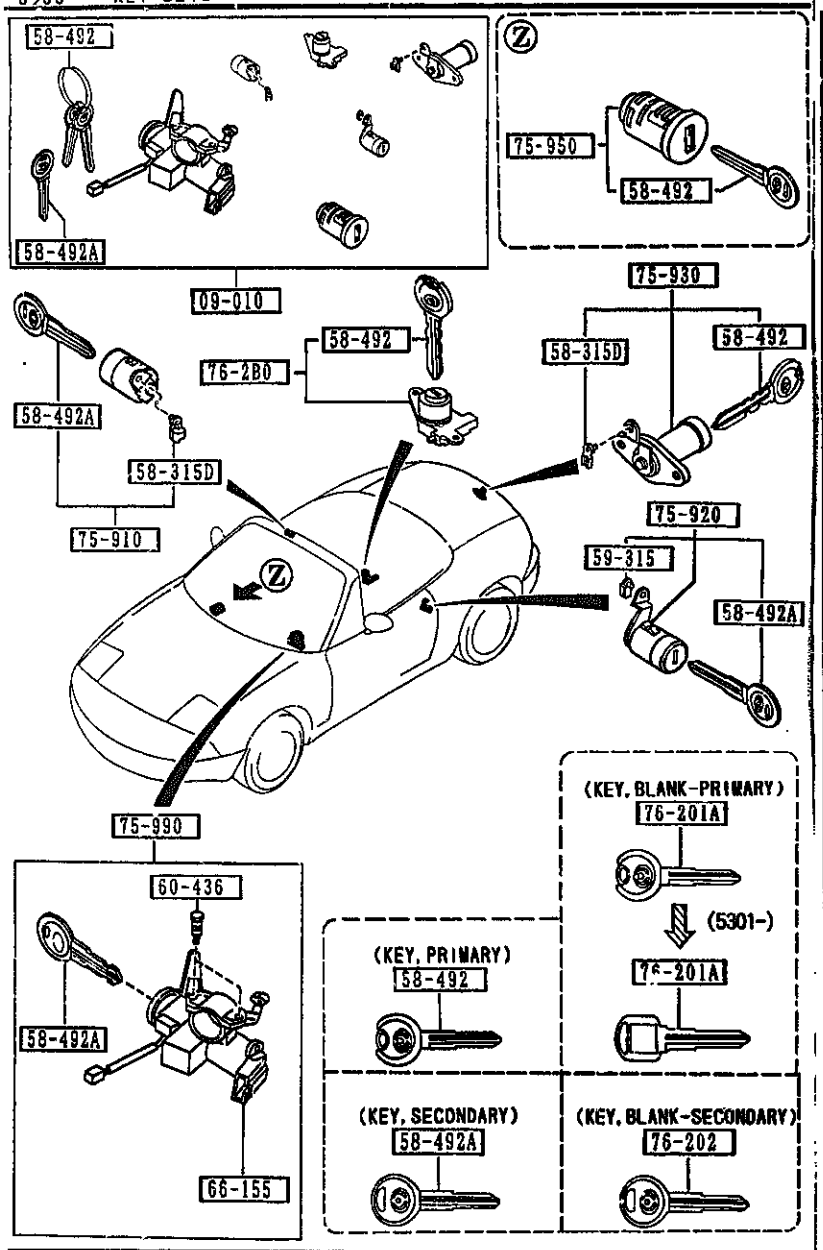

0900 -1 KEY SETS

PART NO.	QTY	MODEL/RESTRICTION	MODEL/RESTRICTION	MODEL/RESTRICTION	FROM-TO
09-010		KEY SET			
NA75-09-010E	1	(MT)			-5401
00 INT-		NA3 NA4 NA5 NA7 BLACK			
NA82-09-010C	1	(AT)			-5401
00 INT-		NA3 NA4 NA5 NA7 BLACK			
NA75-09-010F	1	(MT)			5401-
00 INT-		NA3 NA4 NA5 NA7 NA8 BLACK			
NA82-09-010D	1	(AT)			5401-
00 INT-		NA3 NA4 NA5 NA7 NA8 BLACK			
58-315D		CLIP (R)			
G030-58-315	2				
58-492		KEY,PRIMARY			
FD01-58-492	2	KEY NO. IS REQUIRED			
58-492A		KEY,SECONDARY			
FD01-58-493	1	KEY NO. IS REQUIRED			
59-315		CLIP			
G030-59-315	1				
60-436		BOLT,SET			
N043-66-154	1				
66-155		SWITCH,IGNITION			
D801-66-151	1				-5401
A (D081-66-151A)					
D801-66-151A	1				5401-
75-910		KEY SUB SET(R),DOOR			
NA14-76-210F	1				-5301
N081-76-210D	1				5301-
75-920		KEY SUB SET(L),DOOR			
NA14-76-220F	1				-5301

5301 NA35* -616742
5401 NA35* -619598

0900 KEY SETS

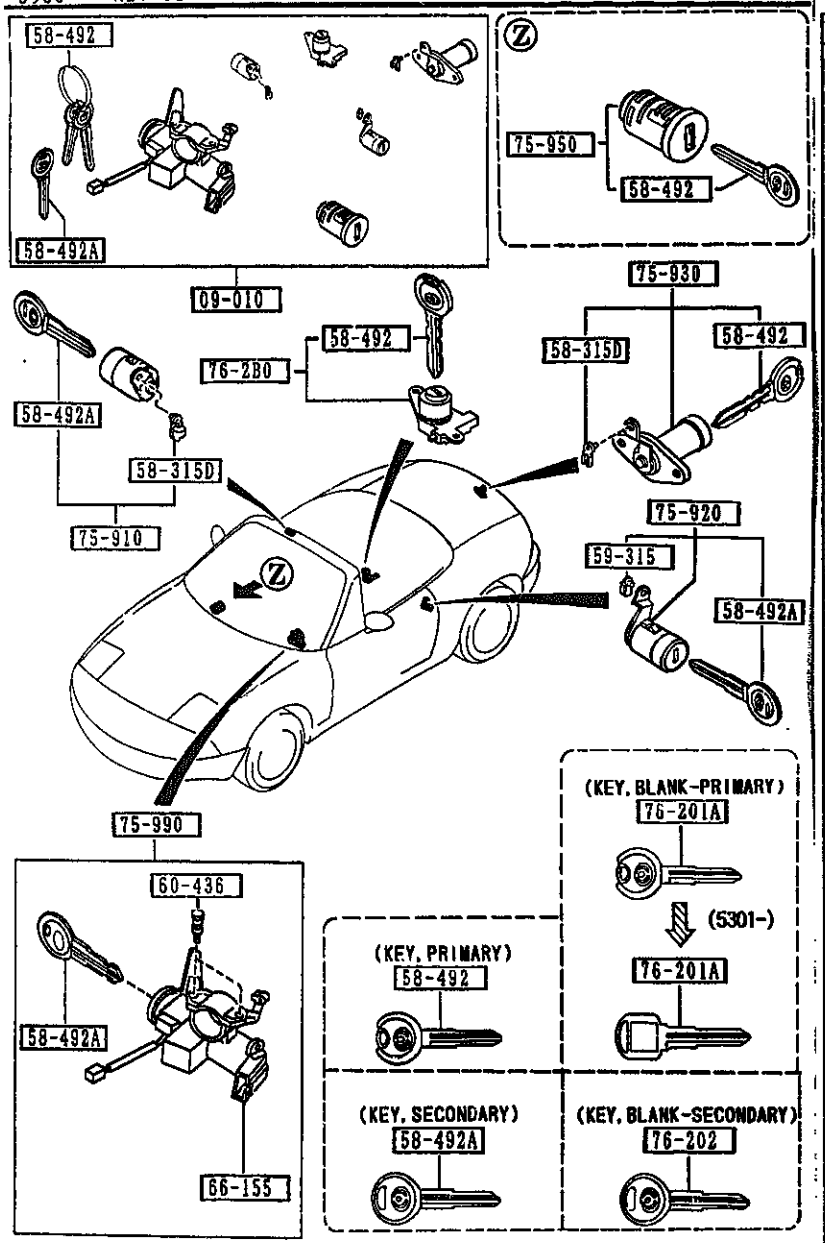

0900 -2 * KEY SETS

PART NO.	QTY	MODEL/RESTRICTION	MODEL/RESTRICTION	MODEL/RESTRICTION	FROM-TO
CONT'D					
N001-76-220D	1				5301-
+---------+					
| 75-930 |		KEY SUB SET,TRUNK			
+---------+					
NA01-76-230C	1				-5301
A (NA01-76-230D)					
NA91-76-230D	1				5301-
+---------+					
| 75-950 |		KEY SUB SET,GLOVE			
+---------+					
NA75-76-250	1				-5301
EA70-76-250B	1				5301-
+---------+					
| 75-990 |		KEY SUB SET,ST.LOCK			
+---------+					
NA75-76-290	1	(MT)			-5301
A (NA75-76-290B)					
NA81-76-290	1	(AT)			-5301
A (NA81-76-290B)					
NA75-76-290B	1	(MT)			5301-
NA81-76-290B	1	(AT)			5301-
+---------+					
| 76-2B0 |		KEY SUB SET,CONSOLE			
+---------+					
NA01-76-2B0C	1				-5301
NA81-76-2B0D	1				5301-
+---------+					
| 76-201A |		KEY,BLANK-PRIMARY			
+---------+					
FD81-76-201	1				-5301
B8YA-76-201	1				5301-
+---------+					
| 76-202 |		KEY,BLANK-SECONDARY			
+---------+					
FD01-76-202	1				-5301

5301 NA35* -616742

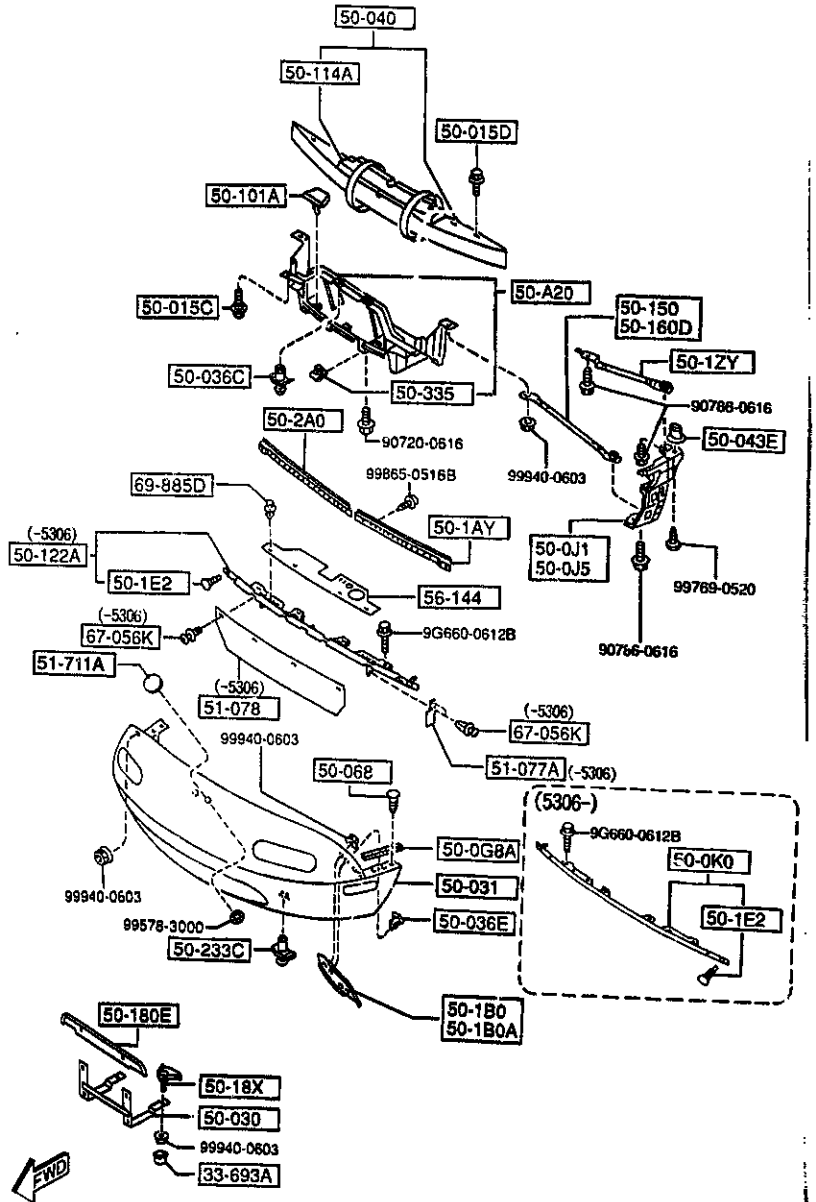

AUNA05

5000 -1 FRONT BUMPER

PART NO.	QTY	MODEL/RESTRICTION	MODEL/RESTRICTION	MODEL/RESTRICTION	FROM-TO
33-693A 0259-33-693	2	CAP,BLEEDER SCREW			
50-A20 NA01-50-A20A	1	GUIDE,AIR (W/O A. LOCK BRAKE)			
NA23-50-A20	1	(W/A. LOCK BRAKE)			
50-0G8A NA01-50-0G9	2	SEAL,RUBBER-FRONT BUMPER			
50-0J1 NA01-50-0J1	1	RETAINER(R),FRONT BUMPER			
50-0J5 NA01-50-0J5	1	RETAINER(L),FRONT BUMPER			
50-0K0 NA01-50-0K0B	1	RETAINER,FASCIA			5306-
50-015C FB01-50-132	2	BOLT			
50-015D NA01-50-0Z2	8	BOLT			
50-030 NA01-50-180A	1	HOLDER,NO. PLATE			
50-031 NAY1-50-030	1	BUMPER,FRONT PAINT TO MATCH			
50-036C BF67-50-033	2	FASTENER			
50-036E KA01-50-102	6	CLIP			
50-040 NA01-50-070	1	REINFORCEMENT,BUMPER (W/O DAY RUNNING LAMP)			

5306 NA35* -617256

CAT. AUNA05-04

1997-07

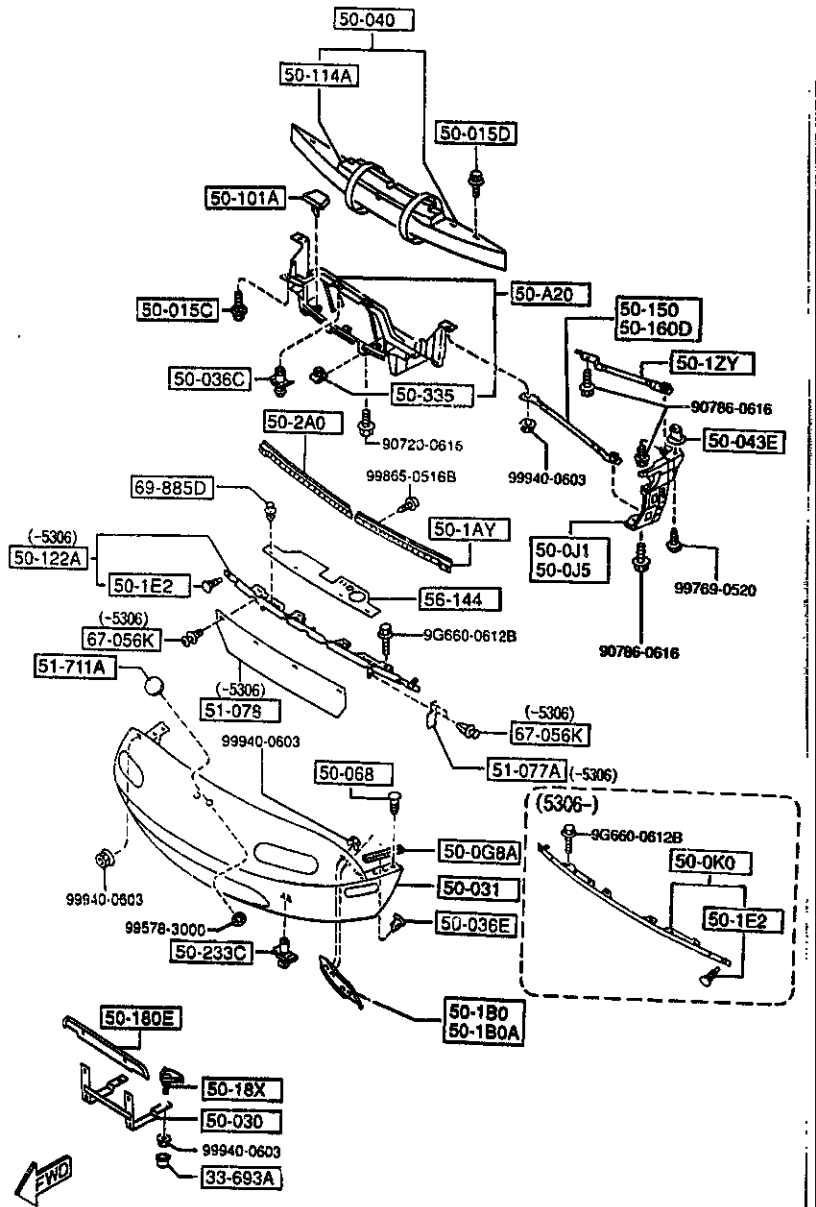

PART NO	QTY	MODEL/RESTRICTION	MODEL/RESTRICTION	MODEL/RESTRICTION	FROM-TO
50-043E B092-50-032	2	SLIDE'A',BUMPER			
50-068 NA01-50-068	6	CLIP			
50-1AY NA01-50-1AYC	1	PLATE,SET NO.1			
50-1B0 NA01-50-1B0	1	PLATE NO.2(R),SET-F. BUMPER			
50-1B0A NA01-50-1C0	1	PLATE NO.2(L),SET-F. BUMPER			
50-1E2 NA01-50-1E2	2	BOLT			
50-1ZY NA01-50-1ZYB	2	BRACKET,FENDER			
50-101A NA01-50-101A	3	COVER,GRILLE			
50-114A NA01-50-114	1	SPACER,E.A.FOAM			
50-122A NA75-50-0K0	1	RETAINER,FRT.BUMPER			-5306
50-150 NA01-50-160	1	BRACKET(R),FRT BUMPER-LWR (W/O A. LOCK BRAKE)			
50-160D NA01-50-160	1	BRACKET(L),F. BUMPER SIDE			
50-18X NA01-50-18X	2	BRACKET,LICENCE PLATE			
50-180E FB01-50-144	1	PROTECTOR,NO. PLATE			

5306 NA35* -617256

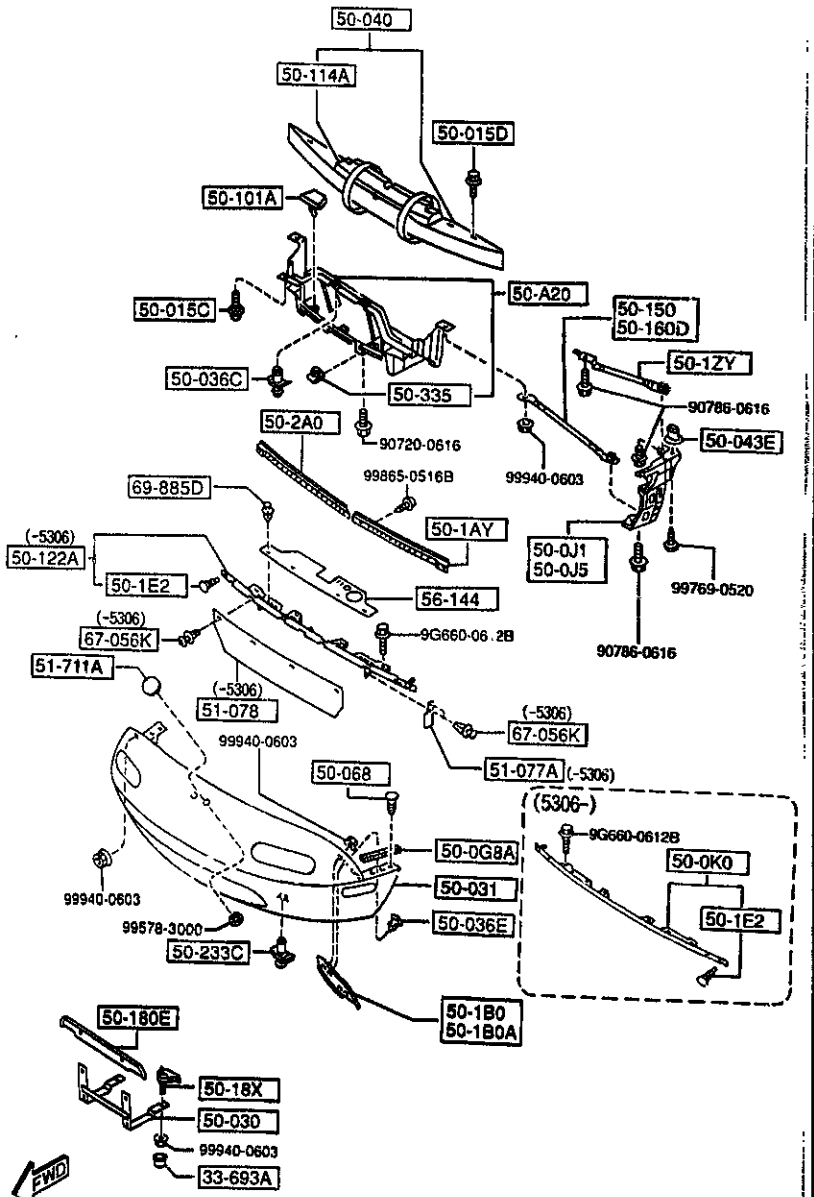

AUNA05

5000 -3 * FRONT BUMPER

PART NO.	QTY	MODEL/RESTRICTION	MODEL/RESTRICTION	MODEL/RESTRICTION	FROM-TO
50-2A0		SET PLATE NO.1(R),RR BUMPER			
NA01-50-2A0B	1				
50-233C		FASTENER,REAR BUMPER			
BF02-50-233	2				
50-335		NUT,CLIP			
FB01-50-133C	4				
51-077A		SEAL,SIDE			
NA75-50-0K8	2				-5306
51-078		SEAL,LOWER			
NA75-50-0K6A	1				-5306
51-711A		ORNAMENT,FRONT			
BB1H-51-731	1				
56-144		SEAL,BUMPER			
NA75-50-0K7A	1				
67-056K		RIVET			
UB39-50-795	8				-5306
69-885D		FASTENER			
NA01-56-145	4				

5306 NA35# -617256

CAT. AUNA05-04

1997-07

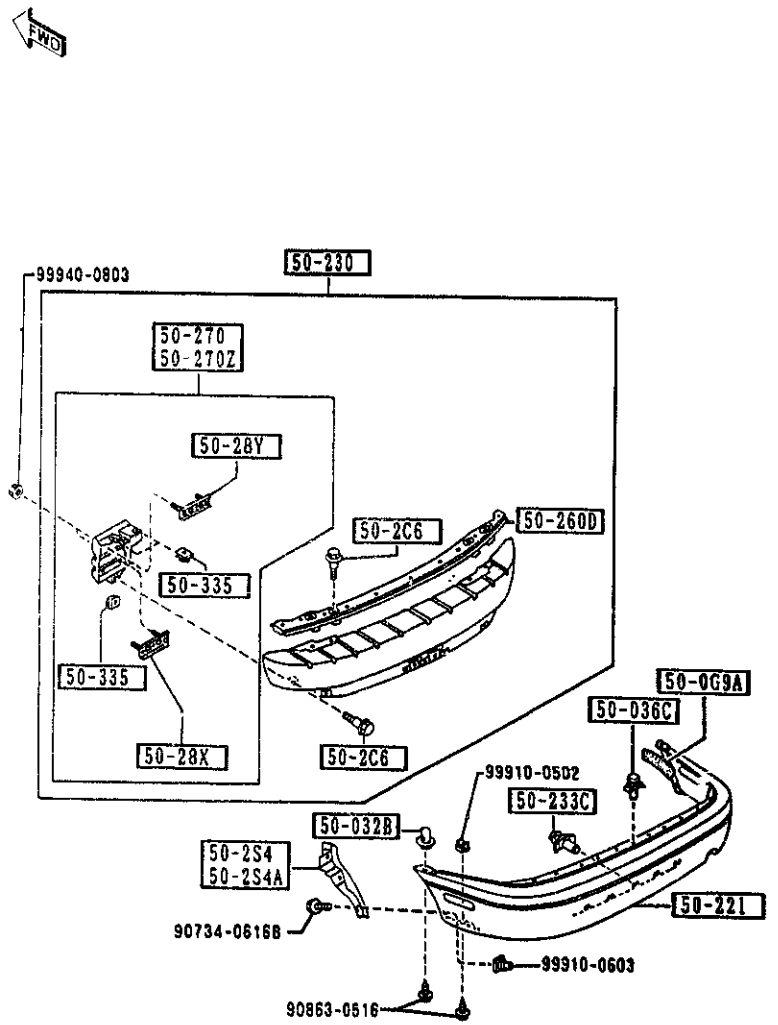

5010 -1 REAR BUMPER

PART NO.	QTY	MODEL/RESTRICTION	MODEL/RESTRICTION	MODEL/RESTRICTION	FROM-TO
50-0G9A NA01-50-0G8	2	SEAL,RUBBER-REAR BUMPER			
50-032B GJ21-50-032	2	SLIDE'UP.',BUMPER			
50-036C BF67-50-033	11	FASTENER			-4A03
BF67-50-033	7				4A03-
50-2C6 NA01-50-2C6	6	BOLT			
50-2S4 NA01-50-2S4	1	SHIELD(R),SPLASH-R.BUMPER			
50-2S4A NA01-50-2S5	1	SHIELD(L),SPLASH-R.BUMPER			
50-221 NAY1-50-220A	1	BUMPER,REAR PAINT TO MATCH			
50-230 NA01-50-260	1	REINFORCEMENT,BUMPER (W/O DAY RUNNING LAMP)			
50-233C BF02-50-233	5	FASTENER,REAR BUMPER			
50-260D NA01-50-2J0	1	RETAINER,R.BUMPER			
50-270 NA01-50-280A	1	STAY(R),RR. BUMPER			
50-270Z NA01-50-290A	1	STAY(L),RR. BUMPER			
50-28X NA01-50-28XC	2	PLATE SET			

4A03 NA35# -603621

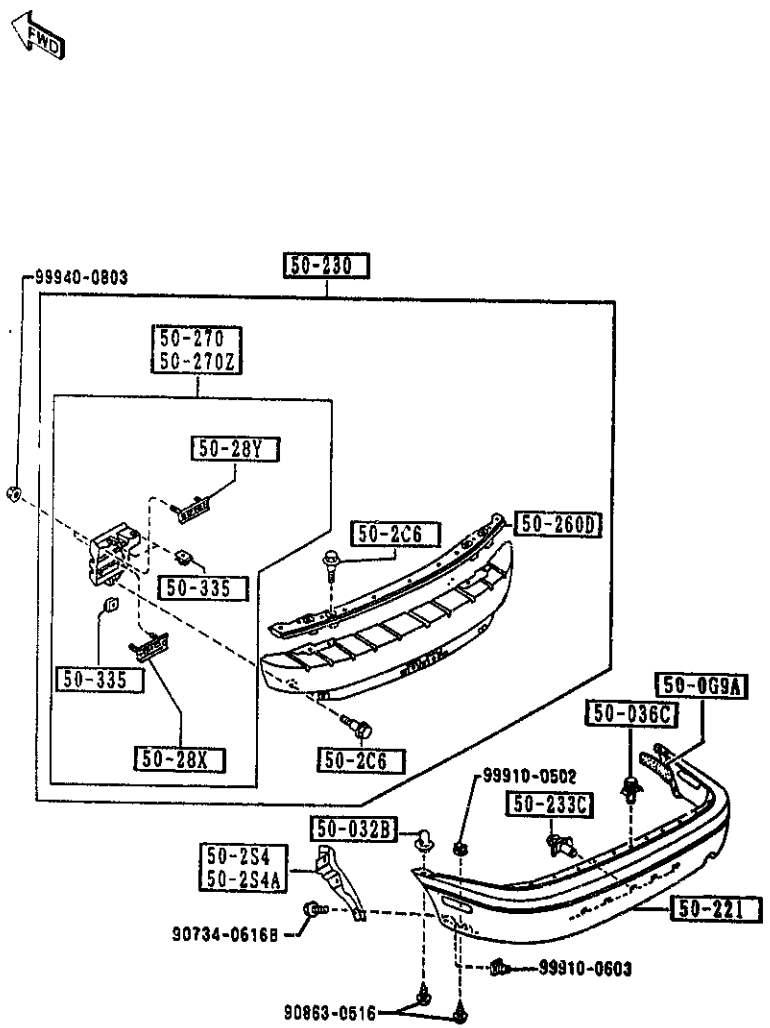

5010 -2 * REAR BUMPER

PART NO	QTY	MODEL/RESTRICTION	MODEL/RESTRICTION	MODEL/RESTRICTION	FROM-TO
50-28Y		PLATE SET			
NA01-50-28YC	2				
50-335		NUT,CLIP			
NA01-50-133	6				

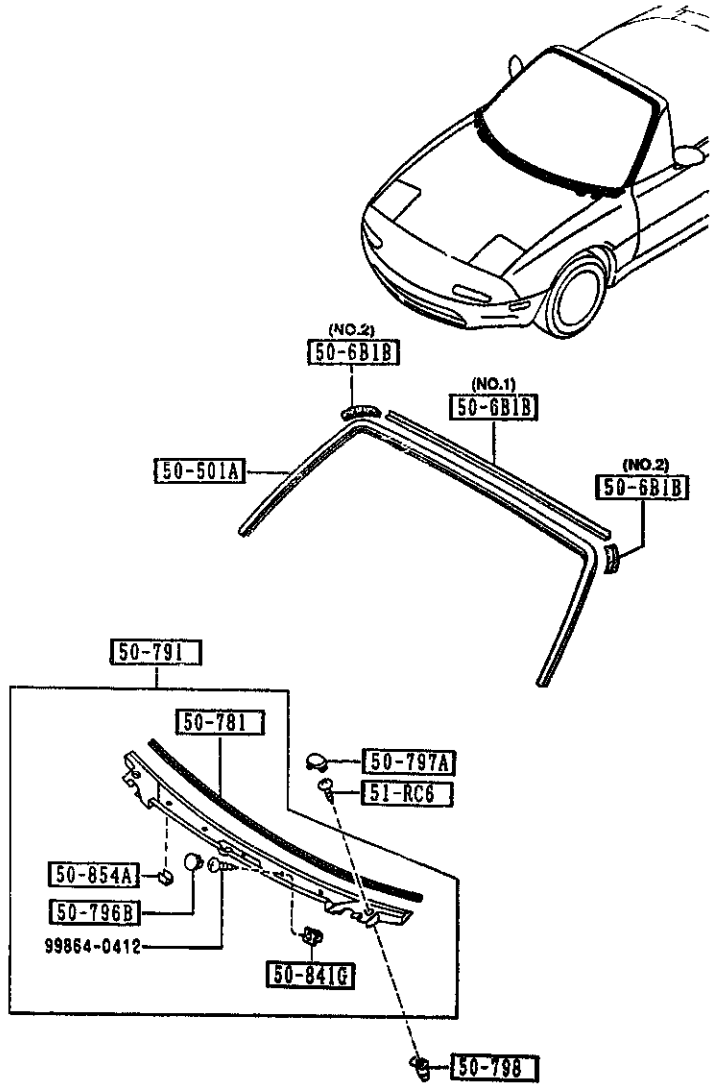

5030 -1 * WINDOW MOULDING & COWL GRILLES

PART NO.	QTY	MODEL/RESTRICTION	MODEL/RESTRICTION	MODEL/RESTRICTION	FROM-TO
50-501A		MOULD(UP),FRT.WINDOW			
NA01-50-601	1				
50-6B1B		PROTR,MOULD-FRT WINDOW			
NA01-50-6B1	1	(ILLUST. NO.1)			
NA01-50-6B2	2	(ILLUST. NO.2)			
50-701		PROTECTOR,COWL GRILLE			
NA01-50-792A	1				
50-791		GRILLE,COWL			
NA01-50-790E	1				
50-796B		CAP			
B455-50-796A	5				
50-797A		CAP			
NA01-50-797A	2				
50-798		SCREW,GROMMET			
NA01-50-798	2				
50-841G		GROMMET,SCREW			
NA01-51-789	5				
50-854A		PROTECTOR			
NA01-50-794	4	('95 MODEL)			
51-RC6		SCREW,SIDE GARNNISH			
H272-51-RC6	2				

5100 -1 * HEAD LAMPS

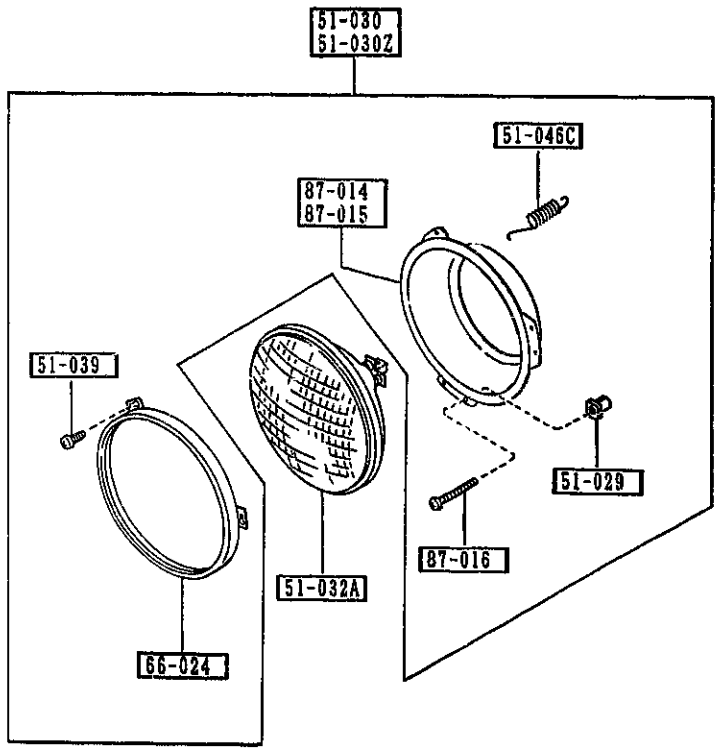

PART NO.	QTY	MODEL/RESTRICTION	MODEL/RESTRICTION	MODEL/RESTRICTION	FROM-TO
51-029		GROMMET,SCREW			
0483-66-061A	4				
51-030		LAMP SET(R),HEAD			
8BN1-51-030	1				
51-030Z		LAMP SET(L),HEAD			
8BN1-51-040	1				
51-032A		UNIT,HEAD LAMP			
NA02-51-031	2				
51-039		SCREW			
B481-51-0E3	6				
51-046C		SPRING			
NA01-51-046	2				
66-024		RING,RETAINING			
NA01-51-[illegible]	2				
87-014		RING(R)MOUNTING			
NA01-51-032	1				
87-015		RING(L)MOUNTING			
NA01-51-054	1				
87-016		SCREW,ADJUST			
NA01-51-037	4				

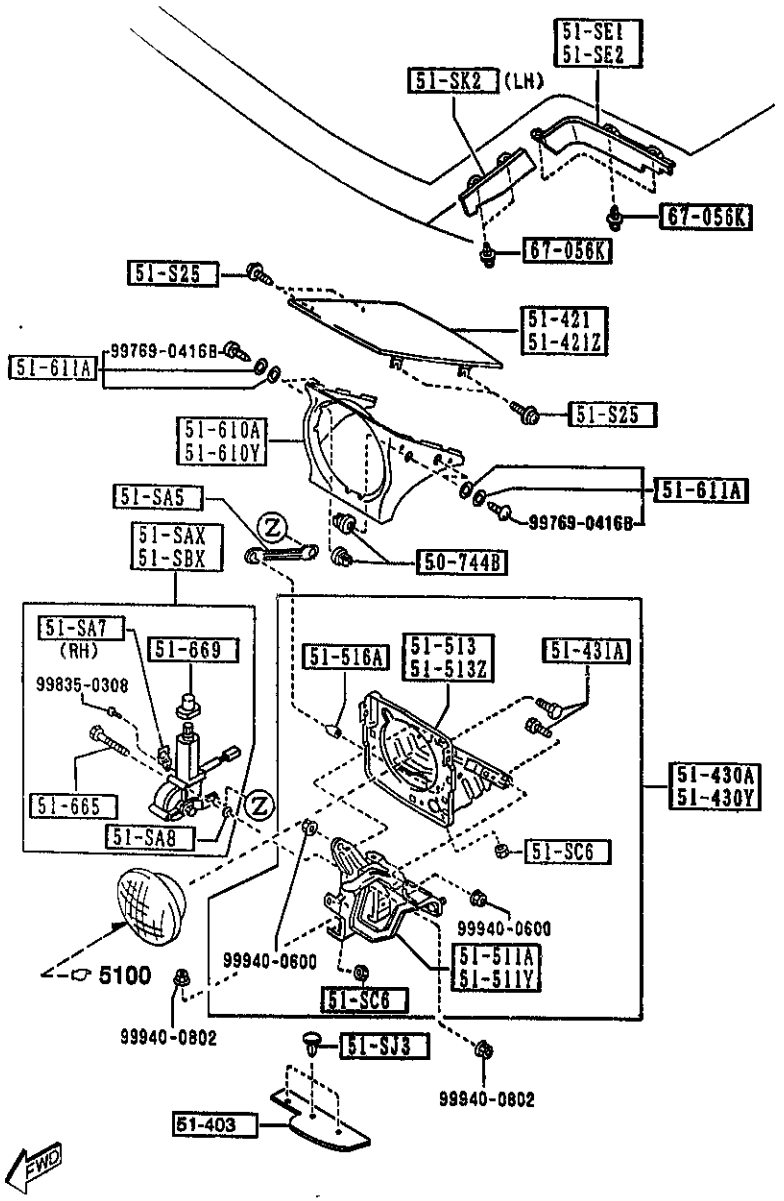

AUNA05

5103 -1 HEAD LAMP RETRACTORS

PART NO.	QTY	MODEL/RESTRICTION	MODEL/RESTRICTION	MODEL/RESTRICTION	FROM-TO
50-744B		GROMMET,SCREW			
B481-50-744	8				
51-SAX		MOTOR(R),RETRACTABLE HEAD			
NA01-51-SAX	1				
51-SA5		ROD,RETRACTABLE			
NA01-51-SA5	2				
51-SA7		BRACKET,CLIP			
NA01-51-SA7	1				
51-SA8		WASHER			
NA01-51-SA8	6				
51-SBX		MOTOR(L),RETRACTABLE HEAD			
NA01-51-SBX	1				
51-SC6		NUT,STOPPER-LAMP HINGE			
KA01-51-SC6	4				
51-SE1		PROTECTOR(R),RETRA H/L			
NA01-51-SE1	1				
51-SE2		PROTECTOR(L),RETRA. H/L			
NA01-51-SE2	1				
51-SJ3		CLIP			
NA01-51-SJ3	6				
51-SK2		PROTECTOR(L),RETRA. SIDE			
NA01-51-SK2	1				
51-S25		BOLT,LAMP LID			
BS34-51-S25A	8				
51-403		PROTECTOR			
NA01-51-SJ2 AN(NA01-51-SJ2A)	2				-5508
NA01-51-SJ2A	2				5508-

5508 NA35# -620210

CAT. AUNA05-04

1997-07

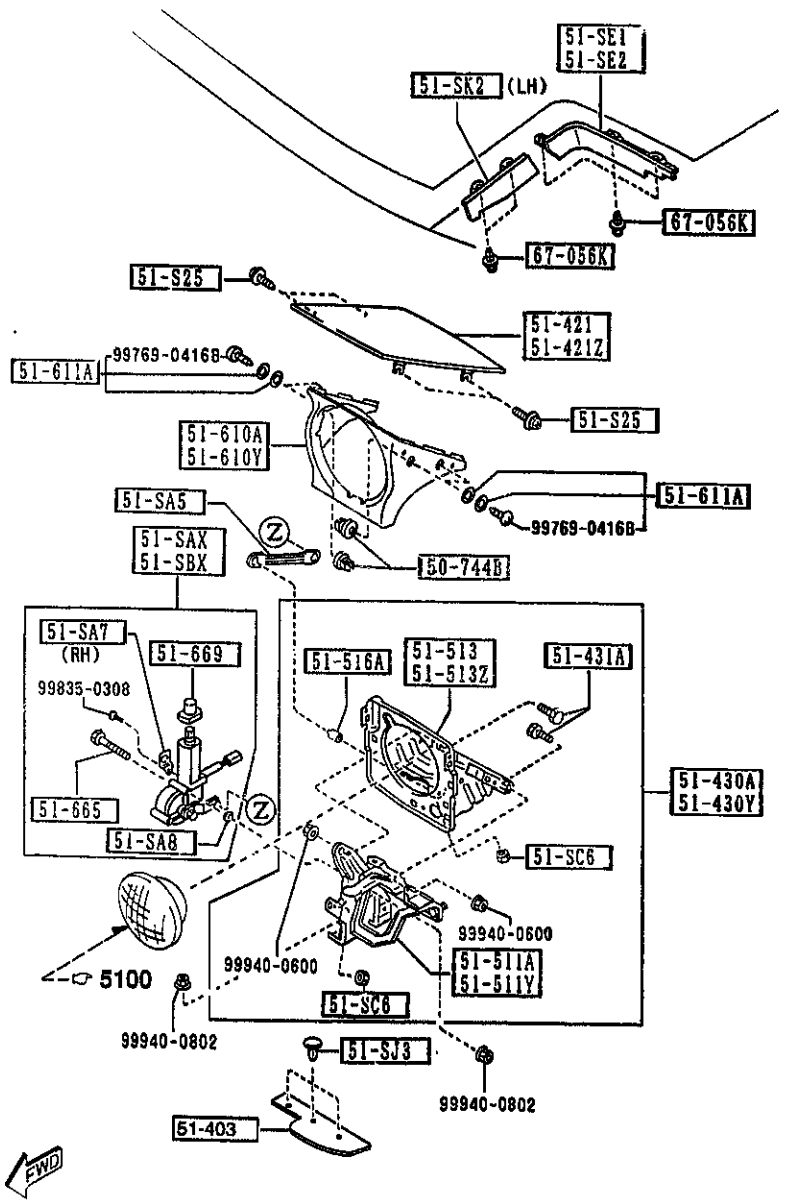

5103 -2 HEAD LAMP RETRACTORS

PART NO.	QTY	MODEL/RESTRICTION	MODEL/RESTRICTION	MODEL/RESTRICTION	FROM TO
51-421 NA01-51-SH1B	1	LID(R),LAMP			
51-421Z NA01-51-SH2B	1	LID(L),LAMP			
51-430A NA01-51-SC0B	1	HINGE(R),LID-LAMP			
51-430Y NA01-51-SD0B	1	HINGE(L),LID-LAMP			
51-431A KA01-51-SD7	4	BOLT,HINGE			
51-511A NA01-51-SC1A	1	BRACKET(R),HINGE-LAMP LID			
51-511Y NA01-51-SD1A	1	BRACKET(L),HINGE-LAMP LID			
51-513 NA01-51-SC5B	1	HOUSING(R),LAMP-LID HINGE			
51-513Z NA01-51-SD5B	1	HOUSING(L),LAMP-LID HINGE			
51-516A KA01-51-SD6	2	CAP,HINGE-H.L.RETRACTABLE			
51-610A NA01-50-741	1	BEZEL(R),HEAD LAMP			
51-610Y NA01-50-751	1	BEZEL(L),HEAD LAMP			
51-611A B481-50-75X	8	SCREW,HEAD LAMP BEZEL			
51-665 FB01-51-665	6	BOLT,MOTOR-RETRACT H/LAMP			

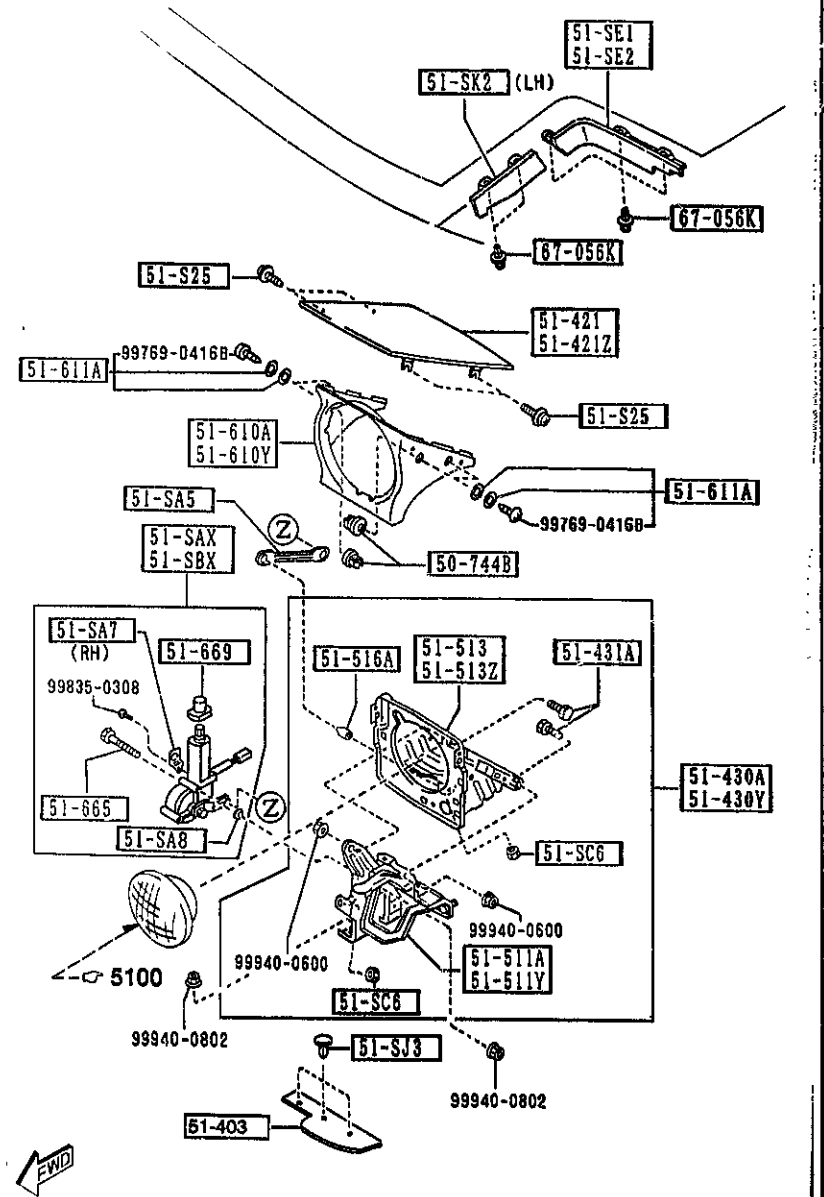

AUNA05

5103 -3 * HEAD LAMP RETRACTORS

PART NO	QTY	MODEL/RESTRICTION	MODEL/RESTRICTION	MODEL/RESTRICTION	FROM-TO
51-669		BOOT,MOTOR-RETRACT H /L			
NA01-51-669	2				
67-056K		RIVET			
UB39-50-795	8				

CAT. AUNA05-04 1997-07

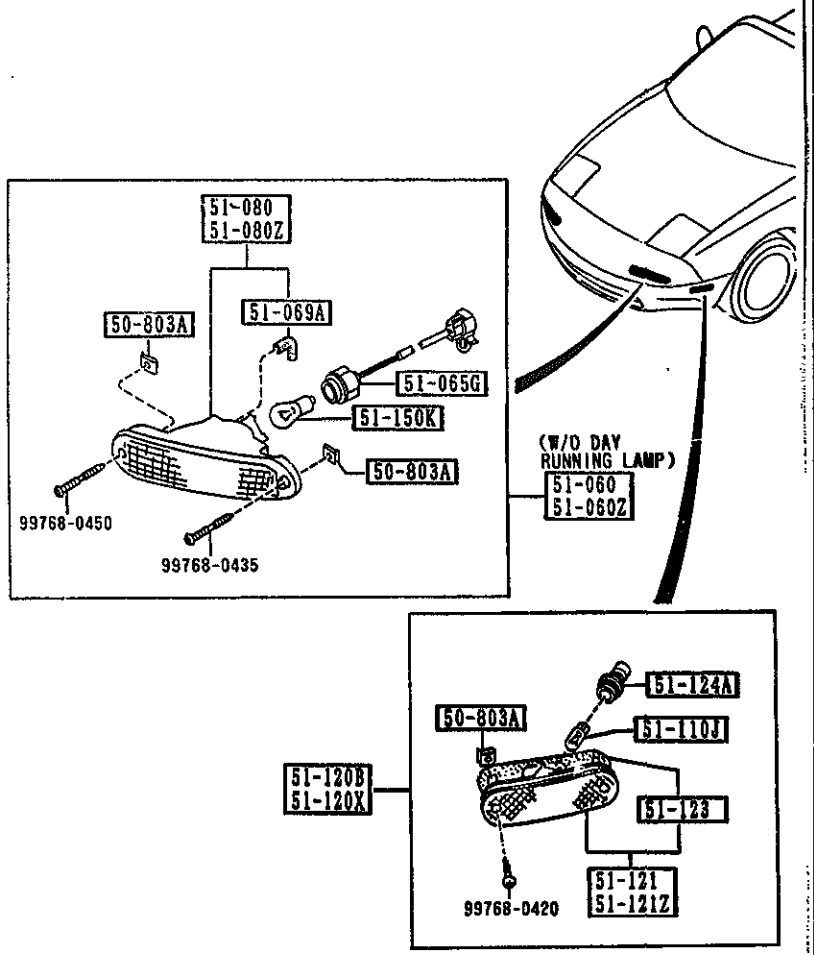

5105 -1 FRONT COMBINATION LAMPS

PART NO.	QTY	MODEL/RESTRICTION	MODEL/RESTRICTION	MODEL/RESTRICTION	FROM-TO
50-803A 0158-50-803	8	NUT,SIDE PROTECTOR			
51-060 8BN1-51-060	1	LAMP SET(R),FRT COMB (W/O DAY RUNNING LAMP)			
51-060Z 8BN1-51-070	1	LAMP SET(L),FRT COMB (W/O DAY RUNNING LAMP)			
51-065G NA01-51-064	2	SOCKET,F. COMB. LAMP (W/O DAY RUNNING LAMP)			
51-069A NA01-51-069	2	TUBE,HEAD LAMP			
51-080 NA01-51-06XA	1	LENS & HOUSING(R)			
51-080Z NA01-51-07XA	1	LENS & HOUSING(L)			
51-110J 99701-6038	2	BULB 12V 3.8W			
51-120B 8BN1-51-120	1	LAMP SET(R),SIDE TURN			
51-120X 8BN1-51-130	1	LAMP SET(L),SIDE TURN			
51-121 NA01-51-5EXA	1	LENS & BODY(R)			
51-121Z NA01-51-5FXA	1	LENS & BODY(L)			
51-123 NA01-51-5D3A	2	GASKET,SIDE TURN			

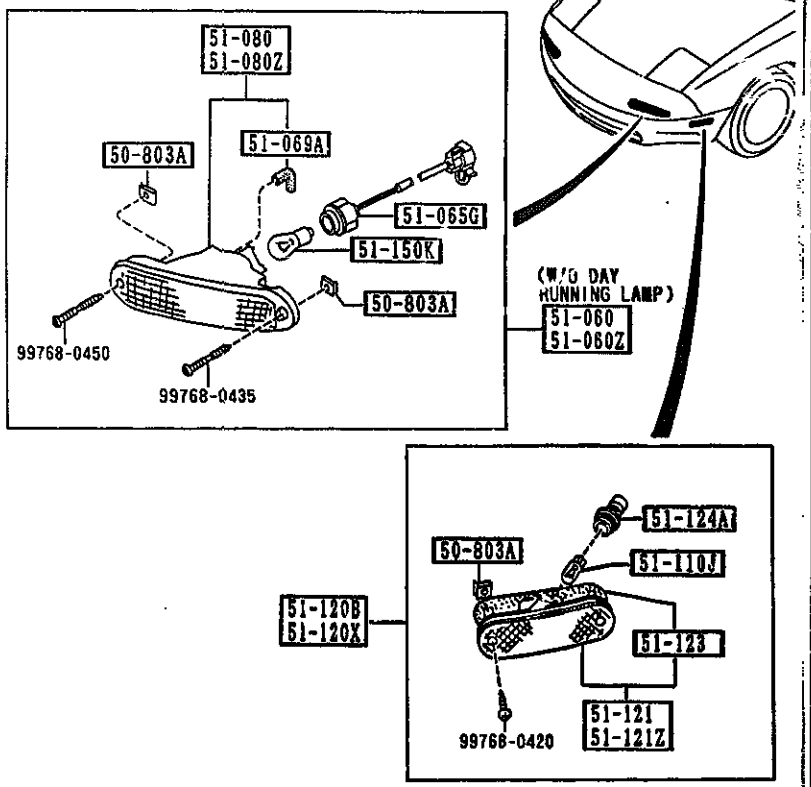

5105 -2 * FRONT COMBINATION LAMPS

PART NO.	QTY	MODEL/RESTRICTION	MODEL/RESTRICTION	MODEL/RESTRICTION	FROM-TO
51-124A		SOCKET,SIDE TURN			
NA01-51-5E2	2				
51-150K		BULB			
99701-4278Y	2	A12V 27/8W			

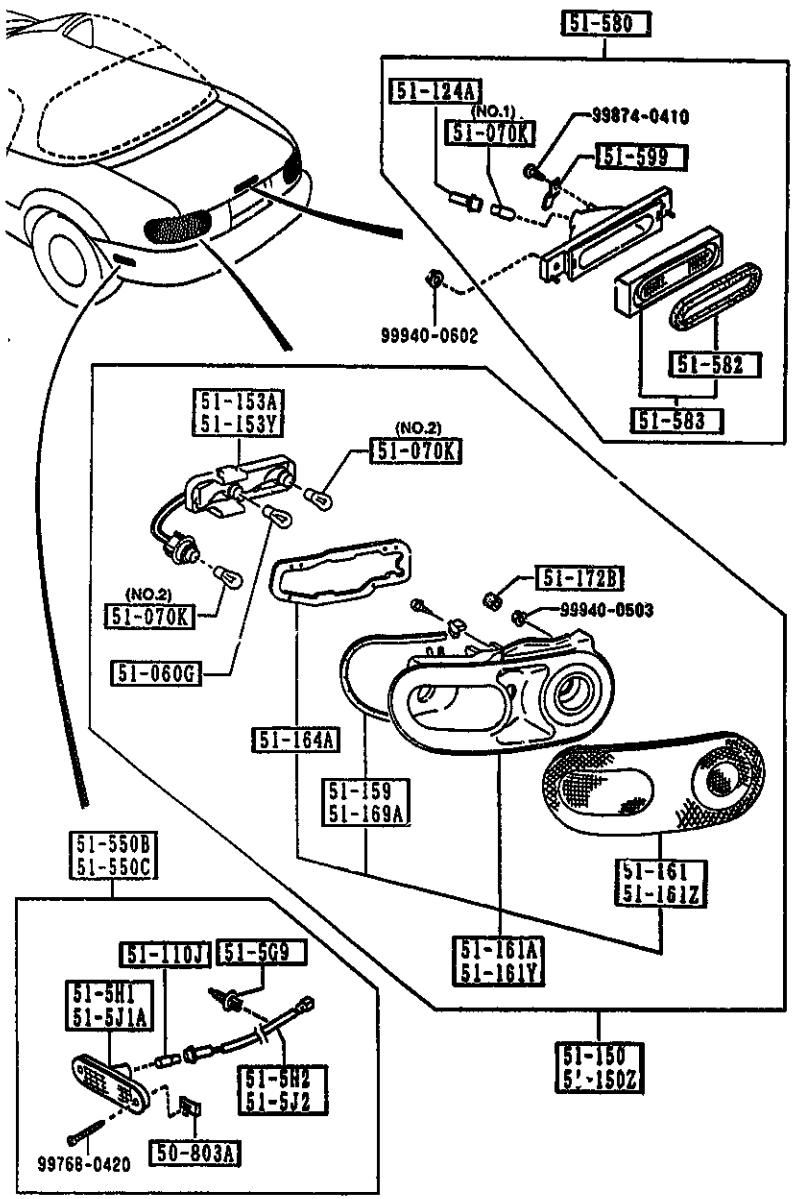

5110 -1 REAR COMBINATION LAMPS

PART NO.	QTY	MODEL/RESTRICTION	MODEL/RESTRICTION	MODEL/RESTRICTION	FROM-TO
50-803A 0158-50-803	4	NUT,SIDE PROTECTOR			
51-060G 99701-4278	2	BULB 12V 27W/8W			
51-070K 99700-7180	1	BULB A12V 18.4W (ILLUST. NO.1)			
99701-3270	4	12V 27W (ILLUST. NO.2)			
51-110J 99701-6038	2	BULB 12V 3.8W			
51-124A BJ38-51-584	1	SOCKET,SIDE TURN			
51-150 8BN1-51-150	1	LAMP SET(R),RR.COMB.			
51-150Z 8BN1-51-160	1	LAMP SET(L),RR.COMB.			
51-153A N001-51-155A	1	SOCKET(R),RR.COMB.			
51-153Y N001-51-165A	1	SOCKET(L),RR.COMB.			
51-159 NA01-51-159	1	PROTECTOR(R),'A'			
51-161 NA01-51-15XC	1	LENS(R),RR.COMB.			
51-161A NA01-51-170B	1	LENS & BODY(R),RR COMB.			
51-161Y		LENS & BODY(L),RR COMB.			

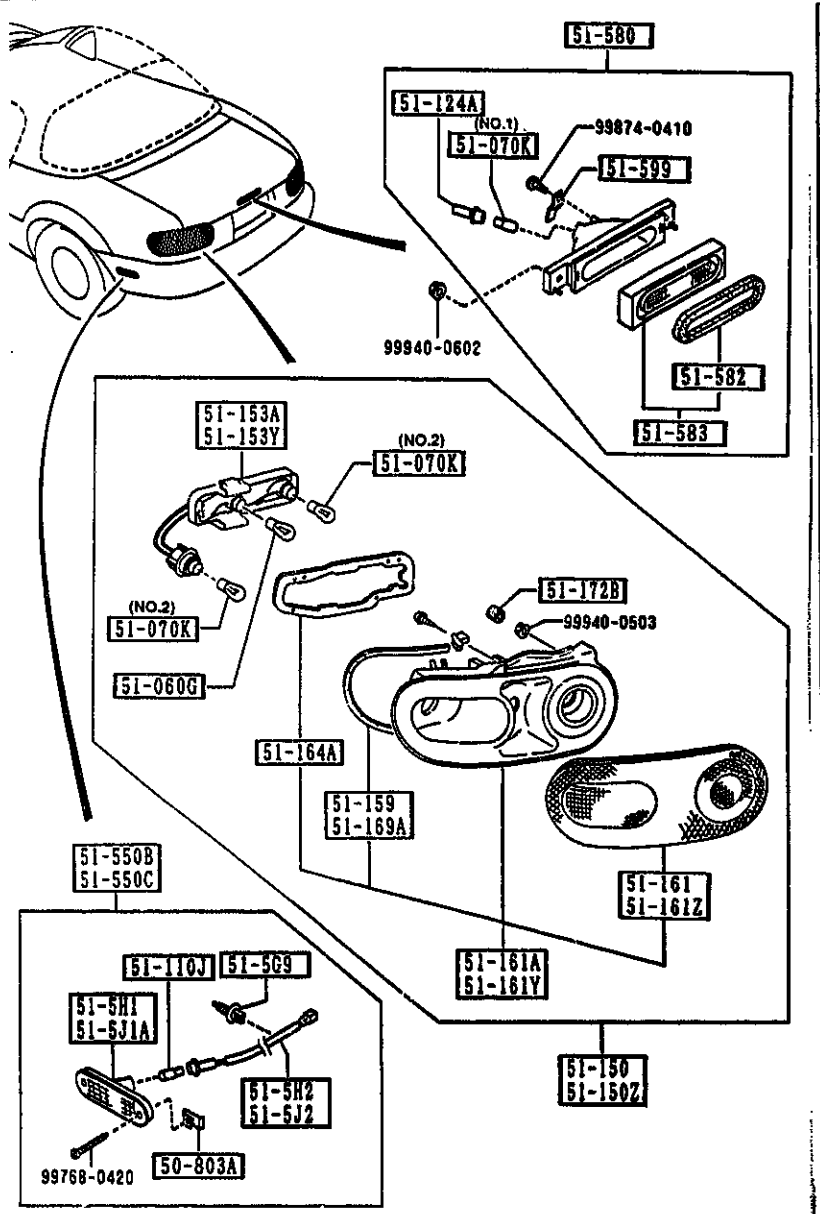

AUNA05

PART NO.	QTY	MODEL/RESTRICTION	MODEL/RESTRICTION	MODEL/RESTRICTION	FROM-TO
CONT'D					
NA01-51-180B	1				
51-1612		LENS(L),RR.COMB.			
NA01-51-16XC	1				
51-164A		GASKET,RR COMB.			
NA01-51-158	2				
51-169A		PROTECTOR(L),'A'			
NA01-51-169	1				
51-172B		CAP			
8030-51-172	1				
51-5G9		CLIP			
NA01-51-5G9	8				
51-5H1		LENS & BODY(R),RR SIDE TURN			
NA01-51-5H1C	1				
51-5H2		SOCKET(R),RR SIDE TURN			
NA01-51-5H2A	1				
51-5J1A		LENS & BODY(L),RR SIDE TURN			
NA01-51-5J1C	1				
51-5J2		SOCKET(L),RR SIDE TURN			
NA01-51-5J2A	1				
51-550B		LAMP SET(R),SIDE TURN-RR			
8BN1-51-550	1				
51-550C		LAMP SET(L),SIDE TURN-RR			
8BN1-51-560	1				
51-580		LAMP,STOP-HI.MOUNT.			
NA01-51-580B	1				
51-582		GASKET,STOP LAMP-HI.MOUNT			
NA01-51-592B	1				

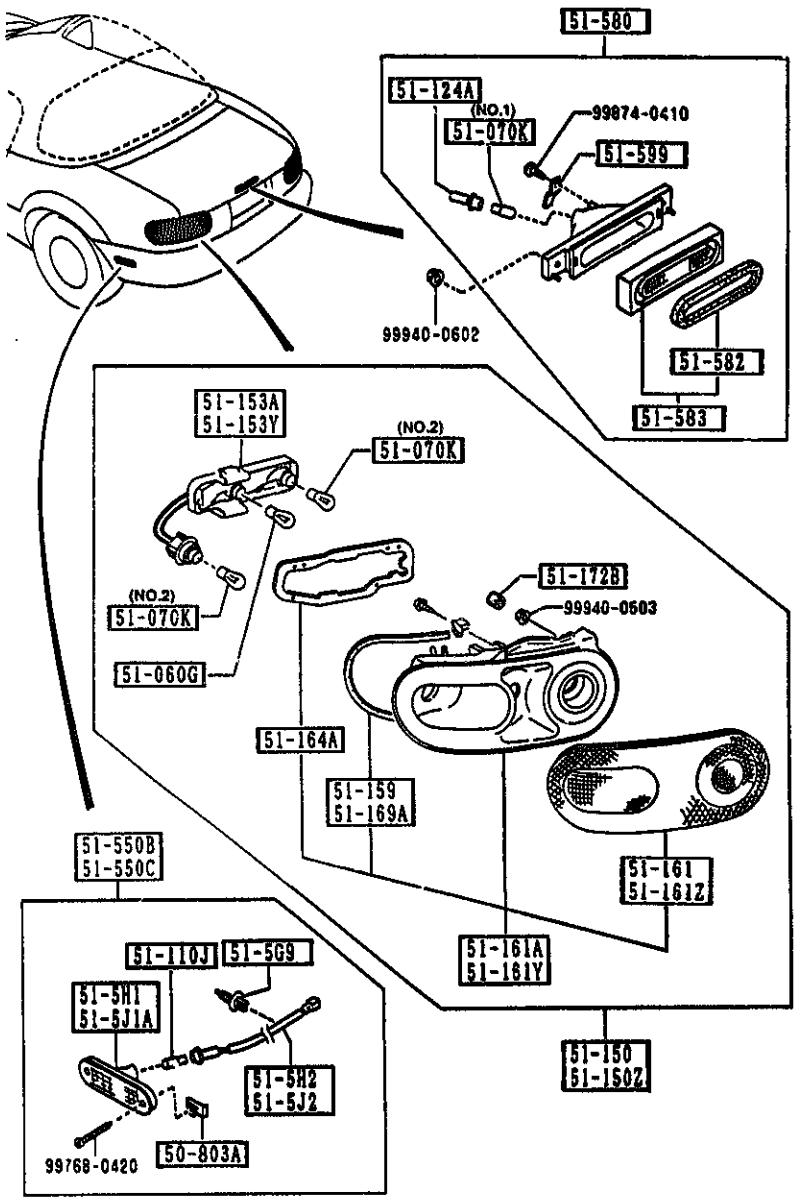

AUNA05

5110 -3 * REAR COMBINATION LAMPS

PART NO	QTY	MODEL/RESTRICTION	MODEL/RESTRICTION	MODEL/RESTRICTION	FROM-TO
51-583		LENS,STOP LAMP-HI.MOUNT			
NA01-51-58XA	1				
51-599		FASTENER,STOP LAMP-HI.			
NA01-51-599	1				-4A03

4A03 NA35* -603621

CAT. AUNA05-04

1997-07

5120 -1 * LICENSE LAMPS

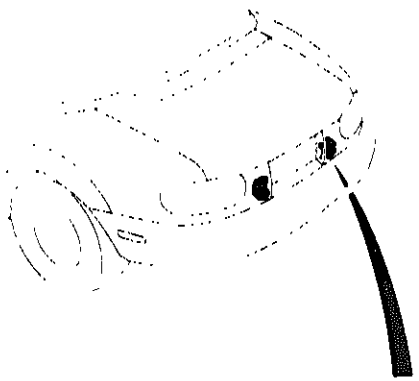

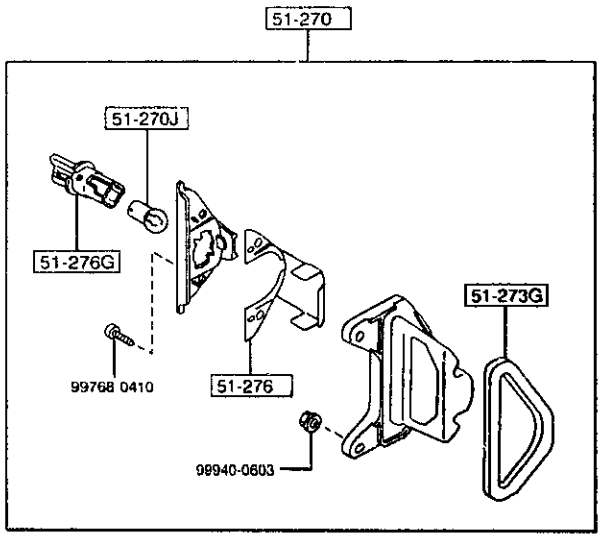

PART NO	QTY	MODEL/RESTRICTION	MODEL/RESTRICTION	MODEL/RESTRICTION	FROM TO
51-270		LAMP,LICENSE			
8BF1-51-270	2				
51-270J		BULB			
99701-2070	2	12V 7.5W			
51-273G		GASKET,LICENSE LAMP			
FB67-51-273	2				
51-276		SHADE,LAMP-LICENSE			
FB67-51-276	2				
51-276G		SOCKET,LICENSE LAMP			
FB67-51-272	2				

5125 -1 * INTERIOR LAMPS

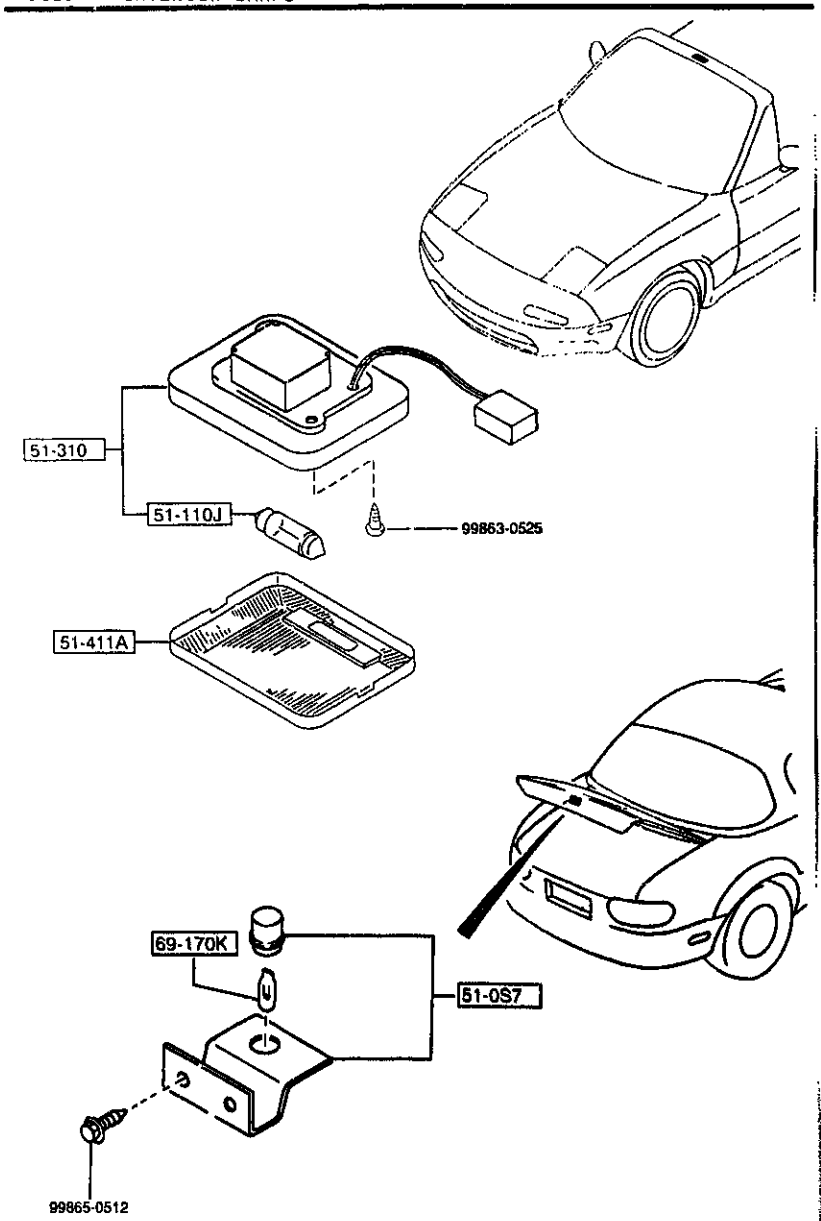

PART NO	QTY	MODEL/RESTRICTION	MODEL/RESTRICTION	MODEL/RESTRICTION	FROM-TO
51-0S7		BRACKET,LAMP			
*NB38-51-445A	1	('96 MODEL)			
51-110J		BULB			
99700-5080	1	12V/8W ('96 MODEL)			
51-310		LAMP,INTERIOR			
NB38-51-310A	1	('96 MODEL)			
51-411A		LENS,ROOM LAMP			
NB38-51-311	1	('96 MODEL)			
69-170K		BULB,INTERIOR MIRROR			
*NB38-68-4G3	1	('96 MODEL)			

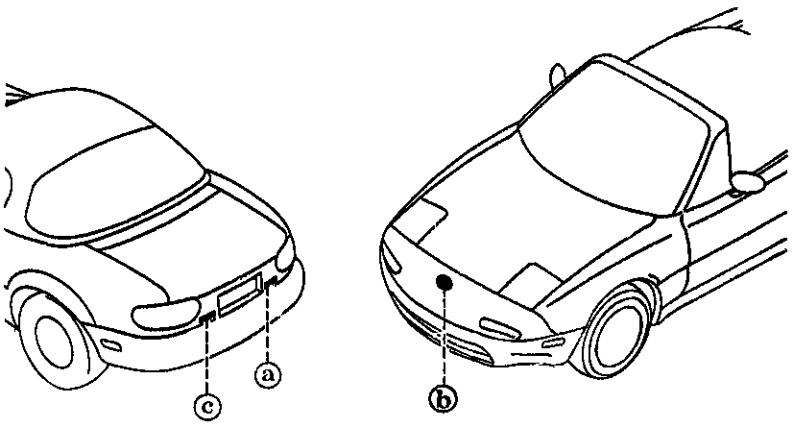

ⓐ 51-711B



ⓒ 51-781



ⓑ 51-711A



5170 -1 * ORNAMENTS

PART NO.	QTY	MODEL/RESTRICTION	MODEL/RESTRICTION	MODEL/RESTRICTION	FROM-TO
51-711A		ORNAMENT,FRONT			
BB1M-51-731	1				
51-711B		ORNAMENT,MAKER NAME-REAR			
NA01-51-711	1				
51-781		ORNAMENT,REAR			
NA01-51-721A	1				

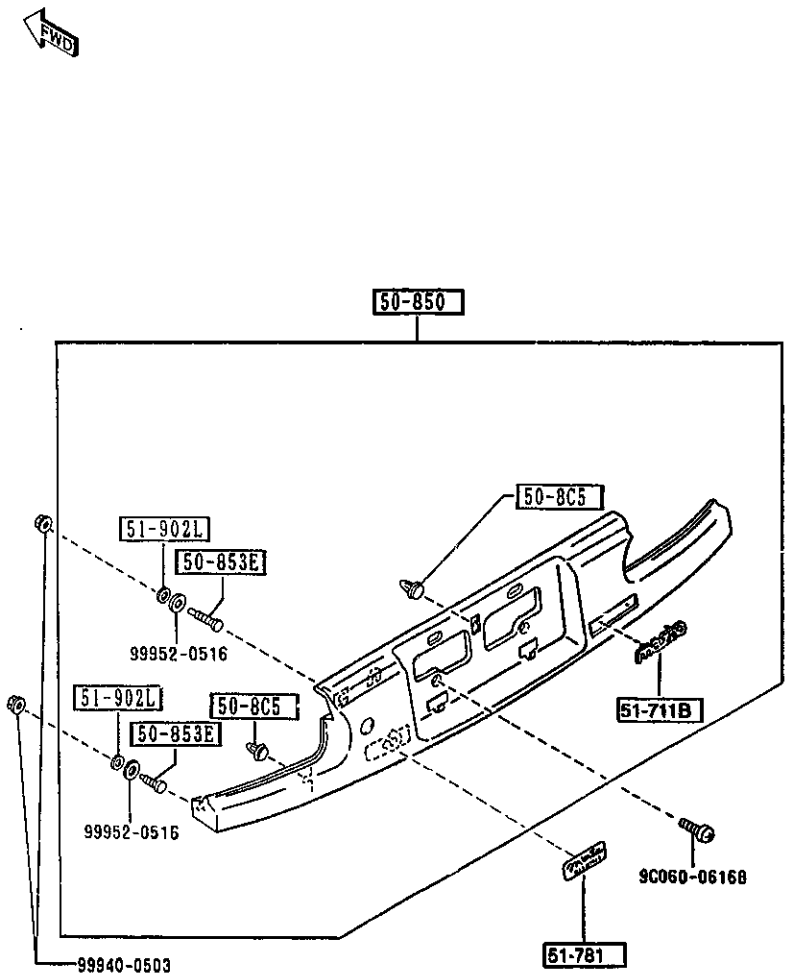

5180 -1 * REAR FINISHER

PART NO.	QTY	MODEL/RESTRICTION	MODEL/RESTRICTION	MODEL/RESTRICTION	FROM-TO
50-8C5		CLIP			
B467-50-8C5	3				
50-850		FINISHER,REAR			
NA01-50-8P0	1				
* A5	EXT-	A5 SATELLITE BLUE MC			
HU	EXT-	HU NEO GREEN			
M8	EXT-	M8 MONTEGO BLUE M			
PT	EXT-	PT CHAST WHITE			
PZ	EXT-	PZ BRILLIANT BLACK			
SU	EXT-	SU CLASSIC RED			
18	EXT-	A1Q ARTVIN RED MC			
6W	EXT-	6W LAGUNA BLUE M.			
50-853E		BOLT,GARNISH-RR			
LA01-50-853	4				
51-711B		ORNAMENT,MAKER NAME-REAR			
NA01-51-711	1				
51-781		ORNAMENT,REAR			
NA01-51-721A	1				
51-902L		GASKET			
G030-51-914	4				

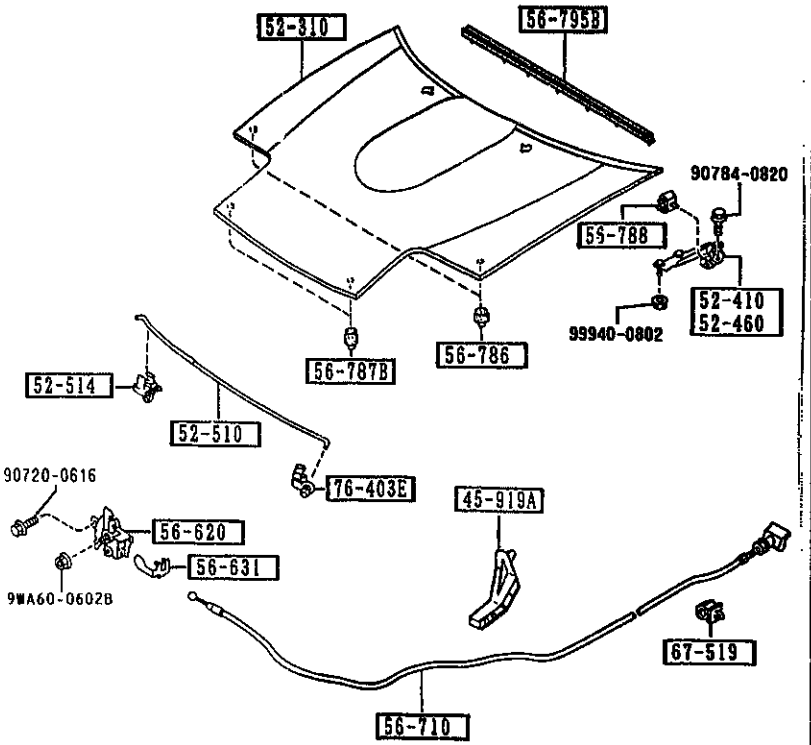

5230 -1 BONNET

PART NO	QTY	MODEL/RESTRICTION	MODEL/RESTRICTION	MODEL/RESTRICTION	FROM-TO
45-919A H115-45-916A	1	HOLDER,PIPE			
52-310 NAY1-52-310B	1	BONNET			
52-410 NA01-52-410A	1	HINGE(R),BONNET			
52-460 NA01-52-420A	1	HINGE(L),BONNET			
52-510 NA75-56-650A	1	STAY,BONNET			
52-514 G030-56-693A	1	HOLDER,ROD			
56-620 NA01-56-620A A (NA01-56-620B)	1	LOCK,BONNET			-4A03
NA01-56-620B	1				4A03-
56-631 LA01-56-631	1	FASTENER,BONNET RELEASE			
56-710 NA01-56-720D	1	WIRE,RELEASE-BONNET			
56-786 NA01-56-787	2	RUBBER(C),CUSHION-BONNET			
56-787B FB01-56-787B	2	RUBBER,CUSHION-BONNET FRT			
56-788 NA01-56-78X	2	RUBBER,CUSHION-BONNET RR			
56-795B NA01-56-760	1	WEATHERSTRIP,BONNET-REAR			

4A03 NA35* -603621

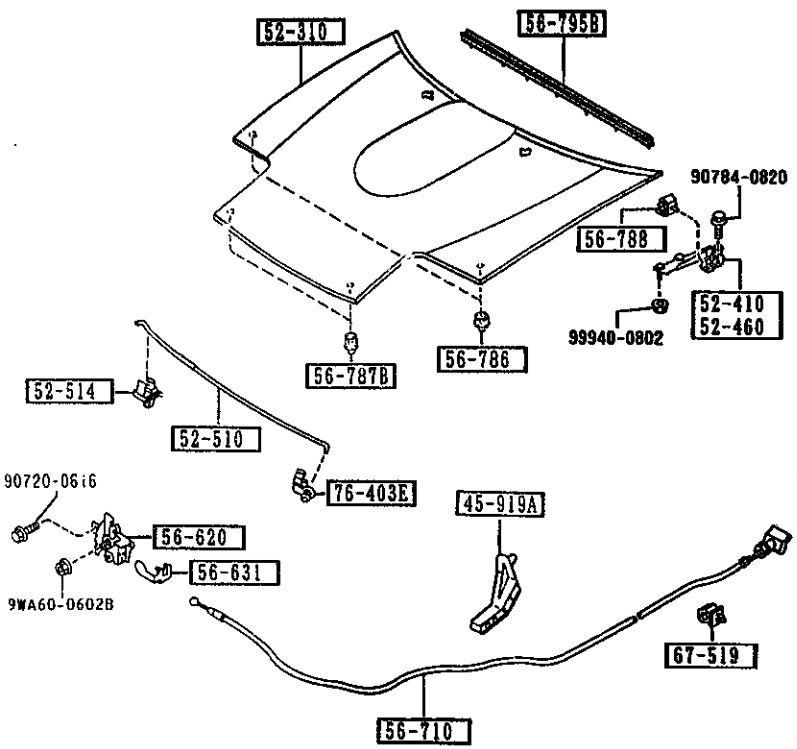

5230 -2 * BONNET

PART NO.	QTY	MODEL/RESTRICTION	MODEL/RESTRICTION	MODEL/RESTRICTION	FROM-TO
67-519		CLIP,PIPE			
G030-67-519	1				
76-403E		HOLDER,ROD			
B092-52-518	1				

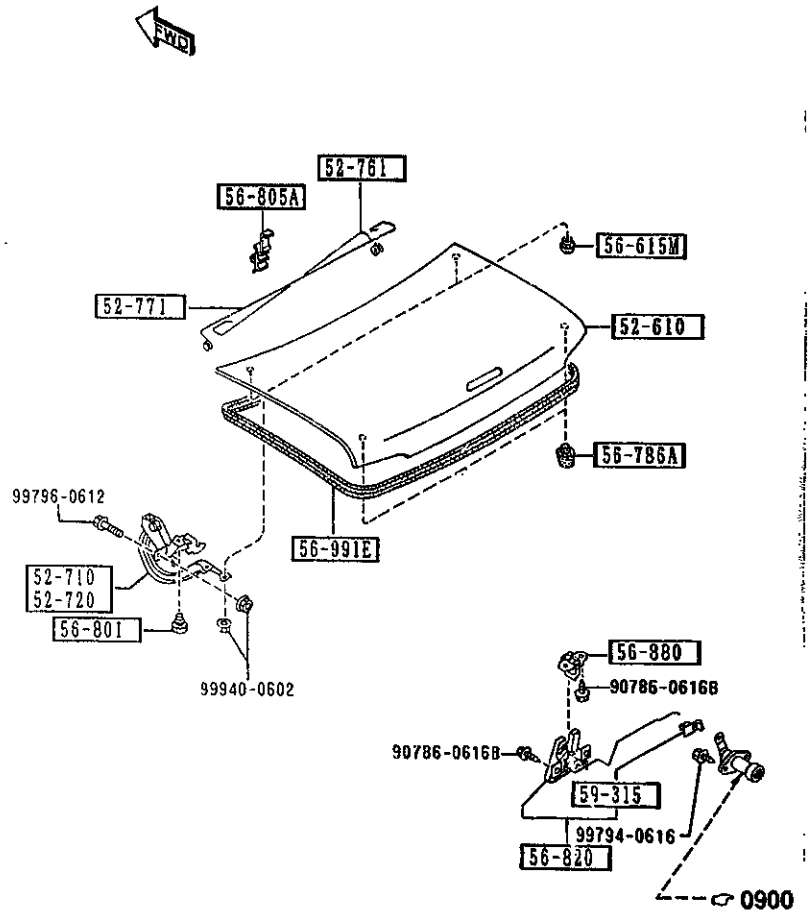

AUNA05

5260 -1 TRUNK LID

PART NO	QTY	MODEL/RESTRICTION	MODEL/RESTRICTION	MODEL/RESTRICTION	FROM-TO
52-610		LID,TRUNK			
NAY1-52-610B A (NAY1-52-610C)	1				-5420
NAY1-52-610C	1				5420-
52-710		HINGE(R),TRUNK LID			
NA01-52-710A AN(NA01-52-710B)	1				-6201
*NA01-52-710B	1				6201-
52-720		HINGE(L),TRUNK LID			
NA01-52-720A AN(NA01-52-720B)	1				-6201
*NA01-52-720B	1				6201-
52-761		SPRING(R),BALANCE			
NA01-52-791A	1				
52-771		SPRING(L),BALANCE			
NA01-52-792A	1				
56-615M		PLUG,DRAIN			
NA01-56-051	2				
56-786A		RUBBER,CUSHION			
B481-56-786	2				
56-801		CUSHION,LID HINGE			
NA01-56-802	2				
56-805A		HOLDER,BALANCE SPRING			
NA01-56-805	1				
56-820		LOCK,LID			
NB38-56-820	1	('96 MODEL)			
N007-56-820	1	('95 MODEL)			
56-880		STRIKER,LID			
NA01-56-840	1				
56-991E		WEATHERSTRIP,LID			

5420 NA35* -620023
6201 NA3** -711421

CAT. AUNA05-04

1997-07

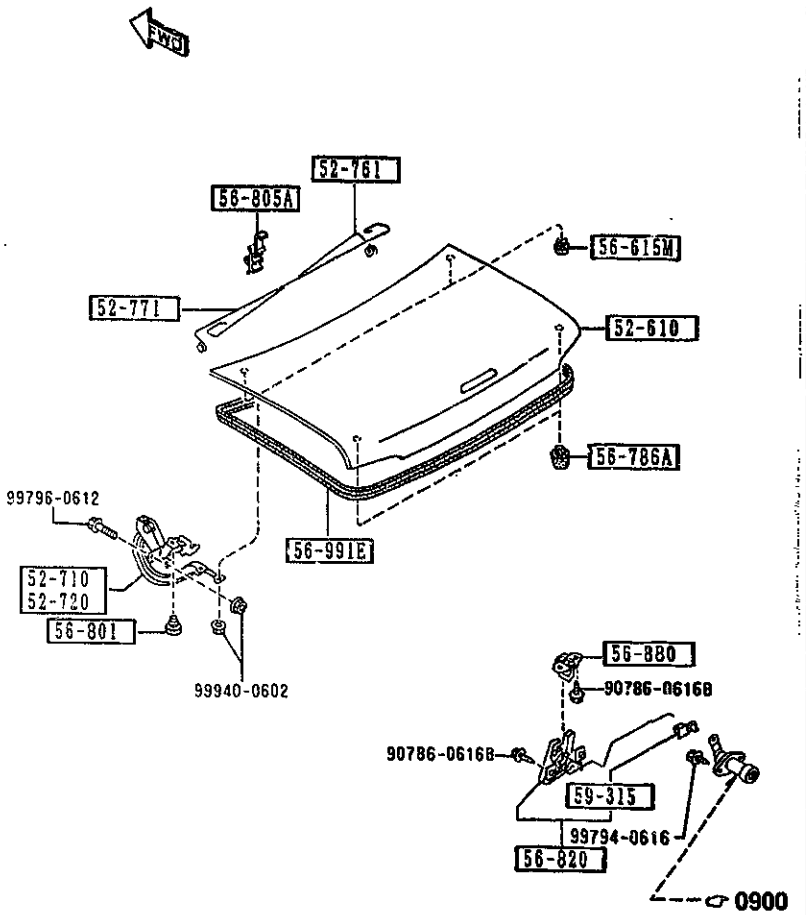

5260 -2 * TRUNK LID

PART NO.	QTY	MODEL/RESTRICTION	MODEL/RESTRICTION	MODEL/RESTRICTION	FROM-TO
CONT'D					
MA01-56-951	1				
59-315		CLIP			
8030-59-315	1				

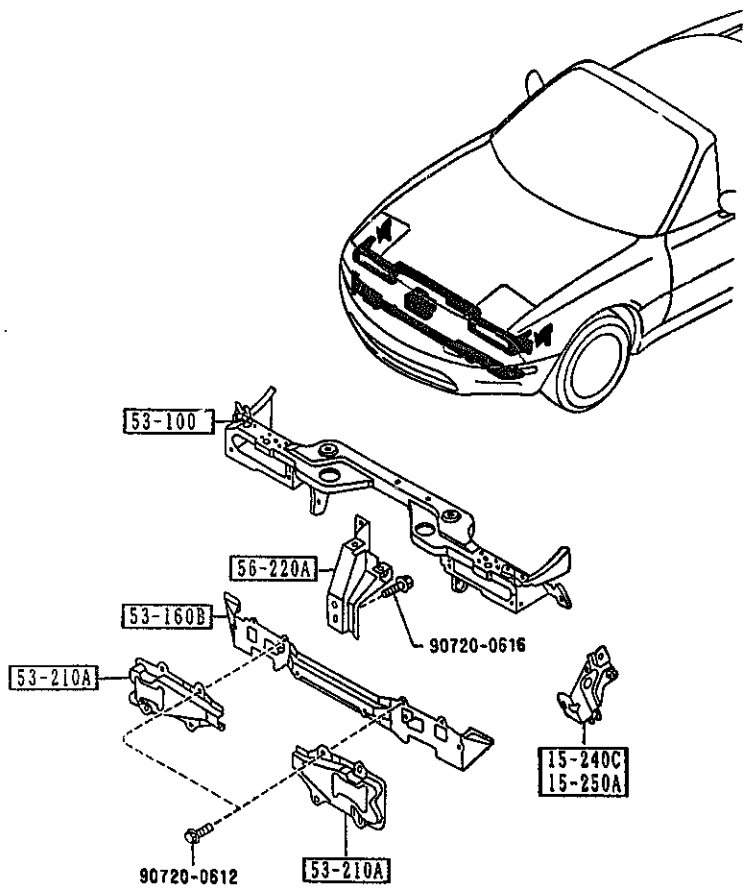

5310 -1 * FRONT PANELS

PART NO.	QTY	MODEL/RESTRICTION	MODEL/RESTRICTION	MODEL/RESTRICTION	FROM-TO
15-240C B61P-15-240A	1	BRACKET(R),RADIATOR			
15-250A B61P-15-250A	1	BRACKET(L),RADIATOR			
53-100 NA75-53-100	1	PANEL,RAD.SHROUD			
53-160B NA01-53-16XC	1	MEMBER,CROSS			
53-210A NA01-54-180	2	BRACKET,BUMPER			
56-220A NA01-56-221B	1	STAY,LOCK-BONNET			

5320 FENDER & WHEEL APRON PANELS

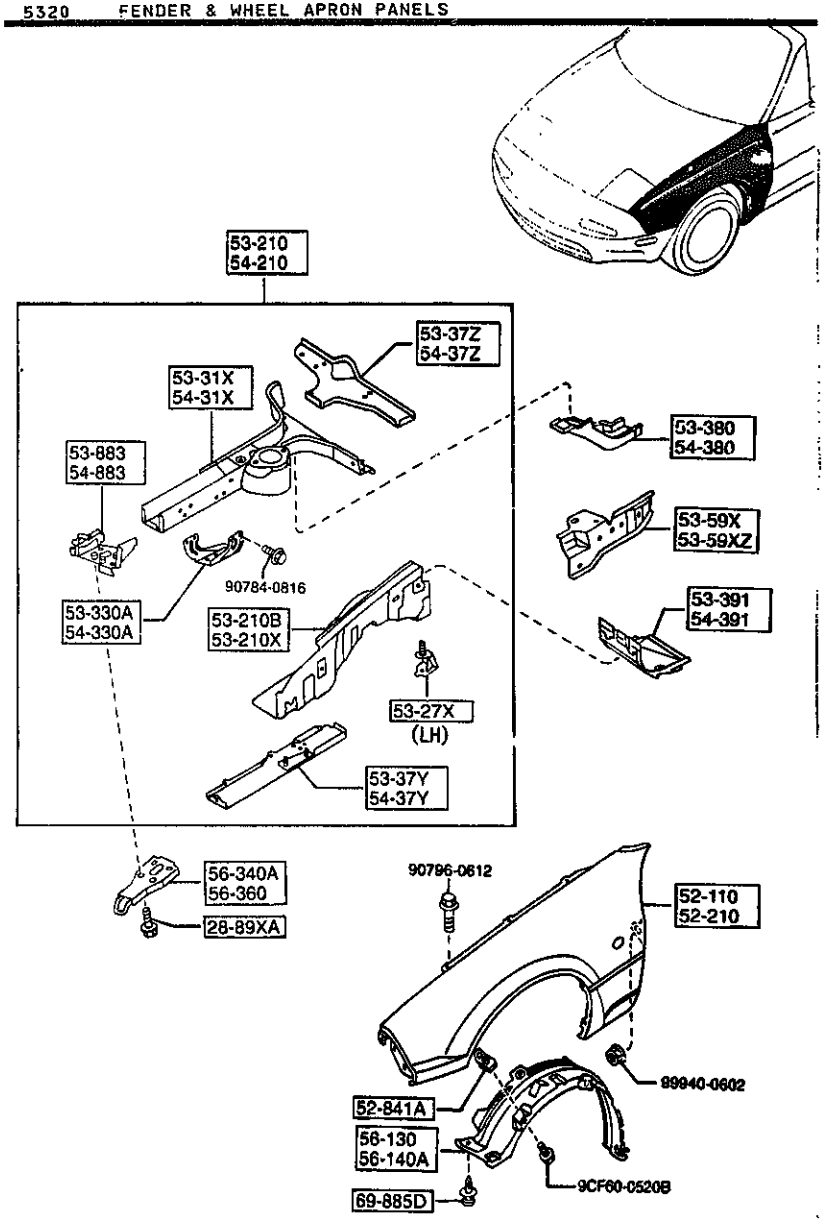

PART NO.	QTY	MODEL/RESTRICTION	MODEL/RESTRICTION	MODEL/RESTRICTION	FROM-TO
28-89XA GJ21-28-89X	6	BOLT,CROSS MEMBER			
52-110 NAY1-52-110	1	PANEL(R),FENDER-FRT.			
52-210 NAY1-52-210	1	PANEL(L),FENDER-FRT.			
52-841A LA01-56-135	10	NUT,CLIP			
53-210 NAY2-53-200	1	PANEL(R),APRON & FRAME			
53-210B NA01-53-210E	1	PANEL(R),WHEEL APRON			
53-210X NA01-54-210F	1	PANEL(L),WHEEL APRON			
53-27X NA01-54-36X	1	BRKT,AIR CLNR-WHL APRON			
53-31X NA75-53-31X	1	FRAME(R),FRONT			-4824
NA75-53-31XA	1				4824-
53-330A NA01-53-330	1	BRACKET(R),STABILIZER			
53-37Y NA01-53-37Y	1	FRAME(UP.,R),FRONT-FRT			
53-37Z NA01-53-37ZA AN(NA01-53-37ZB)	1	FRAME(UP.R),FRONT-REAR			-4A05
NA01-53-37ZB	1				4A05-
53-380 NA01-53-380	1	REINFORCEMENT(R)			

4824 NA35* -601431
4A05 NA35* -603893

AUNA05

CAT. AUNA05-04

1997-07

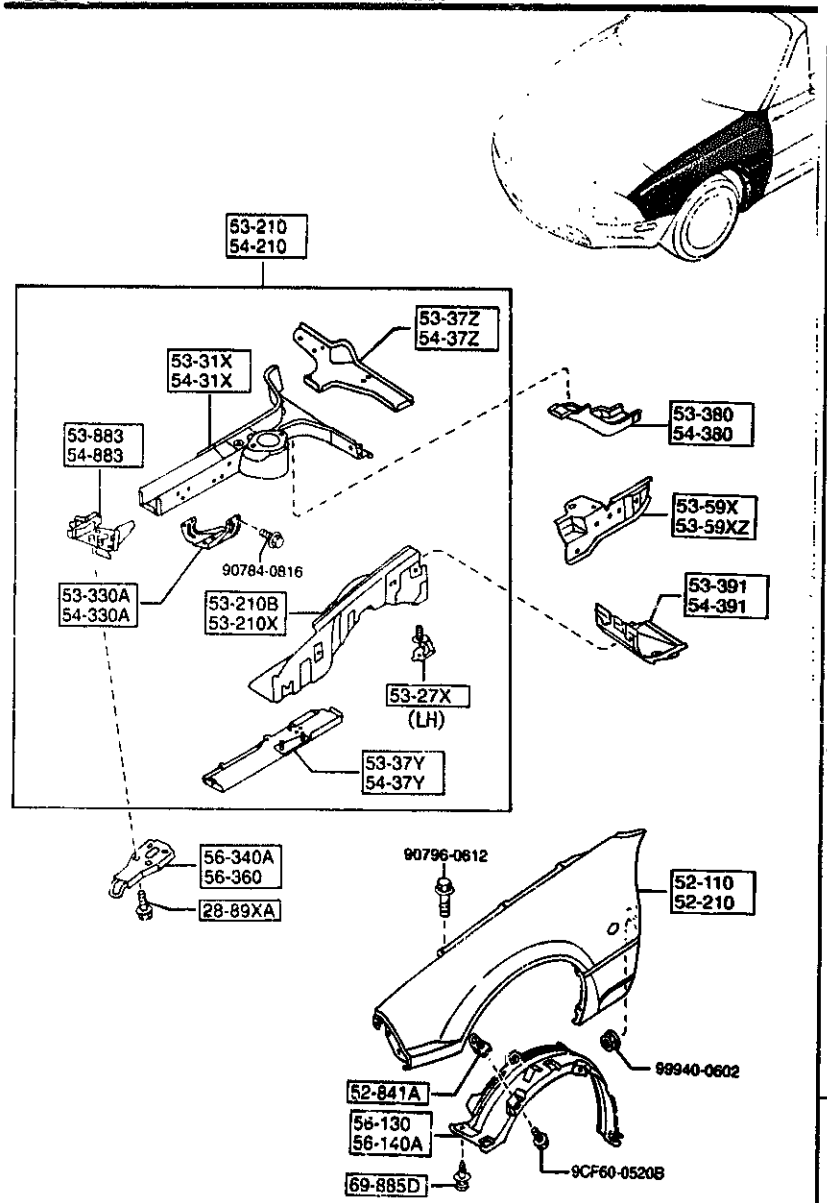

PART NO	QTY	MODEL/RESTRICTION	MODEL/RESTRICTION	MODEL/RESTRICTION	FROM-TO
53-391		BOX(R),TORQUE			
NA01-53-391	1				
53-59X		REINF.(R),WHEEL APRON			
NA01-53-591	1				
53-59XZ		REINF.(L),WHEEL APRON			
NA01-54-590	1				
53-883		REINF.(R),TIE DOWN HOOK			
NA01-53-32XB	1				
54-210		PANEL(L),APRON & FRAME			
NAY2-54-200	1				
54-31X		FRAME(L),FRONT			
NA75-54-31X	1				-4824
NA75-54-31XA	1				4824-
54-330A		BRACKET(L),STABILIZER			
NA01-54-330	1				
54-37Y		FRAME(UP.,L),FRONT-FRT			
NA01-54-37Y	1				
54-37Z		FRAME(UP.L),FRONT-REAR			
NA01-54-37ZA AH(NA01-54-37ZB)	1				-4A05
NA01-54-37ZB	1				4A05-
54-380		FRAME(L),FRONT-REAR			
NA01-54-380B	1				
54-391		BOX(L),TORQUE			
NA01-54-391	1				
54-883		REINF.(L),TIE DOWN HOOK			
NA01-54-32XC	1				
56-130		GUARD(R),MUD			
NA01-56-131A	1				

4826 NA35# -601431
4A05 NA35# -603893

5320 -3 M FENDER & WHEEL APRON PANELS

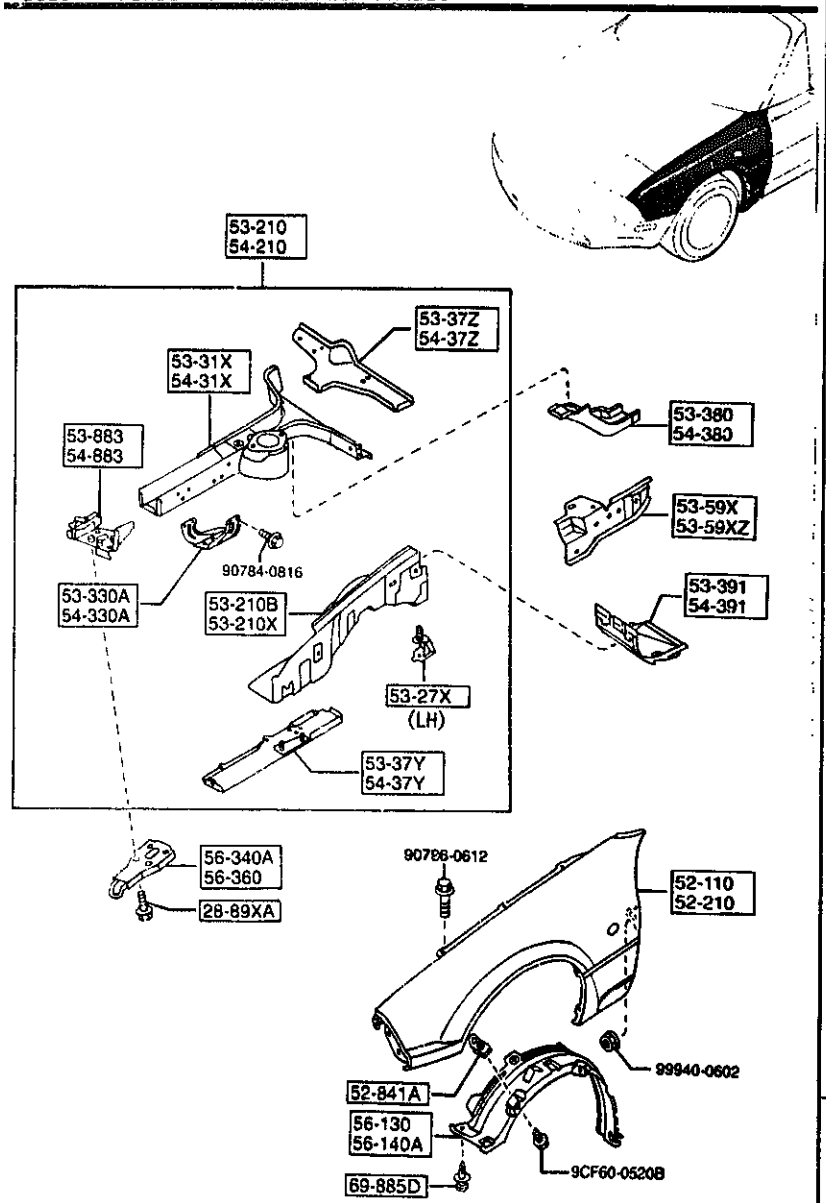

PART NO.	QTY	MODEL/RESTRICTION	MODEL/RESTRICTION	MODEL/RESTRICTION	FROM-TO
56-140A		GUARD(L),MUD			
MA01-56-141C	1				
56-340A		HOOK(R),TIE DOWN-FRONT			
MA01-56-34XC	1				
56-360		HOOK(L),TIE DOWN-FRONT			
MA01-56-34YC	1				
69-885D		FASTENER			
MA01-56-145	10				

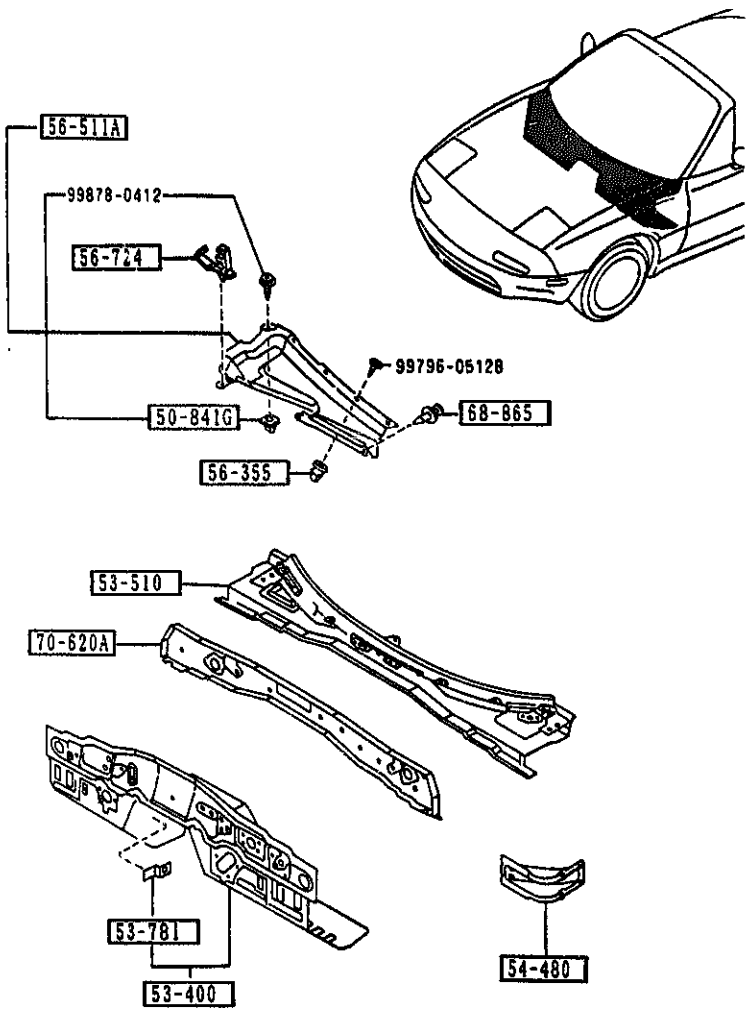

5330 -1 * DASH & COWL PANELS

PART NO.	QTY	MODEL/RESTRICTION	MODEL/RESTRICTION	MODEL/RESTRICTION	FROM-TO
50-841G		GROMMET,SCREW			
F044-51-912	1				
53-400		PANEL,DASH-LOWER			
NA01-54-400G	1				
53-510		PANEL,DASH-UPPER			
NA75-53-510A	1				
53-781		BRACKET,GRILLE-C			
0305-53-781A	1				
54-480		JUNCTION,DASH SIDE-S .SILL			
NA01-54-480	2				
56-355		GROMMET,SCREW-BAFFLE			
G211-56-355A	4				
56-511A		COVER,BAFFLE-COWL PA NEL			
NA01-56-35X	1				
56-724		CLIP'B',WIRE-BONNET			
H260-56-724	1				
68-865		FASTENER			
B048-68-865A	2				
00	INT-	NA3 NA4 NA5 NA6 NA7 NA8 BLACK			
70-620A		PANEL,COWL-FRONT			
NA01-78-62YB	1				

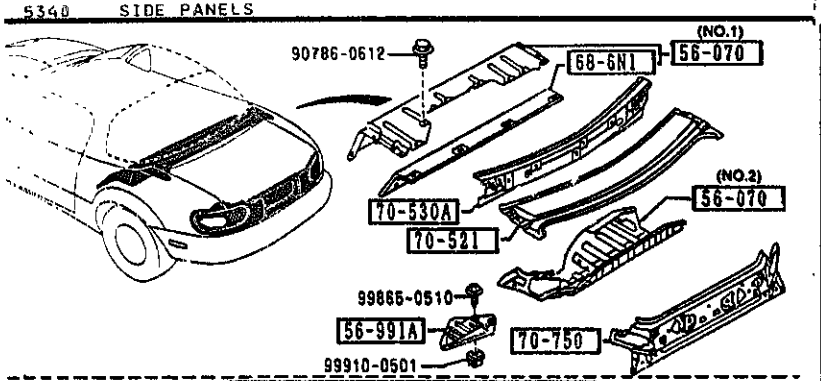

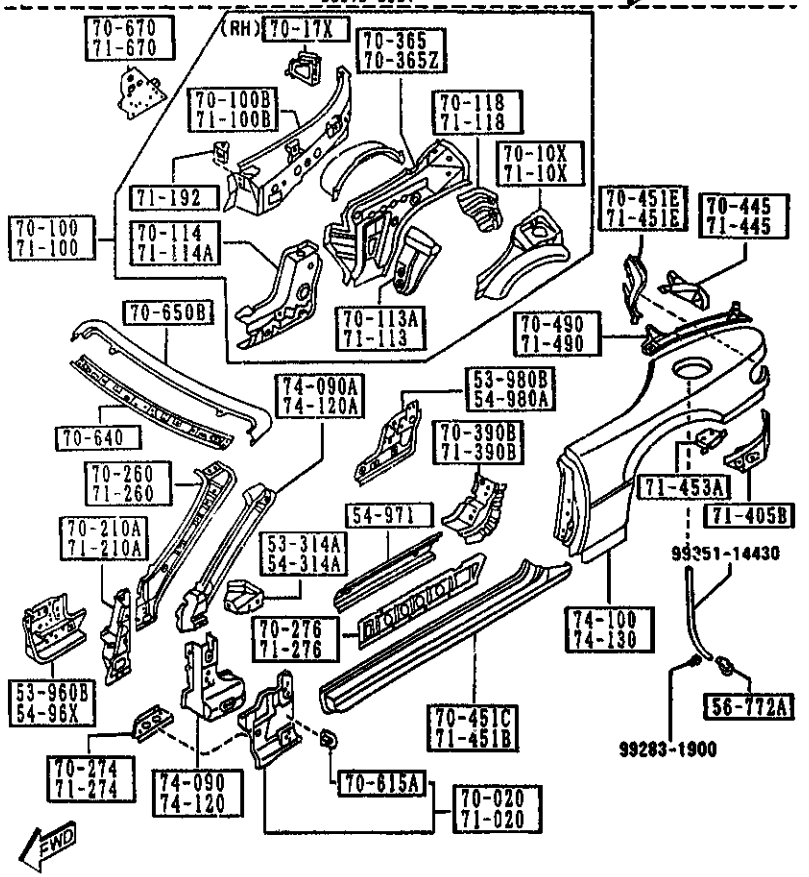

AUNA05

5340 -1 SIDE PANELS

PART NO	QTY	MODEL/RESTRICTION	MODEL/RESTRICTION	MODEL/RESTRICTION	FROM TO
53-314A		BRACKET(R),INST.			
NA01-70-071A	1				
53-960B		SILL(FRT.R),SIDE-INNER			
NA01-53-960C	1				
53-980B		SILL(RR.R),SIDE-INNER			
NA01-53-980C	1				
54-314A		BRACKET(L),INST.			
NA01-71-071A	1				
54-96X		SILL(FRT.L),SIDE-INNER			
NA01-54-96XB	1				
54-971		SILL(C),SIDE-INNER			
NA01-54-971A	2				
54-980A		SILL(RR.L),SIDE-INNER			
NA01-54-980C	1				
56-070		PANEL,BULK HEAD			
NA01-56-39YA	1	(ILLUST. NO.1)			
NA01-70-51Y	1	(ILLUST. NO.2)			
56-772A		PIPE,DRAIN-RR FENDER			
NA01-56-772	1				
56-991A		COVER,SERVICE HOLE			
NA01-56-971	1				
68-6N1		INSULATOR,BALK HEAD PANEL			
NA01-68-6N1	1				
70-020		PANEL(R),COWL SIDE			
NA01-70-020B	1				
70-10X		PANEL(R),QUARTER			
NA01-70-111C	1				

CAT. AUNA05-04

1997-07

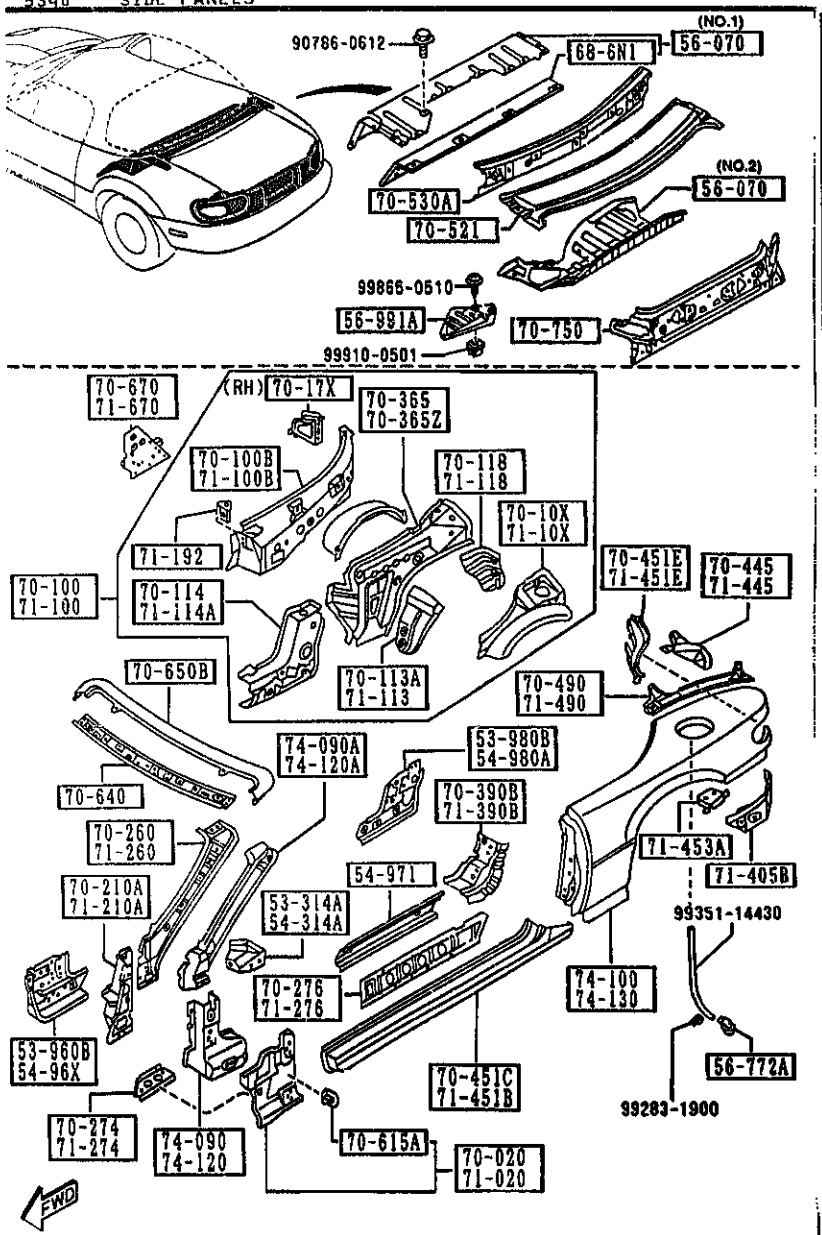

AUNA05

5340 -2 SIDE PANELS

PART NO.	QTY	MODEL/RESTRICTION	MODEL/RESTRICTION	MODEL/RESTRICTION	FROM-TO
70-100		PANEL(R),QUARTER			
NA75-70-100	1				
70-100B		PANEL(R),INSIDE			
NA01-70-19XB	1				
70-113A		PLATE(R),SEAL			
NA01-70-11Z	1				
70-114		PLATE(R),END			
NA01-70-12XA	1				
70-118		PROTECTOR(R),SPLASH			
NA01-70-15X	1				
70-17X		BRKT,BATT.CLAMP-QTR PANEL			
NA01-70-17XA	1				
70-210A		PILLAR(R),HINGE			
NA01-70-230	1				
70-260		PILLAR(R),FRT.-INNER			
NA01-70-240B	1				
70-274		GUSSET(R),SIDE SILL OUTER			
NA01-70-274	1				
70-276		REINF.(R),SIDE SILL			
NA01-70-275	1				
70-365		REINF.(R),BELT LINE-C.PIL			
NA01-70-116A	1				-4829
AN(NA01-70-116B)					
NA01-70-116B	1				4829-
70-365Z		REINF.(L),BELT LINE-C.PIL			
NA01-71-116C	1				-4829
AN(NA01-71-116D)					
NA01-71-116D	1				4829-
70-390B		REINF.(R),STRIKER			

4829 NA35* -602053

CAT. AUNA05-04

1997-07

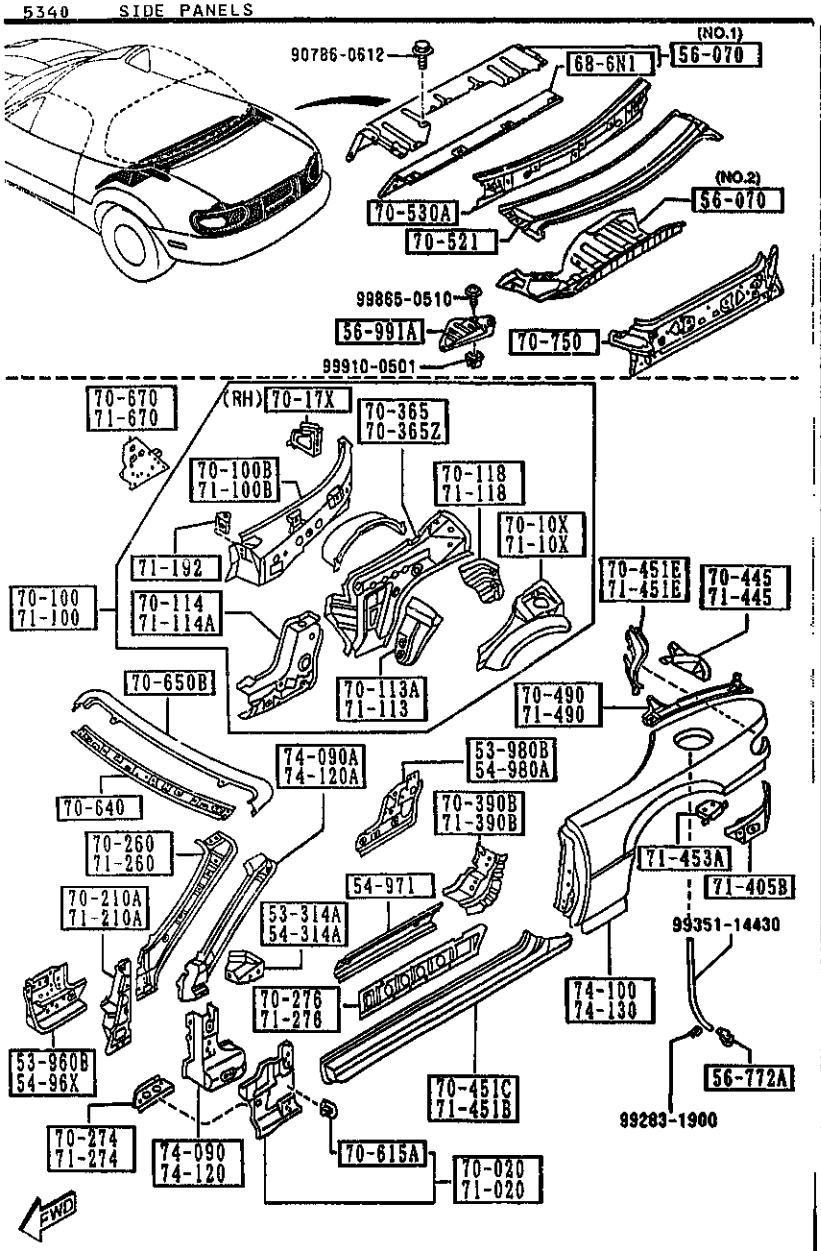

AUNA05

5340 -3 SIDE PANELS

PART NO	QTY	MODEL/RESTRICTION	MODEL/RESTRICTION	MODEL/RESTRICTION	FROM-TO
CONT'D					
NA01-70-460	1				
70-445		GUSSET(R),REAR FENDER-RR			
NA01-70-445	1				
70-451C		SILL(R),SIDE OUT.			
NA01-70-270B	1				
70-451E		HOUSING(R),LAMP-RR FENDER			
NA01-70-J30	1				
70-490		RAIL(R),RAIN-REAR			
NA01-70-440A	1				
70-521		PANEL,REAR DECK			
NA01-70-521A	1				
70-530A		MEMBER,REAR DECK			
NA01-70-530A	1				-4A01
AN(NA01-70-530B)					
NA01-70-530B	1				4A01-
70-615A		BRACKET,FENDER			
B092-70-070A	2				
70-640		HEADER,FRONT			
NA01-70-640	1	('95 MODEL)			
NB38-70-640	1	('96 MODEL)			
70-650B		HEADER,FRONT-UPPER			
NA01-70-650	1				
70-670		PLATE(R),CLOSING-QTR PANEL			
NA01-70-670	1				
70-750		PANEL,REAR END			
NA01-70-750G	1				
71-020		PANEL(L),COWL SIDE			
NA01-71-020B	1				

4A01 NA35* -603621

CAT. AUNA05-04

1997-07

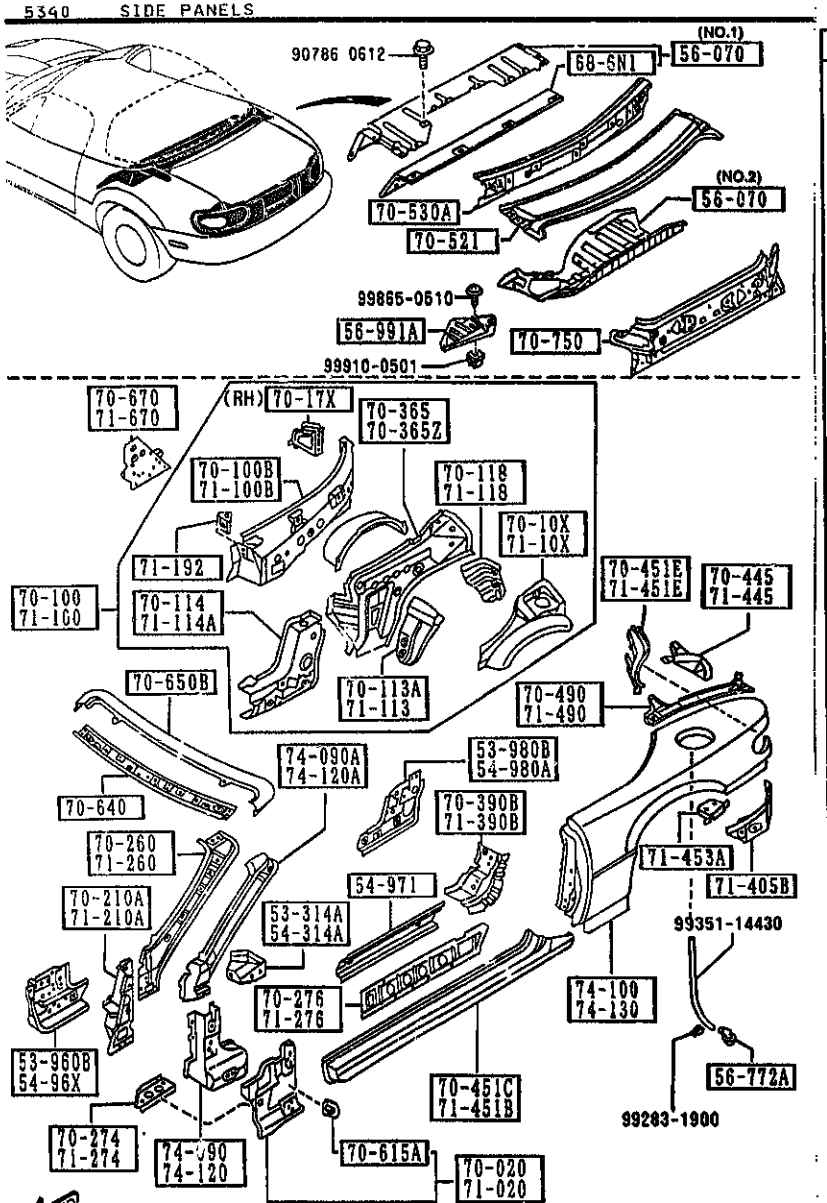

AUNA05

PART NO	QTY	MODEL/RESTRICTION	MODEL/RESTRICTION	MODEL/RESTRICTION	FROM-TO
71-10X NA01-71-11XB	1	PANEL(L),QUARTER			
71-100 NA75-71-100	1	PANEL(L),QUARTER			
71-100B NA01-71-19XB	1	PANEL(L),INSIDE			
71-113 NA01-71-11Z	1	PLATE(L),SEAL			
71-114A NA01-71-12XA	1	JUNCTION(L),CORNER-Q/PANE			
71-118 NA01-71-15XA	1	PROTECTOR(L),SPLASH			
71-192 NA01-71-192	2	BRKT,CAP-QUARTER PANEL			
71-210A NA01-71-230	1	PILLAR(L),HINGE			
71-260 NA01-71-240B A (NA01-71-240C)	1	PILLAR(L),FRT.-INNER			-5301
NA01-71-240C	1				5301-
71-274 NA01-71-274	1	GUSSET(L),SIDE SILL OUTER			
71-276 NA01-71-275	1	REINF.(L),SIDE SILL			
71-390B NA01-71-460	1	REINF.(L),STRIKER			
71-405B NA01-71-421	1	PANEL(L),RR FENDER-LOWER			

5301 NA35* -616742

CAT. AUNA05-04

1997-07

5340 SIDE PANELS

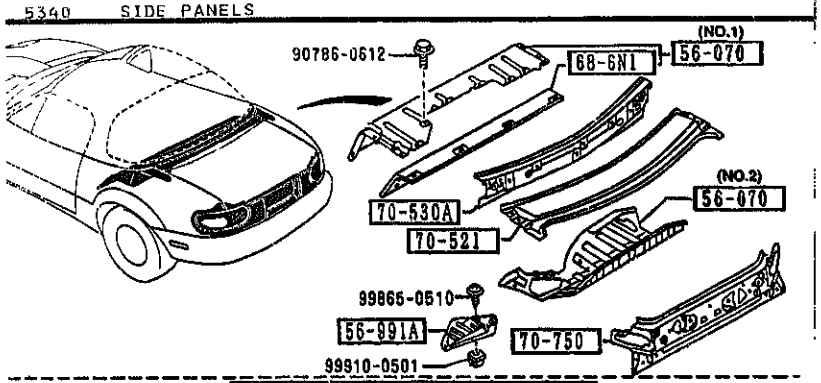

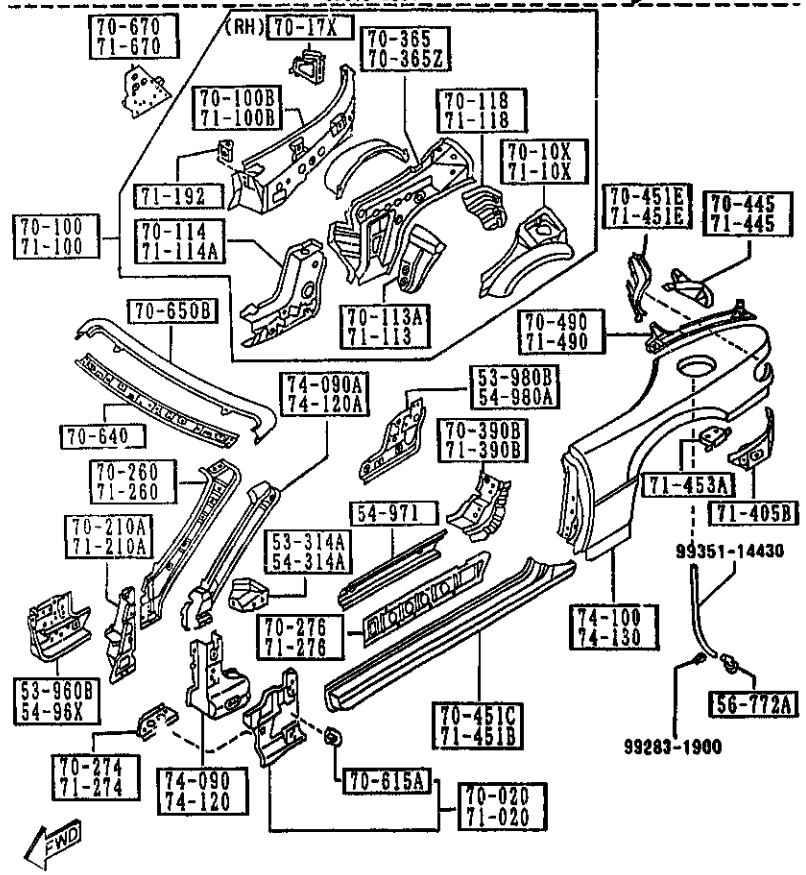

AUNA05

5340 -5 * SIDE PANELS

PART NO.	QTY	MODEL/RESTRICTION	MODEL/RESTRICTION	MODEL/RESTRICTION	FROM-TO
71-445		GUSSET(L),REAR FENDER-RR			
NA01-71-445	1				
71-451B		SILL(L),SIDE OUT.			
NA01-71-270B	1				
71-451E		HOUSING(L),LAMP-RR FENDER			
NA01-71-J3D	1				
71-453A		BRKT(L),TRK.BOARD-FENDER			
NA01-71-453	1				
71-490		RAIL(L),RAIN-REAR			
NA01-71-440A	1				
71-670		PLATE(L),CLOSING-QTR PANEL			
NA01-71-670B	1				
74-090		PILLAR(R),HINGE-OUT.			
NA01-70-280B	1				
74-090A		PILLAR(R),FRONT-OUT.			
NA01-70-210	1				
74-100		PANEL(R),FENDER-REAR			
NAY1-70-400B	1				
74-120		PILLAR(L),HINGE-OUT.			
NA01-71-280B	1				
74-120A		PILLAR(L),FRONT-OUT.			
NA01-71-210	1				
74-130		PANEL(L),FENDER-REAR			
NAY1-71-400B	1				

CAT. AUNA05-04 1997-07

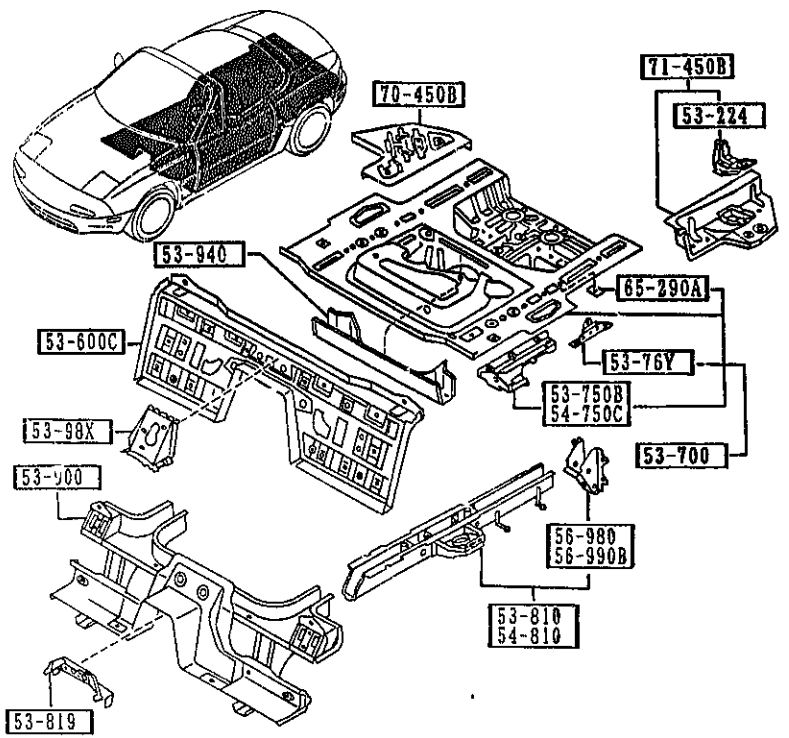

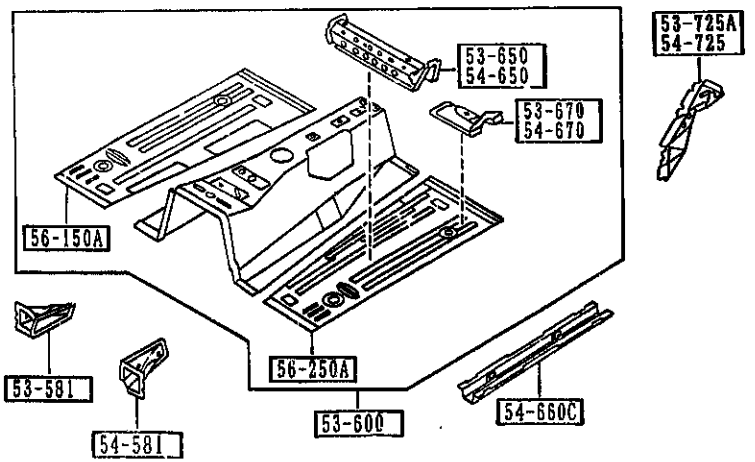

PART NO.	QTY	MODEL/RESTRICTION	MODEL/RESTRICTION	MODEL/RESTRICTION	FROM-TO
53-224		BRACKET,JACK			
B455-53-750C	1				
53-581		JUNCTION(R),FRT. FLOOR			
NA01-53-482	1				
53-600		PAN,FLOOR-FRONT			
NA01-53-600A	1	('95 MODEL)			
NB38-53-600	1	('96 MODEL)			
53-600C		PAN,FLOOR-CENTER			
NA75-53-720	1				
53-650		MEMBER NO.2(R),CROSS-FLOOR			
NA01-53-650 AN(NA01-53-650A)	1				-4805
NA01-53-650A	1				4805-
53-670		BRKT(R),SEAT-F.FLOOR PAN			
NA01-53-670A	1				
53-700		PAN,FLOOR-REAR			
NA01-53-710B	1				
53-725A		GUSSET NO.3(R),C.FLOOR PAN			
NA01-53-725A	1				
53-750B		PLATE(R),SIDE-REAR FLOOR			
NA01-53-750	1				
53-76Y		PLATE,NUT-TRUNK FLOOR PAN			
NA01-53-760	2				
53-810		FRAME(R),REAR SIDE			
NA01-53-810F	1				
53-819		BRACKET,PARKING CABLE-FLOOR			
NA01-53-819	1				
53-900		MEMBER NO.3,CROSS			
NA75-53-900	1				

4805 NA35* -600258

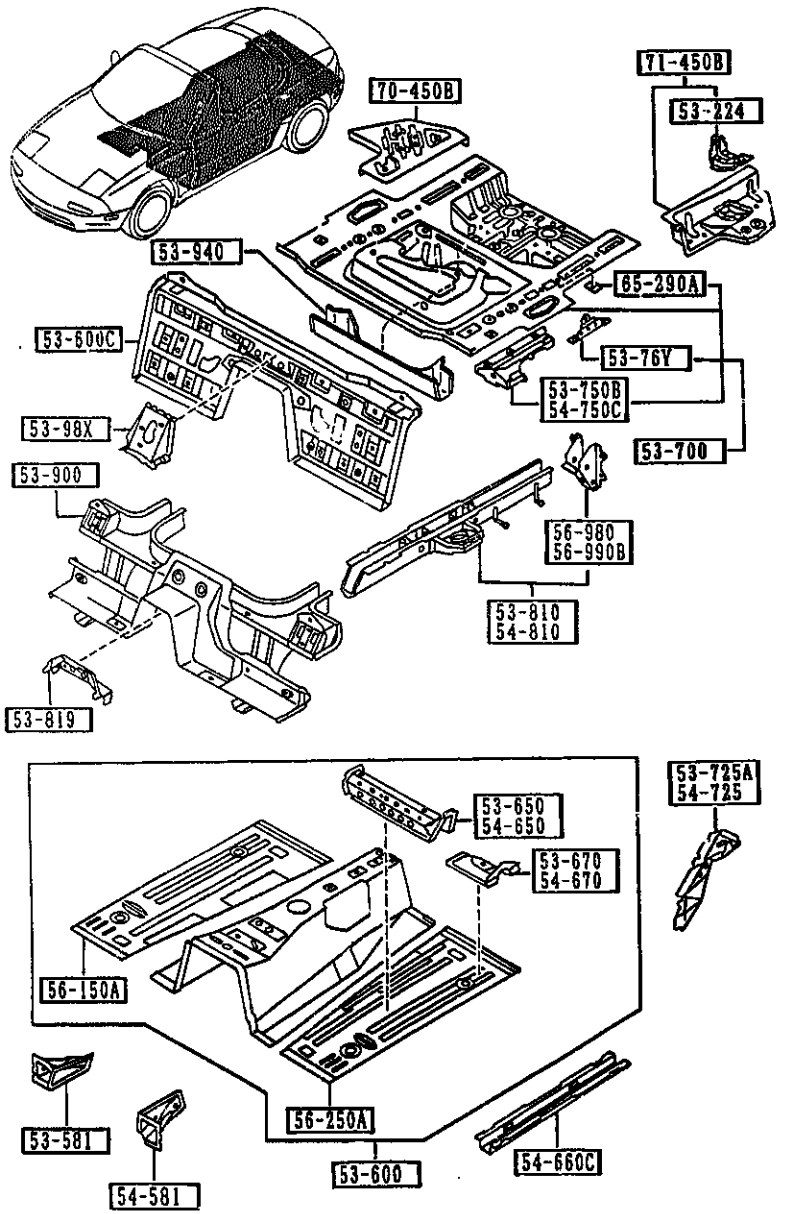

PART NO.	QTY	MODEL/RESTRICTION	MODEL/RESTRICTION	MODEL/RESTRICTION	FROM-TO
53-940		MEMBER NO.4,CROSS			
NA01-53-931	1				
53-98X		GUSSET,FRONT FLOOR PAN			
NA01-53-880A	1				
54-581		JUNCTION(L),FRT. FLOOR			
NA01-54-482	1				
54-650		MEMBER NO.2(L),CROSS-FLOOR			
NA01-54-650	1				-4805
AN(NA01-54-650A)					
NA01-54-650A	1				4805-
54-660C		FRAME,FRONT-FRT FLOOR PAN			
NA01-54-660B	2				
54-670		BRKT(L),SEAT-F.FLOOR PAN			
NA01-54-670A	1				
54-725		GUSSET NO.3(L),C.FLOOR PAN			
NA01-54-725A	1				
54-750C		PLATE(L),SIDE-REAR FLOOR			
NA01-54-750	1				
54-810		FRAME(L),REAR SIDE			
NA01-54-810F	1				
56-150A		PAN(R),FLOOR			
NA01-53-602	1				-4912
AN(NA01-53-602A)					
NA01-53-602A	1				4912-
56-250A		PAN(L),FLOOR			
NA01-54-610	1				-4912
AN(NA01-54-610A)					
NA01-54-610A	1				4912-
56-980		BRKT(R),BUMPER-RR SKIRT			
NA01-53-830C	1				

4805 NA35# -600258
4912 NA35# -602970

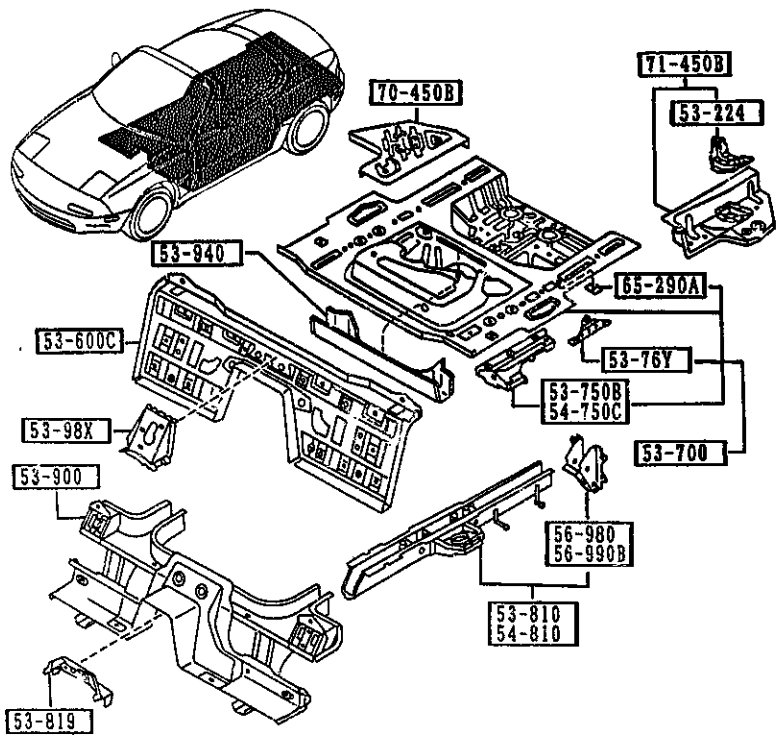

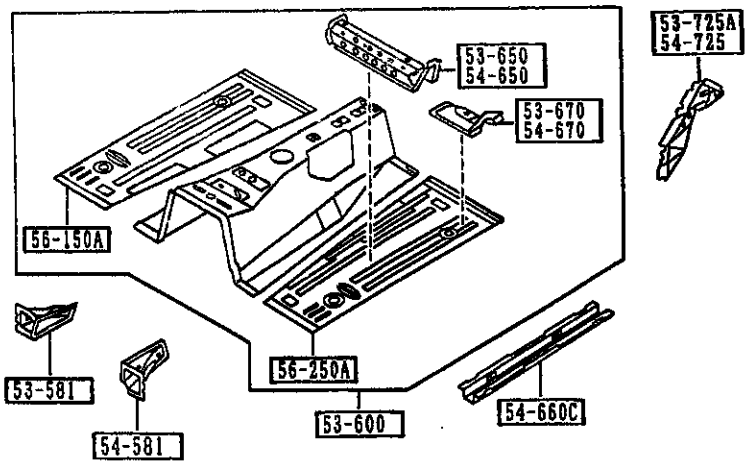

AUNA05

5370 -3 * FLOOR PANELS

PART NO.	QTY	MODEL/RESTRICTION	MODEL/RESTRICTION	MODEL/RESTRICTION	FROM-TO
56-990B NA81-54-830C	1	BRKT(L),BUMPER-RR SKIRT			
65-290A 1353-65-190	1	BRACKET			
70-450B NA01-53-740C	1	PANEL(R),FLOOR SIDE			
71-450B NA01-54-740A	1	PANEL(L),FLOOR SIDE			

CAT. AUNA05-04

1997-07

5380 FLOOR ATTACHMENTS (HOLE COVERS)

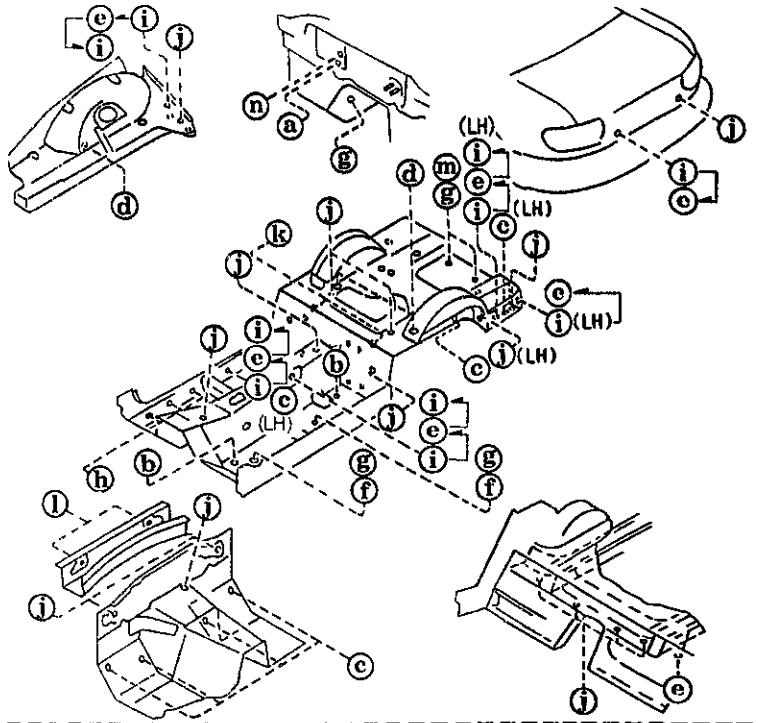

ⓐ 53-134B (HOLE φ26)
ⓑ 56-051 (NO.1)
ⓒ 56-052 (NO.1) (HOLE φ20.5)
ⓓ 56-052 (NO.2) (HOLE φ20.5)
ⓔ 56-051 (NO.2)
ⓕ 56-061A (HOLE φ65)
ⓖ 56-241 (HOLE φ20)
ⓗ 56-241B (HOLE φ29)
ⓘ 56-241J
ⓙ 56-242 (HOLE φ22)
ⓚ 56-615F (HOLE φ40)
ⓛ 56-615M (HOLE φ15)
ⓜ 56-971 (HOLE φ100)
ⓝ 61-031 (HOLE φ36)

AUNA05

5380 -1 * FLOOR ATTACHMENTS (HOLE COVERS)

PART NO.	QTY	MODEL/RESTRICTION	MODEL/RESTRICTION	MODEL/RESTRICTION	FROM-TO
0187-53-134	1	53-134B RUBBER,DUST SEAL			
1011-56-051	4	56-051 COVER,HOLE (ILLUST. NO.1)			
BC1D-56-052	9	(ILLUST. NO.2)			4C05-5106
BC1D-56-052	3	(ILLUST. NO.2)			5106-
B092-56-052	8	56-052 PLUG,DRAIN D=12MM (ILLUST. NO.1)			
FB01-56-056	4	(ILLUST. NO.2) (W/O A. LOCK BRAKE)			
8545-56-052	4	56-061A COVER,HOLE			
0118-56-241	7	56-241 PLUG,DRAIN			
BD01-56-051	6	56-241B PLUG			
8477-56-241	9	56-241J PLUG,DRAIN			-4C05
8477-56-241	6				4C05-
0118-56-242B	19	56-242 PLUG,DRAIN			
0208-56-615	2	56-615F PLUG,DRAIN			
NA01-56-051	2	56-615M PLUG,DRAIN			
8545-56-053	2	56-971 COVER,HOLE			
1708-61-031	1	61-031 PLUG,HOLE			

4C05 NA35* -610026
5106 NA35* -612163

CAT. AUNA05-04 1997-07

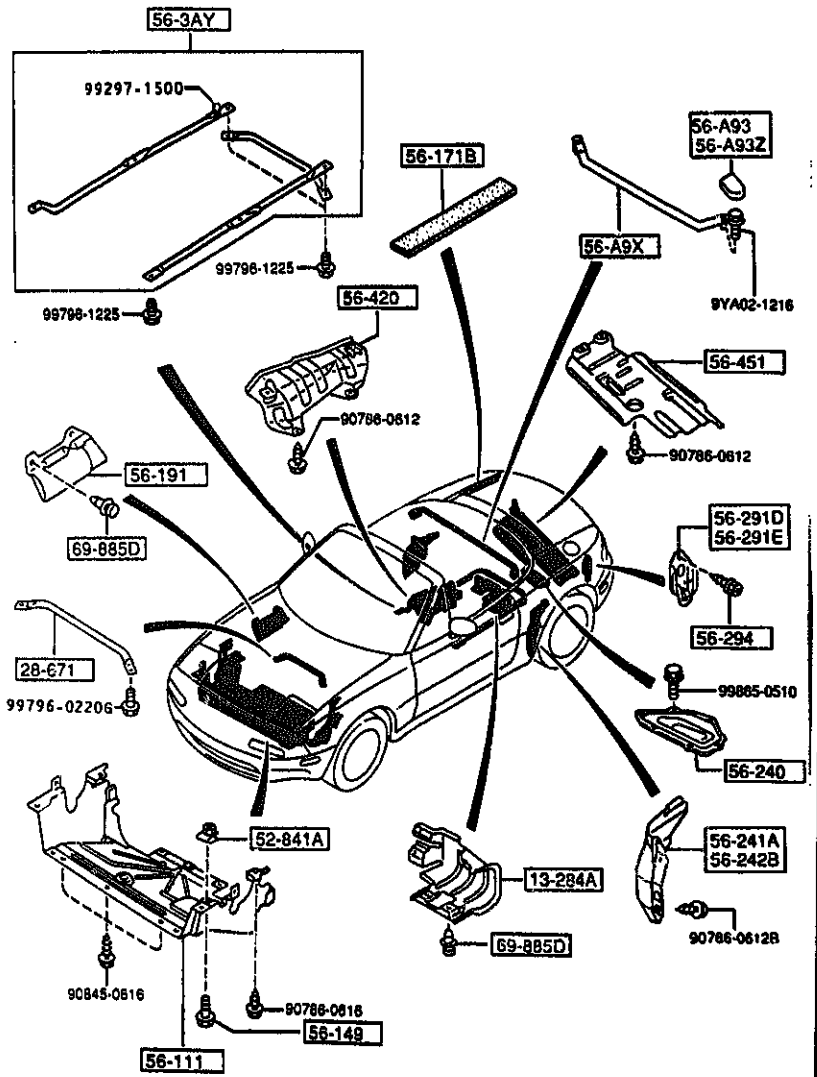

5390 -1 FLOOR ATTACHMENTS

PART NO.	QTY	MODEL/RESTRICTION	MODEL/RESTRICTION	MODEL/RESTRICTION	FROM-TO
13-284A NA75-56-241	1	COVER,FUEL FILTER			
28-671 NA75-56-891	1	ROD,PERFORMANCE			
52-841A B455-56-135	1	NUT,CLIP			
56-A9X NA75-56-A9XB	1	BAR,BRACE			
56-A93 NA75-56-A93	1	COVER(R),BRACE BAR			
56-A93Z NA75-56-A94	1	COVER(L),BRACE BAR			
56-111 NA01-56-111D	1	COVER,UNDER			
56-149 B455-56-149	1	SCREW,TAPPING-MUD GUARD			
56-171B NA01-56-171A	1	PROTECTOR(R),RR FENDER			
56-191 NA01-56-112	1	SHIELD,SPLASH			
56-240 NA75-56-06X	1	COVER			
56-241A NA01-56-311A	1	SHIELD(R),SPLASH-REAR			
56-242B NA01-56-321A	1	SHIELD(L),SPLASH-REAR			
56-291D NA01-56-29XC	1	HOOK(R),TIE DOWN			

5390 FLOOR ATTACHMENT

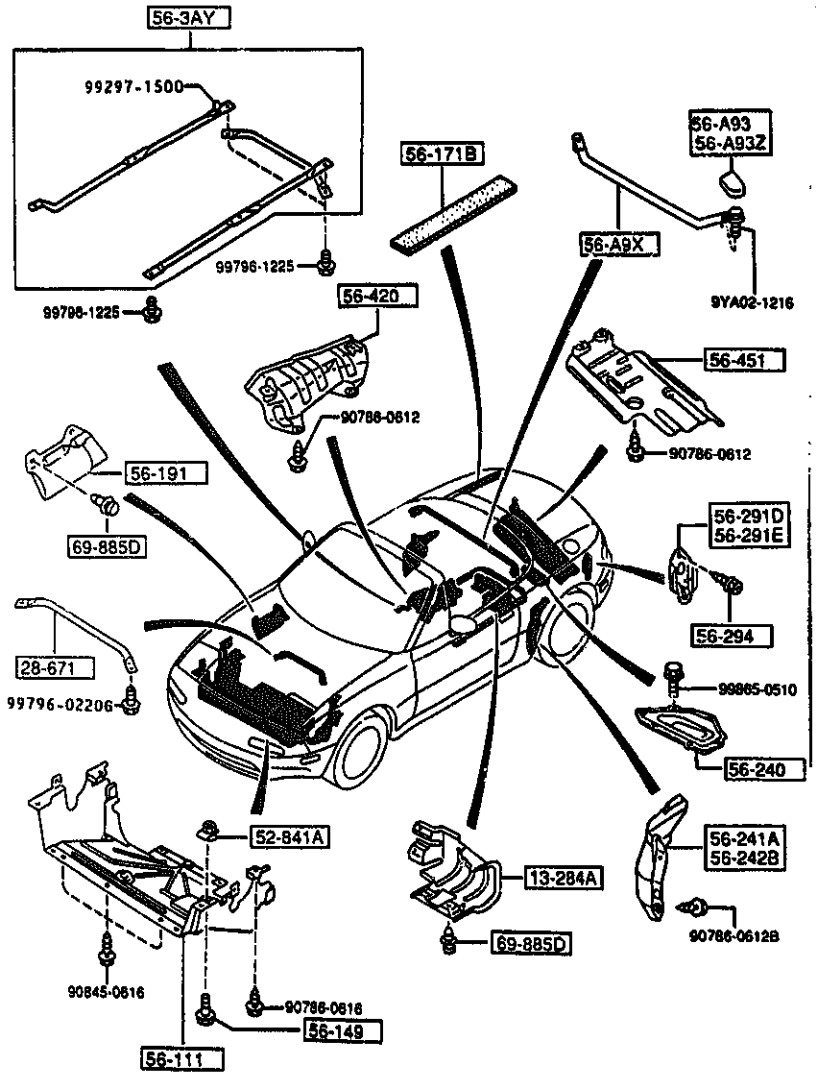

5390 -2 * FLOOR ATTACHMENTS

PART NO.	QTY	MODEL/RESTRICTION	MODEL/RESTRICTION	MODEL/RESTRICTION	FROM-TO
56-291E		HOOK(L),TIE DOWN			
NA01-56-290C	1				
56-294		SCREW,TIE DOWN HOOK			
NA01-56-294	4				
56-3AY		REINF.(L),FLOOR			
NA75-56-3AY	1	('95 MODEL) (('96 MODEL)>(L.S. DIFF))			
56-420		INSULATOR,FRONT			
NA75-56-411 A (NA75-56-411A)	1				-6513
*NA75-56-411A	1				6513-
56-451		INSULATOR			
NA01-56-451	1				
69-885D		FASTENER			
NA01-56-145	7				

6513 NA3** -718765

AUNA05

CAT. AUNA05-04 1997-07

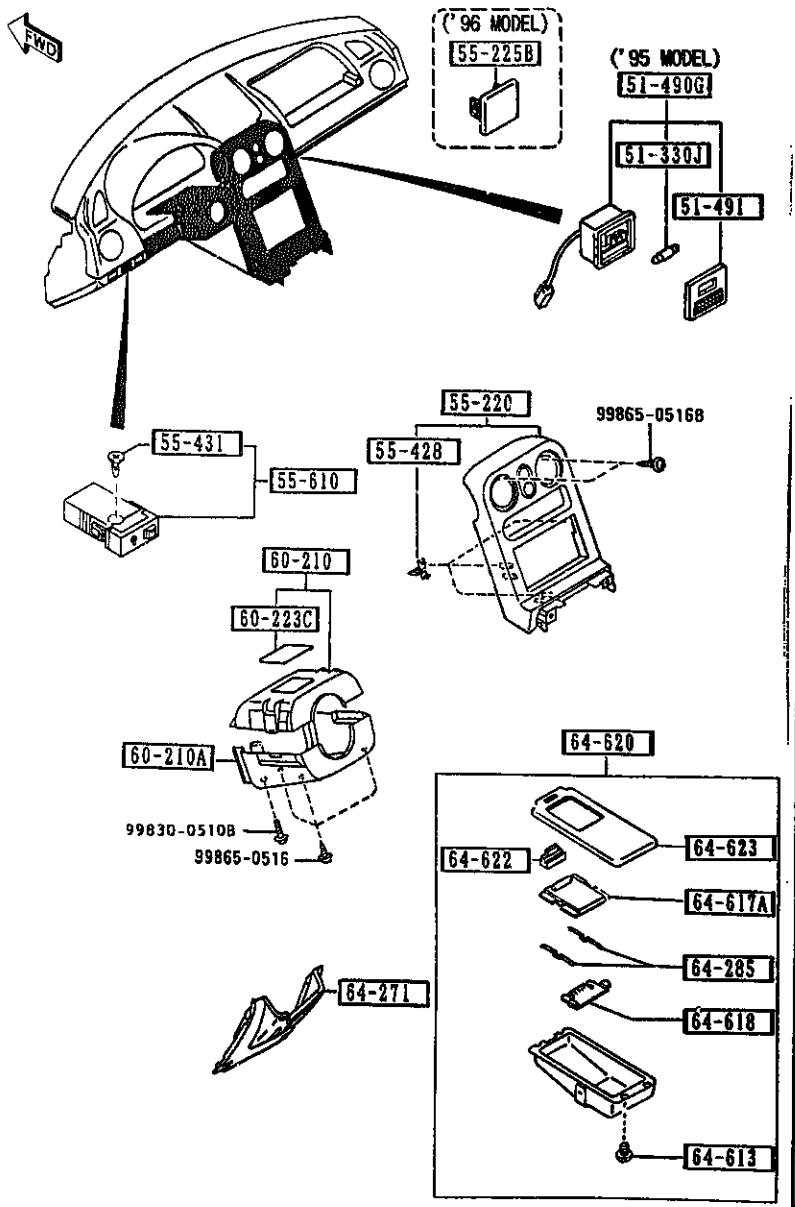

5500 -1 DASHBOARD EQUIPMENTS

PART NO.	QTY	MODEL/RESTRICTION	MODEL/RESTRICTION	MODEL/RESTRICTION	FROM-TO
51-330J		BULB			
99701-5050	1	12V 5W ('95 MODEL)			
51-490B		LAMP,PERSONAL			
NA81-51-490B	1	('95 MODEL)			
00	INT-	NA3 NA4 NA5 NA6 NA7 BLACK			
51-491		LENS,PERSONAL LAMP			
H197-51-491A	1	('95 MODEL)			
55-220		PANEL,CENTER			
NA75-55-210A	1	('95 MODEL) (ML-'96 MODEL)			
80	INT-	NA3 NA4 NA5 NA6 NA7 NA8 BLACK			
NA75-55-210A	1	(W/C.D.) (GUAM-'96 MODEL) (SAIPAN-'96 MODEL)			
80	INT-	NA3 NA4 NA5 NA6 NA7 NA8 BLACK			
NB38-55-210A	1	(W/O C.D.) (GUAM-'96 MODEL) (SAIPAN-'96 MODEL)			
80	INT-	NA3 NA4 NA5 NA6 NA7 NA8 BLACK			
55-225B		COVER,HOLE			
NB38-55-225A	1	('96 MODEL)			
80	INT-	NA3 NA7 NA8 BLACK			
88	INT-	NA4 NA5 TAN			
55-428		SPRING,METER HOOD			
GJ21-55-428	3				
55-431		BULB,RESISTOR			
BR70-55-431	1				
55-610		RESISTOR,PANEL LIGHT			
BR70-55-490	1				
60-210		COVER,COLUMN-UPPER			

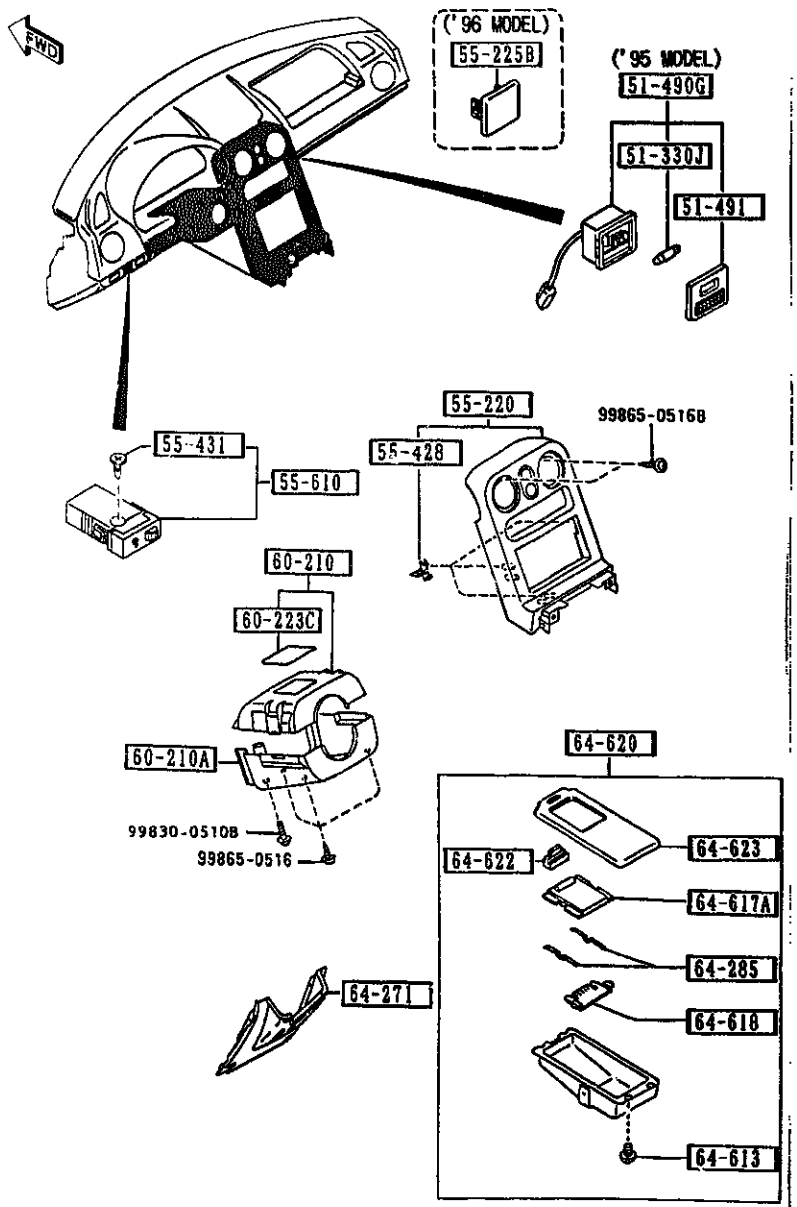

PART NO.	QTY	MODEL/RESTRICTION	MODEL/RESTRICTION	MODEL/RESTRICTION	FROM-TO
CONT'D					
NA01-60-220	1				
80	INT-	NA3 NA4 NA5 NA6 NA7 NA8 BLACK			
60-210A		COVER,COLUMN-LOWER			
NA81-60-230A	1				
08	INT-	NA3 NA4 NA5 NA6 NA7 NA8 BLACK			
60-223C		CAP,COLUMN COVER			
NA01-60-223	1				
00	INT-	NA3 NA4 NA5 NA6 NA7 NA8 BLACK			
64-271		PANEL,CENTER-LOWER			
NA75-64-270B	1				-4B01
00	INT-	NA3 BLACK			
88	INT-	NA4 NA5 TAN			
NA75-64-270C	1				4B01-
80	INT-	NA3 NA7 NA8 BLACK			
88	INT-	NA4 NA5 TAN			
64-285		SPRING,ASHTRAY			
NA01-64-612	2				
64-613		SCREW,ASHTRAY			
NA01-64-613	4				
64-617A		LID,ASHTRAY			
NA01-64-617	1				
80	INT-	NA3 NA4 NA5 NA6 NA7 NA8 BLACK			
64-618		PLATE,ASHTRAY			
NA01-64-618	1				
64-620		TRAY,ASH			
NA01-64-610B	1				
80	INT-	NA3 NA4 NA5 NA6 NA7 NA8 BLACK			

4B01 NA35* -606043

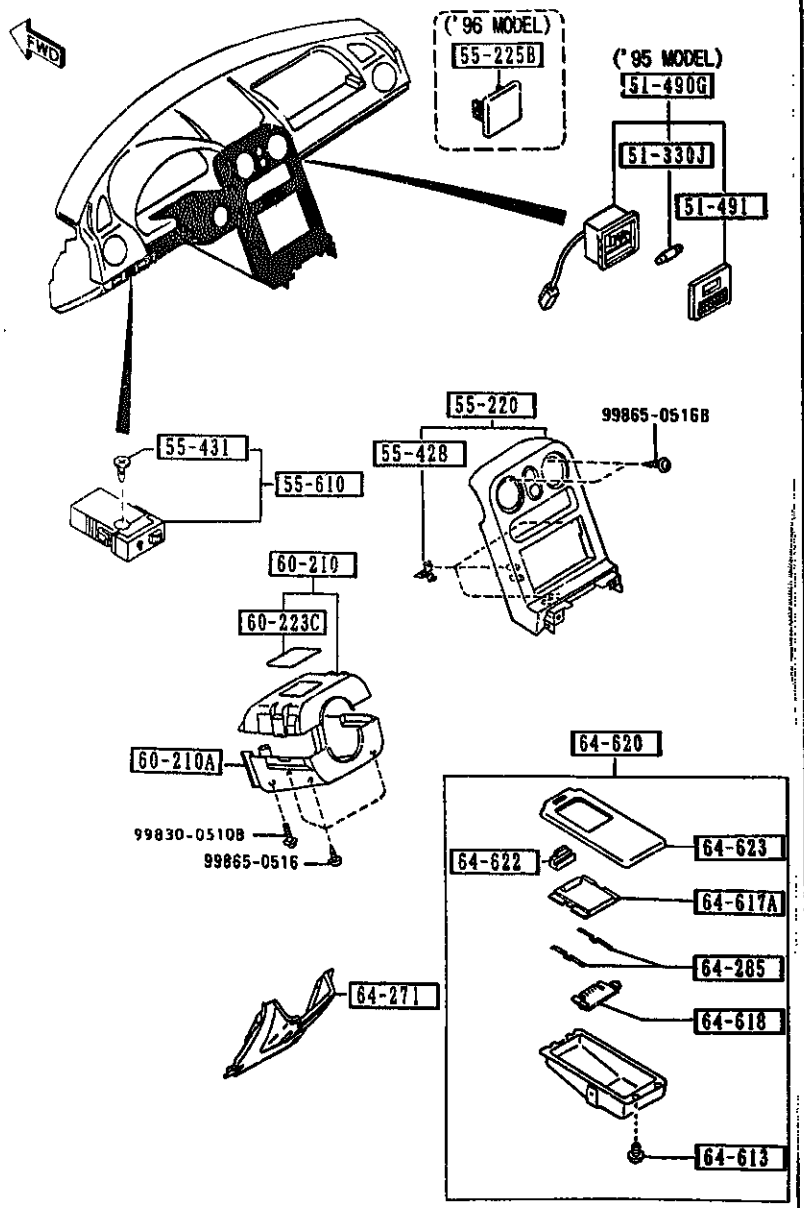

AUNA05

5500 -3 * DASHBOARD EQUIPMENTS

PART NO	QTY	MODEL/RESTRICTION	MODEL/RESTRICTION	MODEL/RESTRICTION	FROM-TO
64-622		LIGHT,PLATE-ASHTRAY			
NA01-64-622	1				
64-623		CASE'OUT',ASHTRAY			
NA01-64-623	1				
00	INT-	NA3 NA4 NA5 NA6 NA7 NA8 BLACK			

CAT. AUNA05-04

1997-07

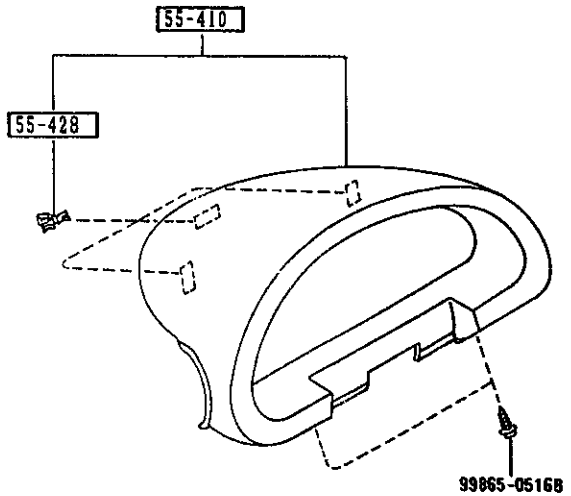

5520 -1 * METER HOOD

PART NO.	QTY	MODEL/RESTRICTION	MODEL/RESTRICTION	MODEL/RESTRICTION	FROM-TO
55-410		HOOD,METER			
NA75-55-420B	1	BASE, R-PKG, PKG-B, R.E.GR, PKG-A, (INSTRUMENT PANEL-BLACK)			
00 INT-		NA3 NA4 NA5 NA7 NA8 BLACK			
NA79-55-420B	1	L-PKG, PKG-C, M-25-ED, (INSTRUMENT PANEL-TAN)			
00 INT-		NA4 NA5 BLACK			
55-428		SPRING,METER HOOD			
GJ21-55-428	3				

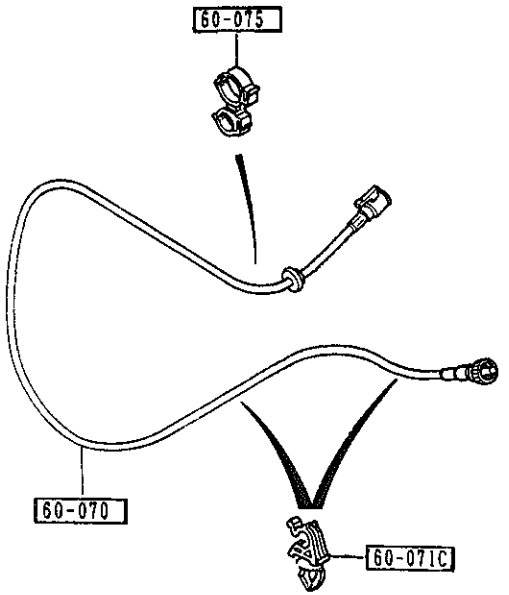

5530 -1 * SPEEDOMETER CABLE

PART NO.	QTY	MODEL/RESTRICTION	MODEL/RESTRICTION	MODEL/RESTRICTION	FROM-TO
60-070		CABLE,SPEEDMETER			
NA01-60-070B	1	(MT)			
NA03-60-070A	1	(AT)			
60-071C		CLIP			
NA03-60-071	2				
60-075		CLIP'A',SPEEDOMETER CABLE			
NA01-60-075	1				

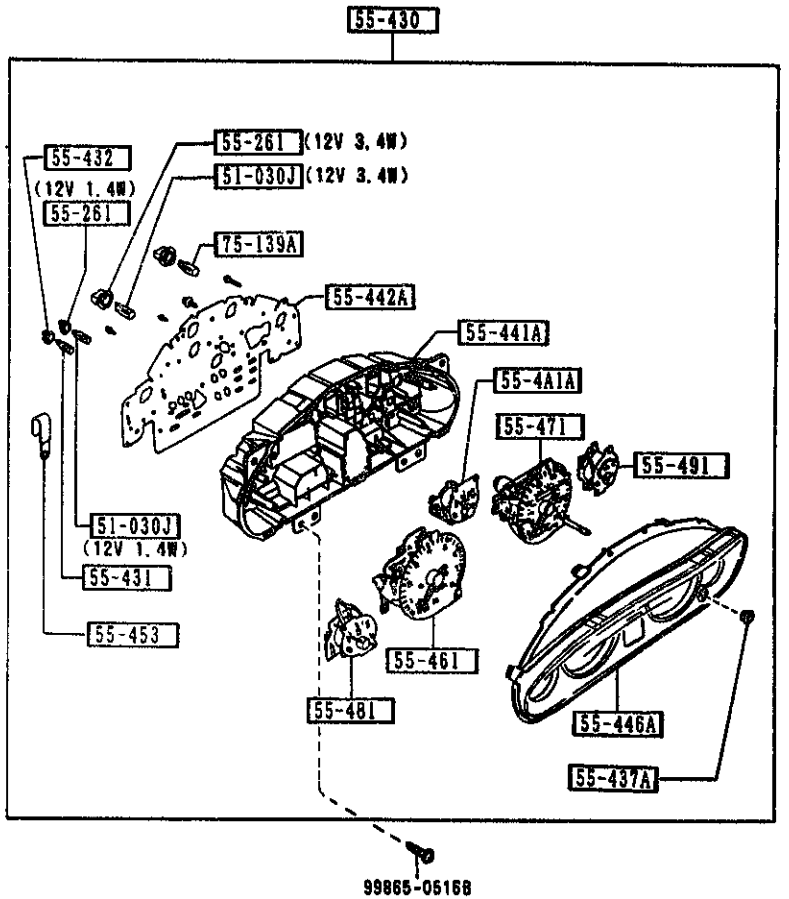

5540 -1 METER COMPONENTS

PART NO.	QTY	MODEL/RESTRICTION	MODEL/RESTRICTION	MODEL/RESTRICTION	FROM-TO
51-030J		BULB			
3625-75-139	8	12V 1.4W (TYPE'A' DESIGN)			
99701-6030	3	12V 3.4W			
3625-75-139	8	12V 1.4W (TYPE'B' DESIGN)			-5B15
3625-75-139	9	12V 1.4W (TYPE'B' DESIGN)			5B15-
55-261		SOCKET			
1316-55-261	3	12V 3.4W			
8548-55-261	8	12V 1.4W (TYPE'A' DESIGN)			
8548-55-261	8	12V 1.4W (TYPE'B' DESIGN)			-5B15
8548-55-261	9	12V 1.4W (TYPE'B' DESIGN)			5B15-
55-4A1A		METER,OIL PRESSURE			
NA75-55-4A1	1	(TYPE'A' DESIGN)			
NA75-55-4A1	1	(TYPE'B' DESIGN)			-5B15
NB39-55-4A1	1	(TYPE'B' DESIGN)			5B15-
55-430		METER SET			
NA75-55-430C	1	BASE, (CHROMIUM-PLATED) ('95 MODEL)			
NB13-55-430B	1	M-25-ED, (BLACK) ('95 MODEL)			
NB13-55-430B	1	('96 MODEL)			-5B15
NB13-55-430B	1	(TYPE'A' DESIGN) ('96 MODEL)			5B15-
NB39-55-430	1	(TYPE'B' DESIGN) ('96 MODEL)			5B15-
55-431		BULB,RESISTOR			
NA01-55-431	1	(TYPE'A' DESIGN)			
NA01-55-431	1	(TYPE'B' DESIGN)			-5B15
55-432		SOCKET,METER SET			
NA01-55-432	1	(TYPE'A' DESIGN)			

5B15 NA3## -705265

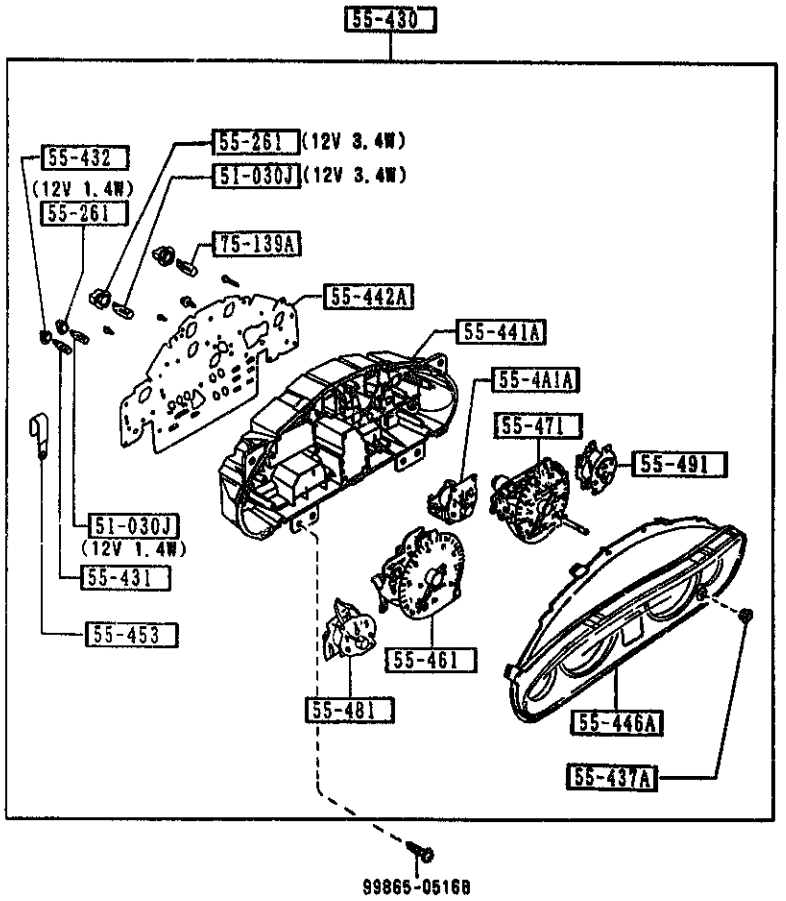

5540 -2 METER COMPONENTS

PART NO.	QTY	MODEL/RESTRICTION	MODEL/RESTRICTION	MODEL/RESTRICTION	FROM-TO
CONT'D					
NA01-55-432	1	(TYPE'B' DESIGN)			-5B15
55-437A		GROMMET,KNOB-METER SET			
NA01-55-437	1				
55-441A		CASE,METER			
NA01-55-441D	1				
55-442A		PLATE,PRINT			
NA75-55-442	1				
55-446A		PLATE,WINDOW			
NA01-55-446B	1	BASE, (CHROMIUM-PLATED) ('95 MODEL)			
NB13-55-446	1	('96 MODEL)			
NB13-55-446	1	M-25-ED, (BLACK) ('95 MODEL)			
55-453		CLAMP			
ND07-55-467	1				
55-461		TACHOMETER			
NA75-55-461	1	(TYPE'A' DESIGN)			
NA75-55-461	1	(TYPE'B' DESIGN)			-5B15
NB39-55-461	1	(TYPE'B' DESIGN)			5B15-
55-471		SPEEDOMETER			
NA01-55-471B	1	(TYPE'A' DESIGN)			
NA01-55-471B	1	(TYPE'B' DESIGN)			-5B15
NB39-55-471	1	(TYPE'B' DESIGN)			5B15-
55-481		METER,FUEL			
NA01-55-481	1	(TYPE'A' DESIGN)			
NA01-55-481	1	(TYPE'B' DESIGN)			-5B15
NB39-55-481	1	(TYPE'B' DESIGN)			5B15-
55-491		METER,TEMP			
NA75-55-491	1	(TYPE'A' DESIGN)			
NA75-55-491	1	(TYPE'B' DESIGN)			-5B15

5B15 NA3## -705265

5540 METER COMPONENTS

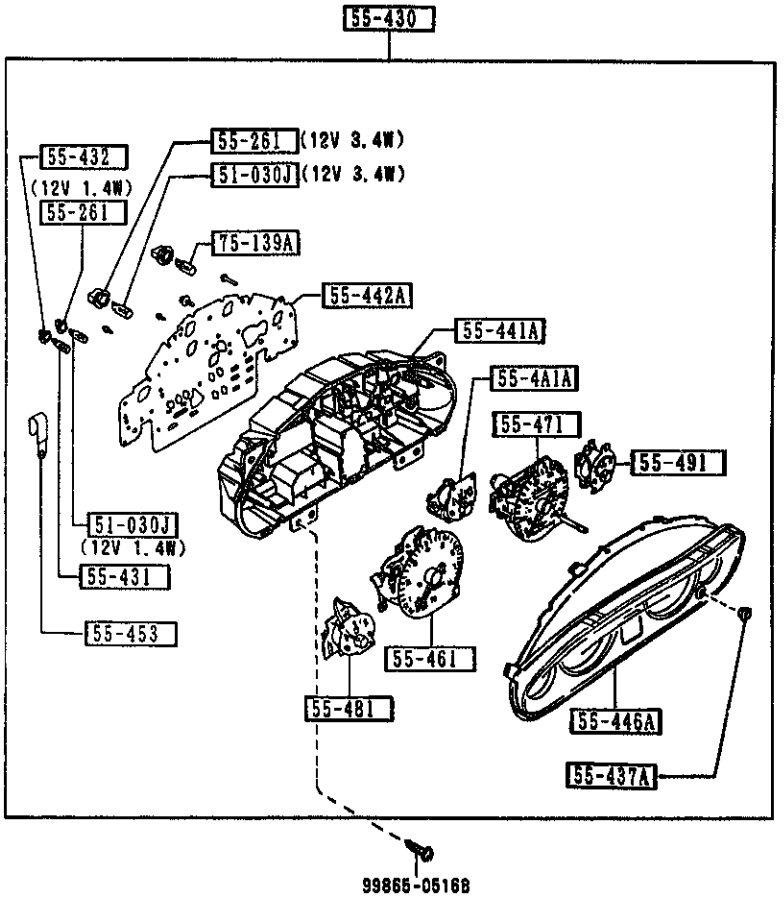

5540 -3 * METER COMPONENTS

PART NO.	QTY	MODEL/RESTRICTION	MODEL/RESTRICTION	MODEL/RESTRICTION	FROM-TO
CONT'D					
NB39-55-491	1	(TYPE'B' DESIGN)			5B15-
+---------+					
| 75-139A |		BULB			
+---------+					
B491-55-431	4				

5B15 NA3** -705265

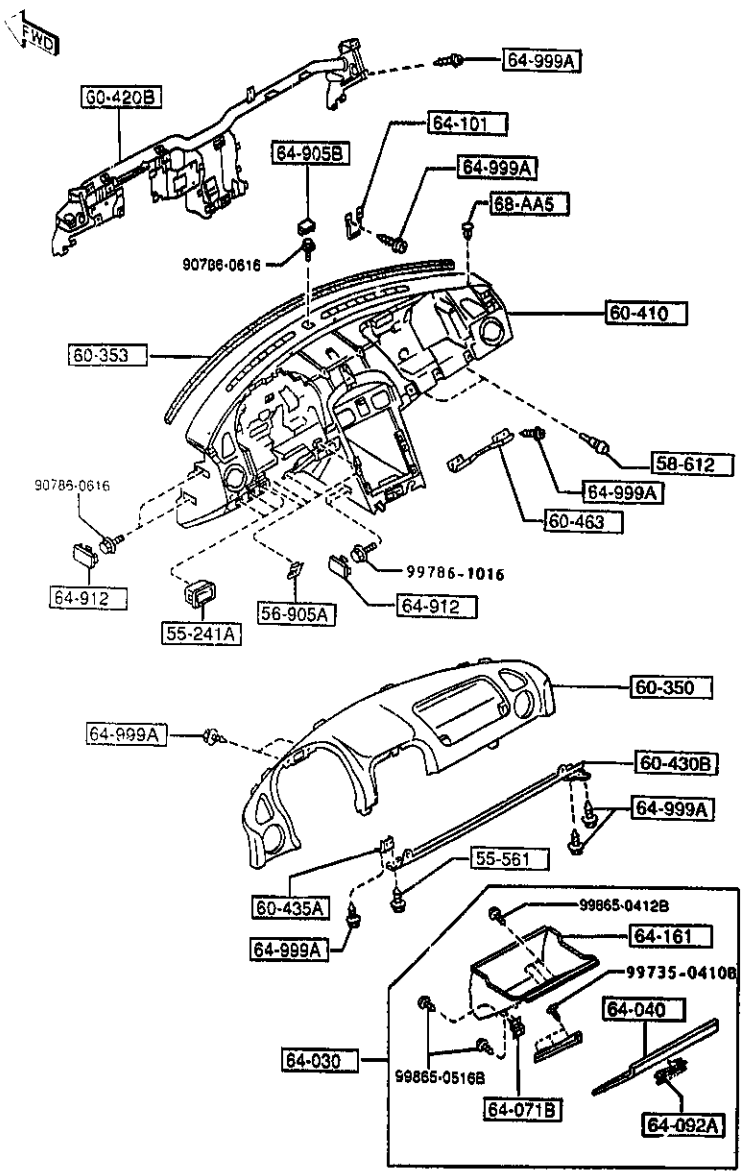

5560 -1 DASHBOARD & RELATED PARTS

PART NO.	QTY	MODEL/RESTRICTION	MODEL/RESTRICTION	MODEL/RESTRICTION	FROM-TO
55-241A		BOX,INSTRUMENT PANEL			
MA01-55-241A	3				
00 INT-		NA3 NA4 NA5 NA6 NA7 NA8 BLACK			
55-561		BOLT,INST. PANEL			
8455-55-561	1				
56-905A		NUT,SPRING			
B092-60-408	4				
58-612		CUSHION,RUBBER			
B092-64-046	2				
60-350		PAD,CRASH			
NA75-60-350B	1				
00 INT-		NA3 NA4 NA5 NA6 NA7 NA8 BLACK			
60-353		RUBBER,URETHNE			
NA75-60-353	1				
60-410		FRAME,INST. PANEL			
NA75-60-401D	1				-4922
00 INT-		NA3 BLACK			
88 INT-		NA5 NA4 BLACK/TAN			
NA75-60-401E	1				4922-5508
00 INT-		NA3 NA7 BLACK			
88 INT-		NA4 NA5 BLACK/TAN			
NA75-60-401G	1				5508-
00 INT-		NA3 NA7 NA3 BLACK			
88 INT-		NA4 NA5 BLACK/TAN			
60-420B		MEMBER,CRASH PAD			
NA75-60-420B	1	('95 MODEL) (ML-'96 MODEL)			
NB38-60-420	1	(GUAM-'96 MODEL) (SAIPAN-'96 MODEL)			
60-430B		MEMBER(R),INST. PANEL			

4922 NA35* -603332
5508 NA35* -620210

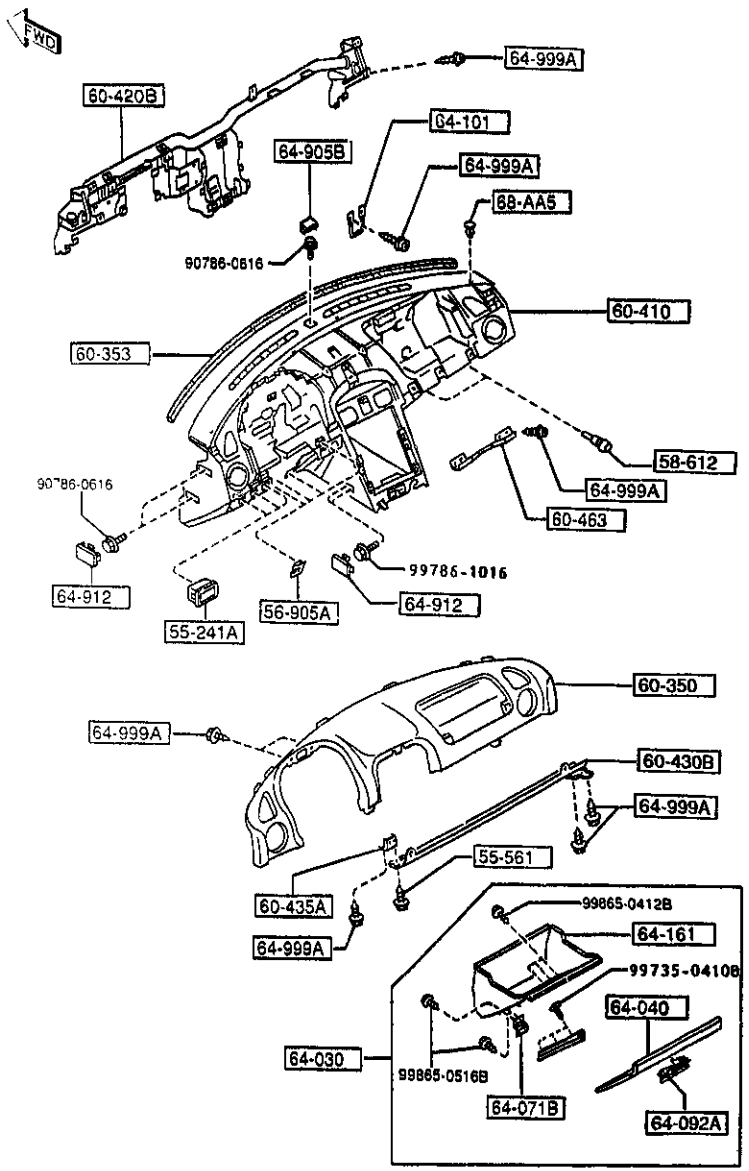

PART NO.	QTY	MODEL/RESTRICTION	MODEL/RESTRICTION	MODEL/RESTRICTION	FROM-TO
CONT'D					
NA75-60-430	1				-4922
NA01-60-430E	1				4922-
60-435A		BRACKET,MEMBER			
NA01-60-435	1				
60-463		BRACKET,CRASH PAD			
NA01-60-463	1				
64-030		BOX,GLOVE			
NA75-64-030C	1				-4901
00	INT-	NA3 BLACK			
88	INT-	NA4 NA5 TAN			
NA75-64-030D	1				4901-4A01
80	INT-	NA3 BLACK			
88	INT-	NA4 NA5 TAN			
NA75-64-030F	1				4A01-
00	INT-	NA3 NA7 NA8 BLACK			
88	INT-	NA4 NA5 TAN			
64-040		LID,GLOVE BOX-OUTER			
NA75-64-041C	1				
80	INT-	NA3 NA7 NA8 BLACK			
88	INT-	NA4 NA5 TAN			
64-071B		HINGE(R),GLOVE LID			
NA75-64-03XA	2				
64-092A		LOCK,GLOVE LID			
BC5E-64-090B	1				4A01-
C8	INT-	NA3 NA7 NA8 BLACK			
67	INT-	NA4 NA5 TAN			
64-101		STRIKER			
BC1D-64-101	1				
64-161		BOX,GLOVE			
NA75-64-161C	1				

6901 NA35* -602618
6922 NA35* -603332
4A01 NA35* -603621

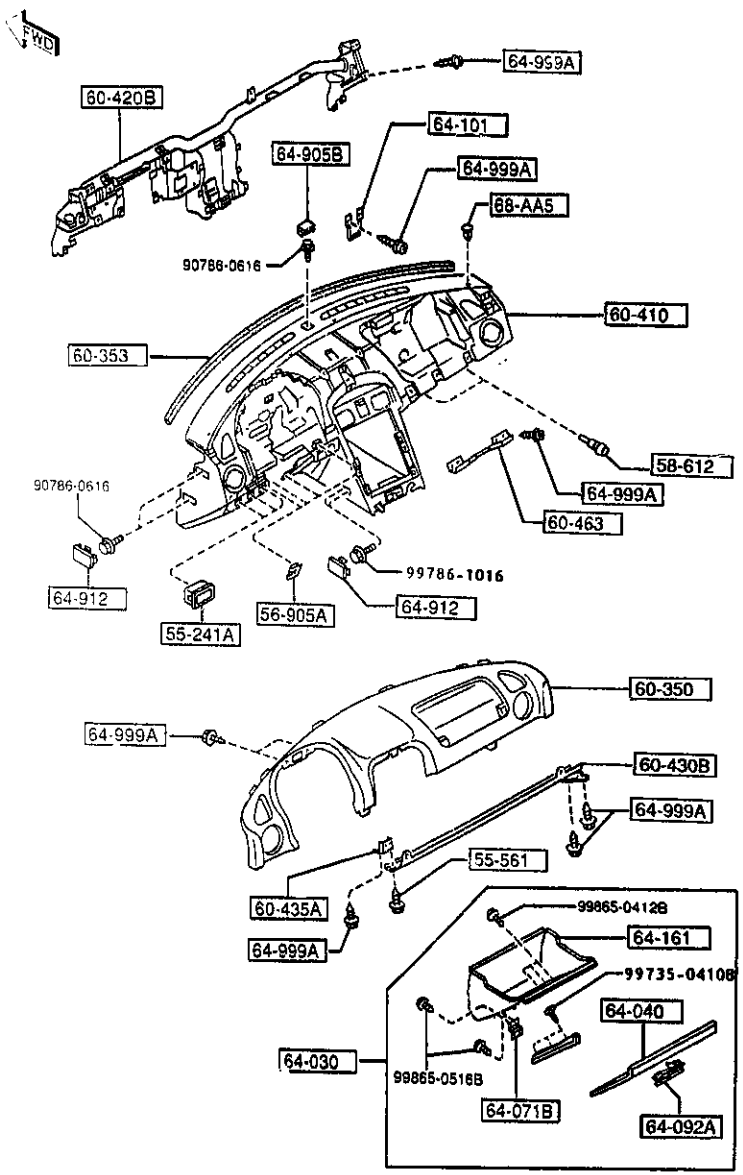

5560 -3 * DASHBOARD & RELATED PARTS

PART NO.	QTY	MODEL/RESTRICTION	MODEL/RESTRICTION	MODEL/RESTRICTION	FROM-TO
CONT'D					
00	INT-	NA3 NA4 NA5 NA6 NA7 NA8 BLACK			
64-905B		COVER,HOLE-(C)			
NA01-64-905	1				
80	INT-	NA3 NA5 NA4 NA7 NA8 BLACK			
64-912		COVER,SIDE			
NA01-64-912	6				
00	INT-	NA3 NA7 BLACK			
80	INT-	NA4 NA5 TAN			
64-999A		SCREW,TAPPING			
W201-64-999	33				
68-AA5		FASTENER,DOOR TRIM			
W201-68-AA5A	4				
00	INT-	NA3 NA4 NA5 NA6 NA7 NA8 BLACK			

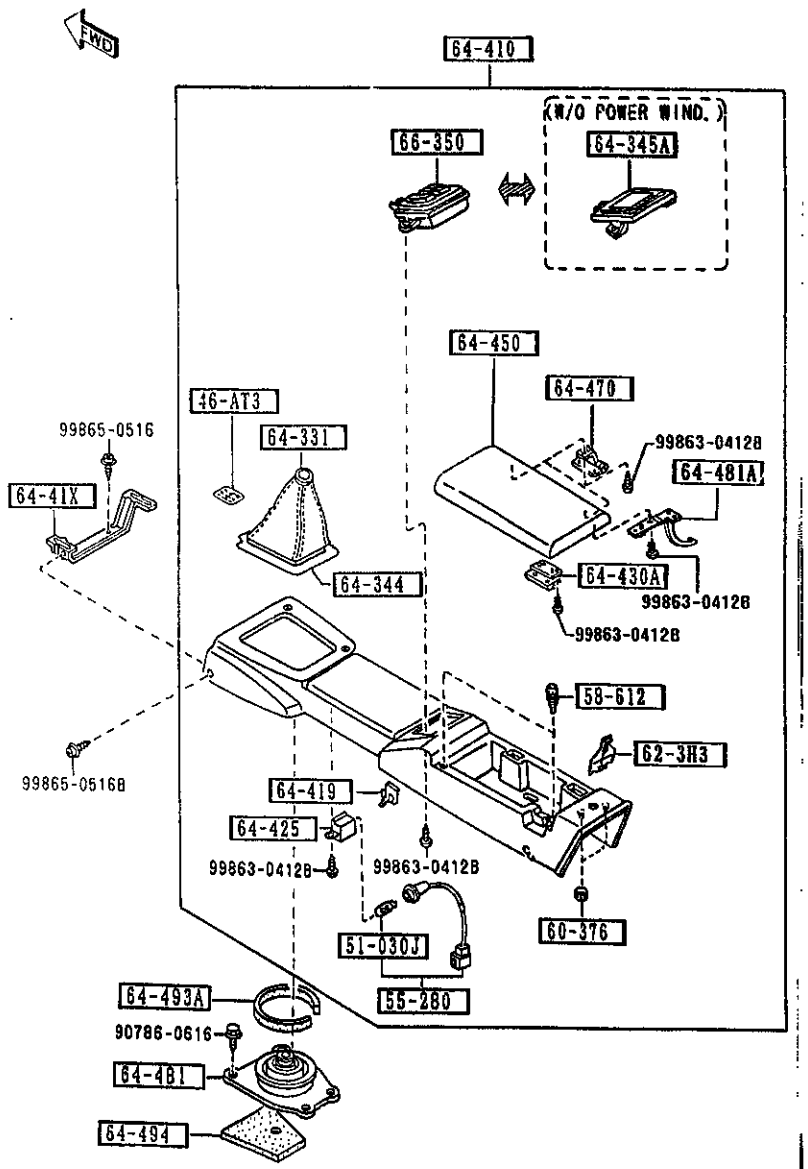

AUNA05

5570 -1 CONSOLE

PART NO.	QTY	MODEL/RESTRICTION	MODEL/RESTRICTION	MODEL/RESTRICTION	FROM-TO
46-AT3		LABEL,CHANGE			
N002-46-AT3	1	(WOOD) (MT)			
51-030J		BULB			
3625-75-139	1	12V 1.4W			
55-280		BULB & SOCKET			
NA01-55-280	1	(MT)			
NA06-55-280	1	(URETHANE) (AT)			
58-612		CUSHION,RUBBER			
B092-64-046	2				
60-376		NUT,TOP-CRASH PAD			
B092-60-376	2				
62-3H3		COVER,LEVER-OPENER			
NA01-64-424	1				
64-331		BOOT,CHANGE			
NA01-64-331	1	(MT)			
00	INT-	NA3 NA4 NA5 NA6 NA7 NA8 BLACK			
64-344		PLATE,BACK-BOOTS RING			
NA01-64-344B	1	(MT)			
64-345A		BOX,COIN-CONSOLE			
NA01-64-437	1	BASE, R-PKG, PKG-A, (W/O POWER WIND.)			
00	INT-	NA3 NA4 NA5 NA6 NA7 NA8 BLACK			
64-41X		BRACKET,REAR CONSOLE			
NA01-64-416	1				
64-42[illegible]		CONSOLE,REAR			
NA01-64-410D	1	BASE, R-PKG, PKG-A, (W/O POWER WIND,W/O CHANGE LABEL) (MT)			

CAT. AUNA05-04

1997-07

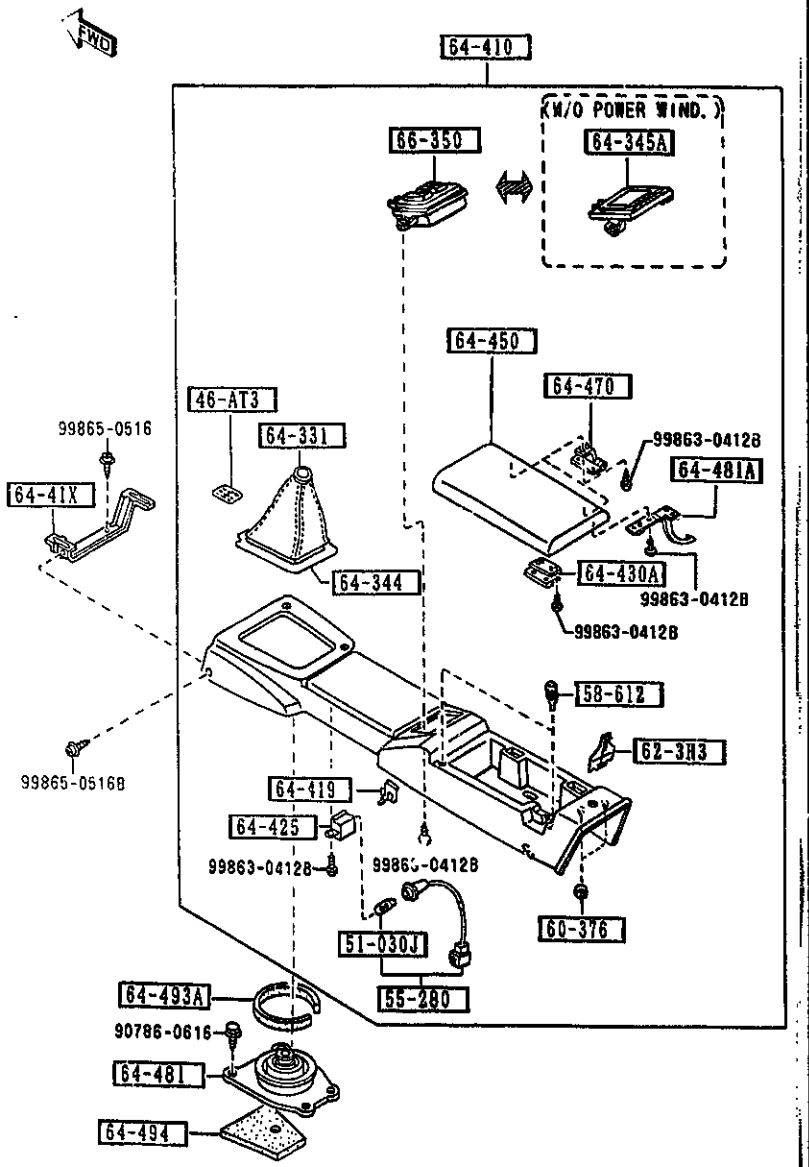

5570 -2 CONSOLE

PART NO.	QTY	MODEL/RESTRICTION	MODEL/RESTRICTION	MODEL/RESTRICTION	FROM-TO
CONT'D					
00 INT-		NA3 NA4 NA5 NA6 NA7 NA8 BLACK			
NA02-64-410D	1	P.E.GR, L-PKG, PKG-B (W/POWER WIND,W/O CHANGE LABEL) (MT)			
00 INT-		NA3 NA4 NA5 NA6 NA7 NA8 BLACK			
NA03-64-410C	1	BASE, R-PKG, PKG-A, (W/O POWER WIND.) (AT)			
00 INT-		NA3 NA4 NA5 NA6 NA7 NA8 BLACK			
NA06-64-410D	1	M-25-ED, P.E.GR, L-PKG, PKG-B, PKG-C, (W/POWER WIND.) (AT)			
00 INT-		NA3 NA4 NA5 NA6 NA7 NA8 BLACK			
N007-64-410B	1	(W/O POWER WIND,W/CHANGE LABEL) (MT)			
00 INT-		NA3 NA4 NA5 NA6 NA7 NA8 BLACK			
N088-64-410B	1	OPT, (W/POWER WIND,W/CHANGE LABEL) (MT)			
88 INT-		NA3 NA4 NA5 NA6 NA7 NA8 BLACK			
64-419 H260-64-419	1	CLIP,HARNESS-HAND BRAKE			
64-425 NA01-64-414	1	CASE,LAMP			
64-430A FB01-64-430	1	LOCK,CONSOLE-REAR			
64-450 NA01-64-450A	1	LID,CONSOLE			
00 INT-		NA3 NA4 NA5 NA6 NA7 NA8 BLACK			

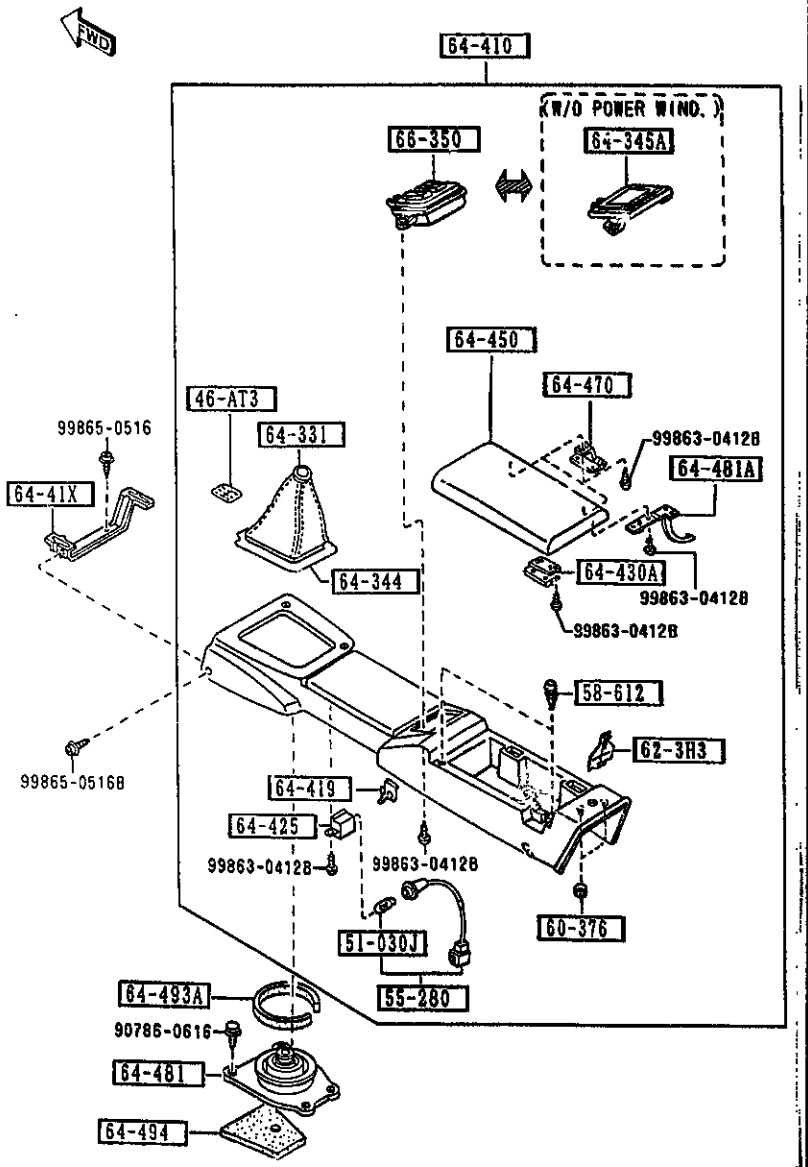

5570 -3 * CONSOLE

PART NO.	QTY	MODEL/RESTRICTION	MODEL/RESTRICTION	MODEL/RESTRICTION	FROM-TO
64-470		HINGE			
NA01-64-45XA	2				
00 INT-		NA3 NA4 NA5 NA6 NA7 NA8 BLACK			
64-481		INSULATOR NO.1,CHANGE			
NA01-64-481B	1	(MT)			
64-481A		STOPPER,CONSOLE LID			
NA01-64-452	1				
00 INT-		NA3 NA4 NA5 NA6 NA7 NA8 BLACK			
64-493A		PACK,SILENT			
H001-64-493	1	(MT)			
64-494		PAD,CHANGE BOOT			
FB01-64-495	1	(MT)			
66-350		SWITCH,POWER WINDOW			
NA01-66-350A	1	M-25-ED, P.E.GR, L-PKG, PKG-B, PKG-C, (W/POWER WIND.) (MT)			
00 INT-		NA3 NA4 NA5 NA6 NA7 NA8 BLACK			
NA03-66-350	1	M-25-ED, P.E.GR, L-PKG, PKG-B, PKG-C, (W/POWER WIND.) (AT)			
00 INT-		NA3 NA4 NA5 NA6 NA7 NA8 BLACK			

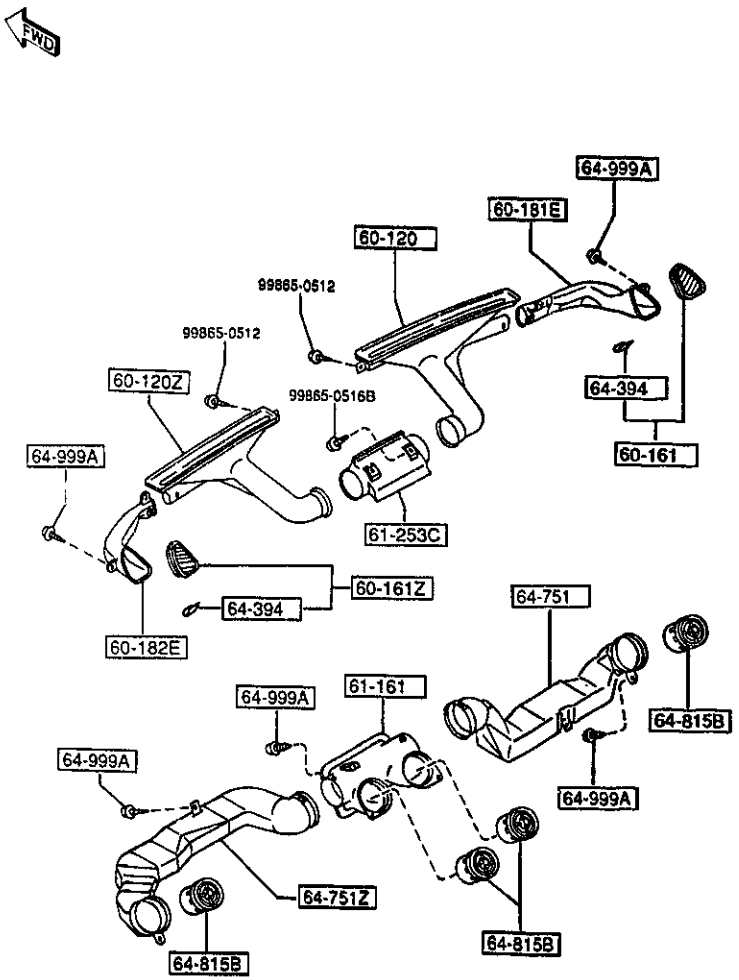

5580 -1 VENTILATOR

PART NO.	QTY	MODEL/RESTRICTION	MODEL/RESTRICTION	MODEL/RESTRICTION	FROM-TO
60-120		NOZZLE(R),DEFROSTER			
NA75-60-121B	1				
60-120Z		NOZZLE(L),DEFROSTER			
NA01-60-141	1				
60-161		GRILLE(R),DEMISTER			
NA75-60-160A	1				
00	INT-	NA3 NA5 NA4 NA7 NAB BLACK			
60-161Z		GRILLE(L),DEMISTER			
NA75-60-170A	1				
00	INT-	NA3 NA5 NA4 NA7 NAB BLACK			
60-181E		DUCT(R),SIDE DEMI.			
NA75-60-185	1				
60-182E		DUCT(L),SIDE DEMI.			
NA75-60-193	1				
61-161		DUCT,CENTER			
NA75-61-161A	1				
61-253C		HOSE(C),DEFROSTER			
NA01-61-253	1				
64-394		SPRING			
GA2A-64-394	2				
64-751		DUCT(R)			
NA75-64-741	1				
64-751Z		DUCT(L)			
NA75-64-841	1				
64-815B		LOUVER,VENTILATOR			
N801-64-81X	4				
00	INT-	NA3 NA4 NA5 NA6 NA7 NA8 BLACK			

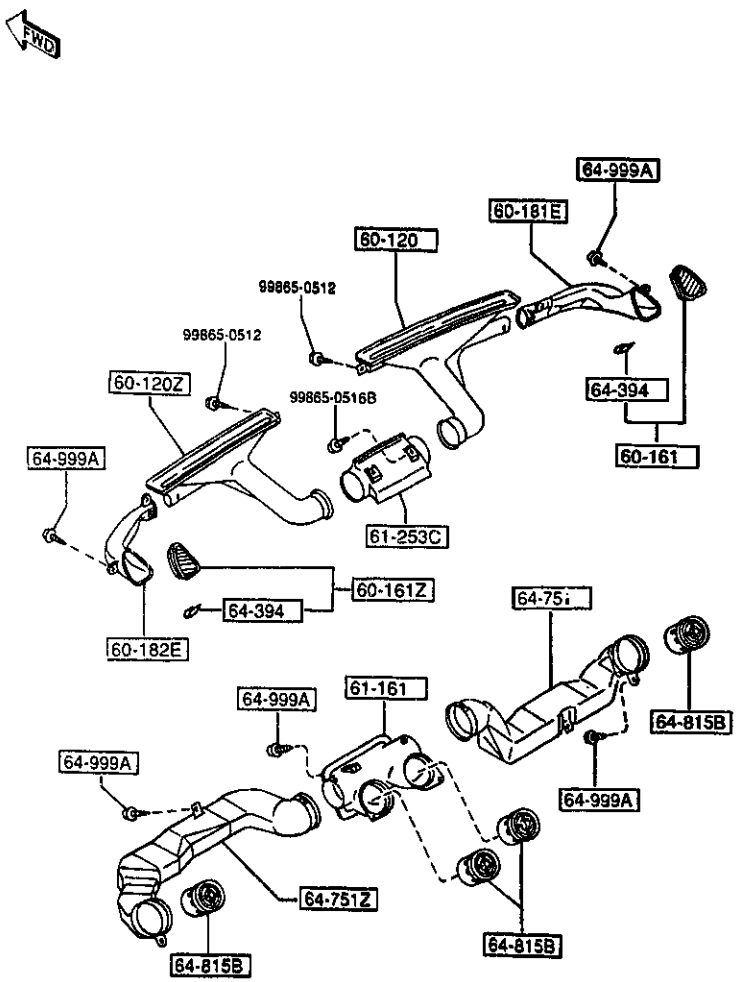

5580 -2 * VENTILATOR

PART NO.	QTY	MODEL/RESTRICTION	MODEL/RESTRICTION	MODEL/RESTRICTION	FROM-TO
64-999A		SCREW,TAPPING			
W201-64-999	10				

SEAT TYPES / GRADE / SPECIFICATIONS	'95 MODEL		
	STA	STB	STC
	BASE, P, E, GR, R-PKG, PKG-A, PKG-B	L-PKG, L-PKG-OPT, PKG-C, PKG-C-OPT,	M-25-ED
SEAT TRIM	CLOTH	LEATHER	LEATHER
	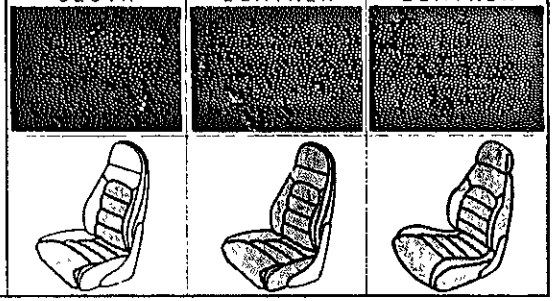		

SEAT TYPES / GRADE / SPECIFICATIONS	'96 MODEL		
	STA	STB	STC
	P, E, GR, P, E, GR-OPT, PKG-A, PKG-B PKG-A-OPT PKG-B-OPT,	L-PKG, L-PKG-OPT PKG-C, PKG-C-OPT,	
SEAT TRIM	CLOTH	LEATHER	LEATHER
	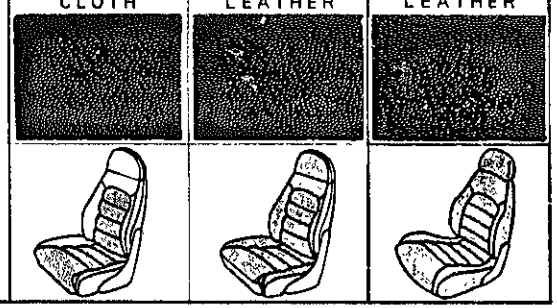		

(STA TYPE)
(STB TYPE)

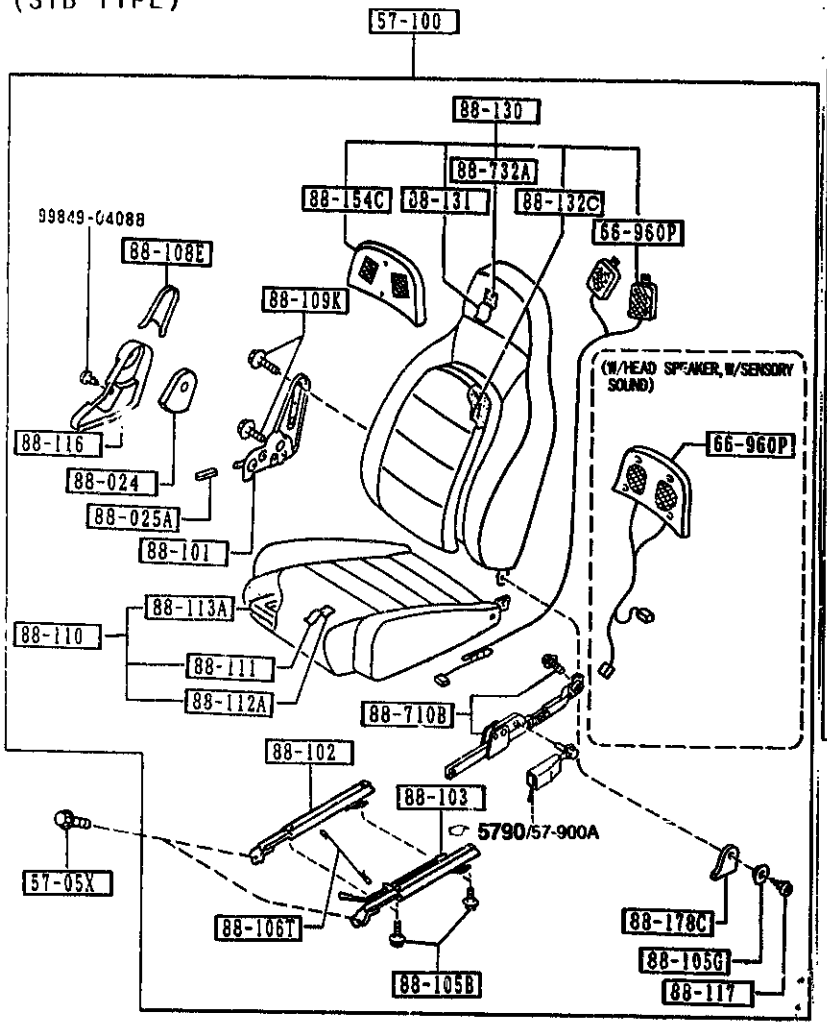

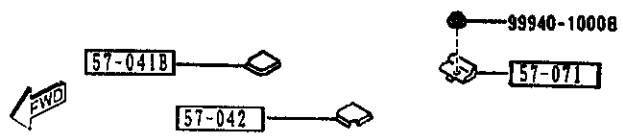

(STA TYPE)
(STB TYPE)

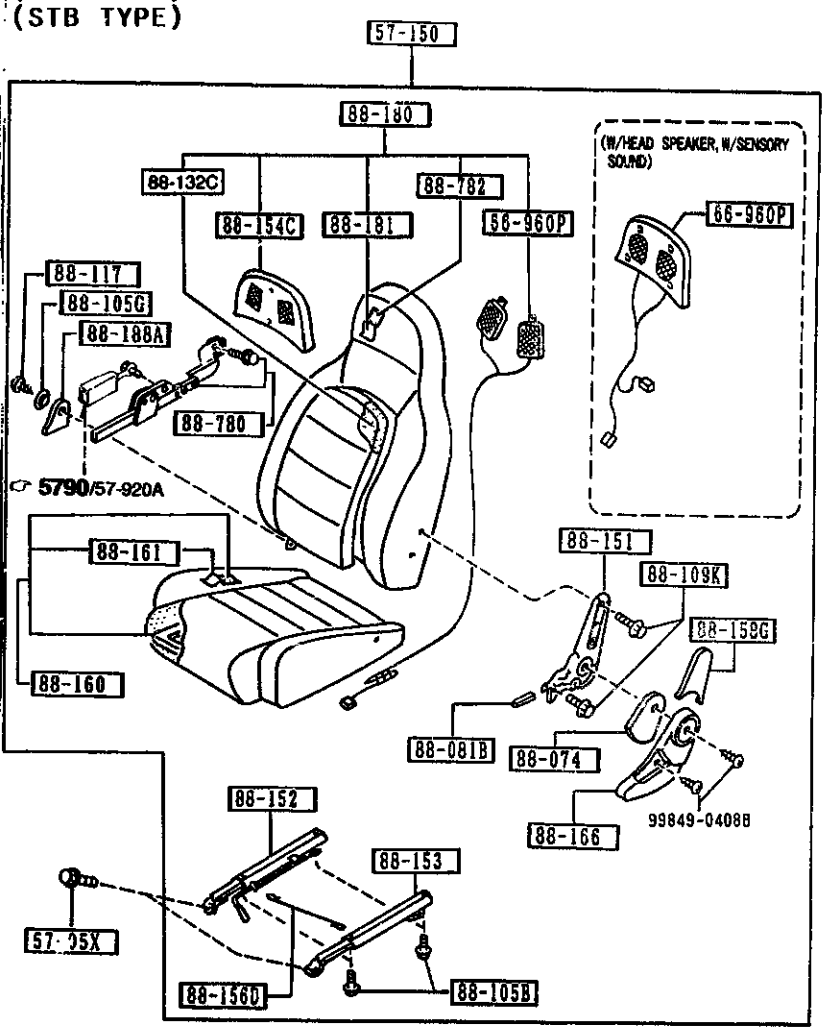

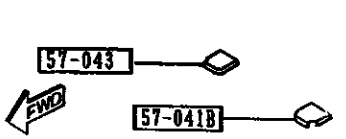

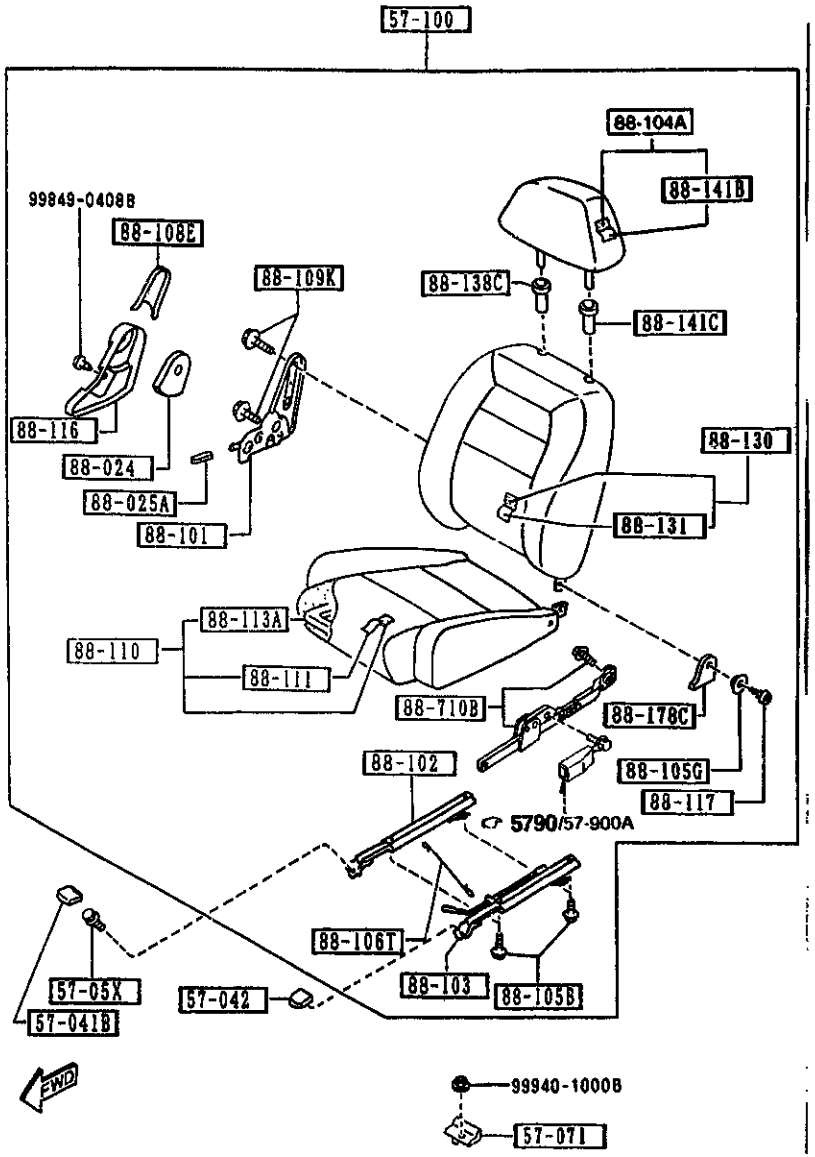
57-100
88-104A
88-141B
99849-04088
88-108E
88-109K
88-138C
88-141C
88-116
88-024
88-025A
88-101
88-130
88-131
88-113A
88-110
88-111
88-710B
88-178C
88-105G
88-117
88-102
5790/57-900A
88-106T
88-103
88-105B
57-05X
57-042
57-041B
FWD
99940-1000B
57-071
AUNA05

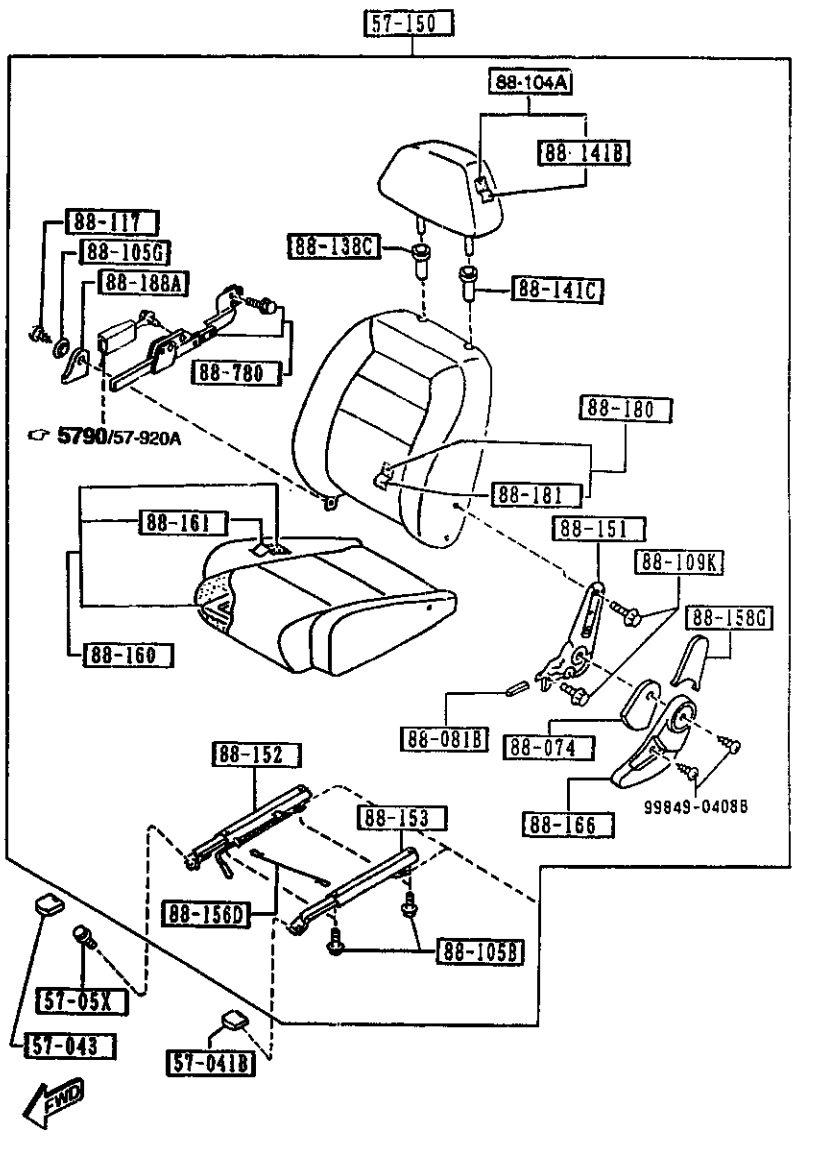
57-150
88-104A
88-141B
88-117
88-105G
88-188A
88-138C
88-141C
88-780
5790/57-920A
88-180
88-181
88-161
88-151
88-109K
88-158G
88-160
88-081B
88-074
99849-04088
88-166
88-152
88-153
88-156D
88-105B
57-05X
57-043
57-041B
FWD
AUNA05

(STA TYPE)
(STB TYPE)

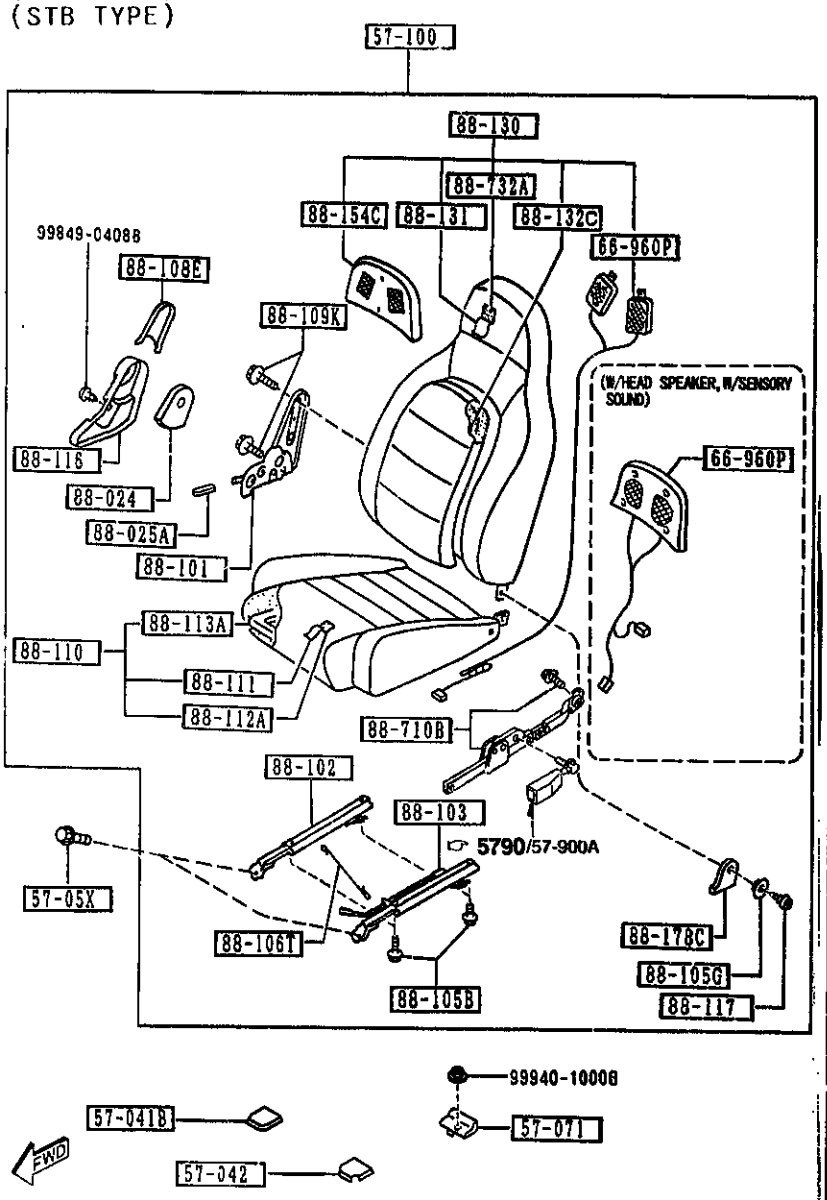

AUNA05

5700 -1 SEATS

PART NO.	QTY	MODEL/RESTRICTION	MODEL/RESTRICTION	MODEL/RESTRICTION	FROM-TO
57-041B		COVER NO.1,ADJ-FRT			
J001-57-041	2	L-PKG, PKG-C, M-25-ED, (STB TYPE,W/HEAD SPEAKER) (STC TYPE,W/O HEAD SPEAKER) ('95 MODEL)			
40 INT-		NA4 NA5 NA3 DARK GRAY			
57-042		COVER NO.2,ADJ-FRT			
N005-57-042	1	L-PKG, PKG-C, M-25-ED, (STB TYPE,W/HEAD SPEAKER) (STC TYPE,W/O HEAD SPEAKER) ('95 MODEL)			-4801
40 INT-		NA4 NA5 NA3 DARK GRAY			
57-043		COVER NO.3,ADJ-FRT			
N005-57-043	1	L-PKG, PKG-C, M-25-ED, (STB TYPE,W/HEAD SPEAKER) (STC TYPE,W/O HEAD SPEAKER) ('95 MODEL)			-4801
40 INT-		NA4 NA5 NA3 DARK GRAY			
57-05X		BOLT,LINK			
B455-57-05XA	8				-6401
A (B455-57-05XB)					
*B455-57-05XB	8				6401-
57-071		BRACKET,SEAT LOCK-RR			
NA75-57-071	1				
57-100		SEAT(R),FRONT			
NBY1-57-100	1	P.E.GR, (STA TYPE,W/HEAD SPEAKER,W/O SENSORY SOUND) (ML-'96 MODEL)			
00 INT-		NA3 BLACK			
NBY2-57-100	1	P.E.GR-OPT, (STA TYPE,W/HEAD SPEAKER, W/SENSORY SOUN			

4801 NA35* -686043
6401 NA3** -717787

CAT. AUNA05-04

1997-07

(STA TYPE)
(STB TYPE)

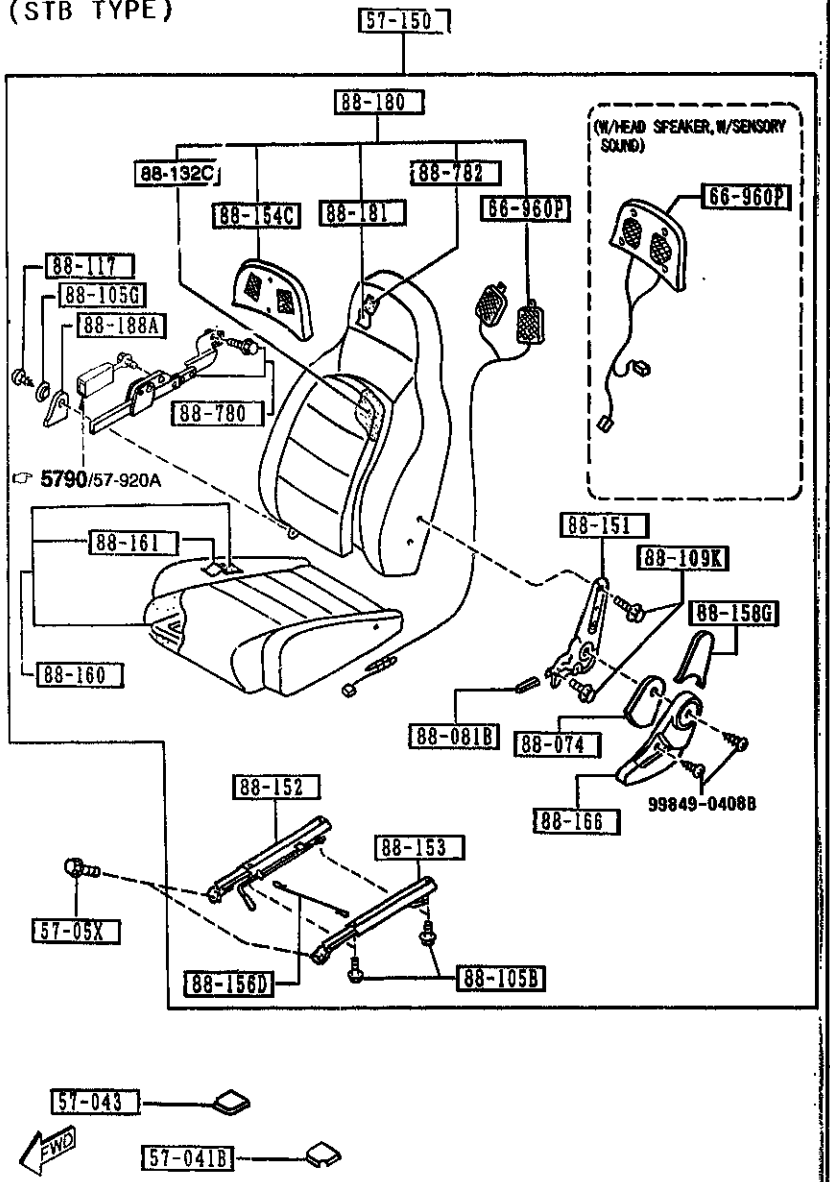

PART NO.	QTY	MODEL/RESTRICTION	MODEL/RESTRICTION	MODEL/RESTRICTION	FROM-TO
CONT'D		D) (ML-'96 MODEL)			
80	INT-	NA3 BLACK			
NBY3-57-100	1	L-PKG, (STB TYPE,W/HEAD SPEAKER,W/O SENSORY SOUND) (ML-'96 MODEL)			
88	INT-	NA5 TAN			
NBY4-57-100	1	L-PKG-OPT, (STB TYPE,W/HEAD SPEAKER, W/SENSORY SOUND) (ML-'96 MODEL)			
88	INT-	NA5 TAN			
NB40-57-100	1	(STA TYPE,W/O HEAD SPEAKER,W/O SENSORY SOUND) (GUAM-'96 MODEL) (SAIPAN-'96 MODEL)			
00	INT-	NA3 BLACK			
NB41-57-100	1	PKG-A, PKG-B, (STA TYPE,W/HEAD SPEAKER,W/O SENSORY SOUND) (GUAM-'96 MODEL) (SAIPAN-'96 MODEL)			
00	INT-	NA3 BLACK			
NB42-57-100	1	PKG-A-OPT, PKG-B-OPT , (STA TYPE,W/HEAD SPEAKER, W/SENSORY SOUND) (GUAM-'96 MODEL) (SAIPAN-'96 MODEL)			
80	INT-	NA3 BLACK			
NB43-57-100	1	PKG-C, (STB TYPE,W/HEAD SPEAKER,W/O SENSORY SOUND) (GUAM-'96 MODEL) (SAIPAN-'96 MODEL)			
88	INT-	NA4 NA5 TAN			
NB44-57-100	1	PKG-C-OPT, (STB TYPE,W/HEAD SPEAKER, W/SENSORY SOUND) (GUAM-'96 MODEL) (SAIPAN-'96 MODEL)			
88	INT-	NA4 NA5 TAN			
NA75-57-100C	1	BASE, R-PKG, (STA TYPE,W/O HEAD S			-4901
4901 NA35# -602618					

(STC TYPE)

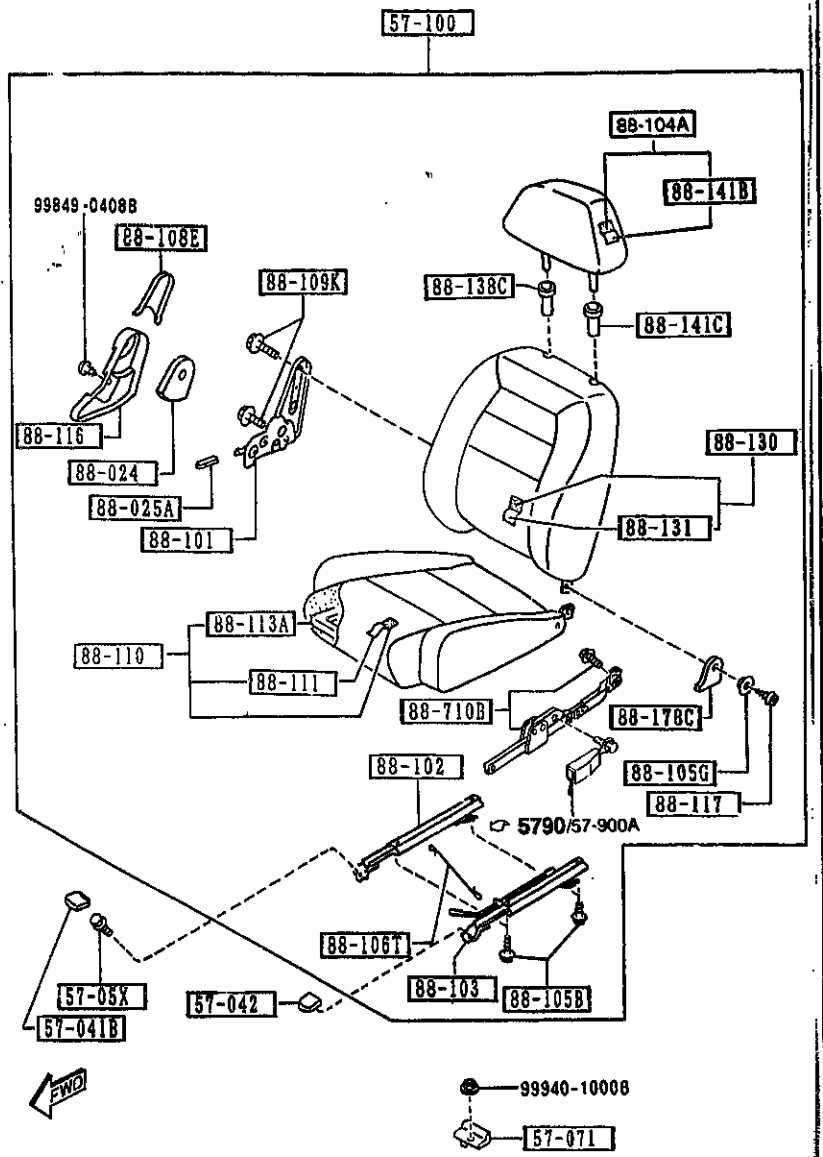

AUNA05

PART NO.	QTY	MODEL/RESTRICTION	MODEL/RESTRICTION	MODEL/RESTRICTION	FROM-TO
CONT'D		PEAKER) ('95 MODEL)			
00	INT-	NA3 BLACK			
NA79-57-100C	1	P.E.GR, PKG-A, PKG-B , (STA TYPE,W/HEAD SPEAKER, W/O SENSORY SOUND) ('95 MODEL)			-4901
00	INT-	NA3 BLACK			
NA80-57-100C	1	OPT, (STA TYPE,W/HEAD SPEAKER, W/SENSORY SOUND) ('95 MODEL)			-4901
00	INT-	NA3 BLACK			
NA81-57-100D	1	L-PKG, PKG-C, (STB TYPE,W/HEAD SPEAKER, W/O SENSORY SOUND) ('95 MODEL)			-4B01
88	INT-	NA4 NA5 TAN			
NA82-57-100D	1	L-PKG-OPT, PKG-C-OPT , (STB TYPE,W/HEAD SPEAKER, W/SENSORY SOUND) ('95 MODEL)			-4B01
88	INT-	NA4 NA5 TAN			
NB11-57-100	1	M-25-ED, (STC TYPE,W/O HEAD SPEAKER) ('95 MODEL)			-4B01
88	INT-	NA5 TAN			
NA75-57-100D	1	BASE, R-PKG, (STA TYPE,W/O HEAD SPEAKER) ('95 MODEL)			4901-4B01
00	INT-	NA3 BLACK			
NA79-57-100D	1	P.E.GR, PKG-A, PKG-B , (STA TYPE,W/HEAD SPEAKER, W/O SENSORY SOUND) ('95 MODEL)			4901-4B01
00	INT-	NA3 BLACK			
NA80-57-100D	1	OPT, (STA TYPE,W/HEAD SPEAKER, W/SENSORY SOUND) ('95 MODEL)			4901-4B01

4901 NA35* -602618
4B01 NA35* -606043

CAT. AUNA05-04

1997-97

(STC TYPE)

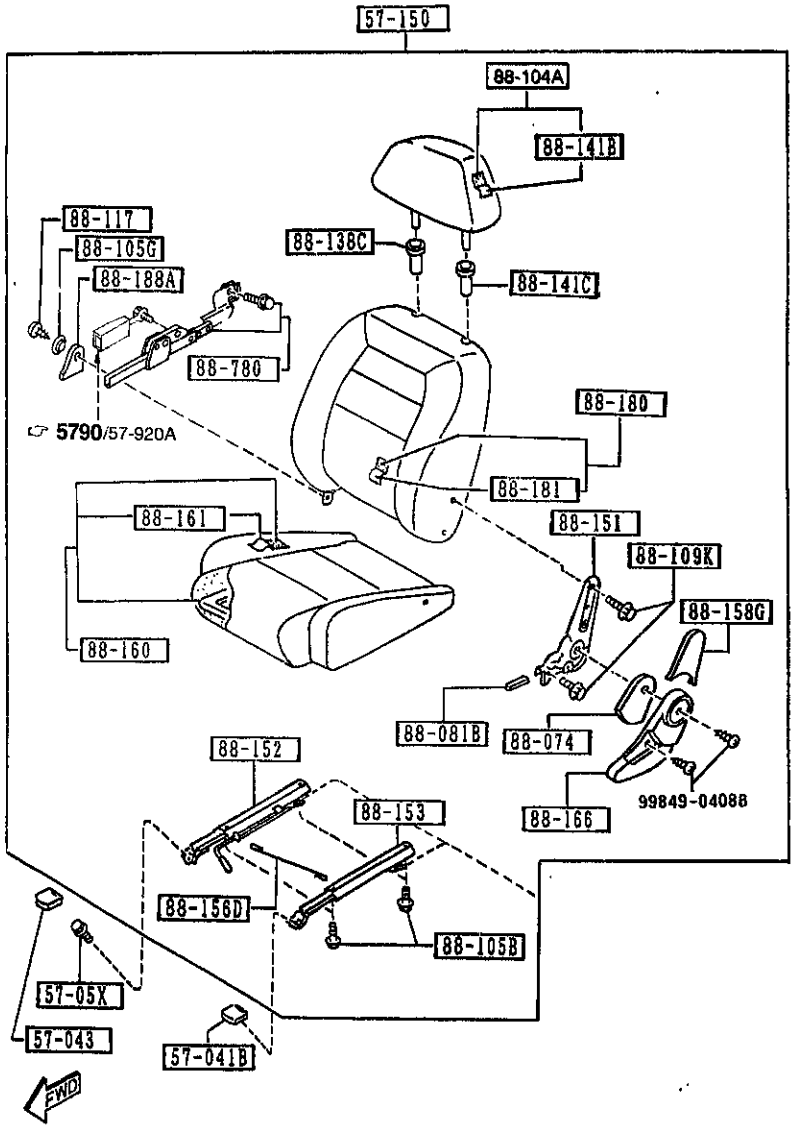

PART NO.	QTY	MODEL/RESTRICTION	MODEL/RESTRICTION	MODEL/RESTRICTION	FROM-TO
CONT'D					
00	INT-	NA3 BLACK			
NA75-57-100E	1	BASE, R-PKG, (STA TYPE,W/O HEAD SPEAKER) ('95 MODEL)			4B01-
00	INT-	NA3 BLACK			
NA79-57-100E	1	P.E.GR, PKG-A, PKG-B, (STA TYPE,W/HEAD SPEAKER, W/O SENSORY SOUND) ('95 MODEL)			4B01-
00	INT-	NA3 BLACK			
NA80-57-100E	1	OPT, (STA TYPE,W/HEAD SPEAKER, W/SENSORY SOUND) ('95 MODEL)			4B01-
00	INT-	NA3 BLACK			
NB11-57-100B	1	M-25-ED, (STC TYPE,W/O HEAD SPEAKER) ('95 MODEL)			4B01-
88	INT-	NA5 TAN			
NA81-57-100E	1	L-PKG, PKG-C, (STB TYPE,W/HEAD SPEAKER, W/O SENSORY SOUND) ('95 MODEL)			4B01-5508
88	INT-	NA4 NA5 TAN			
NA82-57-100E	1	L-PKG-OPT, PKG-C-OPT, (STB TYPE,W/HEAD SPEAKER, W/SENSORY SOUND) ('95 MODEL)			4B01-5508
88	INT-	NA4 NA5 TAN			
NA81-57-100F	1	L-PKG, PKG-C, (STB TYPE,W/HEAD SPEAKER, W/O SENSORY SOUND) ('95 MODEL)			5508-
88	INT-	NA4 NA5 TAN			
NA82-57-100F	1	L-PKG-OPT, PKG-C-OPT, (STB TYPE,W/HEAD SPEAKER, W/SENSORY SOUND) ('95 MODEL)			5508-
88	INT-	NA4 NA5 TAN			
NB47-57-100	1	M.EDI,			5B15-

4B01 NA35* -606043
5508 NA35* -620210
5B15 NA3** -705265

(STA TYPE)
(STB TYPE)

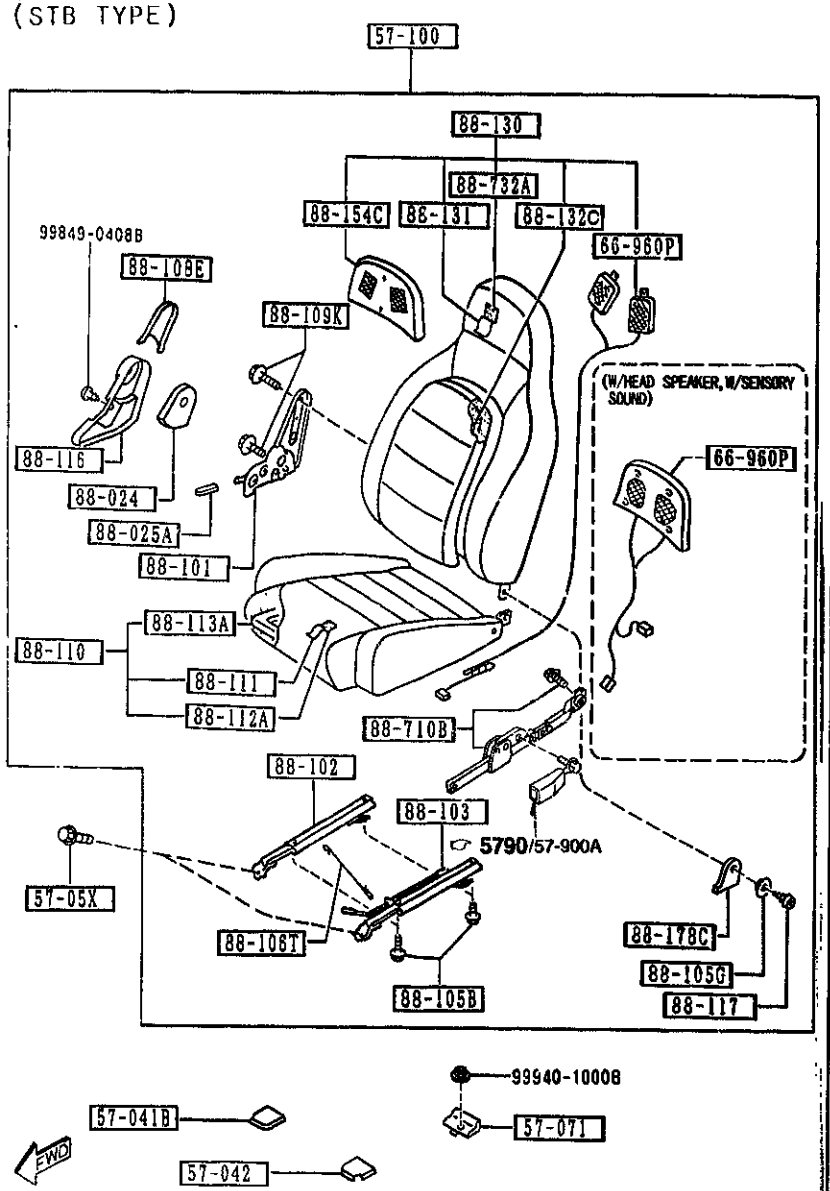

5700 -5 SEATS

PART NO.	QTY	MODEL/RESTRICTION	MODEL/RESTRICTION	MODEL/RESTRICTION	FROM-TO
CONT'D		(STC TYPE) ('96 MODEL)			
88	INT-	NA5 TAN			
┌ 57-150 ┐		SEAT(L),FRONT			
NBY1-57-150	1	P.E.GR, (STA TYPE,W/HEAD SPEAKER,W/O SENSORY SOUND) (ML-'96 MODEL)			
00	INT-	NA3 BLACK			
NBY2-57-150	1	P.E.GR-OPT, (STA TYPE,W/HEAD SPEAKER, W/SENSORY SOUND) (ML-'96 MODEL)			
00	INT-	NA3 BLACK			
NBY3-57-150	1	L-PKG, (STB TYPE,W/HEAD SPEAKER,W/O SENSORY SOUND) (ML-'96 MODEL)			
88	INT-	NA5 TAN			
NBY4-57-150	1	L-PKG-OPT, (STB TYPE,W/HEAD SPEAKER, W/SENSORY SOUND) (ML-'96 MODEL)			
88	INT-	NA5 TAN			
NB40-57-150	1	(STA TYPE,W/O HEAD SPEAKER,W/O SENSORY SOUND) (GUAM-'96 MODEL) (SAIPAN-'96 MODEL)			
00	INT-	NA3 BLACK			
NB41-57-150	1	PKG-A, PKG-B, (STA TYPE,W/HEAD SPEAKER,W/O SENSORY SOUND) (GUAM-'96 MODEL) (SAIPAN-'96 MODEL)			
00	INT-	NA3 BLACK			
NB42-57-150	1	PKG-A-OPT, PKG-B-OPT (STA TYPE,W/HEAD SPEAKER, W/SENSORY SOUND) (GUAM-'96 MODEL) (SAIPAN-'96 MODEL)			
00	INT-	NA3 BLACK			
NB43-57-150	1	PKG-C,			

(STA TYPE)
(STB TYPE)

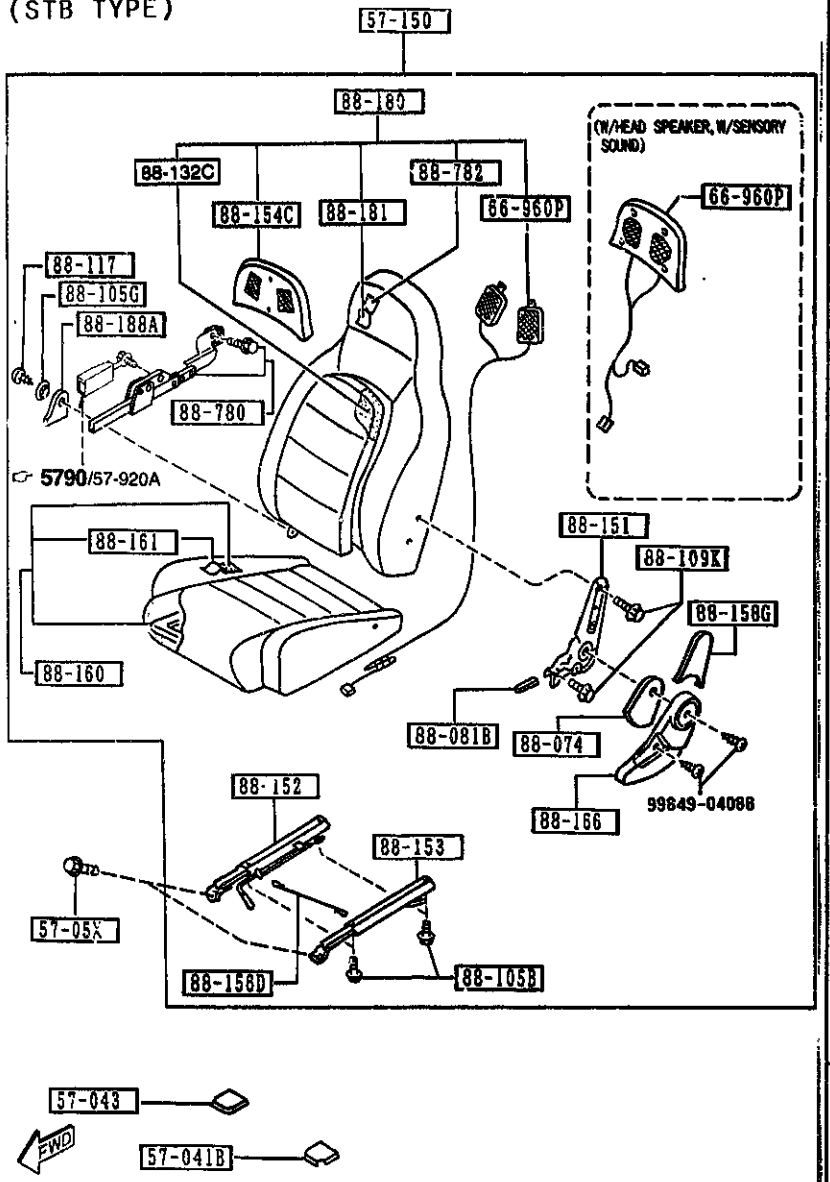

PART NO.	QTY	MODEL/RESTRICTION	MODEL/RESTRICTION	MODEL/RESTRICTION	FROM-TO
CONT'D		(STB TYPE,W/HEAD SPEAKER,W/O SENSORY SOUND) (GUAM-'96 MODEL) (SAIPAN-'96 MODEL)			
88	INT-	NA4 NA5 TAN			
NB44-57-150	1	PKG-C-OPT, (STB TYPE,W/HEAD SPEAKER, W/SENSORY SOUND) (GUAM-'96 MODEL) (SAIPAN-'96 MODEL)			
88	INT-	NA4 NA5 TAN			
NA75-57-150C	1	BASE, R-PKG, (STA TYPE,W/O HEAD SPEAKER) ('95 MODEL)			-4901
00	INT-	NA3 BLACK			
NA79-57-150C	1	P.E.GR, PKG-A, PKG-B, (STA TYPE,W/HEAD SPEAKER, W/O SENSORY SOUND) ('95 MODEL)			-4901
80	INT-	NA3 BLACK			
NA80-57-150C	1	OPT, (STA TYPE,W/HEAD SPEAKER, W/SENSORY SOUND) ('95 MODEL)			-4901
00	INT-	NA3 BLACK			
NA81-57-150D	1	L-PKG, PKG-C, (STB TYPE,W/HEAD SPEAKER, W/O SENSORY SOUND) ('95 MODEL)			-4B01
88	INT-	NA4 NA5 TAN			
NA82-57-150D	1	L-PKG-OPT, PKG-C-OPT, (STB TYPE,W/HEAD SPEAKER, W/SENSORY SOUND) ('95 MODEL)			-4B01
88	INT-	NA4 NA5 TAN			
NB11-57-150	1	M-25-ED, (STC TYPE,W/O HEAD SPEAKER) ('95 MODEL)			-4B01
88	INT-	NA5 TAN			
NA75-57-150D	1	BASE, R-PKG, (STA TYPE,W/O HEAD SPEAKER)			4901-4B01

4901 NA3S* -602618
4B01 NA3S* -606043

(STC TYPE)

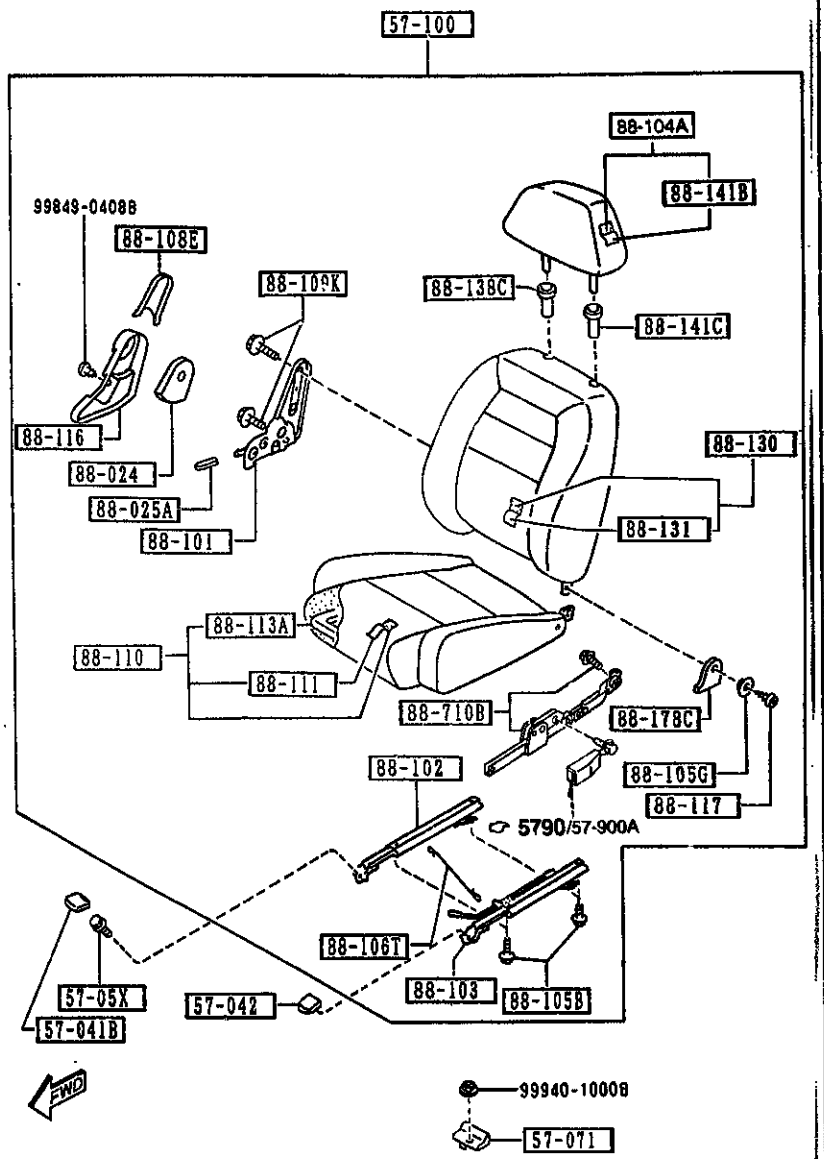

PART NO.	QTY	MODEL/RESTRICTION	MODEL/RESTRICTION	MODEL/RESTRICTION	FROM-TO
CONT'D		('95 MODEL)			
00	INT-	NA3 BLACK			
NA79-57-150D	1	P.E.GR, PKG-A, PKG-B (STA TYPE,W/HEAD SPEAKER, W/O SENSORY SOUND) ('95 MODEL)			4901-4B01
60	INT-	NA3 BLACK			
NA80-57-150D	1	OPT, (STA TYPE,W/HEAD SPEAKER, W/SENSORY SOUND) ('95 MODEL)			4901-4B01
80	INT-	NA3 BLACK			
NA75-57-150E	1	BASE, R-PKG, (STA TYPE,W/O HEAD SPEAKER) ('95 MODEL)			4B01-
00	INT-	NA3 BLACK			
NA79-57-150E	1	P.E.GR, PKG-A, PKG-B (STA TYPE,W/HEAD SPEAKER, W/O SENSORY SOUND) ('95 MODEL)			4B01-
00	INT-	NA3 BLACK			
NA80-57-150E	1	OPT, (STA TYPE,W/HEAD SPEAKER, W/SENSORY SOUND) ('95 MODEL)			4B01-
00	INT-	NA3 BLACK			
NB11-57-150B	1	M-25-ED, (STC TYPE,W/O HEAD SPEAKER) ('95 MODEL)			4B01-
88	INT-	NA5 TAN			
NA81-57-150E	1	L-PKG, PKG-C, (STB TYPE,W/HEAD SPEAKER, W/O SENSORY SOUND) ('95 MODEL)			4B01-5508
88	INT-	NA4 NA5 TAN			
NA82-57-150E	1	L-PKG-OPT, PKG-C-OPT (STB TYPE,W/HEAD SPEAKER, W/SENSORY SOUND) ('95 MODEL)			4B01-5508
88	INT-	NA4 NA5 TAN			

4901 NA35* -602618
4B01 NA35* -606043
5508 NA35* -620210

(STC TYPE)

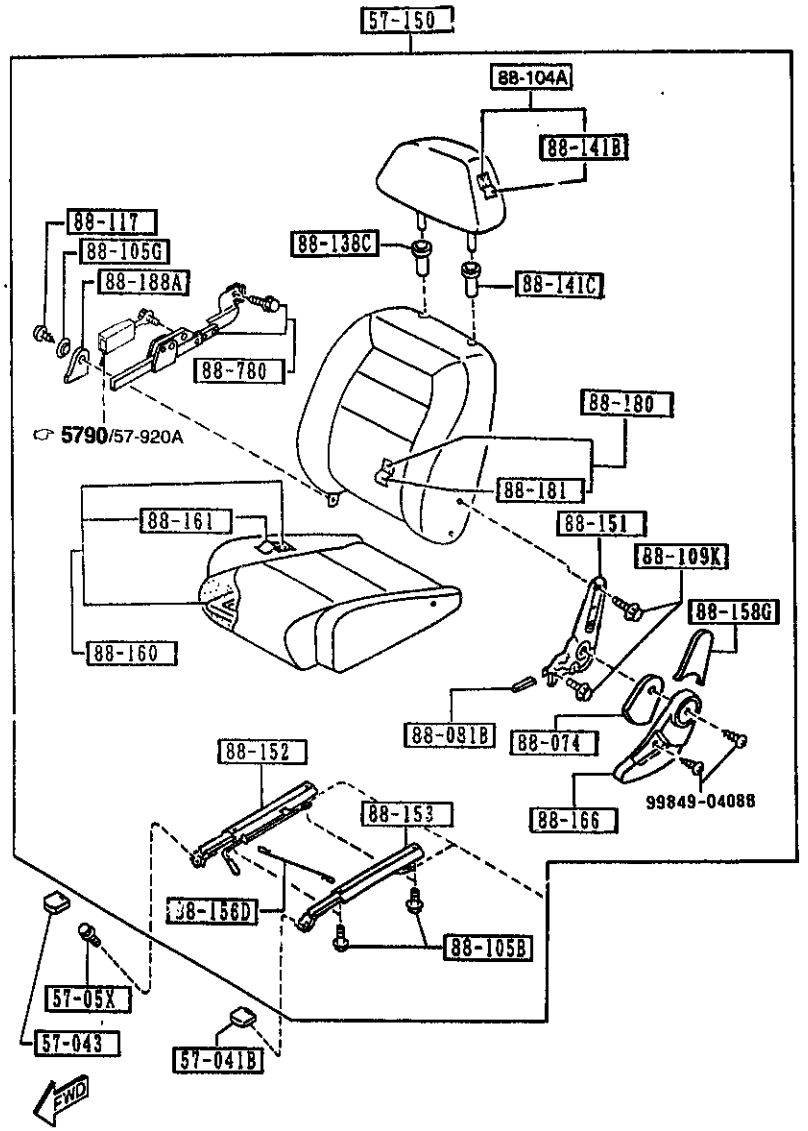

PART NO.	QTY	MODEL/RESTRICTION	MODEL/RESTRICTION	MODEL/RESTRICTION	FROM-TO
CONT'D					
NA81-57-150F	1	L-PKG, PKG-C, (STD TYPE,W/HEAD SPEAKER, W/O SENSORY SOUND) ('95 MODEL)			5508-
88	INT-	NA4 NA5 TAN			
NA82-57-150F	1	L-PKG-OPT, PKG-C-OPT, (STD TYPE,W/HEAD SPEAKER, W/SENSORY SOUND) ('95 MODEL)			5508-
88	INT-	NA4 NA5 TAN			
NB47-57-150	1	M.EDI, (STC TYPE) ('96 MODEL)			5815-
88	INT-	NA5 TAN			
+----------+					
| 66-960P |		SPEAKER,PILLOW-SEAT			
+----------+					
NA04-66-960B	2	L-PKG, P.E.GR, L-PKG, PKG-C, PKG-A, PKG-B, (W/HEAD SPK,W/O SENSORY SOUND SOUND) ('95 MODEL) (ML-'96 MODEL)			
NB11-66-960	2	(W/HEAD SPEAKER,W/SENSORY SOUND) ('96 MODEL)			
NB38-66-960	2	(W/HEAD SPK,W/O SENSORY SOUND SOUND) (GUAM-'96 MODEL) (SAIPAN-'96 MODEL)			
NB20-66-960A	2	L-PKG-OPT, P.E.GR-OPT, (W/HEAD SPEAKER,W/SENSORY SOUND) ('95 MODEL) (ML-'96 MODEL)			
+----------+					
| 88-024 |		PROTR(R),SEAT BELT			
+----------+					
NA01-88-033	1				
+----------+					
| 88-025A |		KNOB(R),KNUCKLE			
+----------+					
NA01-88-034	1				
80	INT-	NA3 NA7 NAB BLACK			
88	INT-	NA4 NA5 TAN			
+----------+					
| 88-074 |		PROTR(L),SEAT BELT			
+----------+					
NA01-88-083	1				

5508 NA35* -620210
5815 NA3** -705265

(STA TYPE)
(STB TYPE)

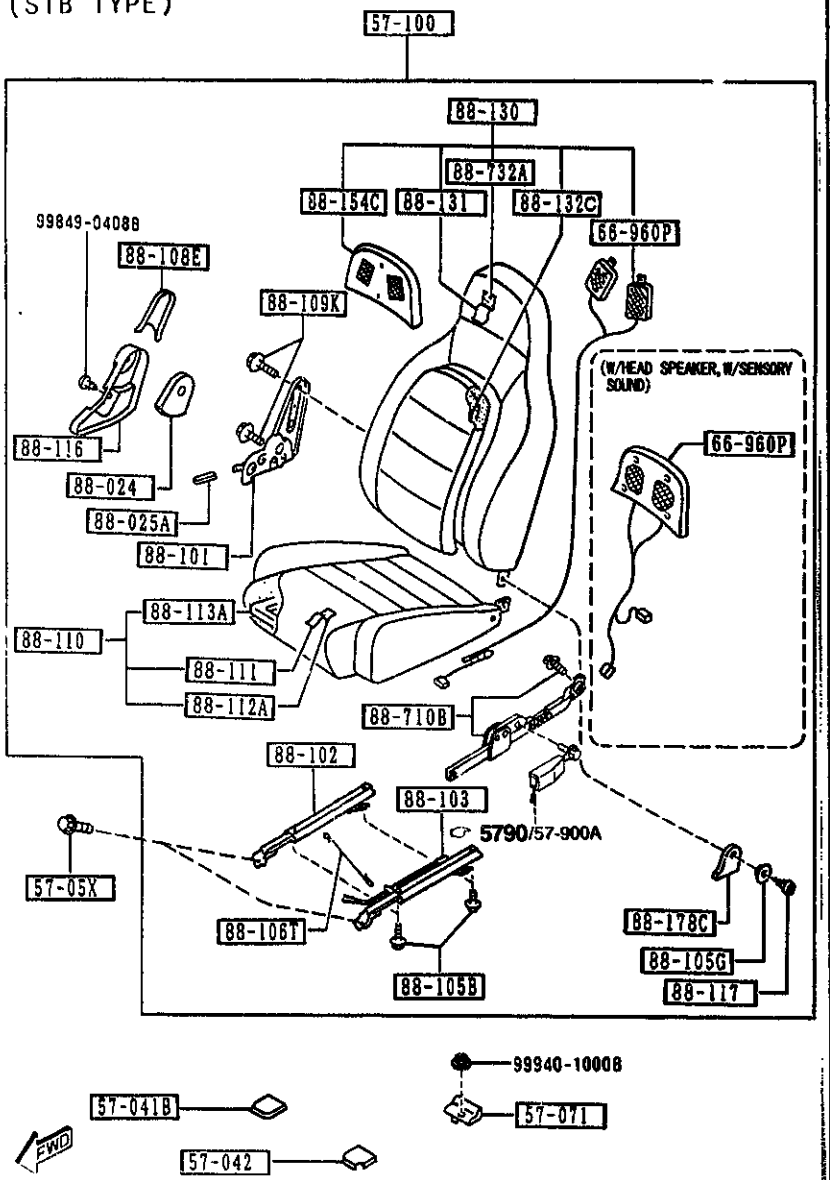

PART NO.	QTY	MODEL/RESTRICTION	MODEL/RESTRICTION	MODEL/RESTRICTION	FROM-TO
88-081B		KNOB(L),KNUCKLE			
NA01-88-084	1				
00	INT-	NA3 NA7 NA8 BLACK			
88	INT-	NA4 NA5 TAN			
88-101		KNUCKLE(R),RECLINING			
NA01-88-101A	1				
88-102		ADJUSTER,NO.1			
NA01-88-102A	1				
88-103		ADJUSTER,NO.2			
NA75-88-103	1				
88-104A		RESTRAINT,HEAD			
NB11-88-140	2	M-25-ED, (STC TYPE,W/O HEAD SPEAKER) ('95 MODEL)			
88	INT-	NA5 TAN			
88-105B		BOLT,LINK			
H260-88-105	8				
88-105G		BUSH,HINGE			
H260-88-108	2				
02	INT-	NA3 NA4 NA5 NA6 NA7 NA8 BLACK			
88-106T		WIRE,CONNECT			
NA01-88-106	1				
88-108E		COVER(R),SEAT BACK			
NA01-88-036	1				
00	INT-	NA3 NA7 NA8 BLACK			
88	INT-	NA4 NA5 TAN			
88-109K		SCREW,KNUCKLE			
H260-88-109	8				
88-110		CUSHION(R),FRT SEAT			

(STA TYPE)
(S1B TYPE)

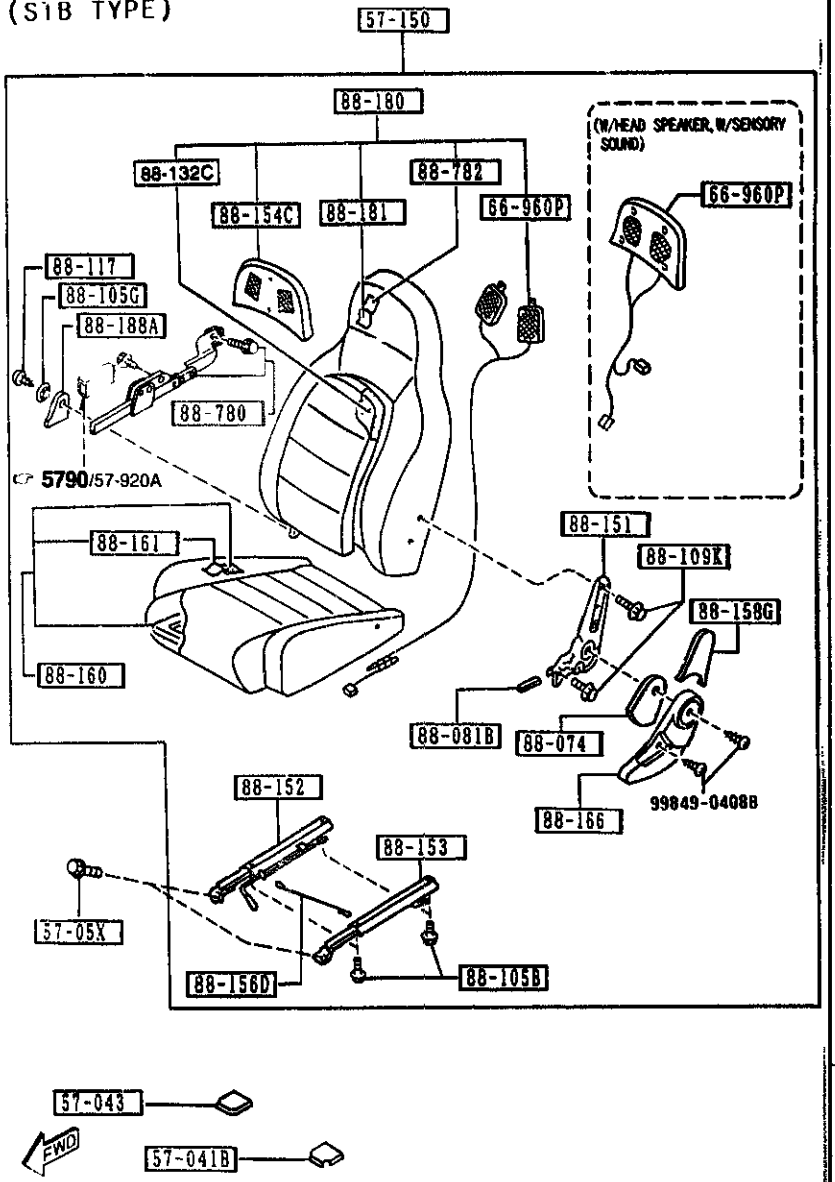

AUNA05

PART NO	QTY	MODEL/RESTRICTION	MODEL/RESTRICTION	MODEL/RESTRICTION	FROM-TO
CONT'D					
M041-88-110	1	BASE, P.E.GR, PKG-A, PKG-B, R-PKG, (STA TYPE) ('96 MODEL)			
00	INT-	NA3 BLACK			
M043-88-110	1	L-PKG, PKG-C, M.EDI, (STB TYPE) (STC TYPE) ('96 MODEL)			
88	INT-	NA4 NA5 TAN			
MA75-88-110	1	BASE, P.E.GR, PKG-A, PKG-B, R-PKG, (STA TYPE) ('95 MODEL)			-4B01
00	INT-	NA3 BLACK			
MA81-88-110	1	L-PKG, PKG-C, (STB TYPE,W/HEAD SPEAKER) ('95 MODEL)			-4B01
88	INT-	NA4 NA5 TAN			
MB11-88-110	1	M-25-ED, (STC TYPE,W/O HEAD SPEAKER) ('95 MODEL)			-4B01
88	INT-	NA5 TAN			
MA75-88-110A	1	BASE, P.E.GR, PKG-A, PKG-B, R-PKG, (STA TYPE) ('95 MODEL)			4B01-
00	INT-	NA3 BLACK			
MB11-88-110B	1	M-25-ED, (STC TYPE,W/O HEAD SPEAKER) ('95 MODEL)			4B01-
88	INT-	NA5 TAN			
MA81-88-110A	1	L-PKG, PKG-C, (STB TYPE,W/HEAD SPEAKER) ('95 MODEL)			4B01-5508
88	INT-	NA4 NA5 TAN			
MA81-88-110B	1	L-PKG, PKG-C, (STB TYPE,W/HEAD SPEAKER) ('95 MODEL)			5508-
88	INT-	NA4 NA5 TAN			
88-111		TRIM(R),SEAT CUSHION			
M041-88-111	1	BASE, P.E.GR, PKG-A, PKG-B, R-PKG,			

4B01 NA35* -606043
5508 NA35* -620210

CAT. AUNA05-04 1997-07

(STC TYPE)

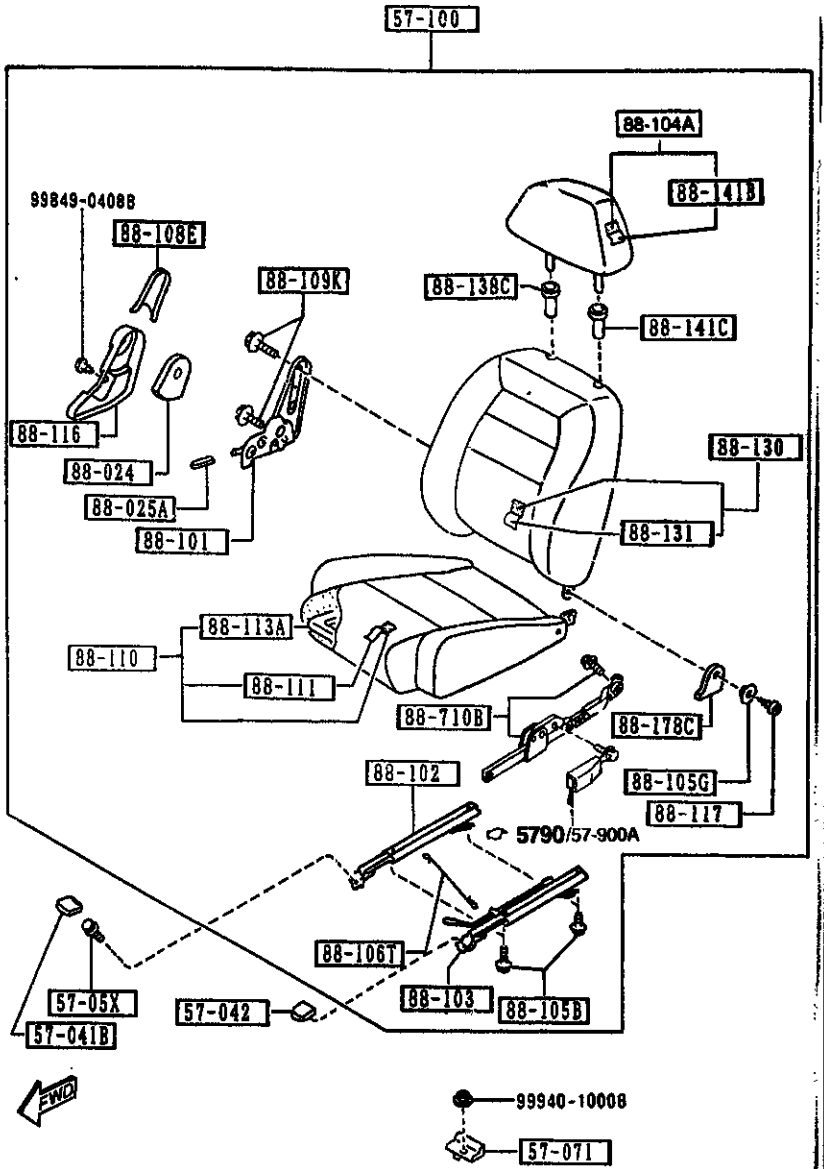

AUNA05

5700 -11 SEATS

PART NO.	QTY	MODEL/RESTRICTION	MODEL/RESTRICTION	MODEL/RESTRICTION	FROM-TO
CONT'D		(STA TYPE) ('96 MODEL)			
88	INT-	NA3 BLACK			
N043-88-111	1	L-PKG, PKG-C, M.EDI, (STB TYPE) (STC TYPE) ('96 MODEL)			
88	INT-	NA4 NA5 TAN			
NA75-88-111	1	BASE, P.E.GR, PKG-A, PKG-B, R-PKG, (STA TYPE) ('95 MODEL)			-4B01
88	INT-	NA3 BLACK			
NA81-88-111	1	L-PKG, PKG-C, (STB TYPE,W/HEAD SPEAKER) ('95 MODEL)			-4B01
88	INT-	NA4 NA5 TAN			
NB11-88-111	1	M-25-ED, (STC TYPE,W/O HEAD SPEAKER) ('95 MODEL)			-4B01
88	INT-	NA5 TAN			
NA75-88-111A	1	BASE, P.E.GR, PKG-A, PKG-B, R-PKG, (STA TYPE) ('95 MODEL)			4B01-
88	INT-	NA3 BLACK			
NB11-88-111B	1	M-25-ED, (STC TYPE,W/O HEAD SPEAKER) ('95 MODEL)			4B01-
88	INT-	NA5 TAN			
NA81-88-111A	1	L-PKG, PKG-C, (STB TYPE,W/HEAD SPEAKER) ('95 MODEL)			4B01-5508
88	INT-	NA4 NA5 TAN			
NA81-88-111B	1	L-PKG, PKG-C, (STB TYPE,W/HEAD SPEAKER) ('95 MODEL)			5508-
88	INT-	NA4 NA5 TAN			
88-112A		PAD(R),CUSHION-FRT			
NA75-88-112	1	BASE, P.E.GR, PKG-A, PKG-B, R-PKG, (STA TYPE) ('95 MODEL)			

4B01 NA35# -606043
5508 NA35# -620218

CAT. AUNA05-04 1997-07

(STC TYPE)

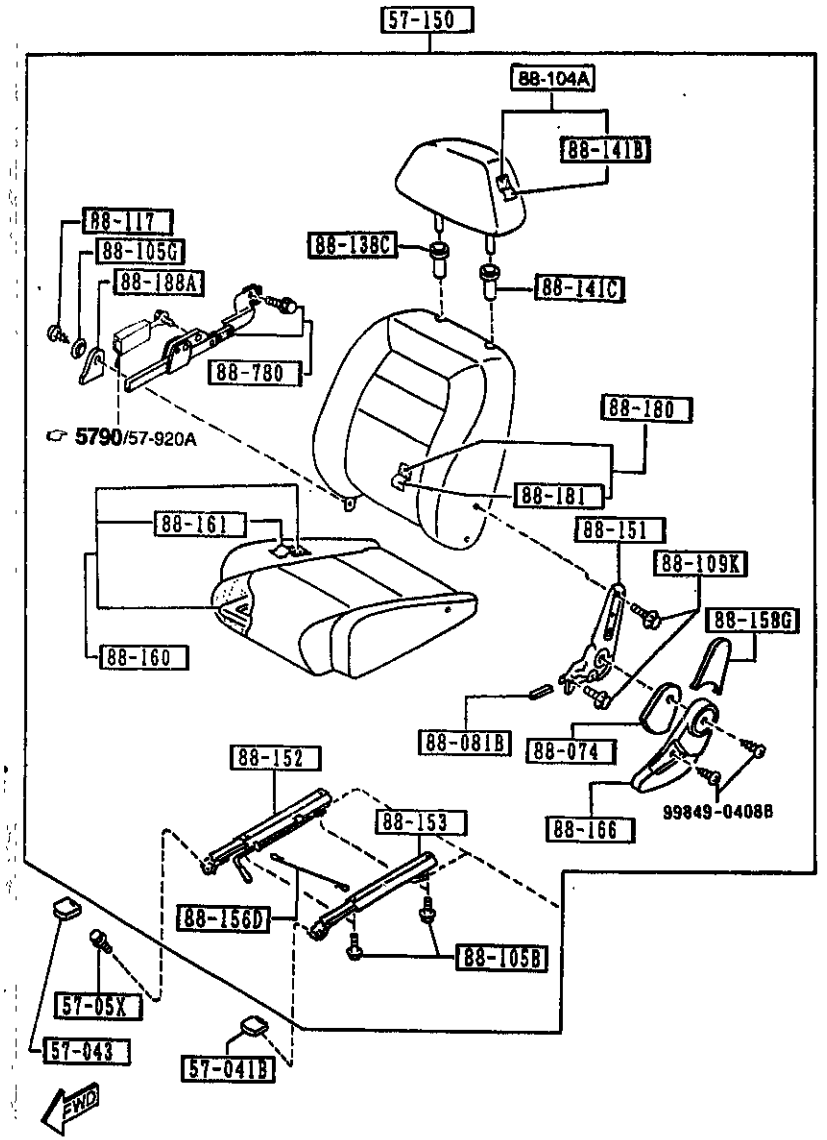

PART NO.	QTY	MODEL/RESTRICTION	MODEL/RESTRICTION	MODEL/RESTRICTION	FROM-TO
CONT'D					
NA81-88-112	1	L-PKG, PKG-C, (STB TYPE,W/HEAD SPEAKER) ('95 MODEL)			
88-113A		FRAME(R),CUSHION-FRT			
NA75-88-113	1				
88-116		COVER(R),KNUCKLE			
NA01-88-031	1				
00	INT-	NA5 NA7 NA8 BLACK			
88	INT-	NA4 NA5 TAN			
88-117		SCREW,KNUCKLE			
H260-88-107	2				
88-130		BACK(R),FRONT SEAT			
NA75-88-130	1	BASE, R-PKG, (STA TYPE,W/O HEAD SPEAKER) ('95 MODEL)			
00	INT-	NA3 BLACK			
NA79-88-130	1	P.E.GR, PKG-A, PKG-B (STA TYPE,W/HEAD SPEAKER, W/O SENSORY SOUND) ('95 MODEL)			
00	INT-	NA3 BLACK			
NA80-88-130	1	OPT, (STA TYPE,W/HEAD SPEAKER, W/SENSORY SOUND) ('95 MODEL)			
00	INT-	NA3 BLACK			
NA81-88-130	1	L-PKG, PKG-C, (STB TYPE,W/HEAD SPEAKER, W/O SENSORY SOUND) ('95 MODEL)			
88	INT-	NA4 NA5 TAN			
NA82-88-130	1	L-PKG-OPT, PKG-C-OPT (STB TYPE,W/HEAD SPEAKER, W/SENSORY SOUND) ('95 MODEL)			
88	INT-	NA4 NA5 TAN			

(STA TYPE)
(STB TYPE)

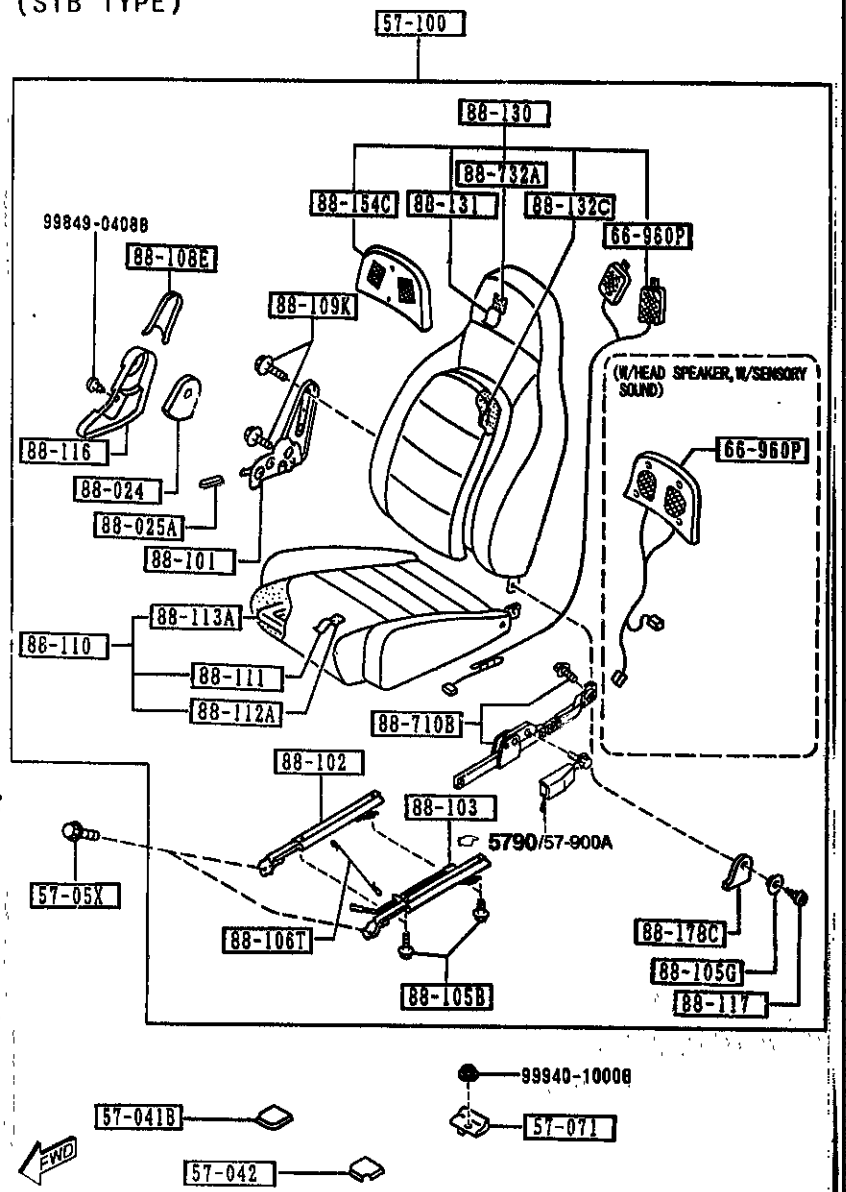

AUNA05

5700 -13 SEATS

PART NO.	QTY	MODEL/RESTRICTION	MODEL/RESTRICTION	MODEL/RESTRICTION	FROM-TO
CONT'D					
NBV1-88-130	1	P.E.GR, (STA TYPE,W/HEAD SPEAKER,W/O SENSORY SOUND) (ML-'96 MODEL)			
80	INT-	NA3 BLACK			
NBY2-88-130	1	P.E.GR-OPT, (STA TYPE,W/HEAD SPEAKER, W/SENSORY SOUND) (ML-'96 MODEL)			
80	INT-	NA3 BLACK			
NBY3-88-130	1	L-PKG, (STB TYPE,W/HEAD SPEAKER,W/O SENSORY SOUND) (ML-'96 MODEL)			
88	INT-	NA5 TAN			
NBY4-88-130	1	L-PKG-OPT, (STB TYPE,W/HEAD SPEAKER, W/SENSORY SOUND) (ML-'96 MODEL)			
88	INT-	NA5 TAN			
NB11-88-130	1	M-25-EB, (STC TYPE,W/O HEAD SPEAKER) ('95 MODEL)			
88	INT-	NA5 TAN			
NB40-88-130	1	(STA TYPE,W/O HEAD SPEAKER,W/O SENSORY SOUND) (GUAM-'96 MODEL) (SAIPAN-'96 MODEL)			
00	INT-	NA3 BLACK			
NB41-88-130	1	PKG-A, PKG-B, (STA TYPE,W/HEAD SPEAKER,W/O SENSORY SOUND) (GUAM-'96 MODEL) (SAIPAN-'96 MODEL)			
00	INT-	NA3 BLACK			
NB42-88-130	1	PKG-A-OPT, PKG-B-OPT, (STA TYPE,W/HEAD SPEAKER, W/SENSORY SOUND) (GUAM-'96 MODEL) (SAIPAN-'96 MODEL)			
00	INT-	NA3 BLACK			
NB43-88-130	1	PKG-C, (STB TYPE,W/HEAD SPE			

CAT. AUNA05-04

1997-07

(STA TYPE)
(STB TYPE)

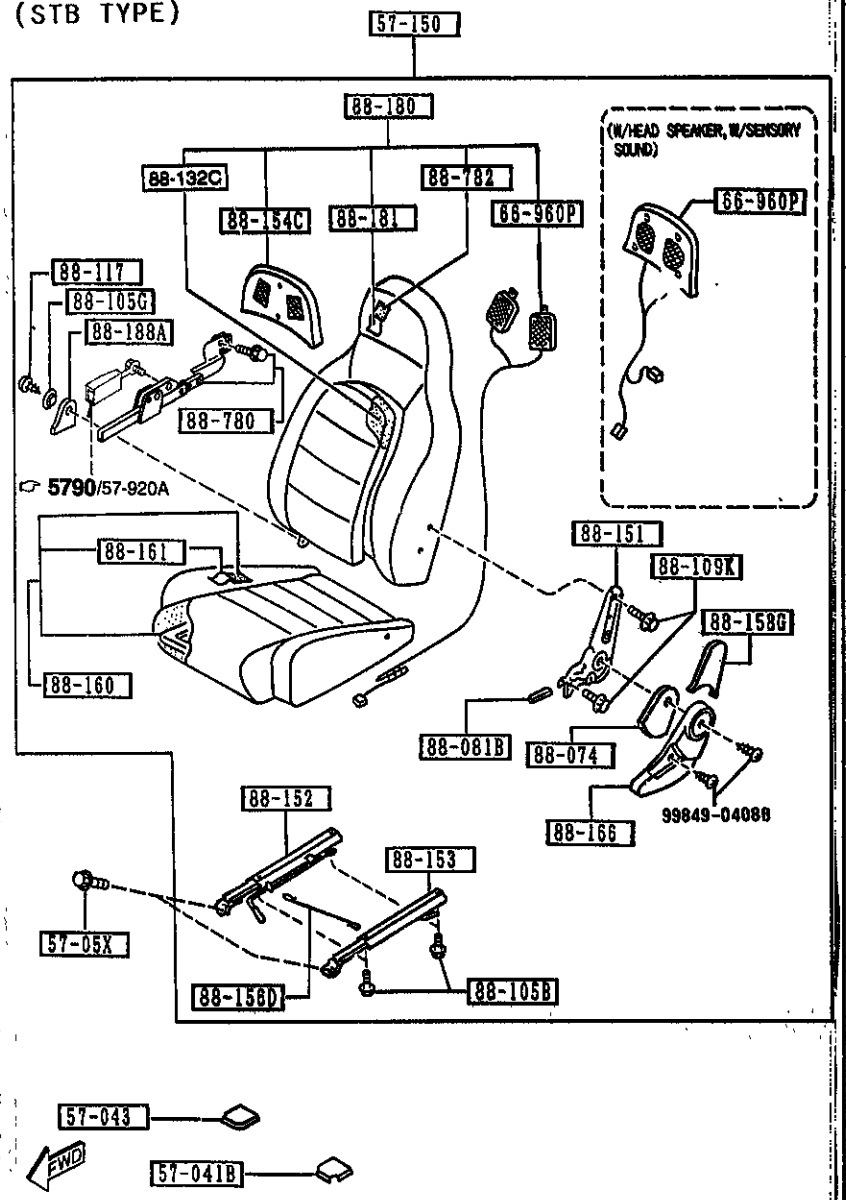

PART NO.	QTY	MODEL/RESTRICTION	MODEL/RESTRICTION	MODEL/RESTRICTION	FROM-TO
CONT'D		AKER,W/O SENSORY SOUND) (GUAM-'96 MODEL) (SAIPAN-'96 MODEL)			
88	INT-	NA4 NA5 TAN			
NB44-88-130	1	PKG-C-OPT, (STB TYPE,W/HEAD SPEAKER, W/SENSORY SOUND) (GUAM-'96 MODEL) (SAIPAN-'96 MODEL)			
88	INT-	NA4 NA5 TAN			
NB47-88-130	1	M.EDI, (STC TYPE) ('96 MODEL)			5B15-
88	INT-	NA4 NA5 TAN			
| 88-131 |		TRIM(R),SEAT BACK			
NA75-88-131	1	BASE, R-PKG, P.E.GR, PKG-A, PKG-B, (STA TYPE,W/O SENSORY SOUND) ('95 MODEL)			
08	INT-	NA3 BLACK			
NA80-88-131	1	OPT, (STA TYPE,W/HEAD SPEAKER, W/SENSORY SOUND) ('95 MODEL)			
80	INT-	NA3 BLACK			
NA81-88-131	1	L-PKG, PKG-C, (STB TYPE,W/HEAD SPEAKER, W/O SENSORY SOUND) ('95 MODEL)			
88	INT-	NA4 NA5 TAN			
NA82-88-131	1	L-PKG-OPT, PKG-C-OPT, (STB TYPE,W/HEAD SPEAKER, W/SENSORY SOUND) ('95 MODEL)			
88	INT-	NA4 NA5 TAN			
NBY2-88-131	1	P.E.GR-OPT, (STA TYPE,W/HEAD SPEAKER, W/SENSORY SOUND) (ML-'96 MODEL)			
08	INT-	NA3 BLACK			
NBY4-88-131	1	L-PKG-OPT, (STB TYPE,W/HEAD SPE			

5B15 NA3[illegible] -705265

(STC TYPE)

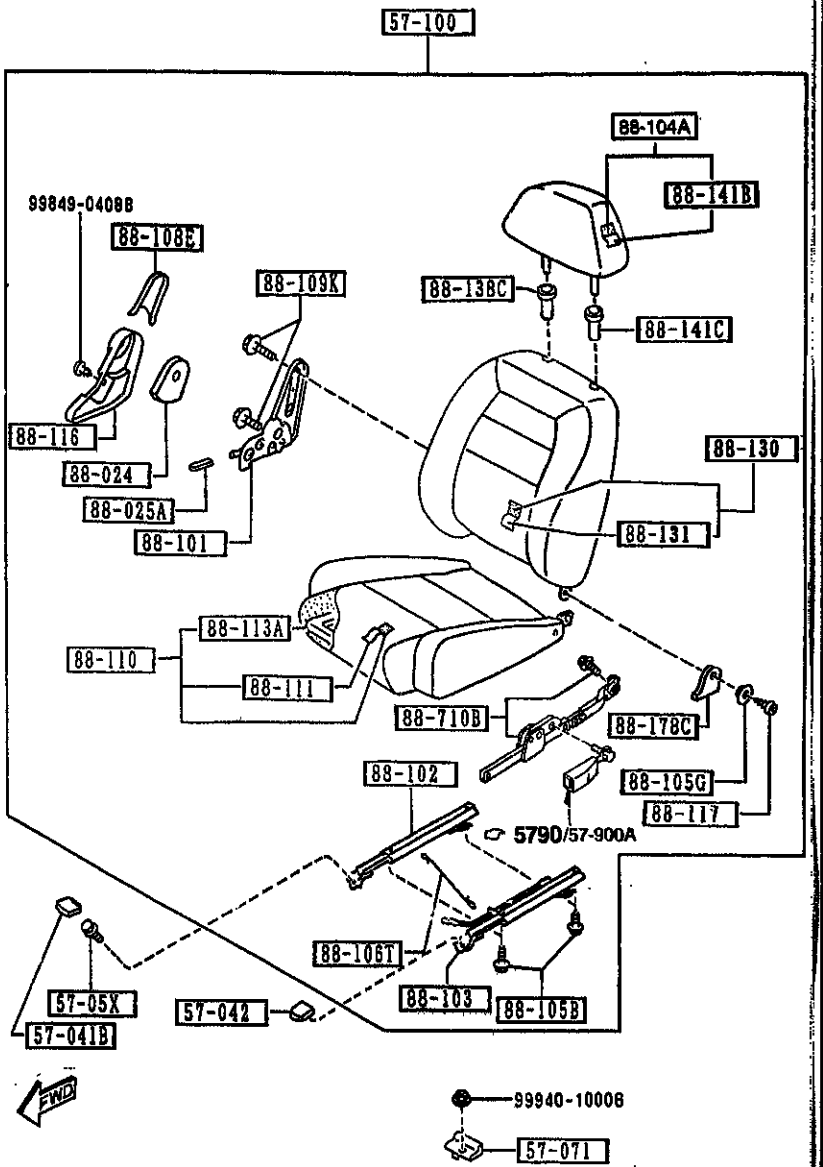

AUNA05

5780 -15 SEATS

PART NO.	QTY	MODEL/RESTRICTION	MODEL/RESTRICTION	MODEL/RESTRICTION	FROM-TO
CONT'D		AKER, W/SENSORY SOUND) (ML-'96 MODEL)			
88	INT-	NA3 TAN			
NB11-88-131	1	M-25-ED, (STC TYPE,W/O HEAD SPEAKER) ('95 MODEL)			
88	INT-	NA5 TAN			
NB40-88-131	1	PKG-A, PKG-B, P.E.OR (STA TYPE,W/O HEAD SPEAKER,W/O SENSORY SOUND) (STA TYPE,W/HEAD SPEAKER,W/O SENSORY SOUND) (GUAM-'96 MODEL) (SAIPAN-'96 MODEL)			
00	INT-	NA3 BLACK			
NB42-88-131	1	PKG-A-OPT, PKG-B-OPT (STA TYPE,W/HEAD SPEAKER, W/SENSORY SOUND) (GUAM-'96 MODEL) (SAIPAN-'96 MODEL)			
00	INT-	NA3 BLACK			
NB43-88-131	1	PKG-C, L-PKG, (STB TYPE,W/HEAD SPEAKER,W/O SENSORY SOUND) (GUAM-'96 MODEL) (SAIPAN-'96 MODEL)			
88	INT-	NA4 NA5 TAN			
NB44-88-131	1	PKG-C-OPT, (STB TYPE,W/HEAD SPEAKER, W/SENSORY SOUND) (GUAM-'96 MODEL) (SAIPAN-'96 MODEL)			
88	INT-	NA4 NA5 TAN			
NB47-88-131	1	M.EDI, (STC TYPE) ('96 MODEL)			5B15-
88	INT-	NA4 NA5 TAN			
+----------+ | 88-132C | +----------+		PAD,SEAT BACK-FRT			
NA01-88-132A	2	BASE, R-PKG, P.E.OR, PKG-A, PKG-B, (STA TYPE,W/O SENSORY SOUND) ('95 MODEL)			

5B15 NA3** -705265

CAT. AUNA05-04

1997-07

(STC TYPE)

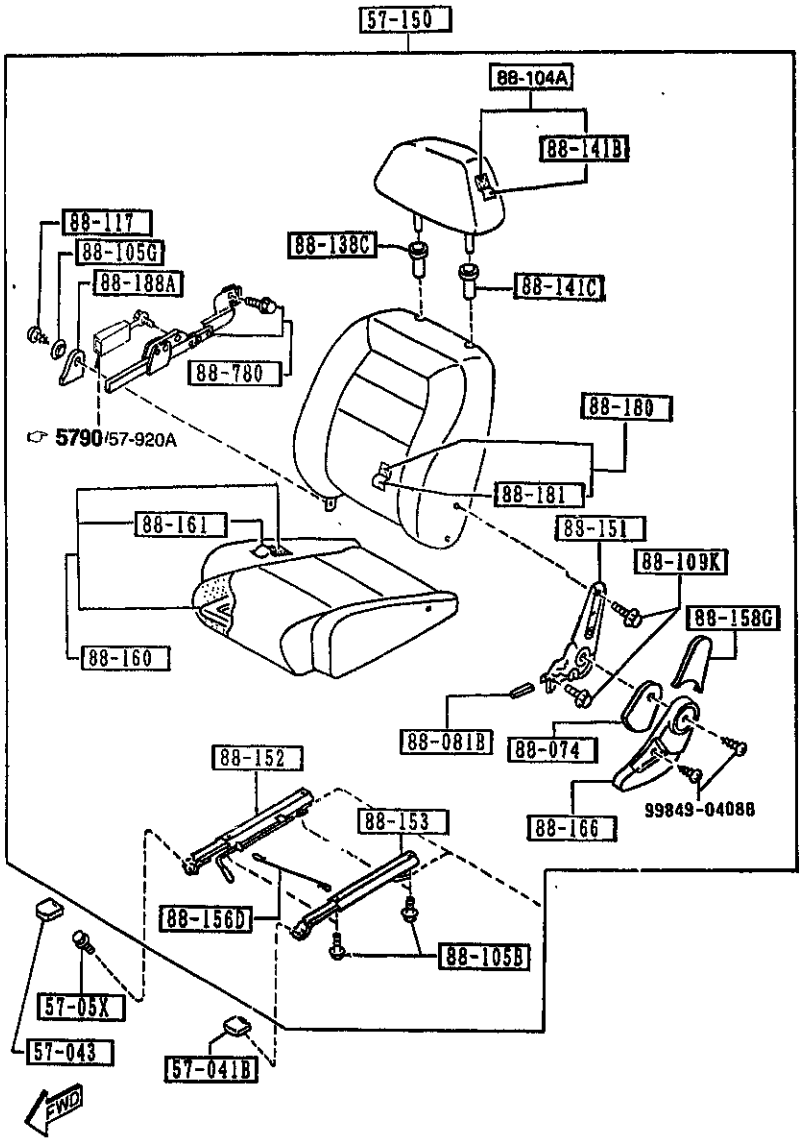

PART NO.	QTY	MODEL/RESTRICTION	MODEL/RESTRICTION	MODEL/RESTRICTION	FROM-TO
CONT'D					
NA01-88-132A	2	(W/O SENSORY SOUND) ('96 MODEL)			
88-138C		GUIDE,POLE-NO.2			
J001-88-148A	2	M-25-ED, (STC TYPE,W/O HEAD SPEAKER) ('95 MODEL)			
02	INT-	NA3 NA7 BLACK			
88	INT-	NA5 NA4 TAN			
88-141B		TRIM,HEAD REST-FRT			
NB11-88-141	2	M-25-ED, (STC TYPE,W/O HEAD SPEAKER) ('95 MODEL)			
88	INT-	NA5 TAN			
88-141C		GUIDE,POLE-NO.1			
J001-88-147A	2	M-25-ED, (STC TYPE,W/O HEAD SPEAKER) ('95 MODEL)			
02	INT-	NA3 NA7 BLACK			
88	INT-	NA5 NA4 TAN			
88-151		KNUCKLE(L),RECLINING			
NA01-88-151A	1				
88-152		ADJUSTER NO.3			
NA01-88-152A	1				
88-153		ADJUSTER NO.4			
NA01-88-153A	1				
88-154C		COVER,HEAD REST			
NA01-88-137	2	(W/HEAD SPEAKER) ('95 MODEL)			
NA01-88-137	2	(W/O SENSORY SOUND) ('96 MODEL)			
88-156D		WIRE,CONNECT			
NA01-88-156	1				
88-158G		COVER(L),SEAT BACK			

(STA TYPE)
(STB TYPE)

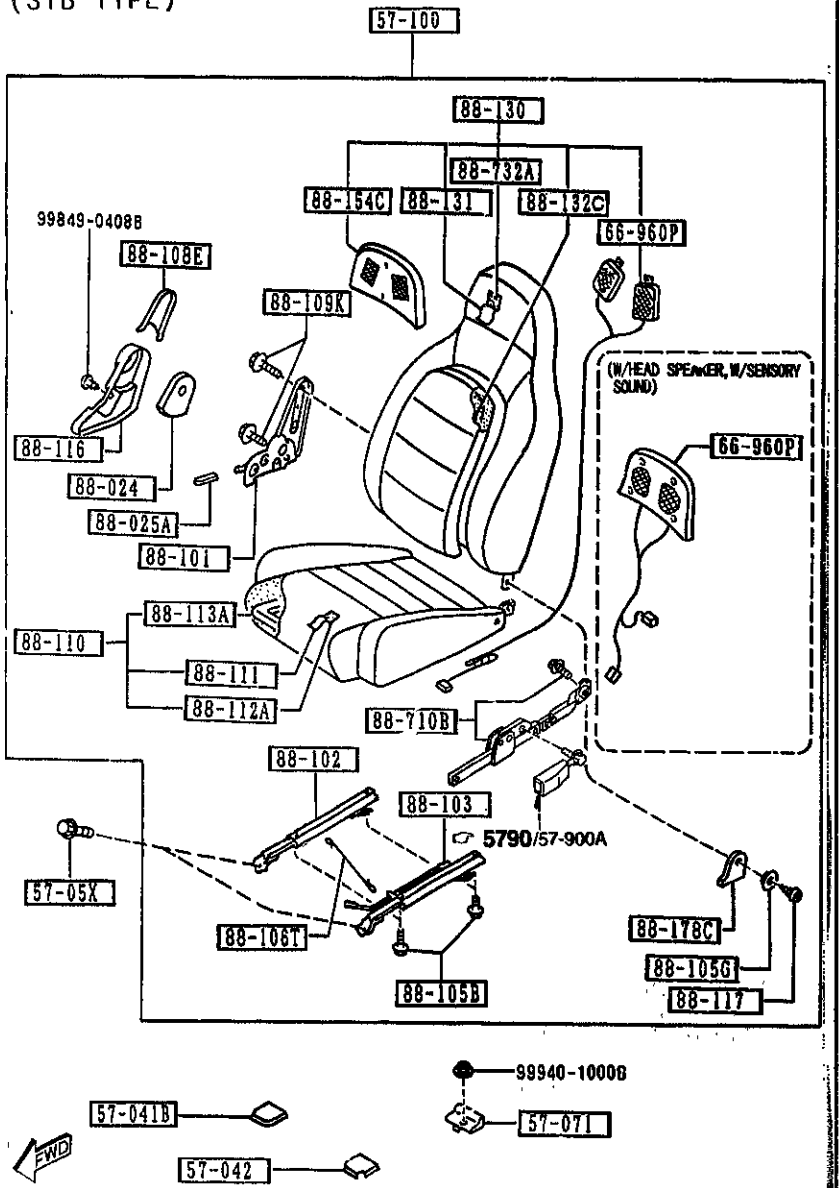

AUNA05

PART NO.	QTY	MODEL/RESTRICTION	MODEL/RESTRICTION	MODEL/RESTRICTION	FROM-TO
CONT'D					
NA01-88-086	1				
00	INT-	NA3 NA7 NA8 BLACK			
88	INT-	NA4 NA5 TAN			
88-160		CUSHION(L),FRT SEAT			
N041-88-160	1	BASE, P.E.GR, PKG-A, PKG-B, R-PKG, (STA TYPE) ('96 MODEL)			
00	INT-	NA3 BLACK			
N043-88-160	1	L-PKG, PKG-C, M.EDI, (STB TYPE) (STC TYPE) ('96 MODEL)			
88	INT-	NA4 NA5 TAN			
NA75-88-160	1	BASE, P.E.GR, PKG-A, PKG-B, R-PKG, (STA TYPE) ('95 MODEL)			-4B01
00	INT-	NA3 BLACK			
NA81-88-160	1	L-PKG, PKG-C, (STB TYPE,W/HEAD SPEAKER) ('95 MODEL)			-4B01
88	INT-	NA4 NA5 TAN			
NB11-88-160	1	M-25-ED, (STC TYPE,W/O HEAD SPEAKER) ('95 MODEL)			-4R01
88	INT-	NA5 TAN			
NA75-88-160A	1	BASE, P.E.GR, PKG-A, PKG-B, R-PKG, (STA TYPE) ('95 MODEL)			4B01-
80	INT-	NA3 BLACK			
NB11-88-160B	1	M-25-ED, (STC TYPE,W/O HEAD SPEAKER) ('95 MODEL)			4B01-
88	INT-	NA5 TAN			
NA81-88-160A	1	L-PKG, PKG-C, (STB TYPE,W/HEAD SPEAKER) ('95 MODEL)			4B01-5508
88	INT-	NA4 NA5 TAN			
NA81-88-160B	1	L-PKG, PKG-C, (STB TYPE,W/HEAD SPEAKER)			5508-

4B01 NA35* -606043
5508 NA35* -620210

CAT. AUNA05-04

1997-07

(STA TYPE)
(STB TYPE)

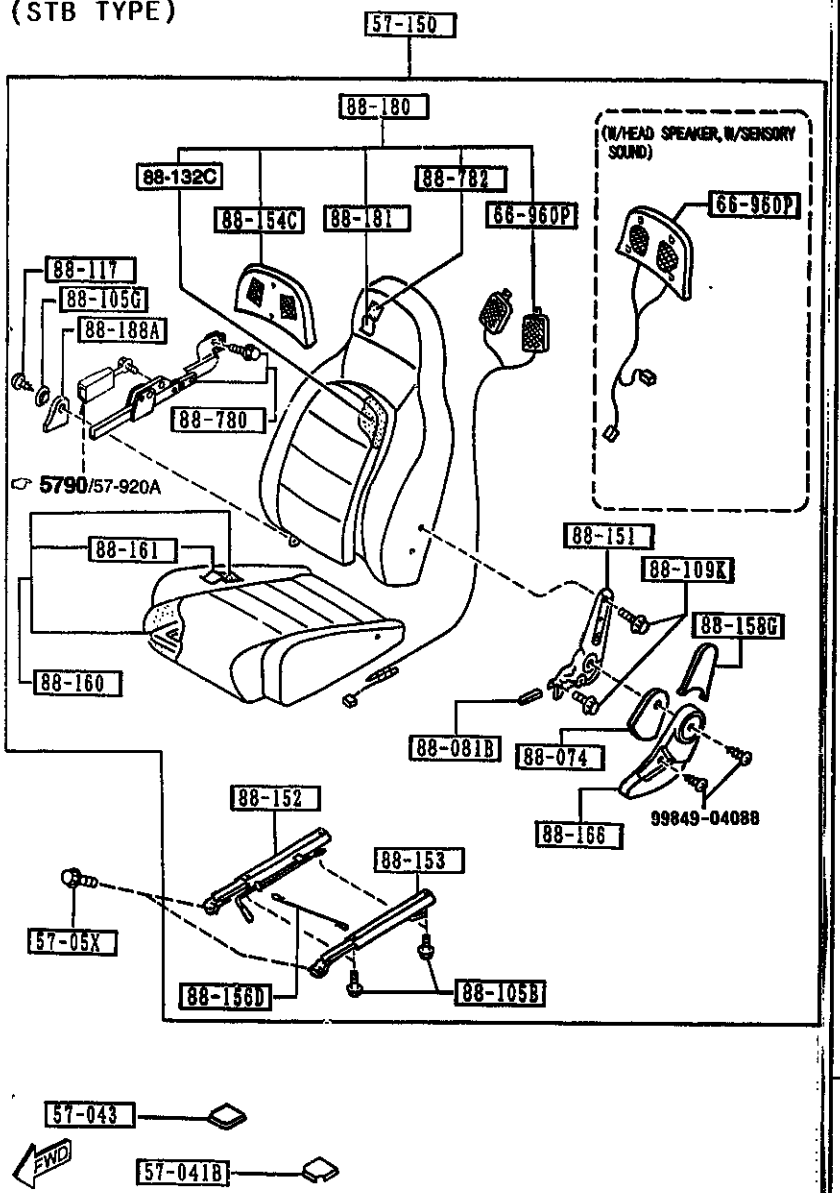

PART NO.	QTY	MODEL/RESTRICTION	MODEL/RESTRICTION	MODEL/RESTRICTION	FROM-TO
CONT'D		('95 MODEL)			
88 INT-		NA4 NA5 TAN			
+----------+					
| 88-161 |		TRIM(L),SEAT CUSHION			
+----------+					
NB41-88-161	1	BASE, P.E.GR, PKG-A, PKG-B, R-PKG, (STA TYPE) ('96 MODEL)			
00 INT-		NA3 BLACK			
NB43-88-161	1	L-PKG, PKG-C, M.EDI, (STB TYPE) (STC TYPE) ('96 MODEL)			
88 INT-		NA4 NA5 TAN			
NA75-88-161	1	BASE, P.E.GR, PKG-A, PKG-B, R-PKG, (STA TYPE) ('95 MODEL)			-4B01
00 INT-		NA3 BLACK			
NA81-88-161	1	L-PKG, PKG-C, (STB TYPE,W/HEAD SPEAKER) ('95 MODEL)			-4B01
88 INT-		NA4 NA5 TAN			
NB11-88-161	1	M-25-ED, (STC TYPE,W/O HEAD SPEAKER) ('95 MODEL)			-4B01
88 INT-		NA5 TAN			
NA75-88-161A	1	BASE, P.E.GR, PKG-A, PKG-B, R-PKG, (STA TYPE) ('95 MODEL)			4B01-
88 INT-		NA3 BLACK			
NB11-88-161B	1	M-25-ED, (STC TYPE,W/O HEAD SPEAKER) ('95 MODEL)			4B01-
88 INT-		NA5 TAN			
NA81-88-161A	1	L-PKG, PKG-C, (STB TYPE,W/HEAD SPEAKER) ('95 MODEL)			4B01-5508
88 INT-		NA4 NA5 TAN			
NA81-88-161B	1	L-PKG, PKG-C, (STB TYPE,W/HEAD SPEAKER) ('95 MODEL)			5508-

B01 NA35 -606043
5508 NA35* -620210

(STC TYPE)

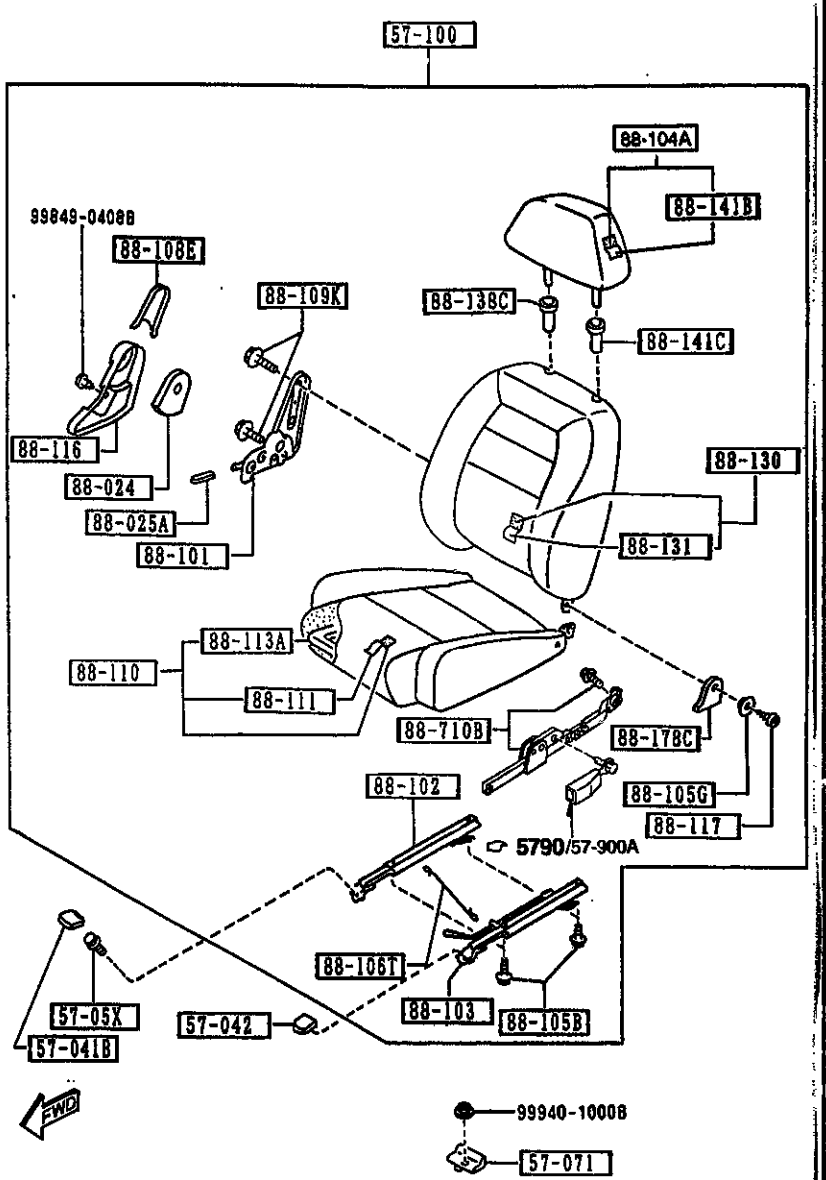

PART NO.	QTY	MODEL/RESTRICTION	MODEL/RESTRICTION	MODEL/RESTRICTION	FROM-TO
CONT'D					
88 INT-		NA4 NA5 TAN			
+----------+					
| 88-166 |		COVER(L),KNUCKLE			
+----------+					
NA01-88-881	1				
00 INT-		NA3 NA7 NA8 BLACK			
88 INT-		NA4 NA5 TAN			
+----------+					
| 88-178C |		COVER(R),HINGE			
+----------+					
NA01-88-035	1				
00 INT-		NA3 NA7 NA8 BLACK			
88 INT-		NA4 NA5 TAN			
+----------+					
| 88-180 |		BACK(L),FRONT SEAT			
+----------+					
NA75-88-180	1	BASE, R-PKG, (STA TYPE,W/O HEAD SPEAKER) ('95 MODEL)			
00 INT-		NA3 BLACK			
NA79-88-180	1	P.E.GR, PKG-A, PKG-B, (STA TYPE,W/HEAD SPEAKER, W/O SENSORY SOUND) ('95 MODEL)			
00 INT-		NA3 BLACK			
NA80-88-180	1	OPT, (STA TYPE,W/HEAD SPEAKER, W/SENSORY SOUND) ('95 MODEL)			
00 INT-		NA3 BLACK			
NA81-88-180	1	L-PKG, PKG-C, (STB TYPE,W/HEAD SPEAKER, W/O SENSORY SOUND) ('95 MODEL)			
88 INT-		NA4 NA5 TAN			
NA82-88-180	1	L-PKG-OPT, PKG-C-OPT, (STB TYPE,W/HEAD SPEAKER, W/SENSORY SOUND) ('95 MODEL)			
88 INT-		NA4 NA5 TAN			
NBY1-88-180	1	P.E.GR, (STA TYPE,W/HEAD SPEAKER,W/O SENSORY SOUND)			

(STC TYPE)

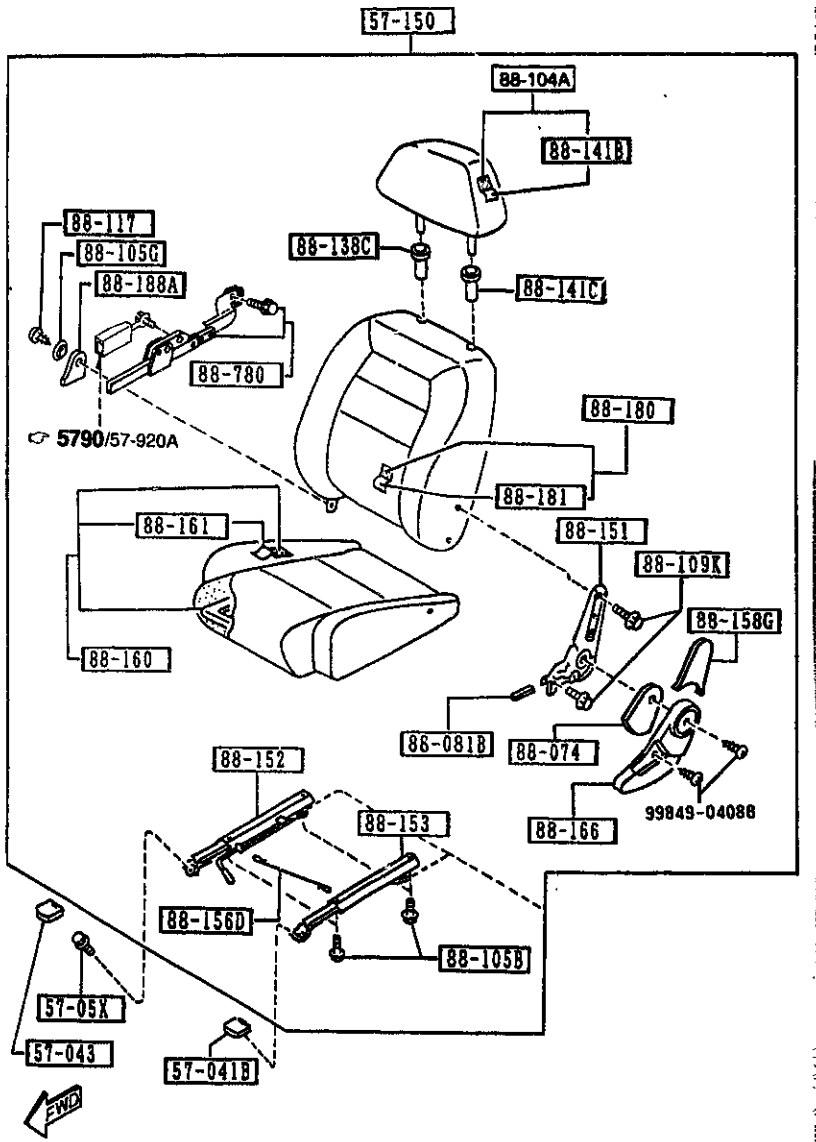

PART NO.	QTY	MODEL/RESTRICTION	MODEL/RESTRICTION	MODEL/RESTRICTION	FROM-TO
CONT'D					
		(ML-'96 MODEL)			
88	INT-	NA3 BLACK			
NBV2-88-180	1	P.E.GR-OPT, (STA TYPE,W/HEAD SPEAKER, W/SENSORY SOUND) (ML-'96 MODEL)			
00	INT-	NA3 BLACK			
NBV3-88-180	1	L-PKG, (STB TYPE,W/HEAD SPEAKER,W/O SENSORY SOUND) (ML-'96 MODEL)			
88	INT-	NA5 TAN			
NBV4-88-180	1	L-PKG-OPT, (STB TYPE,W/HEAD SPEAKER, W/SENSORY SOUND) (ML-'96 MODEL)			
88	INT-	NA5 TAN			
NB11-88-180	1	M-25-ED, (STC TYPE,W/O HEAD SPEAKER) ('95 MODEL)			
88	INT-	NA5 TAN			
NB40-88-180	1	(STA TYPE,W/O HEAD SPEAKER,W/O SENSORY SOUND) (GUAM-'96 MODEL) (SAIPAN-'96 MODEL)			
00	INT-	NA3 BLACK			
NB41-88-180	1	PKG-A, PKG-B, (STA TYPE,W/HEAD SPEAKER,W/O SENSORY SOUND) (GUAM-'96 MODEL) (SAIPAN-'96 MODEL)			
00	INT-	NA3 BLACK			
NB42-88-180	1	PKG-A-OPT, PKG-B-OPT (STA TYPE,W/HEAD SPEAKER, W/SENSORY SOUND) (GUAM-'96 MODEL) (SAIPAN-'96 MODEL)			
00	INT-	NA3 BLACK			
NB43-88-180	1	PKG-C, (STB TYPE,W/HEAD SPEAKER,W/O SENSORY SOUND) (GUAM-'96 MODEL) (SAIPAN-'96 MODEL)			

(STA TYPE)
(STB TYPE)

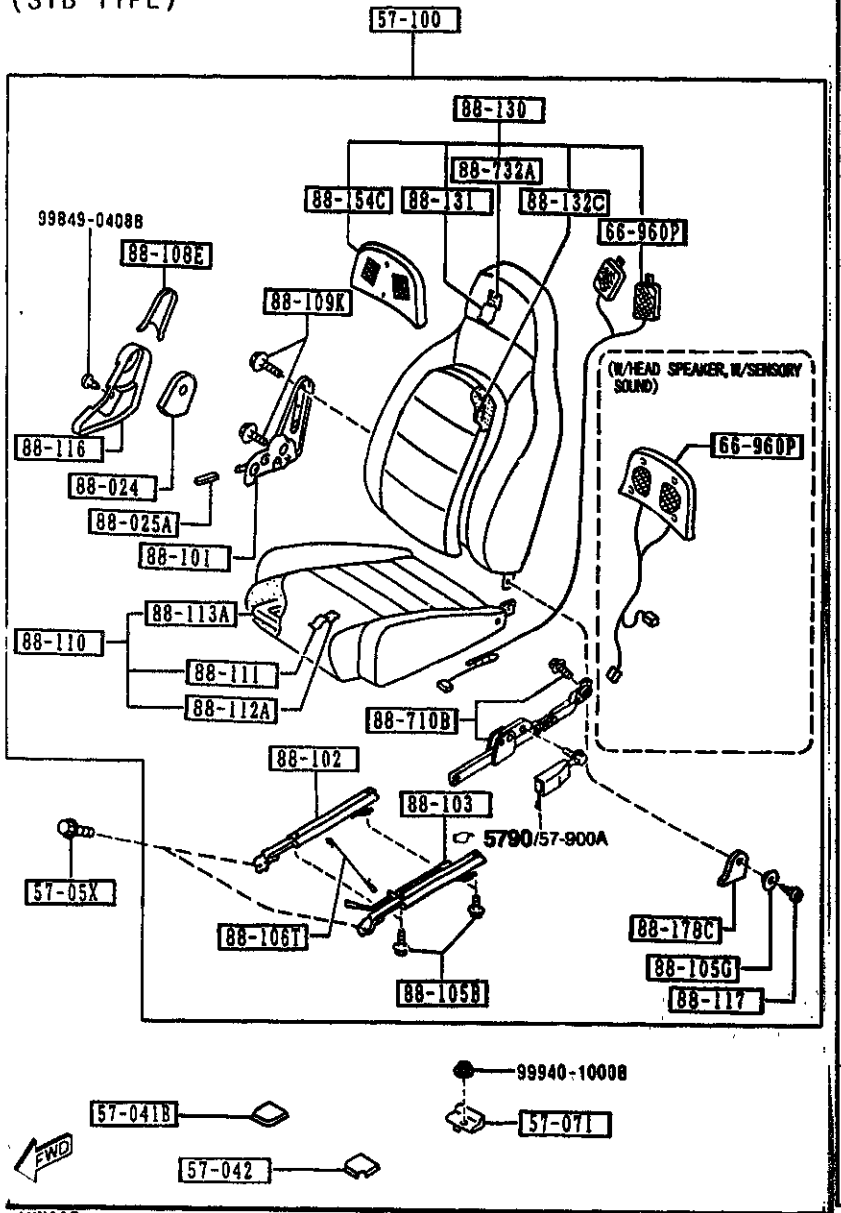

5700 -21 SEATS

PART NO.	QTY	MODEL/RESTRICTION	MODEL/RESTRICTION	MODEL/RESTRICTION	FROM-TO
CONT'D					
88	INT-	NA4 NA5 TAN			
MB44-88-180	1	PKG-C-OPT, (STB TYPE,W/HEAD SPEAKER, W/SENSORY SOUND) (GUAM-'96 MODEL) (SAIPAN-'96 MODEL)			
88	INT-	NA4 NA5 TAN			
MB47-88-180	1	M.EDI, (STC TYPE) ('96 MODEL)			5B15-
88	INT-	NA4 NA5 TAN			
88-181		TRIM(L),SEAT BACK			
MA75-88-181	1	BASE, R-PKG, P.E.GR, PKG-A, PKG-B, (STA TYPE,W/O SENSORY SOUND) ('95 MODEL)			
80	INT-	NA3 BLACK			
MA80-88-181	1	OPT, (STA TYPE,W/HEAD SPEAKER, W/SENSORY SOUND) ('95 MODEL)			
80	INT-	NA3 BLACK			
MA81-88-181	1	L-PKG, PKG-C, (STB TYPE,W/HEAD SPEAKER, W/O SENSORY SOUND) ('95 MODEL)			
88	INT-	NA4 NA5 TAN			
MA82-88-181	1	L-PKG-OPT, PKG-C-OPT, (STB TYPE,W/HEAD SPEAKER, W/SENSORY SOUND) ('95 MODEL)			
88	INT-	NA4 NA5 TAN			
MBY2-88-181	1	P.E.GR-OPT, (STA TYPE,W/HEAD SPEAKER, W/SENSORY SOUND) (ML-'96 MODEL)			
80	INT-	NA3 BLACK			
MBY4-88-181	1	L-PKG-OPT, (STB TYPE,W/HEAD SPEAKER, W/SENSORY SOUND) (ML-'96 MODEL)			

5B15 NA3** -705265

(STA TYPE)
(STB TYPE)

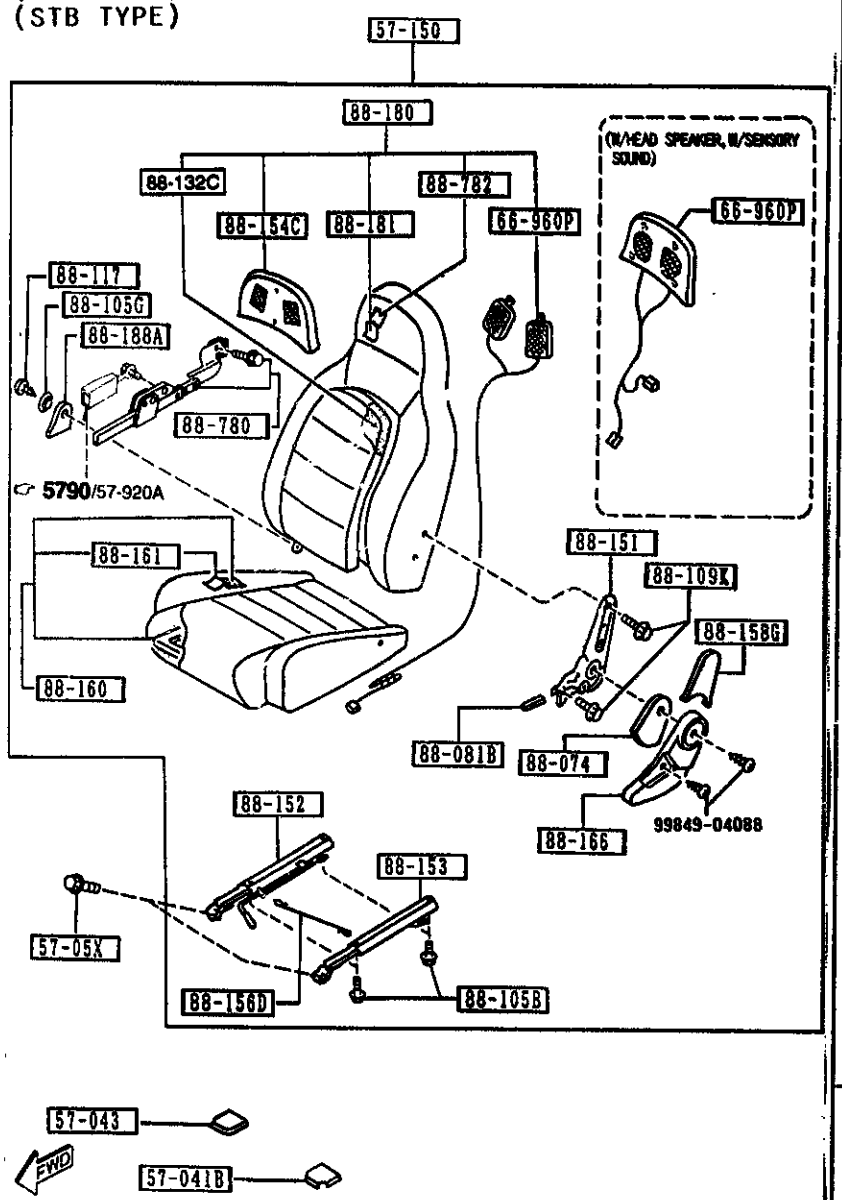

PART NO.	QTY	MODEL/RESTRICTION	MODEL/RESTRICTION	MODEL/RESTRICTION	FROM-TO
CONT'D					
88	INT-	NA5 TAN			
NB11-88-181	1	M-25-ED, (STC TYPE,W/O HEAD SPEAKER) ('95 MODEL)			
88	INT-	NA5 TAN			
NB40-88-181	1	PKG-A, PKG-B, P.E.GR (STA TYPE,W/O HEAD SPEAKER,W/O SENSORY SOUND) (STA TYPE,W/HEAD SPEAKER,W/O SENSORY SOUND) (GUAM-'96 MODEL) (SAIPAN-'96 MODEL)			
88	INT-	NA3 BLACK			
NB42-88-181	1	PKG-A-OPT, PKG-B-OPT (STA TYPE,W/HEAD SPEAKER, W/SENSORY SOUND) (GUAM-'96 MODEL) (SAIPAN-'96 MODEL)			
88	INT-	NA3 BLACK			
NB43-88-181	1	PKG-C, L-PKG, (STB TYPE,W/HEAD SPEAKER,W/O SENSORY SOUND) (GUAM-'96 MODEL) (SAIPAN-'96 MODEL)			
88	INT-	NA4 NA5 TAN			
NB44-88-181	1	PKG-C-OPT, (STB TYPE,W/HEAD SPEAKER, W/SENSORY SOUND) (GUAM-'96 MODEL) (SAIPAN-'96 MODEL)			
88	INT-	NA4 NA5 TAN			
NB47-88-181	1	M.EDI, (STC TYPE) ('96 MODEL)			5B15-
88	INT-	NA4 NA5 TAN			
88-188A		COVER(L),HINGE			
NA01-88-085	1				
88	INT-	NA3 NA7 NA8 BLACK			
88	INT-	NA4 NA5 TAN			
88-710C		ANCHOR UNIT(R),BELT			

5B15 NA3## -705265

(STC TYPE)

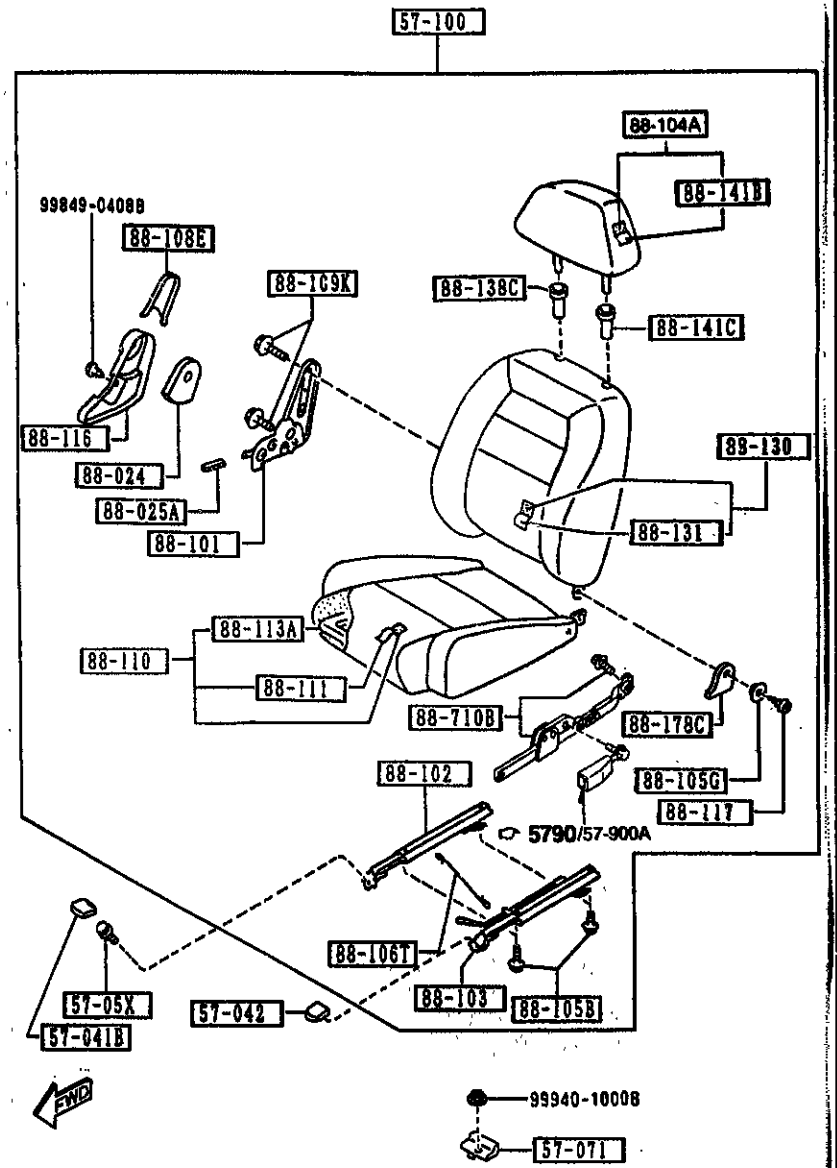

PART NO.	QTY	MODEL/RESTRICTION	MODEL/RESTRICTION	MODEL/RESTRICTION	FROM-TO
CONT'D					
NA75-88-710	1				
88-732A		PAD'B'(R),BACK-FRT			
NA01-88-732A	1	(W/HEAD SPEAKER) ('95 MODEL)			
NA01-88-732A	1	(W/O SENSORY SOUND) ('96 MODEL)			
88-780		ANCHOR UNIT(L),BELT			
NA75-88-760	1				
88-782		PAD'B'(L),BACK-FRT			
NA01-88-782A	1	(W/HEAD SPEAKER) ('95 MODEL)			
NA01-88-782A	1	(W/O SENSORY SOUND) ('96 MODEL)			

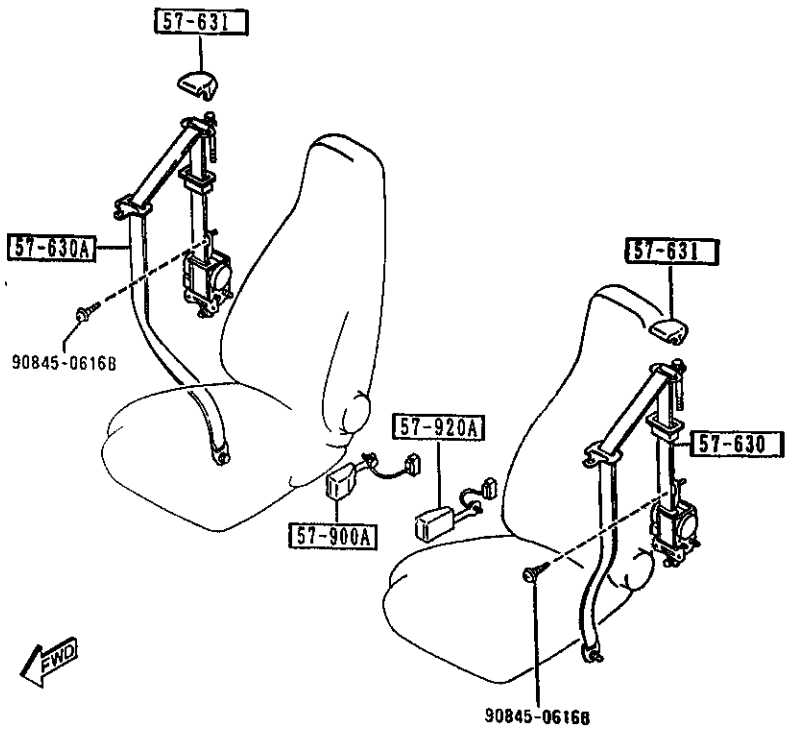

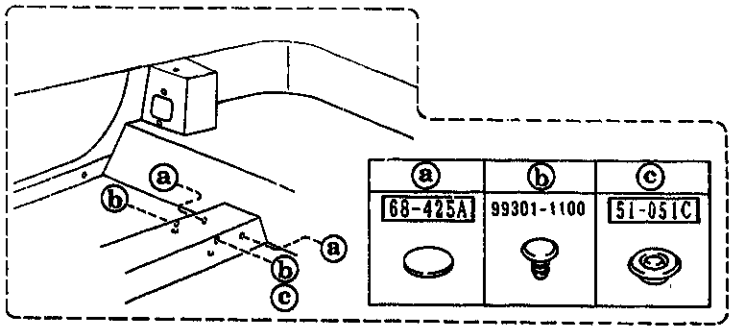

5790 -1 * SEAT BELTS

PART NO.	QTY	MODEL/RESTRICTION	MODEL/RESTRICTION	MODEL/RESTRICTION	FROM-TO
51-051C		PLUG,HOLE			
BR70-51-264	1	('96 MODEL)			
57-630		BELT'B',FRT SEAT			
NA76-57-630D	1	('95 MODEL)			
00	INT-	NA3 BLACK			
88	INT-	NA4 NA5 TAN/BLACK			
NB38-57-630	1	('96 MODEL)			-6601
00	INT-	NA3 BLACK			
88	INT-	NA4 NA5 TAN/BLACK			
*NB38-57-630A	1	('96 MODEL)			6601-
* 00	INT-	NA3 BLACK			
* 88	INT-	NA4 NA5 TAN/BLACK			
57-630A		BELT'B'(R),FRT SEAT			
NA75-57-630F	1				-6601
00	INT-	NA3 BLACK			
88	INT-	NA4 NA5 TAN			
*NA75-57-630G	1				6601-
* 00	INT-	NA3 BLACK			
* 88	INT-	NA4 NA5 TAN			
57-631		COVER,ANCHOR			
NB26-57-631	2				
00	INT-	NA3 NA4 NA5 NA6 NA7 NA8 BLACK			
57-900A		BELT'A'(R),FRT SEAT			
NA75-57-620	1				
00	INT-	NA3 NA4 NA5 NA7 NA8 BLACK			
57-920A		BELT'A'(L),FRT SEAT			
NA75-57-680A	1				
00	INT-	NA3 NA4 NA5 NA7 NA8 BLACK			
68-425A		COVER,HOLE			
LA01-57-425A	2				

6601 NA3** -719621

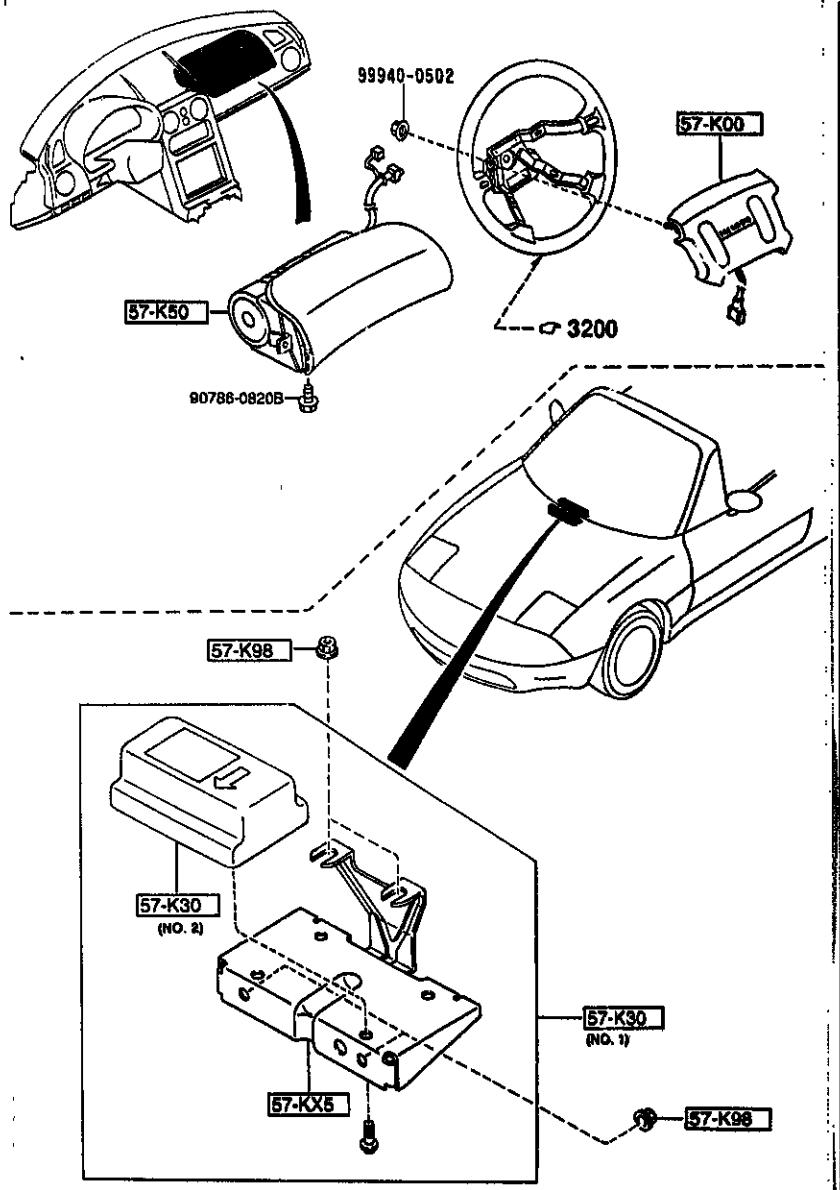

5795 -1 * AIR BAG

PART NO.	QTY	MODEL/RESTRICTION	MODEL/RESTRICTION	MODEL/RESTRICTION	FROM-TO
57-KX5		BRKT,AIR BAG MODULE			
N034-57-KX0A	1				
57-K00		MODULE,AIR BAG			
NB11-57-K00	1				
00 INT-		NA3 NA4 NA5 NA6 NA7 NA8 BLACK			
57-K30		UNIT,SAS			
N034-57-K3XA AN(N034-57-K3XB)	1	(ILLUST. NO.1)			-5320
N034-57-K30 AN(N034-57-K30A)	1	(ILLUST. NO.2)			-5320
N034-57-K3XB AN(N034-57-K3XC)	1	(ILLUST. NO.1)			5320-5C01
N034-57-K30A AN(N034-57-K30B)	1	(ILLUST. NO.2)			5320-5C01
N034-57-K3XC	1	(ILLUST. NO.1)			5C01-
N034-57-K30B	1	(ILLUST. NO.2)			5C01-
57-K50		MODULE,AIR BAG PASSENGER			
NB11-57-K7X	1				
00 INT-		NA3 NA4 NA5 NA6 NA7 NA8 BLACK			
57-K98		NUT			
FC66-57-K98	4				

5320 NA35* -618511
5C01 NA3** -706448

AUNA05

CAT. AUMA05-04 1997-07

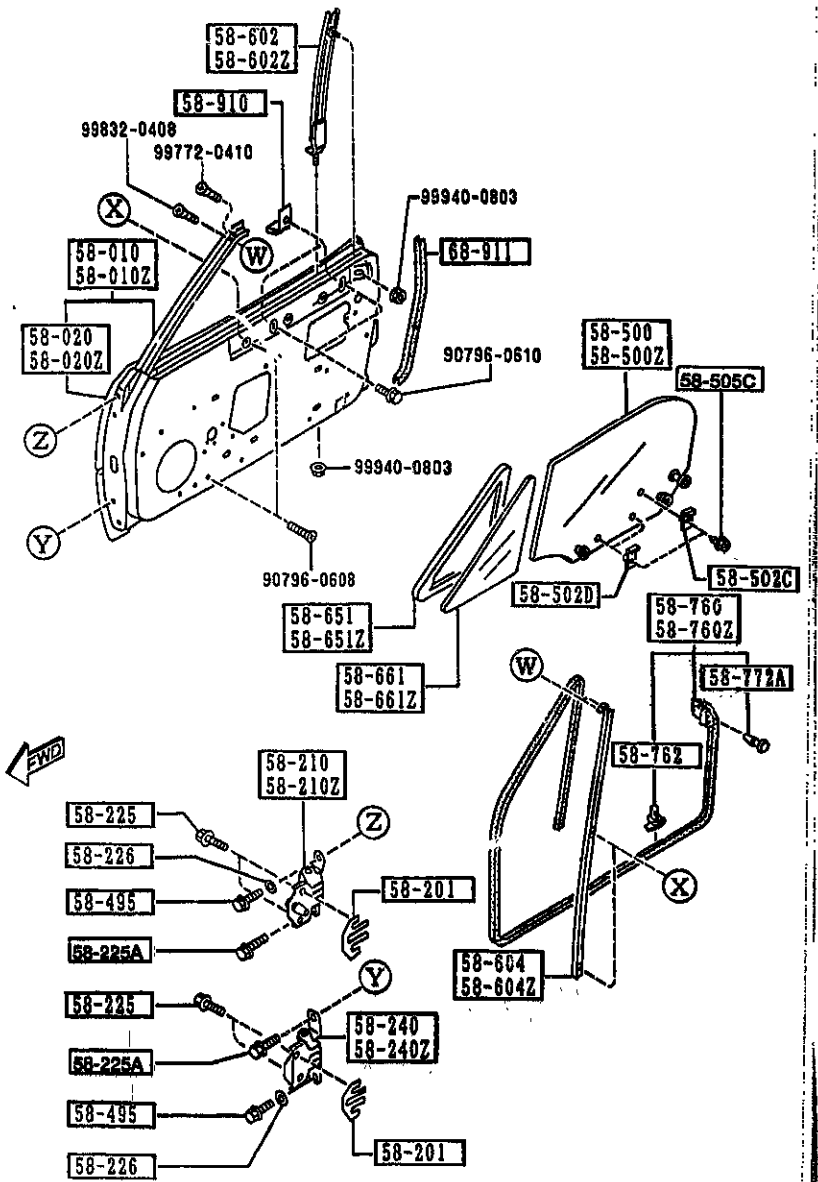

AUNA05

PART NO.	QTY	MODEL/RESTRICTION	MODEL/RESTRICTION	MODEL/RESTRICTION	FROM-TO
58-010		BODY(R),FRONT DOOR			
NAY3-58-02X	1				-6718
※NAY4-58-02X	1				6718-
58-010Z		BODY(L),FRONT DOOR			
NAY3-59-02X	1				-6718
※NAY4-59-02X	1				6718-
58-020		PANEL(R),OUT.-FRT DOOR			
NA52-58-030A	1				
58-020Z		PANEL(L),OUT.-FRT DOOR			
NA52-59-030A	1				
58-201		SHIM,HINGE-DOOR			
B892-58-201A	4				
58-210		HINGE(R),DOOR-UPPER			
FB01-58-210	1				
58-210Z		HINGE(L),DOOR-UPPER			
FB01-59-210	1				
58-225		BOLT,SETTING-HINGE LOWER			
B455-58-225	8				
58-225A		BOLT,SETTING			
※S085-58-225	4				
58-226		WASHER,SETTING			
GJ21-58-226	4				
58-240		HINGE(R),DOOR-LOWER			
B156-58-240	1				
58-240Z		HINGE(L),DOOR-LOWER			
B156-59-240	1				
58-495		BOLT,SET			
BA54-58-225	4				

CAT. AUNA05-04

1997-07

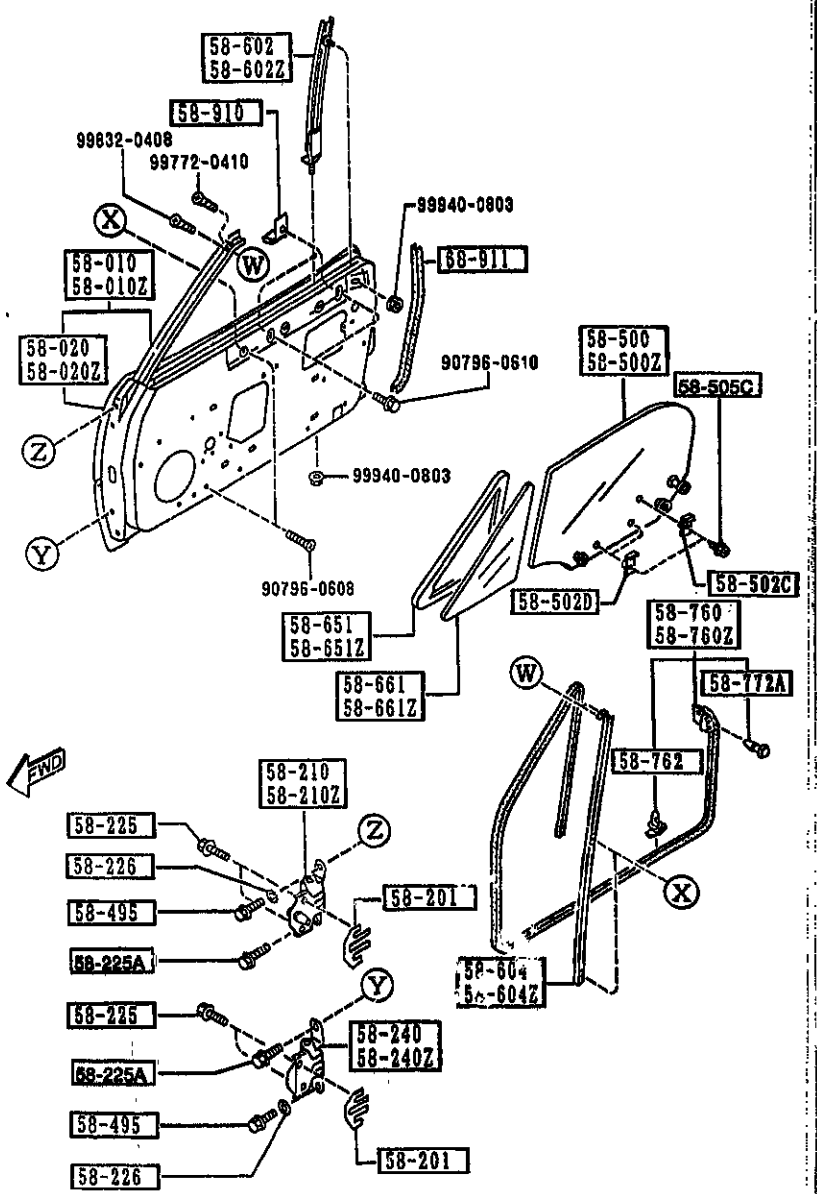

PART NO.	QTY	MODEL/RESTRICTION	MODEL/RESTRICTION	MODEL/RESTRICTION	E ON-TO
58-500		GLASS(R),DOOR-FRT			
NA01-58-510	1	('95 MODEL)			
NA01-58-510	1	('96 MODEL)			-6201
NE39-58-510	1	('96 MODEL)			6201-
58-500Z		GLASS(L),DOOR-FRT			
NA01-59-510	1	('95 MODEL)			
NA01-59-510	1	('96 MODEL)			-6201
NB39-59-510	1	('96 MODEL)			6201-
58-502C		GROMMET,SCREW			
B235-58-502	2				
58-502D		GROMMET,SCREW-DOOR GLASS			
UB39-58-502A	4				
58-505C		SCREW,WINDOW REGULATOR			
B092-58-505	6				
58-602		GUIDE'B'(R),GLASS			
NA01-58-603D	1				
58-602Z		GUIDE'B'(L),GLASS			
NA01-59-603D	1				
58-604		CHANNEL(R),DIVISION-DOOR			
NA01-58-604B	1				
58-604Z		CHANNEL(L),DIVISION-DOOR			
NA01-59-604B	1				
58-651		WEATHERSTRIP(R)			
NA01-58-651A	1				
58-6512		WEATHERSTRIP(L)			
NA01-59-651A	1				
58-661		GLASS(R),VENTILATOR			
NA01-58-661	1	('95 MODEL)			
NA01-58-661	1	('96 MODEL)			-6201

6201 NA3** -711421

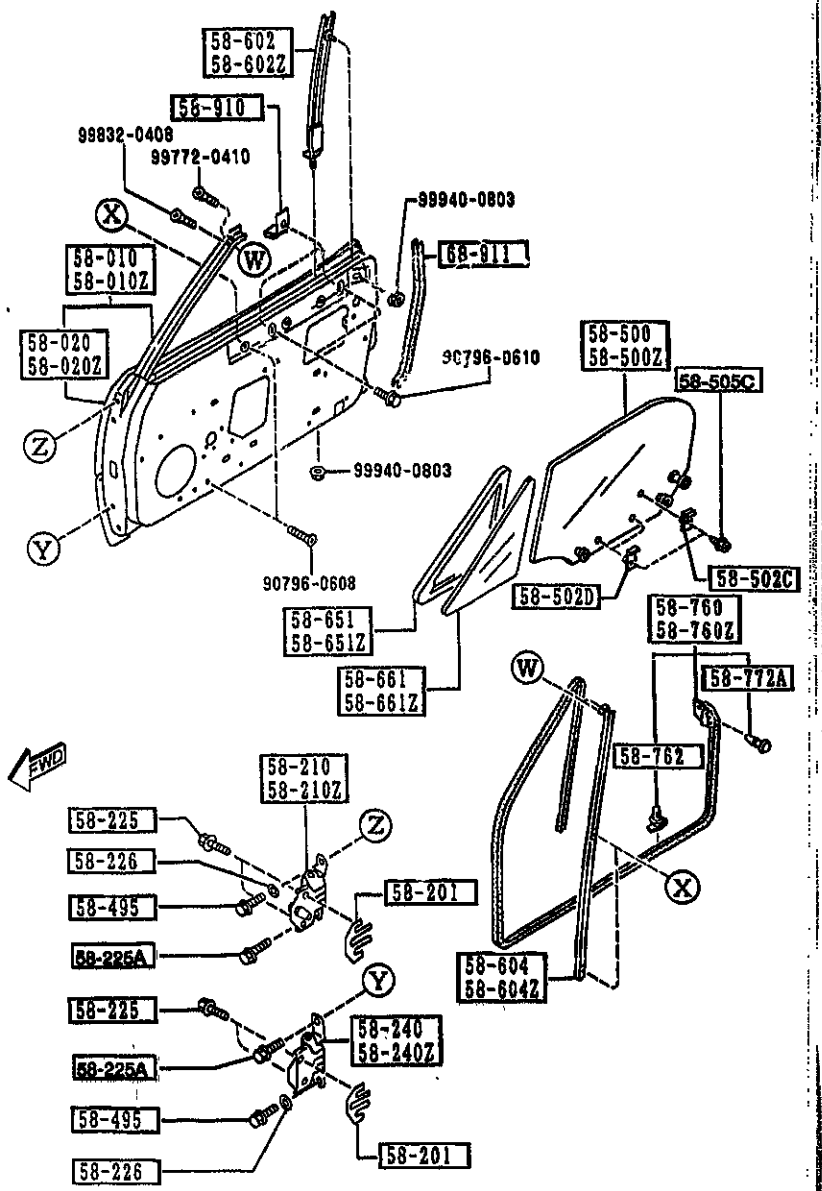

PART NO.	QTY	MODEL/RESTRICTION	MODEL/RESTRICTION	MODEL/RESTRICTION	FROM-TO
CONT'D					
NB39-58-661	1	('96 MODEL)			6201-
58-661Z		GLASS(L),VENTILATOR			
NA01-59-661	1	('95 MODEL)			
NA01-59-661	1	('96 MODEL)			-6201
NB39-59-661	1	('96 MODEL)			6201-
58-760		WEATHERSTRIP(R),DOOR			
NA01-58-760E	1				-6118
AN(NA01-58-760F)					
*NA01-58-760F	1				6118-6501
AN(NA01-58-760G)					
*NA01-58-760G	1				6501-
58-760Z		WEATHERSTRIP(L),DOOR			
NA01-59-760E	1				-6118
AN(NA01-59-760F)					
*NA01-59-760F	1				6118-6501
AN(NA01-59-760G)					
*NA01-59-760G	1				6501-
58-762		FASTENER			
G031-58-762	42				
58-772A		FASTENER			
1811-58-772	4				
58-910		STOPPER,GLASS			
H272-58-911	4				
68-911		WELT,SEAMING			
NA01-68-911	2				
80	INT-	NA3 NA4 NA5 NA6 NA7 NA8 BLACK			

6118 NA3** -709942
6201 NA3** -711421
6501 NA3** -718684

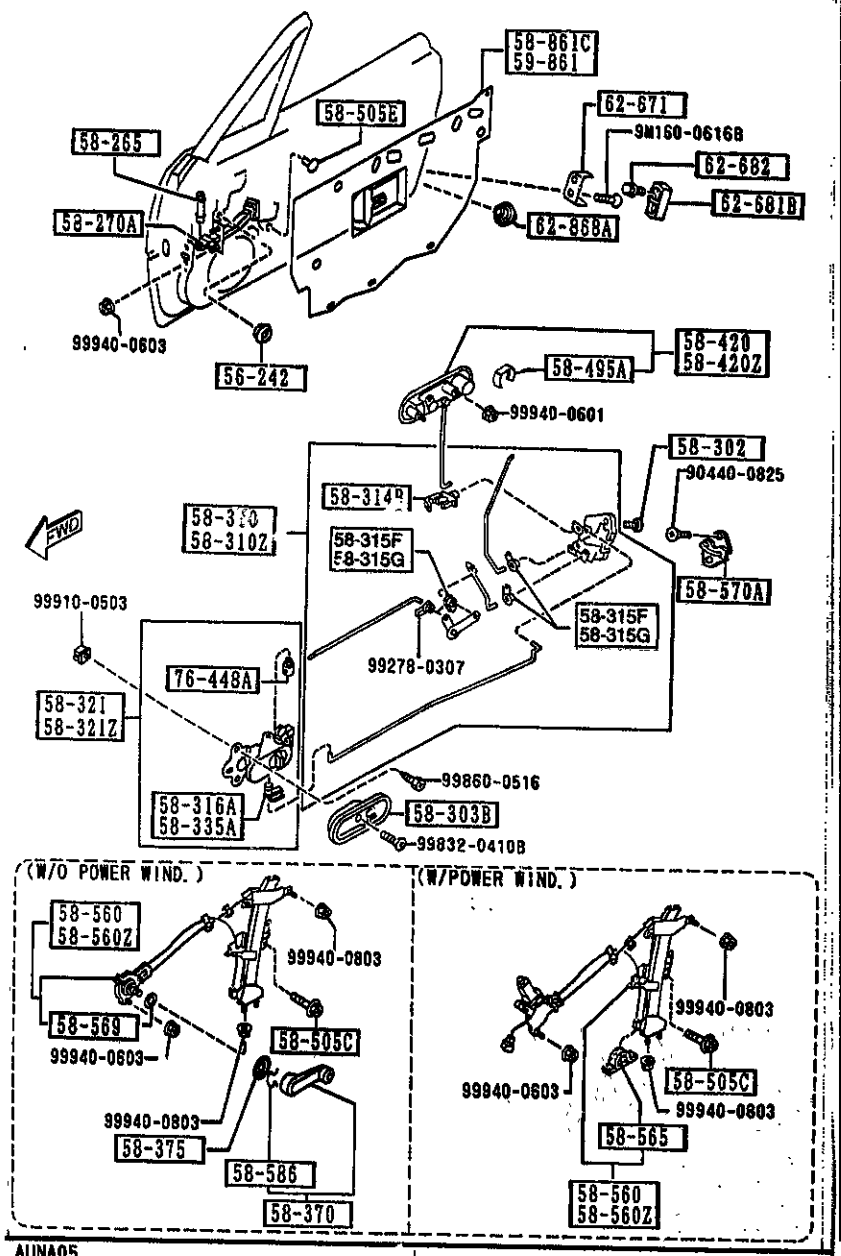

AUNA05

5830 -1 FRONT DOOR MECHANISMS

PART NO.	QTY	MODEL/RESTRICTION	MODEL/RESTRICTION	MODEL/RESTRICTION	FROM-TO
56-242		PLUG,DRAIN			
0118-56-242B	2				
58-265		PIN,CHECKER			
BC1D-58-265	2				
58-270A		CHECKER,DOOR			
NA01-58-270A	2				-5401
AN(NA01-58-270B)					
NA01-58-270B	2				5401-
58-302		SCREW,TAPPING-DOOR LOCK			
HG30-58-302A	6				
58-303B		COVER,INNER HANDLE			
NA01-58-303	2				
00	INT-	NA3 NA4 NA5 NA6 NA7 NA8 BLACK			
58-310		LOCK(R),DOOR			
NA01-58-310B	1				
58-310Z		LOCK(L),DOOR			
NA01-59-310B	1				
58-314B		JOINT			
H043-72-411	2				
58-315F		CLIP(R),LOCK			
G030-59-315	3				
58-315G		CLIP(L),LOCK			
G030-58-315	3				
58-316A		CLIP			
B081-59-335	1				
58-321		HANDLE(R),INNER			
NA01-58-330C	1				
08	INT-	NA3 NA4 NA5 NA6 NA7 NA8 BLACK			

5401 NA35# -619598

CAT. AUNA05-04

1997-07

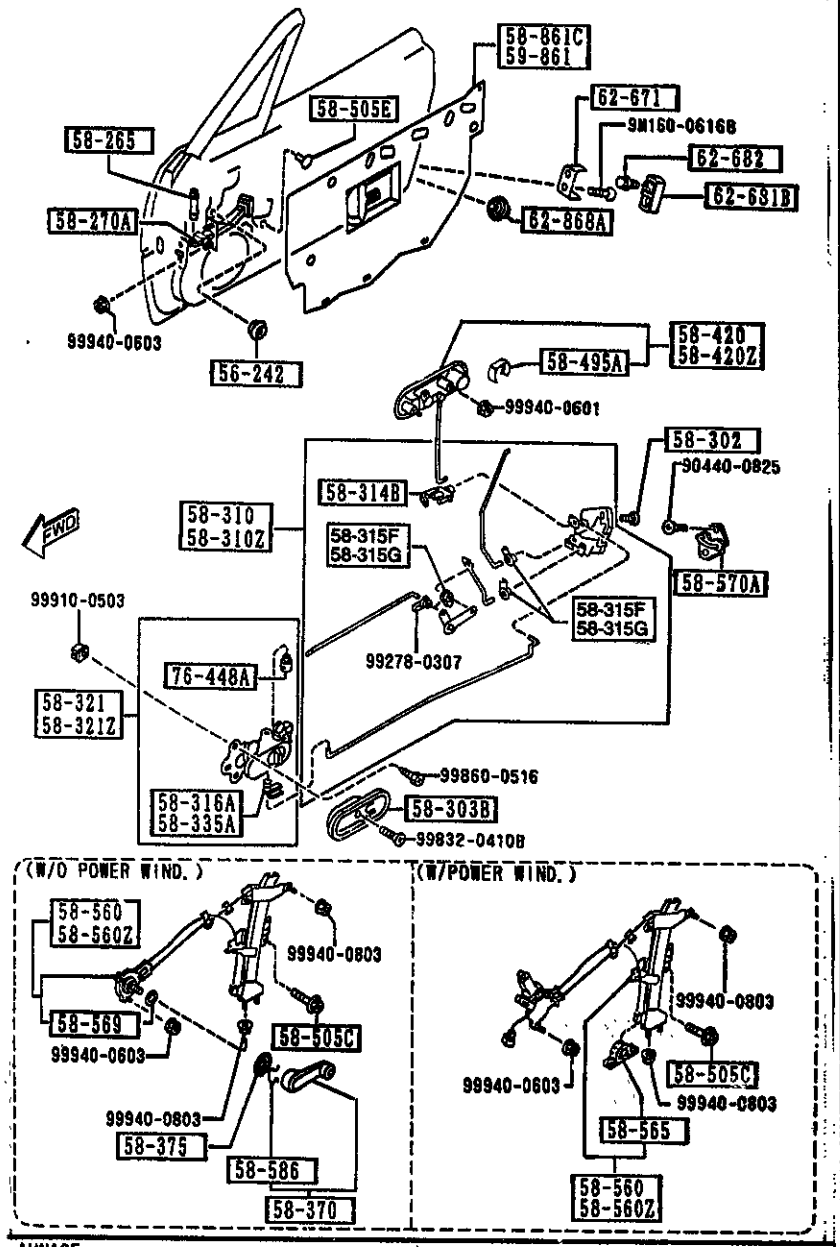

AUNA05

5830 -2 FRONT DOOR MECHANISMS

PART NO.	QTY	MODEL/RESTRICTION	MODEL/RESTRICTION	MODEL/RESTRICTION	FROM-TO
58-321Z		HANDLE(L),INNER			
NA01-59-330C	1				
00 INT-		NA3 NA4 NA5 NA6 NA7 NA8 BLACK			
58-335A		CLIP			
FB01-58-335	1				
58-370		HANDLE,REGULATOR			
S084-58-580A	2	BASE, R-PKG, PKG-A, (W/O POWER WIND.)			
80 INT-		NA3 NA4 NA5 NA6 NA7 NA8 BLACK			
58-375		ESCUTCHEON			
B801-58-582A	2	BASE, R-PKG, PKG-A, (W/O POWER WIND.)			
80 INT-		NA3 NA4 NA5 NA6 NA7 NA8 BLACK			
58-420		HANDLE(R),OUT.			
NA01-58-410D	1				
58-420Z		HANDLE(L),OUT.			
NA01-59-410D	1				
58-495A		RETAINER,LOCK CYL.			
G211-58-495	2				
58-505C		SCREW,WINDOW REGULATOR			
B092-58-505	6				
58-505E		CAP			
B092-58-355	2	BASE, R-PKG, PKG-A, (W/O POWER WIND.)			
58-560		REGULATOR(R),WINDOW			
NA01-58-560F AN(NA01-58-560G)	1	BASE, R-PKG, PKG-A, (W/O POWER WIND.)			-4901
NA02-58-560H AN(NA02-58-560J)	1	M-25-ED, P.E.GR, L-PKG, PKG-B, PKG-C, (W/POWER WIND.)			-4901
NA01-58-560G A (NA01-58-560H)	1	BASE, R-PKG, PKG-A, (W/O POWER WIND.)			4901-4B01

4901 NA35* -602618
4B01 NA35* -606043

CAT. AUNA05-04 1997-07

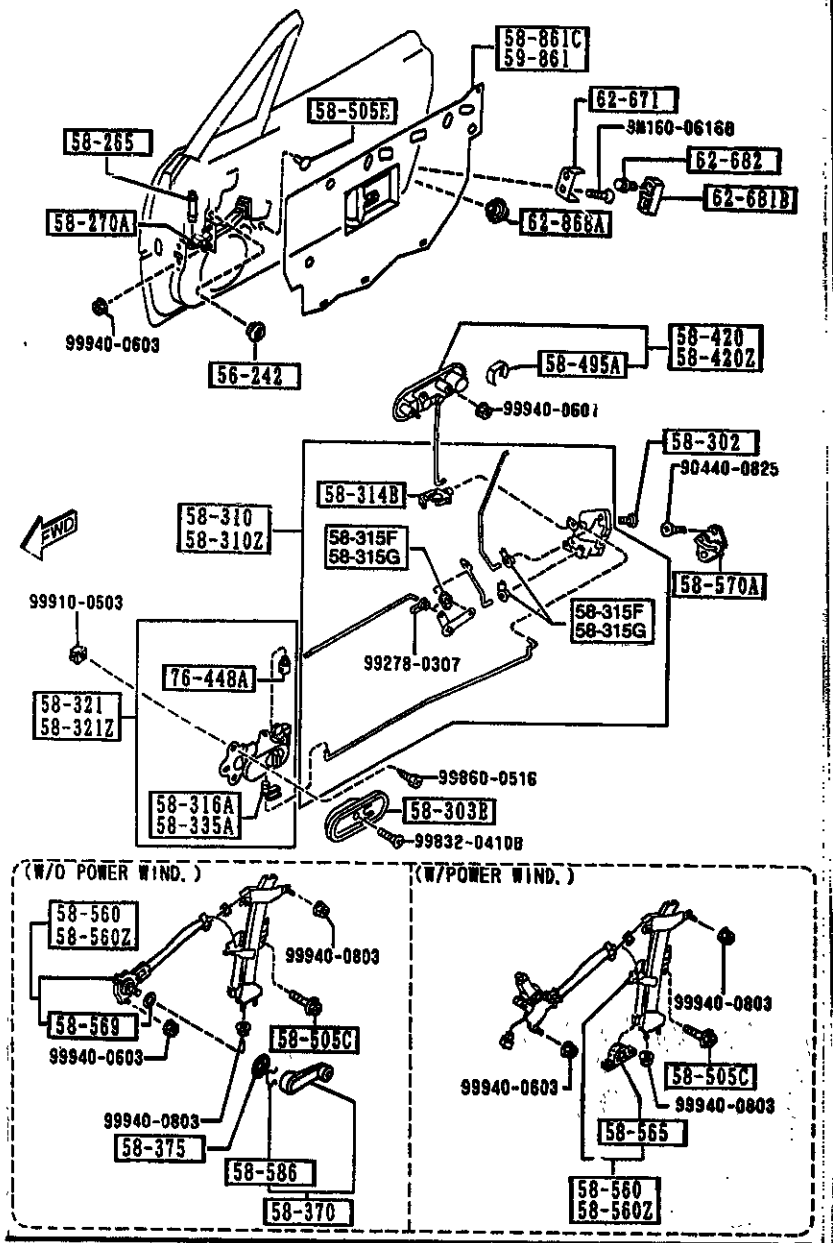

AUNA05

PART NO.	QTY	MODEL/RESTRICTION	MODEL/RESTRICTION	MODEL/RESTRICTION	FROM-TO
CONT'D					
NA02-58-560J A (NA02-58-560K)	1	M-25-ED, P.E.GR, L-PKG, PKG-B, PKG-C, (W/POWER WIND.)			4901-4B01
NA01-58-560H	1	BASE, R-PKG, PKG-A, (W/O POWER WIND.)			4B01-
NA02-58-560K	1	M-25-ED, P.E.GR, L-PKG, PKG-B, PKG-C, (W/POWER WIND.)			4B01-
+---------+ | 58-560Z | +---------+		REGULATOR(L),WINDOW			
NA01-59-560F AN(NA01-59-560G)	1	BASE, R-PKG, PKG-A, (W/O POWER WIND.)			-4901
NA02-59-560H AN(NA02-59-560J)	1	M-25-ED, P.E.GR, L-PKG, PKG-B, PKG-C, (W/POWER WIND.)			-4901
NA01-59-560G A (NA01-59-560H)	1	BASE, R-PKG, PKG-A, (W/O POWER WIND.)			4901-4B01
NA02-59-560J A (NA02-59-560K)	1	M-25-ED, P.E.GR, L-PKG, PKG-B, PKG-C, (W/POWER WIND.)			4901-4B01
NA01-59-560H	1	BASE, R-PKG, PKG-A, (W/O POWER WIND.)			4B01-
NA02-59-560K	1	M-25-ED, P.E.GR, L-PKG, PKG-B, PKG-C, (W/POWER WIND.)			4B01-
+---------+ | 58-565 | +---------+		RUBBER,STOPPER			
H030-58-565	2	M-25-ED, P.E.GR, L-PKG, PKG-B, PKG-C, (W/POWER WIND.)			
+---------+ | 58-569 | +---------+		GASKET,WINDOW REGULATOR			
B092-58-569	2	BASE, R-PKG, PKG-A, (W/O POWER WIND.)			
+---------+ | 58-570A | +---------+		STRIKER			
B001-58-361A	2				
+---------+ | 58-586 | +---------+		RING,SNAP			
B001-58-585	2	BASE, R-PKG, PKG-A, (W/O POWER WIND.)			
+---------+ | 58-861C | +---------+		SCREEN(R),FRONT DOOR			
NA01-58-861A	1	BASE, R-PKG, PKG-A, (W/O POWER WIND.)			
NA02-58-861A	1	M-25-ED, P.E.GR, L-PKG, PKG-B, PKG-C, (W/POWER WIND.)			

4901 NA35* -602618
4B01 NA35* -606043

CAT. AUNA05-04

1997-07

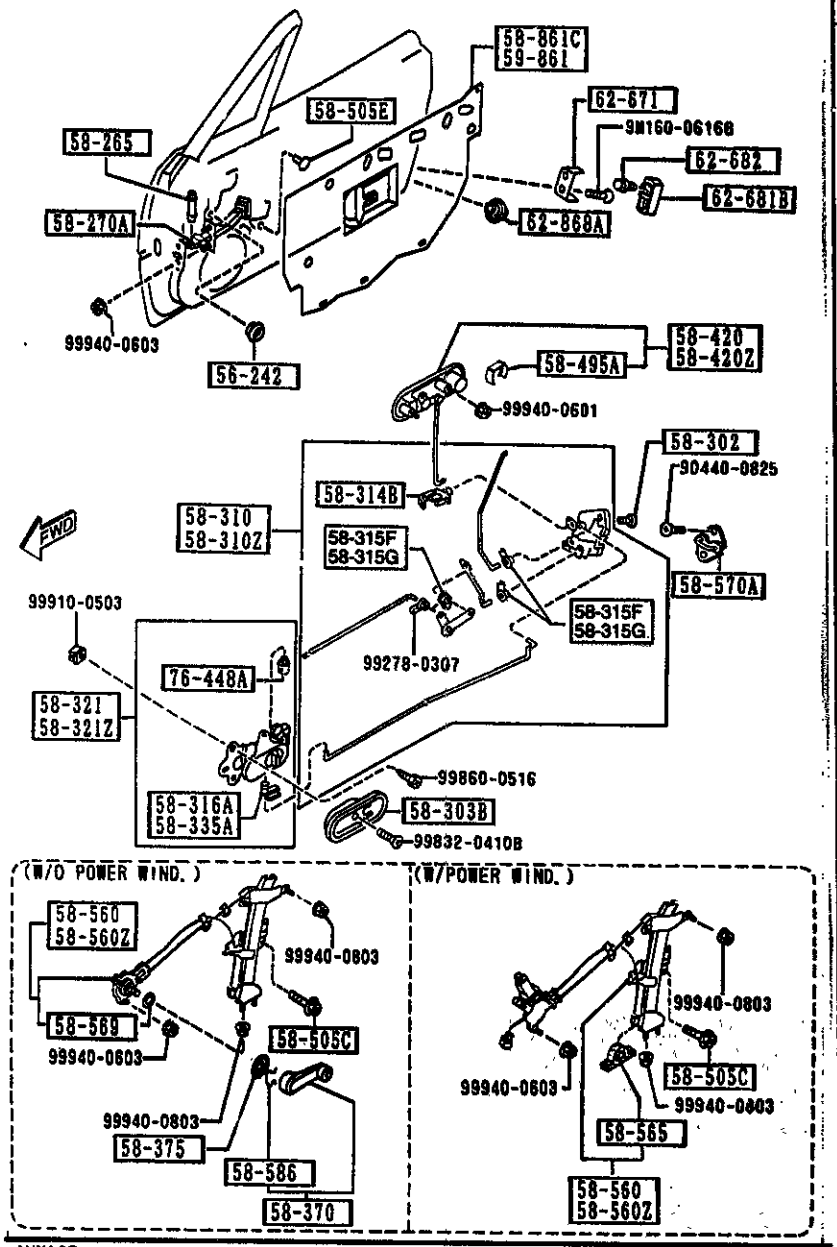

5830 -4 * FRONT DOOR MECHANISMS

PART NO.	QTY	MODEL/RESTRICTION	MODEL/RESTRICTION	MODEL/RESTRICTION	FROM-TO
59-861		SCREEN(L),FRONT DOOR			
NA01-59-861A	1	BASE, R-PKG, PKG-A, (W/O POWER WIND.)			
NA02-59-861A	1	M-25-ED, P.E.GR, L-PKG, PKG-B, PKG-C, (W/POWER WIND.)			
62-671		DOVETAIL,LIFT GATE			
S084-62-671	2				
62-681B		WEDGE,DOOR-FRONT			
NA01-62-681	2				
62-682		SCREW,WEDGE-LIFT GATE			
B216-62-682	4				
62-868A		COVER,HOLE-LIFT GATE			
B499-62-868	2				-4901
76-448A		CLIP			
G030-76-448	2				

4901 NA35* -602618

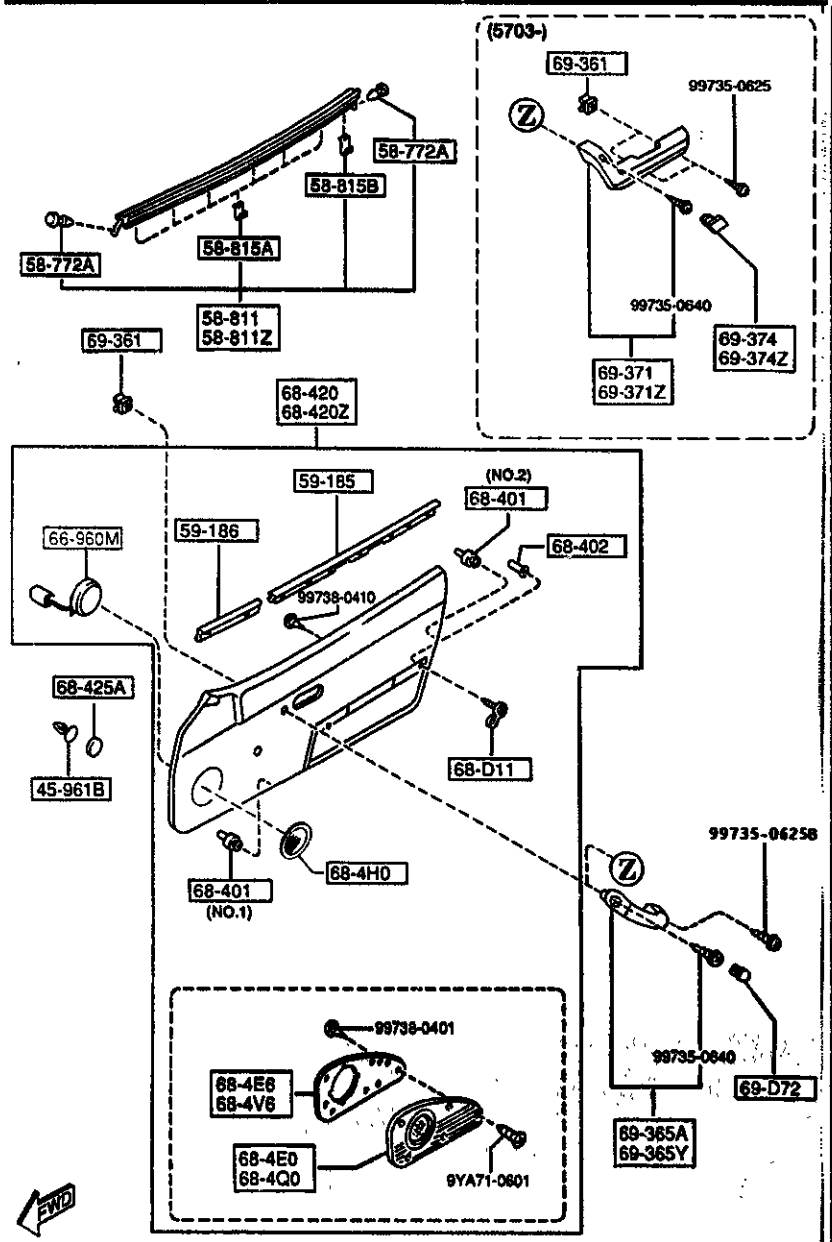

5840 -1 FRONT DOOR TRIMS & RELATED PARTS

PART NO.	QTY	MODEL/RESTRICTION	MODEL/RESTRICTION	MODEL/RESTRICTION	FROM-TO
45-961B		CAP			
H802-45-961	2	(TDA-PLASTIC KICKPLATE)			-4817
H802-45-961	4	OPT, (TDB-STAINLESS KICKPLATE)			-4817
H802-45-961	6	OPT, (TDB-STAINLESS KICKPLATE)			4817-5703
H802-45-961	4	(TDA-PLASTIC KICKPLATE)			4817-5703
H802-45-961	4				5703-
58-772A		FASTENER			
1011-58-772	4				
58-811		WEATHERSTRIP(R),OUT.			
MA01-58-810D	1				
58-811Z		WEATHERSTRIP(L),OUT.			
MA01-59-810D	1				
58-815A		CLIP,WEATHERSTRIP-OUTER			
MA01-58-815	12				
58-815B		CLIP'A',WEATHERSTRIP-OUT			
B157-58-815	2				
59-185		WEATHERSTRIP NO.1			
MA01-58-821	2				
59-186		WEATHERSTRIP NO.2			
MA02-58-821	2				
66-960M		SPEAKER,LOUD-DOOR			
H026-66-960	2	M-25-ED, (W/TWEETER SPEAKER)			-5703
H035-66-960	2	L-PKG-OPT, (W/SENSORY SOUND)			-5703
H842-66-960	2	(W/TWEETER SPEAKER)			5703-
68-D11		CAP,SCREW			
B501-68-D11B	2				-5703

4817 MA3S* -600607
5703 MA3H* -700001

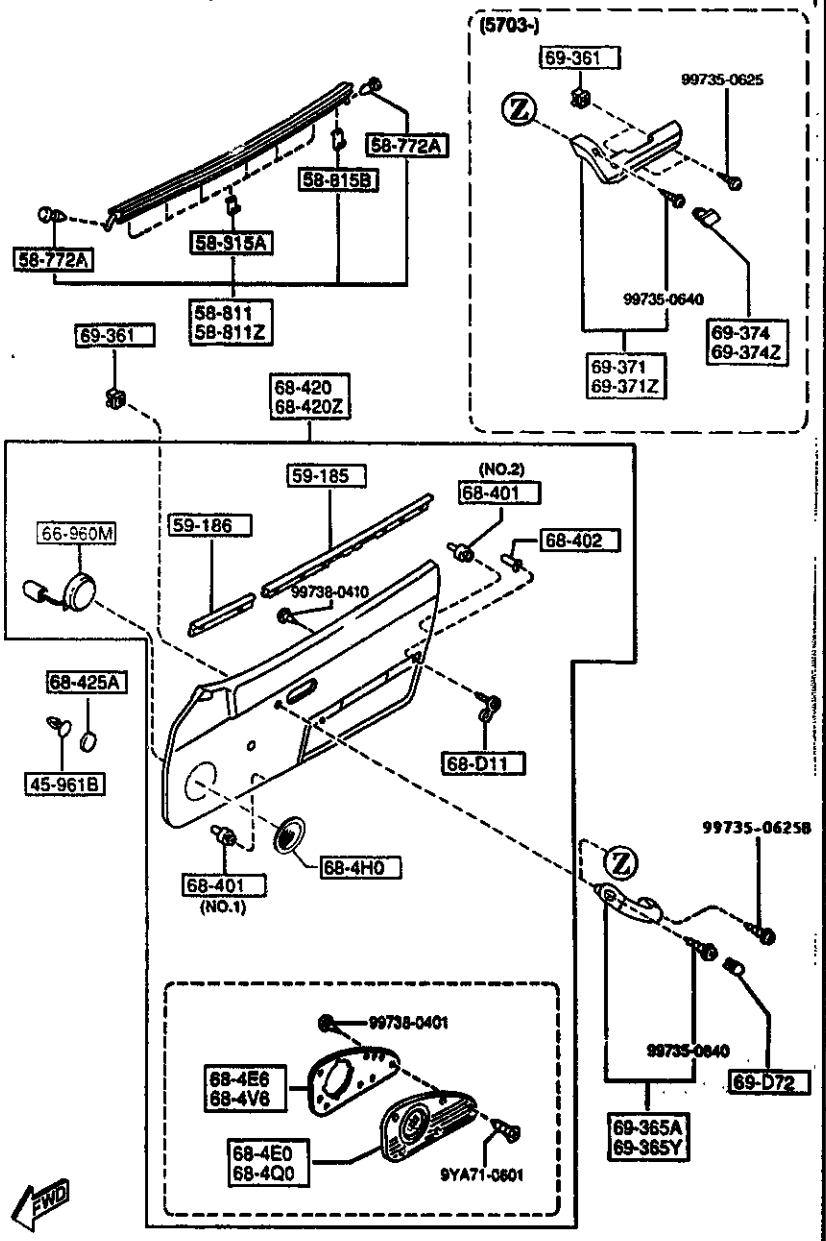

PART NO.	QTY	MODEL/RESTRICTION	MODEL/RESTRICTION	MODEL/RESTRICTION	FROM-TO
CONT'D					
00 INT-		NA3 BLACK			
67 INT-		NA4 NA5 TAN			
68-4E0		PLATE(R),KICK-D.TRIM			
N020-68-4E1A	1	OPT, (TDB-STAINLESS KICKPLATE)			-5703
68-4E6		PLATE(R)			
N020-68-4E6	1	OPT, (TDB-STAINLESS KICKPLATE)			-5703
68-4H0		GRILLE,SPEAKER-FRT			
B501-68-4H3	2	(TDA-PLASTIC KICKPLATE)			-5703
02 INT-		NA3 NA4 NA5 BLACK			
3R72-68-3S0A	2	(W/POWER WIND.+W/C.D.)			5703-
60 INT-		NA3 NA5 DARK GRAY/OFF-BLACK			
A884-68-5H0	2	(W/POWER WIND.+W/O C.D.)			5703-
08 INT-		NA3 NA5 BLACK			
A004-68-5H0	2	BASE, R-PKG, PKG-A, (W/O POWER WIND.)			5703-
00 INT-		NA3 NA5 BLACK			
68-4Q0		PLATE(L),KICK-D.TRIM			
N020-68-4V1A	1	OPT, (TDB-STAINLESS KICKPLATE)			-5703
68-4V6		PLATE(L)			
N020-68-4V6	1	OPT, (TDB-STAINLESS KICKPLATE)			-5703
68-401		FASTENER,DOOR TRIM			
B100-68-401	14	(ILLUST. NO.1)			
W201-68-401	10	OPT, (ILLUST. NO.2) (TDB-STAINLESS KICKPLATE)			-5703
W201-68-401	12	(ILLUST. NO.2)			-5703

5703 NA3## -700001

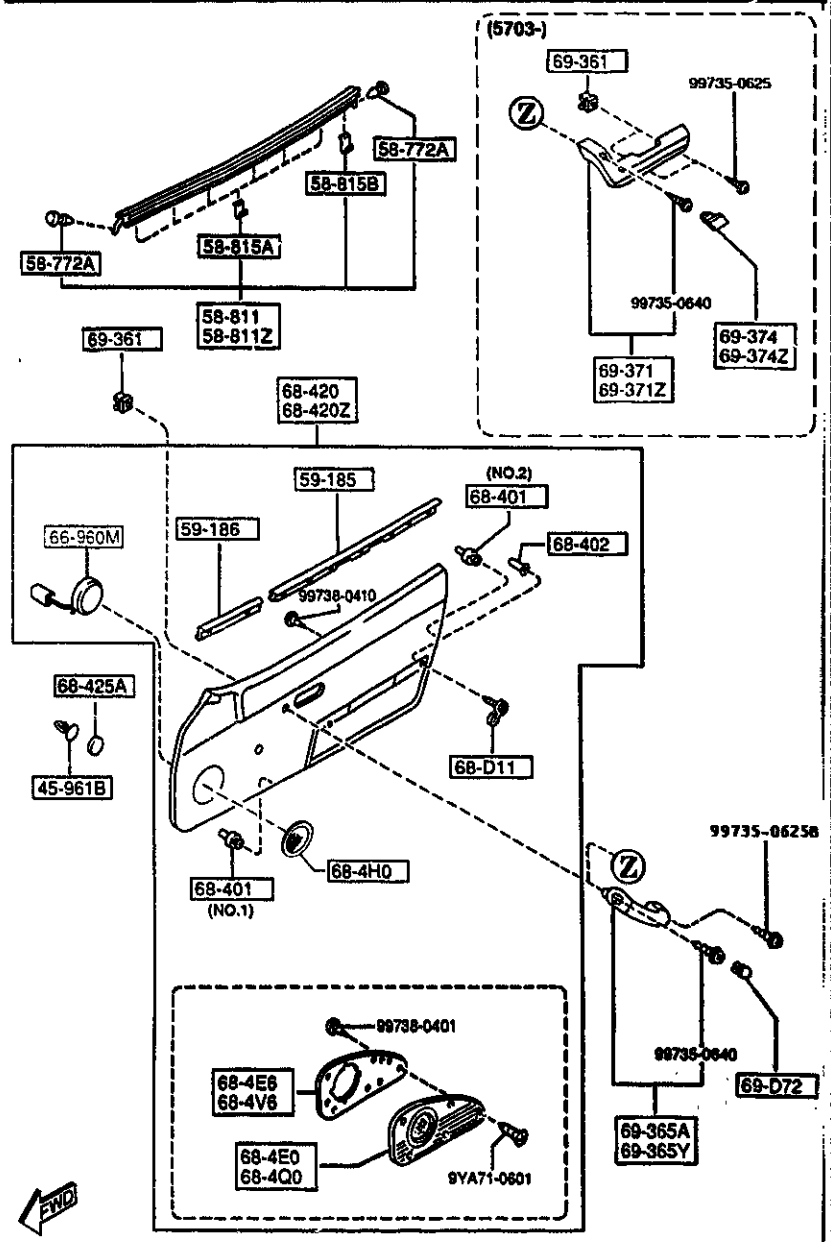

AUNA05

PART NO.	QTY	MODEL/RESTRICTION	MODEL/RESTRICTION	MODEL/RESTRICTION	FROM-TO
CONT'D		(TDA-PLASTIC KICKPLATE)			
W201-68-401	12	(ILLUST. NO.2)			5703-
+----------+					
| 68-402 |		GROMMET,SCREW			
+----------+					
B110-68-429	2				-5703
+----------+					
| 68-420 |		TRIM(R),DOOR			
+----------+					
N026-68-420C	1	(TDB TYPE,W/POWER WIND,W/O TWEETER SPK,W/O SENSORY SOUND)			-5106
80	INT-	NA3 BLACK			
80	INT-	NA5 BLACK/TAN			
N028-68-420C	1	BASE, R-PKG, PKG-A, (TDA TYPE,W/O POWER WIND,W/O TWEETER SPK,W/O SENSORY SOUND)			-5106
80	INT-	NA3 BLACK			
80	INT-	NA5 BLACK/TAN			
N030-68-420C	1	P.E.GR, L-PKG, PKG-B, PKG-C, (TDA TYPE,W/POWER WIND,W/O TWEETER SPK,W/O SENSORY SOUND)			-5106
80	INT-	NA3 BLACK			
80	INT-	NA5 BLACK/TAN			
N032-68-420A	1	(TDA TYPE,W/O POWER WIND,W/ TWEETER SPK, W/O SENSORY SOUND)			-5106
80	INT-	NA3 BLACK			
80	INT-	NA5 BLACK/TAN			
N033-68-420A	1	M-25-ED, (TDA TYPE,W/POWER WIND,W/ TWEETER SPK,W/O SENSORY SOUND)			-5106
80	INT-	NA3 BLACK			
80	INT-	NA5 BLACK/TAN			
N034-68-420A	1	(TDB TYPE,W/POWER WIND,W/ TWEETER SPK,W/O SENSORY SOUND)			-5106
80	INT-	NA3 BLACK			
80	INT-	NA5 BLACK/TAN			
N035-68-420A	1	(TDB TYPE,W/POWER WIND,W/O TWEETER SPK,W/SENSORY SOUND)			-5106

5106 NA35# -612163
5703 NA3## -700801

CAT. AUNA05-04

1997-07

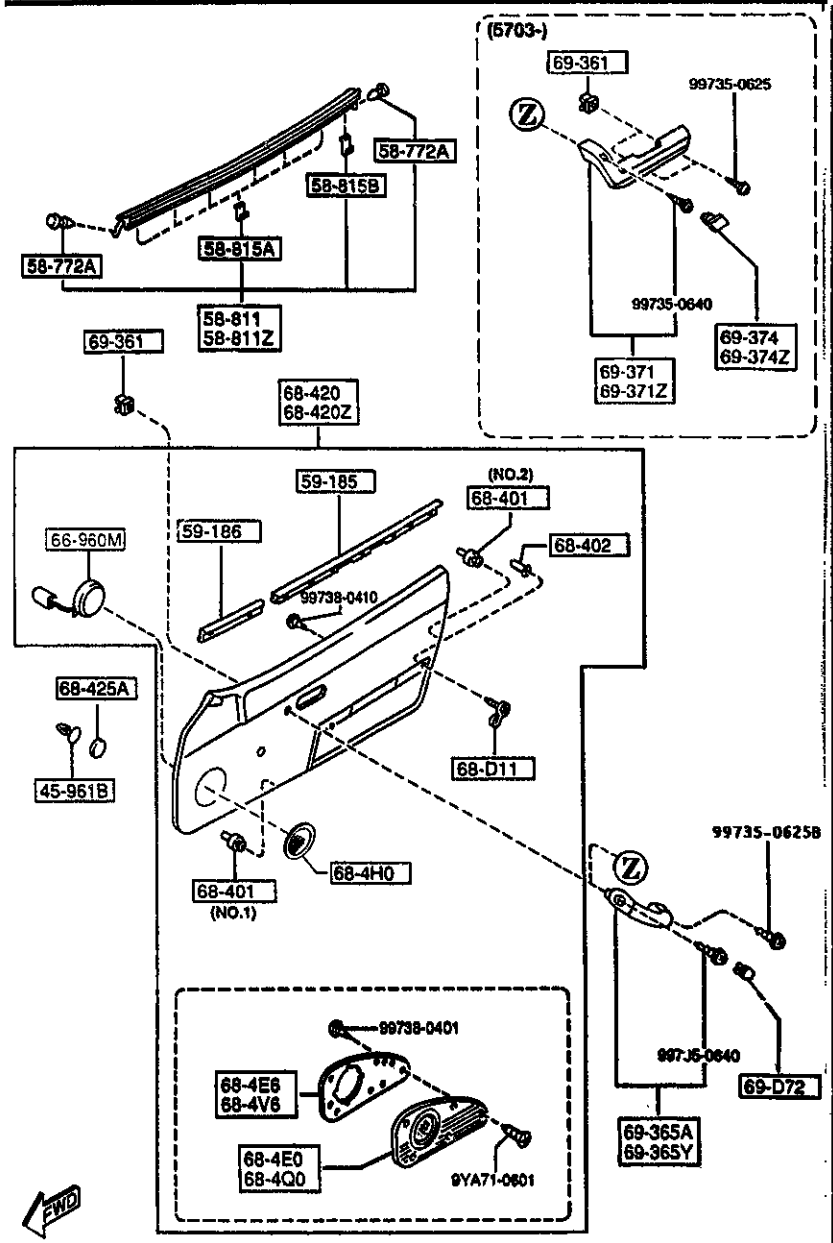

PART NO.	QTY	MODEL/RESTRICTION	MODEL/RESTRICTION	MODEL/RESTRICTION	FROM-TO
CONT'D					
00	INT-	NA3 BLACK			
80	INT-	NA5 BLACK/TAN			
N036-68-420A	1	(TDA TYPE,W/O POWER WIND,W/O TWEETER SPK ,W/SENSORY SOUND)			-5106
00	INT-	NA3 BLACK			
80	INT-	NA5 BLACK/TAN			
N037-68-420A	1	L-PKG-OPT PKG-B-OPT, PKG-C-OPT, (TDA TYPE,W/POWER WIND,W/O TWEETER SPK,W /SENSORY SOUND)			-5106
00	INT-	NA3 BLACK			
80	INT-	NA5 BLACK/TAN			
N026-68-420D	1	(TDB TYPE,W/POWER WIND,W/O TWEETER SPK,W /O SENSORY SOUND)			5106-5703
00	INT-	NA3 BLACK			
80	INT-	NA5 BLACK/TAN			
N028-68-420D	1	BASE, R-PKG, PKG-A, (TDA TYPE,W/O POWER WIND,W/O TWEETER SPK ,W/O SENSORY SOUND)			5106-5703
00	INT-	NA3 BLACK			
80	INT-	NA5 BLACK/TAN			
N038-68-420D	1	P.E.GR, L-PKG, PKG-B , PKG-C, (TDA TYPE,W/POWER WIND,W/O TWEETER SPK,W /O SENSORY SOUND)			5106-5703
00	INT-	NA3 BLACK			
80	INT-	NA5 BLACK/TAN			
N032-68-420B	1	(TDA TYPE,W/O POWER WIND,W/ TWEETER SPK, W/O SENSORY SOUND)			5106-5703
00	INT-	NA3 BLACK			
80	INT-	NA5 BLACK/TAN			
N033-68-420B	1	M-25-GD, (TDA TYPE,W/POWER WIND,W/ TWEETER SPK,W/ O SENSORY SOUND)			5106-5703
00	INT-	NA3 BLACK			
80	INT-	NA5 BLACK/TAN			
N034-68-420B	1	(TDB TYPE,W/POWER WI			5106-5703

5106 NA3*# -612163
5703 NA3*# -700001

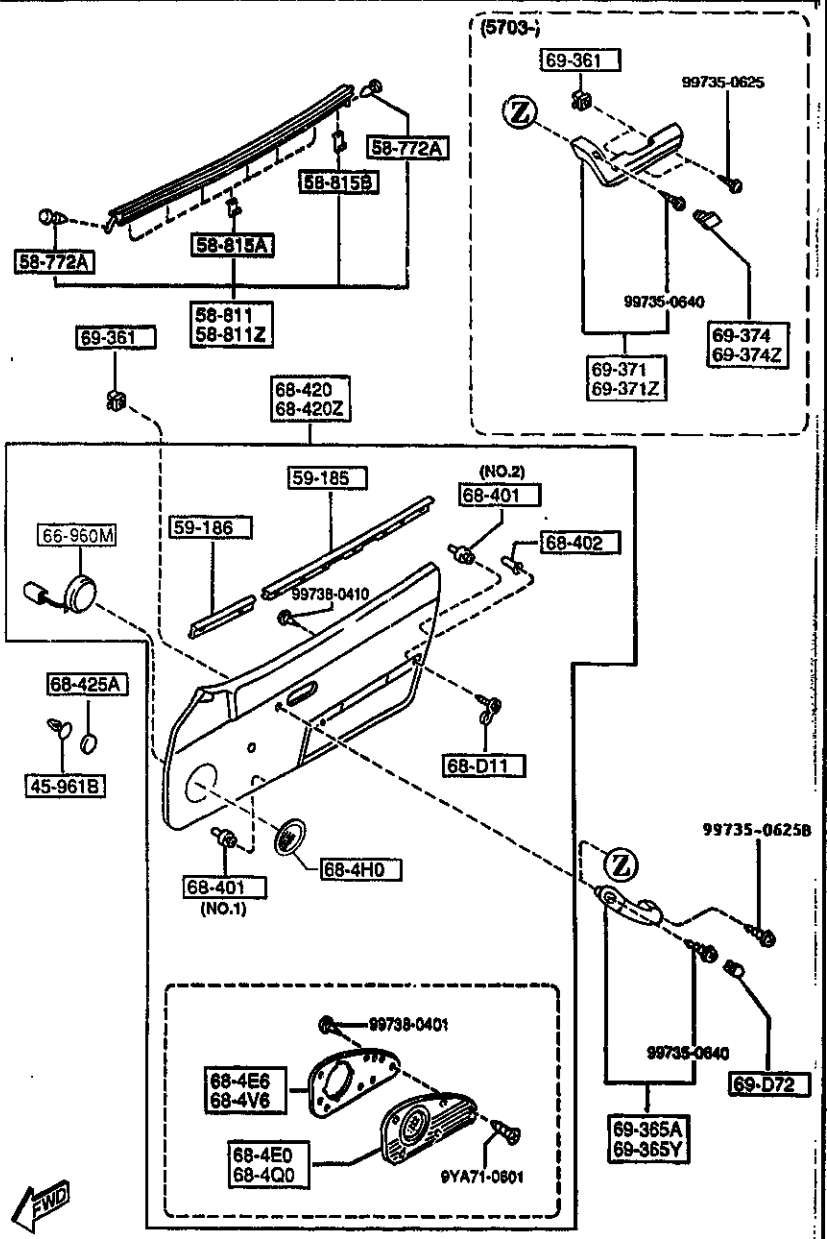

PART NO.	QTY	MODEL/RESTRICTION	MODEL/RESTRICTION	MODEL/RESTRICTION	FROM-TO
CONT'D		ND,W/ TWEETER SPK,W/O SENSORY SOUND)			
00	INT-	NA3 BLACK			
80	INT-	NA5 BLACK/TAN			
NB35-68-420B	1	(TDB TYPE,W/POWER WIND,W/O TWEETER SPK,W/SENSORY SOUND)			5106-5703
00	INT-	NA3 BLACK			
80	INT-	NA5 BLACK/TAN			
NB36-68-420B	1	(TDA TYPE,W/O POWER WIND,W/O TWEETER SPK,W/SENSORY SOUND)			5106-5703
00	INT-	NA3 BLACK			
80	INT-	NA5 BLACK/TAN			
NB37-68-420B	1	L-PKG-OPT PKG-B-OPT, PKG-C-OPT, (TDA TYPE,W/POWER WIND,W/O TWEETER SPK,W/SENSORY SOUND)			5106-5703
00	INT-	NA3 BLACK			
80	INT-	NA5 BLACK/TAN			
NB38-68-420A	1	BASE, R-PKG, PKG-A, (W/O POWER WIND,W/O TWEETER SPK)			5703-
00	INT-	NA3 NA7 BLACK			
NB39-68-420A	1	P.E.GR, L-PKG, PKG-B, PKG-C, (W/POWER WIND,W/O TWEETER SPK.)			5703-
80	INT-	NA3 BLACK			
80	INT-	NA5 BLACK/TAN			
NB44-68-420A	1	OPT, (W/O POWER WIND,W/TWEETER SPK.)			5703-
00	INT-	NA3 NA7 BLACK			
NB56-68-420	1	OPT, (W/POWER WIND,W/TWEETER SPK.)			5703-
00	INT-	NA3 BLACK			
80	INT-	NA5 BLACK/TAN			
+----------+ | 68-420Z | +----------+		TRIM(L),DOOR			
NB26-68-450C	1	(TDB TYPE,W/POWER WIND,W/O TWEETER SPK,W/O SENSORY SOUND)			-5106

5106 NA35* -612163
5703 NA3** -700001

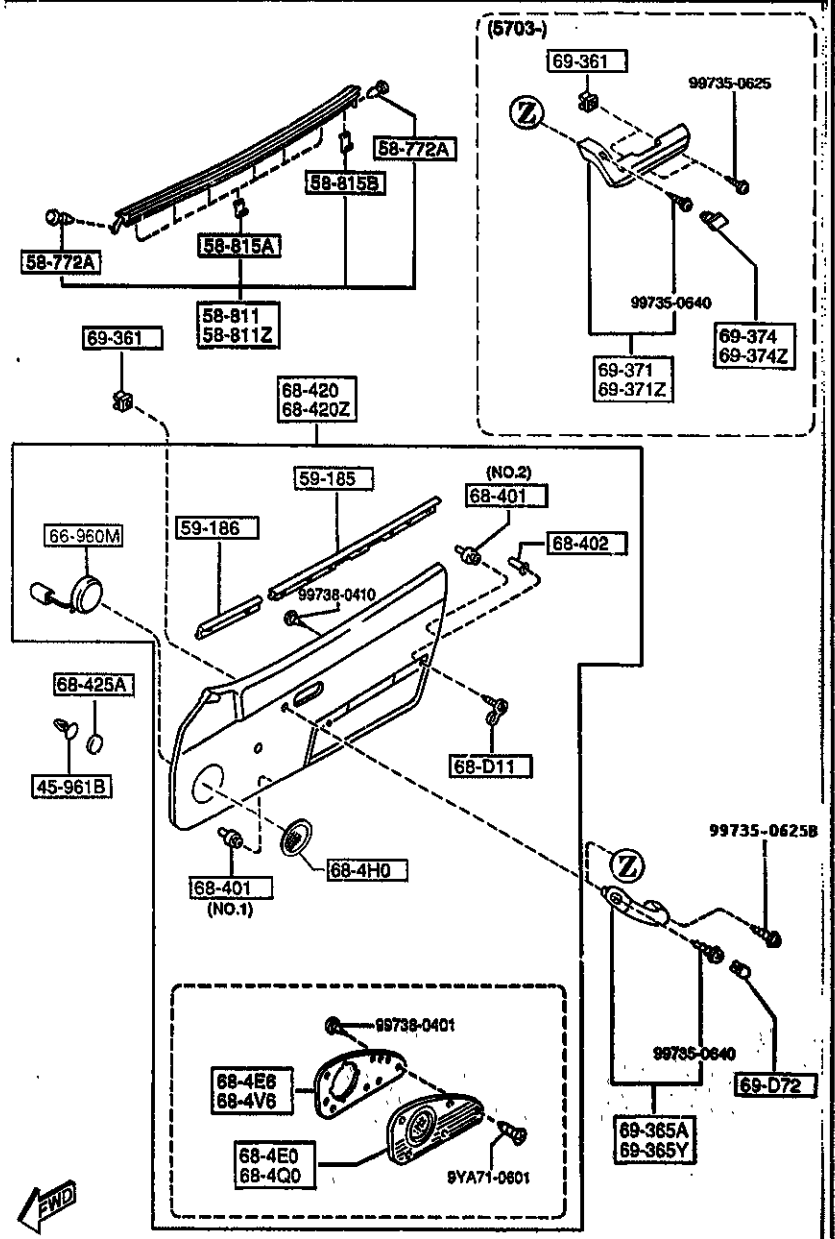

AUNA05

PART NO.	QTY	MODEL/RESTRICTION	MODEL/RESTRICTION	MODEL/RESTRICTION	FROM-TO
CONT'D					
00	INT-	NA3 BLACK			
80	INT-	NA5 BLACK/TAN			
N028-68-450C	1	BASE, R-PKG, PKG-A, (TDA TYPE,W/O POWER WIND,W/O TWEETER SPK ,W/O SENSORY SOUND)			-5106
00	INT-	NA3 BLACK			
80	INT-	NA5 BLACK/TAN			
N030-68-450C	1	P.E.GR, L-PKG, PKG-B , PKG-C, (TDA TYPE,W/POWER WI ND,W/O TWEETER SPK,W /O SENSORY SOUND)			-5106
00	INT-	NA3 BLACK			
80	INT-	NA5 BLACK/TAN			
N032-68-450A	1	(TDA TYPE,W/O POWER WIND,W/ TWEETER SPK, W/O SENSORY SOUND)			-5106
00	INT-	NA3 BLACK			
80	INT-	NA5 BLACK/TAN			
N033-68-450A	1	M-25-ED, (TDA TYPE,W/POWER WI ND,W/ TWEETER SPK,W/ O SENSORY SOUND)			-5106
00	INT-	NA3 BLACK			
80	INT-	NA5 BLACK/TAN			
N034-68-450A	1	(TDB TYPE,W/POWER WI ND,W/ TWEETER SPK,W/ O SENSORY SOUND)			-5106
00	INT-	NA3 BLACK			
80	INT-	NA5 BLACK/TAN			
N035-68-450A	1	(TDB TYPE,W/POWER WI ND,W/O TWEETER SPK,W /SENSORY SOUND)			-5106
00	INT-	NA3 BLACK			
80	INT-	NA5 BLACK/TAN			
N036-68-450A	1	(TDA TYPE,W/O POWER WIND,W/O TWEETER SPK ,W/SENSORY SOUND)			-5106
00	INT-	NA3 BLACK			
80	INT-	NA5 BLACK/TAN			
N037-68-450A	1	L-PKG-OPT PKG-B-OPT, PKG-C-OPT, (TDA TYPE,W/POWER WI			-5106

5106 NA35* -612163

CAT. AUNA05-04

1997-07

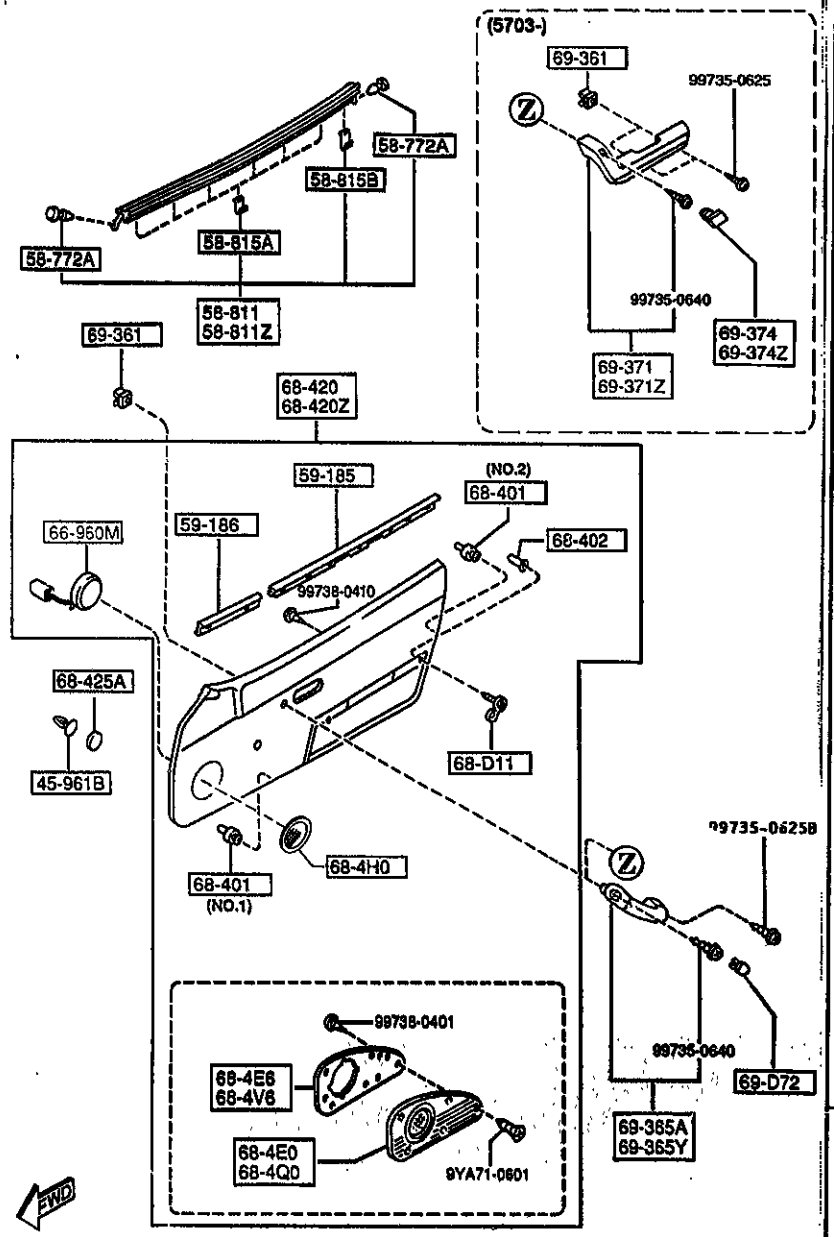

5840 -7 FRONT DOOR TRIMS & RELATED PARTS

PART NO.	QTY	MODEL/RESTRICTION	MODEL/RESTRICTION	MODEL/RESTRICTION	FROM-TO
CONT'D		ND,W/O TWEETER SPK,W/SENSORY SOUND)			
00	INT-	NA3 BLACK			
80	INT-	NA5 BLACK/TAN			
N026-68-450D	1	(TDB TYPE,W/POWER WIND,W/O TWEETER SPK,W/O SENSORY SOUND)			5106-5703
00	INT-	NA3 BLACK			
80	INT-	NA5 BLACK/TAN			
N028-68-450D	1	BASE, R-PKG, PKG-A, (TDA TYPE,W/O POWER WIND,W/O TWEETER SPK,W/O SENSORY SOUND)			5106-5703
00	INT-	NA3 BLACK			
80	INT-	NA5 BLACK/TAN			
N030-68-450D	1	P.E.GR, L-PKG, PKG-B, PKG-C, (TDA TYPE,W/POWER WIND,W/O TWEETER SPK,W/O SENSORY SOUND)			5106-5703
00	INT-	NA3 BLACK			
80	INT-	NA5 BLACK/TAN			
N032-68-450B	1	(TDA TYPE,W/O POWER WIND,W/ TWEETER SPK, W/O SENSORY SOUND)			5106-5703
00	INT-	NA3 BLACK			
80	INT-	NA5 BLACK/TAN			
N033-68-450B	1	M-25-ED, (TDA TYPE,W/POWER WIND,W/ TWEETER SPK,W/O SENSORY SOUND)			5106-5703
00	INT-	NA3 BLACK			
80	INT-	NA5 BLACK/TAN			
N034-68-450B	1	(TDB TYPE,W/POWER WIND,W/ TWEETER SPK,W/O SENSORY SOUND)			5106-5703
00	INT-	NA3 BLACK			
80	INT-	NA5 BLACK/TAN			
N035-68-450B	1	(TDB TYPE,W/POWER WIND,W/O TWEETER SPK,W/SENSORY SOUND)			5106-5703
00	INT-	NA3 BLACK			
80	INT-	NA5 BLACK/TAN			
N036-68-450B	1	(TDA TYPE,W/O POWER			5106-5703

5106 NA35* -612163
5703 NA3** -700001

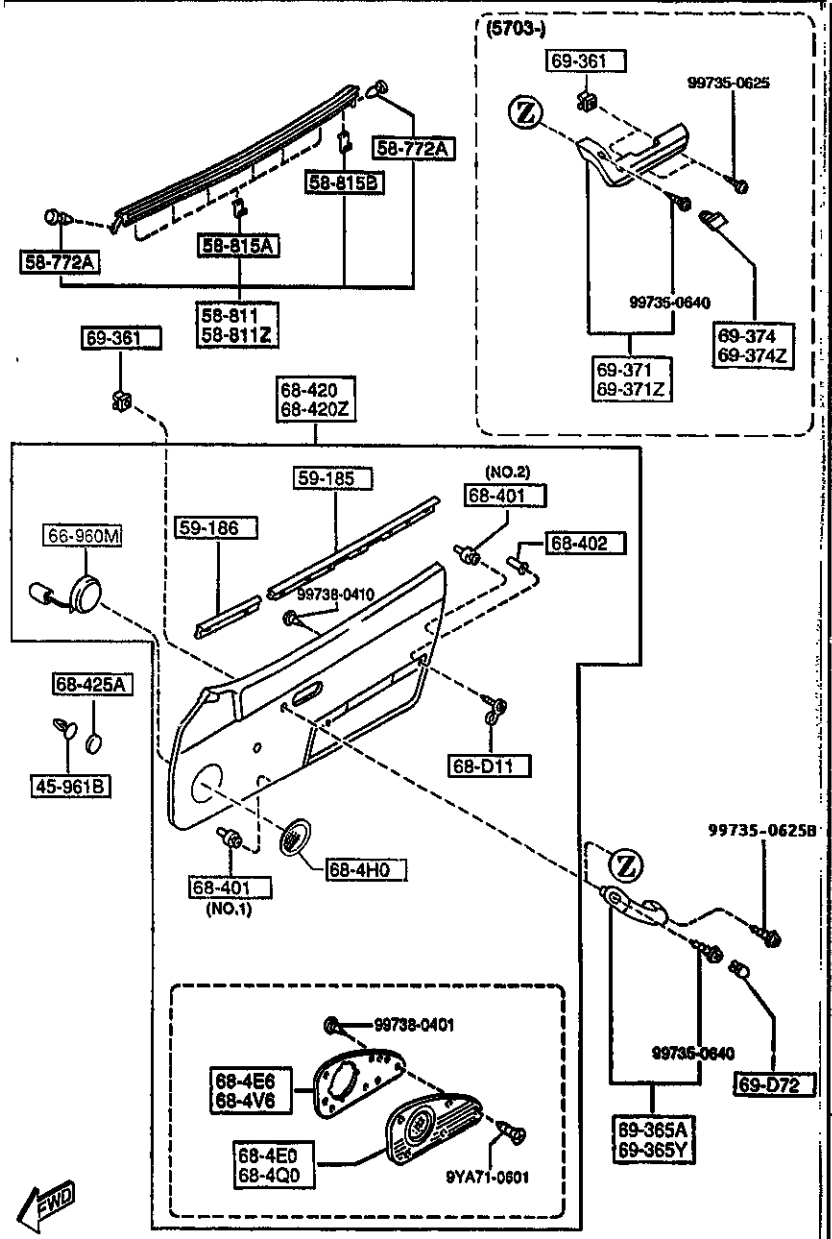

AUNA05

PART NO.	QTY	MODEL/RESTRICTION	MODEL/RESTRICTION	MODEL/RESTRICTION	FROM-TO
CONT'D		WIND,W/O TWEETER SPK ,W/SENSORY SOUND)			
00	INT-	NA3 BLACK			
80	INT-	NA5 BLACK/TAN			
N037-68-450B	1	L-PKG-OPT PKG-B-OPT, PKG-C-OPT, (TDA TYPE,W/POWER WI ND,W/O TWEETER SPK,W /SENSORY SOUND)			5106-5703
00	INT-	NA3 BLACK			
80	INT-	NA5 BLACK/TAN			
NB38-68-450A	1	BASE, R-PKG, PKG-A, (W/O POWER WIND,W/O TWEETER SPK)			5703-
00	INT-	NA3 NA7 BLACK			
NB39-68-450A	1	P.E.GR, L-PKG, PKG-B , PKG-C, (W/POWER WIND,W/O TW EETER SPK.)			5703-
00	INT-	NA3 BLACK			
80	INT-	NA5 BLACK/TAN			
NB44-68-450A	1	OPT, (W/O POWER WIND,W/TW EETER SPK.)			5703-
00	INT-	NA3 NA7 BLACK			
NB56-68-450	1	OPT, (W/POWER WIND,W/TWEE TER SPK.)			5703-
80	INT-	NA3 BLACK			
80	INT-	NA5 BLACK/TAN			
68-425A		COVER,HOLE			
G043-62-864A	2	(TDA-PLASTIC KICKPLA TE)			-4817
G043-62-864A	4	OPT, (TDB-STAINLESS KICKP LATE)			-4817
G043-62-864A	6	OPT, (TDB-STAINLESS KICKP LATE)			4817-5703
G043-62-864A	4	(TDA-PLASTIC KICKPLA TE)			4817-5703
LA01-57-425A	2				5703-
69-D72		CAP,ASSIST GRIP			

4817 NA35* -600407
5106 NA35* -612163
5703 NA3** -700801

CAT. AUNA05-04

1997-07

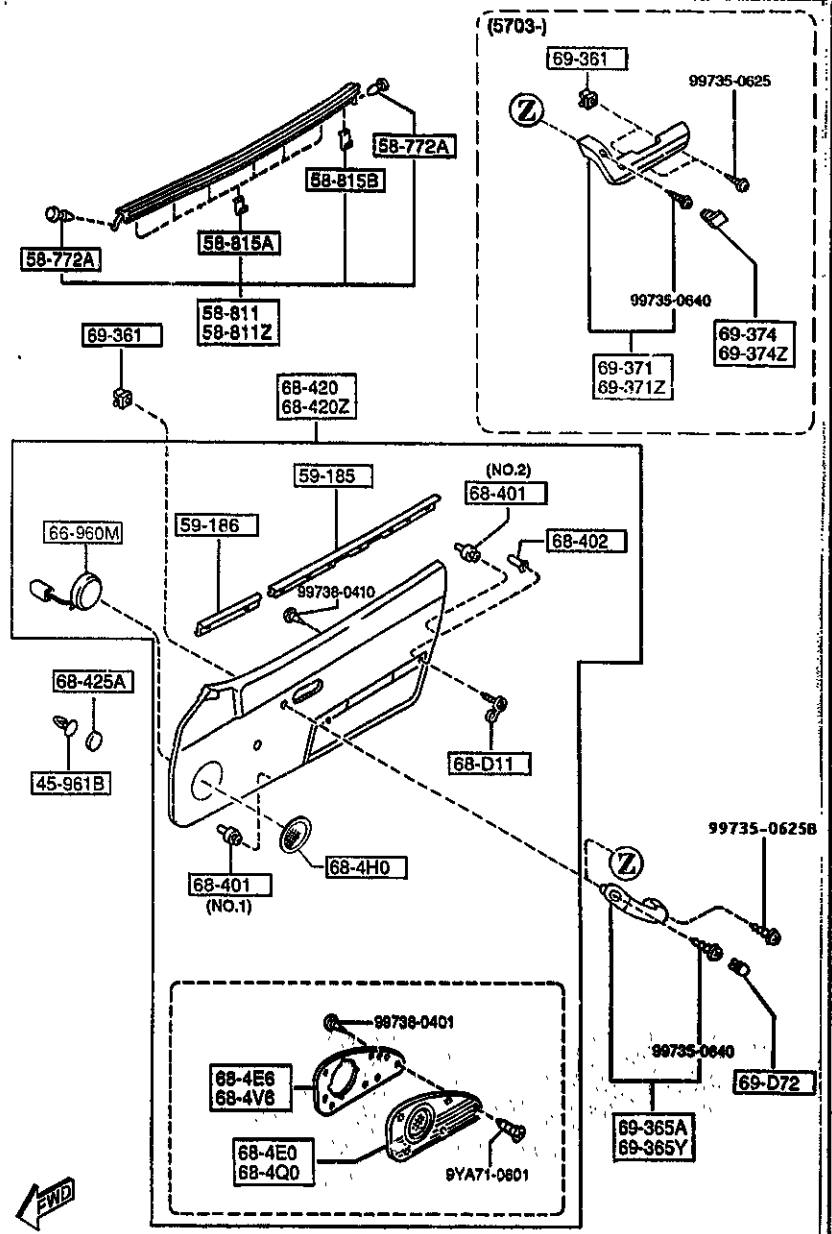

AUNA05

5840 -9 * FRONT DOOR TRIMS & RELATED PARTS

PART NO.	QTY	MODEL/RESTRICTION	MODEL/RESTRICTION	MODEL/RESTRICTION	FROM TO
CONT'D					
N026-69-D72	2				-5703
00 INT-		NA3 NA4 NA5 NA6 NA7 BLACK			
| 69-361 |		GROMMET,SCREW			
B316-69-361	4				-5703
B316-69-361	6				5703-
| 69-365A |		GRIP(R),ASSIST			
N026-69-D70	1				-5703
00 INT-		NA3 NA4 NA5 NA6 NA7 BLACK			
| 69-365Y |		GRIP(L),ASSIST			
N026-69-D90	1				-5703
80 INT-		NA3 NA4 NA5 NA6 NA7 BLACK			
| 69-371 |		RE ST(R),ARM			
BF70-69-370C	1				5703-
08 INT-		NA3 NA7 NA8 BLACK			
88 INT-		NA4 NA5 TAN			
| 69-371Z |		REST(L),ARM			
BF70-69-390C	1				5703-
00 INT-		NA3 NA7 NA8 BLACK			
88 INT-		NA4 NA5 TAN			
| 69-374 |		CAP(R),PULL HANDLE			
BF70-69-372	1				5703-
80 INT-		NA3 NA7 NA8 BLACK			
88 INT-		NA4 NA5 TAN			
| 69-374Z |		CAP(L),PULL HANDLE			
BF70-69-392	1				5703-
08 INT-		NA3 NA7 NA8 BLACK			
88 INT-		NA4 NA5 TAN			

5703 NA3** -700001

CAT. AUNA05-04

1997-07

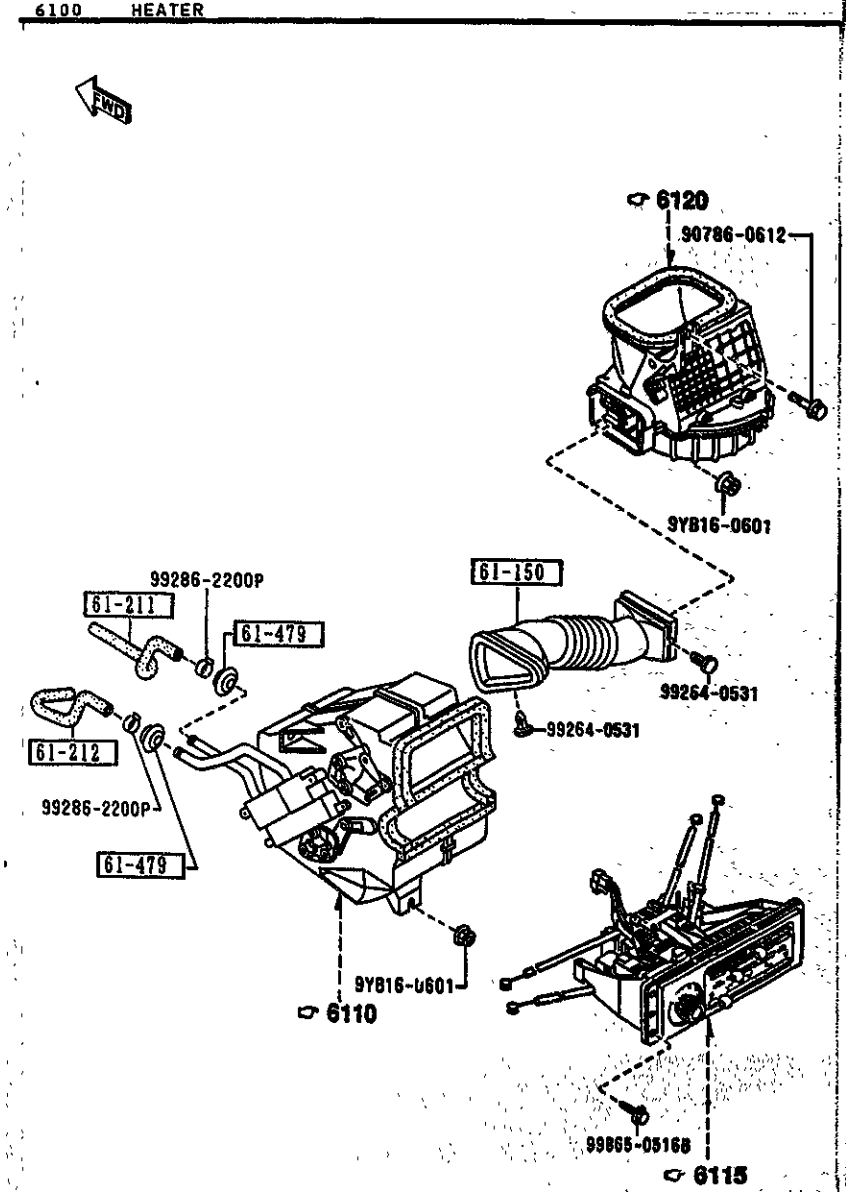

6100 -1 * HEATER

PART NO.	QTY	MODEL/RESTRICTION	MODEL/RESTRICTION	MODEL/RESTRICTION	FROM-TO
61-150		DUCT,AIR			
MA81-61-150A	1				
61-211		HOSE NO.1,WATER			
MA75-61-211	1				
61-212		HOSE NO.2,WATER			
MA75-61-212	1				
61-479		GROMMET			
8871-61-219A	2				

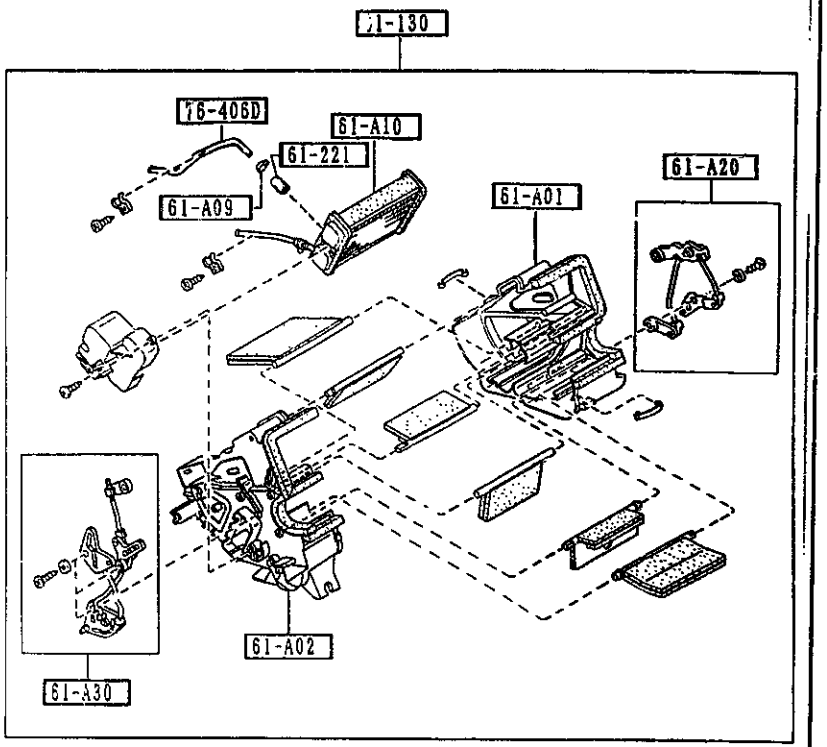

6110 -1 * HEATER UNIT COMPONENTS

PART NO.	QTY	MODEL/RESTRICTION	MODEL/RESTRICTION	MODEL/RESTRICTION	FROM-TO
61-A01		CASE'A',HEATER UNIT			
NA01-61-A01	1				
61-A02		CASE'B',HEATER UNIT			
NA01-61-A02	1				
61-A09		CLIP			
NA01-61-A09	1				
61-A10		CORE,HEATER UNIT			
NA75-61-A10	1				
61-A20		LINK SET,TEMP			
NA01-61-A20	1				
61-A30		LINK SET,MODE			
NA01-61-A30	1				
61-130		HEATER UNIT			
NA75-61-130	1				
61-221		HOSE,WATER			
NA01-61-A21	1				
76-406D		PIPE,HEATER UNIT			
NA75-61-A15	1				

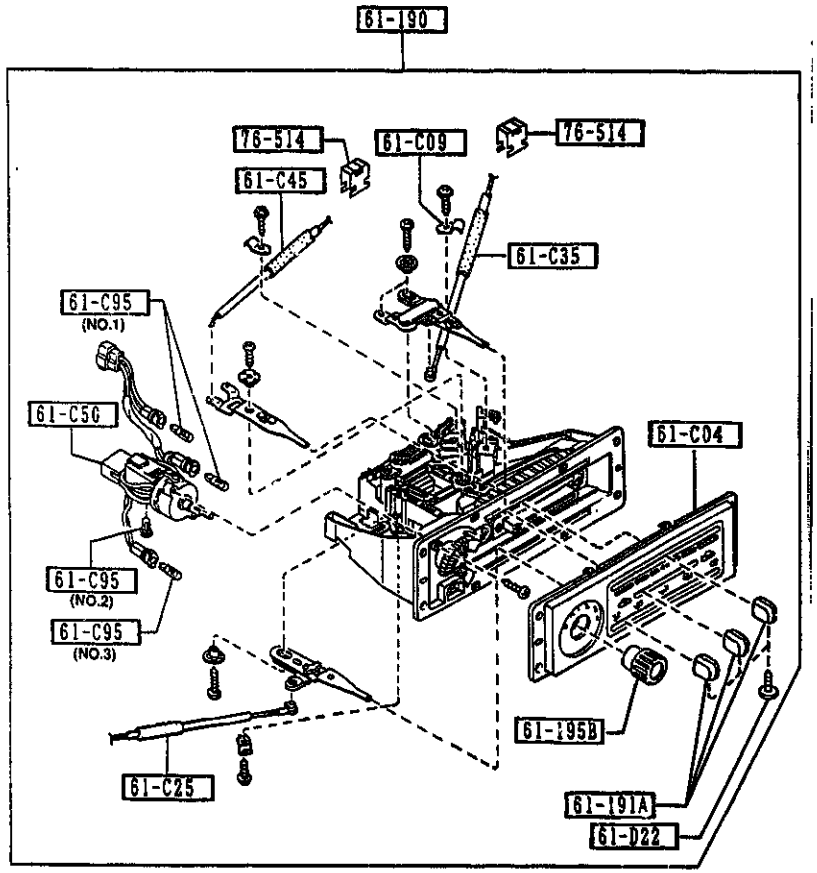

6115 -1 HEATER CONTROL COMPONENTS

PART NO.	QTY	MODEL/RESTRICTION	MODEL/RESTRICTION	MODEL/RESTRICTION	FROM-TO
61-C04		PANEL,PLATE-MODE CONTROL			
NA01-61-C04A	1				
61-C09		CLIP,HEATER CONTROL			
H260-61-CC9	1				
61-C25		WIRE,TEMP. CONTROL			
NA01-61-C25	1				
61-C35		WIRE,MODE CONTROL			
NA01-61-C35	1				
61-C45		WIRE,RECYCLE & FRESH			
NA75-61-C45	1				
61-C50		SWITCH,FAN-HEATER CONTROL			
NA01-61-C50	1				-6401
*NA01-61-C50A	1				6401-
61-C95		BULB,MODE CONTROL			
NA01-61-C95	2	(ILLUST. NO.1)			
NA02-61-C95	1	(ILLUST. NO.2)			
NA03-61-C95	1	(ILLUST. NO.3)			-6401
*NA03-61-C95A	1	(ILLUST. NO.3)			6401-
61-D22		SCREW,RR HEATER UNIT			
NA01-61-D22	3				
61-190		CONTROL,HEATER			
NA75-61-190B AN(NA75-61-190C)	1				-6401
*NA75-61-190C	1				6401-
61-191A		KNOB NO.1			
NA01-61-191	3				
61-195B		KNOB,FAN SWITCH			
NA01-61-195	1				
76-514		CLIP			

6401 NA3** -717787

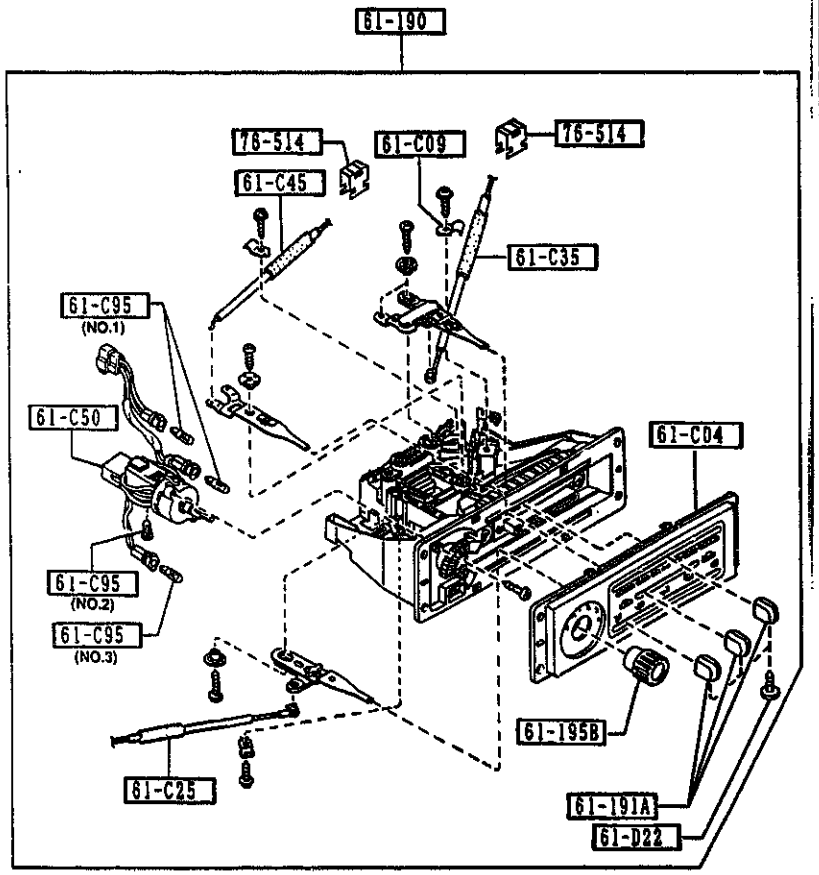

6115 -2 * HEATER CONTROL COMPONENTS

PART NO.	QTY	MODEL/RESTRICTION	MODEL/RESTRICTION	MODEL/RESTRICTION	FROM-TO
CONT'D					
B001-76-526	2				

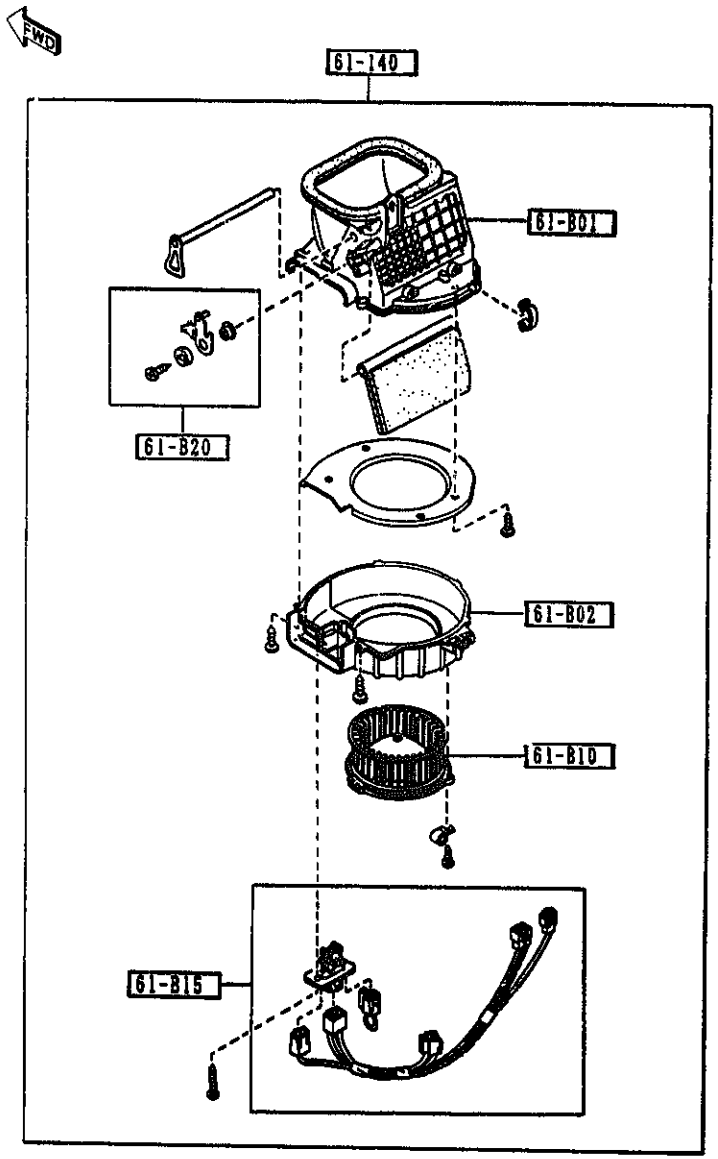

6120 -1 * HEATER BLOWER COMPONENTS

PART NO.	QTY	MODEL/RESTRICTION	MODEL/RESTRICTION	MODEL/RESTRICTION	FROM-TO
61-B01		CASE'A',BLOWER UNIT			
NA75-61-B01	1				
61-B02		CASE'B',BLOWER UNIT			
NA01-61-B02	1				
61-B10		MOTOR,FAN-BLOWER UNIT			
NA81-61-B10	1				
61-B15		RESISTOR,BLOWER UNIT			
NA01-61-B15	1				
61-B20		LINK,RECYCLE & FRESH			
NA01-61-B20	1				
61-140		BLOWER UNIT			
NA75-61-140	1				

(PIPE & CONDENSER)

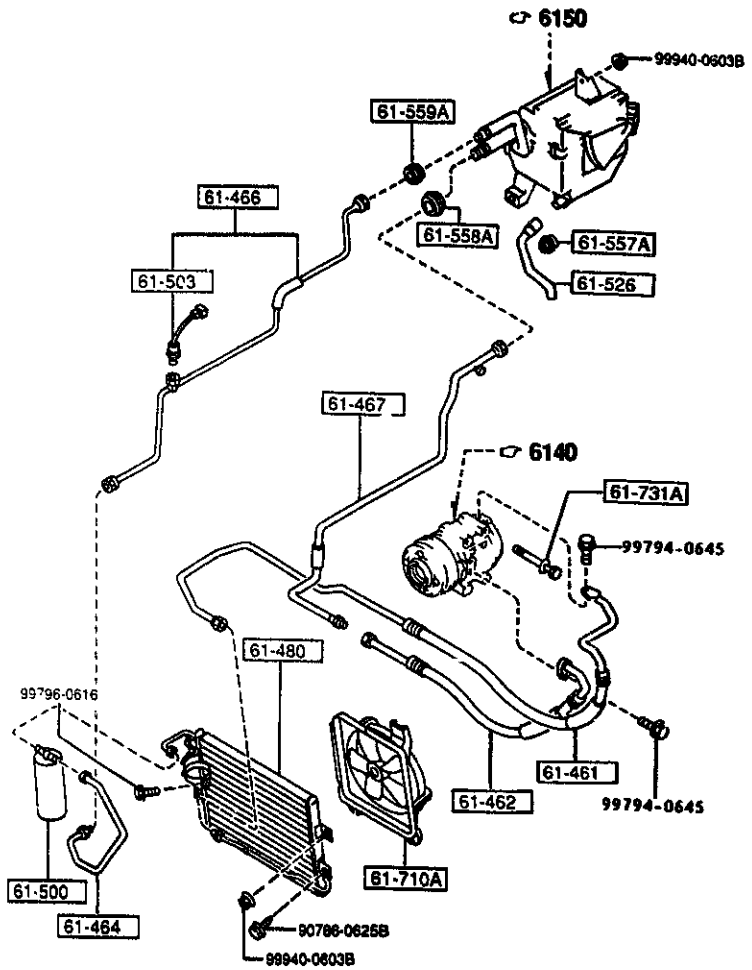

AUNA05

(BRACKET & CLIP)

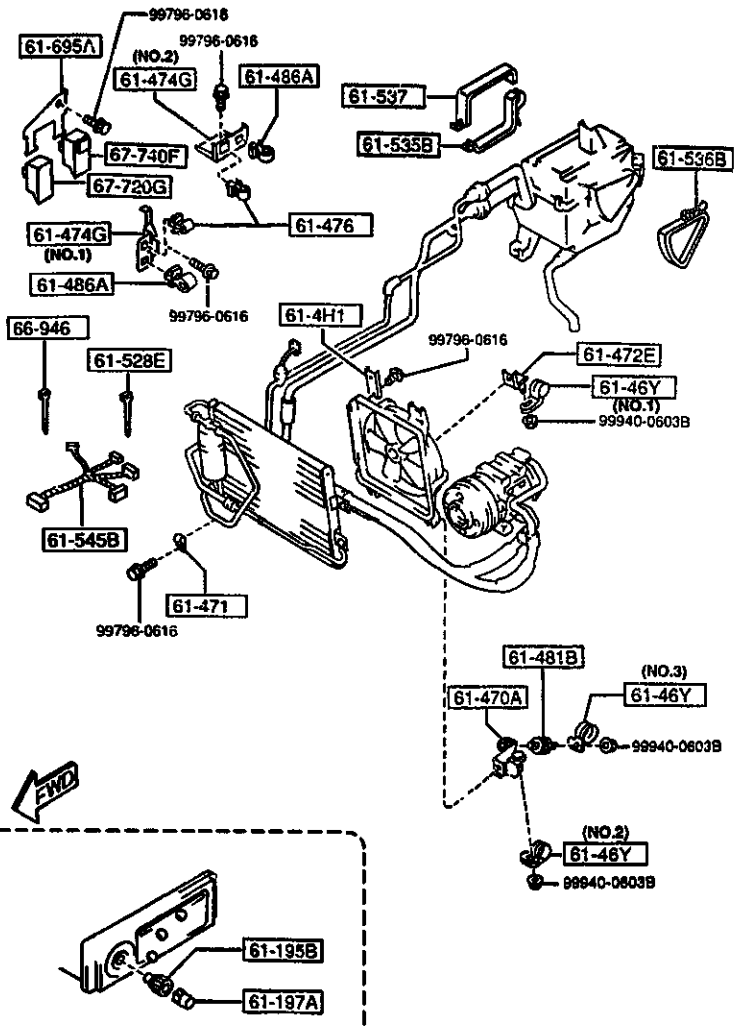

AUNA05

(PIPE & CONDENSER)

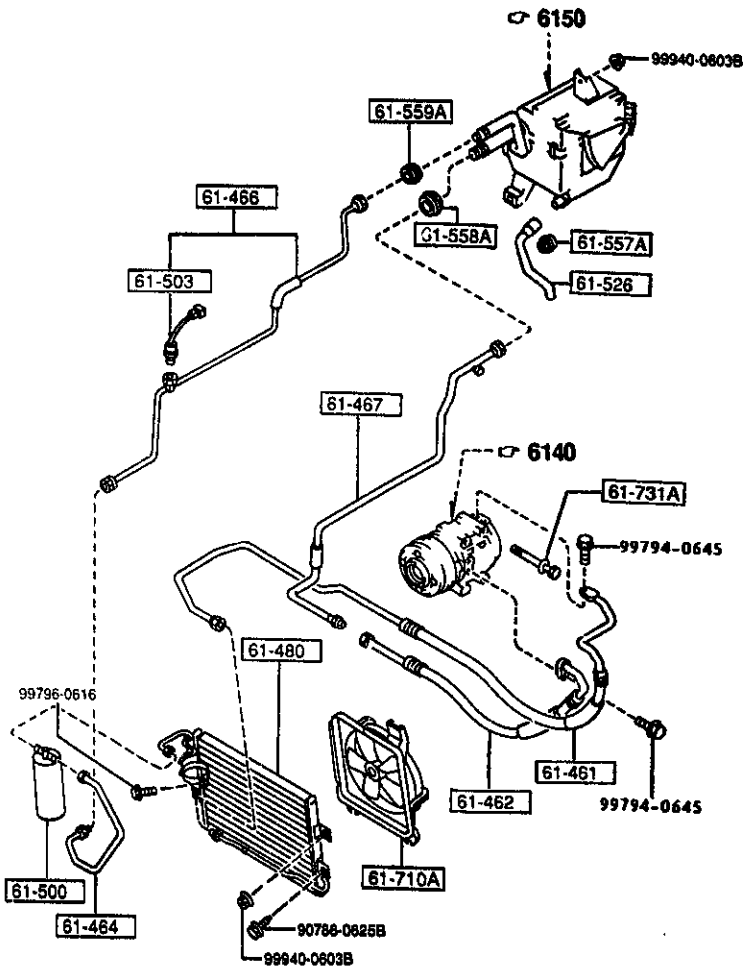

AUNA05

PART NO.	QTY	MODEL/RESTRICTION	MODEL/RESTRICTION	MODEL/RESTRICTION	FROM-TO
61-195B MA01-61-193	1	KNOB,FAN SWITCH			
61-197A MA01-61-197	1	KNOB,AIR CON.			
61-4H1 MA01-61-4H1	1	BRACKET,HOSE (A)			
61-46Y BR71-61-46Y	1	CLIP,PIPE (A) (ILLUST. NO.1)			
BR76-61-46Y	1	(A) (ILLUST. NO.2)			
MA51-61-46YC	1	(A) (ILLUST. NO.3)			
61-461 MA75-61-461	1	HOSE,FLEXIBLE-HIGH (A)			
61-462 MA75-61-462	1	HOSE,FLEXIBLE-LOW (A)			
61-464 MA75-61-467	1	PIPE NO.2,COOLER (A)			
61-466 MA75-61-46XA	1	PIPE NO.4,COOLER (A)			
61-467 MA75-61-468	1	PIPE NO.5,COOLER (A)			
61-470A MA82-61-471A	1	BRACKET,HOSE (A)			
61-471 BF67-61-471	1	CLIP,PIPE (A)			

(BRACKET & CLIP)

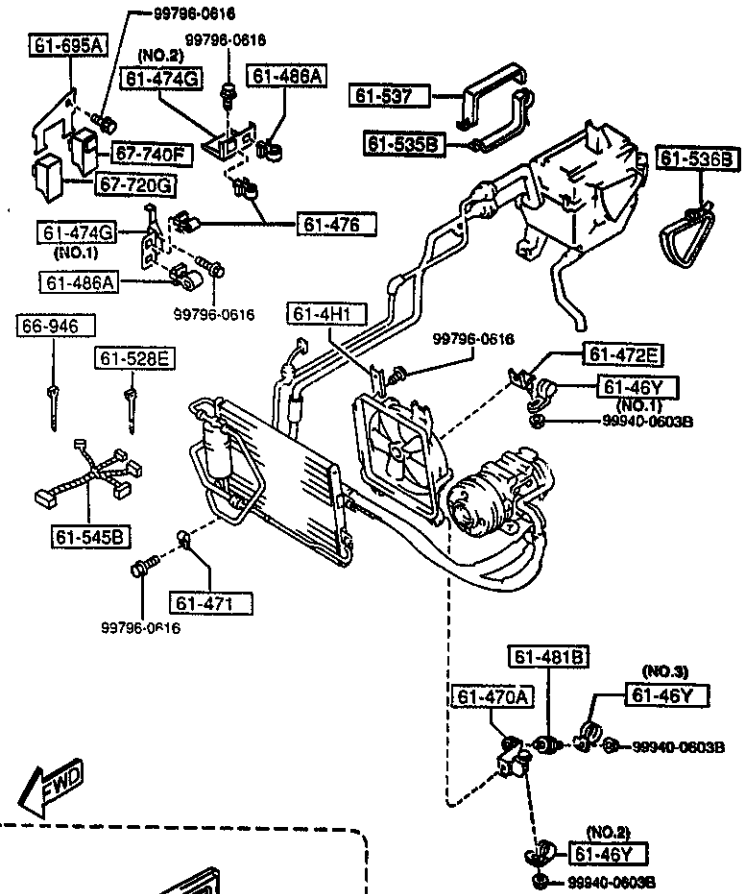

PART NO.	QTY	MODEL/RESTRICTION	MODEL/RESTRICTION	MODEL/RESTRICTION	FROM-TO
61-472E		BRACKET,CLAMP			
NA01-61-472	1	(A)			
61-474G		BRACKET,PIPE			
NA01-61-474	1	(A) (ILLUST. NO.1)			
NA02-61-474A	1	(A) (ILLUST. NO.2)			
61-476		CLIP			
NA02-61-476	2	(A)			
61-480		CONDENSER			
NA75-61-480	1	(A)			
61-481B		RUBBER,INSULATOR			
FC20-61-481	1	(A)			
61-486A		CLIP			
UB39-61-486A	2				
61-500		TANK,LIQUID			
NA75-61-500	1	(A)			
61-503		SW.,PRESSURE-LIQUID TANK			
GB6H-61-503	1	(G)			
61-526		HOSE,DRAIN			
NA01-61-526	1	(A)			
61-528E		BAND			
NA01-61-435	1	(G)			
61-535B		PLATE NO.1,SEAL			
NA01-61-52YA	1	(A)			

(PIPE & CONDENSER)

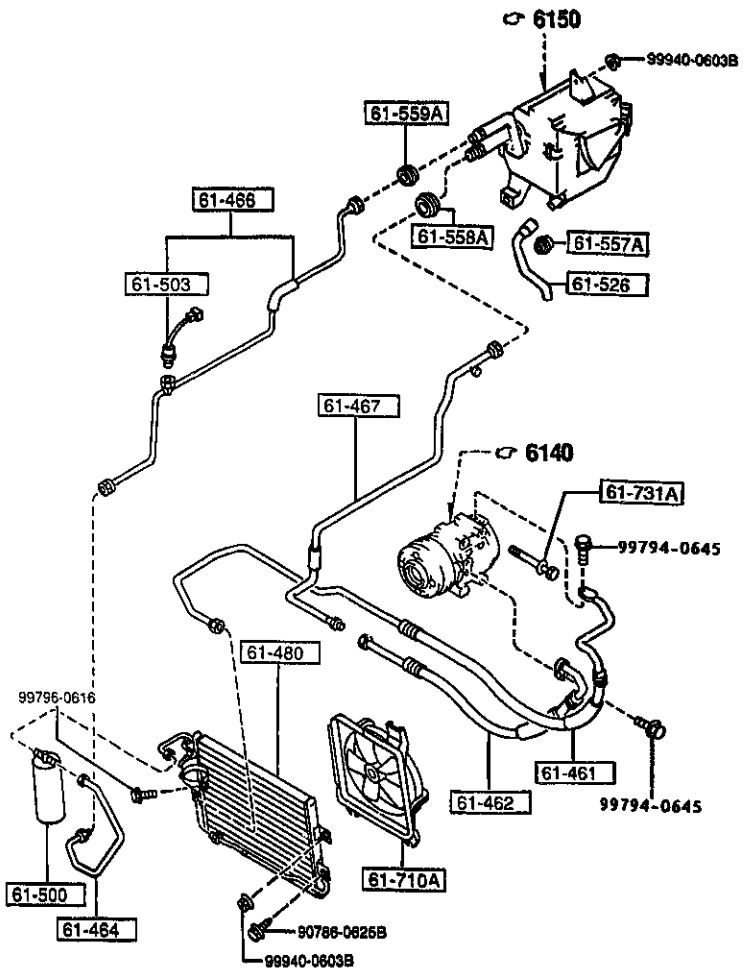

AUNA05

6130 -3 * AIR CONDITIONER

PART NO.	QTY	MODEL/RESTRICTION	MODEL/RESTRICTION	MODEL/RESTRICTION	FROM-TO
61-536B NA01-61-52Z	1	PLATE NO.2,SEAL (A)			
61-537 NA01-61-529	1	PLATE NO.3,SEAL (A)			
61-545B NA75-61-545A	1	HARNESS,WIRE (A)			
61-557A FB04-61-557	1	GROMMET (A)			
61-558A BF67-61-558	1	GROMMET (A)			
61-559A BF67-61-559	1	GROMMET (A)			
61-695A NA75-61-695	1	BRACKET,RELAY (A)			
61-710A NA01-61-710	1	FAN,CONDENSER (A)			
61-731A B111-61-731	4	BOLT,AIR CON.			
66-946 NA02-61-435	1	BAND (A)			
67-720G EE12-67-720	1	RELAY,TRANSFER			
67-740F H450-67-740	1	CONTROL,COOLANT FAN 30A			

CAT. AUNA05-04

1997-07

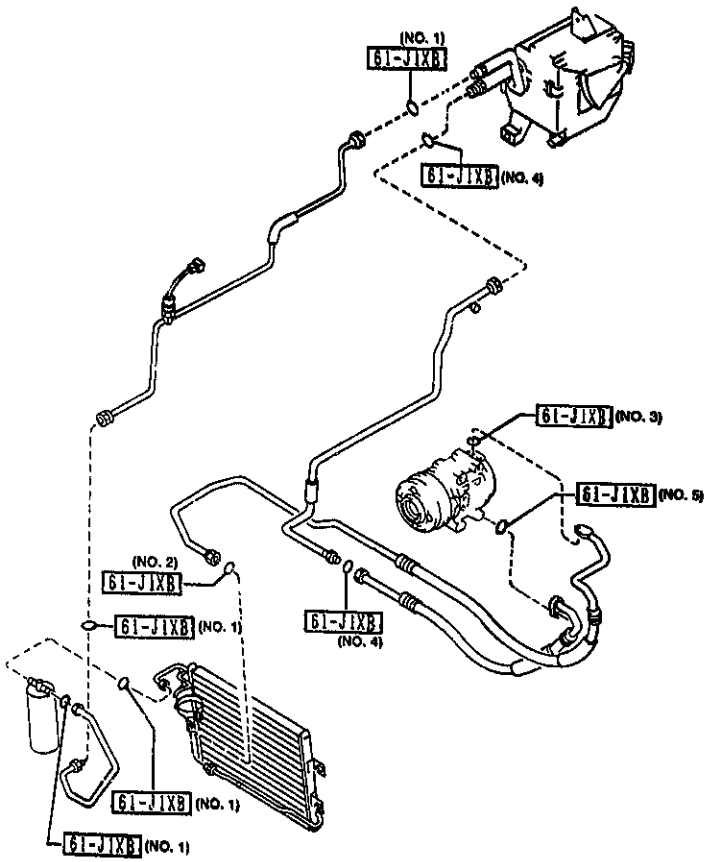

(Note)
The p/no (NO. 1) ~ (NO. 5) with D-code 61-J1XB consist 10 pcs of O Rings.

6135 -1 * AIR CONDITIONING COOLING PIPE O-RING

PART NO.	QTY	MODEL/RESTRICTION	MODEL/RESTRICTION	MODEL/RESTRICTION	FROM-TO
61-J1XB		RING,'O'-NO.3			
LB51-61-J1X	1	(A) (ILLUST. NO.1)			
LB54-61-J1X	1	(A) (ILLUST. NO.2)			
LB55-61-J1X	1	(A) (ILLUST. NO.3)			
LB56-61-J1X	1	(A) (ILLUST. NO.4)			
LB57-61-J1X	1	(A) (ILLUST. NO.5)			

6140 AIR CONDITIONING COMPRESSOR COMPONENTS

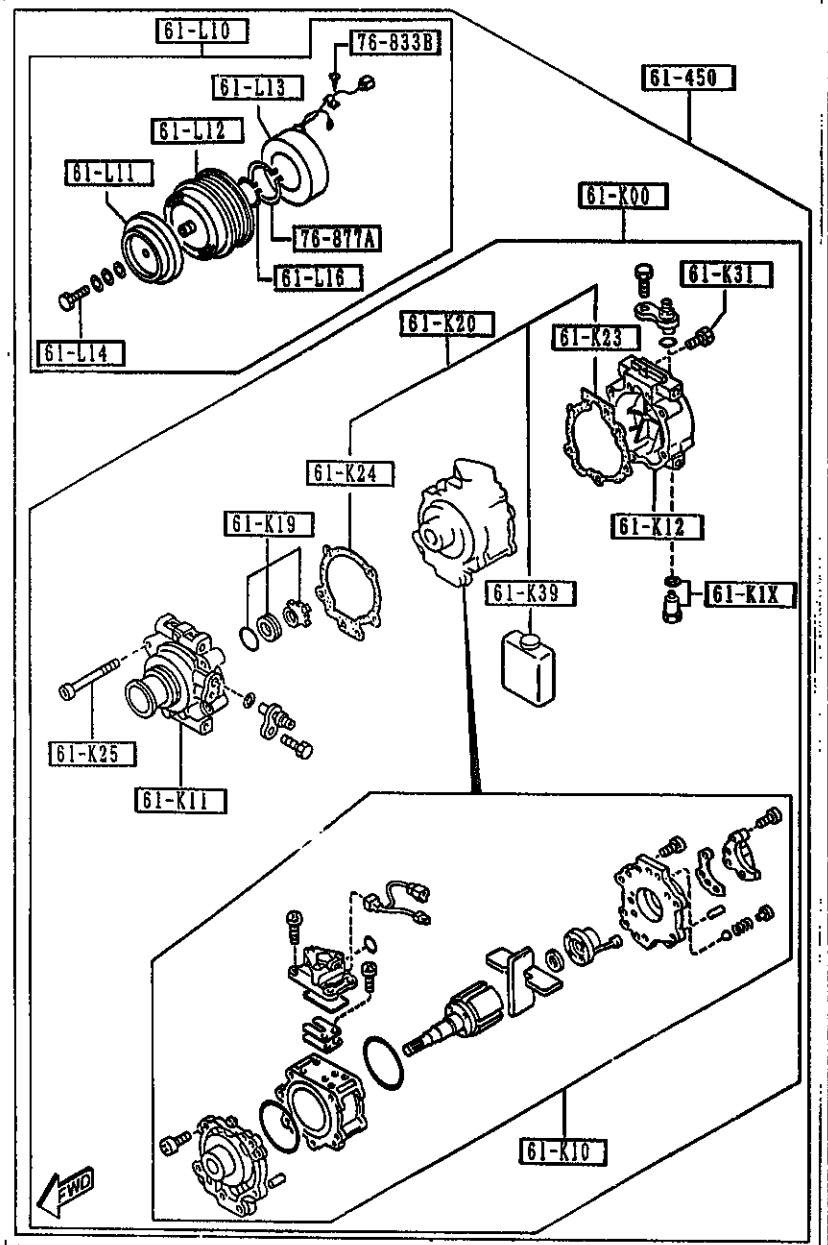

AUNA05

6140 -1 AIR CONDITIONING COMPRESSOR COMPONENTS

PART NO.	QTY	MODEL/RESTRICTION	MODEL/RESTRICTION	MODEL/RESTRICTION	FROM-TO
61-K00		COMPRESSOR,AIR CON.			
NA75-61-K00	1	(A)			
61-K1X		VALVE,RELIEF			
NA75-61-K1X	1	(A)			
61-K10		SHAFT,CYL.-COMPRESSOR			
NA75-61-K10	1	(A)			
61-K11		HEAD,CYL.-COMPRESSOR			
NA75-61-K11	1	(A)			
61-K12		HEAD,CYL.-COMPRESSOR			
NA75-61-K12	1	(A)			
61-K19		SEAL,SHAFT-COMPR.			
NA75-61-K19	1	(A)			
61-K20		GASKET KIT,COMPRESSOR			
NA75-61-K2X	1	(A)			
61-K23		PLUG,COMPRESSOR			
NA75-61-K23	1	(A)			
61-K24		GASKET,COMPRESSOR			
NA02-61-K24	1	(A)			
61-K25		BOLT,COMPRESSOR-AIR CON.			
F065-61-K25	5				
61-K31		BOLT,COMPRESSOR			
F065-61-K31	2				
61-K39		OIL,COMPRESSOR			
NA75-61-K39	1	(A)			

CAT. AUNA05-04

1997-07

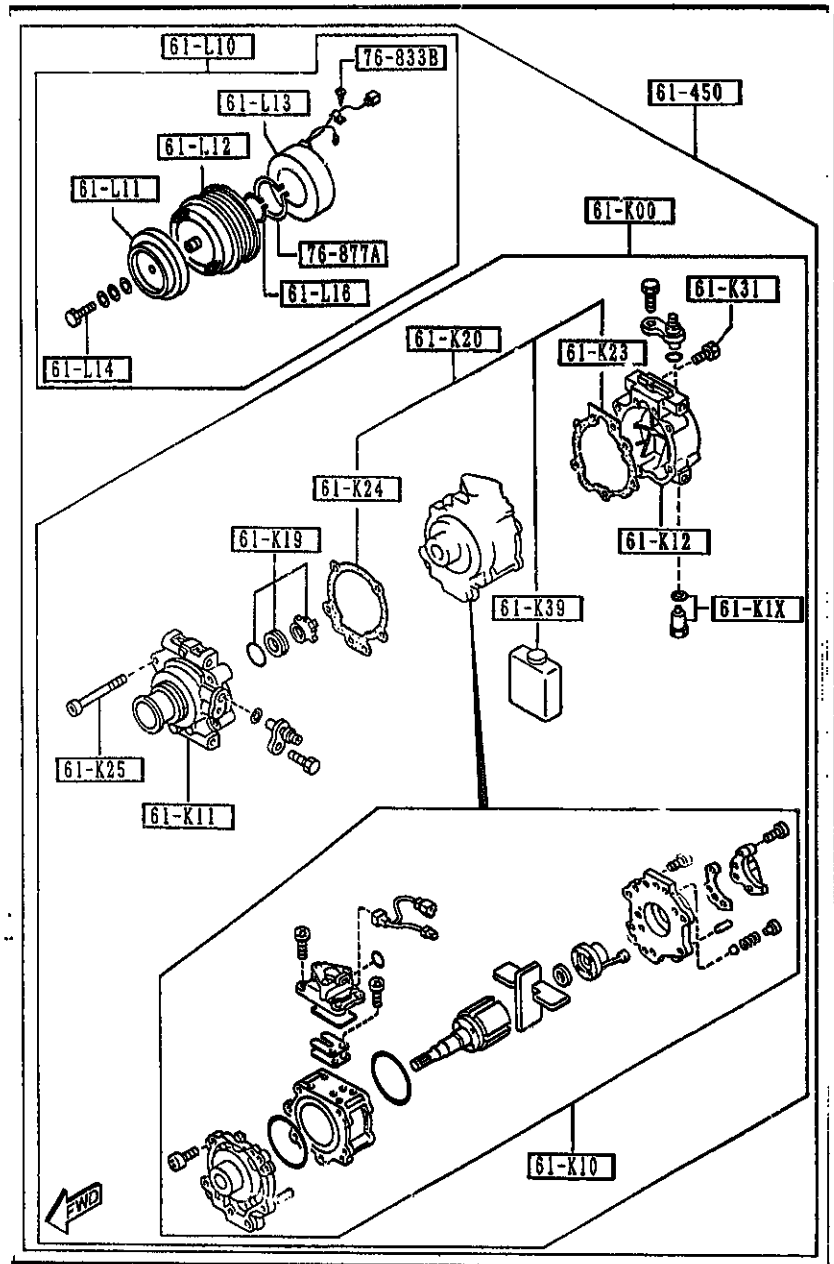

AUNA05

PART NO.	QTY	MODEL/RESTRICTION	MODEL/RESTRICTION	MODEL/RESTRICTION	FROM-TO
61-L10 NA75-61-L10	1	CLUTCH,MAGNET (A)			
61-L11 NA75-61-L11	1	ARMATURE,MAGNETIC CLUTCH (A)			
61-L12 NA75-61-L12	1	PULLEY,MAGNET CLUTCH (A)			
61-L13 NA75-61-L13	1	COIL,FIELD-MAGNET CLUTCH (A)			
61-L14 F065-61-L14	1	BOLT,MAGNET CLUTCH			
61-L16 F065-61-L16	1	RING,SNAP-MAGNET CLUTCH			
61-450 NA75-61-450	1	COMPRESSOR (A)			
76-833B B001-76-734	1	WASHER			
76-877A B001-76-725	1	RING,SNAP			

CAT. AUNA05-04

1997-07

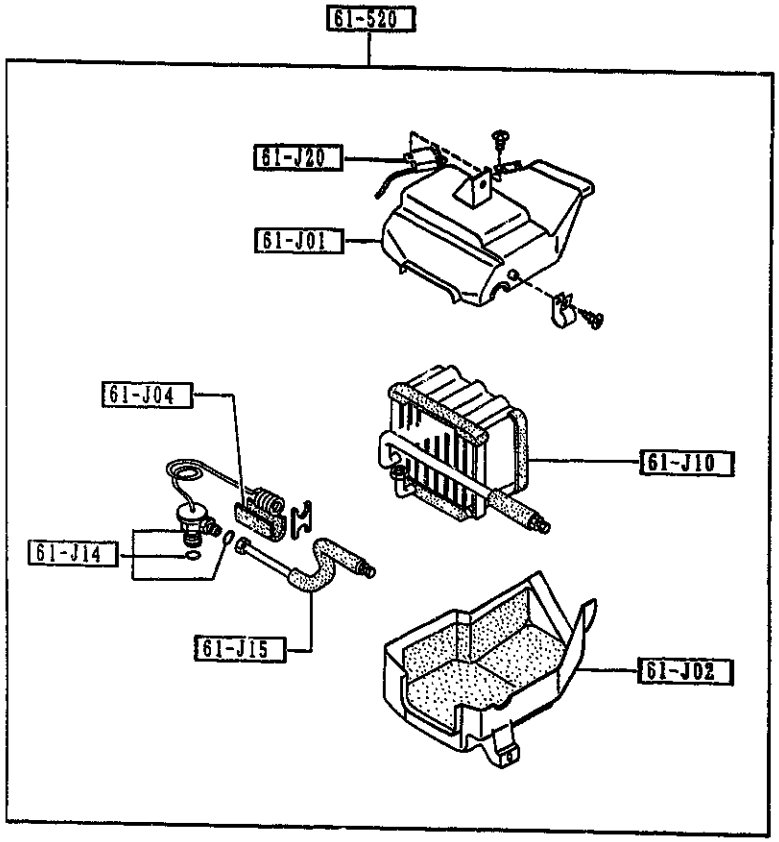

6150 -1 * AIR CONDITIONING COOLING UNIT

PART NO.	QTY	MODEL/RESTRICTION	MODEL/RESTRICTION	MODEL/RESTRICTION	FROM-TO
61-J01		CASE'A',COOLING UNIT			
NA01-61-J01A	1	(A)			
61-J02		CASE'B',COOLING UNIT			
NA01-61-J02A	1	(A)			
61-J04		SEAL,COOLING UNIT			
NA01-61-J04	1	(A)			
61-J10		EVAPORATOR			
NA01-61-J10A	1	(A)			
61-J14		VALVE,EXPANSION			
NA75-61-J14	1	(A)			
61-J15		PIPE,COOLING UNIT			
NA01-61-J15	1	(A)			
61-J20		THERMOSTAT,COOLING UNIT			
NA01-61-J20	1	(A)			
61-520		UNIT,COOLING			
NA75-61-520B	1	(A)			

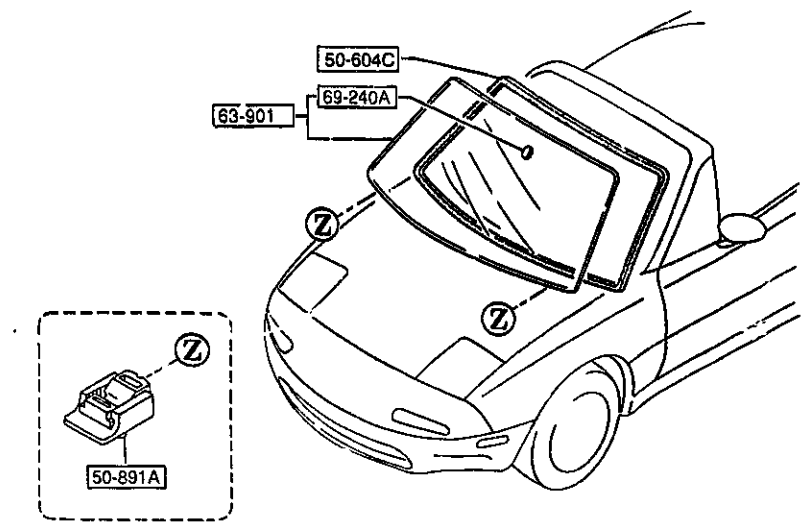

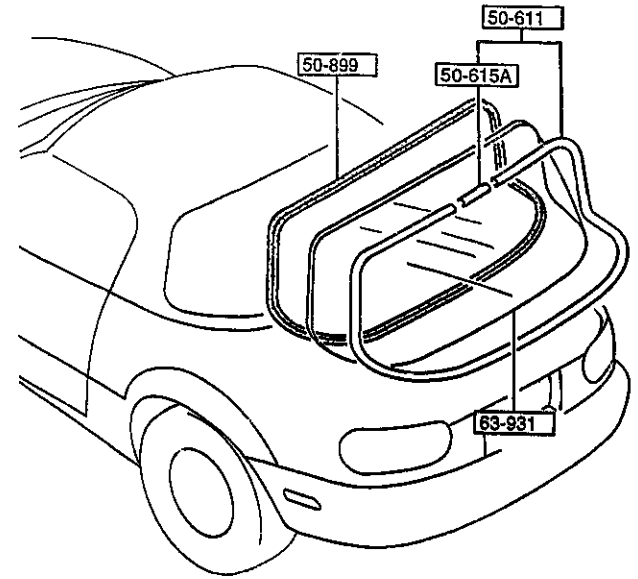

AUNA05

6300 -1 * WINDOW GLASSES

PART NO.	QTY	MODEL/RESTRICTION	MODEL/RESTRICTION	MODEL/RESTRICTION	FROM-TO
50-604C		DAM			
*NA01-50-894A	1				
50-611		MOULD,RR.WINDOW			
NAY1-63-930	1	OPT, (W/DETACHABLE HARD TOP)			
50-615A		JOINT,BACK WINDOW MOULD			
NA01-63-934	1	OPT, (W/DETACHABLE HARD TOP)			
50-891A		SPACER,WINDOW			
EA01-50-891A	2	WHITE			
50-899		DAM,REAR-WIND.			
NA01-63-895	1	OPT, (W/DETACHABLE HARD TOP)			
63-901		GLASS,WINDSHIELD			
NA01-63-901	1	('95 MODEL)			
NB38-63-900A	1	('96 MODEL)			-6201
NB39-63-900	1	('96 MODEL)			6201-
63-931		GLASS,BACK WINDOW			
N007-63-931	1	OPT, (W/DETACHABLE HARD TOP) ('95 MODEL)			
N007-63-931	1	OPT, (W/DETACHABLE HARD TOP) ('96 MODEL)			-6201
NB48-63-931	1	OPT, (W/DETACHABLE HARD TOP) ('96 MODEL)			6201-
69-240A		BASE,INTERIOR MIRROR			
BC1C-69-240	1	('96 MODEL)			

6201 NA3** -711421

CAT. ACNA05-04 1997-07

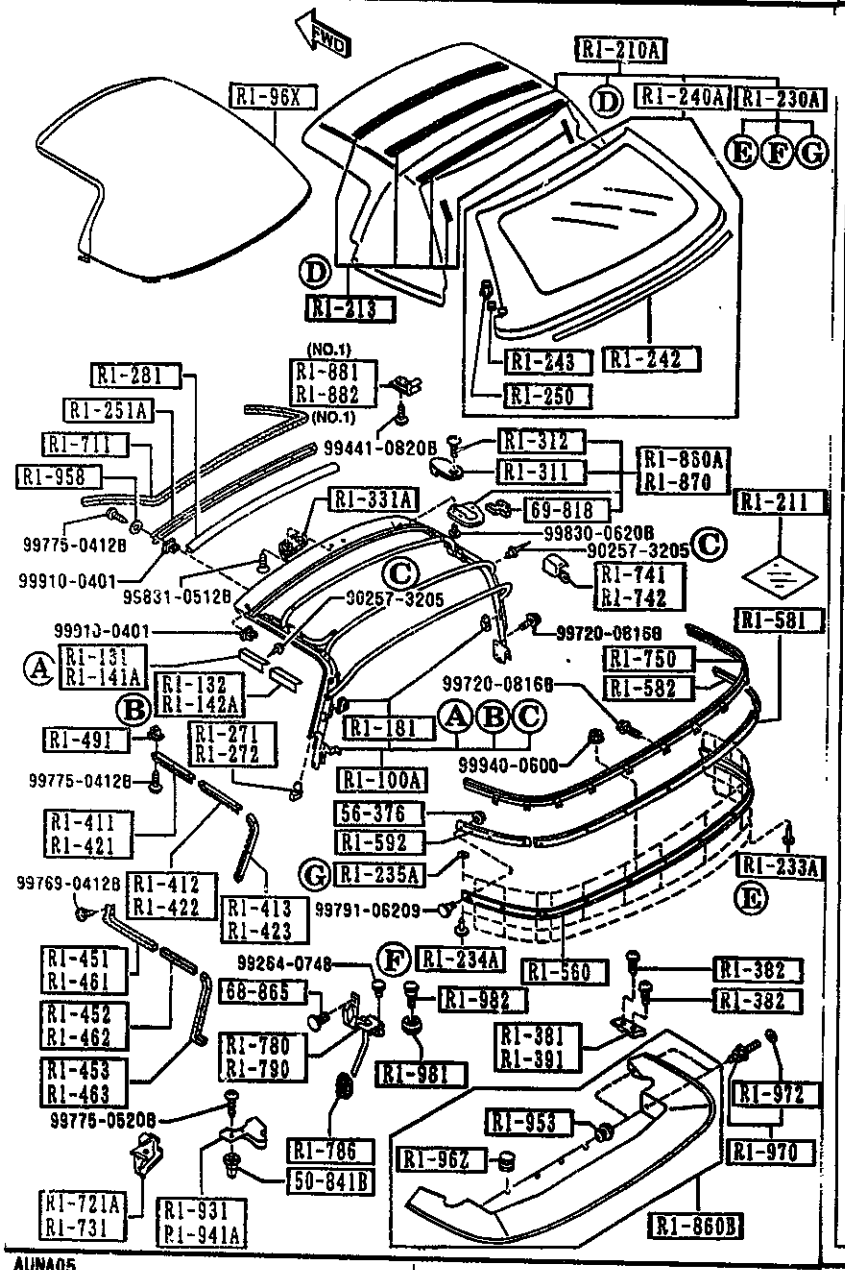

AUNA05

(W/DETACHABLE HARDTOP)

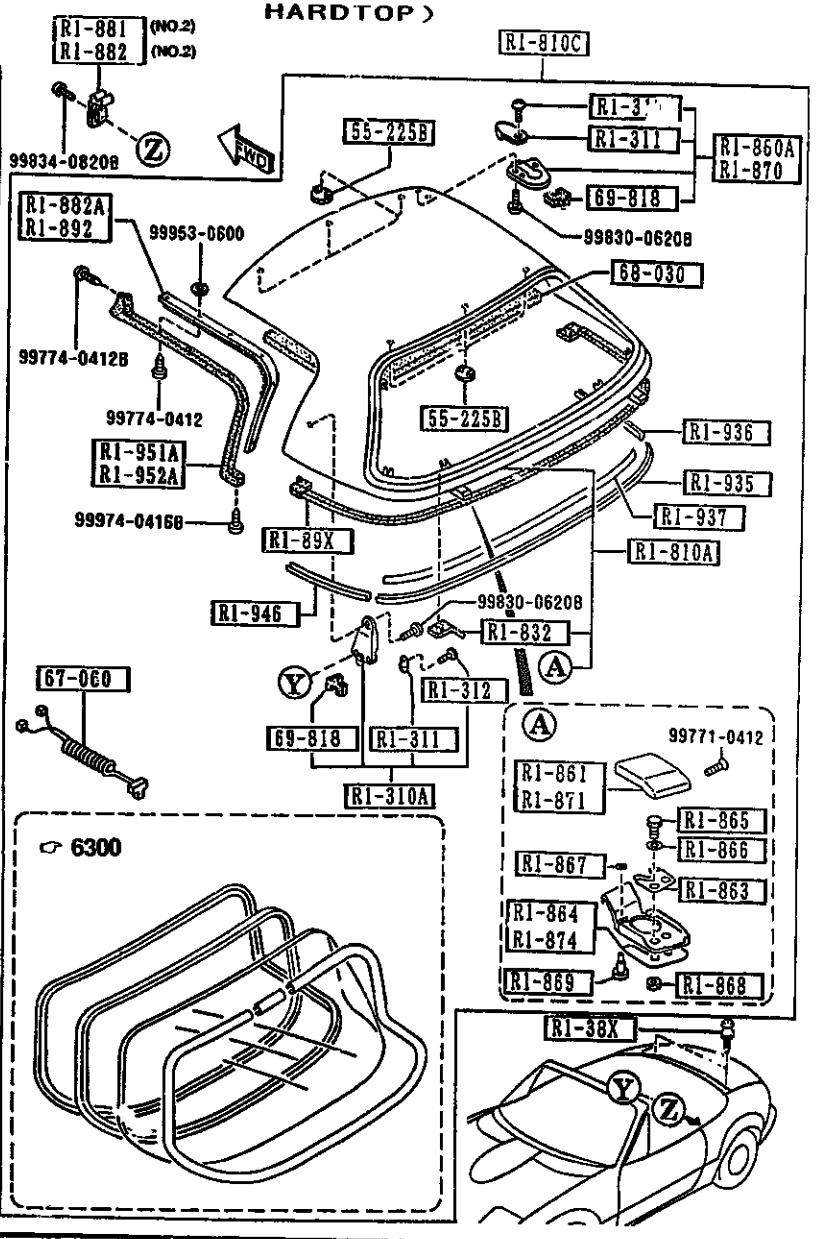

AUMA05

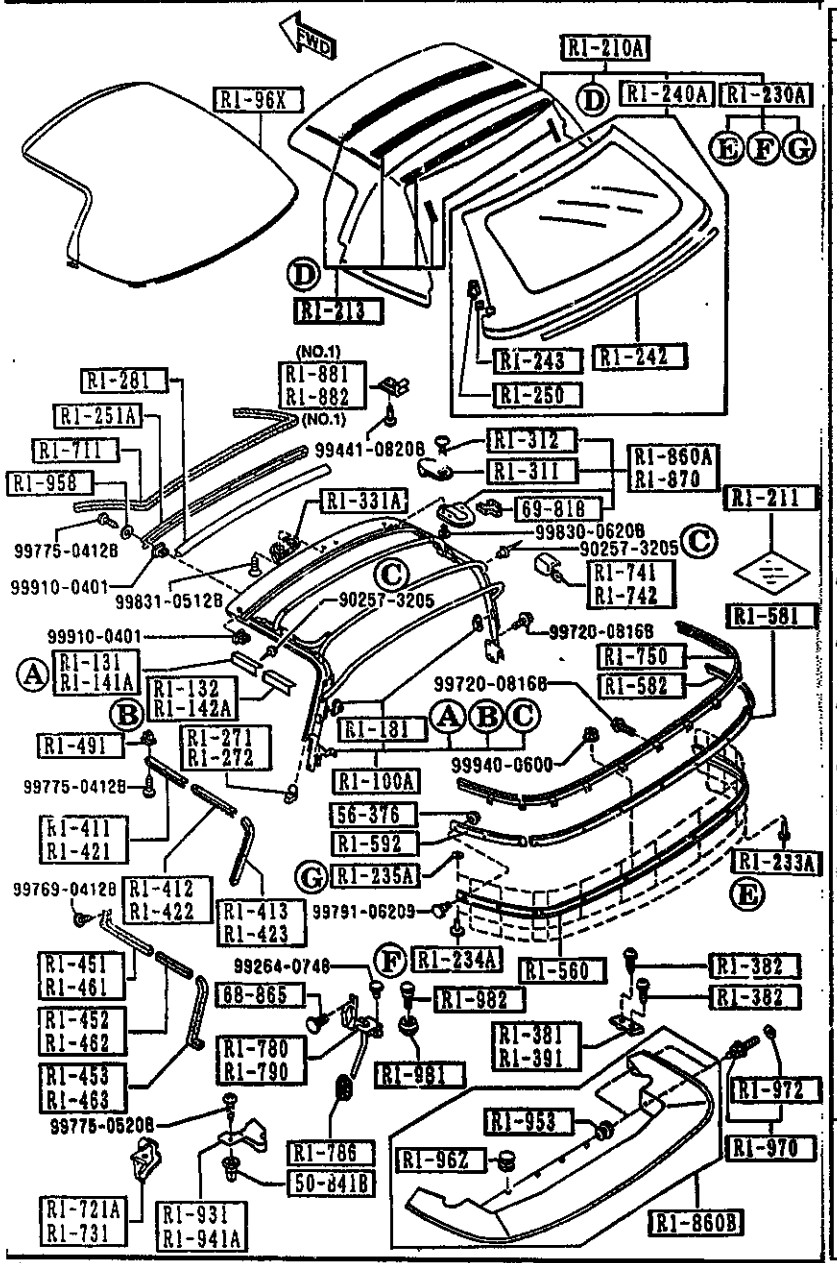

AUNA05

6330 -1 SUN ROOF

PART NO.	QTY	MODEL/RESTRICTION	MODEL/RESTRICTION	MODEL/RESTRICTION	FROM-TO
R1-100A		LINK,SOFT TOP			
NA81-R1-100E	1				
R1-131		PROTECTOR*A*(R),LINK			
NA01-R1-131	1				
R1-132		PROTECTOR*B*(R),LINK			
NA81-R1-132	1				
R1-141A		PROTECTOR*A*(L),LINK			
NA81-R1-141	1				
R1-142A		PROTECTOR*B*(L),LINK			
NA81-R1-142	1				
R1-181		STOPPER,LINK-HOOD			
NA81-R1-181	2				
R1-210A		FABRIC,TOP-SOFT TOP			
NA81-R1-210J	1	BASE, R-PKG, P.E.GR, PKG-A, PKG-B, (BLACK)			-5A02
AN(NA01-R1-210K)					
NA02-R1-210C	1	L-PKG, PKG-C, M-25-ED, (TAN)			-5A02
AN(NA02-R1-210D)					
NA01-R1-210K	1	BASE, R-PKG, P.E.GR, PKG-A, PKG-B, (BLACK)			5A02-6501
AN(NA01-R1-210L)					
NA02-R1-210D	1	L-PKG, PKG-C, M-25-ED, (TAN)			5A02-6501
AN(NA02-R1-210E)					
*NA01-R1-210L	1	BASE, R-PKG, P.E.GR, PKG-A, PKG-B, (BLACK)			6501-
*NA02-R1-210E	1	L-PKG, PKG-C, (TAN)			6501-
R1-211		CLOTH,REPAIR-TOP			
NAV1-R1-211	1	BASE, R-PKG, P.E.GR, PKG-A, PKG-B, (BLACK)			
NAV2-R1-211	1	L-PKG, PKG-C, M-25-ED, (TAN)			
NOV5-R1-211	1	(BLUE)			4B01-

4B01 NA35* -606043
5A02 NA3** -703047
6501 NA3** -718664

CAT. AUNA05-04 1997-07

(W/DETACHABLE HARDTOP)

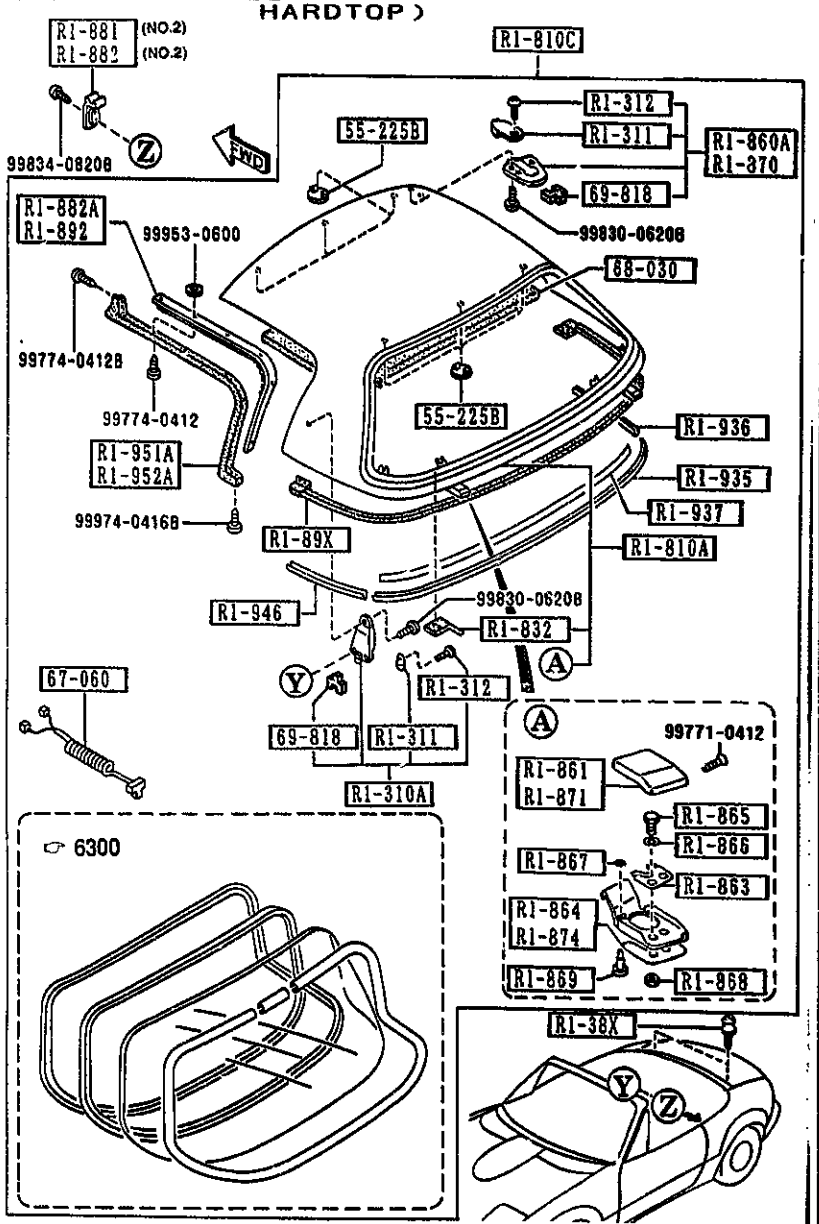

AUNA05

6330 -2 SUN ROOF

PART NO.	QTY	MODEL/RESTRICTION	MODEL/RESTRICTION	MODEL/RESTRICTION	FROM-TO
CONT'D					
N0Y4-R1-211	1	(DARK GREEN)			5C01-
R1-213		CLOTH'C',TOP			
NA02-R1-213	1	L-PKG, PKG-C, M-25-ED, (TAN)			
R1-230A		FASTENER SET,TOP CLOTH			
NA01-R1-230	1				
R1-233A		FASTENER,RAIN RAIL-SIDE			
NA01-R1-233	8				
R1-234A		FASTENER,RAIN RAIL-REAR			
NA01-R1-234	7				
R1-235A		WASHER,FASTENER-RAIN RAIL			
NA01-R1-235	15				
R1-240A		WINDOW,BACK-D. TOP			
NAY1-R1-240F AN(NAY1-R1-240G)	1	BASE, R-PKG, P.E.GR, PKG-A, PKG-B, (BLACK)			-5A02
NAY2-R1-240C AN(NAY2-R1-240D)	1	L-PKG, PKG-C, M-25-ED, (TAN)			-5A02
N0Y5-R1-240 AN(N0Y5-R1-240A)	1	(BLUE)			4B01-5A02
NAY1-R1-240G	1	BASE, R-PKG, P.E.GR, PKG-A, PKG-B, (BLACK)			5A02-
NAY2-R1-240D	1	L-PKG, PKG-C, M-25-ED, (TAN)			5A02-
N0Y5-R1-240A	1	(BLUE)			5A02-
N0Y4-R1-240	1	(DARK GREEN)			5C01-
R1-242		TAPE,SEAL-RAIN RAIL			
NAY1-R1-242	1				
R1-243		STOPPER,ZIPPER-BACK WINDOW			
NAY1-R1-243	2				
R1-250		HEAD,ZIPPER-BACK WINDOW			

4B01 NA35* -606043
5A02 NA3** -703043
5C01 NA3** -706448

CAT. AUNA05-04

1997-07

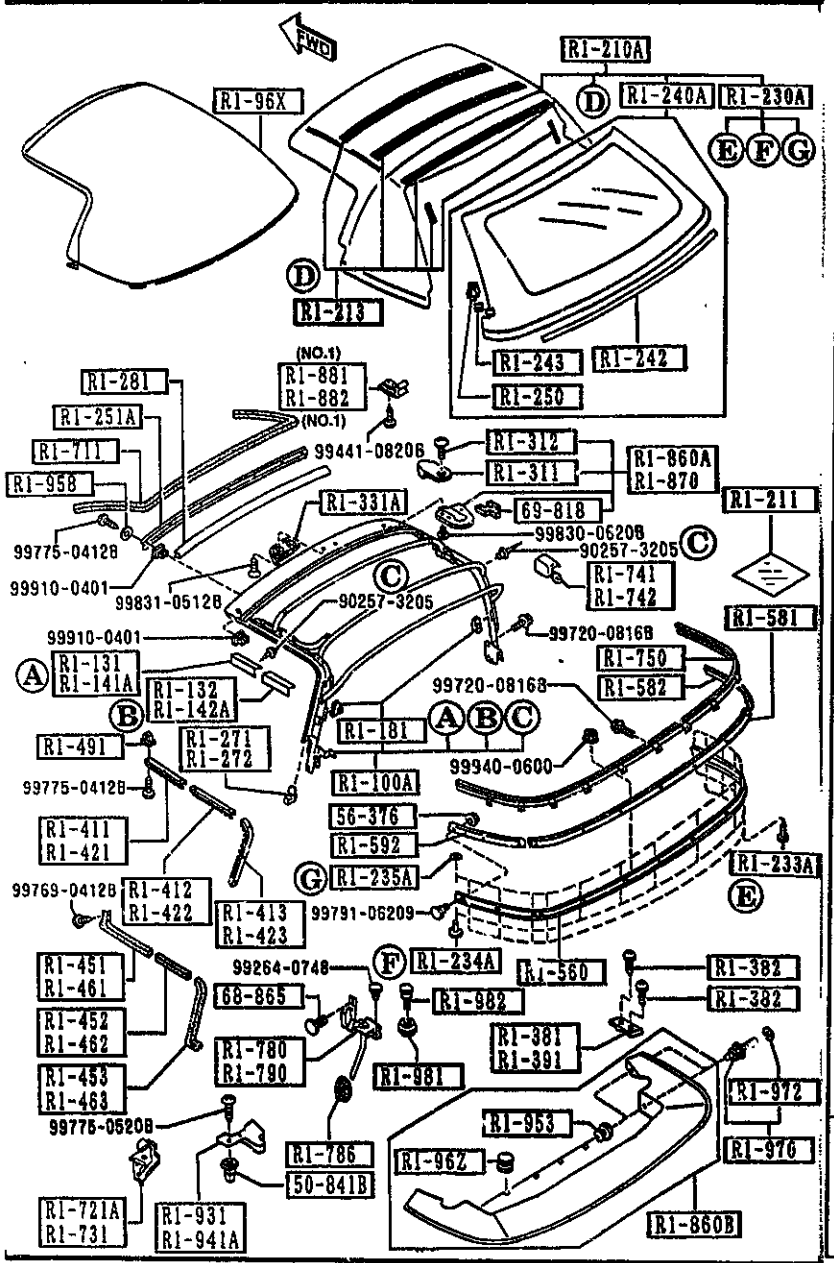

AUNA05

6330 -3 SUN ROOF

PART NO	QTY	MODEL/RESTRICTION	MODEL/RESTRICTION	MODEL/RESTRICTION	FROM-TO
CONT'D					
NA01-R1-2508	1				
R1-251A		PLATE(FRT),SET-ROOF PANEL			
NA01-R1-291	1				
R1-271		CLIP(R),FORM PLATE			
NA01-R1-271	1				
R1-272		CLIP(L),FORM PLATE			
NA01-R1-272	1				
R1-281		WELT,SEAMING-SOFT TOP			
NA01-R1-281	1				
R1-310A		LOCK,DETACHABLE TOP			
NA02-R1-310C	2	OPT, (W/DETACHABLE HARD TOP)			-6401
*NA02-R1-310E	2	OPT, (W/DETACHABLE HARD TOP)			6401-
R1-311		CAP,TOP LOCK			
NA01-R1-311	2	(W/O DETACHABLE HARD TOP)			
NA01-R1-311	6	OPT, (W/DETACHABLE HARD TOP)			
R1-312		SCREW,TOP LOCK			
NA01-R1-312	2	(W/O DETACHABLE HARD TOP)			
NA01-R1-312	6	OPT, (W/DETACHABLE HARD TOP)			
R1-331A		HANDLE,SOFT TOP			
NA01-R1-331	1				
R1-38X		HOOK,SOFT TOP-REAR DECK			
NA01-R1-38XB	2				
R1-381		PLATE(R),HOOK-REAR DECK			
NA01-R1-381B	1				

6401 NA3** -717787

CAT. AUNA05-04

1997-07

(W/DETACHABLE HARDTOP)

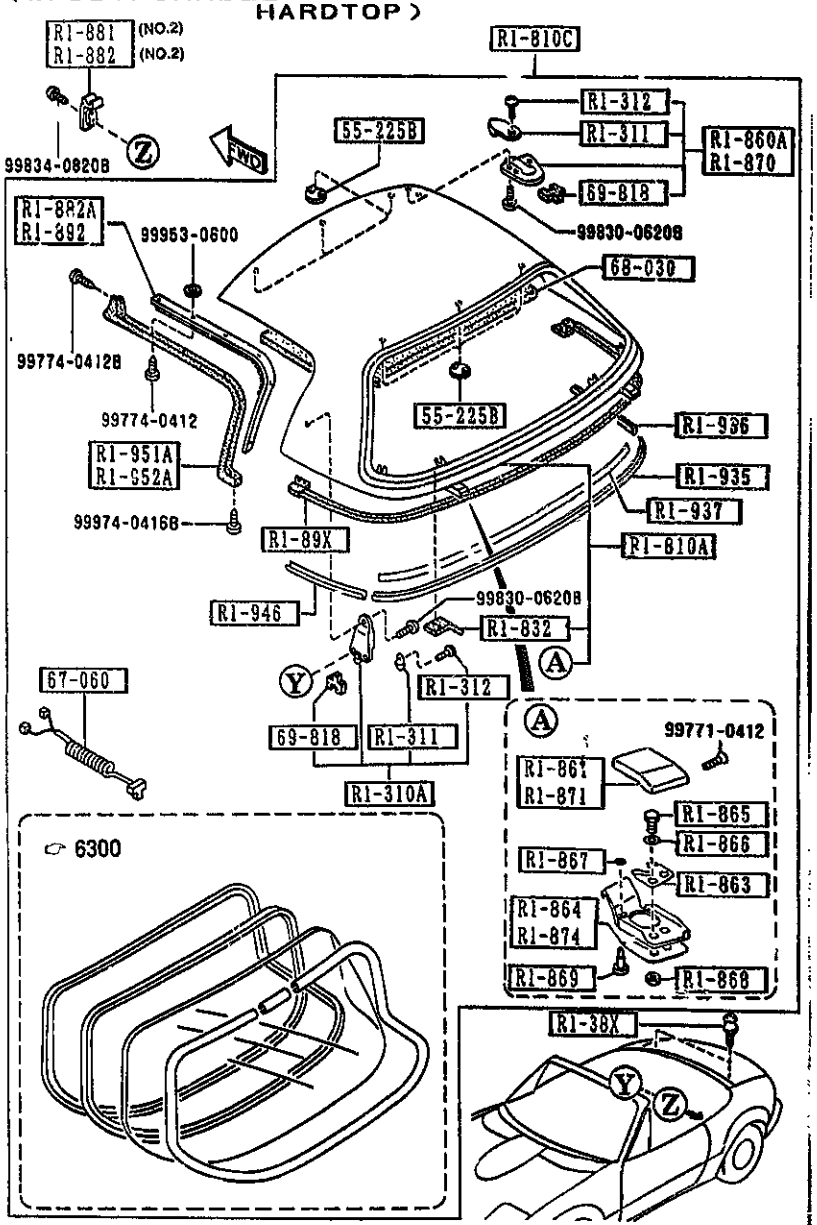

AUNA05

6330 -4 SUN ROOF

PART NO.	QTY	MODEL/RESTRICTION	MODEL/RESTRICTION	MODEL/RESTRICTION	FROM-TO
R1-362 NA01-R1-382A	2	SCREW,HOOK-REAR DECK			
R1-391 NA01-R1-391B	1	PLATE(L),HOOK-REAR DECK			
R1-411 NA01-R1-461	1	RETAINER'A'(R),WTHSTP			
R1-412 NA01-R1-462	1	RETAINER'B'(R),WTHSTP			
R1-413 NA01-R1-463	1	RETAINER'C'(R),WTHSTP			
R1-421 NA01-R1-471	1	RETAINER'A'(L),WTHSTP			
R1-422 NA01-R1-472	1	RETAINER'B'(L),WTHSTP			
R1-423 NA01-R1-473	1	RETAINER'C'(L),WTHSTP			
R1-451 NA01-R1-411B	1	WTHSTP NO.1(R),LINK			
R1-452 NA01-R1-412B	1	WTHSTP NO.2(R),LINK			
R1-453 NA01-R1-413B	1	WTHSTP NO.3(R),LINK			
R1-461 NA01-R1-421B	1	WTHSTP NO.1(L),LINK			
R1-462 NA01-R1-422B	1	WTHSTP NO.2(L),LINK			
R1-463 NA01-R1-423B	1	WTHSTP NO.3(L),LINK			

CAT. AUNA05-04 1997-07

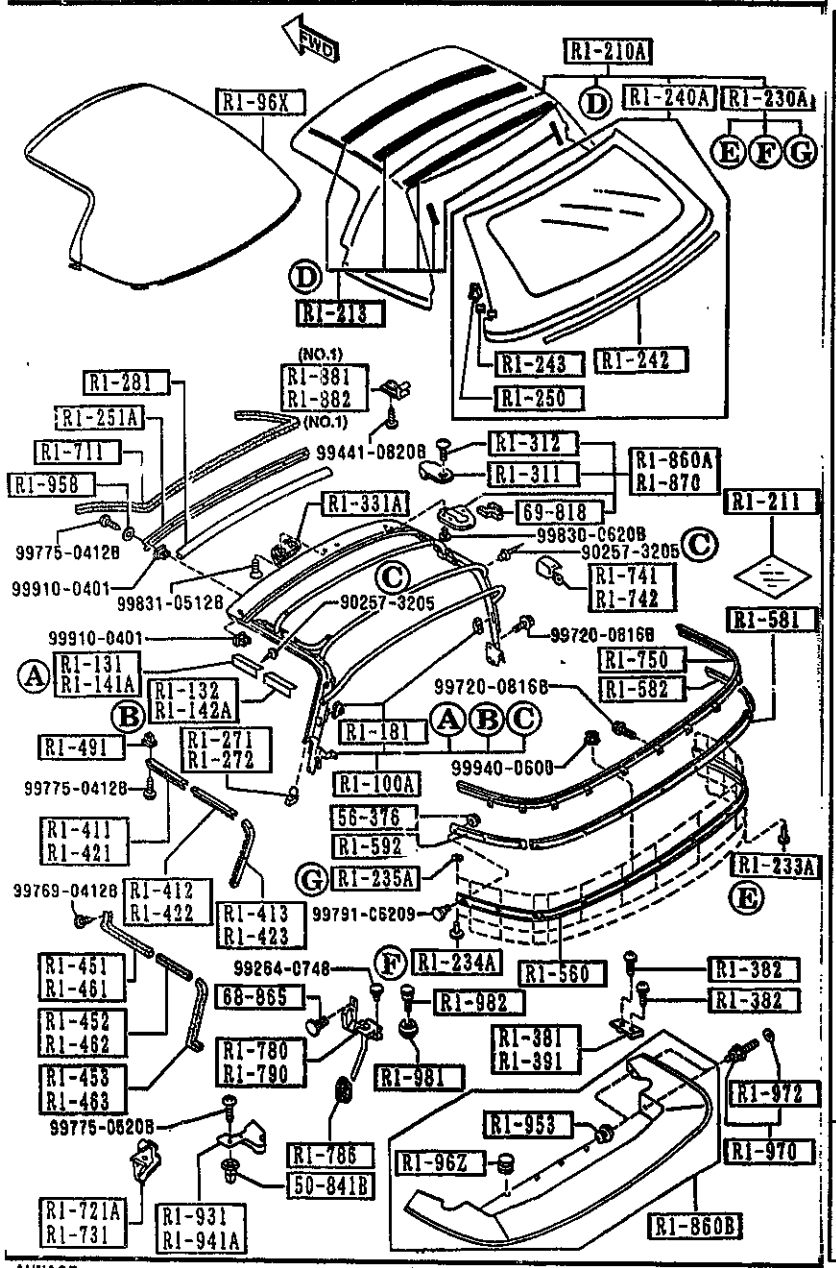

AUNA05

6330 -5 SUN ROOF

PART NO.	QTY	MODEL/RESTRICTION	MODEL/RESTRICTION	MODEL/RESTRICTION	FROM-TO
R1-491 NA01-R1-491	16	GROMMET,SCREW-RETAINER			
R1-560 NA01-R1-560C	1	RAIL,RAIN-SOFT TOP REAR			
R1-581 NA01-R1-581B	1	PLATE(C),SET-TOP FABRIC			
R1-582 NA01-R1-582A	1	PLATE(R),SET-TOP FABRIC			
R1-592 NA01-R1-592A	1	PLATE(L),SET-TOP FABRIC			
R1-711 NA01-R1-711B	1	WTHSTP,FRONT HEADER			
R1-721A NA01-R1-721B	1	WTHSTP(R),CAB SIDE			
R1-731 NA01-R1-731B	1	WTHSTP(L),CAB SIDE			
R1-741 NA01-R1-741B	1	PROTR(R),MOULD-BELTLINE			
R1-742 NA01-R1-742B A (NA01-R1-742C)	1	PROTR(L),MOULD-BELTLINE			-5C01
*NA01-R1-742C	1				5C01-
R1-750 NA01-R1-750E	1	MOULD,BELTLINE-REAR			
R1-780 NA01-R1-780C	1	COVER(R),DRAIN-SOFT TOP			
R1-786 NA01-R1-786A	2	GROMMET,DRAIN HOSE-TOP			

5C01 NA3** -706448

CAT. AUNA05-04

1997-07

(W/DETACHABLE HARDTOP)

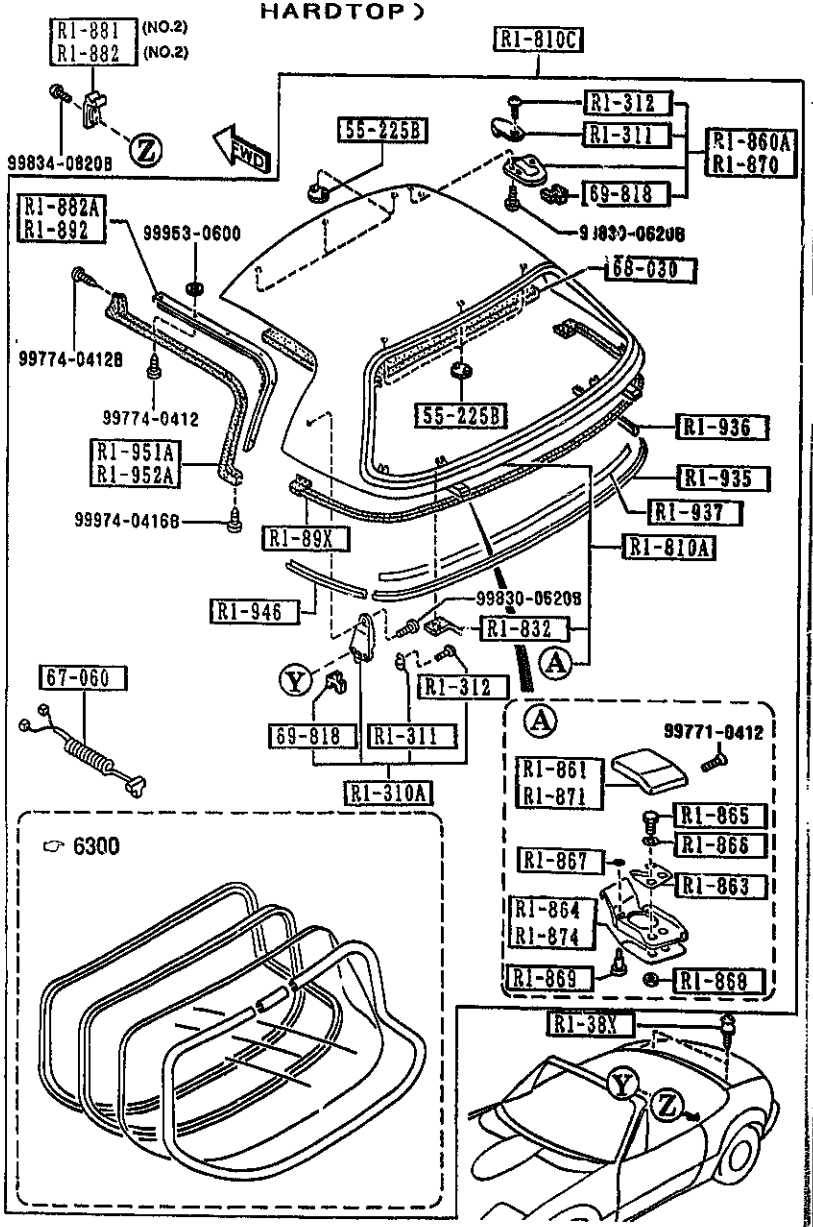

AUNA05

6338 -6 SUN ROOF

PART NO.	QTY	MODEL/RESTRICTION	MODEL/RESTRICTION	MODEL/RESTRICTION	FROM-TO
R1-790		COVER(L),DRAIN-SOFT TOP			
NA01-R1-790C	1				
R1-810A		PANEL,ROOF			
NA06-R1-82X	1	OPT,(W/DETACHABLE HARD TOP)			
HU	EXT-	HU NEO GREEN			
M8	EXT-	M8 MONTEGO BLUE M			
PT	EXT-	PT CHAST WHITE			
PZ	EXT-	PZ BRILLIANT BLACK			
SU	EXT-	SU CLASSIC RED			
6W	EXT-	6W LAGUNA BLUE M.			
R1-810C		ROOF,DETACHABLE TOP			
N007-R1-810A	1	OPT,(W/DETACHABLE HARD TOP)			-6201
HU	EXT-	HU NEO GREEN			
M8	EXT-	M8 MONTEGO BLUE M			
PT	EXT-	PT CHAST WHITE			
PZ	EXT-	PZ BRILLIANT BLACK			
SU	EXT-	SU CLASSIC RED			
6W	EXT-	6W LAGUNA BLUE M.			
NB40-R1-810	1	OPT,(W/DETACHABLE HARD TOP)			6201-
A5	EXT-	A5 SATELLITE BLUE MC			
HU	EXT-	HU NEO GREEN			
M8	EXT-	M8 MONTEGO BLUE M			
PT	EXT-	PT CHAST WHITE			
PZ	EXT-	PZ BRILLIANT BLACK			
SU	EXT-	SU CLASSIC RED			
R1-832		PLATE,CUSHION-D. TOP			
NA01-R1-832A	2	OPT,(W/DETACHABLE HARD TOP)			
R1-860A		LOCK(R),TOP			

6201 NA3** -711421

CAT. AUNA05-04

1997-07

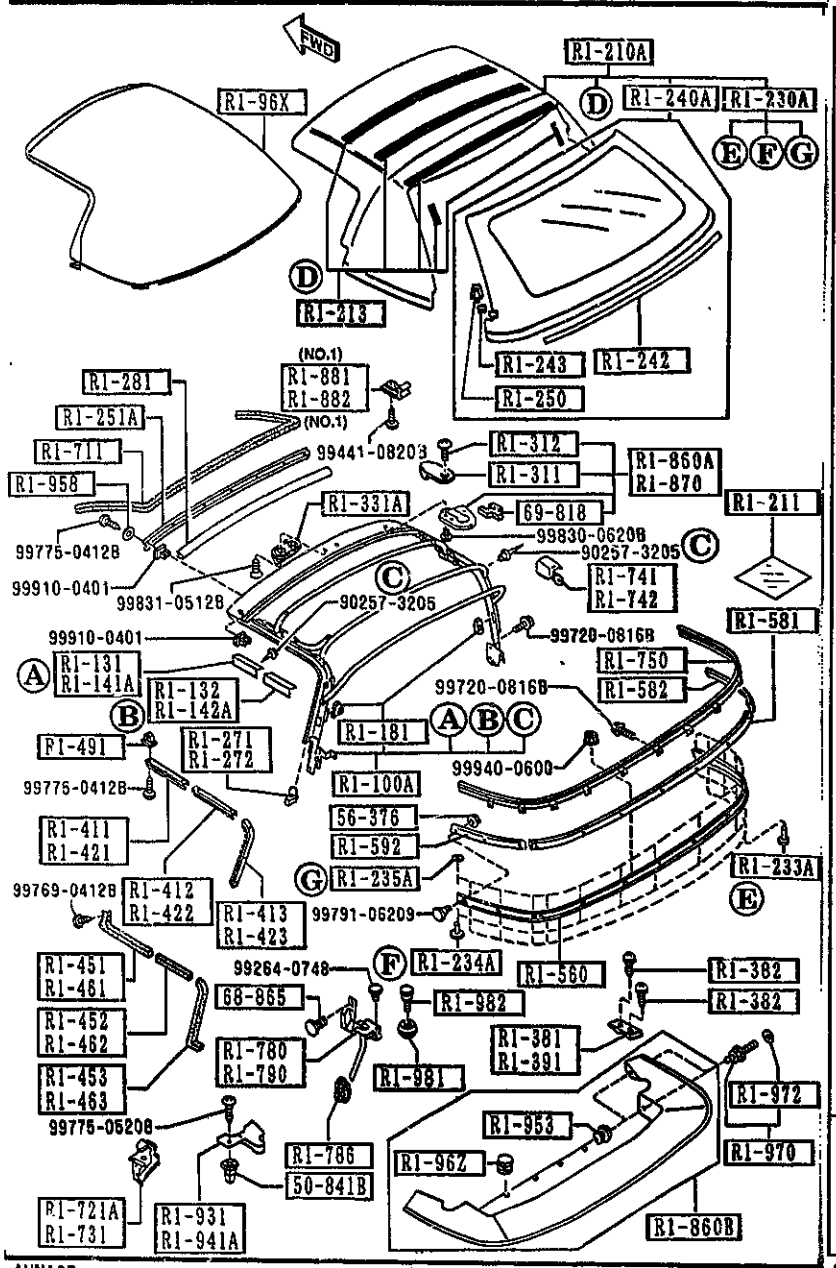

AUNA05

6330 -7 SUN ROOF

PART NO.	QTY	MODEL/RESTRICTION	MODEL/RESTRICTION	MODEL/RESTRICTION	FROM-TO
CONT'D					
NA01-R1-310C	1	(W/O DETACHABLE HARD TOP)			-6401
NA01-R1-310C	2	OPT, (W/DETACHABLE HARD TOP)			-6401
*NA01-R1-310E	1	(W/O DETACHABLE HARD TOP)			6401-
NA01-R1-310E	2	OPT, (W/DETACHABLE HARD TOP)			6401-
R1-8608		BOOT,TOP			
NA01-R1-960E	1				-5B01
66	INT-	NA3 NA7 NAB BLACK			
88	INT-	NA4 NA5 TAN			
NA01-R1-960F	1				5B01-
66	INT-	NA3 NA7 NAB BLACK			
88	INT-	NA4 NA5 TAN			
R1-861		COVER(R),DECK LOCK			
NA01-R1-861	1	OPT, (W/DETACHABLE HARD TOP)			
R1-863		PLATE,DECK LOCK			
NA01-R1-863	2	OPT, (W/DETACHABLE HARD TOP)			
R1-864		SHEET(R),DECK LOCK			
NA01-R1-864	1	OPT, (W/DETACHABLE HARD TOP)			
R1-865		BOLT,DECK LOCK			
NA01-R1-865	4	OPT, (W/DETACHABLE HARD TOP)			
R1-866		WASHER'A',DECK LOCK			
NA01-R1-866	4	OPT, (W/DETACHABLE HARD TOP)			
R1-867		WASHER'B',DECK LOCK			
NA01-R1-867	2	OPT,			

5B01 NA3** -704237
6401 NA3** -717787

CAT. AUNA05-04

1997-07

(W/DETACHABLE HARDTOP)

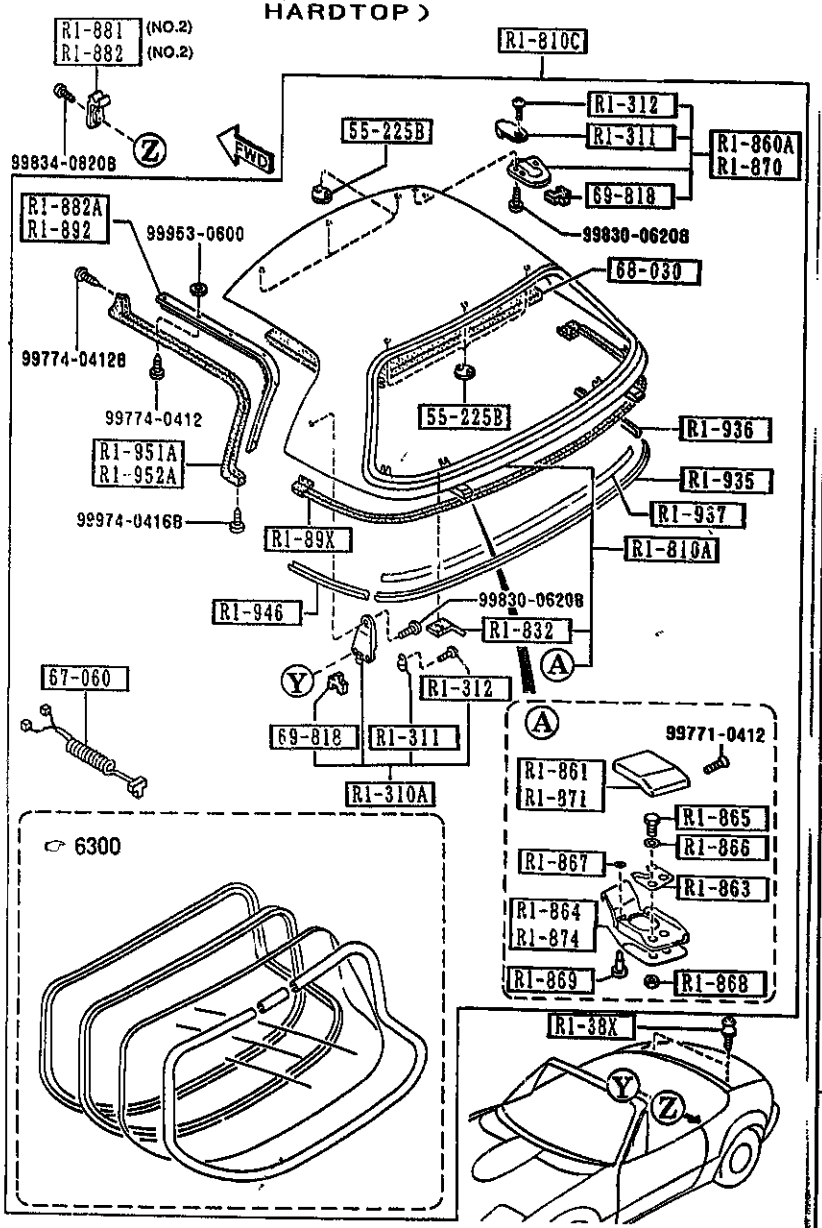

AUNA05

6330 -8 SUN ROOF

PART NO.	QTY	MODEL/RESTRICTION	MODEL/RESTRICTION	MODEL/RESTRICTION	FROM-TO
CONT'D					
		(W/DETACHABLE HARD TOP)			
R1-868		NUT,DECK LOCK			
NA01-R1-868	4	OPT, (W/DETACHABLE HARD TOP)			
R1-869		PIN,DECK LOCK			
NA01-R1-869	2	OPT, (W/DETACHABLE HARD TOP)			
R1-870		LOCK(L),TOP			
NA01-R1-320C	1	(W/O DETACHABLE HARD TOP)			-6401
NA01-R1-320C	2	OPT, (W/DETACHABLE HARD TOP)			-6401
*NA01-R1-320E	1	(W/O DETACHABLE HARD TOP)			6401-
NA01-R1-320E	2	OPT, (W/DETACHABLE HARD TOP)			6401-
R1-871		COVER(L),DECK LOCK			
NA01-R1-871	1	OPT, (W/DETACHABLE HARD TOP)			
R1-874		SHEET(L),DECK LOCK			
NA01-R1-874	1	OPT, (W/DETACHABLE HARD TOP)			
R1-881		STRIKER(R),LOCK-TOP			
NA01-R1-361B	1	(ILLUST. NO.1)			-6401
NA02-R1-361B	1	OPT, (ILLUST. NO.2) (W/DETACHABLE HARD TOP)			-6401
*NA01-R1-361D	1	(ILLUST. NO.1)			6401-
*NA02-R1-361D	1	OPT, (ILLUST. NO.2) (W/DETACHABLE HARD TOP)			6401-
R1-882		STRIKER(L),LOCK-TOP			

6401 NA3** -717787

CAT. AUNA85-04

1997-07

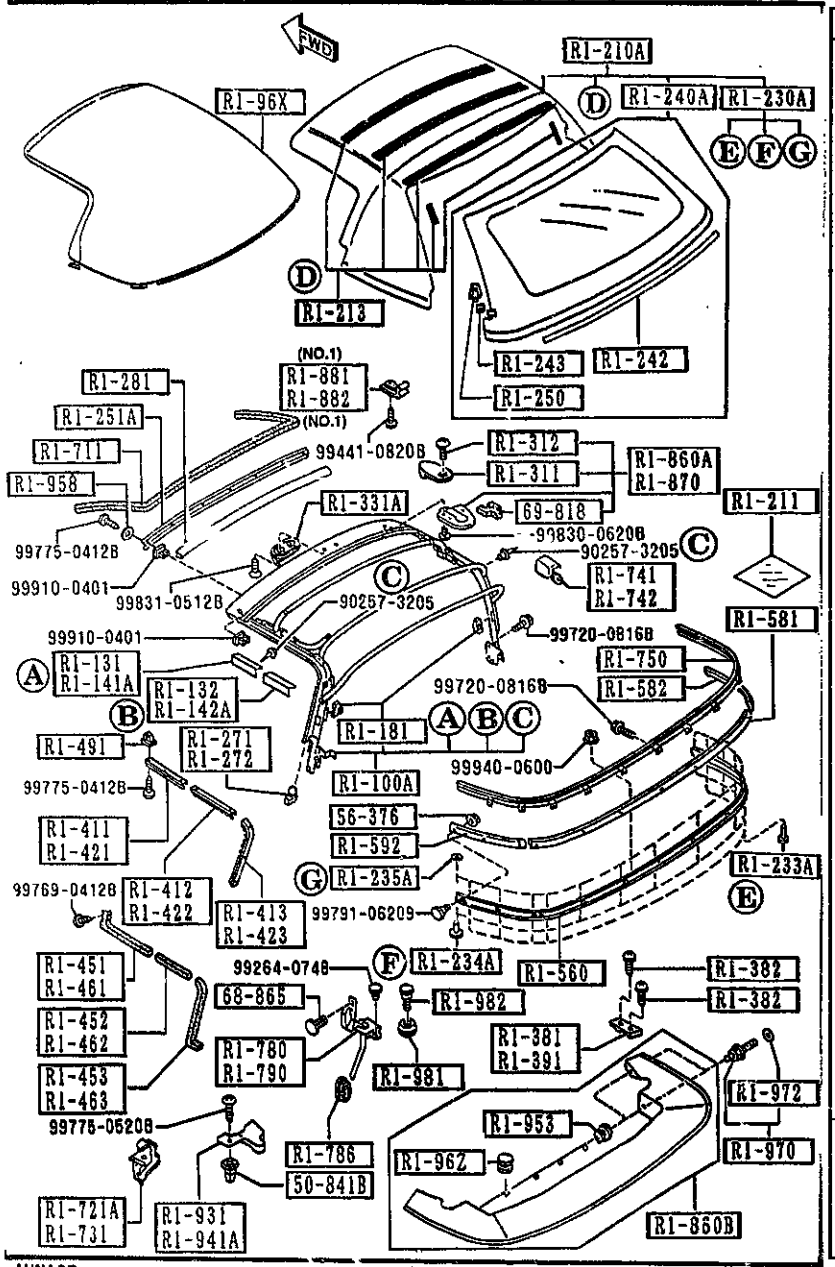

AUNA05

PART NO	QTY	MODEL/RESTRICTION	MODEL/RESTRICTION	MODEL/RESTRICTION	FROM TO
CONT'D					
NA01-R1-371B	1	(ILLUST. NO.1)			-6401
NA02-R1-371B	1	OPT, (ILLUST. NO.2) (W/DETACHABLE HARD TOP)			-6401
*NA01-R1-371D	1	(ILLUST. NO.1)			6401-
*NA02-R1-371D	1	OPT, (ILLUST. NO.2) (W/DETACHABLE HARD TOP)			6401-
R1-882A		RETAINER(R),WTHSTP-D.TOP			
NA01-R1-882	1	OPT, (W/DETACHABLE HARD TOP)			
R1-89X		WEATHERSTRIP,D.TOP-REAR			
NA01-R1-89XA	1	OPT, (W/DETACHABLE HARD TOP)			
R1-892		RETAINER(L),WTHSTP-D.TOP			
NA01-R1-892	1	OPT, (W/DETACHABLE HARD TOP)			
R1-931		COVER(R),BELT LINE			
NA01-R1-931A	1				
R1-935		PROTECTOR(C),EDGE-D.TOP			
NA01-R1-935B	1	OPT, (W/DETACHABLE HARD TOP)			
R1-936		PROTECTOR(R),EDGE-D.TOP			
NA01-R1-936A	1	OPT, (W/DETACHABLE HARD TOP)			
R1-937		TAPE,EDGE PROTECTOR-CTR			
NAY1-R1-937	1				
R1-941A		COVER(L),BELT LINE			
NA01-R1-941A	1				
R1-946		PROTECTOR(L),EDGE-D.TOP			
NA01-R1-946A	1	OPT,			

(401 NA3** -7177?7

CAT. AUNA05-04

1997-07

(W/DETACHABLE HARDTOP)

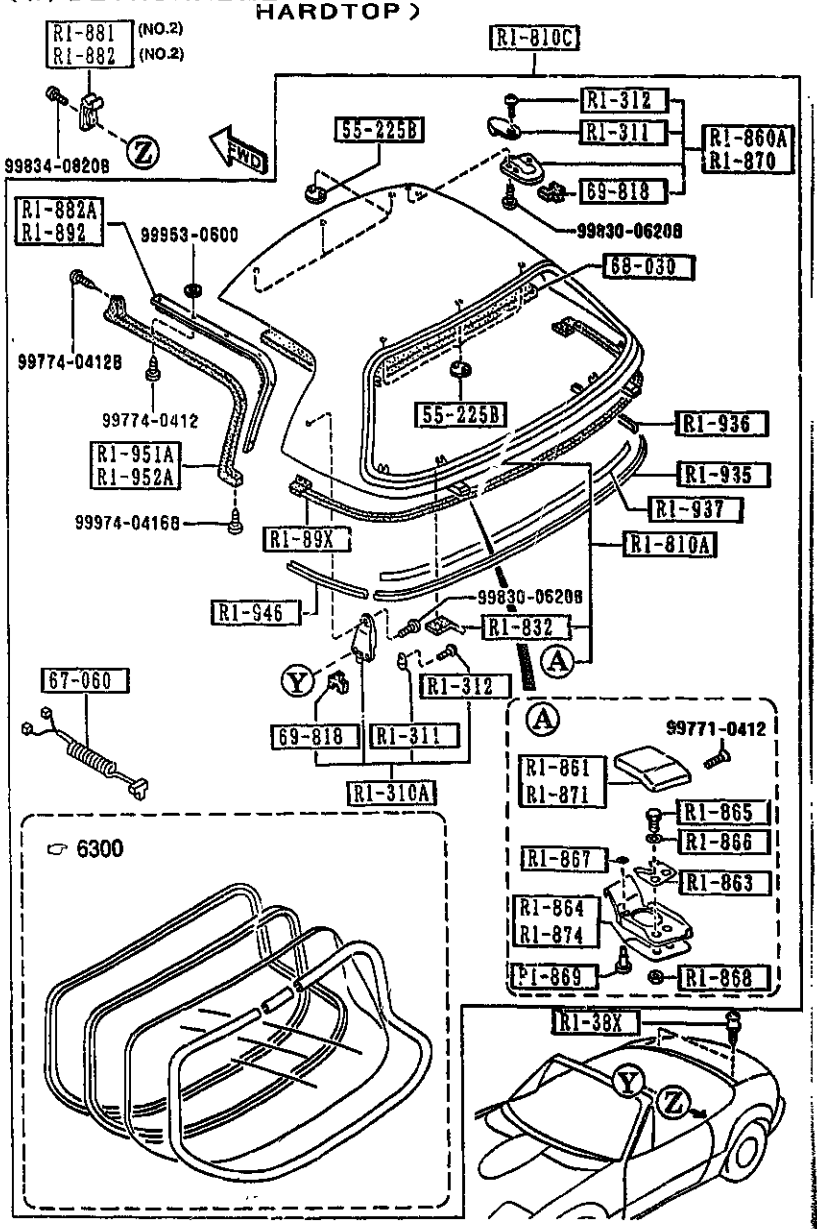

6330 -10 SUN ROOF

PART NO.	QTY	MODEL/RESTRICTION	MODEL/RESTRICTION	MODEL/RESTRICTION	FROM-TO
CONT'D		(W/DETACHABLE HARD TOP)			
R1-951A		WTHSTP(R),ROOF PANEL			
NA01-R1-881B	1	OPT, (W/DETACHABLE HARD TOP)			
R1-952A		WTHSTP(L),ROOF PANEL			
NA01-R1-891B	1	OPT, (W/DETACHABLE HARD TOP)			
R1-953		HOOK,HOOD-REAR CORNER			
B235-R1-953	4				
R1-958		WASHER,HOOK'A'&'B'			
B235-R1-958A	7				
R1-96X		COVER,TOP FABRIC			
NA01-R1-96XC AN(NA01-R1-96XD)	1	(W/O DETACHABLE HARD TOP)			-5B01
*NA01-R1-96XD	1	(W/O DETACHABLE HARD TOP)			5B01-
R1-96Z		HOOK,TOP BOOT			
NA01-R1-96Z	7				
00	INT-	NA3 NA7 NA8 BLACK			
75	INT-	NA4 NA5 NA6 SILVER			
R1-970		HOOK,REAR DECK			
NA01-R1-970A	4				
R1-972		WASHER,HOOK'A'			
NA01-R1-926	4				
R1-981		STOPPER,SOFT TOP			
NA01-R1-981A	2				
R1-982		BOLT,STOPPER-SOFT TOP			
NA01-R1-982A AN(NA01-R1-982B)	2				-6201
*NA01-R1-982B	2				6201-

5B01 NA3** -704237
6201 NA3** -711421

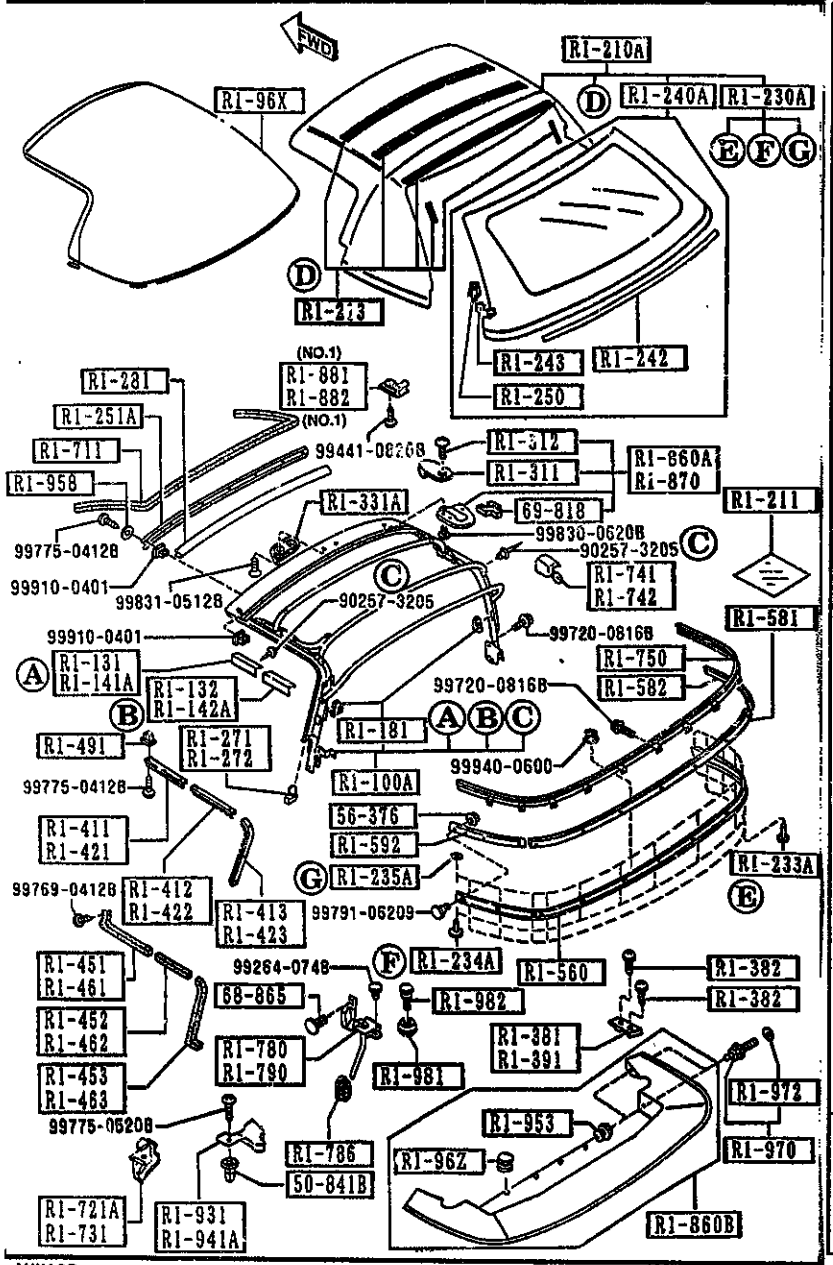

AUNA05

6330 -11* SUN ROOF

PART NO.	QTY	MODEL/RESTRICTION	MODEL/RESTRICTION	MODEL/RESTRICTION	FROM-TO
50-841B		GROMMET,SCREW			
H260-50-841	2				
55-225B		COVER,HOLE			
G030-55-225	6	OPT, (W/DETACHABLE HARD TOP)			
08 INT-		NA3 NA4 NA5 NA6 NA7 NA8 BLACK			
56-376		NUT,SELF LOCK			
B001-56-376	15				
67-060		HARNESS NO.2,REAR			
N007-67-060A	1	OPT, (W/DETACHABLE HARD TOP)			
68-030		CEILING,TOP			
N007-68-031	1	OPT, (W/DETACHABLE HARD TOP)			
80 INT-		NA3 NA4 NA5 NA6 NA7 NA8 BLACK			
68-865		FASTENER			
G032-68-865A	2				
08 INT-		NA3 NA4 NA5 NA6 NA7 NA8 BLACK			
69-818		PAD			
NA01-RI-313	2	(W/O DETACHABLE HARD TOP)			
NA01-RI-313	6	OPT, (W/DETACHABLE HARD TOP)			

CAT. AUNA05-04 1997-07

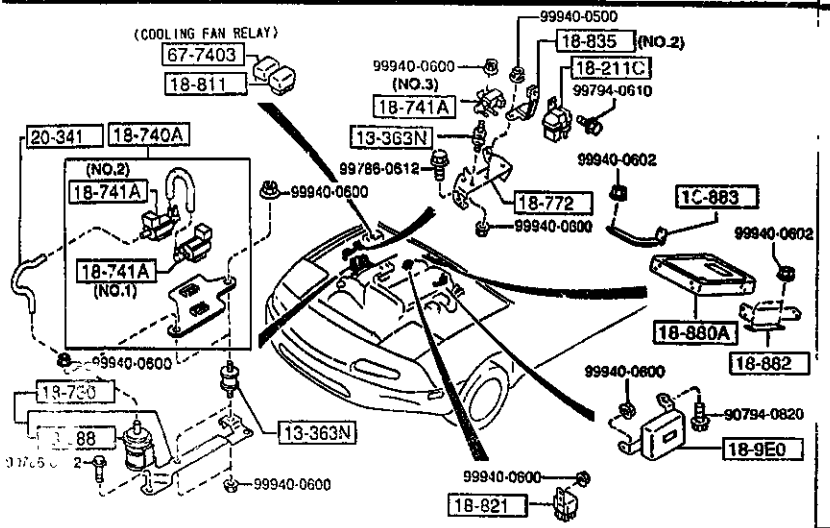

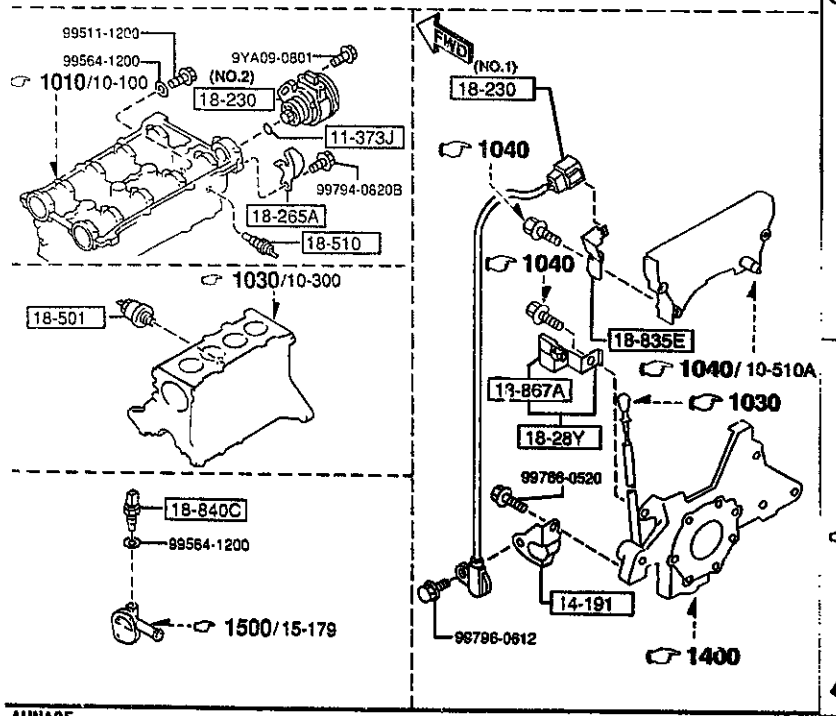

AUNA05

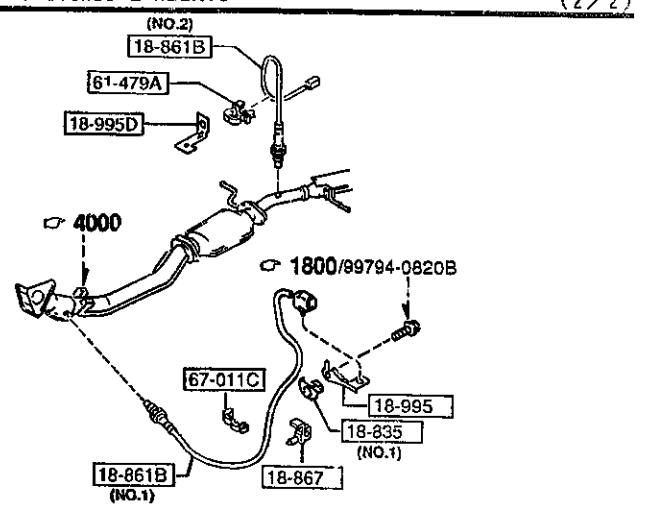

(MT)

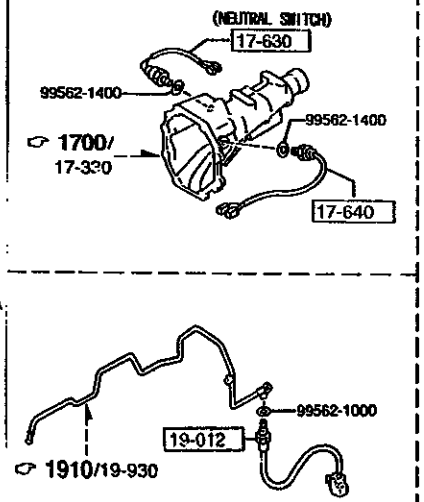

(AT)

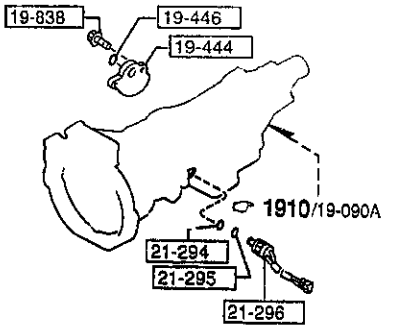

AUNA05

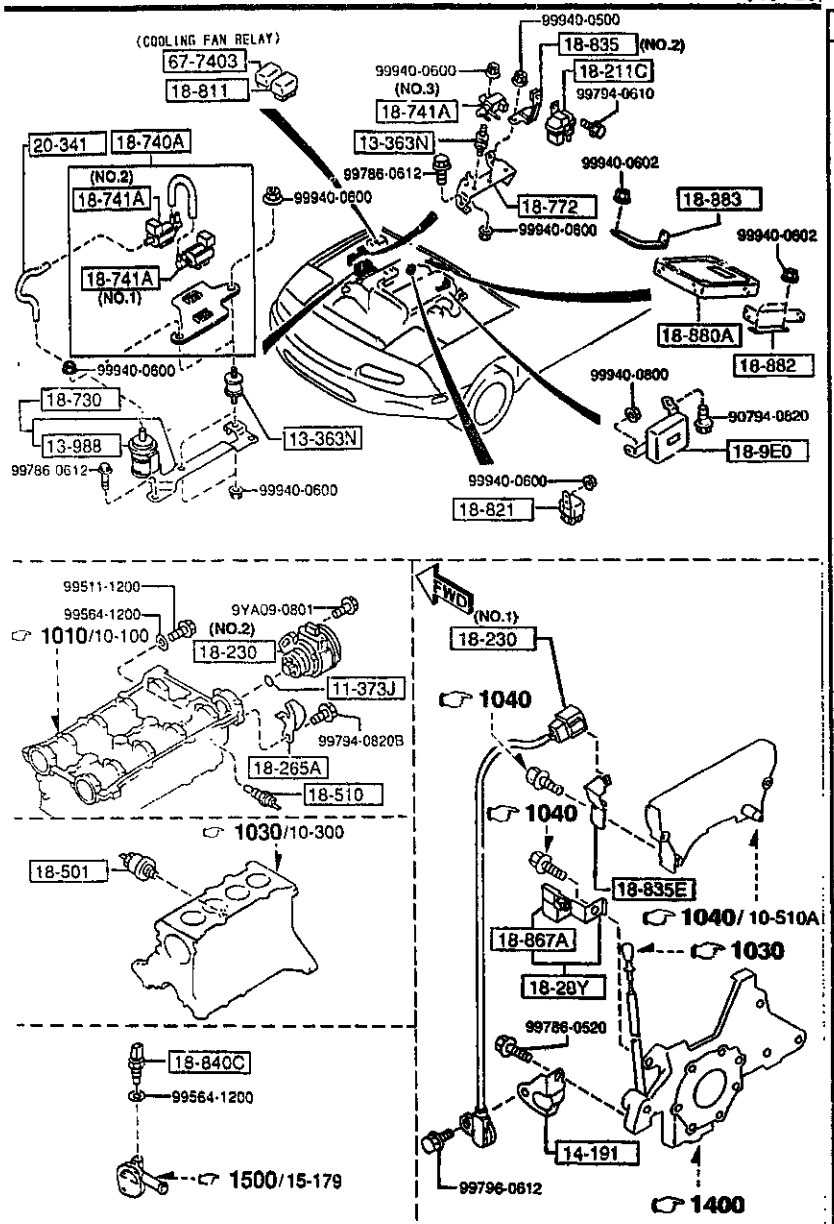

PART NO.	QTY	MODEL/RESTRICTION	MODEL/RESTRICTION	MODEL/RESTRICTION	FROM-TO
11-373J		RING,'O'			
99541-03801	1				
13-363N		RUBBER,MOUNTING			
0222-13-363	3				
13-938		FILTER,AIR			
RFG1-13-980A	1				-5901
14-191		BRACKET,OIL PUMP			
B6BF-14-190	1	('96 MODEL)			
17-630		SWITCH			
8118-17-640B	1	(NEUTRAL SWITCH) (MT)			
17-640		SWITCH,BACK UP LAMP			
M506-17-640A	1	(MT)			
18-211C		SENSOR,M.A.P.			
BPS1-18-211	1	('96 MODEL)			
18-230		SENSOR,CRANKSHAFT POSI.			
BPS1-18-221	1	(ILLUST. NO.1) ('96 MODEL)			
BPE8-18-230	1	(ILLUST. NO.2)			
18-265A		BRACKET,COUPLER-KNOCK SENSOR			
BPE8-18-281A	1				
18-28Y		BRACKET,CONDENSER			
B6BF-18-28Y	1	('96 MODEL)			
18-501		SWITCH,OIL PRESSURE			
B367-18-501	1				
18-510		UNIT,HEAT GAUGE			
B541-18-51X	1	PANASONIC			
KL01-18-51X	1	NIHON THERMOSTAT			

5901 NA3** -702989

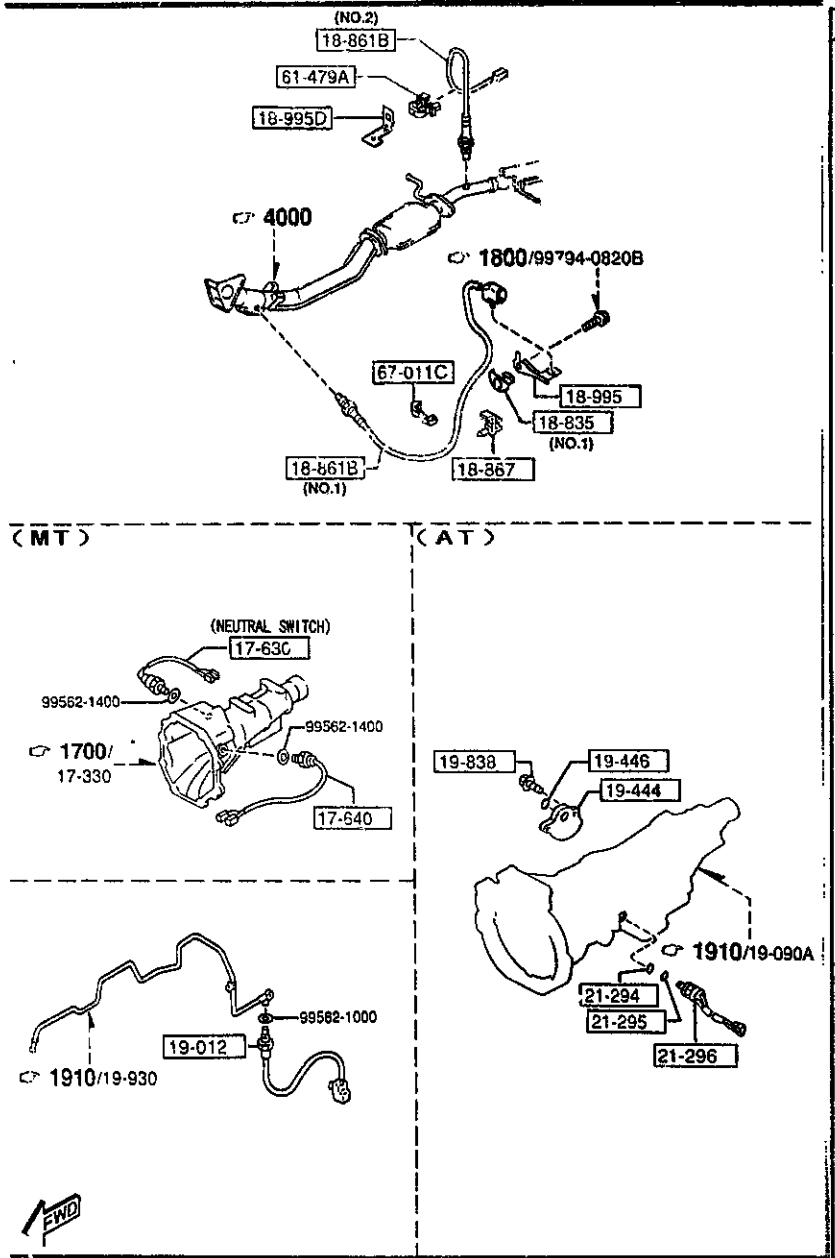

6600 -2 ENGINE SWITCHES & RELAYS

PART NO.	QTY	MODEL/RESTRICTION	MODEL/RESTRICTION	MODEL/RESTRICTION	FROM-TO
18-730		FILTER,AIR			
BPE8-18-730	1				-5901
BPE8-18-730A	1				5901-
18-740A		VALVE,SOLENOID			
BPE8-18-74X A (BPE8-18-74XA)	1				-5901
BPE8-18-74XA	1				5901-
18-741A		VALVE,THREE WAY			
F2L3-18-741	1	(ILLUST. NO.1)			
F2L4-18-741	1	(ILLUST. NO.2)			
JE16-18-741	1	NIHON OIL SEAL (ILLUST. NO.3)			
18-772		BRACKET,IGNITER			
BPE8-18-2F0	1	('95 MODEL)			
B61P-18-2F0B	1	('96 MODEL)			
18-811		RELAY,MAIN			
B6S8-18-811	1				-6701
B5D4-18-811	1				6701-
18-821		RELAY,FUEL PUMP			
3577-18-821A	1				
18-835		BRACKET,WIRE CLIP-OXYGEN			
BPS1-18-835A	1	(ILLUST. NO.2) ('96 MODEL)			
BPE8-18-838B	1	(ILLUST. NO.1)			
18-835E		BRACKET,BOOST SENSOR			
BPS2-18-835	1	('96 MODEL)			
18-840C		SENSOR,TEMP.-ENG.COOLANT			
B593-18-840A	1	DENSO			
18-861B		SENSOR,OXYGEN			
BPS1-18-86ZB	1	(ILLUST. NO.2) ('96 MODEL)			

5901 NA3** -702989
6701 NA3** -719627

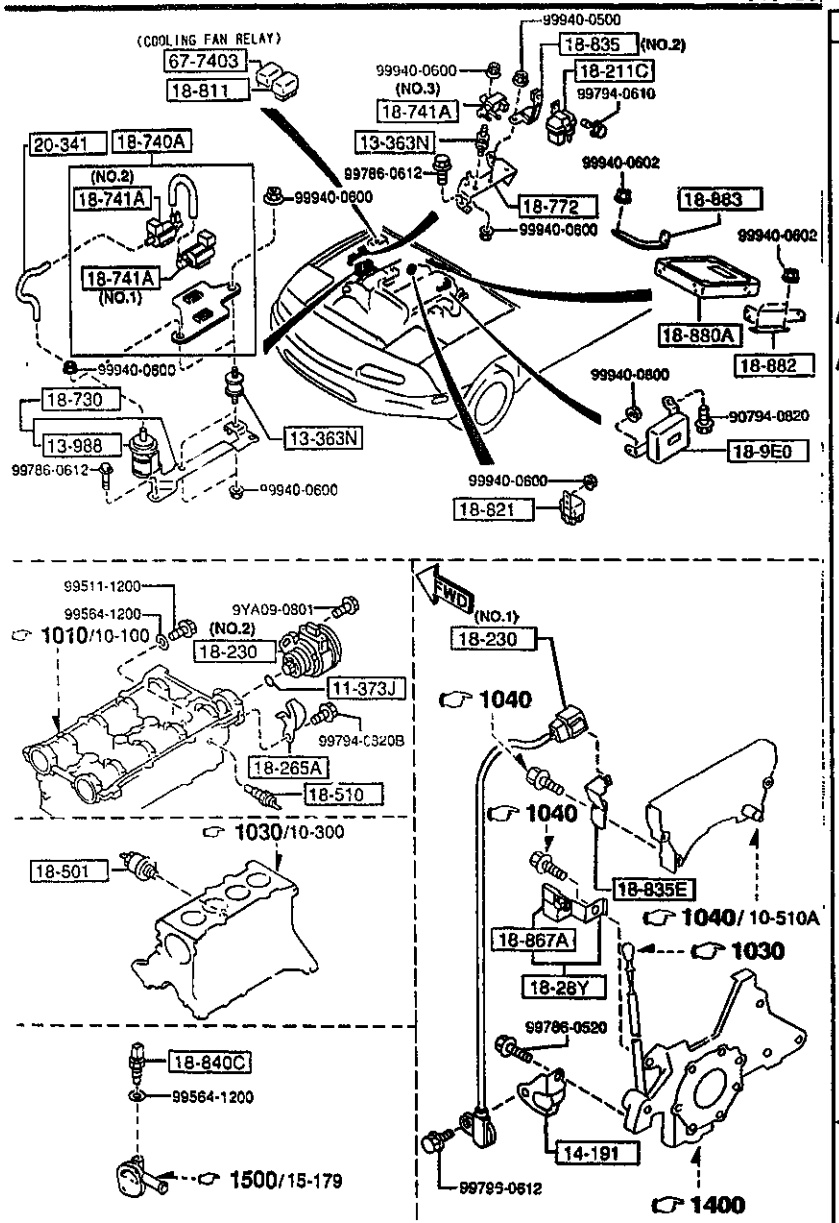

AUNA05

PART NO.	QTY	MODEL/RESTRICTION	MODEL/RESTRICTION	MODEL/RESTRICTION	FROM-TO
CONT'D					
BPE8-18-861A	1	(ILLUST. NO.1)			
18-867		CLIP			
BPE8-18-867A	1				
18-867A		CLIP,WIRE			
B366-18-867A	1	('96 MODEL)			
18-880A		MODULE,POWERTRAIN CONTROL			
BPL9-18-88. A (BPL9-18-8818)	1	('95 MODEL)			-5130
BPS1-18-881A A (BPS1-18-8818)	1	('96 MODEL)			-5B29
BPL9-18-881E	1	('95 MODEL)			5130-
BPS1-18-881B	1	('96 MODEL)			5B29-
18-882		BRACKET,CONTROL UNIT			
BPE8-18-882	1				
18-883		BRACKET,CONTROL UNIT			
BPE8-18-883A	1	('95 MODEL)			
BPS1-18-883	1	('96 MODEL)			
18-9E0		MODULE,PWT.CONT.-A/T			
BPE9-18-9E1A	1	(('95 MODEL)>(AT))			
BPS2-18-9E1	1	(('96 MODEL)>(AT))			
18-995		CLIP			
BPE8-18-998B	1				
18-995B		BRACKET,COUPLER-02 SENSOR			
BPS1-18-998B	1				
19-012		SENSOR,OIL TEMP			
N451-19-012A	1	(AT)			
19-444		SWITCH,INHIBITOR			
N451-19-444	1	(AT)			
19-446		RING,'O'			
9338-19-446	1	(AT)			

5130 NA35* -613967
5B29 NA3** -706256

CAT. AUNA05-04

1997-07

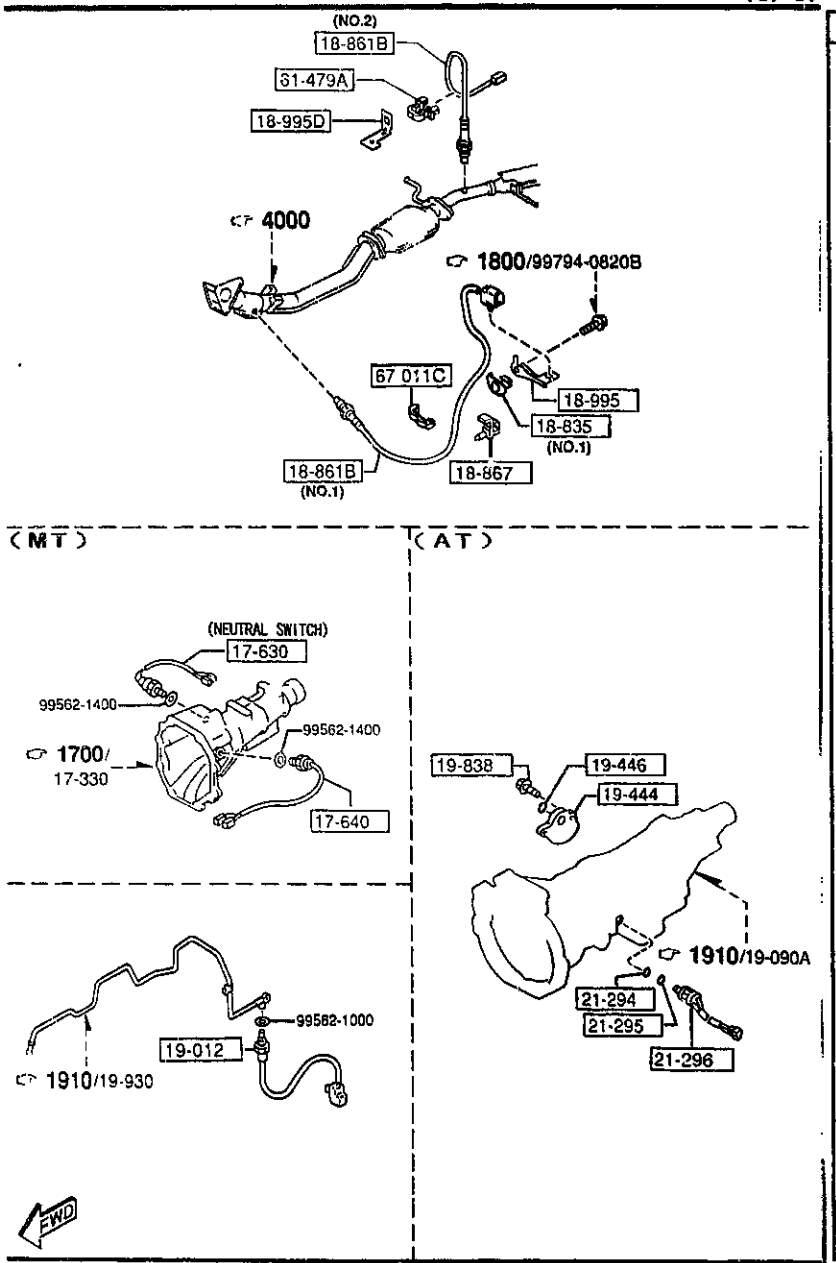

AUNA05

6600 -4 * ENGINE SWITCHES & RELAYS

PART NO.	QTY	MODEL/RESTRICTION	MODEL/RESTRICTION	MODEL/RESTRICTION	FROM-TO
19-838		BOLT-HEX,HD WASHER			
1758-19-838A	2	(AT)			
20-341		HOSE,VACUUM			
BPE8-20-341	1				-5901
21-294		RING,'O'			
BU01-21-294	1	(AT)			
21-295		RING,'O'			
BU01-21-295	1	(AT)			
21-296		SOLENOID,LOCK UP CONTROL			
N451-21-3A5	1	(AT)			
61-479A		CLIP			
UB39-61-479A	1	('96 MODEL)			
67-011C		CLIP			
E356-18-141	1				
67-7403		RELAY,M.O.			
LA10-67-740	1	10A (COOLING FAN RELAY)			

5901 NA3** -702989

CAT. AUNA05-04 1997-07

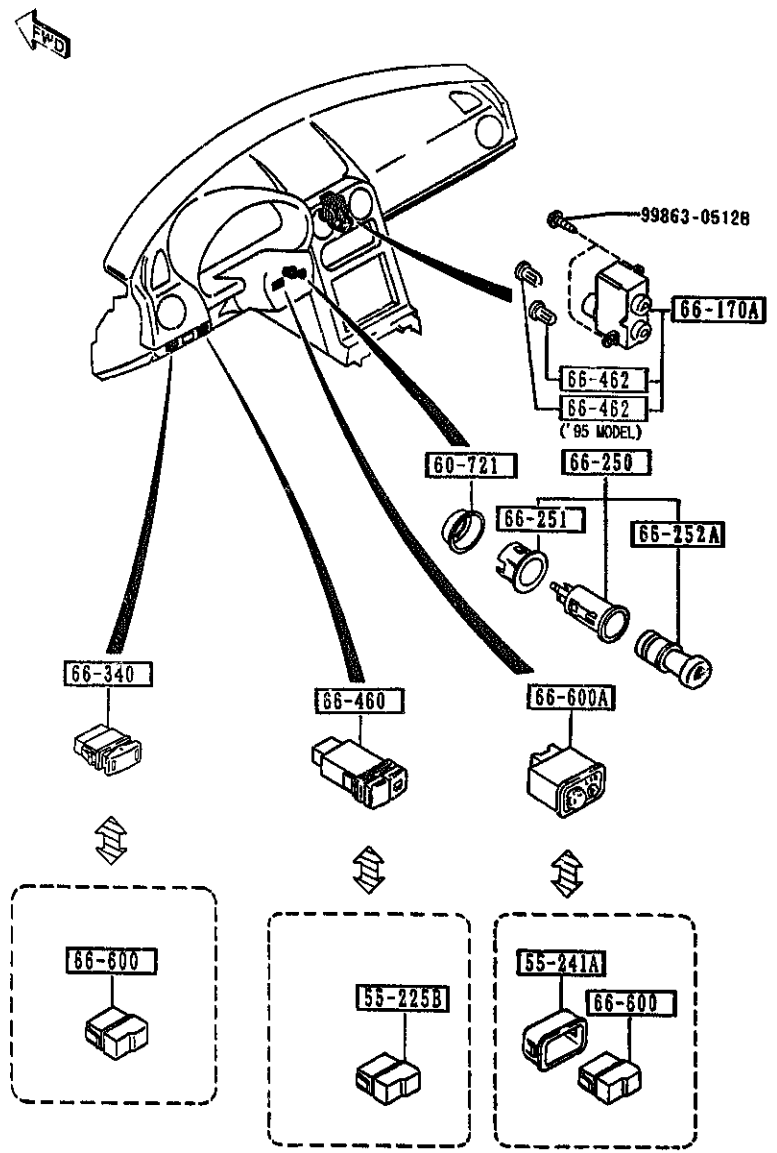

6610 -1 DASHBOARD SWITCHES

PART NO.	QTY	MODEL/RESTRICTION	MODEL/RESTRICTION	MODEL/RESTRICTION	FROM-TO
55-225B		COVER,HOLE			
B481-55-225	1	(W/O DETACHABLE HARD TOP)			-4A03
N034-55-225	1	(W/O DETACHABLE HARD TOP)			4A03-
55-241A		BOX,INSTRUMENT PANEL			
NA01-55-241A	1	BASE, R-PKG, (MANUAL) (MANUAL TYPE DR MIRROR)			
60-721		PROTECTOR			
B092-66-241A	1	('95 MODEL)			-5508
66-170A		SWITCH(R),CLUSTER			
NA01-66-170	1	('95 MODEL)			
N041-66-170A	1	('96 MODEL)			
66-250		LIGHTER,CIGAR			
B150-66-250	1				
66-251		RING,ILLUMINATION			
B001-66-251	1				
66-252A		PLUG,CIGAR LIGHTER			
B001-66-252	1				
66-340		SWITCH,MAIN			
NA01-66-340A	1	M-25-ED, P.E.GR, L-PKG, PKG-B, PKG-C, (W/AUTO CRUISE.CONT.)			
66-460		SWITCH,RR.DEF.			
NA75-66-460	1	OPT, (W/DETACHABLE HARD TOP)			
66-462		BULB'B',SWITCH-RR DEFOGER			
NA01-66-462	1	('96 MODEL)			
NA01-66-462	2	('95 MODEL)			
66-600		COVER,HOLE			

4A03 NA35* -603621
5508 NA35* -620210

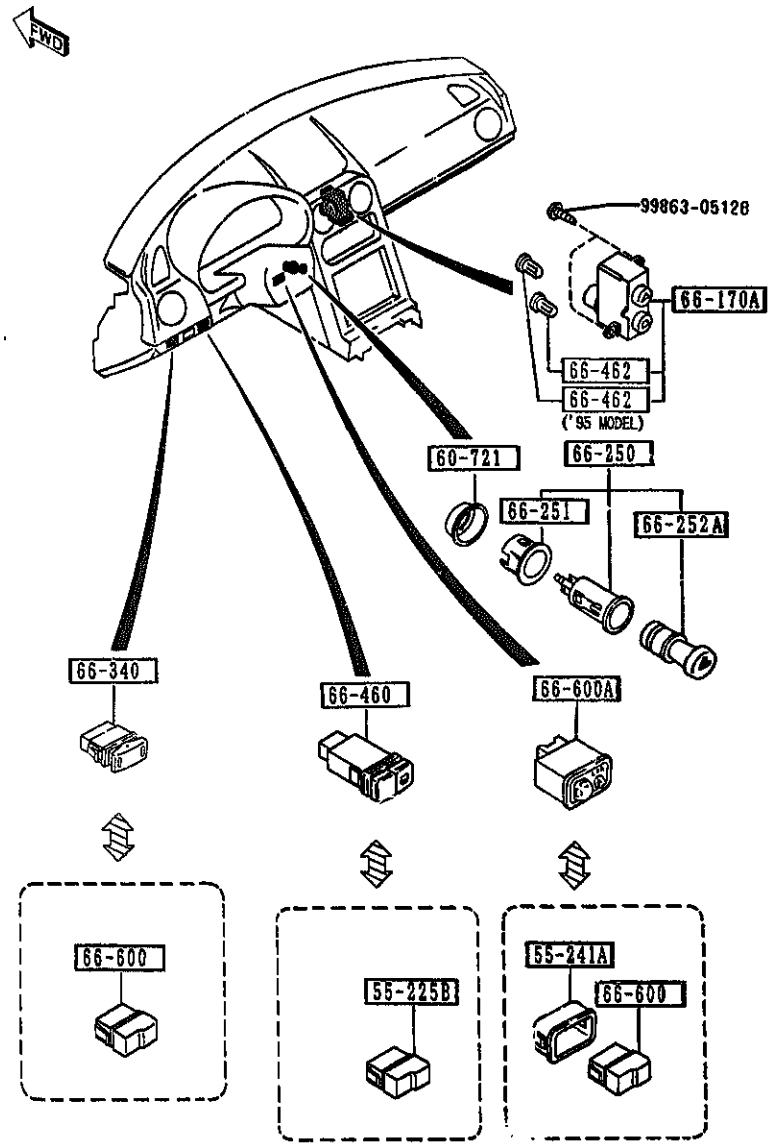

AUNA95

6610 -2 * DASHBOARD SWITCHES

PART NO.	QTY	MODEL/RESTRICTION	MODEL/RESTRICTION	MODEL/RESTRICTION	FROM-TO
CONT'D					
B481-55-225	2				
66-600A		SWITCH,RMT.MIRROR			
NA52-66-600A	1	M-25-ED, P.E.GR, L-PKG, PKG-A, PKG-B, PKG-C, (ELECT.) (ELECT. TYPE DP MIRROR)			

CAT. AL-NA95-04

1997-07

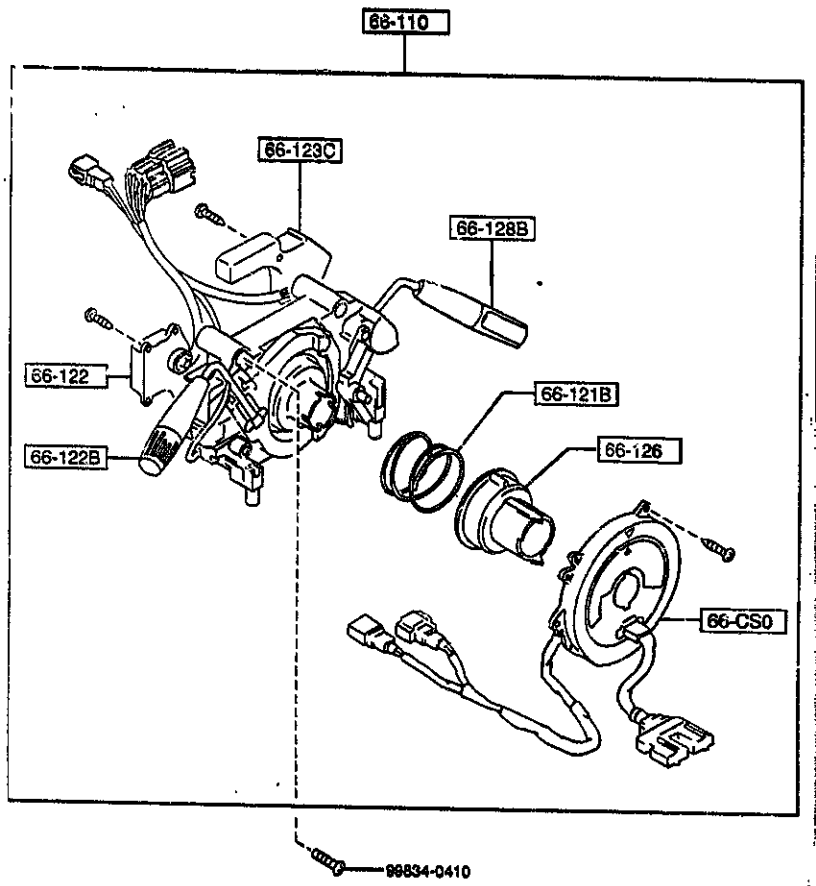

6611 -1 * COMBINATION SWITCH

PART NO.	QTY	MODEL/RESTRICTION	MODEL/RESTRICTION	MODEL/RESTRICTION	FROM-TO
66-CS0		SPRING,CLOCK			
*NB17-66-CS0	1				
66-110		SWITCH,COMBINATION			
NA01-66-120B	1	BASE, R-PKG, PKG-A, (W/O AUTO CRUISE.CONT.)			-4C01
NA02-66-120B	1	M-25-ED, P.E.GR, L-PKG, PKG-B, PKG-C, (W/AUTO CRUISE.CONT.)			-4C01
NB17-66-120	1	BASE, R-PKG, PKG-A, (W/O AUTO CRUISE.CONT.)			4C01-
NB18-66-120	1	M-25-ED, P.E.GR, L-PKG, PKG-B, PKG-C, (W/AUTO CRUISE.CONT.)			4C01-
66-121B		SPRING,CANCEL CAM			
*H384-66-121	1				
66-122		SWITCH,DIMMER			
*NA02-66-136	1				
66-122B		SWITCH,LIGHT & TURN			
*NA02-66-122	1				
66-123C		UNIT,WIPER-COMB. SWITCH			
*NA02-66-135	1				
66-126		CAM,CANCEL-COMB. SW.			
*NA02-66-126	1				
66-128B		LEVER,WIPER-COMB. SWITCH			
*NA01-66-128	1	BASE, R-PKG, PKG-A, (W/O AUTO CRUISE.CONT.)			
*NA02-66-128	1	M-25-ED, P.E.GR, L-PKG, PKG-B, PKG-C, (W/AUTO CRUISE.CONT.)			

4C01 NA35* -609691

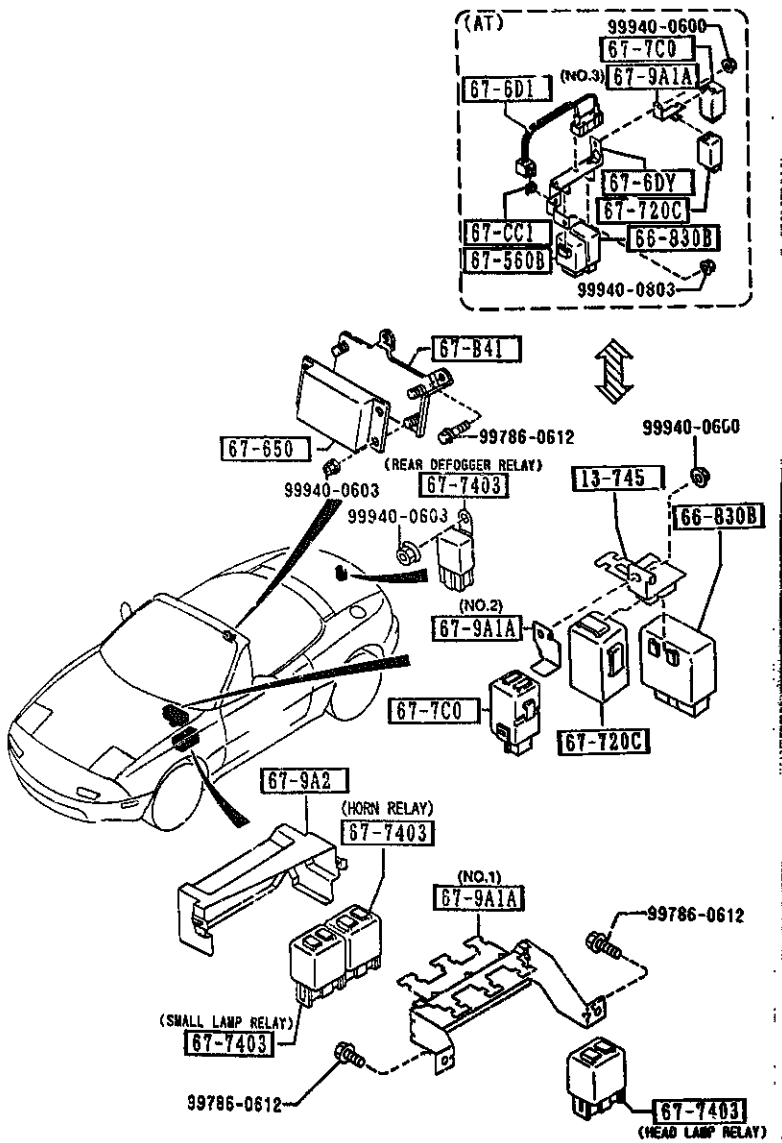

6630 -1 BODY RELAYS & UNIT

PART NO.	QTY	MODEL/RESTRICTION	MODEL/RESTRICTION	MODEL/RESTRICTION	FROM-TO
13-745		BRACKET,RELAY			
NA02-67-9A1	1	(MT)			
66-830B		UNIT,FLASHER			
HE01-66-830	1				
67-B41		BRACKET,DASHBOARD HARNESS			
NB13-67-B4X	1	(W/A. LOCK BRAKE)			
67-CC1		CLIP,HARNESS			
LA01-67-C11	1	(AT)			
67-560B		UNIT,CENTRAL PROCESSING			
NA56-67-560	1	(AT)			
67-6DY		BRACKET,RELAY-INTERLOCK			
NA56-67-6DYA	1	(AT)			
67-6D1		RESISTOR,INTERLOCK			
MD20-67-6D1	1	(AT)			
67-650		BOX,CONTROL-A.B.S.			
N036-67-650	1	(W/A. LOCK BRAKE)			
67-7C0		RELAY,RETRACTOR-COWL PANEL			
B481-67-7C0B	1				
67-720C		TIMER & BUZZER			
NA02-67-720A	1				
67-7403		RELAY,N.O.			
H300-67-740	1	30A (HEAD LAMP RELAY)			
LA10-67-740	2	10A (HORN RELAY) (SMALL LAMP RELAY)			
LA40-67-740	1	OPT, (REAR DEFOGGER RELAY) (W/DETACHABLE HARD TOP)			
67-9A1A		BRACKET,RELAY			

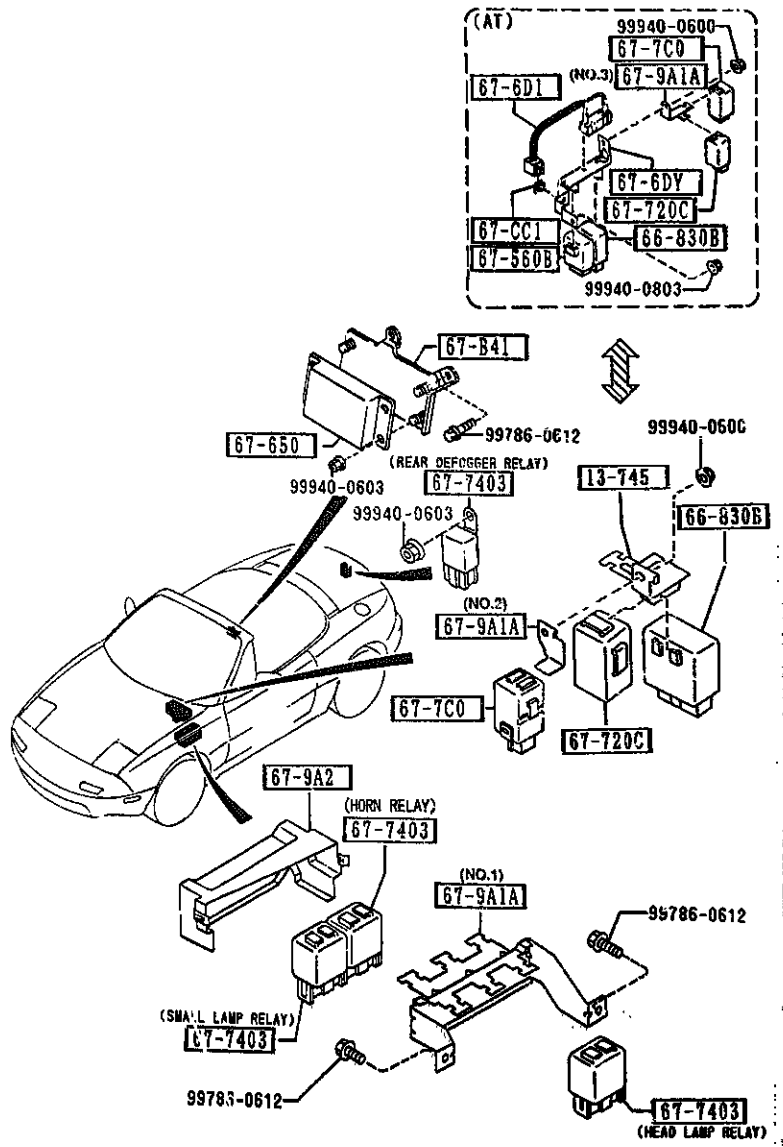

AUNA05

6630 -2 * BODY RELAYS & UNIT

PART NO.	QTY	MODEL/RESTRICTION	MODEL/RESTRICTION	MODEL/RESTRICTION	FROM-TO
CONT'D					
NA01-67-9A1	1	(ILLUST. NO.1)			
NA17-67-9A1	1	(ILLUST. NO.2) (MT)			
NA81-67-9A1	1	(ILLUST. NO.3) (AT)			
67-9A2		COVER,RELAY			
NA02-67-9A2	1				