Parts Catalog

Mazda MX-5 MIATA U.S.A. ('95►'96)

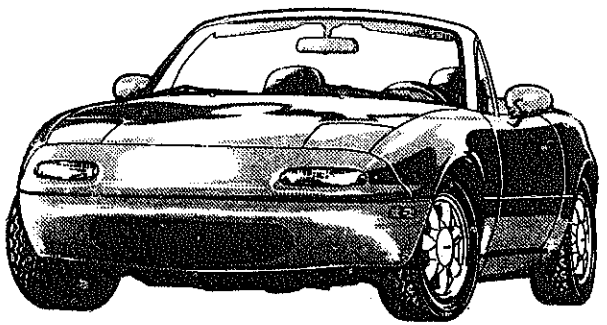

NA35•-600001~700000
NA3••-700001~800000

Jul.'97 (FINAL)

Catalog No. AU-NA05-04

mazda

© 1997 Mazda Motor Corporation

LAYOUT OF CONTENTS / DISPOSITION TYPOGRAPHIQUE DE CONTENU / DISPOSICION DEL CONTENIDO / ANORDNUNG DES INHALTS

- The following is a typical example of the layout of contents on Mazda microfiche parts catalog.
- Voici un exemple typique de la disposition typographique de contenu dans les microfiches de catalogue des pièces de Mazda.
- El siguiente es un ejemplo típico de la disposición del contenido en una microficha del catálogo de repuestos de Mazda.
- Folgendes ist ein typisches Beispiel der Inhaltsanordnung des Mazda-Mikrofiche-Teilekatalogs.

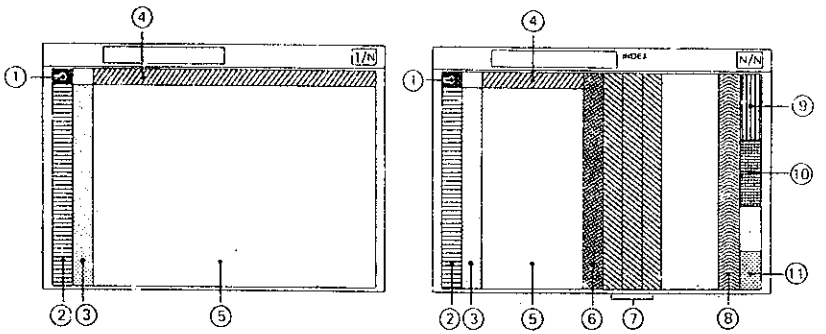

Remark : The items listed under ④ have been deleted from each fiche since Dec. '93

① • Layout of contents
• Disposition Typographique de Contenu
• Disposición del contenido
• Anordnung des Inhalts

② • Pictorial Index
• Index par Schémas
• Indice Gráfico
• Illustrierter Index

③ • Master Section No. Index
• Index des Numéros des Sections Totale
• Indice del Número de la Sección Maéstra
• Hauptabschnittsnummer-Index

~~④ • Section No. Index for the Column~~
~~• Index des Numéros des Sections pour les Colonnes~~
~~• N° de la Sección para el Indice~~
~~• Abschnittsnummer-Index für die Spalte~~

⑤ • Illustration & Text
• Illustrations et Textes
• Ilustración y Texto
• Abbildung und Text

⑥ • Part No. Index
• Index des Numéros des Pièces
• Indice del N° de Pieza
• Teile-Nr.-Index

⑦ • Alphabetical Index
• Index Alphabétique
• Indice Alfabético
• Alphabetischer Index

⑧ • Model Identification
• Identification des Modèles
• Identificación del Modelo
• Modell-Kennzeichnung

⑨ • Vehicle Identification System
• Système d'Identification de Véhicule
• Sistema de Identificación de Vehículo
• Fahrzeug-Identifikationssystem

PICTORIAL INDEX

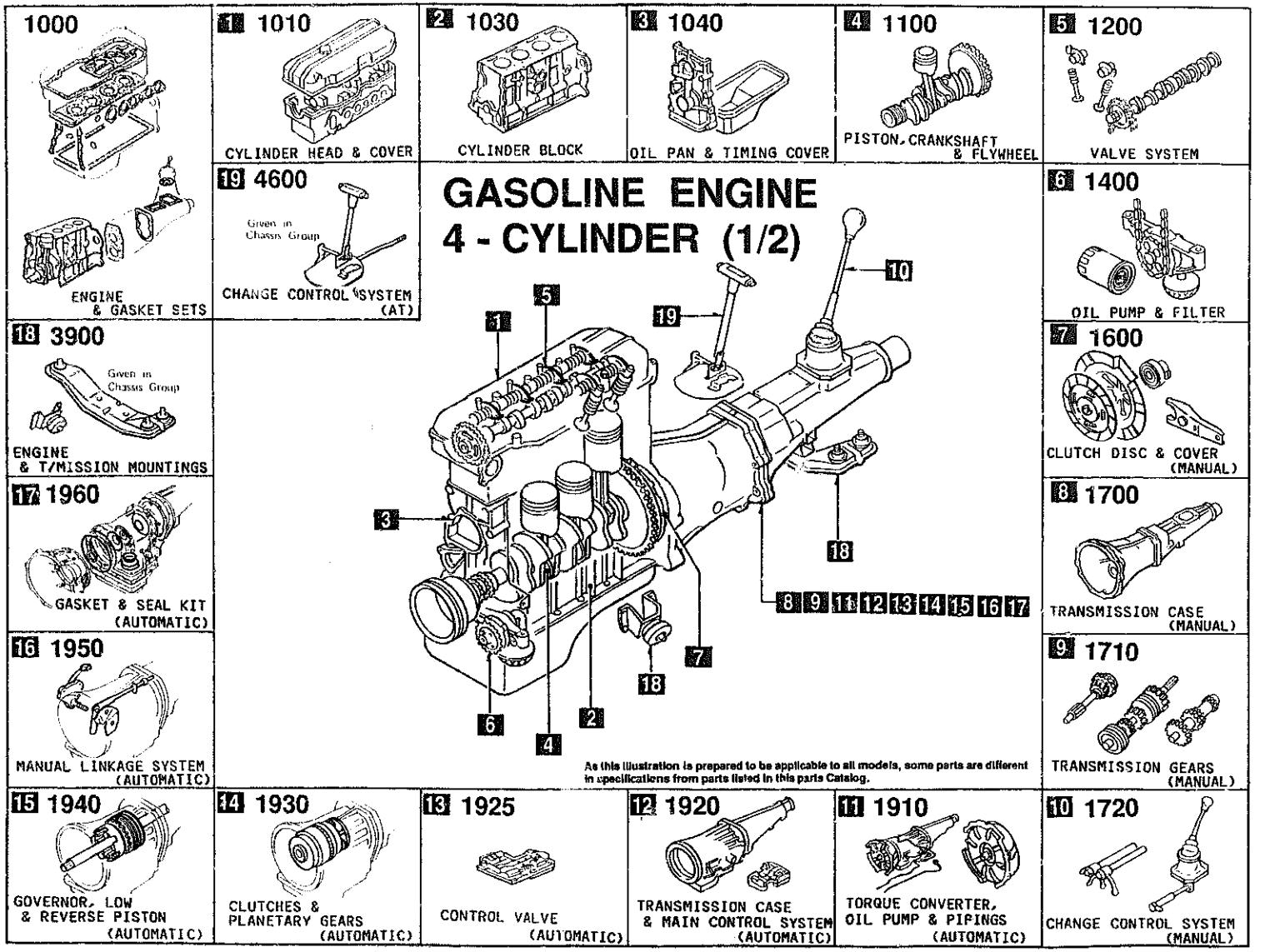

PICTORIAL INDEX

GASOLINE ENGINE
4 - CYLINDER (2/2)

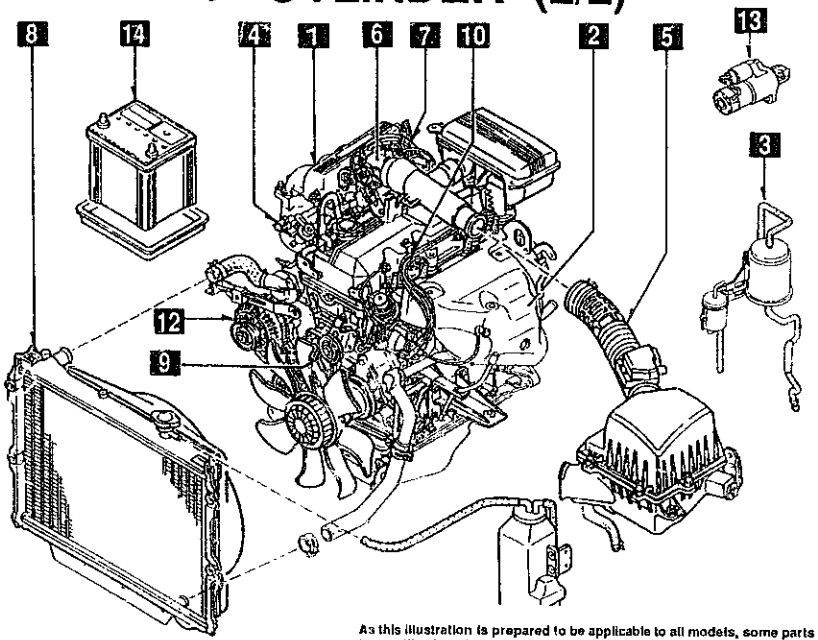

As this illustration is prepared to be applicable to all models, some parts are different in specifications from parts listed in this parts Catalog.

1 1300
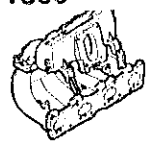
INLET MANIFOLD

2 1310
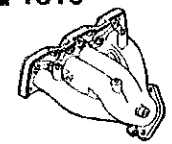
EXHAUST MANIFOLD

3 1320
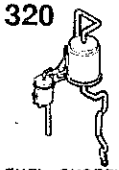
FUEL SYSTEM

4 1325
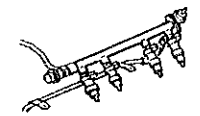
FUEL DISTRIBUTOR

5 1330
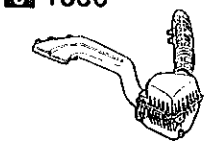
AIR CLEANER

6 1364
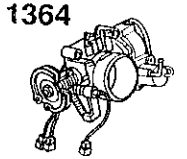
THROTTLE BODY

7 1370
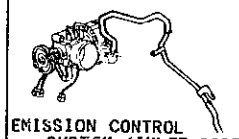
EMISSION CONTROL SYSTEM (INLET SIDE)

8 1500
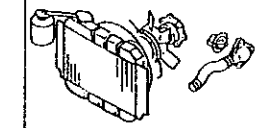
COOLING SYSTEM

9 1580
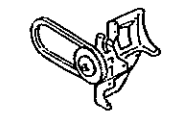
BRACKET, PULLEY & BELT

10 1800
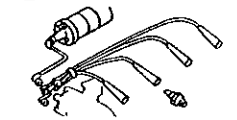
ENGINE ELECTRICAL SYSTEM

11

12 1830
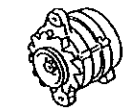
ALTERNATOR

13 1840
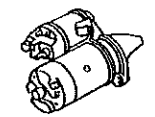
STARTER

14 1850
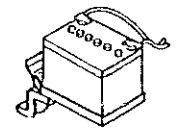
BATTERY

PICTORIAL INDEX

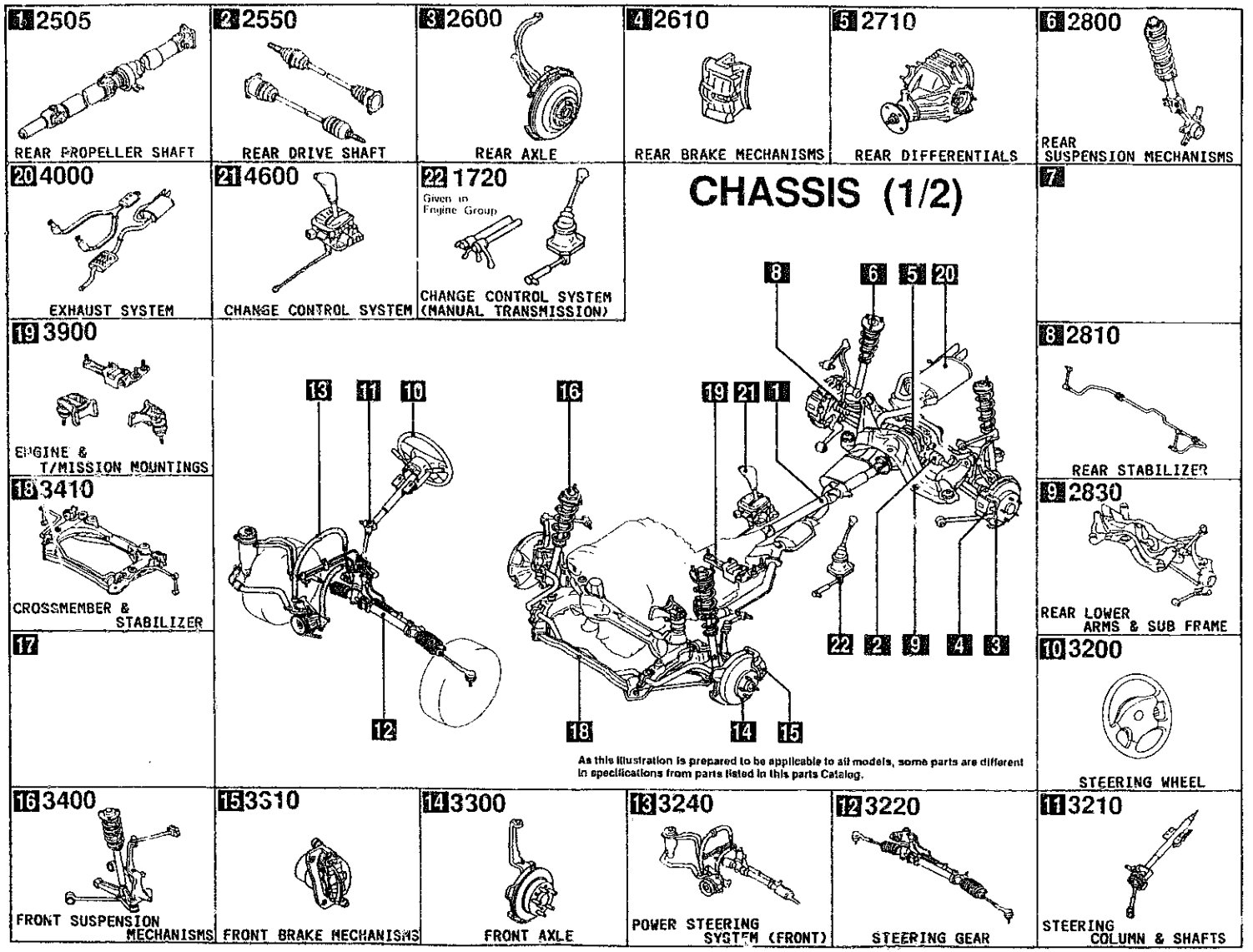

PICTORIAL INDEX

1 3700
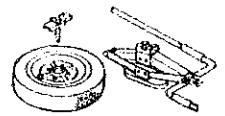
TIRES & JACK

2 4140
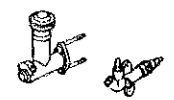
CLUTCH RELEASE & MASTER CYLINDERS

3 4145
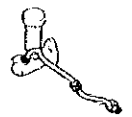
CLUTCH PIPINGS

4 4160

ACCELERATOR CONTROL SYSTEM

5 4200
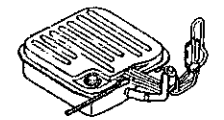
FUEL TANK

6 4210
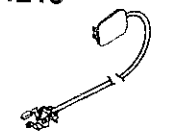
FUEL LID OPENER

CHASSIS (2/2)

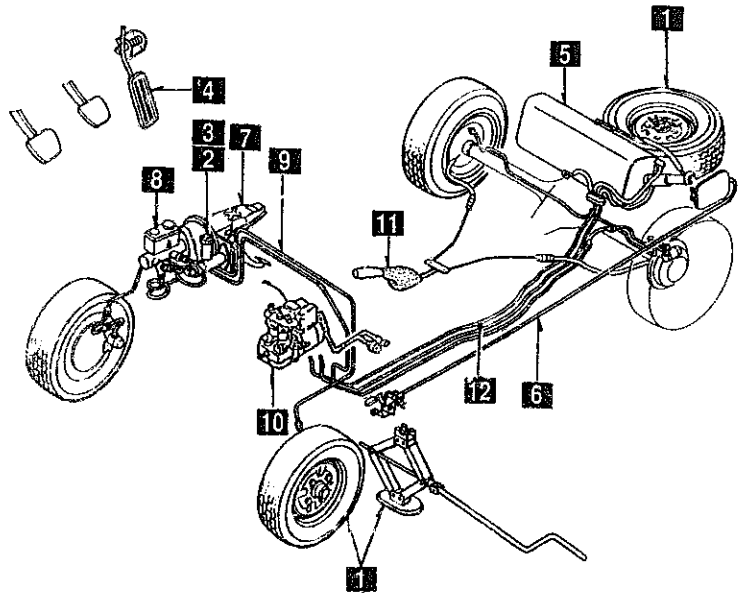

As this illustration is prepared to be applicable to all models, some parts are different in specifications from parts listed in this parts Catalog.

7 4300
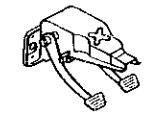
CLUTCH & BRAKE PEDALS

8 4340
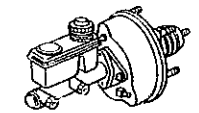
BRAKE MASTER CYLINDER & POWER BRAKE

9 4360

BRAKE PIPINGS

10 4370
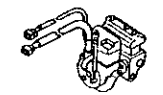
ANTILOCK BRAKE SYSTEM

12 4500

FUEL PIPINGS

11 4400

PARKING BRAKE SYSTEM

PICTORIAL INDEX

1 0900 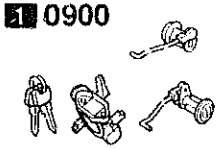 KEY SETS	2 5100  HEAD LAMPS	3 5103 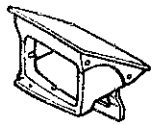 HEAD LAMP RETRACTORS	4 5105 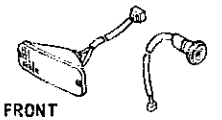 FRONT COMBINATION LAMPS	5 5110 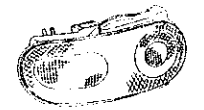 REAR COMBINATION LAMPS	6 5120 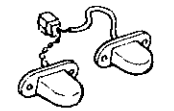 LICENSE LAMPS
	BODY (1/4) 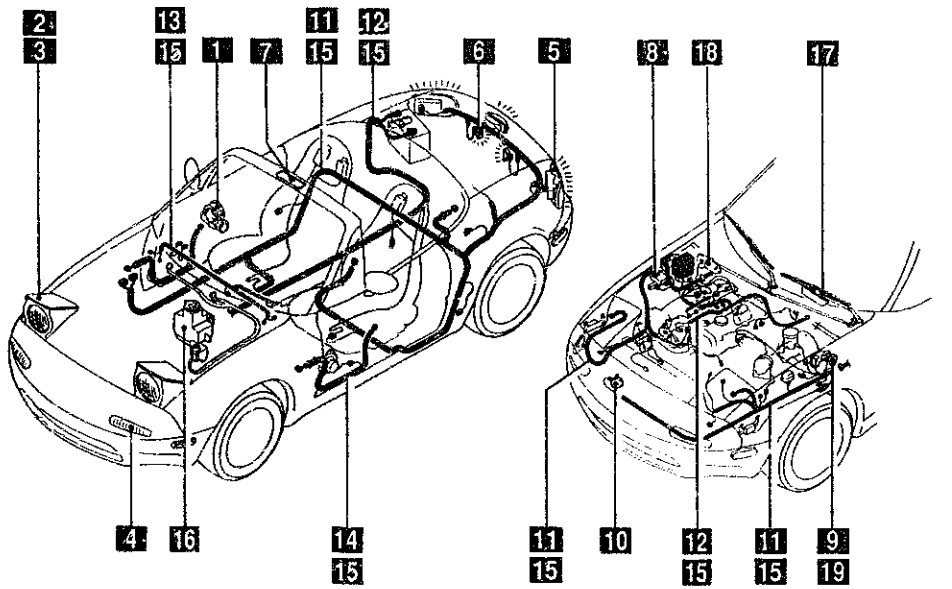 As this illustration is prepared to be applicable to all models, some parts are different in specifications from parts listed in this parts Catalog.				7 5125  INTERIOR LAMPS
19 6640 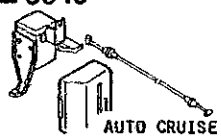 AUTO CRUISE CONTROL SYSTEM					8 6600 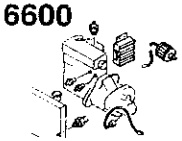 SWITCHES & RELAYS (ENGINE)
18 6740  WIPER MOTOR COMPONENTS (FRONT)					9 6630 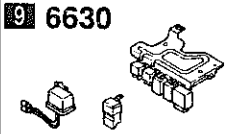 RELAYS & UNIT (BODY)
17 6730 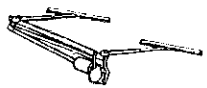 WINDSHIELD WIPERS					10 6635 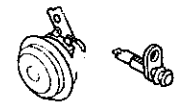 DOOR SWITCH & HORNS
16 6720 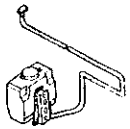 WINDSHIELD WASHER	15 6704 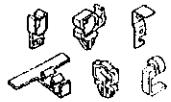 WIRING HARNESS CLAMPS	14 6703  WIRING HARNESSES (DOOR, FLOOR/CEILING)	13 6702  WIRING HARNESSES (DASHBOARD)	12 6701  WIRING HARNESSES (ENGINE & T/MISSION)	11 6700 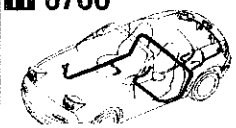 WIRING HARNESSES (FRONT & REAR)

PICTORIAL INDEX

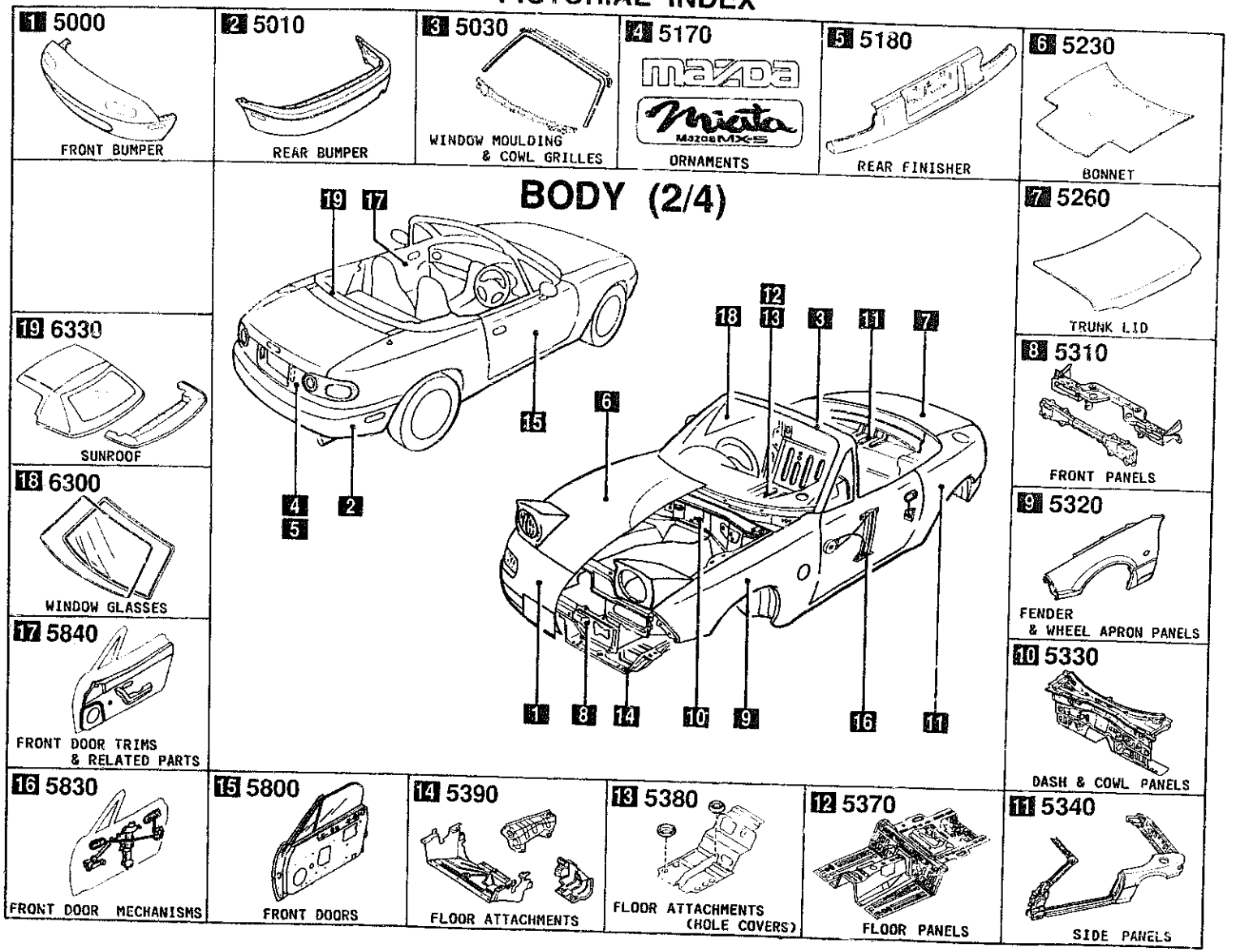

PICTORIAL INDEX

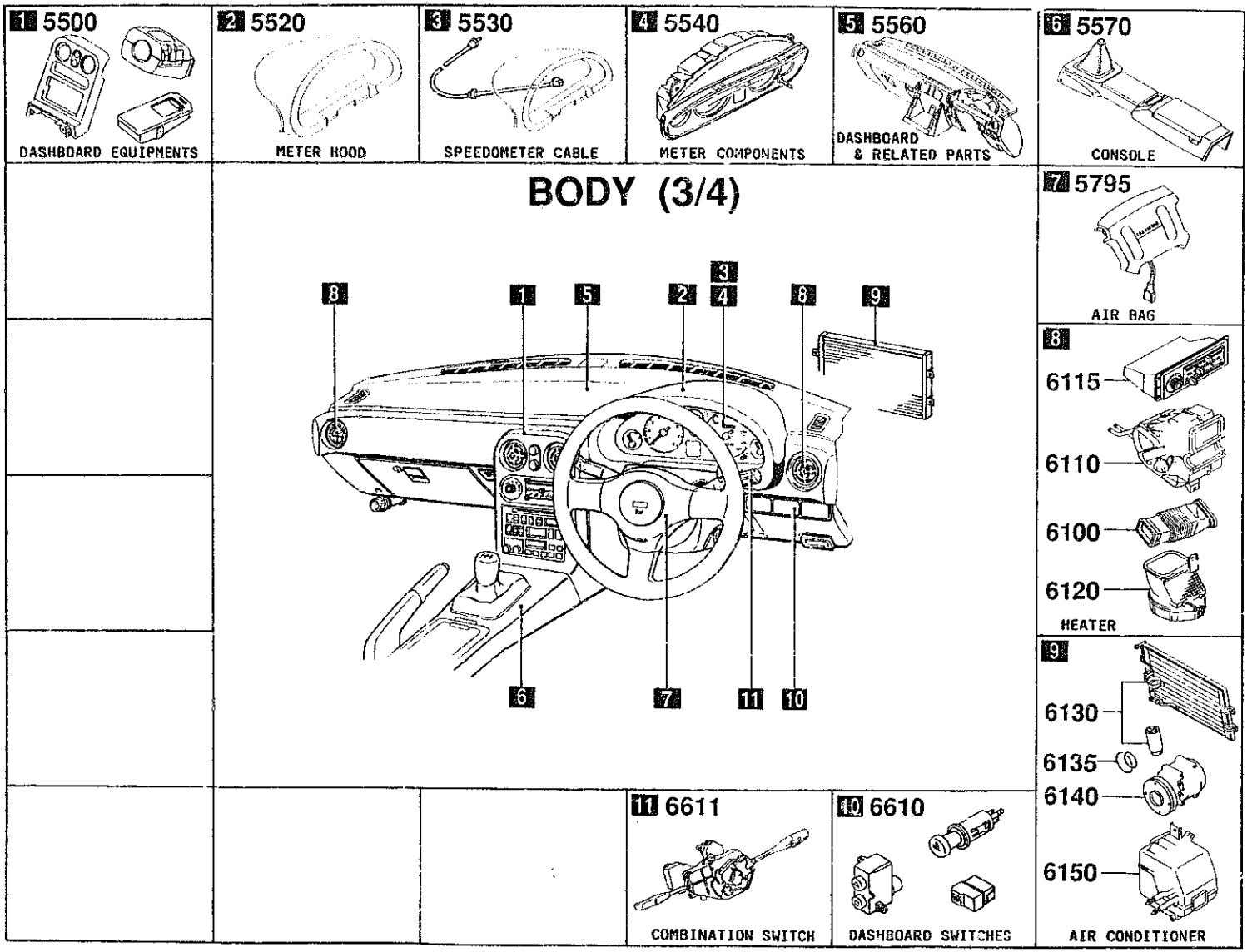

PICTORIAL INDEX

1 5580
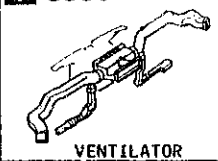
VENTILATOR

2 5700

SEATS

3 5790

SEAT BELTS

4 6680
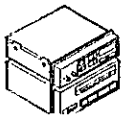
AUDIO SYSTEMS (RADIO & TAPE DECK)

5 6682
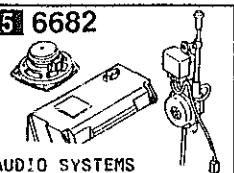
AUDIO SYSTEMS (ANTENNA & SPEAKER)

6 6820
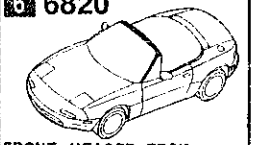
FRONT HEADER TRIM & PILLAR TRIMS

7 6840
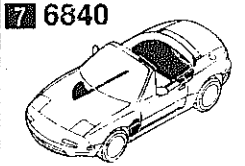
TRIMS & SCUFF PLATES

8 6860
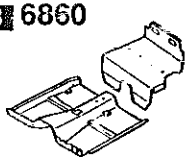
FLOOR MATS & PADS

9 6870

SERVICE TOOLS

10 6900

VISORS, ASSIST HANDLES & MIRRORS

12 7250

QUARTER WINDOW & TRIMS

11 6930
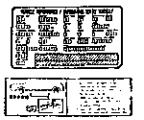
CAUTION PLATES & LABELS

BODY (4/4)

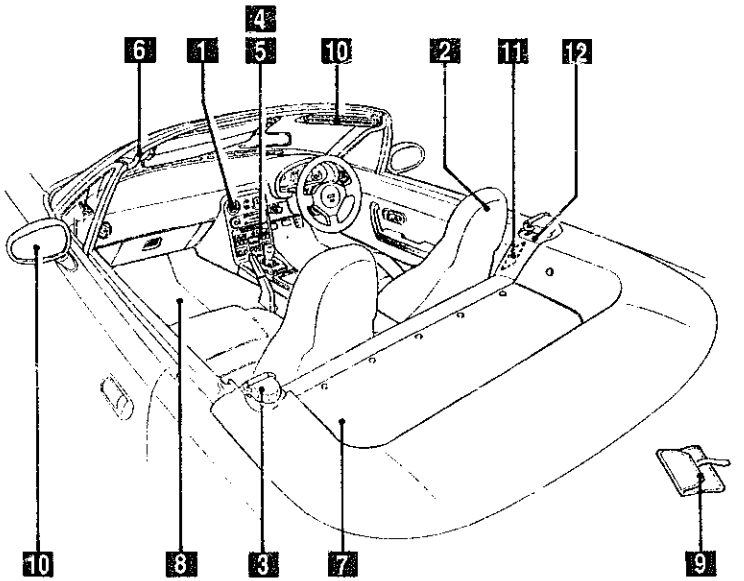

As this illustration is prepared to be applicable to all models, some parts are different in specifications from parts listed in this parts Catalog.

SECTION NAME INDEX (ENGINE)

LO.NO	SEC.NO	SECTION NAME	LO.NO	SEC.NO	SECTION NAME	LO.NO	SEC.NO	SECTION NAME
1-C03	1000	ENGINE & GASKET SETS	1-K09	1950	AUTOMATIC TRANSMISSION MANUAL LINKAGE SYSTEM			
1-E03	1010	CYLINDER HEAD & COVER	1-M09	1960	AUTOMATIC TRANSMISSION GASKET & SEAL KIT			
1-H03	1030	CYLINDER BLOCK						
1-J03	1040	OIL PAN & TIMING COVER						
1-L03	1100	PISTON, CRANKSHAFT & FLYWHEEL						
1-C04	1200	VALVE SYSTEM						
1-E04	1300	INLET MANIFOLD						
1-F04	1310	EXHAUST MANIFOLD						
1-G04	1320	FUEL SYSTEM						
1-I04	1325	FUEL DISTRIBUTOR						
1-J04	1330	AIR CLEANER						
1-L04	1364	THROTTLE BODY						
1-M04	1370	EMISSION CONTROL SYSTEM (INLET SIDE)						
1-C05	1400	OIL PUMP & FILTER						
1-E05	1500	COOLING SYSTEM						
1-H05	1580	BRACKET, PULLEY & BELT						
1-C06	1600	CLUTCH DISC & COVER						
1-D06	1700	MANUAL TRANSMISSION CASE						
1-E06	1710	MANUAL TRANSMISSION GEARS						
1-J06	1720	MANUAL TRANSMISSION CHANGE CONTROL SYSTEM						
1-M06	1800	ENGINE ELECTRICAL SYSTEM						
1-C07	1830	ALTERNATOR						
1-E07	1840	STARTER (MT)						
1-G07	1840 A	STARTER (AT)						
1-I07	1850	BATTERY						
1-J07	1910	AUTOMATIC TRANSMISSION TORQUE CONVERTER, OIL PUMP & PIPINGS						
1-M07	1920	AUTOMATIC TRANSMISSION CASE & MAIN CONTROL SYSTEM						
1-F08	1925	AUTOMATIC TRANSMISSION CONTROL VALVE						
1-M08	1930	AUTOMATIC TRANSMISSION CLUTCHES & PLANETARY GEARS						
1-H09	1940	AUTOMATIC TRANSMISSION GOVERNOR, LOW & REVERSE PISTON						

CATLOG-NO= AUNA05-04

DATE. 1997-07

SECTION NAME INDEX (CHASSIS)

LO.NO	SEC.NO	SECTION NAME
1-C11	2505	REAR PROPELLER SHAFT
1-D11	2550	REAR DRIVE SHAFT
1-F11	2600	REAR AXLE
1-G11	2610	REAR BRAKE MECHANISMS
1-J11	2710	REAR DIFFERENTIALS (NORMAL DIFF.)
1-C12	2710 A	REAR DIFFERENTIALS (LIMITED SLIP DIFF.)
1-G12	2800	REAR SUSPENSION MECHANISMS
1-H12	2810	REAR STABILIZER
1-J12	2830	REAR LOWER ARMS & SUB FRAME
1-K12	3200	STEERING WHEEL
1-L12	3210	STEERING COLUMN & SHAFTS
1-M12	3220	STEERING GEAR (W/O POWER STEERING)
1-C13	3220 A	STEERING GEAR (W/POWER STEERING)
1-N13	3240	POWER STEERING SYSTEM
1-K13	3300	FRONT AXLE (W/O ANTILOCK BRAKE)
1-L13	3300 A	FRONT AXLE (W/ANTILOCK BRAKE)
1-M13	3310	FRONT BRAKE MECHANISMS
1-N13	3400	FRONT SUSPENSION MECHANISMS
1-E14	3410	CROSSMEMBER & STABILIZER
1-F14	3700	TIRES & JACK
1-C15	3980	ENGINE & T/MISSION MOUNTINGS
1-D15	4000	EXHAUST SYSTEM
1-F15	4140	MANUAL TRANSMISSION CLUTCH RELEASE & MASTER CYLINDERS
1-G15	4145	MANUAL TRANSMISSION CLUTCH PIPINGS
1-H15	4160	ACCELERATOR CONTROL SYSTEM
1-I15	4200	FUEL TANK
1-L15	4210	FUEL LID OPENER
1-M15	4300	MANUAL TRANSMISSION CLUTCH & BRAKE PEDALS
1-D16	4300A	AUTOMATIC TRANSMISSION BRAKE PEDAL
1-F16	4340	BRAKE MASTER CYLINDER & POWER BRAKE (W/O ANTILOCK BRAKE)
1-H16	4340 A	BRAKE MASTER CYLINDER & POWER BRAKE (W/ANTILOCK BRAKE)
1-K16	4360	BRAKE PIPINGS (W/O ANTI LOCK BRAKE SYSTEM)
1-M16	4360 A	BRAKE PIPINGS (ANTI LOCK BRAKE SYSTEM)
2-C03	4370	ANTILOCK BRAKE SYSTEM
2-E03	4400	PARKING BRAKE SYSTEM
2-G03	4500	FUEL PIPINGS
2-I03	4600	CHANGE CONTROL SYSTEM (AT)

CATLOG-NO= AUNA05-04

DATE. 1997-07

SECTION NAME INDEX (BODY)

LO.NO	SEC.NO	SECTION NAME
2-C05	0900	KEY SETS
2-E05	5000	FRONT BUMPER
2-H05	5010	REAR BUMPER
2-J05	5030	WINDOW MOULDING & COWL GRILLES
2-K05	5100	HEAD LAMPS
2-L05	5103	HEAD LAMP RETRACTORS
2-C06	5105	FRONT COMBINATION LAMPS
2-E06	5110	REAR COMBINATION LAMPS
2-H06	5120	LICENSE LAMPS
2-I06	5125	INTERIOR LAMPS
2-J06	5170	ORNAMENTS
2-K06	5180	REAR FINISHER
2-L06	5230	BONNET
2-N06	5260	TRUNK LID
2-D07	5310	FRONT PANELS
2-E07	5320	FENDER & WHEEL APRON PANELS
2-H07	5330	DASH & COWL PANELS
2-I07	5340	SIDE PANELS
2-N07	5370	FLOOR PANELS
2-E08	5380	FLOOR ATTACHMENTS (HOLE COVERS)
2-F08	5390	FLOOR ATTACHMENTS
2-C09	5500	DASHBOARD EQUIPMENTS
2-F09	5520	METER HOOD
2-G09	5530	SPEEDOMETER CABLE
2-H09	5540	METER COMPONENTS
2-K09	5560	DASHBOARD & RELATED PARTS
2-N09	5570	CONSOLE
2-E10	5580	VENTILATOR
2-G10	5700	SEATS
2-I12	5790	SEAT BELTS
2-J12	5795	AIR BAG
2-K12	5800	FRONT DOORS
2-N12	5830	FRONT DOOR MECHANISMS
2-F13	5840	FRONT DOOR TRIMS & RELATED PARTS
2-C14	6100	HEATER
2-D14	6110	HEATER UNIT COMPONENTS
2-E14	6115	HEATER CONTROL COMPONENTS
2-G14	6120	HEATER BLOWER COMPONENTS
2-H14	6130	AIR CONDITIONER
2-L14	6135	AIR CONDITIONING COOLING PIPE O-RING
2-M14	6140	AIR CONDITIONING COMPRESSOR COMPONENTS
2-C15	6150	AIR CONDITIONING COOLING UNIT
2-D15	6300	WINDOW GLASSES
2-E15	6330	SUN ROOF
2-E16	6600	ENGINE SWITCHES & RELAYS
2-J16	6610	DASHBOARD SWITCHES
2-L16	6611	COMBINATION SWITCH
2-M16	6630	BODY RELAYS & UNIT
3-C03	6635	DOOR SWITCH & HORNS
3-D03	6640	AUTO CRUISE CONTROL SYSTEM
3-E03	6680	AUDIO SYSTEMS (RADIO & TAPE DECK)
3-K03	6682	AUDIO SYSTEMS (ANTENNA & SPEAKER)
3-N03	6700	FRONT & REAR WIRING HARNESSES
3-F04	6701	ENGINE & TRANSMISSION WIRING HARNESSES
3-G04	6702	DASHBOARD WIRING HARNESSES
3-H04	6703	DOOR, FLOOR & CEILING WIRING HARNESSES
3-I04	6704	WIRING HARNESS CLAMPS
3-L04	6720	WINDSHIELD WASHER (W/O ANTI LOCK BRAKE)
3-N04	6720 A	WINDSHIELD WASHER (W/ANTI LOCK BRAKE)
3-E05	6730	WINDSHIELD WIPERS
3-G05	6740	WIPER MOTOR COMPONRNTS
3-H05	6820	FRONT HEADER TRIM & PILLAR TRIMS
3-I05	6840	TRIMS & SCUFF PLATES
3-L05	6860	FLOOR MATS & PADS
3-C06	6870	SERVICE TOOLS
3-D06	6900	SUN VISORS, ASSIST HANDLES & MIRRORS
3-G06	6930	CAUTION PLATES & LABELS
3-I06	7250	QUARTER WINDOW & TRIMS

CATLOG-NO= AUNA05-04

DATE. 1997-07

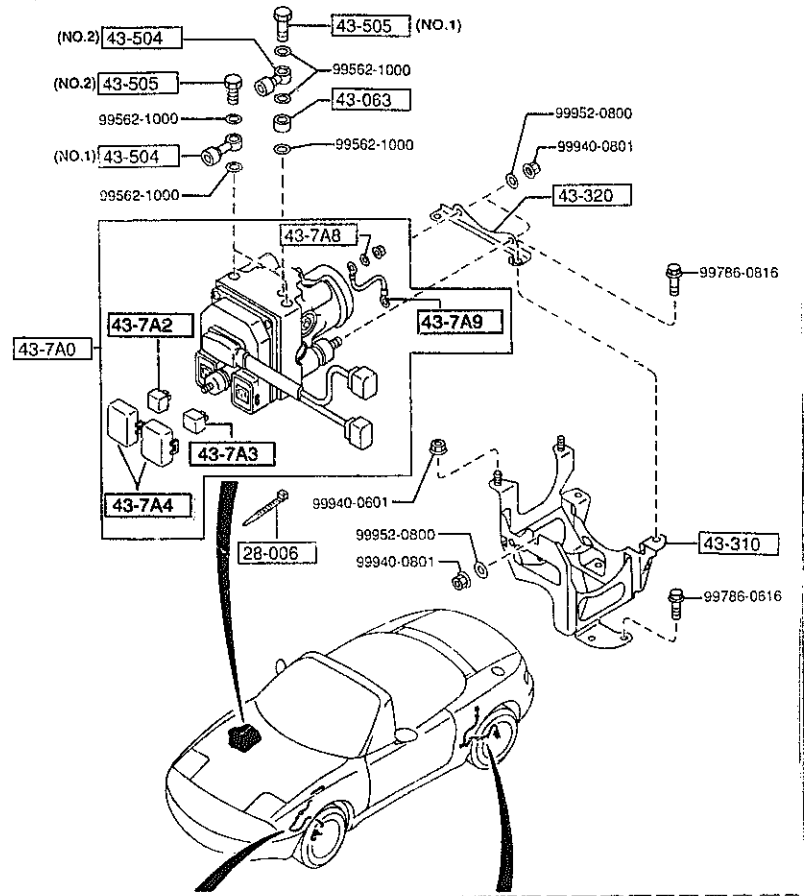

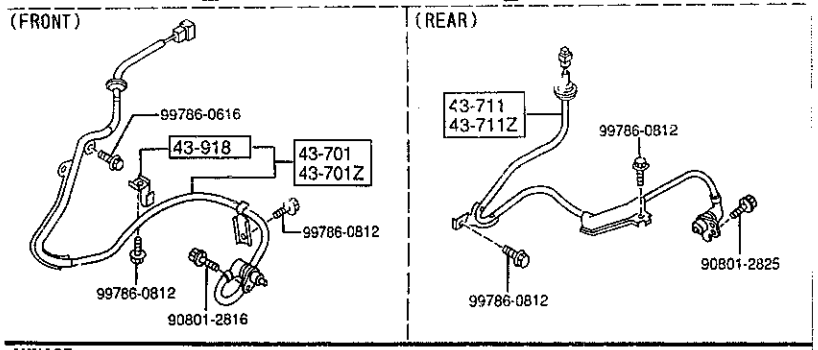

AUNA05

PART NO.	QTY	MODEL/RESTRICTION	MODEL/RESTRICTION	MODEL/RESTRICTION	FROM-TO
28-006		BAND,DUST BOOT-DAMPER			
H720-28-006	1				-4B01
43-063		SPACER			
HG83-43-506	1				
43-310		BRACKET NO 1,A.B.S.			
NB13-43-310A	1				
43-320		BRACKET NO 2,A.B.S.			
NB13-43-321A	1				
43-504		JOINT,PIPE			
EA03-43-504B	2	(ILLUST. NO.1)			
W023-43-504	1	(ILLUST. NO.2)			
43-505		BOLT,CONNECTOR			
HG83-43-505	1	(ILLUST. NO.1)			
W023-43-505	2	(ILLUST. NO.2)			
43-7A0		UNIT,HYDRAULIC-ABS			
NB13-43-7A0A	1				-4C05
A (NB13-43-7A0B)					
NB13-43-7A0B	1				4C05-
43-7A2		RELAY,MOTOR-HYD. UNIT			
*HG82-43-7A2	1				
43-7A3		RELAY,VALVE-HYD. UNIT			
NA23-43-7A4	1				-6401
*NA23-43-7A3	1				6401-
43-7A4		COVER'L',HYDRAULIC UNIT			
*HG82-43-7A4	2				
43-7A8		WASHER,HYD. UNIT			
NA23-43-7A8	1				
43-7A9		WIRE,EARTH-HYD. UNIT			
*H415-43-7A9	1				

4B01 NA35* -606043
4C05 NA35* -610026
6401 NA3** -717787

CAT. AUNA05-04

1997-07

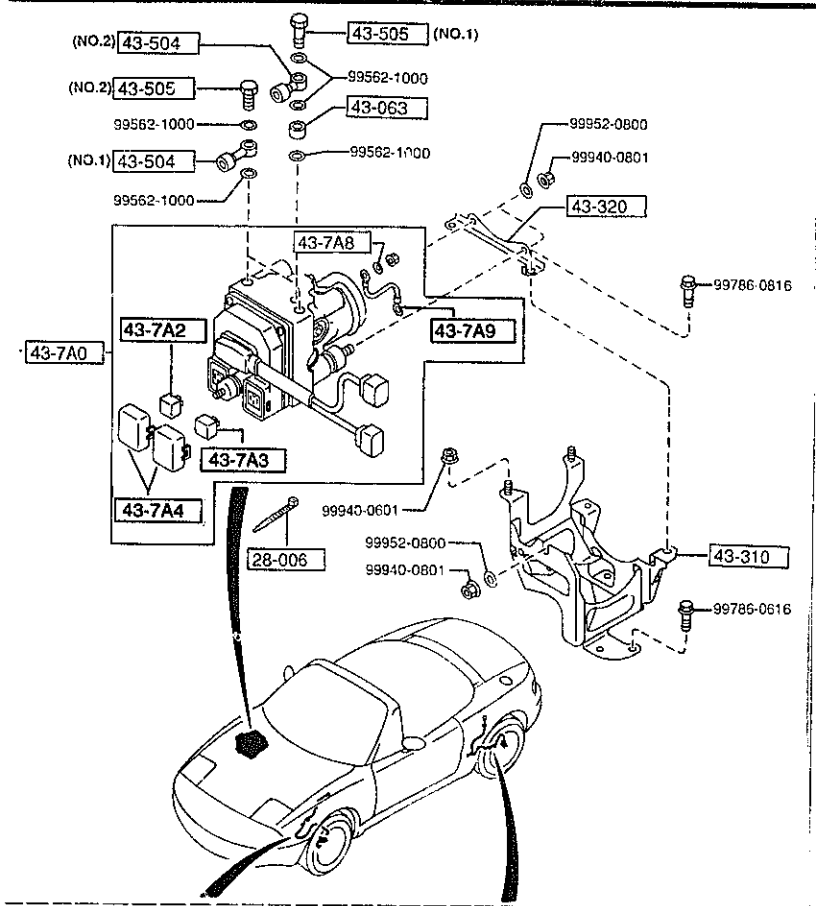

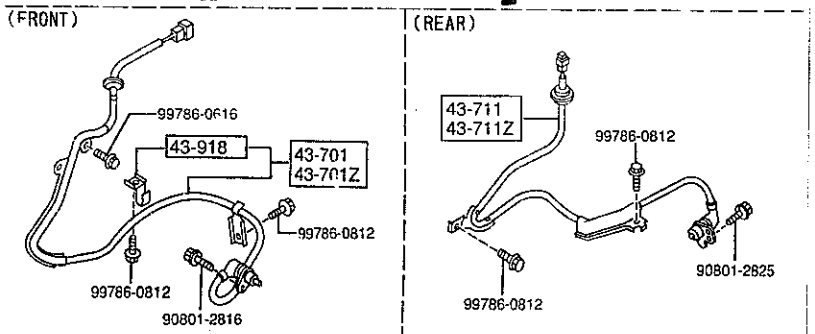

AUNA05

PART NO.	QTY	MODEL/RESTRICTION	MODEL/RESTRICTION	MODEL/RESTRICTION	FROM-TO
43-701		SENSOR(R),FRT-A.B.S.			
NA23-43-70XE	1				
43-701Z		SENSOR(L),FRT-A.B.S.			
NA23-43-73XE	1				
43-711		SENSOR(R),RR-A.B.S.			
NA23-43-71YB	1				
43-711Z		SENSOR(L),RR-A.B.S.			
NA23-43-72/B	1				
43-918		CLIP,SENSOR HARNESS			
NA23-43-705	2				

CAT. AUNA05-04

1997-07

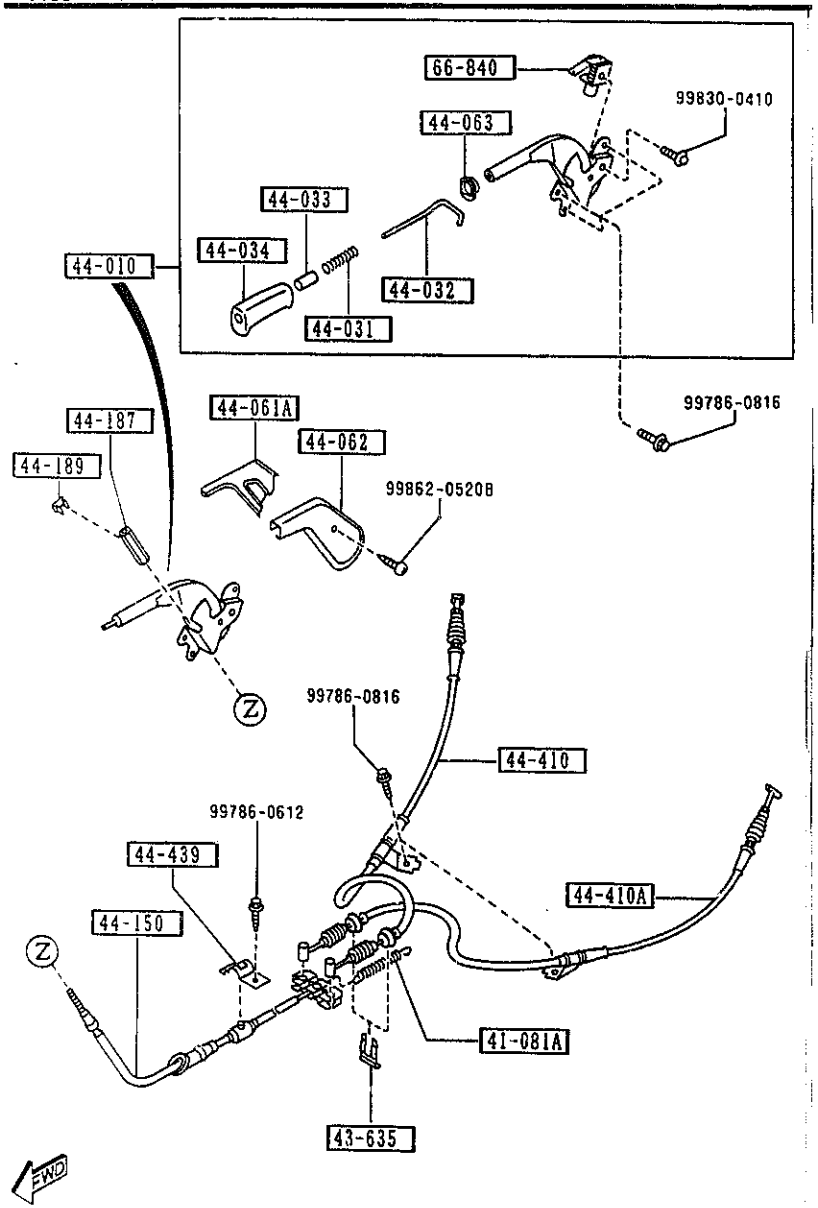

PART NO.	QTY	MODEL/RESTRICTION	MODEL/RESTRICTION	MODEL/RESTRICTION	FROM-TO
41-081A		SPRING,RETURN			
0750-41-306	1				
43-635		CLIP,FLEXIBLE HOSE			
W023-43-635 A (W023-43-635A)	2				-4927
W023-43-635A	2				4927-
44-010		LEVER,PARKING BRAKE			
NA01-44-010	1	(URETHANE)			
N001-44-010A	1	(WOOD)			
44-031		SPRING,PARKING REVER			
G030-44-031	1				
44-032		ROD,RELEASE			
NA01-44-032	1				
44-033		BUTTON,RELEASE			
FB01-44-033	1				
44-034		CAP,PARK BRAKE LEVER			
FB01-44-034	1	(URETHANE)			
N001-44-034B	1	(WOOD)			
44-061A		COVER			
FB01-44-061B	1				
44-062		COVER			
FB01-44-062A	1				
44-063		SPACER			
FC01-44-063A	1	(URETHANE)			
N001-44-063	1	(WOOD)			
44-150		CABLE,PARKING-FRT			
NA01-44-150C	1				
44-187		SCREW,ADJUST			
0866-44-187A	1				

4927 NA35* -603489

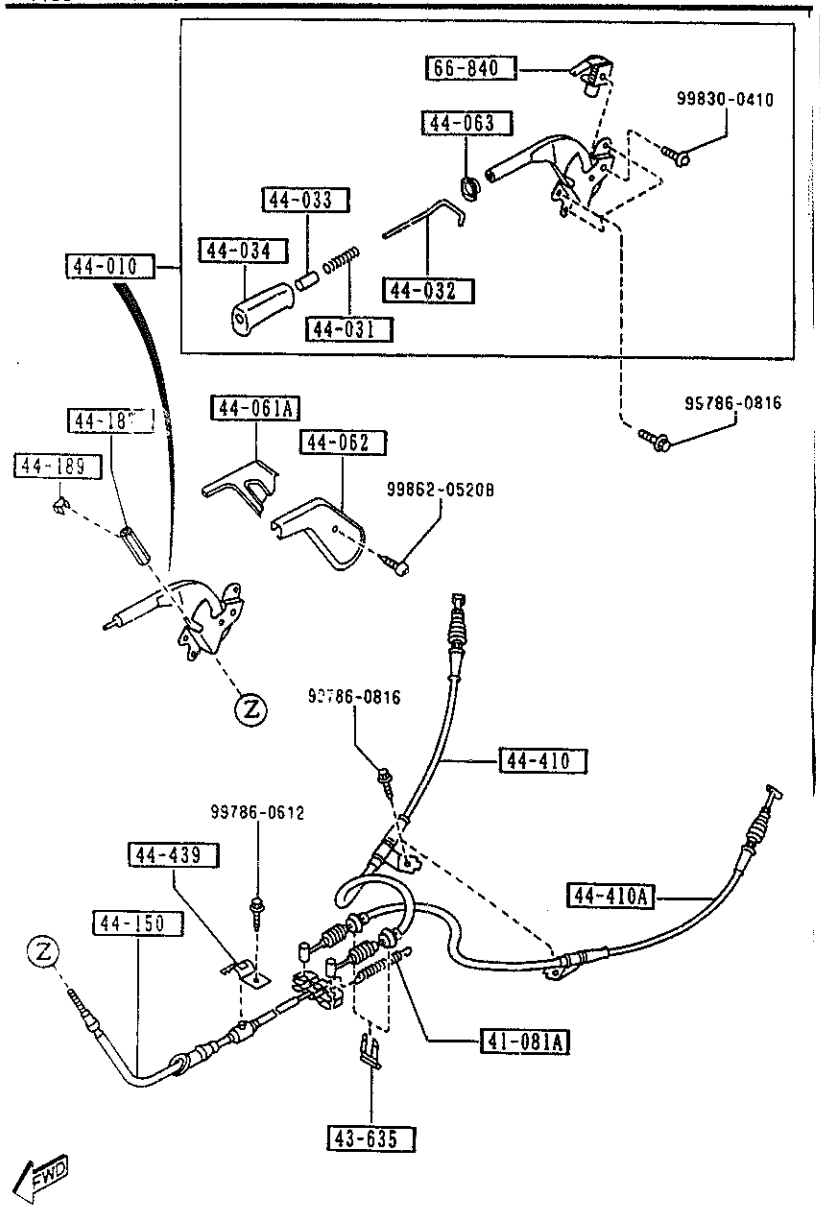

AUNA05

4400 -2 * PARKING BRAKE SYSTEM

PART NO.	QTY	MODEL/RESTRICTION	MODEL/RESTRICTION	MODEL/RESTRICTION	FROM-TO
44-189 0866-44-189	1	CLIP			
44-410 NA75-44-410	1	CABLE(R),R.-PARK.			
44-410A NA75-44-420	1	CABLE(L),R.-PARK.			
44-439 1011-44-439	1	CLIP,CABLE			
66-840 GJ21-66-450A	1	SWITCH,PARKING LAMP			

CAT. AUNA05-04

1997-07

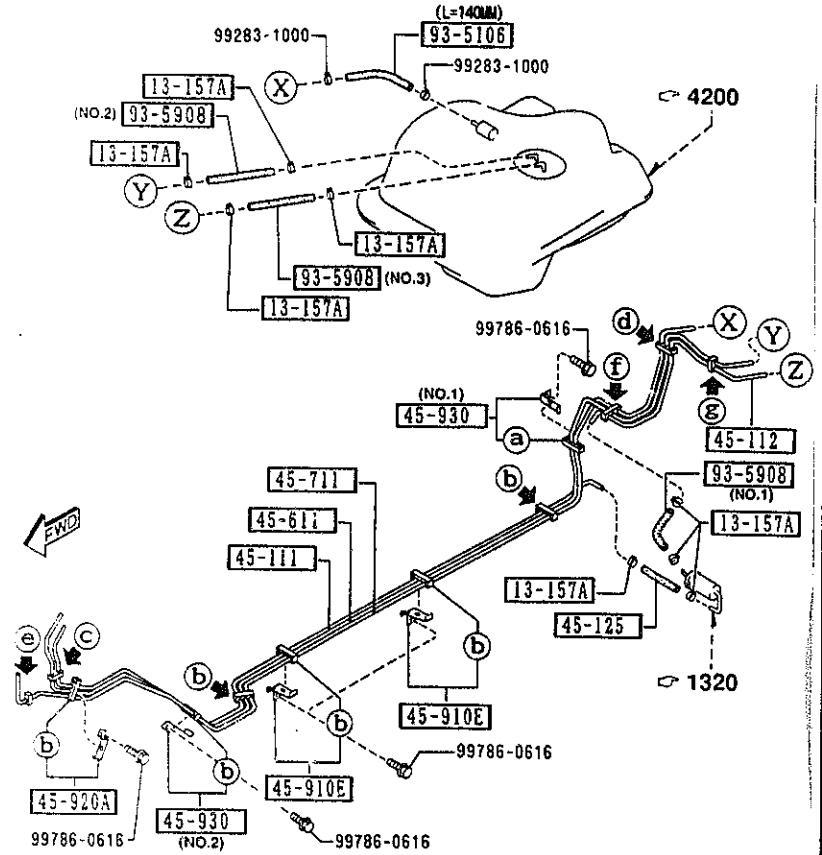

ⓐ	ⓑ	ⓒ	ⓓ	ⓔ	ⓕ	ⓖ
45-912D (NO.1)	45-912D (NO.2)	45-913	45-913A	45-914	45-915	45-921

PART NO.	QTY	MODEL/RESTRICTION	MODEL/RESTRICTION	MODEL/RESTRICTION	FROM-TO
13-157A 8574-13-157	8	CLIP			
45-111 NA01-45-111	1	PIPE,FUEL-MAIN			
45-112 NA75-45-112A	1	PIPE,FUEL-MAIN			
45-125 99359-0815	1	HOSE,FUEL			
45-611 NA75-45-611A	1	PIPE,FUEL-RETURN			
45-711 NA75-45-711A	1	PIPE,EVAPORATION			
45-910E H266-45-910A	2	HOLDER,PIPE			
45-912D H260-45-912 H266-45-912	1 6	HOLDER'A' (ILLUST. NO.1) (ILLUST. NO.2)			
45-913 NA01-45-912	1	HOLDER,PIPE			
45-913A NA01-45-913	1	CLIP,PIPE			
45-914 FB01-45-914	1	HOLDER,PIPE NIFUKO			
45-915 NA01-45-914	1	CLIP,PIPE			
45-920A H266-45-920A	1	HOLDER'B',PIPE			

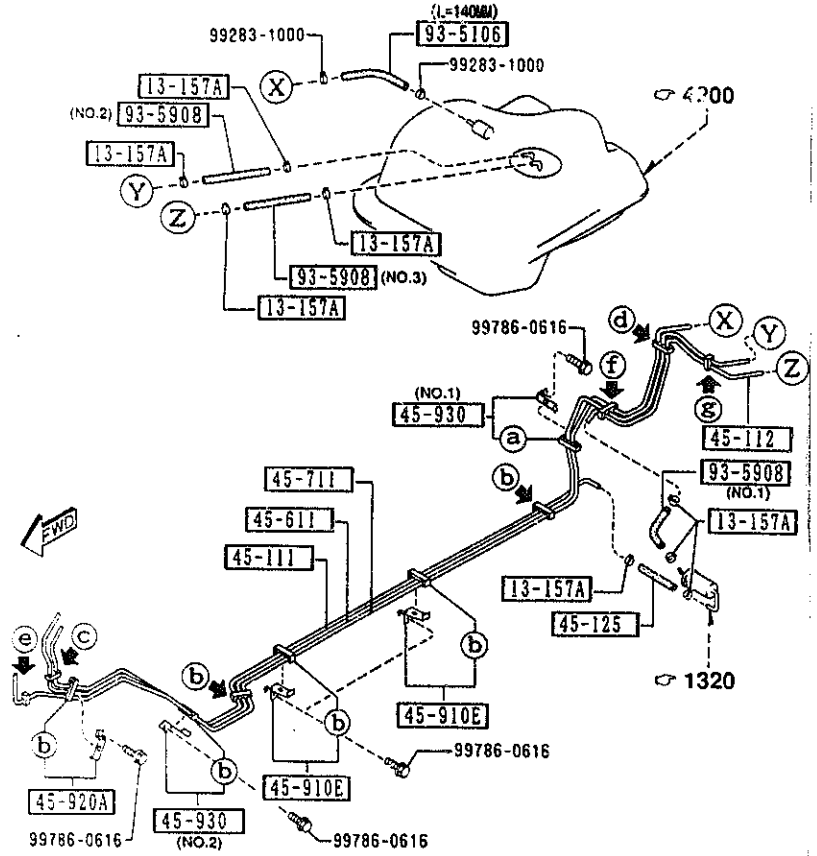

a	b	c	d	e	f	g
45-912D (NO.1)	45-912D (NO.2)	45-973	45-913A	45-914	45-915	45-921

PART NO.	QTY	MODEL/RESTRICTION	MODEL/RESTRICTION	MODEL/RESTRICTION	FROM-TO
45-921		CLIP,PIPE			
B210-45-917	1				
45-930		HOLDER'C',PIPE			
H260-45-930	1	(ILLUST. NO.1)			
H266-45-930A	1	(ILLUST. NO.2)			
93-5106		HOSE			
99351-06999	1	L=1M CUT IT TO USE			
93-5908		HOSE			
99359-0816	1	(ILLUST. NO.1)			
99359-0817	1	(ILLUST. NO.2)			
99359-0818	1	(ILLUST. NO.3)			

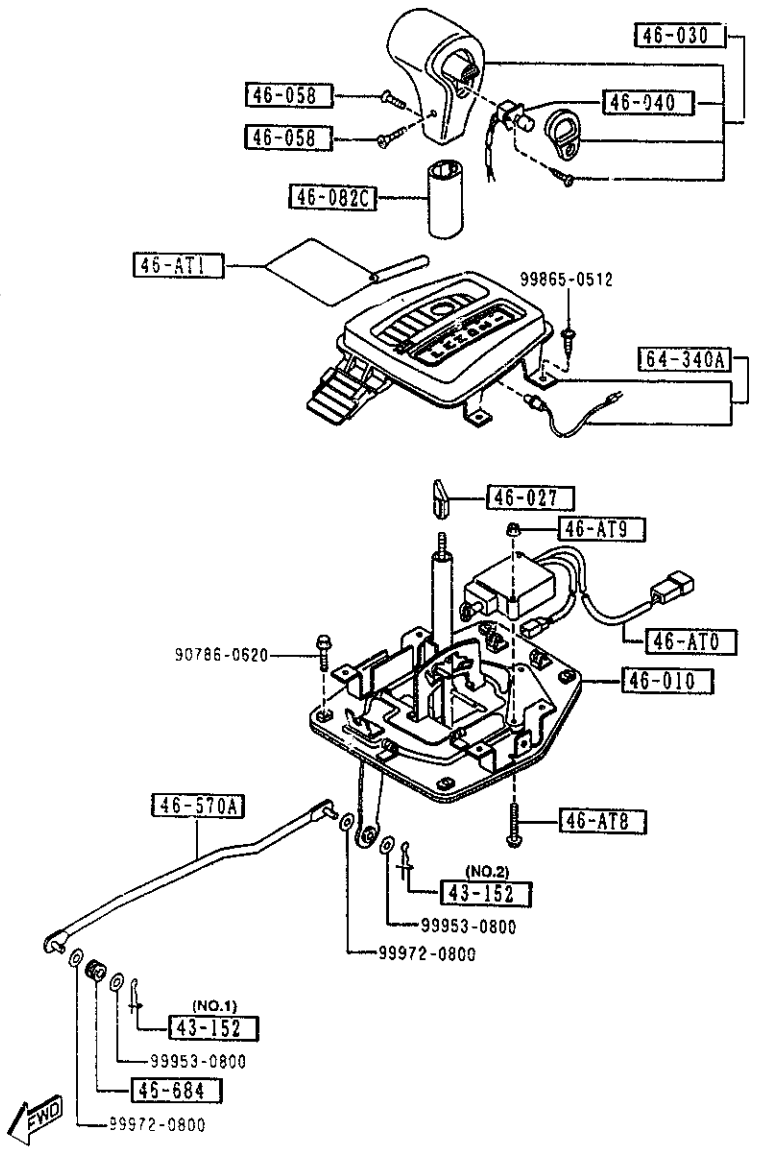

PART NO.	QTY	MODEL/RESTRICTION	MODEL/RESTRICTION	MODEL/RESTRICTION	FROM-TO
43-152		PIN,SNAP			
D001-43-152	1	(ILLUST. NO.1)			
FB02-43-152A	1	(ILLUST. NO.2)			
46-AT0		ACTUATOR,SHIFT LOCK			
NA81-46-AT0B	1				
46-AT1		TAG,CAUTION-CHANGE			
FD02-46-AT1	1				-4A01
46-AT8		SCREW			
H338-46-AT8	2				
46-AT9		NUT			
H338-46-AT9	2				-5401
46-010		LEVER,SELECT			
NA81-46-100	1				
46-027		CAM,CHANGE LEVER			
H338-46-027	1				
46-030		KNOB,CHANGE LEVER			
NA81-46-030A (NA81-46-030B)	1				-5703
NA81-46-030B	1				5703-
46-040		SWITCH,OVER DRIVE CONTROL			
NA81-46-040	1				
46-058		SCREW,CHANGE LEVER KNOB			
FB02-46-058C	2				
46-082C		COVER,SELECT LEVER			
NA03-46-088	1				
46-570A		ROD,SELECTOR-REAR			
NA03-46-570	1				
46-684		BUSH			
1015-46-684A	1				

4A01 NA35* -603621
5401 NA35* -619598
5703 NA3** -700001

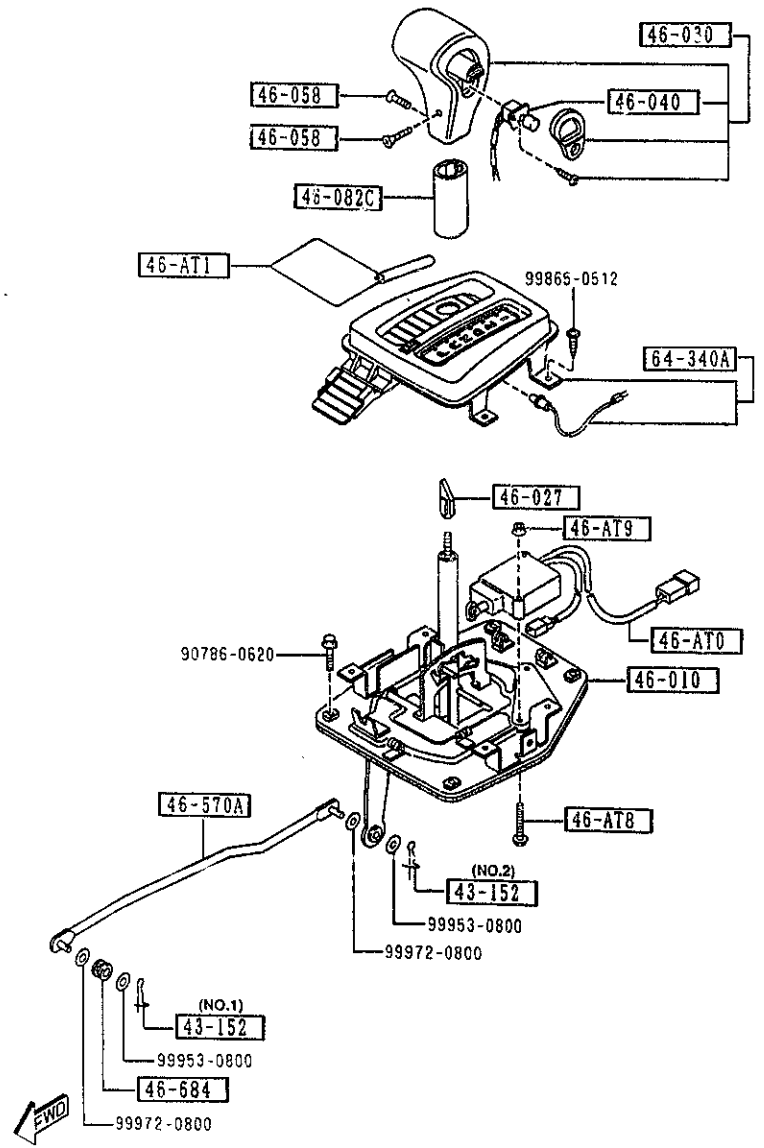

PART NO.	QTY	MODEL/RESTRICTION	MODEL/RESTRICTION	MODEL/RESTRICTION	FROM-TO
64-340A		INDICATOR			
NA81-64-350A	1				