Parts Catalog

Mazda MX-5 MIATA U.S.A. ('95►'96)

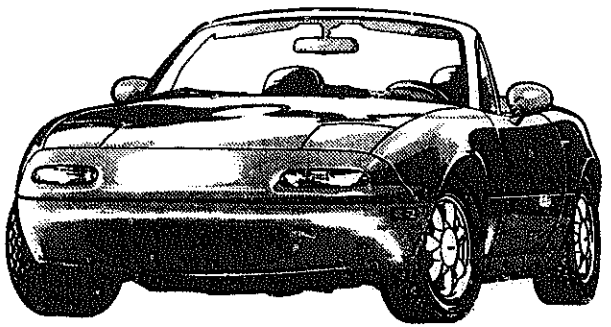

NA35*-600001~700000
NA3*-700001~800000

Jul.'97 (FINAL)

Catalog No. AU-NA05-04

mazda

© 1997 Mazda Motor Corporation

LAYOUT OF CONTENTS / DISPOSITION TYPOGRAPHIQUE DE CONTENU / DISPOSICION DEL CONTENIDO / ANORDNUNG DES INHALTS

- The following is a typical example of the layout of contents on Mazda microfiche parts catalog.
- Voici un exemple typique de la disposition typographique de contenu dans les microfiches de catalogue des pièces de Mazda.
- El siguiente es un ejemplo típico de la disposición del contenido en una microficha del catálogo de repuestos de Mazda.
- Folgendes ist ein typisches Beispiel der Inhaltsanordnung des Mazda-Mikrofiche-Teilekatalogs.

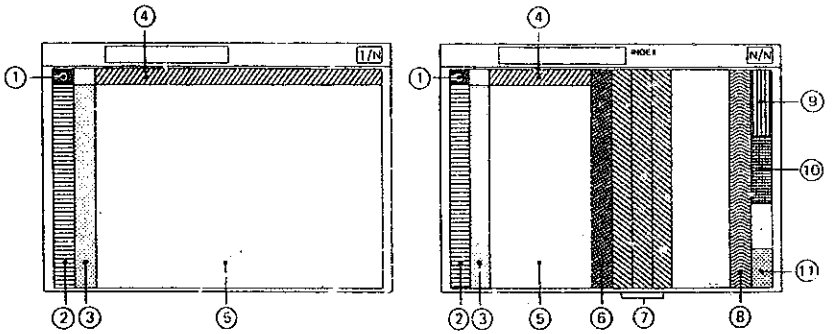

Remark : The items listed under ④ have been deleted from each fiche since Dec. '93

① • Layout of contents
• Disposition Typographique de Contenu
• Disposición del contenido
• Anordnung des Inhalts

② • Pictorial Index
• Index par Schémas
• Indice Gráfico
• Illustrierter Index

③ • Master Section No. Index
• Index des Numéros des Sections Totale
• Indice del Número de la Sección Maéstra
• Hauptabschnittsnummer-Index

~~④ • Section No. Index for the Column~~
~~• Index des Numéros des Sections pour les Colonnes~~
~~• N° de la Sección para el Indice~~
~~• Abschnittsnummer-Index für die Spalte~~

⑤ • Illustration & Text
• Illustrations et Textes
• Ilustración y Texto
• Abbildung und Text

⑥ • Part No. Index
• Index des Numéros des Pièces
• Indice del N° de Pieza
• Teile-Nr.-Index

⑦ • Alphabetical Index
• Index Alphabétique
• Indice Alfabético
• Alphabetischer Index

⑧ • Model Identification
• Identification des Modèles
• Identificación del Modelo
• Modell-Kennzeichnung

⑨ • Vehicle Identification System
• Système d'Identification de Véhicule
• Sistema de Identificación de Vehículo
• Fahrzeug-Identifikations-system

PICTORIAL INDEX

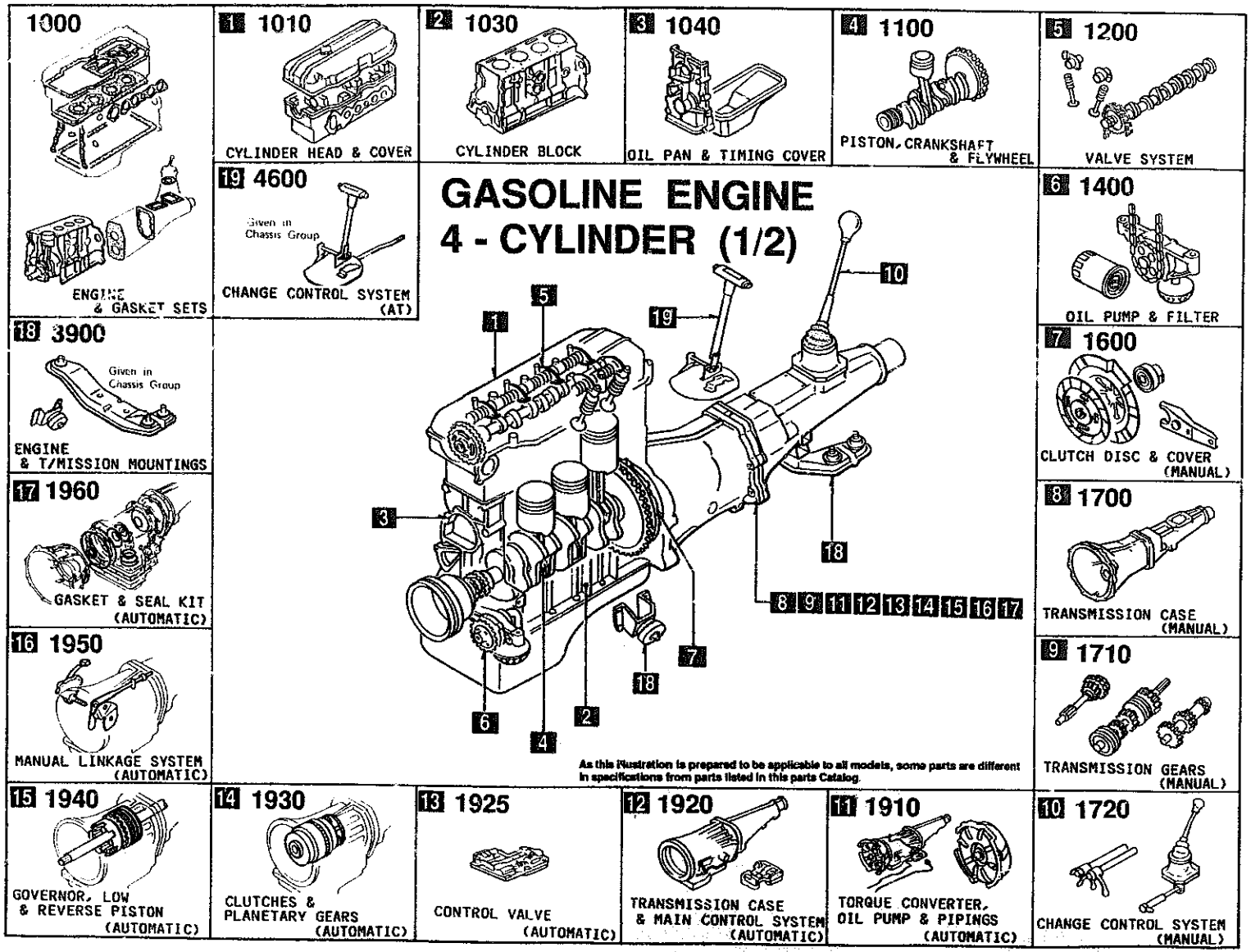

PICTORIAL INDEX

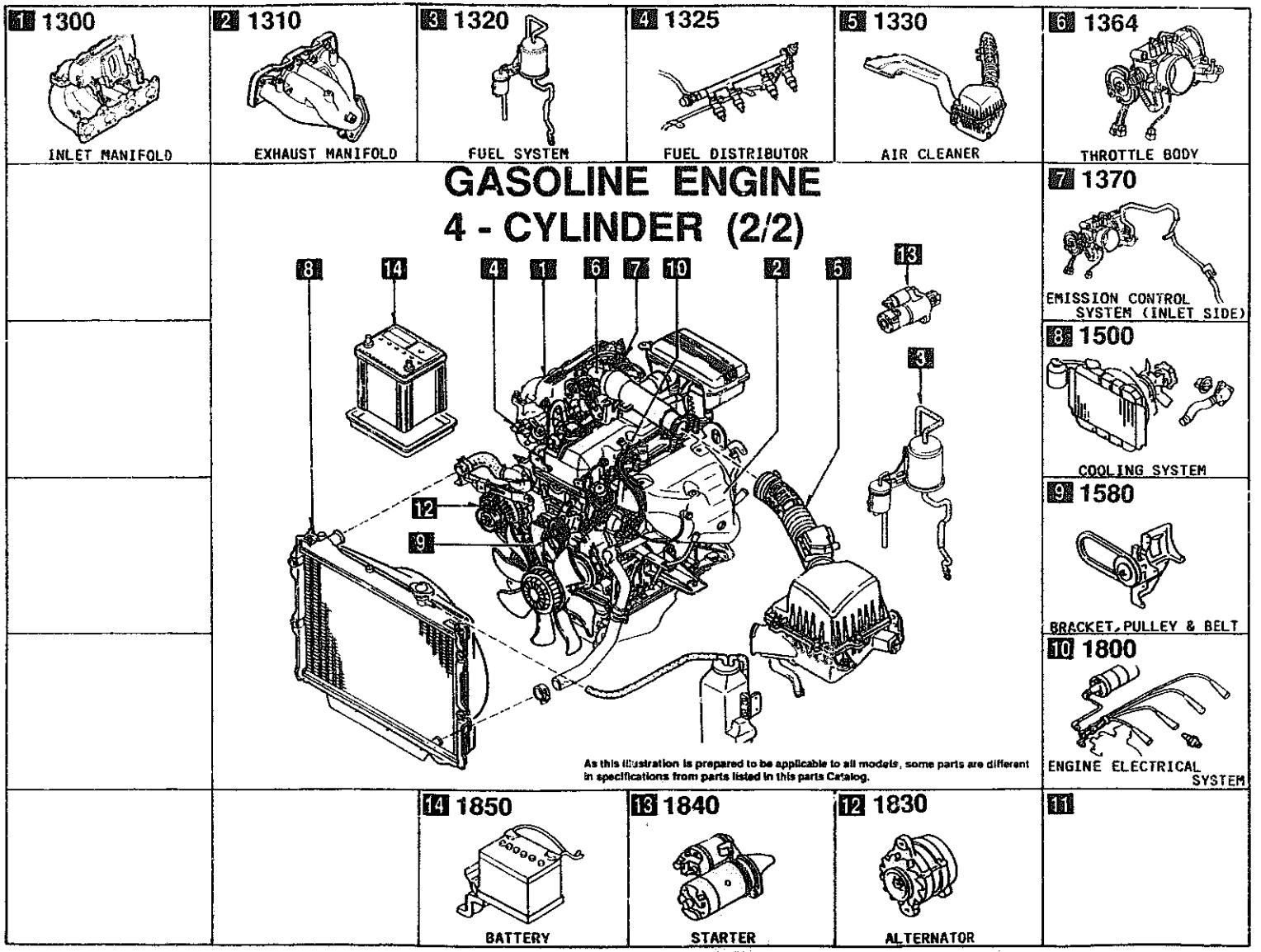

PICTORIAL INDEX

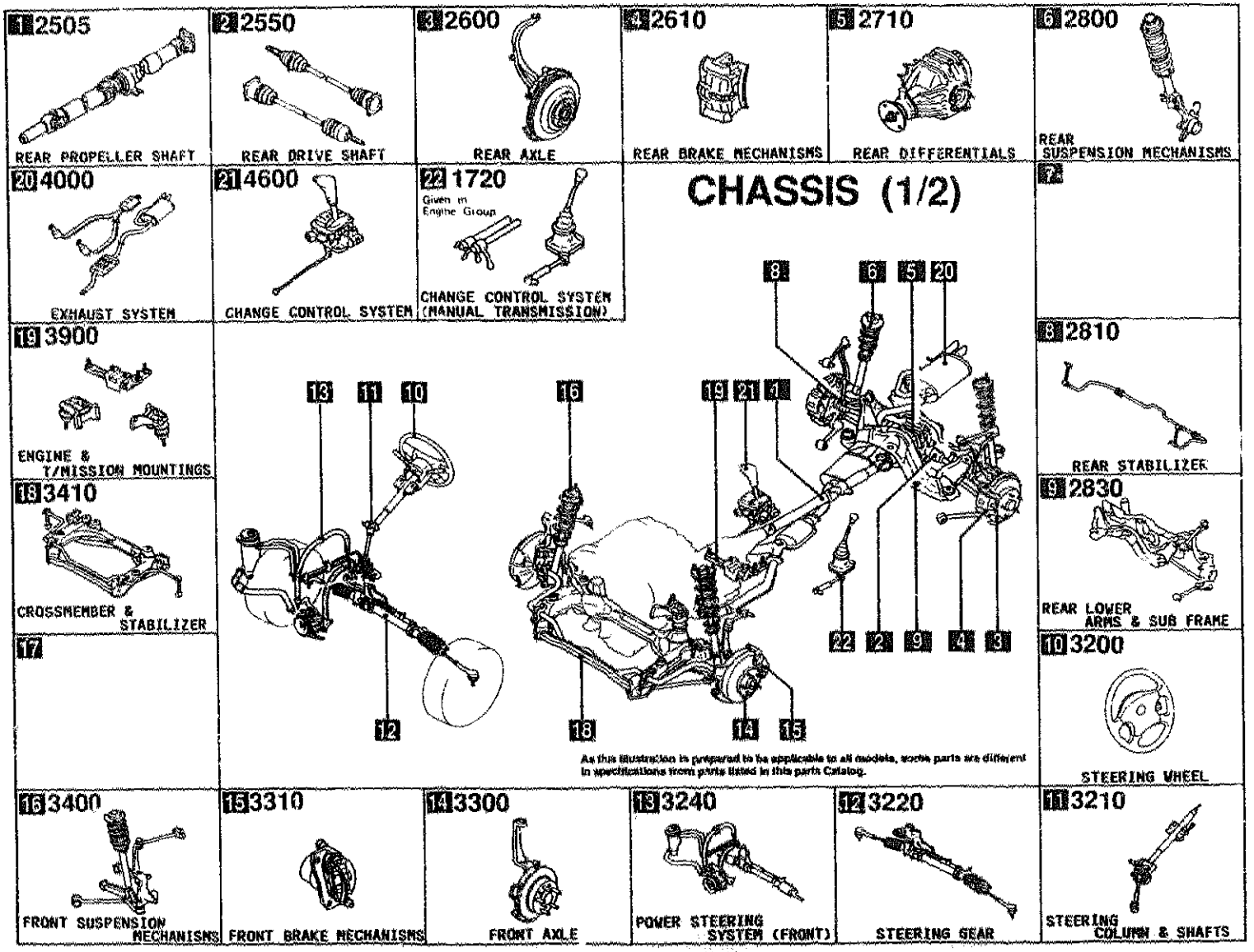

PICTORIAL INDEX

CHASSIS (2/2)

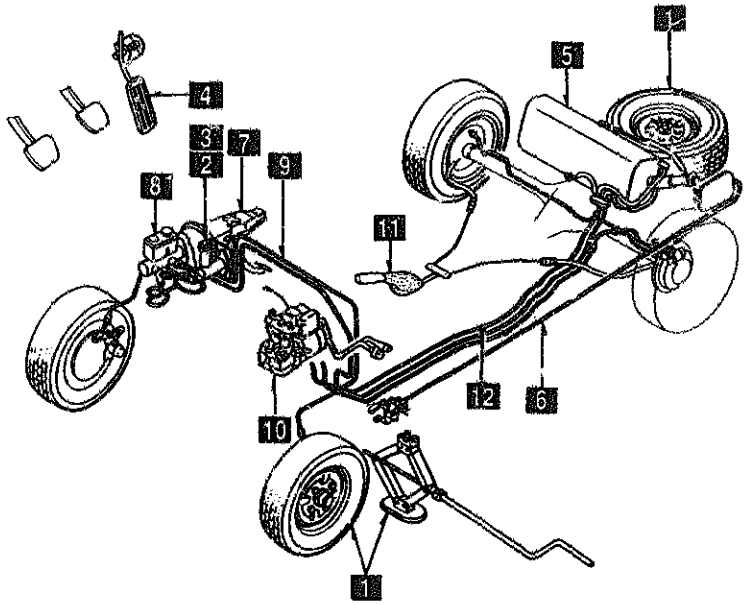

As this illustration is prepared to be applicable to all models, some parts are different in specifications from parts listed in this parts Catalog.

1 3700
TIRES & JACK

2 4140
CLUTCH RELEASE & MASTER CYLINDERS

3 4145
CLUTCH PIPINGS

4 4160
ACCELERATOR CONTROL SYSTEM

5 4200
FUEL TANK

6 4210
FUEL LID OPENER

7 4300
CLUTCH & BRAKE PEDALS

8 4340
BRAKE MASTER CYLINDER & POWER BRAKE

9 4360
BRAKE PIPINGS

10 4370
ANTILOCK BRAKE SYSTEM

11 4400
PARKING BRAKE SYSTEM

12 4500
FUEL PIPINGS

PICTORIAL INDEX

1 0900 — KEY SETS

2 5100 — HEAD LAMPS

3 5103 — HEAD LAMP RETRACTORS

4 5105 — FRONT COMBINATION LAMPS

5 5110 — REAR COMBINATION LAMPS

6 5120 — LICENSE LAMPS

7 5125 — INTERIOR LAMPS

8 6600 — SWITCHES & RELAYS (ENGINE)

9 6630 — RELAYS & UNIT (BODY)

10 6635 — DOOR SWITCH & HORNS

11 6700 — WIRING HARNESSES (FRONT & REAR)

12 6701 — WIRING HARNESSES (ENGINE & T/MISSION)

13 6702 — WIRING HARNESSES (DASHBOARD)

14 6703 — WIRING HARNESSES (DOOR, FLOOR/CEILING)

15 6704 — WIRING HARNESS CLAMPS

16 6720 — WINDSHIELD WASHER

17 6730 — WINDSHIELD WIPERS

18 6740 — WIPER MOTOR COMPONENTS (FRONT)

19 6640 — AUTO CRUISE CONTROL SYSTEM

BODY (1/4)

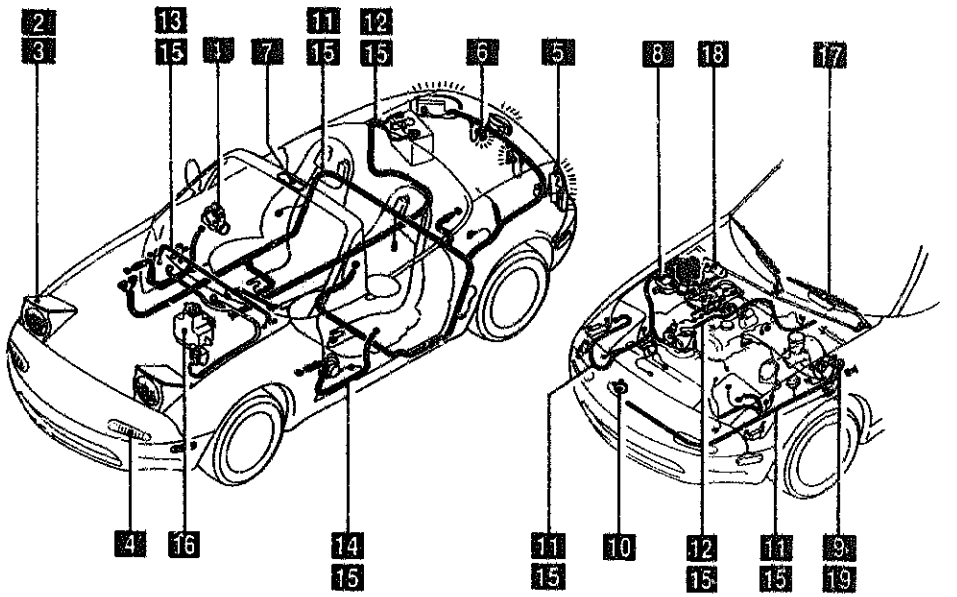

As this illustration is prepared to be applicable to all models, some parts are different in specifications from parts listed in this parts Catalog.

PICTORIAL INDEX

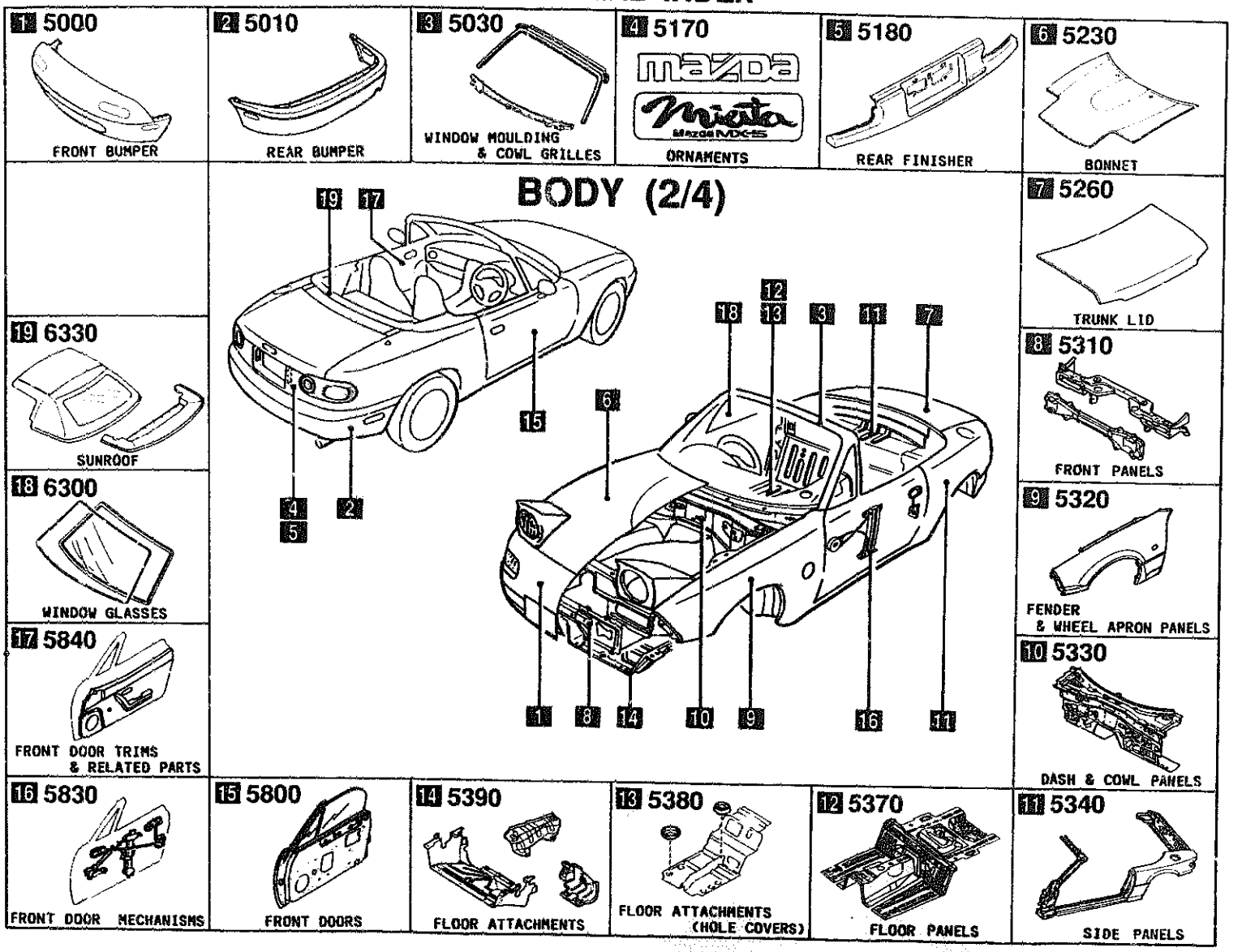

PICTORIAL INDEX

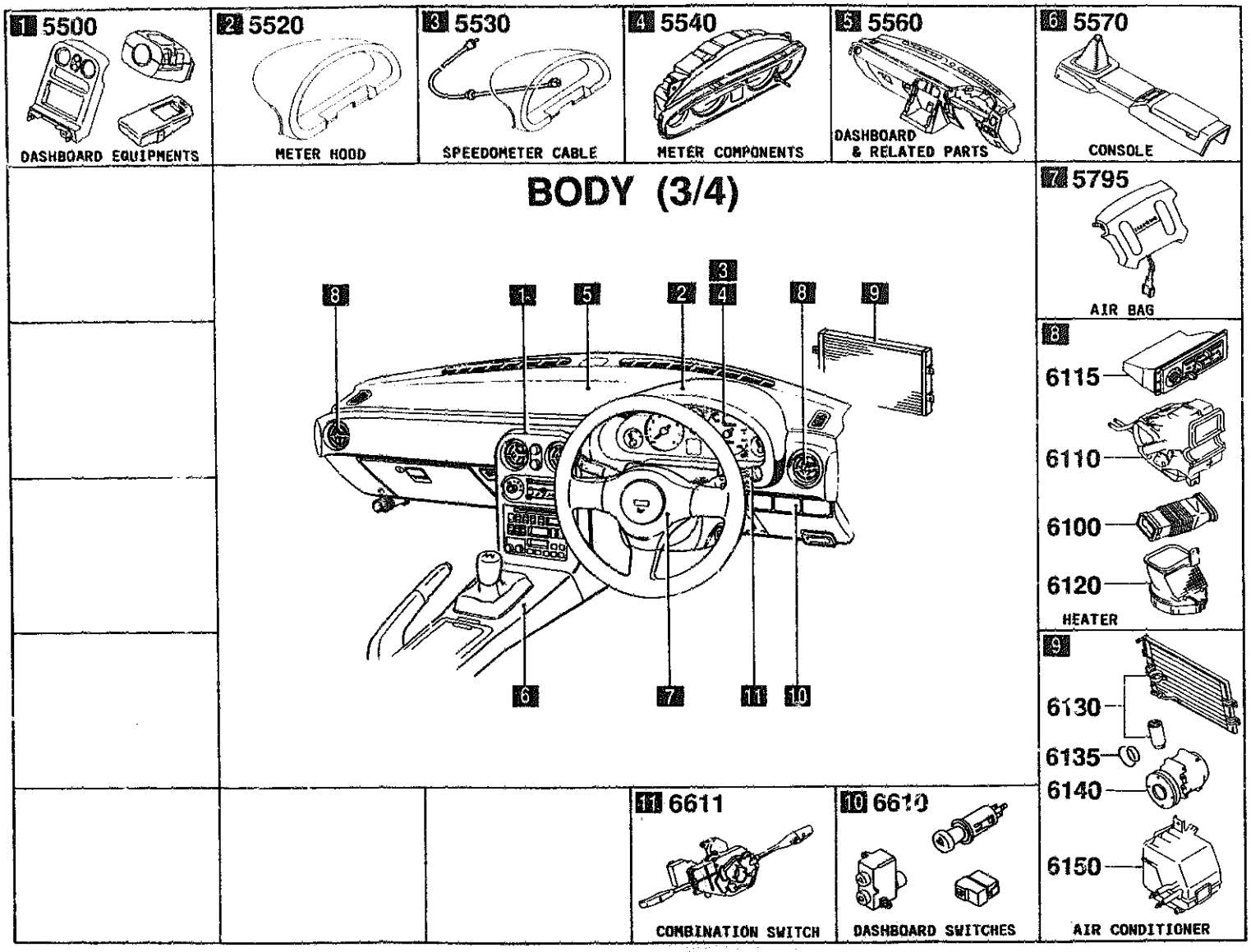

PICTORIAL INDEX

1 5580 VENTILATOR

2 5700 SEATS

3 5790 SEAT BELTS

4 6680 AUDIO SYSTEMS (RADIO & TAPE DECK)

5 6682 AUDIO SYSTEMS (ANTENNA & SPEAKER)

6 6820 FRONT HEADER TRIM & PILLAR TRIMS

7 6840 TRIMS & SCUFF PLATES

8 6860 FLOOR MATS & PADS

9 6870 SERVICE TOOLS

10 6900 VISORS, ASSIST HANDLES & MIRRORS

11 6930 CAUTION PLATES & LABELS

12 7250 QUARTER WINDOW & TRIMS

BODY (4/4)

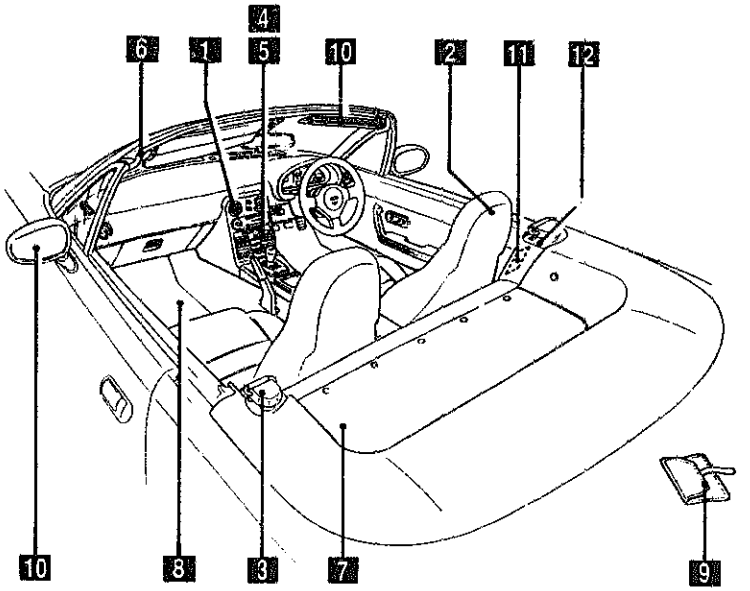

As this illustration is prepared to be applicable to all models, some parts are different in specifications from parts listed in this parts Catalog.

SECTION NAME INDEX (ENGINE)

LO.NO	SEC.NO	SECTION NAME
1-C03	1000	ENGINE & GASKET SETS
1-E03	1010	CYLINDER HEAD & COVER
1-H03	1030	CYLINDER BLOCK
1-J03	1040	OIL PAN & TIMING COVER
1-L03	1100	PISTON, CRANKSHAFT & FLYWHEEL
1-C04	1200	VALVE SYSTEM
1-E04	1300	INLET MANIFOLD
1-F04	1310	EXHAUST MANIFOLD
1-G04	1320	FUEL SYSTEM
1-I04	1325	FUEL DISTRIBUTOR
1-J04	1330	AIR CLEANER
1-L04	1364	THROTTLE BODY
1-M04	1370	EMISSION CONTROL SYSTEM (INLET SIDE)
1-C05	1400	OIL PUMP & FILTER
1-E05	1500	COOLING SYSTEM
1-H05	1580	BRACKET, PULLEY & BELT
1-C06	1600	CLUTCH DISC & COVER
1-D06	1700	MANUAL TRANSMISSION CASE
1-E06	1710	MANUAL TRANSMISSION GEARS
1-J06	1720	MANUAL TRANSMISSION CHANGE CONTROL SYSTEM
1-M06	1800	ENGINE ELECTRICAL SYSTEM
1-C07	1830	ALTERNATOR
1-E07	1840	STARTER (MT)
1-G07	1840 A	STARTER (AT)
1-I07	1850	BATTERY
1-J07	1910	AUTOMATIC TRANSMISSION TORQUE CONVERTER, OIL PUMP & PIPINGS
1-M07	1920	AUTOMATIC TRANSMISSION CASE & MAIN CONTROL SYSTEM
1-F08	1925	AUTOMATIC TRANSMISSION CONTROL VALVE
1-M08	1930	AUTOMATIC TRANSMISSION CLUTCHES & PLANETARY GEARS
1-H09	1940	AUTOMATIC TRANSMISSION GOVERNOR, LOW & REVERSE PISTON
1-K09	1950	AUTOMATIC TRANSMISSION MANUAL LINKAGE SYSTEM
1-M09	1960	AUTOMATIC TRANSMISSION GASKET & SEAL KIT

CATLOG-NO= AUNA05-04

DATE. 1997-07

SECTION NAME INDEX (CHASSIS)

LO.NO	SEC.NO	SECTION NAME	LO.NO	SEC.NO	SECTION NAME	LO.NO	SEC.NO	SECTION NAME
1-C11	2505	REAR PROPELLER SHAFT	1-F16	4340	BRAKE MASTER CYLINDER & POWER BRAKE (W/O ANTILOCK BRAKE)			
1-D11	2550	REAR DRIVE SHAFT						
1-F11	2600	REAR AXLE	1-H16	4340 A	BRAKE MASTER CYLINDER & POWER BRAKE (W/ANTILOCK BRAKE)			
1-G11	2610	REAR BRAKE MECHANISMS						
1-J11	2710	REAR DIFFERENTIALS (NORMAL DIFF.)	1-K16	4360	BRAKE PIPINGS (W/O ANTI LOCK BRAKE SYSTEM)			
1-C12	2710 A	REAR DIFFERENTIALS (LIMITED SLIP DIFF.)	1-M16	4360 A	BRAKE PIPINGS (ANTI LOCK BRAKE SYSTEM)			
1-G12	2800	REAR SUSPENSION MECHANISMS	2-C03	4370	ANTILOCK BRAKE SYSTEM			
1-H12	2810	REAR STABILIZER	2-E03	4400	PARKING BRAKE SYSTEM			
1-I12	2830	REAR LOWER ARMS & SUB FRAME	2-G03	4500	FUEL PIPINGS			
1-K12	3200	STEERING WHEEL	2-I03	4600	CHANGE CONTROL SYSTEM (AT)			
1-L12	3210	STEERING COLUMN & SHAFTS						
1-M12	3220	STEERING GEAR (W/O POWER STEERING)						
1-C13	3220 A	STEERING GEAR (W/POWER STEERING)						
1-H13	3240	POWER STEERING SYSTEM						
1-K13	3300	FRONT AXLE (W/O ANTILOCK BRAKE)						
1-L13	3300 A	FRONT AXLE (W/ANTILOCK BRAKE)						
1-M13	3310	FRONT BRAKE MECHANISMS						
1-N13	3400	FRONT SUSPENSION MECHANISMS						
1-E14	3410	CROSSMEMBER & STABILIZER						
1-F14	3700	TIRES & JACK						
1-C15	3900	ENGINE & T/MISSION MOUNTINGS						
1-D15	4000	EXHAUST SYSTEM						
1-F15	4140	MANUAL TRANSMISSION CLUTCH RELEASE & MASTER CYLINDERS						
1-G15	4145	MANUAL TRANSMISSION CLUTCH PIPINGS						
1-H15	4160	ACCELERATOR CONTROL SYSTEM						
1-I15	4200	FUEL TANK						
1-L15	4210	FUEL LID OPENER						
1-M15	4300	MANUAL TRANSMISSION CLUTCH & BRAKE PEDALS						
1-D16	4300A	AUTOMATIC TRANSMISSION BRAKE PEDAL						

SECTION NAME INDEX (BODY)

LO.NO	SEC.NO	SECTION NAME
2-C05	0900	KEY SETS
2-E05	5000	FRONT BUMPER
2-H05	5010	REAR BUMPER
2-J05	5030	WINDOW MOULDING & COWL GRILLES
2-K05	5100	HEAD LAMPS
2-L05	5103	HEAD LAMP RETRACTORS
2-C06	5105	FRONT COMBINATION LAMPS
2-E06	5110	REAR COMBINATION LAMPS
2-H06	5120	LICENSE LAMPS
2-I06	5125	INTERIOR LAMPS
2-J06	5170	ORNAMENTS
2-K06	5180	REAR FINISHER
2-L06	5230	BONNET
2-N06	5260	TRUNK LID
2-D07	5310	FRONT PANELS
2-E07	5320	FENDER & WHEEL APRON PANELS
2-H07	5330	DASH & COWL PANELS
2-I07	5340	SIDE PANELS
2-N07	5370	FLOOR PANELS
2-E08	5380	FLOOR ATTACHMENTS (HOLE COVERS)
2-F08	5390	FLOOR ATTACHMENTS
2-C09	5500	DASHBOARD EQUIPMENTS
2-F09	5520	METER HOOD
2-G09	5530	SPEEDOMETER CABLE
2-H09	5540	METER COMPONENTS
2-K09	5560	DASHBOARD & RELATED PARTS
2-N09	5570	CONSOLE
2-E10	5580	VENTILATOR
2-G10	5700	SEATS
2-I12	5790	SEAT BELTS
2-J12	5795	AIR BAG
2-K12	5800	FRONT DOORS
2-N12	5830	FRONT DOOR MECHANISMS
2-F13	5840	FRONT DOOR TRIMS & RELATED PARTS
2-C14	6100	HEATER
2-D14	6110	HEATER UNIT COMPONENTS
2-E14	6115	HEATER CONTROL COMPONENTS
2-G14	6120	HEATER BLOWER COMPONENTS
2-H14	6130	AIR CONDITIONER
2-L14	6135	AIR CONDITIONING COOLING PIPE O-RING
2-M14	6140	AIR CONDITIONING COMPRESSOR COMPONENTS
2-C15	6150	AIR CONDITIONING COOLING UNIT
2-D15	6300	WINDOW GLASSES
2-E15	6330	SUN ROOF
2-E16	6600	ENGINE SWITCHES & RELAYS
2-J16	6610	DASHBOARD SWITCHES
2-L16	6611	COMBINATION SWITCH
2-M16	6630	BODY RELAYS & UNIT
3-C03	6635	DOOR SWITCH & HORNS
3-D03	6640	AUTO CRUISE CONTROL SYSTEM
3-E03	6680	AUDIO SYSTEMS (RADIO & TAPE DECK)
3-K03	6682	AUDIO SYSTEMS (ANTENNA & SPEAKER)
3-N03	6700	FRONT & REAR WIRING HARNESSES
3-F04	6701	ENGINE & TRANSMISSION WIRING HARNESSES
3-G04	6702	DASHBOARD WIRING HARNESSES
3-H04	6703	DOOR, FLOOR & CEILING WIRING HARNESSES
3-I04	6704	WIRING HARNESS CLAMPS
3-L04	6720	WINDSHIELD WASHER (W/O ANTI LOCK BRAKE)
3-N04	6720 A	WINDSHIELD WASHER (W/ANTI LOCK BRAKE)
3-E05	6730	WINDSHIELD WIPERS
3-G05	6740	WIPER MOTOR COMPONENTS
3-H05	6820	FRONT HEADER TRIM & PILLAR TRIMS
3-I05	6840	TRIMS & SCUFF PLATES
3-L05	6860	FLOOR MATS & PADS
3-C06	6870	SERVICE TOOLS
3-D06	6900	SUN VISORS, ASSIST HANDLES & MIRRORS
3-G06	6930	CAUTION PLATES & LABELS
3-I06	7250	QUARTER WINDOW & TRIMS

CATLOG-NO= AUNA05-04

DATE. 1997-07

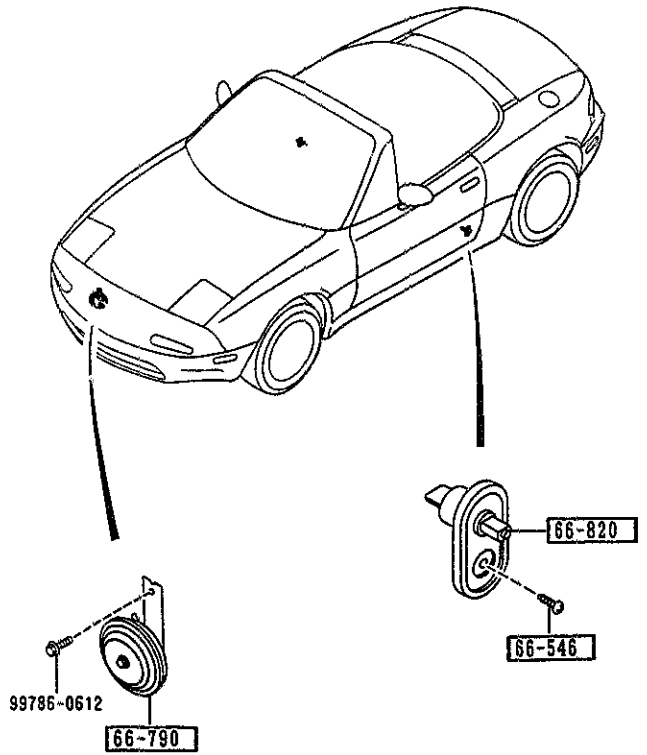

6635 -1 * DOOR SWITCH & HORNS

PART NO.	QTY	MODEL/RESTRICTION	MODEL/RESTRICTION	MODEL/RESTRICTION	FROM-TO
66-546		SCREW,DOOR SWITCH			
LA01-66-546	2				
66-790		HORN,LOW TONE			
SA59-66-790 A (SA59-66-790A)	1				-5106
SA59-66-790A	1				5106-
66-820		SWITCH,DOOR			
B455-66-540	2				

5106 NA35* -612163

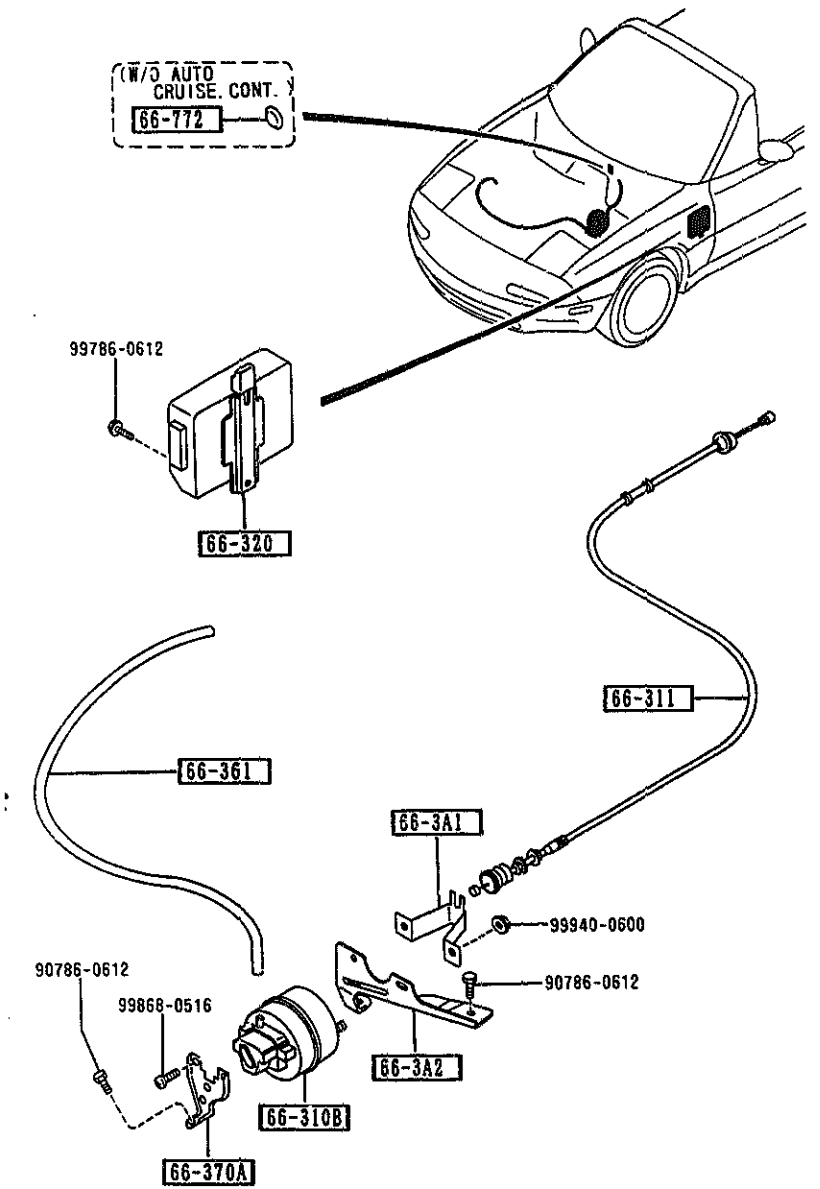

AUNA05

6640 -1 * AUTO CRUISE CONTROL SYSTEM

PART NO.	QTY	MODEL/RESTRICTION	MODEL/RESTRICTION	MODEL/RESTRICTION	FROM-TO
66-3A1		BRACKET,ACTUATOR-A.C.C.			
LA01-66-3A1	1	M-25-ED, P.E.GR, L-PKG, PKG-B, PKG-C, (W/AUTO CRUISE.CONT.)			
66-3A2		BRACKET,ACTUATOR-FRONT			
NA01-66-3A2A	1	M-25-ED, P.E.GR, L-PKG, PKG-B, PKG-C, (W/AUTO CRUISE.CONT.)			
66-310B		ACTUATOR,A.C.C.			
LA01-66-310A	1	M-25-ED, P.E.GR, L-PKG, PKG-B, PKG-C, (W/AUTO CRUISE.CONT.)			
66-311		WIRE,A.C.C.			
NA01-66-311A	1	M-25-ED, P.E.GR, L-PKG, PKG-B, PKG-C, (W/AUTO CRUISE.CONT.)			
66-320		BOX,A.C.C.			
NA01-66-320	1	M-25-ED, P.E.GR, L-PKG, PKG-B, PKG-C, (W/AUTO CRUISE.CONT.)			
66-361		PIPE,AUTO CRUISE CONTROL			
NA75-66-361	1	M-25-ED, P.E.GR, L-PKG, PKG-B, PKG-C, (W/AUTO CRUISE.CONT.)			
66-370A		BRACKET,ACTUATOR			
NA01-66-3A3A	1	M-25-ED, P.E.GR, L-PKG, PKG-B, PKG-C, (W/AUTO CRUISE.CONT.)			
66-772		GROMMET			
B092-41-661	1	BASE, R-PKG, PKG-A, (W/O AUTO CRUISE.CONT.)			

(AM/FM, W/O C. DISC)
('95 MODEL)
('ML-'96 MODEL)

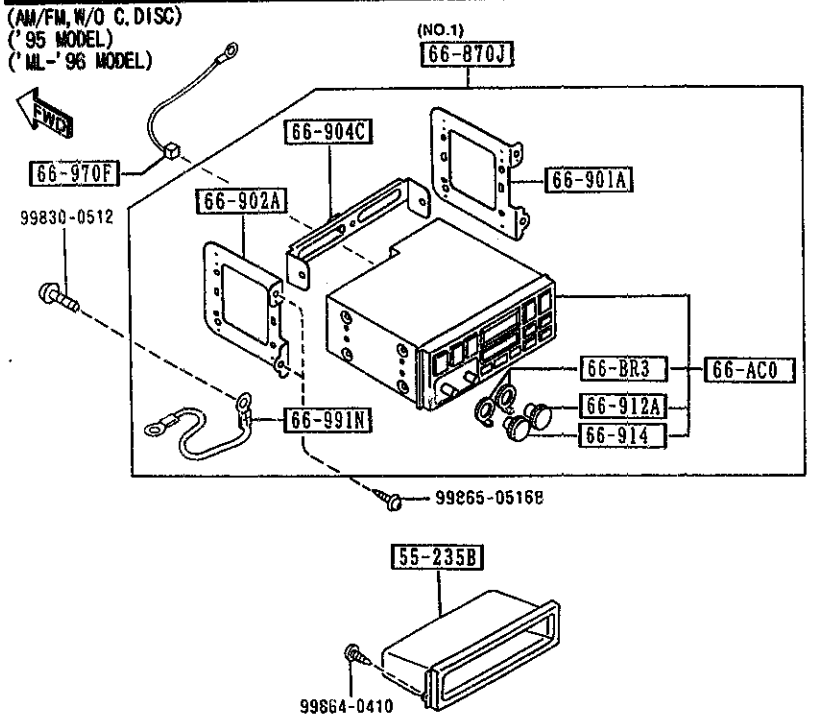

(W/C. D., W/O SENSORY SOUND)

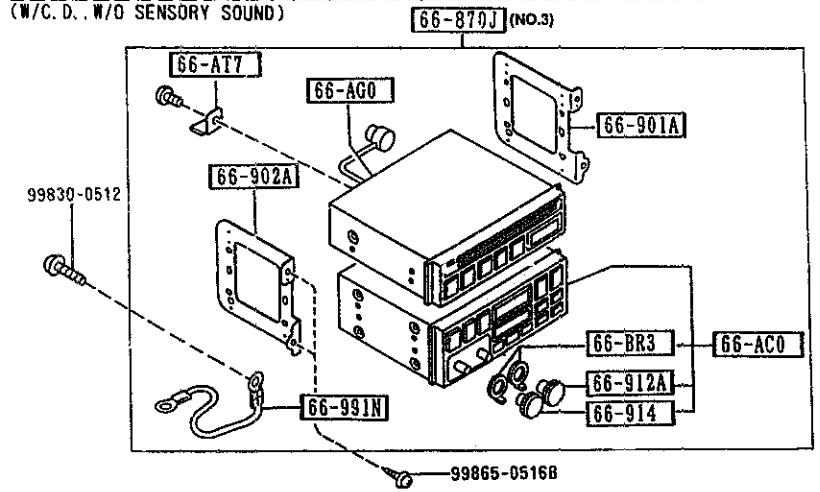

AUNA05

(W/SENSORY SOUND)

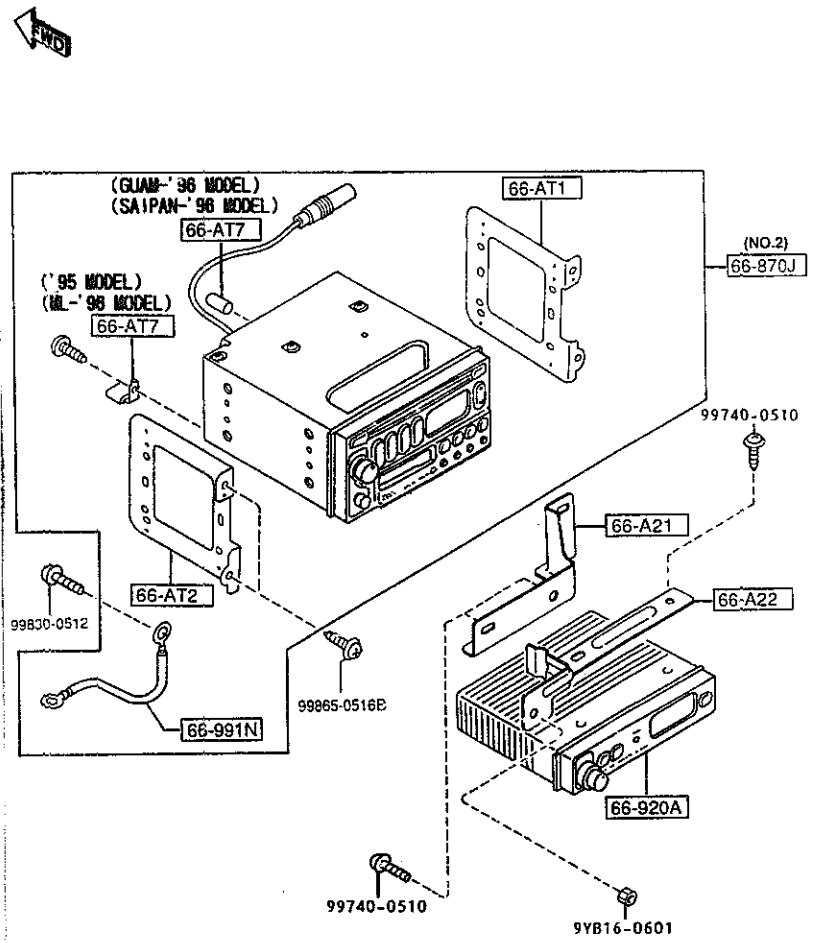

AUNA05

(W/O AUDIO)



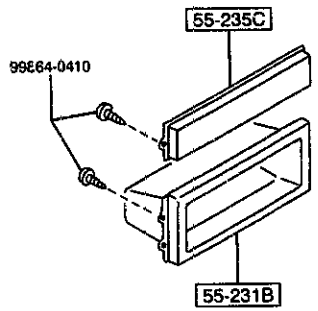

(96 MODEL)

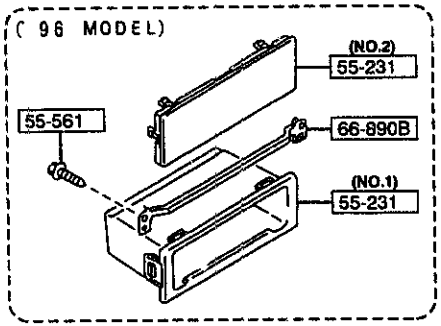

(AM/FM, W/O C. DISC)
(GUAM-' 96 MODEL)
(SAIPAN-' 96 MODEL)

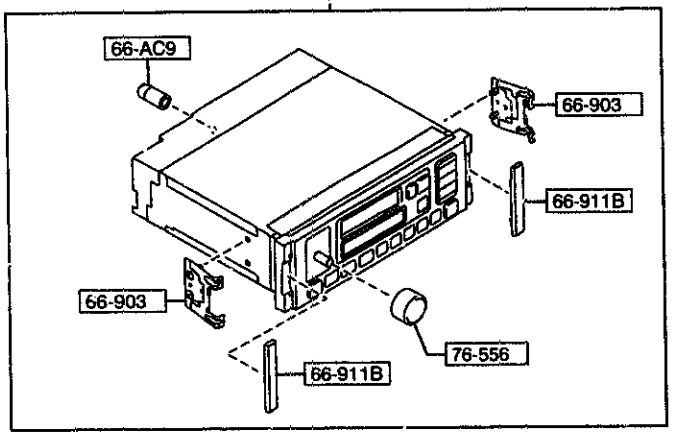

(NO.1)
66-870J

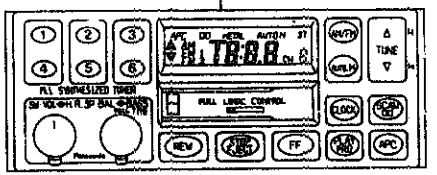

(NO.2)
66-870J

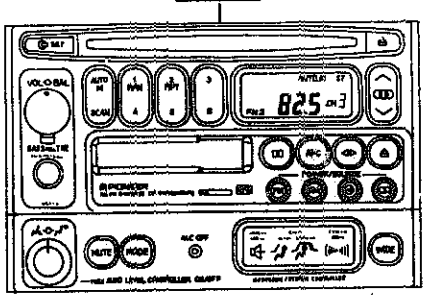

(NO.3)
66-870J

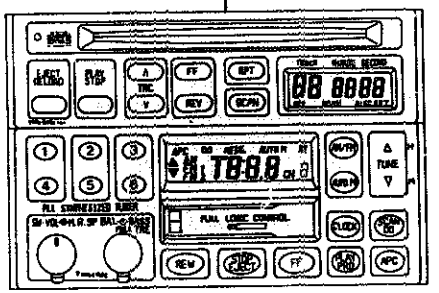

(NO.4)
66-870J

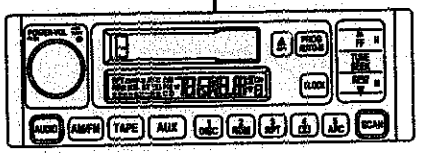

6680 AUDIO SYSTEMS (RADIO & TAPE DECK) (1/4)

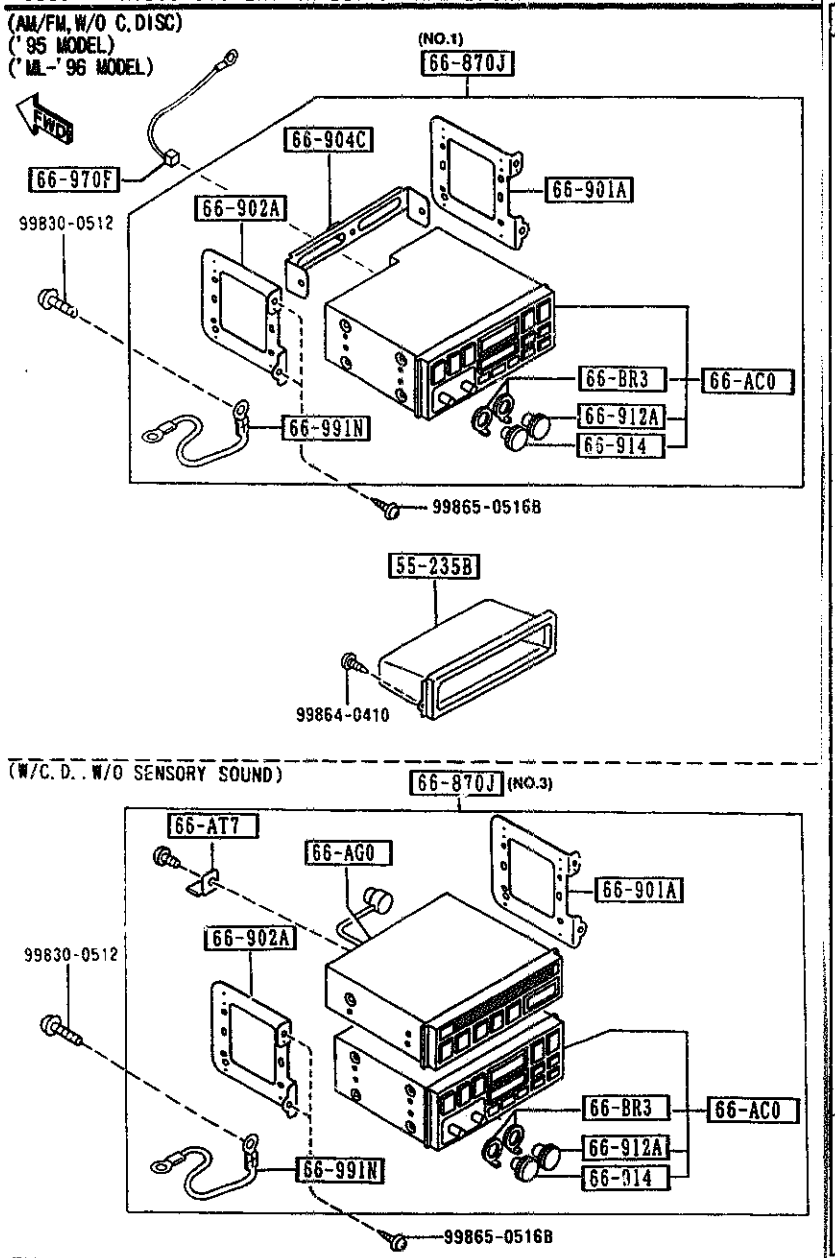

AUNA05

6680 -1 AUDIO SYSTEMS (RADIO & TAPE DECK)

PART NO.	QTY	MODEL/RESTRICTION	MODEL/RESTRICTION	MODEL/RESTRICTION	FROM-TO
55-231		ORNAMENT,STEREO			
B02A-66-9M0A	1	(ILLUST. NO.1) (W/O C.D.) (GUAM-'96 MODEL) (SAIPAN-'96 MODEL)			
B03A-66-9M0	1	(ILLUST. NO.2) (W/O AUDIO) ('96 MODEL)			
B02A-66-9M0A	1	(ILLUST. NO.1) (W/O C.D.) (ML-'96 MODEL)			5B01-
55-231B		ORNAMENT,STEREO			
FC02-55-235A	1	(W/O AUDIO) ('95 MODEL)			
55-235B		ORNAMENT,STEREO-UPPER			
LA03-55-235A	1	(AM/FM,W/O C.DISC) ('95 MODEL) (ML-'96 MODEL)			-5B01
55-235C		ORNAMENT,STEREO-LOWER			
LA02-55-235	1	(W/O AUDIO) ('95 MODEL)			
55-561		BOLT,INST. PANEL			
B455-55-561	2	(AM/FM,W/O C.DISC) (W/O AUDIO) (GUAM-'96 MODEL) (SAIPAN-'96 MODEL)			
B455-55-561	2	(AM/FM,W/O C.DISC) (W/O AUDIO) (ML '96 MODEL)			5B01-
66-AC0		TUNER & DECK,COMB.			
NA01-66-AC0A	1	(W/O SENSORY SOUND) ('95 MODEL) (ML-'96 MODEL)			-5B01
66-AC9		RUBBER,REAR-ET/ED COMBI.			
LB84-66-AC9	1	PANASONIC (AM/FM,W/O C.DISC) (GUAM-'96 MODEL) (SAIPAN-'96 MODEL)			
LB86-66-AC9	1	PANASONIC (AM/FM,W/O C.DISC) (ML-'96 MODEL)			5B01-
66-AG0		PLAYER,COMPACT DISC			

5B01 NA3** -704237

CAT. AUNA05-04 1997-07

(W/SENSORY SOUND)

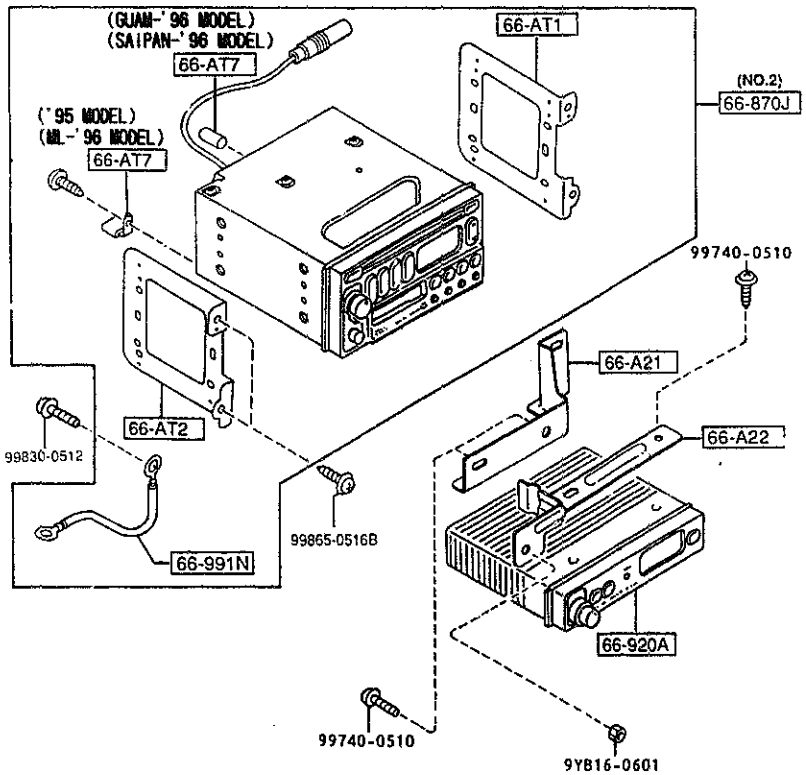

PART NO.	QTY	MODEL/RESTRICTION	MODEL/RESTRICTION	MODEL/RESTRICTION	FROM-TO
CONT'D					
NA01-66-AG0	1	(W/C.D.,W/O SENSORY SOUND) ('95 MODEL)			
+----------+					
| 66-AT1 |		BRACKET(R),FRONT-AUDIO			
+----------+					
N034-66-AS1	1	(W/SENSORY SOUND)			
+----------+					
| 66-AT2 |		BRACKET(L),FRONT-AUDIO			
+----------+					
N034-66-AS2	1	(W/SENSORY SOUND)			
+----------+					
| 66-AT7 |		BRACKET(RR),AUDIO			
+----------+					
NB41-66-AS3	1	(W/SENSORY SOUND) (GUAM-'96 MODEL) (SAIPAN-'96 MODEL)			
N019-66-AT7	1	(W/C.D.,W/O SENSORY SOUND) ('95 MODEL)			
N034-66-AS3	1	(W/SENSORY SOUND) ('95 MODEL) (ML-'96 MODEL)			-5B01
NB41-66-AS3	1	(W/SENSORY SOUND) (ML-'96 MODEL)			5B01-
+----------+					
| 66-A21 |		BRACKET,AMP			
+----------+					
NB11-66-9B1	1	(W/SENSORY SOUND) ('95 MODEL) (ML-'96 MODEL)			-5B01
+----------+					
| 66-A22 |		BRACKET,AMP			
+----------+					
NB11-66-9B2	1	(W/SENSORY SOUND) ('95 MODEL) (ML-'96 MODEL)			-5B01
+----------+					
| 66-BR3 |		KNOB,BALANCE-TUNER			
+----------+					
NA01-66-BR3	2	(W/O SENSORY SOUND) ('95 MODEL) (ML-'96 MODEL)			-5B01
+----------+					
| 66-870J |		AUDIO SET			
+----------+					
NB40-66-9C0	1	(ILLUST. NO.4) (AM/FM,W/O C.DISC) (GUAM-'96 MODEL) (SAIPAN-'96 MODEL)			
NB41-66-9C0	1	(ILLUST. NO.2) (W/SENSORY SOUND) (GUAM-'96 MODEL) (SAIPAN-'96 MODEL)			
NA54-66-9W0	1	(ILLUST. NO.3) (W/C.D.,W/O SENSORY			

5B01 NA3** -704237

(W/O AUDIO)

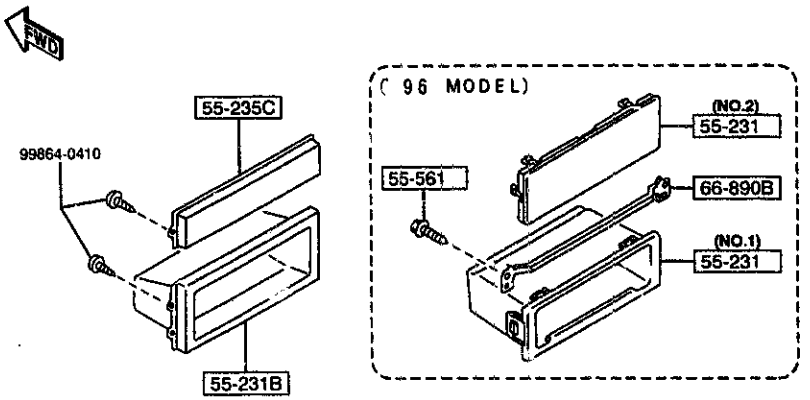

(AM/FM, W/O C. DISC)
(GUAM-' 96 MODEL)
(SAIPAN-' 96 MODEL)

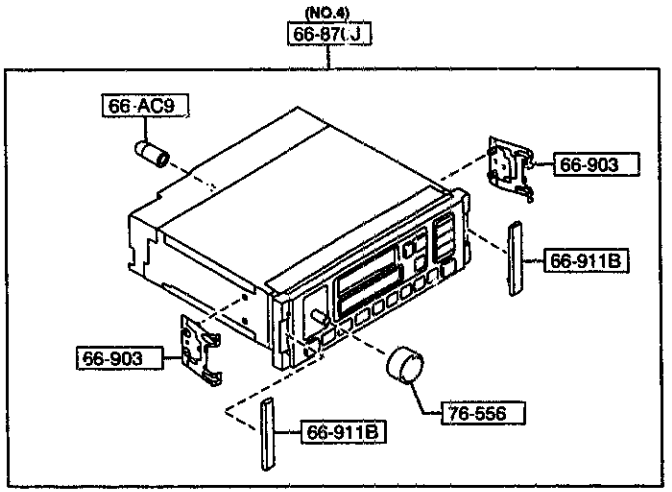

PART NO.	QTY	MODEL/RESTRICTION	MODEL/RESTRICTION	MODEL/RESTRICTION	FROM-TO
CONT'd		SOUND) ('95 MODEL)			
NA53-66-9C0	1	(ILLUST. NO.1) (AM/FM,W/O C.DISC) ('95 MODEL) (ML-'96 MODEL)			-5B01
NB11-66-9C0	1	(ILLUST. NO.2) (W/SENSORY SOUND) ('95 MODEL) (ML-'96 MODEL)			-5B01
NB40-66-9C0	1	(ILLUST. NO.4) (AM/FM,W/O C.DISC) (ML-'96 MODEL)			5B01-
NB41-66-9C0	1	(ILLUST. NO.2) (AM/FM,W/C.D,W/HEAD SPEAKER, W/SENSORY SOUND) (ML-'96 MODEL)			5B01-
66-890B		BRACKET			
NB38-66-9B1	1	(W/O C.D.) (GUAM-'96 MODEL) (SAIPAN-'96 MODEL)			
NB38-66-9B1	1	(W/O C.D.) (ML-'96 MODEL)			5B01-
66-901A		BRACKET(R),TUNER			
NA01-66-AT1	1	(W/O SENSORY SOUND) (ML-'96 MODEL)			
66-902A		BRACKET(L),TUNER			
NA01-66-AT2	1	(W/O SENSORY SOUND) (ML-'96 MODEL)			
66-903		BRACKET,TUNER			
FD04-66-AW1	2	PANASONIC (AM/FM,W/O C.DISC) (GUAM-'96 MODEL) (SAIPAN-'96 MODEL)			
FD04-66-AW1	2	PANASONIC (AM/FM,W/O C.DISC) (ML-'96 MODEL)			5B01-
66-904C		BRACKET,LOW			
N019-66-AT6	1	(AM/FM,W/O C.DISC) (ML-'96 MODEL)			
66-911B		COVER,HOLE			
NB40-66-BC4	2	PANASONIC (AM/FM,W/O C.DISC)			

5B01 NA3** -704237

(NO.1)
66-870J

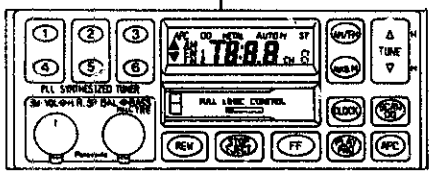

(NO.2)
66-870J

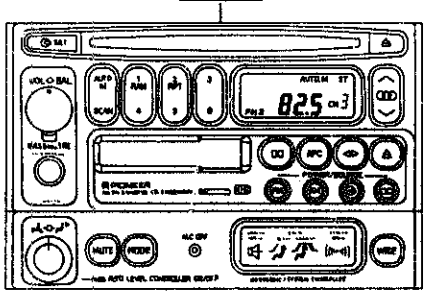

(NO.3)
66-870J

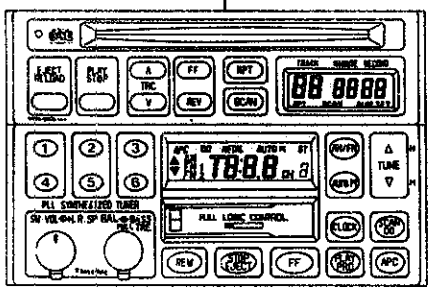

(NO.4)
66-870J

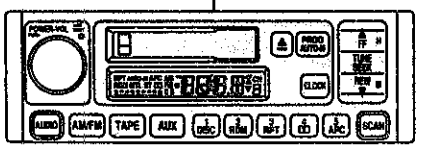

AUNA05

6680 -4 * AUDIO SYSTEMS (RADIO & TAPE DECK)

PART NO.	QTY	MODEL/RESTRICTION	MODEL/RESTRICTION	MODEL/RESTRICTION	FROM-TO
CONT'D		(GUAM-'96 MODEL) (SAIPAN-'96 MODEL)			
NB40-66-BC4	2	PANASONIC (AM/FM,W/O C.DISC) (ML-'96 MODEL)			5B01-
+---------+ | 66-912A | +---------+		KNOB,TONE-TUNER			
NA01-66-BR2	1	(W/O SENSORY SOUND) (ML-'96 MODEL)			
+---------+ | 66-914 | +---------+		KNOB,VOLUME-TUNER			
NA01-66-BR1	1	(W/O SENSORY SOUND) (ML-'96 MODEL)			
+---------+ | 66-920A | +---------+		AMP.,MAIN			
N034-66-920	1	(W/SENSORY SOUND) ('95 MODEL) (ML-'96 MODEL)			-5B01
+---------+ | 66-970F | +---------+		CORD,EARTH			
NB38-66-997	1	(W/O SENSORY SOUND) (ML-'96 MODEL)			
+---------+ | 66-991N | +---------+		CORD,EARTH			
N018-66-997	1	(W/SENSORY SOUND)			
NA01-66-997	1	(W/O SENSORY SOUND) ('95 MODEL) (ML-'96 MODEL)			-5B01
+---------+ | 76-556 | +---------+		KNOB,VOLUME			
NB40-66-BC1	1	(AM/FM,W/O C.DISC) (GUAM-'96 MODEL) (SAIPAN-'96 MODEL)			
NB40-66-BC1	1	(AM/FM,W/O C.DISC) (ML-'96 MODEL)			5B01-

5B01 NA3** -704237

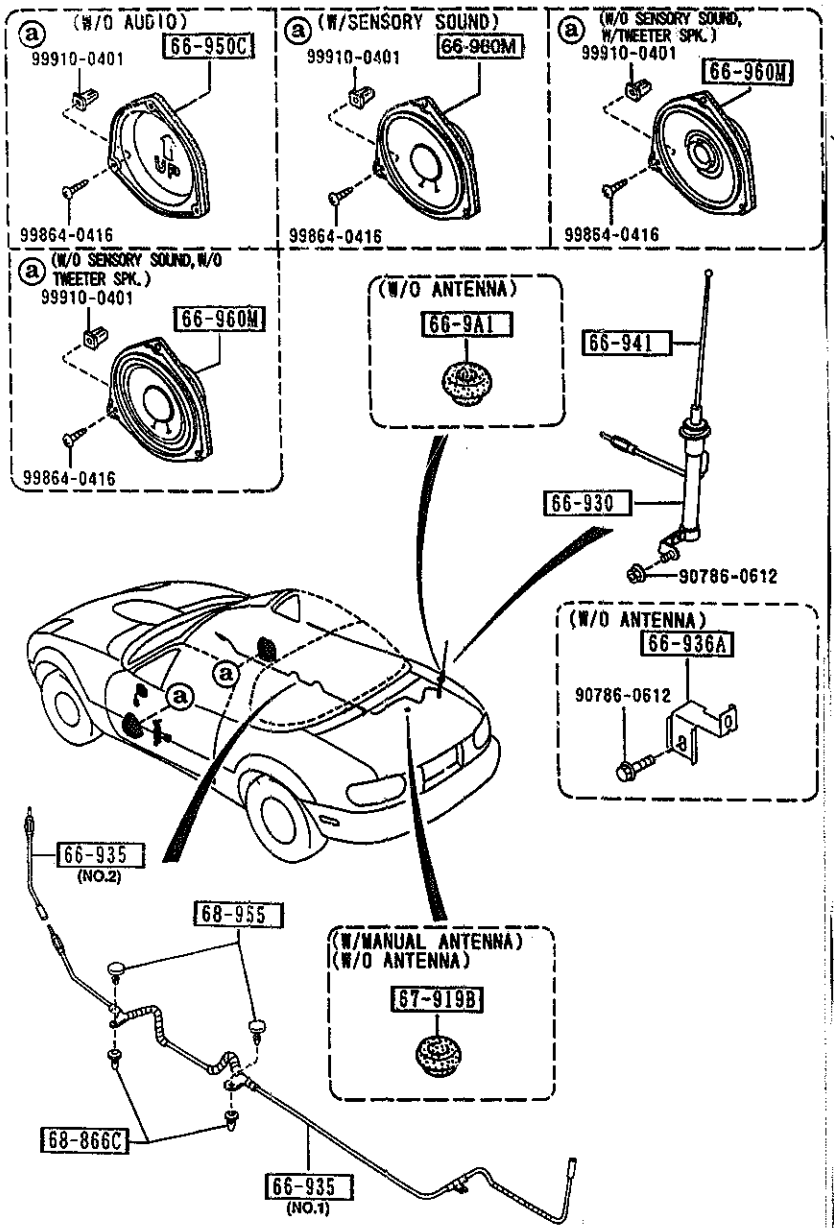

AUNA05

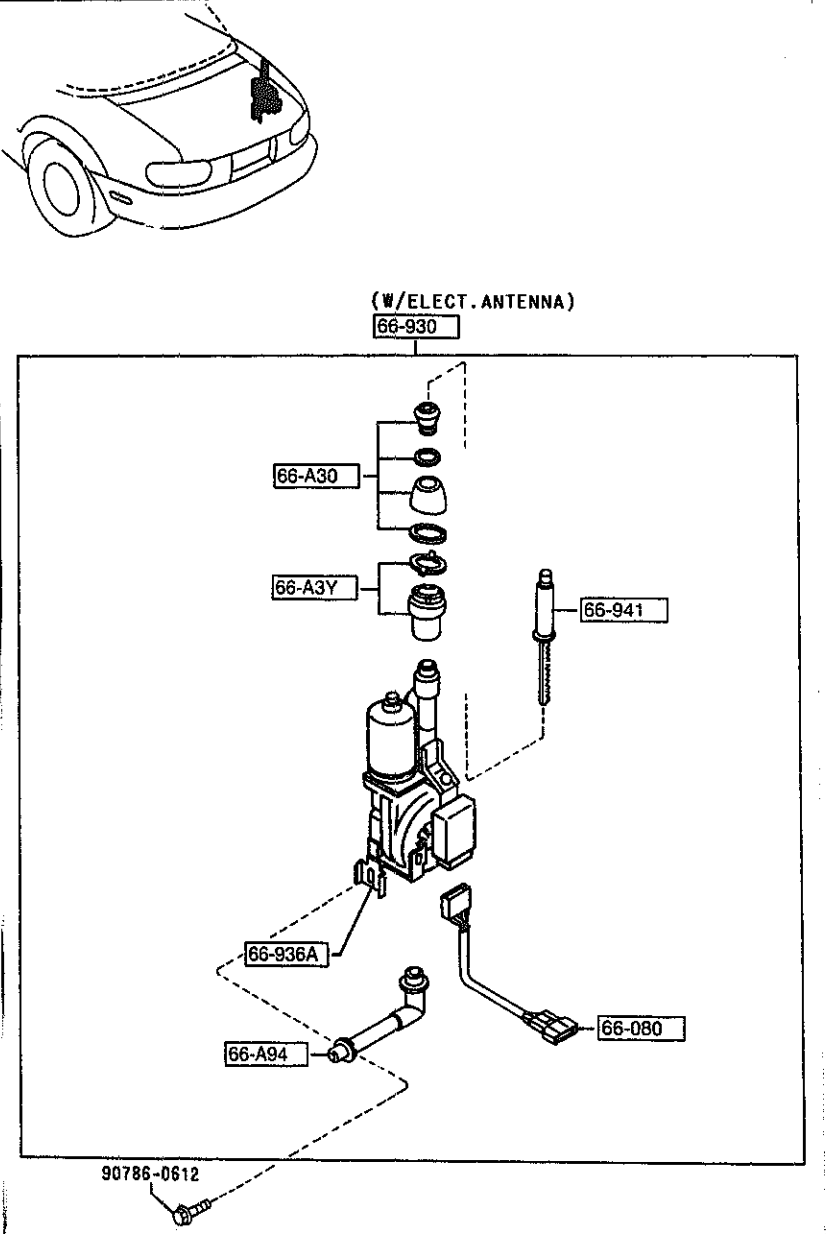

AUNA05

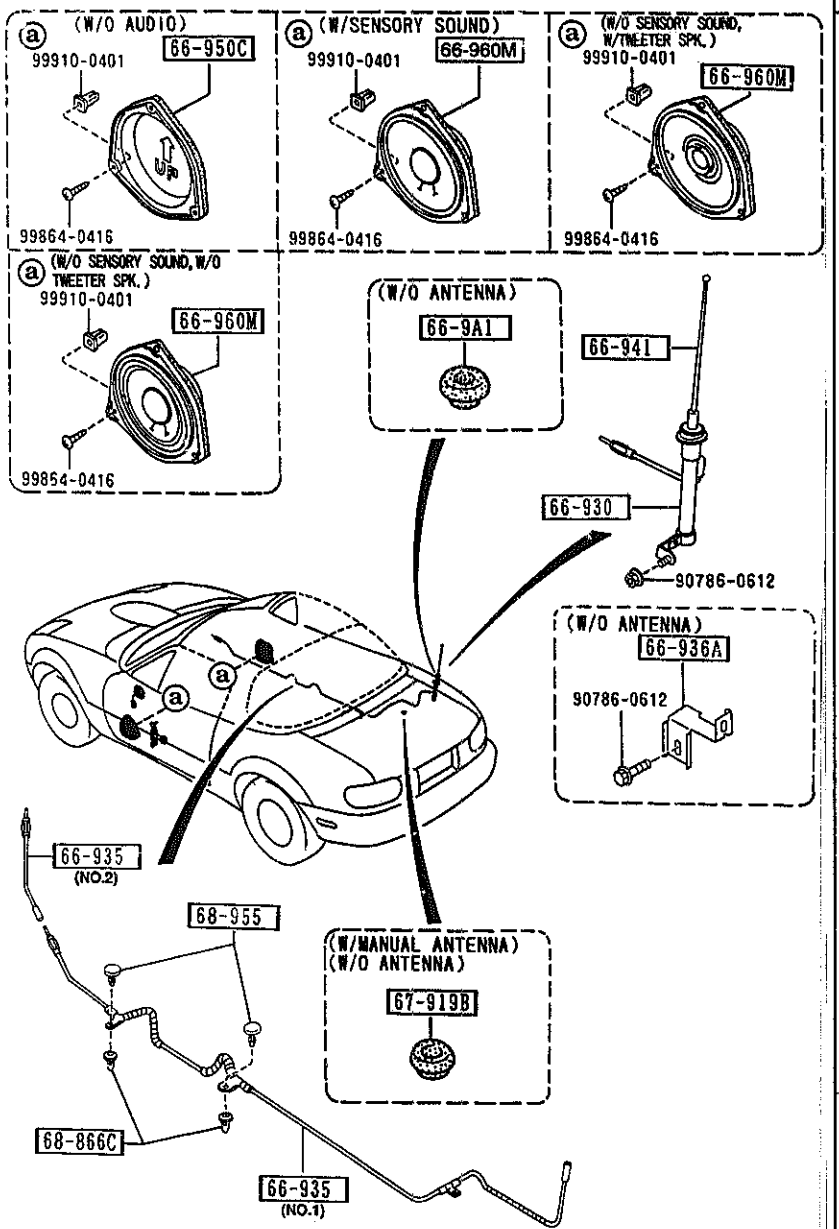

AUNA05

PART NO.	QTY	MODEL/RESTRICTION	MODEL/RESTRICTION	MODEL/RESTRICTION	FROM-TO
66-A3Y		PLATE,EARTH-MOTOR ANTENNA			
N007-66-A3Z	1	M-25-ED, P.E.GR, L-PKG, PKG-B, PKG-C, (W/ELECT.ANTENNA)			
66-A30		NUT,MOUNTING-ANTENNA			
N007-66-A9Y	1	M-25-ED, P.E.GR, L-PKG, PKG-B, PKG-C, (W/ELECT.ANTENNA)			
66-A94		PIPE,DRAIN-ANTENNA			
N007-66-A90	1	M-25-ED, P.E.GR, L-PKG, PKG-B, PKG-C, (W/ELECT.ANTENNA)			
66-080		CORD			
N007-66-D10	1	M-25-ED, P.E.GR, L-PKG, PKG-B, PKG-C, (W/ELECT.ANTENNA)			
66-9A1		COVER,HOLE-ANTENNA			
FB01-66-9A1A	1	(W/O ANTENNA)			
66-930		ANTENNA,RADIO			
NA01-66-A3XA	1	BASE, R-PKG, PKG-A, (W/MANUAL ANTENNA) ('95 MODEL)			
N007-66-930A	1	M-25-ED, P.E.GR, L-PKG, PKG-B, PKG-C, (W/ELECT.ANTENNA)			
N034-66-930	1	BASE, R-PKG, PKG-A, (W/MANUAL ANTENNA) ('96 MODEL)			
66-935		FEEDER-ANTENNA			
NA01-66-940C	1	(ILLUST. NO.1)			
NB40-66-940	1	(ILLUST. NO.2) (AM/FM,W/O C.DISC) ('96 MODEL)			
66-936A		BRKT,MOTOR-ANTENNA			
N007-66-A9X	1	M-25-ED, P.E.GR, L-PKG, PKG-B, PKG-C, (W/ELECT.ANTENNA) (W/O ANTENNA)			
66-941		POLE,ANTENNA			
N007-66-A3X	1	M-25-ED, P.E.GR, L-P			

CAT. AUNA05-04 1997-07

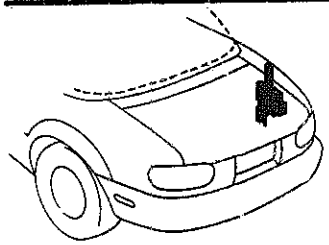

(W/ELECT.ANTENNA)

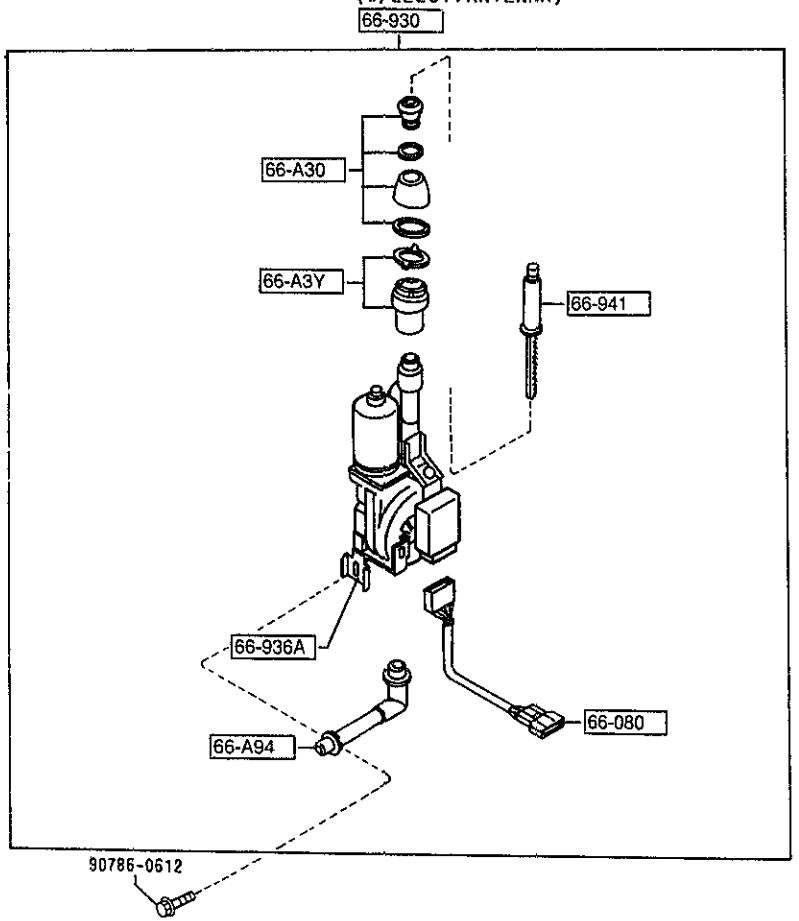

6682 -2 * AUDIO SYSTEMS (ANTENNA & SPEAKER)

PART NO.	QTY	MODEL/RESTRICTION	MODEL/RESTRICTION	MODEL/RESTRICTION	FROM-TO
CONT'D		KG, PKG-B, PKG-C, (W/ELECT.ANTENNA)			
N001-66-A30	1	BASE, R-PKG, PKG-A, (W/MANUAL ANTENNA) ('95 MODEL)			
KA03-66-930A	1	BASE, R-PKG, PKG-A, (W/MANUAL ANTENNA) ('96 MODEL)			
+---------+ | 66-950C | +---------+		BRACKET,LOUD SPEAKER			
NA01-66-9B0A	2	(W/O AUDIO)			
+---------+ | 66-960M | +---------+		SPEAKER,LOUD-DOOR			
N027-66-960	2	(W/O SENSORY SOUND,W/TWEETER SPK.)			
N034-66-960	2	(W/SENSORY SOUND)			
B01F-66-960 A (B02H-66-960)	2	(W/O SENSORY SOUND,W/O TWEETER SPK.)			-4C06
B02H-66-960	2	(W/O SENSORY SOUND,W/O TWEETER SPK.)			4C06-5401
B02J-66-960	2	(W/O SENSORY SOUND,W/O TWEETER SPK.)			5401-5C01
*B02T-66-960	2	(W/O SENSORY SOUND,W/O TWEETER SPK.)			5C01-
+---------+ | 67-919B | +---------+		GROMMET			
N007-67-G11	1	BASE, R-PKG, PKG-A, (W/MANUAL ANTENNA) (W/O ANTENNA)			
+---------+ | 68-866C | +---------+		FASTENER,SEAL			
B235-68-865A	2				
+---------+ | 68-955 | +---------+		FASTENER,LIFT GATE TRIM			
GJ37-68-955	2				
00	INT-	NA3 NA4 NA5 NA6 NA7 NA8 BLACK			

4C06 NA35* -610177
5401 NA35* -619598
5C01 NA3** -706448

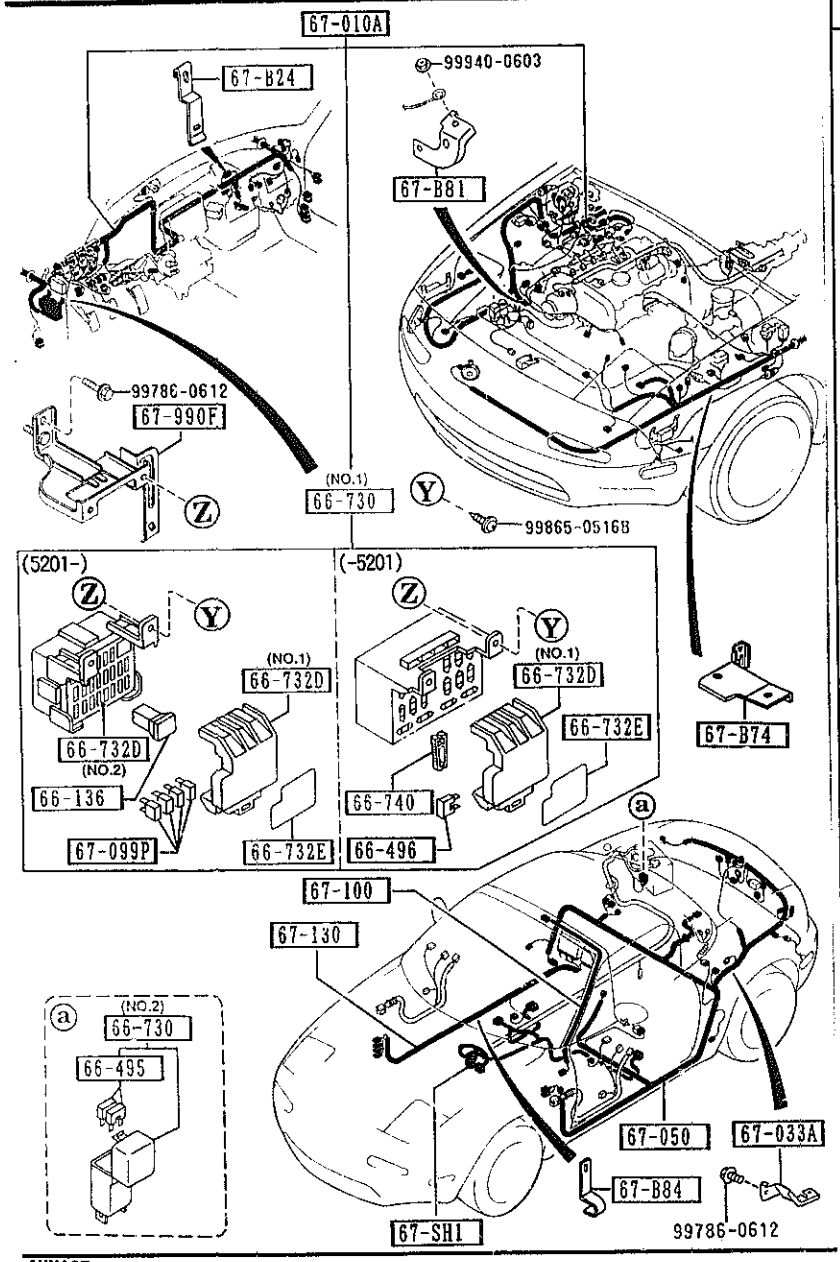

AUNA05

PART NO.	QTY	MODEL/RESTRICTION	MODEL/RESTRICTION	MODEL/RESTRICTION	FROM-TO
66-136		FUSE (30A)			
T001-67-S93	1				5201-
66-495		FUSE (10A)			
99705-1110	2				
66-496		FUSE (15A)			
99705-1115	1				-5201
66-730		BLOCK,FUSE			
N008-66-730	1	(ILLUST. NO.2)			
NA75-66-730	1	(ILLUST. NO.1)			-5201
NB11-66-730	1	(ILLUST. NO.1)			5201-
66-732D		COVER,FUSE BLOCK			
NA01-66-731A	1	FURUKAWA (ILLUST. NO.1)			
NB11-66-731	1	(ILLUST. NO.2)			5201-
66-732E		LABEL,CAUTION-FUSE COVER			
NA75-66-732	1				-5201
NB11-66-732	1				5201-
66-740		HOLDER,FUSE			
H001-66-739	1				-5201
67-B24		BRACKET			
NA75-67-B11A	1	(W/AIR BAG-DRIV.&PASS.SIDE)			
67-B74		BRACKET,HARNESS			
N018-67-BW0	1				
67-B81		BRACKET,HARNESS-ENGINE			
NA75-67-B81	1				
67-B84		BRACKET			
NA75-67-B12	1				
67-SH1		CORD,SHORT			
NBV1-67-SH0	1	(ML-'96 MODEL)			

5201 NA35* -614193

CAT. AUNA05-04

1997-07

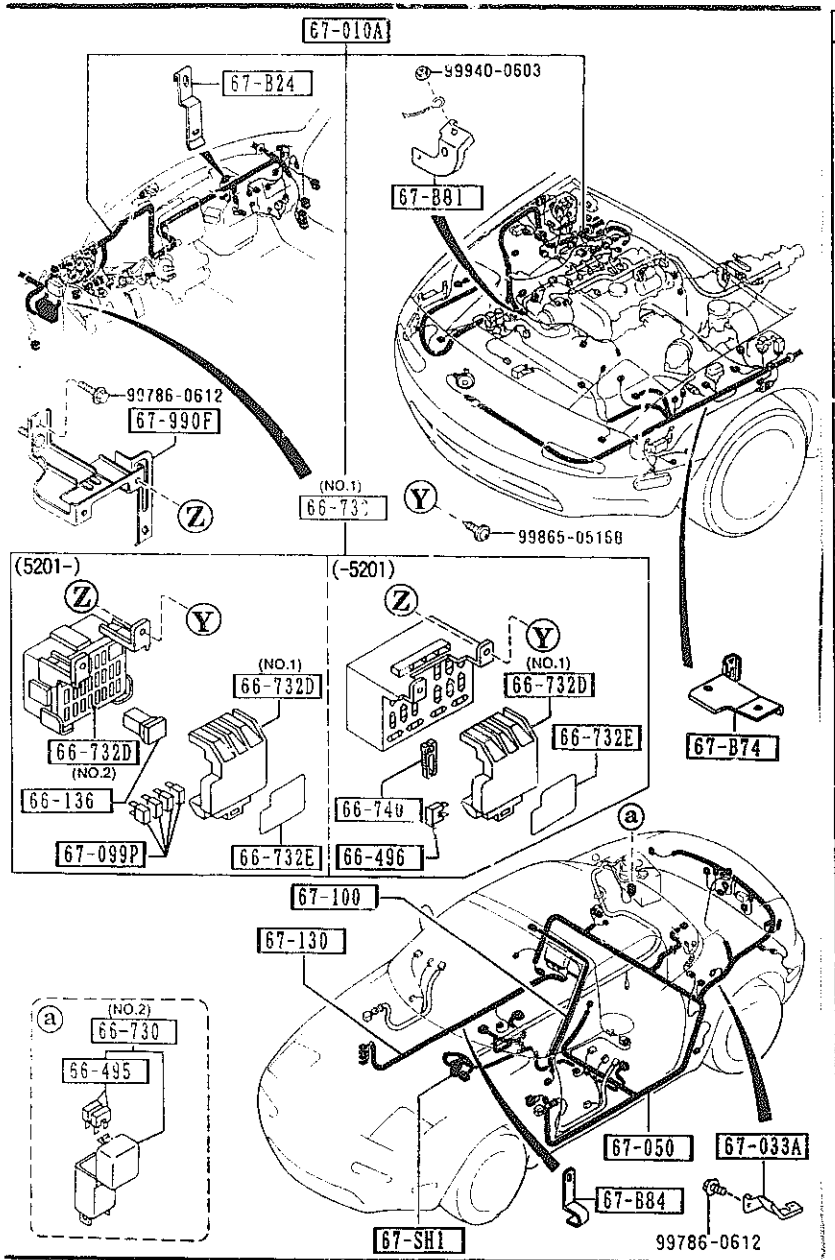

PART NO.	QTY	MODEL/RESTRICTION	MODEL/RESTRICTION	MODEL/RESTRICTION	FROM-TO
67-010A		HARNESS,FRONT			
NB11-67-010B	1	(W/SENSORY SOUND) (('95 MODEL)>(MT)>(W /O A. LOCK BRAKE))			-5201
NB13-67-010B	1	(('95 MODEL)>(MT)>(W /A. LOCK BRAKE))			-5201
NB14-67-010B	1	(W/SENSORY SOUND) (('95 MODEL)>(AT)>(W /O A. LOCK BRAKE))			-5201
NB15-67-010B	1	(('95 MODEL)>(AT)>(W /A. LOCK BRAKE))			-5201
NB31-67-010B	1	(W/O SENSORY SOUND) (('95 MODEL)>(MT)>(W /O A. LOCK BRAKE))			-5201
NB32-67-010B	1	(W/O SENSORY SOUND) (('95 MODEL)>(AT)>(W /O A. LOCK BRAKE))			-5201
NB38-67-010B A (NB38-67-010C)	1	(('96 MODEL)>(MT)>(W /O A. LOCK BRAKE))			-5B01
NB40-67-010B A (NB40-67-010C)	1	(('96 MODEL)>(MT)>(W /A. LOCK BRAKE))			-5B01
NB42-67-010B A (NB42-67-010C)	1	(('96 MODEL)>(AT)>(W /O A. LOCK BRAKE))			-5B01
NB43-67-010B A (NB43-67-010C)	1	(('96 MODEL)>(AT)>(W /A. LOCK BRAKE))			-5B01
NB11-67-010D	1	(W/SENSORY SOUND) (('95 MODEL)>(MT)>(W /O A. LOCK BRAKE))			5201-
NB13-67-010D	1	(('95 MODEL)>(MT)>(W /A. LOCK BRAKE))			5201-
NB14-67-010D	1	(W/SENSORY SOUND) (('95 MODEL)>(AT)>(W /O A. LOCK BRAKE))			5201-
NB15-67-010D	1	(('95 MODEL)>(AT)>(W /A. LOCK BRAKE))			5201-
NB31-67-010D	1	(W/O SENSORY SOUND) (('95 MODEL)>(MT)>(W /O A. LOCK BRAKE))			5201-
NB32-67-010D	1	(W/O SENSORY SOUND) (('95 MODEL)>(AT)>(W /O A. LOCK BRAKE))			5201-
*NB38-67-010C A (NB38-67-010D)	1	(('96 MODEL)>(MT)>(W /O A. LOCK BRAKE))			5B01-6201
*NB40-67-010C A (NB40-67-010D)	1	(('96 MODEL)>(MT)>(W /A. LOCK BRAKE))			5B01-6201
*NB42-67-010C A (NB42-67-010D)	1	(('96 MODEL)>(AT)>(W /O A. LOCK BRAKE))			5B01-6201
*NB43-67-010C	1	(('96 MODEL)>(AT)>(W			5B01-6201

5201 NA35* -614193
5B01 NA3** -704237
6201 NA3** -711421

AUNA05

CAT. AUNA05-04

1997-07

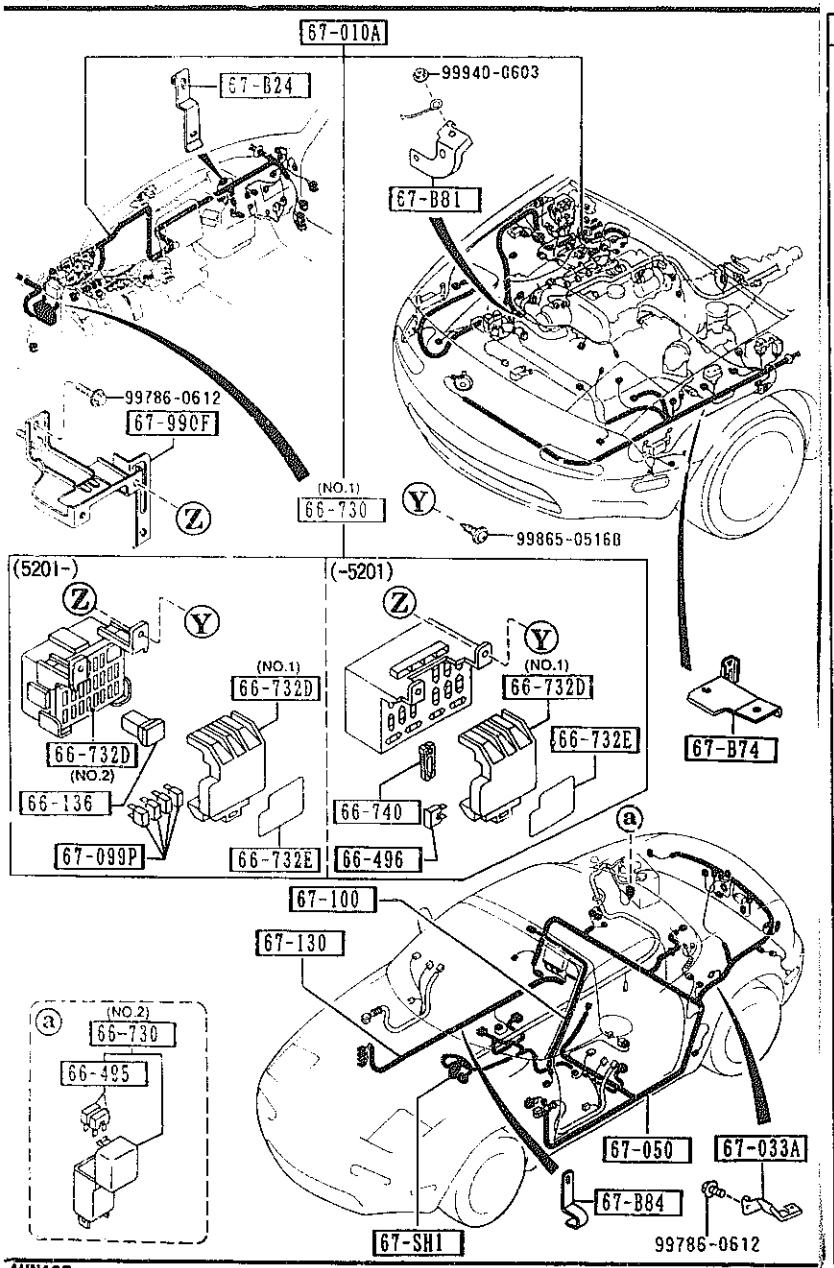

PART NO.	QTY	MODEL/RESTRICTION	MODEL/RESTRICTION	MODEL/RESTRICTION	FROM-TO
CONT'D					
A (NB43-67-010D)		/A. LOCK BRAKE))			
*NB38-67-010D	1	(('96 MODEL)>(MT)>(W /O A. LOCK BRAKE))			6201-
*NB40-67-010D	1	(('96 MODEL)>(MT)>(W /A. LOCK BRAKE))			6201-
*NB42-67-010D	1	(('96 MODEL)>(AT)>(W /O A. LOCK BRAKE))			6201-
*NB43-67-010D	1	(('96 MODEL)>(AT)>(W /A. LOCK BRAKE))			6201-
+---------+					
| 67-033A |		BRACKET,WIRING			
+---------+					
N007-67-B10A	1				
+---------+					
| 67-050 |		HARNESS,REAR			
+---------+					
NB11-67-050B	1	(('95 MODEL)>(W/O A. LOCK BRAKE))			
NB13-67-050E	1	(('95 MODEL)>(W/A. L OCK BRAKE))			
NB38-67-050B	1	(('96 MODEL)>(W/O A. LOCK BRAKE))			-6201
A (NB38-67-050C)					
NB40-67-050B	1	(('96 MODEL)>(W/A. L OCK BRAKE))			-6201
A (NB40-67-050C)					
*NB38-67-050C	1	(('96 MODEL)>(W/O A. LOCK BRAKE))			6201-
*NB40-67-050C	1	(('96 MODEL)>(W/A. L OCK BRAKE))			6201-
+---------+					
| 67-099P |		FUSE			
+---------+					
99705-1210	1	10A			5201-
99705-1215	6	15A			5201-
99705-1220	1	20A			5201-
99705-1230	1	30A			5201-
+---------+					
| 67-100 |		HARNESS,ROOM LAMP			
+---------+					
NB38-67-100C	1	('96 MODEL)			-5801
A (NB38-67-100D)					
NB38-67-100D	1	('96 MODEL)			5801-6201
A (NB38-67-100E)					
*NB38-67-100E	1	('96 MODEL)			6201-6701
A (NB38-67-100G)					
*NB38-67-100G	1	('96 MODEL)			6701-

5201 NA35* -614193
5801 NA3** -708842
6201 NA3** -711421
6701 NA3** -719627

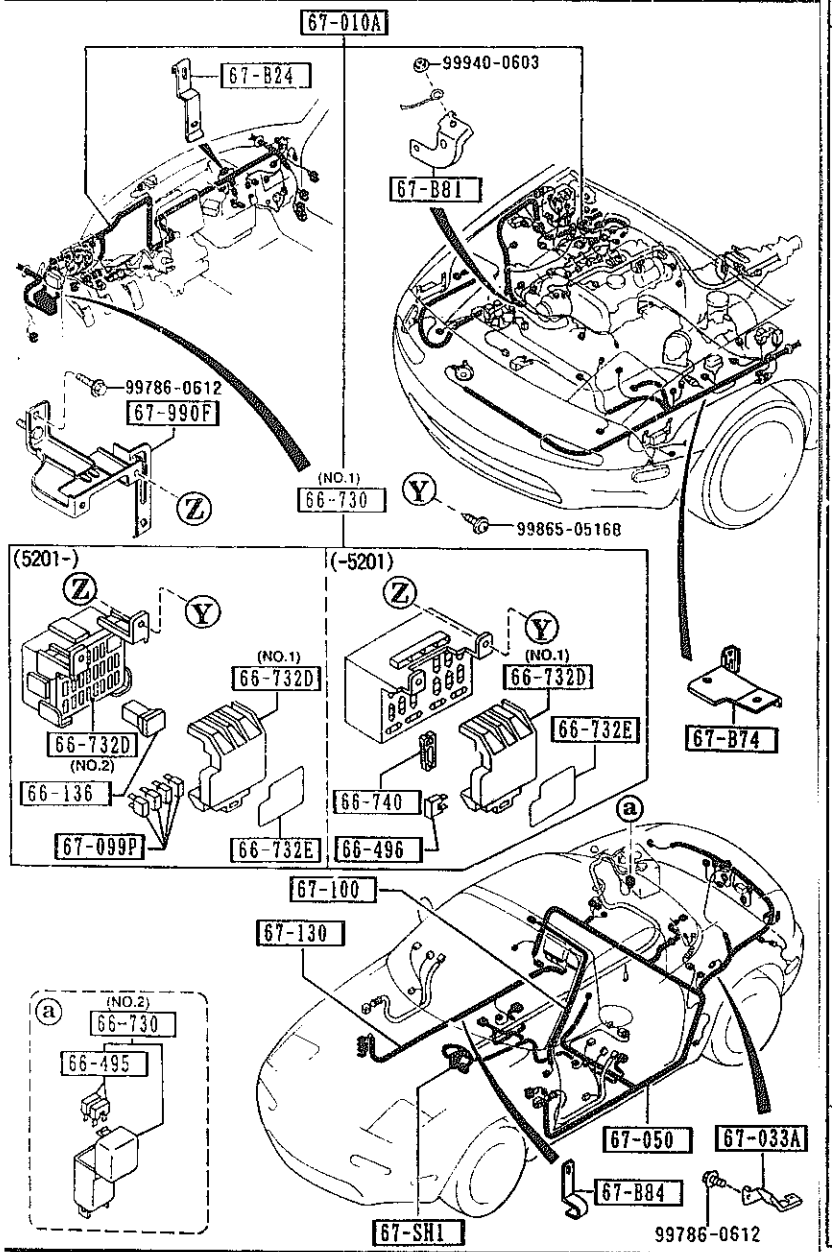

PART NO.	QTY	MODEL/RESTRICTION	MODEL/RESTRICTION	MODEL/RESTRICTION	FROM-TO
67-130		HARNESS'NO.2',FRONT			
NB11-67-110B	1	(('95 MODEL)>(W/O A. LOCK BRAKE))			-5201
NB13-67-110B	1	(('95 MODEL)>(W/A. LOCK BRAKE))			-5201
NB38-67-110B A (NB38-67-110C)	1	(('96 MODEL)>(W/O A. LOCK BRAKE))			-6201
NB40-67-110B A (NB40-67-110C)	1	(('96 MODEL)>(W/A. LOCK BRAKE))			-6201
NB11-67-110C	1	(('95 MODEL)>(W/O A. LOCK BRAKE))			5201-
NB13-67-110C	1	(('95 MODEL)>(W/A. LOCK BRAKE))			5201-
*NB38-67-110C	1	(('96 MODEL)>(W/O A. LOCK BRAKE))			6201-
*NB40-67-110C	1	(('96 MODEL)>(W/A. LOCK BRAKE))			6201-
67-990F		BRACKET,HARNESS			
NA01-67-BJ0 AN(NA01-67-BJ0A)	1				-5801
NA01-67-BJ0A	1				5801-

5201 NA35* -614193
5801 NA3** -700842
6201 NA3** -711421

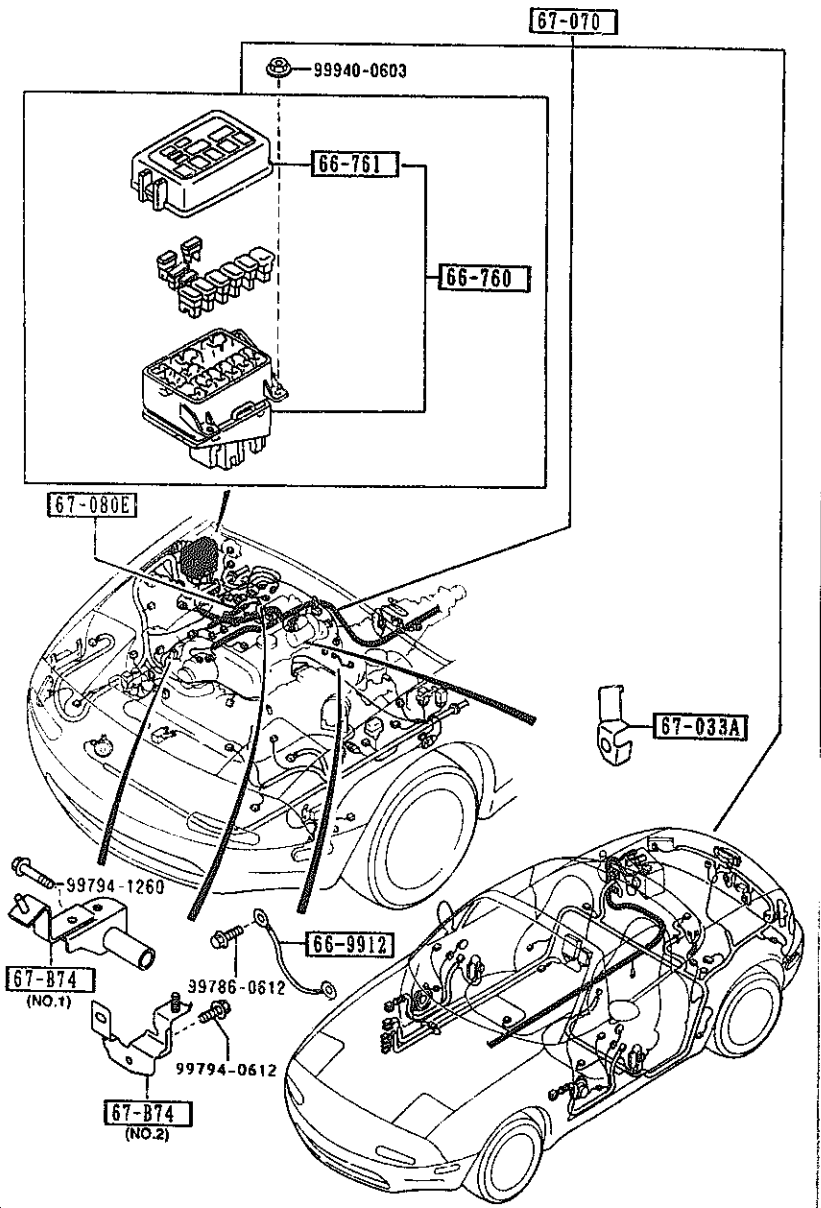

AUNA05

6701 -1 * ENGINE & TRANSMISSION WIRING HARNESSES

PART NO.	QTY	MODEL/RESTRICTION	MODEL/RESTRICTION	MODEL/RESTRICTION	FROM-TO
66-760		BLOCK,MAIN FUSE			
NB11-66-760	1				
66-761		COVER,MAIN FUSE BLOCK			
NB11-66-762	1				
66-9912		WIRE,EARTH			
NA75-67-EW1B	1				
67-B74		BRACKET,HARNESS			
NA80-67-B80	1	(ILLUST. NO.1)			
N027-67-B80	1	(ILLUST. NO.2)			
67-033A		BRACKET,WIRING			
NA01-67-B10B	1				
67-070		HARNESS,ENGINE			
NB11-67-070B	1	((MT)>(W/O A. LOCK BRAKE))			
NB12-67-070B	1	((MT)>(W/A. LOCK BRAKE))			
NB13-67-070B	1	((AT)>(W/O A. LOCK BRAKE))			
NB14-67-070B	1	((AT)>(W/A. LOCK BRAKE))			
67-080E		WIRING,INJECTOR			
NB11-67-080A	1				-5201
NB38-67-080A (NB38-67-080A)	1				5201-6401
*NB38-67-080A	1				6401-

5201 NA35* -614193
6401 NA3** -717787

CAT. AUNA05-04

1997-07

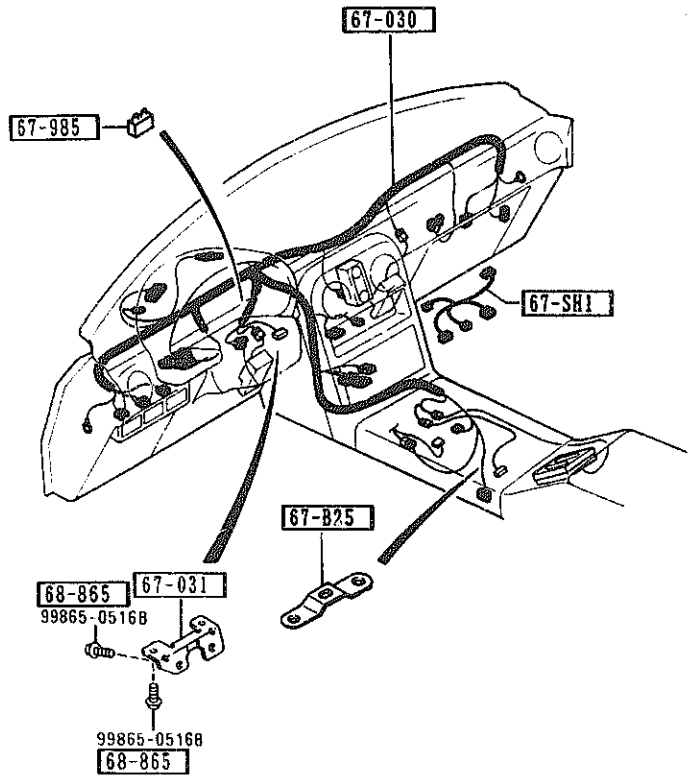

6702 -1 * DASHBOARD WIRING HARNESSES

PART NO.	QTY	MODEL/RESTRICTION	MODEL/RESTRICTION	MODEL/RESTRICTION	FROM-TO
67-B25		BRACKET,HARNESS			
NA01-67-B31	1	(MT)			
67-SH1		CORD,SHORT			
NBY3-67-SH0	1	(ML-'96 MODEL)			
67-030		HARNESS,INSTRUMENT			
NB11-67-030B	1	(W/SENSORY SOUND) (('95 MODEL)>(MT))			
NB12-67-039B	1	(W/O SENSORY SOUND) (('95 MODEL)>(MT))			
NB14-67-030B	1	(W/SENSORY SOUND) (('95 MODEL)>(AT))			
NB15-67-030B	1	(W/O SENSORY SOUND) (('95 MODEL)>(AT))			
NB38-67-030B	1	(W/SENSORY SOUND) (('96 MODEL)>(MT))			
NB39-67-030B	1	(W/O SENSORY SOUND) (('96 MODEL)>(MT))			
NB42-67-030B	1	(W/SENSORY SOUND) (('96 MODEL)>(AT))			
NB43-67-030B	1	(W/O SENSORY SOUND) (('96 MODEL)>(AT))			
67-031		BRACKET			
NB38-60-1A1B	1	('96 MODEL)			
67-985		CONNECTOR,SHORT			
NA80-67-SC0	1	(W/O DAY RUNNING LAMP)			
68-865		FASTENER			
BC1D-68-865	2	('96 MODEL)			

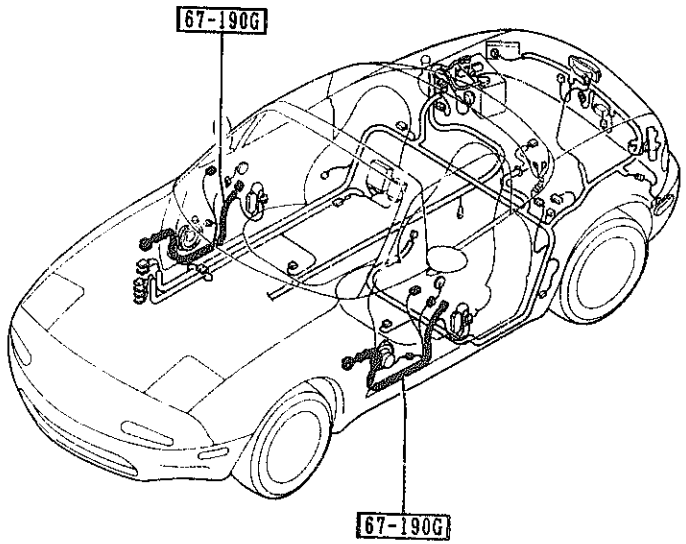

6703 -1 * DOOR, FLOOR & CEILING WIRING HARNESSES

PART NO.	QTY	MODEL/RESTRICTION	MODEL/RESTRICTION	MODEL/RESTRICTION	FROM-TO
67-190G		HARNESS,DOOR			
NA01-67-190A	2	BASE, R-PKG, (W/MANUAL DR MIRROR, W/O TWEETER SPK.,W/O POWER WIND.)			
NA02-67-190A	2	(W/MANUAL DR MIRROR, W/O TWEETER SPK.,W/POWER WIND.)			
NA53-67-190B AN(NA53-67-190C)	2	M-25-ED, P.E.GR, L-PKG, PKG-C, (W/ELECT.DR MIRROR,W/O TWEETER SPK.)			-4B14
NB11-67-190A AN(NB11-67-190B)	2	(W/MANUAL DR MIRROR, W/TWEETER SPK.)			-4B14
NB12-67-190A AN(NB12-67-190B)	2	L-PKG-OPT, M-25-ED, PKG-B-OPT, PKG-C-OPT (W/ELECT.DR MIRROR,W/TWEETER SPK.)			-4B14
NA53-67-190C	2	M-25-ED, P.E.GR, L-PKG, PKG-C, (W/ELECT.DR MIRROR,W/O TWEETER SPK.)			4B14-
*NB11-67-190B	2	(W/MANUAL DR MIRROR, W/TWEETER SPK.)			4B14-
*NB12-67-190B	2	L-PKG-OPT, M-25-ED, PKG-B-OPT, PKG-C-OPT (W/ELECT.DR MIRROR,W/TWEETER SPK.)			4B14-

4B14 NA35* -C07525

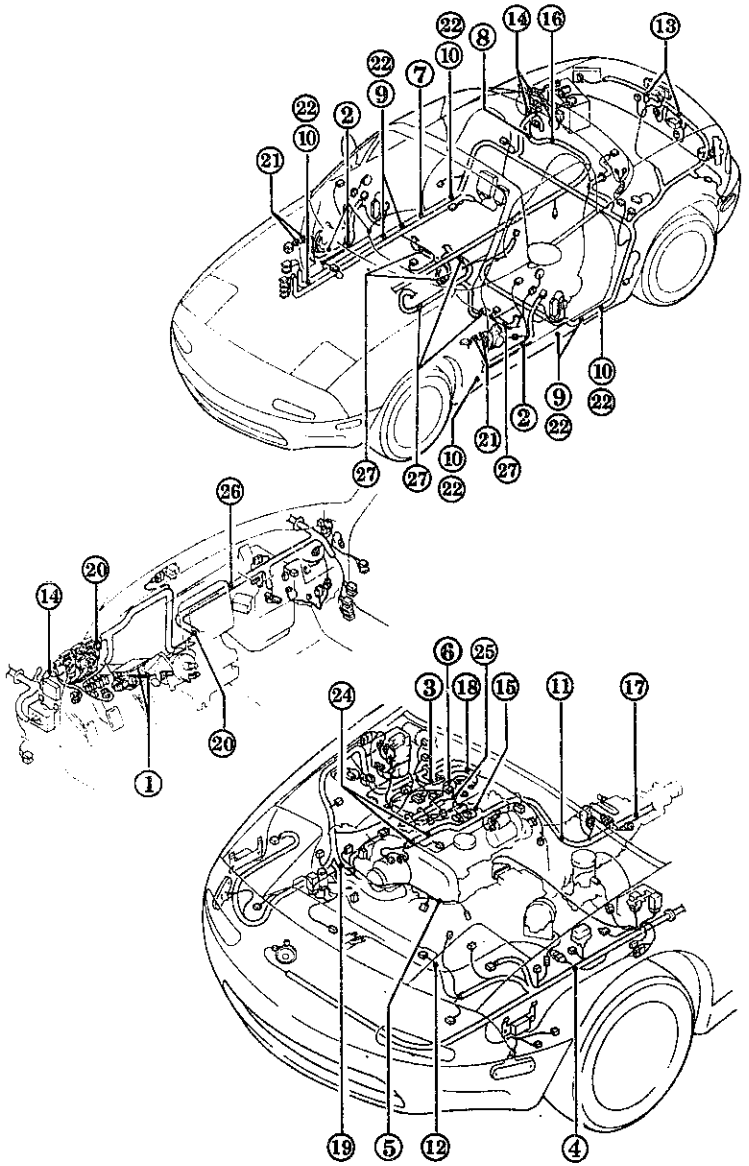

AUNA05

① 14-726	② 45-961B	③ 67-CS1 99786-0612	④ 67-CT2	⑤ 67-011C
⑥ 20-451	⑦ 67-013D	⑧ 67-014F 99786-0620	⑨ 67-022	⑩ 67-026
⑪ 67-048A 99786-0612	⑫ 67-051E	⑬ 67-051J	⑭ 67-052H	⑮ 67-062B 99786-0612
⑯ 67-072H 99786-0620	⑰ 67-073 99796-0812	⑱ 67-073B 99940-0603	⑲ 67-074 99786-0612	⑳ 67-076
㉑ 67-191	㉒ 68-865		㉔ 34-C10	㉕ 66-941A
㉖ 67-059C	㉗ 67-061K			

AUNA05

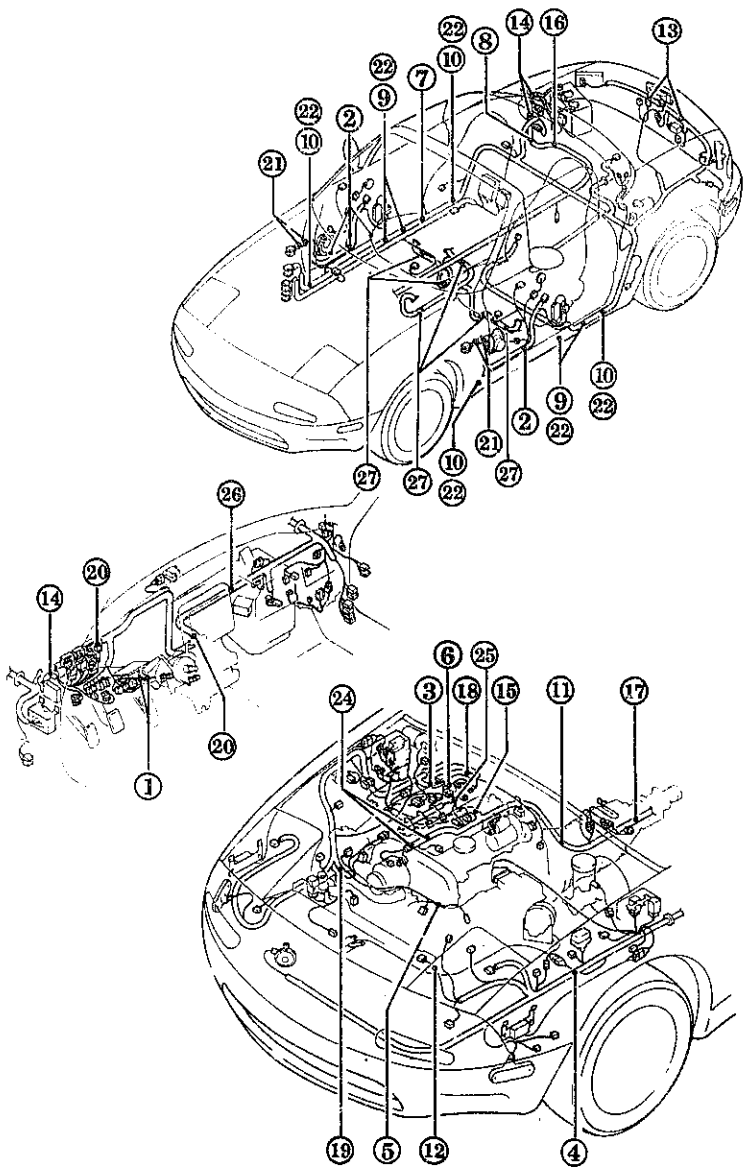

PART NO.	QTY	MODEL/RESTRICTION	MODEL/RESTRICTION	MODEL/RESTRICTION	FROM-TO
14-726		BAND			
N304-14-726	2				
20-451		CLIP			
B612-20-468	1				4A03-
34-C10		BAND,PIPE			
B214-34-C10	2				
45-961B		CAP			
H002-45-961	4				
66-941A		CLIP			
FB01-66-945	1	('95 MODEL)			-4A03
67-CS1		CLIP,HARNESS			
N001-67-CS1C	1				
67-CT2		CLIP,HARNESS			
NA01-67-CH5	1				
67-011C		CLIP			
E356-18-141	1	BASE, R-PKG, (W/O POWER STEERING)			
67-013D		PROTECTOR,HARNESS			
NA75-67-P54	1				
67-014F		PROTECTOR,HARNESS			
NA01-67-P71	1				
67-022		CLIP,HARNESS			
NA01-67-CW5A	4				
67-026		CLIP,HARNESS			
NA02-67-CW5A	4				
67-048A		CLIP,HARNESS			
NA01-67-CS1	1				

4A03 NA35* -603621

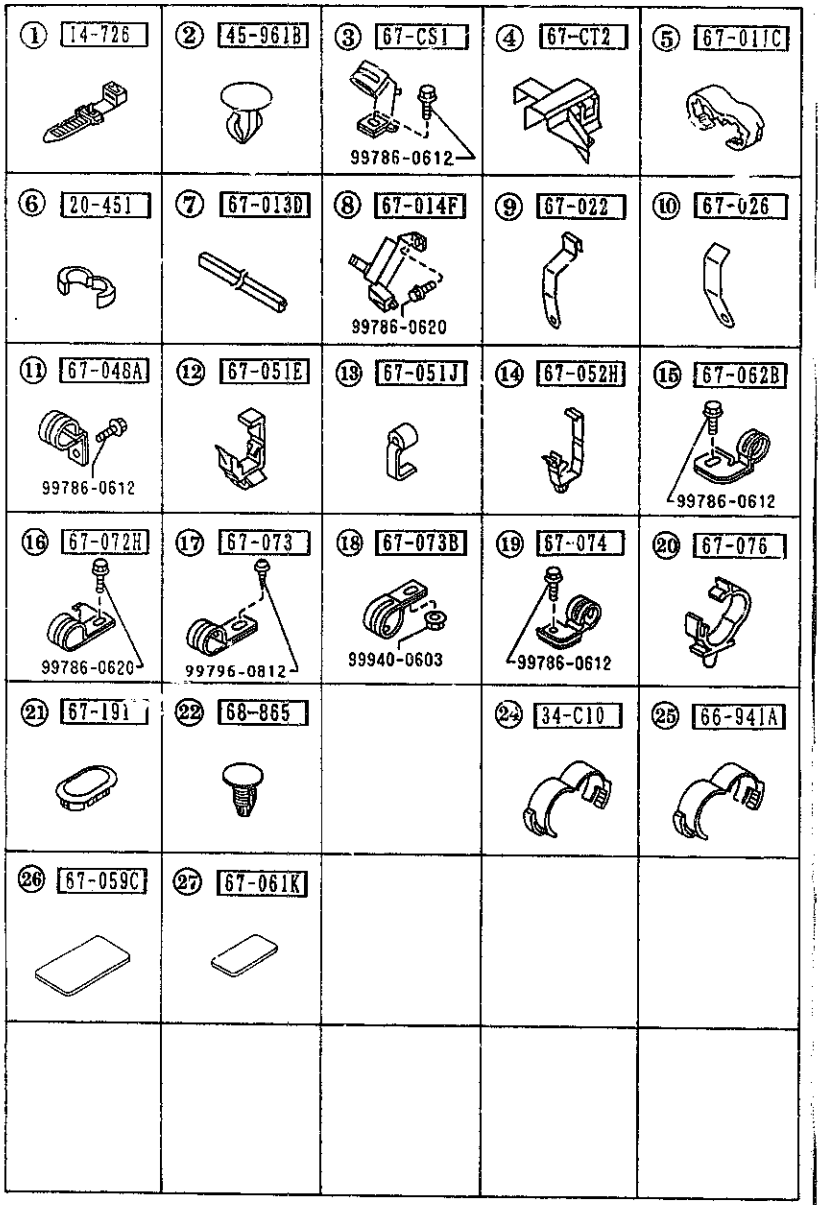

AUNA05

6704 -2 * WIRING HARNESS CLAMPS

PART NO.	QTY	MODEL/RESTRICTION	MODEL/RESTRICTION	MODEL/RESTRICTION	FROM-TO
67-051E UB42-67-051	1	CLIP			
67-051J G031-67-053A	2	CLIP			
67-052H G030-67-018A	3	CLIP			
67-059C G001-67-059	1	PAD,PROTECTOR (ML-'96 MODEL)			
67-061K G001-67-061	7	PAD,PROTECTOR (ML-'96 MODEL)			
67-062B NA02-67-CS1A	1	CLIP,HARNESS			
67-072H NA01-67-CS6	1	CLIP,ENGINE HARNESS			
67-073 UB73-67-073A	1	CLIP			
67-073B H261-67-073	1	CLIP			
67-074 NA01-67-CS5	1	CLIP,HARNESS			
67-076 NA01-67-CH8	2	CLIP,ENGINE HARNESS			
67-191 B300-67-HD1	4	GROMMET			
68-865 B003-68-865	8	FASTENER			
00	INT-	NA3 NA4 NA5 NA6 NA7 NA8 BLACK			

CAT. AUNA05-04 1997-07

6720 WINDSHIELD WASHER
(W/O ANTI LOCK BRAKE)

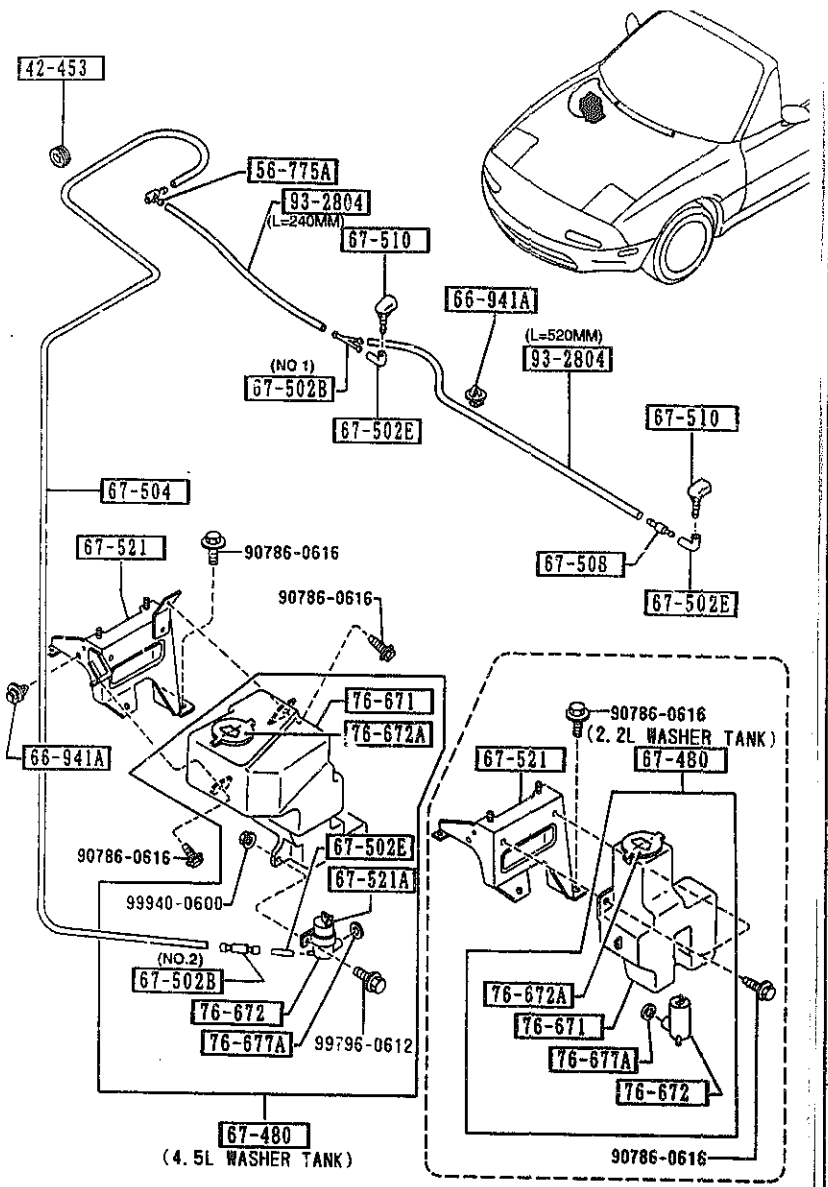

6720 -1 WINDSHIELD WASHER
(W/O ANTI LOCK BRAKE)

PART NO.	QTY	MODEL/RESTRICTION	MODEL/RESTRICTION	MODEL/RESTRICTION	FROM-TO
42-453		PROTECTOR,CABLE			
B048-42-453	1				
56-775A		CLIP,WASHER HOSE			
LA01-67-505B	1				
66-941A		CLIP			
GB08-66-941	4				
67-480		TANK,WASHER-FRONT			
NA01-67-480A	1	(2.2L WASHER TANK)			
NA04-67-480B	1	(4.5L WASHER TANK)			
67-502B		JOINT,HOSE			
H001-67-502	1	(ILLUST. NO.1)			
4116-67-502	1	(ILLUST. NO.2) (4.5L WASHER TANK)			
67-502E		JOINT,ELBOW-W.TANK			
S084-67-502	2	(2.2L WASHER TANK)			
S084-67-502	3	(4.5L WASHER TANK)			
67-504		HOSE'C',WASHER			
NA01-67-501A	1				
67-508		VALVE,CHECK			
FA54-67-508	1				-4901
DB05-67-502	1				4901-
67-510		NOZZLE,WASHER-F.WIND			
NA01-67-510	2				
67-521		BRACKET,WASHER TANK			
NA01-67-520	1	(2.2L WASHER TANK)			
NA04-67-520	1	(4.5L WASHER TANK)			
67-521A		BRACKET			
S095-67-521	1	(4.5L WASHER TANK)			
76-671		TANK,WASHER			

4901 NA35* -602618

AUNA05

CAT. AUNA05-04

1997-07

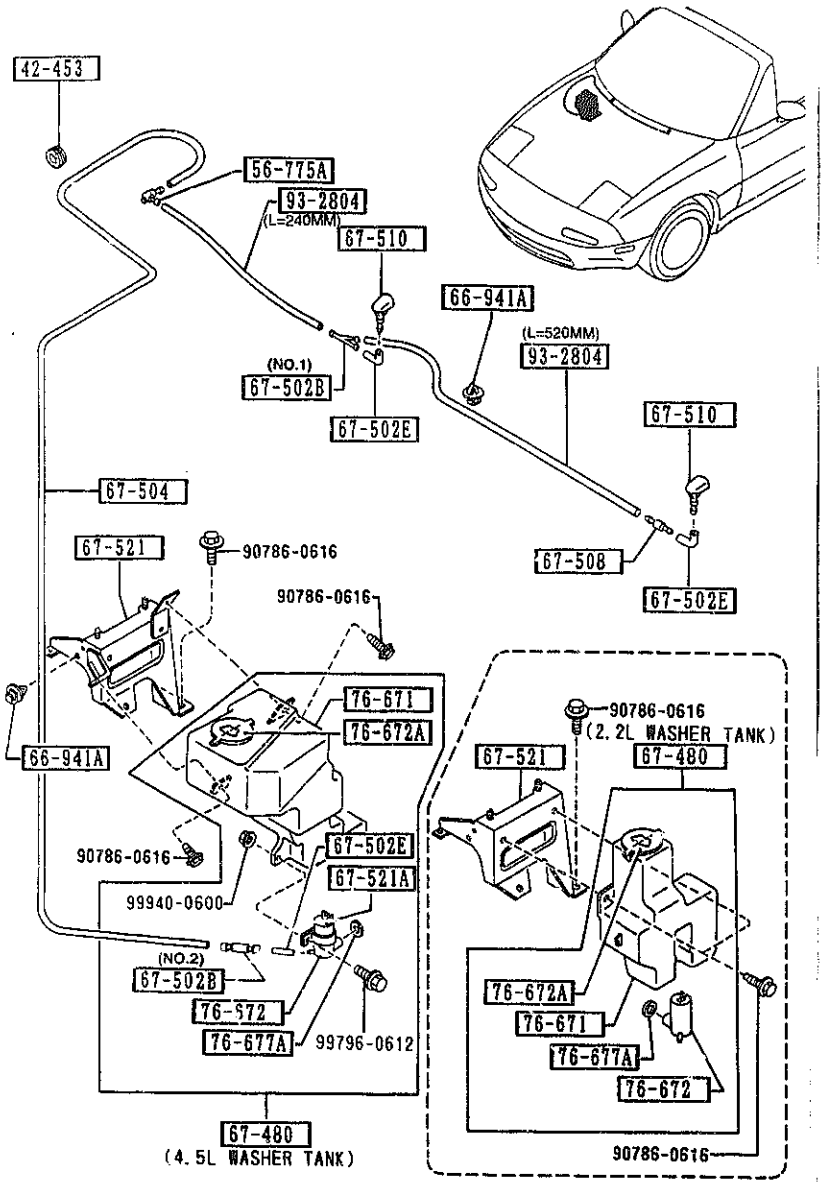

AUNA05

PART NO.	QTY	MODEL/RESTRICTION	MODEL/RESTRICTION	MODEL/RESTRICTION	FROM-TO
CONT'D					
NA01-67-481	1	(2.2L WASHER TANK)			
NA04-67-481	1	(4.5L WASHER TANK)			
+----------+					
| 76-672 |		PUMP,WASHER			
+----------+					
S084-76-672	1				
+----------+					
| 76-672A |		CAP,TANK			
+----------+					
UB39-51-815	1				
+----------+					
| 76-677A |		GROMMET,WASHER TANK			
+----------+					
S084-76-677	1				
+----------+					
| 93-2804 |		PIPE,VINYL			
+----------+					
99328-04010	1	L=10M CUT IT TO USE			

CAT. AUNA05-04

1997-07

6720 A WINDSHIELD WASHER (W/ANTI LOCK BRAKE)

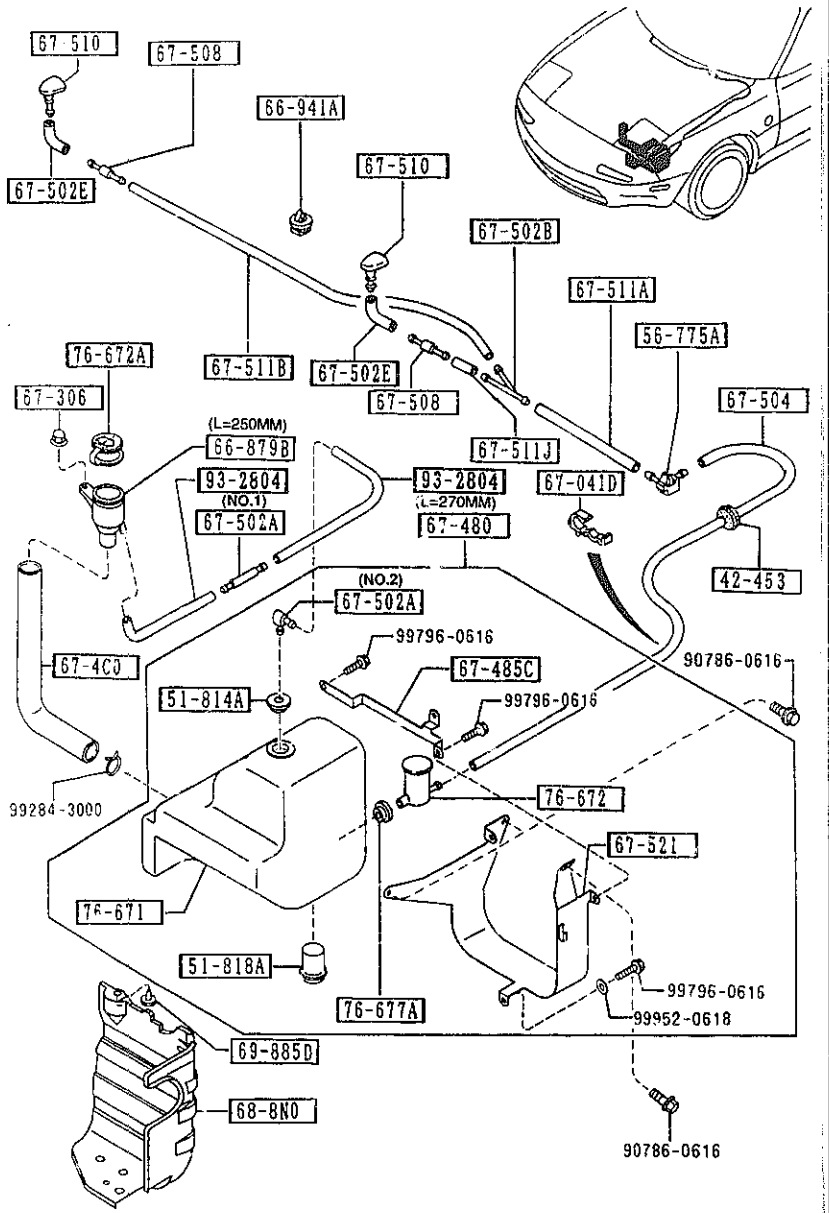

AUNA05

6720 A-1 WINDSHIELD WASHER (W/ANTI LOCK BRAKE)

PART NO.	QTY	MODEL/RESTRICTION	MODEL/RESTRICTION	MODEL/RESTRICTION	FROM-TO
42-453		PROTECTOR,CABLE			
B048-42-453	1				
51-814A		GROMMET,WASHER TANK			
B002-51-814	1				
51-818A		SWITCH,LEVEL-WASHER TANK			
NA17-67-488	1				
56-775A		CLIP,WASHER HOSE			
LA01-67-505B	1				
66-879B		JOINT			
NA17-67-4C2	1				
66-941A		CLIP			
GB08-66-941	5				
67-041D		CLIP,HARNESS			
B092-67-041	1				
67-306		NUT,WIPER LINK			
GJ21-67-306	1				
67-4C0		PIPE,FILLER-F.WASHER TANK			
NA17-67-4C1	1				
67-480		TANK,WASHER-FRONT			
NA17-67-4T0A	1				
67-485C		BRKT'A',WASHER TANK-FRT			
NA18-67-521	1				
67-502A		JOINT,HOSE			
NA17-67-502	1	(ILLUST. NO.1)			
S013-67-502	1	(ILLUST. NO.2)			
67-502B		JOINT,HOSE			
H001-67-502	1				

CAT. AUNA05-04

1997-07

6720 A WINDSHIELD WASHER (W/ANTI LOCK BRAKE)

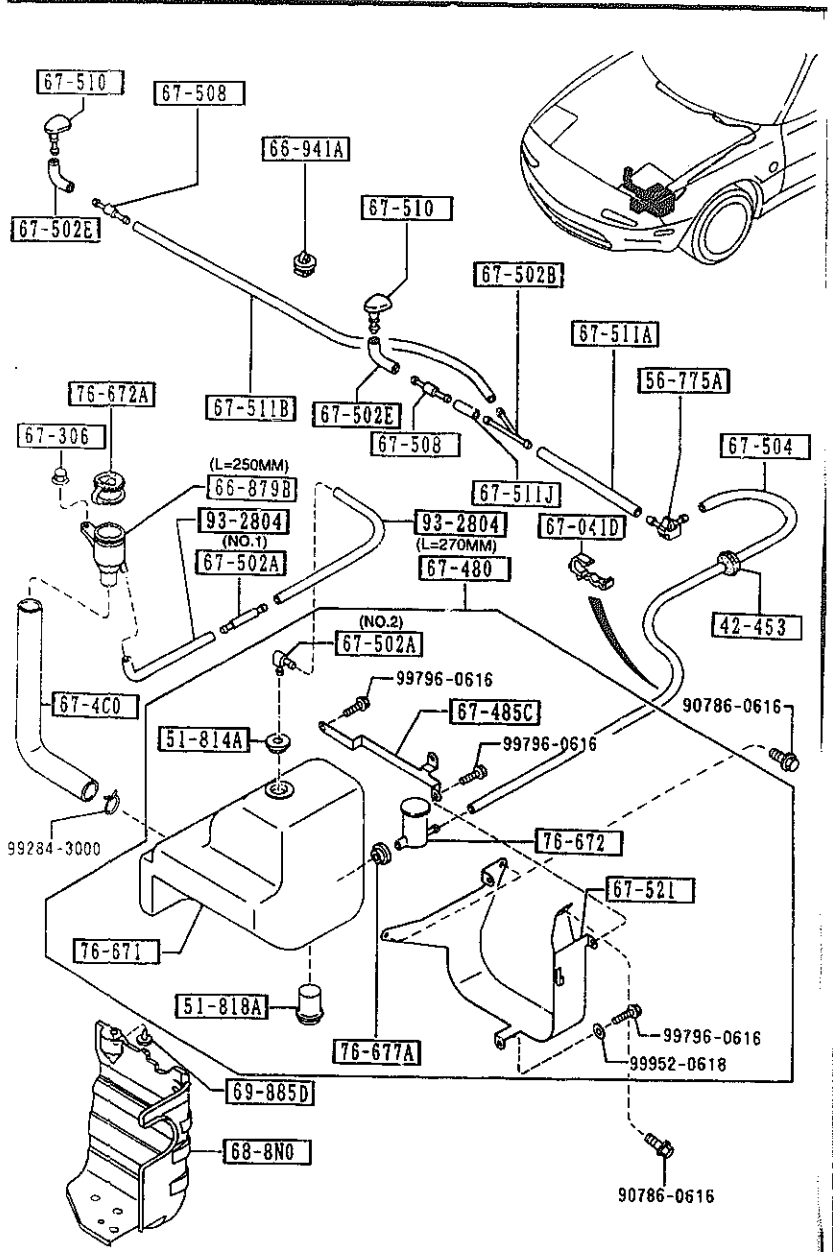

AUNA05

6720 A-2 WINDSHIELD WASHER (W/ANTI LOCK BRAKE)

PART NO.	QTY	MODEL/RESTRICTION	MODEL/RESTRICTION	MODEL/RESTRICTION	FROM-TO
67-502E		JOINT,ELBOW-W.TANK			
S084-67-502	2				
67-504		HOSE'C',WASHER			
NA17-67-501	1				
67-508		VALVE,CHECK			
FA54-67-508	2				-4901
DB05-67-502	2				4901-
67-510		NOZZLE,WASHER-F.WIND			
NA01-67-510	2				
67-511A		PIPE,SCREEN WASHER			
NA18-67-501	1				
67-511B		PIPE,SCREEN WASHER			
NA19-67-501	1				
67-511J		PIPE,SCREEN WASHER			
NA15-67-501	1				
67-521		BRACKET,WASHER TANK			
NA17-67-521	1				
68-8N0		COVER,WASHER TANK			
NA20-56-181A	1				
69-885D		FASTENER			
NA01-56-145	3				
76-671		TANK,WASHER			
NA17-67-4T1	1				
76-672		PUMP,WASHER			
LA01-67-482	1				-6401
*LB83-67-432	1				6401-
76-672A		CAP,TANK			
GJ21-67-483	1				

4901 NA35* -602618
6401 NA3** -717787

CAT. AUNA05-04

1997-07

6720 A WINDSHIELD WASHER
(W/ANTI LOCK BRAKE)

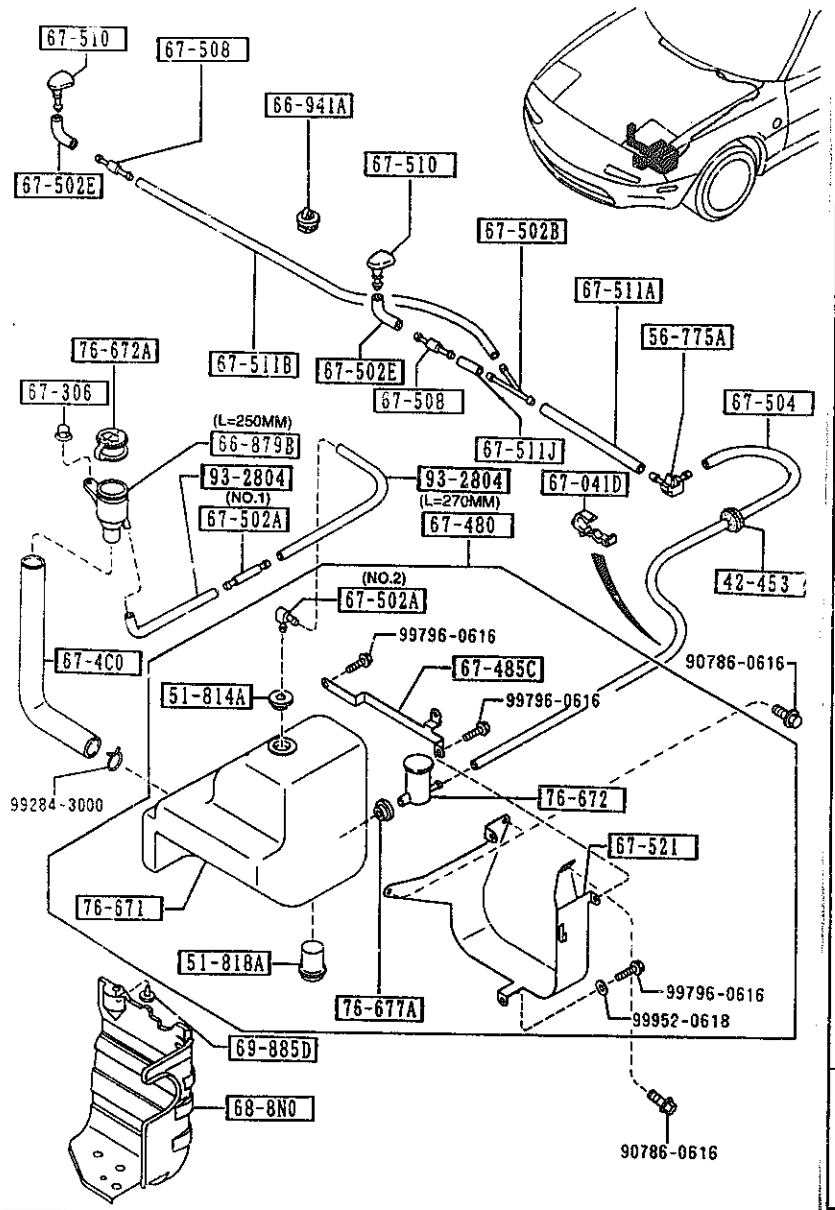

AUNA05

6720 A-3 ※ WINDSHIELD WASHER
(W/ANTI LOCK BRAKE)

PART NO.	QTY	MODEL/RESTRICTION	MODEL/RESTRICTION	MODEL/RESTRICTION	FROM-TO
76-677A S084-76-677	1	GROMMET,WASHER TANK			
93-2804 99328-04010	1	PIPE,VINYL L=10M CUT IT TO USE			

CAT. AUNA05-04

1997-07

6730 -1 WINDSHIELD WIPERS

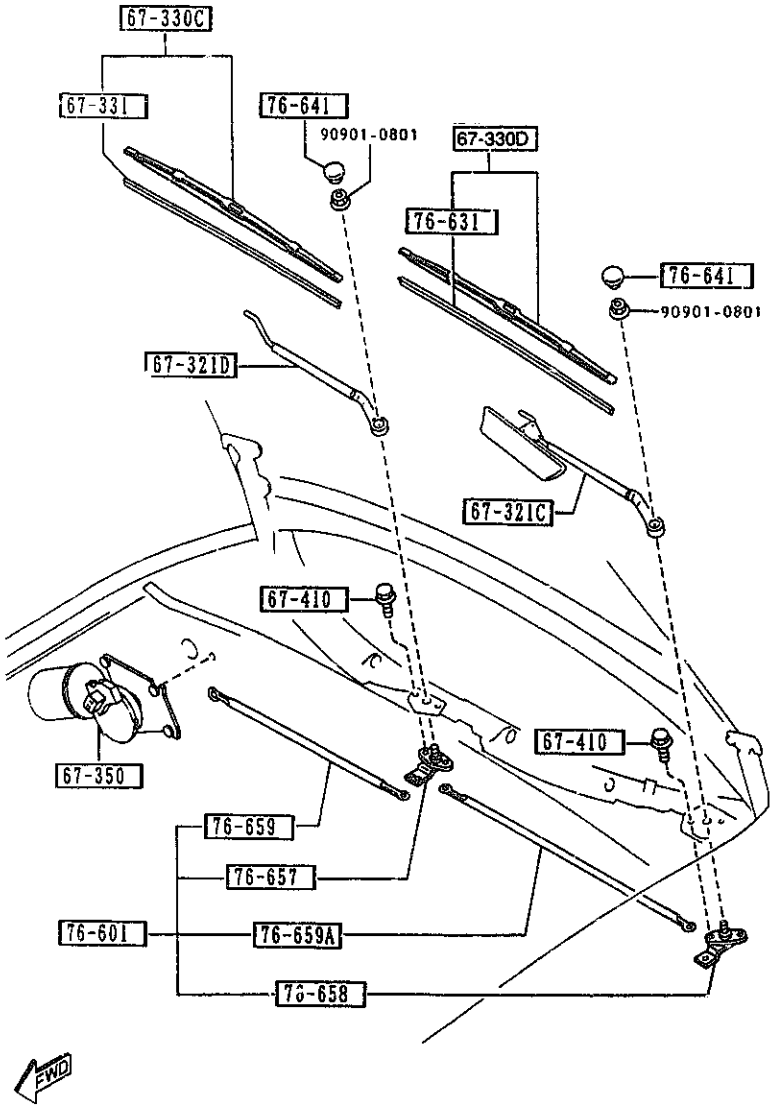

PART NO.	QTY	MODEL/RESTRICTION	MODEL/RESTRICTION	MODEL/RESTRICTION	FROM-TO
67-321C		ARM,WIPER-DRIVER SIDE			
NA01-67-321	1				
67-321D		ARM,WIPER-PASS. SIDE			
NA02-67-321	1				
67-330C		BLADE(R),WIPER-FRONT			
NA02-67-330A	1				-5201
A (BR72-67-330B)					
BR72-67-330B	1				5201-
67-330D		BLADE(L),WIPER-FRONT			
BM90-67-330B	1				-5201
A (BM95-67-330B)					
BM95-67-330B	1				5201-
67-331		RUBBER,BLADE-FRONT			
N002-67-331	1				-5201
B461-67-331A	1				5201-
67-350		MOTOR,WIPER			
NA01-67-340B	1	(EXC.COLD SPEC)			
NA04-67-340A	1	(COLD SPEC)			
67-410		BOLT			
B455-67-369	4				
76-601		LINK,WIPER			
NA01-67-360A	1				
76-631		RUBBER,BLADE-FRONT			
D041-67-331	1				-5201
D040-67-331A	1				5201-
76-641		COVER,WIPER ARM-FRONT			
LA01-67-395A	2				
76-657		SHAFT,DRIVE NO.1			
NA01-67-363	1				

5201 NA35* -614193

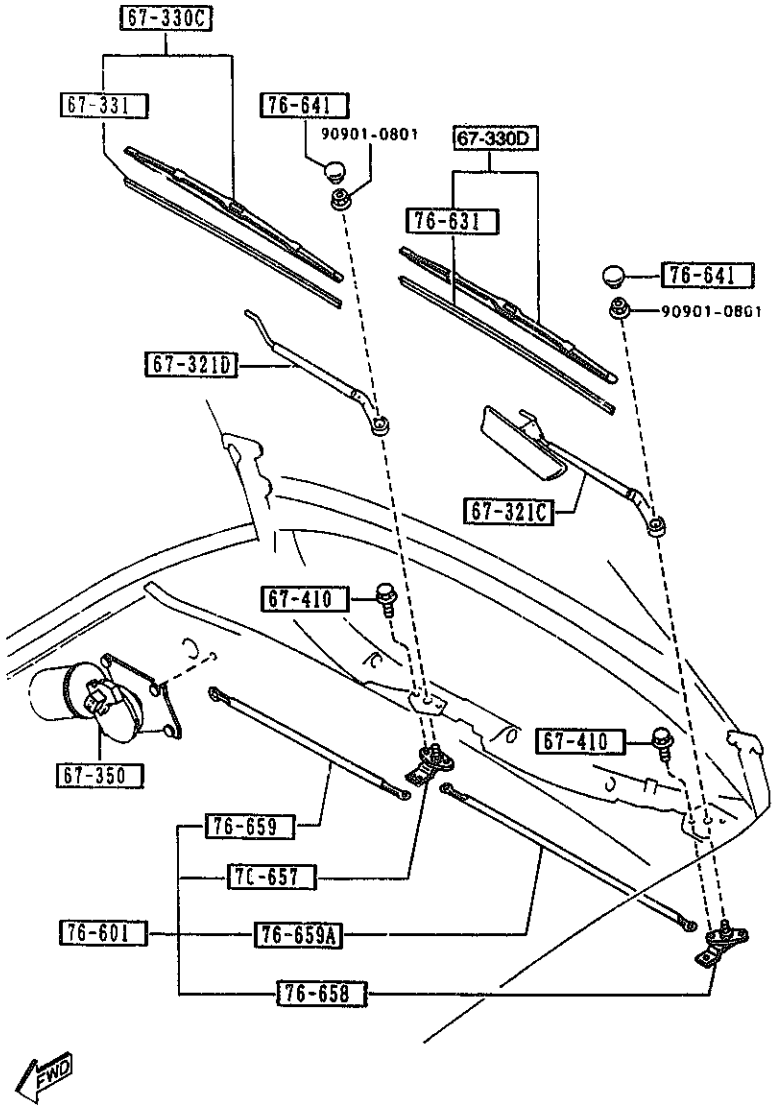

6730 -2 * WINDSHIELD WIPERS

PART NO.	QTY	MODEL/RESTRICTION	MODEL/RESTRICTION	MODEL/RESTRICTION	FROM-TO
76-658		SHAFT,DRIVE NO.2			
NA01-67-364	1				
76-659		ARM NO.1,LINK			
NA01-67-361	1				
76-659A		ARM NO.2,LINK			
NA01-67-362	1				

COMPONENTS OF NA01-67-340B
NA04-67-340A

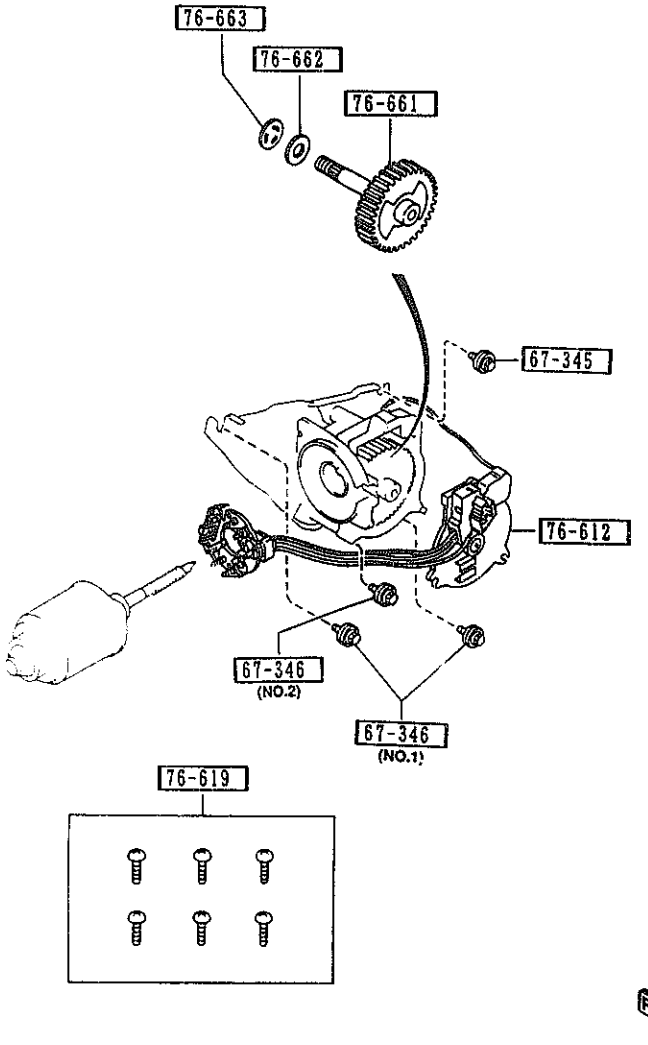

AUNA05

PART NO.	QTY	MODEL/RESTRICTION	MODEL/RESTRICTION	MODEL/RESTRICTION	FROM-TO
67-345		SCREW,EARTH SET-MOTOR BRK			
NA01-67-345	1				
67-346		SCREW,BRACKET-WIPER MOTOR			
NA01-67-346	2	(ILLUST. NO.1)			
NA23-67-346	1	(ILLUST. NO.2)			
76-612		PLATE,HOLDER-BRUSH			
NA23-67-351	1	(EXC.COLD SPEC)			
NA26-67-351	1	(COLD SPEC)			
76-619		PARTS SET			
M043-76-619A	1				
76-661		GEAR,SHAFT			
NA23-67-354	1				
76-662		WASHER			
B094-76-662	1				
76-663		WASHER,TOOTHED			
B094-76-663	1				

CAT. AUNA05-04

1997-07

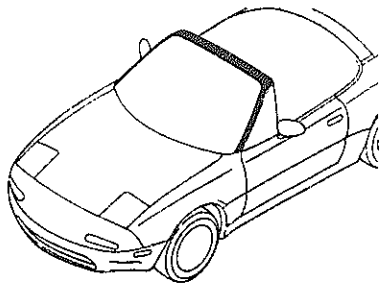

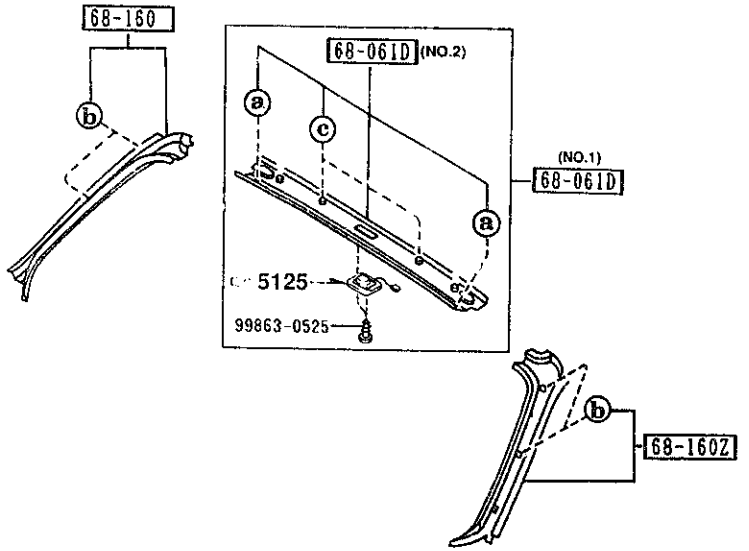

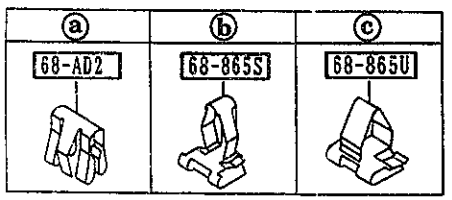

6820 -1 * FRONT HEADER TRIM & PILLAR TRIMS

PART NO.	QTY	MODEL/RESTRICTION	MODEL/RESTRICTION	MODEL/RESTRICTION	FROM-TO
68-AD2		CLIP			
B455-68-AD2	2				
68-061D		TRIM,FRONT HEADER			
NA01-68-090A	1	(ILLUST. NO.2)			-5301
00 INT-		NA3 NA4 NA5 NA6 NA7 BLACK			
NB38-68-09ZA	1	(ILLUST. NO.1) ('96 MODEL)			-6418
00 INT-		NA3 NA4 NA5 NA6 NA7 NA8 BLACK			
NA01-68-090B	1	(ILLUST. NO.2)			5301-5420
00 INT-		NA3 NA4 NA5 NA6 NA7 BLACK			
NA01-68-090C	1	(ILLUST. NO.2)			5420-6418
00 INT-		NA3 NA4 NA5 NA6 NA7 NA8 BLACK			
*NA01-68-090D	1	(ILLUST. NO.2)			6418-
* 00 INT-		NA3 NA4 NA5 NA6 NA7 NA8 BLACK			
68-160		TRIM(R),'A'PILLAR			
NA01-68-160	1				
00 INT-		NA3 NA4 NA5 NA6 NA7 NA8 BLACK			
68-160Z		TRIM(L),'A'PILLAR			
NA01-68-170	1				
00 INT-		NA3 NA4 NA5 NA6 NA7 NA8 BLACK			
68-865S		CLIP,TRIM			
GJ12-68-865	4				
68-865U		CLIP,TRIM			
GJ21-68-865	2				

5301 NA35* -616742
5420 NA35* -620023
6418 NA3** -718226

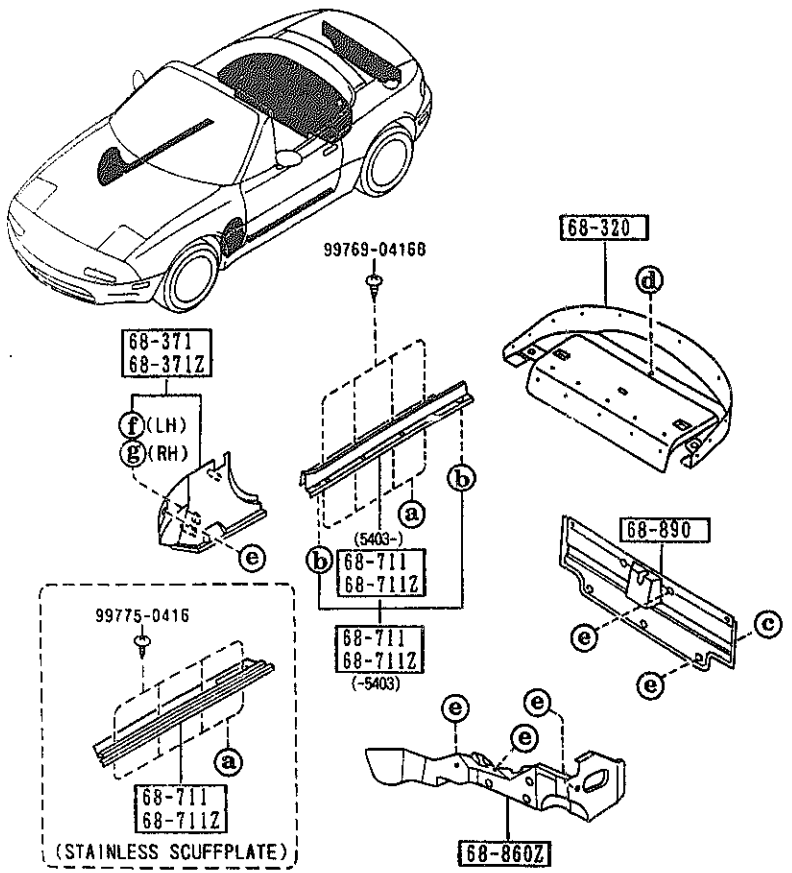

PART NO.	QTY	MODEL/RESTRICTION	MODEL/RESTRICTION	MODEL/RESTRICTION	FROM-TO
68-320		TRAY,REAR PACKAGE			
NA01-68-3F1C	1	(UNWOVEN CLOTH) ('95 MODEL)			
00	INT-	NA3 BLACK			
88	INT-	NA4 NA5 TAN			
NB13-68-3F1	1	M-25-ED, (CUT PAIL CARPET) ('95 MODEL)			
33	INT-	NA5 TAN			
NB38-68-3F1	1	('96 MODEL)			
02	INT-	NA3 NA7 BLACK			
88	INT-	NA4 NA5 TAN			
68-371		TRIM(R),FRONT SIDE			
NA75-68-370	1				
00	INT-	NA3 NA7 NA8 BLACK			
88	INT-	NA4 NA5 TAN			
68-371Z		TRIM(L),FRONT SIDE			
NA01-68-390	1				
00	INT-	NA3 NA7 NA8 BLACK			
88	INT-	NA4 NA5 TAN			
68-402B		GROMMET,SCREW			
FA54-68-719B	8				
68-711		PLATE(R),FRONT SCUFF			
NA01-68-710	1	(PLASTIC)			-5403
00	INT-	NA3 NA4 NA5 NA6 NA7 BLACK			
NA02-68-710 A (NA02-68-710A)	1	OPT, (STAINLESS)			-5901
NA01-68-711	1	(PLASTIC)			5403-
00	INT-	NA3 NA4 NA5 NA6 NA7 NA8 BLACK			
NA02-68-710A	1	OPT, (STAINLESS)			5901-
68-711Z		PLATE(L),FRONT SCUFF			
NA01-68-720	1	(PLASTIC)			-5403

5403 NA35* -619601
5901 NA3** -702989

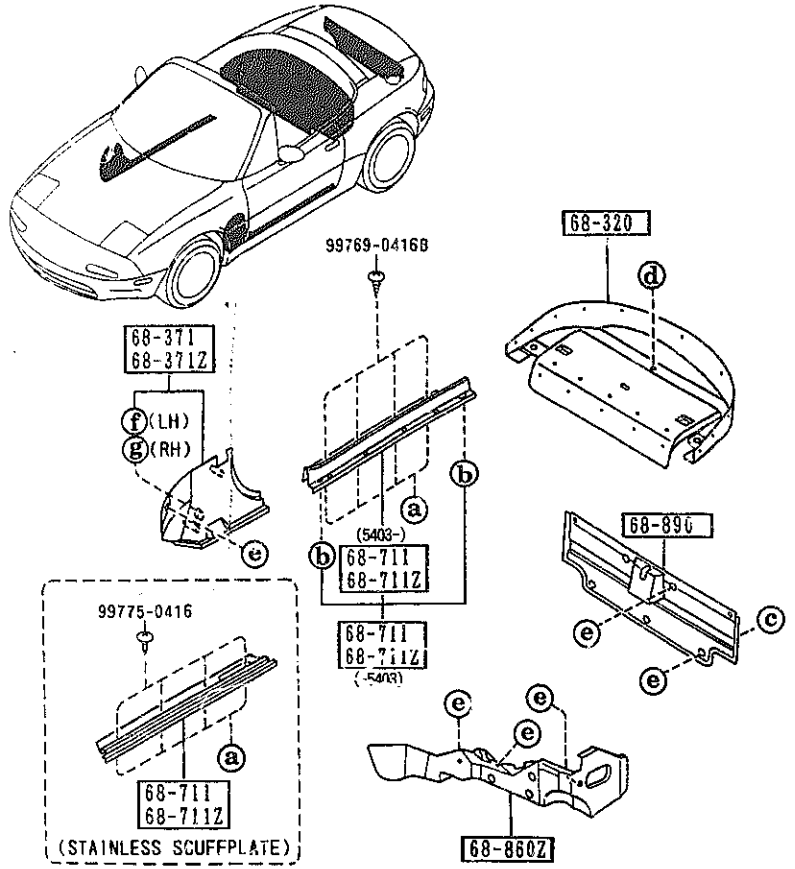

PART NO.	QTY	MODEL/RESTRICTION	MODEL/RESTRICTION	MODEL/RESTRICTION	FROM-TO
CONT'D					
00 INT-		NA3 NA4 NA5 NA6 NA7 BLACK			
NA02-68-720 A (NA02-68-720A)	1	OPT, (STAINLESS)			-5901
NA01-68-721	1	(PLASTIC)			5403-
00 INT-		NA3 NA4 NA5 NA6 NA7 NA8 BLACK			
NA02-68-720A AN(NA02-68-720B)	1	OPT, (STAINLESS)			5901-6101
*NA02-68-720B	1	OPT, (STAINLESS)			6101-
+---------+ | 68-712B | +---------+		CLIP			
B235-68-712	4				-4801
+---------+ | 68-86Y | +---------+		CAP,SEAL-TRUNK END TRIM			
KA01-68-86YA	3				
+---------+ | 68-860Z | +---------+		TRIM(L),TRUNK SIDE			
N026-68-871	1				-5106
00 INT-		NA3 NA4 NA5 BLACK			
N026-68-871A	1				5106-
04 INT-		NA3 NA4 NA5 NA6 NA7 NA8 BLACK			
+---------+ | 68-865 | +---------+		FASTENER			
G032-68-865A	18				
00 INT-		NA3 BLACK			
67 INT-		NA5 TAN			
+---------+ | 68-865Q | +---------+		FASTENER			
GJ21-68-885B	12				
00 INT-		NA3 NA4 NA5 NA6 NA7 NA8 BLACK			
88 INT-		NA4 NA5 TAN			
+---------+ | 68-865S | +---------+		CLIP,TRIM			
GJ12-68-865	1				
+---------+ | 68-865U | +---------+		CLIP,TRIM			
GJ21-68-865	1				

4B01 NA35* -606043
5106 NA35* -612103
5403 NA35* -619601
5901 NA3** -702989
6101 NA3** -708969

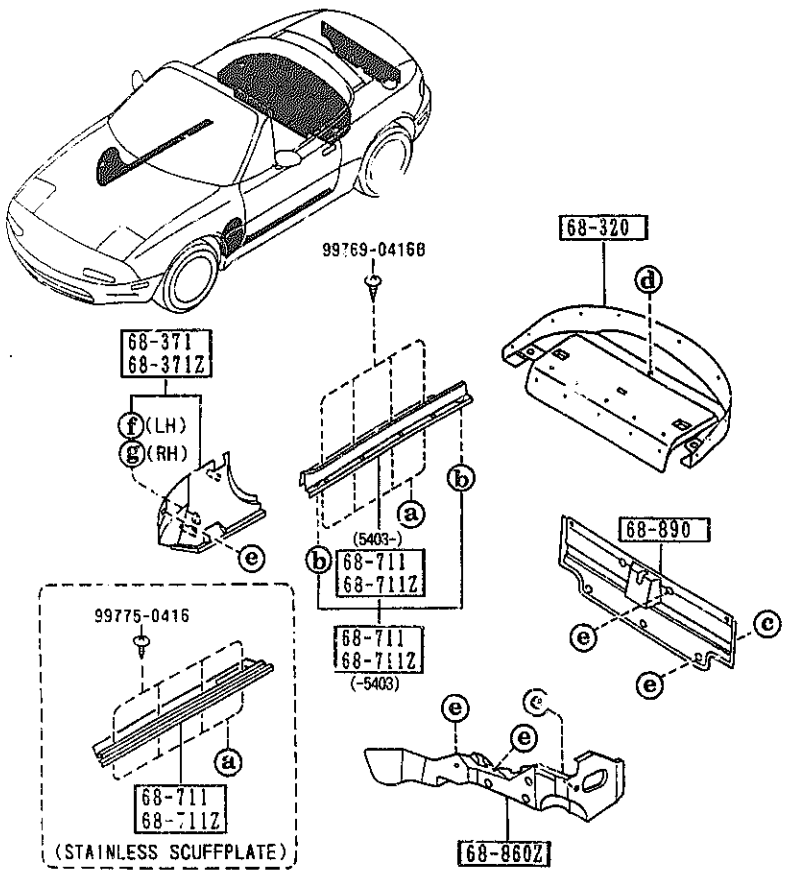

AUNA05

6840 -5 * TRIMS & SCUFF PLATES

PART NO.	QTY	MODEL/RESTRICTION	MODEL/RESTRICTION	MODEL/RESTRICTION	FROM-TO
68-890		TRIM,TRUNK END			
NA01-68-891	1				-5106
00	INT-	NA3 NA4 NA5 BLACK			
NA01-68-891A	1				5106-
04	INT-	NA3 NA4 NA5 NA6 NA7 NA8 BLACK			

5106 NA35* -612163

CAT. AUNA05-04 1997-07

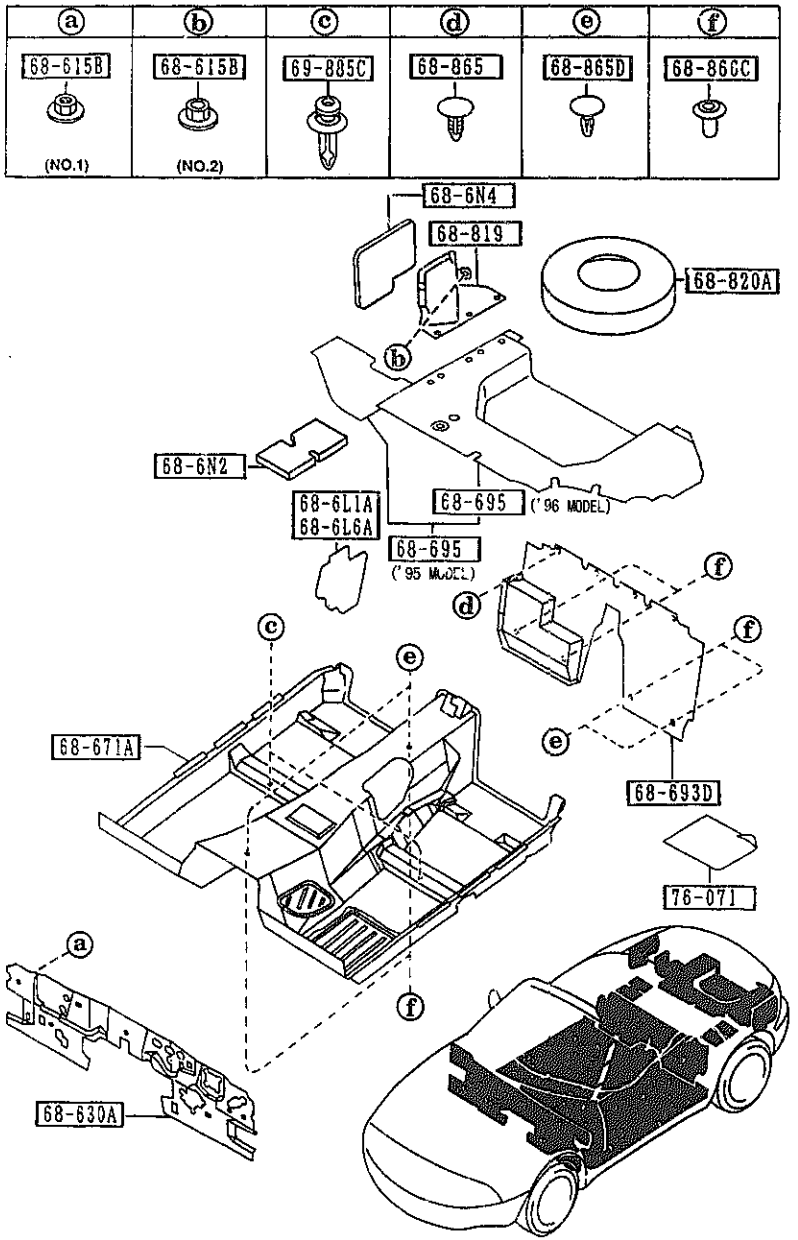

PART NO.	QTY	MODEL/RESTRICTION	MODEL/RESTRICTION	MODEL/RESTRICTION	FROM-TO
68-6L1A		COVER(R),HOLE			
NA01-68-6L1	1				
68-6L6A		COVER(L),HOLE			
NA01-68-6L6	1				
68-6N2		INSULATOR,RR FLOOR			
NA01-68-6N2	2				
68-6N4		PAD,RR FENDER			
NA01-68-6N4	1				
68-615B		NUT,FLANGE-CAP			
B100-68-615	5	(ILLUST. NO.1)			
NA01-68-615	1	(ILLUST. NO.2)			
68-631A		INSULATOR,DASHBOARD			
NA01-68-631D	1				
68-671A		MAT,FLOOR			
NA75-68-670	1	BASE, P.E.GR, PKG-A, PKG-B, R-PKG, (UNWOVEN CLOTH,USA MAKE) ('95 MODEL)			
00	INT-	NA3 BLACK			
NA76-68-670A	1	L-PKG, PKG-C, (UNWOVEN CLOTH,JAPAN MAKE) ('95 MODEL)			
88	INT-	NA4 NA5 TAN			
NB13-68-670	1	M-25-ED, (CUT PAIL CARPET) ('95 MODEL)			
33	INT-	NA5 TAN			
NB38-68-670	1	('96 MODEL)			-6601
02	INT-	NA3 BLACK			
88	INT-	NA4 NA5 TAN			
*NB38-68-670A	1	('96 MODEL)			6601-
* 02	INT-	NA3 BLACK			
* 88	INT-	NA4 NA5 TAN			

6601 NA3** -719621

6860 FLOOR MATS & PADS

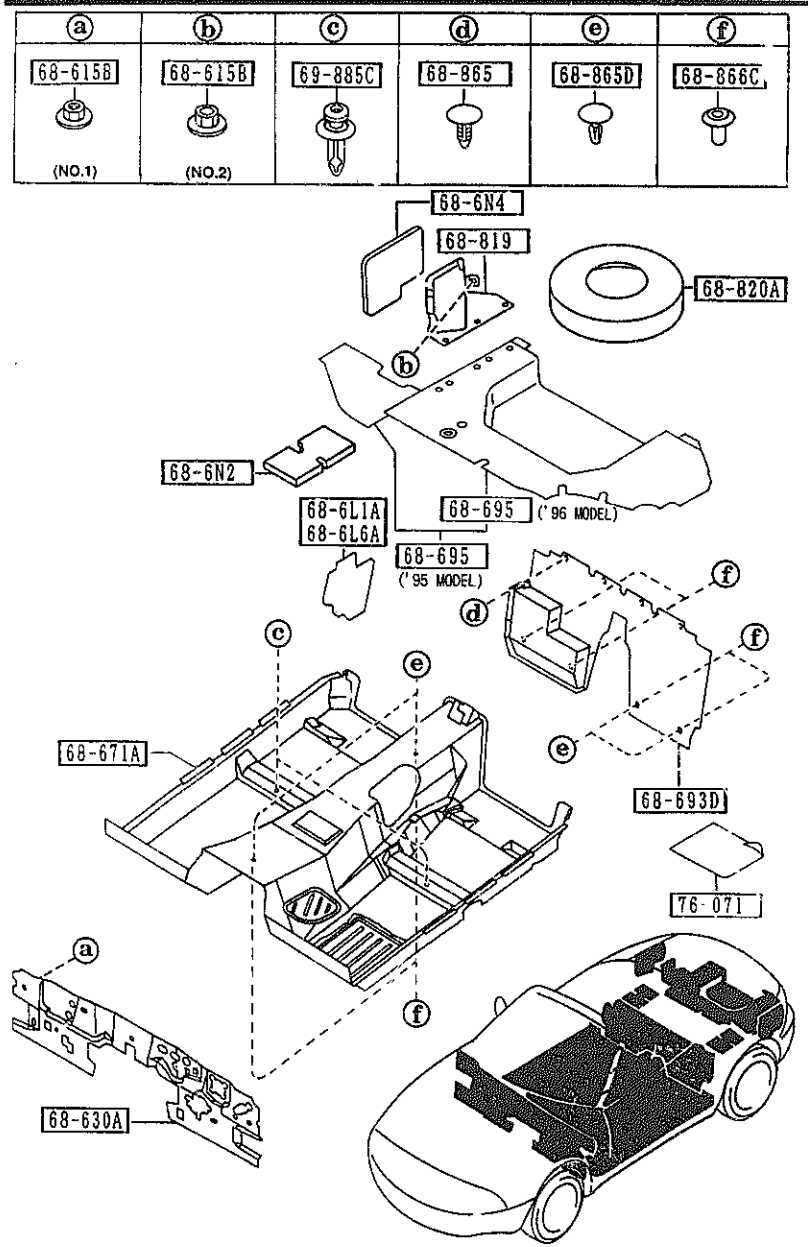

6860 -2 FLOOR MATS & PADS

PART NO.	QTY	MODEL/RESTRICTION	MODEL/RESTRICTION	MODEL/RESTRICTION	FROM-TO
68-693D		MAT,REAR END			
NA75-68-693	1	BASE, P.E.GR, PKG-A, PKG-B, R-PKG, (UNWOVEN CLOTH,USA MAKE) ('95 MODEL)			
00	INT-	NA3 BLACK			
NA76-68-693A	1	L-PKG, PKG-C, (UNWOVEN CLOTH,JAPAN MAKE) ('95 MODEL)			
88	INT-	NA4 NA5 TAN			
NB13-68-693	1	M-25-ED, (CUT PAIL CARPET) ('95 MODEL)			
33	INT-	NA5 TAN			
NB38-68-693	1	('96 MODEL)			
02	INT-	NA3 BLACK			
88	INT-	NA4 NA5 TAN			
68-695		MAT,TRUNK ROOM			
NA01-68-811A	1	('96 MODEL)			
04	INT-	NA3 NA4 NA5 NA6 NA7 NA8 BLACK			
N026-68-811A	1	('95 MODEL)			-5106
00	INT-	NA3 NA4 NA5 BLACK			
N026-68-811B	1	('95 MODEL)			5106-
04	INT-	NA3 NA4 NA5 NA6 NA7 BLACK			
68-819		COVER,BATTERY			
NA01-68-819B	1				-5106
00	INT-	NA3 NA4 NA5 BLACK			
NA01-68-819C	1				5106-
04	INT-	NA3 NA4 NA5 NA6 NA7 NA8 BLACK			
68-820A		COVER,SPARE TIRE			
NA01-68-8P9A	1				
68-865		FASTENER			
G032-68-865A	4				

5106 NA35* -612163

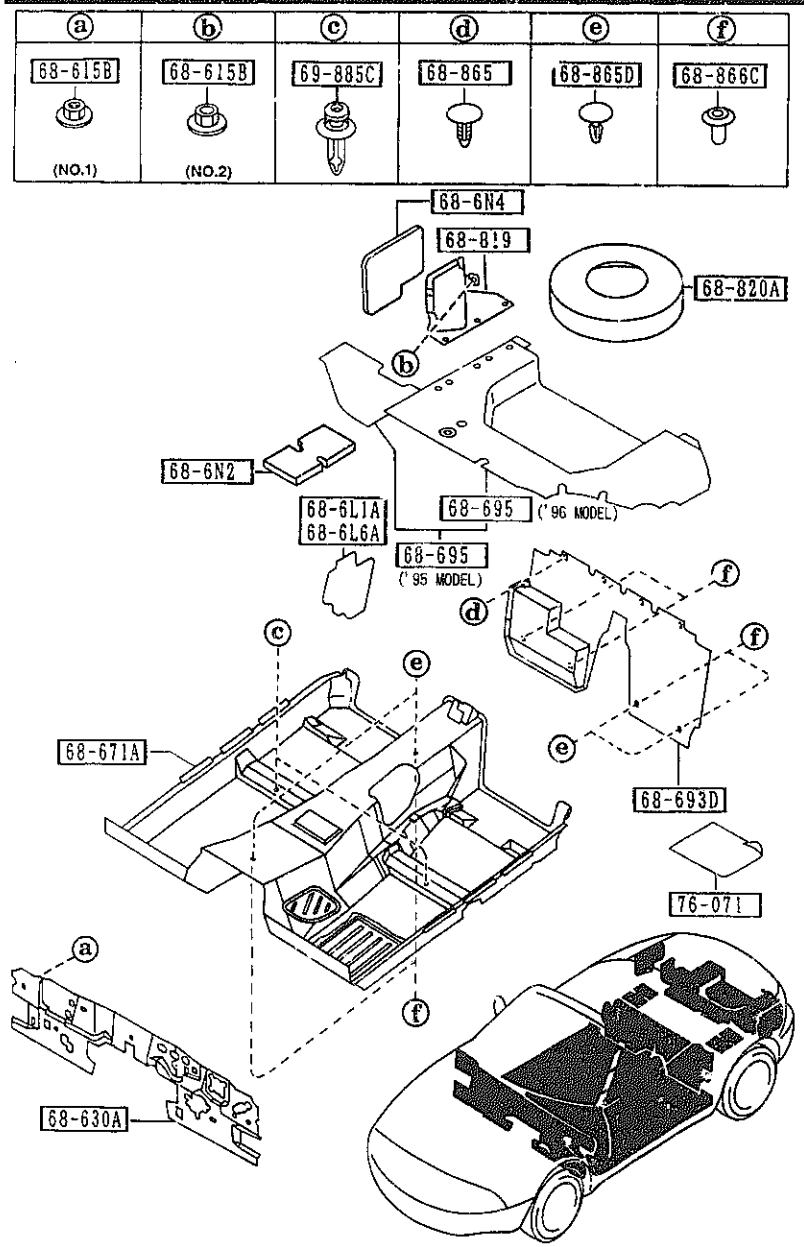

AUNA05

PART NO.	QTY	MODEL/RESTRICTION	MODEL/RESTRICTION	MODEL/RESTRICTION	FROM-TO
CONT'D					
00	INT-	NA3 BLACK			
67	INT-	NA5 TAN			
+----------+					
| 68-865D |		FASTENER			
+----------+					
S083-68-865A	4				
00	INT-	NA3 NA7 NA8 BLACK			
88	INT-	NA4 NA5 TAN			
+----------+					
| 68-866C |		FASTENER,SEAL			
+----------+					
B235-68-865A	4	L-PKG, PKG-C, (UNWOVEN CLOTH,JAPAN MAKE) ('95 MODEL)			
B235-68-865A	6	M-25-ED, BASE, P.E.G R, PKG-A, PKG-B, R-PKG, (CUT PAIL CARPET) (UNWOVEN CLOTH,USA MAKE) ('95 MODEL)			
B235-68-865A	4	('96 MODEL)			
+----------+					
| 69-885C |		FASTENER			
+----------+					
UB54-68-885	2				
00	INT-	NA3 NA4 NA5 NA6 NA7 NA8 BLACK			
+----------+					
| 76-071 |		SILENCER,FLOOR			
+----------+					
0208-76-071	1	30CMX30CM			

CAT. AUNA05-04

1997-07

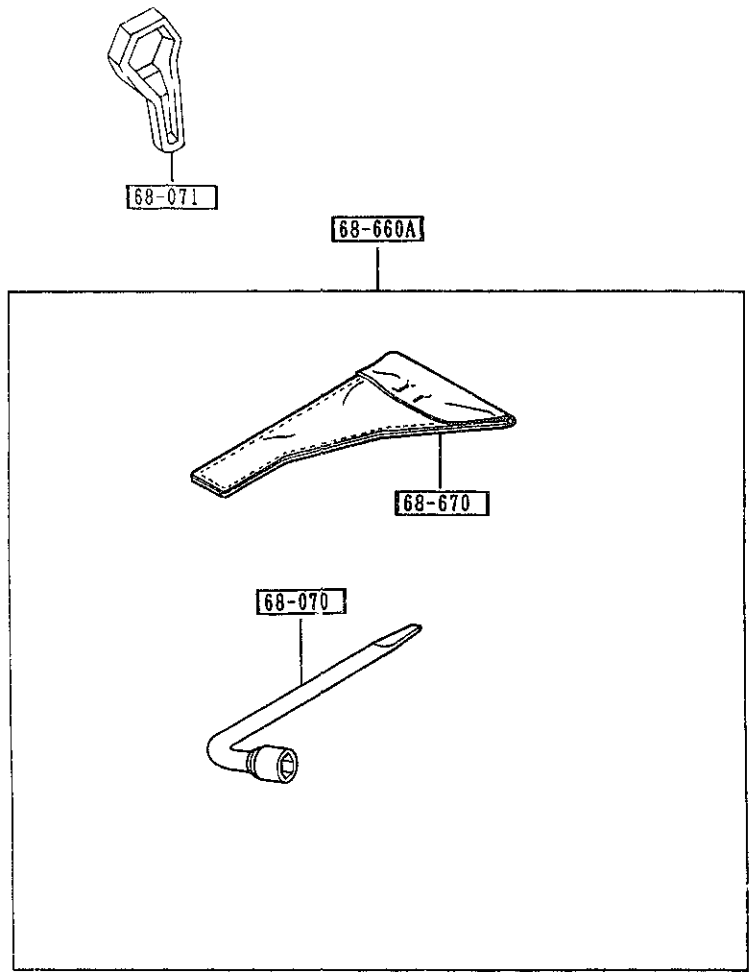

6870 -1 * SERVICE TOOLS

PART NO.	QTY	MODEL/RESTRICTION	MODEL/RESTRICTION	MODEL/RESTRICTION	FROM-TO
68-070		WRENCH,HUB NUT			
NA01-68-070	1				
68-071		WRENCH,WHEEL CAP			
F057-68-071	1				
68-660A		TOOL SET			
NA01-69-650	1				
68-670		BAG,TOOL			
NA01-69-670	1				

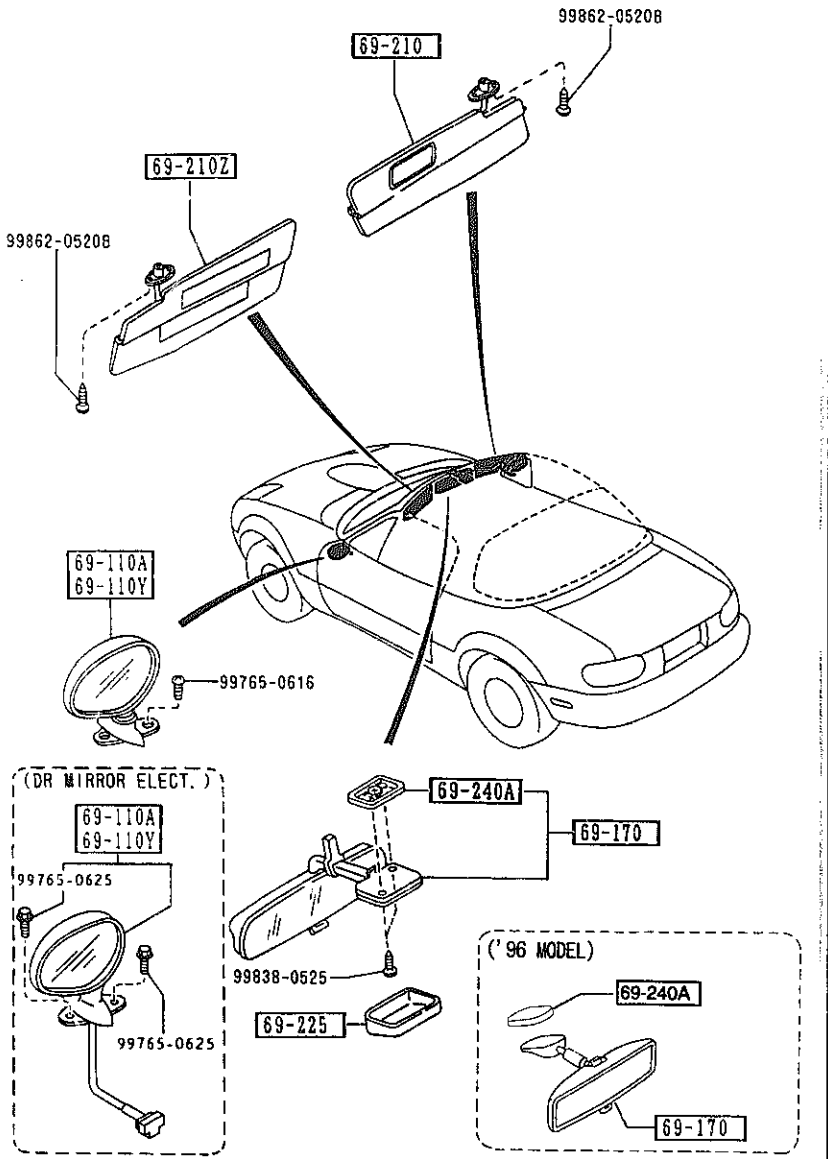

PART NO.	QTY	MODEL/RESTRICTION	MODEL/RESTRICTION	MODEL/RESTRICTION	FROM-TO
69-110A		MIRROR(R),DOOR			
NA52-69-120C	1	M-25-ED, P.E.GR, L-PKG, PKG-A, PKG-B, PKG-C, (ELECT.)			
* A5	EXT-	A5 SATELLITE BLUE MC			
HU	EXT-	HU NEO GREEN			
M8	EXT-	M8 MONTEGO BLUE M			
PT	EXT-	PT CHAST WHITE			
PZ	EXT-	PZ BRILLIANT BLACK			
SU	EXT-	SU CLASSIC RED			
18	EXT-	A1Q ARTVIN RED MC			
6W	EXT-	6W LAGUNA BLUE M.			
NA05-69-120B	1	BASE, R-PKG, (MANUAL)			-5201
HU	EXT-	HU NEO GREEN			
PT	EXT-	PT CHAST WHITE			
PZ	EXT-	PZ BRILLIANT BLACK			
SU	EXT-	SU CLASSIC RED			
6W	EXT-	6W LAGUNA BLUE M.			
NA05-69-120C	1	BASE, R-PKG, (MANUAL)			5201-
* A5	EXT-	A5 SATELLITE BLUE MC			
HU	EXT-	HU NEO GREEN			
M8	EXT-	M8 MONTEGO BLUE M			
PT	EXT-	PT CHAST WHITE			
PZ	EXT-	PZ BRILLIANT BLACK			
SU	EXT-	SU CLASSIC RED			
18	EXT-	A1Q ARTVIN RED MC			
6W	EXT-	6W LAGUNA BLUE M.			
69-110Y		MIRROR(L),DOOR			
NA52-69-180C	1	M-25-ED, P.E.GR, L-PKG, PKG-A, PKG-B, PKG-C, (ELECT.)			
* A5	EXT-	A5 SATELLITE BLUE MC			
HU	EXT-	HU NEO GREEN			
M8	EXT-	M8 MONTEGO BLUE M			

5201 NA35* -614193

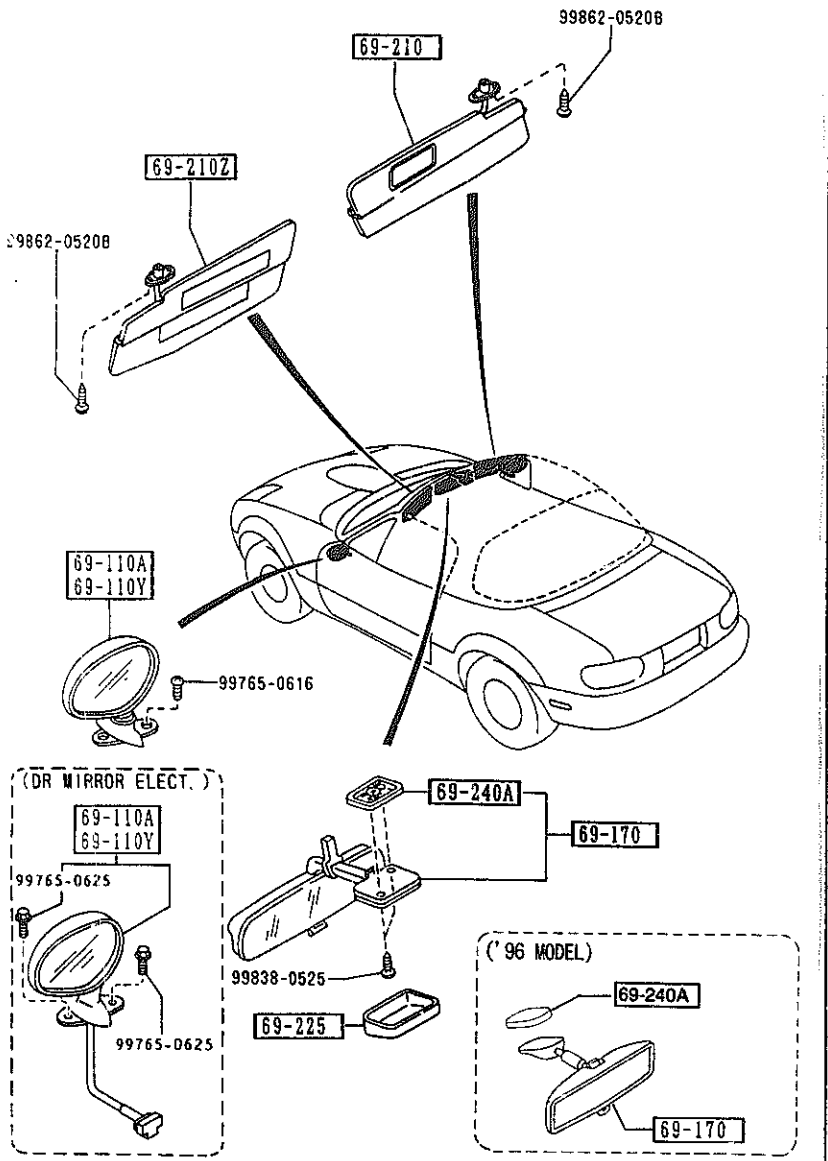

PART NO.	QTY	MODEL/RESTRICTION	MODEL/RESTRICTION	MODEL/RESTRICTION	FROM-TO
CONT'D					
PT EXT-		PT CHAST WHITE			
PZ EXT-		PZ BRILLIANT BLACK			
SU EXT-		SU CLASSIC RED			
18 EXT-		A1Q ARTVIN RED MC			
6W EXT-		6W LAGUNA BLUE M.			
NA05-69-180B	1	BASE, R-PKG, (MANUAL)			-5201
HU EXT-		HU NEO GREEN			
PT EXT-		PT CHAST WHITE			
PZ EXT-		PZ BRILLIANT BLACK			
SU EXT-		SU CLASSIC RED			
6W EXT-		6W LAGUNA BLUE M.			
NA05-69-180C	1	BASE, R-PKG, (MANUAL)			5201-
* A5 EXT-		A5 SATELLITE BLUE MC			
HU EXT-		HU NEO GREEN			
M8 EXT-		M8 MONTEGO BLUE M			
PT EXT-		PT CHAST WHITE			
PZ EXT-		PZ BRILLIANT BLACK			
SU EXT-		SU CLASSIC RED			
18 EXT-		A1Q ARTVIN RED MC			
6W EXT-		6W LAGUNA BLUE M.			
+---------+					
| 69-170 |		MIRROR,INTERIOR			
+---------+					
HG82-69-220A	1	('96 MODEL)			
NA01-69-220A	1	('95 MODEL)			
+---------+					
| 69-210 |		SUN VISOR(R)			
+---------+					
NB12-69-270A	1	(W/AIR BAG-DRIV.&PAS S.SIDE)			
02 INT-		NA3 NA4 NA5 NA7 NAB BLACK			
+---------+					
| 69-210Z |		SUN VISOR(L)			
+---------+					
NB11-69-320A	1	('95 MODEL)			
02 INT-		NA3 NA4 NA5 NA7 BLACK			
NB11-69-320B	1	('96 MODEL)			

5201 NA35* -614193

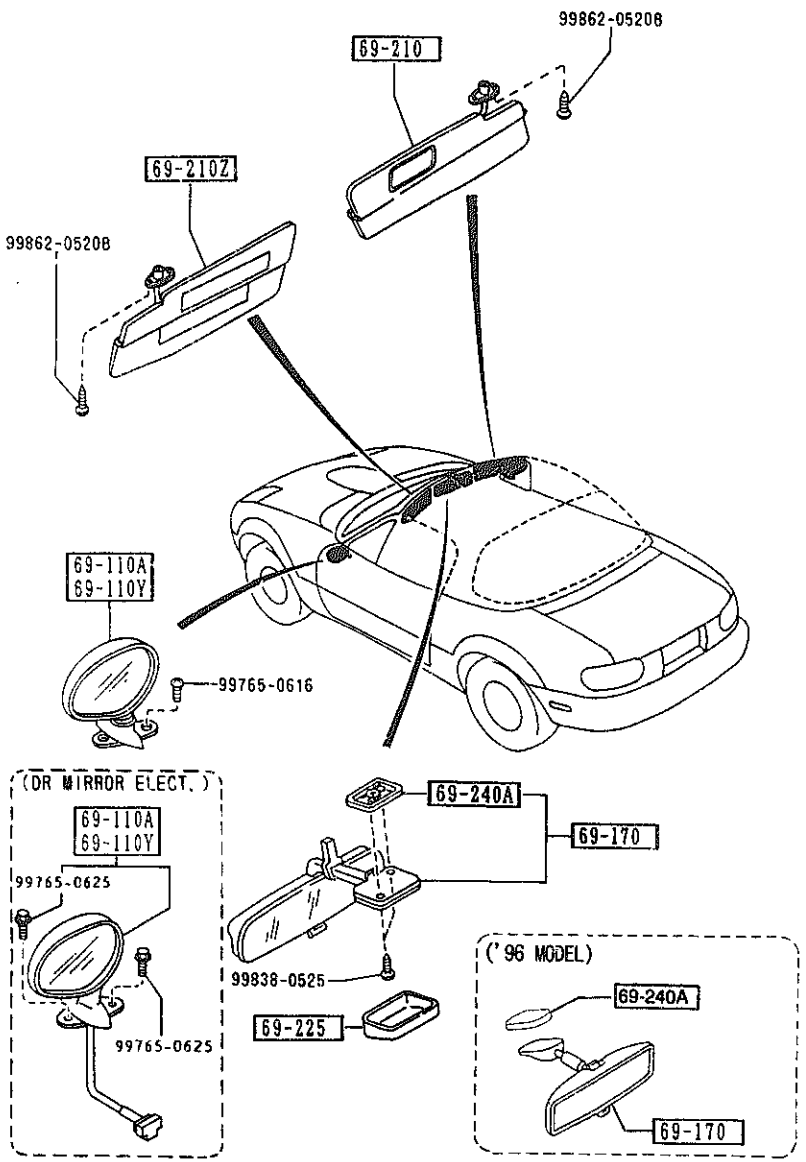

PART NO.	QTY	MODEL/RESTRICTION	MODEL/RESTRICTION	MODEL/RESTRICTION	FROM-TO
CONT'D					
02 INT-		NA3 NA4 NA5 NA7 NA8 BLACK			
+----------+					
| 69-225 |		COVER,INTERIOR MIRRO R			
+----------+					
GJ21-69-225	1	('95 MODEL)			
00 INT-		NA3 NA4 NA5 NA6 NA7 BLACK			
+----------+					
| 69-240A |		BASE,INTERIOR MIRROR			
+----------+					
BC1C-69-240	1	('96 MODEL)			
NA01-69-240	1	('95 MODEL)			

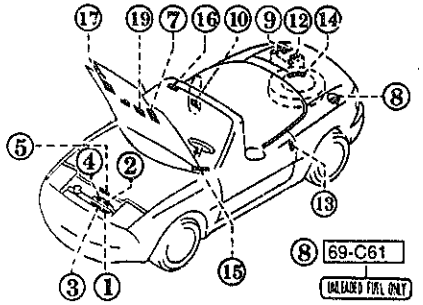

51-791B (PUT IN THE GLOVE BOX)



66-201B (PUT IN THE REAR CONSOLE BOX)



69-A13

8 69-C61

15 69-021A



(NO.1)
1 15-031



(NO.1)
9 69-064

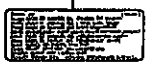

16 69-037



(NO.2)
2 15-031



10 69-D51



17 69-041

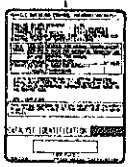

19 69-044A

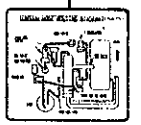

3 15-201

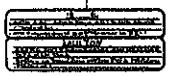

4 15-201A

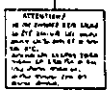

(NO.2)
12 69-064

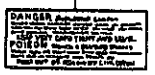

5 51-408A

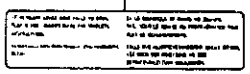

13 69-014

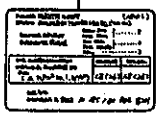

7 61-829



14 69-014A



PART NO.	QTY	MODEL/RESTRICTION	MODEL/RESTRICTION	MODEL/RESTRICTION	FROM-TO
15-031		LABEL,CAUTION			
B660-15-031	1	ENGLISH (ILLUST. NO.1)			
E508-15-031	1	FRENCH (ILLUST. NO.2)			
15-201		PLATE,CAUTION			
0488-15-201	1				
15-201A		LABEL,CAUTION-RADIATOR			
8791-15-201	1				
51-408A		LABEL,CAUTION-RETRACTABLE			
NA04-51-S02	1				
51-7918		LABEL,BILSTEIN			
N021-51-790	1	(BILSTEIN DAMP.)			
61-829		LABEL,CAUTION			
FD16-61-439B	1	(A)			
66-201B		LABEL,ANTI THEFT-AUDIO			
NA01-66-201	1				
69-A13		RIVET,BAND-MODEL PLATE			
GJ21-69-A13	2				
69-C61		LABEL,UNLEADED FUEL			
UB40-69-C61	1				
69-D51		LABEL,VEHICLE INFORMATION			
B001-69-D51	1	VIN NO. IS REQIRED			
69-014		LABEL,TIRE			
NA01-69-014A (NA01-69-014A)	1				-4A01
NA01-69-014A	1				4A01-
69-014A		LABEL,TEMPORARY TIRE			
BF68-69-073	1	ENGLISH			

4A01 NA35* -603621

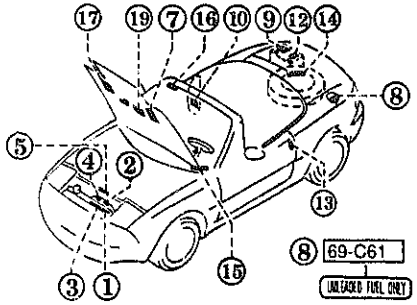

51-791B (PUT IN THE GLOVE BOX)

66-201B (PUT IN THE REAR CONSOLE BOX)

69-A13

8 69-C61

15 69-021A

(NO.1)
1 15-031

(NO.1)
9 69-064

16 69-037

(NO.2)
2 15-031

10 69-D51

17 69-041

19 69-044A

3 15-201

4 15-201A

(NO.2)
12 69-064

5 51-408A

13 69-014

7 61-829

14 69-014A

AUNA05

PART NO.	QTY	MODEL/RESTRICTION	MODEL/RESTRICTION	MODEL/RESTRICTION	FROM-TO
CONT'D					
BF69-69-073B	1	FRENCH			
+---------+					
| 69-021A |		PLATE,CAUTION			
+---------+					
NA01-69-068A	1				
+---------+					
| 69-037 |		LABEL,FUEL ECONOMY			
+---------+					
NB38-69-042	1	(W/FUEL CONSUMPTION LABEL) ('96 MODEL)			
+---------+					
| 69-041 |		LABEL,EMISSION			
+---------+					
NB11-69-036	1	ENGLISH ('95 MODEL)			
NB38-69-036	1	('96 MODEL)			
+---------+					
| 69-044A |		LABEL,VAC.DIAPHRAGM			
+---------+					
NA75-69-044	1	('95 MODEL)			
NB38-69-044	1	('96 MODEL)			
+---------+					
| 69-064 |		LABEL,BATTERY			
+---------+					
FA03-69-C72A	1	(ILLUST. NO.1)			
FA01-69-064A	1	(ILLUST. NO.2)			

CAT. AUNA05-04

1997-07

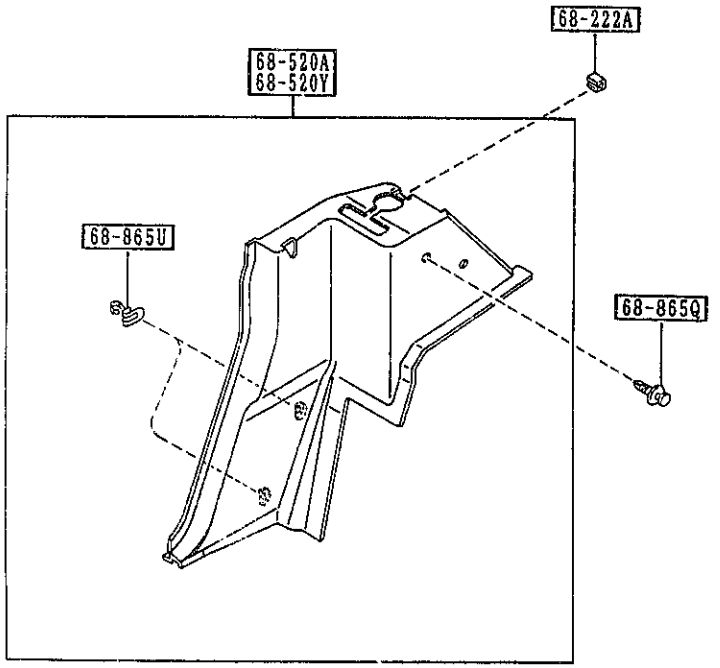

7250 -1 QUARTER WINDOW & TRIMS

PART NO.	QTY	MODEL/RESTRICTION	MODEL/RESTRICTION	MODEL/RESTRICTION	FROM-TO
+---------+					
| 68-222A |		COVER,HOLE			
+---------+					
NA01-68-222A	2				
00 INT-		NA3 NA6 NA7 NA8 BLACK			
88 INT-		NA4 NA5 TAN			
+---------+					
| 68-520A |		TRIM(R),QUARTER			
+---------+					
NA75-68-520	1	(W/O DETACHABLE HARD TOP)			
00 INT-		NA3 NA6 NA7 NA8 BLACK			
88 INT-		NA4 NA5 TAN			
NA76-68-520	1	OPT, (W/DETACHABLE HARD TOP)			
00 INT-		NA3 NA6 NA7 NA8 BLACK			
88 INT-		NA4 NA5 TAN			
+---------+					
| 68-520Y |		TRIM(L),QUARTER			
+---------+					
NA75-68-550	1	(W/O DETACHABLE HARD TOP)			
00 INT-		NA3 NA6 NA7 NA8 BLACK			
88 INT-		NA4 NA5 TAN			
NA76-68-550	1	OPT, (W/DETACHABLE HARD TOP)			
00 INT-		NA3 NA6 NA7 NA8 BLACK			
88 INT-		NA4 NA5 TAN			
+---------+					
| 68-865Q |		FASTENER			
+---------+					
GJ21-68-885B	2				-4B01
00 INT-		NA3 NA4 NA6 NA7 NA5 NA8 BLACK			
88 INT-		NA4 NA5 TAN			
B499-68-AC3	2				4B01-
00 INT-		NA3 BLACK			
69 INT-		NA5 TAN			
+---------+					
| 68-865U |		CLIP,TRIM			
+---------+					

4B01 NA35* -606043

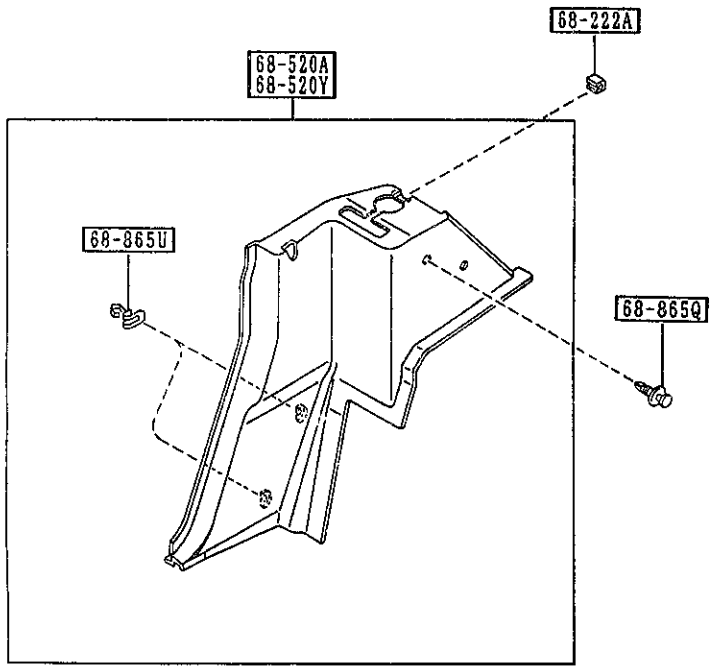

7250 -2 * QUARTER WINDOW & TRIMS

PART NO.	QTY	MODEL/RESTRICTION	MODEL/RESTRICTION	MODEL/RESTRICTION	FROM-TO
CONT'D					
GJ21-68-865	4				