Parts Catalog

Mazda MX-5 MIATA U.S.A. ('97)

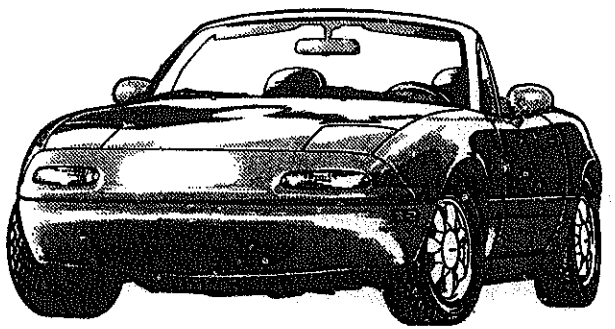

NA35s-700001~800000

Jul.'98 (FINAL)

Catalog No. AU-NA06-03

mazda

© 1998 Mazda Motor Corporation

LAYOUT OF CONTENTS / DISPOSITION TYPOGRAPHIQUE DE CONTENU / DISPOSICION DEL CONTENIDO / ANORDNUNG DES INHALTS

- The following is a typical example of the layout of contents on Mazda microfiche parts catalog.
- Voici un exemple typique de la disposition typographique de contenu dans les microfiches de catalogue des pièces de Mazda.
- El siguiente es un ejemplo típico de la disposición del contenido en una microficha del catálogo de repuestos de Mazda.
- Folgendes ist ein typisches Beispiel der Inhaltsanordnung des Mazda-Mikrofiche-Teilekatalogs.

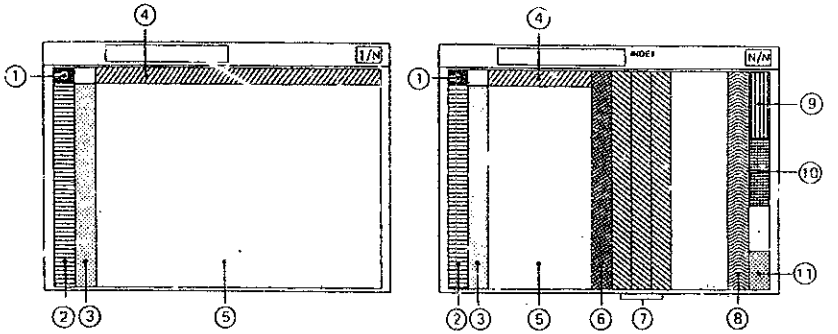

Remark : The items listed under ④ have been deleted from each fiche since Dec. '93

① • Layout of contents
• Disposition Typographique de Contenu
• Disposición del contenido
• Anordnung des Inhalts

② • Pictorial Index
• Index par Schémas
• Indice Gráfico
• Illustrierter Index

③ • Master Section No. Index
• Index des Numéros des Sections Totale
• Indice del Número de la Sección Maéstra
• Hauptabschnittssnummer-Index

~~④ • Section No. Index for the Column~~
~~• Index des Numéros des Sections pour les Colonnes~~
~~• N° de la Sección para el Indice~~
~~• Abschnittssnummer-Index für die Spalte~~

⑤ • Illustration & Text
• Illustrations et Textes
• Ilustración y Texto
• Abbildung und Text

⑥ • Part No. Index
• Index des Numéros des Pièces
• Indice del N° de Pieza
• Teile-Nr.-Index

⑦ • Alphabetical Index
• Index Alphabétique
• Indice Alfabético
• Alphabetischer Index

⑧ • Model Identification
• Identification des Modèles
• Identificación del Modelo
• Modell-Kennzeichnung

⑨ • Vehicle Identification System
• Système d'Identification de Véhicule
• Sistema de Identification de Vehículo
• Fahrzeug-Identifikations-system

PICTORIAL INDEX

GASOLINE ENGINE 4 - CYLINDER (1/2)

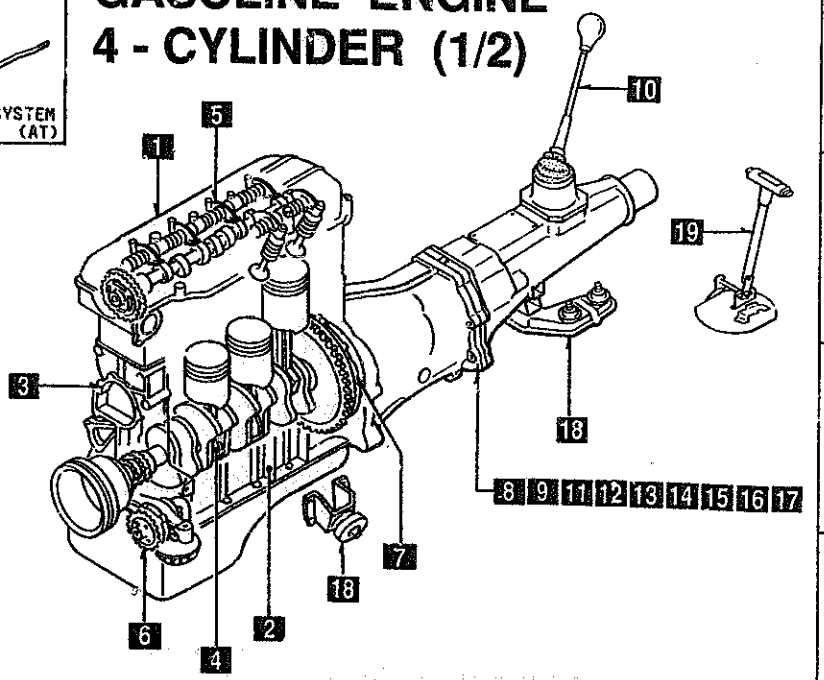

As the illustration is prepared to be applicable to all models, some parts are different in specifications from parts listed in this parts Catalog.

1000

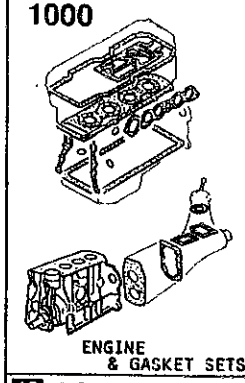

ENGINE & GASKET SETS

1 1010

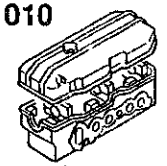

CYLINDER HEAD & COVER

2 1030

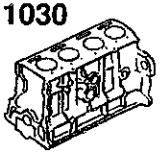

CYLINDER BLOCK

3 1040

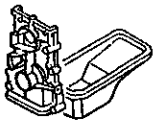

OIL PAN & TIMING COVER

4 1100

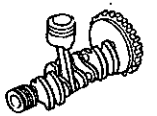

PISTON, CRANKSHAFT & FLYWHEEL

5 1200

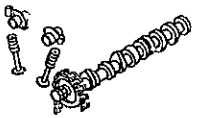

VALVE SYSTEM

19 4600

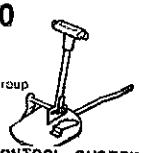

Given in Chassis Group

CHANGE CONTROL SYSTEM (AT)

6 1400

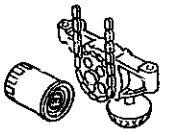

OIL PUMP & FILTER

18 3900

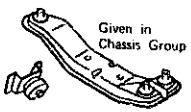

Given in Chassis Group

ENGINE & T/MISSION MOUNTINGS

7 1600

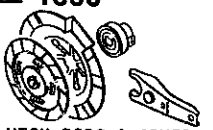

CLUTCH DISC & COVER (MANUAL)

17 1960



GASKET & SEAL KIT (AUTOMATIC)

8 1700

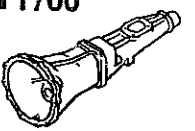

TRANSMISSION CASE (MANUAL)

16 1950

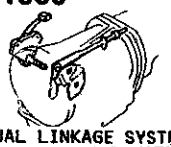

MANUAL LINKAGE SYSTEM (AUTOMATIC)

9 1710

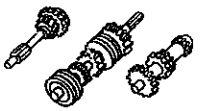

TRANSMISSION GEARS (MANUAL)

15 1940

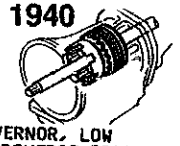

GOVERNOR, LOW & REVERSE PISTON (AUTOMATIC)

14 1930

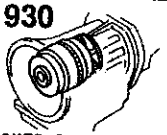

CLUTCHES & PLANETARY GEARS (AUTOMATIC)

13 1925



CONTROL VALVE (AUTOMATIC)

12 1920

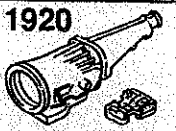

TRANSMISSION CASE & MAIN CONTROL SYSTEM (AUTOMATIC)

11 1910

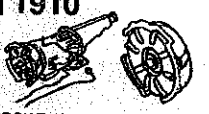

TORQUE CONVERTER, OIL PUMP & PIPINGS (AUTOMATIC)

10 1720

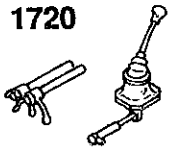

CHANGE CONTROL SYSTEM (MANUAL)

PICTORIAL INDEX

GASOLINE ENGINE
4 - CYLINDER (2/2)

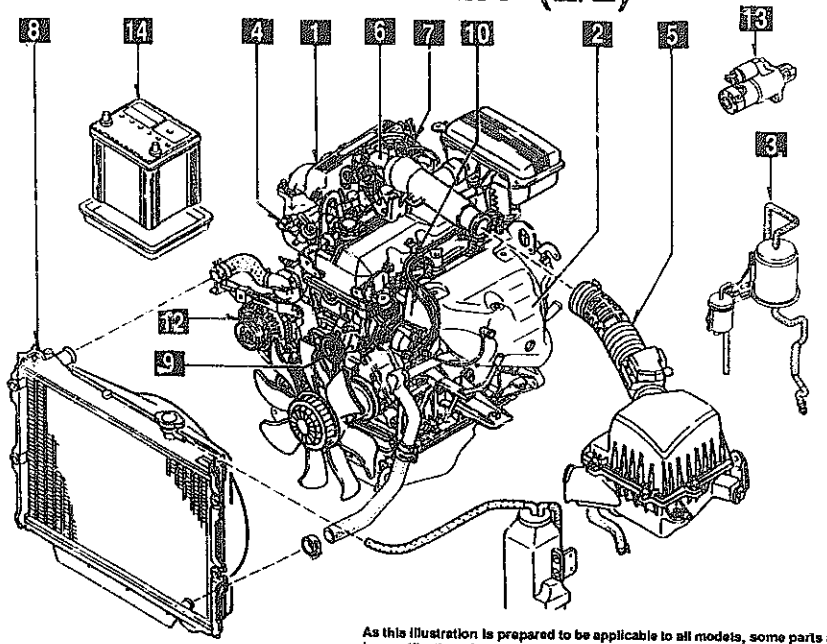

As this illustration is prepared to be applicable to all models, some parts are different in specifications from parts listed in this parts Catalog.

1 1300 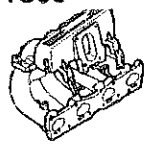 INLET MANIFOLD	2 1310 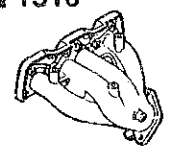 EXHAUST MANIFOLD	3 1320 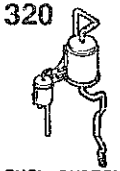 FUEL SYSTEM	4 1325 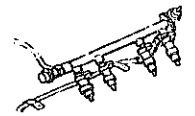 FUEL DISTRIBUTOR	5 1330 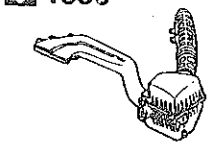 AIR CLEANER	6 1364 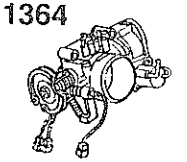 THROTTLE BODY
					7 1370 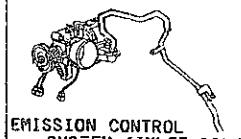 EMISSION CONTROL SYSTEM (INLET SIDE)
					8 1500 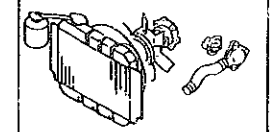 COOLING SYSTEM
					9 1580 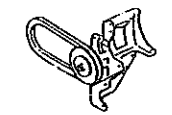 BRACKET, PULLEY & BELT
					10 1800 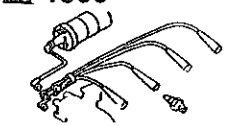 ENGINE ELECTRICAL SYSTEM
		14 1850 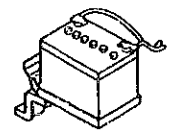 BATTERY	13 1840 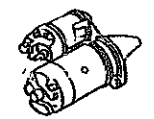 STARTER	12 1830  ALTERNATOR	11

PICTORIAL INDEX

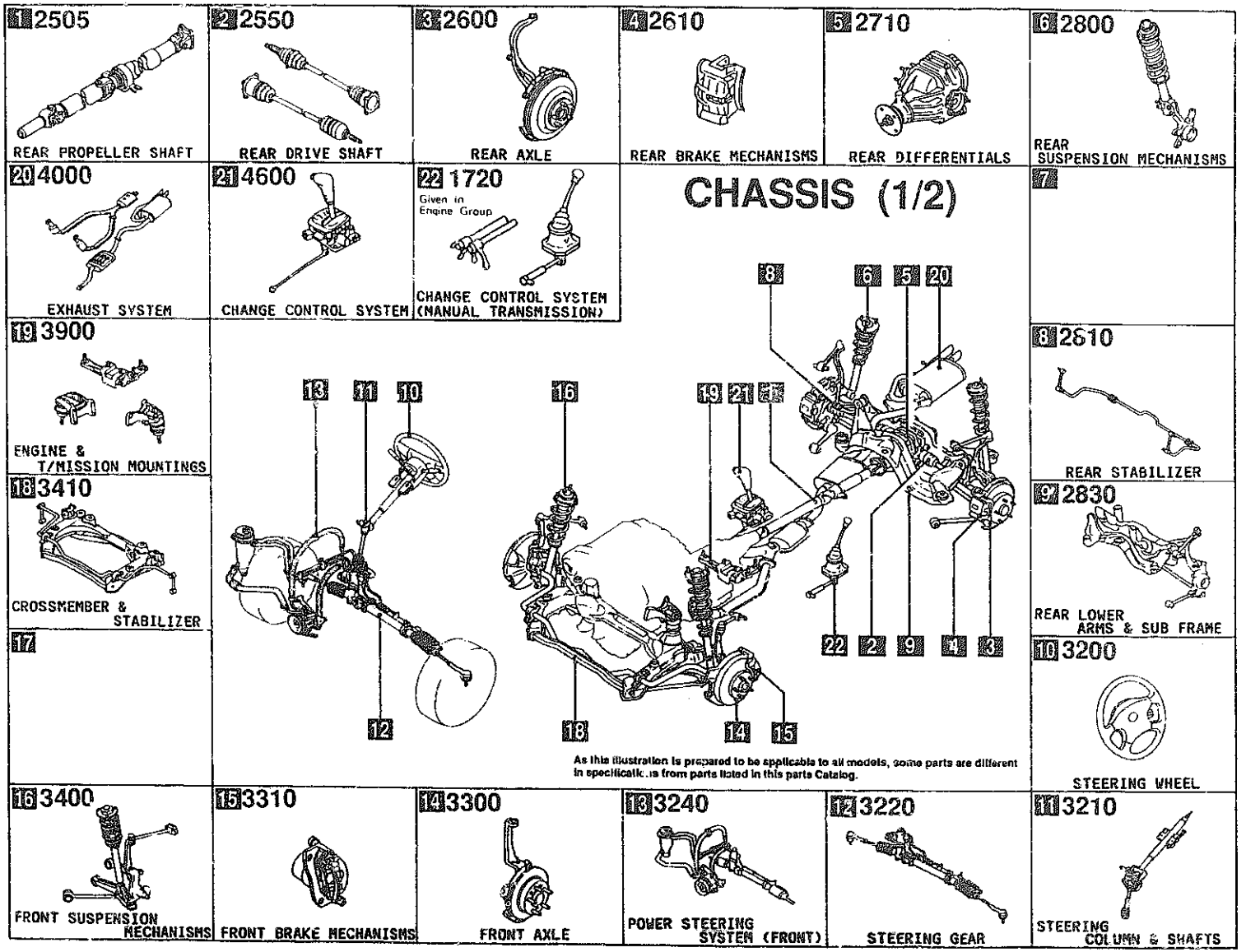

PICTORIAL INDEX

CHASSIS (2/2)

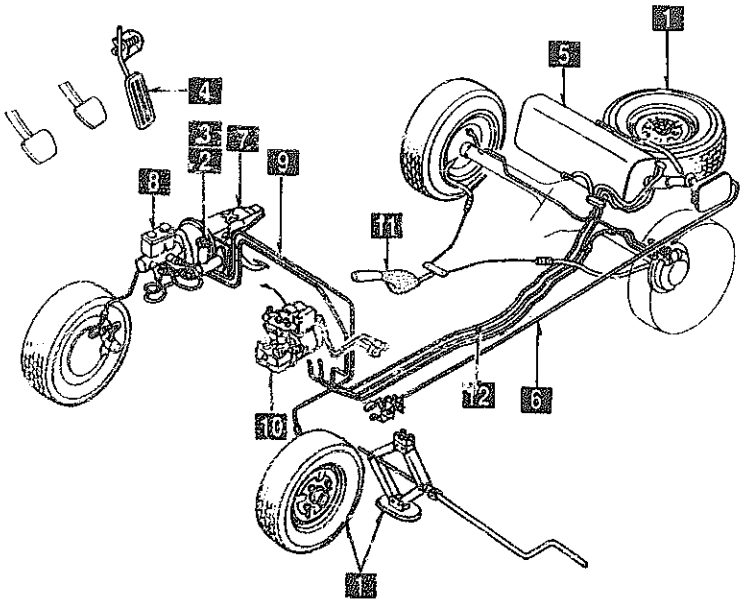

As this illustration is prepared to be applicable to all models, some parts are different in specification from parts listed in this parts Catalog.

1 3700 — TIRES & JACK

2 4140 — CLUTCH RELEASE & MASTER CYLINDERS

3 4145 — CLUTCH PIPINGS

4 4160 — ACCELERATOR CONTROL SYSTEM

5 4200 — FUEL TANK

6 4210 — FUEL LID OPENER

7 4300 — CLUTCH & BRAKE PEDALS

8 4340 — BRAKE MASTER CYLINDER & POWER BRAKE

9 4360 — BRAKE PIPINGS

10 4370 — ANTILOCK BRAKE SYSTEM

11 4400 — PARKING BRAKE SYSTEM

12 4500 — FUEL PIPINGS

PICTORIAL INDEX

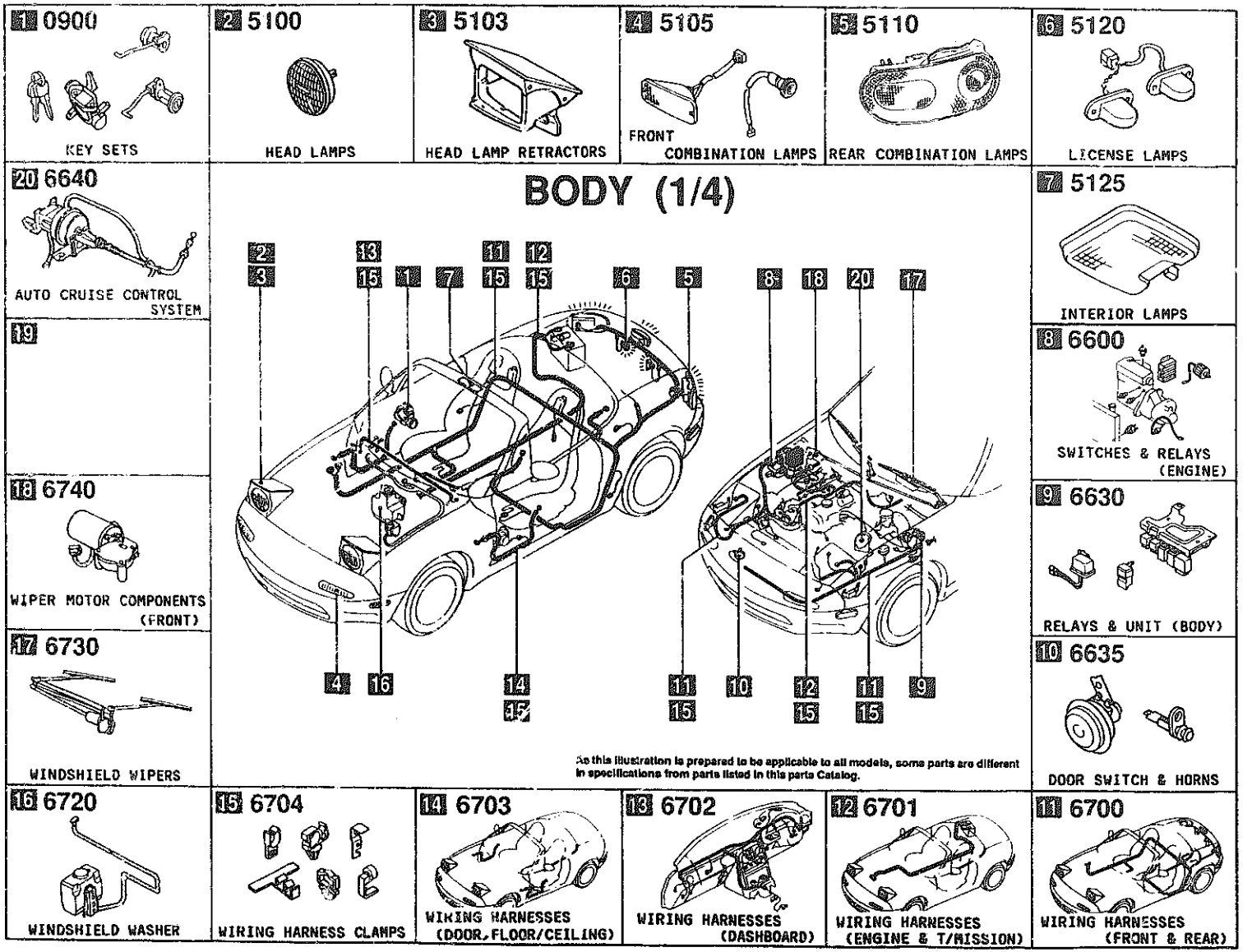

PICTORIAL INDEX

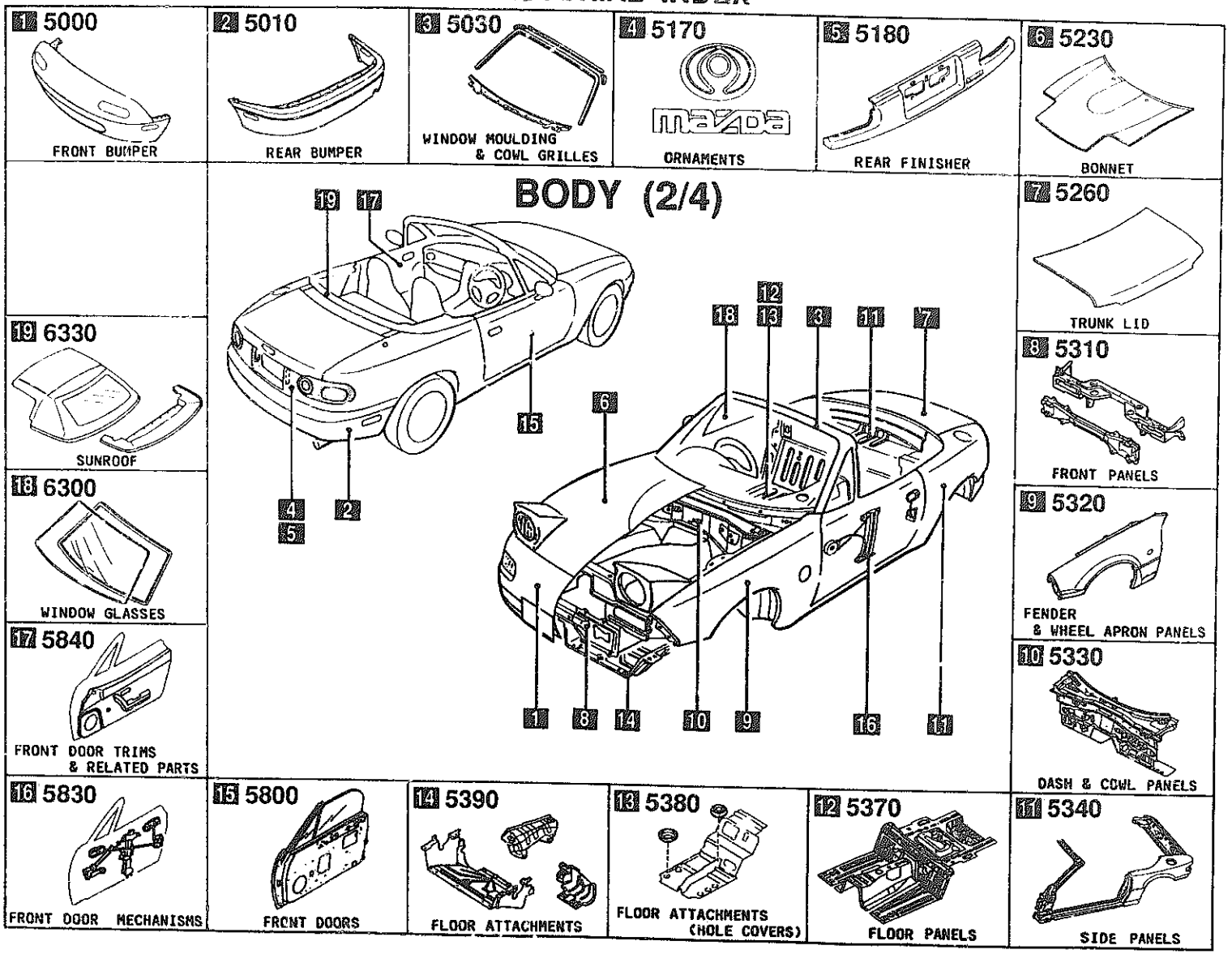

PICTORIAL INDEX

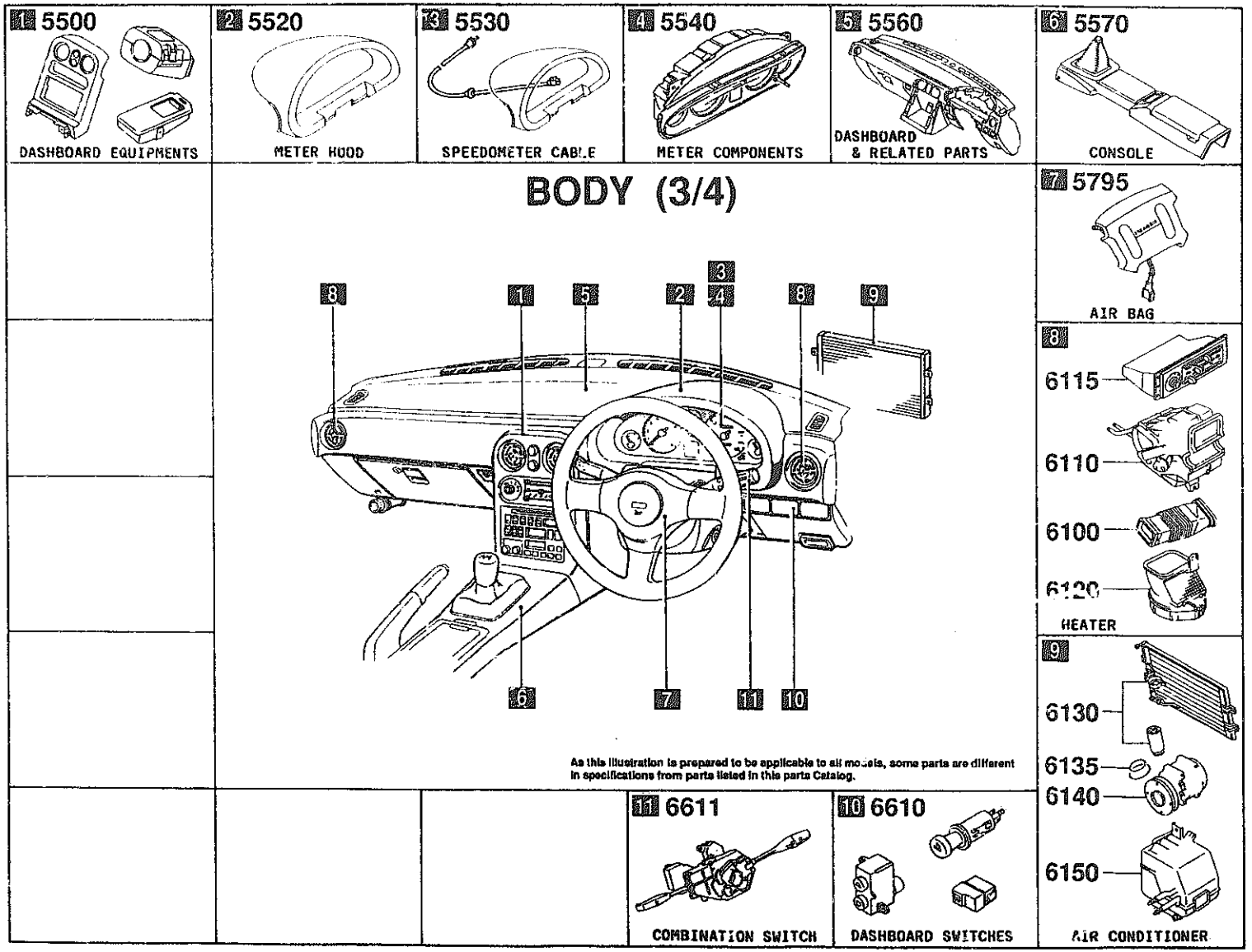

PICTORIAL INDEX

1 5580 VENTILATOR

2 5700 SEATS

3 5790 SEAT BELTS

4 6680 AUDIO SYSTEMS (RADIO & TAPE DECK)

5 6682 AUDIO SYSTEMS (ANTENNA & SPEAKER)

6 6820 FRONT HEADER TRIM & PILLAR TRIMS

7 6840 TRIMS & SCUFF PLATES

8 6860 FLOOR MATS & PADS

9 6870 SERVICE TOOLS

10 6900 VISORS, ASSIST HANDLES & MIRRORS

11 6930 CAUTION PLATES & LABELS

12 7250 QUARTER WINDOW & TRIMS

BODY (4/4)

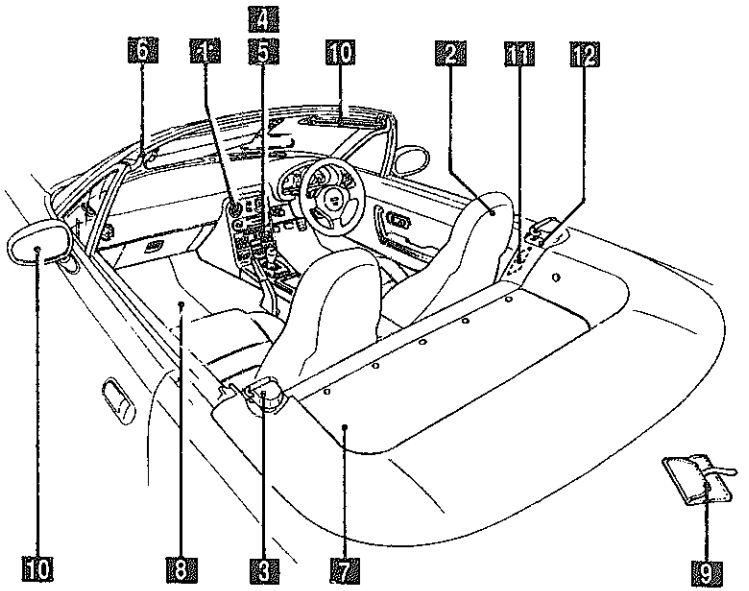

As this illustration is prepared to be applicable to all models, some parts are different in specifications from parts listed in this parts Catalog.

SECTION NAME INDEX (BODY)

LO.NO	SEC.NO	SECTION NAME
2-C10	0900	KEY SETS
2-E10	5000	FRONT BUMPER
2-H10	5010	REAR BUMPER
2-J10	5030	WINDOW MOULDING & COWL GRILLES
2-K10	5100	HEAD LAMPS
2-L10	5103	HEAD LAMP RETRACTORS
2-C11	5105	FRONT COMBINATION LAMPS
2-E11	5110	REAR COMBINATION LAMPS
2-I11	5120	LICENSE LAMPS
2-J11	5125	INTERIOR LAMPS
2-K11	5170	ORNAMENTS
2-L11	5180	REAR FINISHER
2-M11	5230	BONNET
2-C12	5260	TRUNK LID
2-D12	5310	FRONT PANELS
2-E12	5320	FENDER & WHEEL APRON PANELS
2-H12	5330	DASH & COWL PANELS
2-I12	5340	SIDE PANELS
2-C13	5370	FLOOR PANELS
2-F13	5380	FLOOR ATTACHMENTS (HOLE COVERS)
2-H13	5390	FLOOR ATTACHMENTS
2-C14	5500	DASHBOARD EQUIPMENTS
2-E14	5520	METER HOOD
2-F14	5530	SPEEDOMETER CABLE
2-G14	5540	METER COMPONENTS
2-I14	5560	DASHBOARD & RELATED PARTS
2-L14	5570	CONSOLE
2-D15	5580	VENTILATOR
2-F15	5700	SEATS
2-H16	5790	SEAT BELTS
2-I16	5795	AIR BAG
2-J16	5800	FRONT DOORS
3-C03	5830	FRONT DOOR MECHANISMS
3-G03	5840	FRONT DOOR TRIMS & RELATED PARTS
3-C04	6100	HEATER
3-D04	6110	HEATER UNIT COMPONENTS
3-E04	6115	HEATER CONTROL COMPONENTS
3-F04	6120	HEATER BLOWER COMPONENTS
3-G04	6130	AIR CONDITIONER
3-L04	6135	AIR CONDITIONING COOLING PIPE O-RING
3-M04	6140	AIR CONDITIONING COMPRESSOR COMPONENTS
3-C05	6150	AIR CONDITIONING COOLING UNIT
3-D05	6300	WINDOW GLASSES
3-E05	6330	SUN ROOF
3-F06	6600	ENGINE SWITCHES & RELAYS
3-K06	6610	DASHBOARD SWITCHES
3-M06	6611	COMBINATION SWITCH
3-N06	6630	BODY RELAYS & UNIT
3-D07	6635	DOOR SWITCH & HORNS
3-E07	6640	AUTO CRUISE CONTROL SYSTEM
3-F07	6680	AUDIO SYSTEMS (RADIO & TAPE DECK)
3-I07	6682	AUDIO SYSTEMS (ANTENNA & SPEAKER)
3-L07	6700	FRONT & REAR WIPING HARNESSES
3-C08	6701	ENGINE & TRANSMISSION WIRING HARNESSES
3-E08	6702	DASHBOARD WIRING HARNESSES
3-F08	6703	DOOR, FLOOR & CEILING WIRING HARNESSES
3-G08	6704	WIRING HARNESS CLAMPS
3-J08	6720	WINDSHIELD WASHER (W/O ANTI LOCK BRAKE)
3-L08	6720 A	WINDSHIELD WASHER (W/ANTI LOCK BRAKE)
3-C09	6730	WINDSHIELD WIPERS
3-E09	6743	WIPER MOTOR COMPONENTS
3-F09	6820	FRONT HEADER TRIM & PILLAR TRIMS
3-G09	6840	TRIMS & SCUFF PLATES
3-I09	6860	FLOOR MATS & PADS
3-K09	6870	SERVICE TOOLS
3-L09	6900	SUN VISORS, ASSIST HANDLES & MIRRORS
3-C10	6930	CAUTION PLATES & LABELS
3-E10	7250	QUARTER WINDOW & TRIMS

CATLOG-NO= AUNA06-03

DATE. 1998-07

SECTION NAME INDEX (ENGINE)

LO.NO	SEC.NO	SECTION NAME
1-C03	1000	ENGINE & GASKET SETS
1-E03	1010	CYLINDER HEAD & COVER
1-G03	1030	CYLINDER BLOCK
1-H03	1040	OIL PAN & TIMING COVER
1-J03	1100	PISTON, CRANKSHAFT & FLYWHEEL
1-M03	1200	VALVE SYSTEM
1-C04	1300	INLET MANIFOLD
1-D04	1310	EXHAUST MANIFOLD
1-E04	1320	FUEL SYSTEM
1-G04	1325	FUEL DISTRIBUTOR
1-H04	1330	AIR CLEANER
1-J04	1364	THROTTLE BODY
1-K04	1370	EMISSION CONTROL SYSTEM (INLET SIDE)
1-M04	1400	OIL PUMP & FILTER
1-C05	1500	COOLING SYSTEM
1-F05	1580	BRACKET, PULLEY & BELT
1-C06	1600	CLUTCH DISC & COVER
1-D06	1700	MANUAL TRANSMISSION CASE
1-F06	1710	MANUAL TRANSMISSION GEARS
1-K06	1720	MANUAL TRANSMISSION CHANGE CONTROL SYSTEM
1-N06	1800	ENGINE ELECTRICAL SYSTEM
1-D07	1830	ALTERNATOR
1-F07	1840	STARTER (MT)
1-H07	1840 A	STARTER (AT)
1-J07	1850	BATTERY
1-K07	1910	AUTOMATIC TRANSMISSION TORQUE CONVERTER, OIL PUMP & PIPINGS
1-N07	1920	AUTOMATIC TRANSMISSION CASE & MAIN CONTROL SYSTEM
1-H08	1925	AUTOMATIC TRANSMISSION CONTROL VALVE
1-C09	1930	AUTOMATIC TRANSMISSION CLUTCHES & PLANETARY GEARS
1-K09	1940	AUTOMATIC TRANSMISSION GOVERNOR, LOW & REVERSE PISTON
1-N09	1950	AUTOMATIC TRANSMISSION MANUAL LINKAGE SYSTEM
1-D10	1960	AUTOMATIC TRANSMISSION GASKET & SEAL KIT

CATLOG-NO= AUNA06-03

DATE. 1998-07

SECTION NAME INDEX (CHASSIS)

LO.NO	SEC.NO	SECTION NAME
2-C03	2505	REAR PROPELLER SHAFT
2-D03	2550	REAR DRIVE SHAFT
2-E03	2600	REAR AXLE
2-F03	2610	REAR BRAKE MECHANISMS
2-H03	2710	REAR DIFFERENTIALS (NORMAL DIFF.)
2-L03	2710 A	REAR DIFFERENTIALS (LIMITED SLIP DIFF.)
2-D04	2800	REAR SUSPENSION MECHANISMS
2-E04	2810	REAR STABILIZER
2-F04	2830	REAR LOWER ARMS & SUB FRAME
2-H04	3200	STEERING WHEEL
2-I04	3210	STEERING COLUMN & SHAFTS
2-J04	3220	STEERING GEAR (W/O POWER STEERING)
2-L04	3220 A	STEERING GEAR (W/POWER STEERING)
2-N04	3240	POWER STEERING SYSTEM
2-D05	3300	FRONT AXLE
2-F05	3310	FRONT BRAKE MECHANISMS
2-G05	3400	FRONT SUSPENSION MECHANISMS
2-J05	3410	CROSSMEMBER & STABILIZER
2-K05	3700	TIRES & JACK
2-C06	3900	ENGINE & T/MISSION MOUNTINGS
2-D06	4000	EXHAUST SYSTEM
2-E06	4140	MANUAL TRANSMISSION CLUTCH RELEASE & MASTER CYLINDERS
2-F06	4145	MANUAL TRANSMISSION CLUTCH PIPINGS
2-G06	4160	ACCELERATOR CONTROL SYSTEM
2-H06	4200	FUEL TANK
2-K06	4210	FUEL LID OPENER
2-L06	4300	MANUAL TRANSMISSION CLUTCH & BRAKE PEDALS
2-C07	4300A	AUTOMATIC TRANSMISSION BRAKE PEDAL
2-E07	4340	BRAKE MASTER CYLINDER & POWER BRAKE (W/O ANTI LOCK BRAKE)
2-G07	4340 A	BRAKE MASTER CYLINDER & POWER BRAKE (W/ANTI LOCK BRAKE)
2-I07	4360	BRAKE PIPINGS (W/O ANTI LOCK BRAKE)
2-K07	4360 A	BRAKE PIPINGS (W/ANTI LOCK BRAKE)
2-C08	4370	ANTILOCK BRAKE SYSTEM
2-F08	4400	PARKING BRAKE SYSTEM
2-H08	4500	FUEL PIPINGS
2-J08	4600	CHANGE CONTROL SYSTEM (AT)
LO.NO	SEC.NO	SECTION NAME

CATLOG-NO= AUNA06-03

DATE. 1998-07

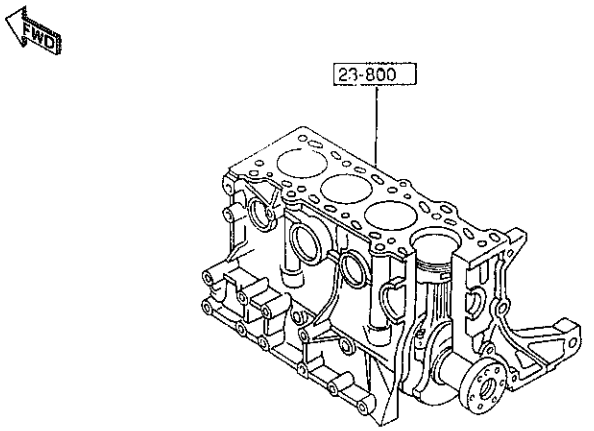

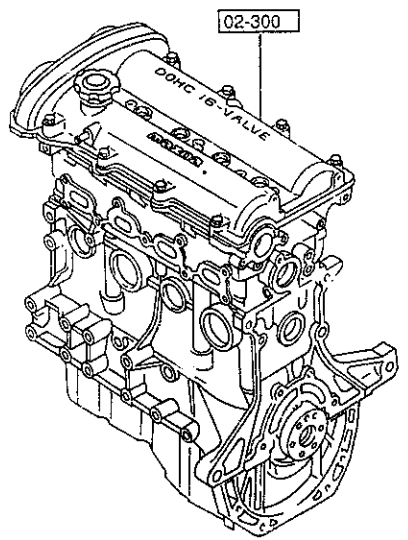

AUNA06

1-SEAL, VALVE ..... (8)
2-SEAL, VALVE ..... (8)
3-GASKET, HEAD COVER ..... (1)
4-GASKET, CYLINDER HEAD ..... (1)
5-SEAL, OIL ..... (1)
6-SEAL, OIL ..... (2)
7-GASKET, IN. MANIFOLD ..... (1)
8-GASKET, EX. MANIFOLD ..... (1)
9-GASKET, THERMOSTAT COVER .... (2)
10-GASKET, W. PUMP INLET ..... (1)
11-GASKET, OIL PAN ..... (1)
12-GASKET, OIL PAN ..... (1)
13-GASKET (L) ..... (1)
14-GASKET (INN), TIMING BELT (L) . (1)
15-GASKET (C), TIMING BELT (L) ... (1)
16-RUBBER, SEAL-SEAL PLATE ..... (1)
17-SEAL, OIL-CRANKSHAFT ..... (1)
18-RING, 'O' ..... (1)
19-GASKET, WATER PUMP ..... (1)
20-RING, 'O' ..... (1)

NOTE
① ··· ⑳ ⇒ 10-271S
THE D-CODE OF 10-271S CONSISTS OF FIGURE NUMBERS ① THROUGH ⑳.

NOTE
① ··· ⑨ ⇒ 10-235S
THE D-CODE OF 10-235S CONSISTS OF FIGURE NUMBERS ① THROUGH ⑨.

NOTE
⑦ ··· ⑩ ⇒ 02-310S
THE D-CODE OF 02-310S CONSISTS OF FIGURE NUMBERS ⑦ THROUGH ⑩.

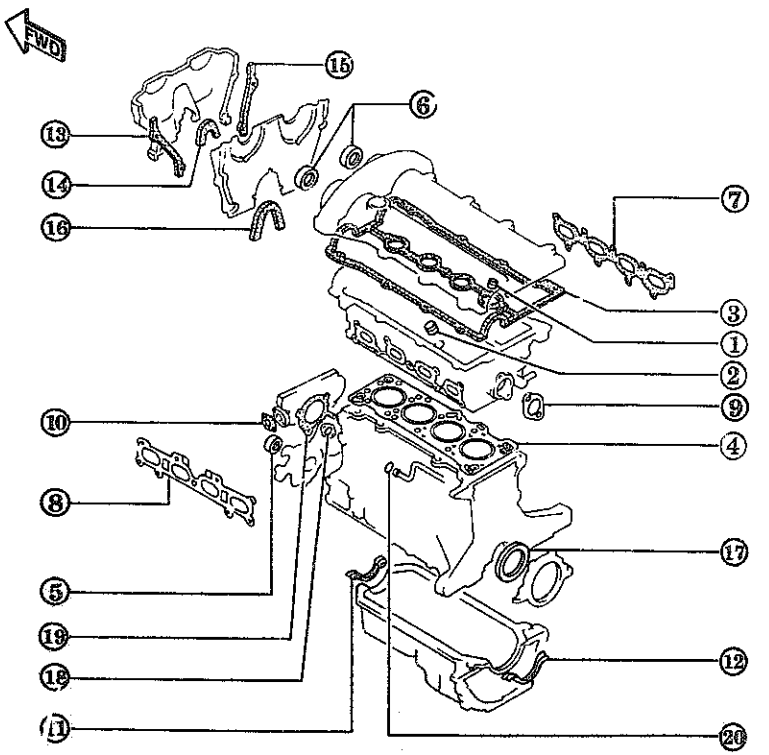

AUNA06

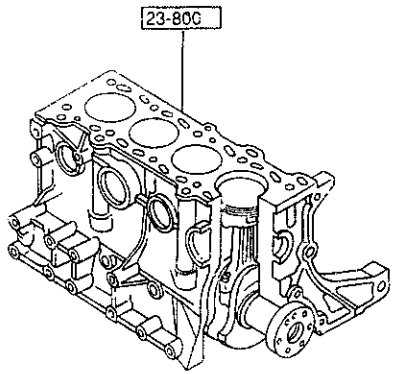

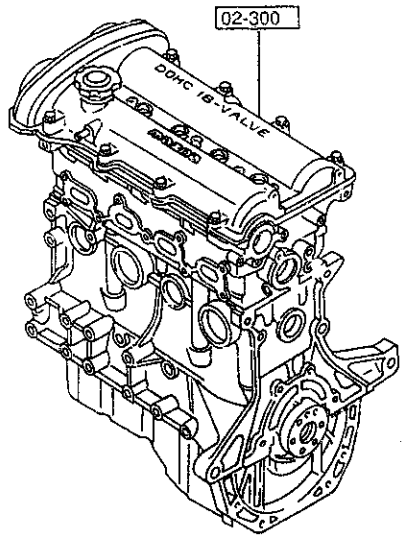

AUNA06

1000 -1 * ENGINE & GASKET SETS

PART NO.	QTY	MODEL/RESTRICTION	MODEL/RESTRICTION	MODEL/RESTRICTION	FROM-TO
C2-300		ENGINE,PARTIAL			
BPS1-02-300	1				
02-310S		GASKET SET,PARTIAL ENGINE			
8ABA-02-310	1				
10-235S		GASKET SET,CYL. HEAD			
*8AN2-10-235A	1				
10-271S		GASKET SET,ENGINE			
8AN2-10-271B	1				
23-800		ENGINE,SHORT			
BPF1-02-200A AN(BPF1-02-200B)	1				-7728
*BPF1-02-200B	1				7728-

7728 NA35*V-738940

CAT. AUNA06-03 1998-07

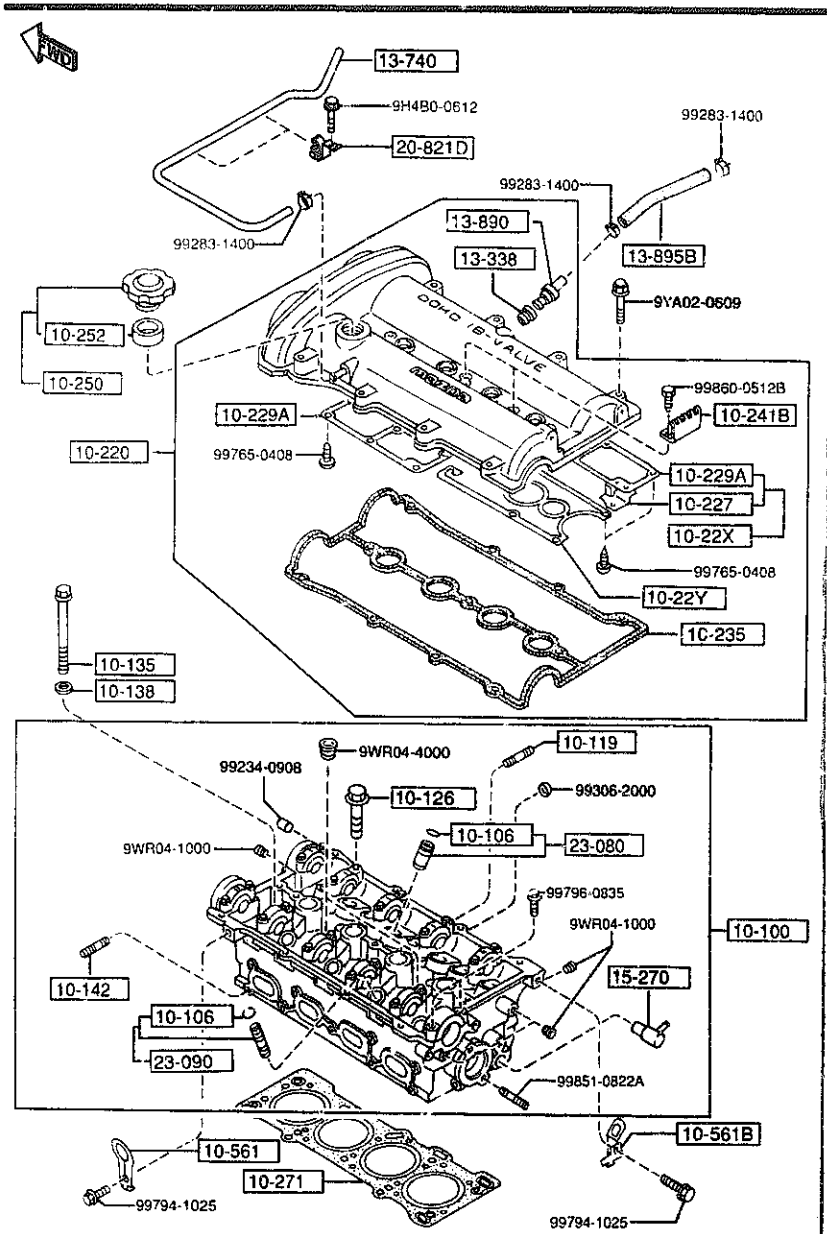

AUNA06

PART NO.	QTY	MODEL/RESTRICTION	MODEL/RESTRICTION	MODEL/RESTRICTION	1998-10
10-100		HEAD,CYLINDER			
BPE8-10-100A	1				
10-106		CLIP,VALVE GUIDE			
B660-10-106	16				
10-119		STUD			
FE4J-13-146	9				
10-126		BOLT,CAMSHAFT CAP			
KL02-10-126	20				
10-135		BOLT,CYLINDER HEAD			
B660-10-135A	10				
10-138		WASHER,PLAIN CYL. HEAD			
B630-10-138A	10				
10-142		STUD,EX. MANIFOLD			
B661-10-104	9				
10-22X		PLATE,OIL BAFFLE-IN. SIDE			
B61P-10-22X	1				
10-22Y		PLATE,OIL BAFFLE-EX.			
B6S7-10-22Y	1				
10-220		COVER,CYLINDER HEAD			
BPE8-10-210C	1				
10-227		PLATE,BAFFLE			
B61P-10-227	1				
10-229A		PLATE,OIL BAFFLE			
B6S7-10-225	2				
10-235		GASKET,HEAD COVER			
BP05-10-235C	1				
10-241B		PROTECTOR,HT.CORD-S. TANK			
BPE8-10-241	2				

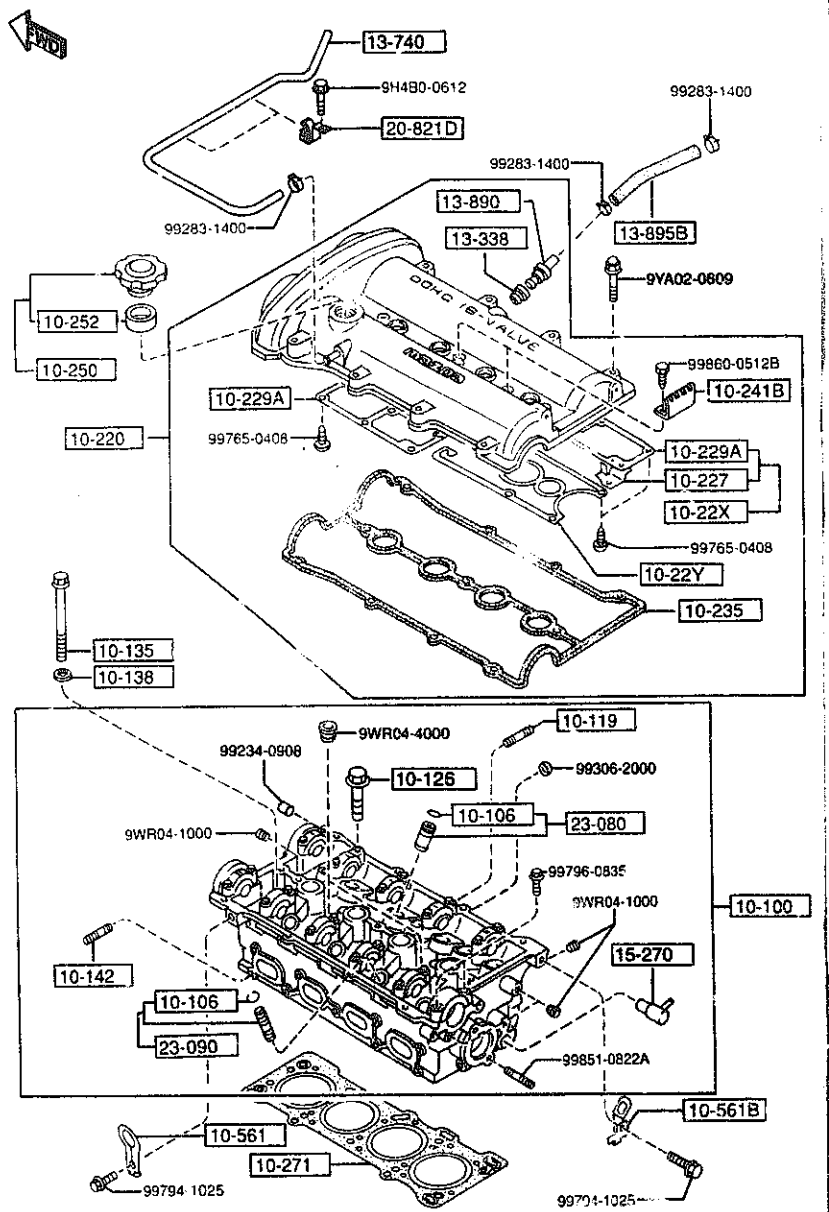

AUNA06

PART NO	QTY	MODEL/RESTRICTION	MODEL/RESTRICTION	MODEL/RESTRICTION	1998-10
10-250		CAP,OIL FILLER			
0453-10-250A	1				
10-252		GASKET			
03[illegible]-10-252	1				
10-271		GASKET,CYLINDER HEAD			
BP26-10-271	1	NON ASBESTOS			
10-561		HANGER,ENGINE			
B660-10-561	1				
10-561B		HANGER,ENGINE-REAR			
BPE8-10-566A	1				
13-338		SEAL,RUBBER			
E301-13-338A	1				
13-740		HOSE,VENT.-PURGE CONT. V.			
BPE8-13-740A	1				
13-890		VALVE,P.C.V.			
BP05-13-890	1				
13-895B		HOSE,P.C.V.			
BPE8-13-895	1				
15-270		PIPE,WATER BY PASS			
BPE8-15-270	1				
20-821D		CLIP,HOSE			
BPE8-20-820	2				
23-080		GUIDE,VALVE			
B6Z1-10-280	8				
23-090		GUIDE,VALVE			
BPY0-10-290	8				

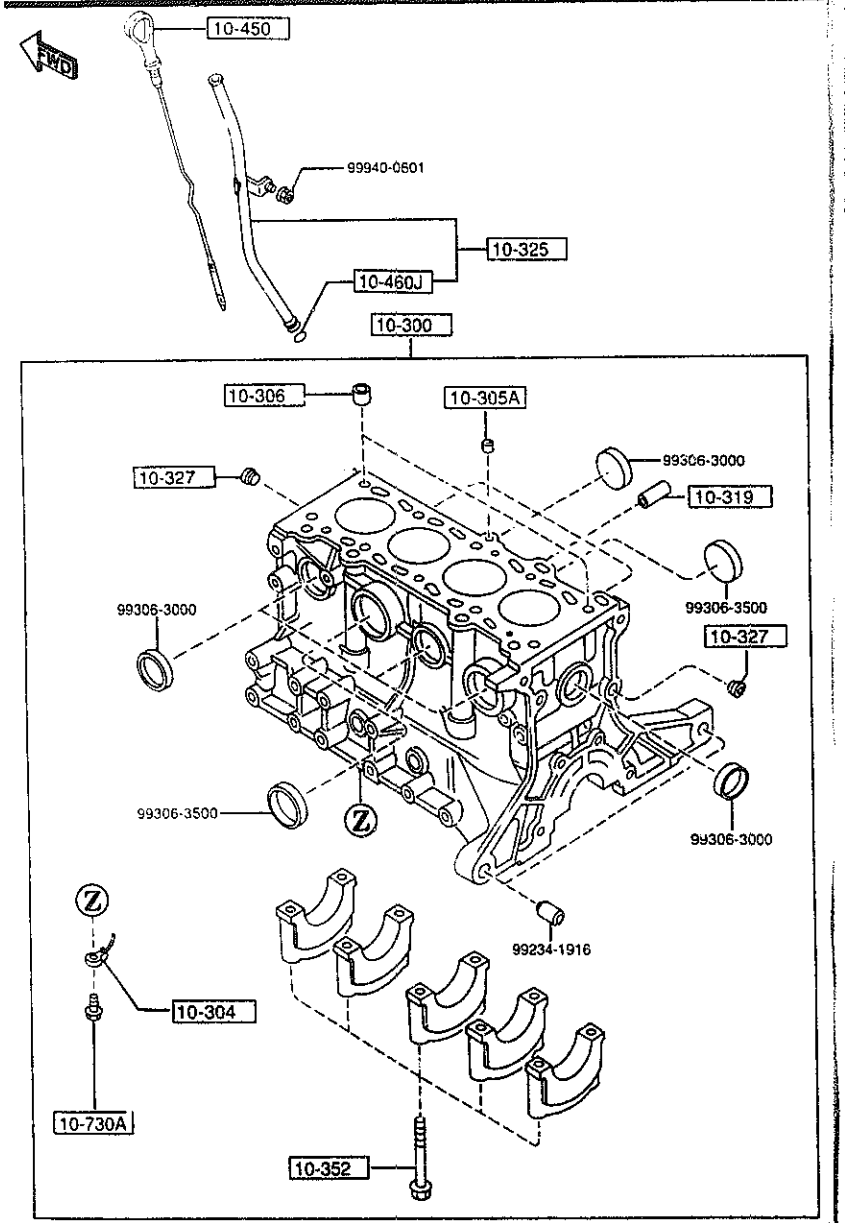

AUNA06

1030 -1 * CYLINDER BLOCK

PART NO.	QTY	MODEL/RESTRICTION	MODEL/RESTRICTION	MODEL/RESTRICTION	FROM TO
10-300		BLOCK,CYLINDER			
BP05-10-300N AN(BP05-10-300P)	1				-7728
*BP05-10-300P	1				7728-
10-304		JET,OIL			
BP01-10-580A	4				
10-305A		PLUG			
B366-10-305	1				
10-306		PIN,TUBULAR			
B630-10-306	2				
10-319		JOINT			
E5B6-10-319C	1				-7728
*BP4W-10-319	1				7728-
10-325		PIPE,OIL LEVEL GAUGE			
BPE8-10-440	1				
10-327		PLUG,BLIND			
0221-10-327	2				
10-352		BOLT,BEARING CAP			
B630-10-352	10				
10-450		GAUGE,OIL LEVEL			
BPE8-10-450	1				
10-460J		RING,'O'			
99541-00907	1				
10-730A		VALVE,OIL JET			
SE01-10-730	4				

7728 NA35*V-738940

CAT. AUNA06-03

1998-07

1040 OIL PAN & TIMING COVER

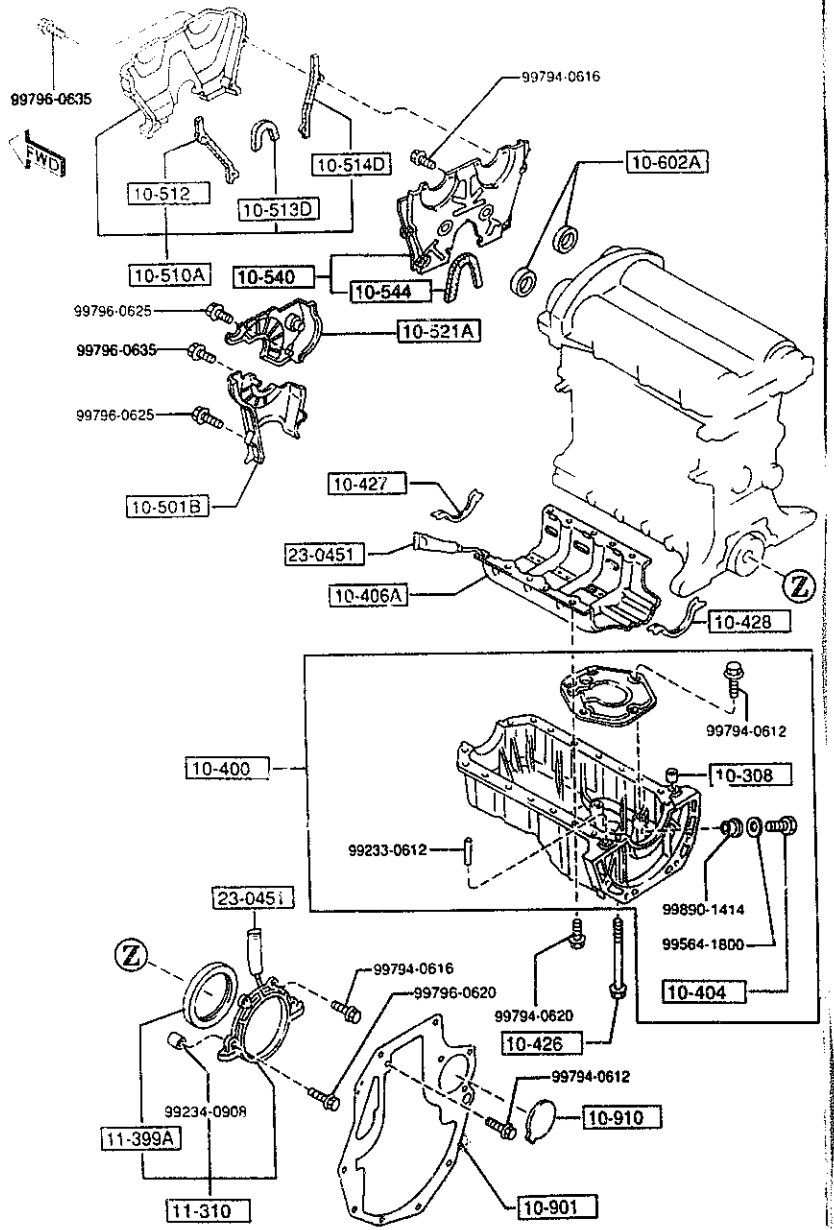

AUNA06

1040 -1 OIL PAN & TIMING COVER

PART NO.	QTY	MODEL/RESTRICTION	MODEL/RESTRICTION	MODEL/RESTRICTION	FROM TO
10-308		PIN,TUBULAR			
B6F4-10-308	1				
10-400		PAN,OIL			
BPE8-10-400A	1				-7801
*BPY0-10-400B	1				7801-
10-404		PLUG,DRAIN			
B6S7-10-404A	1				
10-406A		PLATE,OIL BAFFLE-CYL. BLK			
BPE8-10-40Y	1				
10-426		BOLT			
B6S7-10-465	2				
4 10-427		GASKET,OIL PAN			
B6F4-10-427	1				
10-428		GASKET,OIL PAN			
B6F4-10-428	1				
10-501B		COVER,TIMING BELT-LWR			
B660-10-501E	1	DAIKYOH			
10-510A		COVER(UP.),TIMING CHAIN			
B61P-10-510	1				
10-512		GASKET(L)			
B61P-10-512	1	NON ASBESTOS			
10-513D		GASKET(INN),TIMING BELT(L)			
B61P-10-513	1	NON ASBESTOS			
10-514D		GASKET(C),TIMING BELT(L)			
B61P-10-514	1	NON ASBESTOS			
10-521A		COVER,TIMING BELT-C.			

7801 NA35*V-739024

CAT. AUNA06-03

1998-07

1040 OIL PAN & TIMING COVER

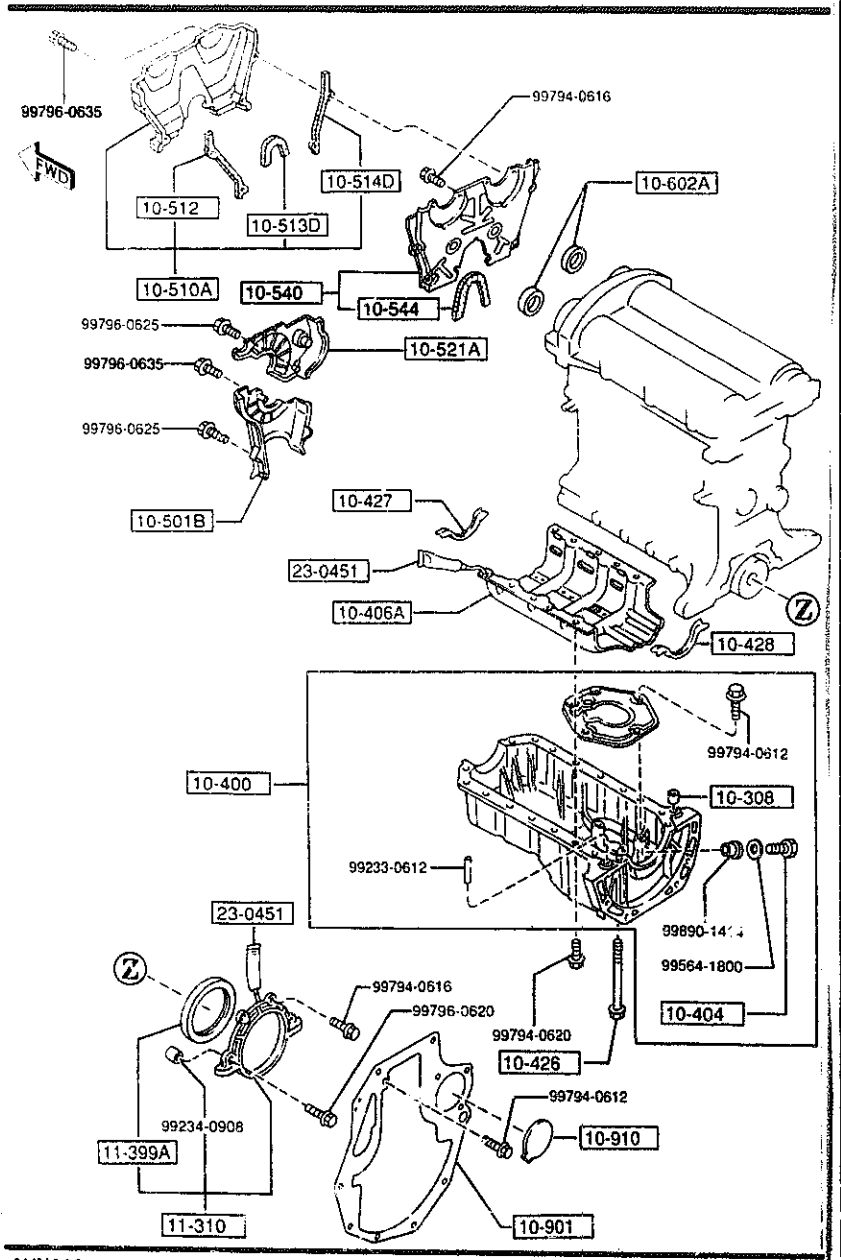

AUNA06

PART NO	QTY	MODEL/RESTRICTION	MODEL/RESTRICTION	MODEL/RESTRICTION	FROM-TO
CONT'D					
B660-10-521B	1				
10-540		PLATE,SEAL-T.BELT COVER U			
B61P-10-540C	1				
10-544		RUBBER,SEAL-SEAL PLATE			
B61P-10-544	1				
10-602A		SEAL,OIL			
FS05-10-602A	2				
10-901		PLATE,END			
B64J-10-901	1	(AT)			
B61P-10-901A	1	(MT)			-7708
A (B61P-10-901B)					
*B61P-10-901B	1	(MT)			7708-
10-910		COVER,END PLATE			
B64J-10-903	1	(AT)			
11-310		COVER,REAR			
B366-11-310C	1	RYOBI			
11-399A		SEAL,OIL-CRANKSHAFT			
BP05-11-312	1				
23-0451		TUBE,SILICON			
8527-77-739	1				

7708 NA35*V-738592

CAT. AUNA06-03

1998-07

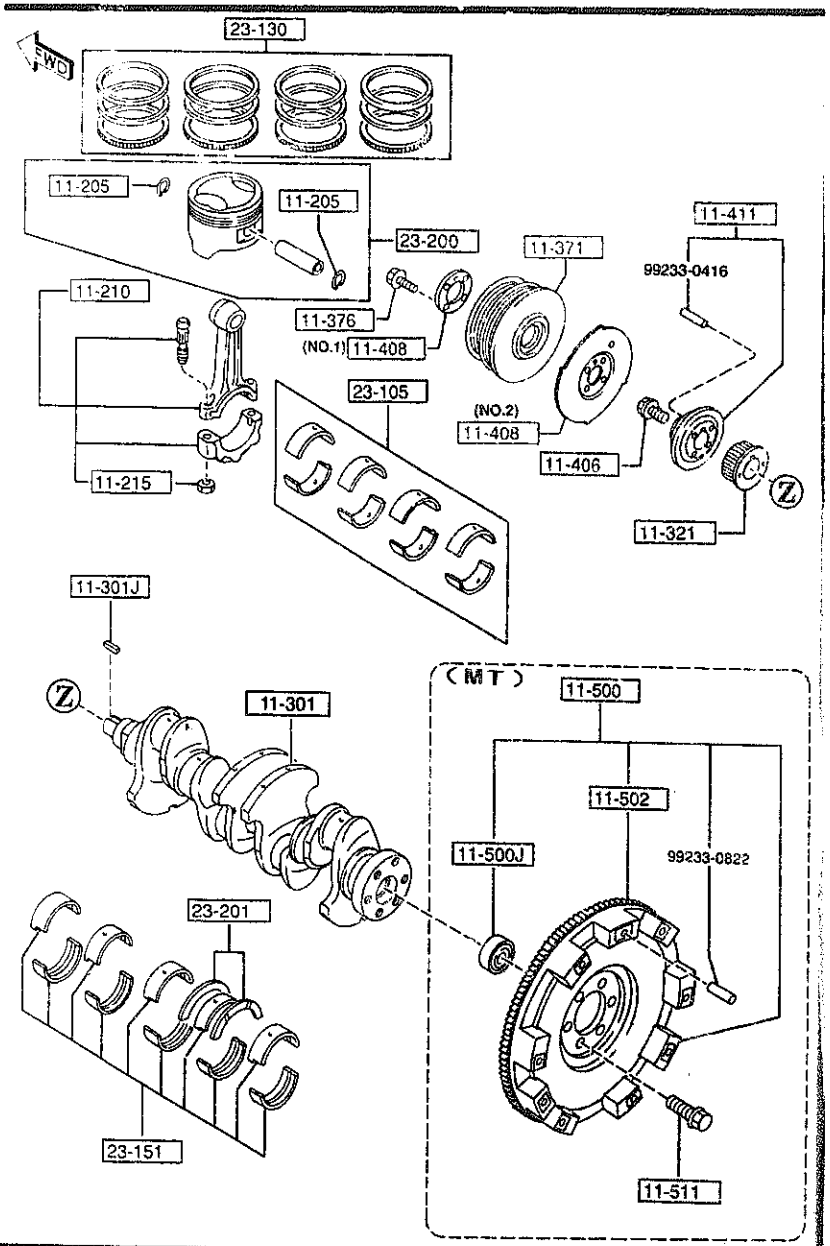

AUNA06

PART NO	QTY	MODEL/RESTRICTION	MODEL/RESTRICTION	MODEL/RESTRICTION	ENGINE
11-205		CLIP			
0221-11-205	8				
11-210		ROD,CONNECTING			
B6S7-11-210E	4				
11-215		NUT,CONNECTING ROD			
B6S7-11-215A	8				
11-301		CRANKSHAFT			
BP06-11-300C	1				
11-301J		KEY,WOODRUFF-PULLEY			
B3C7-11-317	1				
11-321		PULLEY,TIMING BELT			
B3C7-11-321	1				
11-371		PULLEY,CRANKSHAFT			
BPD3-11-401A	1				-7801
*BPD4-11-401	1	NOK			7801-
11-376		BOLT,PULLEY			
JF01-11-405		NOK			
AN(JF01-11-405A)	4				-7623
*JF01-11-405A	4	OHSAKA RASHI (6X16)			7623-
11-406		BOLT,LOCK-C.SHAFT PULLEY			
B3C7-11-406	1				
11-408		PLATE,CRANKSHAFT PULLEY			
B6BF-11-408B	1	(ILLUST. NO.2)			
B3C7-11-408	1	(ILLUST. NO.1)			-7801
11-411		BOSS,PULLEY			
B6BF-11-4C0A	1				
11-500		WHEEL,FLY			
BPR7-11-500	1	(MT)			

7623 NA35*V-738168
7801 NA35*V-739024

CAT. AUNA06-03

1998-07

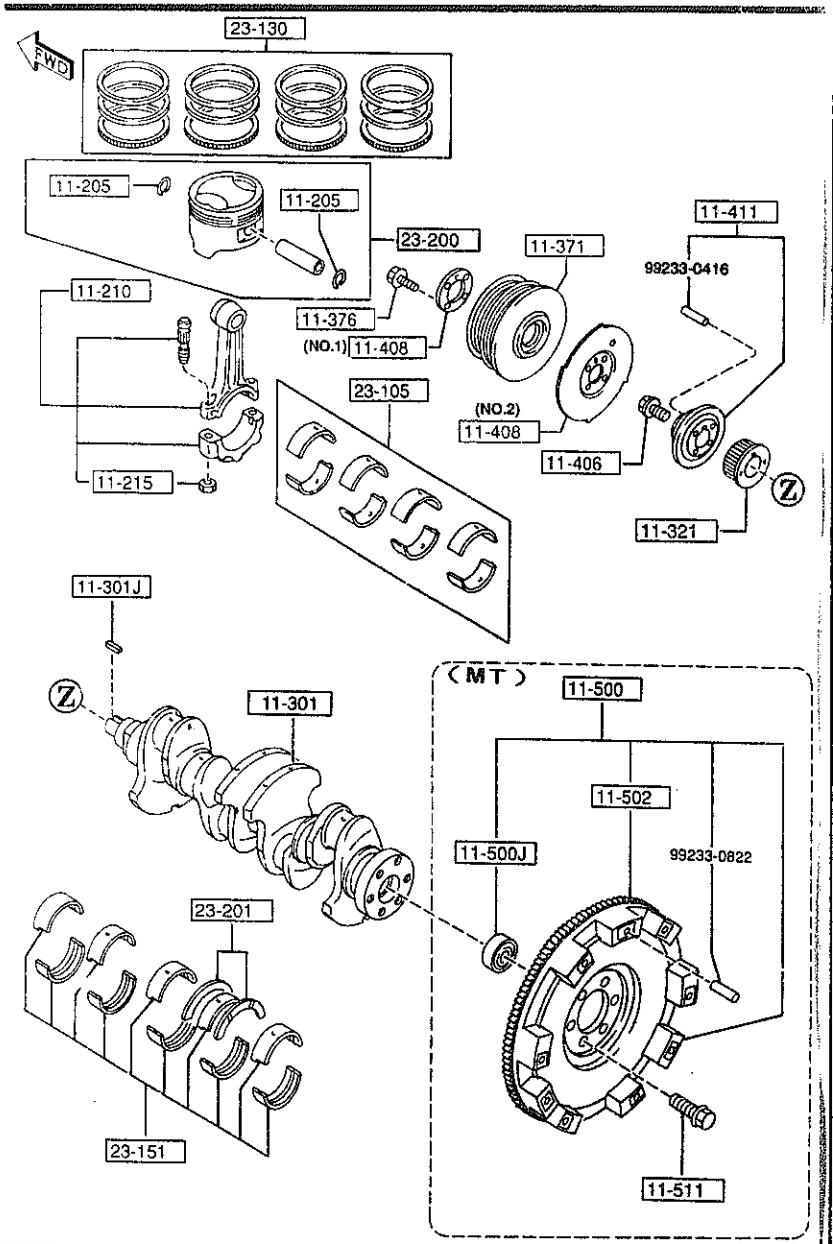

PART NO.	QTY	MODEL/RESTRICTION	MODEL/RESTRICTION	MODEL/RESTRICTION	FROM-TO
11-500J		BEARING,BALL-FLY WHEEL			
FB01-11-303	1	(MT)			
11-502		GEAR,RING-FLY WHEEL			
B367-11-502	1	YOSHIWA (MT)			
0110-11-502	1	KANDA (MT)			
11-511		BOLT,LOCK-FLYWHEEL			
F201-11-511A	6	(MT)			
23-105		METAL SET,CONN.ROD			
B6Y2-11-SE0A	1	STD.			
B6Y2-11-SFXA	1	O.S. 0.50			
B6Y2-11-SFYA	1	O.S. 0.75			
B6Y2-11-SF0A	1	O.S. 0.25			
23-130		RING SET,PISTON			
BPY1-11-SC0	1	STD.			
BPY1-11-SDX	1	O.S. 0.50			
BPY1-11-SD0	1	O.S. 0.25			
23-151		METAL SET,MAIN BRG			
B6Y2-11-SG0	1	STD.			
B6Y1-11-SHX	1	O.S. 0.50			
B6Y1-11-SHY	1	O.S. 0.75			
B6Y1-11-SH0	1	O.S. 0.25			
23-200		PISTON SET			
BPY1-11-SA0A	4	STD.			
BPY1-11-SBXA		O.S. 0.50			

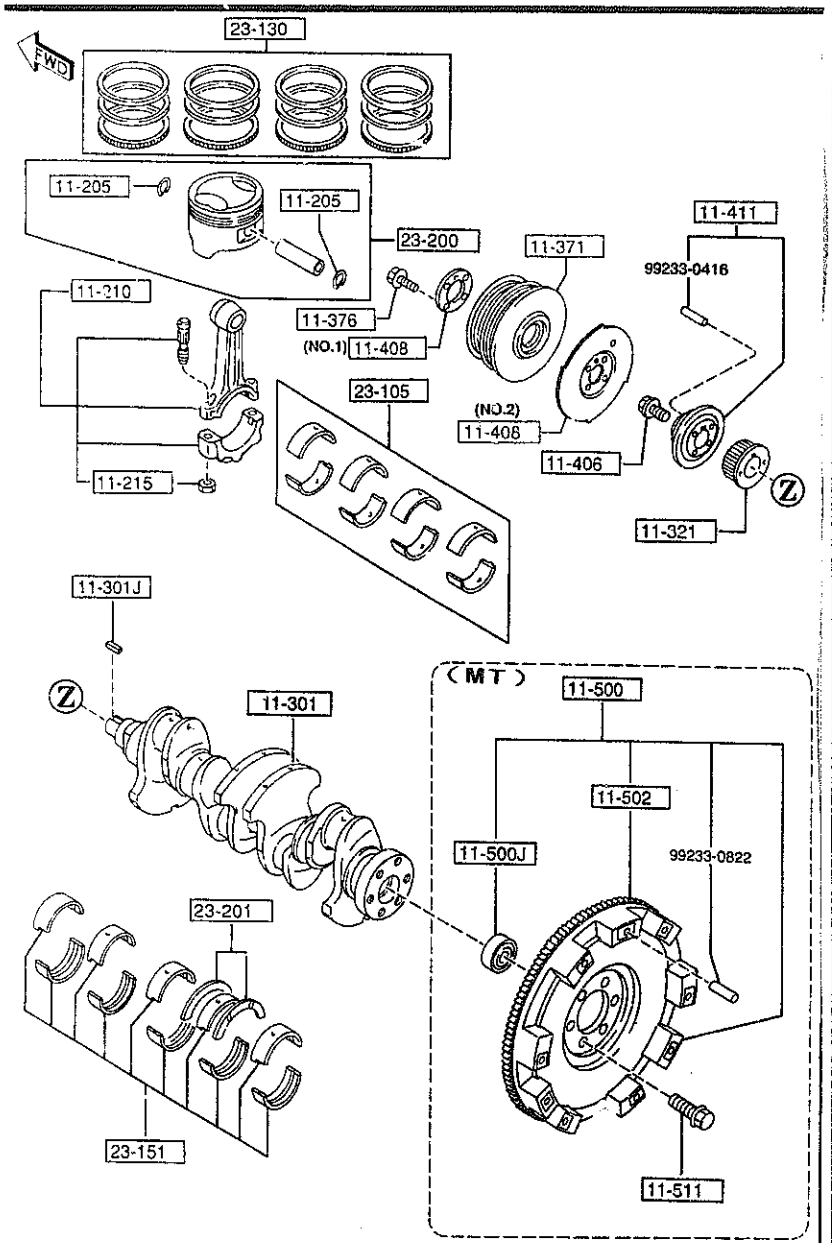

AUNA06

PART NO.	QTY	MODEL/RESTRICTION	MODEL/RESTRICTION	MODEL/RESTRICTION	FROM-TO
CONT'D					
BPY1-11-SB0A	4	O.S. 0.25			
+---------+					
| 23-201 |		METAL SET,THRUST			
+---------+					
B6Y1-11-SJ0	1	STD.			
B6Y1-11-SKX	1	O.S. 0.50			
B6Y1-11-SKY	1	O.S. 0.75			
B6Y1-11-SK0	1	O.S. 0.25			

CAT. AUNA06-03

1998-07

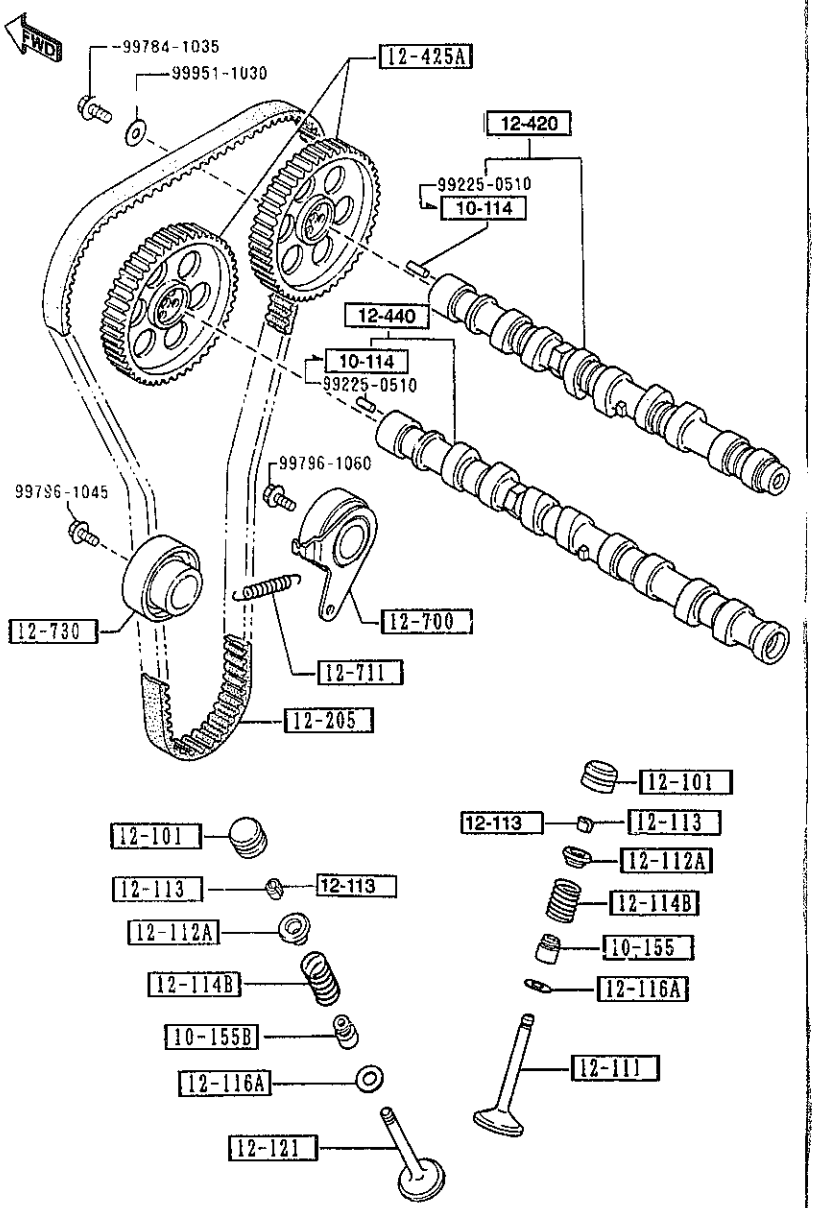

AUNA06

PART NO.	QTY	MODEL/RESTRICTION	MODEL/RESTRICTION	MODEL/RESTRICTION	FROM-TO
10-114		PIN,SET-CAMSHAFT			
F801-10-114	2				6A01-
10-155		SEAL,VALVE			
KL01-10-155	8	NOK			
10-155B		SEAL,VALVE			
KL02-10-155	8	NOK			
12-101		ADJUSTER,HYDRAULIC L ASH			
KL01-12-101B	16	NITTAN VALVE			
12-111		VALVE,INLET			
BP06-12-111A	8	FUJI VALVE			
BP1B-12-111	8	NITTAN VALVE			
12-112A		SEAT,VALVE SPG-UP.			
B6BF-12-113	16				
12-113		COTTER,VALVE-IN.			
FS01-12-114	32				
12-114B		SPRING,VALVE			
BP05-12-125	16				
12-116A		SEAT,VALVE SPG.-LWR			
B660-12-123A	16				
12-121		VALVE,EXHAUST			
BP05-12-121A	8				
12-205		BELT,TIMING			
B6S7-12-205D	1	UNITTA			
12-420		CAMSHAFT			
BP05-12-420E	1				

6A01 NA35*V-720311

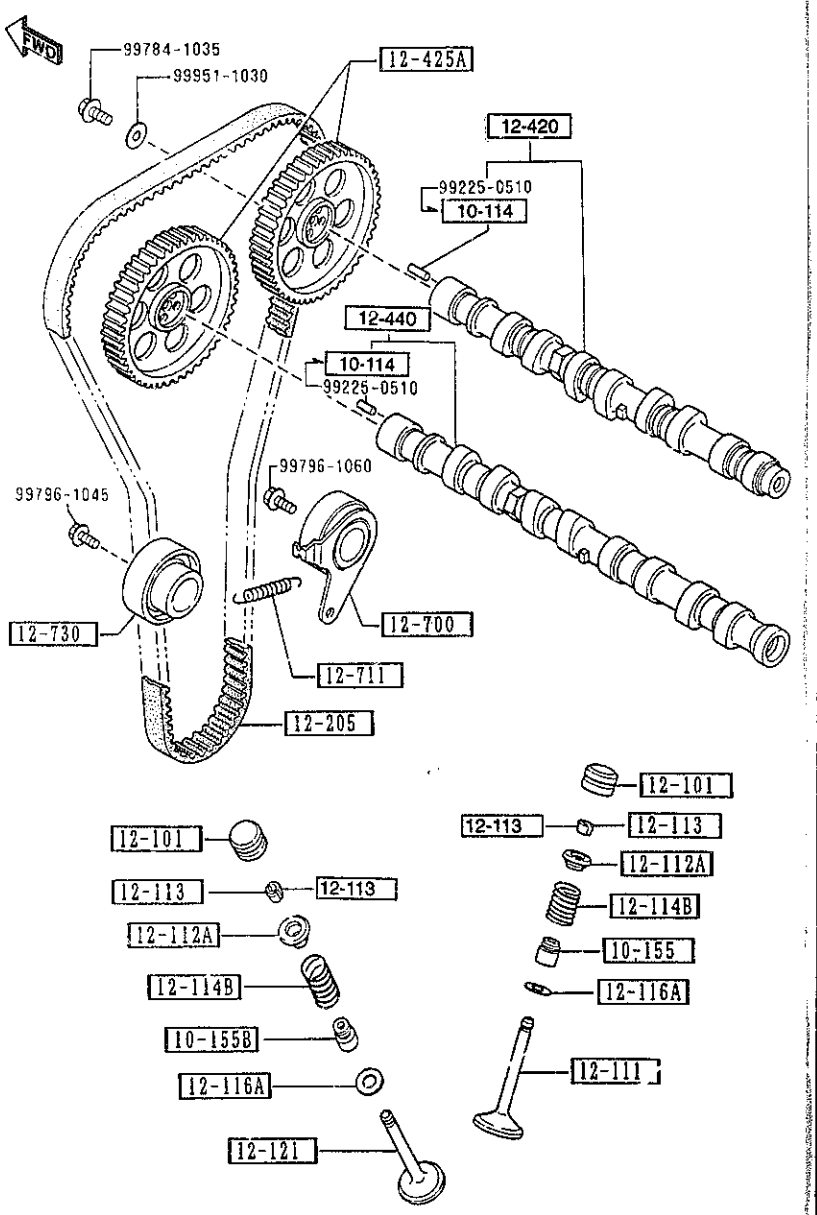

AUNA06

PART NO.	QTY	MODEL/RESTRICTION	MODEL/RESTRICTION	MODEL/RESTRICTION	REMARK
12-425A		PULLEY,CAMSHAFT			
B6S7-12-425A	2				
12-440		CAMSHAFT,EXHAUST			
BP06-12-440C	1				
12-700		TENSIONER,TIMING BELT			
B660-12-700E	1				
12-711		SPRING,TENSIONER			
B660-12-711C	1				
12-730		IDLER,TIMING BELT			
B660-12-730C	1				

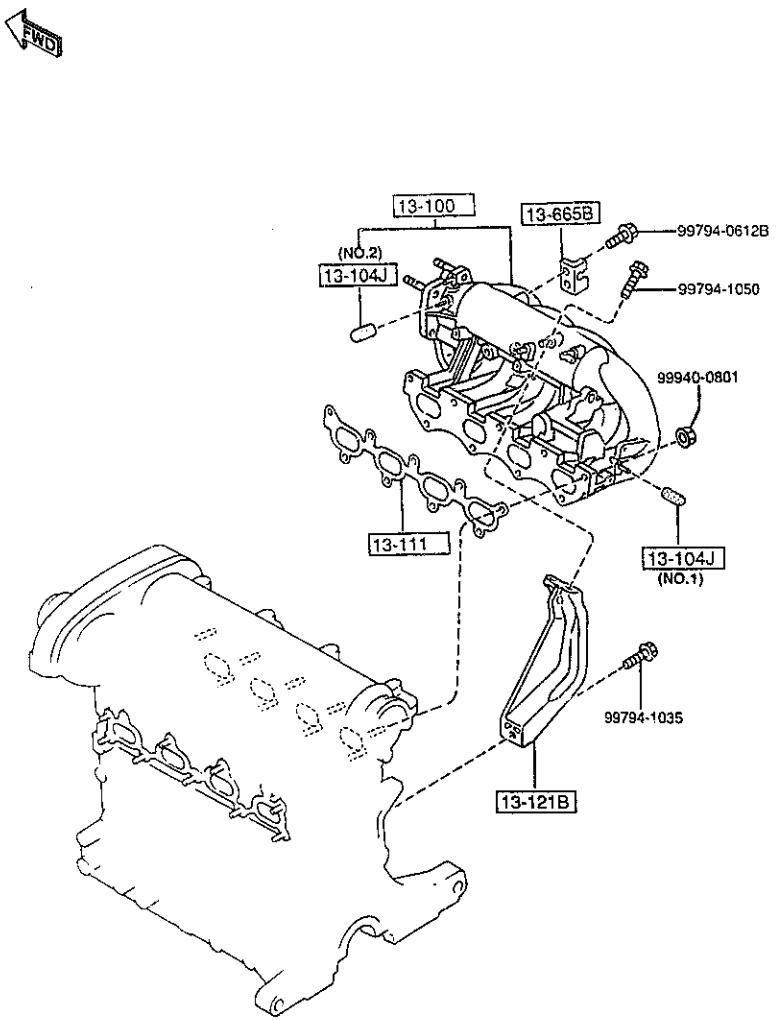

1300 -1 * INLET MANIFOLD

PART NO.	QTY	MODEL/RESTRICTION	MODEL/RESTRICTION	MODEL/RESTRICTION	FROM-TO
13-100		MANIFOLD,INLET			
BPE8-13-100D	1				
13-104J		CAP,BLIND			
F8L7-13-104	1	(ILLUST. NO.1) (MT)			
1010-13-104	1	(ILLUST. NO.2)			
13-111		GASKET,IN.MANIFOLD			
BP05-13-111	1	NON ASBESTOS			
13-121B		STAY,MANIFOLD			
BPE8-13-121	1				
13-665B		BRACKET,ACCEL WIRE			
BPR5-13-665	1				

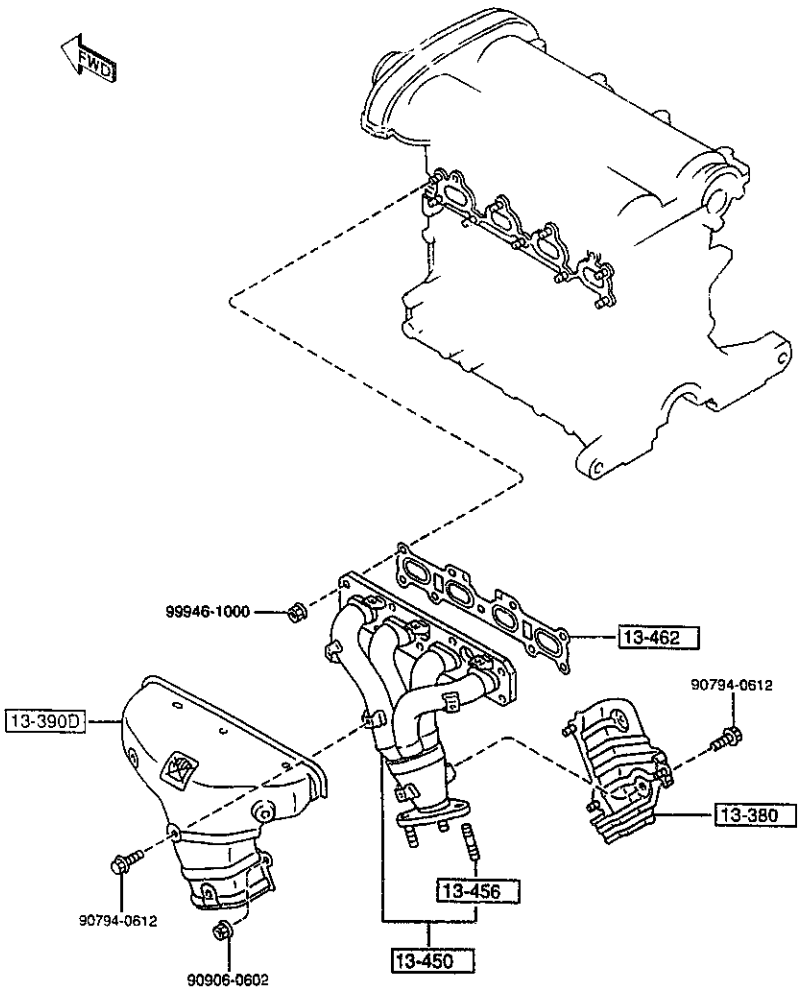

AUNA06

1310 -1 * EXHAUST MANIFOLD

PART NO.	QTY	MODEL/RESTRICTION	MODEL/RESTRICTION	MODEL/RESTRICTION	FROM-TO
13-380		INSULATOR,HEAT			
BPE8-13-380A	1				
13-390D		INSULATOR,EX.MANIFOLD			
BPE8-13-390	1				
13-450		MANIFOLD,EXHAUST			
BPE3-13-450	1				
13-456		STUD			
Z306-13-456	3				
13-462		GASKET,EX.MANIFOLD			
BP05-13-460	1	NON ASBESTOS			

CAT. AUNA06-03 1998-07

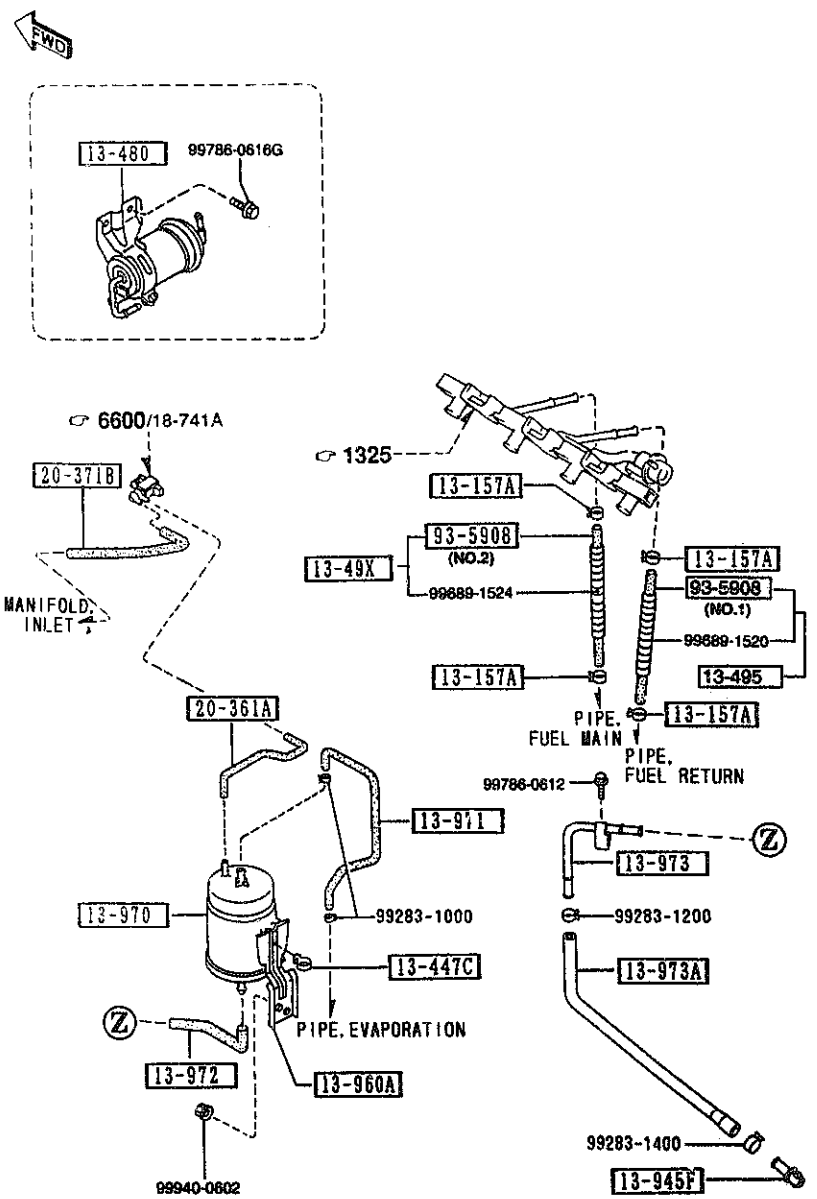

AUNA06

PART NO.	QTY	MODEL/RESTRICTION	MODEL/RESTRICTION	MODEL/RESTRICTION	FROM-TO
13-157A 8574-13-157	4	CLIP			
13-447C B61P-13-447	1	CLAMP,HOSE			
13-480 B61P-20-490	1	FILTER,FUEL			
13-49X BPE8-13-49X	1	HOSE,FUEL-EGI			
13-495 BPE8-13-495	1	HOSE,FUEL			
13-945F JE16-13-298	1	CONNECTOR			
13-960A B61P-13-960	1	BRACKET,CANISTER			
13-970 JE16-13-970A	1	CANISTER			
13-971 B6CA-13-971	1	HOSE,VENTILATION			
13-972 B6CA-13-972	1	HOSE,EVAPORATION			
13-973 B61P-13-97YA	1	HOSE,DRAIN			
13-973A B61P-13-973A	1	HOSE,EVAPORATION			
20-361A B61P-20-361	1	TUBE,VACUUM			
20-371B BPE8-20-371	1	TUBE,VACUUM			

CAT. AUNA06-03

1998-07

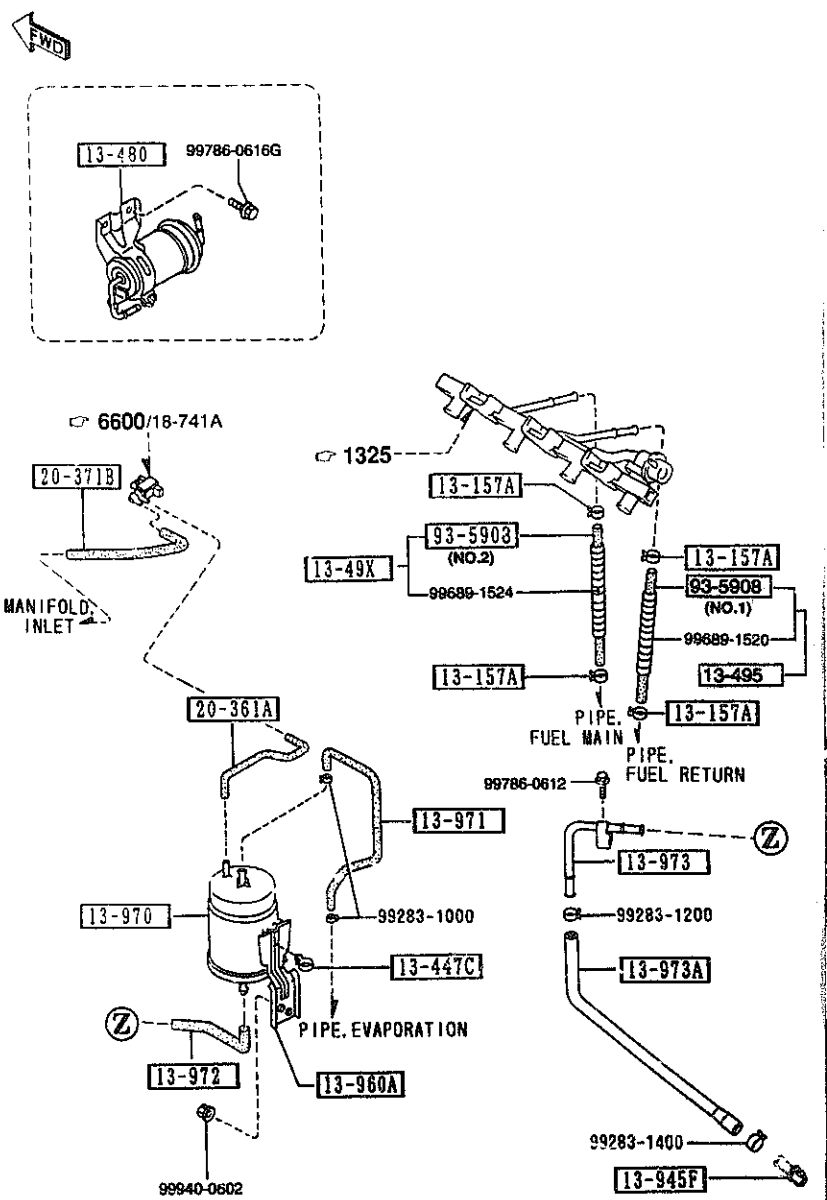

AUNA06

1320 -2 * FUEL SYSTEM

PART NO.	QTY	MODEL/RESTRICTION	MODEL/RESTRICTION	MODEL/RESTRICTION	FROM-TO
93-5908		HOSE			
*99359-0830M	1	(ILLUST. NO.1)			
99359-0834	1	(ILLUST. NO.2)			

CAT. AUNA06-03 1998-07

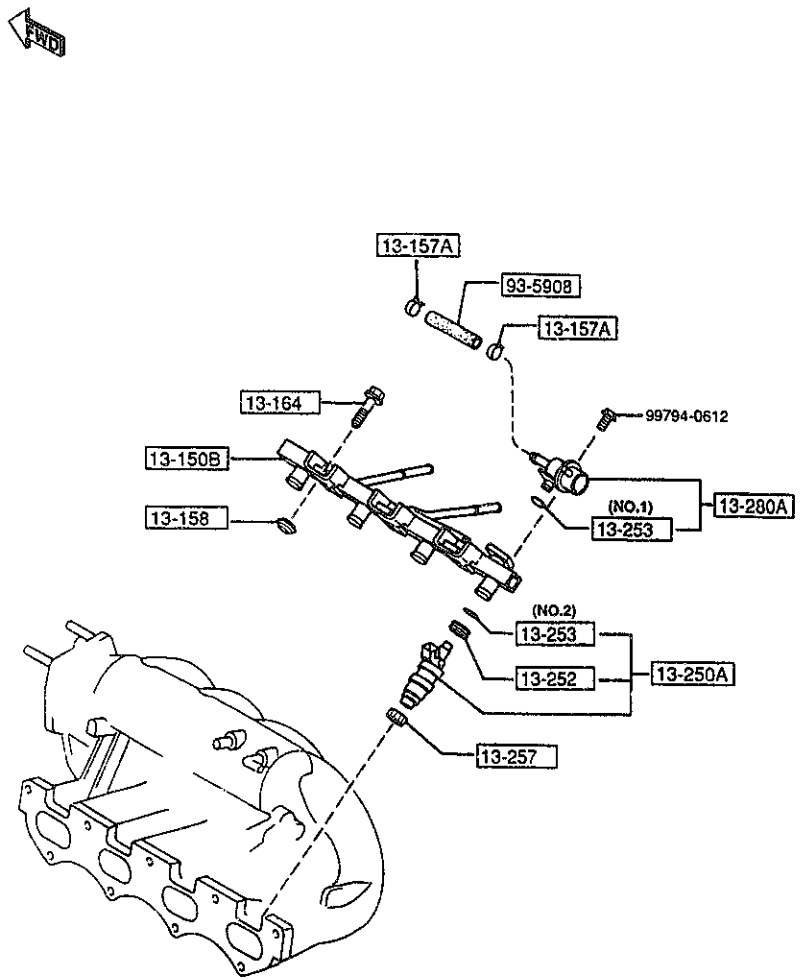

AUNA06

1325 -1 * FUEL DISTRIBUTOR

PART NO.	QTY	MODEL/RESTRICTION	MODEL/RESTRICTION	MODEL/RESTRICTION	FROM-TO
13-150B BPE8-13-150	1	DISTRIBUTOR,FUEL			
13-157A 8574-13-157	2	CLIP			
13-158 B675-13-158	3	INSULATOR,FUEL DIST.			
13-164 F8B3-13-164	3	BOLT,FUEL DISTRIBUTOR			
13-250A BP06-13-250	4	INJECTION,FUEL-M.P.ELECT.			
13-252 8574-13-252	4	GROMMET			
13-253 G601-13-253	1	RING,'O' AISAN INDUSTRY (ILLUST. NO.1)			
8574-13-253	4	(ILLUST. NO.2)			
13-257 JE06-13-257	4	INSULATOR,INJECTION			
13-280A KJ01-13-280	1	PRESSURE RG.,FUEL			
93-5908 99359-0809	1	HOSE			

CAT. AUHA06-03

1998-07

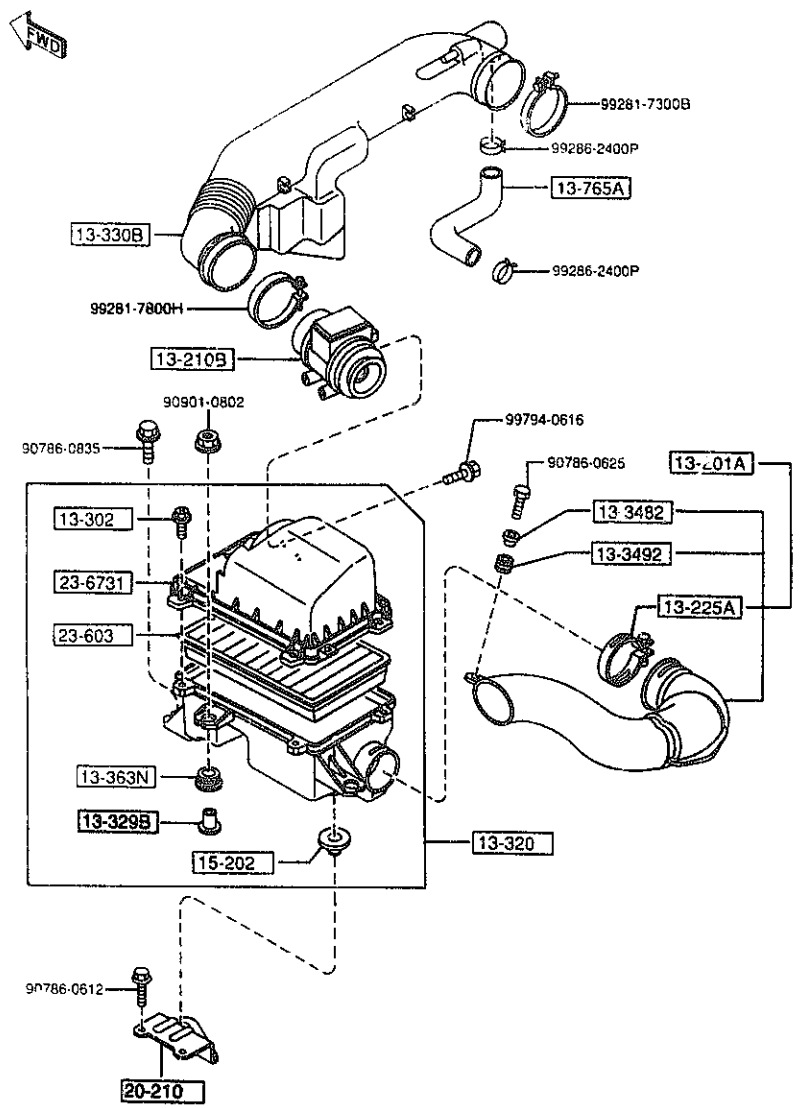

AUNA06

PART NO	QTY	MODEL/RESTRICTION	MODEL/RESTRICTION	MODEL/RESTRICTION	FROM TO
13-201A BPE8-13-200	1	DUCT,FRESH AIR			
13-210B B6BF-13-215	1	SENSOR,AIR FLOW			
13-225A B61P-13-735	1	CLAMP,HOSE			
13-302 F201-13-302A	4	BOLT,AIR CLEANER			
13-320 BPE8-13-320	1	CLEANER,AIR			
13-329B *FE51-13-329	3	SPACER			
13-330B BPE8-13-331B	1	PIPE,AIR INTAKE			
13-3482 SLA1-13-321	1	SPACER,AIR INT.PIPE			
13-3492 S501-13-349	1	INSULATOR			
13-363N FE51-13-363	3	RUBBER,MOUNTING			
13-765A BPE8-13-765A	1	HOSE,AIR			
15-202 B61P-13-Z66	1	RUBBER,MOUNT			
20-210 *B61P-20-211	1	BRACKET,AIR CLEANER			
23-603 B6S7-13-Z40	1	ELEMENT,AIR CLEANER			

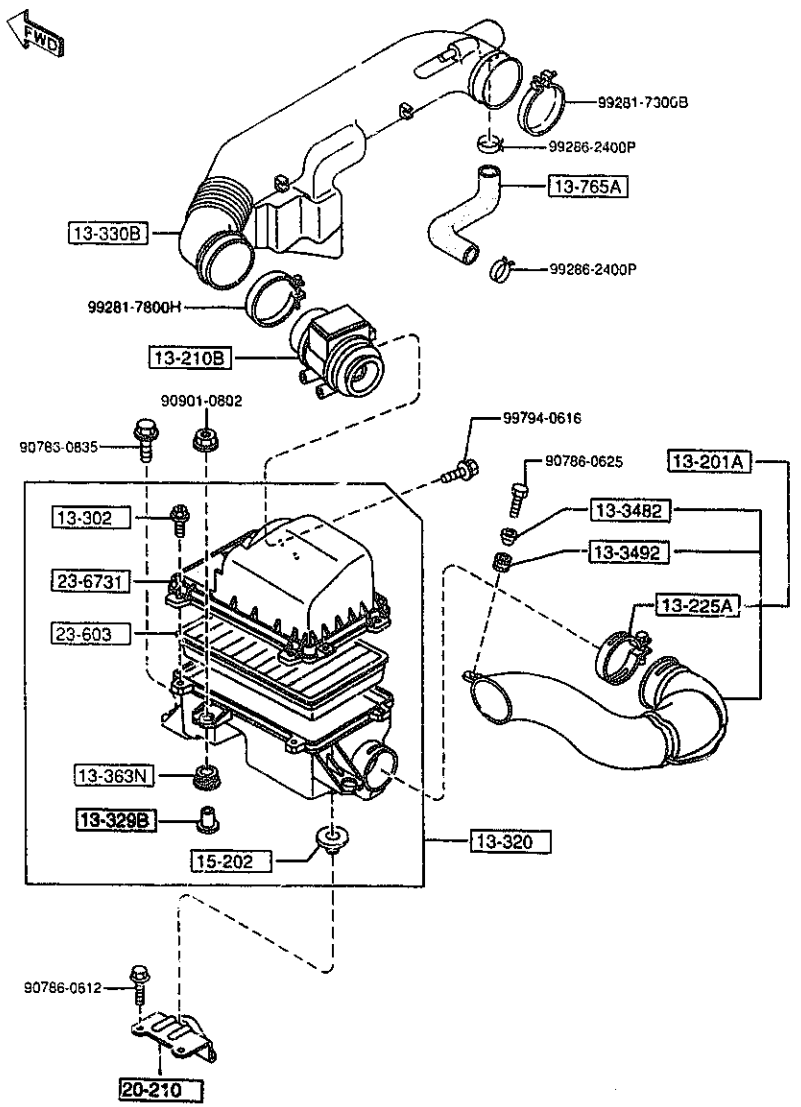

AUNA06

1330 -2 * AIR CLEANER

PART NO.	QTY	MODEL/RESTRICTION	MODEL/RESTRICTION	MODEL/RESTRICTION	FROM-TO
23-6731		COVER,AIR CLEANER			
BPE8-13-Z01	1				

CAT. AUNA06-03

1998-07

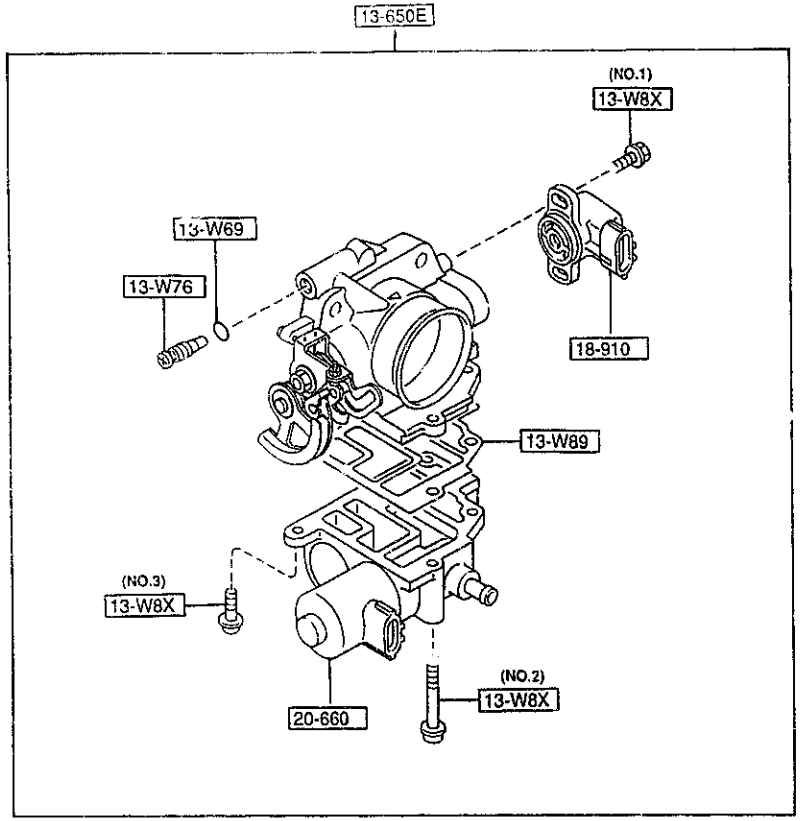

AUNA06

1364 -1 * THROTTLE BODY

PART NO.	QTY	MODEL/RESTRICTION	MODEL/RESTRICTION	MODEL/RESTRICTION	FROM-TO
13-W69		RING,'O'			
K801-13-W69	1				
13-W76		SCREW,ID.ADJUST-TH. BODY			
K801-13-W76	1				
13-W8X		SCREW & WASHER SET			
B551-13-W8X	2	(ILLUST. NO.1)			
B6BF-13-W8X	2	(ILLUST. NO.2)			
K802-13-W8X	2	(ILLUST. NO.3)			
13-W89		GASKET,THERMO			
B6BF-13-W89	1				
13-650E		BODY,THROTTLE			
BPR5-13-640	1				
18-910		SENSOR,THROTTLE-CARB			
JE50-18-911	1				
20-660		VALVE,IDLE AIR CONTROL			
B6BF-20-660	1				

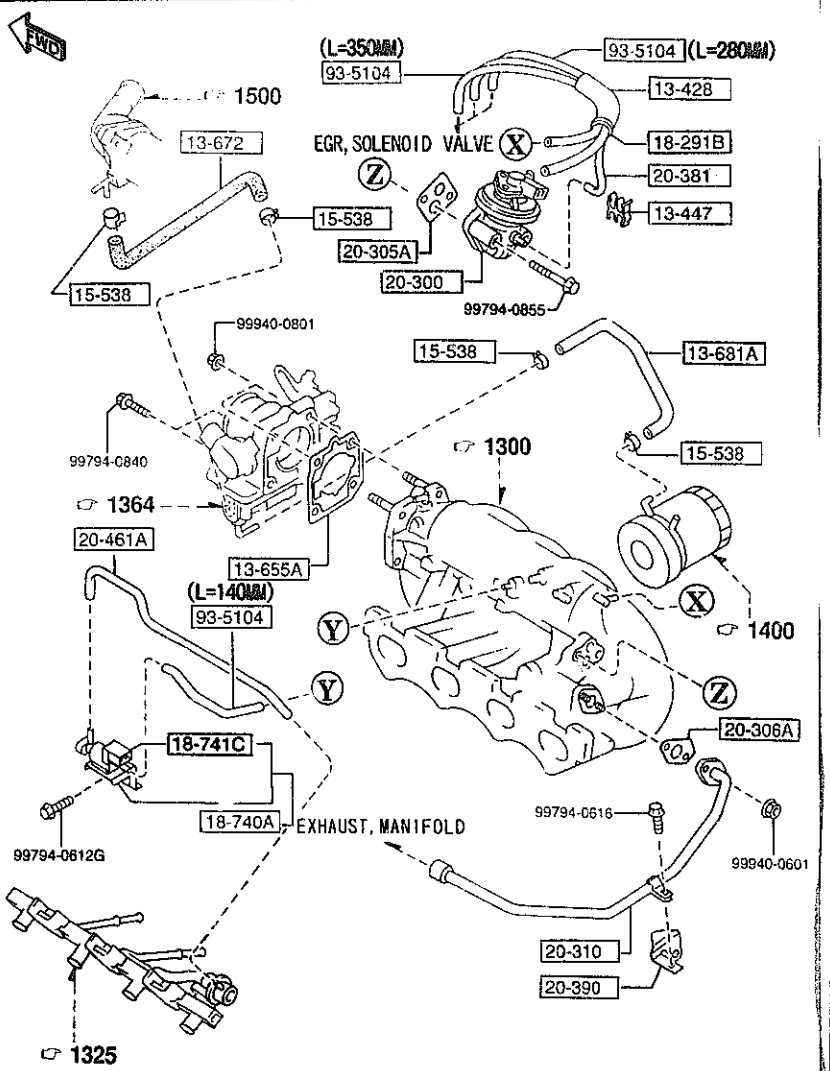

AUNA06

1370 -1 EMISSION CONTROL SYSTEM (INLET SIDE)

PART NO.	QTY	MODEL/RESTRICTION	MODEL/RESTRICTION	MODEL/RESTRICTION	FROM-TO
13-428		PROTECTOR			
BPS1-13-428A	1				
13-447		CLIP			
F601-13-447	1				
13-655A		GASKET			
B6BF-13-655					
13-672		HOSE,WATER			
BPE8-13-682	1				
13-681A		HOSE,WATER			
BPE8-13-681	1				
15-538		CLAMP,WATER HOSE			
B6BF-15-538	4				
18-291B		CLAMP,HOSE			
HE21-18-291	1				
18-740A		VALVE,SOLENOID			
B69N-18-740	1				
18-741C		VALVE,SOLENOID			
*FS05-18-741	1				
20-300		VALVE,E.G.R.			
B6BF-20-300	1				
20-305A		GASKET,E.G.R. VALVE			
JE27-20-305A	1				
20-306A		GASKET			
JE06-20-306	1				
20-310		PIPE,E.G.R.			
BPE8-20-310	1				
20-381		TUBE,VACUUM			
BPS1-20-381	1				

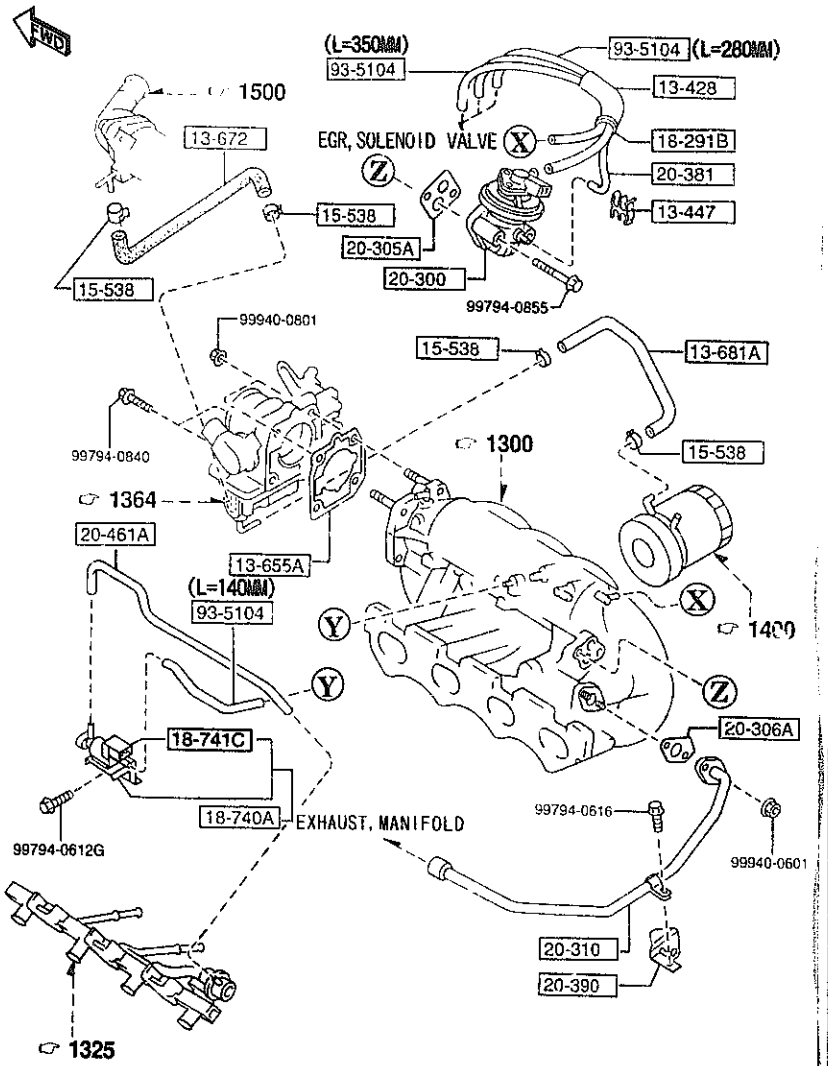

AUNA06

PART NO.	QTY	MODEL/RESTRICTION	MODEL/RESTRICTION	MODEL/RESTRICTION	FROM-TO
20-390		BRACKET,E.G.R.PIPE			
BPE8-20-390	1				
20-461A		TUBE,VACUUM			
BPE8-20-461	1				
93-5104		HOSE			
99351-04999	1	L=1M CUT IT TO USE			

CAT. AUNA06-03

1998-07

1400 OIL PUMP & FILTER

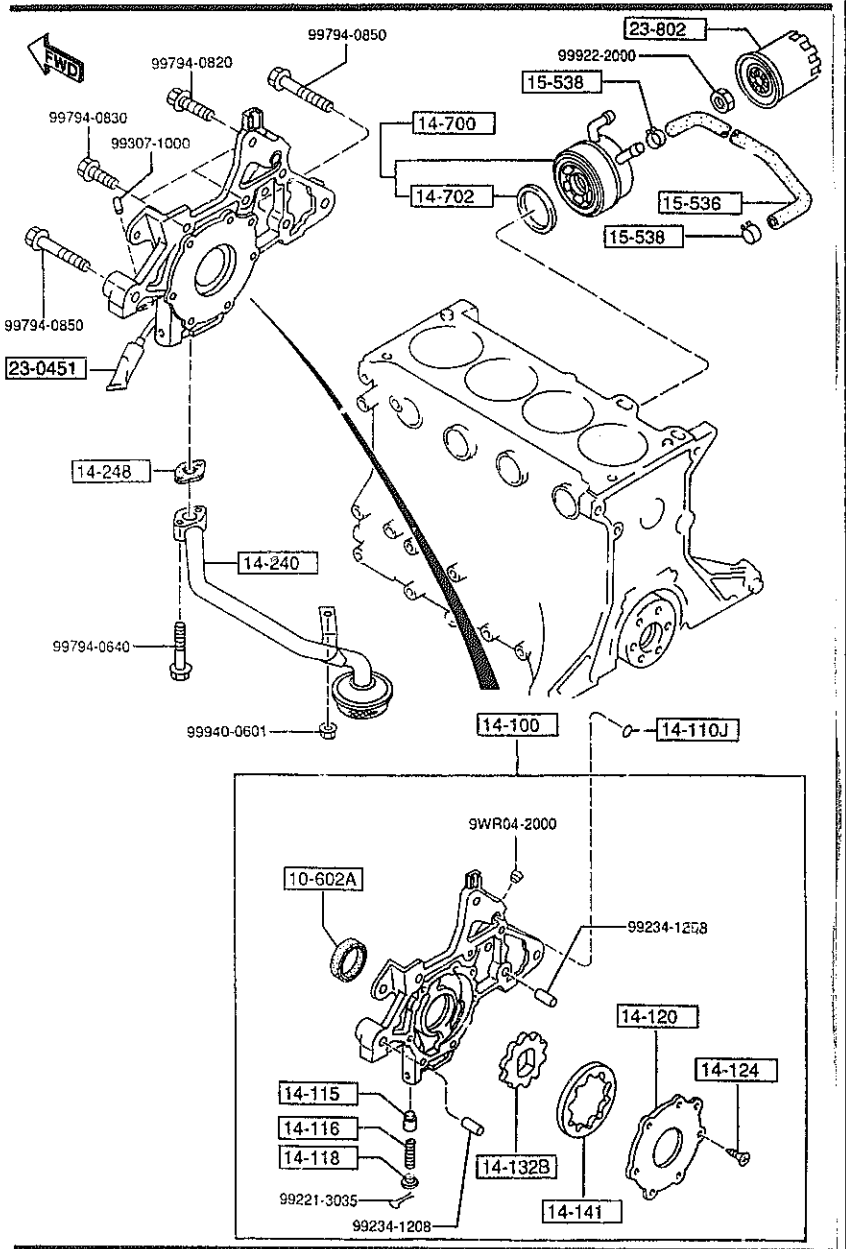

AUNA06

PART NO.	QTY	MODEL/RESTRICTION	MODEL/RESTRICTION	MODEL/RESTRICTION	FROM-TO
10-602A		SEAL,OIL			
B3C7-10-602A	1	NON ASBESTOS			
14-100		PUMP,OIL			
B6S8-14-100H	1				
14-110J		RING,'O'			
FE1H-14-122A	1				
14-115		PLUNGER,CONYROL			
FS01-14-115	1				
14-116		SPRING,PRESSURE			
0324-14-116B	1				
14-118		SHEET,SPRING			
0222-14-118	1				
14-120		COVER,OIL PUMP			
B6BF-14-121	1				
14-124		SCREW,OIL PUMP COVER			
FE1H-14-124	7				
14-132B		GE[illegible],INNER			
B6S7-14-132	1				
14-141		GEAR,OUTER			
B6S7-14-141	1				
14-240		STRAINER,OIL			
BPE8-14-240	1				
14-248		GASKET,OIL STRAINER			
B6BF-14-248	1				
14-700		COOLER,OIL			
BPE8-14-700	1				
14-702		GASKET			

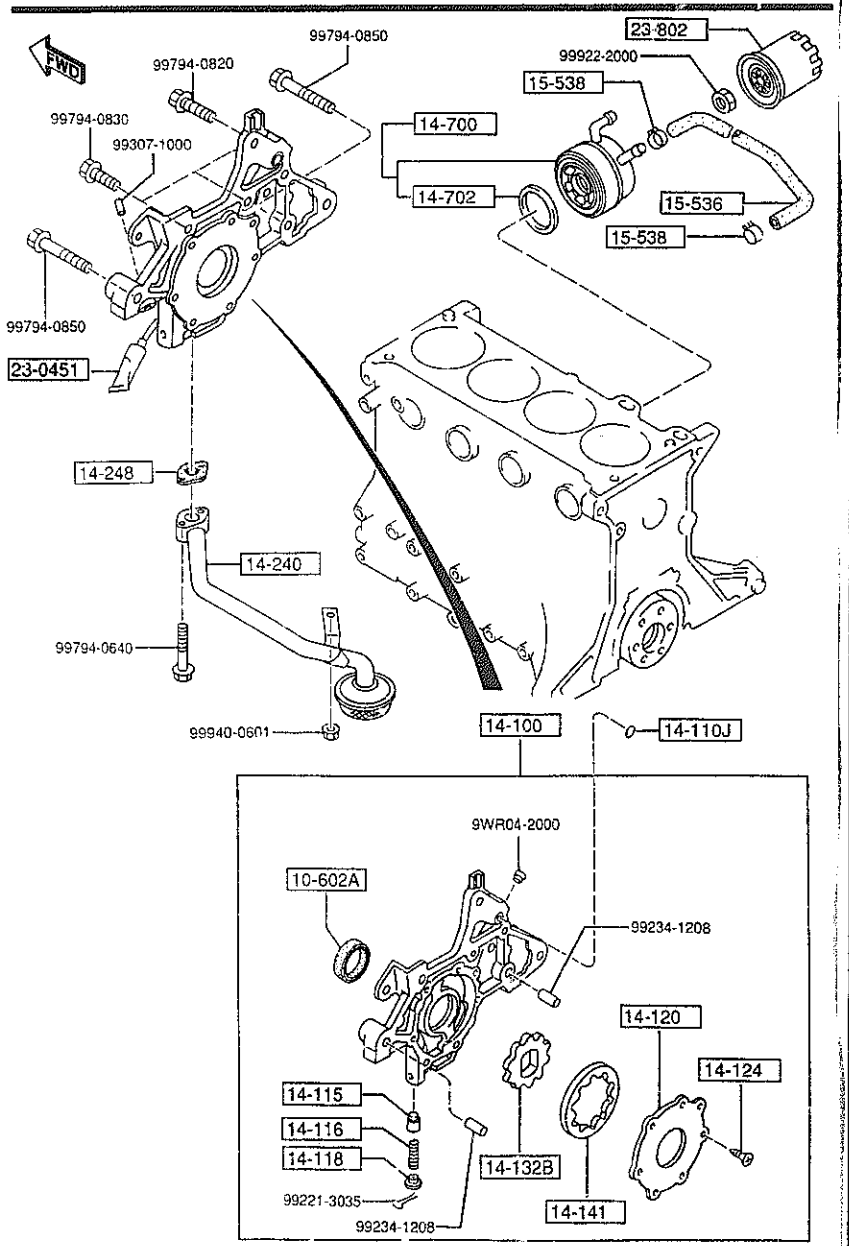

AUNA06

PART NO.	QTY	MODEL/RESTRICTION	MODEL/RESTRICTION	MODEL/RESTRICTION	REMARK
CONT'D					
KL01-14-702A	1				
+---------+					
| 15-536 |		HOSE,WATER-OIL COOLER IN.			
+---------+					
BPE8-15-536	1				
+---------+					
| 15-538 |		CLAMP,WATER HOSE			
+---------+					
B6BF-15-538	2				
+---------+					
| 23-0451 |		TUBE,SILICON			
+---------+					
*8527-77-739	1				
+---------+					
| 23-802 |		CARTRIDGE,OIL FILTER			
+---------+					
B6Y1-14-302A	1	(MAZDA MARK T.ROKI)			

CAT. AUNA06-03

1998-07

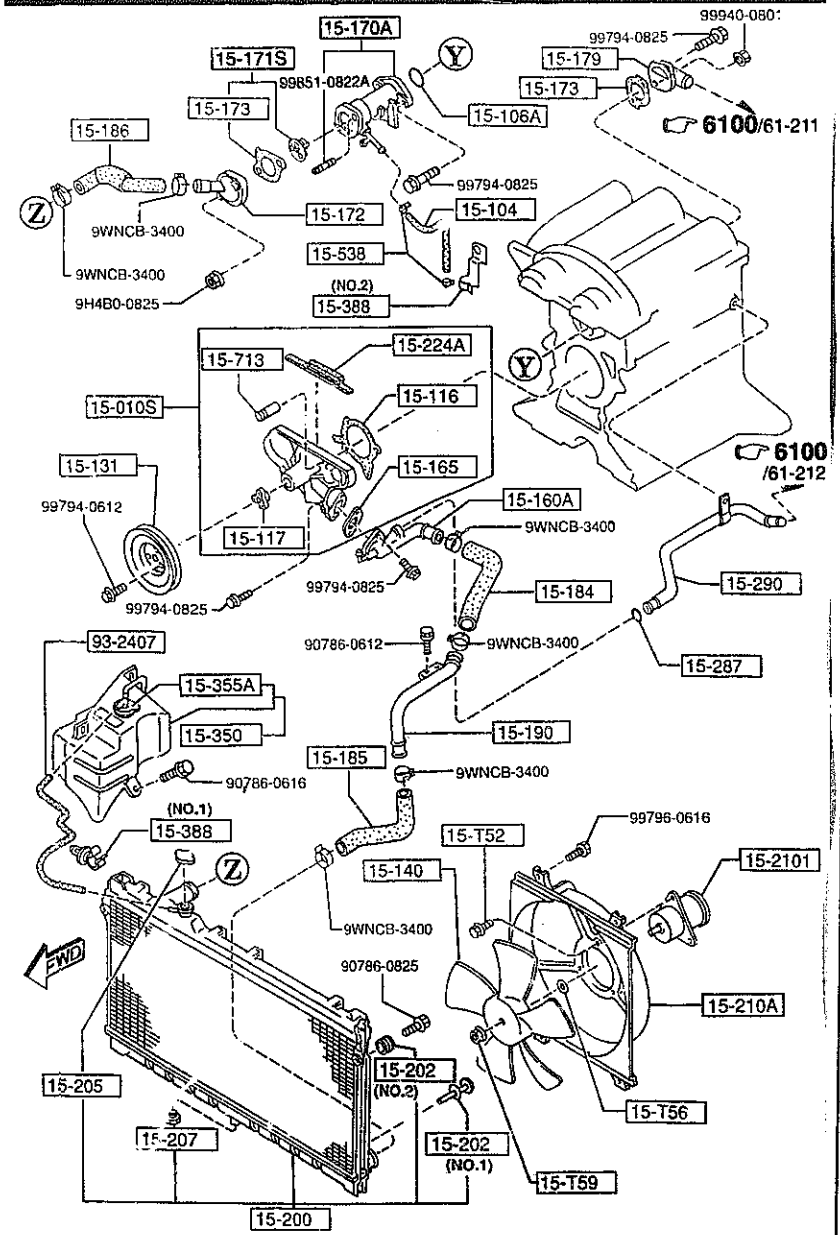

AUNA06

PART NO.	QTY	MODEL/RESTRICTION	MODEL/RESTRICTION	MODEL/RESTRICTION	FROM-TO
15-T52		SCREW,MOTOR-ELECTRIC FAN			
B6S8-15-T52	3				
15-T56		WASHER,MOUNT.-FAN			
B61P-15-T56	1				
15-T59		NUT,COOLING FAN			
B595-15-T59	1				
15-010S		PUMP SET,WATER			
BABB-15-010A	1				
15-104		HOSE,WATER BY-PASS			
B61P-15-261A	1				
15-106A		RING,'O'-WATER PUMP			
B61P-15-106	1				
15-116		GASKET,WATER PUMP			
B6BF-15-116	1				
15-117		BOSS,W.PUMP PULLEY			
E301-15-117	1				
15-131		PULLEY,WATER PUMP			
B3C7-15-131	1				
15-140		FAN,COOLING			
B61P-15-140A	1	(MT)			
B64J-15-140	1	CALSONIC (AT)			-7201
B61P-15-140A	1	(AT)			7201-
15-160A		INLET,WATER PUMP			
B61P-15-160	1				
15-165		GASKET,W.PUMP INLET			
B621-15-165	1	NON ASBESTOS			
15-170A		COVER,THERMO			

7201 NA35*V-730033

CAT. AUNA06-03

1998-07

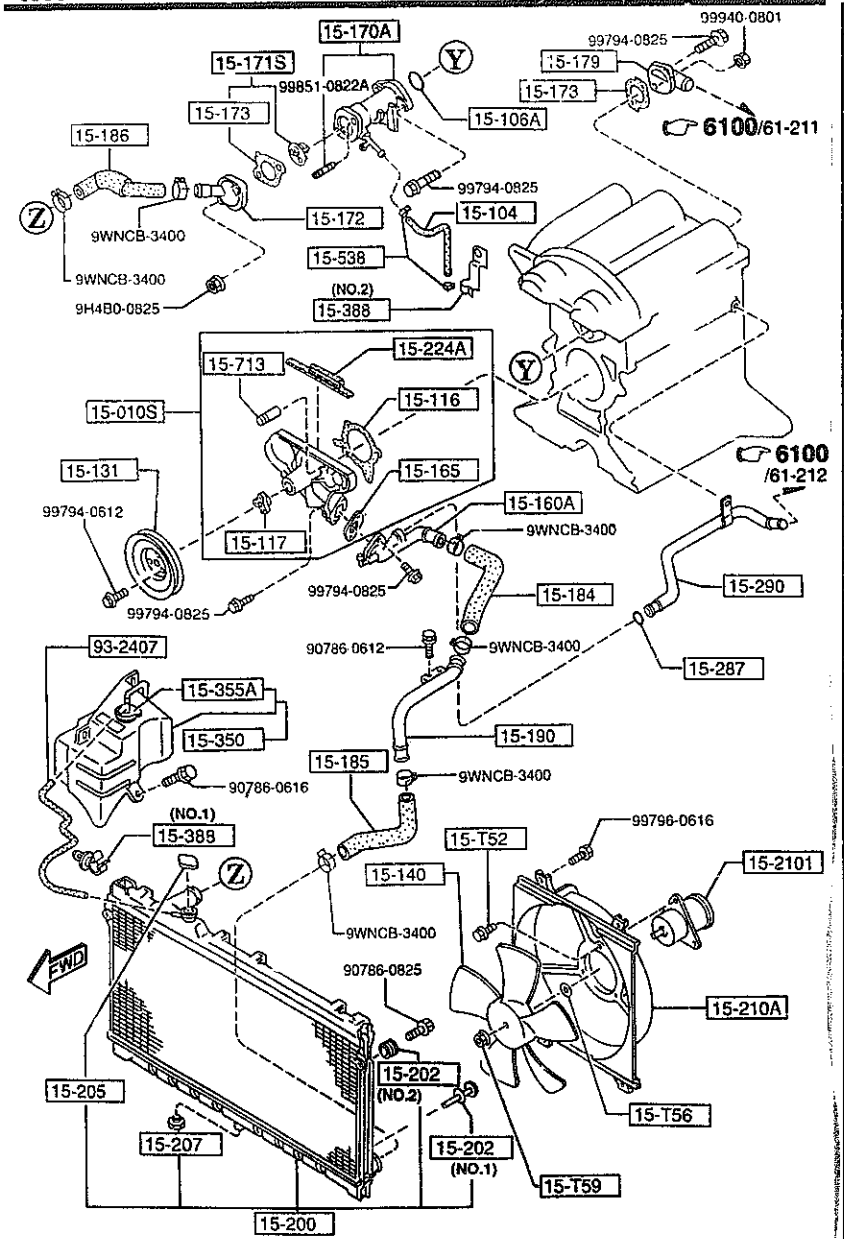

AUNA06

PART NO	QTY	MODEL/RESTRICTION	MODEL/RESTRICTION	MODEL/RESTRICTION	ILLUS. NO.
CONT'D					
BPE8-15-170A	1				
15-171S		THERMOSTAT SET			
8AB9-15-171	1				
15-172		COVER,THERMOSTAT			
BPE8-15-172	1				
15-173		GASKET,THERMOSTAT COVER			
B621-15-173	2	NON ASBESTOS			
15-179		OUTLET,WATER			
BPE8-15-179	1				
15-184		HOSE,WATER			
B61P-15-184	1				
15-185		HOSE,WATER			
BPE8-15-185	1				
15-186		HOSE,WATER			
BPE8-15-186	1				
15-190		PIPE,WATER			
B61P-15-190	1				
15-200		RADIATOR			
BPE8-15-200	1	(MT)			
BPE9-15-200	1	(AT)			
15-202		RUBBER,MOUNT			
B61P-15-202	2	(ILLUST. NO.1)			
N326-15-202	2	(ILLUST. NO.2)			
15-205		CAP,RADIATOR			
D316-15-205	1	CALSONIC			
15-207		COCK,DRAIN			
NF01-15-203	1	CALSONIC			

1500 COOLING SYSTEM

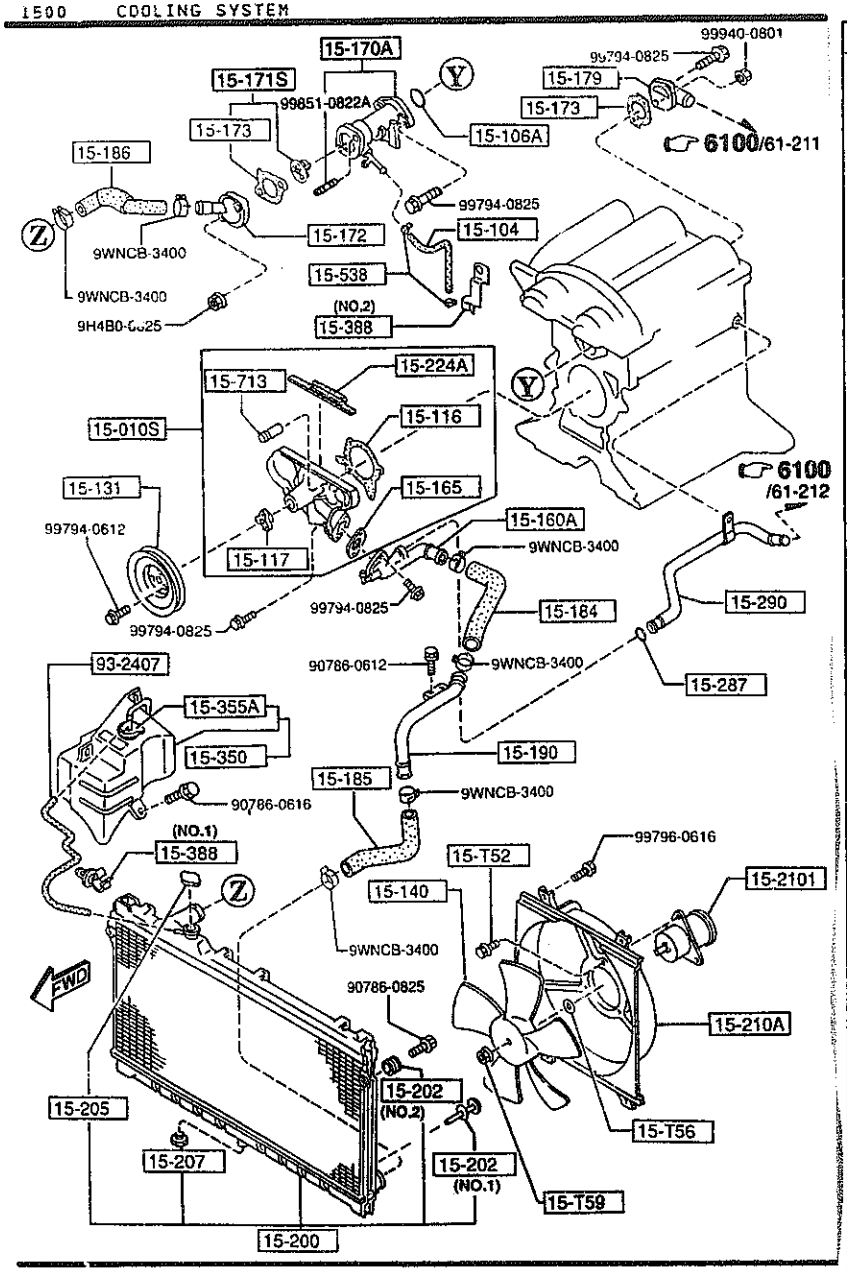

AUNA06

PART NO.	QTY	MODEL/RESTRICTION	MODEL/RESTRICTION	MODEL/RESTRICTION	ITEM NO.
15-210A B61P-15-210B	1	COWLING,RADIATOR			
15-2101 B61P-15-150B	1	FAN DRIVE (MT)			
B64J-15-150A	1	(AT)			-7201
B61P-15-150B	1	(AT)			7201-
15-224A B660-10-543B	1	RUBBER,SEAL			
15-287 E301-15-287	1	RING,'O'-WATER BYPAS S			
15-290 BPE8-15-29-	1	PIPE,BYPASS			
15-350 B61P-15-350D	1	TANK,SUB-RADIATOR			
15-355A B61P-15-355A	1	CAP,SUB TANK			
15-388 F201-15-388A	1	CLIP,HOSE-SUB T.& WA TER H (ILLUST. NO.1)			
B61P-15-547	1	(ILLUST. NO.2)			
15-538 B68F-15-538	2	CLAMP,WATER HOSE			
15-713 F801-15-713	1	SET PIN,SPRING			
93-2407 99324-07610	1	HOSE,WATER			

7201 NA35*V-730033

CAT. AUNA06-03 1998-07

(W/O POWER STEERING)

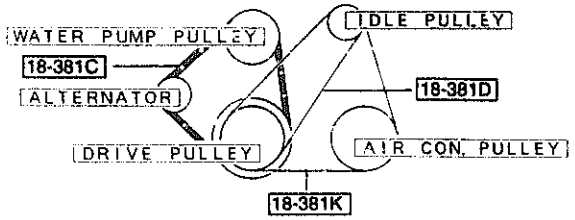

(W/POWER STEERING)

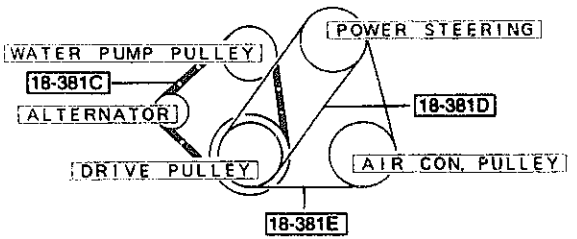

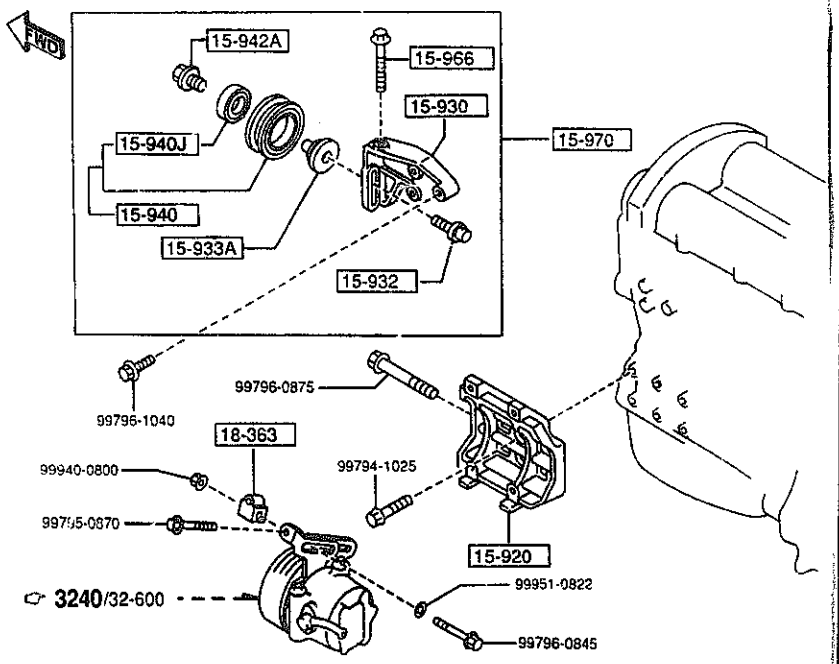

AUNA06

1580 -1 BRACKET, PULLEY & BELT

PART NO	QTY	MODEL/RESTRICTION	MODEL/RESTRICTION	MODEL/RESTRICTION	FROM TO
15-920		BRACKET,COMPRESSOR			
BPE8-15-810A	1	(A) (W/AIR CON.)			
15-930		BRACKET,IDLE PULLEY			
BP01-15-951	1	(A) (W/AIR CON.+W/O POWER STEERING)			
15-932		SHAFT,PULLEY			
B631-15-932	1	(A) (W/AIR CON.+W/O POWER STEERING)			
15-933A		COLLAR			
BP01-15-933	1	(A) (W/AIR CON.+W/O POWER STEERING)			
15-940		PULLEY,IDLE			
BP01-15-940	1	(A) (W/AIR CON.+W/O POWER STEERING)			
15-940J		BEARING			
99606-83020	1	(W/AIR CON.+W/O POWER STEERING)			
15-942A		COLLAR			
E564-15-942	1	(A) (W/AIR CON.+W/O POWER STEERING)			
15-966		BOLT,ADJUST			
E564-15-934	1	(A) (W/AIR CON.+W/O POWER STEERING)			
15-970		PULLEY,IDLE			
BP01-15-930	1	(A) (W/AIR CON.+W/O POWER STEERING)			
18-363		SPACER,STRAP			
FP02-18-363	1	(W/O AIR CON.+W/POWER STEERING)			

(W/O POWER STEERING)

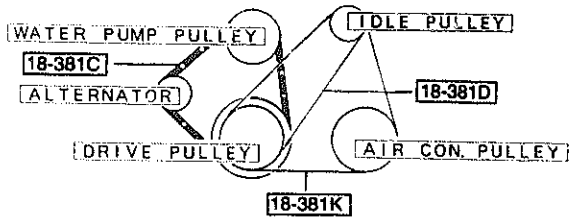

(W/POWER STEERING)

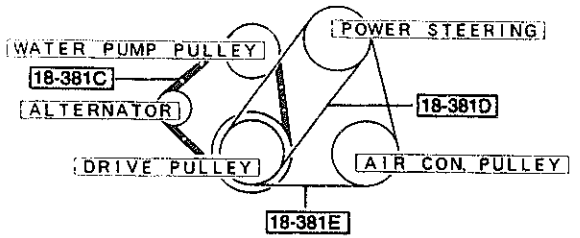

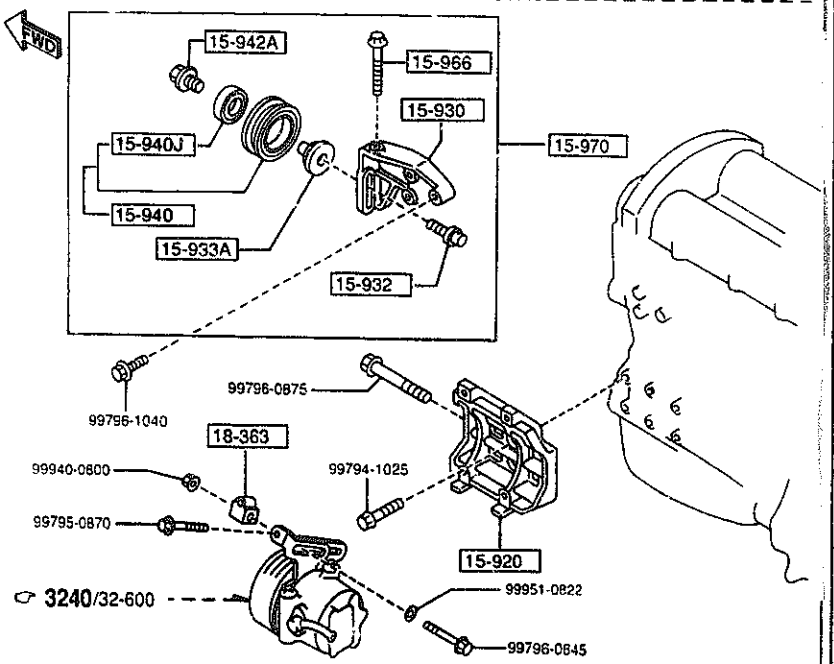

AUNA06

PART NO.	QTY	MODEL/RESTRICTION	MODEL/RESTRICTION	MODEL/RESTRICTION	FROM-TO
18-381C		BELT'V',W/PUMP&ALTERNATOR			
*B68F-18-381	1	4PK L=885 BANDO			
*B596-18-381	1	4PK L=885 GOOD YEAR			-6801
18-381D		BELT'V',POWER STEERING			
*B61P-15-907A	1	4PK-855 MITSUBOSHI (W/O AIR CON.+W/POWER STEERING)			
18-381E		BELT'V',P/STG. & AIR CON.			
*BPE8-15-909A (BPE8-15-909A)	1	(E) GOODYEAR 4PK940 (W/AIR CON.+W/POWER STEERING)			-7924
*BPF3-15-909A (BPF3-15-909A)	1	(A) 4PK L=940MM BANDO (W/AIR CON.+W/POWER STEERING)			-7924
*BPE8-15-909A	1	(E) GOODYEAR 4PK940 (W/AIR CON.+W/POWER STEERING)			7924-
*BPF3-15-909A	1	(A) 4PK L=940MM BANDO (W/AIR CON.+W/POWER STEERING)			7924-
18-381K		BELT'V',AIR CON.			
*B3C7-15-907C	1	4PK L=848MM (W/AIR CON.+W/O POWER STEERING)			
*BPE8-15-908	1	(E) GOODYEAR 4PK848 (W/AIR CON.+W/O POWER STEERING)			

6801 NA35#V-719630
7924 NA35#V-739048

CAT. AUNA06-03

1998-07

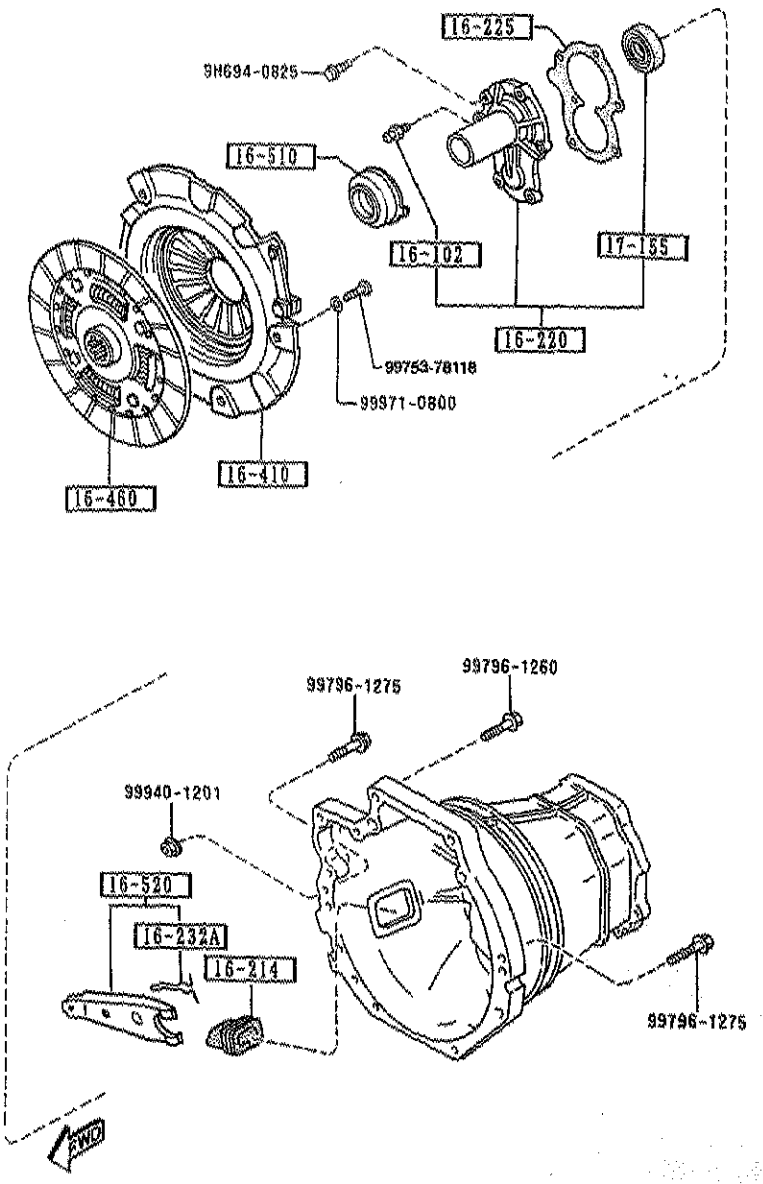

AUNA06

1600 -1 * CLUTCH DISC & COVER

PART NO.	QTY	MODEL/RESTRICTION	MODEL/RESTRICTION	MODEL/RESTRICTION	FROM-TO
16-102		PIN,PIVOT-CLUTCH REL .FORK			
0603-16-102B	1				-7722
*FE69-16-102A	1				7722-
16-214		COVER,DUST-CLUTCH FO RK			
FE51-16-214A	1				
16-220		COVER,FRONT CLUTCH			
B622-16-2?0A	1				-7722
*B626-16-220	1				7722-
16-225		GASKET,FRONT COVER			
FE50-16-225A	1				
16-232A		SUPPORTER,FORK			
1416-16-232A	1				
16-410		COVER,CLUTCH			
BP07-16-410	1				
16-460		DISC,CLUTCH			
BP07-16-460	1				
16-510		COLLAR,CLUTCH REL.			
B622-16-510	1				
16-520		FORK,CLUTCH RELEASE			
B622-16-520 A (B622-16-520A)	1				-7722
*B622-16-520A	1				7722-
17-155		SEAL,OIL			
H501-17-103	1				

7722 NA35*V-738852

CAT. AUNA06-03

1998-07

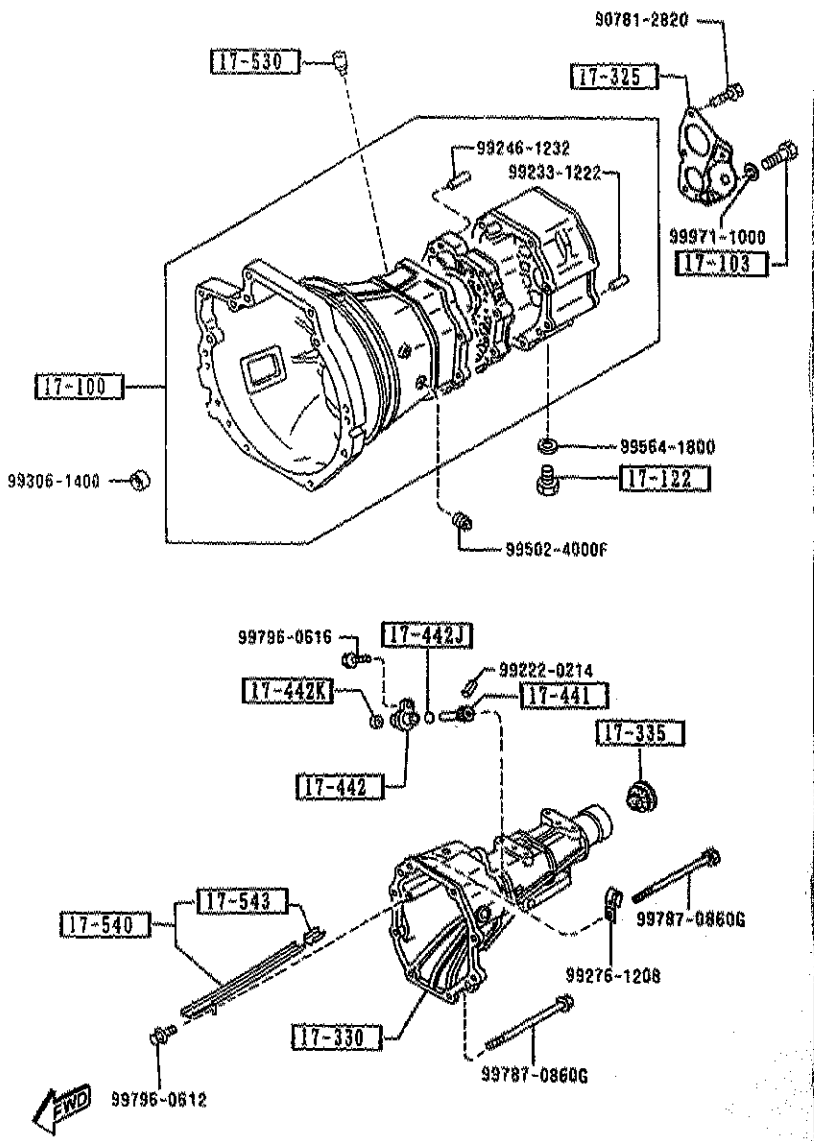

PART NO.	QTY	MODEL/RESTRICTION	MODEL/RESTRICTION	MODEL/RESTRICTION	FROM-TO
17-100		CASE,T/MISSION			
M526-17-100A (M526-17-10XA)	1				-7722
*M526-17-10XA A (M526-17-10XB)	1				7722-7818
*M526-17-10XB	1				7818-
17-103		BOLT			
M501-17-103	2				
17-122		PLUG,MAGNET			
0810-17-121	1				
17-325		COVER,BEARING			
M501-17-370A	1				
17-330		HOUSING,EXTENSION			
M5Y1-17-330	1				
17-335		SEAL,OIL			
M507-17-335A	1				
17-441		GEAR,DRIVEN			
M510-17-441	1	N=22			
17-442		SLEEVE,SPEEDOMETER			
1669-17-442B	1				
17-442J		RING,'O'			
1011-17-443	1				
17-442K		SEAL,OIL			
99586-08166	1				
17-530		BREATHER,AIR-T/MISSION			
0884-17-530	1				
17-540		PASS,OIL			
M509-17-540	1				

7722 NA35*V-738852
7818 NA35*V-739032

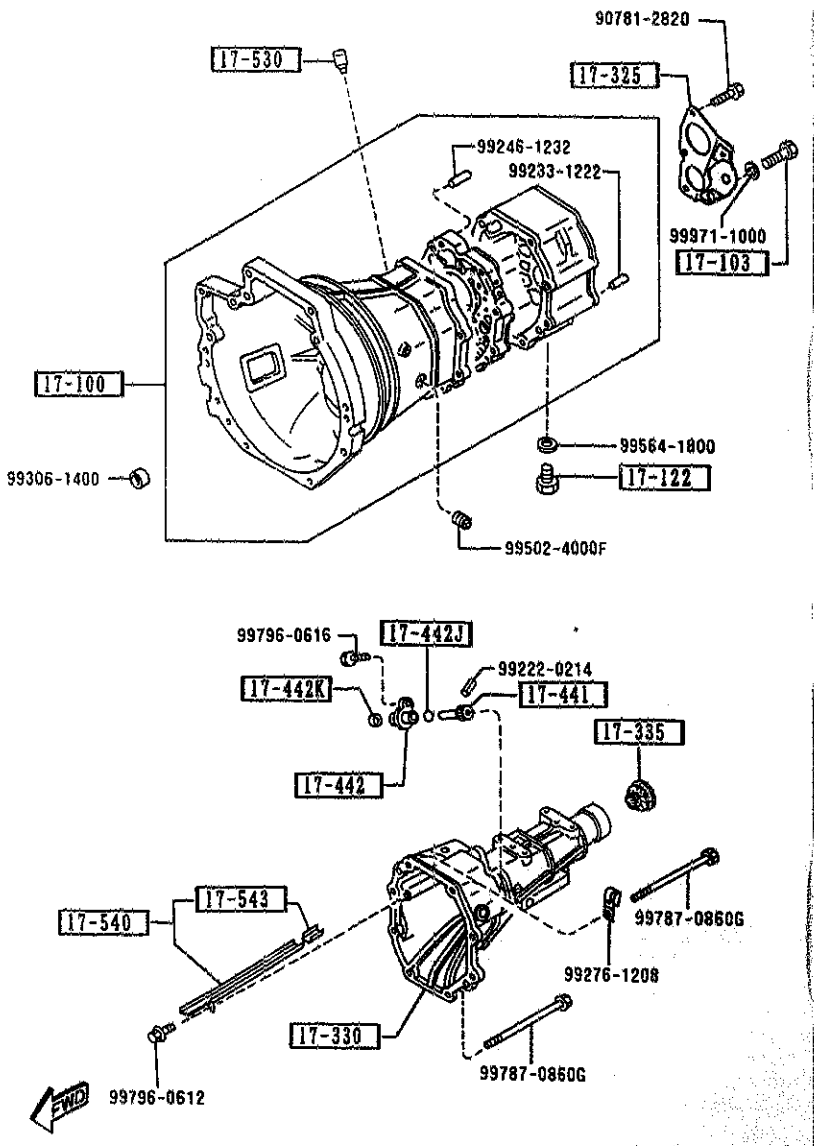

AUNA06

PART NO.	QTY	MODEL/RESTRICTION	MODEL/RESTRICTION	MODEL/RESTRICTION	FROM-TO
17-543		RUBBER,SEAL			
M501-17-543A	1	SUMINO INDUSTRY			

CAT. AUNA06-0□

1998-07

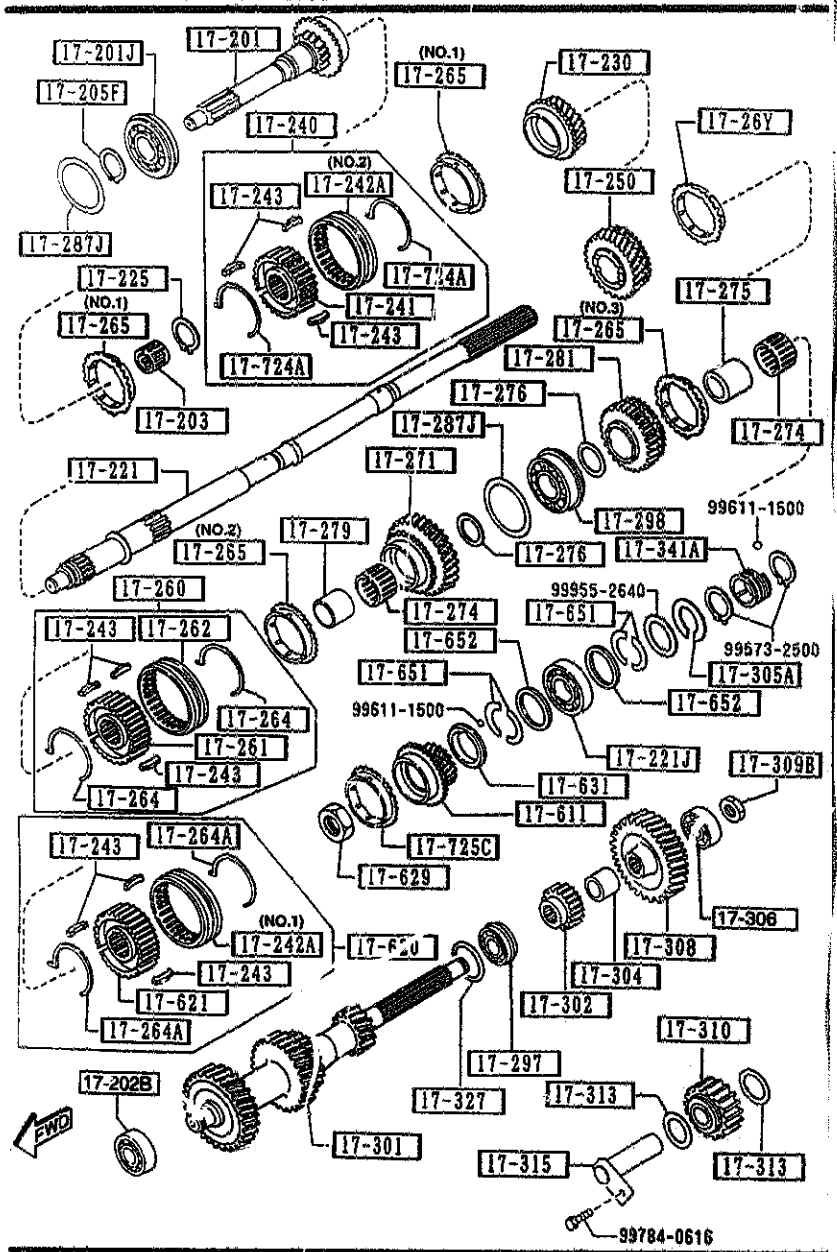

AUNA06

PART NO.	QTY	MODEL/RESTRICTION	MODEL/RESTRICTION	MODEL/RESTRICTION	FROM-TO
17-201 M516-17-201	1	GEAR,MAIN DRIVE			
17-201J M502-17-295C	1	BEARING,BALL-MAIN DRIVE GEAR			
17-202B *M502-17-297A	1	BEARING,BALL			-7801
*F520-17-171B	1				7801-
17-203 M501-17-210A	1	BEARING,NEEDLE			
17-205F M501-17-205	1	RING,RETAINING			
17-221 M505-17-221B	1	SHAFT,MAIN			
17-221J 99606-63053	1	BEARING,BALL			
17-225 0317-17-225	1	RING,SNAP			
17-230 M513-17-231B AN(M513-17-231C)	1	GEAR,3RD			-6C01
M513-17-231C	1				6C01-
17-240 M517-17-240	1	HUB SET,CLUTCH-3RD & 4TH			
17-241 M501-17-241C	1	HUB,CLUTCH			
17-242A F401-17-242A	1	SLEEVE,CLUTCH HUB (ILLUST. NO.1)			
M502-17-242	1	(ILLUST. NO.2)			

6C01 NA35*V-725591
7801 NA35*V-739024

CAT. AUNA06-03

1998-07

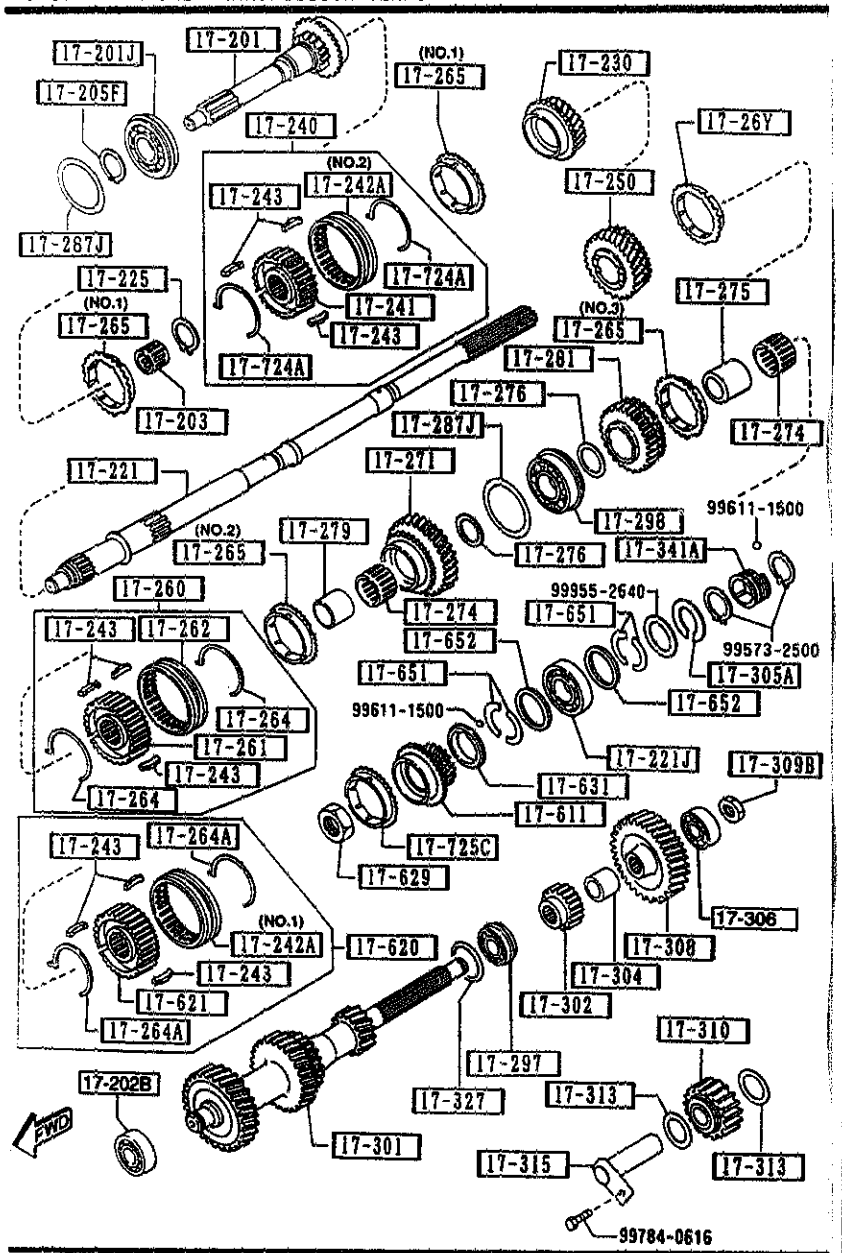

AUNA06

PART NO.	QTY	MODEL/RESTRICTION	MODEL/RESTRICTION	MODEL/RESTRICTION	FROM-TO
17-243		KEY,SYNCHRONIZER			
F401-17-243A AN(F401-17-243C)	9				-6A01
F401-17-243C	9				6A01-
17-250		GEAR,2ND			
M520-17-251A	1				
17-26Y		RING,SYNCHRONIZER			
R504-17-26Y	1				
17-260		HUB SET,CLUTCH-1ST & 2ND			
M517-17-260	1				
17-261		HUB,CLUTCH			
M511-17-261	1				
17-262		SLEEVE,CLUTCH HUB			
M505-17-262	1				
17-264		SPRING,SYNCHRO. KEY			
G401-17-264	2				
17-264A		SPRING,SYNCHRONIZER			
F401-17-264A	2				
17-265		RING,SYNCHRONIZER			
G501-17-265A	2	(ILLUST. NO.1)			
M502-17-265C	1	(ILLUST. NO.2)			
M504-17-265A	1	(ILLUST. NO.3)			
17-271		GEAR,1ST			
M516-17-271A	1				
17-274		BEARING,NEEDLE			
4069-17-283A	2				
17-275		RACE,INNER			
4069-17-284E	1				

6A01 NA35#V-720311

CAT. AUNA06-03

1998-07

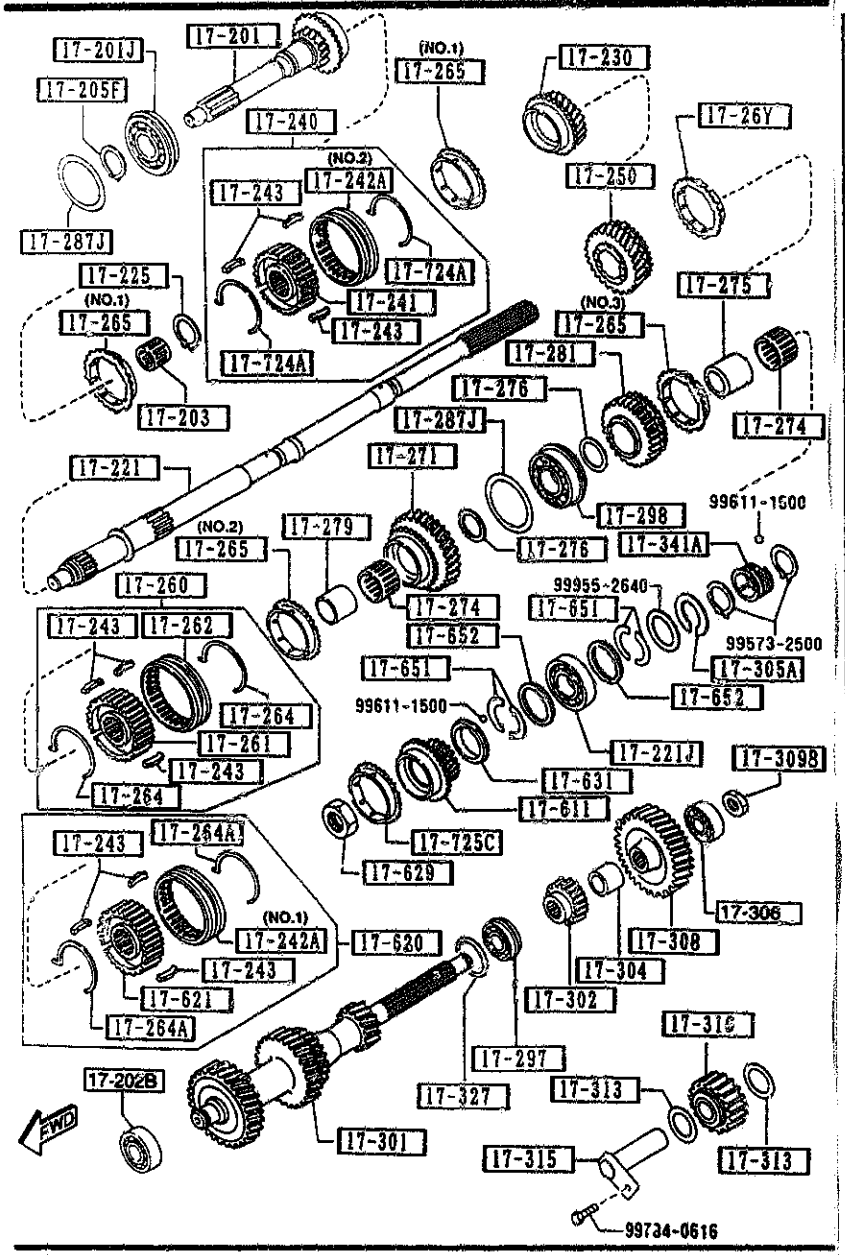

AUNA06

PART NO.	QTY	MODEL/RESTRICTION	MODEL/RESTRICTION	MODEL/RESTRICTION	FROM-TO
17-276		WASHER,THRUST			
0259-17-274A	2	T=3.0MM			
0259-17-276	2	T=2.2MM			
0259-17-277	2	T=2.7MM			
0259-17-278	2	T=3.2MM			
0259-17-279	2	T=3.7MM			
17-279		SLEEVE,GEAR			
8540-17-279A	1				
17-281		GEAR,REVERSE			
M513-17-281	1				
17-287J		SHIM,ADJUST			
99963-6310	2	T=0.1MM			-7721
99963-6315	1	T=0.15MM			-7721
99963-6330	2	T=0.3MM			-7721
*99963-6310	4	T=0.1MM			7721-
*99963-6330	3	T=0.3MM			7721-
17-297		BEARING,BALL-COUNTER SHAFT G.			
M506-17-297	1				
17-298		BEARING			
M502-17-298A	1				
17-301		GEAR,COUNTER SHAFT			
M528-17-301A	1				
17-302		GEAR,COUNTER REVERSE			
M516-17-302	1				
17-304		SPACER			

7721 NA35#V-738834

CAT. AUNA06-03 1998-07

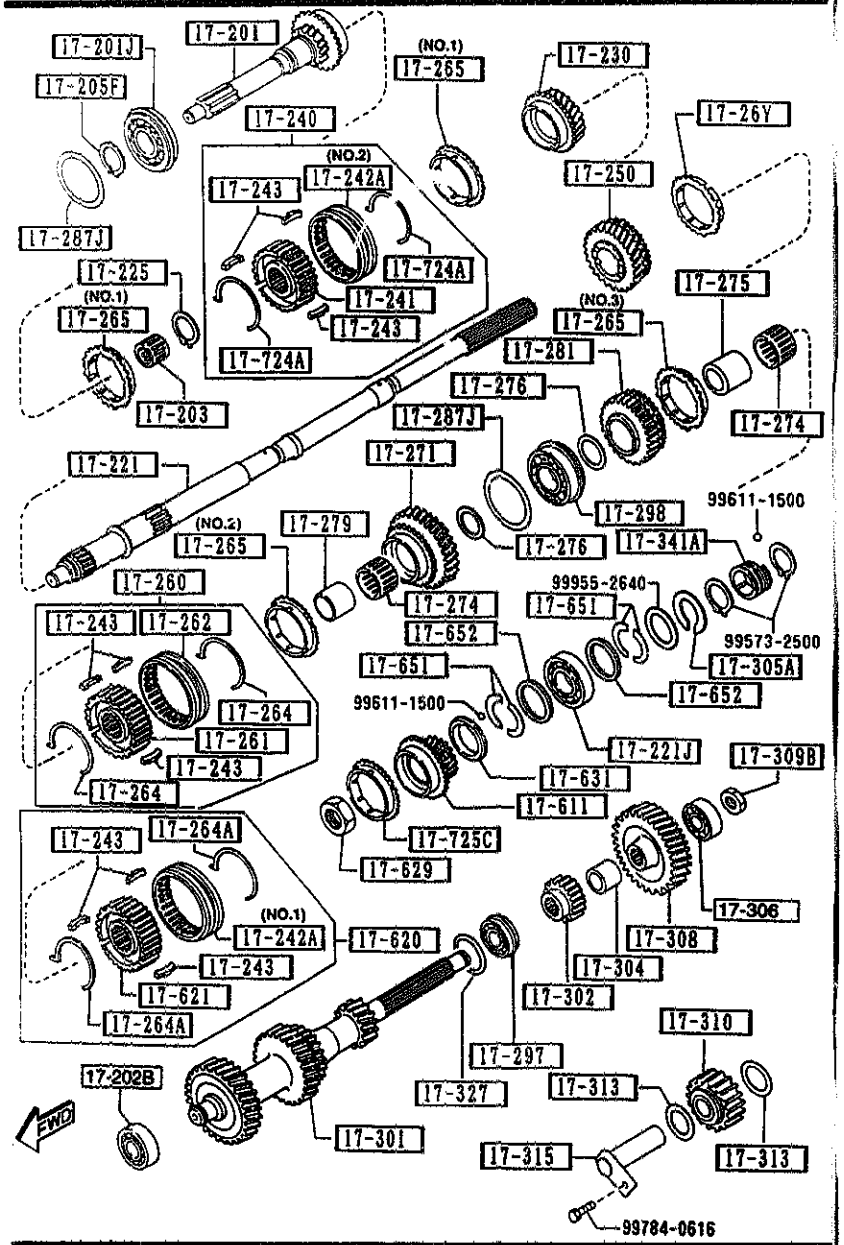

AUNA06

PART NO	QTY	MODEL/RESTRICTION	MODEL/RESTRICTION	MODEL/RESTRICTION	FROM-TO
CONT'D					
M504-17-304	1				
17-305A		RING,RETAINING-BALL BEARING			
0839-17-305B	1				
17-306		BEARING,BALL			
*P502-17-204	1				-7820
*M502-17-299B	1				7820-
17-308		GEAR,COUNTER			
M510-17-308	1				
17-309B		NUT,LOCK-COUNTER SHAFT BR			
M501-17-309	1				
17-310		GEAR,REVERSE IDLE			
M513-17-310 AN(M513-17-310A)	1				-7501
M513-17-310A	1				7501-
17-313		WASHER,THRUST-REVERSE IDLE G. T=2.0MM			
M501-17-313	2				
17-315		SHAFT,REV. IDLE GEAR			
M501-17-140	1				
17-327		SHIM,ADJUST-COUNTER SHAFT GEAR T=0.1MM			
0305-17-327	2				
0305-17-328	1	T=0.3MM			-7721
*0305-17-328	2	T=0.3MM			7721-
17-341A		GEAR,SPEEDO.DRIVE			
M503-17-341 A (M503-17-341A)	1				-7201
M503-17-341A	1				7201-
17-611		GEAR,OVER TOP			
M517-17-61_	1				

7201 NA35*V-730033
7501 NA35*V-736464
7721 NA35*V-738834
7820 NA35*V-739035

CAT. AUNA06-03

1998-07

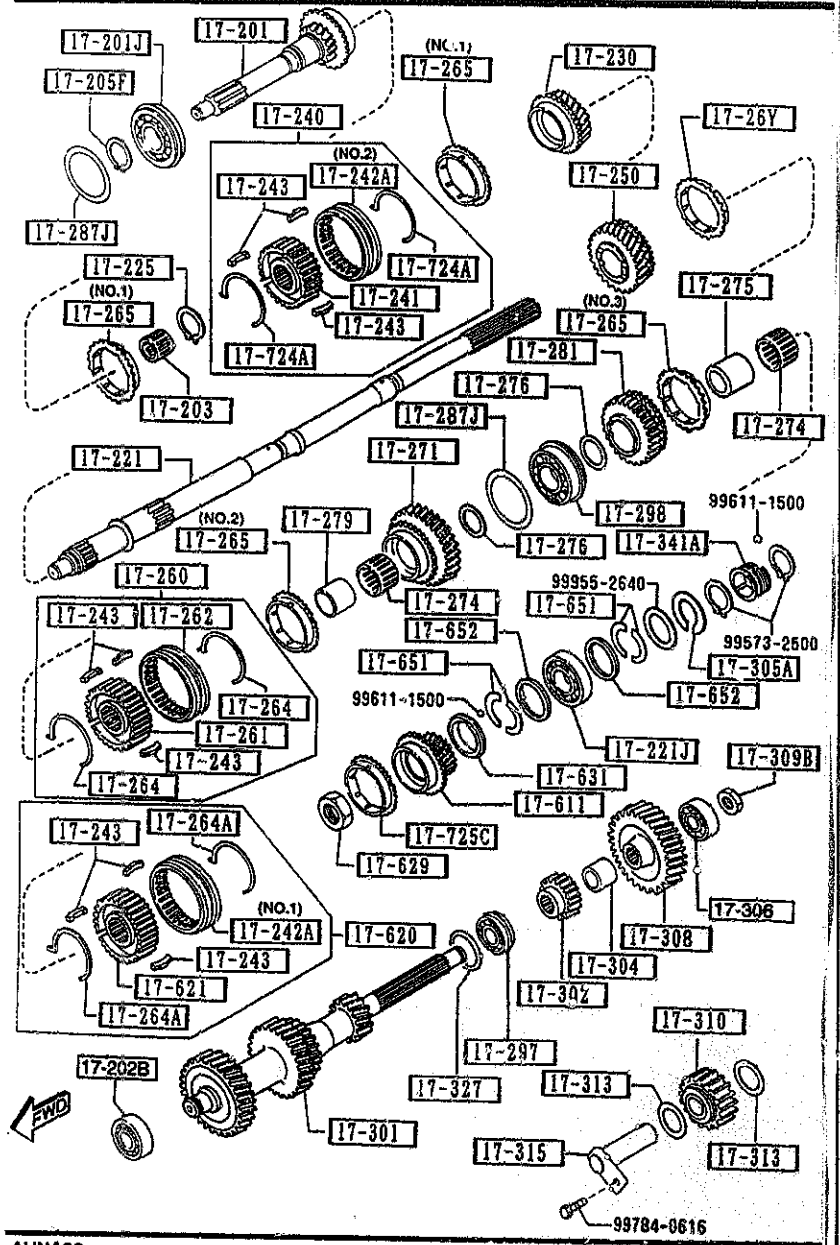

AUNA06

1710 -5 * MANUAL TRANSMISSION GEARS

PART NO.	QTY	MODEL/RESTRICTION	MODEL/RESTRICTION	MODEL/RESTRICTION	FROM-TO
17-620		HUB SET,CLUTCH-D.T. & REV			
M505-17-620	1				
17-621		HUB,CLUTCH			
M505-17-621	1				
17-629		NUT,LOCK-CLUTCH HUB			
8601-17-629	1				
17-631		WASHER,THRUST LOCK-OVER TOP G.			
0884-17-632B	1	T=6.2MM			
0884-17-633B	1	T=6.4MM			
0884-17-634B	1	T=6.5MM			
0884-17-635B	1	T=6.6MM			
17-651		WASHER,THRUST			
M501-17-651	4	T=3.0MM			
M501-17-653	2	T=3.1MM			
M501-17-654	2	T=3.2MM			
M501-17-655	2	T=2.9MM			
17-652		RING,THRUST WASHER			
M501-17-652	2	T=2.0MM			
17-724A		SPRING,SYNCHRO.KEY			
W501-17-724	2				
17-725C		RING,SYNCHRONIZER			
V501-17-725	1				

CAT. AUNA06-03

1998-07

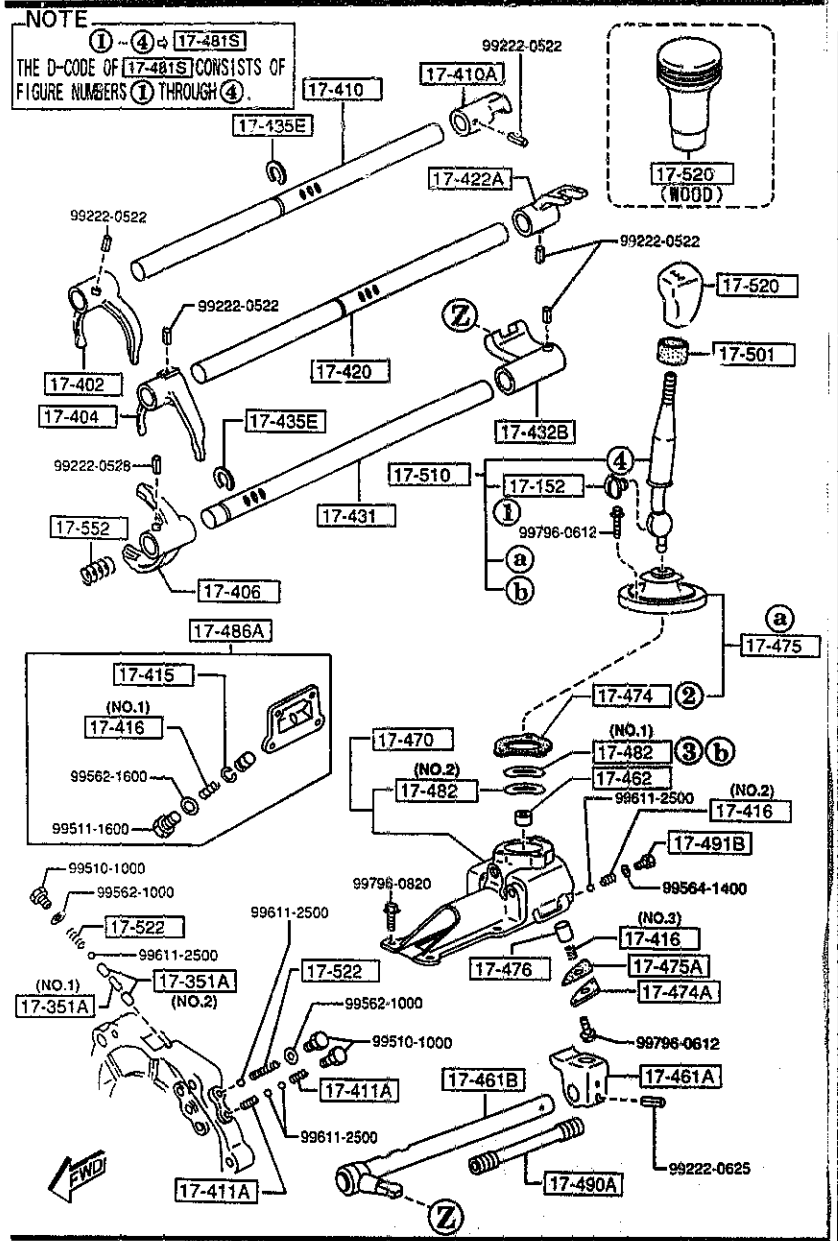

AUNA06

PART NO.	QTY	MODEL/RESTRICTION	MODEL/RESTRICTION	MODEL/RESTRICTION	FROM-TO
17-152		BUSH			
M501-17-515	1				
17-351A		PIN,INTER LOCK			
R501-17-351	1	(ILLUST. NO.1)			
0114-17-351	2	(ILLUST. NO.2)			
17-402		FORK,SHIFT (1ST & 2ND)			
M503-17-402	1				
17-404		FORK,SHIFT (3RD & 4TH)			
M501-17-404B	1				
17-406		FORK,SHIFT			
M504-17-406A	1				
17-410		ROD,SHIFT(1ST&2ND)			
M503-17-411	1				
17-410A		END,S/ROD(1ST&2ND)			
M507-17-412A	1				
17-411A		SPRING,SHIFT ROD-REVERSE			
0014-17-411	2				
17-415		RING,RETAINING-SHIFT ROD END			
3648-17-415	1				-7201
17-416		SPRING,SHIFT ROD END			
M501-17-416	1	(ILLUST. NO.1)			
M504-17-416	1	(ILLUST. NO.2)			
M505-17-416	1	(ILLUST. NO.3)			
17-420		ROD,SHIFT(3RD&4TH)			
M504-17-421A	1				
17-422A		END,S/ROD(3RD&4TH)			
M507-17-422A	1				
17-431		ROD,SHIFT-OVER TOP & REVERSE			

7201 NA35*V-730033

CAT. AUNA06-03 1998-07

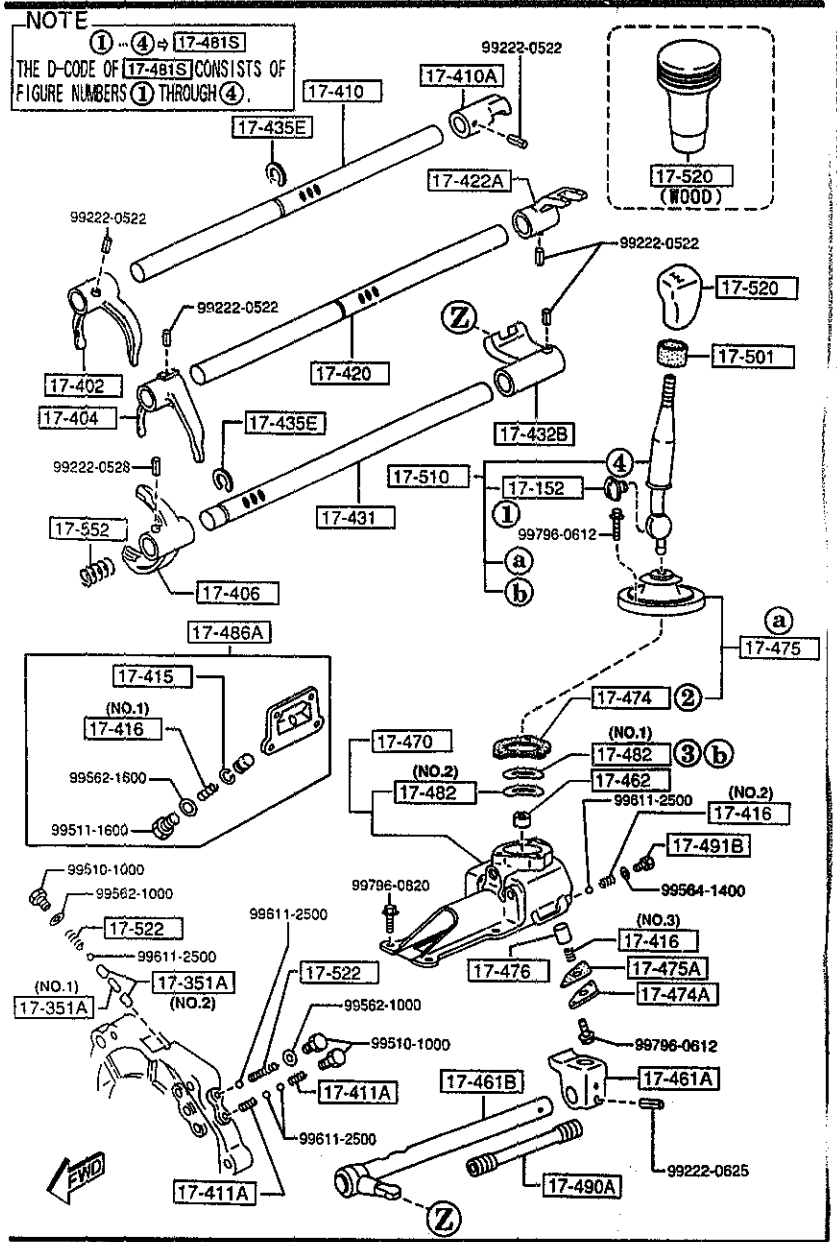

AUNA06

PART NO.	QTY	MODEL/RESTRICTION	MODEL/RESTRICTION	MODEL/RESTRICTION	FROM-TO
CONT'D					
M506-17-431A	1				
17-432B		END,SHIFT ROD(O/TOP& REV.)			
M508-17-432	1				
17-435E		RING,RETAINING			
R502-17-435	2				
17-461A		END,CONTROL LEVER			
M508-17-461A	1				
17-461B		ROD,CONTROL			
M516-17-450A	1				
17-462		SHEET,SPRING			
0398-17-462A	1				
17-470		CASE,CHANGE CONTROL			
M510-17-470C	1				
17-474		GASKET,COVER PLATE			
0303-17-474	1				
17-474A		CAP,SPRING			
M501-17-474	1				
17-475		BOOT,DUST-CHANGE LEVER			
M513-17-480A	1				
17-475A		GASKET,SPRING CAP			
M501-17-475	1				
17-476		SPINDLE,SELECT LOCK			
M502-17-476A	1				
17-481S		BUSH SET,CHANGE LEVER			
8ANI-17-481	1				
17-482		WASHER,WAVE-CHANGE CONT.CASE			
M505-17-482	1	(ILLUST. NO.1)			
8599-17-482	1	(ILLUST. NO.2)			

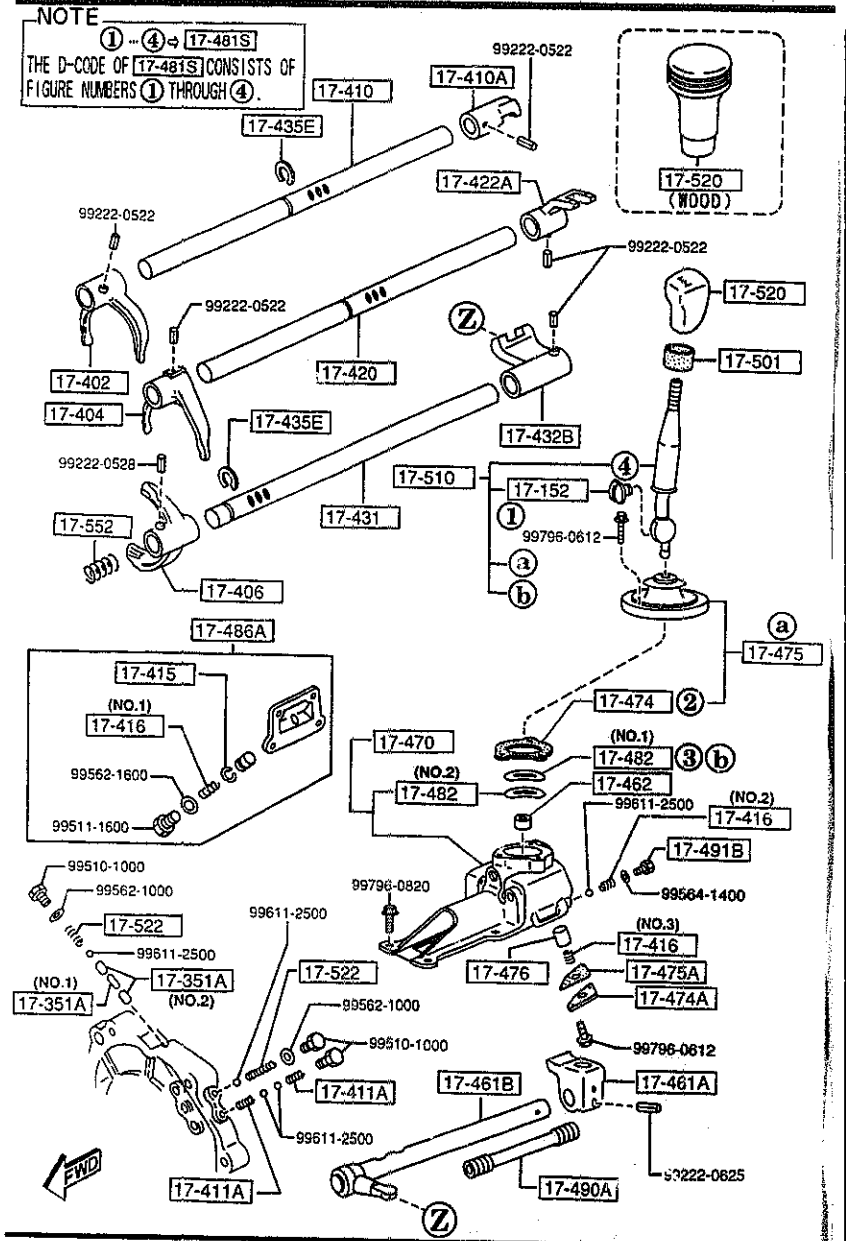

AUNA06

PART NO.	QTY	MODEL/RESTRICTION	MODEL/RESTRICTION	MODEL/RESTRICTION	FROM-TO
17-486A		COVER,BLIND			
R501-17-47X AN(R501-17-47XA)	1				-7201
R501-17-47XA	1				7201-
17-490A		COVER,ROD			
M504-17-490A	1				
17-491B		CAP,SPRING			
0183-17-491	1				
17-501		INSULATOR,CHG LEVER			
M501-17-501	1				
17-510		LEVER,CHANGE			
M524-17-510C	1				
17-520		KNOB,CHANGE LEVER			
M515-17-520	1	(URETHANE)			
00	INT-	NA3 NA5 BLACK			
M517-17-520	1	(WOOD)			
M518-17-520A	1	(LEATHER)			
17-522		SPRING			
0103-17-411	2				
17-552		SPRING			
M505-17-552	1				

7201 NA35*V-730033

CAT. AUNA06-03 1998-07

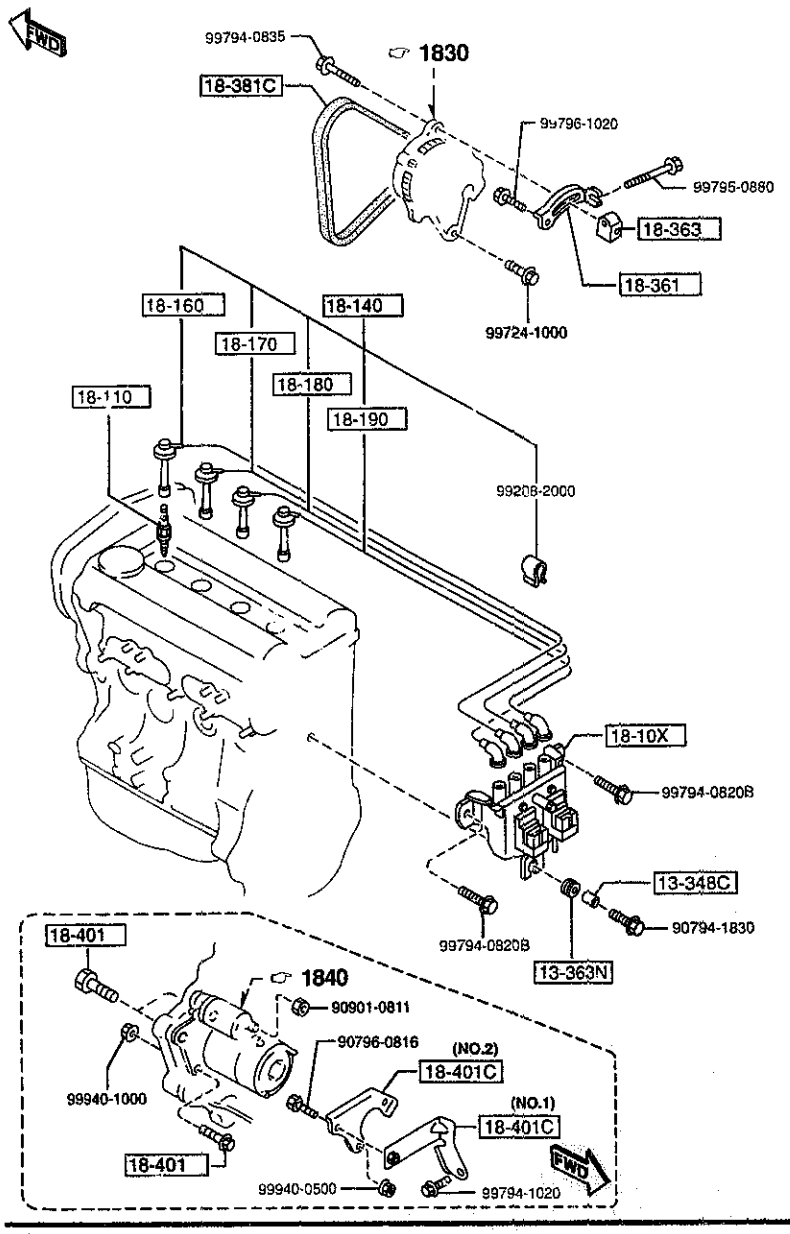

AUNA06

PART NO.	QTY	MODEL/RESTRICTION	MODEL/RESTRICTION	MODEL/RESTRICTION	FROM-TO
13-348C		SPACER			
B61P-13-348	1				
13-363N		RUBBER,MOUNTING			
B61P-13-363A	1				
18-10X		COIL & IGNITER			
BPE8-18-10XB	1				
18-110		PLUG,SPARK			
BP01-18-110	4	BKR5E-11 NGK (STD.)			
BP02-18-110	4	K16PR-U11 ND (STD.)			
BP03-18-110	4	BKR6E-11 NGK (OPTION COLD TYPE)			
BP04-18-110	4	K20PR-U11 ND (OPTION COLD TYPE)			
18-140		CORD SET,HI.TENSION			
BPE8-18-140A	1				
18-160		CORD NO.1,HI.TENSION			
BPE8-18-T51	1				
18-170		CORD NO.2,HI.TENSION			
BPE8-18-T52	1				
18-180		CORD NO.3,HI.TENSION			
BPE8-18-T53	1				
18-190		CORD NO.4,HI.TENSION			
BPE8-18-T54A	1				
18-361		STRAP,ALTERNATOR			
B6BF-18-361C	1				
18-363		SPACER,STRAP			
FP01-18-363	1				
18-381C		BELT'V',W/PUMP&ALTERNATOR			
B6BF-18-381		4PK L=885 BANDO			

CAT. AUNA06-03

1998-07

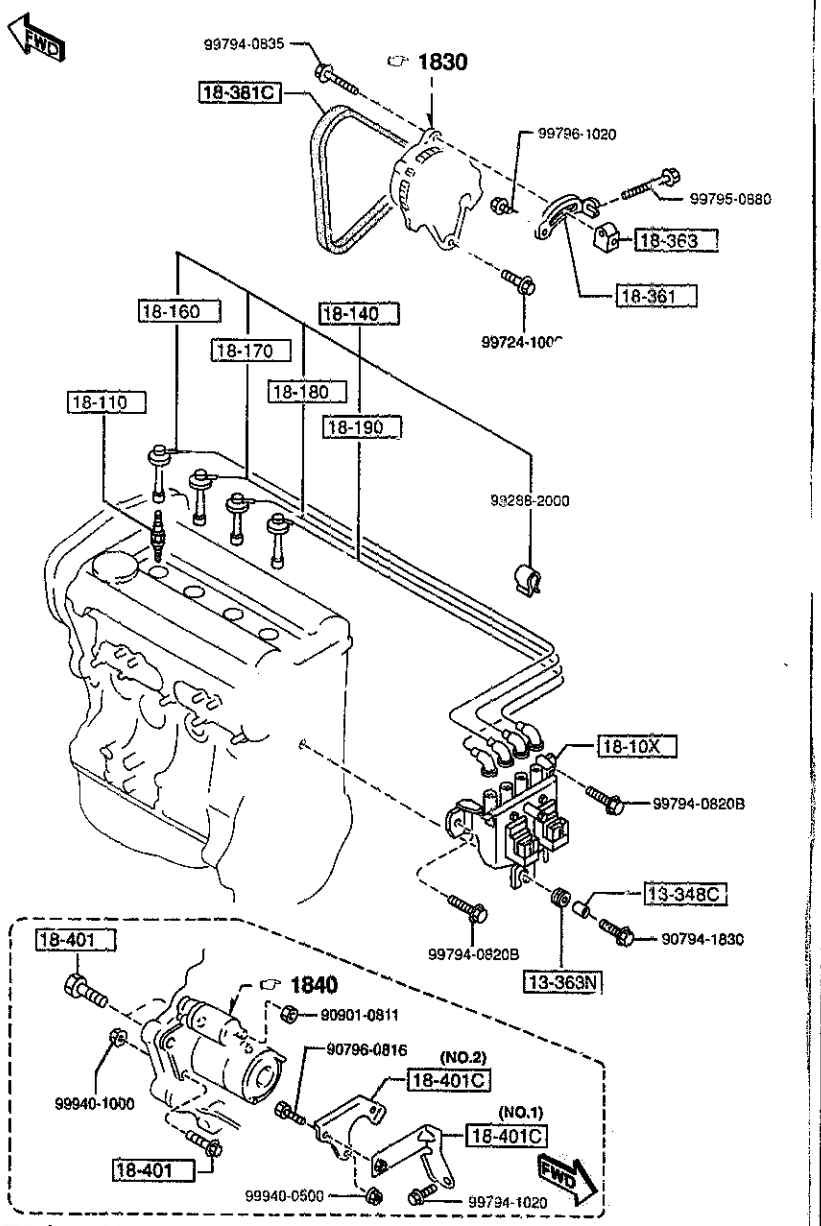

AUNA06

PART NO.	QTY	MODEL/RESTRICTION	MODEL/RESTRICTION	MODEL/RESTRICTION	FROM-TO
CONT'D					
	1				
B596-18-381	1	4PK L=885 GOOD YEAR			-6801
18-401		BOLT,STARTER			
B6BG-18-401A	3				
18-401C		BRACKET,STARTER			
BPE8-18-410	1	(ILLUST. NO.1) (MT)			
B660-18-411C	1	(ILLUST. NO.2) (MT)			

6801 NA35*V-719630

CAT. AUNA06-03

1998-07

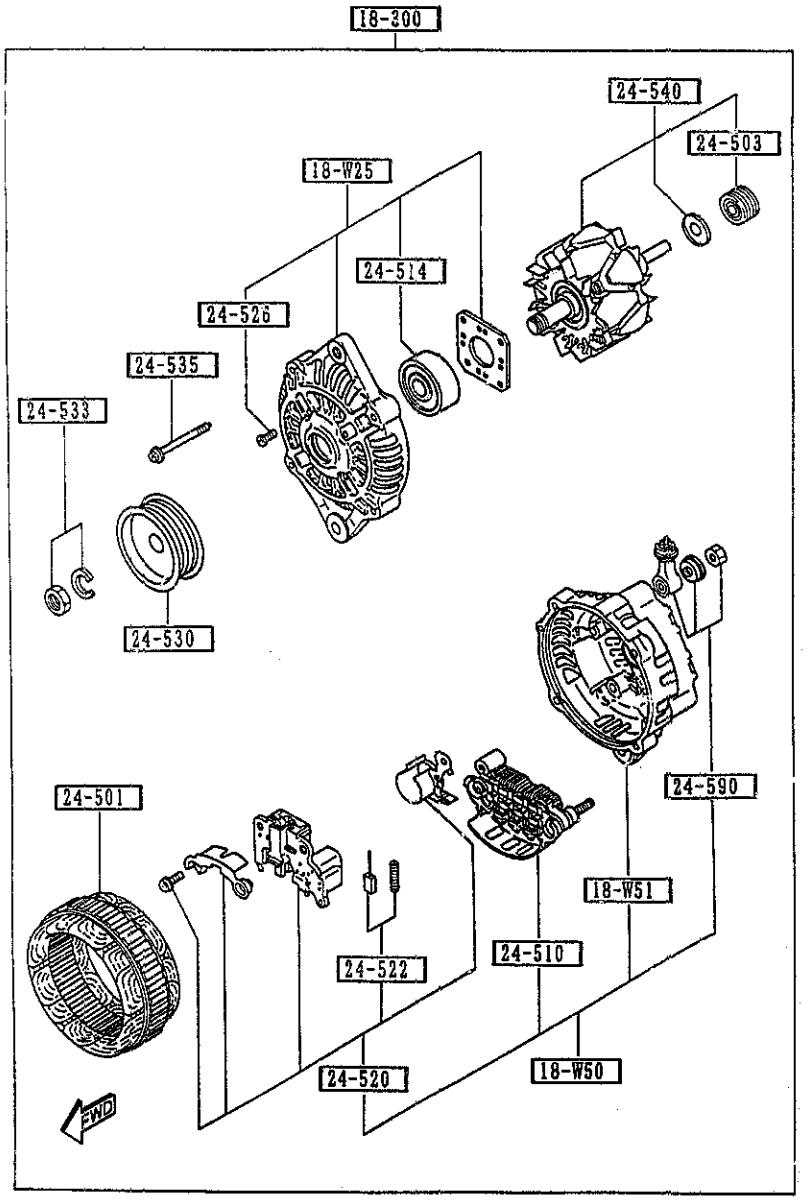

AUNA06

PART NO.	QTY	MODEL/RESTRICTION	MODEL/RESTRICTION	MODEL/RESTRICTION	FROM-TO
18-W25		COVER,FRONT-ALTERNATOR			
FS05-18-W25	1				
18-W50		COVER,REAR-ALTERNATOR			
BPE8-18-W50	1				-6B01
BPE9-18-W50	1				6B01-
18-W51		COVER,REAR-ALTERNATOR (G)			
FS05-18-W51	1				
18-300		ALTERNATOR			
BPE8-18-300	1	(MT)			-6B01
BPE9-18-300	1	(AT)			-6B01
AN(BPE9-18-300A)					
BPE9-18-300A	1				6B01-
24-501		STATOR			
JE15-18-W45	1				
24-503		BEARING,BALL-ALT. REAR			
N336-18-W36	1				
24-510		RECTIFIER			
BPE8-18-W60	1				-6B01
BPE9-18-W60	1				6B01-
24-514		BEARING,BALL-ALT. FRONT			
PN16-18-W27	1				
24-520		REGULATOR,VOLTAGE			
B64J-18-W70A	1				-6B01
B62P-18-W70	1				6B01-
24-522		BRUSH			
B3C7-18-W77	2				
24-526		SCREW SET			
RF71-18-W26	1				

6B01 NA35*V-723096

CAT. AUNA06-03

1998-07

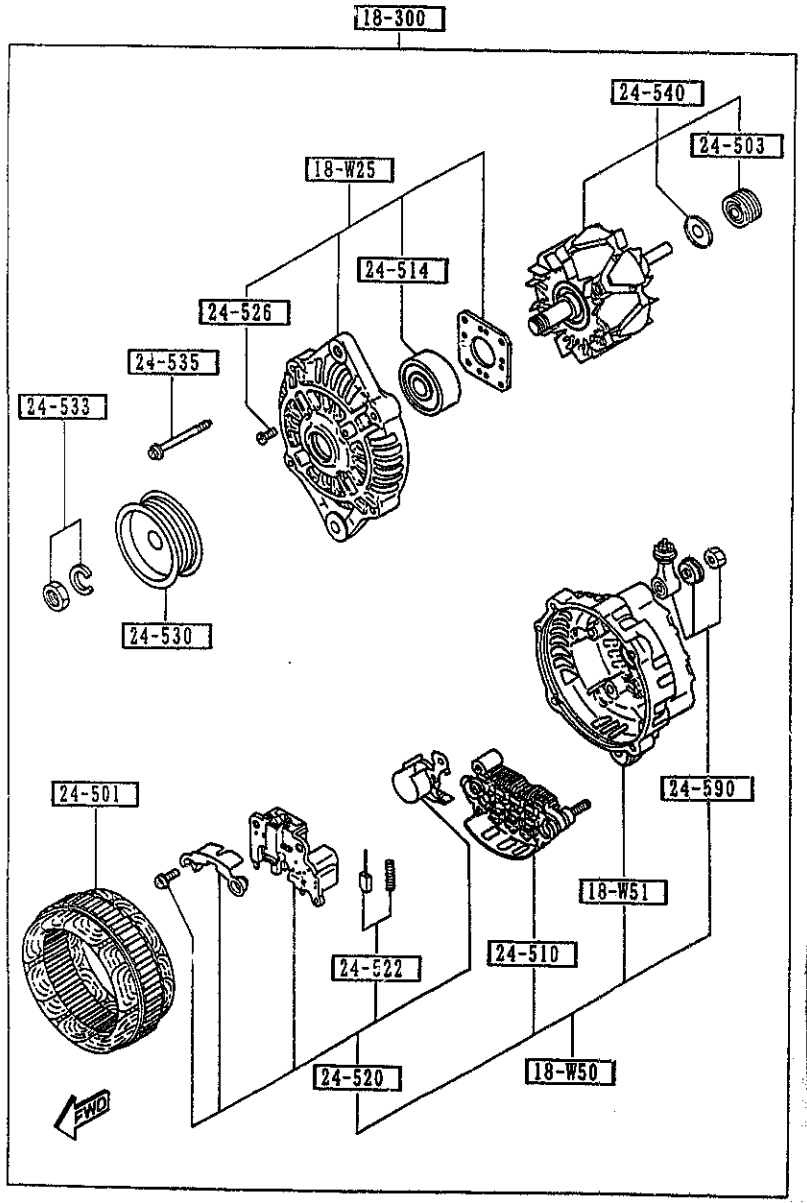

AUNA06

1830 -2 * ALTERNATOR

PART NO.	QTY	MODEL/RESTRICTION	MODEL/RESTRICTION	MODEL/RESTRICTION	FROM-TO
24-530		PULLEY			
B3C7-18-W10	1				
24-533		NUT SET			
B3C7-18-W05	1				
24-535		SCREW SET			
RF71-18-W20	1				
24-540		ROTOR			
F285-18-W35A	1	(AT)			
B366-18-W35D	1	(MT)			-6B01
F285-18-W35A	1	(MT)			6B01-
24-590		TERMINAL SET			
BPD3-18-W80	1				

6B01 NA35*V-723096

CAT. AUNA06-03

1998-07

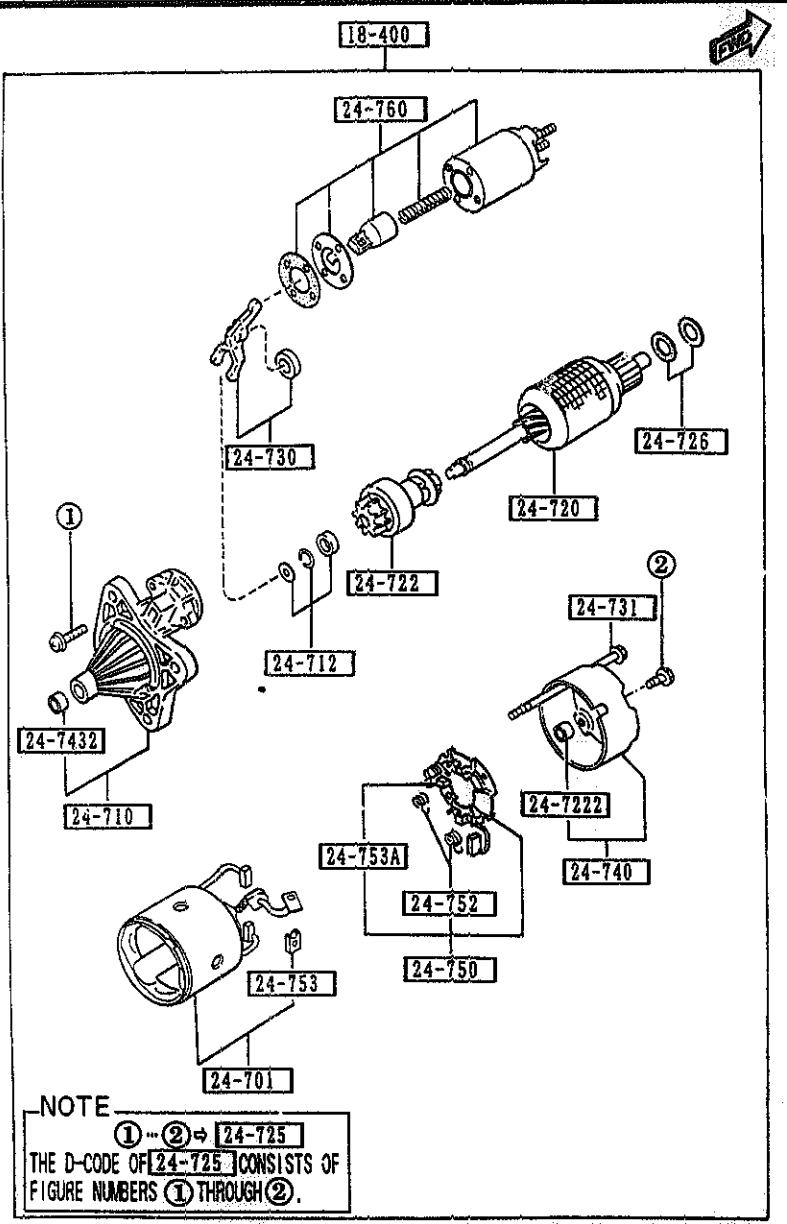

AUNA06

1840 -1 STARTER
(MT)

PART NO.	QTY	MODEL/RESTRICTION	MODEL/RESTRICTION	MODEL/RESTRICTION	FROM-TO
18-400		STARTER			
B61R-18-400A	1	NON ASBESTOS			
24-701		YOKE			
B61R-18-X65	1				
24-710		BRACKET,FRONT			
B61R-18-X00	1				
24-712		STOPPER SET			
E356-18-X30	1				
24-720		ARMATURE			
B6S8-18-X60	1	NON ASBESTOS			
24-722		CLUTCH,OVER RUNNING			
B630-18-X45	1	MITSUBISHI			
24-7222		SLEEVE,BEARING-REAR			
E356-18-X81	1				
24-725		SCREW SET			
E356-18-X95	1	MITSUBISHI			
24-726		WASHER SET			
E356-18-X92	1				
24-730		LEVER			
E356-18-X05	1	MITSUBISHI			
24-731		BOLT SET			
B630-18-X90	2				
24-740		BRACKET,REAR			
E356-18-X80	1	MITSUBISHI			
24-7432		SLEEVE,BEARING-FRONT			

CAT. AUNA06-03

1998-07

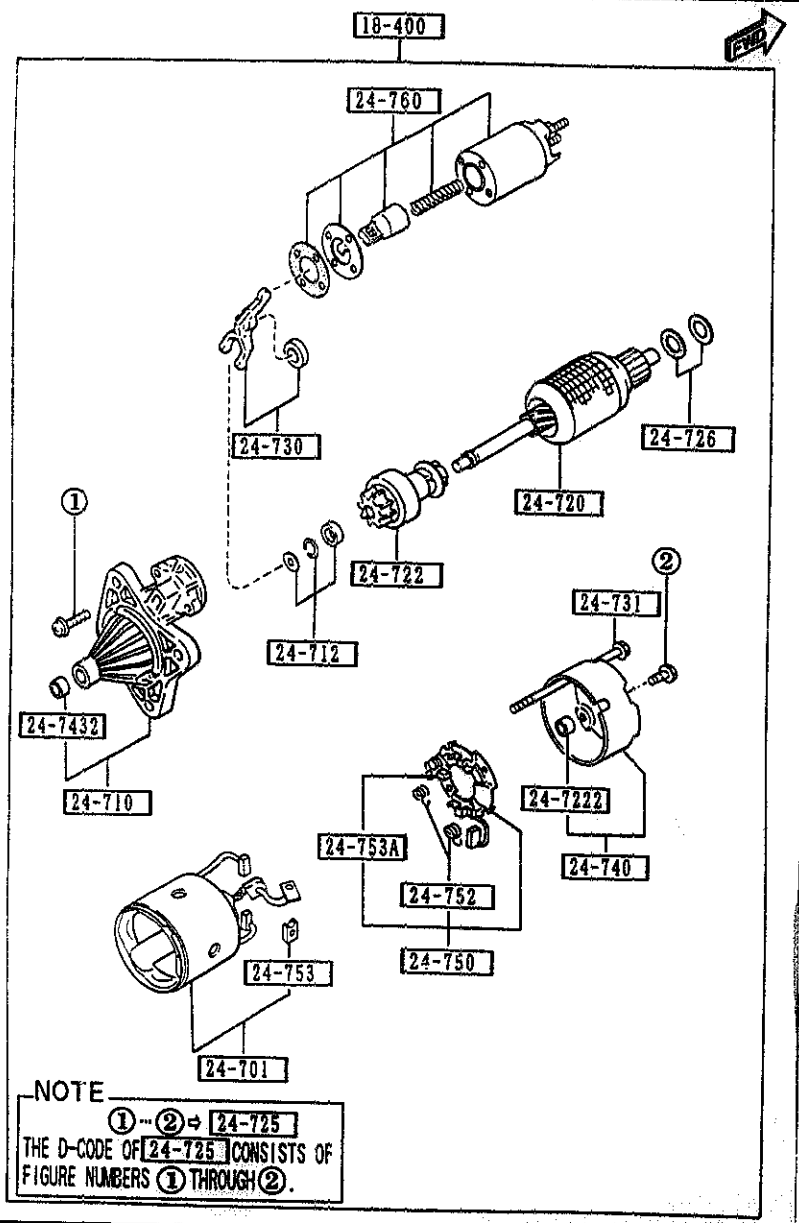

AUNA06

1840 -2 * STARTER (MT)

PART NO	QTY	MODEL/RESTRICTION	MODEL/RESTRICTION	MODEL/RESTRICTION	FROM-TO
CONT'D					
F210-18-X01	1				
24-750		HOLDER,BRUSH			
B61R-18-X70	1				
24-752		SPRING,BRUSH			
0222-24-752A	4				
24-753		BRUSH,YOKE			
B630-18-X66	2				
24-753A		BRUSH			
B660-18-X66	2				
24-760		SWITCH			
E356-18-X10	1	MITSUBISHI			

CAT. AUNA06-03

1998-07

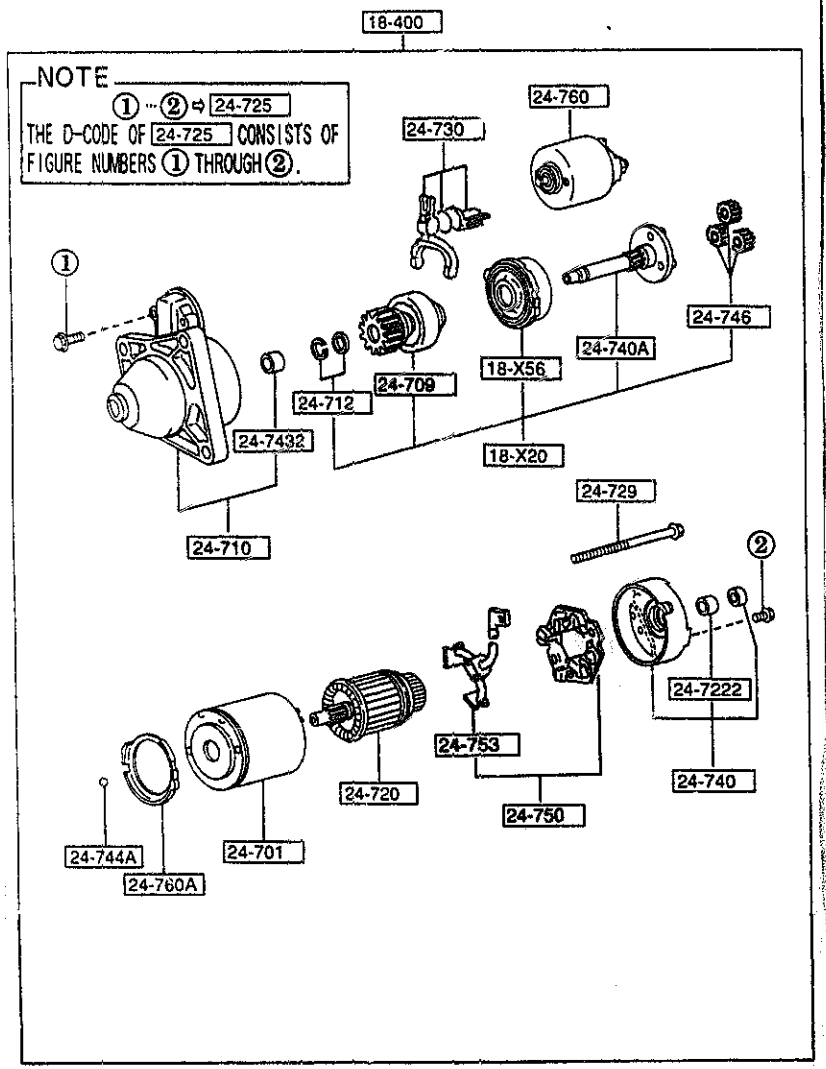

AUNA06

PART NO.	QTY	MODEL/RESTRICTION	MODEL/RESTRICTION	MODEL/RESTRICTION	FROM-TO
18-X20		SHAFT,PINION			
AM15-18-X20	1				
18-X56		GEAR,INTERNAL-STARTER			
F225-18-X56	1	MITSUBISHI			
18-400		STARTER			
BPE9-18-400	1				
24-701		YOKE			
JF01-18-X65	1				
24-709		PINION			
AM15-18-X25	1				
24-710		BRACKET,FRONT			
BPE9-18-X00	1				
24-712		STOPPER SET			
N326-18-X30	1	MITSUBISHI			
24-720		ARMATURE			
AM15-18-X60	1				
24-7222		SLEEVE,BEARING-REAR			
N326-18-X62A	1	MITSUBISHI			
24-725		SCREW SET			
E356-18-X95	1	MITSUBISHI			
24-729		BOLT			
N326-18-X91	2				
24-730		LEVER			
N326-18-X05	1				
24-740		BRACKET,REAR			
JF01-18-X80A	1				

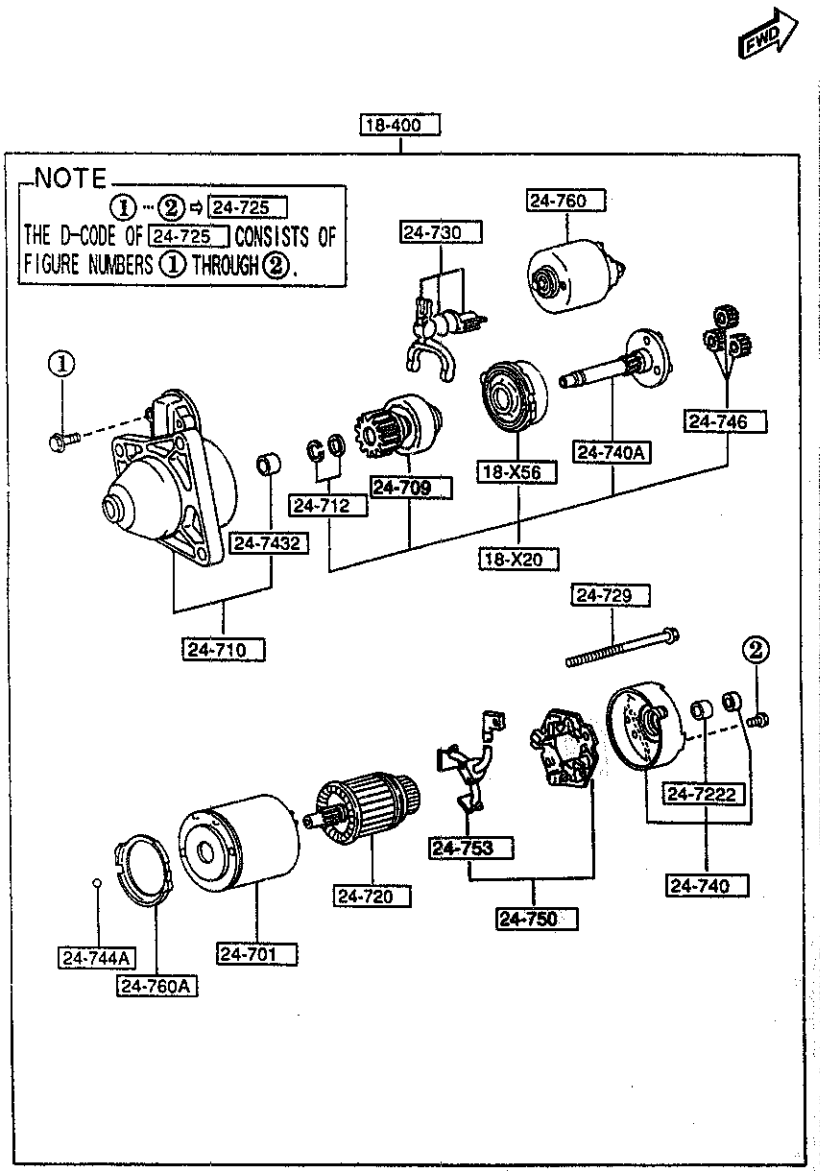

AUNA06

PART NO.	QTY	MODEL/RESTRICTION	MODEL/RESTRICTION	MODEL/RESTRICTION	FROM-TO
24-740A		SHAFT			
F214-18-X40	1				
24-7432		SLEEVE,BEARING-FRONT			
E356-18-X01	1	MITSUBISHI			
24-744A		BALL,STEEL			
N326-18-X93	1	MITSUBISHI			
24-746		GEAR			
N326-18-X57	3	MITSUBISHI			
24-750		HOLDER,BRUSH			
F2D4-18-X70	1				
24-753		BRUSH,YOKE			
F2D4-18-X66	1				
24-760		SWITCH			
8PD4-18-X10	1				
24-760A		GASKET			
N326-18-X87	1				

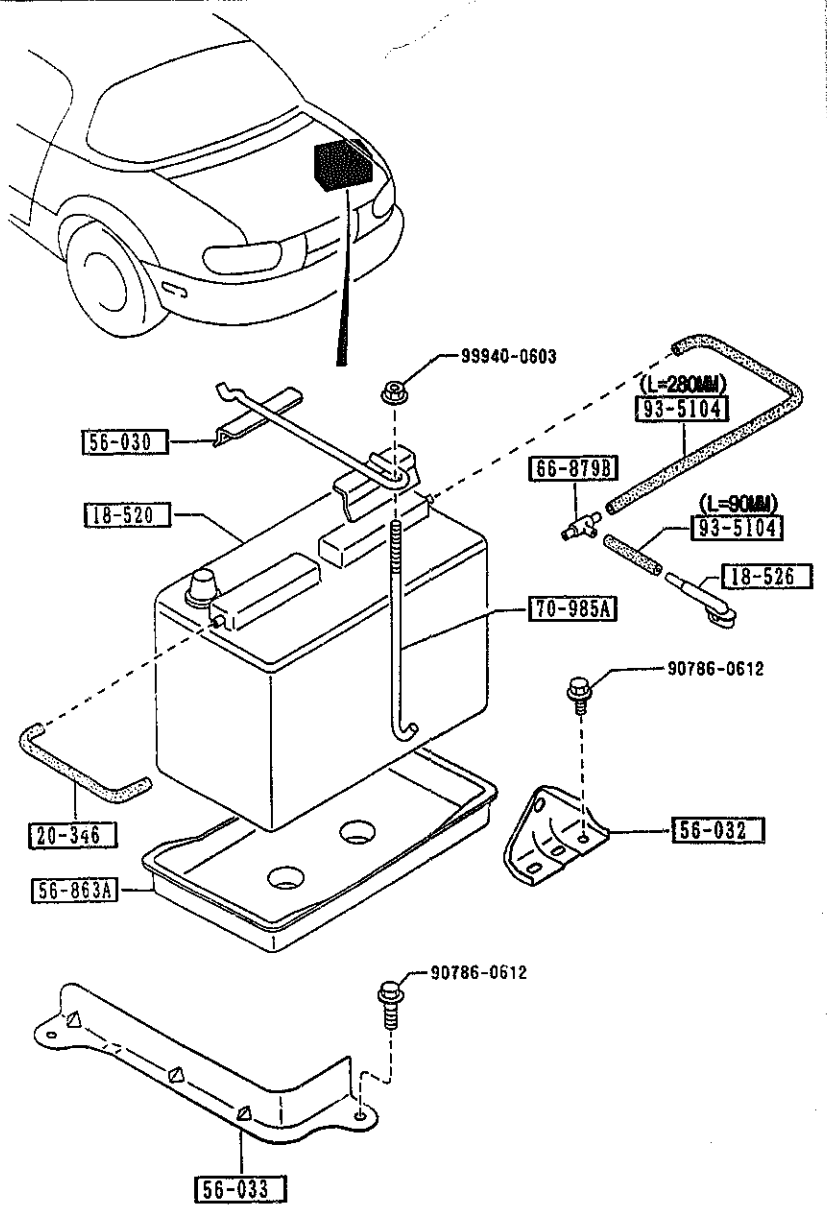

AUNA06

1850 -1 * BATTERY

PART NO.	QTY	MODEL/RESTRICTION	MODEL/RESTRICTION	MODEL/RESTRICTION	FROM-TO
18-520		BATTERY			
B6AC-18-520	1	S46A24L(S) PANASONIC			
18-526		CONNECTOR,TUBE-BATTERY			
B61P-18-526	1				
20-346		TUBE,VACUUM			
B61P-18-524	1				
56-030		CLAMP,BATTERY			
NA01-56-03XA	1				
56-032		BRACKET,BATTERY CLAMP			
NA01-56-032B	1				
56-033		BRACKET,STOPPER-BATTERY			
NA01-56-033B	1				
56-863A		TRAY,BATTERY			
B095-56-032	1				
66-879B		JOINT			
0813-66-879	1				
70-985A		BOLT,CLAMP			
0259-54-292A	1				
93-5104		HOSE			
99351-04999	1	L=1M CUT IT TO USE			

CAT. AUNA06-03

1998-07

1910 AUTOMATIC TRANSMISSION TORQUE CONVERTER, OIL PUMP & PIPINGS

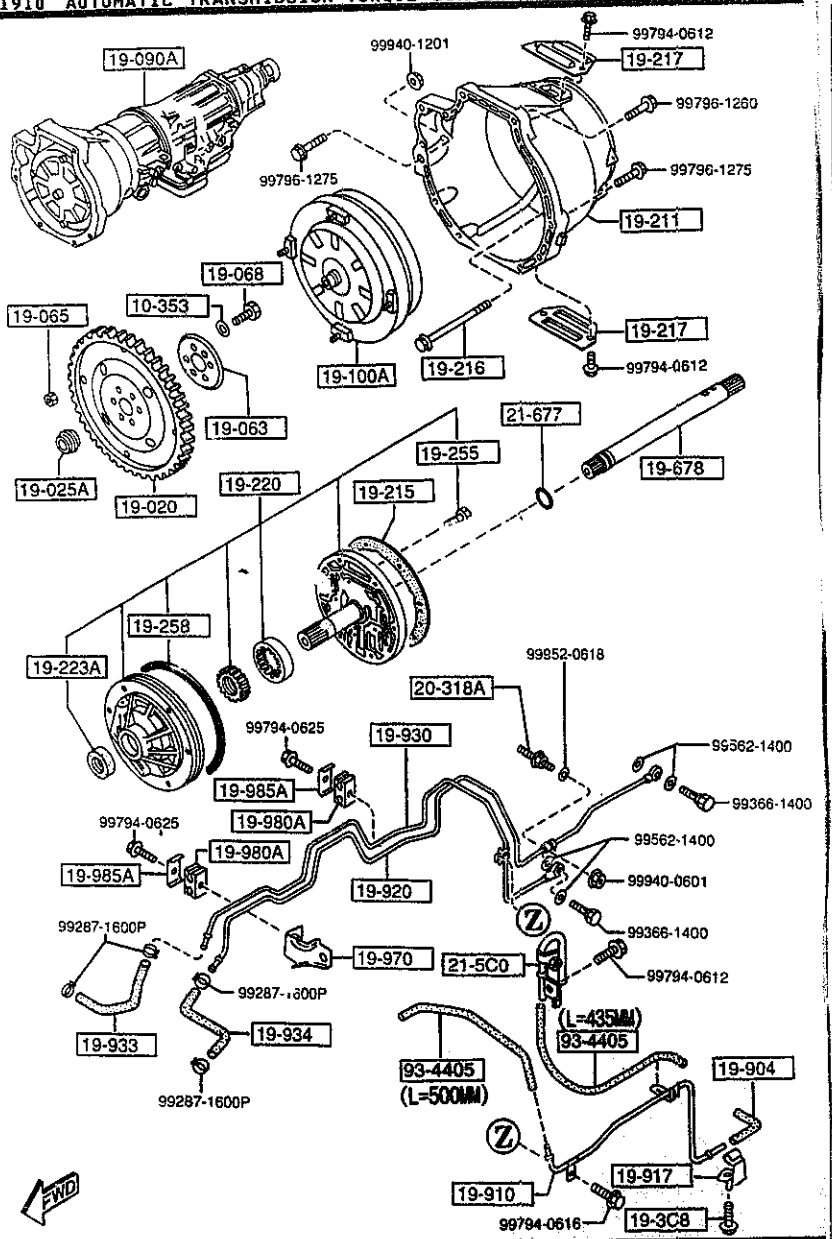

AUNA06

1910 -1 AUTOMATIC TRANSMISSION TORQUE CONVERTER, OIL PUMP & PIPINGS

PART NO.	QTY	MODEL/RESTRICTION	MODEL/RESTRICTION	MODEL/RESTRICTION	FROM-TO
10-353		WASHER,PLAIN			
0290-10-353	6				
19-020		PLATE,DRIVE			
BU55-19-020	1				
19-025A		ADAPTER,DRIVE PLATE			
FU60-19-025	1				-7A20
19-063		PLATE,BACKING			
FT31-19-063	1				-7A20
*FA01-19-025	1	SUMINO INDUSTORY			7A20-
19-065		NUT			
FU51-19-065	4				
19-068		BOLT,LOCK			
FT31-19-064	6				
19-090A		T/MISSION CPT.			
N451-19-090C A (N451-19-090D)	1				-7201
N451-19-090D A (N451-19-090E)	1				7201-7415
N451-19-090E	1				7415-
19-100A		CONVERTER,TORQUE			
BU55-19-100	1				-7107
N451-19-100	1				7107-
19-211		HOUSING,CONVERTER			
BU55-19-211	1				
19-215		GASKET,OIL PUMP			
BU46-19-215	1	NON ASBESTOS			
19-216		BOLT			
BU01-19-216	6				

7107 NA35*V-727942
7201 NA35*V-730033
7415 NA35*V-735532
7A20 NA35*V-739053

CAT. AUNA06-03 1998-07

1910 AUTOMATIC TRANSMISSION TORQUE CONVERTER, OIL PUMP & PIPINGS

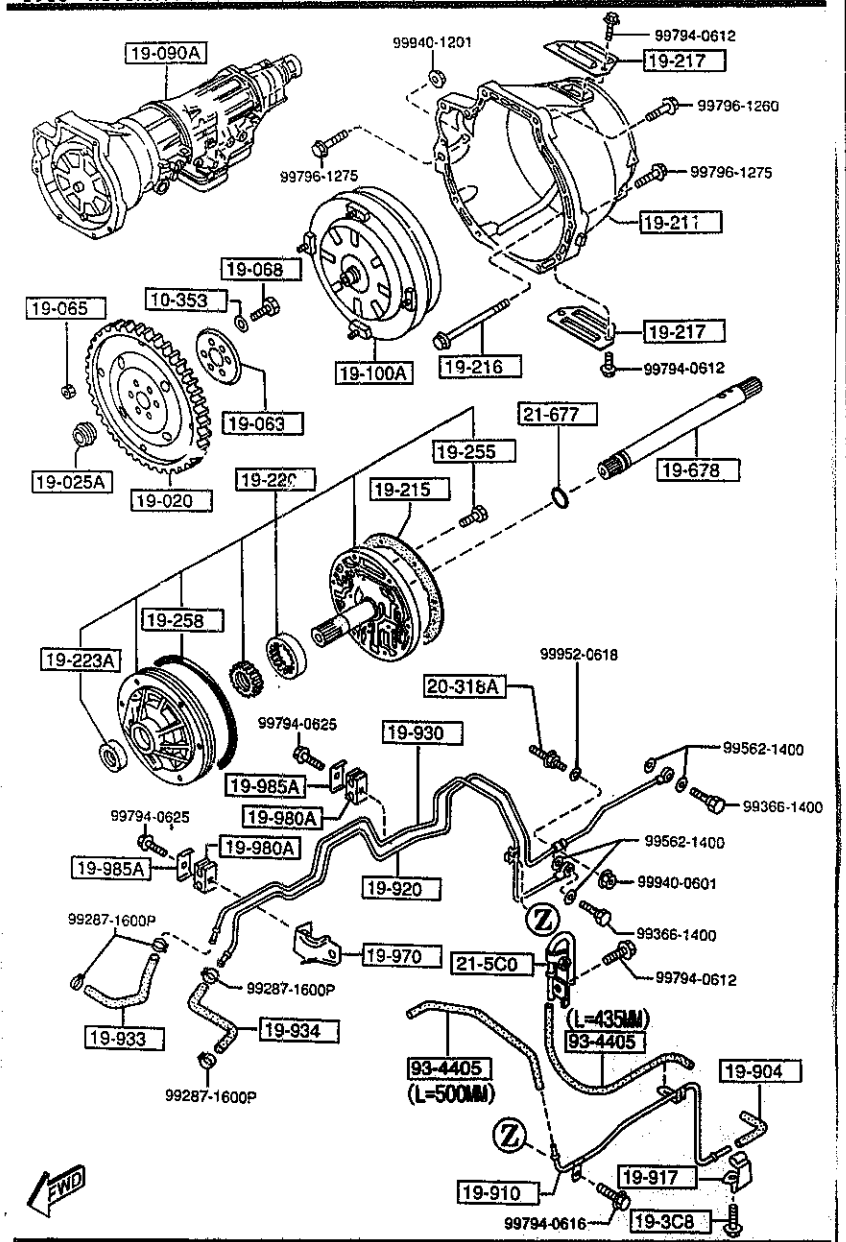

AUNA06

PART NO.	QTY	MODEL/RESTRICTION	MODEL/RESTRICTION	MODEL/RESTRICTION	FROM-TO
19-217		COVER,BLIND			
BU55-19-217	2				
19-220		PUMP,OIL			
N451-19-220	1				-7415
A (N451-19~220A)					
N451-19-220A	1				7415-
19-223A		SEAL,OIL			
0338-19-223A	1	NOK			
19-255		BOLT			
0338-19-255	5				
19-258		SEAL,CUT RING			
0338-19-258	1				
19-3C8		BOLT,BAFFLE PLATE			
BU55-19-3C8	1	L=12MM			
19-678		SHAFT,INPUT			
N451-21-678	1				
19-904		HOSE,VACUUM			
0338-19-904A	1				
19-910		PIPE,VACUUM			
BU55-19-910A	1				
19-917		CLIP			
0436-19-917	1				
19-920		PIPE,OIL			
N451-19-920	1				
19-930		PIPE,OIL			
N452-19-930	1				
19-933		HOSE,OIL			
BU55-19-933A	1				

7415 NA35*V-735532

1910 AUTOMATIC TRANSMISSION TORQUE CONVERTER, OIL PUMP & PIPINGS

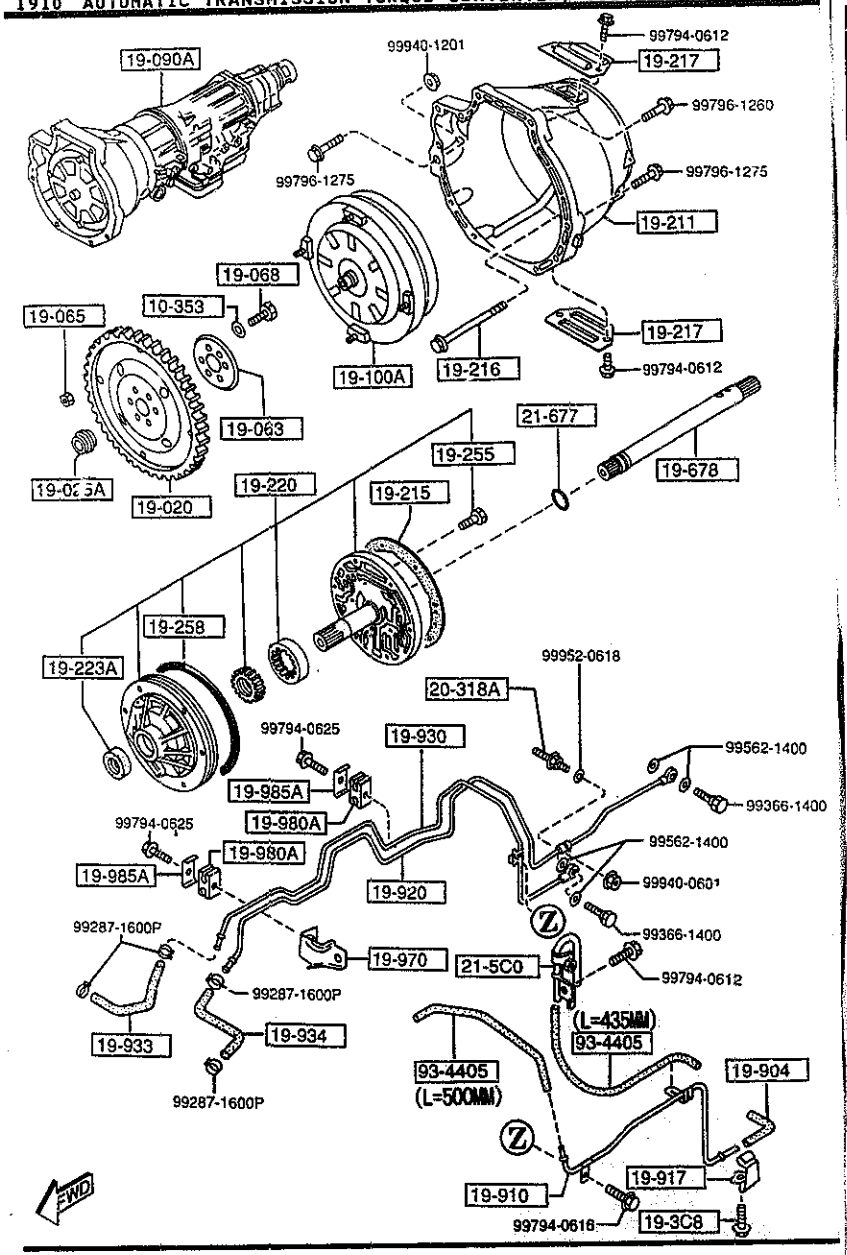

AUNA06

1910 -3 * AUTOMATIC TRANSMISSION TORQUE CONVERTER, OIL PUMP & PIPINGS

PART NO.	QTY	MODEL/RESTRICTION	MODEL/RESTRICTION	MODEL/RESTRICTION	FROM-TO
19-934 BU55-19-934A	1	HOSE,OIL			
19-970 BU55-19-970A	1	BRACKET			
19-980A BU29-19-980	2	SUPPORT,OIL PIPE			
19-985A BU29-19-985	2	CLIP,OIL PIPE			
20-318A BU27-19-838	1	BOLT			
21-5C0 N451-21-5C0	1	BREATHER			
21-677 BU01-21-677	1	RING,'O'			
93-4405 99344-05150	1	HOSE L=15M CUT IT TO USE			

CAT. AUNA06-03

1998-07

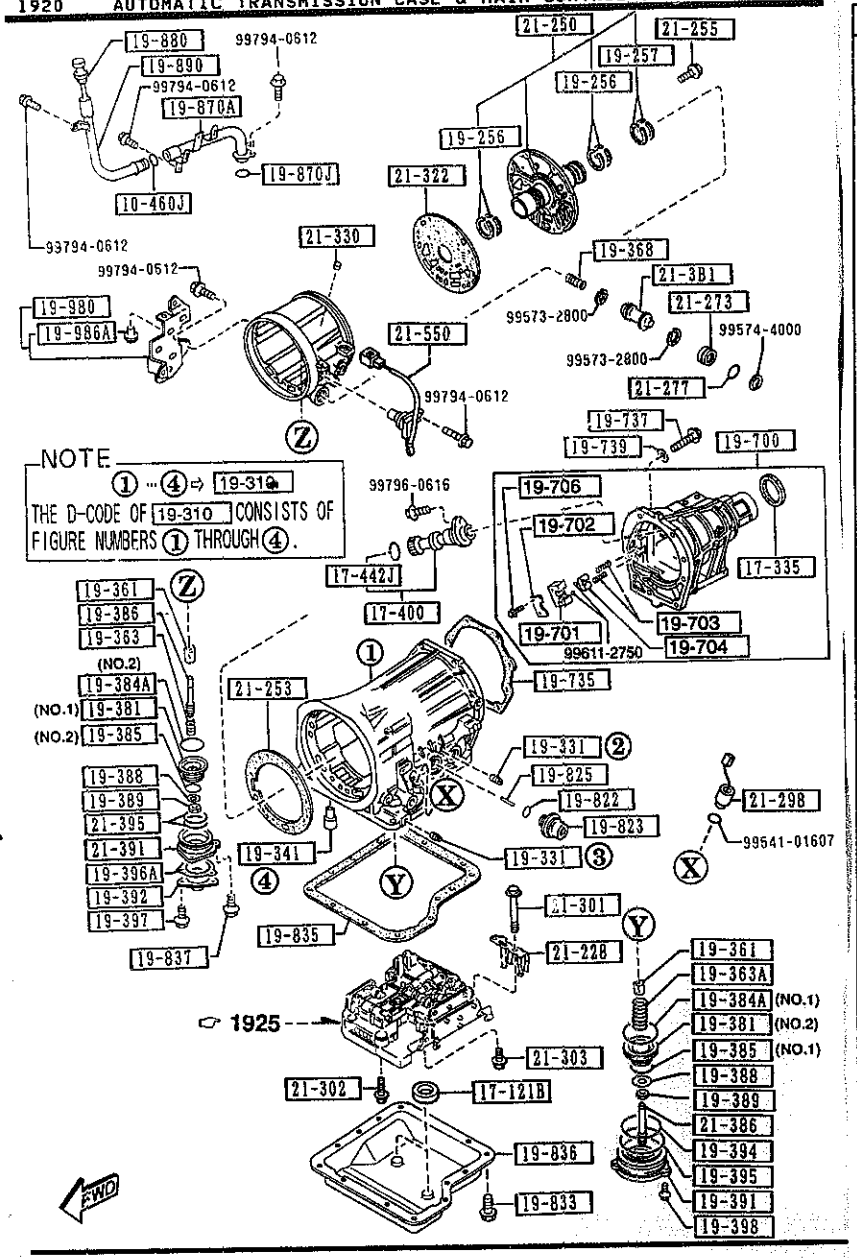

PART NO.	QTY	MODEL/RESTRICTION	MODEL/RESTRICTION	MODEL/RESTRICTION	FROM-TO
10-460J 99541-01201	1	RING,'O'			
17-121B F401-17-121	2	MAGNET			
17-335 M507-17-335A	1	SEAL,OIL			
17-400 N451-17-400	1	GEAR SET,DRIVEN-SPEED			
17-442J 1011-17-443	1	RING,'O'			
19-256 BU01-19-256	4	RING,SEAL			
19-257 BU01-19-257	2	RING,SEAL			
19-310 N451-19-310	1	CASE,T/MISSION			
19-331 0338-19-331A	2	PLUG,SQUARE HEAD			
19-341 0338-19-341	1	BOLT,ANCHOR END			
19-361 0338-19-361B	2	STRUT,BAND			
19-363 FT40-19-363	1	SPRING,PISTON RETURN			
19-363A BU10-19-363	1	SPRING,PISTON RETURN			
19-368 BU20-19-368	1	SPRING,CUSHION-PSTN.STEM			

1920 AUTOMATIC TRANSMISSION CASE & MAIN CONTROL SYSTEM

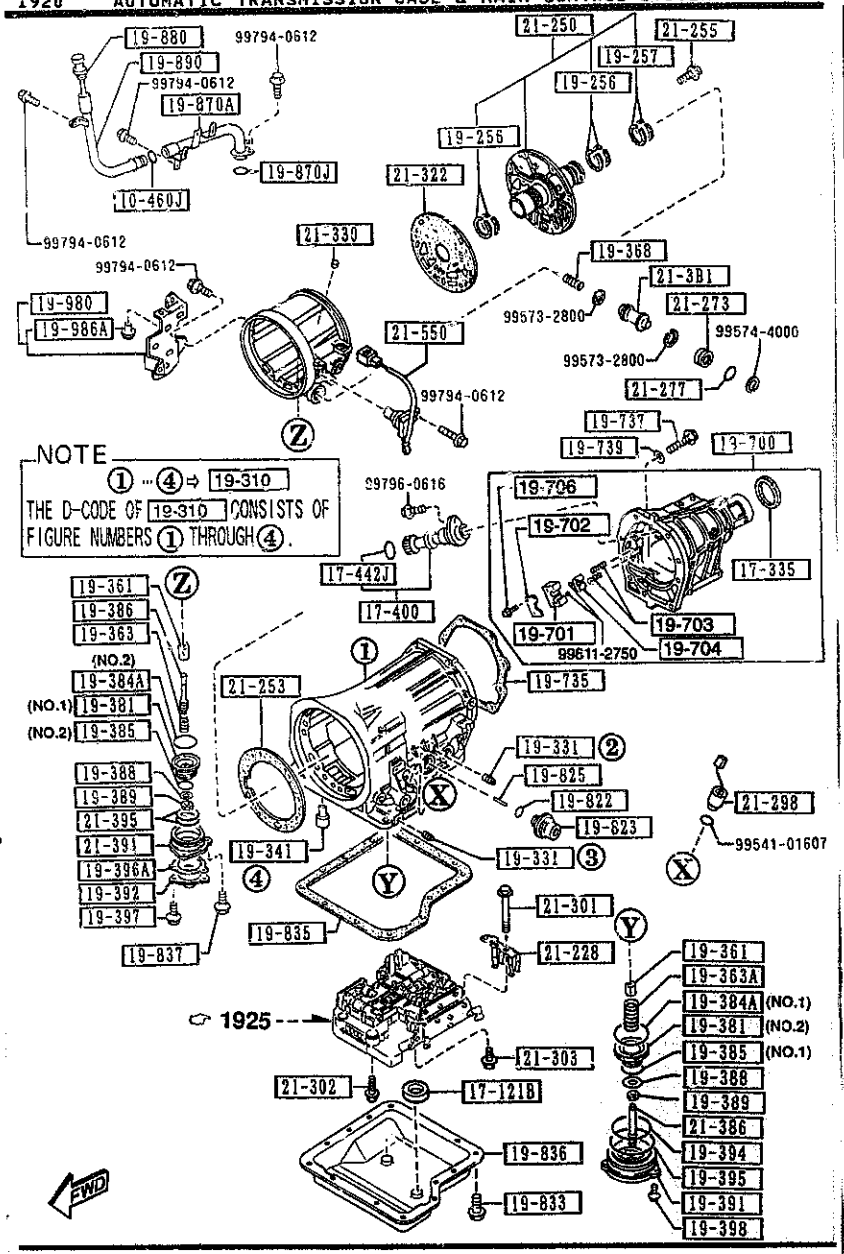

AUNA06

PART NO.	QTY	MODEL/RESTRICTION	MODEL/RESTRICTION	MODEL/RESTRICTION	FROM-TO
19-381		PISTON,BAND SERVO			
BV03-19-381	1	(ILLUST. NO.1)			
N451-19-381	1	(ILLUST. NO.2)			
19-384A		SEAL,PISTON			
BU10-19-384	1	(ILLUST. NO.1)			
BU55-19-384	1	(ILLUST. NO.2)			
19-385		SEAL,PISTON			
BU05-19-385	1	D=49.4MM (ILLUST. NO.1)			
0842-19-385	1	D=36MM (ILLUST. NO.2)			
19-386		STEM,PISTON			
0338-19-386A	1				
19-388		WASHER,PLAIN			
0338-19-388A	2				
19-389		NUT			
0338-19-389	2				
19-391		RETAINER,SERVO			
N451-19-391	1				
19-392		COVER,SERVO			
1758-19-392A	1				
19-394		SEAL,LATHE CUT			
0842-19-394	1				
19-395		RING,'O'			
0338-19-395	1				
19-396A		GASKET			
BU46-19-3J4	1	NON ASBESTOS			
19-397		BOLT			
1758-19-397	3				

CAT. AUNA06-03

1998-07

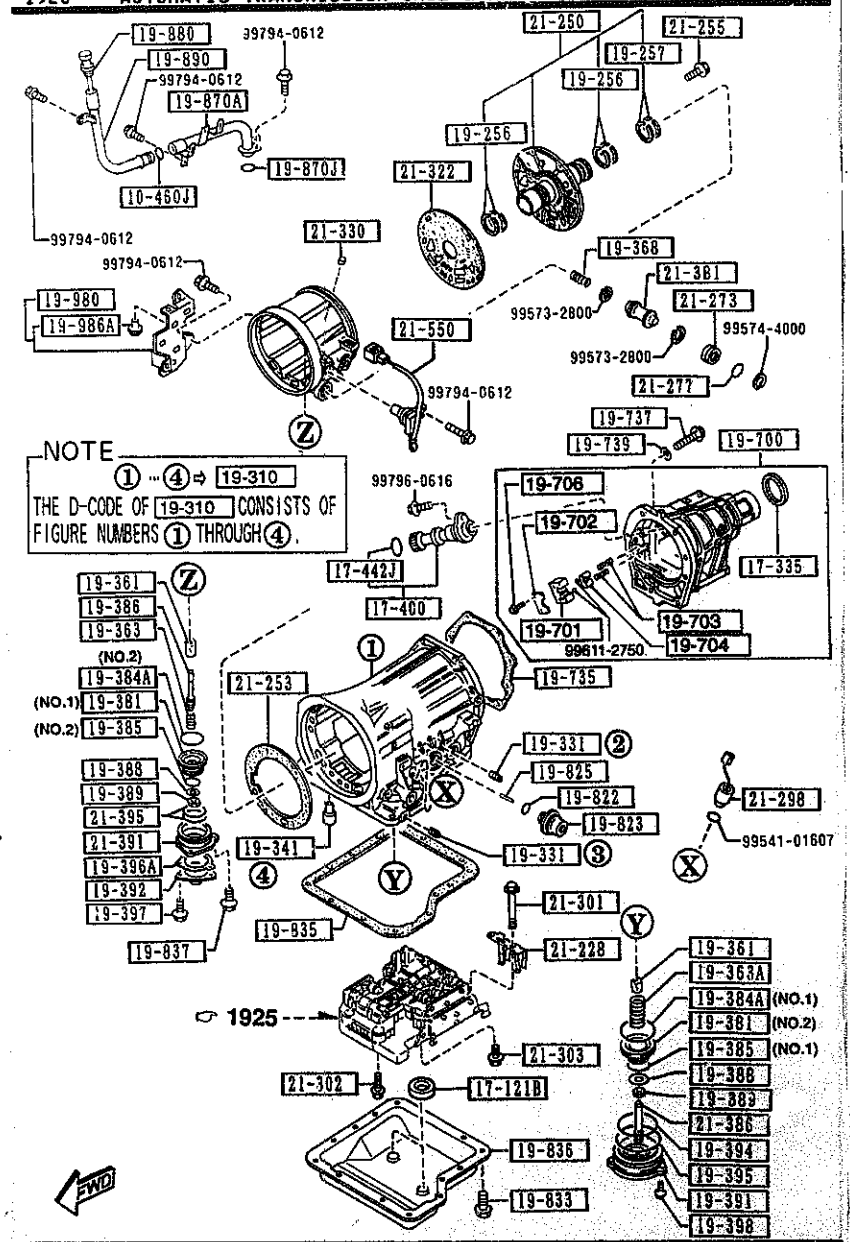

AUNA06

PART NO.	QTY	MODEL/RESTRICTION	MODEL/RESTRICTION	MODEL/RESTRICTION	FROM-TO
19-398		BOLT			
0338-19-398	3				
19-700		HOUSING,EXTENSION			
BUY2-19-7A0	1				
19-701		SUPPORTER,ACTUATOR			
BU17-19-701	1				
19-702		PLATE,RETAINING			
0338-19-702A	1				
19-703		SPRING,BALL PARK			
BU17-19-703	2				
19-704		RETAINER			
BU17-19-704	1				
19-706		BOLT			
0338-19-706	1				
19-735		GASKET,EXTENSION			
BT28-19-735	1	NON ASBESTOS			
19-737		BOLT			
BV12-19-737	8				-7709
*BV36-19-737	8				7709-
19-739		WASHER,PLAIN			
BV40-19-739	8				-7709
19-822		SEAL,'O'RING			
0338-19-822	1				
19-823		DIAPHRAGM,VACUUM			
BT07-19-823	1				
19-825		ROD,DIAPHRAGM			
BU55-19-825	1	L=29.75MM			

7709 NA35*V-738621

CAT. AUNA06-03

1998-07

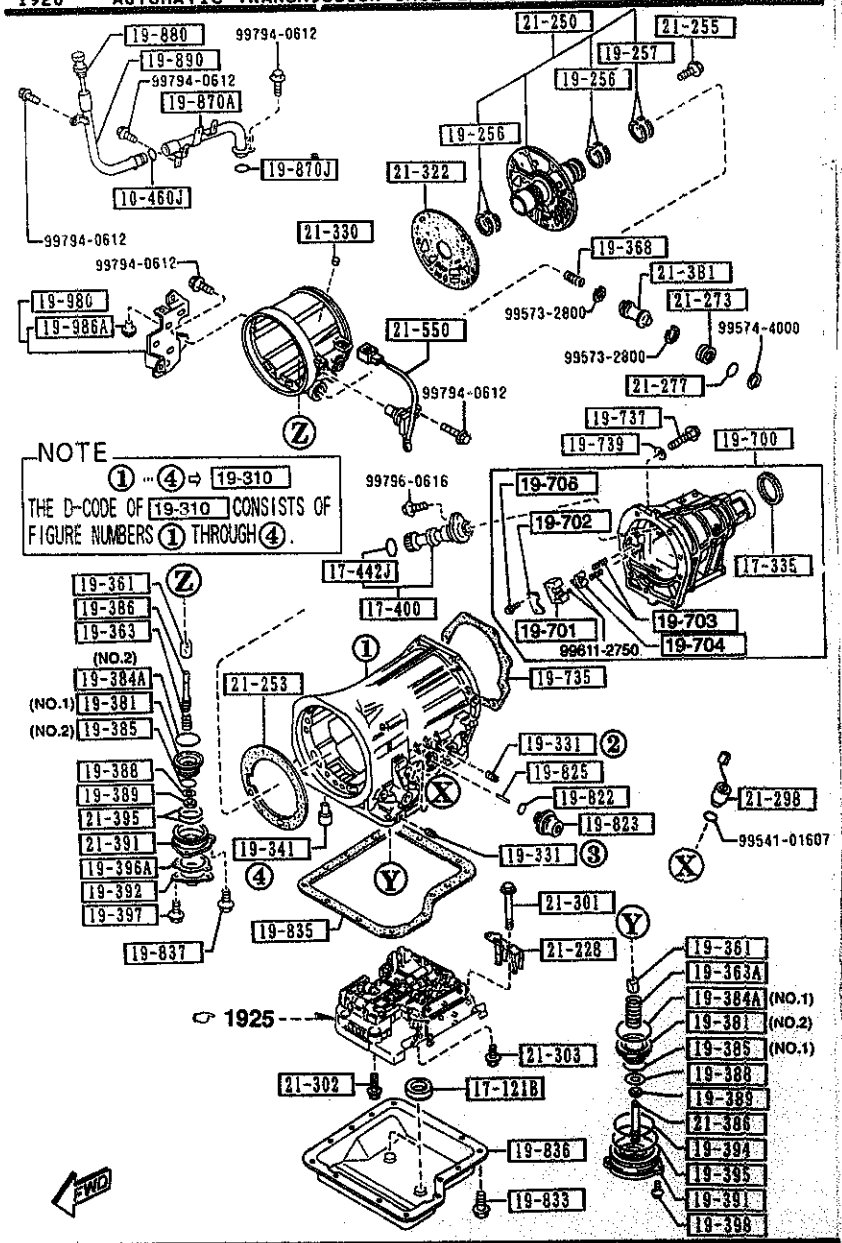

AUNA06

PART NO.	QTY	MODEL/RESTRICTION	MODEL/RESTRICTION	MODEL/RESTRICTION	FROM-TO
CONT'D					
0338-19-825	1	L=30.0MM			
0338-19-826	1	L=31.0MM			
0338-19-827	1	L=30.5MM			
0338-19-828	1	L=29.0MM			
0338-19-829	1	L=29.5MM			
19-833		BOLT,CONTROL VALVE			
BU91-19-833	13	L=15MM			
19-835		GASKET,OIL PAN			
BT28-19-835	1	NON ASBESTOS			
19-836		PAN,OIL			
BV02-19-836	1				
19-837		BOLT,OIL PAN			
0338-19-837	3				
19-870A		TUBE,FILLER			
BU55-19-870	1				
19-870J		RING,'O'			
99541-01601	1				
19-880		GAUGE,OIL LEVEL			
BV55-19-880A	1				
19-890		TUBE,OIL FILTER-UPPER			
BU55-19-890	1				
19-980		BRACKET			
BU55-19-980A	1				
19-986A		BUSH,RUBBER			
BV01-19-986	1				

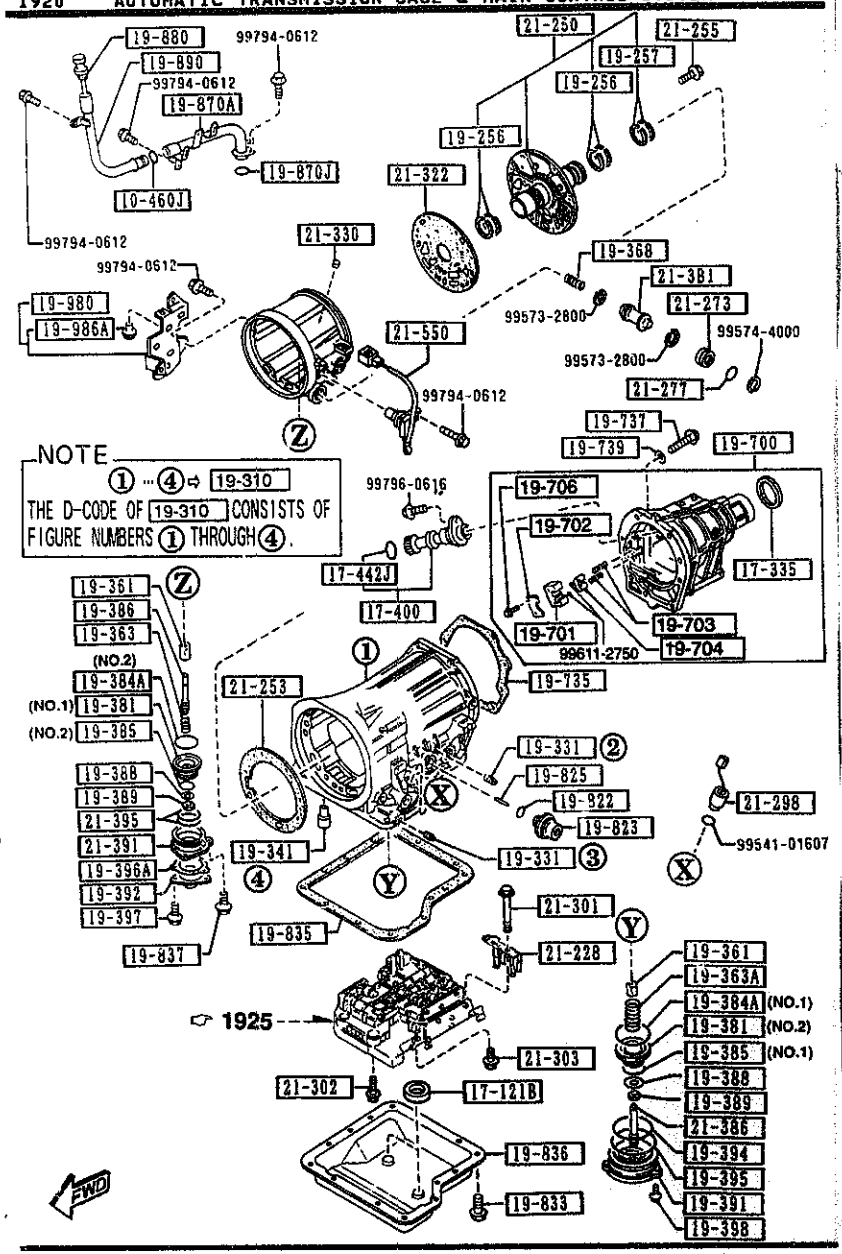

AUNA06

PART NO.	QTY	MODEL/RESTRICTION	MODEL/RESTRICTION	MODEL/RESTRICTION	FROM-TO
21-228		HOLDER,SOCKET			
BV01-21-228A	1				
21-250		SUPPORT,DRUM			
BV01-21-250A	1				
21-253		GASKET,DRUM SUPPORT			
BU46-21-2F3	1	NON ASBESTOS			
21-255		BOLT			
BU01-21-255	5				
21-273		PLUG,ACCUMULATOR			
BU01-21-273	1				
21-277		RING,'O'			
BU01-21-277	1				
21-298		COUPLER,SOLENOID VALVE			
BV09-21-2K0	1				
21-381		PISTON,ACCUMULATOR			
N451-21-381	1				
21-301		BOLT,CONTROL VALVE			
BV01-21-301	2				
21-302		BOLT,CONTROL VALVE			
BV01-21-302	4				
21-303		BOLT,CONTROL VALVE			
BV01-21-303	1				
21-322		GASKET,O/DRIVE CASE			
BU46-21-3C2	1				
21-330		VALVE,ONE WAY			
BV01-21-330	1				
21-386		STEM,PISTON BAND			

CAT. AUNA06-03

1998-07

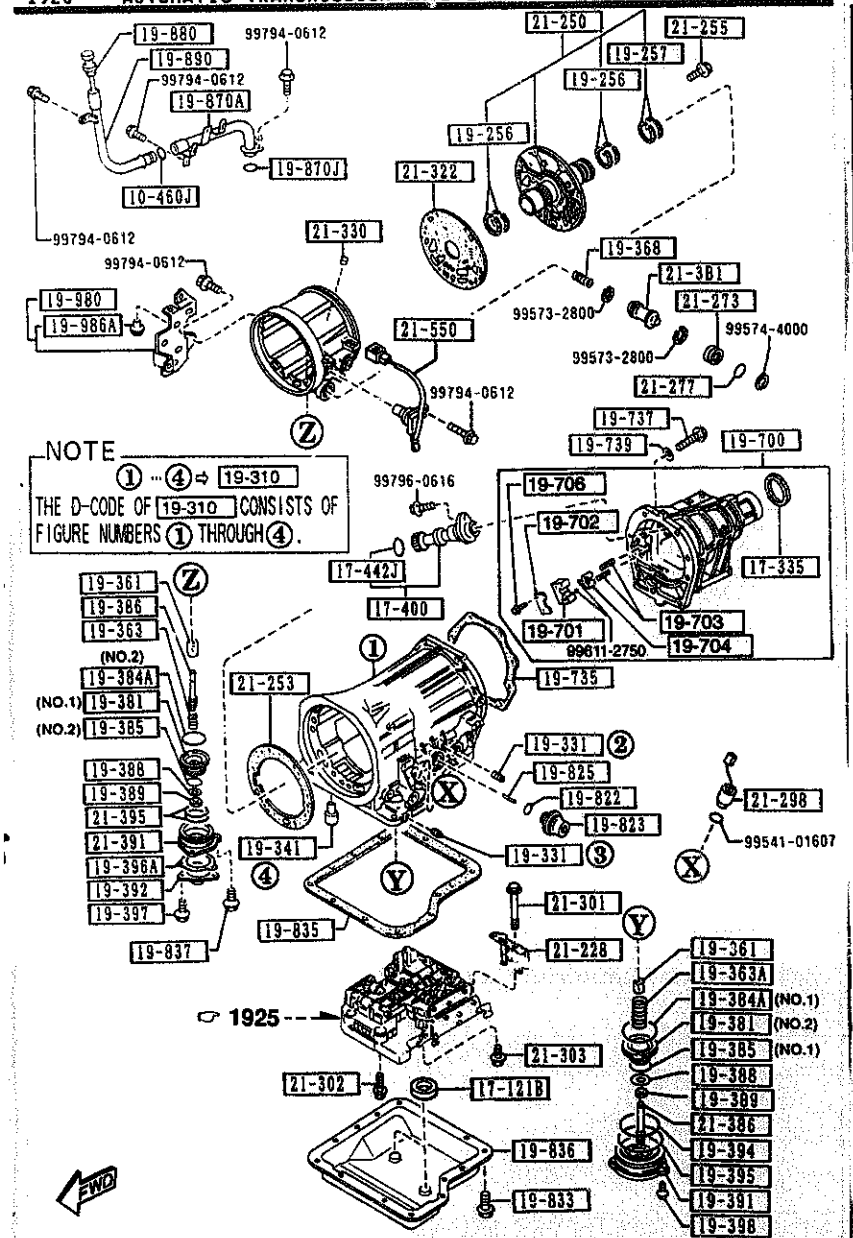

AUNA06

PART NO.	QTY	MODEL/RESTRICTION	MODEL/RESTRICTION	MODEL/RESTRICTION	FROM-TO
CONT'D					
BU01-21-386	1				
+---------+					
| 21-391 |		RETAINER,SERVO			
+---------+					
BV02-21-391	1				
+---------+					
| 21-395 |		RING,'O'			
+---------+					
BU01-21-395	2				
+---------+					
| 21-550 |		GENERATOR,PULSE			
+---------+					
N451-21-550A	1				

NOTE
① ··· ② ⇨ 19-750
THE D-CODE OF 19-750 CONSISTS OF FIGURE NUMBERS ① THROUGH ②.

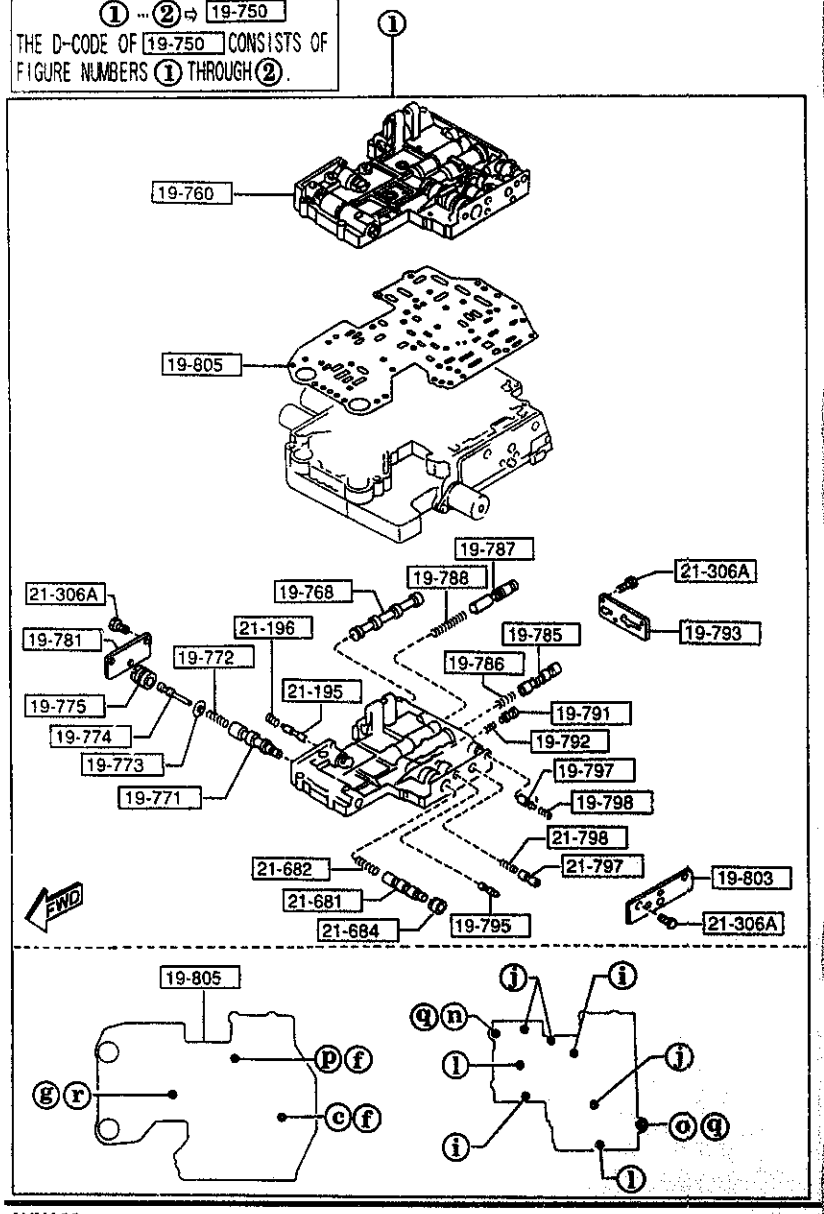

AUNA06

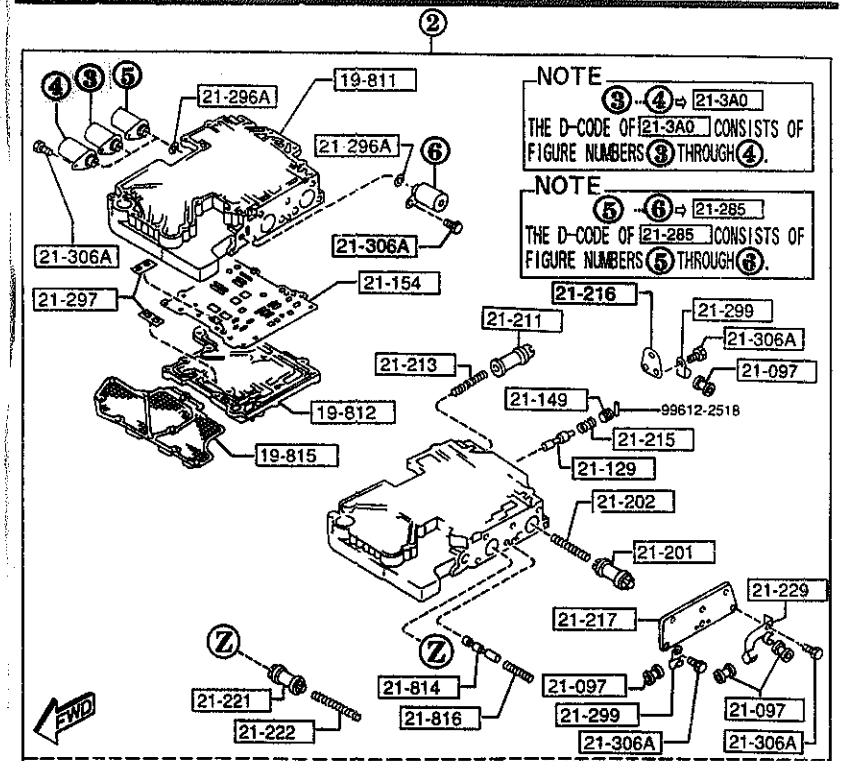

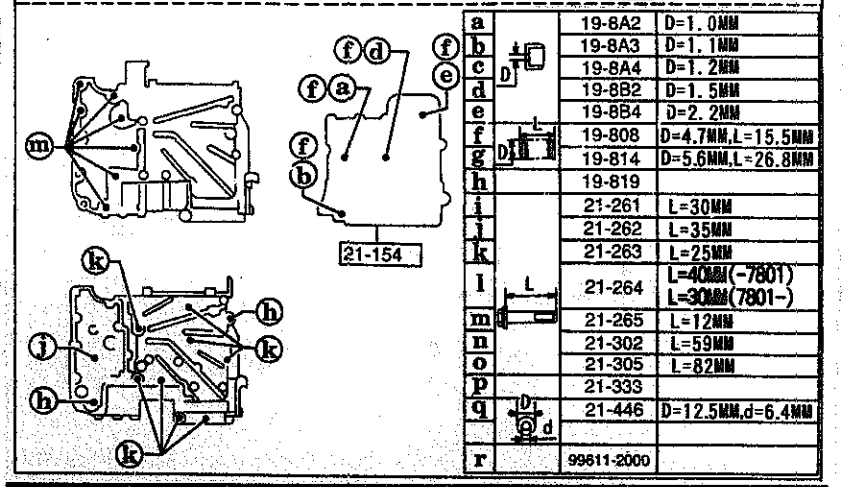

a	D	19-8A2	D=1.0MM
b		19-8A3	D=1.1MM
c		19-8A4	D=1.2MM
d		19-8B2	D=1.5MM
e		19-8B4	D=2.2MM
f	L D	19-808	D=4.7MM,L=15.5MM
g		19-814	D=5.6MM,L=26.8MM
h		19-819	
i	L	21-261	L=30MM
j		21-262	L=35MM
k		21-263	L=25MM
l		21-264	L=40MM(-7801) L=30MM(7801-)
m		21-265	L=12MM
n		21-302	L=59MM
o		21-305	L=82MM
p		21-333	
q	D d	21-446	D=12.5MM,d=6.4MM
r		99611-2000	

AUNA06

NOTE
① ··· ② ⇨ 19-750
THE D-CODE OF 19-750 CONSISTS OF FIGURE NUMBERS ① THROUGH ②.

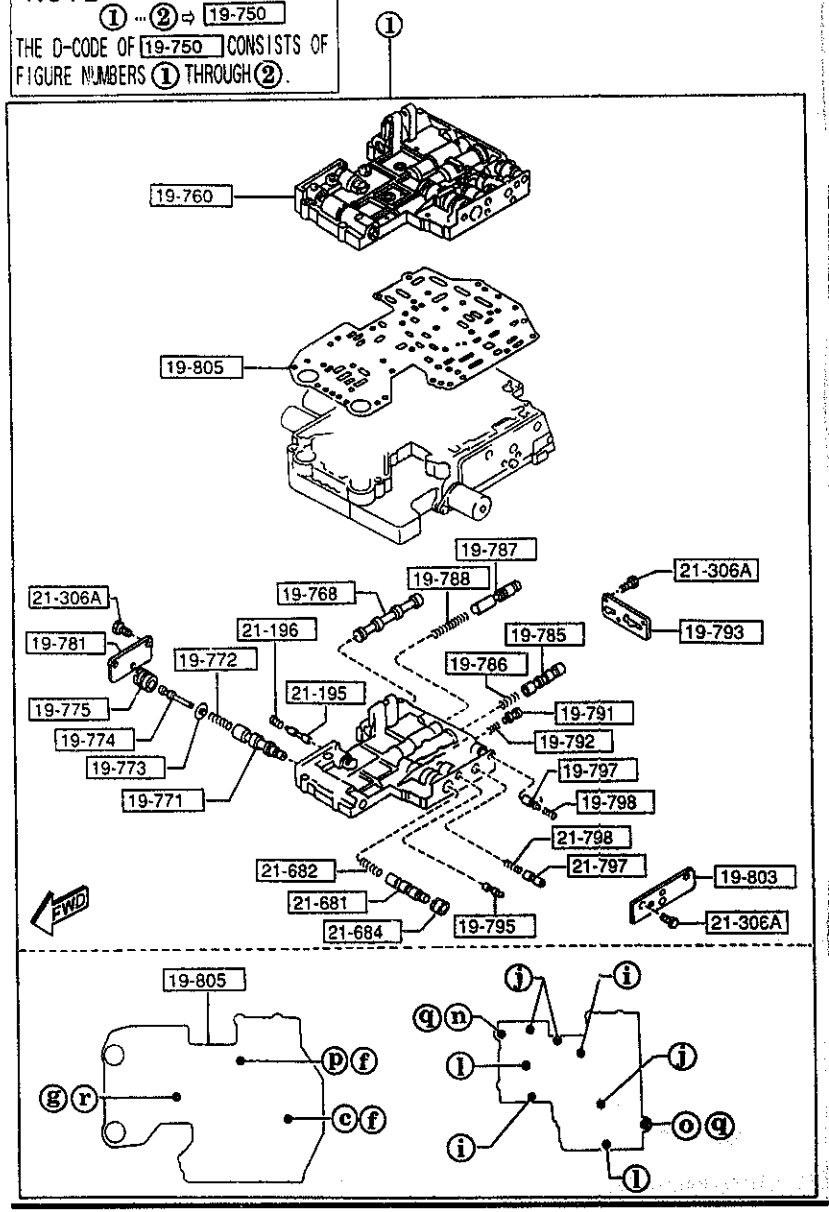

AUNA06

1925 -1 AUTOMATIC TRANSMISSION CONTROL VALVE

PART NO.	QTY	MODEL/RESTRICTION	MODEL/RESTRICTION	MODEL/RESTRICTION	FROM-TO
19-750 N451-19-750	1	VALVE,CONTROL			
19-760 BV01-19-760F	1	BODY,CONTROL VALVE-UP			
19-758 BU91-19-768	1	VALVE,MANUAL			
19-771 BV01-19-771	1	VALVE,REGULATOR			
19-772 0338-19-772	1	SPRING,REGULATOR			
19-773 0338-19-773	1	SEAT,REGULATOR SPRING			
19-774 N451-19-774	1	PLUG,REGULATOR			
19-775 N451-19-775	1	SLEEVE,REGULATOR PLUG			
19-781 1758-19-781	1	PLATE,SIDE'D'			
19-785 BV01-19-785	1	VALVE,1-2 SHIFT			
19-786 BV11-19-527	1	SPRING,1-2 SHIFT			
19-787 N451-19-787	1	VALVE,2-3 SHIFT			
19-788 N451-19-788	1	SPRING,2-3 SHIFT			
19-791 0338-19-791A	1	VALVE,MODIFIER			

CAT. AUNA06-03 1998-07

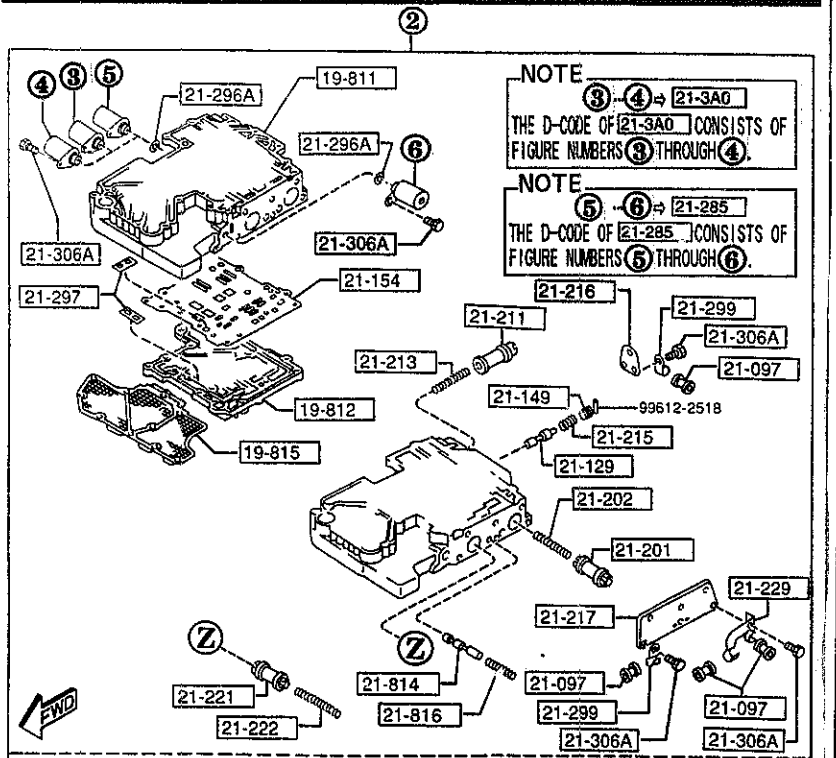

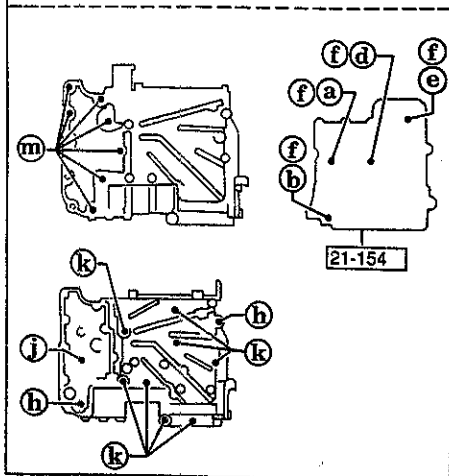

a	D	19-8A2	D=1.0MM
b	D	19-8A3	D=1.1MM
c	D	19-8A4	D=1.2MM
d	D	19-8B2	D=1.5MM
e	D	19-8B4	D=2.2MM
f	D L	19-808	D=4.7MM,L=15.5MM
g	D L	19-814	D=5.6MM,L=26.8MM
h		19-819	
i		21-261	L=30MM
j		21-262	L=35MM
k		21-263	L=25MM
l	L	21-264	L=40MM(-7801) L=30MM(7801-)
m	L	21-265	L=12MM
n		21-302	L=59MM
o		21-305	L=82MM
p		21-333	
q	D d	21-446	D=12.5MM,d=6.4MM
r		99611-2000	

AUNA06

PART NO.	QTY	MODEL/RESTRICTION	MODEL/RESTRICTION	MODEL/RESTRICTION	FROM-TO
19-792 BV01-19-792	1	SPRING,MODIFIER			
19-793 BV01-19-793	1	PLATE,SIDE'A'			
19-795 N451-19-795	1	VALVE,THROTTLE			
19-797 BV01-19-797A	1	VALVE,THROTTLE BACK-UP			
19-798 N451-19-798	1	SPRING,THROTTLE BACK-UP			
19-8A2 BV01-19-8A2	1	VALVE,ORIFICE CHECK			
19-8A3 BV01-19-8A3	1	VALVE,ORIFICE CHECK			
19-8A4 BV01-19-8A4	1	VALVE,ORIFICE CHECK			
19-8B2 BV01-19-8B2	1	VALVE,ORIFICE CHECK			
19-8B4 BV01-19-8B4	1	VALVE,ORIFICE CHECK			
19-803 BV01-19-803	1	PLATE,SIDE'B'			
19-805 BV17-19-805	1	PLATE,SEPARATOR			
19-808 0338-19-808	6	SPRING			
19-811 BV02-19-811C	1	BODY,VALVE LWR			

CAT. AUNA06-03

1998-07

NOTE
① ... ② ⇨ 19-750
THE D-CODE OF 19-750 CONSISTS OF FIGURE NUMBERS ① THROUGH ②.

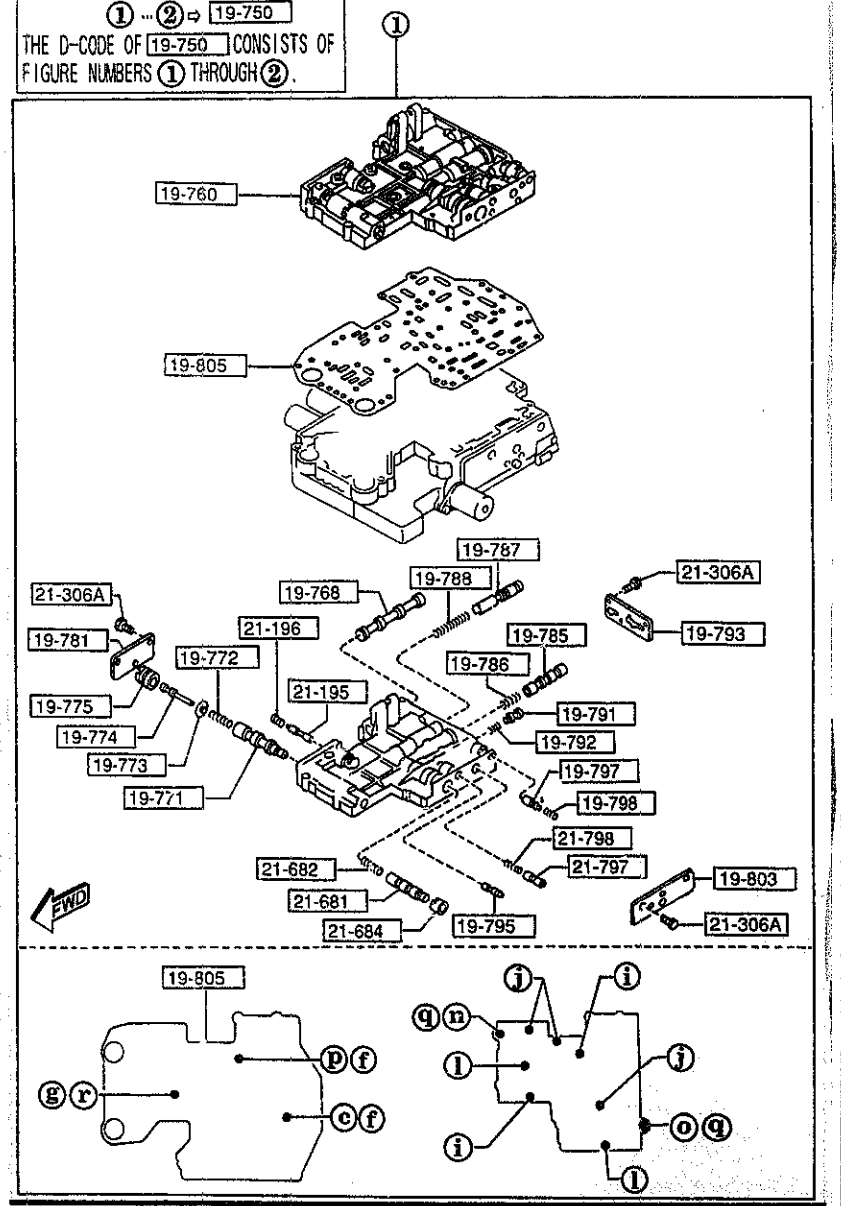

AUNA06

PART NO.	QTY	MODEL/RESTRICTION	MODEL/RESTRICTION	MODEL/RESTRICTION	FROM-TO
19-812		COVER,VALVE BODY			
BV01-19-812A	1				
19-814		SPRING			
0338-19-814	1				
19-815		STRAINER,OIL			
BV01-19-815	1				
19-819		NUT			
BV01-19-819	2				
21-097		PROTECTOR			
FU01-21-097	4				
21-129		VALVE,1-2 REDUCING			
BV01-21-129	1				
21-149		PLUG,STOPPER			
BV01-21-149A	1				
21-154		PLATE,SEPARATOR			
N451-21-154	1				
21-195		VALVE,REDUCING			
BV01-21-195	1				
21-196		SPRING,REDUCING			
BV01-21-196	1				
21-201		PISTON,ACCUM			
N451-21-201	1				
21-202		SPRING,ACCUM N-R			
BV06-21-202	1				
21-211		PISTON,N/D ACCUM			
N451-21-211	1				
21-213		SPRING,N/D ACCUM			
BV01-21-213	1				

CAT. AUNA06-03

1998-07

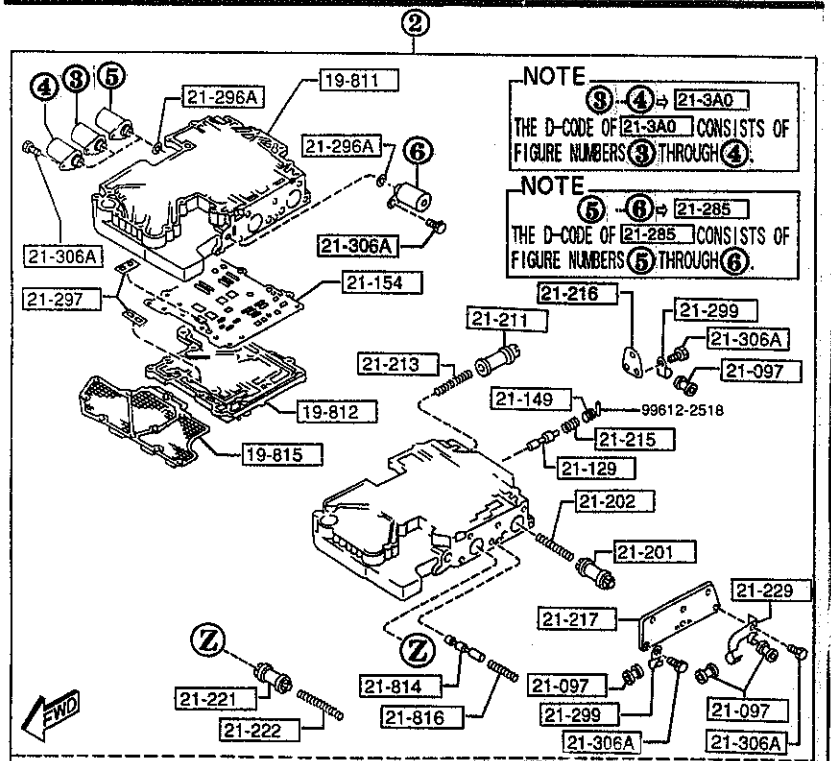

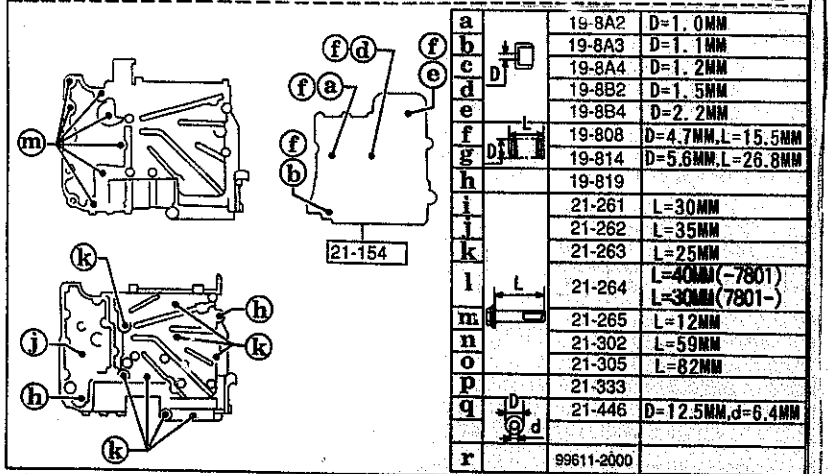

a		19-8A2	D=1.0MM
b	D	19-8A3	D=1.1MM
c		19-8A4	D=1.2MM
d		19-8B2	D=1.5MM
e		19-8B4	D=2.2MM
f	L D	19-808	D=4.7MM,L=15.5MM
g		19-814	D=5.6MM,L=26.8MM
h		19-819	
i		21-261	L=30MM
j		21-262	L=35MM
k		21-263	L=25MM
l	L	21-264	L=40MM(-7801) L=30MM(7801-)
m		21-265	L=12MM
n		21-302	L=59MM
o		21-305	L=82MM
p		21-333	
q	D d	21-446	D=12.5MM,d=6.4MM
r		99611-2000	

AUNA06

PART NO.	QTY	MODEL/RESTRICTION	MODEL/RESTRICTION	MODEL/RESTRICTION	FROM-TO
21-215 BV02-21-215	1	SPRING,BY-PASS			
21-216 BV01-21-216	1	PLATE'E',SIDE			
21-217 BV01-21-217	1	PLATE'F',SIDE			
21-221 N451-21-221	1	PISTON,1/2 ACCUM			
21-222 BV02-21-222B	1	SPRING,ACCUM 1-2			
21-229 BV01-21-229A	1	CLIP			
21-261 N451-21-261	2	BOLT			
21-262 N451-21-262	4	BOLT			
21-263 N451-21-263	8	BOLT			
21-264 N451-21-264	2	BOLT			-7801
*BV01-21-261	2				7801-
21-265 FU01-21-265C	7	BOLT			
21-285 BV01-21-280A	1	VALVE,SOLENOID			
21-296A BV01-21-296	4	STRAINER,OIL			

7801 NA35*V-739024

CAT. AUNA06-03

1998-07

NOTE
① ... ② ⇨ 19-750
THE D-CODE OF 19-750 CONSISTS OF FIGURE NUMBERS ① THROUGH ②.

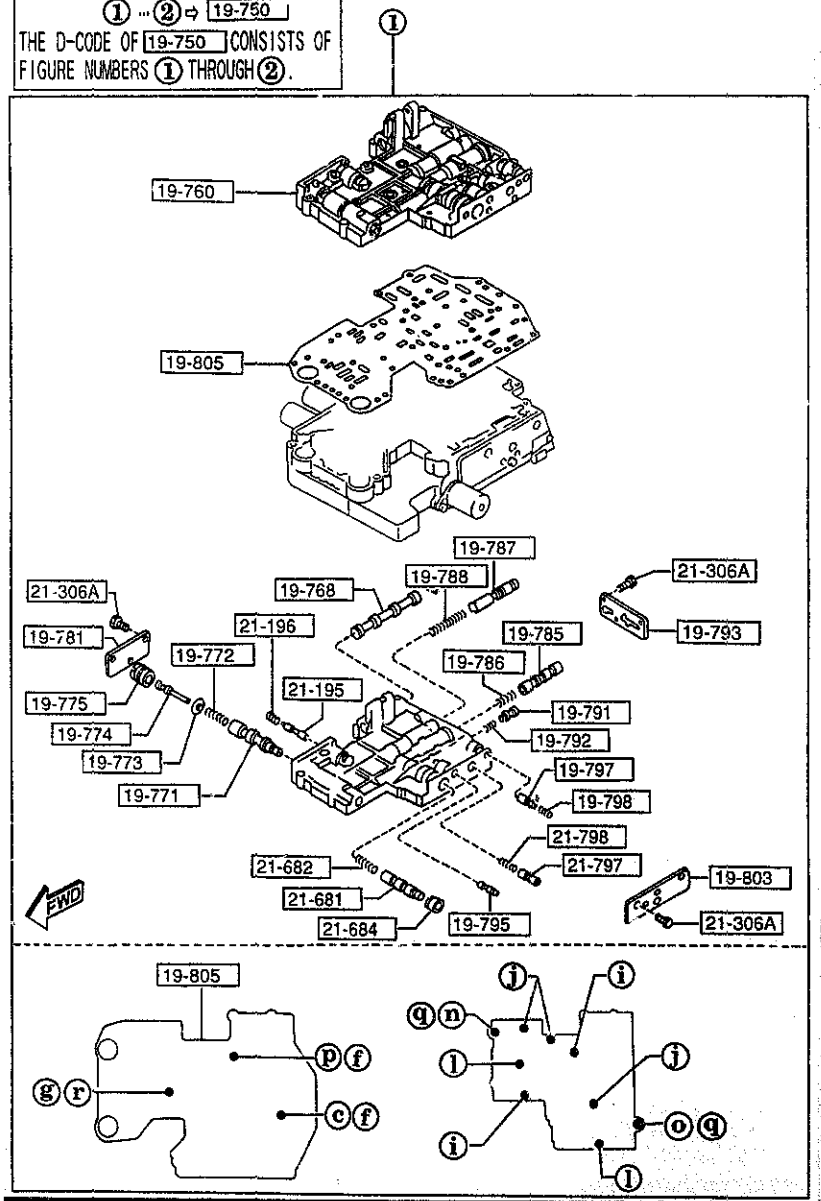

AUNA06

1925 -5 AUTOMATIC TRANSMISSION CONTROL VALVE

PART NO.	QTY	MODEL/RESTRICTION	MODEL/RESTRICTION	MODEL/RESTRICTION	FROM-TO
21-297		STRAINER,INNER			
BV01-21-297	2				
21-299		CLIP			
BV01-21-299	2				
21-3A0		SOLENOID			
BV02-21-3A0A	1				
21-302		BOLT,CONTROL VALVE			
BV02-21-302	1				
21-305		BOLT			
BV01-21-305B	1				
21-306A		BOLT			
BV01-21-306	22				
21-333		VALVE,ONE WAY			
BV01-21-333	1				
21-446		WASHER,DISHED			
BV01-21-446	2				
21-681		VALVE,SHIFT 3-4			
BV01-21-681	1				
21-682		SPRING,3-4 SHIFT			
BV01-21-682	1				
21-684		VALVE,3-4 SHIFT-COAST			
BV01-21-684	1				
21-797		VALVE,CONTROL BACK UP			
BV01-21-797	1				
21-798		SPRING,BACK UP			
BV01-21-798	1				
21-814		SPRING,3-2 TIMING			
BV01-21-814	1				

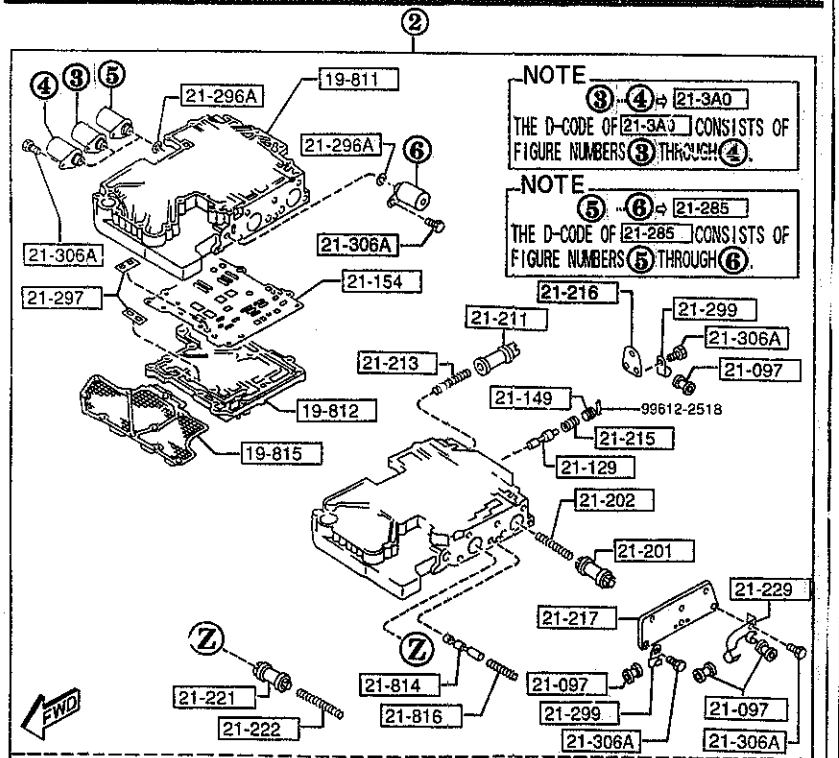

a		19-8A2	D=1.0MM
b		19-8A3	D=1.1MM
c		19-8A4	D=1.2MM
d		19-8B2	D=1.5MM
e		19-8B4	D=2.2MM
f		19-808	D=4.7MM,L=15.5MM
g		19-814	D=5.6MM,L=26.8MM
h		19-819	
i		21-261	L=30MM
j		21-262	L=35MM
k		21-263	L=25MM
l		21-264	L=40MM(-7801) L=30MM(7801-)
m		21-265	L=12MM
n		21-302	L=59MM
o		21-305	L=82MM
p		21-333	
q		21-446	D=12.5MM,d=6.4MM
r		99611-2000	

AUNA06

PART NO.	QTY	MODEL/RESTRICTION	MODEL/RESTRICTION	MODEL/RESTRICTION	FROM-TO
21-816		SPRING,3-2 TIMING			
BV01-21-816	1				

CAT. AUNA06-03

1998-07

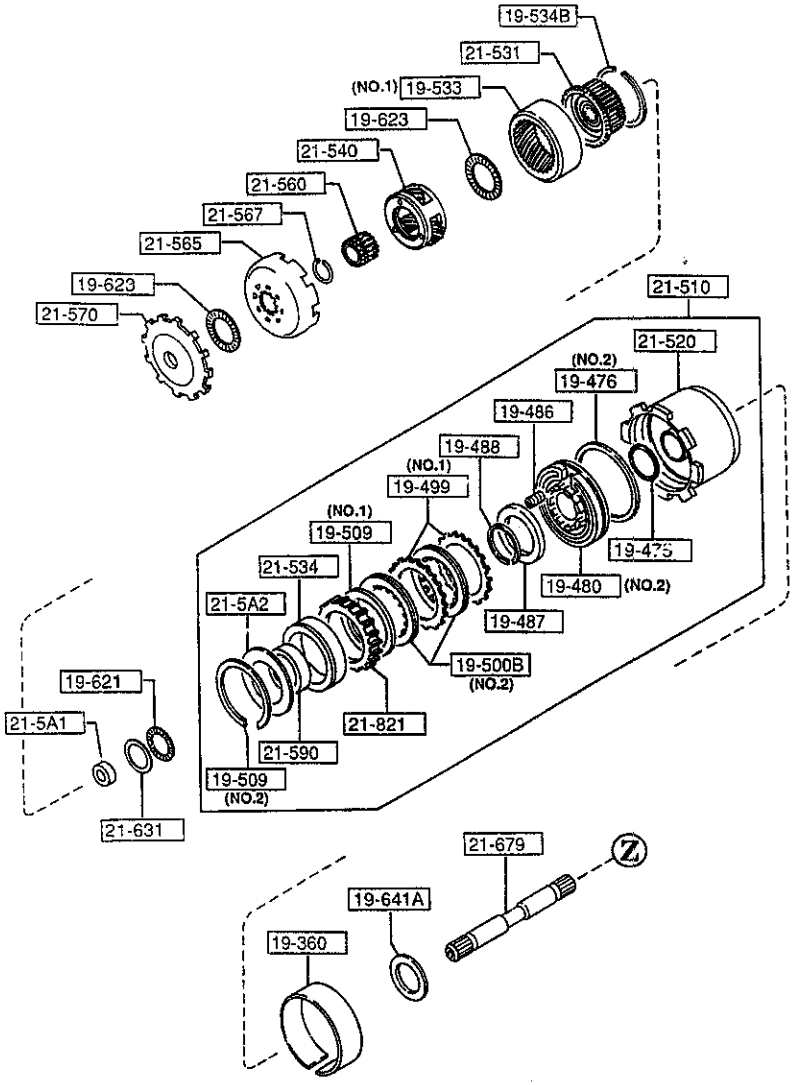

AUNA06

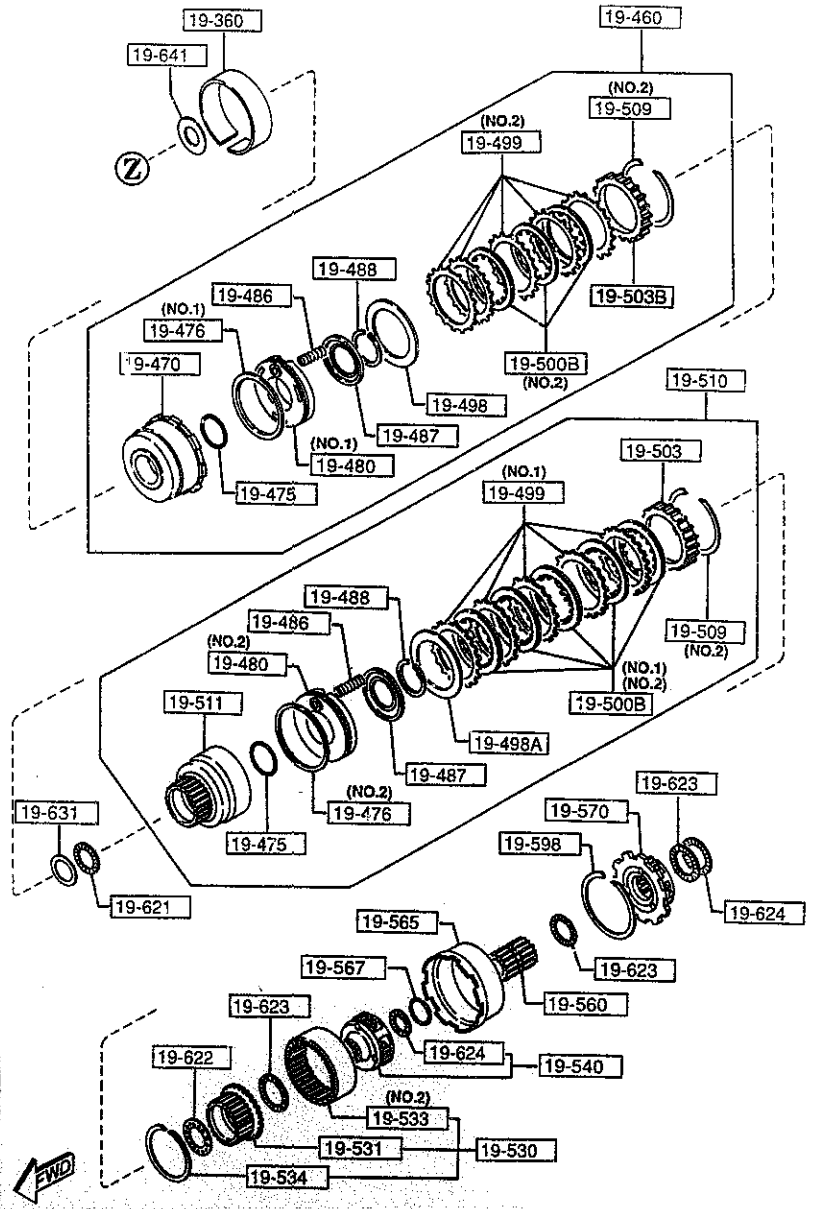

AUNA06

1930 AUTOMATIC TRANSMISSION CLUTCHES & PLANETARY GEARS (1/2)

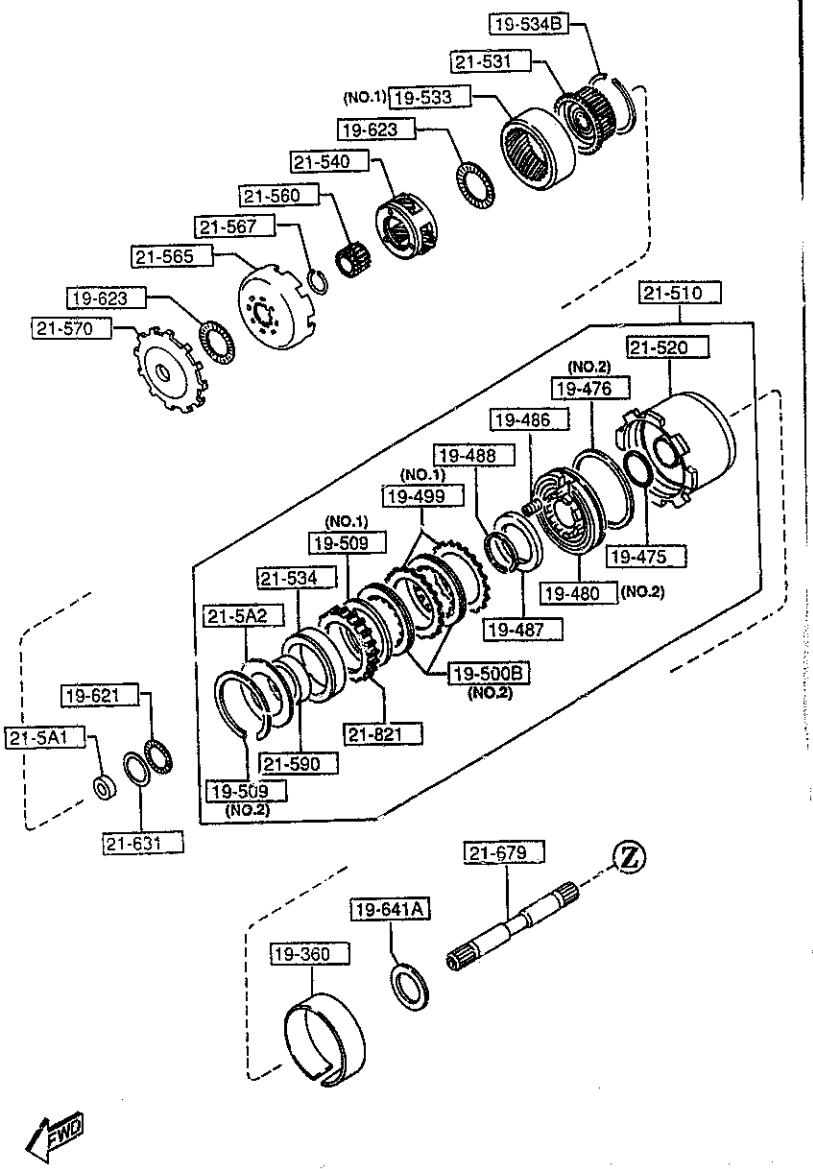

1930 -1 AUTOMATIC TRANSMISSION CLUTCHES & PLANETARY GEARS

PART NO.	QTY	MODEL/RESTRICTION	MODEL/RESTRICTION	MODEL/RESTRICTION	FROM-TO
19-360		BAND,BRAKE			
0338-19-360B	2				
19-460		CLUTCH,FRONT			
N451-19-460	1				-7201
AN(N451-19-460A)					
N451-19-460A	1				7201-
19-470		DRUM,CLUTCH			
N451-19-470	1				-7201
AN(N451-19-470A)					
N451-19-470A	1				7201-
19-475		SEAL,'O'RING			
0338-19-475	3				
19-476		SEAL,LATHE CUT			
BV01-19-476	1	(ILLUST. NO.1)			
0338-19-476	2	(ILLUST. NO.2)			
19-480		PISTON,CLUTCH			
BV01-19-480	1	(ILLUST. NO.1)			
0338-19-480	2	(ILLUST. NO.2)			
19-486		SPRING,PISTON RETURN			
0338-19-486	25				
19-487		RETAINER,SPRING			
0338-19-487	3				
19-488		RING,SNAP			
0338-19-488	3				
19-498		PLATE,DISHED			
0338-19-498	1				
19-498A		PLATE,DISHED			
EU17-19-498	1				
19-499		PLATE,DRIVEN			
FT01-19-499	7	(ILLUST. NO.1)			

7201 NA35*V-730033

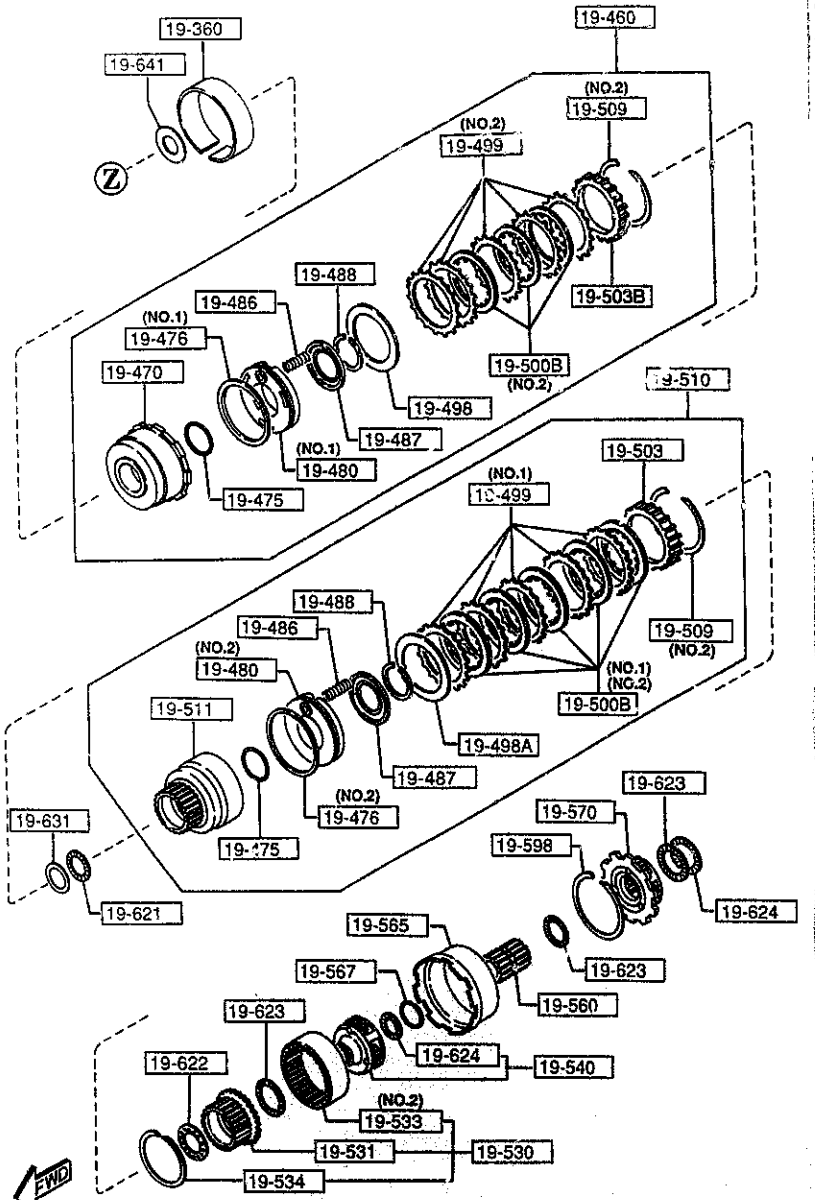

AUNA06

PART NO.	QTY	MODEL/RESTRICTION	MODEL/RESTRICTION	MODEL/RESTRICTION	FROM-TO
CONT'D					
0338-19-499	5	(ILLUST. NO.2)			
+----------+					
| 19-500B |		PLATE,DRIVEN			
+----------+					
BU55-19-5J0	5	SELECTIVE USE (ILLUST. NO.1)			
BU17-19-500A	10	SELECTIVE USE (ILLUST. NO.2)			
+----------+					
| 19-503 |		PLATE,RETAINING			
+----------+					
0338-19-503	1	T=10.2MM			
BU17-19-504	1	T=9.4MM			
BU17-19-505	1	T=9.6MM			
BU17-19-506	1	T=9.8MM			
BU17-19-507	1	T=10MM			
BU17-19-508	1	T=10.2MM			
BU17-19-509	1	T=10.4MM			
+----------+					
| 19-503B |		PLATE,RETAINING			
+----------+					
BV02-19-507	1	T=6.8MM			
3959-19-507	1	T=5.8MM			
BV02-19-508	1	T=7.0MM			
3959-19-508	1	T=6.0MM			
3959-19-509	1	T=6.2MM			
N451-19-505	1	T=6.4MM			7801
BV02-19-506	1	T=6.6MM			-7801
*BU05-21-525	1	T=6.4MM			7801-
*BU05-21-526	1	T=6.6MM			7801-
+----------+					
| 19-509 |		RING,SNAP			
+----------+					

7801 NA35*V-739024

CAT. AUNA06-03

1998-07

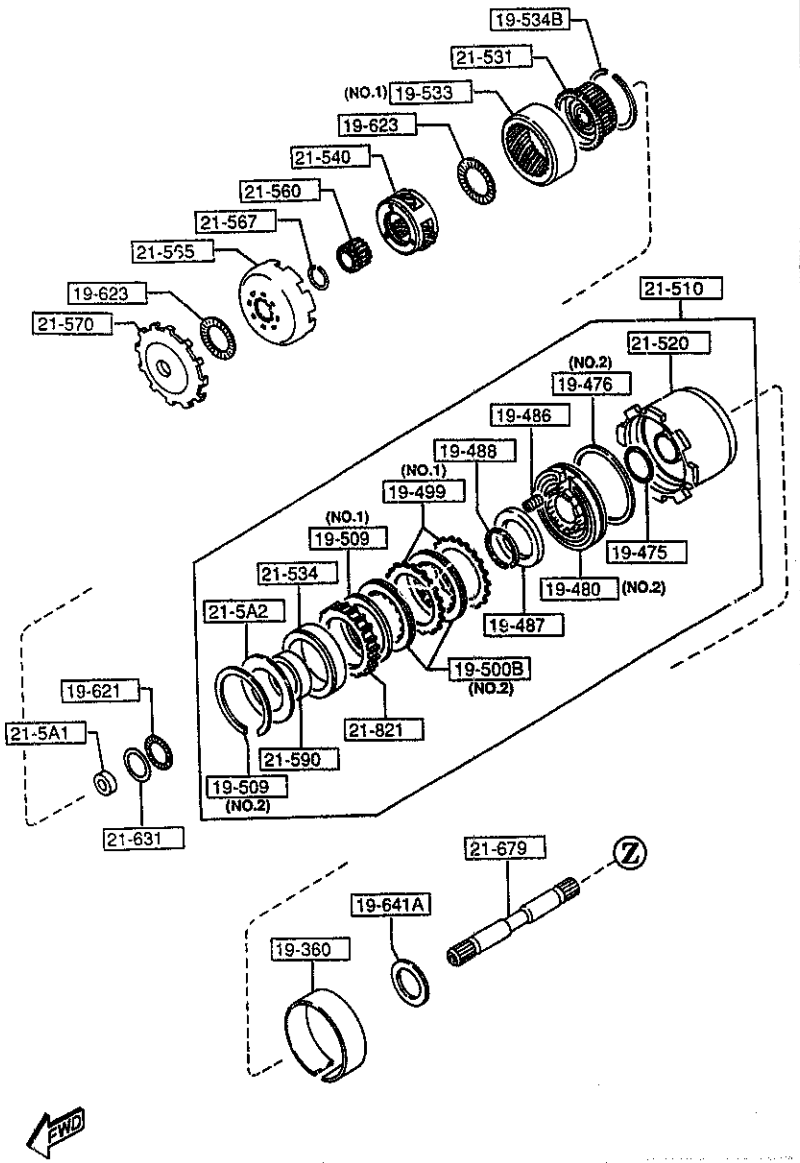

PART NO.	QTY	MODEL/RESTRICTION	MODEL/RESTRICTION	MODEL/RESTRICTION	FROM-TO
CONT'D					
BV01-19-509	1	(ILLUST. NO.1)			
0338-19-509	3	T=2.0MM (ILLUST. NO.2)			
19-510		CLUTCH,REAR			
BU17-19-510A	1				
19-511		DRUM,REAR CLUTCH			
1758-19-511A	1				
19-530		HUB,REAR CLUTCH			
0338-19-530	1				
19-531		HUB,REAR CLUTCH			
0338-19-531	1				
19-533		GEAR,INTERNAL			
BV01-19-533	1	(ILLUST. NO.1)			
0338-19-533A	1	(ILLUST. NO.2)			
19-534		RING,SNAP			
0338-19-534	1				
19-534B		RING,SNAP			
BU03-19-534	1				
19-540		CARRIER,FRONT			
0338-19-540	1				
19-560		GEAR,SUN			
0338-19-560	1				
19-565		SHELL,CONNECTING			
BU27-19-565	1				
19-567		RING,SNAP			
0338-19-567	1				
19-570		CARRIER,REAR			
0338-19-570	1				

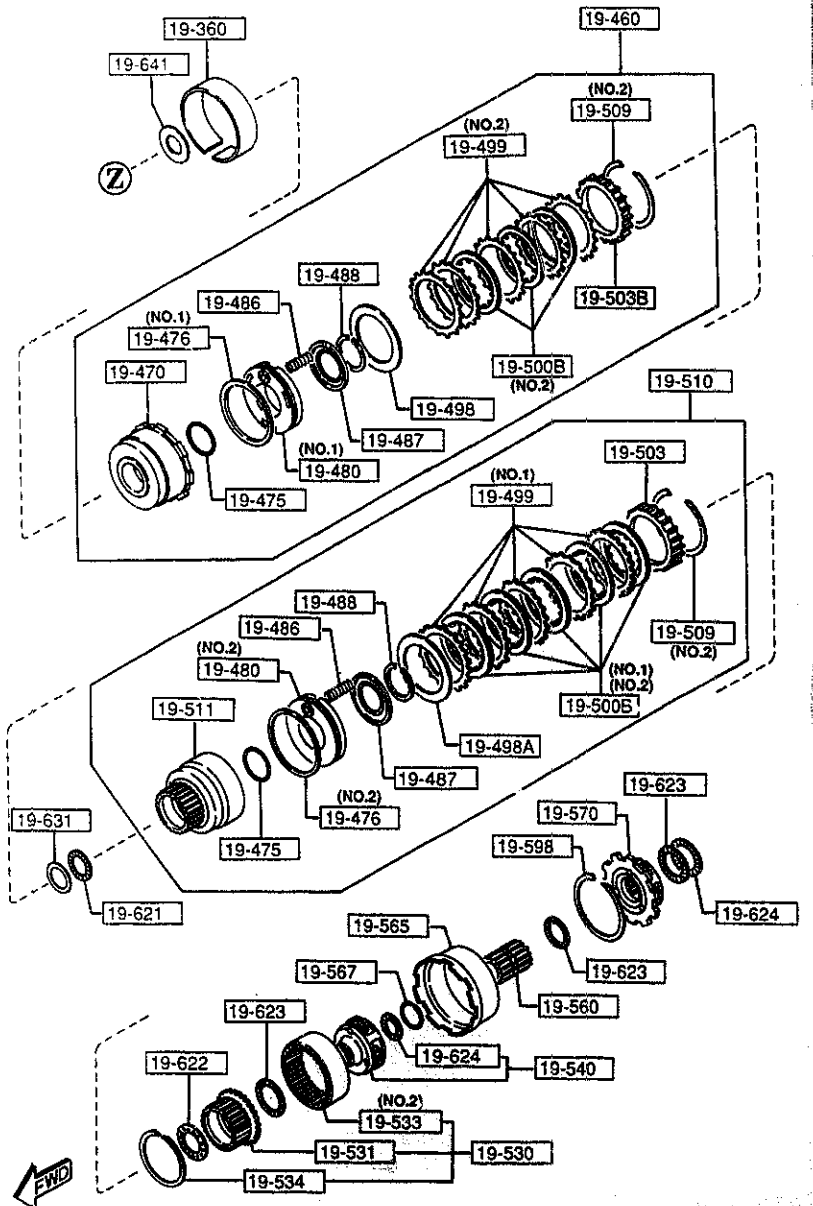

AUNA06

PART NO.	QTY	MODEL/RESTRICTION	MODEL/RESTRICTION	MODEL/RESTRICTION	FROM-TO
19-598		RING,SNAP			
0338-19-598	1				
19-621		BEARING,NEEDLE			
0338-19-621	2				
19-622		BEARING,NEEDLE			
BU91-19-622	1	D=34.7MM			
FT01-19-622	1	D=33.8MM			
19-623		BEARING,NEEDLE			
0338-19-623A	5				
19-624		BEARING,NEEDLE			
0338-19-624	2				
19-631		RACE,BRG.PUMP COVER			
0338-19-631	1	T=1.2MM			
0338-19-632	1	T=1.4MM			
0338-19-633	1	T=1.6MM			
0338-19-634	1	T=1.8MM			
0338-19-635	1	T=2.0MM			
0338-19-636	1	T=2.2MM			
19-641		WASHER,FRONT CLUTCH			
BV01-19-6C1	1	T=0.8MM			
BV01-19-6C2	1	T=1MM			
BV01-19-6C3	1	T=1.2MM			
BV01-19-6C4	1	T=1.4MM			
BV01-19-6C5	1	T=1.6MM			
BV01-19-6C6		T=1.8MM			

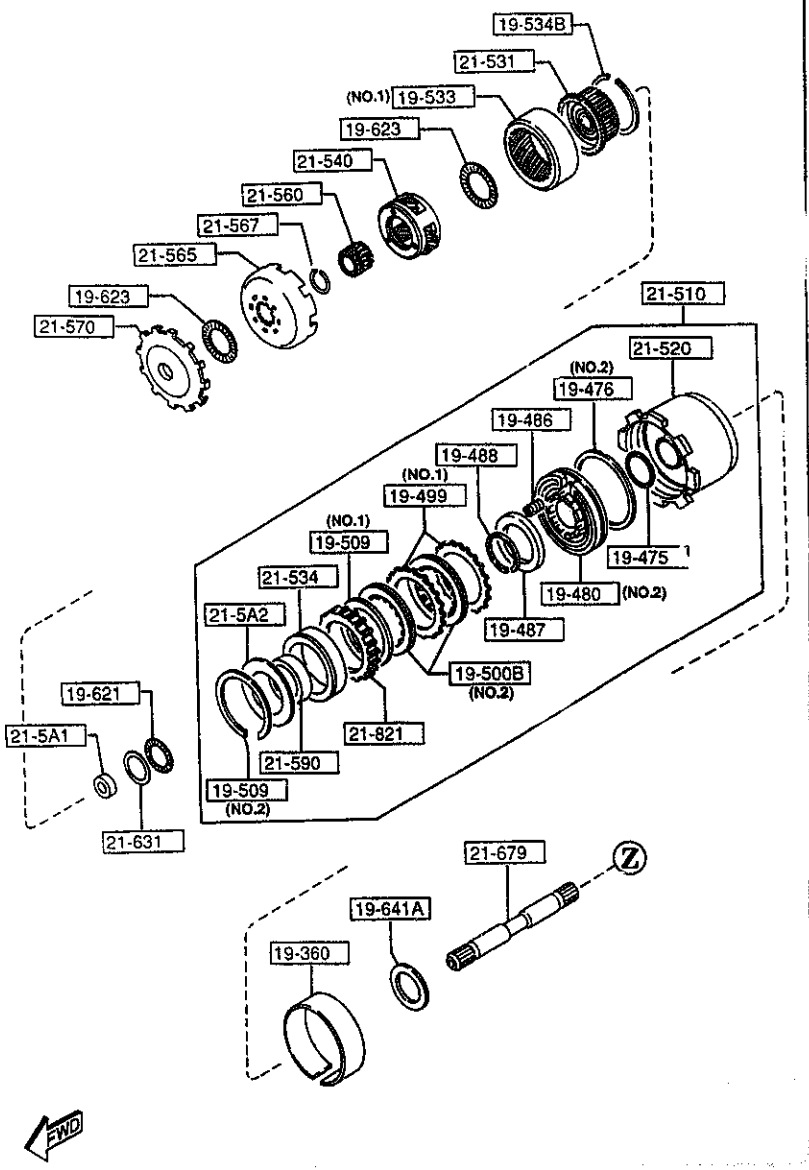

PART NO.	QTY	MODEL/RESTRICTION	MODEL/RESTRICTION	MODEL/RESTRICTION	FROM-TO
CONT'D					
	1				
BV01-19-6C7	1	T=2MM			
BV01-19-6C8	1	T=2.2MM			
+----------+					
| 19-641A |		WASHER			
+----------+					
BV03-19-6C1	1	T=0.8MM			
BV03-19-6C2	1	T=1MM			
BV03-19-6C3	1	T=1.2MM			
BV03-19-6C4	1	T=1.4MM			
BV03-19-6C5	1	T=1.6MM			
BV03-19-6C6	1	T=1.8MM			
BV03-19-6C7	1	T=2MM			
BV03-19-6C8	1	T=2.2MM			
+----------+					
| 21-5A1 |		SLEEVE,SEAL-O.D.CARRIER			
+----------+					
BV01-21-5A1	1				
+----------+					
| 21-5A2 |		RACE,SIDE-ONE WAY CLUTCH			
+----------+					
BV01-21-5A2	1	T=0.6MM			
BV01-21-5A3	1	T=0.8MM			
BV01-21-5A4	1	T=1MM			
BV01-21-5A5	1	T=1.2MM			
BV01-21-535	1	T=0.4MM			
+----------+					
| 21-510 |		CLUTCH,DIRECT			
+----------+					
BV01-21-510B	1				
+----------+					
| 21-520 |		DRUM,DIRECT			
+----------+					
BV01-21-530C	1				

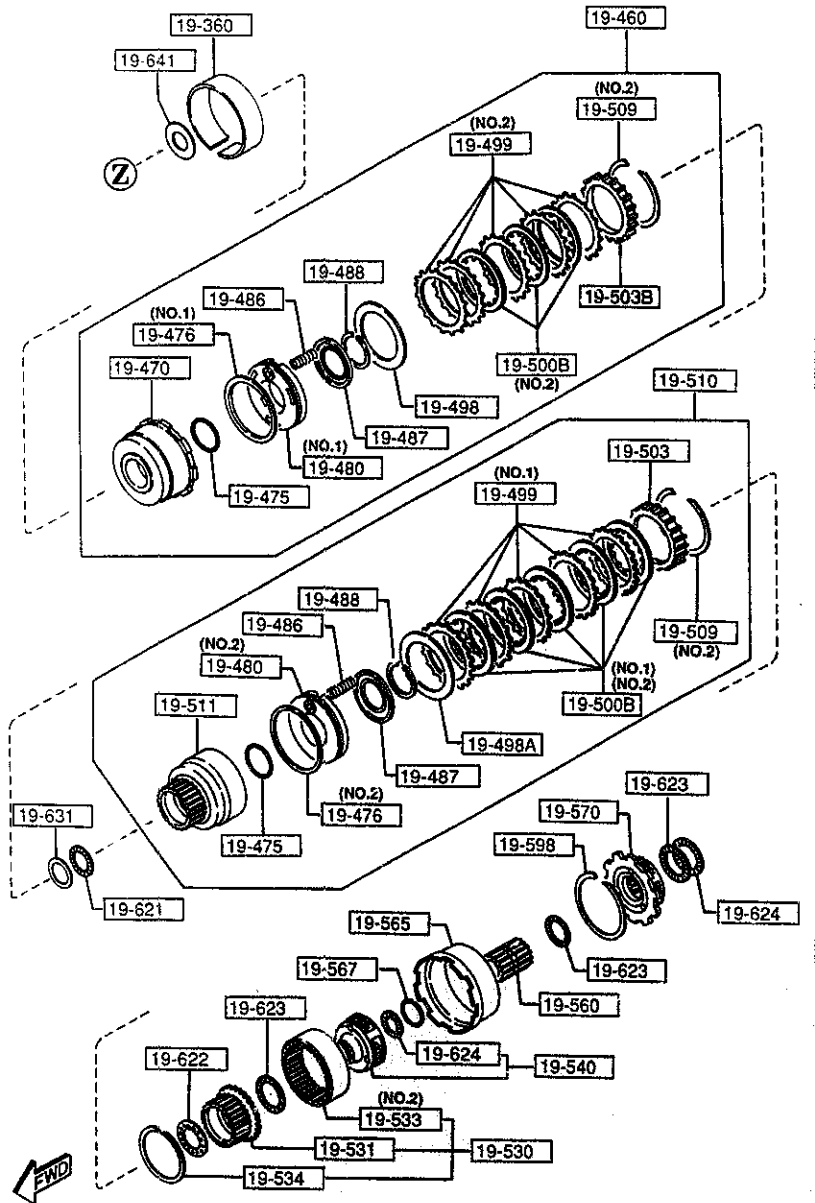

AUNA06

PART NO.	QTY	MODEL/RESTRICTION	MODEL/RESTRICTION	MODEL/RESTRICTION	FROM-TO
21-531		HUB,O/DRIVE CLUTCH			
BV01-21-536	1				
21-534		RACE,OUTER-ONE WAY CLUTCH			
BV01-21-534	1				
21-540		CARRIER,OVER DRIVE			
BV01-21-540B	1				
21-560		GEAR,OVER DRIVE			
BV01-21-560	1				
21-565		CONNECTING,SHELL			
BU03-21-565	1				
21-567		RING,SNAP			
BU03-21-567	1				
21-570		SUPPORT,CENTER			
BV01-21-570A	1				
21-590		CLUTCH,ONE WAY			
BV01-21-533	1				
21-631		RACE,BRG.HUB CLUTCH			
BU01-21-631	1	L=1.2MM			
BU01-21-632	1	L=1.4MM			
BU01-21-633	1	L=1.6MM			
BU01-21-634	1	L=1.8MM			
BU01-21-635	1	L=2.0MM			
BU01-21-636	1	L=2.2MM			
21-679		SHAFT,INTERMEDIATE			
BU01-21-679	1				
21-821		PLATE,RETAINING			

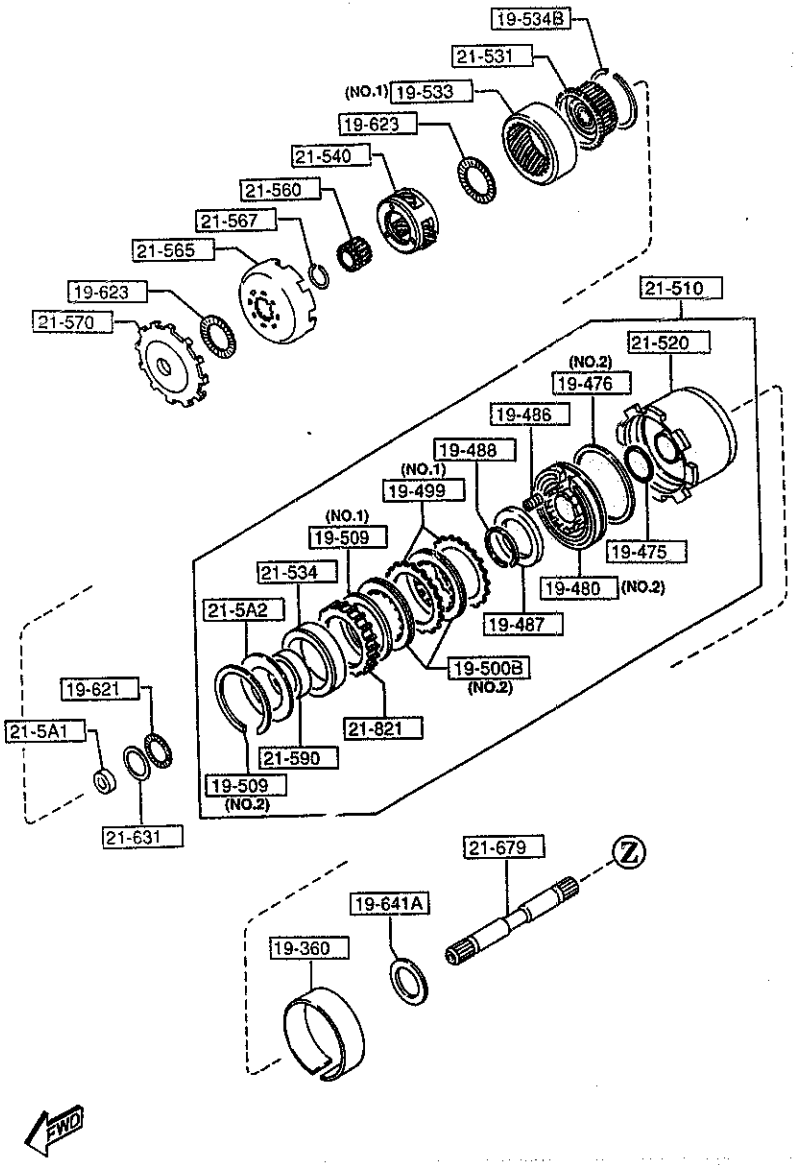

1930 -7 * AUTOMATIC TRANSMISSION CLUTCHES & PLANETARY GEARS

PART NO.	QTY	MODEL/RESTRICTION	MODEL/RESTRICTION	MODEL/RESTRICTION	FROM-TO
CONT'D					
8V01-21-821A	1				

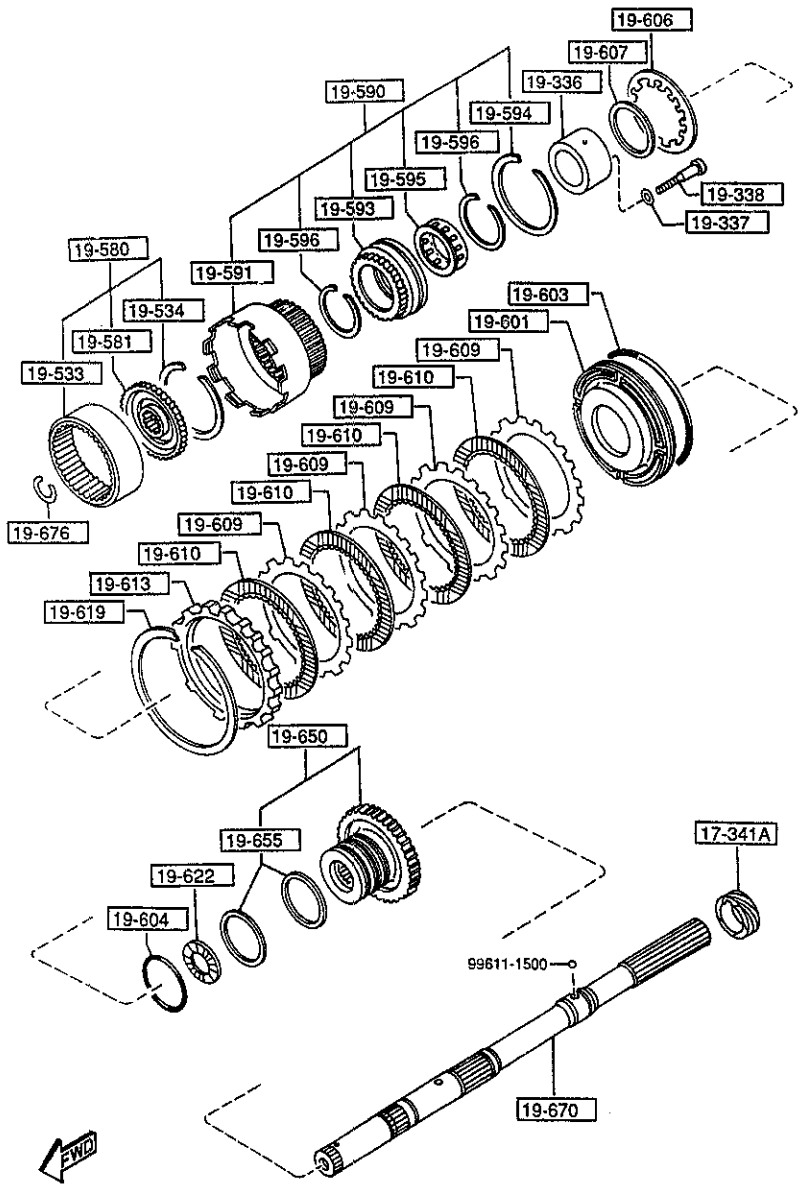

AUNA06

PART NO.	QTY	MODEL/RESTRICTION	MODEL/RESTRICTION	MODEL/RESTRICTION	FROM-TO
17-341A 1281-17-341	1	GEAR,SPEEDO.DRIVE			
19-336 0338-19-336	1	RACE,INNER			
19-337 0338-19-337	8	WASHER,PLAIN			
19-338 0338-19-338	8	BOLT			
19-533 0338-19-533A	2	GEAR,INTERNAL			
19-534 0338-19-534	1	RING,SNAP			
19-580 0338-19-580	1	FLANGE			
19-581 0338-19-581	1	FLANGE,DRIVE			
19-590 0338-19-590	1	DRUM,CONNECTING			
19-591 0338-19-591	1	DRUM,CONNECTING			
19-593 0338-19-593	1	RACE,OUTER			
19-594 0338-19-594	1	RING,SNAP			
19-595 0338-19-595	1	CLUTCH,ONE WAY			
19-596 0338-19-596	2	RING,SNAP			

1940 AUTOMATIC TRANSMISSION GOVERNOR, LOW & REVERSE PISTON

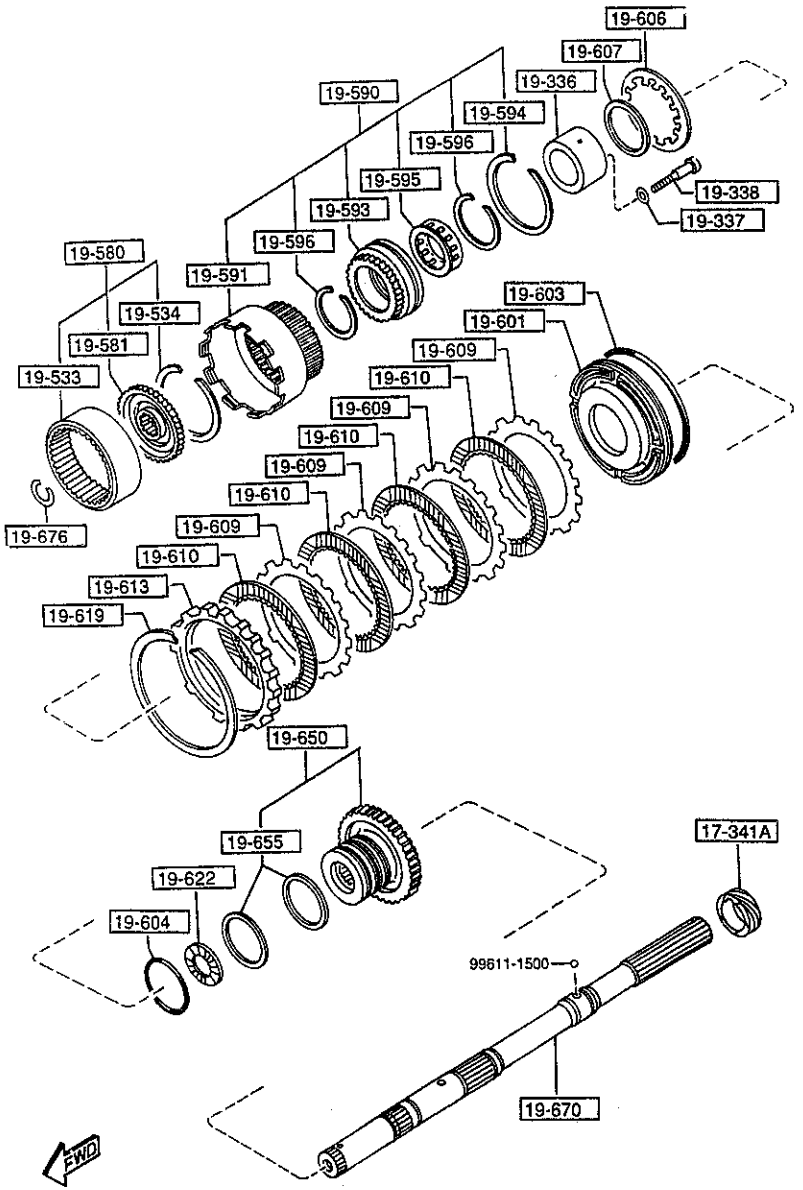

AUNA06

1940 -2 AUTOMATIC TRANSMISSION GOVERNOR, LOW & REVERSE PISTON

PART NO.	QTY	MODEL/RESTRICTION	MODEL/RESTRICTION	MODEL/RESTRICTION	FROM-TO
19-601		PISTON,LOW & REVERSE			
BT08-19-600	1				
19-603		SEAL,PISTON			
0338-19-603	1				
19-604		SEAL,'O'RING			
0338-19-604	1				
19-606		SPRING,PISTON			
0338-19-606	1				
19-607		RING,SNAP			
0338-19-607	1				
19-609		PLATE,DRIVEN			
0338-19-609	4				
19-610		PLATE,DRIVE			
BU17-19-610	4				
19-613		PLATE,RETAINING			
0338-19-613A	1	T=11.8MM			
0338-19-614A	1	T=12MM			
0338-19-615A	1	T=12.2MM			
0338-19-616A	1	T=12.4MM			
0338-19-617A	1	T=12.6MM			
0338-19-618A	1	T=12.8MM			
19-619		RING,SNAP			
0338-19-619	1				
19-622		BEARING,NEEDLE			
BU91-19-622	1	D=34.7MM			
FT01-19-622	1	D=33.8MM			

CAT. AUNA0 -03

1998-07

1940 AUTOMATIC TRANSMISSION GOVERNOR, LOW & REVERSE PISTON

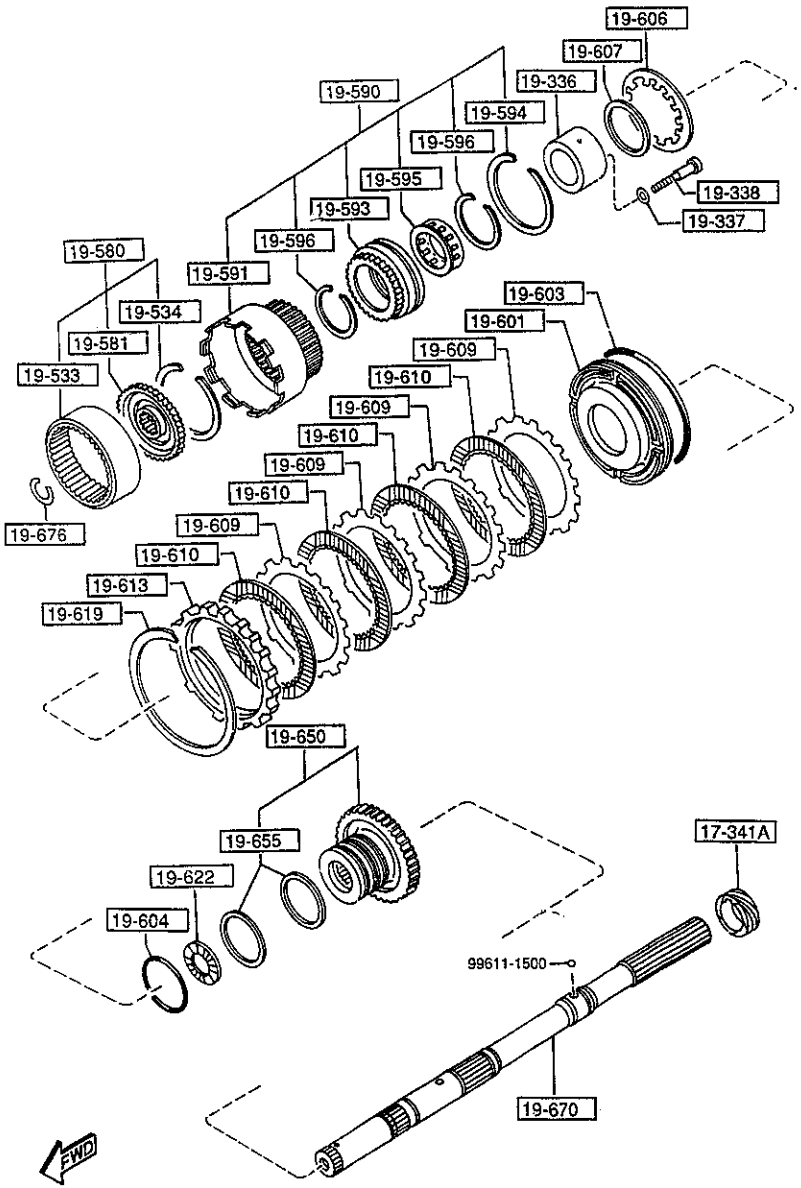

1940 -3 * AUTOMATIC TRANSMISSION GOVERNOR, LOW & REVERSE PISTON

PART NO.	QTY	MODEL/RESTRICTION	MODEL/RESTRICTION	MODEL/RESTRICTION	FROM-TO
19-650		DISTRIBUTOR,OIL			
BV01-19-650	1				
19-655		RING,SEAL			
BV01-19-655	2				
19-670		SHAFT			
BU55-19-670	1				
19-676		RING			
0338-19-676	1				

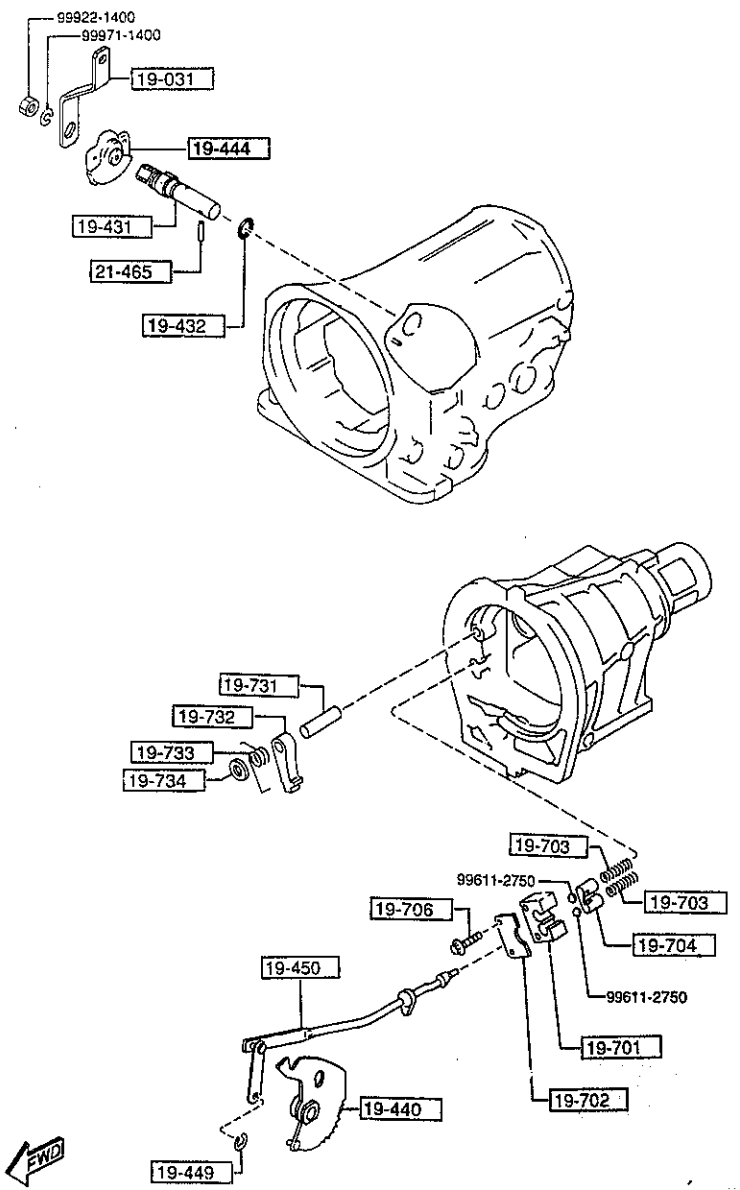

AUNA06

PART NO.	QTY	MODEL/RESTRICTION	MODEL/RESTRICTION	MODEL/RESTRICTION	FROM-TO
19-031 BU55-19-031	1	LEVER,SELECT			
19-431 BU67-19-431	1	SHAFT,MANUAL			
19-432 0338-19-432	1	RING,'O'			
19-440 BU56-19-440	1	PLATE,MANUAL			
19-444 N451-19-444	1	SWITCH,INHIBITOR			
19-449 0338-19-449	1	RING,SNAP			
19-450 BU17-19-450	1	ROD,PARKING			
19-701 BU17-19-701	1	SUPPORTER,ACTUATOR			
19-702 0338-19-702A	1	PLATE,RETAINING			
19-703 BU17-19-703	2	SPRING,BALL PARK			
19-704 BU17-19-704	1	RETAINER			
19-706 0338-19-706	1	BOLT			
19-731 0338-19-731	1	SHAFT,PARKING PAWL			
19-732 BU17-19-732	1	PAWL,PARKING			

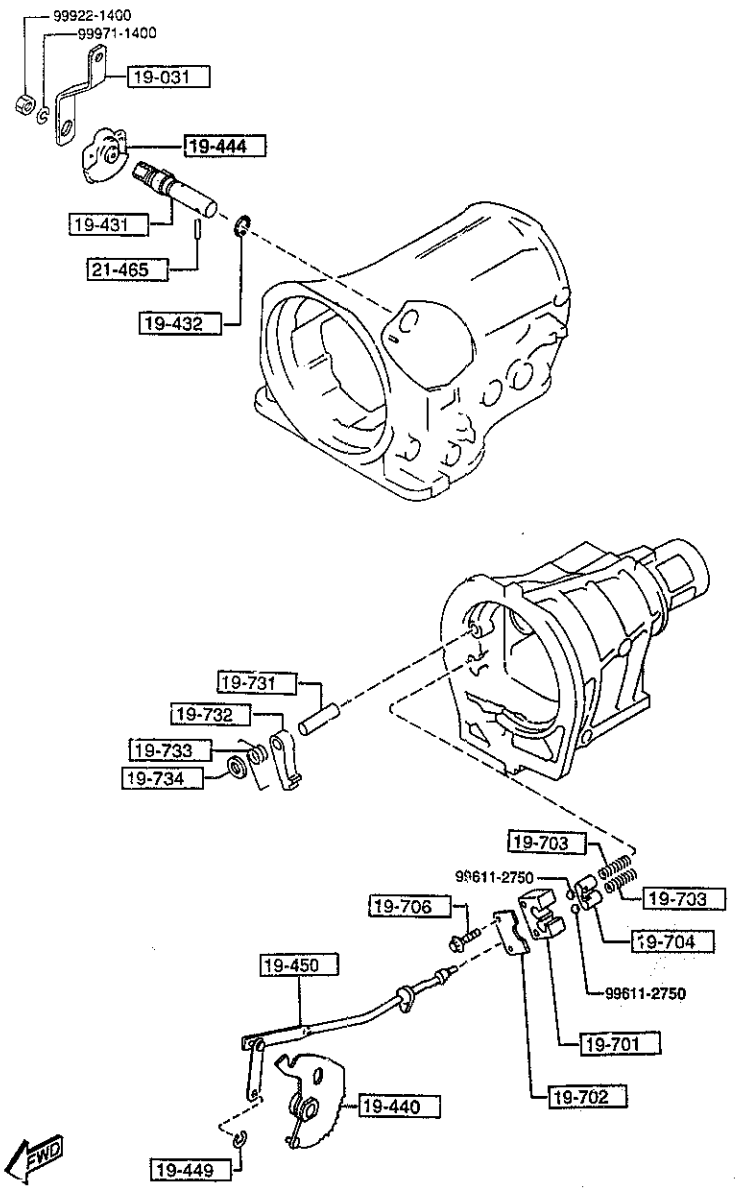

PART NO.	QTY	MODEL/RESTRICTION	MODEL/RESTRICTION	MODEL/RESTRICTION	FROM-TO
+---------+					
| 19-733 |		SPRING,PAWL RETURN			
+---------+					
0338-19-733C	1				
+---------+					
| 19-734 |		SPACER,DOWEL			
+---------+					
0338-19-734A	1				
+---------+					
| 21-465 |		PIN,SPRING-PARKING ROD			
+---------+					
BU67-21-465	1				

1960 AUTOMATIC TRANSMISSION GASKET & SEAL KIT

22-900

1-SEAL, OIL	(1)	17-SEAL, LATHE CUT	(1)
2-GASKET, OIL PUMP	(1)	18-SEAL, PISTON	(1)
3-SEAL, OIL	(1)	19-SEAL, "O" RING	(1)
4-RING, SEAL	(4)	20-RING, SEAL	(2)
5-RING, SEAL	(2)	21-GASKET, EXTENTION	(1)
6-SEAL, CUT RING	(1)	22-SEAL, "O" RING	(1)
7-GASKET	(1)	23-GASKET, OIL PAN	(1)
8-SEAL, PISTON	(1)	24-GASKET, DRUM SUPPORT	(1)
9-SEAL, PISTON	(1)	25-RING, "O"	(1)
10-SEAL, PISTON	(1)	26-RING, "O"	(1)
11-SEAL, PISTON	(1)	27-RING, "O"	(1)
12-SEAL, LATHE CUT	(1)	28-GASKET, O/DRIVE CASE	(1)
13-RING, "O"	(1)	29-RING, "O"	(2)
14-RING, "O"	(1)	30-RING, "O"	(1)
15-RING, "O"	(1)	31-RING, "O"	(4)
16-SEAL, "O" RING	(3)		

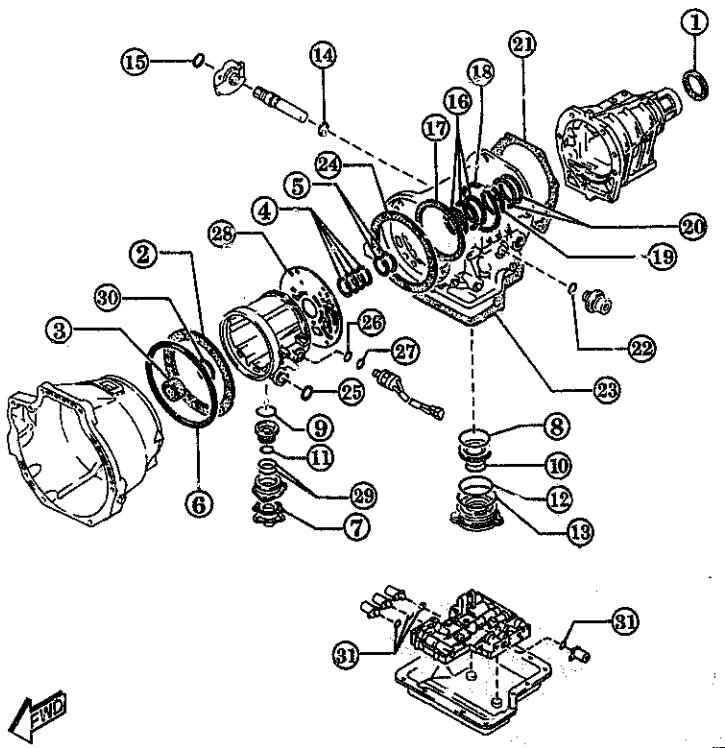

AUNA06

1960 -1 * AUTOMATIC TRANSMISSION GASKET & SEAL KIT

PART NO.	QTY	MODEL/RESTRICTION	MODEL/RESTRICTION	MODEL/RESTRICTION	FROM-TO
22-900		GASKET & SEAL KIT			
N451-22-900	1				

CAT. AUNA06-03

1998-07