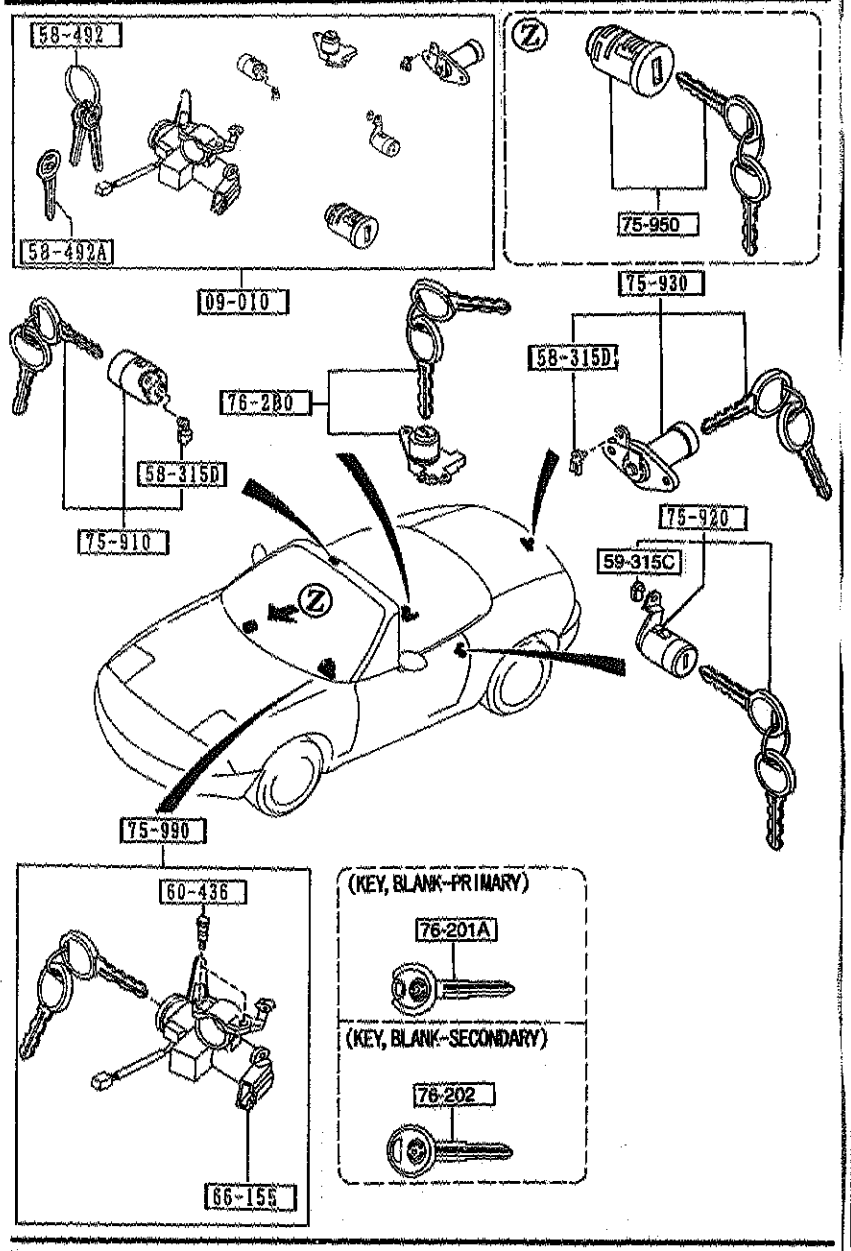

AUNA06

PART NO.	QTY	MODEL/RESTRICTION	MODEL/RESTRICTION	MODEL/RESTRICTION	FROM-TO
09-010		KEY SET			
NA75-09-010F	1	(MT)			
00	INT-	NA3 NA4 NA5 NA7 BLACK			
NA82-09-010D	1	(AT)			
00	INT-	NA3 NA4 NA5 NA7 BLACK			
58-315D		CLIP (R)			
G030-58-315	2				
58-492		KEY,PRIMARY			
FD01-58-492	2	KEY NO. IS REQUIRED			
58-492A		KEY,SECONDARY			
FD01-58-493	1	KEY NO. IS REQUIRED			
59-315C		CLIP'B'(L),DOOR LOCK			
G030-59-315	1				
60-436		BOLT,SET			
*H043-66-154	2				
66-155		SWITCH,IGNITION			
D001-66-151A	1				
75-910		KEY SUB SET(R),DOOR			
N001-76-210D	1				
75-920		KEY SUB SET(L),DOOR			
N001-76-220D	1				
75-930		KEY SUB SET,TRUNK			
NA01-76-230D	1				
75-950		KEY SUB SET,GLOVE			
EA70-76-250B	1				
75-990		KEY SUB SET,ST. LOCK			
NA75-76-290B	1	(MT)			

CAT. AUNA06-03

1998-07

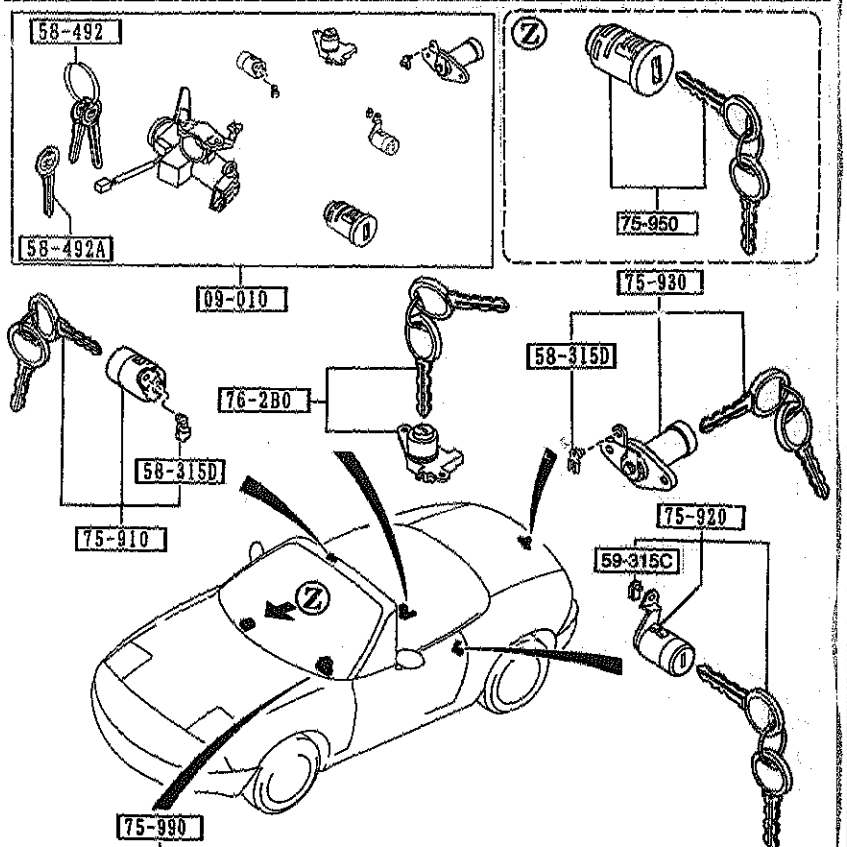

AUNA06

0900 -2 * KEY SETS

PART NO.	QTY	MODEL/RESTRICTION	MODEL/RESTRICTION	MODEL/RESTRICTION	FROM-TO
CONT'D					
NA81-76-2908	1	(AT)			
76-2B0		KEY SUB SET,CONSOLE			
NA01-76-2B0D	1				
00		BLACK			
76-201A		KEY,BLANK-PRIMARY			
FD01-76-201	1				
76-202		KEY,BLANK-SECONDARY			
FD01-76-202	1				

CAT. AUNA06-03

1998-07

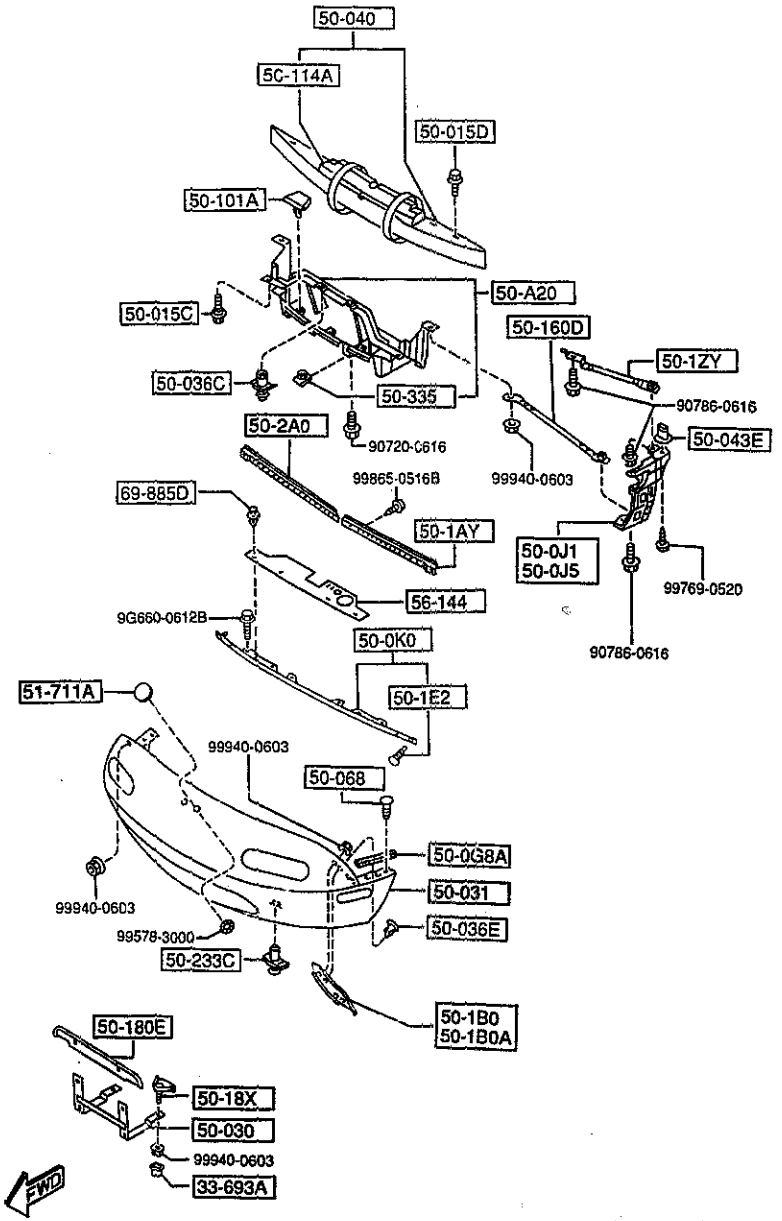

AUNA06

5000 -1 FRONT BUMPER

PART NO.	QTY	MODEL/RESTRICTION	MODEL/RESTRICTION	MODEL/RESTRICTION	FROM-TO
33-693A		CAP,BLEEDER SCREW			
0259-33-693	2				
50-A20		GUIDE,AIR			
NA01-50-A20A	1	(W/O A. LOCK BRAKE)			-7501
NA23-50-A20	1	(W/A. LOCK BRAKE)			-7501
NA01-50-A20B	1	(W/O A. LOCK BRAKE)			7501-
NA23-50-A20A	1	(W/A. LOCK BRAKE)			7501-
50-0G8A		SEAL,RUBBER-FRONT BUMPER			
NA01-50-0G9	2				
50-0J1		RETAINER(R),FRONT BUMPER			
NA01-50-0J1	1				
50-0J5		RETAINER(L),FRONT BUMPER			
NA01-50-0J5	1				
50-0K0		RETAINER,FASCIA			
NA01-50-0K0B	1				
50-015C		BOLT			
FB01-50-132	2				
50-015D		BOLT			
NA01-50-0Z2	8				
50-030		HOLDER,NO. PLATE			
NA01-50-180A	1				
50-031		BUMPER,FRONT			
NAY1-50-030	1	PAINT TO MATCH			
50-036C		FASTENER			
BF67-50-033	2				
50-036E		CLIP			
KA01-50-102	6				

7501 NA35*V-736464

CAT. AUNA06-03

1998-07

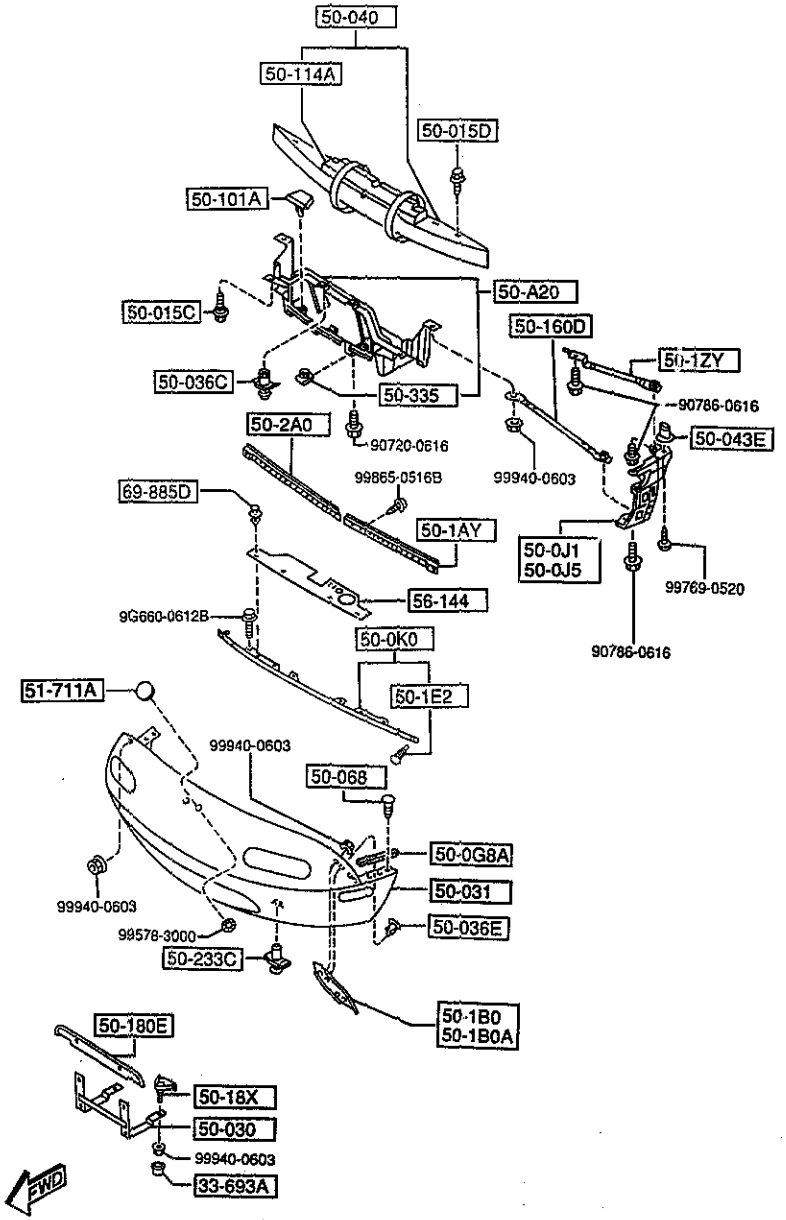

AUNA06

PART NO.	QTY	MODEL/RESTRICTION	MODEL/RESTRICTION	MODEL/RESTRICTION	FROM-TO
50-040		REINFORCEMENT,BUMPER			
NA01-50-070	1	(W/O DAY RUNNING LAMP)			
50-043E		SLIDE'A',BUMPER			
B092-50-032	2				
50-068		CLIP			
NA01-50-068	6				
50-1AY		PLATE,SET NO.1			
NA01-50-1AYC	1				
50-1B0		PLATE NO.2(R),SET-F. BUMPER			
NA01-50-1B0	1				
50-1B0A		PLATE NO.2(L),SET-F. BUMPER			
NA01-50-1C0	1				
50-1E2		BOLT			
NA01-50-1E2	2				
50-1ZY		BRACKET,FENDER			
NA01-50-1ZYB	2				
50-101A		COVER,GRILLE			
NA01-50-101A	3				
50-114A		SPACER,E.A.FOAM			
NA01-50-114	1				
50-160D		BRACKET(L),F. BUMPER SIDE			
NA01-50-160	1	(W/A. LOCK BRAKE)			
NA01-50-160	2	(W/O A. LOCK BRAKE)			
50-18X		BRACKET,LICENCE PLATE			
NA01-50-18X	1				
50-180E		PROTECTOR,NO. PLATE			
FB01-50-144	1				

CAT. AUNA06-03

1998-07

5000 FRONT BUMPER

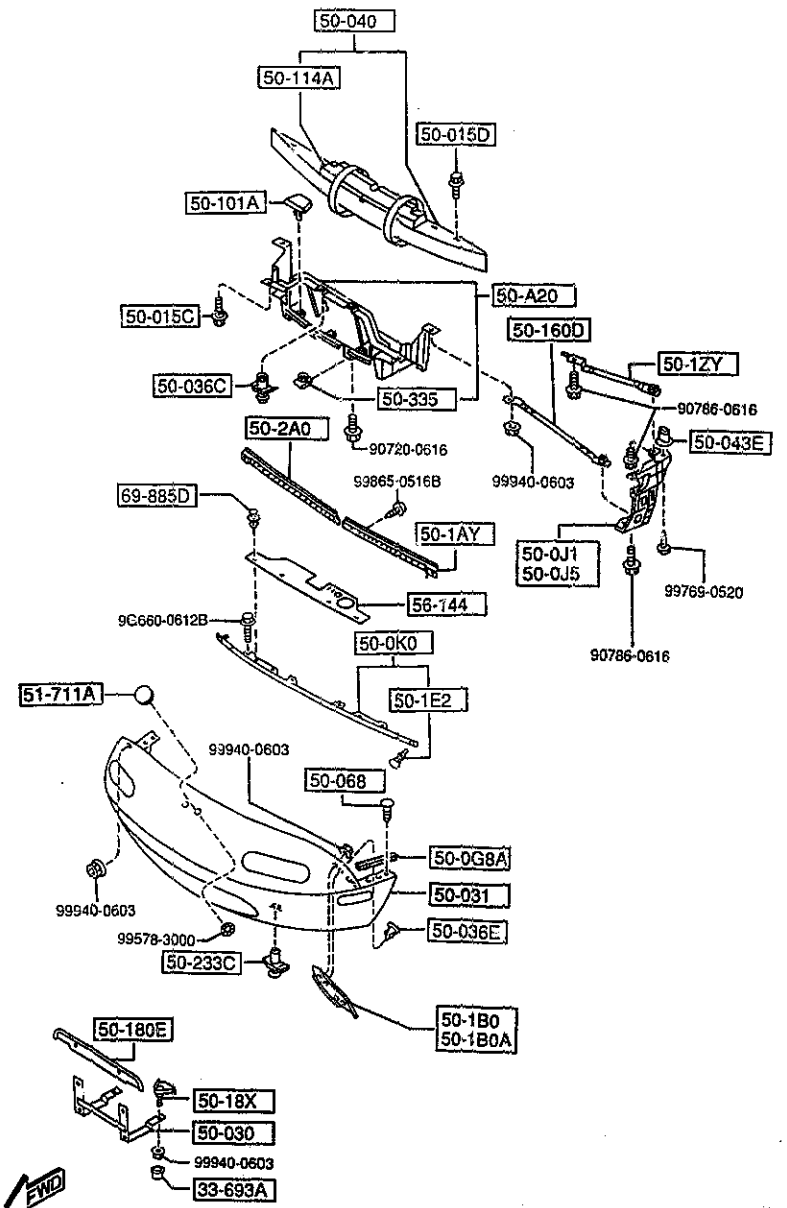

AUNA06

5000 -3 * FRONT BUMPER

PART NO.	QTY	MODEL/RESTRICTION	MODEL/RESTRICTION	MODEL/RESTRICTION	FROM-TO
50-2A0		SET PLATE NO.1(R),RR BUMPER			
NA01-50-2A0B	1				
50-233C		FASTENER,REAR BUMPER			
BF8Z-50-233	2				
50-335		NUT,CLIP			
FB01-50-133C	4				
51-711A		ORNAMENT,FRONT			
BB1H-51-731	1				
56-144		SEAL,BUMPER			
NA75-50-0K7A	1				
69-885D		FASTENER			
NA01-56-145	4				

CAT. AUNA06-03

1998-07

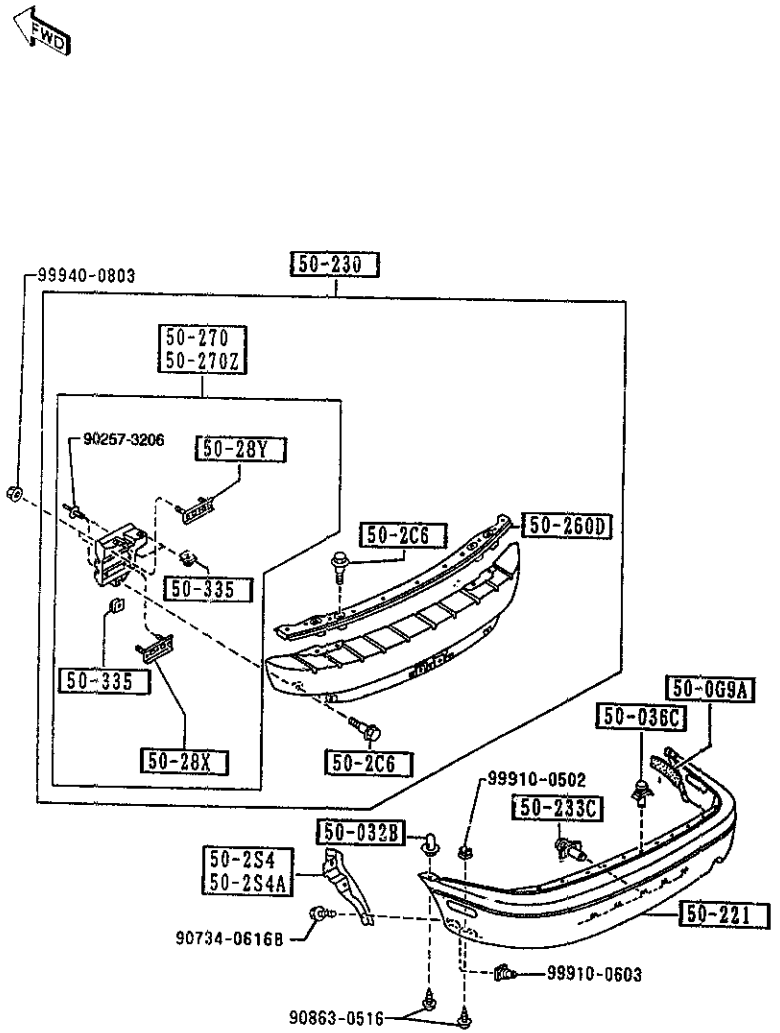

AUNA06

5010 -I REAR BUMPER

PART NO.	QTY	MODEL/RESTRICTION	MODEL/RESTRICTION	MODEL/RESTRICTION	FROM-TO
50-0G9A NA01-50-0G8	2	SEAL,RUBBER-REAR BUMPER			
50-032B GJ21-50-032	2	SLIDE'UP.',BUMPER			
50-036C BF67-50-033	7	FASTENER			
50-2C6 NA01-50-2C6	6	BOLT			
50-2S4 NA01-50-2S4	1	SHIELD(R),SPLASH-R.BUMPER			
50-2S4A NA01-50-2S5	1	SHIELD(L),SPLASH-R.BUMPER			
50-221 NAY1-50-220A	1	BUMPER,REAR PAINT TO MATCH			
50-230 NA01-50-260	1	REINFORCEMENT,BUMPER (W/O DAY RUNNING LAMP)			
50-233C BF82-50-233	5	FASTENER,REAR BUMPER			
50-260D NA01-50-2J0	1	RETAINER,R.BUMPER			
50-270 NA01-50-280A	1	STAY(R),RR. BUMPER			
50-270Z NA01-50-290A	1	STAY(L),RR. BUMPER			
50-28X NA01-50-28XC	2	PLATE SET			

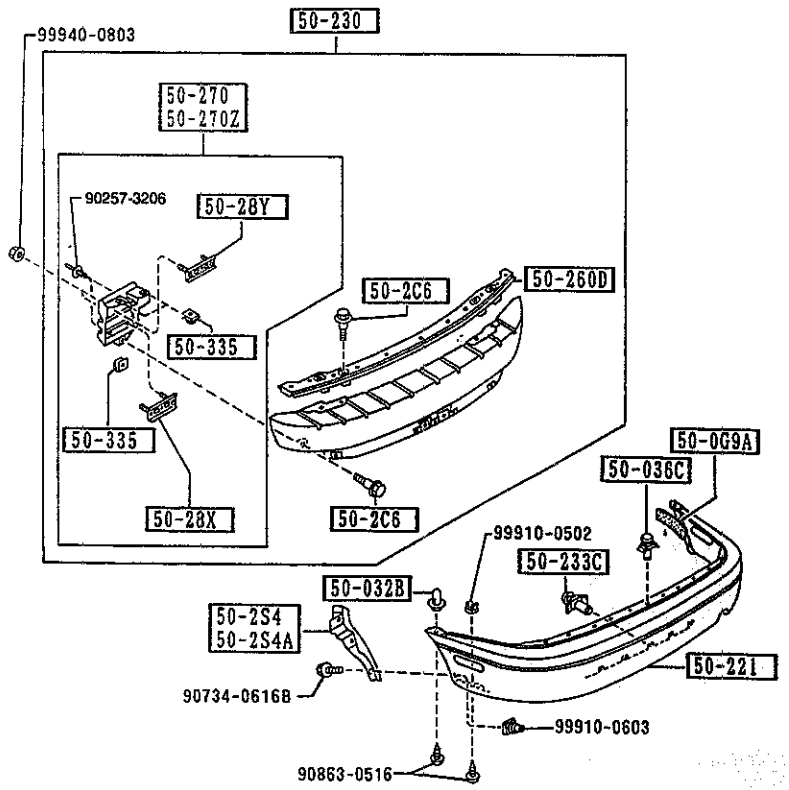

5010 -2 * REAR BUMPER

PART NO.	QTY	MODEL/RESTRICTION	MODEL/RESTRICTION	MODEL/RESTRICTION	FROM-TO
50-28Y		PLATE SET			
NA01-50-28YC	2				
50-335		NUT,CLIP			
NA01-50-133	6				

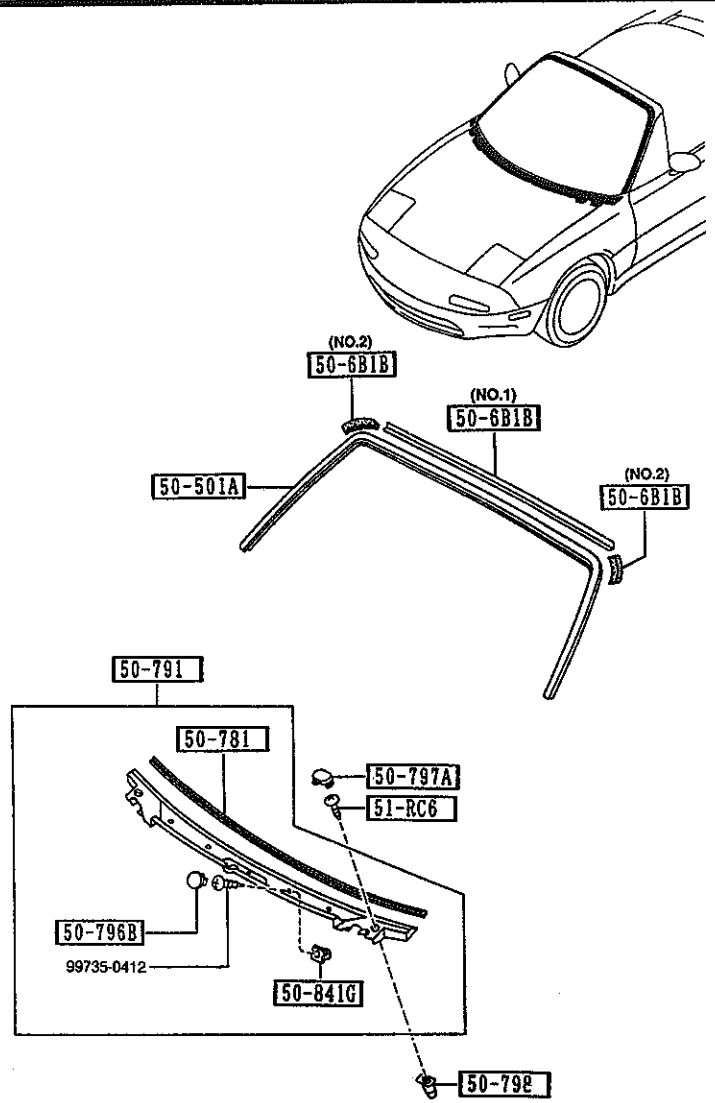

5030 -1 * WINDOW MOULDING & COWL GRILLES

PART NO.	QTY	MODEL/RESTRICTION	MODEL/RESTRICTION	MODEL/RESTRICTION	FROM-TO
50-501A		MOULD(UP),FRT.WINDOW			
NAY1-50-601	1				-7324
*NA01-50-601A	1				7324-
50-6B1B		PROTR,MOULD-FRT WINDOW			
NA01-50-6B1	1	(ILLUST. NO.1)			-7324
NA01-50-6B2	2	(ILLUST. NO.2)			-7324
DX50-50-6B1	1	(ILLUST. NO.1)			7324-
50-781		PROTECTOR,COWL GRILLE			
NA01-50-792A	1				
50-791		GRILLE,COWL			
NA01-50-790E	1				
50-796B		CAP			
B455-50-796A	5				
50-797A		CAP			
NA01-50-797A	2				
50-798		SCREW,GROMMET			
NA01-50-798	2				
50-841G		GROMMET,SCREW			
NA01-51-789	5				
51-RC6		SCREW,SIDE GARNNISH			
H272-51-RC6	2				

7324 NA35*V-733789

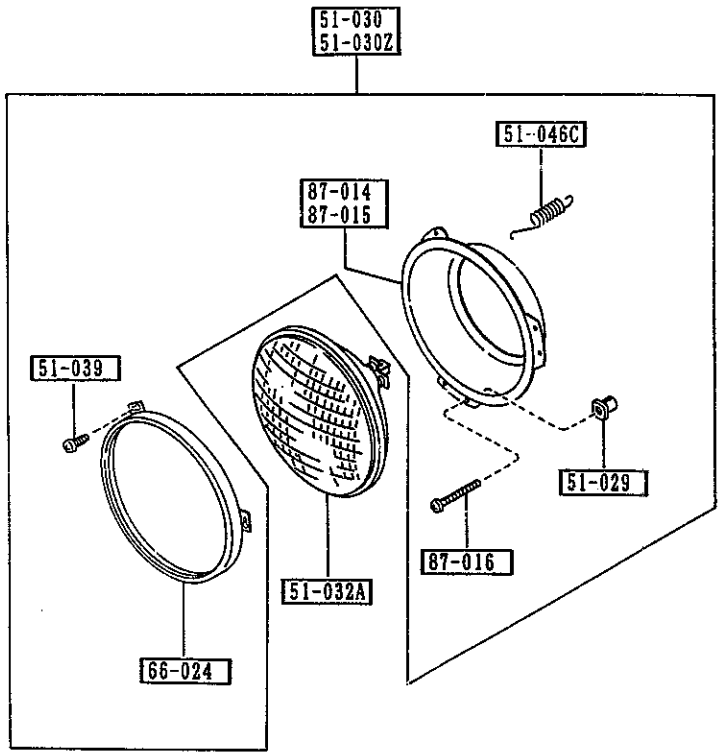

5100 -1 * HEAD LAMPS

PART NO.	QTY	MODEL/RESTRICTION	MODEL/RESTRICTION	MODEL/RESTRICTION	FROM-TO
51-029		GROMMET,SCREW			
0483-66-061A	4				
51-030		LAMP SET(R),HEAD			
8BN1-51-030	1				
51-030Z		LAMP SET(L),HEAD			
8BN1-51-040	1				
51-032A		UNIT,HEAD LAMP			
NA02-51-031	2				
51-039		SCREW			
B481-51-0E3	6				
51-046C		SPRING			
NA01-51-046	2				
66-024		RING,RETAINING			
NA01-51-033A	2				
87-014		RING(R)MOUNTING			
NA01-51-032	1				
87-015		RING(L)MOUNTING			
NA01-51-034	1				
87-016		SCREW,ADJUST			
NA01-51-037	4				

5103 HEAD LAMP RETRACTORS

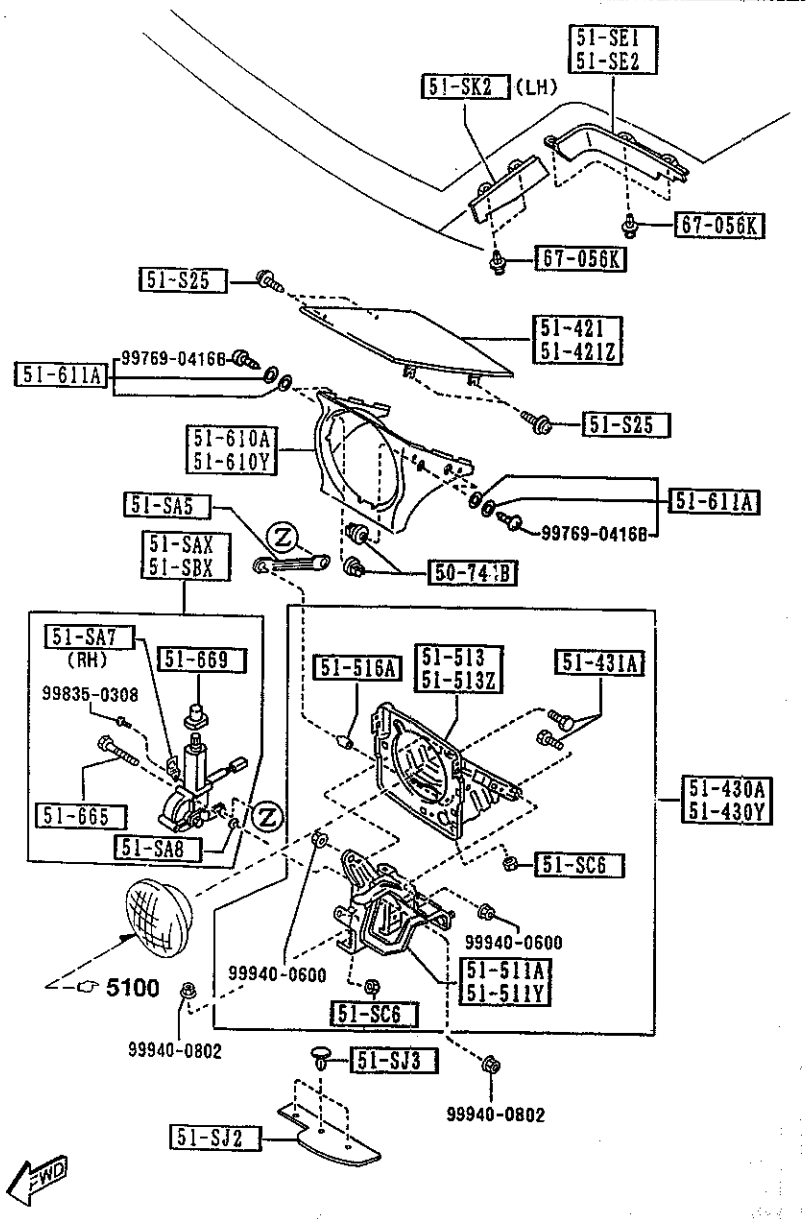

AUNA06

5103 -1 HEAD LAMP RETRACTORS

PART NO.	QTY	MODEL/RESTRICTION	MODEL/RESTRICTION	MODEL/RESTRICTION	FROM-TO
50-744B		GROMMET,SCREW			
B481-50-744	8				
51-SAX		MOTOR(R),RETRACTABLE HEAD			
NA01-51-SAX	1				
51-SA5		ROD,RETRACTABLE			
NA01-51-SA5	2				
51-SA7		BRACKET,CLIP			
NA01-51-SA7	1				
51-SA8		WASHER			
NA01-51-SA8	6				
51-SBX		MOTOR(L),RETRACTABLE HEAD			
NA01-51-SBX	1				
51-SC6		NUT,STOPPER-LAMP HINGE			
KA01-51-SC6	4				
51-SE1		PROTECTOR(R),RETRA H/L			
NA01-51-SE1	1				
51-SE2		PROTECTOR(L),RETRA. H/L			
NA01-51-SE2	1				
51-SJ2		PROTECTOR(L),RETRA. FRONT			
NA01-51-SJ2A	2				
51-SJ3		CLIP			
NA01-51-SJ3	6				
51-SK2		PROTECTOR(L),RETRA. SIDE			
NA01-51-SK2	1				
51-S25		BOLT,LAMP LID			
BS34-51-S25A	8				
51-421		LID(R),LAMP			
NA01-51-SH1B	1				

CAT. AUNA06-03 1998-07

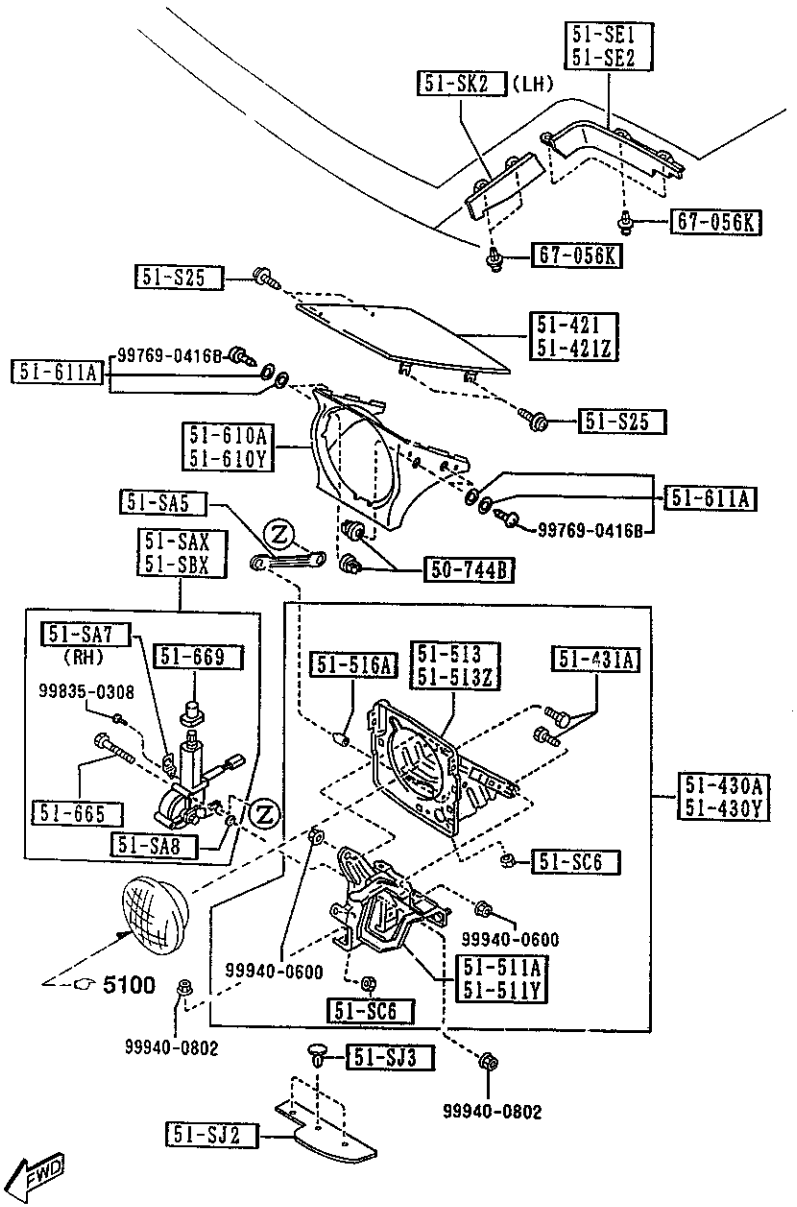

AUNA06

PART NO.	QTY	MODEL/RESTRICTION	MODEL/RESTRICTION	MODEL/RESTRICTION	FROM-TO
51-421Z NA01-51-SH2B	1	LID(L),LAMP			
51-430A NA01-51-SC0B	1	HINGE(R),LID-LAMP			
51-430Y NA01-51-SD0B	1	HINGE(L),LID-LAMP			
51-431A KA01-51-SD7	4	BOLT,HINGE			
51-511A NA01-51-SC1A	1	BRACKET(R),HINGE-LAMP LID			
51-511Y NA01-51-SD1A	1	BRACKET(L),HINGE-LAMP LID			
51-513 NA01-51-SC5B	1	HOUSING(R),LAMP-LID HINGE			
51-513Z NA01-51-SD5B	1	HOUSING(L),LAMP-LID HINGE			
51-516A KA01-51-SD6	2	CAP,HINGE-H.L.RETRACTABLE			
51-610A NA01-50-741	1	BEZEL(R),HEAD LAMP			
51-610Y NA01-50-751	1	BEZEL(L),HEAD LAMP			
51-611A B481-50-75X	8	SCREW,HEAD LAMP BEZEL			
51-665 FB01-51-665	6	BOLT,MOTOR-RETRACT H/LAMP			
51-669 NA01-51-669	2	BOOT,MOTOR-RETRACT H/L			

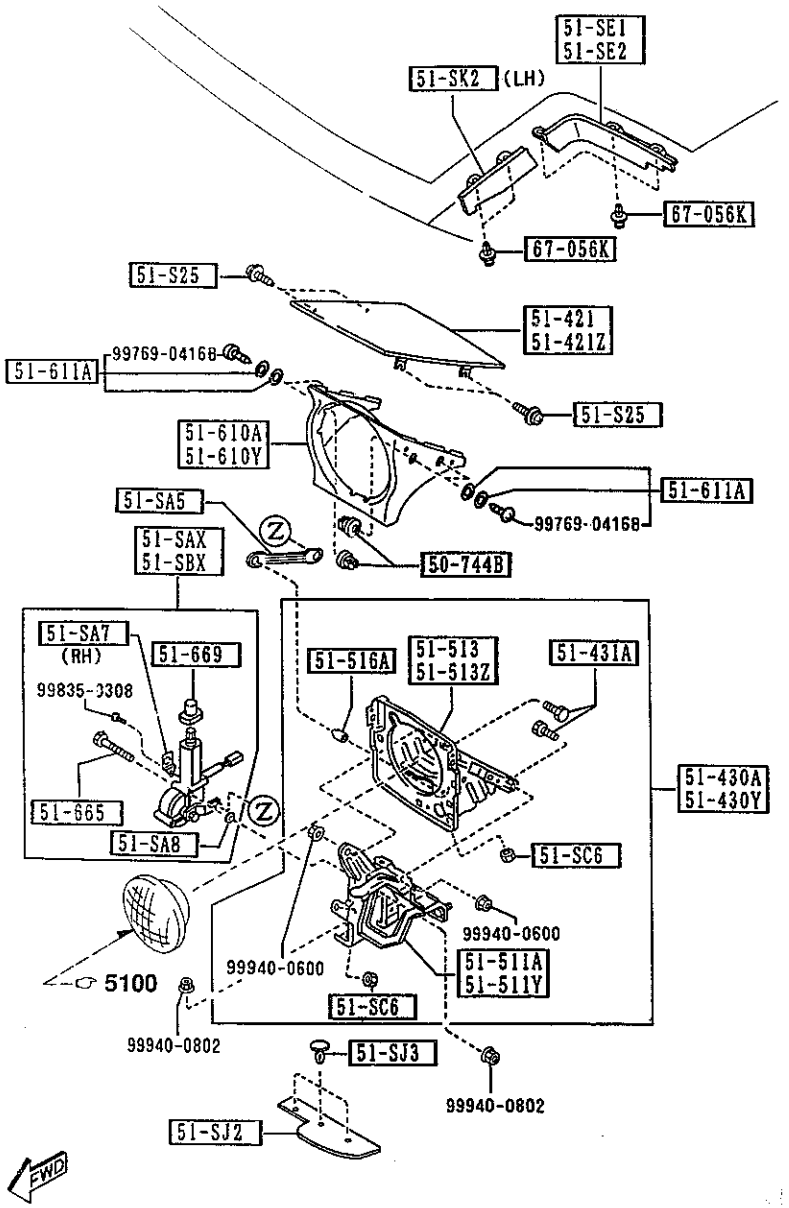

AUNA06

5103 -3 * HEAD LAMP RETRACTORS

PART NO.	QTY	MODEL/RESTRICTION	MODEL/RESTRICTION	MODEL/RESTRICTION	FROM-TO
67-056K UB39-50-795	8	RIVET			

CAT. AUNA06-03 1998-07

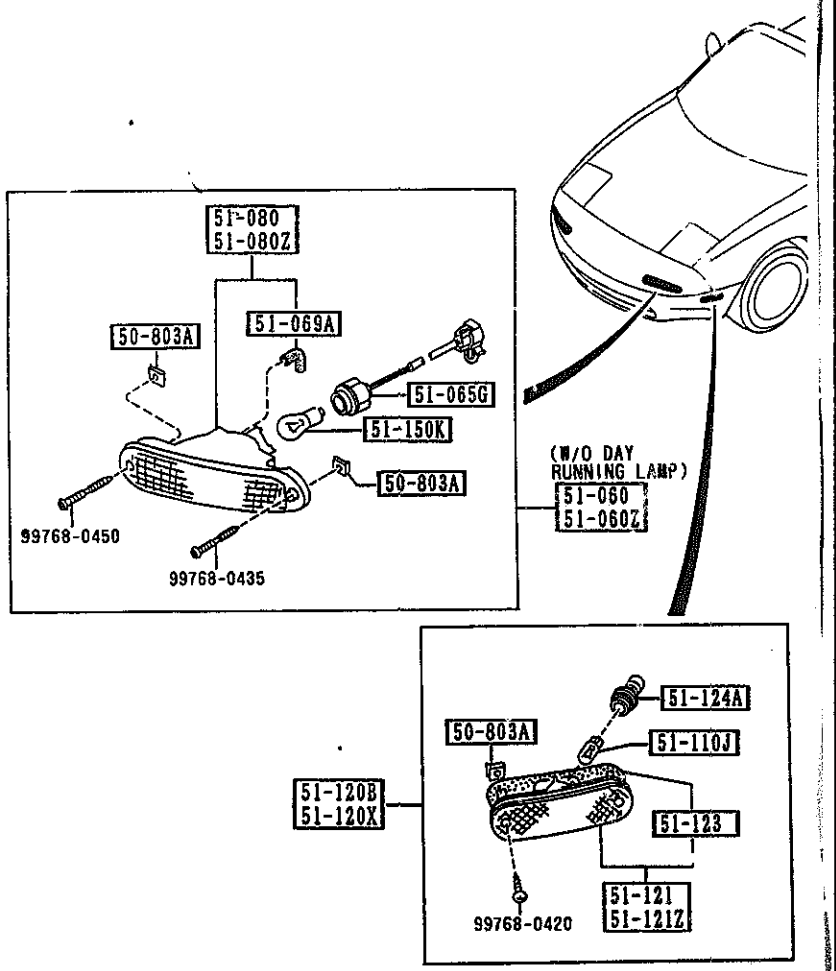

PART NO.	QTY	MODEL/RESTRICTION	MODEL/RESTRICTION	MODEL/RESTRICTION	FROM-TO
50-803A G158-50-803	8	NUT,SIDE PROTECTOR			
51-060 8BN1-51-060	1	LAMP SET(R),FRT COMB (W/O DAY RUNNING LAMP)			
51-060Z 8BN1-51-070	1	LAMP SET(L),FRT COMB (W/O DAY RUNNING LAMP)			
51-065G NA01-51-064	2	SOCKET,F. COMB. LAMP (W/O DAY RUNNING LAMP)			
51-069A NA01-51-069	2	TUBE,HEAD LAMP			
51-080 NA01-51-06XA	1	LENS & HOUSING(R)			
51-080Z NA01-51-07XA	1	LENS & HOUSING(L)			
51-110J 99701-6038	2	BULB 12V 3.8W			
51-120B 8BN1-51-120	1	LAMP SET(R),SIDE TURN			
51-120X 8BN1-51-130	1	LAMP SET(L),SIDE TURN			
51-121 NA01-51-5EXA	1	LENS & BODY(R)			
51-121Z NA01-51-5FXA	1	LENS & BODY(L)			
51-123 NA01-51-5D3A	2	GASKET,SIDE TURN			

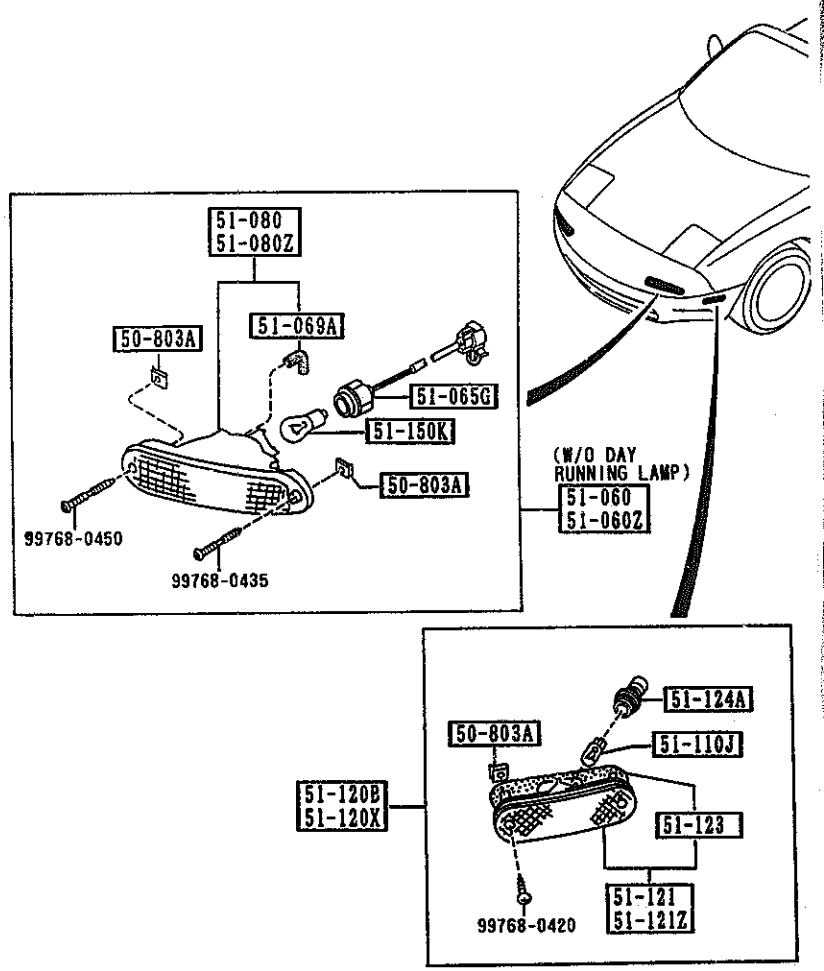

5105 -2 * FRONT COMBINATION LAMPS

PART NO.	QTY	MODEL/RESTRICTION	MODEL/RESTRICTION	MODEL/RESTRICTION	FROM-TO
51-124A		SOCKET,SIDE TURN			
NA01-51-5E2	2				
51-150K		BULB			
99701-4278V	2	A12V 27/8W			

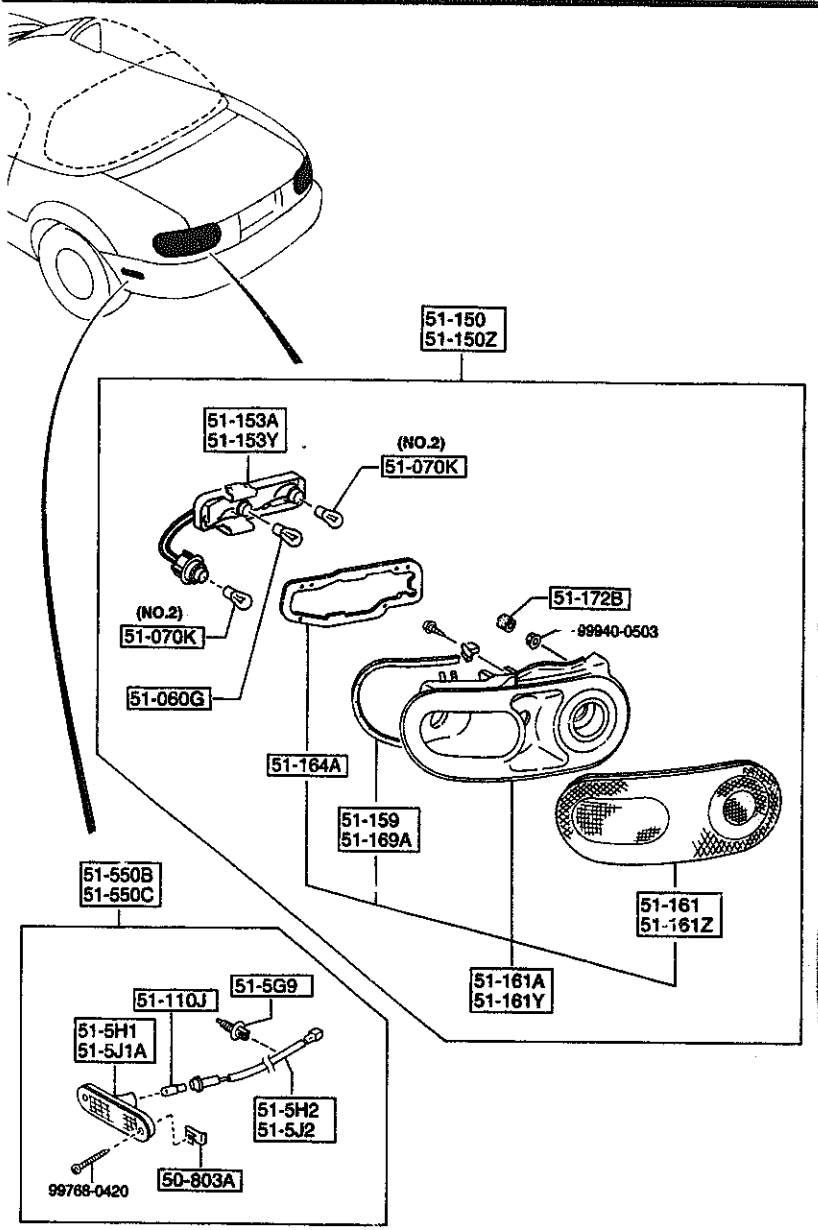

AUNA06

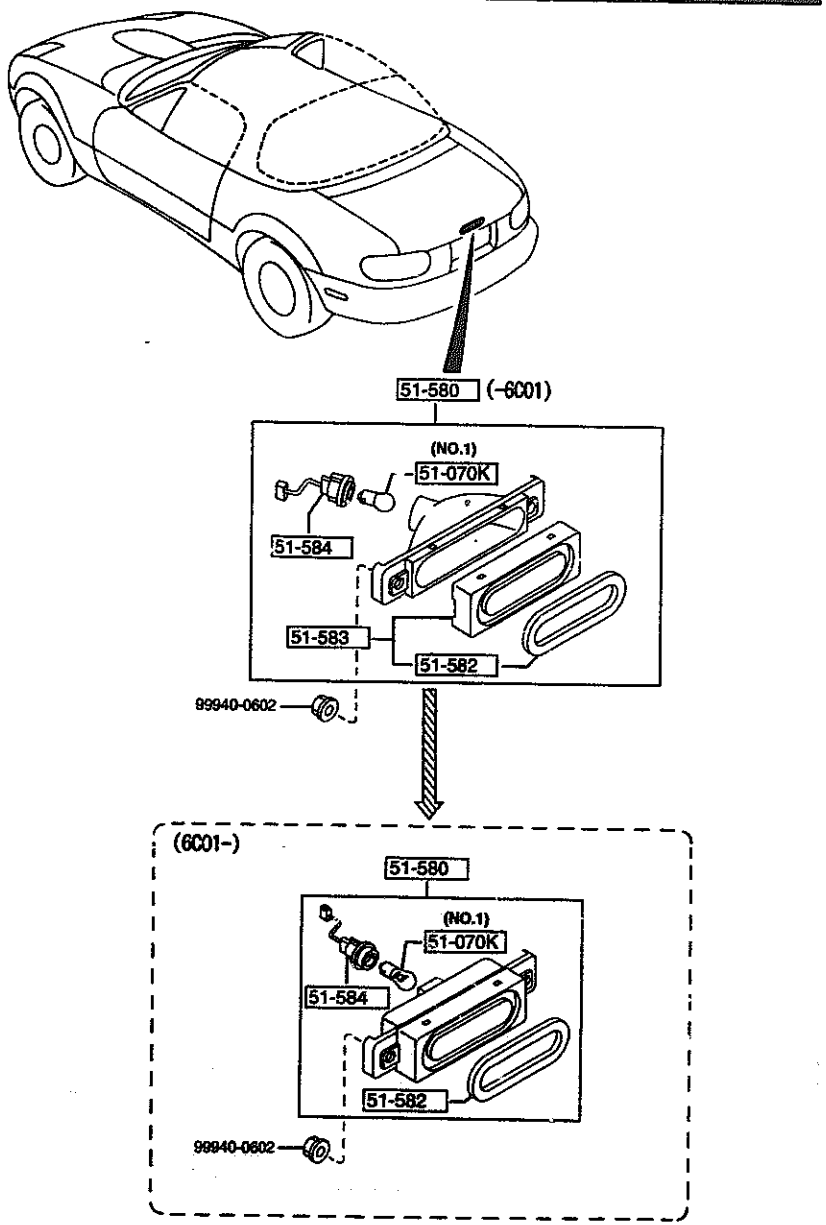

AUNA06

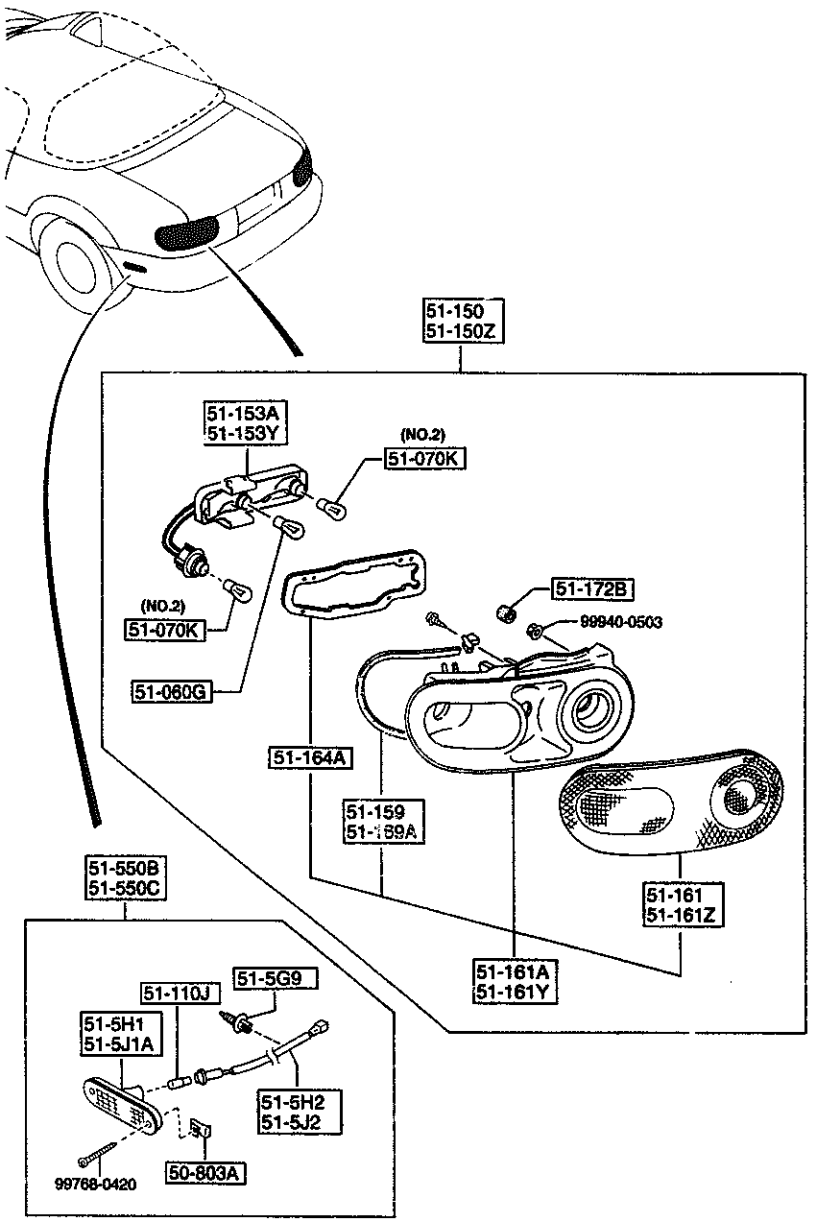

AUNA06

PART NO.	QTY	MODEL/RESTRICTION	MODEL/RESTRICTION	MODEL/RESTRICTION	FROM-TO
50-803A		NUT,SIDE PROTECTOR			
G158-50-803	4				
51-060G		BULB			
99701-4278	2	12V 27W/8W			
51-070K		BULB			
99701-3270	4	12V 27W (ILLUST. NO.2)			
99700-7180	1	A12V 18.4W (ILLUST. NO.1)			-6C01
99701-3210	1	12V 21W (ILLUST. NO.1)			6C01-
51-110J		BULB			
99701-6038	2	12V 3.8W			
51-150		LAMP SET(R),RR.COMB.			
8BN1-51-150	1				
51-150Z		LAMP SET(L),RR.COMB.			
8BN1-51-160	1				
51-153A		SOCKET(R),RR.COMB.			
N001-51-155A	1				
51-153Y		SOCKET(L),RR.COMB.			
N001-51-165A	1				
51-159		PROTECTOR(R),'A'			
NA01-51-159	1				
51-161		LENS(R),RR.COMB.			
NA01-51-15XC	1				
51-161A		LENS & BODY(R),RR COMB.			
NA01-51-170B	1				
51-161Y		LENS & BODY(L),RR COMB.			
NA01-51-180B	1				

6C01 NA35*V-725591

CAT. AUNA06-03 1998-07

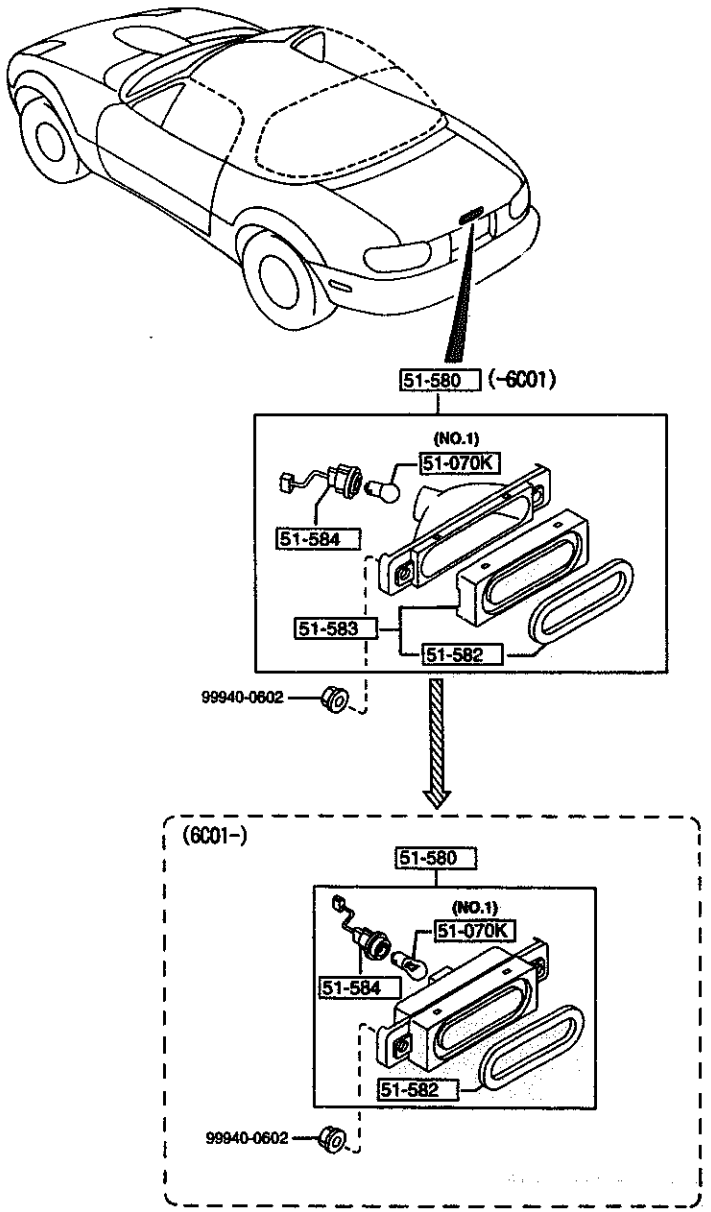

AUNA06

5110 -2 REAR COMBINATION LAMPS

PART NO.	QTY	MODEL/RESTRICTION	MODEL/RESTRICTION	MODEL/RESTRICTION	FROM-TO
51-161Z NA01-51-16XC	1	LENS(L),RR.COMB.			
51-164A NA01-51-158	2	GASKET,RR COMB.			
51-169A NA01-51-169	1	PROTECTOR(L),'A'			
51-172B G030-51-172	1	CAP			
51-5G9 NA01-51-5G9	8	CLIP			
51-5H1 NA01-51-5H1C	1	LENS & BODY(R),RR SIDE TURN			
51-5H2 NA01-51-5H2A	1	SOCKET(R),RR SIDE TURN			
51-5J1A NA01-51-5J1C	1	LENS & BODY(L),RR SIDE TURN			
51-5J2 NA01-51-5J2A	1	SOCKET(L),RR SIDE TURN			
51-550B 8BN1-51-550	1	LAMP SET(R),SIDE TURN-RR			
51-550C 8BN1-51-560	1	LAMP SET(L),SIDE TURN-RR			
51-580 NA01-51-580B	1	LAMP,STOP-HI.MOUNT.			-6C01
NA12-51-580B AN(NA12-51-580C)	1				6C01-6C10
NA12-51-580C	1				6C10-
51-592 NA01-51-592B	1	GASKET,STOP LAMP-HI.MOUNT			

6C01 NA35*V-725591
6C10 NA35*V-726284

CAT. AUNA06-03

1998-07

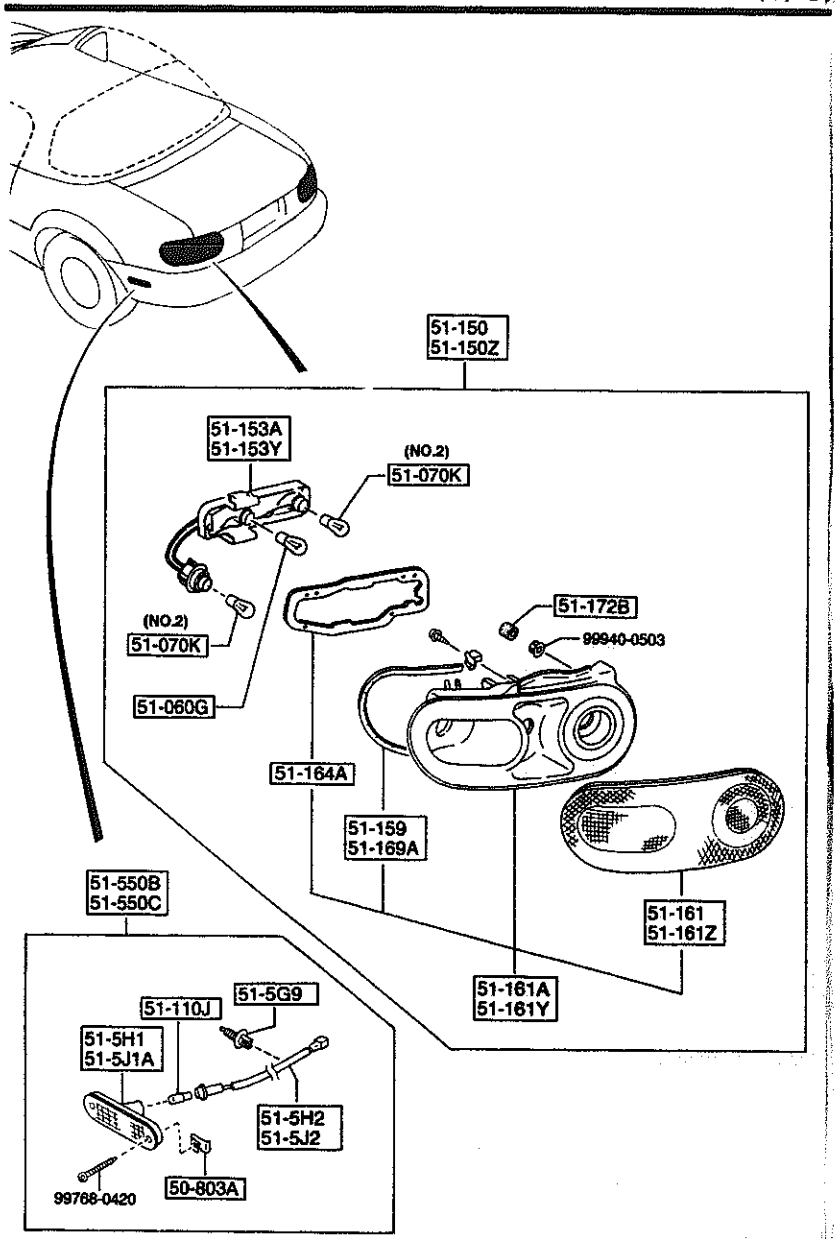

AUNA06

PART NO.	QTY	MODEL/RESTRICTION	MODEL/RESTRICTION	MODEL/RESTRICTION	FROM-TO
51-583		LENS,STOP LAMP-HI.MOUNT			
NA01-51-58XA	1				-6C01
51-584		SOCKET,STOP LAMP-HI.MOUNT			
BJ38-51-584	1				-6C01
NA12-51-584A	1				6C01-

6C01 NA35*V-725591

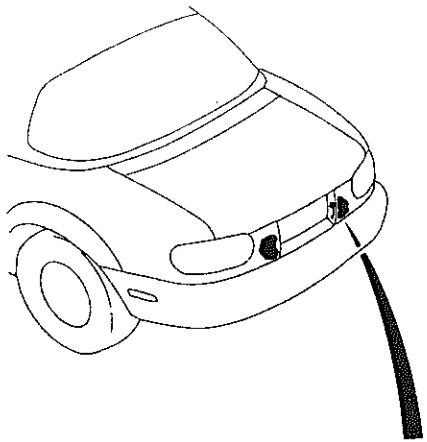

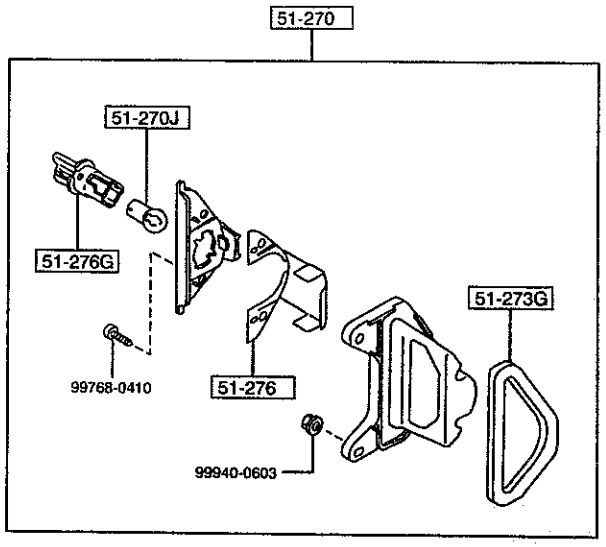

5120 -1 * LICENSE LAMPS

PART NO.	QTY	MODEL/RESTRICTION	MODEL/RESTRICTION	MODEL/RESTRICTION	FROM-TO
51-270		LAMP,LICENSE			
8BF1-51-270	2				
51-270J		BULB			
99701-2070	2	12V 7.5W			
51-273G		GASKET,LICENSE LAMP			
FB67-51-273	2				
51-276		SHADE,LAMP-LICENSE			
FB67-51-276	2				
51-276G		SOCKET,LICENSE LAMP			
FB67-51-272	2				

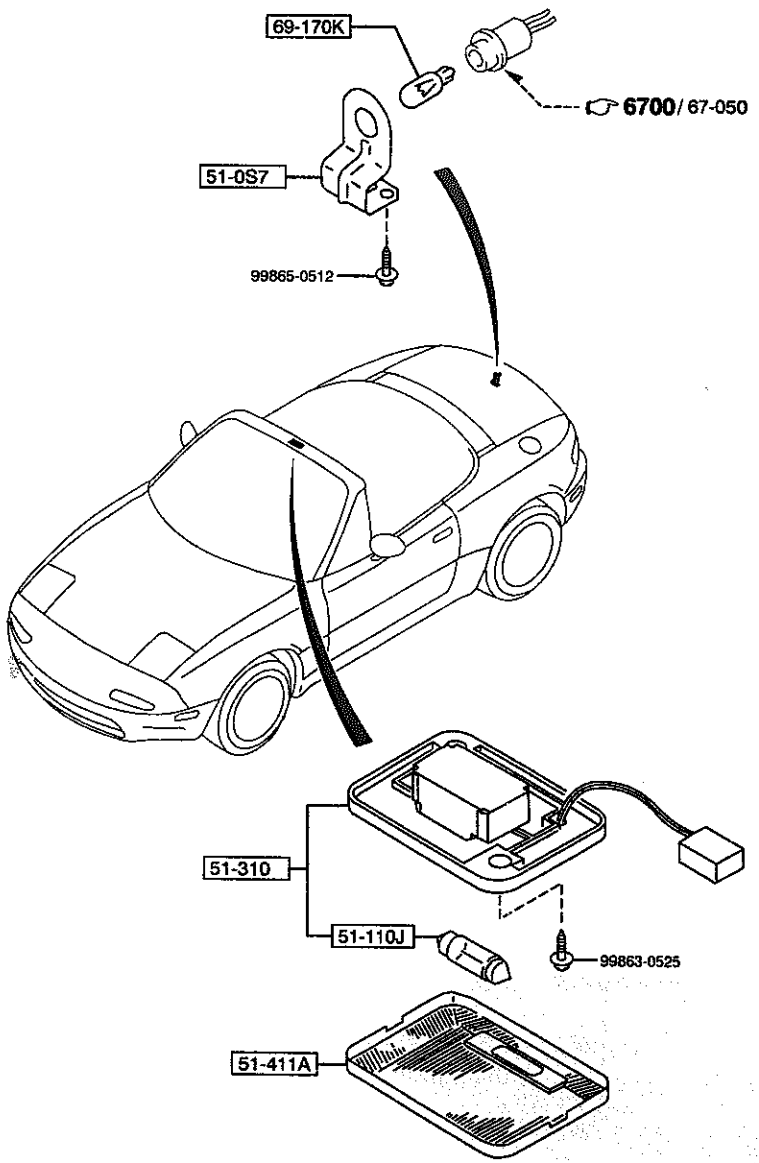

AUNA06

5125 -1 * INTERIOR LAMPS

PART NO.	QTY	MODEL/RESTRICTION	MODEL/RESTRICTION	MODEL/RESTRICTION	FROM-TO
51-0S7		BRACKET,LAMP			
NB38-51-445A	1				
51-110J		BULB			
99700-5080	1	12V/8W			
51-310		LAMP,INTERIOR			
NB38-51-310A	1				
51-411A		LENS,ROOM LAMP			
NB38-51-311	1				
69-170K		BULB,INTERIOR MIRROR			
NB38-68-4G3	1				

CAT. AUNA06-03

1998-07

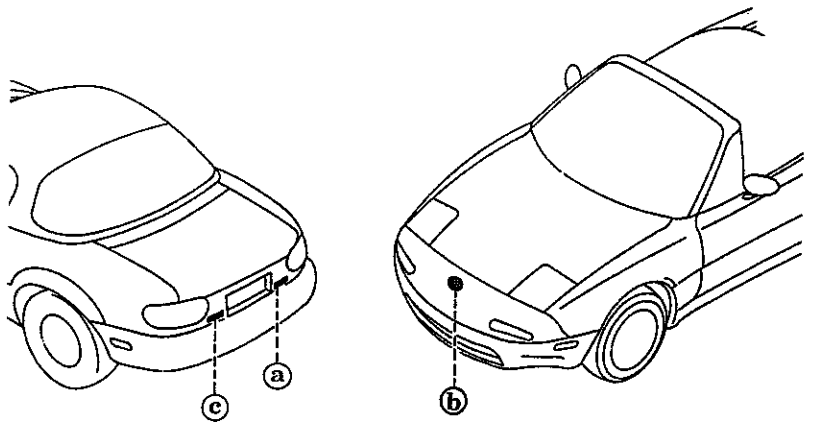

ⓐ 51-711B



ⓒ 51-781



ⓑ 51-711A

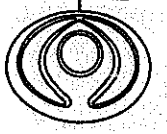

5170 -1 * ORNAMENTS

PART NO.	QTY	MODEL/RESTRICTION	MODEL/RESTRICTION	MODEL/RESTRICTION	FROM-TO
51-711A BB1H-51-731	1	ORNAMENT,FRONT			
51-711B NA01-51-711	1	ORNAMENT,MAKER NAME-REAR			
51-781 NA01-51-721A	1	ORNAMENT,REAR			

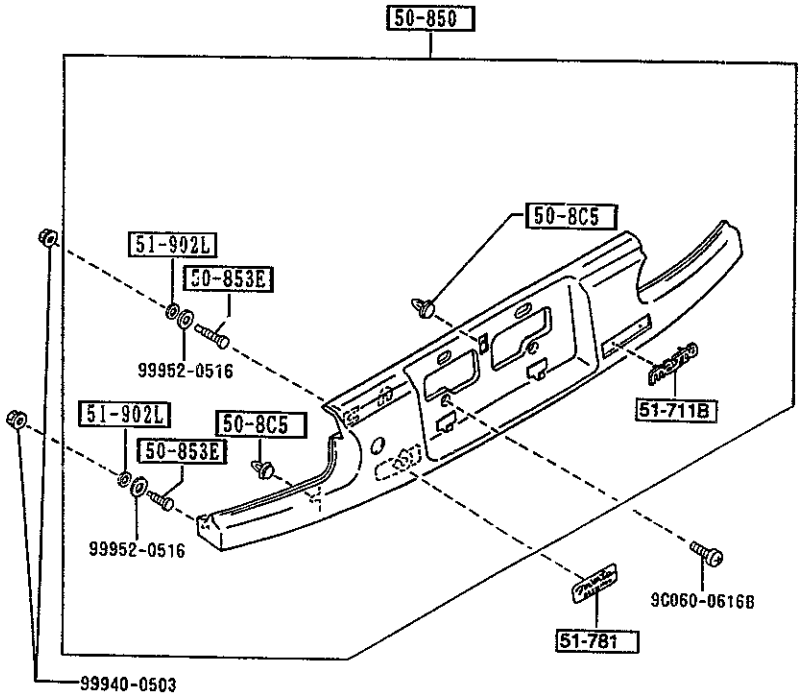

5180 -1 * REAR FINISHER

PART NO.	QTY	MODEL/RESTRICTION	MODEL/RESTRICTION	MODEL/RESTRICTION	FROM-TO
50-8C5		CLIP			
B467-50-8C5	3				
50-850		FINISHER,REAR			
NA01-50-8P0	1				
A5	EXT-	A5 SATELLITE BLUE MC			-7301
HU	EXT-	HU NED GREEN			
M8	EXT-	M8 MONTEGO BLUE M			
PT	EXT-	PT CHAST WHITE			
PZ	EXT-	PZ BRILLIANT BLACK			
SU	EXT-	SU CLASSIC RED			
23	EXT-	13C MARINA GREEN MC			
57	EXT-	12K TWILIGHT BLUE			
NA01-50-8P0A	1				7301-
A5	EXT-	A5 SATELLITE BLUE MC			
HU	EXT-	HU NED GREEN			
M8	EXT-	M8 MONTEGO BLUE M			
PT	EXT-	PT CHAST WHITE			
PZ	EXT-	PZ BRILLIANT BLACK			
SU	EXT-	SU CLASSIC RED			
23	EXT-	13C MARINA GREEN MC			
57	EXT-	12K TWILIGHT BLUE			
50-853E		BOLT,GARNISH-RR			
LA01-50-853	4				
51-711B		ORNAMENT,MAKER NAME-REAR			
NA01-51-711	1				
51-781		ORNAMENT,REAR			
NA01-51-721A	1				
51-902L		GASKET			
G030-51-914	4				

7301 NA35*V-732210

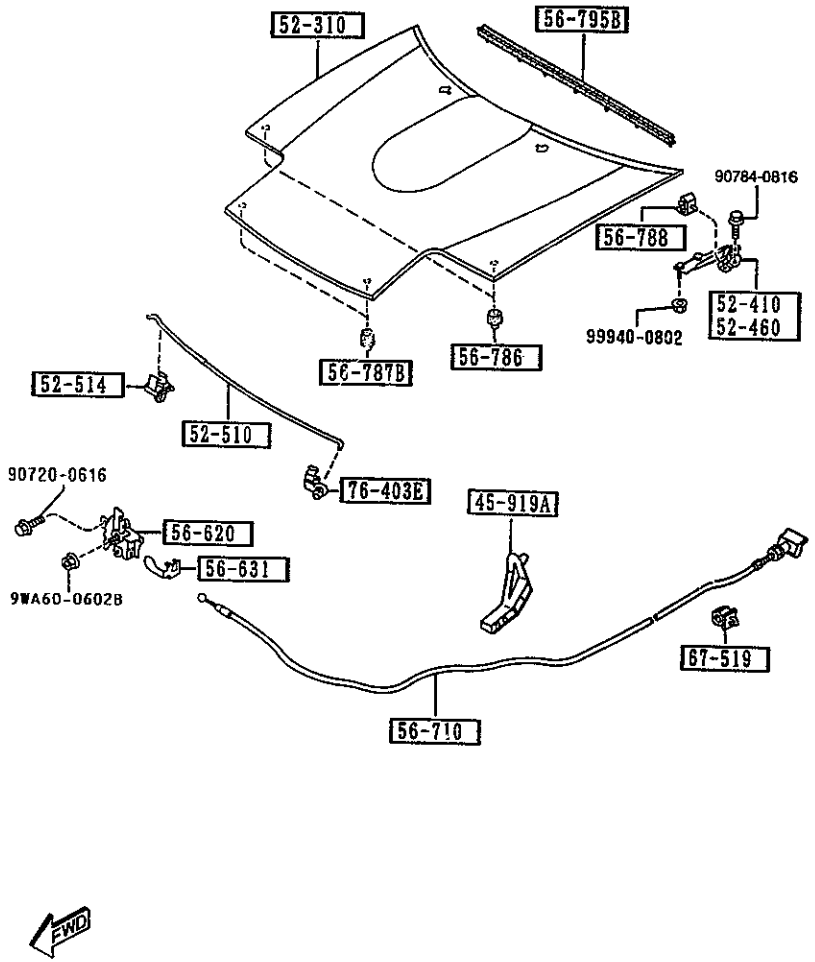

AUNA06

5230 -1 BONNET

PART NO.	QTY	MODEL/RESTRICTION	MODEL/RESTRICTION	MODEL/RESTRICTION	FROM-TO
45-919A H11S-45-916A	1	HOLDER,PIPE			
52-310 NAY1-52-310B	1	BONNET			
52-410 NA01-52-410A A (NA01-52-410B)	1	HINGE(R),BONNET			-7901
*NA01-52-410B	1				7901-
52-460 NA01-52-420A A (NA01-52-420B)	1	HINGE(L),BONNET			-7901
*NA01-52-420B	1				7901-
52-510 NA75-56-650A	1	STAY,BONNET			
52-514 G030-56-693A	1	HOLDER,ROD			
56-620 NA01-56-620B	1	LOCK,BONNET			
56-631 LA01-56-631	1	FASTENER,BONNET RELEASE			
56-710 NA01-56-720D	1	WIRE,RELEASE-BONNET			
56-786 NA01-56-787	2	RUBBER(C),CUSHION-BONNET			
56-787B FB01-56-787B	2	RUBBER,CUSHION-BONNET FRT			
56-788 NA01-56-78X	2	RUBBER,CUSHION-BONNET RR			
56-795B		WEATHERSTRIP,BONNET-REAR			

7901 NA35*V-739040

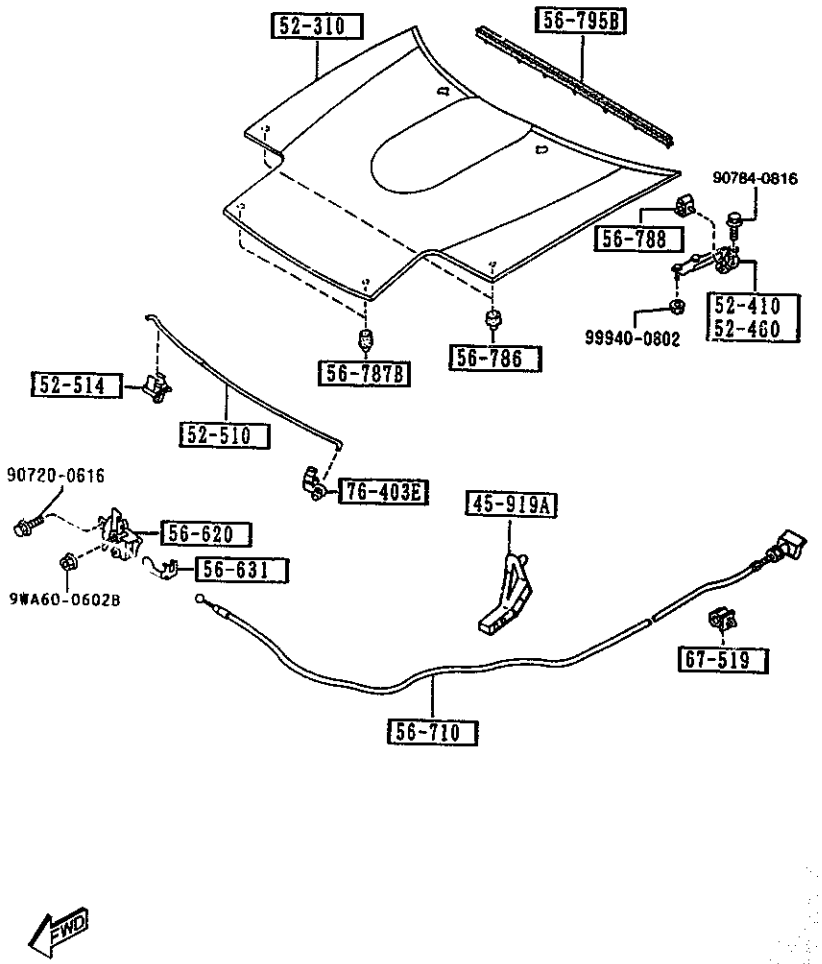

AUNA06

5230 -2 * BONNET

PART NO.	QTY	MODEL/RESTRICTION	MODEL/RESTRICTION	MODEL/RESTRICTION	FROM-TO
CONT'D					
NA01-56-760	1				
+---------+					
| 67-519 |		CLIP,PIPE			
+---------+					
G030-67-519	1				
+---------+					
| 76-403E |		HOLDER,ROD			
+---------+					
B092-52-518	1				

CAT. AUNA06-03

1998-07

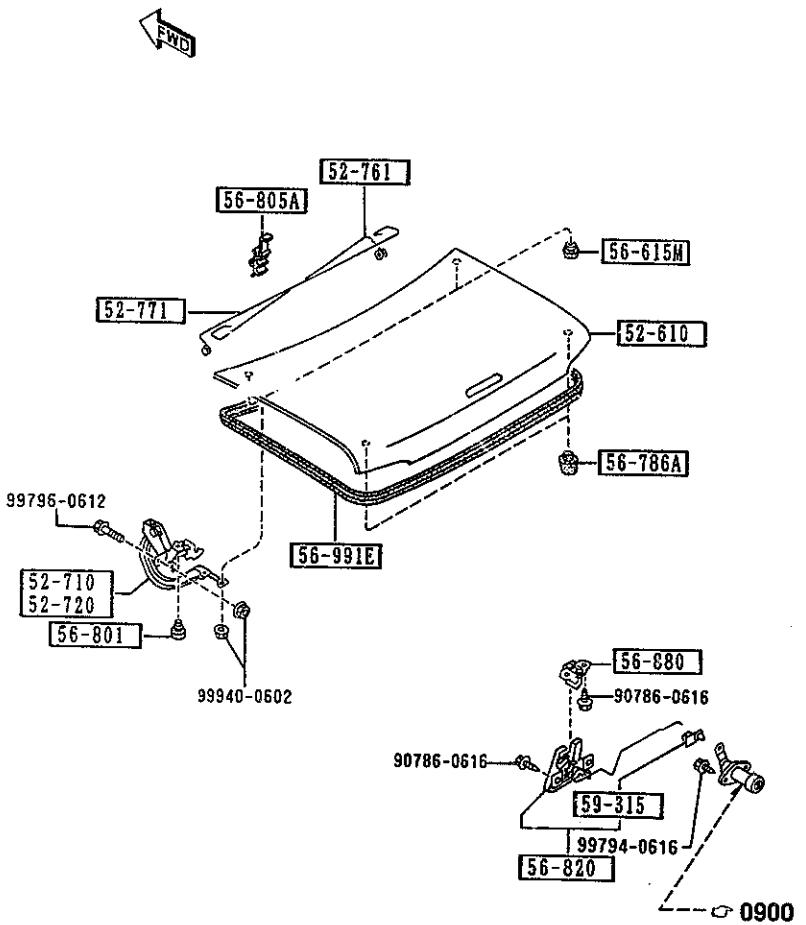

5260 -1 * TRUNK LID

PART NO.	QTY	MODEL/RESTRICTION	MODEL/RESTRICTION	MODEL/RESTRICTION	FROM-TO
52-610		LID,TRUNK			
NAV1-52-610C	1				
52-710		HINGE(R),TRUNK LID			
NA01-52-710B A (NA01-52-710C)	1				-7701
*NA01-52-710C	1				7701-
52-720		HINGE(L),TRUNK LID			
NA01-52-720B	1				
52-761		SPRING(R),BALANCE			
NA01-52-791A	1				
52-771		SPRING(L),BALANCE			
NA01-52-792A	1				
56-615M		PLUG,DRAIN			
NA01-56-051	2				
56-786A		RUBBER,CUSHION			
B481-56-786	2				
56-801		CUSHION,LID HINGE			
NA01-56-802	2				
56-805A		HOLDER,BALANCE SPRING			
NA01-56-805	1				
56-820		LOCK,LID			
NB38-56-820	1				
56-880		STRIKER,LID			
NA01-56-840	1				
56-991E		WEATHERSTRIP,LID			
NA01-56-951	1				
59-315		CLIP			
G030-59-315	1				

7701 NA35*V-738443

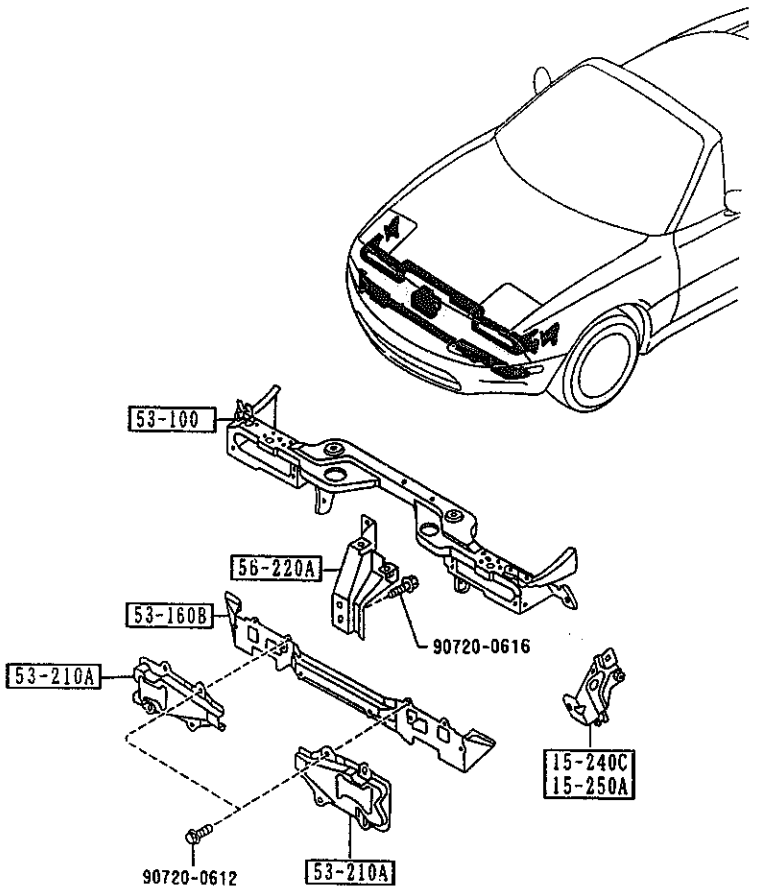

5310 -1 * FRONT PANELS

PART NO.	QTY	MODEL/RESTRICTION	MODEL/RESTRICTION	MODEL/RESTRICTION	FROM-TO
15-240C B61P-15-240A	1	BRACKET(R),RADIATOR			
15-250A B61P-15-250A	1	BRACKET(L),RADIATOR			
53-100 NA75-53-100	1	PANEL,RAD.SHROUD			
53-160B NA01-53-16XC	1	MEMBER,CROSS			
53-210A NA01-54-180	2	BRACKET,BUMPER			
56-220A NA01-56-221B	1	STAY,LOCK-BONNET			

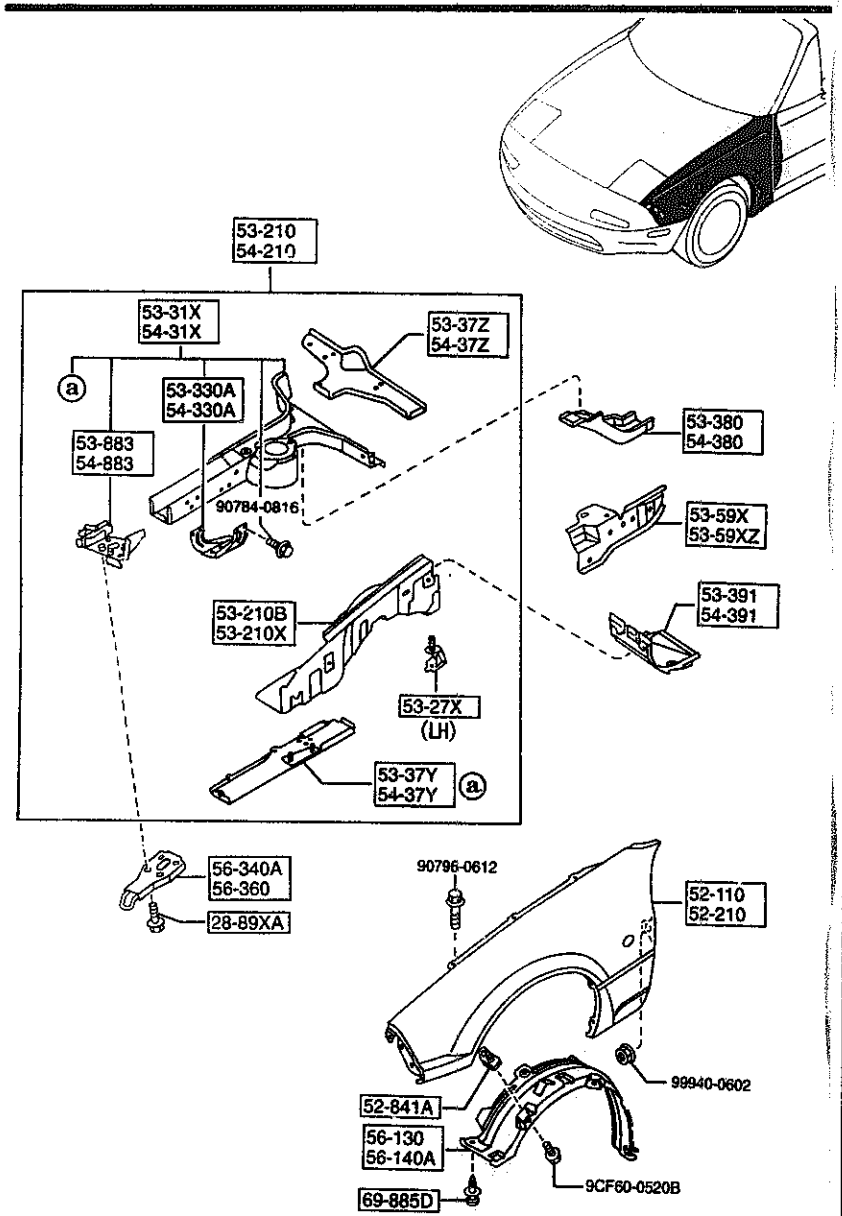

AUNA06

PART NO.	QTY	MODEL/RESTRICTION	MODEL/RESTRICTION	MODEL/RESTRICTION	FROM-TO
28-89XA GJ21-28-89X	6	BOLT,CROSS MEMBER			
52-110 NAY1-52-110	1	PANEL(R),FENDER-FRT.			
52-210 NAY1-52-210	1	PANEL(L),FENDER-FRT.			
52-841A LA01-56-135	10	NUT,CLIP			
53-210 NAY2-53-200	1	PANEL(R),APRON & FRAME			
53-210B NA01-53-210E	1	PANEL(R),WHEEL APRON			
53-210X NA01-54-210F	1	PANEL(L),WHEEL APRON			
53-27X NA01-54-36X	1	BRKT,AIR CLNR-WHL APRON			
53-31X NA75-53-31XA A (NA75-53-31XE)	1	FRAME(R),FRONT			-7A01
*NA75-53-31XE	1				7A01-
53-330A NA01-53-330	1	BRACKET(R),STABILIZER			
53-37Y NA01-53-37Y	1	FRAME(UP.,R),FRONT-FRT			
53-37Z NA01-53-37ZB	1	FRAME(UP.R),FRONT-REAR			
53-380 NA01-53-380	1	REINFORCEMENT(R)			

7A01 NA35*V-739048

CAT. AUNA06-03

1998-07

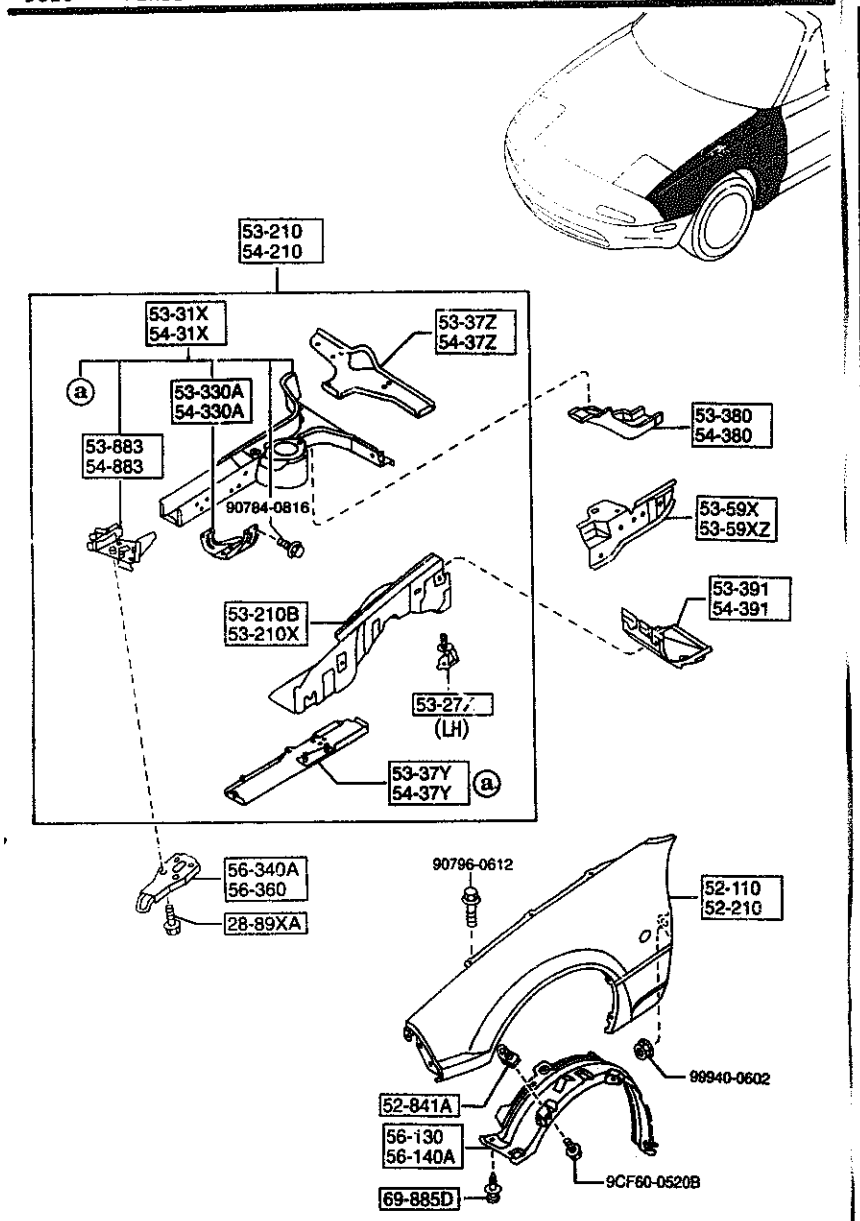

AUNA06

PART NO.	QTY	MODEL/RESTRICTION	MODEL/RESTRICTION	MODEL/RESTRICTION	FROM-TO
53-391 NA01-53-391	1	BOX(R),TORQUE			
53-59X NA01-53-591	1	REINF.(R),WHEEL APRON			
53-59XZ NA01-54-590	1	REINF.(L),WHEEL APRON			
53-883 NA01-53-32XB	1	REINF.(R),TIE DOWN HOOK			
54-210 NAY2-54-200	1	PANEL(L),APRON & FRAME			
54-31X NA75-54-31XA A (NA75-54-31XE)	1	FRAME(L),FRONT			-7A01
*NA75-54-31XE	1				7A01-
54-330A NA01-54-330	1	BRACKET(L),STABILIZER			
54-37Y NA01-54-37Y	1	FRAME(UP.,L),FRONT-FRT			
54-37Z NA01-54-37ZB	1	FRAME(UP.L),FRONT-REAR			
54-380 NA01-54-380B	1	FRAME(L),FRONT-REAR			
54-391 NA01-54-391	1	BOX(L),TORQUE			
54-883 NA01-54-32XC	1	REINF.(L),TIE DOWN HOOK			
56-130 NA01-56-131A	1	GUARD(R),MUD			

7A01 NA35*V-739048

CAT. AUNA06-03 1998-07

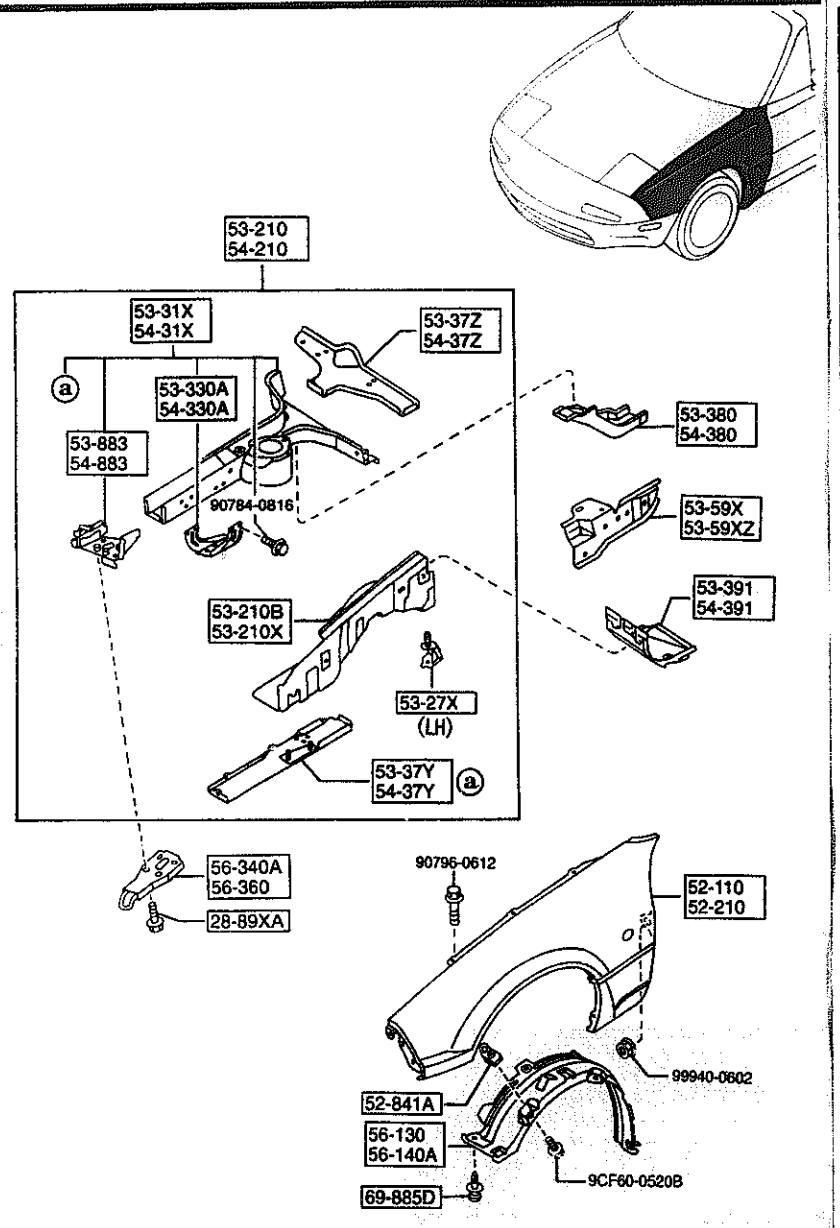

AUNA06

5320 -3 * FENDER & WHEEL APRON PANELS

PART NO.	QTY	MODEL/RESTRICTION	MODEL/RESTRICTION	MODEL/RESTRICTION	FROM TO
+---------+					
| 56-140A |		GUARD(L),MUD			
+---------+					
NA01-56-141C	1				
+---------+					
| 56-340A |		HOOK(R),TIE DOWN-FRONT			
+---------+					
NA01-56-34XC	1				
+---------+					
| 56-360 |		HOOK(L),TIE DOWN-FRONT			
+---------+					
NA01-56-34YC	1				
+---------+					
| 69-885D |		FASTENER			
+---------+					
NA01-56-145	10				

CAT. AUNA06-03 1998-07

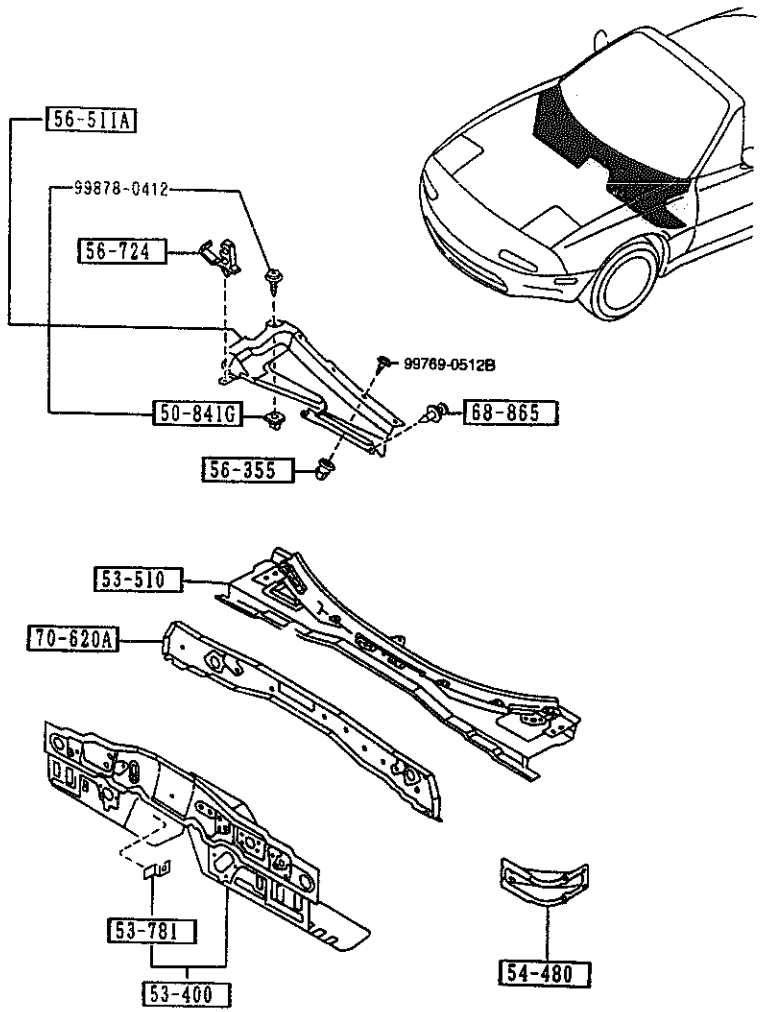

5330 -1 * DASH & COWL PANELS

PART NO.	QTY	MODEL/RESTRICTION	MODEL/RESTRICTION	MODEL/RESTRICTION	FROM-TO
| 50-841G |		GROMMET,SCREW			
F044-51-912	1				
| 53-400 |		PANEL,DASH-LOWER			
NA01-54-400G AN(NA01-54-400J)	1				-7401
*NA01-54-400J	1				7401-
| 53-510 |		PANEL,DASH-UPPER			
NA75-53-510A AN(NA75-53-510B)	1				-7401
NA75-53-510B AN(NA75-53-510C)	1				7401-7801
*NA75-53-510C	1				7801-
| 53-781 |		BRACKET,GRILLE-C			
0305-53-781A	1				
| 54-480 |		JUNCTION,DASH SIDE-S .SILL			
NA01-54-480 A (NA01-54-480B)	2				-7601
*NA01-54-480B	2				7601-
| 56-355 |		GROMMET,SCREW-BAFFLE			
G211-56-355A	4				
| 56-511A |		COVER,BAFFLE-COWL PA NEL			
NA01-56-35X	1				
| 56-724 |		CLIP'B',WIRE-BONNET			
H260-56-724	1				
| 68-865 |		FASTENER			
B040-68-865A	2				
00	INT-	NA3 NA5 BLACK			
| 70-620A |		PANEL,COWL-FRONT			
NA01-70-62YB AN(NA01-70-62YC)	1				-7601
NA01-70-62YC	1				7601-

7401 NA35*V-734532
7601 NA35*V-737527
7801 NA35*V-739024

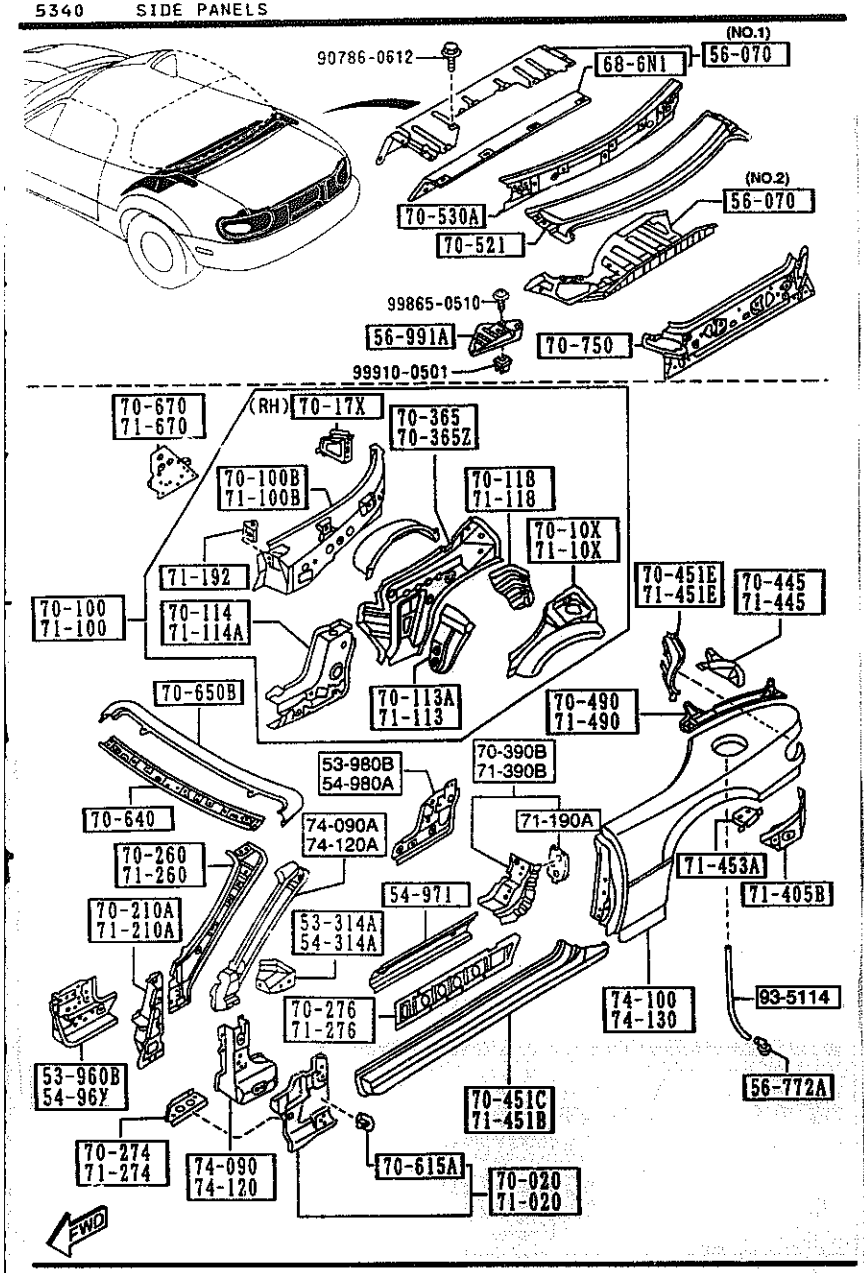

AUNA06

5340 -1 SIDE PANELS

PART NO.	QTY	MODEL/RESTRICTION	MODEL/RESTRICTION	MODEL/RESTRICTION	FROM TO
53-314A NA01-70-071A	1	BRACKET(R),INST.			
53-960B NA01-53-960C	1	SILL(FRT.R),SIDE-INNER			
53-980B NA01-53-980C AN(NA01-53-980D)	1	SILL(RR.R),SIDE-INNER			-7A06
*NA01-53-980D	1				7A06-
54-314A NA01-71-071A	1	BRACKET(L),INST.			
54-96X NA01-54-96XB	1	SILL(FRT.L),SIDE-INNER			
54-971 NA01-54-971A AN(NA01-54-971B)	2	SILL(C),SIDE-INNER			-7601
*NA01-54-971B	2				7601-
54-980A NA01-54-980C AN(NA01-54-980D)	1	SILL(RR.L),SIDE-INNER			-7A06
*NA01-54-980D	1				7A06-
56-070 NA01-56-39YA	1	PANEL,BULK HEAD (ILLUST. NO.1)			
NA01-70-51Y	1	(ILLUST. NO.2)			
56-772A NA01-56-772	1	PIPE,DRAIN-RR FENDER			
56-991A NA01-56-971	1	COVER,SERVICE HOLE			
68-6N1 NA01-68-6N1	1	INSULATOR,BALK HEAD PANEL			
70-020		PANEL(R),COWL SIDE			

7601 NA35*V-737527
7A06 NA35*V-739049

CAT. AUNA06-03 1998-07

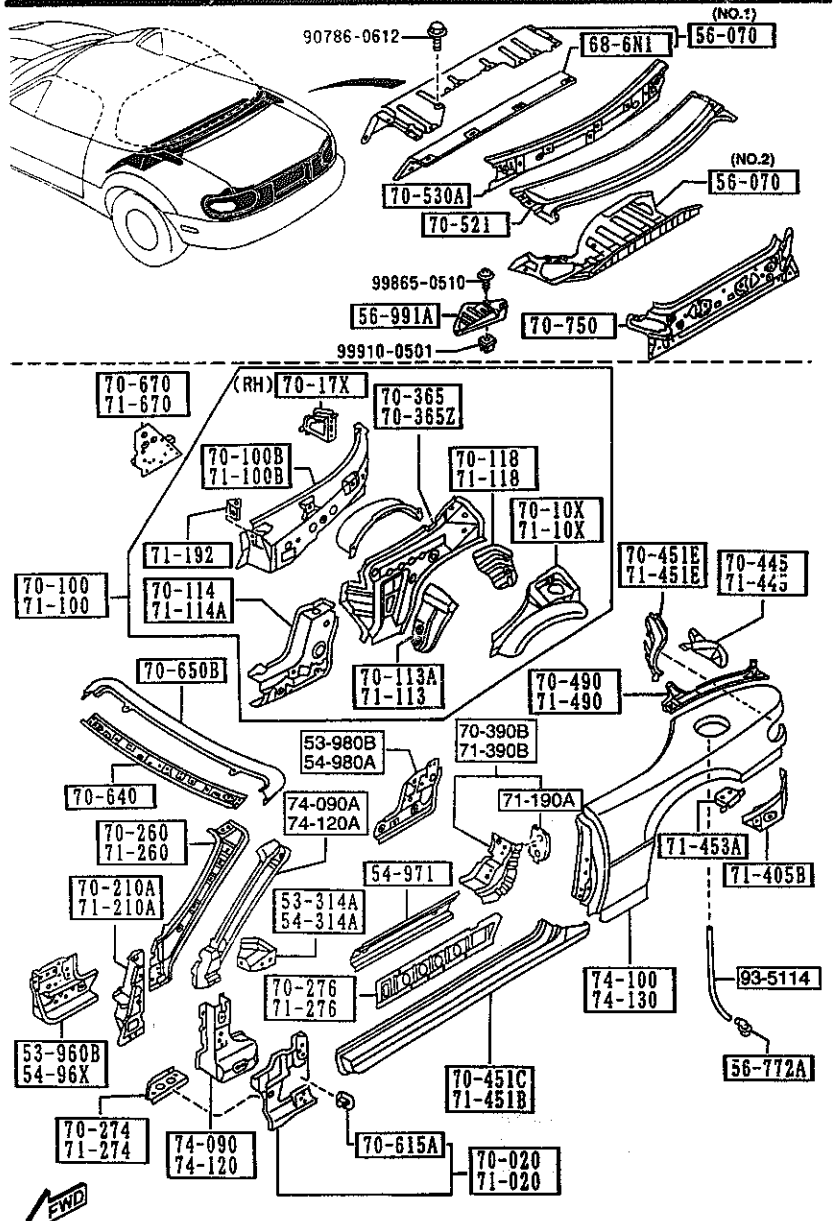

AUNA06

PART NO.	QTY	MODEL/RESTRICTION	MODEL/RESTRICTION	MODEL/RESTRICTION	FROM-TO
CONT'D					
NA01-70-020B	1				
+----------+					
| 70-10X |		PANEL(R),QUARTER			
+----------+					
NA01-70-111C	1				
+----------+					
| 70-100 |		PANEL(R),QUARTER			
+----------+					
NA75-70-100	1				
+----------+					
| 70-100B |		PANEL(R),INSIDE			
+----------+					
NA01-70-19XB	1				-7407
A (NA01-70-19XC)					
*NA01-70-19XC	1				7407-7624
A (NA01-70-19XE)					
*NA01-70-19XE	1				7624-
+----------+					
| 70-113A |		PLATE(R),SEAL			
+----------+					
NA01-70-11Z	1				
+----------+					
| 70-114 |		PLATE(R),END			
+----------+					
NA01-70-12XA	1				
+----------+					
| 70-118 |		PROTECTOR(R),SPLASH			
+----------+					
NA01-70-15X	1				
+----------+					
| 70-17X |		BRKT,BATT.CLAMP-QTR PANEL			
+----------+					
NA01-70-17XA	1				
+----------+					
| 70-210A |		PILLAR(R),HINGE			
+----------+					
NA01-70-230	1				-7401
AN(NA01-70-230A)					
NA01-70-230A	1				7401-7917
AN(NA01-70-230B)					
*NA01-70-230B	1				7917-7926
AN(NA01-70-230C)					
*NA01-70-230C	1				7926-
+----------+					
| 70-260 |		PILLAR(R),FRT.-INNER			
+----------+					
NA01-70-240B	1				-7702
A (NA01-70-240D)					
*NA01-70-240D	1				7702-
+----------+					
| 70-274 |		GUSSET(R),SIDE SILL OUTER			
+----------+					

7401 NA35*V-734532
7407 NA35*V-734849
7624 NA35*V-738232
7702 NA35*V-738476
7917 NA35*V-739046
7926 NA35*V-739048

CAT. AUNA06-03 1998-07

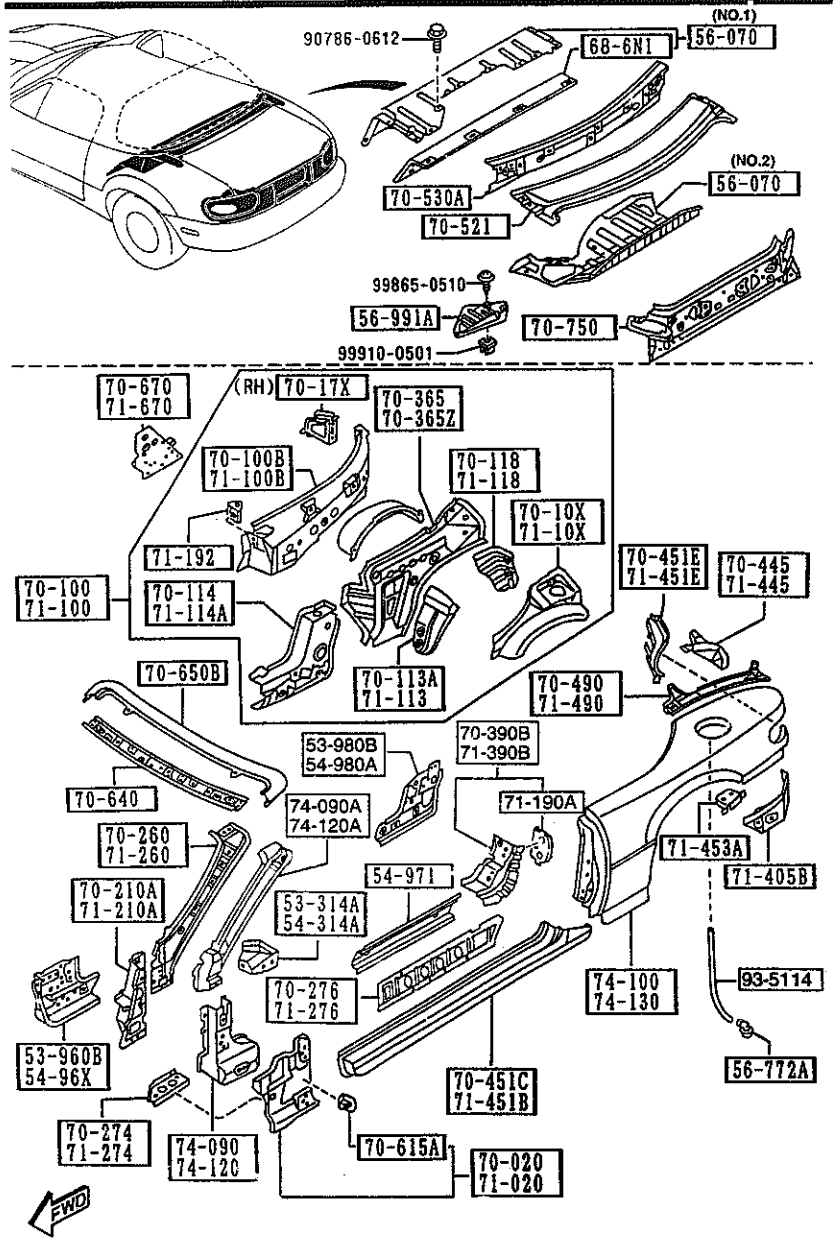

AUNA06

5340 -3 SIDE PANELS

PART NO.	QTY	MODEL/RESTRICTION	MODEL/RESTRICTION	MODEL/RESTRICTION	FROM-TO
CONT'D					
NA01-70-274	1				
+---------+					
| 70-276 |		REINF.(R),SIDE SILL			
+---------+					
NA01-70-275	1				
+---------+					
| 70-365 |		REINF.(R),BELT LINE-C.PIL			
+---------+					
NA01-70-116B	1				-7325
A (NA01-70-116C)					
NA01-70-116C	1				7325-
+---------+					
| 70-365Z |		REINF.(L),BELT LINE-C.PIL			
+---------+					
NA01-71-116D	1			-	-7325
A (NA01-71-116E)					
NA01-71-116E	1				7325-
+---------+					
| 70-390B |		REINF.(R),STRIKER			
+---------+					
NA01-70-460	1				
+---------+					
| 70-445 |		GUSSET(R),REAR FENDER-RR			
+---------+					
NA01-70-445	1				
+---------+					
| 70-451C |		SILL(R),SIDE OUT.			
+---------+					
NA01-70-270B	1				
+---------+					
| 70-451E |		HOUSING(R),LAMP-RR FENDER			
+---------+					
NA01-70-J30	1				
+---------+					
| 70-490 |		RAIL(R),RAIN-REAR			
+---------+					
NA01-70-440A	1				
+---------+					
| 70-521 |		PANEL,REAR DECK			
+---------+					
NA01-70-521A	1				
+---------+					
| 70-530A |		MEMBER,REAR DECK			
+---------+					
NA01-70-530B	1				-7801
AN(NA01-70-530C)					
*NA01-70-530C	1				7801-7923
AN(NA01-70-530D)					
*NA01-70-530D	1				7923-
+---------+					
| 70-615A |		BRACKET,FENDER			
+---------+					
BD92-70-070A	2				

7325 NA35*V-733908
7801 NA35*V-739024
7923 NA35*V-739048

CAT. AUNA06-03 1998-07

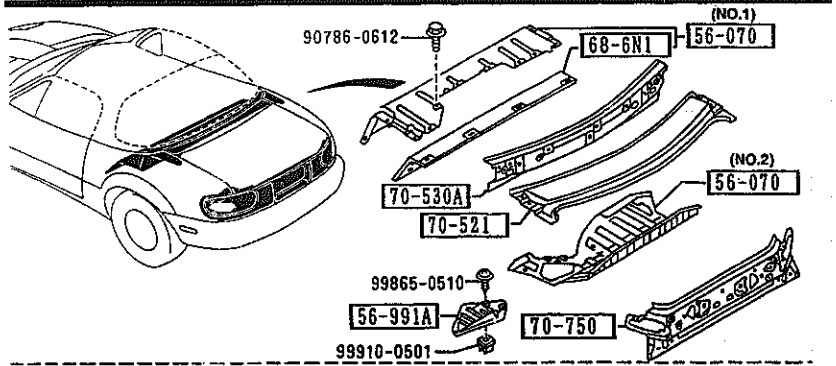

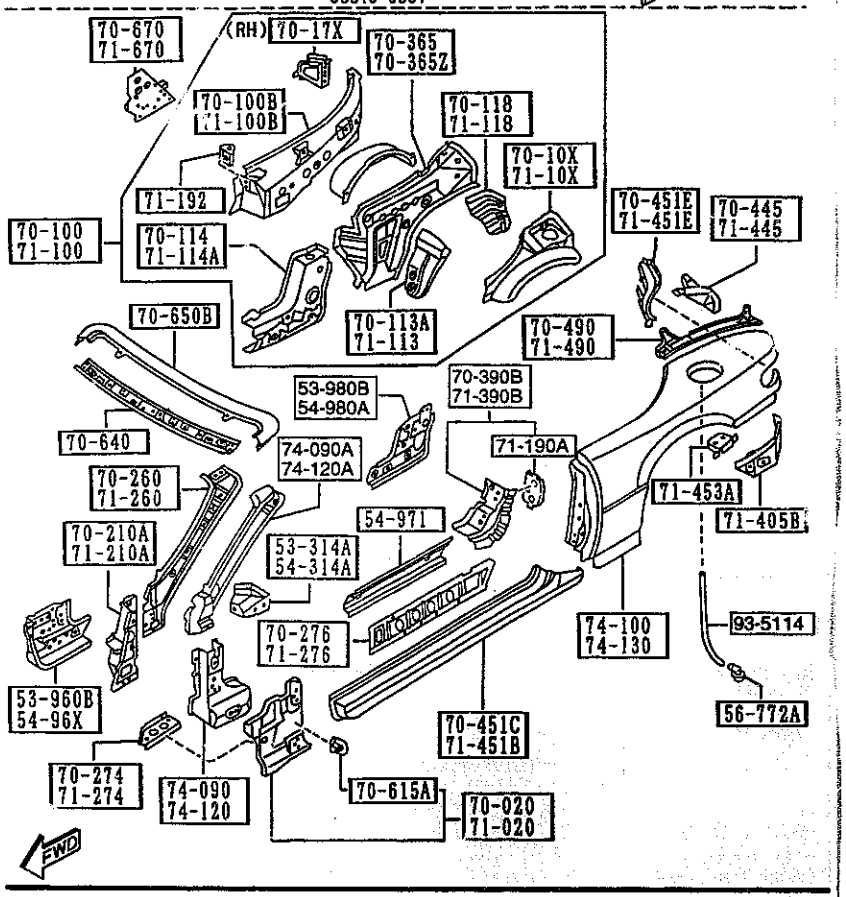

AUNA06

PART NO.	QTY	MODEL/RESTRICTION	MODEL/RESTRICTION	MODEL/RESTRICTION	FROM-TO
70-640		HEADER,FRONT			
NB38-70-640 AN(NB38-70-640A)	1				-7601
NB38-70-640A	1				7601-
70-650B		HEADER,FRONT-UPPER			
NA01-70-650	1				
70-670		PLATE(R),CLOSING-QTR PANEL			
NA01-70-670 A (NA01-70-670B)	1				-7701
*NA01-70-670B	1				7701-7A01
*NA01-70-670C	1				7A01-
70-750		PANEL,REAR END			
NA01-70-750G	1				
71-020		PANEL(L),COWL SIDE			
NA01-71-020B	1				
71-10X		PANEL(L),QUARTER			
NA01-71-11XB	1				
71-100		PANEL(L),QUARTER			
NA75-71-100	1				
71-100B		PANEL(L),INSIDE			
NA01-71-19XB A (NA01-[illegible])	1				-7407
*NA01-71-19XC A (NA01-71-19XE)	1				7407-7624
*NA01-71-19XE	1				7624-
71-113		PLATE(L),SEAL			
NA01-71-11Z	1				
71-114A		JUNCTION(L),CORNER-Q /PANE			
NA01-71-12XA	1				
71-118		PROTECTOR(L),SPLASH			
NA01-71-15XA	1				

7407 NA35*V-734849
7601 NA35*V-737527
7624 NA35*V-738232
7701 NA35*V-738443
7A01 NA35*V-739048

CAT. AUNA06-03

1998-07

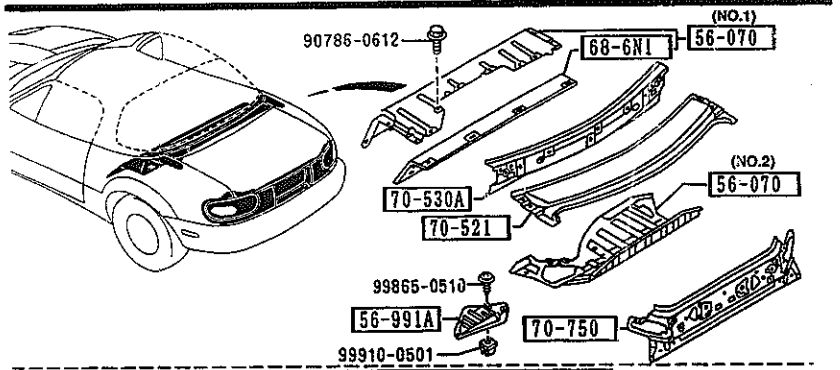

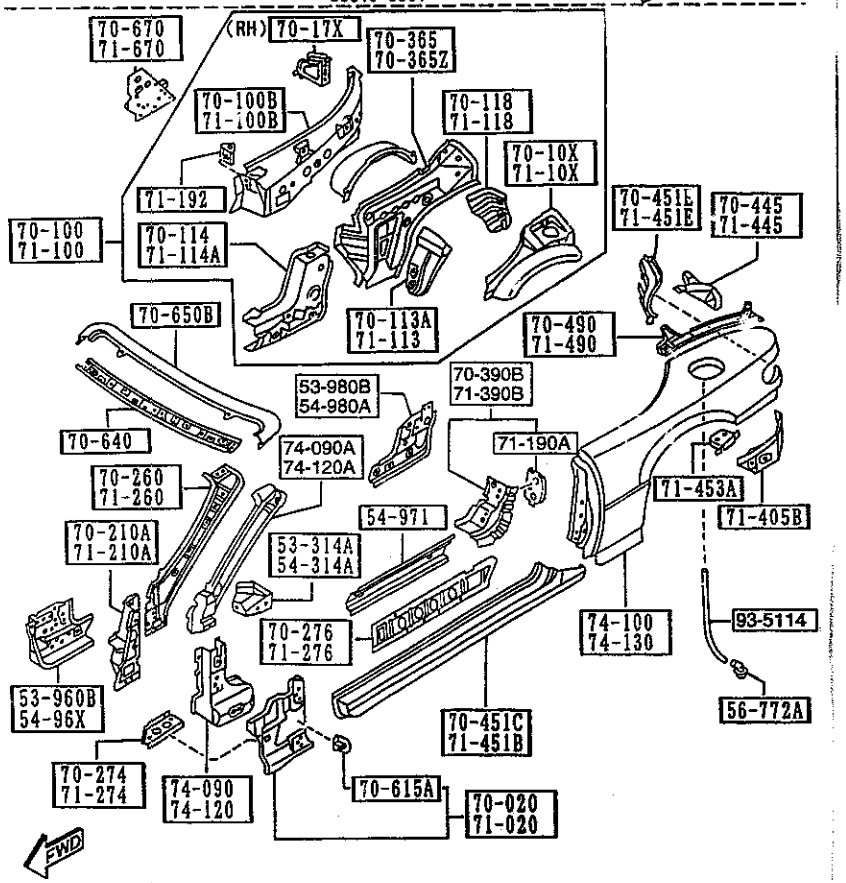

AUNA06

PART NO	QTY	MODEL/RESTRICTION	MODEL/RESTRICTION	MODEL/RESTRICTION	FROM-TO
71-[illegible]0A		PLATE,NUT			
*B001-70-490	2				
71-192		BRKT,CAP-QUARTER PANEL			
NA01-71-192	2				
71-210A		PILLAR(L),HINGE			
NA01-71-230 AN(NA01-71-230A)	1				-7401
NA01-71-230A AN(NA01-71-230B)	1				7401-7917
*NA01-71-230B AN(NA01-71-230C)	1				7917-7924
*NA01-71-230C	1				7924-
71-260		PILLAR(L),FRT.-INNER			
NA01-71-240C A (NA01-71-240D)	1				-7702
*NA01-71-240D	1				7702-
71-274		GUSSET(L),SIDE SILL OUTER			
NA01-71-274	1				
71-276		REINF.(L),SIDE SILL			
NA01-71-275	1				
71-390B		REINF.(L),STRIKER			
NA01-71-460	1				
71-405B		PANEL(L),RR FENDER-LOWER			
NA01-71-421	1				
71-445		GUSSET(L),REAR FENDER-RR			
NA01-71-445	1				
71-451B		SILL(L),SIDE OUT.			
NA01-71-270B	1				
71-451E		HOUSING(L),LAMP-RR FENDER			
NA01-71-J30	1				

7401 NA35*V-734532
7702 NA35*V-738476
7917 NA35*V-739046
7924 NA35*V-739048

CAT. AUNA06-03

1998-07

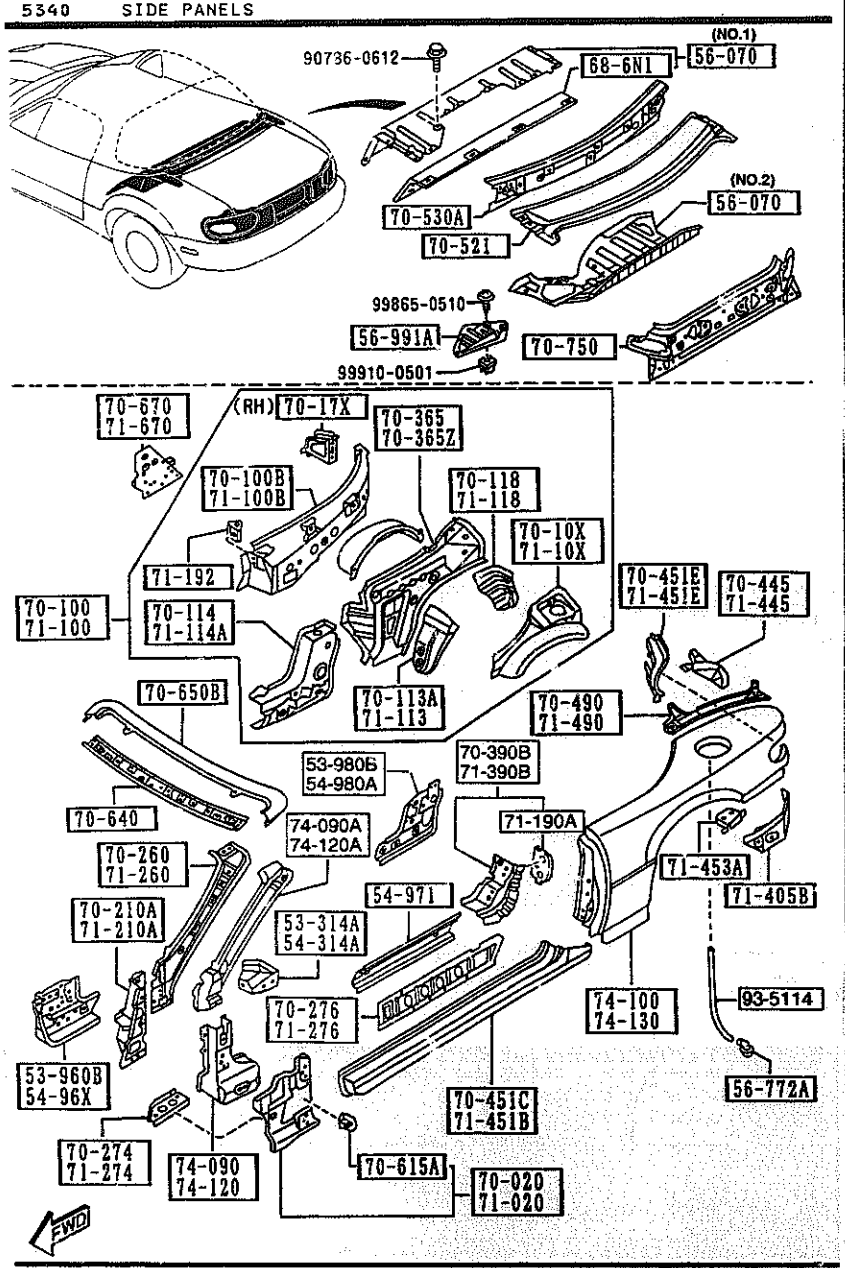

AUNA06

PART NO.	QTY	MODEL/RESTRICTION	MODEL/RESTRICTION	MODEL/RESTRICTION	FROM-TO
71-453A NA01-71-453	1	BRKT(L),TRK.BOARD-FENDER			
71-490 NA01-71-440A	1	RAIL(L),RAIN-REAR			
71-670 NA01-71-670B	1	PLATE(L),CLOSING-QTR PANEL			-7701
A (NA01-71-670C)					
*NA01-71-670C	1				7701-7A01
*NA01-71-670D	1				7A01-
74-090 NA01-70-280B	1	PILLAR(R),HINGE-OUT.			
74-090A NA01-70-210	1	PILLAR(R),FRONT-OUT.			
74-100 NAY1-70-400B	1	PANEL(R),FENDER-REAR			
74-120 NA01-71-280B	1	PILLAR(L),HINGE-OUT.			
74-120A NA01-71-210	1	PILLAR(L),FRONT-OUT.			
74-130 NAY1-71-400B	1	PANEL(L),FENDER-REAR			
93-5114 99351-14999		HOSE L=1M CUT IT TO USE			

7701 NA35※V-738443
7A01 NA35※V-739048

CAT. AUNA06-03

1998-07

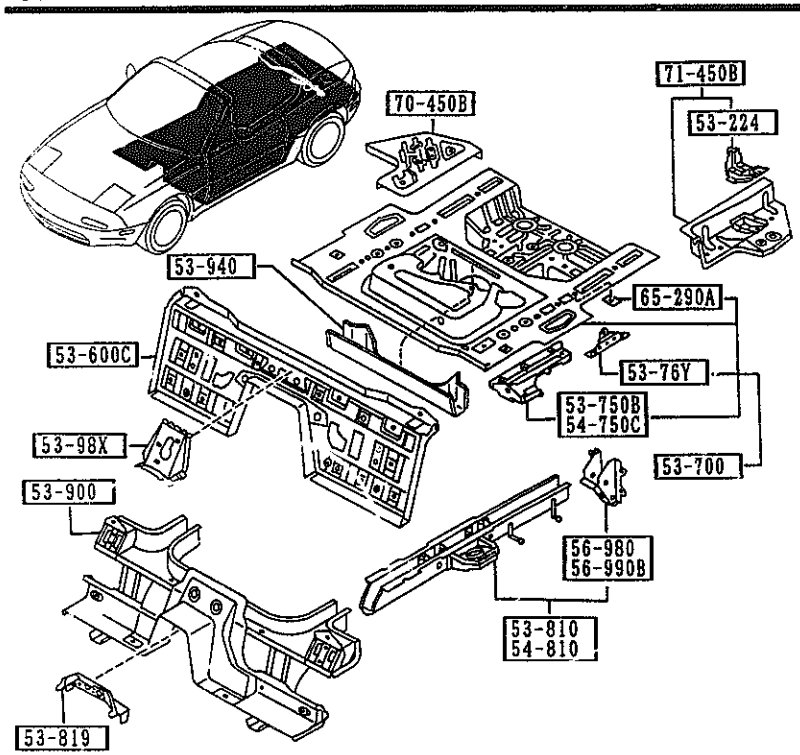

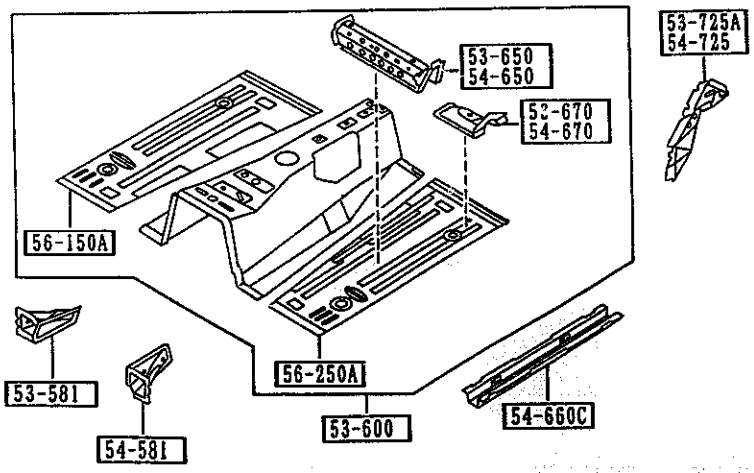

AUNA06

PART NO.	QTY	MODEL/RESTRICTION	MODEL/RESTRICTION	MODEL/RESTRICTION	FROM-TO
53-224		BRACKET,JACK			
B455-53-750C	1				
53-581		JUNCTION(R),FRT. FLOOR			
NA01-53-482	1				
53-600		PAN,FLOOR-FRONT			
NB38-53-600 AN(NB38-53-600A)	1				-7601
*NB38-53-600A C (NB38-53-600B)	1				7601-7623
*NB38-53-600B	1				7623-
53-600C		PAN,FLOOR-CENTER			
NA75-53-720	1				
53-650		MEMBER NO.2(R),CROSS-FLOOR			
NA01-53-650A	1				
53-670		BRKT(R),SEAT-F.FLOOR PAN			
NA01-53-670A	1				
53-700		PAN,FLOOR-REAR			
NA01-53-710B	1				
53-725A		GUSSET NO.3(R),C.FLOOR PAN			
NA01-53-725A	1				
53-750B		PLATE(R),SIDE-REAR FLOOR			
NA01 53-750	1				-7A01
*NA01-53-750A	1				7A01-
53-76Y		PLATE,NUT-TRUNK FLOOR PAN			
NA01-53-760 A (NA01-53-760A)	2				-7301
NA01-53-760A AN(NA01-53-760B)	2				7301-7801
*NA01-53-760B	2				7801-
53-810		FRAME(R),REAR SIDE			
NA01-53-810F A (NA01-53-810H)	1				-7801

NB38-53-600A 7301 NA35*V-732210
C NB38-53-600B 1 7601 NA35*V-737527
8477-56-241 1 7623 NA35*V-738188
7801 NA35*V-739024
7A01 NA35*V-739048

CAT. AUNA06-03

1998-07

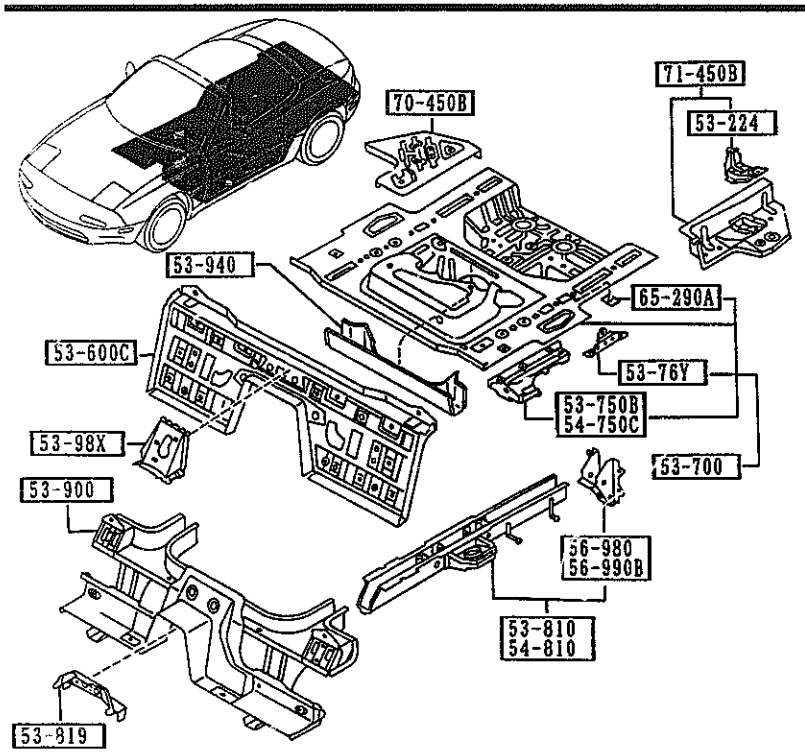

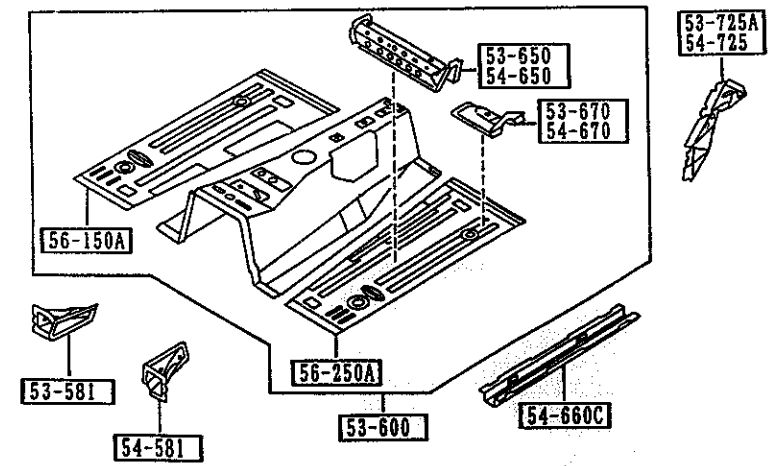

AUNA06

PART NO	QTY	MODEL/RESTRICTION	MODEL/RESTRICTION	MODEL/RESTRICTION	FROM-TO
CONT'D					
*NA01-53-810H	1				7801-
+---------+					
| 53-819 |		BRACKET,PARKING CABLE-FLOOR			
+---------+					
NA01-53-819	1				
+---------+					
| 53-900 |		MEMBER NO.3,CROSS			
+---------+					
NA75-53-900 AN(NA75-53-900A)	1				-7601
NA75-53-900A	1				7601-
+---------+					
| 53-940 |		MEMBER NO.4,CROSS			
+---------+					
NA01-53-931	1				
+---------+					
| 53-98X |		GUSSET,FRONT FLOOR PAN			
+---------+					
NA01-53-880A	1				
+---------+					
| 54-581 |		JUNCTION(L),FRT. FLOOR			
+---------+					
NA01-54-482	1				
+---------+					
| 54-650 |		MEMBER NO.2(L),CROSS-FLOOR			
+---------+					
NA01-54-650A	1				
+---------+					
| 54-660C |		FRAME,FRONT-FRT FLOOR PAN			
+---------+					
NA01-54-660B	2				
+---------+					
| 54-670 |		BRKT(L),SEAT-F.FLOOR PAN			
+---------+					
NA01-54-670A	1				
+---------+					
| 54-725 |		GUSSET NO.3(L),C.FLOOR PAN			
+---------+					
NA01-54-725A	1				
+---------+					
| 54-750C |		PLATE(L),SIDE-REAR FLOOR			
+---------+					
NA01-54-750	1				-7A01
*NA01-54-750A	1				7A01-
+---------+					
| 54-810 |		FRAME(L),REAR SIDE			
+---------+					
NA01-54-810F A (NA01-54-810H)	1				-7801
*NA01-54-810H	1				7801-
+---------+					
| 56-150A |		PAN(R),FLOOR			
+---------+					

7601 NA35*V-737527
7801 NA35*V-739024
7A01 NA35*V-739048

CAT. AUNA06-03

1998-07

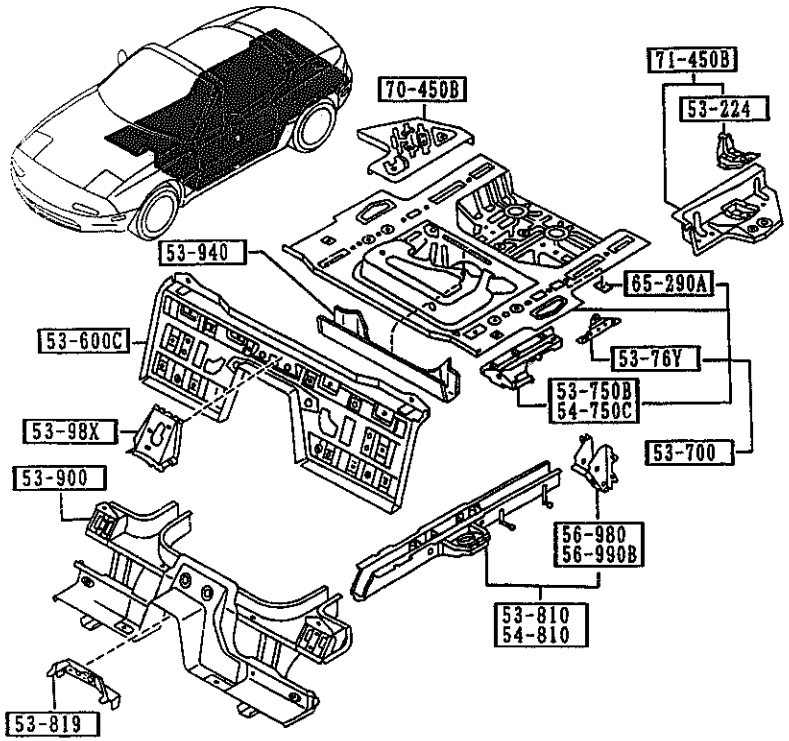

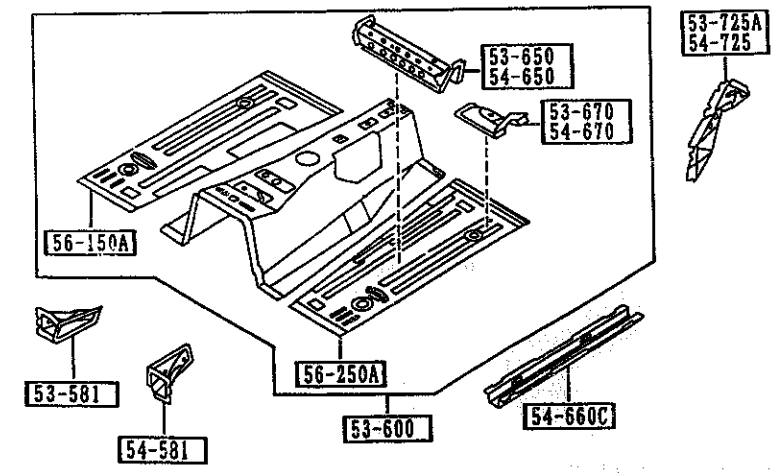

AUNA06

5370 -3 * FLOOR PANELS

PART NO.	QTY	MODEL/RESTRICTION	MODEL/RESTRICTION	MODEL/RESTRICTION	FROM-TO
CONT'D					
NA01-53-602A	1				
+---------+					
| 56-250A |		PAN(L),FLOOR			
+---------+					
NA01-54-610A	1				
+---------+					
| 56-980 |		BRKT(R),BUMPER-RR SK IRT			
+---------+					
NA01-53-830C	1				
+---------+					
| 56-990B |		BRKT(L),BUMPER-RR SK IRT			
+---------+					
NA01-54-830C	1				
+---------+					
| 65-290A |		BRACKET			
+---------+					
1353-65-190	1				
+---------+					
| 70-450B |		PANEL(R),FLOOR SIDE			
+---------+					
NA01-53-740C	1				
+---------+					
| 71-450B |		PANEL(L),FLOOR SIDE			
+---------+					
NA01-54-740A	1				

5380 FLOOR ATTACHMENTS (HOLE COVERS)

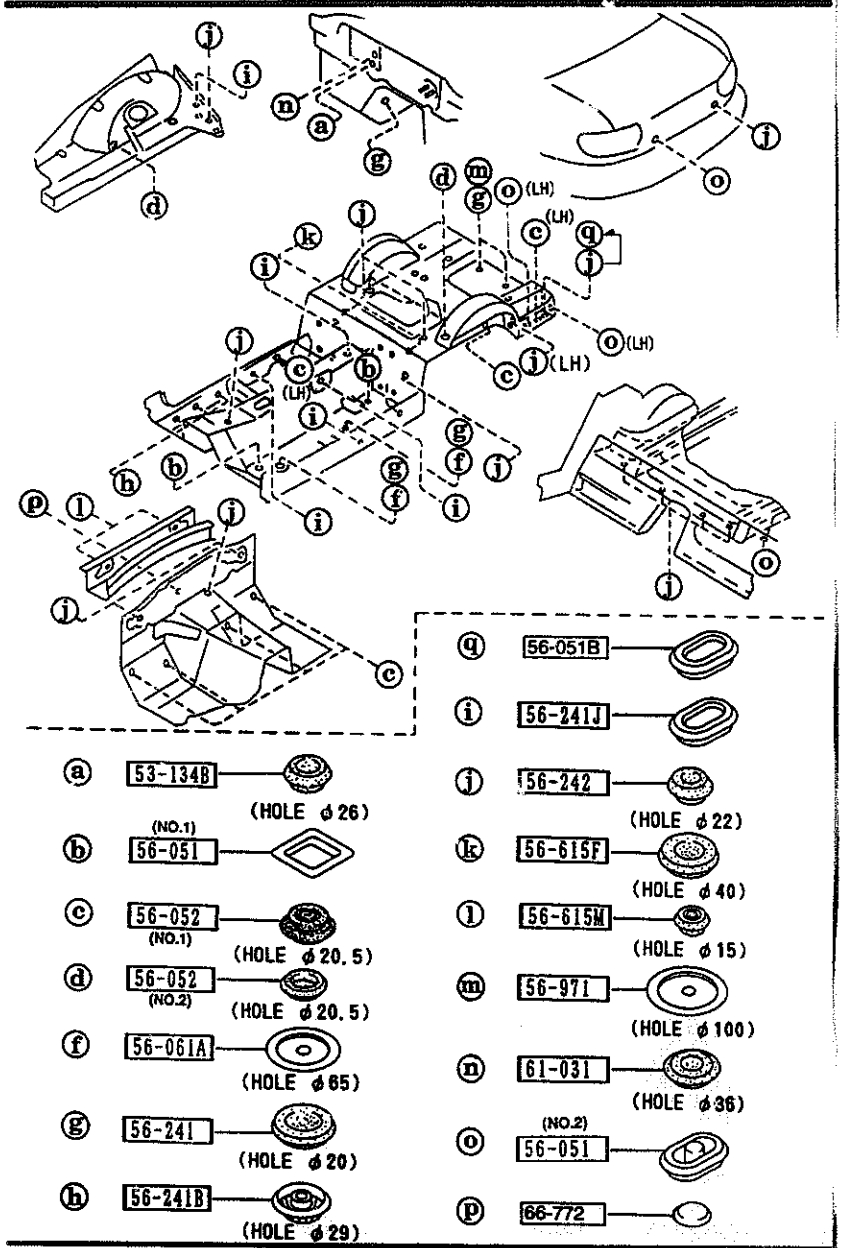

AUNA06

5380 -1 FLOOR ATTACHMENTS (HOLE COVERS)

PART NO.	QTY	MODEL/RESTRICTION	MODEL/RESTRICTION	MODEL/RESTRICTION	5380-1
53-134B		RUBBER,DUST SEAL			
0187-53-134	1				
56-051		COVER,HOLE			
1011-56-051	4	(ILLUST. NO.1)			
BC1D-56-052	3	(ILLUST. NO.2)			-7701
*BC1D-56-052	4	(ILLUST. NO.2)			7701-
56-051B		COVER,HOLE			
*GA5R-56-051	3				7701-
56-052		PLUG,DRAIN			
B092-56-052	8	D=12MM (ILLUST. NO.1)			
FB01-56-056	4	(ILLUST. NO.2) (W/O A. LOCK BRAKE)			
56-061A		COVER,HOLE			
8545-56-052	4				
56-241		PLUG,DRAIN			
0118-56-241	7				
56-241B		PLUG			
B001-56-051	6				
56-241J		PLUG,DRAIN			
8477-56-241	6				
56-242		PLUG,DRAIN			
0118-56-242B	19				-7701
*0118-56-242B	15				7701-
56-615F		PLUG,DRAIN			
0208-56-615	2				
56-615M		PLUG,DRAIN			
NA01-56-051	2				
56-971		COVER,HOLE			
8545-56-053	2				

7701 NA35*V-738443

CAT. AUNA06-03

1998-07

5380 FLOOR ATTACHMENTS (HOLE COVERS)

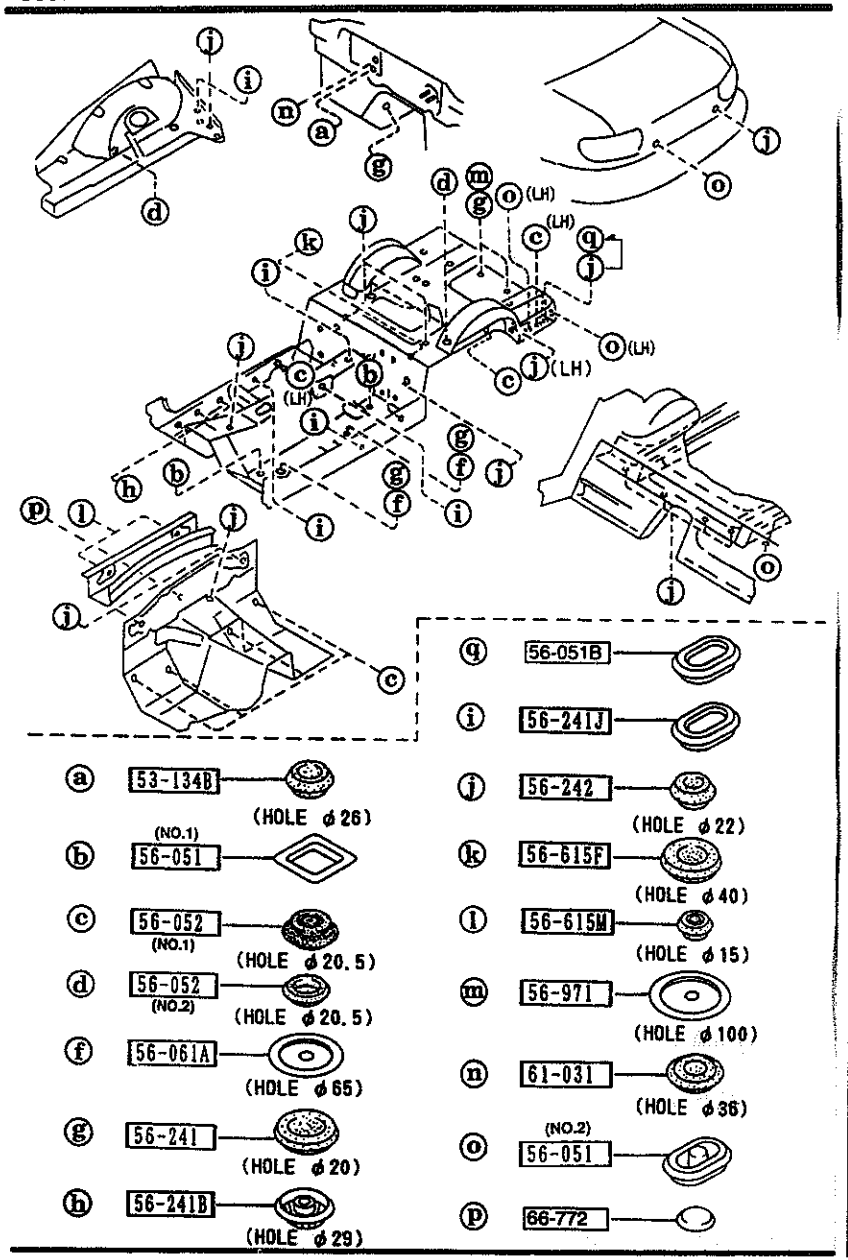

AUNA06

5380 -2 * FLOOR ATTACHMENTS (HOLE COVERS)

PART NO.	QTY	MODEL/RESTRICTION	MODEL/RESTRICTION	MODEL/RESTRICTION	REMARK
61-031		PLUG,HOLE			
1708-61-031	1				
66-772		GROMMET			
*B092-41-661	1	BASE, N-PKG, R-PKG, (W/O AUTO CRUISE CONT.)			

CAT. AUNA06-03 1998-07

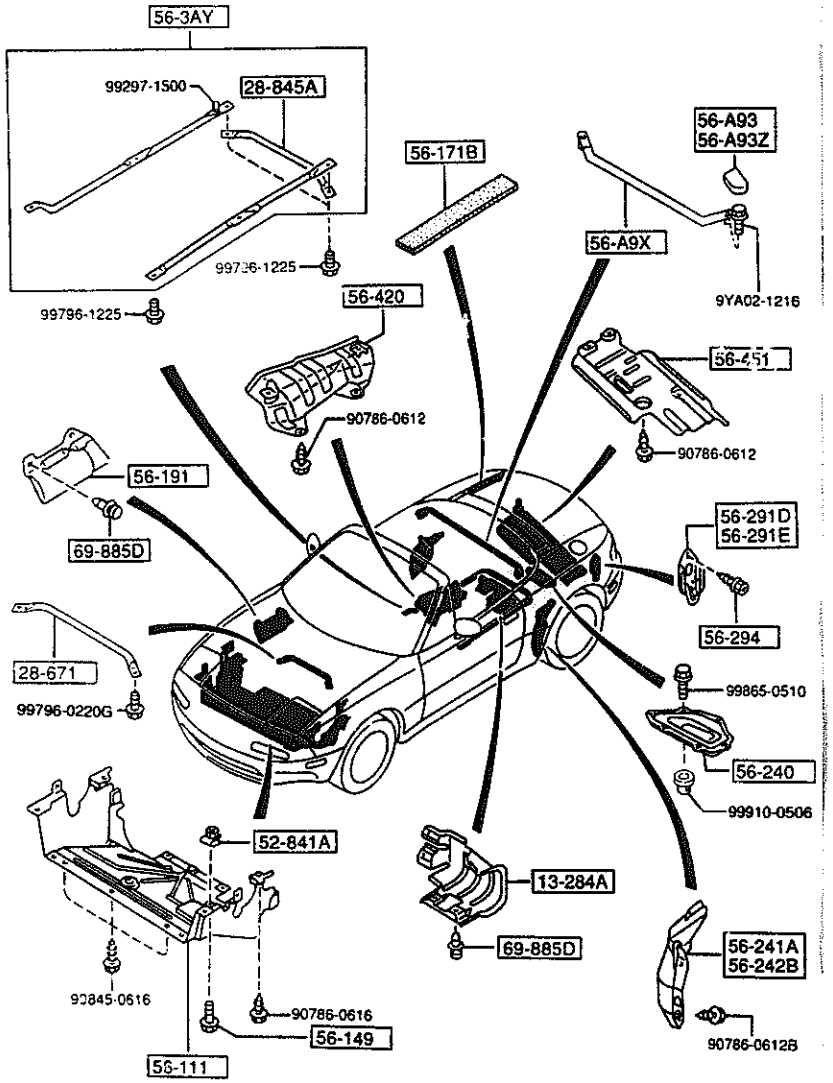

AUNA06

PART NO	QTY	MODEL/RESTRICTION	MODEL/RESTRICTION	MODEL/RESTRICTION	ILLUS. NO.
13-284A		COVER,FUEL FILTER			
NA75-56-241 AN(NA75-56-241A)	1				-7A15
*NA75-56-241A	1				7A15-
28-671		ROD,PERFORMANCE			
NA75-56-B91	1				
28-845A		BAR,REAR SUSPENSION			
N007-28-845A	1	(L.S. DIFF)			
52-841A		NUT,CLIP			
B455-56-135	1				
56-A9X		BAR,BRACE			
NA75-56-A9XB	1				
56-A93		COVER(R),BRACE BAR			
NA75-56-A93	1				
56-A93Z		COVER(L),BRACE BAR			
NA75-56-A94	1				
56-111		COVER,UNDER			
NA01-56-111D A (NA01-56-111E)	1				-7901
*NA01-56-111E	1				7901-
56-149		SCREW,TAPPING-MUD GUARD			
B455-56-149	1				
56-171B		PROTECTOR(R),RR FENDER			
NA01-56-171A	1				
56-191		SHIELD,SPLASH			
NA01-56-112	1				
56-240		COVER			
NA75-56-06X	1				
56-241A		SHIELD(R),SPLASH-REAR			

7901 NA35*V-739040
7A15 NA35*V-739052

CAT. AUNA06-03

1998-07

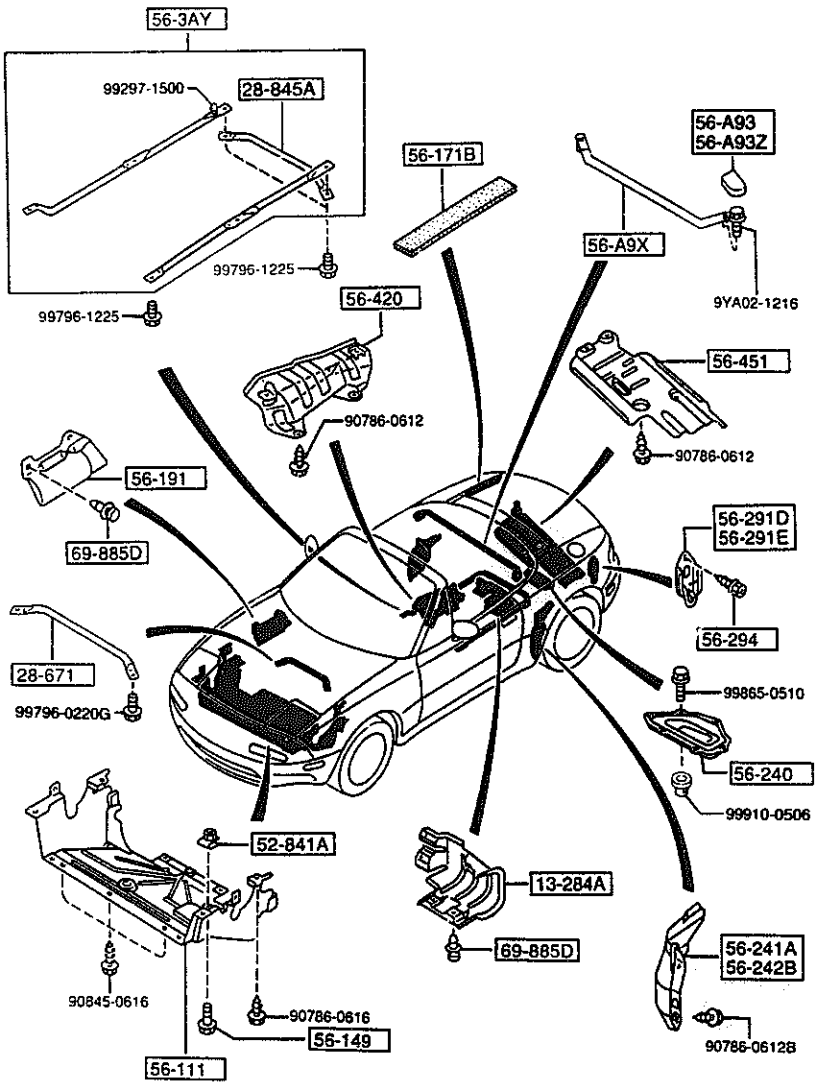

PART NO.	QTY	MODEL/RESTRICTION	MODEL/RESTRICTION	MODEL/RESTRICTION	ITEM-TO
CONT'D					
NA01-56-311A	1				-7701
AN(NA01-56-311C)					
*NA01-56-311C	1				7701-7A01
AN(NA01-56-311D)					
*NA01-56-311D	1				7A01-
+----------+					
| 56-242B |		SHIELD(L),SPLASH-REA			
+----------+		R			
NA01-56-321A	1				-7701
AN(NA01-56-321C)					
*NA01-56-321C	1				7701-7A01
AN(NA01-56-321D)					
*NA01-56-321D	1				7A01-
+----------+					
| 56-291D |		HOOK(R),TIE DOWN			
+----------+					
NA01-56-29XC	1				
+----------+					
| 56-291E |		HOOK(L),TIE DOWN			
+----------+					
NA01-56-290C	1				
+----------+					
| 56-294 |		SCREW,TIE DOWN HOOK			
+----------+					
NA01-56-294	4				
+----------+					
| 56-3AY |		REINF.(L),FLOOR			
+----------+					
NA75-56-3AY	1	(L.S. DIFF)			
+----------+					
| 56-420 |		INSULATOR,FRONT			
+----------+					
NA75-56-411B	1				-7701
AN(NA75-56-411C)					
*NA75-56-411C	1				7701-
+----------+					
| 56-451 |		INSULATOR			
+----------+					
NA01-56-451	1				
+----------+					
| 69-885D |		FASTENER			
+----------+					
NA01-56-145	7				

7701 NA35*V-738443
7A01 NA35*V-739048

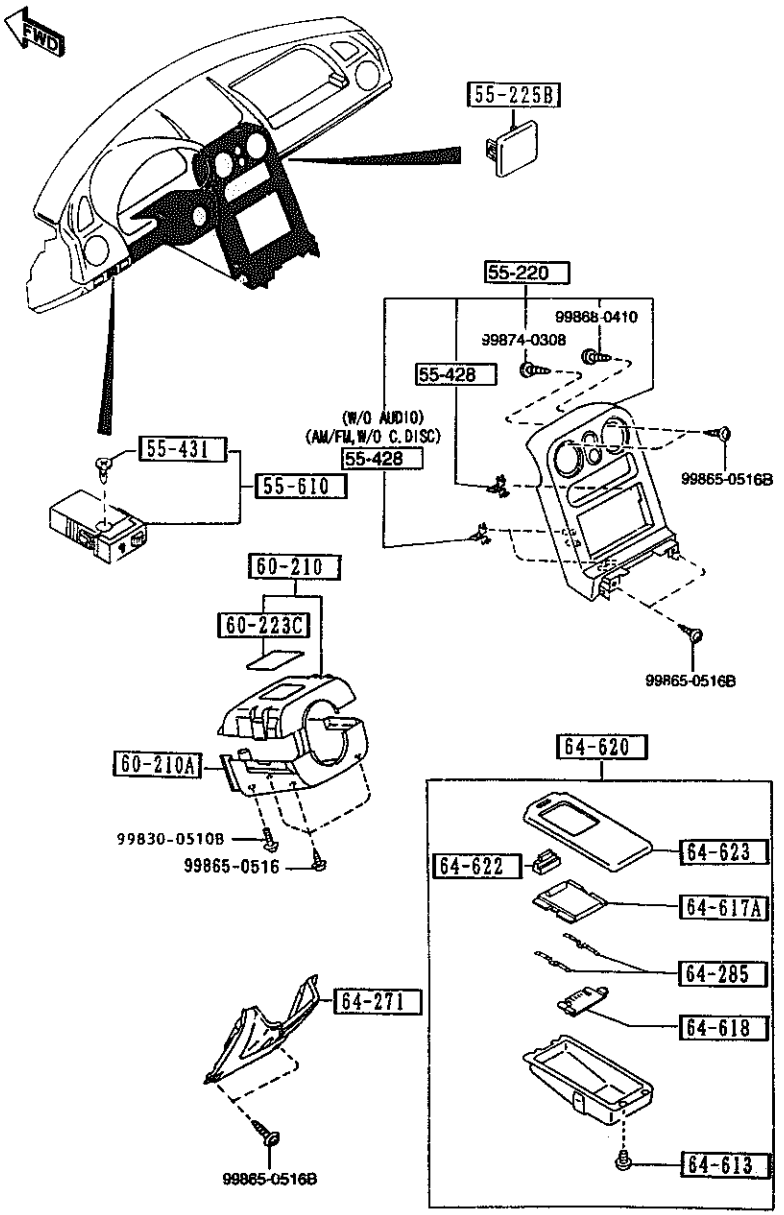

AUNA06

5500 -1 DASHBOARD EQUIPMENTS

PART NO.	QTY	MODEL/RESTRICTION	MODEL/RESTRICTION	MODEL/RESTRICTION	FROM-TO
55-220		PANEL,CENTER			
NA75-55-210A	1	(AM/FM,W/C.DISC)			
00	INT-	NA3 NA4 NA5 NA6 BLACK			
NB38-55-210A	1	(AM/FM,W/O C.DISC) (W/O AUDIO)			
00	INT-	NA3 NA4 NA5 NA6 BLACK			
55-225B		COVER,HOLE			
NB38-55-225A	1				
00	INT-	NA3 NA7 BLACK			
88	INT-	NA4 NA5 TAN			
55-428		SPRING,METER HOOD			
GJ21-55-428	1	(AM/FM,W/C.DISC)			
GJ21-55-428	3	(AM/FM,W/O C.DISC) (W/O AUDIO)			
55-431		BULB,RESISTOR			
BR70-55-431	1				
55-610		RESISTOR,PANE. LIGHT			
BR70-55-490	1				
60-210		COVER,COLUMN-UPPER			
NA01-60-220	1				
00	INT-	NA3 NA4 NA5 NA6 BLACK			
60-210A		COVER,COLUMN-LOWER			
NA01-60-230A	1				
00	INT-	NA3 NA4 NA5 NA6 BLACK			
60-223C		CAP,COLUMN COVER			
NA01-60-223	1				
00	INT-	NA3 NA4 NA5 NA6 BLACK			
64-271		PANEL,CENTER-LOWER			
NA75-64-270C	1				

CAT. AUNA06-03

1998-07

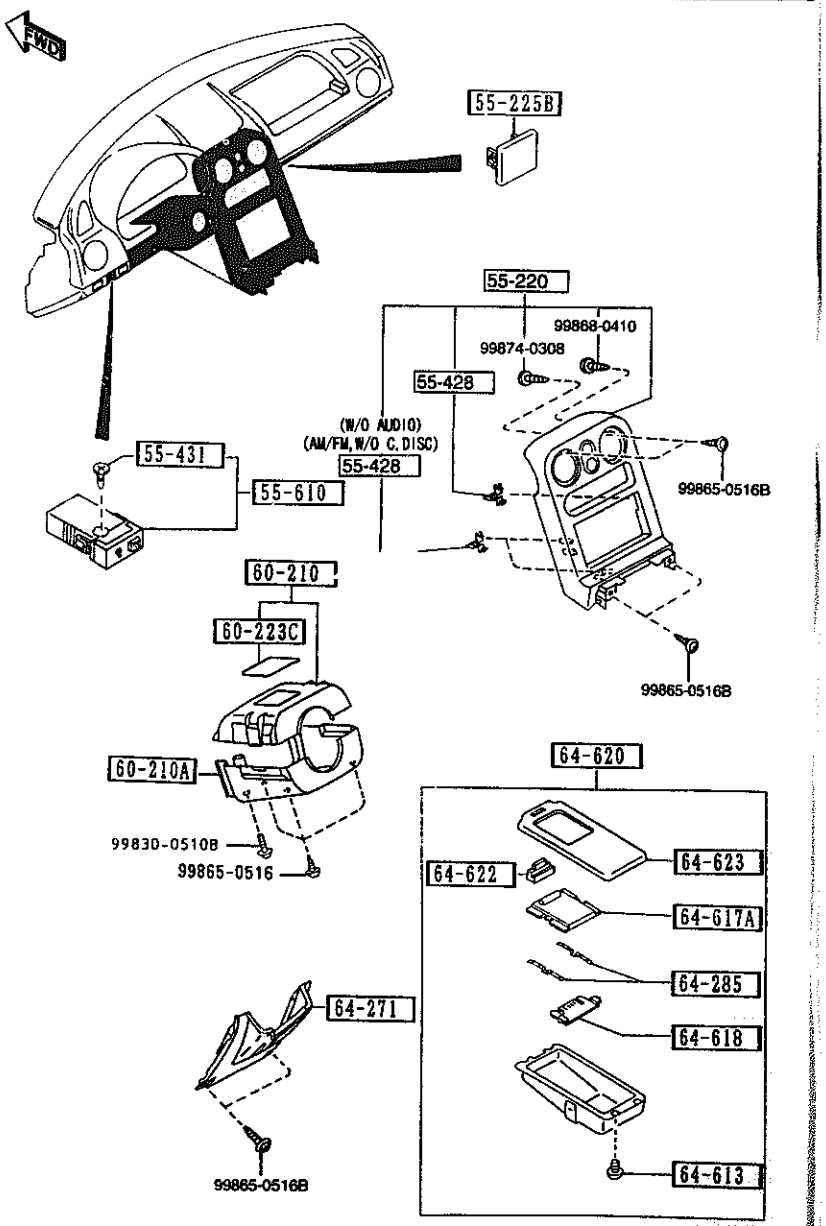

AUNA06

PART NO.	QTY	MODEL/RESTRICTION	MODEL/RESTRICTION	MODEL/RESTRICTION	FROM-TO
CONT'D					
00	INT-	NA3 NA7 BLACK			
88	INT-	NA4 NA5 TAN			
+---------+					
| 64-285 |		SPRING,ASHTRAY			
+---------+					
NA01-64-612	2				
+---------+					
| 64-613 |		SCREW,ASHTRAY			
+---------+					
NA01-64-613	4				
+---------+					
| 64-617A |		LID,ASHTRAY			
+---------+					
NA01-64-617	1				
00	INT-	NA3 NA4 NA5 NA6 BLACK			
+---------+					
| 64-618 |		PLATE,ASHTRAY			
+---------+					
NA01-64-618	1				
+---------+					
| 64-620 |		TRAY,ASH			
+---------+					
NA01-64-610B	1				
00	INT-	NA3 NA4 NA5 NA6 BLACK			
+---------+					
| 64-622 |		LIGHT,PLATE-ASHTRAY			
+---------+					
NA01-64-622	1				
+---------+					
| 64-623 |		CASE'OUT',ASHTRAY			
+---------+					
NA01-64-623	1				
00	INT-	NA3 NA4 NA5 NA6 BLACK			

CAT. AUNA06-03 1998-07

5520 -1 * METER HOOD



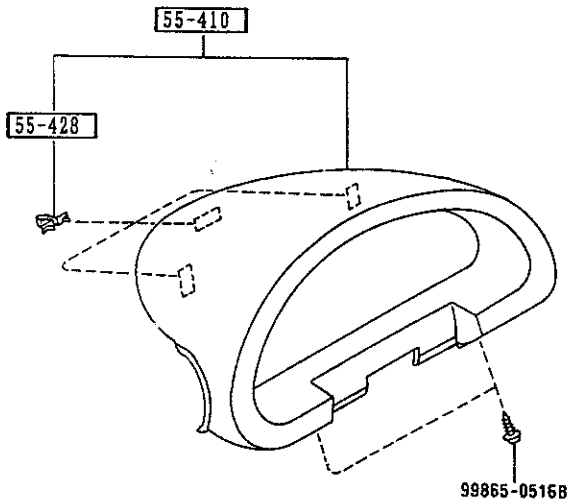

PART NO.	QTY	MODEL/RESTRICTION	MODEL/RESTRICTION	MODEL/RESTRICTION	FROM TO
55-410		HOOD,METER			
475-55-420B	1				
00 INT-		NA3 NA4 NA5 NA7 BLACK			
55-428		SPRING,METER HOOD			
6J21-55-428	3				

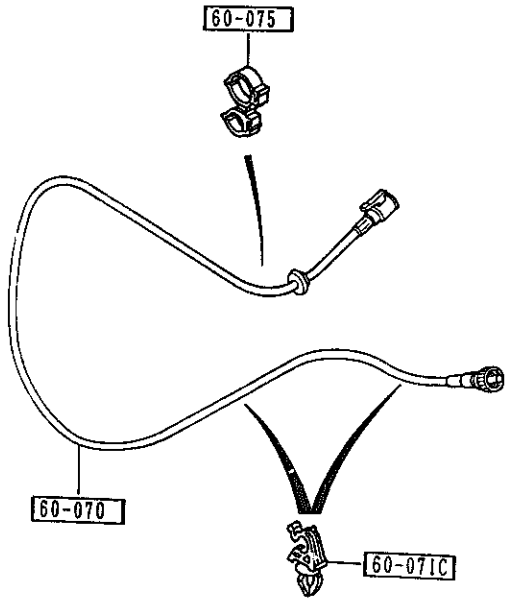

5530 -1 * SPEEDOMETER CABLE

PART NO.	QTY	MODEL/RESTRICTION	MODEL/RESTRICTION	MODEL/RESTRICTION	FROM-TO
60-070		CABLE,SPEEDMETER			
NA01-60-070B	1	(MT)			
NA03-60-070A	1	(AT)			
60-071C		CLIP			
NA03-60-071	2				
60-075		CLIP'A',SPEEDOMETER CABLE			
NAG1-60-075	1				

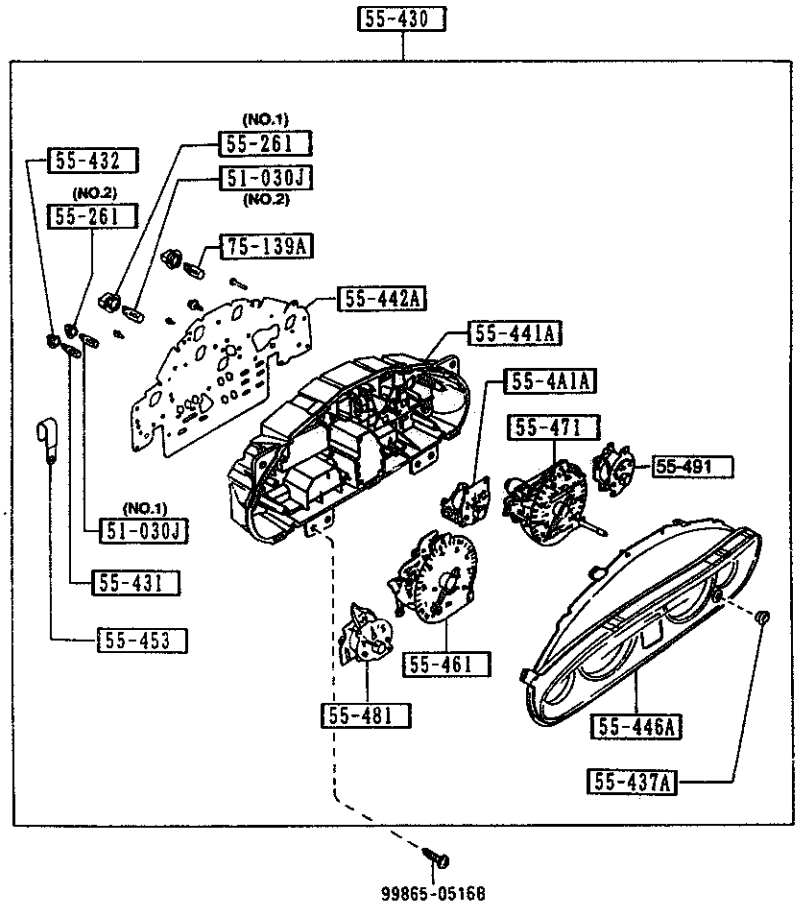

5540 -1 METER COMPONENTS

PART NO.	QTY	MODEL/RESTRICTION	MODEL/RESTRICTION	MODEL/RESTRICTION	FROM-TO
51-030J		BULB			
3625-75-139	8	12V 1.4W (ILLUST. NO.1)			
99701-6030	3	12V 3.4W (ILLUST. NO.2)			
55-261		SOCKET			
1316-55-261	3	12V 3.4W (ILLUST. NO.1)			
8548-55-261	8	12V 1.4W (ILLUST. NO.2)			
55-4A1A		METER,OIL PRESSURE			
NA75-55-4A1	1	(TYPE'A' DESIGN)			
NB39-55-4A1	1	(TYPE'B' DESIGN)			
55-430		METER SET			
NB13-55-430B	1	(TYPE'A' DESIGN)			
NB39-55-430	1	(TYPE'B' DESIGN)			
55-431		BULB,RESISTOR			
NA01-55-431	1	(TYPE'A' DESIGN)			
55-432		SOCKET,METER SET			
NA01-55-432	1	(TYPE'A' DESIGN)			
55-437A		GROMMET,KNOB-METER SET			
NA01-55-437	1				
55-441A		CASE,METER			
NA01-55-441D	1				
55-442A		PLATE,PRINT			
NA75-55-442	1				
55-446A		PLATE,WINDOW			
NB13-55-446	1				
55-453		CLAMP			
N007-55-467	1				

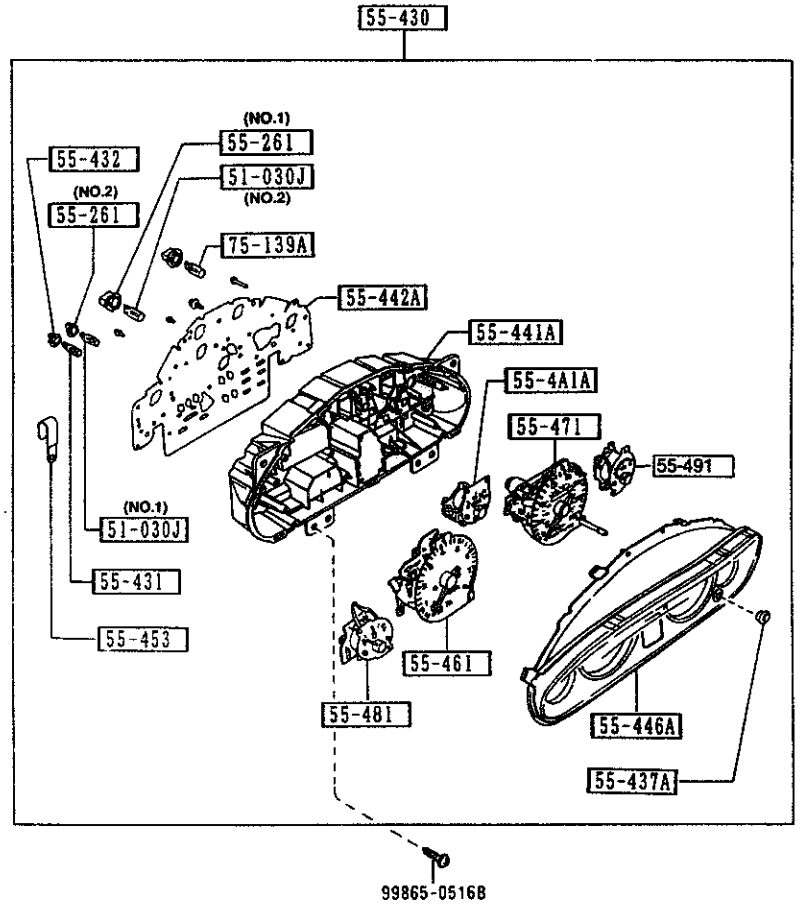

AUNA06

5540 -2 * METER COMPONENTS

PART NO	QTY	MODEL/RESTRICTION	MODEL/RESTRICTION	MODEL/RESTRICTION	FROM-TO
55-461		TACHOMETER			
NA75-55-461	1	(TYPE'A' DESIGN)			
NB39-55-461	1	(TYPE'B' DESIGN)			
55-471		SPEEDOMETER			
NA01-55-471B	1	(TYPE'A' DESIGN)			
NB39-55-471	1	(TYPE'B' DESIGN)			
55-481		METER,FUEL			
NA01-55-481	1	(TYPE'A' DESIGN)			
NB39-55-481	1	(TYPE'B' DESIGN)			
55-491		METER,TEMP			
NA75-55-491	1	(TYPE'A' DESIGN)			
NB39-55-491	1	(TYPE'B' DESIGN)			
75-139A		BULB			
B491-55-431	4				

5560 DASHBOARD & RELATED PARTS

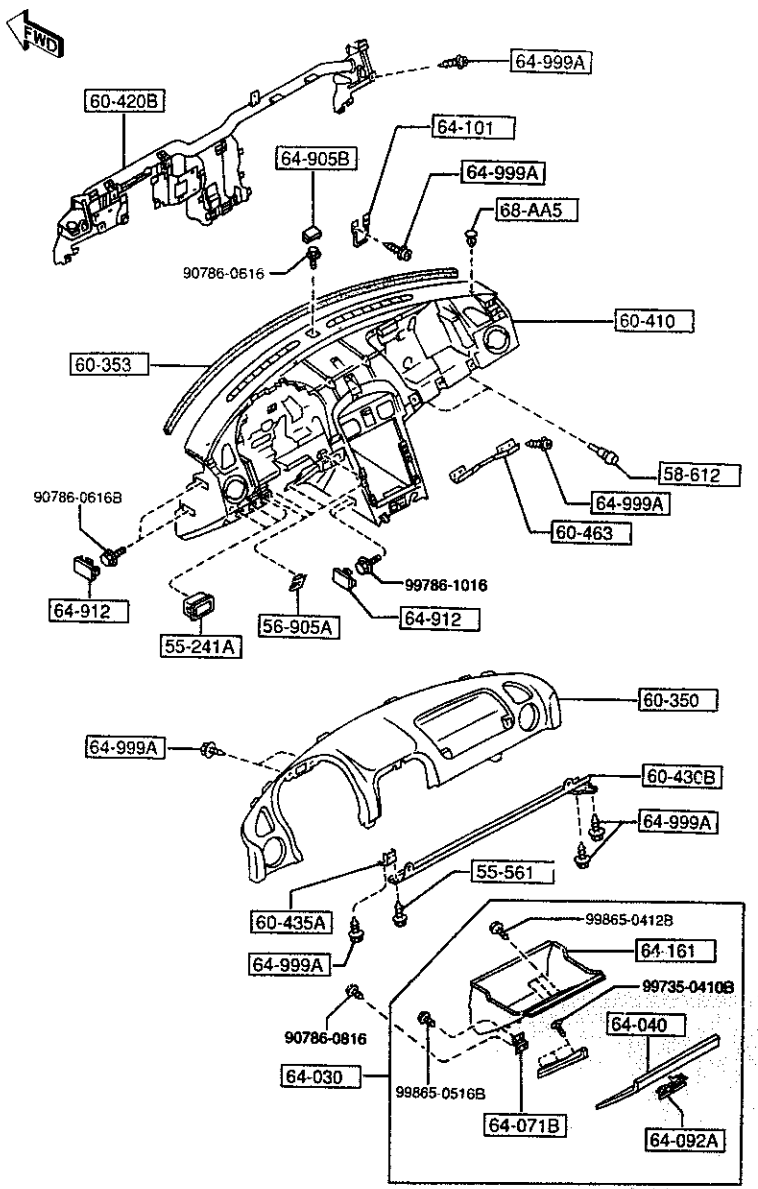

PART NO.	QTY	MODEL/RESTRICTION	MODEL/RESTRICTION	MODEL/RESTRICTION	FROM-TO
55-241A		BOX,INSTRUMENT PANEL			
NA01-55-241A	3				
00 INT-		NA3 NA4 NA5 NA6 BLACK			
55-561		BOLT,INST. PANEL			
B455-55-561	1				
56-905A		NUT,SPRING			
B092-60-408	4				
58-612		CUSHION,RUBBER			
B092-64-046	2				
60-350		PAD,CRASH			
NA75-60-350B	1				
00 INT-		NA3 NA4 NA5 NA6 BLACK			
60-353		RUBBER,URETHNE			
NA75-60-353	1				
60-410		FRAME,INST. PANEL			
NA75-60-401G	1				
00 INT-		NA3 NA7 BLACK			
88 INT-		NA4 NA5 BLACK/TAN			
60-420B		MEMBER,CRASH PAD			
NB38-60-420A (NB38-60-420A)	1				-7701
*NB38-60-420A	1				7701-
60-430B		MEMBER(R),INST. PANEL			
NA01-60-430E	1				
60-435A		BRACKET,MEMBER			
NA01-60-435	1				
60-463		BRACKET,CRASH PAD			
NA01-60-463	1				

7701 NA35*V-738443

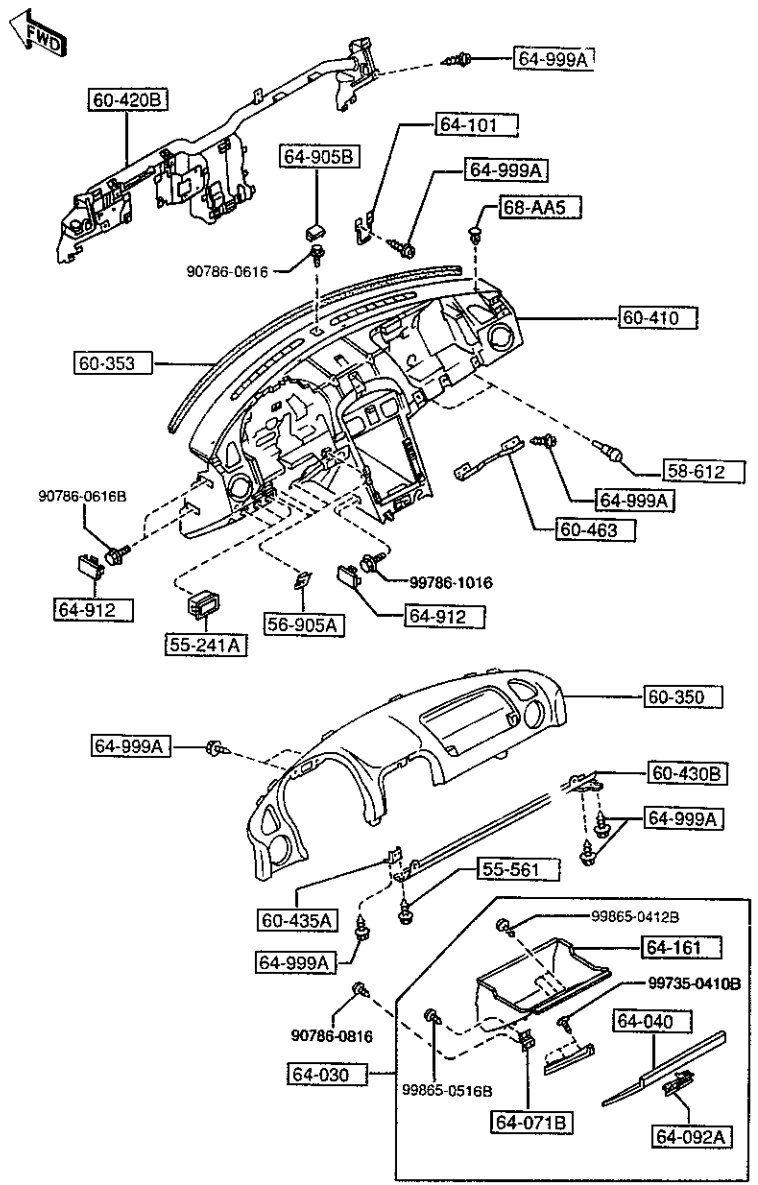

AUNA06

PART NO.	QTY	MODEL/RESTRICTION	MODEL/RESTRICTION	MODEL/RESTRICTION	FROM-TO
64-030		BOX,GLOVE			
NA75-64-030F	1				
00	INT-	NA3 NA7 BLACK			
88	INT-	NA4 NA5 TAN			
64-040		LID,GLOVE BOX-OUTER			
NA75-64-041C	1				
00	INT-	NA3 NA7 BLACK			
88	INT-	NA4 NA5 TAN			
64-071B		HINGE(R),GLOVE LID			
NA75-64-03XA	2				
64-092A		LOCK,GLOVE LID			
BC5E-64-090B	1				
00	INT-	NA3 NA7 BLACK			
67	INT-	NA4 NA5 TAN			
64-101		STRIKER			
BC1D-64-101	1				
64-161		BOX,GLOVE			
NA75-64-161C	1				
00	INT-	NA3 NA4 NA5 NA6 BLACK			
64-905B		COVER,HOLE-(C)			
NA01-64-905	1				
00	INT-	NA3 NA4 NA5 NA7 BLACK			
64-912		COVER,SIDE			
NA01-64-912	6				
00	INT-	NA3 NA7 NA8 BLACK			
88	INT-	NA4 NA5 TAN			
64-999A		SCREW,TAPPING			
W201-64-999	33				

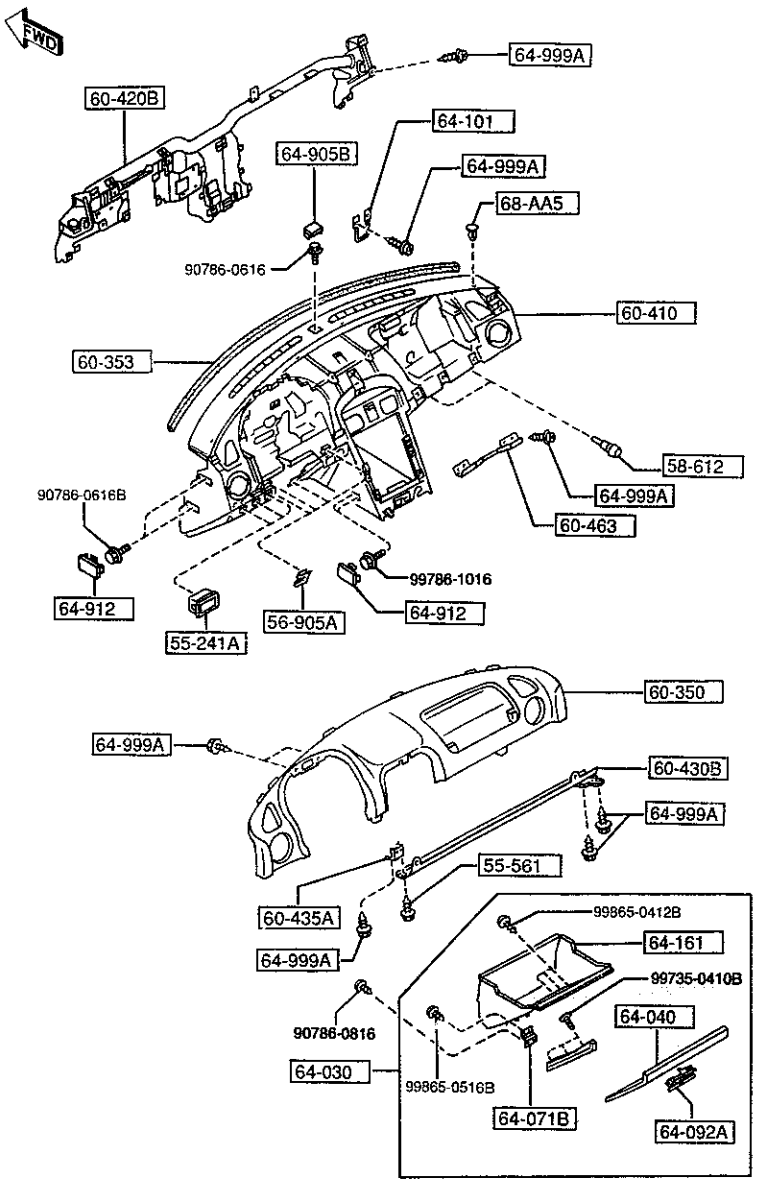

AUNA06

PART NO.	QTY	MODEL/RESTRICTION	MODEL/RESTRICTION	MODEL/RESTRICTION	FROM-TO
68-AA5		FASTENER,DOOR TRIM			
W201-68-AA5A	4				
00	INT-	NA3 NA4 NA5 NA6 NA7 NA8 BLACK			

CAT. AUNA06-03 1998-07

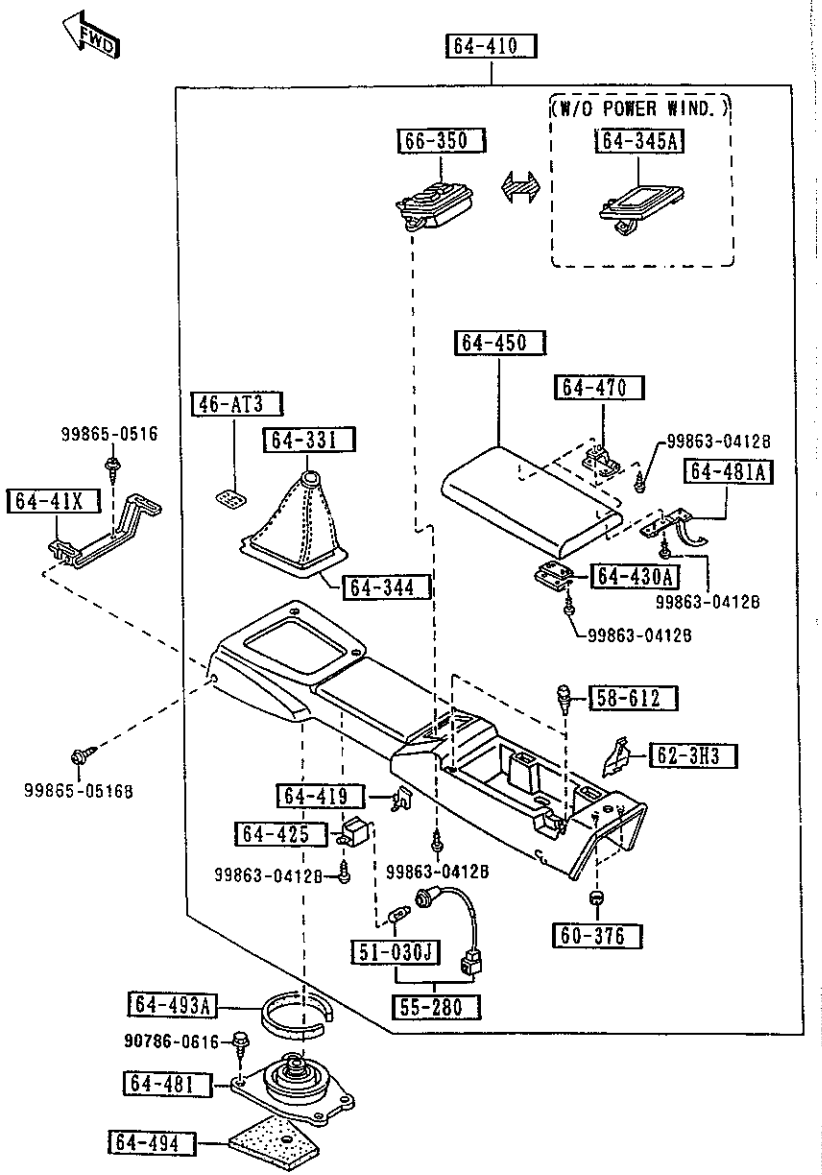

AUNA06

5570 -1 CONSOLE

PART NO	QTY	MODEL/RESTRICTION	MODEL/RESTRICTION	MODEL/RESTRICTION	FROM-TO
46-AT3		LABEL,CHANGE			
N002-46-AT3	1	(WOOD) (MT)			
51-030J		BULB			
3625-75-139	1	12V 1.4W			
55-280		BULB & SOCKET			
NA01-55-280	1	(MT)			
NA06-55-280	1	(AT)			
58-612		CUSHION,RUBBER			
B092-64-046	2				
60-376		NUT,TOP-CRASH PAD			
B092-60-376	2				
62-3H3		COVER,LEVER-OPENER			
NA01-64-424	1				
64-331		BOOT,CHANGE			
NA01-64-331	1	(MT)			
00	INT-	NA3 NA4 NA5 NA6 BLACK			
64-344		PLATE,BACK-BOOTS RIN G			
NA01-64-344B	1	(MT)			
64-345A		BOX,COIN-CONSOLE			
NA01-64-437	1	BASE, R-PKG, (W/O POWER WIND.)			
00	INT-	NA3 NA4 NA5 NA6 BLACK			
64-41X		BRACKET,REAR CONSOLE			
NA01-64-416	1				
64-410		CONSOLE,REAR			
NA01-64-410D	1	(W/O POWER WIND,W/O CHANGE LABEL) (MT)			-7714
00	INT-	NA3 NA4 NA5 NA6			

7714 NA35*V-738705

CAT. AUNA06-03 1998-07

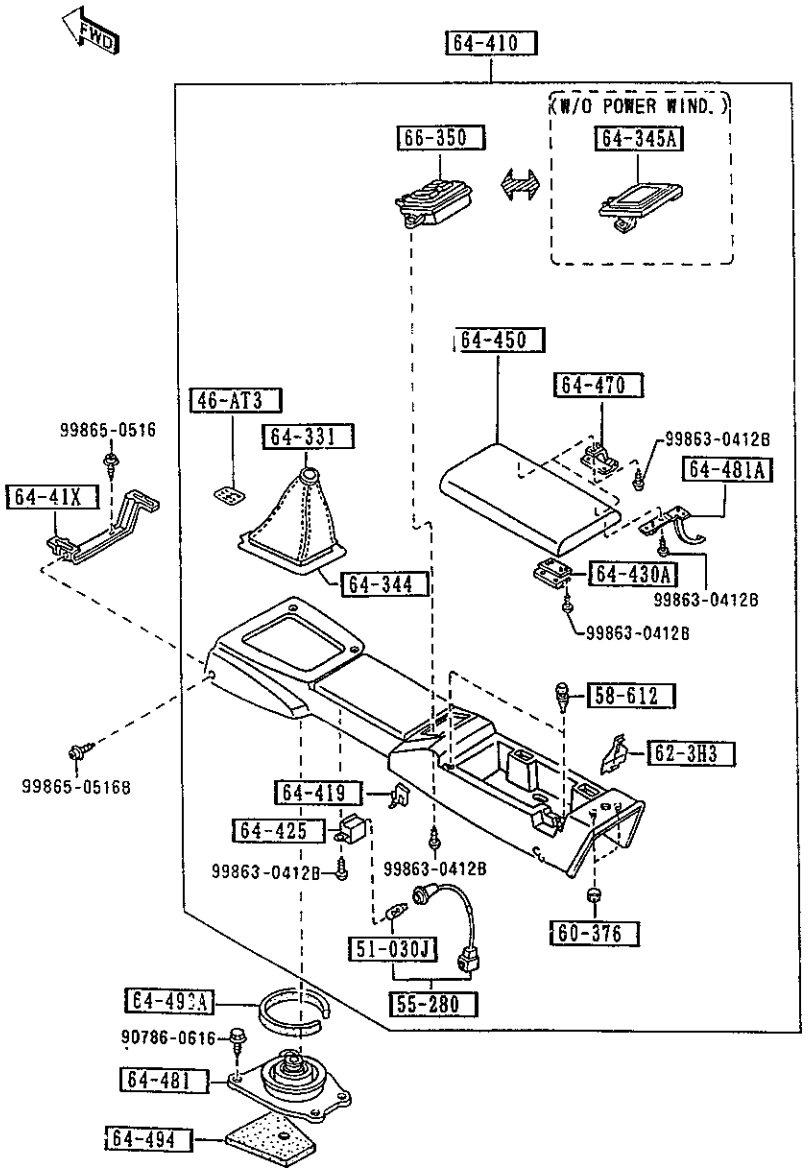

AUNA06

PART NO.	QTY	MODEL/RESTRICTION	MODEL/RESTRICTION	MODEL/RESTRICTION	FROM-TO
CONT'D		BLACK			
NA02-64-410D	1	(W/POWER WIND,W/O CHANGE LABEL) (MT)			-7714
00	INT-	NA3 NA4 NA5 NA6 BLACK			
NA03-64-410C	1	BASE, R-PKG, (W/O POWER WIND.) (AT)			-7714
00	INT-	NA3 NA4 NA5 NA6 BLACK			
NA06-64-410D	1	F-SV, L-PKG, P.E.GR, T-PKG, (W/POWER WIND.) (AT)			-7714
00	INT-	NA3 NA4 NA5 NA6 BLACK			
N007-64-410B	1	(W/O POWER WIND,W/CHANGE LABEL) (MT)			-7714
00	INT-	NA3 NA4 NA5 NA6 BLACK			
N008-64-410B	1	(W/POWER WIND,W/CHANGE LABEL) (MT)			-7714
00	INT-	NA3 NA4 NA5 NA6 BLACK			
*NA01-64-410E	1	(W/O POWER WIND,W/O CHANGE LABEL) (MT)			7714-
* 00	INT-	NA3 NA4 NA5 NA6 NA7 NA8 BLACK			
*NA02-64-410E	1	(W/POWER WIND,W/O CHANGE LABEL) (MT)			7714-
* 00	INT-	NA3 NA4 NA5 NA6 NA7 NA8 BLACK			
*NA03-64-410D	1	BASE, R-PKG, (W/O POWER WIND.) (AT)			7714-
* 00	INT-	NA3 NA4 NA5 NA6 NA7 NA8 BLACK			
*NA06-64-410E	1	F-SV, L-PKG, P.E.GR, T-PKG, (W/POWER WIND.) (AT)			7714-
* 00	INT-	NA3 NA4 NA5 NA6 NA7 NA8 BLACK			
*N007-64-410C	1	(W/O POWER WIND,W/CH			7714-

7714 NA35*V-738705

CAT. AUNA06-03 1998-07

5570 CONSOLE

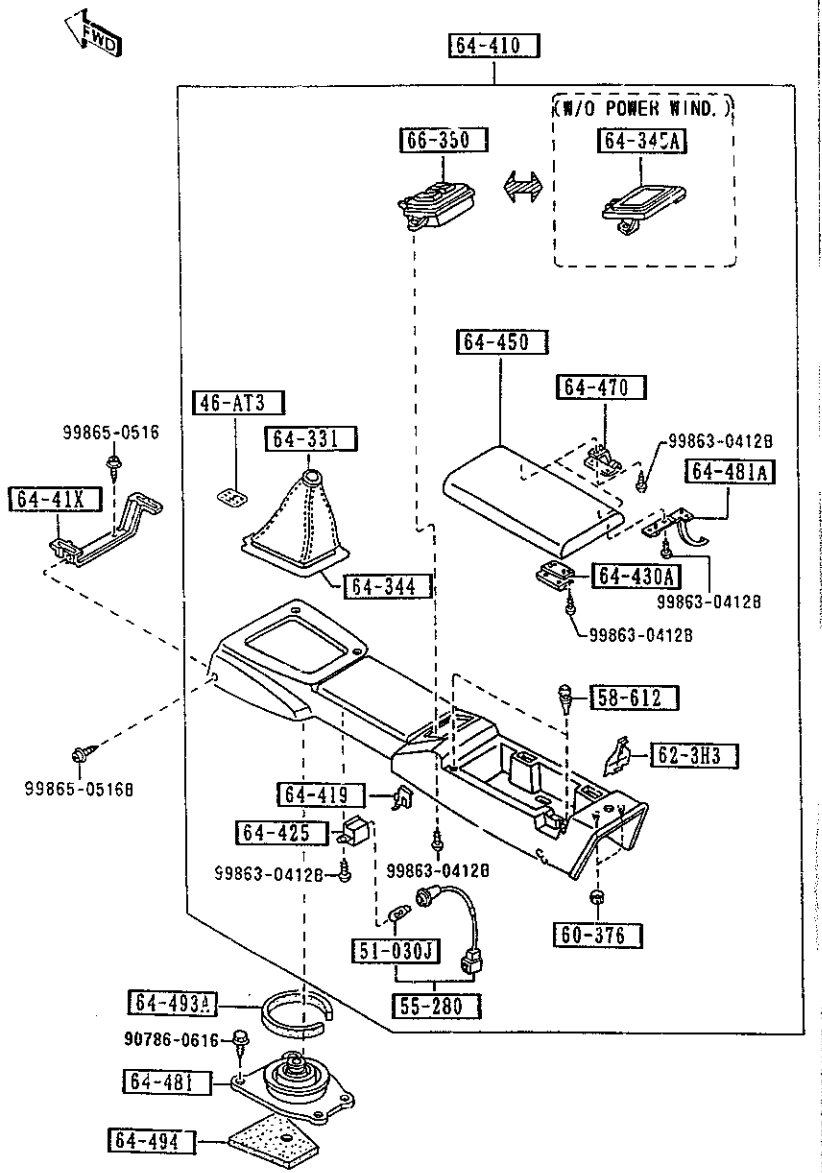

5570 -3 CONSOLE

PART NO	QTY	MODEL/RESTRICTION	MODEL/RESTRICTION	MODEL/RESTRICTION	FROM TO
CONT'D					
		ANGE LABEL) (MT)			
* 00	INT-	NA3 NA4 NA5 NA6 NA7 NA8 BLACK			
*N008-64-410C	1	(W/POWER WIND,W/CHANGE LABEL) (MT)			7714-
* 00	INT-	NA3 NA4 NA5 NA6 NA7 NA8 BLACK			
64-419 H260-64-419	1	CLIP,HARNESS-HAND BRAKE			
64-425 NA01-64-414	1	CASE,LAMP			
64-430A FB01-64-430	1	LOCK,CONSOLE-REAR			
64-450 NA01-64-450A	1	LID,CONSOLE			-7714
00	INT-	NA3 NA4 NA5 NA6 BLACK			
*NA01-64-450B	1				7714-
* 00	INT-	NA3 NA4 NA5 NA6 NA7 NA8 BLACK			
64-470 NA01-64-45XA	2	HINGE			
00	INT-	NA3 NA4 NA5 NA6 BLACK			
64-481 NA01-64-481B	1	INSULATOR NO.1,CHANGE (MT)			
64-481A NA01-64-452	1	STOPPER,CONSOLE LID			
00	INT-	NA3 NA4 NA5 NA6 BLACK			
64-493A H001-64-493	1	PACK,SILENT (MT)			

7714 NA35*V-738705

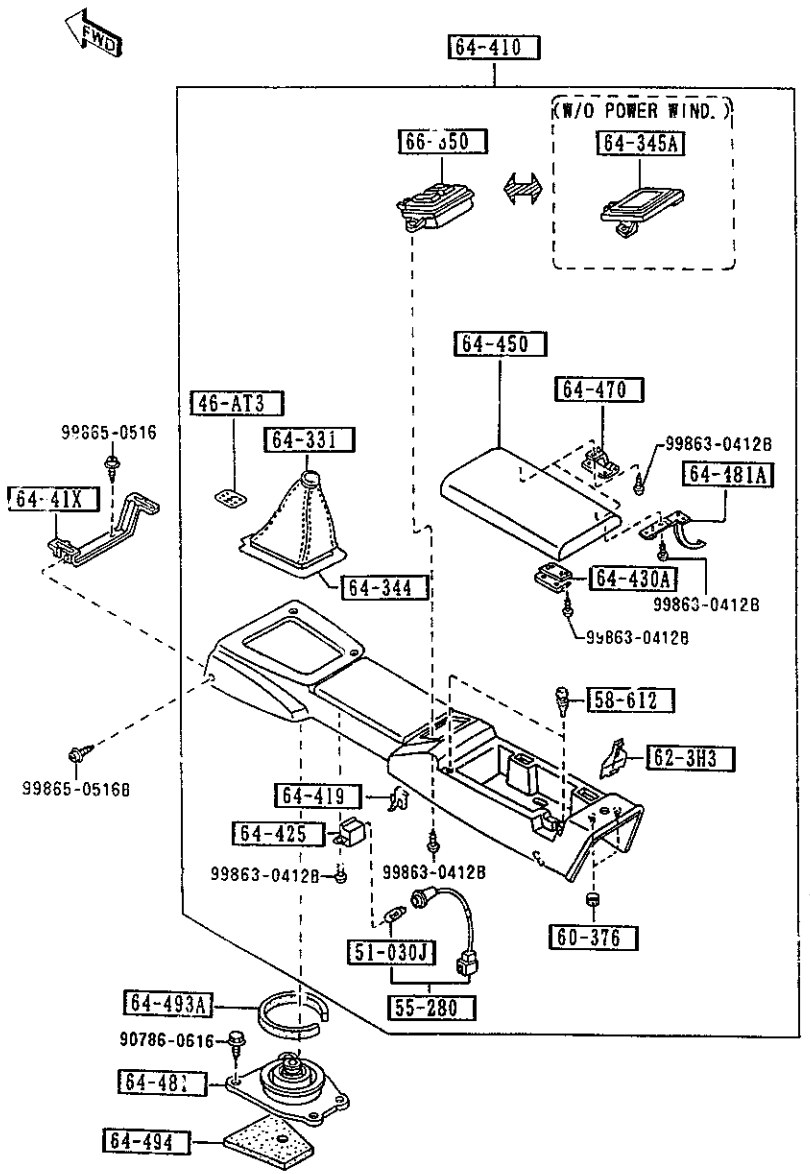

AUNA06

5570 -4 * CONSOLE

PART NO.	QTY	MODEL/RESTRICTION	MODEL/RESTRICTION	MODEL/RESTRICTION	[illegible]
64-494		PAD,CHANGE BOOT			
FB01-64-495	1	(MT)			
66-350		SWITCH,POWER WINDOW			
NA01-66-350A	1	F-SV, L-PKG, P.E.GR, T-PKG, (W/POWER WIND.) (MT)			
00	INT-	NA3 NA4 NA5 NA6 BLACK			
NA03-66-350	1	F-SV, L-PKG, P.E.GR, T-PKG, (W/POWER WIND.) (AT)			
00	INT-	NA3 NA4 NA5 NA6 BLACK			

CAT. AUNA06-03 1998-07

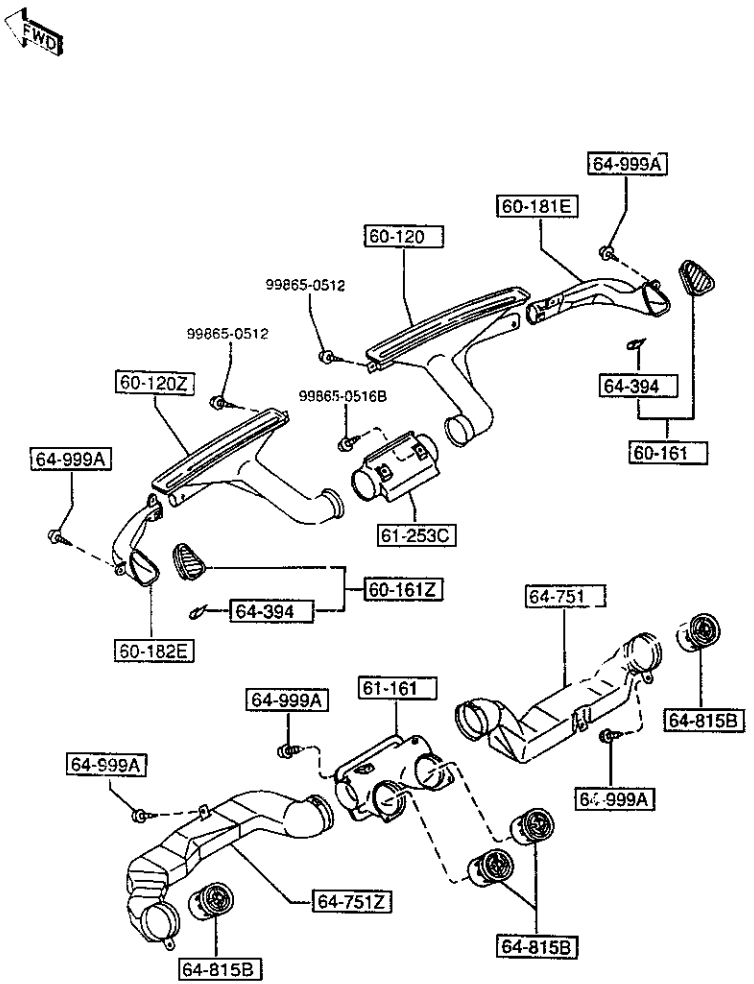

ART NO.	QTY	MODEL/RESTRICTION	MODEL/RESTRICTION	MODEL/RESTRICTION	FROM-TO
60-120		NOZZLE(R),DEFROSTER			
NA75-60-121B	1				
60-120Z		NOZZLE(L),DEFROSTER			
NA01-60-141	1				
60-161		GRILLE(R),DEMISTER			
NA75-60-160A	1				
00	INT-	NA3 NA4 NA5 NA7 BLACK			
60-161Z		GRILLE(L),DEMISTER			
NA75-60-170A	1				
00	INT-	NA3 NA4 NA5 NA7 BLACK			
60-181E		DUCT(R),SIDE DEMI.			
NA75-60-183	1				
60-182E		DUCT(L),SIDE DEMI.			
NA75-60-193	1				
61-161		DUCT,CENTER			
NA75-61-161A	1				
61-253C		HOSE(C),DEFROSTER			
NA01-61-253	1				
64-394		SPRING			
GA2A-64-394	2				
64-751		DUCT(R)			
NA75-64-741	1				
64-751Z		DUCT(L)			
NA75-64-841	1				
64-815B		LOUVER,VENTILATOR			
N801-64-81X	4				
00	INT-	NA3 NA4 NA5 NA6 BLACK			

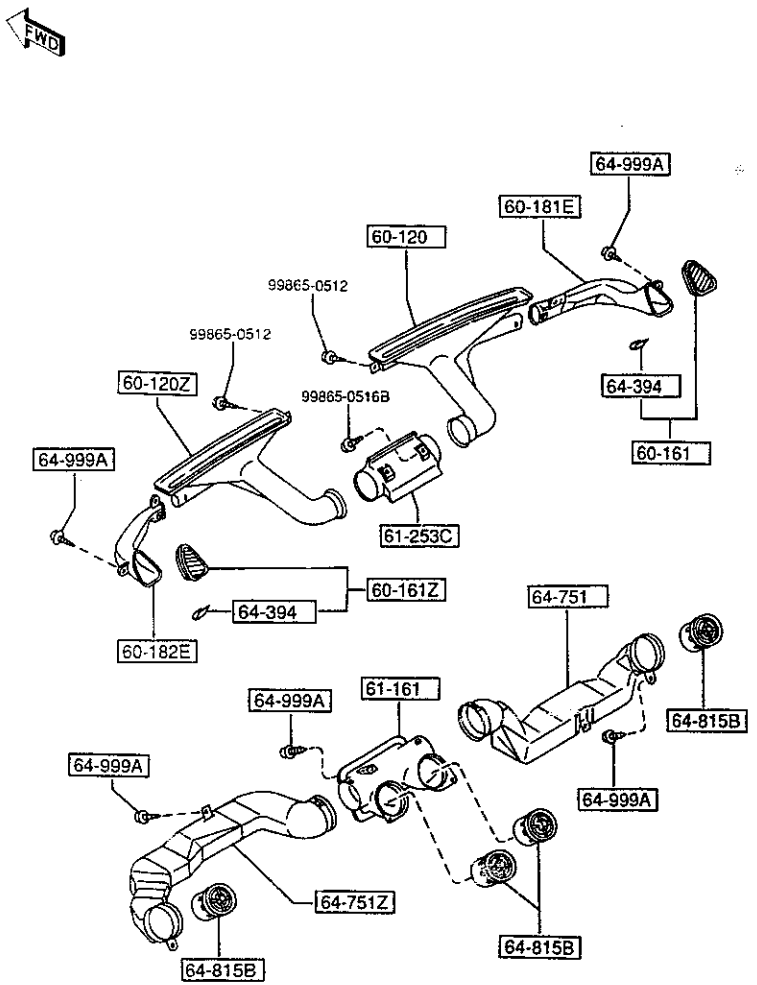

AUNA06

5580 -2 * VENTILATOR

PART NO	QTY	MODEL/RESTRICTION	MODEL/RESTRICTION	MODEL/RESTRICTION	FROM-TO
64-999A		SCREW,TAPPING			
W201-64-999	10				

CAT. AUNA06-03 1998-07

SEAT TYPES / SPECIFICATIONS	STA TYPE	STB TYPE	STC TYPE
SEAT TRIM	CLOTH	LEATHER (W/O CAR NAME)	LEATHER (W/ CAR NAME)
			

AUNA06

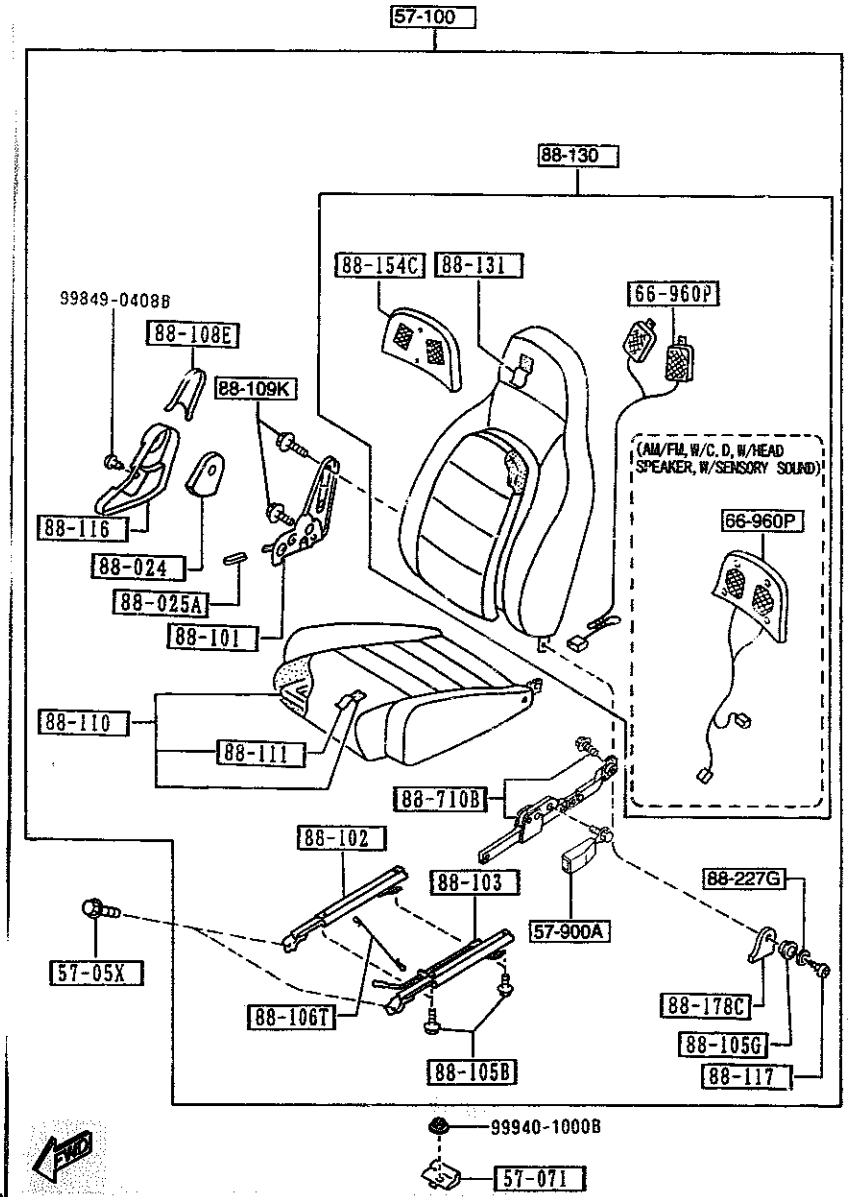

AUNA06

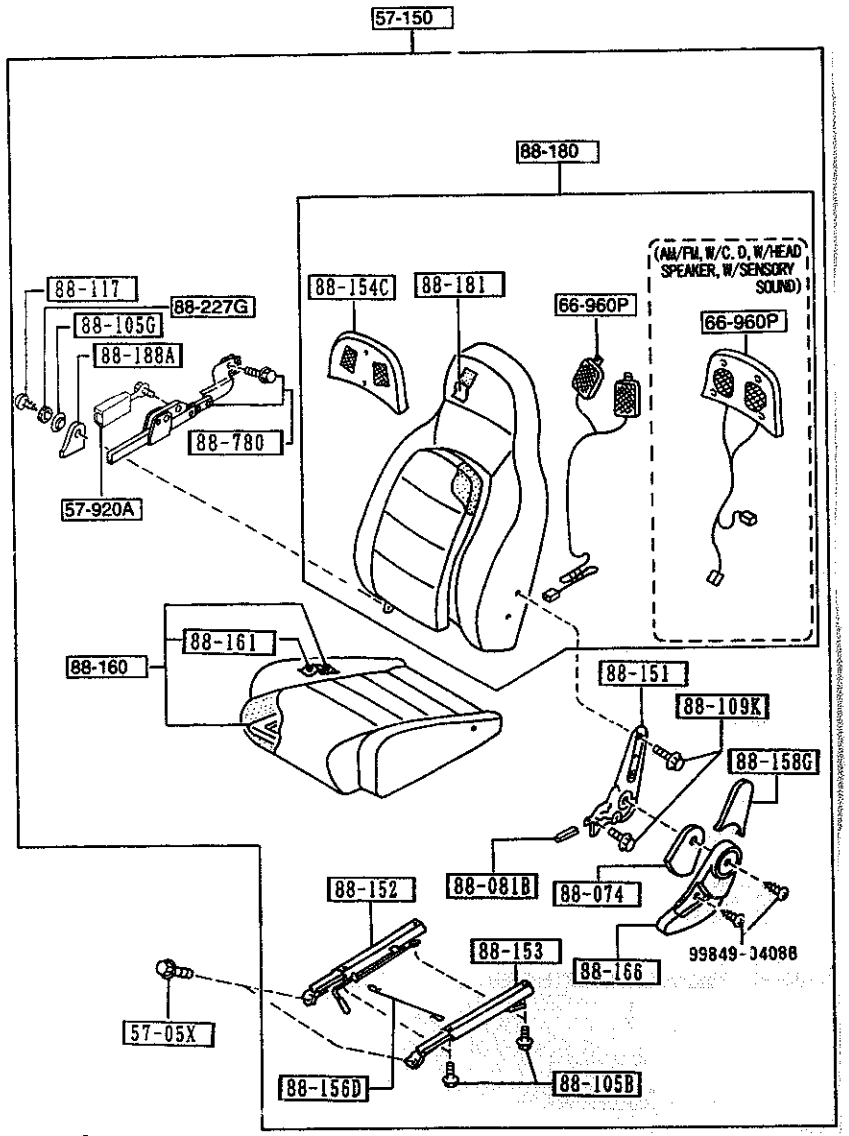
57-150
88-180
(AM/FM, W/C.D, W/HEAD SPEAKER, W/SENSORY SOUND)
88-117
88-227G
88-105G
88-188A
88-780
57-920A
88-154C
88-181
66-960P
66-960P
88-160
88-161
88-151
88-109K
88-158G
88-081B
88-074
99849-04088
88-166
88-152
88-153
57-05X
88-156D
88-105B
END

AUNA06

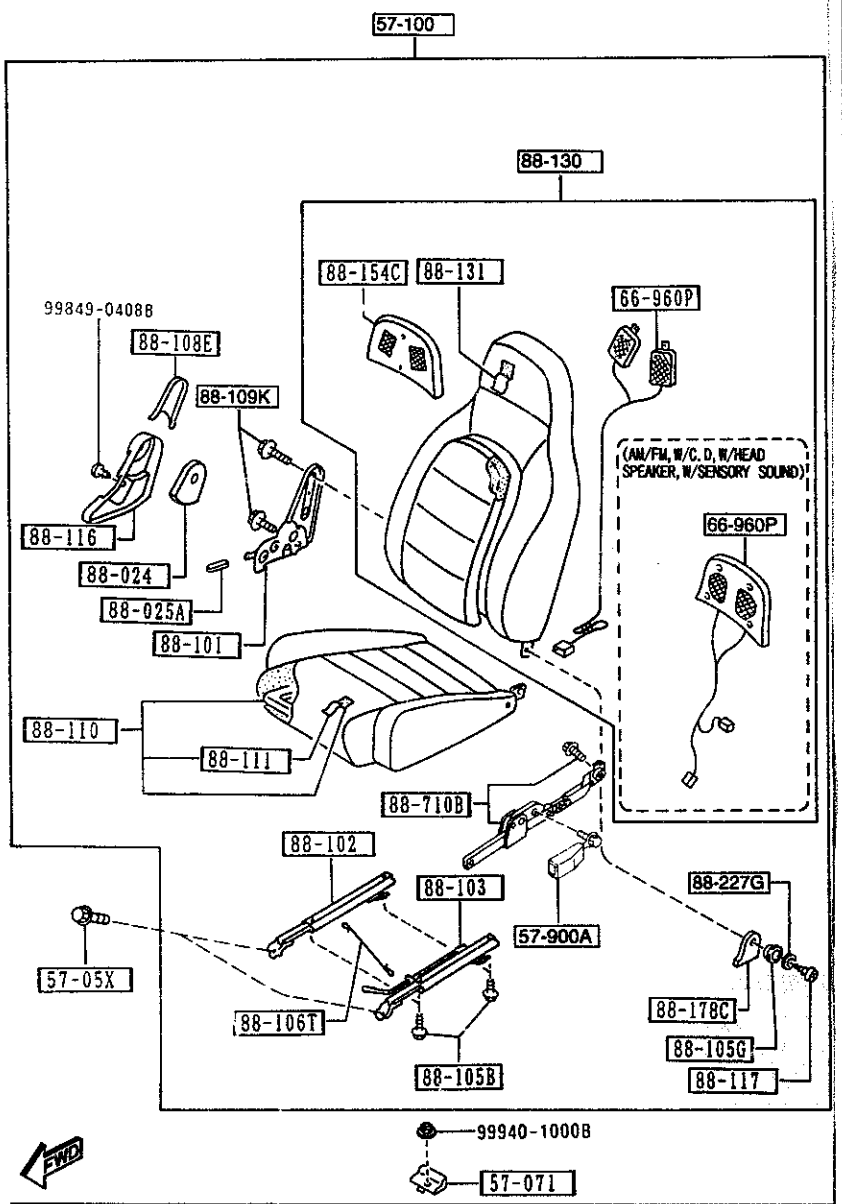

AUNA06

PART NO.	QTY	MODEL/RESTRICTION	MODEL/RESTRICTION	MODEL/RESTRICTION	FROM-TO
57-05X B455-57-05XB	8	BOLT,LINK			
57-071 NA75-57-071	1	BRACKET,SEAT LOCK-RR			
57-100		SEAT(R),FRONT			
NB40-57-100	1	(STA TYPE+W/O AUDIO)			-6801
		(STA TYPE+AM/FM,W/O C.D,W/O HEAD SPEAKER)			
00	INT-	NA3 BLACK			
NB41-57-100	1	(STA TYPE+AM/FM,W/O C.D,W/HEAD SPEAKER)			-6801
00	INT-	NA3 BLACK			
NB42-57-100	1	(STA TYPE+AM/FM,W/C.D,W/HEAD SPEAKER, W/SENSORY SOUND)			-6801
00	INT-	NA3 BLACK			
NB43-57-100	1	(STB TYPE+AM/FM,W/O C.D,W/HEAD SPEAKER)			-6801
88	INT-	NA4 NA5 TAN			
NB44-57-100	1	(STB TYPE+AM/FM,W/C.D,W/HEAD SPEAKER, W/SENSORY SOUND)			-6801
88	INT-	NA4 NA5 TAN			
NB47-57-100	1	(STC TYPE)			-6801
88	INT-	NA5 TAN			
NB47-57-100B	1	(STC TYPE)			6801-6C01
88	INT-	NA5 TAN			
NB40-57-100A	1	(STA TYPE+W/O AUDIO)			6801-7301
		(STA TYPE+AM/FM,W/O C.D,W/O HEAD SPEAKER)			
00	INT-	NA3 BLACK			
NB41-57-100A	1	(STA TYPE+AM/FM,W/O C.D,W/HEAD SPEAKER)			6801-7301
00	INT-	NA3 BLACK			
NB42-57-100A	1	(STA TYPE+AM/FM,W/C.D,W/HEAD SPEAKER, W/SENSORY SOUND)			6801-7301
00	INT-	NA3 BLACK			

6801 NA35*V-719630
6C01 NA35*V-725591
7301 NA35*V-732210

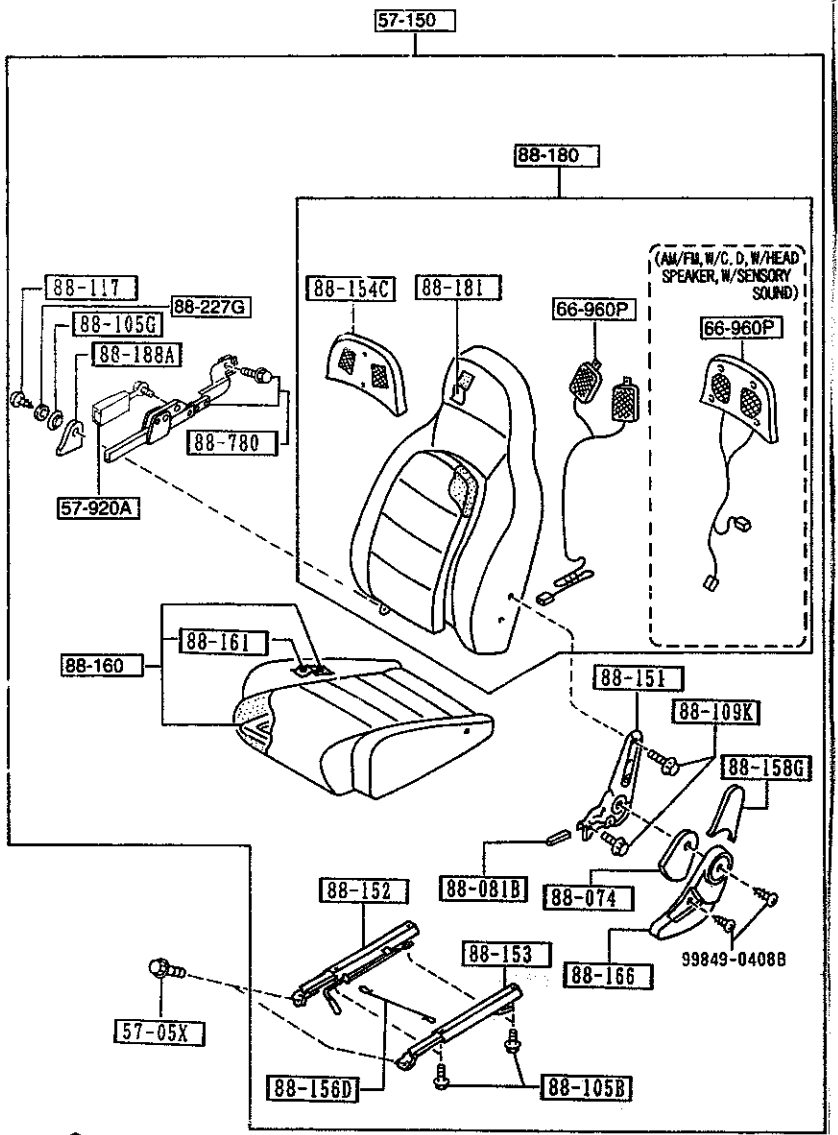

PART NO.	QTY	MODEL/RESTRICTION	MODEL/RESTRICTION	MODEL/RESTRICTION	FROM-TO
CONT'D					
NB43-57-100B	1	(STB TYPE+AM/FM,W/O C.D,W/HEAD SPEAKER)			6801-7301
88	INT-	NA4 NA5 TAN			
NB44-57-100B	1	(STB TYPE+AM/FM,W/C.D,W/HEAD SPEAKER, W/SENSORY SOUND)			6801-7301
88	INT-	NA4 NA5 TAN			
NB49-57-100	1	(STC TYPE)			6C01-7301
88	INT-	NA5 TAN			
NB40-57-100E	1	(STA TYPE+W/O AUDIO)			7301-
		(STA TYPE+AM/FM,W/O C.D,W/O HEAD SPEAKER)			
00	INT-	NA3 BLACK			
NB41-57-100G	1	(STA TYPE+AM/FM,W/O C.D,W/HEAD SPEAKER)			7301-
00	INT-	NA3 BLACK			
NB42-57-100F	1	(STA TYPE+AM/FM,W/C.D,W/HEAD SPEAKER, W/SENSORY SOUND)			7301-
00	INT-	NA3 BLACK			
NB43-57-100D	1	(STB TYPE+AM/FM,W/O C.D,W/HEAD SPEAKER)			7301-
88	INT-	NA4 NA5 TAN			
NB44-57-100C	1	(STB TYPE+AM/FM,W/C.D,W/HEAD SPEAKER, W/SENSORY SOUND)			7301-
88	INT-	NA4 NA5 TAN			
NB49-57-100A	1	(STC TYPE)			7301-
88	INT-	NA5 TAN			
57-150		SEAT(L),FRONT			
NB40-57-150	1	(STA TYPE+W/O AUDIO)			-6801
		(STA TYPE+AM/FM,W/O C.D,W/O HEAD SPEAKER)			
00	INT-	NA3 BLACK			
NB41-57-150	1	(STA TYPE+AM/FM,W/O C.D,W/HEAD SPEAKER)			-6801
00	INT-	NA3 BLACK			
NB42-57-150	1	(STA TYPE+AM/FM,W/C.D,W/HEAD SPEAKER, W/SENSORY SOUND)			-6801

6801 NA35*V-719630
6C01 NA35*V-725591
7301 NA35*V-732210

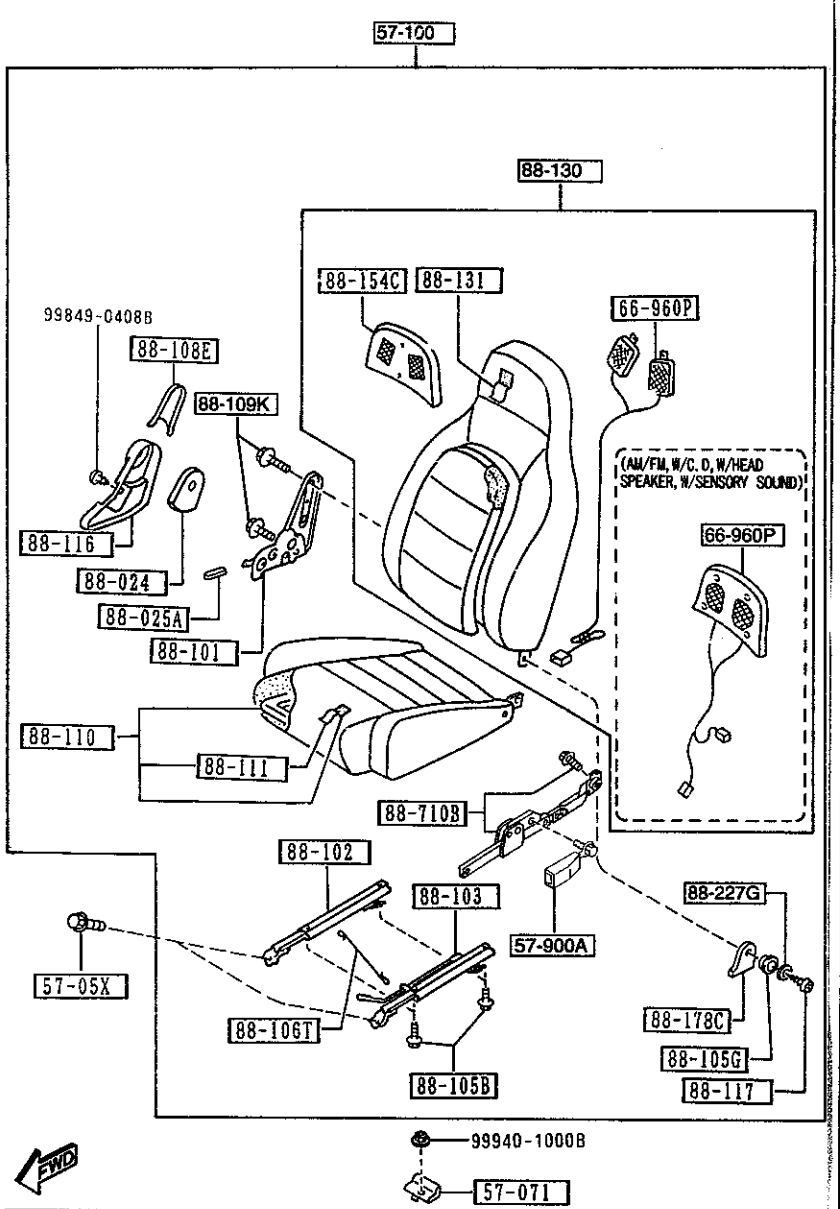

AUNA06

PART NO.	QTY	MODEL/RESTRICTION	MODEL/RESTRICTION	MODEL/RESTRICTION	FROM-TO
CONT'D					
00	INT-	NA3 BLACK			
NB43-57-150	1	(STB TYPE+AM/FM,W/O C.D,W/HEAD SPEAKER)			-6801
88	INT-	NA4 NA5 TAN			
NB44-57-150	1	(STB TYPE+AM/FM,W/C.D,W/HEAD SPEAKER, W/SENSORY SOUND)			-6801
88	INT-	NA4 NA5 TAN			
NB47-57-150	1	(STC TYPE)			-6801
88	INT-	NA5 TAN			
NB47-57-150B	1	(STC TYPE)			6801-6C01
88	INT-	NA5 TAN			
NB40-57-150A	1	(STA TYPE+W/O AUDIO)			6801-7301
		(STA TYPE+AM/FM,W/O C.D,W/O HEAD SPEAKER)			
00	INT-	NA3 BLACK			
NB41-57-150A	1	(STA TYPE+AM/FM,W/O C.D,W/HEAD SPEAKER)			6801-7301
00	INT-	NA3 BLACK			
NB42-57-150A	1	(STA TYPE+AM/FM,W/C.D,W/HEAD SPEAKER. W/SENSORY SOUND)			6801-7301
00	INT-	NA3 BLACK			
NB43-57-150B	1	(STB TYPE+AM/FM,W/O C.D,W/HEAD SPEAKER)			6801-7301
88	INT-	NA4 NA5 TAN			
NB44-57-150B	1	(STB TYPE+AM/FM,W/C.D,W/HEAD SPEAKER, W/SENSORY SOUND)			6801-7301
88	INT-	NA4 NA5 TAN			
NB49-57-150	1	(STC TYPE)			6C01-7301
88	INT-	NA5 TAN			
NB40-57-150E	1	(STA TYPE+W/O AUDIO)			7301-
		(STA TYPE+AM/FM,W/O C.D,W/O HEAD SPEAKER)			
00	INT-	NA3 BLACK			
NB41-57-150G	1	(STA TYPE+AM/FM,W/O C.D,W/HEAD SPEAKER)			7301-
00	INT-	NA3 BLACK			

6801 NA35*V-719630
6C01 NA35*V-725591
7301 NA35*V-732210

CAT. AUNA06-03

1998-07

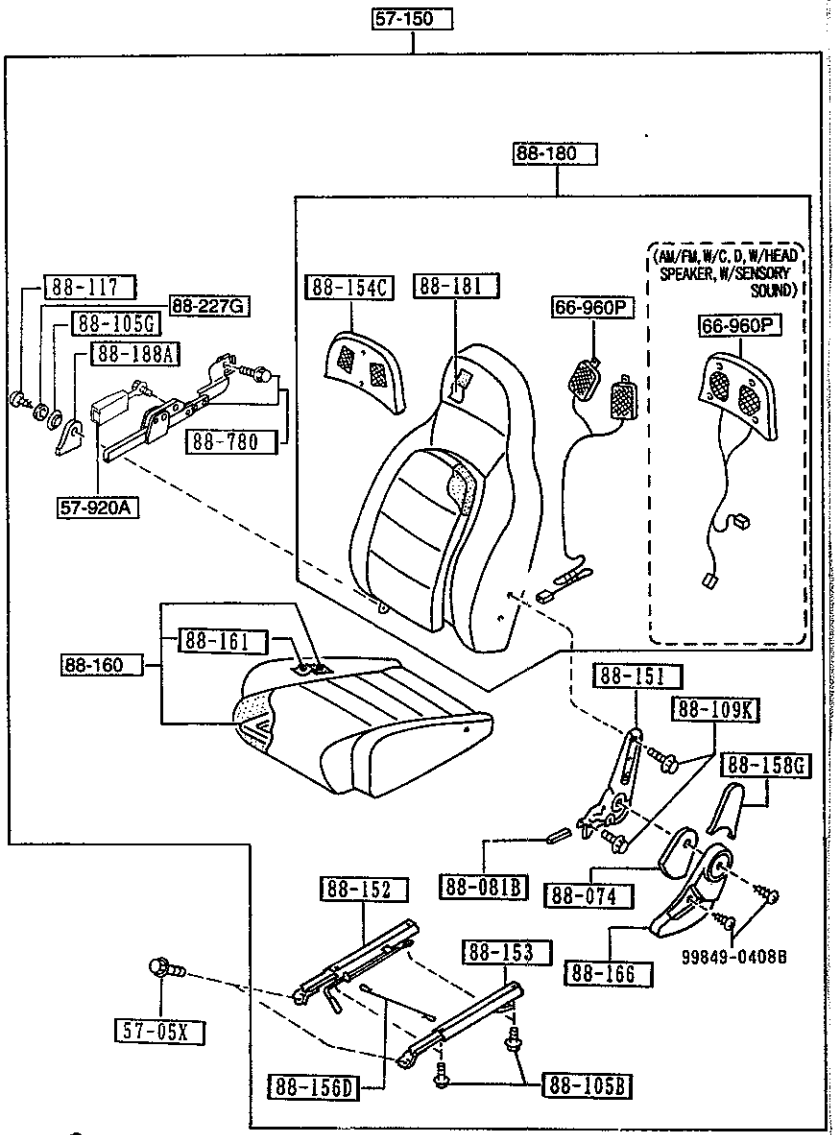

AUNA06

PART NO.	QTY	MODEL/RESTRICTION	MODEL/RESTRICTION	MODEL/RESTRICTION	FROM-TO
CONT'D					
NB42-57-150F	1	(STA TYPE+AM/FM,W/C.D,W/HEAD SPEAKER, W/SENSORY SOUND)			7301-
00 INT-		NA3 BLACK			
NB43-57-150B	1	(STB TYPE+AM/FM,W/O C.D,W/HEAD SPEAKER)			7301-
88 INT-		NA4 NA5 TAN			
NB44-57-150C	1	(STB TYPE+AM/FM,W/C.D,W/HEAD SPEAKER, W/SENSORY SOUND)			7301-
88 INT-		NA4 NA5 TAN			
NB49-57-150A	1	(STC TYPE)			7301-
88 INT-		NA5 TAN			
| 57-900A |		BELT'A'(R),FRT SEAT			
NA75-57-620	1				
00 INT-		NA3 NA4 NA5 NA7 NA8 BLACK			
| 57-920A |		BELT'A'(L),FRT SEAT			
NA75-57-680A	1				
00 INT-		NA3 NA4 NA5 NA7 NA8 BLACK			
| 66-960P |		SPEAKER,PILLOW-SEAT			
NB11-66-960	2	(AM/FM,W/C.D,W/HEAD SPEAKER, W/SENSORY SOUND)			
NB38-66-960 AN(NB38-66-960A)	2	(AM/FM,W/O C.D,W/HEAD SPEAKER)			-7301
NB38-66-960A	2	(AM/FM,W/O C.D,W/HEAD SPEAKER)			7301-
| 88-024 |		PROTR(R),SEAT BELT			
NA01-88-033	1				
| 88-025A |		KNOB(R),KNUCKLE			
NA01-88-034	1				
00 INT-		NA3 NA7 NA8 BLACK			
88 INT-		NA4 NA5 TAN			
| 88-074 |		PROTR(L),SEAT BELT			
NA01-88-083	1				

7301 NA35*V-732210

CAT. AUNA06-03

1998-07

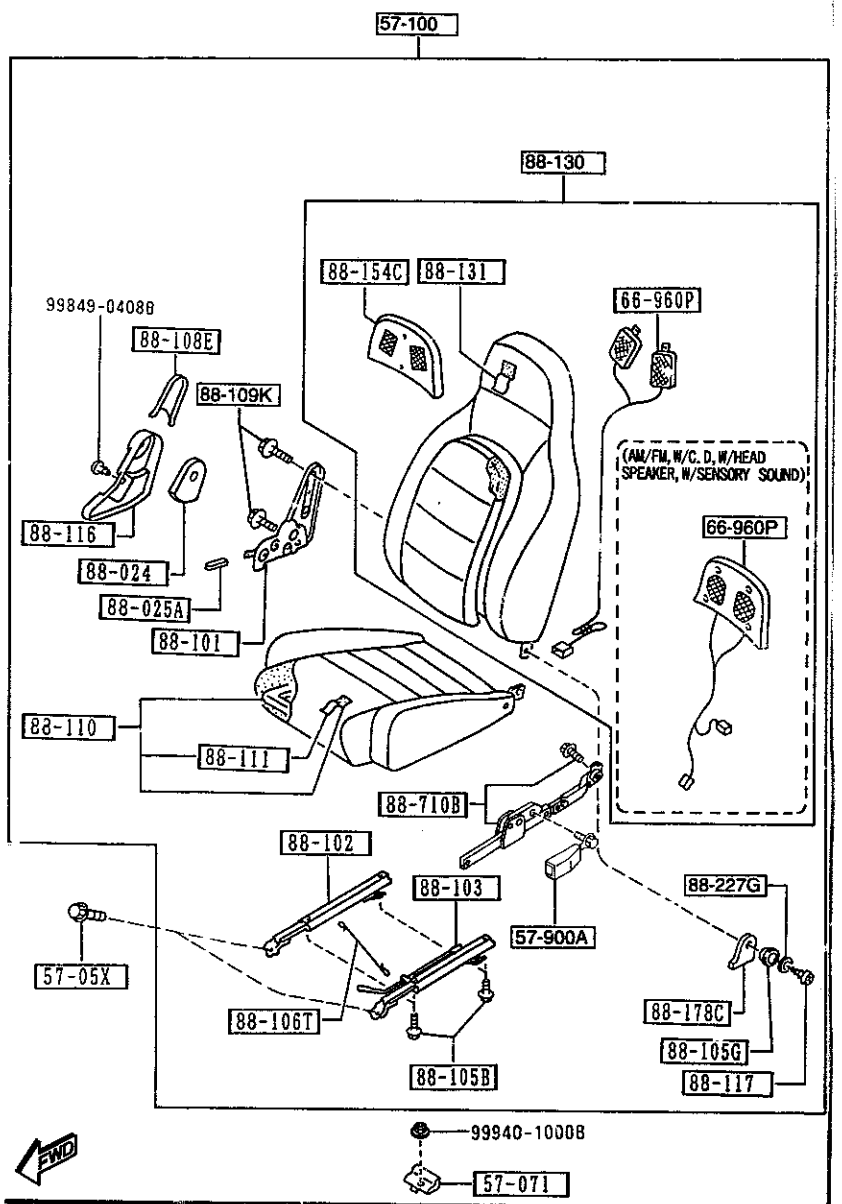

AUNA06

PART NO.	QTY	MODEL/RESTRICTION	MODEL/RESTRICTION	MODEL/RESTRICTION	FROM-TO
88-081B		KNOB(L),KNUCKLE			
NA01-88-084	1				
00	INT-	NA3 NA7 NA8 BLACK			
88	INT-	NA4 NA5 TAN			
88-101		KNUCKLE(R),RECLINING			
NA01-88-101A	1				
88-102		ADJUSTER,NO.1			
NA01-88-102A	1				
88-103		ADJUSTER,NO.2			
NA75-88-103	1				
88-105B		BOLT,LINK			
H260-88-105	8				
88-105G		BUSH,HINGE			
H260-88-108	2				-6A01
02	INT-	NA3 NA4 NA5 NA6 NA7 NA8 BLACK			
NA75-88-108	2				6A01-
88-106T		WIRE,CONNECT			
NA01-88-106	1				
88-108E		COVER(R),SEAT BACK			
NA01-88-036	1				
00	INT-	NA3 NA7 NA8 BLACK			
88	INT-	NA4 NA5 TAN			
88-109K		SCREW,KNUCKLE			
H260-88-109	8				
88-110		CUSHION(R),FRT SEAT			
N043-88-110	1	F-SV, L-PKG, (STB TYPE) (STC TYPE)			
88	INT-	NA4 NA5 TAN			
N041-88-110	1	BASE, P.E.GR, R-PKG, T-PKG,			-7301

6A01 NA35*V-720311
7301 NA35*V-732210

CAT. AUNA06-03 1998-07

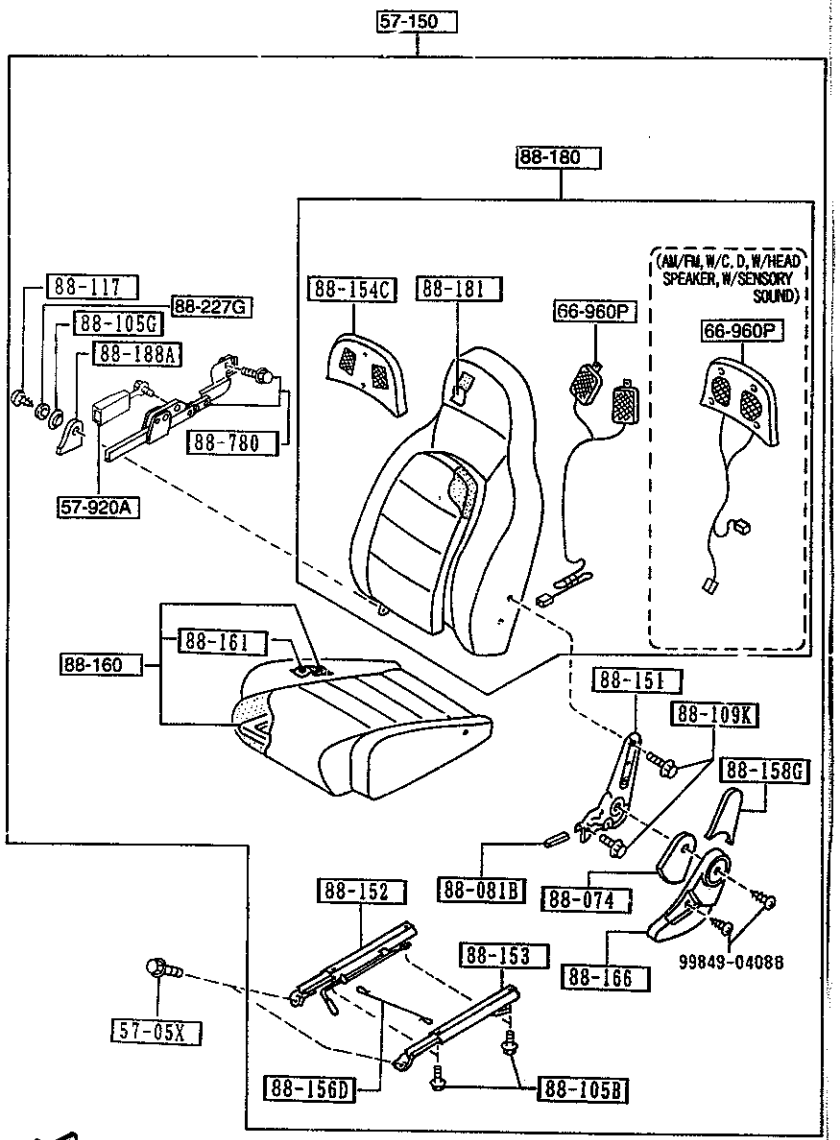

AUNA06

PART NO.	QTY	MODEL/RESTRICTION	MODEL/RESTRICTION	MODEL/RESTRICTION	FROM-TO
CONT'D					
		(STA TYPE)			
00	INT-	NA3 BLACK			
N041-88-110A	1	BASE, P.E.GR, R-PKG, T-PKG, (STA TYPE)			7301-
00	INT-	NA3 BLACK			
+----------+					
| 88-111 |		TRIM(R),SEAT CUSHION			
+----------+					
N043-88-111	1	F-SV, L-PKG, (STB TYPE) (STC TYPE)			
88	INT-	NA4 NA5 TAN			
N041-88-111	1	BASE, P.E.GR, R-PKG, T-PKG, (STA TYPE)			-7301
00	INT-	NA3 BLACK			
N041-88-111A	1	BASE, P.E.GR, R-PKG, T-PKG, (STA TYPE)			7301-
00	INT-	NA3 BLACK			
+----------+					
| 88-116 |		COVER(R),KNUCKLE			
+----------+					
NA01-88-031	1				
00	INT-	NA3 NA7 NA8 BLACK			
88	INT-	NA4 NA5 TAN			
+----------+					
| 88-117 |		SCREW,KNUCKLE			
+----------+					
H260-88-107	2				
+----------+					
| 88-130 |		BACK(R),FRONT SEAT			
+----------+					
NB43-88-130	1	(STB TYPE+AM/FM,W/O C.D,W/HEAD SPEAKER)			-6801
88	INT-	NA4 NA5 TAN			
NB44-88-130	1	(STB TYPE+AM/FM,W/C.D,W/HEAD SPEAKER, W/SENSORY SOUND)			-6801
88	INT-	NA4 NA5 TAN			
NB47-88-130	1	(STC TYPE)			-6801
88	INT-	NA4 NA5 TAN			
NB40-88-130	1	(STA TYPE+W/O AUDIO)			-7301
		(STA TYPE+AM/FM,W/O C.D,W/O HEAD SPEAKER)			

6801 NA35*V-719630
7301 NA35*V-732210

CAT. AUNA06-03

1998-07

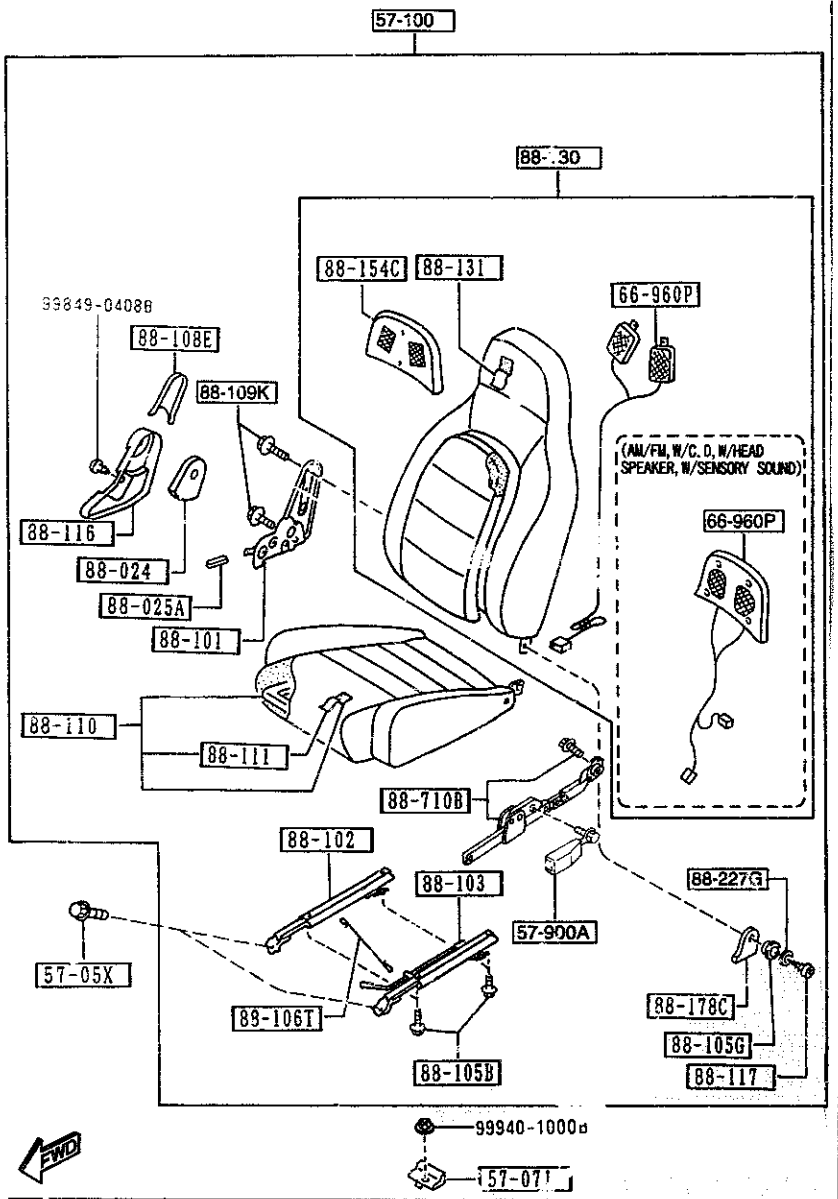

AUNA06

PART NO.	QTY	MODEL/RESTRICTION	MODEL/RESTRICTION	MODEL/RESTRICTION	FROM-TO
CONT'D					
00	INT-	NA3 BLACK			
NB41-88-130	1	(STA TYPE+AM/FM,W/O C.D,W/HEAD SPEAKER)			-7301
00	INT-	NA3 BLACK			
NB42-88-130	1	(STA TYPE+AM/FM,W/C.D,W/HEAD SPEAKER, W/SENSORY SOUND)			-7301
00	INT-	NA3 BLACK			
NB44-88-130A	1	(STB TYPE+AM/FM,W/C.D,W/HEAD SPEAKER, W/SENSORY SOUND)			6801-
88	INT-	NA4 NA5 TAN			
NB47-88-130A	1	(STC TYPE)			6801-6C01
88	INT-	NA4 NA5 TAN			
NB43-88-130A	1	(STB TYPE+AM/FM,W/O C.D,W/HEAD SPEAKER)			6801-7301
88	INT-	NA4 NA5 TAN			
NB49-88-130	1	(STC TYPE)			6C01-
88	INT-	NA5 TAN			
NB43-88-130B	1	(STB TYPE+AM/FM,W/O C.D,W/HEAD SPEAKER)			7301-
88	INT-	NA4 NA5 TAN			
NC00-88-130A	1	(STA TYPE+AM/FM,W/O C.D,W/HEAD SPEAKER)			7301-
00	INT-	NA3 BLACK			
NC01-88-130	1	(STA TYPE+AM/FM,W/C.D,W/HEAD SPEAKER, W/SENSORY SOUND)			7301-
00	INT-	NA3 BLACK			
NC02-88-130	1	(STA TYPE+W/O AUDIO)			7301-
		(STA TYPE+AM/FM,W/O C.D,W/O HEAD SPEAKER)			
00	INT-	NA3 BLACK			
+88-131+		TRIM(R),SEAT BACK			
NB43-88-131	1	(STB TYPE+AM/FM,W/O C.D,W/HEAD SPEAKER)			-6801
88	INT-	NA4 NA5 TAN			
NB44-88-131	1	(STB TYPE+AM/FM,W/C.D,W/HEAD SPEAKER, W/SENSORY SOUND)			-6801

6801 NA35*V-719630
6C01 NA35*V-725591
7301 NA35*V-732210

CA:. AUNA06-03

1998-07

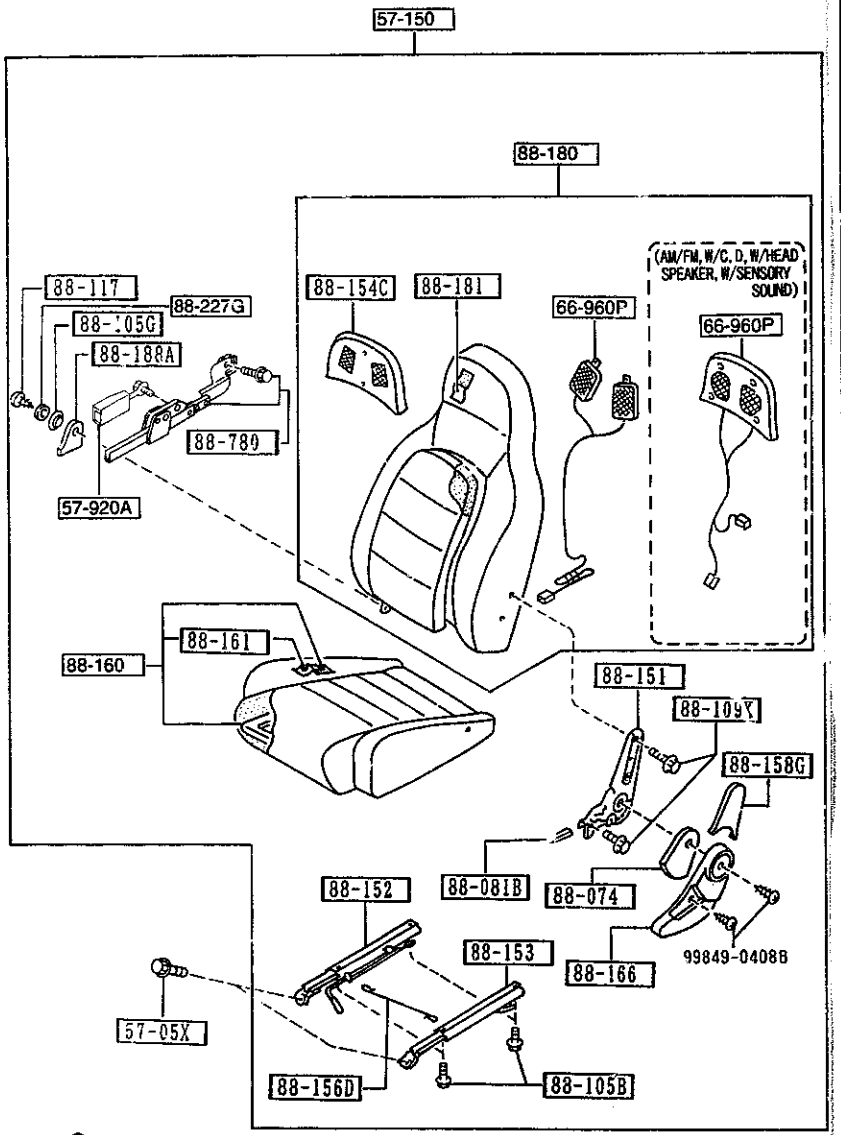

PART NO.	QTY	MODEL/RESTRICTION	MODEL/RESTRICTION	MODEL/RESTRICTION	FROM-TO
CONT'D					
88	INT-	NA4 NA5 TAN			
NB47-88-131	1	(STC TYPE)			-6801
88	INT-	NA4 NA5 TAN			
NB40-88-131	1	(STA TYPE+W/O AUDIO)			-7301
		(STA TYPE+AM/FM,W/O C.D,W/O HEAD SPEAKER) (STA TYPE+AM/FM,W/O C.D,W/HEAD SPEAKER)			
00	INT-	NA3 BLACK			
NB42-88-131	1	(STA TYPE+AM/FM,W/C.D,W/HEAD SPEAKER, W/SENSORY SOUND)			-7301
00	INT-	NA3 BLACK			
NB43-88-131A	1	(STB TYPE+AM/FM,W/O C.D,W/HEAD SPEAKER)			6801-
88	INT-	NA4 NA5 TAN			
NB44-88-131A	1	(STB TYPE+AM/FM,W/C.D,W/HEAD SPEAKER, W/SENSORY SOUND)			6801-
88	INT-	NA4 NA5 TAN			
NB47-88-131A	1	(STC TYPE)			6801-6901
88	INT-	NA4 NA5 TAN			
NB49-88-131	1	(STC TYPE)			6C01-
88	INT-	NA5 TAN			
NC00-88-131	1	(STA TYPE+W/O AUDIO)			7301-
		(STA TYPE+AM/FM,W/O C.D,W/O HEAD SPEAKER) (STA TYPE+AM/FM,W/O C.D,W/HEAD SPEAKER)			
00	INT-	NA3 BLACK			
NC01-88-131	1	(STA TYPE+AM/FM,W/C.D,W/HEAD SPEAKER, W/SENSORY SOUND)			7301-
00	INT-	NA3 BLACK			
+----------+					
| 88-151 |		KNUCKLE(L),RECLINING			
+----------+					
NA01-88-151A	1				
+----------+					
| 88-152 |		ADJUSTER NO.3			
+----------+					
NA01-88-152A	1				

6801 NA35*V-719630
6C01 NA35*V-725591
7301 NA35*V-732210

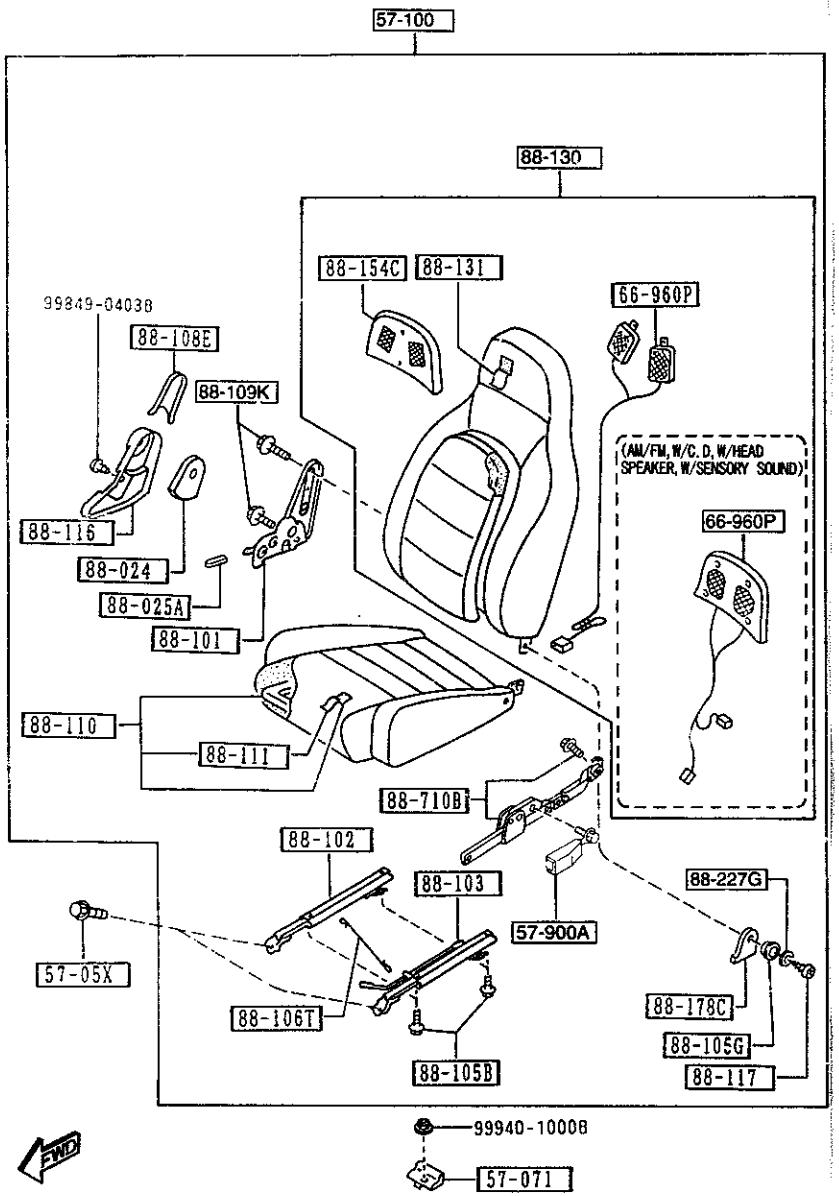

AUNA06

PART NO	QTY	MODEL/RESTRICTION	MODEL/RESTRICTION	MODEL/RESTRICTION	FROM-TO
88-153		ADJUSTER NO.4			
NA01-88-153A	1				
88-154C		COVER,HEAD REST			
NA01-88-137	2	(W/O C.D.)			
88-156D		WIRE,CONNECT			
NA01-88-156	1				
88-158G		COVER(L),SEAT BACK			
NA01-88-086	1				
00	INT-	NA3 NA7 NA8 BLACK			
88	INT-	NA4 NA5 TAN			
88-160		CUSHION(L),FRT SEAT			
N043-88-160	1	F-SV, L-PKG, (STB TYPE) (STC TYPE)			
88	INT-	NA4 NA5 TAN			
N041-88-160	1	BASE, P.E.GR, R-PKG, T-PKG, (STA TYPE)			-7301
00	INT-	NA3 BLACK			
N041-88-160A	1	BASE, P.E.GR, R-PKG, T-PKG, (STA TYPE)			7301-
00	INT-	NA3 BLACK			
88-161		TRIM(L),SEAT CUSHION			
N043-88-161	1	F-SV, L-PKG, (STB TYPE) (STC TYPE)			
88	INT-	NA4 NA5 TAN			
N041-88-161	1	BASE, P.E.GR, R-PKG, T-PKG, (STA TYPE)			-7301
00	INT-	NA3 BLACK			
N041-88-161A	1	BASE, P.E.GR, R-PKG, T-PKG, (STA TYPE)			7301-
00	INT-	NA3 BLACK			
88-166		COVER(L),KNUCKLE			

7301 NA35*V-732210

CAT. AUNA06-03 1998-07

5700 SEATS (3/3)

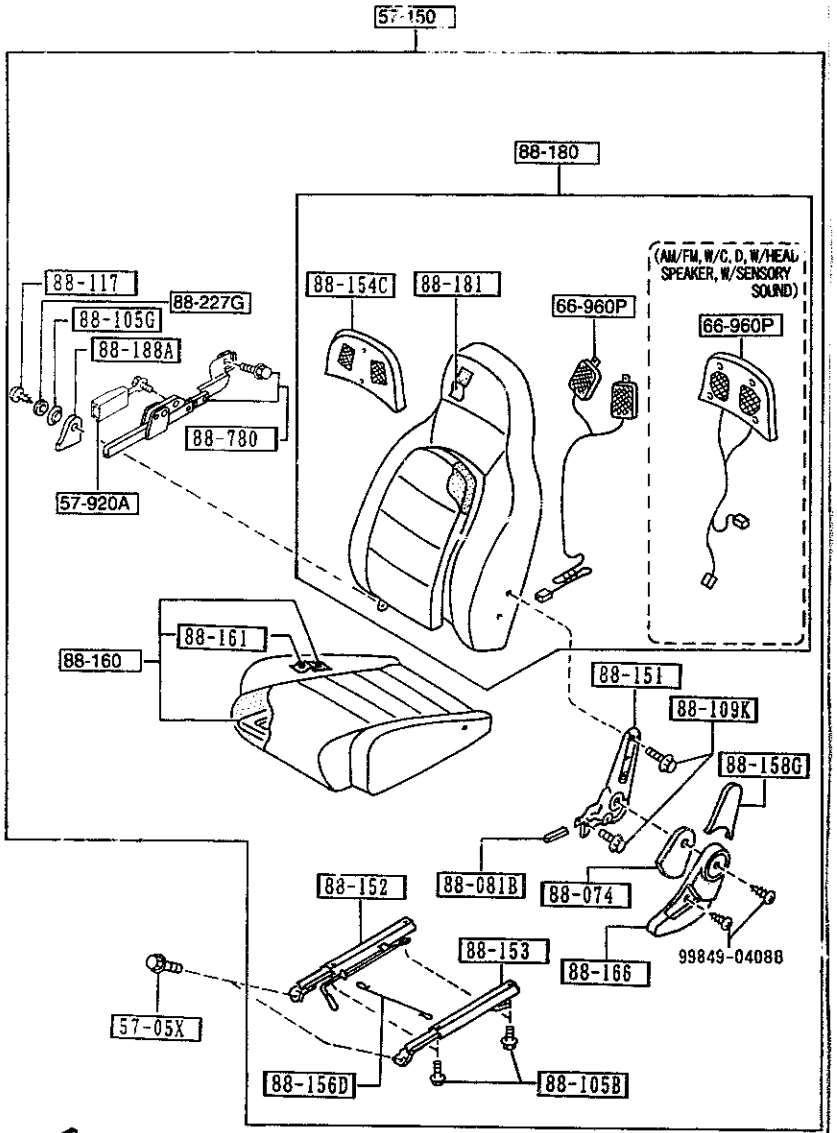

AUNA06

PART NO.	QTY	MODEL/RESTRICTION	MODEL/RESTRICTION	MODEL/RESTRICTION	FROM-TO
CONT'D					
NA01-88-081	1				
00	INT-	NA3 NA7 NA8 BLACK			
88	INT-	NA4 NA5 TAN			
+---------+					
| 88-178C |		COVER(R),HINGE			
+---------+					
NA01-88-035	1				
00	INT-	NA3 NA7 NA8 BLACK			
88	INT-	NA4 NA5 TAN			
+---------+					
| 88-180 |		BACK(L),FRONT SEAT			
+---------+					
NB43-88-180	1	(STB TYPE+AM/FM,W/O C.D,W/HEAD SPEAKER)			-6801
88	INT-	NA4 NA5 TAN			
NB44-88-180	1	(STB TYPE+AM/FM,W/C.D,W/HEAD SPEAKER, W/SENSORY SOUND)			-6801
88	INT-	NA4 NA5 TAN			
NB47-88-180	1	(STC TYPE)			-6801
88	INT-	NA4 NA5 TAN			
NB40-88-180	1	(STA TYPE+W/O AUDIO)			-7301
		(STA TYPE+AM/FM,W/O C.D,W/O HEAD SPEAKER)			
00	INT-	NA3 BLACK			
NB41-88-180	1	(STA TYPE+AM/FM,W/C.D,W/HEAD SPEAKER)			-7301
00	INT-	NA3 BLACK			
NB42-88-180	1	(STA TYPE+AM/FM,W/C.D,W/HEAD SPEAKER, W/SENSORY SOUND)			-7301
00	INT-	NA3 BLACK			
NB44-88-180A	1	(STB TYPE+AM/FM,W/C.D,W/HEAD SPEAKER, W/SENSORY SOUND)			6801-
88	INT-	NA4 NA5 TAN			
NB47-88-180A	1	(STC TYPE)			6801-6C01
88	INT-	NA4 NA5 TAN			
NB43-88-180A	1	(STB TYPE+AM/FM,W/O C.D,W/HEAD SPEAKER)			6801-7301
88	INT-	NA4 NA5 TAN			
NB49-88-180	1	(STC TYPE)			6C01-

6801 NA35*V-719630
6C01 NA35*V-725591
7301 NA35*V-732210

CAT. AUNA06-03

1998-07

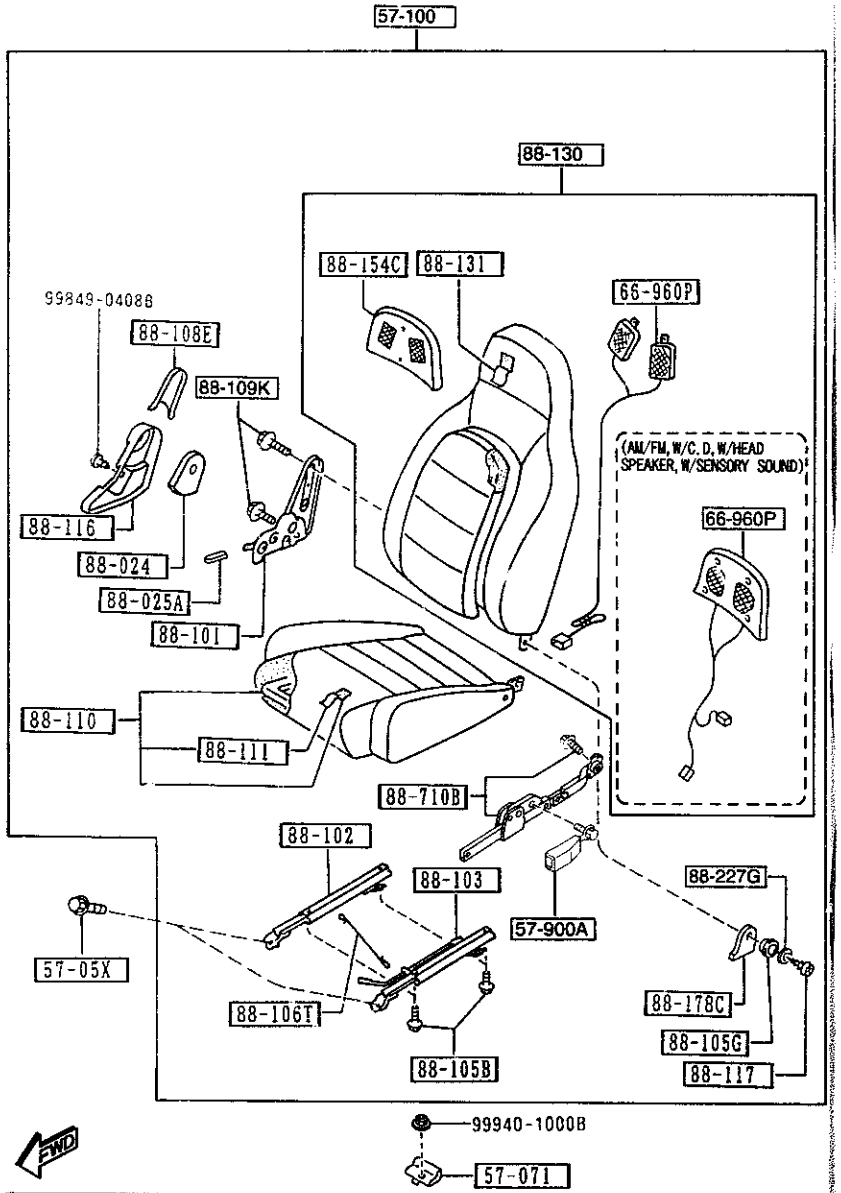

AUNA06

PART NO	QTY	MODEL/RESTRICTION	MODEL/RESTRICTION	MODEL/RESTRICTION	FROM-TO
CONT'D					
88	INT-	NA5 TAN			
NB43-88-180B	1	(STB TYPE+AM/FM,W/O C.D,W/HEAD SPEAKER)			7301-
88	INT-	NA4 NA5 TAN			
NC00-88-180A	1	(STA TYPE+AM/FM,W/O C.D,W/HEAD SPEAKER)			7301-
00	INT-	NA3 BLACK			
NC01-88-180	1	(STA TYPE+AM/FM,W/C.D,W/HEAD SPEAKER, W/SENSORY SOUND)			7301-
00	INT-	NA3 BLACK			
NC02-88-180	1	(STA TYPE+W/O AUDIO)			7301-
		(STA TYPE+AM/FM,W/O C.D,W/O HEAD SPEAKER)			
00	INT-	NA3 BLACK			
+----------+					
| 88-181 |		TRIM(L),SEAT BACK			
+----------+					
NB43-88-181	1	(STB TYPE+AM/FM,W/O C.D,W/HEAD SPEAKER)			-6801
88	INT-	NA4 NA5 TAN			
NB44-88-181	1	(STB TYPE+AM/FM,W/C.D,W/HEAD SPEAKER, W/SENSORY SOUND)			-6801
88	INT-	NA4 NA5 TAN			
NB47-88-181	1	(STC TYPE)			-6801
88	INT-	NA4 NA5 TAN			
NB40-88-181	1	(STA TYPE+W/O AUDIO)			-7301
		(STA TYPE+AM/FM,W/O C.D,W/O HEAD SPEAKER)			
		(STA TYPE+AM/FM,W/O C.D,W/HEAD SPEAKER)			
00	INT-	NA3 BLACK			
NB42-88-181	1	(STA TYPE+AM/FM,W/C.D,W/HEAD SPEAKER, W/SENSORY SOUND)			-7301
00	INT-	NA3 BLACK			
NB43-88-181A	1	(STB TYPE+AM/FM,W/C C.D,W/HEAD SPEAKER)			6801-
88	INT-	NA4 NA5 TAN			
NB44-88-181A	1	(STB TYPE+AM/FM,W/C.D,W/HEAD SPEAKER, W/			6801-

6801 NA35*V-719630
7301 NA35*V-732210

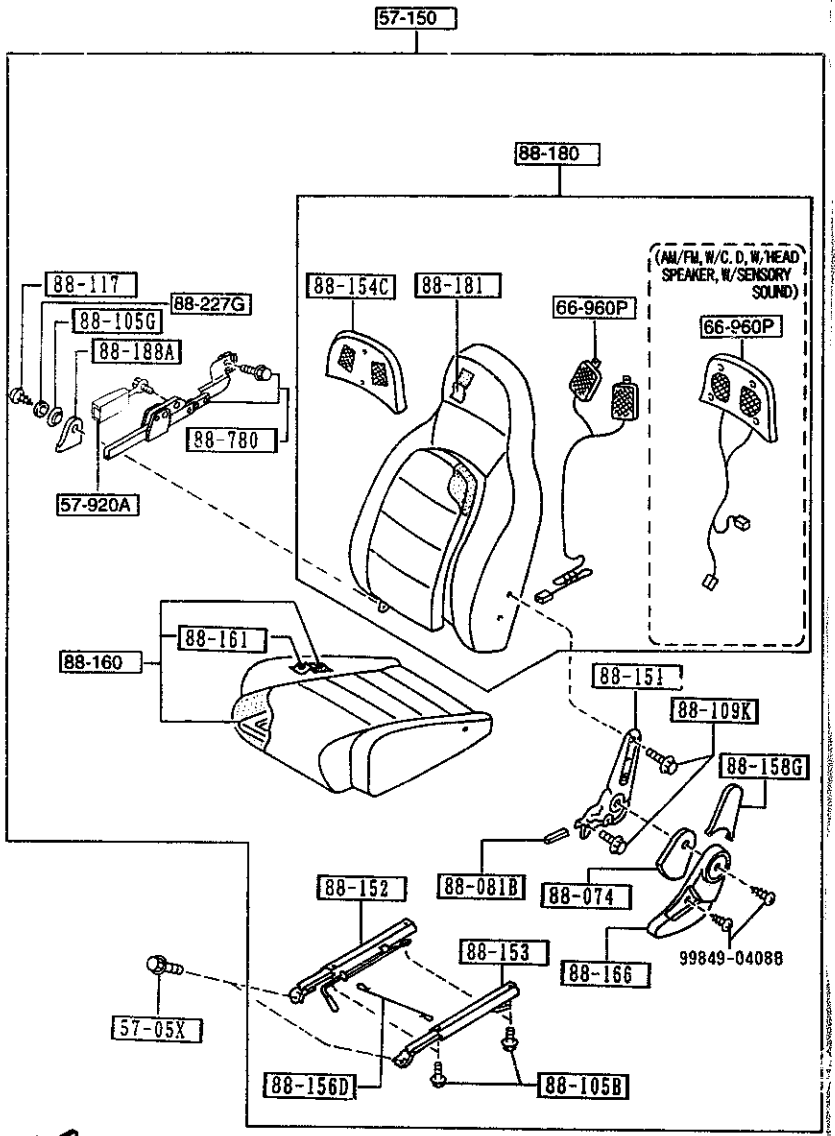

AUNA06

PART NO.	QTY	MODEL/RESTRICTION	MODEL/RESTRICTION	MODEL/RESTRICTION	FROM-TO
CONT'D		SENSORY SOUND)			
86	INT-	NA4 NA5 TAN			
NB47-88-181A	1	(STC TYPE)			6801-6C01
88	INT-	NA4 NA5 TAN			
NB49-88-181	1	(STC TYPE)			6C01-
88	INT-	NA5 TAN			
NC00-88-181	1	(STA TYPE+W/O AUDIO)			7301-
		(STA TYPE+AM/FM,W/O C.D,W/O HEAD SPEAKER)			
		(STA TYPE+AM/FM,W/O C.D,W/HEAD SPEAKER)			
00	INT-	NA3 BLACK			
NC01-88-181	1	(STA TYPE+AM/FM,W/C.D,W/HEAD SPEAKER, W/SENSORY SOUND)			7301-
00	INT-	NA3 BLACK			
+----------+					
| 88-188A |		COVER(L),HINGE			
+----------+					
NA01-88-085	1				
00	INT-	NA3 NA7 NA8 BLACK			
88	INT-	NA4 NA5 TAN			
+----------+					
| 88-227G |		SILENCER			
+----------+					
*H261-88-139	2				-6A01
*N041-88-049	2				7301-
+----------+					
| 88-710B |		ANCHOR UNIT(R),BELT			
+----------+					
NA75-88-710	1				
+----------+					
| 88-780 |		ANCHOR UNIT(L),BELT			
+----------+					
NA75-88-760	1				

6801 NA35*V-719630
6A01 NA35*V-720311
6C01 NA35*V-725591
7301 NA35*V-732210

CAT. AUNA06-03

1998-07

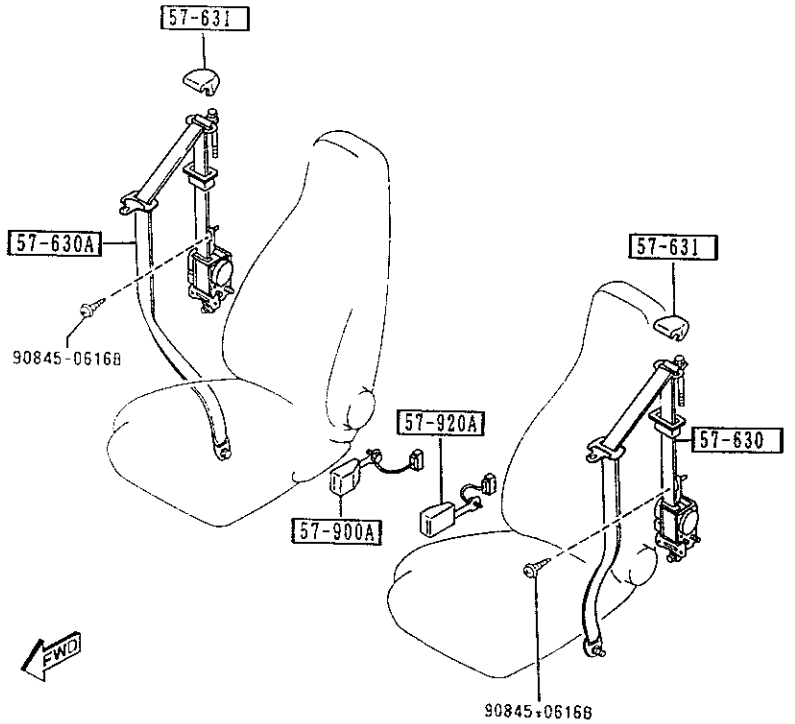

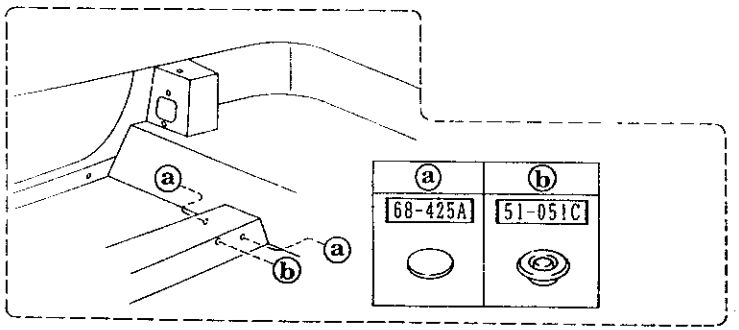

5790 -1 * SEAT BELTS

PART NO.	QTY	MODEL/RESTRICTION	MODEL/RESTRICTION	MODEL/RESTRICTION	FROM-TO
51-051C		PLUG,HOLE			
BR70-51-264	1				
57-630		BELT'B',FRT SEAT			
NB38-57-630A	1				
00 INT-		NA3 BLACK			
88 INT-		NA4 NA5 TAN/BLACK			
57-630A		BELT'B'(R),FRT SEAT			
NA75-57-630G	1				
00 INT-		NA3 BLACK			
88 INT-		NA4 NA5 TAN			
57-631		COVER,ANCHOR			
N026-57-631	2				
00 INT-		NA3 NA4 NA5 NA6 NA7 NA8 BLACK			
57-900A		BELT'A'(R),FRT SEAT			
NA75-57-620	1				
00 INT-		NA3 NA4 NA5 NA7 NA8 BLACK			
57-920A		BELT'A'(L),FRT SEAT			
NA75-57-680A	1				
00 INT-		NA3 NA4 NA5 NA7 NA8 BLACK			
68-425A		COVER,HOLE			
LA01-57-425A	2				

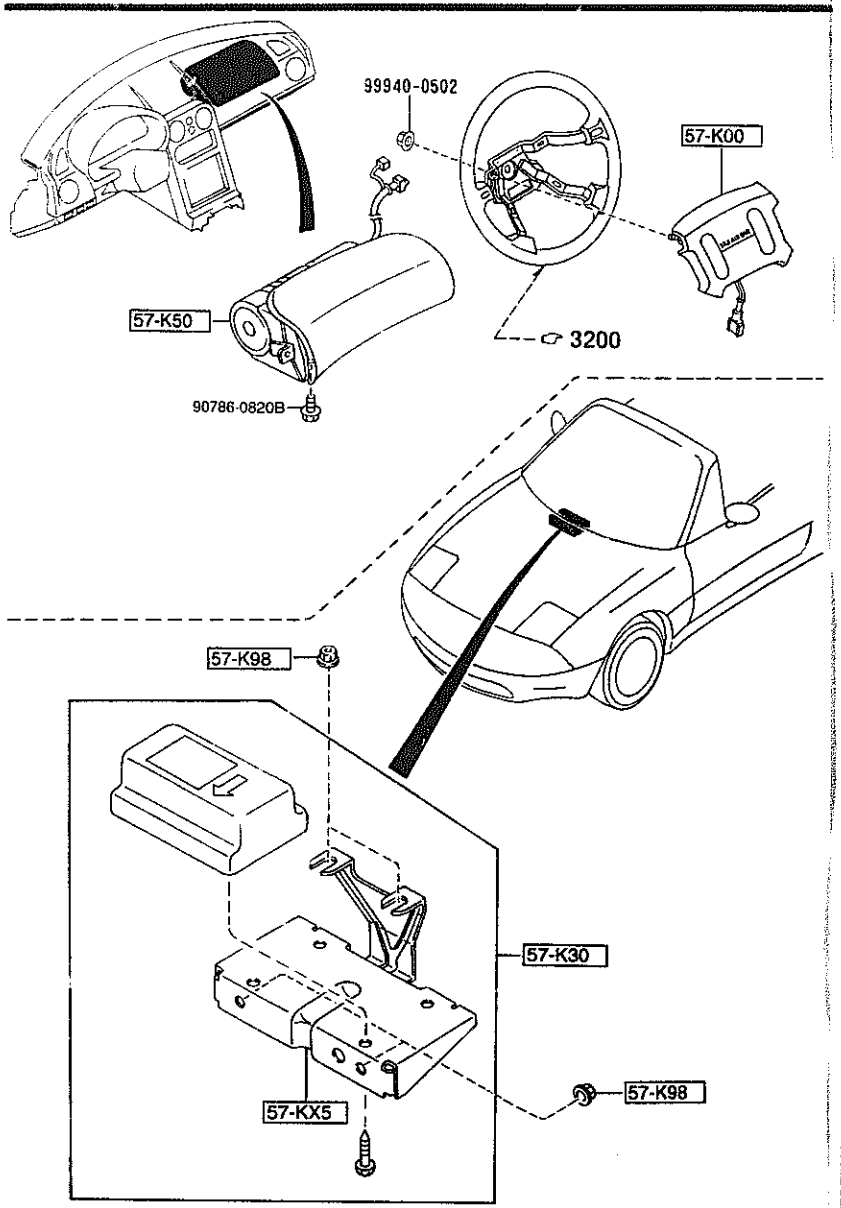

5795 -1 * AIR BAG

PART NO	QTY	MODEL/RESTRICTION	MODEL/RESTRICTION	MODEL/RESTRICTION	FROM-TO
57-KX5		BRKT,AIR BAG MODULE			
N034-57-KX0A	1				
57-K00		MODULE,AIR BAG			
NB11-57-K00	1				
00	INT-	NA3 NA4 NA5 NA6 NA7 NA8 BLACK			
57-K30		UNIT,SAS			
N034-57-K3XC	1				
57-K50		MODULE,AIR BAG PASSENGER			
NB11-57-K7X	1				
00	INT-	NA3 NA4 NA5 NA6 NA7 NA8 BLACK			
57-K98		NUT			
FC66-57-K98	4				

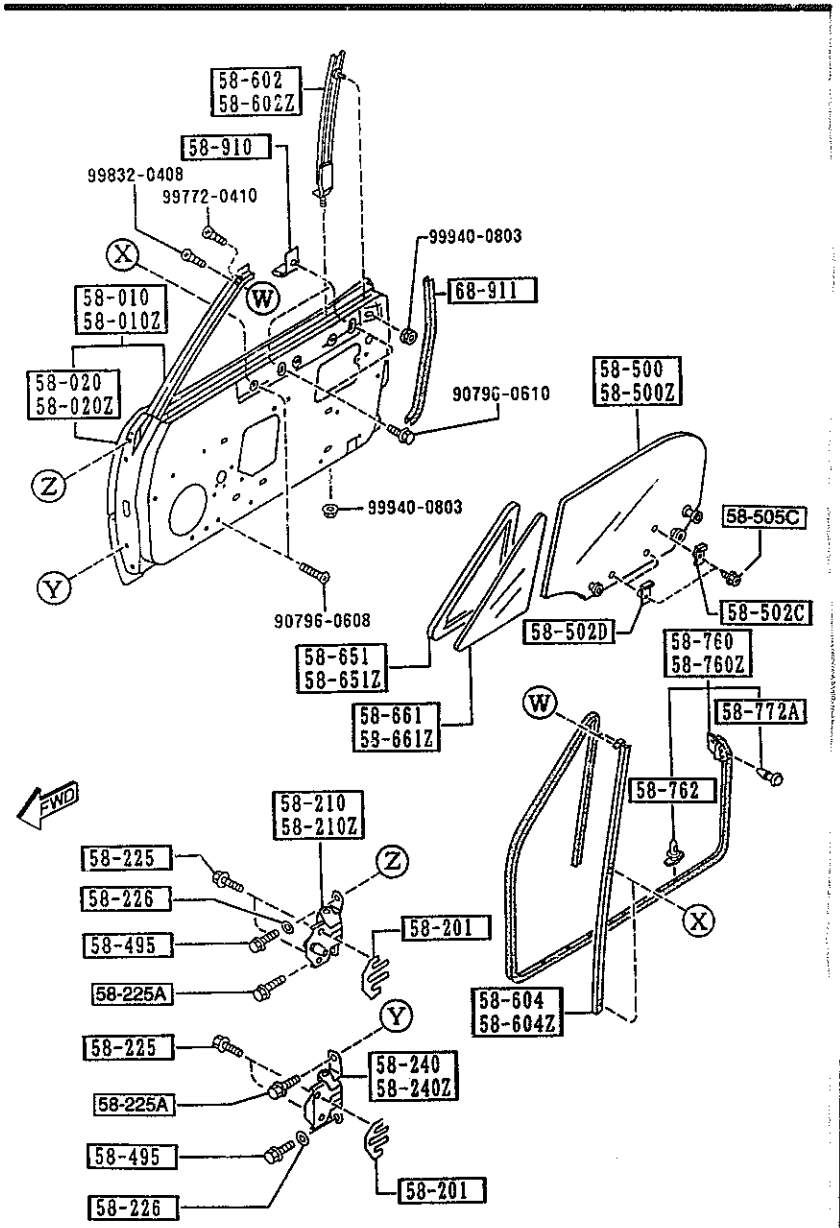

AUNA06

PART NO.	QTY	MODEL/RESTRICTION	MODEL/RESTRICTION	MODEL/RESTRICTION	FROM-TO
58-010		BODY(R),FRONT DOOR			
NAY4-58-02X AN(NAY4-58-02XA)	1				-7301
NAY4-58-02XA	1				7301-
58-010Z		BODY(L),FRONT DOOR			
NAY4-59-02X AN(NAY4-59-02XA)	1				-7301
NAY4-59-02XA	1				7301-
58-020		PANEL(R),OUT.-FRT DOOR			
NA52-58-030A	1				
58-020Z		PANEL(L),OUT.-FRT DOOR			
NA52-59-030A	1				
58-201		SHIM,HINGE-DOOR			
B092-58-201A	4				
58-210		HINGE(R),DOOR-UPPER			
FB01-58-210	1				
58-210Z		HINGE(L),DOOR-UPPER			
FB01-59-210	1				
58-225		BOLT,SETTING-HINGE LOWER			
B455-58-225	8				
58-225A		BOLT,SETTING			
S085-58-225	4				
58-226		WASHER,SETTING			
GJ21-58-226	4				
58-240		HINGE(R),DOOR-LOWER			
B156-58-240	1				
58-240Z		HINGE(L),DOOR-LOWER			
B156-59-240	1				
58-495		BOLT,SET			

7301 NA35*V-732210

CAT. AUNA06-03

1998-07

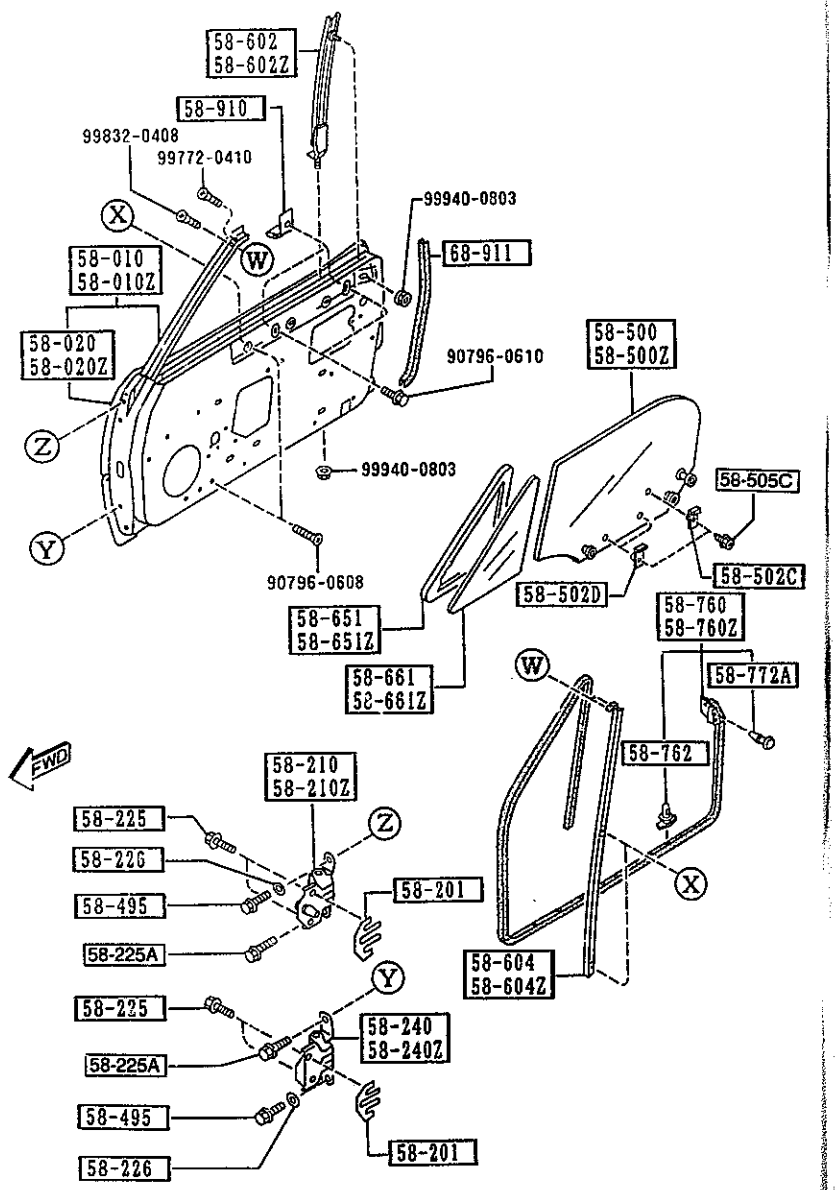

AUNA06

PART NO.	QTY	MODEL/RESTRICTION	MODEL/RESTRICTION	MODEL/RESTRICTION	FROM-TO
CONT'D					
BA54-58-225	4				
58-500		GLASS(R),DOOR-FRT			
NB39-58-510	1				
58-500Z		GLASS(L),DOOR-FRT			
NB39-59-510	1				
58-502C		GROMMET,SCREW			
B235-58-502	2				
58-502D		GROMMET,SCREW-DOOR GLASS			
UB39-58-502A	4				
58-505C		SCREW,WINDOW REGULATOR			
B092-58-505	6				
58-602		GUIDE'B'(R),GLASS			
NA01-58-603D	1				
58-602Z		GUIDE'B'(L),GLASS			
NA01-59-603D	1				
58-604		CHANNEL(R),DIVISION-DOOR			
NA01-58-604B	1				
58-604Z		CHANNEL(L),DIVISION-DOOR			
NA01-59-604B	1				
58-651		WEATHERSTRIP(R)			
NA01-58-651A	1				-7701
A (NA01-58-651B)					
*NA01-58-651B	1				7701-
58-651Z		WEATHERSTRIP(L)			
NA01-59-651A	1				-7701
A (NA01-59-651B)					
*NA01-59-651B	1				7701-
58-661		GLASS(R),VENTILATOR			
NB39-58-661	1				-7618
AN(NB39-58-661A)					

7618 NA35*V-738068
7701 NA35*V-738443

CAT. AUNA06-03

1998-07

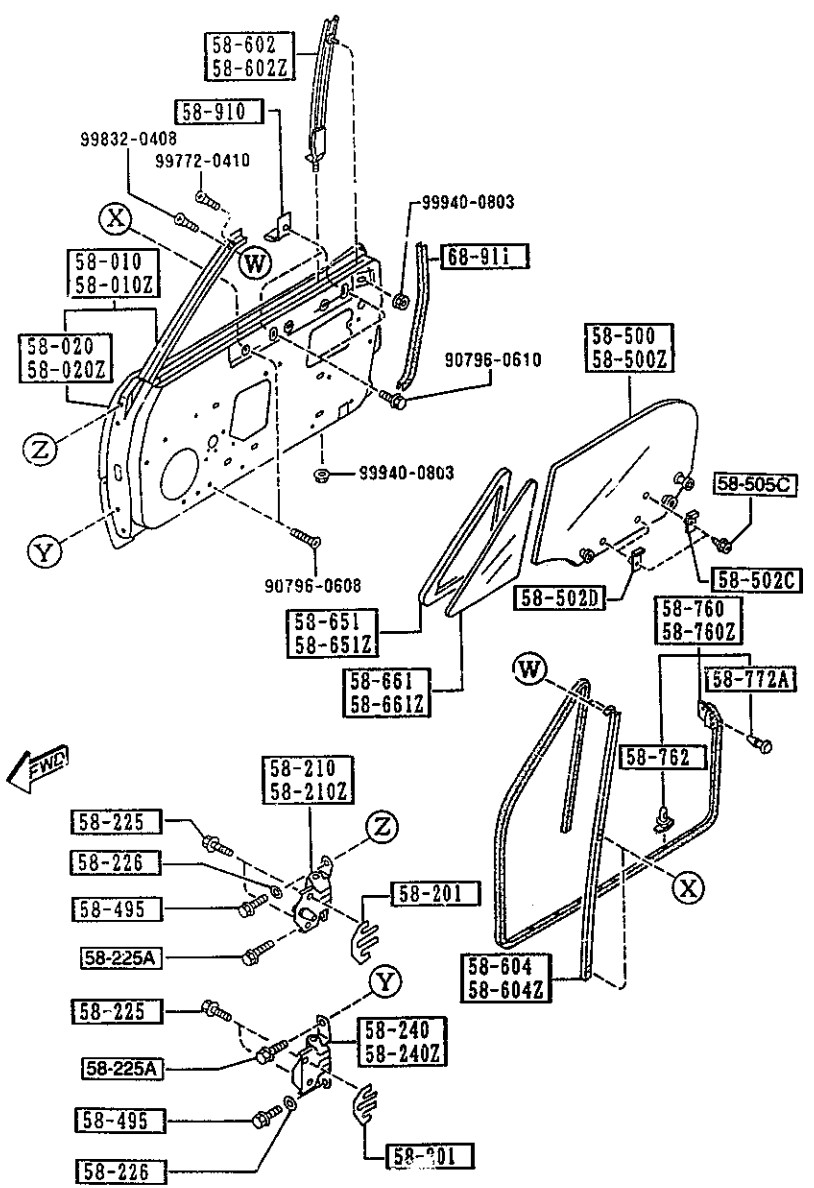

PART NO	QTY	MODEL/RESTRICTION	MODEL/RESTRICTION	MODEL/RESTRICTION	FROM-TO
CONT'D					
*NB39-58-661A	1				7618-
58-661Z		GLASS(L),VENTILATOR			
NB39-59-661	1				-7618
AN(NB39-59-661A)					
*NB39-59-661A	1				7618-
58-760		WEATHERSTRIP(R),DOOR			
NA01-58-760G	1				-6801
AN(NA01-58-760H)					
NA01-58-760H	1				6801-6819
AN(NA01-58-760J)					
NA01-58-760J	1				6819-
58-760Z		WEATHERSTRIP(L),DOOR			
NA01-59-760G	1				-6801
AN(NA01-59-760H)					
NA01-59-760H	1				6801-6819
AN(NA01-59-760J)					
NA01-59-760J	1				6819-
58-762		FASTENER			
G031-58-762	42				
58-772A		FASTENER			
*1011-58-772	4				
58-910		STOPPER,GLASS			
H272-58-911	4				
68-911		WELT,SEAMING			
NA01-68-911	2				
00	INT-	NA3 NA5 BLACK			

6801 NA35*V-719630
6819 NA35*V-719802
7618 NA35*V-738068