# Parts Catalog

# Mazda MX-5 MIATA U.S.A. ('97)

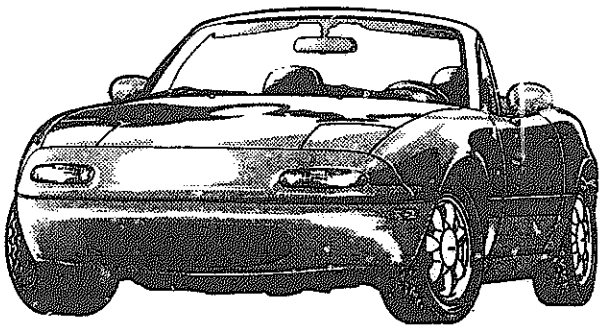

NA35 • -700001~800000

**Jul.'98 (FINAL)**

**Catalog No. AU-NA06-03**

mazda

© 1998 Mazda Motor Corporation

## LAYOUT OF CONTENTS / DISPOSITION TYPOGRAPHIQUE DE CONTENU / DISPOSICION DEL CONTENIDO / ANORDNUNG DES INHALTS

- The following is a typical example of the layout of contents on Mazda microfiche parts catalog.
- Voici un exemple typique de la disposition typographique de contenu dans les microfiches de catalogue des pièces de Mazda.
- El siguiente es un ejemplo típico de la disposición del contenido en una microficha del catálogo de repuestos de Mazda.
- Folgendes ist ein typisches Beispiel der Inhaltsanordnung des Mazda-Mikrofiche-Teilekatalogs.

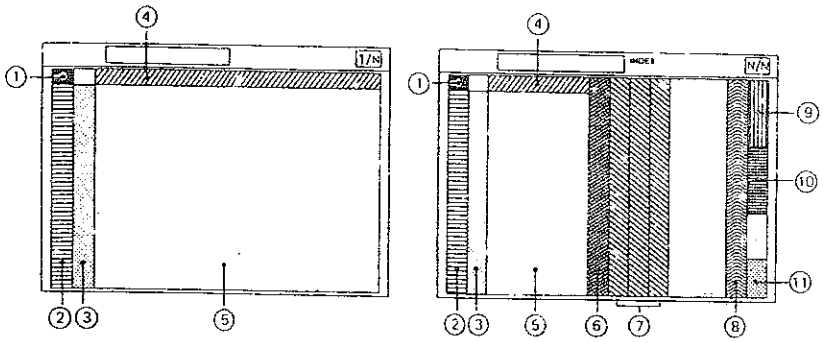


**Remark :** The items listed under ④ have been deleted from each fiche since Dec. '93

① · Layout of contents
· Disposition Typographique de Contenu
· Disposición del contenido
· Anordnung des Inhalts

② · Pictorial Index
· Index par Schémas
· Indice Gráfico
· Illustrierter Index

③ · Master Section No. Index
· Index des Numéros des Sections Totale
· Indice del Número de la Sección Maéstra
· Hauptabschnitssnummer-Index

~~④ · Section No. Index for the Column~~
~~· Index des Numéros des Sections pour les Colonnes~~
~~· N° de la Sección para el Indice~~
~~· Abschnittssnummer-Index für die Spalte~~

⑤ · Illustration & Text
· Illustrations et Textes
· Ilustración y Texto
· Abbildung und Text

⑥ · Part No. Index
· Index des Numéros des Pièces
· Indice del N° de Pieza
· Teile-Nr.-Index

⑦ · Alphabetical Index
· Index Alphabétique
· Indice Alfabético
· Alphabetischer Index

⑧ · Model Identification
· Identification des Modèles
· Identificación del Modelo
· Modell-Kennzeichnung

⑨ · Vehicle Identification System
· Système d'Identification de Véhicule
· Sistema de Identificación de Vehículo
· Fahrzeug-Identifikations-system

# PICTORIAL INDEX

## GASOLINE ENGINE 4 - CYLINDER (1/2)

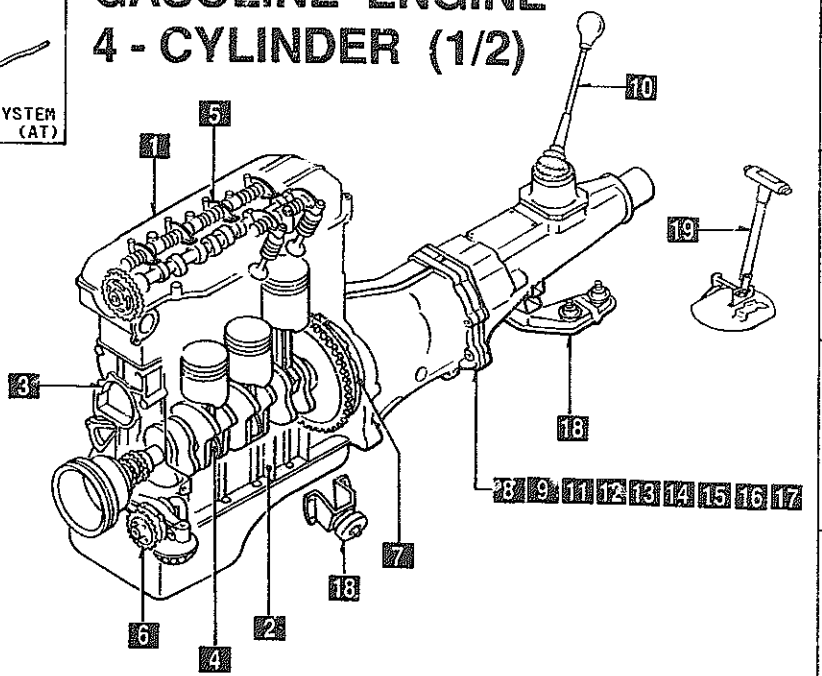


As this illustration is prepared to be applicable to all models, some parts are different in specifications from parts listed in this parts Catalog.

**1000**
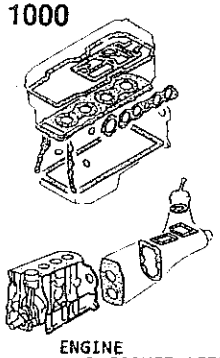
ENGINE & GASKET SETS

**1 1010**
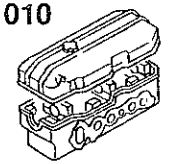
CYLINDER HEAD & COVER

**2 1030**
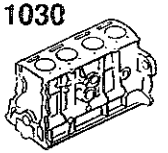
CYLINDER BLOCK

**3 1040**
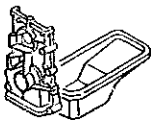
OIL PAN & TIMING COVER

**4 1100**
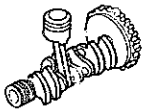
PISTON, CRANKSHAFT & FLYWHEEL

**5 1200**
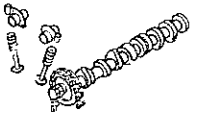
VALVE SYSTEM

**19 4600**
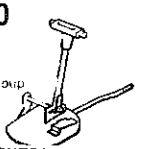

CHANGE CONTROL SYSTEM (AT)

**6 1400**
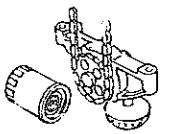
OIL PUMP & FILTER

**18 3900**
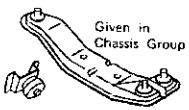

ENGINE & T/MISSION MOUNTINGS

**7 1600**
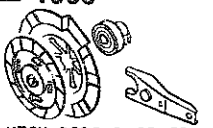
CLUTCH DISC & COVER (MANUAL)

**17 1960**
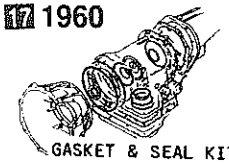
GASKET & SEAL KIT (AUTOMATIC)

**8 1700**
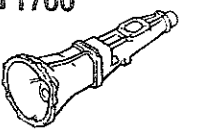
TRANSMISSION CASE (MANUAL)

**16 1950**

MANUAL LINKAGE SYSTEM (AUTOMATIC)

**9 1710**
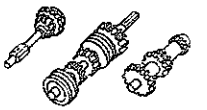
TRANSMISSION GEARS (MANUAL)

**15 1940**
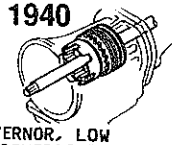
GOVERNOR, LOW & REVERSE PISTON (AUTOMATIC)

**14 1930**
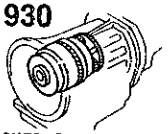
CLUTCHES & PLANETARY GEARS (AUTOMATIC)

**13 1925**

CONTROL VALVE (AUTOMATIC)

**12 1920**
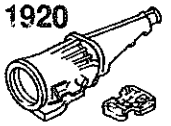
TRANSMISSION CASE & MAIN CONTROL SYSTEM (AUTOMATIC)

**11 1910**

TORQUE CONVERTER, OIL PUMP & PIPINGS (AUTOMATIC)

**10 1720**
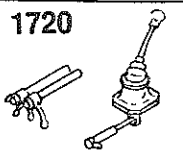
CHANGE CONTROL SYSTEM (MANUAL)

# PICTORIAL INDEX

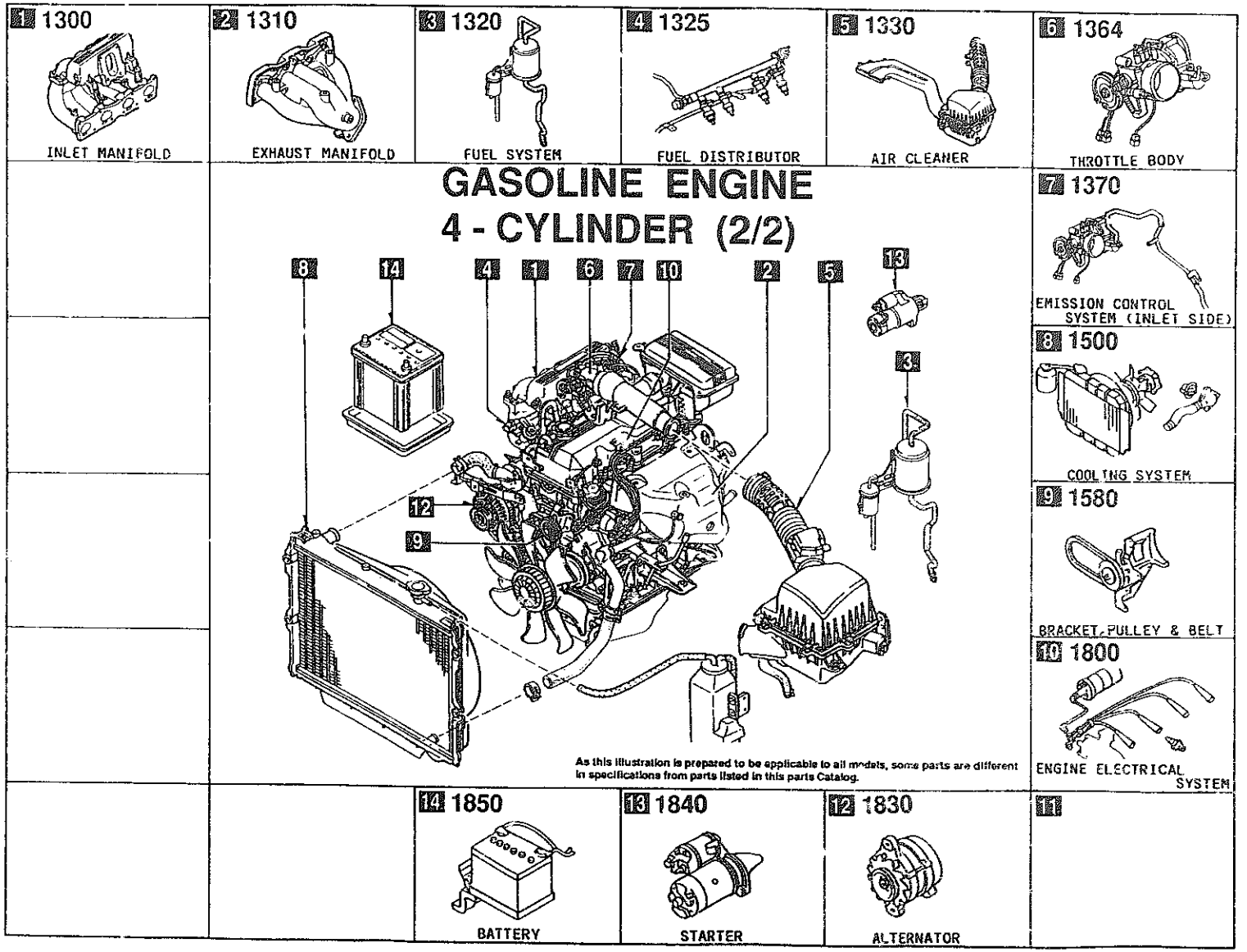

# PICTORIAL INDEX

## CHASSIS (1/2)

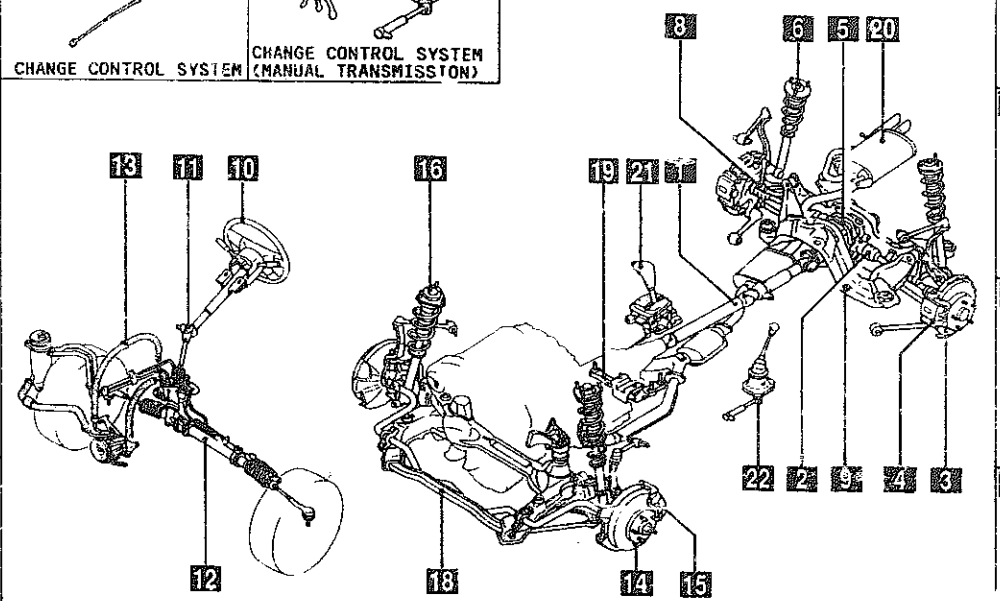


As this illustration is prepared to be applicable to all models, some parts are different in specifications from parts listed in this parts Catalog.

1 2505 — REAR PROPELLER SHAFT

2 2550 — REAR DRIVE SHAFT

3 2600 — REAR AXLE

4 2610 — REAR BRAKE MECHANISMS

5 2710 — REAR DIFFERENTIALS

6 2800 — REAR SUSPENSION MECHANISMS

7

8 2810 — REAR STABILIZER

9 2830 — REAR LOWER ARMS & SUB FRAME

10 3200 — STEERING WHEEL

11 3210 — STEERING COLUMN & SHAFTS

12 3220 — STEERING GEAR

13 3240 — POWER STEERING SYSTEM (FRONT)

14 3300 — FRONT AXLE

15 3310 — FRONT BRAKE MECHANISMS

16 3400 — FRONT SUSPENSION MECHANISMS

17

18 3410 — CROSSMEMBER & STABILIZER

19 3900 — ENGINE & T/MISSION MOUNTINGS

20 4000 — EXHAUST SYSTEM

21 4600 — CHANGE CONTROL SYSTEM

22 1720 — Given in Engine Group — CHANGE CONTROL SYSTEM (MANUAL TRANSMISSION)

# PICTORIAL INDEX

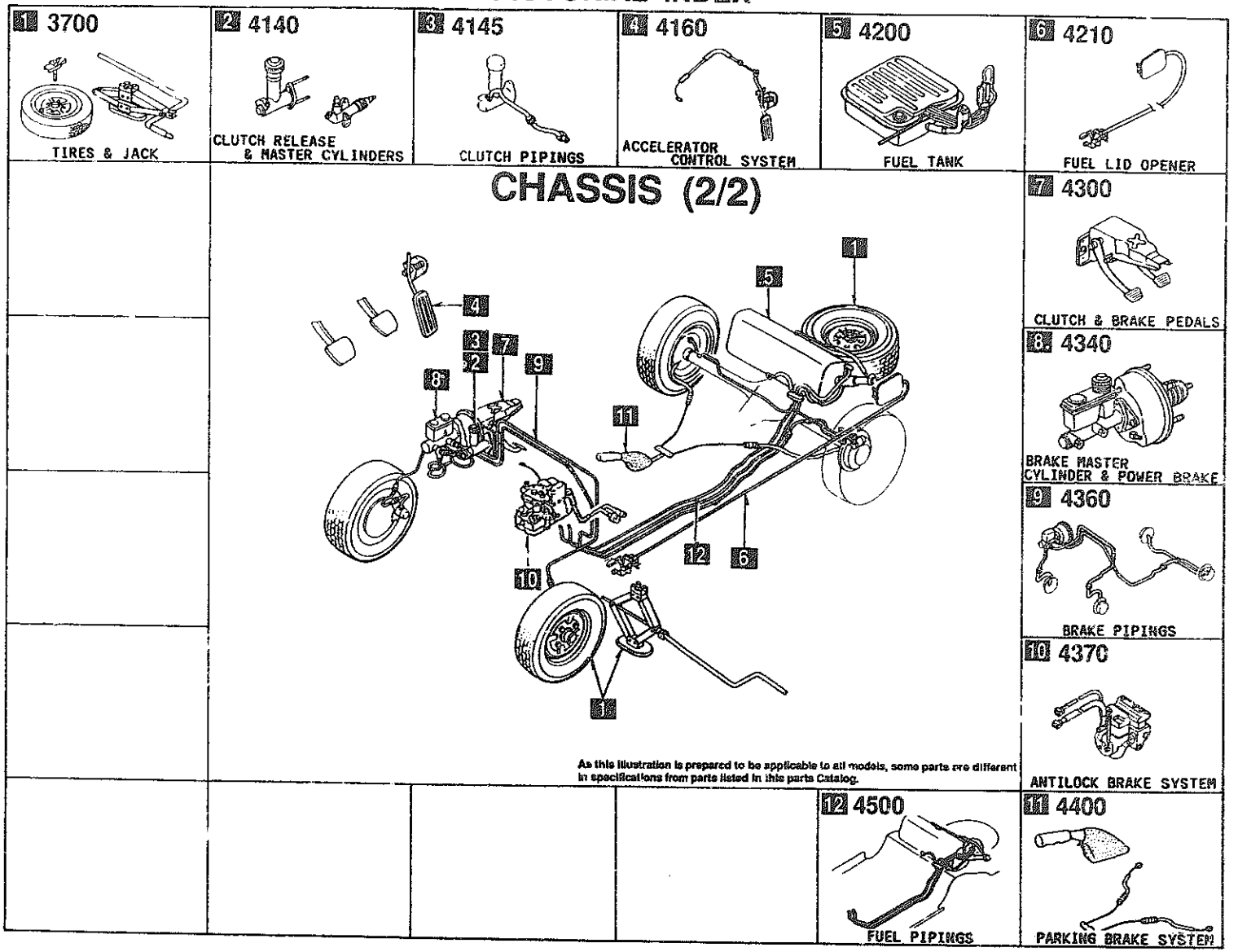

# PICTORIAL INDEX

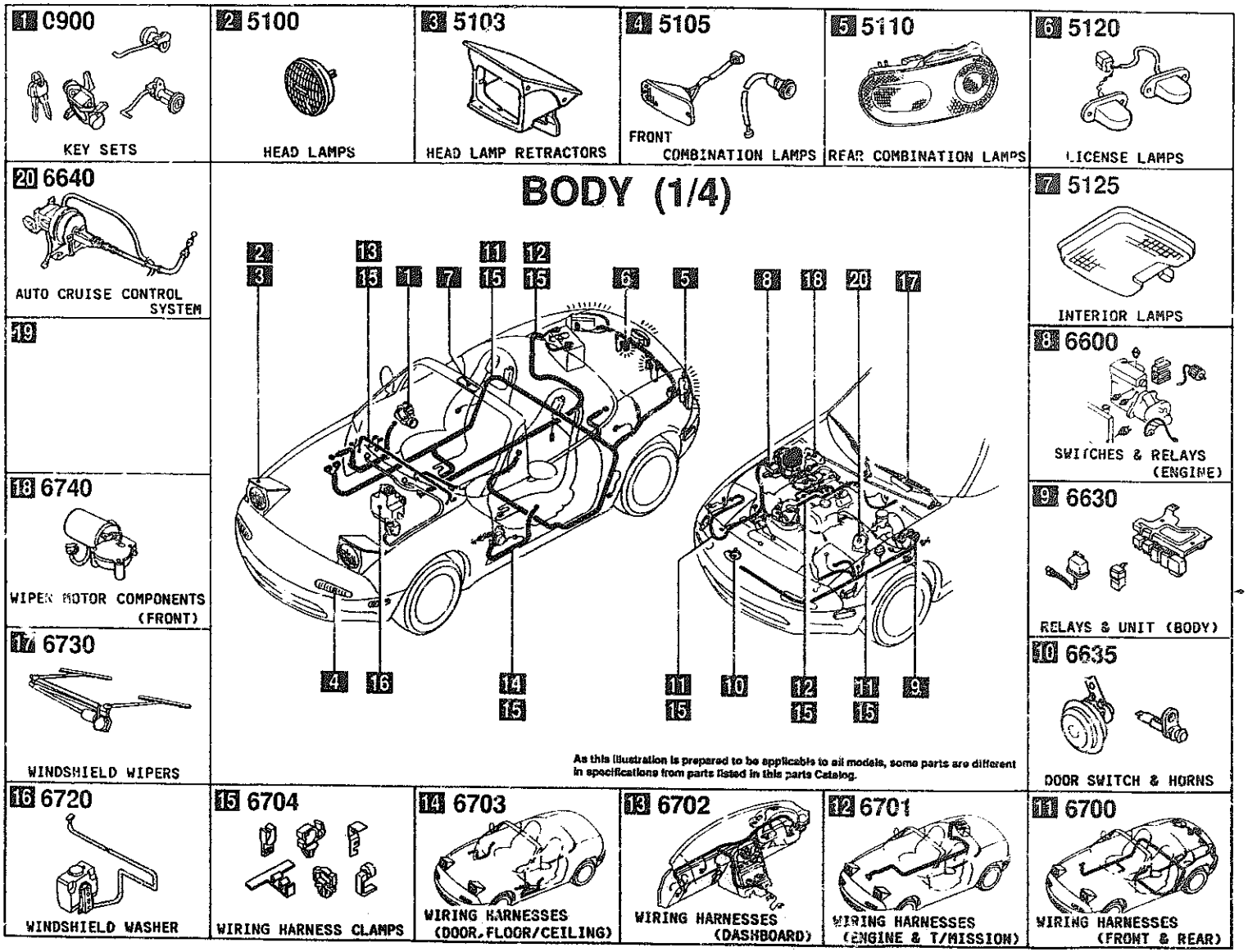

# PICTORIAL INDEX

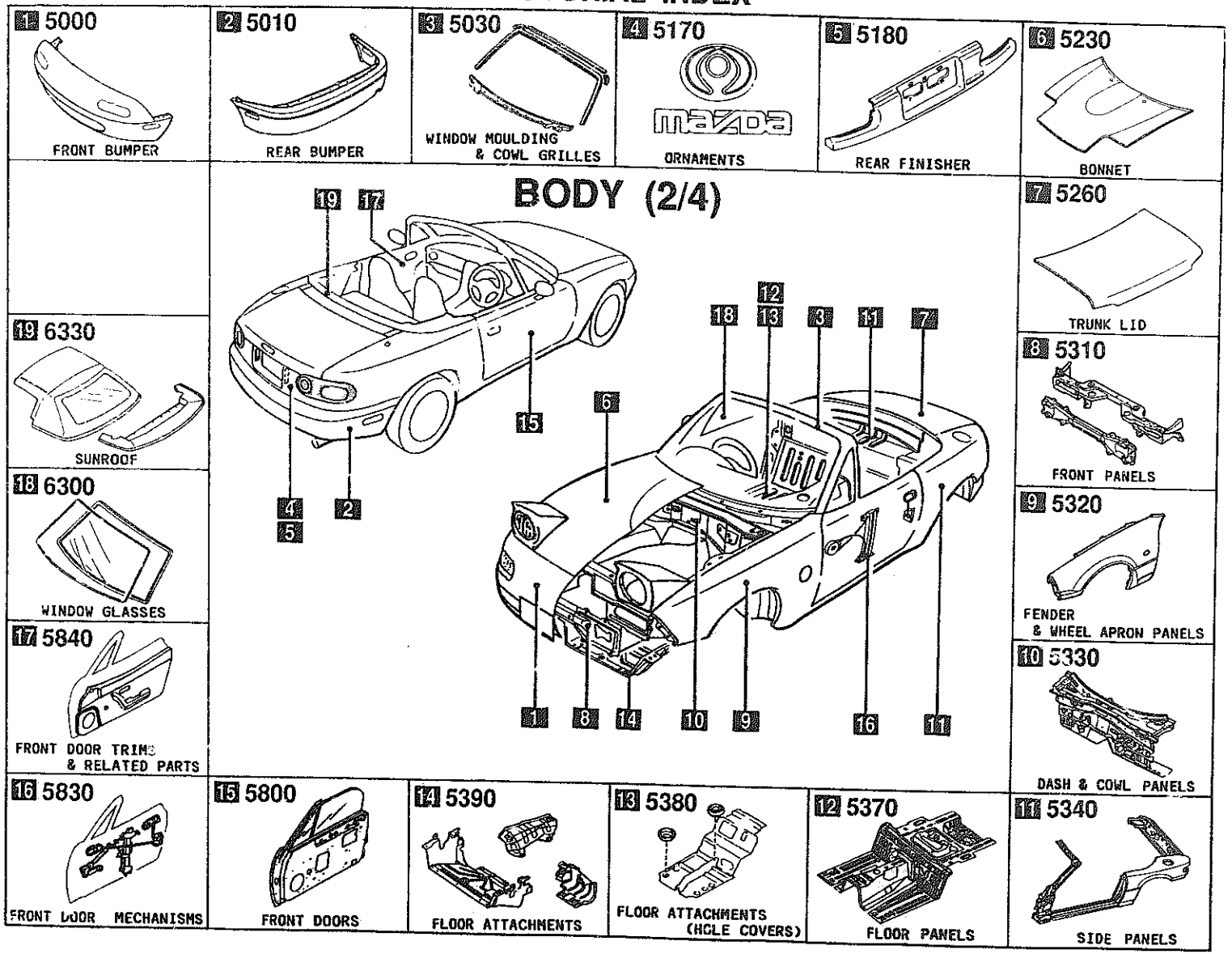

# PICTORIAL INDEX

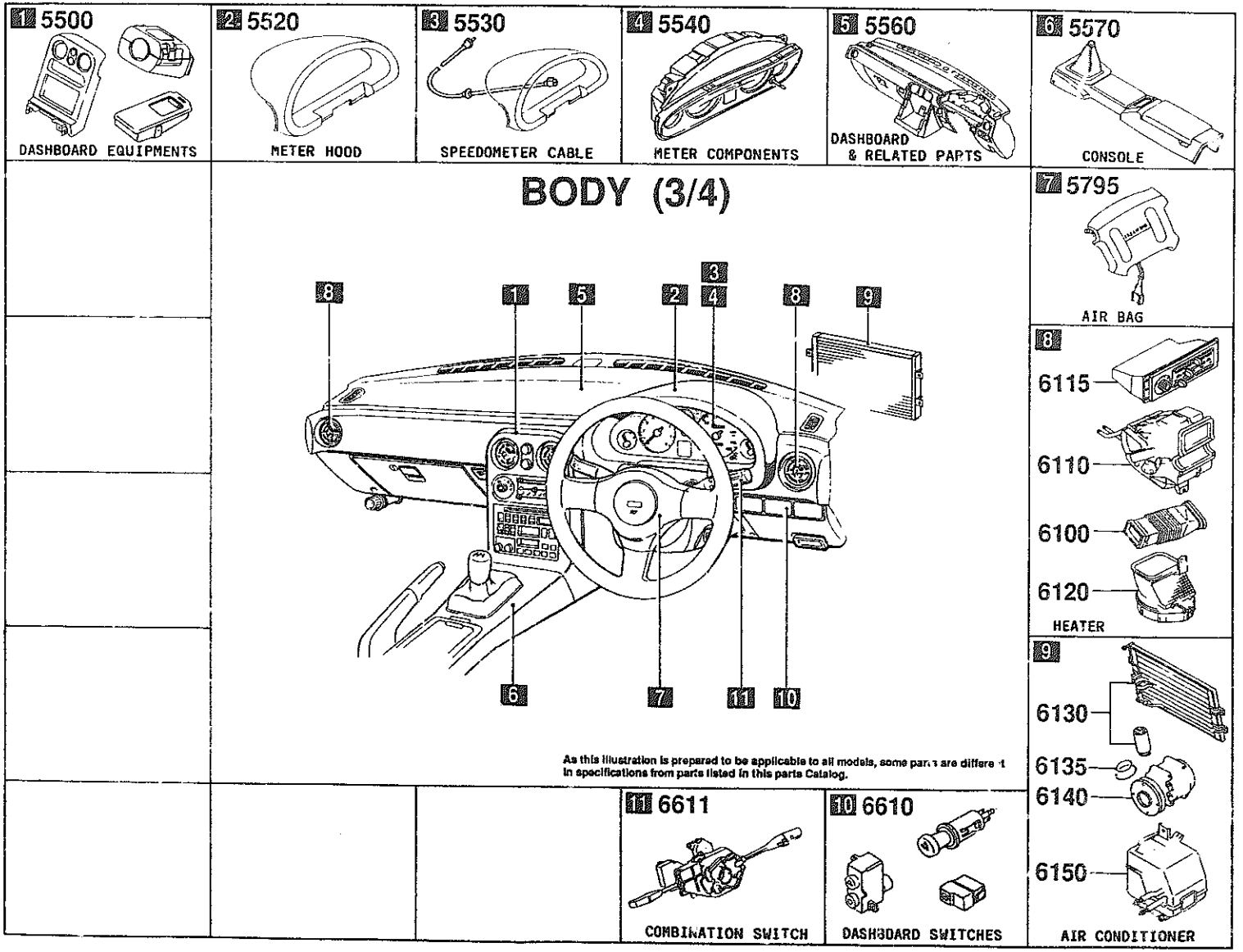

# PICTORIAL INDEX


1 5580 VENTILATOR

2 5700 SEATS

3 5790 SEAT BELTS

4 6680 AUDIO SYSTEMS (RADIO & TAPE DECK)

5 6682 AUDIO SYSTEMS (ANTENNA & SPEAKER)

6 6820 FRONT HEADER TRIM & PILLAR TRIMS

7 6840 TRIMS & SCUFF PLATES

8 6860 FLOOR MATS & PADS

9 6870 SERVICE TOOLS

10 6900 VISORS, ASSIST HANDLES & MIRRORS

11 6930 CAUTION PLATES & LABELS

12 7250 QUARTER WINDOW & TRIMS


## BODY (4/4)

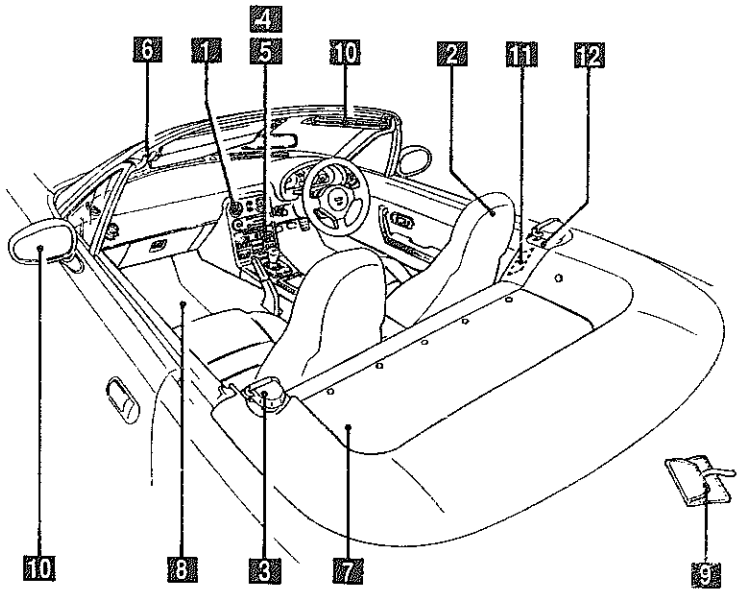


As this illustration is prepared to be applicable to all models, some parts are different in specifications from parts listed in this parts Catalog.

SECTION NAME INDEX (ENGINE)

| LO.NO | SEC.NO | SECTION NAME |
|---|---|---|
| 1-C03 | 1000 | ENGINE & GASKET SETS |
| 1-E03 | 1010 | CYLINDER HEAD & COVER |
| 1-G03 | 1030 | CYLINDER BLOCK |
| 1-H03 | 1040 | OIL PAN & TIMING COVER |
| 1-J03 | 1100 | PISTON, CRANKSHAFT & FLYWHEEL |
| 1-M03 | 1200 | VALVE SYSTEM |
| 1-C04 | 1300 | INLET MANIFOLD |
| 1-D04 | 1310 | EXHAUST MANIFOLD |
| 1-E04 | 1320 | FUEL SYSTEM |
| 1-G04 | 1325 | FUEL DISTRIBUTOR |
| 1-H04 | 1330 | AIR CLEANER |
| 1-J04 | 1364 | THROTTLE BODY |
| 1-K04 | 1370 | EMISSION CONTROL SYSTEM (INLET SIDE) |
| 1-M04 | 1400 | OIL PUMP & FILTER |
| 1-C05 | 1500 | COOLING SYSTEM |
| 1-F05 | 1580 | BRACKET, PULLEY & BELT |
| 1-C06 | 1600 | CLUTCH DISC & COVER |
| 1-D06 | 1700 | MANUAL TRANSMISSION CASE |
| 1-F06 | 1710 | MANUAL TRANSMISSION GEARS |
| 1-K06 | 1720 | MANUAL TRANSMISSION CHANGE CONTROL SYSTEM |
| 1-N06 | 1800 | ENGINE ELECTRICAL SYSTEM |
| 1-D07 | 1830 | ALTERNATOR |
| 1-F07 | 1840 | STARTER (MT) |
| 1-H07 | 1840 A | STARTER (AT) |
| 1-J07 | 1850 | BATTERY |
| 1-K07 | 1910 | AUTOMATIC TRANSMISSION TORQUE CONVERTER, OIL PUMP & PIPINGS |
| 1-N07 | 1920 | AUTOMATIC TRANSMISSION CASE & MAIN CONTROL SYSTEM |
| 1-H08 | 1925 | AUTOMATIC TRANSMISSION CONTROL VALVE |
| 1-C09 | 1930 | AUTOMATIC TRANSMISSION CLUTCHES & PLANETARY GEARS |
| 1-K09 | 1940 | AUTOMATIC TRANSMISSION GOVERNOR, LOW & REVERSE PISTON |
| 1-N09 | 1950 | AUTOMATIC TRANSMISSION MANUAL LINKAGE SYSTEM |
| 1-D10 | 1960 | AUTOMATIC TRANSMISSION GASKET & SEAL KIT |

CATLOG-NO= AUNA06-03

DATE. 1998-07

SECTION NAME INDEX (CHASSIS)

| LO.NO | SEC.NO | SECTION NAME |
|---|---|---|
| 2-C03 | 2505 | REAR PROPELLER SHAFT |
| 2-D03 | 2550 | REAR DRIVE SHAFT |
| 2-E03 | 2600 | REAR AXLE |
| 2-F03 | 2610 | REAR BRAKE MECHANISMS |
| 2-H03 | 2710 | REAR DIFFERENTIALS (NORMAL DIFF.) |
| 2-L03 | 2710 A | REAR DIFFERENTIALS (LIMITED SLIP DIFF.) |
| 2-D04 | 2810 | REAR SUSPENSION MECHANISMS |
| 2-E04 | 2810 | REAR STABILIZER |
| 2-F04 | 2830 | REAR LOWER ARMS & SUB FRAME |
| 2-H04 | 3200 | STEERING WHEEL |
| 2-I04 | 3210 | STEERING COLUMN & SHAFTS |
| 2-J04 | 3220 | STEERING GEAR (W/O POWER STEERING) |
| 2-L04 | 3220 A | STEERING GEAR (W/POWER STEERING) |
| 2-N04 | 3240 | POWER STEERING SYSTEM |
| 2-D05 | 3300 | FRONT AXLE |
| 2-F05 | 3310 | FRONT BRAKE MECHANISMS |
| 2-G05 | 3400 | FRONT SUSPENSION MECHANISMS |
| 2-J05 | 3410 | CROSSMEMBER & STABILIZER |
| 2-K05 | 3700 | TIRES & JACK |
| 2-C06 | 3900 | ENGINE & T/MISSION MOUNTINGS |
| 2-D06 | 4000 | EXHAUST SYSTEM |
| 2-E06 | 4140 | MANUAL TRANSMISSION CLUTCH RELEASE & MASTER CYLINDERS |
| 2-F06 | 4145 | MANUAL TRANSMISSION CLUTCH PIPINGS |
| 2-G06 | 4160 | ACCELERATOR CONTROL SYSTEM |
| 2-H06 | 4200 | FUEL TANK |
| 2-K06 | 4210 | FUEL LID OPENER |
| 2-L06 | 4300 | MANUAL TRANSMISSION CLUTCH & BRAKE PEDALS |
| 2 C07 | 4300A | AUTOMATIC TRANSMISSION BRAKE PEDAL |
| 2-E07 | 4340 | BRAKE MASTER CYLINDER & POWER BRAKE (W/O ANTI LOCK BRAKE) |
| 2-G07 | 4340 A | BRAKE MASTER CYLINDER & POWER BRAKE (W/ANTI LOCK BRAKE) |
| 2-I07 | 4360 | BRAKE PIPINGS (W/O ANTI LOCK BRAKE) |
| 2-K07 | 4360 A | BRAKE PIPINGS (W/ANTI LOCK BRAKE) |
| 2-C08 | 4370 | ANTILOCK BRAKE SYSTEM |
| 2-F08 | 4400 | PARKING BRAKE SYSTEM |
| 2-H08 | 4500 | FUEL PIPINGS |
| 2-J08 | 4600 | CHANGE CONTROL SYSTEM (AT) |

CATLOG-NO= AUNA06-03

DATE. 1998-07

SECTION NAME INDEX (BODY)

| LO.NO | SEC.NO | SECTION NAME |
|---|---|---|
| 2-C10 | 0900 | KEY SETS |
| 2-F10 | 5000 | FRONT BUMPER |
| 2-H10 | 5010 | REAR BUMPER |
| 2-J10 | 5030 | WINDOW MOULDING & COWL GRILLES |
| 2-K10 | 5100 | HEAD LAMPS |
| 2-L10 | 5103 | HEAD LAMP RETRACTORS |
| 2-C11 | 5105 | FRONT COMBINATION LAMPS |
| 2-E11 | 5110 | REAR COMBINATION LAMPS |
| 2-I11 | 5120 | LICENSE LAMPS |
| 2-J11 | 5125 | INTERIOR LAMPS |
| 2-K11 | 5170 | ORNAMENTS |
| 2-L11 | 5180 | REAR FINISHER |
| 2-M11 | 5230 | BONNET |
| 2-C12 | 5260 | TRUNK LID |
| 2-D12 | 5310 | FRONT PANELS |
| 2-E12 | 5320 | FENDER & WHEEL APRON PANELS |
| 2-K12 | 5330 | DASH & COWL PANELS |
| 2-I12 | 5340 | SIDE PANELS |
| 2-C13 | 5370 | FLOOR PANELS |
| 2-F13 | 5380 | FLOOR ATTACHMENTS (HOLE COVERS) |
| 2-H13 | 5390 | FLOOR ATTACHMENTS |
| 2-C14 | 5500 | DASHBOARD EQUIPMENTS |
| 2-E14 | 5520 | METER HOOD |
| 2-F14 | 5530 | SPEEDOMETER CABLE |
| 2-G14 | 5540 | METER COMPONENTS |
| 2-I14 | 5560 | DASHBOARD & RELATED PARTS |
| 2-L14 | 5570 | CONSOLE |
| 2-D15 | 5580 | VENTILATOR |
| 2-F15 | 5700 | SEATS |
| 2-H16 | 5790 | SEAT BELTS |
| 2-I16 | 5795 | AIR BAG |
| 2-J16 | 5800 | FRONT DOORS |
| 3-C03 | 5830 | FRONT DOOR MECHANISMS |
| 3-G03 | 5840 | FRONT DOOR TRIMS & RELATED PARTS |
| 3-C04 | 6100 | HEATER |
| 3-D04 | 6110 | HEATER UNIT COMPONENTS |
| 3-E04 | 6115 | HEATER CONTROL COMPONENTS |
| 3-F04 | 6120 | HEATER BLOWER COMPONENTS |
| 3-G04 | 6130 | AIR CONDITIONER |
| 3-L04 | 6135 | AIR CONDITIONING COOLING PIPE O-RING |
| 3-M04 | 6140 | AIR CONDITIONING COMPRESSOR COMPONENTS |
| 3-C05 | 6150 | AIR CONDITIONING COOLING UNIT |
| 3-D05 | 6300 | WINDOW GLASSES |
| 3-E05 | 6330 | SUN ROOF |
| 3-F06 | 6600 | ENGINE SWITCHES & RELAYS |
| 3-K06 | 6610 | DASHBOARD SWITCHES |
| 3-M06 | 6611 | COMBINATION SWITCH |
| 3-N06 | 6630 | BODY RELAYS & UNIT |
| 3-D07 | 6635 | DOOR SWITCH & HORNS |
| 3-E07 | 6640 | AUTO CRUISE CONTROL SYSTEM |
| 3-F07 | 6660 | AUDIO SYSTEMS (RADIO & TAPE DECK) |
| 3-I07 | 6682 | AUDIO SYSTEMS (ANTENNA & SPEAKER) |
| 3-L07 | 6700 | FRONT & REAR WIRING HARNESSES |
| 3-C08 | 6701 | ENGINE & TRANSMISSION WIRING HARNESSES |
| 3-E08 | 6702 | DASHBOARD WIRING HARNESSES |
| 3-F08 | 6703 | DOOR, FLOOR & CEILING WIRING HARNESSES |
| 3-G08 | 6704 | WIRING HARNESS CLAMPS |
| 3-J08 | 6720 | WINDSHIELD WASHER (W/O ANTI LOCK BRAKE) |
| 3-L08 | 6720 A | WINDSHIELD WASHER (W/ANTI LOCK BRAKE) |
| 3-C09 | 6730 | WINDSHIELD WIPERS |
| 3-E09 | 6740 | WIPER MOTOR COMPONENTS |
| 3-F09 | 6820 | FRONT HEADER TRIM & PILLAR TRIMS |
| 3-G09 | 6840 | TRIMS & SCUFF PLATES |
| 3-I09 | 6860 | FLOOR MATS & PADS |
| 3-K09 | 6870 | SERVICE TOOLS |
| 3-L09 | 6900 | SUN VISORS, ASSIST HANDLES & MIRRORS |
| 3-C10 | 6930 | CAUTION PLATES & LABELS |
| 3-E10 | 7250 | QUARTER WINDOW & TRIMS |

CATLOG-NO= AUNA06-03

DATE. 1998-07

5830 FRONT DOOR MECHANISMS

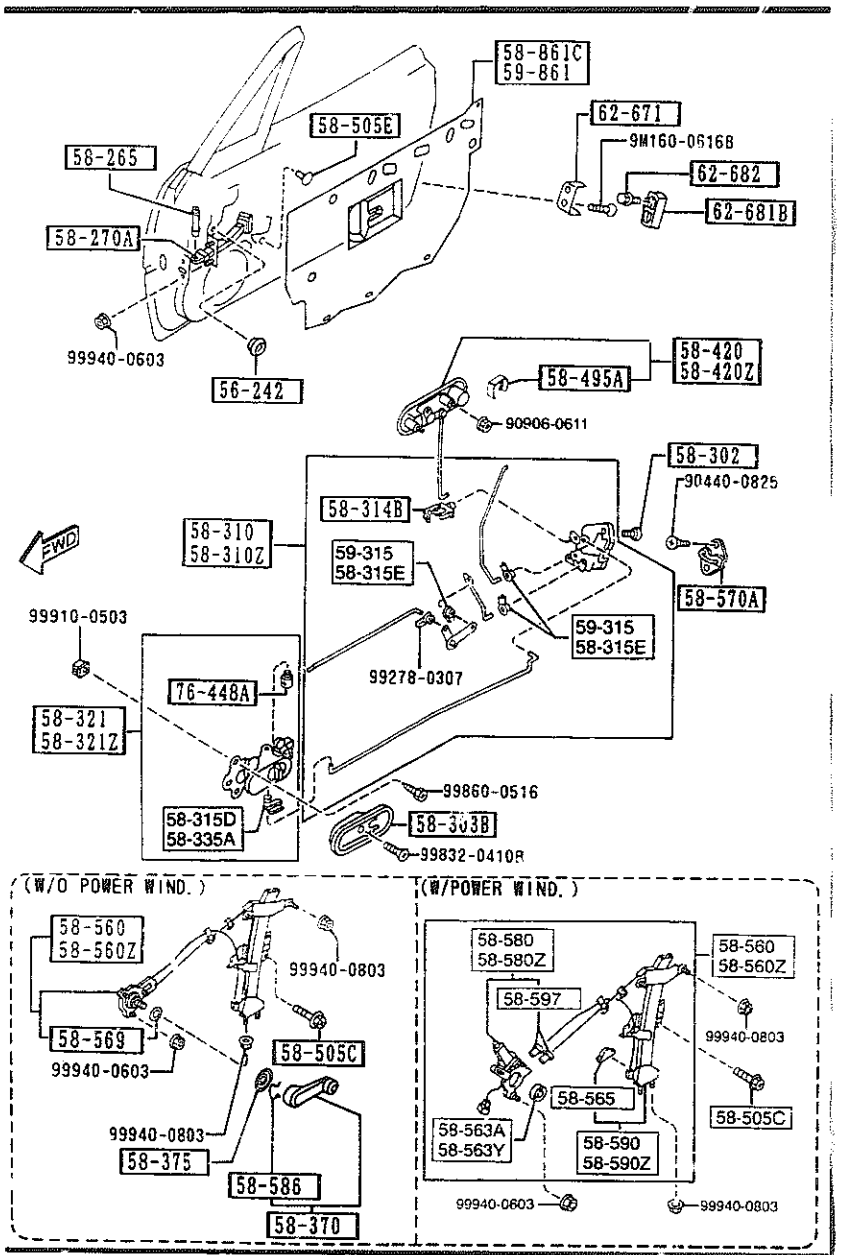


AUNA06

5830 -1 FRONT DOOR MECHANISMS

| PART NO | QTY | MODEL/RESTRICTION | MODEL/RESTRICTION | MODEL/RESTRICTION | [illegible] |
|---|---|---|---|---|---|
| 56-242 | | PLUG,DRAIN | | | |
| 0118-56-242B | 2 | | | | |
| 58-265 | | PIN,CHECK R | | | |
| BC1D-58-265 | 2 | | | | |
| 58-270A | | CHECKER,DOOR | | | |
| NA01-58-270B | 2 | | | | |
| 58-302 | | SCREW,TAPPING-DOOR LOCK | | | |
| HG30-58-302A | 6 | | | | |
| 58-303B | | COVER,INNER HANDLE | | | |
| NA01-58-303 | 2 | | | | |
| 00 | INT- | NA3 NA5 BLACK | | | |
| 58-310 | | LOCK(R),DOOR | | | |
| NA01-58-310B | 1 | | | | |
| 58-310Z | | LOCK(L),DOOR | | | |
| NA01-59-310B | 1 | | | | |
| 58-314B | | JOINT | | | |
| H043-72-411 | 2 | | | | |
| 58-315D | | CLIP (R) | | | |
| B001-59-335 | 1 | | | | |
| 58-315E | | CLIP (L) | | | |
| G030-58-315 | 3 | | | | |
| 58-321 | | HANDLE(R),INNER | | | |
| NA01-58-330C | 1 | | | | |
| 00 | INT- | NA3 NA5 BLACK | | | |
| 58-321Z | | HANDLE(L),INNER | | | |
| NA01-59-330C | 1 | | | | |
| 00 | INT- | NA3 NA5 BLACK | | | |
| 58-335A | | CLIP | | | |

CAT. AUNA06-03 1998-07

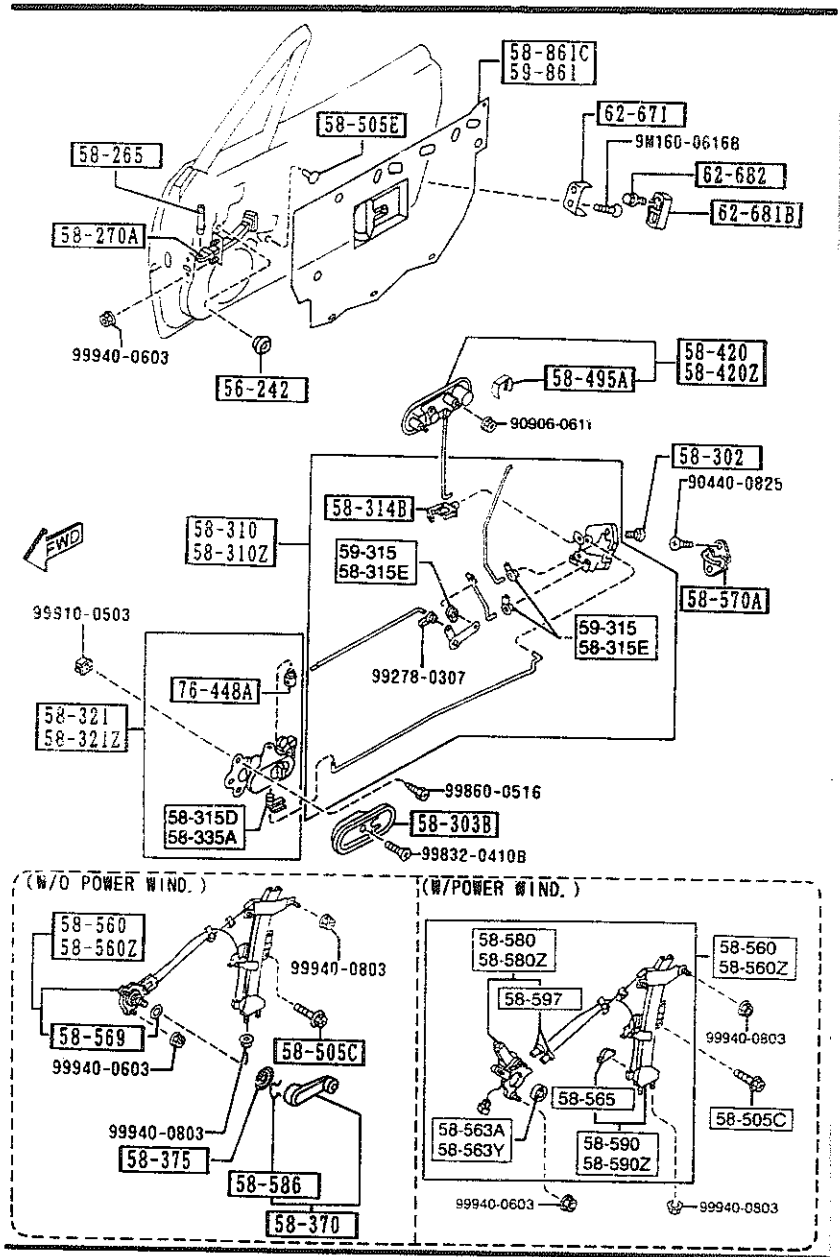


AUNA06

| PART NO | QTY | MODEL/REMARKS |
|---|---|---|
| CONT'D | | |
| FB01-58-335 | 1 | (FOR LEFT) |
| 58-370 | | HANDLE,REGULATOR |
| S084-58-580A | 2 | BASE, R-PKG, (W/O POWER WIND.) |
| 00 | INT- | NA3 NA5 BLACK |
| 58-375 | | ESCUTCHEON |
| B001-58-582A | 2 | BASE, R-PKG, (W/O POWER WIND.) |
| 00 | INT- | NA3 NA5 BLACK |
| 58-420 | | HANDLE(R),OUTER |
| NA01-58-410D | 1 | |
| 58-420Z | | HANDLE(L),OUTER |
| NA01-59-410D | 1 | |
| 58-495A | | RETAINER,LOCK CYL. |
| G211-58-495 | 2 | |
| 58-505C | | SCREW,WINDOW REGULATOR |
| B092-58-505 | 6 | |
| 58-505E | | CAP |
| B092-58-355 | 2 | BASE, R-PKG, (W/O POWER WIND.) |
| 58-560 | | REGULATOR(R),WINDOW |
| NA01-58-560H | 1 | BASE, R-PKG, (W/O POWER WIND.) |
| NA02-58-560K | 1 | F-SV, L-PKG, P.E.GR, T-PKG, (W/POWER WIND.) |
| 58-560Z | | REGULATOR(L),WINDOW |
| NA01-59-560H | 1 | BASE, R-PKG, (W/O POWER WIND.) |
| NA02-59-560K | 1 | F-SV, L-PKG, P.E.GR, T-PKG, (W/POWER WIND.) |
| 58-563A | | DRUM(R),POWER WINDOW REG. |
| *NA02-58-563 | 1 | F-SV, L-PKG, P.E.GR, |

CAT. AUNA06-03

1998-07

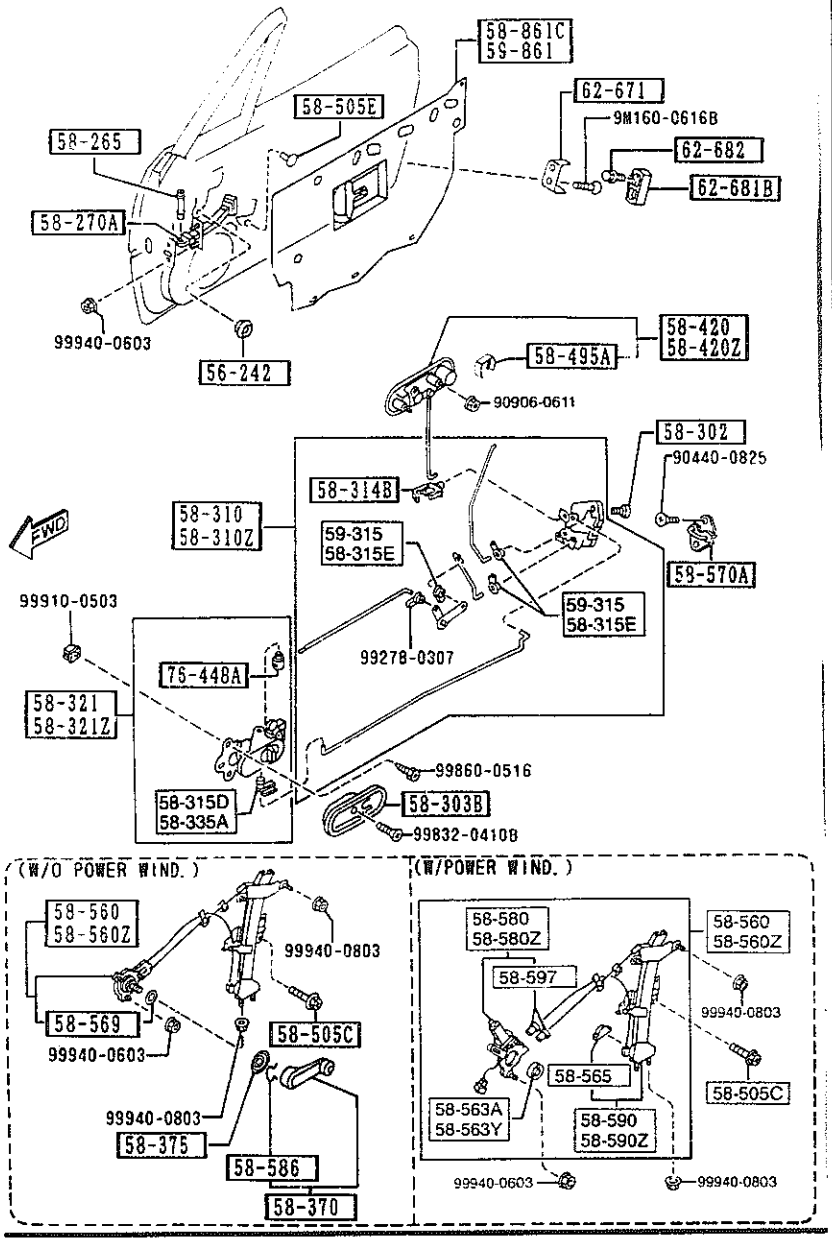


AUNA06



| PART NO. | QTY | MODEL APPLICATION |
|---|---|---|
| CONT'D | | T-PKG, (W/POWER WIND.) |
| 58-563Y | | DRUM(L),POWER WINDOW REG |
| *NA02-59-563 | 1 | F-SV, L-PKG, P.E.GR, T-PKG, (W/POWER WIND.) |
| 58-565 | | RUBBER,STOPPER |
| HG30-58-565 | 2 | F-SV, L-PKG, P.E.GR, T-PKG, (W/POWER WIND.) |
| 58-569 | | GASKET,WINDOW REGULATOR |
| B092-58-569 | 2 | BASE, R-PKG, (W/O POWER WIND.) |
| 58-570A | | STRIKER |
| B001-58-361A | 2 | |
| 58-580 | | MOTOR(R),WINDOW |
| *NA02-58-58X | 1 | F-SV, L-PKG, P.E.GR, T-PKG, (W/POWER WIND.) |
| 58-580Z | | MOTOR(L),WINDOW |
| *NA02-59-58X | 1 | F-SV, L-PKG, P.E.GR, T-PKG, (W/POWER WIND.) |
| 58-586 | | RING,SNAP |
| B001-58-585 | 2 | BASE, R-PKG, (W/O POWER WIND.) |
| 58-590 | | ARM/BASE(R),WINDOW |
| *NA02-58-590 | 1 | F-SV, L-PKG, P.E.GR, T-PKG, (W/POWER WIND.) |
| 58-590Z | | ARM/BASE(L),WINDOW |
| *NA02-59-590 | 1 | F-SV, L-PKG, P.E.GR, T-PKG, (W/POWER WIND.) |
| 58-597 | | BOLT,COVER-REG. GUIDE |
| *NA02-58-564 | 4 | F-SV, L-PKG, P.E.GR, T-PKG, (W/POWER WIND.) |

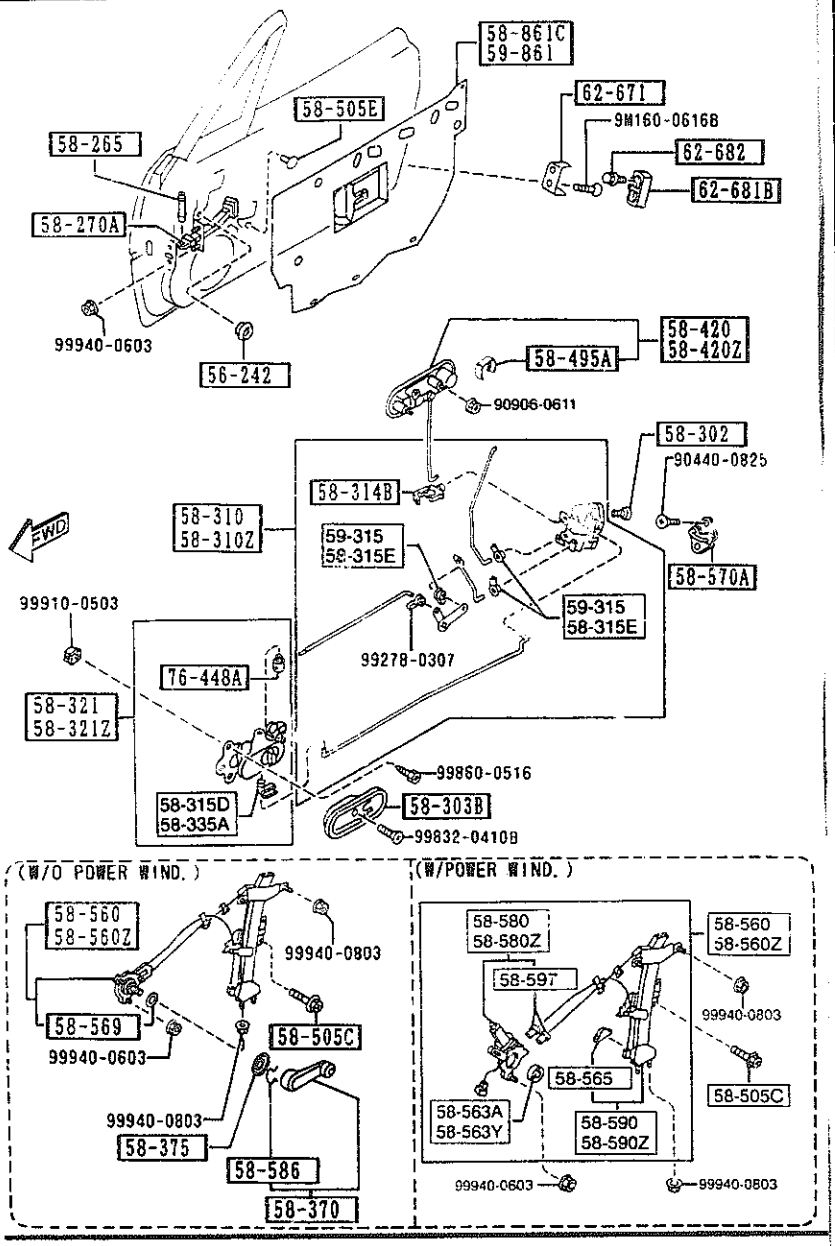


AUNA06



| PART NO | QTY | MODEL/SPECIFICATION | | |
|---|---|---|---|---|
| 58-861C | | SCREEN(R),FRONT DOOR | | |
| NA01-58-861A | 1 | BASE, R-PKG, (W/O POWER WIND.) | | |
| NA02-58-861A | 1 | F-SV, L-PKG, P.E.GR, T-PKG, (W/POWER WIND.) | | |
| 59-315 | | CLIP | | |
| G030-59-315 | 3 | (FOR RIGHT) | | |
| 59-861 | | SCREEN(L),FRONT DOOR | | |
| NA01-59-861A | 1 | BASE, R-PKG, (W/O POWER WIND.) | | |
| NA02-59-861A | 1 | F-SV, L-PKG, P.E.GR, T-PKG, (W/POWER WIND.) | | |
| 62-671 | | DOVETAIL,LIFT GATE | | |
| S084-62-671 AN(S084-62-671A) | 2 | | | -7401 |
| S084-62-671A | 2 | | | 7401- |
| 62-681B | | WEDGE,DOOR-FRONT | | |
| NA01-62-681 | 2 | | | |
| 62-682 | | SCREW,WEDGE-LIFT GATE | | |
| B216-62-682 | 4 | | | |
| 76-448A | | CLIP | | |
| G030-76-448 | 2 | | | |

7401 NA35*V-734532

5840 FRONT DOOR TRIMS & RELATED PARTS

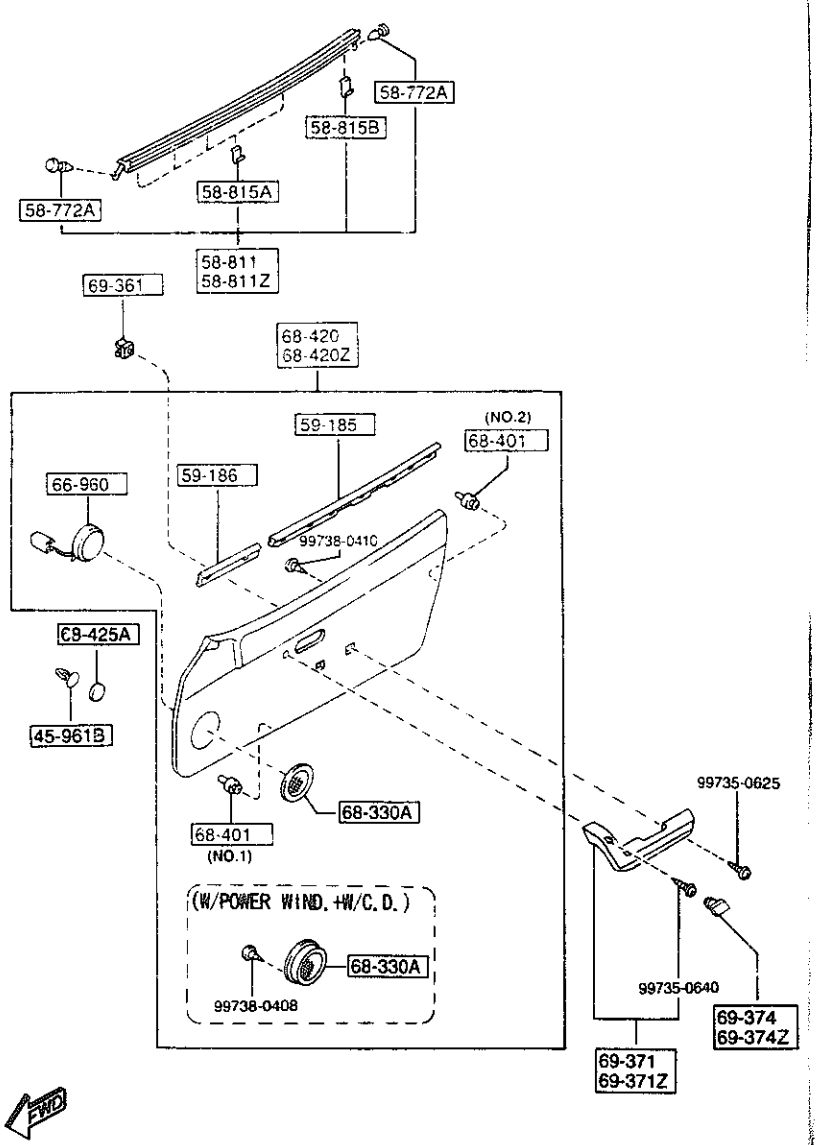


AUNA06

5840 -1 FRONT DOOR TRIMS & RELATED PARTS

| PART NO | QTY | MODEL/RESTRICTION | MODEL/RESTRICTION | MODEL/RESTRICTION | [illegible] |
|---|---|---|---|---|---|
| 45-961B | | CAP | | | |
| H002-45-961 | 4 | | | | |
| 58-772A | | FASTENER | | | |
| 1011-58-772 | 4 | | | | |
| 58-811 | | WEATHERSTRIP(R),OUT. | | | |
| NA01-58-810D | 1 | | | | |
| 58-811Z | | WEATHERSTRIP(L),OUT. | | | |
| NA01-59-810D | 1 | | | | |
| 58-815A | | CLIP,WEATHERSTRIP-OUTER | | | |
| NA01-58-815 | 8 | | | | |
| 58-815B | | CLIP'A',WEATHERSTRIP-OUT | | | |
| B157-58-815 | 2 | | | | |
| 59-185 | | WEATHERSTRIP NO.1 | | | |
| NA01-58-821 | 2 | | | | -7901 |
| AN(NA01-58-821A) | | | | | |
| *NA01-58-821A | 2 | | | | 7901- |
| 59-186 | | WEATHERSTRIP NO.2 | | | |
| NA02-58-821 | 2 | | | | |
| 66-960 | | SPEAKER,LOUD-FRONT | | | |
| NB42-66-960 | 2 | (W/C.D.) | | | |
| 68-330A | | GRILLE,SPEAKER | | | |
| BR72-68-350A | 2 | (W/POWER WIND.+W/C.D.) | | | |
| 60 | INT- | NA3 NA4 NA5 DARK GRAY/OFF-BLACK | | | |
| A004-68-5H0 | 2 | BASE, R-PKG, (W/O POWER WIND.) (W/POWER WIND.+W/O C.D.) | | | |
| 00 | INT- | NA3 NA5 NA7 BLACK | | | |
| 68-401 | | FASTENER,DOOR TRIM | | | |
| B100-68-401 | 14 | (ILLUST. NO.1) | | | |

7901 NA35*V-739040

CAT. AUNA06-03 1998-07

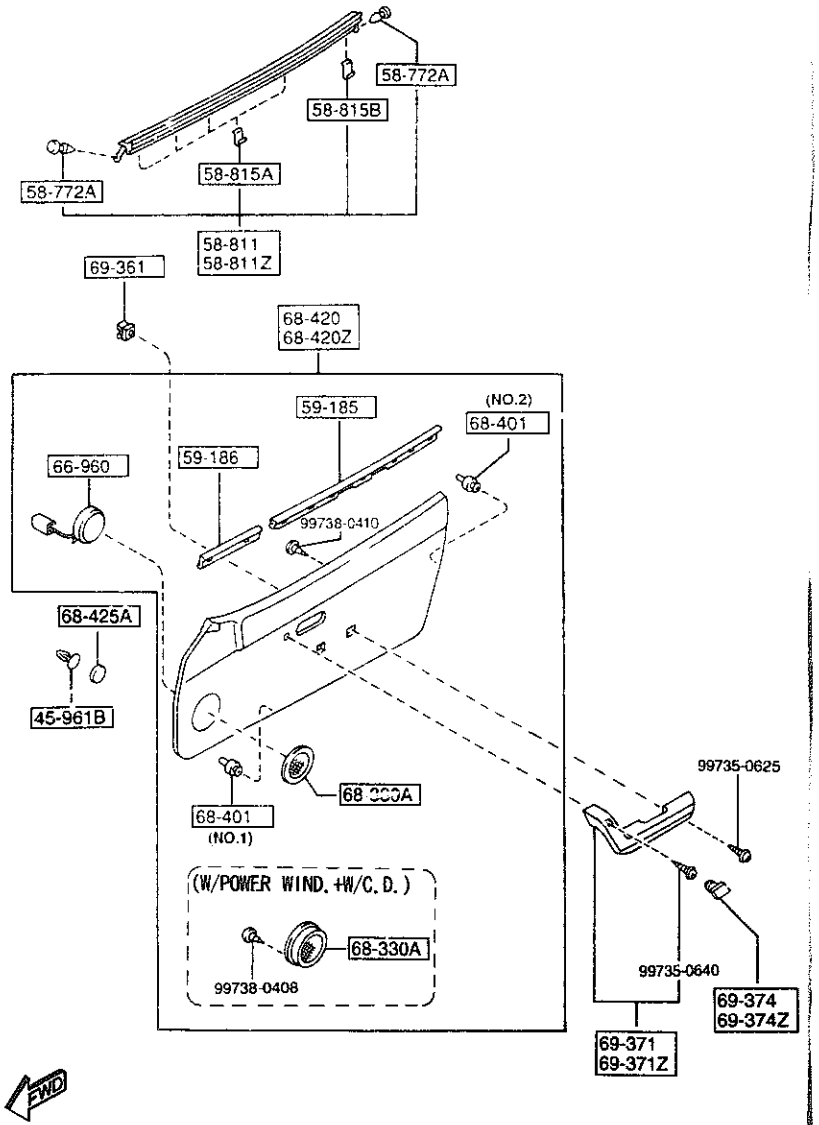


AUNA06



| PART NO | QTY | MODEL/ST-TRIM-A | MODEL/ST-TRIM-B | | |
|---|---|---|---|---|---|
| CONT'D | | | | | |
| W201-68-401 | 12 | (ILLUST. NO.2) | | | |
| +---------+ | | | | | |
| \| 68-420 \| | | TRIM(R),DOOR | | | |
| +---------+ | | | | | |
| NB85-68-420B | 1 | (W/POWER WIND.+W/O C.D.) | | | -7301 |
| 00 | INT- | NA3 BLACK | | | |
| 80 | INT- | NA5 BLACK/TAN | | | |
| NB87-68-420B | 1 | (W/POWER WIND.+W/C.D.) | | | -7301 |
| 00 | INT- | NA3 BLACK | | | |
| 80 | INT- | NA5 BLACK/TAN | | | |
| *NB84-68-420A | 1 | (W/O POWER WIND.+W/O C.D.) | | | -7901 |
| 00 | INT- | NA3 NA7 BLACK | | | |
| *NB86-68-420A | 1 | (W/O POWER WIND.+W/C.D.) | | | -7901 |
| 00 | INT- | NA3 NA7 BLACK | | | |
| NB85-68-420C | 1 | (W/POWER WIND.+W/O C.D.) | | | 7301-7901 |
| 00 | INT- | NA3 BLACK | | | |
| 80 | INT- | NA5 BLACK/TAN | | | |
| NB87-68-420C | 1 | (W/POWER WIND.+W/C.D.) | | | 7301-7901 |
| 00 | INT- | NA3 BLACK | | | |
| 80 | INT- | NA5 BLACK/TAN | | | |
| *NB84-68-420B | 1 | (W/O POWER WIND.+W/O C.D.) | | | 7901- |
| * 00 | INT- | NA3 NA7 BLACK | | | |
| *NB85-68-420D | 1 | (W/POWER WIND.+W/O C.D.) | | | 7901- |
| * 00 | INT- | NA3 BLACK | | | |
| * 80 | INT- | NA5 BLACK/TAN | | | |
| *NB86-68-420B | 1 | (W/O POWER WIND.+W/C.D.) | | | 7901- |
| * 00 | INT- | NA3 NA7 BLACK | | | |
| *NB87-68-420D | 1 | (W/POWER WIND.+W/C.D.) | | | 7901- |
| * 00 | INT- | NA3 BLACK | | | |
| * 80 | INT- | NA5 BLACK/TAN | | | |

7301 NA35*V-732210
7901 NA35*V-739040

CAT. AUNA06-03 1998-07

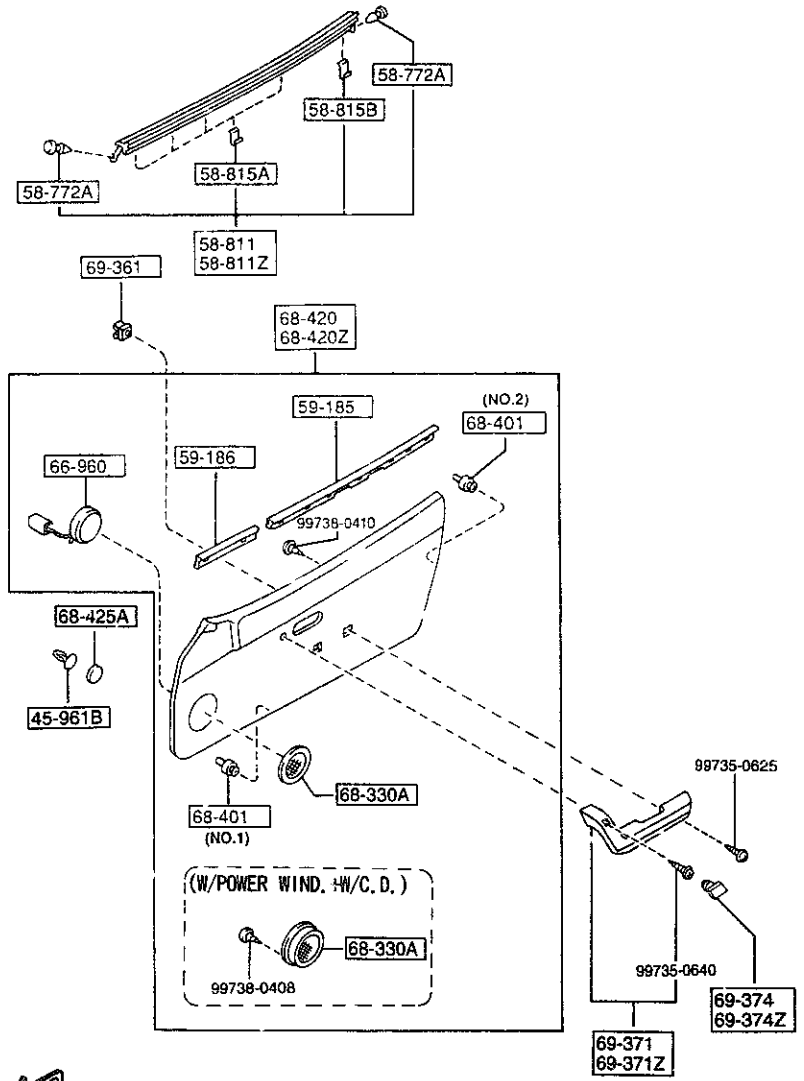


AUNA06



| PART NO | QTY | MODEL/RESTRICTION | MODEL/RESTRICTION | MODEL/RESTRICTION | PAGE |
|---|---|---|---|---|---|
| 68-420Z | | TRIM(L),DOOR | | | |
| NB85-68-450B | 1 | (W/POWER WIND.+W/O C.D.) | | | -7301 |
| 00 | INT- | NA3 BLACK | | | |
| 80 | INT- | NA5 BLACK/TAN | | | |
| NB87-68-450B | 1 | (W/POWER WIND.+W/C.D.) | | | -7301 |
| 00 | INT- | NA3 BLACK | | | |
| 80 | INT- | NA5 BLACK/TAN | | | |
| NB84-68-450A | 1 | (W/O POWER WIND.+W/O C.D.) | | | -7901 |
| 00 | INT- | NA3 NA7 BLACK | | | |
| NB86-68-450A | 1 | (W/O POWER WIND.+W/C.D.) | | | -7901 |
| 00 | INT- | NA3 NA7 BLACK | | | |
| NB85-68-450C | 1 | (W/POWER WIND.+W/O C.D.) | | | 7301-7901 |
| 00 | INT- | NA3 BLACK | | | |
| 80 | INT- | NA5 BLACK/TAN | | | |
| NB87-68-450C | 1 | (W/POWER WIND.+W/C.D.) | | | 7301-7901 |
| 00 | INT- | NA3 BLACK | | | |
| 80 | INT- | NA5 BLACK/TAN | | | |
| *NB84-68-450B | 1 | (W/O POWER WIND.+W/O C.D.) | | | 7901- |
| * 00 | INT- | NA3 NA7 BLACK | | | |
| *NB85-68-450D | 1 | (W/POWER WIND.+W/O C.D.) | | | 7901- |
| * 00 | INT- | NA3 BLACK | | | |
| * 80 | INT- | NA5 BLACK/TAN | | | |
| *NB86-68-450B | 1 | (W/O POWER WIND.+W/C.D.) | | | 7901- |
| * 00 | INT- | NA3 NA7 BLACK | | | |
| *NB87-68-450D | 1 | (W/POWER WIND.+W/C.D.) | | | 7901- |
| * 00 | INT- | NA3 BLACK | | | |
| * 80 | INT- | NA5 BLACK/TAN | | | |
| 68-425A | | COVER,HOLE | | | |
| LA01-57-425A | 2 | | | | |

7301 NA35*V-732210
7901 NA35*V-739040

CAT. AUNA06-03 1998-07

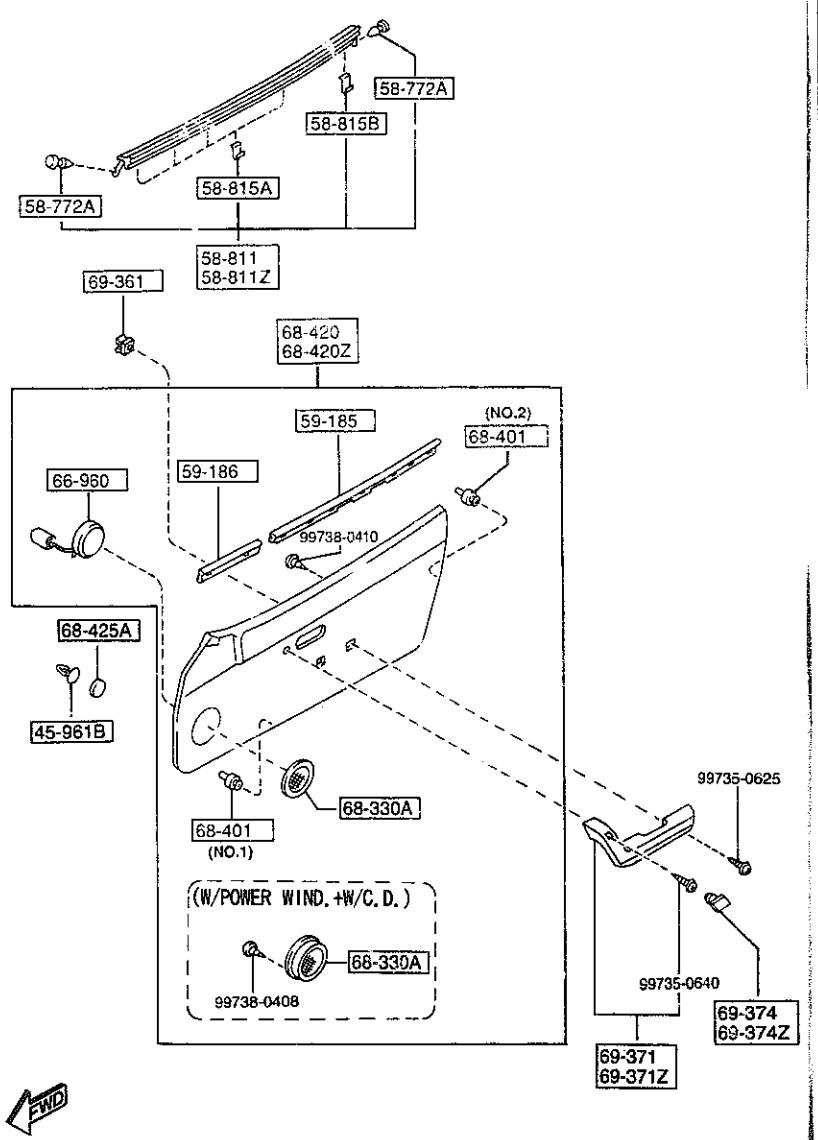


AUNA06



| PART NO | QTY | MODEL/RESTRICTION | MODEL/RESTRICTION | MODEL/RESTRICTION | FROM-TO |
|---|---|---|---|---|---|
| 69-361 | | GROMMET,SCREW | | | |
| B316-69-361 | 6 | | | | |
| 69-371 | | REST(R),ARM | | | |
| BF70-69-370C | 1 | | | | |
| 00 | INT- | NA3 NA7 NA8 BLACK | | | |
| 88 | INT- | NA4 NA5 TAN | | | |
| 69-371Z | | REST(L),ARM | | | |
| BF70-69-390C | 1 | | | | |
| 00 | INT- | NA3 NA7 NA8 BLACK | | | |
| 88 | INT- | NA4 NA5 TAN | | | |
| 69-374 | | CAP(R),PULL HANDLE | | | |
| BF70-69-372 | 1 | | | | |
| 00 | INT- | NA3 NA7 NA8 BLACK | | | |
| 88 | INT- | NA4 NA5 TAN | | | |
| 69-374Z | | CAP(L),PULL HANDLE | | | |
| BF70-69-392 | 1 | | | | |
| 00 | INT- | NA3 NA7 NA8 BLACK | | | |
| 88 | INT- | NA4 NA5 TAN | | | |

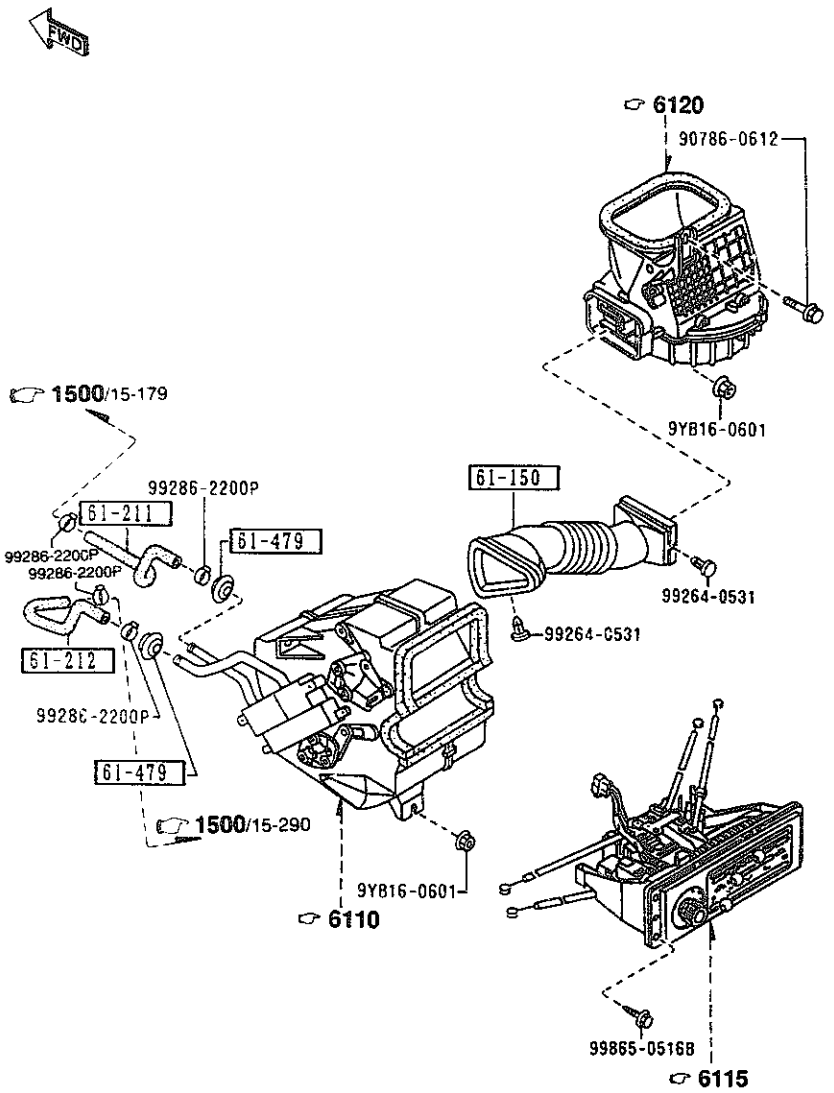


AUNA06

6100 -1 * HEATER

| PART NO | QTY | MODEL/DESTINATION | | |
|---|---|---|---|---|
| 61-150 | | DUCT,AIR | | |
| NA01-61-150A | 1 | | | |
| 61-211 | | HOSE NO.1,WATER | | |
| NA75-61-211 | 1 | | | |
| 61-212 | | HOSE NO.2,WATER | | |
| NA75-61-212 | 1 | | | |
| 61-479 | | GROMMET | | |
| 8871-61-219A | 2 | | | |

CAT. AUNA06-03 1998-07

6110 HEATER UNIT COMPONENTS

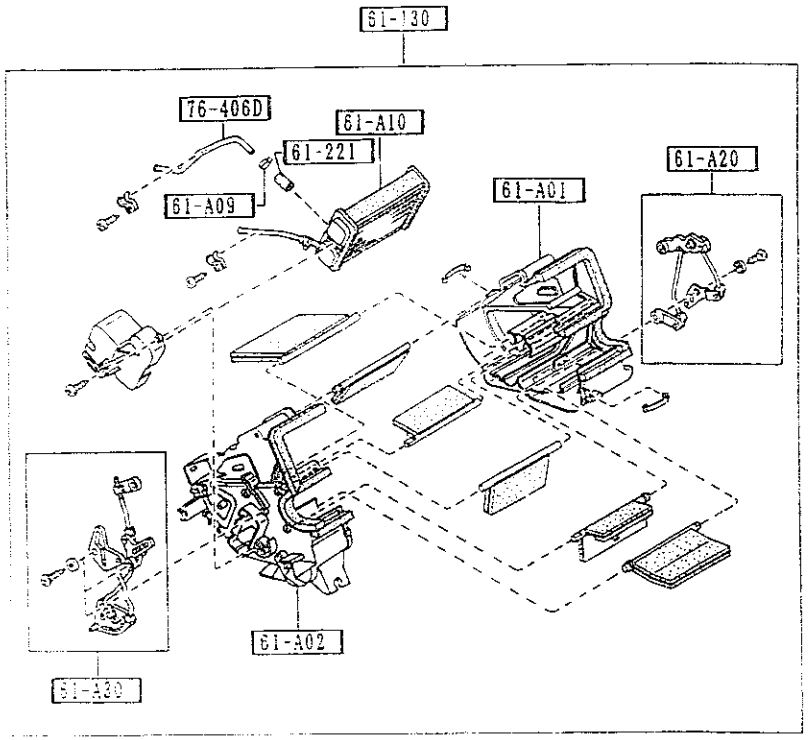


6110 -1 * HEATER UNIT COMPONENTS

| PART NO | QTY | MODEL/REF SPECIFICATION | MODEL/REF SPECIFICATION | MODEL/REF SPECIFICATION | |
|---|---|---|---|---|---|
| 61-A01 | | CASE'A',HEATER UNIT | | | |
| NA01-61-A01 | 1 | | | | |
| 61-A02 | | CASE'B',HEATER UNIT | | | |
| NA01-61-A02 | 1 | | | | |
| 61-A09 | | CLIP | | | |
| NA01-61-A09 | 1 | | | | |
| 61-A10 | | CORE,HEATER UNIT | | | |
| NA75-61-A10 | 1 | | | | |
| 61-A20 | | LINK SET,TEMP | | | |
| NA01-61-A20 | 1 | | | | |
| 61-A30 | | LINK SET,MODE | | | |
| NA01-61-A30 | 1 | | | | |
| 61-130 | | HEATER UNIT | | | |
| NA75-61-130 A (NA75-61-130A) | 1 | | | | -7701 |
| *NA75-61-130A | 1 | | | | 7701- |
| 61-221 | | HOSE,WATER | | | |
| NA01-61-A21 | 1 | | | | |
| 76-406D | | PIPE,HEATER UNIT | | | |
| NA75-61-A15 | 1 | | | | |

7701 NA35*V-738443

6115 HEATER CONTROLS COMPONENTS

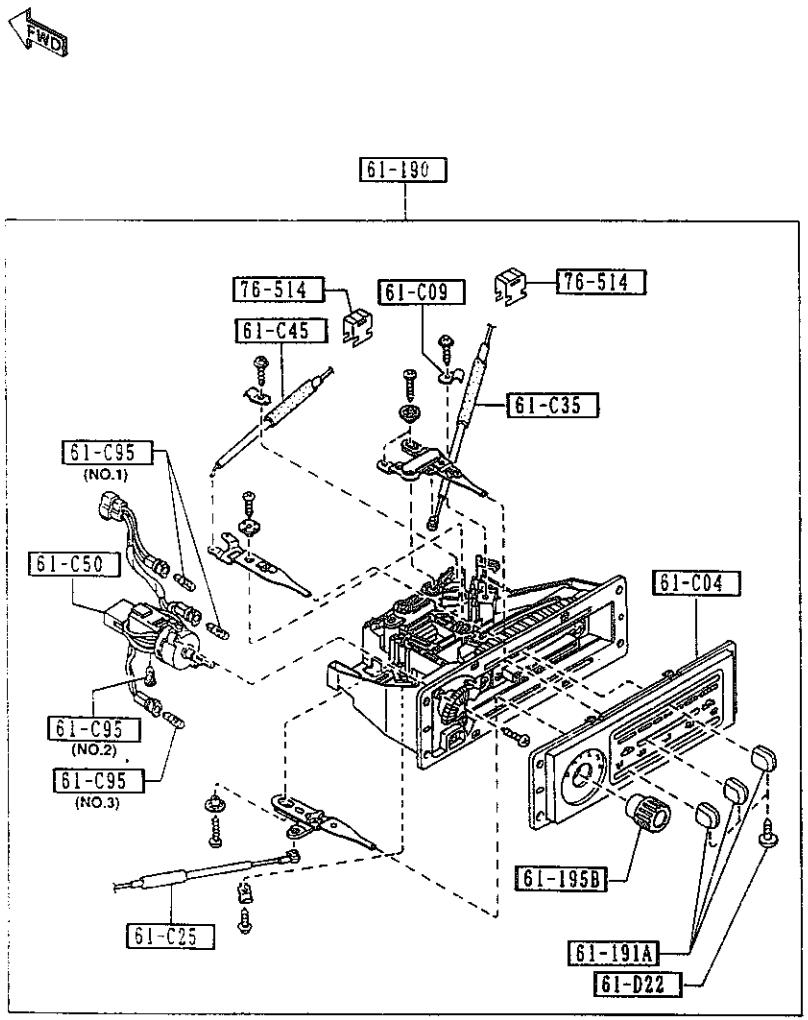


6115 -1 * HEATER CONTROL COMPONENTS

| PART NO. | QTY | MODEL/REMARKS |
|---|---|---|
| 61-C04 | | PANEL,PLATE-MODE CONTROL |
| NA01-61-C04A | 1 | |
| 61-C09 | | CLIP,HEATER CONTROL |
| H260-61-C09 | 1 | |
| 61-C25 | | WIRE,TEMP. CONTROL |
| NA01-61-C25 | 1 | |
| 61-C35 | | WIRE,MODE CONTROL |
| NA01-61-C35 | 1 | |
| 61-C45 | | WIRE,RECYCLE & FRESH |
| NA75-61-C45 | 1 | |
| 61-C50 | | SWITCH,FAN-HEATER CONTROL |
| NA01-61-C50A | 1 | |
| 61-C95 | | BULB,MODE CONTROL |
| NA01-61-C95 | 2 | (ILLUST. NO.1) |
| NA02-61-C95 | 1 | (ILLUST. NO.2) |
| NA03-61-C95A | 1 | (ILLUST. NO.3) |
| 61-D22 | | SCREW,RR HEATER UNIT |
| NA01-61-D22 | 3 | |
| 61-190 | | CONTROL,HEATER |
| NA75-61-190C | 1 | |
| 61-191A | | KNOB NO.1 |
| NA01-61-191 | 3 | |
| 61-195B | | KNOB,FAN SWITCH |
| NA01-61-195 | 1 | |
| 76-514 | | CLIP |
| B001-76-526 | 2 | |

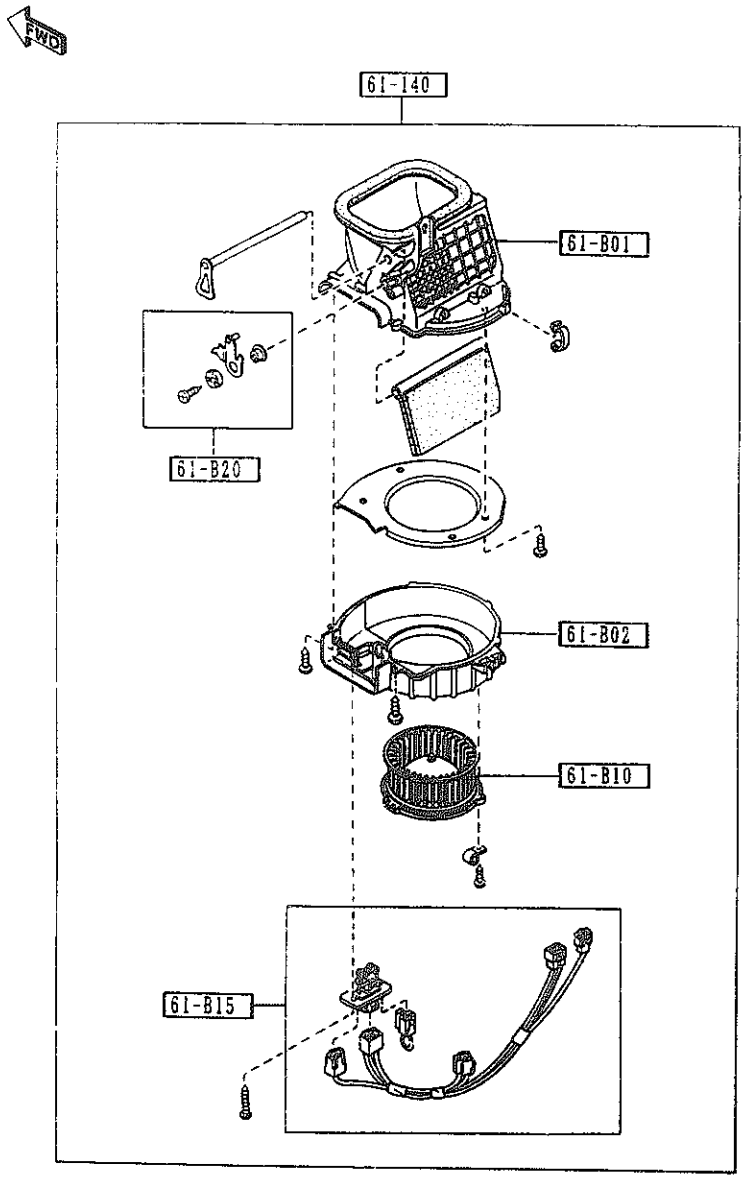


AUNA06

## 6120 -1 * HEATER BLOWER COMPONENTS

| PART NO | QTY | MODEL/DESTINATION | MODEL/DESTINATION | MODEL/DESTINATION | |
|---|---|---|---|---|---|
| 61-B01 | | CASE'A',BLOWER UNIT | | | |
| NA75-61-B01 | 1 | | | | |
| 61-B02 | | CASE'B',BLOWER UNIT | | | |
| NA01-61-B02 | 1 | | | | |
| 61-B10 | | MOTOR,FAN-BLOWER UNIT | | | |
| NA01-61-B10 | 1 | | | | |
| 61-B15 | | RESISTOR,BLOWER UNIT | | | |
| NA01-61-B15 | 1 | | | | |
| 61-B20 | | LINK,RECYCLE & FRESH | | | |
| NA01-61-B20 | 1 | | | | |
| 61-140 | | BLOWER UNIT | | | |
| NA75-61-140 | 1 | | | | -7701 |
| AN(NA75-61-140A) | | | | | |
| *NA75-61-140A | 1 | | | | 7701- |

7701 NA35*V-738443

CAT. AUNA06-03

1998-07

## (PIPE & CONDENSER)

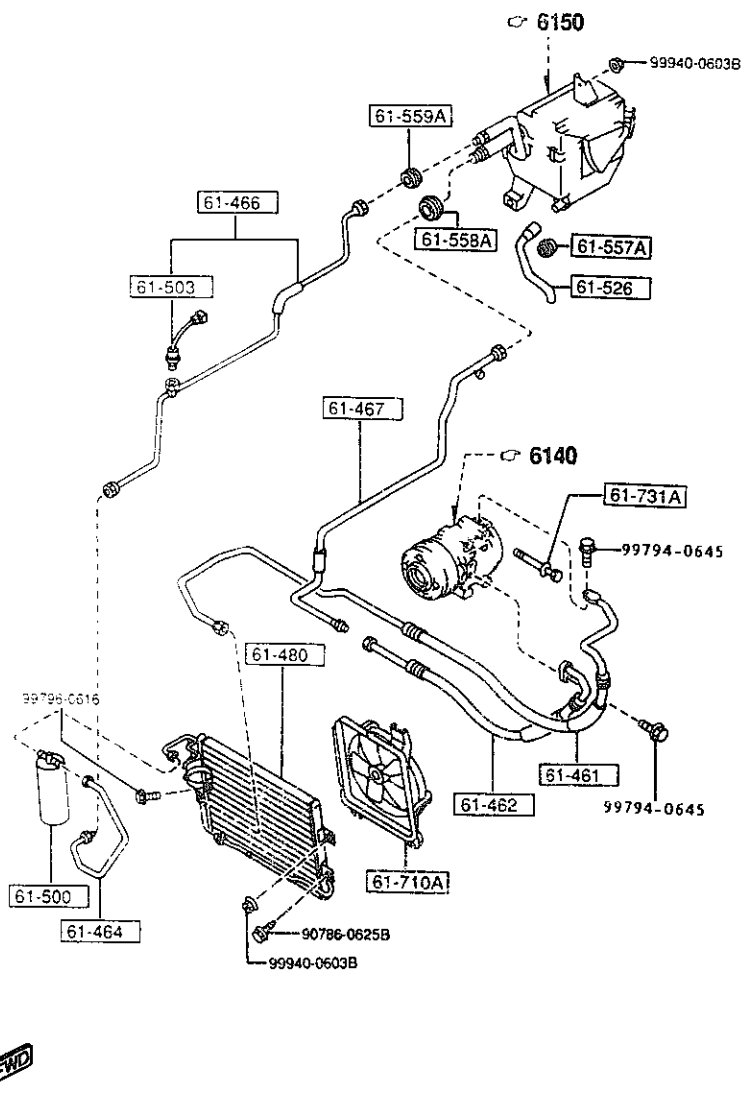


AUNA06



## (BRACKET & CLIP)

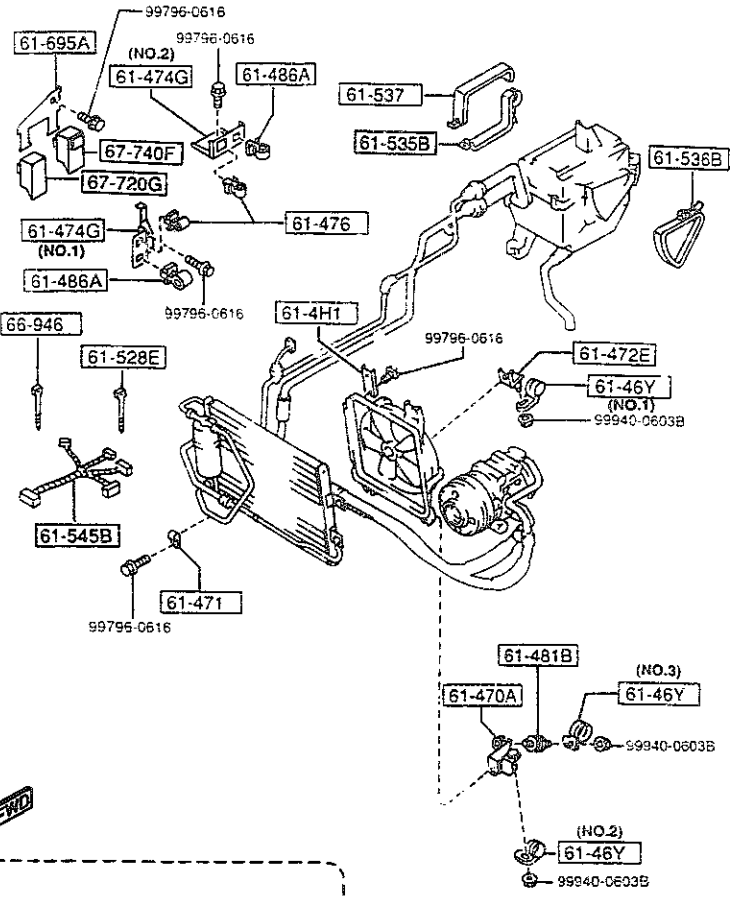


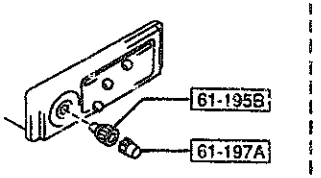


AUNA06

## (PIPE & CONDENSER)

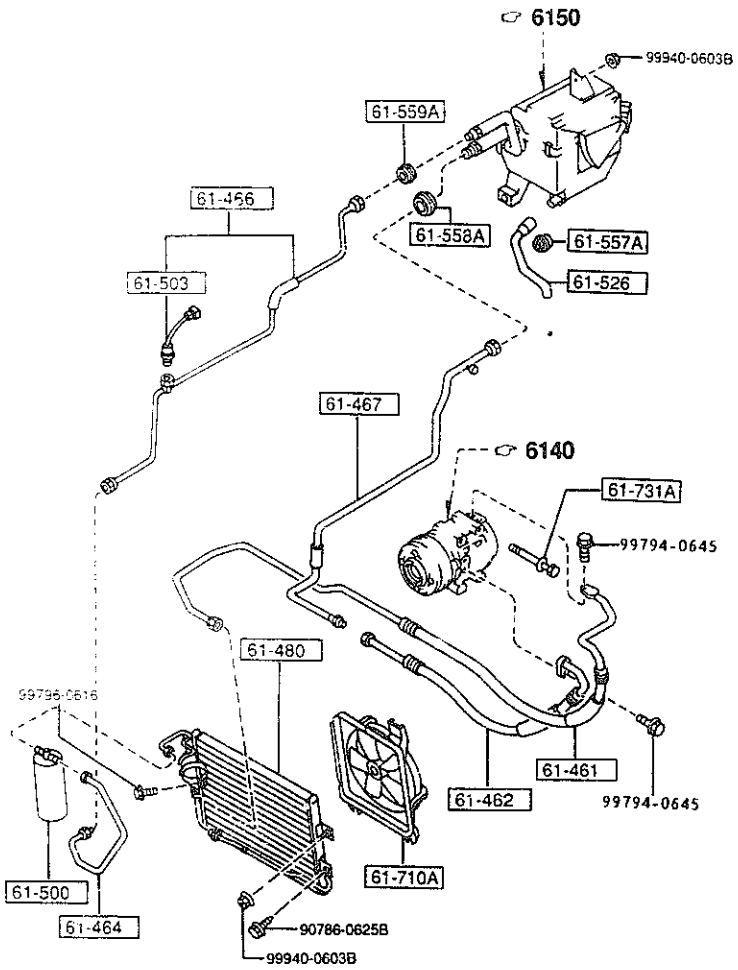


AUNA06



| PART NO | QTY | MODEL/SPECIFICATION | MODEL CODE | |
|---|---|---|---|---|
| 61-195B<br>NA01-61-193 | 1 | KNOB,FAN SWITCH | | |
| 61-197A<br>NA01-61-197 | 1 | KNOB,AIR CON. | | |
| 61-4H1<br>NA01-61-4H1 | 1 | BRACKET,HOSE<br>(A) | | |
| 61-46Y<br>BR71-61-46Y | 1 | CLIP,PIPE<br>(A)<br>(ILLUST. NO.1) | | |
| BR76-61-46Y | 1 | (A)<br>(ILLUST. NO.2) | | |
| NA01-61-46YC | 1 | (A)<br>(ILLUST. NO.3) | | |
| 61-461<br>NA75-61-461 | 1 | HOSE,FLEXIBLE-HIGH<br>(A) | | |
| 61-462<br>NA75-61-462 | 1 | HOSE,FLEXIBLE-LOW<br>(A) | | |
| 61-464<br>NA75-61-467 | 1 | PIPE NO.2,COOLER<br>(A) | | |
| 61-466<br>NA75-61-46XA | 1 | PIPE NO.4,COOLER<br>(A) | | |
| 61-467<br>NA75-61-468 | 1 | PIPE NO.5,COOLER<br>(A) | | |
| 61-470A<br>NA02-61-471A | 1 | BRACKET,HOSE<br>(A) | | |
| 61-471<br>BF67-61-471 | 1 | CLIP,PIPE<br>(A) | | |

## (BRACKET & CLIP)

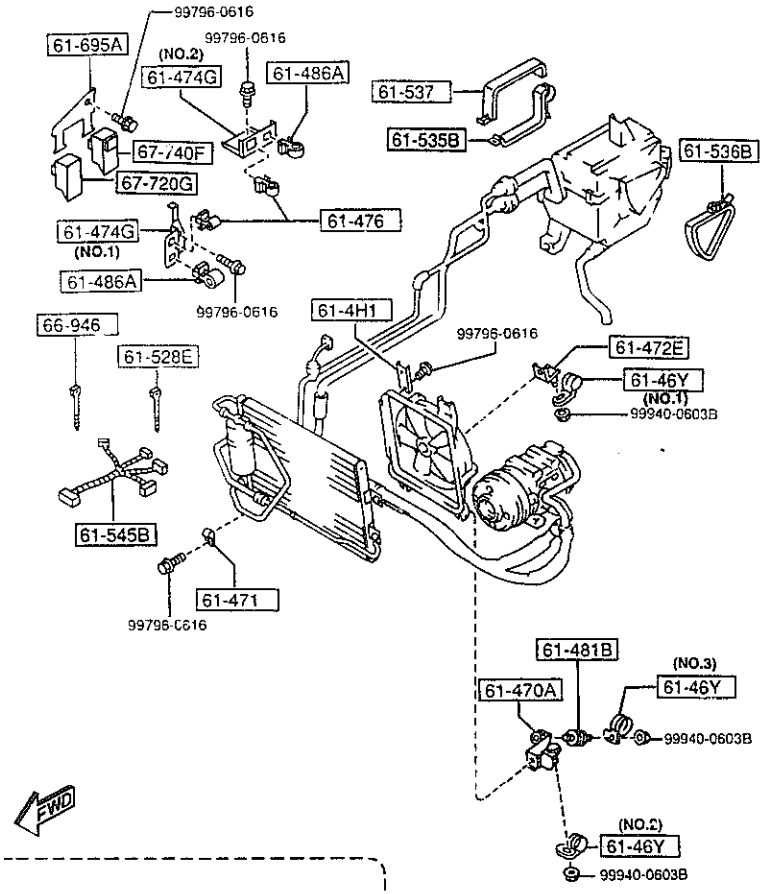


AUNA06



| PART NO | QTY | MODEL/DESCRIPTION | | | |
|---|---|---|---|---|---|
| 61-472E | | BRACKET,CLAMP | | | |
| NA01-61-472 | 1 | (A) | | | |
| 61-474G | | BRACKET,PIPE | | | |
| NA01-61-474 | 1 | (A) (ILLUST. NO.1) | | | |
| NA02-61-474A | 1 | (A) (ILLUST. NO.2) | | | |
| 61-476 | | CLIP | | | |
| NA02-61-476 | 2 | (A) | | | |
| 61-480 | | CONDENSER | | | |
| NA75-61-480 | 1 | (A) | | | |
| 61-481B | | RUBBER,INSULATOR | | | |
| FC20-61-481 | 1 | (A) | | | |
| 61-486A | | CLIP | | | |
| UB39-61-486A | 2 | | | | |
| 61-500 | | TANK,LIQUID | | | |
| NA75-61-500 | 1 | (A) | | | |
| 61-503 | | SW.,PRESSURE-LIQUID TANK | | | |
| GB6H-61-503 | 1 | (G) | | | |
| 61-526 | | HOSE,DRAIN | | | |
| NA01-61-526 | | (A) | | | -7722 |
| AN(NA01-61-526A) | 1 | | | | |
| *NA01-61-526A | 1 | (A) | | | 7722- |
| 61-528E | | BAND | | | |
| NA01-61-435 | 1 | (G) | | | |
| 61-535B | | PLATE NO.1,SEAL | | | |
| NA01-61-52YA | | (A) | | | |

7722 NA35*V-738852

CAT. AUNA06-03 1998-07

## (PIPE & CONDENSER)

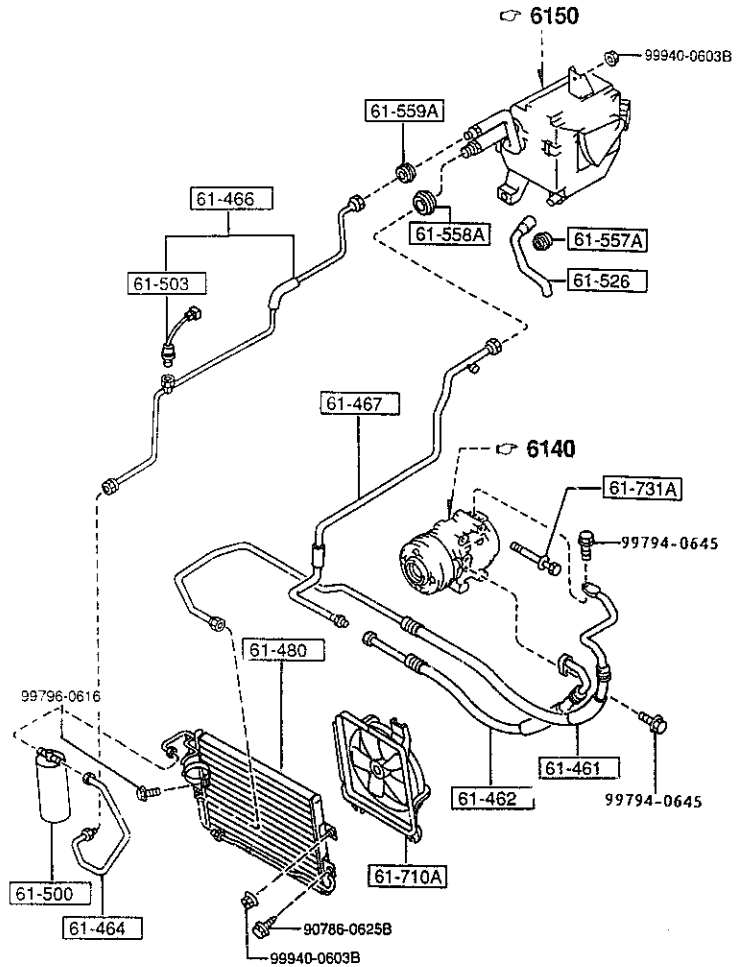


AUNA06



| PART NO. | QTY | MODEL/RESTRICTION | MODEL/RESTRICTION | MODEL/RESTRICTION | |
|---|---|---|---|---|---|
| CONT'D | 1 | | | | |
| 61-536B<br>NA01-61-52Z | 1 | PLATE NO.2,SEAL<br>(A) | | | |
| 61-537<br>NA01-61-529 | 1 | PLATE NO.3,SEAL<br>(A) | | | |
| 61-545B<br>NA75-61-545A | 1 | HARNESS,WIRE<br>(A) | | | |
| 61-557A<br>FB04-61-557 | 1 | GROMMET<br>(A) | | | |
| 61-558A<br>BF67-61-558 | 1 | GROMMET<br>(A) | | | |
| 61-559A<br>BF67-61-559 | 1 | GROMMET<br>(A) | | | |
| 61-695A<br>NA75-61-695 | 1 | BRACKET,RELAY<br>(A) | | | |
| 61-710A<br>NA01-61-710 | 1 | FAN,CONDENSER<br>(A) | | | |
| 61-731A<br>B111-61-731 | 4 | BOLT,AIR CON. | | | |
| 66-946<br>NA02-61-435 | 1 | BAND<br>(A) | | | |
| 67-720G<br>EE12-67-720 | 1 | RELAY,TRANSFER | | | |

## (BRACKET & CLIP)

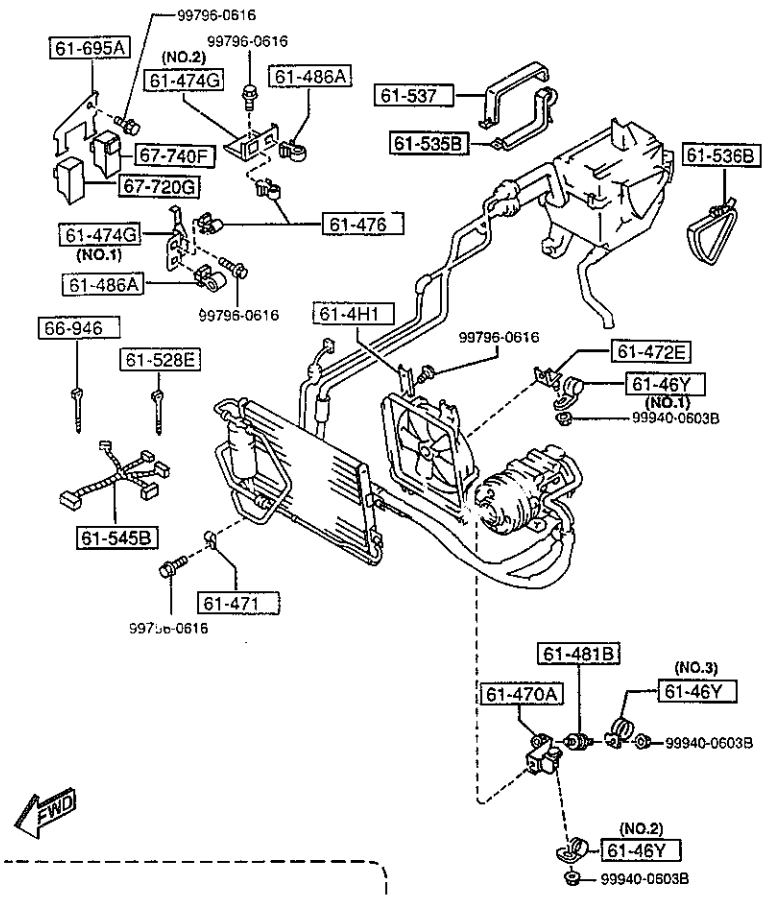


AUNA06

6130 -4 * AIR CONDITIONER

| PART NO. | QTY | MODEL/RESTRICTION | MODEL/RESTRICTION | MODEL/RESTRICTION | FROM-TO |
|---|---|---|---|---|---|
| 67-740F<br>H450-67-740 | 1 | CONTROL,COOLANT FAN<br>30A | | | |

CAT. AUNA06-03 1998-07

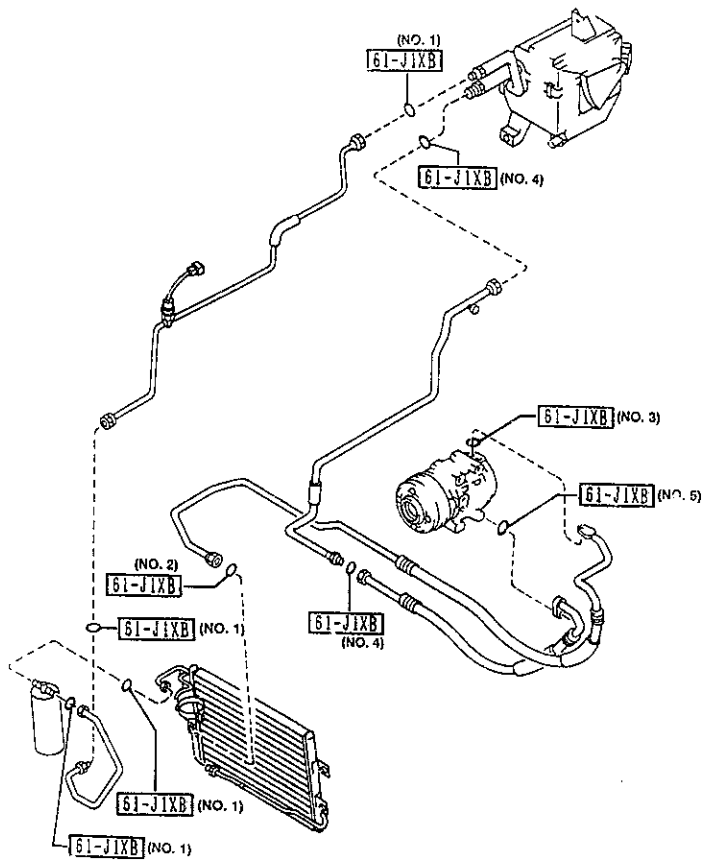


(Note)
The p/no (NO. 1) ~ (NO. 5) with D-code 61-J1XB consist 10 pcs of O Rings.

AUNA06

6135 -1 * AIR CONDITIONING COOLING PIPE O-RING

| PART NO. | QTY | MODEL/RESTRICTION | MODEL/RESTRICTION | MODEL/RESTRICTION | [illegible] |
|---|---|---|---|---|---|
| 61-J1XB | | RING,'O'-NO.3 | | | |
| LB51-61-J1X | 1 | (E) (ILLUST. NO.1) | | | |
| LB54-61-J1X | 1 | (E) (ILLUST. NO.2) | | | |
| LB55-61-J1X | 1 | (E) (ILLUST. NO.3) | | | |
| LB56-61-J1X | 1 | (E) (ILLUST. NO.4) | | | |
| LB57-61-J1X | 1 | (E) (ILLUST. NO.5) | | | |

CAT. AUNA06-03

1998-07

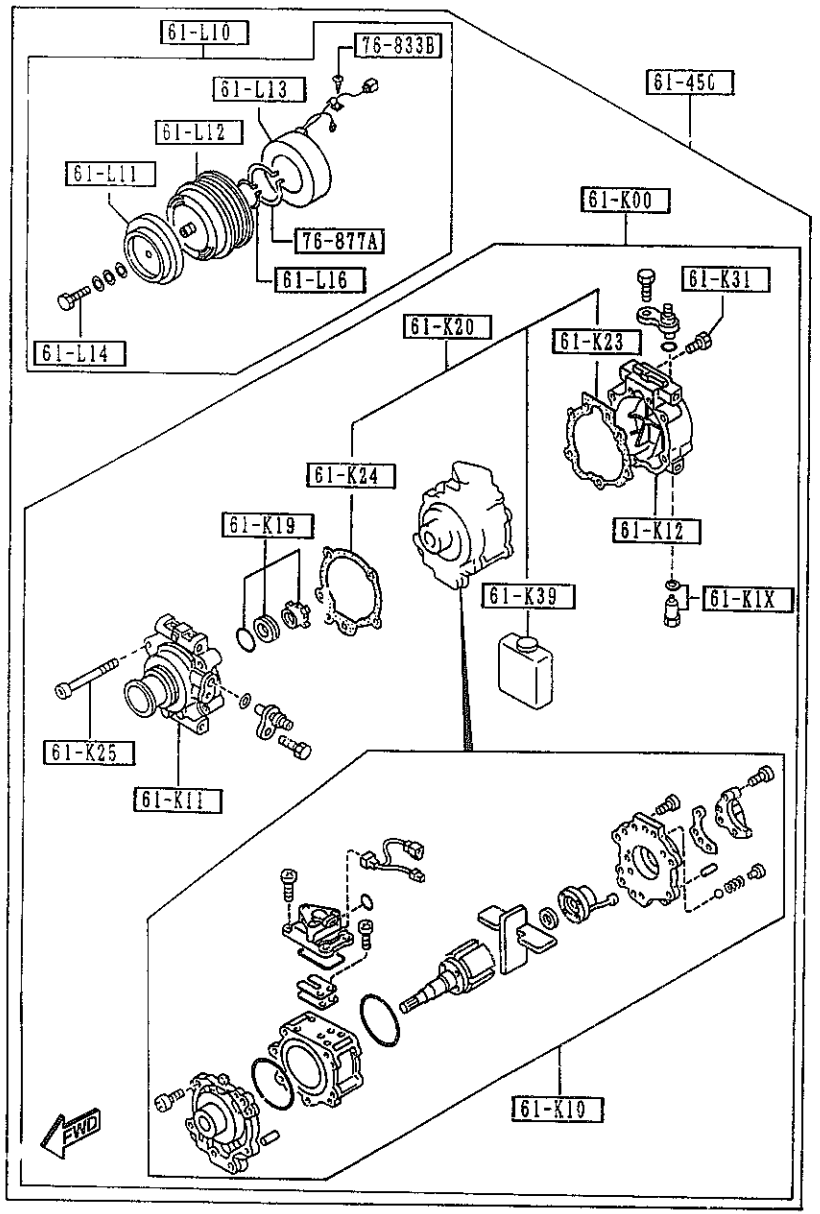


AUNA06

6140 -1 AIR CONDITIONING COMPRESSOR COMPONENTS

| PART NO. | QTY | MODEL/RESTRICTION | MODEL/RESTRICTION | MODEL/RESTRICTION | |
|---|---|---|---|---|---|
| 61-K00 | | COMPRESSOR,AIR CON. | | | |
| NA75-61-K00 | 1 | (A) | | | |
| 61-K1X | | VALVE,RELIEF | | | |
| NA75-61-K1X | 1 | (A) | | | |
| 61-K10 | | SHAFT,CYL.-COMPRESSOR | | | |
| NA75-61-K10 | 1 | (A) | | | |
| 61-K11 | | HEAD,CYL.-COMPRESSOR | | | |
| NA75-61-K11 | 1 | (A) | | | |
| 61-K12 | | HEAD,CYL.-COMPRESSOR | | | |
| NA75-61-K12 | 1 | (A) | | | |
| 61-K19 | | SEAL,SHAFT-COMPR. | | | |
| NA75-61-K19 | 1 | (A) | | | |
| 61-K20 | | GASKET KIT,COMPRESSOR | | | |
| NA75-61-K2X | 1 | (A) | | | |
| 61-K23 | | PLUG,COMPRESSOR | | | |
| NA75-61-K23 | 1 | (A) | | | |
| 61-K24 | | GASKET,COMPRESSOR | | | |
| ✱NA02-61-K24 | 1 | (A) | | | |
| 61-K25 | | BOLT,COMPRESSOR-AIR CON. | | | |
| F065-61-K25 | 5 | | | | |
| 61-K31 | | BOLT,COMPRESSOR | | | |
| F065-61-K31 | 2 | | | | |
| 61-K39 | | OIL,COMPRESSOR | | | |
| NA75-61-K39 | 1 | (A) | | | |

CAT. AUNA06-03

1998-07

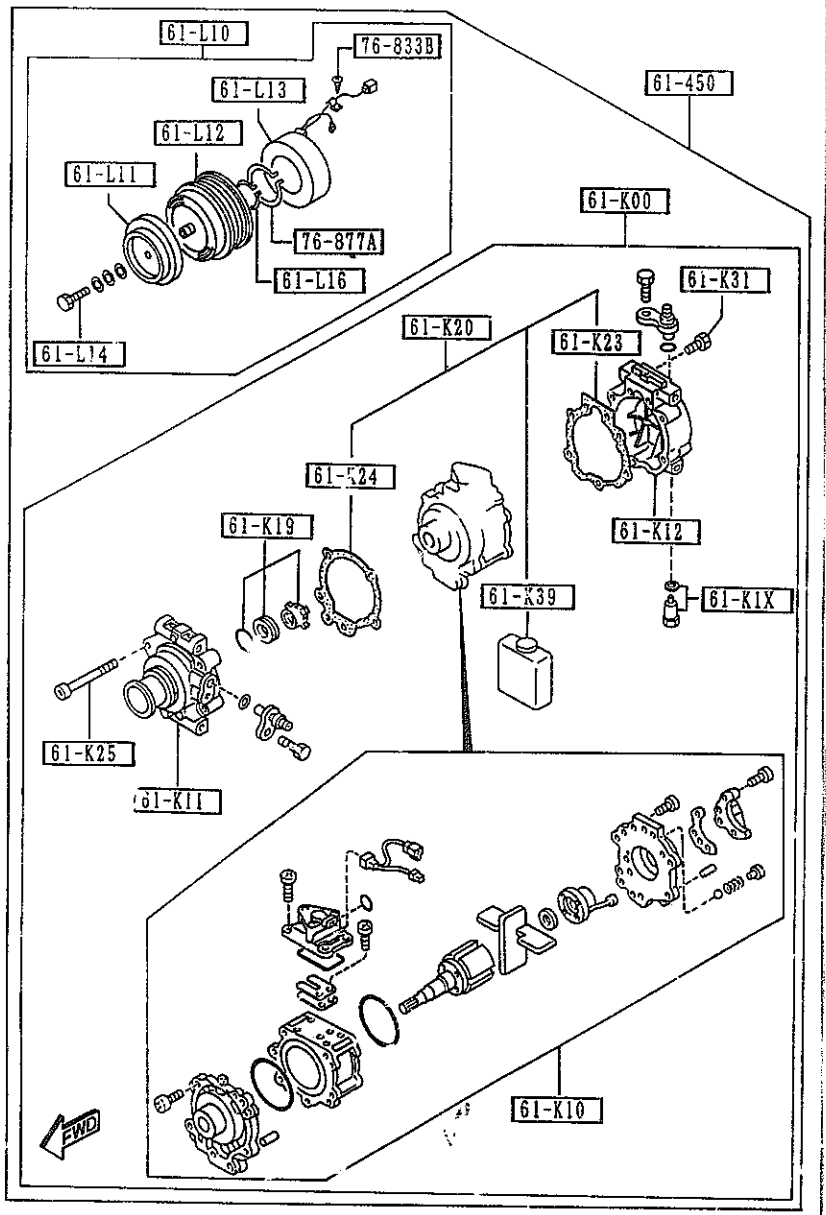


AUNA06

6140 -2 * AIR CONDITIONING COMPRESSOR COMPONENTS

| PART NO. | QTY | MODEL/RESTRICTION | MODEL/RESTRICTION | MODEL/RESTRICTION | FROM-TO |
|---|---|---|---|---|---|
| 61-L10<br>NA75-61-L10 | 1 | CLUTCH,MAGNET<br>(A) | | | |
| 61-L11<br>NA75-61-L11 | 1 | ARMATURE,MAGNETIC CLUTCH<br>(A) | | | |
| 61-L12<br>NA75-61-L12 | 1 | PULLEY,MAGNET CLUTCH<br>(A) | | | |
| 61-L13<br>NA75-61-L13 | 1 | COIL,FIELD-MAGNET CLUTCH<br>(A) | | | |
| 61-L14<br>F065-61-L14 | 1 | BOLT,MAGNET CLUTCH | | | |
| 61-L16<br>F065-61-L16 | 1 | RING,SNAP-MAGNET CLUTCH | | | |
| 61-450<br>NA75-61-450 | 1 | COMPRESSOR<br>(A) | | | |
| 76-833B<br>B001-76-734 | 1 | WASHER | | | |
| 76-877A<br>B001-76-725 | 1 | RING,SNAP | | | |

CAT. AUNA06-03

1998-07

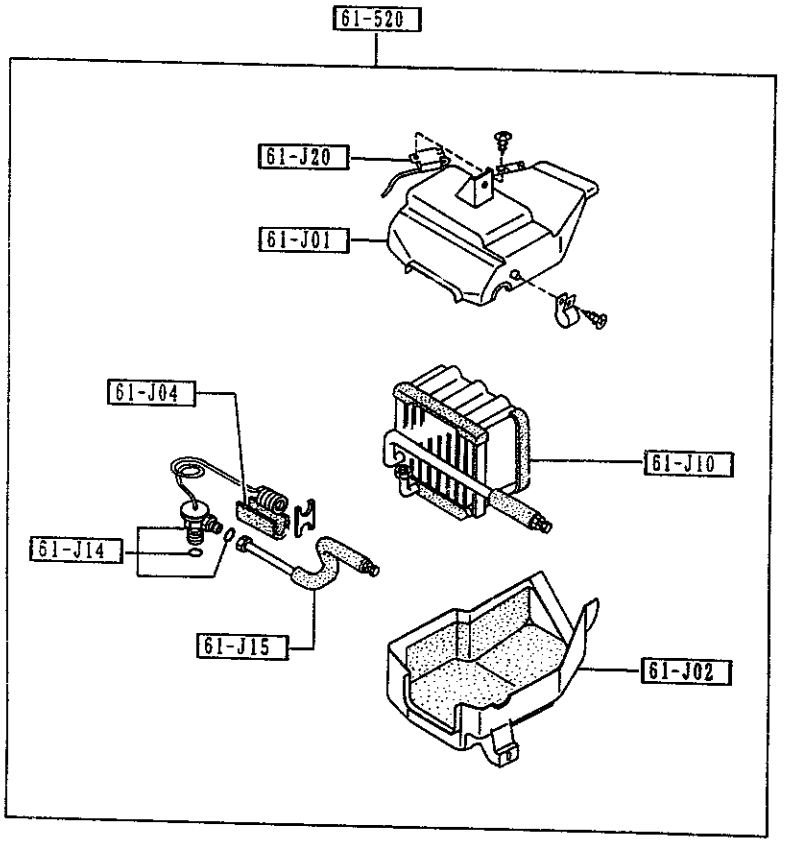


AUNA06

## 6150 -1 * AIR CONDITIONING COOLING UNIT

| PART NO. | QTY | MODEL/RESTRICTION | MODEL/RESTRICTION | MODEL/RESTRICTION | REMARK |
|---|---|---|---|---|---|
| 61-J01<br>NA01-61-J01A | 1 | CASE'A',COOLING UNIT<br>(A) | | | |
| 61-J02<br>NA01-61-J02A | 1 | CASE'B',COOLING UNIT<br>(A) | | | |
| 61-J04<br>NA01-61-J04 | 1 | SEAL,COOLING UNIT<br>(A) | | | |
| 61-J10<br>NA01-61-J10A | 1 | EVAPORATOR<br>(A) | | | |
| 61-J14<br>NA75-61-J14 | 1 | VALVE,EXPANSION<br>(E) | | | |
| 61-J15<br>NA01-61-J15 | 1 | PIPE,COOLING UNIT<br>(A) | | | |
| 61-J20<br>NA01-61-J20 | 1 | THERMOSTAT,COOLING UNIT<br>(A) | | | |
| 61-520<br>NA75-61-520B | 1 | UNIT,COOLING<br>(A) | | | |

CAT. AUNA06-03

1998-07

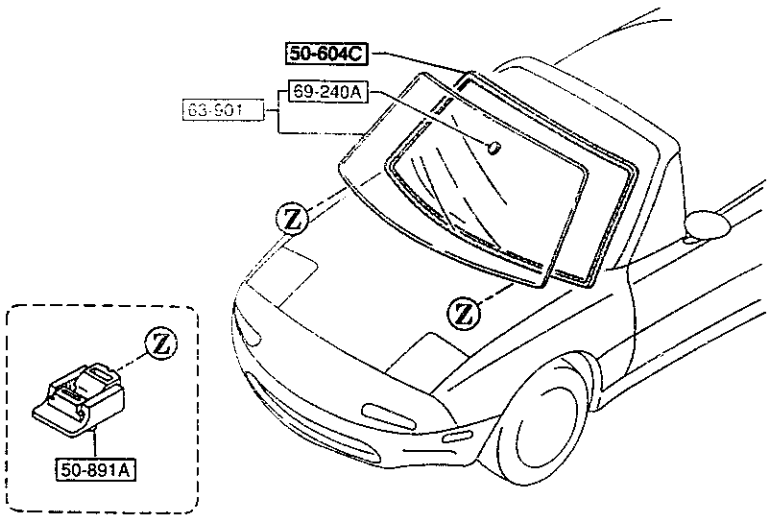


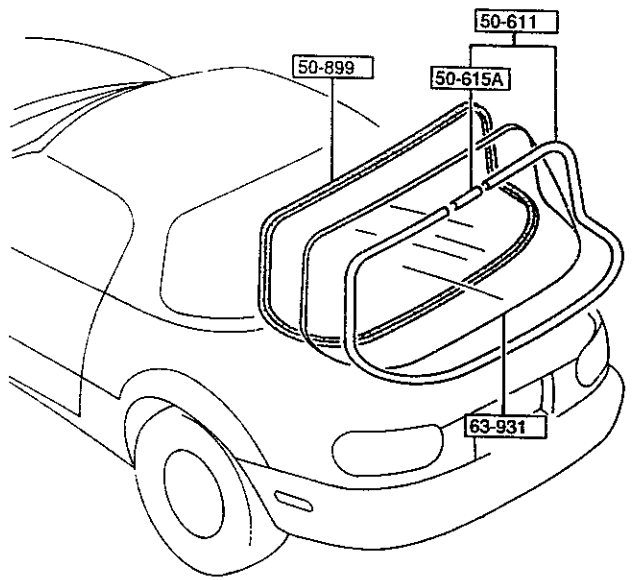


AUNA06



| PART NO | QTY | MODEL/RESTRICTION | MODEL/RESTRICTION | MODEL/RESTRICTION | [illegible] |
|---|---|---|---|---|---|
| 50-604C | | DAM | | | |
| NA01-50-894A | 1 | | | | |
| 50-611 | | MOULD,RR.WINDOW | | | |
| NAY1-63-930 | 1 | (W/DETACHABLE HARD TOP) | | | |
| 50-615A | | JOINT,BACK WINDOW MOULD | | | |
| NA01-63-934 | 1 | (W/DETACHABLE HARD TOP) | | | |
| 50-891A | | SPACER,WINDOW | | | |
| EA01-50-891A | 2 | WHITE | | | -6901 |
| E040-50-891 | 2 | WHITE | | | 6901- |
| 50-899 | | DAM,REAR-WIND. | | | |
| NA01-63-895 | 1 | (W/DETACHABLE HARD TOP) | | | |
| 63-901 | | GLASS,WINDSHIELD | | | |
| NB39-63-900 AN(NB39-63-900A) | 1 | | | | -6910 |
| NB39-63-900A | 1 | | | | 6910- |
| 63-931 | | GLASS,BACK WINDOW | | | |
| NB40-63-931 | 1 | (W/DETACHABLE HARD TOP) | | | |
| 69-240A | | BASE,INTERIOR MIRROR | | | |
| BC1C-69-240 | 1 | | | | |

6901 NA35*V-720297
6910 NA35*V-720303

CAT. AUNA06-03 1998-07

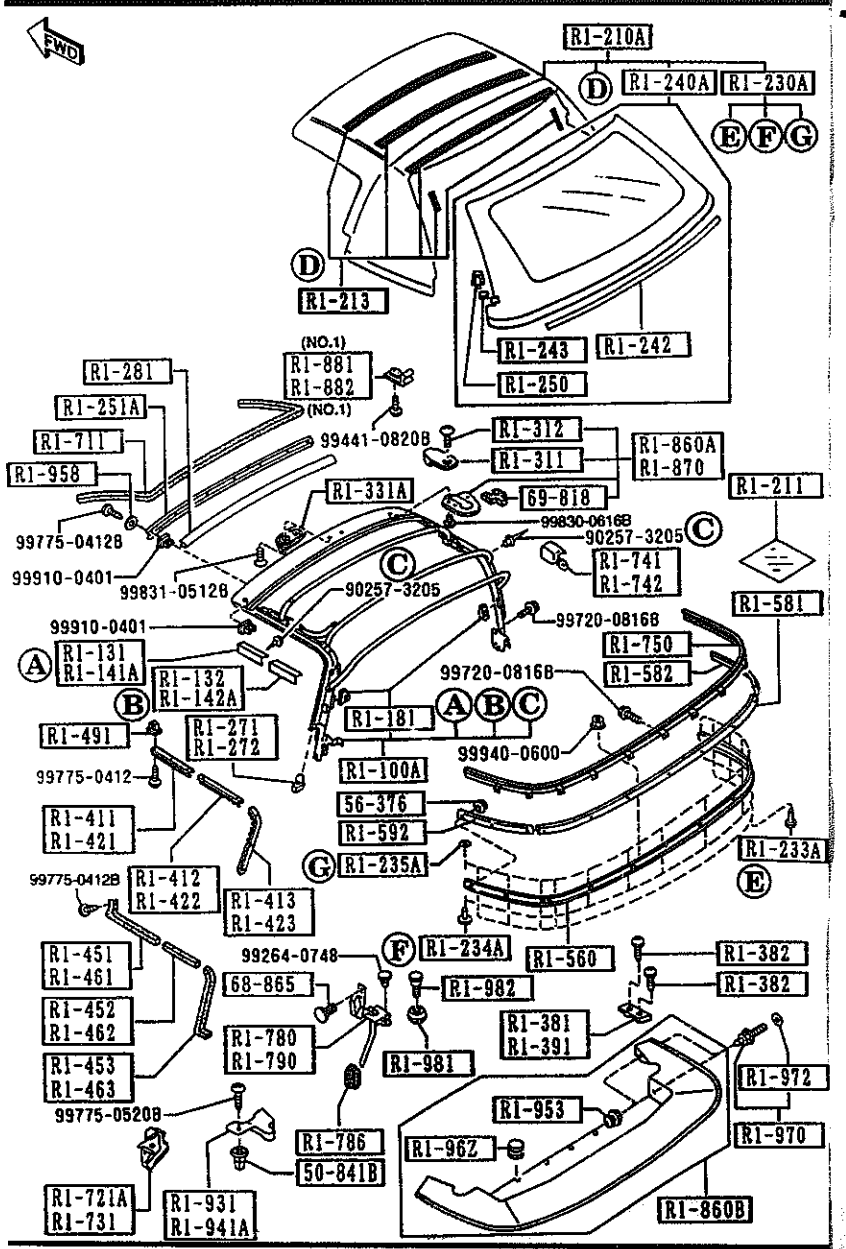


AUNA06



(W/DETACHABLE HARDTOP)

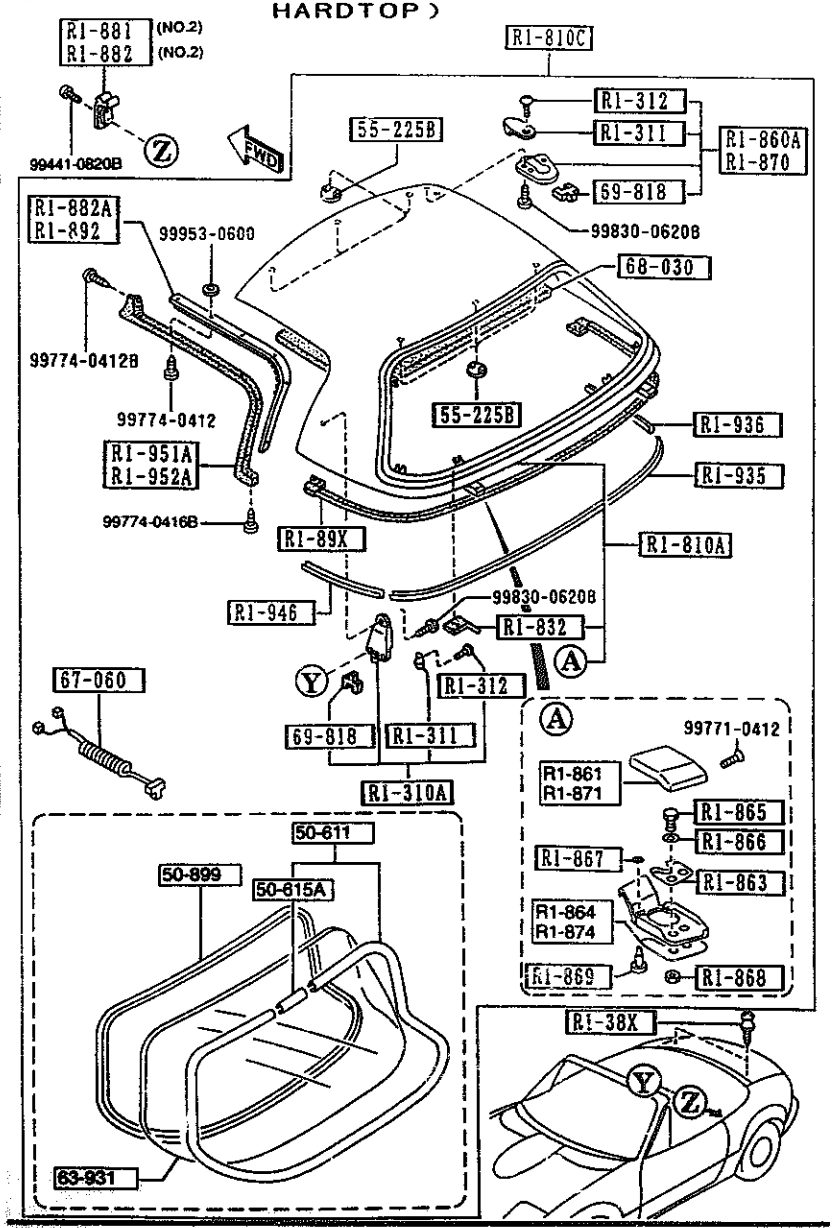


AUNA06

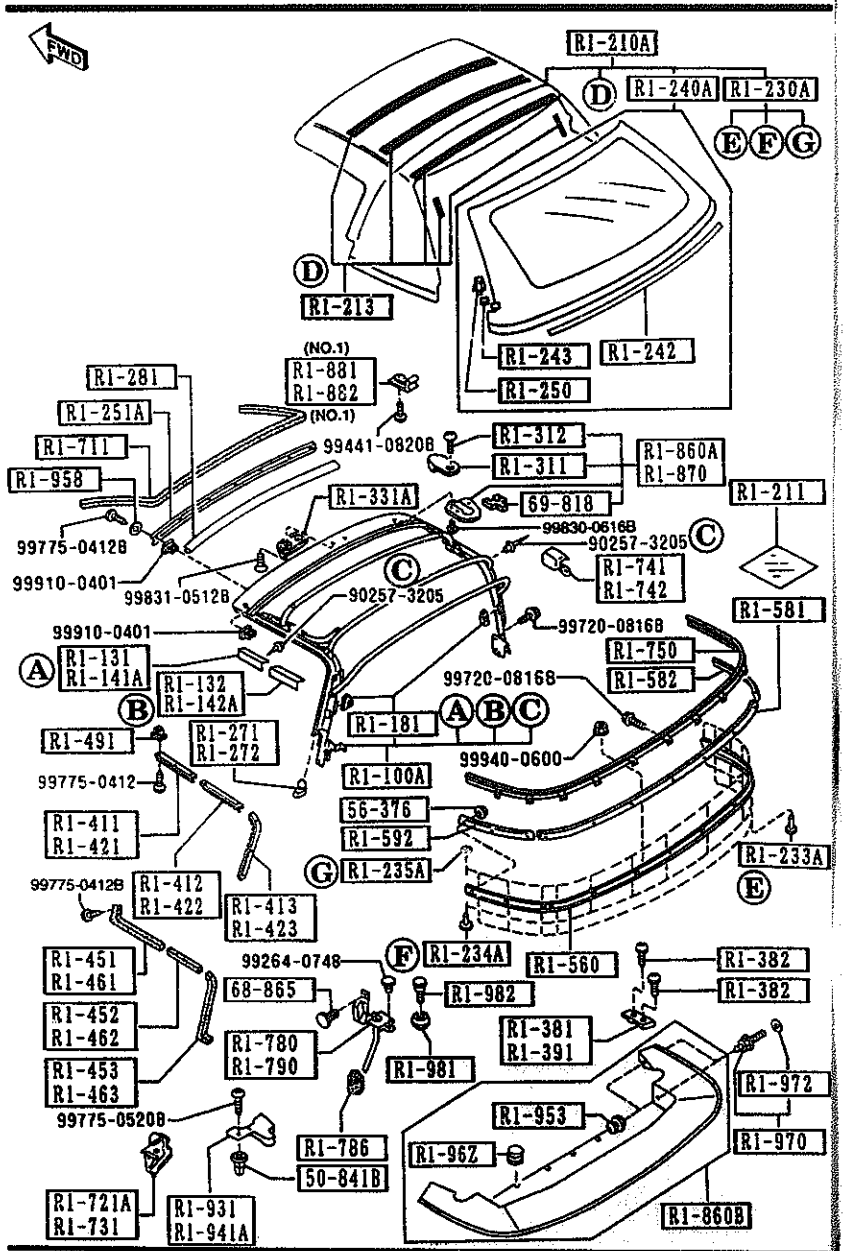


AUNA06



| PART NO. | QTY | MODEL/RESTRICTION | MODEL/RESTRICTION | MODEL/RESTRICTION | MODEL |
|---|---|---|---|---|---|
| R1-100A | | LINK,SOFT TOP | | | |
| NA01-R1-100E | 1 | | | | |
| R1-131 | | PROTECTOR'A'(R),LINK | | | |
| NA01-R1-131 | 1 | | | | |
| R1-132 | | PROTECTOR'B'(R),LINK | | | |
| NA01-R1-132 | 1 | | | | |
| R1-141A | | PROTECTOR'A'(L),LINK | | | |
| NA01-R1-141 | 1 | | | | |
| R1-142A | | PROTECTOR'B'(L),LINK | | | |
| NA01-R1-142 | 1 | | | | |
| R1-181 | | STOPPER,LINK-HOOD | | | |
| NA01-R1-181 | 2 | | | | |
| R1-210A | | FABRIC,TOP-SOFT TOP | | | |
| NA01-R1-210L AN(NA01-R1-210M) | 1 | BASE, P.E.GR, R-PKG, T-PKG, (BLACK) | | | -6801 |
| NA02-R1-210E AN(NA02-R1-210F) | 1 | F-SV, L-PKG, (TAN) | | | -6801 |
| NA01-R1-210M | 1 | BASE, P.E.GR, R-PKG, T-PKG, (BLACK) | | | 6801- |
| NA02-R1-210F | 1 | F-SV, L-PKG, (TAN) | | | 6801- |
| R1-211 | | CLOTH,REPAIR-TOP | | | |
| NAY1-R1-211 | 1 | BASE, P.E.GR, R-PKG, T-PKG, (BLACK) | | | |
| NAY2-R1-211 | 1 | F-SV, L-PKG, (TAN) | | | |
| R1-213 | | CLOTH'C',TOP | | | |
| NA02-R1-213 | 1 | F-SV, L-PKG, (TAN) | | | |
| R1-230A | | FASTENER SET,TOP CLOTH | | | |
| NA01-R1-230 | 1 | | | | |

6801 NA35*V-719630

CAT. AUNA06-03 1998-07

(W/DETACHABLE HARDTOP)

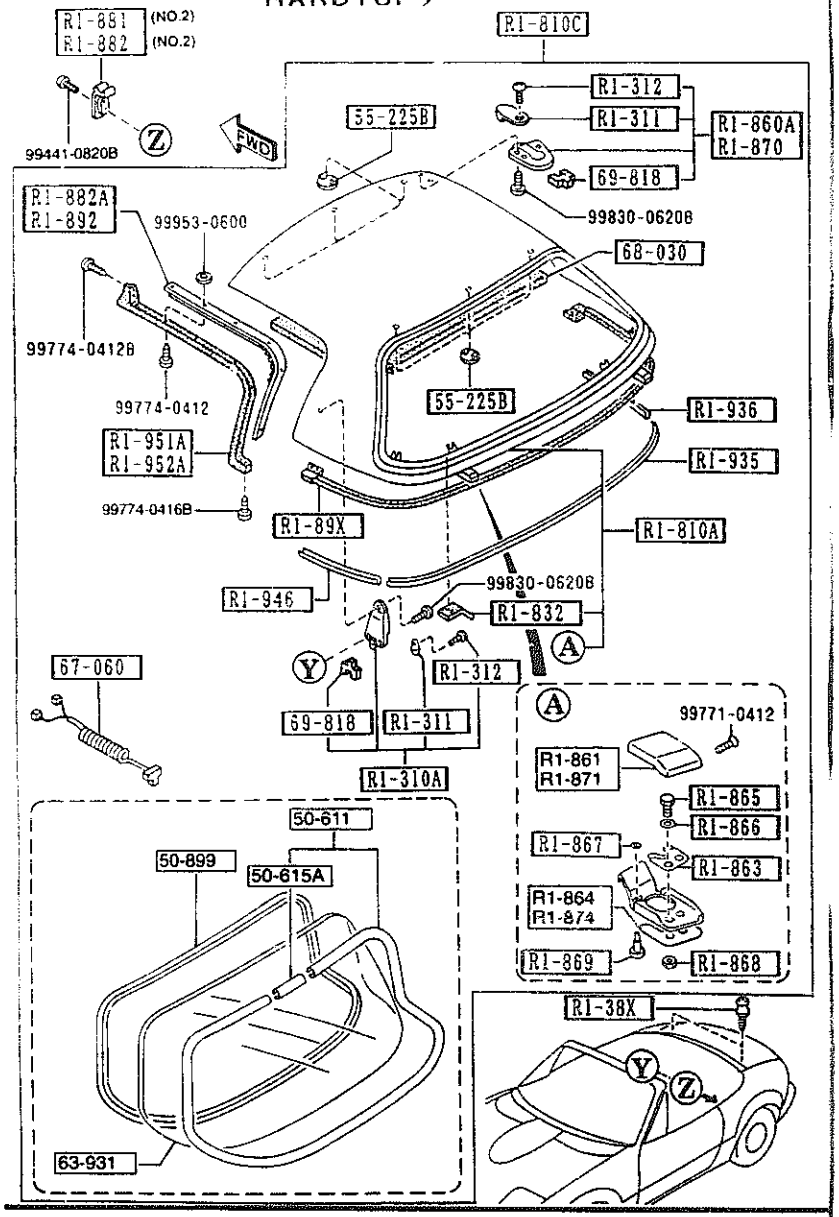


AUNA06



| PART NO | QTY | DESCRIPTION | REMARKS |
|---|---|---|---|
| R1-233A | | FASTENER,RAIN RAIL-SIDE | |
| NA01-R1-233 | 8 | | |
| R1-234A | | FASTENER,RAIN RAIL-REAR | |
| NA01-R1-234 | 7 | | |
| R1-235A | | WASHER,FASTENER-RAIN RAIL | |
| NA01-R1-235 | 15 | | |
| R1-240A | | WINDOW,BACK-D. TOP | |
| NAY1-R1-240G | 1 | BASE, P.E.GR. R-PKG, T-PKG, (BLACK) | |
| NAY2-R1-240D | 1 | F-SV, L-PKG, (TAN) | |
| R1-242 | | TAPE,SEAL-RAIN RAIL | |
| NAY1-R1-242 | 1 | | |
| R1-243 | | STOPPER,ZIPPER-BACK WINDOW | |
| NAY1-R1-243 | 2 | | |
| R1-250 | | HEAD,ZIPPER-BACK WINDOW | |
| NA01-R1-250B | 1 | | |
| R1-251A | | PLATE(FRT),SET-ROOF PANEL | |
| NA01-R1-251 | 1 | | |
| R1-271 | | CLIP(R),FORM PLATE | |
| NA01-R1-271 | 1 | | |
| R1-272 | | CLIP(L),FORM PLATE | |
| NA01-R1-272 | 1 | | |
| R1-281 | | WELT,SEAMING-SOFT TOP | |
| NA01-R1-281 | 1 | | |
| R1-310A | | LOCK,DETACHABLE TOP | |
| NA02-R1-310E | 2 | (W/DETACHABLE HARD TOP) | |
| R1-311 | | CAP,TOP LOCK | |

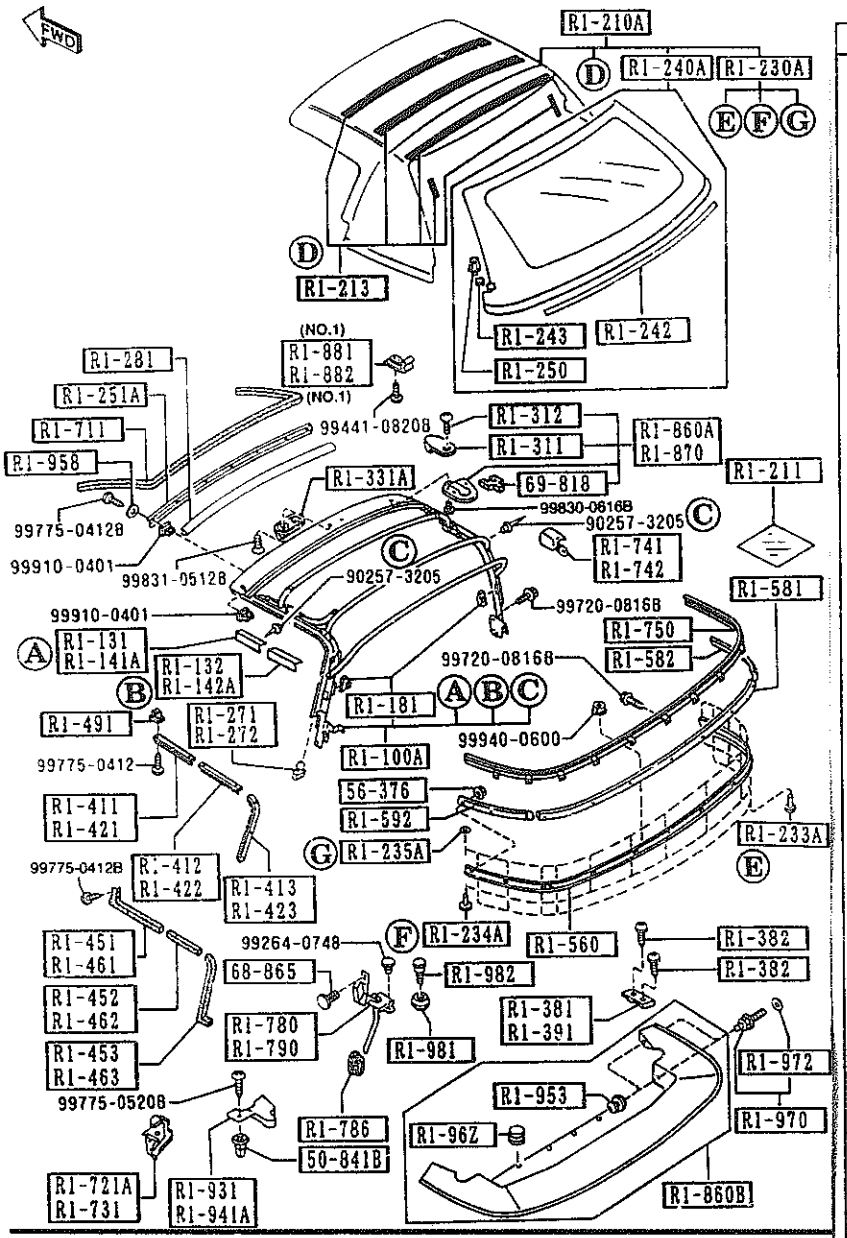


AUNA06



| PART NO. | QTY | MODEL/REMARKS |
|---|---|---|
| CONT'D | | |
| NA01-R1-311 | 2 | (W/O DETACHABLE HARD TOP) |
| NA01-R1-311 | 6 | (W/DETACHABLE HARD TOP) |
| R1-312 | | SCREW,TOP LOCK |
| NA01-R1-312 | 2 | (W/O DETACHABLE HARD TOP) |
| NA01-R1-312 | 6 | (W/DETACHABLE HARD TOP) |
| R1-331A | | HANDLE,SOFT TOP |
| NA01-R1-331 | 1 | |
| R1-38X | | HOOK,SOFT TOP-REAR DECK |
| NA01-R1-38XB | 2 | |
| R1-381 | | PLATE(R),HOOK-REAR DECK |
| NA01-R1-381B | 1 | |
| R1-382 | | SCREW,HOOK-REAR DECK |
| NA01-R1-382A | 2 | |
| R1-391 | | PLATE(L),HOOK-REAR DECK |
| NA01-R1-391B | 1 | |
| R1-411 | | RETAINER'A'(R),WTHSTP |
| NA01-R1-461 | 1 | |
| R1-412 | | RETAINER'B'(R),WTHSTP |
| NA01-R1-462 | 1 | |
| R1-413 | | RETAINER'C'(R),WTHSTP |
| NA01-R1-463 | 1 | |
| R1-421 | | RETAINER'A'(L),WTHSTP |
| NA01-R1-471 | 1 | |
| R1-422 | | RETAINER'B'(L),WTHSTP |
| NA01-R1-472 | 1 | |
| R1-423 | | RETAINER'C'(L),WTHSTP |

(W/DETACHABLE HARDTOP)

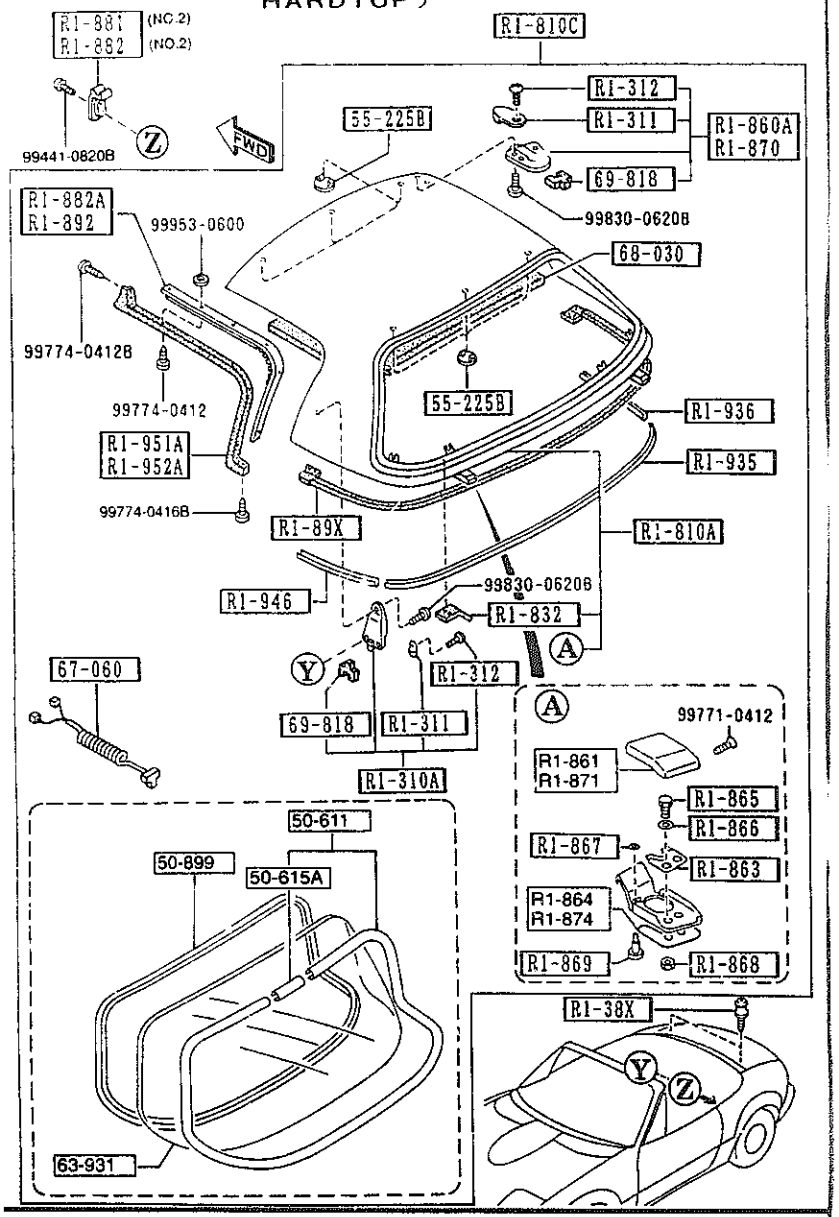


AUNA06



| PART NO | QTY | MODEL/RESTRICTION | MODEL/RESTRICTION | MODEL/RESTRICTION | [illegible] |
|---|---|---|---|---|---|
| CONT'D | | | | | |
| NA01-R1-473 | 1 | | | | |
| +---------+ | | | | | |
| \| R1-451 \| | | WTHST NO.1(R),LINK | | | |
| +---------+ | | | | | |
| NA01-R1-411B | 1 | | | | -6909 |
| AN(NA01-R1-411C) | | | | | |
| NA01-R1-411C | 1 | | | | 6909- |
| +---------+ | | | | | |
| \| R1-452 \| | | WTHSTP NO.2(R),LINK | | | |
| +---------+ | | | | | |
| NA01-R1-412B | 1 | | | | -6909 |
| AN(NA01-R1-412C) | | | | | |
| NA01-R1-412C | 1 | | | | 6909- |
| +---------+ | | | | | |
| \| R1-453 \| | | WTHSTP NO.3(R),LINK | | | |
| +---------+ | | | | | |
| NA01-R1-413B | 1 | | | | -6819 |
| AN(NA01-R1-413C) | | | | | |
| NA01-R1-413C | 1 | | | | 6819- |
| +---------+ | | | | | |
| \| R1-461 \| | | WTHSTP NO.1(L),LINK | | | |
| +---------+ | | | | | |
| NA01-R1-421B | 1 | | | | -6909 |
| AN(NA01-R1-421C) | | | | | |
| NA01-R1-421C | 1 | | | | 6909- |
| +---------+ | | | | | |
| \| R1-462 \| | | WTHSTP NO.2(L),LINK | | | |
| +---------+ | | | | | |
| NA01-R1-422B | 1 | | | | -6909 |
| AN(NA01-R1-422C) | | | | | |
| NA01-R1-422C | 1 | | | | 6909- |
| +---------+ | | | | | |
| \| R1-463 \| | | WTHSTP NO.3(L),LINK | | | |
| +---------+ | | | | | |
| NA01-R1-423B | 1 | | | | -6819 |
| AN(NA01-R1-423C) | | | | | |
| NA01-R1-423C | 1 | | | | 6819- |
| +---------+ | | | | | |
| \| R1-491 \| | | GROMMET,SCREW-RETAIN | | | |
| +---------+ | | ER | | | |
| NA01-R1-491 | 16 | | | | |
| +---------+ | | | | | |
| \| R1-560 \| | | RAIL,RAIN-SOFT TOP R | | | |
| +---------+ | | EAR | | | |
| NA01-R1-560C | 1 | | | | |
| +---------+ | | | | | |
| \| R1-581 \| | | PLATE(C),SET-TOP FAB | | | |
| +---------+ | | RIC | | | |
| NA01-R1-581B | 1 | | | | -6901 |
| NA01-R1-581C | 1 | | | | 6901- |

6819 NA35*V-719802
6901 NA35*V-720297
6909 NA35*V-720301

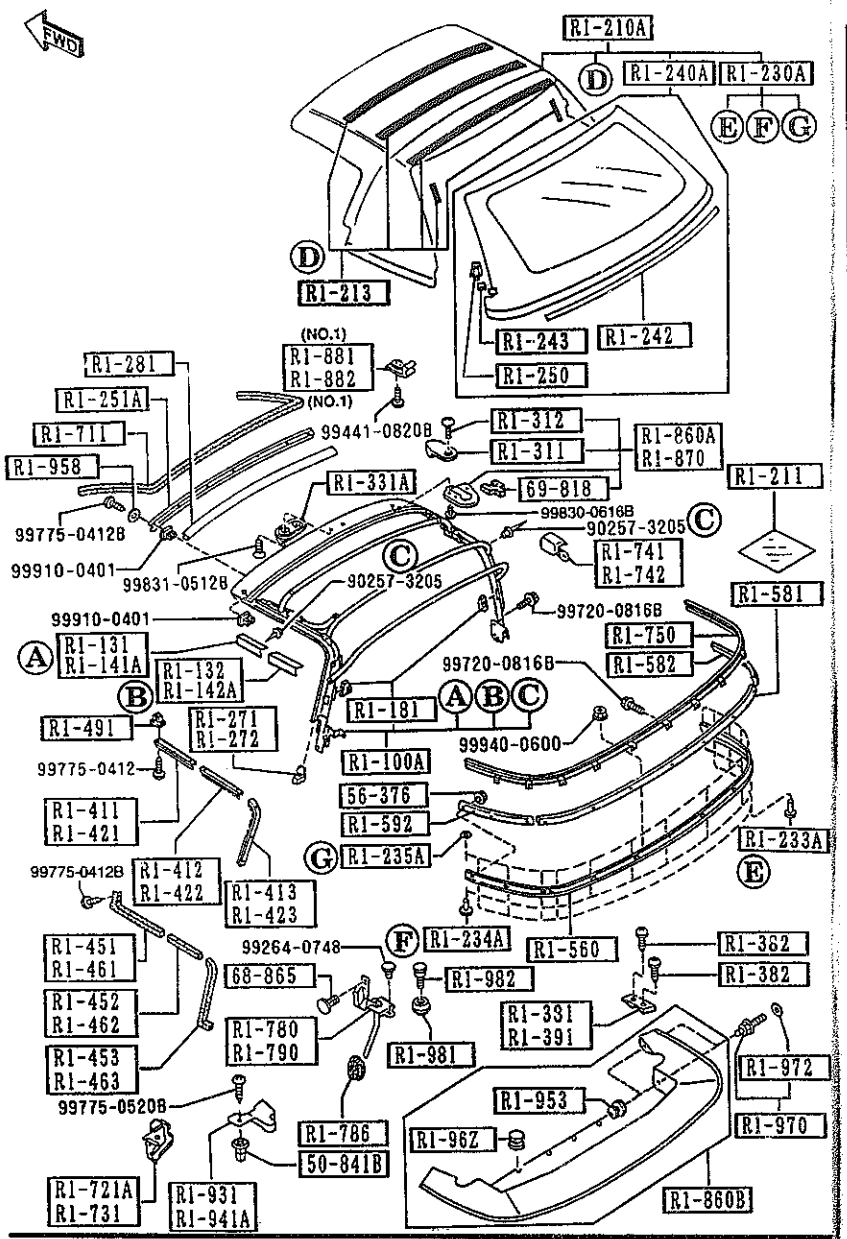


AUNA06



| PART NO | QTY | MODEL/RESTRICTION | MODEL/RESTRICTION | MODEL/RESTRICTION | REMARKS |
|---|---|---|---|---|---|
| R1-582 | | PLATE(R),SET-TOP FABRIC | | | |
| NA01-R1-582A | 1 | | | | -6901 |
| NA01-R1-582B | 1 | | | | 6901- |
| R1-592 | | PLATE(L),SET-TOP FABRIC | | | |
| NA01-R1-592A | 1 | | | | -6901 |
| NA01-R1-592B | 1 | | | | 6901- |
| R1-711 | | WTHSTP,FRONT HEADER | | | |
| NA01-R1-711B | 1 | | | | |
| R1-721A | | WTHSTP(R),CAB SIDE | | | |
| NA01-R1-721B AN(NA01-R1-721C) | 1 | | | | -6A01 |
| NA01-R1-721C | 1 | | | | 6A01- |
| R1-731 | | WTHSTP(L),CAB SIDE | | | |
| NA01-R1-731B AN(NA01-R1-731C) | 1 | | | | -6A01 |
| NA01-R1-731C | 1 | | | | 6A01- |
| R1-741 | | PROTR(R),MOULD-BELTLINE | | | |
| NA01-R1-741B | 1 | | | | |
| R1-742 | | PROTR(L),MOULD-BELTLINE | | | |
| NA01-R1-742C | 1 | | | | |
| R1-750 | | MOULD,BELTLINE-REAR | | | |
| NA01-R1-750E | 1 | | | | |
| R1-780 | | COVER(R),DRAIN-SOFT TOP | | | |
| NA01-R1-780C A (NA01-R1-780D) | 1 | | | | -7717 |
| *NA01-R1-780D | 1 | | | | 7717- |
| R1-786 | | GROMMET,DRAIN HOSE-TOP | | | |
| NA01-R1-786A | 2 | | | | |
| R1-790 | | COVER(L),DRAIN-SOFT TOP | | | |
| NA01-R1-790C A (NA01-R1-790D) | 1 | | | | -7717 |

6901 NA35*V-720297
6A01 NA35*V-720311
7717 NA35*V-738778

CAT. AUNA06-03 1998-07

## (W/DETACHABLE HARDTOP)

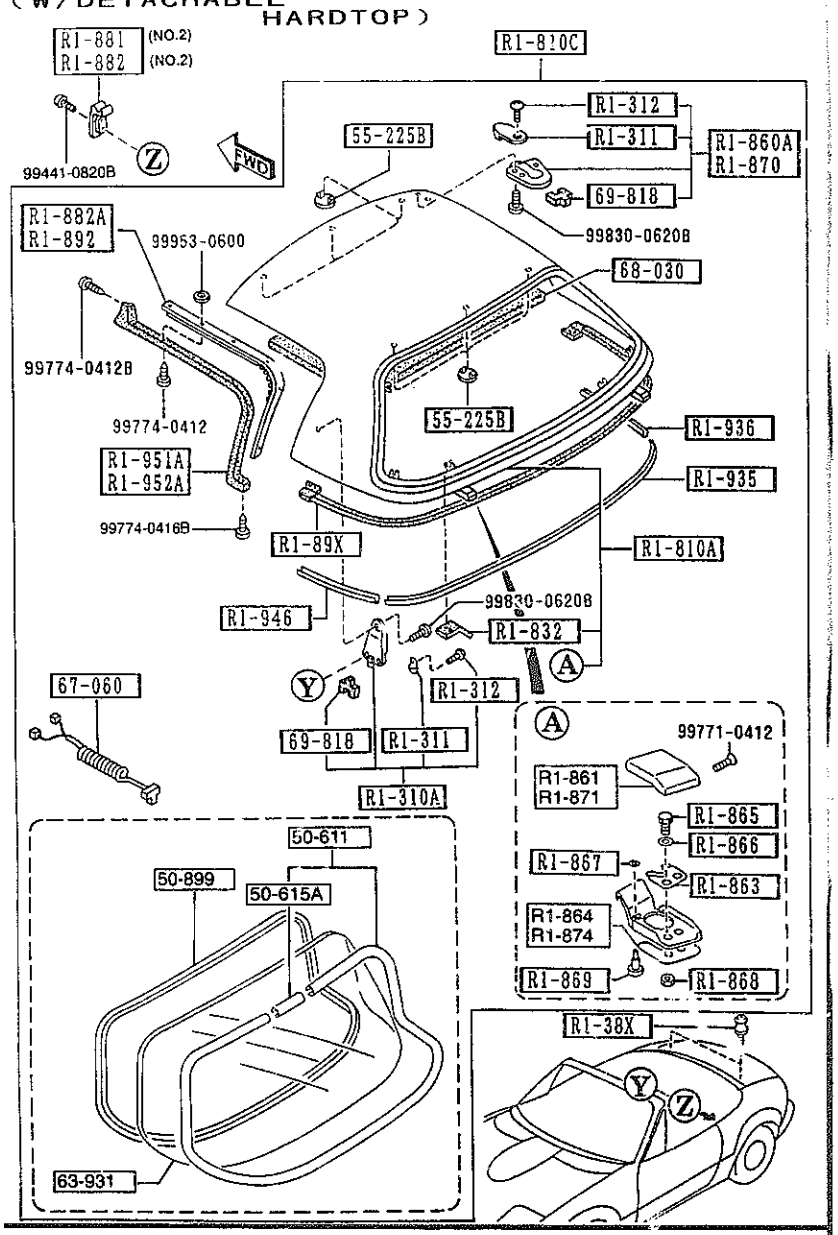


AUNA06



| PART NO. | QTY | MODEL/RESTRICTION | MODEL/RESTRICTION | MODEL/RESTRICTION | APPLIED |
|---|---|---|---|---|---|
| CONT'D | | | | | |
| *NA01-R1-790B | 1 | | | | 7717- |
| R1-810A | | PANEL,ROOF | | | |
| NA06-R1-82X | 1 | (W/DETACHABLE HARD TOP) | | | -6C10 |
| A5 | EXT- | A5 SATELLITE BLUE MC | | | |
| HU | EXT- | HU NEO GREEN | | | |
| M3 | EXT- | M8 MONTEGO BLUE M | | | |
| PT | EXT- | PT CHAST WHITE | | | |
| PZ | EXT- | PZ BRILLIANT BLACK | | | |
| SU | EXT- | SU CLASSIC RED | | | |
| NA06-R1-82XB | 1 | (W/DETACHABLE HARD TOP) | | | 6C10- |
| A5 | EXT- | A5 SATELLITE BLUE MC | | | |
| HU | EXT- | HU NEO GREEN | | | |
| * M8 | EXT- | M8 MONTEGO BLUE M | | | |
| PT | EXT- | PT CHAST WHITE | | | |
| PZ | EXT- | PZ BRILLIANT BLACK | | | |
| SU | EXT- | SU CLASSIC RED | | | |
| 23 | EXT- | 13C MARINA GREEN MC | | | |
| 57 | EXT- | 12K TWILIGHT BLUE | | | |
| R1-810C | | ROOF,DETACHABLE TOP | | | |
| NB40-R1-810 | 1 | (W/DETACHABLE HARD TOP) | | | -6C10 |
| A5 | EXT- | A5 SATELLITE BLUE MC | | | |
| HU | EXT- | HU NEO GREEN | | | |
| M8 | EXT- | M8 MONTEGO BLUE M | | | |
| PT | EXT- | PT CHAST WHITE | | | |
| PZ | EXT- | PZ BRILLIANT BLACK | | | |
| SU | EXT- | SU CLASSIC RED | | | |
| NB40-R1-810B | 1 | (W/DETACHABLE HARD TOP) | | | 6C10-7901 |
| A5 | EXT- | A5 SATELLITE BLUE MC | | | |
| HU | EXT- | HU NEO GREEN | | | |
| M8 | EXT- | M8 MONTEGO BLUE M | | | |
| PT | EXT- | PT CHAST WHITE | | | |

6C10 NA35*V-726284
7717 NA35*V-738778
7901 NA35*V-739040

CAT. AUNA06-03

1998-07

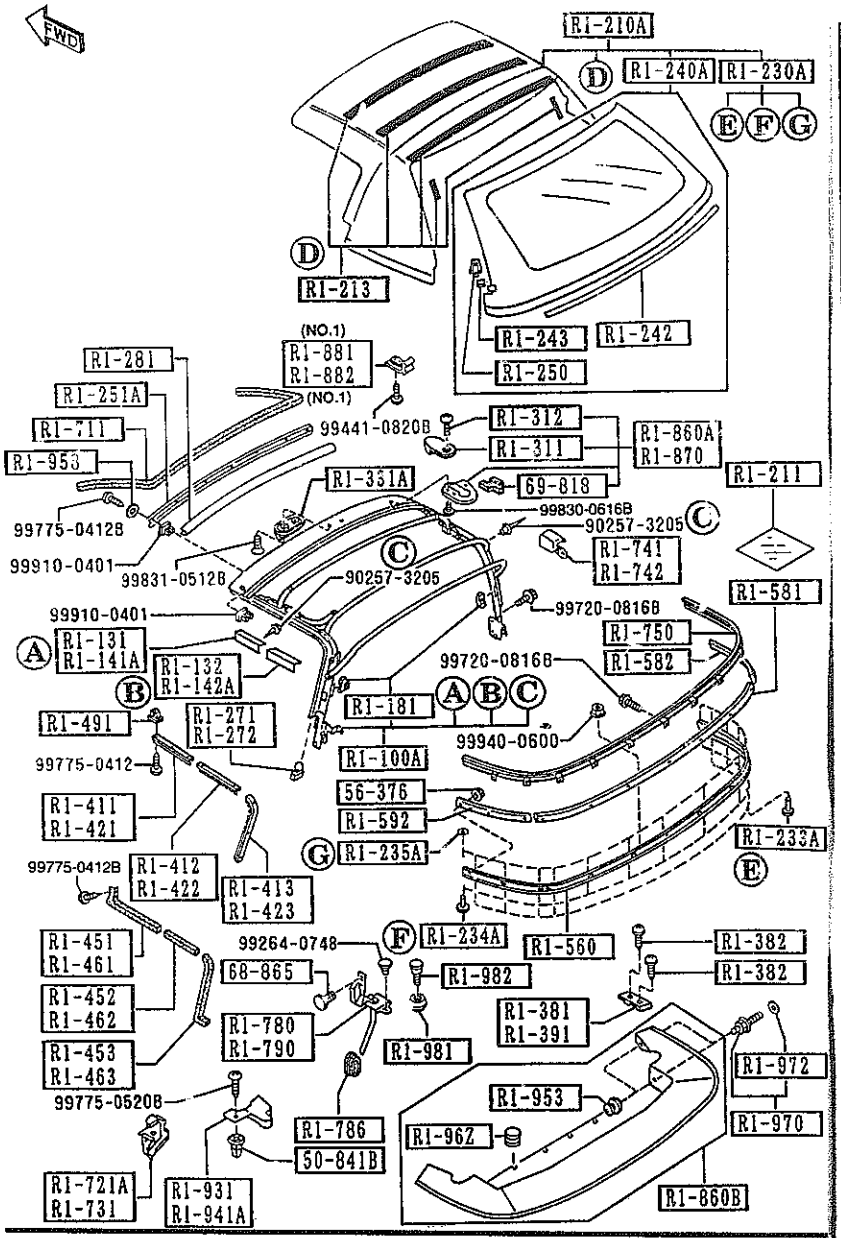


AUNA06



| PART NO. | QTY | MODEL/RESTRICTION | MODEL/RESTRICTION | MODEL/RESTRICTION | RANGE |
|---|---|---|---|---|---|
| CONT'D | | | | | |
| PZ EXT- | | PZ BRILLIANT BLACK | | | |
| SU EXT- | | SU CLASSIC RED | | | |
| 23 EXT- | | 13C MARINA GREEN MC | | | |
| 57 EXT- | | 12K TWILIGHT BLUE | | | |
| *NB40-R1-810C | 1 | (W/DETACHABLE HARD TOP) | | | 7901- |
| * A5 EXT- | | A5 SATELLITE BLUE MC | | | |
| * HU EXT- | | HU NEO GREEN | | | |
| * M8 EXT- | | M8 MONTEGO BLUE M | | | |
| * PT EXT- | | PT CHAST WHITE | | | |
| * PZ EXT- | | PZ BRILLIANT BLACK | | | |
| * SU EXT- | | SU CLASSIC RED | | | |
| * 23 EXT- | | 13C MARINA GREEN MC | | | |
| * 57 EXT- | | 12K TWILIGHT BLUE | | | |
| +---------+ | | | | | |
| \| R1-832 \| | | PLATE,CUSHION-D. TOP | | | |
| +---------+ | | | | | |
| NA01-R1-832A | 2 | (W/DETACHABLE HARD TOP) | | | |
| +---------+ | | | | | |
| \| R1-860A \| | | LOCK(R),TOP | | | |
| +---------+ | | | | | |
| NA01-R1-310E A (NA01-R1-310F) | 1 | (W/O DETACHABLE HARD TOP) | | | -7722 |
| *NA01-R1-310E A (NA01-R1-310F) | 2 | (W/DETACHABLE HARD TOP) | | | -7722 |
| *NA01-R1-310F A (NA01-R1-310G) | 1 | (W/O DETACHABLE HARD TOP) | | | 7722-7A15 |
| *NA01-R1-310F A (NA01-R1-310G) | 2 | (W/DETACHABLE HARD TOP) | | | 7722-7A15 |
| *NA01-R1-310G | 1 | (W/O DETACHABLE HARD TOP) | | | 7A15- |
| *NA01-R1-310G | 2 | (W/DETACHABLE HARD TOP) | | | 7A15- |
| +---------+ | | | | | |
| \| R1-860B \| | | BOOT,TOP | | | |
| +---------+ | | | | | |
| NA01-R1-960F | 1 | | | | -7401 |
| 66 INT- | | NA3 BLACK | | | |
| 88 INT- | | NA5 TAN | | | |
| NA01-R1-960H | 1 | | | | 7401- |
| 66 INT- | | NA3 BLACK | | | |
| 88 INT- | | NA5 TAN | | | |

7401 NA35*V-734532
7722 NA35*V-738852
7901 NA35*V-739040
7A15 NA35*V-739052

CAT. AUNA06-03 1998-07

## (W/DETACHABLE HARDTOP)

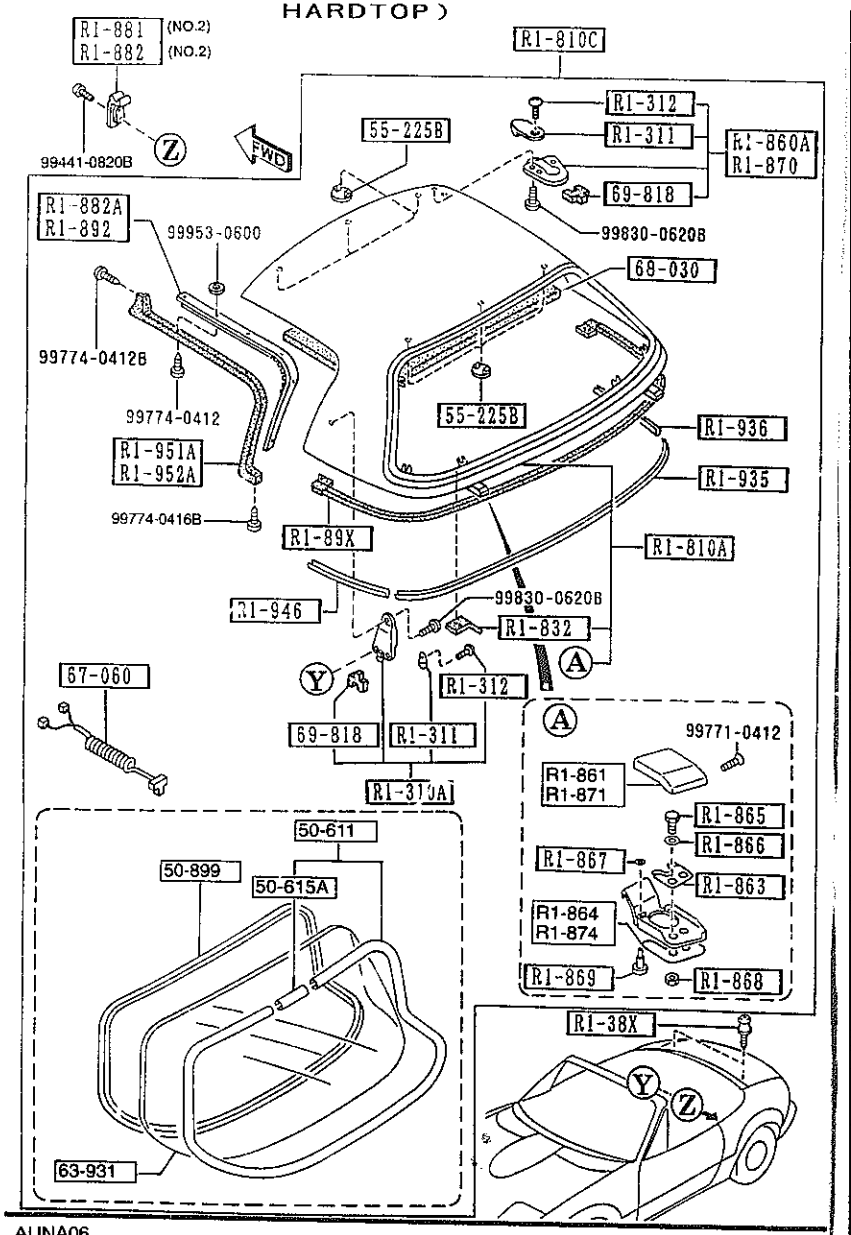


AUNA06

| PART NO. | QTY | MODEL/RESTRICTION | MODEL/RESTRICTION | MODEL/RESTRICTION | REMARKS |
|---|---|---|---|---|---|
| R1-861 | | COVER(R),DECK LOCK | | | |
| NA01-R1-861 | 1 | (W/DETACHABLE HARD TOP) | | | |
| R1-863 | | PLATE,DECK LOCK | | | |
| NA01-R1-863 | 2 | (W/DETACHABLE HARD TOP) | | | |
| R1-864 | | SHEET(R),DECK LOCK | | | |
| NA01-R1-864 | 1 | (W/DETACHABLE HARD TOP) | | | |
| R1-865 | | BOLT,DECK LOCK | | | |
| NA01-R1-865 | 4 | (W/DETACHABLE HARD TOP) | | | |
| R1-866 | | WASHER'A',DECK LOCK | | | |
| NA01-R1-866 | 4 | (W/DETACHABLE HARD TOP) | | | |
| R1-867 | | WASHER'B',DECK LOCK | | | |
| NA01-R1-867 | 2 | (W/DETACHABLE HARD TOP) | | | |
| R1-868 | | NUT,DECK LOCK | | | |
| NA01-R1-868 | 4 | (W/DETACHABLE HARD TOP) | | | |
| R1-869 | | PIN,DECK LOCK | | | |
| NA01-R1-869 | 2 | (W/DETACHABLE HARD TOP) | | | |
| R1-870 | | LOCK(L),TOP | | | |
| NA01-R1-320EA (NA01-R1-320F) | 1 | (W/O DETACHABLE HARD TOP) | | | -7722 |
| *NA01-R1-320EA (NA01-R1-320F) | 2 | (W/DETACHABLE HARD TOP) | | | -7722 |
| *NA01-R1-320FA (NA01-R1-320G) | 1 | (W/O DETACHABLE HARD TOP) | | | 7722-7A15 |
| *NA01-R1-320FA (NA01-R1-320G) | 2 | (W/DETACHABLE HARD TOP) | | | 7722-7A15 |
| *NA01-R1-320G | 1 | (W/O DETACHABLE HARD TOP) | | | 7A15- |
| *NA01-R1-320G | 2 | (W/DETACHABLE HARD TOP) | | | 7A15- |

7722 NA35*V-738852
7A15 NA35*V-739052

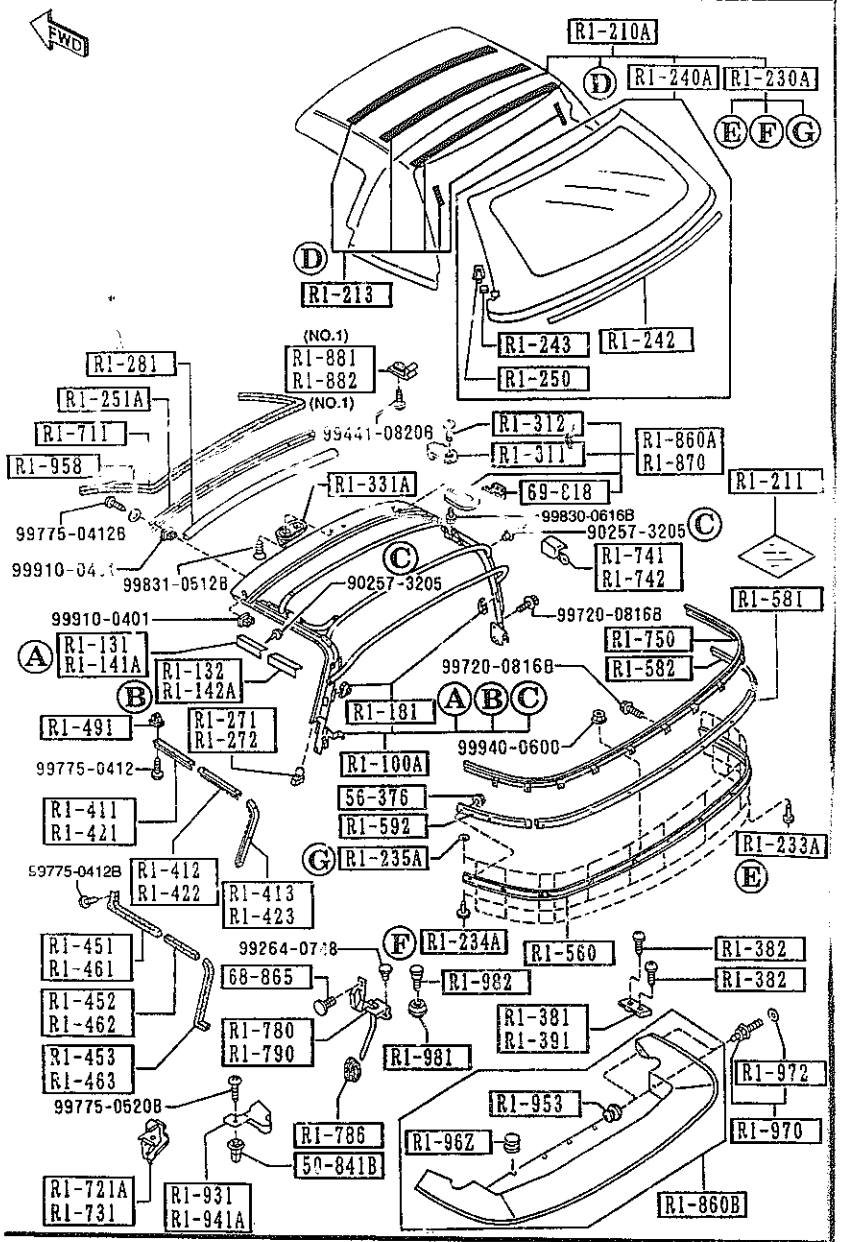


AUNA06



| PART NO. | QTY | MODEL/DESTINATION | MODEL/DESTINATION | MODEL/DESTINATION | NOTE |
|---|---|---|---|---|---|
| R1-871 | | COVER(L),DECK LOCK | | | |
| NA01-R1-871 | 1 | (W/DETACHABLE HARD TOP) | | | |
| R1-874 | | SHEET(L),DECK LOCK | | | |
| NA01-R1-874 | 1 | (W/DETACHABLE HARD TOP) | | | |
| R1-881 | | STRIKER(R),LOCK-TOP | | | |
| NA01-R1-361D | 1 | (ILLUST. NO.1) | | | |
| NA02-R1-361D | 1 | (ILLUST. NO.2) (W/DETACHABLE HARD TOP) | | | |
| R1-882 | | STRIKER(L),LOCK-TOP | | | |
| NA01-R1-371D | 1 | (ILLUST. NO.1) | | | |
| NA02-R1-371D | 1 | (ILLUST. NO.2) (W/DETACHABLE HARD TOP) | | | |
| R1-882A | | RETAINER(R),WTHSTP-D.TOP | | | |
| NA01-R1-882 | 1 | (W/DETACHABLE HARD TOP) | | | |
| R1-89X | | WEATHERSTRIP,D.TOP-REAR | | | |
| NA01-R1-89XA | 1 | (W/DETACHABLE HARD TOP) | | | -7722 |
| A (NA01-R1-89XB) | | | | | |
| *NA01-R1-89XB | 1 | (W/DETACHABLE HARD TOP) | | | 7722- |
| R1-892 | | RETAINER(L),WTHSTP-D.TOP | | | |
| NA01-R1-892 | 1 | (W/DETACHABLE HARD TOP) | | | |
| R1-931 | | COVER(R),BELT LINE | | | |
| NA01-R1-931A | 1 | | | | |
| R1-935 | | PROTECTOR(C),EDGE-D.TOP | | | |
| NA01-R1-935B | 1 | (W/DETACHABLE HARD TOP) | | | |
| R1-936 | | PROTECTOR(R),EDGE-D.TOP | | | |
| NA01-R1-936A | 1 | (W/DETACHABLE HARD TOP) | | | |

7722 NA35*V-738852

## (W/DETACHABLE HARDTOP)

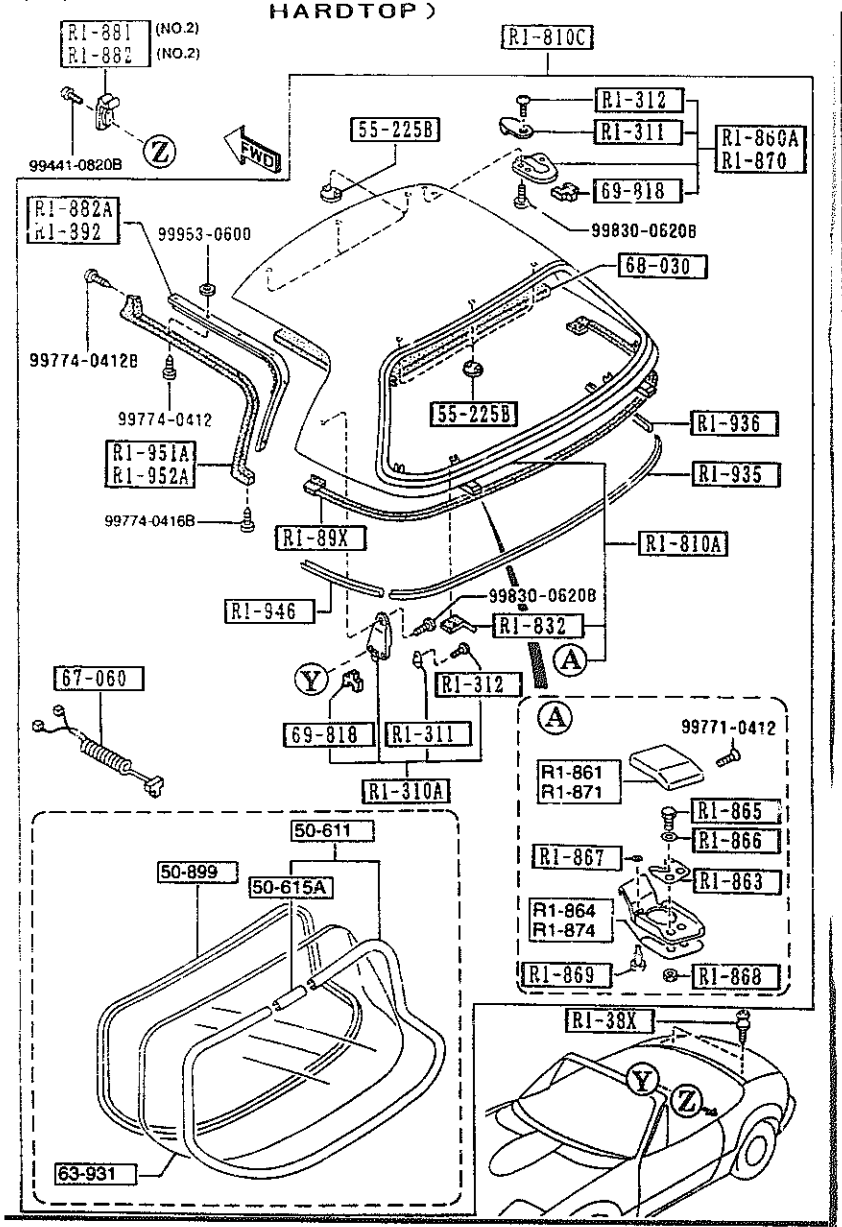


AUNA06

| PART NO | QTY | MODEL/DESTINATION | MODEL/DESTINATION | MODEL/DESTINATION | REMARK |
|---|---|---|---|---|---|
| NA01-R1-941A | 1 | R1-941A COVER(L),BELT LINE | | | |
| NA01-R1-946A | 1 | R1-946 PROTECTOR(L),EDGE-D.TOP (W/DETACHABLE HARD TOP) | | | |
| NA01-R1-881B | 1 | R1-951A WTHSTP(R),ROOF PANEL (W/DETACHABLE HARD TOP) | | | |
| NA01-R1-891B | 1 | R1-952A WTHSTP(L),ROOF PANEL (W/DETACHABLE HARD TOP) | | | |
| B235-R1-953 | 4 | R1-953 HOOK,HOOD-REAR CORNER | | | |
| B235-R1-958A | 7 | R1-958 WASHER,HOOK'A'&'B' | | | |
| NA01-R1-96Z | 7 | R1-96Z HOOK,TOP BOOT | | | |
| 00 | INT- | NA3 BLACK | | | |
| 75 | INT- | NA5 SILVER | | | |
| NA01-R1-970A | 4 | R1-970 HOOK,REAR DECK | | | |
| NA01-R1-926 | 4 | R1-972 WASHER,HOOK'A' | | | |
| NA01-R1-981A | 2 | R1-981 STOPPER,SOFT TOP | | | |
| NA01-R1-982B | 2 | R1-982 BOLT,STOPPER-SOFT TOP | | | |
| *NAY1-63-930 | 1 | 50-611 MOULD,RR.WINDOW (W/DETACHABLE HARD TOP) | | | |

CAT. AUNA06-03 1998-07

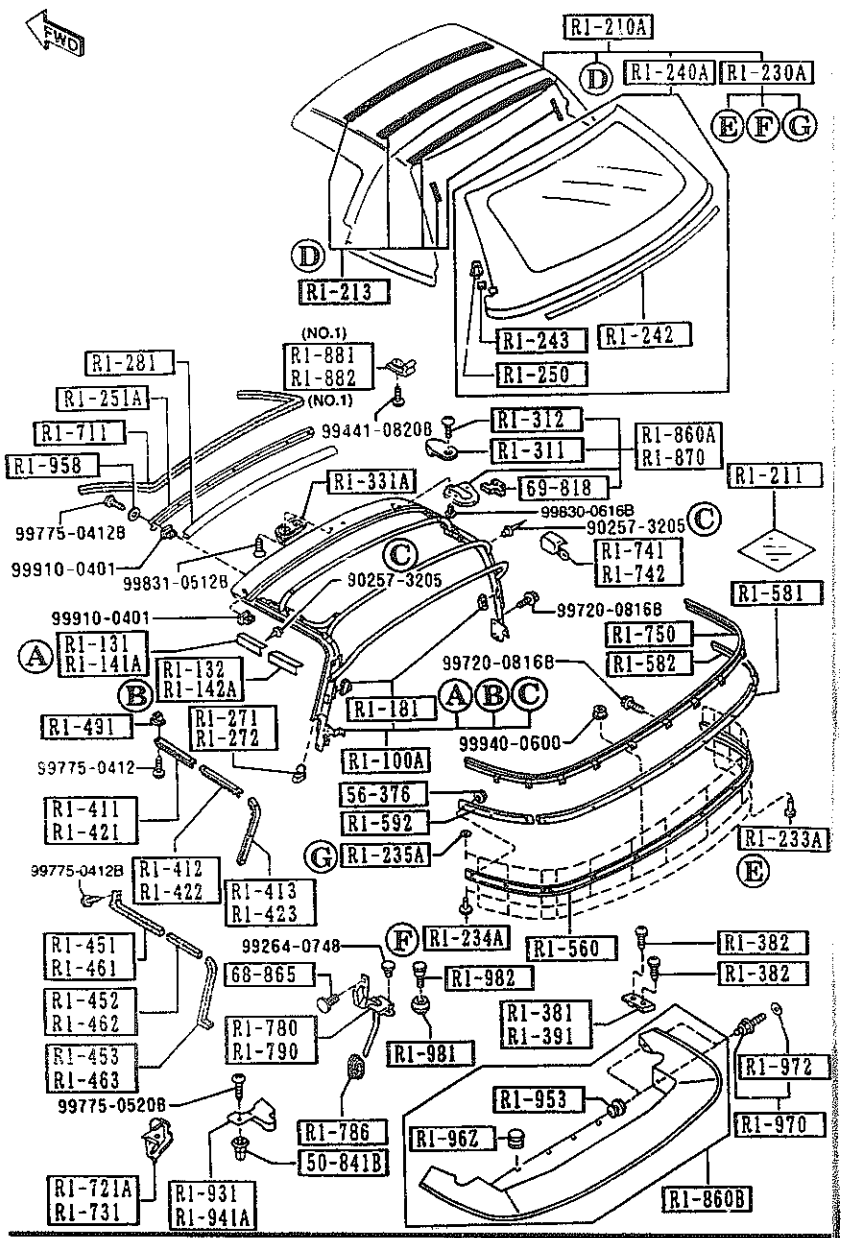


AUNA06



| PART NO | QTY | MODEL/REMARKS | | |
|---|---|---|---|---|
| 50-615A | | JOINT,BACK WINDOW MOULD | | |
| *NA01-63-934 | 1 | (W/DETACHABLE HARD TOP) | | |
| 50-841B | | GROMMET,SCREW | | |
| H260-50-841 | 2 | | | |
| 50-899 | | DAM,REAR-WIND. | | |
| *NA01-63-895 | 1 | (W/DETACHABLE HARD TOP) | | |
| 55-225B | | COVER,HOLE | | |
| G030-55-225 | 6 | (W/DETACHABLE HARD TOP) | | |
| 00 | INT- | NA3 NA5 BLACK | | |
| 56-376 | | NUT,SELF LOCK | | |
| B001-56-376 | 13 | | | |
| 63-931 | | GLASS,BACK WINDOW | | |
| *NB40-63-931 | 1 | (W/DETACHABLE HARD TOP) | | |
| 67-060 | | HARNESS NO.2,REAR | | |
| N007-67-060A | 1 | (W/DETACHABLE HARD TOP) | | |
| 68-030 | | CEILING,TOP | | |
| N007-68-031 | 1 | (W/DETACHABLE HARD TOP) | | |
| 00 | INT- | NA3 NA5 BLACK | | |
| 68-865 | | FASTENER | | |
| G032-68-865A | 2 | | | |
| 00 | INT- | NA3 BLACK | | |
| 67 | INT- | NA5 TAN | | |
| 69-818 | | PAD | | |
| NA01-R1-313 A (NA01-R1-313A) | 2 | (W/O DETACHABLE HARD TOP) | | -7722 |
| NAG1-R1-313 A (NA01-R1-313A) | 6 | (W/DETACHABLE HARD TOP) | | -7722 |
| *NA01-R1-313A | 2 | (W/O DETACHABLE HARD | | 7722-7A15 |

7722 NA35*V-738852
7A15 NA35*V-739052

CAT. AUNA06-03 1998-07

## (W/DETACHABLE HARDTOP)

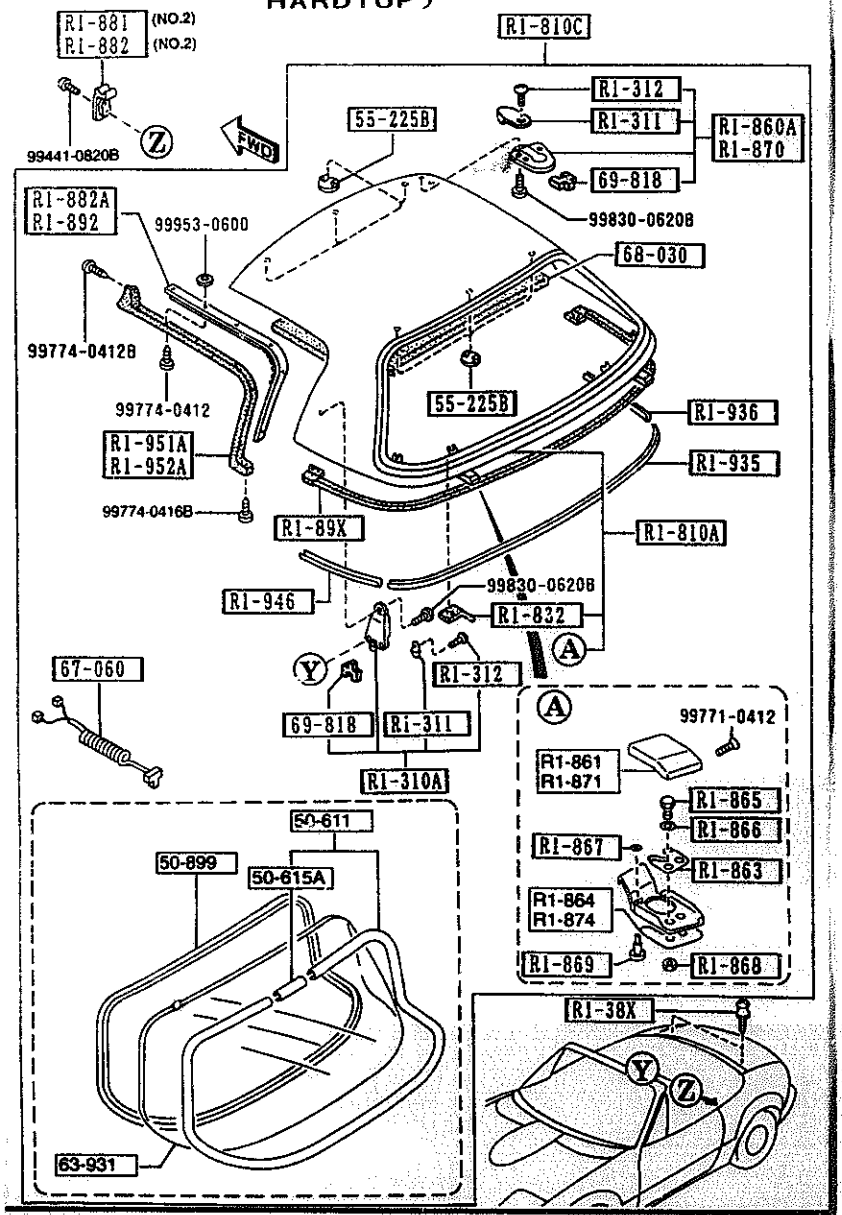


AUNA06

6330 -12* SUN ROOF

| PART NO. | QTY | MODEL/RESTRICTION | MODEL/RESTRICTION | MODEL/RESTRICTION | FROM-TO |
|---|---|---|---|---|---|
| CONT'D A (NA01-R1-313B) | | TOP) | | | |
| *NA01-R1-313A A (NA01-R1-313B) | 6 | (W/DETACHABLE HARD TOP) | | | 7722-7A15 |
| *NA01-R1-313B | 2 | (W/O DETACHABLE HARD TOP) | | | 7A15- |
| *NA01-R1-313B | 6 | (W/DETACHABLE HARD TOP) | | | 7A15- |

7722 NA35*V-738852
7A15 NA35*V-739052

CAT. AUNA06-03 1998-07

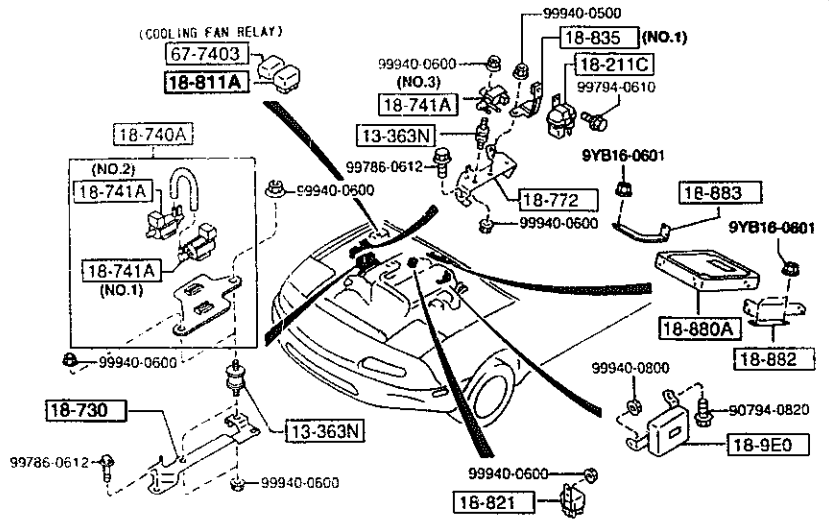


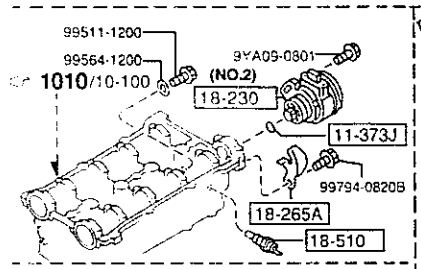


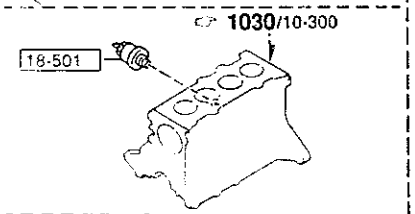


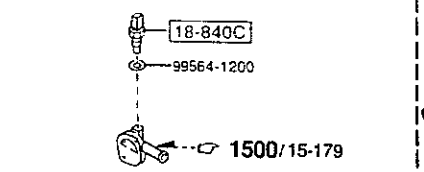


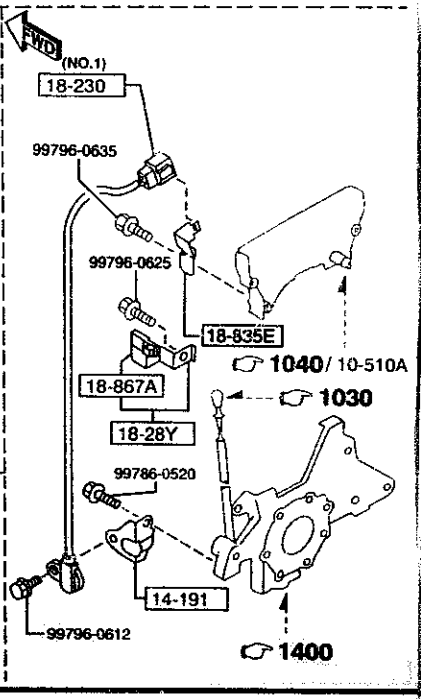


AUNA06



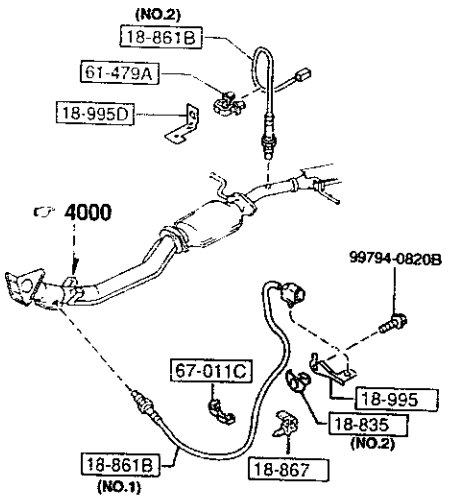


(MT)

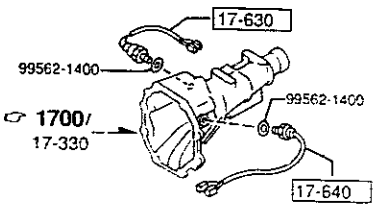


(AT)

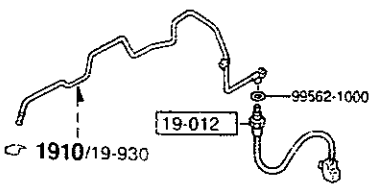





(AT)

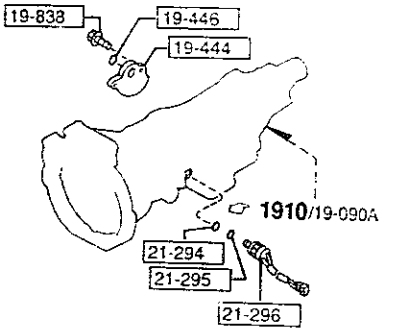


AUNA06

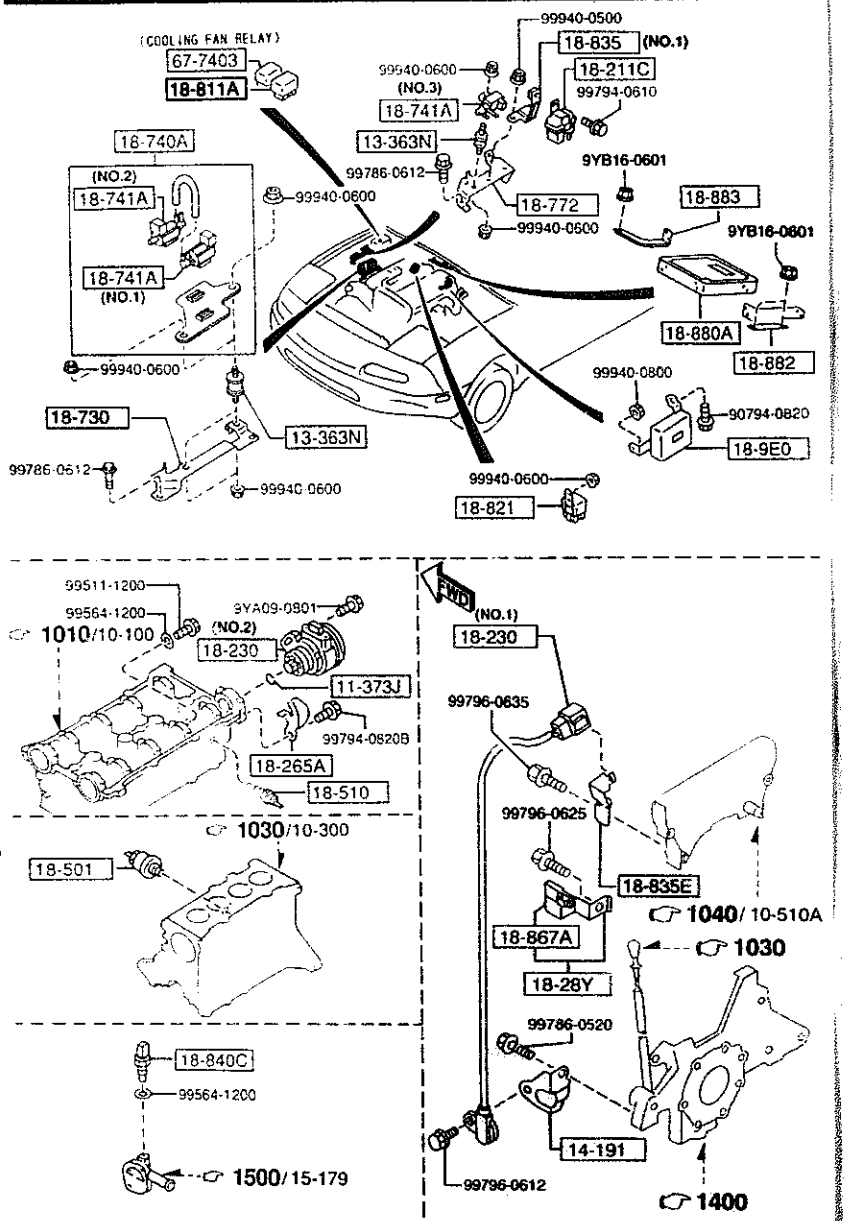


AUNA06



| PART NO | QTY | MODEL/RESTRICTION | MODEL/RESTRICTION | MODEL/RESTRICTION | REMARKS |
|---|---|---|---|---|---|
| 11-373J | | RING,'O' | | | |
| 99541-03801 | 1 | | | | |
| 13-363N | | RUBBER,MOUNTING | | | |
| 0222-13-363 | 3 | | | | |
| 14-191 | | BRACKET,OIL PUMP | | | |
| B68F-14-190 | 1 | | | | |
| 17-630 | | SWITCH | | | |
| 8118-17-640B | 1 | (MT) | | | |
| 17-640 | | SWITCH,BACK UP LAMP | | | |
| M506-17-640A | 1 | (MT) | | | |
| 18-211C | | SENSOR,M.A.P. | | | |
| BPS1-18-211 | 1 | | | | |
| 18-230 | | SENSOR,CRANKSHAFT POSI. | | | |
| BPS1-18-221 | 1 | (ILLUST. NO.1) | | | |
| BPE8-18-230 | 1 | (ILLUST. NO.2) | | | |
| 18-265A | | BRACKET,COUPLER-KNOCK SENSOR | | | |
| BPE8-18-281A | 1 | | | | |
| 18-28Y | | BRACKET,CONDENSER | | | |
| B6BF-18-28Y | 1 | | | | |
| 18-501 | | SWITCH,OIL PRESSURE | | | |
| B367-18-501 | 1 | | | | |
| 18-510 | | UNIT,HEAT GAUGE | | | |
| B541-18-51X | 1 | PANASONIC | | | |
| KL01-18-51X | 1 | NIHON THERMOSTAT | | | |
| 18-730 | | FILTER,AIR | | | |
| BPE8-18-730A | 1 | | | | |
| 18-740A | | VALVE,SOLENOID | | | |

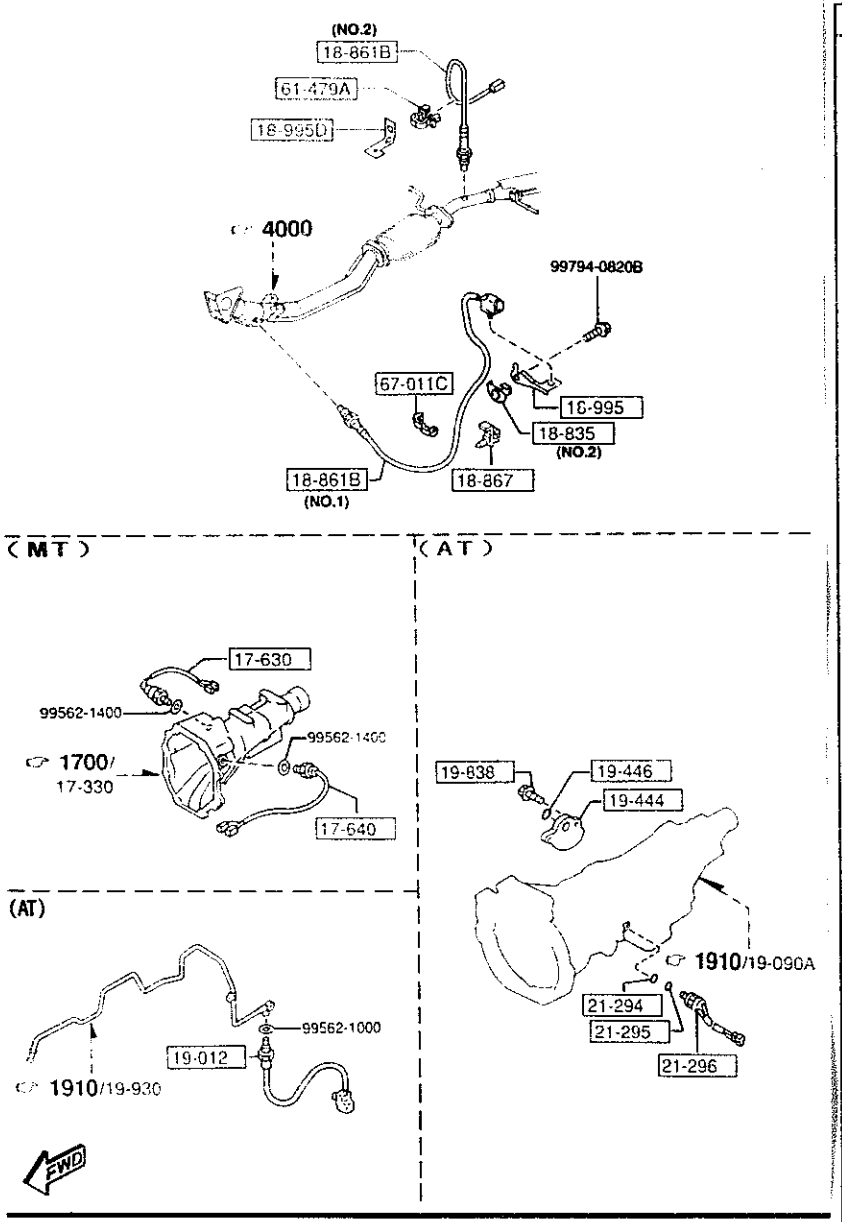


AUNA06



| PART NO | QTY | MODEL/SPECIFICATION | MODEL/SPECIFICATION | MODEL/SPECIFICATION | REMARKS |
|---|---|---|---|---|---|
| CONT'D | | | | | |
| BPE8-18-74XA | 1 | | | | |
| +---------+ | | | | | |
| \| 18-741A \| | | VALVE,THREE WAY | | | |
| +---------+ | | | | | |
| F2L3-18-741 | 1 | (ILLUST. NO.1) | | | |
| F2L4-18-741 | 1 | (ILLUST. NO.2) | | | |
| JE16-18-741 | 1 | NIHON OIL SEAL (ILLUST. NO.3) | | | |
| +---------+ | | | | | |
| \| 18-772 \| | | BRACKET,IGNITER | | | |
| +---------+ | | | | | |
| B61P-18-2F0B | 1 | | | | |
| +---------+ | | | | | |
| \| 18-811A \| | | RELAY,CONTROL | | | |
| +---------+ | | | | | |
| B5B4-18-811 | 1 | | | | |
| +---------+ | | | | | |
| \| 18-821 \| | | RELAY,FUEL PUMP | | | |
| +---------+ | | | | | |
| B577-18-821A | 1 | | | | |
| +---------+ | | | | | |
| \| 18-835 \| | | BRACKET,WIRE CLIP-OXYGEN | | | |
| +---------+ | | | | | |
| BPS1-18-835A | 1 | (ILLUST. NO.1) | | | |
| BPE8-18-838B | 1 | (ILLUST. NO.2) | | | |
| +---------+ | | | | | |
| \| 18-835E \| | | BRACKET,BOOST SENSOR | | | |
| +---------+ | | | | | |
| BPS2-18-835 | 1 | | | | |
| +---------+ | | | | | |
| \| 18-840C \| | | SENSOR,TEMP.-ENG.COOLANT | | | |
| +---------+ | | | | | |
| B593-18-840A | 1 | DENSO | | | |
| +---------+ | | | | | |
| \| 18-861B \| | | SENSOR,OXYGEN | | | |
| +---------+ | | | | | |
| BP3A-18-861 | 1 | (ILLUST. NO.1) | | | |
| BP3B-18-861 | 1 | (ILLUST. NO.2) | | | |
| +---------+ | | | | | |
| \| 18-867 \| | | CLIP | | | |
| +---------+ | | | | | |
| BPE8-18-867A | 1 | | | | |
| +---------+ | | | | | |
| \| 18-867A \| | | CLIP,WIRE | | | |
| +---------+ | | | | | |
| B366-18-867A | 1 | | | | |
| +---------+ | | | | | |
| \| 18-880A \| | | MODULE,POWERTRAIN CONTROL | | | |
| +---------+ | | | | | |
| BP3A-18-881A A (BP3A-18-881B) | 1 | | | | -7106 |

7106 NA35*V-727842

CAT. AUNA06-03 1998-07

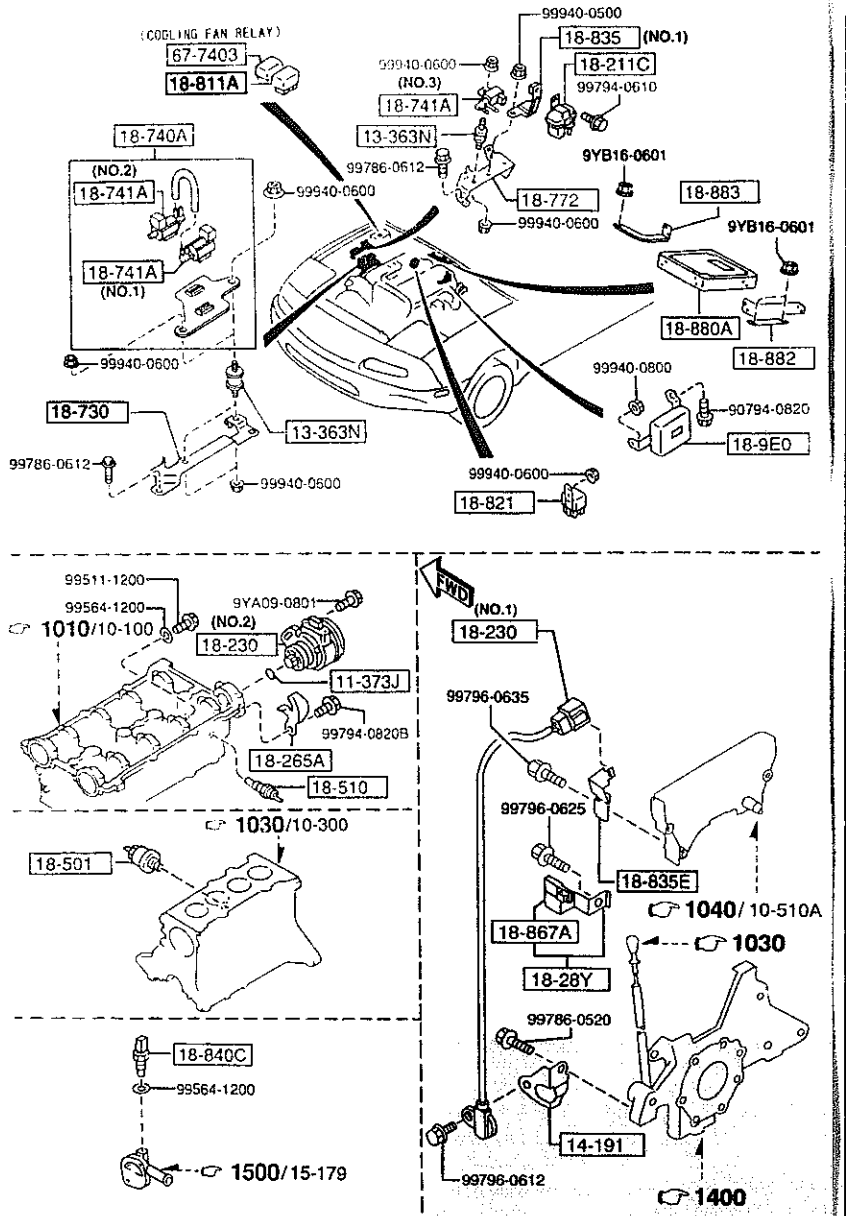


AUNA06



| PART NO | QTY | MODEL/RESTRICTION | MODEL/RESTRICTION | MODEL/RESTRICTION | REMARKS |
|---|---|---|---|---|---|
| CONT'D | | | | | |
| BP3A-18-881B | 1 | | | | 7106- |
| 18-882 | | BRACKET,CONTROL UNIT | | | |
| BPE8-18-882 | 1 | | | | |
| 18-883 | | BRACKET,CONTROL UNIT | | | |
| BPS1-18-883 | 1 | | | | |
| 18-9E0 | | MODULE,PWT.CONT.-A/T | | | |
| BP3A-18-9E1 | 1 | (AT) | | | |
| 18-995 | | CLIP | | | |
| BPE8-18-998B | 1 | | | | |
| 18-995D | | BRACKET,COUPLER-02 SENSOR | | | |
| BPS1-18-998B | 1 | | | | |
| 19-012 | | SENSOR,OIL TEMP | | | |
| N451-19-012A | 1 | (AT) | | | |
| 19-444 | | SWITCH,INHIBITOR | | | |
| N451-19-444 | 1 | (AT) | | | |
| 19-446 | | RING,'O' | | | |
| 0338-19-446 | 1 | (AT) | | | |
| 19-838 | | BOLT-HEX,HD WASHER | | | |
| 1758-19-838A | 2 | (AT) | | | |
| 21-294 | | RING,'O' | | | |
| BU01-21-294 | 1 | (AT) | | | |
| 21-295 | | RING,'O' | | | |
| BU01-21-295 | 1 | (AT) | | | |
| 21-296 | | SOLENOID,LOCK UP CONTROL | | | |
| N451-21-3A5 | 1 | (AT) | | | |
| 61-479A | | CLIP | | | |
| UB39-61-479A | 1 | | | | |

7106 NA35*V-727842

CAT. AUNA06-03

1998-07

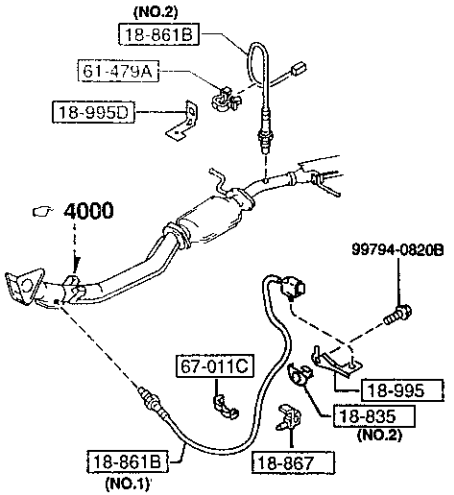


(MT)

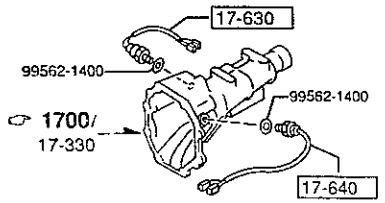


(AT)

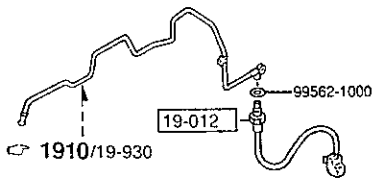


(AT)

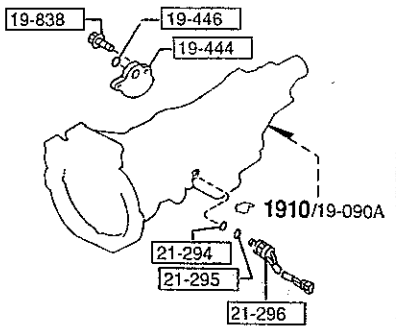





AUNA06

6600 -4 * ENGINE SWITCHES & RELAYS

| PART NO | QTY | MODEL/RESTRICTION | MODEL/RESTRICTION | MODEL/RESTRICTION | REMARK |
|---|---|---|---|---|---|
| 67-011C | | CLIP | | | |
| E356-18-141 | 1 | | | | |
| 67-7403 | | RELAY,N.O. | | | |
| LA10-67-740 | 1 | 10A (COOLING FAN RELAY) | | | |

CAT. AUNA06-03

1998-07

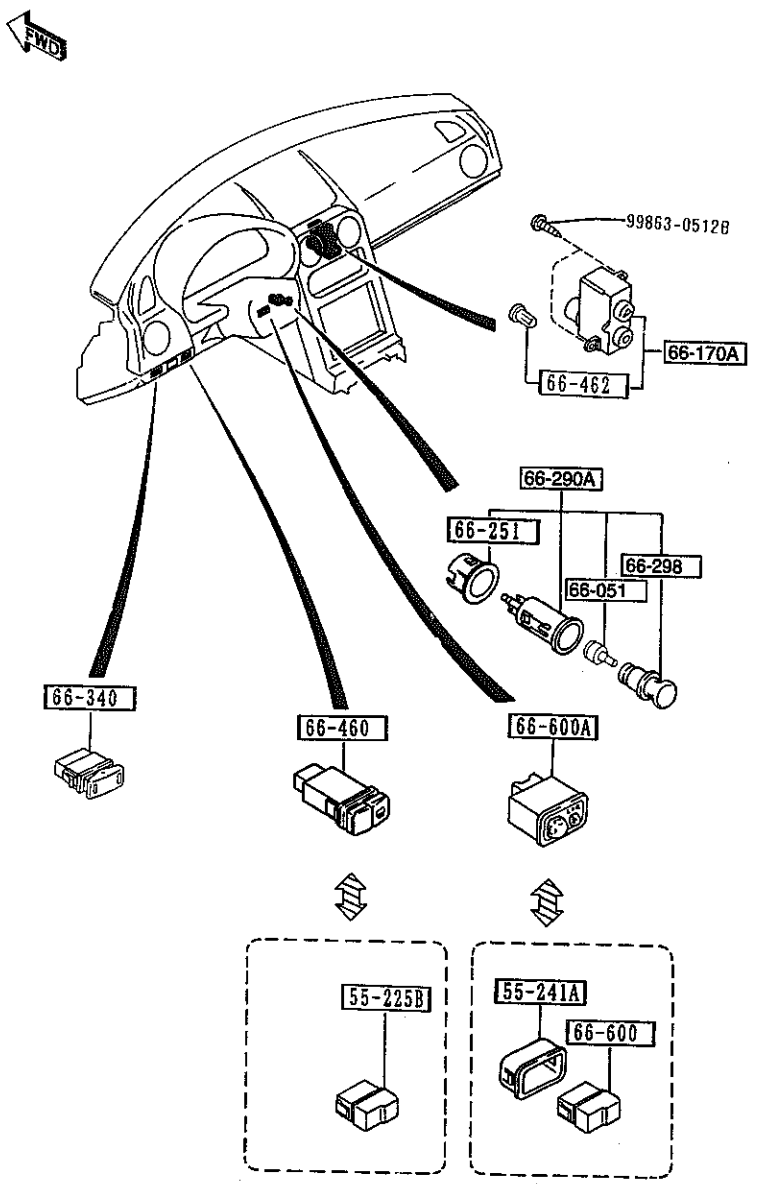


AUNA06

6610 -1 DASHBOARD SWITCHES

| PART NO. | QTY | MODEL/RESTRICTION | MODEL/RESTRICTION | MODEL/RESTRICTION | FROM-TO |
|---|---|---|---|---|---|
| 55-225B | | COVER,HOLE | | | |
| N034-55-225 | 1 | (W/O DETACHABLE HARD TOP) | | | |
| 55-241A | | BOX,INSTRUMENT PANEL | | | |
| NA01-55-241A | 1 | BASE, R-PKG, (MANUAL TYPE DR MIRROR) | | | |
| 00 | INT- | NA3 NA5 BLACK | | | |
| 66-051 | | CAP | | | |
| B16A-66-29Y | 1 | | | | |
| 66-170A | | SWITCH(R),CLUSTER | | | |
| N041-66-170A | 1 | | | | |
| 66-251 | | RING,ILLUMINATION | | | |
| S09A-66-251 | 1 | | | | |
| 66-290A | | OUTLET | | | |
| B16A-66-290 | 1 | | | | |
| 66-298 | | CAP,OUTLET | | | |
| B16A-66-298 | 1 | | | | |
| 66-340 | | SWITCH,MAIN | | | |
| NA01-66-340A | 1 | P.E.GR, L-PKG, (W/AUTO CRUISE.CONT.) | | | |
| 66-460 | | SWITCH,RR.DEF. | | | |
| NA75-66-460 | 1 | (W/DETACHABLE HARD TOP) | | | |
| 66-462 | | BULB'B',SWITCH-RR DEFOGER | | | |
| NA01-66-462 | 1 | | | | |
| 66-600 | | COVER,HOLE | | | |
| B481-55-225 | 1 | | | | |
| 66-600A | | SWITCH,RMT.MIRROR | | | |
| NA52-66-600A | 1 | F-SV, L-PKG, P.E.GR, T-PKG, (ELECT. TYPE DR MIRR | | | |

CAT. AUNA06-03

1998-07

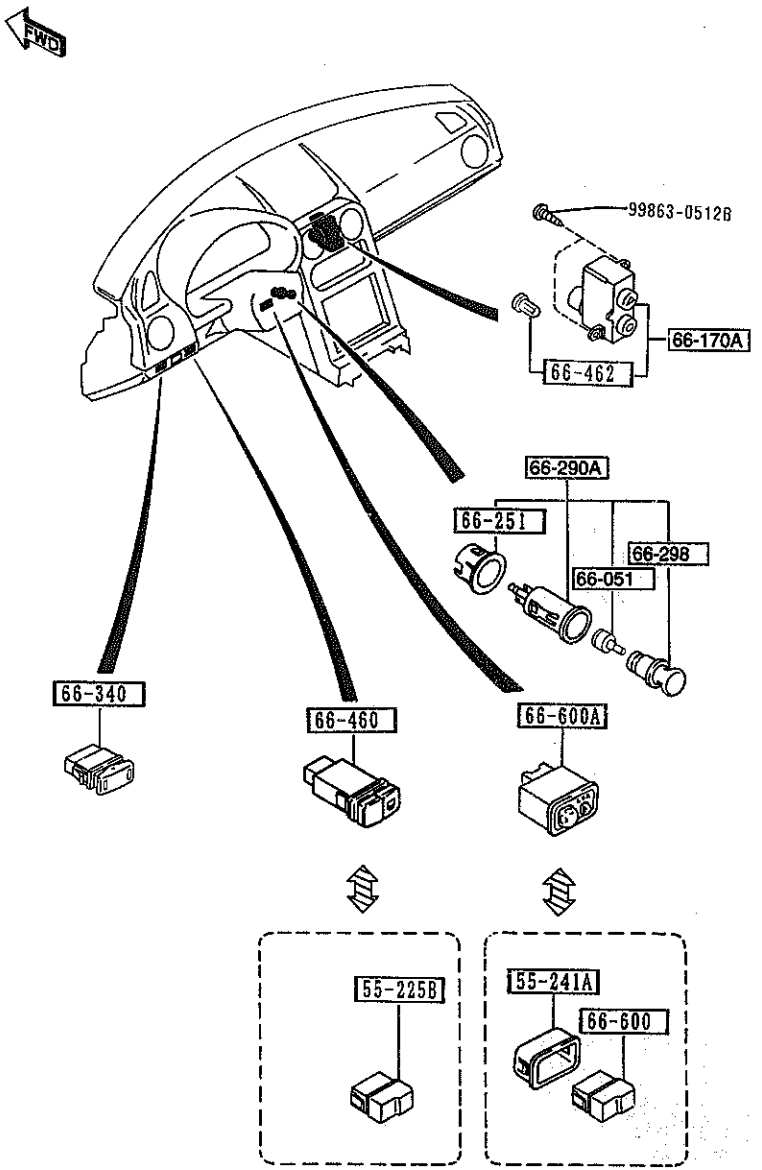


AUNA06



| PART NO. | QTY | MODEL/RESTRICTION | MODEL/RESTRICTION | MODEL/RESTRICTION | FROM-TO |
|---|---|---|---|---|---|
| CONT'D | | OR) | | | |

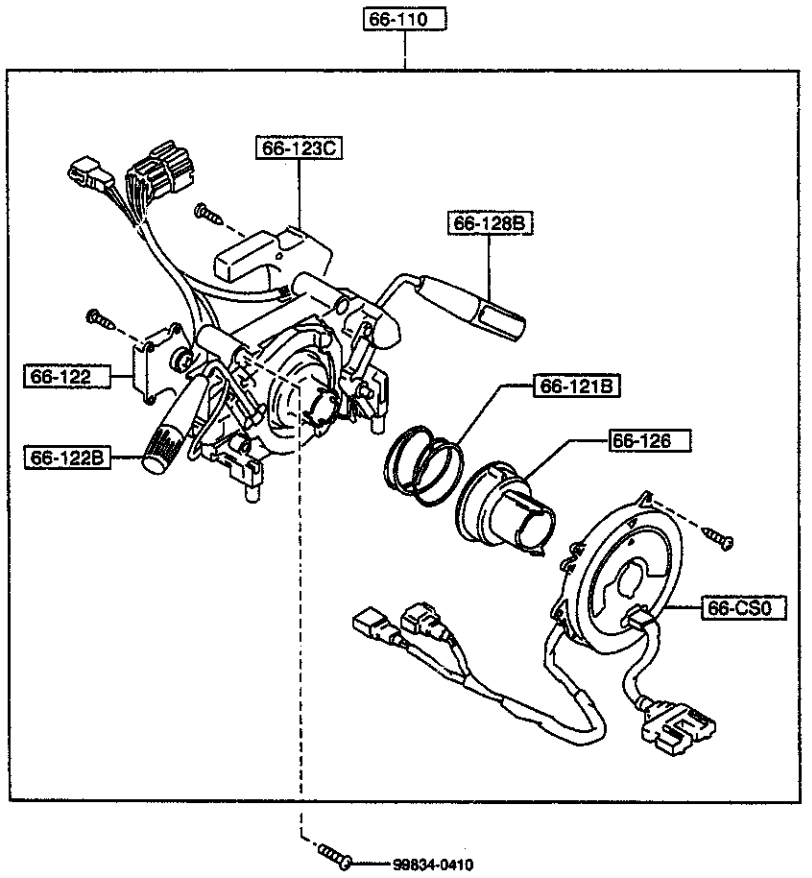


6611 -1 * COMBINATION SWITCH

| PART NO. | QTY | MODEL/RESTRICTION | MODEL/RESTRICTION | MODEL/RESTRICTION | FROM-TO |
|---|---|---|---|---|---|
| 66-CS0 | | SPRING,CLOCK | | | |
| NB17-66-CS0 A (NB17-66-CS0A) | 1 | | | | -7801 |
| *NB17-66-CS0A | 1 | | | | 7801- |
| 66-110 | | SWITCH,COMBINATION | | | |
| NB17-66-120 A (NB17-66-120A) | 1 | BASE, N-PKG, R-PKG, (W/O AUTO CRUISE.CONT.) | | | -7801 |
| NB18-66-120 A (NB18-66-120A) | 1 | P.E.GR, L-PKG, (W/AUTO CRUISE.CONT.) | | | -7801 |
| *NB17-66-120A | 1 | BASE, N-PKG, R-PKG, (W/O AUTO CRUISE.CONT.) | | | 7801- |
| *NB18-66-120A | 1 | P.E.GR, L-PKG, (W/AUTO CRUISE.CONT.) | | | 7801- |
| 66-121B | | SPRING,CANCEL CAM | | | |
| H384-66-121 | 1 | | | | |
| 66-122 | | SWITCH,DIMMER | | | |
| NA02-66-136 | 1 | | | | |
| 66-122B | | SWITCH,LIGHT & TURN | | | |
| NA02-66-122 | 1 | | | | |
| 66-123C | | UNIT,WIPER-COMB. SWITCH | | | |
| NA02-66-135 | 1 | | | | |
| 66-126 | | CAM,CANCEL-COMB. SW. | | | |
| NA02-66-126 | 1 | | | | |
| 66-128B | | LEVER,WIPER-COMB. SWITCH | | | |
| NA01-66-128 | 1 | BASE, N-PKG, R-PKG, (W/O AUTO CRUISE.CONT.) | | | |
| NA02-66-128 | 1 | P.E.GR, L-PKG, (W/AUTO CRUISE.CONT.) | | | |

7801 NA35*V-739024

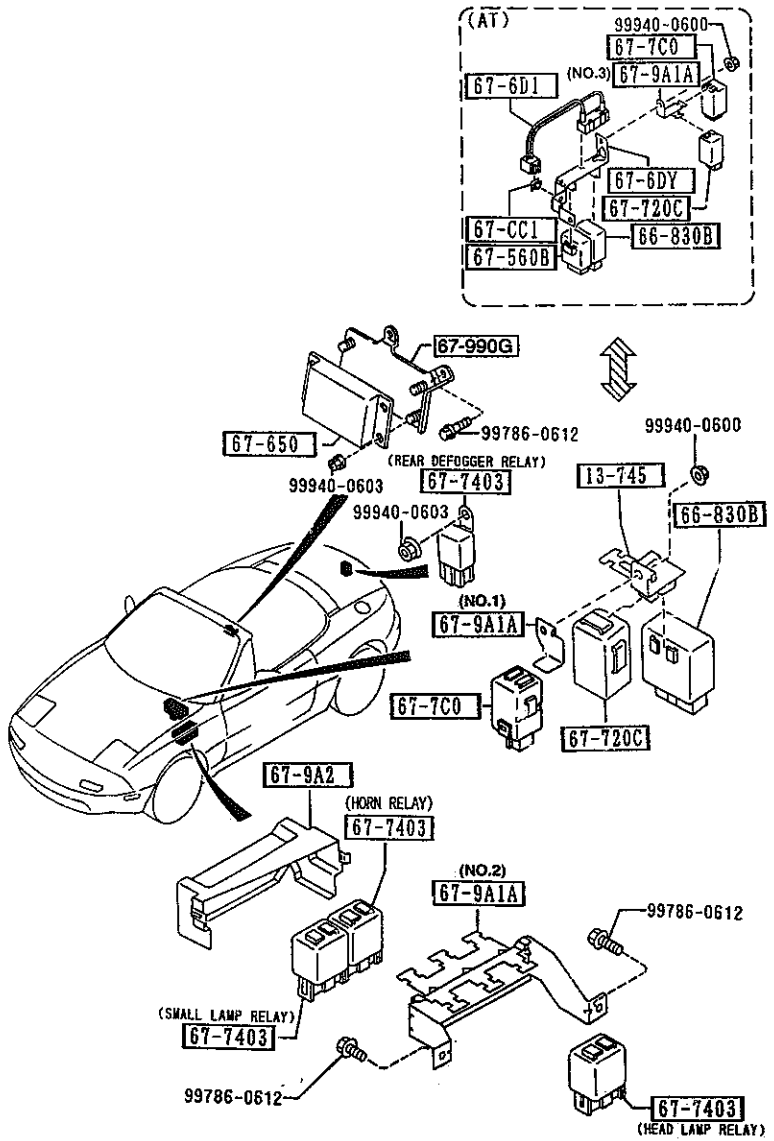


AUNA06



| PART NO. | QTY | MODEL/RESTRICTION | MODEL/RESTRICTION | MODEL/RESTRICTION | FROM-TO |
|---|---|---|---|---|---|
| 13-745 | | BRACKET,RELAY | | | |
| NA02-67-9A1 | 1 | (MT) | | | |
| 66-830B | | UNIT,FLASHER | | | |
| HE01-66-830 | 1 | | | | |
| 67-CC1 | | CLIP,HARNESS | | | |
| LA01-67-C11 | 1 | (AT) | | | |
| 67-560B | | UNIT,CENTRAL PROCESSING | | | |
| NA56-67-560 | 1 | (AT) | | | |
| 67-6DY | | BRACKET,RELAY-INTERLOCK | | | |
| NA56-67-6DYA | 1 | (AT) | | | |
| 67-6D1 | | RESISTOR,INTERLOCK | | | |
| M020-67-6D1 | 1 | (AT) | | | |
| 67-650 | | BOX,CONTROL-A.B.S. | | | |
| N036-67-650 | 1 | (W/A. LOCK BRAKE) | | | -6B01 |
| NB84-67-650 | 1 | (W/A. LOCK BRAKE) | | | 6B01- |
| 67-7C0 | | RELAY,RETRACTOR-COWL PANEL | | | |
| B481-67-7C0B | 1 | | | | |
| 67-720C | | TIMER & BUZZER | | | |
| NA02-67-720A | 1 | | | | |
| 67-7403 | | RELAY,N.O. | | | |
| H300-67-740 | 1 | 30A<br>(HEAD LAMP RELAY) | | | |
| LA10-67-740 | 2 | 10A<br>(HORN RELAY)<br>(SMALL LAMP RELAY) | | | |
| LA40-67-740 | 1 | (REAR DEFOGGER RELAY)<br>(W/DETACHABLE HARD TOP) | | | |
| 67-9A1A | | BRACKET,RELAY | | | |
| NA17-67-9A1 | 1 | (ILLUST. NO.1)<br>(MT) | | | |
| NA75-67-9A1 | 1 | (ILLUST. NO.2) | | | |

6B01 NA35*V-723096

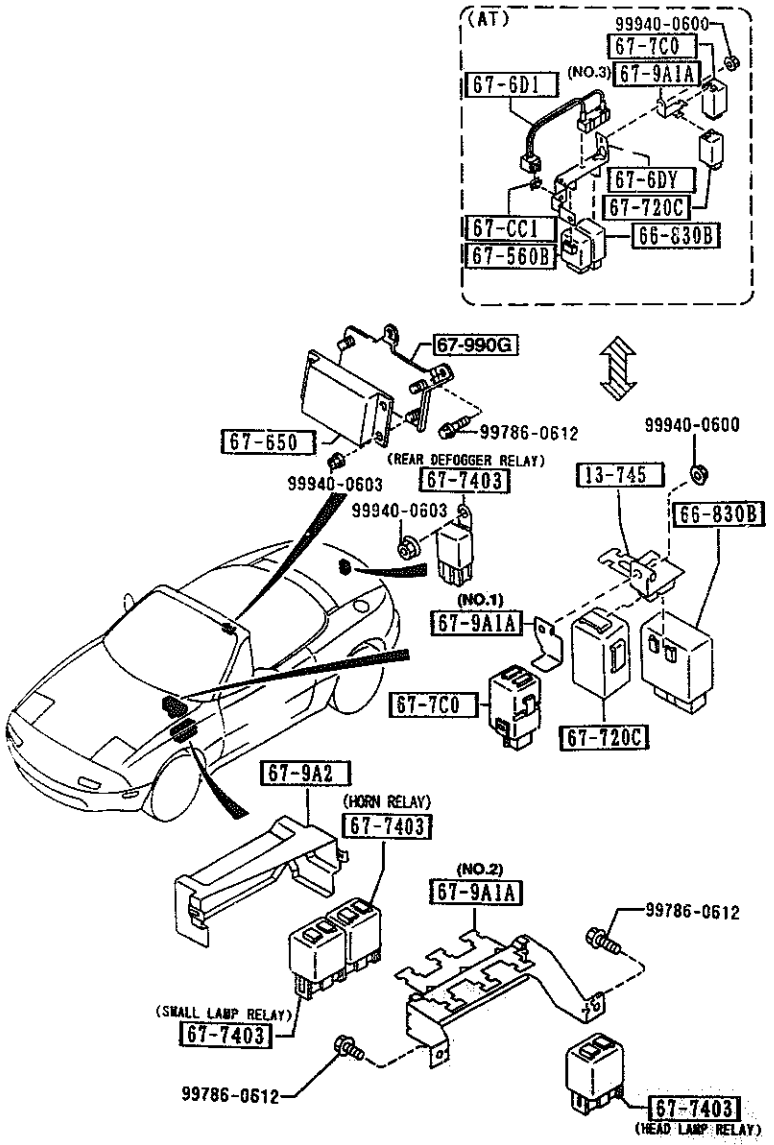




6630 -2 * BODY RELAYS & UNIT

| PART NO. | QTY | MODEL/RESTRICTION | MODEL/RESTRICTION | MODEL/RESTRICTION | FROM-TO |
|---|---|---|---|---|---|
| CONT'D | | | | | |
| NA81-67-9A1 | 1 | (ILLUST. NO.3) (AT) | | | |
| 67-9A2 | | COVER,RELAY | | | |
| NA82-67-9A2 | 1 | | | | |
| 67-990G | | BRACKET,A.B.S. | | | |
| *NB13-67-B4X | 1 | (W/A. LOCK BRAKE) | | | |

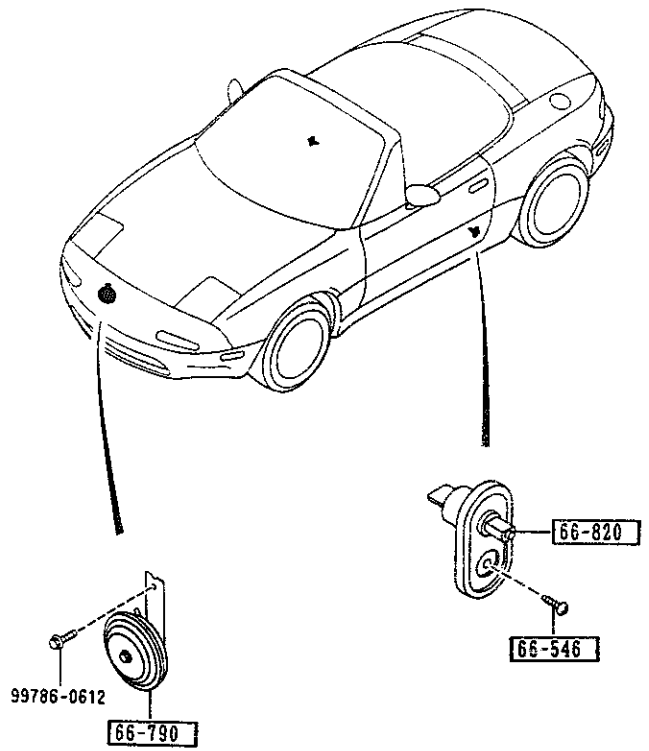


6635 -1 * DOOR SWITCH & HORNS

| PART NO. | QTY | MODEL/DESCRIPTION | MODEL/DESCRIPTION | MODEL/DESCRIPTION | REMARKS |
|---|---|---|---|---|---|
| 66-546 | | SCREW,DOOR SWITCH | | | |
| LA01-66-546 | 2 | | | | |
| 66-790 | | HORN,LOW TONE | | | |
| SA59-66-790A | 1 | | | | |
| 66-820 | | SWITCH,DOOR | | | |
| B455-66-540 | 2 | | | | |

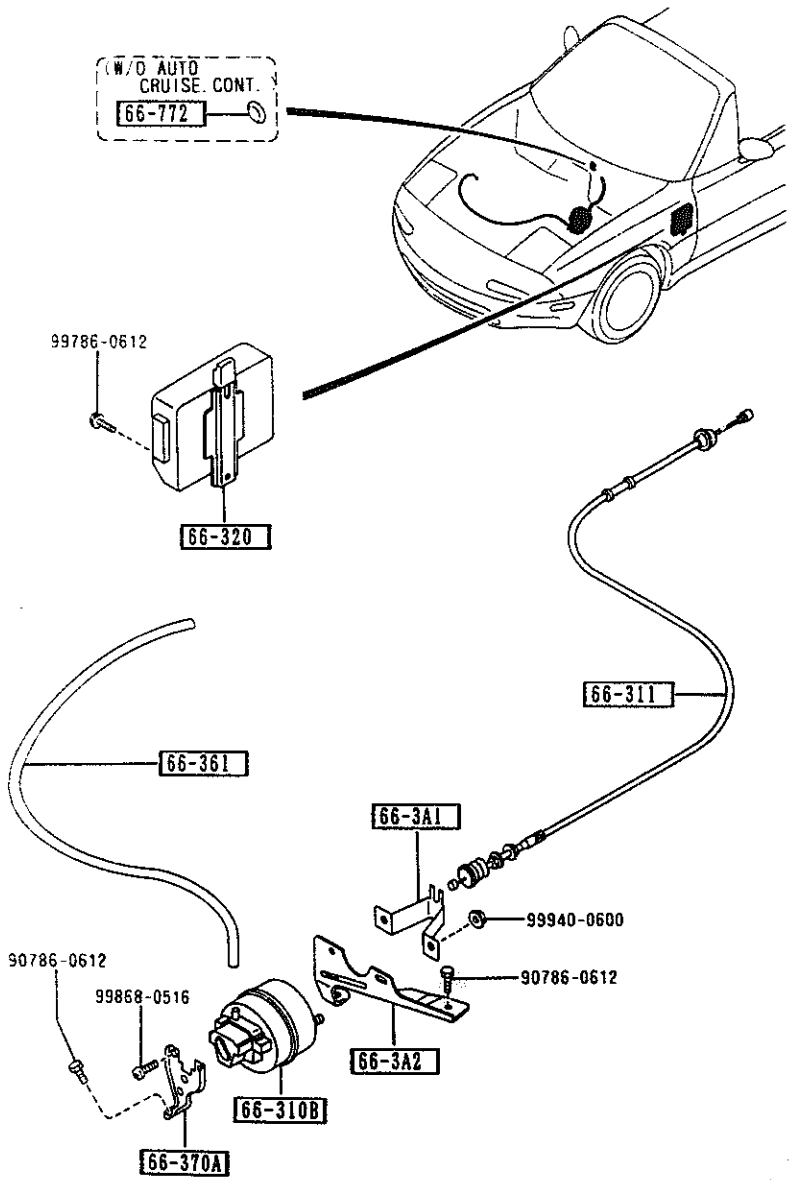


6640 -1 * AUTO CRUISE CONTROL SYSTEM

| PART NO | QTY | MODEL/RESTRICTION | MODEL/RESTRICTION | MODEL/RESTRICTION | REMARK |
|---|---|---|---|---|---|
| 66-3A1 | | BRACKET,ACTUATOR-A.C.C. | | | |
| LA01-66-3A1 | 1 | P.E.GR, L-PKG, (W/AUTO CRUISE CONT.) | | | |
| 66-3A2 | | BRACKET,ACTUATOR-FRONT | | | |
| NA01-66-3A2A | 1 | P.E.GR, L-PKG, (W/AUTO CRUISE CONT.) | | | |
| 66-310B | | ACTUATOR,A.C.C. | | | |
| LA01-66-310A | 1 | P.E.GR, L-PKG, (W/AUTO CRUISE CONT.) | | | |
| 66-311 | | WIRE,A.C.C. | | | |
| NA01-66-311A | 1 | P.E.GR, L-PKG, (W/AUTO CRUISE CONT.) | | | |
| 66-320 | | BOX,A.C.C. | | | |
| NA01-66-320 | 1 | P.E.GR, L-PKG, (W/AUTO CRUISE CONT.) | | | |
| 66-361 | | PIPE,AUTO CRUISE CONTROL | | | |
| NA75-66-361 | 1 | P.E.GR, L-PKG, (W/AUTO CRUISE CONT.) | | | |
| 66-370A | | BRACKET,ACTUATOR | | | |
| NA01-66-3A3A | 1 | P.E.GR, L-PKG, (W/AUTO CRUISE CONT.) | | | |
| 66-772 | | GROMMET | | | |
| B092-41-661 | 1 | BASE, N-PKG, R-PKG, (W/O AUTO CRUISE CONT.) | | | |

(W/O AUDIO)

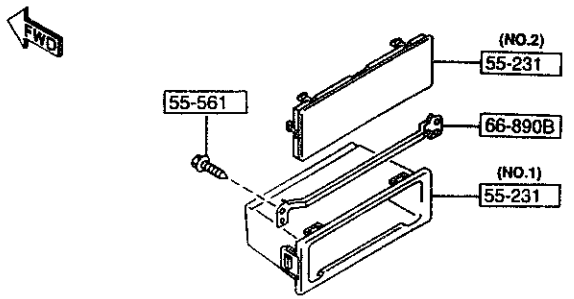


(AM/FM, W/O C.DISC)

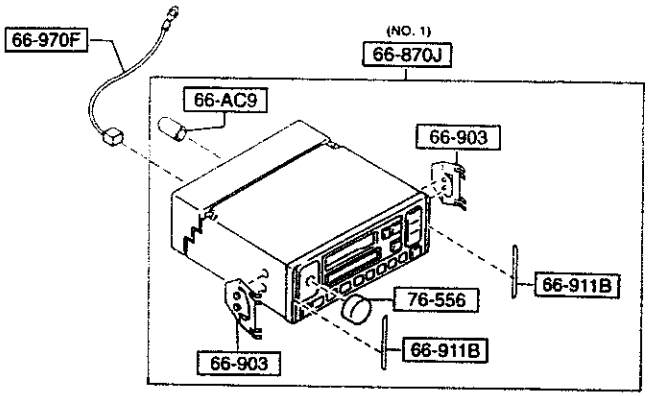


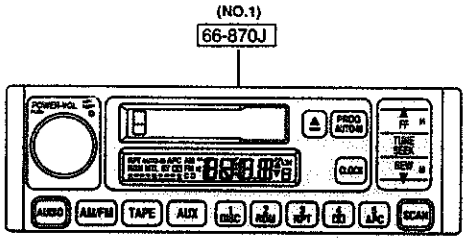


AUNA06



(AM/FM, W/C.DISC)

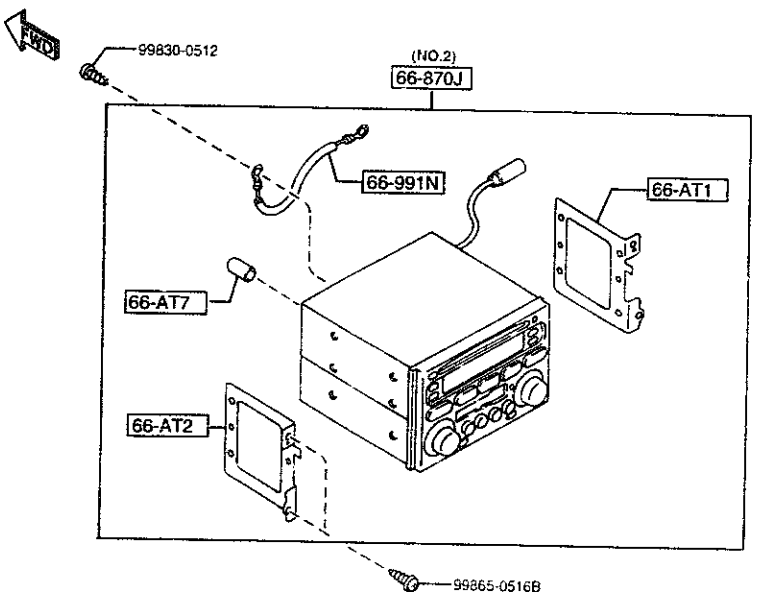


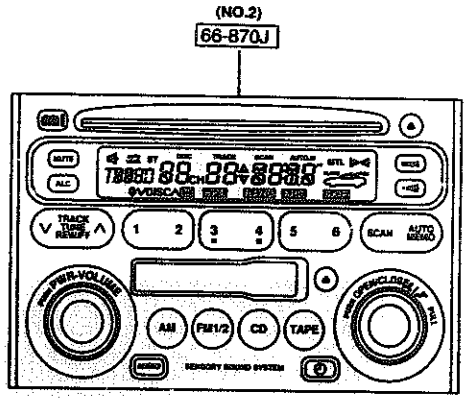


AUNA06

(W/O AUDIO)

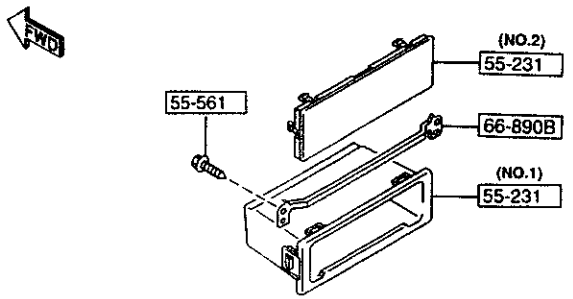


(AM/FM,W/O C.DISC)

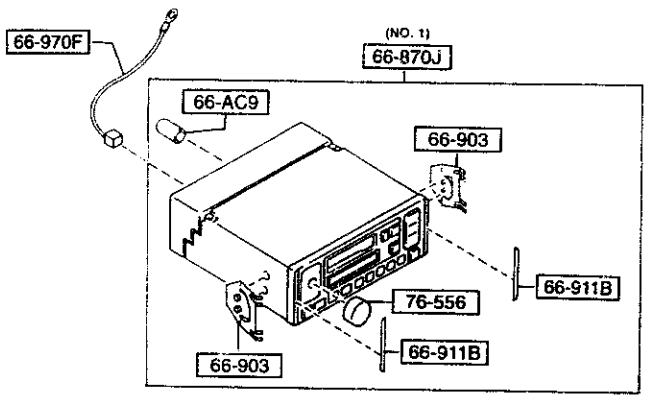


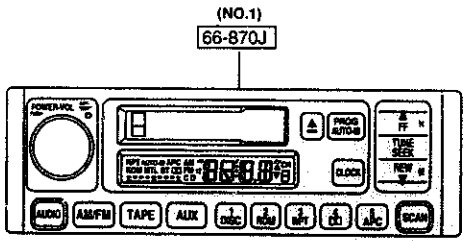






| PART NO | QTY | MODEL/DESCRIPTION | MODEL/DESCRIPTION | MODEL/DESCRIPTION | REMARKS |
|---|---|---|---|---|---|
| +---------+ | | | | | |
| \| 55-231 \| | | ORNAMENT,STEREO | | | |
| +---------+ | | | | | |
| B02A-66-9M0A | 1 | (ILLUST. NO.1)<br>(AM/FM,W/O C.DISC)<br>(W/O AUDIO) | | | |
| B03A-66-9M0 | 1 | (ILLUST. NO.2)<br>(W/O AUDIO) | | | |
| +---------+ | | | | | |
| \| 55-561 \| | | BOLT,INST. PANEL | | | |
| +---------+ | | | | | |
| B455-55-561 | 2 | (W/O AUDIO)<br>(AM/FM,W/O C.DISC) | | | |
| +---------+ | | | | | |
| \| 66-AC9 \| | | RUBBER,REAR-ET/ED COMBI. | | | |
| +---------+ | | | | | |
| LB84-66-AC9 | 1 | PANASONIC<br>(AM/FM,W/O C.DISC) | | | |
| +---------+ | | | | | |
| \| 66-AT1 \| | | BRACKET(R),FRONT-AUDIO | | | |
| +---------+ | | | | | |
| N034-66-AS1 | 1 | (AM/FM,W/C.DISC) | | | |
| +---------+ | | | | | |
| \| 66-AT2 \| | | BRACKET(L),FRONT-AUDIO | | | |
| +---------+ | | | | | |
| N034-66-AS2 | 1 | (AM/FM,W/C.DISC) | | | |
| +---------+ | | | | | |
| \| 66-AT7 \| | | BRACKET(RR),AUDIO | | | |
| +---------+ | | | | | |
| NB41-66-AS3 | 1 | (AM/FM,W/C.DISC) | | | |
| +---------+ | | | | | |
| \| 66-870J \| | | AUDIO SET | | | |
| +---------+ | | | | | |
| NB40-66-9C0 | 1 | (ILLUST. NO.1)<br>(AM/FM,W/O C.DISC) | | | |
| NB41-66-9C0 | 1 | (ILLUST. NO.2)<br>(AM/FM,W/C.DISC) | | | |
| +---------+ | | | | | |
| \| 66-890B \| | | BRACKET | | | |
| +---------+ | | | | | |
| NB38-66-9B1 | 1 | (W/O AUDIO)<br>(AM/FM,W/O C.DISC) | | | |
| +---------+ | | | | | |
| \| 66-903 \| | | BRACKET,TUNER | | | |
| +---------+ | | | | | |
| FD04-66-AW1 | 2 | PANASONIC<br>(AM/FM,W/O C.DISC) | | | |
| +---------+ | | | | | |
| \| 66-911B \| | | COVER,HOLE | | | |
| +---------+ | | | | | |
| NB40-66-BC4 | 2 | PANASONIC<br>(AM/FM,W/O C.DISC) | | | |
| +---------+ | | | | | |
| \| 66-970F \| | | CORD,EARTH | | | |
| +---------+ | | | | | |
| NB38-66-997 | 1 | (W/O AUDIO)<br>(AM/FM,W/O C.DISC) | | | |

6680 AUDIO SYSTEMS (RADIO & TAPE DECK) (2/2)

(AM/FM,W/C.DISC)

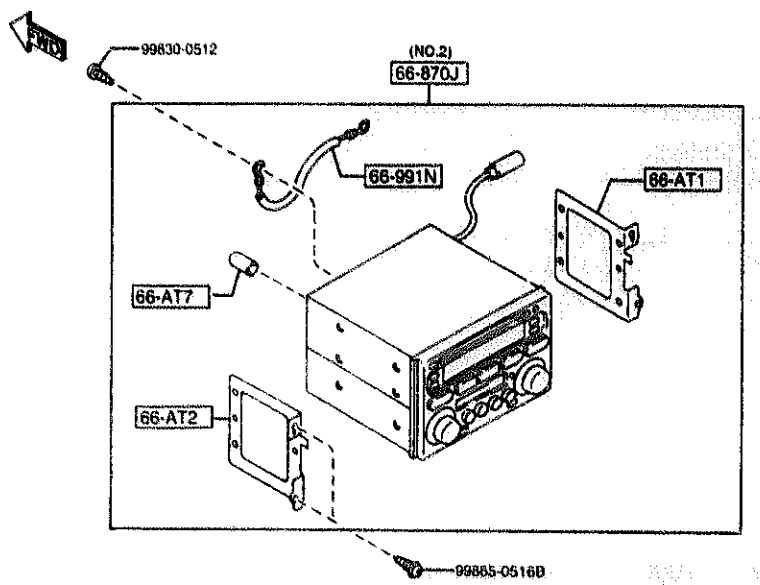


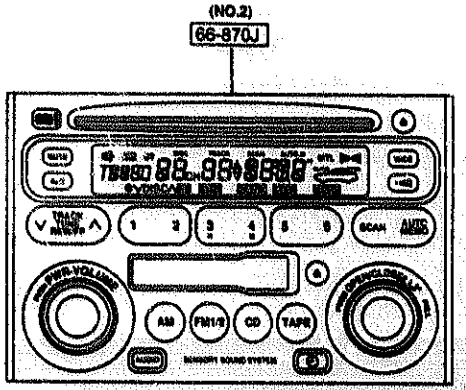


6680 -2 * AUDIO SYSTEMS (RADIO & TAPE DECK)

| PART NO | QTY | MODEL/RESTRICTION | MODEL/RESTRICTION | MODEL/RESTRICTION | CODE-TO |
|---|---|---|---|---|---|
| 66-991N | | CORD,EARTH | | | |
| N010-66-997 | 1 | (AM/FM,W/C.DISC) | | | |
| 76-556 | | KNOB,VOLUME | | | |
| NB40-66-BC1 AN(TB48-66-BC1 ) | 1 | (AM/FM,W/O C.DISC) | | | -6B01 |
| TB48-66-BC1 | 1 | (AM/FM,W/O C.DISC) | | | 6B01- |

6B01 NA35HV-723096

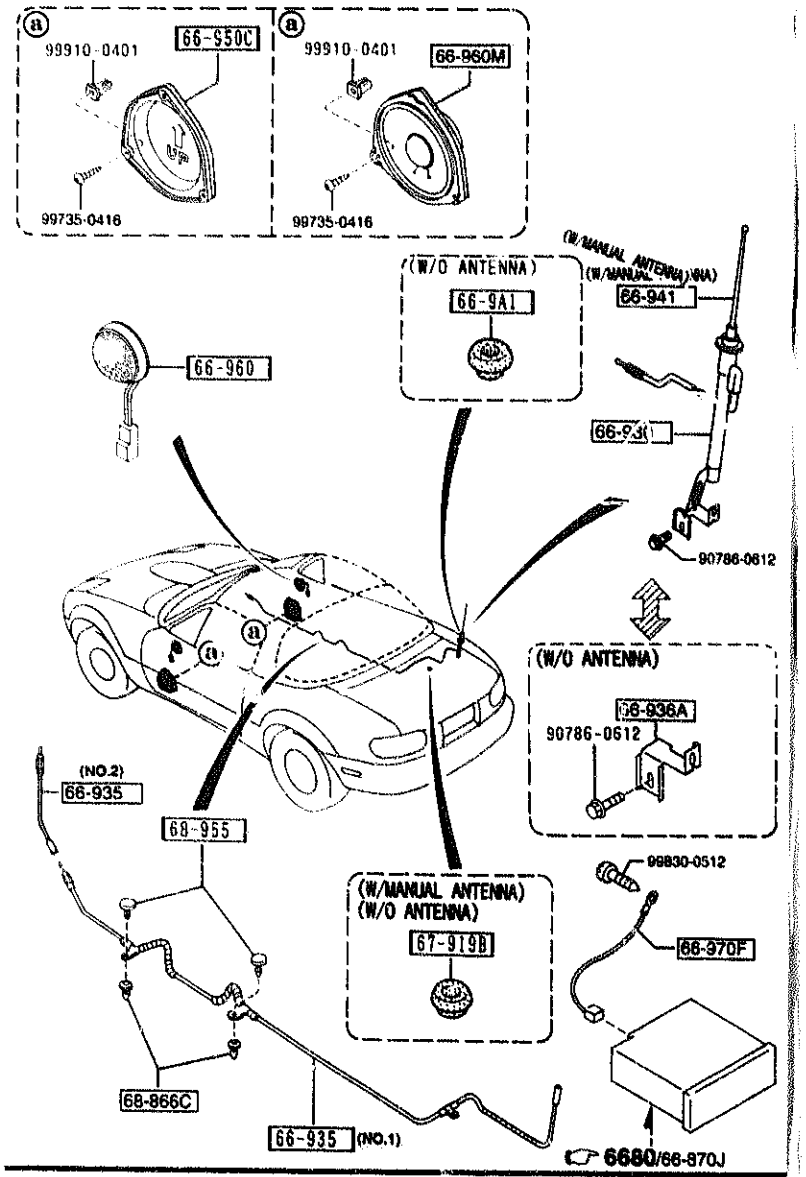


AUNA06



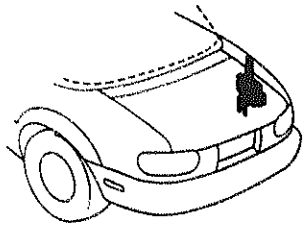

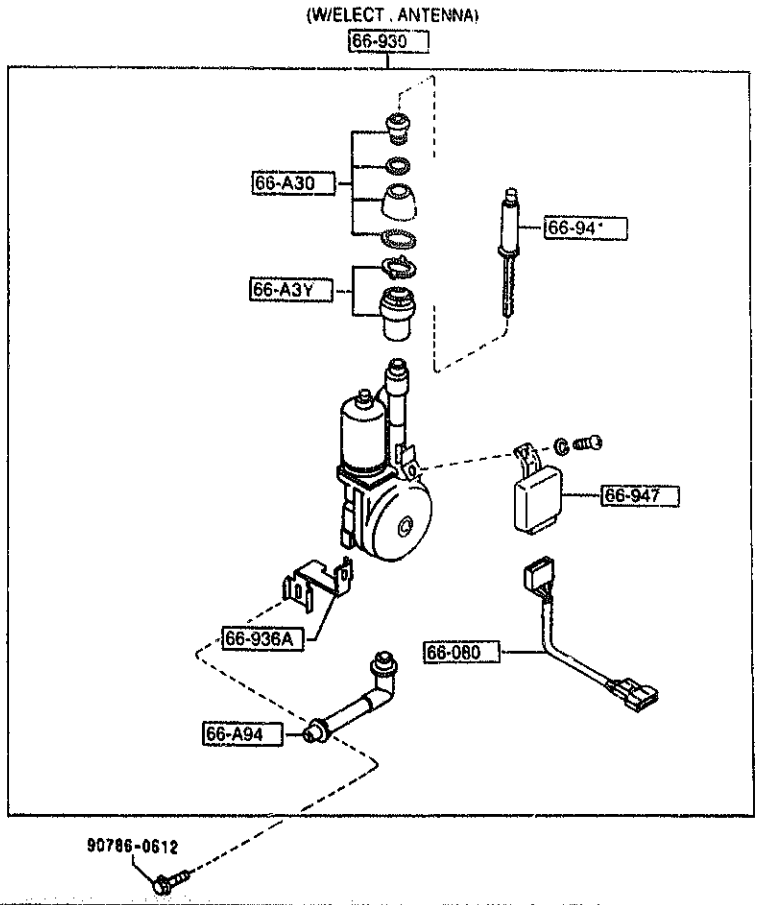


AUNA06

6682 AUDIO SYSTEMS (ANTENNA & SPEAKER) (1/2)

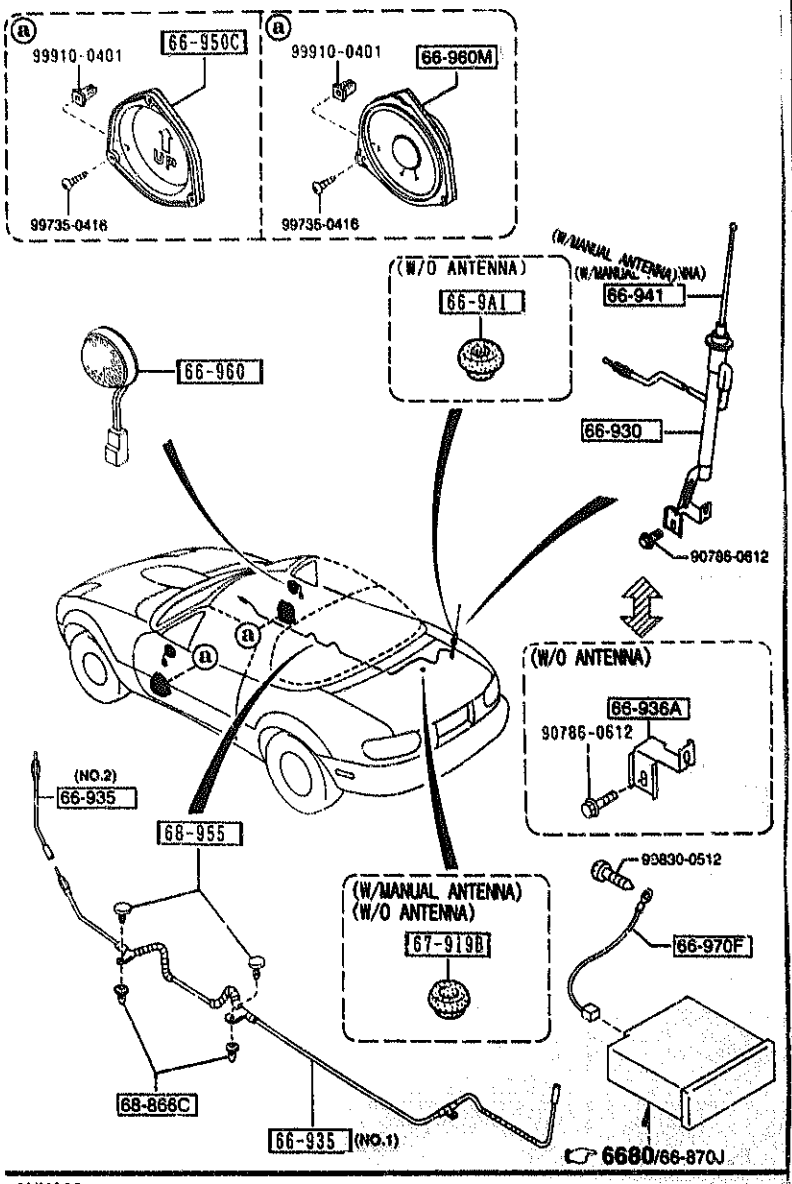


AUNA06

6682 -1 AUDIO SYSTEMS (ANTENNA & SPEAKER)

| PART NO | QTY | MODEL/RESTRICTION | MODEL/RESTRICTION | MODEL/RESTRICTION | FROM-TO |
|---|---|---|---|---|---|
| 66-A3Y | | PLATE,EARTH-MOTOR ANTENNA | | | |
| N007-66-A3Z | 1 | P.E.GR, L-PKG, (W/ELECT.ANTENNA) | | | |
| 66-A30 | | NUT,MOUNTING-ANTENNA | | | |
| N007-66-A9Y | 1 | P.E.GR, L-PKG, (W/ELECT.ANTENNA) | | | |
| 66-A94 | | PIPE,DRAIN-ANTENNA | | | |
| N007-66-A90 | 1 | P.E.GR, L-PKG, (W/ELECT.ANTENNA) | | | |
| 66-080 | | CORD | | | |
| N007-66-D10 | 1 | P.E.GR, L-PKG, (W/ELECT.ANTENNA) | | | |
| 66-9A1 | | COVER,HOLE-ANTENNA | | | |
| FB01-66-9A1A | 1 | (W/O ANTENNA) | | | |
| 66-930 | | ANTENNA,RADIO | | | |
| N007-66-930A | 1 | P.E.GR, L-PKG, (W/ELECT.ANTENNA) | | | |
| N034-66-930 | 1 | BASE, F-SV, R-PKG, T-PKG, (W/MANUAL ANTENNA) | | | |
| 66-935 | | FEEDER-ANTENNA | | | |
| NA01-66-940C | 1 | (ILLUST. NO.1) | | | |
| NB40-66-940 | 1 | (ILLUST. NO.2) (AM/FM,W/O C.DISC) | | | |
| 66-936A | | BRKT,MOTOR-ANTENNA | | | |
| N007-66-A9X | 1 | P.E.GR, L-PKG, (W/ELECT.ANTENNA) (W/O ANTENNA) | | | |
| 66-941 | | POLE,ANTENNA | | | |
| N007-66-A3X | 1 | P.E.GR, L-PKG, (W/ELECT.ANTENNA) | | | |
| KA03-66-930A | 1 | BASE, F-SV, R-PKG, T-PKG, (W/MANUAL ANTENNA) | | | |
| 66-947 | | RELAY,ANTENNA | | | |
| *N007-66-A3Y | 1 | P.E.GR, L-PKG, (W/ELECT.ANTENNA) | | | 7801- |

7801 NA35*V-739024

CAT. AUNA06-03

1998-07

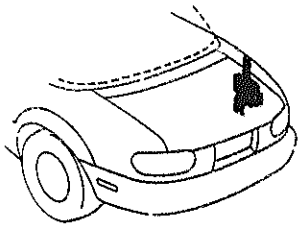

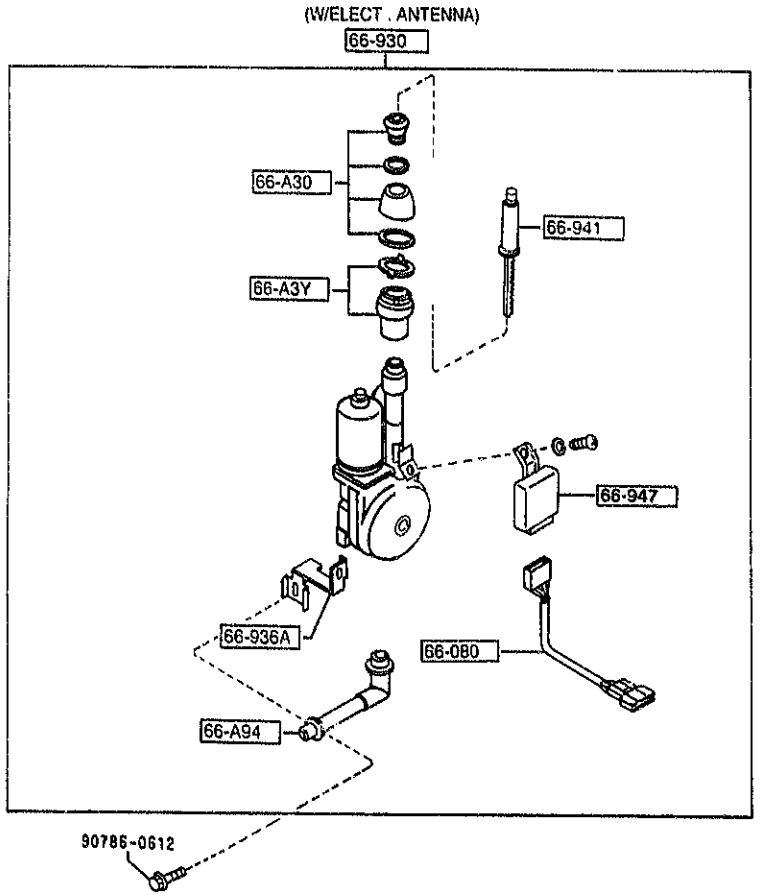




| PART NO. | QTY | MODEL/RESTRICTION | MODEL/RESTRICTION | MODEL/RESTRICTION | FROM TO |
|---|---|---|---|---|---|
| 66-950C | | BRACKET,LOUD SPEAKER | | | |
| NA01-66-980A | 2 | (W/O AUDIO) | | | |
| 66-960 | | SPEAKER,LOUD-FRONT | | | |
| NB42-66-960 | 2 | (AM/FM,W/C.DISC) | | | |
| 66-960M | | SPEAKER,LOUD-DOOR | | | |
| B02T-66-960 | 2 | (AM/FM,W/O C.DISC) | | | |
| N034-66-960 | 2 | (AM/FM,W/C.DISC) | | | |
| 66-970F | | CORD,EARTH | | | |
| NB38-66-997 | 1 | (W/O AUDIO)<br>(AM/FM,W/O C.DISC) | | | |
| 67-919B | | GROMMET | | | |
| N007-67-G21 | 1 | BASE, F-SV, R-PKG, T-PKG,<br>(W/MANUAL ANTENNA)<br>(W/O ANTENNA) | | | |
| 68-866C | | FASTENER,SEAL | | | |
| B235-68-865A | 2 | | | | |
| 68-955 | | FASTENER,LIFT GATE TRIM | | | |
| GJ37-68-955 | 2 | | | | |
| 00 | INT- | NA3 NA4 NA5 NA6<br>BLACK | | | |

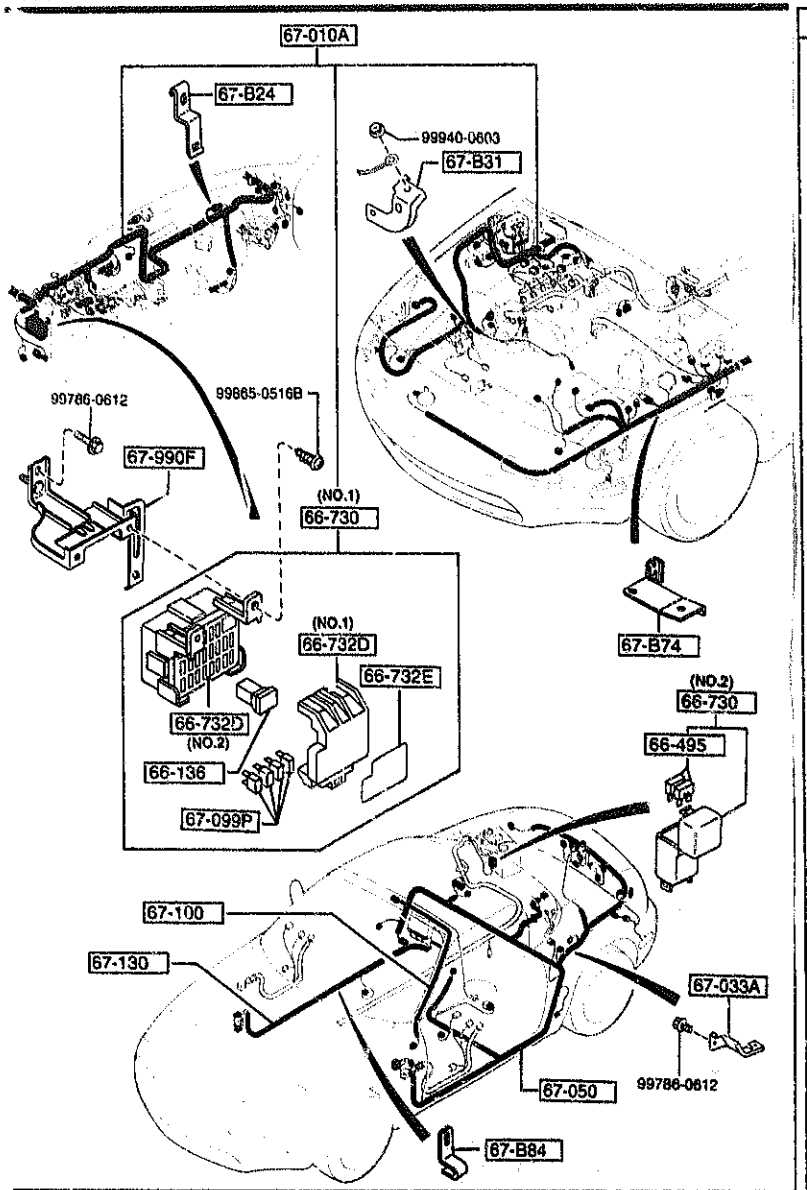


AUNA06



| PART NO. | QTY | MODEL/RESTRICTION | MODEL/RESTRICTION | MODEL/RESTRICTION | FROM-TO |
|---|---|---|---|---|---|
| 66-136 | | FUSE (30A) | | | |
| T001-67-S93 | 1 | | | | |
| 66-495 | | FUSE (10A) | | | |
| 99705-1110 | 2 | | | | |
| 66-730 | | BLOCK,FUSE | | | |
| NB11-66-730 | 1 | (ILLUST. NO.1) | | | |
| N008-66-730 | 1 | (ILLUST. NO.2) | | | |
| 66-732D | | COVER,FUSE BLOCK | | | |
| NA01-66-731A | 1 | FURUKAWA (ILLUST. NO.1) | | | |
| NB11-66-731 | 1 | (ILLUST. NO.2) | | | |
| 66-732E | | LABEL,CAUTION-FUSE COVER | | | |
| NB11-66-732 | 1 | | | | |
| 67-B24 | | BRACKET | | | |
| NA75-67-B11A | 1 | (W/AIR BAG-DRIV.&PASS.SIDE) | | | |
| 67-B74 | | BRACKET,HARNESS | | | |
| N010-67-BW0 | 1 | | | | |
| 67-B81 | | BRACKET,HARNESS-ENGINE | | | |
| NA75-67-B81 | 1 | | | | |
| 67-B84 | | BRACKET | | | |
| NA75-67-B12 | 1 | | | | |
| 67-010A | | HARNESS,FRONT | | | |
| NB38-67-010D | 1 | ((MT)>(W/O A. LOCK BRAKE) ) | | | -6C01 |
| NB40-67-010D | 1 | ((MT)>(W/A. LOCK BRAKE) ) | | | -6C16 |
| NB42-67-010D | 1 | ((AT)>(W/O A. LOCK BRAKE) ) | | | -6C16 |
| NB43-67-010D | 1 | ((AT)>(W/A. LOCK BRAKE) ) | | | -6C16 |
| NC29-67-010A | 1 | BASE, N-PKG, R-PKG, (W/O AUTO CRUISE.CONT.) | | | 6C01- |

6C01 NA35#V-725591
6C16 NA35#V-726785

CAT. AUNA06-03

1998-07

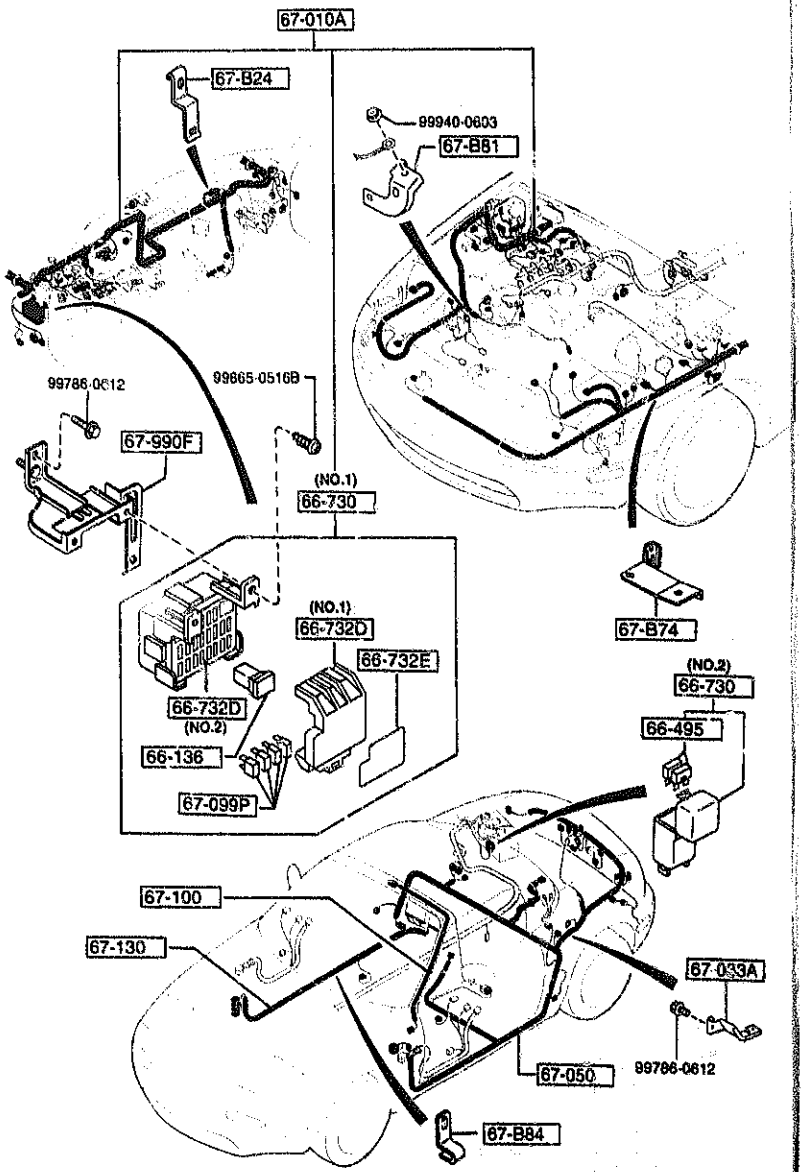


AUNA06



| PART NO. | QTY | MODEL/RESTRICTION | MODEL/RESTRICTION | MODEL/RESTRICTION | FROM-TO |
|---|---|---|---|---|---|
| CONT'D | | | | | |
| | | ((MT)>(W/O A. LOCK BRAKE) ) | | | |
| NB38-67-010D | 1 | P.E.GR, L-PKG, (W/AUTO CRUISE.CONT. ) ((MT)>(W/O A. LOCK BRAKE) ) | | | 6C01-6C16 |
| NB38-67-010E | 1 | P.E.GR, L-PKG, (W/AUTO CRUISE.CONT. ) ((MT)>(W/O A. LOCK BRAKE) ) | | | 6C16- |
| NB40-67-010E | 1 | ((MT)>(W/A. LOCK BRAKE) ) | | | 6C16- |
| NB42-67-010E | 1 | ((AT)>(W/O A. LOCK BRAKE) ) | | | 6C16- |
| NB43-67-010E | 1 | ((AT)>(W/A. LOCK BRAKE) ) | | | 6C16- |
| +----------+ | | | | | |
| \| 67-033A \| | | BRACKET,WIRING | | | |
| +----------+ | | | | | |
| N007-67-B10A | 1 | | | | |
| +----------+ | | | | | |
| \| 67-050 \| | | HARNESS,REAR | | | |
| +----------+ | | | | | |
| NB84-67-050 | 1 | (W/O A. LOCK BRAKE) | | | -6C01 |
| NB86-67-050 | 1 | (W/A. LOCK BRAKE) | | | -6C01 |
| NB84-67-050B | 1 | (W/O A. LOCK BRAKE) | | | 6C01- |
| NB86-67-050B | 1 | (W/A. LOCK BRAKE) | | | 6C01- |
| +----------+ | | | | | |
| \| 67-099P \| | | FUSE | | | |
| +----------+ | | | | | |
| 99705-1210 | 1 | 10A | | | |
| 99705-1215 | 6 | 15A | | | |
| 99705-1220 | 1 | 20A | | | |
| 99705-1230 | 1 | 30A | | | |
| +----------+ | | | | | |
| \| 67-100 \| | | HARNESS,ROOM LAMP | | | |
| +----------+ | | | | | |
| NB38-67-100G | 1 | | | | |
| +----------+ | | | | | |
| \| 67-130 \| | | HARNESS'NO.2',FRONT | | | |
| +----------+ | | | | | |
| NB84-67-110 | 1 | (W/O A. LOCK BRAKE) | | | |
| NB86-67-110 | 1 | (W/A. LOCK BRAKE) | | | |

6C01 NA35#V-725591
6C16 NA35#V-726785

CAT. AUNA06-03

1998-07

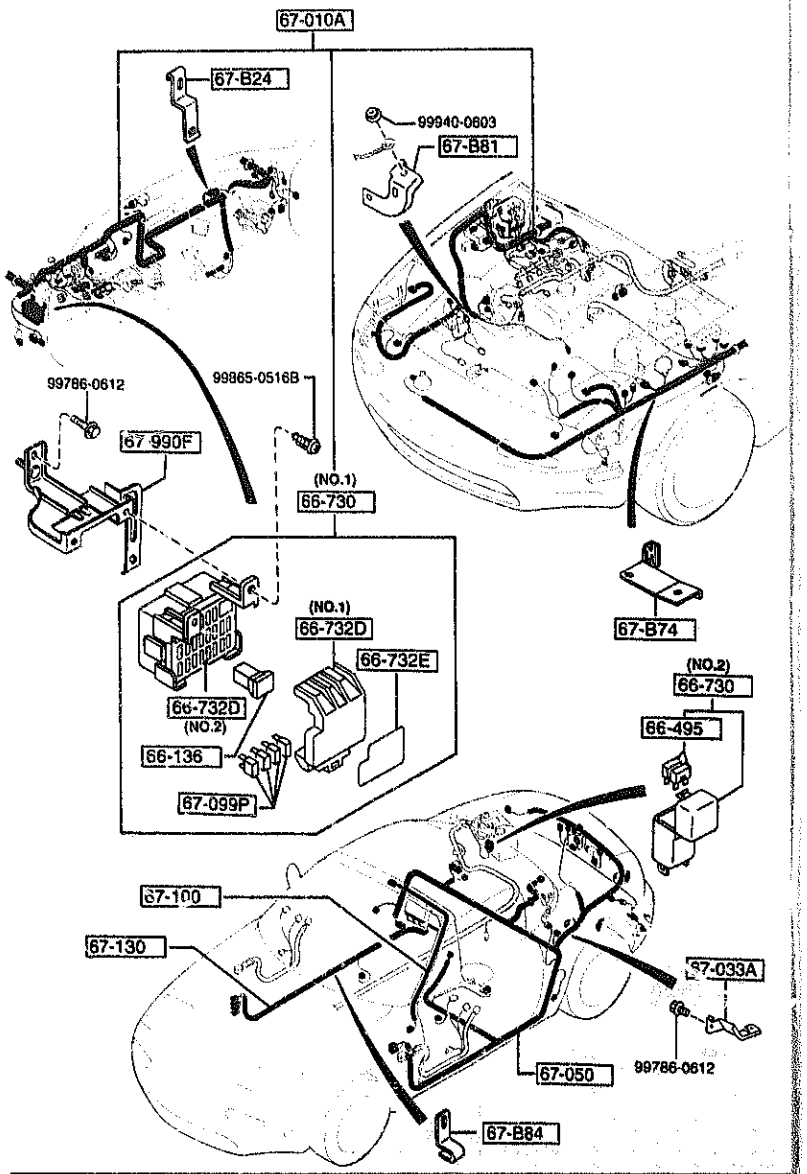


AUNA06

6700 -3 * FRONT & REAR WIRING HARNESSES

| PART NO. | QTY | MODEL/RESTRICTION | MODEL/RESTRICTION | MODEL/RESTRICTION | REMARKS |
|---|---|---|---|---|---|
| 67-990F | | BRACKET,HARNESS | | | |
| NA01-67-BJ0A | 1 | | | | |

CAT. AUNA06-03

1998-07

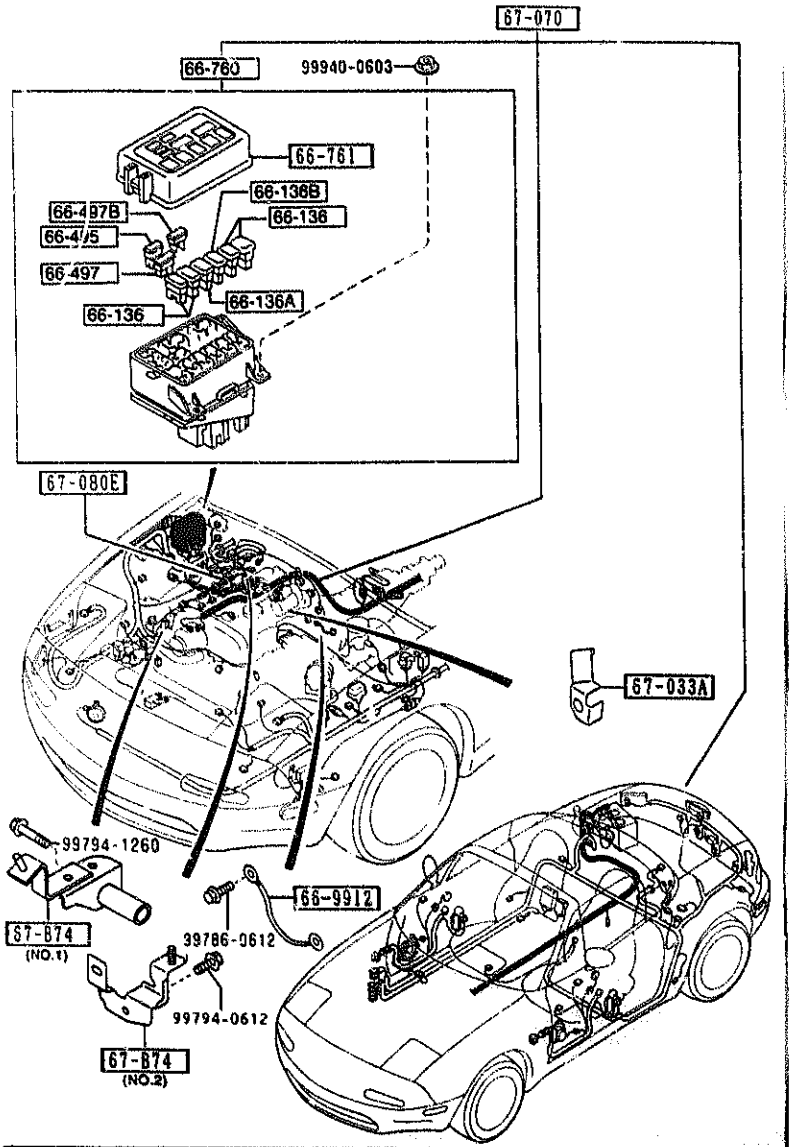


AUNA06

6701 -1 ENGINE & TRANSMISSION WIRING HARNESSES

| PART NO | QTY | MODEL/RESTRICTION | MODEL/RESTRICTION | MODEL/RESTRICTION | FROM-TO |
|---|---|---|---|---|---|
| 66-136 | | FUSE (30A) | | | |
| H115-67-099 | 4 | | | | |
| 66-136A | | FUSE (40A) | | | |
| H116-67-099 | 1 | 40A | | | |
| 66-136B | | FUSE (80A) | | | |
| H117-67-099 | 1 | | | | |
| 66-495 | | FUSE (10A) | | | |
| 99705-1110 | 1 | | | | |
| 66-497 | | FUSE (20A) | | | |
| 99705-1120 | 1 | | | | |
| 66-497B | | FUSE (30A) | | | |
| 99705-1130 | 1 | | | | |
| 66-760 | | BLOCK,MAIN FUSE | | | |
| NB11-66-760 | 1 | | | | |
| 66-761 | | COVER,MAIN FUSE BLOCK | | | |
| NB11-66-762 | 1 | | | | |
| 66-9912 | | WIRE,EARTH | | | |
| NA75-67-EW1B | 1 | | | | |
| 67-874 | | BRACKET,HARNESS | | | |
| NA80-67-B80 | 1 | (ILLUST. NO.1) | | | |
| NB84-67-B80 | 1 | (ILLUST. NO.2) | | | |
| 67-033A | | BRACKET,WIRING | | | |
| NA01-67-B10B A (NA01-67-B10C) | 1 | | | | -7701 |
| *NA01-67-B10C | 1 | | | | 7701- |
| 67-070 | | HARNESS,ENGINE | | | |
| NB11-67-070B | 1 | ((MT)>(W/O A. LOCK BRAKE) ) | | | |
| NB12-67-070B | 1 | ((MT)>(W/A. LOCK BRAKE) ) | | | |

7701 NA35*V-738443

CAT. AUNA06-03 1998-07

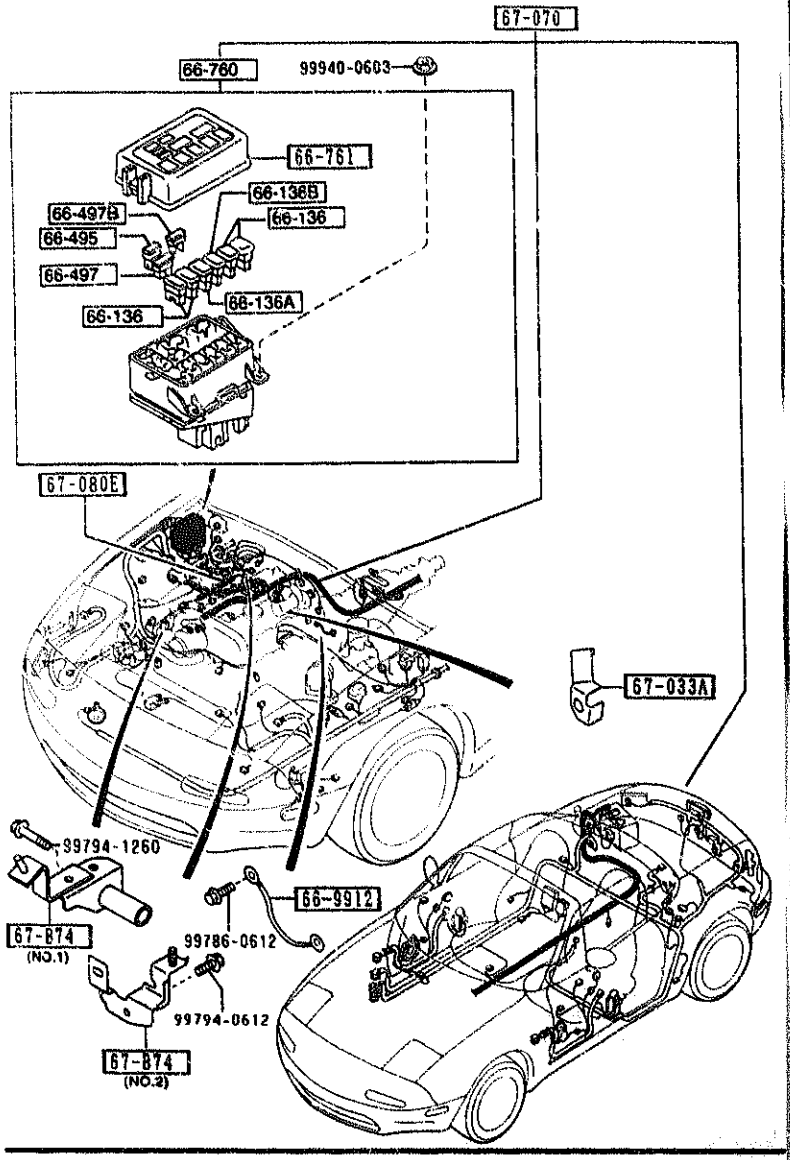


AUNA06

6701 -2 * ENGINE & TRANSMISSION WIRING HARNESSES

| PART NO | QTY | MODEL/RESTRICTION | MODEL/RESTRICTION | MODEL/RESTRICTION | ILLUS. NO. |
|---|---|---|---|---|---|
| CONT'D | | | | | |
| NB13-67-070B | 1 | ((AT)>(W/O A. LOCK BRAKE) ) | | | |
| NB14-67-070B | 1 | ((AT)>(W/A. LOCK BRAKE) ) | | | |
| 67-080E | | WIRING,INJECTOR | | | |
| NB38-67-080A | 1 | | | | |

CAT. AUNA06-03

1998-07

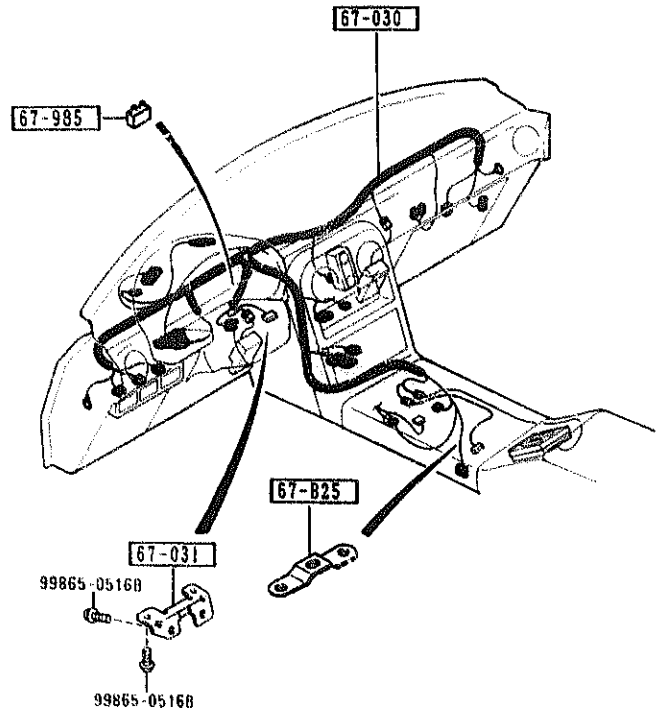


## 6702 -1 ✱ DASHBOARD WIRING HARNESSES

| PART NO. | QTY | MODEL/RESTRICTION | MODEL/RESTRICTION | MODEL/RESTRICTION | CODE |
|---|---|---|---|---|---|
| 67-B25 | | BRACKET,HARNESS | | | |
| NA01-67-B31 | 1 | (MT) | | | |
| 67-030 | | HARNESS,INSTRUMENT | | | |
| NB38-67-030B | 1 | (AM/FM,W/C.DISC)<br>(MT) | | | |
| NB42-67-030B | 1 | (AM/FM,W/C.DISC)<br>(AT) | | | |
| NB43-67-030B | 1 | (AM/FM,W/O C.DISC)<br>(W/O AUDIO)<br>(AT) | | | |
| NB39-67-030B | 1 | (AM/FM,W/O C.DISC)<br>(W/O AUDIO)<br>(MT) | | | -6C01 |
| NB39-67-030B | 1 | (AM/FM,W/O C.DISC+W/AUTO CRUISE.CONT.)<br>(W/O AUDIO+W/AUTO CRUISE.CONT.)<br>(MT) | | | 6C01- |
| NC29-67-030 | 1 | (W/O AUDIO+W/O AUTO CRUISE.CONT.)<br>(AM/FM,W/O C.DISC+W/O AUTO CRUISE.CONT.)<br>(MT) | | | 6C01- |
| 67-031 | | BRACKET | | | |
| NB38-60-1A1B | 1 | | | | |
| 67-985 | | CONNECTOR,SHORT | | | |
| NA80-67-SC0 | 1 | (W/O DAY RUNNING LAMP) | | | |

6C01 NA35*V-725591

6703 -1 * DOOR, FLOOR & CEILING WIRING HARNESSES

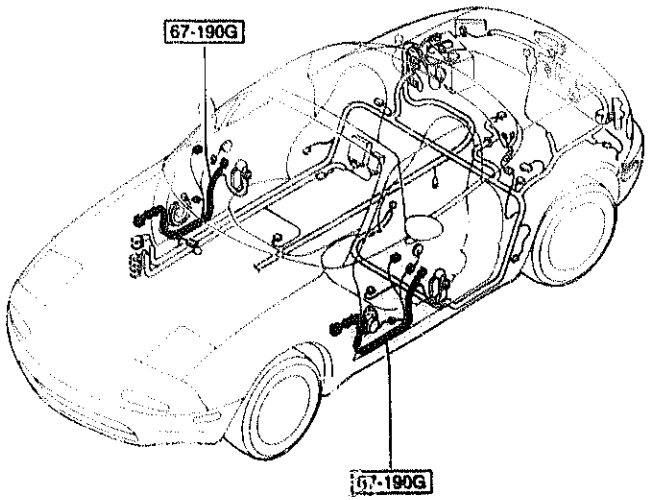


| PART NO | QTY | MODEL/RESTRICTION | MODEL/RESTRICTION | MODEL/RESTRICTION | REMARKS |
|---|---|---|---|---|---|
| 67-190G | | HARNESS,DOOR | | | |
| NA01-67-190A | 2 | (W/MANUAL DR MIRROR, W/O TWEETE R SPK.,W/O POWER WIND.) | | | |
| NA02-67-190A | 2 | (W/MANUAL DR MIRROR, W/O TWEETER SPK.,W/POWER WIND.) | | | |
| NA53-67-190D | 2 | (W/ELECT.DR MIRROR,W/O TWEETER SPK.) | | | |
| NB11-67-190B | 2 | (W/MANUAL DR MIRROR, W/TWEETER SPK.) | | | |
| NB12-67-190C | 2 | (W/ELECT.DR MIRROR,W/TWEETER SPK.) | | | |

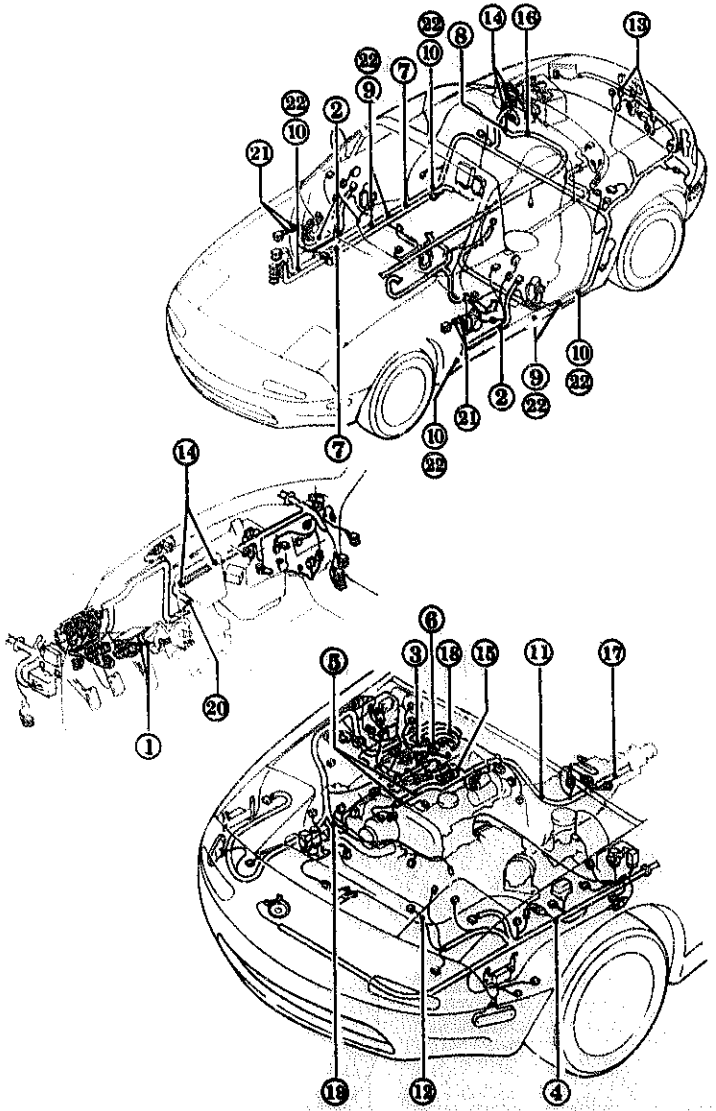

AUNA06



| | | | | |
|---|---|---|---|---|
| ① 14-726 | ② 45-961B | ③ 67-CS1 99786-0612 | ④ 67-CT2 | ⑤ 34-C10 |
| ⑥ 20-451 | ⑦ 67-013D | ⑧ 67-014F 99786-0620 | ⑨ 67-022 | ⑩ 67-026 |
| ⑪ 67-048A 99786-0612 | ⑫ 67-051E | ⑬ 67-051J | ⑭ 67-052H | ⑮ 67-062B 99786-0612 |
| ⑯ 67-072H 99786-0620 | ⑰ 67-073 99796-0812 | ⑱ 67-073B 99940-0603 | ⑲ 67-074 99786-0612 | ⑳ 67-076 |
| ㉑ 67-191 | ㉒ 68-865 | | | |
| | | | | |
| | | | | |

AUNA06

6704 WIRING HARNESS CLAMPS (1/2)

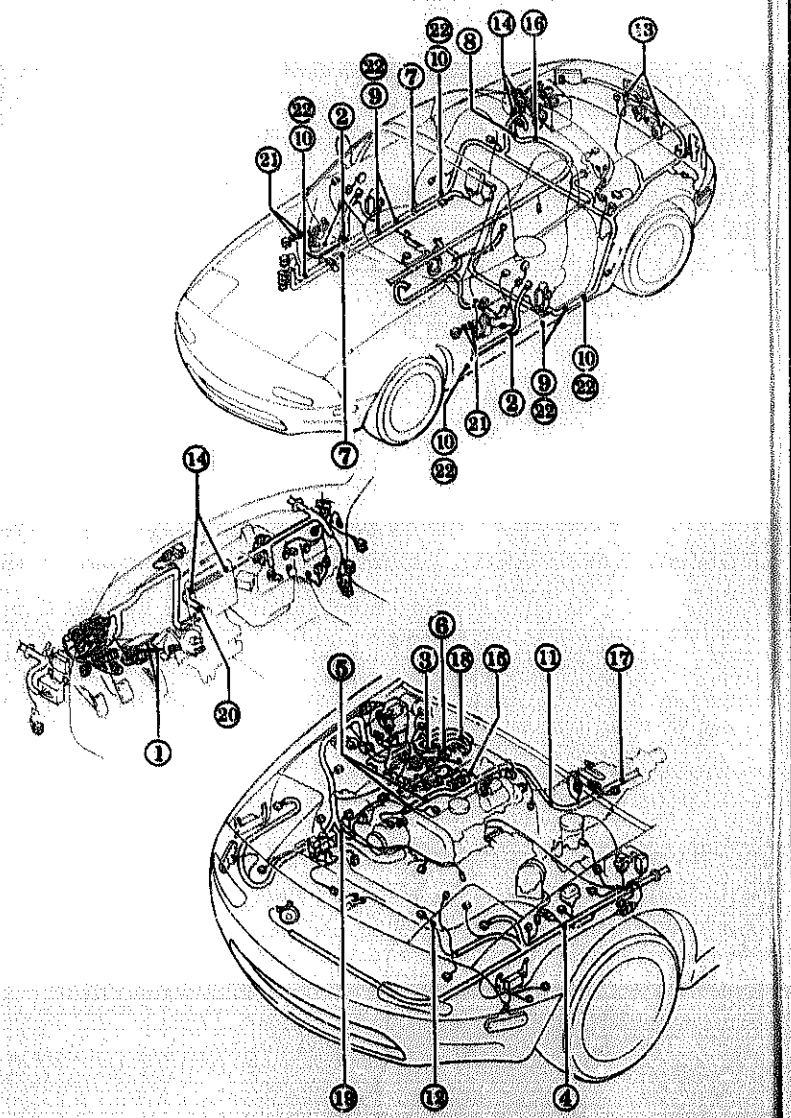

AUNA06

6704 -1 WIRING HARNESS CLAMPS

| PART NO. | QTY | MODEL/RESTRICTION | MODEL/RESTRICTION | MODEL/RESTRICTION | REMARK |
|---|---|---|---|---|---|
| 14-726 | | BAND | | | |
| N304-14-726 | 2 | | | | |
| 20-451 | | CLIP | | | |
| B612-20-460 | 1 | | | | |
| 34-C10 | | BAND,PIPE | | | |
| B214-34-C10 | 2 | | | | |
| 45-961B | | CAP | | | |
| H002-45-961 | 4 | | | | |
| 67-CS1 | | CLIP,HARNESS | | | |
| N001-67-CS1C | 1 | | | | |
| 67-CT2 | | CLIP,HARNESS | | | |
| NA01-67-CH5 | 1 | | | | |
| 67-013D | | PROTECTOR,HARNESS | | | |
| NA75-67-P54 | 2 | | | | |
| 67-014F | | PROTECTOR,HARNESS | | | |
| NA01-67-P71 | 1 | | | | |
| 67-022 | | CLIP,HARNESS | | | |
| NA01-67-CW5A | 4 | | | | |
| 67-026 | | CLIP,HARNESS | | | |
| NA02-67-CW5A | 4 | | | | |
| 67-048A | | CLIP,HARNESS | | | |
| NA01-67-CS1 | 1 | | | | |
| 67-051E | | CLIP | | | |
| UB42-67-051 | 1 | | | | |
| 67-051J | | CLIP | | | |
| G031-67-053A | 2 | | | | |
| 67-052H | | CLIP | | | |
| G030-67-018A | 4 | | | | |

CAT. AUNA06-03 1998-07

| | | | | |
|---|---|---|---|---|
| ① 14-726  | ② 45-961B  | ③ 67-CS1  99786-0612 | ④ 67-CT2 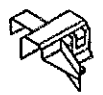 | ⑤ 34-C10  |
| ⑥ 20-451  | ⑦ 67-013D  | ⑧ 67-014F  99786-0620 | ⑨ 67-022  | ⑩ 67-026  |
| ⑪ 67-048A  99786-0612 | ⑫ 67-051E  | ⑬ 67-051J  | ⑭ 67-052H  | ⑮ 67-062B  99786-0612 |
| ⑯ 67-072H  99786-0620 | ⑰ 67-073  99796-0812 | ⑱ 67-073B  99940-0603 | ⑲ 67-074  99786-0612 | ⑳ 67-076  |
| ㉑ 67-191  | ㉒ 68-865  | | | |
| | | | | |
| | | | | |

| PART NO | QTY | MODEL/DESTINATION | MODEL/DESTINATION | MODEL/DESTINATION | REMARK |
|---|---|---|---|---|---|
| 67-062B | | CLIP,HARNESS | | | |
| NA02-67-CS1A | 1 | | | | |
| 67-072H | | CLIP,ENGINE HARN'SS | | | |
| NA01-67-CS6 | 1 | | | | |
| 67-073 | | CLIP | | | |
| UB73-67-073A | 1 | | | | |
| 67-073B | | CLIP | | | |
| H261-67-073 | 1 | | | | |
| 67-074 | | CLIP,HARNESS | | | |
| NA01-67-CS5 | 1 | | | | |
| 67-076 | | CLIP,ENGINE HARNESS | | | |
| NA01-67-CH8 | 1 | | | | |
| 67-191 | | GROMMET | | | |
| B300-67-HD1 | 4 | | | | |
| 68-865 | | FASTENER | | | |
| B003-68-865 | 8 | | | | |
| 00 | INT- | NA3 NA4 NA5 NA6 BLACK | | | |

6720 WINDSHIELD WASHER
(W/O ANTI LOCK BRAKE)

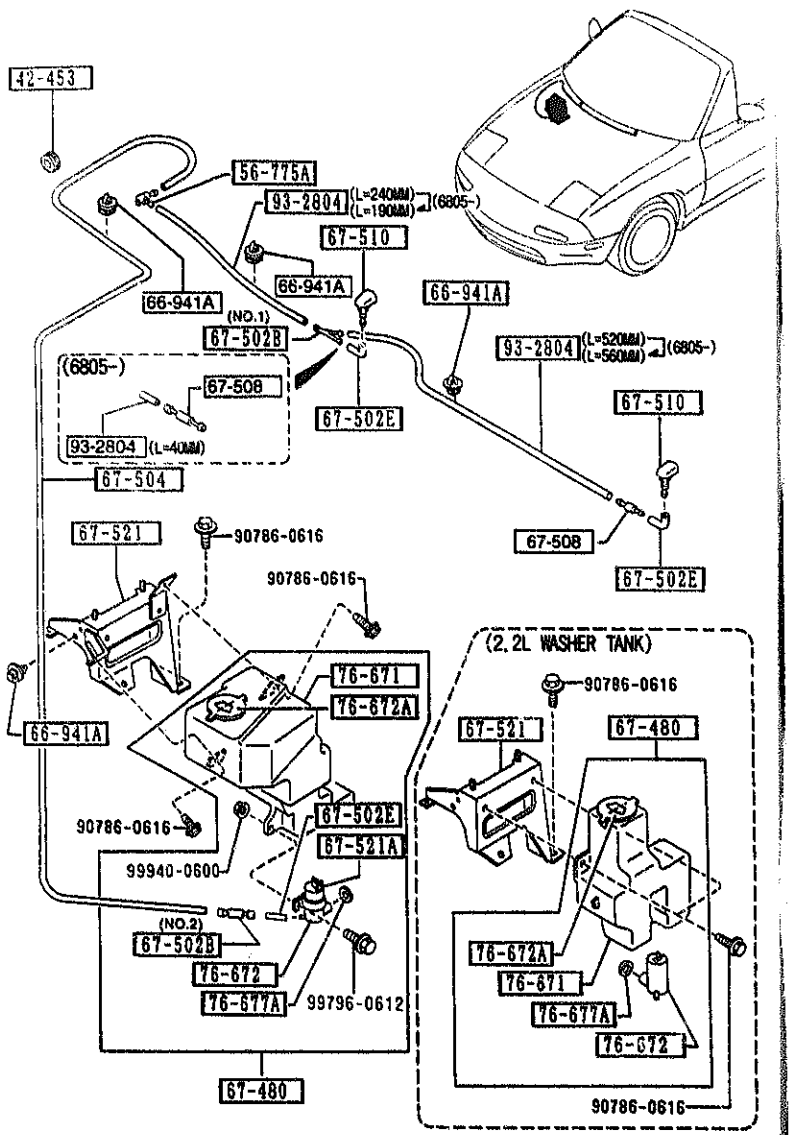


AUNA06

6720 -1 WINDSHIELD WASHER
(W/O ANTI LOCK BRAKE)

| PART NO. | QTY | MODEL/RESTRICTION | MODEL/RESTRICTION | MODEL/RESTRICTION | ITEM TO |
|---|---|---|---|---|---|
| 42-453 | | PROTECTOR,CABLE | | | |
| B048-42-453 | 1 | | | | |
| 56-775A | | CLIP,WASHER HOSE | | | |
| LA01-67-505B | 1 | | | | |
| 66-941A | | CLIP | | | |
| GB08-66-941 | 4 | | | | |
| 67-480 | | TANK,WASHER-FRONT | | | |
| NA01-67-480A | 1 | (2.2L WASHER TANK) | | | |
| NA04-67-480B | 1 | (4.5L WASHER TANK) | | | |
| 67-502B | | JOINT,HOSE | | | |
| H001-67-502 | 1 | (ILLUST. NO.1) | | | |
| 4116-67-502 | 1 | (ILLUST. NO.2) (4.5L WASHER TANK) | | | |
| 67-502E | | JOINT,ELBOW-W.TANK | | | |
| S084-67-502 | 3 | (4.5L WASHER TANK) | | | |
| 67-504 | | HOSE'C',WASHER | | | |
| NA01-67-501A | 1 | | | | |
| 67-508 | | VALVE,CHECK | | | |
| DB05-67-502 | 1 | | | | -6805 |
| FA54-67-508 | 2 | | | | 6805- |
| 67-510 | | NOZZLE,WASHER-F.WIND | | | |
| NA01-67-510 | 2 | | | | |
| 67-521 | | BRACKET,WASHER TANK | | | |
| NA01-67-520 | 1 | (2.2L WASHER TANK) | | | |
| NA04-67-520 | 1 | (4.5L WASHER TANK) | | | |
| 67-521A | | BRACKET | | | |
| S095-67-521 | 1 | (4.5L WASHER TANK) | | | |
| 76-671 | | TANK,WASHER | | | |
| NA01-67-481 | 1 | (2.2L WASHER TANK) | | | |

6805 NA35*V-719634

CAT. AUNA06-03 1998-07

6720 WINDSHIELD WASHER
(W/O ANTI LOCK BRAKE)

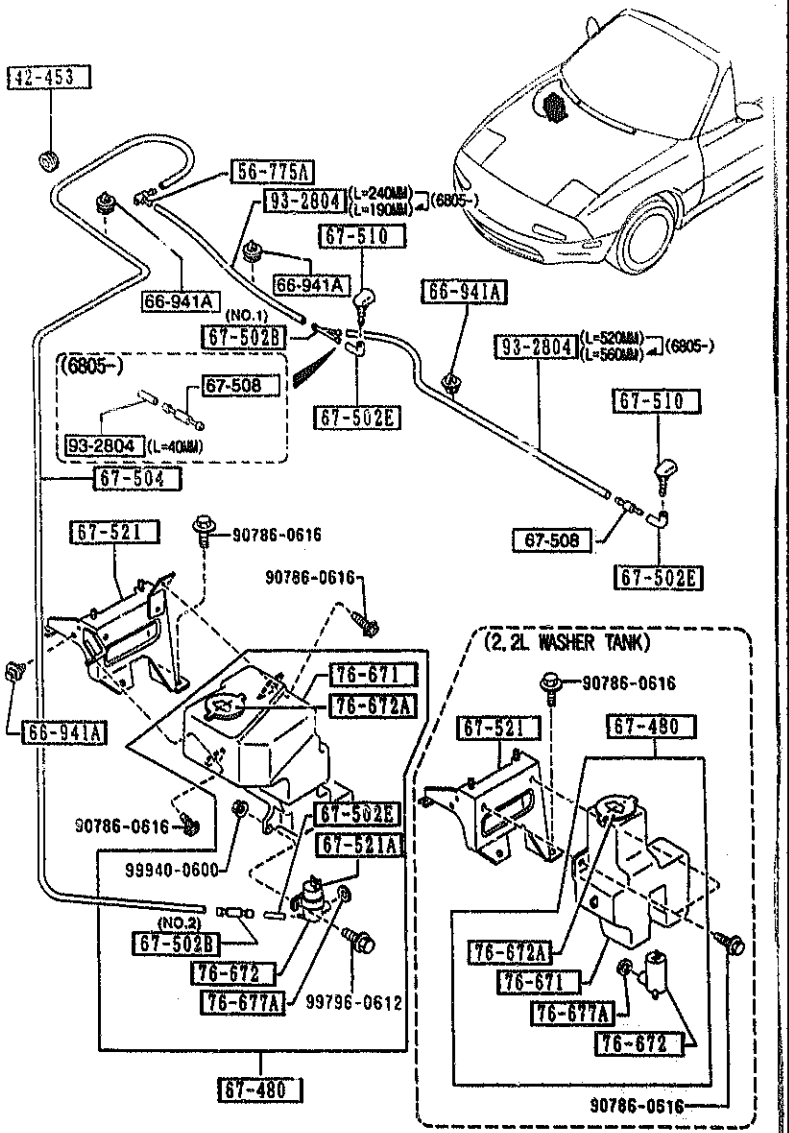


6720 -2 * WINDSHIELD WASHER
(W/O ANTI LOCK BRAKE)

| PART NO. | QTY | MODEL/RESTRICTION | MODEL/RESTRICTION | MODEL/RESTRICTION | ITEM NO. |
|---|---|---|---|---|---|
| CONT'D | | | | | |
| NA04-67-481 | 1 | (4.5L WASHER TANK) | | | |
| +---------+ | | | | | |
| \| 76-672 \| | | PUMP,WASHER | | | |
| +---------+ | | | | | |
| S084-76-672 | 1 | | | | |
| +---------+ | | | | | |
| \| 76-672A \| | | CAP,TANK | | | |
| +---------+ | | | | | |
| UB39-51-815 | 1 | | | | |
| +---------+ | | | | | |
| \| 76-677A \| | | GROMMET,WASHER TANK | | | |
| +---------+ | | | | | |
| S084-76-677 | 1 | | | | |
| +---------+ | | | | | |
| \| 93-2804 \| | | PIPE,VINYL | | | |
| +---------+ | | | | | |
| 99328-04010 | 1 | L=10M CUT IT TO USE | | | |

6720 A WINDSHIELD WASHER (W/ANTI LOCK BRAKE)

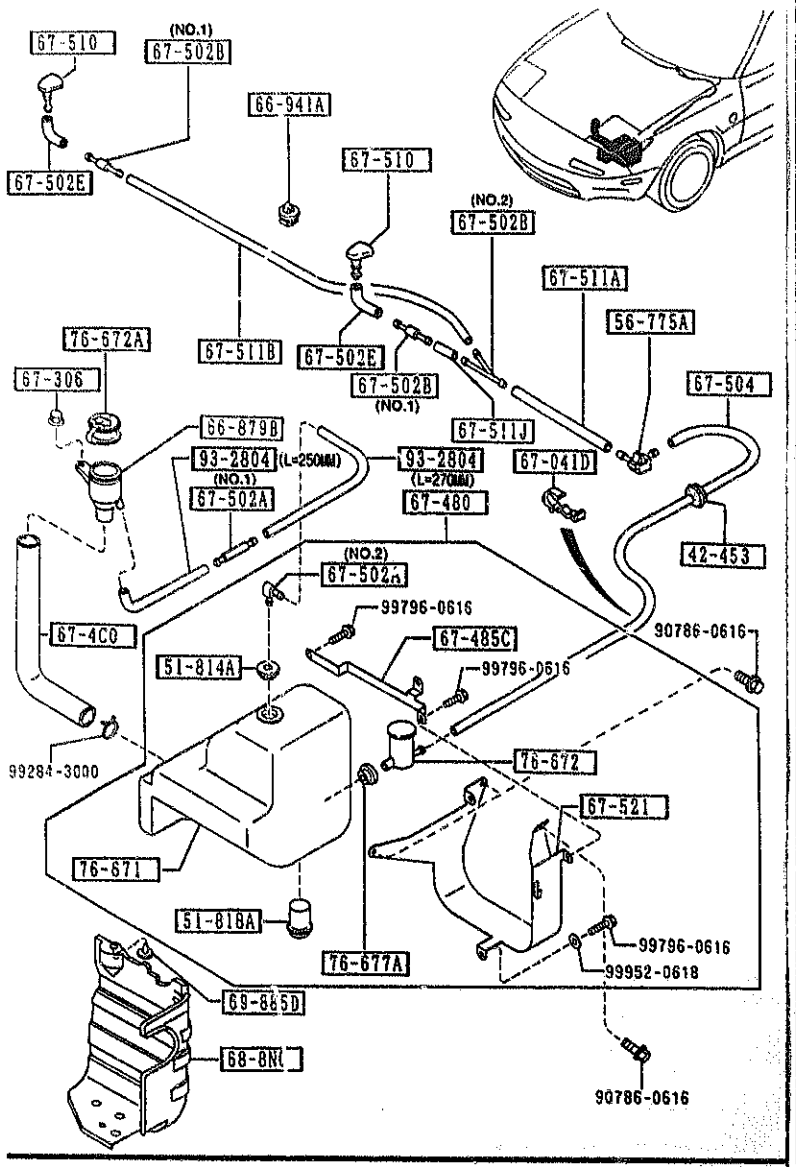


AUNA06

6720 A-1 WINDSHIELD WASHER (W/ANTI LOCK BRAKE)

| PART NO. | QTY | MODEL/RESTRICTION | MODEL/RESTRICTION | MODEL/RESTRICTION | FROM-TO |
|---|---|---|---|---|---|
| 42-453 | | PROTECTOR,CABLE | | | |
| B048-42-453 | 1 | | | | |
| 51-814A | | GROMMET,WASHER TANK | | | |
| B002-51-814 | 1 | | | | |
| 51-818A | | SWITCH,LEVEL-WASHER TANK | | | |
| NA17-67-488 | 1 | | | | |
| 56-775A | | CLIP,WASHER HOSE | | | |
| LA01-67-505B | 1 | | | | |
| 66-879B | | JOINT | | | |
| NA17-67-4C2 | 1 | | | | |
| 66-941A | | CLIP | | | |
| GB08-66-941 | 3 | | | | |
| 67-041D | | CLIP,HARNESS | | | |
| B092-67-041 | 1 | | | | |
| 67-306 | | NUT,WIPER LINK | | | |
| GJ21-67-306 | 1 | | | | |
| 67-4C0 | | PIPE,FILLER-F.WASHER TANK | | | |
| NA17-67-4C1 | 1 | | | | |
| 67-480 | | TANK,WASHER-FRONT | | | |
| NA17-67-4T0A | 1 | | | | |
| 67-485C | | BRKT'A',WASHER TANK-FRT | | | |
| NA18-67-521 | 1 | | | | |
| 67-502A | | JOINT,HOSE | | | |
| NA17-67-502 | 1 | (ILLUST. NO.1) | | | |
| S013-67-502 | 1 | (ILLUST. NO.2) | | | |
| 67-502B | | JOINT,HOSE | | | |
| DB05-67-502 | 2 | (ILLUST. NO.1) | | | |
| H001-67-502 | 1 | (ILLUST. NO.2) | | | |

CAT. AUNA06-03

1998-07

6720 A WINDSHIELD WASHER (W/ANTI LOCK BRAKE)

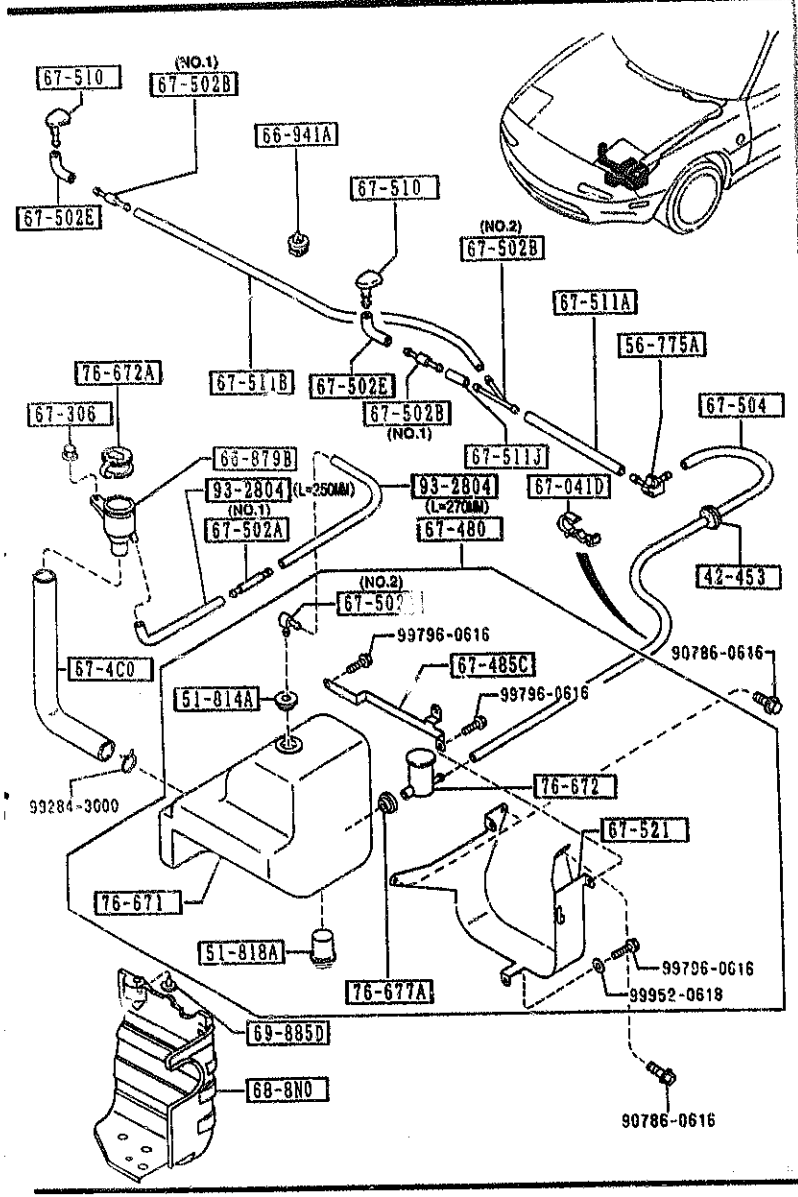


AUNA06

6720 A-2 WINDSHIELD WASHER (W/ANTI LOCK BRAKE)

| PART NO. | QTY | MODEL/RESTRICTION | MODEL/RESTRICTION | MODEL/RESTRICTION | EBOM-10 |
|---|---|---|---|---|---|
| 67-502E<br>S004-67-502 | 2 | JOINT,ELBOW-W.TANK | | | |
| 67-504<br>NA17-67-501 | 1 | HOSE'C',WASHER | | | |
| 67-510<br>NA01-67-510 | 2 | NOZZLE,WASHER-F.WIND | | | |
| 67-511A<br>NA18-67-501 | 1 | PIPE,SCREEN WASHER | | | |
| 67-511B<br>NA19-67-501 | 1 | PIPE,SCREEN WASHER | | | |
| 67-511J<br>NA15-67-501 | 1 | PIPE,SCREEN WASHER | | | |
| 67-521<br>NA17-67-521 | 1 | BRACKET,WASHER TANK | | | |
| 68-8N0<br>NA20-56-181A | 1 | COVER,WASHER TANK | | | |
| 69-885D<br>NA01-56-145 | 3 | FASTENER | | | |
| 76-671<br>NA17-67-471 | 1 | TANK,WASHER | | | |
| 76-672<br>LB83-67-482 | 1 | PUMP,WASHER | | | |
| 76-672A<br>GJ21-67-483 | 1 | CAP,TANK | | | |
| 76-677A<br>S004-76-677 | 1 | GROMMET,WASHER TANK | | | |
| 93-2804<br>99328-04010 | | PIPE,VINYL<br>L=10M CUT IT TO USE | | | |

CAT. AUNA06-03

1998-07

6720 A WINDSHIELD WASHER
(W/ANTI LOCK BRAKE)

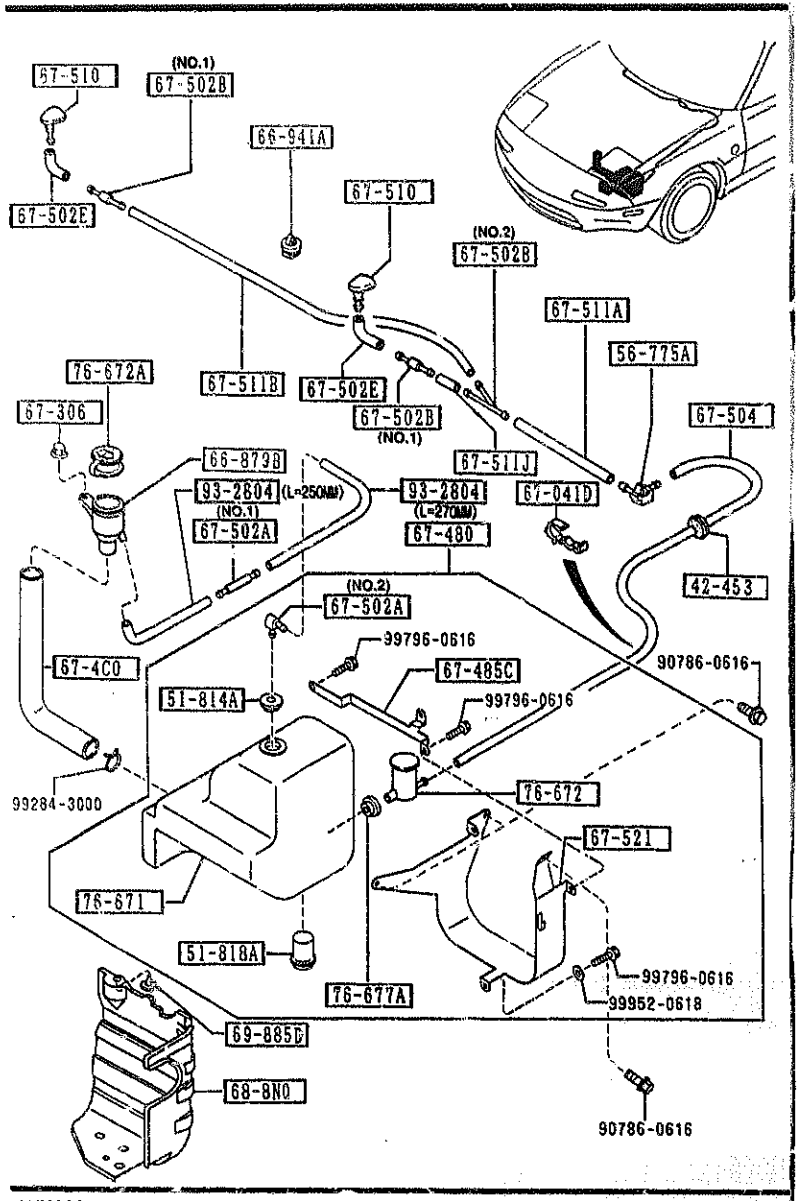


AUNA06

6720 A-3 * WINDSHIELD WASHER
(W/ANTI LOCK BRAKE)

| PART NO. | QTY | MODEL/RESTRICTION | MODEL/RESTRICTION | MODEL/RESTRICTION | FROM-TO |
|---|---|---|---|---|---|
| CONT'D | 1 | | | | |

CAT. AUNA06-03

1998-07

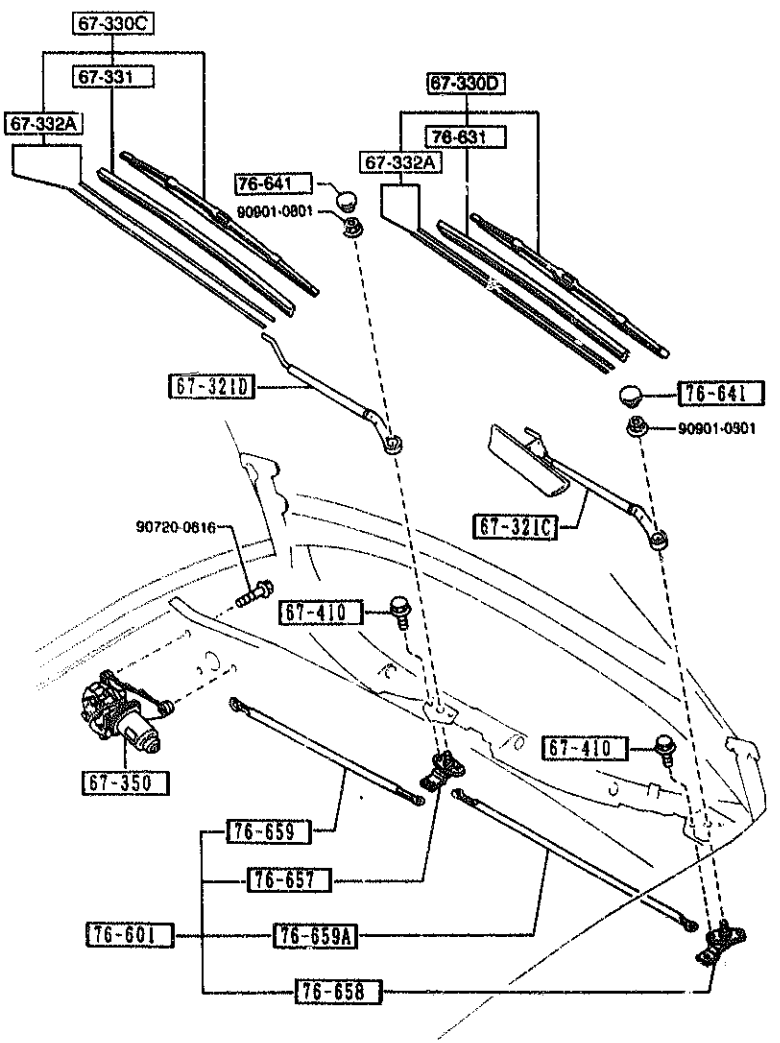


END

AUNA06



| PART NO | QTY | MODEL/RESTRICTION | MODEL/RESTRICTION | MODEL/RESTRICTION | FROM-TO |
|---|---|---|---|---|---|
| 67-321C | | ARM,WIPER-DRIVER SIDE | | | |
| WA01-67-321 | 1 | | | | |
| 67-321D | | ARM,WIPER-PASS. SIDE | | | |
| NA02-67-321 | 1 | | | | |
| 67-330C | | BLADE(R),WIPER-FRONT | | | |
| BR72-67-330B | 1 | | | | |
| 67-330D | | BLADE(L),WIPER-FRONT | | | |
| BM95-67-330B | 1 | | | | |
| 67-331 | | RUBBER,BLADE-FRONT | | | |
| B461-67-331A | 1 | | | | -7501 |
| D040-67-333 | 1 | | | | 7501- |
| 67-332A | | PLATE,BACKING | | | |
| NA10-67-332 | 2 | | | | 7501- |
| 67-350 | | MOTOR,WIPER | | | |
| NA01-67-340B<br>AN(NA01-67-340C) | 1 | (EXC. COLD SPEC) | | | -7501 |
| NA04-67-340A<br>AN(NA04-67-340B) | 1 | (COLD SPEC) | | | -7501 |
| *NA01-67-340C<br>AN(NA01-67-340D) | 1 | (EXC. COLD SPEC) | | | 7501-7916 |
| *NA04-67-340B<br>AN(NA04-67-340C) | 1 | (COLD SPEC) | | | 7501-7916 |
| *NA01-67-340D | 1 | (EXC. COLD SPEC) | | | 7916- |
| *NA04-67-340C | 1 | (COLD SPEC) | | | 7916- |
| 67-410 | | BOLT | | | |
| B455-67-369 | 4 | | | | |
| 76-601 | | LINK,WIPER | | | |
| NA01-67-360A | 1 | | | | |
| 76-631 | | RUBBER,BLADE-FRONT | | | |
| D040-67-331A<br>G (D040-67-333 ) | 1 | | | | -7501 |
| D040-67-333 | 1 | | | | 7501- |

7501 NA35*V-736464
7916 NA35*V-739046

CAT. AUNA06-03 1998-07

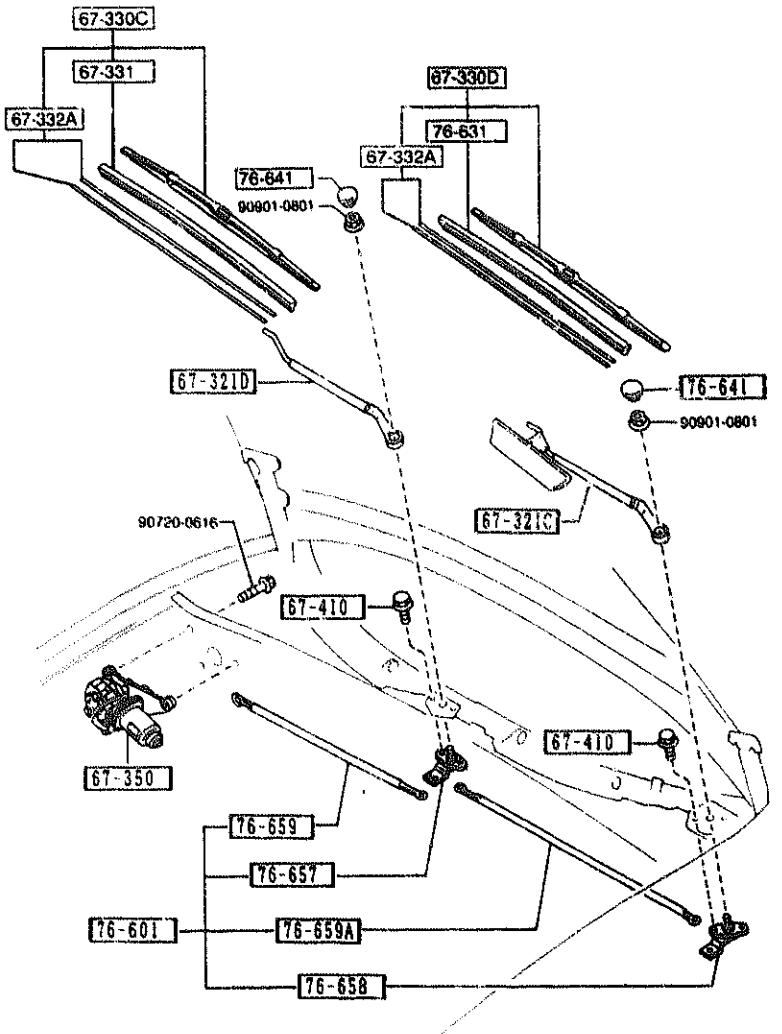


AUNA06

6730 -2 * WINDSHIELD WIPERS

| PART NO | QTY | MODEL/RESTRICTION | MODEL/RESTRICTION | MODEL/RESTRICTION | FROM-TO |
|---|---|---|---|---|---|
| 76-641 | | COVER,WIPER ARM-FRONT | | | |
| LA01-67-395A AN(LA01-67-395C) | 2 | | | | -6901 |
| LA01-67-395C | 2 | | | | 6901- |
| 76-657 | | SHAFT,DRIVE NO.1 | | | |
| NA01-67-363 | 1 | | | | |
| 76-658 | | SHAFT,DRIVE NO.2 | | | |
| NA01-67-364 | 1 | | | | |
| 76-659 | | ARM NO.1,LINK | | | |
| NA01-67-361 | 1 | | | | |
| 76-659A | | ARM NO.2,LINK | | | |
| NA01-67-362 | 1 | | | | |

6901 NA35*V-720297

CAT. AUNA06-03 1998-07

COMPONENTS OF NA01-67-340D
NA04-67-340C

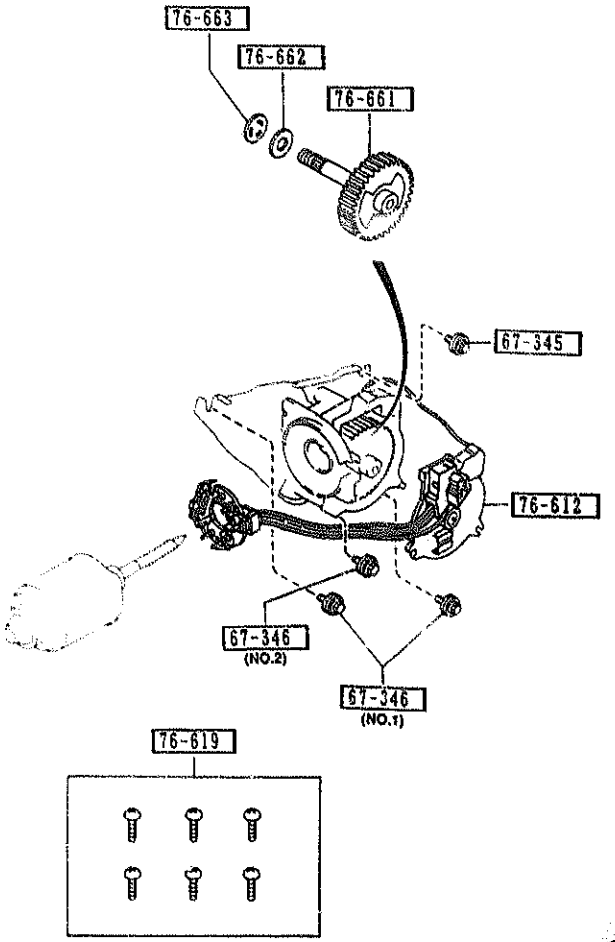


6740 -1 * WIPER MOTOR COMPONRNTS

| PART NO. | QTY | MODEL/RESTRICTION | MODEL/RESTRICTION | MODEL/RESTRICTION | FROM-TO |
|---|---|---|---|---|---|
| 67-345 | | SCREW,EARTH SET-MOTOR BRK | | | |
| NA01-67-345 | 1 | | | | |
| 67-346 | | SCREW,BRACKET-WIPER MOTOR | | | |
| NA01-67-346 | 2 | (ILLUST. NO.1) | | | |
| NA23-67-346 | 1 | (ILLUST. NO.2) | | | |
| 76-612 | | PLATE,HOLDER-BRUSH | | | |
| NA23-67-351 | 1 | (EXC. COLD SPEC) | | | |
| NA26-67-351 | 1 | (COLD SPEC) | | | |
| 76-619 | | PARTS SET | | | |
| H093-76-619A | 1 | | | | |
| 76-661 | | GEAR,SHAFT | | | |
| NA23-67-354 | 1 | | | | |
| 76-662 | | WASHER | | | |
| B094-76-662 | 1 | | | | |
| 76-663 | | WASHER,TOOTHED | | | |
| B094-76-663 | 1 | | | | |

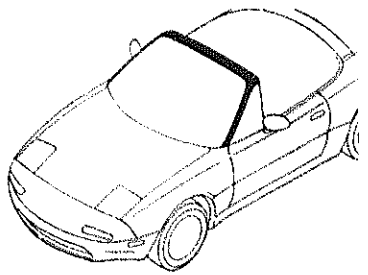

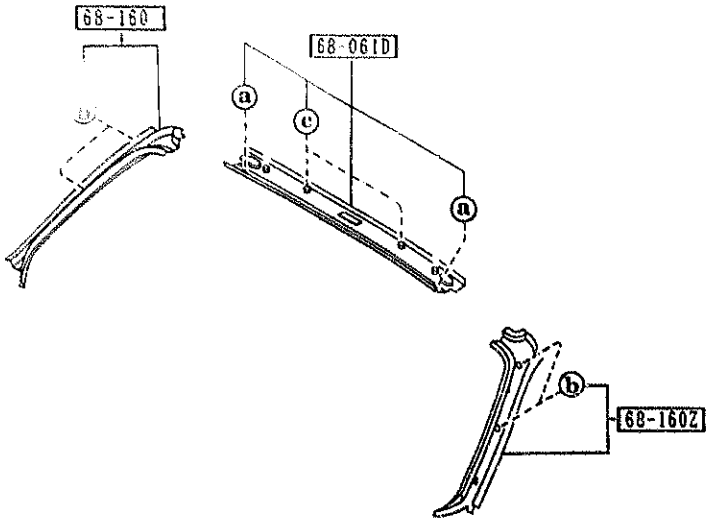


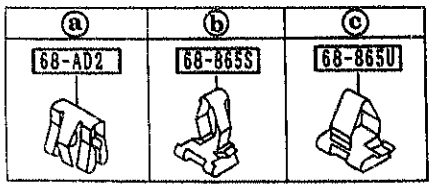




6820 -1 ※ FRONT HEADER TRIM & PILLAR TRIMS

| PART NO | QTY | MODEL/RESTRICTION | MODEL/RESTRICTION | MODEL/RESTRICTION | REMARKS |
|---|---|---|---|---|---|
| 68-AD2 | | CLIP | | | |
| B455-68-AD2 | 2 | | | | |
| 68-061D | | TRIM,FRONT HEADER | | | |
| NA01-68-090D | 1 | | | | -7717 |
| 00 | INT- | NA3 NA4 NA5 NA6 NA7 NA8 BLACK | | | |
| ※NA01-68-090E | 1 | | | | 7717- |
| ※ 00 | INT- | NA3 NA4 NA5 NA6 NA7 NA8 BLACK | | | |
| 68-160 | | TRIM(R),'A'PILLAR | | | |
| NA01-68-160 | 1 | | | | |
| 00 | INT- | NA3 NA4 NA5 NA6 NA7 NA8 BLACK | | | |
| 68-160Z | | TRIM(L),'A'PILLAR | | | |
| NA01-68-170 | 1 | | | | |
| 00 | INT- | NA3 NA4 NA5 NA6 NA7 NA8 BLACK | | | |
| 68-865S | | CLIP,TRIM | | | |
| GJ12-68-865 | 4 | | | | |
| 68-865U | | CLIP,TRIM | | | |
| GJ21-68-865 | 2 | | | | |

7717 NA35※V-738778

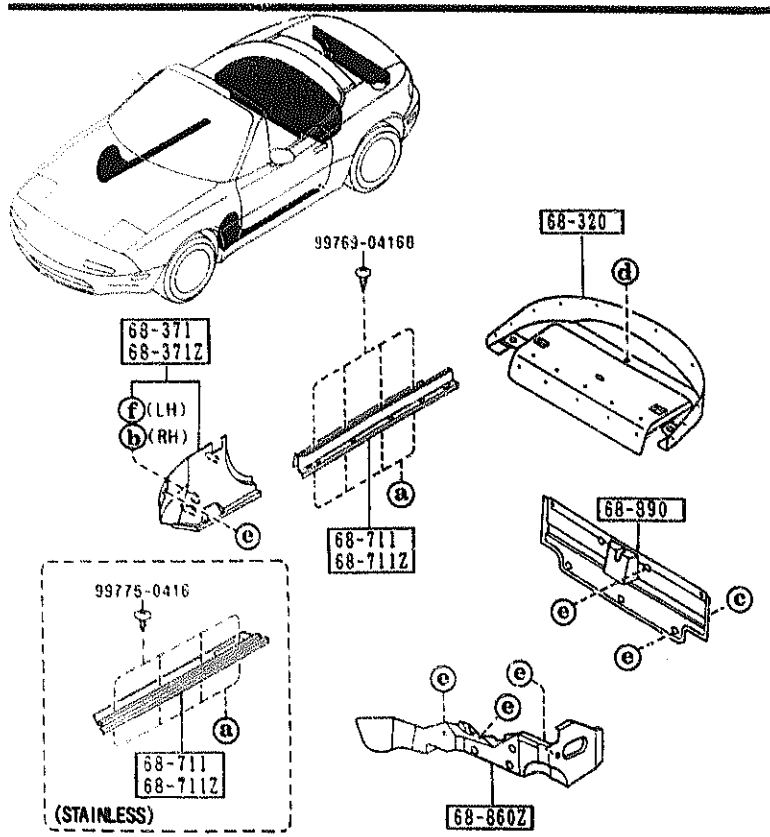






| PART NO | QTY | MODEL/RESTRICTION | MODEL/RESTRICTION | MODEL/RESTRICTION | FROM-TO |
|---|---|---|---|---|---|
| 68-320 | | TRAY,REAR PACKAGE | | | |
| NB38-68-3F1 | 1 | | | | -7901 |
| 02 | INT- | NA3 NA7 BLACK | | | |
| 88 | INT- | NA4 NA5 TAN | | | |
| *NB38-68-3F1B | 1 | | | | 7901- |
| * 02 | INT- | NA3 NA7 BLACK | | | |
| * 88 | INT- | NA4 NA5 TAN | | | |
| 68-371 | | TRIM(R),FRONT SIDE | | | |
| NA75-68-370 | 1 | | | | |
| 00 | INT- | NA3 NA7 NA8 BLACK | | | |
| 88 | INT- | NA4 NA5 TAN | | | |
| 68-371Z | | TRIM(L),FRONT SIDE | | | |
| NA01-68-390 | 1 | | | | |
| 00 | INT- | NA3 NA7 NA8 BLACK | | | |
| 88 | INT- | NA4 NA5 TAN | | | |
| 68-402B | | GROMMET,SCREW | | | |
| FA54-68-719B | 8 | | | | |
| 68-711 | | PLATE(R),FRONT SCUFF | | | |
| NA02-68-710A | 1 | (STAINLESS) | | | |
| NA01-68-711 | 1 | (PLASTIC) | | | |
| 00 | INT- | NA3 NA4 NA5 NA6 NA7 NA8 BLACK | | | |
| 68-711Z | | PLATE(L),FRONT SCUFF | | | |
| NA02-68-720B | 1 | (STAINLESS) | | | |
| NA01-68-721 | 1 | (PLASTIC) | | | |
| 00 | INT- | NA3 NA4 NA5 NA6 NA7 NA8 BLACK | | | |
| 68-86Y | | CAP,SEAL-TRUNK END TRIM | | | |
| KA01-68-86YA | 3 | | | | |
| 68-860Z | | TRIM(L),TRUNK SIDE | | | |
| NB26-68-871A | 1 | | | | |
| 04 | INT- | NA3 NA4 NA5 NA6 NA7 | | | |

7901 NA35#V-739040

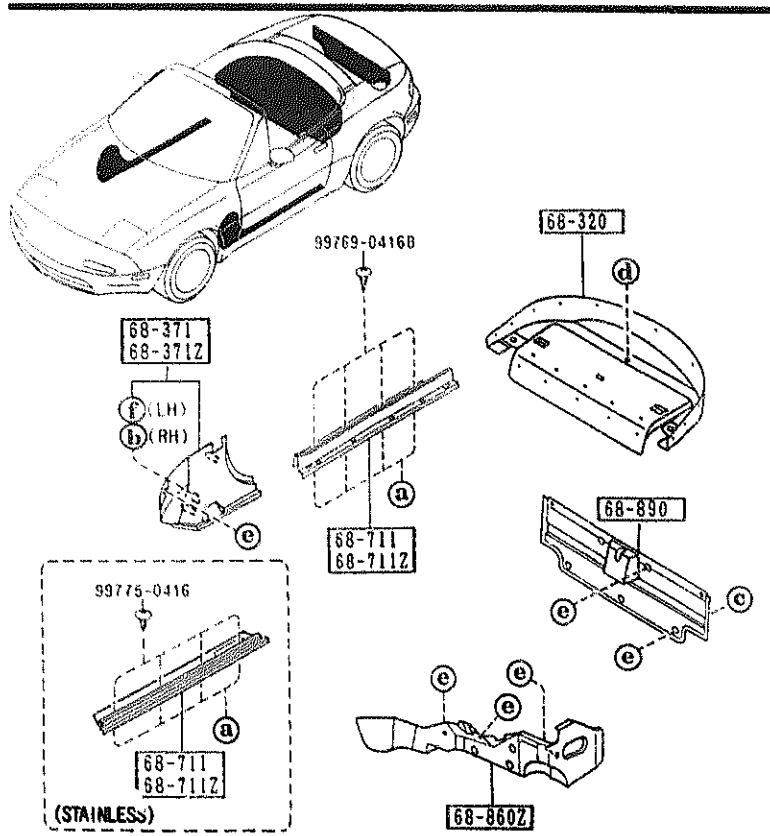


| ⓐ | ⓑ | ⓒ | ⓓ | ⓔ |
|---|---|---|---|---|
| 68-402B | 68-865U | 68-86Y | 68-865 | 68-865Q |

| ⓕ |
|---|
| 68-865S |

AUNA06



| PART NO | QTY | MODEL/RESTRICTION | MODEL/RESTRICTION | MODEL/RESTRICTION | 1998-10 |
|---|---|---|---|---|---|
| CONT'D | | NA8 BLACK | | | |
| 68-865 | | FASTENER | | | |
| 0032-68-865A | 18 | | | | |
| 00 | INT- | NA3 BLACK | | | |
| 67 | INT- | NA5 TAN | | | |
| 68-865Q | | FASTENER | | | |
| GJ21-68-885B | 12 | | | | |
| 00 | INT- | NA3 NA4 NA5 NA6 NA7 NA8 BLACK | | | |
| 88 | INT- | NA4 NA5 TAN | | | |
| 68-865S | | CLIP,TRIM | | | |
| GJ12-68-865 | 1 | | | | |
| 68-865U | | CLIP,TRIM | | | |
| GJ21-68-865 | 1 | | | | |
| 68-890 | | TRIM,TRUNK END | | | |
| NA01-68-891A | 1 | | | | |
| 04 | ?NT- | NA3 NA4 NA5 NA6 NA7 NA8 BLACK | | | |

CAT. AUNA06-03

1998-07

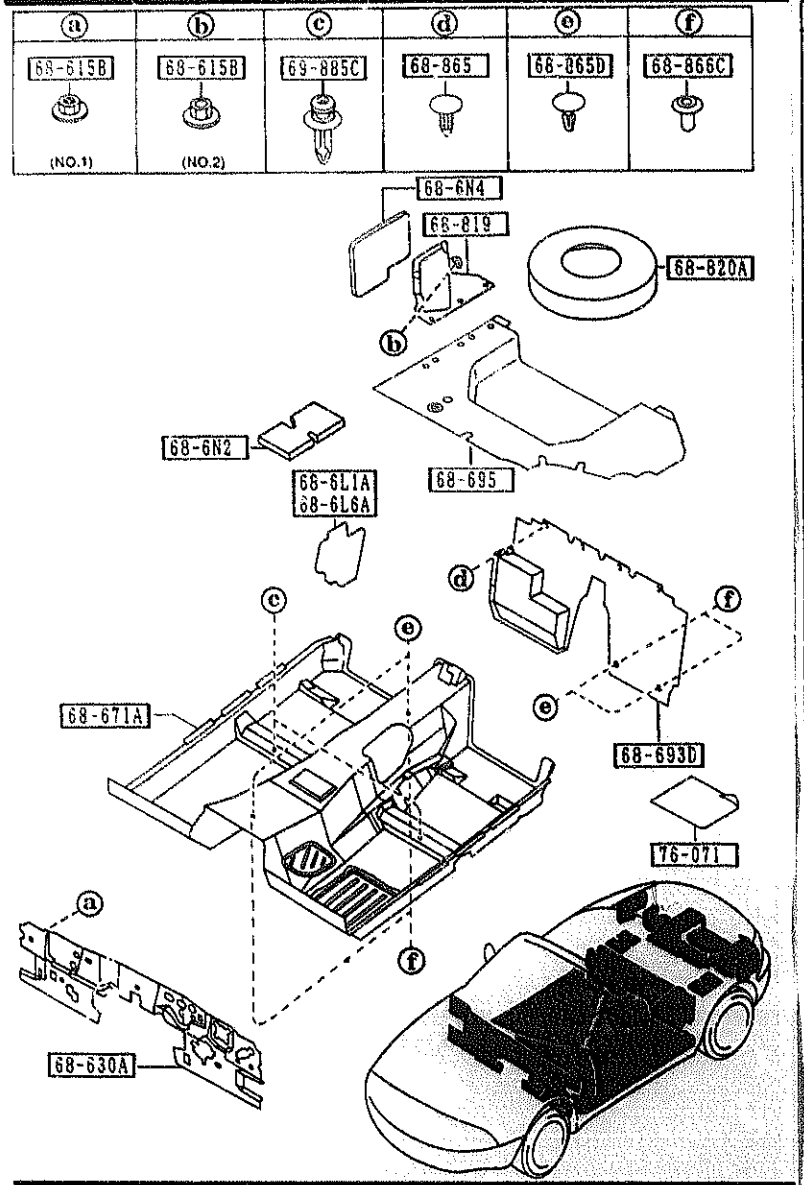


AUNA06



| PART NO | QTY | MODEL/RESTRICTION | MODEL/RESTRICTION | MODEL/RESTRICTION | FROM '97 |
|---|---|---|---|---|---|
| 68-6L1A | | COVER(R),HOLE | | | |
| NA01-68-6L1 | 1 | | | | |
| 68-6L6A | | COVER(L),HOLE | | | |
| NA01-68-6L6 | 1 | | | | |
| 68-6N2 | | INSULATOR,RR FLOOR | | | |
| NA01-68-6N2 | 2 | | | | |
| 68-6N4 | | PAD,RR FENDER | | | |
| NA01-68-6N4 | 1 | | | | |
| 68-615B | | NUT,FLANGE-CAP | | | |
| B100-68-615 | 5 | (ILLUST. NO.1) | | | |
| NA01-68-615 | 1 | (ILLUST. NO.2) | | | |
| 68-630A | | INSULATOR,DASHBOARD | | | |
| NA01-68-631D | 1 | | | | |
| 68-671A | | MAT,FLOOR | | | |
| NB38-68-670A | 1 | | | | |
| 02 | INT- | NA3 BLACK | | | |
| 88 | INT- | NA4 NA5 TAN | | | |
| 68-693D | | MAT,REAR END | | | |
| NB38-68-693 | 1 | | | | |
| 02 | INT- | NA3 BLACK | | | |
| 88 | INT- | NA4 NA5 TAN | | | |
| 68-695 | | MAT,TRUNK ROOM | | | |
| NA01-68-811A | 1 | | | | |
| 04 | INT- | NA3 NA4 NA5 NA6 NA7 NA8 BLACK | | | |
| 68-819 | | COVER,BATTERY | | | |
| NA01-68-819C | 1 | | | | |
| 04 | INT- | NA3 NA4 NA5 NA6 NA7 NA8 BLACK | | | |
| 68-820A | | COVER,SPARE TIRE | | | |

## 6860 FLOOR MATS & PADS

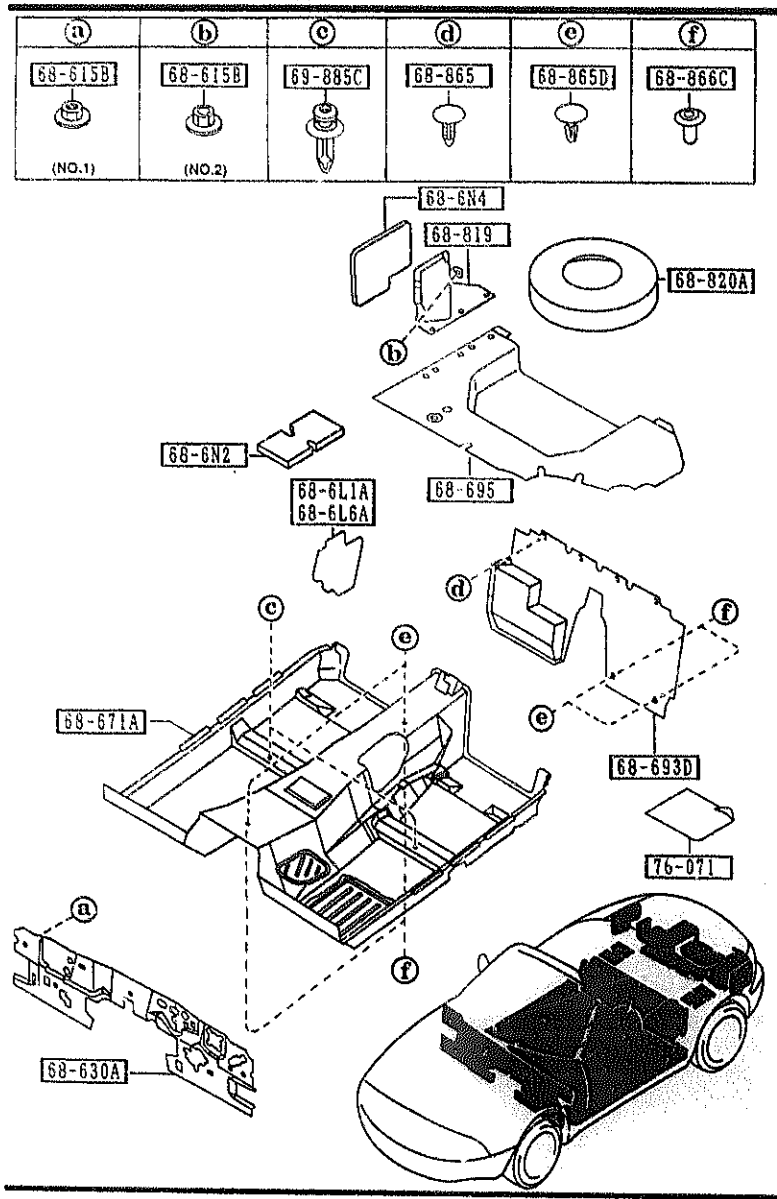


AUNA06

| PART NO. | QTY | MODEL/RESTRICTION | MODEL/RESTRICTION | MODEL/RESTRICTION | FROM-TO |
|---|---|---|---|---|---|
| CONT'D | | | | | |
| NA01-68-8P9A | 1 | | | | |
| 68-865 | | FASTENER | | | |
| G032-68-865A | 4 | | | | |
| 00 | INT- | NA3 BLACK | | | |
| 67 | INT- | NA5 TAN | | | |
| 68-865D | | FASTENER | | | |
| S083-68-865A | 4 | | | | |
| 00 | INT- | NA3 NA7 NA8 BLACK | | | |
| 88 | INT- | NA4 NA5 TAN | | | |
| 68-866C | | FASTENER,SEAL | | | |
| B235-68-865A | 4 | | | | |
| 69-885C | | FASTENER | | | |
| UB54-68-885 | 2 | | | | |
| 00 | INT- | NA3 NA4 NA5 NA6 NA7 NA8 BLACK | | | |
| 76-071 | | SILENCER,FLOOR | | | |
| 0208-76-071 | 1 | 30CMX30CM | | | |

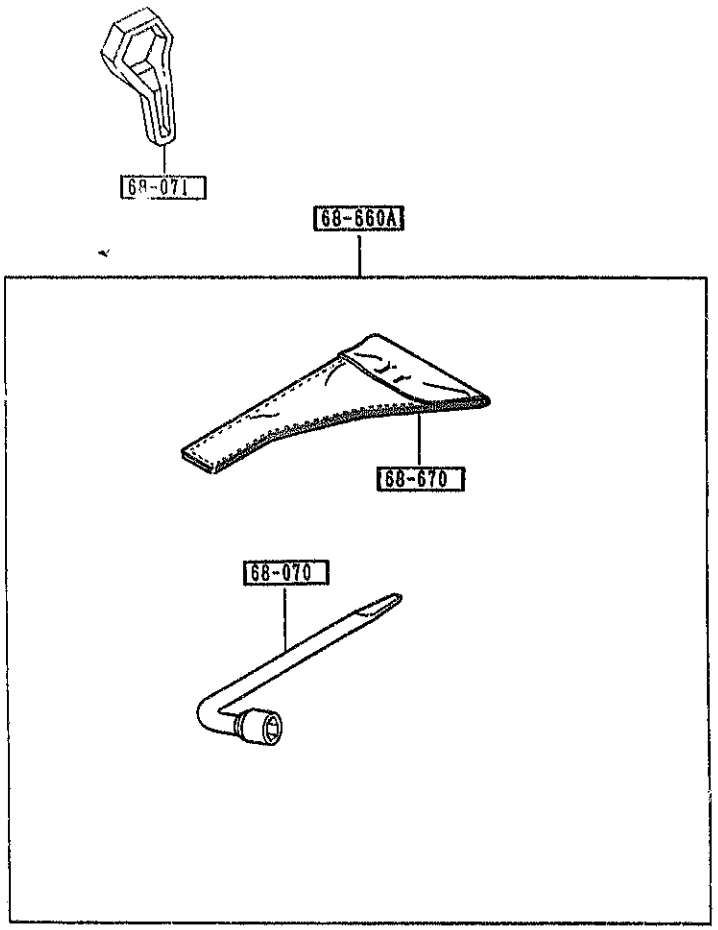


## 6870 -1 * SERVICE TOOLS

| PART NO. | QTY | MODEL/RESTRICTION | MODEL/RESTRICTION | MODEL/RESTRICTION | FROM-TO |
|---|---|---|---|---|---|
| 68-070 | | WRENCH,HUB NUT | | | |
| NA01-68-070 | 1 | | | | |
| 68-071 | | WRENCH,WHEEL CAP | | | |
| F057-68-071 | 1 | (HALF CAP) | | | |
| 68-660A | | TOOL SET | | | |
| NA01-69-650 | 1 | | | | -6901 |
| AN(NA01-69-650A) | | | | | |
| NA01-69-650A | 1 | | | | 6901- |
| 68-670 | | BAG,TOOL | | | |
| NA01-69-670 | 1 | | | | -6901 |
| AN(NA01-69-670A) | | | | | |
| NA01-69-670A | 1 | | | | 6901- |

6901 NA35*V-720297

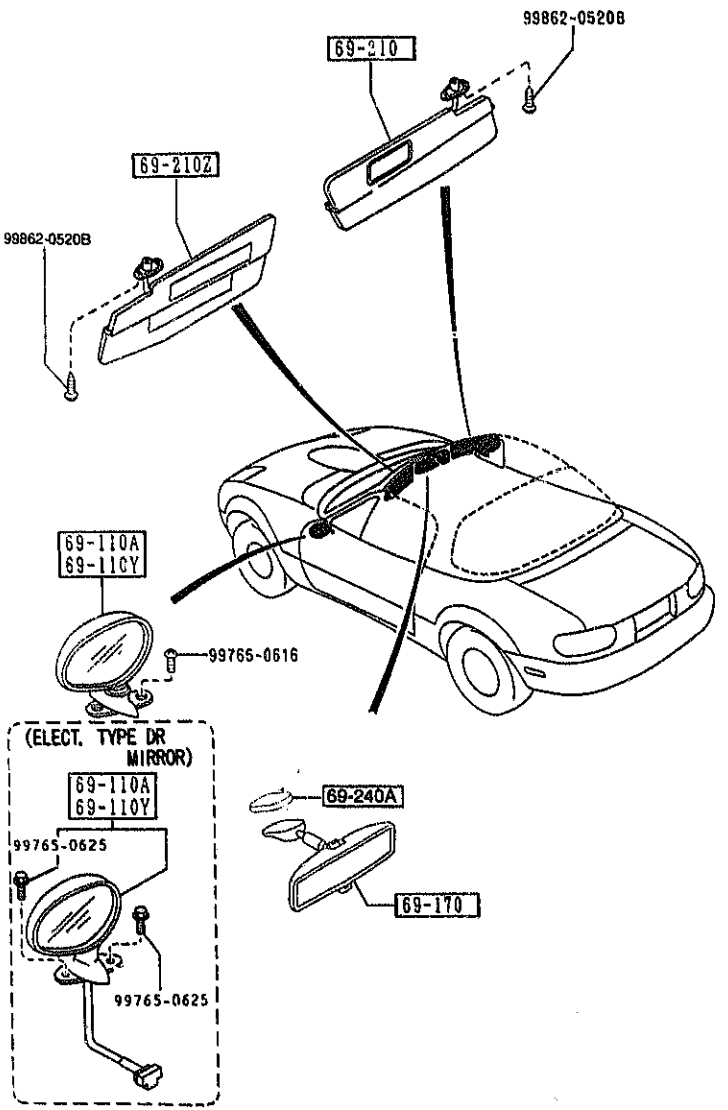






| PART NO. | QTY | MODEL/RESTRICTION | MODEL/RESTRICTION | MODEL/RESTRICTION | FROM-TO |
|---|---|---|---|---|---|
| 69-110A | | MIRROR(R),DOOR | | | |
| NA05-69-120C | 1 | BASE, R-PKG, (MANUAL TYPE DR MIRROR) | | | |
| A5 | EXT- | A5 SATELLITE BLUE MC | | | |
| HU | EXT- | HU NEO GREEN | | | |
| M8 | EXT- | M8 MONTEGO BLUE M | | | |
| PT | EXT- | PT CHAST WHITE | | | |
| PZ | EXT- | PZ BRILLIANT BLACK | | | |
| SU | EXT- | SU CLASSIC RED | | | |
| 23 | EXT- | 13C MARINA GREEN MC | | | |
| 57 | EXT- | 12K TWILIGHT BLUE | | | |
| NA52-69-120C | 1 | F-SV, L-PKG, P.E.GR, T-PKG, (ELECT. TYPE DR MIRROR) | | | |
| A5 | EXT- | A5 SATELLITE BLUE MC | | | |
| HU | EXT- | HU NEO GREEN | | | |
| M8 | EXT- | M8 MONTEGO BLUE M | | | |
| PT | EXT- | PT CHAST WHITE | | | |
| PZ | EXT- | PZ BRILLIANT BLACK | | | |
| SU | EXT- | SU CLASSIC RED | | | |
| 23 | EXT- | 13C MARINA GREEN MC | | | |
| 57 | EXT- | 12K TWILIGHT BLUE | | | |
| 69-110Y | | MIRROR(L),DOOR | | | |
| NA05-69-180C | 1 | BASE, R-PKG, (MANUAL TYPE DR MIRROR) | | | |
| A5 | EXT- | A5 SATELLITE BLUE MC | | | |
| HU | EXT- | HU NEO GREEN | | | |
| M8 | EXT- | M8 MONTEGO BLUE M | | | |
| PT | EXT- | PT CHAST WHITE | | | |
| PZ | EXT- | PZ BRILLIANT BLACK | | | |
| SU | EXT- | SU CLASSIC RED | | | |
| 23 | EXT- | 13C MARINA GREEN MC | | | |
| 57 | EXT- | 12K TWILIGHT BLUE | | | |
| NA52-69-180C | 1 | F-SV, L-PKG, P.E.GR, T-PKG, | | | |

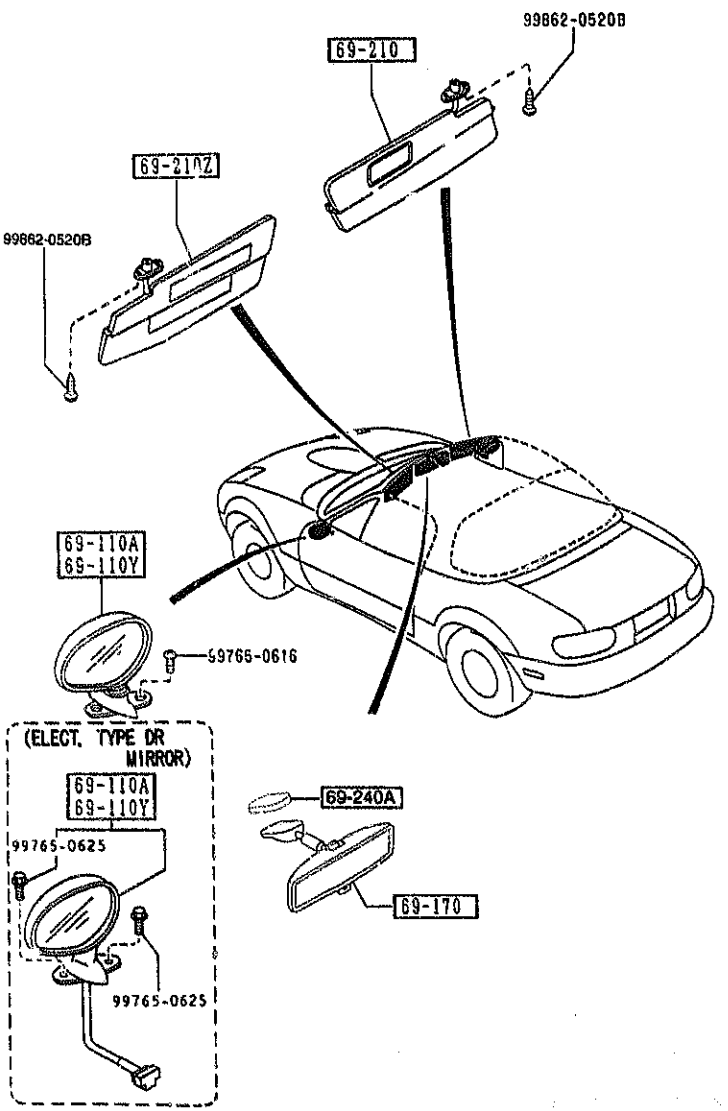




| PART NO. | QTY | MODEL/RESTRICTION | MODEL/RESTRICTION | MODEL/RESTRICTION | FROM-TO |
|---|---|---|---|---|---|
| CONT'D | | (ELECT. TYPE DR MIRROR) | | | |
| A5 EXT- | | A5 SATELLITE BLUE MC | | | |
| HU EXT- | | HU NEO GREEN | | | |
| M8 EXT- | | M8 MONTEGO BLUE M | | | |
| PT EXT- | | PT CHAST WHITE | | | |
| PZ EXT- | | PZ BRILLIANT BLACK | | | |
| SU EXT- | | SU CLASSIC RED | | | |
| 23 EXT- | | 13C MARINA GREEN MC | | | |
| 57 EXT- | | 12K TWILIGHT BLUE | | | |
| +----------+ \| 69-170 \| +----------+ | | MIRROR,INTERIOR | | | |
| HG82-69-220A | 1 | | | | |
| +----------+ \| 69-210 \| +----------+ | | SUN VISOR(R) | | | |
| NB12-69-270A | 1 | | | | -7301 |
| 02 INT- | | NA3 NA4 NA5 NA7 NA8 BLACK | | | |
| NB39-69-270B | 1 | | | | 7301-7701 |
| 02 INT- | | NA3 NA4 NA5 NA7 NA8 BLACK | | | |
| *NB39-69-270C | 1 | | | | 7701-7A01 |
| * 02 INT- | | NA3 NA4 NA5 NA7 NA8 BLACK | | | |
| *NB39-69-270D | 1 | | | | 7A01- |
| * 02 INT- | | NA3 NA4 NA5 NA7 NA8 BLACK | | | |
| +----------+ \| 69-210Z \| +----------+ | | SUN VISOR(L) | | | |
| NB11-69-320B | 1 | | | | -7301 |
| 02 INT- | | NA3 NA4 NA5 NA7 NA8 BLACK | | | |
| NB39-69-320B | 1 | | | | 7301-7A01 |
| 02 INT- | | NA3 NA4 NA5 NA7 NA8 BLACK | | | |
| *NB39-69-320C | 1 | | | | 7A01- |
| * 02 INT- | | NA3 NA4 NA5 NA7 NA8 BLACK | | | |
| +----------+ \| 69-240A \| +----------+ | | BASE,INTERIOR MIRROR | | | |

7301 NA35*V-732210
7701 NA35*V-738443
7A01 NA35*V-739048

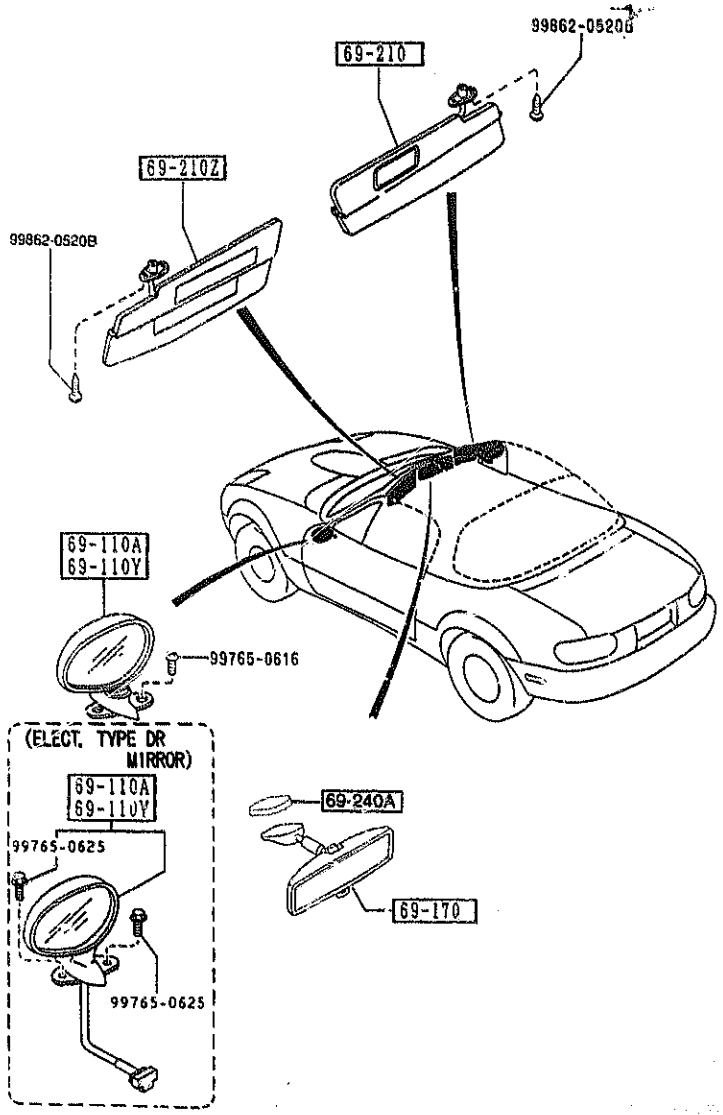


AUNAC6



| PART NO. | QTY | MODEL/RESTRICTION | MODEL/RESTRICTION | MODEL/RESTRICTION | FROM-TO |
|---|---|---|---|---|---|
| CONT'D | | | | | |
| BC1C-69-240 | 1 | | | | |

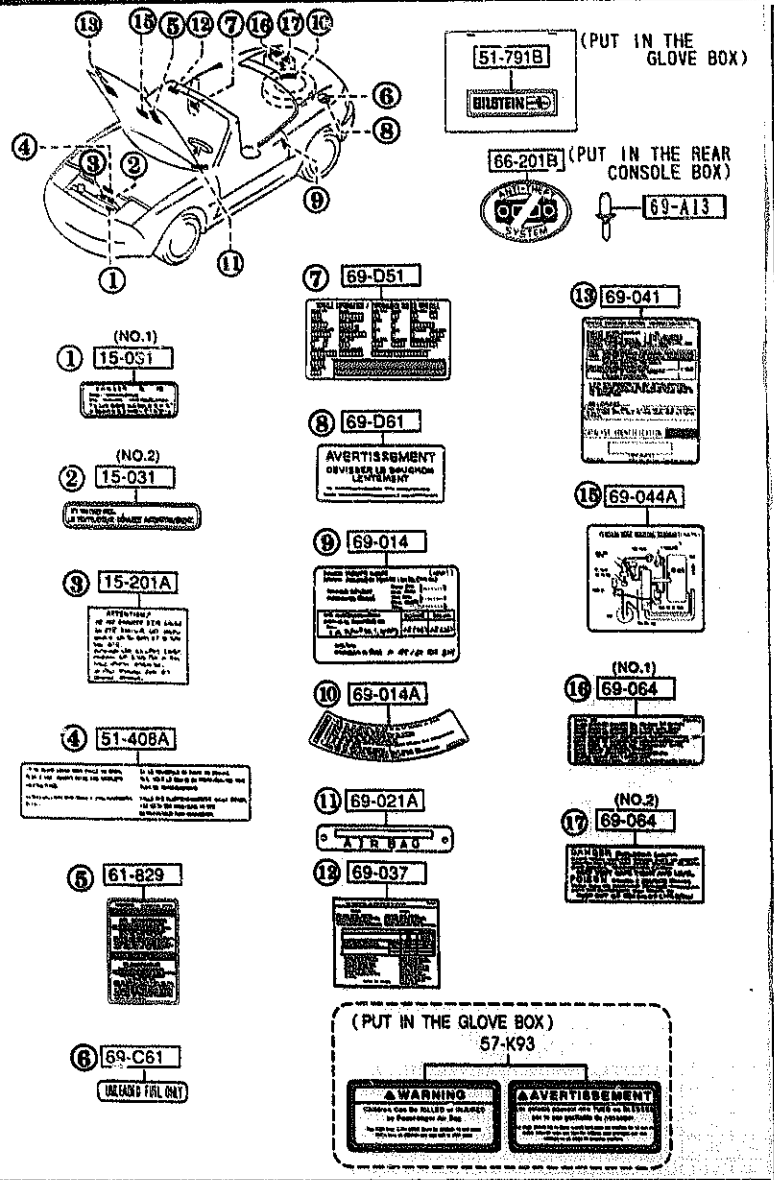






| PART NO. | QTY | MODEL/RESTRICTION | MODEL/RESTRICTION | MODEL/RESTRICTION | FROM-TO |
|---|---|---|---|---|---|
| 15-031 | | LABEL,CAUTION | | | |
| B660-15-031 | 1 | ENGLISH (ILLUST. NO.1) | | | |
| E508-15-031 | 1 | FRENCH (ILLUST. NO.2) | | | |
| 15-201A | | LABEL,CAUTION-RADIATOR | | | |
| B791-15-201 | 1 | | | | |
| 51-408A | | LABEL,CAUTION-RETRACTABLE | | | |
| NA04-51-S02 | 1 | | | | |
| 51-791B | | LABEL,BILSTEIN | | | |
| N021-51-790 | 1 | | | | |
| 57-K93 | | LABEL'C',CAUTION-A/B | | | |
| *BG1R-57-K93A | 1 | (W/AIR BAG-DRIV.&PASS.SIDE) | | | 7301- |
| 61-829 | | LABEL,CAUTION | | | |
| FD16-61-439B | 1 | (A) | | | |
| 66-201B | | LABEL,ANT; THEFT-AUDIO | | | |
| NA01-66-201 | 1 | | | | |
| 69-A13 | | RIVET,BLIND,VIN PLATE | | | |
| GJ21-69-A13 | 2 | | | | |
| 69-C61 | | LABEL,UNLEADED FUEL | | | |
| UB40-69-C61 | 1 | | | | |
| 69-D51 | | LABEL,VEHICLE INFORMATION | | | |
| B001-69-D51 | 1 | VIN NO. IS REQIRED | | | |
| 69-D61 | | LABEL,FUEL WARNING | | | |
| KA10-69-D61A | 1 | | | | |
| 69-014 | | LABEL,TIRE | | | |
| NA01-69-014A | 1 | | | | |

7301 NA35*V-732210

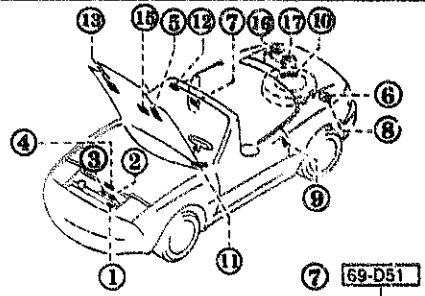

51-791B (PUT IN THE GLOVE BOX)

66-2018 (PUT IN THE REAR CONSOLE BOX)

69-A13

① (NO.1) 15-031

② (NO.2) 15-031

③ 15-201A

④ 51-408A

⑤ 61-829

⑥ 69-C61

⑦ 69-D51

⑧ 69-D61

⑨ 69-014

⑩ 69-014A

⑪ 69-021A

⑫ 69-037

⑬ 69-041

⑭ 69-044A

⑯ (NO.1) 69-064

⑰ (NO.2) 69-064

(PUT IN THE GLOVE BOX) 57-K93

AUNA06

6930 -2 M CAUTION PLATES & LABELS

| PART NO. | QTY | MODEL/RESTRICTION | MODEL/RESTRICTION | MODEL/RESTRICTION | FROM-TO |
|---|---|---|---|---|---|
| 69-014A | | LABEL,TEMPORARY TIRE | | | |
| BF68-69-073 | 1 | ENGLISH | | | |
| BF69-69-073B | 1 | FRENCH | | | |
| 69-021A | | PLATE,CAUTION | | | |
| NA01-69-068A | 1 | | | | |
| 69-037 | | LABEL,FUEL ECONOMY | | | |
| NB85-69-042 | 1 | (W/FUEL CONSUMPTION LABEL) | | | |
| 69-041 | | LABEL,EMISSION | | | |
| NB84-69-036 | 1 | | | | |
| 69-044A | | LABEL,VAC.DIAPHP.GM | | | |
| NB38-69-044 | 1 | (W/VACUUM DIAP (RAGM LABEL) | | | |
| 69-064 | | LABEL,BATTERY | | | |
| FA03-69-C72A | 1 | (ILLUST. NO.1) | | | |
| FA01-69-064A | 1 | (ILLUST. NO.2) | | | |

CAT. AUNA06-03

1998-07

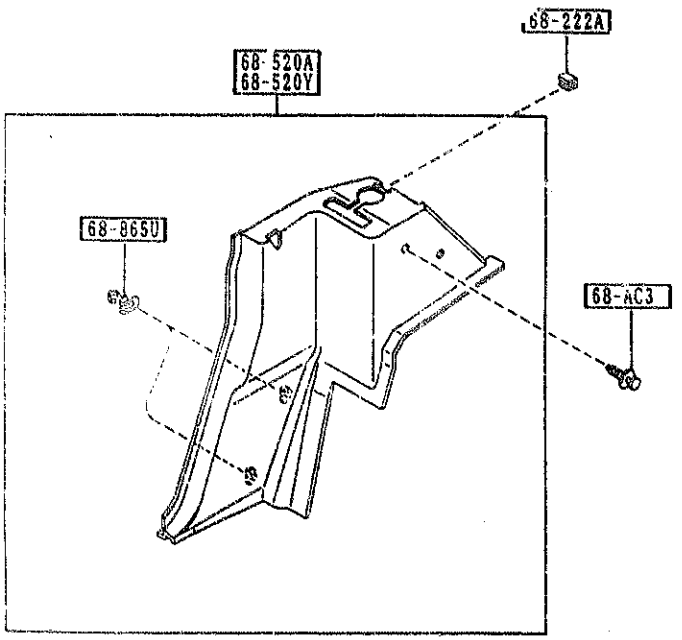


7250 -1 * QUARTER WINDOW & TRIMS

| PART NO | QTY | MODEL/RESTRICTION | MODEL/RESTRICTION | MODEL/RESTRICTION | REMARK |
|---|---|---|---|---|---|
| 68-AC3 | | FASTENER | | | |
| 8499-68-AC3 | 2 | | | | |
| 00 | INT- | NA3 NA7 NA8 BLACK | | | |
| 69 | INT- | NA4 NA5 TAN | | | |
| 68-222A | | COVER,HOLE | | | |
| NA01-68-222A | 2 | | | | |
| 00 | INT- | NA3 NA7 NA8 BLACK | | | |
| 88 | INT- | NA4 NA5 TAN | | | |
| 68-520A | | TRIM(R),QUARTER | | | |
| NA75-68-520 | 1 | (W/O DETACHABLE HARD TOP) | | | |
| 00 | INT- | NA3 NA7 NA8 BLACK | | | |
| 88 | INT- | NA4 NA5 TAN | | | |
| NA76-68-520 | 1 | (W/DETACHABLE HARD TOP) | | | |
| 00 | INT- | NA3 NA7 NA8 BLACK | | | |
| 88 | INT- | NA4 NA5 TAN | | | |
| 68-520Y | | TRIM(L),QUARTER | | | |
| NA75-68-550 | 1 | (W/O DETACHABLE HARD TOP) | | | |
| 00 | INT- | NA3 NA7 NA8 BLACK | | | |
| 88 | INT- | NA4 NA5 TAN | | | |
| NA76-68-550 | 1 | (W/DETACHABLE HARD TOP) | | | |
| 00 | INT- | NA3 NA7 NA8 BLACK | | | |
| 88 | INT- | NA4 NA5 TAN | | | |
| 68-865U | | CLIP,TRIM | | | |
| GJ21-68-865 | 4 | | | | |