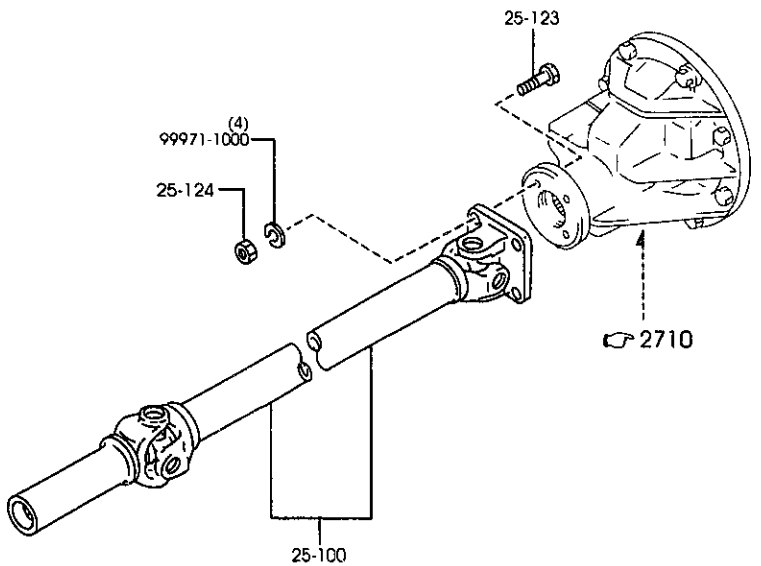

AUNA07 (1N04040)

2505A -1 ※ REAR PROPELLER SHAFT

PART NO.	QTY	MODEL/RESTRICTION	MODEL/RESTRICTION	MODEL/RESTRICTION	FROM-TO
25-100		SHAFT,PROPELLER-FRT			
MF04-25-100	1	(MT)			
MF06-25-100	1	(AT)			
25-123		BOLT			
P011-25-123	4				
25-124		NUT			
1368-25-124	4				

CAT. AUNA07-05 2000-01

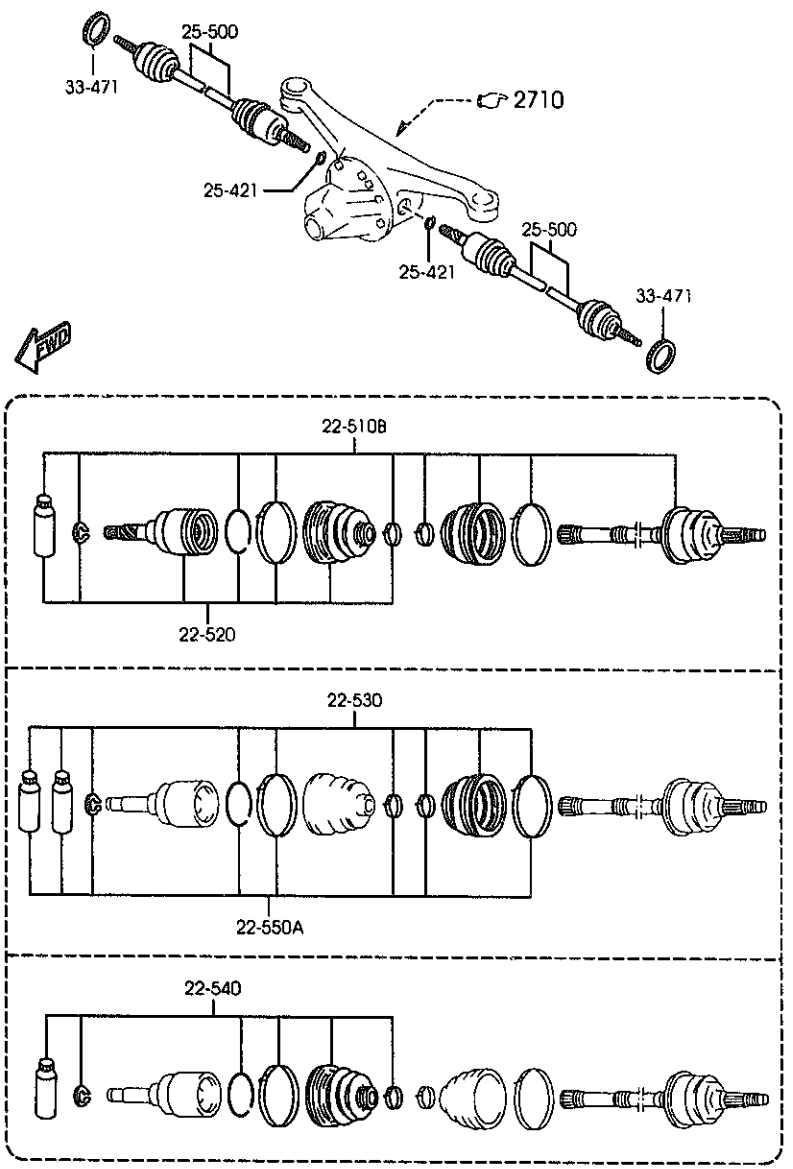

PART NO.	QTY	MODEL/RESTRICTION	MODEL/RESTRICTION	MODEL/RESTRICTION	FROM-TO
22-510B		JOINT SET,OUTER			
MD11-22-510A	2	(W/O A. LOCK BRAKE)			-8C01
MD12-22-510A AN(MD12-22-510B)	2	(W/A. LOCK BRAKE)			-9501
MD12-22-510A AN(MD12-22-510B)	2	(W/O A. LOCK BRAKE)			8C01-9501
MD12-22-510B	2				9501-
22-520		JOINT SET,INNER			
MD02-22-520A	2				
22-530		BOOT SET,OUTER JOINT			
M090-22-530	2				
22-540		BOOT SET,INNER JOINT			
M090-22-540	2				
22-550A		CLIP SET,DRIVE SHAFT			
M090-22-550	2				
25-421		CLIP			
G003-25-421	2				
25-500		SHAFT,DRIVE			
MD11-25-500A	2	(W/O A. LOCK BRAKE)			-8C01
MD12-25-500A AN(MD12-25-500B)	2	(W/A. LOCK BRAKE)			-9501
MD12-25-500A AN(MD12-25-500B)	2	(W/O A. LOCK BRAKE)			8C01-9501
MD12-25-500B	2				9501-
33-471		ROTOR,SENSOR-FRT A.B.S.			
BC4C-33-471	2	(W/A. LOCK BRAKE)			

8C01 NB353*-124914
9501 NB353*-137711

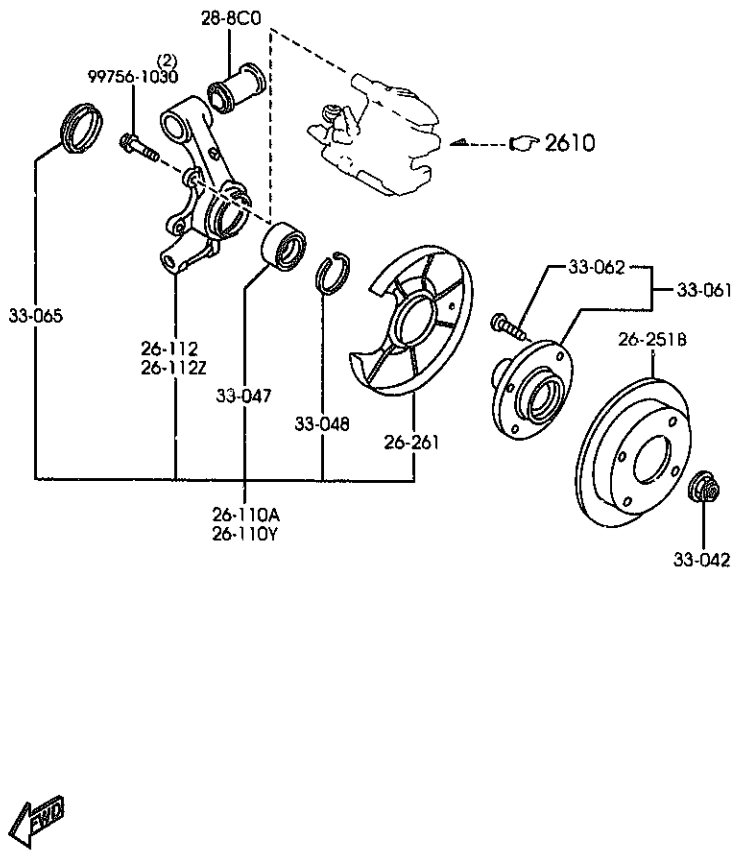

AUNA07 (1N04060)

PART NO.	QTY	MODEL/RESTRICTION	MODEL/RESTRICTION	MODEL/RESTRICTION	FROM-TO
26-110A		KNUCKLE(R),REAR			
NC10-26-130	1	(W/O A. LOCK BRAKE)			
NC14-26-130	1	(W/A. LOCK BRAKE)			
26-110Y		KNUCKLE(L),REAR			
NC10-26-140	1	(W/O A. LOCK BRAKE)			
NC14-26-140	1	(W/A. LOCK BRAKE)			
26-112		SUPPORT(R),HUB			
NC10-26-112A	1	(W/O A. LOCK BRAKE)			
NC14-26-112A	1	(W/A. LOCK BRAKE)			
26-112Z		SUPPORT(L),HUB			
NC10-26-122A	1	(W/O A. LOCK BRAKE)			
NC14-26-122A	1	(W/A. LOCK BRAKE)			
26-251B		PLATE,DISC			
BR74-26-251E	2				
26-261		COVER,DUST			
B530-26-261B	2				
28-8C0		BUSHING,RUBBER			
NA01-28-8C0C	2				
33-042		NUT			
GJ21-33-042B	2				
33-047		BEARING,WHEEL			
B455-33-047C	2				
33-048		RING,RETAINING-DISC PLATE			
H260-33-048	2				-8101
AN(B21M-33-048)					
B21M-33-048	2				8101-
33-061		HUB,WHEEL			
B01A-33-060A	2				
33-062		BOLT,HUB			

8101 NB353*-102707

CAT. AUNA07-05 2000-01

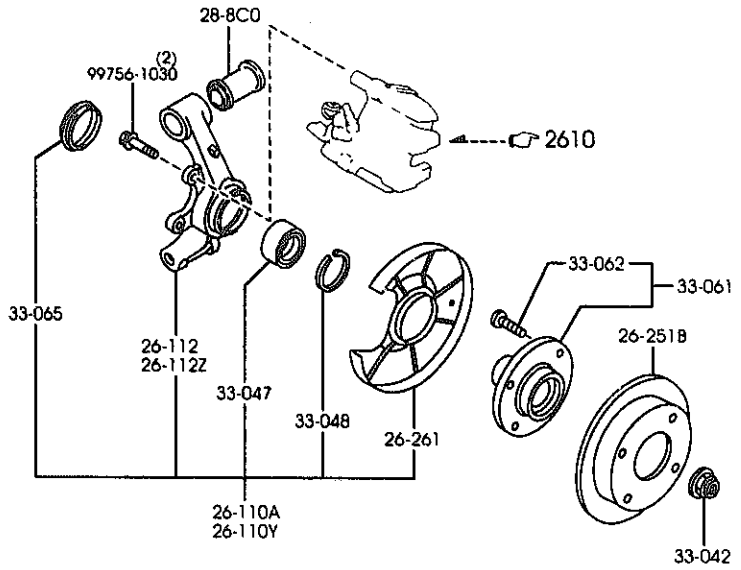

AUNA07 (1N04060)

PART NO.	QTY	MODEL/RESTRICTION	MODEL/RESTRICTION	MODEL/RESTRICTION	FROM-TO
CONT'D					
B01Y-33-062	8				
33-065		SEAL,OIL-AXLE			
G304-33-065	2				

CAT. AUNA07-05 2000-01

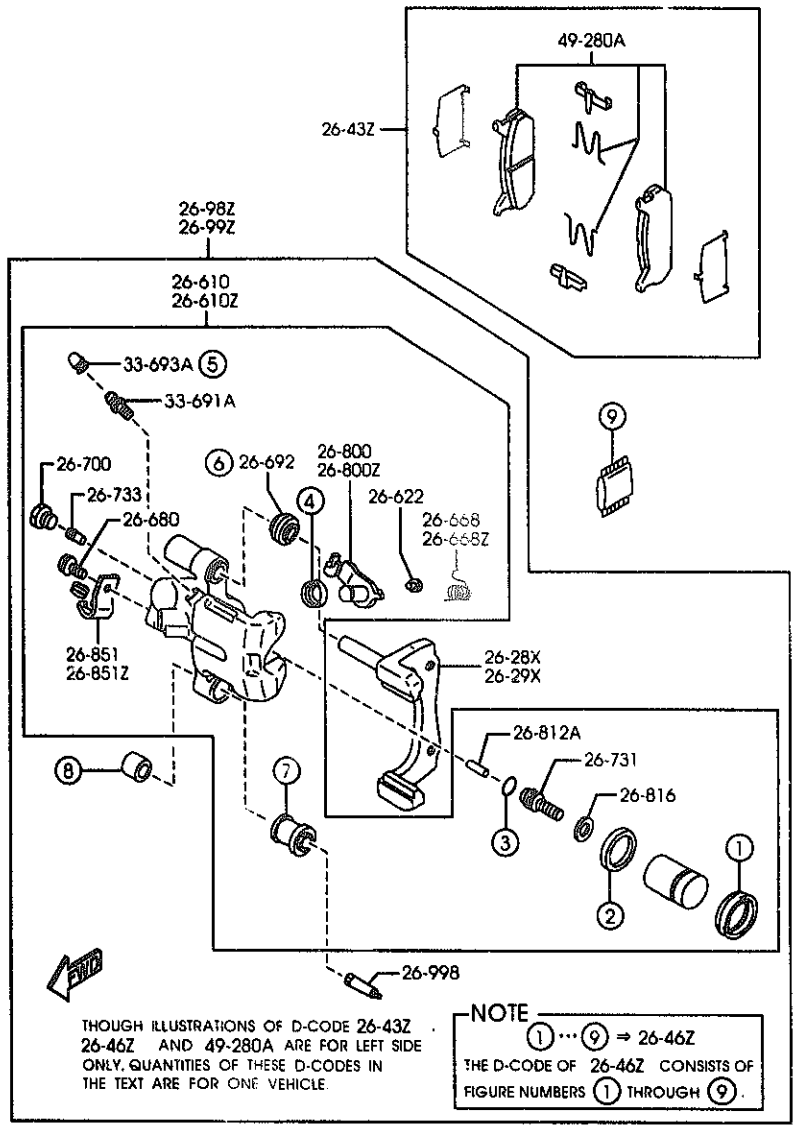

THOUGH ILLUSTRATIONS OF D-CODE 26-43Z, 26-46Z AND 49-280A ARE FOR LEFT SIDE ONLY. QUANTITIES OF THESE D-CODES IN THE TEXT ARE FOR ONE VEHICLE.

NOTE
(1) ··· (9) ⇒ 26-46Z
THE D-CODE OF 26-46Z CONSISTS OF FIGURE NUMBERS (1) THROUGH (9).

AUNA07 (1N05840)

PART NO.	QTY	MODEL/RESTRICTION	MODEL/RESTRICTION	MODEL/RESTRICTION	FROM-TO
26-28X		SUPPORT(R),MOUNTING			
NA75-26-28X	1				
26-29X		SUPPORT(L),MOUNTING			
NA75-26-29X	1				
26-43Z		PAD SET,RR CALIPER			
NAY5-26-43ZA	1				
26-46Z		SEAL & BOOT SET,CAL.-RR			
NAY1-26-46ZA	1				
A (NAY1-26-46ZB)					-8701
NAY1-26-46ZB	1				8701-
26-610		BODY & PISTON(R),CALIPER			
NA75-26-61XB	1				
AN(NA75-26-61XC)					-8801
NA75-26-61XC	1				8801-
26-610Z		BODY & PISTON(L),CALIPER			
NA75-26-71XB	1				
AN(NA75-26-71XC)					-8801
NA75-26-71XC	1				8801-
26-622		PIN,STOPPER-RR CALIPER			
BW0H-26-696	2				
26-668		SPRING(R),LEVER			
BW0H-26-668	1				
26-668Z		SPRING(L),LEVER			
BW0H-26-669	1				
26-680		BOLT			
BW0H-26-680	2				
26-692		BOOT,GUIDE PIN			
GA2E-26-692	2				
26-700		PLUG,SCREW			
BW0H-26-700	2				

8701 NB353#-121022
8801 NB353#-121854

CAT. AUNA07-05 2000-01

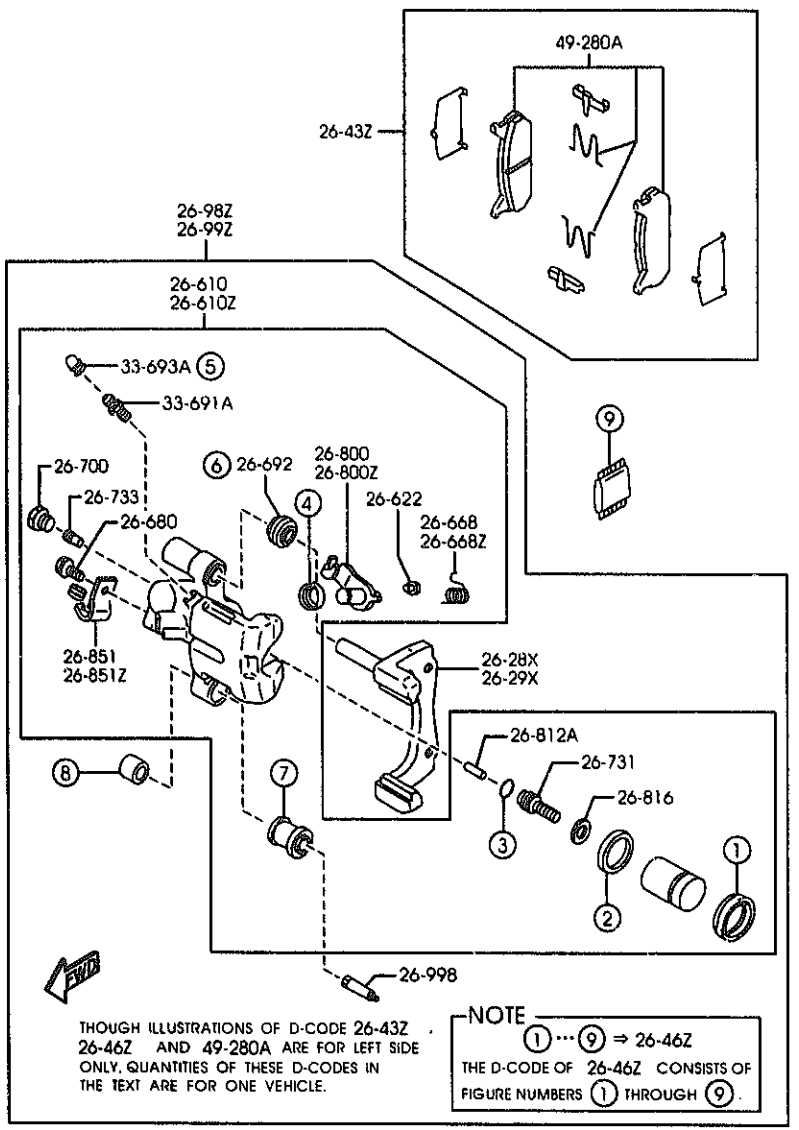

THOUGH ILLUSTRATIONS OF D-CODE 26-43Z, 26-46Z AND 49-280A ARE FOR LEFT SIDE ONLY. QUANTITIES OF THESE D-CODES IN THE TEXT ARE FOR ONE VEHICLE.

NOTE
(1)···(9) ⇒ 26-46Z
THE D-CODE OF 26-46Z CONSISTS OF FIGURE NUMBERS (1) THROUGH (9).

PART NO.	QTY	MODEL/RESTRICTION	MODEL/RESTRICTION	MODEL/RESTRICTION	FROM-TO
26-731		SPINDLE,ADJUSTER			
NA75-26-731	2				
26-733		GEAR,ADJUST			
BW0H-26-733	2				
26-800		LEVER(R),OPERATING			
BC1F-26-800A A (BC1F-26-800B)	1				-8801
BC1F-26-800B	1				8801-
26-800Z		LEVER(L),OPERATING			
BC1F-26-810A A (BC1F-26-810B)	1				-8801
BC1F-26-810B	1				8801-
26-812A		ROD,PUSH-FRT CALIPER			
BW0H-26-81Z	2				
26-816		RING,SNAP-RR CALIPER			
GA2E-26-816	2				
26-851		BRACKET(R),CABLE			
BW0H-26-851	1				
26-851Z		BRACKET(L),CABLE			
BW0H-26-861	1				
26-98Z		CALIPER(R),PADLESS-RR			
NAZ5-26-98ZB AN(NAZ5-26-98ZC)	1				-8801
NAZ5-26-98ZC	1				8801-
26-99Z		CALIPER(L),PADLESS-RR			
NAZ5-26-99ZB AN(NAZ5-26-99ZC)	1				-8801
NAZ5-26-99ZC	1				8801-
26-998		PIN,GUIDE			
BW0H-26-998A	2				

8801 NB353M-121854

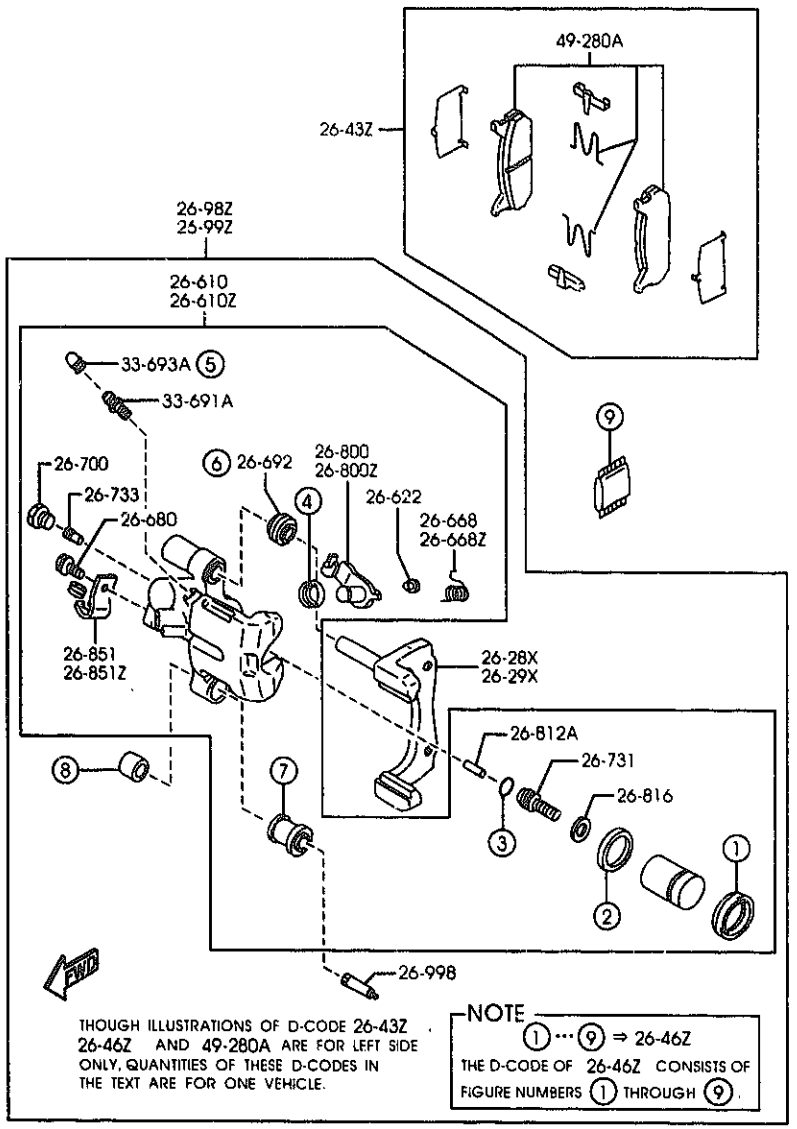

THOUGH ILLUSTRATIONS OF D-CODE 26-43Z, 26-46Z AND 49-280A ARE FOR LEFT SIDE ONLY, QUANTITIES OF THESE D-CODES IN THE TEXT ARE FOR ONE VEHICLE.

NOTE
(1) ··· (9) ⇒ 26-46Z
THE D-CODE OF 26-46Z CONSISTS OF FIGURE NUMBERS (1) THROUGH (9).

AUNA07 (1N05840)

PART NO.	QTY	MODEL/RESTRICTION	MODEL/RESTRICTION	MODEL/RESTRICTION	FROM-TO
33-691A		SCREW,BLEEDER			
BW0H-26-691	2				
33-693A		CAP,BLEEDER SCREW			
0259-33-693	2				
49-280A		PAD SUB SET,RR CALIPER			
NAY5-26-48Z	1				

CAT. AUNA07-05 2000-01

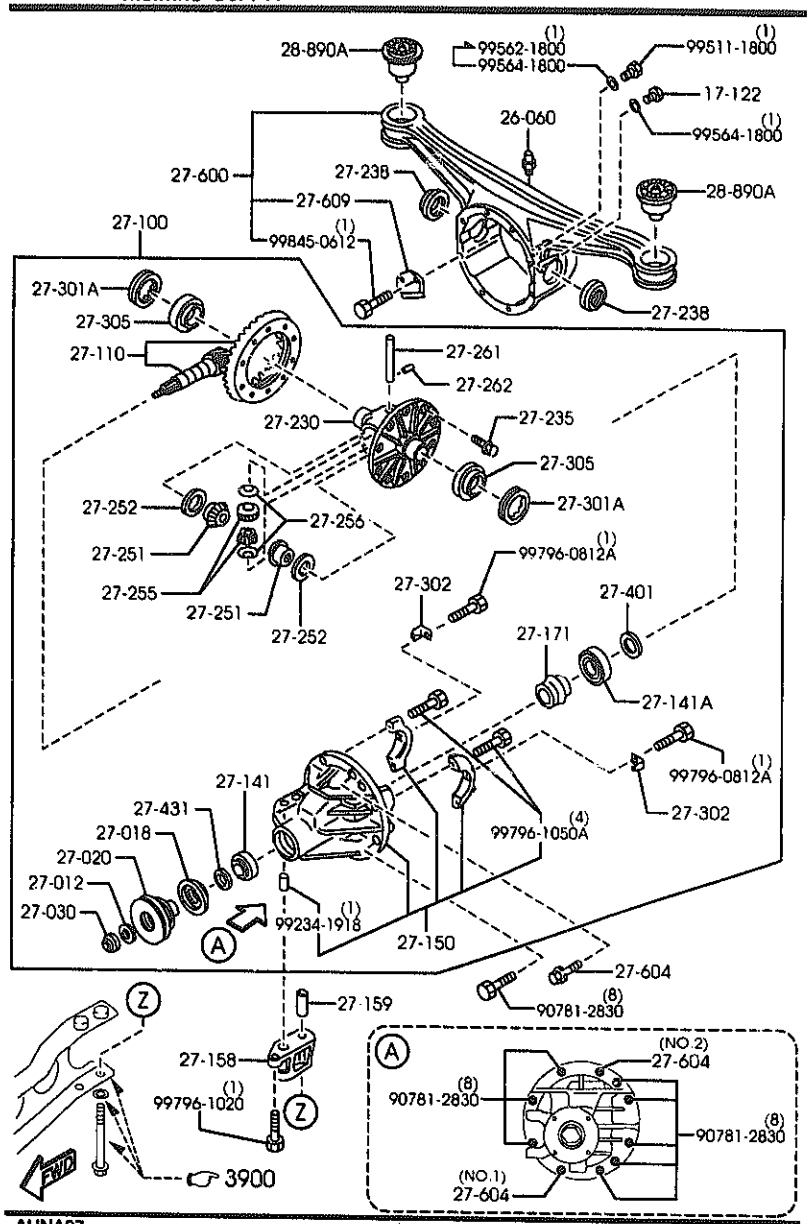

AUNA07

(1N08080)

PART NO.	QTY	MODEL/RESTRICTION	MODEL/RESTRICTION	MODEL/RESTRICTION	FROM-TO
17-122		PLUG,MAGNET			
0810-17-121	1				
26-060		BREATHER			
0730-26-060	1				
27-012		WASHER			
0223-27-012	1				
27-018		SEAL,OIL			
MA02-27-165A	1				
27-020		FLANGE,COMPANION			
MA02-27-120A	1	(AT)			
MA03-27-120A AN(MA03-27-120B)	1	(MT)			-7C24
MA03-27-120B	1	(MT)			7C24-
27-030		NUT,LOCK			
0223-27-030	1				
27-100		DRIVING & DIFF.			
MA02-27-100	1	(AT)			
MA11-27-100	1	(MT)			
27-110		GEAR SET,FINAL			
M061-27-110C	1	R=4.300 (MT)			
M068-27-110B	1	R=4.100 (AT)			
27-141		BEARING,PINION			
0755-27-210	1				
27-141A		BEARING,PINION			
M025-27-210	1				
27-150		CARRIER,DIFFERENTIAL			
MA02-27-150A	1				
27-158		SPACE			

7C24 NB353*-102379

CAT. AUNA07-05

2000-01

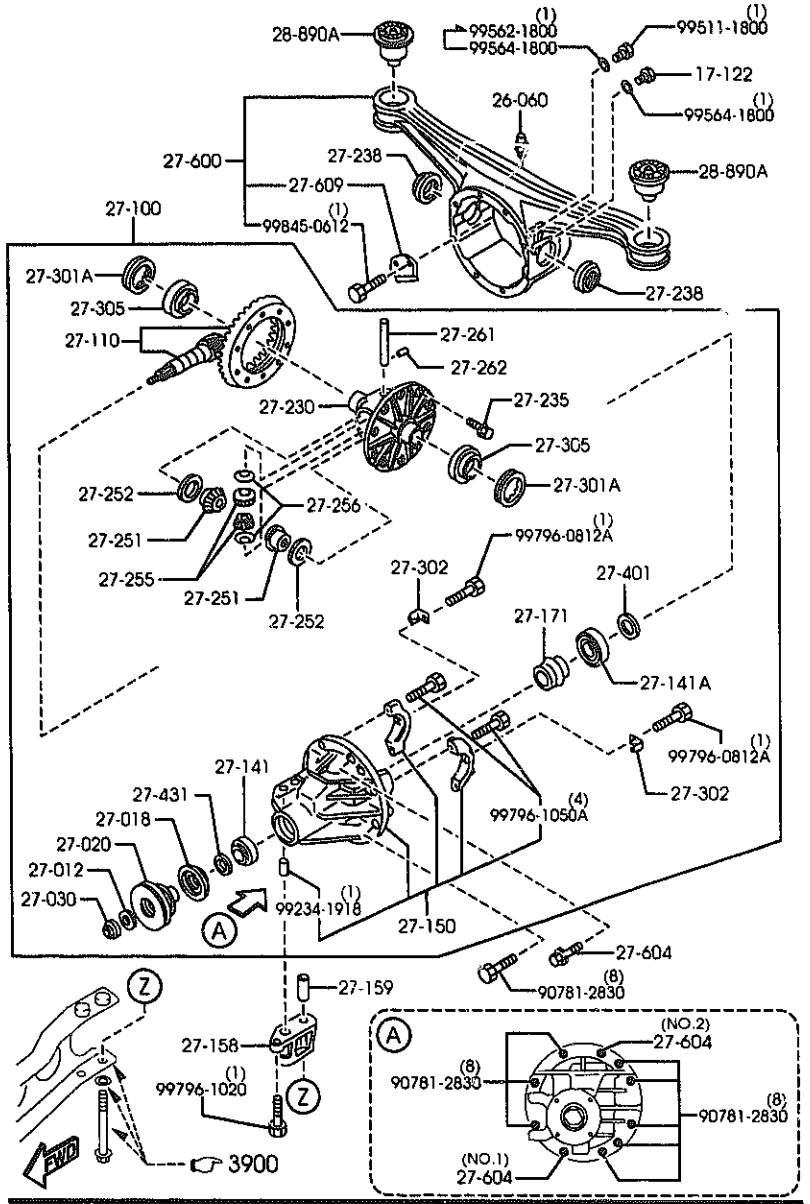

AUNA07 (1N08080)

PART NO.	QTY	MODEL/RESTRICTION	MODEL/RESTRICTION	MODEL/RESTRICTION	FROM-TO
CONT'D					
MA02-27-158	1				
27-159		PIN,TUBULAR			
MA02-27-159	1				
27-171		PIECE,DISTANCE			
M035-27-171	1				
27-230		CASE,DIFF. GEAR			
M069-27-231	1				
27-235		BOLT,RING GEAR			
8051-27-235	10	D=10.2MM			
8051-27-236	10	D=10.0MM			
27-238		SEAL,OIL			
MA02-27-238 AN(MA02-27-238A)	2				-8C21
MA02-27-238A	2				8C21-
27-251		GEAR,DIFF.SIDE			
M069-27-251	2				
27-252		WASHER			
0290-27-252	2	T=2MM			
0290-27-253	2	T=2.1MM			
0290-27-254	2	T=2.2MM			
0290-27-256	2	T=2.05MM			
0290-27-259	2	T=2.15MM			
27-255		PINION,DIFFERENTIAL			
M025-27-255C A (M025-27-255D)	2				-8420
M025-27-255D	2				8420-
27-256		WASHER,THRUST			

8420 NB353*-115899
8C21 NB353*-126395

CAT. AUNA07-05 2000-01

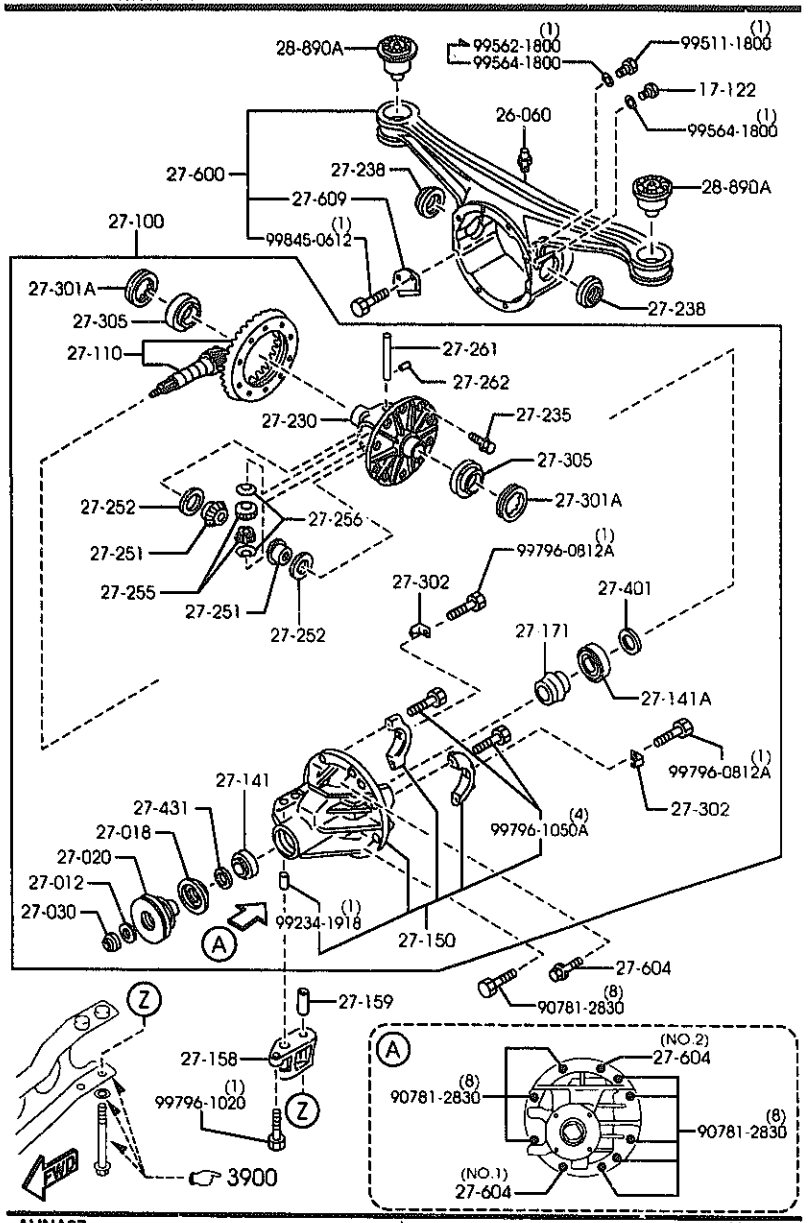

AUNA07 (1N08080)

PART NO.	QTY	MODEL/RESTRICTION	MODEL/RESTRICTION	MODEL/RESTRICTION	FROM-TO
CONT'D					
M025-27-256	2	T=2.0MM			
+---------+					
| 27-261 |		SHAFT,DIFF. PINION			
+---------+					
M025-27-261A	1				
+---------+					
| 27-262 |		PIN			
+---------+					
0114-27-262	1				
+---------+					
| 27-301A |		SCREW,ADJUST			
+---------+					
0290-27-301	2				
+---------+					
| 27-302 |		PLATE,LOCK			
+---------+					
0290-27-302	2				
+---------+					
| 27-305 |		BEARING			
+---------+					
0221-27-350	2				
+---------+					
| 27-401 |		SPACER			
+---------+					
0223-27-401A	1	T=3.08MM			
0223-27-402A	1	T=3.11MM			
0223-27-403A	1	T=3.14MM			
0223-27-404A	1	T=3.17MM			
0223-27-405A	1	T=3.2MM			
0223-27-406A	1	T=3.23MM			
0223-27-407A	1	T=3.26MM			
0223-27-408A	1	T=3.29MM			
0223-27-409A	1	T=3.32MM			
0223-27-411A	1	T=3.35MM			
0223-27-412A	1	T=3.38MM			
0223-27-413A	1	T=3.41MM			
0223-27-414A		T=3.44MM			

CAT. AUNA07-05 2000-01

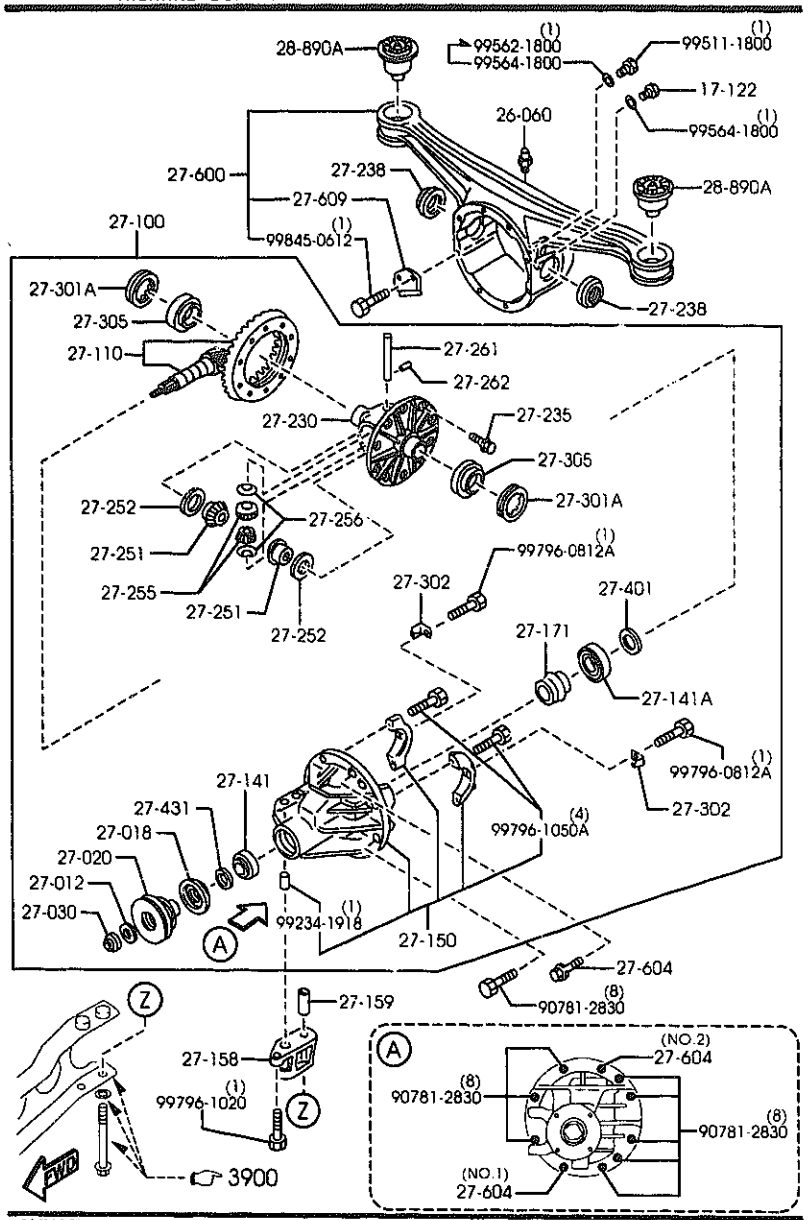

AUNA07 (1N08080)

PART NO.	QTY	MODEL/RESTRICTION	MODEL/RESTRICTION	MODEL/RESTRICTION	FROM-TO
CONT'D					
	1				
0223-27-415A	1	T=3.47MM			
0223-27-416	1	T=3.095MM			
0223-27-417	1	T=3.125MM			
0223-27-418	1	T=3.155MM			
0223-27-419	1	T=3.185MM			
0223-27-422	1	T=3.215MM			
0223-27-423	1	T=3.245MM			
0223 27-424	1	T=3.275MM			
0223-27-425	1	T=3.305MM			
0223-27-426	1	T=3.335MM			
0223-27-427	1	T=3.365MM			
0223-27-428	1	T=3.395MM			
0223-27-433	1	T=3.425MM			
0223-27-434	1	T=3.455MM			
+---------+					
| 27-431 |		SPACER			
+---------+					
PA01-27-431	1				
+---------+					
| 27-600 |		CASING,DIFFERENTIAL			
+---------+					
MA02-27-600A	1				
+---------+					
| 27-604 |		BOLT,CARRIER			
+---------+					
M053-27-604	1	(ILLUST. NO.1)			
M053-27-605	1	(ILLUST. NO.2)			
+---------+					
| 27-609 |		PLATE,BAFFLE-DIFF CA SING			
+---------+					
M0A1-27-609A	1				

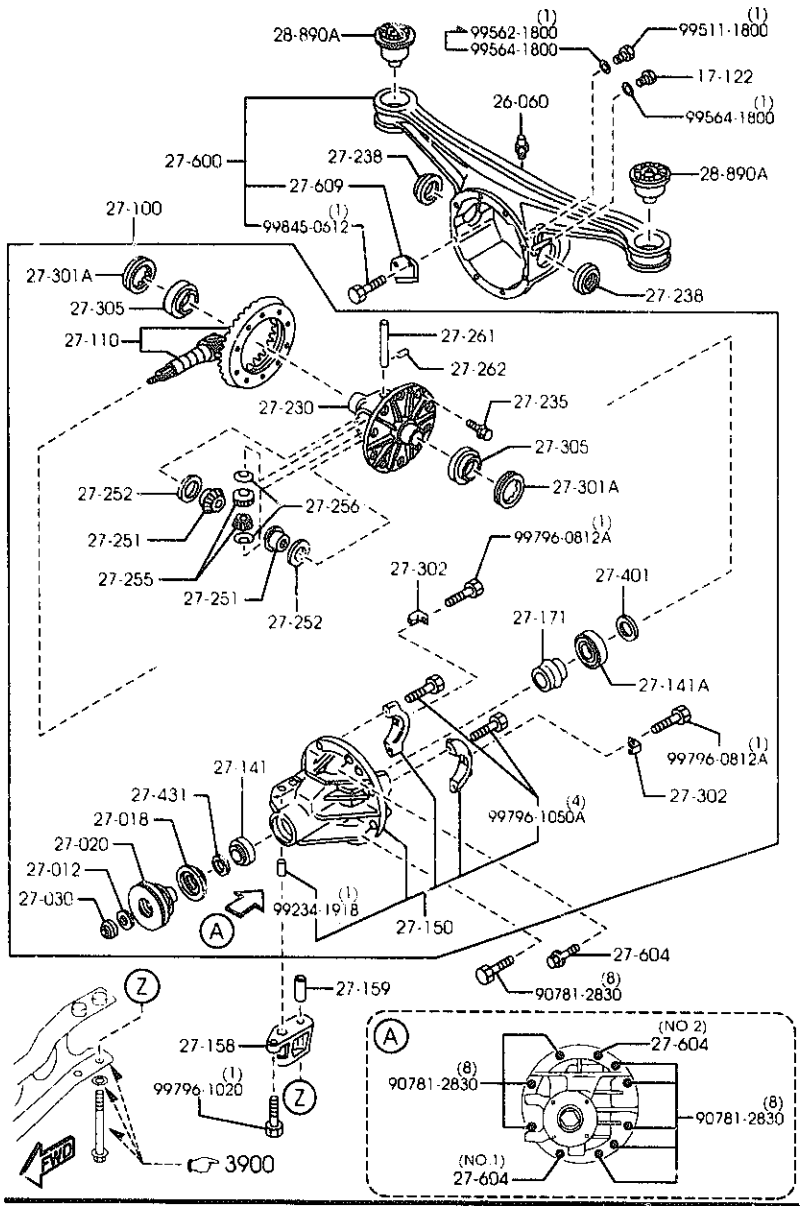

AUNA07 (1N08080)

PART NO.	QTY	MODEL/RESTRICTION	MODEL/RESTRICTION	MODEL/RESTRICTION	FROM-TO
28-890A		RUBBER,SUB FRAME MTG			
NA01-28-890	2				

CAT. AUNA07-05 2000-01

2710B REAR DIFFERENTIALS (LIMITED SLIP DIFF.)

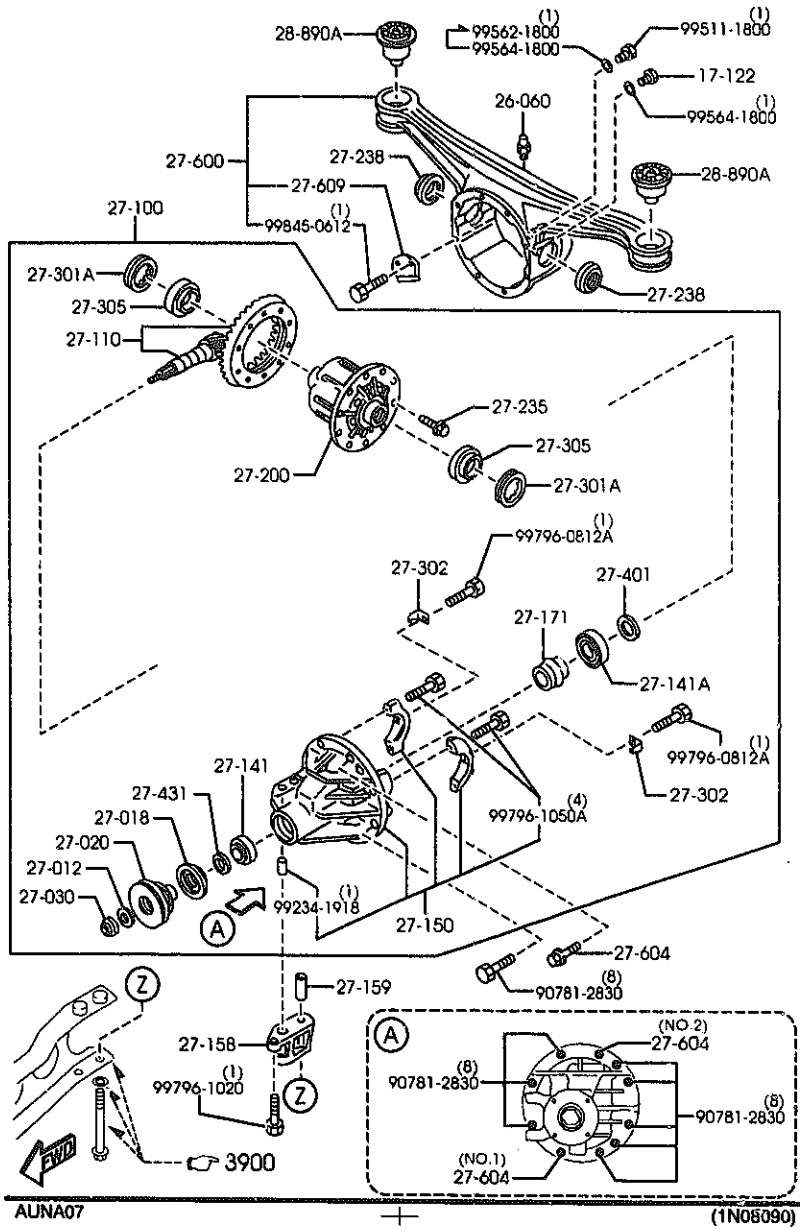

2710B -1 REAR DIFFERENTIALS (LIMITED SLIP DIFF.)

PART NO.	QTY	MODEL/RESTRICTION	MODEL/RESTRICTION	MODEL/RESTRICTION	FROM-TO
17-122		PLUG,MAGNET			
0810-17-121	1				
26-060		BREATHER			
0730-26-060	1				
27-012		WASHER			
0223-27-012	1				
27-018		SEAL,OIL			
MA02-27-165A	1				
27-020		FLANGE,COMPANION			
MA03-27-120A	1				-7C24
AN(MA03-27-120B)					
MA03-27-120B	1				7C24-
27-030		NUT,LOCK			
0223-27-030	1				
27-100		DRIVING & DIFF.			
MH07-27-100B	1	(6-SP)			
MH08-27-100	1	(5-SP)			
27-110		GEAR SET,FINAL			
M037-27-110B	1	R=3.909 (6-SP)			
M061-27-110C	1	R=4.300 (5-SP)			
27-141		BEARING,PINION			
0755-27-210	1				
27-141A		BEARING,PINION			
M025-27-210	1				
27-150		CARRIER,DIFFERENTIAL			
MA02-27-150A	1				
27-158		SPACE			
MA02-27-158	1				

7C24 NB353*-102379

CAT. AUNA07-05 2000-01

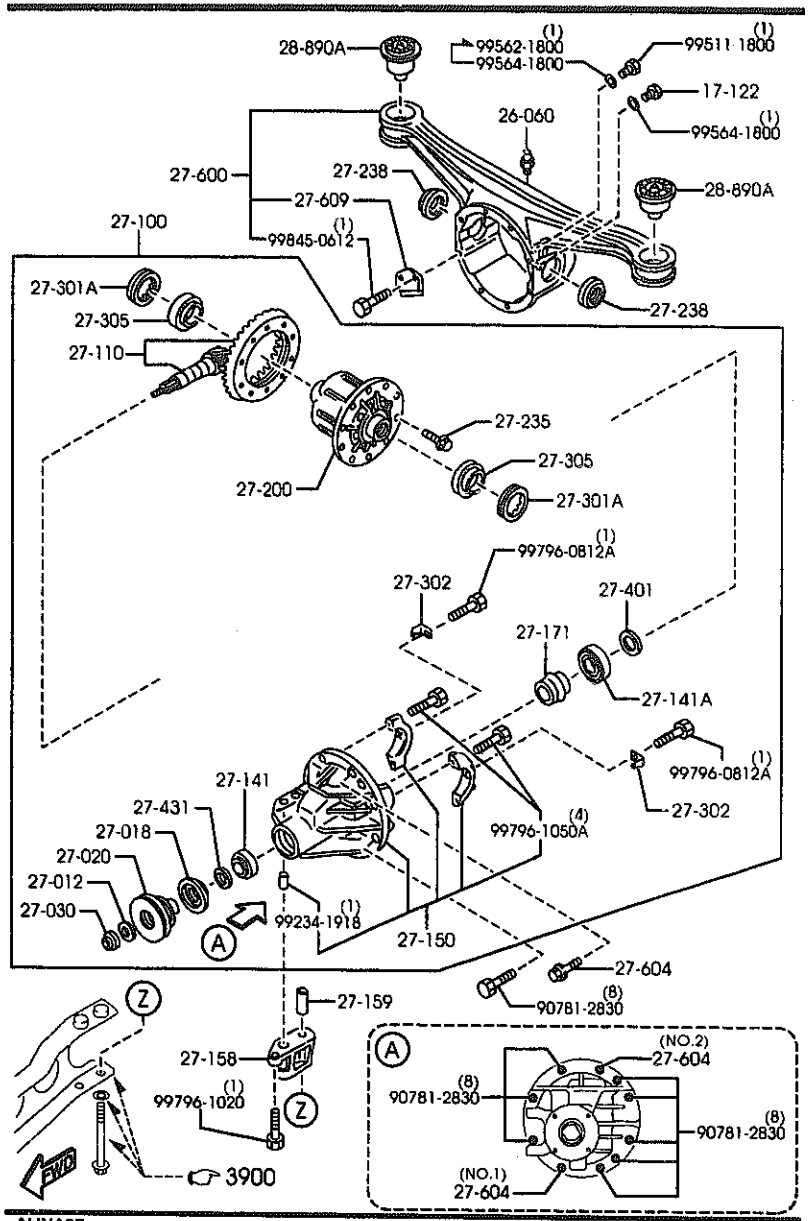

AUNA07

(1N08090)

PART NO.	QTY	MODEL/RESTRICTION	MODEL/RESTRICTION	MODEL/RESTRICTION	FROM-TO
27-159		PIN,TUBULAR			
MA02-27-159	1				
27-171		PIECE,DISTANCE			
M035-27-171	1				
27-200		DIFFERENTIAL			
MM03-27-200	1				
27-235		BOLT,RING GEAR			
8051-27-235	10	D=10.2MM			
8051-27-236	10	D=10.0MM			
27-238		SEAL,OIL			
MA02-27-238 AN(MA02-27-238A)	2				-8C21
MA02-27-238A	2				8C21-
27-301A		SCREW,ADJUST			
0290-27-301	2				
27-302		PLATE,LOCK			
0290-27-302	2				
27-305		BEARING			
0221-27-350	2				
27-401		SPACER			
0223-27-401A	1	T=3.08MM			
0223-27-402A	1	T=3.11MM			
0223-27-403A	1	T=3.14MM			
0223-27-404A	1	T=3.17MM			
0223-27-405A	1	T=3.2MM			
0223-27-406A	1	T=3.23MM			
0223-27-407A		T=3.26MM			

8C21 NB353*-126395

CAT. AUNA07-05

2000-01

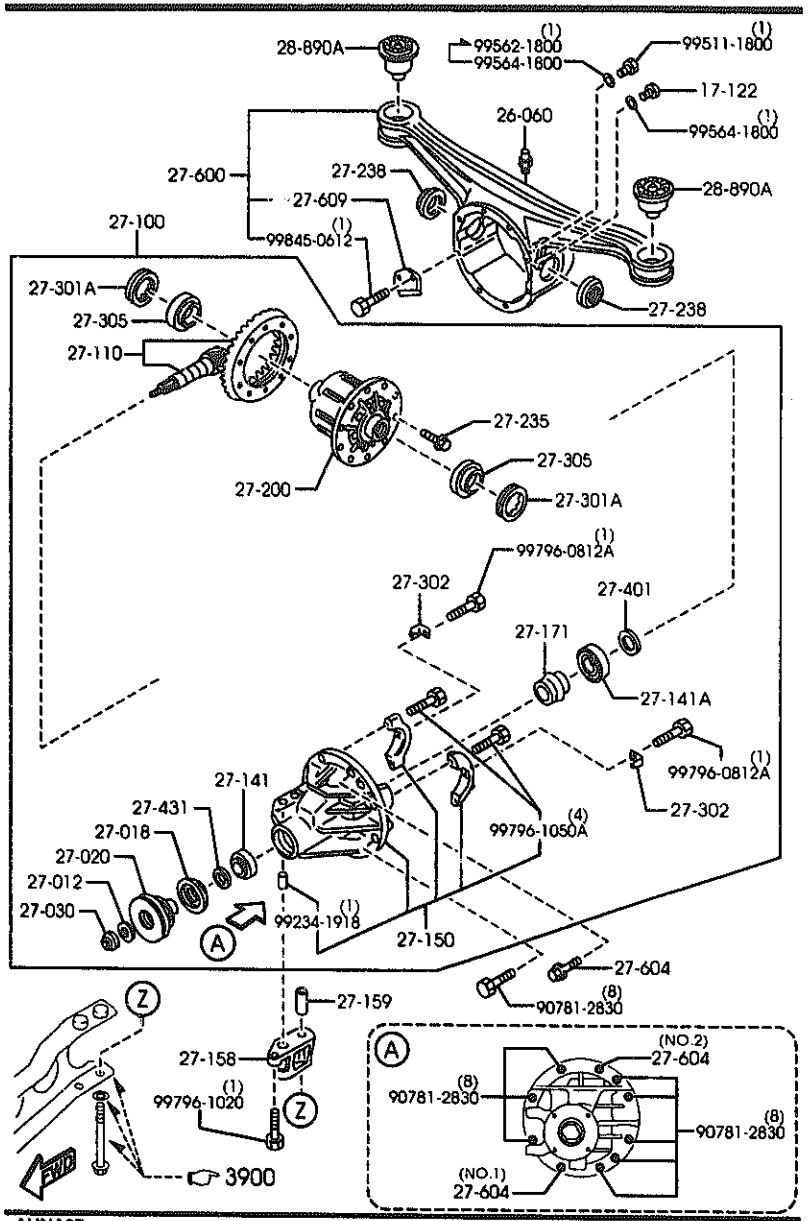

AUNA07

(1N08090)

PART NO.	QTY	MODEL/RESTRICTION	MODEL/RESTRICTION	MODEL/RESTRICTION	FROM-TO
CONT'D					
	1				
0223-27-408A	1	T=3.29MM			
0223-27-409A	1	T=3.32MM			
0223-27-411A	1	T=3.35MM			
0223-27-412A	1	T=3.38MM			
0223-27-413A	1	T=3.41MM			
0223-27-414A	1	T=3.44MM			
0223-27-415A	1	T=3.47MM			
0223-27-416	1	T=3.095MM			
0223-27-417	1	T=3.125MM			
0223-27-418	1	T=3.155MM			
0223-27-419	1	T=3.185MM			
0223-27-422	1	T=3.215MM			
0223-27-423	1	T=3.245MM			
0223-27-424	1	T=3.275MM			
0223-27-425	1	T=3.305MM			
0223-27-426	1	T=3.335MM			
0223-27-427	1	T=3.365MM			
0223-27-428	1	T=3.395MM			
0223-27-433	1	T=3.425MM			
0223-27-434	1	T=3.455MM			
+----------+					
| 27-431 |		SPACER			
+----------+					
PA01-27-431	1				

CAT. AUNA07-05

2000-01

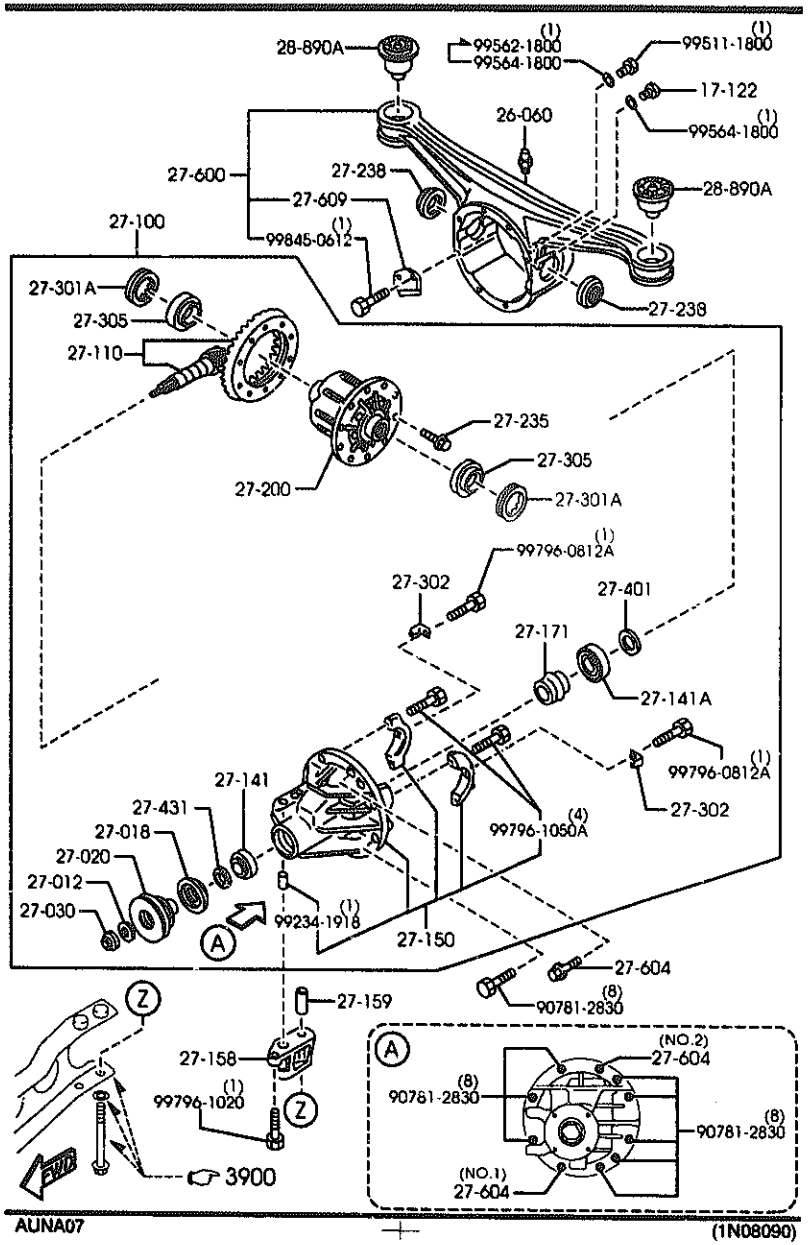

PART NO.	QTY	MODEL/RESTRICTION	MODEL/RESTRICTION	MODEL/RESTRICTION	FROM-TO
27-600		CASING,DIFFERENTIAL			
MA02-27-600A	1				
27-604		BOLT,CARRIER			
M053-27-604	1	(ILLUST. NO.1)			
M053-27-605	1	(ILLUST. NO.2)			
27-609		PLATE,BAFFLE-DIFF CASING			
M0A1-27-609A	1				
28-890A		RUBBER,SUB FRAME MTG			
NA01-28-890	2				

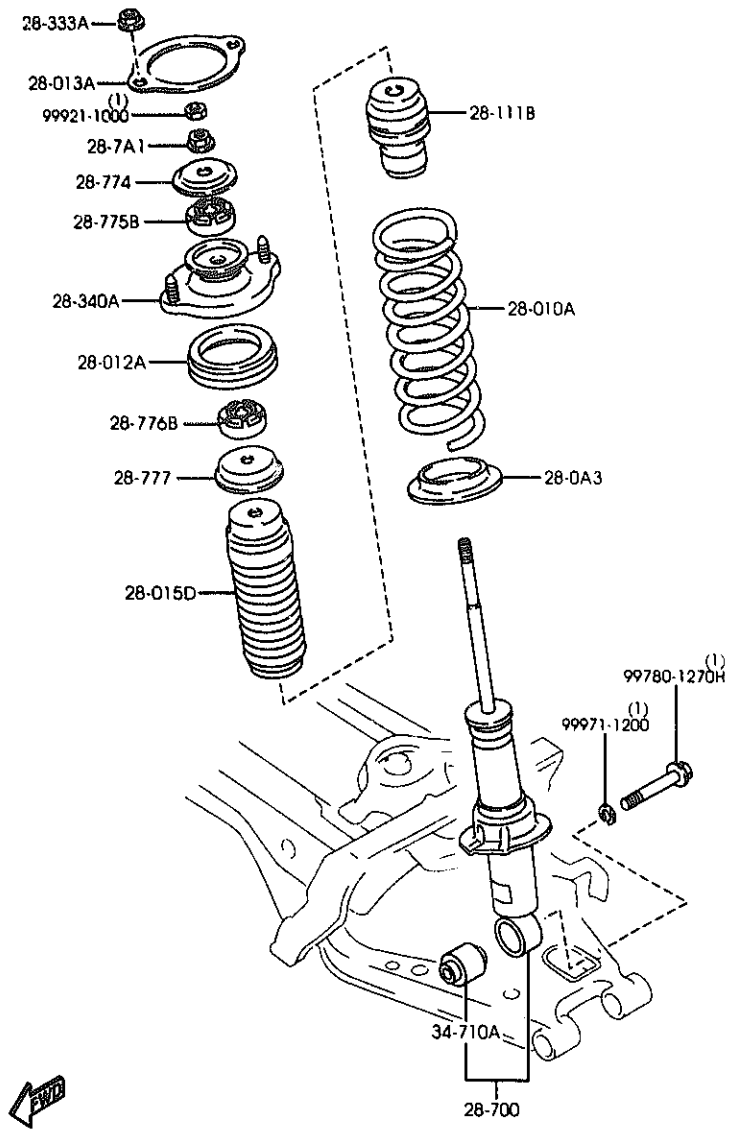

AUNA07 (1N05880)

PART NO.	QTY	MODEL/RESTRICTION	MODEL/RESTRICTION	MODEL/RESTRICTION	FROM-TO
28-0A3		RUBBER,SPRING SHEET			
NC10-28-0A3	2				
AN(NC10-28-0A3A)					-8801
NC10-28-0A3A	2				8801-
28-010A		SPRING,COIL-REAR			
NC10-28-011B	2	(NOR. SUSP) (SPORT SUSP)			
NC12-28-011C	2	(HARD SUSP)			
28-012A		SHEET,RUBBER			
NC10-28-012B	2				
28-013A		SHEET,RUBBER			
G030-28-013A	2				
28-015D		BOOT,DUST			
NC10-28-015A	2				
28-111B		STOPPER,BUMP			
NC10-28-111B	2				
28-333A		NUT,FLANGE			
H001-28-333	4				
28-340A		SHEET,SPRING-UPPER			
NC10-28-340B	2				
28-7A1		NUT,FLANGE-RR DAMPER			
D061-28-7A1	2				
28-700		DAMPER,REAR			
NC10-28-700C	2	(NOR. SUSP) (SPORT SUSP)			
NC12-28-700C	2	(HARD SUSP)			
AN(NC12-28-700D)					-9201
NC12-28-700D	2	(HARD SUSP)			9201-
28-774		RETAINER,REAR DAMPER			
NC10-28-774	2				

8801 NB353*-121854
9201 NB353*-130051

CAT. AUNA07-05 2000-01

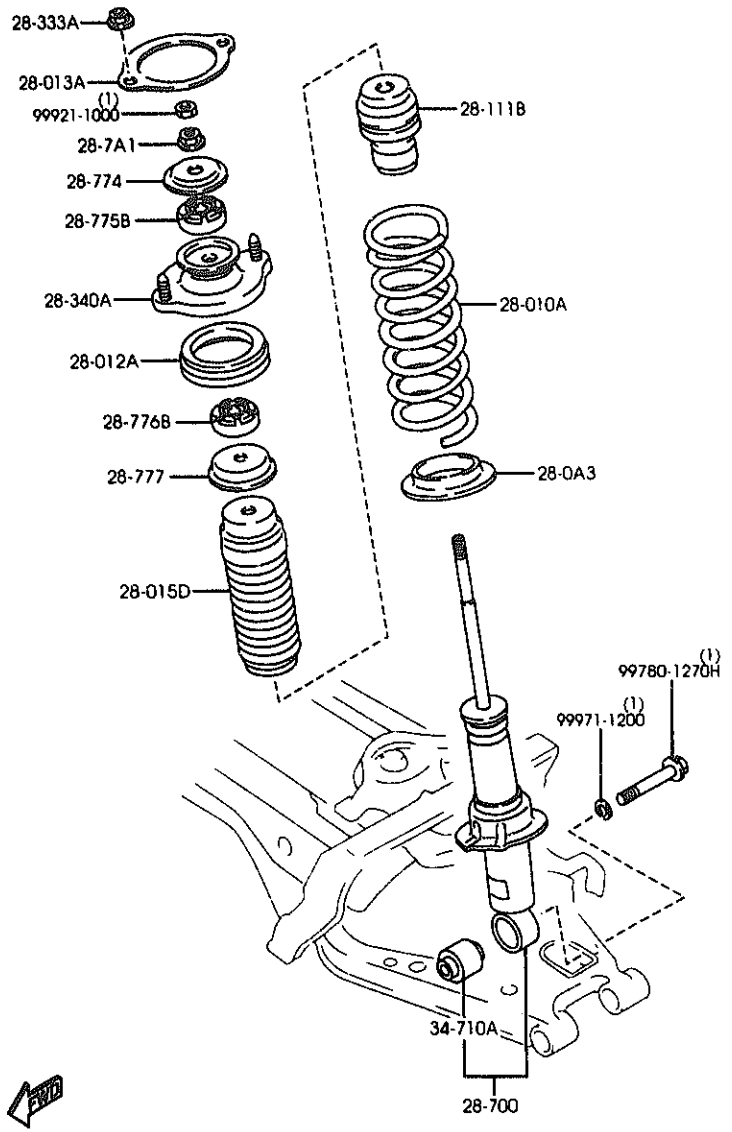

PART NO.	QTY	MODEL/RESTRICTION	MODEL/RESTRICTION	MODEL/RESTRICTION	FROM-TO
28-775B NC10-28-775	2	BUSH,REAR DAMPER-UPPER			
28-776B NC10-28-776	2	BUSH,REAR DAMPER-LOWER			
28-777 NC10-28-777	2	WASHER			
34-710A NC10-34-710	2	BUSHING,DAMPER-LOWER			

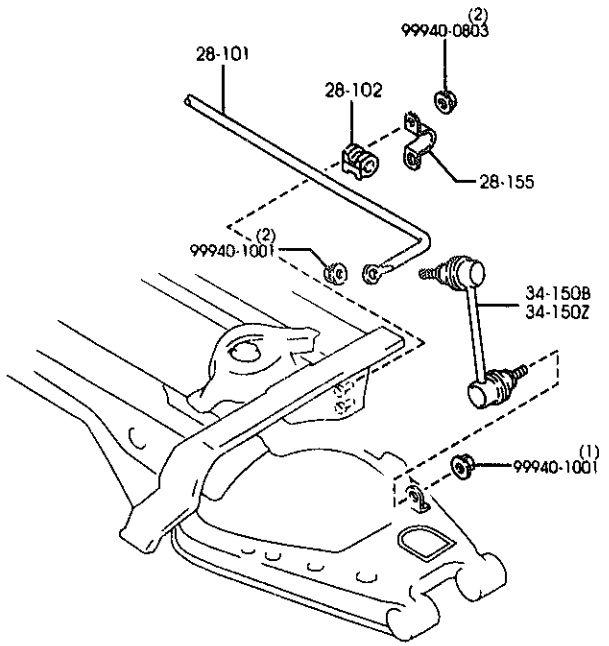

2810A -1 ※ REAR STABILIZER

PART NO.	QTY	MODEL/RESTRICTION	MODEL/RESTRICTION	MODEL/RESTRICTION	FROM-TO
28-101		STABILIZER,RR			
MC12-28-151	1	(HARD SUSP)			
N023-28-151	1	(NOR. SUSP) (SPORT SUSP)			
28-102		BUSH,STABILIZER-RR			
G113-28-156	2	(HARD SUSP)			
N023-28-156	2	(NOR. SUSP) (SPORT SUSP)			
28-155		PLATE,STABILIZER-RR			
FB01-28-155	2				
34-150B		LINK(R),CONTROL			
GA2A-34-170A	1				
34-150Z		LINK(L),CONTROL			
GA2A-34-150A	1				

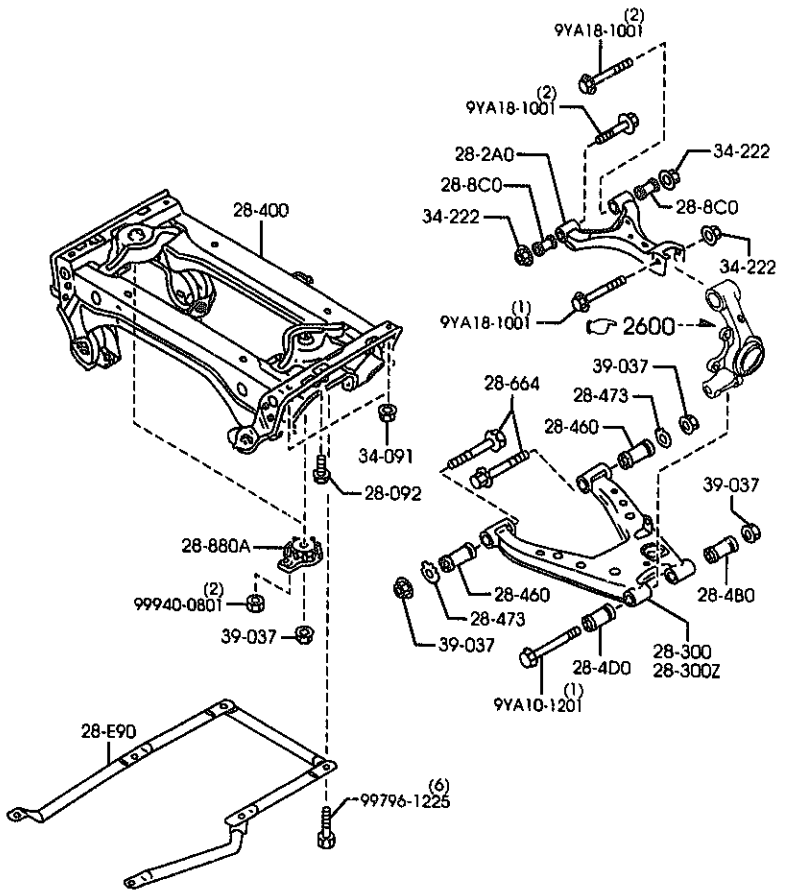

AUNA07 (1N04100)

PART NO.	QTY	MODEL/RESTRICTION	MODEL/RESTRICTION	MODEL/RESTRICTION	FROM-TO
28-E90		BAR,CROSS-REAR			
NC10-28-E90	1				
28-092		BOLT,CONTROL LINK			
NA01-28-092	2				
28-2A0		ARM,UPPER-REAR			
NC10-28-C10	2				
28-300		ARM(R),LOWER-REAR			
NC10-28-310	1				
28-300Z		ARM(L),LOWER-REAR			
NC10-28-360	1				
28-4B0		BUSHING,RUBBER-LOWER ARM			
NA01-28-4B0	2				
28-4D0		BUSHING,RUBBER-LOWER ARM			
NA01-28-4D0	2				
28-400		MEMBER,CROSS			
NC10-28-800C	1				
28-460		BUSHING,LOWER ARM			
NA01-28-460	4				
28-473		PLATE,CAM-SUB FRAME			
NA80-28-473A	4				
28-664		BOLT,ADJUST			
NA80-28-66ZC	4				
28-8C0		BUSHING,RUBBER			
NA01-28-8C0C	4				
28-880A		WASHER,STOP			
NA01-28-880C	2				
34-091		NUT			
FB01-34-091	4				-8212

8212 NB353#-107693

CAT. AUNA07-05 2000-01

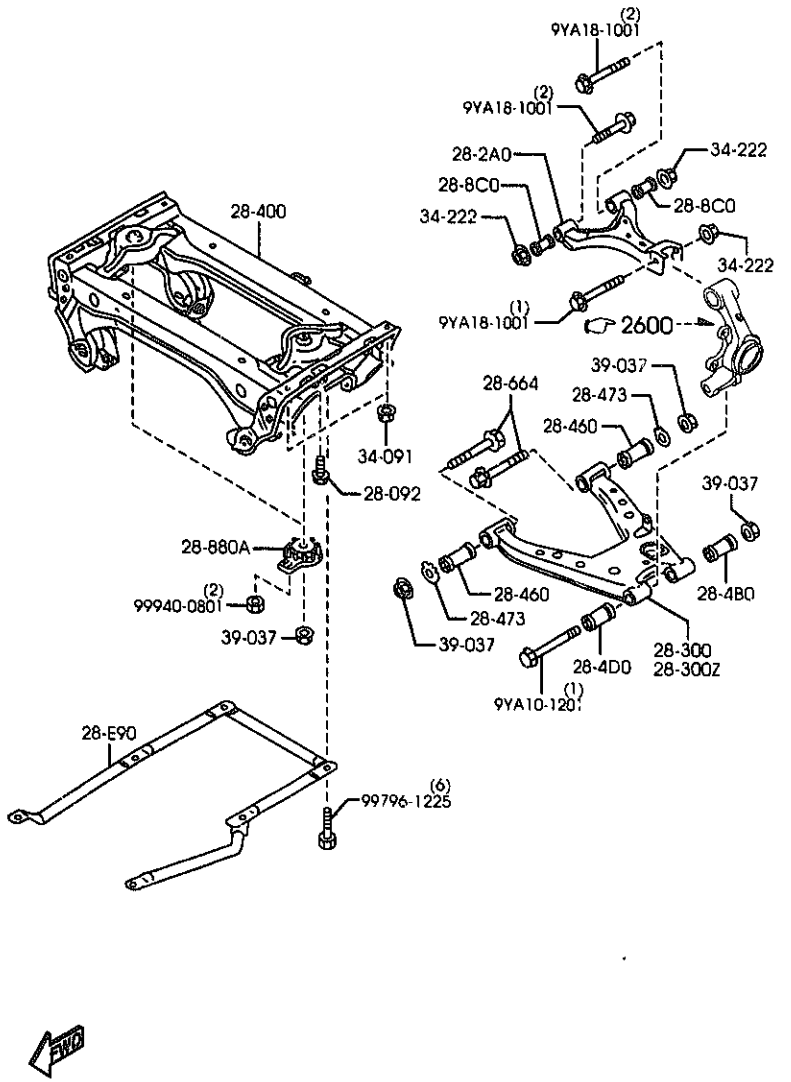

2830A -2 * REAR LOWER ARMS & SUB FRAME

PART NO.	QTY	MODEL/RESTRICTION	MODEL/RESTRICTION	MODEL/RESTRICTION	FROM-TO
CONT'D AN(FB01-34-091A)					
FB01-34-091A	4				8212-
+---------+ | 34-222 | +---------+		NUT			
8B71-34-222	6				
+---------+ | 39-037 | +---------+		NUT			
8001-39-037B	8				

8212 NB353*-107693

(URETHANE)

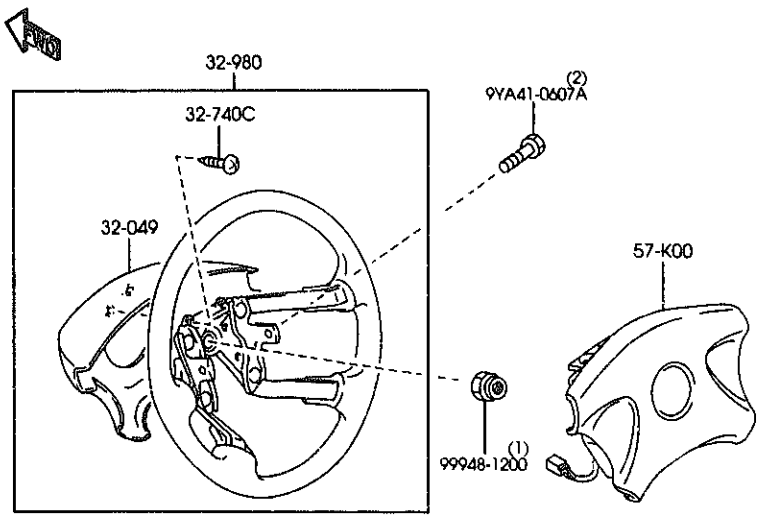

(LEATHER)
(WOOD)

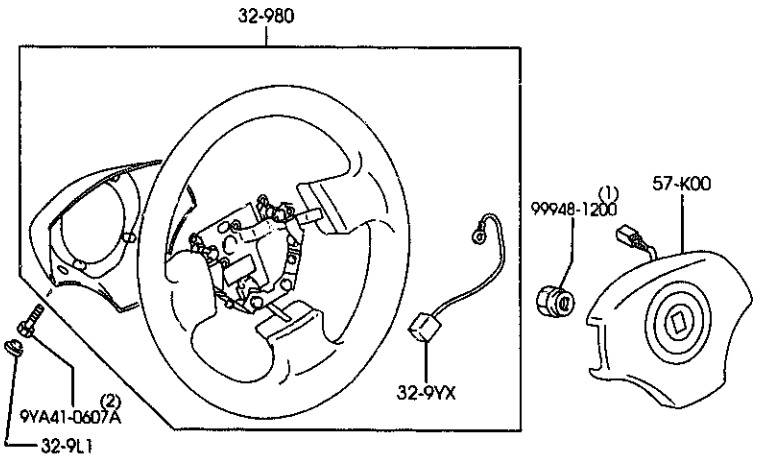

3200A -1 * STEERING WHEEL

PART NO.	QTY	MODEL/RESTRICTION	MODEL/RESTRICTION	MODEL/RESTRICTION	FROM-TO
32-049		COVER,WHEEL CORE			
GE7T-32-049	1	(URETHANE WHEEL)			
32-740C		PARTS SET,ST. WHEEL			
GE7T-32-750	1	(URETHANE WHEEL)			
32-9L1		CAP			
BC1D-32-9L1	2	(LEATHER WHEEL'TYPE-B') (LEATHER WHEEL'TYPE-A') (WOOD WHEEL-A TYPE)			
32-9YX		HARNESS,ST. WHEEL BOSS			
NC10-32-9YX	1	(LEATHER WHEEL'TYPE-B') (LEATHER WHEEL'TYPE-A') (WOOD WHEEL-A TYPE)			
32-980		BOSS,STEERING WHEEL			
*NC35-32-980	1	(WOOD WHEEL-A TYPE)			
ND65-32-980	1	(LEATHER WHEEL'TYPE-A')			
NC10-32-980A AN(NC10-32-980C)	1	(LEATHER WHEEL'TYPE-B')			-8410
GE8K-32-980A AN(GE8K-32-980B)	1	(URETHANE WHEEL)			-8615
NC10-32-980C	1	(LEATHER WHEEL'TYPE-B')			8410-
GE8K-32-980B	1	(URETHANE WHEEL)			8615-
57-K00		MODULE,AIR BAG			
NC10-57-K00B	1	(URETHANE WHEEL)			
00	INT-	NB0 NB1 NB2 NB6 NB7 BLACK			
NC13-57-K00	1	(LEATHER WHEEL'TYPE-B') (LEATHER WHEEL'TYPE-A') (WOOD WHEEL-A TYPE)			

8410 NB353*-115009
8615 NB353*-120314

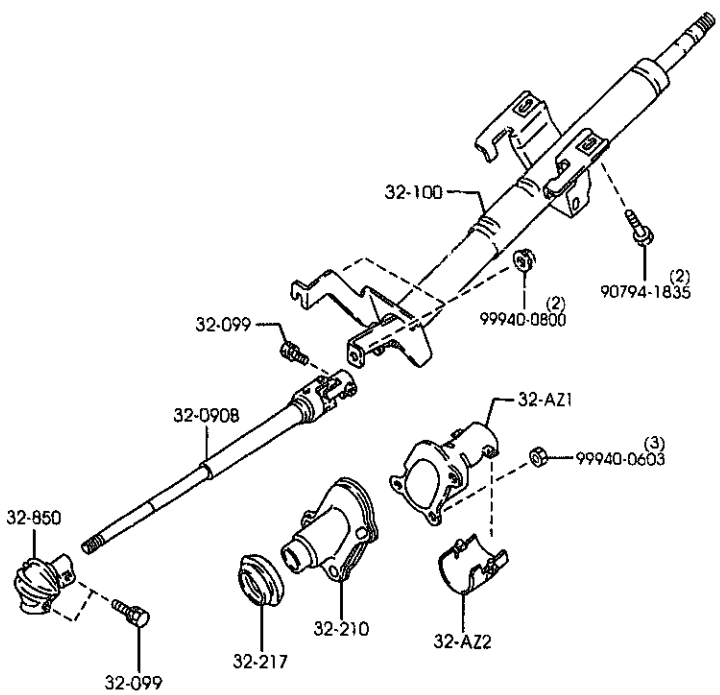

3210A -1 * STEERING COLUMN & SHAFTS

PART NO.	QTY	MODEL/RESTRICTION	MODEL/RESTRICTION	MODEL/RESTRICTION	FROM-TO
32-AZ1		COVER,JOINT-UPPER			
NA75-32-AZ1	1				
32-AZ2		COVER,JOINT-LOWER			
NA01-32-AZ2A	1				
32-090B		SHAFT,INTERMED.			
NC10-32-090C	1	(W/POWER STEERING)			-8413
AN(NC10-32-090D)					
NC11-32-090C	1	(W/O POWER STEERING)			-8601
AN(NC11-32-090D)					
NC10-32-090D	1	(W/POWER STEERING)			8413-
NC11-32-090D	1	(W/O POWER STEERING)			8601-
32-099		BOLT,SHAFT			
B455-32-099A	3				
32-100		SHAFT,ENGY.ABSORBER			
NC10-32-100D	1				
32-210		COVER,DUST			
NC10-32-210	1				
32-217		GROMMET			
NA01-32-217	1				
32-850		JOINT,STEERING			
NC10-32-850	1				

8413 NB353*-115160
8601 NB353*-119466

AUNA07 (1N04120)

CAT. AUNA07-05 2000-01

3220AA STEERING GEAR
(W/O POWER STEERING)

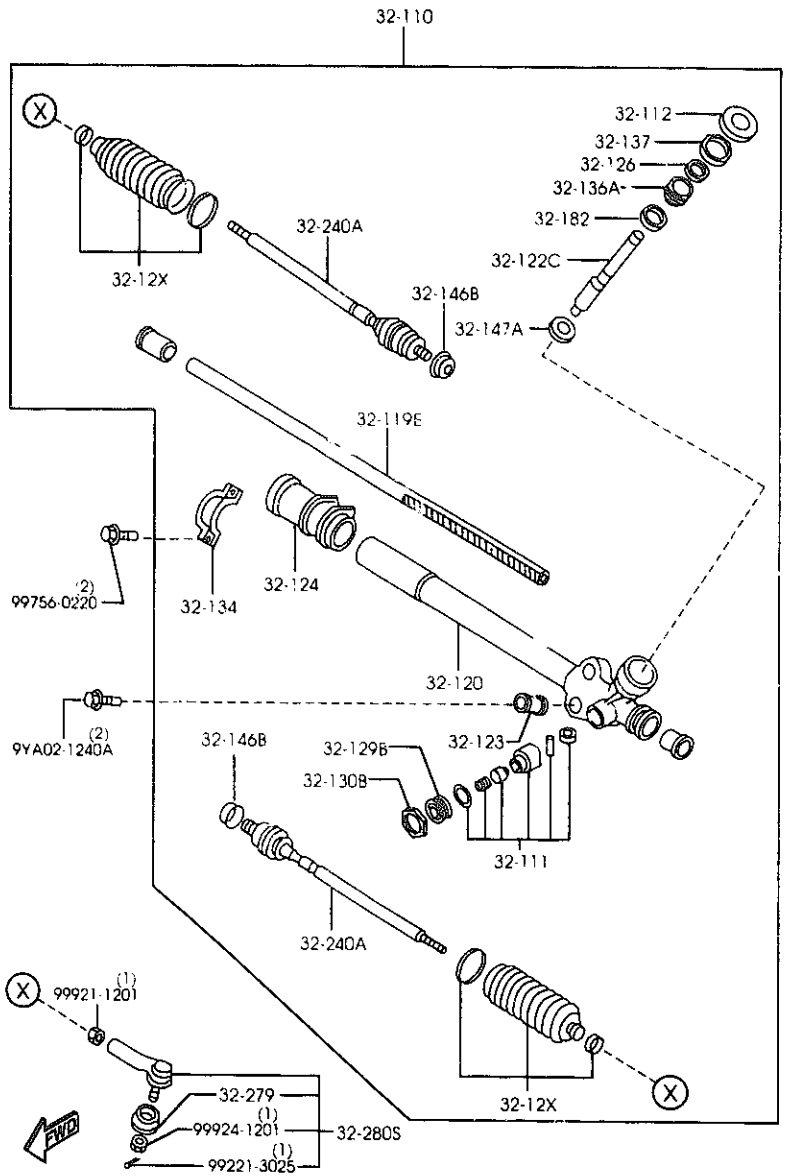

AUNA07

(1N08030)

3220AA-1 STEERING GEAR
(W/O POWER STEERING)

PART NO.	QTY	MODEL/RESTRICTION	MODEL/RESTRICTION	MODEL/RESTRICTION	FROM-TO
32-110		GEAR,STEERING			
NC11-32-110A	1				
32-111		YOKE,SUPPORT			
GJ21-32-111	1				
32-112		COVER,DUST			
NC11-32-112	1				
32-119E		RACK,STEERING GEAR			
NA01-32-119	1				
32-12X		BOOT SET,ST. GEAR			
NA01-32-12X	2				
32-120		HOUSING,GEAR			
NC11-32-120	1				
32-122C		PINION,STEERING GEAR			
NA01-32-122	1				
32-123		RUBBER,MOUNTING			
NC10-32-123	2				
32-124		RUBBER,MOUNTING			
NC11-32-124	1				
32-126		SEAL,SHAFT			
GJ21-32-126	1				
32-129B		PLUG,PINION			
HE01-32-129	1				
32-130B		NUT,LOCK			
S083-32-137	1				
32-134		PLATE,CLAMP			
NC10-32-134	1				
32-136A		COVER,REAR			
GJ21-32-136	1				

CAT. AUNA07-05

2000-01

3220AA STEERING GEAR (W/O POWER STEERING)

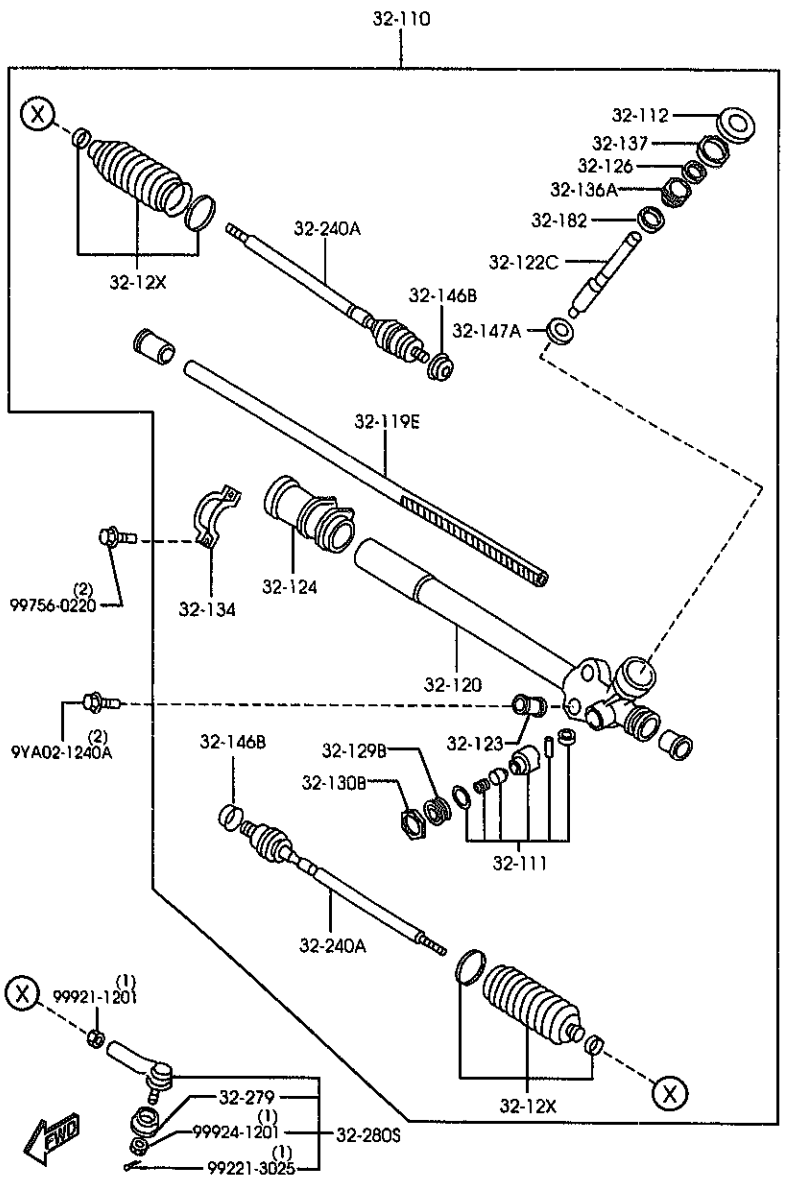

AUNA07 (1N08030)

3220AA-2 * STEERING GEAR (W/O POWER STEERING)

PART NO.	QTY	MODEL/RESTRICTION	MODEL/RESTRICTION	MODEL/RESTRICTION	FROM-TO
32-137		NUT,LOCK			
GJ21-32-137	1				
32-146B		WASHER			
HA14-32-146	2				
32-147A		BEARING,PINION			
G030-32-147	1				
32-182		BEARING			
0259-32-182	1				
32-240A		JOINT,BALL			
NA01-32-240	2				
32-279		SEAL,DUST-BALL JOINT			
B455-32-279	2				
32-280S		JOINT SET,BALL			
8AN1-32-280	2				

CAT. AUNA07-05 2000-01

3220AR STEERING GEAR (W/POWER STEERING)

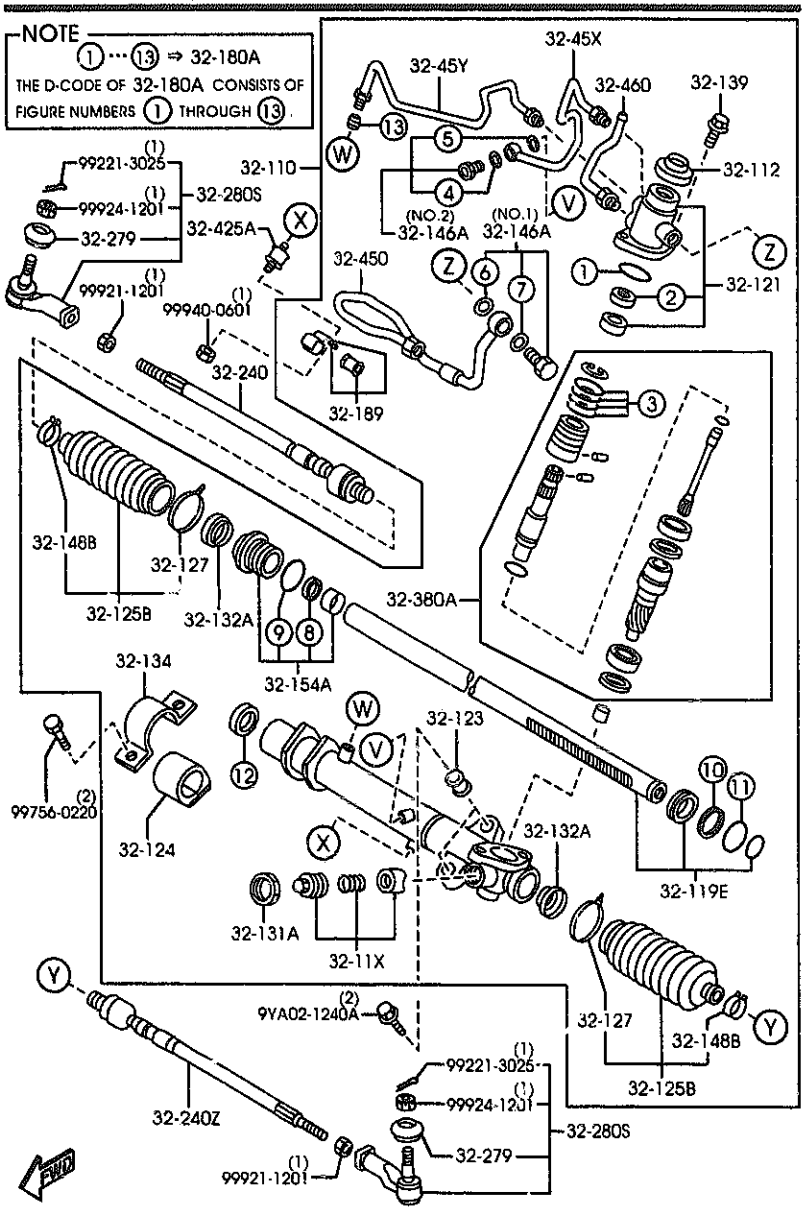

AUNA07 (1N04130)

3220AB-1 STEERING GEAR (W/POWER STEERING)

PART NO.	QTY	MODEL/RESTRICTION	MODEL/RESTRICTION	MODEL/RESTRICTION	FROM-TO
32-11X		YOKE SET,SUPPORT-ST. GEAR			
NC10-32-11X A (NC10-32-11XA)	1				-8603
NC10-32-11XA	1				8603-
32-110		GEAR,STEERING			
NC10-32-110E AN(NC10-32-110F)	1				-7C03
NC10-32-110F AN(NC10-32-110G)	1				7C03-9208
NC10-32-110G	1				9208-
32-112		COVER,DUST			
NC10-32-112	1				
32-119E		RACK,STEERING GEAR			
NC10-32-119	1				
32-121		HOUSING,VALVE-ST. GEAR			
NC10-32-126	1				
32-123		RUBBER,MOUNTING			
NC10-32-123	2				
32-124		RUBBER,MOUNTING			
NC10-32-124	1				
32-125B		BOOT,RACK			
NC10-32-125	2				
32-127		CLIP,WIRE			
B456-32-127	2				
32-131A		NUT,LOCK-RACK			
B456-32-131	1				
32-132A		WASHER			
B456-32-132	2				
32-134		PLATE,CLAMP			
NC10-32-134	1				

7C03 NB353*-100063
8603 NB353*-119663
9208 NB353*-130784

CAT. AUNA07-05 2000-01

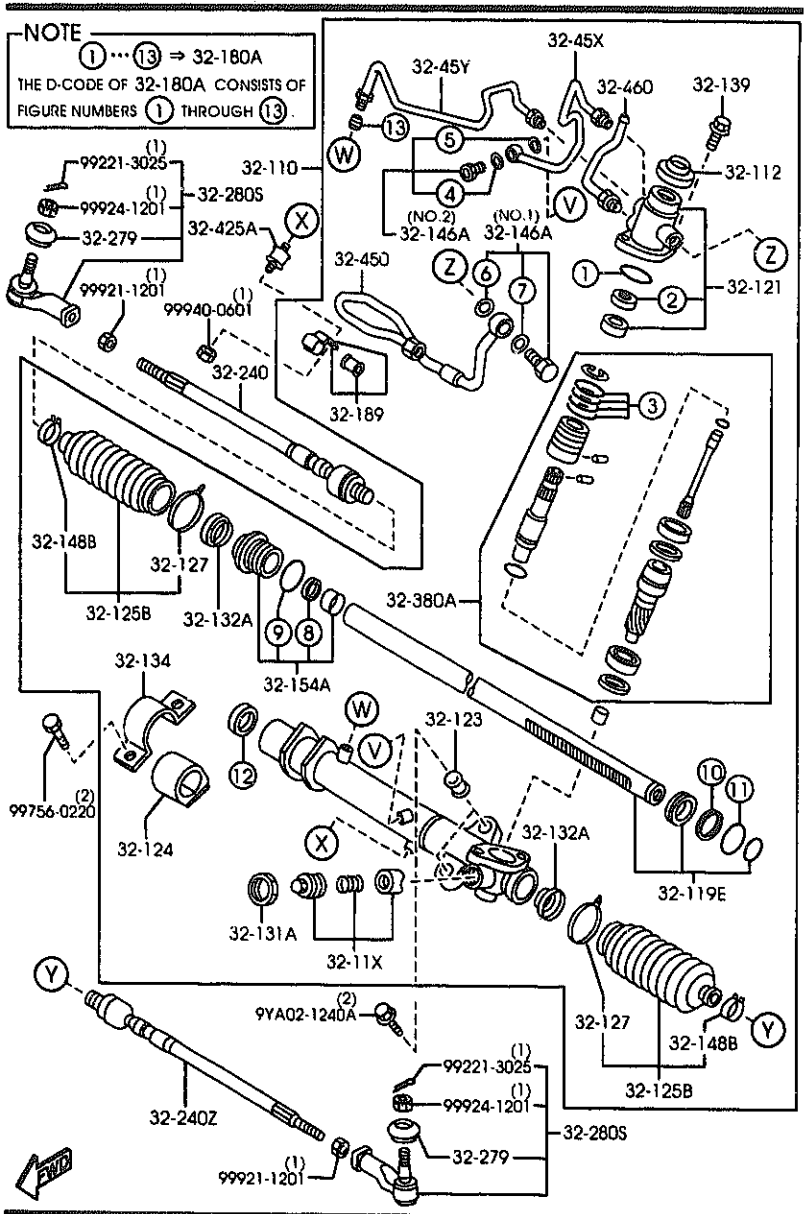

PART NO.	QTY	MODEL/RESTRICTION	MODEL/RESTRICTION	MODEL/RESTRICTION	FROM-TO
32-139		BOLT			
B038-32-139	2				
32-146A		BOLT SET,CONNECTOR			
BC54-32-146	1	(ILLUST. NO.1)			
B093-32-146	1	(ILLUST. NO.2)			
32-148B		CLIP			
B046-32-127	2				
32-154A		HOLDER,STEERING GEAR			
NC10-32-154	1				
32-180A		SEAL KIT,ST. GEAR			
NC10-32-180	1				
32-189		CLAMP			
NC10-32-188	1				
32-240		JOINT(R),BALL			
NC10-32-240	1				
32-240Z		JOINT(L),BALL			
NC10-32-250	1				
32-279		SEAL,DUST-BALL JOINT			
B455-32-279	2				
32-280S		JOINT SET,BALL			
8AN1-32-280	2				
32-380A		VALVE,ST. GEAR			
NC10-32-380	1				-9208
NC10-32-380A	1				9208-
32-425A		RUBBER,MOUNTING			
H267-32-425	1				
32-45X		PIPE(R),RETURN-PRESSURE			
NC10-32-45X	1				

9208 NB353*-130784

CAT. AUNA07-05 2000-01

3220AB STEERING GEAR (W/POWER STEERING)

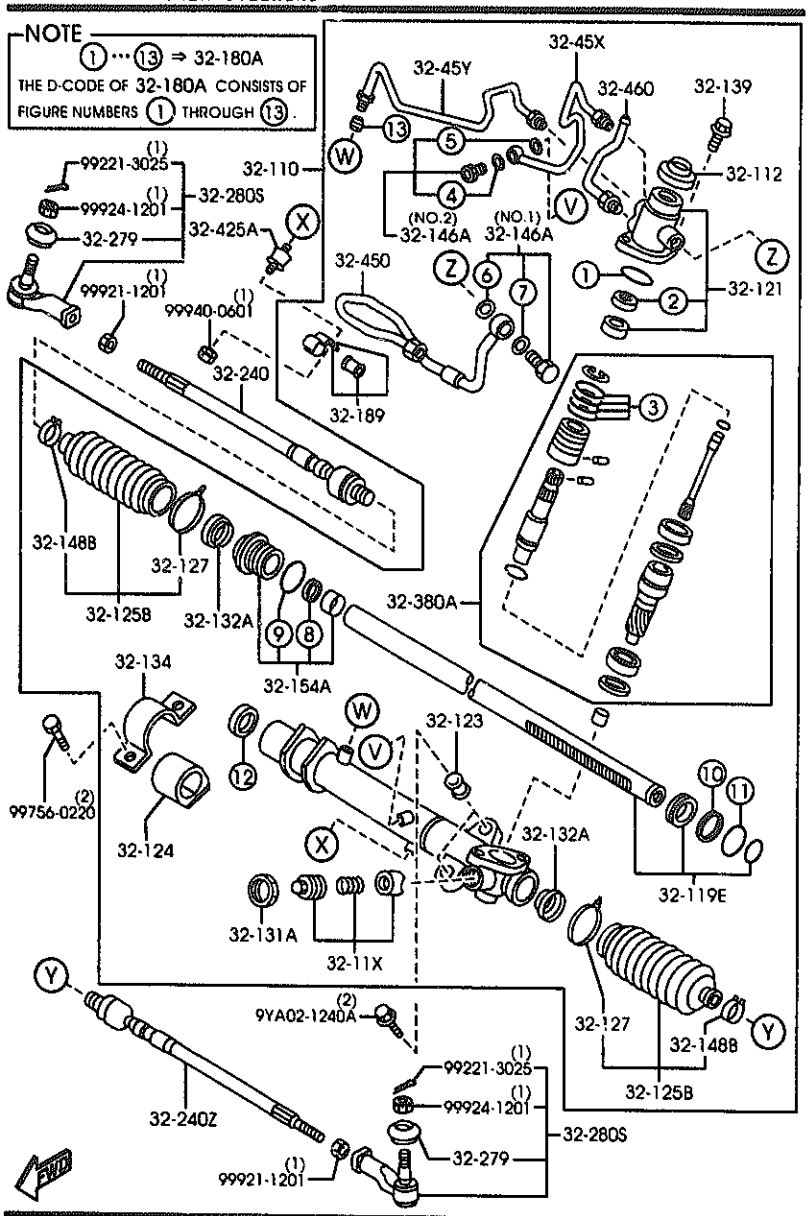

AUNA07 (1N04130)

3220AB-3 * STEERING GEAR (W/POWER STEERING)

PART NO.	QTY	MODEL/RESTRICTION	MODEL/RESTRICTION	MODEL/RESTRICTION	FROM-TO
32-45Y		PIPE(L),RETURN-PRESSURE			
NC10-32-45Y	1				
32-450		PIPE,PRESSURE			
NC10-32-450	1				
32-460		PIPE NO.2,PRESSURE			
NC10-32-460	1				

CAT. AUNA07-05 2000-01

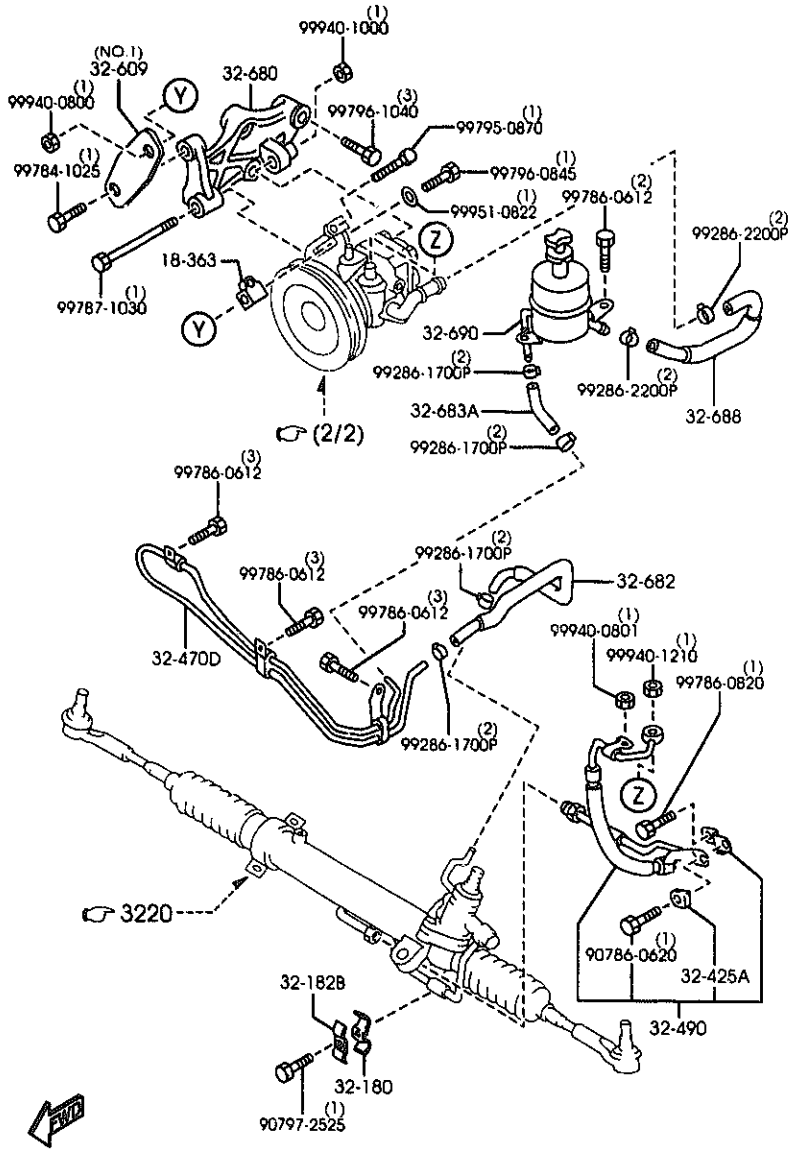

AUNA07 (1N04141)

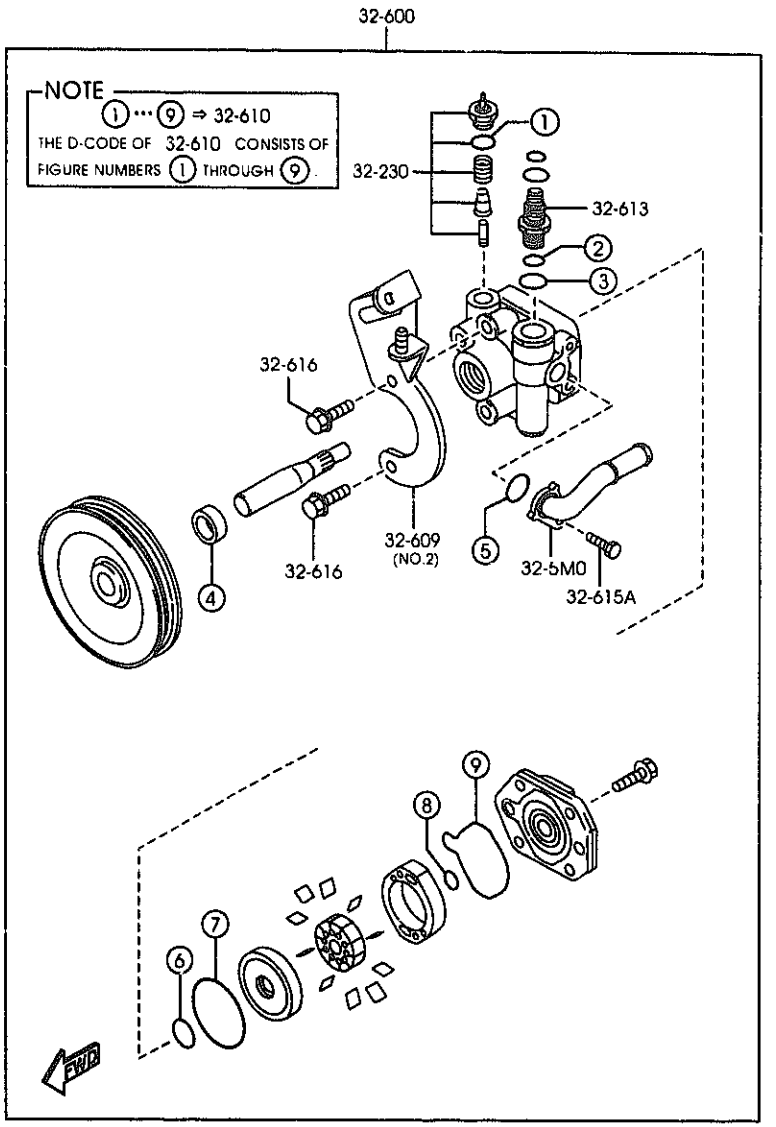

AUNA07 (1N04142)

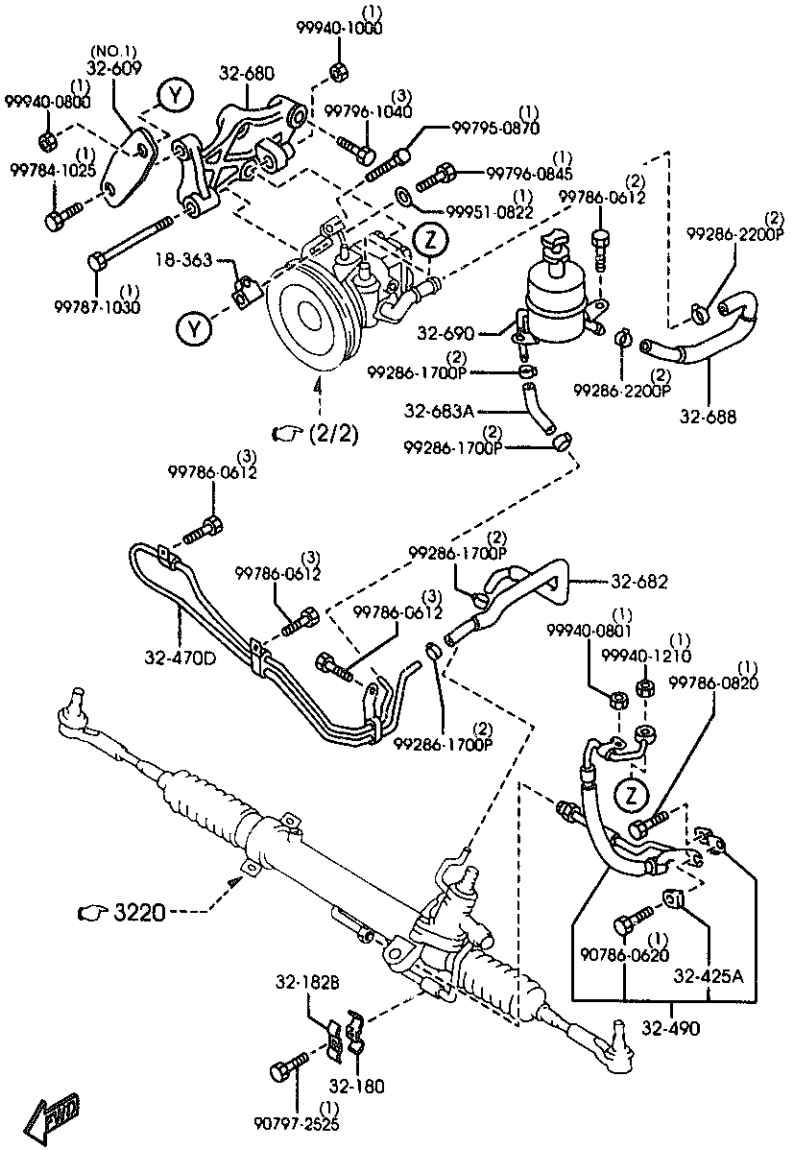

AUNA07 (1N04141)

PART NO.	QTY	MODEL/RESTRICTION	MODEL/RESTRICTION	MODEL/RESTRICTION	FROM-TO
18-363		SPACER,STRAP			
FP02-18-363	1				
32-180		CLIP,PIPE-P.S.			
UC87-32-18X	1				
32-182B		CLIP,PIPE-P.S.			
UC87-32-182	1				
32-230		SENSOR,STEERING PRESSURE			
B456-32-230C	1				
32-425A		RUBBER,MOUNTING			
BC1D-32-425	1	MOLTEN			
32-470D		PIPE,COOLING			
NC10-32-470A	1				
32-490		HOSE,PRESSURE			
NC10-32-490H AN(NC10-32-490J)	1				-8201
NC10-32-490J	1				8201-
32-5M0		PIPE,SUCTION			
N002-32-5M0A	1				
32-600		PUMP,VANE			
NC10-32-600B	1				
32-609		BRACKET,VANE PUMP			
NC10-32-609	1	(ILLUST. NO.1)			
NC11-32-609A	1	(ILLUST. NO.2)			
32-610		SEAL KIT,VANE PUMP			
B456-32-610A	1				
32-613		NIPPLE,VANE PUMP			
B456-32-613A	1				
32-615A		BOLT			

8201 NB353#-106606

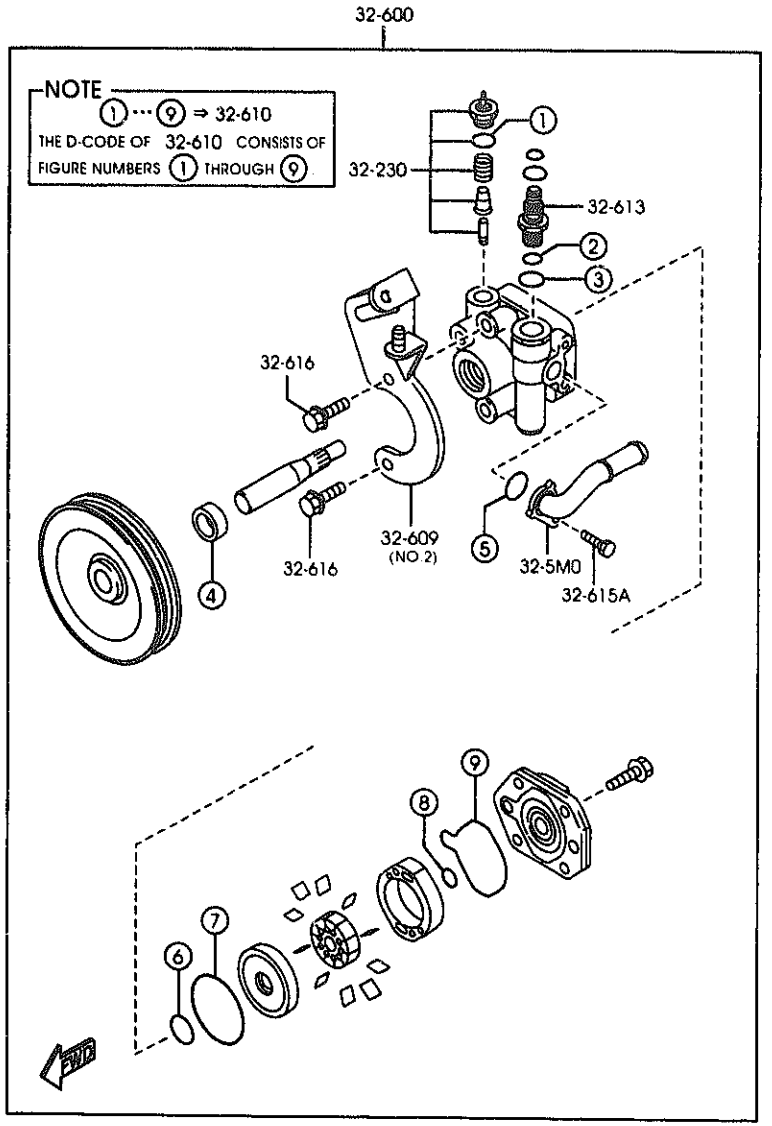

PART NO.	QTY	MODEL/RESTRICTION	MODEL/RESTRICTION	MODEL/RESTRICTION	FROM-TO
CONT'D					
B456-32-615A	1				
32-616		BOLT,VANE PUMP			
B456-32-616	2				
32-680		BRACKET,VANE PUMP			
NA02-32-680	1				
32-682		HOSE,RETURN			
NC10-32-682	1				
32-683A		HOSE,RETURN			
NC10-32-683	1				
32-688		HOSE,SUCTION			
NC10-32-688	1				
32-690		TANK,VANE PUMP			
NC10-32-690B A (NC10-32-690C)	1				-8A01
NC10-32-690C	1				8A01-

8A01 NB353※-122764

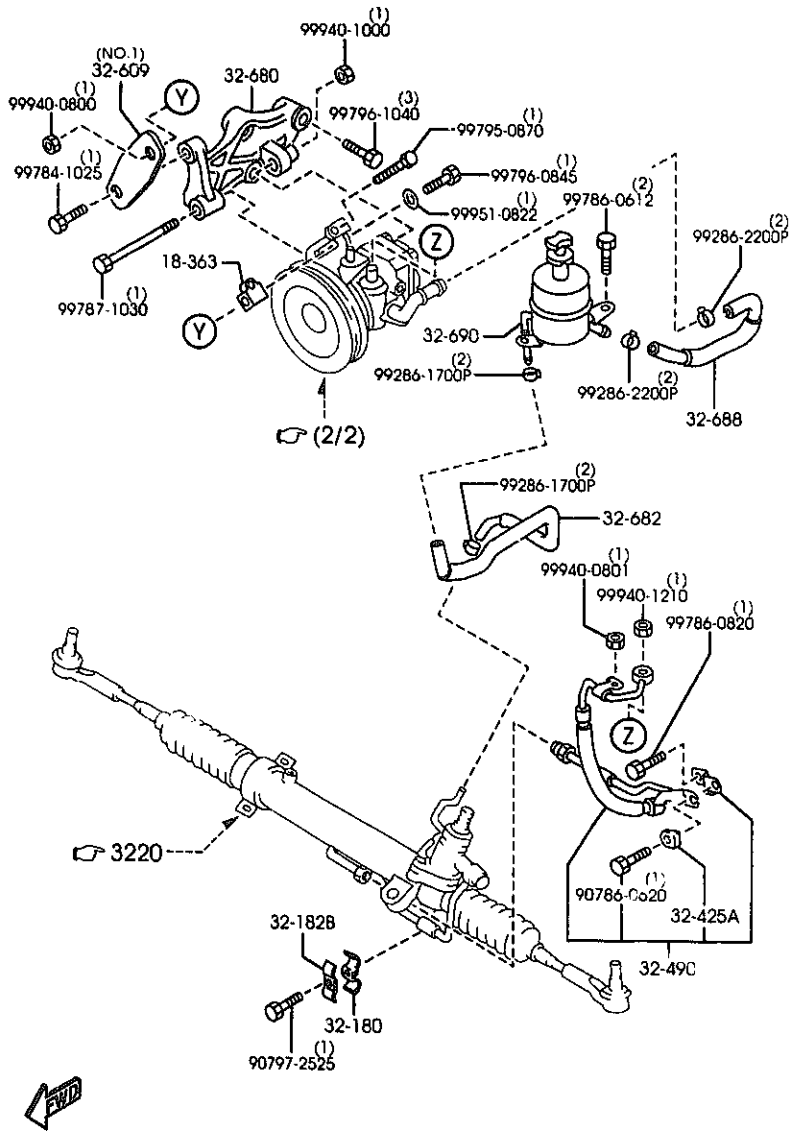

AUNA07 (1N08041)

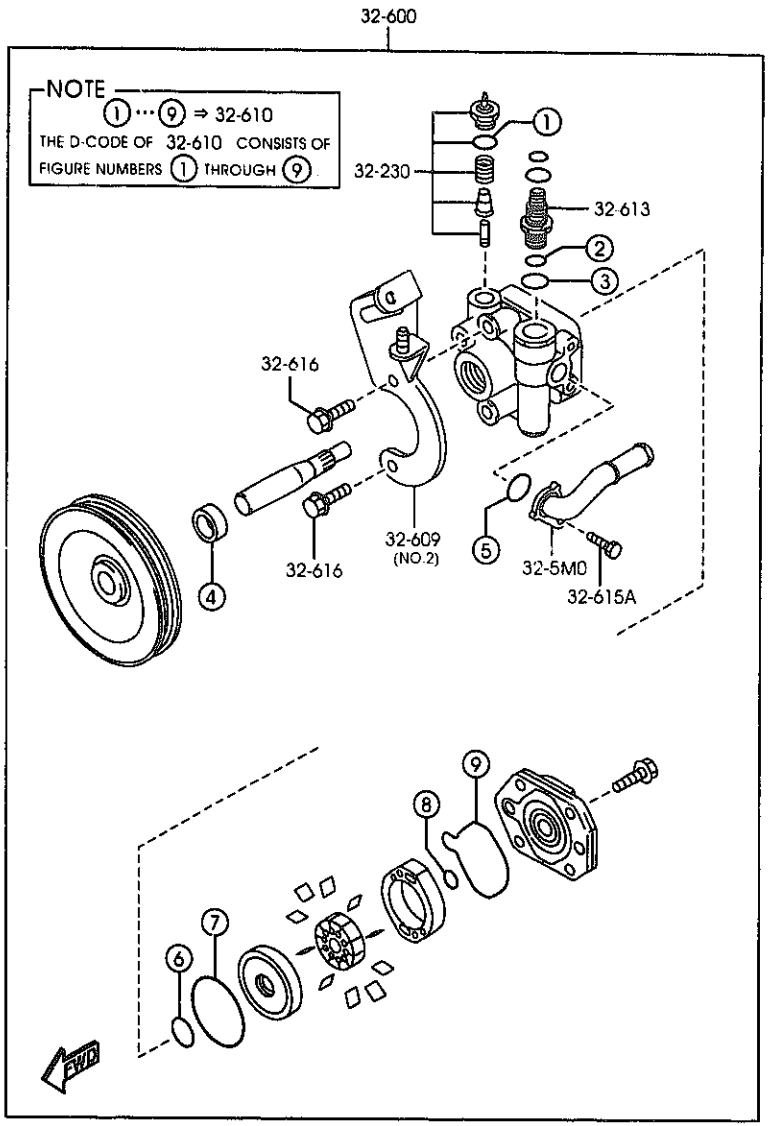

AUNA07 (1N08042)

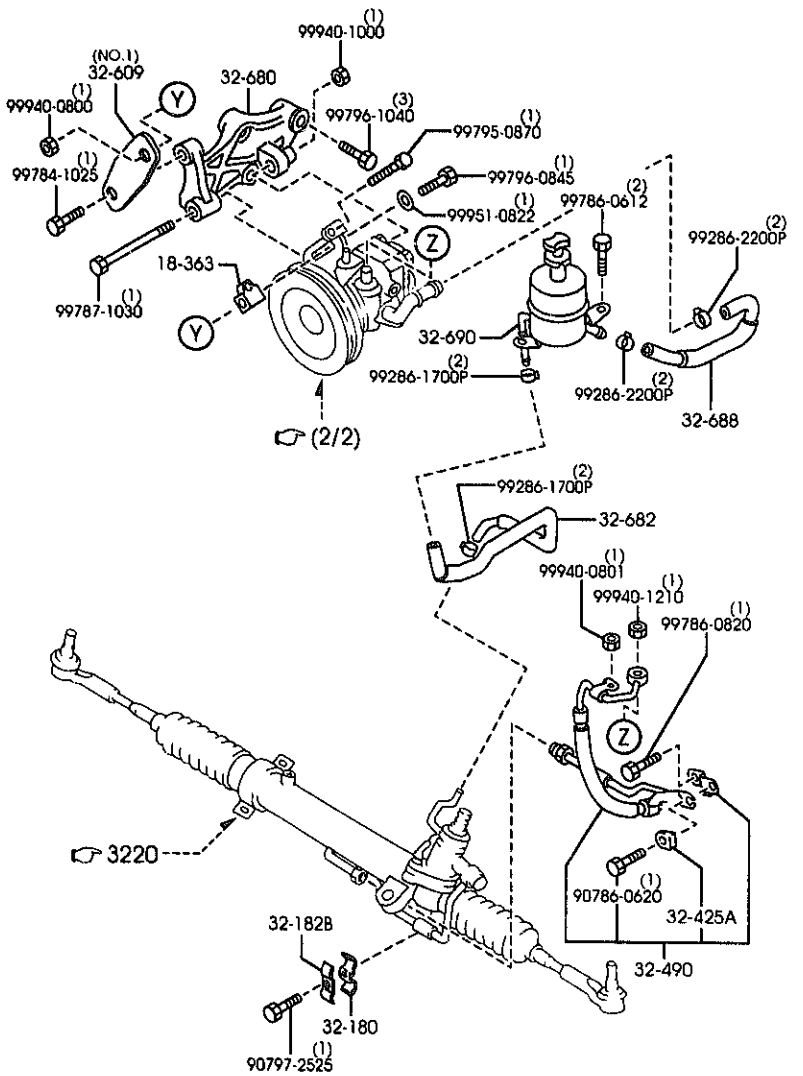

PART NO.	QTY	MODEL/RESTRICTION	MODEL/RESTRICTION	MODEL/RESTRICTION	FROM-TO
18-363		SPACER,STRAP			
FP02-18-363	1				
32-180		CLIP,PIPE-P.S.			
UC87-32-18X	1				
32-182B		CLIP,PIPE-P.S.			
UC87-32-182	1				
32-230		SENSOR,STEERING PRESSURE			
B456-32-230C	1				
32-425A		RUBBER,MOUNTING			
BC1D-32-425	1	MOLTEN			
32-490		HOSE,PRESSURE			
NC10-32-490H AN(NC10-32-490J)	1				-8201
NC10-32-490J	1				8201-
32-5M0		PIPE,SUCTION			
N002-32-5M0A	1				
32-600		PUMP,VANE			
NC10-32-600B	1				
32-609		BRACKET,VANE PUMP			
NC10-32-609	1	(ILLUST. NO.1)			
NC11-32-609A	1	(ILLUST. NO.2)			
32-610		SEAL KIT,VANE PUMP			
B456-32-610A	1				
32-613		NIPPLE,VANE PUMP			
B456-32-613A	1				
32-615A		BOLT			
B456-32-615A	1				
32-616		BOLT,VANE PUMP			

8201 NB353*-106606

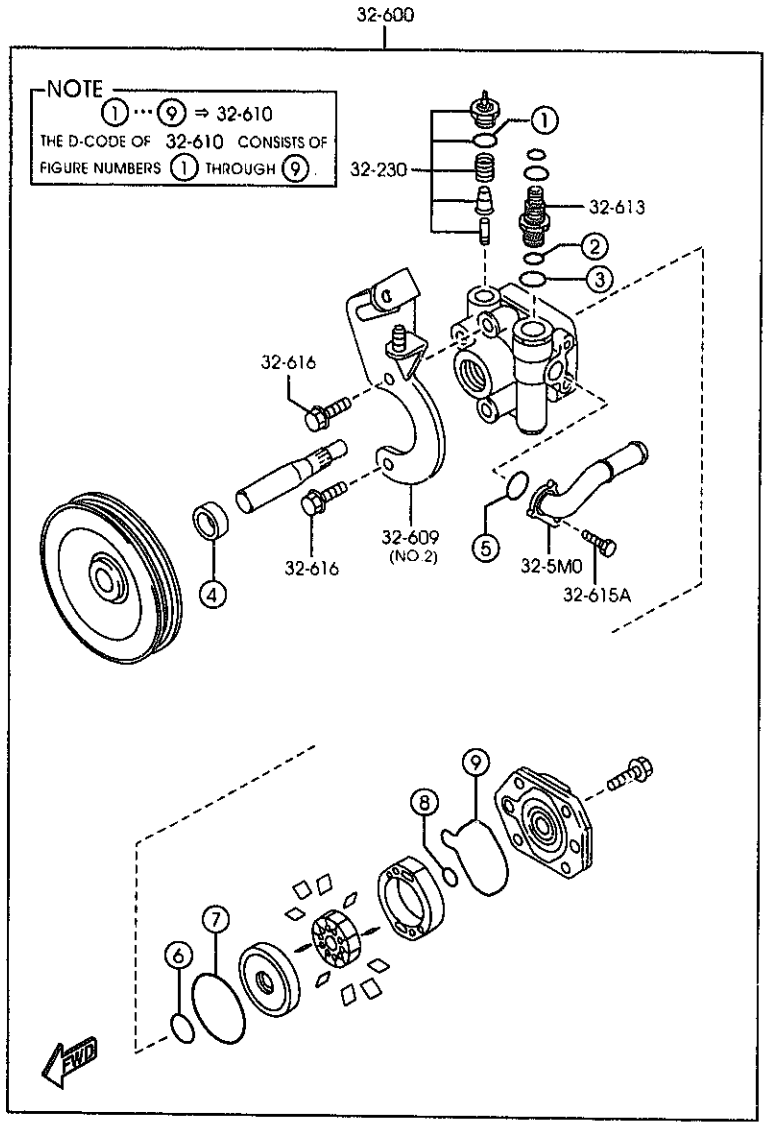

AUNA07 (1N08042)

PART NO.	QTY	MODEL/RESTRICTION	MODEL/RESTRICTION	MODEL/RESTRICTION	FROM-TO
CONT'D					
B456-32-616	2				
32-680		BRACKET,VANE PUMP			
NA02-32-680	1				
32-682		HOSE,RETURN			
NC13-32-682A	1				
32-688		HOSE,SUCTION			
NC10-32-688	1				
32-690		TANK,VANE PUMP			
NC10-32-690B	1				-8A01
A (NC10-32-690C)					
NC10-32-690C	1				8A01-

8A01 NB353*-122764

CAT. AUNA07-05 2000-01

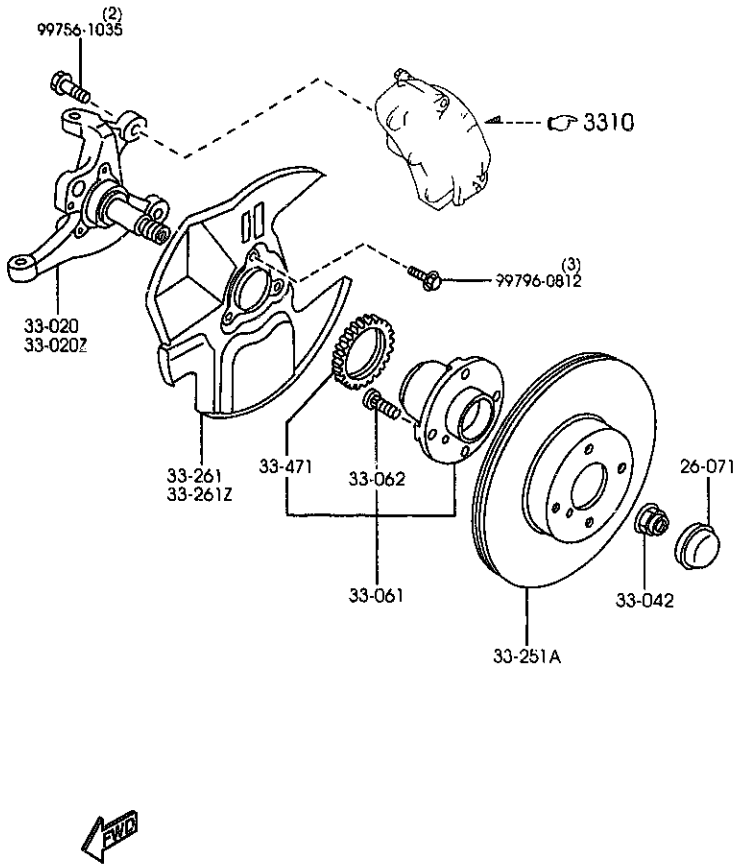

3300A -1 ※ FRONT AXLE

PART NO.	QTY	MODEL/RESTRICTION	MODEL/RESTRICTION	MODEL/RESTRICTION	FROM-TO
26-071		CAP,HUB			
B455-26-071	2				
33-020		KNUCKLE(R),STEERING			
NC10-33-021 AN(NC10-33-021A)	1	(W/O A. LOCK BRAKE)			-7C01
NC14-33-021 AN(NC14-33-021A)	1	(W/A. LOCK BRAKE)			-7C01
NC10-33-021A	1	(W/O A. LOCK BRAKE)			7C01-
NC14-33-021A	1	(W/A. LOCK BRAKE)			7C01-
33-020Z		KNUCKLE(L),STEERING			
NC10-33-031 AN(NC10-33-031A)	1	(W/O A. LOCK BRAKE)			-7C01
NC14-33-031 AN(NC14-33-031A)	1	(W/A. LOCK BRAKE)			-7C01
NC10-33-031A	1	(W/O A. LOCK BRAKE)			7C01-
NC14-33-031A	1	(W/A. LOCK BRAKE)			7C01-
33-042		NUT			
D06Y-33-042	2	W/WASHER			
33-061		HUB,WHEEL			
NA01-33-04X	2	(W/O A. LOCK BRAKE)			
NA23-33-04XA	2	(W/A. LOCK BRAKE)			
33-062		BOLT,HUB			
B455-33-062	8				
33-251A		PLATE,DISC			
NA75-33-25XC	2				
33-261		COVER(R),DUST			
NA75-33-261	1				
33-261Z		COVER(L),DUST			
NA75-33-271	1				
33-471		ROTOR,SENSOR-FRT A.B.S.			
NA23-33-471B	2	(W/A. LOCK BRAKE)			

7C01 NB353※-100063

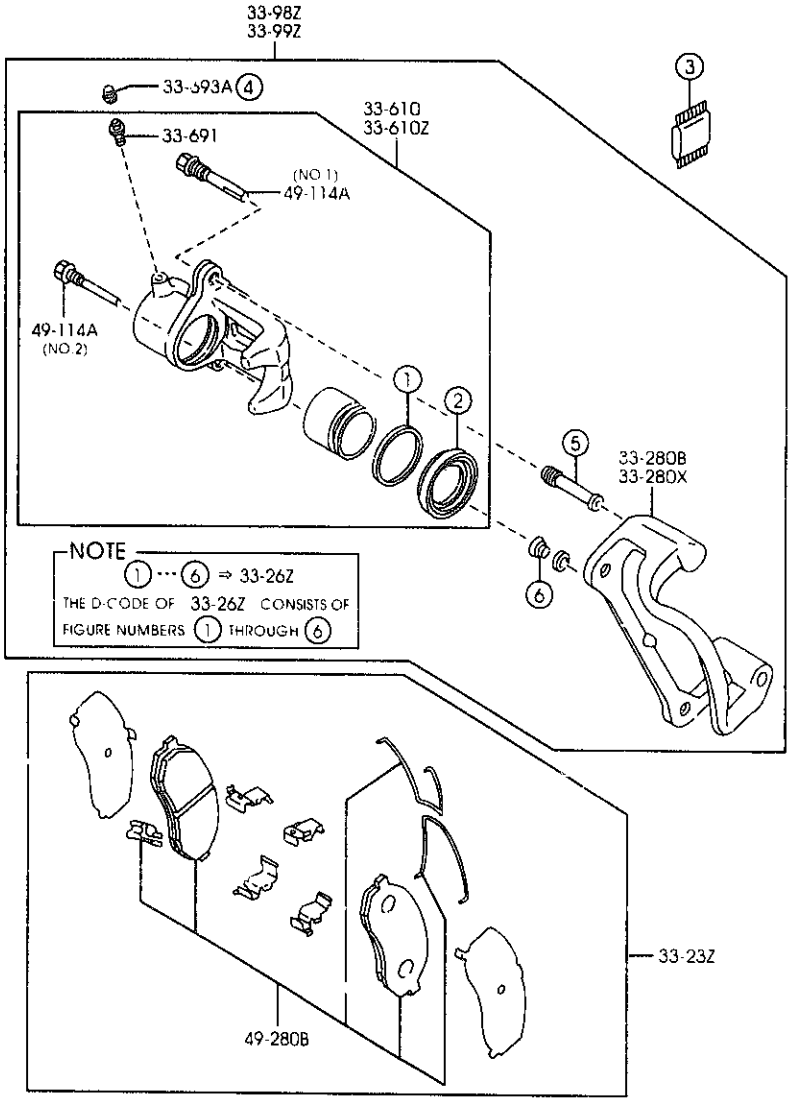

THOUGH ILLUSTRATIONS OF D-CODE 33-23Z, 33-26Z AND 49-280B ARE FOR LEFT SIDE ONLY, QUANTITIES OF THESE D-CODES IN THE TEXT ARE FOR ONE VEHICLE.

PART NO.	QTY	MODEL/RESTRICTION	MODEL/RESTRICTION	MODEL/RESTRICTION	FROM-TO
33-23Z		PAD SET,FRT CALIPER			
NAY5-33-23ZA AN(NAY5-33-23ZB)	1				-9120
NAY5-33-23ZB	1				9120-
33-26Z		SEAL & BOOT SET,CAL. -FRT			
NAY5-33-26Z	1				
33-280B		SUPPORT(R),MOUNTING			
NA75-33-281	1				
33-280X		SUPPORT(L),MOUNTING			
NA75-33-291	1				
33-610		BODY & PISTON(R),CALIPER			
NA75-33-61X	1				
33-610Z		BODY & PISTON(L),CALIPER			
NA75-33-71X	1				
33-691		SCREW,BLEEDER			
8001-33-691	2				
33-693A		CAP,BLEEDER SCREW			
0259-33-693	2				
33-98Z		CALIPER(R),PADLESS-FR			
NAZ5-33-98Z	1				
33-99Z		CALIPER(L),PADLESS-FR			
NAZ5-33-99Z	1				
49-114A		PIN,SLIDER			
8173-49-114	2	(ILLUST. NO.1)			
8239-49-114	2	(ILLUST. NO.2)			
49-280B		PAD SUB SET,FRT CALIPER			
NAY5-33-28Z AN(NAY5-33-28ZA)	1				-9120
NAY5-33-28ZA	1				9120-

9120 NB353*-120748

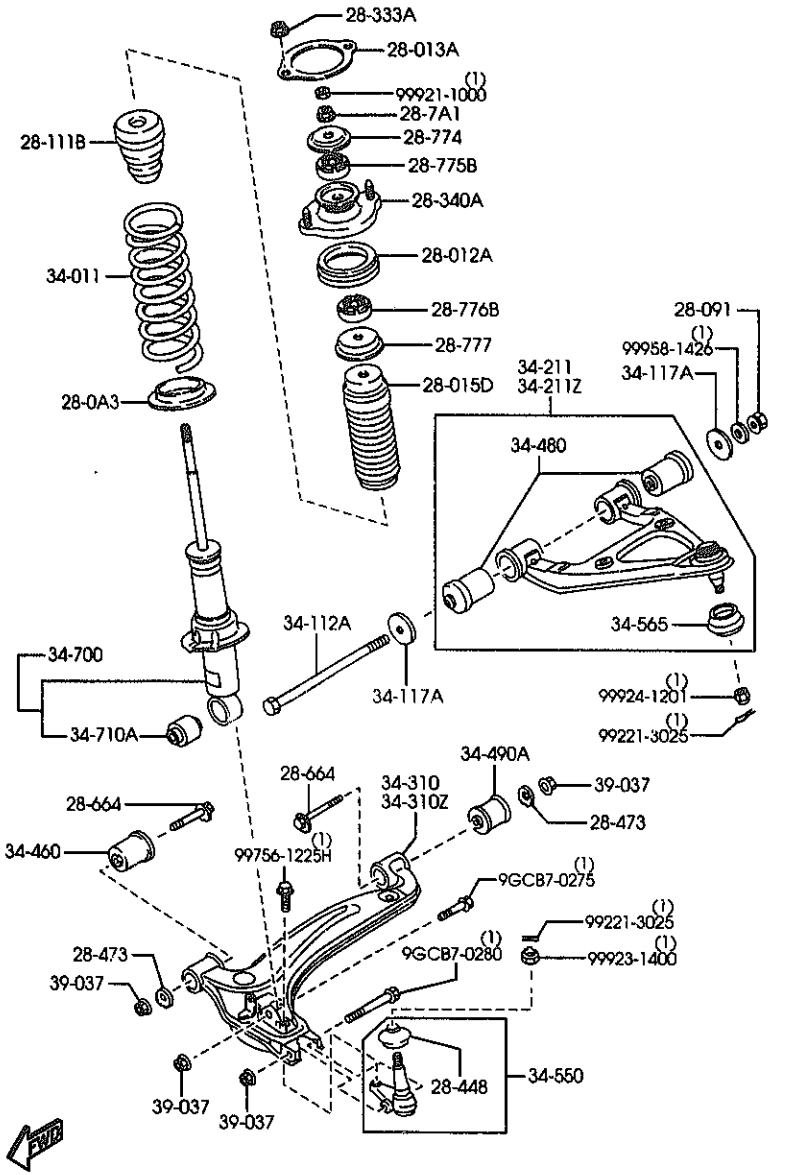

AUNA07 (1N11570)

PART NO.	QTY	MODEL/RESTRICTION	MODEL/RESTRICTION	MODEL/RESTRICTION	FROM-TO
28-0A3		RUBBER,SPRING SHEET			
NC10-28-0A3	2				-8801
AN(NC10-28-0A3A)					
NC10-28-0A3A	2				8801-
28-012A		SHEET,RUBBER			
NC10-28-012B	2				
28-013A		SHEET,RUBBER			
G030-28-013A	2				
28-015D		BOOT,DUST			
NC10-28-015A	2				
28-091		NUT			
FB01-28-091A	2				
28-111B		STOPPER,BUMP			
NC10-34-111	2				
28-333A		NUT,FLANGE			
H001-28-333	4				
28-340A		SHEET,SPRING-UPPER			
NC10-28-340B	2				
28-448		SEAL,DUST-BALL JOINT			
H266-28-448	2				
28-473		PLATE,CAM-SUB FRAME			
NA80-28-473A	4				
28-664		BOLT,ADJUST			
NA8C-28-66ZC	4				
28-7A1		NUT,FLANGE-RR DAMPER			
D061-28-7A1	2				
28-774		RETAINER,REAR DAMPER			
NC10-28-774	2				

8801 NB353*-121854

CAT. AUNA07-05 2000-01

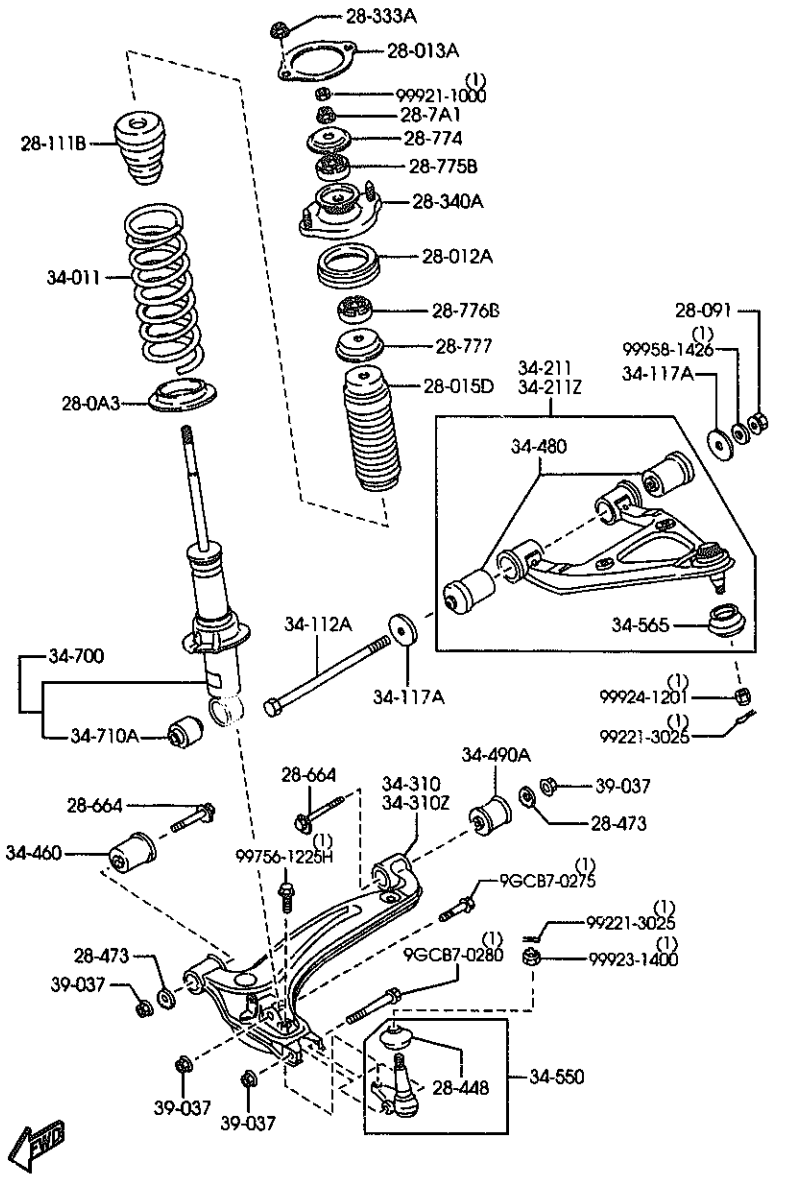

AUNA07 (1N11570)

PART NO.	QTY	MODEL/RESTRICTION	MODEL/RESTRICTION	MODEL/RESTRICTION	FROM-TO
28-775B NC10-28-775	2	BUSH,REAR DAMPER-UPPER			
28-776B NC10-28-776	2	BUSH,REAR DAMPER-LOWER			
28-777 NC10-28-777	2	WASHER			
34-011 NC10-34-011B	2	SPRING,COIL-FRONT (NOR. SUSP) (SPORT SUSP)			
NC12-34-011B	2	(HARD SUSP) (W/A. LOCK BRAKE)			
34-112A NA01-34-112	2	BOLT			
34-117A NA01-34-117A	4	WASHER			
34-211 NC10-34-200	1	ARM(R),UPPER (W/O A. LOCK BRAKE)			
NC14-34-200 AN(NC14-34-200A)	1	(W/A. LOCK BRAKE)			-7C01
NC14-34-200A	1	(W/A. LOCK BRAKE)			7C01-
34-211Z NC10-34-200	1	ARM(L),UPPER (W/O A. LOCK BRAKE)			
NC14-34-250 AN(NC14-34-250A)	1	(W/A. LOCK BRAKE)			-7C01
NC14-34-250A	1	(W/A. LOCK BRAKE)			7C01-
34-310 NC10-34-310C	1	ARM(R),LOWER			
34-310Z NC10-34-360C	1	ARM(L),LOWER			
34-460 NA01-34-460A	2	BUSH,RUBBER-LWR ARM			

7C01 NB353#-100063

CAT. AUNA07-05 2000-01

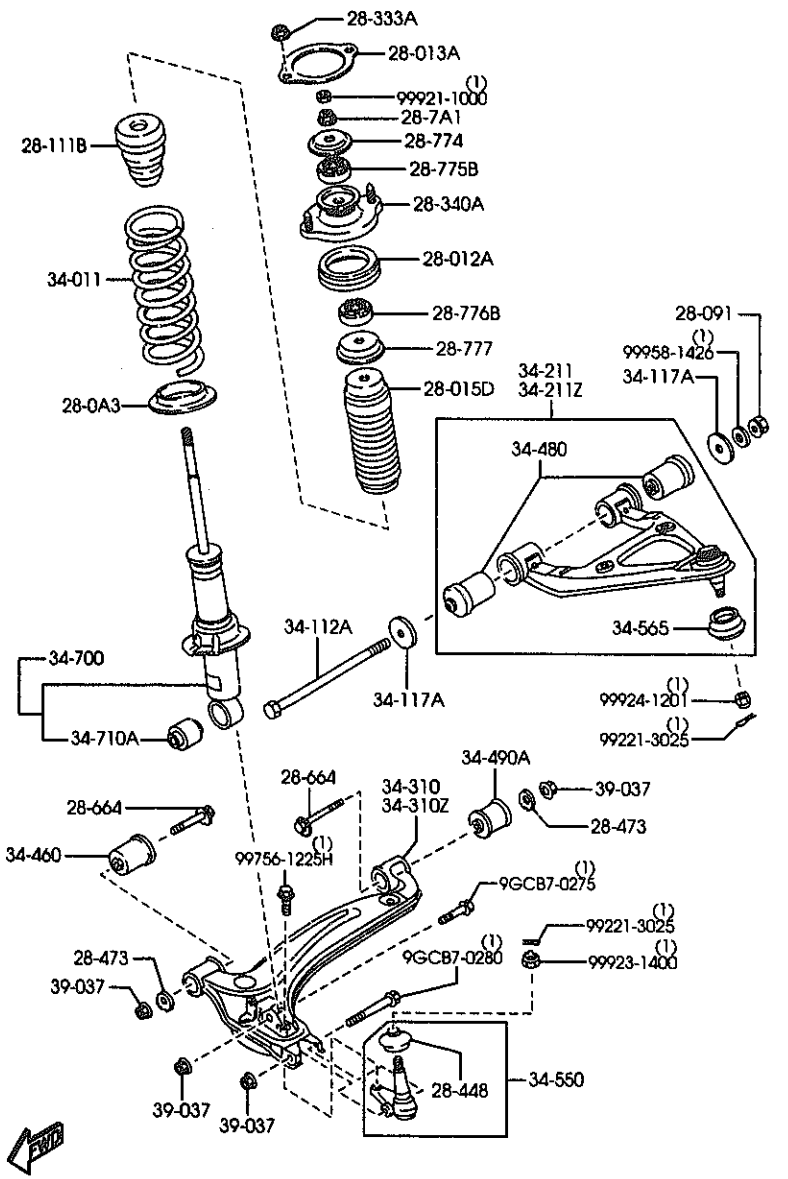

AUNA07 (1N11570)

PART NO.	QTY	MODEL/RESTRICTION	MODEL/RESTRICTION	MODEL/RESTRICTION	FROM-TO
34-480		BUSHING,RUBBER-LOWER ARM			
NC10-34-480	4				
34-490A		BUSHING,RUBBER			
NA01-34-490	2				
34-550		BALL JOINT,LOWER			
NA01-34-550B	2				
34-565		SEAL,DUST			
NA01-34-548	2				
34-700		DAMPER,FRONT			
NC10-34-700C	2	((NOR. SUSP)>(W/O A. LOCK BRAKE)) ((SPORT SUSP)>(W/O A. LOCK BRAKE))			
NC14-34-700C	2	((NOR. SUSP)>(W/A. LOCK BRAKE)) ((SPORT SUSP)>(W/A. LOCK BRAKE))			
NC12-34-700C	2	(HARD SUSP)			-9201
AN(NC12-34-700D)					
NC12-34-700D	2	(HARD SUSP)			9201-
34-710A		BUSHING,DAMPER-LOWER			
NC10-34-710	2				
39-037		NUT			
B001-39-037B	8				

9201 NB353*-130051

CAT. AUNA07-05 2000-01

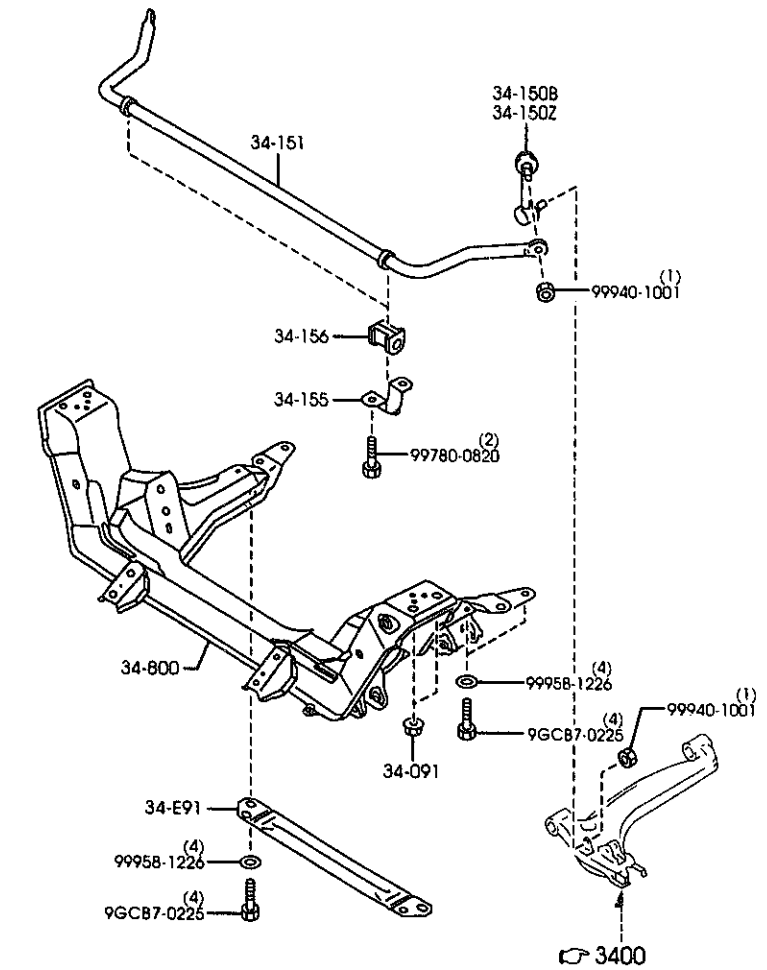

AUNA07 (1N04180)

3410A -1 * CROSSMEMBER & STABILIZER

PART NO.	QTY	MODEL/RESTRICTION	MODEL/RESTRICTION	MODEL/RESTRICTION	FROM-TO
34-E91		BAR,FRONT CROSS			
NC10-34-E91A	1				
34-091		NUT			
FB01-34-091 AN(FB01-34-091A)	4				-8212
FB01-34-091A	4				8212-
34-150B		LINK(R),CONTROL			
NC10-34-150	1				
34-150Z		LINK(L),CONTROL			
NC10-34-170	1				
34-151		STABILIZER,FRONT			
NC10-34-151A	1				
34-155		PLATE,STABILIZER			
FB01-34-155	2				
34-156		BUSH,STABILIZER-FRT			
NC10-34-156	2				
34-800		MEMBER,CROSS			
NC10-34-800A AN(NC10-34-800B)	1				-8101
NC10-34-800B	1				8101-

8101 NB353*-102707
8212 NB353*-107693

CAT. AUNA07-05 2000-01

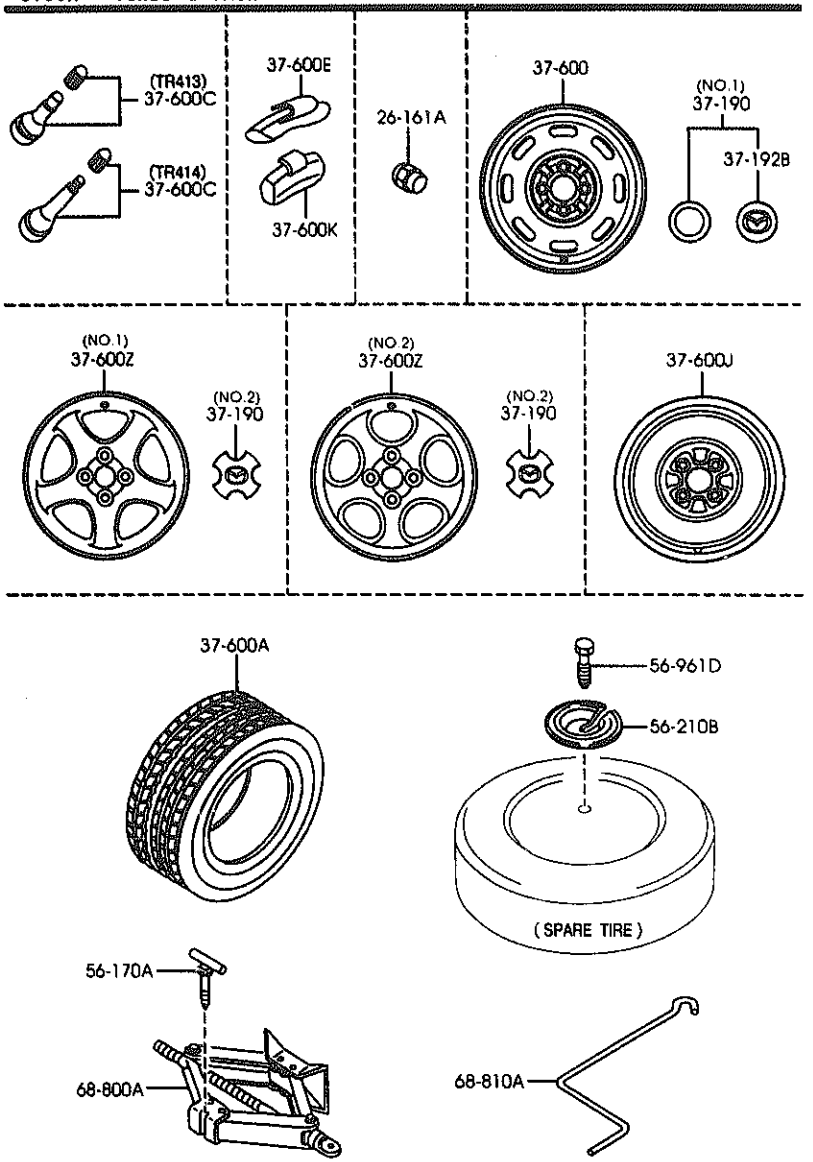

PART NO.	QTY	MODEL/RESTRICTION	MODEL/RESTRICTION	MODEL/RESTRICTION	FROM-TO
26-161A		NUT,HUB			
B002-37-160	16	PLATED			
37-190		CAP,CENTER			
B21V-37-190	4	(ILLUST. NO.1) (FOR STEEL WHEEL)			
NC10-37-190	4	(ILLUST. NO.2) (FOR ALUMI WHEEL) ((MT)>(5-SP)) (AT)			
WN053-37-190	4	(ILLUST. NO.2) (FOR ALUMI WHEEL) (L.S. DIFF) ((MT)>(6-SP))			
37-192B		EMBLEM,CENTER			
G14H-37-192	4				
37-600		WHEEL,DISC-STEEL			
9965B-95540	4	5.5JJX14 P=100/O=45			
37-600A		TIRE			
90620-47614	1	T115/70D14			
90621-55695	4	195/50R15			
90628-36684	4	P185/60R14			
90629-26684	4	185/60R14			
37-600C		VALVE,AIR			
99636-04130	1	TR413			
99636-04140	4	TR414			
37-600E		WEIGHT,DISC WHEEL-STEEL			
99655-30005 A (99657-20005)	4	5G			-9701
99655-30010 A (99657-20010)	4	10G			-9701
99655-30015 A (99657-20015)	4	15G			-9701

9701 NB353#-138751

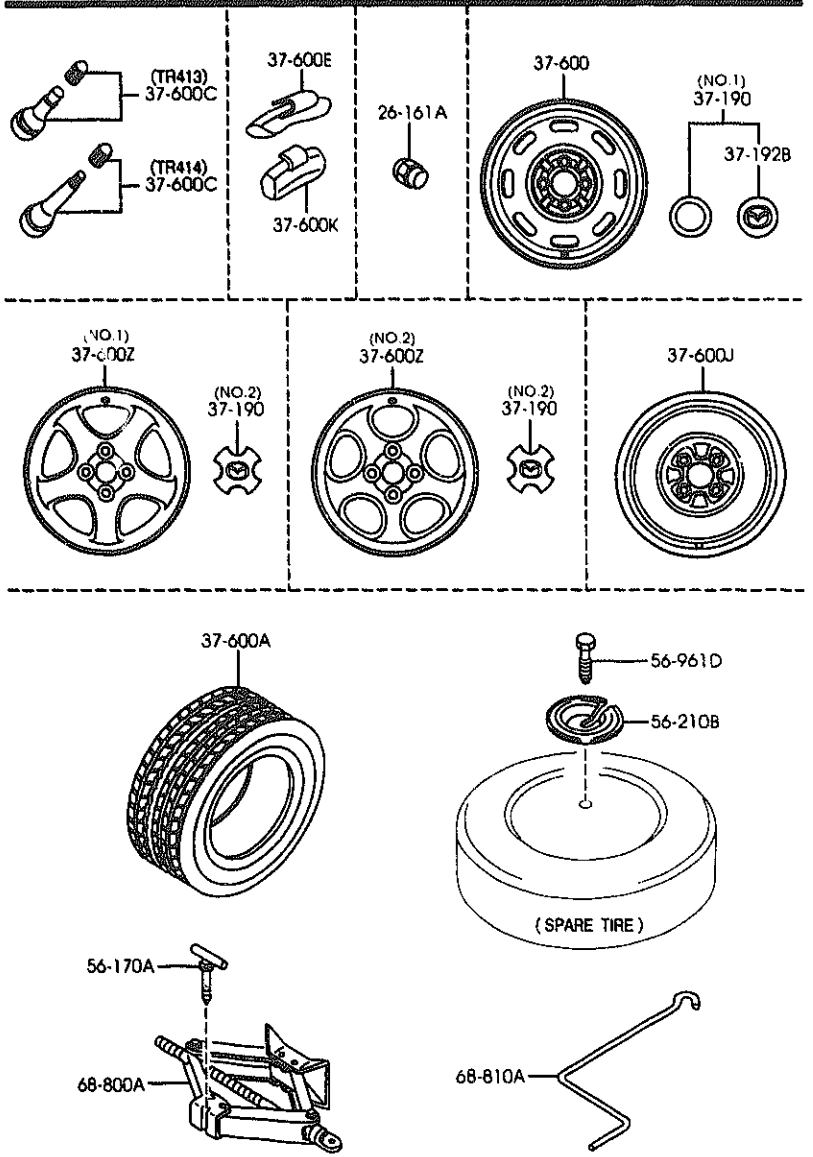

AUNA07 (1N05870)

PART NO.	QTY	MODEL/RESTRICTION	MODEL/RESTRICTION	MODEL/RESTRICTION	FROM-TO
CONT'D					
99655-30020 A (99657-20020)	4	20G			-9701
99655-30025 A (99657-20025)	4	25G			-9701
99655-30030 A (99657-20030)	4	30G			-9701
99655-30035 A (99657-20035)	4	35G			-9701
99655-30040 A (99657-20040)	4	40G			-9701
99655-30045 A (99657-20045)	4	45G			-9701
99655-30050 A (99657-20050)	4	50G			-9701
99655-30055 A (99657-20055)	4	55G			-9701
99655-30060 A (99657-20060)	4	60G			-9701
99657-20005	4	5G			9701-
99657-20010	4	10G			9701-
99657-20015	4	15G			9701-
99657-20020	4	20G			9701-
99657-20025	4	25G			9701-
99657-20030	4	30G			9701-
99657-20035	4	35G			9701-
99657-20040	4	40G			9701-
99657-20045	4	45G			9701-
99657-20050	4	50G			9701-
99657-20055	4	55G			9701-
99657-20060	4	60G			9701-
+---------+ | 37-600J | +---------+ 99652-14040	1	WHEEL,DISK-TEMPORARY 4TX14 P=100/D=45			

9701 NB353*-138751

CAT. AUNA07-05 2000-01

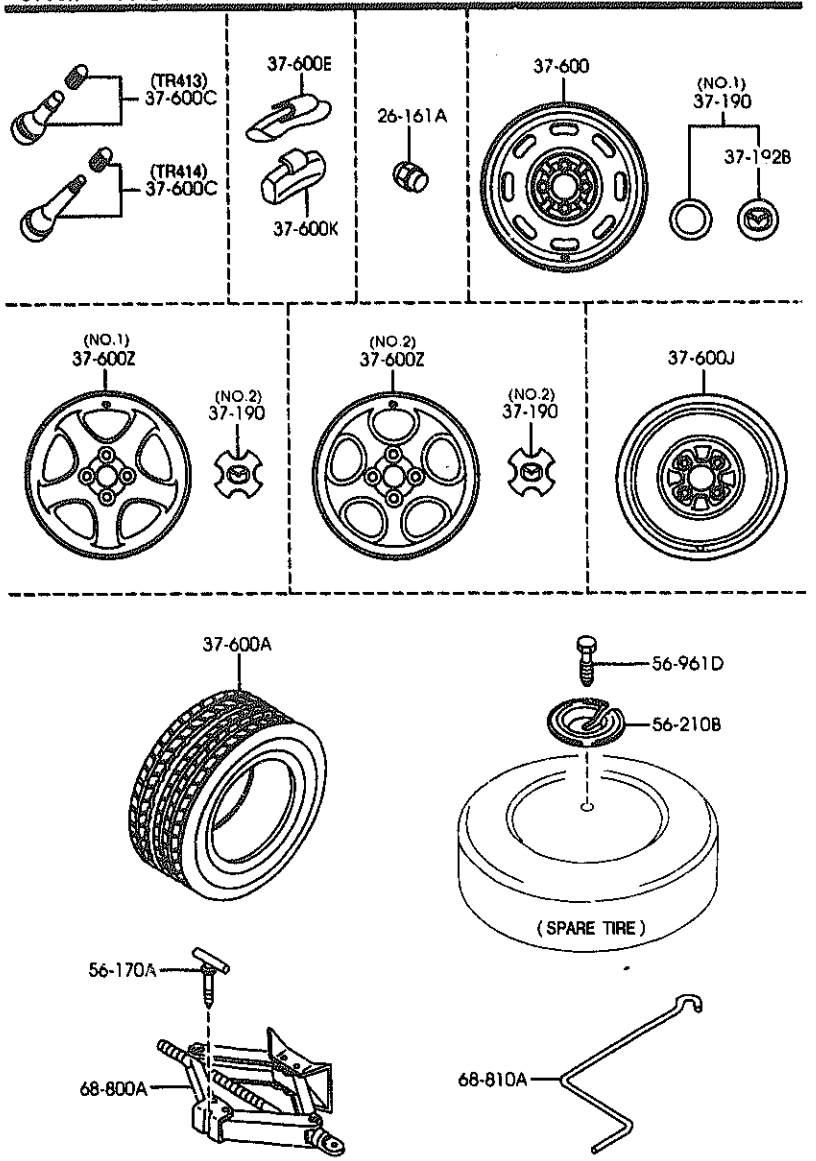

AUNA07 (1N05870)

PART NO.	QTY	MODEL/RESTRICTION	MODEL/RESTRICTION	MODEL/RESTRICTION	FROM-TO
37-600K		WEIGHT,DISC WHEEL-ALUMI			
99655-90005 A (99657-30005)	4	5G FOR 1-PIECE WHL			-9701
99655-90010 A (99657-30010)	4	10G FOR 1-PIECE WHL			-9701
99655-90015 A (99657-30015)	4	15G FOR 1-PIECE WHL			-9701
99655-90020 A (99657-30020)	4	20G FOR 1-PIECE WHL			-9701
99655-90025 A (99657-30025)	4	25G FOR 1-PIECE WHL			-9701
99655-90030 A (99657-30030)	4	30G FOR 1-PIECE WHL			-9701
99655-90035 A (99657-30035)	4	35G FOR 1-PIECE WHL			-9701
99655-90040 A (99657-30040)	4	40G FOR 1-PIECE WHL			-9701
99655-90045 A (99657-30045)	4	45G FOR 1-PIECE WHL			-9701
99655-90050 A (99657-30050)	4	50G FOR 1-PIECE WHL			-9701
99655-90055 A (99657-30055)	4	55G FOR 1-PIECE WHL			-9701
99655-90060 A (99657-30060)	4	60G FOR 1-PIECE WHL			-9701
99657-30005	4	5G FOR 1-PIECE WHL			9701-
99657-30010	4	10G FOR 1-PIECE WHL			9701-
99657-30015	4	15G FOR 1-PIECE WHL			9701-
99657-30020	4	20G FOR 1-PIECE WHL			9701-
99657-30025	4	25G FOR 1-PIECE WHL			9701-
99657-30030	4	30G FOR 1-PIECE WHL			9701-
99657-30035	4	35G FOR 1-PIECE WHL			9701-
99657-30040	4	40G FOR 1-PIECE WHL			9701-
99657-30045	4	45G FOR 1-PIECE WHL			9701-
99657-30050	4	50G FOR 1-PIECE WHL			9701-

9701 NB353#-138751

CAT. AUNA07-05 2000-01

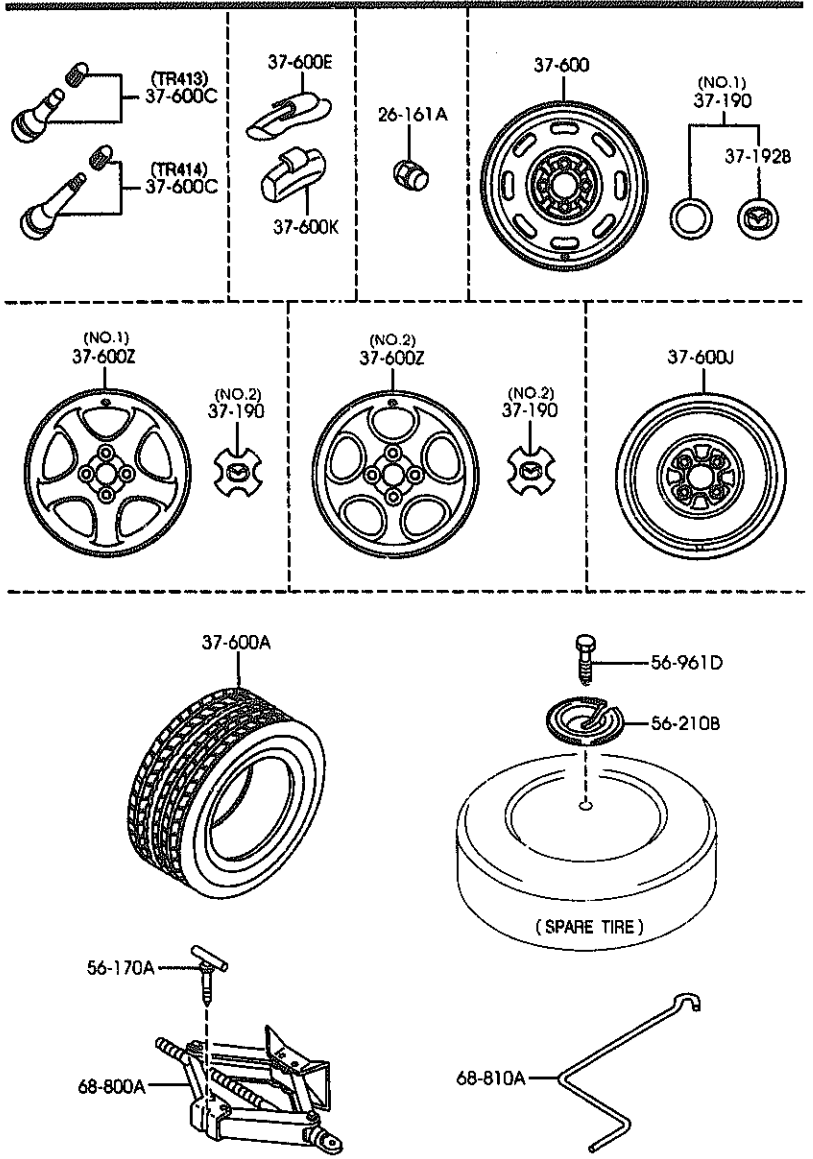

AUNA07 (1N05870)

PART NO.	QTY	MODEL/RESTRICTION	MODEL/RESTRICTION	MODEL/RESTRICTION	FROM-TO
CONT'D					
99657-30055	4	55G FOR 1-PIECE WHL			9701-
99657-30060	4	60G FOR 1-PIECE WHL			9701-
+---------+					
| 37-600Z |		WHEEL,DISC-ALUMI.			
+---------+					
9965F-66050	4	6JJX15 P=100/O=40 (ILLUST. NO.1) (SILVER)			
9965H-66050	4	6JJX15 P=100/O=40 (ILLUST. NO.1) (BUFF FINISHING)			
99652-56040	4	6JJX14 ENKEI (ILLUST. NO.2)			
+---------+					
| 56-170A |		BOLT,JACK SET			
+---------+					
B001-56-170C	1				
+---------+					
| 56-210B |		CLAMP,SPARE TIRE			
+---------+					
GA5R-56-971A AN(GA5R-56-971B)	1				-8C03
GA5R-56-971B AN(GA5R-56-971C)	1				8C03-9801
GA5R-56-971C	1				9801-
+---------+					
| 56-961D |		BOLT			
+---------+					
T001-56-961	1	L=60MM			
+---------+					
| 68-800A |		JACK			
+---------+					
B455-37-790A (B455-37-790B)	1				-8514
B455-37-790B	1				8514-8901
B25D-37-790	1				8901-
+---------+					
| 68-810A |		HANDLE,JACK			
+---------+					
D201-37-810	1	((MT))(6-SP))			
GJ21-37-810	1	((MT))(5-SP)) (AT)			-9201
D201-37-810	1	((MT))(5-SP)) (AT)			9201-

8514 NB353M-117642
8901 NB353M-122306
8C03 NB353M-125134
9201 NB353M-130051
9701 NB353M-138751
9801 NB353M-139968

CAT. AUNA07-05 2000-01

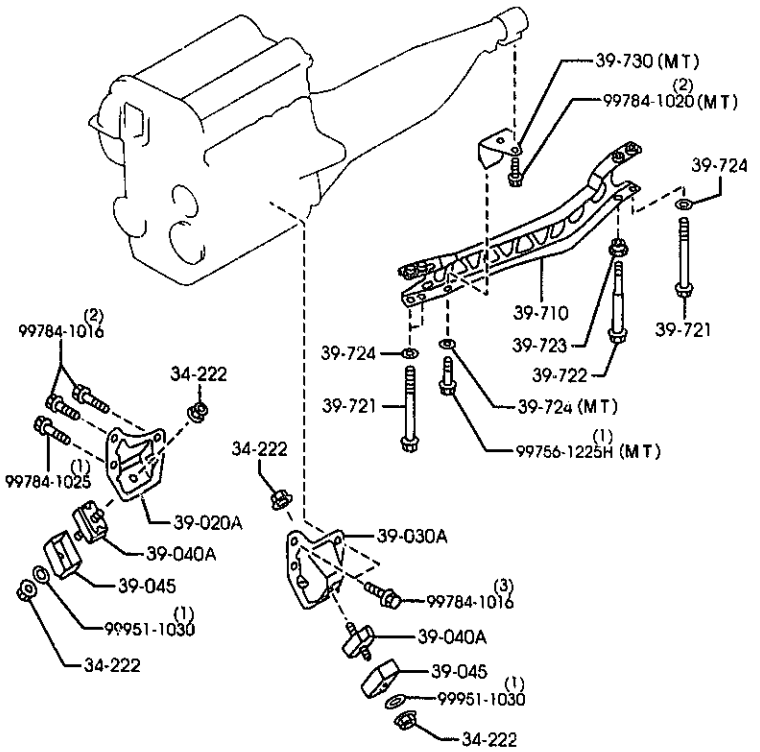

AUNA07 (1N08050)

3900A -1 * ENGINE & T/MISSION MOUNTINGS

PART NO.	QTY	MODEL/RESTRICTION	MODEL/RESTRICTION	MODEL/RESTRICTION	FROM-TO
34-222		NUT			
8871-34-222	4				
39-020A		BRACKET(R),ENGINE			
NC10-39-020	1				
39-030A		BRACKET(L),ENGINE			
NA75-39-030	1				
39-040A		RUBBER,ENGINE MT.			
NC10-39-040	2				
39-045		CASING,STOPPER			
NA01-39-041A	2				
39-710		FRAME,POWER PLANT			
NC10-39-710A	1	(MT)			
NC13-39-710A	1	(AT)			
39-721		BOLT,PLANT FRAME			
NA01-39-721	3				
39-722		BOLT,PLANT FRAME			
NA01-39-722	1				
39-723		SPACER,PLANT FRAME			
NA01-39-723	1				
39-724		WASHER,PLAIN-FRAME			
NA01-39-724	3	(AT)			
NA01-39-724	4	(MT)			
39-730		BRACKET,PLANT FRAME			
NA01-39-730A	1	(MT)			

CAT. AUNA07-05 2000-01

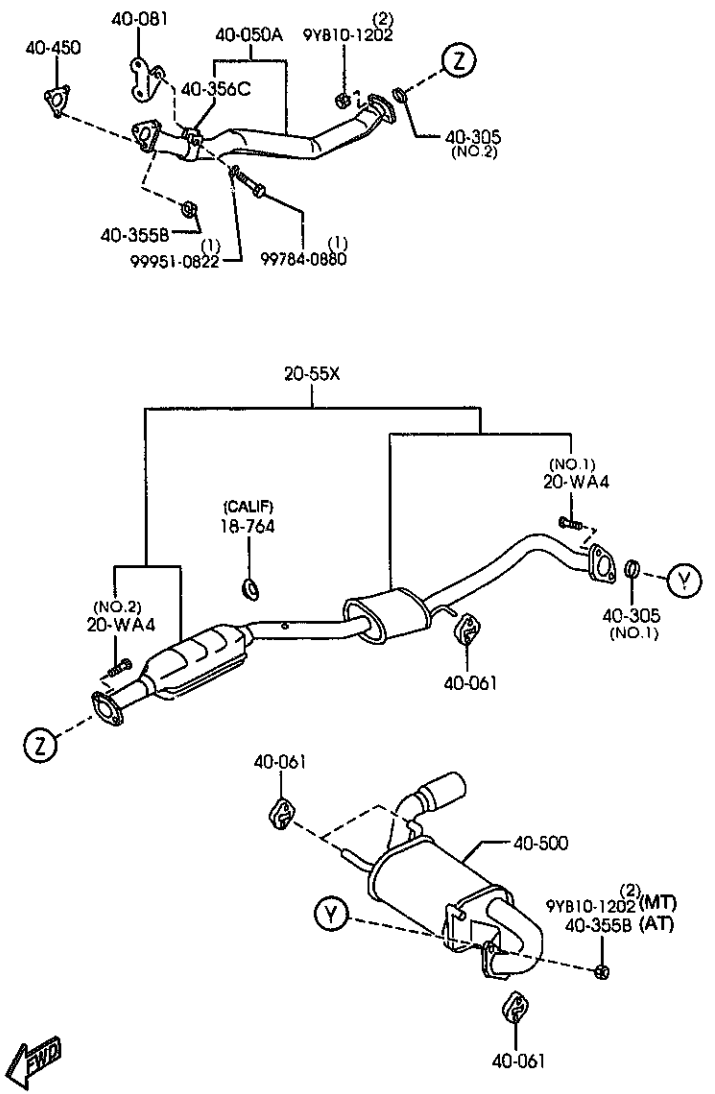

AUNA07 (1N08060)

PART NO.	QTY	MODEL/RESTRICTION	MODEL/RESTRICTION	MODEL/RESTRICTION	FROM-TO
18-764		CAP,BLIND-THERMO SEN SOR			
B366-18-764	1	(CALIF)			
20-WA4		BOLT			
Z502-20-WA4 A (FP13-20-WA4)	2	(ILLUST. NO.1) (AT)			-8B25
KF68-20-WA5 AN(BP5B-20-WA5)	2	(ILLUST. NO.1) (MT)			-8B25
KF68-20-WA5 AN(BP5B-20-WA5)	2	(ILLUST. NO.2)			-8B25
FP13-20-WA4	2	(ILLUST. NO.1) (AT)			8B25-
BP5B-20-WA5	2	(ILLUST. NO.1) (MT)			8B25-
BP5B-20-WA5	2	(ILLUST. NO.2)			8B25-
20-55X		CONVERTER			
BP4W-20-55XH	1	((MT)>(FED))			
BP4X-20-55XH	1	((AT)>(FED))			
BP4Y-20-55XF	1	((MT)>(CALIF))			
BP4Z-20-55XF	1	((AT)>(CALIF))			
40-050A		PIPE,EXHAUST-FRONT			
BPM3-40-500C AN(BPM3-40-500D)	1				-7C16
BPM3-40-500D	1				7C16-
40-061		HANGER,SILENCER			
BP47-40-061 AN(BP47-40-061A)	4				-8201
BP47-40-061A	4				8201-
40-081		BRACKET,HANGER			
BPM1-40-080B	1	(MT)			
BPM2-40-080B	1	(AT)			
40-305		GASKET			
Z510-40-305	1	(ILLUST. NO.1) (AT)			
Z520-40-305	1	(ILLUST. NO.2)			
Z520-40-305	1	(ILLUST. NO.1) (MT)			

7C16 NB353*-101122
8201 NB353*-106606
8B25 NB353*-124579

CAT. AUNA07-05 2000-01

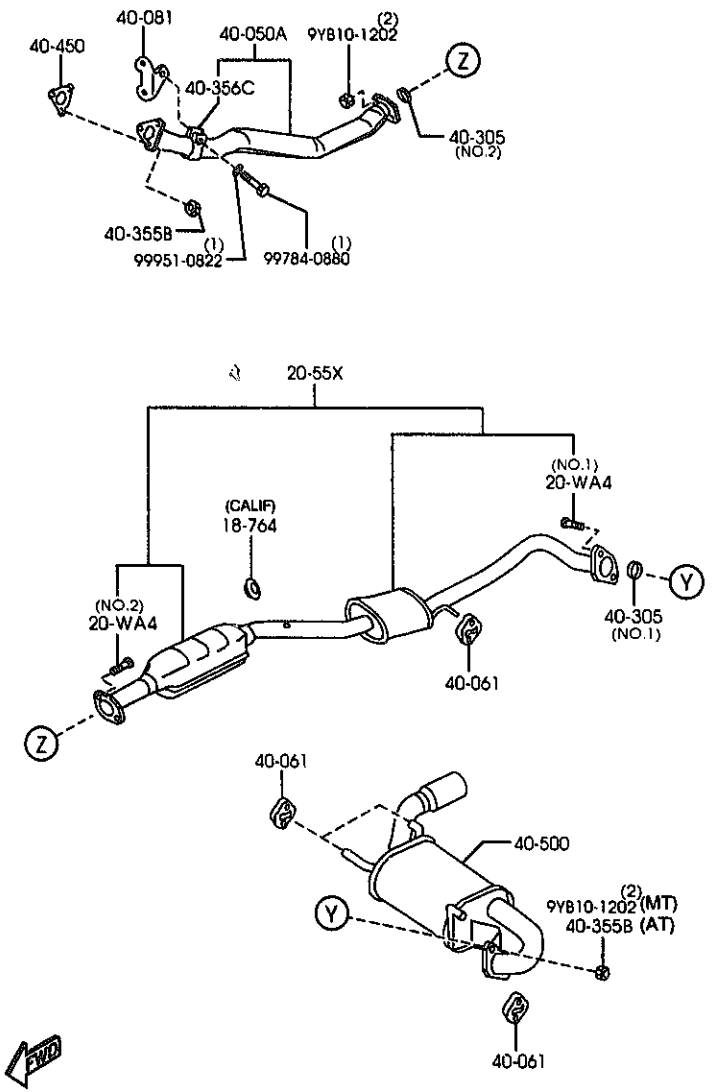

AUNA07 (1N08060)

PART NO.	QTY	MODEL/RESTRICTION	MODEL/RESTRICTION	MODEL/RESTRICTION	FROM-TO
40-355B		NUT			
JE10-40-355	3	(MT)			
JE10-40-355	5	(AT)			
40-356C		BAND			
BPM1-40-356A	1				-7C16
A (BPM1-40-356B)					
BPM1-40-356B	1				7C16-
40-450		GASKET,CONVERTER			
BPM1-40-450A	1				
40-500		SILENCER,MAIN			
BPM1-40-100C	1	(AT)			-8601
A (BPM1-40-100D)					
BPM3-40-100C	1	(MT)			-8A19
AN(BPM3-40-100D)					
BPM1-40-100D	1	(AT)			8601-
BPM3-40-100D	1	(MT)			8A19-

7C16 NB353*-101122
8601 NB353*-119466
8A19 NB353*-122952

CAT. AUNA07-05 2000-01

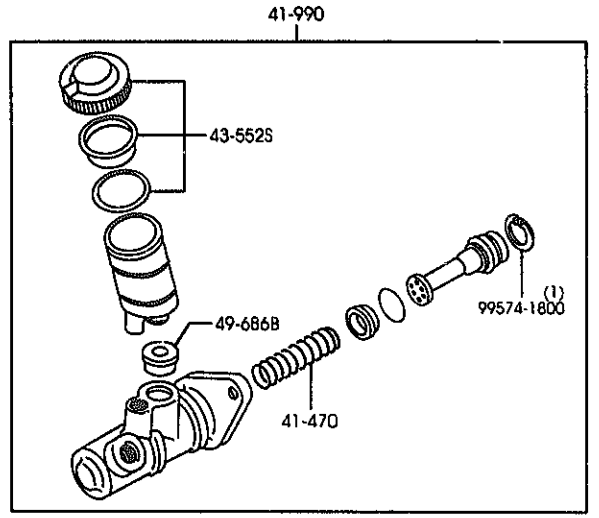

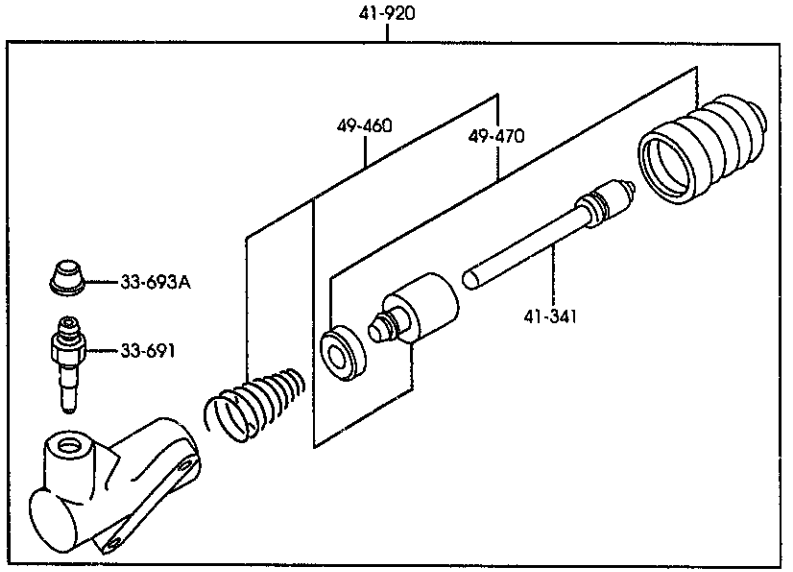

AUNA07 (1N03030)

PART NO.	QTY	MODEL/RESTRICTION	MODEL/RESTRICTION	MODEL/RESTRICTION	FROM-TO
33-691		SCREW,BLEEDER			
GA5R-33-691	1				
33-693A		CAP,BLEEDER SCREW			
0259-33-693	1				
41-341		ROD,PUSH			
H266-41-341	1				-8901
NC10-41-341	1				8901-
41-470		SPRING			
B312-41-470	1				
41-920		CYL.,CLUTCH RELEASE			
NA01-41-920 AN(NA01-41-920A)	1				-8901
NA01-41-920A	1				8901-
41-990		CYL.,CLUTCH MASTER			
NA01-41-400A	1				
43-552S		CAP SET,RESERVE TANK			
B093-49-580	1				
49-460		PARTS KIT,INNER			
HD05-49-460	1				
49-470		SEAL KIT			
HD05-49-470	1				
49-686B		BUSH,ELBOW JOINT			
0305-49-686B	1				

8901 NB353※-122306

CAT. AUNA07-05 2000-01

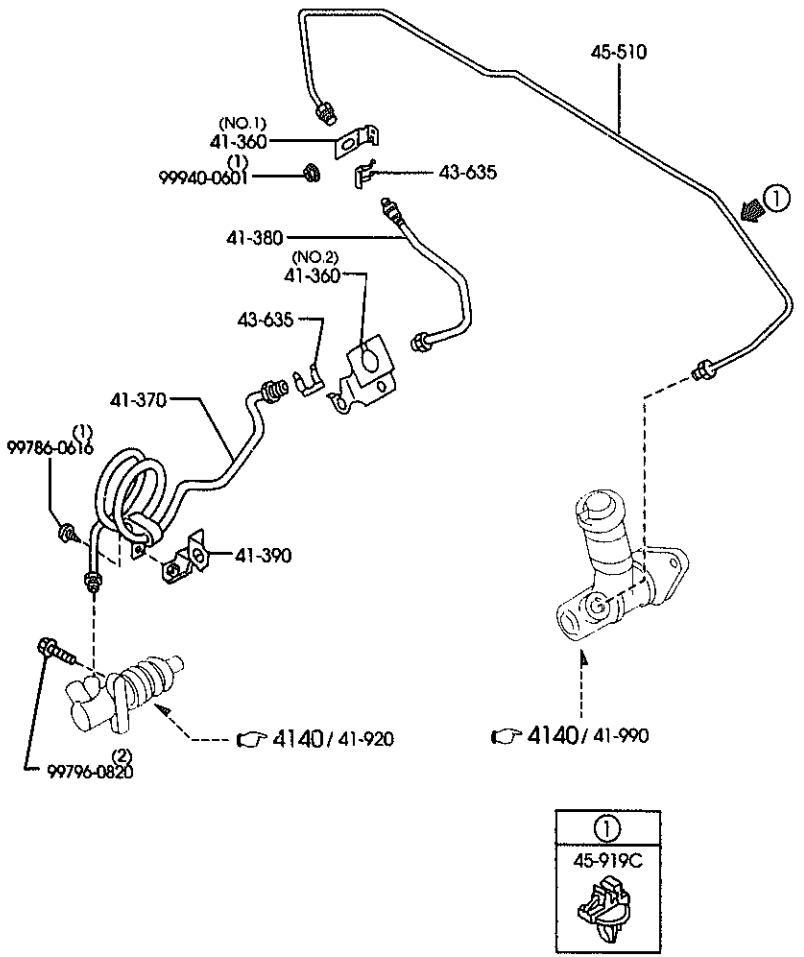

AUNA07 (1N1580)

4145A -1 ✱ MANUAL TRANSMISSION CLUTCH PIPINGS

PART NO.	QTY	MODEL/RESTRICTION	MODEL/RESTRICTION	MODEL/RESTRICTION	FROM-TO
41-360		HOLDER,CLUTCH			
NC10-41-370	1	(ILLUST. NO.1)			
NC11-41-370	1	(ILLUST. NO.2)			
41-370		PIPE,CLUTCH			
NA75-41-360A	1				
41-380		HOSE,FLEXIBLE			
NC10-41-380	1				
41-390		HOLDER,PIPE			
NA01-41-390	1				
43-635		CLIP,FLEXIBLE HOSE			
W023-43-635A	2				
45-510		PIPE,CLUTCH			
NA01-45-510C	1	(W/O A. LOCK BRAKE)			
NC14-45-510A	1	(W/A. LOCK BRAKE)			
45-919C		CLIP,PIPE			
G030-45-919A	1				

CAT. AUNA07-05 2000-01

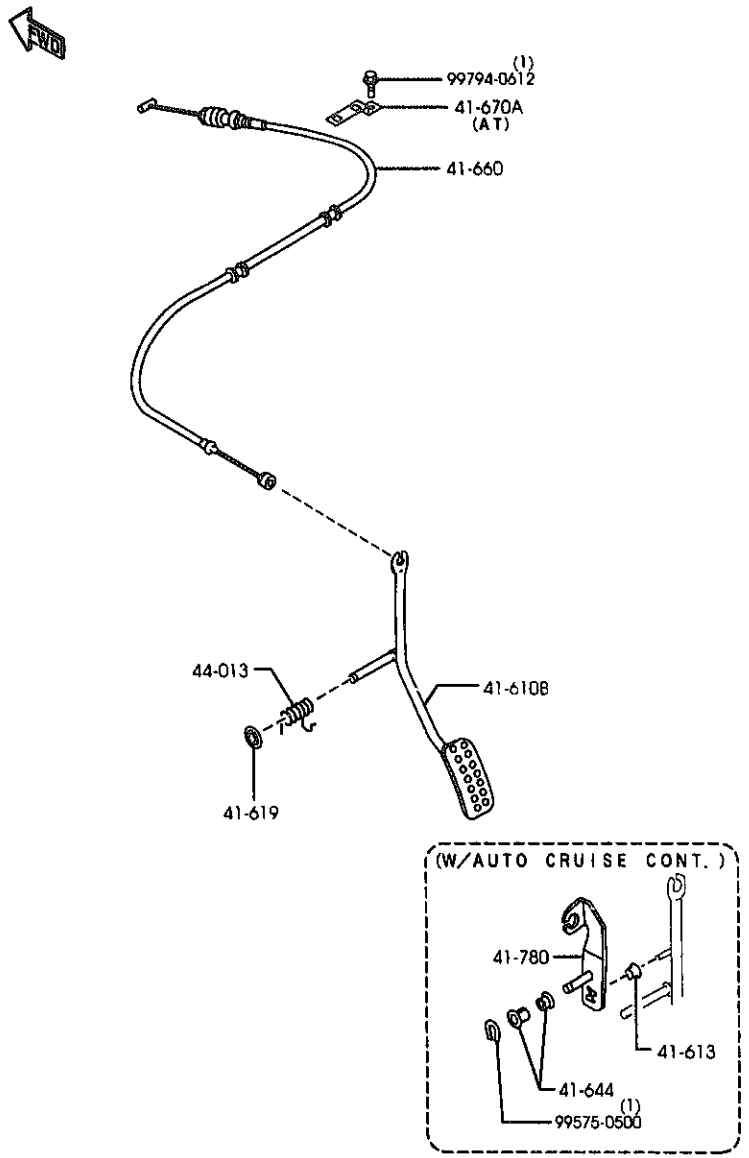

AUNA07 (1N01940)

4160A -1 ※ ACCELERATOR CONTROL SYSTEM

PART NO.	QTY	MODEL/RESTRICTION	MODEL/RESTRICTION	MODEL/RESTRICTION	FROM-TO
41-610B		PEDAL & ARM			
NA01-41-610B	1	(W/O AUTO CRUISE.CONT.)			
NA02-41-610B	1	(W/AUTO CRUISE.CONT.)			
41-613		ROLLER			
B104-41-114	1	(W/AUTO CRUISE.CONT.)			
41-619		SPRING,RETURN			
NA01-41-619	1				
41-644		BUSH			
0259-41-644	2	ONDO KOSAKUSHO (W/AUTO CRUISE.CONT.)			
41-660		CABLE,ACCEL.			
NC10-41-660A	1				
41-670A		BRACKET,CABLE			
N053-41-671A	1	(AT)			
41-780		LEVER,ACCELERATOR			
NA01-41-130A	1	(W/AUTO CRUISE.CONT.)			
44-013		WASHER			
H380-44-013	1				

CAT. AUNA07-05 2000-01

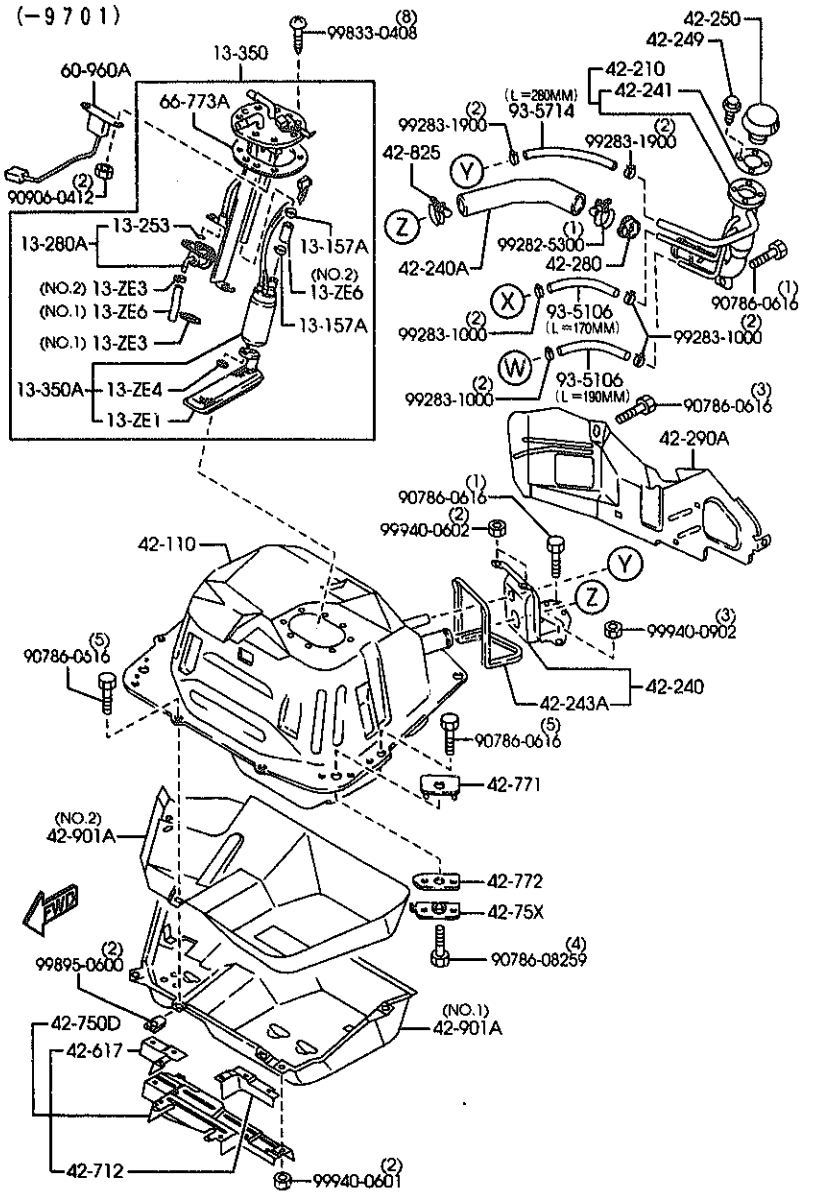

AUNA07 (1N03711)

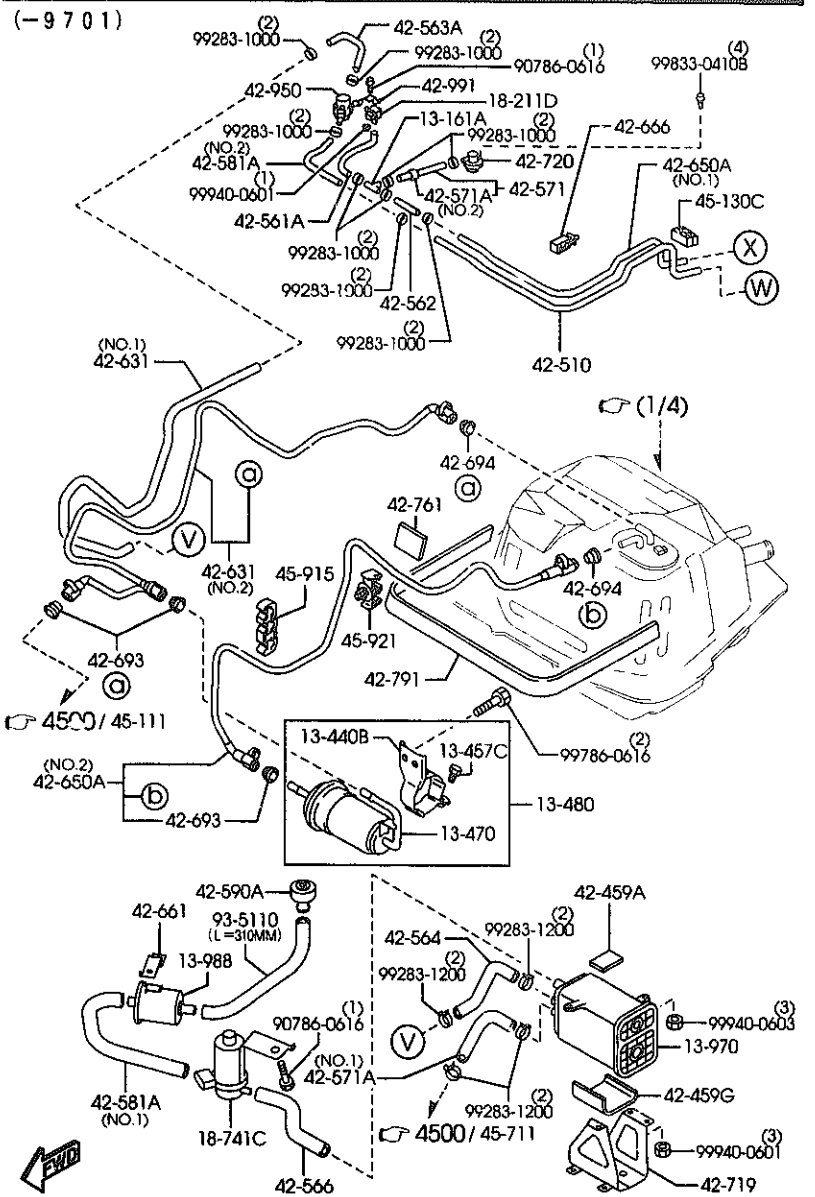

AUNA07 (1N03712)

(9701–)

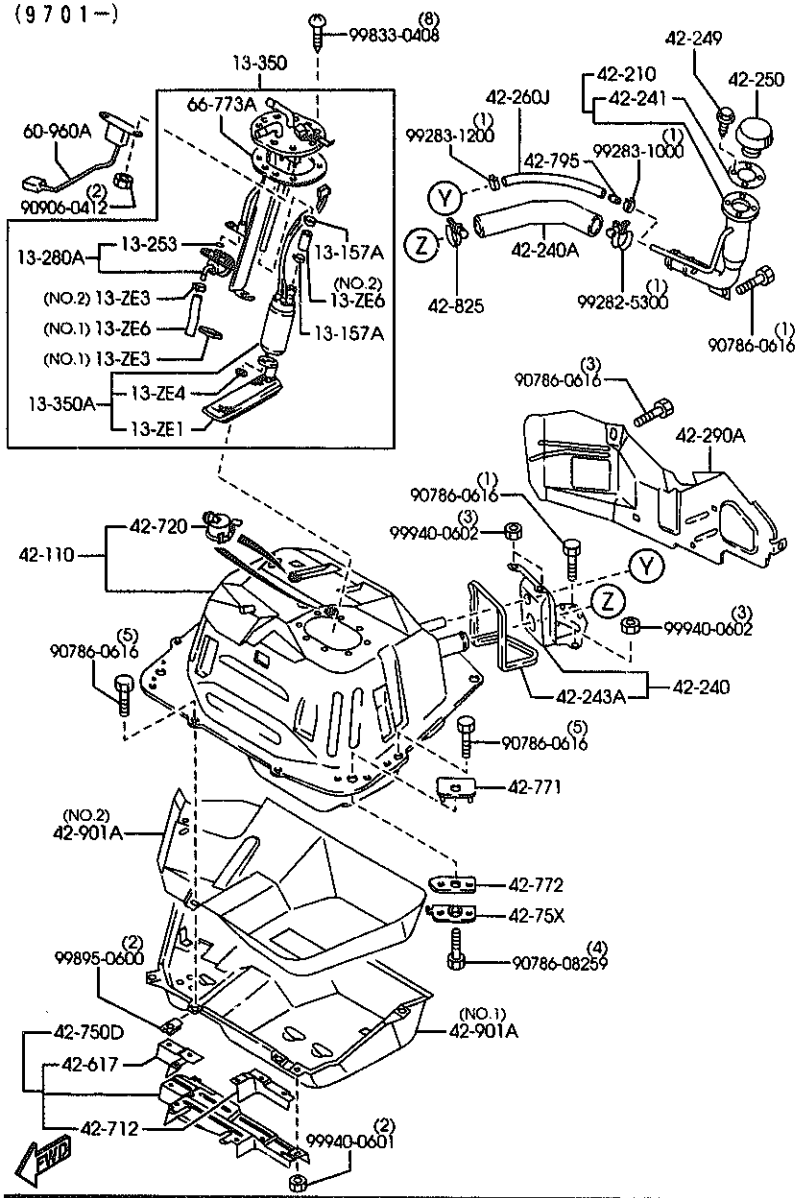

AUNA07 (1N03713)

(9701–)

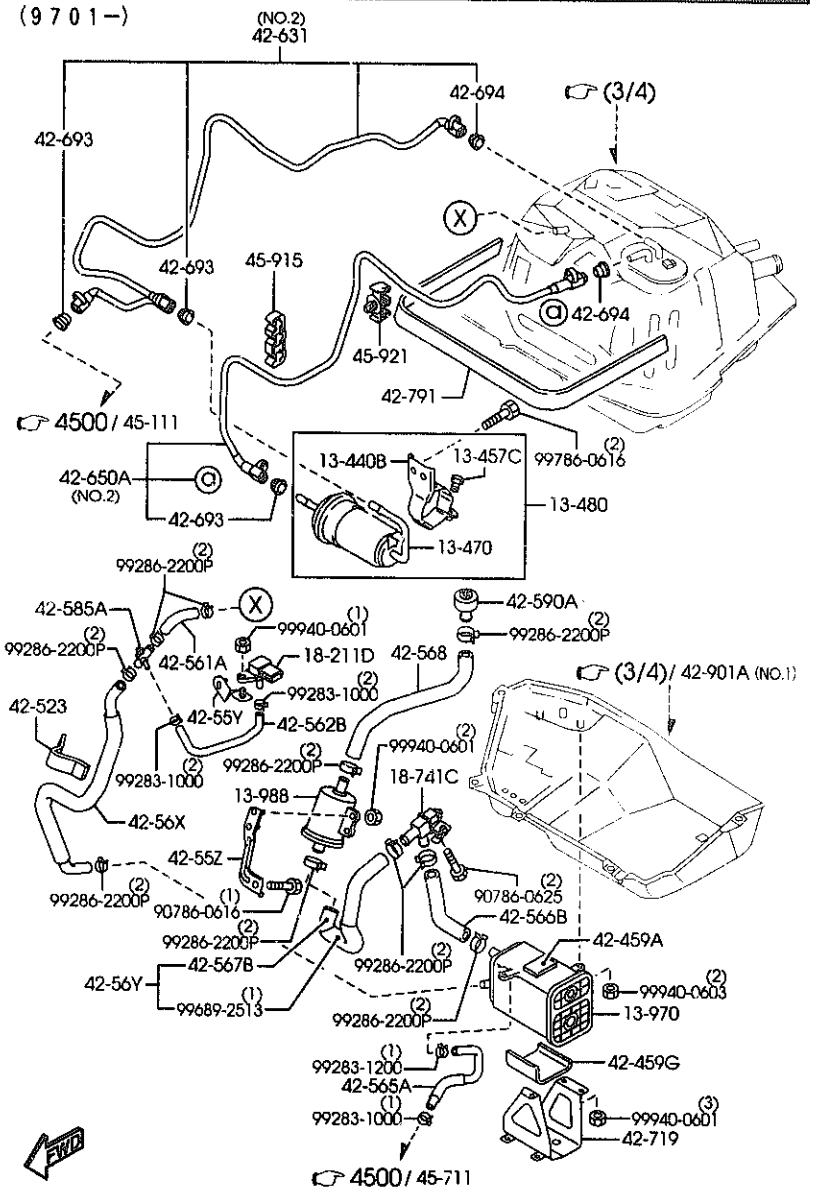

AUNA07 (1N03714)

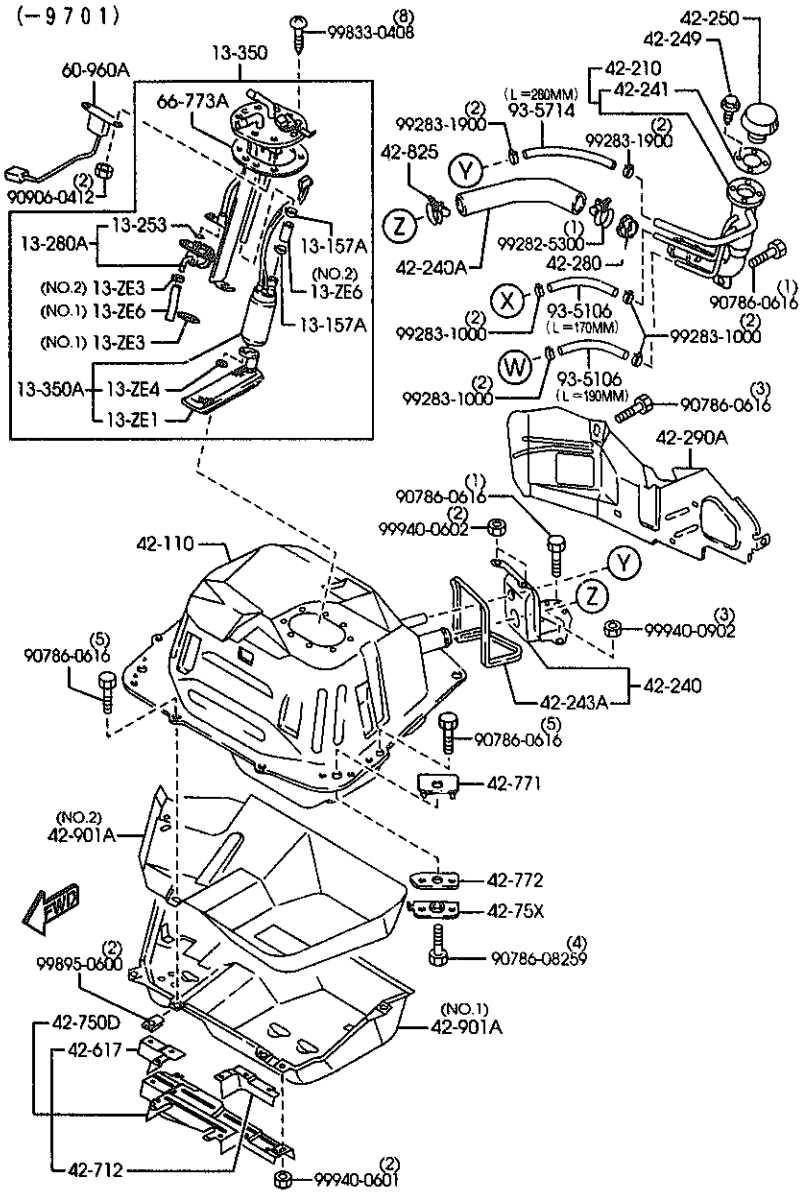

AUNA07 (1N03711)

PART NO.	QTY	MODEL/RESTRICTION	MODEL/RESTRICTION	MODEL/RESTRICTION	FROM-TO
13-ZE1		FILTER,FUEL PUMP			
BP4W-13-ZE1	1				
13-ZE3		CLIP,HOSE-FUEL HOSE			
BP4W-13-FD1	1	(ILLUST. NO.1)			
B62K-13-ZE3	1	(ILLUST. NO.2)			
13-ZE4		WASHER,LOCK-PUMP FILTER			
F8B3-13-ZE4	1	MITSUBISHI			-9501
FP34-13-ZE4		MITSUBISHI			
AN(F8B3-13-ZE4)	1				9501-9801
F8B3-13-ZE4	1	MITSUBISHI			9801-
13-ZE6		HOSE,FUEL PUMP-IN TANK			
BP4W-13-ZE2	1	(ILLUST. NO.1)			
KL19-13-ZE6	1	(ILLUST. NO.2)			
13-157A		CLIP			
AZ28-13-157	2				
13-161A		JOINT'T'			
E580-13-161	1				-9701
13-253		RING,'O'			
8574-13-253	1				
13-280A		PRESSURE RG.,FUEL			
BP4W-13-280	1				-8C01
BP4W-13-280A	1				8C01-9501
A (BP4W-13-280B)					
BP4W-13-280B	1				9501-
13-350		PUMP,FUEL			
BP4W-13-35ZA	1				-7C03
A (BP4W-13-35ZB)					
BP4W-13-35ZB	1				7C03-8320
AN(BP4W-13-35ZC)					
BP4W-13-35ZC	1				8320-8C01
AN(BP4W-13-35ZD)					
BP4W-13-35ZD	1				8C01-9501

7C03 NB353#-100063
8320 NB353#-112366
8C01 NB353#-124914
9501 NB353#-137711
9701 NB353#-138751
9801 NB353#-139968

CAT. AUNA07-05 2000-01

(−9701)

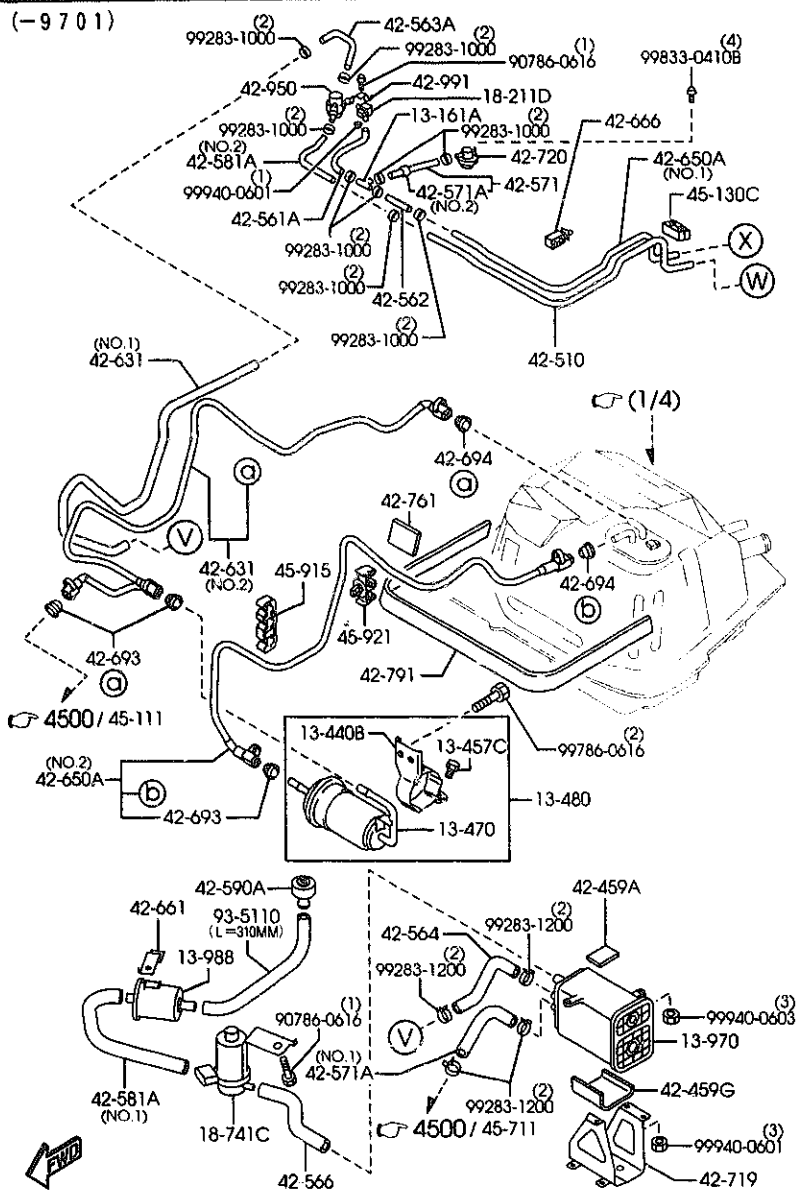

PART NO.	QTY	MODEL/RESTRICTION	MODEL/RESTRICTION	MODEL/RESTRICTION	FROM-TO
CONT'D AN(BP4W-13-35ZE)					
BP4W-13-35ZE AN(BP4W-13-35ZF)	1				9501-9801
BP4W-13-35ZF C (BP4W-13-35ZG)	1				9801-9901
BP4W-13-35ZG	1				9901-
| 13-350A |		PUMP,FUEL-SUB			
BP4W-13-350A	1				
| 13-440B |		BRACKET,FUEL FILTER			
BP4M-13-484	1				
| 13-457C |		BOLT			
BP01-13-485	1				
| 13-470 |		FILTER,FUEL			
BP4W-13-480	1				
| 13-480 |		FILTER,FUEL			
BP4W-20-490B	1				
| 13-970 |		CANISTER			
BP4W-13-970	1				-9701
BP5R-13-970	1				9701-
| 13-988 |		FILTER,AIR			
Z526-13-988	1				-9701
KLG4-13-988	1				9701-
| 18-211D |		SENSOR,BOOST			
JE96-18-211	1				
| 18-741C |		VALVE,SOLENOID			
BP4W-18-741A	1				-9701
BP5R-18-741	1				9701-
| 42-110 |		TANK,FUEL			
NC10-42-110C AN(NC10-42-110D)	1				-9201
NC10-42-110D	1				9201-9501

BP4W-13-35ZF		9201	NB353*-130051
C BP4W-13-35ZG		9501	NB353*-137711
NC49-42-694	2	9701	NB353*-138751
		9801	NB353*-139968
		9901	NB353*-140605

CAT. AUNA07-05 2000-01

(9701-)

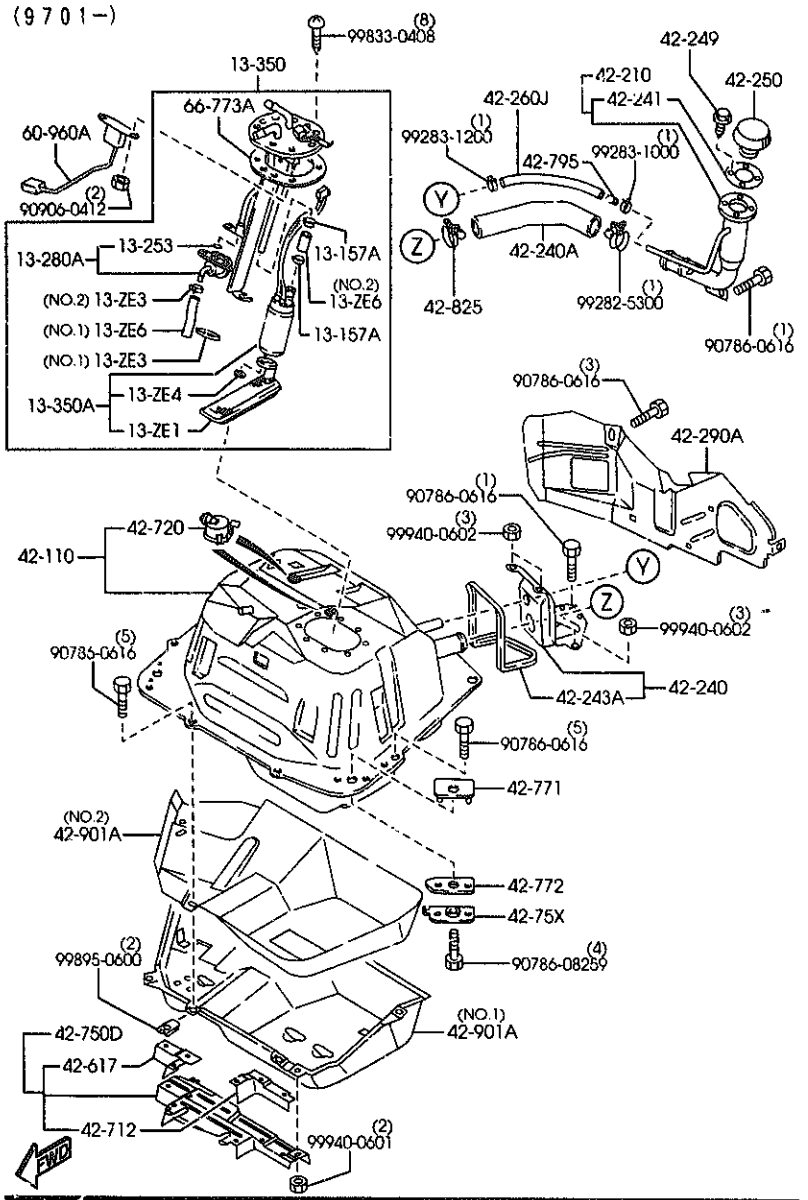

AUNA07 (1N03713)

PART NO.	QTY	MODEL/RESTRICTION	MODEL/RESTRICTION	MODEL/RESTRICTION	FROM-TO
CONT'D AN(NC10-42-110F)					
NC10-42-110F	1				9501-9701
NC49-42-110	1				9701-
42-210		PIPE,FILLER			
NC10-42-210D AN(NC10-42-210E)	1				-7C17
*NC49-42-210B	1				0201-
NC10-42-210E AN(NC10-42-210F)	1				7C17-8305
NC10-42-210F AN(NC10-42-210G)	1				8305-8323
NC10-42-210G C (NC10-42-210H)	1				8323-8B05
NC10-42-210H	1				8B05-9701
NC49-42-210A	1				9701-0201
42-240		COVER,DUST			
NC10-42-240	1				-9701
NC49-42-240	1				9701-
42-240A		HOSE,JOINT			
NC10-42-231	1				
42-241		GASKET,FILLER PIPE			
0B66-42-366B	1				
42-243A		GASKET'A',DUST COVER			
NA01-42-233	1				
42-249		BOLT,FILLER PIPE			
NA01-42-249B	4				
42-250		CAP,FILLER			
NC10-42-250A (NC10-42-250A)	1				-8B24
NC10-42-250A	1				8B24-9701
NC49-42-250	1				9701-
42-260J		HOSE,BREATHER			
NC49-42-232	1				9701-

NC10-42-210G C NC10-42-210H GE4T-42-270

7C17 NB353*-101341
8305 NB353*-110055
8323 NB353*-112641
8B05 NB353*-123496
8B24 NB353*-124510
9501 NB353*-137711
9701 NB353*-13B751

CAT. AUNA07-05 2000-01

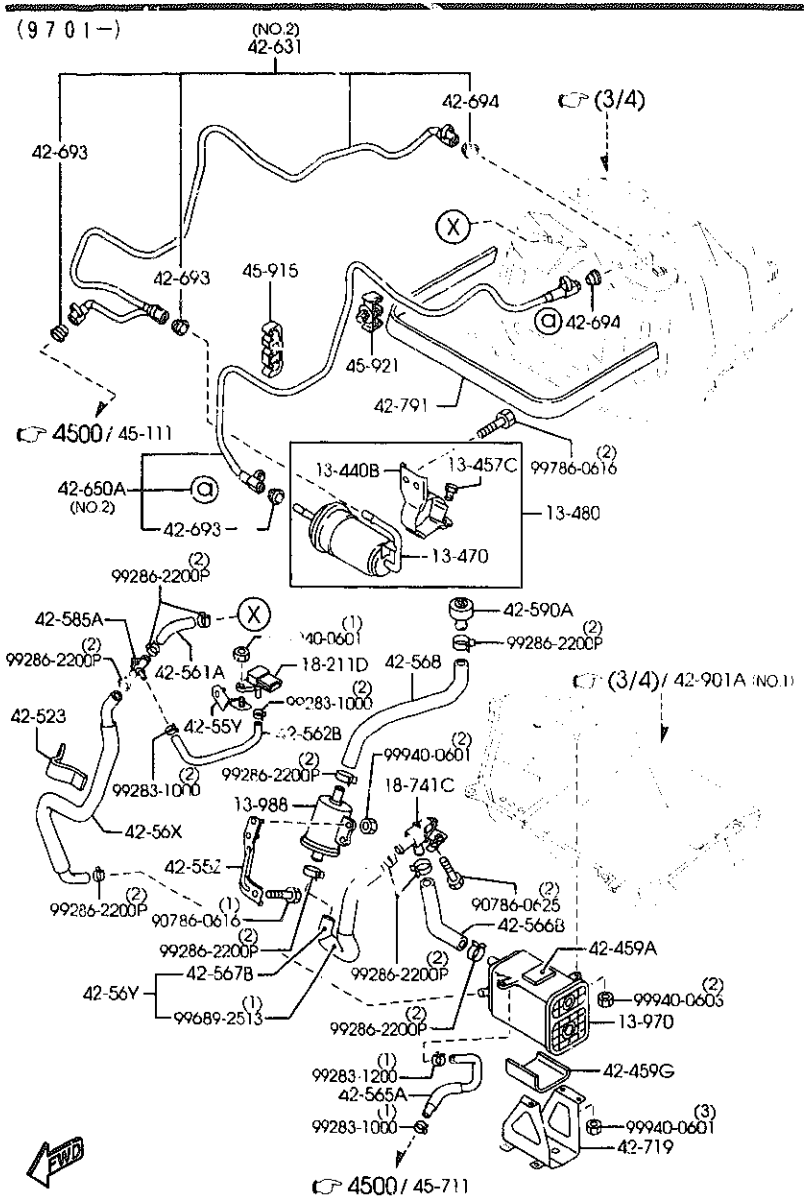

AUNA07 (1N03714)

4200A -4 FUEL TANK

PART NO.	QTY	MODEL/RESTRICTION	MODEL/RESTRICTION	MODEL/RESTRICTION	FROM-TO
42-280		VALVE,NON RETURN			
GA2A-42-270	1				-8B05
GE4T-42-279	1				8B05-9701
42-290A		PROTECTOR'A',FILLER PIPE			
NC11-42-291 A (NC11-42-291A)	1				-8301
NC11-42-291A	1				8301-
42-459A		RUBBER,CUSHION			
BP4W-18-991	1				
42-459G		RUBBER,CUSHION			
BP4W-18-992	1				
42-510		PIPE,FUEL			
NC10-42-511	1				-9701
42-523		PAD,FUEL TANK			
GA5R-42-767	1	NISSHO			9701-
42-55Y		BRACKET			
NC49-42-55Y	1				9701-
42-55Z		BRACKET			
NC49-42-55Z	1				9701-
42-56X		HOSE,FUEL			
NC49-42-56XA A (NC49-42-56XC)	1				9701-9820
NC49-42-56XC	1				9820-
42-56Y		HOSE,FUEL			
*NC49-42-56Y	1				9701-
42-561A		HOSE,FUEL			
NC10-42-560	1				-9701
NC49-42-561	1				9701-
42-562		HOSE NO.2,BREATHER			

8301 NB353*-109481
8B05 NB353*-123496
9701 NB353*-138751
9820 NB353*-140247

CAT. AUNA07-05 2000-01

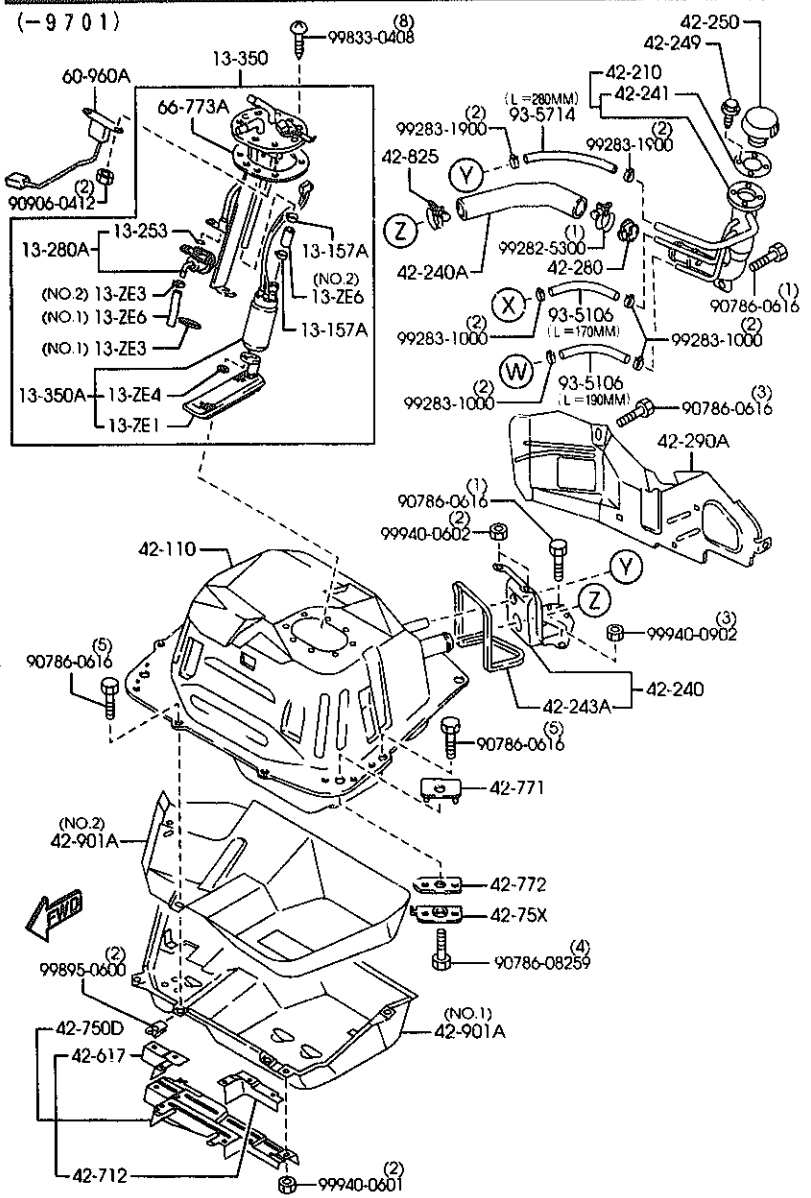

AUNA07 (1N03711)

PART NO.	QTY	MODEL/RESTRICTION	MODEL/RESTRICTION	MODEL/RESTRICTION	FROM-TO
CONT'D					
NC10-42-562A	1				-9701
42-562B		HOSE,FUEL			
NC49-42-562	1				9701-
42-563A		HOSE NO.3,BREATHER			
NC10-42-563	1				-9701
42-564		HOSE NO.4,BREATHER			
NC10-42-564	1				-9701
42-565A		HOSE,FUEL			
NC49-42-565A	1				9701-
42-566		HOSE NO.5,BREATHER			
NC10-42-566	1				-9701
42-566B		HOSE,FUEL			
NC49-42-566	1				9701-
42-567B		HOSE,FUEL			
NC49-42-567	1				9701-
42-568		HOSE,FUEL			
NC49-42-568A	1				9701-
42-571		HOSE,VENT			
NC10-42-570	1				-9701
42-571A		HOSE,FUEL			
NC10-42-565A	1	(ILLUST. NO.1)			-9701
NC10-42-571	1	(ILLUST. NO.2)			-9701
42-581A		HOSE,FUEL			
NC10-42-567	1	(ILLUST. NO.1)			-9701
NC10-42-568	1	(ILLUST. NO.2)			-9701
42-585A		JOINT			
LC62-42-585	1				9701-

9701 NB353*-138751

CAT. AUNA07-05 2000-01

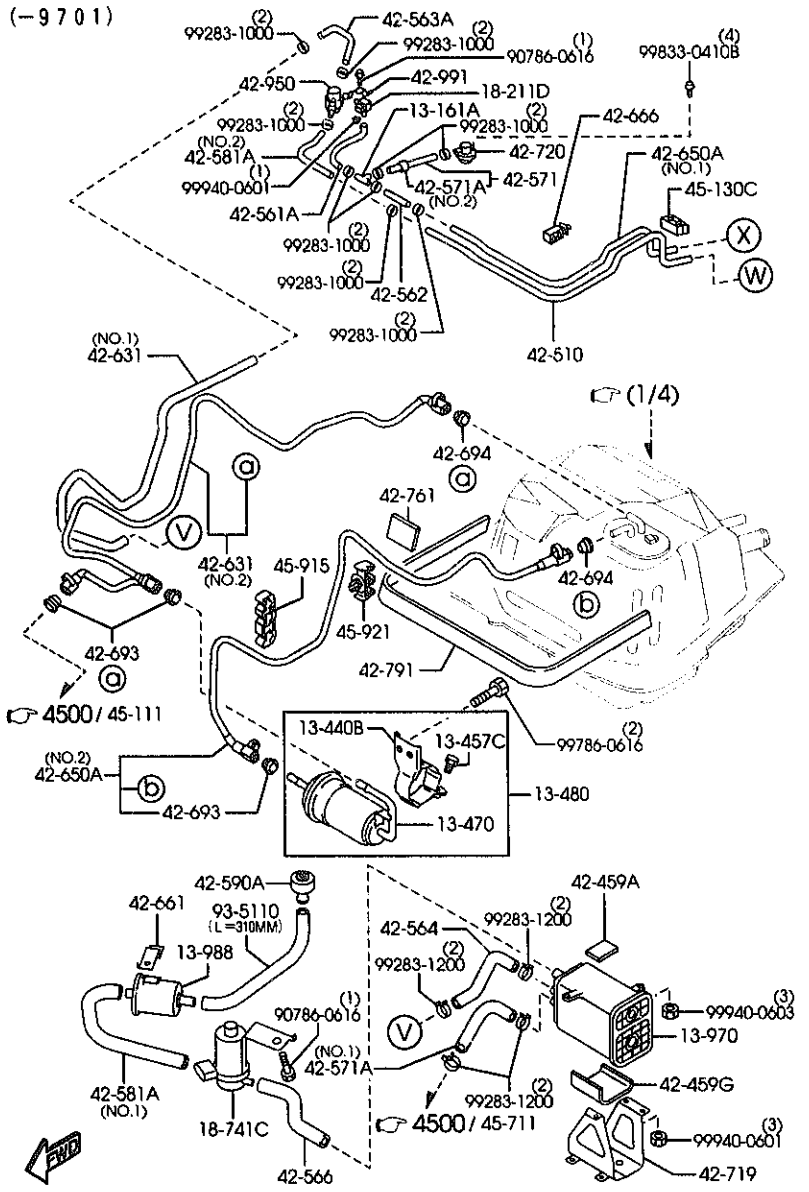

PART NO.	QTY	MODEL/RESTRICTION	MODEL/RESTRICTION	MODEL/RESTRICTION	FROM-TO
42-590A		CHAMBER,EVAPO.-TANK BRKT			
NC10-42-590	1				-9701
NC49-42-590	1				9701-
42-617		PROTECTOR			
NC10-42-756	1				
42-631		PIPE,FUEL MAIN			
NC10-42-61YD A (NC10-42-61YE)	1	(ILLUST. NO.2)			-7C03
NC10-42-513	1	(ILLUST. NO.1)			-9701
NC10-42-61YE AN(NC10-42-61YG)	1	(ILLUST. NO.2)			7C03-9801
NC10-42-61YG C (NC10-42-61YH)	1	(ILLUST. NO.2)			9801-9901
NC10-42-61YH	1	(ILLUST. NO.2)			9901-
42-650A		PIPE,FUEL			
NC10-42-61XD A (NC10-42-61XE)	1	(ILLUST. NO.2)			-7C03
NC10-42-512A	1	(ILLUST. NO.1)			-9701
NC10-42-61XE AN(NC10-42-61XG)	1	(ILLUST. NO.2)			7C03-9801
NC10-42-61XG C (NC10-42-61XH)	1	(ILLUST. NO.2)			9801-9901
NC10-42-61XH	1	(ILLUST. NO.2)			9901-
42-661		BRACKET,FUEL PIPE			
NC10-42-558	1				-9701
42-666		CLIP			
NC10-42-591A	2				-9701
42-693		RETAINER			
T032-42-694	3				
42-694		RETAINER			
T032-42-694	2				-9901
NC49-42-694	2				9901-
42-712		PROTECTOR			

NC10-42-61YG 7C03 NB353*-100063
C NC10-42-61YH 9701 NB353*-138751
NC49-42-694 2 9801 NB353*-139968
NC10-42-61XG 9901 NB353*-140606
C NC10-42-61XH
NC49-42-694 2

(9701-)

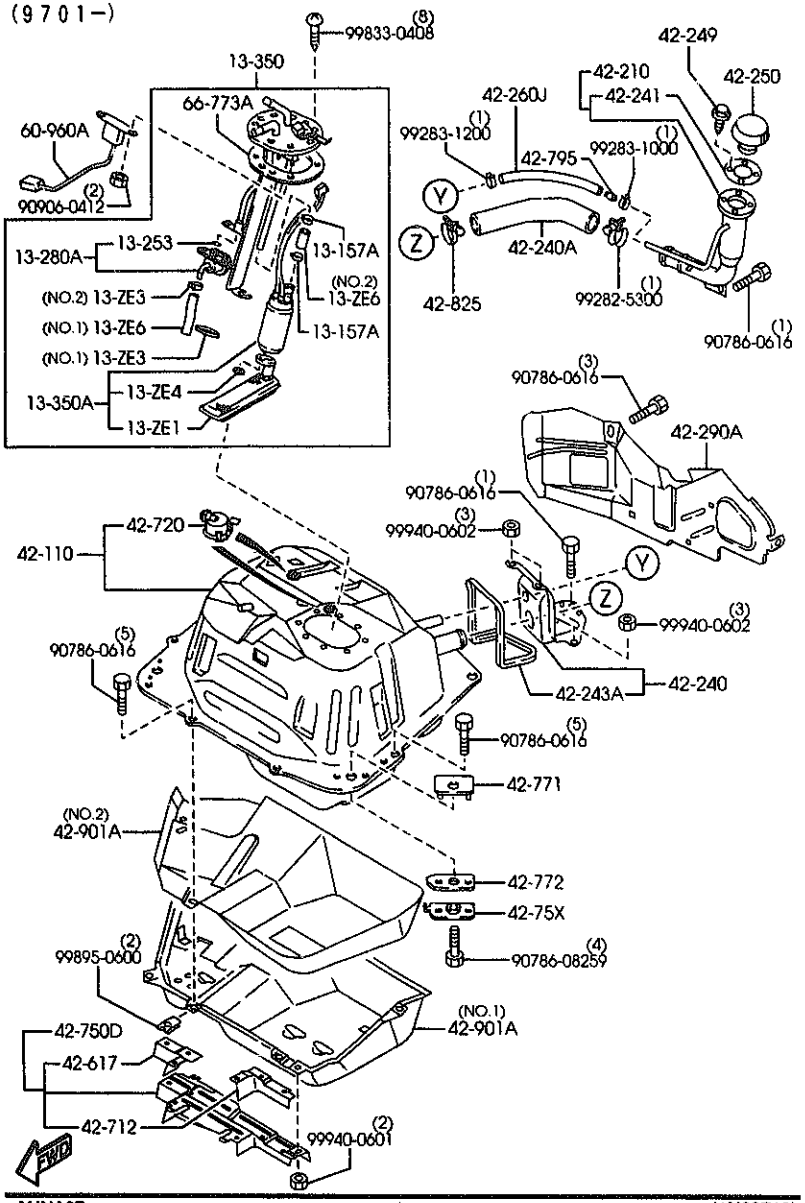

AUNA07 (1N03713)

PART NO.	QTY	MODEL/RESTRICTION	MODEL/RESTRICTION	MODEL/RESTRICTION	FROM-TO
CONT'D					
NC10-42-755	1				
42-719		PROTECTOR			
NC10-42-79X	1				
42-720		VALVE,FUEL VAPOR.			
BC1M-42-980A	1				-9701
BJ0E-42-980	2				9701-
42-75X		REINF.,FUEL TANK			
NA01-42-77X	4				-9701
NC11-42-773	4				9701-
42-750D		INSULATOR,FUEL TANK			
NC10-42-740A	1				
42-761		PAD			
NC10-42-761	1				-9701
42-771		RUBBER(UP),MOUNT-TANK			
NC10-42-771	4				
42-772		RUBBER(LWR),MOUNT-TANK			
NA01-42-772	4				
42-791		PAD,FUEL TANK			
NA01-42-761	1				
42-795		INSERT			
LA01-42-795	1				9701-
42-825		CLAMP,HOSE			
S05B-42-239	1				
42-901A		INSULATOR			
NC10-42-74XC	1	(ILLUST. NO.1)			
NC10-42-743A	1	(ILLUST. NO.2)			
42-950		VALVE,PRESSURE CONTROL			
NC10-42-950	1				-9701

9701 NB353*-13B751

CAT. AUNA07-05 2000-01

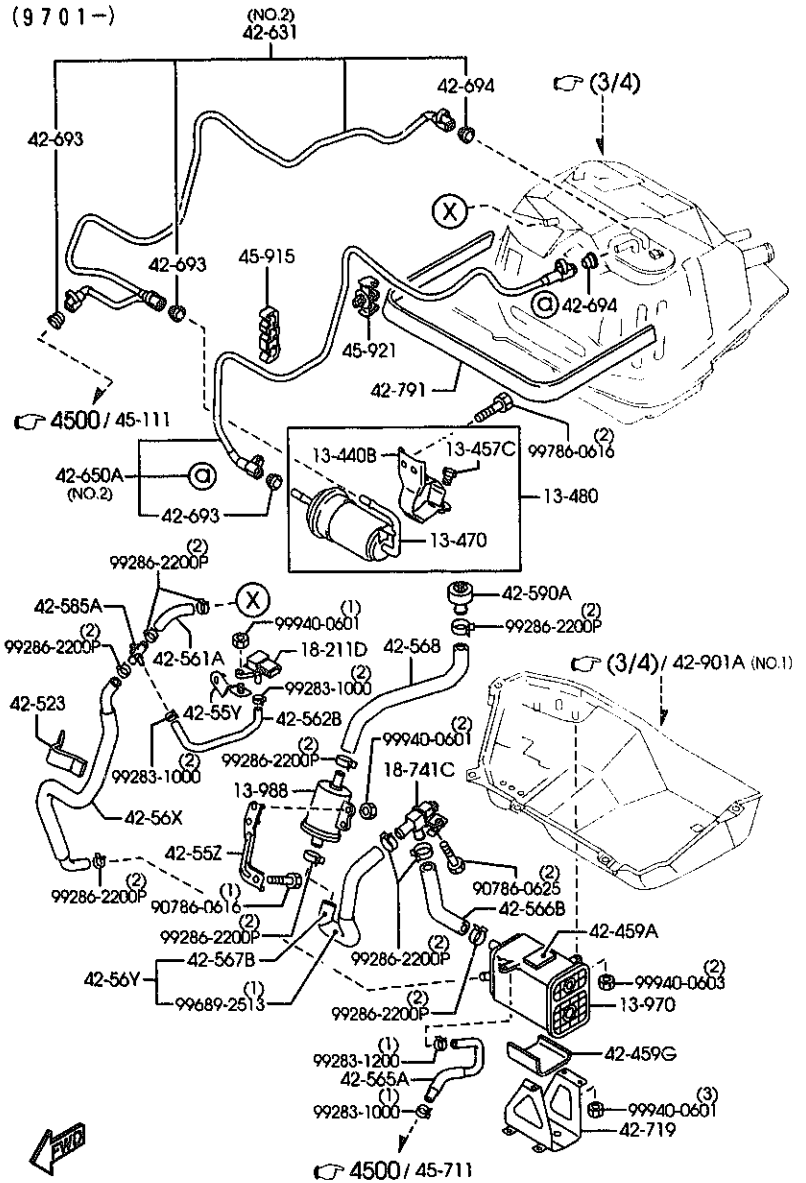

AUNA07 (1N03714)

4200A -8 * FUEL TANK

PART NO.	QTY	MODEL/RESTRICTION	MODEL/RESTRICTION	MODEL/RESTRICTION	FROM-TO
42-991		BRACKET			
NC10-42-55Y	1				-9701
45-130C		RUBBER,MOUNTING			
NC10-42-663	1				-9701
45-915		CLIP,PIPE			
NA01-45-914	1				
45-921		CLIP,PIPE			
8210-45-917	1				
60-960A		GAUGE,FUEL TANK			
NC10-60-960	1				
66-773A		GASKET			
BP4W-60-962	1				
93-5106		HOSE			
99351-06999	1	L=1M CUT IT TO USE			-9701
93-5110		HOSE			
99351-10999	1	L=1M CUT IT TO USE			-9701
93-5714		HOSE			
99357-14999	1	L=1M CUT IT TO USE			-9701

9701 NB353*-138751

CAT. AUNA07-05 2000-01

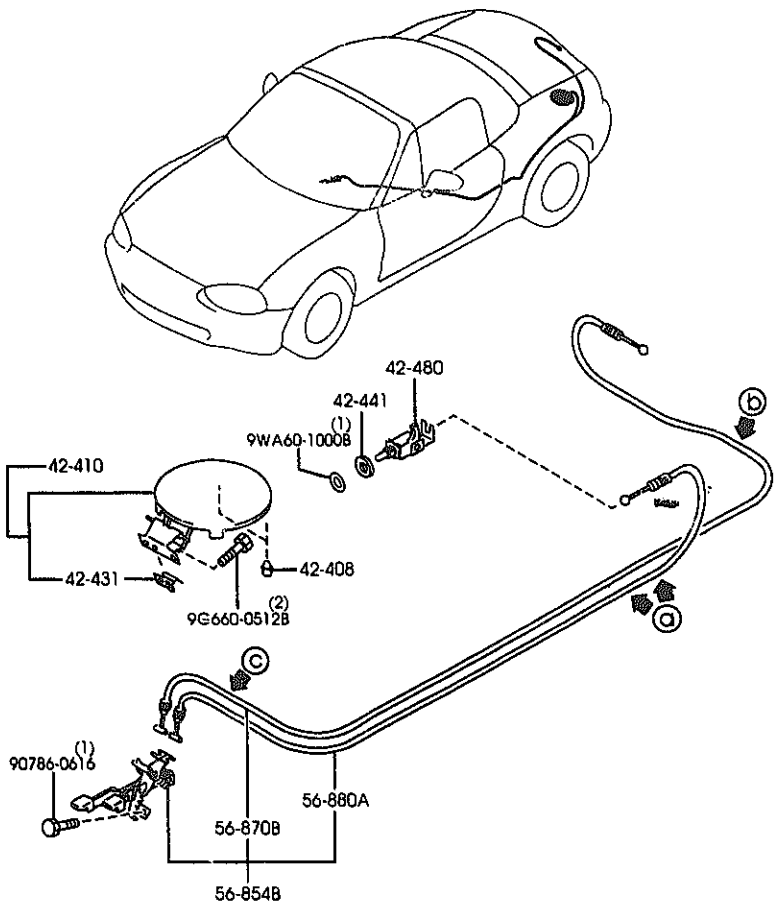

AUNA07 (1N04450)

4210A -1 FUEL LID OPENER

PART NO.	QTY	MODEL/RESTRICTION	MODEL/RESTRICTION	MODEL/RESTRICTION	FROM-TO
42-408		STOPPER,FILLER LID			
0187-70-491	2				
42-410		LID,FUEL FILLER			
NC10-42-410B AN(NC10-42-410C)	1				-7C01
NC10-42-410C AN(NC10-42-410D)	1				7C01-9510
NC10-42-410D	1				9510-
42-431		SPRING LIFT,LID			
H043-42-431D	1				
42-441		WASHER,LID OPENER			
NA01-56-896	1				
42-480		OPENER,FILLER LID			
B095-56-890A AN(B095-56-890B)	1				-9118
B095-56-890B	1				9118-
56-832		CLIP'B',OPENER CABLE			
NC10-56-832	2				
56-854B		OPENER,T/LID & F/LID			
NC10-56-850A AN(NC10-56-850B)	1				-9201
NC10-56-850B A (NC10-56-850C)	1				9201-9A01
*NC10-56-850C	1				9A01-
56-870B		CABLE,T/LID OPENER			
NC10-56-870A AN(NC10-56-870B)	1				-9201
NC10-56-870B A (NC10-56-870C)	1				9201-9A01
*NC10-56-870C	1				9A01-
56-880A		CABLE,F/LID OPENER			
NC10-56-880A AN(NC10-56-880B)	1				-9201
NC10-56-880B	1				9201-

7C01 NB353*-100063
9118 NB353*-128424
9201 NB353*-130051
9510 NB353*-137762
9A01 NB353*-141073

CAT. AUNA07-05 2000-01

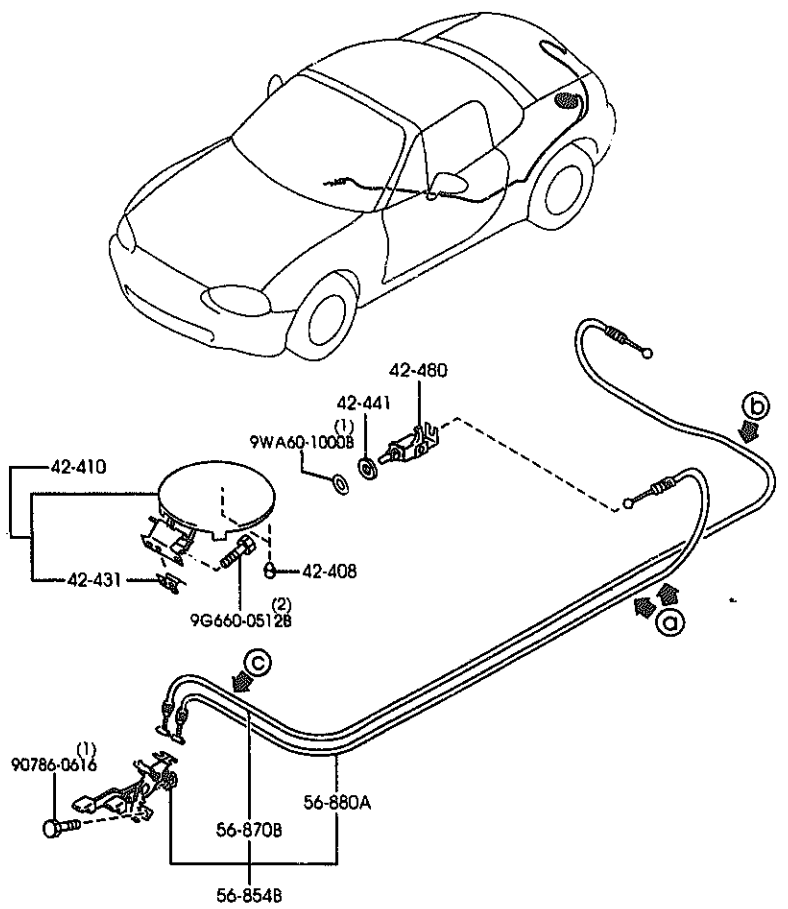

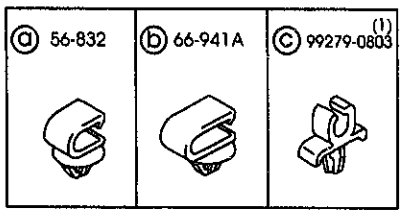

AUNA07 (1N04450)

PART NO.	QTY	MODEL/RESTRICTION	MODEL/RESTRICTION	MODEL/RESTRICTION	FROM-TO
66-941A		CLIP			
M003-66-941	1				

CAT. AUNA07-05 2000-01

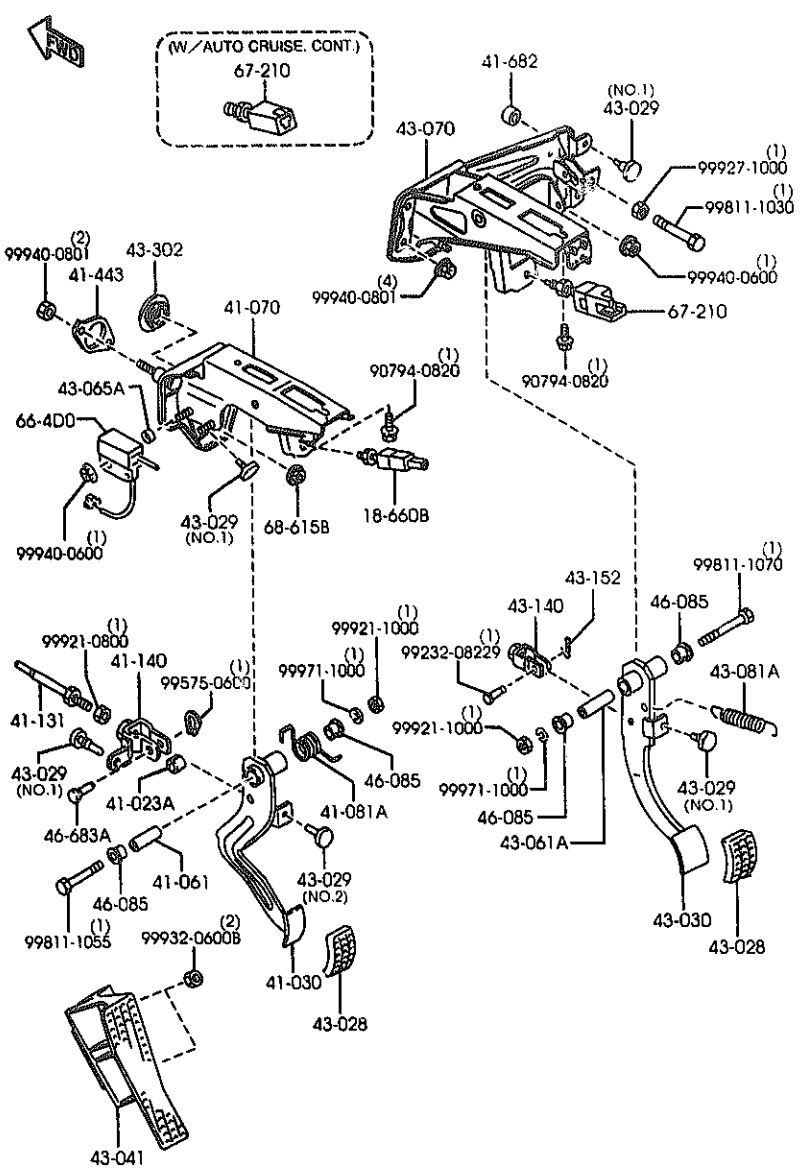

AUNA07 (1N04460)

PART NO.	QTY	MODEL/RESTRICTION	MODEL/RESTRICTION	MODEL/RESTRICTION	FROM-TO
18-660B		SWITCH,CLUTCH			
LA01-66-490A	1				
41-023A		BUSH			
0727-41-023	1				
41-030		PEDAL,CLUTCH			
NA01-41-030D AN(NA01-41-030E)	1				-8101
NA01-41-030E	1				8101-
41-061		SPACER			
0727-41-061	1				
41-070		BRACKET,MASTER CYL.			
NA01-41-070B AN(NA01-41-070C)	1				-8101
NA01-41-070C	1				8101-
41-081A		SPRING,RETURN			
BR70-41-081	1				
41-131		ROD,PUSH			
0824-41-131	1				
41-140		FORK,CLUTCH			
NA01-41-140B	1				
41-443		GASKET			
NA01-41-443	1				
41-682		RUBBER,STOP			
1456-41-682	1				
43-028		PAD,PEDAL			
B092-43-028	2				
43-029		RUBBER,STOPPER			
B001-43-029	4	KURDISHI TEKKO (ILLUST. NO.1)			
G030-43-029	1	OIRES KOGYO (ILLUST. NO.2)			

8101 NB353#-102707

CAT. AUNA07-05 2000-01

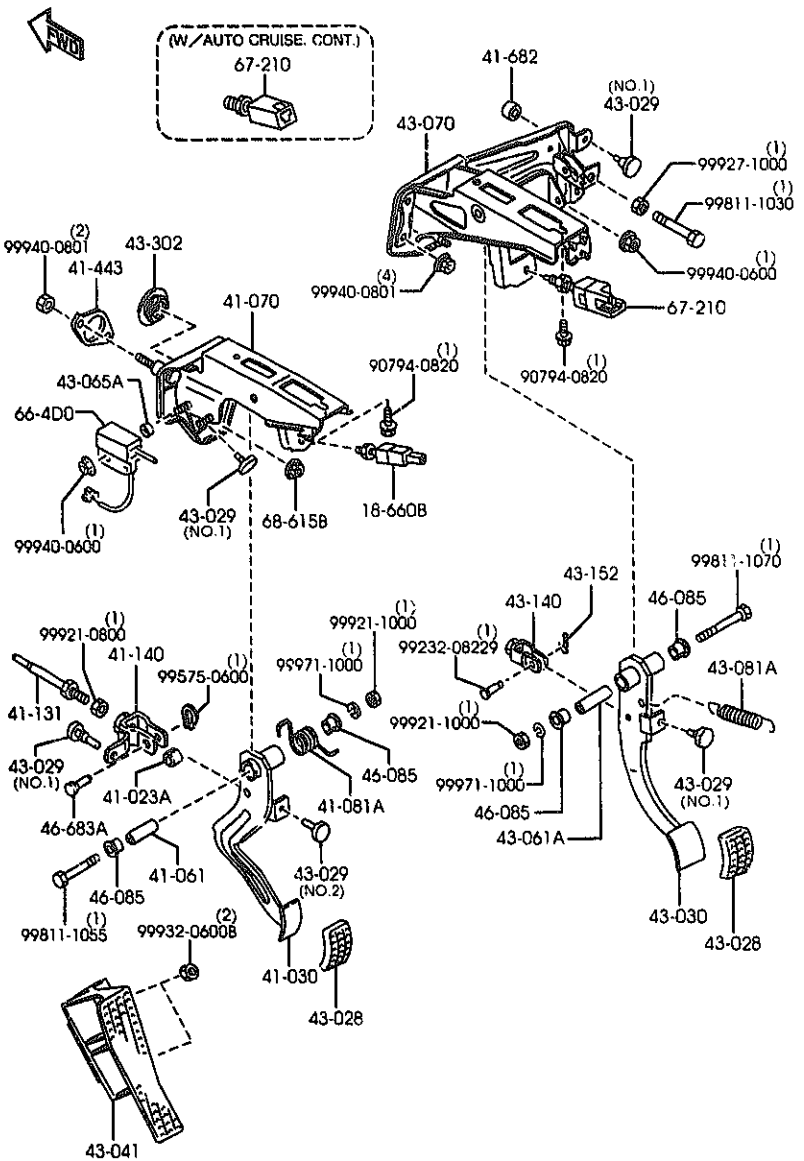

AUNA07 (1N04460)

PART NO.	QTY	MODEL/RESTRICTION	MODEL/RESTRICTION	MODEL/RESTRICTION	FROM-TO
43-030		PEDAL,BRAKE			
NA01-43-030B	1				
43-041		REST,FOOT			
NC10-43-041	1				
43-061A		PIPE,PEDAL			
0866-43-062	1				
43-065A		SPACER			
BR70-43-065	1				
43-070		BRACKET,MASTER CYL.			
NA02-43-070C	1				-8801
AN(NA02-43-070D)					
NA02-43-070D	1				8801-
43-081A		SPRING,RETURN-BRAKE			
B092-41-081	1				
43-140		FORK,BRAKE			
1524-43-141	1				
43-152		PIN,SNAP			
D001-43-152	1				
43-302		GROMMET,BRAKE PEDAL			
B180-43-302	1				
46-085		BUSH			
1015-46-085	4				
46-683A		PIN			
0223-46-683	1				
66-4D0		SWITCH,CLUTCH CUT			
FB01-66-4D0	1				
67-210		SWITCH,STOP-LAMP			
BR70-66-490A	1	(W/AUTO CRUISE.CONT.)			

8801 NB353*-121854

CAT. AUNA07-05 2000-01

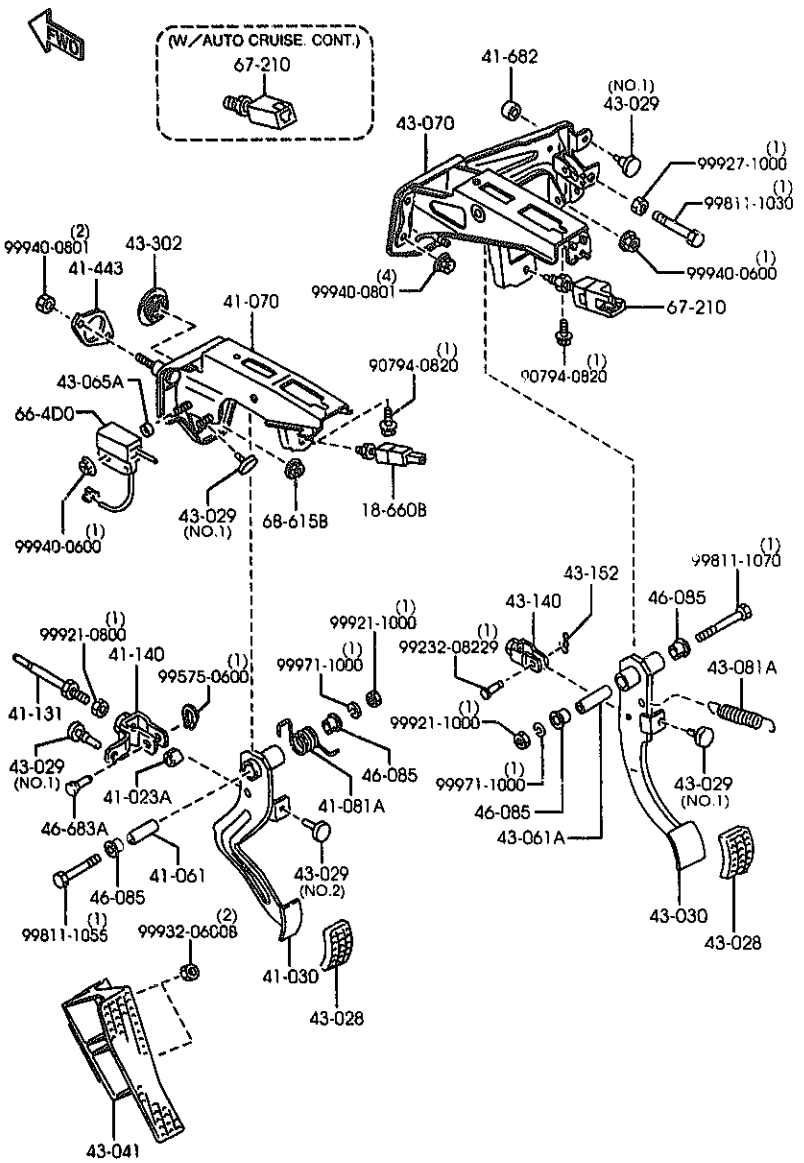

AUNA07 (1N04460)

4300A -3 * MANUAL TRANSMISSION CLUTCH & BRAKE PEDALS

PART NO.	QTY	MODEL/RESTRICTION	MODEL/RESTRICTION	MODEL/RESTRICTION	FROM-TO
CONT'D					
8001-66-490A	1	(W/O AUTO CRUISE.CONT.)			-8801
UH71-66-490	1	(W/O AUTO CRUISE.CONT.)			8801-
68-615B		NUT,FLANGE-CAP			
8100-68-615	1				

8801 NB353*-121854

CAT. AUNA07-05 2000-01

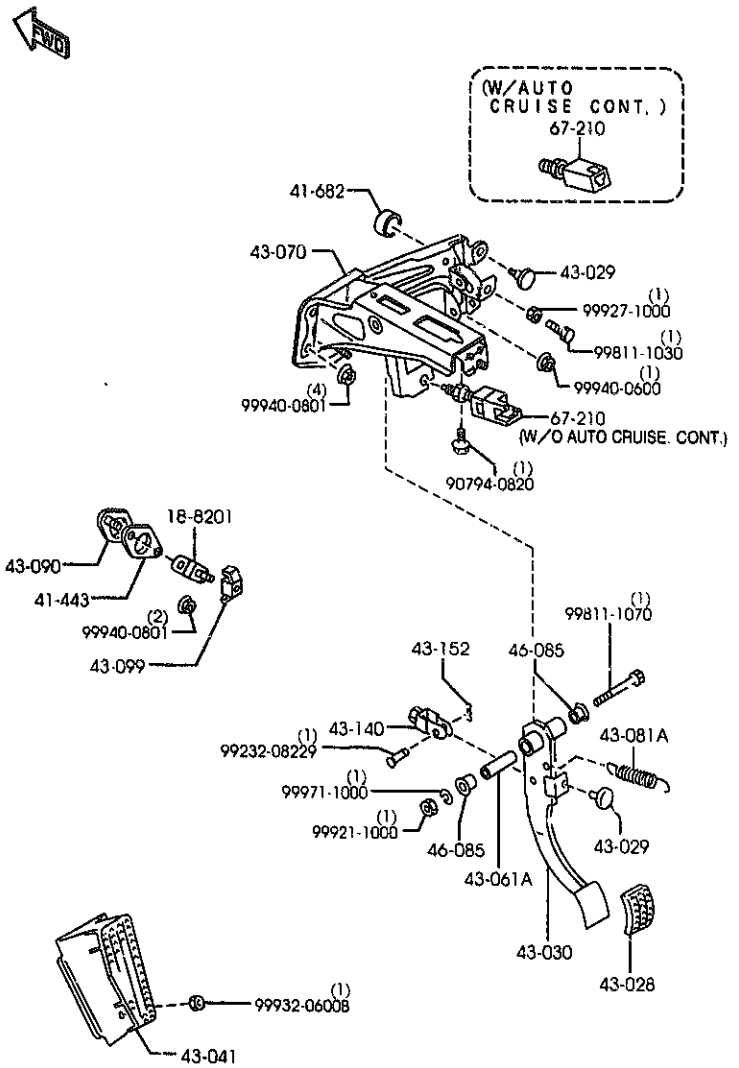

AUNA07 (1N01980)

43008 -1 AUTOMATIC TRANSMISSION BRAKE PEDAL

PART NO.	QTY	MODEL/RESTRICTION	MODEL/RESTRICTION	MODEL/RESTRICTION	FROM-TO
18-8201		BRACKET,CONTROL UNIT			
NA75-18-9453	1				
41-443		GASKET			
NA01-41-443	1				
41-682		RUBBER,STOP			
1456-41-682	1				
43-028		PAD,PEDAL			
0268-43-028	1				
43-029		RUBBER,STOPPER			
B001-43-029	2	KUROISHI TEKKO			
43-030		PEDAL,BRAKE			
NA03-43-030B	1				
43-041		REST,FOOT			
NC10-43-041	1				
43-061A		PIPE,PEDAL			
0B66-43-062	1				
43-070		BRACKET,MASTER CYL.			
NA02-43-070C	1				-8801
AN(NA02-43-070D)					
NA02-43-070D	1				8801-
43-081A		SPRING,RETURN-BRAKE			
B092-41-081	1				
43-090		PLATE			
NA03-43-090A	1				
43-099		HOLDER,PLATE			
HB23-43-099	1				
43-140		FORK,BRAKE			
1524-43-141	1				

8801 NB353*-121854

CAT. AUNA07-05 2000-01

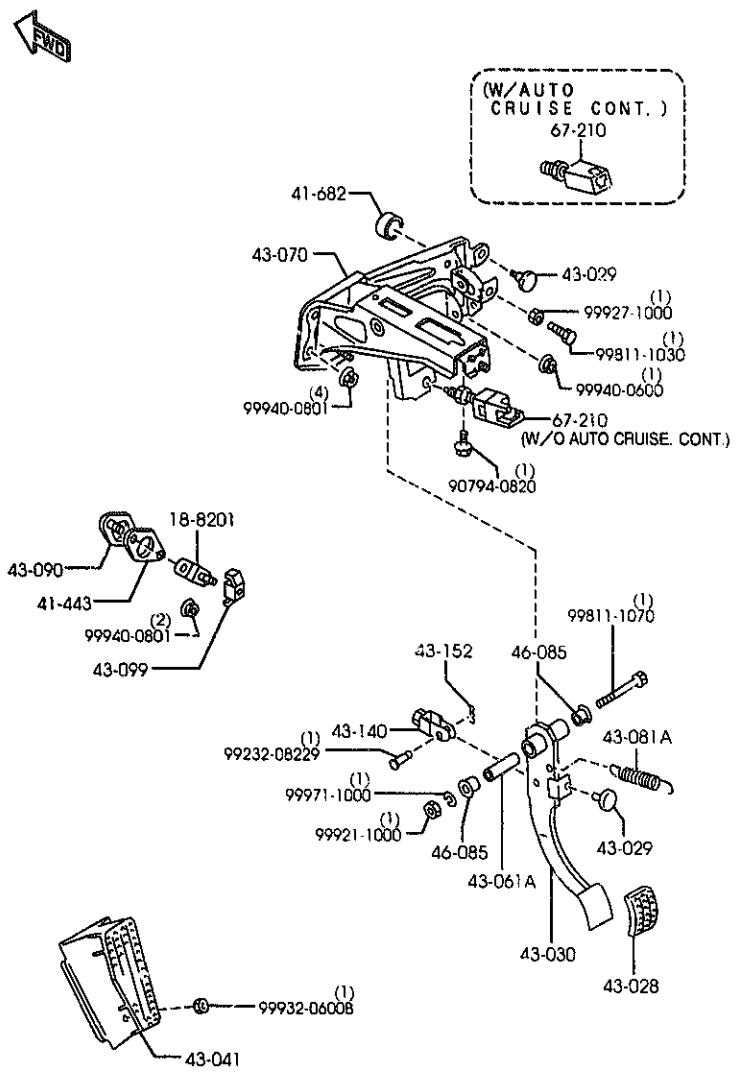

4300B -2 * AUTOMATIC TRANSMISSION BRAKE PEDAL

PART NO.	QTY	MODEL/RESTRICTION	MODEL/RESTRICTION	MODEL/RESTRICTION	FROM-TO
43-152		PIN,SNAP			
B001-43-152	1				
46-085		BUSH			
1015-46-085	2				
67-210		SWITCH,STOP-LAMP			
3R70-66-490A	1	(W/AUTO CRUISE.CONT.)			
B001-66-490A	1	(W/O AUTO CRUISE.CONT.)			-8801
UH71-66-490	1	(W/O AUTO CRUISE.CONT.)			8801-

8801 NB353*-121854

AUNA07 (1N01980)

CAT. AUNA07-05 2000-01