Parts Catalog

Mazda MX-5 MIATA
U.S.A.
('99►)

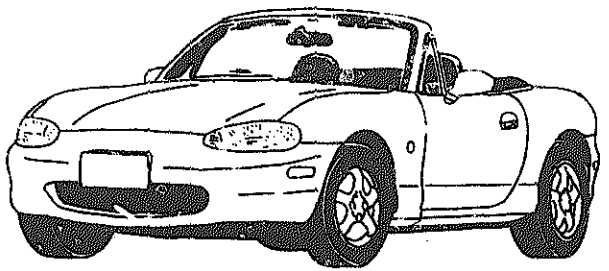

(3353#-100001~)

Jan.'00(REVISED)

Catalog No. AU-NA07-05

mazda

©2000 Mazda Motor Corporation

LAYOUT OF CONTENTS / DISPOSITION TYPOGRAPHIQUE DE CONTENU / DISPOSICION DEL CONTENIDO / ANORDNUNG DES INHALTS

- The following is a typical example of the layout of contents on Mazda microfiche parts catalog
- Voici un exemple typique de la disposition typographique de contenu dans les microfiches de catalogue des pièces de Mazda.
- El siguiente es un ejemplo típico de la disposición del contenido en una microficha del catálogo de repuestos de Mazda.
- Folgendes ist ein typisches Beispiel der Inhaltsanordnung des Mazda-Mikrofiche-Teilekatalogs.

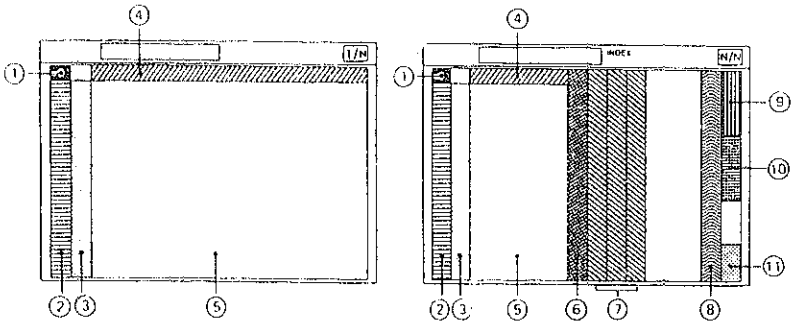

Remark : The items listed under ④ have been deleted from each fiche since Dec. '93

① · Layout of contents
· Disposition Typographique de Contenu
· Disposición del contenido
· Anordnung des Inhalts

② · Pictorial Index
· Index par Schémas
· Indice Gráfico
· Illustrierter Index

③ · Master Section No. Index
· Index des Numéros des Sections Totale
· Indice del Número de la Sección Maéstra
· Hauptabschnitssnummer-Index

~~④ · Section No. Index for the Column~~
~~· Index des Numéros des Sections pour les Colonnes~~
~~· N° de la Sección para el Indice~~
~~· Abschnitssnummer-Index für die Spalte~~

⑤ · Illustration & Text
· Illustrations et Textes
· Ilustración y Texto
· Abbildung und Text

⑥ · Part No. Index
· Index des Numéros des Pièces
· Indice del N° de Pieza
· Teile-Nr.-Index

⑦ · Alphabetical Index
· Index Alphabétique
· Indice Alfabético
· Alphabetischer Index

⑧ · Model Identification
· Identification des Modèles
· Identificación del Modelo
· Modell-Kennzeichnung

⑨ · Vehicle Identification System
· Système d'Identification de Véhicule
· Sistema de Identification de Vehiculo
· Fahrzeug-Identifikations-system

PICTORIAL INDEX

GASOLINE ENGINE
4 - CYLINDER (1/2)

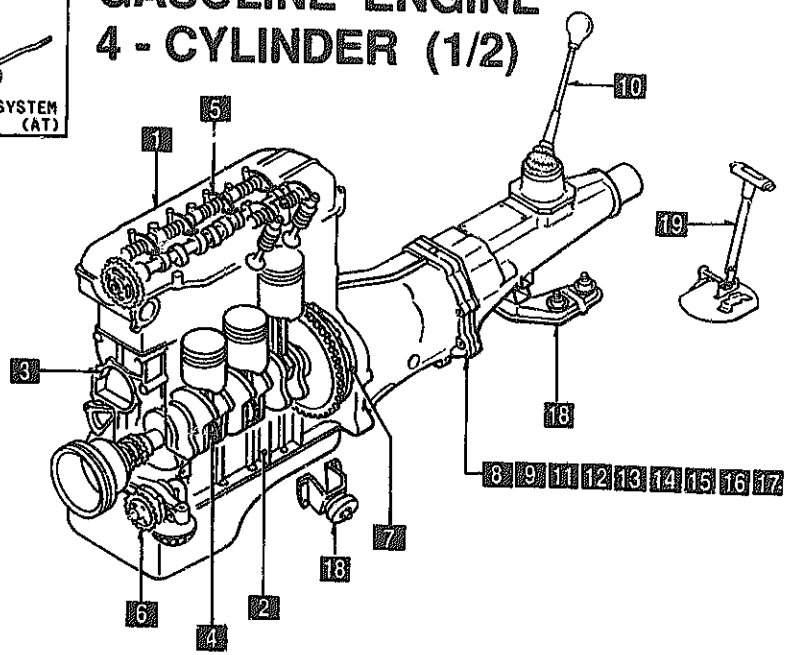

As this illustration is prepared to be applicable to all models, some parts are different in specifications from parts listed in this parts Catalog.

1000

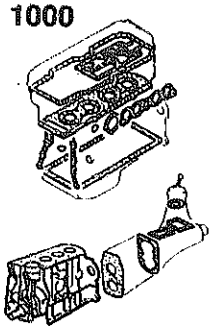

ENGINE & GASKET SETS

1 1010

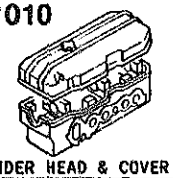

CYLINDER HEAD & COVER

2 1030

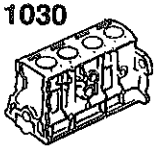

CYLINDER BLOCK

3 1040

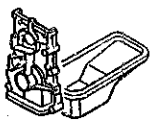

OIL PAN & TIMING COVER

4 1100

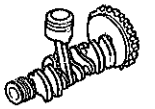

PISTON, CRANKSHAFT & FLYWHEEL

5 1200

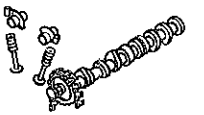

VALVE SYSTEM

19 4600

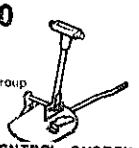

Given in Chassis Group

CHANGE CONTROL SYSTEM (AT)

6 1400

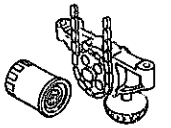

OIL PUMP & FILTER

18 3900

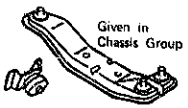

Given in Chassis Group

ENGINE & T/MISSION MOUNTINGS

7 1600

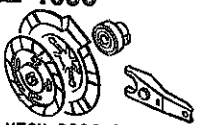

CLUTCH DISC & COVER (MANUAL)

17 1960



GASKET & SEAL KIT (AUTOMATIC)

8 1700

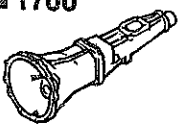

TRANSMISSION CASE (MANUAL)

16 1950



MANUAL LINKAGE SYSTEM (AUTOMATIC)

9 1710

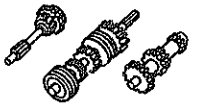

TRANSMISSION GEARS (MANUAL)

15 1940

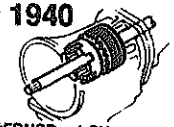

GOVERNOR, LOW & REVERSE PISTON (AUTOMATIC)

14 1930

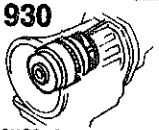

CLUTCHES & PLANETARY GEARS (AUTOMATIC)

13 1925



CONTROL VALVE (AUTOMATIC)

12 1920

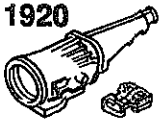

TRANSMISSION CASE & MAIN CONTROL SYSTEM (AUTOMATIC)

11 1910

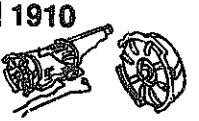

TORQUE CONVERTER, OIL PUMP & PIPINGS (AUTOMATIC)

10 1720

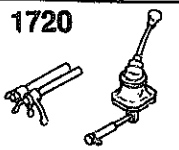

CHANGE CONTROL SYSTEM (MANUAL)

PICTORIAL INDEX

GASOLINE ENGINE
4 - CYLINDER (2/2)

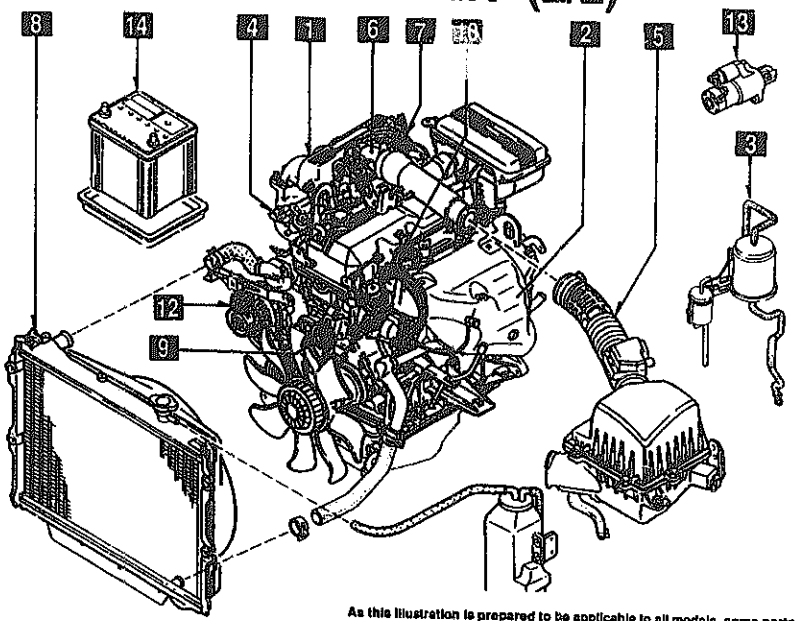

As this illustration is prepared to be applicable to all models, some parts are different in specifications from parts listed in this parts catalog.

1 1300
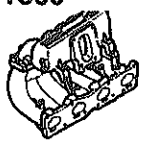
INLET MANIFOLD

2 1310

EXHAUST MANIFOLD

3 1320
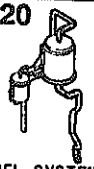
FUEL SYSTEM

4 1325

FUEL DISTRIBUTOR

5 1330
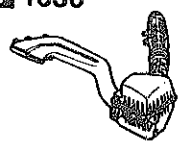
AIR CLEANER

6 1364
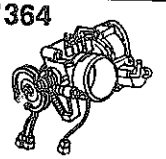
THROTTLE BODY

7 1370

EMISSION CONTROL SYSTEM (INLET SIDE)

8 1500
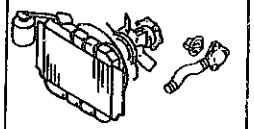
COOLING SYSTEM

9 1580

BRACKET, PULLEY & BELT

10 1800

ENGINE ELECTRICAL SYSTEM

11

12 1830
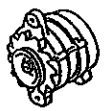
ALTERNATOR

13 1840
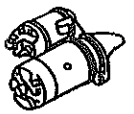
STARTER

14 1850
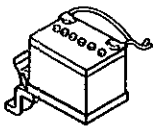
BATTERY

PICTORIAL INDEX

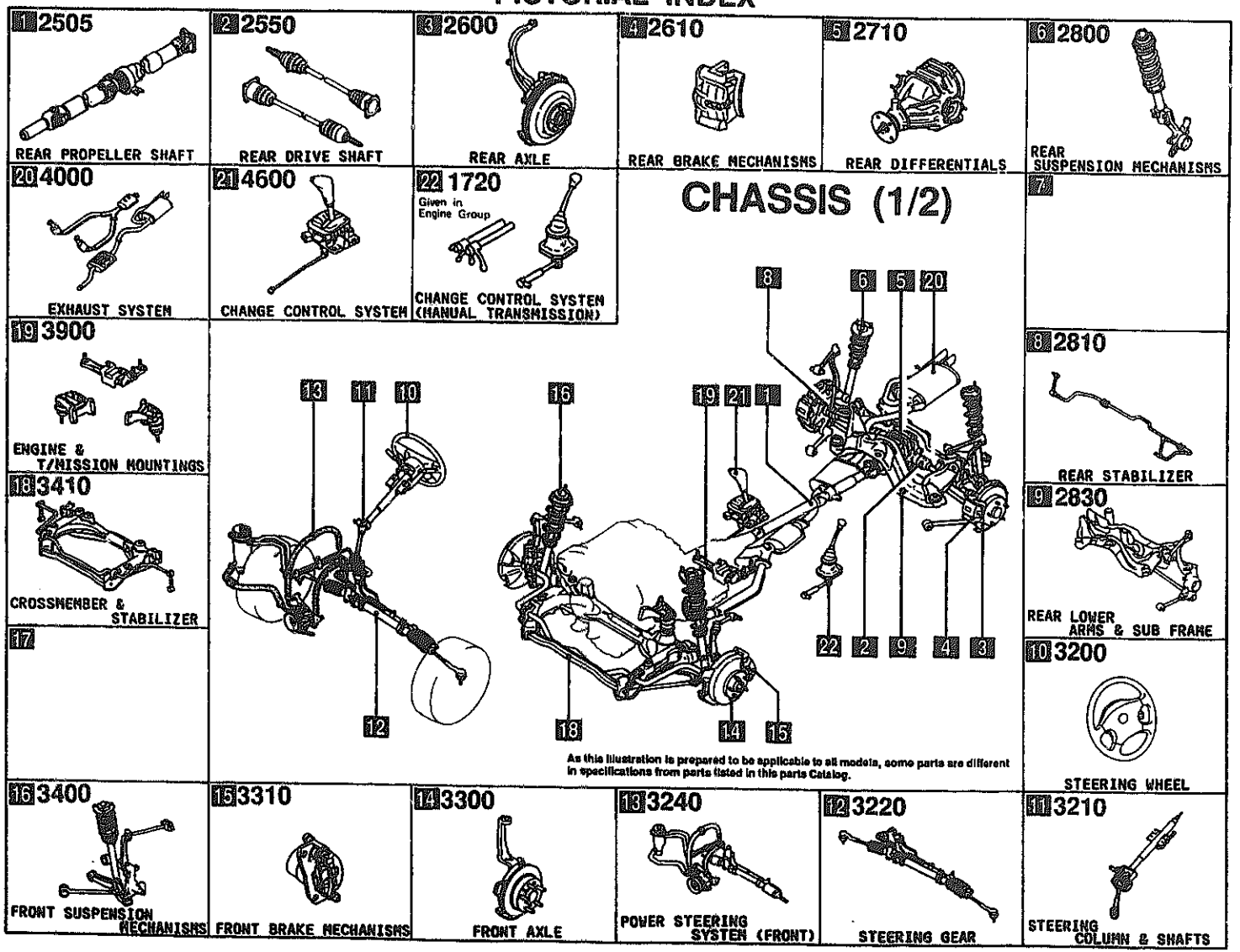

PICTORIAL INDEX

1 3700

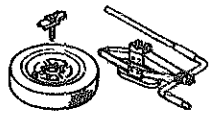

TIRES & JACK

2 4140



CLUTCH RELEASE & MASTER CYLINDERS

3 4145

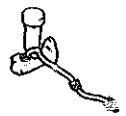

CLUTCH PIPINGS

4 4160



ACCELERATOR CONTROL SYSTEM

5 4200



FUEL TANK

6 4210

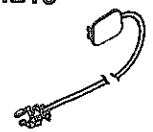

FUEL LID OPENER

CHASSIS (2/2)

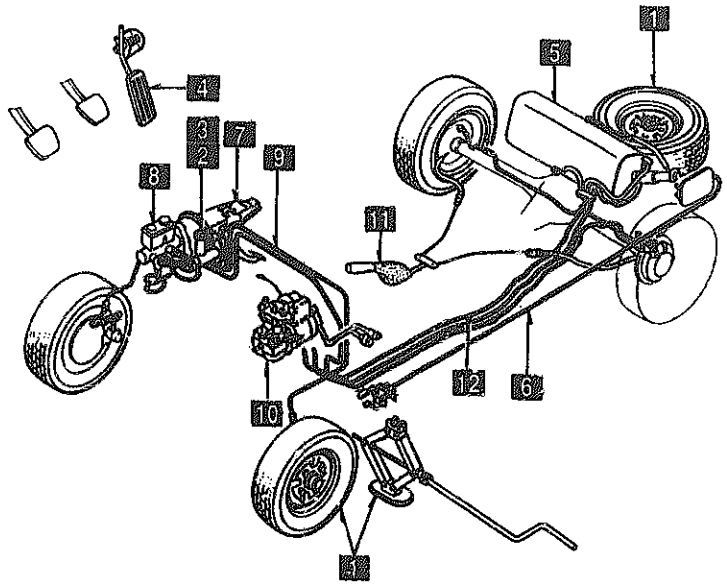

As this illustration is prepared to be applicable to all models, some parts are different in specifications from parts listed in this parts Catalog.

7 4300

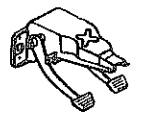

CLUTCH & BRAKE PEDALS

8 4340

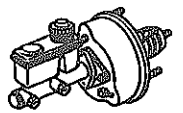

BRAKE MASTER CYLINDER & POWER BRAKE

9 4360



BRAKE PIPINGS

10 4370

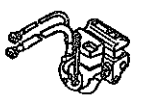

ANTILOCK BRAKE SYSTEM

12 4500

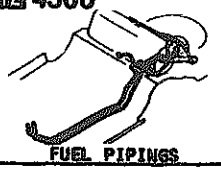

FUEL PIPINGS

11 4400



PARKING BRAKE SYSTEM

PICTORIAL INDEX

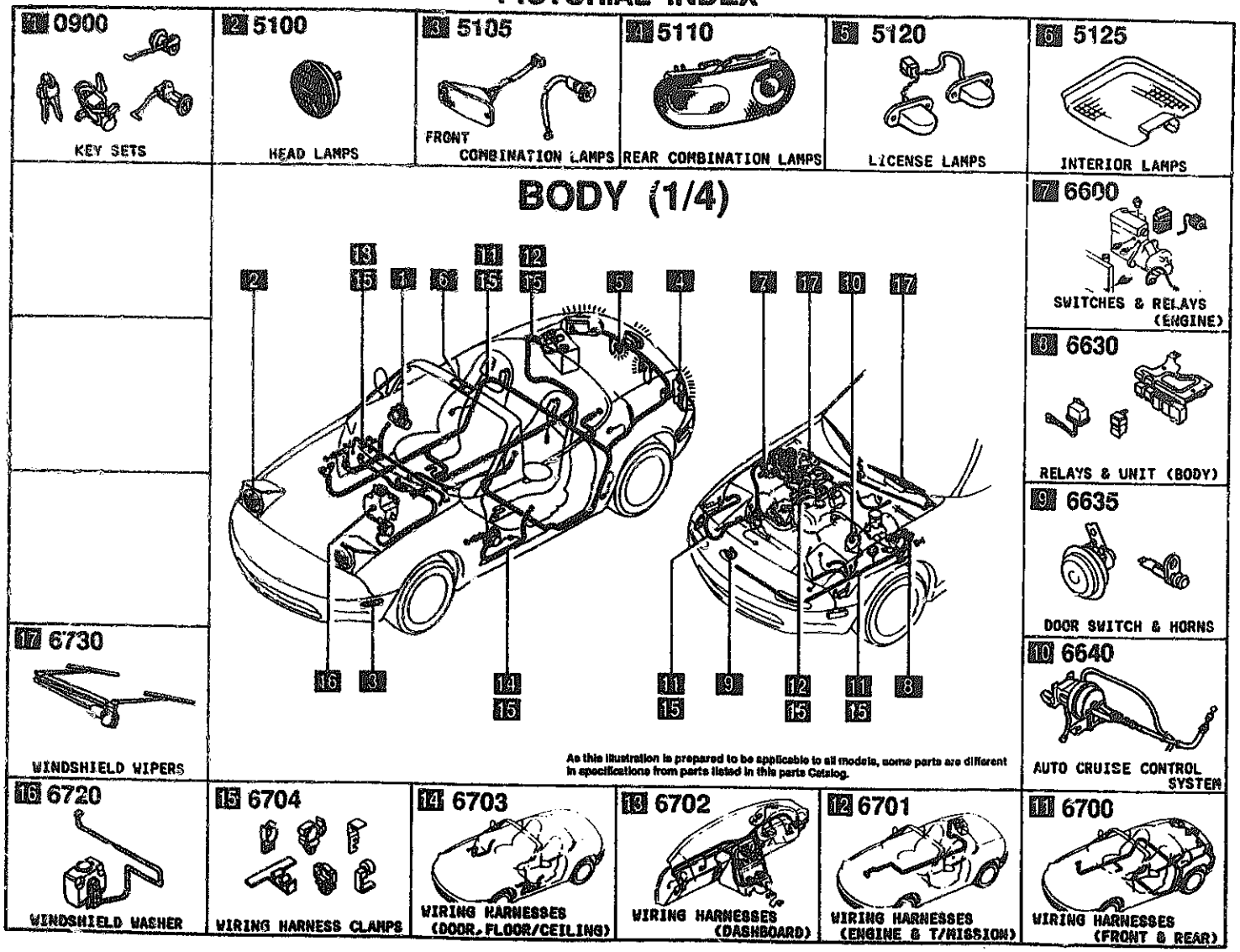

PICTORIAL INDEX

BODY (2/4)

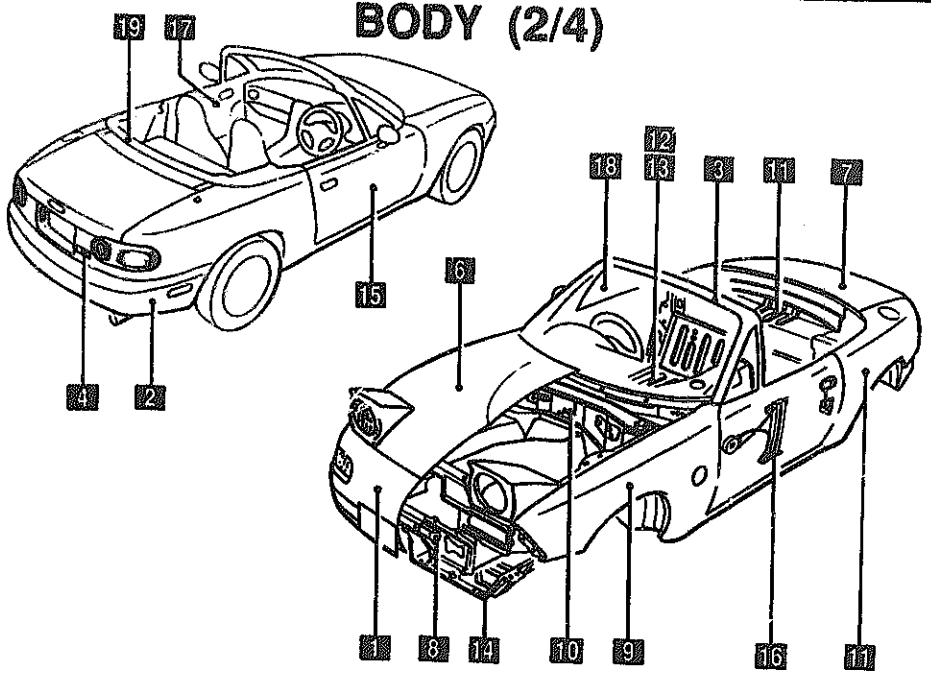

1 5100
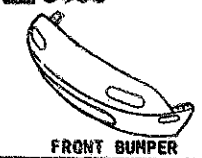
FRONT BUMPER

2 5010

REAR BUMPER

3 5030
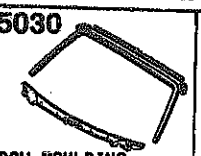
WINDOW MOULDING & COWL GRILLES

4 5170

ORNAMENTS

5

6 5230

BONNET

7 5260

TRUNK LID

8 5310

FRONT PANELS

9 5320

FENDER & WHEEL APRON PANELS

10 5330

DASH & COWL PANELS

11 5340

SIDE PANELS

12 5370
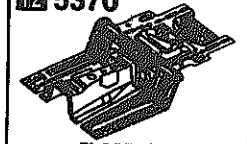
FLOOR PANELS

13 5380

FLOOR ATTACHMENTS (HOLE COVERS)

14 5390
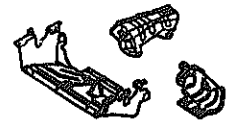
FLOOR ATTACHMENTS

15 5800
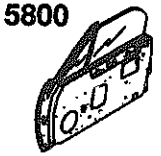
FRONT DOORS

16 5830

FRONT DOOR MECHANISMS

17 5840
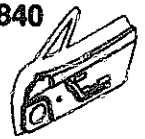
FRONT DOOR TRIMS & RELATED PARTS

18 6300

WINDOW GLASSES

19 6330

SUNROOF

PICTORIAL INDEX

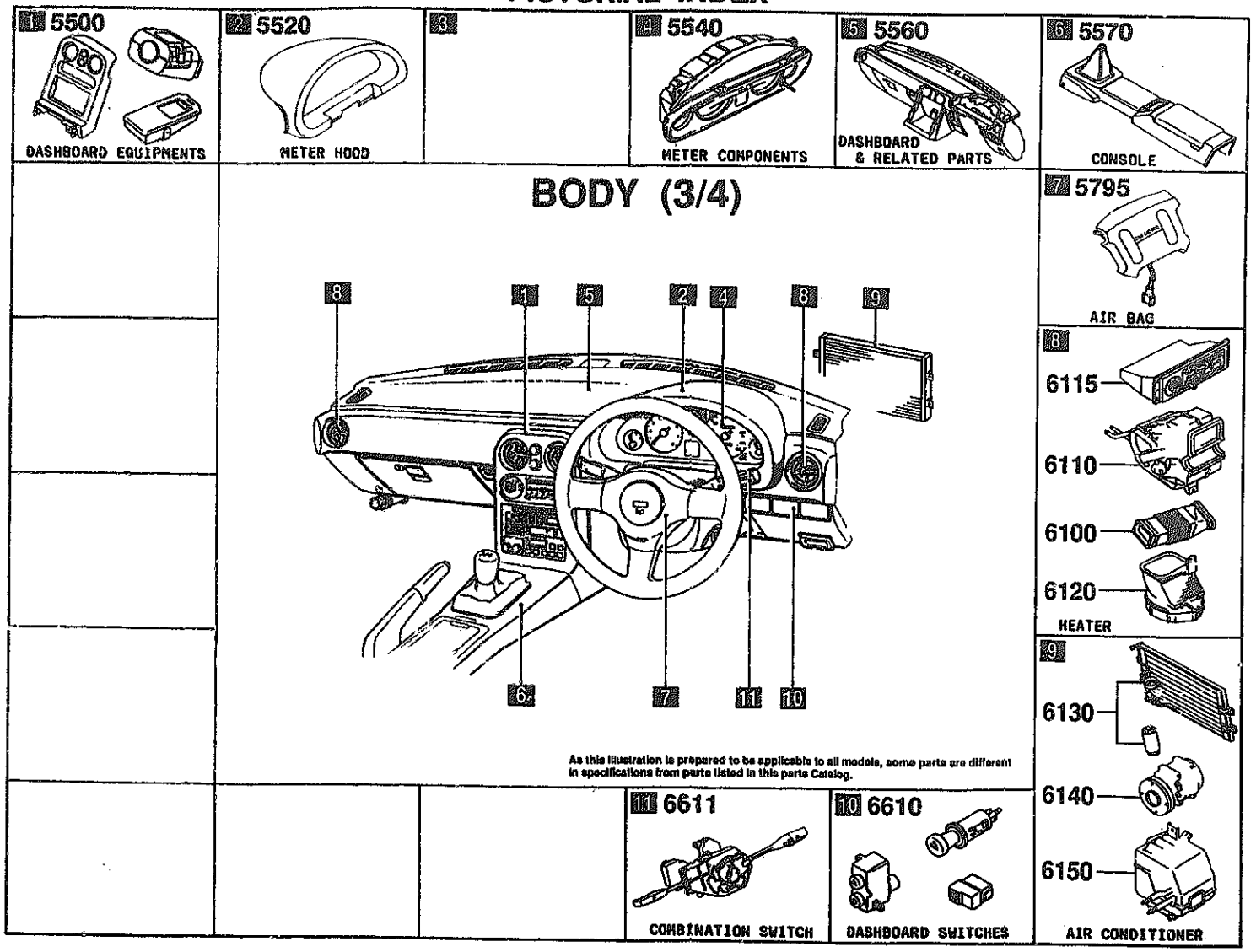

PICTORIAL INDEX

1 5580
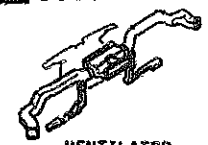
VENTILATOR

2 5700

SEATS

3 5790

SEAT BELTS

4 6680
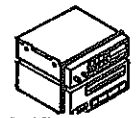
AUDIO SYSTEMS (RADIO & TAPE DECK)

5 6682
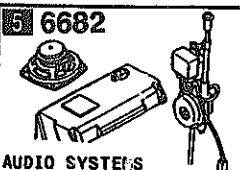
AUDIO SYSTEMS (ANTENNA & SPEAKER)

6 6820
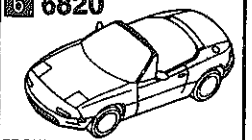
FRONT HEADER TRIM & PILLAR TRIMS

7 6840
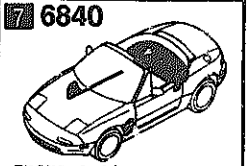
TRIMS & SCUFF PLATES

8 6860
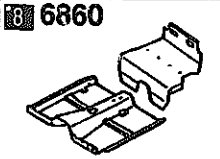
FLOOR MATS & PADS

9 6870

SERVICE TOOLS

10 6900

VISORS, ASSIST HANDLES & MIRRORS

12 7250

QUARTER WINDOW & TRIMS

13 6930

CAUTION PLATES & LABELS

BODY (4/4)

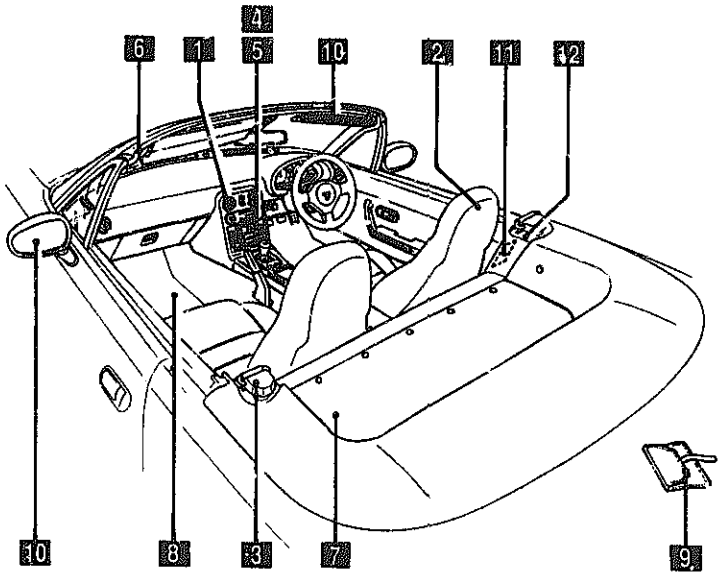

As this illustration is prepared to be applicable to all models, some parts are different in specifications from parts listed in this parts Catalog.

SECTION NAME INDEX (ENGINE)

LO.NO	SEC.NO	SECTION NAME	LO.NO	SEC.NO	SECTION NAME	LO.NO	SEC.NO	SECTION NAME
1-C03	1000A	ENGINE & GASKET SETS	1-H08	1920A	AUTOMATIC TRANSMISSION CASE & MAIN CONTROL SYSTEM			
1-E03	1010A	CYLINDER HEAD & COVER	1-D09	1925A	AUTOMATIC TRANSMISSION CONTROL VALVE			
1-H03	1030A	CYLINDER BLOCK	1-E09	1930A	AUTOMATIC TRANSMISSION CLUTCHES & PLANETARY GEARS			
1-I03	1040A	OIL PAN & TIMING COVER	1-J09	1940A	AUTOMATIC TRANSMISSION GOVERNOR, LOW & REVERSE PISTON			
1-K03	1100A	PISTON, CRANKSHAFT & FLYWHEEL	1-L09	1960A	AUTOMATIC TRANSMISSION GASKET & SEAL KIT			
1-N03	1200A	VALVE SYSTEM						
1-D04	1300A	INLET MANIFOLD						
1-E04	1310A	EXHAUST MANIFOLD						
1-F04	1320A	FUEL SYSTEM						
1-H04	1325A	FUEL DISTRIBUTOR						
1-I04	1330A	AIR CLEANER						
1-K04	1364A	THROTTLE BODY						
1-L04	1370A	EMISSION CONTROL SYSTEM (INLET SIDE)						
1-D05	1400A	OIL PUMP & FILTER						
1-F05	1500A	COOLING SYSTEM						
1-I05	1580A	BRACKET, PULLEY & BELT						
1-C06	1600A	CLUTCH DISC & COVER (5-SPEED)						
1-D06	1600AA	CLUTCH DISC & COVER (6-SPEED)						
1-E06	1700A	MANUAL TRANSMISSION CASE (5-SPEED)						
1-H06	1700AA	MANUAL TRANSMISSION CASE (6-SPEED)						
1-J06	1710A	MANUAL TRANSMISSION GEARS (5-SPEED)						
1-E07	1710AA	MANUAL TRANSMISSION GEARS (6-SPEED)						
1-L07	1720A	MANUAL TRANSMISSION CHANGE CONTROL SYSTEM (5-SPEED)						
1-N07	1720AA	MANUAL TRANSMISSION CHANGE CONTROL SYSTEM (6-SPEED)						
1-E08	1800A	ENGINE ELECTRICAL SYSTEM						
1-G08	1830A	ALTERNATOR						
1-H08	1840A	STARTER						
1-J08	1850A	BATTERY						
1-K08	1910A	AUTOMATIC TRANSMISSION TORQUE CONVERTER, OIL PUMP & PIPINGS						

CATLOG-NO= AUNA07-05

DATE. 2000-01

SECTION NAME INDEX (CHASSIS)

LO.NO	SEC.NO	SECTION NAME	LO.NO	SEC.NO	SECTION NAME	LO.NO	SEC.NO	SECTION NAME
1-C11	2505A	REAR PROPELLER SHAFT	2-C03	4340A	BRAKE MASTER CYLINDER & POWER BRAKE (W/O ANTILOCK BRAKE)			
1-D11	2550A	REAR DRIVE SHAFT						
1-E11	2600A	REAR AXLE	2-E03	4340B	BRAKE MASTER CYLINDER & POWER BRAKE (W/ANTILOCK BRAKE)			
1-G11	2610A	REAR BRAKE MECHANISMS						
1-J11	2710A	REAR DIFFERENTIALS (NORMAL DIFF.)	2-G03	4360A	BRAKE PIPINGS (W/O ANTILOCK BRAKE)			
1-C12	2710B	REAR DIFFERENTIALS (LIMITED SLIP DIFF.)	2-I03	4360B	BRAKE PIPINGS (W/ANTILOCK BRAKE)			
1-G12	2800A	REAR SUSPENSION MECHANISMS	2-K03	4370A	ANTILOCK BRAKE SYSTEM			
1-I12	2810A	REAR STABILIZER	2-M03	4400A	PARKING BRAKE SYSTEM			
1-J12	2830A	REAR LOWER ARMS & SUB FRAME	2-C04	4500A	FUEL PIPINGS			
1-L12	3200A	STEERING WHEEL	2-D04	4600A	CHANGE CONTROL SYSTEM (AT)			
1-N12	3210A	STEERING COLUMN & SHAFTS						
1-N12	3220AA	STEERING GEAR (W/O POWER STEERING)						
1-D13	3220AB	STEERING GEAR (W/POWER STEERING)						
1-G13	3240A	POWER STEERING SYSTEM (MT)						
1-J13	3240B	POWER STEERING SYSTEM (AT)						
1-M13	3300A	FRONT AXLE						
1-N13	3310A	FRONT BRAKE MECHANISMS						
1-C14	3400A	FRONT SUSPENSION MECHANISMS						
1-F14	3410A	CROSSMEMBER & STABILIZER						
1-G14	3700A	TIRES & JACK						
1-C15	3900A	ENGINE & T/MISSION MOUNTINGS						
1-D15	4000A	EXHAUST SYSTEM						
1-F15	4140A	MANUAL TRANSMISSION CLUTCH RELEASE & MASTER CYLINDERS						
1-G15	4145A	MANUAL TRANSMISSION CLUTCH PIPINGS						
1-H15	4160A	ACCELERATOR CONTROL SYSTEM						
1-I15	4200A	FUEL TANK						
1-G16	4210A	FUEL LID OPENER						
1-I16	4300A	MANUAL TRANSMISSION CLUTCH & BRAKE PEDALS						
1-L16	4300B	AUTOMATIC TRANSMISSION BRAKE PEDAL						

CATLOG-NO= AUNA07-05

DATE. 2000-01

SECTION NAME INDEX (BODY)

LO.NO	SEC.NO	SECTION NAME
2-C06	0900A	KEY SETS
2-F06	5000A	FRONT BUMPER
2-I06	5010A	REAR BUMPER
2-K06	5030A	WINDOW MOULDING & COWL GRILLES
2-L06	5100A	HEAD LAMPS
2-M06	5105A	FRONT COMBINATION LAMPS
2-N06	5110A	REAR COMBINATION LAMPS
2-D07	5120A	LICENSE LAMPS
2-E07	5125A	INTERIOR LAMPS
2-F07	5170A	ORNAMENTS
2-G07	5230A	BONNET
2-I07	5260A	TRUNK LID
2-K07	5310A	FRONT PANELS
2-M07	5320A	FENDER & WHEEL APRON PANELS
2-E08	5330A	DASH & COWL PANELS
2-F08	5340A	SIDE PANELS
2-L08	5370A	FLOOR PANELS
2-D09	5380A	FLOOR ATTACHMENTS (HOLE COVERS)
2-F09	5390A	FLOOR ATTACHMENTS
2-C10	5500A	DASHBOARD EQUIPMENTS
2-D10	5520A	METER HOOD
2-E10	5540A	METER COMPONENTS
2-H10	5560A	DASHBOARD & RELATED PARTS
2-K10	5570A	CONSOLE
2-N10	5580A	VENTILATOR
2-C11	5700A	SEATS
2-K11	5790A	SEAT BELTS
2-H11	5795A	AIR BAG
2-C12	5800A	FRONT DOORS
2-G12	5830A	FRONT DOOR MECHANISMS
2-C13	5840A	FRONT DOOR TRIMS & RELATED PARTS
2-C14	6100A	HEATER
2-D14	6110A	HEATER UNIT CONPONENTS
2-E14	6115A	HEATER CONTROL COMPONENTS
2-G14	6120A	HEATER BLOWER COMPONENTS
2-H14	6130A	AIR CONDITIONER
2-L14	6140A	AIR CONDITIONING COMPRESSOR COMPONENTS
2-N14	6150A	AIR CONDITIONING COOLING UNIT
2-C15	63[illegible]A	WINDOW GLASSES
2-D15	6[illegible]	SUN ROOF
2-E16	6600A	ENGINE SWITCHES & RELAYS
2-J16	6610A	DASHBOARD SWITCHES
2-L16	6611A	COMBINATION SWITCH
2-N16	6630A	BODY RELAYS & UNIT
3-C03	6635A	DOOR SWITCH & HORNS
3-D03	6640A	AUTO CRUISE CONTROL SYSTEM
3-F03	6680A	AUDIO SYSTEMS (RADIO & TAPE DECK)
3-J03	6682A	AUDIO SYSTEMS (ANTENNA & SPEAKER)
3-N03	6700A	FRONT & REAR WIRING HARNESSES
3-F04	6701A	ENGINE & TRANSMISSION WIRING HARNESSES
3-I04	6702A	DASHBOARD WIRING HARNESSES
3-J04	6703A	DOOR, FLOOR & CEILING WIRING HARNESSES
3-K04	6704A	WIRING HARNESS CLAMPS
3-M04	6720A	WINDSHIELD WASHER (W/O ANTILOCK BRAKE)
3-E05	6720B	WINDSHIELD WASHER (W/ANTILOCK BRAKE)
3-H05	6730A	WINDSHIELD WIPERS
3-J05	6820A	FRONT HEADER TRIM & PILLAR TRIMS
3-K05	6840A	TRIMS & SCUFF PLATES
3-D06	6860A	FLOOR MATS & PADS
3-G06	6870A	SERVICE TOOLS
3-H06	6900A	SUN VISORS, ASSIST HANDLES & MIRRORS
3-J06	6930A	CAUTION PLATES & LABELS
3-L06	7250A	QUARTER WINDOW & TRIMS

CATLOG-NO= AUNA07-05

DATE. 2000-01

10-271S

1-SEAL,VALVE ..... (8)
2-SEAL,VALVE ..... (8)
3-GASKET,HEAD COVER .... (1)
4-GASKET,CYLINDER HEAD .. (1)
5-SEAL,OIL ..... (1)
6-SEAL,OIL ..... (2)
7-GASKET,IN. MANIFOLD .... (1)
8-GASKET,EX. MANIFOLD .... (1)
9-GASKET,THERMOSTAT COVER . (2)
10-GASKET,W. PUMP INLET ... (1)
11-GASKET,OIL PAN ..... (1)
12-GASKET,OIL PAN ..... (1)
13-GASKET(L) ..... (1)
14-GASKET(INN), TIMING BELT(L) . (1)
15-GASKET(C), TIMING BELT(L) . . (1)
16-RUBBER,SEAL-SEAL PLATE . (1)
17-SEAL,OIL-CRANKSHAFT ... (1)
18-RING,' O' ..... (1)
19-GASKET,WATER PUMP .... (1)
20-RING,' O' WATER PUMP ... (1)
21-GASKET ..... (1)

02-310S

7-GASKET,IN. MANIFOLD ..... (1)
8-GASKET,EX. MANIFOLD .... (1)
9-GASKET,THERMOSTAT COVER . (2)
10-GASKET,W. PUMP INLET ... (1)

10-235S

1-SEAL,VALVE ..... (8)
2-SEAL,VALVE ..... (8)
3-GASKET,HEAD COVER ..... (1)
4-GASKET,CYLINDER HEAD ... (1)
7-GASKET,IN. MANIFOLD ..... (1)
8-GASKET,EX. MANIFOLD .... (1)

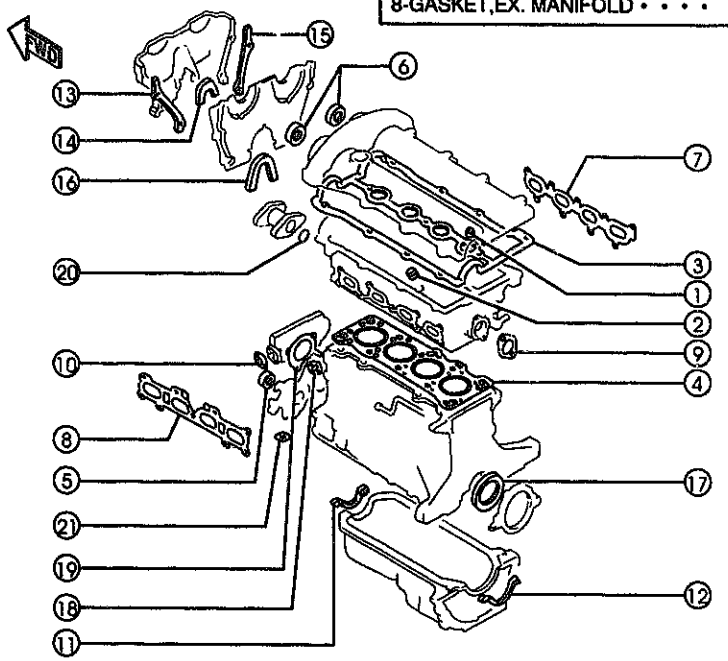

AUNA07 (1N08181)



23-800

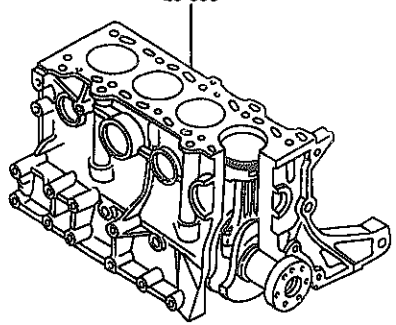

02-300

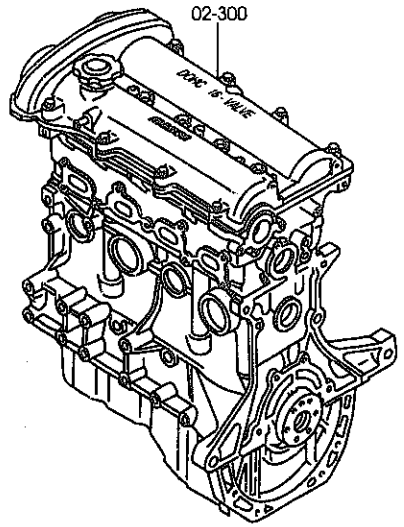

AUNA07 (1N08182)

10-271S

1-SEAL,VALVE ..... (8)
2-SEAL,VALVE ..... (8)
3-GASKET,HEAD COVER .... (1)
4-GASKET,CYLINDER HEAD .. (1)
5-SEAL,OIL ..... (1)
6-SEAL,OIL ..... (2)
7-GASKET,IN. MANIFOLD .... (1)
8-GASKET,EX. MANIFOLD .... (1)
9-GASKET,THERMOSTAT COVER . (2)
10-GASKET,W. PUMP INLET ... (1)
11-GASKET,OIL PAN ..... (1)
12-GASKET,OIL PAN ..... (1)
13-GASKET(L) ..... (1)
14-GASKET(INN), TIMING BELT(L) . (1)
15-GASKET(C), TIMING BELT(L) .. (1)
16-RUBBER,SEAL-SEAL PLATE . (1)
17-SEAL,OIL-CRANKSHAFT ... (1)
18-RING,' O' ..... (1)
19-GASKET,WATER PUMP .... (1)
20-RING,' O' WATER PUMP ... (1)
21-GASKET ..... (1)

02-310S

7-GASKET,IN. MANIFOLD .... (1)
8-GASKET,EX. MANIFOLD .... (1)
9-GASKET,THERMOSTAT COVER . (2)
10-GASKET,W. PUMP INLET ... (1)

10-235S

1-SEAL,VALVE ..... (8)
2-SEAL,VALVE ..... (8)
3-GASKET,HEAD COVER ..... (1)
4-GASKET,CYLINDER HEAD ... (1)
7-GASKET,IN. MANIFOLD ..... (1)
8-GASKET,EX. MANIFOLD .... (1)

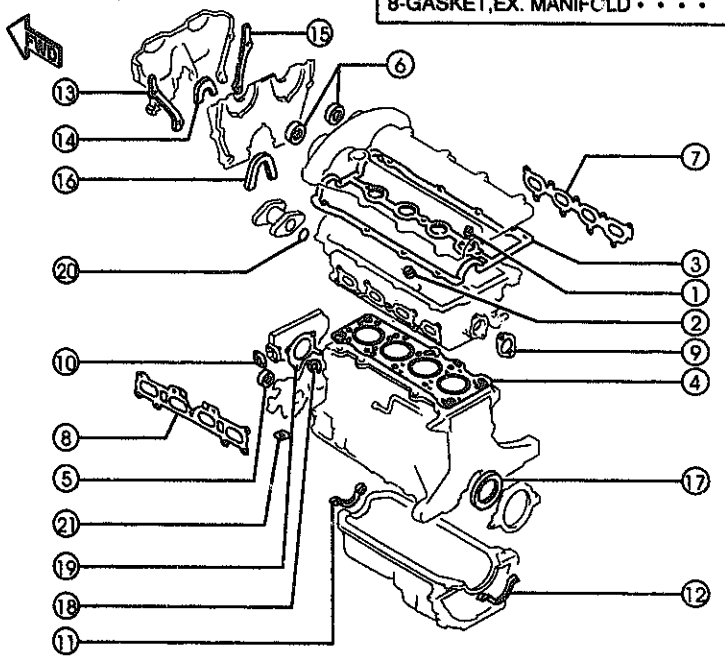

AUNA07 (1N08181)

1000A -1 * ENGINE & GASKET SETS

PART NO.	QTY	MODEL/RESTRICTION	MODEL/RESTRICTION	MODEL/RESTRICTION	FROM-TO
02-300		ENGINE,PARTIAL			
BP4W-02-300	1	(FED)			
BP4V-02-300	1	(CALIF)			
02-310S		GASKET SET,PARTIAL ENGINE			
8AN3-02-310	1				
10-235S		GASKET SET,CYL. HEAD			
8AN3-10-235	1				
10-271S		GASKET SET,ENGINE			
8AN3-10-271	1				
23-800		ENGINE,SHORT			
BP4W-02-200A	1				

CAT. AUNA07-05 2000-01

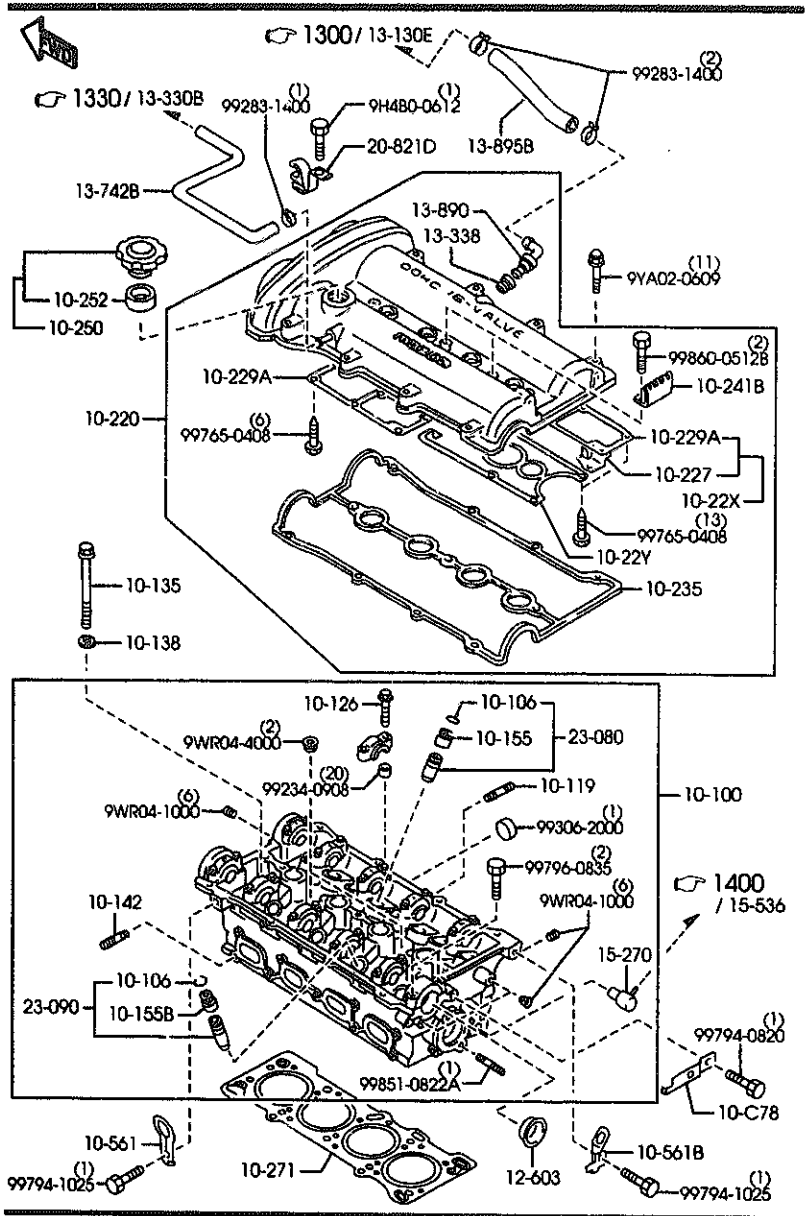

AUNA07 (1N09510)

PART NO.	QTY	MODEL/RESTRICTION	MODEL/RESTRICTION	MODEL/RESTRICTION	FROM-TO
10-C78		PLATE,STOPPER			
BP4W-10-C78	1				
10-100		HEAD,CYLINDER			
BP4W-10-100	1				
10-106		CLIP,VALVE GUIDE			
B660-10-106	16				
10-119		STUD			
FE4J-13-146	9				
10-126		BOLT,CAMSHAFT CAP			
KL02-10-126	26				
10-135		BOLT,CYLINDER HEAD			
B660-10-135A	10				
10-138		WASHER,PLAIN CYL. HEAD			
B630-10-138A	10				
10-142		STUD,EX. MANIFOLD			
B661-10-104	9				
10-155		SEAL,VALVE			
KL01-10-155	8	NOK			
10-155B		SEAL,VALVE			
KL02-10-155	8	NOK			
10-22X		PLATE,OIL BAFFLE-IN. SIDE			
B61P-10-22X	1				
10-22Y		PLATE,OIL BAFFLE-EX.			
B6S7-10-22Y	1				
10-220		COVER,CYLINDER HEAD			
BP4W-10-210	1				

CAT. AUNA07-05 2000-01

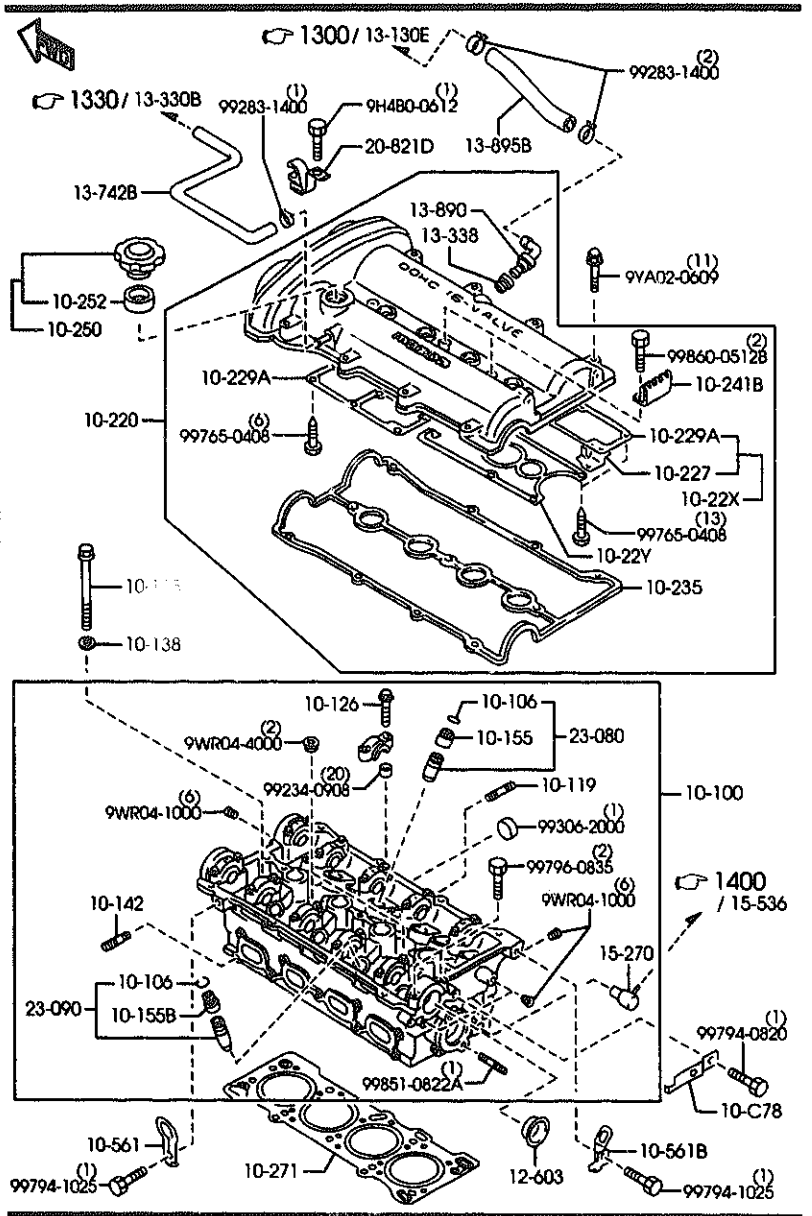

AUNA07 (1N09510)

PART NO.	QTY	MODEL/RESTRICTION	MODEL/RESTRICTION	MODEL/RESTRICTION	FROM-TO
10-227		PLATE,BAFFLE			
B61P-10-227	1				
10-229A		PLATE,OIL BAFFLE			
B637-10-225	2				
10-235		GASKET,HEAD COVER			
BP05-10-235C	1				
10-241B		PROTECTOR,HT.CORD-S.TANK			
BPE8-10-241	2				
10-250		CAP,OIL FILLER			
0453-10-250A	1				
10-252		GASKET			
0324-10-252	1				
10-271		GASKET,CYLINDER HEAD NON ASBESTOS			
BP26-10-271	1				
10-561		HANGER,ENGINE			
B660-10-561	1				
10-561B		HANGER,ENGINE-REAR			
BPE8-10-566A	1				
12-603		CAP,SEAL-OIL			
KLG4-12-603	1				
13-338		SEAL,RUBBER			
E301-13-338A	1				
13-742B		HOSE,VENTILATION			
BP4W-13-742	1				
13-890		VALVE,P.C.V.			
B541-13-890A	1				
13-895B		HOSE,P.C.V.			

CAT. AUNA07-05 2000-01

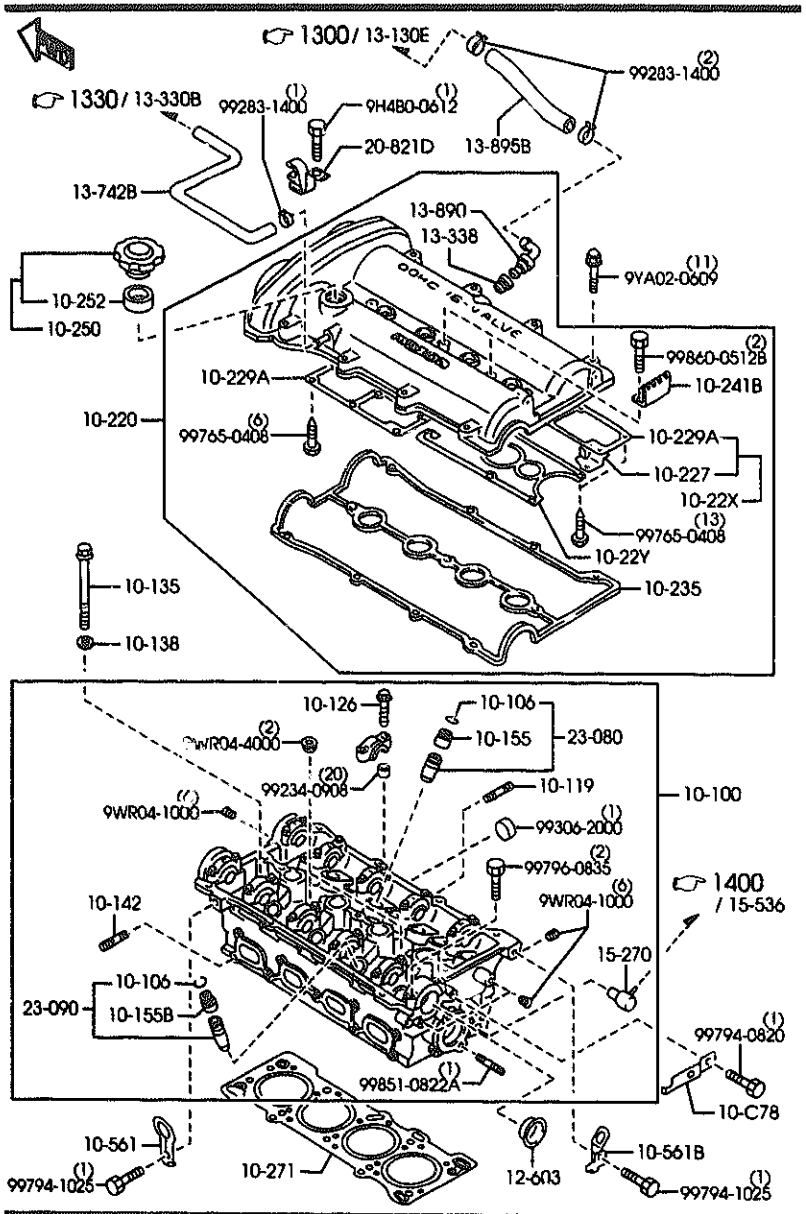

AUNA07 (1N09510)

PART NO.	QTY	MODEL/RESTRICTION	MODEL/RESTRICTION	MODEL/RESTRICTION	FROM-TO
CONT'D					
BP4W-13-895	1				
15-270		PIPE,WATER BY PASS			
BPE8-15-270	1				
20-821D		CLIP,HOSE			
BPE8-20-820	1				
23-080		GUIDE,VALVE			
B6Z1-10-280	8				
23-090		GUIDE,VALVE			
BPY0-10-290	8				

CAT. AUNA07-05 2000-01

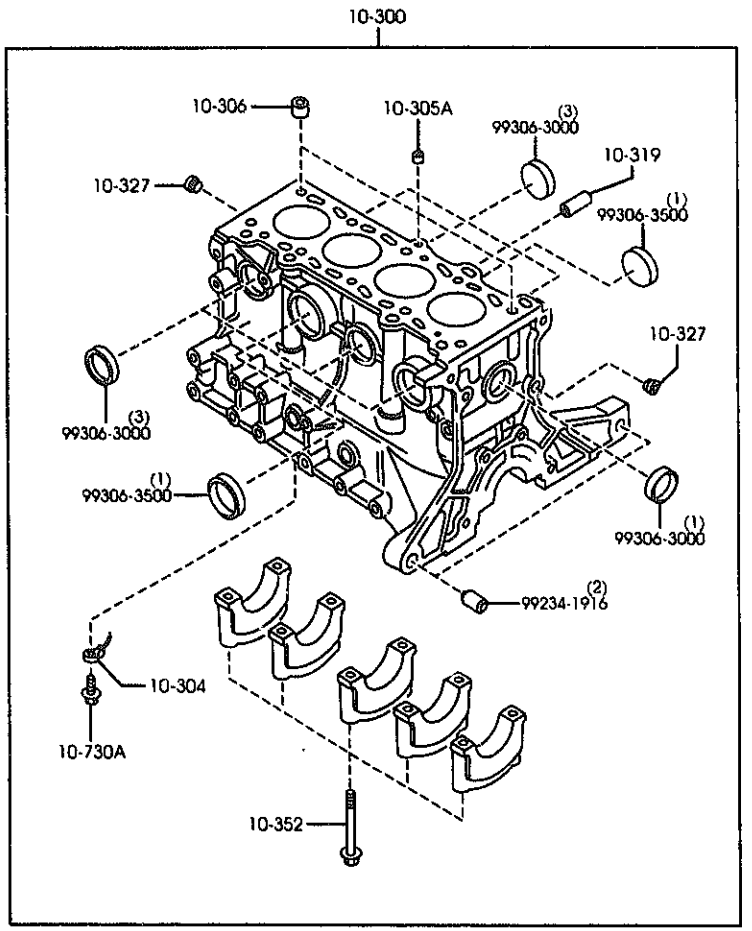

1030A -1 ※ CYLINDER BLOCK

PART NO.	QTY	MODEL/RESTRICTION	MODEL/RESTRICTION	MODEL/RESTRICTION	FROM-TO
10-300		BLOCK,CYLINDER			
BP05-10-300P A (BP5C-10-300A)	1				-8303
BP5C-10-300A	1				8303-
10-304		JET,OIL			
BP01-10-580A	4				
10-305A		PLUG			
B366-10-305	1				
10-306		PIN,TUBULAR			
B630-10-306	2				
10-319		JOINT			
BP4W-10-319	1				-8303
E5B6-10-319C	1				8303-
10-327		PLUG,BLIND			
0221-10-327	2				
10-352		BOLT,CRANKSHAFT CAP			
B630-10-352	10				
10-730A		VALVE,OIL JET			
SE01-10-730	4				

8303 NB353※-109670

1040A OIL PAN & TIMING COVER

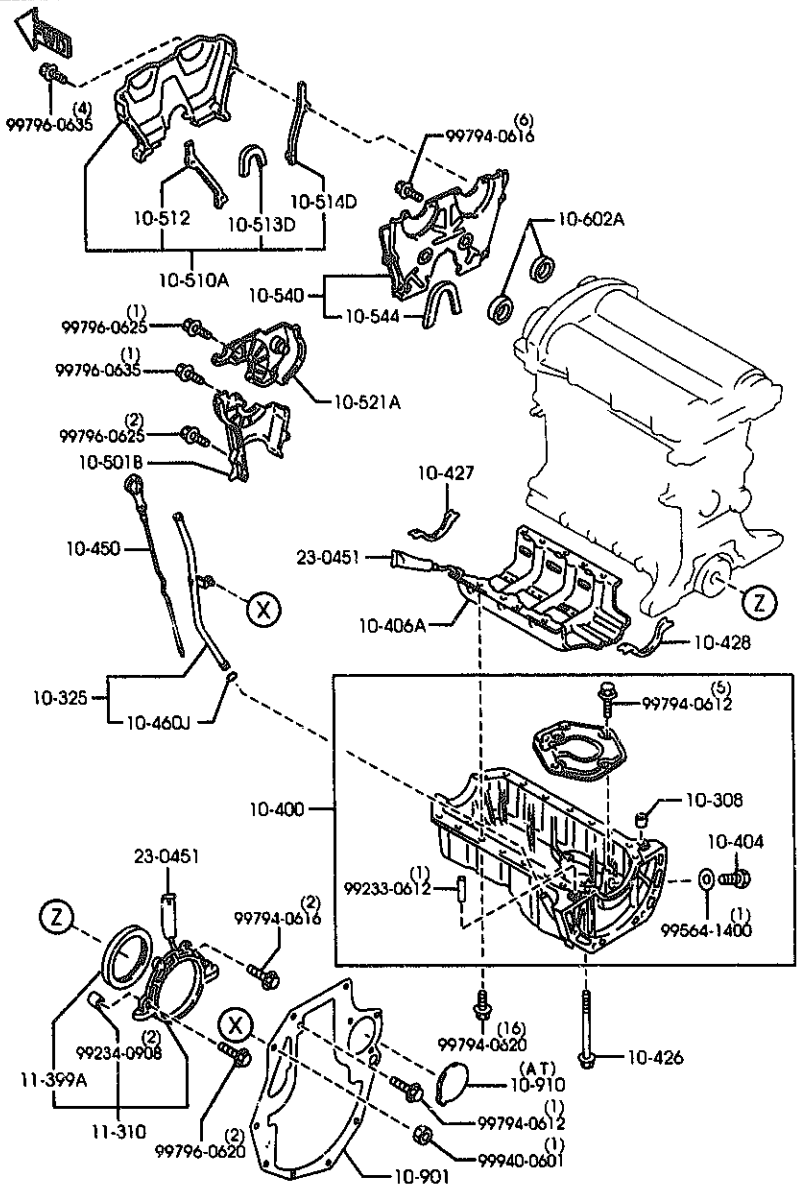

AUNA07 (1N07500)

1040A -1 OIL PAN & TIMING COVER

PART NO.	QTY	MODEL/RESTRICTION	MODEL/RESTRICTION	MODEL/RESTRICTION	FROM-TO
10-308		PIN,TUBULAR			
B6F4-10-308	1				
10-325		PIPE,OIL LEVEL GAUGE			
BP4W-10-440A	1	(FED)			
BP4Y-10-440A	1	(CALIF)			
10-400		PAN,OIL			
BPY0-10-400B	1				-7C01
BPE8-10-400D	1				7C01-
10-404		PLUG,DRAIN			
B6S7-10-404A	1				-7C01
B6S7-10-404B	1				7C01-
10-406A		PLATE,OIL BAFFLE			
BPE8-10-40Y	1				
10-426		BOLT			
B6S7-10-465	2				
10-427		GASKET,OIL PAN			
B6F4-10-427	1				
10-428		GASKET,OIL PAN			
B6F4-10-428	1				
10-450		GAUGE,OIL LEVEL			
BP4W-10-450	1	(FED)			
BP4Y-10-450A	1	(CALIF)			
10-460J		RING,'O'			
99541-00907	1				
10-501B		COVER,TIMING BELT-LWR			
B660-10-501E	1	DAIKYOH			
10-510A		COVER(UP.),TIMING CHAIN			
B61P-10-510	1				

7C01 NB353#-100063

CAT. AUNA07-05 2000-01

1040A OIL PAN & TIMING COVER

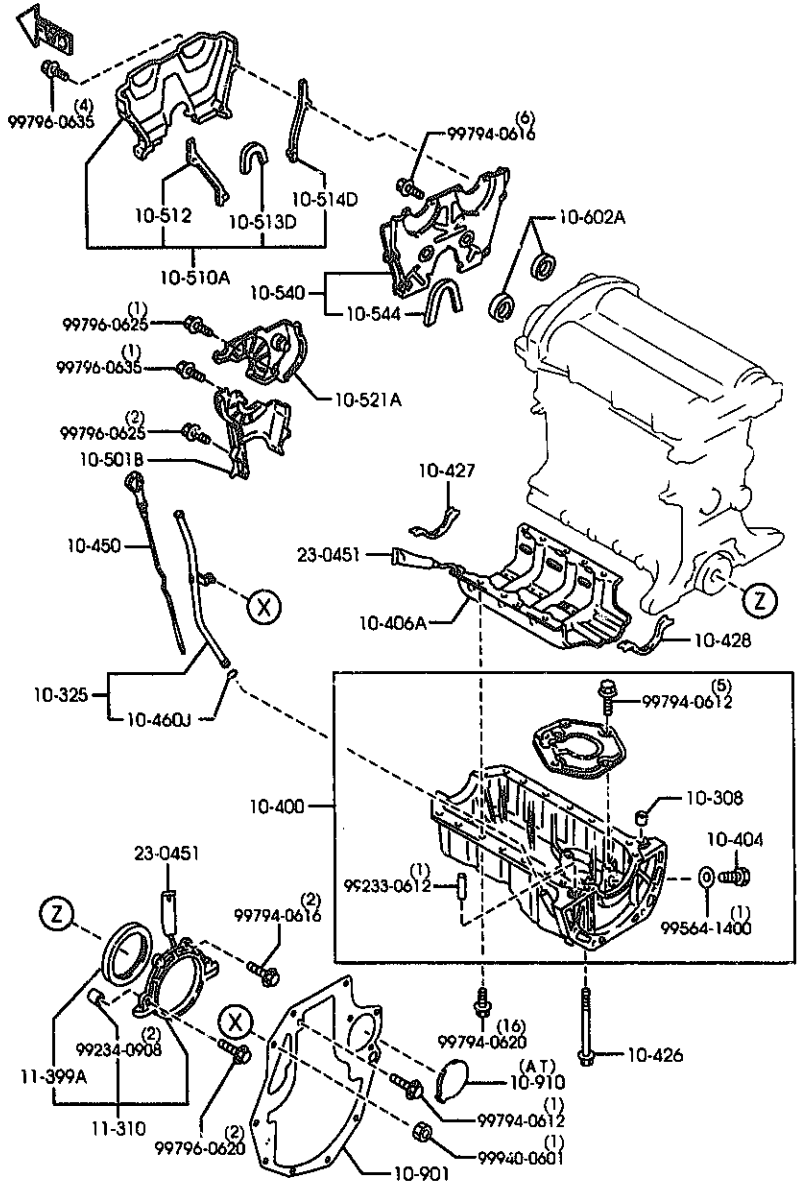

AUNA07 (1N07500)

1040A -2 # OIL PAN @ TIMING COVER

PART NO.	QTY	MODEL/RESTRICTION	MODEL/RESTRICTION	MODEL/RESTRICTION	FROM-TO
10-512		GASKET(L)			
B61P-10-512	1	NON ASBESTOS			
10-513D		GASKET(INN),TIMING BELT(L)			
B61P-10-513	1	NON ASBESTOS			
10-514D		GASKET(C),TIMING BELT(L)			
B61P-10-514	1	NON ASBESTOS			
10-521A		COVER,TIMING BELT-C.			
B660-10-521B	1				
10-540		PLATE,SEAL-T.BELT COVER U			
B61P-10-540C	1				
10-544		RUBBER,SEAL-SEAL PLATE			
B61P-10-544	1				
10-602A		SEAL,OIL			
F505-10-602A	2				
10-901		PLATE,END			
BP4X-10-901	1	(AT)			
B61P-10-901B	1	(MT)			
10-910		COVER,END PLATE			
BP4X-10-903	1	(AT)			
11-310		COVER,REAR			
B366-11-310C	1	RYOBI			
11-399A		SEAL,OIL-CRANKSHAFT			
BP05-11-312	1				
23-0451		TUBE,SILICON			
8527-77-739	1				

CAT. AUNA07-05 2000-01

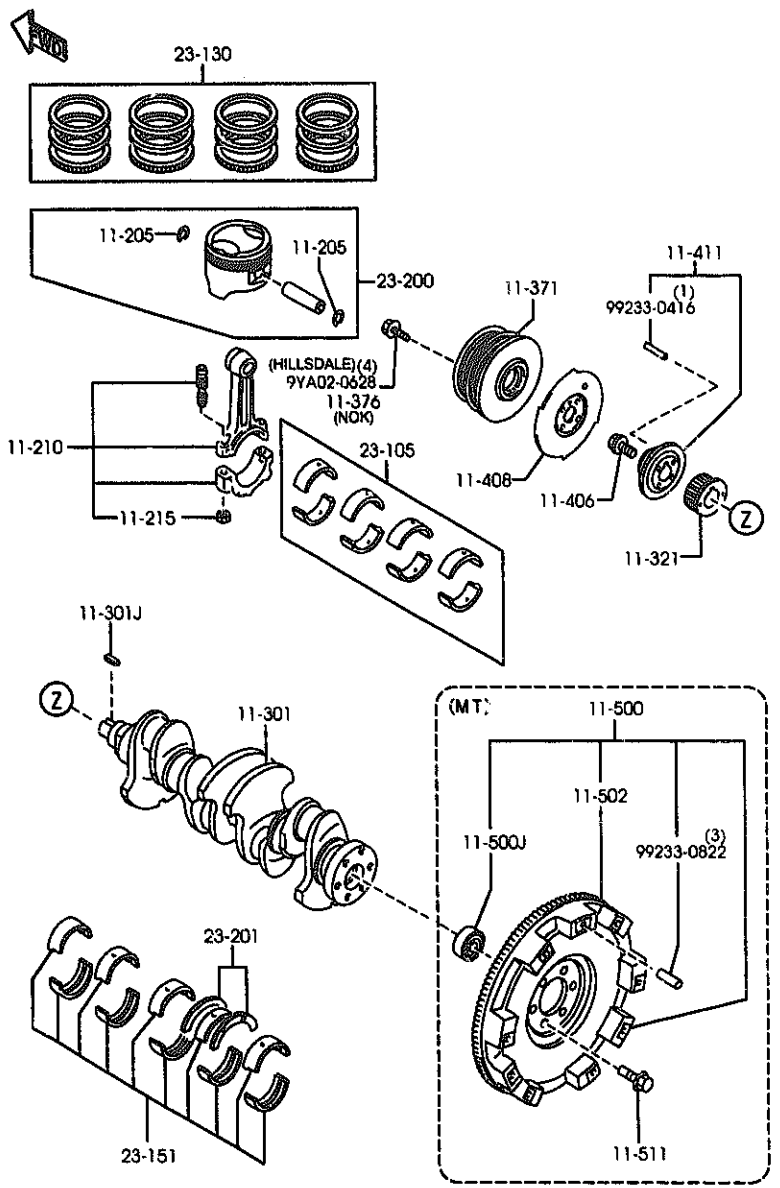

AUNA07 (1N01440)

1100A -1 PISTON, CRANKSHAFT & FLYWHEEL

PART NO.	QTY	MODEL/RESTRICTION	MODEL/RESTRICTION	MODEL/RESTRICTION	FROM-TO
11-205		CLIP,PISTON PIN			
0221-11-205	8				
11-210		ROD,CONNECTING			
B6S7-11-210E	4				
11-215		NUT,CONNECTING ROD			
B6S7-11-215A	8				
11-301		CRANKSHAFT			
BP06-11-300C	1				
11-301J		KEY,WOODRUFF-PULLEY			
B3C7-11-317	1				
11-321		PULLEY,TIMING BELT			
B3C7-11-321	1				
11-371		PULLEY,CRANKSHAFT			
BPD4-11-401	1	NOK			
BP4W-11-401	1	HILLSDALE			
11-376		BOLT,PULLEY			
JF01-11-405A	4	OHSAKA RASHI (6X16)			
11-406		BOLT,LOCK-C.SHAFT PULLEY			
B3C7-11-406	1				
11-408		PLATE,CRANKSHAFT PULLEY			
BP4W-11-408	1				
11-411		BOSS,PULLEY			
B6BF-11-400A	1				
11-500		WHEEL,FLY			
BPR7-11-500	1	(MT)			
11-500J		BEARING,BALL-FLY WHEEL			
F801-11-303	1	(MT)			

CAT. AUNA07-05 2000-01

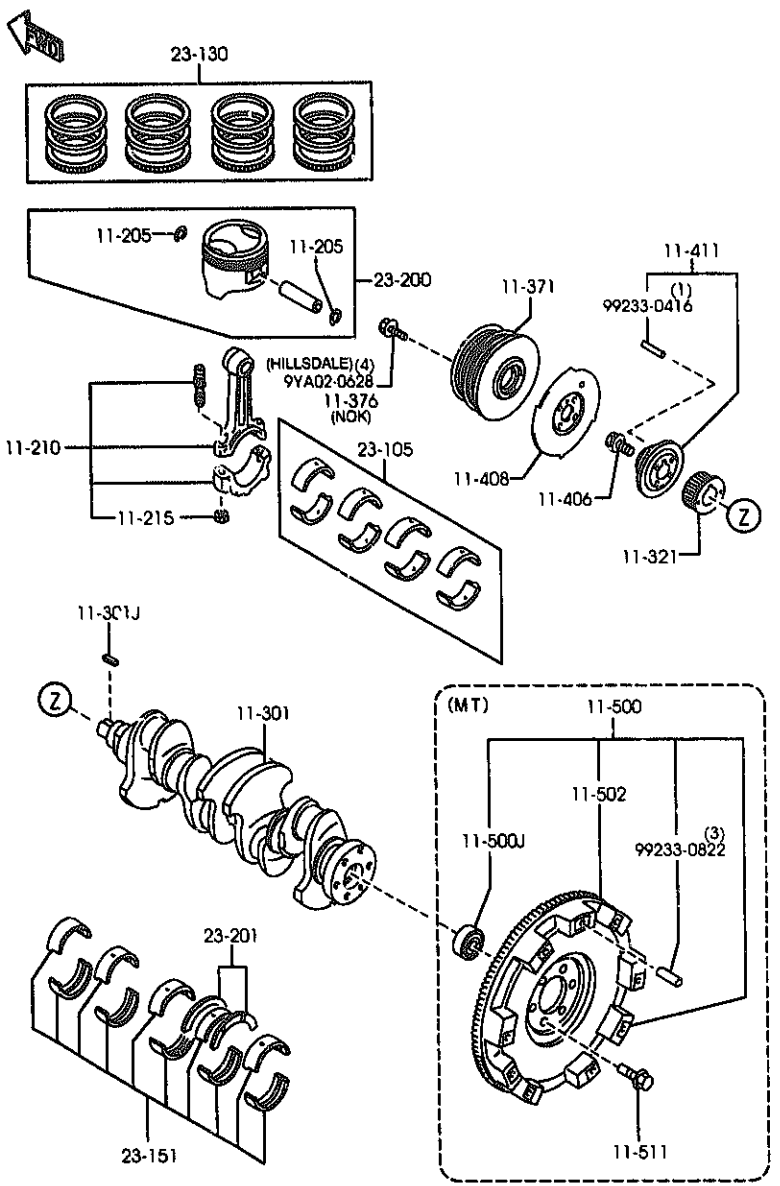

AUNA07 (1N01440)

PART NO.	QTY	MODEL/RESTRICTION	MODEL/RESTRICTION	MODEL/RESTRICTION	FROM-TO
11-502		GEAR,RING-FLY WHEEL			
B367-11-502	1	YOSHIWA (MT)			
0110-11-502	1	KANDA (MT)			
11-511		BOLT,LOCK-FLYWHEEL			
FZ01-11-511A	6	(MT)			
23-105		METAL SET,CONN.ROD			
B6Y2-11-SE0A	1	STD.			
B6Y2-11-SFXA	1	O.S. 0.50			
B6Y2-11-SFYA	1	O.S. 0.75			
B6Y2-11-SF0A	1	O.S. 0.25			
23-130		RING SET,PISTON			
BPZ0-11-SC0A	1	STD.			
BPZ0-11-SDXA	1	O.S. 0.50			
BPZ0-11-SD0A	1	O.S. 0.25			
23-151		METAL SET,MAIN BRG.			
B6Y2-11-SG0	1	STD.			
B6Y1-11-SHX	1	O.S. 0.50			
B6Y1-11-SHY	1	O.S. 0.75			
B6Y1-11-SH0	1	O.S. 0.25			
23-200		PISTON SET			
BPZ0-11-SA0	4	STD			
BPZ0-11-SBX	4	O.S. 0.50			
BPZ0-11-SB0	4	O.S. 0.25			

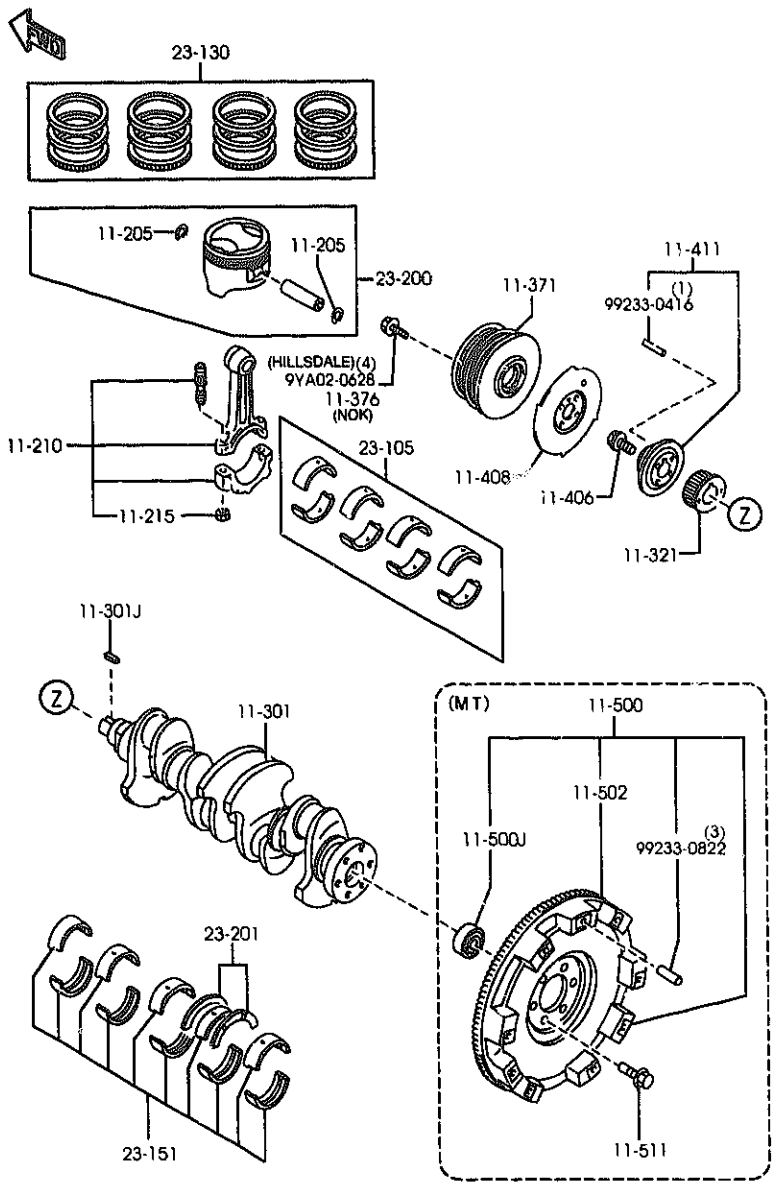

AUNA07 (1N01440)

1100A -3 * PISTON, CRANKSHAFT & FLYWHEEL

PART NO.	QTY	MODEL/RESTRICTION	MODEL/RESTRICTION	MODEL/RESTRICTION	FROM-TO
23-201		METAL SET,THRUST			
B6Y1-11-SJ0	1	STD.			
B6Y1-11-SKX	1	O.S. 0.50			
B6Y1-11-SKY	1	O.S. 0.75			
B6Y1-11-SK0	1	O.S. 0.25			

CAT. AUNA07-05 2000-01

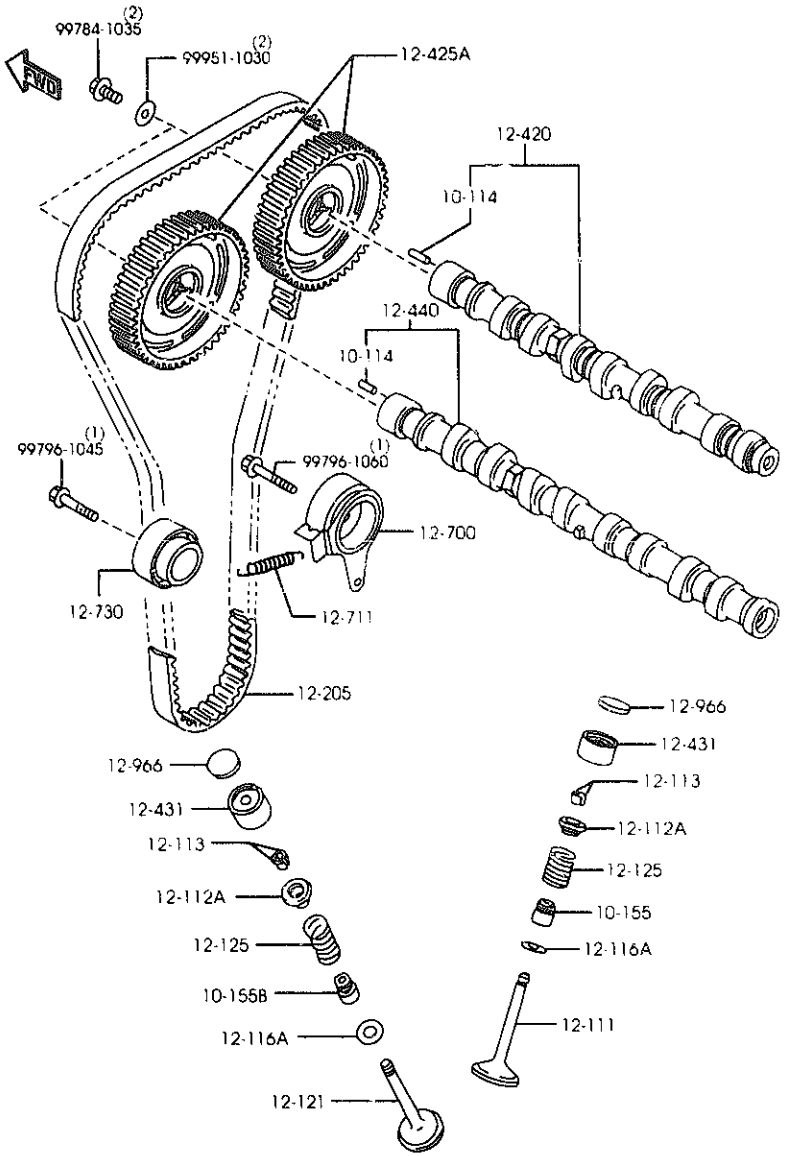

AUNA07 (1N07110)

PART NO.	QTY	MODEL/RESTRICTION	MODEL/RESTRICTION	MODEL/RESTRICTION	FROM-TO
10-114		PIN,SET-CAMSHAFT			
F801-10-114	2				
10-155		SEAL,VALVE			
KL01-10-155	8	NOK			
10-155B		SEAL,VALVE			
KL02-10-155	8	NOK			
12-111		VALVE,INLET			
BP2Y-12-111	8				-8A01
BP4W-12-111	8				8A01-
12-112A		SEAT,VALVE SPG-UP.			
B6BF-12-113	16				
12-113		COTTER,VALVE-IN.			
FS01-12-114	32				
12-116A		SEAT,VALVE SPG.-LWR			
B660-12-123A	16				
12-121		VALVE,EXHAUST			
BP4W-12-121	8				
12-125		SPRING,VALVE			
BP2Y-12-125A	16				
12-205		BELT,TIMING			
B6S7-12-205D	1	UNITTA			
12-420		CAMSHAFT			
BP4W-12-420	1				
12-425A		PULLEY,CAMSHAFT			
BP4W-12-425	2				
12-431		TAPPET			
BP2Y-12-183	16				

8A01 NB353#-122764

CAT. AUNA07-05 2000-01

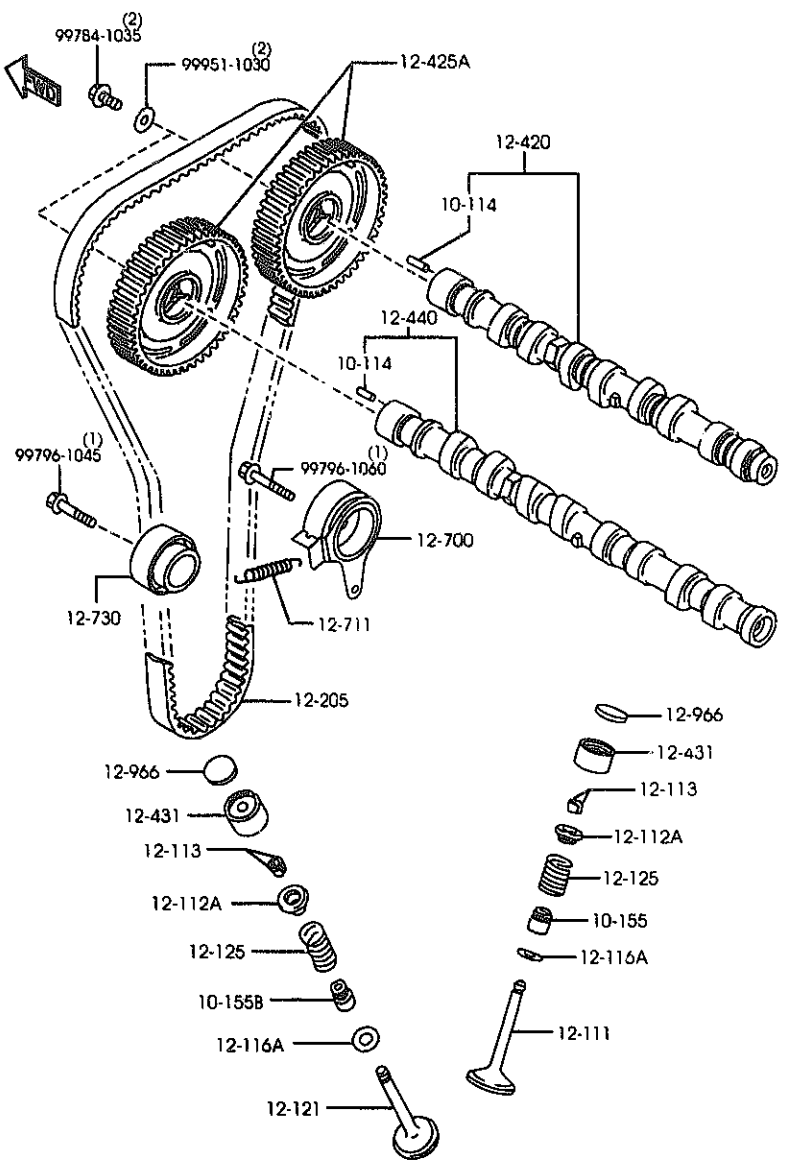

AUNA07 (1N07110)

PART NO.	QTY	MODEL/RESTRICTION	MODEL/RESTRICTION	MODEL/RESTRICTION	FROM-TO
12-440		CAMSHAFT,EXHAUST			
BP4W-12-440	1				
12-700		TENSIONER,TIMING BELT			
B660-12-700E	1				
12-711		SPRING,TENSIONER			
B660-12-711C	1				
12-730		IDLER,TIMING BELT			
B660-12-730C	1				
12-966		DISC,ADJUSTING			
Z5Y1-12-541	16	T=2.750MM			
Z5Y2-12-541	16	T=2.800MM			
Z5Y3-12-541	16	T=2.850MM			
Z5Y4-12-541	16	T=2.900MM			
Z5Y5-12-541	16	T=2.950MM			
Z5Y6-12-541	16	T=3.000MM			
Z502-12-545	16	T=3.052MM			
Z502-12-552	16	T=3.100MM			
Z502-12-558	16	T=3.148MM			
Z502-12-565	16	T=3.196MM			
Z502-12-573	16	T=3.252MM			
Z502-12-579	16	T=3.300MM			
Z502-12-586	16	T=3.348MM			
Z502-12-593	16	T=3.396MM			

CAT. AUNA07-05 2000-01

1300A INLET MANIFOLD

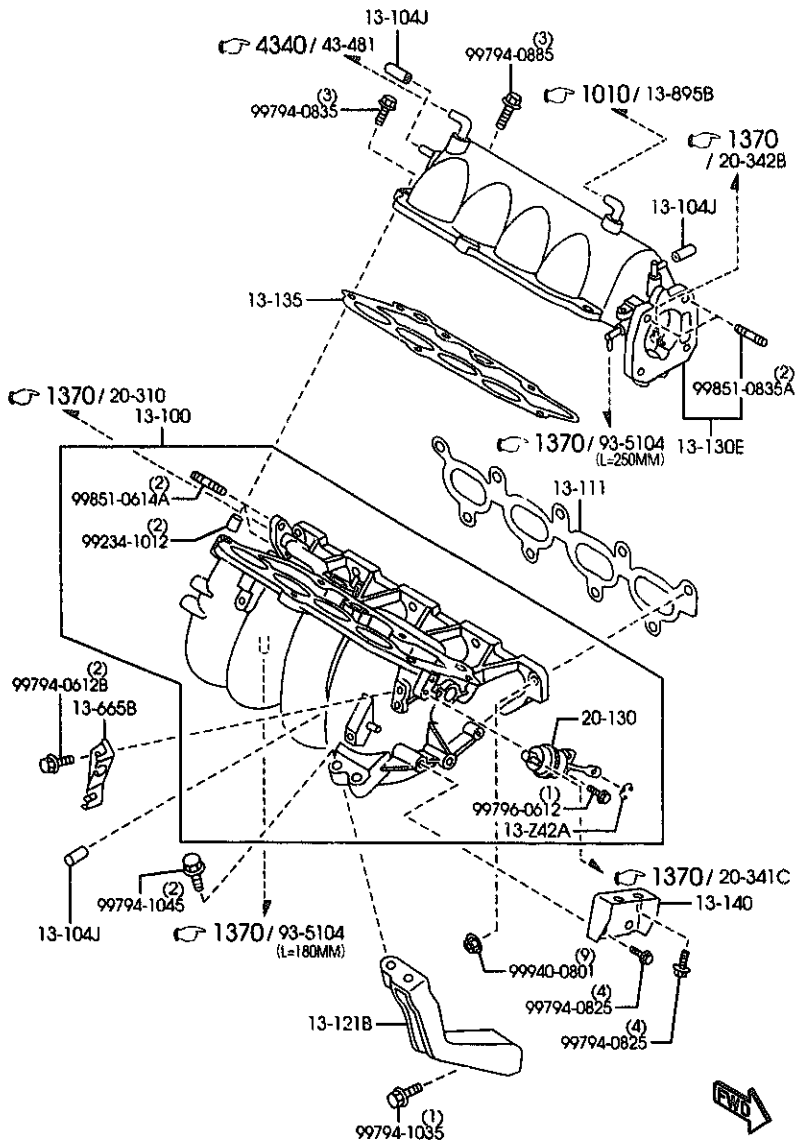

AUNA07 (1N11430)

1300A -1 * INLET MANIFOLD

PART NO.	QTY	MODEL/RESTRICTION	MODEL/RESTRICTION	MODEL/RESTRICTION	FROM-TC
13-Z42A		RING,'E'			
F8B3-13-Z42	1				
13-100		MANIFOLD,INLET			
BP5A-13-100A	1				
13-104J		CAP,BLIND			
1010-13-104	3				
13-111		GASKET,IN.MANIFOLD			
BP4W-13-111	1				
13-121B		STAY,MANIFOLD			
BPE8-13-121	1				
13-130E		TANK,SURGE			
BP5A-13-130B	1				
13-135		GASKET			
BP5A-13-135	1				
13-140		BRKT,SURGE TANK			
BP4W-13-141	1				
13-665B		BRACKET,ACCEL WIRE			
BP4W-13-665	1				
20-130		ACTUATOR,SHUTTER VALVE			
BP5A-20-170	1				

CAT. AUNA07-05 2000-01

1310A EXHAUST MANIFOLD

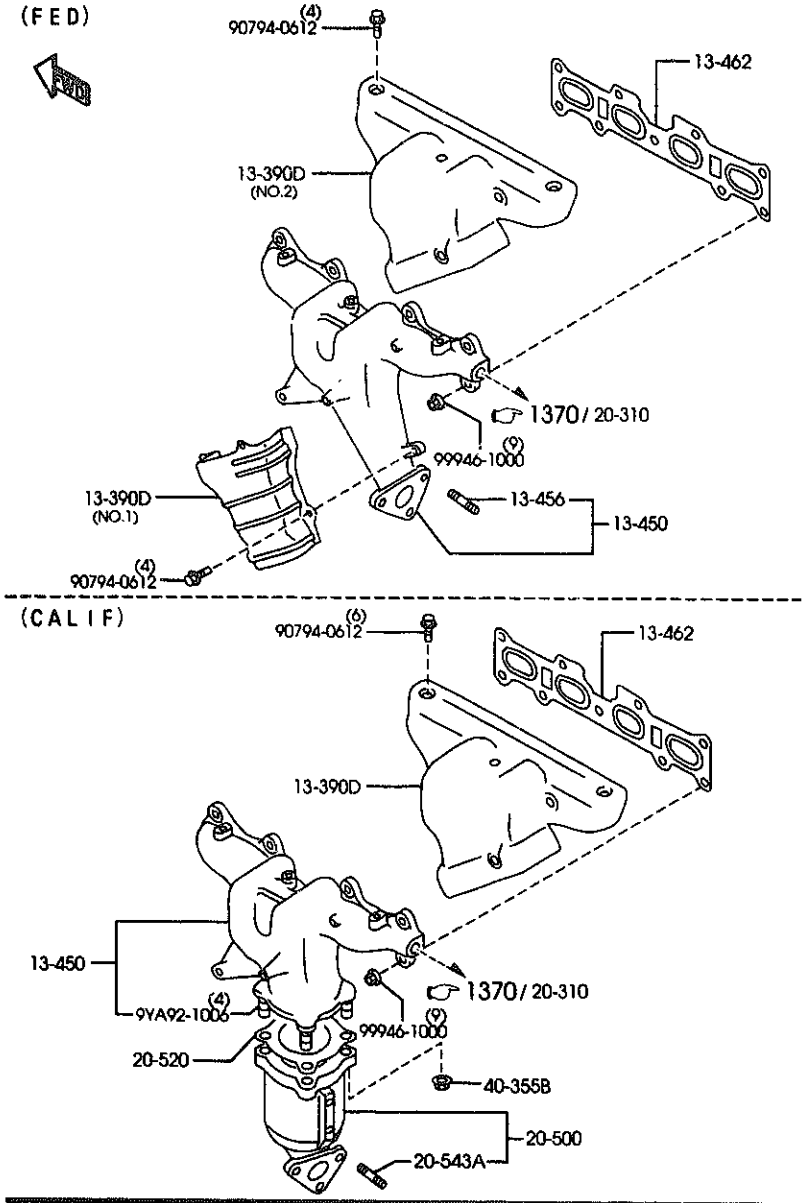

AUNA07 (1N11440)

1310A -1 * EXHAUST MANIFOLD

PART NO.	QTY	MODEL/RESTRICTION	MODEL/RESTRICTION	MODEL/RESTRICTION	FROM-TO
13-390D		INSULATOR,EX.MANIFOLD			
BP4W-13-390	1	(ILLUST. NO.1) (FED)			
BP4Y-13-390A	1	(ILLUST. NO.2) (FED)			
BP4Z-13-390	1	(CALIF)			
13-450		MANIFOLD,EXHAUST			
BP4W-13-450	1	(FED)			
BP4Y-13-450B	1	(CALIF)			
13-456		STUD			
2306-13-456	3	(FED)			
13-462		GASKET,EX.MANIFOLD			
BPD3-13-460	1				
20-500		CONVERTER,CATALYST			
BP4Y-20-500C	1	IDENTIFY MARK:BP4Y (CALIF)			
20-520		GASKET,CAT.			
BP4Y-20-520A	1	(CALIF)			
20-543A		STUD			
G501-20-WA1	3	(CALIF)			
40-355B		NUT			
JE10-40-355	4	(CALIF)			

CAT. AUNA07-05 2000-01

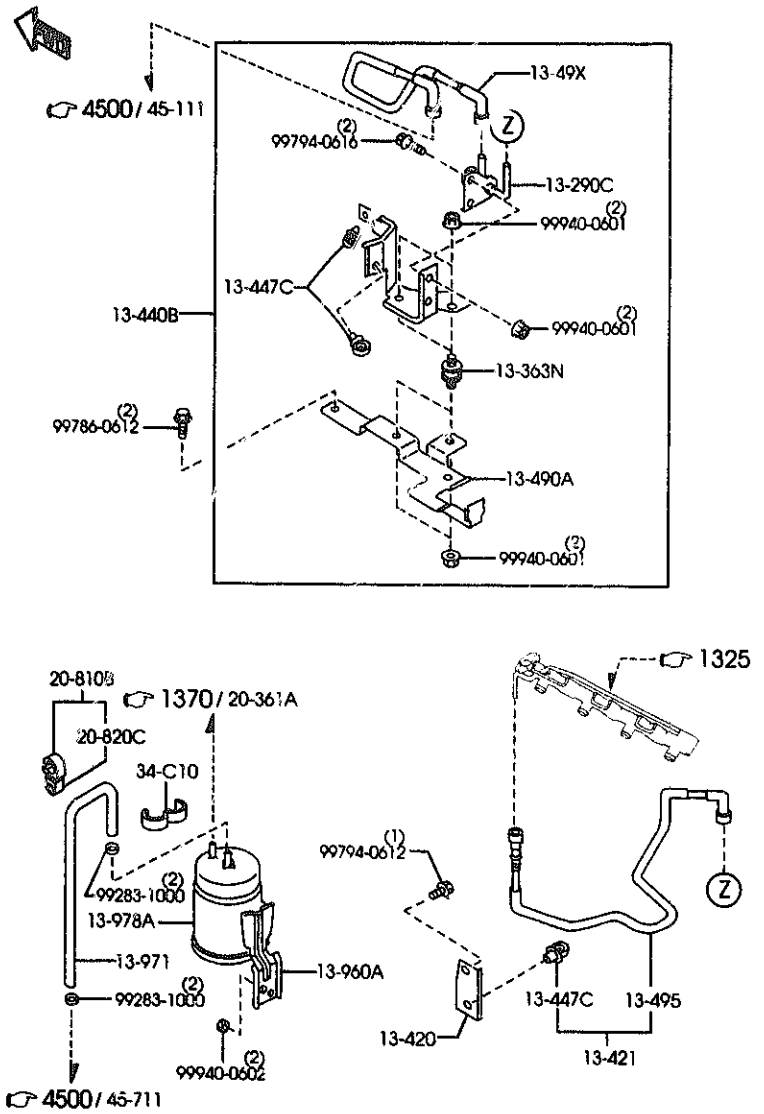

PART NO.	QTY	MODEL/RESTRICTION	MODEL/RESTRICTION	MODEL/RESTRICTION	FROM-TO
13-290C		DAMPER,PULSATION			
BP4X-20-180	1				
13-363N		RUBBER,MOUNTING			
0222-13-363	2				
13-420		BRACKET			
BP5A-13-425A	1				
13-421		HOSE,FUEL MAIN			
BP4W-13-410	1				-8212
AN(BP4W-13-410A)					
BP4W-13-410A	1				8212-
13-440B		BRACKET,FUEL FILTER			
BP4W-13-44YA	1				
13-447C		CLAMP,HOSE			
BP4W-13-447	3				
13-49X		HOSE,FUEL			
BP4W-13-49XA	1				
13-490A		BRACKET,FUEL FILTER			
BP4W-13-440	1				
13-495		HOSE,FUEL			
BP4W-13-495	1				-8212
AN(BP4W-13-495A)					
BP4W-13-495A	1				8212-
13-960A		BRACKET,CANISTER			
B61P-13-960	1				
13-971		HOSE,VENTILATION			
BP4W-13-971	1				
13-978A		TANK,CATCH			
JE96-13-978	1				
20-810B		CLIP			

8212 NB353#-107693

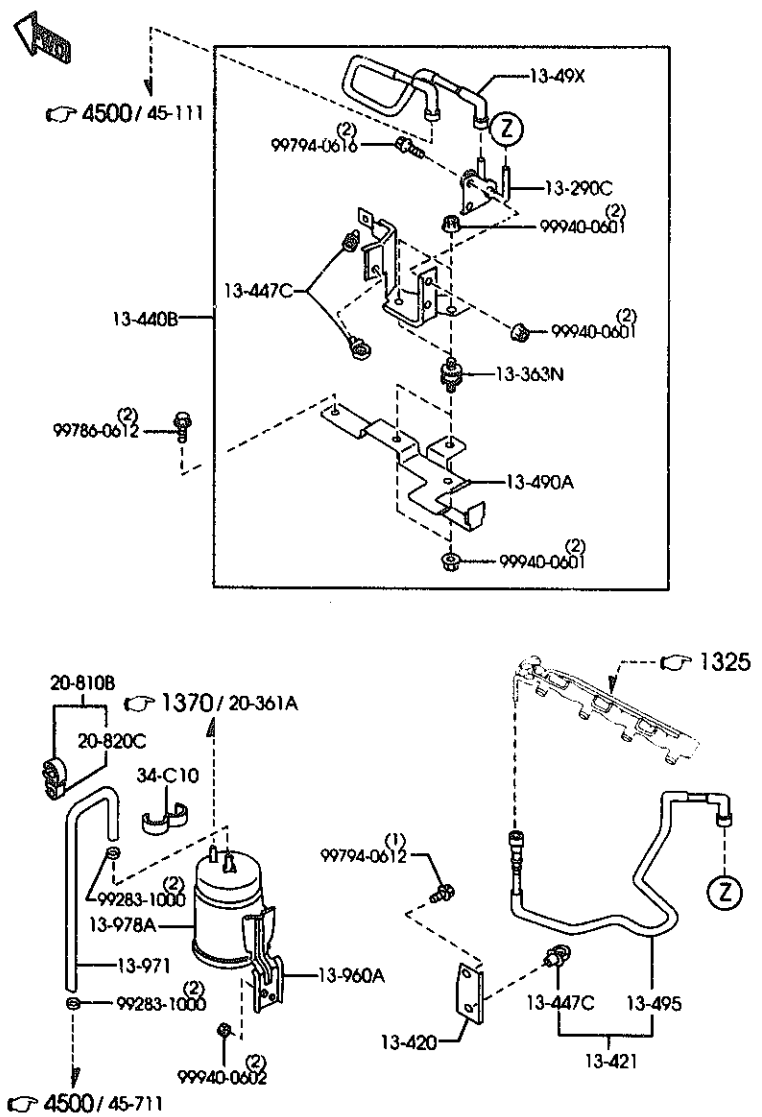

PART NO.	QTY	MODEL/RESTRICTION	MODEL/RESTRICTION	MODEL/RESTRICTION	FROM-TO
CONT'D					
B542-20-810	1				
20-820C		CLIP,HOSE			
B567-20-811	1				
34-C10		BAND,PIPE			
B214-34-C10	1				

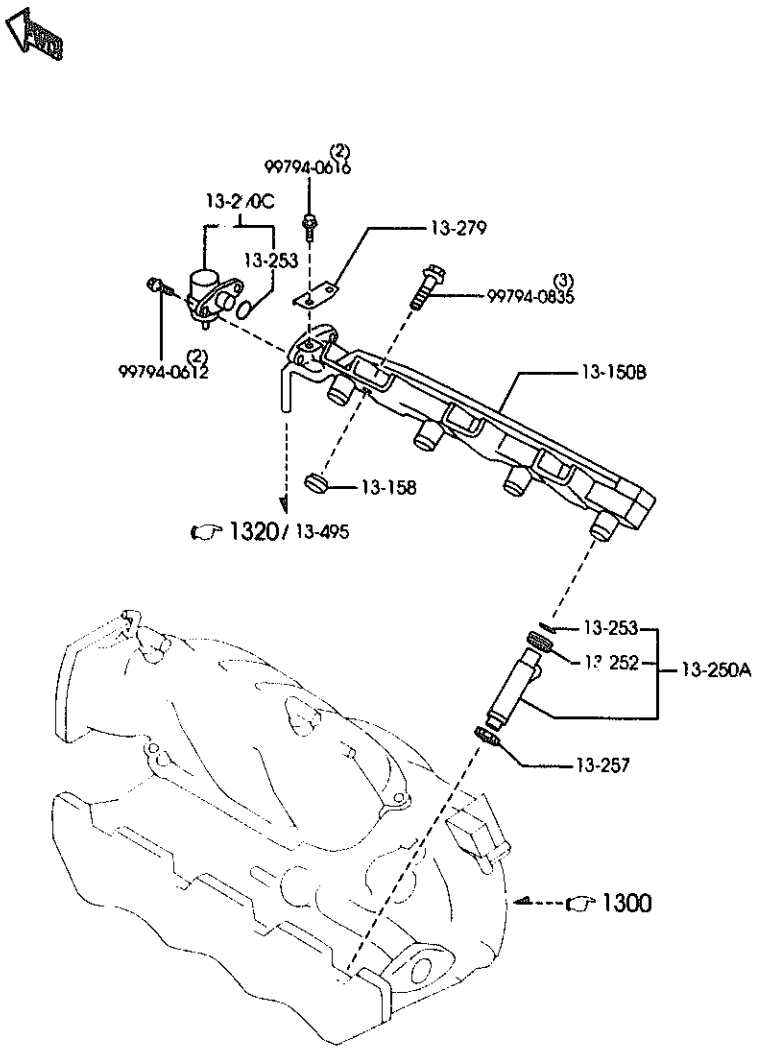

AUNA07 (1N11460)

1325A -1 # FUEL DISTRIBUTOR

PART NO.	QTY	MODEL/RESTRICTION	MODEL/RESTRICTION	MODEL/RESTRICTION	FROM-TO
13-150B BP5A-13-150A	1	DISTRIBUTOR,FUEL			
13-158 B675-13-158	3	INSULATOR,FUEL DIST.			
13-250A BP4W-13-250	4	INJECTION,FUEL-M.P.ELECT.			
13-252 8574-13-252	4	GROMMET			
13-253 8574-13-253	5	RING,'O'			
13-257 8574-13-257	4	INSULATOR,INJECTION			
13-279 BP4W-13-279	1	BRACKET			
13-290C BP4W-20-180	1	DAMPER,PULSATION			

CAT. AUNA07-05 2000-01

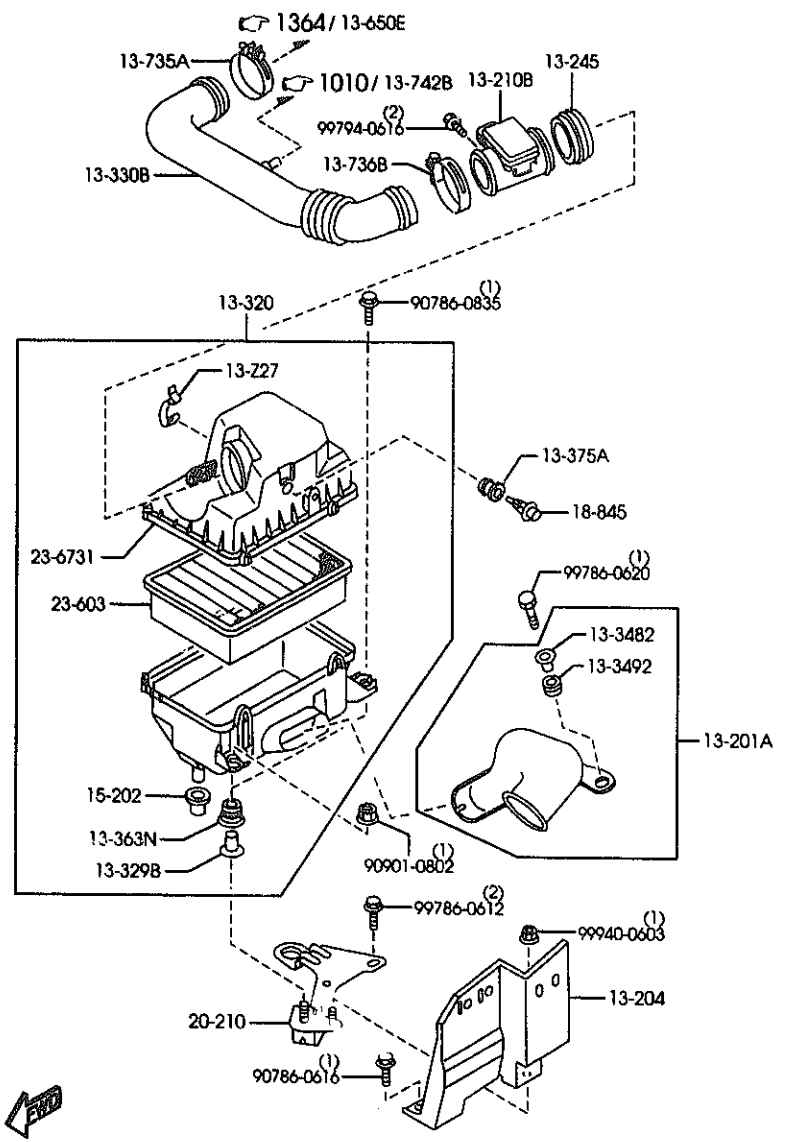

AUNA07 (1N11470)

PART NO.	QTY	MODEL/RESTRICTION	MODEL/RESTRICTION	MODEL/RESTRICTION	FROM-TO
13-Z27		CLIP			
B593-13-Z27	2				
13-201A		DUCT,FRESH AIR			
BP4W-13-200	1				
13-204		BAFFLE,AIR INTAKE			
BP4W-13-204 AN(BP4W-13-204A)	1				-8109
BP4W-13-204A	1				8109-
13-210B		SENSOR,AIR FLOW			
FP39-13-215	1				
13-245		JOINT,RUBBER			
B578-13-245B	1				
13-320		CLEANER,AIR			
BP4W-13-320A	1				
13-329B		SPACER			
FE51-13-329	2				
13-330B		PIPE,AIR INTAKE			
BP4W-13-331A	1				
13-3482		SPACER,AIR INT.PIPE			
SLA1-13-321	1				
13-3492		INSULATOR			
S501-13-349	1				
13-363N		RUBBER,MOUNTING			
FE51-13-363	2				
13-375A		GROMMET,EX.INSULATOR -LOW			
KL47-13-375	1				
13-735A		CLAMP,HOSE			
B595-13-735	1				-8120
BP4W-13-735	1				8120-

8109 NB353#-103296
8120 NB353#-105093

CAT. AUNA07-05 2000-01

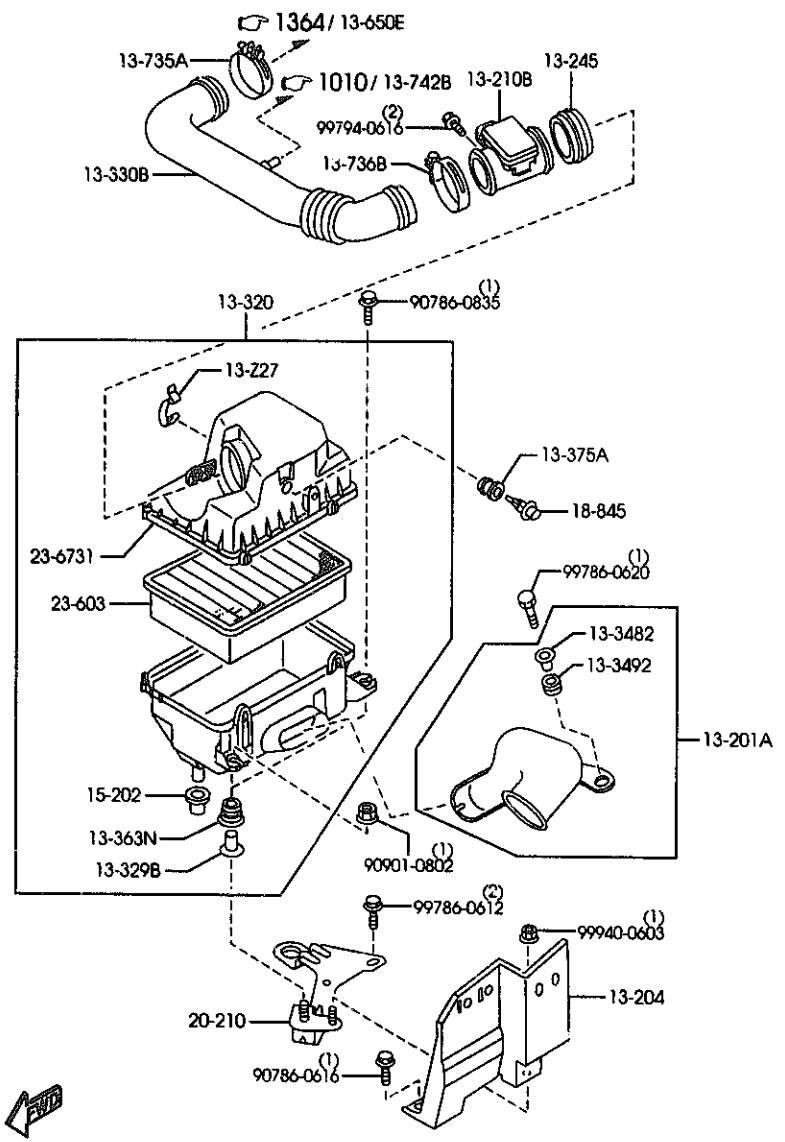

AUNA07 (1N11470)

PART NO.	QTY	MODEL/RESTRICTION	MODEL/RESTRICTION	MODEL/RESTRICTION	FROM-TO
13-736B		CLAMP,HOSE			
B6CK-13-735	1				
15-202		RUBBER,MOUNT			
B61P-13-Z66	1				
18-845		SENSOR,IN.AIR TEMP			
BP4W-18-845	1				
20-210		BRACKET,AIR CLEANER			
BP4W-20-210	1				
23-603		ELEMENT,AIR CLEANER			
FS05-13-Z40	1				
23-6731		COVER,AIR CLEANER			
BP4W-13-Z01A	1				

CAT. AUNA07-05 2000-01

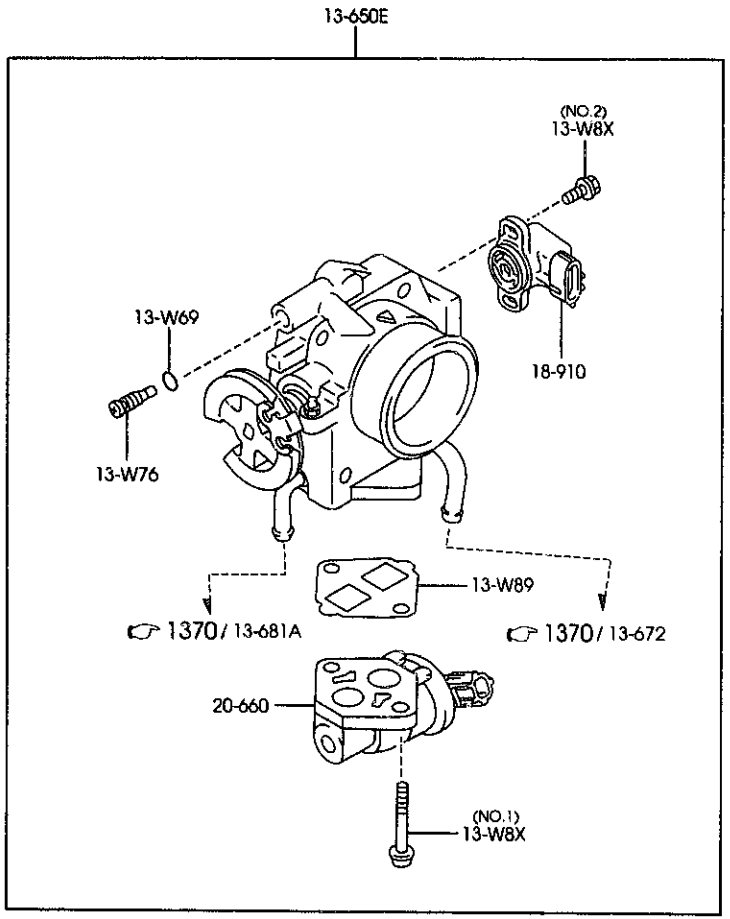

1364A -1 ※ THROTTLE BODY

PART NO.	QTY	MODEL/RESTRICTION	MODEL/RESTRICTION	MODEL/RESTRICTION	FROM-TO
13-W69		RING,'O'			
K801-13-W69	1				
13-W76		SCREW,ID.ADJUST-TH. BODY			
K801-13-W76	1				
13-W8X		SCREW & WASHER SET			
BP2Y-13-W8X	2	(ILLUST. NO.1)			
B551-13-W8X	2	(ILLUST. NO.2)			
13-W89		GASKET,THERMO			
BP2Y-13-W89	1				
13-650E		BODY,THROTTLE			
BP4W-13-640 AN(BP4W-13-640A)	1	(MT)			-7C03
BP4X-13-640 AN(BP4X-13-640A)	1	(AT)			-7C03
BP4W-13-640A	1	(MT)			7C03-
BP4X-13-640A	1	(AT)			7C03-
18-910		SENSOR,THROTTLE-CARB			
BP2Y-18-911A	1				
20-660		VALVE,IDLE AIR CONTROL			
BP2Y-20-660	1				-7C03
BP4W-20-660	1				7C03-

7C03 NB353※-100063

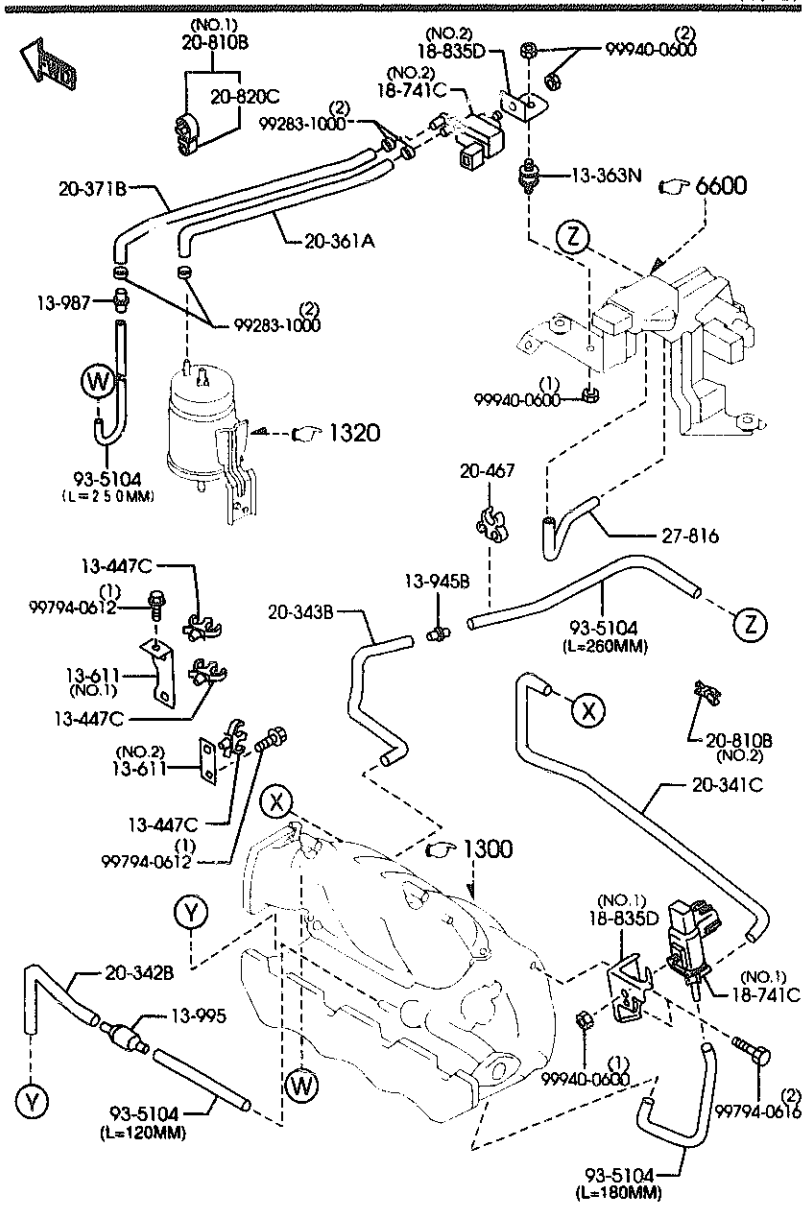

AUNA07 (1N11481)

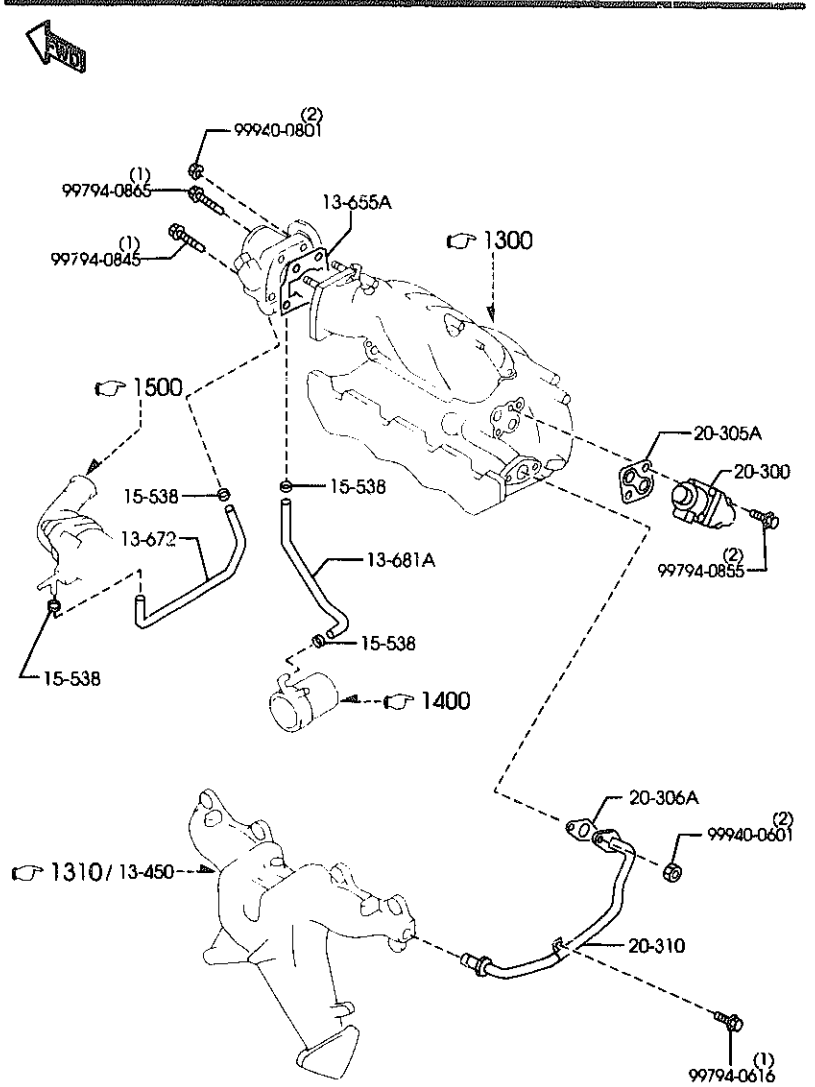

AUNA07 (1N11482)

1370A EMISSION CONTROL SYSTEM (INLET SIDE) (1/2)

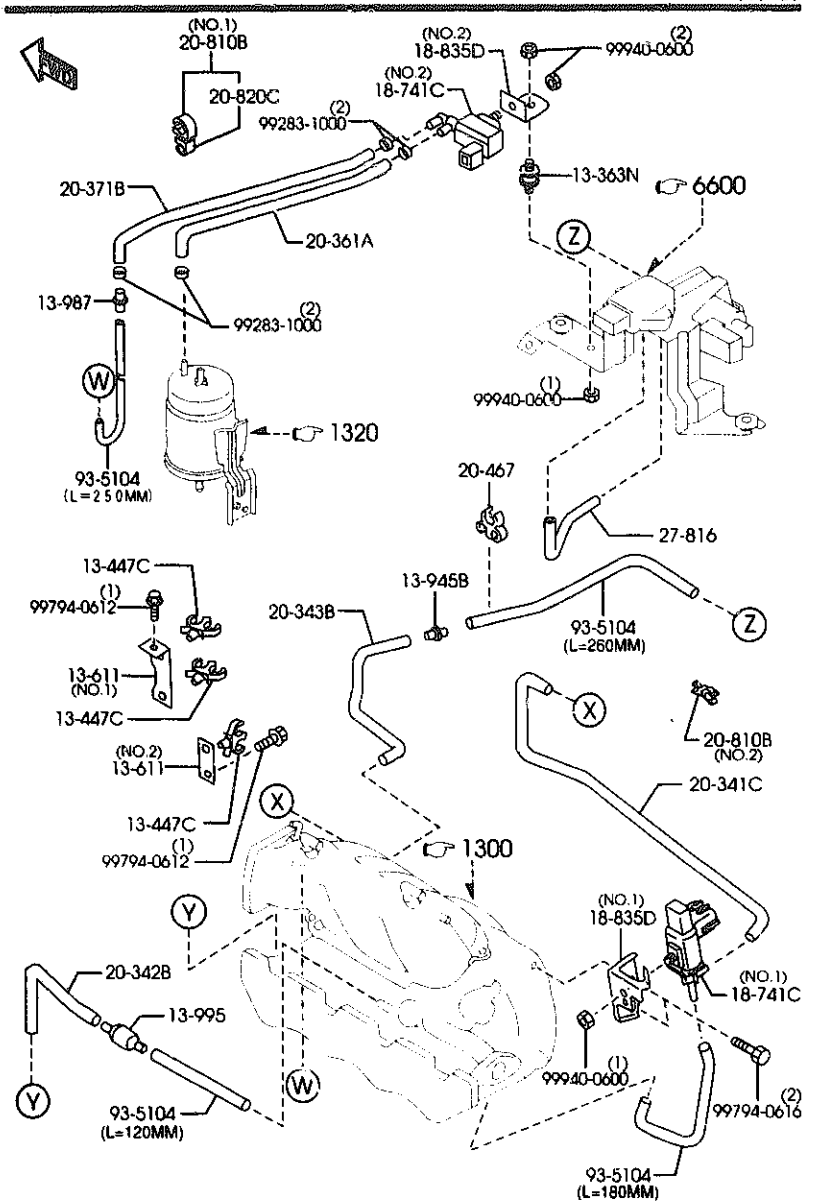

AUNA07 (1N11481)

1370A -1 EMISSION CONTROL SYSTEM (INLET SIDE)

PART NO.	QTY	MODEL/RESTRICTION	MODEL/RESTRICTION	MODEL/RESTRICTION	FROM-TO
13-363N		RUBBER,MOUNTING			
0222-13-363	1				
13-447C		CLAMP,HOSE			
RF67-13-447	3				
13-611		BRACKET			
BP4W-13-641	1	(ILLUST. NO.1)			
BP4W-13-642	1	(ILLUST. NO.2)			
13-655A		GASKET			
B68F-13-655	1				
13-672		HOSE,WATER			
BP4W-13-682	1				
13-681A		HOSE,WATER			
BP4W-13-681B	1				
13-945B		CONNECTOR			
F807-13-945	1				
13-987		HARNESS,WIRING			
SL44-13-987	1				
13-995		VALVE,CHECK			
HE41-13-995	1				
15-538		CLAMP,WATER HOSE			
B68F-15-538	4				
18-741C		VALVE,SOLENOID			
BP5W-18-741	1	(ILLUST. NO.1)			
Z504-18-741	1	(ILLUST. NO.2)			-7C24
KLG5-18-741	1	(ILLUST. NO.2)			7C24-
18-835D		BRACKET,SOLENOID VALVE			
BP5W-18-836B	1	(ILLUST. NO.1)			
BP4W-18-837	1	(ILLUST. NO.2)			

7C24 NB353M-102379

CAT. AUNA07-05 2000-01

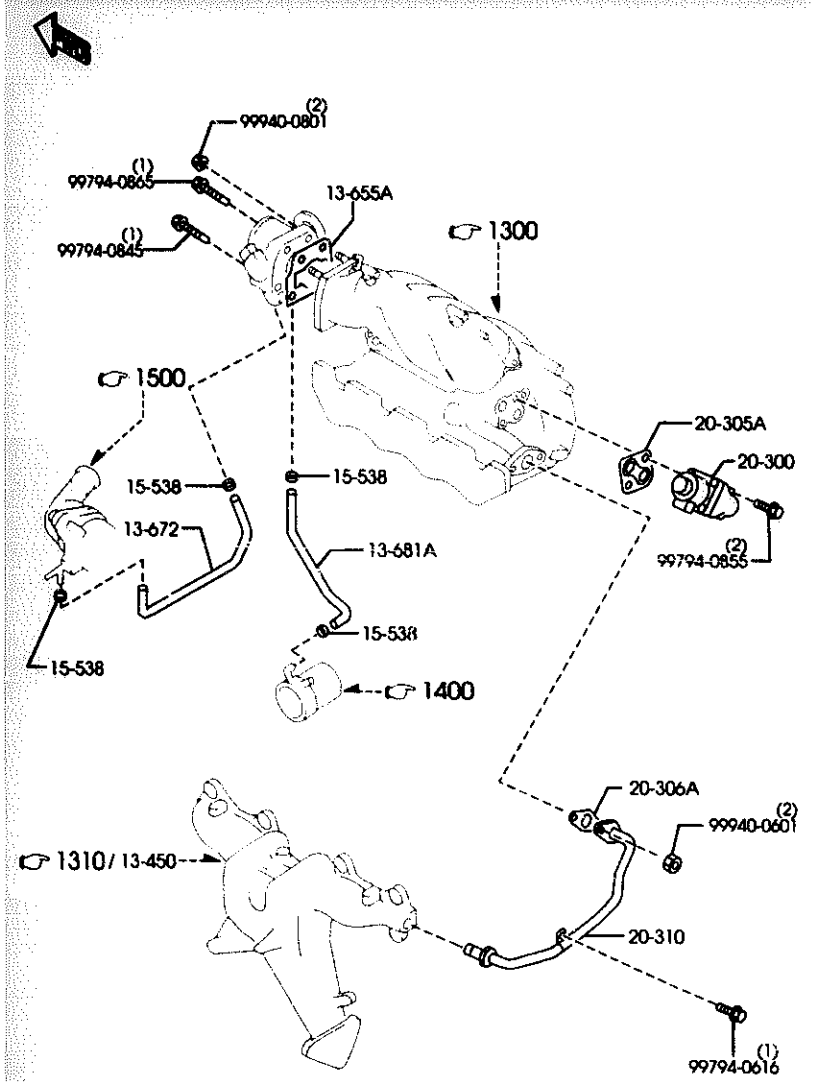

AUNA07 (1N11482)

PART NO.	QTY	MODEL/RESTRICTION	MODEL/RESTRICTION	MODEL/RESTRICTION	FROM-TO
20-300		VALVE,E.G.R.			
BP4W-20-300 A (BP4W-20-300A)	1				-8907
BP4W-20-300A	1				8907-
20-305A		GASKET,E.G.R. VALVE			
JE27-20-305A	1				
20-306A		GASKET			
JE06-20-306	1				
20-310		PIPE,E.G.R.			
BP4W-20-310A	1				
20-341C		TUBE,VACUUM			
BP4W-20-341A	1				
20-342B		TUBE,VACUUM			
BP4W-20-342	1				
20-343B		TUBE,VACUUM			
BP4W-20-343	1				
20-361A		TUBE,VACUUM			
BP4W-20-361B	1				
20-371B		TUBE,VACUUM			
BP4W-20-371B	1				
20-467		CLIP,HOSE			
JF03-20-467	1				
20-810B		CLIP			
JE15-20-810	1	(ILLUST. NO.1)			
KLL5-20-810	1	(ILLUST. NO.2)			
20-820C		CLIP,HOSE			
B367-20-811	1				
27-816		HOSE,VACUUM			
M0C7-27-816	1				

8907 NB353*-122394

CAT. AUNA07-05 2000-01

1370A EMISSION CONTROL SYSTEM (INLET SIDE) (1/2)

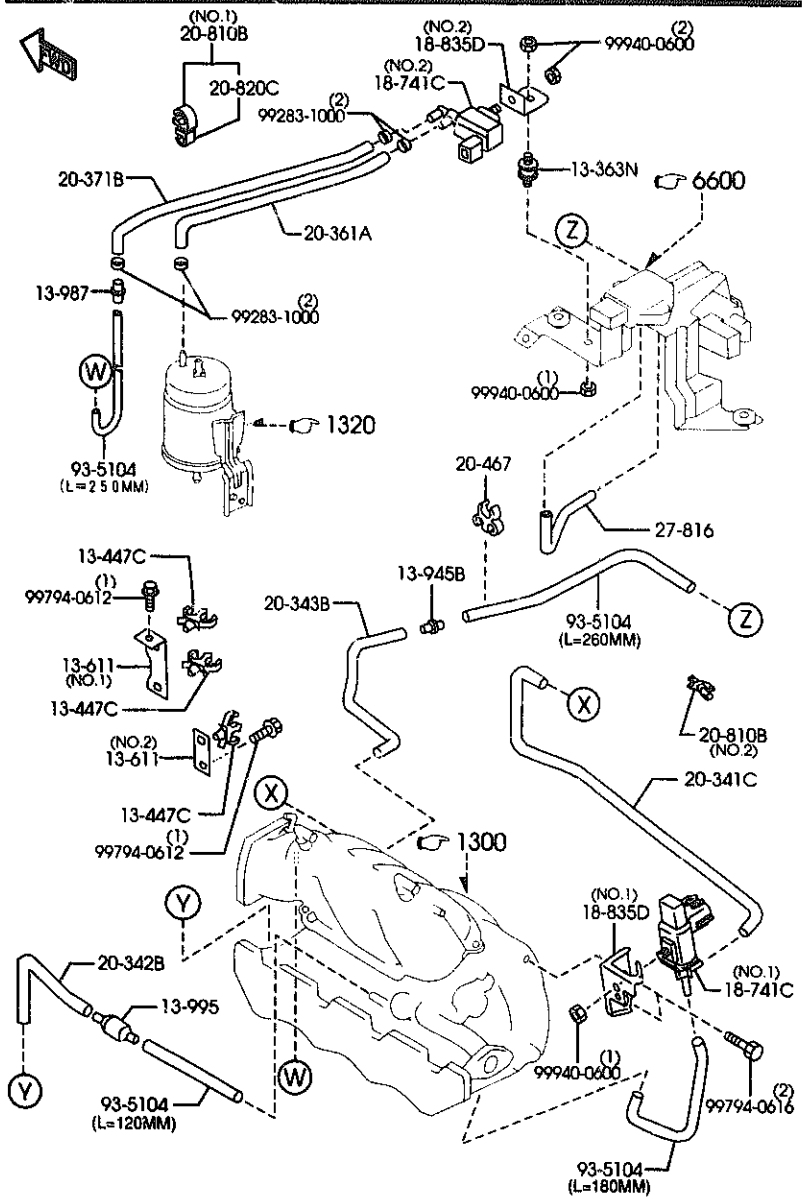

AUNA07 (1N11481)

1370A -3 ※ EMISSION CONTROL SYSTEM (INLET SIDE)

PART NO.	QTY	MODEL/RESTRICTION	MODEL/RESTRICTION	MODEL/RESTRICTION	FROM-TO
93-5104		HOSE			
99351-04999	1	L=1M CUT IT TO USE			

CAT. AUNA07-05 2000-01

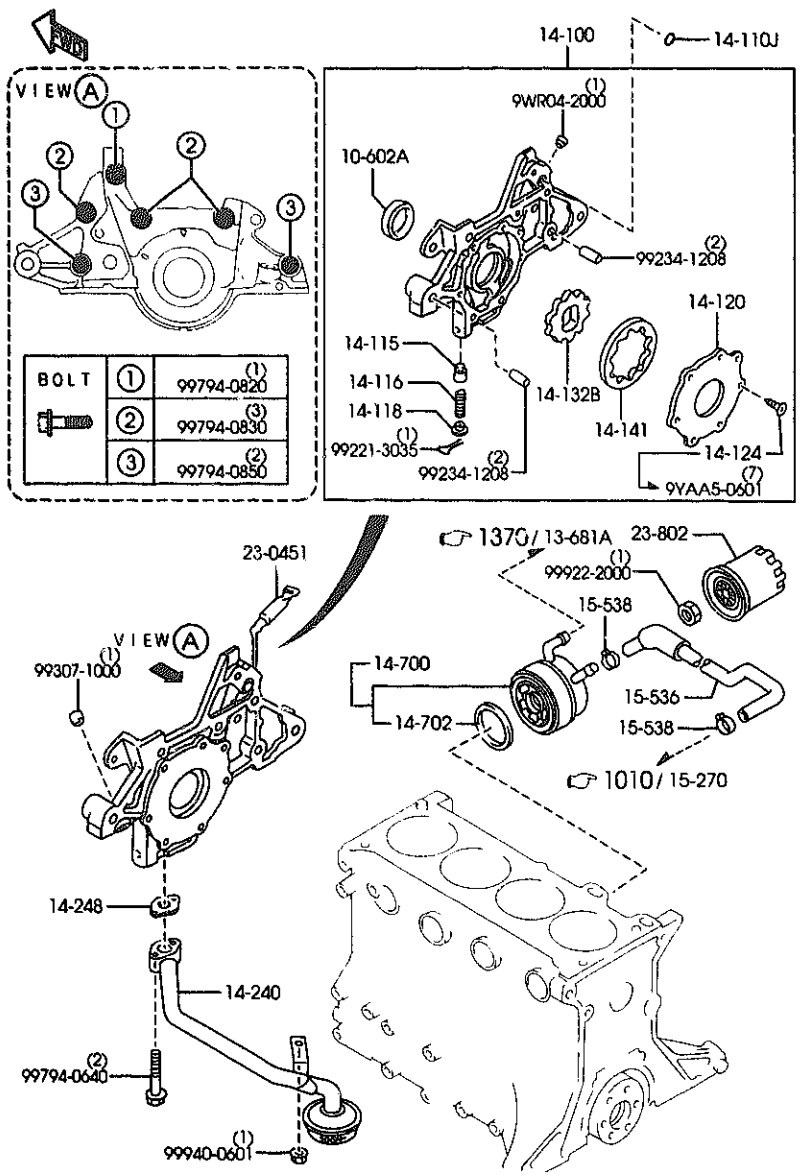

AUNA07 (1N11490)

PART NO.	QTY	MODEL/RESTRICTION	MODEL/RESTRICTION	MODEL/RESTRICTION	FROM-TO
10-602A		SEAL,OIL			
B3C7-10-602A	1	NON ASBESTOS			
14-100		PUMP,OIL			
BP4W-14-100	1	IDENTIFY MARK (BP4W)			-9301
ZL01-14-100 AN(BP4W-14-100)	1	IDENTIFY MARK (ZL01)			-9301
BP5A-14-100	1	IDENTIFY MARK (BP4W)			9301-
14-110J		RING,'O'			
FE1H-14-122A	1				
14-115		PLUNGER,CONTROL			
FS01-14-115	1	(IDENTIFY MARK (B6SB))			-9301
ZL01-14-115	1	(IDENTIFY MARK (ZL01))			-9301
0221-14-115	1				9301-
14-116		SPRING,PRESSURE			
0324-14-116B	1	(IDENTIFY MARK (B6SB))			
ZL01-14-116	1	(IDENTIFY MARK (ZL01))			-9301
14-118		SHEET,SPRING			
0222-14-118	1	(IDENTIFY MARK (B6SB))			
ZL01-14-118	1	(IDENTIFY MARK (ZL01))			-9301
14-120		COVER,OIL PUMP			
B6BF-14-121	1	(IDENTIFY MARK (B6SB))			
ZL01-14-121	1	(IDENTIFY MARK (ZL01))			-9301
14-124		SCREW,OIL PUMP COVER			
ZL01-14-124	7	SANYCO (IDENTIFY MARK (ZL01))			-9301
FE1H-14-124	7	(IDENTIFY MARK (B6SB			-9601

9301 NB353#-133012
9601 NB353#-138251

CAT. AUNA07-05 2000-01

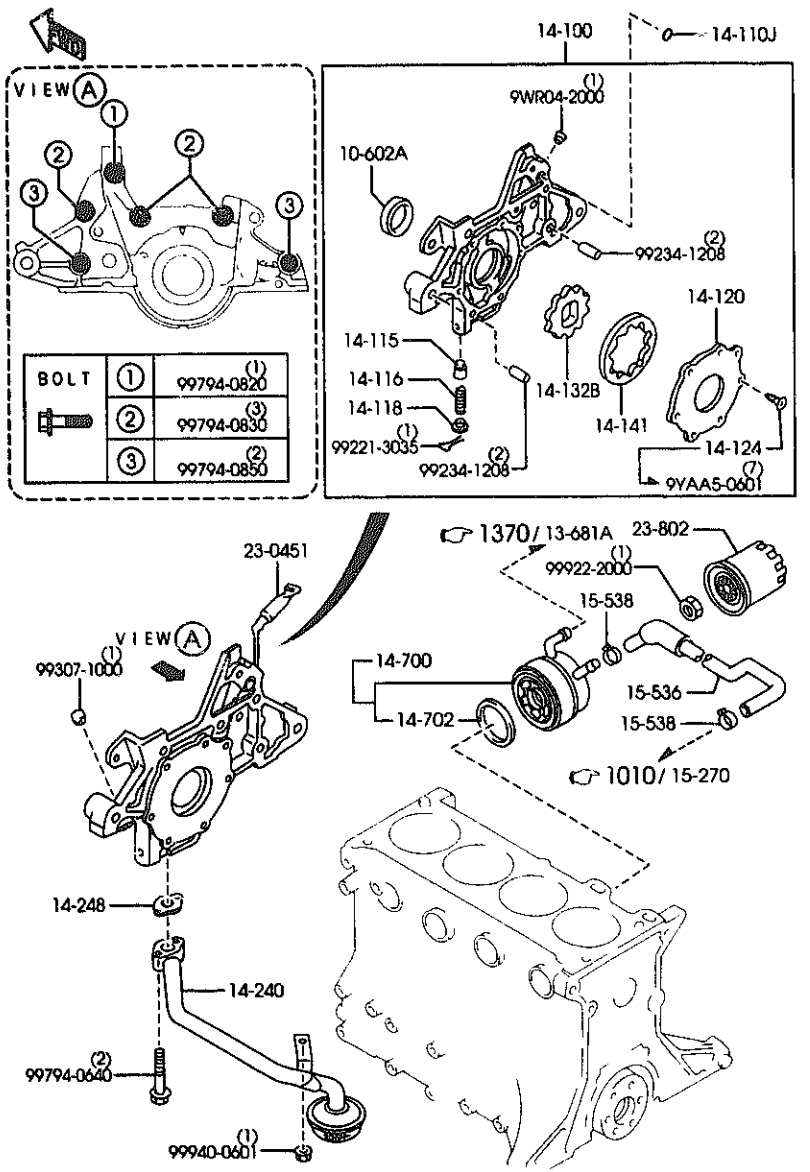

AUNA07 (1N11490)

PART NO.	QTY	MODEL/RESTRICTION	MODEL/RESTRICTION	MODEL/RESTRICTION	FROM-TO
CONT'D		))			
+----------+					
| 14-132B |		GEAR,INNER			
+----------+					
B6S7-14-132	1	(IDENTIFY MARK (B6S8))			
ZL01-14-132	1	(IDENTIFY MARK (ZL01))			-9301
+----------+					
| 14-141 |		GEAR,OUTER			
+----------+					
B6S7-14-141	1	(IDENTIFY MARK (B6S8))			
ZL01-14-141	1	(IDENTIFY MARK (ZL01))			
+----------+					
| 14-240 |		STRAINER,OIL			
+----------+					
BPE8-14-240	1				
+----------+					
| 14-248 |		GASKET,OIL STRAINER			
+----------+					
B6BF-14-248	1				
+----------+					
| 14-700 |		COOLER,OIL			
+----------+					
BPE8-14-700	1				
+----------+					
| 14-702 |		GASKET			
+----------+					
KL01-14-702A	1				
+----------+					
| 15-536 |		HOSE,WATER-OIL COOLE R IN.			
+----------+					
BP4W-15-536A	1				
+----------+					
| 15-538 |		CLAMP,WATER HOSE			
+----------+					
B6BF-15-538	2				
+----------+					
| 23-0451 |		TUBE,SILICON			
+----------+					
8527-77-739	1				
+----------+					
| 23-802 |		CARTRIDGE,OIL FILTER			
+----------+					
B6Y1-14-302A	1	(MAZDA MARK T.ROKI)			
B6Y2-14-302	1	(MAZDA MARK-TENNEX)			8202-

8202 NB353※-106606
9301 NB353※-133012

CAT. AUNA07-05 2000-01

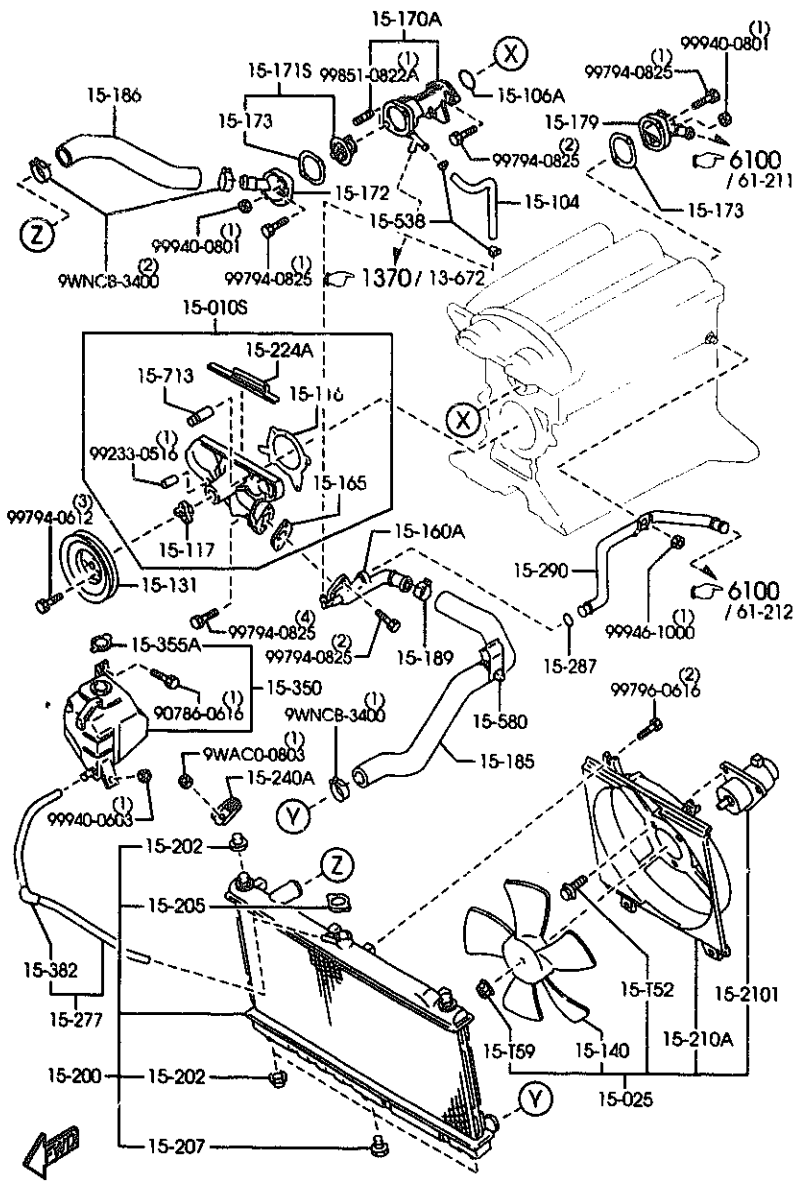

AUNA07 (1N11500)

PART NO.	QTY	MODEL/RESTRICTION	MODEL/RESTRICTION	MODEL/RESTRICTION	FROM-TO
15-T52		SCREW,MOTOR-ELECTRIC FAN			
B6S8-15-T52	3				
15-T59		NUT,COOLING FAN			
B595-15-T59	1				
15-010S		PUMP SET,WATER			
8ABB-15-010A	1				
15-025		FAN,ELECTRIC			
BP4W-15-025	1				
15-104		HOSE,WATER BY-PASS			
B61P-15-261A	1				
15-106A		RING,'O'-WATER PUMP			
B61P-15-106	1				
15-116		GASKET,WATER PUMP			
B6BF-15-116	1				
15-117		BOSS,W.PUMP PULLEY			
E301-15-117	1				
15-131		PULLEY,WATER PUMP			
B3C7-15-131	1				
15-140		FAN,COOLING			
BP4W-15-140	1				
15-160A		INLET,WATER PUMP			
B61P-15-160	1				
15-165		GASKET,W.PUMP INLET			
B621-15-165	1	NON ASBESTOS			
15-170A		COVER,THERMO			
BPE8-15-170A	1				
15-171S		THERMOSTAT SET			

CAT. AUNA07-05 2000-01

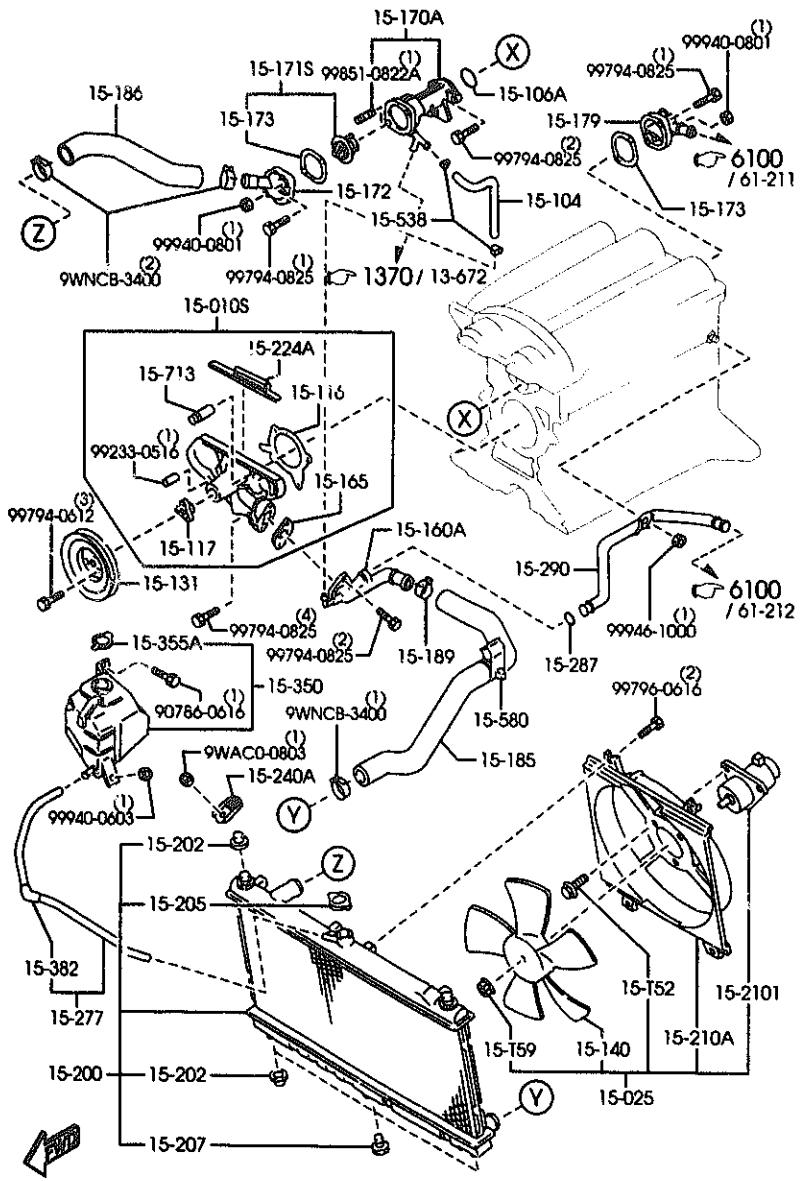

AUNA07 (1N11500)

PART NO.	QTY	MODEL/RESTRICTION	MODEL/RESTRICTION	MODEL/RESTRICTION	FROM-TO
CONT'D					
6ABE-15-171	1				
| 15-172 |		COVER,THERMOSTAT			
BPEB-15-172	1				
| 15-173 |		GASKET,THERMOSTAT COVER			
B621-15-173	2	NON ASBESTOS			
| 15-179 |		OUTLET,WATER			
BP4W-15-179	1				
| 15-185 |		HOSE,WATER			
BP4W-15-185B	1				
| 15-186 |		HOSE,WATER			
BP4W-15-186A	1				-7C03
AN(BP4W-15-186B)					
BP4W-15-186B	1				7C03-
| 15-189 |		CLAMP,HOSE			
B366-15-182	1				
| 15-200 |		RADIATOR			
BP4W-15-200A	1	(MT)			
BP4X-15-200A	1	(AT)			
| 15-202 |		RUBBER,MOUNT			
JE48-15-202	4				
| 15-205 |		CAP,RADIATOR			
KL01-15-205	1				
| 15-207 |		COCK,DRAIN			
NF01-15-203	1	CALSONIC			
| 15-210A |		COWLING,RADIATOR			
BP4W-15-210	1				
| 15-2101 |		FAN DRIVE			
Z5A1-15-150		CALSONIC			

7C03 NB353#-100063

CAT. AUNA07-05 2000-01

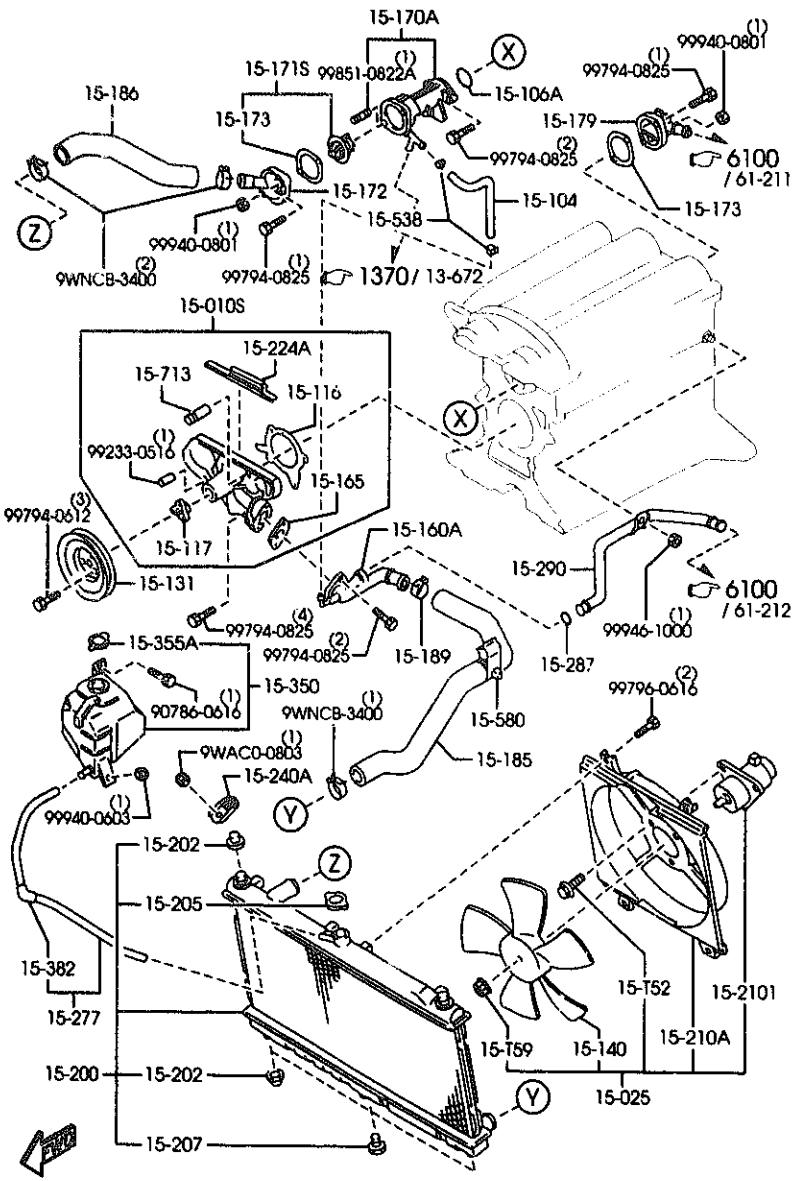

AUNA07 (1N11500)

PART NO.	QTY	MODEL/RESTRICTION	MODEL/RESTRICTION	MODEL/RESTRICTION	FROM-TO
CONT'D	1				
+----------+					
| 15-224A |		RUBBER,SEAL			
+----------+					
B660-10-543B	1				
+----------+					
| 15-240A |		BRACKET,RADIATOR UP.			
+----------+					
BP4W-15-231	2				
+----------+					
| 15-277 |		HOSE,WATER SUB TANK			
+----------+					
BP4W-15-380	1				
+----------+					
| 15-287 |		RING,'O'-WATER BYPAS			
+----------+		S			
E301-15-287	1				
+----------+					
| 15-290 |		PIPE,BYPASS			
+----------+					
BP4W-15-290 AN(BP4W-15-290A)	1				-8108
BP4W-15-290A	1				8108-
+----------+					
| 15-350 |		TANK,SUB-RADIATOR			
+----------+					
BP4W-15-350A	1				
+----------+					
| 15-355A |		CAP,SUB TANK			
+----------+					
SLA1-15-355	1				
+----------+					
| 15-382 |		PROTECTOR,HOSE-SUB T			
+----------+		ANK			
BP4W-15-382	1				
+----------+					
| 15-538 |		CLAMP,WATER HOSE			
+----------+					
B6BF-15-538	2				
+----------+					
| 15-580 |		CLIP,WATER HOSE			
+----------+					
B6MC-15-581A AN(B6MC-15-581B)	1				-8301
B6MC-15-581B	1				8301-
+----------+					
| 15-713 |		SET PIN,SPRING			
+----------+					
F801-15-713	1				

8108 NB353#-103075
8301 NB353#-109401

CAT. AUNA07-05 2000-01

1580A BRACKET, PULLEY & BELT

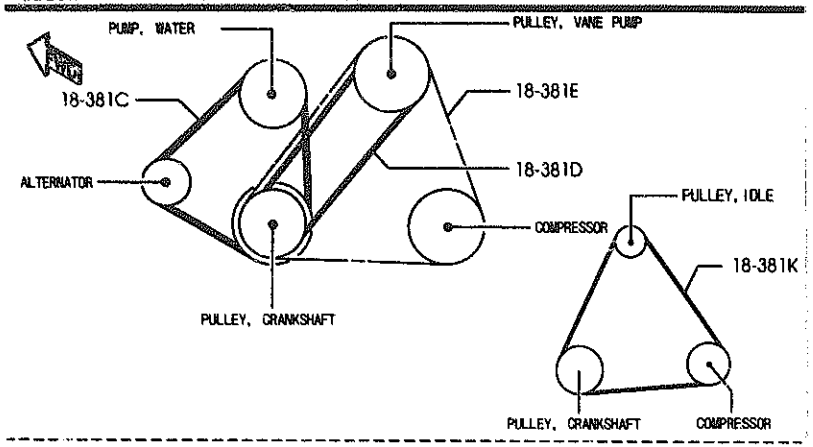

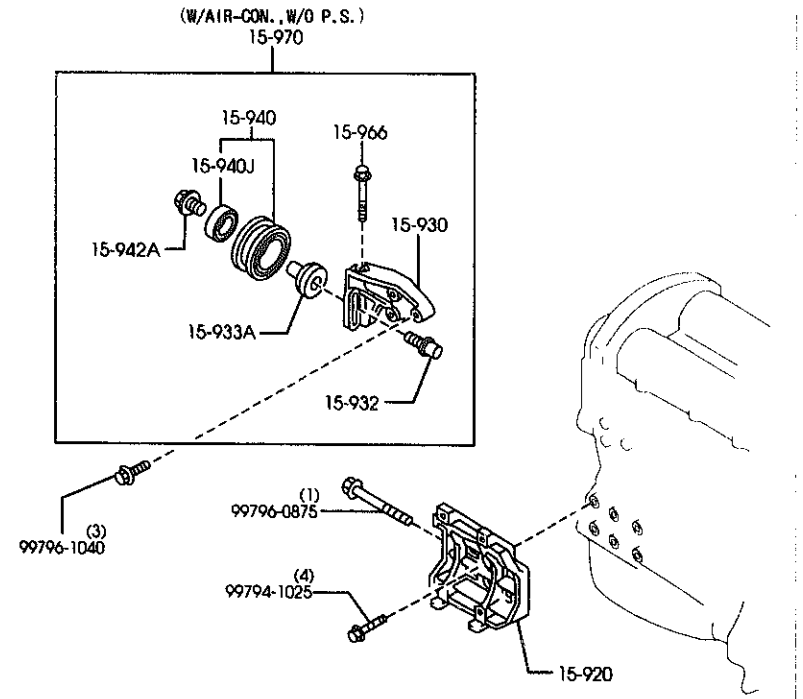

AUNA07

(1N10320)

1580A -1 BRACKET, PULLEY & BELT

PART NO.	QTY	MODEL/RESTRICTION	MODEL/RESTRICTION	MODEL/RESTRICTION	FROM-TO
15-920		BRACKET,COMPRESSOR			
BPE8-15-810A	1	(A) (W/AIR CON.)			
15-930		BRACKET,IDLE PULLEY			
BP01-15-951	1	(A) (W/AIR-CON.,W/O P.S.)			
15-932		SHAFT,PULLEY			
B631-15-932	1	(A) (W/AIR-CON.,W/O P.S.)			
15-933A		COLLAR			
BP01-15-933	1	(A) (W/AIR-CON.,W/O P.S.)			
15-940		PULLEY,IDLE			
BP01-15-940	1	(A) (W/AIR-CON.,W/O P.S.)			
15-940J		BEARING			
99606-83020	1	(W/AIR-CON.,W/O P.S.)			
15-942A		COLLAR			
E564-15-942	1	(A) (W/AIR-CON.,W/O P.S.)			
15-966		BOLT,ADJUST			
E564-15-934	1	(A) (W/AIR-CON.,W/O P.S.)			
15-970		PULLEY,IDLE			
BP01-15-930	1	(A) (W/AIR-CON.,W/O P.S.)			
18-381C		BELT'V',W/PUMP&ALTERNATOR			
BP4W-18-381	1	4PK L=885 GATES			
B6BF-18-381	1	4PK L=885 BANDO			

CAT. AUNA07-05

2000-01

1580A BRACKET, PULLEY & BELT

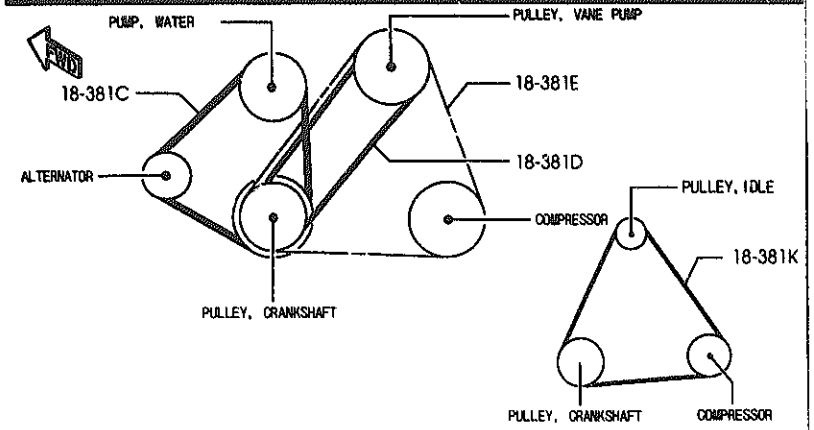

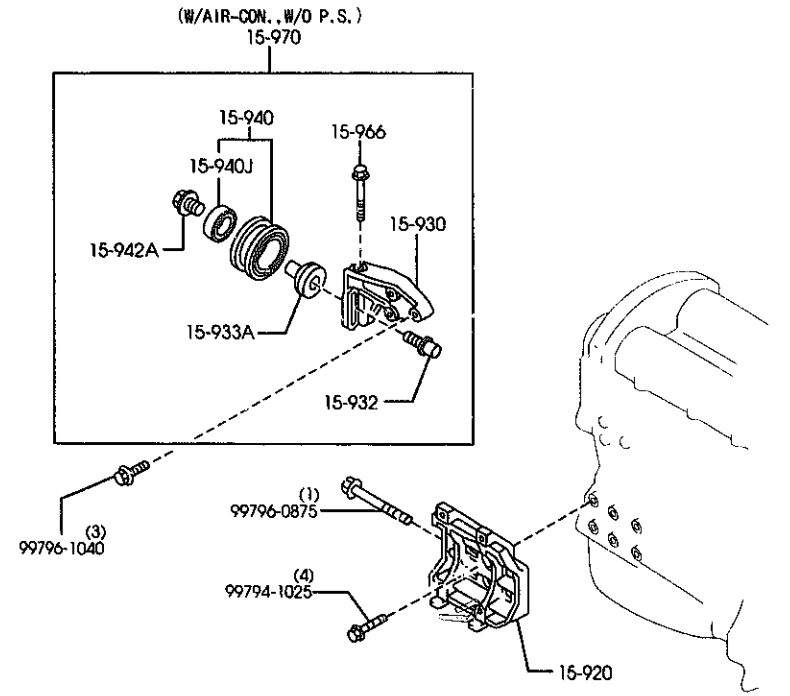

AUNA07 (1N10320)

1580A -2 * BRACKET, PULLEY & BELT

PART NO.	QTY	MODEL/RESTRICTION	MODEL/RESTRICTION	MODEL/RESTRICTION	FROM-TO
18-381D		BELT'V',POWER STEERING			
8P4W-15-907A	1	4PK-860 GATES			
B61P-15-907A	1	4PK-855 MITSUBOSHI			
18-381E		BELT'V',P/STG. & AIR CON.			
BPE8-15-909A	1	(E) GOODYEAR 4PK940			
BPF3-15-909A	1	(A) 4PK L=950MM BAND			
18-381K		BELT'V',AIR CON.			
B3C7-15-907C	1	4PK L=848MM (W/AIR-CON.,W/O P.S.)			
BPE8-15-908	1	(E) GOODYEAR 4PK848 (W/AIR-CON.,W/O P.S.)			

CAT. AUNA07-05 2000-01

1600A CLUTCH DISC & COVER (5-SPEED)

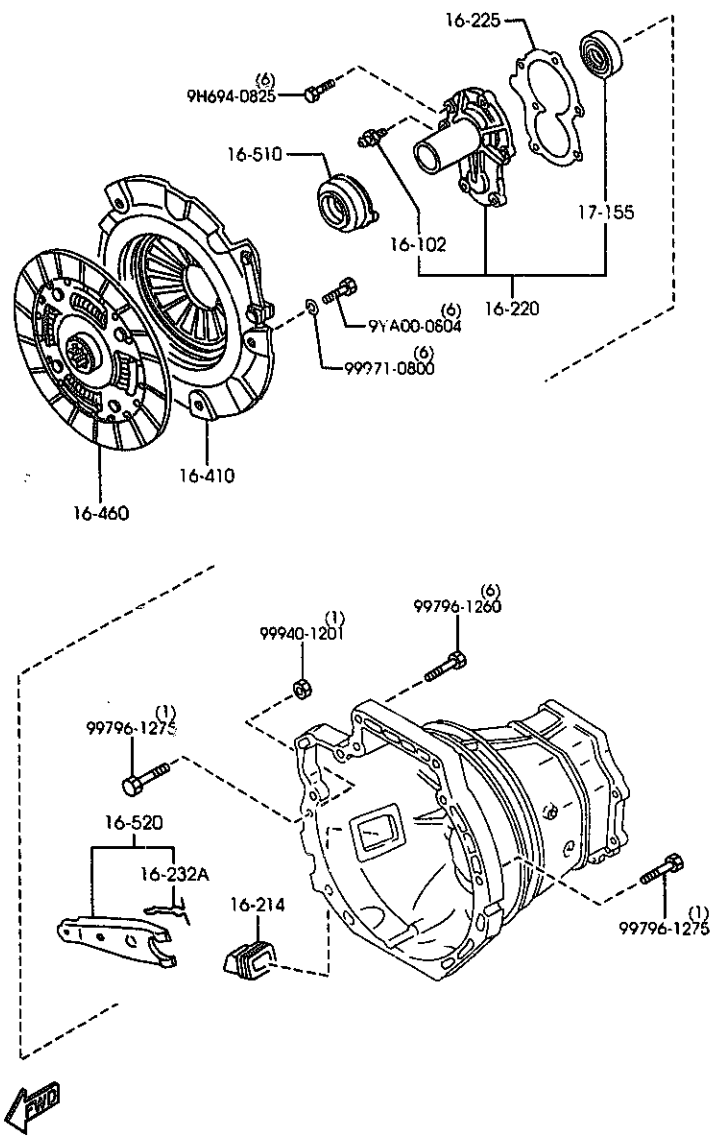

AUNA07 (1N04000)

1600A -1 * CLUTCH DISC & COVER (5-SPEED)

PART NO.	QTY	MODEL/RESTRICTION	MODEL/RESTRICTION	MODEL/RESTRICTION	FROM-TO
16-102		PIN,PIVOT-CLUTCH REL .FORK			
FE69-16-102A	1				
16-214		COVER,DUST-CLUTCH FORK			
FE51-16-214A	1				
16-220		COVER,FRONT CLUTCH			
B626-16-220 AN(B626-16-220A)	1				-8901
*B626-16-220B	1				0201-
B626-16-220A	1				8901-0201
16-225		GASKET,FRONT COVER			
FE50-16-225A	1				
16-232A		SUPPORTER,FORK			
1416-16-232A	1				
16-410		COVER,CLUTCH			
BP11-16-410	1				
16-460		DISC,CLUTCH			
BP07-16-460A AN(BP07-16-460B)	1				-8301
BP07-16-460B	1				8301-
16-510		COLLAR,CLUTCH REL.			
B622-16-510	1				
16-520		FORK,CLUTCH RELEASE			
B622-16-520A	1				
17-155		SEAL,OIL			
H501-17-103	1				

8301 NB353*-109481
8901 NB353*-122306

CAT. AUNA07-05 2000-01

1600AA CLUTCH DISC & COVER (6-SPEED)

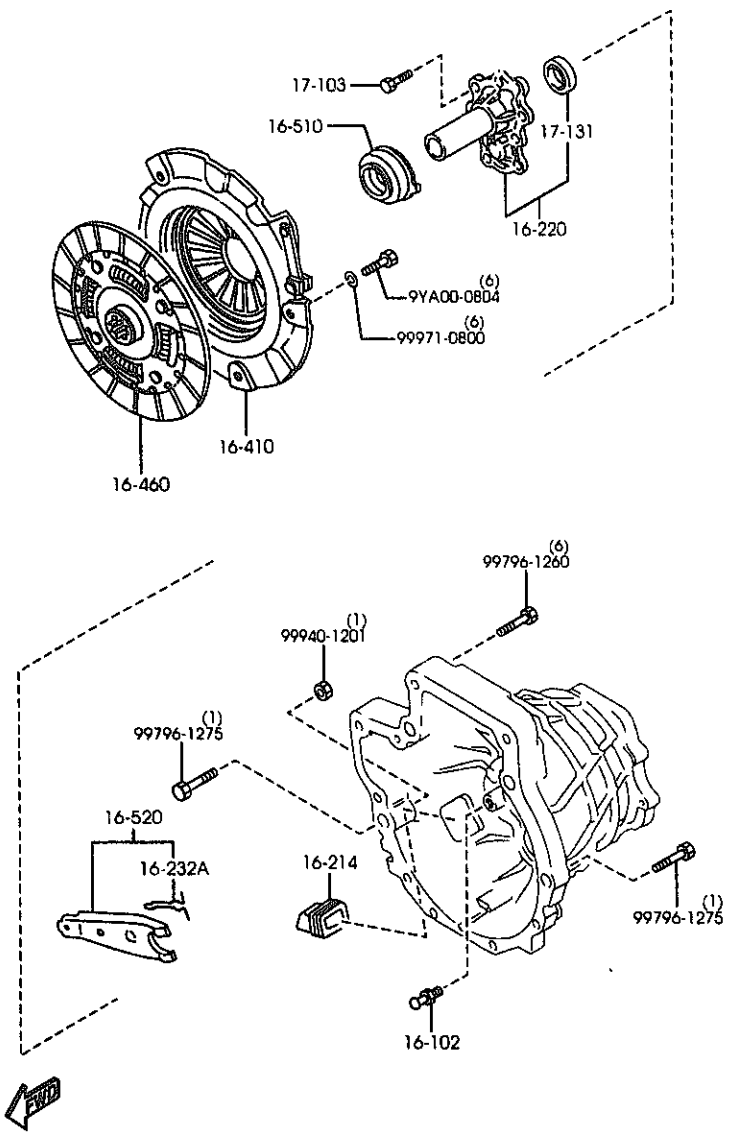

AUNA07 (1N03460)

1600AA-1 ※ CLUTCH DISC & COVER (6-SPEED)

PART NO.	QTY	MODEL/RESTRICTION	MODEL/RESTRICTION	MODEL/RESTRICTION	FROM-TO
16-102		PIN,PIVOT-CLUTCH REL .FORK			
FE69-16-102A	1				
16-214		COVER,DUST-CLUTCH FO RK			
FE51-16-214A	1				
16-220		COVER,FRONT CLUTCH			
Y601-16-220	1				
16-232A		SUPPORTER,FORK			
1416-16-232A	1				
16-410		COVER,CLUTCH			
BP11-16-410	1				
16-460		DISC,CLUTCH			
BP07-16-460B	1				
16-510		COLLAR,CLUTCH REL.			
B622-16-510	1				
16-520		FORK,CLUTCH RELEASE			
B622-16-520A	1				
17-103		BOLT			
Y601-17-103	7				
17-131		SEAL,OIL			
Y601-17-131	1				

CAT. AUNA07-05 2000-01

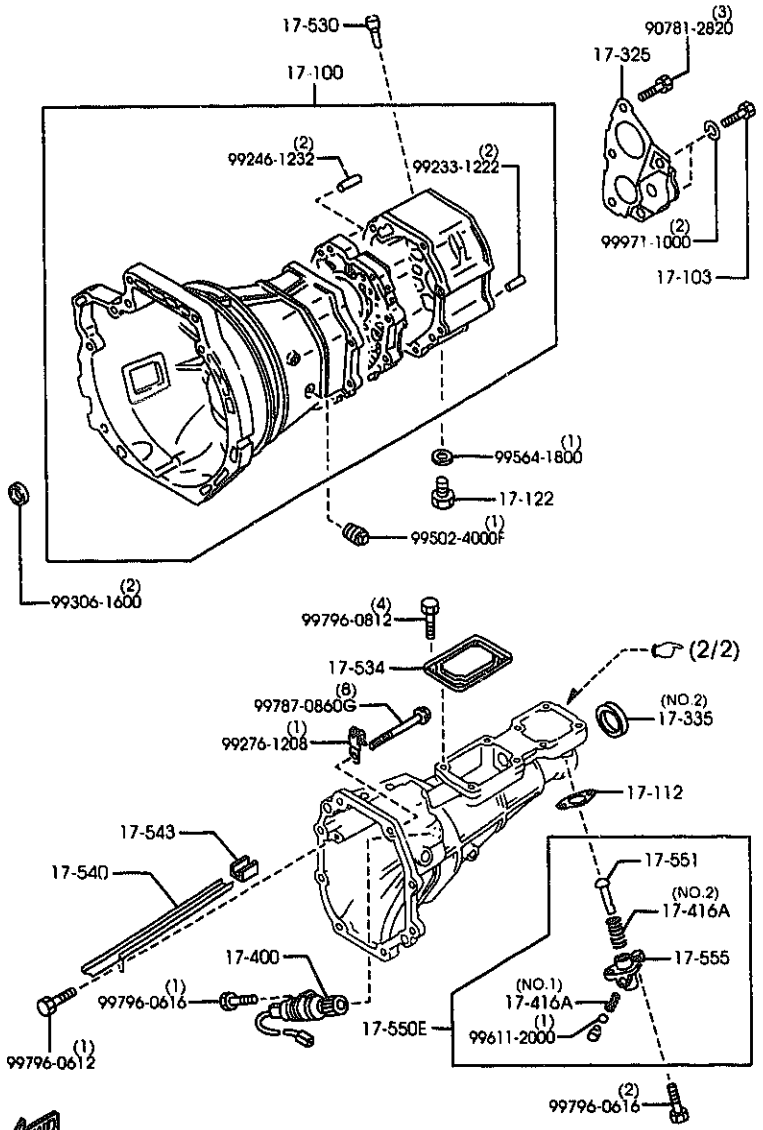

AUNA07 (1N04011)

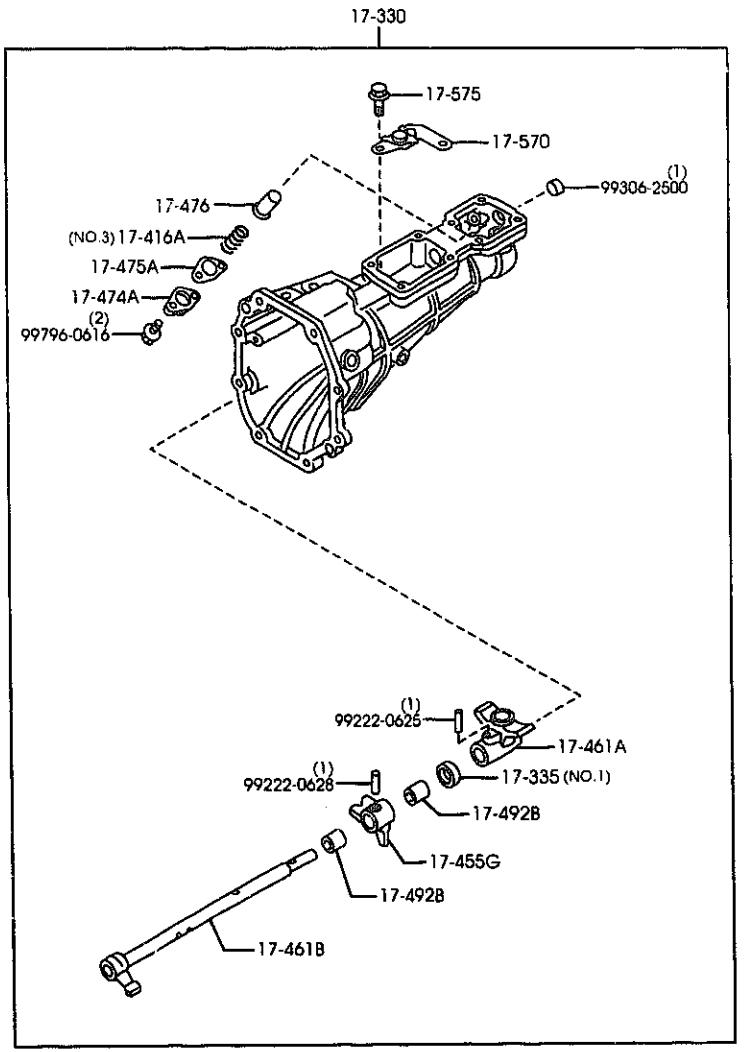

AUNA07 (1N04012)

1700A MANUAL TRANSMISSION CASE (5-SPEED) (1/2)

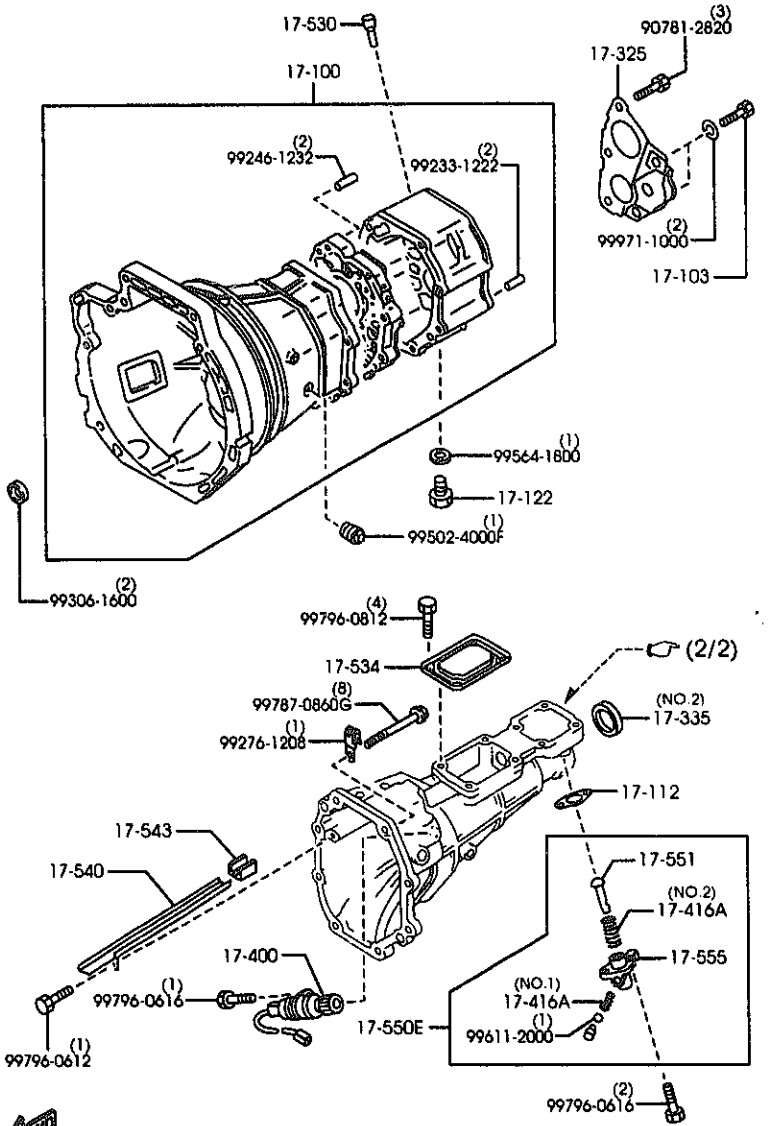

AUNA07 (1N04011)

1700A -1 MANUAL TRANSMISSION CASE (5-SPEED)

PART NO.	QTY	MODEL/RESTRICTION	MODEL/RESTRICTION	MODEL/RESTRICTION	FROM-TO
17-100		CASE,T/MISSION			
M526-17-10XC	1				
17-103		BOLT			
M501-17-103	2				
17-112		GASKET			
S524-17-112	1				
17-122		PLUG,MAGNET			
0810-17-121	1				
17-325		COVER,BEARING			
M501-17-370A	1				
17-330		HOUSING,EXTENSION			
M526-17-330	1				
17-335		SEAL,OIL			
65A0-17-335	1	(ILLUST. NO.1)			
M507-17-335A	1	(ILLUST. NO.2)			
17-400		GEAR SET,DRIVEN-SPEED			
M527-17-400 AN(M527-17-400A)	1				-9401
M527-17-400A	1				9401-
17-416A		SPRING			
R504-17-416	1	(ILLUST. NO.1)			
R505-17-416	1	(ILLUST. NO.2)			
R506-17-416	1	(ILLUST. NO.3)			
17-455G		SELECTOR			
R504-17-455B	1				
17-461A		END,CONTROL LEVER			
R522-17-461A	1				
17-461B		ROD,CONTROL			
M511-17-460	1				

9401 NB353#-136673

CAT. AUNA07-05 2000-01

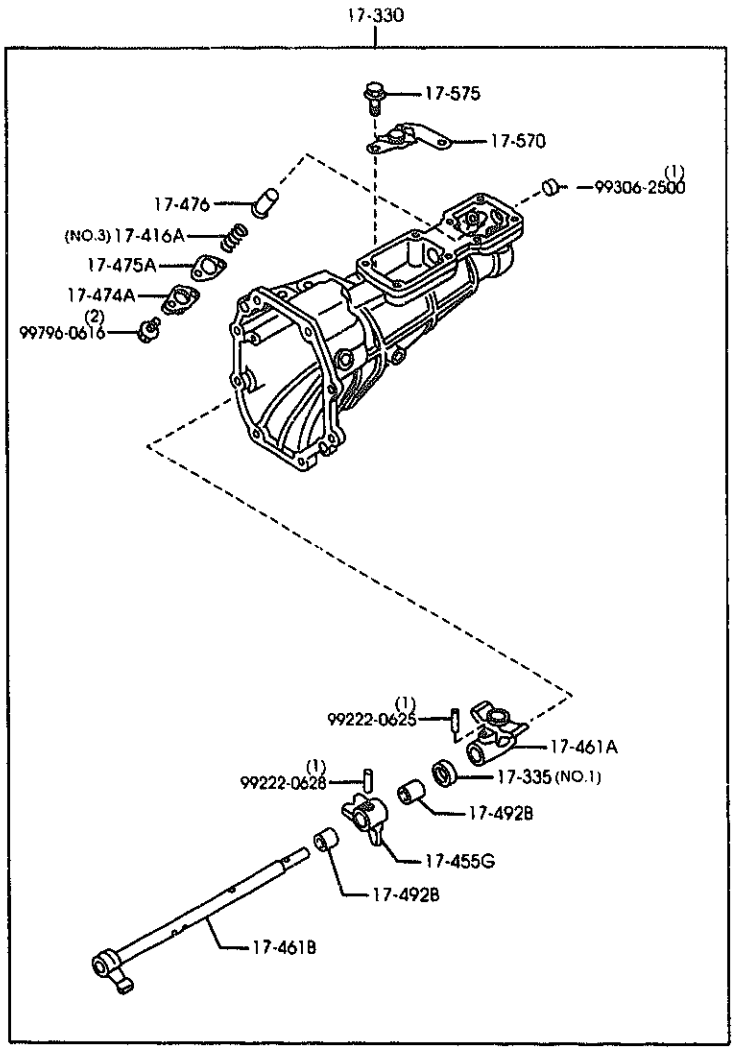

AUNA07 (1N04012)

1700A -2 * MANUAL TRANSMISSION CASE (5-SPEED)

PART NO.	QTY	MODEL/RESTRICTION	MODEL/RESTRICTION	MODEL/RESTRICTION	FROM-TO
17-474A M501-17-474	1	CAP,SPRING			
17-475A M501-17-475	1	GASKET,SPRING CAP			
17-476 R501-17-476	1	SPINDLE,SELECT LOCK			
17-492B 05A0-17-492	2	BUSH,SHIFT ROD-DIFF. LOCK			
17-530 0884-17-530	1	BREATHER,AIR-T/MISSION			
17-534 R501-17-523	1	COVER,BLIND-EXTENSION HOUSING			
17-540 M509-17-540	1	PASS,OIL			
17-543 M501-17-543A	1	RUBBER,SEAL SUMIND INDUSTRY			
17-550E R503-17-550	1	SPINDLE,SELECT			
17-551 R502-17-551	1	SPINDLE,SELECT LOCK			
17-555 R501-17-555	1	HOLDER,SPINDLE			
17-570 R526-17-570	1	GUIDE,CHANGE			
17-575 P501-17-575	2	BOLT			

CAT. AUNA07-05 2000-01

1700AA MANUAL TRANSMISSION CASE (6-SPEED)

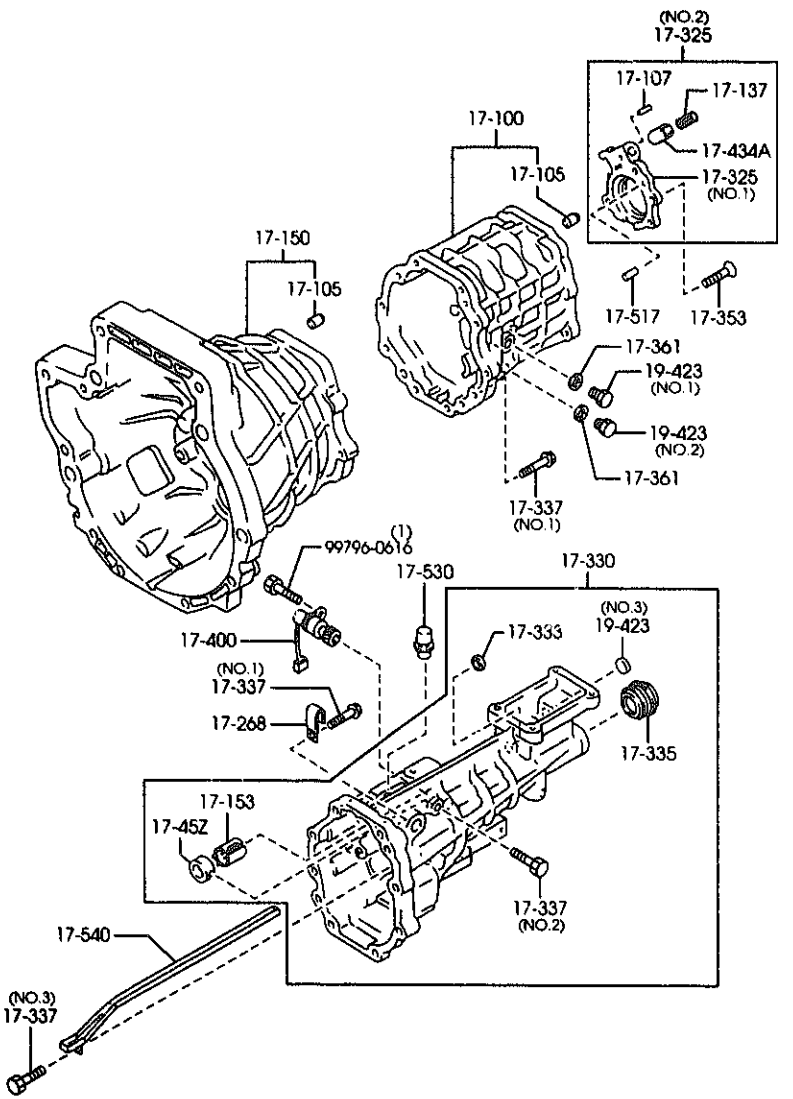

AUNA07 (1N03570)

1700AA-1 MANUAL TRANSMISSION CASE (6-SPEED)

PART NO.	QTY	MODEL/RESTRICTION	MODEL/RESTRICTION	MODEL/RESTRICTION	FROM-TO
17-100		CASE,T/MISSION			
Y601-17-100	1				
17-105		DOWEL,TRANS.&CLUTCH CASE			
Y601-17-105	4				
17-107		PIN,SPRING			
Y601-17-107	1				
17-137		SPRING			
Y604-17-137	1				
17-150		PLATE,CLUTCH			
Y601-17-150	1				
17-153		PLATE,BAFFLE			
Y601-17-153	1				
17-268		CLIP			
Y601-17-269	2				
17-325		COVER,BEARING			
Y601-17-325	1	(ILLUST. NO.1)			
Y601-17-370	1	(ILLUST. NO.2)			
17-330		HOUSING,EXTENSION			
Y601-17-330	1				
17-333		BUSH			
Y601-17-333	1				
17-335		SEAL,OIL			
H507-17-335A	1				
17-337		BOLT			
Y601-17-337	17	(ILLUST. NO.1)			
Y604-17-337	1	(ILLUST. NO.2)			
Y605-17-337	1	(ILLUST. NO.3)			
17-353		SCREW SET			

CAT. AUNA07-05 2000-01

1700AA MANUAL TRANSMISSION CASE (6-SPEED)

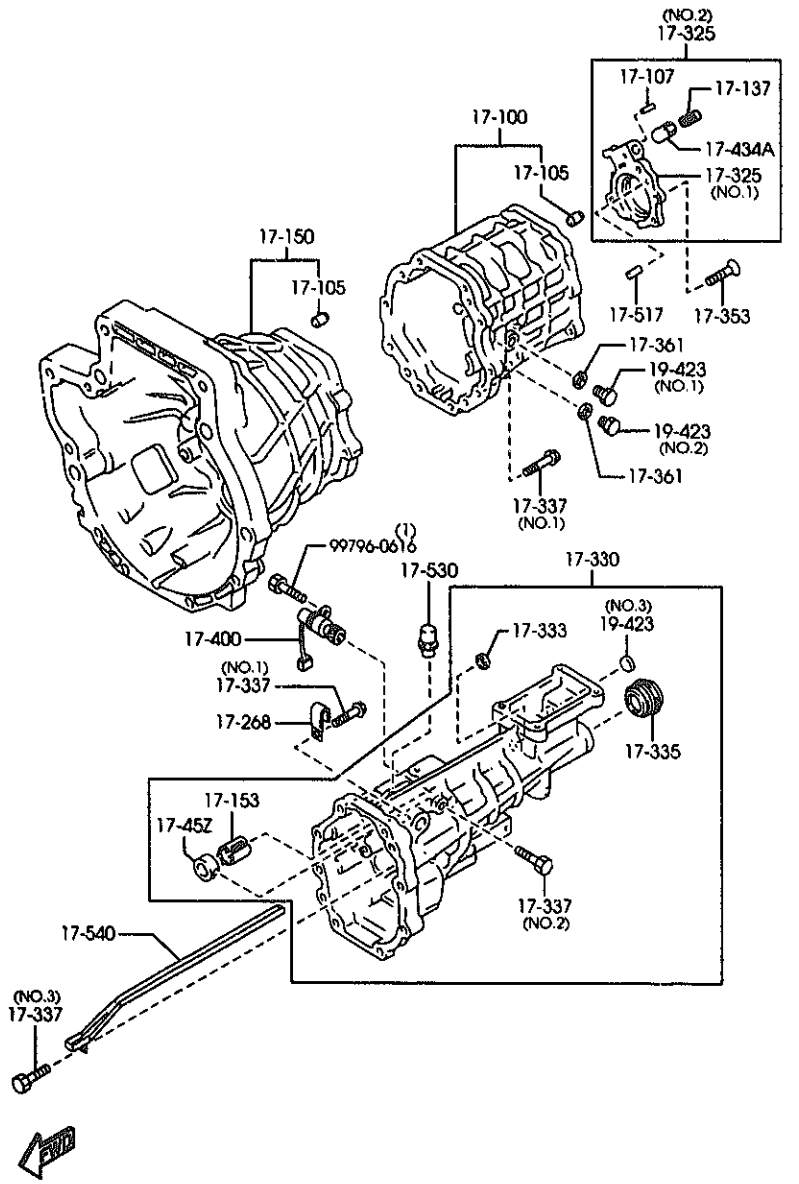

AUNA07 (1N03570)

1700AA-2 # MANUAL TRANSMISSION CASE (6-SPEED)

PART NO.	QTY	MODEL/RESTRICTION	MODEL/RESTRICTION	MODEL/RESTRICTION	FROM-TO
CONT'D					
Y601-17-347	4				
17-361		GASKET,REAR COVER			
Y601-17-361	2				
17-400		GEAR SET,DRIVEN-SPEED			
M528-17-400 AN(M528-17-400A)	1				-9401
M528-17-400A	1				9401-
17-434A		PIN,PUSH			
Y601-17-414	1				
17-45Z		SUPPORT,LEVER			
Y601-17-45Z	1				
17-517		PIN			
Y602-17-517	1				
17-530		BREATHER,AIR-T/MISSION			
Y601-17-530	1				
17-540		PASS,OIL			
Y601-17-540	1				
19-423		PLUG			
Y601-17-495	1	(ILLUST. NO.1)			
Y602-17-495	1	(ILLUST. NO.2)			
Y605-17-495	1	(ILLUST. NO.3)			

9401 NB353#-136673

CAT. AUNA07-05 2000-01

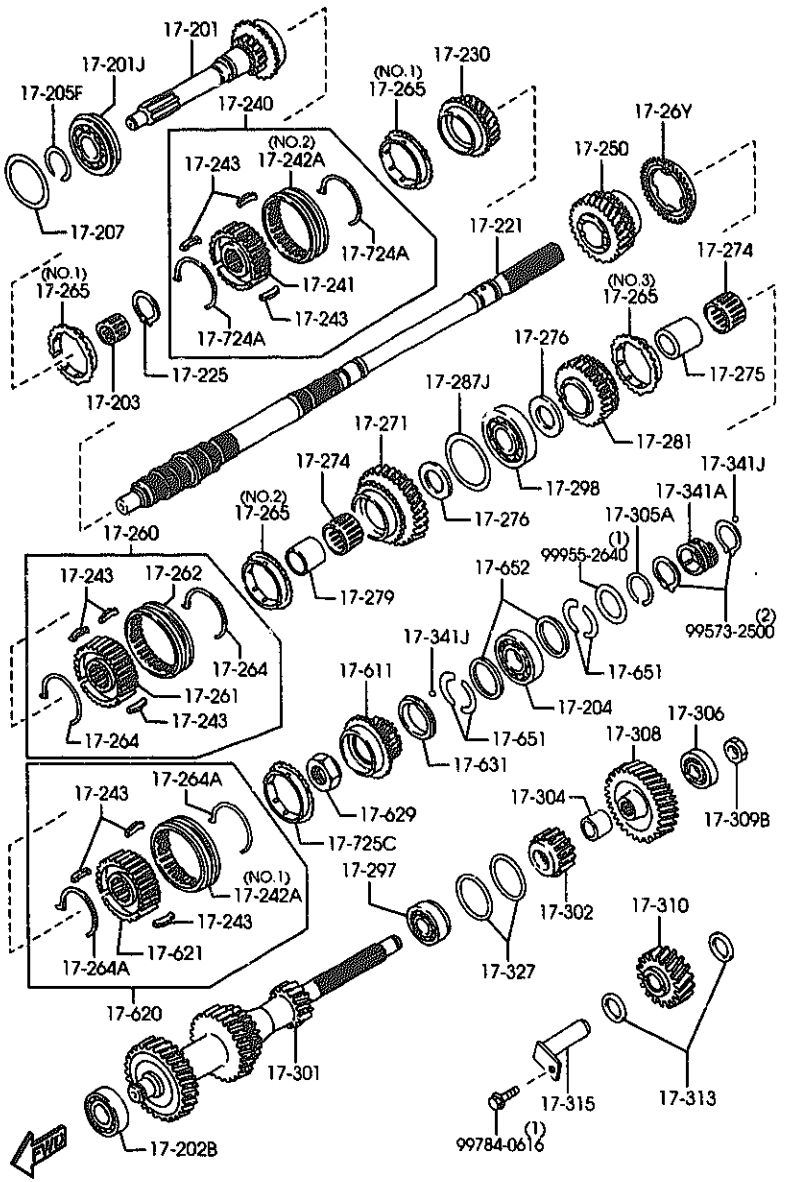

AUNA07 (1N03680)

PART NO.	QTY	MODEL/RESTRICTION	MODEL/RESTRICTION	MODEL/RESTRICTION	FROM-TO
17-201		GEAR,MAIN DRIVE			
M516-17-201 AN(M516-17-201A)	1				-9421
M516-17-201A	1				9421-
17-201J		BEARING,BALL-MAIN DRIVE GEAR			
M502-17-295C	1				
17-202B		BEARING,BALL			
F520-17-171B A (F520-17-171C)	1				-8801
F520-17-171C	1				8801-
17-203		BEARING,NEEDLE			
M501-17-210A	1				
17-204		BEARING,BALL-MAIN SHAFT			
99606-63053	1				-9701
M503-17-204	1				9701-
17-205F		RING,RETAINING			
M501-17-205	1				
17-207		SHIM,ADJUST			
*99963-6335	1	T=0.35MM			
*99963-6340	1	T=0.4MM			
*99963-6345	1	T=0.45MM			
*99963-6350	1	T=0.5MM			
*99963-6355	1	T=0.55MM			
*99963-6360	1	T=0.6MM			
*99963-6365	1	T=0.65MM			
*99963-6370	1	T=0.7MM			
*99963-6375	1	T=0.75MM			
*99963-6380		T=0.8MM			

8801 NB353*-121854
9421 NB353*-137365
9701 NB353*-138751

CAT. AUNA07-05 2000-01

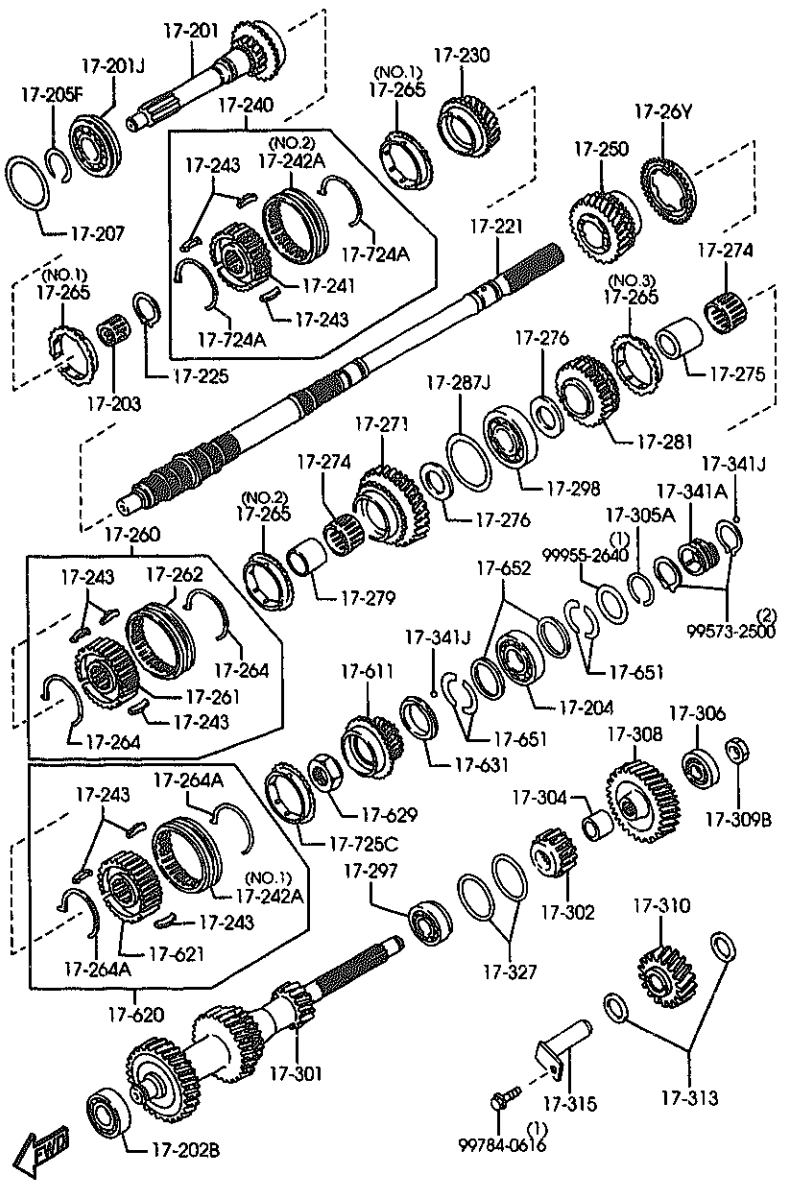

AUNA07 (1N03680)

PART NO.	QTY	MODEL/RESTRICTION	MODEL/RESTRICTION	MODEL/RESTRICTION	FROM-TO
CONT'D					
	1				
※99963-6385	1	T=0.85MM			
※99963-6390	1	T=0.9MM			
※99963-6395	1	T=0.95MM			
※99963-6330	1	T=0.3MM			0201-
17-221		SHAFT,MAIN			
M505-17-221B A (M505-17-221C)	1				-7C15
M505-17-221C A (M505-17-221D)	1				7C15-9701
M505-17-221D	1				9701-
17-225		RING,SNAP			
0317-17-225	1				
17-230		GEAR,3RD			
M521-17-231	1				
17-240		HUB SET,CLUTCH-3RD & 4TH			
M518-17-240 AN(M518-17-240A)	1				-8722
M518-17-240A	1				8722-
17-241		HUB,CLUTCH			
M501-17-241C	1				
17-242A		SLEEVE,CLUTCH HUB			
F401-17-242A	1	(ILLUST. NO.1)			
M503-17-242 AN(M503-17-242A)	1	(ILLUST. NO.2)			-8722
M503-17-242A	1	(ILLUST. NO.2)			8722-
17-243		KEY,SYNCHRONIZER			
F401-17-243C	9				
17-250		GEAR,2ND			
M528-17-251	1				

7C15 NB353※-100927
8722 NB353※-121529
9701 NB353※-138751

CAT. AUNA07-05 2000-01

1710A MANUAL TRANSMISSION GEARS (5-SPEED)

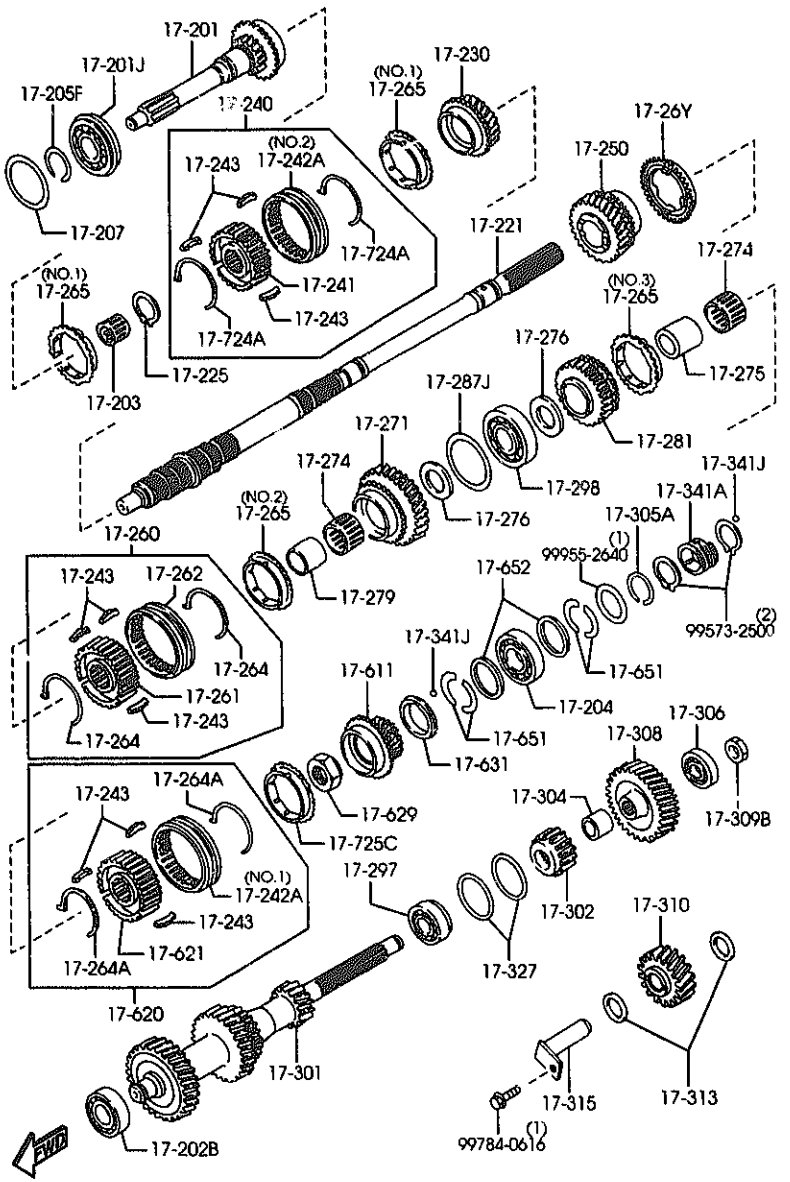

AUNA07 (1N03680)

1710A -3 MANUAL TRANSMISSION GEARS (5-SPEED)

PART NO.	QTY	MODEL/RESTRICTION	MODEL/RESTRICTION	MODEL/RESTRICTION	FROM-TO
17-26Y		RING,SYNCHRONIZER			
R504-17-26Y	1				-9405
R506-17-26Y	1				9405-
17-260		HUB SET,CLUTCH-1ST & 2ND			
M520-17-260 AN(M520-17-260A)	1				-8216
M520-17-260A AN(M520-17-260B)	1				8216-8722
M520-17-260B	1				8722-9405
M520-17-260C AN(M520-17-260D)	1				9405-9A01
*M520-17-260D	1				9A01-
17-261		HUB,CLUTCH			
M511-17-261	1				
17-262		SLEEVE,CLUTCH HUB			
M507-17-262 AN(M507-17-262A)	1				-8722
M507-17-262A	1				8722-9405
M507-17-262B AN(M507-17-262C)	1				9405-9A01
*M507-17-262C	1				9A01-
17-264		SPRING,SYNCHRO. KEY			
G401-17-264	2				
17-264A		SPRING,SYNCHRONIZER			
F401-17-264A	2				
17-265		RING,SYNCHRONIZER			
G501-17-265A	2	(ILLUST. NO.1)			
M502-17-265C	1	(ILLUST. NO.2)			
M504-17-265A	1	(ILLUST. NO.3)			
17-271		GEAR,1ST			
M516-17-271A	1				
17-274		BEARING,NEEDLE			
4069-17-283A	2				

8216 NB353*-108004
8722 NB353*-121529
9405 NB353*-136797
9A01 NB353*-141073

CAT. AUNA07-05 2000-01

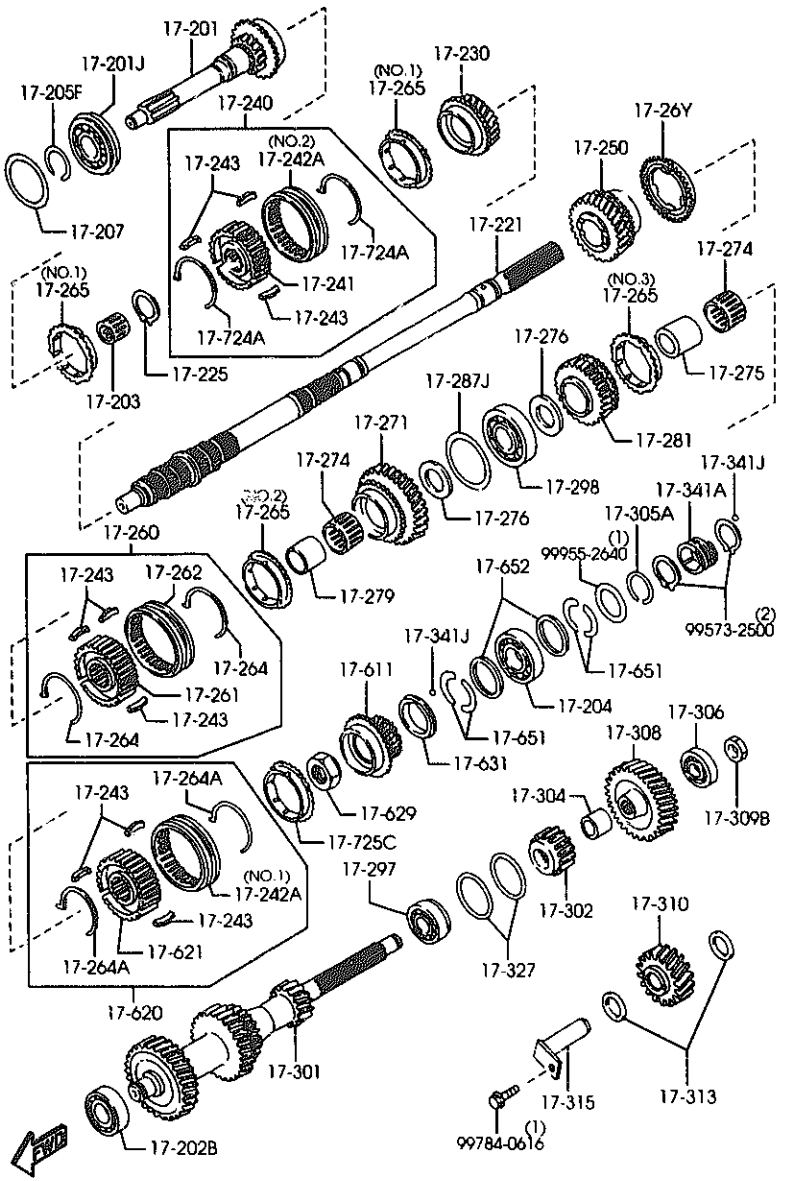

AUNA07 (1N03680)

PART NO.	QTY	MODEL/RESTRICTION	MODEL/RESTRICTION	MODEL/RESTRICTION	FROM-TO
17-275		RACE,INNER			
4069-17-284E	1				
17-276		WASHER,THRUST			
0259-17-274A	2	T=3.0MM			
0259-17-276	2	T=2.2MM			
0259-17-277	2	T=2.7MM			
0259-17-278	2	T=3.2MM			
0259-17-279	2	T=3.7MM			
17-279		SLEEVE,GEAR			
8540-17-275A	1				
17-281		GEAR,REVERSE			
M513-17-281B	1				-8818
M513-17-281C	1				8818-
17-287J		SHIM,ADJUST			
99963-6310	2	T=0.1MM			
99963-6330	1	T=0.3MM			
17-297		BEARING,BALL-COUNTER SHAFT G.			
M506-17-297	1				
17-298		BEARING			
M502-17-298A	1				
17-301		GEAR,COUNTER SHAFT			
M528-17-301A	1				-9101
M528-17-301B A (M528-17-301C)	1				9101-9421
M528-17-301C	1				9421-
17-302		GEAR,COUNTER REVERSE			
M516-17-302	1				

8818 NB353#-121982
9101 NB353#-126971
9421 NB353#-137365

CAT. AUNA07-05 2000-01

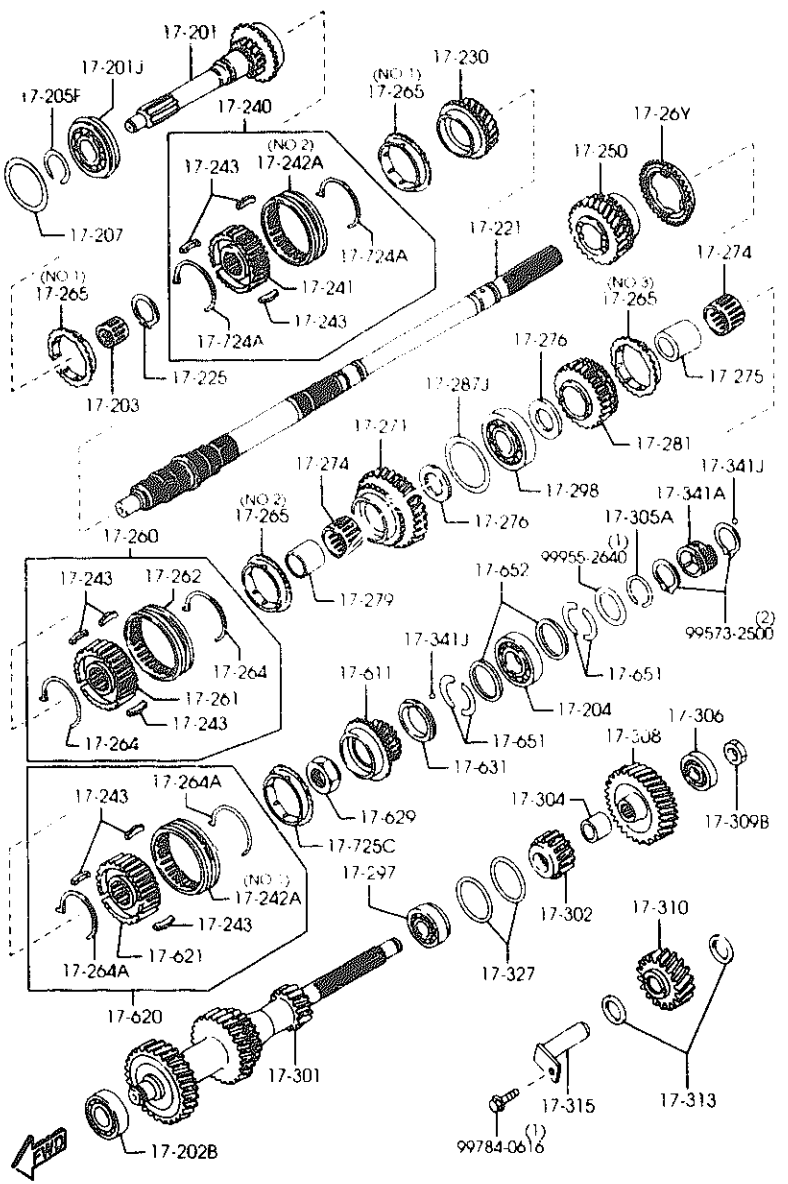

AUNA07 (1NO3680)

PART NO.	QTY	MODEL/RESTRICTION	MODEL/RESTRICTION	MODEL/RESTRICTION	FROM-TO
17-304		SPACER			
M504-17-304	1				
17-305A		RING,RETAINING-BALL BEARING			
0839-17-305B	1				
17-306		BEARING,BALL			
M502-17-299B	1				
17-308		GEAR,COUNTER			
M510-17-308	1				
17-309B		NUT,LOCK-COUNTER SHAFT BR			
M501-17-309	1				
17-310		GEAR,REVERSE IDLE			
M513-17-310B	1				-8818
M513-17-310C	1				8818-
17-313		WASHER,THRUST-REVERSE IDLE G. T=2.0MM			
M501-17-313	2				
17-315		SHAFT,REV. IDLE GEAR			
M501-17-140	1				
17-327		SHIM,ADJUST-COUNTER SHAFT GEAR T=0.1MM			
0305-17-327	2				
0305-17-328	2	T=0.3MM			
17-341A		GEAR,SPEEDO.DRIVE			
M503-17-341A	1				
17-341J		BALL,STEEL			
99611-1500	2				
17-611		GEAR,OVER TOP			
M517-17-611	1				

8818 NB353*-121982

CAT. AUNA07-05 2000-01

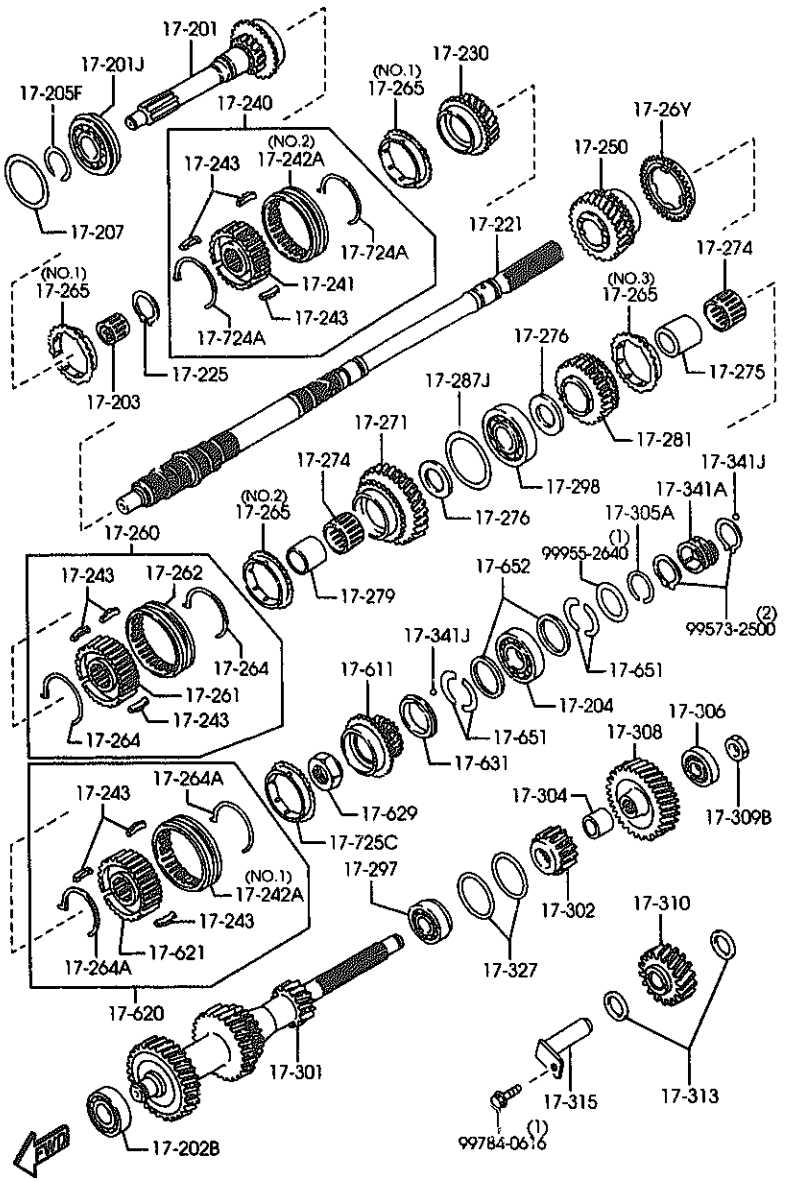

AUNA07 (1N03680)

PART NO.	QTY	MODEL/RESTRICTION	MODEL/RESTRICTION	MODEL/RESTRICTION	FROM-TO
17-620		HUB SET,CLUTCH-O.T. & REV			
M505-17-620 A (M505-17-620B)	1				-9101
M505-17-620B	1				9101-
17-621		HUB,CLUTCH			
M505-17-621 AN(M505-17-621A)	1				-9101
M505-17-621A	1				9101-
17-629		NUT,LOCK-CLUTCH HUB			
8601-17-629	1				
17-631		WASHER,THRUST LOCK-O VER TOP G.			
0884-17-632B A (0884-17-632C)	1	T=6.2MM			-9301
0884-17-633B A (0884-17-633C)	1	T=6.4MM			-9301
0884-17-634B A (0884-17-634C)	1	T=6.5MM			-9301
0884-17-635B A (0884-17-635C)	1	T=6.6MM			-9301
0884-17-632C	1	T=6.2MM			9301-
0884-17-633C	1	T=6.4MM			9301-
0884-17-634C	1	T=6.5MM			9301-
0884-17-635C	1	T=6.6MM			9301-
17-651		WASHER,THRUST			
M501-17-651	4	T=3.0MM			
M501-17-653	2	T=3.1MM			
M501-17-654	2	T=3.2MM			
M501-17-655	2	T=2.9MM			
17-652		RING,THRUST WASHER			
M501-17-652	2	T=2.0MM			

9101 NB353*-126971
9301 NB353*-133012

CAT. AUNA07-05 2000-01

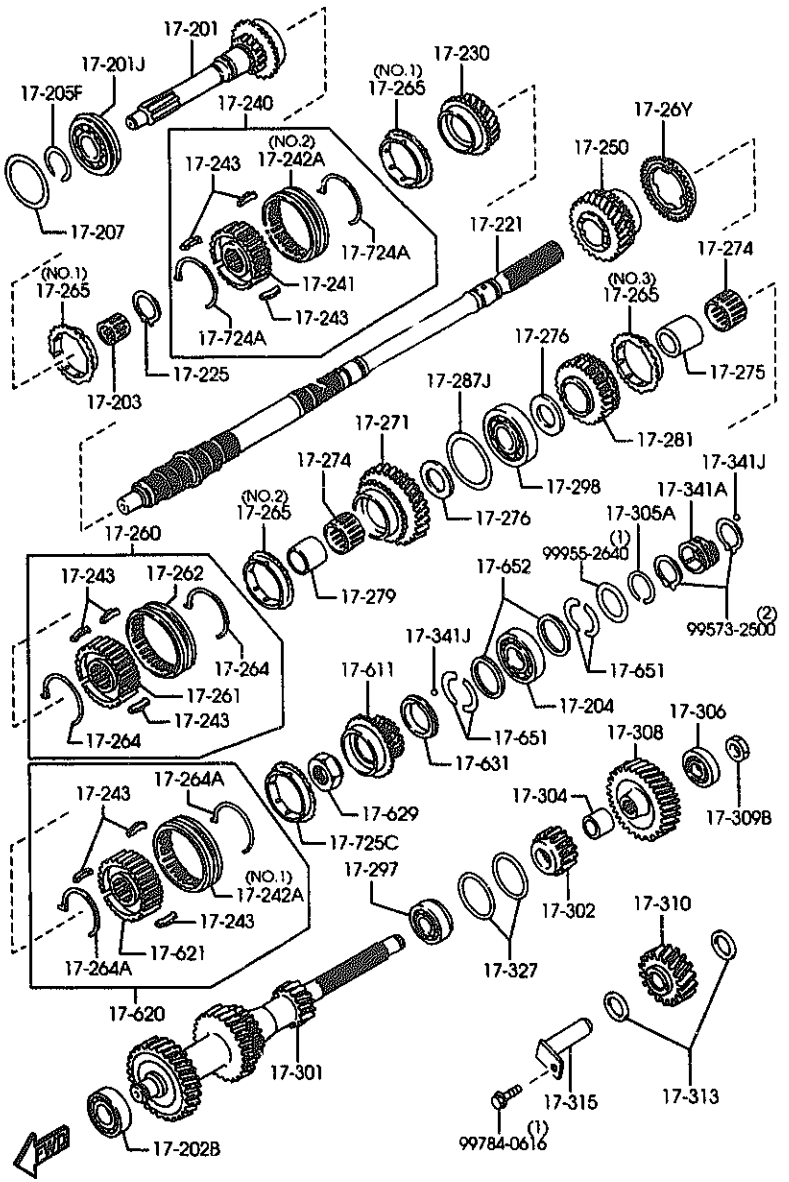

AUNA07 (1N03680)

PART NO.	QTY	MODEL/RESTRICTION	MODEL/RESTRICTION	MODEL/RESTRICTION	FROM-TO
17-724A		SPRING,SYNCHRO.KEY			
W501-17-724	2				
17-725C		RING,SYNCHRONIZER			
V501-17-725	1				

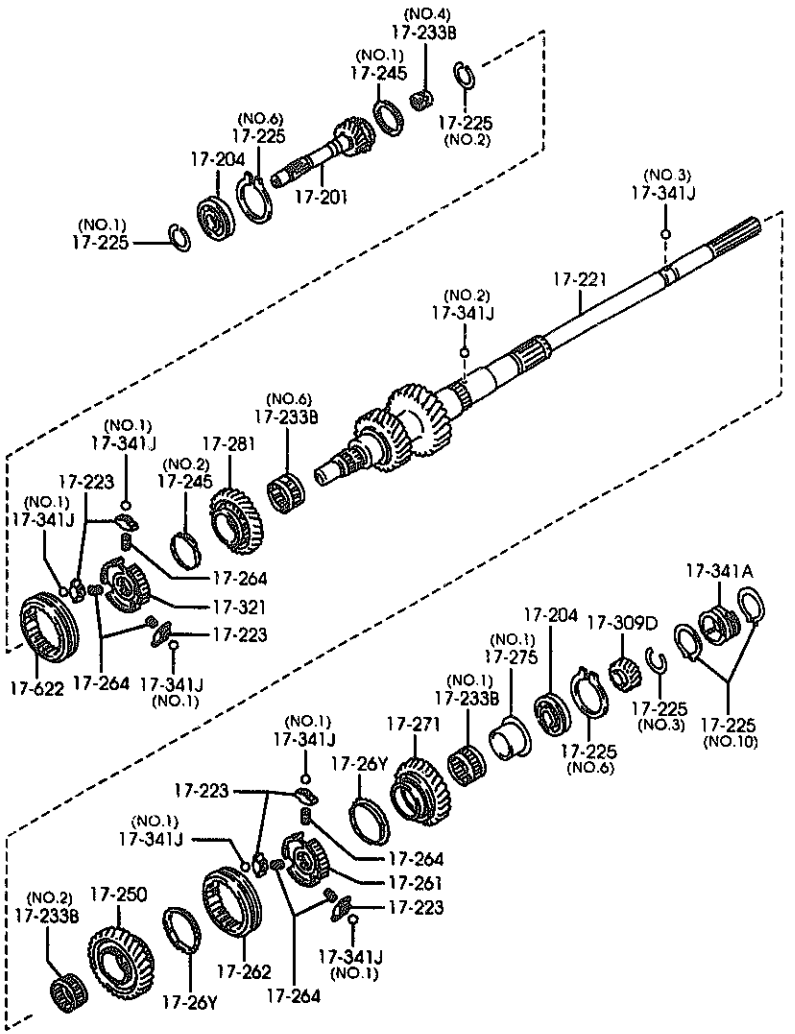

AUNA07 (1N03491)

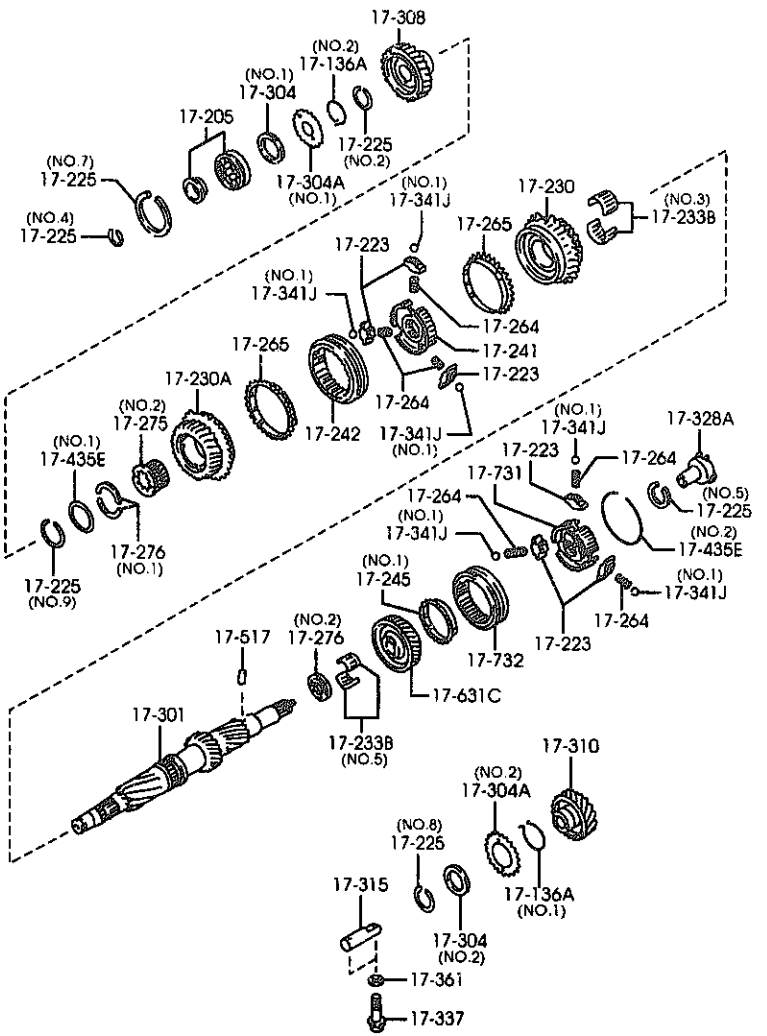

AUNA07 (1N03492)

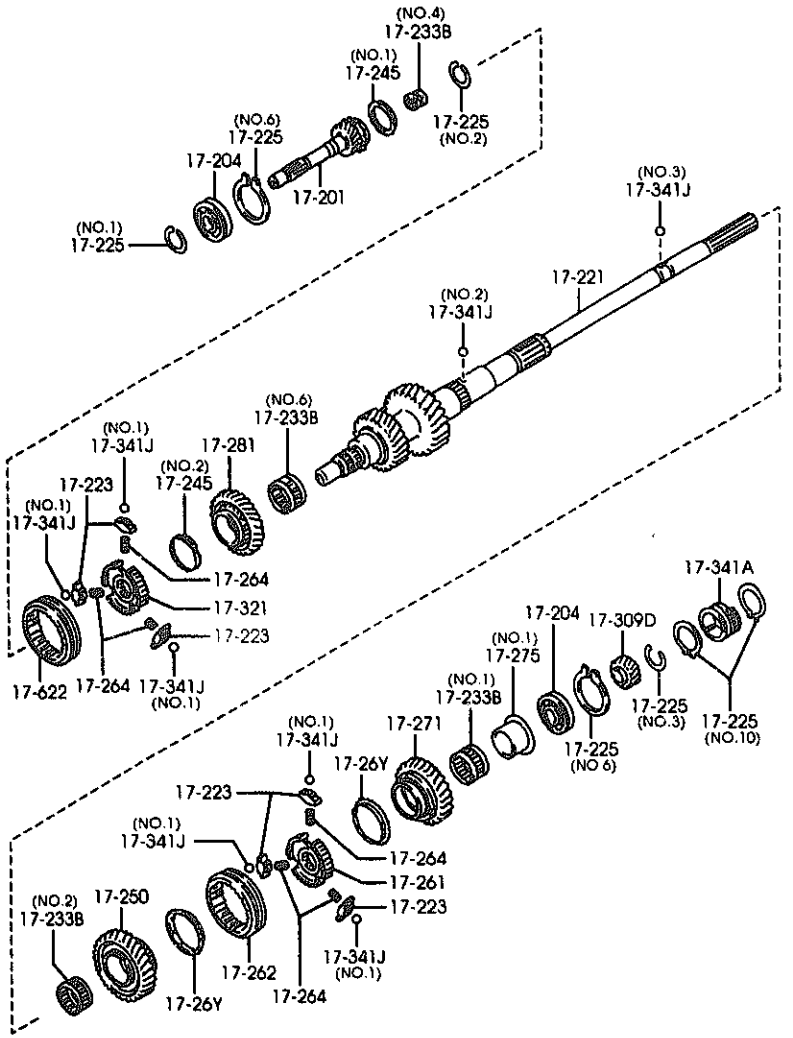

1710AA-1 MANUAL TRANSMISSION GEARS (6-SPEED)

PART NO.	QTY	MODEL/RESTRICTION	MODEL/RESTRICTION	MODEL/RESTRICTION	FROM-TO
17-136A		SPRING,TORSION			
Y601-17-136	1	(ILLUST. NO.1)			
Y602-17-136	1	(ILLUST. NO.2)			
17-201		GEAR,MAIN DRIVE			
Y601-17-21X	1				
17-204		BEARING,BALL-MAIN SHAFT			
Y601-17-204	2				
17-205		BEARING,ROLLER			
Y601-17-306	1				
17-221		SHAFT,MAIN			
Y601-17-221	1				
17-223		KEY,SYNCHRONIZER			
Y601-17-263	12				
17-225		RING,SNAP			
Y601-17-225	1	T=1.95MM (ILLUST. NO.1)			
Y602-17-225	1	T=2.00MM (ILLUST. NO.1)			
Y603-17-225	1	T=2.05MM (ILLUST. NO.1)			
Y604-17-225	1	T=2.10MM (ILLUST. NO.1)			
Y605-17-225	1	T=2.15MM (ILLUST. NO.1)			
Y606-17-225	1	T=2.20MM (ILLUST. NO.1)			
Y611-17-225	2	T=1.80MM (ILLUST. NO.2)			
Y612-17-225	2	T=1.85MM (ILLUST. NO.2)			
Y613-17-225	2	T=1.90MM (ILLUST. NO.2)			
Y614-17-225	2	T=1.95MM (ILLUST. NO.2)			
Y615-17-225	2	T=2.00MM (ILLUST. NO.2)			
Y616-17-225		T=2.05MM			

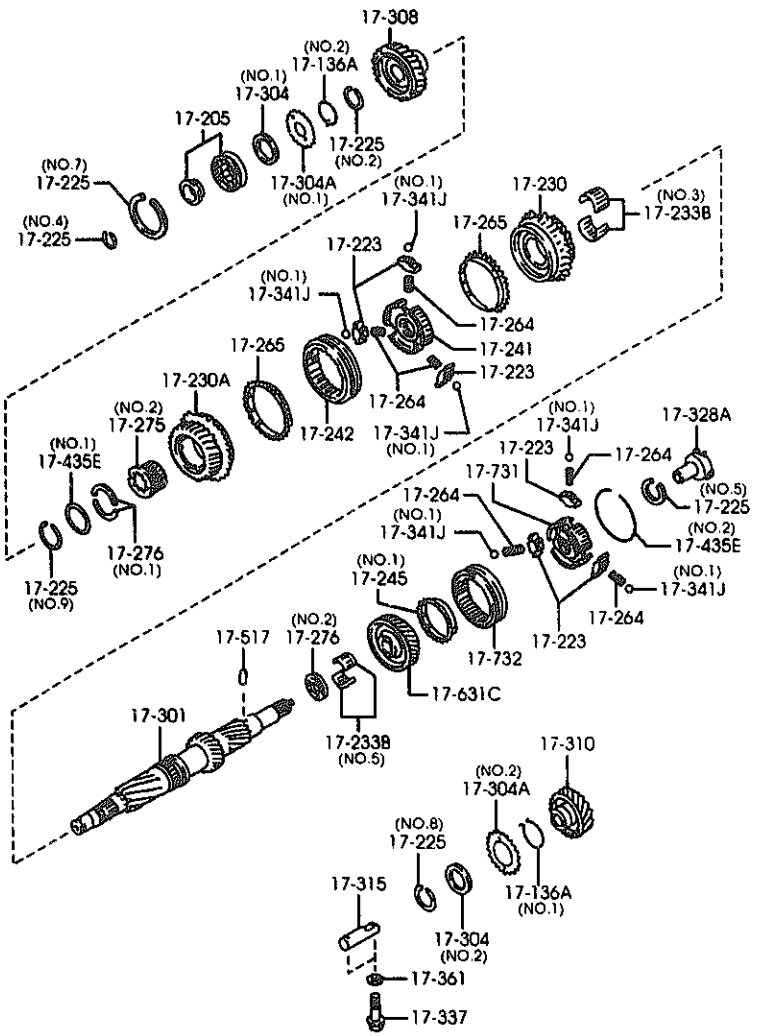

PART NO.	QTY	MODEL/RESTRICTION	MODEL/RESTRICTION	MODEL/RESTRICTION	FROM-TO
CONT'D	2	(ILLUST. NO.2)			
Y621-17-225	1	T=2.67MM (ILLUST. NO.3)			
Y622-17-225	1	T=2.73MM (ILLUST. NO.3)			
Y623-17-225	1	T=2.79MM (ILLUST. NO.3)			
Y624-17-225	1	T=2.85MM (ILLUST. NO.3)			
Y625-17-225	1	T=2.91MM (ILLUST. NO.3)			
Y626-17-225	1	T=2.97MM (ILLUST. NO.3)			
Y627-17-225	1	T=3.03MM (ILLUST. NO.3)			
Y628-17-225	1	T=3.09MM (ILLUST. NO.3)			
Y629-17-225	1	T=3.15MM (ILLUST. NO.3)			
Y630-17-225	1	T=3.21MM (ILLUST. NO.3)			
Y631-17-225	1	T=3.27MM (ILLUST. NO.3)			
Y641-17-225	1	T=2.10MM (ILLUST. NO.4)			
Y642-17-225	1	T=2.20MM (ILLUST. NO.4)			
Y643-17-225	1	T=2.05MM (ILLUST. NO.4)			
Y644-17-225	1	T=2.15MM (ILLUST. NO.4)			
Y645-17-225	1	T=2.25MM (ILLUST. NO.4)			
Y646-17-225	1	T=2.30MM (ILLUST. NO.4)			
Y651-17-225	1	T=2.80MM (ILLUST. NO.5)			
Y652-17-225	1	T=2.85MM (ILLUST. NO.5)			
Y653-17-225	1	T=2.90MM (ILLUST. NO.5)			
Y654-17-225	1	T=2.95MM (ILLUST. NO.5)			
Y655-17-225	1	T=3.00MM (ILLUST. NO.5)			

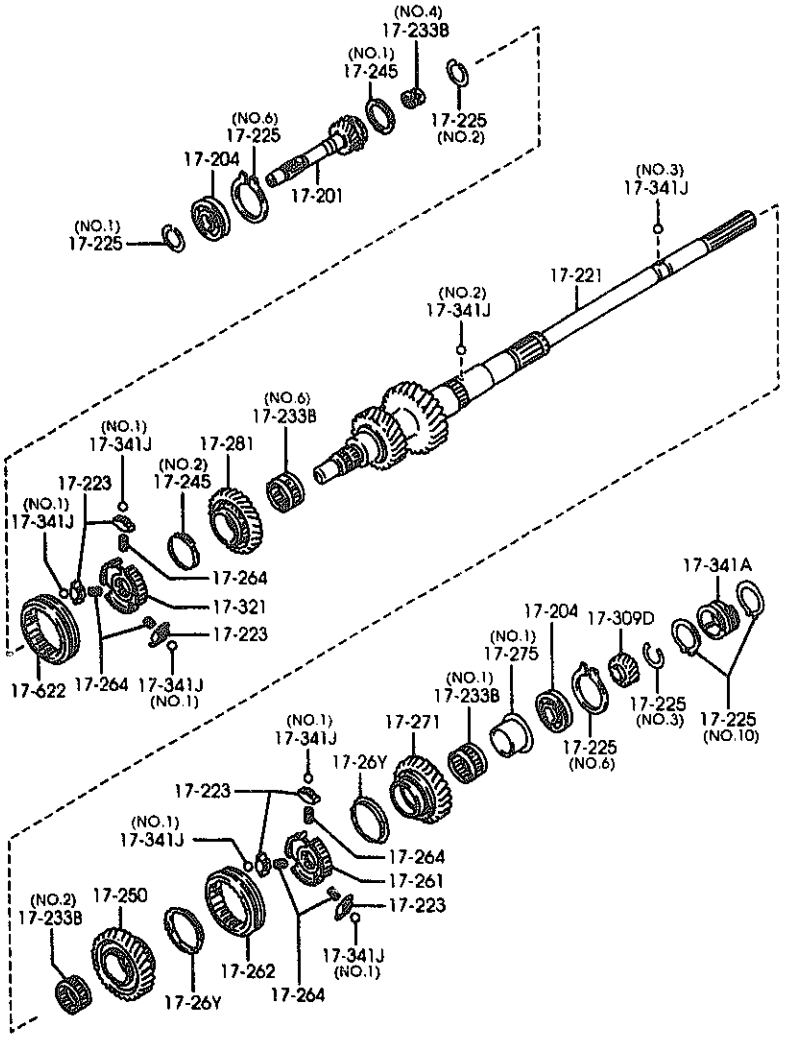

AUNA07 (1N03491)

PART NO.	QTY	MODEL/RESTRICTION	MODEL/RESTRICTION	MODEL/RESTRICTION	FROM-TO
CONT'D					
V656-17-225	1	R=3.05MM (ILLUST. NO.5)			
V661-17-225	2	(ILLUST. NO.6)			
V662-17-225	1	(ILLUST. NO.7)			
V663-17-225	1	(ILLUST. NO.8)			
V664-17-225	1	(ILLUST. NO.9)			
V665-17-225	2	(ILLUST.NO.10)			
17-230		GEAR,3RD			
V601-17-250	1				
17-230A		GEAR,4TH			
V601-17-220	1				
17-233B		BEARING,NEEDLE			
V601-17-233	1	(ILLUST. NO.1)			
V602-17-233	1	(ILLUST. NO.2)			
V603-17-233	1	(ILLUST. NO.3)			
V604-17-233	1	(ILLUST. NO.4)			
V605-17-233	1	(ILLUST. NO.5)			
V606-17-233	1	(ILLUST. NO.6)			
17-241		HUB,CLUTCH			
V601-17-241	1				
17-242		SLEEVE,CLUTCH HUB			
V601-17-242	1				
17-245		RING,SYNCHRONIZER			
V601-17-245	2	(ILLUST. NO.1)			
V602-17-245	1	(ILLUST. NO.2)			
17-250		GEAR,2ND			
V601-17-251	1				
17-26Y		RING,SYNCHRONIZER			
V601-17-26Y	2				
17-261		HUB,CLUTCH			

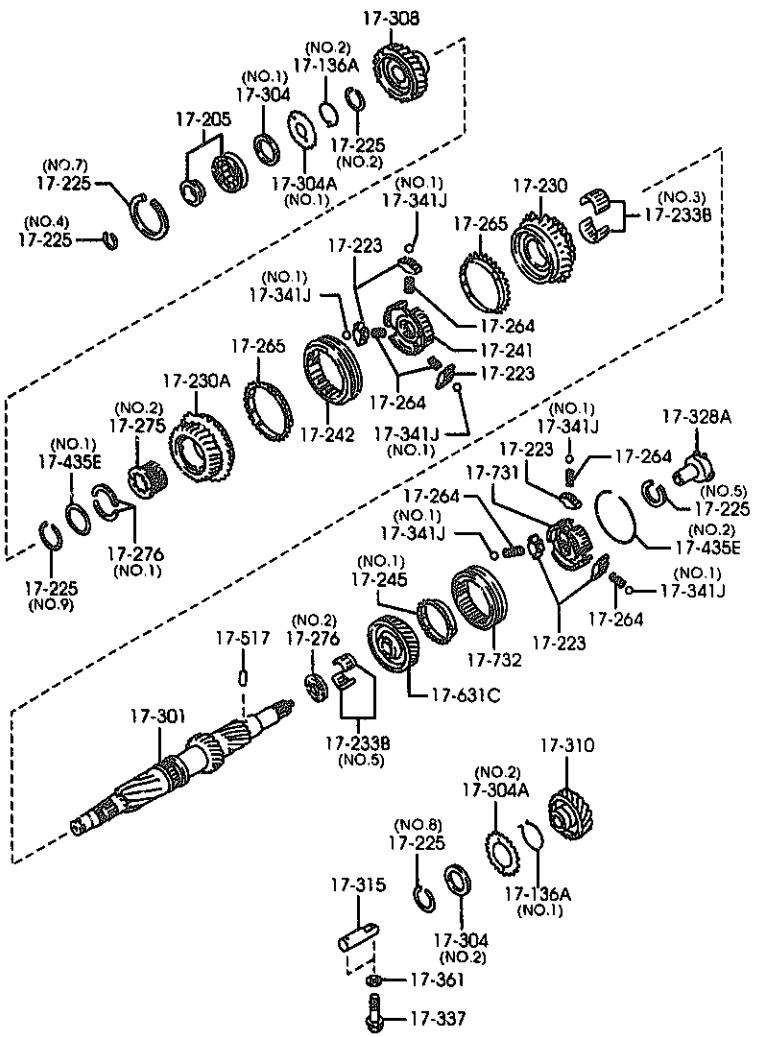

PART NO.	QTY	MODEL/RESTRICTION	MODEL/RESTRICTION	MODEL/RESTRICTION	FROM-TO
CONT'D					
Y601-17-261	1				
17-262		SLEEVE,CLUTCH HUB			
Y601-17-262	1				
17-264		SPRING,SYNCHRO. KEY			
Y601-17-264	12				
17-265		RING,SYNCHRONIZER			
Y601-17-265	2				
17-271		GEAR,1ST			
Y601-17-271	1				
17-275		RACE,INNER			
Y601-17-285	1	(ILLUST. NO.1)			
Y602-17-285	1	(ILLUST. NO.2)			
17-276		WASHER,THRUST			
Y601-17-276	2	T=3.75MM (ILLUST. NO.1)			
Y602-17-276	2	T=3.80MM (ILLUST. NO.1)			
Y603-17-276	2	T=3.85MM (ILLUST. NO.1)			
Y604-17-276	2	T=3.90MM (ILLUST. NO.1)			
Y605-17-276	2	T=3.95MM (ILLUST. NO.1)			
Y606-17-276	2	T=4.00MM (ILLUST. NO.1)			
Y607-17-276	2	T=4.05MM (ILLUST. NO.1)			
Y608-17-276	2	T=4.10MM (ILLUST. NO.1)			
Y609-17-276	1	(ILLUST. NO.2)			
17-281		GEAR,REVERSE			
Y601-17-281	1				
17-301		GEAR,COUNTER SHAFT			
Y601-17-301	1				

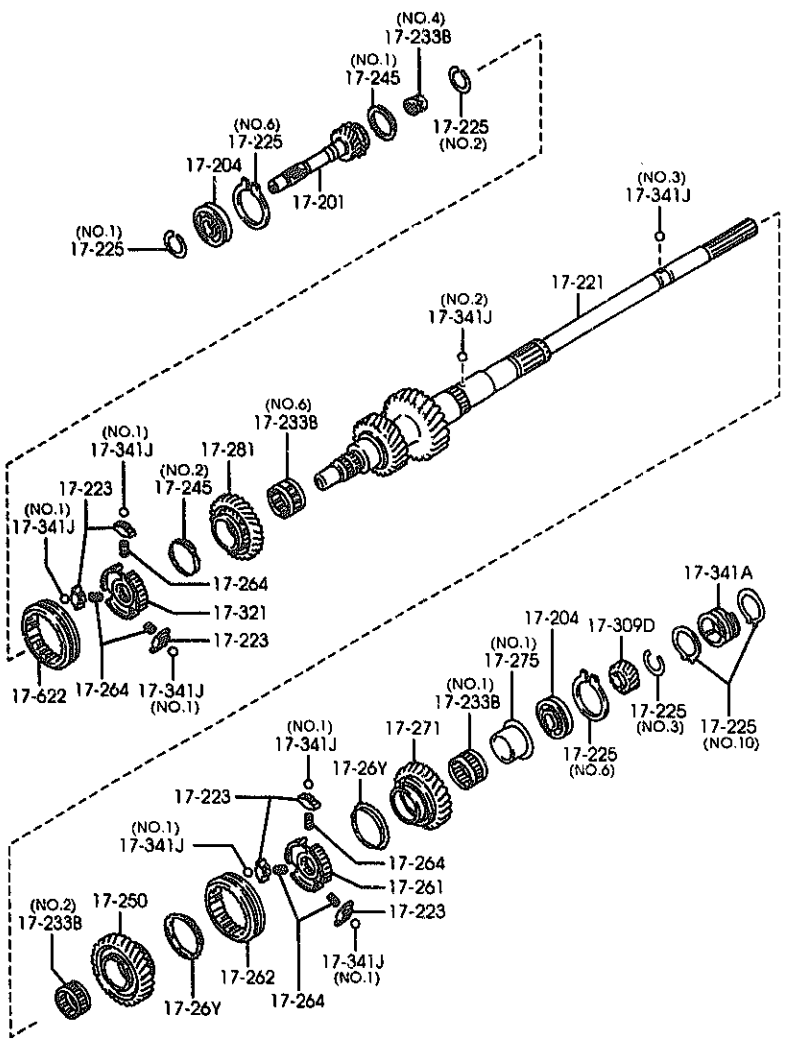

PART NO.	QTY	MODEL/RESTRICTION	MODEL/RESTRICTION	MODEL/RESTRICTION	FROM-TO
17-304		SPACER			
Y601-17-307	1	(ILLUST. NO.1)			
Y602-17-307	1	(ILLUST. NO.2)			
17-304A		GEAR,FRICTION			
Y601-17-304	1	(ILLUST. NO.1)			
Y602-17-304	1	(ILLUST. NO.2)			
17-308		GEAR,COUNTER			
Y601-17-308	1				
17-309D		GEAR,COUNTER(6TH)			
Y601-17-309	1				
17-310		GEAR,REVERSE IDLE			
Y601-17-310	1				
17-315		SHAFT,REV. IDLE GEAR			
Y601-17-315	1				
17-321		HUB,CLUTCH			
Y601-17-621	1				
17-328A		FUNNEL			
Y601-17-32X	1				
17-337		BOLT			
Y602-17-337	2				
17-341A		GEAR,SPEEDO.DRIVE			
M503-17-341A	1				
17-341J		BALL,STEEL			
Y601-17-108	12	(ILLUST. NO.1)			
Y604-17-108	1	(ILLUST. NO.2)			
Y605-17-108	1	(ILLUST. NO.3)			
17-361		GASKET,REAR COVER			
Y602-17-361	2				

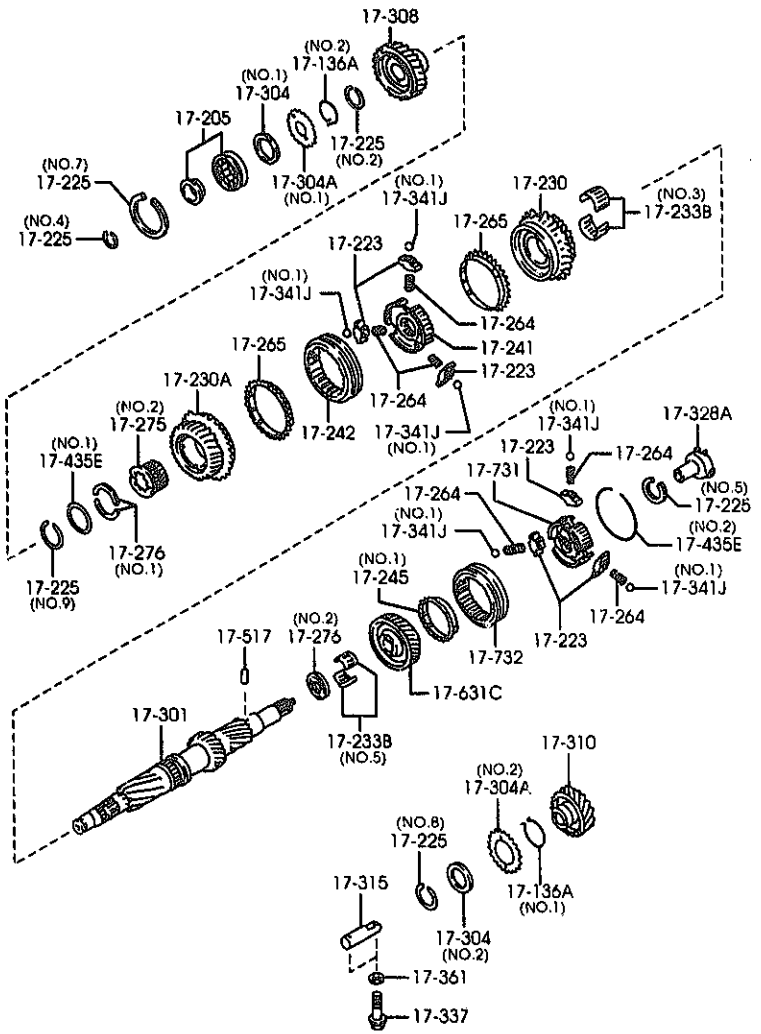

1710AA-6 ※ MANUAL TRANSMISSION GEARS (6-SPEED)

PART NO.	QTY	MODEL/RESTRICTION	MODEL/RESTRICTION	MODEL/RESTRICTION	FROM-TO
17-435		RING,SNAP			
Y601-17-435	1				
17-435E		RING,RETAINING			
Y602-17-435	1	(ILLUST. NO.2)			
Y603-17-435	1	(ILLUST. NO.1)			
17-517		PIN			
Y601-17-517	1				
17-622		SLEEVE,CLUTCH HUB			
Y601-17-622A	1				
17-631C		GEAR,6TH			
Y601-17-631	1				
17-731		HUB,CLUTCH			
Y601-17-731	1				
17-732		SLEEVE,CLUTCH HUB			
Y601-17-732	1				

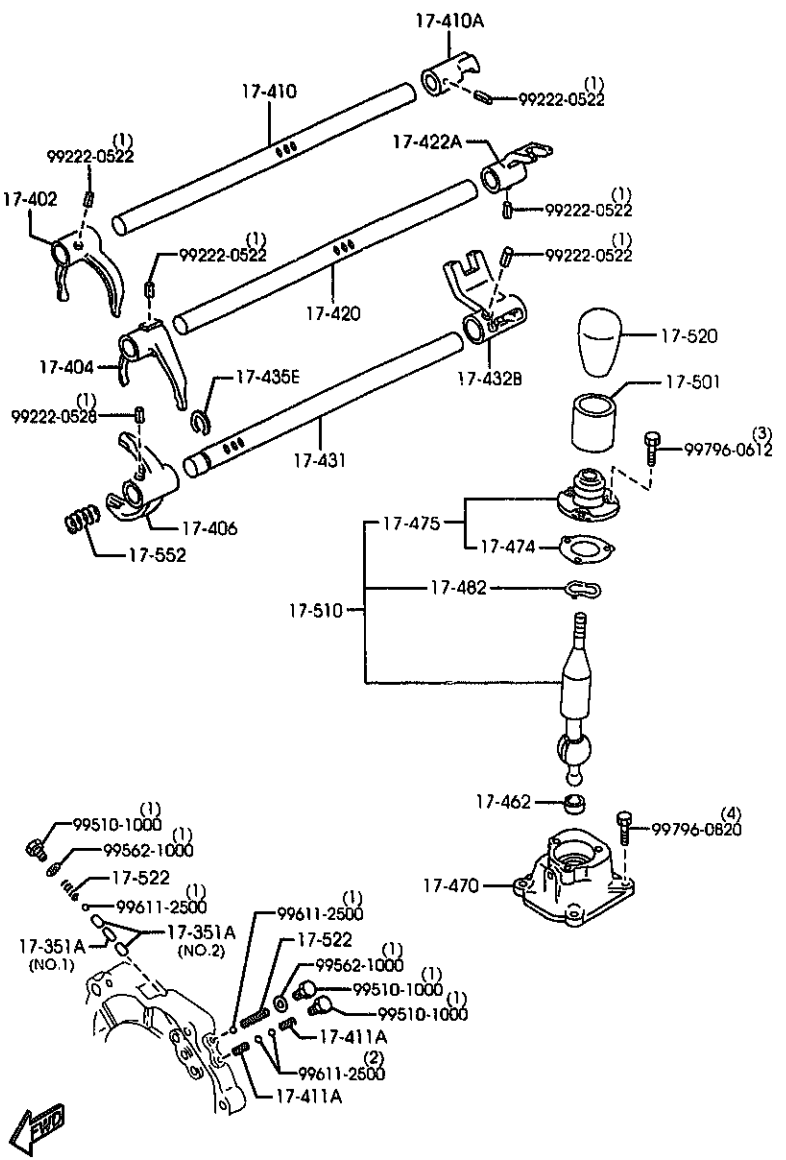

AUNA07 (1N04030)

PART NO.	QTY	MODEL/RESTRICTION	MODEL/RESTRICTION	MODEL/RESTRICTION	FROM-TO
17-351A		PIN,INTER LOCK			
R501-17-351	1	(ILLUST. NO.1)			
0114-17-351	2	(ILLUST. NO.2)			
17-402		FORK,SHIFT (1ST & 2ND)			
M503-17-402	1				
17-404		FORK,SHIFT (3RD & 4TH)			
M501-17-404B (M501-17-404C)	1				-8201
M501-17-404C (M501-17-404D)	1				8201-9201
M501-17-404D	1				9201-
17-406		FORK,SHIFT			
M504-17-406A	1				
17-410		ROD,SHIFT(1ST&2ND)			
M503-17-411	1				
17-410A		END,S/ROD(1ST&2ND)			
M509-17-412 (M509-17-412A)	1				-8501
M509-17-412A	1				8501-
17-411A		SPRING,SHIFT ROD-REVERSE			
0014-17-411	2				
17-420		ROD,SHIFT(3RD&4TH)			
M504-17-421A	1				
17-422A		END,S/ROD(3RD&4TH)			
M509-17-422 (M509-17-422A)	1				-8501
M509-17-422A	1				8501-
17-431		ROD,SHIFT-OVER TOP & REVERSE			
M506-17-431A	1				
17-432B		END,SHIFT ROD(O/TOP&REV.)			
M511-17-432 (M511-17-432A)	1				-8501

8201 NB353#-106606
8501 NB353#-116870
9201 NB353#-130051

CAT. AUNA07-05 2000-01

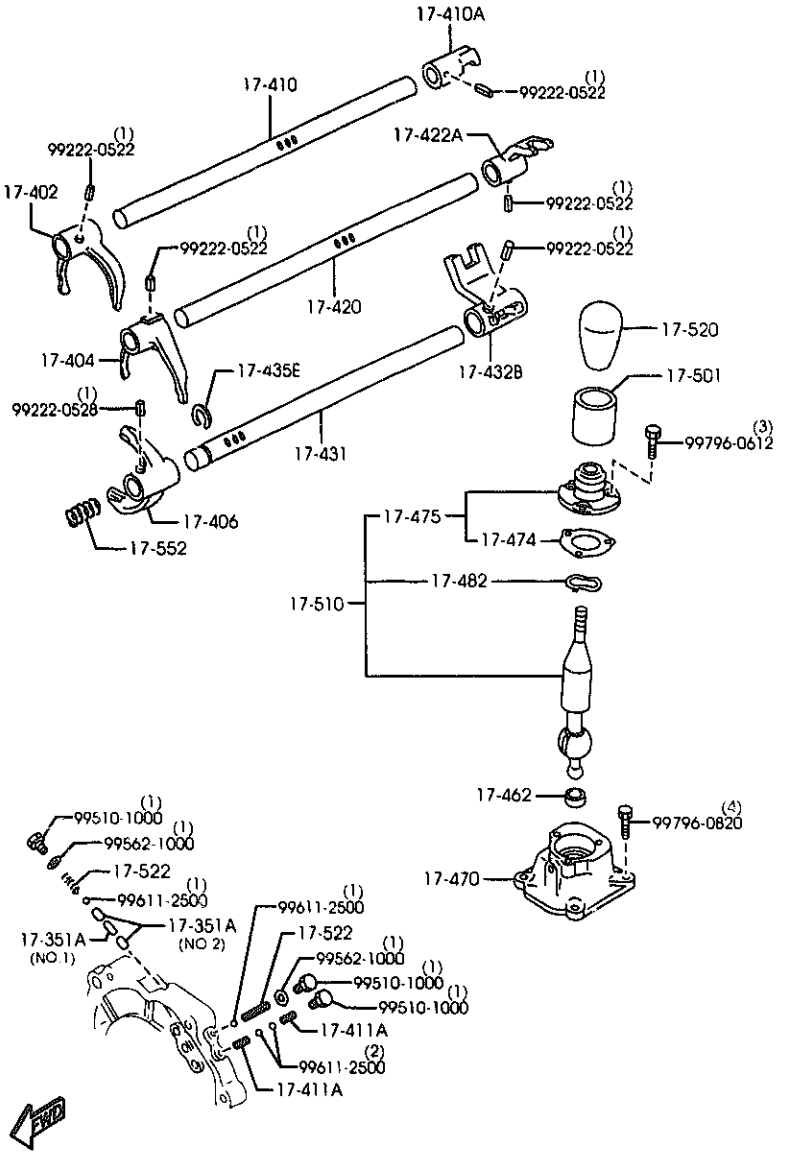

AUNA07 (1N04030)

PART NO.	QTY	MODEL/RESTRICTION	MODEL/RESTRICTION	MODEL/RESTRICTION	FROM-TO
CONT'D					
M511-17-432A	1				8501-
17-435E		RING,RETAINING			
R502-17-435	1				
17-462		SHEET,SPRING			
0398-17-462A	1				
17-470		CASE,CHANGE CONTROL			
M513-17-470	1				
17-474		GASKET,COVER PLATE			
0303-17-474	1				
17-475		BOOT,DUST-CHANGE LEVER			
M513-17-480A	1				
17-482		WASHER,WAVE-CHANGE CONT.CASE			
M505-17-482	1				
17-501		INSULATOR,CHG LEVER			
M501-17-501	1				
17-510		LEVER,CHANGE			
M528-17-510	1				
17-520		KNOB,CHANGE LEVER			
M523-17-520	1				
17-522		SPRING			
0103-17-411	2				
17-552		SPRING			
M505-17-552	1				

8501 NB353※-116870

CAT. AUNA07-05 2000-01

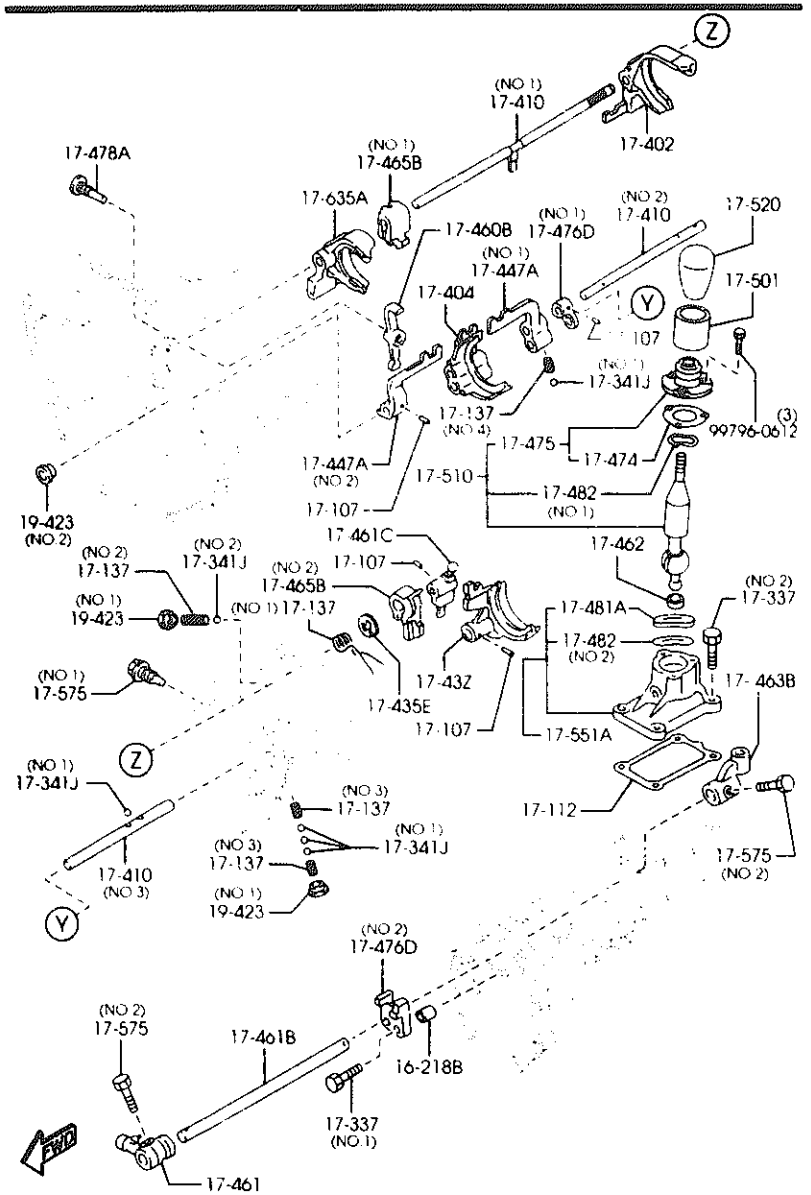

AUNA07 (1N08910)

PART NO.	QTY	MODEL/RESTRICTION	MODEL/RESTRICTION	MODEL/RESTRICTION	FROM-TO
16-218B		PIN,TUBULAR			
Y601-17-209	2				
17-107		PIN,SPRING			
Y601-17-107	4				
17-112		GASKET			
Y601-17-112	1				
17-137		SPRING			
Y603-17-136	1	(ILLUST. NO.1)			
Y601-17-137	1	(ILLUST. NO.2)			
Y602-17-137	2	(ILLUST. NO.3)			
Y603-17-137	1	(ILLUST. NO.4)			
17-337		BOLT			
Y603-17-337	2	(ILLUST. NO.1)			
Y606-17-337	4	(ILLUST. NO.2)			
17-341J		BALL,STEEL			
Y602-17-108	5	(ILLUST. NO.1)			
Y603-17-108	1	(ILLUST. NO.2)			
17-402		FORK,SHIFT (1ST & 2ND)			
Y601-17-40X	1				
17-404		FORK,SHIFT (3RD & 4TH)			
Y601-17-40Y	1				
17-410		ROD,SHIFT(1ST&2ND)			
Y601-17-411A	1	(ILLUST. NO.1)			
Y602-17-411	1	(ILLUST. NO.2)			
Y603-17-411	1	(ILLUST. NO.3)			
17-43Z		FORK,SHIFT-6			
Y601-17-43Z	1				
17-435E		RING,RETAINING			
Y601-17-435	1				

CAT. AUNA07-05 2000-01

1720AA MANUAL TRANSMISSION CHANGE CONTROL SYSTEM (6-SPEED)

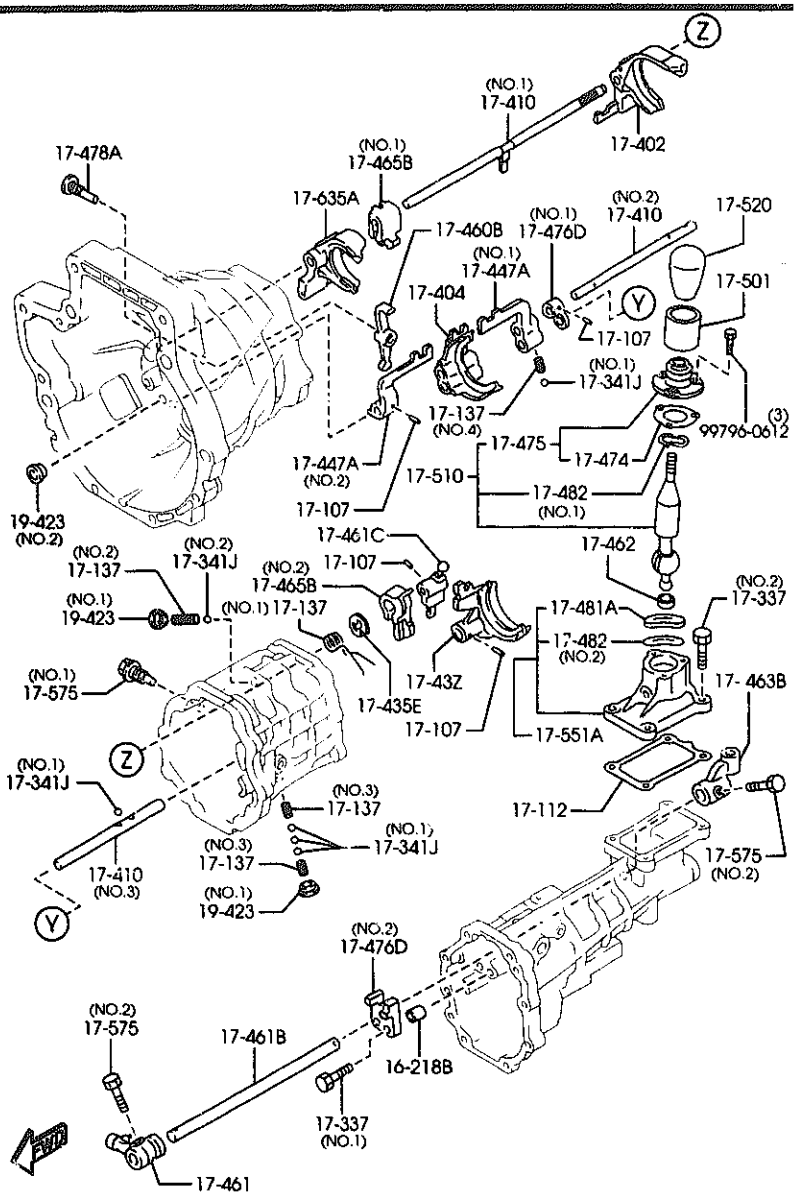

AUNA07 (1N08910)

1720AA-2 MANUAL TRANSMISSION CHANGE CONTROL SYSTEM (6-SPEED)

PART NO.	QTY	MODEL/RESTRICTION	MODEL/RESTRICTION	MODEL/RESTRICTION	FROM-TO
17-447A		ARM,SHIFT			
Y601-17-44Y	1	(ILLUST. NO.1)			
Y602-17-447	1	(ILLUST. NO.2)			
17-460B		LEVER,COUNTER			
Y601-17-446	1				
17-461		LEVER,CONTROL			
Y601-17-45X	1				
17-461B		ROD,CONTROL			
Y601-17-461	1				
17-461C		LEVER,IN. SHIFT			
Y601-17-455A	1				
17-462		SHEET,SPRING			
0398-17-462A	1				
17-463B		END,CONTROL			
Y601-17-463	1				
17-465B		SLEEVE,INTERLOCK			
Y601-17-465A	1	(ILLUST. NO.1)			
Y602-17-465	1	(ILLUST. NO.2)			
17-474		GASKET,COVER PLATE			
0303-17-474	1				
17-475		BOOT,DUST-CHANGE LEVER			
M513-17-480A	1				
17-476D		BLOCK,STOPPER			
Y601-17-476	1	(ILLUST. NO.1)			
Y602-17-476	1	(ILLUST. NO.2)			
17-478A		SHAFT,CRANK LEVER			
Y601-17-478	1				
17-481A		BUSH,CHANGE			

CAT. AUNA07-05 2000-01

1720AA MANUAL TRANSMISSION CHANGE CONTROL SYSTEM (6-SPEED)

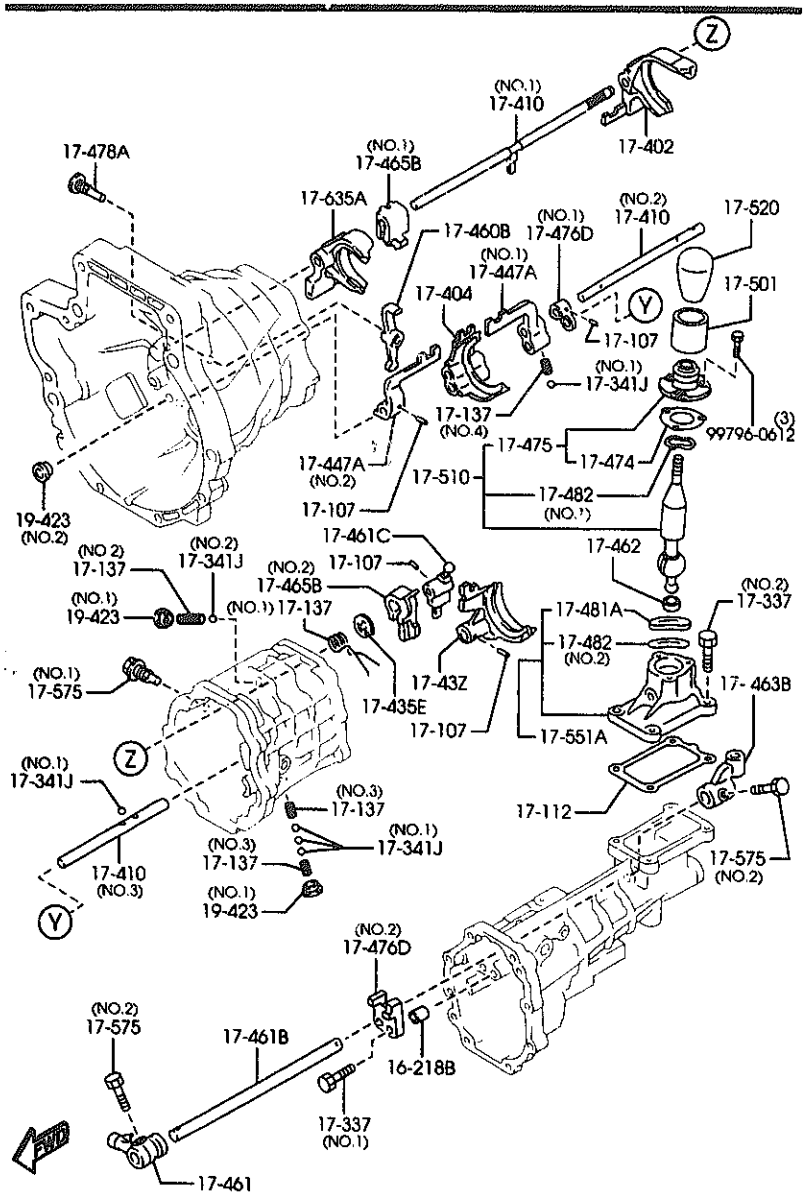

AUNA07 (1N08910)

1720AA-3 * MANUAL TRANSMISSION CHANGE CONTROL SYSTEM (6-SPEED)

PART NO.	QTY	MODEL/RESTRICTION	MODEL/RESTRICTION	MODEL/RESTRICTION	FROM-TO
CONT'D					
R503-17-492	1				
+----------+					
| 17-482 |		WASHER,WAVE-CHANGE CONT.CASE			
+----------+					
M505-17-482	1	(ILLUST. NO.1)			
8599-17-482	1	(ILLUST. NO.2)			
+----------+					
| 17-501 |		INSULATOR,CHG LEVER			
+----------+					
M501-17-501	1				
+----------+					
| 17-510 |		LEVER,CHANGE			
+----------+					
Y601-17-510B	1				
+----------+					
| 17-520 |		KNOB,CHANGE LEVER			
+----------+					
Y604-17-520	1				
+----------+					
| 17-551A |		CASE,CONTROL			
+----------+					
Y601-17-470	1				
+----------+					
| 17-575 |		BOLT			
+----------+					
Y601-17-575	1	(ILLUST. NO.1)			
Y602-17-575	2	(ILLUST. NO.2)			
+----------+					
| 17-635A |		FORK,SHIFT#5TH & REVERSE			
+----------+					
Y601-17-43Y	1				
+----------+					
| 19-423 |		PLUG			
+----------+					
Y603-17-495	2	(ILLUST. NO.1)			
Y604-17-495	1	(ILLUST. NO.2)			

CAT. AUNA07-05 2000-01

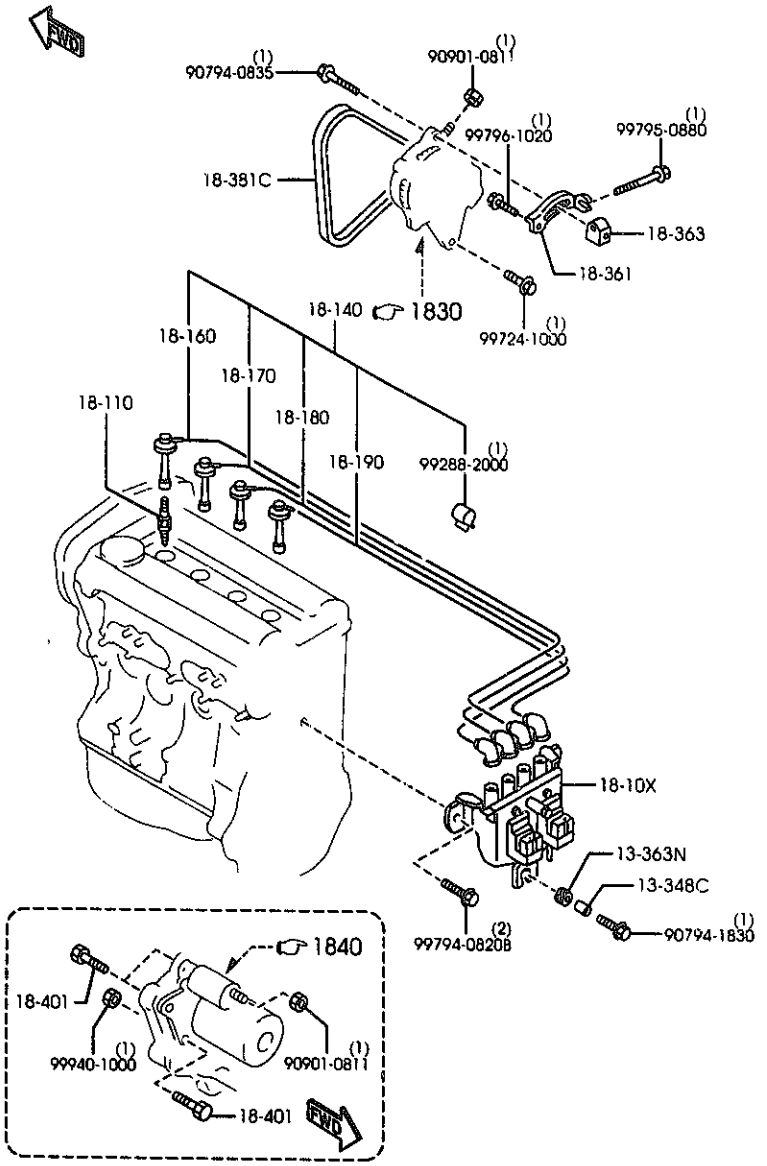

AUNA07 (1N08340)

PART NO.	QTY	MODEL/RESTRICTION	MODEL/RESTRICTION	MODEL/RESTRICTION	FROM-TO
13-348C		SPACER			
B61P-13-348	1				
13-363N		RUBBER,MOUNTING			
B61P-13-363A	1				
18-10X		COIL & IGNITER			
BP4W-18-10XA	1				
18-110		PLUG,SPARK			
BP01-18-110	4	BKR5E-11 NGK (STD.)			
BP02-18-110	4	K16PR-U11 ND (STD.)			
BP03-18-110	4	BKR6E-11 NGK (OPTION COLD TYPE)			
BP04-18-110	4	K20PR-U11 ND (OPTION COLD TYPE)			
BP11-18-110	4	RC10YC4 CHAMPION (STD.)			
BP12-18-110	4	RC8YC4 CHAMPION (OPTION COLD TYPE)			
BP13-18-110	4	BP1318110 MAZDA (STD.)			9501-
BP14-18-110	4	BP1418110 MAZDA (OPTION COLD TYPE)			9501-
18-140		CORD SET,HI.TENSION			
BPE8-18-140A	1				
18-160		CORD NO.1,HI.TENSION			
BPE8-18-T51	1				
18-170		CORD NO.2,HI.TENSION			
BPE8-18-T52	1				
18-180		CORD NO.3,HI.TENSION			
BPE8-18-T53	1				
18-190		CORD NO.4,HI.TENSION			
BPE8-18-T54A	1				

9501 NB353*-137711

CAT. AUNA07-05 2000-01

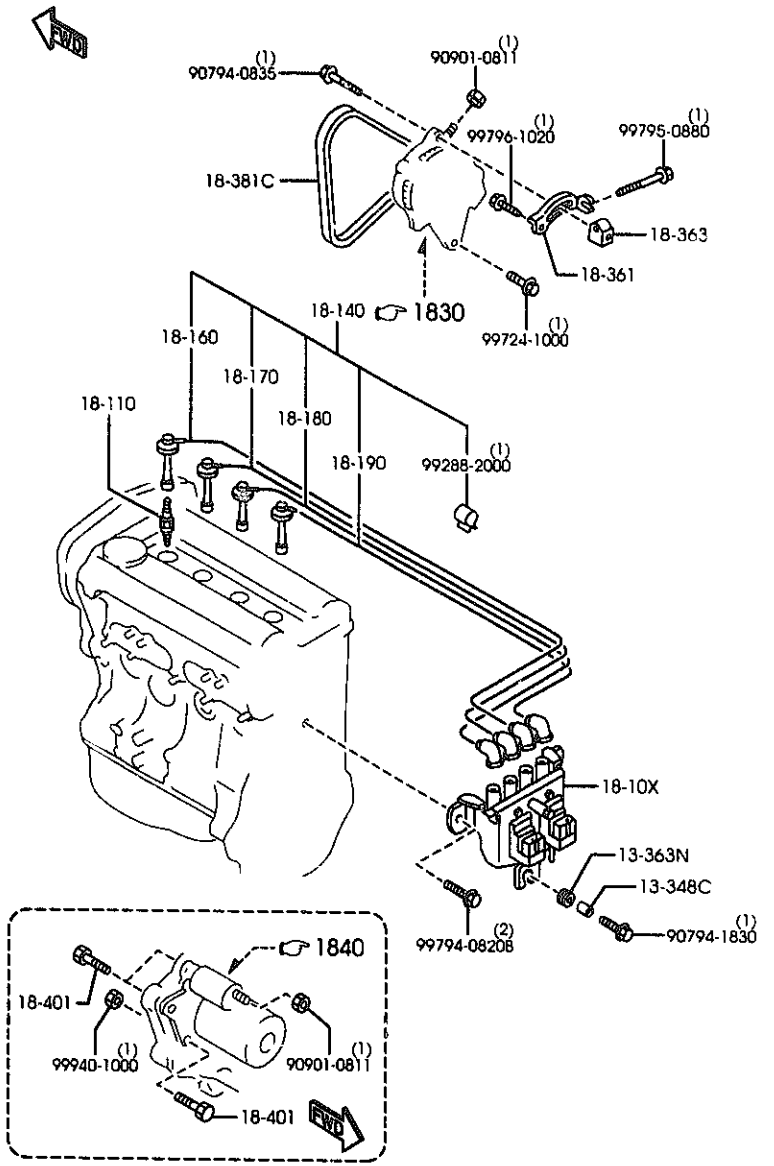

AUNA07 (1N08340)

PART NO.	QTY	MODEL/RESTRICTION	MODEL/RESTRICTION	MODEL/RESTRICTION	FROM-TO
18-361		STRAP,ALTERNATOR			
B6BF-18-361C	1				
18-363		SPACER,STRAP			
FP01-18-363	1				
18-381C		BELT'V',W/PUMP&ALTERNATOR			
BP4W-18-381	1	4PK L=885 GATES			
B6BF-18-381	1	4PK L=885 BANDO			
18-401		BOLT,STARTER			
B6BG-18-401A	3				

CAT. AUNA07-05 2000-01

1830A ALTERNATOR

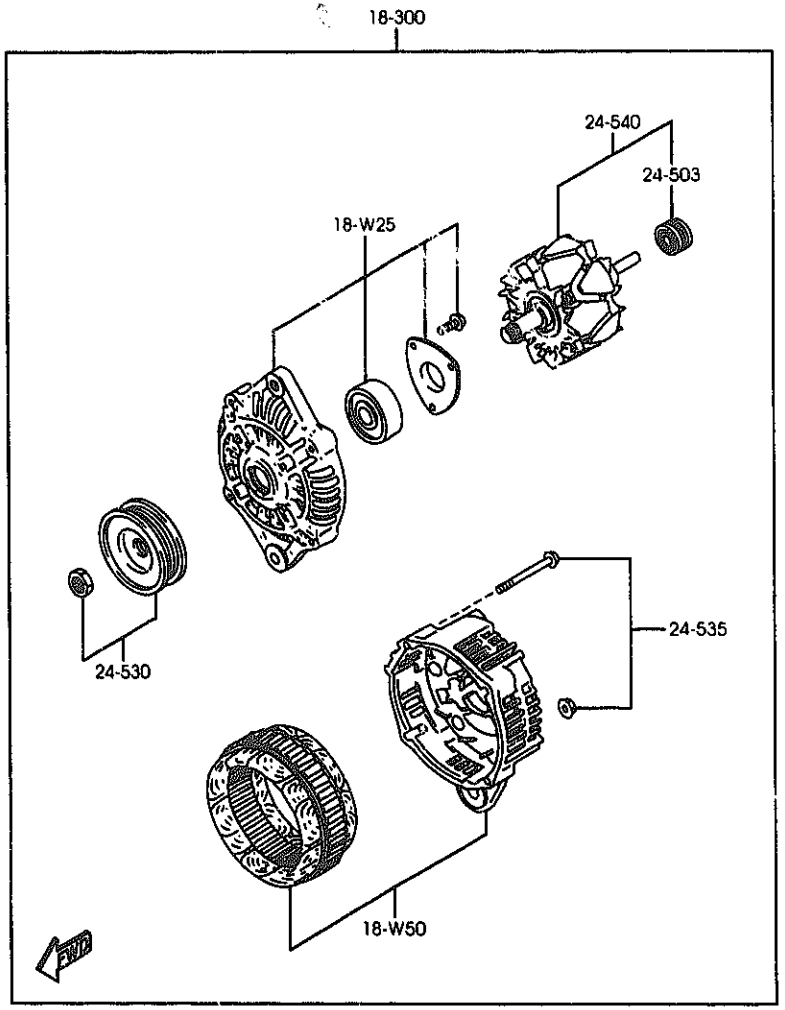

AUNA07 (1N07300)

1850A -1 ※ ALTERNATOR

PART NO.	QTY	MODEL/RESTRICTION	MODEL/RESTRICTION	MODEL/RESTRICTION	FROM-TO
18-W25		COVER,FRONT-ALTERNATOR			
BP4W-18-W25	1				
18-W50		COVER,REAR-ALTERNATOR			
BP4W-18-W50	1				
18-300		ALTERNATOR			
BP4W-18-300C	1				
24-503		BEARING,BALL-ALT. REAR			
B3D1-18-W36	1				
24-530		PULLEY			
B3D1-18-W10	1				
24-535		SCREW SET			
WL01-18-W20	1				
24-540		ROTOR			
BP4W-18-W35	1				

CAT. AUNA07-05 2000-01

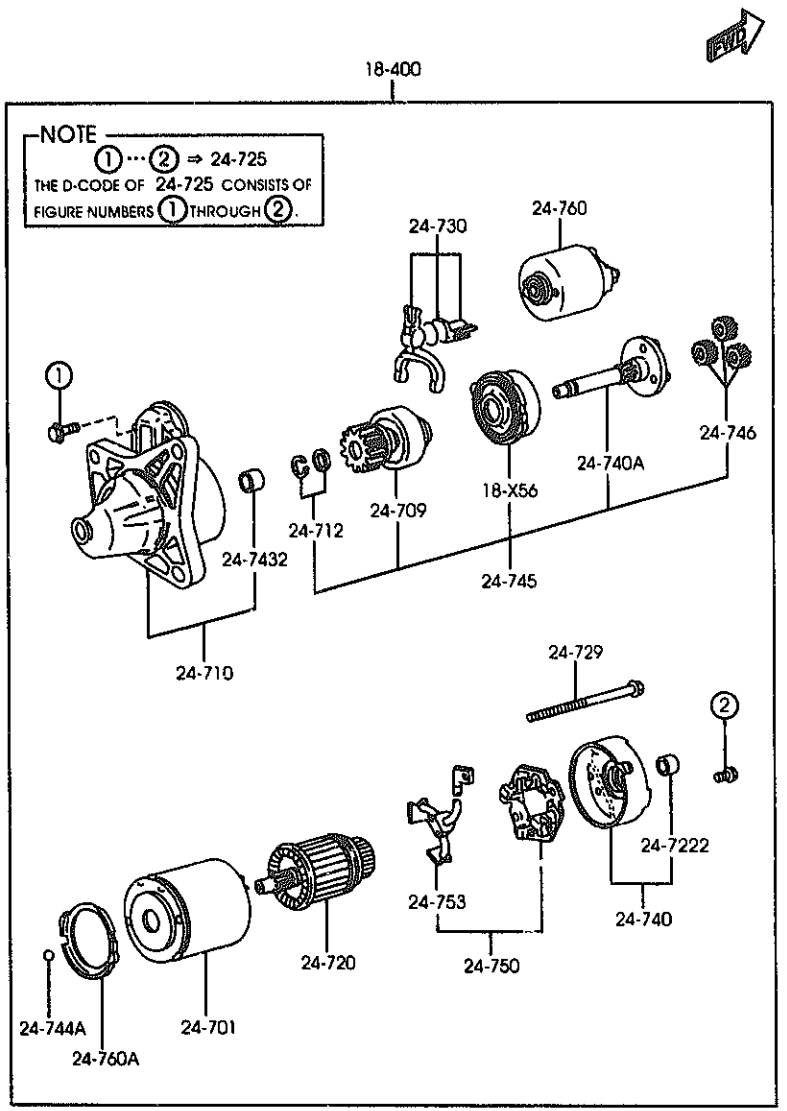

PART NO.	QTY	MODEL/RESTRICTION	MODEL/RESTRICTION	MODEL/RESTRICTION	FROM-TO
18-X56		GEAR,INTERNAL-STARTER			
FP13-18-X56	1	MITSUBISHI			
18-400		STARTER			
BPD4-18-400 A (BPD4-18-400A)	1				-7C01
BPD4-18-400A	1				7C01-
24-701		YOKE			
FP13-18-X65	1	MITSUBISHI			
24-709		PINION			
BPD4-18-X25	1				
24-710		BRACKET,FRONT			
BPD4-18-X00	1				
24-712		STOPPER SET			
N326-18-X30	1	MITSUBISHI			
24-720		ARMATURE			
BPD4-18-X60	1	MITSUBISHI			
24-7222		SLEEVE,BEARING-REAR			
N326-18-X62A	1	MITSUBISHI			
24-725		SCREW SET			
E356-18-X95	1	MITSUBISHI			
24-729		BOLT			
BPD4-18-X90	2	MITSUBISHI			
24-730		LEVER			
BPD4-18-X05A	1				
24-740		BRACKET,REAR			
FP13-18-X80		MITSUBISHI			

7C01 MB353*-100063

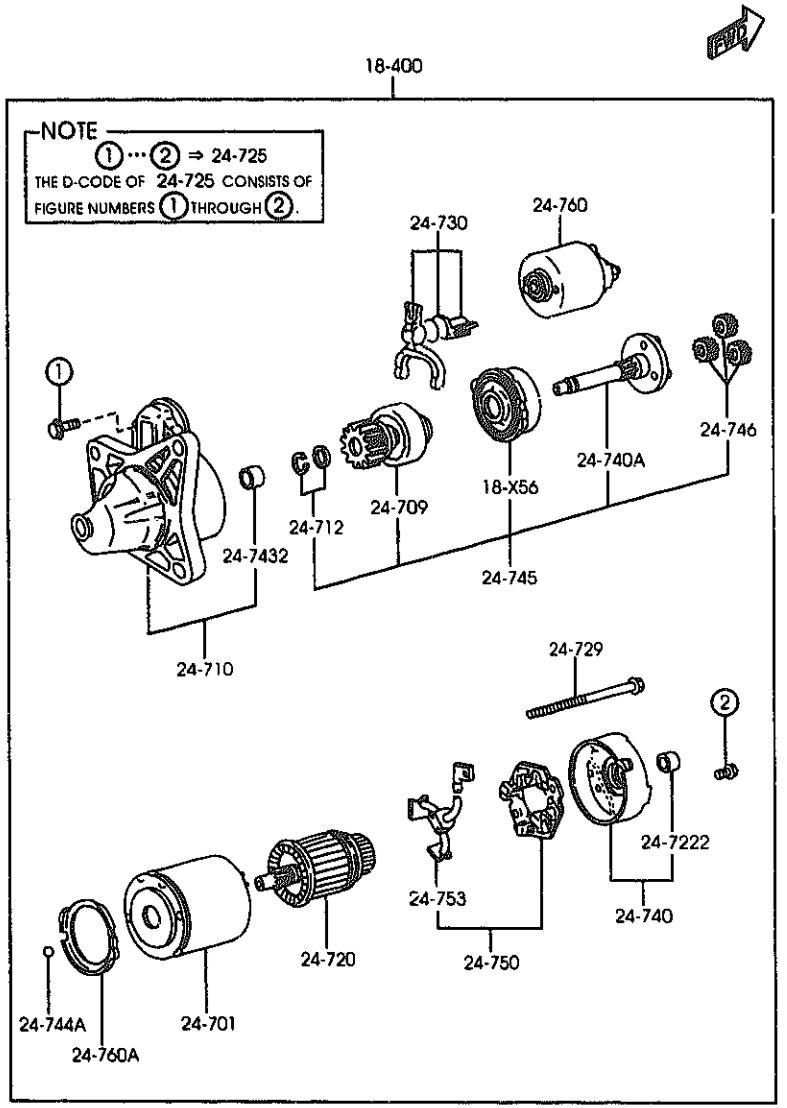

AUNA07 (1N07310)

1840A -2 ※ STARTER

PART NO.	QTY	MODEL/RESTRICTION	MODEL/RESTRICTION	MODEL/RESTRICTION	FROM-TO
CONT'D	1				
24-740A		SHAFT			
BPD4-18-X40	1	MITSUBISHI			
24-7432		SLEEVE,BEARING-FRONT			
E356-18-X01	1	MITSUBISHI			
24-744A		BALL,STEEL			
N326-18-X93	1	MITSUBISHI			
24-745		SHAFT,CLUTCH			
BPD8-19-X20A	1				
24-746		GEAR			
N326-18-X57	3	MITSUBISHI			
24-750		HOLDER,BRUSH			
F2D4-18-X70	1				
24-753		BRUSH,YOKE			
F2D4-18-X66	1				
24-760		SWITCH			
BPD4-18-X10	1				
24-760A		GASKET			
FP13-18-X87	1	MITSUBISHI			

CAT. AUNA07-05 2000-01

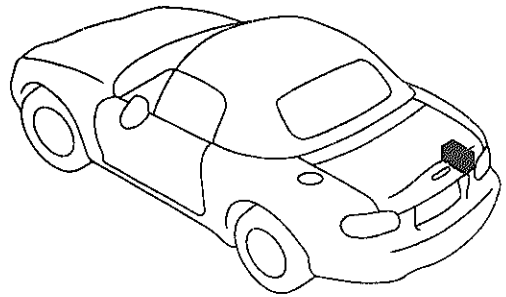

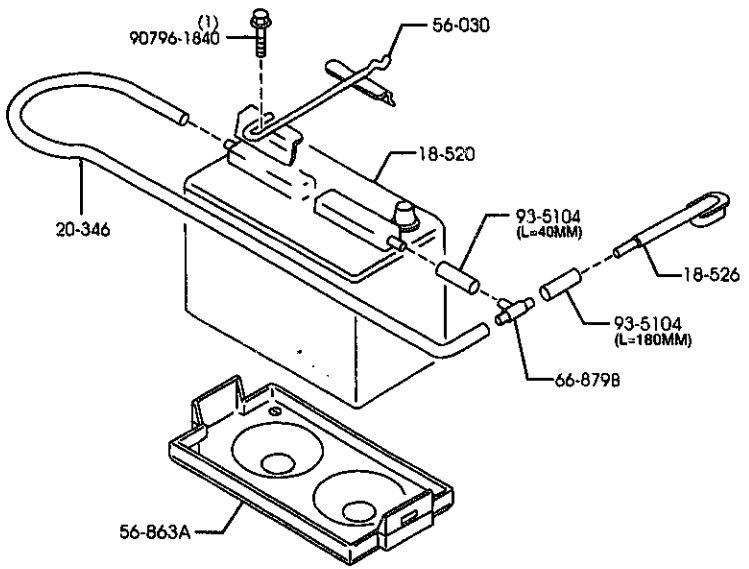

1850A -1 * BATTERY

PART NO.	QTY	MODEL/RESTRICTION	MODEL/RESTRICTION	MODEL/RESTRICTION	FROM-TO
18-520		BATTERY			
B6AC-18-520	1	S46A24L(S) PANASONIC			
18-526		CONNECTOR,TUBE-BATTERY			
B61P-18-526	1				
20-346		TUBE,VACUUM			
BP4W-18-524	1				
56-030		CLAMP,BATTERY			
NC10-56-03XB	1				
56-863A		TRAY,BATTERY			
NC10-56-041A	1				
66-879B		JOINT			
0813-66-879	1				
93-5104		HOSE			
99351-04999	1	L=1M CUT IT TO USE			

1910A AUTOMATIC TRANSMISSION TORQUE CONVERTER, OIL PUMP & PIPINGS

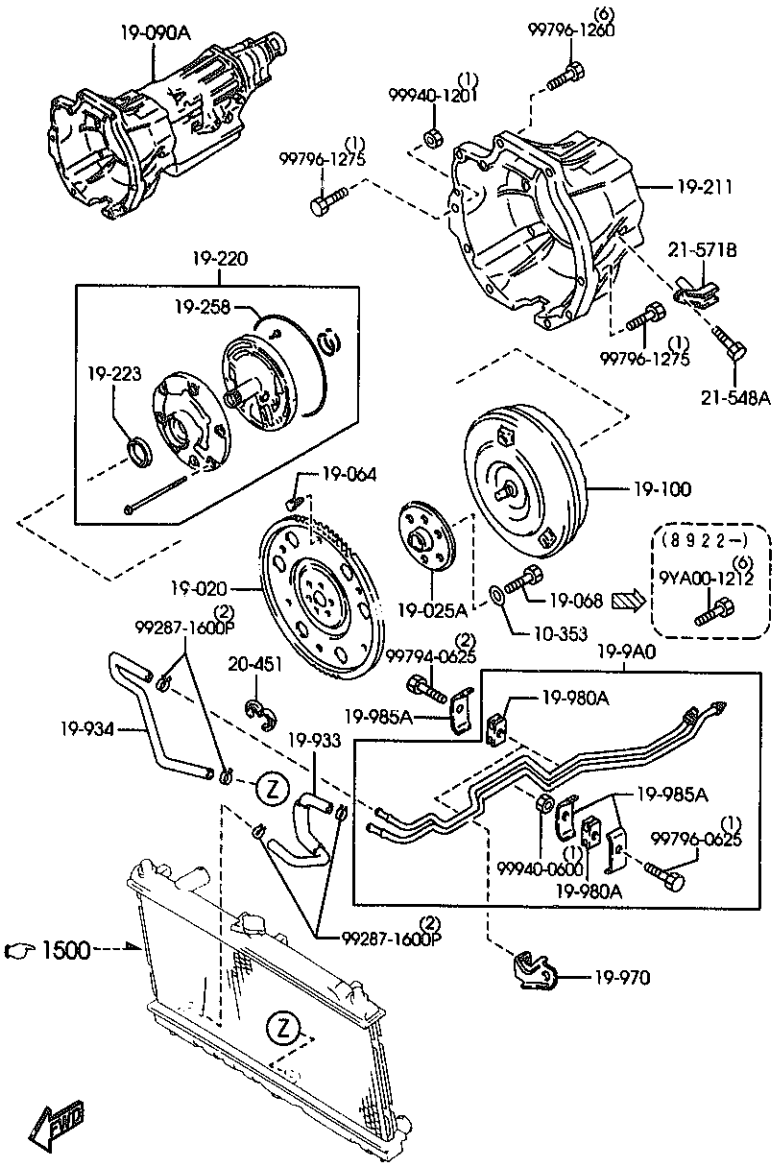

AUNA07 (1N09660)

1910A -1 AUTOMATIC TRANSMISSION TORQUE CONVERTER, OIL PUMP & PIPINGS

PART NO.	QTY	MODEL/RESTRICTION	MODEL/RESTRICTION	MODEL/RESTRICTION	FROM-TO
10-353		WASHER,PLAIN			
0290-10-353	6				-8922
19-020		PLATE,DRIVE			
SB01-19-020	1				
19-025A		ADAPTER,DRIVE PLATE			
FA01-19-025	1	SUMINO INDUSTORY			
19-064		BOLT			
3649-19-064A	6				
19-068		BOLT,LOCK			
FT31-19-064	6				-8922
19-090A		T/MISSION CPT.			
SB01-19-090C	1				-7C24
SB01-19-090D	1				7C24-
19-100		COUPLING			
SB01-19-100	1				
19-211		HOUSING,CONVERTER			
SB01-19-210	1				
19-220		PUMP,OIL			
SB01-19-700	1				
19-223		SEAL,OIL			
BT24-19-223	1				
19-258		SEAL,CUT RING			
BT24-19-258	1				
19-9A0		PIPE,OIL-OILPUMP			
SB01-19-9A0B	1				
19-933		HOSE,OIL			
SB01-19-933B	1				

7C24 NB353*-102379
8922 NB353*-122646

CAT. AUNA07-05 2000-01

1910A AUTOMATIC TRANSMISSION TORQUE CONVERTER, OIL PUMP & PIPINGS

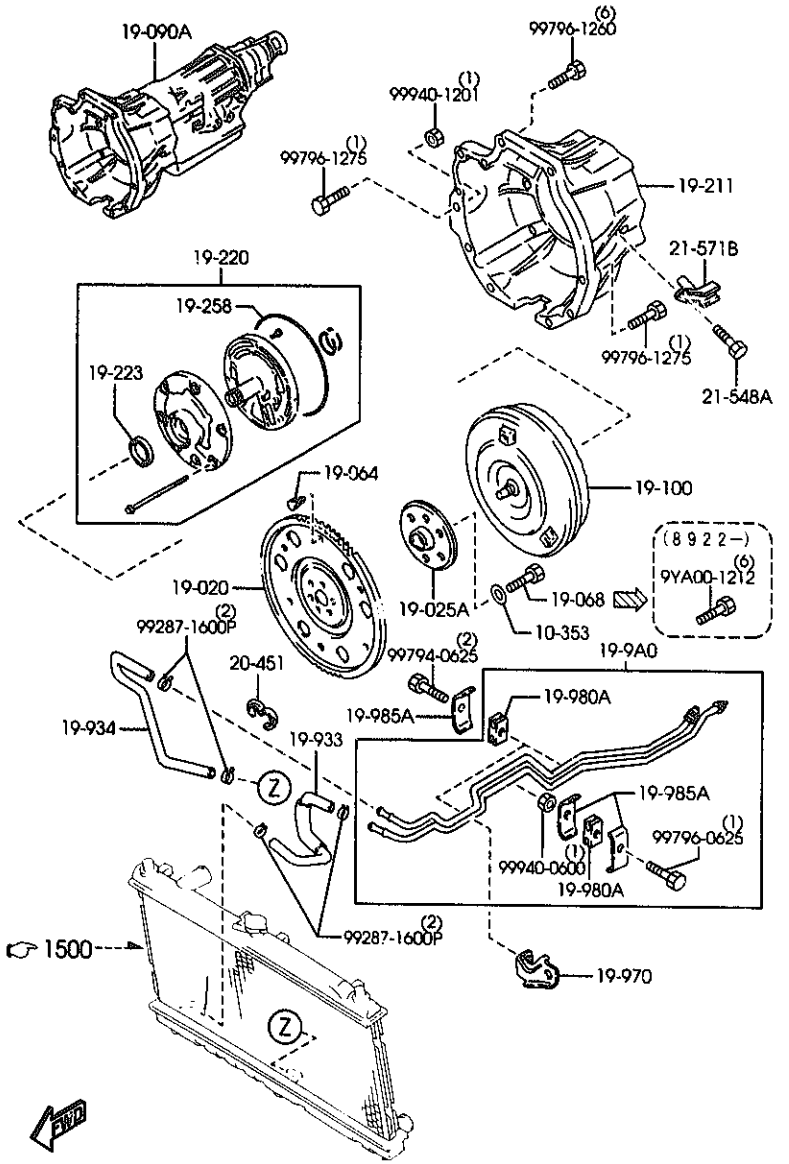

AUNA07 (1N09660)

1910A -2 * AUTOMATIC TRANSMISSION TORQUE CONVERTER, OIL PUMP & PIPINGS

PART NO.	QTY	MODEL/RESTRICTION	MODEL/RESTRICTION	MODEL/RESTRICTION	FROM-TO
19-934		HOSE,OIL			
SB01-19-934	1				
19-970		BRACKET			
BU55-19-970A	1				
19-980A		SUPPORT,OIL PIPE			
BU29-19-980	3				
19-985A		CLIP,OIL PIPE			
BU29-19-985	4				
20-451		CLIP			
B612-20-468	1				
21-548A		BOLT			
SB01-21-548	1				
21-571B		GENERATOR,SPEED PULSE			
SB01-21-5H1	1				

CAT. AUNA07-05 2000-01

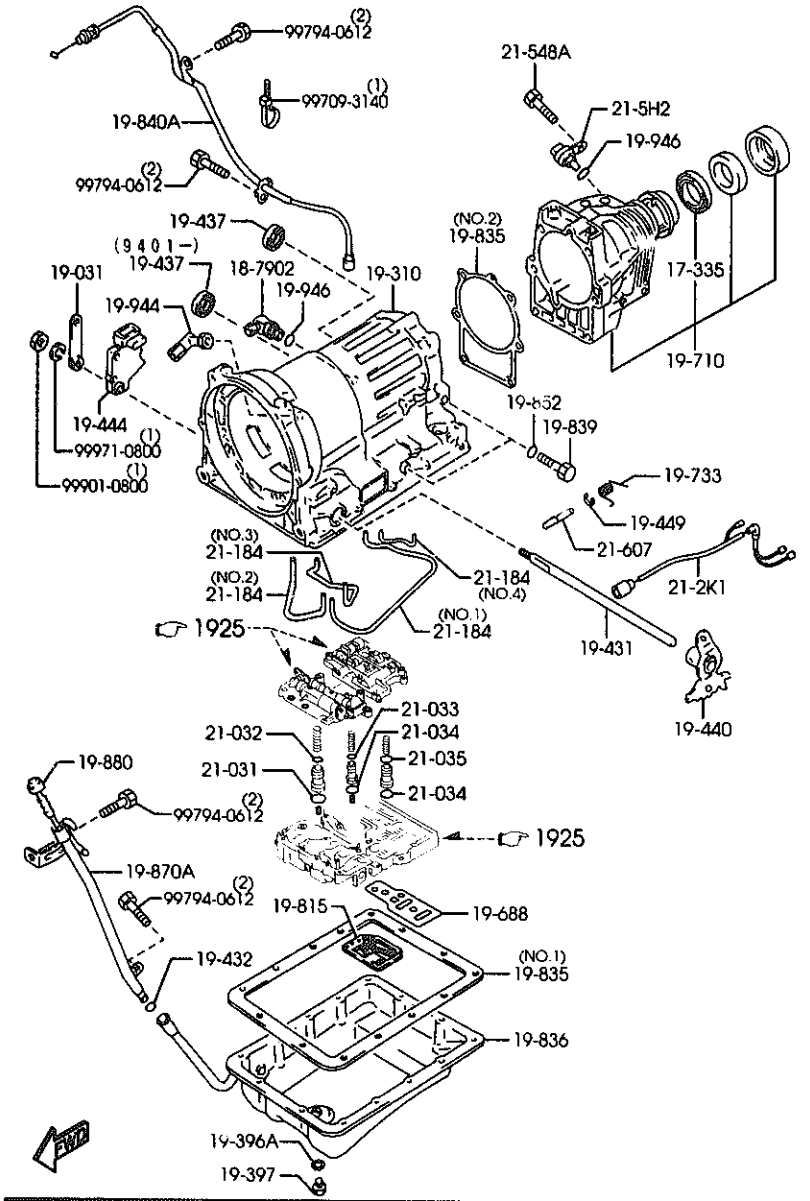

AUNA07 (1N07950)

PART NO.	QTY	MODEL/RESTRICTION	MODEL/RESTRICTION	MODEL/RESTRICTION	FROM-TO
17-335		SEAL,OIL			
BV8B-17-335	1				
18-7902		CONNECTOR			
BV8B-19-926	1				
19-031		LEVER,SELECT			
SB01-19-030	1				
19-310		CASE,T/MISSION			
BV8B-19-310	1				
19-396A		GASKET			
BT24-19-859	1				
19-397		BOLT			
BT24-19-858	1				
19-431		SHAFT,MANUAL			
BT24-19-431	1				
19-432		RING,'O'			
99541-01007	1				
19-437		SEAL,MANUAL SHAFT LEVER			
BT24-19-437	1				-9401
BT24-19-437	2				9401-
19-440		PLATE,MANUAL			
SB01-19-441	1				
19-444		SWITCH,INHIBITOR			
BV8B-19-444	1				
19-449		RING,SNAP			
BT24-19-449	1				
19-688		GASKET,GOVERNOR			
SB01-19-688	1				

9401 NB353*-136673

CAT. AUNA07-05 2000-01

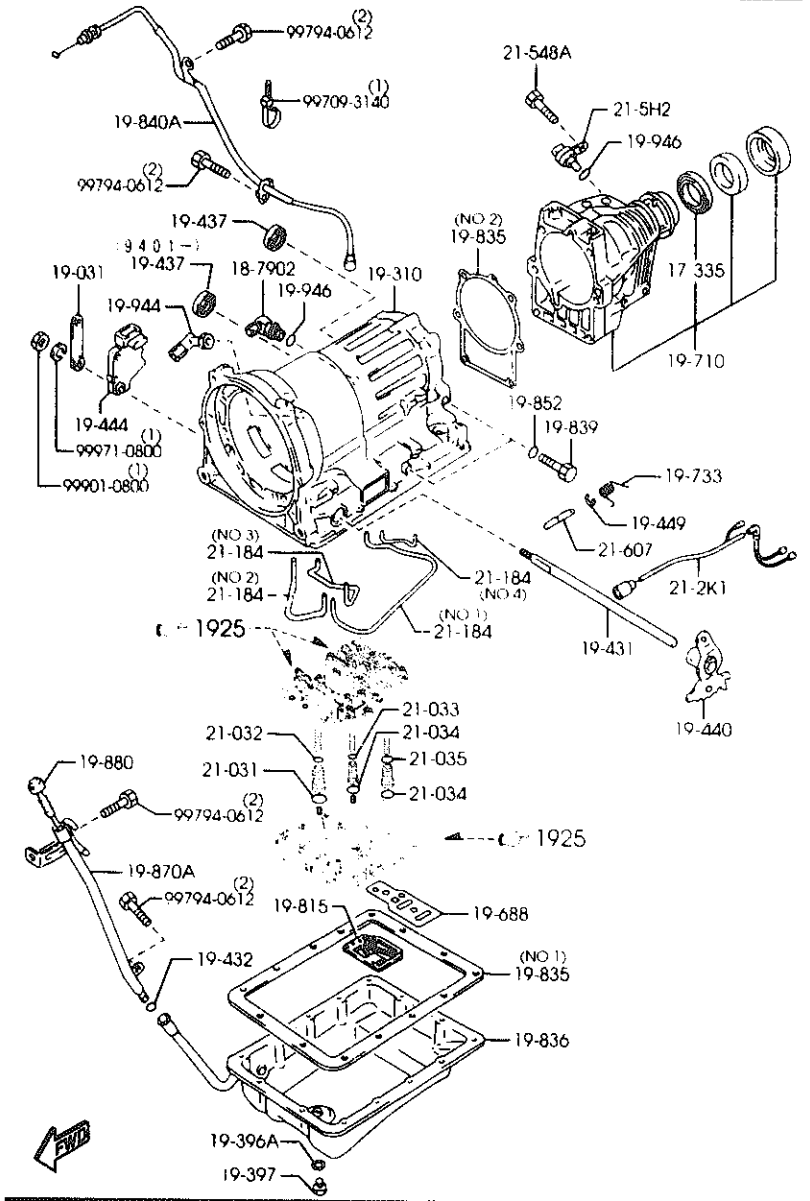

AUNA07 (1N07950)

PART NO.	QTY	MODEL/RESTRICTION	MODEL/RESTRICTION	MODEL/RESTRICTION	FROM-TO
19-710		HOUSING,EXTENSION			
SB02-19-710	1				
19-733		SPRING,PAWL RETURN			
BU60-19-733	1				
19-815		STRAINER,OIL			
BV8B-19-815	1				
19-835		GASKET,OIL PAN			
SB01-19-0A2	1	(ILLUST. NO.2)			
BT24-19-835	1	(ILLUST. NO.1)			
19-836		PAN,OIL			
SB01-19-830	1				
19-839		SCREW,T. MISSION CASE			
BT24-19-839	2				
19-840A		CABLE,THROTTLE-A/T			
SB01-21-600	1				
19-852		RING,'O'-T. MISSION CASE			
BT24-19-852	2				
19-870A		TUBE,FILLER			
SB01-19-890A	1				
19-880		GAUGE,OIL LEVEL			
SB01-19-880 A (SB01-19-880A)	1				-7C24
SB01-19-880A	1				7C24-
19-944		UNION,OIL PIPE			
BV8B-19-936	1				
19-946		RING,'O'			
BT24-19-946	2				
21-031		RING,'O'-UP.ACCUM 2ND PIS			
BT24-21-031	1				

7C24 NB353*-102379

CAT. AUNA07-05 2000-01

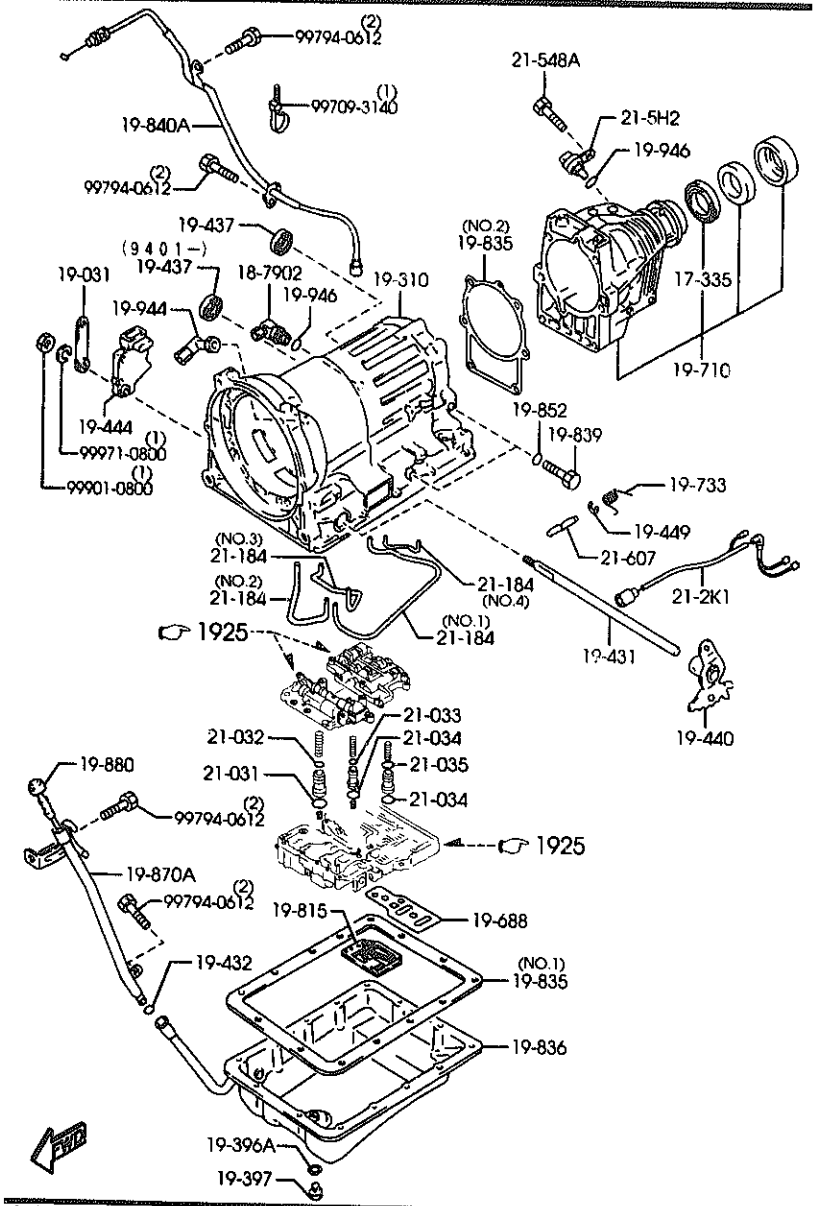

AUNA07 (1N07950)

PART NO.	QTY	MODEL/RESTRICTION	MODEL/RESTRICTION	MODEL/RESTRICTION	FROM-TO
21-032		RING,'O'-UP.ACCUM 2ND PIS			
BT24-21-032	1				
21-033		RING,'O'-ACCUM. CLUTCH			
BT24-21-033	1				
21-034		RING,'O'-ACCUM. CLUTCH			
BT24-21-034	2				
21-035		RING,'O'-ACCUM. FOR. CLUTCH			
BT24-21-035	1				
21-184		PIPE,OIL			
BV8B-21-181	1	(ILLUST. NO.1)			
BV8C-21-181	1	(ILLUST. NO.2)			
BV8B-21-184	1	(ILLUST. NO.3)			
BV8C-21-184	1	(ILLUST. NO.4)			
21-2K1		CONNECTOR,SOLENOID VALVE			
BV8B-21-2K1	1				
21-5H2		SENSOR,REVOLUTION			
BV8B-21-5H2	1				
21-548A		BOLT			
BV3B-21-548	1				
21-607		PIN,PARKING PAWL			
BU60-21-607	1				

CAT. AUNA07-05 2000-01

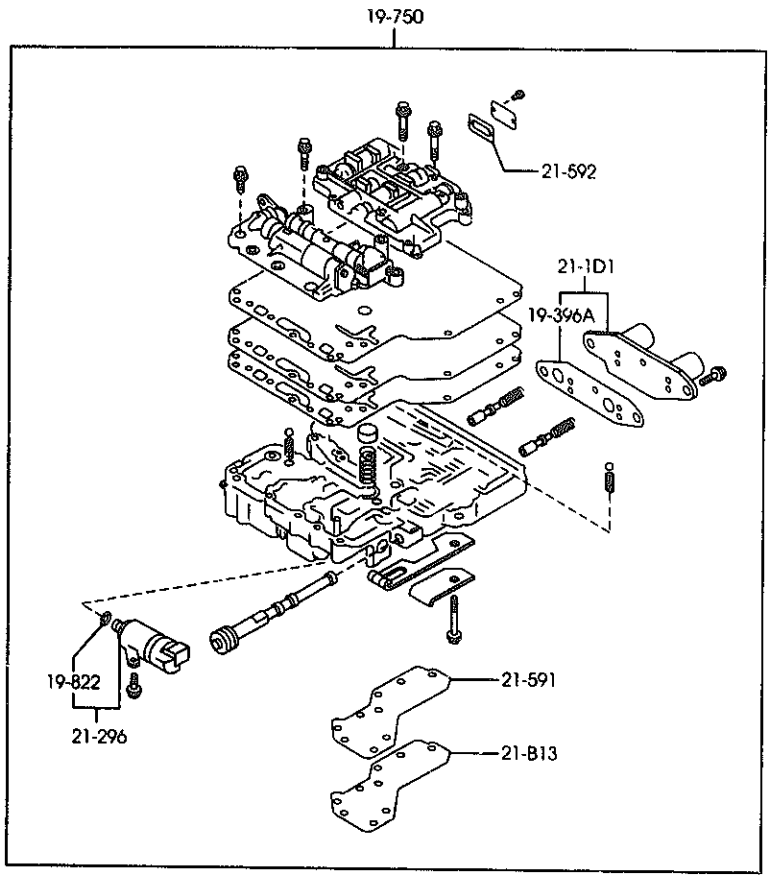

AUNA07

(1N07960)

1925A -1 * AUTOMATIC TRANSMISSION CONTROL VALVE

PART NO.	QTY	MODEL/RESTRICTION	MODEL/RESTRICTION	MODEL/RESTRICTION	FROM-TO
19-396A		GASKET			
BV8B-19-859	1				
19-750		VALVE,CONTROL			
SB01-19-750	1				
19-822		SEAL,'O'RING			
BV8B-19-822	1				
21-B13		GASKET,PLATE			
SB01-21-B06	1				
21-1D1		SOLENOID			
SB01-21-1D1	1				
21-296		SOLENOID,LOCK UP CONTROL			
SB01-21-3A5	1				
21-591		GASKET,UPPER-C. V. BODY			
SB01-21-591	1				
21-592		GASKET,LOWER-C. V. BODY			
SB01-21-592	1				

CAT. AUNA07-05

2000-01

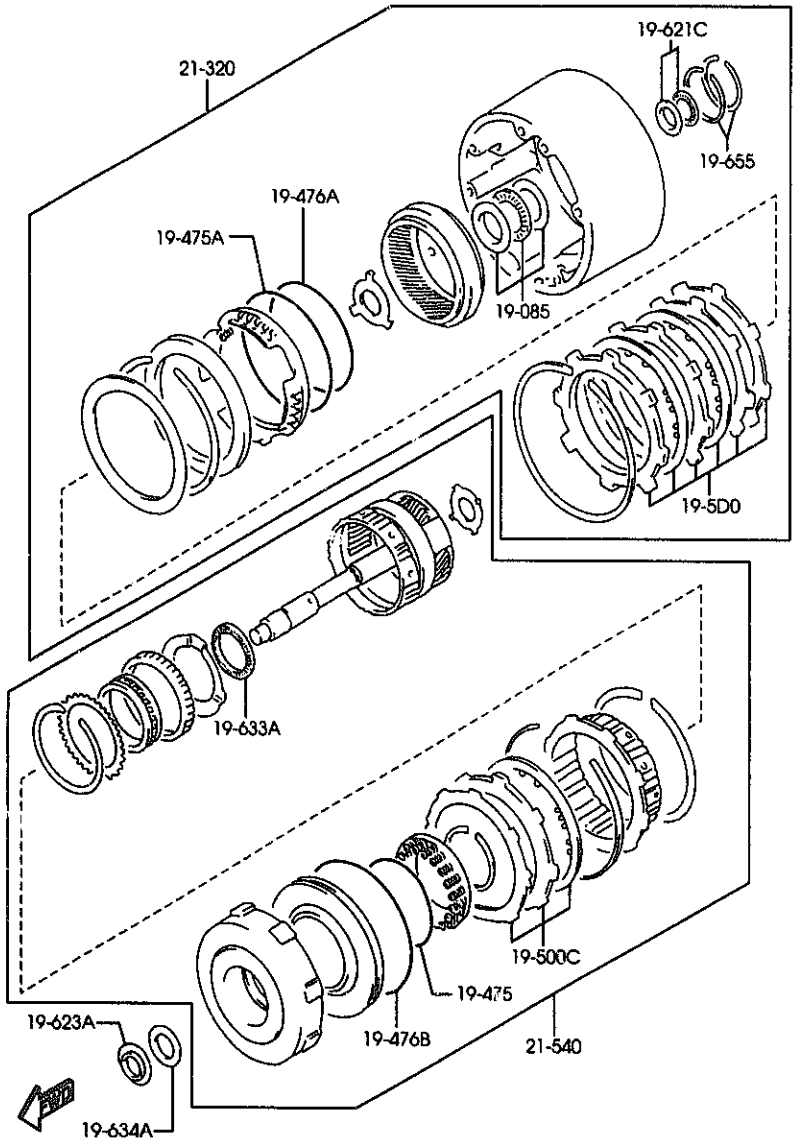

AUNA07 (1N07971)

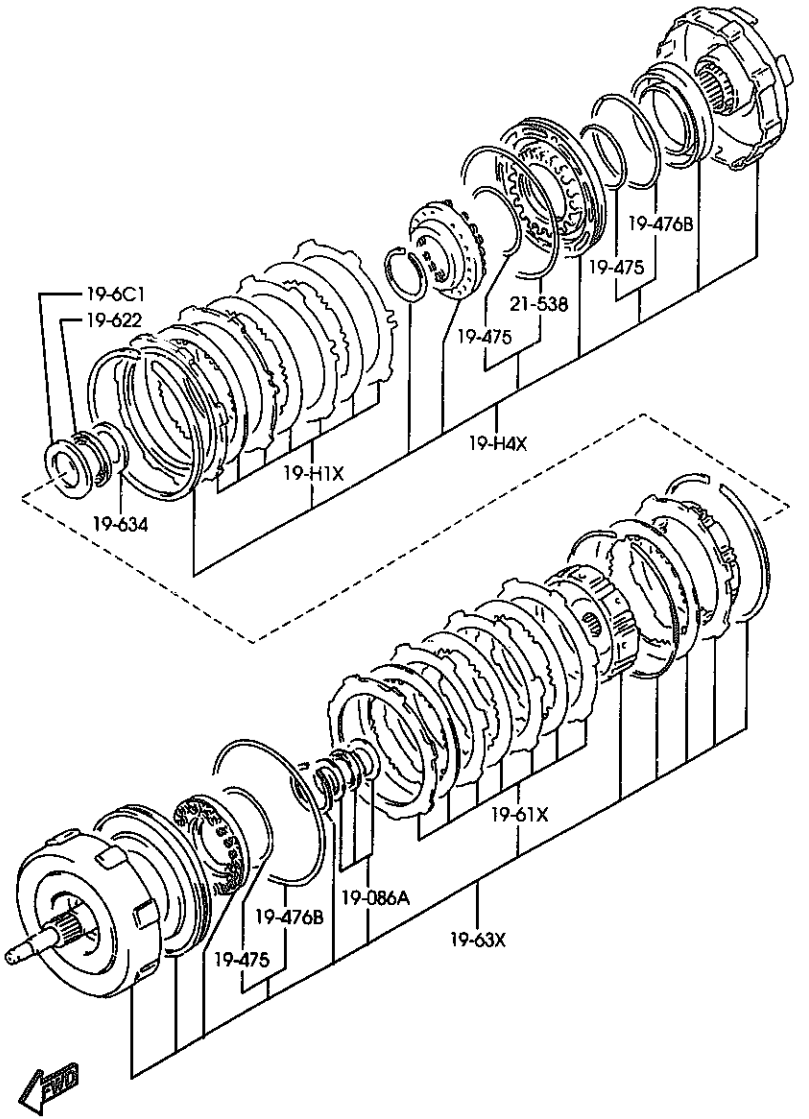

AUNA07 (1N07972)

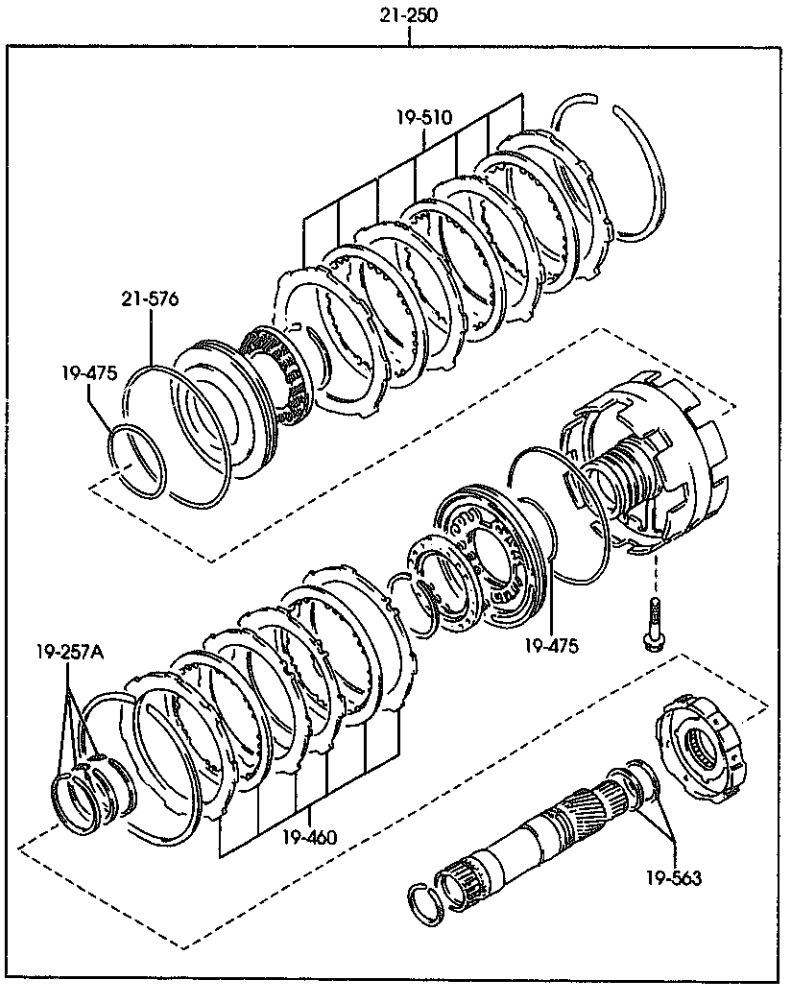

FWD

AUNA07 (1N07973)

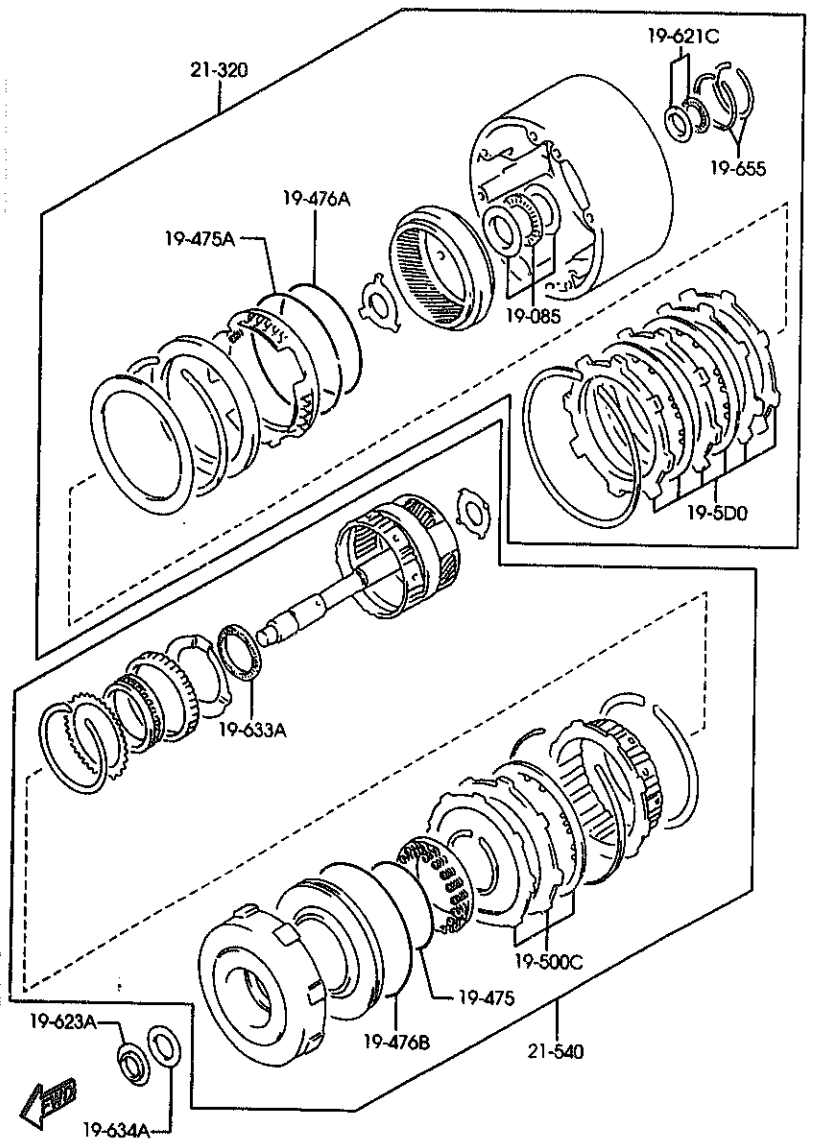

AUNA07 (1N07971)

PART NO.	QTY	MODEL/RESTRICTION	MODEL/RESTRICTION	MODEL/RESTRICTION	FROM-TO
19-H1X		CLUTCH,PACK DIRECT			
SB01-19-H1X	1				
19-H4X		CLUTCH,DIRECT			
SB01-19-H4X	1				
19-085		BEARING			
SB01-19-085	1				
19-086A		BEARING			
SB01-19-086	1				
19-257A		RING,SEAL			
BT24-19-257	3				
19-460		CLUTCH,FRONT			
SB01-19-460	1				
19-475		SEAL,'O'RING			
BT24-19-475	6				
19-475A		RING,'O'			
BU60-19-475	1				
19-476A		RING,'O'			
BU60-19-476	1				
19-476B		RING,'O'			
BT24-19-476	3				
19-5D0		CLUTCH,HIGH			
SB01-19-5D0	1				
19-500C		CLUTCH			
SB01-19-500	1				-9A01
※SB10-19-500	1				9A01-
19-510		CLUTCH,REAR			
SB01-19-510	1				

9A01 NB353※-141073

CAT. AUNA07-05 2000-01

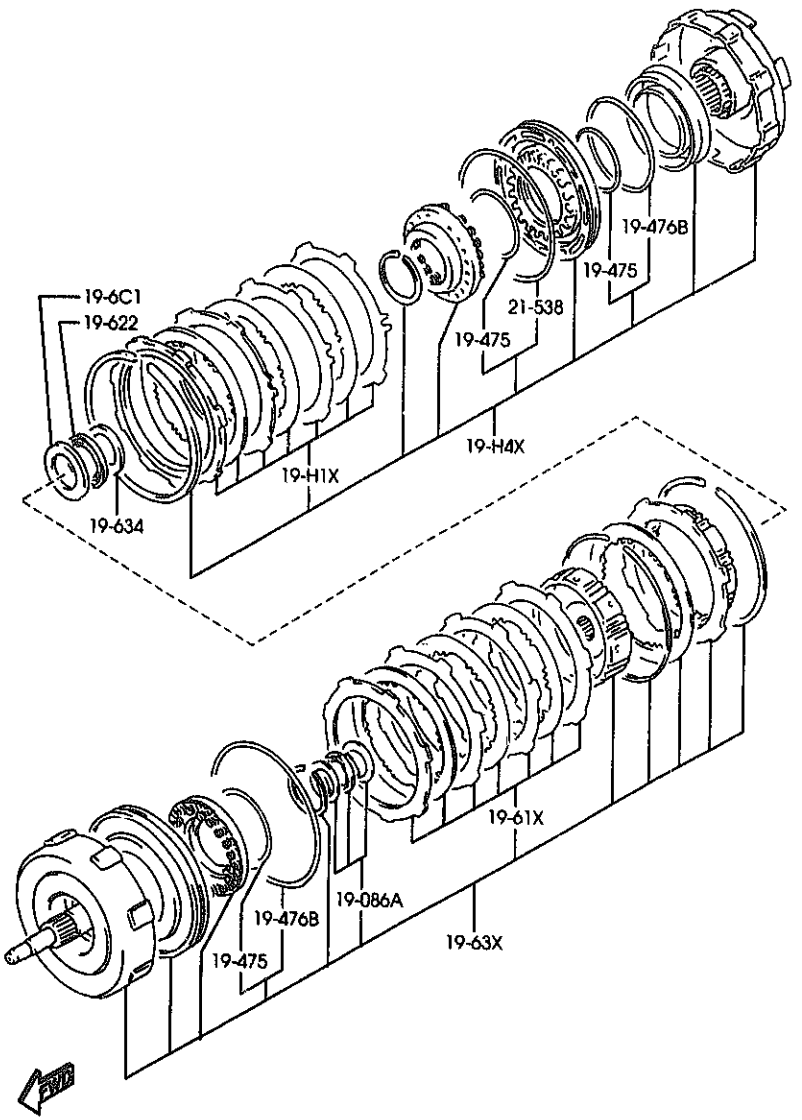

AUNA07 (1N07972)

PART NO.	QTY	MODEL/RESTRICTION	MODEL/RESTRICTION	MODEL/RESTRICTION	FROM-TO
19-563		RING,SEAL			
BT24-19-563	2				
19-6C1		RACE,BEARING			
SB01-19-6C1	1				
19-61X		CLUCH,PACK FORWARD			
SB01-19-61X	1				
19-621C		BEARING,THRUST			
SB01-19-621	1				
19-622		BEARING,NEEDLE			
BT24-19-622	1				
19-623A		BEARING,NEEDLE			
BU60-19-623	1				
19-63X		CLUTCH,FORWARD			
SB01-19-63X	1				
19-633A		RACE,THRUST BEARING			
BU61-19-633	1				
19-634		RACE,BEARING			
BT24-19-634	1				
19-634A		RACE,THRUST BEARING			
BU60-19-634	1				
19-655		RING,SEAL			
SB01-19-655	2				
21-250		SUPPORT,DRUM			
SB01-21-250	1				-9601
N (SB01-21-250A)					
SB01-21-250A	1				9601-
21-320		CASE,OVER DRIVE			
SB01-21-31X	1				

9601 NB353#-138251

CAT. AUNA07-05 2000-01

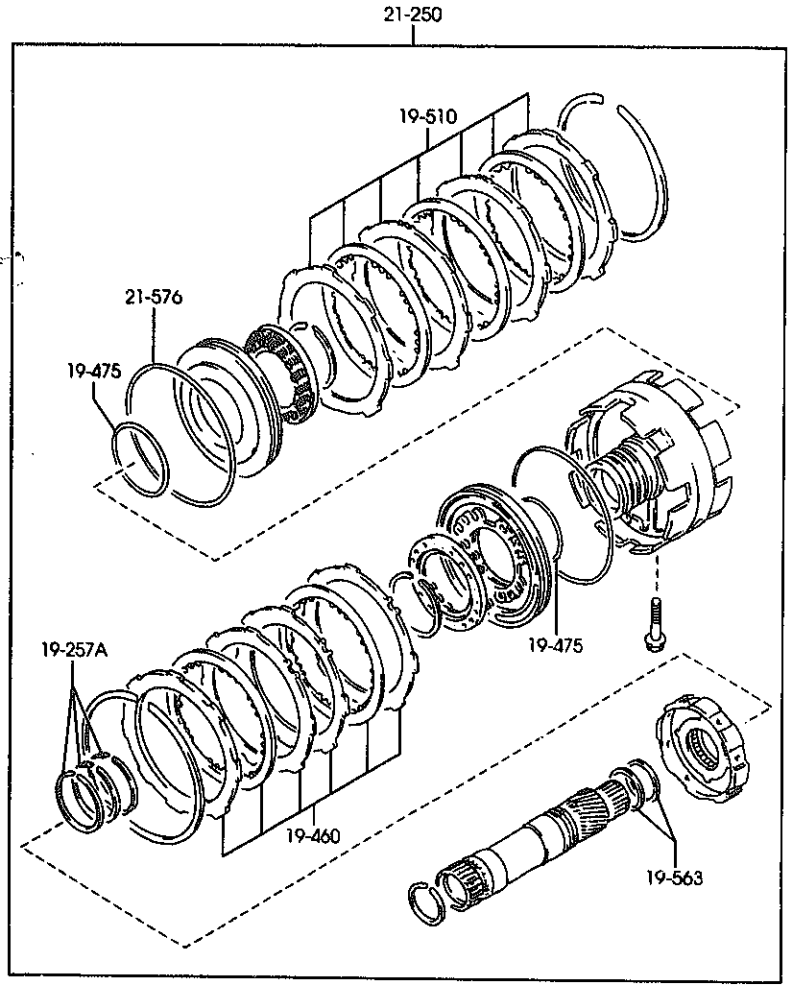

AUNA07 (1N07973)

PART NO.	QTY	MODEL/RESTRICTION	MODEL/RESTRICTION	MODEL/RESTRICTION	FROM-TO
21-538		RING,'O'			
BT24-21-538	1				
21-540		CARRIER,OVER DRIVE			
SB01-21-540	1				-9A01
※SB10-21-540	1				9A01-
21-576		RING,'O'			
BT24-21-576	1				

9A01 NB353※-141073

CAT. AUNA07-05 2000-01

1940A AUTOMATIC TRANSMISSION GOVERNOR, LOW & REVERSE PISTON

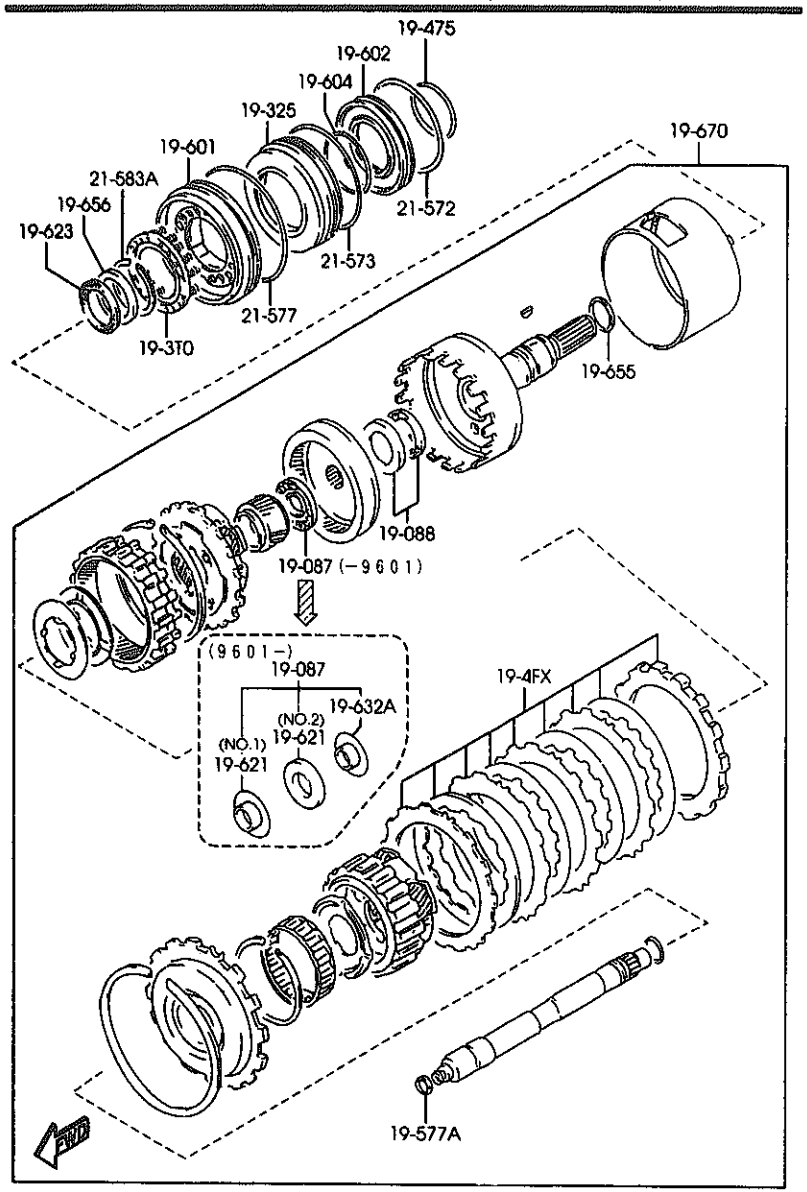

AUNA07 (1N07980)

1940A -1 AUTOMATIC TRANSMISSION GOVERNOR, LOW & REVERSE PISTON

PART NO.	QTY	MODEL/RESTRICTION	MODEL/RESTRICTION	MODEL/RESTRICTION	FROM-TO
19-087		BEARING			
SB01-19-087	1				-9601
SB01-19-1Z0	1				9601-
19-088		BEARING			
SB01-19-088	1				
19-3T0		RETAINER & SPRING,BRAKE			
BV88-19-3T0	1				
19-325		SLEEVE,OIL DIST.			
BT24-19-325	1				
19-4FX		CLUTCH,PACK-LOW & REV			
SB01-19-4FX	1				
19-475		SEAL,'O'RING			
BT24-19-475	1				
19-577A		RING,SNAP			
BU60-19-577	1				
19-601		PISTON,LOW & REVERSE			
BT24-19-601	1				
19-602		PISTON			
BT24-19-602	1				
19-604		SEAL,'O'RING			
BT24-19-604	1				
19-621		BEARING,NEEDLE			
SB02-19-621	1	(ILLUST. NO.1)			
SB03-19-621	1	(ILLUST. NO.2)			
19-623		BEARING,NEEDLE			
BT24-19-623	1				
19-632A		RACE,BEARING			
BT24-19-632	1				

9601 NB353*-138251

CAT. AUNA07-05 2000-01

1940A AUTOMATIC TRANSMISSION GOVERNOR, LOW & REVERSE PISTON

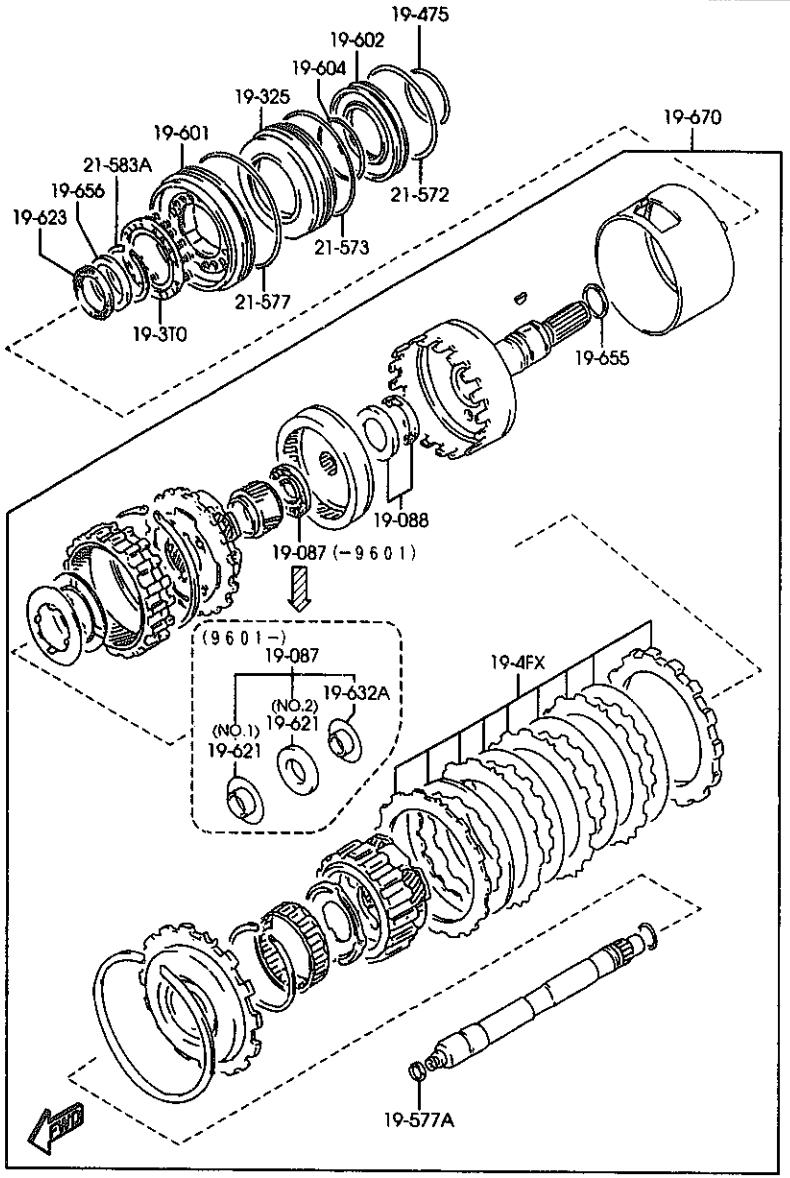

AUNA07 (1N07980)

1940A -2 ¥ AUTOMATIC TRANSMISSION GOVERNOR, LOW & REVERSE PISTON

PART NO.	QTY	MODEL/RESTRICTION	MODEL/RESTRICTION	MODEL/RESTRICTION	FROM-TO
19-655		RING,SEAL			
BT24-19-655	1				
19-656		RACE,BEARING OIL DIS TR			
BT24-19-656	1				
19-670		SHAFT			
SB01-19-670	1				-9601
¥ (SB01-19-670A)					
SB01-19-670A	1				9601-
21-572		RING,'O'			
BT24-21-572	1				
21-573		RING,'O'			
BT24-21-573	1				
21-577		RING,'O'			
BT24-21-577	1				
21-583A		RING,SNAP			
BT24-21-583	1				

9601 NB353¥-138251

CAT. AUNA07-05 2000-01

1960A AUTOMATIC TRANSMISSION GASKET & SEAL KIT

22-900

1-RING, 'O'	(1)	14-RING, 'O'	(1)
2-SEAL, OIL	(1)	15-RING, SEAL	(2)
3-RING, 'O'	(1)	16-RING, SEAL	(3)
4-RING, SEAL	(2)	17-RING, 'O'	(1)
5-RING, 'O'	(1)	18-RING, 'O'	(1)
6-RING, 'O'	(1)	19-RING, 'O'	(1)
7-RING, 'O'	(1)	20-RING, 'O'	(1)
8-RING, 'O'	(2)	21-RING, SEAL	(1)
9-RING, 'O'	(1)	22-RING, SEAL	(1)
10-RING, 'O'	(1)	23-GASKET, OIL PAN	(1)
11-RING, 'O'	(1)	24-GASKET	(2)
12-RING, 'O'	(1)	25-GASKET, OIL PAN	(1)
13-RING, 'O'	(1)		

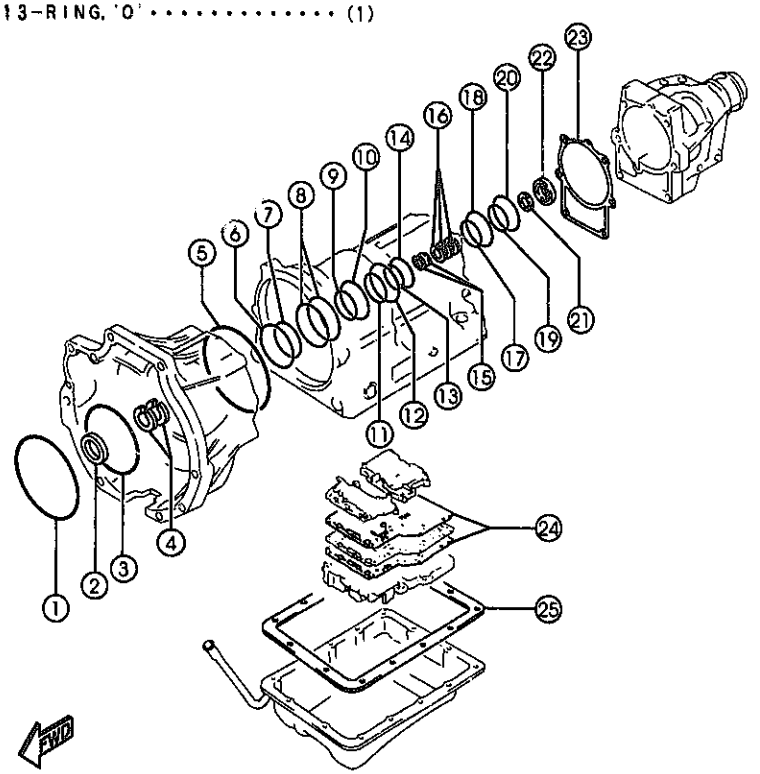

AUNA07 (1N05600)

1960A -1 ✱ AUTOMATIC TRANSMISSION GASKET & SEAL KIT

PART NO.	QTY	MODEL/RESTRICTION	MODEL/RESTRICTION	MODEL/RESTRICTION	FROM-TO
22-900		GASKET & SEAL KIT			
SB01-22-900	1				

CAT. AUNA07-05 2000-01