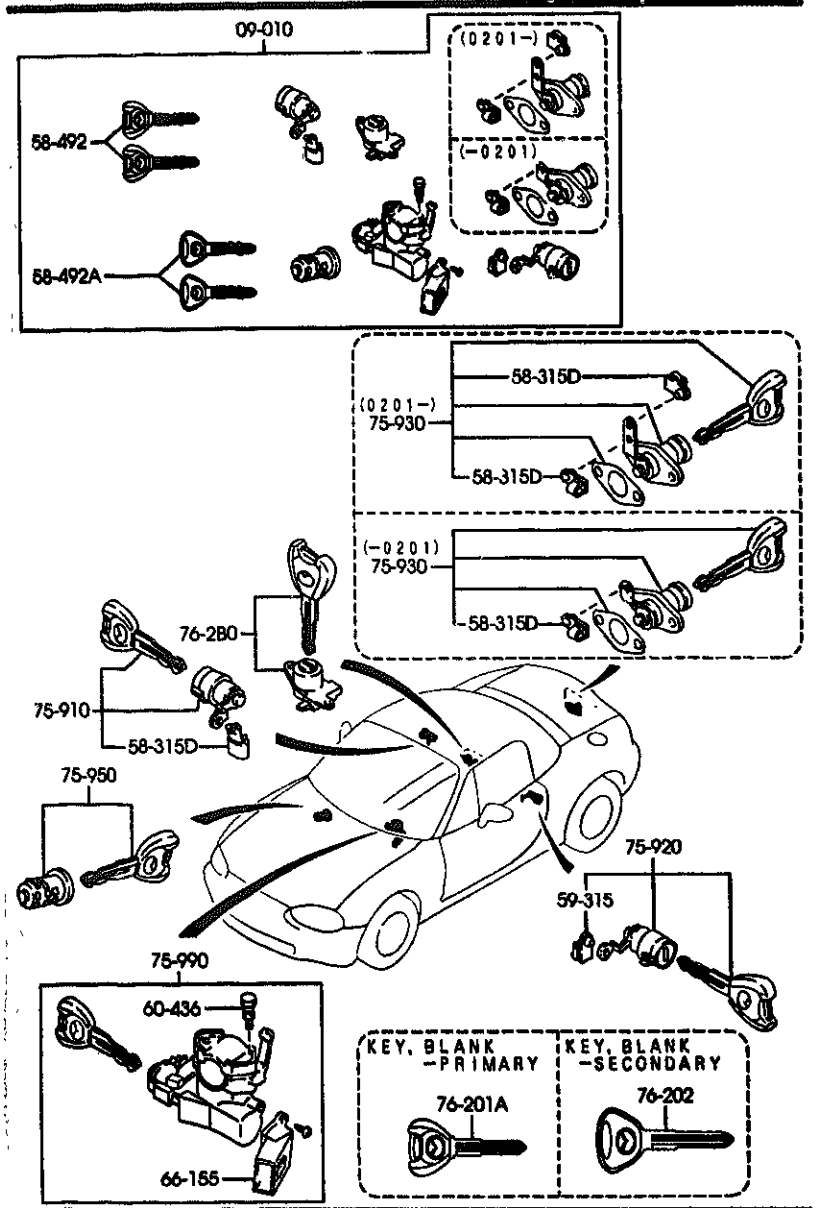

AUNA07 (1N03620)

PART NO.	QTY	MODEL/RESTRICTION	MODEL/RESTRICTION	MODEL/RESTRICTION	FROM-TO
09-010		KEY SET			
*NC93-09-010 A (NC93-09-010A)	1	((MT)>(6-SP)>('00 MODEL))			-0201
NC10-09-010A A (NC10-09-010B)	1	((MT)>(5-SP)) ((MT)>(6-SP)>('99 MODEL))			-9510
NC13-09-010A A (NC13-09-010B)	1	(AT)			-9510
*NC10-09-010D	1	((MT)>(5-SP)) ((MT)>(6-SP)>('99 MODEL))			0201-
*NC13-09-010D	1	(AT)			0201-
*NC93-09-010A	1	((MT)>(6-SP)>('00 MODEL))			0201-
NC10-09-010B A (NC10-09-010C)	1	((MT)>(5-SP)) ((MT)>(6-SP)>('99 MODEL))			9510-9A01
NC13-09-010B A (NC13-09-010C)	1	(AT)			9510-9A01
*NC10-09-010C	1	((MT)>(5-SP)) ((MT)>(6-SP)>('99 MODEL))			9A01-0201
*NC13-09-010C	1	(AT)			9A01-0201
58-315D		CLIP (R)			
0030-58-315	2				-0201
*0030-58-315	3				0201-
58-492		KEY,PRIMARY			
GD7B-58-492A	2	KEY NO. IS REQUIRED ((MT)>(6-SP)>('99 MODEL))			
*NC93-58-492	2	((MT)>(6-SP)>('00 MODEL))			
GD7B-58-492A	2	KEY NO. IS REQUIRED ((MT)>(5-SP)) (AT)			9A01-
58-492A		KEY,SECONDARY			
*GD7B-58-493	1	KEY NO. IS REQUIRED ((MT)>(6-SP)>('00 MODEL))			
GD7B-58-493	2	KEY NO. IS REQUIRED ((MT)>(5-SP)) (AT)			-9A01

9510 NB353#-137762
9A01 NB353#-141075

CAT. AUNA07-05 2000-01

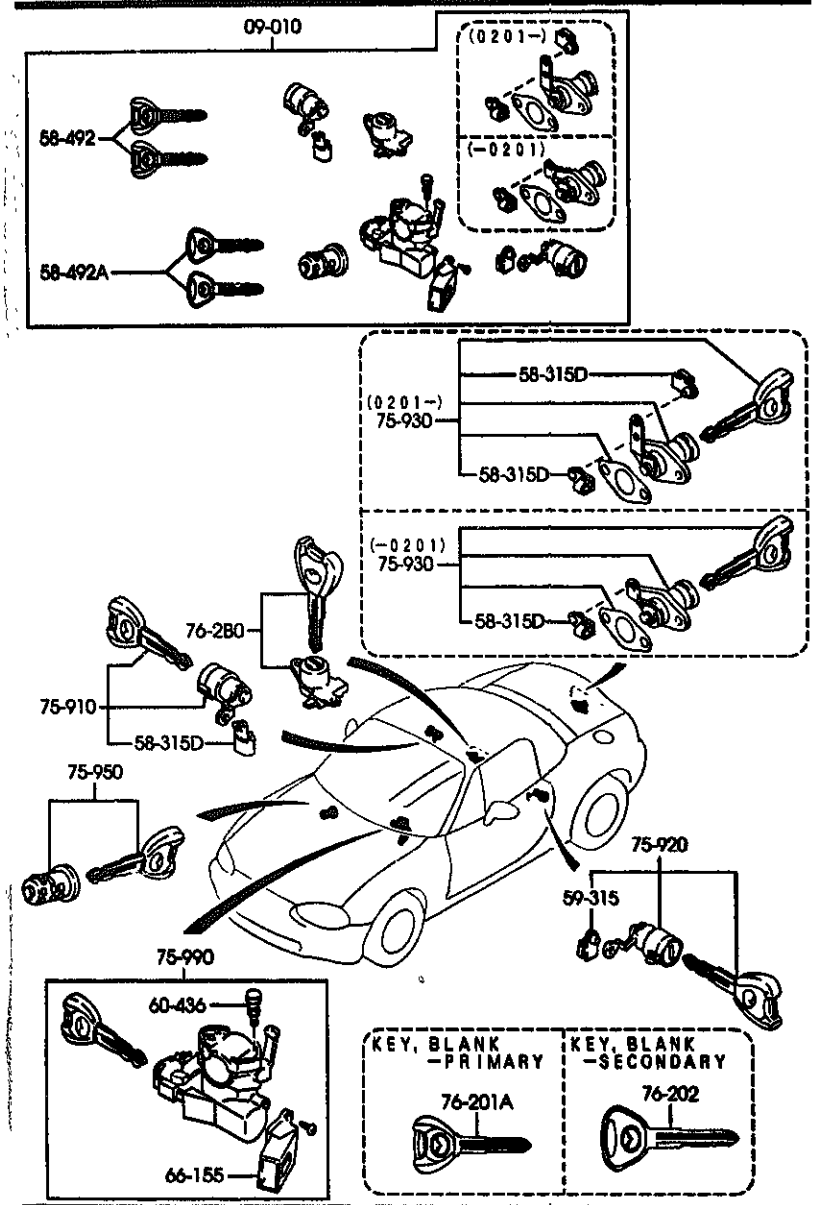

AUNA07 (1N03620)

PART NO.	QTY	MODEL/RESTRICTION	MODEL/RESTRICTION	MODEL/RESTRICTION	FROM-TO
59-315		CLIP			
0030-59-315	1				
60-436		BOLT,SET			
H043-66-154	2				
66-155		SWITCH,IGNITION			
N053-66-151	1				
75-910		KEY SUB SET(R),DOOR			
NCY0-76-210 AN(NCY0-76-210A)	1				-8801
NCY0-76-210A A (NCY0-76-210B)	1				8801-8C01
NCY0-76-210B	1				8C01-
75-920		KEY SUB SET(L),DOOR			
NCY0-76-220 AN(NCY0-76-220A)	1				-8801
NCY0-76-220A A (NCY0-76-220B)	1				8801-8C01
NCY0-76-220B	1				8C01-
75-930		KEY SUB SET,TRUNK			
NCY0-76-230 A (NCY0-76-230A)	1				-9510
NNCV1-76-230	1				0201-
NCY0-76-230A	1				9510-0201
75-950		KEY SUB SET,GLOVE			
B01N-76-250B	1				
75-990		KEY SUB SET,ST. LOCK			
NCY0-76-290	1	(MT)			
NCY3-76-290	1	(AT)			
76-280		KEY SUB SET,CONSOLE			
NCY0-76-280	1				
76-201A		KEY,BLANK-PRIMARY			
GD78-76-201A	1	((MT)>(6-SP)>('99 MODEL))			

8801 NB353M-121854
8C01 NB353M-124914
9510 NB353M-137762

CAT. AUNA07-05 2000-01

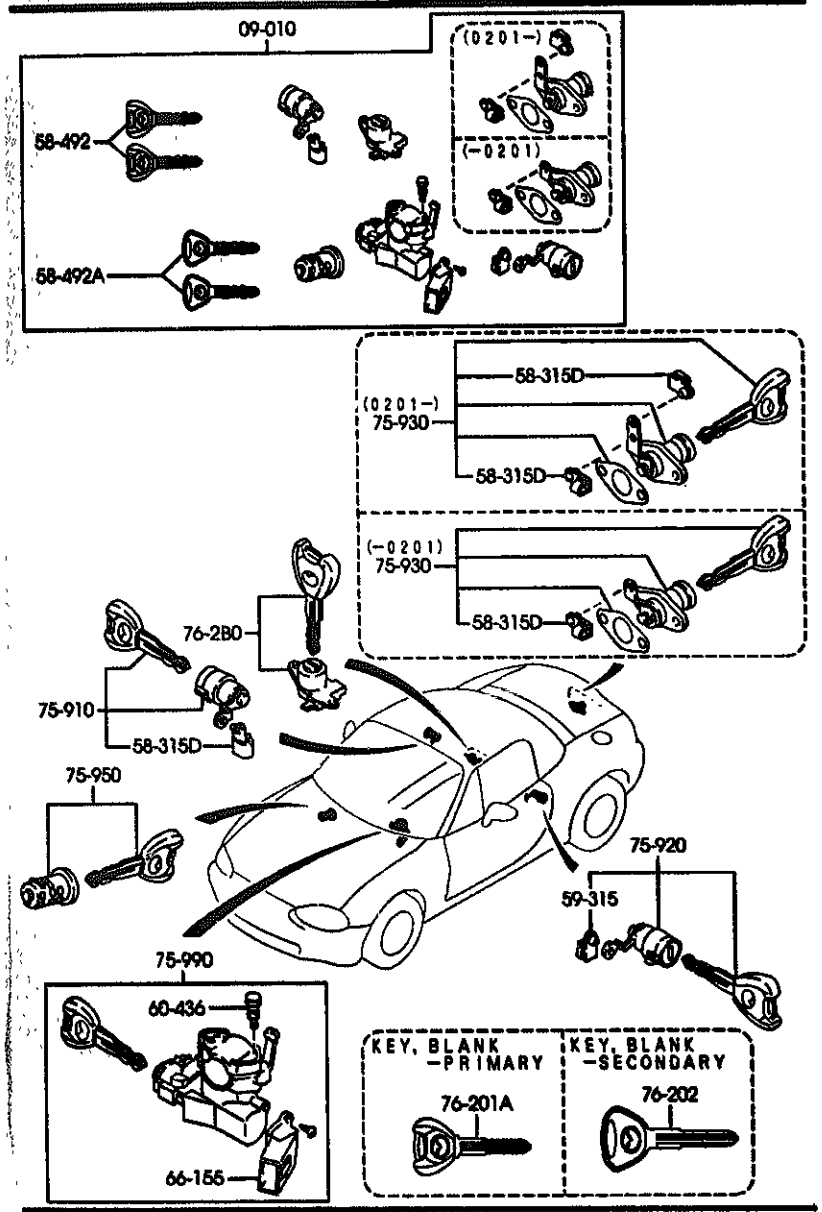

AUNA07 (1N03620)

0900A -3 M KEY SETS

PART NO.	QTY	MODEL/RESTRICTION	MODEL/RESTRICTION	MODEL/RESTRICTION	FROM-TO
CONT'D					
MN8Y3-76-201	1	((MT)>(6-SP)>('00 MODEL))			
76-202		KEY,BLANK-SECONDARY			
8B7B-76-202	1	((MT)>(5-SP)) (AT)			

CAT. AUMA07-05 2000-01

5000A FRONT BUMPER

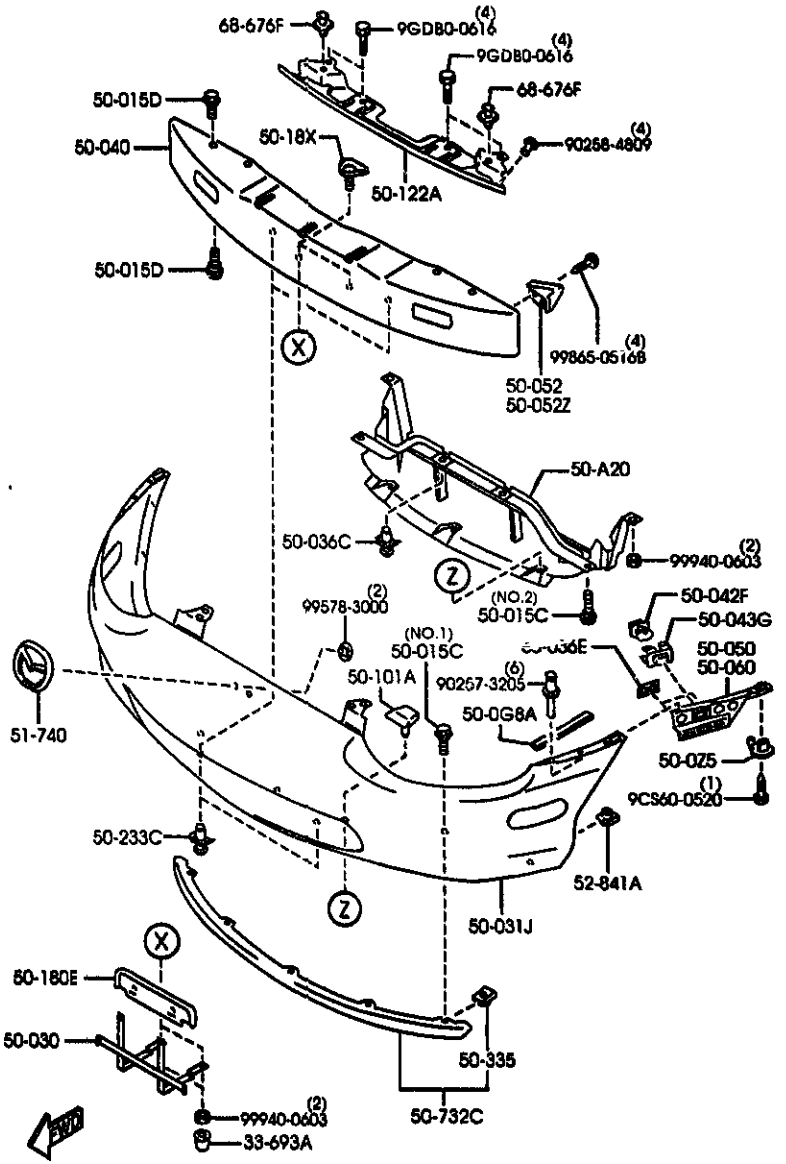

AUNA07 (1N04340)

5000A -1 FRONT BUMPER

PART NO.	QTY	MODEL/RESTRICTION	MODEL/RESTRICTION	MODEL/RESTRICTION	FROM-TO
33-693A		CAP,BLEEDER SCREW			
0259-33-693	2				
50-A20		GUIDE,AIR			
MC10-50-A21	1				-7C18
AM(MC10-50-A21A)					
MC10-50-A21A	1				7C18-
50-008A		SEAL,RUBBER-FRONT BUMPER			
MC10-50-008	2				
50-0Z5		GROMMET,SCREW			
BC1M-50-0Z5	2				
50-015C		BOLT			
BR70-50-0Z2	5	(ILLUST. NO.1)			
FB01-50-132	2	(ILLUST. NO.2)			
50-015D		BOLT			
NA01-50-0Z2	8				
50-030		HOLDER,LICENSE PLATE			
NA01-50-180A	1				
50-031J		BUMPER,FRONT			
NCY1-50-030C	1				
50-036C		FASTENER			
BF67-50-033	2				
50-036E		CLIP			
GJ21-50-049	4				
50-048		REINF,BUMPER-FRONT			
MC10-50-071A	1				
50-042F		SLIDE'B',BUMPER			
MC10-50-E11B	2				
50-043G		SLIDE,FRONT BUMPER			
MC10-50-E13A	2				

7C18 MB353M-101565

CAT. AUNA07-05 2000-01

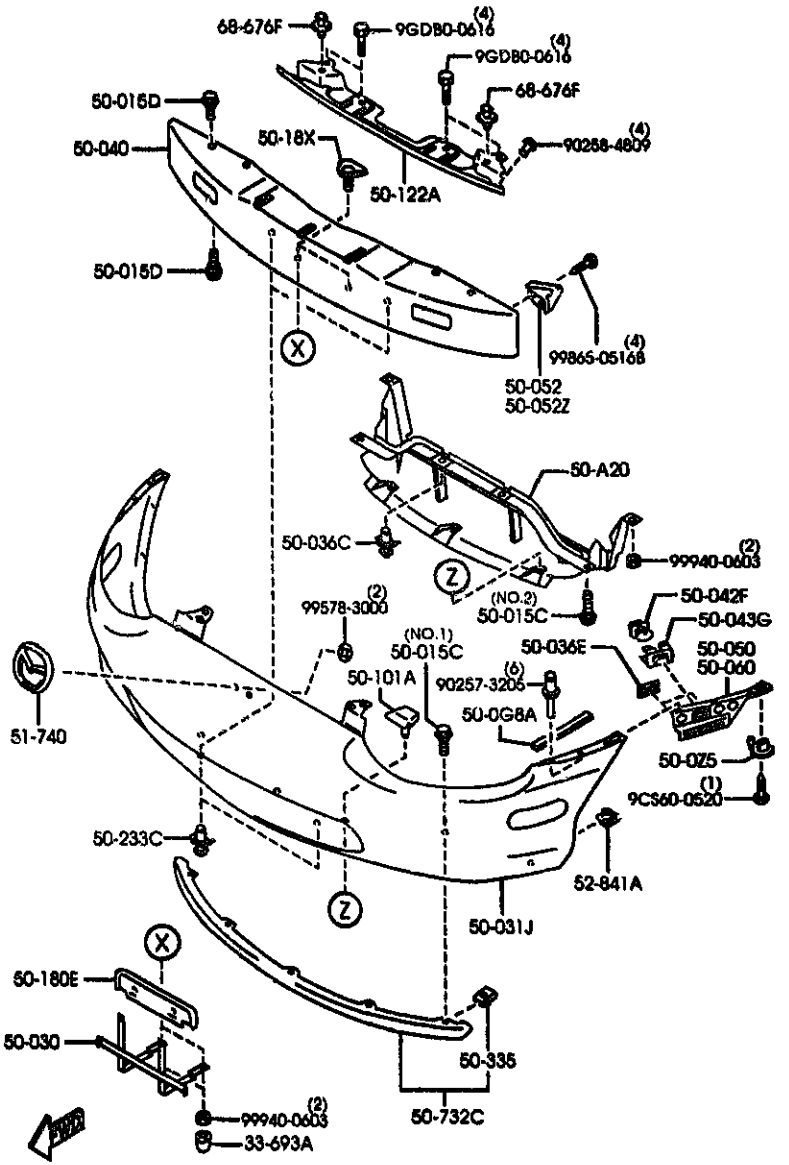

AUNA07 (1N04340)

PART NO.	QTY	MODEL/RESTRICTION	MODEL/RESTRICTION	MODEL/RESTRICTION	FROM-TO
50-050		GUARD(R),BUMPER			
NC10-50-121B	1				
50-052		BRKT(R),FRT. BUMPER			
NC10-50-151	1				
50-052Z		BRKT(L),FRT. BUMPER			
NC10-50-161	1				
50-060		GUARD(L),BUMPER			
NC10-50-131B	1				
50-101A		COVER,GRILLE			
NA01-50-101A	3				
50-122A		RETAINER,FRT.BUMPER			
NC10-50-0K0B	1				
50-18X		BRACKET,LICENCE PLATE			
NA01-50-18X	2				
50-180E		PROTECTOR,NO. PLATE			
FB01-50-144	1				
50-233C		FASTENER,REAR BUMPER			
3F02-50-233	2				
50-335		NUT,CLIP			
FB01-50-133C	5				
50-732C		SKIRT,FRONT AIR DAM			
NC10-51-9K0A	1				
51-740		MASCOT,FRONT			
NC10-51-731	1				
52-841A		NUT,CLIP			
B455-56-135	6				
60-676F		FASTENER,SCREW			
1395-60-676	2				

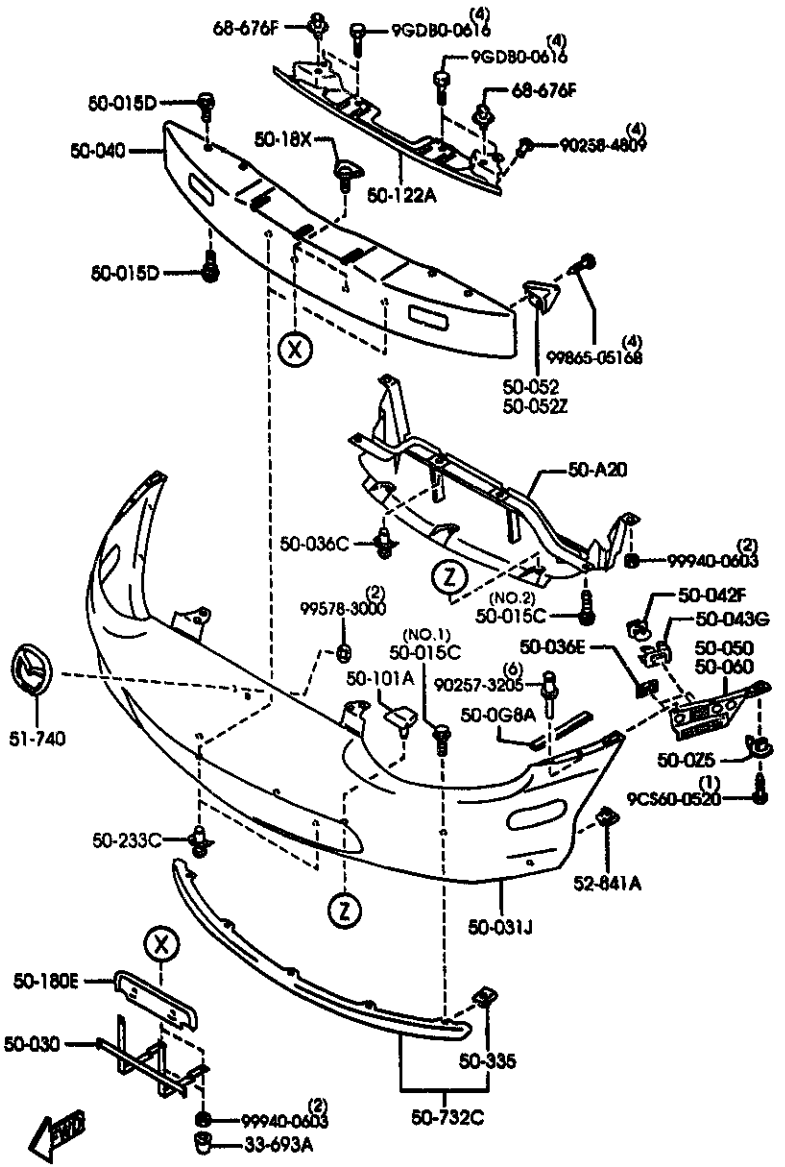

AUNA07 (1N04340)

PART NO.	QTY	MODEL/RESTRICTION	MODEL/RESTRICTION	MODEL/RESTRICTION	FROM-TO
CONT'D					
00	INT-	NB0 NB1 NB2 NB6 NB7 BLACK			

CAT. AUNA07-05 2000-01

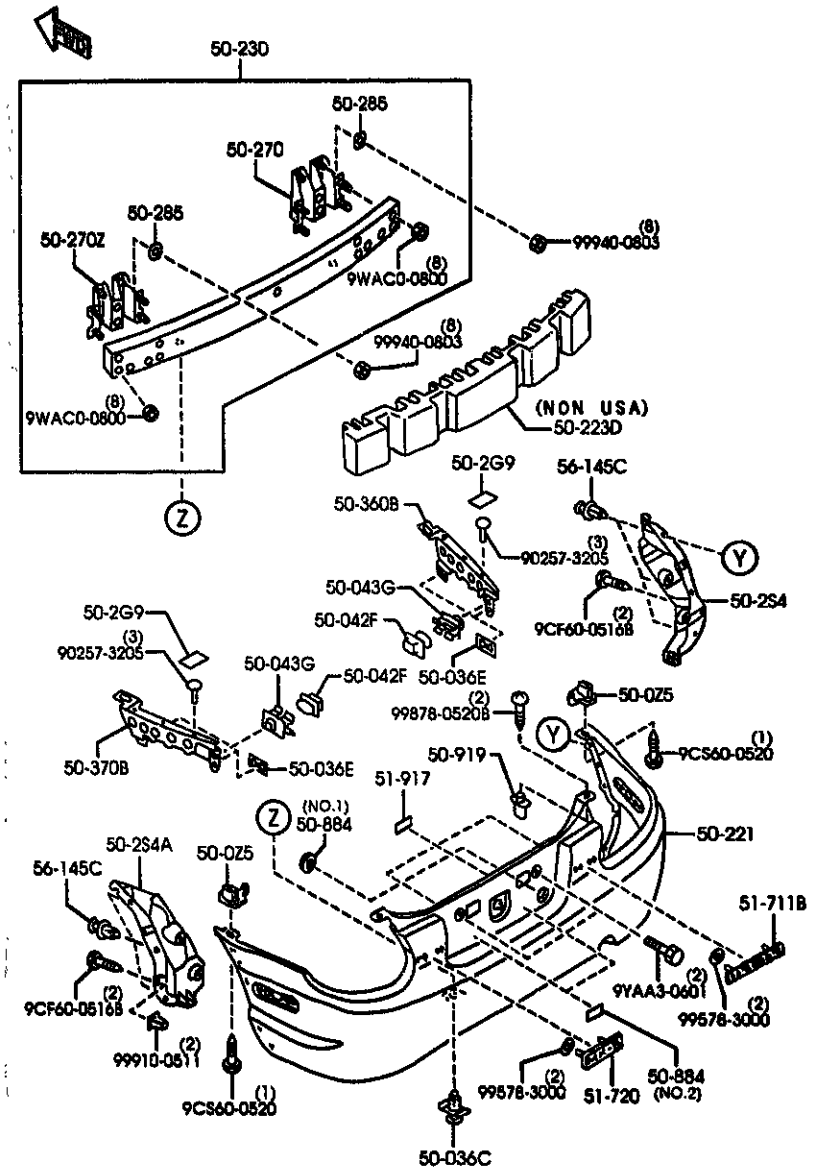

AUNA07 (1N04680)

PART NO.	QTY	MODEL/RESTRICTION	MODEL/RESTRICTION	MODEL/RESTRICTION	FROM-TO
50-025		GROMMET,SCREW			
8C1M-50-0Z5	2				
50-036C		FASTENER			
BF67-50-038	2				
50-036E		CLIP			
0J21-50-049	4				
50-042F		SLIDE'D',BUMPER			
NC10-50-E11B	2				
50-043G		SLIDE,FRONT BUMPER			
NC10-50-E13A	2				
50-2G9		SEAL,RUBBER			
NC10-50-201B AN(NC10-50-201C)	6				-8824
NC10-50-201C	2				8824-
50-2S4		SHIELD(R),SPLASH-R.BUMPER			
NC10-50-341A	1				
50-2S4A		SHIELD(L),SPLASH-R.BUMPER			
NC10-50-351A	1				
50-221		BUMPER,REAR			
NCY1-50-220E	1				
50-223D		FOAM,BUMPER-REAR			
NC13-50-311A	1	NON USA,			
50-230		REINF,BUMPER-REAR			
NC10-50-260A	1				
NC13-50-260B	1	NON USA,			
50-270		STAY(R),RR. BUMPER			
NC10-50-270	1				
50-270Z		STAY(L),RR. BUMPER			
NC10-50-204	1				

8824 MB353M-122128

CAT. AUNA87-05 2000-01

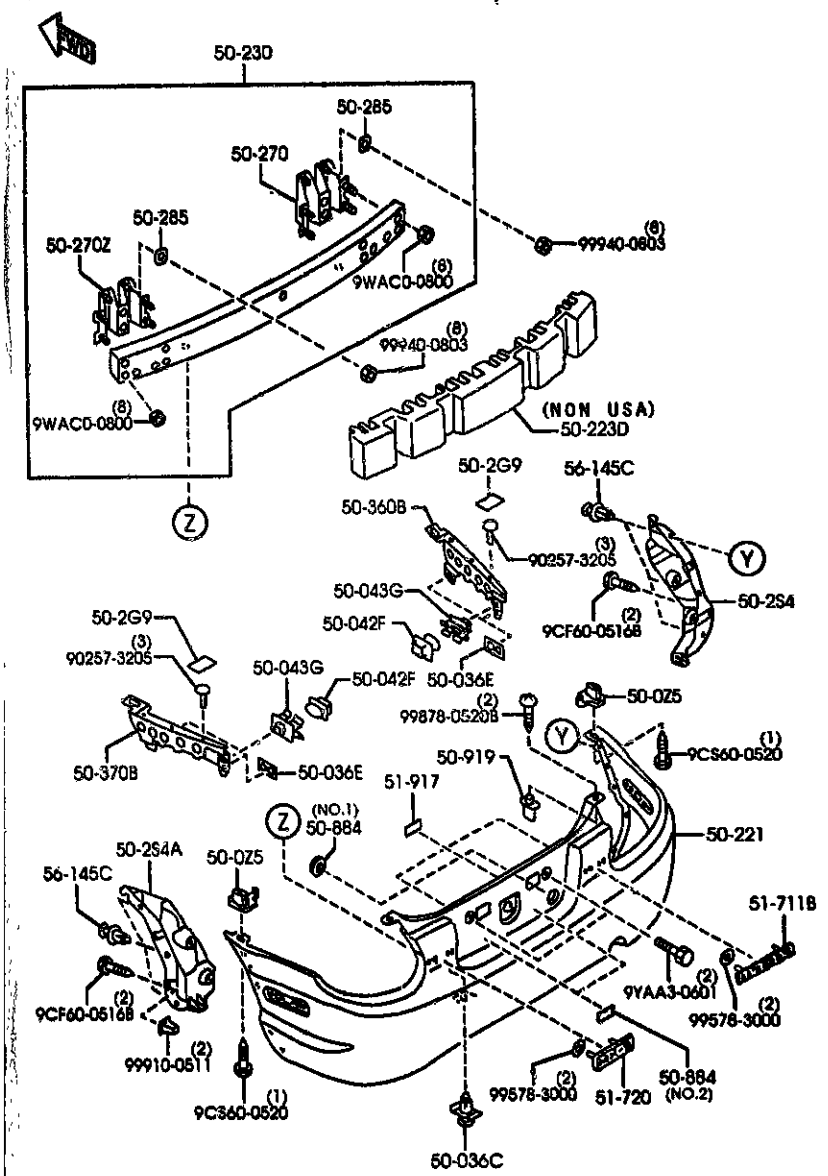

5010A -2 * REAR BUMPER

PART NO.	QTY	MODEL/RESTRICTION	MODEL/RESTRICTION	MODEL/RESTRICTION	FROM-TO
50-285		GASKET,SEAL			
G030-50-285	4				
50-360B		GUARD(R),REAR BUMPER			
NC10-50-361B	1				
50-370B		GUARD(L),REAR BUMPER			
NC10-50-371B	1				
50-884		TAPE			
NC10-50-EM1	1	(ILLUST. NO.1)			
B455-50-G32	2	(ILLUST. NO.2)			
50-919		GROMMET,SCREW-SIDE WINDOW			
B216-50-919	2				
51-711B		ORNAMENT,MAKER NAME-REAR			
NC10-51-711	1				
51-720		ORNAMENT,CAR NAME-REAR			
NC10-51-721B	1				
51-917		SEAL,RUBBER			
NC10-50-2G2	3				
56-145C		CLIP,MUD GUARD			
BC1D-56-145	6				

2-J 6

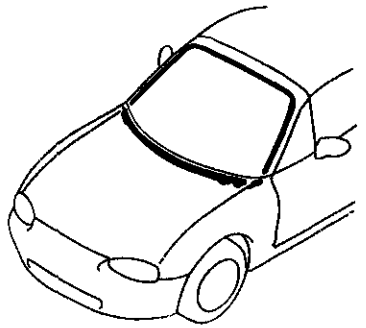

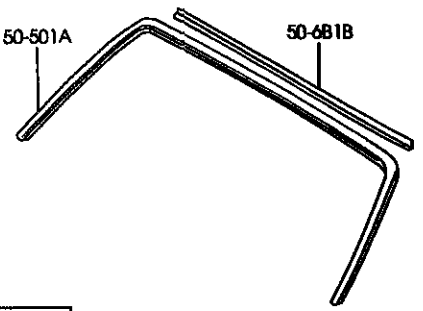

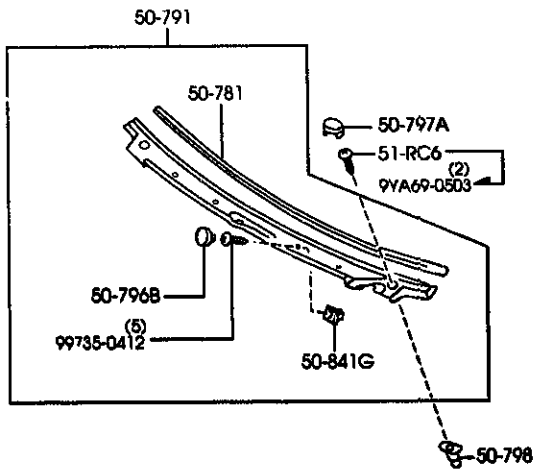

5030A -1 * WINDOW MOULDING & COWL GRILLES

PART NO.	QTY	MODEL/RESTRICTION	MODEL/RESTRICTION	MODEL/RESTRICTION	FROM-TO
50-501A NA01-50-601A	1	MOULD,FRT WINDOW-UP			
50-6B1B DX50-50-6B1	1	PROTR,MOULD-FRT WINDOW			
50-781 NA01-50-792A	1	PROTECTOR,COWL GRILLE			
50-791 NA01-50-790E	1	GRILLE,COWL			
50-796B B455-50-796A	5	CAP			
50-797A NA01-50-797A	2	CAP			
50-798 NA01-50-798	2	SCREW,GROMMET			
50-841G NA01-51-789	5	GROMMET,SCREW			
51-RC6 H272-51-RC6	2	SCREW,SIDE GARNNISH			-8A01

8A01 NB3S3*-122764

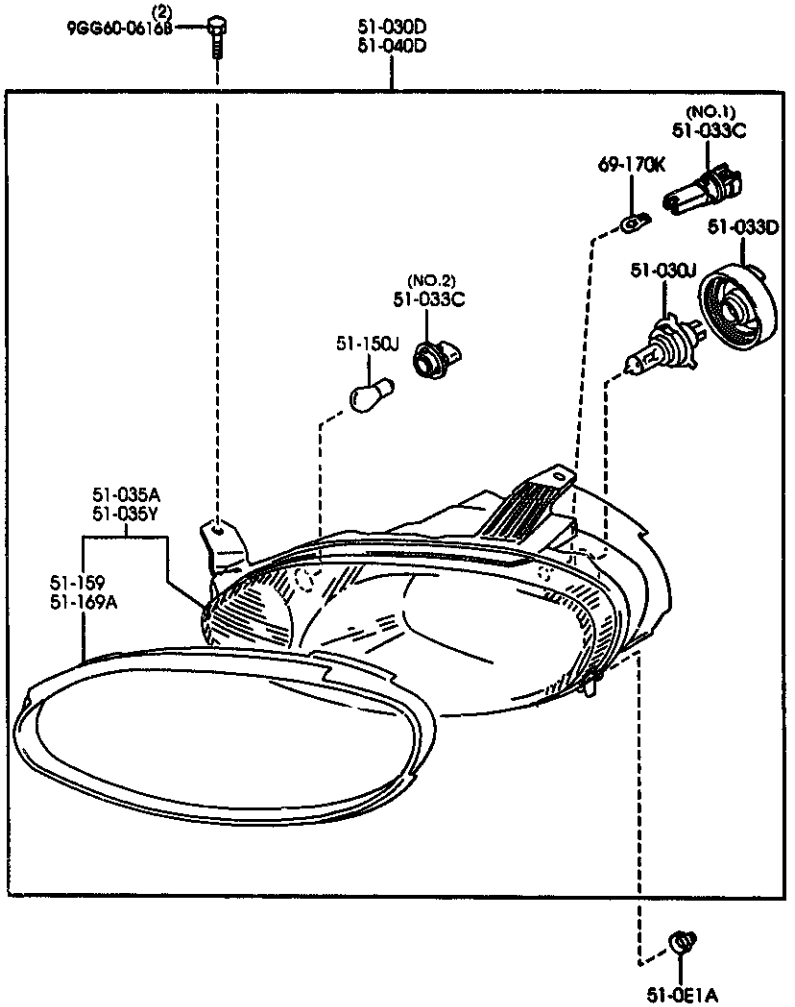

AUNA07

(1N04350)

5100A -1 * HEAD LAMPS

PART NO.	QTY	MODEL/RESTRICTION	MODEL/RESTRICTION	MODEL/RESTRICTION	FROM-TO
51-0E1A		FASTENER,LAMP			
NC13-51-025C	2				
51-030D		LAMP(R),HEAD			
NC10-51-030E	1				
51-030J		BULB			
99705-0605	2	12V 60/55W			
51-033C		SOCKET			
H432-51-0B6	2	(ILLUST. NO.1)			
NC10-51-064	2	(ILLUST. NO.2)			
51-033D		COVER,SOCKET-NO.1			
H432-51-0A1	2				
51-035A		UNIT(R),HEAD LAMP			
NC10-51-0K0E	1				
51-035Y		UNIT(L),HEAD LAMP			
NC10-51-0L0E	1				
51-040D		LAMP(L),HEAD			
NC10-51-040E	1				
51-150J		BULB			
99701-7278	2				
51-159		PROTECTOR(R),"A"			
NC10-51-0M5B	1				
51-169A		PROTECTOR(L),"A"			
NC10-51-0N5B	1				
69-170K		BULB,INTERIOR MIRROR			
99701-6050	2	12V 5W			

CAT. AUNA07-05

2000-01

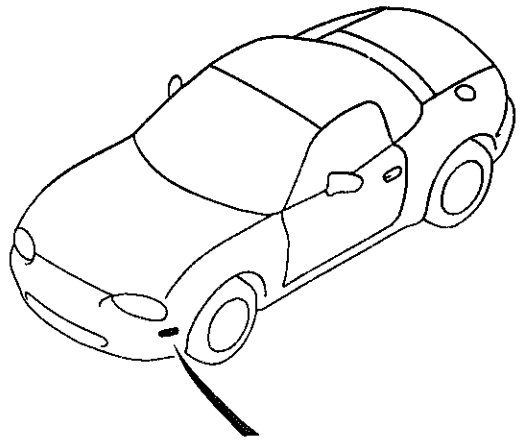

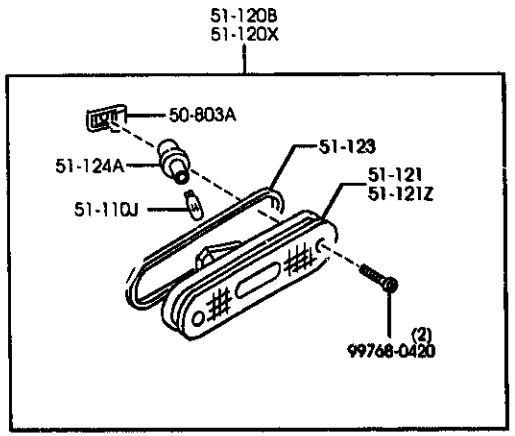

5105A -1 # FRONT COMBINATION LAMPS

PART NO.	QTY	MODEL/RESTRICTION	MODEL/RESTRICTION	MODEL/RESTRICTION	FROM-TO
50-803A		NUT,SIDE PROTECTOR			
0150-50-803	4				
51-110J		BULB			
99701-6038	2	12V 3.8W			
51-120B		LAMP SET(R),SIDE TURN			
8BM1-51-120	1				
51-120X		LAMP SET(L),SIDE TURN			
8BM1-51-130	1				
51-121		LENS & BODY(R)			
NA01-51-5EXA	1				
51-121Z		LENS & BODY(L)			
NA01-51-5FXA	1				
51-123		GASKET,SIDE TURN			
NA01-51-5D3A	2				
51-124A		SOCKET,SIDE TURN			
NA01-51-5E2	2				

5110A REAR COMBINATION LAMPS

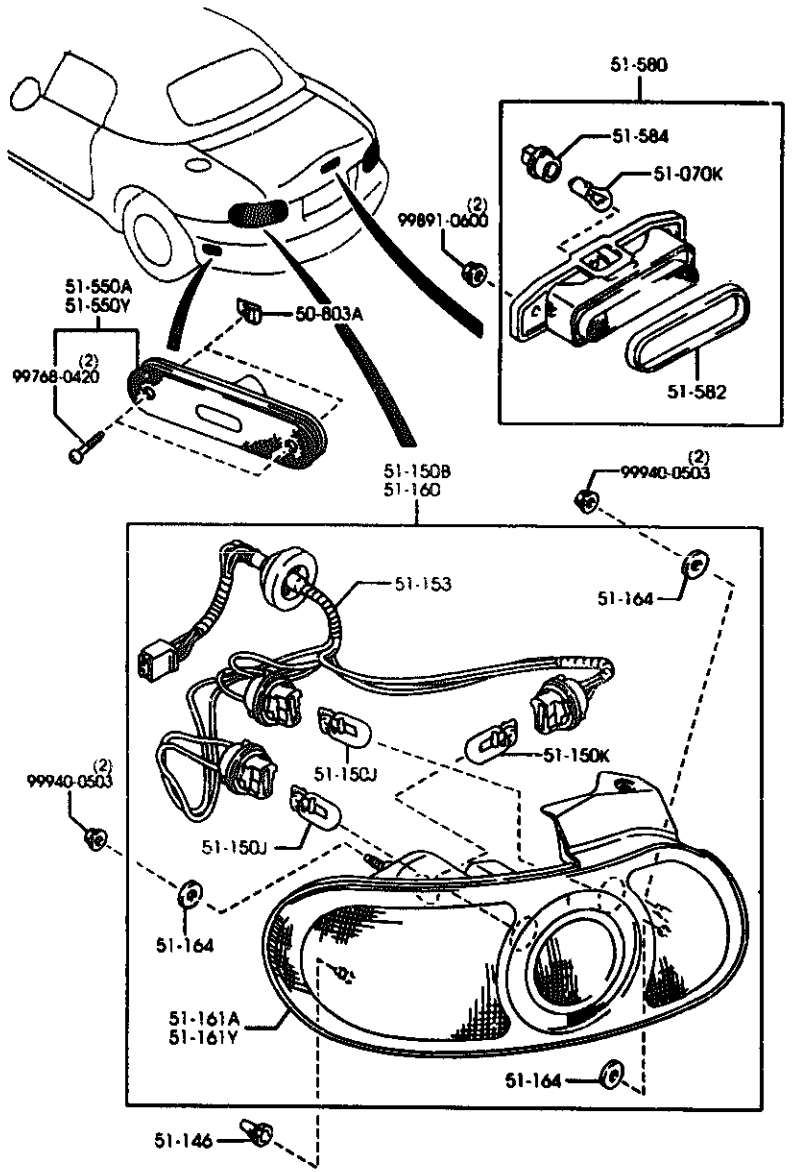

AUNA07 (1N04370)

5110A -1 REAR COMBINATION LAMPS

PART NO.	QTY	MODEL/RESTRICTION	MODEL/RESTRICTION	MODEL/RESTRICTION	FROM-TO
50-803A 0150-50-803	4	NUT,SIDE PROTECTOR			
51-070K 99701-3210	1	BULB 12V 21W			
51-146 GA78-51-146	2	GROMMET,SCREW-R.COMB			
51-150B MC10-51-150C	1	LAMP(R),RR COMB.			
51-150J 9973?-6210	4	BULB 12V 21W			
51-150K 99780-8215	2	BULB 12V 21/5W			
51-153 MC10-51-155	2	SOCKET,RR.COMB.			
51-160 MC10-51-160C	1	LAMP(L),RR COMB.			
51-161A MC10-51-170C	1	LENS & BODY(R),RR COMB.			
51-161Y MC10-51-180C	1	LENS & BODY(L),RR COMB.			
51-164 M432-51-150	6	GASKET(R),RR.COMB.			
51-550A MC10-51-5H0A	1	LAMP(R),SIDE TURN-RR			
51-550Y MC10-51-5J0A	1	LAMP(L),SIDE TURN-RR			

CAT. AUNA07-05 2000-01

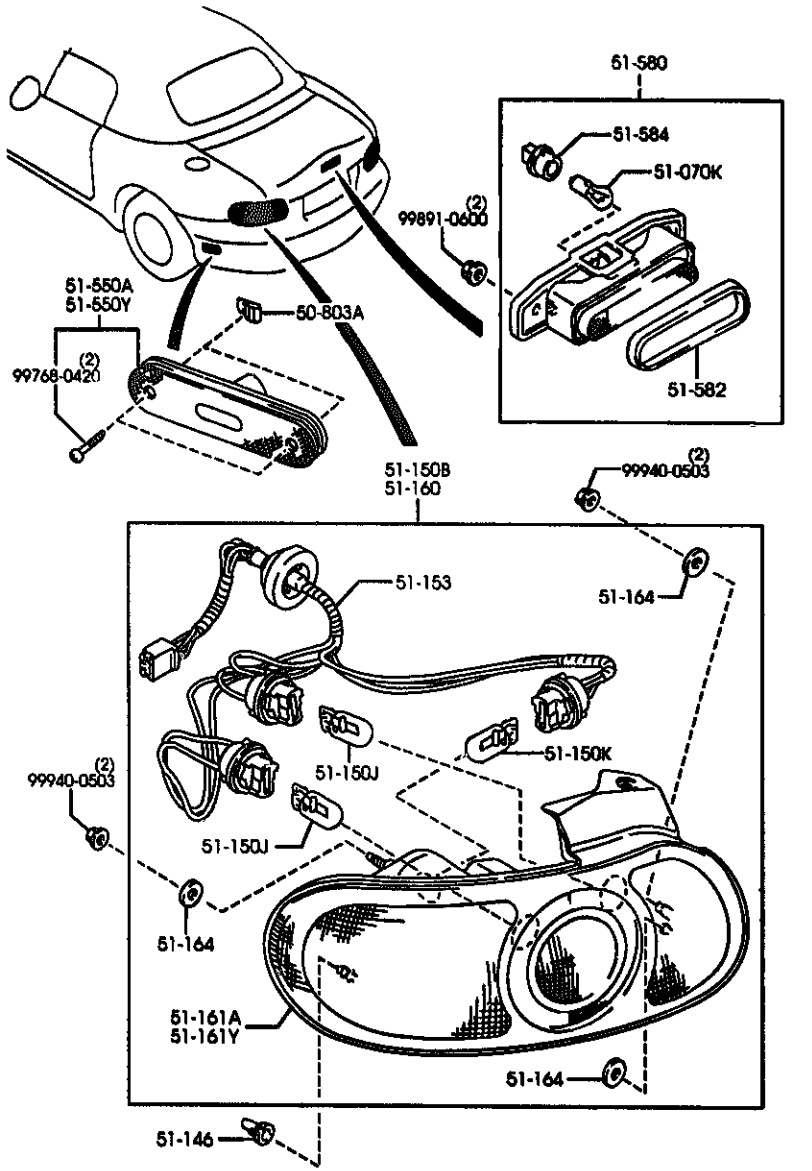

AUNA07 (1N04370)

5110A -2 * REAR COMBINATION LAMPS

PART NO.	QTY	MODEL/RESTRICTION	MODEL/RESTRICTION	MODEL/RESTRICTION	FROM-TO
51-580		LAMP,STOP-HI.MOUNT.			
MC10-51-580C	1				
51-582		GASKET,STOP LAMP-HI. MOUNT			
MC10-51-592A	1				
51-584		SOCKET,STOP LAMP-HI. MOUNT			
MA12-51-584A	1				

CAT. AUNA07-05 2000-01

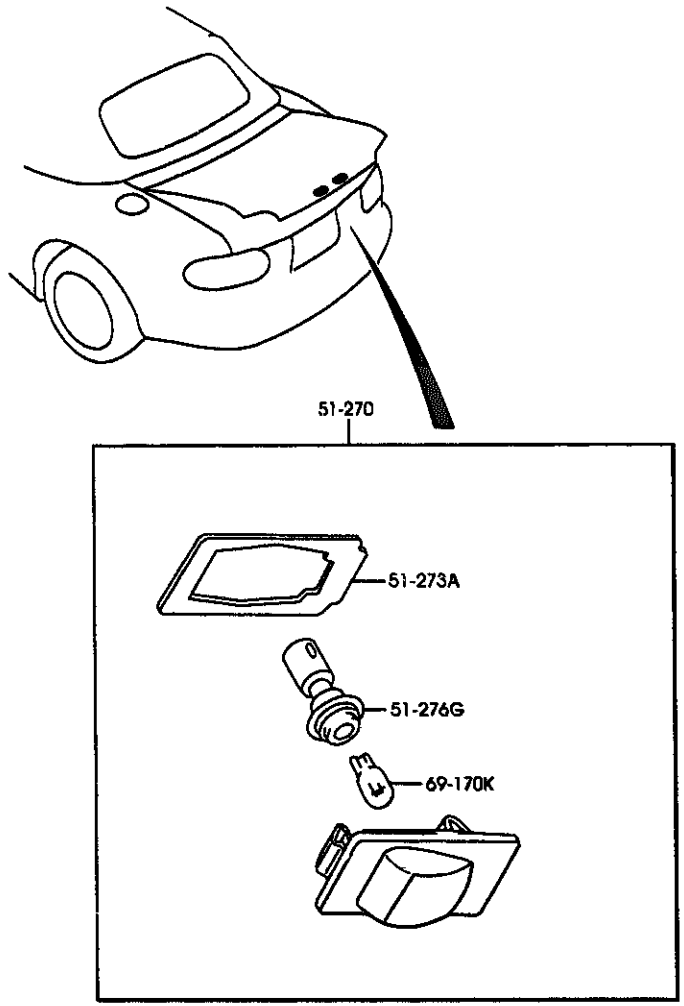

5120A -1 * LICENSE LAMPS

PART NO.	QTY	MODEL/RESTRICTION	MODEL/RESTRICTION	MODEL/RESTRICTION	FROM-TO
51-270		LAMP,LICENSE			
NC10-51-270B	2				
51-273A		GASKET,LICENSE			
NC10-51-273A	2				
51-276G		SOCKET,LICENSE LAMP			
NC10-51-272	2				
69-170K		BULB,INTERIOR MIRROR			
99701-6050	2	12V 5W			

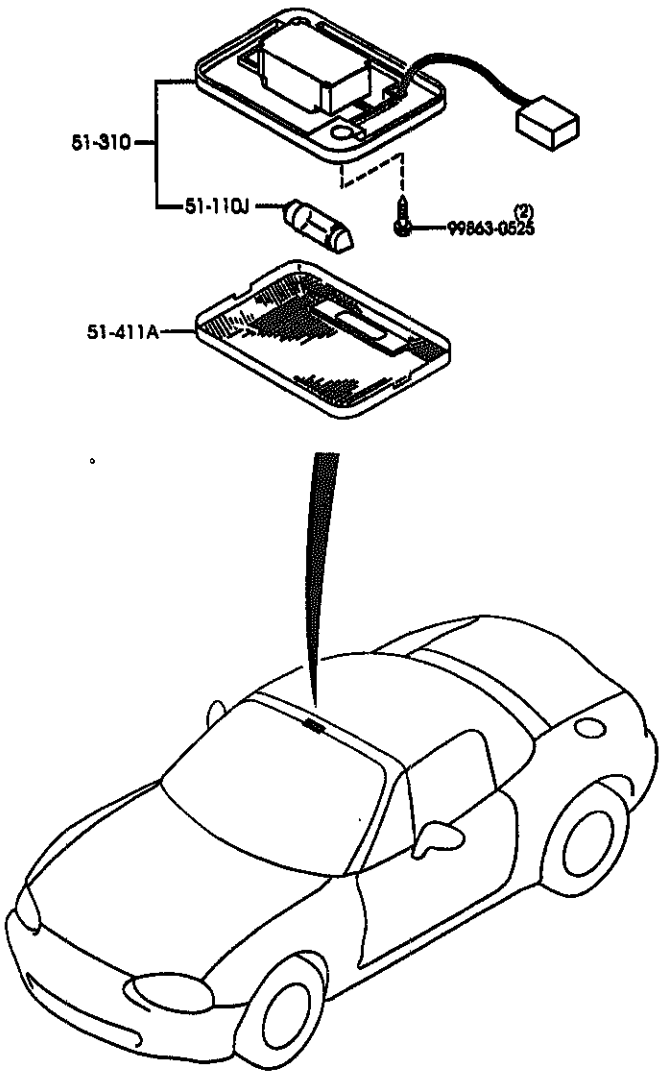

5125A -1 * INTERIOR LAMPS

PART NO.	QTY	MODEL/RESTRICTION	MODEL/RESTRICTION	MODEL/RESTRICTION	FROM-TO
51-110J		BULB			
99700-5080 AM(99700-5080L)	1	12V/8W			-8301
99700-5080L	1	12V/8W			8301-
51-310		LAMP,INTERIOR			
NB38-51-310A AM(NB38-51-310B)	1				-8301
NB38-51-310B	1				8301-
51-411A		LENS,ROOM LAMP			
NB38-51-311	1				

8301 NB3SS#-109401

AUNA07 (1N06030)

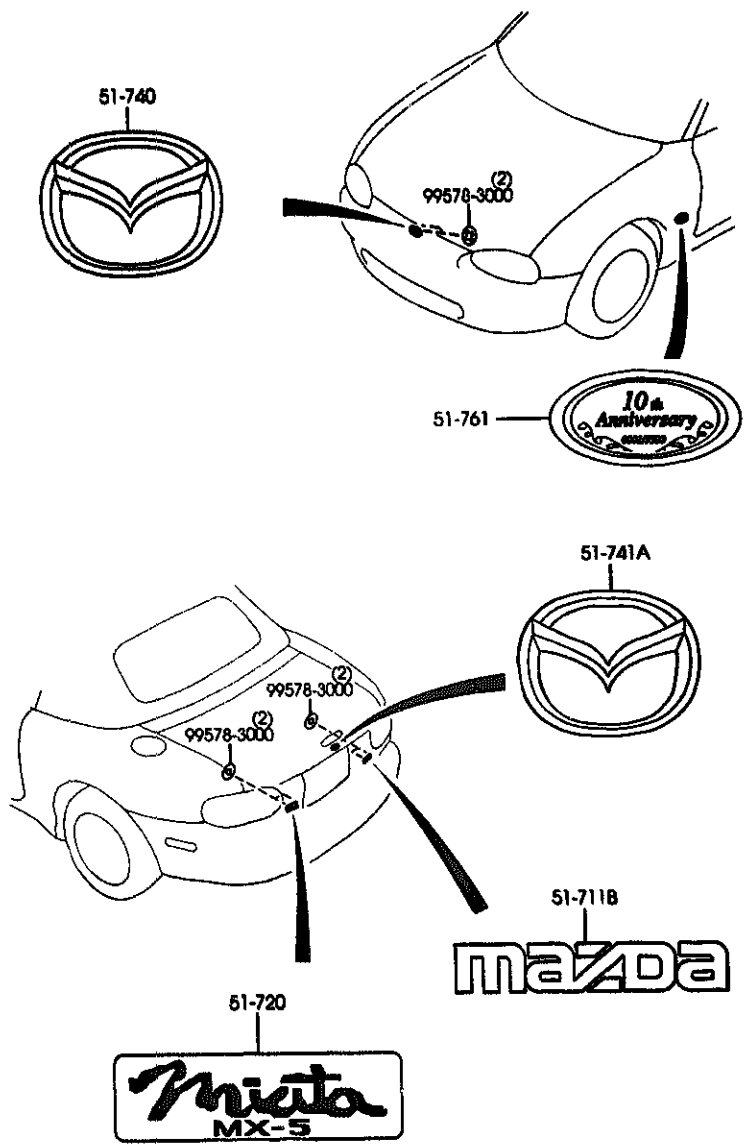

PART NO.	QTY	MODEL/RESTRICTION	MODEL/RESTRICTION	MODEL/RESTRICTION	FROM-TO
51-711B		ORNAMENT,MAKER NAME-REAR			
NC10-51-711	1				
51-720		ORNAMENT,CAR NAME-REAR			
NC10-51-721B	1				
51-740		MASCOT,FRONT			
NC10-51-731	1				
51-741A		MASCOT,REAR			
NC37-51-731A	1				
51-761		ORNAMENT,SIDE			
NH65-51-761B	1	LIMITED NO.IS REQ'RD (18TH-ANNIV.)			

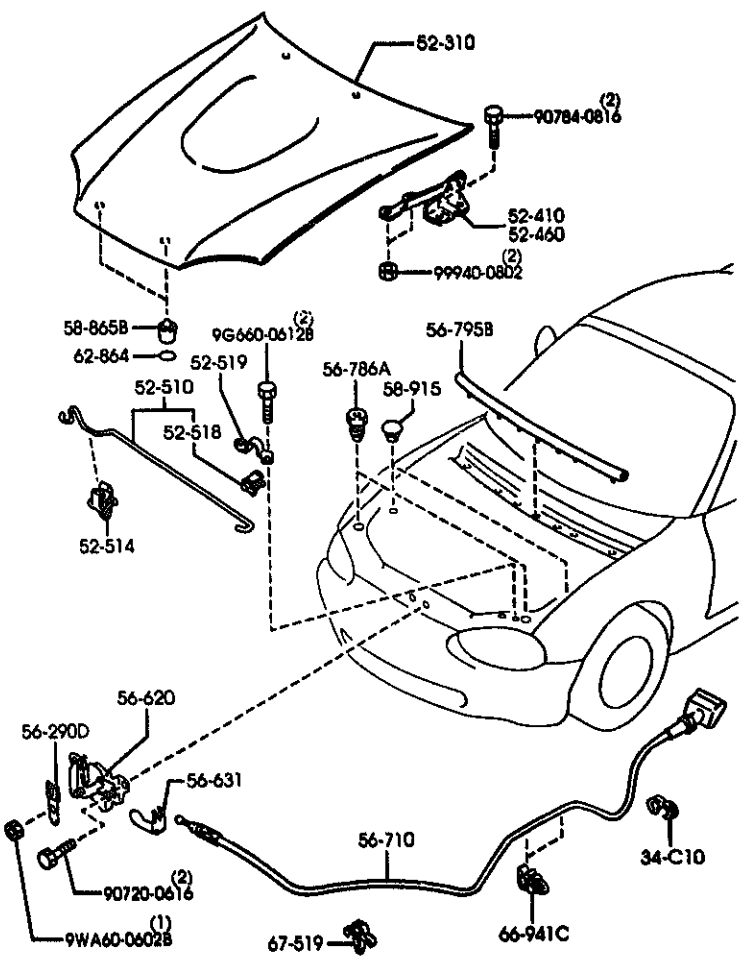

5230A -1 BONNET

PART NO.	QTY	MODEL/RESTRICTION	MODEL/RESTRICTION	MODEL/RESTRICTION	FROM-TO
34-C10		BAND,PIPE			
B214-34-C10	1				
52-310		BONNET			
NCY0-52-31XC A (NCY0-52-31XF)	1				-8801
NCY0-52-31XF	1				8801-
52-410		HINGE(R),BONNET			
NA01-52-410C A (NA01-52-410D)	1				-8401
NA01-52-410D	1				8401-
52-460		HINGE(L),BONNET			
NA01-52-420C A (NA01-52-420D)	1				-8401
NA01-52-420D	1				8401-
52-510		STAY,BONNET			
NC10-56-650B AM(NC10-56-650C)	1				-8801
NC10-56-650C AM(NC10-56-650D)	1				8801-9409
NC10-56-650D	1				9409-
52-514		HOLDER,ROD			
0030-56-693A	1				
52-518		HOLDER,BONNET STAY			
T001-56-652	1				
52-519		PLATE,SET-HOLDER			
881A-56-641	1				
56-290B		BRACKET			
NC10-56-626	1				
56-620		LOCK,BONNET			
NC10-56-620 AM(NC10-56-620A)	1				-8311
NC10-56-620A	1				8311-

8311 NB353N-110914
8401 NB353N-114005
8801 NB353N-121854
8801 NB353N-123277
9409 NB353N-137028

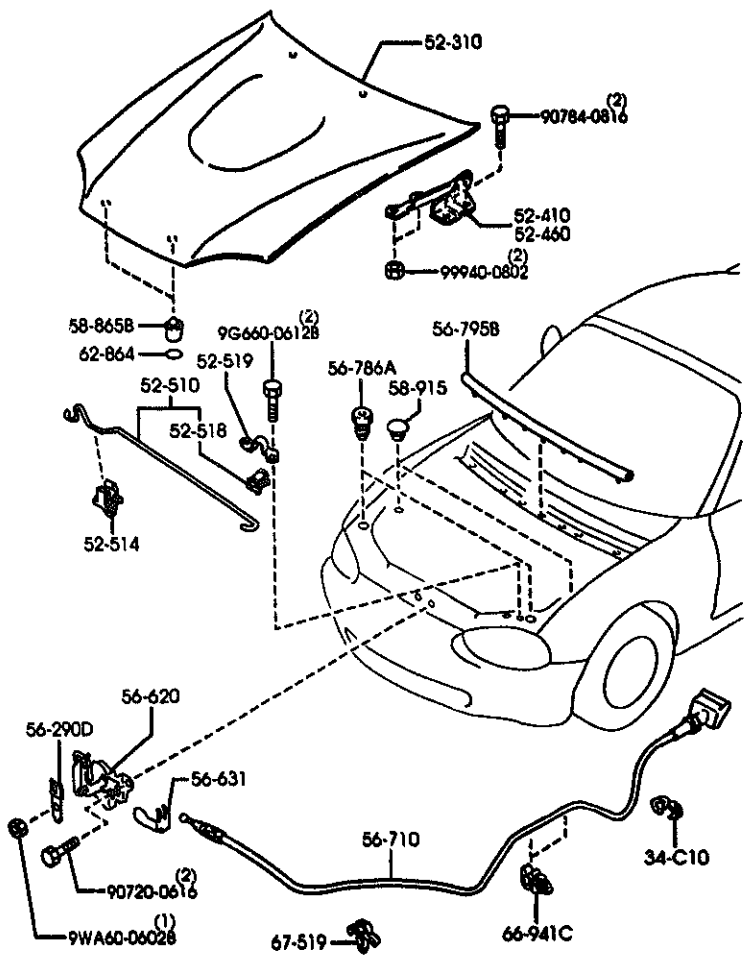

AUNA07 (1N06460)

5230A -2 * BONNET

PART NO.	QTY	MODEL/RESTRICTION	MODEL/RESTRICTION	MODEL/RESTRICTION	FROM-TO
56-631		FASTENER,BONNET RELEASE			
LA01-56-631	1				
56-710		WIRE,RELEASE-BONNET			
NC10-56-720C	1				
56-786A		RUBBER,CUSHION			
BC1M-56-786	2				
56-795B		WEATHERSTRIP,BONNET-REAR			
NC10-56-760A	1				
58-865B		CUSHION,RUBBER			
B030-58-873	2				
58-915		PLUG,HOLE			
0001-58-915	2				8901-
62-864		TAPE,PROTECTOR-STOPPER			
NC10-56-864A	2				
66-941C		CLIP			
UB42-66-971	2				
67-519		CLIP,PIPE			
0030-67-519	1				

8901 ND353*-122306

CAT. AUNA07-05 2000-01

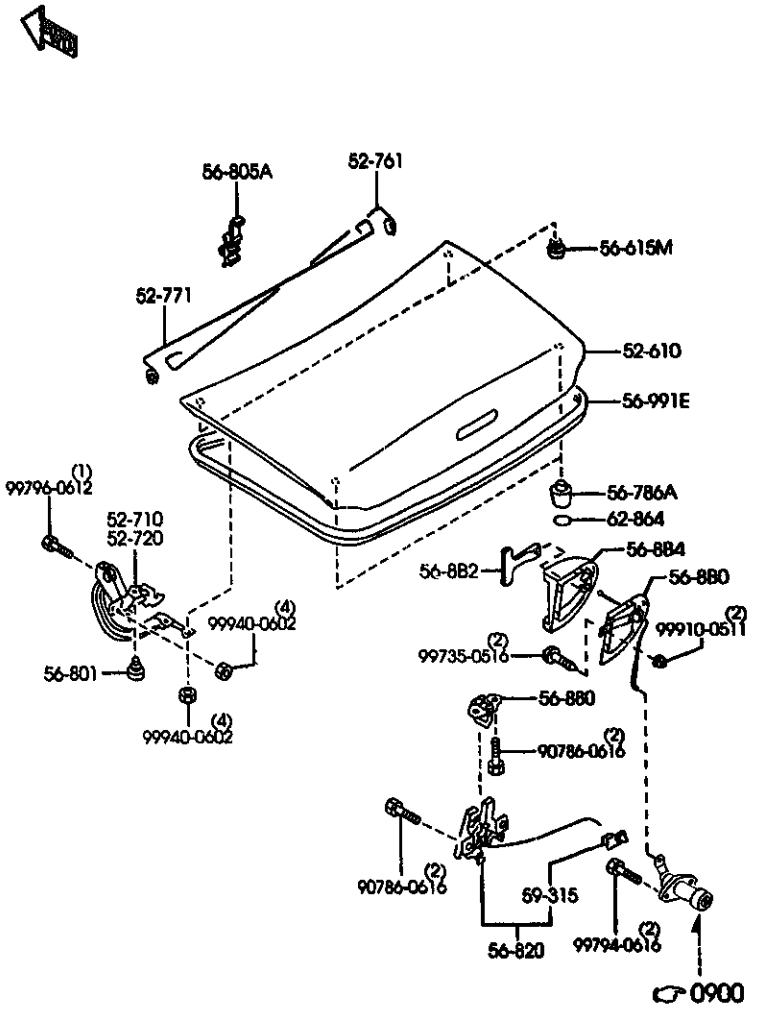

AUNA07 (1N06530)

5260A -1 TRUNK LID

PART NO.	QTY	MODEL/RESTRICTION	MODEL/RESTRICTION	MODEL/RESTRICTION	FROM-TO
52-610		LID,TRUNK			
NCY0-52-61XE AM(NCY0-52-61XF)	1				-8401
NCY0-52-61XF	1				8401-
52-710		HINGE(R),TRUNK LID			
NA01-52-710C	1				
52-720		HINGE(L),TRUNK LID			
NA01-52-720B	1				
52-761		SPRING(R),BALANCE			
NC10-52-791A	1				
52-771		SPRING(L),BALANCE			
NC10-52-792A	1				
56-615M		PLUG,DRAIN			
NA01-56-051	2				
56-786A		RUBBER,CUSHION			
B481-56-786	2				-8B01
11043-56-786	2				8B01-
56-8B8		CABLE,RELEASE			
※NC10-56-8B0	1				0201-
56-8B2		HANDLE,RELEASE			
※BJ0E-56-8B2B	1				0201-
56-8B4		BASE(L),IN REL HANDLE			
※NC10-56-8B4	1				0201-
56-801		CUSHION,LID HINGE			
NA01-56-802	2				
56-805A		HOLDER,BALANCE SPRING			
NA01-56-805	1				
56-820		LOCK,LID			
NC10-56-820A	1				-8201

8201 NR353※-186406
8401 NR353※-114005
8B01 NR553※-123277

CAT. AUNA87-05 2000-01

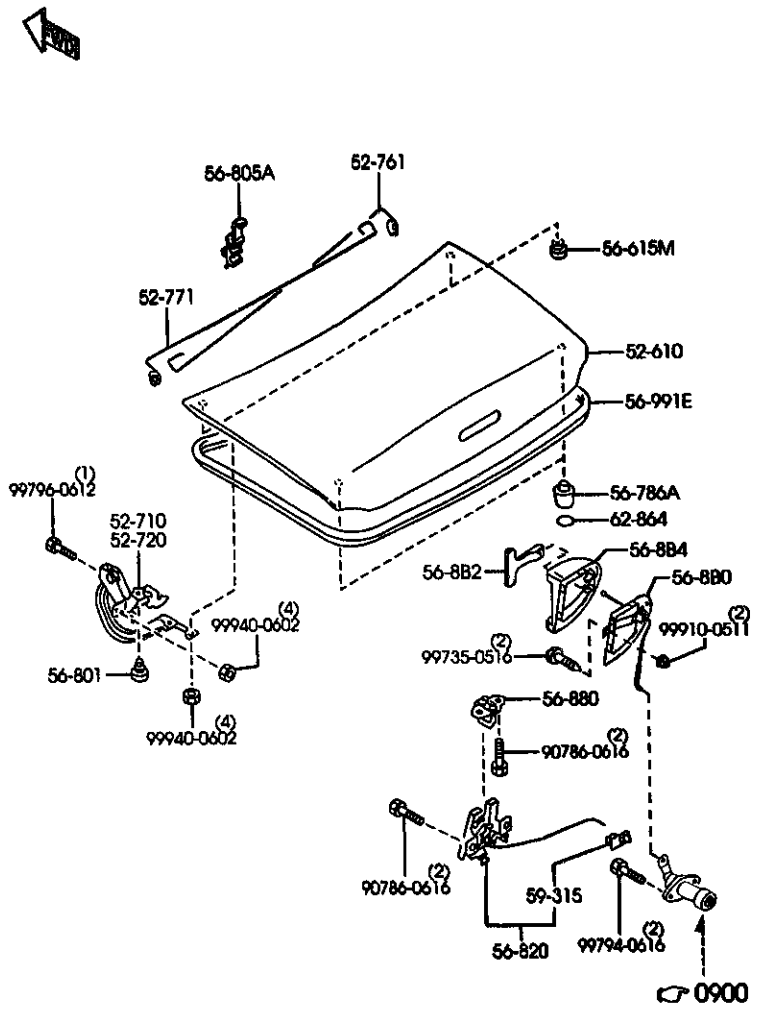

AUNA07 (1N06530)

5260A -2 * TRUNK LID

PART NO.	QTY	MODEL/RESTRICTION	MODEL/RESTRICTION	MODEL/RESTRICTION	FROM-TO
CONT'D AN(NC10-56-820B)					
NC10-56-820B	1				8201-
56-880		STRIKER,LID			
NA81-56-840	1				
56-991E		WEATHERSTRIP,LID			
NC10-56-951	1				
59-315		CLIP			
0830-59-315	1				
62-864		TAPE,PROTECTOR-STOPPER			
0843-62-864A	2				

8201 NB353*-106696

CAT. AUNA07-05 2000-01

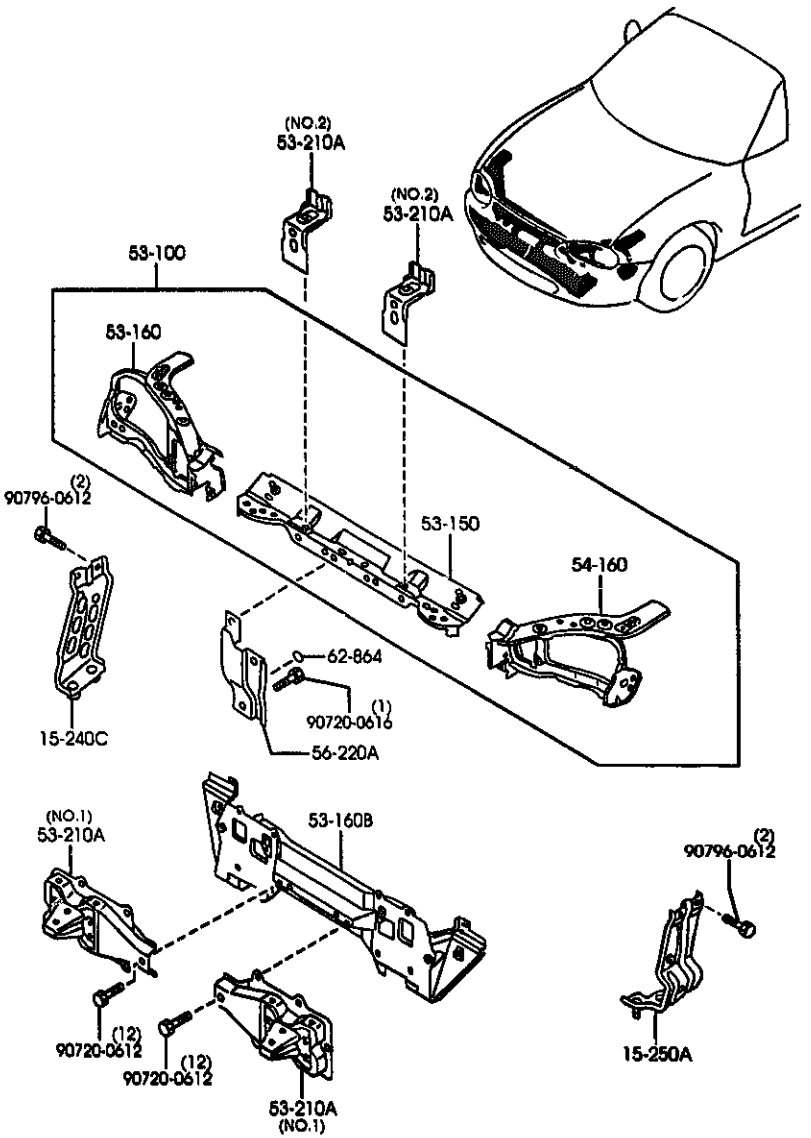

PART NO.	QTY	MODEL/RESTRICTION	MODEL/RESTRICTION	MODEL/RESTRICTION	FROM-TO
15-240C		BRACKET(R),RADIATOR			
BP4W-15-241	1				
15-250A		BRACKET(L),RADIATOR			
BP4W-15-250	1				
53-100		PANEL,SHROUD			
NC10-53-100D AN(NC10-53-100E)	1				-7C01
*NH067-53-100	1				0114-
NC10-53-100E AN(NC10-53-100F)	1				7C01-8301
NC10-53-100F AN(NC10-53-100G)	1				8301-8401
NC10-53-100G AN(NH067-53-100)	1				8401-0114
53-150		MEMBER,SHROUD-UPPER			
NC10-53-150A AN(NC10-53-150B)	1				-7C01
*NH067-53-150	1				0114-
NC10-53-150B AN(NC10-53-150C)	1				7C01-8301
NC10-53-150C AN(NC10-53-150D)	1				8301-8401
NC10-53-150D AN(NH067-53-150)	1				8401-0114
53-160		PANEL(R),SHROUD			
NCY0-53-120B	1				
53-160B		MEMBER,CROSS			
NC10-53-16XC AN(NH067-53-16X	1				-0114
*NH067-53-16X	1				0114-
53-210A		BRACKET,BUMPER			
NC10-52-12X	2	(ILLUST. NO.1)			
NC10-53-1D8A	2	(ILLUST. NO.2)			
54-160		PANEL(L),SHROUD			
NCY0-54-120B	1				

7C01 NB353*-100065
8301 NB353*-109481
8401 NB353*-114005

CAT. AUNA07-05 2000-01

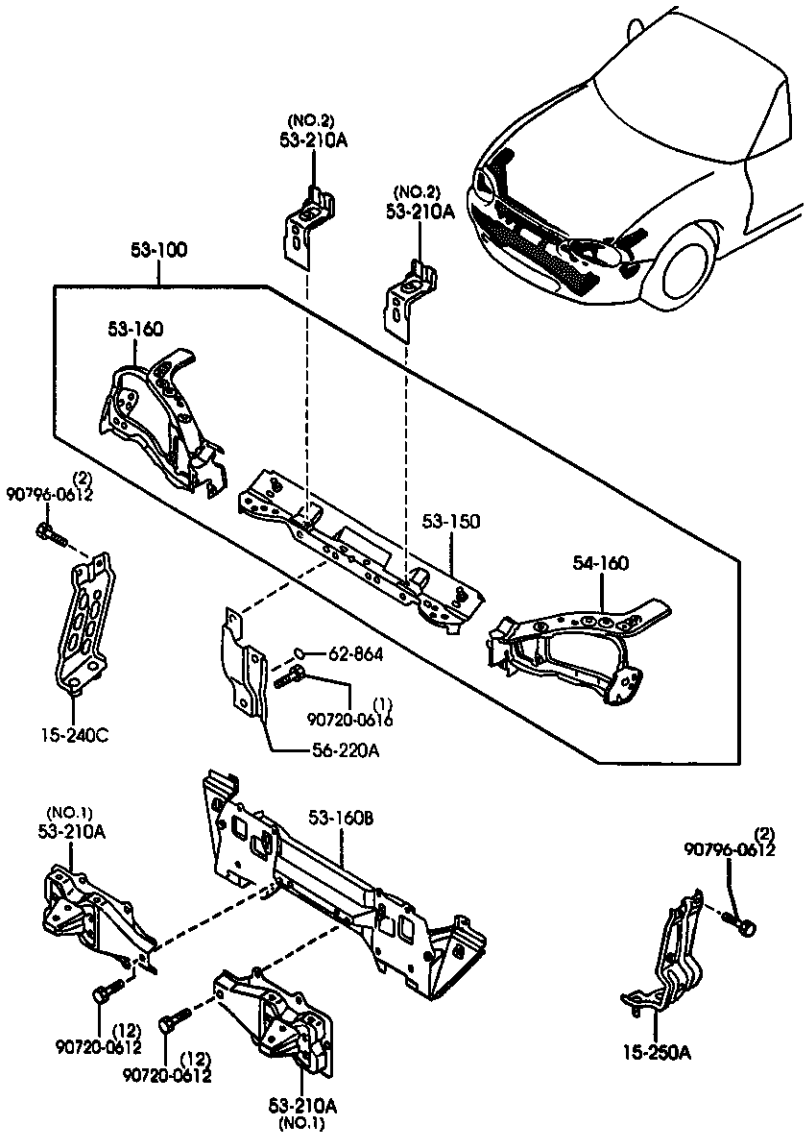

PART NO.	QTY	MODEL/RESTRICTION	MODEL/RESTRICTION	MODEL/RESTRICTION	FROM-TO
56-220A		STAY,LOCK-BONNET			
NC10-56-221A AM(NC10-56-221C)	1				-8109
NC10-56-221C AM(NB53-56-221C)	1				8109-8601
NB53-56-221C	1				8601-
62-864		TAPE,PROTECTOR-STOPPER			
8043-62-864A	1				-8601

8109 NB353*-103296
8601 NB353*-119466

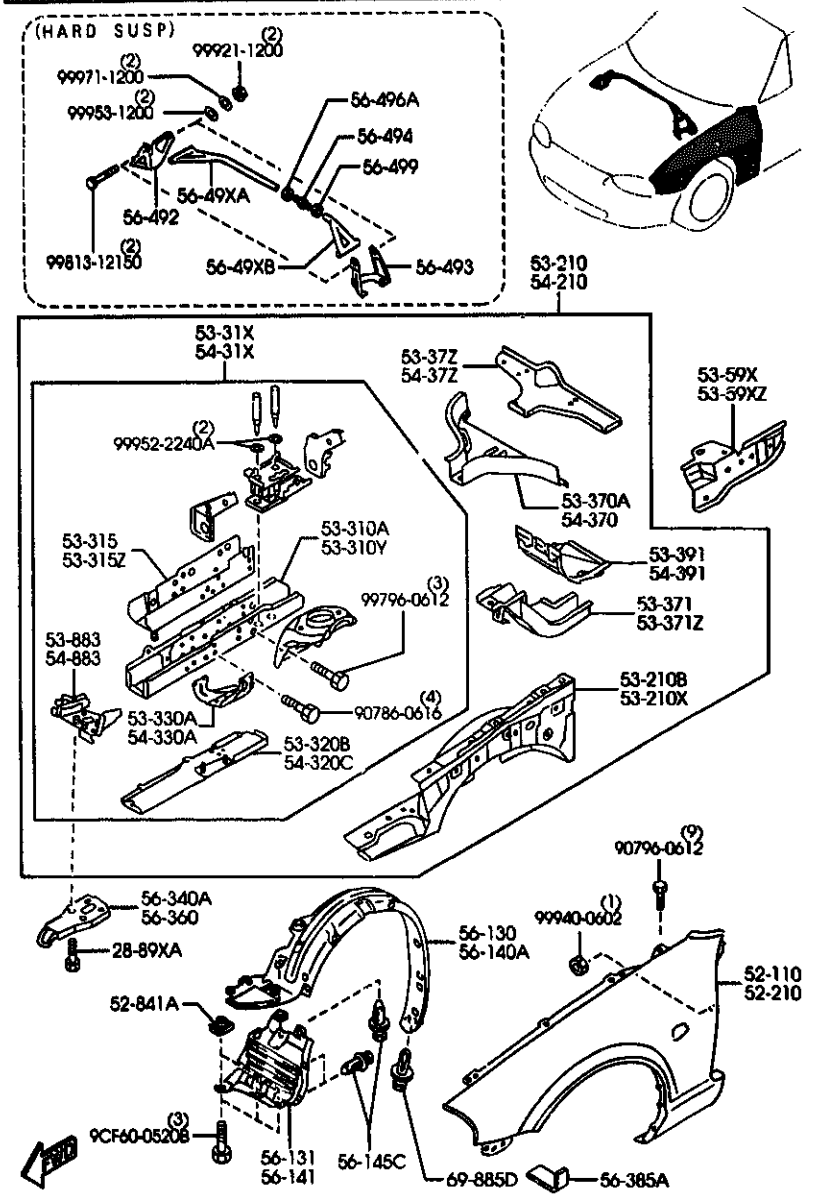

AUNA07 (1N06690)

PART NO.	QTY	MODEL/RESTRICTION	MODEL/RESTRICTION	MODEL/RESTRICTION	FROM-TO
28-89XA		BOLT,CROSS MEMBER			
6J21-28-89X	6				
52-110		PANEL(R),FENDER-FRT.			
NCY0-52-110E C0(NCY0-52-110F)	1				-8901
NCY0-52-110F	1				8901-
52-210		PANEL(L),FENDER-FRT.			
NCY0-52-210E C0(NCY0-52-210F)	1				-8901
NCY0-52-210F	1				8901-
52-841A		NUT,CLIP			
B455 56-135	6				
53-210		PANEL(R),APRON & FRAME			
NCY0-53-200A	1				
53-210B		PANEL(R),WHEEL APRON			
NC10-53-210D C (NC10-53-210E)	1				-8701
NC10-53-210E	1				8701-
53-210X		PANEL(L),WHEEL APRON			
NC10-54-210E C (NC10-54-210F)	1				-8701
NC10-54-210F	1				8701-
53-31X		FRAME(R),FRONT			
NC10-53-31XD	1				
53-310A		FRAME(R),SIDE-INNER			
NC10-53-310	1				
53-310Y		FRAME(L),SIDE-INNER			
NC10-54-310	1				
53-315		REINF.(R),FRAME-FRT SIDE			
NC10-53-35XA	1				

NCY0-52-110E
C0 NCY0-52-110F
G001-58-915
NCY0-52-210E
C0 NCY0-52-210F
G001-58-915
NC10-53-210D
C NC10-53-210E
G001-58-915
NC10-54-210E
C NC10-54-210F
G001-58-915
8701 NB353X-121022
8901 NB353W-122306

CAT. AUNA07-05 2000-01

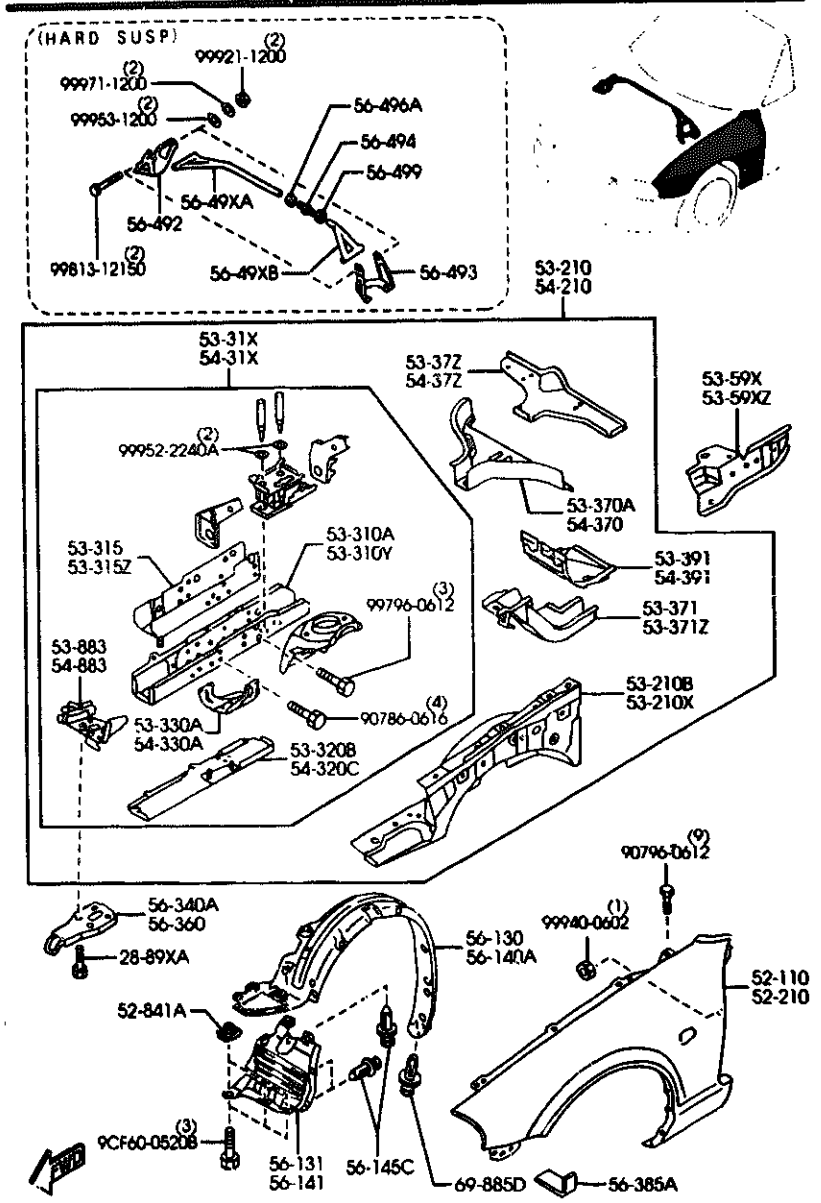

AUNA07 (1N06690)

PART NO.	QTY	MODEL/RESTRICTION	MODEL/RESTRICTION	MODEL/RESTRICTION	FROM-TO
53-315Z NC10-54-35XA	1	REINF.(L),FRAME-FRT SIDE			
53-320B NC10-53-320B	1	FRAME(R),SIDE-FRONT			
53-330A NA01-53-330	1	BRACKET(R),STABILIZER			
53-37Z NA01-53-37ZB	1	FRAME(UP.R),FRONT-REAR			
53-370A NA01-53-370A	1	GUSSET(R),FRONT FRAME			
53-371 NC10-53-390A	1	FRAME(R),BUMPER-F.SIDE			
53-371Z NC10-54-390A	1	FRAME(L),BUMPER-F.SIDE			
53-391 NA01-53-391	1	BOX(R),TORQUE			
53-59X NA01-53-591	1	REINF.(R),WHEEL APRON			
53-59XZ NA01-54-590	1	REINF.(L),WHEEL APRON			
53-883 NA01-53-32XB	1	REINF.(R),TIE DOWN HOOK			
54-210 NCY0-54-208A	1	PANEL(L),APRON & FRAME			
54-31X NC10-54-31XC	1	FRAME(L),FRONT			
54-320C NC10-54-320	1	FRAME(L),SIDE-FRONT			

CAT. AUNA07-05 2000-01

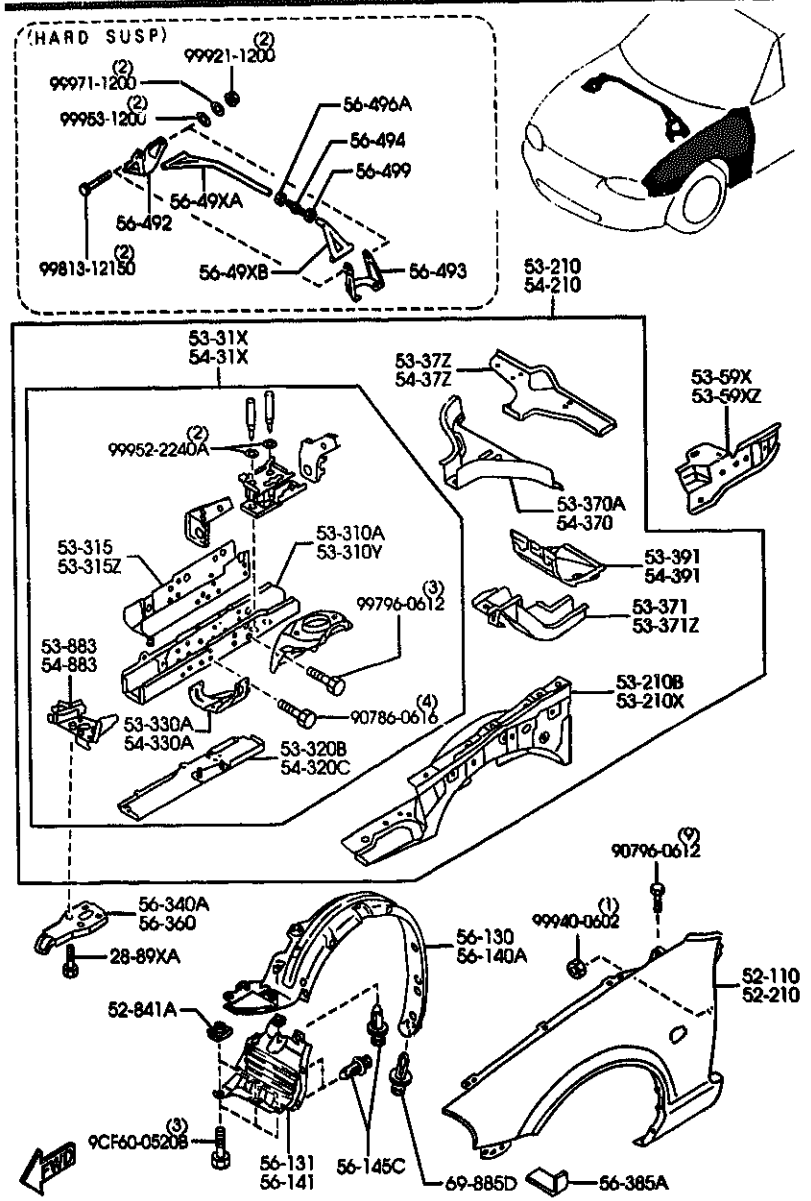

AUNA07 (1N06690)

PART NO.	QTY	MODEL/RESTRICTION	MODEL/RESTRICTION	MODEL/RESTRICTION	FROM-TO
54-330A NA01-54-330	1	BRACKET(L),STABILIZER			
54-37Z NA01-54-37ZD	1	FRAME(UP.L),FRONT-REAR			
54-370 NA01-54-370A	1	GUSSET(L),FRONT FRAME			
54-391 NA01-54-391	1	BOX(L),TORQUE			
54-883 NA01-54-32XC	1	REINF.(L),TIE DOWN HOOK			
56-130 NC10-56-131E	1	GUARD(R),MUD			
56-131 NC10-56-132E	1	SHIELD(R),SPLASH			
56-140A NC10-56-141E	1	GUARD(L),MUD			
56-141 NC10-56-142D	1	SHIELD(L),SPLASH			
56-145C BC1D-56-145	36	CLIP,MUD GUARD			
56-340A NA01-56-34XC	1	HOOK(R),TIE DOWN-FRONT			
56-360 NA01-56-34VC	1	HOOK(L),TIE DOWN-FRONT			
56-385A GA2A-56-892	2	TAPE,SEAL-F.FENDER			
56-49XA ND44-56-49Y	1	BAR(R),STRUT (HARD SUSP)			

CAT. AUNA07-05 2000-01

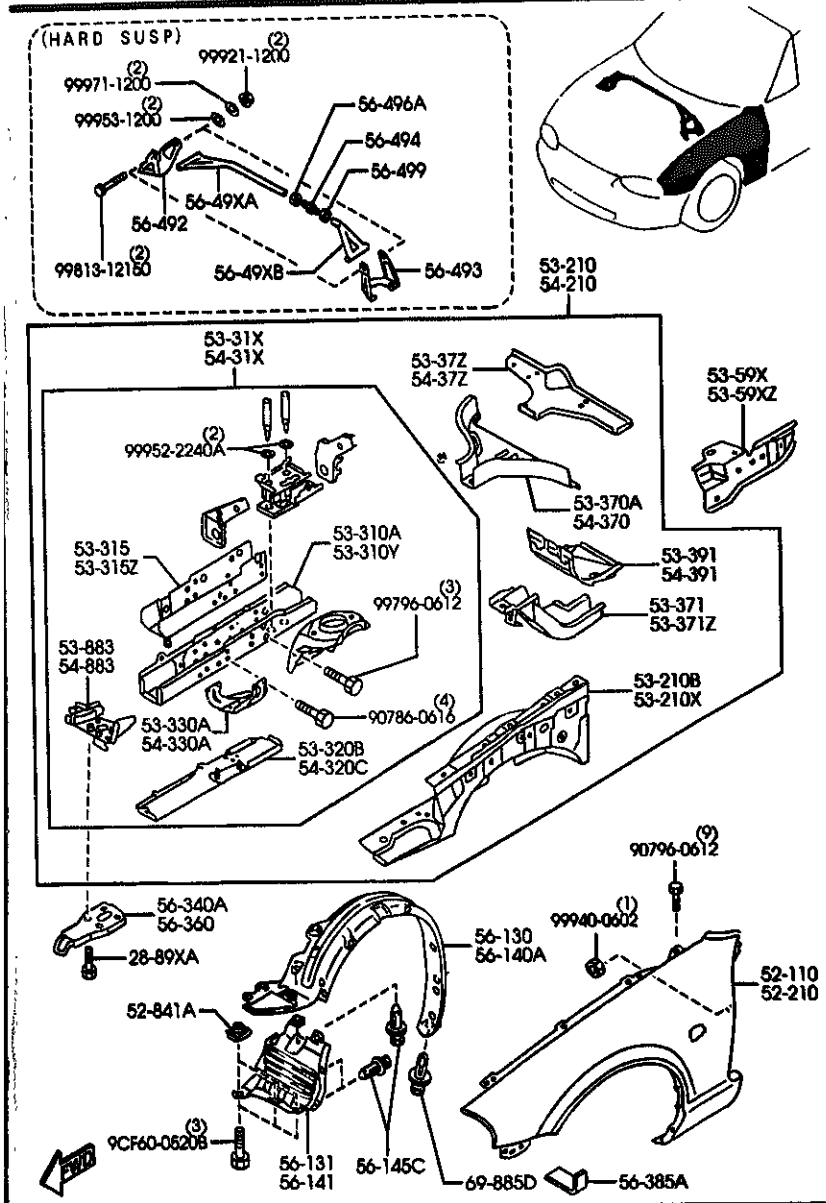

AUNA07 (1N06890)

PART NO.	QTY	MODEL/RESTRICTION	MODEL/RESTRICTION	MODEL/RESTRICTION	FROM-TO
56-49XB		BAR(L),STRUT			
N044-56-49X	1	(HARD SUSP)			
56-492		PLATE(R),STRUT BAR			
N044-56-492	1	(HARD SUSP)			
56-493		PLATE(L),STRUT BAR			
N044-56-493	1	(HARD SUSP)			
56-494		JOINT,STRUT BAR			
N021-56-494A	1	(HARD SUSP)			
56-496A		NUT(R),STRUT BAR			
N022-56-496A	1	(HARD SUSP)			
56-499		NUT(L),STRUT BAR			
N021-56-499A	1	(HARD SUSP)			
69-885D		FASTENER			
NA01-56-145	2				

CAT. AUNA07-05 2000-01

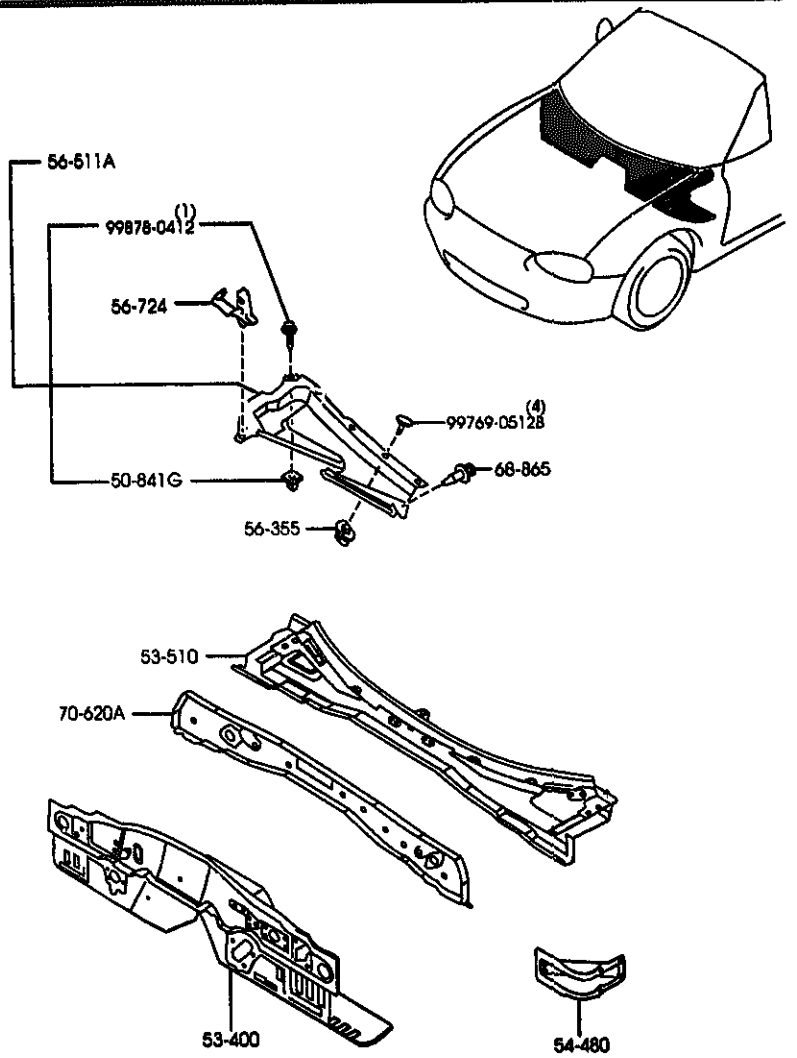

5330A -1 * DASH & COWL PANELS

PART NO.	QTY	MODEL/RESTRICTION	MODEL/RESTRICTION	MODEL/RESTRICTION	FROM-TO
50-841G		GROMMET,SCREW			
F044-51-912	1				
53-400		PANEL,DASH-LOWER			
MC10-54-400B	1				
53-510		PANEL,DASH-UPPER			
MC10-53-510A	1				
54-480		JUNCTION,DASH SIDE-S .SILL			
NA01-54-480B	2				
56-355		GROMMET,SCREW-BAFFLE			
0211-56-355A	4				
56-511A		COVER,BAFFLE-COWL PA NEL			
NA01-56-35X	1				
56-724		CLIP'B',WIRE-BONNET			
H260-56-724	1				-8501
NC18-56-833	1				8501-
68-865		FASTENER			
B048-68-865A	2				-9B01
00	INT-	NB0 NB1 NB2 NB6 NB7 BLACK			
>NB67-68-865	2				9B01-
70-620A		PANEL,COWL-FRONT			
NA01-70-62YB	1				

8501 NB353*-116870
9B01 NB353*-141489

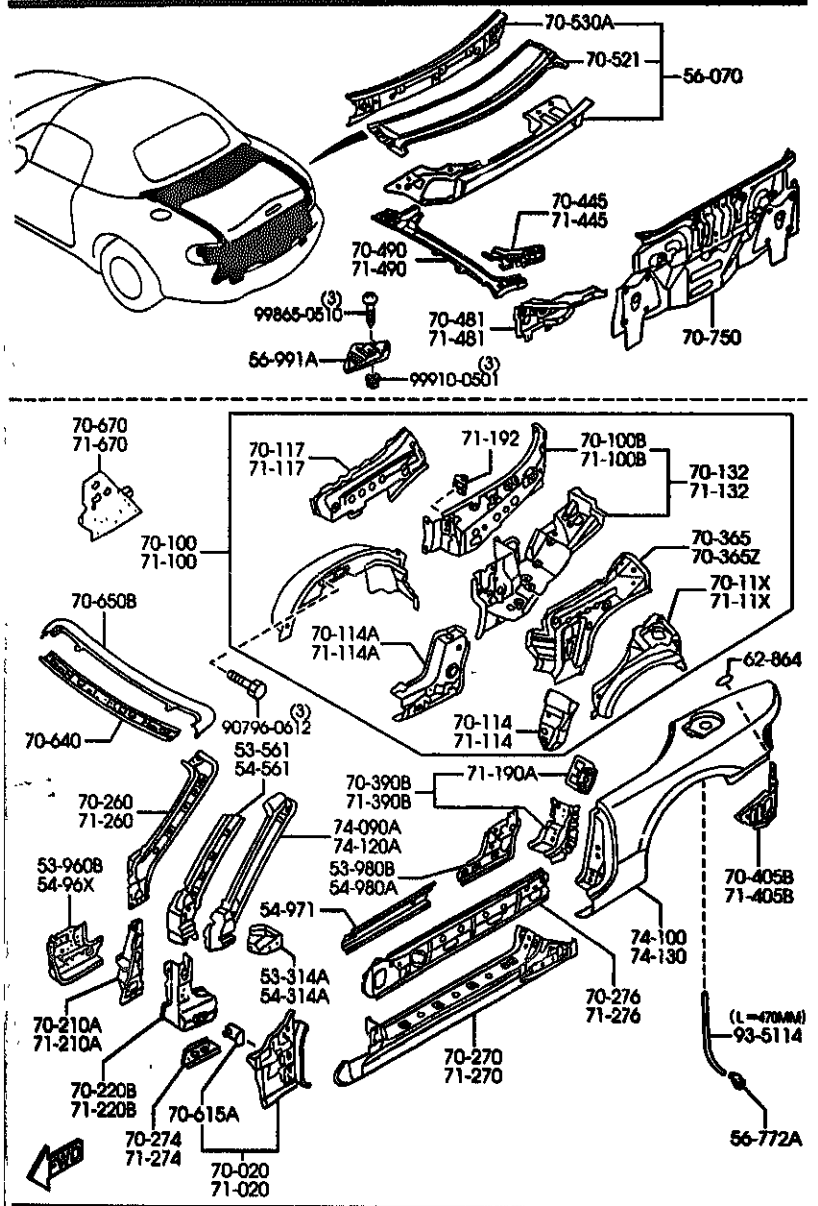

AUNA07 (1N06540)

PART NO.	QTY	MODEL/RESTRICTION	MODEL/RESTRICTION	MODEL/RESTRICTION	FROM-TO
53-314A		BRACKET(R),INST.			
NA01-70-071A	1				
53-561		REINF.(R),F. PILLAR INNER			
NC10-70-244C	1				-9B17
AN(N067-70-244)					
*N067-70-244	1				9B17-
53-960B		SILL(FRT.R),SIDE-INNER			
NA01-53-960D	1				
53-980B		SILL(RR.R),SIDE-INNER			
NA01-53-980D	1				-8901
AN(NA01-53-980E)					
NA01-53-980E	1				8901-
54-314A		BRACKET(L),INST.			
NA01-71-071A	1				
54-561		REINF.(L),F. PILLAR INNER			
NC10-71-244C	1				-9B17
AN(N067-71-244)					
*N067-71-244	1				9B17-
54-96X		SILL(FRT.L),SIDE-INNER			
NA01-54-96XC	1				
54-971		SILL(C),SIDE-INNER			
[illegible]-54-971B	2				
54-980A		SILL(RR.L),SIDE-INNER			
NA01-54-980D	1				-8901
AN(NA01-54-980E)					
NA01-54-980E	1				8901-
56-070		PANEL,BULK HEAD			
NC10-70-50Y	1				
56-772A		PIPE,DRAIN-RR FENDER			
NC10-56-4B1A	1				

8901 NB353*-122306

CAT. AUNA07-05 2000-01

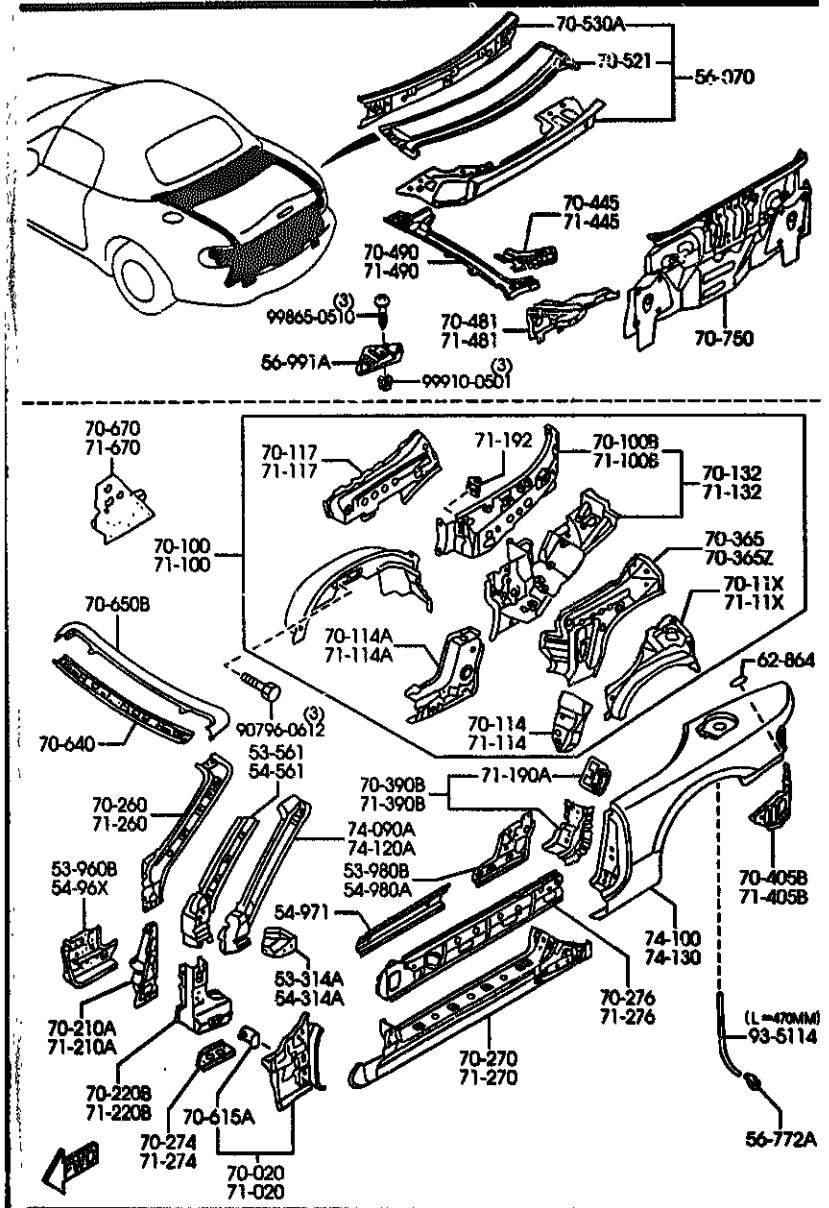

AUNA07 (1N06540)

PART NO.	QTY	MODEL/RESTRICTION	MODEL/RESTRICTION	MODEL/RESTRICTION	FROM-TO
56-991A		COVER,SERVICE HOLE			
NA01-56-971	1				
62-864		TAPE,PROTECTOR-STOPPER			
*G043-62-864A	2				9A01-
70-020		PANEL(R),COWL SIDE			
NC10-70-020	1				
70-190		PANEL(R),QUARTER			
NC10-70-190	1				
70-190B		PANEL(R),INSIDE			
NA01-70-19XE	1				-8113
AN(NAC1-70-19XF)					
NA01-70-19XF	1				8113-
70-11X		PILLAR(R),REAR-INNER			
NCY0-70-11X	1				
70-114		PLATE(R),END			
NC10-70-112A	1				
70-114A		JUNCTION(R),CORNER			
NC10-70-1AXA	1				
70-117		REINF.(R),QUARTER PANEL			
NC10-70-117	1				-8113
AN(NC10-70-117A)					
NC10-70-117A	1				8113-
70-132		JUNCTION(R),QUARTER PANEL			
NC10-70-1X0	1				
70-210A		PILLAR(R),HINGE			
NA01-70-230C	1				
70-220B		REINF.(R),HINGE-UPPER			
NC10-70-200A	1				-8901
AN(NC10-70-200B)					
*N067-70-280	1				0114-

8113 NB353*-103843
8901 NB353*-122306

CAT. AUNA07-05 2000-01

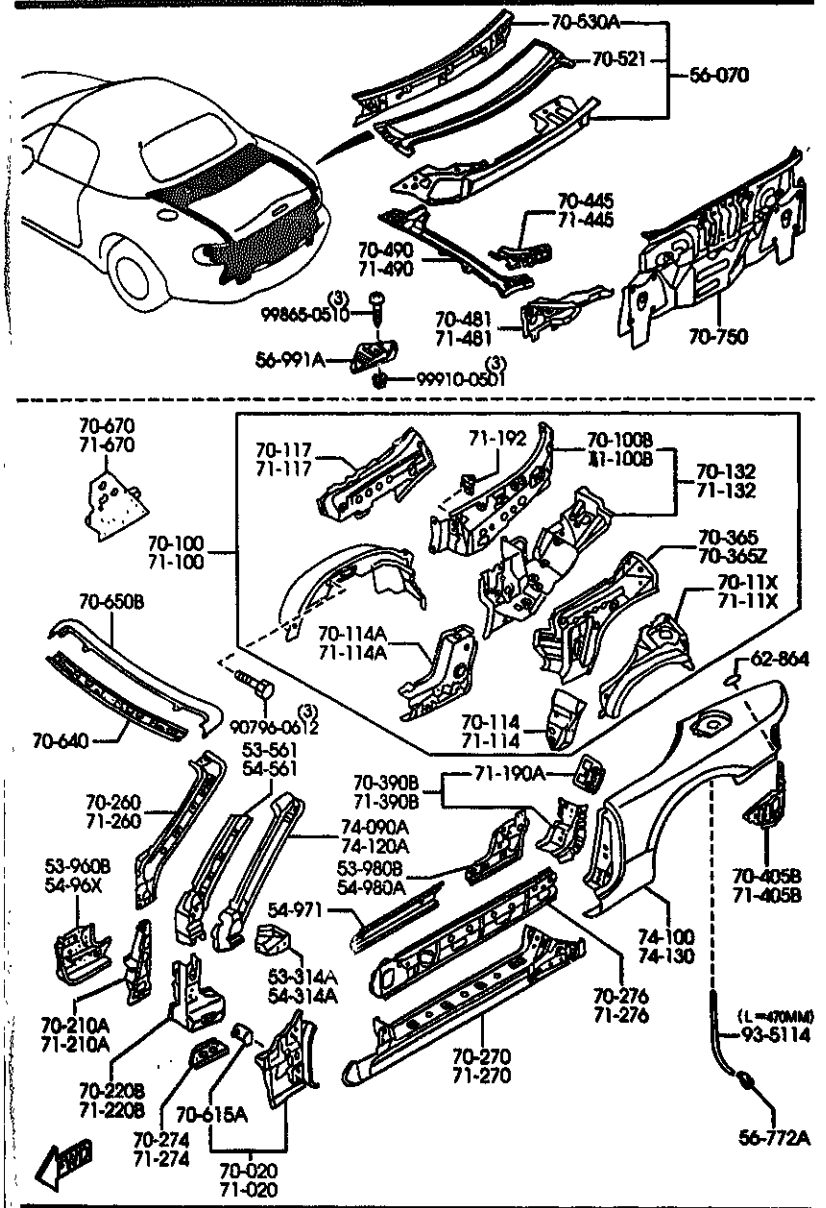

AUNA07 (1N06540)

PART NO.	QTY	MODEL/RESTRICTION	MODEL/RESTRICTION	MODEL/RESTRICTION	FROM-TO
CONT'D					
NC10-70-280B AN(NB67-70-280)	1				8901-0114
70-260		PILLAR(R),FRT.-INNER			
NC10-70-240A	1				
70-270		PANEL(R),SIDE SILL			
NC10-70-270D	1				
70-274		GUSSET(R),SIDE SILL OUTER			
NA01-70-274	1				
70-276		REINF.(R),SIDE SILL			
NC10-70-272A	1				
70-365		REINF.(R),BELT LINE-C.PIL			
NA01-70-116C AN(NA01-70-116B)	1				-7C01
NA01-70-116D	1				7C01-
70-365Z		REINF.(L),BELT LINE-C.PIL			
NA01-71-116E AN(NA01-71-116F)	1				-7C01
NA01-71-116F	1				7C01-
70-390B		REINF.(R),STRIKER			
NC10-70-460B	1				
70-405B		PANEL(R),RR FENDER-LOWER			
NCY0-70-4A0	1				
70-445		GUSSET(R),REAR FENDER-RR			
NC10-70-4A5B	1				
70-481		PLATE(R),CORNER			
NC10-70-481B	1				
70-490		RAIL(R),RAIN-REAR			
NC10-70-440A	1				
70-521		PANEL,REAR DECK			
NA01-70-521A	1				

7C01 NB353M-100043
8901 NB353M-122306

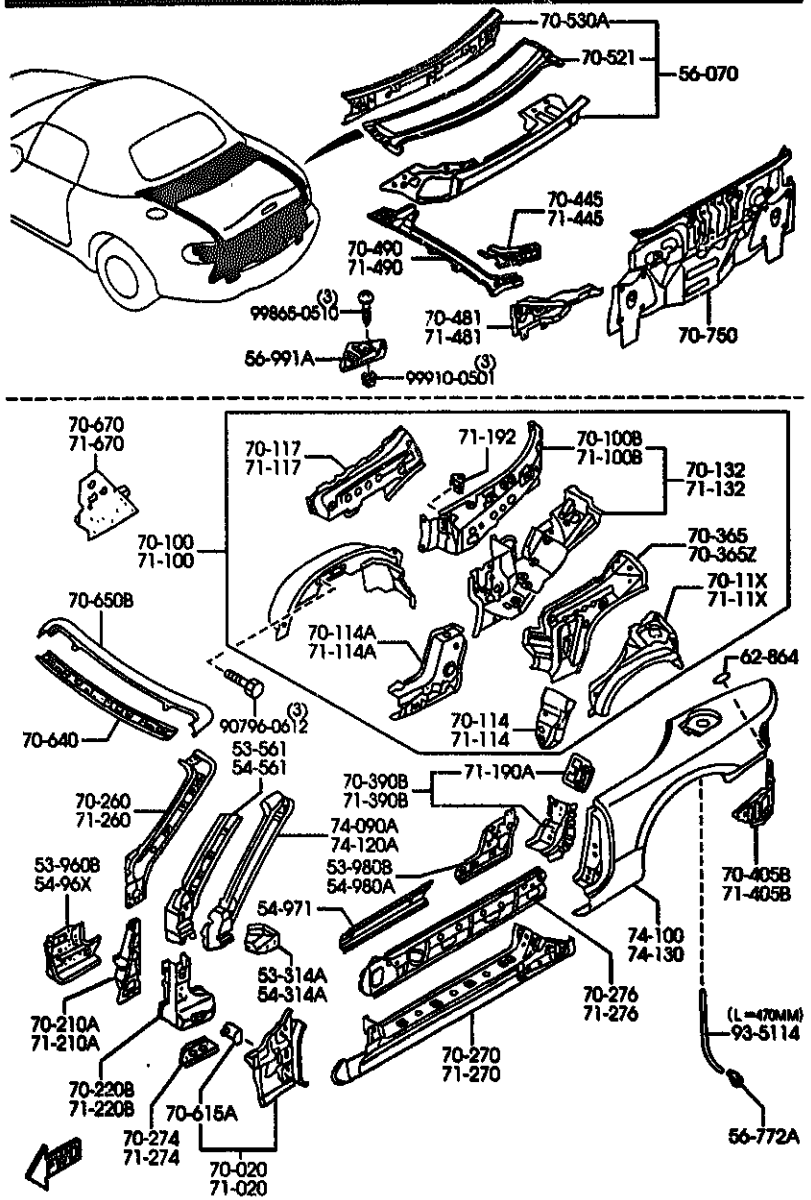

AUNA07 (1N06540)

PART NO.	QTY	MODEL/RESTRICTION	MODEL/RESTRICTION	MODEL/RESTRICTION	FROM-TO
70-530A NA01-70-530D	1	MEMBER,REAR DECK			
70-615A 8892-70-070A	2	BRACKET,FENDER			
70-640 NB38-70-640A	1	HEADER,FRONT			
70-650B NA01-70-650	1	HEADER,FRONT-UPPER			
70-670 NA01-70-670C	1	PLATE(R),CLOSING-QTR PANEL			
70-750 NC10-70-750B AM(NC10-70-750C)	1	PANEL,REAR END			-0201
NC10-70-750C	1				0201-
71-020 NC10-71-020	1	PANEL(L),COWL SIDE			
71-100 NC10-71-100	1	PANEL(L),QUARTER			
71-100B NA01-71-19XE AM(NA01-71-19XF)	1	PANEL(L),INSIDE			-8113
NA01-71-19XF	1				8113-
71-11X NCY0-71-11X	1	PILLAR(L),REAR INNER			
71-114 NC10-71-112A	1	PLATE(L),END			
71-114A NC10-71-1AXA	1	JUNCTION(L),CORNER			
71-117		REINF.(L),QUARTER PANEL			

8113 NB353#-103043

CAT. AUNA07-05 2000-01

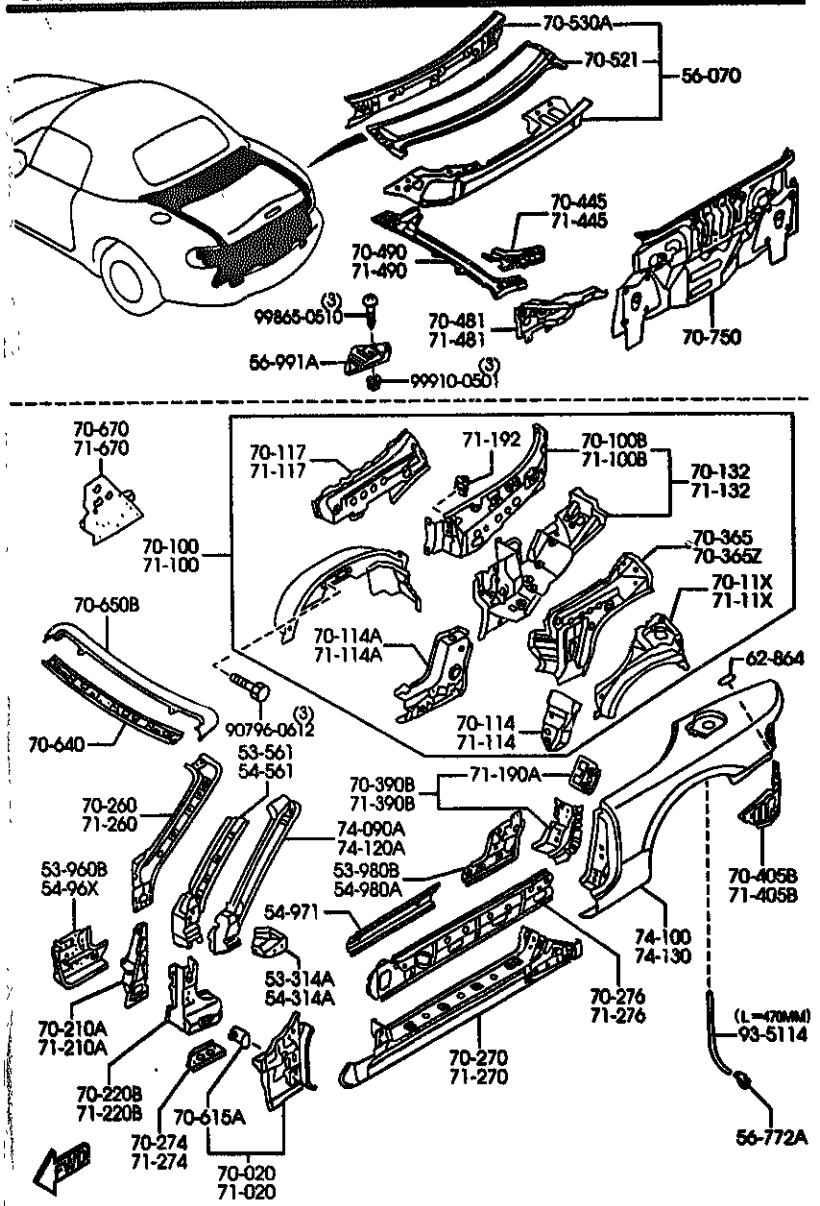

AUNA07 (1N06540)

PART NO.	QTY	MODEL/RESTRICTION	MODEL/RESTRICTION	MODEL/RESTRICTION	FROM-TO
CONT'D					
MC10-71-117 AM(MC10-71-117A)	1				-8113
MC10-71-117A	1				8113-
71-152		JUNCTION(L),QUARTER PANEL			
MC10-71-1X0	1				
71-190A		PLATE,NUT			
*GE4T-70-46X	2				
71-192		BRKT,CAP-QUARTER PANEL			
NA01-71-192	2				
71-210A		PILLAR(L),HINGE			
NA01-71-230C	1				
71-220B		REINF(L),HINGE-UPPER			
MC10-71-280A AM(MC10-71-280B)	1				-8901
*NH67-71-280	1				0114-
MC10-71-280B AM(NH67-71-280)	1				8901-0114
71-260		PILLAR(L),FRT.-INNER			
MC10-71-240A	1				
71-270		PANEL(L),SIDE SILL			
MC10-71-270D	1				
71-274		GUSSET(L),SIDE SILL OUTER			
NA01-71-274	1				
71-276		REINF.(L),SIDE SILL			
MC10-71-272A	1				
71-390B		REINF.(L),STRIKER			
MC10-71-460B	1				
71-405B		PANEL(L),RR FENDER-LOWER			
MC10-71-4A1B	1				

8113 NB353*-103843
8901 NB353*-122306

CAT. AUNA07-05 2000-01

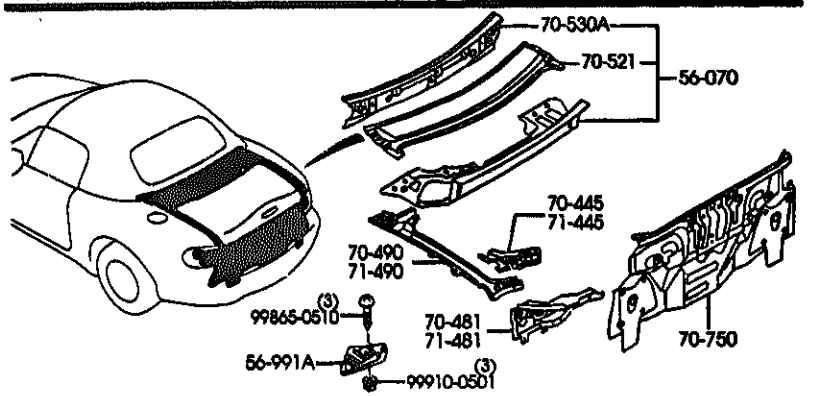

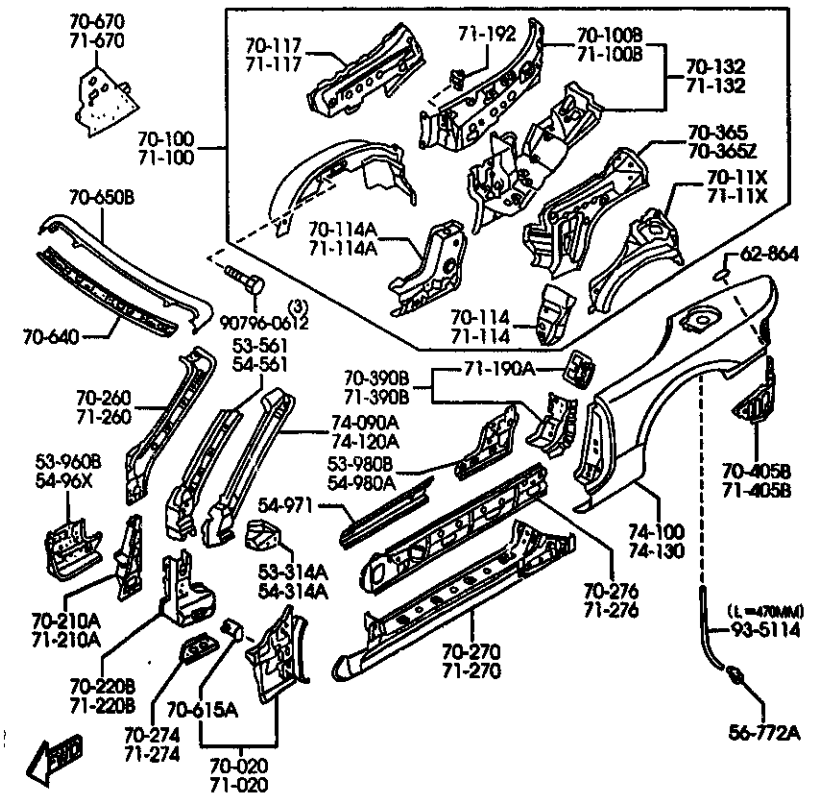

AUNA07 (1N06540)

PART NO.	QTY	MODEL/RESTRICTION	MODEL/RESTRICTION	MODEL/RESTRICTION	FROM-TO
71-445		GUSSET(L),REAR FENDER-RR			
NC10-71-4A5B	1				
71-481		PLATE(L),CORNER			
NC10-71-481B	1				
71-490		RAIL(L),RAIN-REAR			
NC10-71-440A	1				
71-670		PLATE(L),CLOSING-QTR PANEL			
NA01-71-670D	1				
74-090A		PILLAR(R),FRONT-OUT.			
NC10-70-210	1				-9A21
AM(NB67-70-210)					
*NB67-70-210	1				9A21-
74-100		PANEL(R),FENDER-REAR			
NCY0-70-400	1				
74-120A		PILLAR(L),FRONT-OUT.			
NC10-71-210	1				-9A29
AM(NB67-71-210)					
*NB67-71-210	1				9A29-
74-130		PANEL(L),FENDER-REAR			
NCY0-71-400	1				
93-5114		HOSE			
99351-14999	1	L=1M CUT IT TO USE			

9A21 NB353*-141339

CAT. AUMA87-05 2000-01

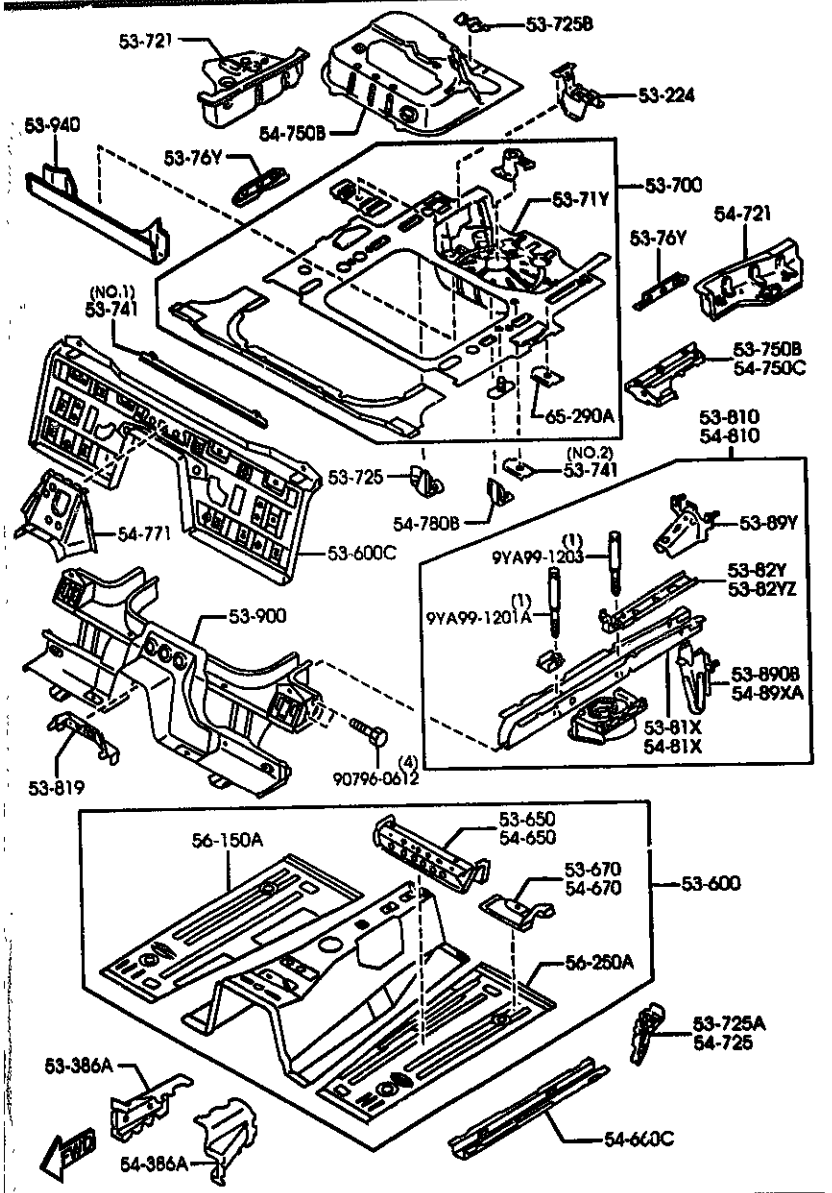

AUNA07 (1N06480)

PART NO.	QTY	MODEL/RESTRICTION	MODEL/RESTRICTION	MODEL/RESTRICTION	FROM-TO
53-224		BRACKET,JACK			
NC10-53-79X	1				
53-306A		JUNCTION(R)			
NC10-53-482B	1				
53-600		PAN,FLOOR-FRONT			
NC12-53-600A	1				-8301
NC12-53-600B AN(NC12-53-600C)	1				8301-8C22
NC12-53-600C	1				8C22-9801
NC12-53-600D	1				9801-
53-600C		PAN,FLOOR-CENTER			
NC10-53-720A	1				
53-650		MEMBER NO.2(2),CROSS -FLOOR			
NA01-53-650A	1				
53-670		BRKT(R),SEAT-F.FLOOR PAN			
NA81-53-670A	1				
53-700		PAN,FLOOR-REAR			
NCY0-53-710	1				
53-71V		PAN,FLOOR-REAR			
NC10-53-71VC	1				
53-721		PANEL(R),SIDE-FLOOR			
NC10-53-741A AN(NC10-53-741B)	1				-8301
NC10-53-741B	1				8301-
53-725		BRACKET			
NC10-53-760B AN(NC10-53-760C)	1				-9622
NC10-53-760C	1				9622-
53-725A		GUSSET NO.3(R),C.FLO OR PAN			
NA01-53-725A	1				

8301 NB353#-109481
8C22 NB353#-126469
9622 NB353#-138594
9801 NB353#-139968

CAT. AUNA07-85 2000-01

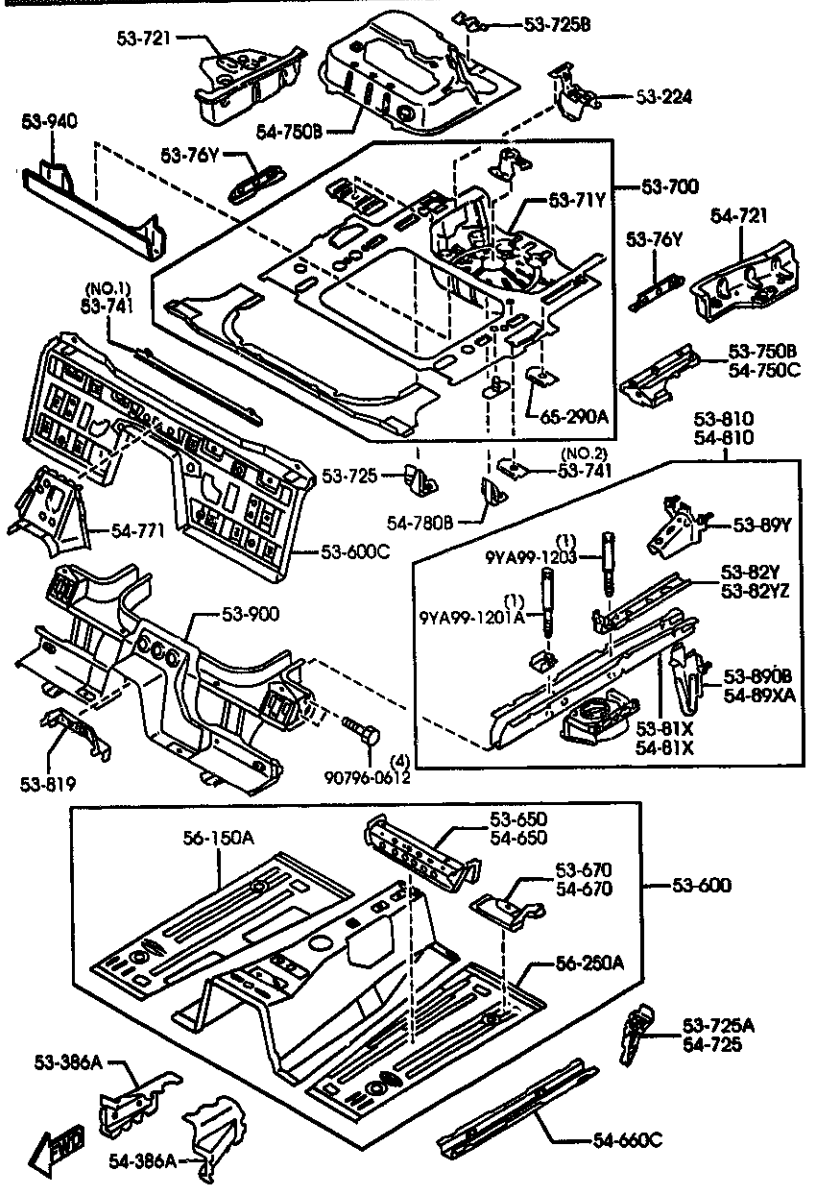

AUNA07 (1N06480)

PART NO.	QTY	MODEL/RESTRICTION	MODEL/RESTRICTION	MODEL/RESTRICTION	FROM-TO
53-725B		REINFORCEMENT			
NC10-53-718	1				
53-741		REINFORCEMENT			
NC10-53-728	1	(ILLUST. NO.1)			
S131-53-990	1	(ILLUST. NO.2)			
53-750B		PLATE(R),SIDE-REAR FLOOR			
NA01-53-750B	1				
53-76Y		PLATE,NUT-TRUNK FLOOR PAN			
NA01-53-760B	2				
53-81X		FRAME(R),REAR SIDE-UPPER			
NC10-53-811A	1				
53-810		FRAME(R),REAR SIDE			
NC10-53-810D	1				-0201
AN(NC10-53-810E)					
*NC10-53-810E	1				0201-
53-819		BRACKET,PARKING CABLE-FLOOR			
NA01-53-819	1				
53-82Y		REINF(R),REAR FRAME			
NC10-53-82Z	1				
53-82YZ		REINF(L),REAR FRAME			
NC10-54-82Z	1				
53-89Y		BRKT(R),RR BUMPER-LOWER			
NC10-53-89XA	2				
53-890B		BRACKET,HOOK			
NC10-53-890A	1				
53-900		MEMBER NO.3,CROSS			
NC12-53-900A	1				-9415
AN(NC12-53-900B)					
NC12-53-900B	1				9415-

9415 NB3553M-157199

CAT. AUNA07-05 2000-01

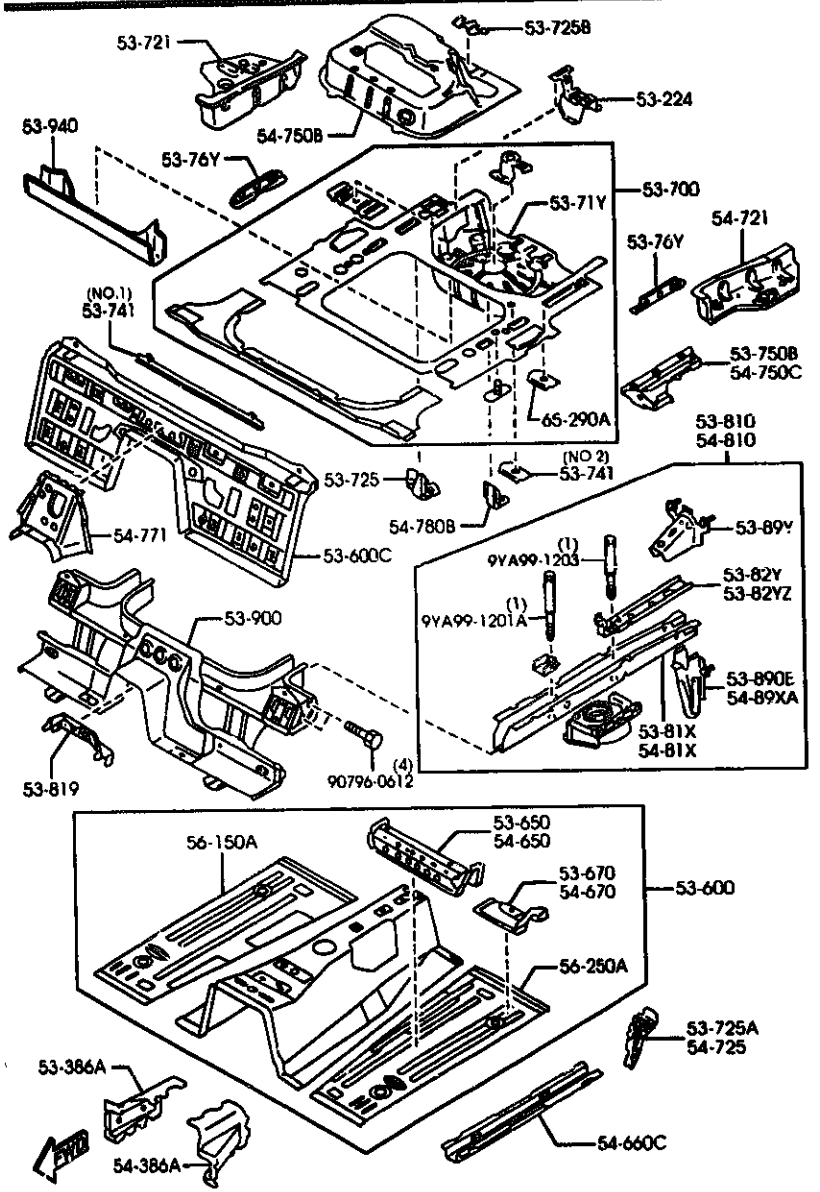

AUNA07 (1N06480)

PART NO.	QTY	MODEL/RESTRICTION	MODEL/RESTRICTION	MODEL/RESTRICTION	FROM-TO
53-940		MEMBER NO.4,CROSS			
MC10-53-931	1				
54-386A		JUNCTION(L)			
MC10-54-402B	1				
54-650		MEMBER NO.2(L),CROSS -FLOOR			
MA01-54-650A	1				
54-660C		FRAME,FRONT-FRT FLOO R PAN			
MA01-54-660B	2				
54-670		BRKT(L),SEAT-F.FLOOR PAN			
MA01-54-670A	1				
54-721		PANEL(L),SIDE-FLOOR			
MC10-54-741A	1				
54-725		GUSSET NO.3(L),C.FLO OR PAN			
MA01-54-725A	1				
54-750B		MEMBER NO.3,UPPER-F. FLOOR			
MC10-53-71X	1				
54-750C		PLATE(L),SIDE-REAR F LOOR			
MA01-54-750B	1				
54-771		GUSSET			
MC10-54-770A	1				
54-780B		BRKT(L),FUEL TANK*B*			
MA01-54-780	1				
54-81X		FRAME(L),REAR SIDE-U PPER			
MC10-54-811A	1				
54-810		FRAME(L),REAR SIDE			
MC10-54-810D	1				-0201
AM(MC10-54-810E)					
*MC10-54-810E	1				0201-

CAT. AUNA07-05 2000-01

5370A FLOOR PANELS

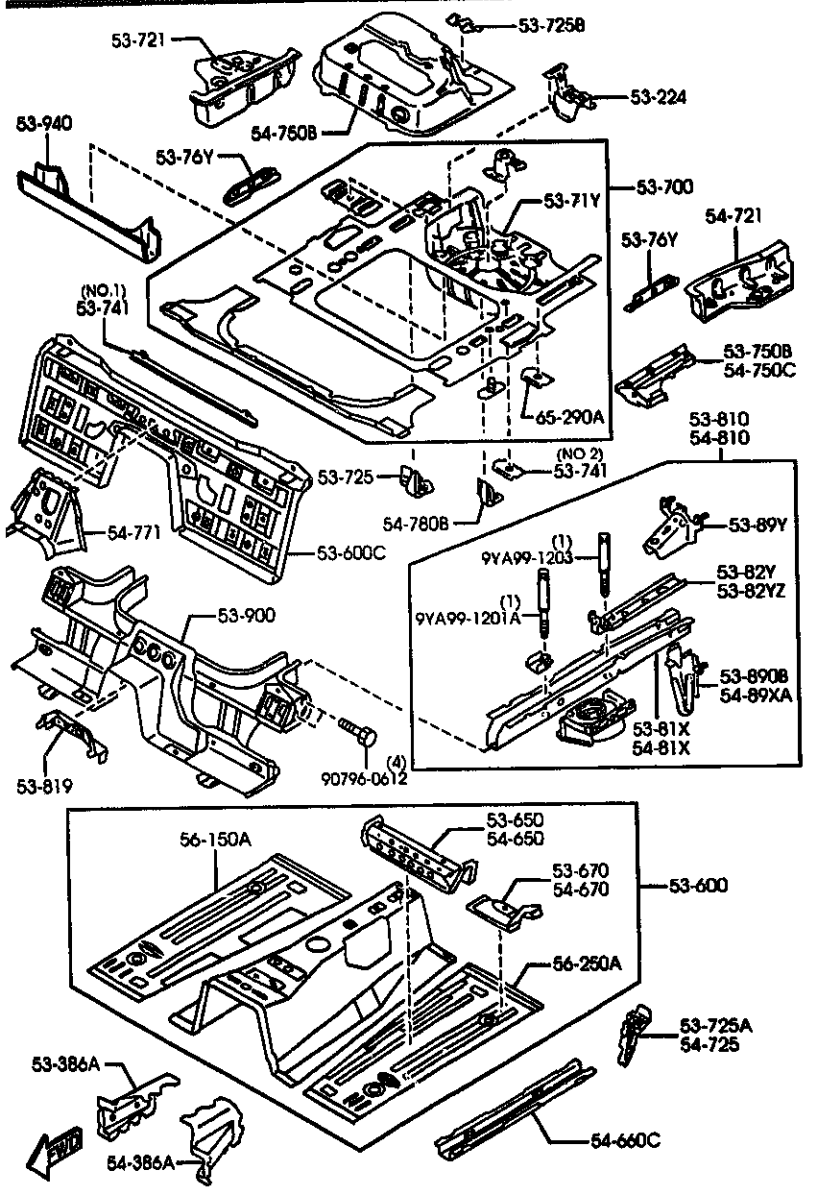

AUNA07 (1N06480)

5370A -4 * FLOOR PANELS

PART NO.	QTY	MODEL/RESTRICTION	MODEL/RESTRICTION	MODEL/RESTRICTION	FROM-TO
54-89XA		HOOK,TOWING-REAR			
NC10-54-890A	1				
56-150A		PAN(R),FLOOR			
NA01-53-602A	1				
56-250A		PAN(L),FLOOR			
NA01-54-610A	1				-8C22
AN(NA01-54-610B)					
NA01-54-610B	1				8C22-
65-290A		BRACKET			
1353-65-190	1				

8C22 NB353M-126469

CAT. AUNA07-05 2000-01

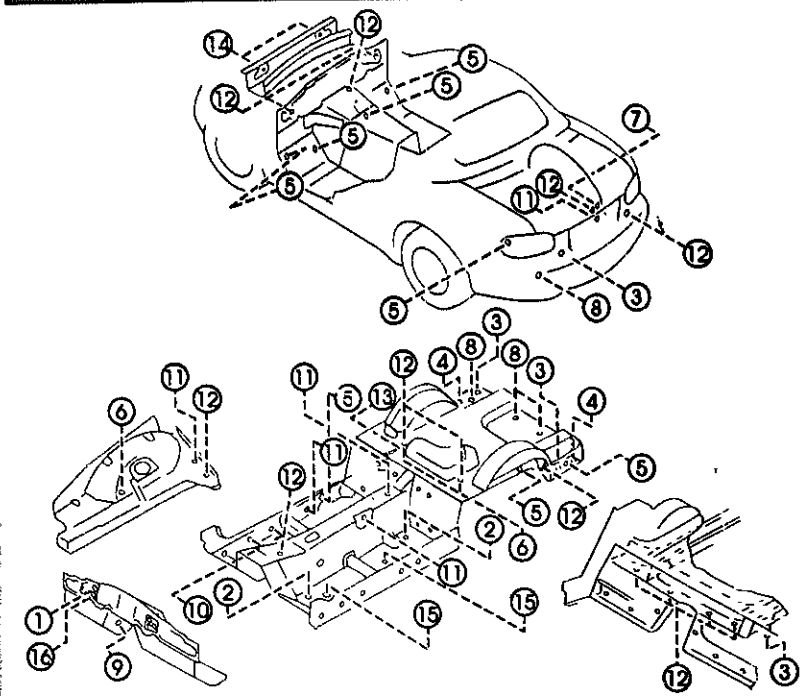

① 55-134B
② (NO.1) 56-051
③ (NO.2) 56-051
④ 56-056
⑤ (NO.1) 56-052
⑥ (NO.2) 56-052
⑦ 56-057A
⑧ 56-056
⑨ 56-241
⑩ 56-241B
⑪ 56-241J
⑫ 56-242
⑬ 56-615F
⑭ 56-615M
⑮ 56-971
⑯ 61-031

AUNA07 (1N06550)

PART NO.	QTY	MODEL/RESTRICTION	MODEL/RESTRICTION	MODEL/RESTRICTION	FROM-TO
55-134B		RUBBER,DUST SEAL			
0187-53-134	1	(W/O AIR CON.)			
56-051		COVER,HOLE			
1011-56-051	4	(ILLUST. NO.1)			
8C1D-56-052	4	(ILLUST. NO.2)			
56-051B		COVER,HOLE			
GA5R-56-051	2				
56-052		PLUG,DRAIN			
8892-56-052	11	D=12MM (ILLUST. NO.1)			
FB01-56-056	4	(ILLUST. NO.2) (W/O A. LOCK BRAKE)			
56-056		COVER,HOLE			
T001-56-053	5				
56-057A		GROMMET,SCREW			
MC10-56-057	2				
56-241		PLUG,DRAIN			
0110-56-241	1				
56-241B		PLUG			
B001-56-051	6				
56-241J		PLUG,DRAIN			
0477-56-241	7				
56-242		PLUG,DRAIN			
*0110-56-242B	15				
56-615F		PLUG,DRAIN			
0288-56-615	2				
56-615M		PLUG,DRAIN			
HA01-56-051	2				
56-971		COVER,HOLE			

CAT. AUNA07-05 2000-01

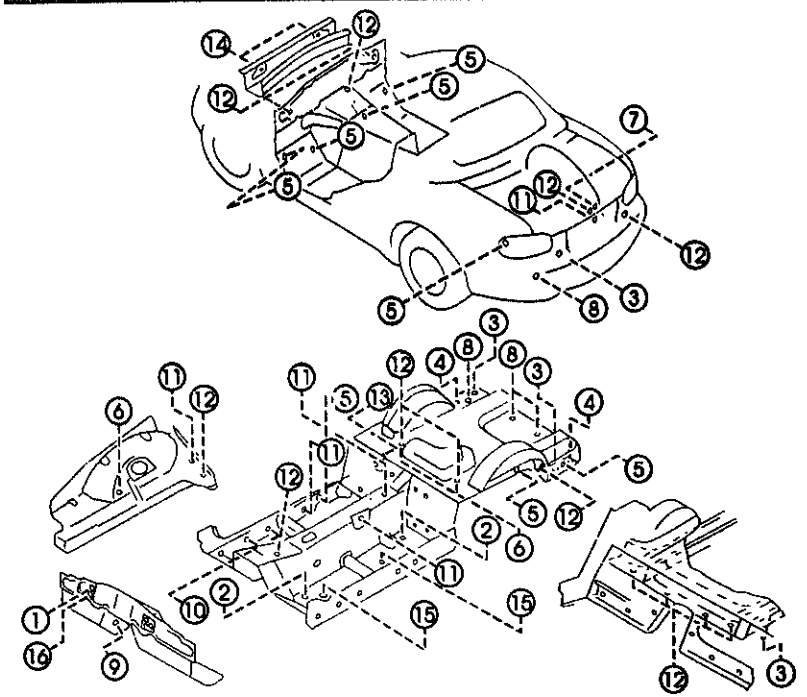

① 53-134B
② (NO.1) 56-051
③ (NO.2) 56-051
④ 56-051B
⑤ (NO.1) 56-052
⑥ (NO.2) 56-052
⑦ 56-057A
⑧ 56-056
⑨ 56-241
⑩ 56-241B
⑪ 56-241J
⑫ 56-242
⑬ 56-615F
⑭ 56-615M
⑮ 56-971
⑯ 61-031

AUNA07 (1N06550)

PART NO.	QTY	MODEL/RESTRICTION	MODEL/RESTRICTION	MODEL/RESTRICTION	FROM-TO
CONT'D					
0866-56-971	4				
61-031		PLUG,HOLE			
1788-61-031	1				

CAT. AUNA07-05 2000-01

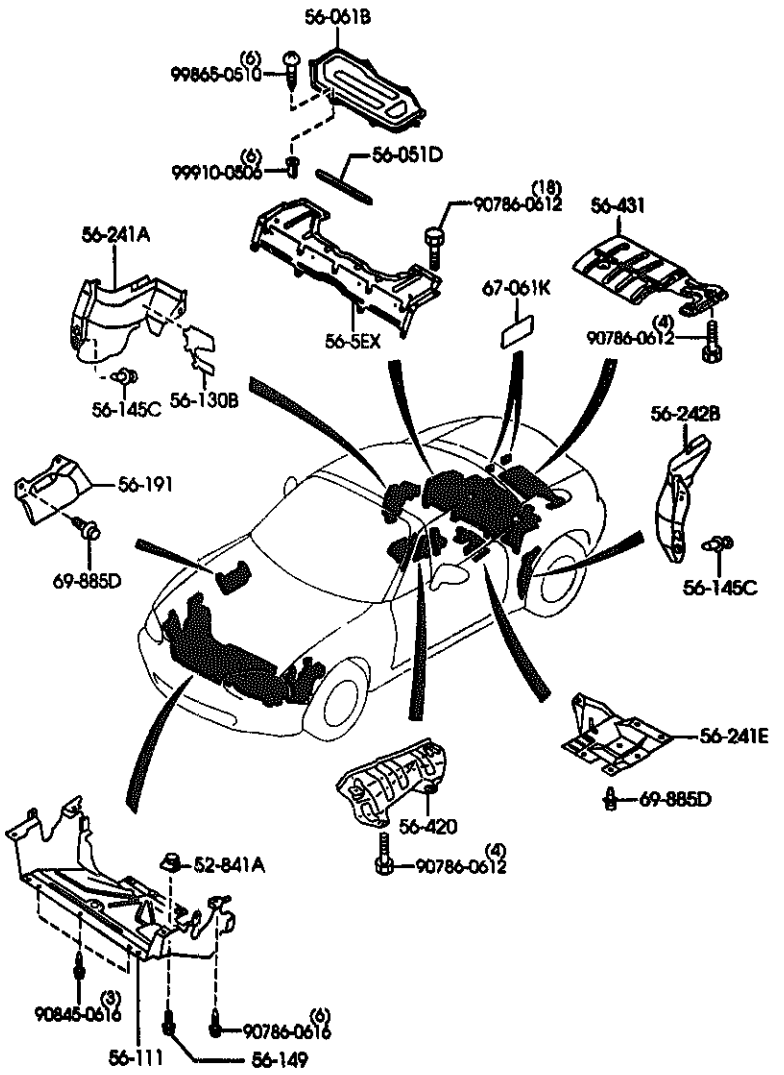

PART NO.	QTY	MODEL/RESTRICTION	MODEL/RESTRICTION	MODEL/RESTRICTION	FROM-TO
52-841A		NUT,CLIP			
8455-56-135	1				
56-051D		RUBBER,SEAL			
NC10-56-062	1				
56-061B		COVER(R),SIDE-DEC			
NC10-56-061	1				
56-111		COVER,UNDER			
NA01-56-111E AN(NA01-56-111F)	1				-8C14
NA01-56-111F	1				8C14-
56-130B		PLATE(R)			
NC10-56-312	1				
56-145C		CLIP,MUD GUARD			
8C1D-56-145	8				
56-149		SCREW,TAPPING-MUD GUARD			
8455-56-149	1				
56-191		SHIELD,SPLASH			
NA01-56-112	1				
56-241A		SHIELD(R),SPLASH-REAR			
NA01-56-311D	1				
56-241E		SHIELD(R),SIGHT-R. FENDER			
NC1D-56-241B	1				
56-242B		SHIELD(L),SPLASH-REAR			
NA01-56-321D	1				
56-420		INSULATOR,FRONT			
NA75-56-411C	1				
56-431		INSULATOR,HEAT			
NC10-56-451C	1				

8C14 MB353R-125954

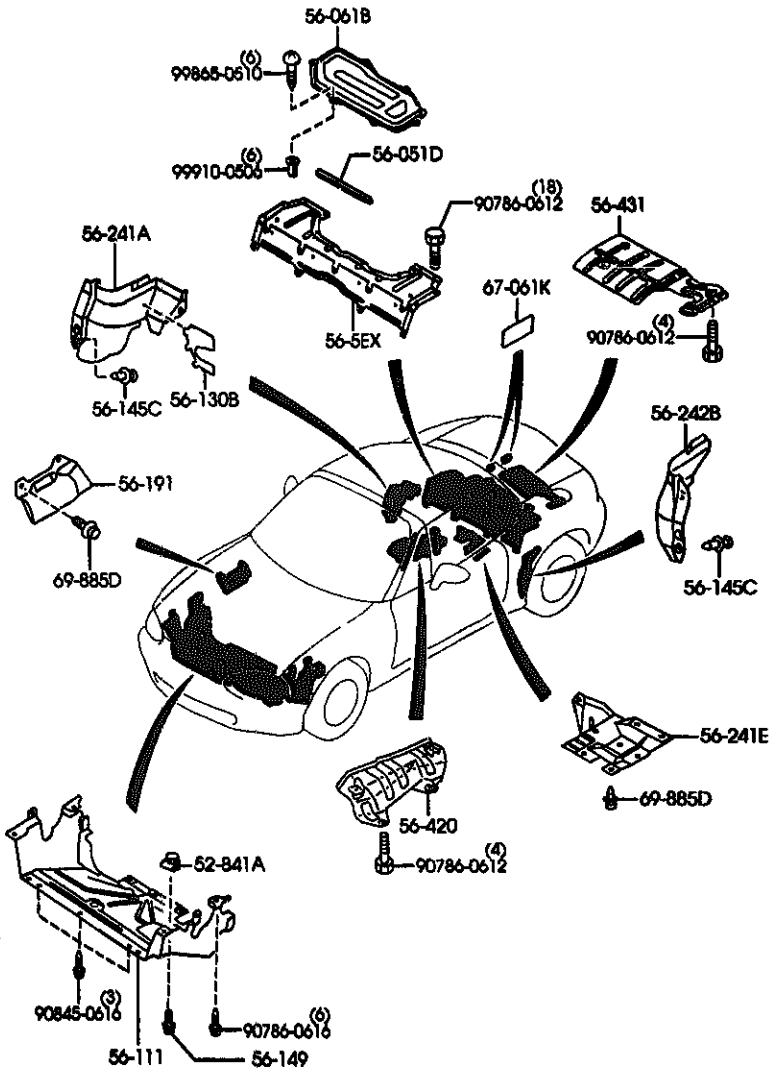

AUNA07 (1N06560)

PART NO.	QTY	MODEL/RESTRICTION	MODEL/RESTRICTION	MODEL/RESTRICTION	FROM-TO
56-5EX		BULKHEAD			
✕NC10-56-5EXB	1				
67-061K		PAD,PROTECTOR			
8001-67-061	2				
69-885D		FASTENER			
NA01-56-145	7				

CAT. AUNA07-05 2000-01

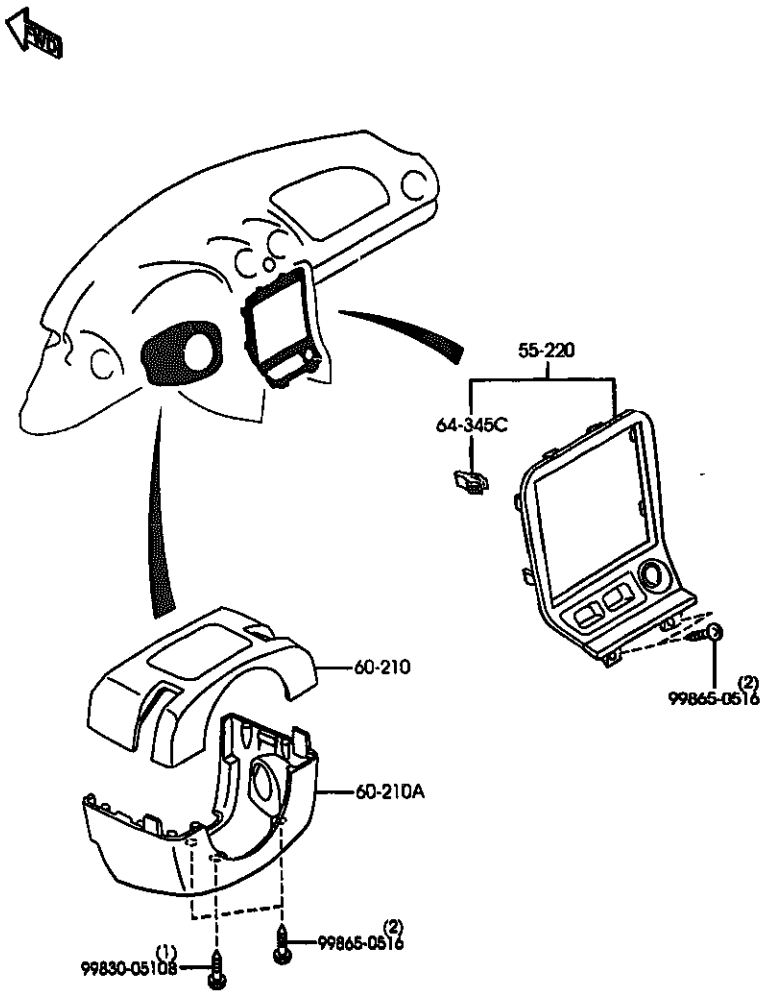

AUNA07 (1N08100)

5500A -1 * DASHBOARD EQUIPMENTS

PART NO.	QTY	MODEL/RESTRICTION	MODEL/RESTRICTION	MODEL/RESTRICTION	FROM-TO
55-220		PANEL,CENTER			
MC10-55-210B	1	(AT) ((MT)>(5-SP))			
MC65-55-210	1	((MT)>(6-SP)>('99 MODEL))			
*MN055-55-210	1	((MT)>(6-SP)>('00 MODEL))			
60-210		COVER,COLUMN-UPPER			
MC10-60-220	1				
60-210A		COVER,COLUMN-LOWER			
MC10-60-231A	1				
64-345C		SPRING,UPPER PLATE			
J001-64-345	4				

CAT. AUNA07-05 2000-01

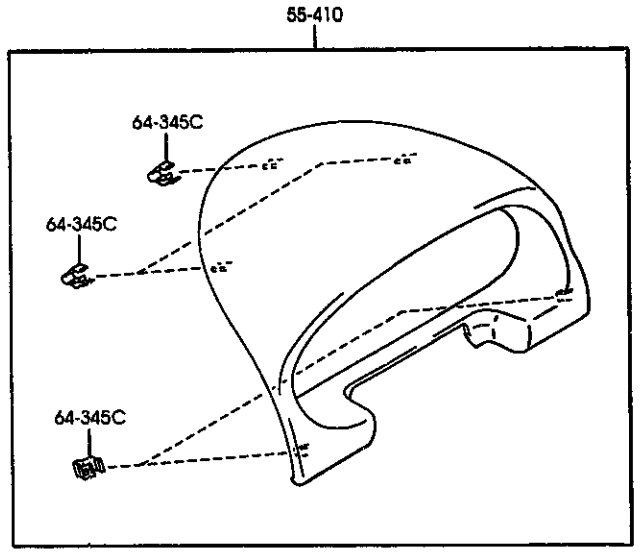

5520A -1 * METER HOOD

PART NO.	QTY	MODEL/RESTRICTION	MODEL/RESTRICTION	MODEL/RESTRICTION	FROM-TO
55-410		HOOD,METER			
NC10-55-420B	1				
64-345C		SPRING,UPPER PLATE			
J001-64-345	5				

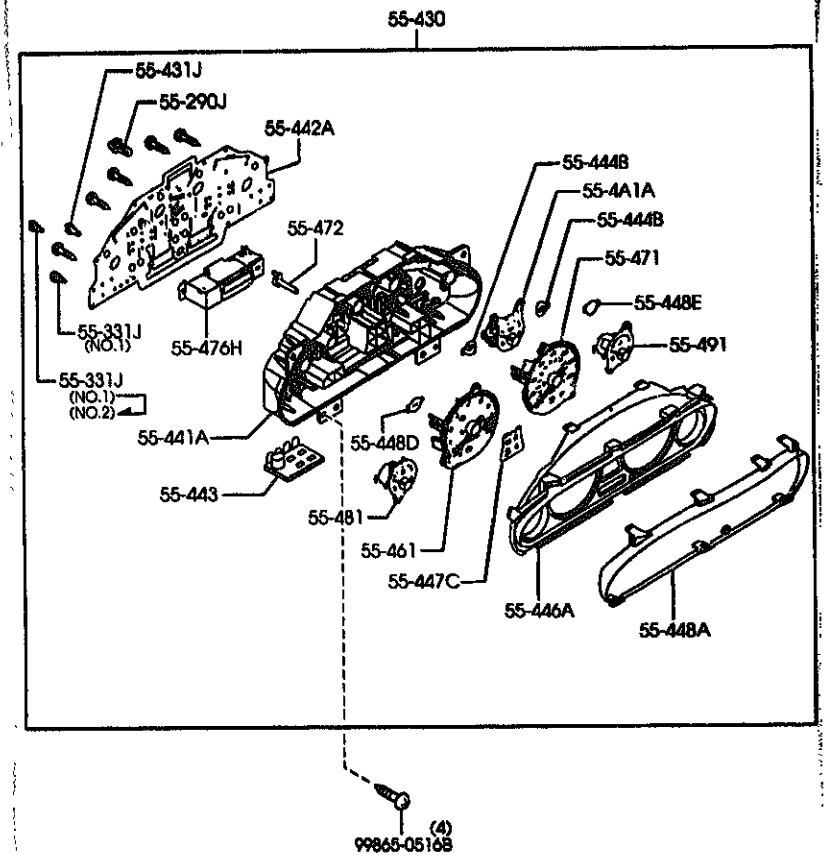

AUNA07 (1N10380)

5540A -1 METER COMPONENTS

PART NO.	QTY	MODEL/RESTRICTION	MODEL/RESTRICTION	MODEL/RESTRICTION	FROM-TO
55-298J		BULB			
MC10-55-45Y	4				
55-331J		BULB			
MC10-55-43X	11	((MT)>(6-SP))			
MC10-55-43X	13	(ILLUST. NO.1) ((MT)>(5-SP)) (AT)			-8801
MC10-55-43X	12	(ILLUST. NO.1) ((MT)>(5-SP)) (AT)			8801-
MC30-55-431	1	(ILLUST. NO.2) ((MT)>(5-SP)) (AT)			8801-8C01
55-4A1A		METER,OIL PRESSURE			
MC10-55-4A1	1	((MT)>(5-SP)) (AT)			
*MC33-55-4A1	1	((MT)>(6-SP)>('00 MODEL))			
MB53-55-4A1	1	((MT)>(6-SP)>('99 MODEL))			
55-430		METER SET			
MC10-55-430	1	((MT)>(5-SP)) (AT)			
MC65-55-430	1	((MT)>(6-SP)>('99 MODEL))			
*MC93-55-430A	1	((MT)>(6-SP)>('00 MODEL))			
55-431J		BULB'A',METER SET			
MC10-55-43Z	1				
55-441A		CASE,METER			
MC10-55-441	1				
55-442A		PLATE,PRINT			
MC10-55-442	1				
55-443		PLATE NO.2,PRINT			
MC10-55-443	1				
55-444B		LENS,WARNING			

8801 NB353*-121854
8C01 NB353*-124914

CAT. AUNA07-05 2000-01

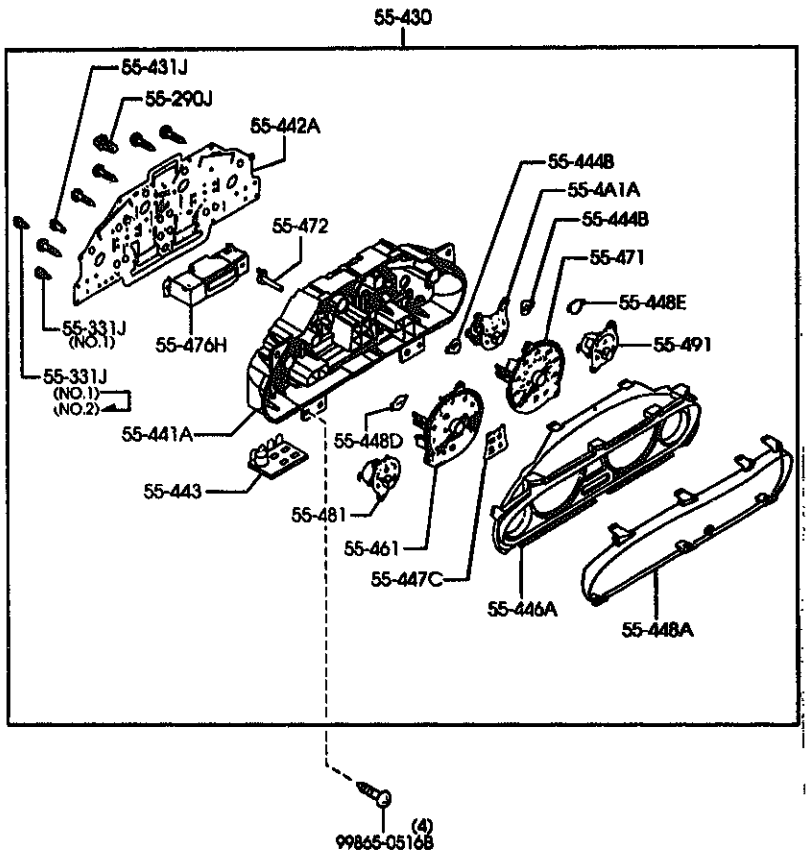

AUNA07 (1N10380)

5540A -2 METER COMPONENTS

PART NO.	QTY	MODEL/RESTRICTION	MODEL/RESTRICTION	MODEL/RESTRICTION	FROM-TO
CONT'D					
MC10-55-444	1	((MT)>(5-SP)) (AT)			
MC10-55-444	2	((MT)>(6-SP))			
55-446A		PLATE,WINDOW			
MC10-55-446	1	((MT)>(5-SP)) (AT)			
MC65-55-446	1	((MT)>(6-SP))			
55-447C		LENS,WARNING			
MC10-55-445	1				
55-448A		LENS,FRONT			
MC10-55-447	1				
55-448D		LENS,WARNING UNIT			
MC10-55-448	1				
55-448E		LENS'E',WARNING-METER SET			
MB5S-55-449	1	((MT)>(6-SP))			
MC10-55-449	1	((MT)>(5-SP)) (AT)			-9501
MB5S-55-449	1	((MT)>(5-SP)) (AT)			9501-
55-461		TACHOMETER			
MC10-55-461	1	((MT)>(5-SP)) (AT)			
MC65-55-461	1	((MT)>(6-SP)>('99 MODEL))			
*MC93-55-461	1	((MT)>(6-SP)>('00 MODEL))			
55-471		SPEEDOMETER			
MC10-55-471	1	((MT)>(5-SP)) (AT)			
MC65-55-471	1	((MT)>(6-SP)>('99 MODEL))			
*MC93-55-471	1	((MT)>(6-SP)>('00 MODEL))			
55-472		KNOB,TRIPMETER			
MC10-55-473	1				

9501 MB5S3*-137711

CAT. AUNA07-05 2000-01

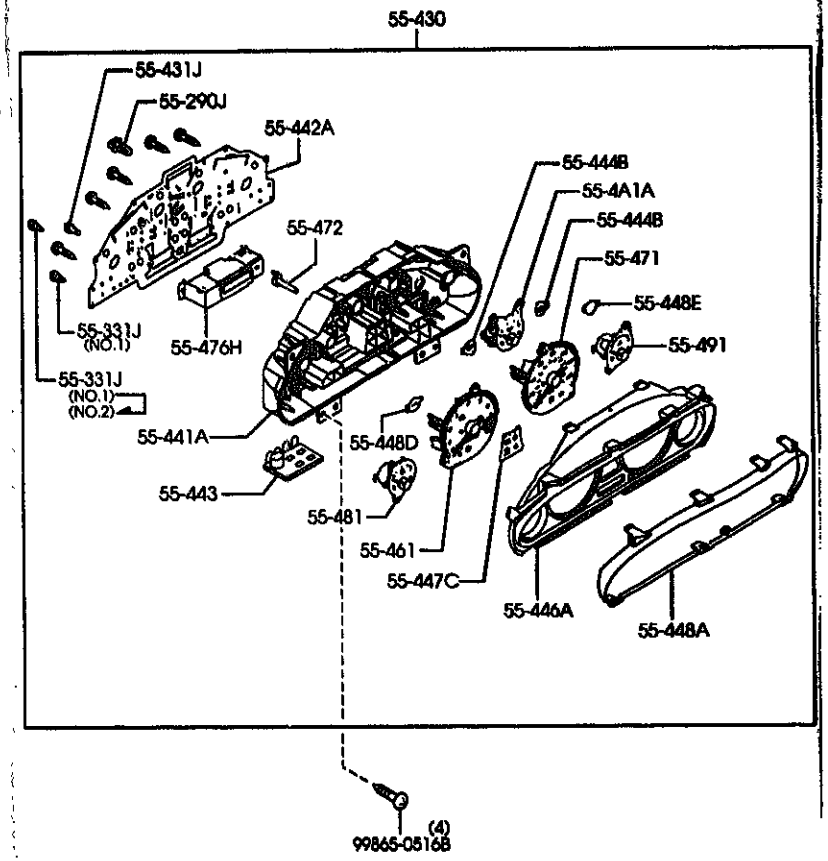

5540A -3 * METER COMPONENTS

PART NO.	QTY	MODEL/RESTRICTION	MODEL/RESTRICTION	MODEL/RESTRICTION	FROM-TO
55-476H		UNIT,DISPLAY-METER SET			
NC10-55-476	1				
55-481		METER,FUEL			
NC10-55-481	1	((MT))(5-SP)) (AT)			
*NC33-55-481	1	((MT))(6-SP))('00 MODEL))			
N053-55-481	1	((MT))(6-SP))('99 MODEL))			
55-491		METER,TEMP			
NC10-55-491	1	((MT))(5-SP)) (AT)			
*NC33-55-491	1	((MT))(6-SP))('00 MODEL))			
N053-55-491	1	((MT))(6-SP))('99 MODEL))			

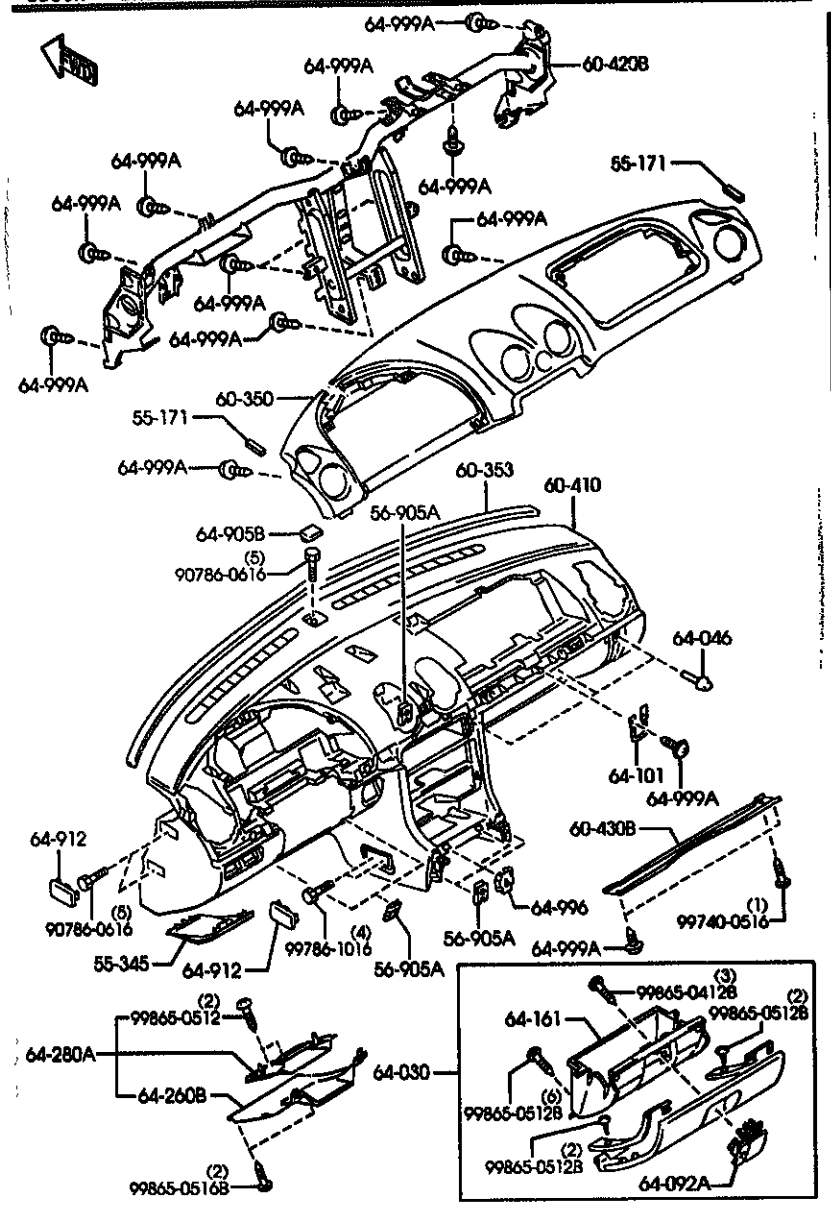

AUNA07 (1N10390)

PART NO.	QTY	MODEL/RESTRICTION	MODEL/RESTRICTION	MODEL/RESTRICTION	FROM-TO
55-171		TAPE,CUSHION			
0E4T-55-171	2				8507-
55-345		COVER,FUSE BOX			
NC10-55-551	1				
02	INT-	NB0 NB2 BLACK			
21	INT-	NB1 TAN			
* 00	INT-	NB6 BEIGE			
56-905A		NUT,SPRING			
3092-60-408	5				
60-350		PAD,CRASH			
NC10-60-350	1				
60-353		RUBBER,URETHNE			
NA75-60-353	1				
60-410		FRAME,INST. PANEL			
NC10-60-401C	1				
02	INT-	NB0 NB2 BLACK			
21	INT-	NB1 BLACK/TAN			
* 80	INT-	NB6 BLACK/BEIGE			
60-420B		MEMBER,CRASH PAD			
NC10-60-420D	1				-8201
AR(NC10-60-420E)					
NC10-60-420E	1				8201-
60-430B		MEMBER(R),INST. PANEL			
NC10-60-430A	1				
64-030		BOX,GLOVE			
NC10-64-030D	1				-8A01
02	INT-	NB0 NB2 BLACK			
21	INT-	NB1 TAN			
NC10-64-030E	1				8A01-
02	INT-	NB0 NB2 BLACK			
21	INT-	NB1 TAN			

8201 NB353M-106606
8507 NB353M-116978
8A01 NB353M-122764

CAT. AUNA07-05 2000-01

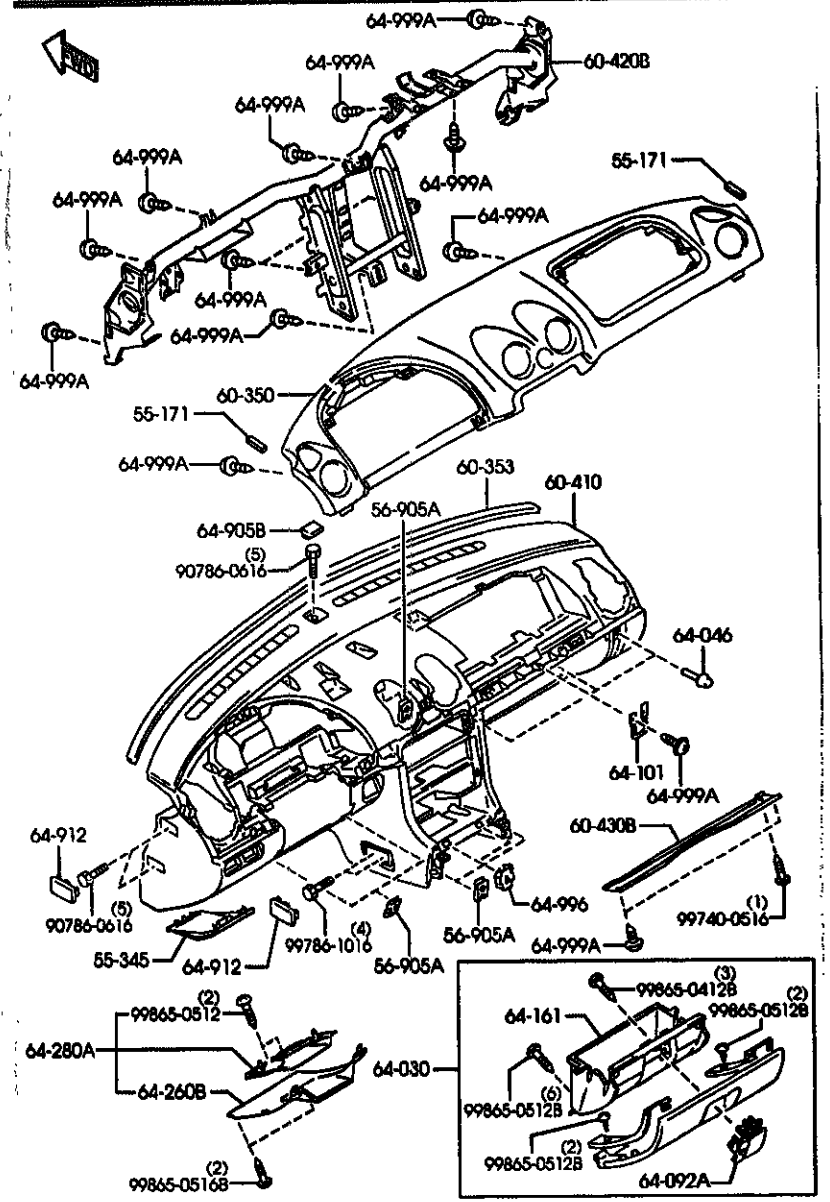

AUNA07 (1N10390)

PART NO.	QTY	MODEL/RESTRICTION	MODEL/RESTRICTION	MODEL/RESTRICTION	FROM-TO
CONT'D					
* 00	INT-	NB6 BEIGE			
64-046		CUSHION,RUBBER-GLOVE LID			
LB02-64-046	3				
64-092A		LOCK,GLOVE LID			
NC10-64-090	1				-8A01
02	INT-	NB0 NB2 BLACK			
21	INT-	NB1 TAN			
NC10-64-090A	1				8A01-
02	INT-	NB0 NB2 BLACK			
21	INT-	NB1 TAN			
* 00	INT-	NB6 BEIGE			
64-101		STRIKER			
LB02-64-101	1				
64-161		BOX,GLOVE			
NC10-64-161C	1				
64-260B		PANEL,LOWER			
N053-64-261A	1				
02	INT-	NB0 NB2 BLACK			
21	INT-	NB1 TAN			
* 00	INT-	NB6 BEIGE			
64-280A		PANEL,LOWER			
NC10-64-280B	1				-8115
02	INT-	NB0 BLACK			
21	INT-	NB1 TAN			
NC10-64-280C	1				8115-
02	INT-	NB0 NB2 BLACK			
21	INT-	NB1 TAN			
* 00	INT-	NB6 BEIGE			
64-905B		COVER,HOLE-(C)			
NA01-64-905A	1				

8115 NB3S3H-104369
8A01 NB3S3H-122764

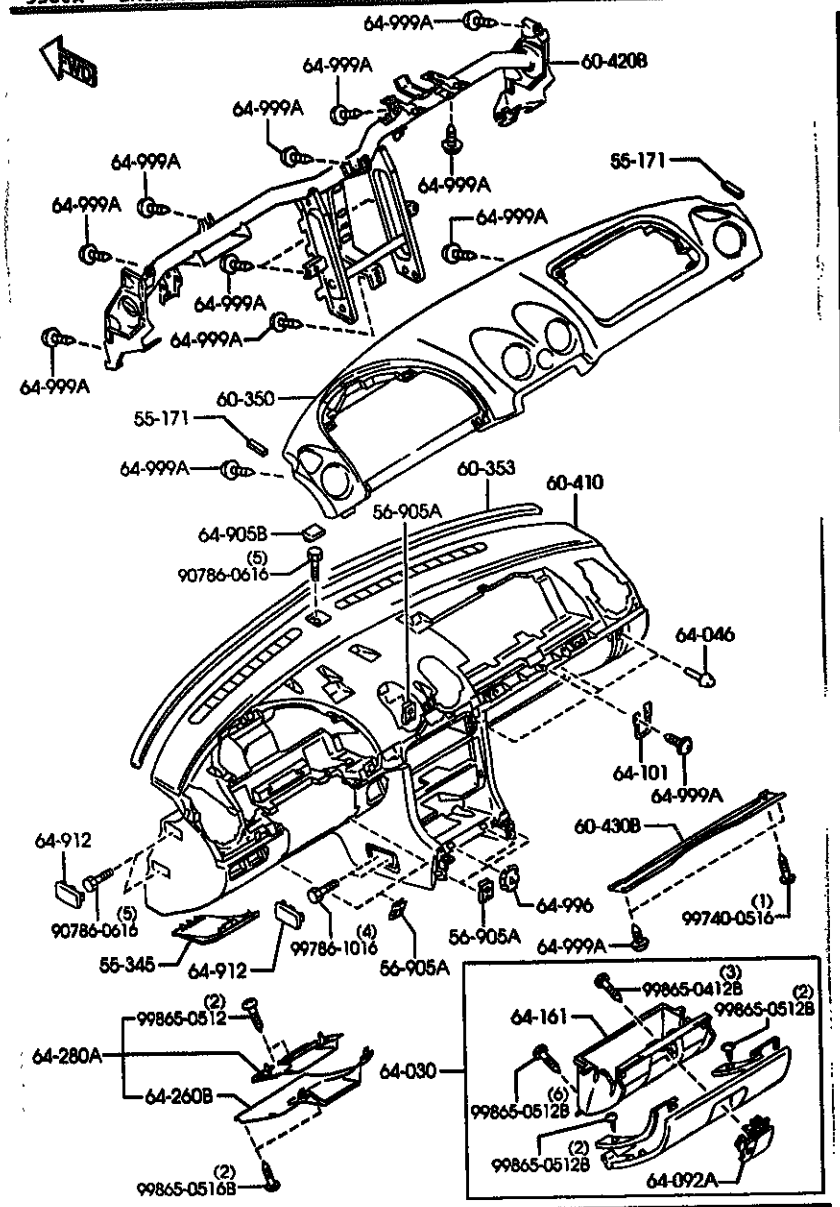

5560A -3 * DASHBOARD & RELATED PARTS

PART NO.	QTY	MODEL/RESTRICTION	MODEL/RESTRICTION	MODEL/RESTRICTION	FROM-TO
CONT'D					
02	INT-	NB0 NB1 NB2 NB6 BLACK			
64-912		COVER,SIDE			
NA01-64-912A	6				
02	INT-	NB0 NB2 BLACK			
21	INT-	NB1 TAN			
* 80	INT-	NB6 BEIGE			
64-996		NUT,EXPANSION			
GJ21-64-996	2				
64-999A		SCREW,TAPPING			
W201-64-999	27				

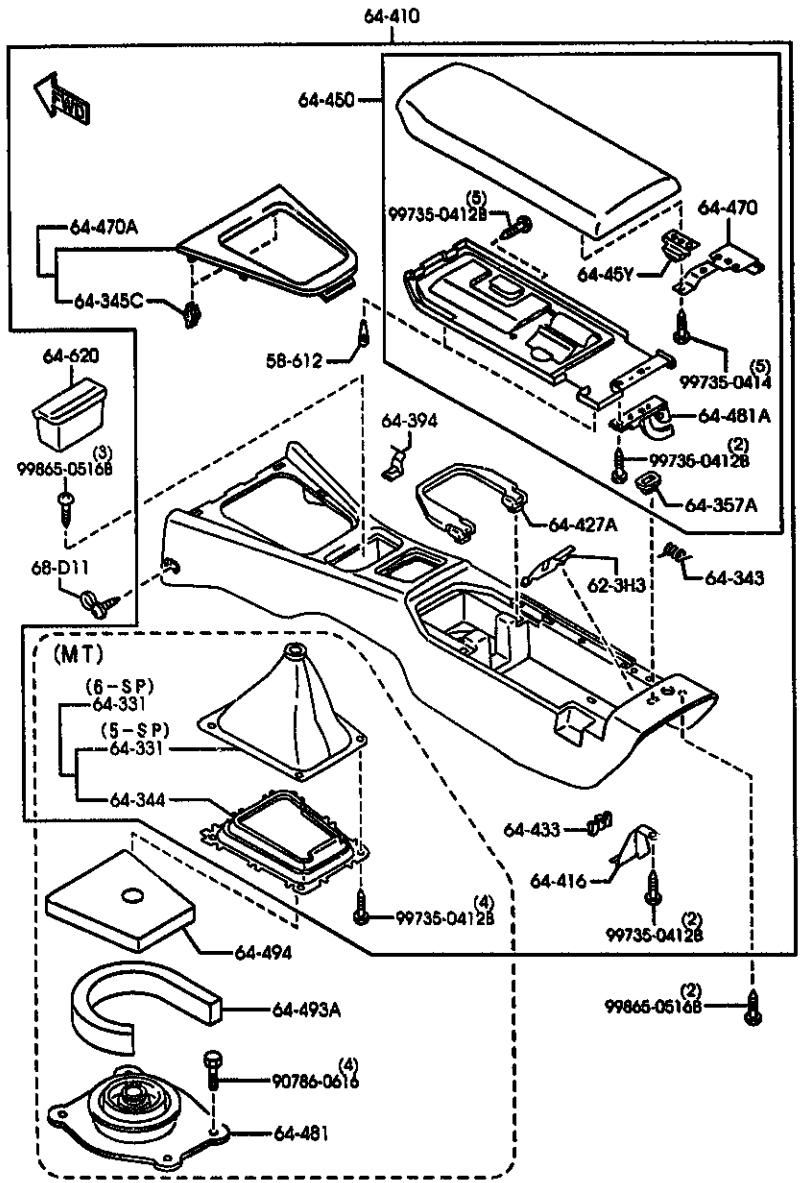

AUNA07 (1N03540)

PART NO.	QTY	MODEL/RESTRICTION	MODEL/RESTRICTION	MODEL/RESTRICTION	FROM-TO
58-612		CUSHION,RUBBER			
8092-64-046	2				
62-3H3		COVER,LEVER-OPENER			
MA01-64-424	1				-8301
AM(MA01-64-424A)					
MA01-64-424A	1				8301-
64-331		BOOT,CHANGE			
NC65-64-330	1	((MT))((6-SP))('99 MODEL))			
*NC35-64-331	1	((MT))((6-SP))('00 MODEL))			
NC10-64-331	1	((MT))((5-SP))			-8301
AM(NC10-64-331A)					
NC16-64-331A	1	((MT))((5-SP))			8301-
64-343		SPRING			
NC10-64-343B	1				
64-344		PLATE,BACK-BOOTS RING			
NC10-64-334	1	(MT)			
64-345C		SPRING,UPPER PLATE			
J001-64-345	2				
64-357A		PROTECTOR			
NC10-64-357A	1				
64-394		SPRING			
GE6T-64-394	1				
64-410		CONSOLE,REAR			
*NC35-64-420	1	((MT))((6-SP))('00 MODEL))			
* 02	INT-	NB0 NB2 BLACK			
* 21	INT-	NB1 TAN			
* 80	INT-	NB6 BEIGE			
NC65-64-420	1	((MT))((6-SP))('99 MODEL))			
02	INT-	NB0 NB2 BLACK			

8301 NB353*-109481

CAT. AUNA87-05 2000-01

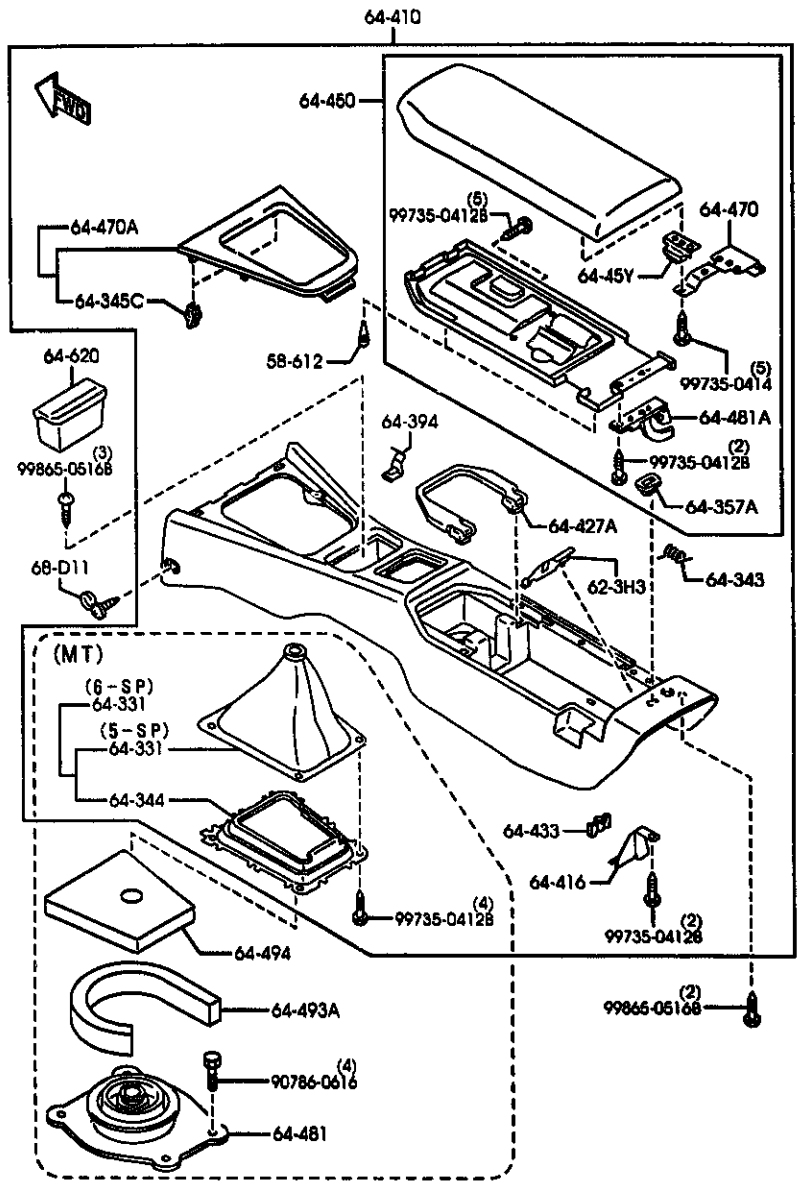

AUNA07 (1N03540)

PART NO.	QTY	MODEL/RESTRICTION	MODEL/RESTRICTION	MODEL/RESTRICTION	FROM-TO
CONT'D					
21	INT-	NB1 TAN			
MC10-64-420K	1	((MT)>(5-SP))			-8301
02	INT-	NB0 BLACK			
21	INT-	NB1 TAN			
MC13-64-420K	1	(AT)			-8301
02	INT-	NB0 BLACK			
21	INT-	NB1 TAN			
MC10-64-420M	1	((MT)>(5-SP))			8301-
02	INT-	NB0 NB2 BLACK			
21	INT-	NB1 TAN			
* 80	INT-	NB6 BEIGE			
MC13-64-420L	1	(AT)			8301-
02	INT-	NB0 NB2 BLACK			
21	INT-	NB1 TAN			
64-416		BRACKET,CONSOLE-NO.3			
MC10-64-436	1				
64-427A		HOLDER,CUP			
MC10-64-39X	1				
64-633		PLATE,CONSOLE LID			
MC10-64-433B	1				
64-45Y		LOCK,CONSOLE LID			
MC10-64-453	1				
64-450		LID,CONSOLE			
MC10-64-450E	1				
02	INT-	NB0 NB2 BLACK			
21	INT-	NB1 TAN			
* 80	INT-	NB6 BEIGE			
64-470		HINGE			
MC10-64-45X	1				
64-470A		PANEL,CONTROL-RR CONSOLE			
MC10-64-470A	1	((MT)>(5-SP))			

8301 NB353*-189481

CAT. AUNA07-05 2000-01

5570A CONSOLE

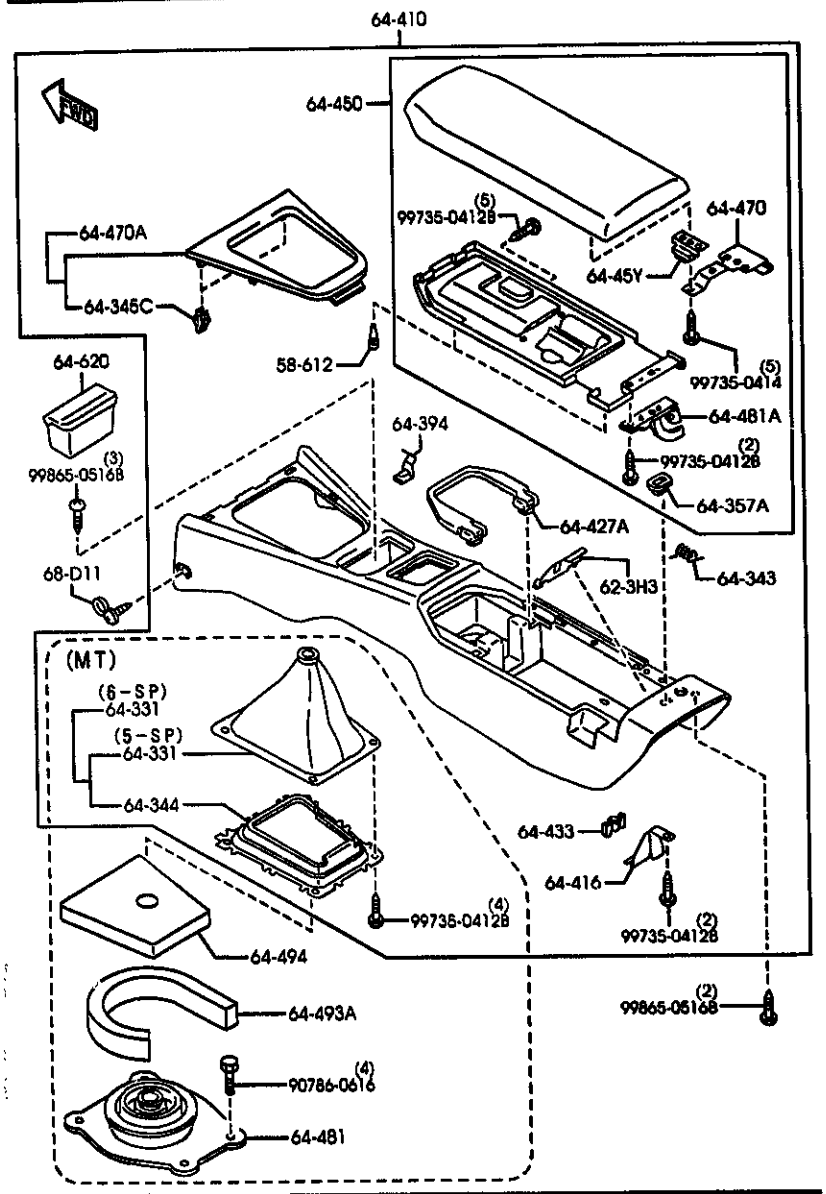

AUNA07 (1N03540)

5570A -3 * CONSOLE

PART NO.	QTY	MODEL/RESTRICTION	MODEL/RESTRICTION	MODEL/RESTRICTION	FROM-TO
CONT'D		(AT)			
*NC35-64-470	1	((MT)>(6-SP)>('08 MODEL))			
NC65-64-470	1	((MT)>(6-SP)>('99 MODEL))			
64-481		INSULATOR NO.1,CHANGE			
NA01-64-481B	1	(MT)			
64-481A		STOPPER,CONSOLE LID			
NC18-64-452B	1				
64-493A		PACK,SILENT			
H001-64-493	1	(MT)			
64-496		PAD,CHANGE BOOT			
FB81-64-495	1	(MT)			
64-620		TRAY,ASH			
NC18-64-618A	1				
83	INT-	NB0 NB2 BLACK			
21	INT-	NB1 TAN			
* 80	INT-	NB6 BEIGE			
68-D11		CAP,SCREW			
B501-68-D11B	2				
00	INT-	NB0 NB2 BLACK			
21	INT-	NB1 TAN			
* 89	INT-	NB6 LIGHT BEIGE			

CAT. AUNA07-05 2000-01

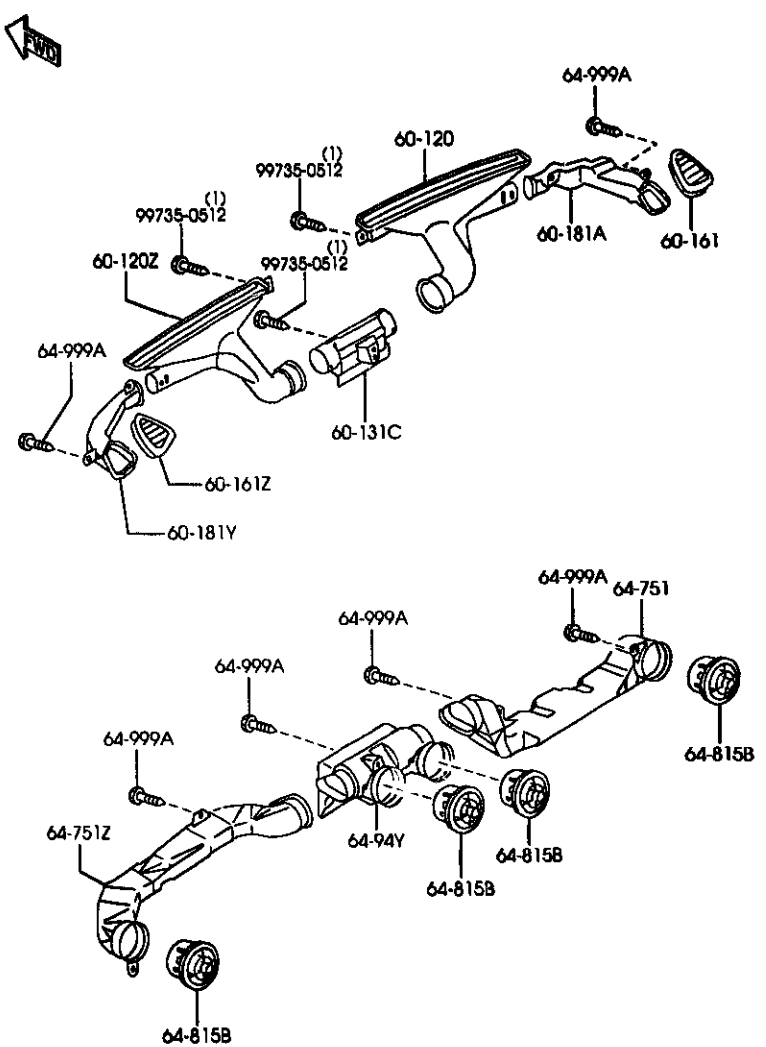

5580A -1 M VENTILATOR

PART NO.	QTY	MODEL/RESTRICTION	MODEL/RESTRICTION	MODEL/RESTRICTION	FROM-TO
60-120		NOZZLE(R),DEFROSTER			
NA75-60-121B	1				
60-120Z		NOZZLE(L),DEFROSTER			
NA01-60-141	1				
60-131C		DUCT,DEFROSTER			
MC10-60-122A	1				
60-161		GRILLE(R),DEMISTER			
MC10-60-160	1				
60-161Z		GRILLE(L),DEMISTER			
MC10-60-170	1				
60-181A		DUCT(R),SIDE DEMIST.			
MC10-60-181A	1				
60-181Y		DUCT(L),SIDE DEMIST.			
MC10-60-191A	1				
64-751		DUCT(R)			
MC10-64-741A	1				
64-751Z		DUCT(L)			
MC10-64-861A	1				
64-815B		LOUVER,VENTILATOR			
NA01-64-81XB	4				-8301
00	INT-	NB0 NB1 BLACK			
NA01-64-81XC	4				8301-
00	INT-	NB0 NB1 NB2 NB6 BLACK			
64-94Y		DUCT NO.2(C),VENT.			
MC10-64-941	1				
64-999A		SCREW,TAPPING			
W201-64-999	9				

8301 NB353M-109401

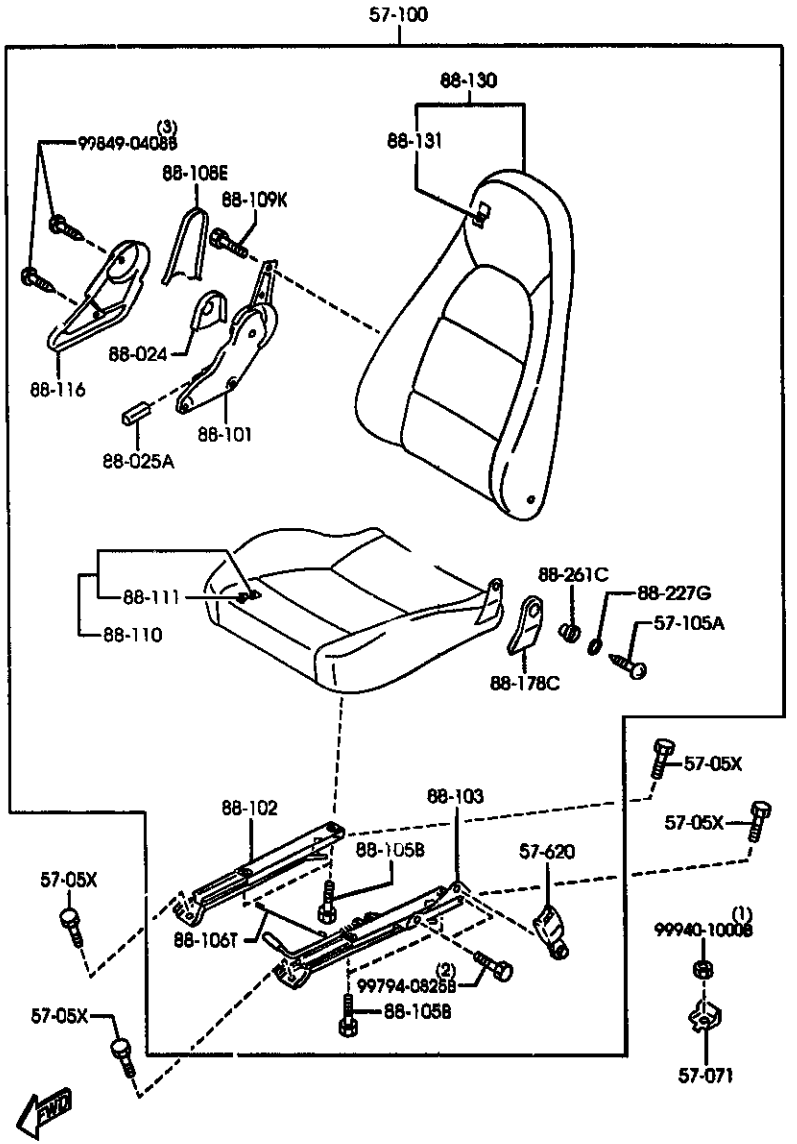

AUNA07 (1N08121)

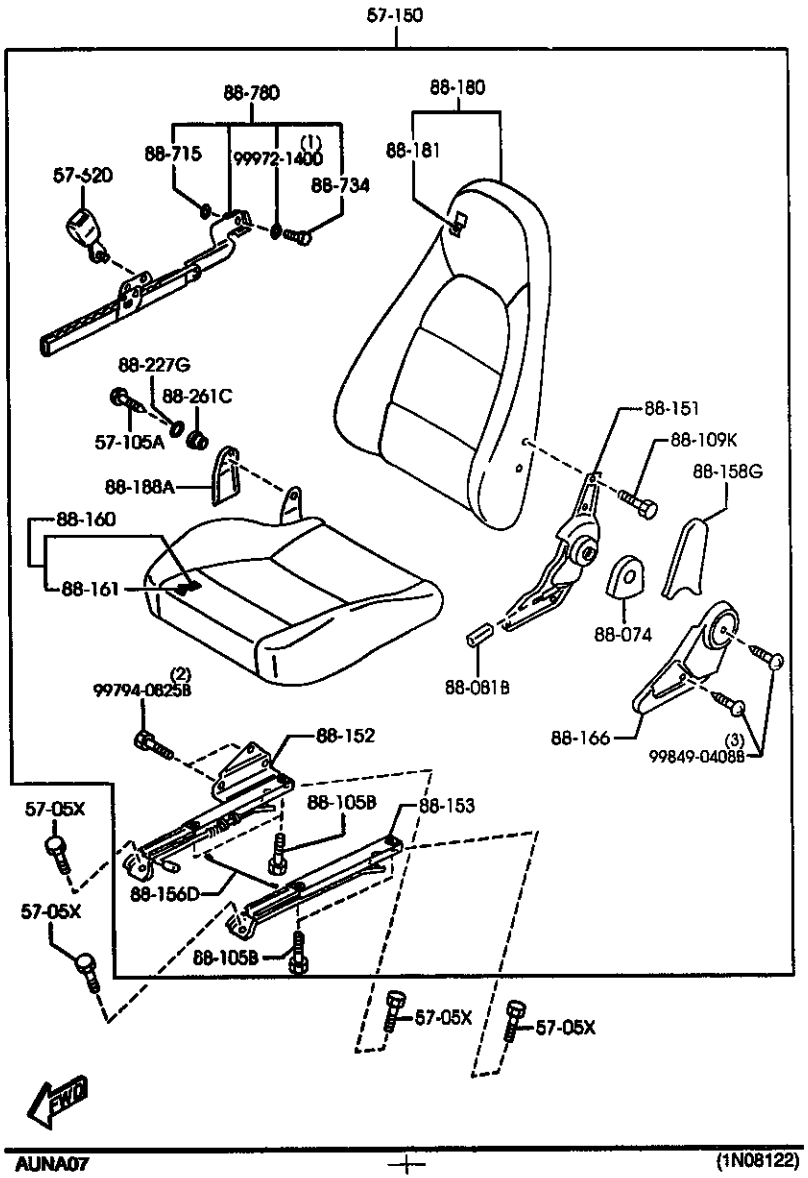

AUNA07 (1N08122)

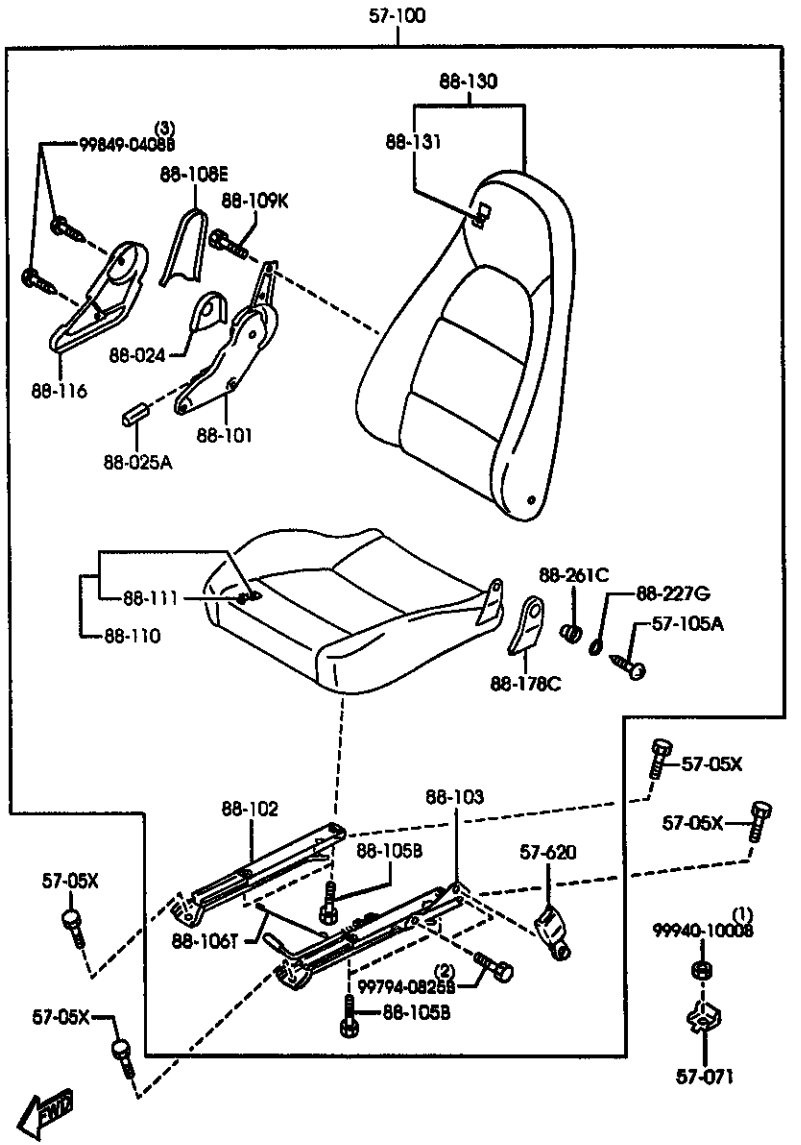

AUNA07 (1N06121)

PART NO.	QTY	MODEL/RESTRICTION	MODEL/RESTRICTION	MODEL/RESTRICTION	FROM-TO
57-05X		BOLT,LINK			
B455-57-05XB	8				
57-071		BRACKET,SEAT LOCK-RR			
NA75-57-071	1				
57-100		SEAT(R),FRONT			
NC10-57-100C	1	(STA TYPE) ((MT)>(5-SP)) (AT)			
02	INT-	NB0 BLACK			
NC11-57-100F	1	(STB TYPE) ((MT)>(5-SP)) (AT)			
21	INT-	NB1 TAN			
* 80	INT-	NB6 BEIGE			
NC65-57-100	1	(STC TYPE) ((MT)>(6-SP))			
55	INT-	NB2 BLUE/BLACK			
57-105A		BOLT,HINGE			
D201-88-063	2				-7C10
NC10-88-063	2				7C10-
57-150		SEAT(L),FRONT			
NC10-57-150C	1	(STA TYPE) ((MT)>(5-SP)) (AT)			
02	INT-	NB0 BLACK			
NC11-57-150F	1	(STB TYPE) ((MT)>(5-SP)) (AT)			
21	INT-	NB1 TAN			
* 80	INT-	NB6 BEIGE			
NC65-57-150	1	(STC TYPE) ((MT)>(6-SP))			
55	INT-	NB2 BLUE/BLACK			
57-620		BELT'A',FRONT SEAT			
NC10-57-620	2				
80	INT-	NB0 NB1 NB2 NB6 NB7 BLACK			

7C10 NB353*-100409

CAT. AUNA07-05 2000-01

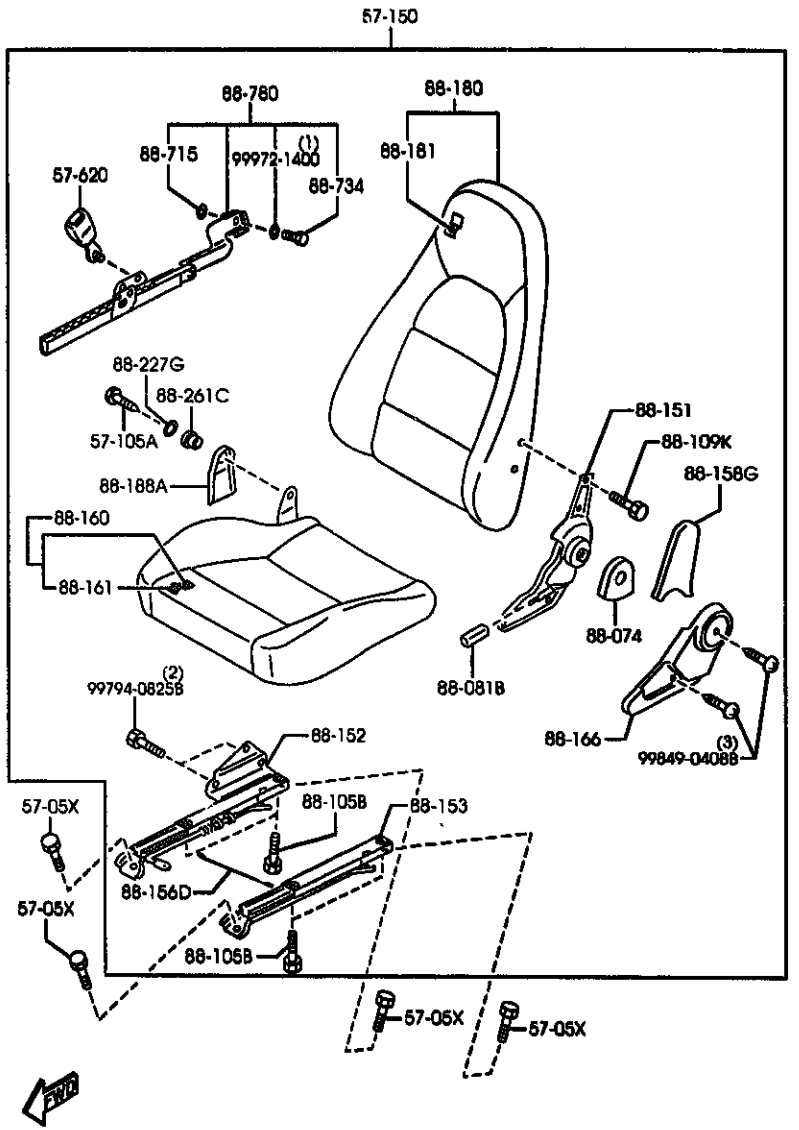

PART NO.	QTY	MODEL/RESTRICTION	MODEL/RESTRICTION	MODEL/RESTRICTION	FROM-TO
88-024		PROTR(R),SEAT BELT			
NA01-88-033	1				
88-025A		KNOB(R),KNUCKLE			
NA01-88-034	1				
00	INT-	NB0 NB2 BLACK			
21	INT-	NB1 TAN			
* 80	INT-	NB6 NB7 BEIGE			
88-074		PROTR(L),SEAT BELT			
NA01-88-083	1				
88-081B		KNOB(L),KNUCKLE			
NA01-88-084	1				
00	INT-	NB0 NB2 BLACK			
21	INT-	NB1 TAN			
* 80	INT-	NB6 NB7 BEIGE			
88-101		KNUCKLE(R),RECLINING			
NA01-88-101C	1				
88-102		ADJUSTER,NO.1			
NA01-88-102A	1				
88-103		ADJUSTER,NO.2			
NC10-88-103	1				
88-105B		BOLT,LINK			
H260-88-105	8				-9701
88-106T		WIRE,CONNECT			
NA01-88-106	1				
88-108E		COVER(R),SEAT BACK			
NA01-88-036	1				
00	INT-	NB0 NB2 BLACK			
21	INT-	NB1 TAN			
* 80	INT-	NB6 NB7 BEIGE			

9701 NB353*-138751

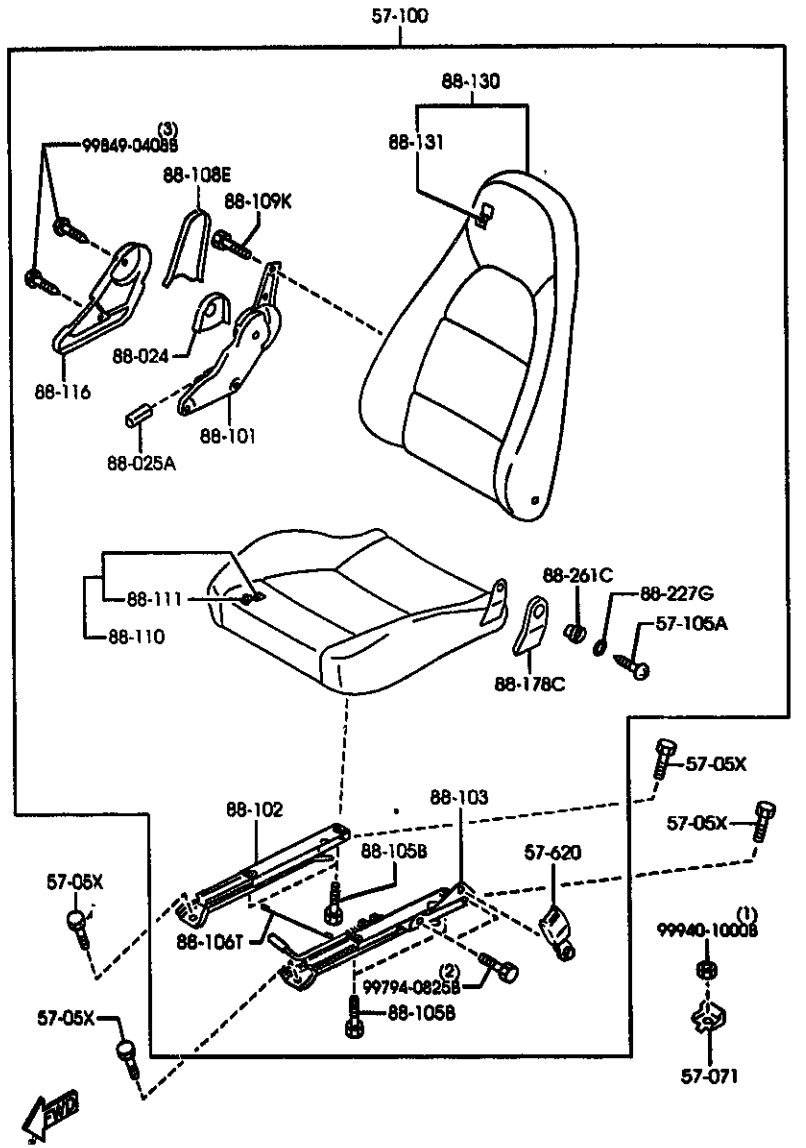

AUNA07 (1N08121)

PART NO.	QTY	MODEL/RESTRICTION	MODEL/RESTRICTION	MODEL/RESTRICTION	FROM-TO
88-109K		SCREW,KNUCKLE			
H260-88-109	8				
88-110		CUSHION(R),FRT SEAT			
NC10-88-110	1	(STA TYPE) ((MT)>(5-SP)) (AT)			
82	INT-	NB0 BLACK			
NC11-88-110A	1	(STB TYPE) ((MT)>(5-SP)) (AT)			
21	INT-	NB1 TAN			
* 80	INT-	NB6 NB7 BEIGE/BLACK			
NB65-88-110	1	(STC TYPE) ((MT)>(6-SP))			
55	INT-	NB2 BLUE/BLACK			
88-111		TRIM(R),SEAT CUSHION			
NC10-88-111	1	(STA TYPE) ((MT)>(5-SP)) (AT)			
82	INT-	NB0 BLACK			
NC11-88-111A	1	(STB TYPE) ((MT)>(5-SP)) (AT)			
21	INT-	NB1 TAN			
* 80	INT-	NB6 NB7 BEIGE/BLACK			
NB65-88-111	1	(STC TYPE) ((MT)>(6-SP))			
55	INT-	NB2 BLUE/BLACK			
88-116		COVER(R),KNUCKLE			
NA01-88-031	1				
80	INT-	NB0 NB2 BLACK			
21	INT-	NB1 TAN			
* 80	INT-	NB6 NB7 BEIGE			
88-130		BACK(R),FRONT SEAT			
NC10-88-130	1	(STA TYPE) ((MT)>(5-SP)) (AT)			
82	INT-	NB0 BLACK			

CAT. AUNA07-05 2000-01

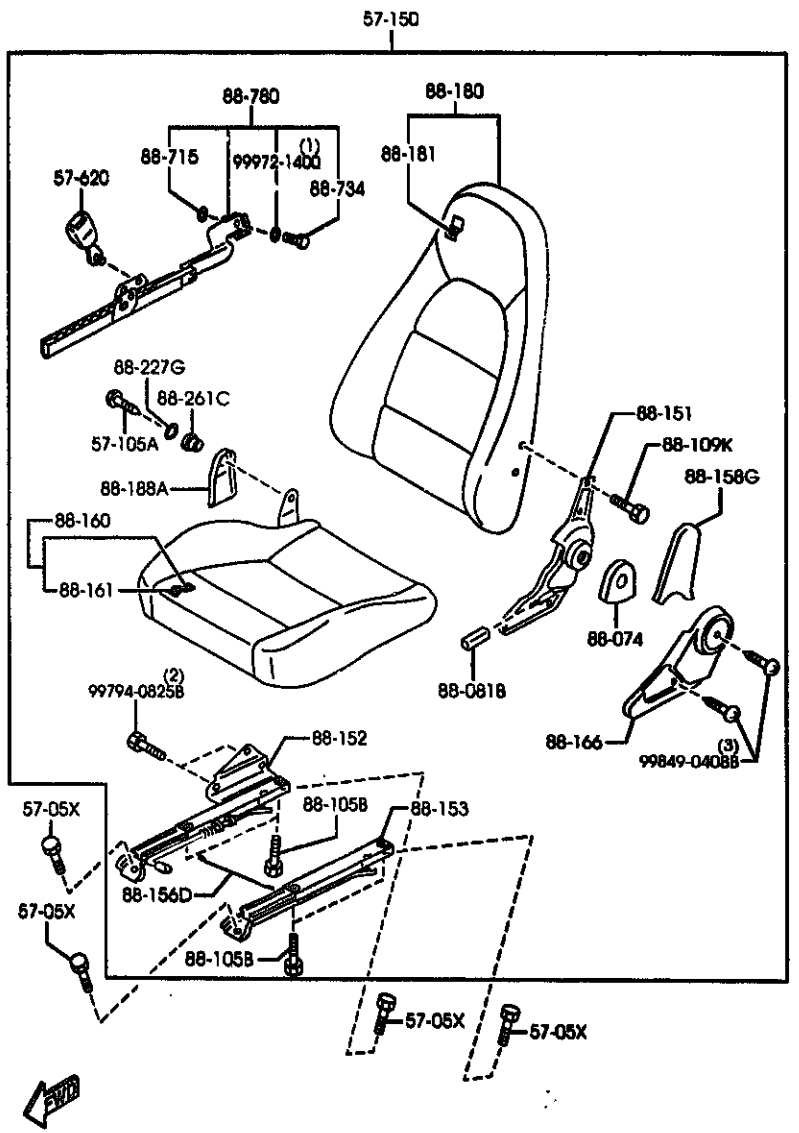

AUNA07 (1N06122)

PART NO.	QTY	MODEL/RESTRICTION	MODEL/RESTRICTION	MODEL/RESTRICTION	FROM-TO
CONT'D					
NC11-88-130B	1	(STB TYPE) ((MT)>(5-SP)) (AT)			
21	INT-	NB1 TAN			
* 80	INT-	NB6 BEIGE			
NC65-88-130	1	(STC TYPE) ((MT)>(6-SP))			
55	INT-	NB2 BLUE/BLACK			
+----------+ | 88-131 | +----------+		TRIM(R),SEAT BACK			
NC10-88-131	1	(STA TYPE) ((MT)>(5-SP)) (AT)			
92	INT-	NB0 BLACK			
%C11-88-131B	1	(STB TYPE) ((MT)>(5-SP)) (AT)			
21	INT-	NB1 TAN			
* 80	INT-	NB6 BEIGE			
NC65-88-131	1	(STC TYPE) ((MT)>(6-SP))			
55	INT-	NB2 BLUE/BLACK			
+----------+ | 88-151 | +----------+		KNUCKLE(L),RECLINING			
NA01-88-151C	1				
+----------+ | 88-152 | +----------+		ADJUSTER NO.3			
NC10-88-152	1				
+----------+ | 88-153 | +----------+		ADJUSTER NO.4			
NA01-88-153A	1				
+----------+ | 88-156D | +----------+		WIRE,CONNECT			
NA01-88-156	1				
+----------+ | 88-1580 | +----------+		COVER(L),SEAT BACK			
NA01-88-086	1				
80	INT-	NB0 NB2 BLACK			
21	INT-	NB1 TAN			
* 80	INT-	NB6 NB7 BEIGE			

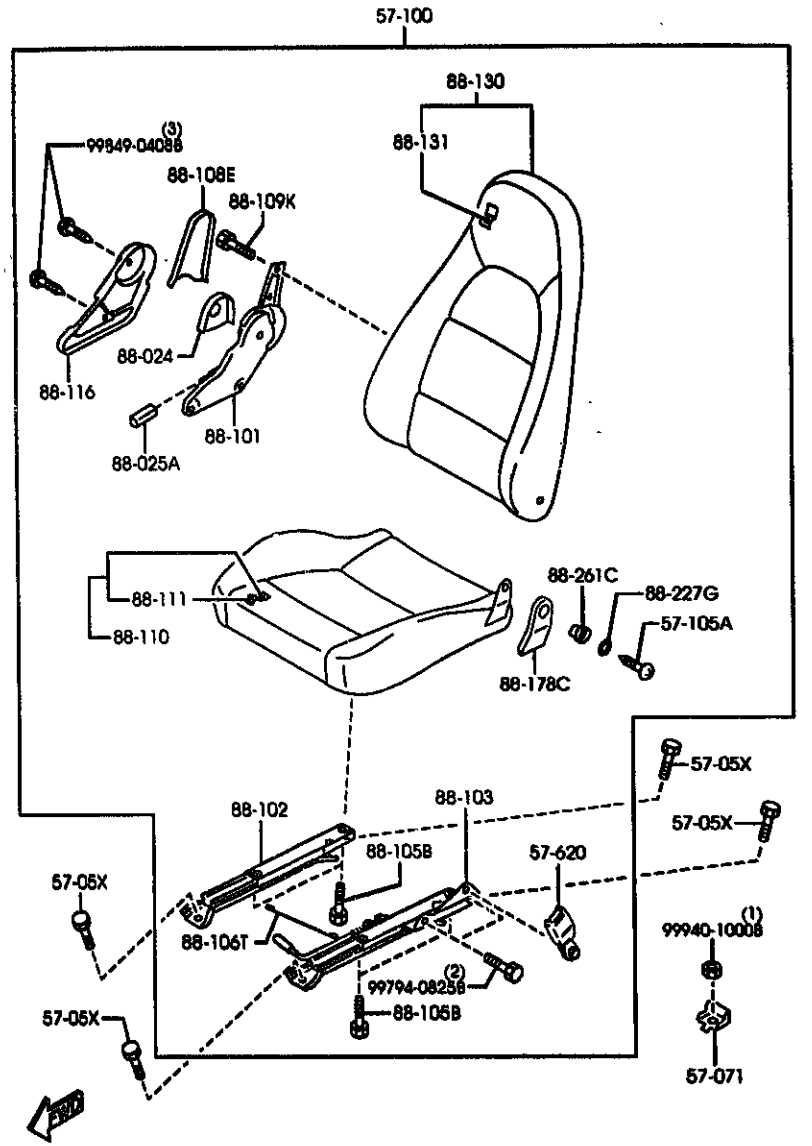

AUNA07 (1N08121)

PART NO.	QTY	MODEL/RESTRICTION	MODEL/RESTRICTION	MODEL/RESTRICTION	FROM-TO
88-160		CUSHION(L),FRT SEAT			
NC10-88-160	1	(STA TYPE) ((MT)>(5-SP)) (AT)			
82	INT-	NB0 BLACK			
NC11-88-160A	1	(STB TYPE) ((MT)>(5-SP)) (AT)			
21	INT-	NB1 TAN			
* 80	INT-	NB6 NB7 BEIGE/BLACK			
N065-88-160	1	(STC TYPE) ((MT)>(6-SP))			
55	INT-	NB2 BLUE/BLACK			
88-161		TRIM(L),SEAT CUSHION			
NC10-88-161	1	(STA TYPE) ((MT)>(5-SP)) (AT)			
82	INT-	NB0 BLACK			
NC11-88-161A	1	(STB TYPE) ((MT)>(5-SP)) (AT)			
21	INT-	NB1 TAN			
* 80	INT-	NB6 NB7 BEIGE/BLACK			
N065-88-161	1	(STC TYPE) ((MT)>(6-SP))			
55	INT-	NB2 BLUE/BLACK			
88-166		COVER(L),KNUCKLE			
NA01-88-081	1				
00	INT-	NB0 NB2 BLACK			
21	INT-	NB1 TAN			
* 80	INT-	NB6 NB7 BEIGE			
88-178C		COVER(R),HINGE			
NA01-88-035	1				
00	INT-	NB0 NB2 BLACK			
21	INT-	NB1 TAN			
* 80	INT-	NB6 NB7 BEIGE			
88-180		BACK(L),FRONT SEAT			

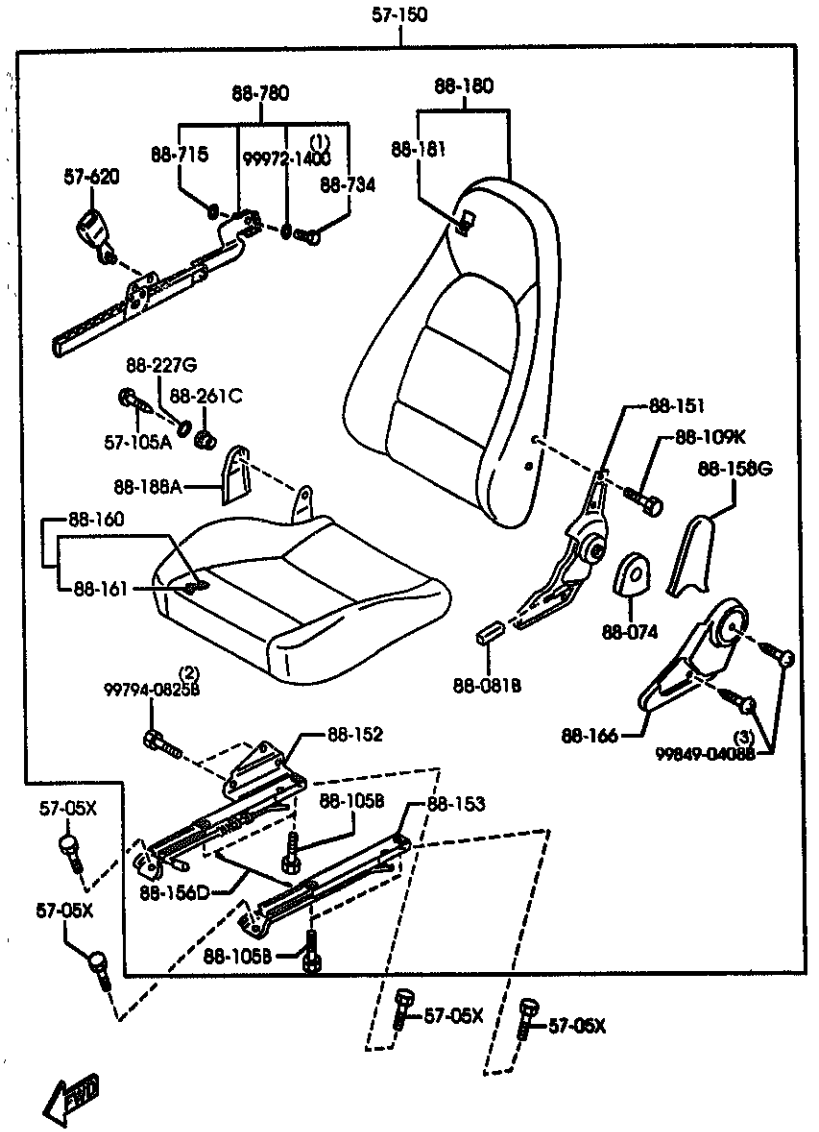

AUNA07 (1N08122)

PART NO.	QTY	MODEL/RESTRICTION	MODEL/RESTRICTION	MODEL/RESTRICTION	FROM-TO
CONT'D					
MC10-88-180	1	(STA TYPE) ((MT)>(5-SP)) (AT)			
02	INT-	NB0 BLACK			
MC11-88-180B	1	(STB TYPE) ((MT)>(5-SP)) (AT)			
21	INT-	NB1 TAN			
* 88	INT-	NB6 BEIGE			
MC65-88-180	1	(STC TYPE) ((MT)>(6-SP))			
55	INT-	NB2 BLUE/BLACK			
| 88-181 |		TRIM(L),SEAT BACK			
MC10-88-181	1	(STA TYPE) ((MT)>(5-SP)) (AT)			
02	INT-	NB0 BLACK			
MC11-88-181B	1	(STB TYPE) ((MT)>(5-SP)) (AT)			
21	INT-	NB1 TAN			
* 88	INT-	NB6 BEIGE			
MC65-88-181	1	(STC TYPE) ((MT)>(6-SP))			
55	INT-	NB2 BLUE/BLACK			
| 88-188A |		COVER(L),HINGE			
MA01-88-085	1				
88	INT-	NB0 NB2 BLACK			
21	INT-	NB1 TAN			
* 88	INT-	NB6 NB7 BEIGE			
| 88-2270 |		SILENCER			
MC10-88-049	2				
| 88-261C |		LEVER,RELEASE			
MA75-88-188	2				
| 88-715 |		WASHER			
MA11-88-715	1	(STA TYPE) ((MT)>(5-SP)) (AT)			

CAT. AUNA07-05 2000-01

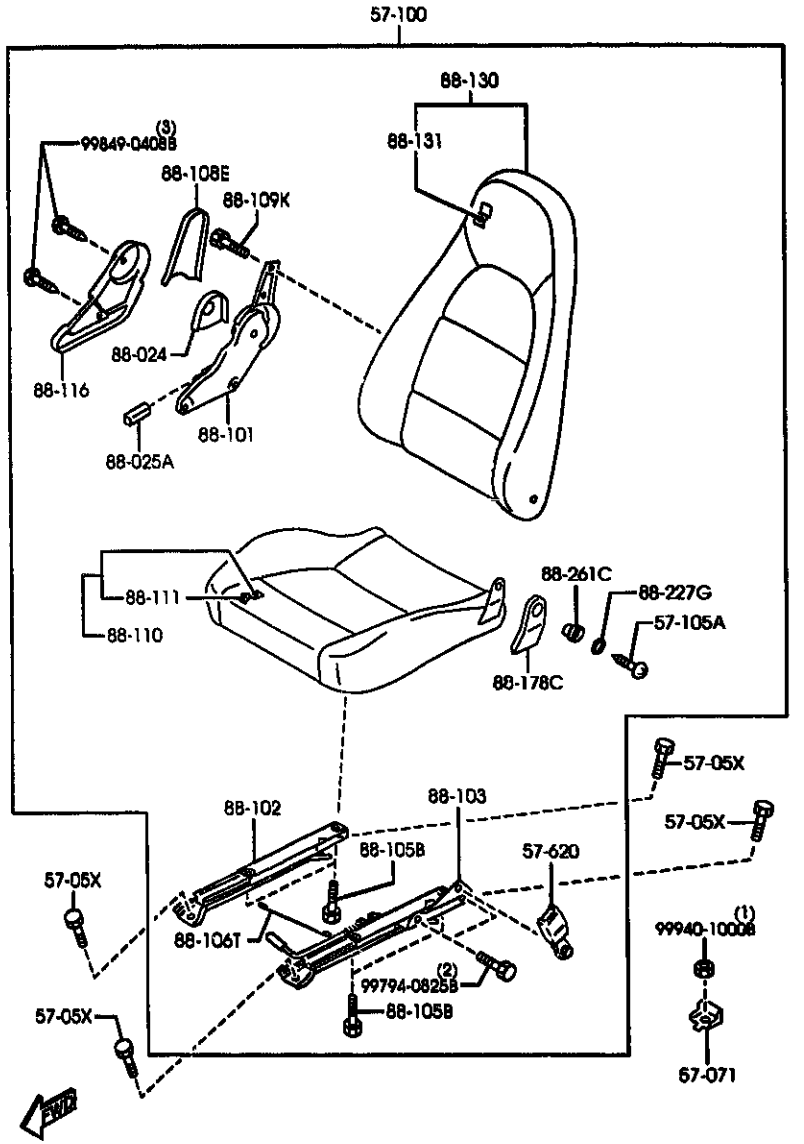

AUNA07 (1N08121)

5700A -7 # SEATS

PART NO.	QTY	MODEL/RESTRICTION	MODEL/RESTRICTION	MODEL/RESTRICTION	FROM-TO
88-754		BOLT			
MA75-88-764	1	(STA TYPE) ((MT)>(5-SP)) (AT)			
88-780		ANCHOR UNIT(L),BELT			
MA75-88-760	1	(STA TYPE) ((MT)>(5-SP)) (AT)			

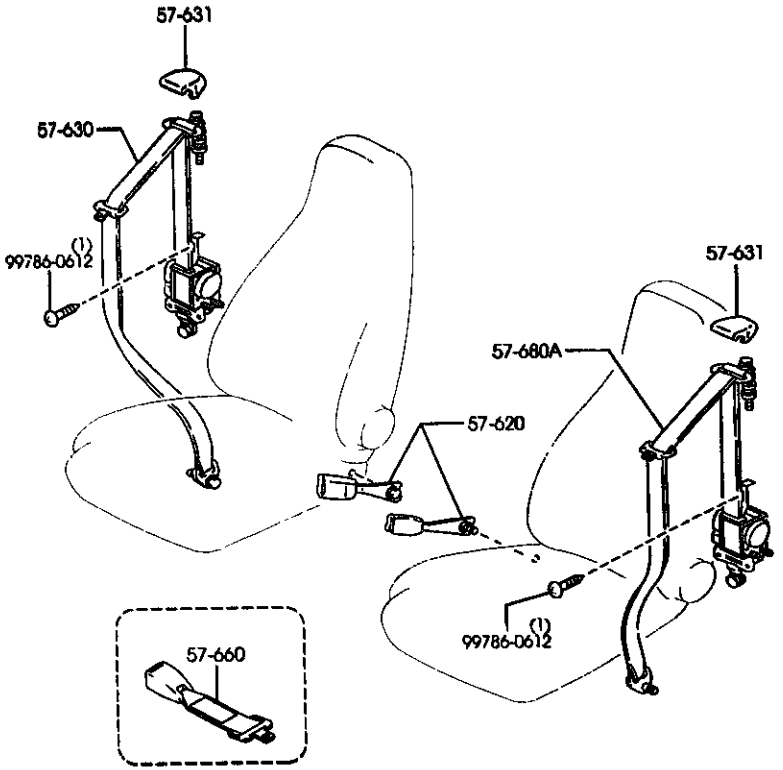

4WD

AUNA07 (1N03700)

PART NO.	QTY	MODEL/RESTRICTION	MODEL/RESTRICTION	MODEL/RESTRICTION	FROM-TO
57-620		BELT'A',FRONT SEAT			
MC10-57-620	2				
00	INT-	NB0 NB1 NB2 NB6 NB7 BLACK			
57-630		BELT'B',FRT SEAT			
MC10-57-630D	1				-7C03
00	INT-	NB0 BLACK			
21	INT-	NB1 BLACK/TAN			
MC10-57-630E	1				7C03-9401
00	INT-	NB0 NB2 BLACK			
21	INT-	NB1 BLACK/TAN			
MC10-57-630F	1				9401-
00	INT-	NB0 NB2 BLACK			
21	INT-	NB1 BLACK/TAN			
* 80	INT-	NB6 NB7 BLACK/BEIGE			
57-631		COVER,ANCHOR			
MC10-57-631A	2				
02	INT-	NB0 NB2 BLACK			
21	INT-	NB1 TAN			
* 80	INT-	NB6 NB7 BEIGE			
57-660		BELT,EXTENSION-FRONT SEAT			
*FDV5-57-63X	1	OPTION-9 INCH			9B01-
*FDV6-57-63X	1	OPTION-12 INCH			9B01-
57-680A		BELT'B'(L),FRT SEAT			
MC10-57-690C	1				-7C03
00	INT-	NB0 BLACK			
21	INT-	NB1 BLACK/TAN			
MC10-57-690D	1				7C03-9401
00	INT-	NB0 NB2 BLACK			
21	INT-	NB1 BLACK/TAN			
MC10-57-690E	1				9401-
00	INT-	NB0 NB2 BLACK			

7C03 NB353*-100063
9401 NB353*-136473
9B01 NB353*-141489

CAT. AUNA07-05 2000-01

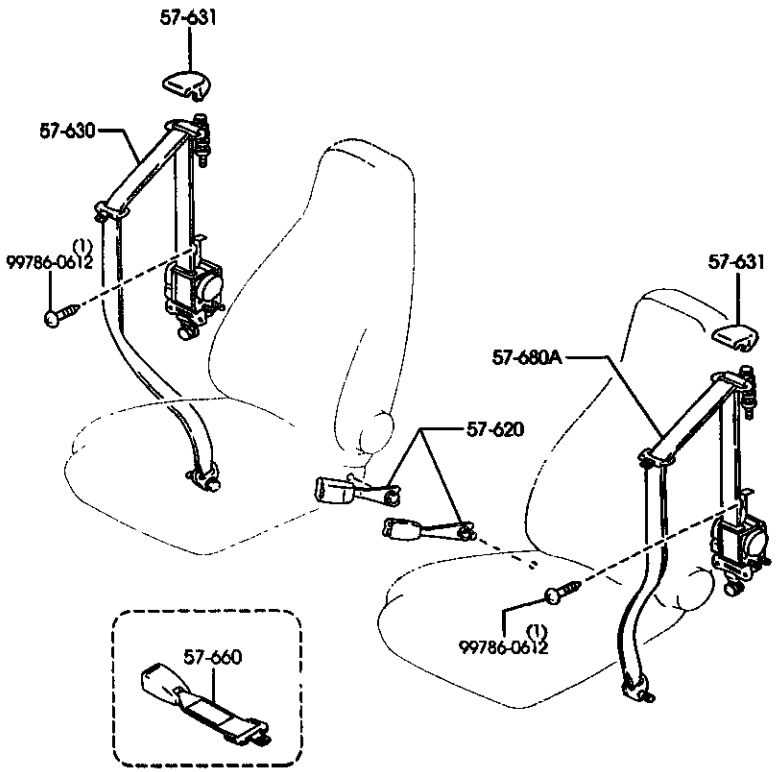

PART NO.	QTY	MODEL/RESTRICTION	MODEL/RESTRICTION	MODEL/RESTRICTION	FROM-TO
CONT'D					
21	INT-	NB1 BLACK/TAN			
* 80	INT-	NB4 NB7 BLACK/BEIGE			

(URETHANE)

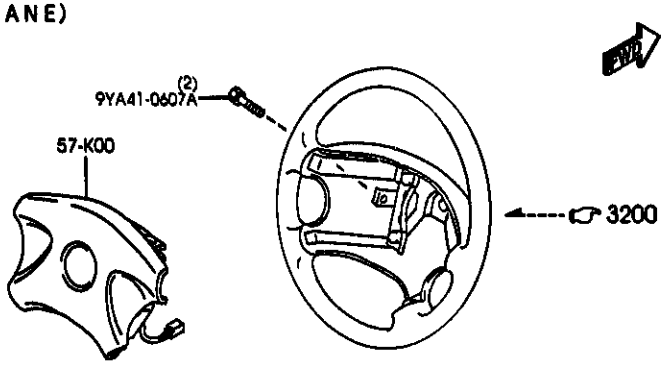

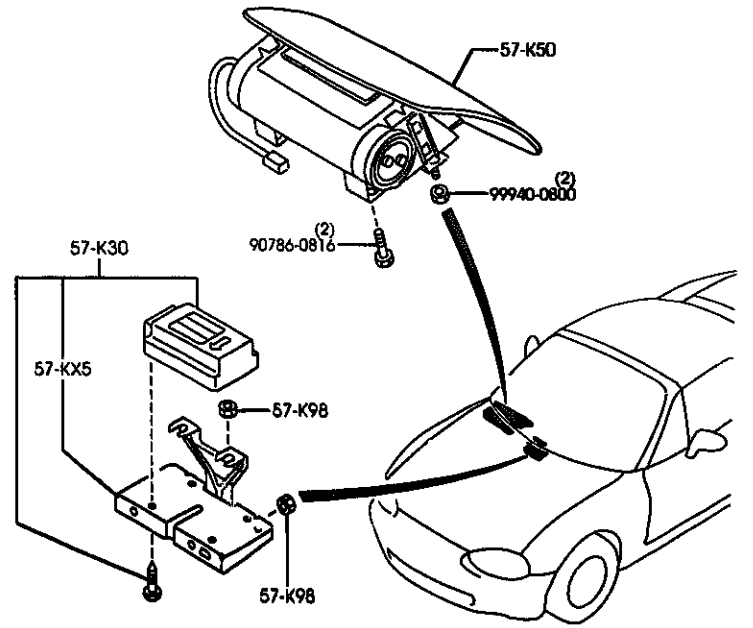

AUNA07 (1N08141)

(LEATHER)

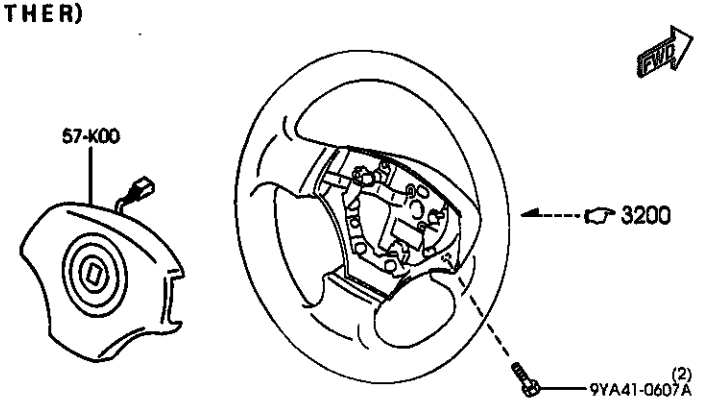

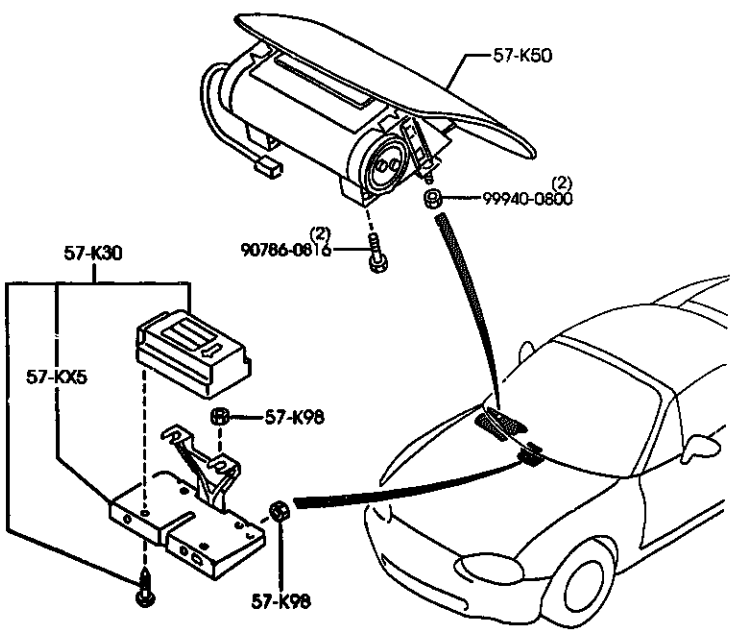

AUNA07 (1N08142)

(URETHANE)

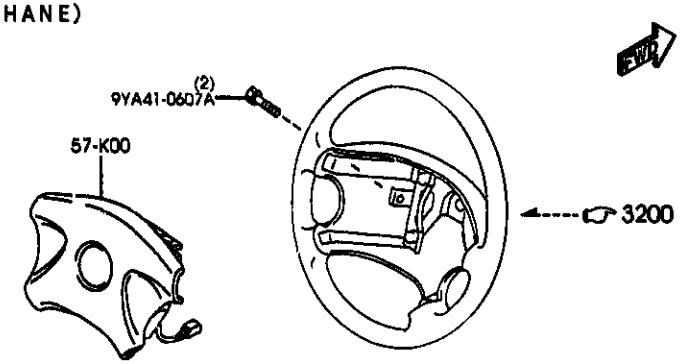

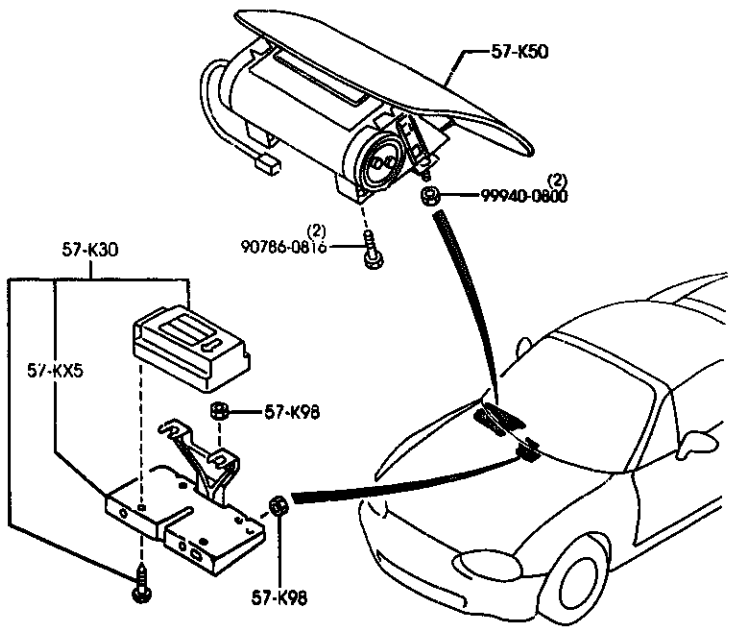

AUNA07 (1N08141)

5795A -1 * AIR BAG

PART NO.	QTY	MODEL/RESTRICTION	MODEL/RESTRICTION	MODEL/RESTRICTION	FROM-TO
57-KX5		BRKT,AIR BAG MODULE			
MD34-57-KX0A	1				
57-K00		MODULE,AIR BAG			
MC18-57-K00B	1	(URETHANE WHEEL)			
00	INT-	NB0 NB1 NB2 NB6 NB7 BLACK			
MC13-57-K00	1	(LEATHER WHEEL'TYPE-B') (LEATHER WHEEL'TYPE-A') (WOOD WHEEL-A TYPE)			
57-K30		UNIT,SAS			
MC18-57-K3XB	1				
57-K50		MODULE,AIR BAG PASSENGER			
MC18-57-K70C	1				
02	INT-	NB0 NB1 NB2 NB6 NB7 BLACK			
57-K98		NUT			
FC66-57-K98	4				

CAT. AUNA97-05 2000-01

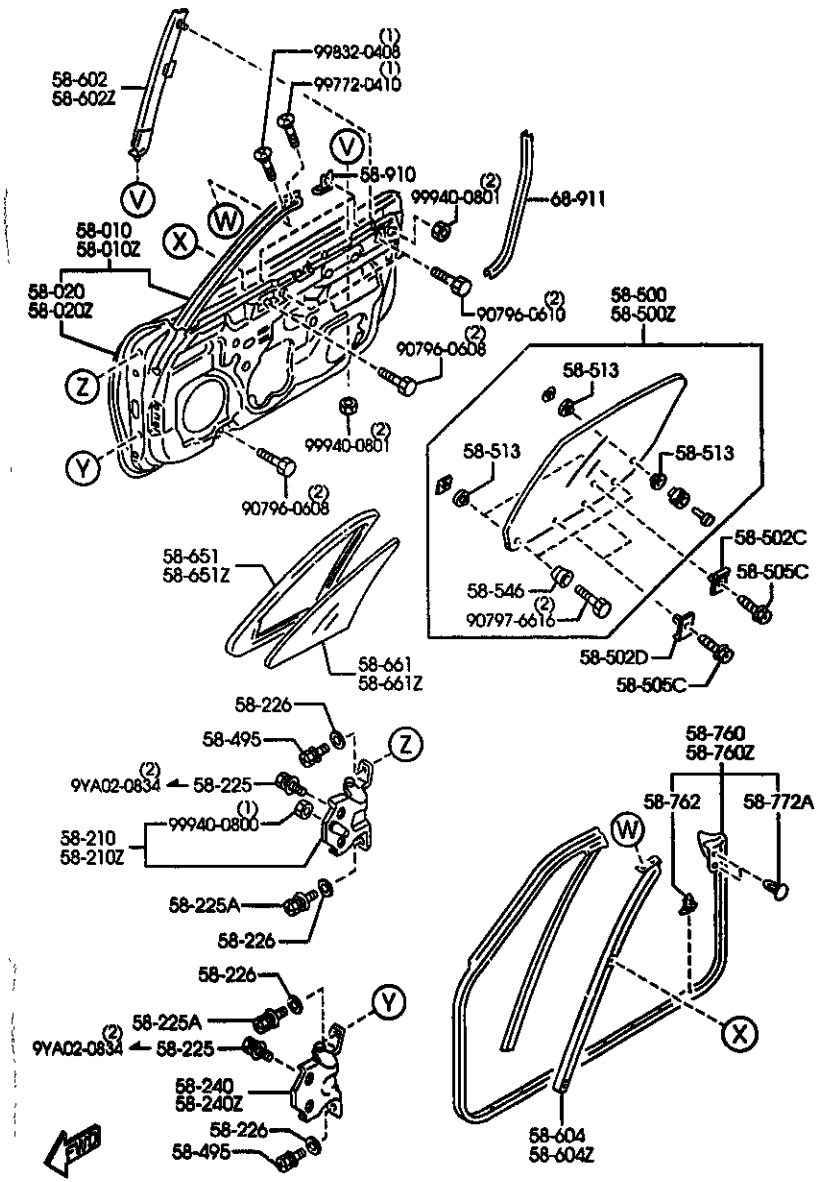

AUNA07 (1N11530)

PART NO.	QTY	MODEL/RESTRICTION	MODEL/RESTRICTION	MODEL/RESTRICTION	FROM-TO
| 58-010 |		BODY(R),FRONT DOOR			
NCY0-58-02XC	1				-7C04
A (NCY0-58-02XD)					
NCY0-58-02XD	1				7C04-8301
A (NCY0-58-02XF)					
NCY0-58-02XF	1				8301-8311
A (NCY0-58-02XG)					
NCY0-58-02XG	1				8311-9301
AN(NCY0-58-02XH)					
NCY0-58-02XH	1				9301-9C01
AN(NCY0-58-02XJ)					
*NCY0-58-02XJ	1				9C01-
| 58-010Z |		BODY(L),FRONT DOOR			
NCY0-59-02XC	1				-7C04
A (NCY0-59-02XD)					
NCY0-59-02XD	1				7C04-8301
A (NCY0-59-02XF)					
NCY0-59-02XF	1				8301-8311
A (NCY0-59-02XG)					
NCY0-59-02XG	1				8311-9301
AN(NCY0-59-02XH)					
NCY0-59-02XH	1				9301-9C01
AN(NCY0-59-02XJ)					
*NCY0-59-02XJ	1				9C01-
| 58-020 |		PANEL(R),OUT.-FRT DOOR			
NC10-58-030F	1				
| 58-020Z |		PANEL(L),OUT.-FRT DOOR			
NC10-59-030F	1				
| 58-210 |		HINGE(R),DOOR-UPPER			
DX50-58-210	1				
| 58-210Z |		HINGE(L),DOOR-UPPER			
DX50-59-210	1				
| 58-225 |		BOLT,SETTING-HINGE LOWER			
9455-58-225	8				-9507
| 58-225A |		BOLT,SETTING			
S005-58-225	4				

7C04 NB353N-100085
8301 NB353N-109481
8311 NB353N-110914
9301 NB353N-133012
9507 NB353N-137718
9C01 NB353N-142298

CAT. AUNA07-05 2000-01

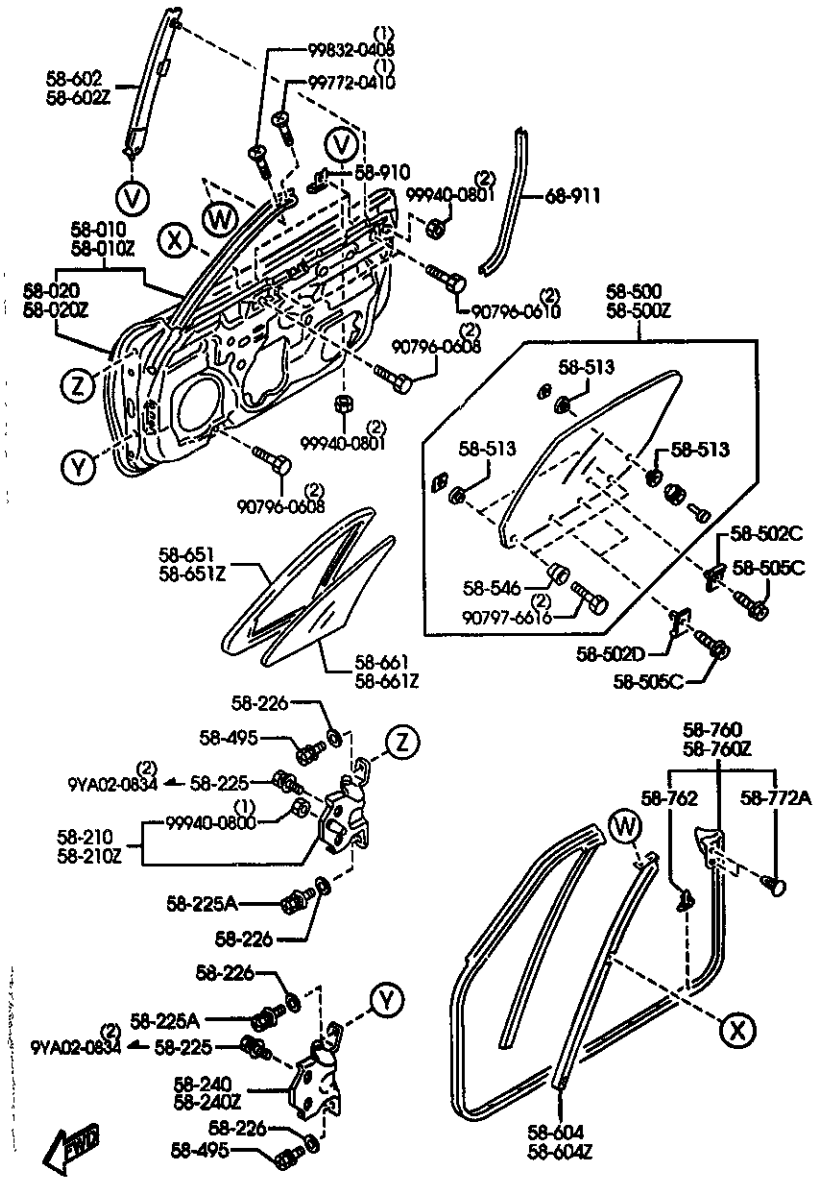

AUNA07 (1N11530)

PART NO.	QTY	MODEL/RESTRICTION	MODEL/RESTRICTION	MODEL/RESTRICTION	FROM-TO
58-226		WASHER,SETTING			
6J21-58-226	8				
58-240		HINGE(R),DOOR-LOWER			
DX58-59-240	1				
58-240Z		HINGE(L),DOOR-LOWER			
DX58-58-240	1				
58-495		BOLT,SET			
BA54-58-225	4				
58-500		GLASS(R),DOOR-FRT			
NC10-58-510B AM(NC10-58-510C)	1				-7C01
NC10-58-510C AM(NC10-58-510D)	1				7C01-8601
NC10-58-510D	1				8601-
58-500Z		GLASS(L),DOOR-FRT			
NC10-59-510B AM(NC10-59-510C)	1				-7C01
NC10-59-510C AM(NC10-59-510D)	1				7C01-8601
NC10-59-510D	1				8601-
58-502C		GROMMET,SCREW			
B235-58-502	2				
58-502D		GROMMET,SCREW-DOOR GLASS			
UB39-58-502A	4				
58-505C		SCREW,WINDOW REGULATOR			
B092-58-505	6				
58-513		WASHER			
NA01-58-523	8				
58-546		STOPPER,DOOR GLASS-FRONT			
N001-58-546	4				

7C01 NB353M-100063
8601 NB353M-119466

CAT. AUNA07-05 2000-01

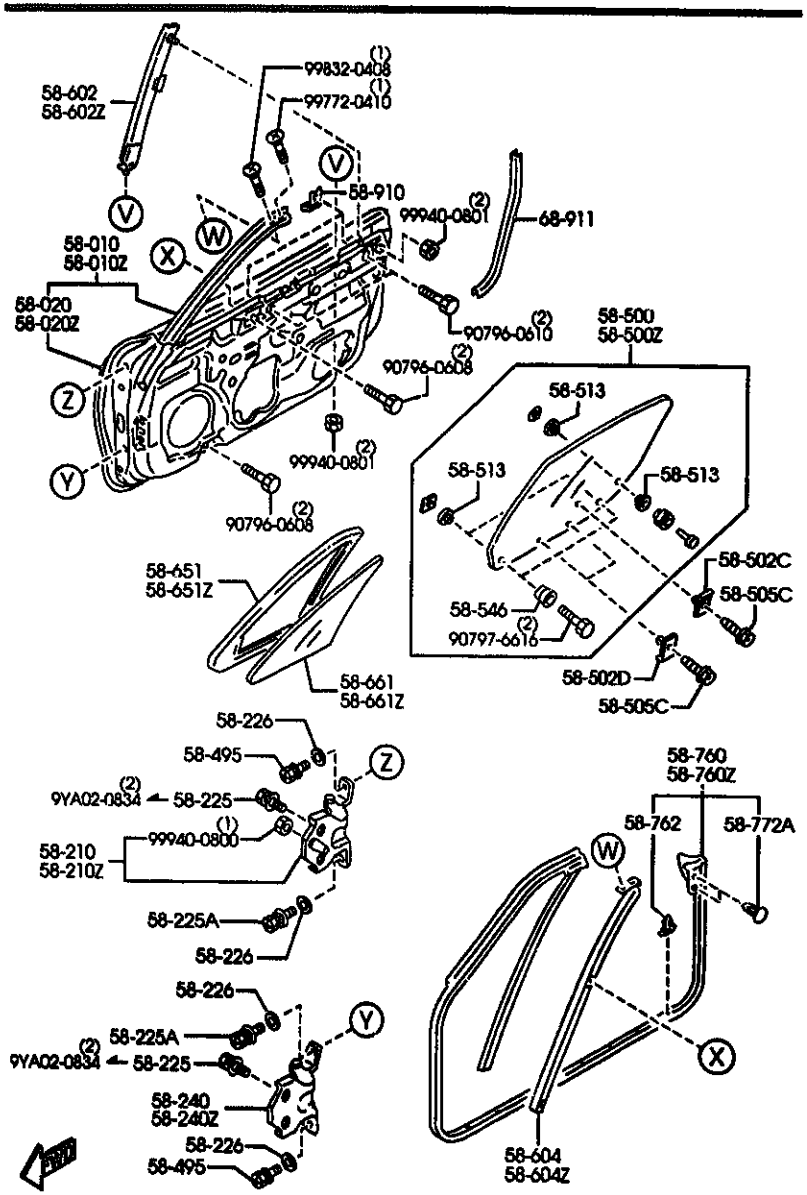

AUNA07 (1N11530)

PART NO.	QTY	MODEL/RESTRICTION	MODEL/RESTRICTION	MODEL/RESTRICTION	FROM-TO
58-602		GUIDE'B'(R),GLASS			
NA01-58-603D	1				
58-602Z		GUIDE'B'(L),GLASS			
NA01-59-603D	1				
58-604		CHANNEL(R),DIVISION-DOOR			
NA01-58-604B	1				-7C04
NC10-58-604	1				7C04-
58-604Z		CHANNEL(L),DIVISION-DOOR			
NA01-59-604B	1				-7C04
NC10-59-604	1				7C04-
58-651		WEATHERSTRIP(R)			
NA01-58-651B	1				
58-651Z		WEATHERSTRIP(L)			
NA01-59-651B	1				
58-661		GLASS(R),VENTILATOR			
NB39-58-661A	1				
58-661Z		GLASS(L),VENTILATOR			
NB39-59-661A	1				
58-760		WEATHERSTRIP(R),DOOR			
NC10-58-760A AH(NC10-58-760B)	1				-7C03
NC10-58-760B AH(NC10-58-760C)	1				7C03-8110
NC10-58-760C AH(NC10-58-760D)	1				8110-8201
NC10-58-760D AH(NC10-58-760E)	1				8201-8309
NC10-58-760E AH(NC10-58-760F)	1				8309-8427
NC10-58-760F	1				8427-
58-760Z		WEATHERSTRIP(L),DOOR			
NC10-59-760A AH(NC10-59-760B)	1				-7C03

7C03 NB353M-100063
7C04 NB353M-100083
8110 NB353M-103510
8201 NB353M-106406
8309 NB353M-110520
8427 NB353M-116413

CAT. AUNA07-05 2000-01

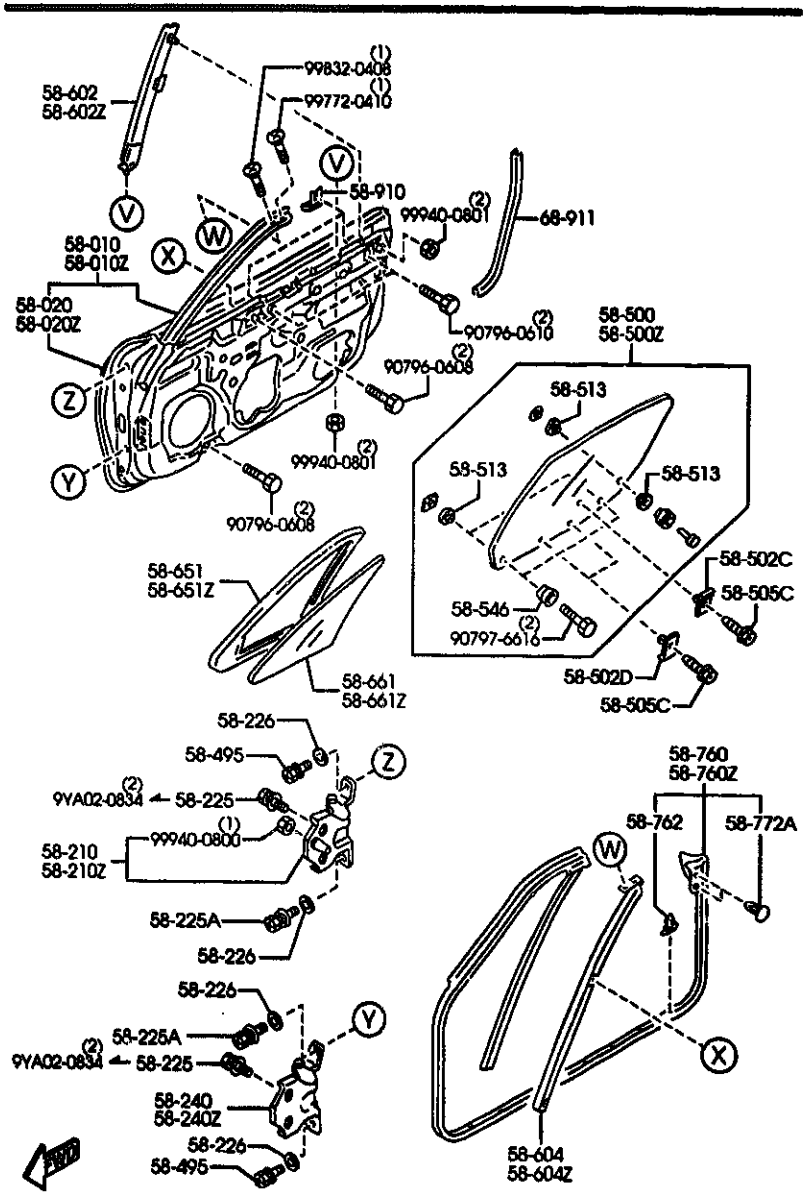

AUNA07 (1N11530)

PART NO.	QTY	MODEL/RESTRICTION	MODEL/RESTRICTION	MODEL/RESTRICTION	FROM-TO
CONT'D					
NC10-59-760B AN(NC10-59-760C)	1				7C03-8110
NC10-59-760C AN(NC10-59-760D)	1				8110-8201
NC10-59-760D AN(NC10-59-760E)	1				8201-8309
NC10-59-760E AN(NC10-59-760F)	1				8309-8427
NC10-59-760F	1				8427-
+----------+ | 58-762 | +----------+ BC1D-58-762	38	FASTENER			
+----------+ | 58-772A | +----------+ 1811-58-772	4	FASTENER			
+----------+ | 58-910 | +----------+ J002-58-910A	4	STOPPER,GLASS			
+----------+ | 68-911 | +----------+ NC10-68-911	2	WELT,SEAMING			
00	INT-	NB0 NB1 NB2 NB6 BLACK			

7C03 NB353M-100043
8110 NB353M-103510
8201 NB353M-106606
8309 NB353M-110520
8427 NB353M-116413

CAT. AUNA87-05 2000-01

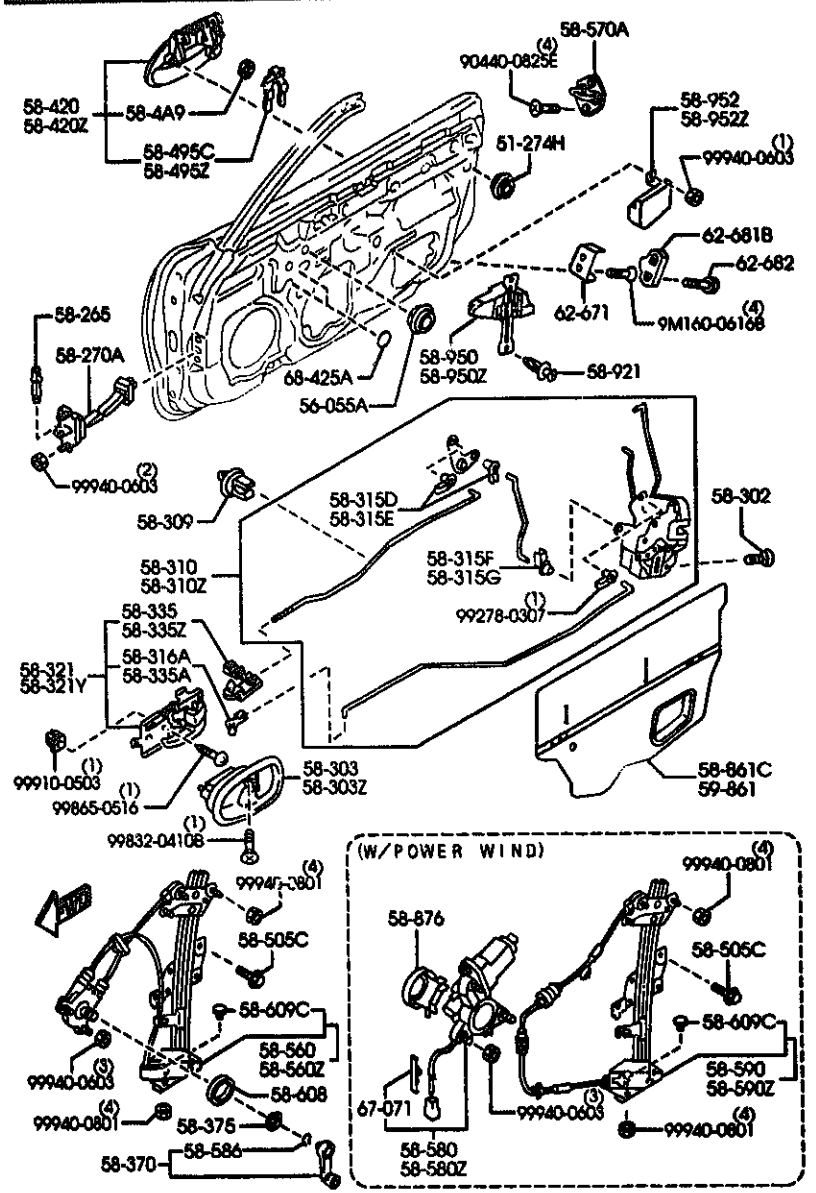

AUNA07 (1N06570)

PART NO.	QTY	MODEL/RESTRICTION	MODEL/RESTRICTION	MODEL/RESTRICTION	FROM-TO
51-274H		GROMMET			
BF67-51-261	2				
56-055A		GROMMET			
A001-56-053	2				
58-265		PIN,CHECKER			
BC1D-58-265	2				
58-270A		CHECKER,DOOR			
NA01-58-270B	2				
58-302		SCREW,TAPPING-DOOR LOCK			
LA81-58-302A	6				
58-303		COVER(R),IN.HANDLE			
EA01-58-303	1				
02	INT-	NB0 NB1 NB2 NB6 BLACK			
58-303Z		COVER(L),IN.HANDLE			
EA81-59-303	1				
02	INT-	NB0 NB1 NB2 NB6 NB7 BLACK			
58-309		HOLDER,ROD			
B001-58-309A	2				
58-310		LOCK(R),DOOR			
NC10-58-310	1	(W/O POWER DOOR LOCK)			-8101
AN(NC10-58-310A)					
NC11-58-310C	1	(W/POWER DOOR LOCK)			-8101
A (NC11-58-310E)					
NC10-58-310A	1	(W/O POWER DOOR LOCK)			8101-9701
NC11-58-310E	1	(W/POWER DOOR LOCK)			8101-9701
NC20-58-310	1	(W/O POWER DOOR LOCK)			9701-
NC21-58-310	1	(W/POWER DOOR LOCK)			9701-
58-310Z		LOCK(L),DOOR			
NC10-59-310	1	(W/O POWER DOOR LOCK)			-8101

8101 NB353N-102707
9701 NB353N-158751

CAT. AUNA07-05 2000-01

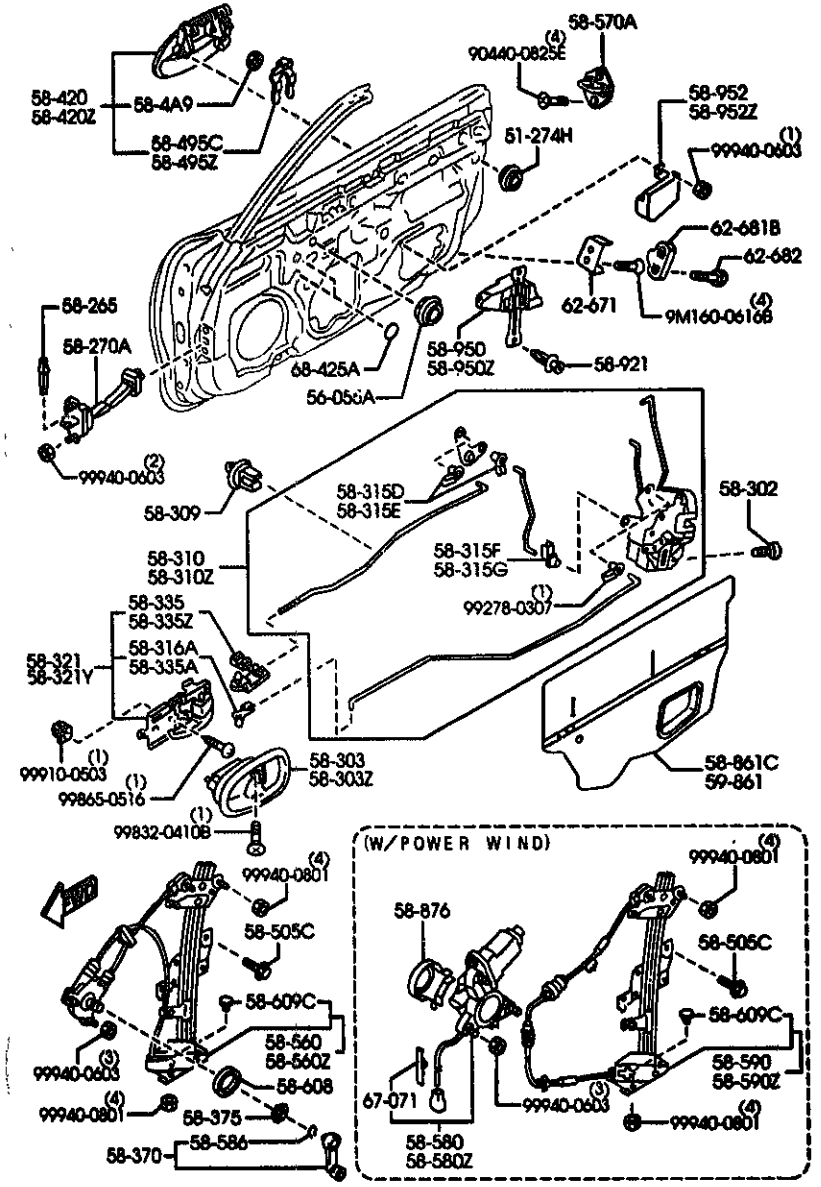

AUNA07 (1N06570)

PART NO.	QTY	MODEL/RESTRICTION	MODEL/RESTRICTION	MODEL/RESTRICTION	FROM-TO
CONT'D AM(NC10-59-310A)		)			
NC11-59-310C A (NC11-59-310E)	1	(W/POWER DOOR LOCK)			-8101
NC10-59-310A	1	(W/O POWER DOOR LOCK)			8101-9701
NC11-59-310E	1	(W/POWER DOOR LOCK)			8101-9701
NC20-59-310	1	(W/O POWER DOOR LOCK)			9701-
NC21-59-310	1	(W/POWER DOOR LOCK)			9701-
| 58-315D |		CLIP (R)			
0030-58-315	2	(W/POWER DOOR LOCK)			
| 58-315E |		CLIP (L)			
0030-59-315	2	(W/POWER DOOR LOCK)			
| 58-315F |		CLIP(R),LOCK			
0030-59-315	1	(W/POWER DOOR LOCK)			
| 58-315G |		CLIP(L),LOCK			
0030-58-315	1	(W/POWER DOOR LOCK)			
| 58-316A |		CLIP			
MB001-59-335	1	(('00 MODEL)>(6-SP))			
| 58-321 |		HANDLE(R),INNER			
*002A-58-330B	1	(('00 MODEL)>(6-SP))			
B01A-58-330B	1	('99 MODEL)			-8B10
02	INT-	NB0 NB1 NB2 BLACK			
B01A-58-330C	1	('99 MODEL) (('00 MODEL)>(4-SP)) (('00 MODEL)>(5-SP))			8B10-
02	INT-	NB0 NB1 NB2 NB6 NB7 BLACK			
| 58-321Y |		HANDLE(L),INNER			
*002A-59-330B	1	(('00 MODEL)>(6-SP))			
B01A-59-330B	1	('99 MODEL)			-8B10

8101 NB353*-102707
8B10 NB353*-123755
9701 NB353*-138751

CAT. AUNA07-05 2000-01

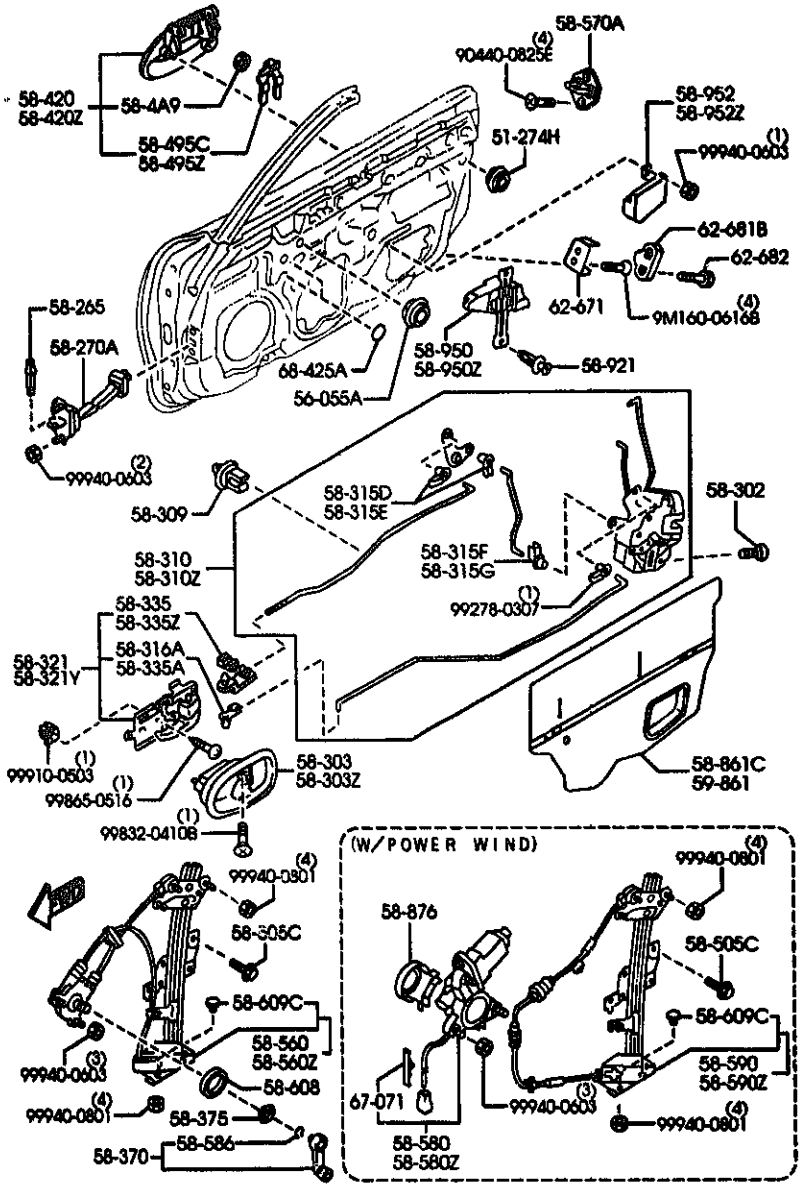

AUNA07 (1N06570)

PART NO.	QTY	MODEL/RESTRICTION	MODEL/RESTRICTION	MODEL/RESTRICTION	FROM-TO
CONT'D					
02	INT-	NB0 NB1 NB2 BLACK			
B01A-59-330C	1	('99 MODEL) (('00 MODEL)>(4-SP)) (('00 MODEL)>(5-SP))			8B10-
02	INT-	NB0 NB1 NB2 NB6 NB7 BLACK			
58-335		CLIP(R),INNER HANDLE			
B01A-58-335	1	('99 MODEL) (('00 MODEL)>(4-SP)) (('00 MODEL)>(5-SP))			
KB02A-58-335	1	(6) (('00 MODEL)>(6-SP))			
58-335A		CLIP			
WFB01-58-335	1	(('00 MODEL)>(6-SP))			
58-335Z		CLIP(L),INNER HANDLE			
B01A-59-335	1	('99 MODEL) (('00 MODEL)>(4-SP)) (('00 MODEL)>(5-SP))			
KB02A-59-335	1	(6) (('00 MODEL)>(6-SP))			
58-370		HANDLE,REGULATOR			
S084-58-580A	2	(W/O POWER WIND.)			
00	INT-	NB0 NB1 NB2 NB6 NB7 BLACK			
58-375		ESCUTCHEON			
B001-58-582A	2	(W/O POWER WIND.)			
00	INT-	NB0 NB1 NB2 NB6 NB7 BLACK			
58-4A9		PLUG,OUTER HANDLE			
H030-58-4A9	2				
58-420		HANDLE(R),OUTER			
GA5R-58-410F	1				

8B10 NB3S3N-123755

CAT. AUMA07-05 2000-01

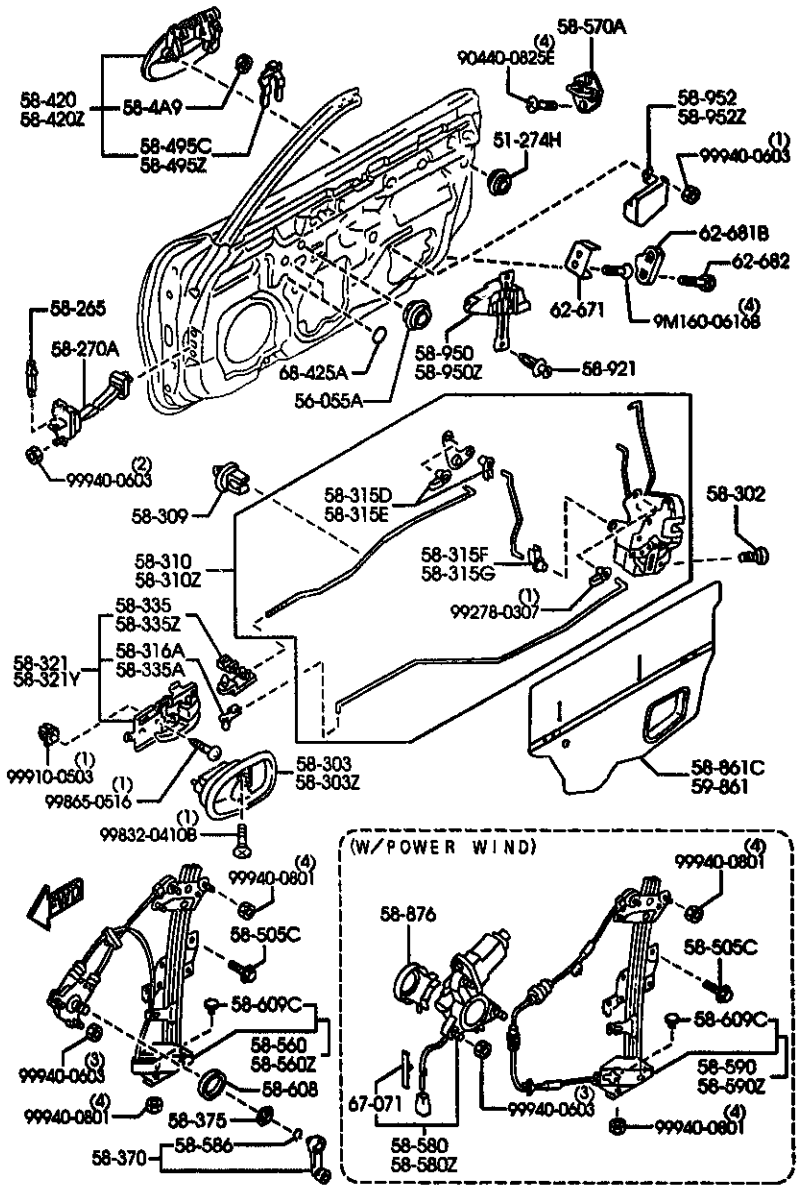

AUNA07 (1N06570)

PART NO.	QTY	MODEL/RESTRICTION	MODEL/RESTRICTION	MODEL/RESTRICTION	FROM-TO
CONT'D					
PT	EXT-	PT CHAST WHITE			
PZ	EXT-	PZ A3F BRILLIANT BLACK			
SU	EXT-	SU A3E CLASSIC RED			
* 17	EXT-	23E ARTVIN RED MC			
40	EXT-	20P INNOCENT BLUE MC			
46	EXT-	18J NEAT GREEN MC			
47	EXT-	18J SPACE GREEN MC			
56	EXT-	18K NEW ORANGE MC			
57	EXT-	12K TWILIGHT BLUE			
92	EXT-	18G HIGHLIGHT SILVER M			
| 58-420Z |		HANDLE(L),OUTER			
EA01-59-410F	1				
PT	EXT-	PT CHAST WHITE			
PZ	EXT-	PZ A3F BRILLIANT BLACK			
SU	EXT-	SU A3E CLASSIC RED			
* 17	EXT-	23E ARTVIN RED MC			
40	EXT-	20P INNOCENT BLUE MC			
46	EXT-	18J NEAT GREEN MC			
47	EXT-	18J SPACE GREEN MC			
56	EXT-	18K NEW ORANGE MC			
57	EXT-	12K TWILIGHT BLUE			
92	EXT-	18G HIGHLIGHT SILVER M			
| 58-495C |		RETAINER(R),LOCK CYLINDER			
GT28-58-495	1				
| 58-495Z |		RETAINER(L),LOCK CYLINDER			
GT28-59-495	1				
| 58-505C |		SCREW,WINDOW REGULATOR			
B092-58-505	6				
| 58-560 |		REGULATOR(R),WINDOW			

CAT. AUNA07-05 2000-01

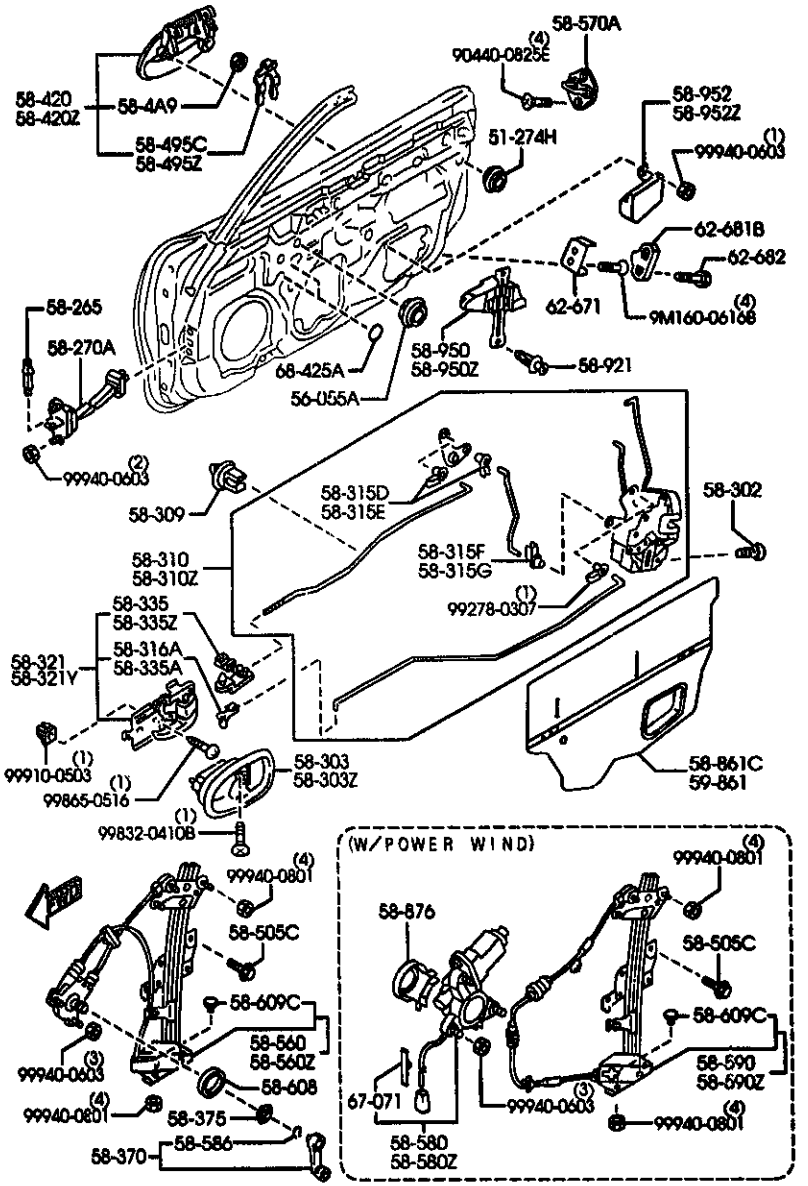

AUNA07 (1N06570)

PART NO.	QTY	MODEL/RESTRICTION	MODEL/RESTRICTION	MODEL/RESTRICTION	FROM-TO
CONT'D					
NC10-58-560B A (NC10-58-560F)	1	(W/O POWER WIND.)			-7C16
NC10-58-560F	1	(W/O POWER WIND.)			7C16-
| 58-560Z |		REGULATOR(L),WINDOW			
NC10-59-560B A (NC10-59-560F)	1	(W/O POWER WIND.)			-7C16
NC10-59-560F	1	(W/O POWER WIND.)			7C16-
| 58-570A |		STRIKER			
FD01-58-361	2				
| 58-580 |		MOTOR(R),WINDOW			
NC11-58-58XA	1	(W/POWER WIND.)			
| 58-580Z |		MOTOR(L),WINDOW			
NC11-59-58XA	1	(W/POWER WIND.)			
| 58-586 |		RING,SNAP			
B001-58-585	2	(W/O POWER WIND.)			
| 58-590 |		ARM/BASE(R),WINDOW			
NC11-58-590A A (NC11-58-590B)	1	(W/POWER WIND.)			-7C16
NC11-58-590B A (NC11-58-590C)	1	(W/POWER WIND.)			7C16-9C06
※NC11-58-590C	1	(W/POWER WIND.)			9C06-
| 58-590Z |		ARM/BASE(L),WINDOW			
NC11-59-590A A (NC11-59-590B)	1	(W/POWER WIND.)			-7C16
NC11-59-590B A (NC11-59-590C)	1	(W/POWER WIND.)			7C16-9C06
※NC11-59-590C	1	(W/POWER WIND.)			9C06-
| 58-608 |		PAD			
B092-58-863A	2	(W/O POWER WIND.)			
| 58-609C |		BOLT			
※NA01-58-609A	2				
| 58-8*1C |		SCREEN(R),FRONT DOOR			
7C16 ND353※-101122					

CAT. AUNA07-85 2000-01

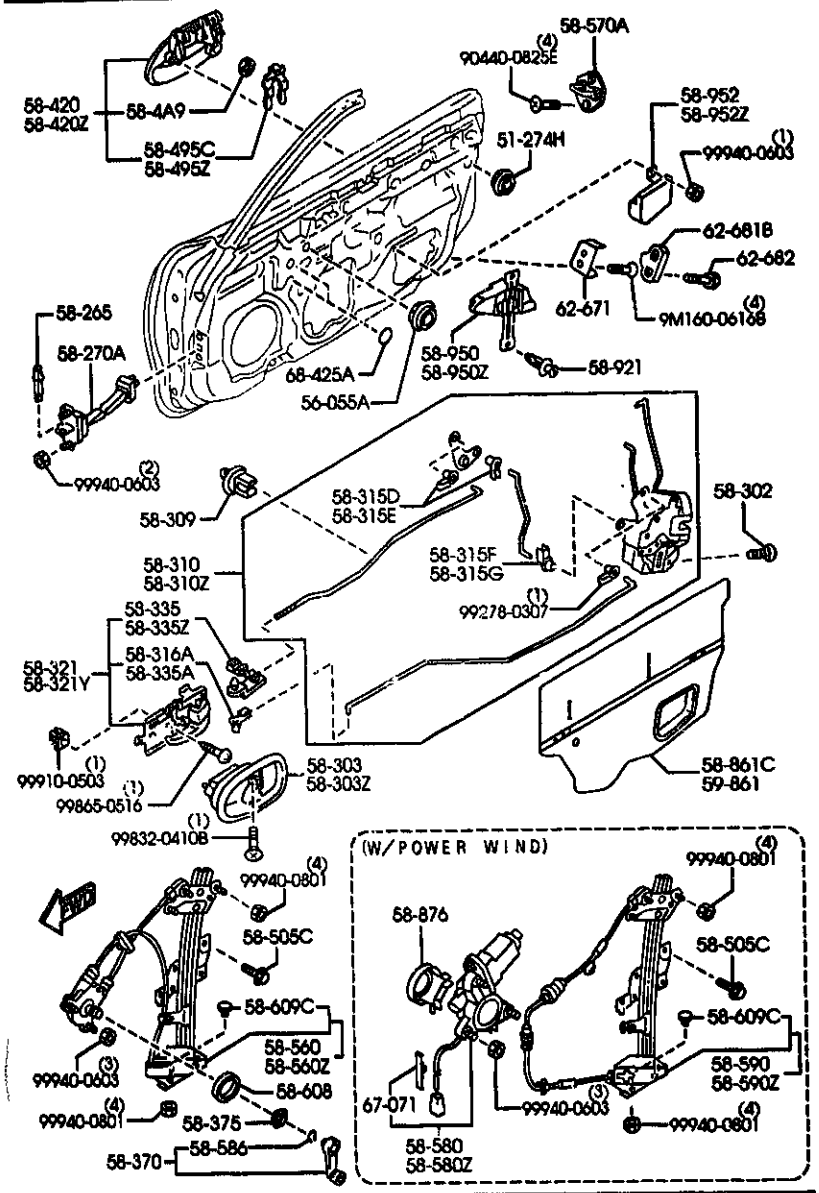

AUNA07 (1N06570)

PART NO.	QTY	MODEL/RESTRICTION	MODEL/RESTRICTION	MODEL/RESTRICTION	FROM-TO
CONT'D					
MC10-58-861B A (MC10-58-861C)	1	(W/O POWER WIND.)			-7C01
MC11-58-861B A (MC11-58-861C)	1	(W/POWER WIND,W/O POWER AMP.)			-7C01
MC12-58-861C A (MC12-58-861D)	1	(W/POWER WIND,W/POWER AMP(BOSE))			-7C01
MC12-58-861D A (MC12-58-861G)	1	(W/POWER WIND,W/POWER AMP(BOSE))			7C01-8201
MC10-58-861C AN(MC10-58-861E)	1	(W/O POWER WIND.)			7C01-8701
MC11-58-861C AN(MC11-58-861E)	1	(W/POWER WIND,W/O POWER AMP.)			7C01-8701
MC12-58-861G AN(MC12-58-861H)	1	(W/POWER WIND,W/POWER AMP(BOSE))			8201-8701
MC10-58-861E A (MC1F-58-861F)	1	(W/O POWER WIND.)			8701-9101
MC11-58-861E A (MC11-58-861F)	1	(W/POWER WIND,W/O POWER AMP.)			8701-9101
MC12-58-861H	1	(W/POWER WIND,W/POWER AMP(BOSE))			8701-9101
MC10-58-861F	1	(W/O POWER WIND.)			9101-
MC11-58-861F	1	(W/POWER WIND,W/O POWER AMP.)			9101-
MC12-58-861J	1	(W/POWER WIND,W/POWER AMP(BOSE))			9101-
+---------+ | 58-876 | +---------+		COVER,SERVICE			
MC11-58-562	2	(W/POWER WIND.)			
+---------+ | 58-921 | +---------+		FASTENER			
MC10-58-954	4				
+---------+ | 58-950 | +---------+		PAD(R),FRONT DOOR			
MC10-58-87XA AN(MC10-58-87XB)	1				-7C03
MC10-58-87XB A (MC10-58-87XC)	1				7C03-9C17
*MC10-58-87XC	1				9C17-
+---------+ | 58-950Z | +---------+		PAD(L),FRONT DOOR			
MC10-59-87XA AN(MC10-59-87XB)	1				-7C03
MC10-59-87XB A (MC10-59-87XC)	1				7C03-9C17

7C01 MB353*-100063
7C03 MB353*-100063
8201 MB353*-106606
8701 MB353*-121022
9101 MB353*-126971

CAT. AUNA07-05 2000-01

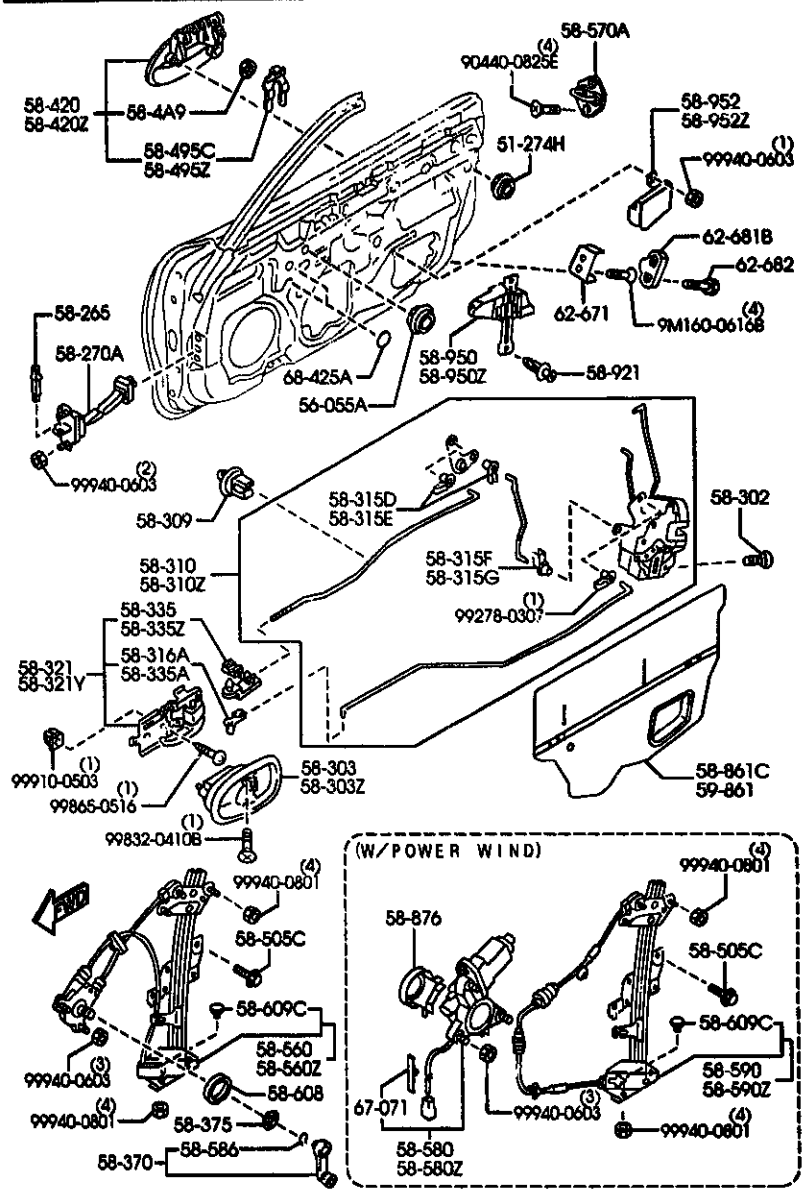

AUNA07 (1N06570)

PART NO.	QTY	MODEL/RESTRICTION	MODEL/RESTRICTION	MODEL/RESTRICTION	FROM-TO
CONT'D					
*NC10-59-87XC	1				9C17-
+----------+					
| 58-952 |		PAD(R)			
+----------+					
NC10-58-960A	1				-9920
AN(NC10-58-960B)					
*NC10-58-960B	1				9920-9C17
A (NC10-58-960C)					
*NC10-58-960C	1				9C17-
+----------+					
| 58-952Z |		PAD(L)			
+----------+					
NC10-59-960A	1				-9920
AN(NC10-59-960B)					
*NC10-59-960B	1				9920-9C17
A (NC10-59-960C)					
*NC10-59-960C	1				9C17-
+----------+					
| 59-861 |		SCREEN(L),FRONT DOOR			
+----------+					
NC10-59-861B	1	(W/O POWER WIND.)			-7C01
A (NC10-59-861C)					
NC11-59-861B	1	(W/POWER WIND,W/O PO			-7C01
A (NC11-59-861C)		WER AMP.)			
NC12-59-861C	1	(W/POWER WIND,W/POWE			-7C01
A (NC12-59-861D)		R AMP(BOSE))			
NC12-59-861D	1	(W/POWER WIND,W/POWE			7C01-8201
A (NC12-59-861B)		R AMP(BOSE))			
NC10-59-861C	1	(W/O POWER WIND.)			7C01-8701
AN(NC10-59-861E)					
NC11-59-861C	1	(W/POWER WIND,W/O PO			7C01-8701
AN(NC11-59-861E)		WER AMP.)			
NC12-59-861B	1	(W/POWER WIND,W/POWE			8201-8701
AN(NC12-59-861H)		R AMP(BOSE))			
NC10-59-861E	1	(W/O POWER WIND.)			8701-9101
A (NC10-59-861F)					
NC11-59-861E	1	(W/POWER WIND,W/O PO			8701-9101
A (NC11-59-861F)		WER AMP.)			
NC12-59-861H	1	(W/POWER WIND,W/POWE			8701-9101
		R AMP(BOSE))			
NC10-59-861F	1	(W/O POWER WIND.)			9101-
NC11-59-861F	1	(W/POWER WIND,W/O PO			9101-
		WER AMP.)			
NC12-59-861J	1	(W/POWER WIND,W/POWE			9101-
		R AMP(BOSE))			
+----------+					
| 62-671 |		DOVETAIL,LIFT GATE			
+----------+					

7C01 NB353N-100063
8201 NB353N-106606
8701 NB353N-121022
9101 NB353N-126971
9920 NB353N-140912

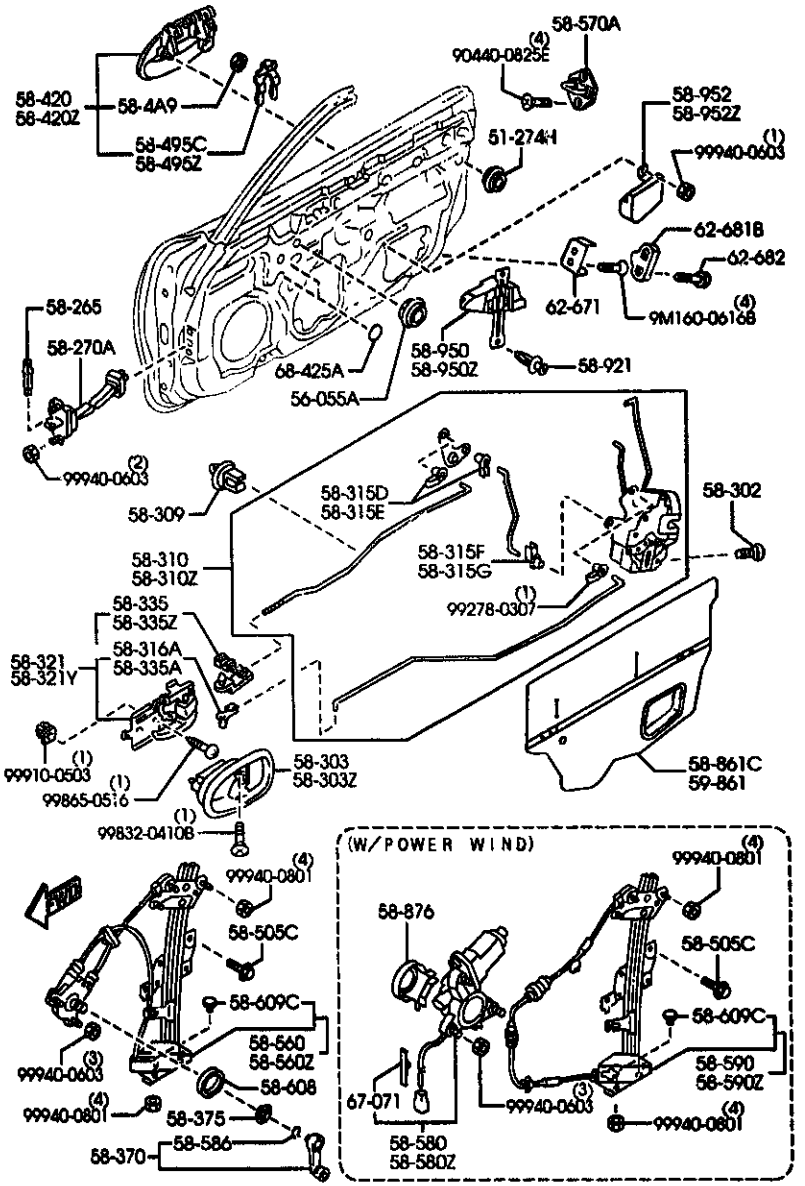

AUNA07 (1N06570)

5830A -B * FRONT DOOR MECHANISMS

PART NO.	QTY	MODEL/RESTRICTION	MODEL/RESTRICTION	MODEL/RESTRICTION	FROM-TO
CONT'D					
S084-62-671A	2				
62-6818		WEDGE,DOOR-FRONT			
MA01-62-681	2				
62-682		SCREW,WEDGE-LIFT GATE			
B216-62-682	4				
67-071		CLIP			
*B111-67-C99	2	(W/POWER WIND.)			
68-425A		COVER,HOLE			
LA01-57-425A	4	(W/O POWER WIND.)			

CAT. AUNA97-85 2000-01

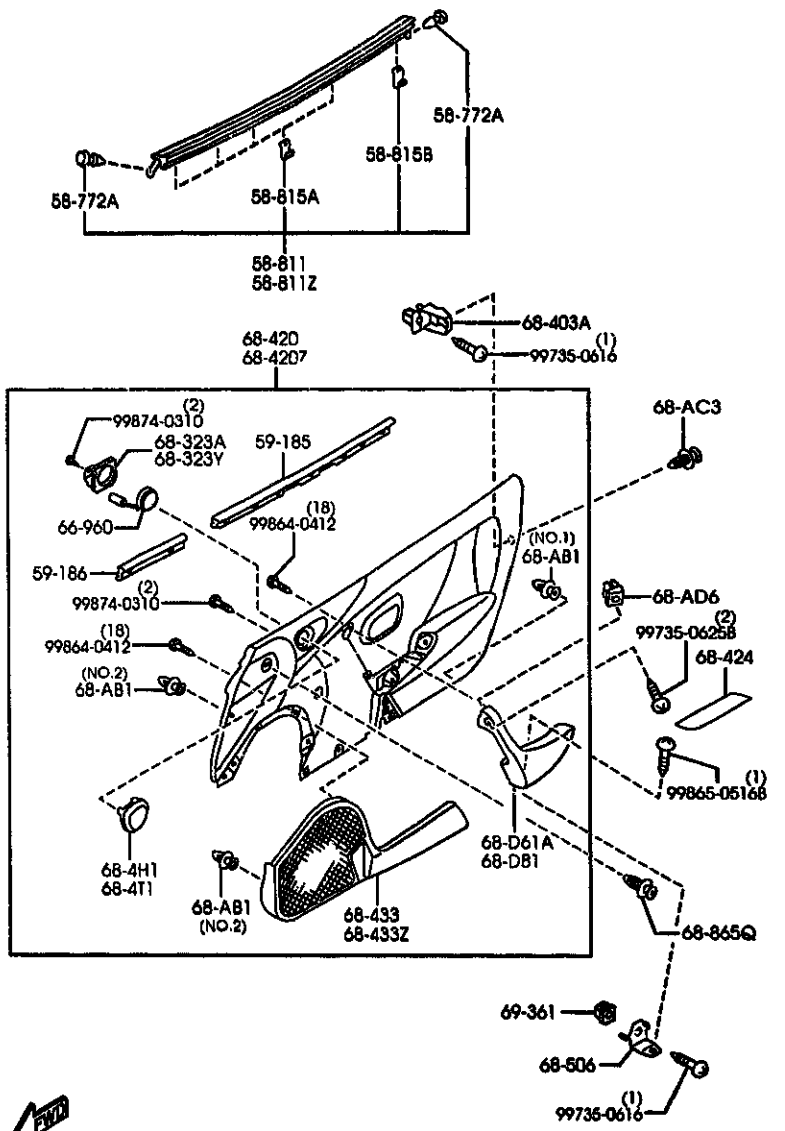

PART NO.	QTY	MODEL/RESTRICTION	MODEL/RESTRICTION	MODEL/RESTRICTION	FROM-TO
58-772A		FASTENER			
1011-58-772	4				
58-811		WEATHERSTRIP(R),OUT.			
NA01-58-810D	1				
58-811Z		WEATHERSTRIP(L),OUT.			
NA01-59-810D	1				
58-815A		CLIP,WEATHERSTRIP-OUTER			
NA01-58-815	8				
58-815B		CLIP'A',WEATHERSTRIP-OUT			
B157-58-815	2				
59-185		WEATHERSTRIP NO.1			
NA01-58-821A	2				
59-186		WEATHERSTRIP NO.2			
NA02-58-821	2				-7C03
NC11-58-821	2				7C03-
66-960		SPEAKER,LOUD-FRONT			
NC12-66-960	2	(W/6-SPEAKER,W/POWER AMP.(BOSE))			
68-AB1		FASTENER			
0351-68-ABX	8	(ILLUST. NO.1)			
0352-68-ABX	4	(ILLUST. NO.2)			
68-AC3		FASTENER			
B467-68-AC3	4				
82	INT-	NB0 NB2 BLACK			
21	INT-	NB1 TAN			
* 80	INT-	NB6 NB7 LIGHT BEIGE			
68-AD6		GROMMET,SCREW			
B481-68-AD6	2				
68-D61A		HANDLE(R),PULL-FRT			

7C03 NBSS3*-100063

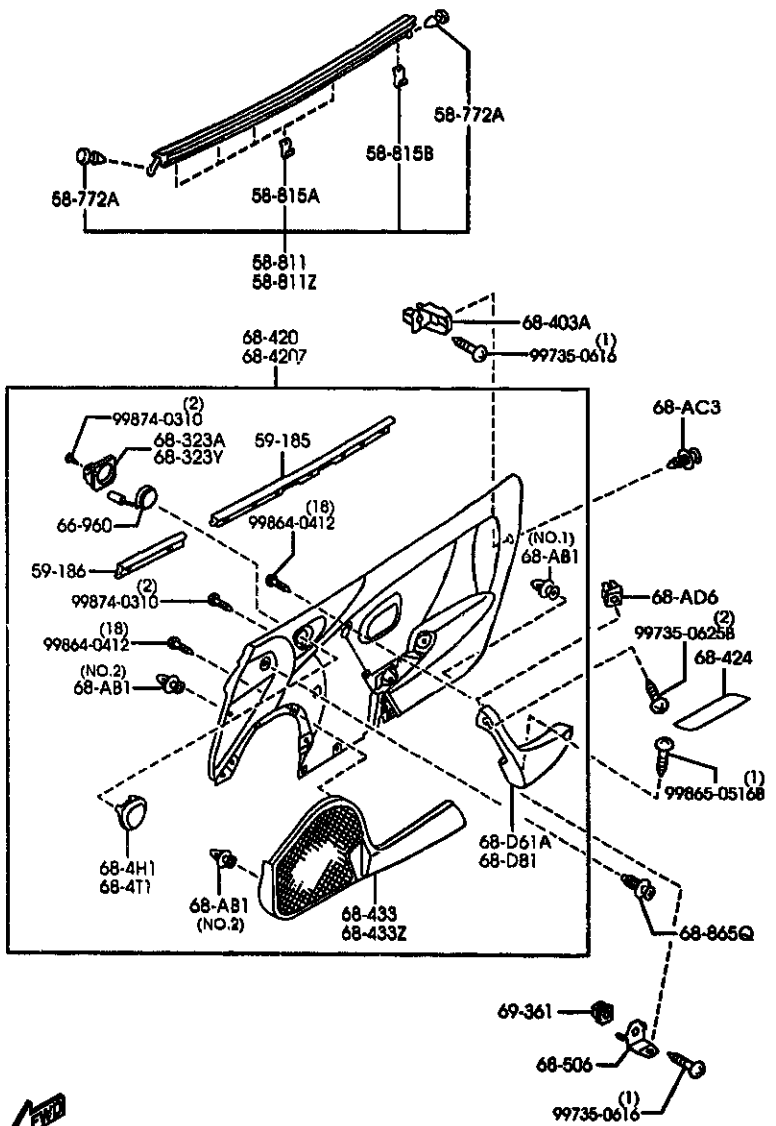

AUNA07

(1N04440)

PART NO.	QTY	MODEL/RESTRICTION	MODEL/RESTRICTION	MODEL/RESTRICTION	FROM-TO
CONT'D					
NC10-68-D71	1				
02	INT-	NB0 NB2 BLACK			
21	INT-	NB1 TAN			
* 80	INT-	NB6 BEIGE			
68-D81		HANDLE(L),PULL-FRT			
NC10-68-D81	1				
02	INT-	NB0 NB2 BLACK			
21	INT-	NB1 TAN			
* 80	INT-	NB6 NB7 BEIGE			
68-323A		BRACKET(R)			
NC12-66-9B1A	1	(W/4-SPEAKER,W/POWER AMP.(BOSE))			
68-323Y		BRACKET(L)			
NC12-66-9B2A	1	(W/4-SPEAKER,W/POWER AMP.(BOSE))			
68-4H1		GRILLE(R),SPEAKER			
NC10-68-4H1	1				
68-4T1		GRILLE(L),SPEAKER			
NC10-68-4W1	1				
68-403A		BRACKET,TRIM			
NC10-68-403	4				
68-420		TRIM(R),DOOR			
NC12-68-420E	1	(W/O POWER WIND,W/4-SPEAKER, W/O POWER AMP.)			-7C03
02	INT-	NB0 BLACK			
21	INT-	NB1 BLACK/TAN			
NC14-68-420E	1	(W/POWER WIND,W/4-SPEAKER,W/O POWER AMP.)			-7C03
02	INT-	NB0 BLACK			
21	INT-	NB1 BLACK/TAN			
NC15-68-420F	1	(W/POWER WIND,W/4-SPEAKER, W/POWER AMP.(BOSE))			-7C03

7C03 NB3S3*-100063

CAT. AUNA07-05

2000-01

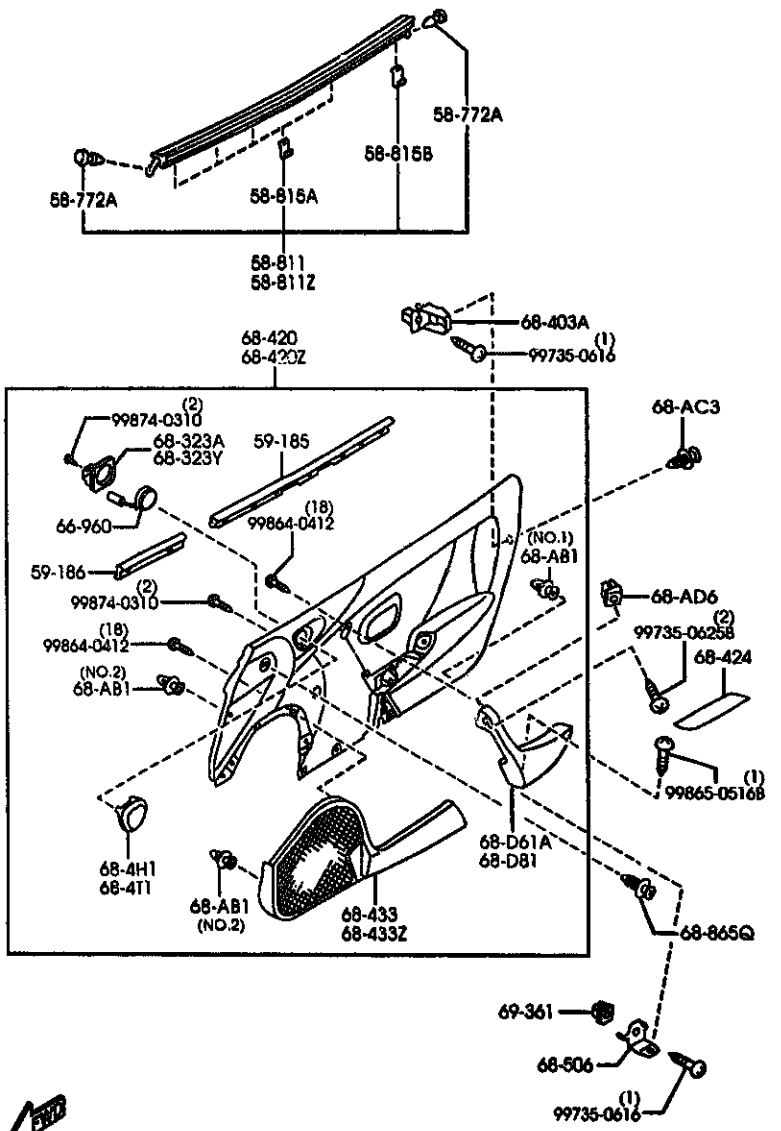

PART NO.	QTY	MODEL/RESTRICTION	MODEL/RESTRICTION	MODEL/RESTRICTION	FROM-TO
CONT'D					
02	INT-	NB0 BLACK			
21	INT-	NB1 BLACK/TAN			
NC10-68-420E	1	(W/O POWER WIND,W/2-SPEAKER)			-7C09
02	INT-	NB0 BLACK			
21	INT-	NB1 BLACK/TAN			
NC11-68-420E	1	(W/POWER WIND,W/2-SPEAKER)			-7C12
02	INT-	NB0 BLACK			
21	INT-	NB1 BLACK/TAN			
NC15-68-420H	1	(W/POWER WIND,W/4-SPEAKER, W/POWER AMP.(BOSE))			7C03-9101
02	INT-	NB0 NB2 BLACK			
21	INT-	NB1 BLACK/TAN			
NC12-68-420F	1	(W/O POWER WIND,W/4-SPEAKER, W/O POWER AMP.)			7C03-9701
02	INT-	NB0 NB2 BLACK			
21	INT-	NB1 BLACK/TAN			
NC14-68-420F	1	(W/POWER WIND,W/4-SPEAKER,W/O POWER AMP.)			7C03-9701
02	INT-	NB0 NB2 BLACK			
21	INT-	NB1 BLACK/TAN			
NC10-68-420F	1	(W/O POWER WIND,W/2-SPEAKER)			7C09-9701
02	INT-	NB0 NB2 BLACK			
21	INT-	NB1 BLACK/TAN			
NC11-68-420F	1	(W/POWER WIND,W/2-SPEAKER)			7C12-9701
02	INT-	NB0 NB2 BLACK			
21	INT-	NB1 BLACK/TAN			
NC15-68-420J	1	(W/POWER WIND,W/4-SPEAKER, W/POWER AMP.(BOSE))			9101-9701
02	INT-	NB0 NB2 BLACK			
21	INT-	NB1 BLACK/TAN			
NC10-68-420B	1	(W/O POWER WIND,W/2-SPEAKER)			9701-

7C03 NB353M-100063
7C09 NB353M-100301
7C12 NB353M-100687
9701 NB353M-136751

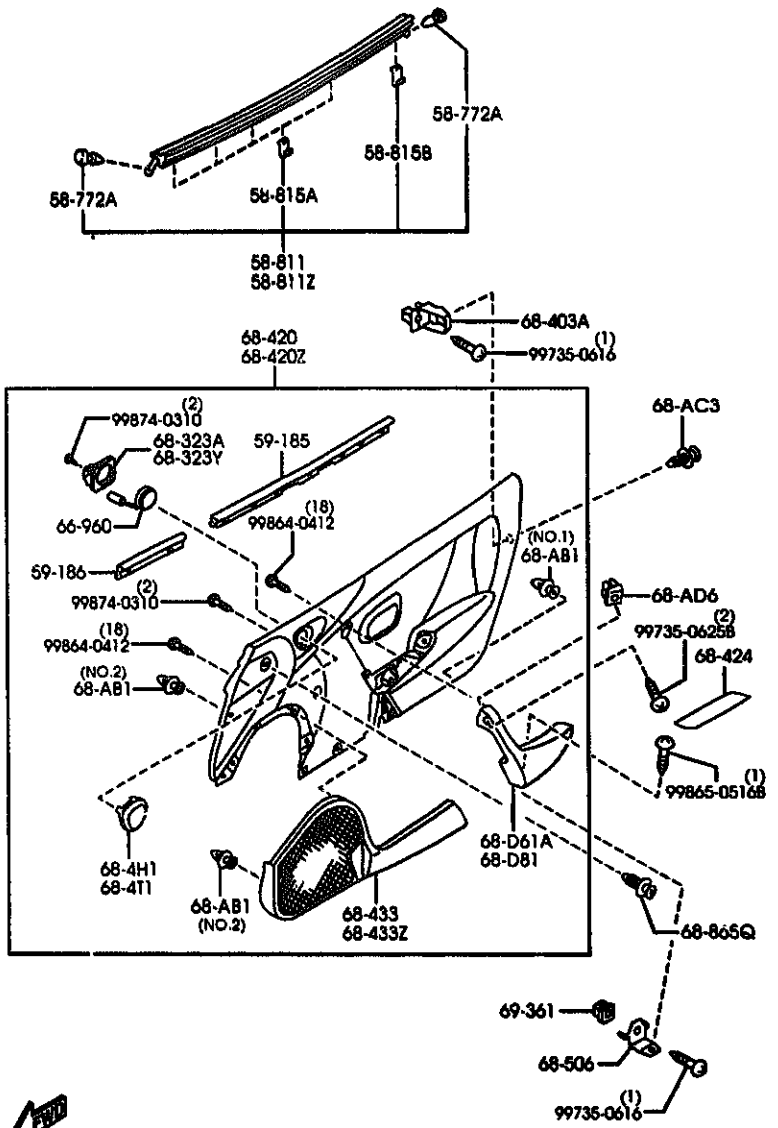

AUNA07 (1N04440)

PART NO.	QTY	MODEL/RESTRICTION	MODEL/RESTRICTION	MODEL/RESTRICTION	FROM-TO
CONT'D					
02	INT-	NB0 NB2 BLACK			
21	INT-	NB1 BLACK/TAN			
* 80	INT-	NB6 NB7 BLACK/BEIGE			
NC11-68-420G	1	(W/POWER WIND,W/2-SPEAKER)			9701-
02	INT-	NB0 NB2 BLACK			
21	INT-	NB1 BLACK/TAN			
* 80	INT-	NB6 NB7 BLACK/BEIGE			
NC12-68-420G	1	(W/O POWER WIND,W/4-SPEAKER, W/O POWER AMP.)			9701-
02	INT-	NB0 NB2 BLACK			
21	INT-	NB1 BLACK/TAN			
* 80	INT-	NB6 NB7 BLACK/BEIGE			
NC14-68-420G	1	(W/POWER WIND,W/4-SPEAKER,W/O POWER AMP.)			9701-
02	INT-	NB0 NB2 BLACK			
21	INT-	NB1 BLACK/TAN			
* 80	INT-	NB6 NB7 BLACK/BEIGE			
NC15-68-420K	1	(W/POWER WIND,W/4-SPEAKER, W/POWER AMP.(BOSE))			9701-
02	INT-	NB0 NB2 BLACK			
21	INT-	NB1 BLACK/TAN			
* 80	INT-	NB6 NB7 BLACK/BEIGE			
68-420Z		TRIM(L),DOOR			
NC12-68-450E	1	(W/O POWER WIND,W/4-SPEAKER, W/O POWER AMP.)			-7C03
02	INT-	NB0 BLACK			
21	INT-	NB1 BLACK/TAN			
NC14-68-450E	1	(W/POWER WIND,W/4-SPEAKER,W/O POWER AMP.)			-7C03
02	INT-	NB0 BLACK			
21	INT-	NB1 BLACK/TAN			
NC15-68-450F	1	(W/POWER WIND,W/4-SPEAKER, W/POWER AMP.(BOSE))			-7C03

7C03 NB353M-100063
9701 NB353M-138751

CAT. AUNA07-05 2000-01

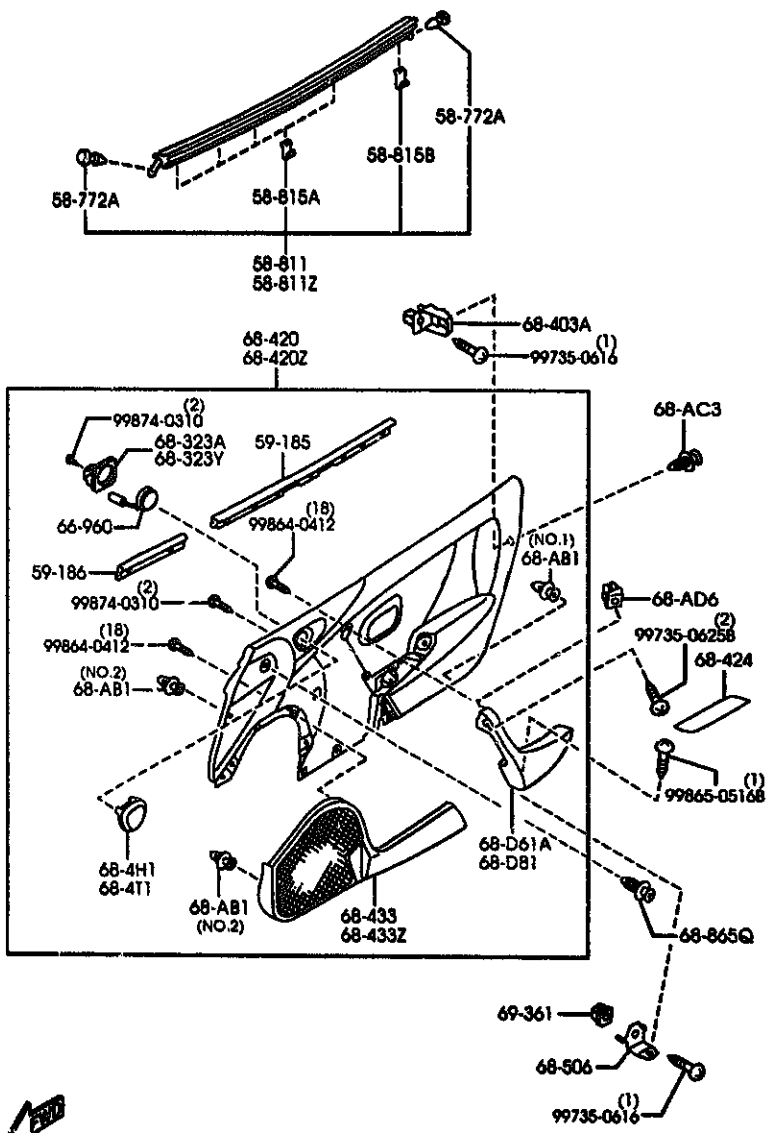

AUNA07

(1N04440)

PART NO.	QTY	MODEL/RESTRICTION	MODEL/RESTRICTION	MODEL/RESTRICTION	FROM-TO
CONT'D					
02	INT-	NB0 BLACK			
21	INT-	NB1 BLACK/TAN			
NC10-68-450E	1	(W/O POWER WIND,W/2-SPEAKER)			-7C09
02	INT-	NB0 BLACK			
21	INT-	NB1 BLACK/TAN			
NC11-68-450E	1	(W/POWER WIND,W/2-SPEAKER)			-7C11
02	INT-	NB0 BLACK			
21	INT-	NB1 BLACK/TAN			
NC15-68-450N	1	(W/POWER WIND,W/4-SPEAKER, W/POWER AMP.(BOSE))			7C03-9101
02	INT-	NB0 NB2 BLACK			
21	INT-	NB1 BLACK/TAN			
NC12-68-450F	1	(W/O POWER WIND,W/4-SPEAKER, W/O POWER AMP.)			7C03-9701
02	INT-	NB0 NB2 BLACK			
21	INT-	NB1 BLACK/TAN			
NC14-68-450F	1	(W/POWER WIND,W/4-SPEAKER,W/O POWER AMP.)			7C03-9701
02	INT-	NB0 NB2 BLACK			
21	INT-	NB1 BLACK/TAN			
NC10-68-450F	1	(W/O POWER WIND,W/2-SPEAKER)			7C09-9701
02	INT-	NB0 NB2 BLACK			
21	INT-	NB1 BLACK/TAN			
NC11-68-450F	1	(W/POWER WIND,W/2-SPEAKER)			7C11-9701
02	INT-	NB0 NB2 BLACK			
21	INT-	NB1 BLACK/TAN			
NC15-68-450J	1	(W/POWER WIND,W/4-SPEAKER, W/POWER AMP.(BOSE))			9101-9701
02	INT-	NB0 NB2 BLACK			
21	INT-	NB1 BLACK/TAN			
NC10-68-4500	1	(W/O POWER WIND,W/2-SPEAKER)			9701-
02	INT-	NB0 NB2 BLACK			

7C03 MB353M-100863
7C09 MB353M-100501
7C11 MB353M-100549
9701 MB353M-138751

CAT. AUNA07-05

2000-01

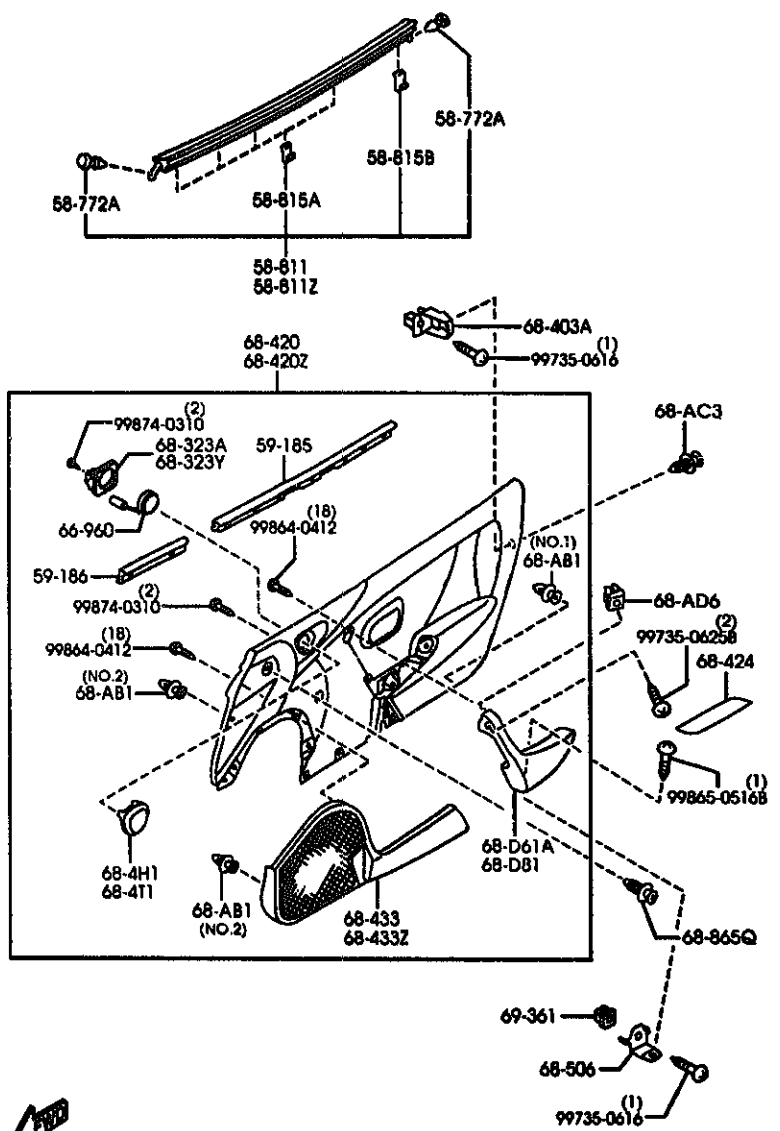

AUNA07

(1N04440)

PART NO.	QTY	MODEL/RESTRICTION	MODEL/RESTRICTION	MODEL/RESTRICTION	FROM-TO
CONT'D					
21	INT-	NB1 BLACK/TAN			
* 80	INT-	NB6 NB7 BLACK/BEIGE			
NC11-68-458G	1	(W/POWER WIND,W/2-SPEAKER)			9701-
02	INT-	NB0 NB2 BLACK			
21	INT-	NB1 BLACK/TAN			
* 80	INT-	NB6 NB7 BLACK/BEIGE			
NC12-68-458G	1	(W/O POWER WIND,W/4-SPEAKER, W/O POWER AMP.)			9701-
02	INT-	NB0 NB2 BLACK			
21	INT-	NB1 BLACK/TAN			
* 80	INT-	NB6 NB7 BLACK/BEIGE			
NC14-68-458G	1	(W/POWER WIND,W/4-SPEAKER,W/O POWER AMP.)			9701-
02	INT-	NB0 NB2 BLACK			
21	INT-	NB1 BLACK/TAN			
* 80	INT-	NB6 NB7 BLACK/BEIGE			
NC15-68-458K	1	(W/POWER WIND,W/4-SPEAKER, W/POWER AMP.(BOSE))			9701-
02	INT-	NB0 NB2 BLACK			
21	INT-	NB1 BLACK/TAN			
* 80	INT-	NB6 NB7 BLACK/BEIGE			
68-424		COVER,RECESS			
NC10-68-424A	1	(FOR RIGHT)			
02	INT-	NB0 NB2 BLACK			
21	INT-	NB1 BROWN			
* 80	INT-	NB6 NB7 BEIGE			
NC11-68-424A	1	(FOR LEFT)			
02	INT-	NB0 NB2 BLACK			
21	INT-	NB1 BROWN			
* 80	INT-	NB6 NB7 BEIGE			
68-433		POCKET(R),DOOR TRIM			
NC10-68-4C1	1	(W/2-SPEAKER) (W/4-SPEAKER,W/O POW			

9701 NB353#-130791

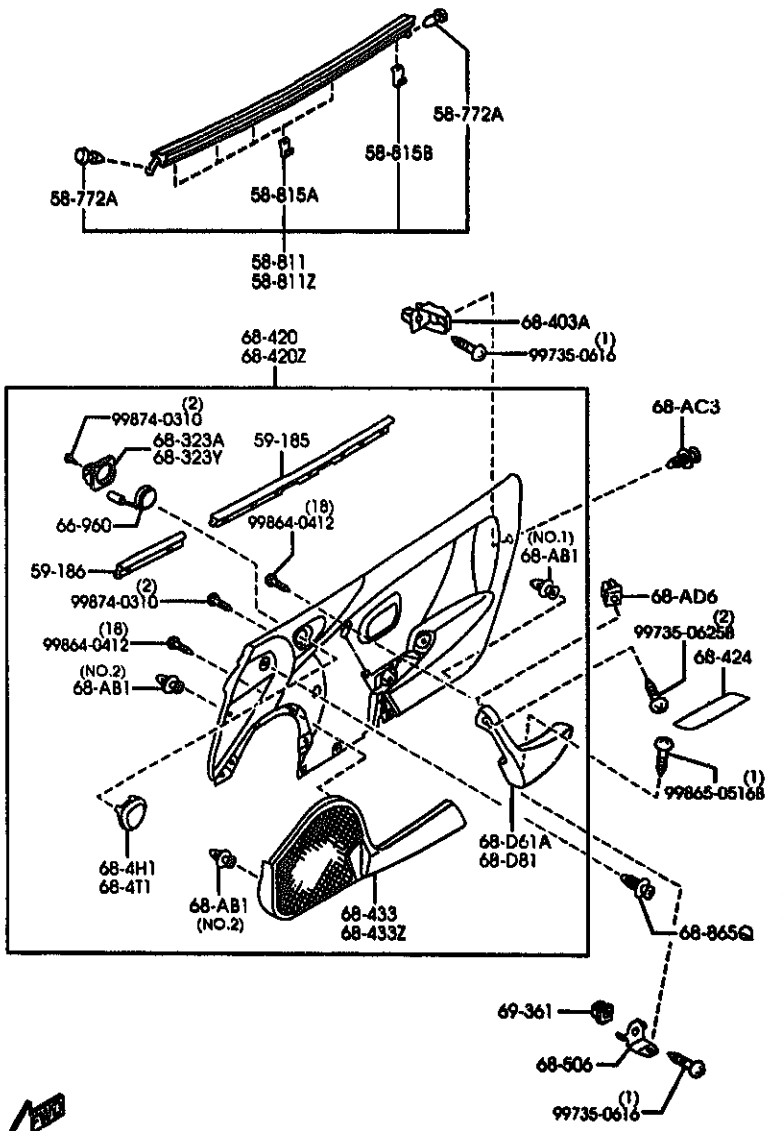

AUNA07 (1N04440)

PART NO.	QTY	MODEL/RESTRICTION	MODEL/RESTRICTION	MODEL/RESTRICTION	FROM-TO
COST'D		ER AMP.)			
02 INT-		NB0 NB2 BLACK			
21 INT-		NB1 TAN			
✱ 80 INT-		NB6 NB7 BEIGE			
NC15-68-4C1	1	(W/4-SPEAKER,W/POWER AMP.(BOSE))			
02 INT-		NB0 NB2 BLACK			
21 INT-		NB1 TAN			
✱ 80 INT-		NB6 NB7 BEIGE			
68-433Z		POCKET(L),DOOR TRIM			
NC10-68-4N1	1	(W/2-SPEAKER) (W/4-SPEAKER,W/O POWER AMP.)			
02 INT-		NB0 NB2 BLACK			
21 INT-		NB1 TAN			
✱ 80 INT-		NB6 NB7 BEIGE			
NC15-68-4N1	1	(W/4-SPEAKER,W/POWER AMP.(BOSE))			
02 INT-		NB0 NB2 BLACK			
21 INT-		NB1 TAN			
✱ 80 INT-		NB6 NB7 BEIGE			
68-506		BRACKET,PULL HANDLE			
B110-68-525	2				
68-865Q		FASTENER			
GJ21-68-885B	2				
02 INT-		NB0 NB1 NB2 NB6 NB7 BLACK			
69-361		GROMMET,SCREW			
B316-69-361	2				

CAT. AUNA07-05 2000-01

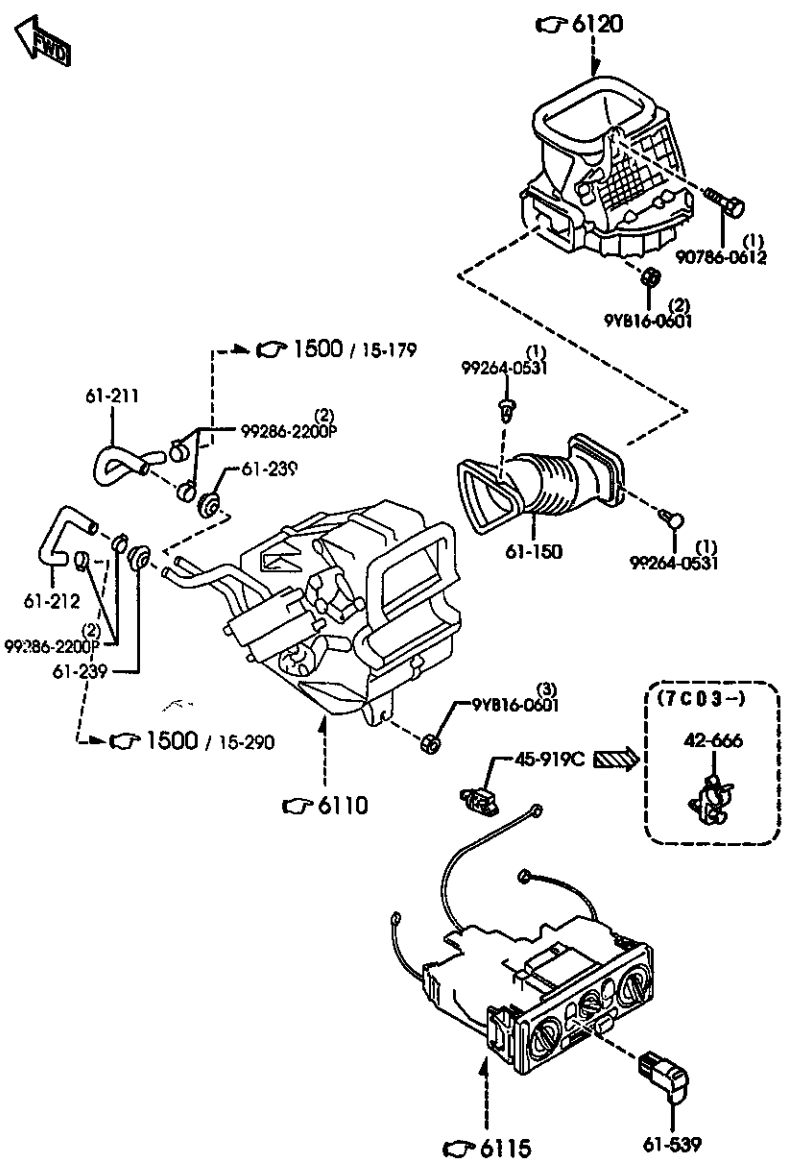

AUNA07 (1N08230)

6100A -1 * HEATER

PART NO.	QTY	MODEL/RESTRICTION	MODEL/RESTRICTION	MODEL/RESTRICTION	FROM-TO
42-666		CLIP			
W023-42-666	1				7C03-
45-919C		CLIP,PIPE			
H260-45-916	1				-7C03
61-150		DUCT,AIR			
HA01-61-150A	1	(W/O AIR CON.)			
61-211		HOSE NO.1,WATER			
NC10-61-211	1				
61-212		HOSE NO.2,WATER			
NC10-61-212	1				
61-239		GROMMET,HEATER PIPE			
D201-61-239	2				
61-539		COVER,AIRCON. SWITCH			
GE4T-61-539A	1				-9106
GE4T-61-539B	1				9106-

7C03 MB353*-100063
9106 MB353*-126971

CAT. AUNA07-05 2000-01

6110A HEATER UNIT COMPONENTS

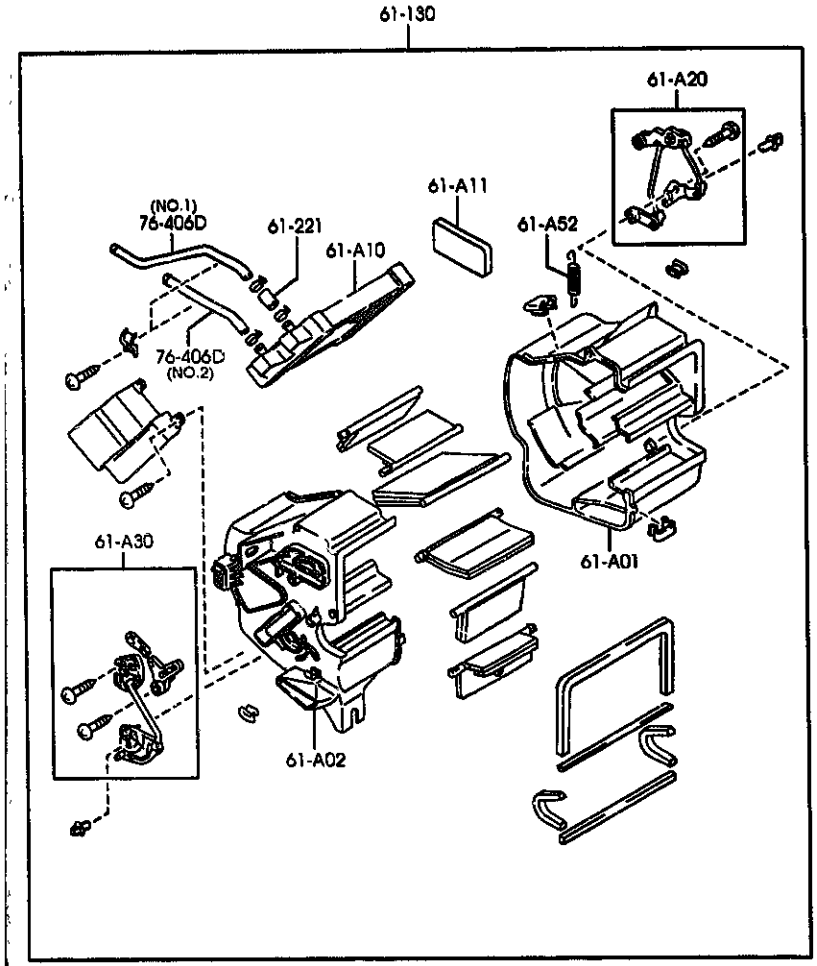

AUNA07 (1N07710)

6110A -1 ※ HEATER UNIT COMPONENTS

PART NO.	QTY	MODEL/RESTRICTION	MODEL/RESTRICTION	MODEL/RESTRICTION	FROM-TO
61-A01		CASE'A',HEATER UNIT			
MC10-61-A01	1				
61-A02		CASE'B',HEATER UNIT			
MC10-61-A02	1				-8420
A (MC10-61-A02A)					
MC10-61-A02A	1				8420-
61-A10		CORE,HEATER UNIT			
MC10-61-A10	1				
61-A11		LINING,HEATER UNIT			
MC10-61-A11	1				
61-A20		LINK SET,TEMP			
MC10-61-A20	1				
61-A30		LINK SET,MODE			
MC11-61-A30	1				
61-A52		SPRING,HEATER UNIT			
MC10-61-A52	1				
61-130		HEATER UNIT			
MC11-61-130	1				-8420
AN(MC11-61-130A)					
MC11-61-130A	1				8420-8707
A (MC11-61-130B)					
MC11-61-130B	1				8707-
61-221		HOSE,WATER			
MA01-61-A21	1				
76-406D		PIPE,HEATER UNIT			
MC10-61-A15	1	(ILLUST. NO.1)			
MC10-61-A16	1	(ILLUST. NO.2)			

8420 MB353※-115899
8707 MB353※-121164

CAT. AUNA07-05 2000-01

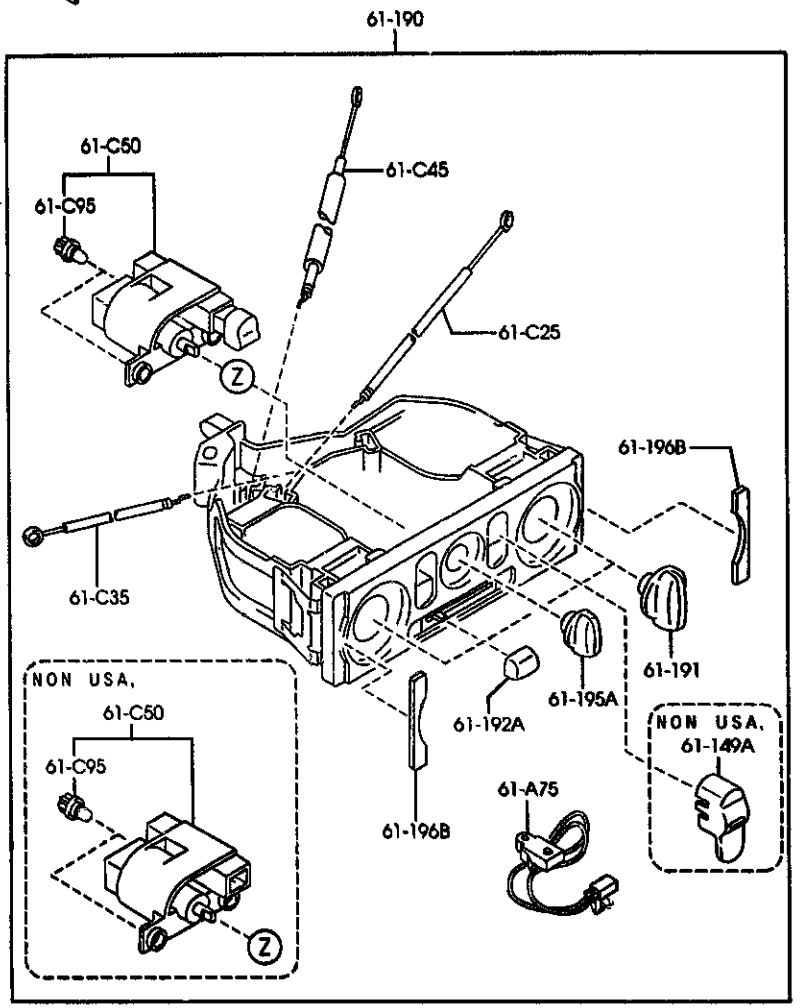

PART NO.	QTY	MODEL/RESTRICTION	MODEL/RESTRICTION	MODEL/RESTRICTION	FROM-TO
61-A75		SWITCH,MICRO			
*BJ1A-61-A75	1	(W/RR.WINDOW DEFOGGER)			0106-
61-C25		WIRE,TEMP. CONTROL			
NC10-61-C25 AN(NC10-61-C25A)	1				-8901
NC10-61-C25A	1				8901-
61-C35		WIRE,MODE CONTROL			
NC10-61-C35	1				
61-C45		WIRE,RECYCLE & FRESH			
NC10-61-C45 AN(NC10-61-C45A)	1				-8101
NC10-61-C45A AN(NC10-61-C45B)	1				8101-8901
NC10-61-C45B	1				8901-
61-C50		SWITCH,FAN-HEATER CONTROL			
NC10-61-C50	1	NON USA,			
NC11-61-C50 AN(S38A-61-C50)	1	(W/RR.WINDOW DEFOGGER)			-8101
*BJ1A-61-C50	1	(W/RR.WINDOW DEFOGGER)			0106-
S38A-61-C50	1	(W/RR.WINDOW DEFOGGER)			8101-0106
61-C95		BULB,MODE CONTROL			
NC10-61-C95 AN(S38A-61-C95)	2				-8101
S38A-61-C95	2				8101-
61-149A		COVER,HOLE			
NC10-61-1K9	1	NON USA,			
61-190		CONTROL,HEATER			
*NC65-61-190A	1	NON USA,			
NC11-61-190D AN(NC11-61-190E)	1	(W/RR.WINDOW DEFOGGER)			-7C03
*NC67-61-190	1	(W/RR.WINDOW DEFOGGER)			0106-
NC11-61-190E	1	(W/RR.WINDOW DEFOGGE			7C03-8901

7C03 NB353*-100063
8101 NB353*-102707
8901 NB353*-122306
0106 NB353*-143734

CAT. AUNA07-05 2000-01

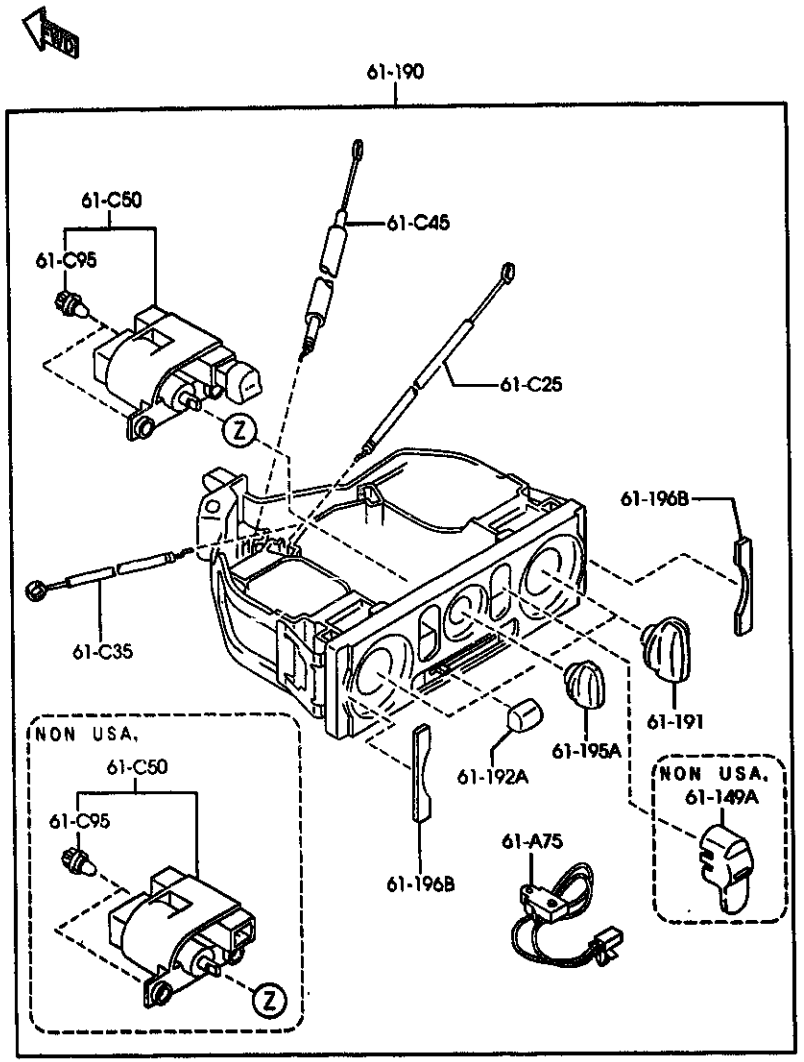

6115A -2 * HEATER CONTROL COMPONENTS

PART NO.	QTY	MODEL/RESTRICTION	MODEL/RESTRICTION	MODEL/RESTRICTION	FROM-TO
CONT'D AN(NC11-61-190F)		R)			
NC11-61-190F	1	(W/RR.WINDOW DEFOGGER)			8901-9106
NC66-61-190	1	(W/RR.WINDOW DEFOGGER)			9106-0106
61-191		KNOB NO.1,MODE CONT.			
NC10-61-191 AN(S38A-61-191)	2				-8101
S38A-61-191	2				8101-9106
B25D-61-191	2				9106-
61-192A		KNOB NO.2			
S38A-61-192	1				
61-195A		KNOB			
NC10-61-195 AN(S38A-61-195)	1				-8101
S38A-61-195	1				8101-9106
B25D-61-195	1				9106-
61-196B		COVER,HEATER CONTROL			
GE4T-61-199	2				-8101
S38A-61-199	2				8101-

8101 MB353M-102707
8901 MB353M-122306
9106 MB353M-126971
0106 MB353M-143734

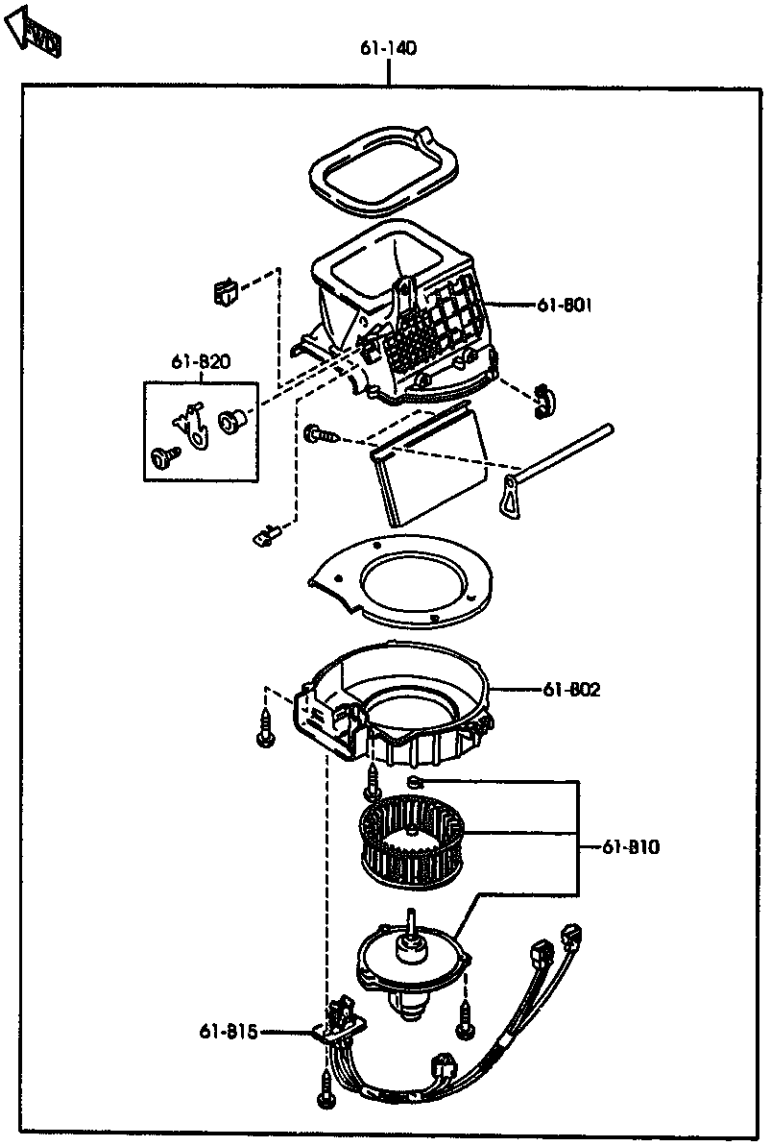

AUNA07 (1N07360)

6120A -1 * HEATER BLOWER COMPONENTS

PART NO.	QTY	MODEL/RESTRICTION	MODEL/RESTRICTION	MODEL/RESTRICTION	FROM-TO
61-B01		CASE'A',BLOWER UNIT			
NA75-61-B01	1				
61-B02		CASE'B',BLOWER UNIT			
NA01-61-B02	1				
61-B10		MOTOR,FAN-BLOWER UNIT			
NC11-61-B10	1				-8901
AM(BR70-61-B10)					
BR70-61-B10	1				8901-
61-B15		RESISTOR,BLOWER UNIT			
NA01-61-B15	1				
61-B20		LINK,RECYCLE & FRESH			
NA01-61-B20	1				
61-140		BLOWER UNIT			
NC11-61-140	1				-8713
AM(NC11-61-140A)					
NC11-61-140A	1				8713-

0713 MB353M-121320
0901 MB353M-122306

CAT. AUNA07-05 2000-01

(PIPE & CONDENSER)

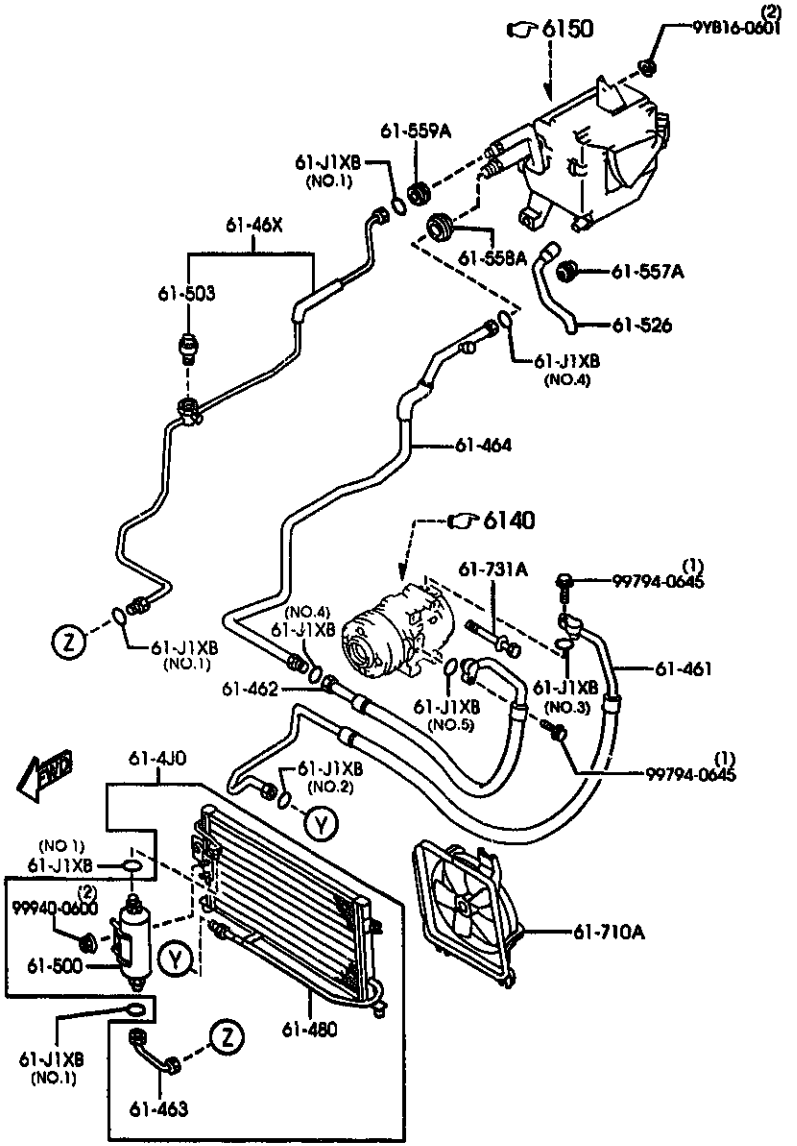

(BRACKET & CLIP)

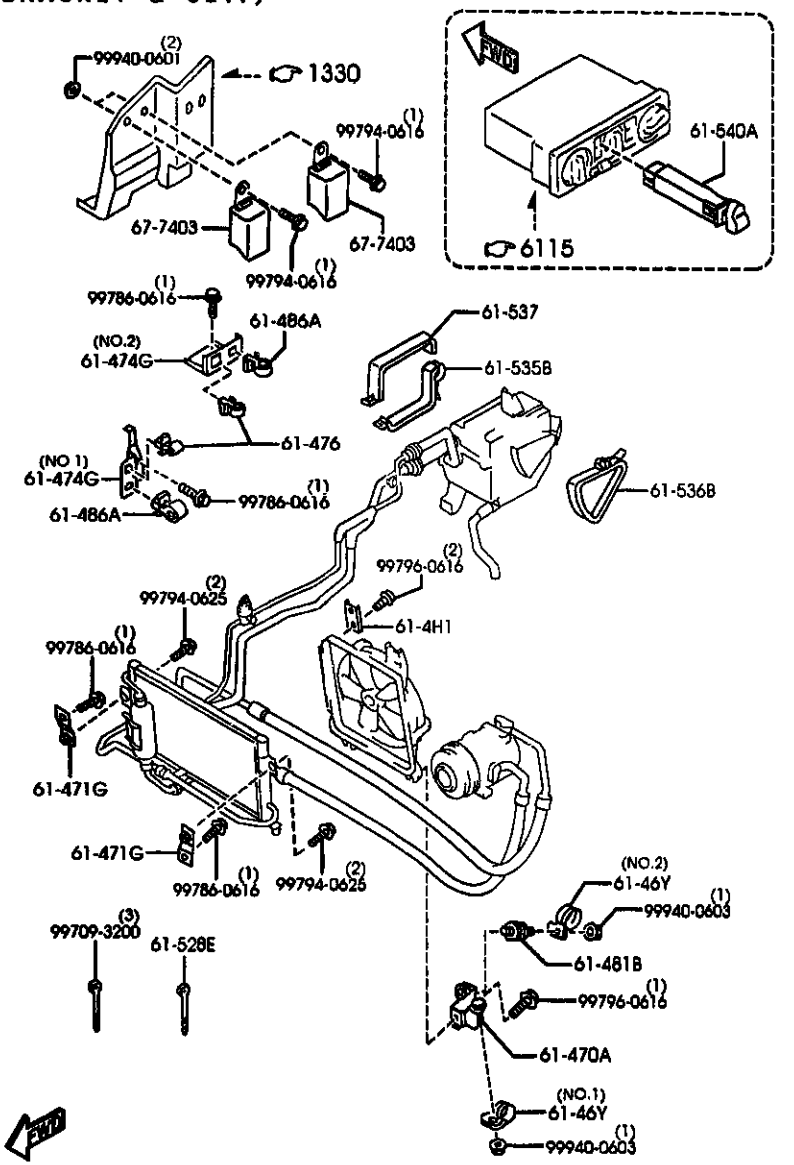

(PIPE & CONDENSER)

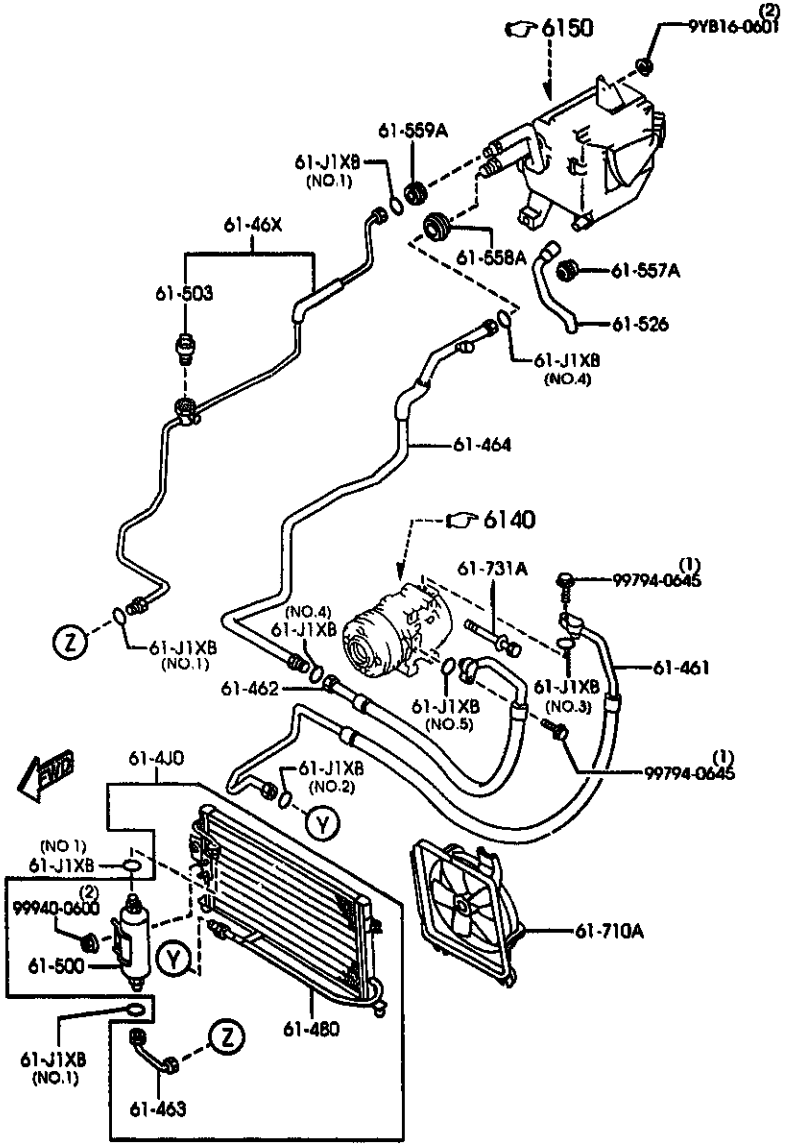

AUNA07 (1N07871)

PART NO.	QTY	MODEL/RESTRICTION	MODEL/RESTRICTION	MODEL/RESTRICTION	FROM-TO
61-J1XB		RING,"O"-NO.3			
LB51-61-J1X	4	(E) (ILLUST. NO.1)			
LB54-61-J1X	1	(E) (ILLUST. NO.2)			
LB55-61-J1X	1	(E) (ILLUST. NO.3)			
LB56-61-J1X	2	(E) (ILLUST. NO.4)			
LB57-61-J1X	1	(E) (ILLUST. NO.5)			
61-4H1		BRACKET,HOSE			
NA01-61-4H1	1	(A)			
61-4J0		BRACKET,CONDENSER			
MC10-61-4J0	1	(E)			
61-46X		PIPE,COOLER-HIGH			
MC10-61-46X	1	(E)			
61-46Y		CLIP,PIPE			
BR76-61-46Y	1	(A) (ILLUST. NO.1)			
NA01-61-46YC	1	(A) (ILLUST. NO.2)			
61-461		HOSE,FLEXIBLE-HIGH			
MC10-61-461A	1	(E)			
61-462		HOSE,FLEXIBLE-LOW			
MC10-61-462A	1	(E)			
61-463		PIPE NO.1,COOLER			
MC10-61-464	1	(E)			
61-464		PIPE NO.2,COOLER			
MC10-61-465	1	(E)			

CAT. AUNA07-05 2000-01

(BRACKET & CLIP)

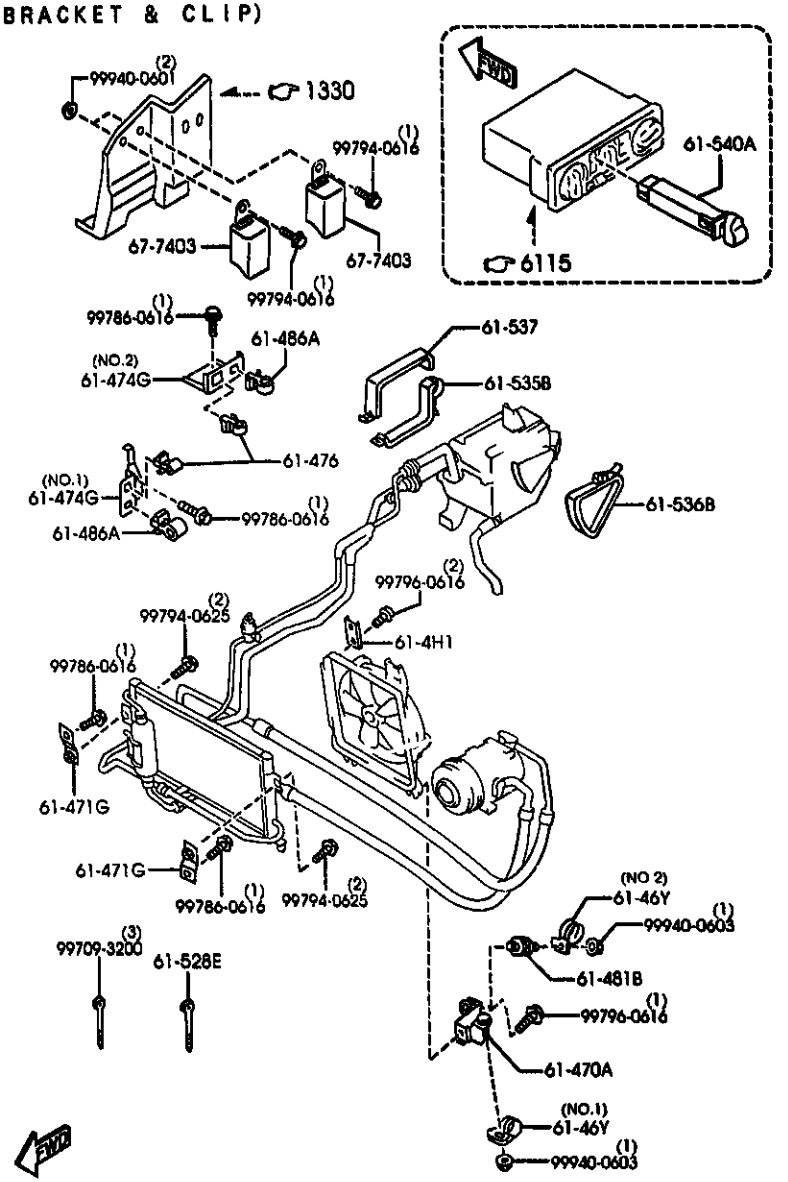

AUNA07 (1N07872)

PART NO.	QTY	MODEL/RESTRICTION	MODEL/RESTRICTION	MODEL/RESTRICTION	FROM-TO
61-470A		BRACKET,HOSE			
NA02-61-471A	1	(A)			
61-4710		BRACKET,PIPE			
NC10-61-471	2	(E)			
61-474G		BRACKET,PIPE			
NA01-61-474	1	(A) (ILLUST. NO.1)			
NA02-61-474A	1	(A) (ILLUST. NO.2)			
61-476		CLIP			
NA02-61-476	2	(A)			
61-480		CONDENSER			
NC10-61-480	1	(E)			
61-481B		RUBBER,INSULATOR			
FC20-61-481	1	(A)			
61-486A		CLIP			
UB39-61-486A	2				
61-500		TANK,LIQUID			
NC10-61-500	1	(E)			
61-503		SW.,PRESSURE-LIQUID TANK			
GB6H-61-503	1	(G)			
61-526		HOSE,DRAIN			
NA01-61-526A	1	(A)			
61-528E		BAND			
NA01-61-435	1	(G)			

CAT. AUNA07-05 2000-01

(PIPE & CONDENSER)

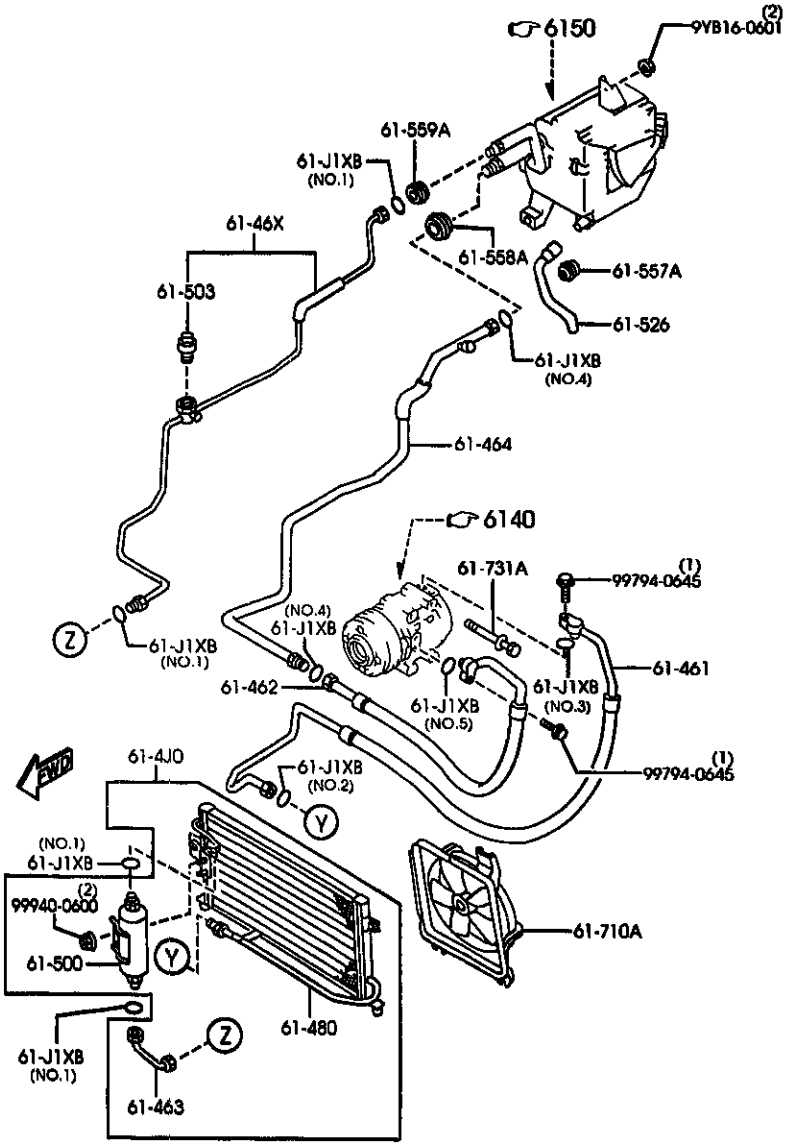

AUNA07 (1N07871)

6130A -3 * AIR CONDITIONER

PART NO.	QTY	MODEL/RESTRICTION	MODEL/RESTRICTION	MODEL/RESTRICTION	FROM-TO
61-535B NA01-61-52YA	1	PLATE NO.1,SEAL (A)			
61-536B NA01-61-522	1	PLATE NO.2,SEAL (A)			
61-537 NA01-61-529	1	PLATE NO.3,SEAL (A)			
61-540A GE4T-61-538B	1	SWITCH,AIR CON.			
61-557A FB84-61-557	1	GROMMET (A)			
61-558A BF67-61-558	1	GROMMET (A)			
61-559A BF67-61-559	1	GROMMET (A)			
61-710A MC10-61-710B	1	FAN,CONDENSER (A)			
61-731A B111-61-731	4	BOLT,AIR CON.			
67-7403 H310-67-740	2	RELAY,M.O. 30A			

CAT. AUNA07-05 2000-01

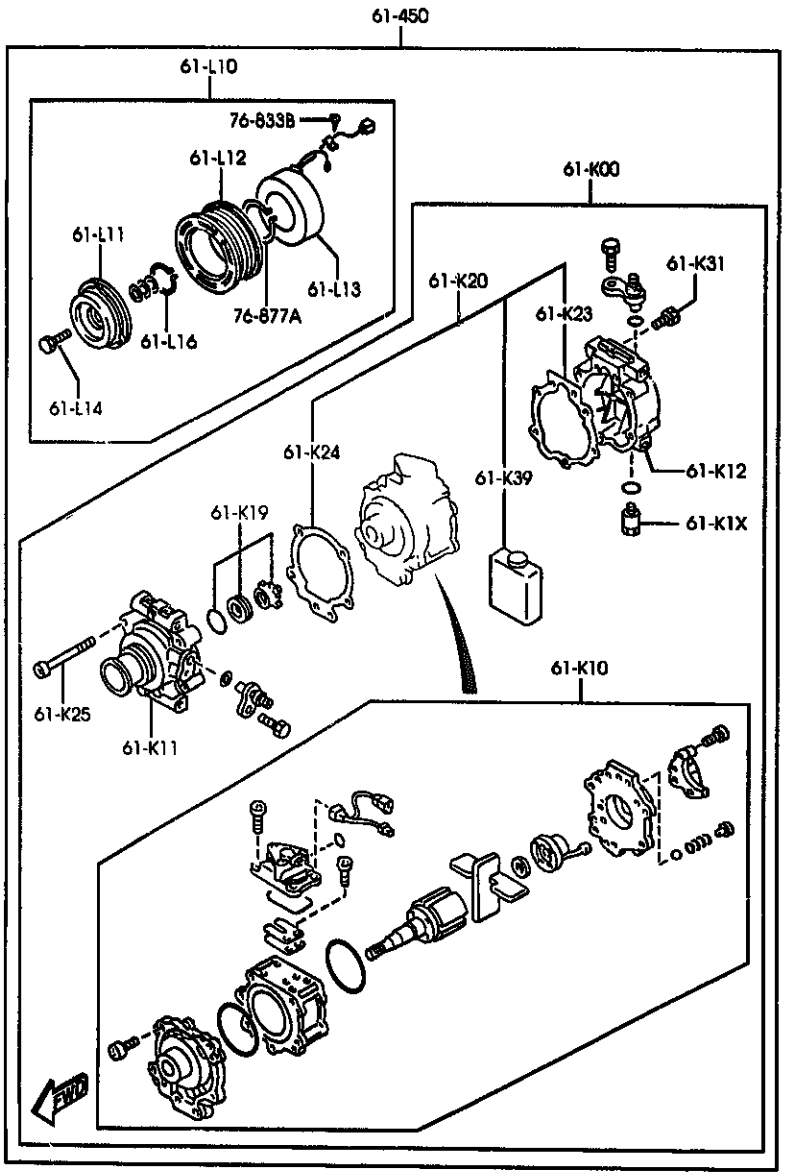

AUNA07 (1N07380)

PART NO.	QTY	MODEL/RESTRICTION	MODEL/RESTRICTION	MODEL/RESTRICTION	FROM-TO
61-K00		COMPRESSOR,AIR CON.			
NC10-61-K00	1	(E)			
61-K1X		VALVE,RELIEF			
NA75-61-K1X	1	(A)			
61-K10		SHAFT,CYL.-COMPRESSOR			
NA75-61-K10	1	(A)			
61-K11		HEAD,CYL.-COMPRESSOR			
NA75-61-K11	1	(A)			
61-K12		HEAD,CYL.-COMPRESSOR			
NA75-61-K12	1	(A)			
61-K19		SEAL,SHAFT-COMPR.			
NA75-61-K19	1	(A)			
61-K2X		GASKET KIT,COMPRESSOR			
NA75-61-K2X	1	(A)			
61-K23		PLUG,COMPRESSOR			
NA75-61-K23	1	(A)			
61-K24		GASKET,COMPRESSOR			
NA82-61-K24	1	(A)			
61-K25		BOLT,COMPRESSOR-AIR CON.			
F065-61-K25	5				
61-K31		BOLT,COMPRESSOR			
F065-61-K31	2				
61-K39		OIL,COMPRESSOR			
NA75-61-K39	1	(A)			

CAT. AUNA07-05 2000-01

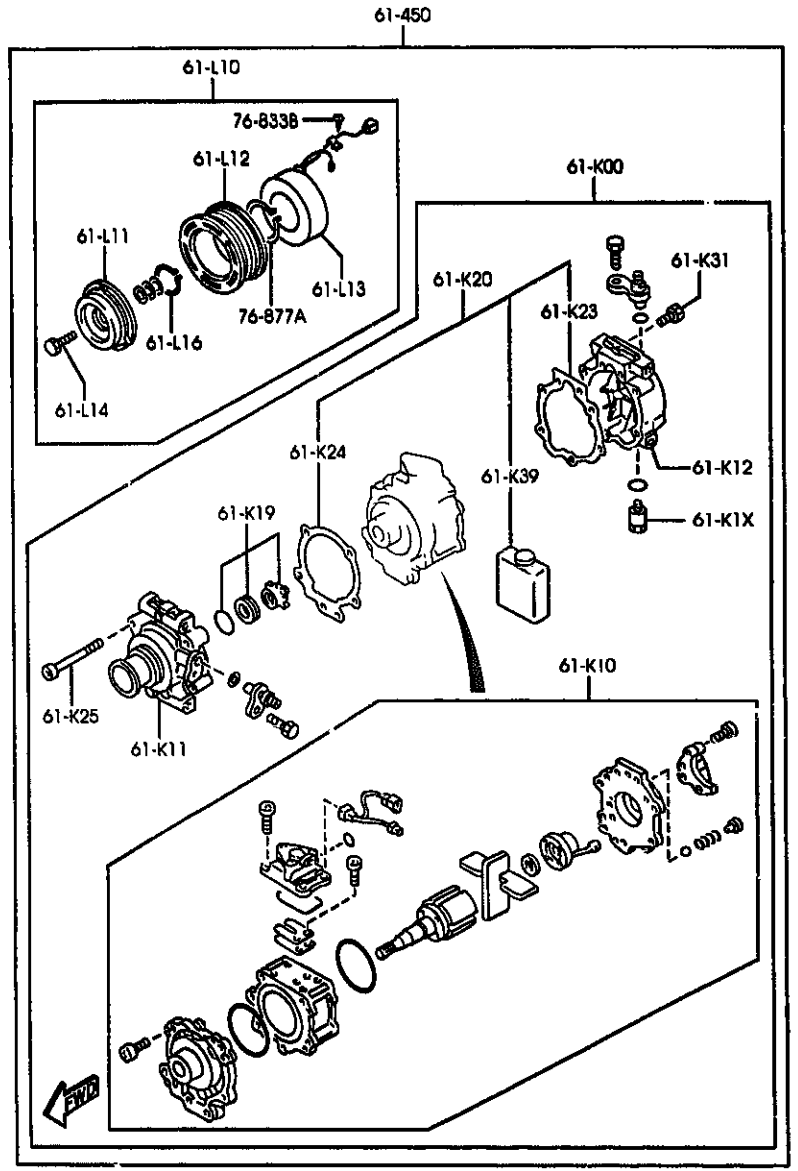

AUNA07 (1N07380)

6140A -2 * AIR CONDITIONING COMPRESSOR COMPONENTS

PART NO.	QTY	MODEL/RESTRICTION	MODEL/RESTRICTION	MODEL/RESTRICTION	FROM-TO
61-L10		CLUTCH,MAGNET			
NA75-61-L10	1	(A)			
61-L11		ARMATURE,MAGNETIC CLUTCH			
NA75-61-L11	1	(A)			
61-L12		PULLEY,MAGNET CLUTCH			
NA75-61-L12	1	(A)			
61-L13		COIL,FIELD-MAGNET CLUTCH			
NA75-61-L13	1	(A)			
61-L14		BULT,MAGNET CLUTCH			
F065-61-L14	1				
61-L16		RING,SNAP-MAGNET CLUTCH			
F065-61-L16	1				
61-450		COMPRESSOR			
NC10-61-450	1	(E)			
76-833B		WASHER			
B001-76-734	1				
76-877A		RING,SNAP			
B001-76-725	1				

CAT. AUNA07-05 2000-01

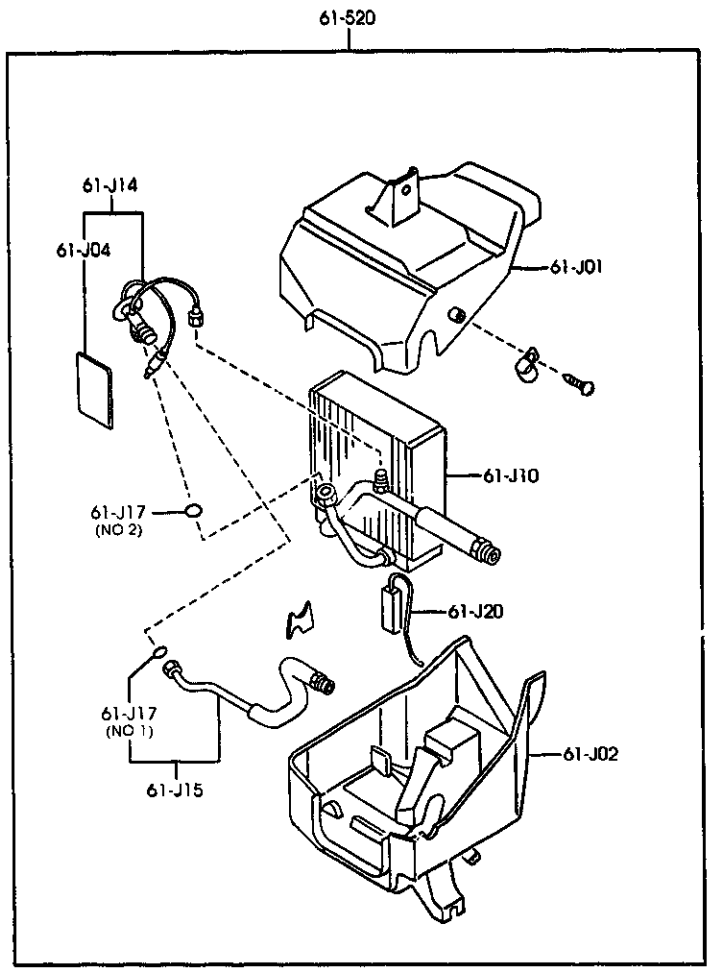

6150A -1 * AIR CONDITIONING COOLING UNIT

PART NO.	QTY	MODEL/RESTRICTION	MODEL/RESTRICTION	MODEL/RESTRICTION	FROM-TO
61-J01		CASE'A',COOLING UNIT			
NA01-61-J01A	1	(A)			
61-J02		CASE'B',COOLING UNIT			
NC10-61-J02	1	(E)			
61-J04		SEAL,COOLING UNIT			
NA01-61-J04	1	(A)			
61-J10		EVAPORATOR			
NC10-61-J10	1	(E)			
61-J14		VALVE,EXPANSION			
NC10-61-J14	1	(E)			
61-J15		PIPE,COOLING UNIT			
NC10-61-J15	1	(E)			
61-J17		RING,'O'-COOLING UNIT			
*LB51-61-J17	1	(E) (ILLUST. NO.1)			
*LB54-61-J17	1	(E) (ILLUST. NO.2)			
61-J20		THERMOSTAT,COOLING UNIT			
NC10-61-J20	1	(E)			
61-520		UNIT,COOLING			
NC10-61-520	1	(E)			

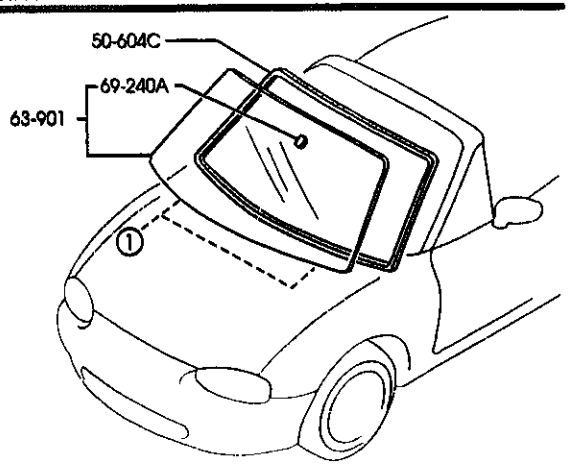

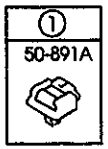

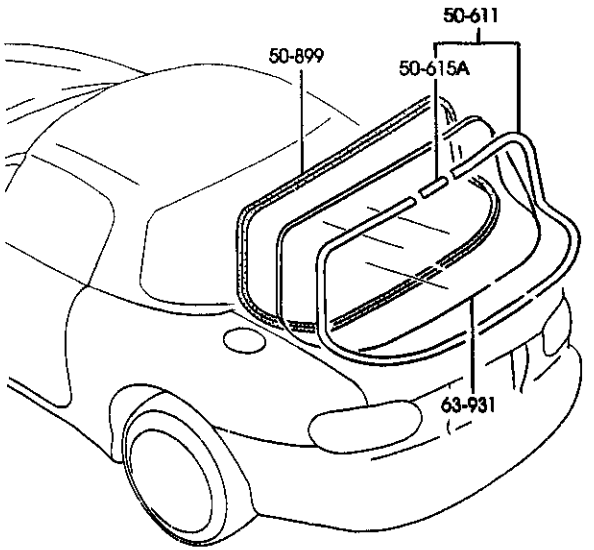

AUNA07 (1N06580)

6300A -1 * WINDOW GLASSES

PART NO.	QTY	MODEL/RESTRICTION	MODEL/RESTRICTION	MODEL/RESTRICTION	FROM-TO
50-604C		DAM			
NA01-50-894A	1	L=3550MM			
GA7B-50-899	1	L=3960MM			
50-611		MOULD,RR.WINDOW			
NAV1-63-930	1	(W/DETACHABLE HARD TOP)			
50-615A		JOINT,BACK WINDOW MOULD			
NA01-63-934	1	(W/DETACHABLE HARD TOP)			
50-891A		SPACER,WINDOW			
E048-50-891	2	WHITE			
50-899		DAM,REAR-WIND.			
NA01-63-855	1	(W/DETACHABLE HARD TOP)			
63-901		GLASS,WINDSHIELD			
NC11-63-900	1				
63-931		GLASS,BACK WINDOW			
NB48-63-931	1	(W/DETACHABLE HARD TOP)			
69-240A		BASE,INTERIOR MIRROR			
BC1C-69-240	1				

CAT. AUNA07-05 2000-01

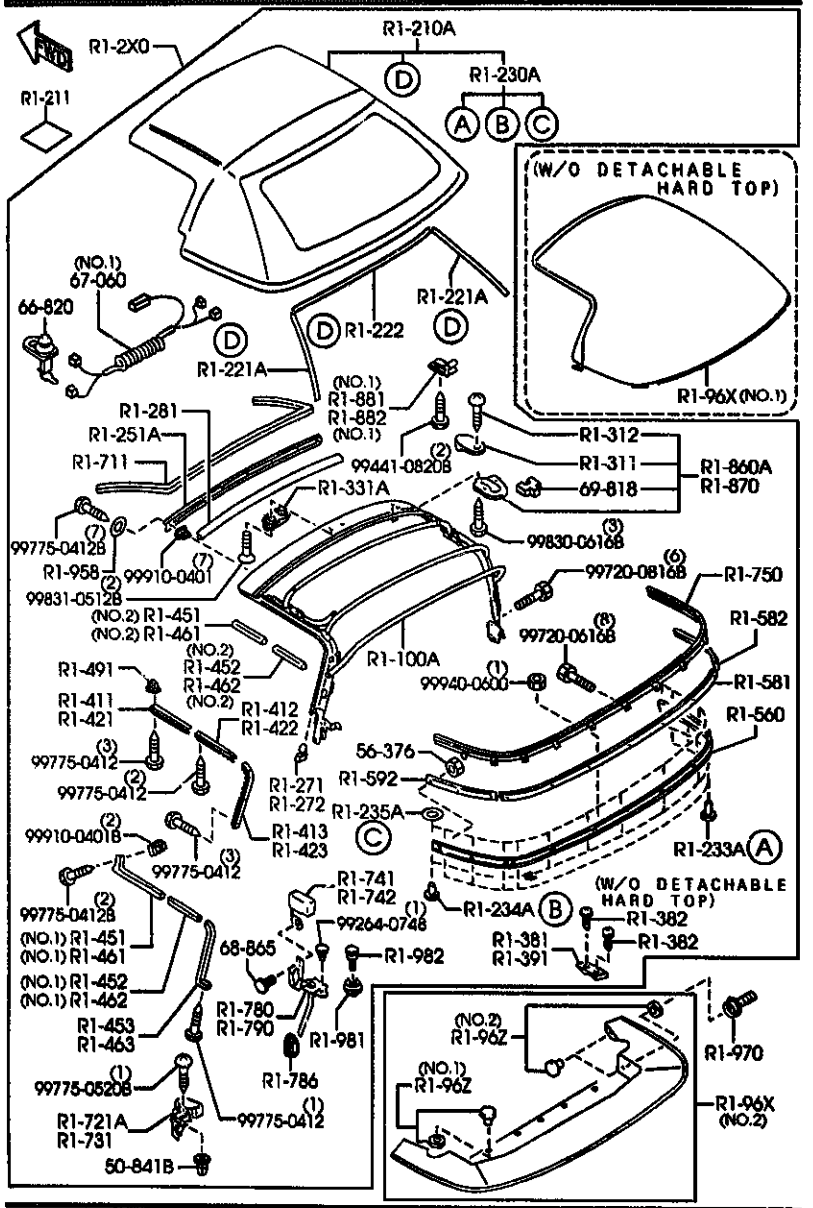

AUNA07 (1N06591)

(W/DETACHABLE HARD TOP)

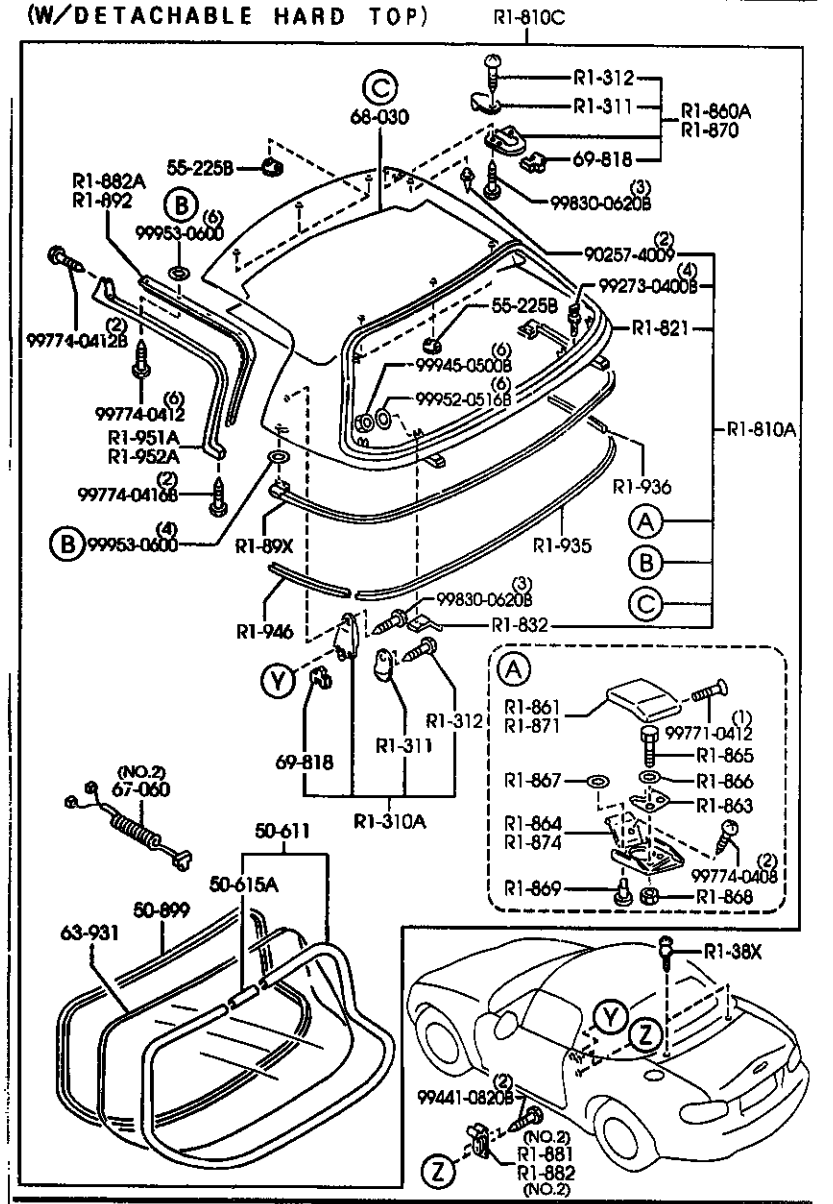

AUNA07 (1N06592)

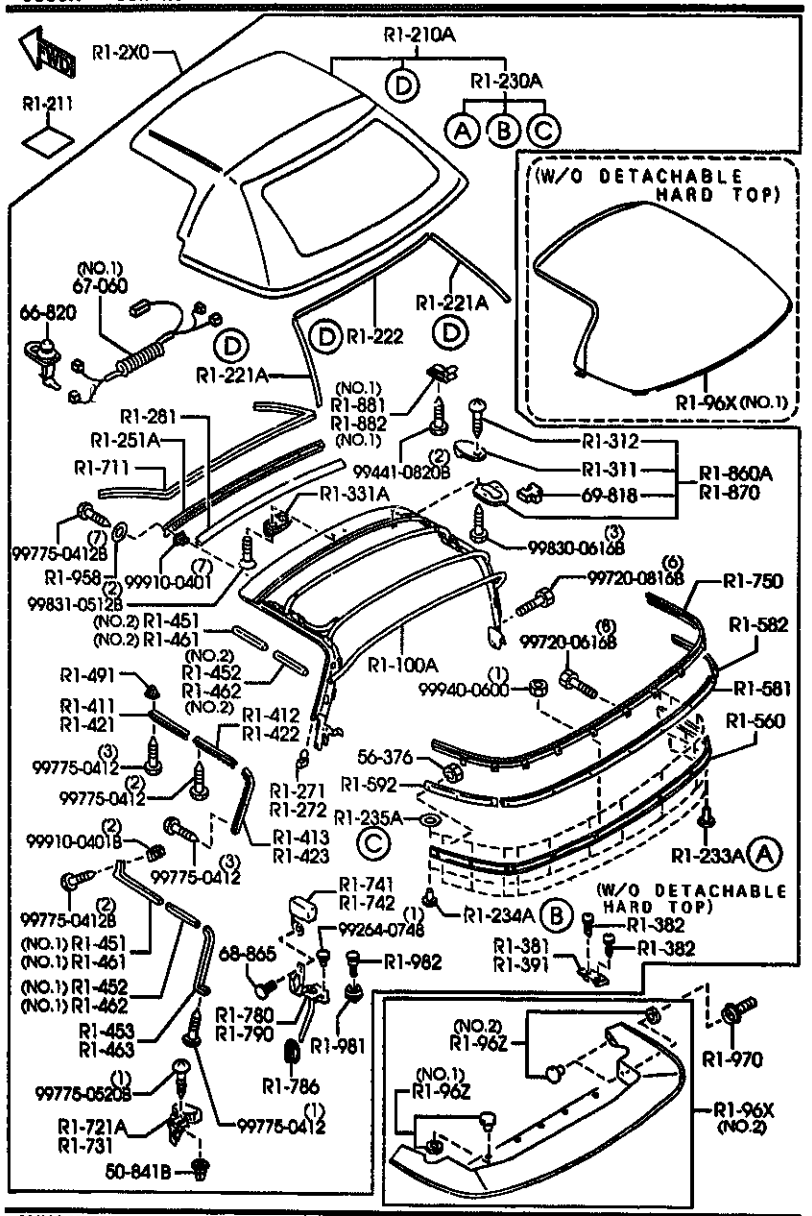

AUNA07 (1N06591)

PART NO.	QTY	MODEL/RESTRICTION	MODEL/RESTRICTION	MODEL/RESTRICTION	FROM-TO
R1-100A		LINK,SOFT TOP			
NC10-R1-100A (NC10-R1-100A)	1				-8907
NC10-R1-100A	1				8907-9701
NC10-R1-100B	1				9701-
R1-2X0		TOP,SOFT			
NC11-R1-020V	1	NON USA,			
44	INT-	NB2 BLUE			
66	INT-	NB0 NB7 BLACK			
* 82	INT-	NB6 BEIGE			
88	INT-	NB1 TAN			
NC10-R1-020T	1	(W/RR.WINDOW DEFOGGER)			-8202
66	INT-	NB0 BLACK			
88	INT-	NB1 TAN			
NC10-R1-020U	1	(W/RR.WINDOW DEFOGGER)			8202-8907
66	INT-	NB0 BLACK			
88	INT-	NB1 TAN			
NC10-R1-020V	1	(W/RR.WINDOW DEFOGGER)			8907-9101
44	INT-	NB2 BLUE			
66	INT-	NB0 BLACK			
88	INT-	NB1 TAN			
NC10-R1-020W	1	(W/RR.WINDOW DEFOGGER)			9101-9701
44	INT-	NB2 BLUE			
66	INT-	NB0 BLACK			
88	INT-	NB1 TAN			
NC20-R1-020B	1	(W/RR.WINDOW DEFOGGER)			9701-
44	INT-	NB2 BLUE			
66	INT-	NB0 NB7 BLACK			
* 82	INT-	NB6 BEIGE			
88	INT-	NB1 TAN			
R1-210A		FABRIC,TOP-SOFT TOP			

8202 NB353*-186606
8907 NB353*-122394
9101 NB353*-126971
9701 NB353*-138751

CAT. AUNA07-05 2000-01

(W/DETACHABLE HARD TOP)

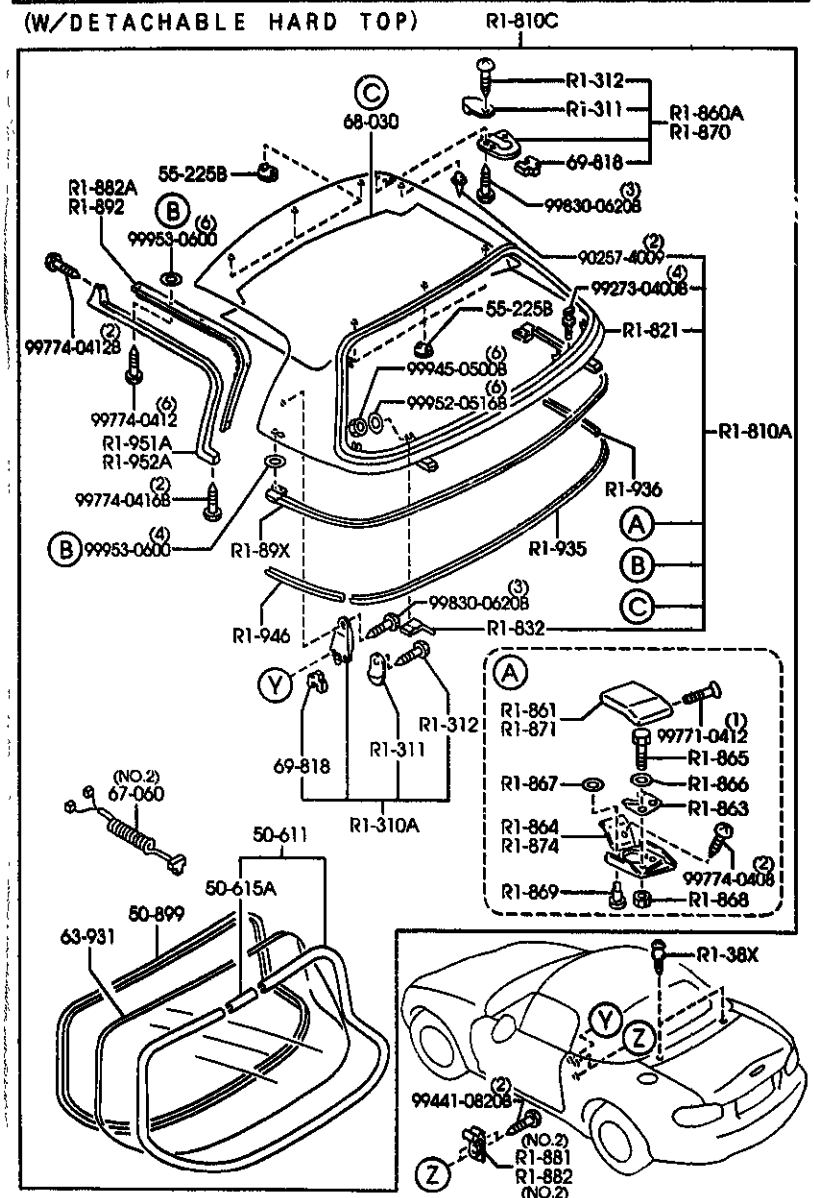

AUNA07 (1N06592)

PART NO.	QTY	MODEL/RESTRICTION	MODEL/RESTRICTION	MODEL/RESTRICTION	FROM-TO
CONT'D					
NC10-R1-210D	1	(W/RR.WINDOW DEFOGGER)			
44	INT-	NB2 BLUE			
66	INT-	NB0 NB7 BLACK			
* 82	INT-	NB6 BEIGE			
88	INT-	NB1 TAN			
NC11-R1-210C	1	NON USA,			
44	INT-	NB2 BLUE			
66	INT-	NB0 NB7 BLACK			
* 82	INT-	NB6 BEIGE			
88	INT-	NB1 TAN			
R1-211		CLOTH,REPAIR-TOP			
NAV1-R1-211	1	BLACK			
NAY2-R1-211	1	TAN			
NOY5-R1-211	1	BLUE			
R1-221A		PAD,SOFT TOP			
*NC10-R1-221	2				8806-
R1-222		PAD,SOFT TOP			
*NC10-R1-222	1				8806-
R1-230A		FASTENER SET,TOP CLOTH			
NA01-R1-230	1				
R1-233A		FASTENER,RAIN RAIL-SIDE			
NA01-R1-233	8				-9101
*NA01-R1-234	8				9101-
R1-234A		FASTENER,RAIN RAIL-REAR			
NA01-R1-234	7				-9101
*NA01-R1-234	5				9101-
R1-235A		WASHER,FASTENER-RAIN RAIL			
NA01-R1-235	15				-9101
*NA01-R1-235	13				9101-

9101 NB3S3*-126971

CAT. AUNA07-05 2000-01

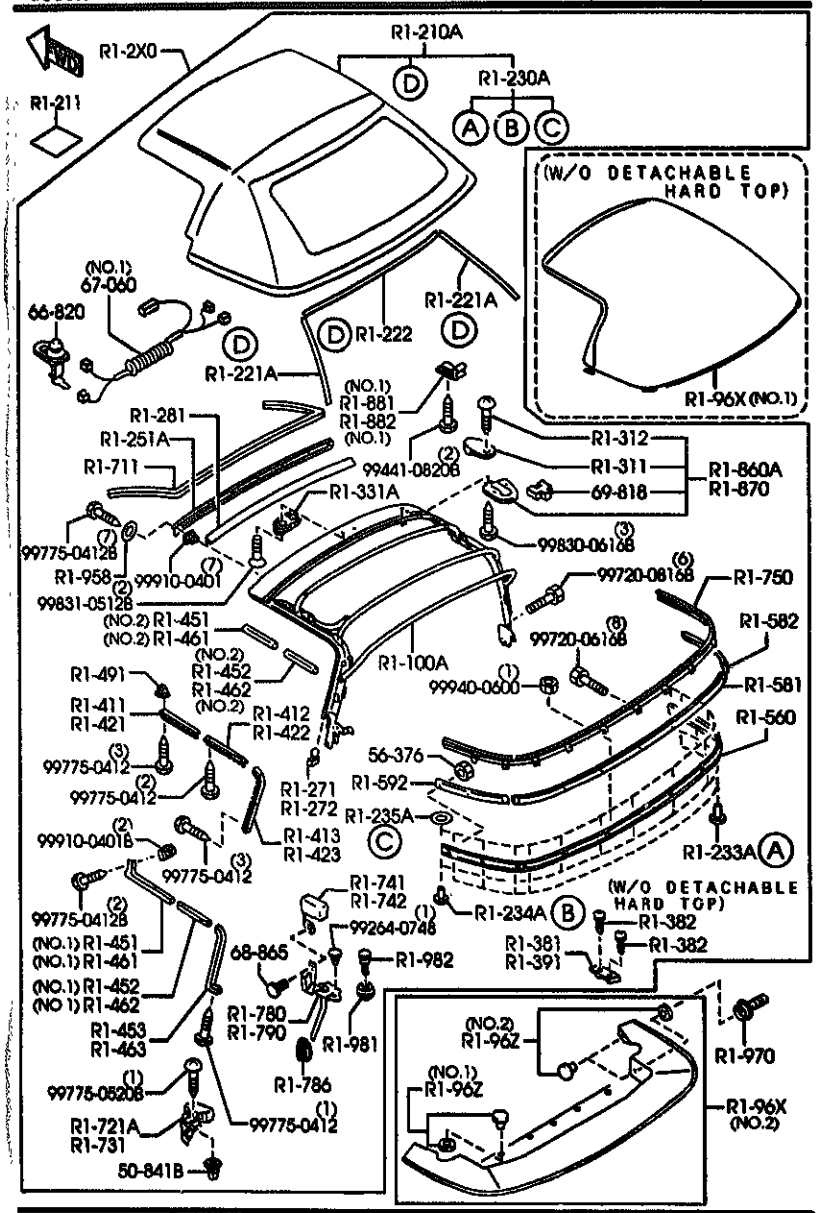

AUNA07 (1N06591)

PART NO.	QTY	MODEL/RESTRICTION	MODEL/RESTRICTION	MODEL/RESTRICTION	FROM-TO
R1-251A		PLATE(FRT),SET-ROOF PANEL			
MA01-R1-291 AM(MA01-R1-291A)	1				-9101
MA01-R1-291A	1				9101-
R1-271		CLIP(R),FORM PLATE			
MA01-R1-271	1				
R1-272		CLIP(L),FORM PLATE			
MA01-R1-272	1				
R1-281		WELT,SEAMING-SOFT TOP			
MC10-R1-281	1				
R1-310A		LOCK,DETACHABLE TOP			
MA02-R1-310B	2	(W/DETACHABLE HARD TOP)			
R1-311		CAP,TOP LOCK			
MA01-R1-311	2	(W/O DETACHABLE HARD TOP)			
MA01-R1-311	6	(W/DETACHABLE HARD TOP)			
R1-312		SCREW,TOP LOCK			
MA01-R1-312	2	(W/O DETACHABLE HARD TOP)			
MA01-R1-312	6	(W/DETACHABLE HARD TOP)			
R1-331A		HANDLE,SOFT TOP			
MA01-R1-331	1				
R1-38X		HOOK,SOFT TOP-REAR DECK			
MA01-R1-38XB	2	(W/DETACHABLE HARD TOP)			
R1-381		PLATE(R),HOOK-REAR DECK			
MA01-R1-381C AM(MA01-R1-381E)	1				-8201
MA01-R1-381E	1				8201-
R1-382		SCREW,HOOK-REAR DECK			

8201 NB353#-106606
9101 NB353#-126971

CAT. AUNA07-05 2000-01

(W/DETACHABLE HARD TOP)

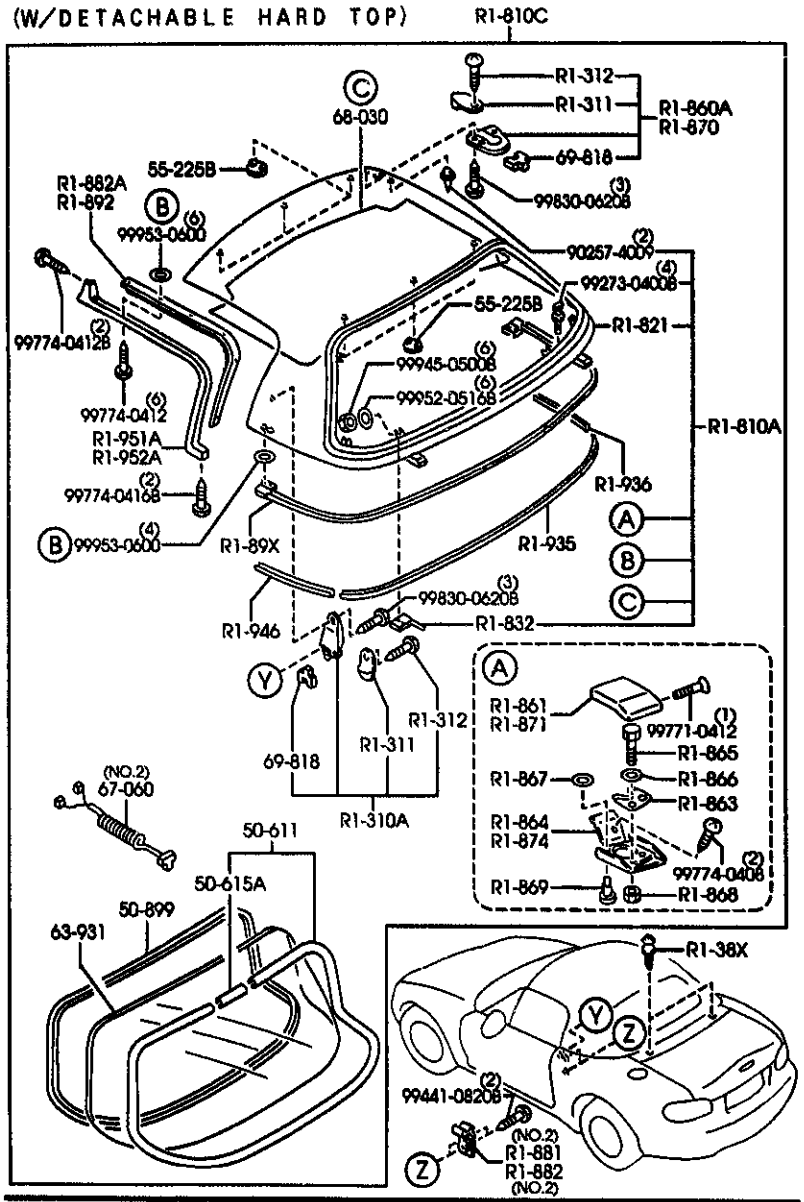

AUNA07 (1N06592)

PART NO.	QTY	MODEL/RESTRICTION	MODEL/RESTRICTION	MODEL/RESTRICTION	FROM-TO
CONT'D					
NA01-R1-382A A (NA01-R1-382C)	2	(W/DETACHABLE HARD TOP)			-8101
NA01-R1-382A A (NA01-R1-382C)	4	(W/O DETACHABLE HARD TOP)			-8101
NA01-R1-382C	2	(W/DETACHABLE HARD TOP)			8101-
NA01-R1-382C	4	(W/O DETACHABLE HARD TOP)			8101-
R1-391		PLATE(L),HOOK-REAR DECK			
NA01-R1-391C AN(NA01-R1-391E)	1				-8201
NA01-R1-391E	1				8201-
R1-411		RETAINER'A'(R),WTHSTP			
NA01-R1-461	1				
R1-412		RETAINER'B'(R),WTHSTP			
NA01-R1-462	1				
R1-413		RETAINER'C'(R),WTHSTP			
NA01-R1-463	1				
R1-421		RETAINER'A'(L),WTHSTP			
NA01-R1-471	1				
R1-422		RETAINER'B'(L),WTHSTP			
NA01-R1-472	1				
R1-423		RETAINER'C'(L),WTHSTP			
NA01-R1-473	1				
R1-451		WTHSTP NO.1(R),LINK			
NC10-R1-411C	1	(ILLUST. NO.1)			
NC10-R1-431B	1	(ILLUST. NO.2)			
R1-452		WTHSTP NO.2(R),LINK			
NC10-R1-412C	1	(ILLUST. NO.1)			
NC10-R1-432B A (NC10-R1-432C)	1	(ILLUST. NO.2)			-8202
NC10-R1-432C	1	(ILLUST. NO.2)			8202-8907
NC10-R1-432D	1	(ILLUST. NO.2)			8907-

8101 NB353M-102707
8201 NB353M-106406
8202 NB353M-106406
8907 NB353M-122394

CAT. AUNA07-05 2000-01

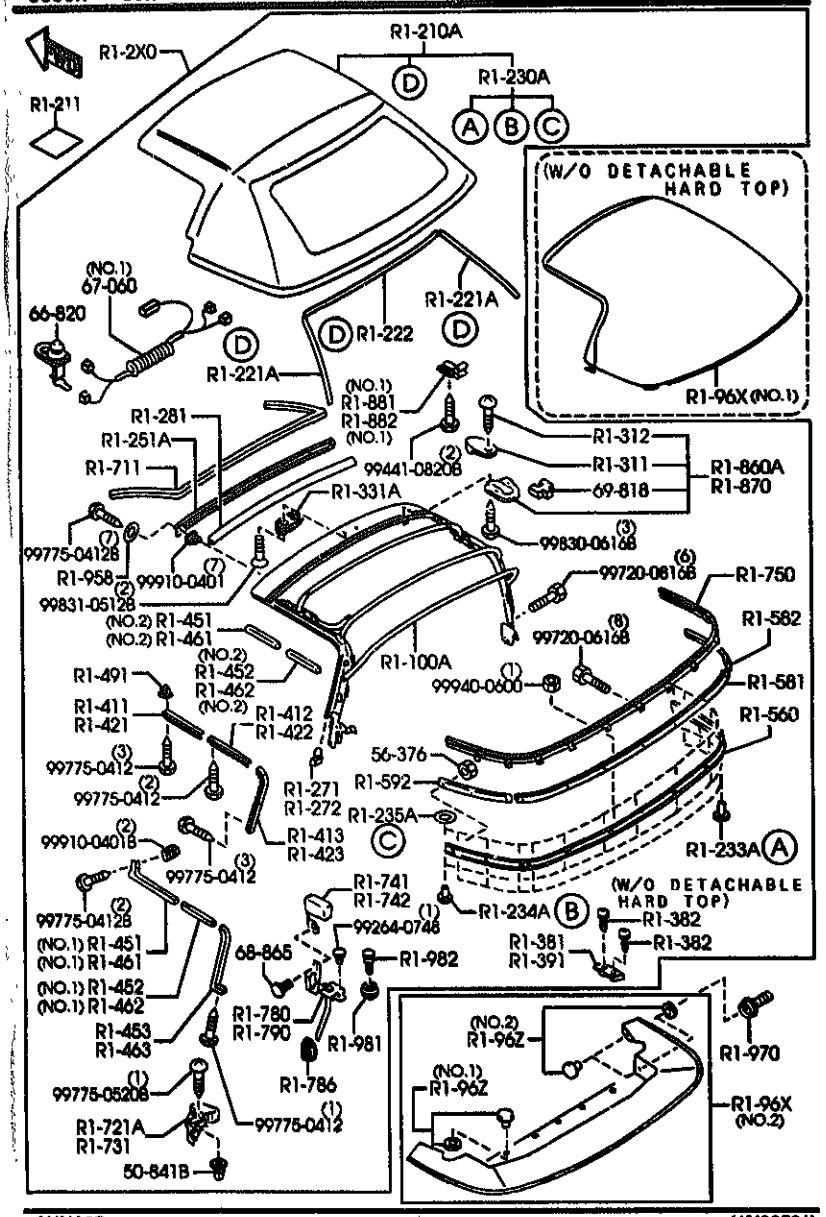

AUNA07 (1N06591)

PART NO.	QTY	MODEL/RESTRICTION	MODEL/RESTRICTION	MODEL/RESTRICTION	FROM-TO
R1-455		WTHSTP NO.3(R),LINK			
NC10-R1-413C	1				
R1-461		WTHSTP NO.1(L),LINK			
NC10-R1-421C	1	(ILLUST. NO.1)			
NC10-R1-441B	1	(ILLUST. NO.2)			
R1-462		WTHSTP NO.2(L),LINK			
NC10-R1-422C	1	(ILLUST. NO.1)			
NC10-R1-442B	1	(ILLUST. NO.2)			-8202
A (NC10-R1-442C)					
NC10-R1-442C	1	(ILLUST. NO.2)			8202-8907
NC10-R1-442D	1	(ILLUST. NO.2)			8907-
R1-463		WTHSTP NO.3(L),LINK			
NC10-R1-423C	1				
R1-491		GROMMET,SCREW-RETAINER			
NA01-R1-491	16				
R1-560		RAIL,RAIN-SOFT TOP REAR			
NA01-R1-560B	1				-9101
A (NA01-R1-560E)					
NA01-R1-560E	1				9101-
R1-581		PLATE(C),SET-TOP FABRIC			
NA01-R1-581C	1				
R1-582		PLATE(R),SET-TOP FABRIC			
NC10-R1-582A	1				
R1-592		PLATE(L),SET-TOP FABRIC			
NC10-R1-592A	1				
R1-711		WTHSTP,FRONT HEADER			
NC10-R1-711B	1				-8401
AN(NC10-R1-711C)					
NC10-R1-711C	1				8401-
R1-721A		WTHSTP(R),CAB SIDE			
NC10-R1-721A	1				-8106

8106 NB353M-102707
8202 NB353M-106606
8401 NB353M-114005
8907 NB353M-122394
9101 NB353M-126971

CAT. AUNA07-05 2000-01

(W/DETACHABLE HARD TOP)

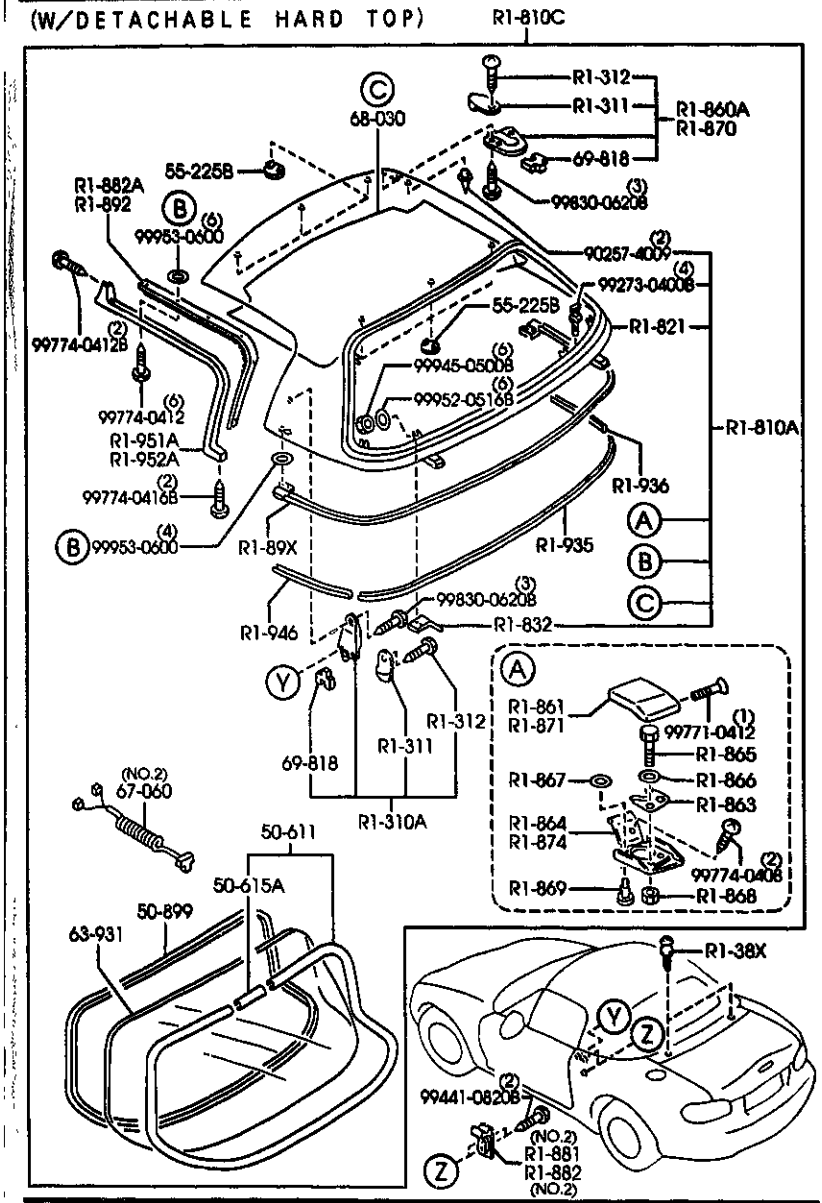

AUNA07 (1N06592)

PART NO.	QTY	MODEL/RESTRICTION	MODEL/RESTRICTION	MODEL/RESTRICTION	FROM-TO
CONT'D AN(NC10-R1-721B)					
NC10-R1-721B AN(NC10-R1-721C)	1				8106-8A05
NC10-R1-721C	1				8A05-
R1-731		WTHSTP(L),CAB SIDE			
NC10-R1-731A AN(NC10-R1-731B)	1				-8106
NC10-R1-731B AN(NC10-R1-731C)	1				8106-8A05
NC10-R1-731C	1				8A05-
R1-741		PROTR(R),MOULD-BELT LINE			
NA01-R1-741B	1				
R1-742		PROTR(L),MOULD-BELT LINE			
NA01-R1-742C	1				
R1-750		MOULD,BELTLINE-REAR			
NC10-R1-750 AN(NC10-R1-750A)	1				-7C10
NC10-R1-750A AN(NC10-R1-750B)	1				7C10-8130
NC10-R1-750B AN(NC10-R1-750C)	1				8130-8601
NC10-R1-750C AN(NC10-R1-750D)	1				8601-8C01
NC10-R1-750D	1				8C01-
R1-780		COVER(R),DRAIN-SOFT TOP			
NC10-R1-780A AN(NC10-R1-780C)	1				-7C13
NC10-R1-780C A (NC10-R1-780D)	1				7C13-7C15
NC10-R1-780D AN(NC10-R1-780E)	1				7C15-8106
NC10-R1-780E AN(NC10-R1-780F)	1				8106-9805
NC10-R1-780F	1				9805-
R1-786		GROMMET,DRAIN HOSE-TOP			
NA01-R1-786A	2				

7C10 NB353N-100409 9805 NB353N-140094
7C13 NB353N-100845
7C15 NB353N-100927
8106 NB353N-102707
8130 NB353N-106372
8601 NB353N-119466
8A05 NB353N-122780
8C01 NB353N-124914

CAT. AUNA07-85 2000-01

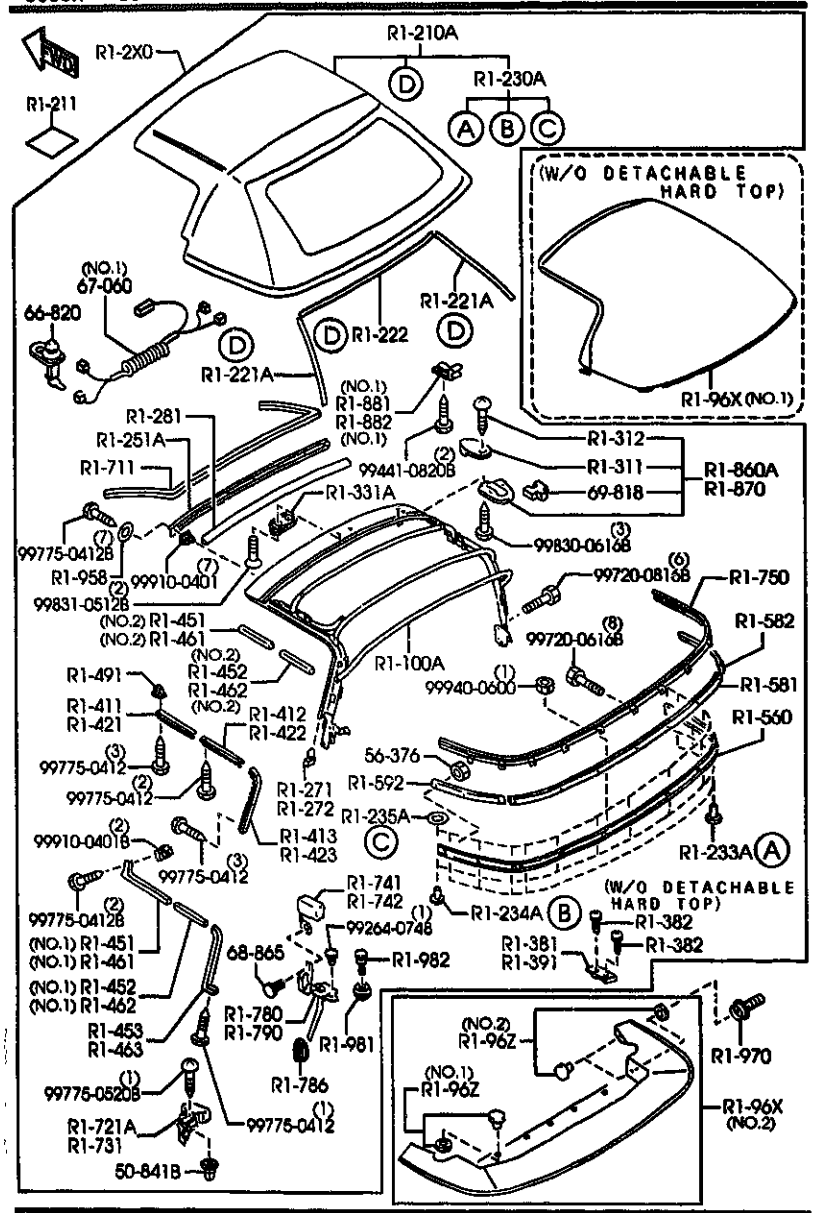

AUNA07 (1N06591)

PART NO.	QTY	MODEL/RESTRICTION	MODEL/RESTRICTION	MODEL/RESTRICTION	FROM-TO
R1-790		COVER(L),DRAIN-SOFT TOP			
NC10-R1-790A AN(NC10-R1-790C)	1				-7C13
NC10-R1-790C A (NC10-R1-790D)	1				7C13-7C15
NC10-R1-790D AN(NC10-R1-790E)	1				7C15-8106
NC10-R1-790E AN(NC10-R1-790F)	1				8106-9805
NC10-R1-790F	1				9805-
R1-810A		PANEL,ROOF			
NC10-R1-82XB	1	(W/DETACHABLE HARD TOP)			
PT	EXT-	PT CHAST WHITE			
PZ	EXT-	PZ A3F BRILLIANT BLACK			
SU	EXT-	SU A3E CLASSIC RED			
* 17	EXT-	23E ARTVIN RED MC			
46	EXT-	18J GRACE GREEN MC			
56	EXT-	18K EVOLUTION ORANGE MC			
57	EXT-	12K TWILIGHT BLUE			
92	EXT-	18G HIGHLIGHT SILVER M			
R1-810C		ROOF,DETACHABLE TOP			
NC10-R1-810J	1	(W/DETACHABLE HARD TOP)			
PT	EXT-	PT CHAST WHITE			
PZ	EXT-	PZ A3F BRILLIANT BLACK			
SU	EXT-	SU A3E CLASSIC RED			
* 17	EXT-	23E ARTVIN RED MC			
40	EXT-	20P INNOCENT BLUE MC			
46	EXT-	18J NEW GREEN M			
56	EXT-	18K NEW ORANGE MC			
57	EXT-	12K TWILIGHT BLUE			
92	EXT-	18G HIGHLIGHT SILVER M			

7C13 NB353*-100845
7C15 NB353*-100927
8106 NB353*-102707
9805 NB353*-140094

(W/DETACHABLE HARD TOP)

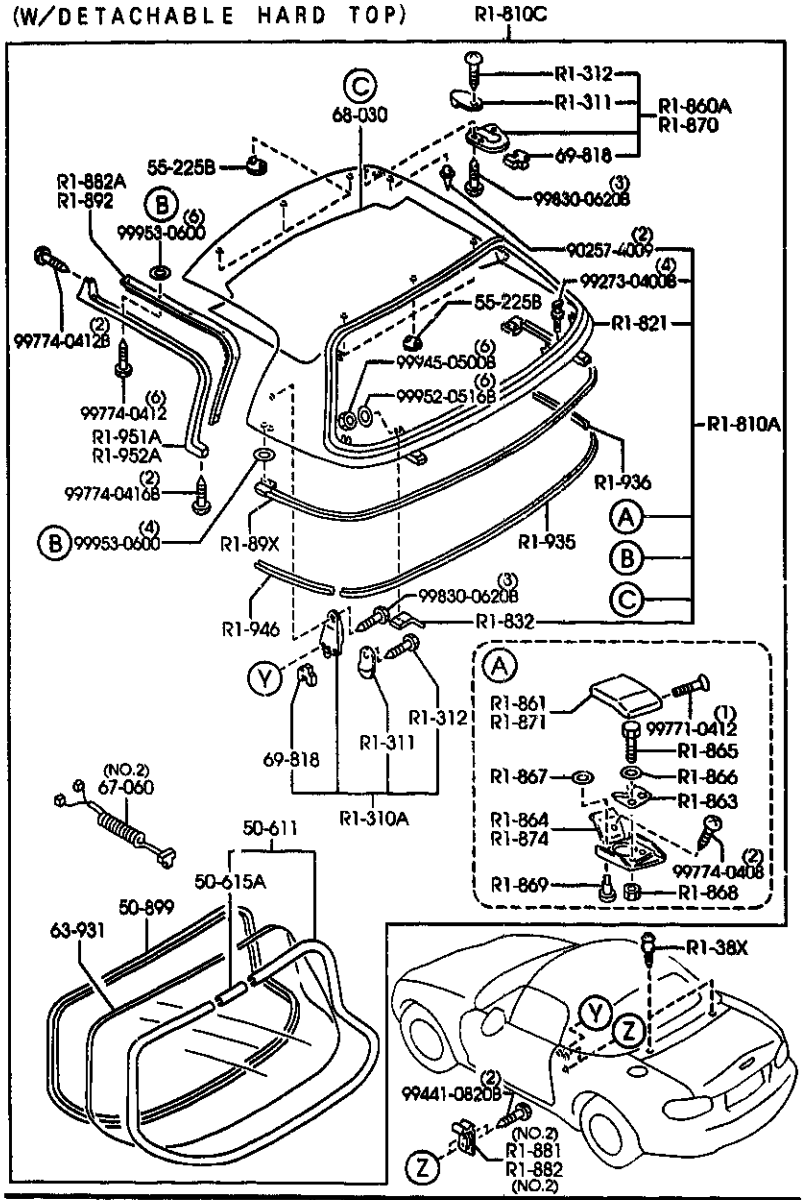

AUNA07 (1N06592)

PART NO.	QTY	MODEL/RESTRICTION	MODEL/RESTRICTION	MODEL/RESTRICTION	FROM-TO
R1-821		PANEL,OUTER-D.TOP			
NA01-R1-821D	1	(W/DETACHABLE HARD TOP)			
R1-832		PLATE,CUSHION-D. TOP			
NC18-R1-832	1	(FOR RIGHT) (W/DETACHABLE HARD TOP)			
NC10-R1-835	1	(FOR LEFT) (W/DETACHABLE HARD TOP)			
R1-860A		LOCK(R),TOP			
NA01-R1-310G	1	(W/O DETACHABLE HARD TOP)			
NA01-R1-310G	2	(W/DETACHABLE HARD TOP)			
R1-861		COVER(R),DECK LOCK			
NA01-R1-861	1	(W/DETACHABLE HARD TOP)			
R1-863		PLATE,DECK LOCK			
NA01-R1-863	2	(W/DETACHABLE HARD TOP)			
R1-864		SHEET(R),DECK LOCK			
NA01-R1-864	1	(W/DETACHABLE HARD TOP)			
R1-865		BOLT,DECK LOCK			
NA01-R1-865	4	(W/DETACHABLE HARD TOP)			
R1-866		WASHER'A',DECK LOCK			
NA01-R1-866	4	(W/DETACHABLE HARD TOP)			
R1-867		WASHER'B',DECK LOCK			
NA01-R1-867	2	(W/DETACHABLE HARD TOP)			
R1-868		NUT,DECK LOCK			
NA01-R1-868	4	(W/DETACHABLE HARD TOP)			

CAT. AUNA07-05 2000-01

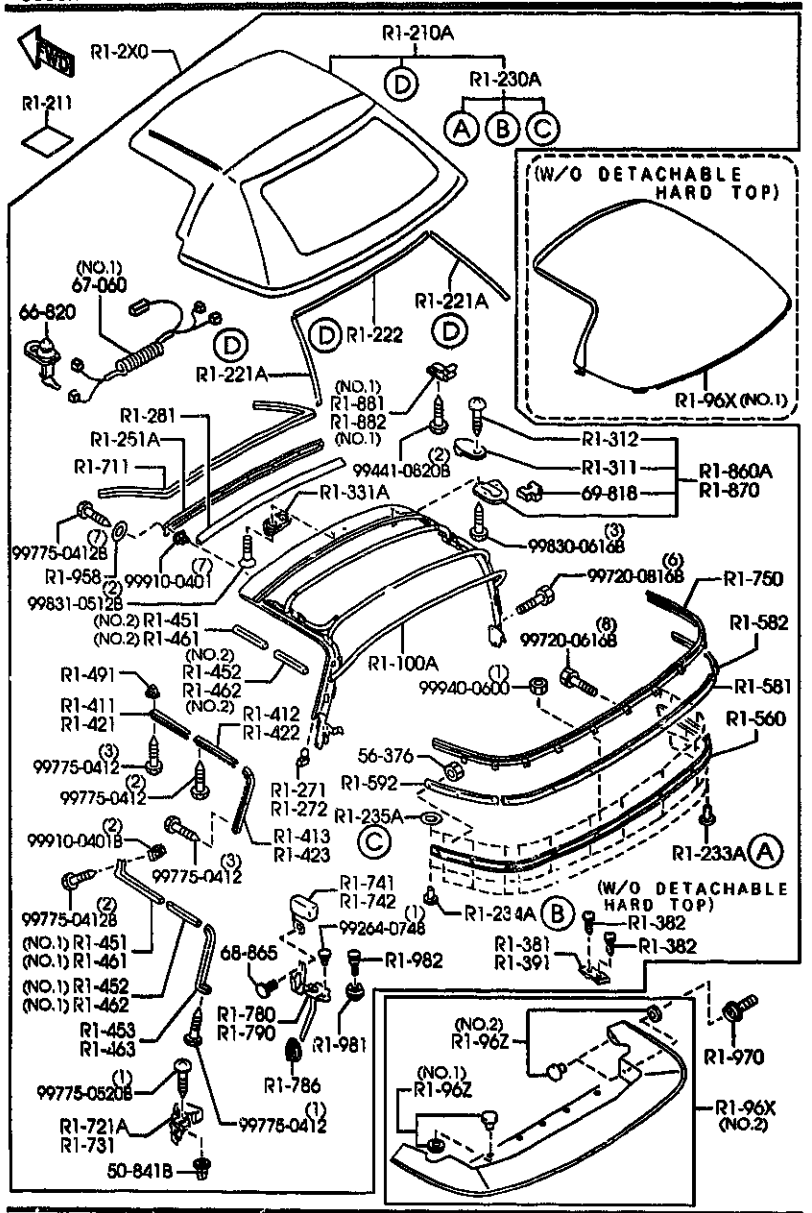

AUNA07 (1N06591)

PART NO.	QTY	MODEL/RESTRICTION	MODEL/RESTRICTION	MODEL/RESTRICTION	FROM-TO
R1-869		PIN,DECK LOCK			
NA01-R1-869	2	(W/DETACHABLE HARD TOP)			
R1-870		LOCK(L),TOP			
NA01-R1-320B	1	(W/O DETACHABLE HARD TOP)			
NA01-R1-320B	2	(W/DETACHABLE HARD TOP)			
R1-871		COVER(L),DECK LOCK			
NA01-R1-871	1	(W/DETACHABLE HARD TOP)			
R1-874		SHEET(L),DECK LOCK			
NA01-R1-874	1	(W/DETACHABLE HARD TOP)			
R1-881		STRIKER(R),LOCK-TOP			
NA02-R1-361D	1	(ILLUST. NO.2) (W/DETACHABLE HARD TOP)			
NA01-R1-361D AM(NA01-R1-361F)	1	(ILLUST. NO.1)			-9203
NA01-R1-361F	1	(ILLUST. NO.1)			9203-
R1-882		STRIKER(L),LOCK-TOP			
NA02-R1-371D	1	(ILLUST. NO.2) (W/DETACHABLE HARD TOP)			
NA01-R1-371D AM(NA01-R1-371F)	1	(ILLUST. NO.1)			-9203
NA01-R1-371F	1	(ILLUST. NO.1)			9203-
R1-882A		RETAINER(R),WTHSTP-D.TOP			
NA01-R1-882	1	(W/DETACHABLE HARD TOP)			
R1-89X		WEATHERSTRIP,D.TOP-REAR			
NA01-R1-89XB	1	(W/DETACHABLE HARD TOP)			
R1-892		RETAINER(L),WTHSTP-D.TOP			
NA01-R1-892	1	(W/DETACHABLE HARD TOP)			

9203 NB353*-130349

CAT. AUNA07-05 2000-01

(W/DETACHABLE HARD TOP)

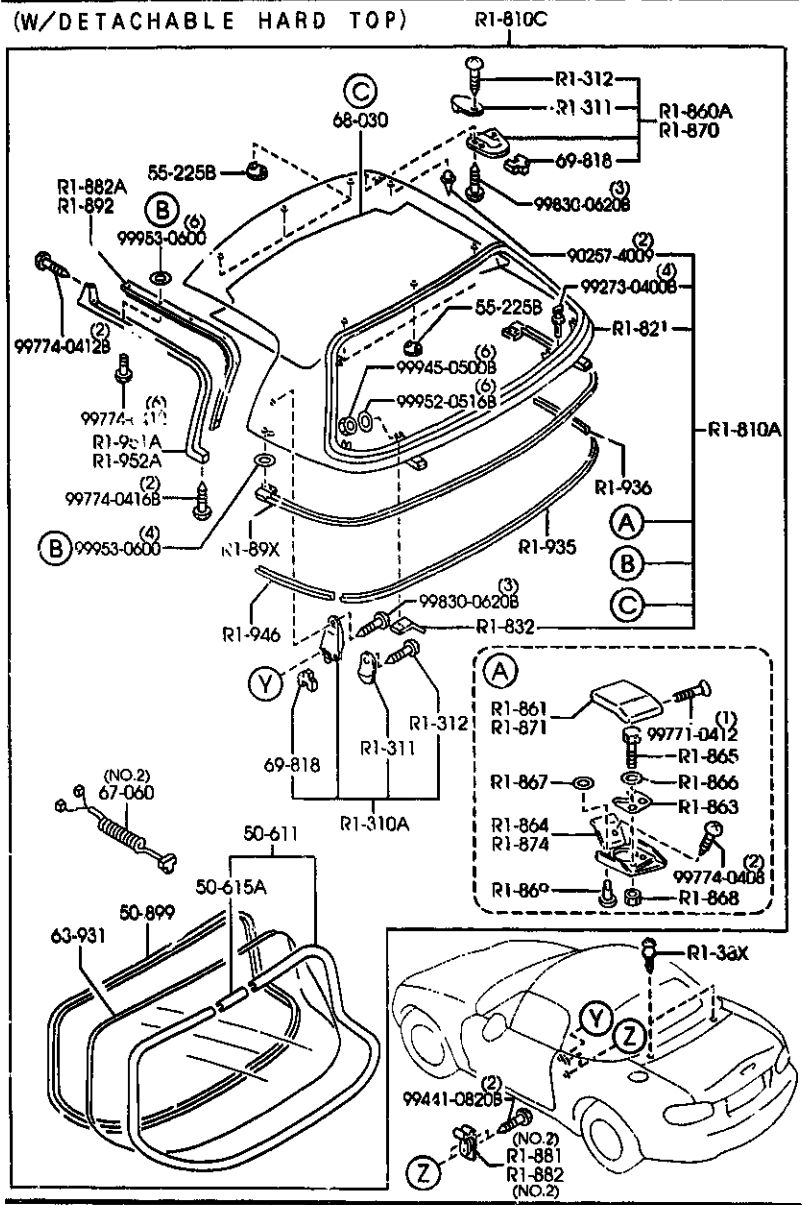

AUNA07 (1N06592)

PART NO.	QTY	MODEL/RESTRICTION	MODEL/RESTRICTION	MODEL/RESTRICTION	FROM-TO
R1-935		PROTECTOR(C),EDGE-D. TOP			
NA01-R1-935B	1	(W/DETACHABLE HARD TOP)			
R1-936		PROTECTOR(R),EDGE-D. TOP			
NA01-R1-936A	1	(W/DETACHABLE HARD TOP)			
R1-946		PROTECTOR(L),EDGE-D. TOP			
NA01-R1-946A	1	(W/DETACHABLE HARD TOP)			
R1-951A		WTHSTP(R),ROOF PANEL			
NC10-R1-881D	1	(W/DETACHABLE HARD TOP)			
R1-952A		WTHSTP(L),ROOF PANEL			
NC10-R1-891D	1	(W/DETACHABLE HARD TOP)			
R1-958		WASHER,HOOK'A'&'B'			
B235-R1-958A	7				
R1-96X		COVER,TOP FABRIC			
NA01-R1-96XD	1	(ILLUST. NO.1) (W/O DETACHABLE HARD TOP)			
NC10-R1-960B	1	(ILLUST. NO.2)			-8522
21	INT-	NB1 TAN			
66	INT-	NB8 BLACK			
NC10-R1-960C	1	(ILLUST. NO.2)			8522-
21	INT-	NB1 TAN			
53	INT-	NB2 BLUE			
66	INT-	NB8 BLACK			
* 80	INT-	NB6 NB7 BEIGE			
R1-96Z		HOOK,TOP BOOT			
NA01-R1-96Z	5	(ILLUST. NO.1)			
00	INT-	NB0 BLACK			
75	INT-	NB1 NB2 NB6 NB7 SILVER			
NC10-R1-96Z	4	(ILLUST. NO.2)			

8522 NB*53*-118501

CAT. AUNA07-05 2000-01

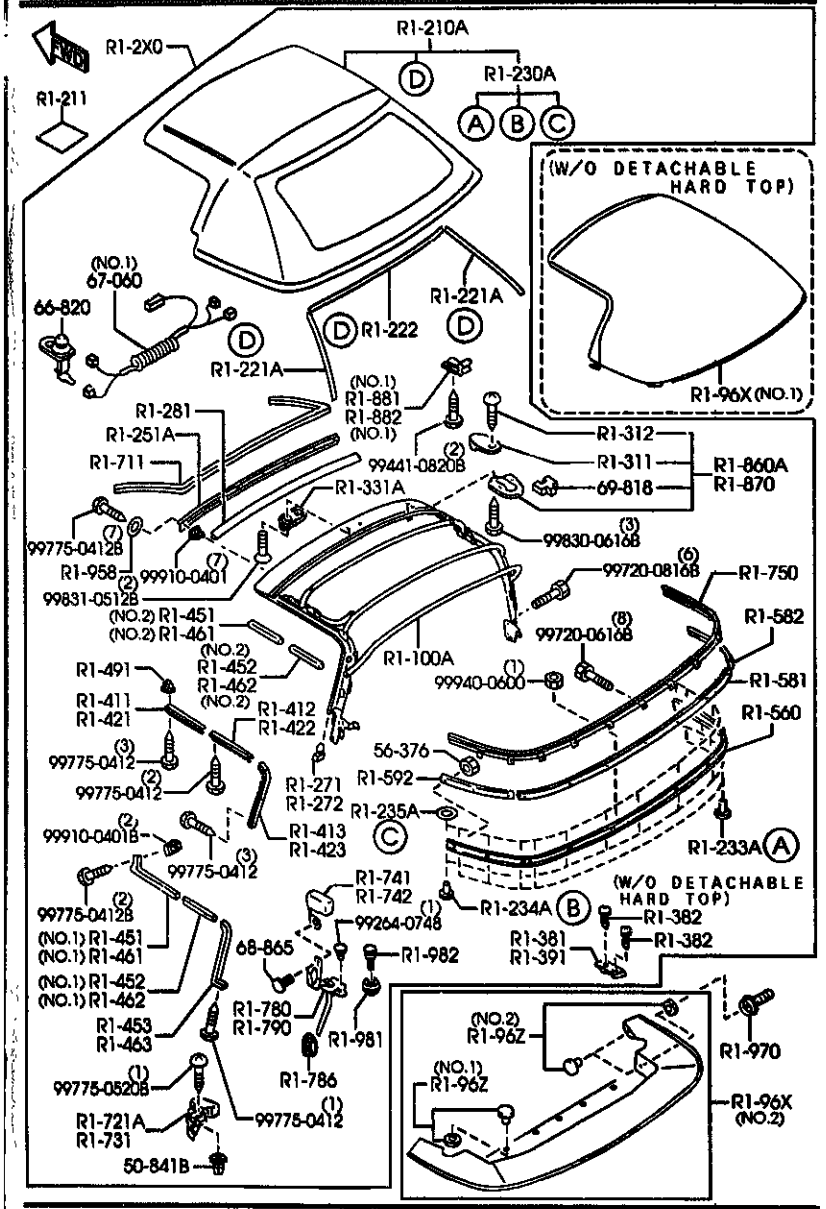

AUNA07 (1N06591)

PART NO.	QTY	MODEL/RESTRICTION	MODEL/RESTRICTION	MODEL/RESTRICTION	FROM-TO
R1-970		HOOK,REAR DECK			
NC10-R1-970 AN(NC10-R1-970A)	4				-7C25
NC10-R1-970A AN(NC10-R1-970B)	4				7C25-8409
NC10-R1-970B	4				8409-
R1-981		STOPPER,SOFT TOP			
NA01-R1-981A	2				
R1-982		BOLT,STOPPER-SOFT TOP			
NA01-R1-982B	2				
50-611		MOULD,RR.WINDOW			
NAV1-63-930	1	(W/DETACHABLE HARD TOP)			
50-615A		JOINT,BACK WINDOW MOULD			
NA01-63-934	1	(W/DETACHABLE HARD TOP)			
50-841B		GROMMET,SCREW			
H260-50-841	2				
50-899		DAM,REAR-WIND.			
NA01-63-895	1	(W/DETACHABLE HARD TOP)			
55-225B		COVER,HOLE			
0830-55-225	6	(W/DETACHABLE HARD TOP)			
00	INT-	NB0 NB1 NB2 NB6 NB7 BLACK			
56-376		NUT,SELF LOCK			
B001-56-376	13				
63-931		GLASS,BACK WINDOW			
NB40-63-931	1	(W/DETACHABLE HARD TOP)			
66-820		SWITCH,DOOR			
H001-66-540	1	(W/RR.WINDOW DEFOGGER)			-9701

7C25 NB353*-102504
8409 NB353*-114868
9701 NB353*-138751

CAT. AUNA07-05 2000-01

(W/DETACHABLE HARD TOP)

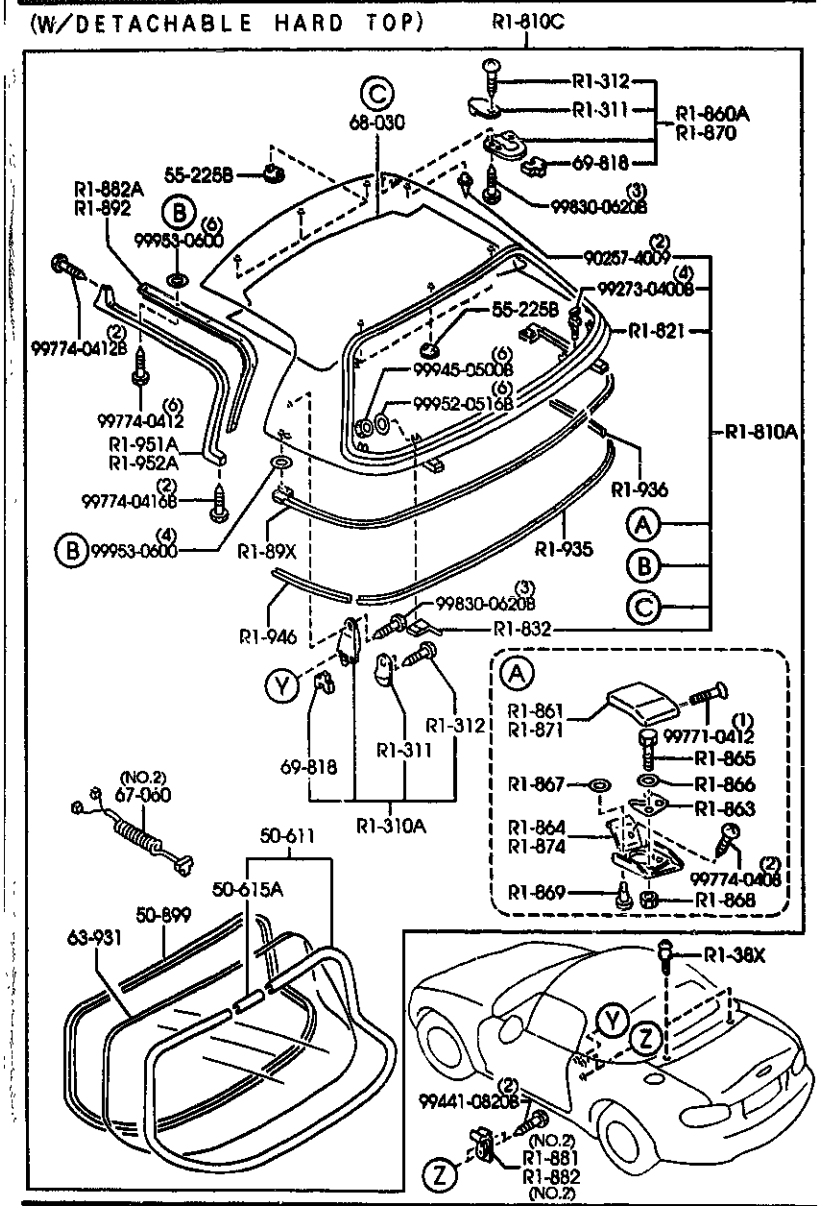

AUNA07 (1N06592)

6330A -12M SUN ROOF

PART NO.	QTY	MODEL/RESTRICTION	MODEL/RESTRICTION	MODEL/RESTRICTION	FROM-TO
67-860		HARNESS NO.2,REAR			
NC11-67-060A	1	(ILLUST. NO.2) (W/DETACHABLE HARD TOP)			
NC10-67-060C	1	(ILLUST. NO.1) (W/RR.WINDOW DEFOGGER)			-9701
NC10-67-060D	1	(ILLUST. NO.1) (W/RR.WINDOW DEFOGGER)			9701-
68-030		CEILING,TOP			
N807-68-031	1	(W/DETACHABLE HARD TOP)			9601-
08	INT-	NB0 NB1 NB2 NB6 NB7 BLACK			
68-865		FASTENER			
0032-68-865A	2				
00	INT-	NB0 NB1 NB2 NB6 NB7 BLACK			
69-818		PAD			
NA01-R1-313B	2	(W/O DETACHABLE HARD TOP)			
NA01-R1-313B	6	(W/DETACHABLE HARD TOP)			

9601 NB353M-138251
9701 NB353M-138751

CAT. AUNA07-05 2000-01

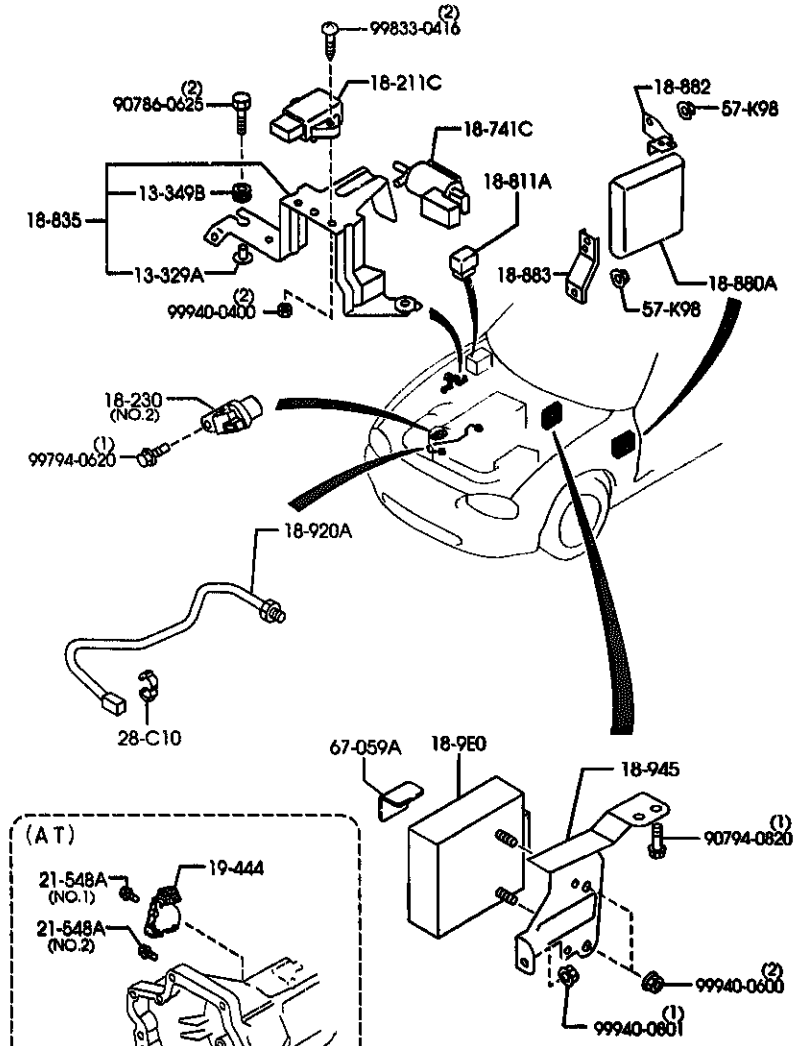

AUNA07 (1N03691)

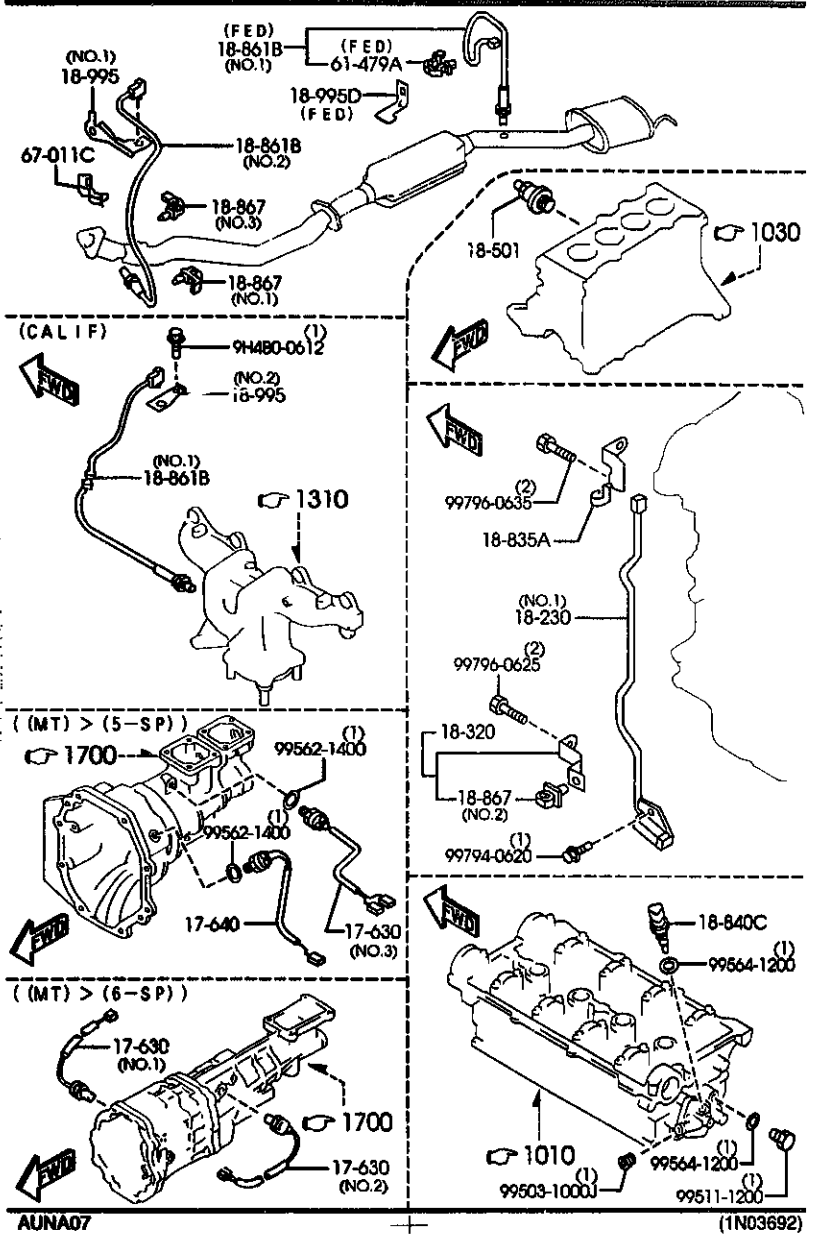

AUNA07 (1N03692)

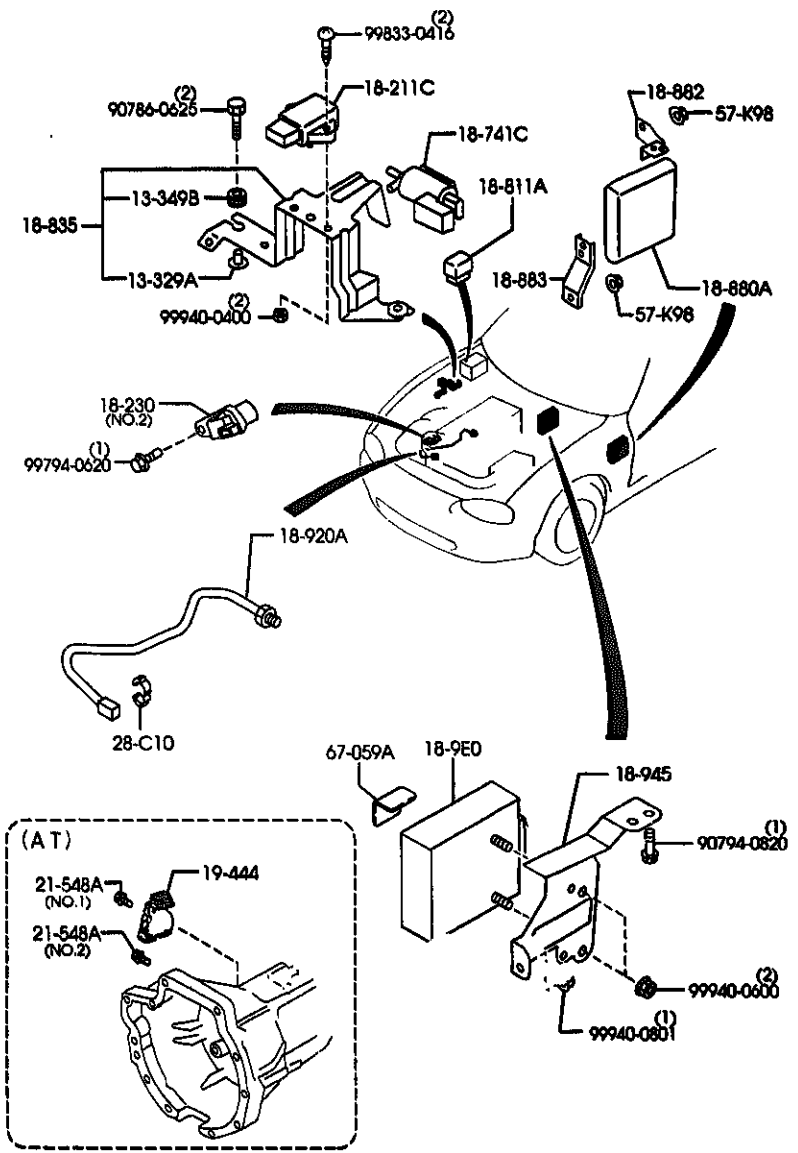

AUNA07 (1N03691)

PART NO.	QTY	MODEL/RESTRICTION	MODEL/RESTRICTION	MODEL/RESTRICTION	FROM-TO
13-329A		SPACER,FUEL FILTER			
B6S7-13-329	2				
13-3498		INSULATOR			
B6S7-13-349	2				
17-630		SWITCH			
Y601-17-640	1	(ILLUST. NO.1) ((MT)>(6-SP))			
Y602-17-640	1	(ILLUST. NO.2) ((MT)>(6-SP))			
8118-17-640B	1	(ILLUST. NO.3) ((MT)>(5-SP))			
17-640		SWITCH,BACK UP LAMP			
M587-17-640	1	((MT)>(5-SP))			
18-211C		SENSOR,BOOST			
BP4W-18-211	1				
18-230		SENSOR,CRANKSHAFT POSI.			
BP4W-18-221B	1	(ILLUST. NO.1)			
BP4W-18-230	1	(ILLUST. NO.2)			
18-320		BRACKET			
BP4W-18-28YA	1				
18-501		SWITCH,OIL PRESSURE			
B367-18-501	1				
18-741C		VALVE,SOLENOID			
BP4Y-18-741	1				
18-811A		RELAY,CONTROL			
B5B4-18-811	1				
18-835		BRACKET,WIRE CLIP-OXYGEN			
BP4W-18-835A	1				
18-835A		BRACKET			
BP4Y-18-835A	1				

CAT. AUNA07-05 2000-01

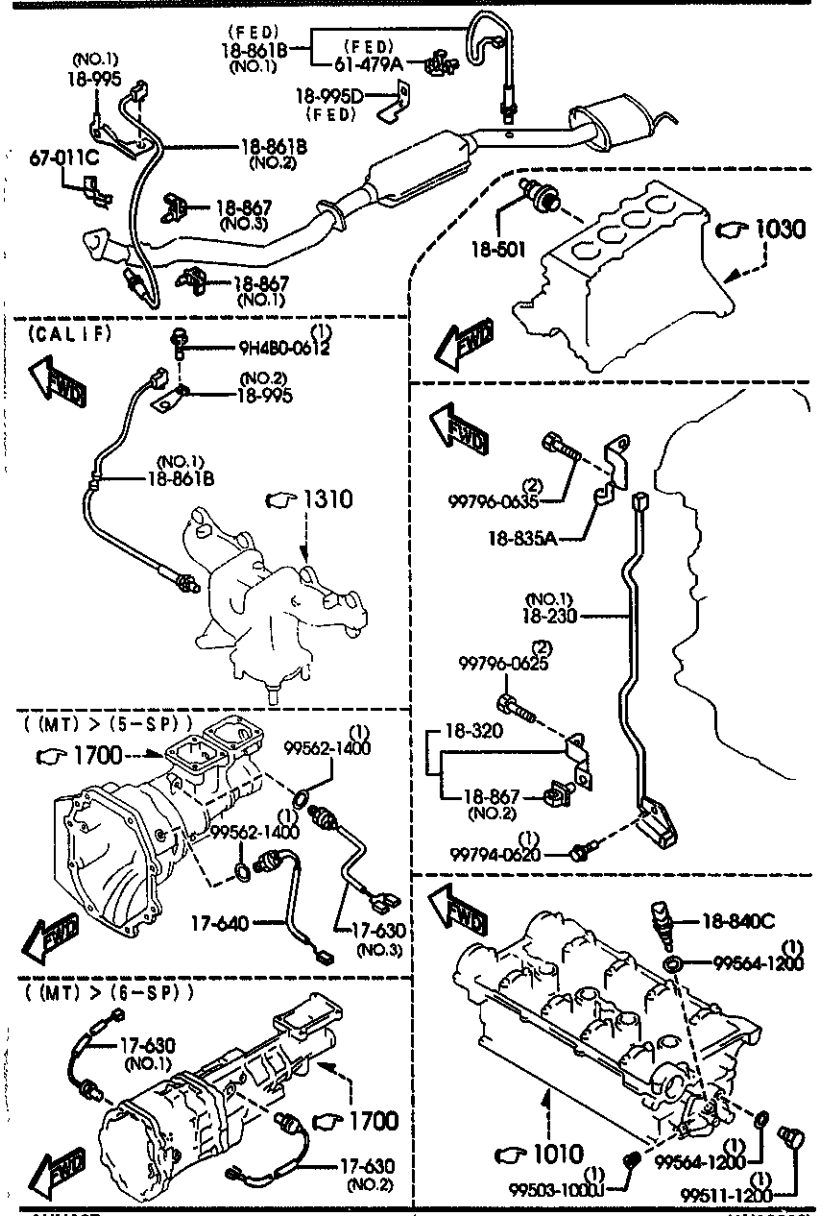

AUNA07 (1N03692)

PART NO.	QTY	MODEL/RESTRICTION	MODEL/RESTRICTION	MODEL/RESTRICTION	FROM-TO
18-840C		SENSOR,TEMP.-ENG.COOLANT			
KLK1-18-840	1				
18-861B		SENSOR,OXYGEN			
*BP3B-18-86Z	1	(ILLUST. NO.1) (FED)			
BP4X-18-861A	1	(ILLUST. NO.2)			
BP4Y-18-861C	1	(ILLUST. NO.1) (CALIF)			
18-867		CLIP			
BPE8-18-867A	1	(ILLUST. NO.1)			
B367-18-867	1	(ILLUST. NO.2)			
G607-18-867	1	(ILLUST. NO.3)			
18-881A		MODULE,POWERTRAIN CONTROL			
BP4W-18-881A A (BP4W-18-881B)	1	((FED)>(MT))			-7C03
BP4X-18-881A A (BP4X-18-881B)	1	((FED)>(AT))			-7C03
BP4Y-18-881A A (BP4Y-18-881B)	1	((CALIF)>(MT))			-7C03
BP4Z-18-881A A (BP4Z-18-881B)	1	((CALIF)>(AT))			-7C03
BP4W-18-881B AN(BP4W-18-881C)	1	((FED)>(MT))			7C03-8121
BP4X-18-881B AN(BP4X-18-881C)	1	((FED)>(AT))			7C03-8121
BP4Y-18-881B A (BP4Y-18-881C)	1	((CALIF)>(MT))			7C03-8121
BP4Z-18-881B A (BP4Z-18-881C)	1	((CALIF)>(AT))			7C03-8121
BP4W-18-881C	1	((FED)>(MT))			8121-9701
BP4X-18-881C	1	((FED)>(AT))			8121-9701
BP4Y-18-881C	1	((CALIF)>(MT))			8121-9701
BP4Z-18-881C	1	((CALIF)>(AT))			8121-9701
BP5R-18-881	1	((FED)>(MT))			9701-
BP5S-18-881	1	((FED)>(AT))			9701-
BP5T-18-881	1	((CALIF)>(MT))			9701-
BP5U-18-881	1	((CALIF)>(AT))			9701-

7C03 NB353N-100063
8121 NB353N-105246
9701 NB353N-138751

CAT. AUNA07-05 2000-01

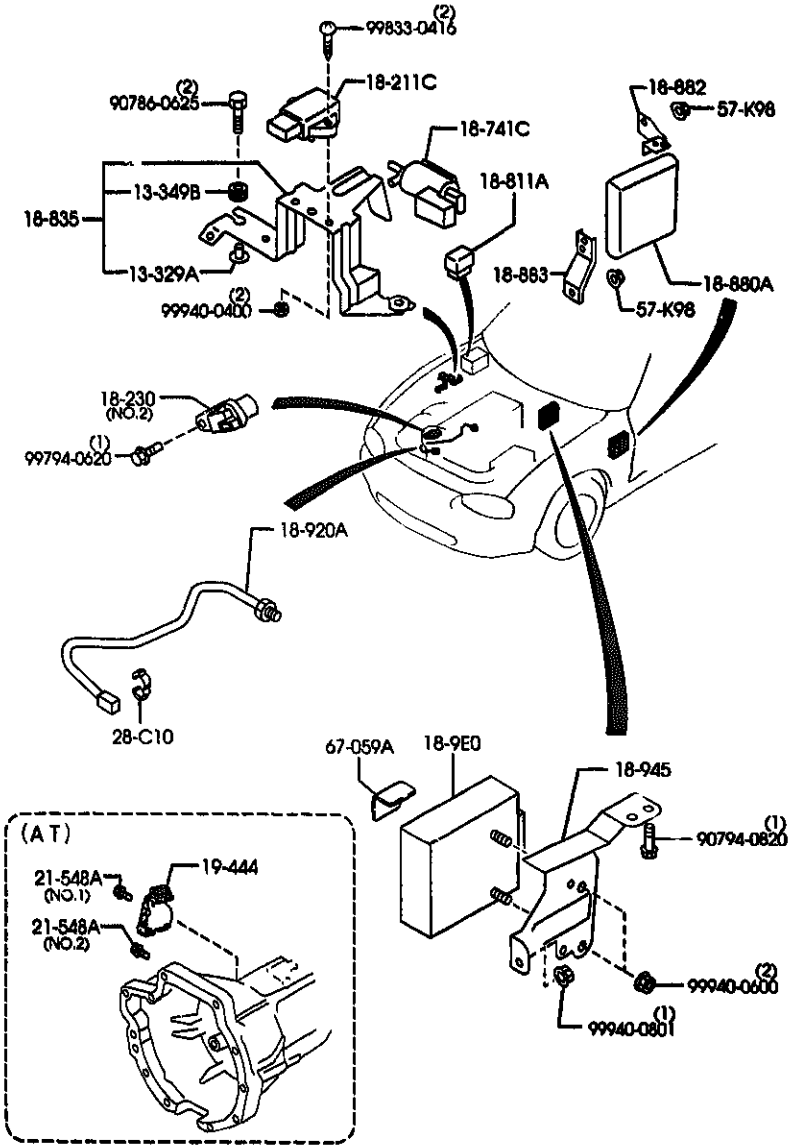

AUNA07 (1NO3691)

6600A -S ENGINE SWITCHES & RELAYS

PART NO.	QTY	MODEL/RESTRICTION	MODEL/RESTRICTION	MODEL/RESTRICTION	FROM-TO
18-882		BRACKET,CONTROL UNIT			
BP4W-18-882	1				
18-883		BRACKET,CONTROL UNIT			
BP4W-18-883	1				
18-9E0		MODULE,PWT.CONT.-A/T			
BP4X-18-9E1C	1	(AT)			-8624
A (BP4X-18-9E1D)					
BP4X-18-9E1D	1	(AT)			8624-9712
AN(BP4X-18-9E1E)					
BP4X-18-9E1E	1	(AT)			9712-
18-920A		SENSOR,KNOCK			
JE8S-18-921A	1				
18-945		BRACKET,CONT.UNIT			
BP5B-18-945A	1	(AT)			
18-995		CLIP			
BPE8-18-998B	1	(ILLUST. NO.1)			
BP4V-18-998A	1	(ILLUST. NO.2) (CALIF)			
18-995D		BRACKET,COUPLER-02 SENSOR			
BPS1-18-998B	1	(FED)			
19-444		SWITCH,INHIBITOR			
BV8B-19-444	1	(AT)			
21-548A		BOLT			
BV8B-21-548	1	(ILLUST. NO.1) (AT)			
SB01-21-548	1	(ILLUST. NO.2) (AT)			
28-C10		BAND,PIPE			
JE48-18-868	1				
57-K98		NUT			
FC66-57-K98	2				

8624 NB353#-120710
9712 NB353#-130810

CAT. AUNA07-05

2000-01

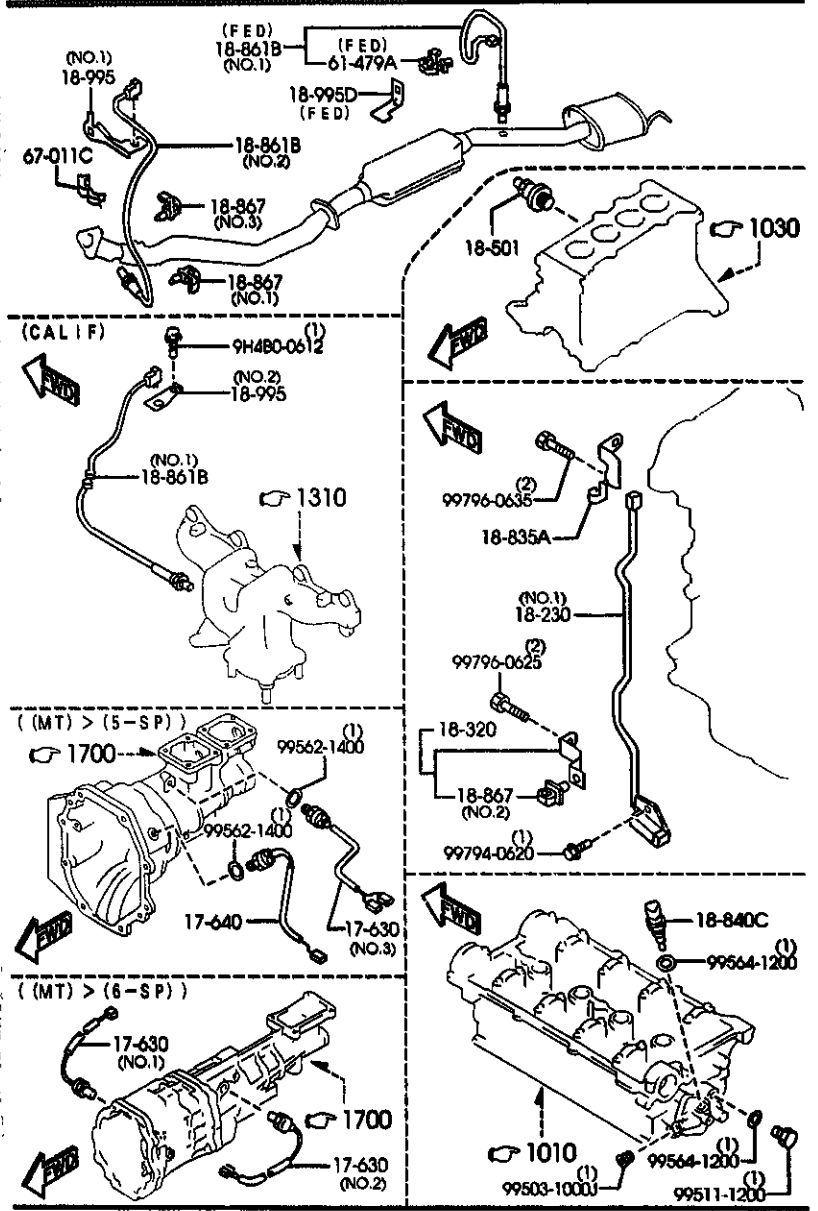

AUNA07 (1N03892)

6600A -4 M ENGINE SWITCHES & RELAYS

PART NO.	QTY	MODEL/RESTRICTION	MODEL/RESTRICTION	MODEL/RESTRICTION	FROM-TO
61-479A		CLIP			
UB39-61-479A	1	(FED)			
67-011C		CLIP			
E356-18-141	1				
67-059A		PROTECTOR			
S001-67-153	1	(AT)			

CAT. AUNA07-05 2000-01

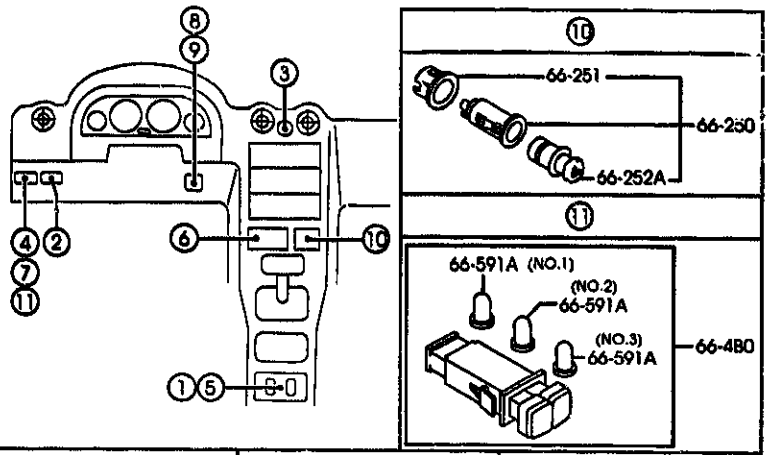

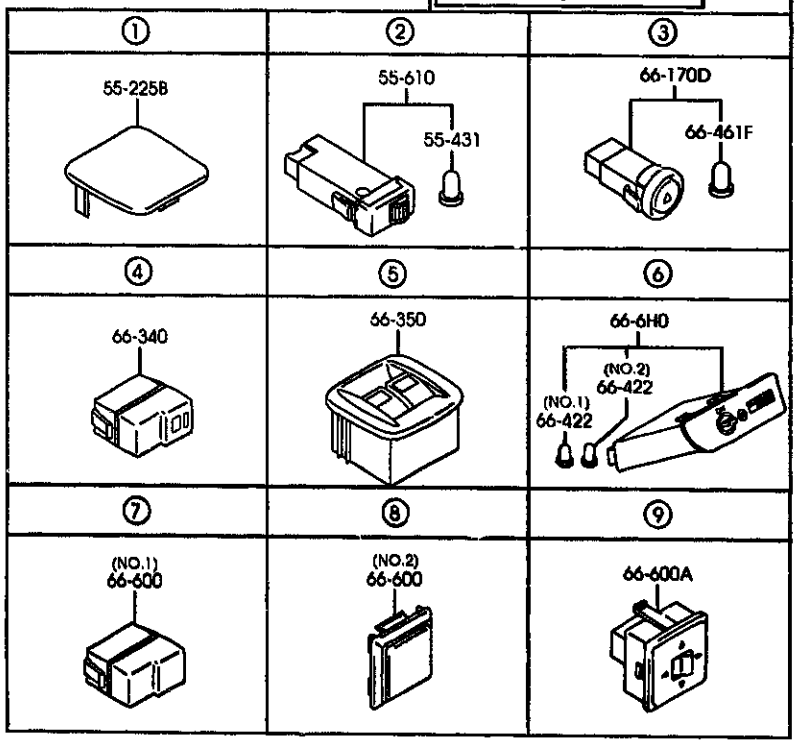

AUNA07 (1N03520)

PART NO.	QTY	MODEL/RESTRICTION	MODEL/RESTRICTION	MODEL/RESTRICTION	FROM-TO
55-225B		COVER,HOLE			
NC10-55-225B	1	(W/O POWER WIND.)			-8817
02	INT-	NB0 NB2 BLACK			
21	INT-	NB1 TAN			
NC10-55-225C	1	(W/O POWER WIND.)			8817-
02	INT-	NB0 NB2 BLACK			
21	INT-	NB1 TAN			
* 80	INT-	NB6 BEIGE			8908-
55-431		BULB,RESISTOR			
BR70-55-431	1				
55-610		RESISTOR,PANEL LIGHT			
BR70-55-490	1				
66-170D		SWITCH,HAZARD			
NC10-66-4H0	1				
66-250		LIGHTER,CIGAR			
013H-66-250	1				
66-251		RING,ILLUMINATION			
B001-66-251	1				
66-252A		PLUG,CIGAR LIGHTER			
C001-66-252	1				
66-340		SWITCH,MAIN			
NC11-66-340	1	(W/AUTO CRUISE.CONT.)			-8C01
66-350		SWITCH,POWER WINDOW			
NC11-66-350B	1	(W/POWER WIND.)			
02	INT-	NB0 NB2 BLACK			
21	INT-	NB1 TAN			
* 80	INT-	NB6 BEIGE			
66-480		SWITCH,FOG-FRONT			
NC10-66-480A	1				8C01-

8817 NB353*-121495
8908 NB353*-122409
8C01 NB353*-124914

CAT. AUNA07-05

2000-01

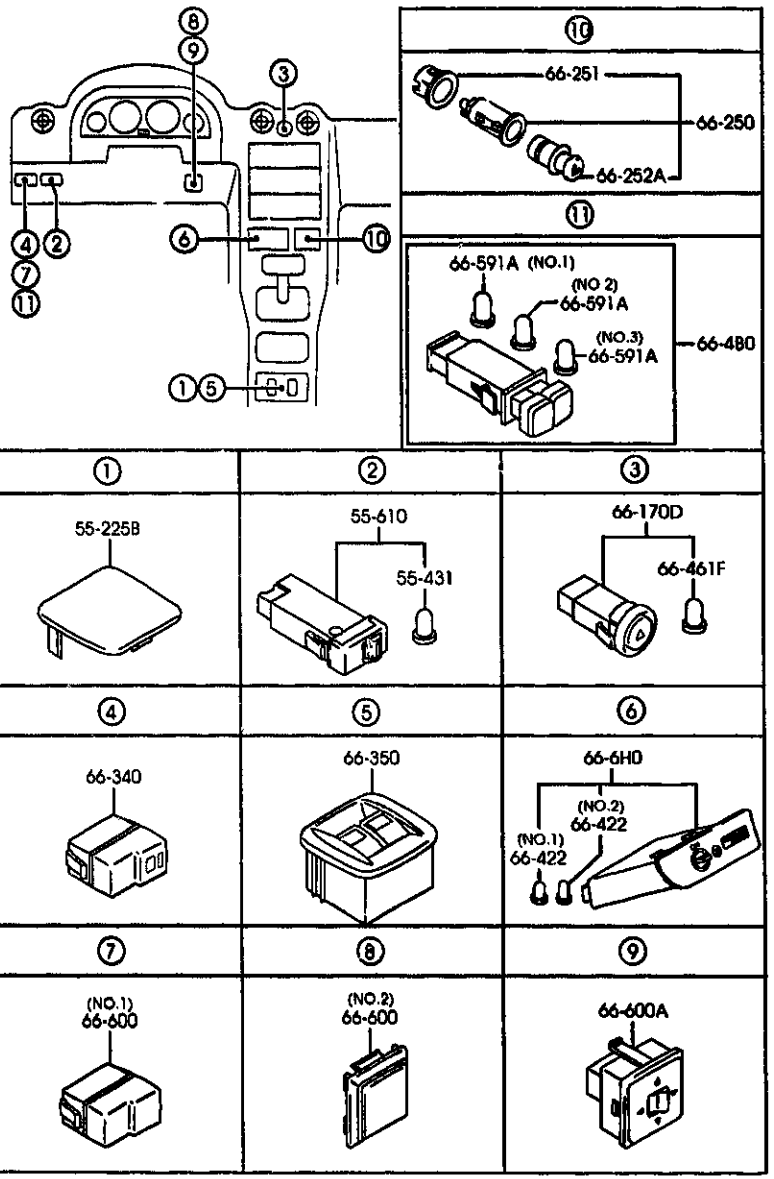

AUNA07 (1N03520)

PART NO.	QTY	MODEL/RESTRICTION	MODEL/RESTRICTION	MODEL/RESTRICTION	FROM-TO
66-422		BULB			
MC10-66-461	1	(ILLUST. NO.1)			
MC11-66-461	1	(ILLUST. NO.2)			
66-461F		BULB,SWITCH-HAZARD			
B455-61-C95	1				
66-591A		BULB			
MC10-66-581	1	(ILLUST. NO.1)			8C01-
MC11-66-581	1	(ILLUST. NO.2)			8C01-
MC12-66-581	1	(ILLUST. NO.3)			8C01-
66-6H0		SWITCH,CUT OFF-AIR BAG			
MC10-66-6H0B	1				
66-600		COVER,HOLE			
B481-55-225	1	(ILLUST. NO.1) (W/O AUTO CRUISE.CONT.)			
D002-55-225	1	(ILLUST. NO.2) (MANUAL TYPE DR MIRROR)			
66-600A		SWITCH,RMT.MIRROR			
GJB4-66-600A	1	(ELECT. TYPE DR MIRROR)			

8C01 NB353#-124914

CAT. AUNA07-05 2000-01

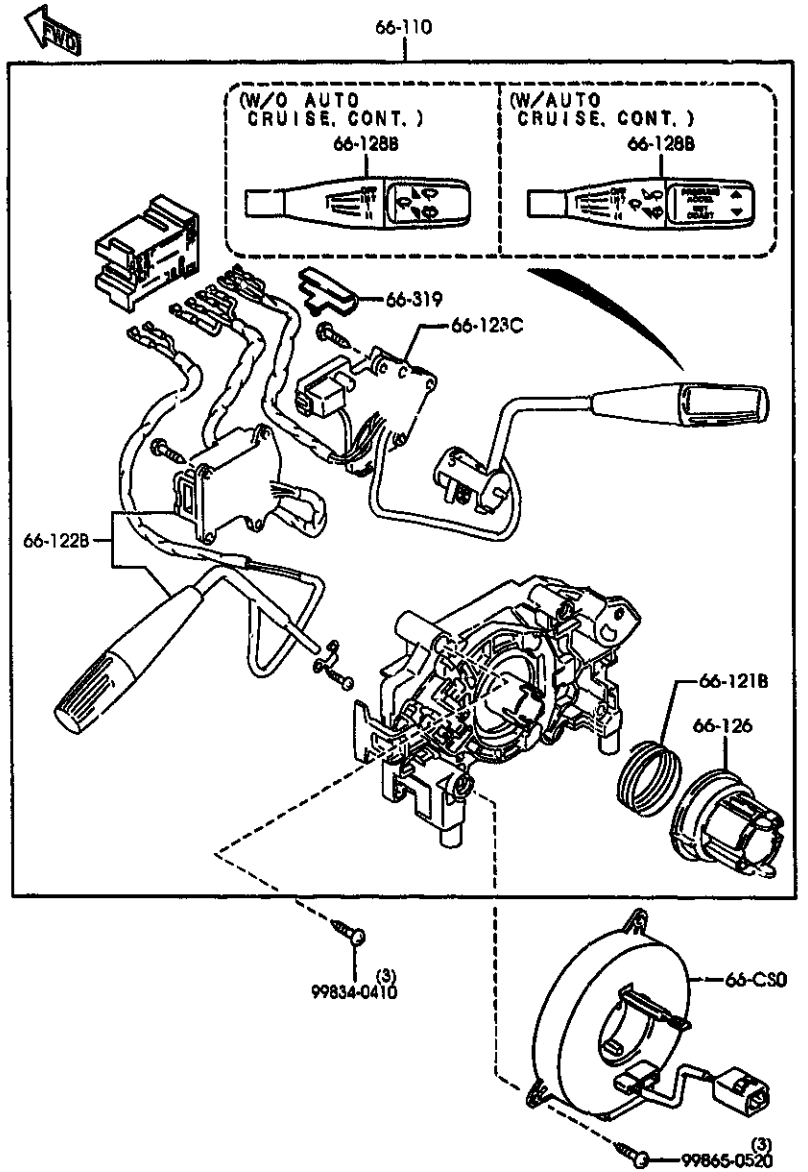

AUNA07 (1N04510)

6611A -1 * COMBINATION SWITCH

PART NO.	QTY	MODEL/RESTRICTION	MODEL/RESTRICTION	MODEL/RESTRICTION	FROM-TO
66-CS0		SPRING,CLOCK			
0E8C-66-CS0A	1	TOKAI RIKA			
66-110		SWITCH,COMBINATION			
NC10-66-120A	1	(W/O AUTO CRUISE.CONT.)			
NC11-66-120A	1	(W/AUTO CRUISE.CONT.)			
66-121B		SPRING,CANCEL CAM			
H384-66-121	1				
66-122B		SWITCH,LIGHT & TURN			
NC11-66-122	1				
66-123C		UNIT,WIPER-COMB. SWITCH			
NC10-66-135	1	(W/O AUTO CRUISE.CONT.)			
66-126		CAM,CANCEL-COMB. SW.			
NC11-66-126	1				
66-128B		LEVER,WIPER-COMB. SWITCH			
NC10-66-128	1	(W/O AUTO CRUISE.CONT.)			
NC11-66-128	1	(W/AUTO CRUISE.CONT.)			
66-319		CLIP			
NC11-66-139	1				

CAT. AUNA07-05 2000-01

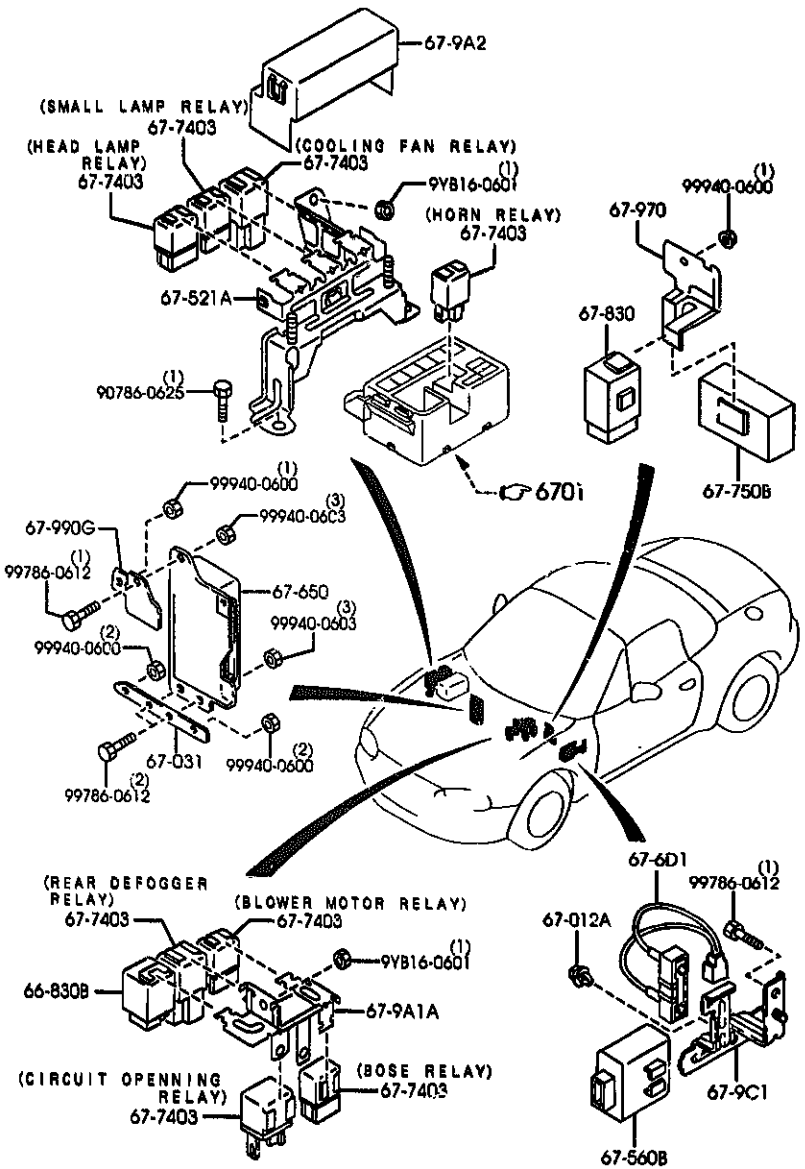

AUNA07 (1N04520)

PART NO.	QTY	MODEL/RESTRICTION	MODEL/RESTRICTION	MODEL/RESTRICTION	FROM-TO
66-830B		UNIT,FLASHER			
BQ1P-66-830A	1				
67-012A		CLIP			
LA31-67-C11	1	(AT)			
67-031		BRACKET			
MC14-67-652	1	(W/A. LOCK BRAKE)			
67-521A		BRACKET			
MC10-67-9BYA	1				
67-560B		UNIT,CENTRAL PROCESSING			
MC13-67-560	1	(AT)			
67-6D1		RESISTOR,INTERLOCK			
M020-67-6D1	1	(AT)			
67-650		BOX,CONTROL-A.B.S.			
MC14-67-650	1	(W/A. LOCK BRAKE)			
67-7403		RELAY,N.O.			
B5B4-18-821	1	(CIRCUIT OPENNING RELAY)			
CA01-67-730A	2	(COOLING FAN RELAY) (REAR DEFOGGER RELAY)			
J110-67-730	3	(BLOWER MOTOR RELAY) (SMALL LAMP RELAY) (HEAD LAMP RELAY)			
J150-67-730	1	(BOSE RELAY)			
LA10-67-740	1	10A (HORN RELAY)			
67-750B		UNIT,CONT.-RUNNING LAMP			
MC11-67-750	1	MSN USA,			
67-830		UNIT,DOOR LOCK & TIMER			
B85A-67-830	1	(W/POWER DOOR LOCK)			
67-9A1A		BRACKET,RELAY			
MC10-67-9AY	1				

CAT. AUNA07-05 2000-01

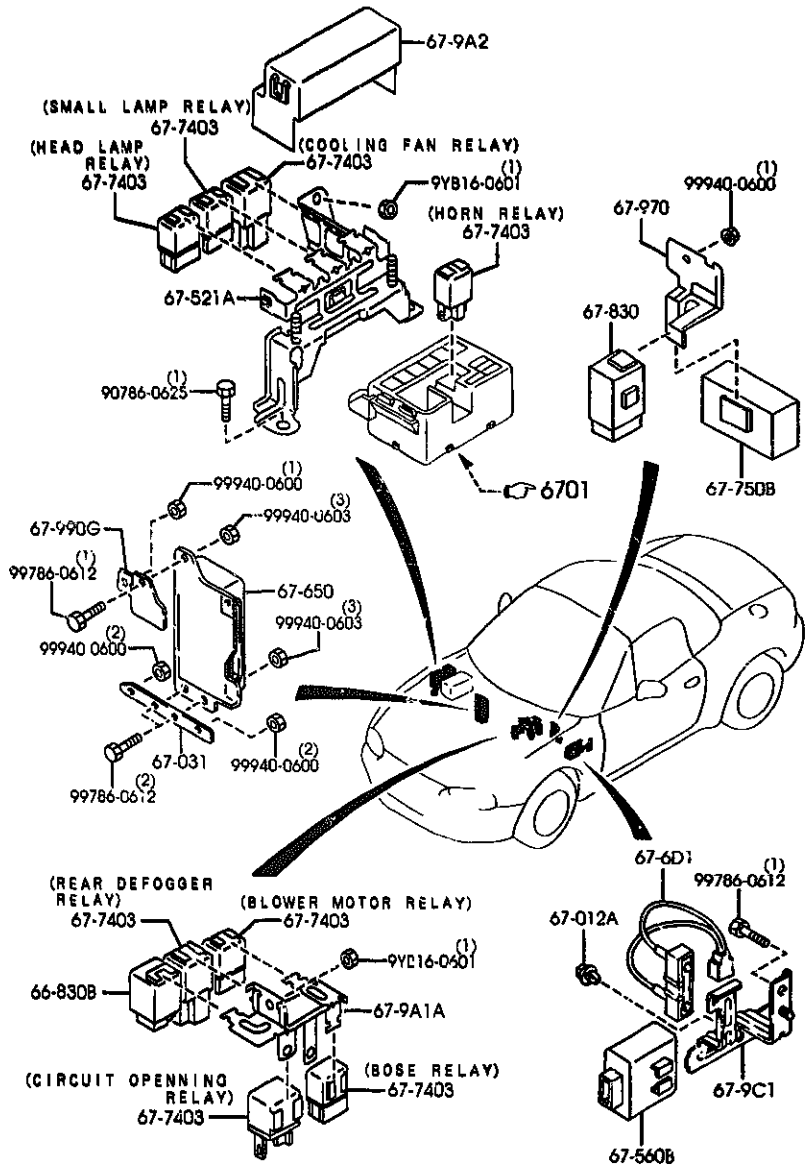

AUNA07 (1N04520)

PART NO.	QTY	MODEL/RESTRICTION	MODEL/RESTRICTION	MODEL/RESTRICTION	FROM-TO
67-9A2		COVER,RELAY			
NC10-67-9A2	1				
67-9C1		BRACKET,RELAY			
NC13-67-9C1	1	(AT)			
67-970		BRACKET,RELAY			
NC10-67-9D1	1				
67-990G		BRACKET,A.B.S.			
NC14-67-651	1	(W/A. LOCK BRAKE)			

CAT. AUNA07-05