Parts Catalog

Mazda MX-5 MIATA U.S.A. ('99►)

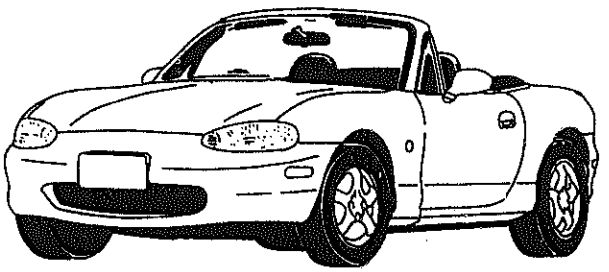

NB353#-100001~

Jan.'00(REVISED)

Catalog No. AU-NA07-05

mazda

©2000 Mazda Motor Corporation

LAYOUT OF CONTENTS / DISPOSITION TYPOGRAPHIQUE DE CONTENU / DISPOSICION DEL CONTENIDO / ANORDNUNG DES INHALTS

- The following is a typical example of the layout of contents on Mazda microfiche parts catalog.
- Voici un exemple typique de la disposition typographique de contenu dans les microfiches de catalogue des pièces de Mazda.
- El siguiente es un ejemplo típico de la disposición del contenido en una microficha del catálogo de repuestos de Mazda.
- Folgendes ist ein typisches Beispiel der Inhaltsanordnung des Mazda-Mikrofiche Teilekatalogs.

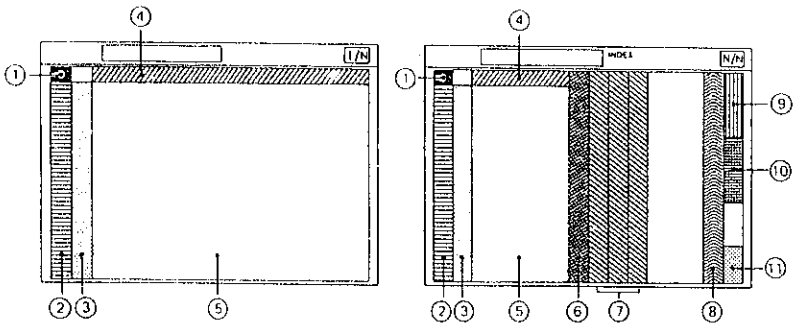

Remark : The items listed under④ have been deleted from each fiche since Dec. '93

① · Layout of contents
· Disposition Typographique de Contenu
· Disposición del contenido
· Anordnung des Inhalts

② · Pictorial Index
· Index par Schemas
· Indice Gráfico
· Illustrierter Index

③ · Master Section No. Index
· Index des Numéros des Sections Totale
· Indice del Número de la Sección Maéstra
· Hauptabschnittsnummer-Index

~~④ · Section No. Index for the Column~~
~~· Index des Numéros des Sections pour les Colonnes~~
~~· N° de la Sección para el Indice~~
~~· Abschnittsnummer-Index für die Spalte~~

⑤ · Illustration & Text
· Illustrations et Textes
· Ilustración y Texto
· Abbildung und Text

⑥ · Part No. Index
· Index des Numéros des Pièces
· Indice del N° de Pieza
· Teile-Nr.-Index

⑦ · Alphabetical Index
· Index Alphabétique
· Indice Alfabético
· Alphabetischer Index

⑧ · Model Identification
· Identification des Modèles
· Identificación del Modelo
· Modell-Kennzeichnung

⑨ · Vehicle Identification System
· Système d'Identification de Véhicule
· Sistema de Identificación de Vehículo
· Fahrzeug-Identifikationssystem

PICTORIAL INDEX

GASOLINE ENGINE
4 - CYLINDER (1/2)

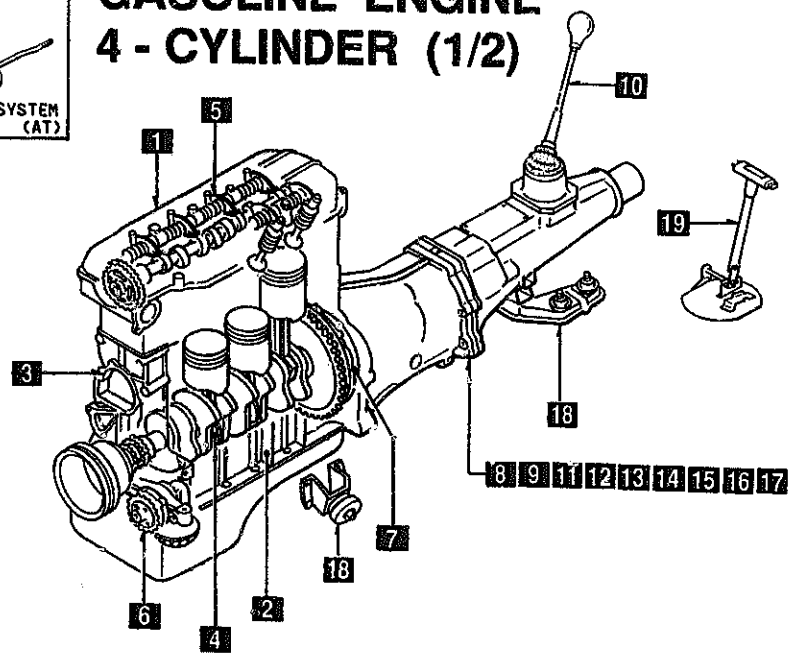

As this illustration is prepared to be applicable to all models, some parts are different in specifications from parts listed in this parts Catalog.

1000
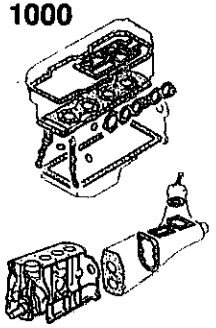
ENGINE & GASKET SETS

1 1010
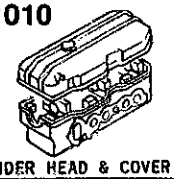
CYLINDER HEAD & COVER

2 1030
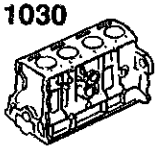
CYLINDER BLOCK

3 1040
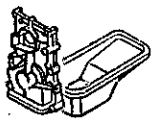
OIL PAN & TIMING COVER

4 1100
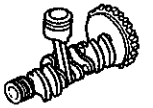
PISTON, CRANKSHAFT & FLYWHEEL

5 1200
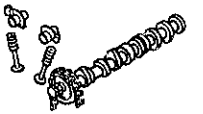
VALVE SYSTEM

19 4600
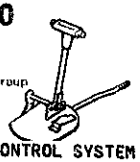

CHANGE CONTROL SYSTEM (AT)

6 1400
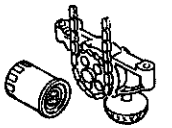
OIL PUMP & FILTER

18 3900


ENGINE & T/MISSION MOUNTINGS

7 1600
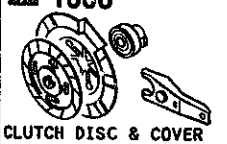
CLUTCH DISC & COVER (MANUAL)

17 1960

GASKET & SEAL KIT (AUTOMATIC)

8 1700
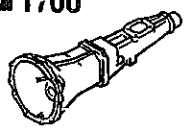
TRANSMISSION CASE (MANUAL)

16 1950
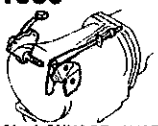
MANUAL LINKAGE SYSTEM (AUTOMATIC)

9 1710
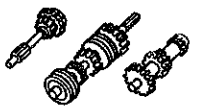
TRANSMISSION GEARS (MANUAL)

15 1940
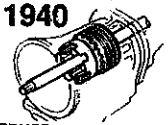
GOVERNOR, LOW & REVERSE PISTON (AUTOMATIC)

14 1930
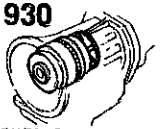
CLUTCHES & PLANETARY GEARS (AUTOMATIC)

13 1925

CONTROL VALVE (AUTOMATIC)

12 1920
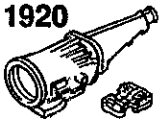
TRANSMISSION CASE & MAIN CONTROL SYSTEM (AUTOMATIC)

11 1910
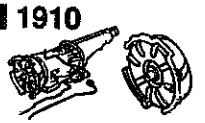
TORQUE CONVERTER, OIL PUMP & PIPINGS (AUTOMATIC)

10 1720
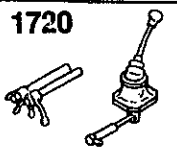
CHANGE CONTROL SYSTEM (MANUAL)

PICTORIAL INDEX

GASOLINE ENGINE
4 - CYLINDER (2/2)

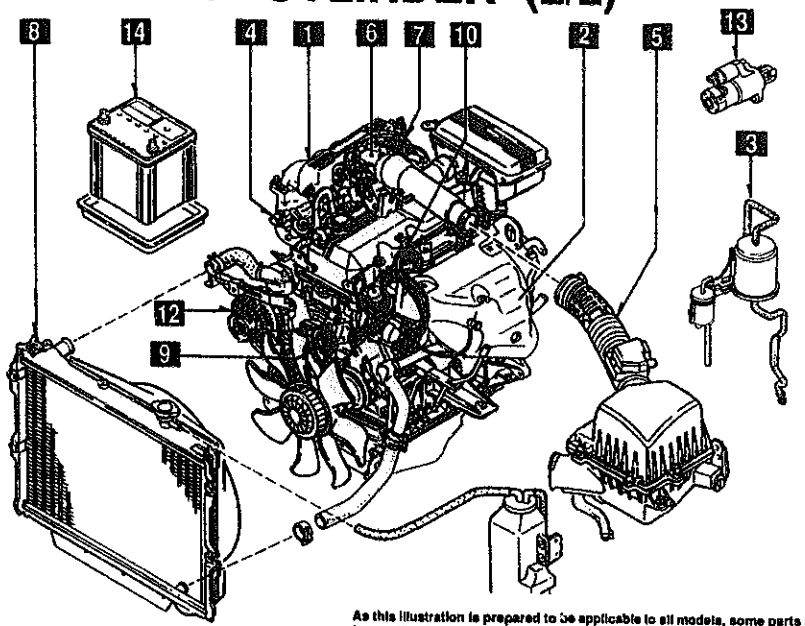

As this illustration is prepared to be applicable to all models, some parts are different in specifications from parts listed in this parts Catalog.

1 1300
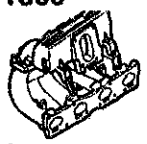
INLET MANIFOLD

2 1310

EXHAUST MANIFOLD

3 1320
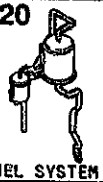
FUEL SYSTEM

4 1325
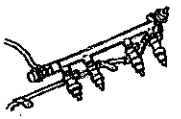
FUEL DISTRIBUTOR

5 1330
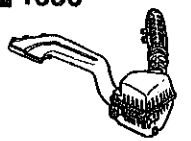
AIR CLEANER

6 1364
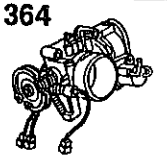
THROTTLE BODY

7 1370
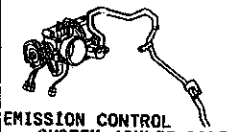
EMISSION CONTROL SYSTEM (INLET SIDE)

8 1500
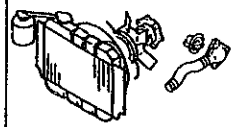
COOLING SYSTEM

9 1580
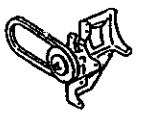
BRACKET, PULLEY & BELT

10 1800

ENGINE ELECTRICAL SYSTEM

11

12 1830

ALTERNATOR

13 1840
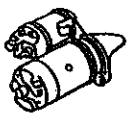
STARTER

14 1850
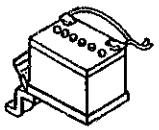
BATTERY

PICTORIAL INDEX

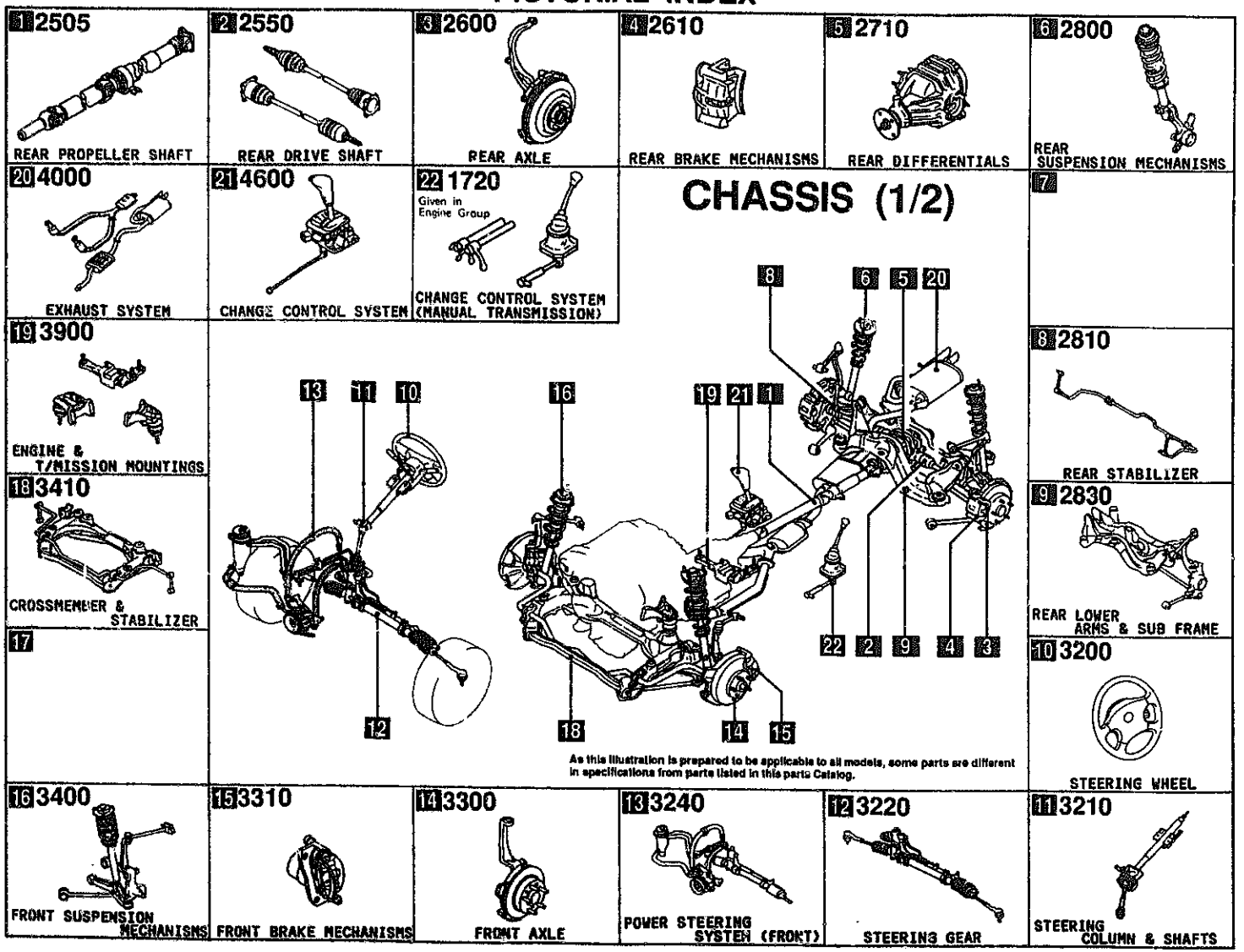

PICTORIAL INDEX

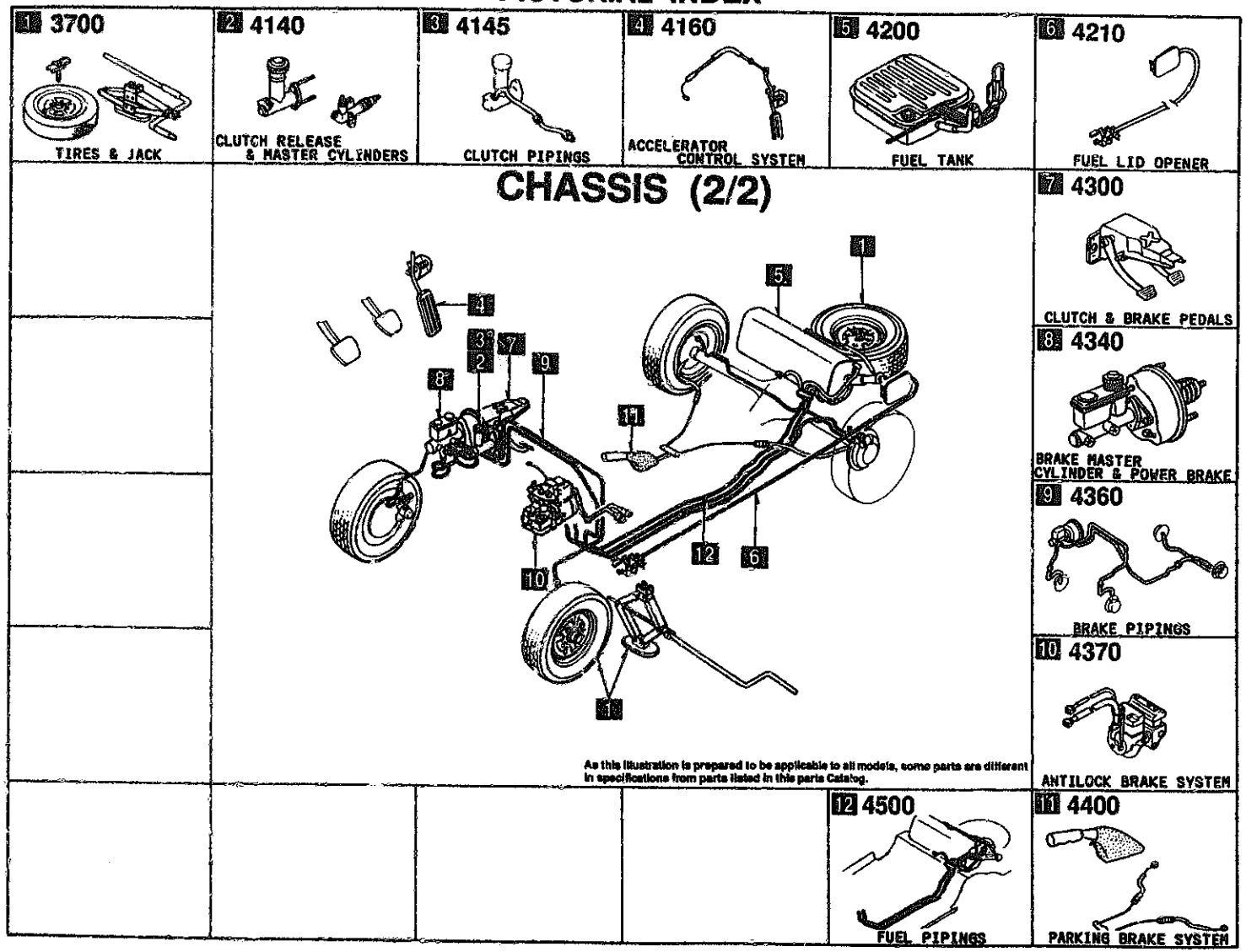

PICTORIAL INDEX

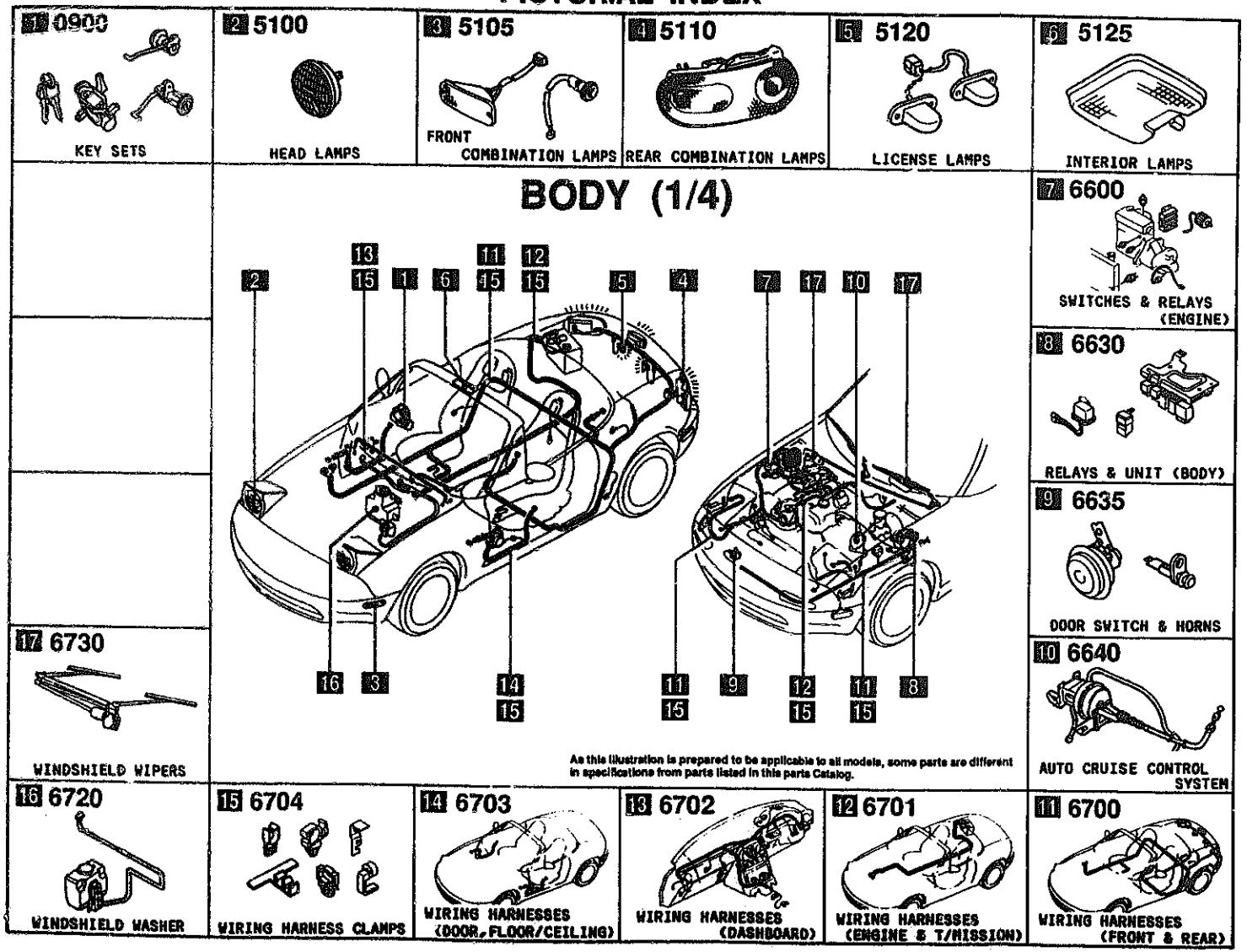

PICTORIAL INDEX

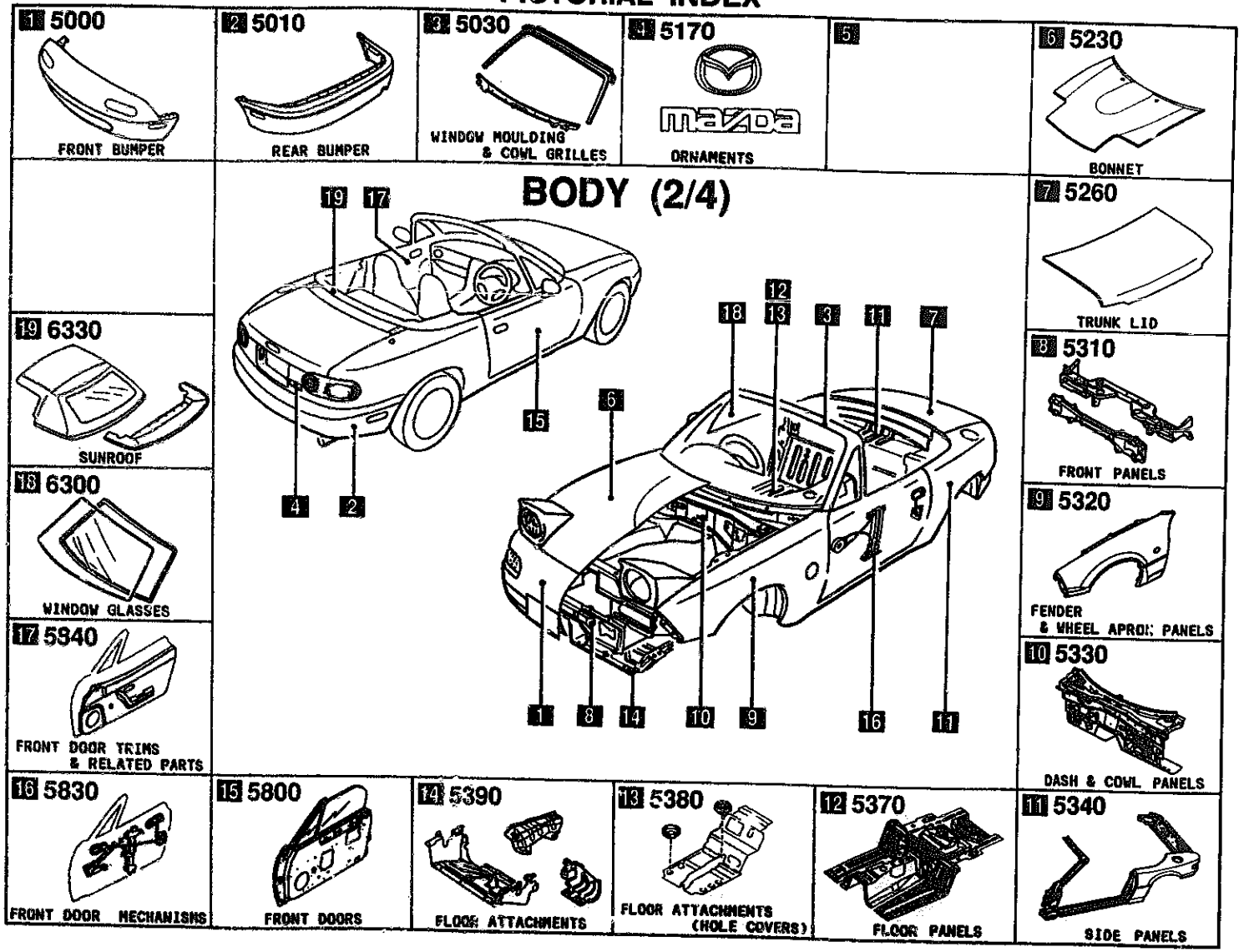

PICTORIAL INDEX

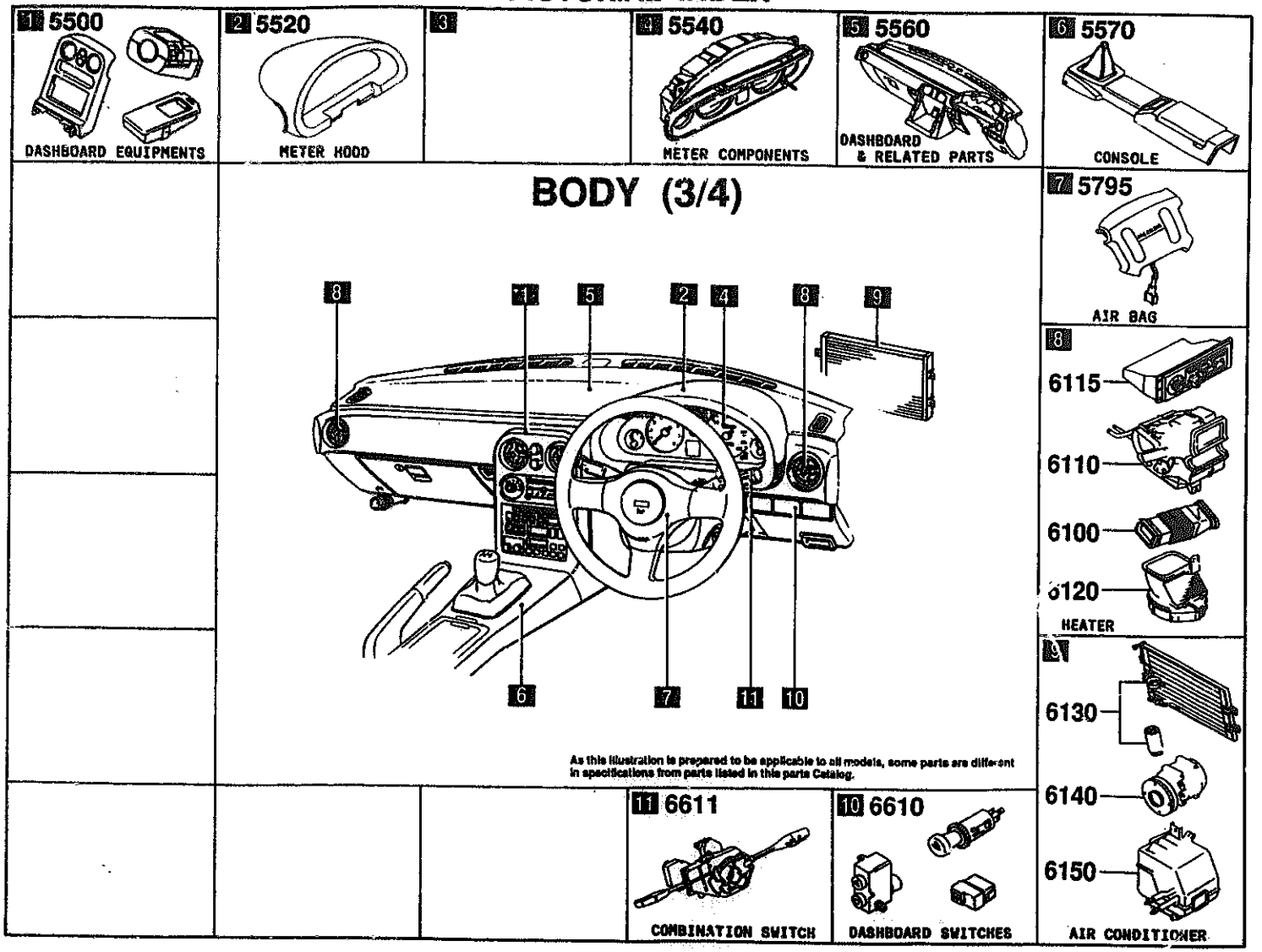

PICTORIAL INDEX

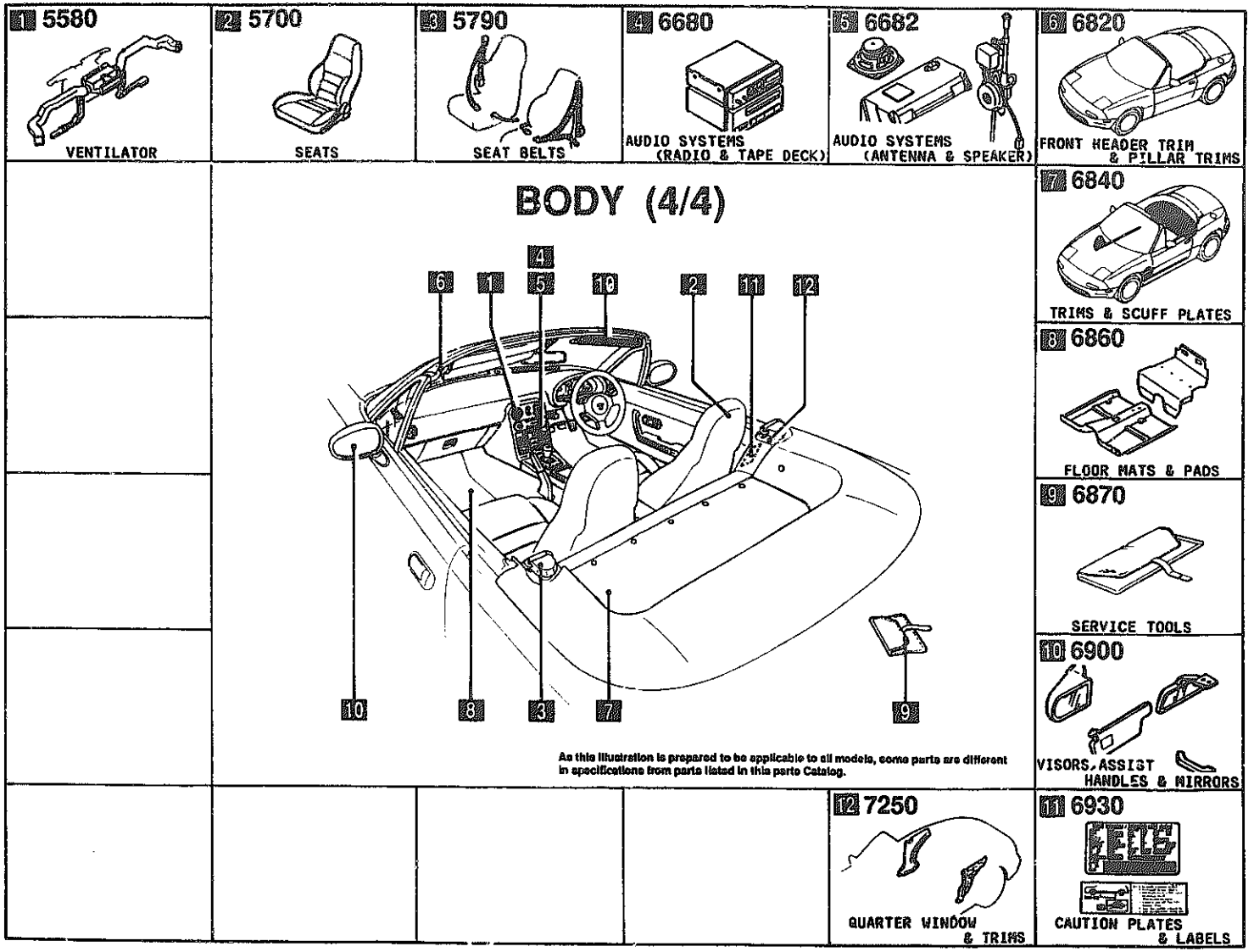

SECTION NAME INDEX (ENGINE)

LO.NO	SEC.NO	SECTION NAME
1-C03	1000A	ENGINE & GASKET SETS
1-E03	1010A	CYLINDER HEAD & COVER
1-H03	1030A	CYLINDER BLOCK
1-I03	1040A	OIL PAN & TIMING COVER
1-K03	1100A	PISTON, CRANKSHAFT & FLYWHEEL
1-N03	1200A	VALVE SYSTEM
1-D04	1300A	INLET MANIFOLD
1-E04	1310A	EXHAUST MANIFOLD
1-F04	1320A	FUEL SYSTEM
1-H04	1325A	FUEL DISTRIBUTOR
1-I04	1330A	AIR CLEANER
1-K04	1364A	THROTTLE BODY
1-L04	1370A	EMISSION CONTROL SYSTEM (INLET SIDE)
1-D05	1400A	OIL PUMP & FILTER
1-F05	1500A	COOLING SYSTEM
1-I05	1580A	BRACKET, PULLEY & BELT
1-C06	1600A	CLUTCH DISC & COVER (5-SPEED)
1-D06	1600AA	CLUTCH DISC & COVER (6-SPEED)
1-E06	1700A	MANUAL TRANSMISSION CASE (5-SPEED)
1-H06	1700AA	MANUAL TRANSMISSION CASE (6-SPEED)
1-J06	1710A	MANUAL TRANSMISSION GEARS (5-SPEED)
1-E07	1710AA	MANUAL TRANSMISSION GEARS (6-SPEED)
1-L07	1720A	MANUAL TRANSMISSION CHANGE CONTROL SYSTEM (5-SPEED)
1-N07	1720AA	MANUAL TRANSMISSION CHANGE CONTROL SYSTEM (6-SPEED)
1-E08	1800A	ENGINE ELECTRICAL SYSTEM
1-G08	1830A	ALTERNATOR
1-H08	1840A	STARTER
1-J08	1850A	BATTERY
1-K08	1910A	AUTOMATIC TRANSMISSION TORQUE CONVERTER, OIL PUMP & PIPINGS
1-H08	1920A	AUTOMATIC TRANSMISSION CASE & MAIN CONTROL SYSTEM
1-D09	1925A	AUTOMATIC TRANSMISSION CONTROL VALVE
1-E09	1930A	AUTOMATIC TRANSMISSION CLUTCHES & PLANETARY GEARS
1-J09	1940A	AUTOMATIC TRANSMISSION GOVERNOR, LOW & REVERSE PISTON
1-L09	1960A	AUTOMATIC TRANSMISSION GASKET & SEAL KIT

CATLOG-NO= AUNA07-05

DATE. 2000-01

SECTION NAME INDEX (CHASSIS)

LO.NO	SEC.NO	SECTION NAME	LO.NO	SEC.NO	SECTION NAME	LO.NO	SEC.NO	SECTION NAME
1-C11	2505A	REAR PROPELLER SHAFT	2-C03	4340A	BRAKE MASTER CYLINDER & POWER BRAKE (W/O ANTILOCK BRAKE)			
1-D11	2550A	REAR DRIVE SHAFT						
1-E11	2600A	REAR AXLE	2-E03	4340B	BRAKE MASTER CYLINDER & POWER BRAKE (W/ANTILOCK BRAKE)			
1-G11	2610A	REAR BRAKE MECHANISMS						
1-J11	2710A	REAR DIFFERENTIALS (NORMAL DIFF.)	2-G03	4360A	BRAKE PIPINGS (W/O ANTILOCK BRAKE)			
1-C12	2710B	REAR DIFFERENTIALS (LIMITED SLIP DIFF.)	2-I03	4360B	BRAKE PIPINGS (W/ANTILOCK BRAKE)			
1-G12	2800A	REAR SUSPENSION MECHANISMS	2-K03	4370A	ANTILOCK BRAKE SYSTEM			
1-I12	2810A	REAR STABILIZER	2-M03	4400A	PARKING BRAKE SYSTEM			
1-J12	2830A	REAR LOWER ARMS & SUB FRAME	2-C04	4500A	FUEL PIPINGS			
1-L12	3200A	STEERING WHEEL	2-D04	4600A	CHANGE CONTROL SYSTEM (AT)			
1-N12	3210A	STEERING COLUMN & SHAFTS						
1-N12	3220AA	STEERING GEAR (W/O POWER STEERING)						
1-D13	3220AB	STEERING GEAR (W/POWER STEERING)						
1-G13	3240A	POWER STEERING SYSTEM (MT)						
1-J13	3240B	POWER STEERING SYSTEM (AT)						
1-M13	3300A	FRONT AXLE						
1-N13	3310A	FRONT BRAKE MECHANISMS						
1-C14	3400A	FRONT SUSPENSION MECHANISMS						
1-F14	3410A	CROSSMEMBER & STABILIZER						
1-G14	3700A	TIRES & JACK						
1-C15	3900A	ENGINE & T/MISSION MOUNTINGS						
1-D15	4000A	EXHAUST SYSTEM						
1-F15	4140A	MANUAL TRANSMISSION CLUTCH RELEASE & MASTER CYLINDERS						
1-G15	4145A	MANUAL TRANSMISSION CLUTCH PIPINGS						
1-H15	4160A	ACCELERATOR CONTROL SYSTEM						
1-I15	4200A	FUEL TANK						
1-G16	4210A	FUEL LID OPENER						
1-I16	4300A	MANUAL TRANSMISSION CLUTCH & BRAKE PEDALS						
1-L16	4300B	AUTOMATIC TRANSMISSION BRAKE PEDAL						

SECTION NAME INDEX (BODY)

LO.NO	SEC.NO	SECTION NAME
2-C06	0900A	KEY SEYS
2-F06	5000A	FRONT BUMPER
2-I06	5010A	REAR BUMPER
2-K06	5050A	WINDOW MOULDING & COWL GRILLES
2-L06	5100A	HEAD LAMPS
2-M06	5105A	FRONT COMBINATION LAMPS
2-N06	5110A	REAR COMBINATION LAMPS
2-D07	5120A	LICENSE LAMPS
2-E07	5125A	INTERIOR LAMPS
2-F07	5170A	ORNAMENTS
2-G07	5230A	BONNET
2-I07	5260A	TRUNK LID
2-K07	5310A	FRONT PANELS
2-M07	5320A	FENDER & WHEEL APRON PANELS
2-E08	5330A	DASH & COWL PANELS
2-F08	5340A	SIDE PANELS
2-L08	5370A	FLOOR PANELS
2-D09	5380A	FLOOR ATTACHMENTS (HOLE COVERS)
2-F09	5390A	FLOOR ATTACHMENTS
2-C10	5500A	DASHBOARD EQUIPMENTS
2-D10	5520A	METER HOOD
2-E10	5540A	METER COMPONENTS
2-H10	5560A	DASHBOARD & RELATED PARTS
2-K10	5570A	CONSOLE
2-N10	5580A	VENTILATOR
2-C11	5700A	SEATS
2-K11	5790A	SEAT BELTS
2-M11	5795A	AIR BAG
2-C12	5800A	FRONT DOORS
2-G12	5830A	FRONT DOOR MECHANISMS
2-C13	5840A	FRONT DOOR TRIMS & RELATED PARTS
2-C14	6100A	HEATER
2-D14	6110A	HEATER UNIT COMPONENTS
2-E14	6115A	HEATER CONTROL COMPONENTS
2-G14	6120A	HEATER BLOWER COMPONENTS
2-H14	6130A	AIR CONDITIONER
2-L14	6140A	AIR CONDITIONING COMPRESSOR COMPONENTS
2-N14	6150A	AIR CONDITIONING COOLING UNIT
2-C15	6300A	WINDOW GLASSES
2-D15	6330A	SUN ROOF
2-E16	6600A	ENGINE SWITCHES & RELAYS
2-J16	6610A	DASHBOARD SWITCHES
2-L16	6611A	COMBINATION SWITCH
2-M16	6630A	BODY RELAYS & UNIT
3-C03	6635A	DOOR SWITCH & HORNS
3-D03	6640A	AUTO CRUISE CONTROL SYSTEM
3-F03	6680A	AUDIO SYSTEMS (RADIO & TAPE DECK)
3-J03	6682A	AUDIO SYSTEMS (ANTENNA & SPEAKER)
3-N03	6700A	FRONT & REAR WIRING HARNESSES
3-F04	6701A	ENGINE & TRANSMISSION WIRING HARNESSES
3-I04	6702A	DASHBOARD WIRING HARNESSES
3-J04	6703A	DOOR, FLOOR & CEILING WIRING HARNESSES
3-K04	6704A	WIRING HARNESS CLAMPS
3-M04	6720A	WINDSHIELD WASHER (W/O ANTILOCK BRAKE)
3-E05	6720B	WINDSHIELD WASHER (W/ANTILOCK BRAKE)
3-H05	6730A	WINDSHIELD WIPERS
3-J05	6820A	FRONT HEADER TRIM & PILLAR TRIMS
3-K05	6840A	TRIMS & SCUFF PLATES
3-D06	6860A	FLOOR MATS & PADS
3-G06	6870A	SERVICE TOOLS
3-H06	6900A	SUN VISORS, ASSIST HANDLES & MIRRORS
3-J06	6930A	CAUTION PLATES & LABELS
3-L06	7250A	QUARTER WINDOW & TRIMS

CATLOG-NO= AUNA07-05

DATE. 2000-01

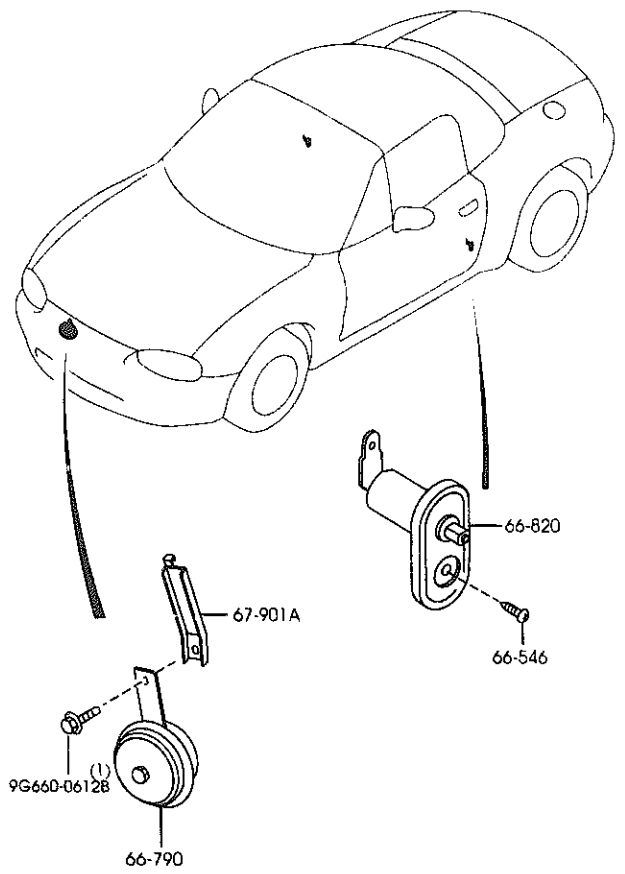

6635A -1 * DOOR SWITCH & HORNS

PART NO.	QTY	MODEL/RESTRICTION	MODEL/RESTRICTION	MODEL/RESTRICTION	FROM-TO
66-546		SCREW,DOOR SWITCH			
LA01-66-546	2				
66-790		HORN,LOW TONE			
BG3F-66-790	1				
66-820		SWITCH,DOOR			
S09A-66-540	2				
67-901A		BRACKET,HORN			
NC10-66-7B1	1				

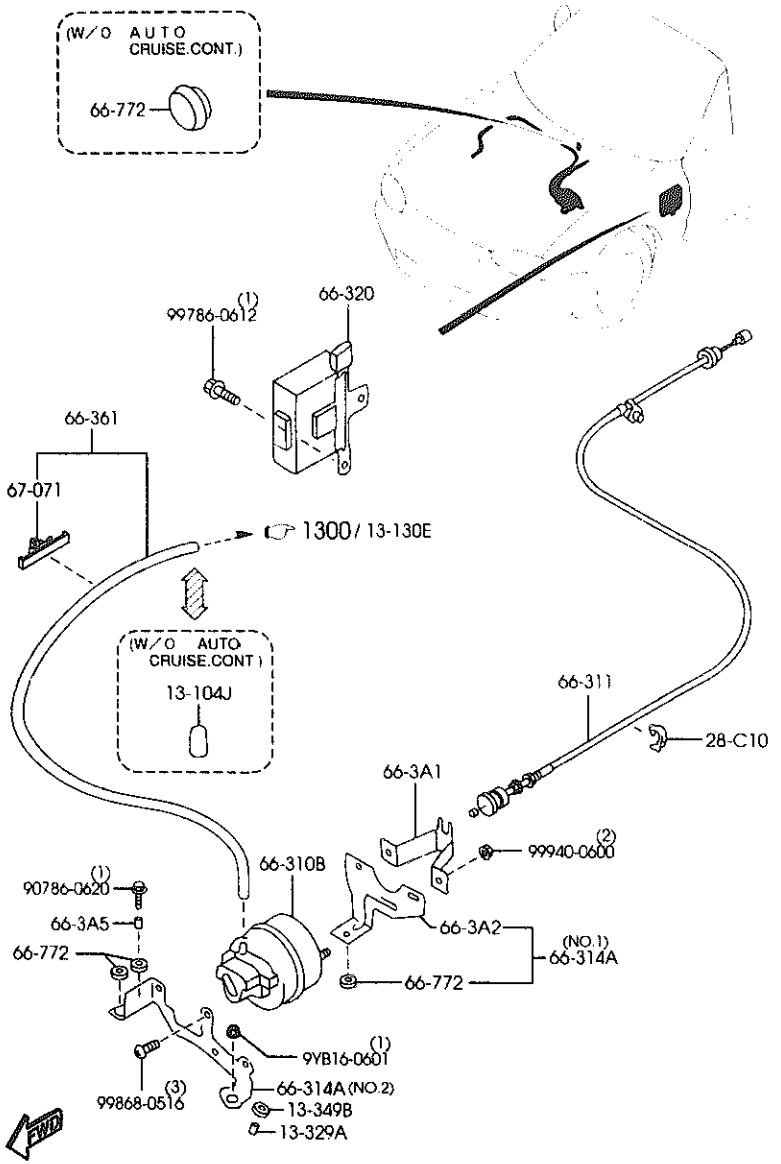

AUNA07 (1N03610)

PART NO.	QTY	MODEL/RESTRICTION	MODEL/RESTRICTION	MODEL/RESTRICTION	FROM-TO
13-104J		CAP,BLIND			
1010-13-104	1	(W/O AUTO CRUISE.CONT.)			
13-329A		SPACER,FUEL FILTER			
B6S7-13-329	1	(W/AUTO CRUISE.CONT.)			
13-349B		INSULATOR			
B6S7-13-349	1	(W/AUTO CRUISE.CONT.)			
28-C10		BAND,PIPE			
JE48-18-868	3	(W/AUTO CRUISE.CONT.)			
66-3A1		BRACKET,ACTUATOR-A.C.C.			
LA01-66-3A1	1	(W/AUTO CRUISE.CONT.)			
66-3A2		BRACKET,ACTUATOR-FRONT			
NC11-66-3A2	1	(W/AUTO CRUISE.CONT.)			
66-3A5		SPACER,ACTUATOR			
UE54-66-3A5	1	(W/AUTO CRUISE.CONT.)			
66-310B		ACTUATOR,A.C.C.			
LA01-66-310A	1	(W/AUTO CRUISE.CONT.)			
66-311		WIRE,A.C.C.			
NC11-66-311	1	(W/AUTO CRUISE.CONT.)			
66-314A		BRACKET,A.C.C.			
NC11-66-3AY	1	(ILLUST. NO.1) (W/AUTO CRUISE.CONT.)			
NC11-66-3A3A	1	(ILLUST. NO.2) (W/AUTO CRUISE.CONT.)			
66-320		BOX,A.C.C.			
NC11-66-320B	1	(W/AUTO CRUISE.CONT.			-8819
8819 NB353*-122015					

CAT. AUNA07-05 2000-01

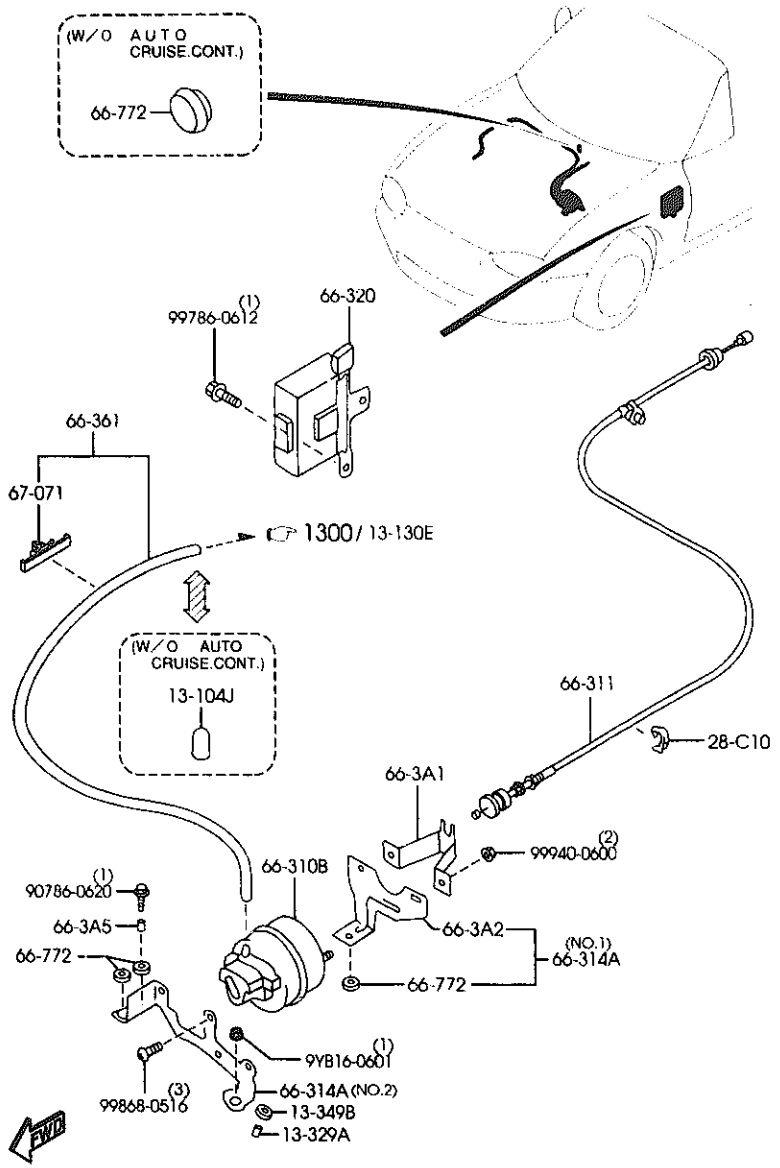

AUNA07 (1N03610)

PART NO.	QTY	MODEL/RESTRICTION	MODEL/RESTRICTION	MODEL/RESTRICTION	FROM-TO
CONT'D					
A (NC11-66-320C)		)			
NC11-66-320C	1	(W/AUTO CRUISE.CONT.			8819-8C02
A (NC12-66-320)		)			
NC12-66-320	1	(W/AUTO CRUISE.CONT.			8C02-
		)			
+---------+					
| 66-361 |		PIPE,AUTO CRUISE CON			
+---------+		TROL			
NC11-66-360B	1	(W/AUTO CRUISE.CONT.			
		)			
+---------+					
| 66-772 |		GROMMET			
+---------+					
B092-41-661	1	(W/O AUTO CRUISE.CON			
		T.)			
UE54-66-3A4	3	(W/AUTO CRUISE.CONT.			
		)			
+---------+					
| 67-071 |		CLIP			
+---------+					
*B111-67-C99	1	(W/AUTO CRUISE.CONT.			
		)			

8819 NB353*-122015
8C02 NB353*-125019

CAT. AUNA07-05 2000-01

(AM/FM, W/DECK, W/POWER AMP)

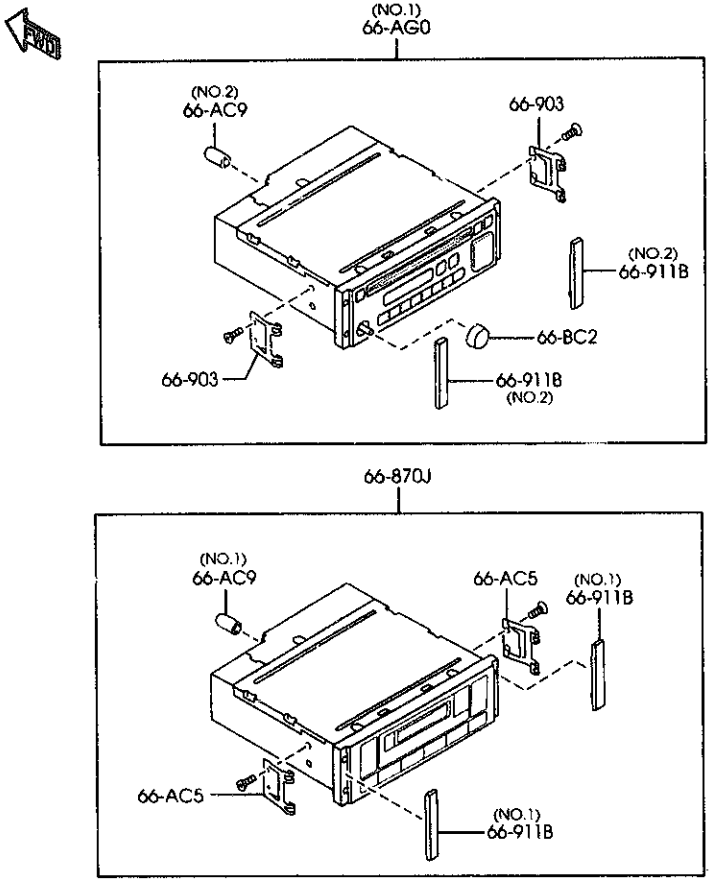

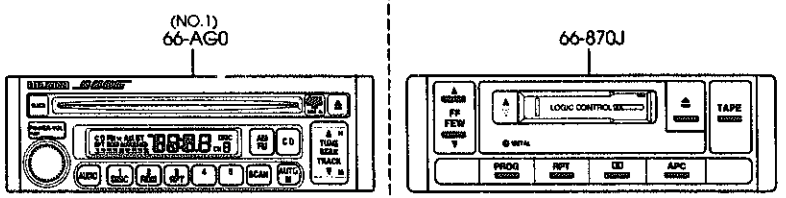

(AM/FM, W/O DECK, W/O POWER AMP)

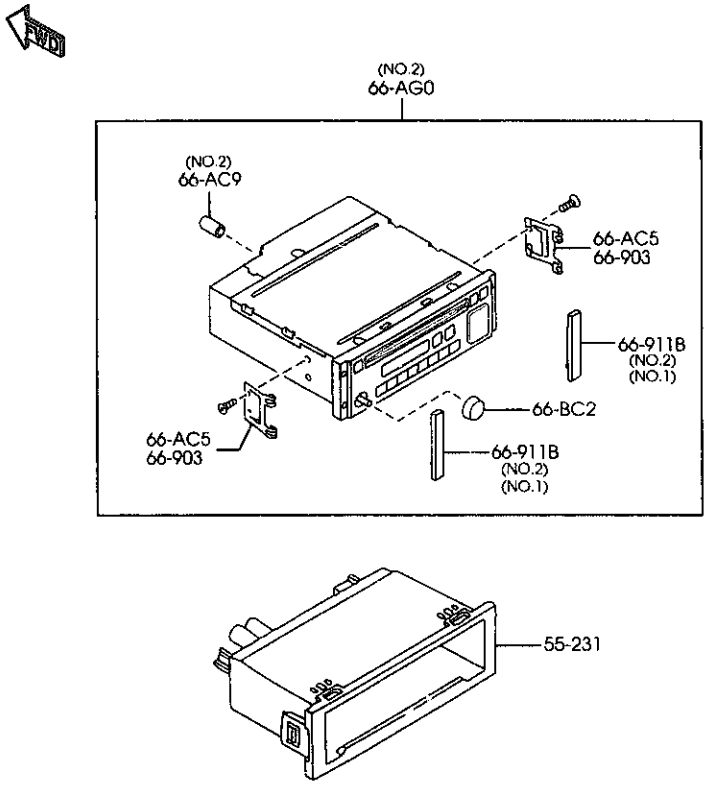

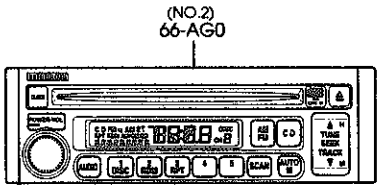

(AM/FM, W/DECK, W/O POWER AMP)

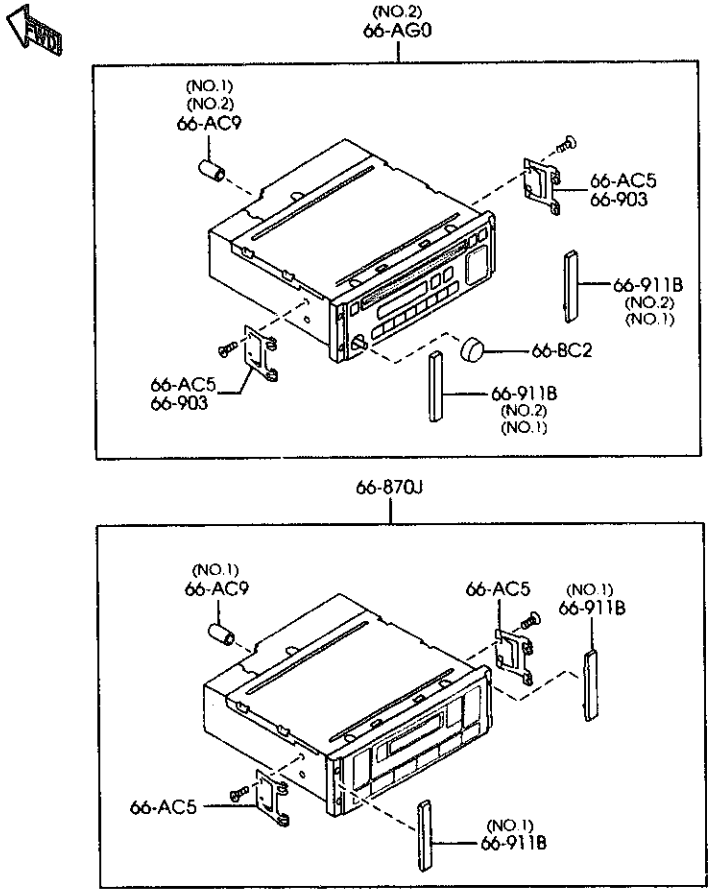

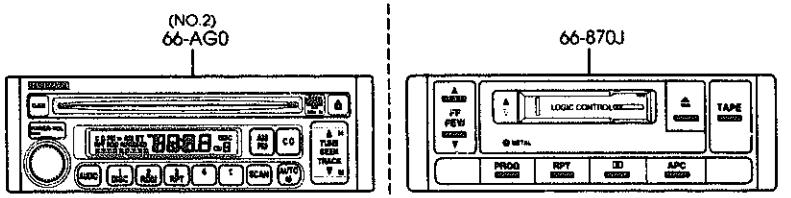

AUNA07 (1N03593)

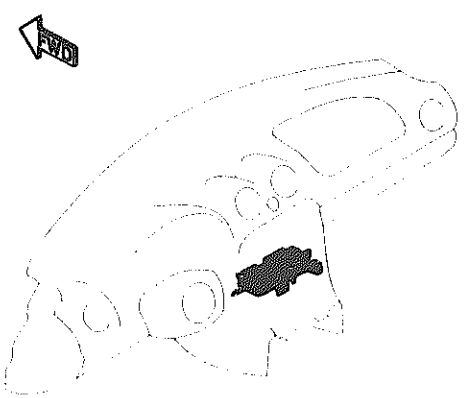

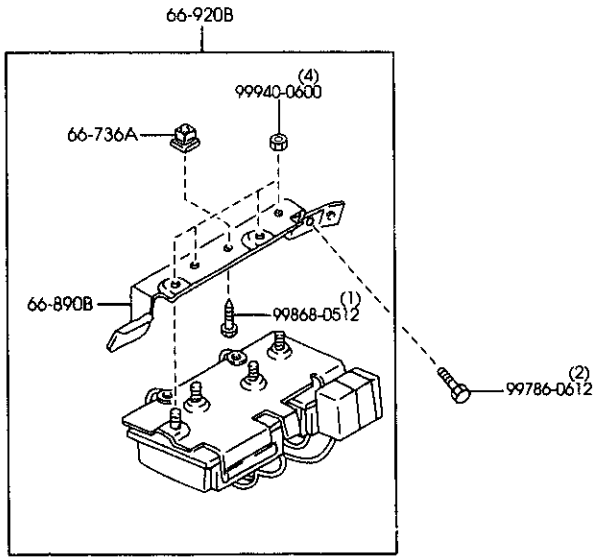

AUNA07 (1N03594)

(AM/FM, W/DECK, W/POWER AMP)

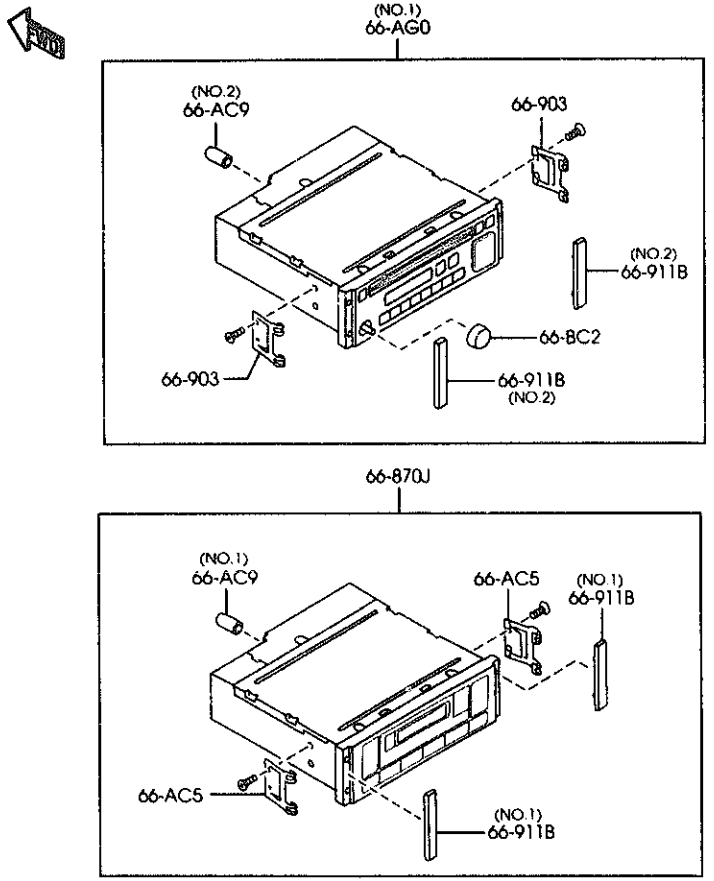

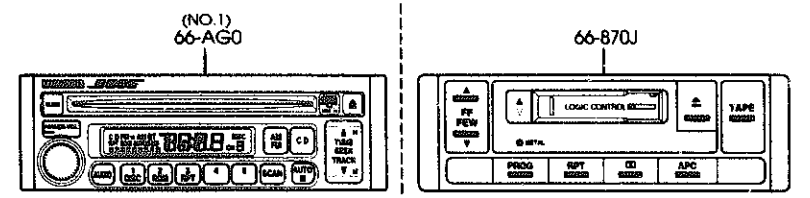

AUNA07 (1N03591)

PART NO.	QTY	MODEL/RESTRICTION	MODEL/RESTRICTION	MODEL/RESTRICTION	FROM-TO
55-231		ORNAMENT,STEREO			
B02A-66-9H0A	1	(AM/FM,W/O DECK)			
66-AC5		SPRING,AUDIO			
B01A-66-AC5	2	FMS (AM/FM,W/O DECK,W/O POWER AMP) (AM/FM,W/DECK,W/POWER AMP)			
B01A-66-AC5	4	FMS NON USA,			
66-AC9		RUBBER,REAR-ET/ED COMBI.			
LB03-66-AC9	1	FMS (ILLUST. NO.1)			
S22K-66-AC9	1	MATSUSHITA MAKE (ILLUST. NO.2)			
66-AG0		PLAYER,COMPACT DISC			
NC20-66-9R0	1	(ILLUST. NO.2) (W/O POWER AMP)			-8901
NC10-66-9R0 A (NC10-66-9R0A)	1	(ILLUST. NO.1) (W/POWER AMP)			-9623
BG1R-66-9R0	1	(ILLUST. NO.2) (W/O POWER AMP)			8901-
NC10-66-9R0A	1	(ILLUST. NO.1) (W/POWER AMP)			9623-
66-BC2		KNOB,VOLUME-TUNER & DECK			
BG1S-66-BC1	1	MATSUSHITA MAKE (W/POWER AMP)			
BG1S-66-BC1	1	MATSUSHITA MAKE (W/O POWER AMP)			-8901
BG1R-66-BC1	1	FMS MAKE (W/O POWER AMP)			8901-
66-736A		GROMMET,SCREW			
NC10-66-AD5	1	(W/POWER AMP)			
66-870J		AUDIO SET			
NC15-66-9D0	1	(AM/FM,W/DECK)			
66-890B		BRACKET			
NC10-66-9B1	1	(W/POWER AMP)			

8901 NB353*-122306
9623 NB353*-138616

CAT. AUNA07-05 2000-01

(AM/FM, W/O DECK, W/O POWER AMP)

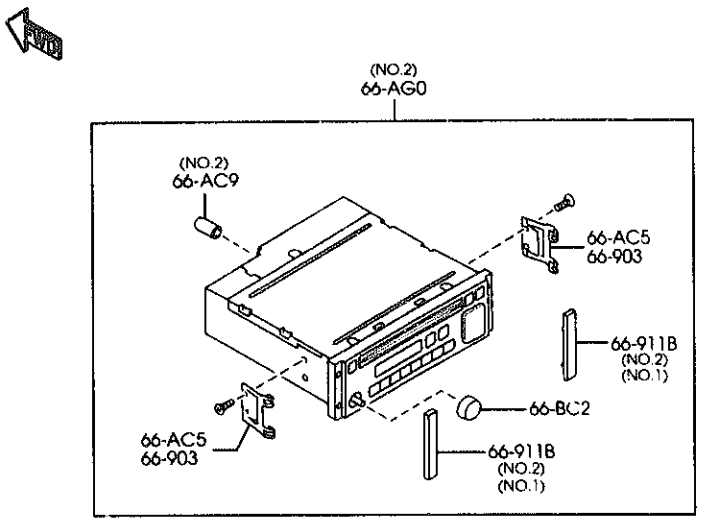

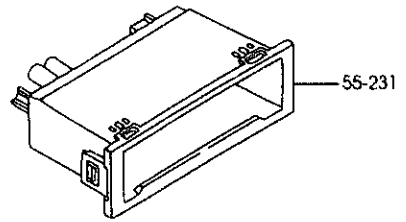

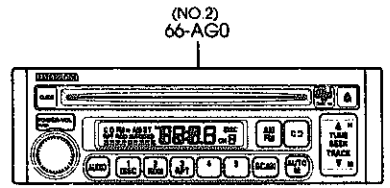

PART NO.	QTY	MODEL/RESTRICTION	MODEL/RESTRICTION	MODEL/RESTRICTION	FROM-TO
66-903		BRACKET,TUNER			
FD04-66-AW1	2	PANASONIC			
66-911B		COVER,HOLE			
LB63-66-BC4	2	FMS (ILLUST. NO.1) (AM/FM.W/DECK,W/POWER AMP) (AM/FM,W/O DECK,W/O POWER AMP)			
NB40-66-BC4	2	PANASONIC (ILLUST. NO.2)			
LB83-66-BC4	2	FMS (ILLUST. NO.1) (W/O POWER AMP)			-8901
NB40-66-BC4	2	PANASONIC (ILLUST. NO.2) (W/O POWER AMP)			-8901
LB83-66-BC4	4	FMS NON USA, (ILLUST. NO.1)			8901-
66-920B		AMP,POWER-AUDIO			
NC10-66-92ZA A (NC10-66-92ZB)	1	(W/POWER AMP)			-9A25
NC10-66-92ZB	1	(W/POWER AMP)			9A25-

8901 NB353*-122306
9A25 NB353*-141388

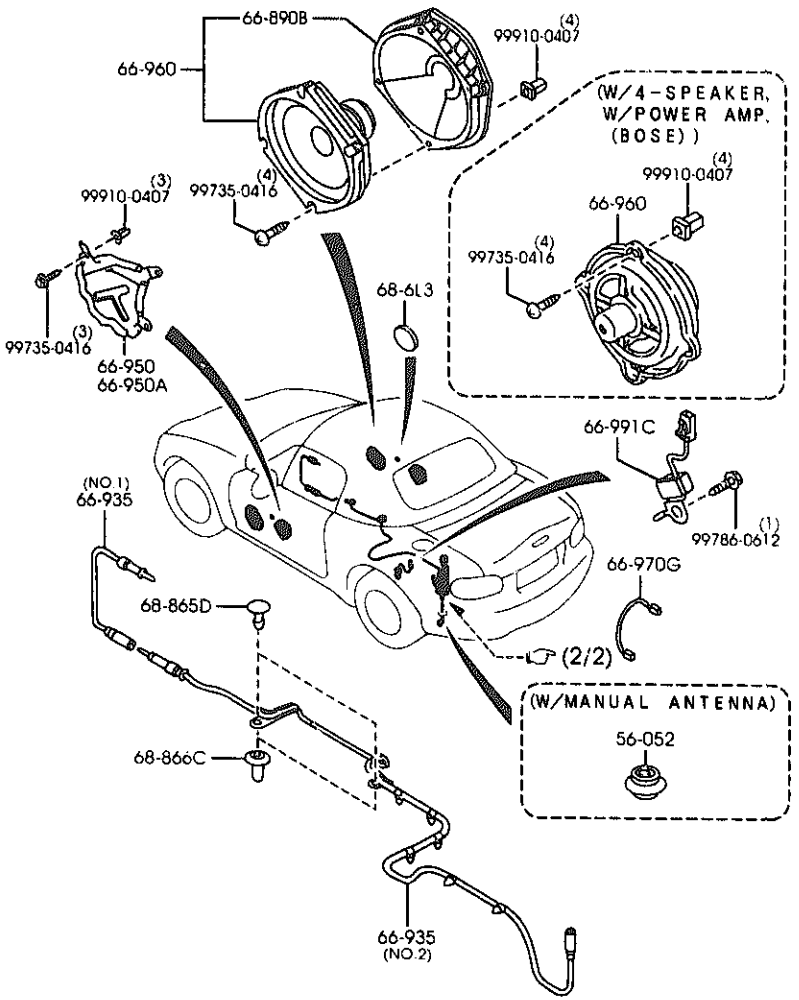

AUNA07 (1N03551)

(W/MANUAL ANTENNA)

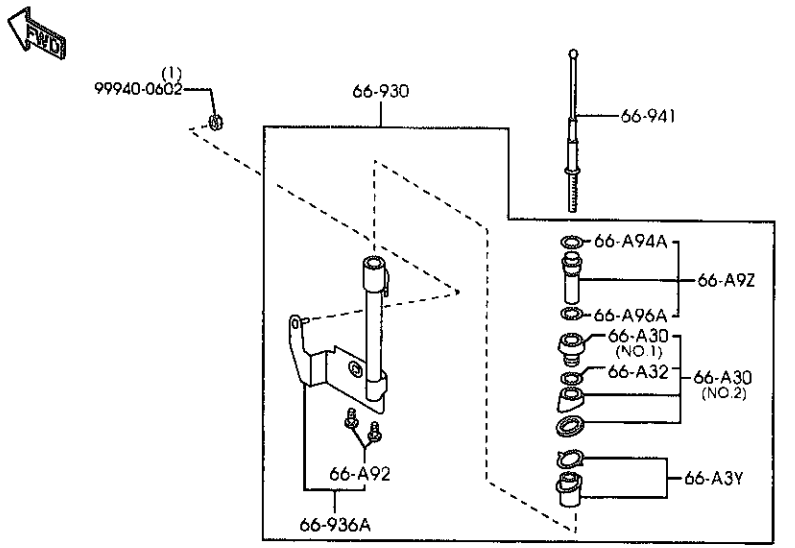

(W/ELECT. ANTENNA)

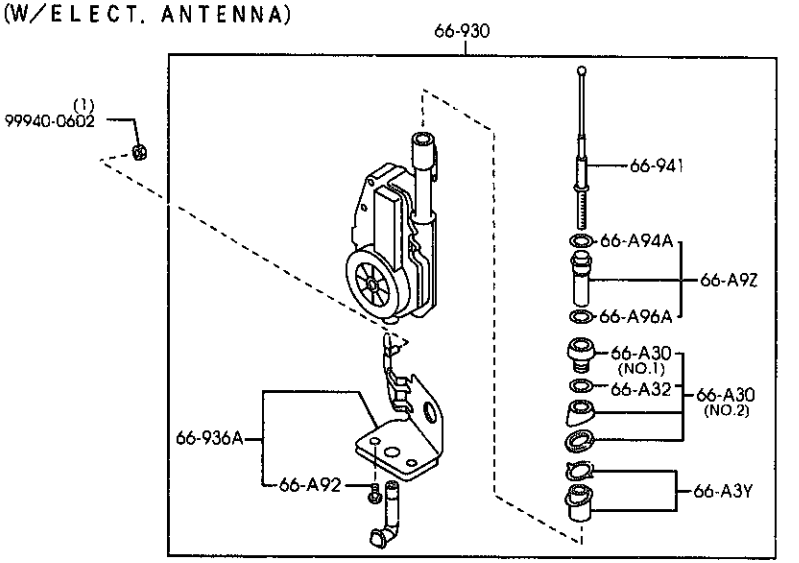

AUNA07 (1N03552)

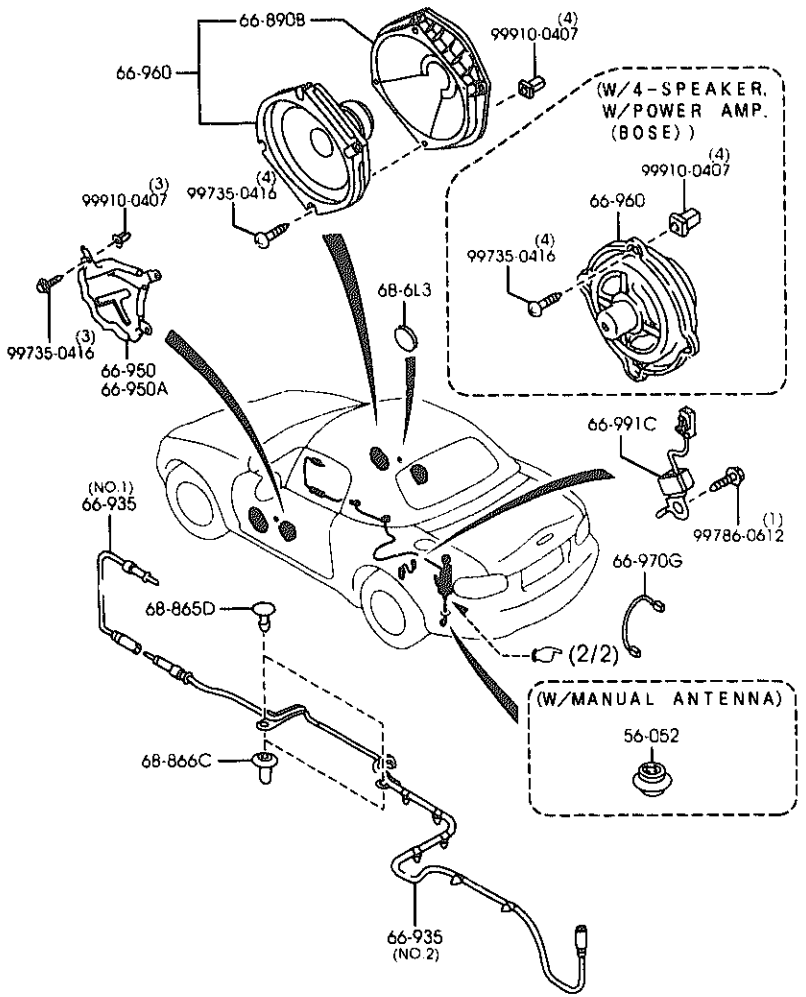

PART NO.	QTY	MODEL/RESTRICTION	MODEL/RESTRICTION	MODEL/RESTRICTION	FROM-TO
56-052		PLUG,DRAIN			
B092-56-052	1	D=12MM (W/MANUAL ANTENNA)			
66-A3Y		PLATE,EARTH-MOTOR ANTENNA			
NC10-66-A3Z	1				
66-A39		NUT,MOUNTING-ANTENNA			
M001-66-A31	1	(ILLUST. NO.1)			
NC10-66-A9Y	1	(ILLUST. NO.2)			
66-A32		RING,'O'-MOUNTING ANTENNA			
FB01-66-A32	1				
66-A9Z		INSULATOR,ROD-ANTENNA			
HG30-66-A9Z	1				
66-A92		SCREW,ANTENNA			
HG30-66-A92	2				
66-A94A		RING,'O'-ANTENNA			
HE02-66-A94	1				
66-A96A		RING,'O'-ANTENNA			
HE02-66-A96	1				
66-890B		BRACKET			
NC25-66-9B1A	2	(W/2-SPEAKER) (W/4-SPEAKER,W/O POWER AMP.)			
66-930		ANTENNA,RADIO			
NC10-66-930A (NC10-66-930DA)	1	(W/ELECT.ANTENNA)			-8113
NC20-66-930AN(NC20-66-930A)	1	(W/MANUAL ANTENNA)			-8301
NC10-66-930AN(NC10-66-930B)	1	(W/ELECT.ANTENNA)			8113-8323
NC20-66-930A	1	(W/MANUAL ANTENNA)			8301-
NC10-66-930B	1	(W/ELECT.ANTENNA)			8323-
66-935		FEEDER-ANTENNA			

8113 HB353*-103843
8301 HB353*-109481
8323 HB353*-112641

(W/MANUAL ANTENNA)

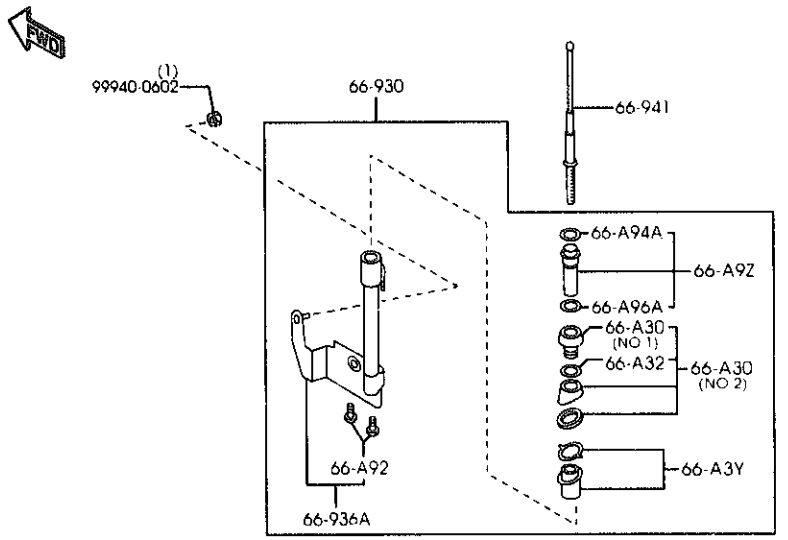

(W/ELECT. ANTENNA)

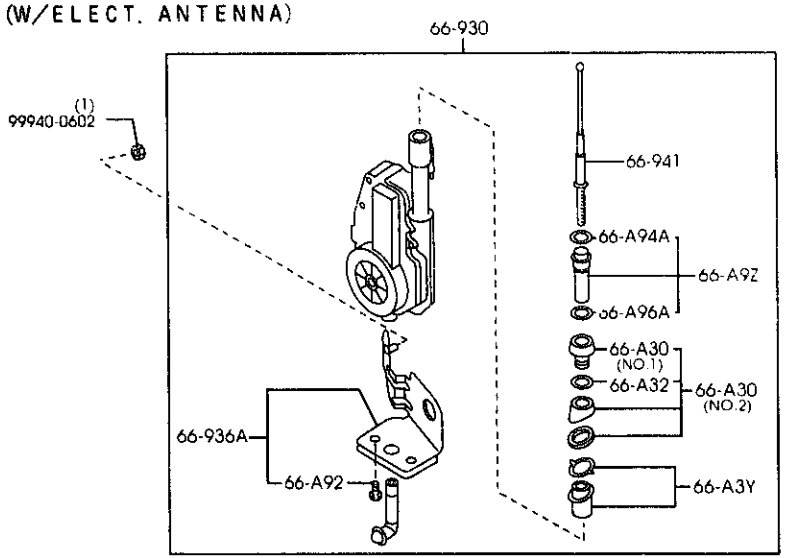

PART NO.	QTY	MODEL/RESTRICTION	MODEL/RESTRICTION	MODEL/RESTRICTION	FROM-TO
CONT'D					
NC11-66-940A	1	(ILLUST. NO.1)			
NC22-66-940C AN(NC22-66-940D)	1	(ILLUST. NO.2)			-7C03
NC22-66-940D	1	(ILLUST. NO.2)			7C03-
+---------+ | 66-936A | +---------+		BRKT,MOTOR-ANTENNA			
NC20-66-A9X	1	(W/MANUAL ANTENNA)			
NC10-66-A9X AN(NC10-66-A9XA)	1	(W/ELECT.ANTENNA)			-8323
NC10-66-A9XA	1	(W/ELECT.ANTENNA)			8323-
+---------+ | 66-941 | +---------+		POLE,ANTENNA			
B05A-66-A30	1	(W/ELECT.ANTENNA)			
KA03-66-930A	1	(W/MANUAL ANTENNA)			
+---------+ | 66-950 | +---------+		BRACKET(R),SPEAKER			
NC20-66-9BXA A (NC20-66-9BXB)	1	(W/4-SPEAKER,W/POWER AMP.(BOSE))			-7C03
NC20-66-9BXB	1	(W/4-SPEAKER,W/POWER AMP.(BOSE))			7C03-
+---------+ | 66-950A | +---------+		BRACKET(L),SPEAKER			
NC20-66-9BYA A (NC20-66-9BYB)	1	(W/4-SPEAKER,W/POWER AMP.(BOSE))			-7C03
NC20-66-9BYB	1	(W/4-SPEAKER,W/POWER AMP.(BOSE))			7C03-
+---------+ | 66-960 | +---------+		SPEAKER,LOUD-FRONT			
NC25-66-960A	2	(W/2-SPEAKER) (W/4-SPEAKER,W/O POWER AMP.)			
NC18-66-960 AN(NC18-66-960A)	2	(W/4-SPEAKER,W/POWER AMP.(BOSE))			-8701
NC18-66-960A A (NC18-66-960B)	2	(W/4-SPEAKER,W/POWER AMP.(BOSE))			8701-8731
NC18-66-960B	2	(W/4-SPEAKER,W/POWER AMP.(BOSE))			8731-
+---------+ | 66-970G | +---------+		CORD,SHORT			
NC15-66-970A	1	(AM/FM,W/DECK)			
+---------+ | 66-991C | +---------+		CONDENSER			
NC10-66-991A	1				

7C03 NB353*-100063
8323 NB353*-112641
8701 NB353*-121022
8731 NB353*-121884

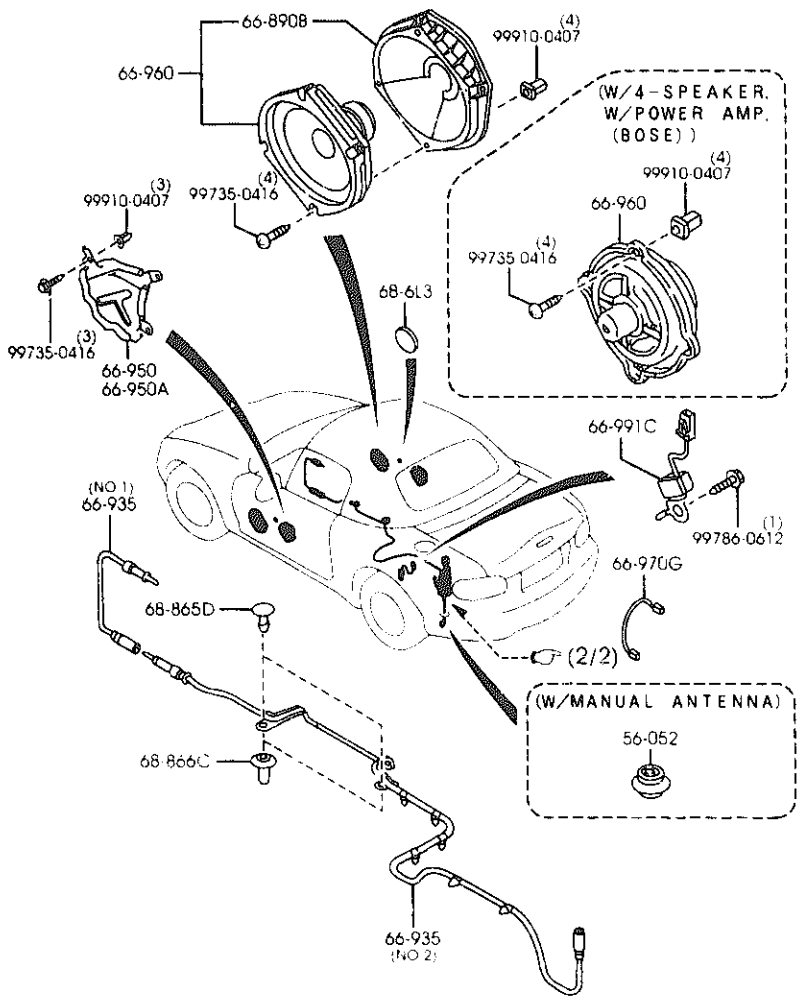

PART NO.	QTY	MODEL/RESTRICTION	MODEL/RESTRICTION	MODEL/RESTRICTION	FROM-TO
68-6L3		COVER'C',HOLE			
GA78-68-6L3	2	(W/4-SPEAKER,W/POWER AMP.(BOSE))			
68-865D		FASTENER			
S083-68-865A	2				-8401
00	INT-	NB0 NB1 BLACK			
GJ37-68-955	2				8401-
00	INT-	NB0 NB1 BLACK			
68-866C		FASTENER,SEAL			
B235-68-865A AN(B235-68-965B)	2				-9106
B235-68-865B	2				9106-

8401 NB353*-114005
9106 NB353*-126971

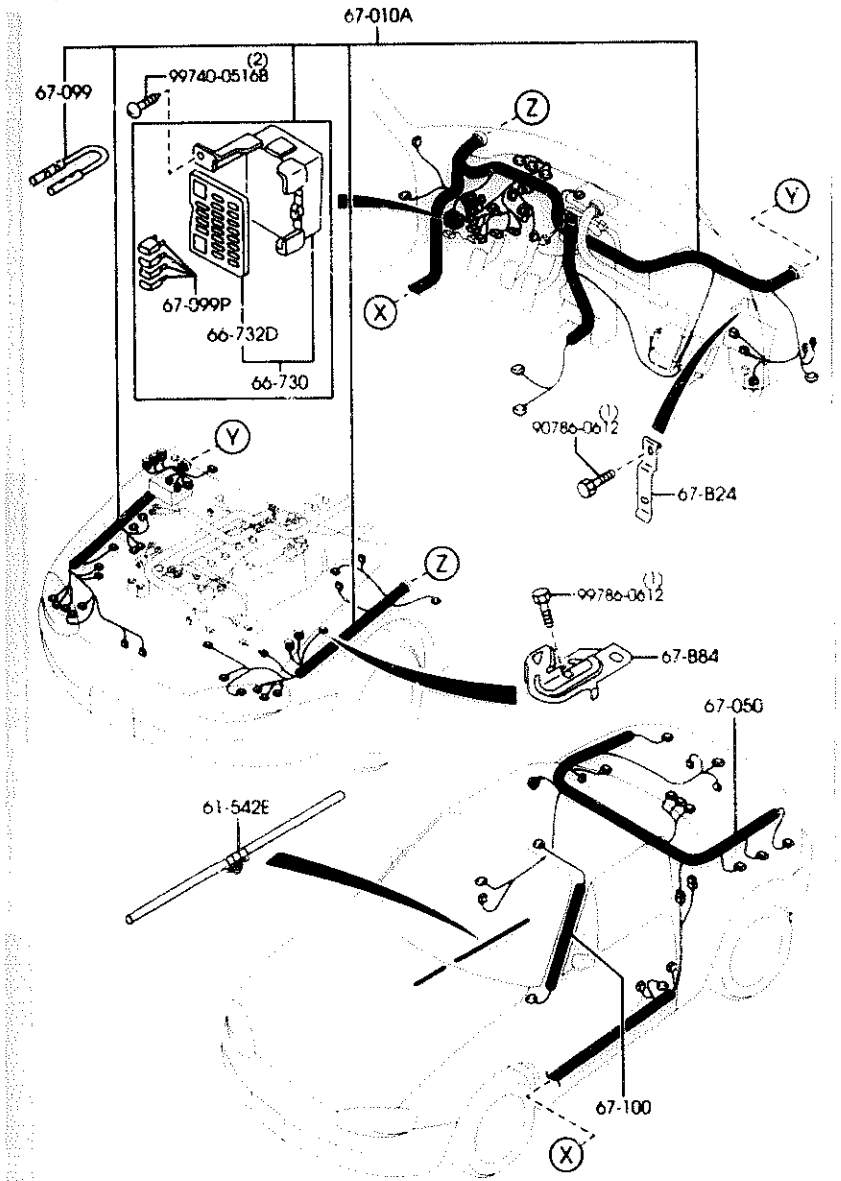

AUNA07 (1N04560)

PART NO.	QTY	MODEL/RESTRICTION	MODEL/RESTRICTION	MODEL/RESTRICTION	FROM-TO
61-542E NC10-67-011	1	WIRE HARNESS			
66-730 NC10-66-730B	1	BLOCK,FUSE			
66-732D NC10-66-731A	1	COVER,FUSE BLOCK			
67-B24 MA75-67-B11A	1	BRACKET			
67-B84 NC19-67-B12	1	BRACKET			
67-010A		HARNESS,FRONT			
*NC17-67-010M	1	NON USA,			
*NC22-67-010M	1	NON USA,			
*NC24-67-010M	1	NON USA,			
*NC25-67-010M	1	NON USA,			
NC10-67-010D A (NC10-67-010G)	1	(W/O POWER AMP) ((MT))(W/O A. LOCK B RAKE))			-8401
NC11-67-010D A (NC11-67-010G)	1	(W/POWER AMP) ((MT))(W/O A. LOCK B RAKE))			-8401
NC19-67-010D A (NC19-67-010G)	1	(W/POWER AMP) ((AT))(W/O A. LOCK B RAKE))			-8401
NC21-67-010D A (NC21-67-010G)	1	(W/POWER AMP) ((AT))(W/A. LOCK BRAKE))			-8401
NC23-67-010D A (NC23-67-010G)	1	(W/POWER AMP) ((MT))(W/A. LOCK BRAKE))			-8401
NC10-67-010G AN(NC10-67-010H)	1	(W/O POWER AMP) ((MT))(W/O A. LOCK B RAKE))			8401-8A01
NC11-67-010G AN(NC11-67-010H)	1	(W/POWER AMP) ((MT))(W/O A. LOCK B RAKE))			8401-8A01
NC19-67-010G AN(NC19-67-010H)	1	(W/POWER AMP) ((AT))(W/O A. LOCK B RAKE))			8401-8A01
NC21-67-010G	1	(W/POWER AMP)			8401-8A01

8401 NB353*-114005
8A01 NB353*-122764

CAT. AUNA07-05 2000-01

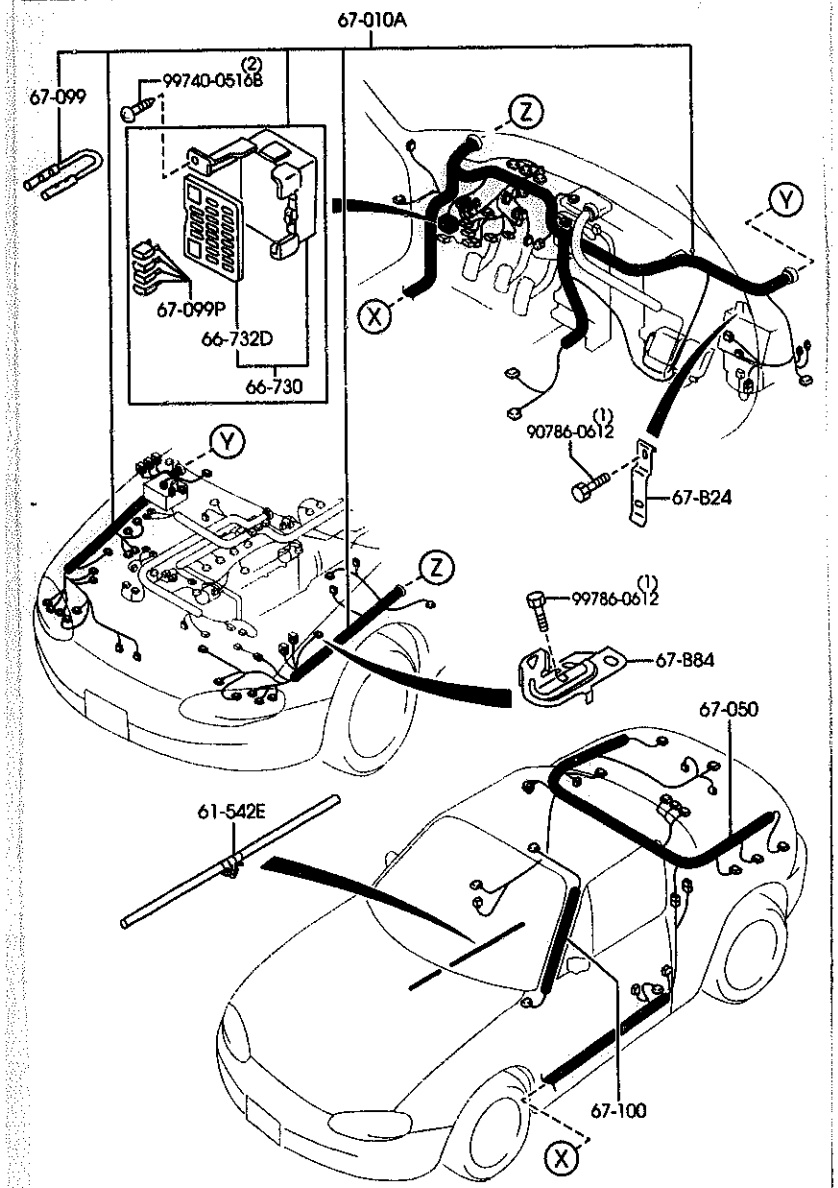

AUNA07 (1N04560)

PART NO.	QTY	MODEL/RESTRICTION	MODEL/RESTRICTION	MODEL/RESTRICTION	FROM-TO
CONT'D AN(NC21-67-010H)		((AT)>(W/A. LOCK BRAKE))			
NC23-67-010G AN(NC23-67-010H)	1	(W/POWER AMP) ((MT)>(W/A. LOCK BRAKE))			8401-8A01
NC10-67-010H A (NC10-67-010J)	1	(W/O POWER AMP) ((MT)>(W/O A. LOCK BRAKE))			8A01-8C01
NC11-67-010H A (NC11-67-010J)	1	(W/POWER AMP) ((MT)>(W/O A. LOCK BRAKE))			8A01-8C01
NC19-67-010H A (NC19-67-010J)	1	(W/POWER AMP) ((AT)>(W/O A. LOCK BRAKE))			8A01-8C01
NC21-67-010H A (NC21-67-010J)	1	(W/POWER AMP) ((AT)>(W/A. LOCK BRAKE))			8A01-8C01
NC23-67-010H A (NC23-67-010J)	1	(W/POWER AMP) ((MT)>(W/A. LOCK BRAKE))			8A01-8C01
NC10-67-010J AN(NC10-67-010L)	1	(W/O POWER AMP) ((MT)>(W/O A. LOCK BRAKE))			8C01-9401
NC11-67-010J AN(NC11-67-010L)	1	(W/POWER AMP) ((MT)>(W/O A. LOCK BRAKE))			8C01-9401
NC19-67-010J AN(NC19-67-010L)	1	(W/POWER AMP) ((AT)>(W/O A. LOCK BRAKE))			8C01-9401
NC21-67-010J AN(NC21-67-010L)	1	(W/POWER AMP) ((AT)>(W/A. LOCK BRAKE))			8C01-9401
NC23-67-010J AN(NC23-67-010L)	1	(W/POWER AMP) ((MT)>(W/A. LOCK BRAKE))			8C01-9401
NC10-67-010L	1	(W/O POWER AMP) ((MT)>(W/O A. LOCK BRAKE))			9401-9A01
NC11-67-010L	1	(W/POWER AMP) ((MT)>(W/O A. LOCK BRAKE))			9401-9A01
NC19-67-010L	1	(W/POWER AMP) ((AT)>(W/O A. LOCK BRAKE))			9401-9A01
NC21-67-010L	1	(W/POWER AMP) ((AT)>(W/A. LOCK BRAKE))			9401-9A01
NC23-67-010L	1	(W/POWER AMP) ((MT)>(W/A. LOCK BRAKE))			9401-9A01
*NC10-67-010M	1	(W/O POWER AMP)			9A01-

8401 NB353*-114005
8A01 NB353*-122764
8C01 NB353*-124914
9401 NB353*-136673
9A01 NB353*-141073

CAT. AUNA07-05 2000-01

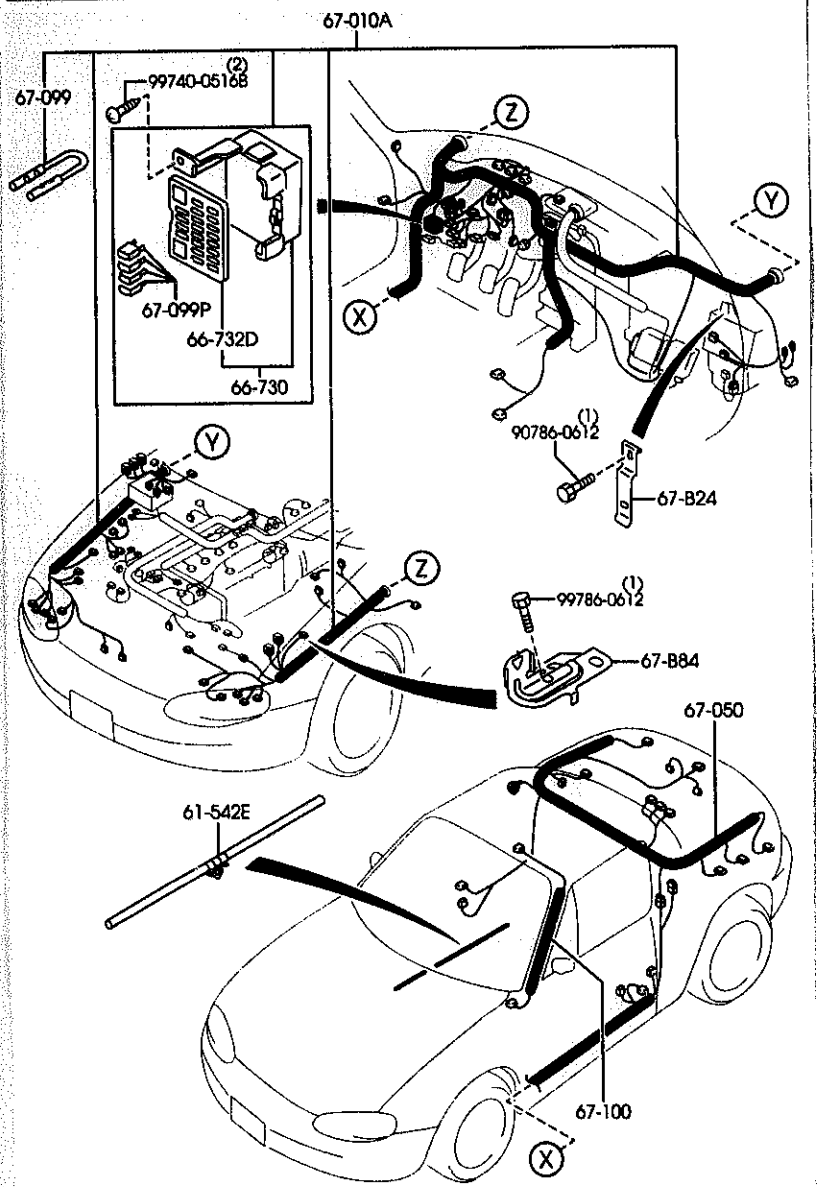

AUNA07 (1N04560)

PART NO.	QTY	MODEL/RESTRICTION	MODEL/RESTRICTION	MODEL/RESTRICTION	FROM-TO
CONT'D		((MT)>(W/O A. LOCK BRAKE))			
*NC11-67-010M	1	(W/POWER AMP) ((MT)>(W/O A. LOCK BRAKE))			9A01-
*NC19-67-010M	1	(W/POWER AMP) ((AT)>(W/O A. LOCK BRAKE))			9A01-
*NC21-67-010M	1	(W/POWER AMP) ((AT)>(W/A. LOCK BRAKE))			9A01-
*NC23-67-010M	1	(W/POWER AMP) ((MT)>(W/A. LOCK BRAKE))			9A01-
+---------+ | 67-050 | +---------+		HARNESS,REAR			
NC10-67-050D AN(NC10-67-050E)	1	(W/O A. LOCK BRAKE)			-8301
NC14-67-050D AN(NC14-67-050E)	1	(W/A. LOCK BRAKE)			-8301
NC10-67-050E AN(NC10-67-050F)	1	(W/O A. LOCK BRAKE)			8301-8A01
NC14-67-050E AN(NC14-67-050F)	1	(W/A. LOCK BRAKE)			8301-8A01
NC10-67-050F AN(NC10-67-050G)	1	(W/O A. LOCK BRAKE)			8A01-9401
NC14-67-050F AN(NC14-67-050G)	1	(W/A. LOCK BRAKE)			8A01-9401
NC10-67-050G	1	(W/O A. LOCK BRAKE)			9401-9701
NC14-67-050G	1	(W/A. LOCK BRAKE)			9401-9701
NC49-67-050	1	(W/O A. LOCK BRAKE)			9701-
NC54-67-050	1	(W/A. LOCK BRAKE)			9701-
+---------+ | 67-099 | +---------+		LINK,FUSIBLE			
B180-67-099	1	10 OHM (W/A. LOCK BRAKE)			
+---------+ | 67-099P | +---------+		FUSE			
99705-1210	6	10A			
99705-1215	7	15A			
99705-1220	2	20A (W/O POWER AMP) ((MT)>(W/O A. LOCK BRAKE))			

8301 NB353*-109481
8A01 NB353*-122764
9401 NB353*-136673
9701 NB353*-138751
9A01 NB353*-141073

CAT. AUNA07-05 2000-01

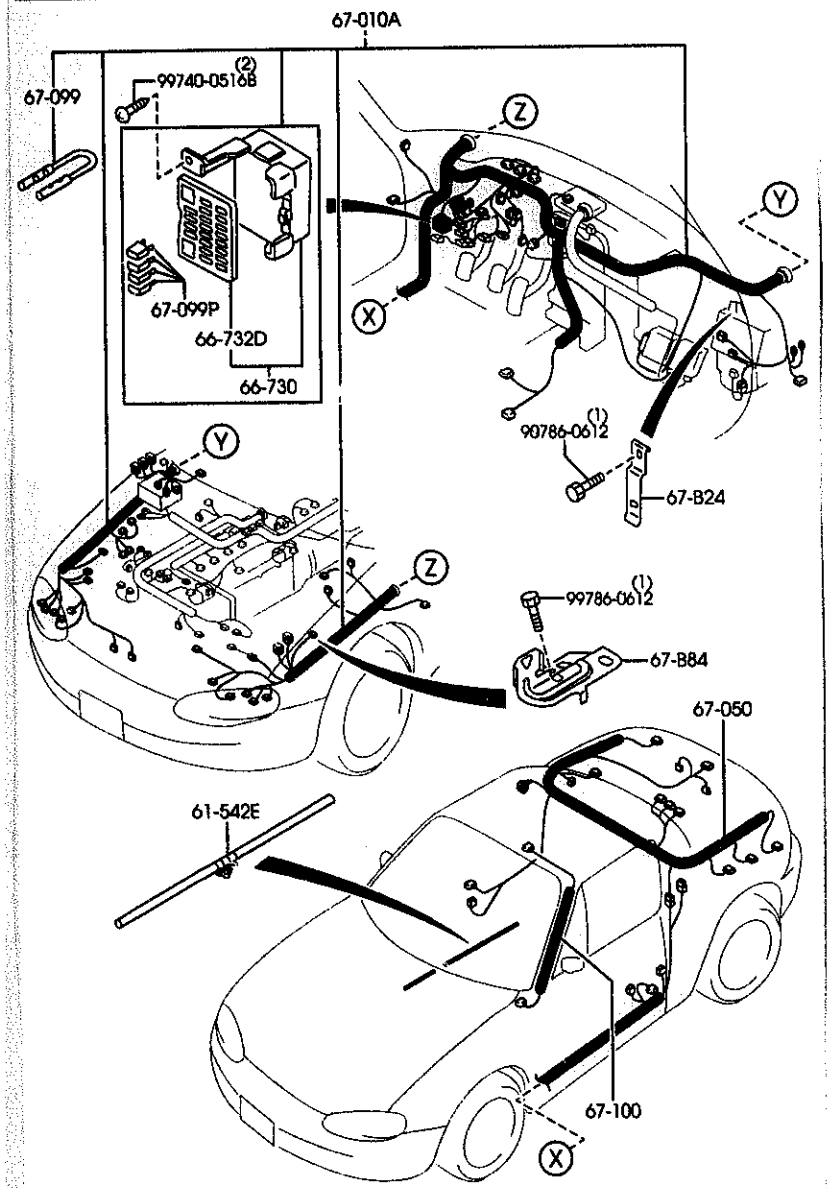

AUNA07 (1N04560)

PART NO.	QTY	MODEL/RESTRICTION	MODEL/RESTRICTION	MODEL/RESTRICTION	FROM-TO
CONT'D					
99705-1220	3	20A (W/POWER AMP) ((MT)>(W/O A. LOCK BRAKE))			
99705-1220	3	20A ((MT)>(W/A. LOCK BRAKE)) (AT)			
99705-1230	1	30A			
67-100		HARNESS,ROOM LAMP			
NC10-67-100B	1				

CAT. AUNA07-05 2000-01

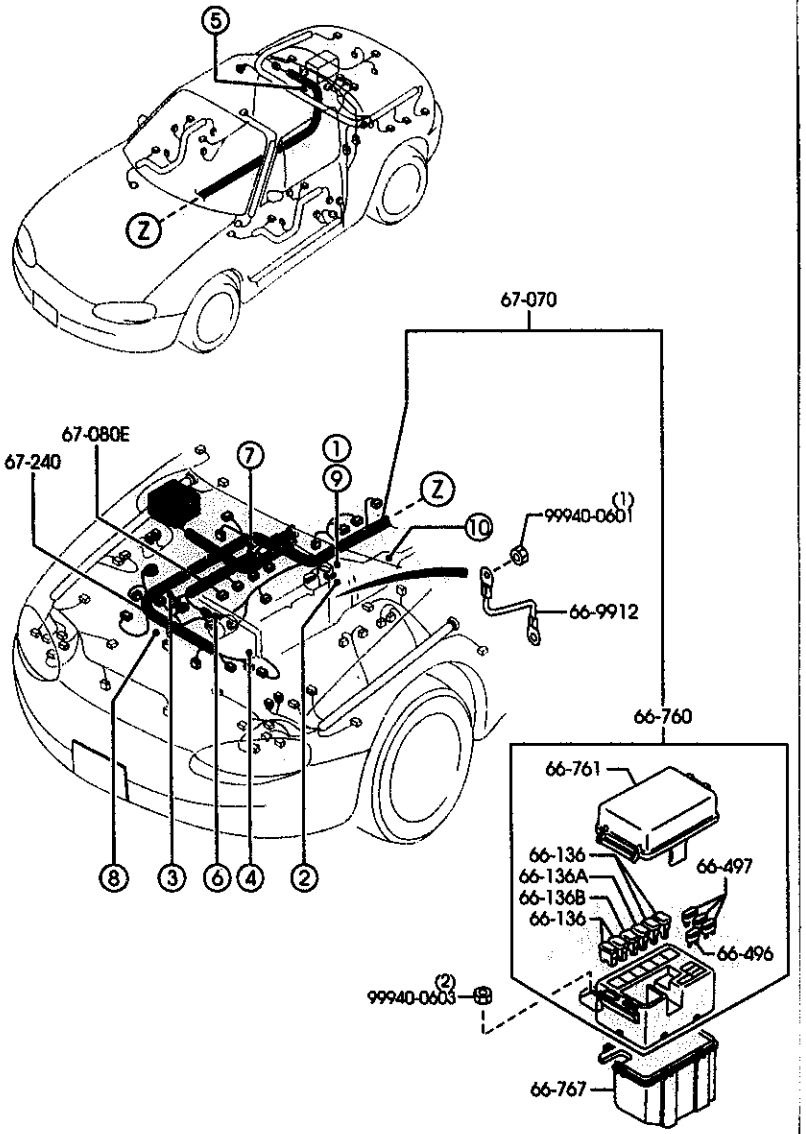

AUNA07 (1N04571)

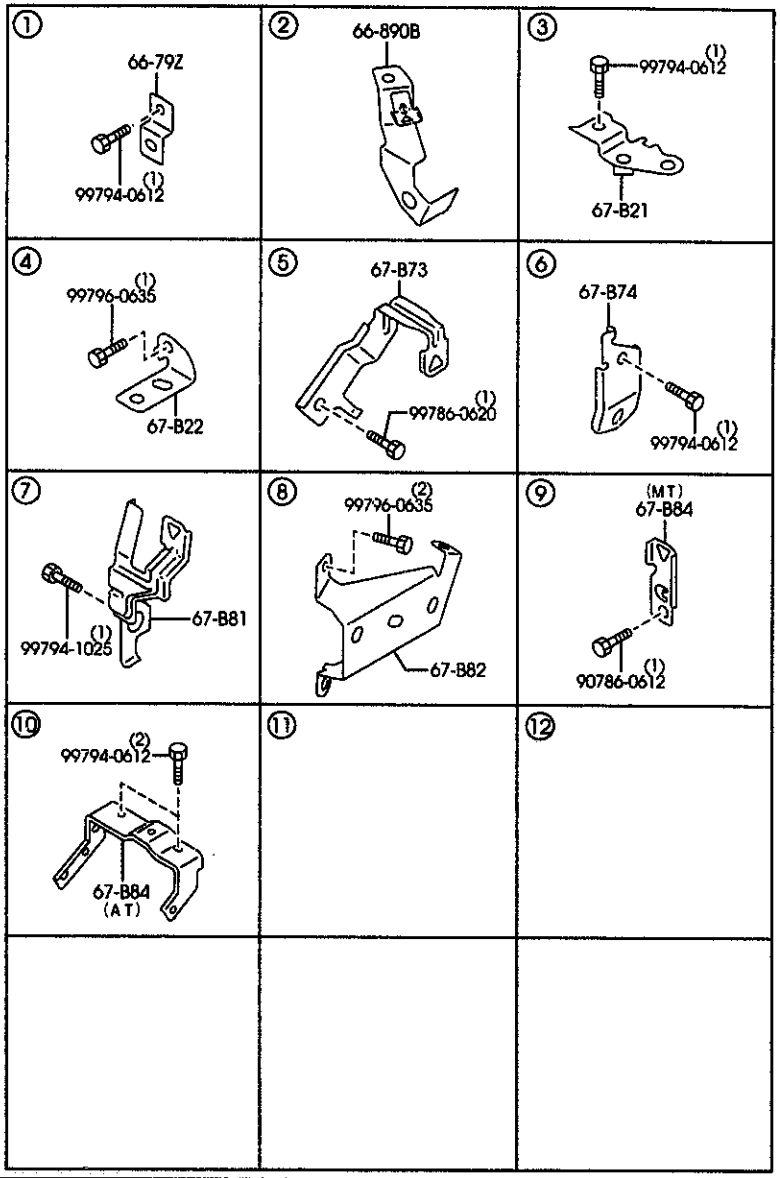

AUNA07 (1N04572)

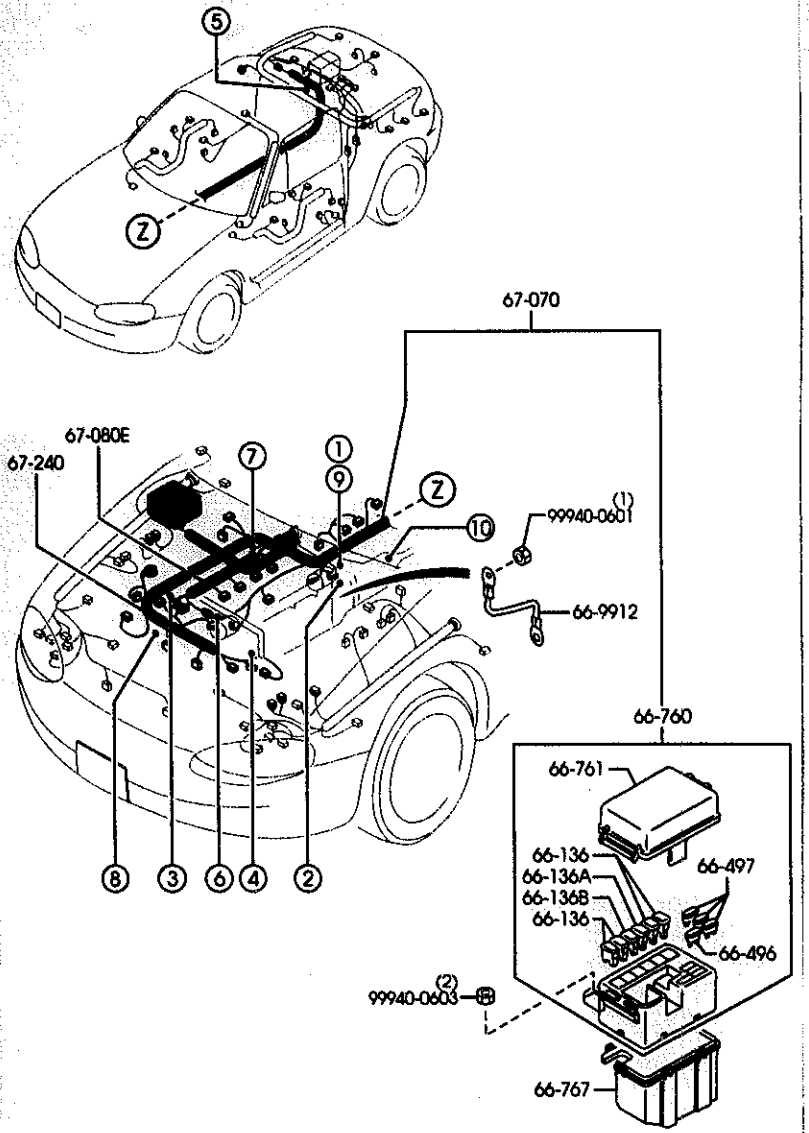

AUNA07 (1N04571)

6701A -1 ENGINE & TRANSMISSION WIRING HARNESSES

PART NO.	QTY	MODEL/RESTRICTION	MODEL/RESTRICTION	MODEL/RESTRICTION	FROM-TO
66-136		FUSE (30A)			
H115-67-099	4				
66-136A		FUSE (40A)			
H116-67-099	1	40A			
66-136B		FUSE (80A)			
H117-67-099	1				
66-496		FUSE (15A)			
99705-1115	1				
66-497		FUSE (20A)			
99705-1120	3				
66-760		BLOCK,MAIN FUSE			
NC10-66-760	1				
66-761		COVER,MAIN FUSE BLOC K			
NC10-66-762	1				
66-767		COVER,UNDER-MAIN FUS E BLK			
NC10-66-767	1				
66-79Z		BRACKET,HORN			
BC5D-66-7B1	1	(AT)			
66-890B		BRACKET			
NC10-67-B7X	1				
66-9912		WIRE,EARTH			
NA75-67-EW1B	1				
67-B21		BRACKET,HARNESS			
NC10-67-B2XB	1				
67-B22		BRACKET,HARNESS			
NC10-67-B22	1				
67-B73		BRACKET,HARNESS			

CAT. AUNA07-05 2000-01

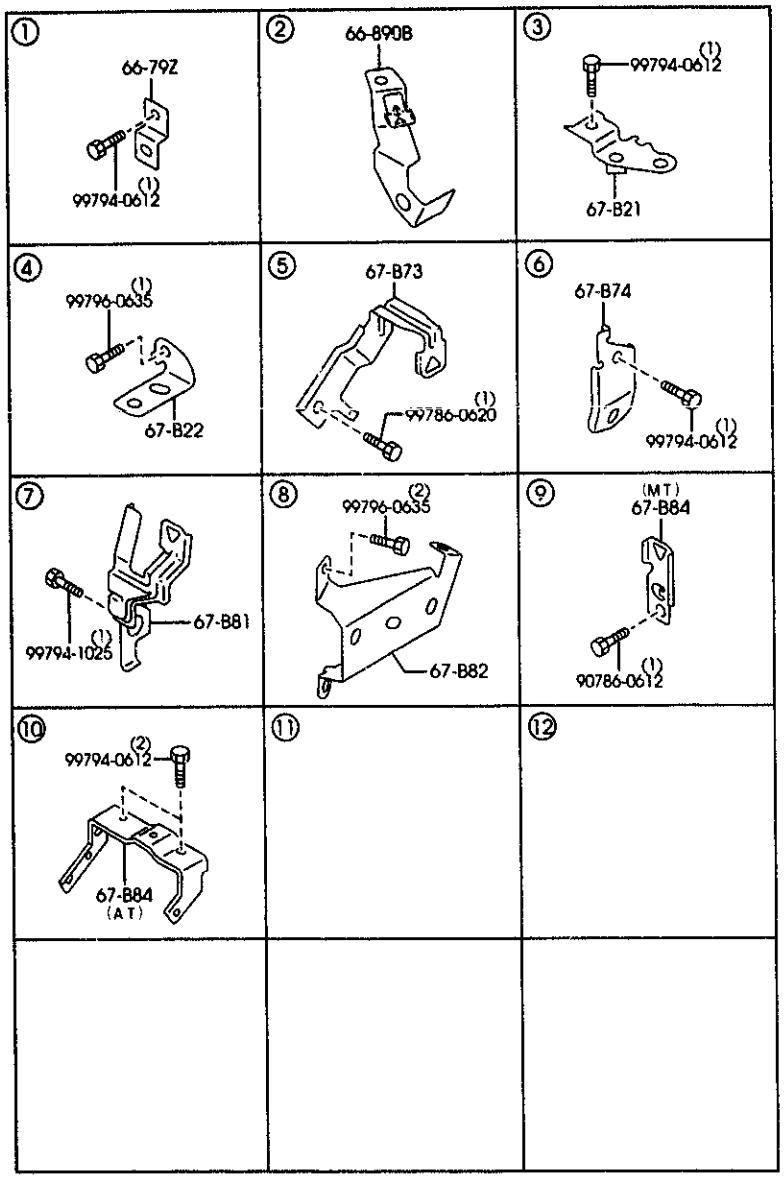

AUNA07 (1N04572)

6701A -2 ※ ENGINE & TRANSMISSION WIRING HARNESSES

PART NO.	QTY	MODEL/RESTRICTION	MODEL/RESTRICTION	MODEL/RESTRICTION	FROM-TO
CONT'D					
NC10-67-B73	1				
+---------+					
| 67-B74 |		BRACKET,HARNESS			
+---------+					
NC10-67-B74	1				
+---------+					
| 67-B81 |		BRACKET,HARNESS-ENGINE			
NC10-67-B81A AN(NC10-67-B81B)	1				-8701
NC10-67-B81B	1				8701-
+---------+					
| 67-B82 |		BRKT,THROTTLE SENSOR			
+---------+					
NC10-67-B82A	1				
+---------+					
| 67-B84 |		BRACKET			
+---------+					
NC10-67-B72	1	(MT)			
NC13-67-B72A	1	(AT)			
+---------+					
| 67-070 |		HARNESS,ENGINE			
+---------+					
NC13-67-070F A (NC13-67-070H)	1	(AT)			-8701
NC10-67-070F A (NC10-67-070H)	1	(MT)			-8728
NC13-67-070H	1	(AT)			8701-9701
NC10-67-070H	1	(MT)			8728-9701
NC49-67-070A	1	(MT)			9701-
NC53-67-070A	1	(AT)			9701-
+---------+					
| 67-080E |		WIRING,INJECTOR			
+---------+					
NC10-67-080C A (NC10-67-080D)	1				-8326
NC10-67-080D	1				8326-
+---------+					
| 67-240 |		HARNESS,EMISSION			
+---------+					
NC10-67-020D AN(NC10-67-020E)	1	(FED)			-8301
NC16-67-020D A (NC16-67-020E)	1	(CALIF)			-8301
NC10-67-020E	1	(FED)			8301-
NC16-67-020E	1	(CALIF)			8301-

8301 NB353※-109481
8326 NB353※-113169
8701 NB353※-121022
8728 NB353※-121712
9701 NB353※-138751

CAT. AUNA07-05 2000-01

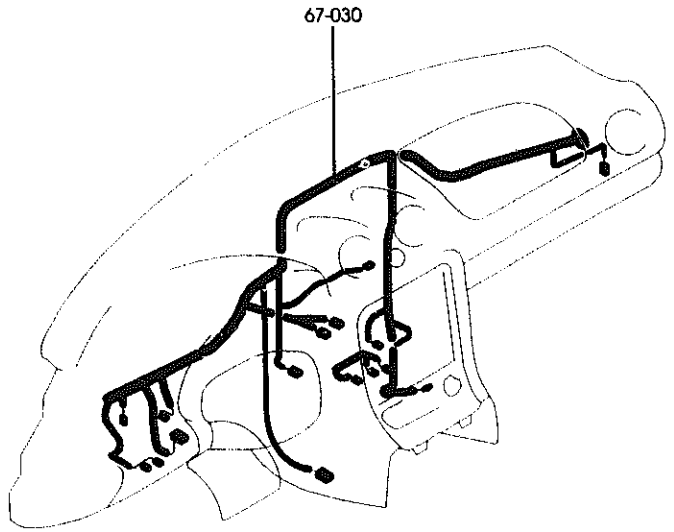

6702A -1 * DASHBOARD WIRING HARNESSES

PART NO.	QTY	MODEL/RESTRICTION	MODEL/RESTRICTION	MODEL/RESTRICTION	FROM-TO
67-030		HARNESS,INSTRUMENT			
NC13-67-030	1	NON USA,			
NC10-67-030D A (NC10-67-030E)	1	(W/O POWER AMP)			-8C01
NC12-67-030D A (NC12-67-030E)	1	(W/POWER AMP)			-8C01
NC10-67-030E	1	(W/O POWER AMP,W/AUTO CRUISE. CONT.)			8C01-
NC11-67-030	1	(W/O POWER AMP,W/O AUTO CRUISE. CONT.)			8C01-
NC12-67-030E	1	(W/POWER AMP,W/AUTO CRUISE. CONT.)			8C01-

8C01 NB353*-124914

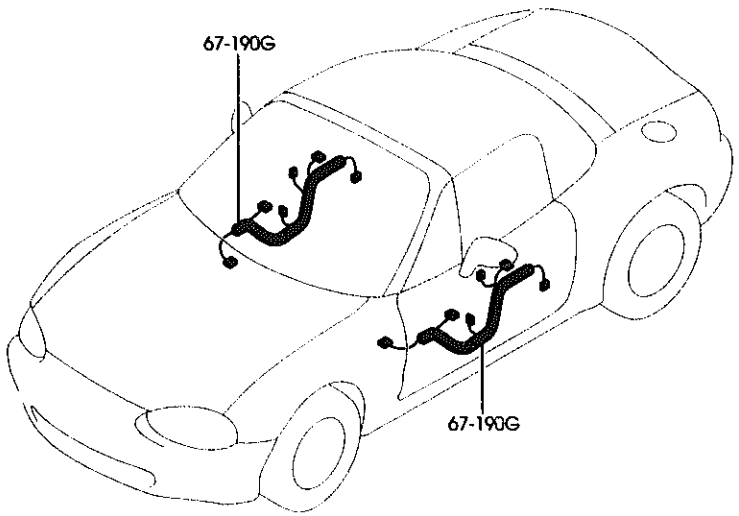

6703A -1 * DOOR, FLOOR & CEILING WIRING HARNESSES

PART NO.	QTY	MODEL/RESTRICTION	MODEL/RESTRICTION	MODEL/RESTRICTION	FROM-TO
67-190G		HARNESS,DOOR			
NC13-67-190G	2	NON USA,			
NC14-67-190D	2	NON USA,			
NC15-67-190C A (NC15-67-190D)	2	(W/4-SPEAKER,W/POWER DOOR LOCK)			-7C03
NC11-67-190E AN(NC11-67-190F)	2	(W/2-SPEAKER,W/O POWER DOOR LOCK)			-8301
NC15-67-190D AN(NC15-67-190E)	2	(W/4-SPEAKER,W/POWER DOOR LOCK)			7C03-8301
NC11-67-190F	2	(W/2-SPEAKER,W/O POWER DOOR LOCK)			8301-
NC15-67-190E	2	(W/4-SPEAKER,W/POWER DOOR LOCK)			8301-

7C03 NB353*-100063
8301 NB353*-109481

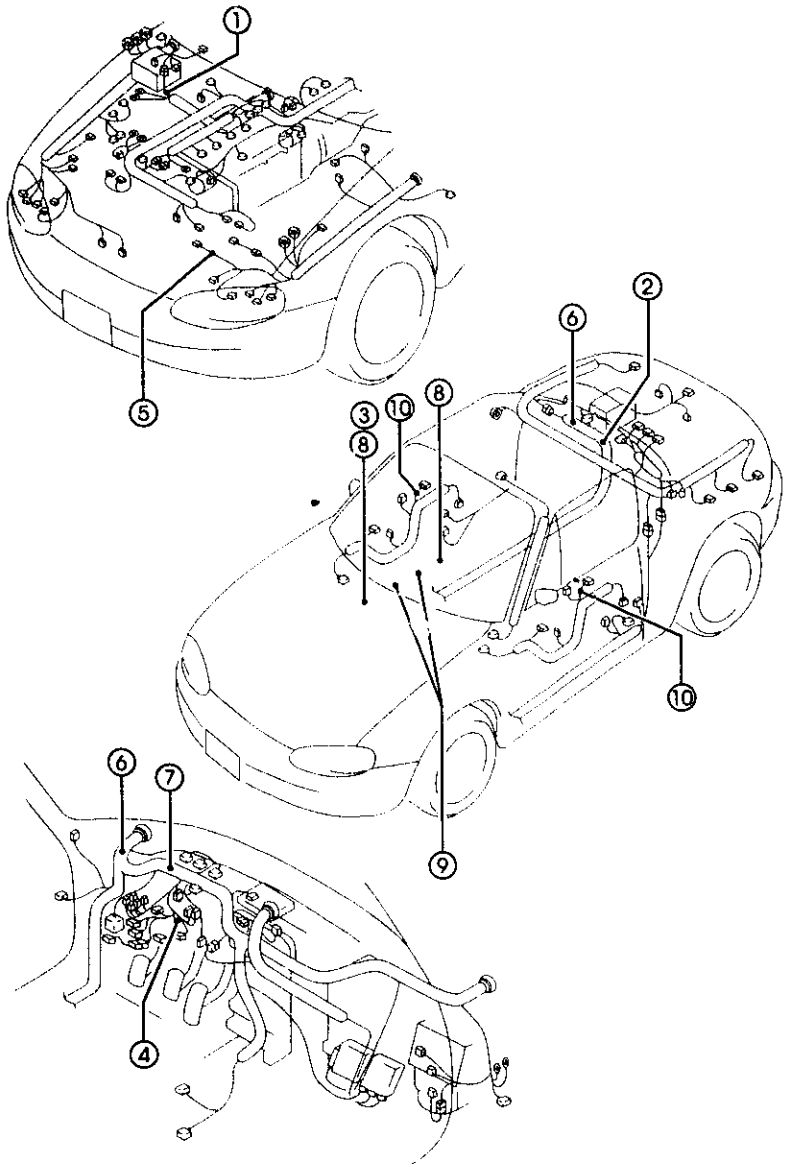

AUNA07 (1N03601)

① 67-013A	② 67-014F, 90786-0620 (1)		③ 67-026	④ 61-477C
⑤ 67-051E	⑥ 67-052H	⑦ 67-076	⑧ 68-865	⑨ 99264-0738 (2)
⑩ 68-425A				

AUNA07 (1N03602)

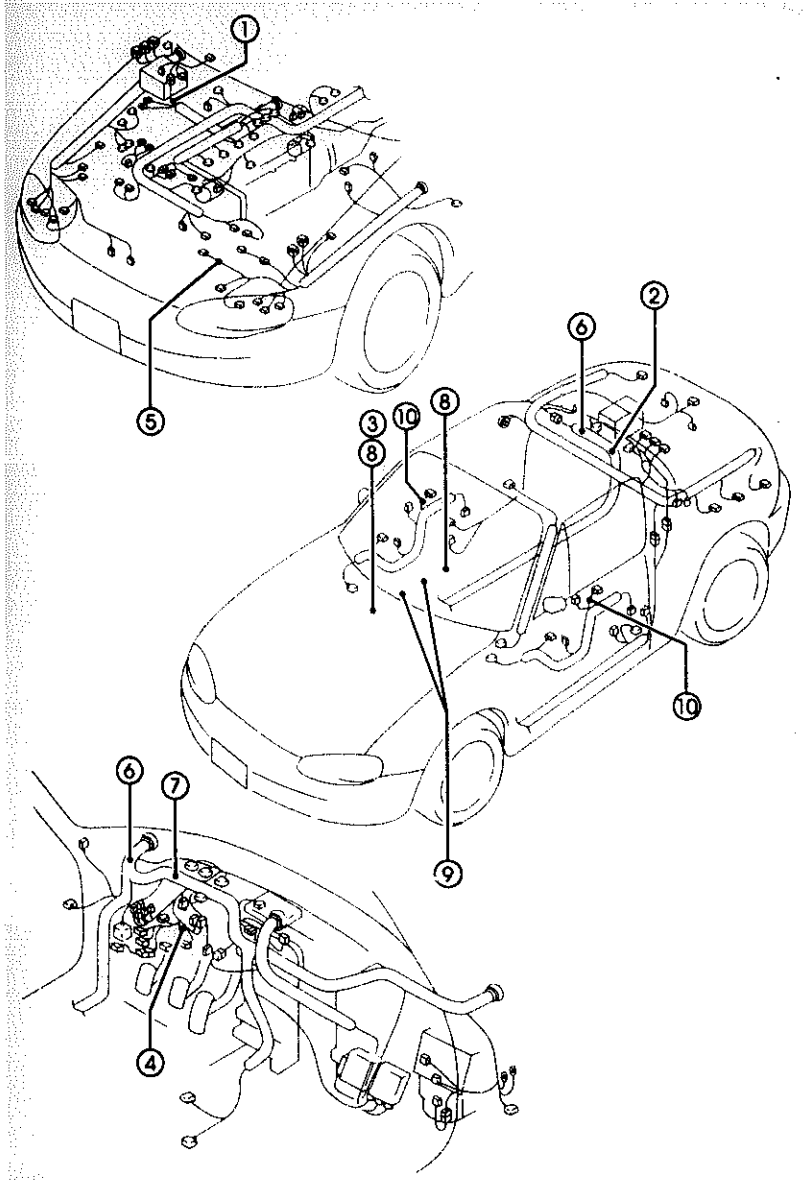

AUNA07 (1N0360)

6704A -1 * WIRING HARNESS CLAMPS

PART NO.	QTY	MODEL/RESTRICTION	MODEL/RESTRICTION	MODEL/RESTRICTION	FROM-TO
61-477C		CLIP			
B02A-61-477	1	(W/O POWER DOOR LOCK)			
67-013A		CLIP			
BR70-67-CC6A	1				
67-014F		PROTECTOR,HARNESS			
NA01-67-P71	1				
67-026		CLIP,HARNESS			
NA02-67-CW5A	1				
67-051E		CLIP			
UB42-67-051	1				-8401
67-052H		CLIP			
G030-67-018A	2				
67-076		CLIP,ENGINE HARNESS			
NA01-67-CH8	1				
68-425A		COVER,HOLE			
*LA01-57-425A	2	(W/2-SPEAKER)			9118-
68-865		FASTENER			
BR70-68-865	2				

8401 NB353*-114005
9118 NB353*-128424

CAT. AUNA07-05 2000-01

(1.5L WASHER TANK)

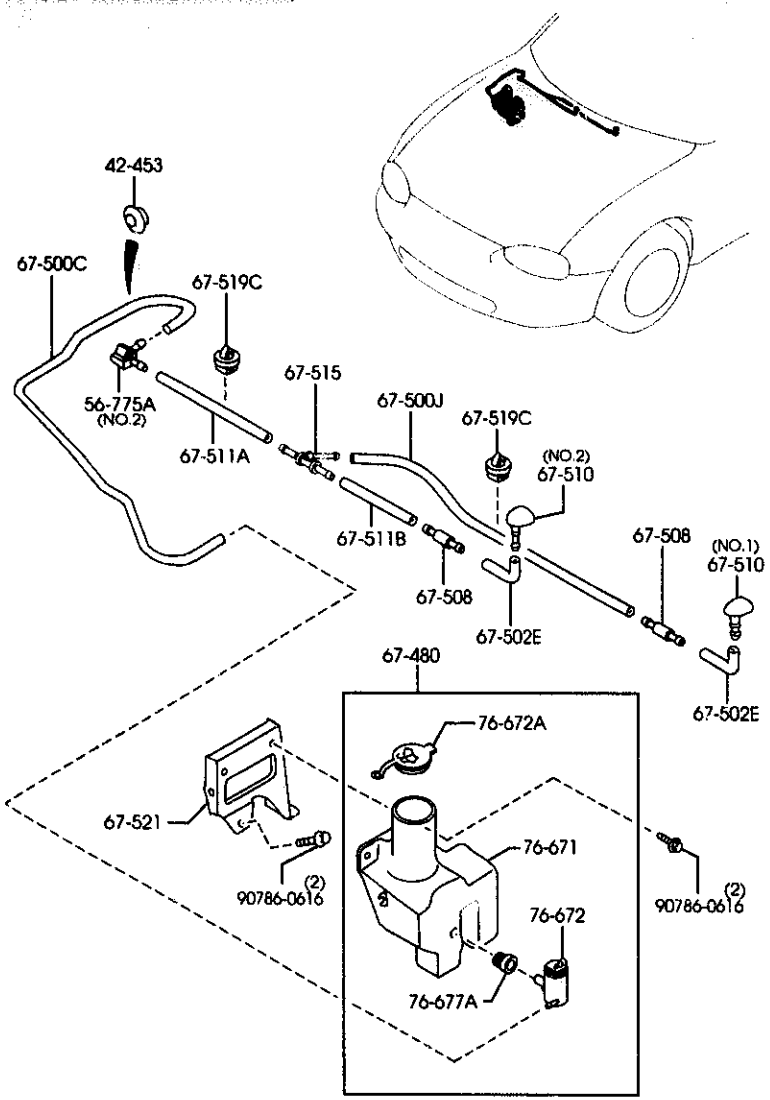

AUNA07 (1N04591)

(NON USA)

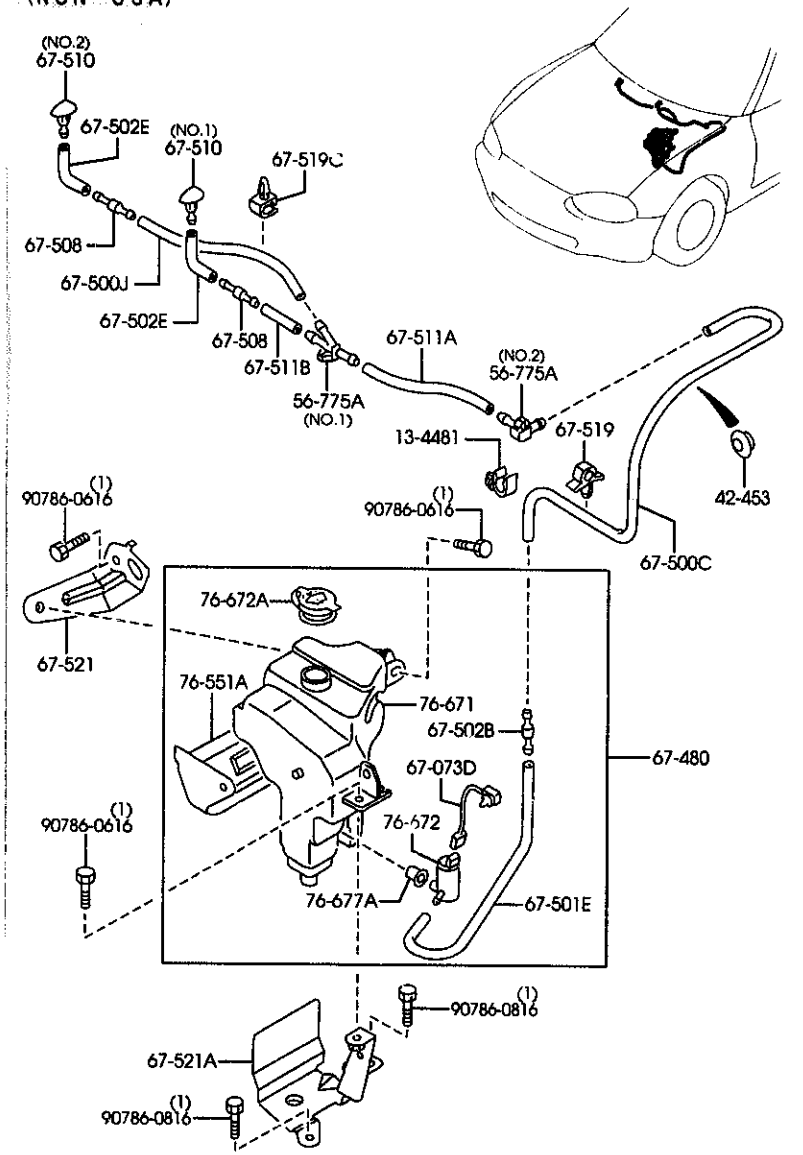

AUNA07 (1N04592)

(1.5L WASHER TANK)

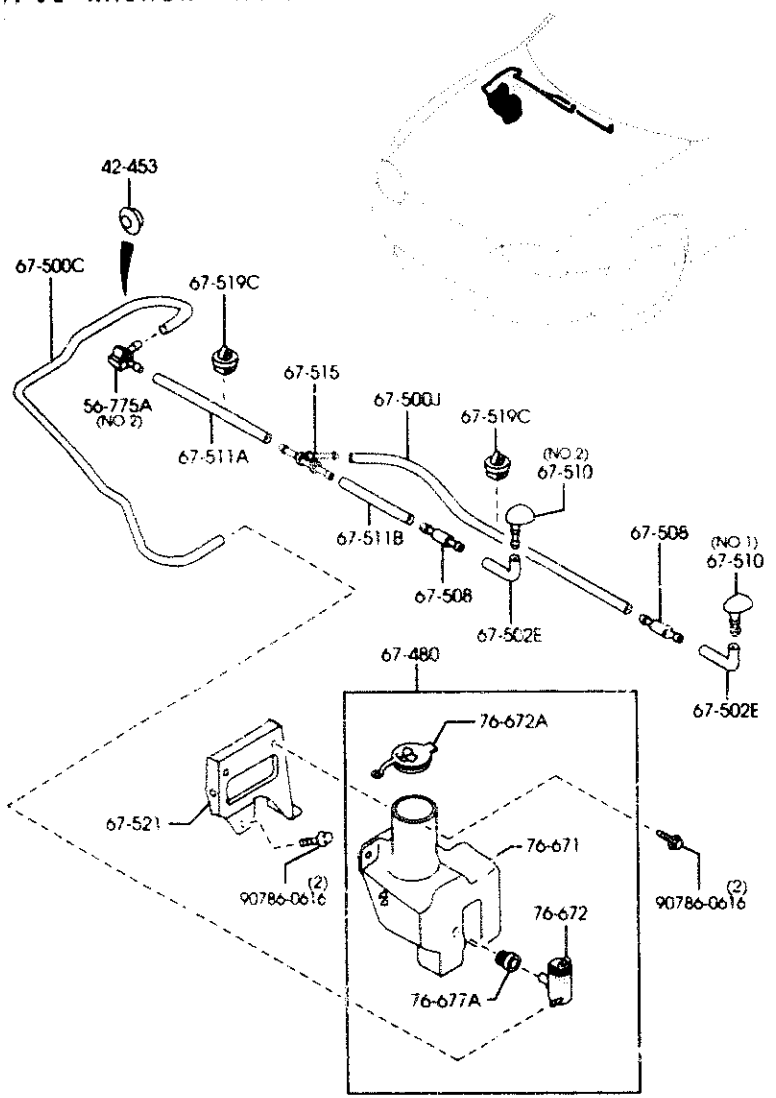

6720A -1 WINDSHIELD WASHER (W/O ANTILOCK BRAKE)

PART NO.	QTY	MODEL/RESTRICTION	MODEL/RESTRICTION	MODEL/RESTRICTION	FROM-TO
13-4481		CLIP			
N326-20-811	1	NON USA,			
42-453		PROTECTOR,CABLE			
B048-42-453	1				
56-775A		CLIP,WASHER HOSE			
D061-67-505	1	NON USA, (ILLUST. NO.1)			
M020-67-505	1	(ILLUST. NO.2)			
67-073D		CORD			
NC14-67-5D9A	1	NON USA,			
67-480		TANK,WASHER-FRONT			
NA01-67-480A	1	(1.5L WASHER TANK)			
NC15-67-480E	1	NON USA,			
67-500C		PIPE,SCREEN WASHER			
NC11-67-501C	1	NON USA,			
NC10-67-501 AM(NC10-67-501A)	1	(1.5L WASHER TANK)			-8B01
NC10-67-501A AM(NC10-67-501B)	1	(1.5L WASHER TANK)			8B01-9501
NC10-67-501B	1	(1.5L WASHER TANK)			9501-
67-500J		PIPE,SCREEN WASHER			
NC16-67-501	1				
67-501E		PIPE,NOZZLE-FRONT WASHER			
NC17-67-501B	1	NON USA,			
67-502B		JOINT,HOSE			
D805-67-502	1	NON USA,			
67-502E		JOINT,ELBOW-W.TANK			
S084-67-502	2				
67-508		VALVE,CHECK			
FA54-67-508	2				

8B01 NB353#-123277
9501 NB353#-137711

(NON USA)

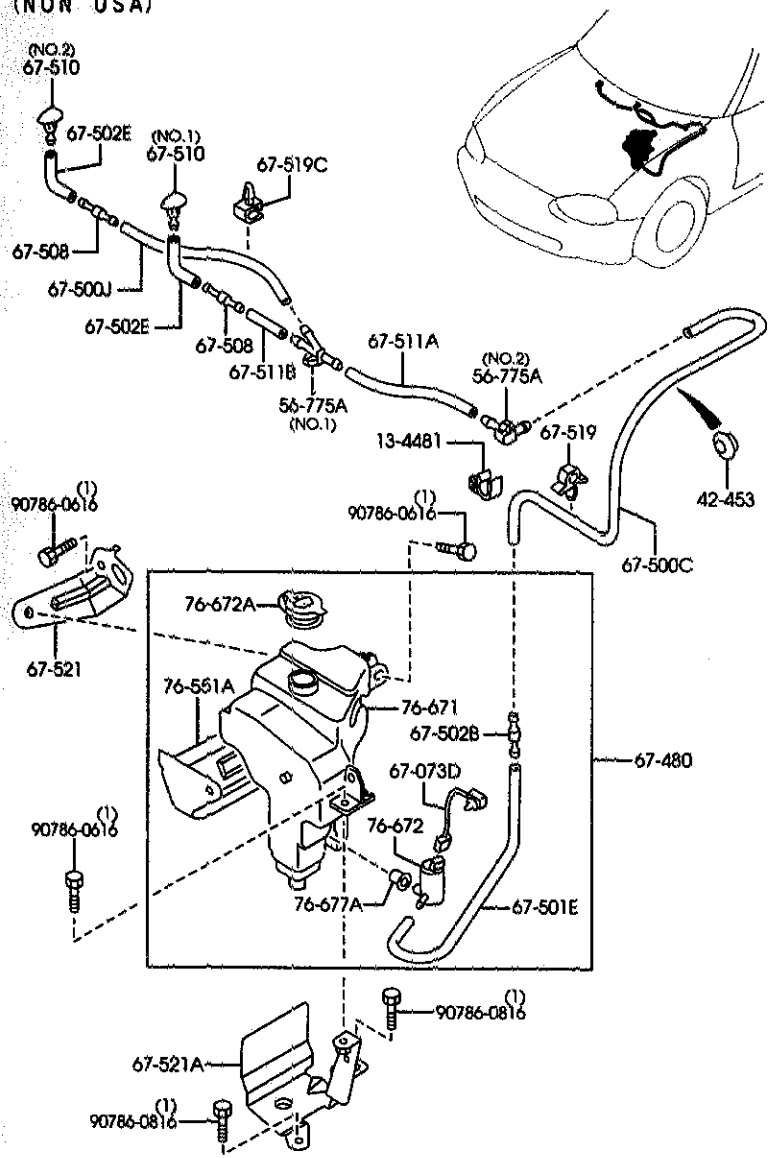

AUNA07 (1N04592)

6720A -2 WINDSHIELD WASHER
(W/O ANTILOCK BRAKE)

PART NO.	QTY	MODEL/RESTRICTION	MODEL/RESTRICTION	MODEL/RESTRICTION	FROM-TO
67-510		NOZZLE,WASHER-F.WIND			
NC10-67-510	1	(ILLUST. NO.1)			
NC11-67-510	1	(ILLUST. NO.2)			
67-511A		PIPE,SCREEN WASHER			
NC14-67-501	1				
67-511B		PIPE,SCREEN WASHER			
NC15-67-501	1				
67-515		CLIP			
GA2A-67-505	1	(1.5L WASHER TANK)			
67-519		CLIP,PIPE			
G030-67-519	1	NON USA,			
67-519C		CLIP			
FB02-67-519	1	NON USA,			
FB02-67-519	2	(1.5L WASHER TANK)			
67-521		BRACKET,WASHER TANK			
NC10-67-520A	1	(1.5L WASHER TANK)			
NC17-67-520B	1	NON USA,			
67-521A		BRACKET			
NC18-67-520A	1	NON USA,			
76-551A		INSULATOR			
NC15-67-454A	1	NON USA,			
76-671		TANK,WASHER			
NA01-67-481	1	(1.5L WASHER TANK)			
NC15-67-481B	1	NON USA,			
76-672		PUMP,WASHER			
S084-76-672	1				
76-672A		CAP,TANK			
UB39-51-815	1	(1.5L WASHER TANK)			
GJ21-67-483	1	NON USA,			

CAT. AUNA07-05 2000-01

(1.5L WASHER TANK)

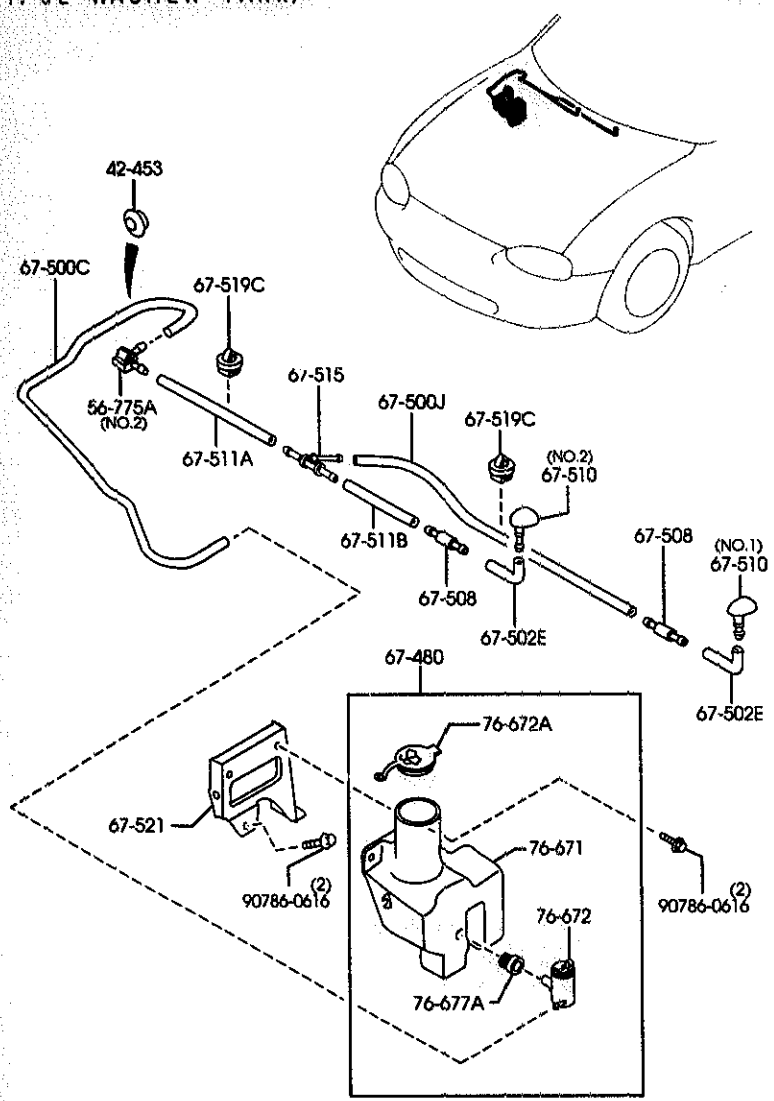

AUNA07 (1N04591)

6720A -3 * WINDSHIELD WASHER (W/O ANTILOCK BRAKE)

PART NO.	QTY	MODEL/RESTRICTION	MODEL/RESTRICTION	MODEL/RESTRICTION	FROM-TO
76-677A		GROMMET,WASHER TANK			
S084-76-677	1				

CAT. AUNA07-05 2000-01

(1.5L WASHER TANK)

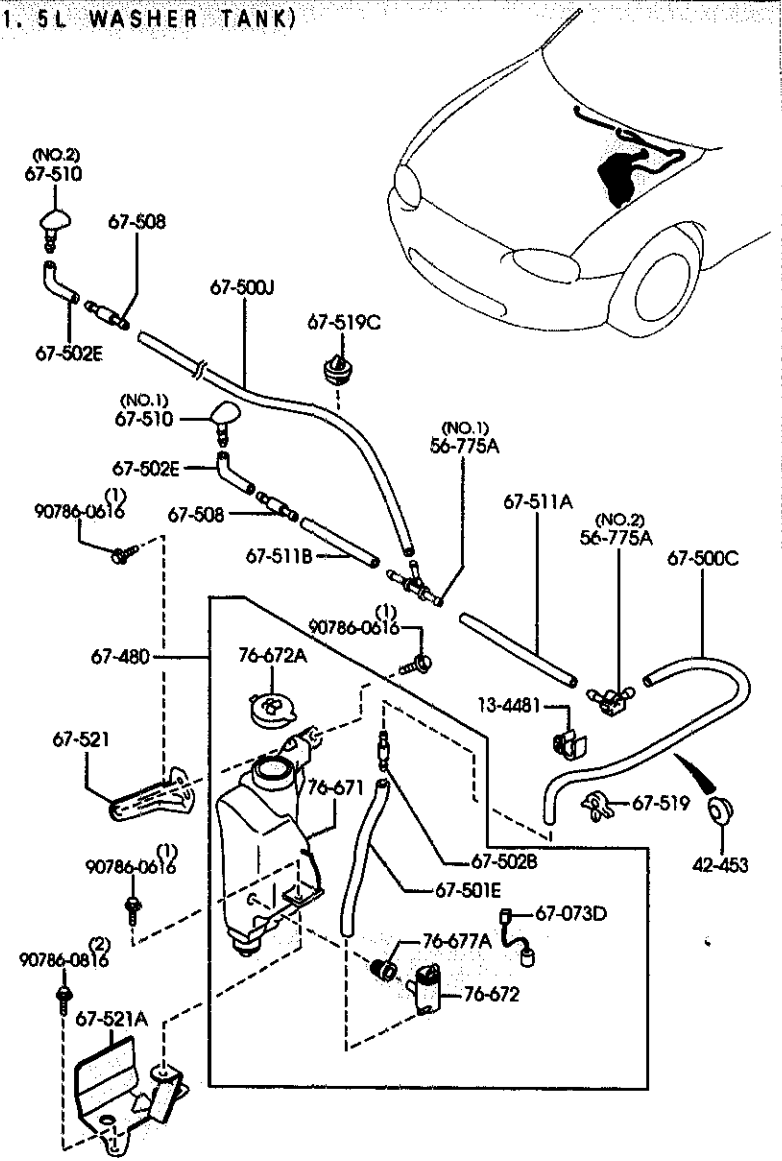

AUNA07 (1N04601)

(NON USA)

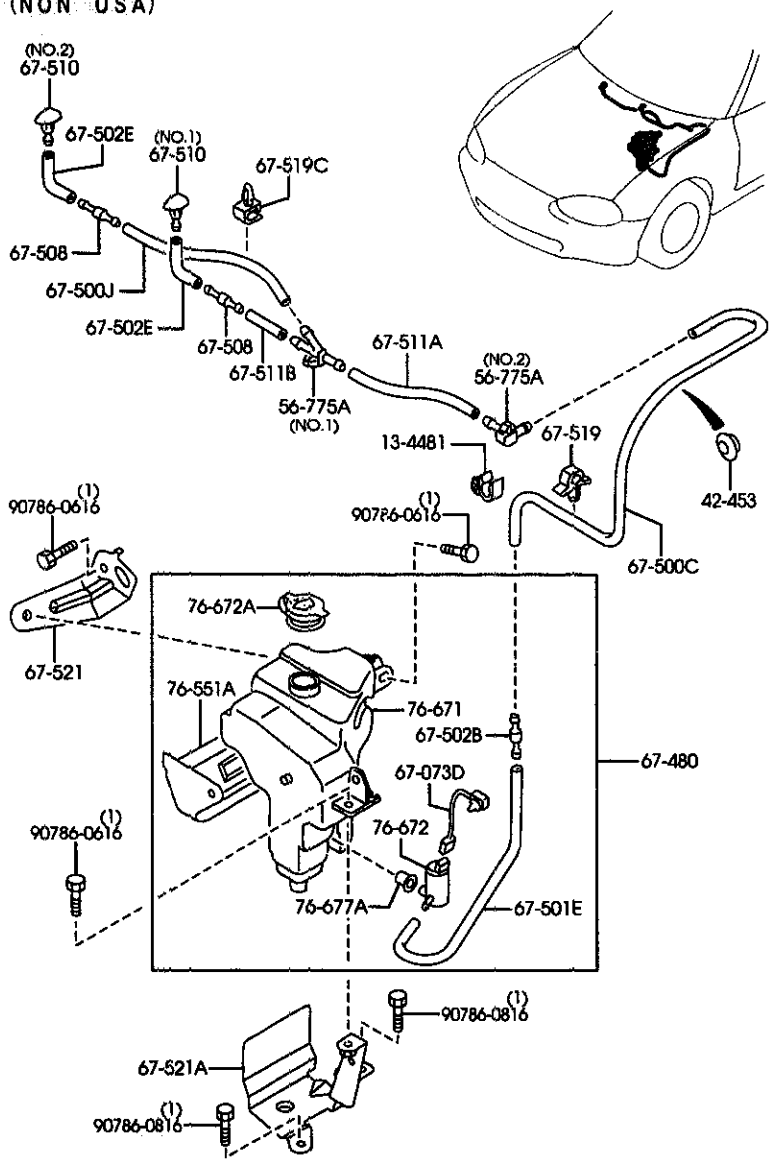

AUNA07 (1N04602)

(1.5L WASHER TANK)

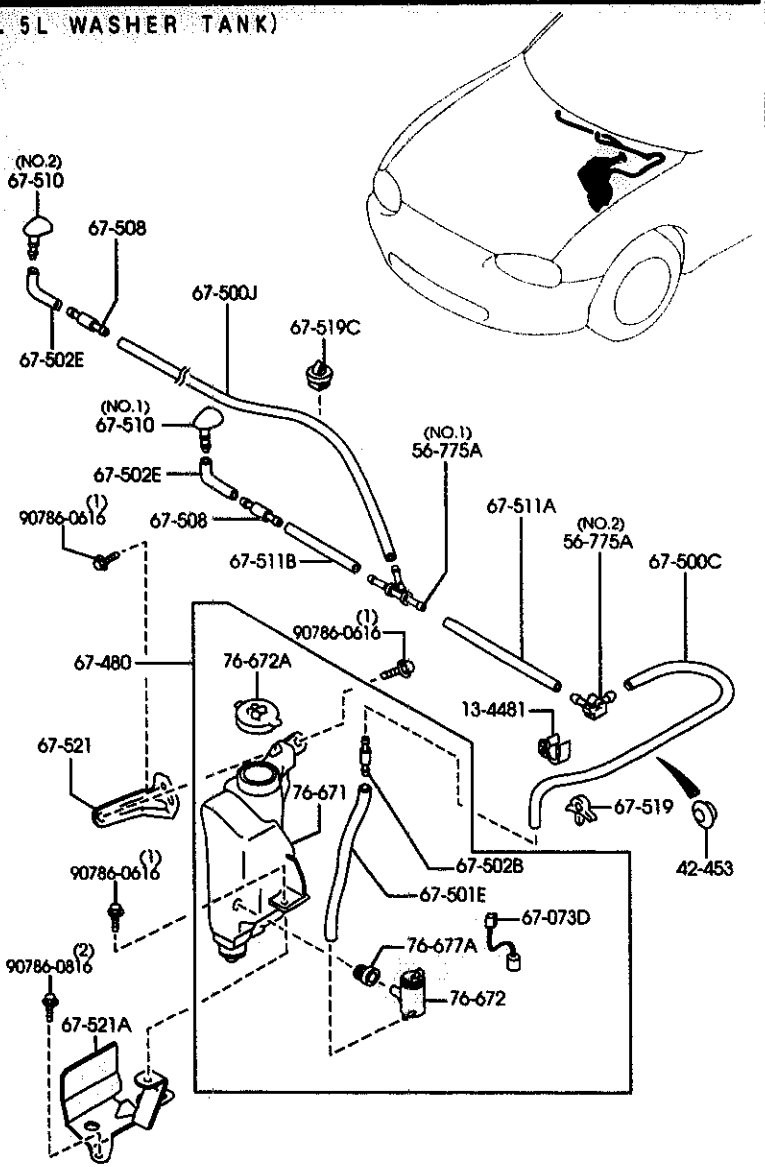

AUNA07 (1N04601)

67208 -1 WINDSHIELD WASHER (W/ANTILOCK BRAKE)

PART NO.	QTY	MODEL/RESTRICTION	MODEL/RESTRICTION	MODEL/RESTRICTION	FROM-TO
13-4481		CLIP			
N326-20-811	1	(W/AUTO CRUISE.CONT.)			
42-453		PROTECTOR,CABLE			
B048-42-453	1				
56-775A		CLIP,WASHER HOSE			
D061-67-505	1	(ILLUST. NO.1)			
MD20-67-505	1	(ILLUST. NO.2)			
67-073D		CORD			
NC14-67-539A	1				
67-480		TANK,WASHER-FRONT			
NC14-67-480D	1	(1.5L WASHER TANK)			
NC15-67-480E	1	NON USA,			
67-500C		PIPE,SCREEN WASHER			
NC11-67-501C	1				
67-500J		PIPE,SCREEN WASHER			
NC16-67-501	1				
67-501E		PIPE,NOZZLE-FRONT WASHER			
NC17-67-501B	1				
67-502B		JOINT,HOSE			
D805-67-502	1				
67-502E		JOINT,ELBOW-W.TANK			
S084-67-502	2				
67-508		VALVE,CHECK			
FA54-67-508	2				
67-510		NOZZLE,WASHER-F.WIND			
NC10-67-510	1	(ILLUST. NO.1)			
NC11-67-510	1	(ILLUST. NO.2)			

CAT. AUNA07-05 2000-01

(NON USA)

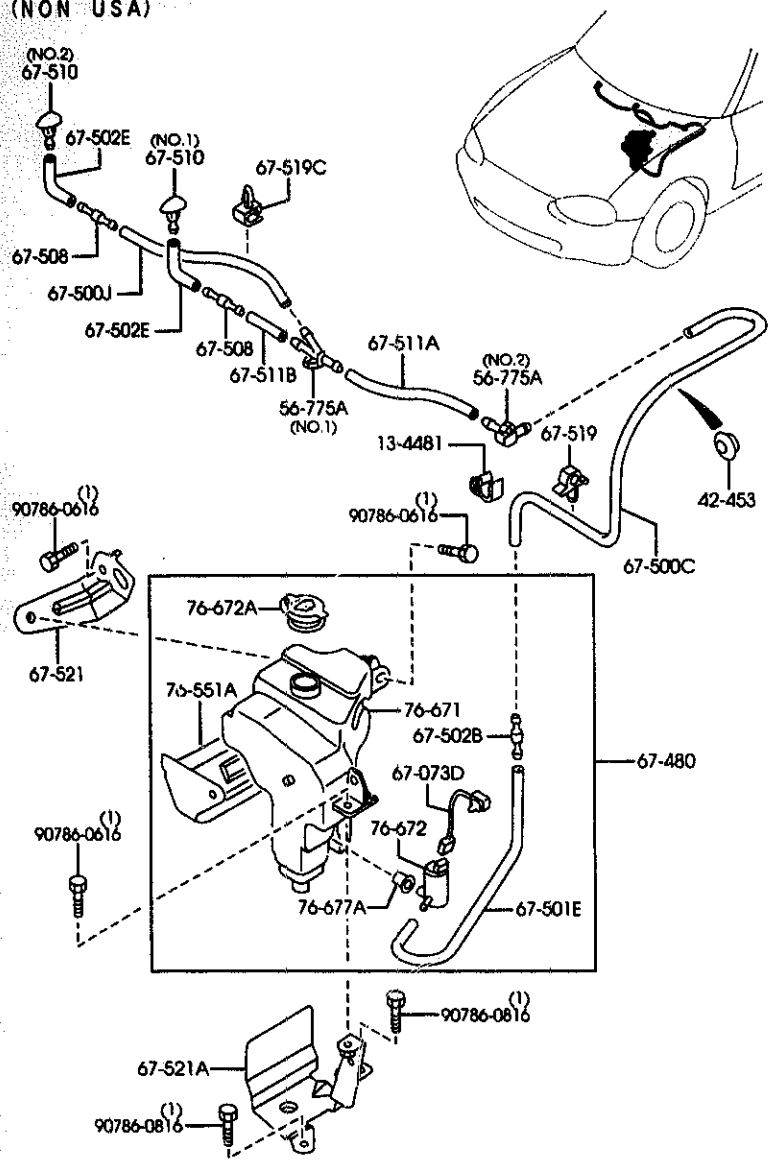

6720B -2 * WINDSHIELD WASHER (W/ANTILOCK BRAKE)

PART NO.	QTY	MODEL/RESTRICTION	MODEL/RESTRICTION	MODEL/RESTRICTION	FROM-TO
67-511A		PIPE,SCREEN WASHER			
NC14-67-501	1				
67-511B		PIPE,SCREEN WASHER			
NC15-67-501	1				
67-519		CLIP,PIPE			
G030-67-519	1	(W/O AUTO CRUISE.CONT.)			
67-519C		CLIP			
FB02-67-519	1				
67-521		BRACKET,WASHER TANK			
NC17-67-520B	1				
67-521A		BRACKET			
NC18-67-520A	1				
76-551A		INSULATOR			
NC15-67-454A	1	NON USA,			
76-671		TANK,WASHER			
NC14-67-481A	1	(1.5L WASHER TANK)			
NC15-67-481B	1	NON USA,			
76-672		PUMP,WASHER			
S084-76-672	1				
76-672A		CAP,TANK			
GJ21-67-483	1				
76-677A		GROMMET,WASHER TANK			
S084-76-677	1				

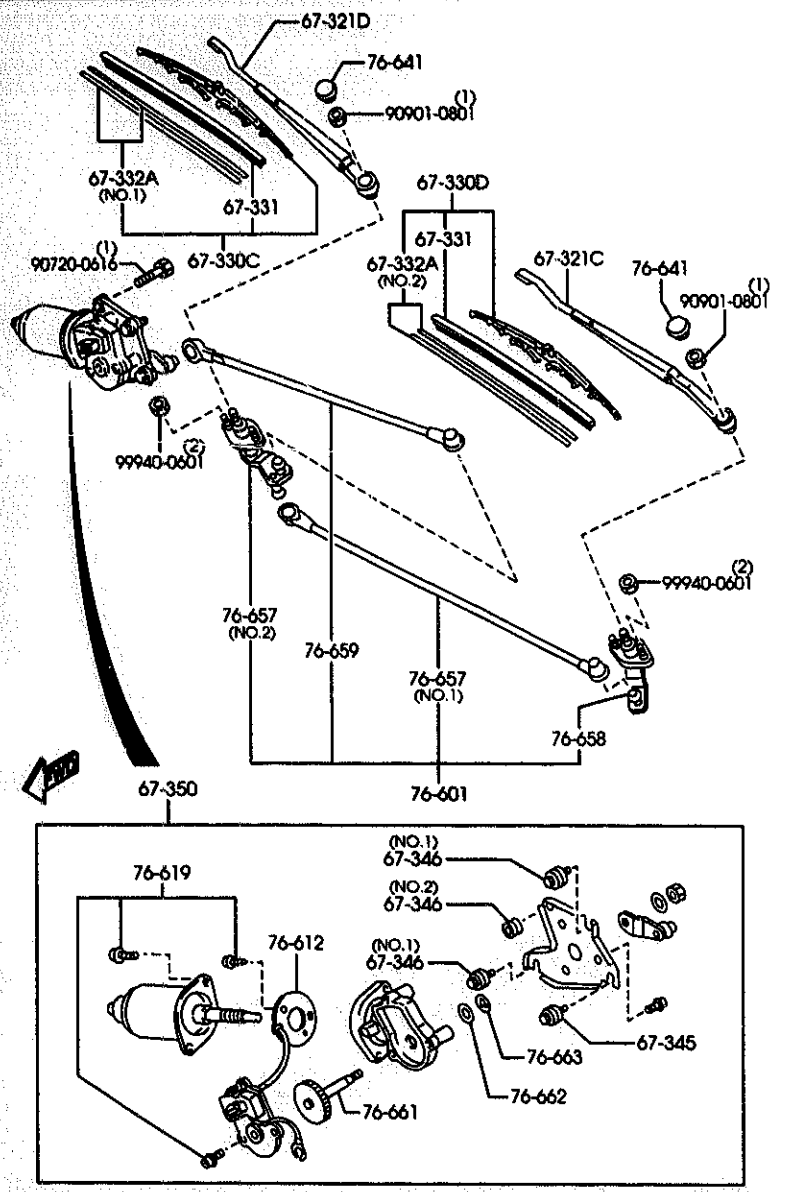

AUNA07 (1N03110)

PART NO.	QTY	MODEL/RESTRICTION	MODEL/RESTRICTION	MODEL/RESTRICTION	FROM-TO
67-321C		ARM,WIPER-DRIVER SIDE			
NC10-67-321	1				
67-321D		ARM,WIPER-PASS. SIDE			
NC11-67-321	1				
67-330C		BLADE(R),WIPER-FRONT			
NC11-67-330	1				
67-330D		BLADE(L),WIPER-FRONT			
NC10-67-330	1				
67-331		RUBBER,BLADE-FRONT			
B16B-67-333	2				
67-332A		PLATE,BACKING			
NA10-67-332	1	(ILLUST. NO.1)			
NC33-67-332	1	(ILLUST. NO.2)			
67-345		SCREW,EARTH SET-MOTOR BRK			
NA01-67-345	1				
67-346		SCREW,BRACKET-WIPER MOTOR			
NA01-67-346	2	(ILLUST. NO.1)			
NA23-67-346	1	(ILLUST. NO.2)			
67-350		MOTOR,WIPER			
NA04-67-340D	1	NON USA,			
NA01-67-340D	1	(EXC. COLD SPEC)			-7C01
NA01-67-340E	1	(EXC. COLD SPEC)			7C01-
76-601		LINK,WIPER			
NC10-67-360A	1				-7C01
NC10-67-360B	1				7C01-
76-612		PLATE,HOLDER-BRUSH			
NA23-67-351	1	(EXC. COLD SPEC)			
NA26-67-351	1	NON USA,			

7C01 NB353#-100063

CAT. AUNA07-05 2000-01

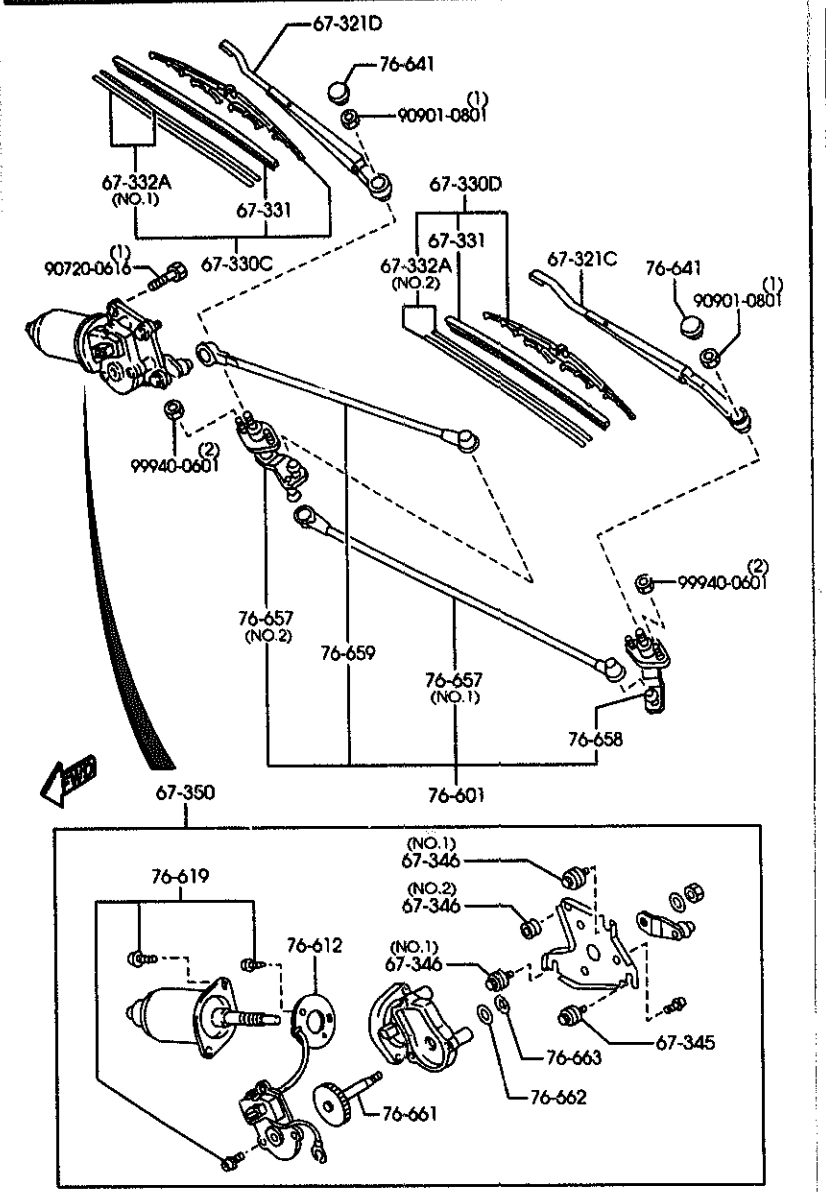

AUNA07 (1N03110)

6730A -2 * WINDSHIELD WIPERS

PART NO.	QTY	MODEL/RESTRICTION	MODEL/RESTRICTION	MODEL/RESTRICTION	FROM-TO
76-619		PARTS SET			
H043-76-619A	1				
76-641		COVER,WIPER ARM-FRONT			
LA01-67-395C	2				
76-657		SHAFT,DRIVE NO.1			
NC10-67-362	1	(ILLUST. NO.1)			
NC10-67-363A	1	(ILLUST. NO.2)			
76-658		SHAFT,DRIVE NO.2			
NC10-67-364A	1				
76-659		ARM NO.1,LINK			
NC10-67-361	1				-7C01
NC10-67-361A	1				7C01-
76-661		GEAR,SHAFT			
NA23-67-354	1				
76-662		WASHER			
B094-76-662	1				
76-663		WASHER,TOOTHED			
B094-76-663	1				

7C01 NB353*-100063

CAT. AUNA07-05 2000-01

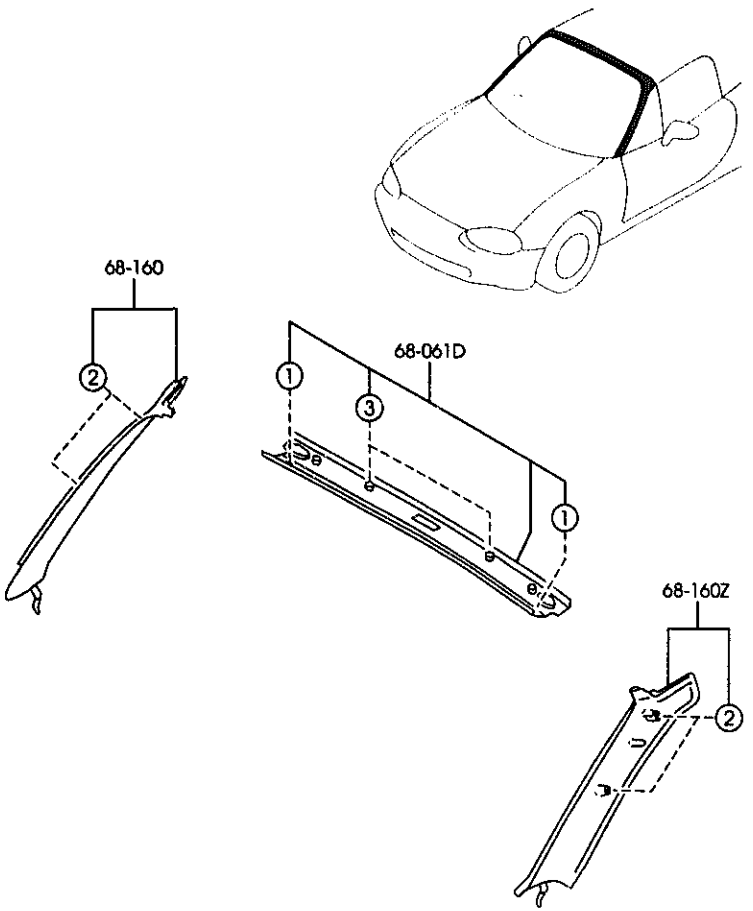

①	②	③
68-AD2	68-865S	68-865U

6820A -1 * FRONT HEADER TRIM & PILLAR TRIMS

PART NO.	QTY	MODEL/RESTRICTION	MODEL/RESTRICTION	MODEL/RESTRICTION	FROM-TO
68-AD2		CLIP			
B455-68-AD2	2				
68-061D		TRIM,FRONT HEADER			
NA01-68-090E	1				
00	INT-	NB0 NB1 NB2 NB6 NB7 BLACK			
68-160		TRIM(R),'A'PILLAR			
NC10-68-160A	1				
02	INT-	NB0 NB1 NB2 NB6 NB7 BLACK			
68-160Z		TRIM(L),'A'PILLAR			
NC10-68-170A	1				
02	INT-	NB0 NB1 NB2 NB6 NB7 BLACK			
68-865S		CLIP,TRIM			
GJ12-68-865	4				
68-865U		CLIP,TRIM			
GJ21-68-865	2				

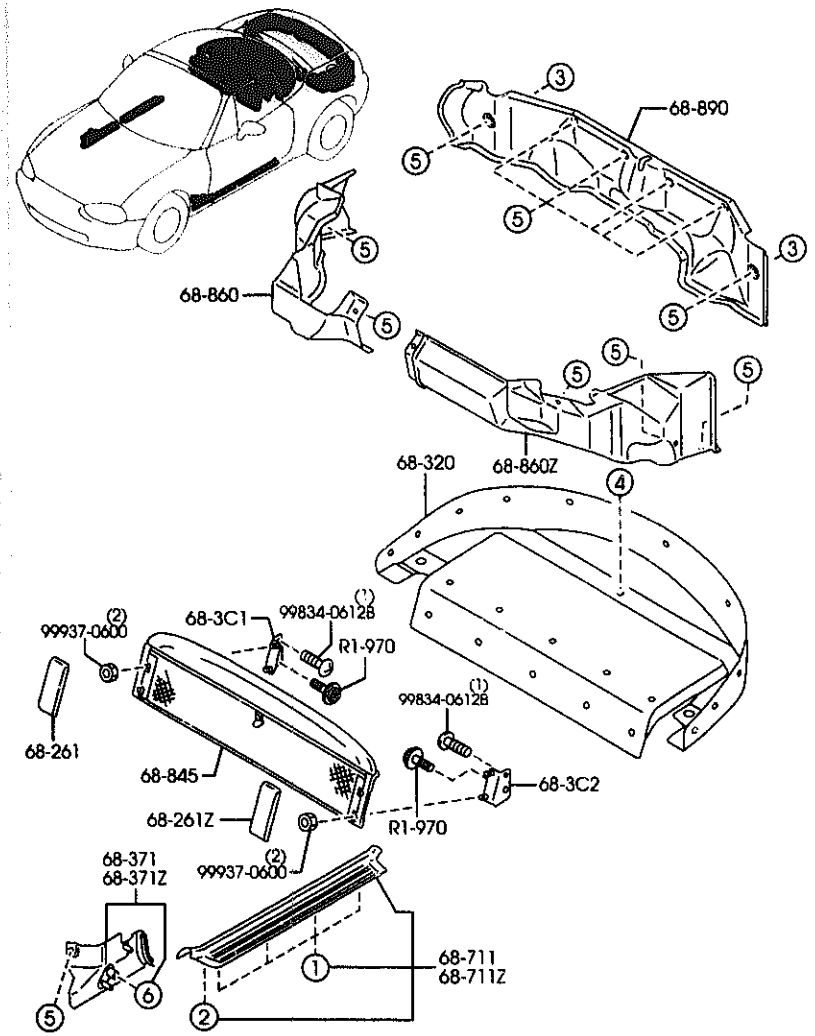

①	②	③	④	⑤	⑥
68-AD3	68-712D	68-86Y	68-865	68-865Q	68-865S

AUNA07 (1N06510)

PART NO.	QTY	MODEL/RESTRICTION	MODEL/RESTRICTION	MODEL/RESTRICTION	FROM-TO
R1-970		HOOK,REAR DECK			
NC10-R1-970B	2				
68-AD3		CLIP,SCUFF PLATE			
G25D-68-AD3	8				
68-261		COVER(R),BELT			
N053-68-3R1A	1	(W/AERO BOARD)			-7C03
02	INT-	NB0 BLACK			
21	INT-	NB1 TAN			
N053-68-3R1B	1	(W/AERO BOARD)			7C03-8C03
02	INT-	NB0 BLACK			
21	INT-	NB1 TAN			
N053-68-3R1C	1	(W/AERO BOARD)			8C03-
02	INT-	NB0 NB2 BLACK			
21	INT-	NB1 TAN			
* 80	INT-	NB6 NB7 BEIGE			
68-261Z		COVER(L),BELT			
N054-68-3R1A	1	(W/AERO BOARD)			-7C03
02	INT-	NB0 BLACK			
21	INT-	NB1 TAN			
N054-68-3R1B	1	(W/AERO BOARD)			7C03-8C03
02	INT-	NB0 BLACK			
21	INT-	NB1 TAN			
N054-68-3R1C	1	(W/AERO BOARD)			8C03-
02	INT-	NB0 NB2 BLACK			
21	INT-	NB1 TAN			
* 80	INT-	NB6 NB7 BEIGE			
68-3C1		BRACKET(R),PKG TRIM			
N053-68-3CX	1	(W/AERO BOARD)			
02	INT-	NB0 NB2 BLACK			
21	INT-	NB1 TAN			
* 80	INT-	NB6 NB7 BEIGE			

7C03 NB353*-100063
8C03 NB353*-125134

CAT. AUNA07-05 2000-01

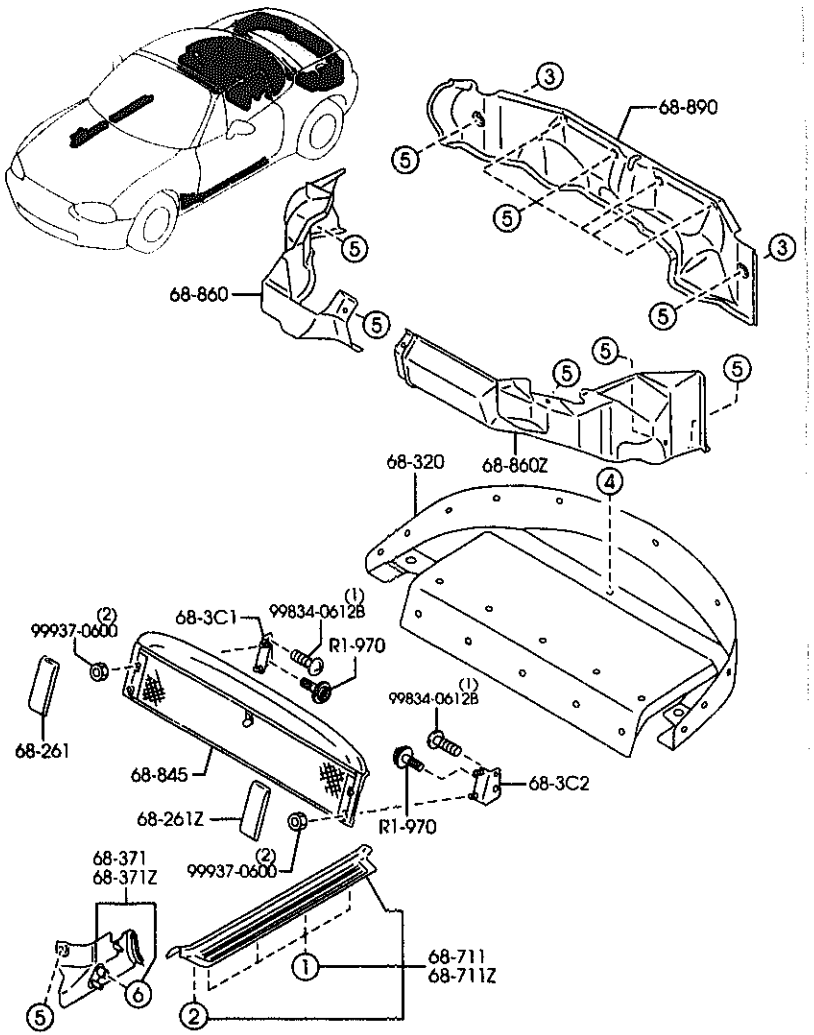

①	②	③	④	⑤	⑥
68-AD3	68-712D	68-86Y	68-865	68-865Q	68-865S

AUNA07 (1N06510)

PART NO.	QTY	MODEL/RESTRICTION	MODEL/RESTRICTION	MODEL/RESTRICTION	FROM-TO
+---------+					
| 68-3C2 |		BRACKET(L),PKG TRIM			
+---------+					
N053-68-3CY	1	(W/AERO BOARD)			
02	INT-	NB0 NB2 BLACK			
21	INT-	NB1 TAN			
* 80	INT-	NB6 NB7 BEIGE			
+---------+					
| 68-320 |		TRAY,REAR PACKAGE			
+---------+					
NC10-68-3F1D	1	((MT)>(5-SP)) (AT)			
02	INT-	NB0 BLACK			
21	INT-	NB1 TAN			
55	INT-	NB2 BLUE			
N055-68-3F1	1	((MT)>(6-SP))			
02	INT-	NB0 BLACK			
21	INT-	NB1 BROWN			
55	INT-	NB2 BLUE			
* 80	INT-	NB6 NB7 BEIGE			
+---------+					
| 68-371 |		TRIM(R),FRONT SIDE			
+---------+					
NC10-68-370A	1				
02	INT-	NB0 NB2 BLACK			
21	INT-	NB1 TAN			
* 80	INT-	NB6 NB7 BEIGE			
+---------+					
| 68-371Z |		TRIM(L),FRONT SIDE			
+---------+					
NC10-68-390A	1				
02	INT-	NB0 NB2 BLACK			
21	INT-	NB1 TAN			
* 80	INT-	NB6 NB7 BEIGE			
+---------+					
| 68-711 |		PLATE(R),FRONT SCUFF			
+---------+					
*NC65-68-710B	1	((MT)>(6-SP)>('80 MODEL))			
* 02	INT-	NB0 NB2 BLACK			
* 21	INT-	NB1 TAN			
* 80	INT-	NB6 NB7 BEIGE			
NC10-68-710B	1	((MT)>(5-SP)) (AT)			-8903

8903 NB353*-122341

CAT. AUNA07-05 2000-01

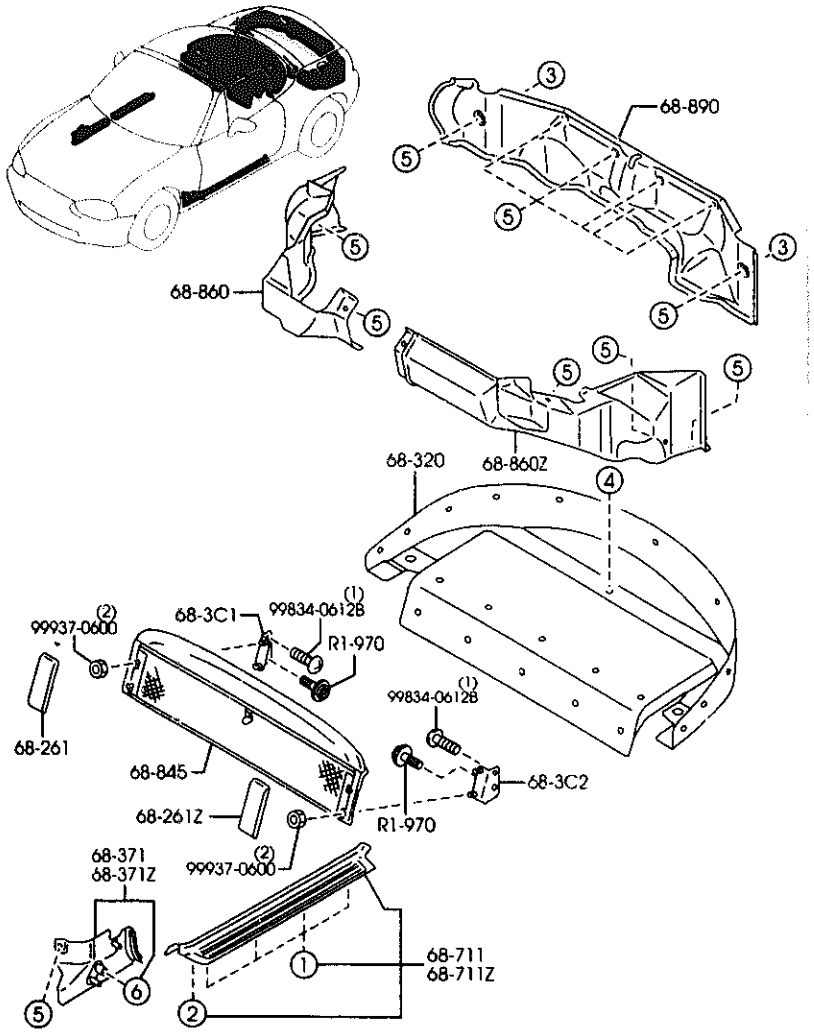

①	②	③	④	⑤	⑥
68-AD3	68-712D	68-86Y	68-865	68-865Q	68-865S

AUNA07 (1N06510)

PART NO.	QTY	MODEL/RESTRICTION	MODEL/RESTRICTION	MODEL/RESTRICTION	FROM-TO
CONT'D					
02	INT-	NB0 NB2 BLACK			
21	INT-	NB1 TAN			
NC65-68-710	1	((MT)>(6-SP)>('99 MODEL))			-9601
02	INT-	NB0 NB2 BLACK			
21	INT-	NB1 TAN			
NC10-68-710C	1	((MT)>(5-SP)) (AT)			8903-
02	INT-	NB0 NB2 BLACK			
21	INT-	NB1 TAN			
* 80	INT-	NB6 NB7 BEIGE			
+----------+					
| 68-711Z |		PLATE(L),FRONT SCUFF			
+----------+					
*NC65-68-720B	1	((MT)>(6-SP)>('00 MODEL))			
* 02	INT-	NB0 NB2 BLACK			
* 21	INT-	NB1 TAN			
* 80	INT-	NB6 NB7 BEIGE			
NC10-68-720B	1	((MT)>(5-SP)) (AT)			-8903
02	INT-	NB0 NB2 BLACK			
21	INT-	NB1 TAN			
NC65-68-720	1	((MT)>(6-SP)>('99 MODEL))			-9601
02	INT-	NB0 NB2 BLACK			
21	INT-	NB1 TAN			
NC10-68-720C	1	((MT)>(5-SP)) (AT)			8903-
02	INT-	NB0 NB2 BLACK			
21	INT-	NB1 TAN			
* 80	INT-	NB6 NB7 BEIGE			
+----------+					
| 68-712D |		CLIP			
+----------+					
B456-68-712	2				
+----------+					
| 68-845 |		BOARD,AIP			
+----------+					
N053-68-3X0B	1	(W/AERO BOARD)			-7C03
02	INT-	NB0 BLACK			

7C03 NB353*-100063
8903 NB353*-122341
9601 NB353*-138251

CAT. AUNA07-05 2000-01

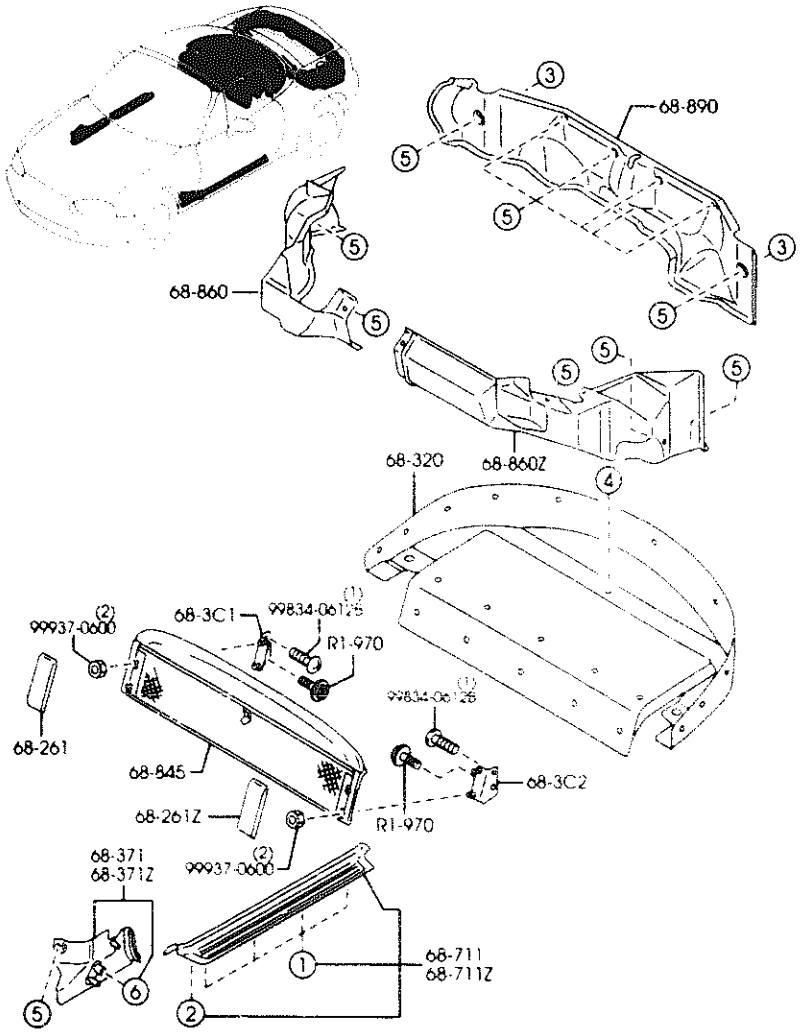

①	②	③	④	⑤	⑥
68-AD3	68-712D	68-86Y	68-865	68-865Q	68-865S

ALINA07 (1N06510)

PART NO.	QTY	MODEL/RESTRICTION	MODEL/RESTRICTION	MODEL/RESTRICTION	FROM-TO
CONT'D					
21	INT-	NB1 TAN			
N053-68-3X0C	1	(W/AERO BOARD)			7C03-8C03
02	INT-	NB0 NB2 BLACK			
21	INT-	NB1 TAN			
N053-68-3X0E	1	(W/AERO BOARD)			8C03-
02	INT-	NB0 NB2 BLACK			
21	INT-	NB1 TAN			
* 80	INT-	NB6 NB7 BEIGE			
| 68-86Y |		CAP,SEAL-TRUNK END TRIM			
KA01-68-86YA	2				
| 68-860 |		TRIM(R),TRUNK SIDE			
NC10-68-851	1				
04	INT-	NB0 NB1 NB2 NB6 NB7 BLACK			
| 68-860Z |		TRIM(L),TRUNK SIDE			
NC10-68-871	1				
04	INT-	NB0 NB1 NB2 NB6 NB7 BLACK			
| 68-865 |		FASTENER			
G032-68-865A	18				
00	INT-	NB0 BLACK			
39	INT-	NB1 SADDLE			
58	INT-	NB2 LAPIS BLUE			
* 80	INT-	NB6 NB7 BEIGE			
| 68-865Q |		FASTENER			
GJ21-68-885B	14				
02	INT-	NB0 NB2 BLACK			
21	INT-	NB1 TAN			
* 80	INT-	NB6 NB7 BEIGE			
| 68-865S |		CLIP,TRIM			
GJ12-68-865	2				

7C03 NB353*-100063
8C03 NB353*-125134

CAT. AUNA07-05 2000-01

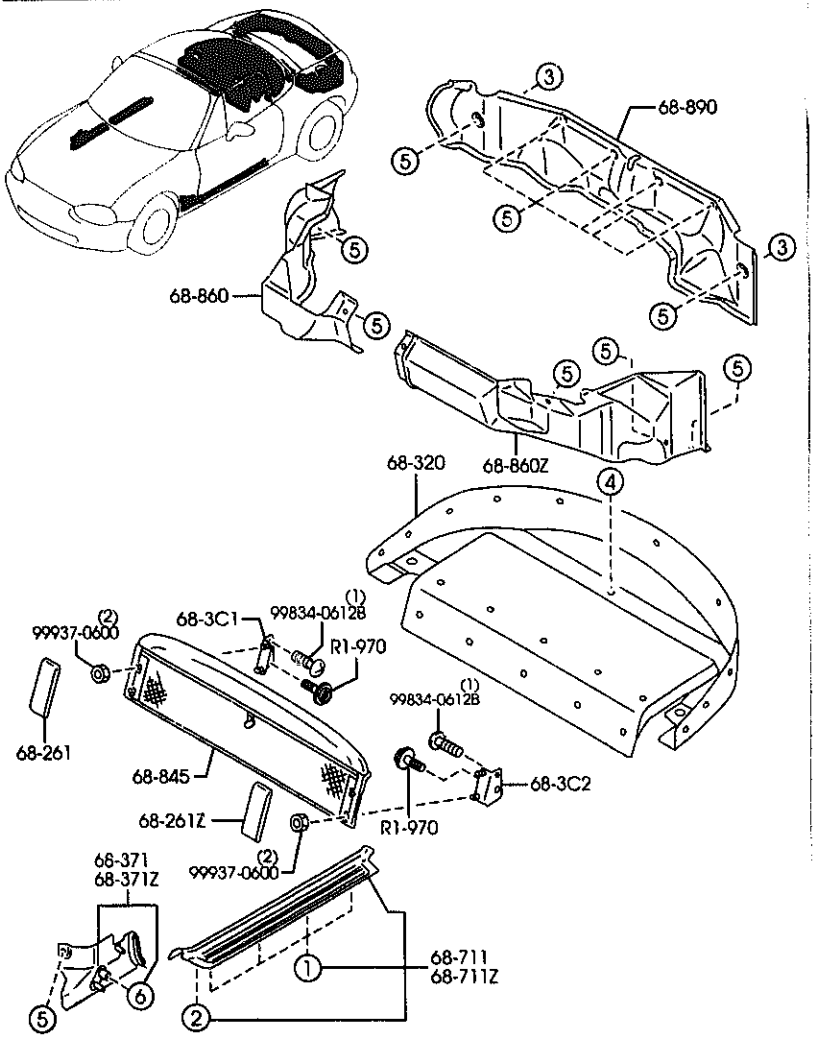

①	②	③	④	⑤	⑥
68-AD3	68-712D	68-86Y	68-865	68-865Q	68-865S

AUNA07 (1N06510)

PART NO.	QTY	MODEL/RESTRICTION	MODEL/RESTRICTION	MODEL/RESTRICTION	FROM-TO
68-890		TRIM,TRUNK END			
NC10-68-891A	1				-0201
04 INT-		NB0 NB1 NB2 NB6 NB7 BLACK			
*NC49-68-891	1				0201-
* 04 INT-		NB0 NB1 NB2 NB6 NB7 BLACK			

CAT. AUNA07-05 2000-01

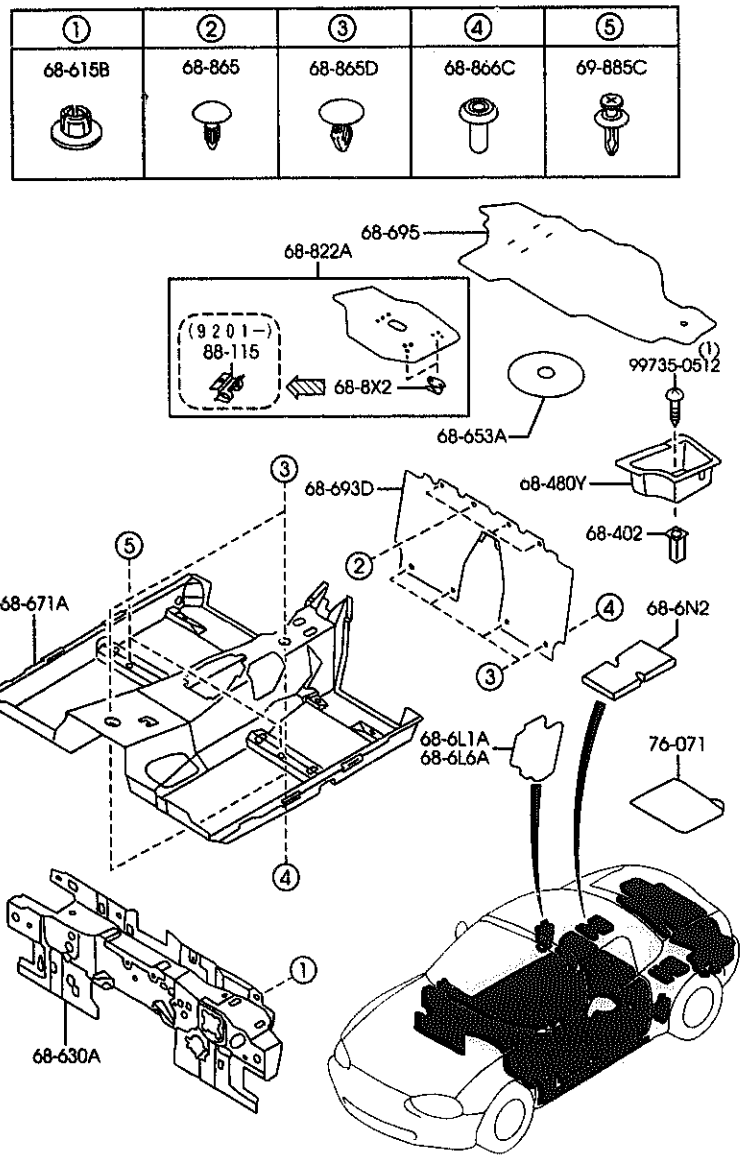

AUNA07 (1N06600)

PART NO.	QTY	MODEL/RESTRICTION	MODEL/RESTRICTION	MODEL/RESTRICTION	FROM-TO
68-402		GROMMET,SCREW			
B110-68-429	1				
68-480Y		POCKET(L)			
NC10-68-8F6A	1				
68-6L1A		COVER(R),HOLE			
NA01-68-6L1	1				
68-6L6A		COVER(L),HOLE			
NA01-68-6L6	1				
68-6N2		INSULATOR,RR FLOOR			
NA01-68-6N2	2				-7C17
AN(NA01-68-6N2A)					
NA01-68-6N2A	2				7C17-
68-615B		NUT,FLANGE-CAP			
B100-68-615	9				
68-630A		INSULATOR,DASHBOARD			
NC10-68-63XC	1				
68-653A		INSULATOR,SPARE TIRE			
B01C-68-8L1	1				
68-671A		MAT,FLOOR			
NC10-68-670C	1				-8201
02	INT-	NB0 BLACK			
21	INT-	NB1 TAN			
NC10-68-670D	1				8201-
02	INT-	NB0 BLACK			
21	INT-	NB1 TAN			
55	INT-	NB2 BLUE			
* 80	INT-	NB6 NB7 BEIGE			
68-693D		MAT,REAR END			
NC10-68-693C	1	((MT)>(5-SP)) (AT)			
02	INT-	NB0 BLACK			

7C17 NB353*-101341
8201 NB353*-106606

CAT. AUNA07-05 2000-01

①	②	③	④	⑤
68-615B	68-865	68-865D	68-866C	69-885C

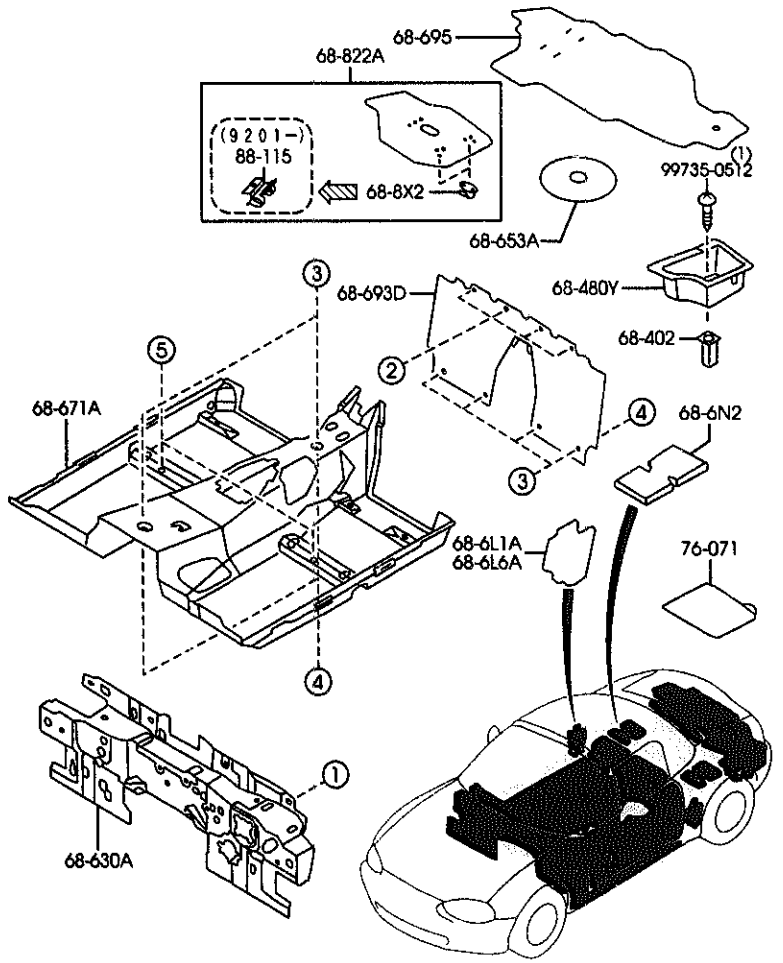

AUNA07 (1N06600)

PART NO.	QTY	MODEL/RESTRICTION	MODEL/RESTRICTION	MODEL/RESTRICTION	FROM-TO
CONT'D					
21	INT-	NB1 TAN			
55	INT-	NB2 BLUE			
N055-68-693	1	((MT)>(6-SP))			
02	INT-	NB0 BLACK			
21	INT-	NB1 BROWN			
55	INT-	NB2 BLUE			
* 80	INT-	NB6 NB7 BEIGE			
+----------+					
| 68-695 |		MAT,TRUNK ROOM			
+----------+					
NC10-68-81XA	1				
04	INT-	NB0 NB1 NB2 NB6 NB7 BLACK			
+----------+					
| 68-8X2 |		CLIP			
+----------+					
M020-68-839	2				-9201
+----------+					
| 68-822A |		BOARD(R),TRUNK			
+----------+					
NC10-68-8E0A	1				-9201
NC10-68-8E0B	1				9201-
+----------+					
| 68-865 |		FASTENER			
+----------+					
G032-68-865A	4				
00	INT-	NB0 BLACK			
39	INT-	NB1 SADDLE			
58	INT-	NB2 LAPIS BLUE			
* 80	INT-	NB6 NB7 BEIGE			
+----------+					
| 68-865D |		FASTENER			
+----------+					
S083-68-865A	6				
00	INT-	NB0 BLACK			
39	INT-	NB1 SADDLE			
58	INT-	NB2 LAPIS BLUE			
* 80	INT-	NB6 NB7 BEIGE			
+----------+					
| 68-866C |		FASTENER,SEAL			
+----------+					
B235-68-865A	6				-9106
AN(B235-68-865B)					
B235-68-865B	6				9106-

9106 NB353*-126971
9201 NB353*-130051

CAT. AUNA07-05 2000-01

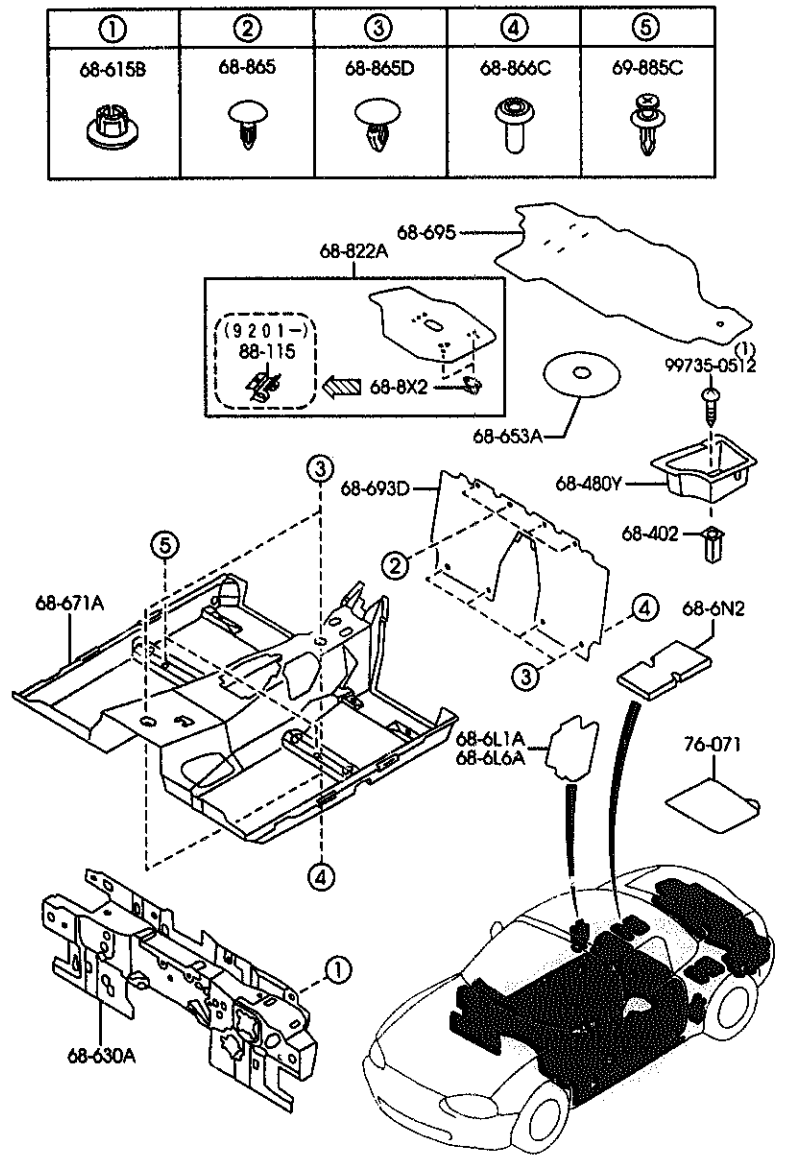

AUNA07 (1N06600)

PART NO.	QTY	MODEL/RESTRICTION	MODEL/RESTRICTION	MODEL/RESTRICTION	FROM-TO
69-885C		FASTENER			
UB54-68-885	2				
00	INT-	NB0 NB1 NB6 NB7 BLACK			
48	INT-	NB2 BLUE			
76-071		SILENCER,FLOOR			
0208-76-071	1	30CMX30CM			
88-115		SPRING,LOCK			
*D201-68-8T3	2				9201-

9201 NB353*-130051

CAT. AUNA07-05 2000-01

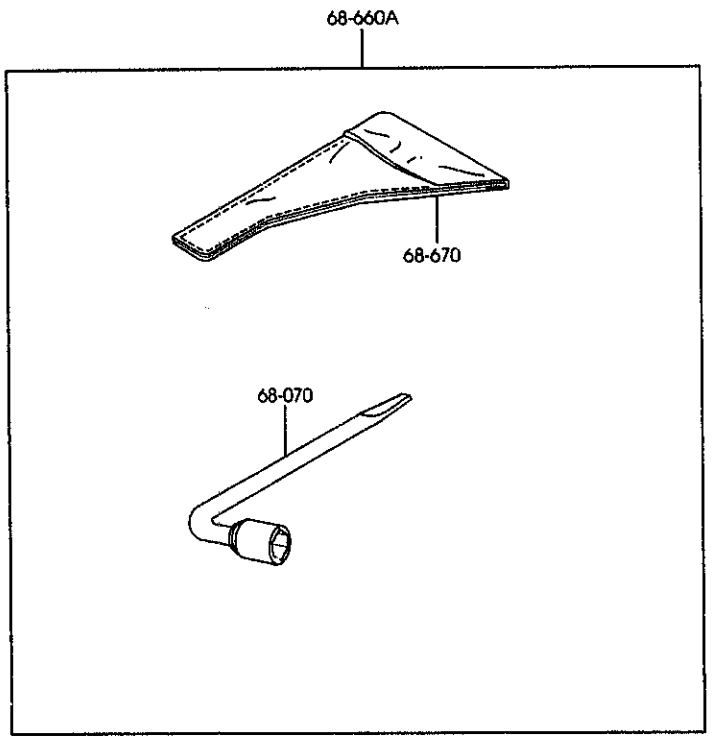

6870A -1 * SERVICE TOOLS

PART NO.	QTY	MODEL/RESTRICTION	MODEL/RESTRICTION	MODEL/RESTRICTION	FROM-TO
68-070		WRENCH,HUB NUT			
NA01-68-070	1				
68-660A		TOOL SET			
NA01-69-650A	1				
68-670		BAG,TOOL			
NA01-69-670A	1				

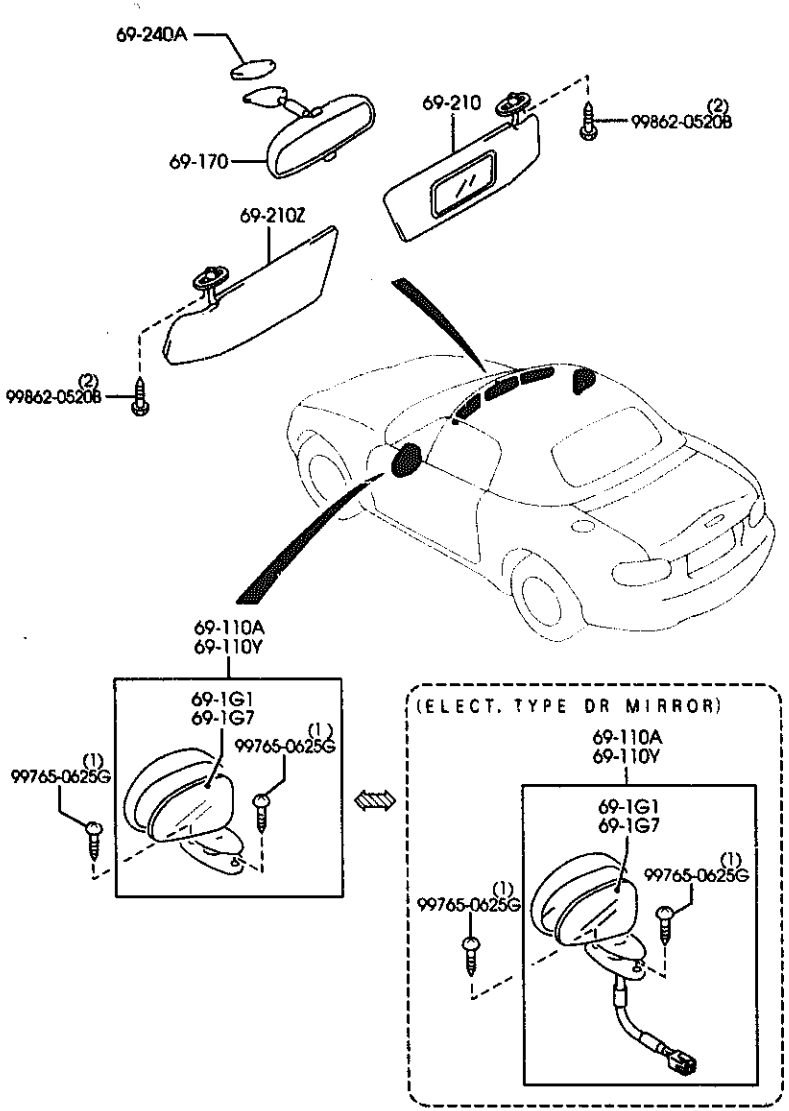

AUNA07 (1N05150)

PART NO.	QTY	MODEL/RESTRICTION	MODEL/RESTRICTION	MODEL/RESTRICTION	FROM-TO
69-101		GLASS & HOLDER(R),MIRROR			
NC10-69-101	1				
69-107		GLASS & HOLDER(L),MIRROR			
NC10-69-107	1				
69-110A		MIRROR(R),DOOR			
NC10-69-120E	1	(MANUAL TYPE DR MIRROR)			
PT	EXT-	PT CHAST WHITE			
PZ	EXT-	PZ BRILLIANT BLACK			
SU	EXT-	SU A3E CLASSIC RED			
* 17	EXT-	23E ART VIN RED 3MC			
40	EXT-	20P INNOCENT BLUE MC			
46	EXT-	18J NEW GREEN M			
56	EXT-	18K NEW ORANGE MC			
57	EXT-	12K TWILIGHT BLUE			
92	EXT-	18G HIGHLIGHT SILVER M			
NC11-69-120E	1	(ELECT. TYPE DR MIRROR)			
PT	EXT-	PT CHAST WHITE			
PZ	EXT-	PZ BRILLIANT BLACK			
SU	EXT-	SU A3E CLASSIC RED			
* 17	EXT-	23E ART VIN RED 3MC			
40	EXT-	20P INNOCENT BLUE MC			
46	EXT-	18J NEW GREEN M			
56	EXT-	18K NEW ORANGE MC			
57	EXT-	12K TWILIGHT BLUE			
92	EXT-	18G HIGHLIGHT SILVER M			
69-110Y		MIRROR(L),DOOR			
NC10-69-180E	1	(MANUAL TYPE DR MIRROR)			
PT	EXT-	PT CHAST WHITE			
PZ	EXT-	PZ BRILLIANT BLACK			
SU	EXT-	SU A3E CLASSIC RED			

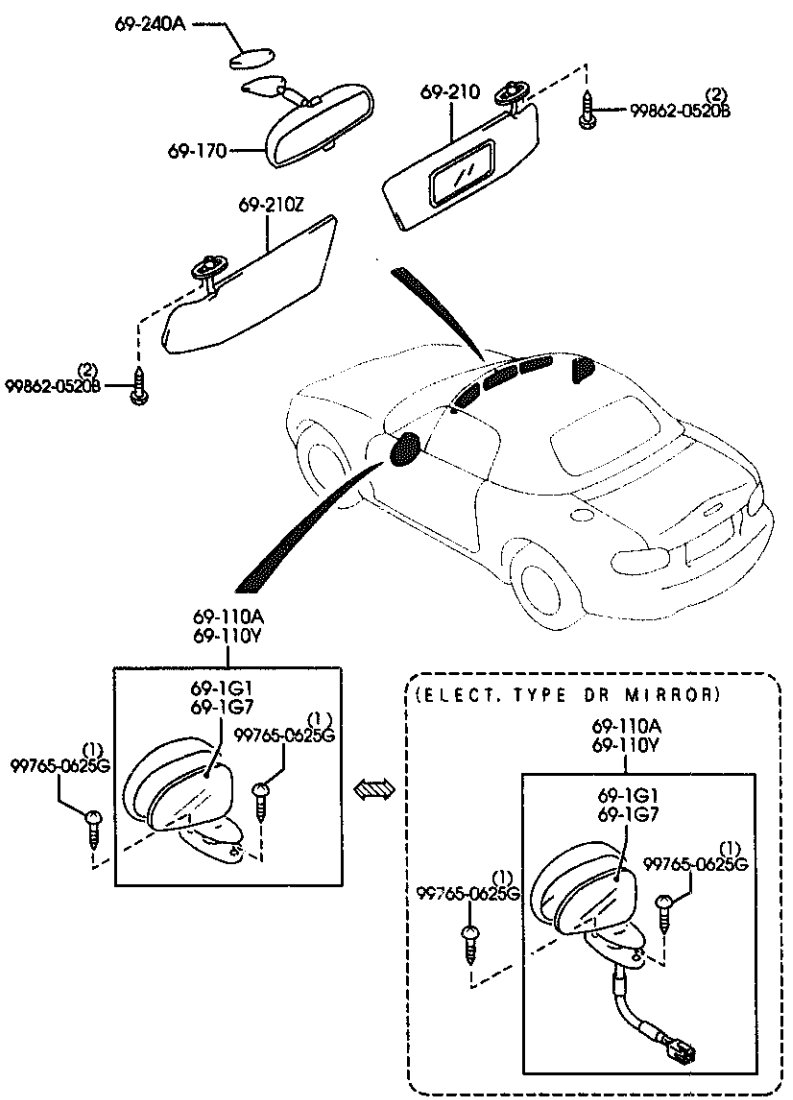

PART NO.	QTY	MODEL/RESTRICTION	MODEL/RESTRICTION	MODEL/RESTRICTION	FROM-TO
CONT'D					
* 17 EXT-		23E ART VIN RED 3MC			
40 EXT-		20P INNOCENT BLUE MC			
46 EXT-		18J NEW GREEN M			
56 EXT-		18K NEW ORANGE MC			
57 EXT-		12K TWILIGHT BLUE			
92 EXT-		18G HIGHLIGHT SILVER M			
NC11-69-180E	1	(ELECT. TYPE DR MIRROR)			
PT EXT-		PT CHAST WHITE			
PZ EXT-		PZ BRILLIANT BLACK			
SU EXT-		SU A3E CLASSIC RED			
* 17 EXT-		23E ART VIN RED 3MC			
40 EXT-		20P INNOCENT BLUE MC			
46 EXT-		18J NEW GREEN M			
56 EXT-		18K NEW ORANGE MC			
57 EXT-		12K TWILIGHT BLUE			
92 EXT-		18G HIGHLIGHT SILVER M			
+---------+					
| 69-170 |		MIRROR,INTERIOR			
+---------+					
HG82-69-220A	1				
+---------+					
| 69-210 |		SUN VISOR(R)			
+---------+					
NC10-69-270A	1				-8106
02 INT-		NBJ NB1 BLACK			
NC10-69-270B	1				8106-
02 INT-		NB0 NB1 NB2 NB6 BLACK			
+---------+					
| 69-210Z |		SUN VISOR(L)			
+---------+					
NC10-69-320A	1				-8106
02 INT-		NB0 NB1 BLACK			
NC10-69-320B	1				8106-
02 INT-		NB0 NB1 NB2 NB6 BLACK			
+---------+					
| 69-240A |		BASE,INTERIOR MIRROR			
+---------+					
BC1C-69-240	1				

8106 NB353M-102707

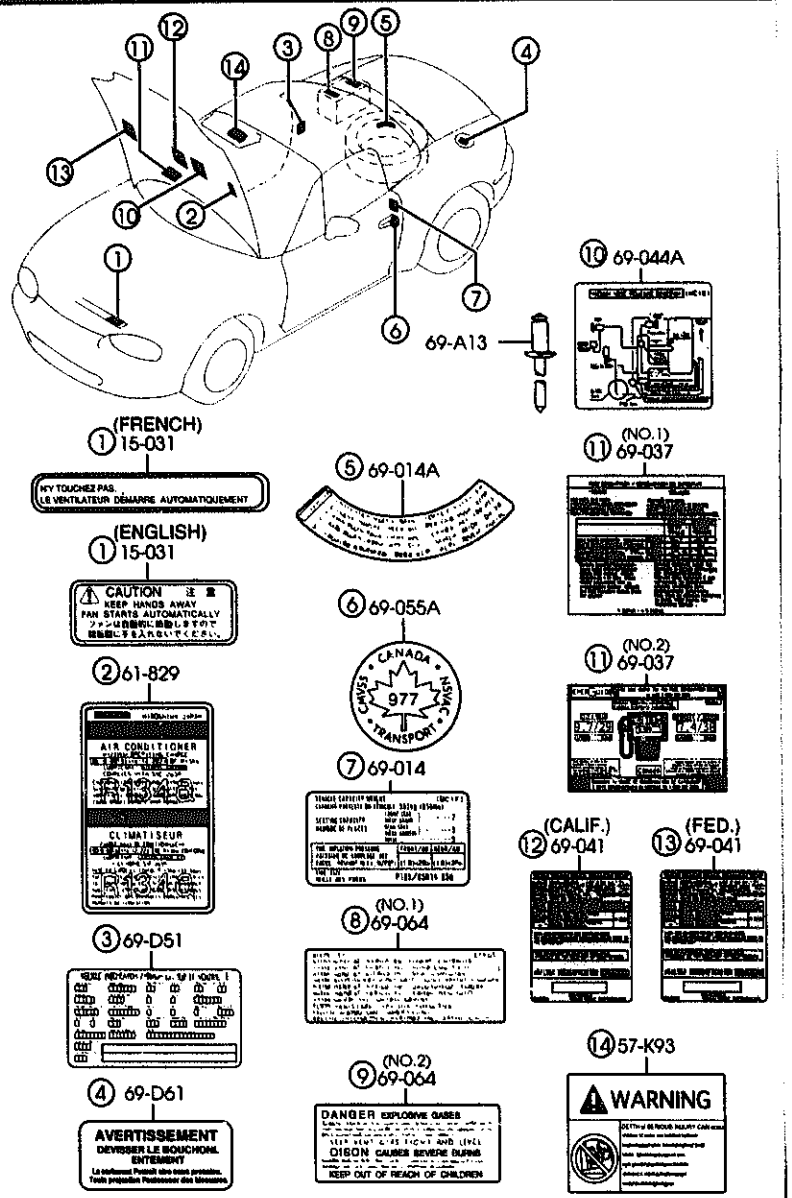

AUNA07 (1N11520)

PART NO.	QTY	MODEL/RESTRICTION	MODEL/RESTRICTION	MODEL/RESTRICTION	FROM-TO
15-031		LABEL,CAUTION			
E50B-15-031	1	FRENCH			
B660-15-031	1	ENGLISH			7C03-
57-K93		LABEL'C',CAUTION-A/B			
B01R-57-K93A	1				
61-829		LABEL,CAUTION			
FD16-61-439B	1	(A)			
69-A13		RIVET,BLIND,VIN PLATE			
GJ21-69-A13	2	(W/THEFT PREVENTION LABEL)			
69-D51		LABEL,VEHICLE INFORMATION			
B001-69-D51	1	VIN NO. IS REQIRED			
69-D61		LABEL,FUEL WARNING			
BC1M-69-D61	1	NON USA,			
69-014		LABEL,TIRE			
NC10-69-014A	1				
69-014A		LABEL,TEMPORARY TIRE			
BF68-69-073	1	ENGLISH			
BF69-69-073B	1	FRENCH			
69-037		LABEL,FUEL ECONOMY			
NC12-69-042	1	NON USA, (ILLUST. NO.1)			
NC49-69-042	1	NON USA, (ILLUST. NO.2)			
NC53-69-042	1	NON USA, (ILLUST. NO.2)			
NC65-69-042	1	NON USA, (ILLUST. NO.2)			9101-
69-041		LABEL,EMISSION			

7C03 NB353*-100063
9101 NB353*-126971

CAT. AUNA07-05 2000-01

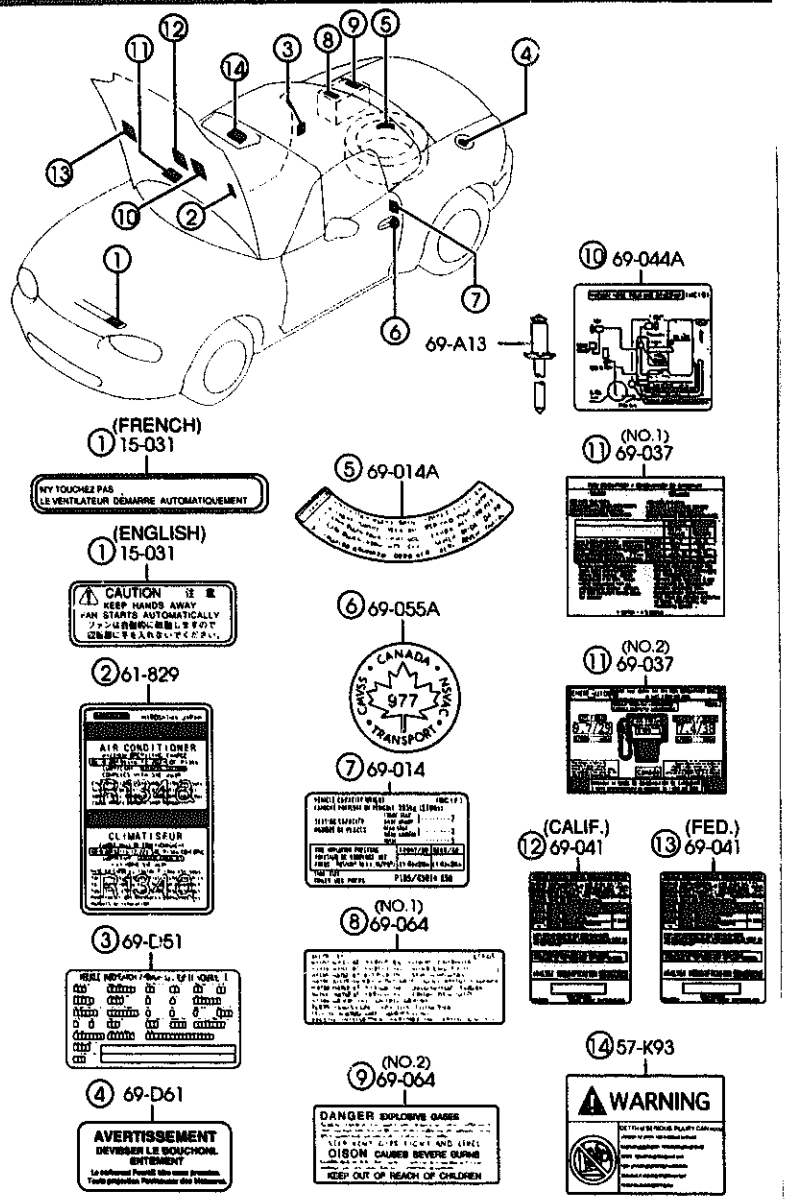

PART NO.	QTY	MODEL/RESTRICTION	MODEL/RESTRICTION	MODEL/RESTRICTION	FROM-TO
CONT'D					
NC10-69-036	1	(FED.)			-9701
NC11-69-036	1	(CALIF.)			-9701
NC49-69-036	1	(FED.) (CAN)			9701-
NC57-69-036	1	(CALIF.)			9701-
+---------+ | 69-044A | +---------+		LABEL,VAC.DIAPHRAGM			
NC10-69-044	1	(CAN)			-9701
NC49-69-044	1	(CAN)			9701-
+---------+ | 69-055A | +---------+		LABEL,SAFETY PANEL			
FA11-69-C31A	1	NON USA,			
+---------+ | 69-064 | +---------+		LABEL,BATTERY			
FA03-69-C72A	1	(ILLUST. NO.1) (W/BATTERY LABEL)			
FA01-69-064A	1	(ILLUST. NO.2) (W/BATTERY LABEL)			

9701 NB353*-138751

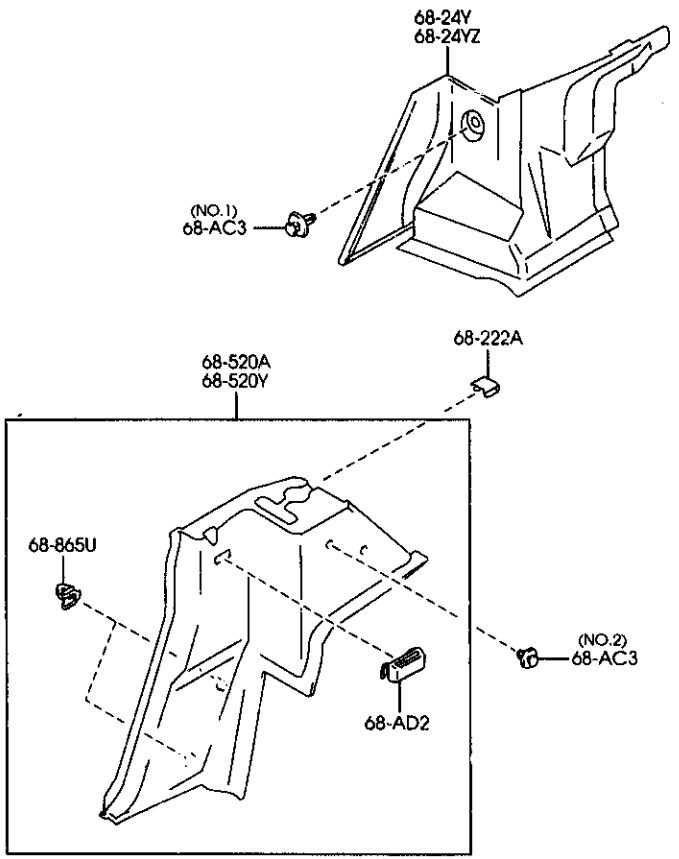

PART NO.	QTY	MODEL/RESTRICTION	MODEL/RESTRICTION	MODEL/RESTRICTION	FROM-TO
68-AC3		FASTENER			
B467-68-AC3	2	(ILLUST. NO.1)			
02	INT-	NB0 NB2 BLACK			
21	INT-	NB1 TAN			
* 80	INT-	NB6 NB7 LIGHT BEIGE			
B499-68-AC3	2	(ILLUST. NO.2)			-9201
00	INT-	NB0 NB2 BLACK			
21	INT-	NB1 TAN			
B499-68-AC3A	2	(ILLUST. NO.2)			9201-
00	INT-	NB0 NB2 BLACK			
21	INT-	NB1 TAN			
* 80	INT-	NB6 NB7 LIGHT BEIGE			
68-AD2		CLIP			
NC10-68-AD2B	2				-8C01
00	INT-	NB0 NB2 BLACK			
21	INT-	NB1 TAN			
NC10-68-AD2C	2				8C01-
00	INT-	NB0 NB2 BLACK			
21	INT-	NB1 TAN			
* 80	INT-	NB6 NB7 BEIGE			
68-222A		COVER,HOLE			
NA01-68-222A	2				
00	INT-	NB0 NB2 BLACK			
21	INT-	NB1 TAN			
* 80	INT-	NB6 NB7 BEIGE			
68-24Y		COVER(R),LINK			
NC10-68-282	1				
02	INT-	NB0 NB2 BLACK			
21	INT-	NB1 TAN			
* 80	INT-	NB6 NB7 BEIGE			
68-24YZ		COVER(L),LINK			
NC10-68-292	1				

8C01 NB353*-124914
9201 NB353*-130051

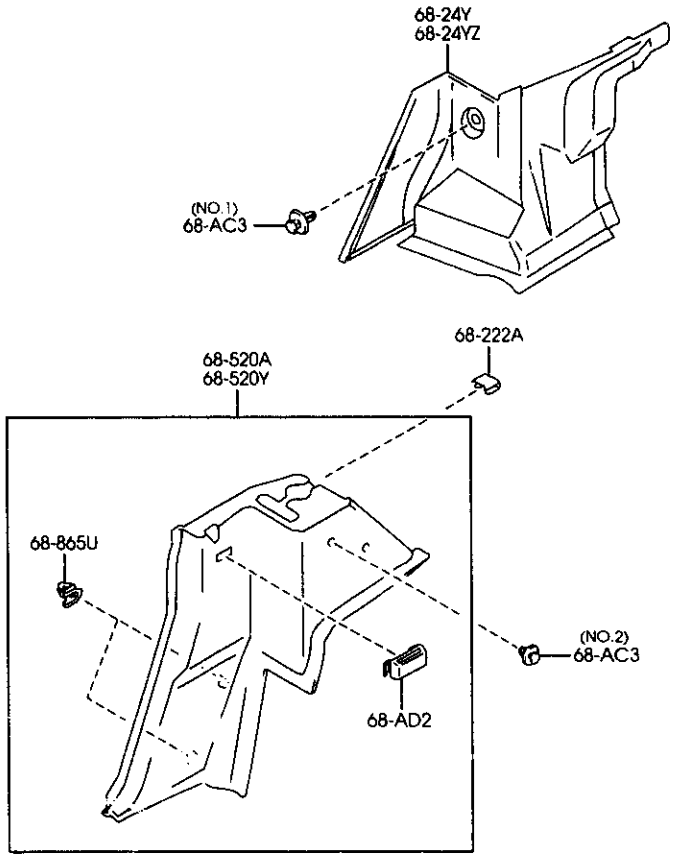

PART NO.	QTY	MODEL/RESTRICTION	MODEL/RESTRICTION	MODEL/RESTRICTION	FROM-TO
CONT'D					
02	INT-	NB0 NB2 BLACK			
21	INT-	NB1 TAN			
* 80	INT-	NB6 NB7 BEIGE			
+----------+					
| 68-520A |		TRIM(R),QUARTER			
+----------+					
NC10-68-520B	1	(W/O DETACHABLE HARD TOP, W/O AERO BOARD)			-8C01
00	INT-	NB0 NB2 BLACK			
21	INT-	NB1 TAN			
NC30-68-520B	1	(W/DETACHABLE HARD TOP, W/O AERO BOARD)			-8C01
00	INT-	NB0 NB2 BLACK			
21	INT-	NB1 TAN			
NC31-68-520B	1	(W/DETACHABLE HARD TOP, W/AERO BOARD)			-8C01
00	INT-	NB0 NB2 BLACK			
21	INT-	NB1 TAN			
N053-68-520B	1	(W/O DETACHABLE HARD TOP, W/AERO BOARD)			-8C01
00	INT-	NB0 NB2 BLACK			
21	INT-	NB1 TAN			
NC10-68-520C	1	(W/O DETACHABLE HARD TOP, W/O AERO BOARD)			8C01-
00	INT-	NB0 NB2 BLACK			
21	INT-	NB1 TAN			
* 80	INT-	NB6 NB7 BEIGE			
NC30-68-520C	1	(W/DETACHABLE HARD TOP, W/O AERO BOARD)			8C01-
00	INT-	NB0 NB2 BLACK			
21	INT-	NB1 TAN			
* 80	INT-	NB6 NB7 BEIGE			
NC31-68-520C	1	(W/DETACHABLE HARD TOP, W/AERO BOARD)			8C01-
00	INT-	NB0 NB2 BLACK			
21	INT-	NB1 TAN			
* 80	INT-	NB6 NB7 BEIGE			
N053-68-520C	1	(W/O DETACHABLE HARD TOP, W/AERO BOARD)			8C01-

8C01 NB353*-124914

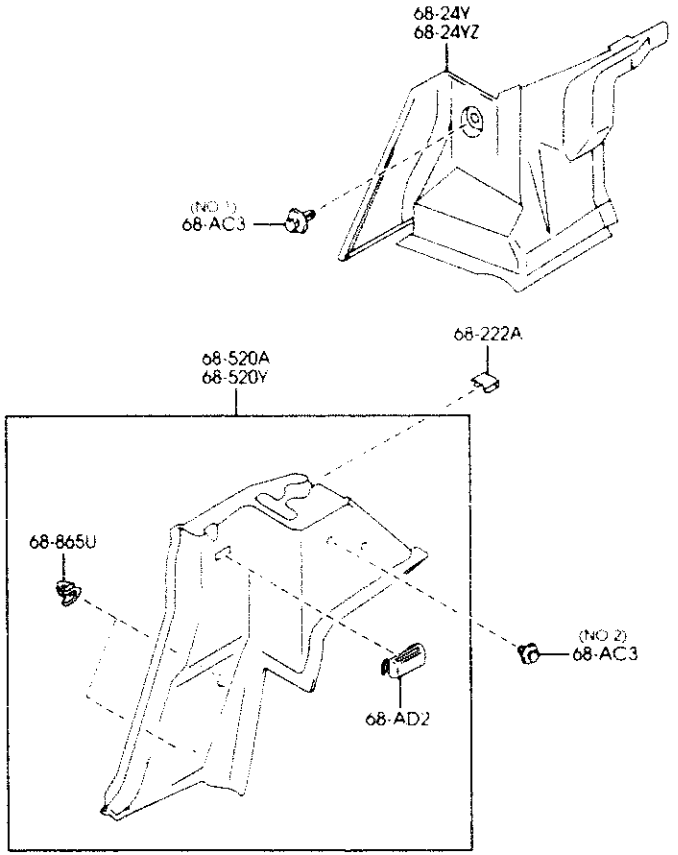

PART NO.	QTY	MODEL/RESTRICTION	MODEL/RESTRICTION	MODEL/RESTRICTION	FROM-TO
CONT'D					
00	INT-	NB0 NB2 BLACK			
21	INT-	NB1 TAN			
* 80	INT-	NB6 NB7 BEIGE			
+---------+					
| 68-520Y |		TRIM(L),QUARTER			
+---------+					
NC10-68-550B	1	(W/O DETACHABLE HARD TOP, W/O AERO BOARD)			-8C01
00	INT-	NB0 NB2 BLACK			
21	INT-	NB1 TAN			
NC30-68-550B	1	(W/DETACHABLE HARD TOP, W/O AERO BOARD)			-8C01
00	INT-	NB0 NB2 BLACK			
21	INT-	NB1 TAN			
NC31-68-550B	1	(W/DETACHABLE HARD TOP, W/AERO BOARD)			-8C01
00	INT-	NB0 NB2 BLACK			
21	INT-	NB1 TAN			
ND53-68-550B	1	(W/O DETACHABLE HARD TOP, W/AERO BOARD)			-8C01
00	INT-	NB0 NB2 BLACK			
21	INT-	NB1 TAN			
NC10-68-550C	1	(W/O DETACHABLE HARD TOP, W/O AERO BOARD)			8C01-
00	INT-	NB0 NB2 BLACK			
21	INT-	NB1 TAN			
* 80	INT-	NB6 NB7 BEIGE			
NC30-68-550C	1	(W/DETACHABLE HARD TOP, W/O AERO BOARD)			8C01-
00	INT-	NB0 NB2 BLACK			
21	INT-	NB1 TAN			
* 80	INT-	NB6 NB7 BEIGE			
NC31-68-550C	1	(W/DETACHABLE HARD TOP, W/AERO BOARD)			8C01-
00	INT-	NB0 NB2 BLACK			
21	INT-	NB1 TAN			
* 80	INT-	NB6 NB7 BEIGE			
ND53-68-550C	1	(W/O DETACHABLE HARD			8C01-

8C01 NB353*-124914

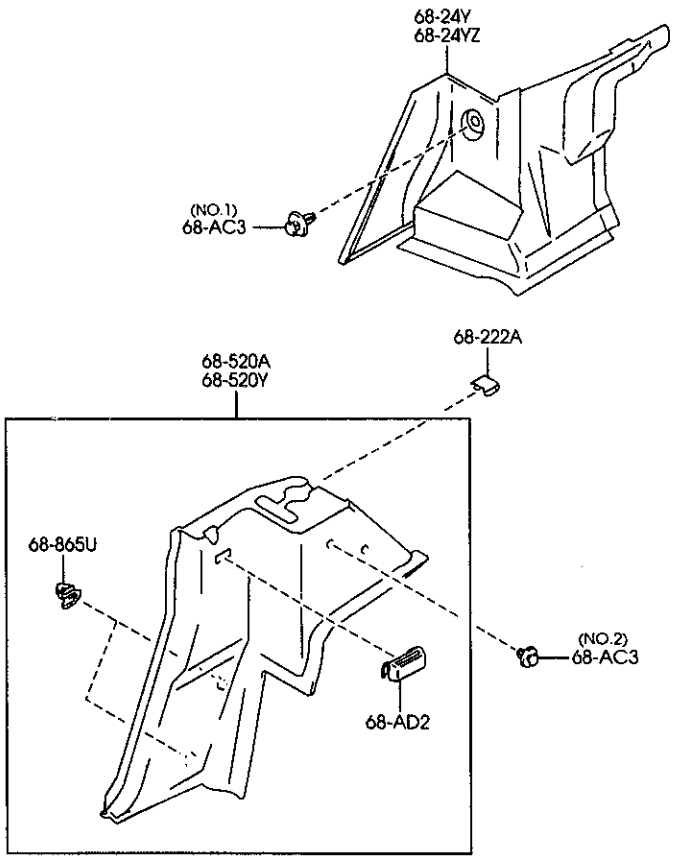

PART NO.	QTY	MODEL/RESTRICTION	MODEL/RESTRICTION	MODEL/RESTRICTION	FROM-TO
CONT'D		TOP, W/AERO BOARD)			
00 INT-		NB0 NB2 BLACK			
21 INT-		NB1 TAN			
* 80 INT-		NB6 NB7 BEIGE			
68-865U		CLIP,TRIM			
GJ21-68-865	4				