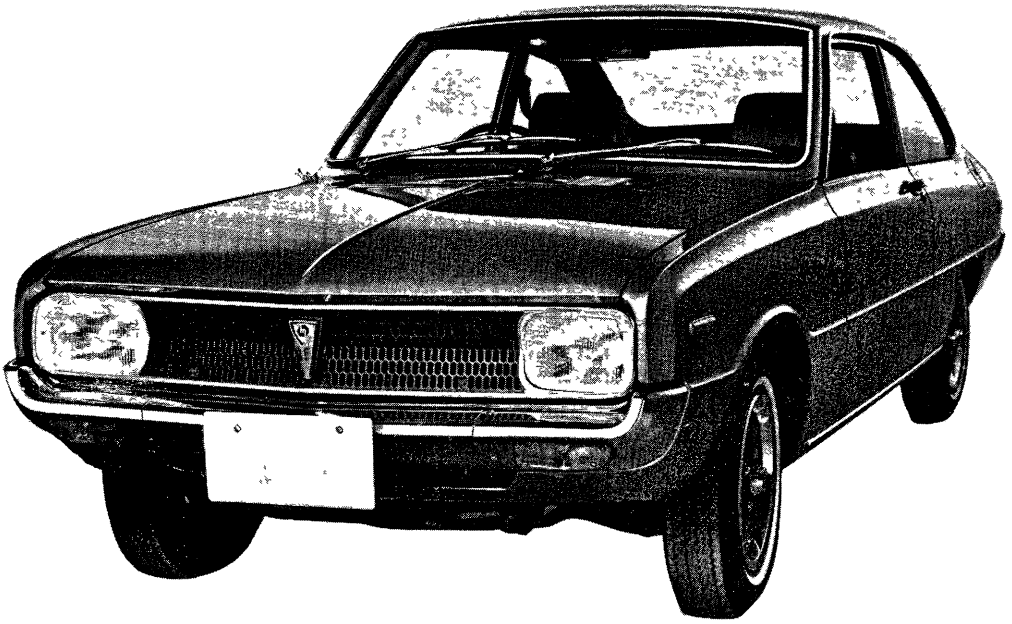

TOYO KOGYO CO.,LTD.

MAZDA ROTARY ENGINE - LICENSE NSU · WANKEL

R100 SEDAN & COUPE VOL. 2

Model N°	Model / Type	Description	Omschrijving
2 0 6 1	M10A-4	For France	Niet ingevoerd
2 0 6 2	M10A-4	Sedan	Niet ingevoerd
2 0 6 3	M10A-4	RHD	Niet ingevoerd
2 0 6 4	M10A-4	RHD	Niet ingevoerd
2 1 1 2	M10A	Arctic spec.	Niet ingevoerd
2 1 1 3	M10A	For West Canada	Niet ingevoerd
2 1 2 3	M10A	RHD	Niet ingevoerd
2 1 2 4	M10A	For Okinawa	Niet ingevoerd
2 1 2 5	M10A	R 100 - Coupe - T-type dashboard - General export model	R 100 - Coupé - Instrumenten bord type T - Algemene uit
2 3 2 8	M10A	For East Canada	Niet ingevoerd
2 3 2 9	M10A	For U.S.A.	Niet ingevoerd
2 3 3 4	M10A-E	RHD	Niet ingevoerd
2 3 3 5	M10A-E	For France	Niet ingevoerd
2 3 3 6	M10A-E	Coupe E-type	Niet ingevoerd
2 3 3 9	M10A-E	For U.S.A.	Niet ingevoerd

Model N°	Model / Type	Description	Omschrijving
2 4 1 5	M10A-4-SL	For France	Niet ingevoerd
2 4 1 6	M10A-4-SL	Sedan	Niet ingevoerd
2 4 1 7	M10A-4-SL	Arctic spec.	Niet ingevoerd
2 4 1 8	M10A-4-SL	RHD	Niet ingevoerd
2 4 1 9	M10A-4-SL	RHD	Niet ingevoerd
2 7 9 7	M10A	RHD	Niet ingevoerd

2064	M10A–4	For England
2112	M10A	MAZDA R100 Coupe, "T" Type Dashboard Model (L.H.D.) Arctic Spec. Model, For Finland & Norway
2113	M10A	MAZDA R100 Coupe, "T" Type Dashboard Model (L.H.D.) For West Canada
2123	M10A	MAZDA R100 Coupe, "T" Type Dashboard Model (R.H.D.) General Export Model
2124	M10A	MAZDA R100 Coupe, "T" Type Dashboard Model (L.H.D.) For Okinawa
2125	M10A	MAZDA R100 Coupe, "T" Type Dashboard Model (L.H.D.) General Export Model
2328	M10A	MAZDA R100 Coupe, "T" Type Dashboard Model (L.H.D.) For East Canada, Emission Controlled Model
2329	M10A	MAZDA R100 Coupe, "T" Type Dashboard Model (L.H.D.) For U.S.A., Emission Controlled Model
2334	M10A–E	MAZDA R100 Coupe E Type, Plain Type Dashboard (R.H.D.) General Export Model
2335	M10A–E	MAZDA R100 Coupe E Type, Plain Type Dashboard (L.H.D.) For France
2336	M10A–E	MAZDA R100 Coupe E Type, Plain Type Dashboard (L.H.D.) General Export Model
2339	M10A–E	MAZDA R100 Coupe E Type, Plain Type Dashboard (L.H.D.) For U.S.A., Emission Controlled Model
2415	M10A–4–SL	MAZDA R100 Sedan SL, "T" Type Dashboard Model (L.H.D.) For France
2416	M10A–4–SL	MAZDA R100 Sedan SL, "T" Type Dashboard Model (L.H.D.) General Export Model
2417	M10A–4–SL	MAZDA R100 Sedan SL, "T" Type Dashboard Model (L.H.D.) Arctic Spec. Model, For Finland & Norway
2418	M10A–4–SL	MAZDA R100 Sedan SL, "T" Type Dashboard Model (R.H.D.) General Export Model
2419	M10A–4–SL	MAZDA R100 Sedan SL, "T" Type Dashboard Model (R.H.D.) For England
2797	M10A	MAZDA R100 Coupe,"T" Type Dashboard Model (R.H.D.) For England

(I) Layout

This parts catalog consists of index of groups, illustrations composition lists and index of part numbers.

Pages listing parts, with no designation of applying models signify that the parts listed therein are used in common for all models, and whenever the page lists parts for specific models, this is shown by giving the applying models on the page.

A. See index given at back of the parts catalog and find pages where illustration, part number and figure number is listed.

⇩

B. Open to page indicated and locate the part number in the parts composition art, and after this locate the part in the illustration by referring to figure number given at front of the part number.

⇩

C. The corresponding figure number in the illustration is for the part required.

On part Number

A. Exclusive parts

Example :

0822	10	100	B
Indication of Vehicle Model	Indication of Group	Indication of inherent number	Indication of Modification

B. Standardized parts (General parts)

Example :

Or 90 / 99	801	0612	C
Indication of Standardized part	Indication of Category	Indication of Size	Indication of Material

C. Standardized parts (Tires, Tubes, Disc Wheels, etc.)

Example :

99	62	08	7016
Indication of Standardized part	Indication of Category	Indication of Type	Indication of Size

(L) ..... Left

(C) ..... Center

(Frt.) ..... Front

(Rr.) ..... Rear

Cpt. ..... Complete

Ass'y ..... Assembly

Std. ..... Standard

O. S. ..... Over Size

U. S. ..... Under Size

IN. ..... Inlet

T/Mission ..... Transmission

Ⓐ ..... Austrian Approval Mark

Ⓔ2 ..... ECE (Economic Commission for Europe) Approval Mark

Ⓑ ..... British Approval Mark

Ⓒ ..... Parts with Different Colours (Indicate Colour when Ordering)

10 ..... Indication of Group

(Ⅲ) On Groups

1) The figure enclosed by a triangle at the top of each page (Example 10) indicates group number.

2) Group numbers are determined according to structure and function of parts.

3) The group number given in index of groups coincide with the numerals (Example 10) of the illustration and parts composition pages.

(Ⅳ) Explanation on Parts Composition Lists

1) Indication of composition of assembly.

A. The largeness of the letters used for part names are given in three sizes.

(a) The largest letters show the largest composition of parts. Therefore, the parts printed in the largest letters always include parts printed offset to the right, and also printed in medium-size letters.

(b) The parts printed in medium-size letters always include parts printed in the smallest letters and offset to the right.

(c) The parts printed in smallest letters and offset to the right are always included in the parts printed in medium-sized letters or largest size letters that are located above.

(c)		0820 32 130A	Steering Worm Ball Nut Ass'y	1
(d)	2	0259 32 182	Ball Bearing	1
(e)	3	0820 32 141	Sector Shaft	1
(f)	4	99781 1092	Bolt, Steering Gear	3

(a) ..... Includes (b) to (e)
(c) ..... Includes (d)
(f) ..... Is not included in any ass'y nor sub ass'y

(V) Precautions to be taken when placing orders for parts

1) Always specify part number, name of part and quantity required.

2) Be sure to list the parts in order of part number, when filling in order sheet.

3) As processing of orders received by us is done by electronic computers, importance is attached to the part number. Therefore, in case the part number and name of the part do not coincide with each other, the part will be sent to you in accordance with part number.

(VI) Replacement pages and purport

Page replacements are supplied in monthly frequency as a rule, listing parts modified or newly added and month and year date will be printed in lower corner of each replacement page.
Therefore it is essential that care be taken to check on these dates to confirm if the parts listed conform to the car imported, before ordering.

1) Explanation on designation given in remarks column

a. Car No. ..... Chassis no. of car that modification becomes effective from.

b. $^{70}/_{7}$ ..... 70 designates year of modification and numerals 1 ~ 12 shows month of year.

c. ○ Mark ..... Indicates that modified part and former part are interchangeable.







10	Rotor Housing (Rear) (Emission Controlled Model)	13	14 ~ 16
10.11	Rotor (Front)	17	18 ~ 20
10.11	Rotor (Rear)	21	22 ~ 23
13	In. & Ex. Manifold (General Export Model)	24	25 ~ 26
13	In. & Ex. Manifold (Emission Controlled Model)	27	28 ~ 29
13	Emission Control System	30	31 ~ 32
23	Carburettor (General Export Model)	33 ~ 34	35 ~ 38
23	Air Cleaner (R.H.D.) & For Okinawa	39	40
23	Air Cleaner (L.H.D.)	41	42
23	Air Cleaner (Emission Controlled Model)	43	44
14	Oil Pump	45	46 ~ 48
23	Metering Oil Pump	49	50
14.15	Cooling System (General Export Model)	51	52 ~ 54

17	T/Mission (Case)	69	70 ~ 72
17	T/Mission (Gear)	73	74 ~ 76
17	T/Mission (Shift Fork)	77	78
17	T/Mission (Change Control)	79	80 ~ 81
18	Electric Equipment (Engine No. 1)	82	83 ~ 85
18	Electric Equipment (Engine No. 2)	86	87 ~ 89
24	Distributor (Trailing Side) (General Export Model)	90	91
24	Distributor (Leading Side) (General Export Model)	92	93 ~ 94
24	Alternator (General Export Model)	95	96 ~ 97
24	Starter (General Export Model)	98	99 ~ 101
	Chassis Parts		
25	Propeller Shaft	102	103
26	Rear Axle	104	105 ~ 106

32	Steering System (Wheel & Gear) (With Steering Lock)	124	125 ~ 129
32	Steering System (Wheel Gear)	130	131 ~ 134
32	Steering System (Rod, R.H.D.)	135	136 ~ 137
32	Steering System (Rod, L.H.D.) (Plain Type Dashboard Sedan Model)	138	139 ~ 140
32	Steering System (Rod, L.H.D.) ("T" Type Dashboard & Coupe Model)	141	142 ~ 143
33	Front Axle	144	145 ~ 146
49	Caliper	147	148 ~ 149
34	Front Suspension (Spring)	150	151 ~ 152
34	Front Suspension (Damper)	153	154 ~ 155
34	Front Suspension (Cross Member)	156	157 ~ 158
39	Engine & T/Mission Support (General Export Model)	159	160
39	Engine & T/Mission Support (Emission Controlled Model)	161	162
40	Exhaust System (General Export Model)	163	164 ~ 165

(Emission Controlled Model)

23	Fuel Pump	178	179 ~ 180
41	Accelerator Control System (R.H.D.)	181	182
41	Accelerator Control System (L.H.D.)	183	184
41.43	Clutch & Brake System (R.H.D.)	185	186 ~ 187
41.43	Clutch & Brake System (L.H.D.)	188	189 ~ 190
41.43	Clutch & Brake Master Cylinder	191	192 ~ 193
49	Tandem Master Cylinder (R.H.D.)	194	195 ~ 196
49	Tandem Master Cylinder (L.H.D.)	197	198 ~ 199
44	Parking Brake System	200	201 ~ 202
43.45	Clutch & Brake Piping (R.H.D.)	203	204
43.45	Clutch & Brake Piping (R.H.D.) ..... (With Tandem Master Cylinder)	205	206
43.45	Clutch & Brake Piping (L.H.D.) ..... (General Export Model)	207	208
43.45	Clutch & Brake Piping (L.H.D.) ..... (Emission Controlled Model)	209	210 ~

51~70	Body Panels (Front)	220	221 ~ 223
53.54	Body Panels (Side) (All Coupe Models)	224	225 ~ 227
53.54	Body Panels (Side) (All Sedan Models)	228	229 ~ 231
52~70	Body Panel (Floor, Rear & Roof)	232	233 ~ 238
55.68	Dashboard (Meter & Switch, R.H.D.) ("T" Type Dashboard Model)	239	240 ~ 244
55.68	Dashboard (Meter & Switch, L.H.D.) ("T" Type Dashboard Model)	245	246 ~ 250
55.60	Dashboard (Meter & Switch, R.H.D.) (Plain Type Dashboard Model)	251	252 ~ 254
55.60	Dashboard (Meter & Switch, L.H.D.) (Plain Type Dashboard Model)	255	256 ~ 258
55	Meter (R.H.D.) ("T" Type Dashboard Model)	259	260 ~ 261
55	Meter (L.H.D.) ("T" Type Dashboard Model)	262	263 ~ 264
55.75	Meter (R.H.D.) (Plain Type Dashboard Model)	265	266
55.75	Meter (L.H.D.) (Plain Type Dashboard Model)	267	268
57	Seat (R.H.D.) (All Coupe Models)	269	270 ~ 273

58.59	Front Side Door (Lock)	295	296 ~ 300
61.76	Car Heater (R.H.D.) ("T" Type Dashboard Model)	301	302 ~ 305
61.76	Car Heater (L.H.D.) ("T" Type Dashboard Model)	306	307 ~ 310
61.76	Car Heater (L.H.D., Powerful Type) ("T" Type Dashboard Model)	311	312 ~ 315
61.76	Car Heater (R.H.D.) (Nippon Radiator Make) (Plain Type Dashboard Model)	316	317 ~ 320
61.76	Car Heater (R.H.D.) (Denso Make) (Plain Type Dashboard Model)	321	322 ~ 325
61.76	Car Heater (L.H.D.) (Plain Type Dashboard Model)	326	327 ~ 330
66	Lamps (Front Side) (Canada & U. S. A. Model)	331	332 ~ 333
66	Lamps (Front Side) (General Export Model)	334	335 ~ 339
66	Lamps (Rear Side) (Canada & U. S. A. Model)	340	341 ~ 343
66	Lamps (Rear Side) (General Export Model)	344	345 ~ 347
66.67	Electric Equipment (Body, R.H.D.) (All Coupe Models)	348	349 ~ 352
66.67	Electric Equipment (Body, L.H.D.) (General Export Coupe Model)	353	354 ~ 357

87	Wiper Motor	376	377
66.87	Windshield Washer	378	379
66	Auto Radio ("T" Type Dashboard Model)	380	381 ~ 382
66	Auto Radio (Plain Type Dashboard Model)	383	384 ~ 385
66.68	Crush Pad & Glove Box (R.H.D.) ("T" Type Dashboard Model)	386	387 ~ 389
66.68	Crush Pad & Glove Box (L.H.D.) ("T" Type Dashboard Model)	390	391 ~ 393
68.70	Crush Pad, Glove Pocket & Console Box (Plain Type Dashboard Model)	394	395 ~ 398
68	Service Tools	399	400 ~ 401
69	Attachment (All Coupe Models)	402	403 ~ 406
69	Attachment (All Sedan Models)	407	408 ~ 410
69	Trim & Top Ceiling ("T" Type Dashboard Coupe Model)	411	412 ~ 413
69	Trim & Top Ceiling (Plain Type Dashboard Coupe Model)	414	415
69	Trim & Top Ceiling (All Sedan Models)	416	417 ~ 418

("T" Type Dashboard Sedan Model)

69 Floor Mat & Trim ..... 432 433 ~ 434
(Plain Type Dashboard Sedan Model)

70.71 Window Glass & Moulding ..... 435 436 ~ 438
(All Coupe Models)

70.71 Window Glass & Moulding ..... 439 440 ~ 441
(All Sedan Models)

70.71 Ventilator ..... 442 443 ~ 444
("T" Type Dashboard Model)

70.71 Ventilator ..... 445 446 ~ 447
(Plain Type Dashboard Model)

72.73 Rear Side Door (Glass) ..... 448 449 ~ 451
(All Sedan Models)

72.73 Rear Side Door (Lock) ..... 452 453 ~ 456
(All Sedan Models)

09 Key Set ..... 457 458 ~ 459
(All Coupe Models)

09 Key Set ..... 460 461 ~ 462
(All Sedan Models)

78 Car Cooler (R.H.D.) ..... 463 464 ~ 467
("T" Type Dashboard Model)

78 Car Cooler (L.H.D.) ..... 468 469 ~ 472
("T" Type Dashboard Model)

Index ..... 473 ~ 524

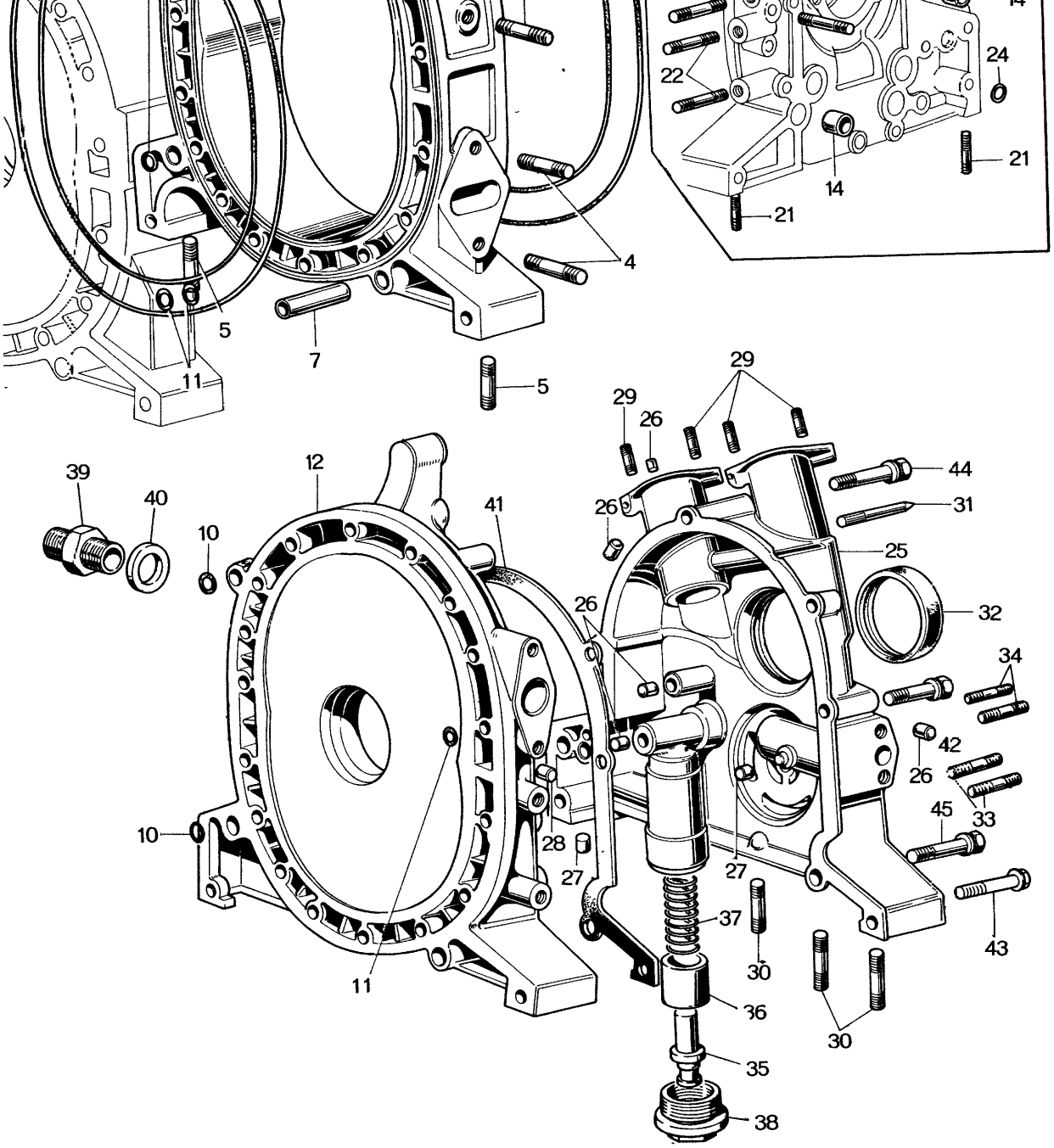
22
24
14
21
14
21
4
5
7
11
5
29
29
26
44
26
31
25
39
40
12
41
10
26
32
34
42
26
33
45
10
28
27
27
37
43
30
11
36
30
35
38

7	0813 10 111	Tubular Dowel	2	
8	0810 10 171	Sealing Rubber, Inner	2	
9	0813 10 172	Sealing Rubber, Outer	2	
10	0813 10 173	"O" Ring, Tubular Dowel Hole	4	
11	0813 10 174	"O" Ring, Tension Bolt Hole	36	Car No. 94733 $^{71}/_{4}$ ~ Discarded
	0820 23 040	"O" Ring Set (No. 8 ~ No. 11 included)	1	
12	0839 10 200B	FRONT HOUSING Ass'y	1	
	2123 10 200	FRONT HOUSING Ass'y	1	Car No. 64624 $^{70}/_{8}$ ~ O
	2123 10 200C	FRONT HOUSING Ass'y	1	Car No. 82291 $^{71}/_{1}$ ~ O
	2123 10 200D	FRONT HOUSING Ass'y	1	Car No. 87033 $^{71}/_{1}$ ~ O
•	2123 10 200G	FRONT HOUSING Ass'y	1	Car No. 95859 $^{71}/_{4}$ ~ O
	2113 10 200B	FRONT HOUSING Ass'y for West Canada	1	Car No. 64614 $^{70}/_{8}$ ~ O
	2113 10 200E	FRONT HOUSING Ass'y Arctic Spec. Model	1	Car No. 83040 $^{71}/_{1}$ ~ X
	2113 10 200F	FRONT HOUSING Ass'y	1	Car No. 87033 $^{71}/_{1}$ ~ O
•	2113 10 200I	FRONT HOUSING Ass'y	1	Car No. 95859 $^{71}/_{4}$ ~ O
13	0829 10 203	Knock Pin, Gear	1	
	0839 10 203	Pin, Dowel	1	Car No. 83040 $^{71}/_{1}$ ~ X
14	0813 10 204	Tubular Dowel	2	
15	99307 0800	Blind Plug	1	
•	0839 10 206	Blind Plug	1	Car No. 95859 $^{71}/_{4}$ ~ O
16	99307 1000	Blind Plug	1	
	99307 1200	Blind Plug	3	Car No. 83040 $^{71}/_{1}$ ~ X
•	0839 10 205	Blind Plug	3	Car No. 95859 $^{71}/_{4}$ ~ O
17	99306 3000	Blind Plug, Water	4	
18	99852 0850	Stud, Water Pump	1	Car No. 83040 $^{71}/_{1}$ ~ Discarded
19	99852 0878	Stud, Water Pump	3	
20	99852 0822	Stud, Inlet Manifold	2	
21	99852 0614	Stud, Oil Pan	2	
22	99859 1220	Stud, Mounting	4	

27	99307 1200	Blind Plug	2	Car No. 83040 $^{71}/_{1}$ ~ Discarded
28	99307 1400	Blind Plug	1	Car No. 83040 $^{71}/_{1}$ ~ Discarded
29	99851 0818	Stud, Distributor	4	
30	99851 0614	Stud, Oil Pan	6	
31	0820 10 631A	Top Indicator Pin	1	
32	0813 10 605	Oil Seal	1	
	0820 10 605	Oil Seal	1	Car No. 65849 $^{70}/_{9}$ ~ O
33	99851 0645	Stud	2	
34	99852 0645	Stud	2	Car No. 83040 $^{71}/_{1}$ ~ Discarded
35	0813 10 611	Pellet	1	
36	0813 10 612	Slide Valve	1	Car No. 83039 $^{71}/_{1}$ ~ Discarded
	0850 14 115	Plunger	1	Car No. 83040 $^{71}/_{1}$ ~ Added Anew
37	0813 10 613	Return Spring	1	
	0850 14 273	Return Spring	1	Car No. 83040 $^{71}/_{1}$ ~ X
38	0820 10 614	Plug, Pellet	1	
	0221 14 117	Plug, Pellet	1	Car No. 83040 $^{71}/_{1}$ ~ X
39	99384 1200	Union Joint	1	
40	99562 1600	Packing	1	
41	0820 10 641C	Gasket, Front Cover	1	
	0839 10 641	Gasket, Front Cover	1	Car No. 83040 $^{71}/_{1}$ ~ X
42	908016 8 35	Set Bolt, Front Cover	3	
	908016 8 40	Set Bolt, Front Cover	4	Car No. 83040 $^{71}/_{1}$ ~ X
43	908016 8 45	Set Bolt, Front Cover	2	Car No. 83039 $^{71}/_{1}$ ~ Discarded
44	908016 8 65	Set Bolt, Front Cover	1	Car No. 66862 $^{70}/_{9}$ ~ Discarded
	99801 08 65	Bolt	1	
	99971 0800	Spring Washer	1	Car No. 66862 $^{70}/_{9}$ ~ Added Anew
	99952 0800	Plain Washer	1	

•	0820 99 100D	Packing Set—Engine	1	Use up to Car No. 83672 $^{71}/_{1}$ ~ X

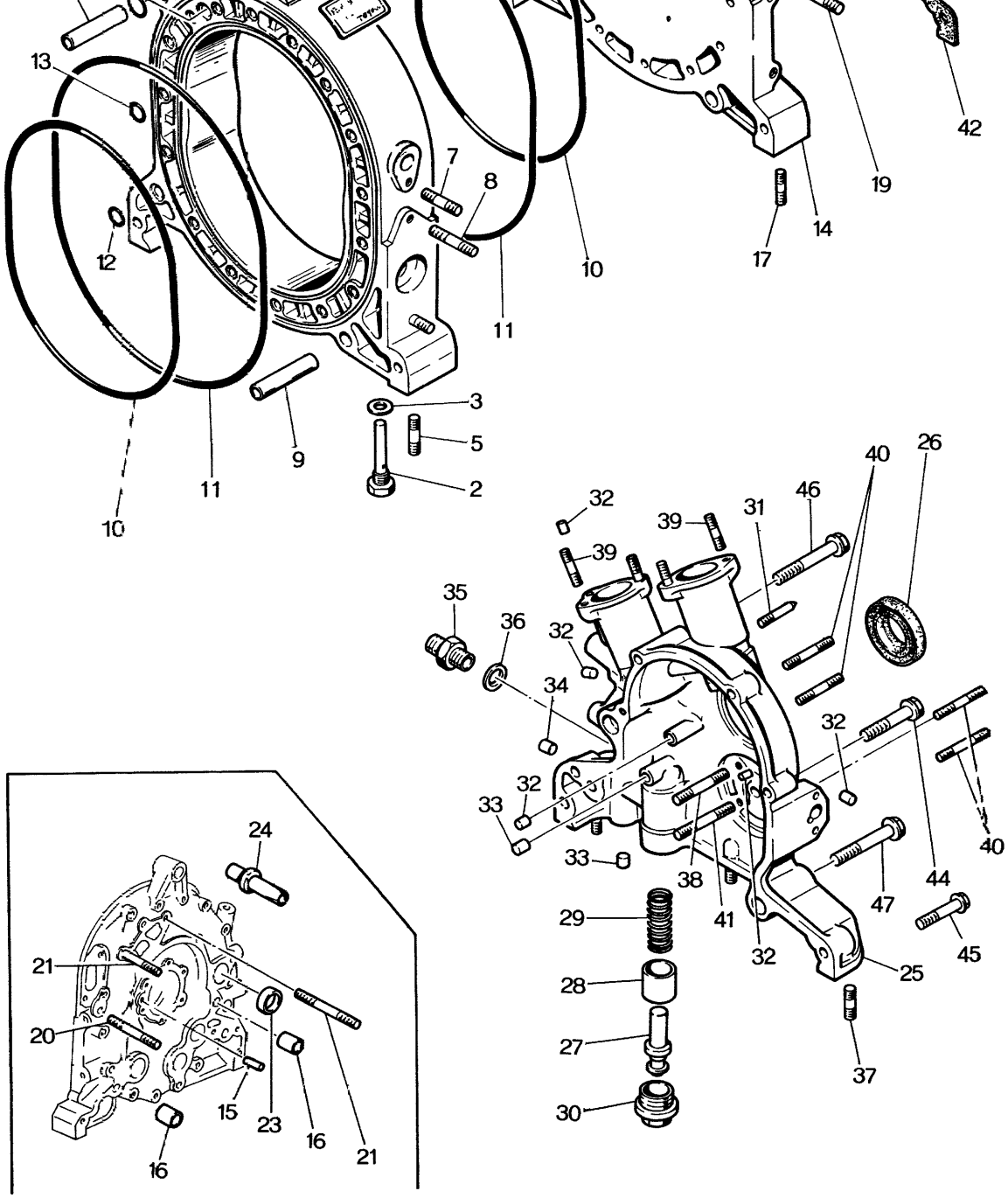
13
12
7
8
10
11
3
5
2
9
11
10
42
19
14
17
40
26
46
31
39
39
32
35
36
32
34
32
32
33
32
33
38
41
32
29
28
27
30
25
37
47
44
45
40
24
21
20
15
23
16
16
21

7	99851 0822	Stud, Inlet Manifold	1	
8	99851 1028	Stud, Reactor	2	
	2329 10 105	Stud, Reactor	2	Car No. 59444 $^{70}/_{4}$ ~ ○
9	0813 10 111	Tubular Dowel	2	
10	0810 10 171	Sealing Rubber, Inner	2	
11	0813 10 172	Sealing Rubber, Outer	2	
12	0813 10 173	"O" Ring, Tubular Dowel Hole	4	
13	0813 10 174	"O" Ring, Tension Bolt Hole	36	
	0820 23 040	"O" Ring Set (No. 10 ~ NO. 13 included)	1	
14	2329 10 200C	FRONT HOUSING Ass'y	1	
	2329 10 200E	FRONT HOUSING Ass'y	1	Car No. 70576 $^{70}/_{11}$ ~ ○
15	0820 10 203	Dowel Pin	1	
16	2329 10 204	Tubular Dowel	2	
17	99852 0614	Stud, Oil Pan	2	
18	99307 0800	Blind Plug	1	
19	99852 0822	Stud, Inlet Manifold	2	
20	99852 0865	Stud, Water Pump	1	
21	99852 0878	Stud, Water Pump	2	
22	99307 1000	Blind Plug	1	

27	0813 10 611	Pellet	1		
28	0813 10 612	Slide Valve	1		
29	0813 10 613	Return Spring	1		
30	0820 10 614	Plug, Pellet	1		
31	0820 10 631A	Pin, Top Indicator	1		
32	99307 0600	Blind Plug	5		
33	99307 1200	Blind Plug	2		
34	99307 1400	Blind Plug	1		
35	99384 1200	Union Joint	1		
36	99564 1600	Packing	1		
• 37	99851 0614	Stud Oil Pan	6	Car No. 64624 $^{70}/_{8}$ ~ Discarded	
•	908062 6 16	Set Bolt, Oil Pan	6	Car No. 64624 $^{70}/_{8}$ ~ Added Anew	
38	99851 0645	Stud	2		
39	99851 0818	Stud, Distributor	4		
40	99855 1020	Stud	4		
41	99852 0645	Stud	2		
42	0820 10 641C	Gasket, Front Cover	1		
43	0813 10 174	"O" Ring	1		
44	908016 8 35	Set Bolt, Front Cover	3		

51	99901	0800	Nut, Engine Hanger	1
	99971	0800	Spring Washer	1

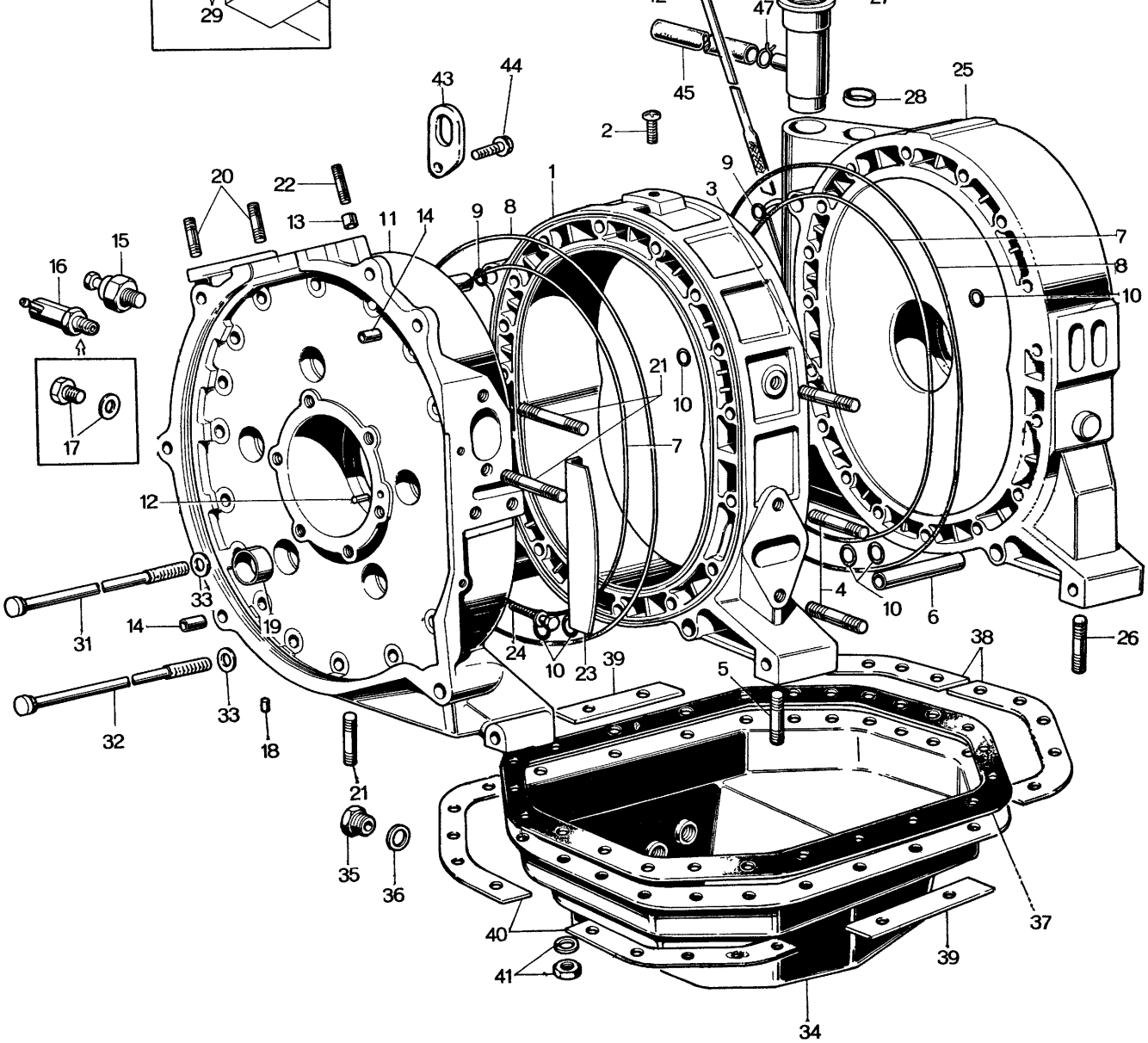
29
47
27
45
43
44
2
28
25
20
22
13
11
14
9
8
1
3
9
7
8
10
15
16
17
21
10
7
12
33
31
14
19
24
10
23
39
4
10
6
26
38
5
33
32
18
21
35
36
40
41
34
39
37

6	0813 10 111	Tubular Dowel	2	
7	0810 10 171	Sealing Rubber, Inner	2	
8	0813 10 172	Sealing Rubber, Outer	2	
9	0813 10 173	"O" Ring, Tubular Dowel Hole	4	
10	0813 10 174	"O" Ring, Tension Bolt Hole	36	
(N)	0820 23 040	"O" Ring Set (No. 7 ~No. 10 included)	1	
11	0822 10 300B	REAR HOUSING Ass'y	1	
	2123 10 300	REAR HOUSING Ass'y } With Car Heater (R.H.D.)	1	Car No. 64624 $^{70}/_{8}$ ~ X
	2123 10 300C	REAR HOUSING Ass'y } With Car Heater (R.H.D.)	1	Car No. 83263 $^{71}/_{1}$ ~ O
•	2123 10 300E	REAR HOUSING Ass'y } With Car Heater (R.H.D.)	1	Car No. 95859 $^{71}/_{4}$ ~ O
	2112 10 300E	REAR HOUSING Ass'y	1	
	2112 10 300H	REAR HOUSING Ass'y } With Car Heater (L.H.D.)	1	Car No. 64624 $^{70}/_{8}$ ~ X
	2359 10 300	REAR HOUSING Ass'y } With Car Heater (L.H.D.)	1	Car No. 83263 $^{71}/_{1}$ ~ O
•	2359 10 300B	REAR HOUSING Ass'y } With Car Heater (L.H.D.)	1	Car No. 95859 $^{71}/_{4}$ ~ O
	2125 10 300E	REAR HOUSING Ass'y	1	
	2125 10 300H	REAR HOUSING Ass'y } Without Car Heater	1	Car No. 64624 $^{70}/_{8}$ ~ X
	2335 10 300A	REAR HOUSING Ass'y } Without Car Heater	1	Car No. 83263 $^{71}/_{1}$ ~ O
•	2335 10 300C	REAR HOUSING Ass'y } Without Car Heater	1	Car No. 95859 $^{71}/_{4}$ ~ O
12	0820 10 203	Knock Pin, Gear		
13	99234 1208	Tubular Pin, Starter	2	
14	0221 10 309	Tubular Pin	2	
15	0813 18 501	Oil Pressure Switch	1	
16	0820 15 330	Hose Joint, With Car Heater	1	
17	99511 1600	Plug, Without Car Heater	1	
	99564 1600	Packing	1	
18	99307 1200	Blind Plug	1	
•	0839 10 205	Blind Plug	1	Car No. 95859 $^{71}/_{4}$ ~ O
19	99306 3000	Blind Plug, Water	5	

24	908062 6 10	Set Bolt, Dust Cover	2	Car No. 66861 70/9 ~ Discarded
	99806 0610	Bolt	2	Car No. 66862 70/9 ~ Added Anew
	99971 0600	Spring washer	2	
25	0822 10 400A	INTERMEDIATE HOUSING Ass'y	1	
	2123 10 400	INTERMEDIATE HOUSING Ass'y	1	Car No. 64624 70/8 ~ X
	2123 10 400A	INTERMEDIATE HOUSING Ass'y	1	Car No. 83040 71/1 ~ X
•	2123 10 400C	INTERMEDIATE HOUSING Ass'y	1	Car No. 94253 71/4 ~ O
26	99852 0614	Stud, Oil Pan	2	Car No. 64624 70/8 ~ Discarded
	908062 6 16	Washer & Bolt	2	Car No. 64624 70/8 ~ Added Anew
27	0820 10 410B	Oil Filler Pipe Ass'y	1	
28	99305 2800	Expansion Plug	1	
29	99510 1000	Plug	1	
	99564 1000	Packing	1	
30	0243 10 250B	Oil Filler Cap Ass'y	1	
31	0820 10 451	Tension Bolt	17	
	0822 10 451A	Tension Bolt	18	Car No. 62480 70/6 ~ X
	0822 10 451B	Tension Bolt	18	Car No. 69264 70/10 ~ O
	0822 10 451C	Tension Bolt	18	Car No. 83040 71/1 ~ O
32	0820 10 452	Tension Bolt	1	
	0822 10 452A	Tension Bolt	1	Car No. 62480 70/6 ~ X
	0822 10 452B	Tension Bolt	1	Car No. 69264 70/10 ~ O
	0822 10 452D	Tension Bolt	1	Car No. 83040 71/1 ~ X
33	0813 10 455A	Plain Washer	19	
	0823 10 455	Plain Washer	19	Car No. 62480 70/6 ~ X
•	0839 10 455	Washer Seal	19	Car No. 94734 71/4 ~ O
	0813 10 456A	Nut	19	Car No. 62480 70/6 ~ Discarded
	0820 10 453	Tension Bolt	1	Car No. 62480 70/6 ~ Discarded
34	0820 10 700B	OIL PAN Ass'y	1	
•	2359 10 700C	OIL PAN Ass'y	1	Car No. 100261 71/6 ~ O
35	99511 1400	Drain Plug	1	
36	99562 1400	Packing, Drain Plug	1	

42	0820 10 830B	Oil Level Gauge	1	
43	0820 10 862A	Engine Hanger	1	
•	2090 10 862A	Engine Hanger	1	Car No. 95206 $^{7}1/_{4}$ ~ ○
44	908012 8 18	Set Bolt, Engine Hanger	1	
45	0820 10 871A	Ventilation Hose	1	
46	0820 10 872A	Clip	1	
47	0222 13 493	Clip	1	
•	2090 10 730B	Oil Level Warning Swith	1	Car No. 100261 $^{7}1/_{6}$ ~ Added Anew
•	908332 4 18	Washer & Screw	4	Car No. 100261 $^{7}1/_{6}$ ~ Added Anew

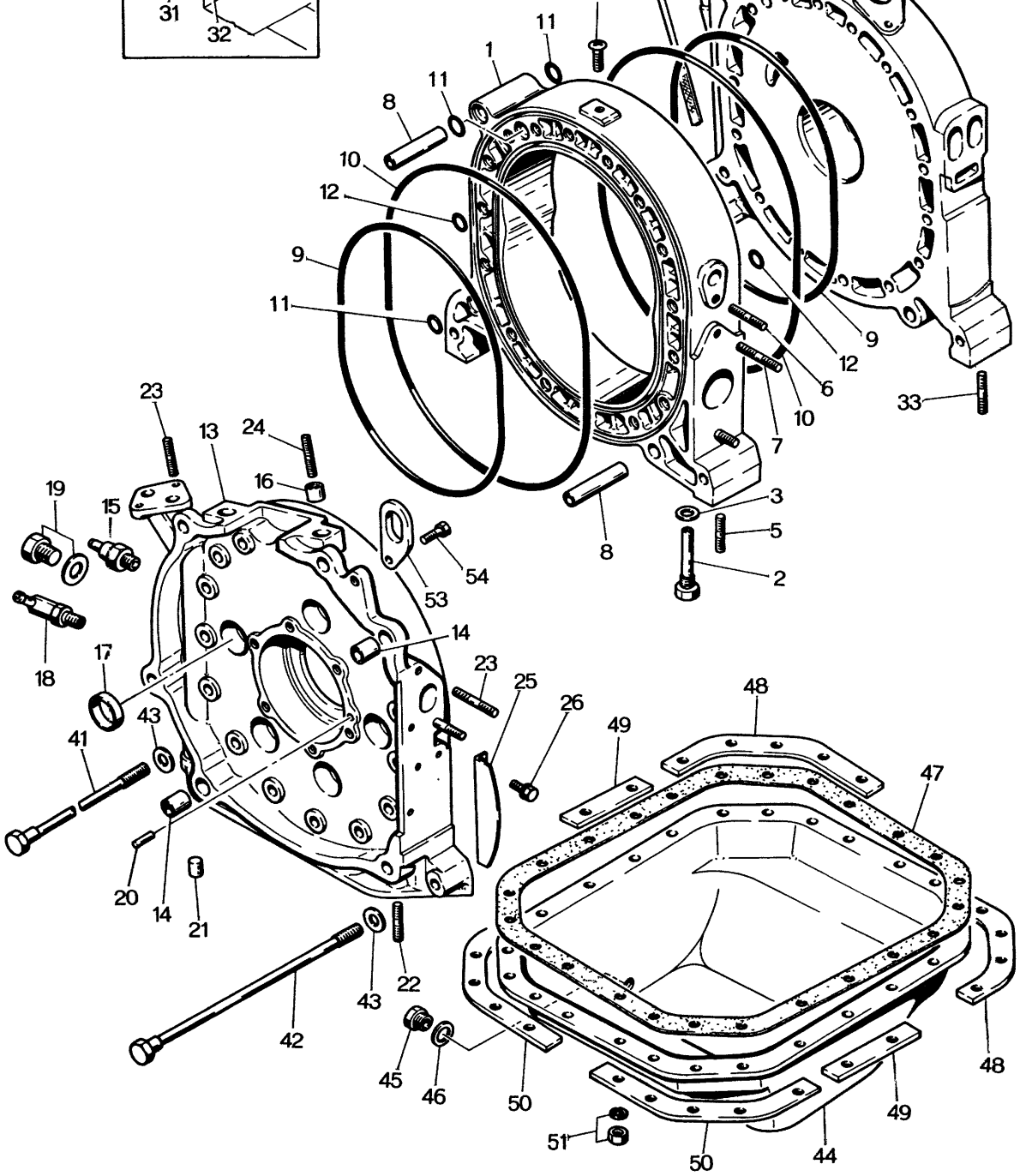
31
32
11
1
11
8
10
12
9
11
9
12
6
10
7
33
3
5
2
8
23
13
24
16
19
15
18
17
53
54
14
23
25
26
49
48
47
43
41
20
14
21
43
22
42
45
46
50
51
50
44
49
48

	2329 10 105	Stud, Reactor	2	Car No. 59444 $^{70}/_{4}$ ~ O
8	0813 10 111	Tubular Dowel	2	
9	0810 10 171	Sealing Rubber, Inner	2	
10	0813 10 172	Sealing Rubber, Outer	2	
11	0813 10 173	"O" Ring, Tubular Dowel Hole	4	
12	0813 10 174	"O" Ring, Tension Bolt Hole	36	
	0820 23 040	"O" Ring Set (No. 9 ~ No. 12 included)	1	
13	2328 10 300C	REAR HOUSING Ass'y,	1	
	2328 10 300D	REAR HOUSING Ass'y,	1	Car No. 64871 $^{70}/_{8}$ ~ X
14	0221 10 309	Tubular Pin	2	
15	0813 18 501	Oil Pressure Switch	1	
16	99234 1208	Tubular Pin	2	
17	99306 3000	Blind Plug	5	
18	0820 15 330	Hose Joint, With car Heater	1	
19	99511 1600	Plug } Without Car Heater	1	
	99564 1600	Packing } Without Car Heater		
20	0820 10 203	Dowel Pin	1	

25	0820 10 305	Dust Cover	1	
26	908062 6 10	Set Bolt, Dust Cover	2	
27	2329 23 050	INTERMEDIATE HOUSING Ass'y	1	
28	2329 10 410	Oil Separator	1	
29	2329 10 417	Pipe Joint	1	
30	99305 2800	Expansion Plug	1	
31	99510 1000	Hex Head Plug	1	
32	99564 1000	Packing	1	
• 33	99852 0614	Stud	2	Car No. 64624 $^{7}/_{8}$ ~ Discarded
•	908062 6 16	Set Bolt, Oil Pan		Car No. 64624 $^{7}/_{8}$ ~ Added Anew
34	2329 18 920A	Thermo Senser	1	
35	2329 18 921	Gasket	2	
36	2329 18 922	Insulator	1	
37	2329 18 923	Cover	1	
38	2329 18 924	Washer	2	
39	908012 8 25	Set Bolt	2	
40	0243 10 250B	Oil Filter Cap	1	

46	99562 1400	Packing	1
47	0820 10 711	Gasket	1
48	0820 10 721	Stiffener	2
49	0820 10 722	Stiffener	2
50	0820 10 723	Stiffener	2
51	99906 0600	Nut, Oil Pan	22
	99971 0600	Spring Washer	22
52	0820 10 830B	Oil Level Gauge	1
53	0820 10 862A	Engine Hanger	1
54	908016 8 18	Set Bolt, Engine Hanger	1

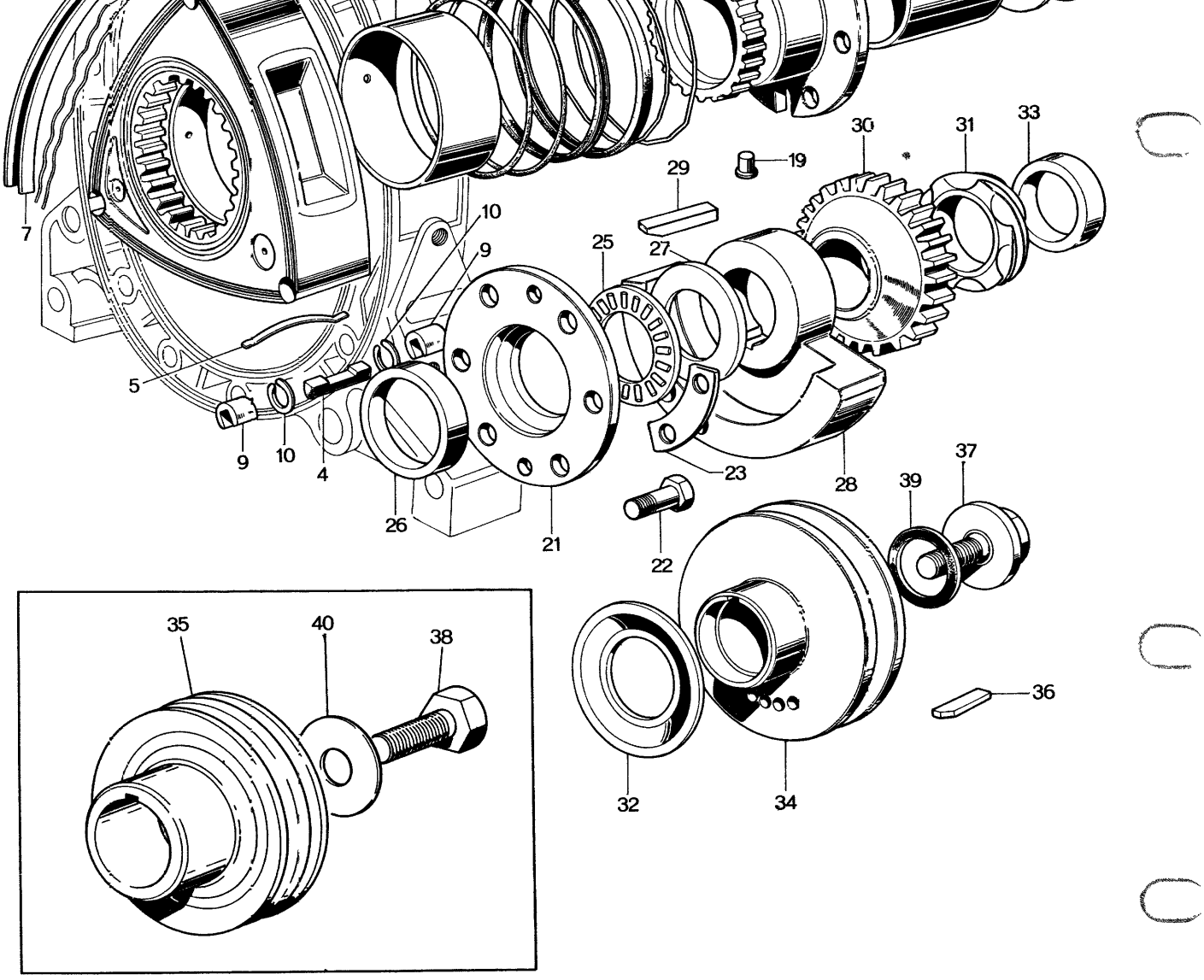
7
5
9
10
4
26
21
10
9
25
27
29
19
30
31
33
23
28
22
39
37
36
32
34

35
40
38

	4	0820 23 131A	Apex Seal	3	
		0820 23 131C	Apex Seal	3	Car No. 62907 $^{70}/_{7}$ ~ ○
	5	0820 11 304A	Apex Seal Spring	3	
	6	2125 23 151	Side Seal Outer (Frt.)	3	
		2125 23 154	Side Seal Outer (Frt.)	3	
	7	2125 23 152	Side Seal Inner (Frt.)	3	
		2125 23 155	Side Seal Inner (Frt.)	3	
	8	0820 11 317	Side Seal Spring	12	
	9	0820 11 321B	Corner Seal	6	
		0820 23 175	Corner Seal (Over Size) 0.2	6	
		0820 23 175A	Corner Seal (Over Size) 0.2	6	Car No. 61649 $^{70}/_{6}$ ~ ○
		0820 23 176	Corner Seal (Over Size) 0.03	6	
•		0820 23 176A	Corner Seal (Over Size) 0.03	6	Car No. 90655 $^{71}/_{3}$ ~ ○
	10	0820 11 323	Corner Seal Spring	6	
		0839 11 323	Corner Seal Spring	6	Car No. 72949 $^{70}/_{11}$ ~ ○
	11	0820 11 331	Oil Seal, Inner	2	} Order Under 0820 23 180
	12	0820 11 333	Oil Seal, Outer	2	
	13	0820 11 341	"O" Ring, Inner	2	
	14	0820 11 343	"O" Ring, Outer	2	
	15	0820 11 351	Oil Seal Spring, Inner	2	
•		0839 11 351	Oil Seal Spring, Inner	2	Car No. 99984 $^{71}/_{5}$ ~ ○
	16	0820 11 353	Oil Seal Spring, Outer	2	
•		0839 11 353	Oil Seal Spring, Outer	2	Car No. 99984 $^{71}/_{5}$ ~ ○
•	Ⓝ	0820 23 180	Oil Seal Set (Fig No. 11 & 12 included)	2	

21	0820 11 501A	Thrust Bearing		1	
	0839 11 501	Thrust Bearing		1	Car No. 83040 $^{71}/_{1}$ ~ X
22	99801 0822	Bolt, Stationary Gear		6	
23	0813 11 503	Lock Washer		3	
	0820 11 503	Lock Washer		3	Car No. 83040 $^{71}/_{1}$ ~ Δ
24	~~0820 11 504~~	Thrust Plate		~~1~~	
	0839 11 504B	Thrust Plate		1	Car No. 62024 $^{70}/_{6}$ ~ O ※
25	0813 11 505B	Needle Bearing		2	
26	0820 11 506	Spacer L = 9.08		1	
	0839 11 506	Spacer L = 9.08		1	Car No. 83040 $^{71}/_{1}$ ~ O
	0820 11 508	Spacer L = 9.04	Selective use	1	
	0839 11 508	Spacer L = 9.04		1	Car No. 83040 $^{71}/_{1}$ ~ O
	0820 11 509	Spacer L = 9.00		1	
	0839 11 509	Spacer L = 9.00		1	Car No. 83040 $^{71}/_{1}$ ~ O
	0820 11 502	Spacer = 9.02		1	
	0839 11 502	Spacer = 9.02		1	Car No. 83040 $^{71}/_{1}$ ~ O
27	0820 11 507	Thrust Washer		1	
28	0820 11 511E	Balance Weight		1	
	0820 11 511F	Balance Weight		1	Car No. 83040 $^{71}/_{1}$ ~ O
29	0820 11 512A	Key		1	
30	0820 11 521B	Drive Gear, Oil Pump		1	
	0839 11 551	Sprocket, Oil Pump		1	Car No. 83040 $^{71}/_{1}$ ~ X
31	0820 11 531	Drive Gear, Distributor		1	
	0839 11 531	Drive Gear, Distributor		1	Car No. 75586 $^{70}/_{12}$ ~ O
32	0813 11 541	Oil Baffle Plate		1	
33	0820 11 542	Spacer		1	
34	0820 11 601	Pulley, General Export Model		1	
35	2329 11 601A	Pulley, Emission Controlled Model		1	
36	99236 0525	Key		1	
37	0820 11 611A	Bolt, Pulley		1	

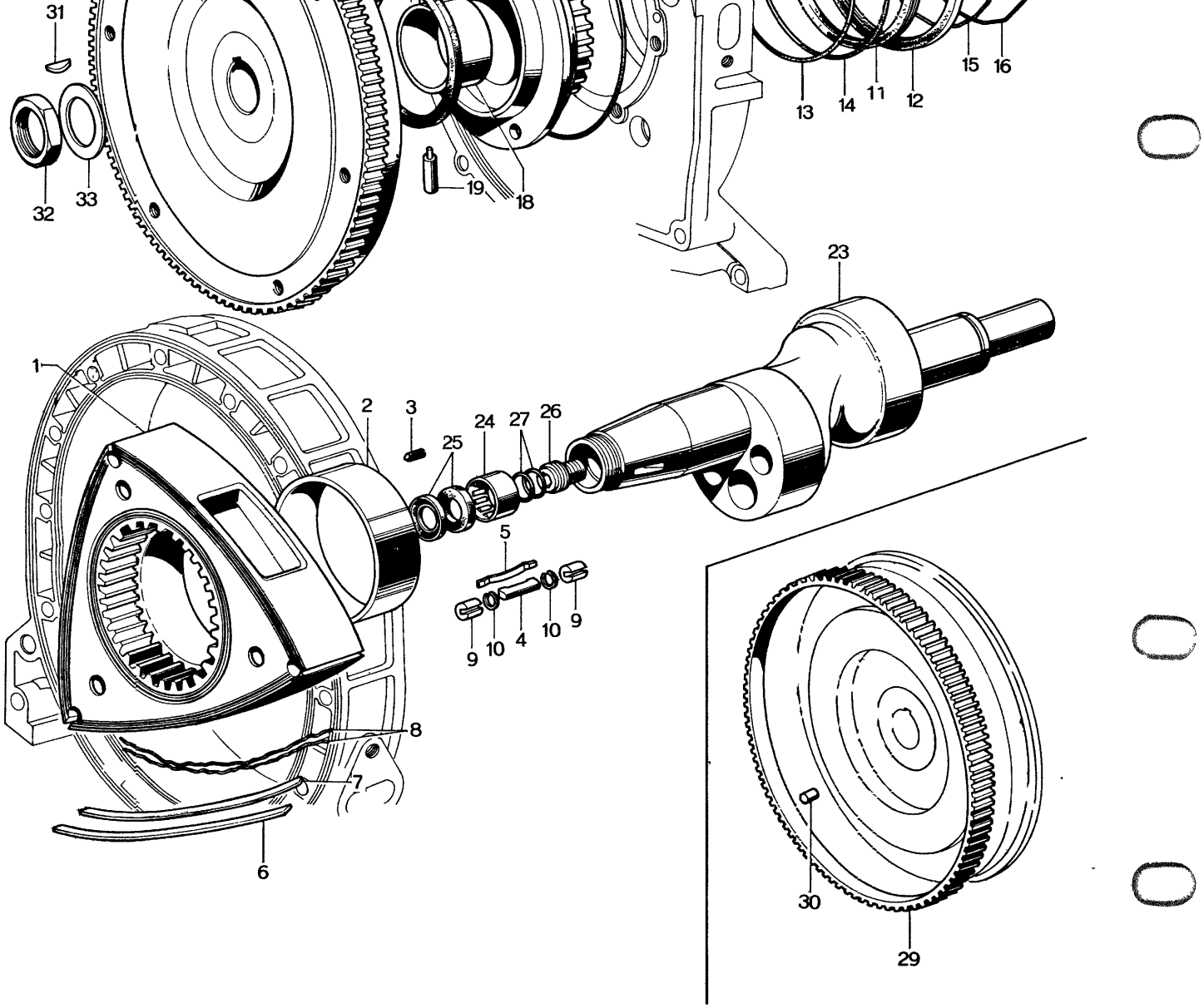
31
32
33
19
18
13
14
11
12
15
16
23
1
2
3
24
27
26
25
5
9
10
4
10
9
8
7
6
30
29

4	0820 23 131A	Apex Seal	3	
	0820 23 131C	Apex Seal	3	Car No. 62907 $^{70}/_{7}$ ~ O
5	0820 11 304A	Apex Seal Spring	3	
6	2125 23 154	Side Seal Outer (Rr.)	3	
	2125 23 151	Side Seal Outer (Rr.)	3	
7	2125 23 155	Side Seal Inner (Rr.)	3	
	2125 23 152	Side Seal Inner (Rr.)	3	
8	0820 11 317	Side Seal Spring	12	
9	0820 11 321B	Corner Seal	6	
	0820 23 175	Corner Seal (Over Size 0.2)	6	
•	0820 23 175A	Corner Seal (Over Size 0.2)	6	Car No. 61649 $^{70}/_{6}$ ~ O
	0820 23 176	Corner Seal (Over Size 0.03)	6	
•	0820 23 176A	Corner Seal (Over Size 0.03)	6	Car No. 90655 $^{71}/_{3}$ ~ O
10	0820 11 323	Corner Seal Spring	6	
	0839 11 323	Corner Seal Spring	6	Car No. 72947 $^{70}/_{11}$ ~ O
11	0820 11 331	Oil Seal, Inner	2	Order Under 0820 23 180
12	0820 11 333	Oil Seal, Outer	2	Order Under 0820 23 180
13	0820 11 341	"O" Ring, Inner	2	
14	0820 11 343	"O" Ring, Outer	2	
15	0820 11 351	Spring, Oil Seal Inner	2	
•	0839 11 351	Spring, Oil Seal Inner	2	Car No. 99984 $^{71}/_{5}$ ~ O
16	0820 11 353	Spring, Oil Seal Outer	2	Car No. 99984 $^{71}/_{5}$ ~ O
•	0839 11 353	Spring, Oil Seal Outer	2	
•	0820 23 180	Oil Seal Set (Fig.No. 11 & 12 included)	2	
17	0820 10 550	STATIONARY GEAR Ass'y (Rr.)	1	
	0820 10 550A	STATIONARY GEAR Ass'y (Rr.)	1	Car No. 89519 $^{71}/_{2}$ ~ O
	0820 10 550B	STATIONARY GEAR Ass'y (Rr.)	1	Car No. 92891 $^{71}/_{3}$ ~ O
18	0813 10 502A	Bush, Main Bearing	1	
•	~~0820 10 502A~~	~~Bush, Main Bearing~~	~~1~~	~~Car No. 89519 $^{71}/_{2}$ ~ X~~
	0820 10 502B	Bush, Main Bearing	1	Car No. 92891 $^{71}/_{3}$ ~ X
19	0813 10 554	Lock Pin, Bush	1	

	0820 11 400D	ECCENTRIC SHAFT Ass'y	1	Car No. 62024 $^{70}/_{6}$ ~ ○ ※
	0820 11 400F	ECCENTRIC SHAFT Ass'y	1	Car No. 87033 $^{71}/_{1}$ ~ ×
24	0810 11 403	Needle Bearing	1	
25	0810 11 404	Oil Seal	2	
26	0813 11 405	Blind Plug	1	
27	99541 01101	"O" Ring	2	
28	0820 11 700F	FLY WHEEL Ass'y,	1	
	0820 11 700G	FLY WHEEL Ass'y,	1	Car No. 87003 $^{71}/_{1}$ ~ ×
29	0600 11 502	Ring Gear	1	☆
30	0820 11 703	Pin	1	
31	0820 11 705	Key, Fly Wheel	1	
32	0810 11 711	Nut, Fly Wheel	1	
33	0820 11 712	Lock Washer	1	

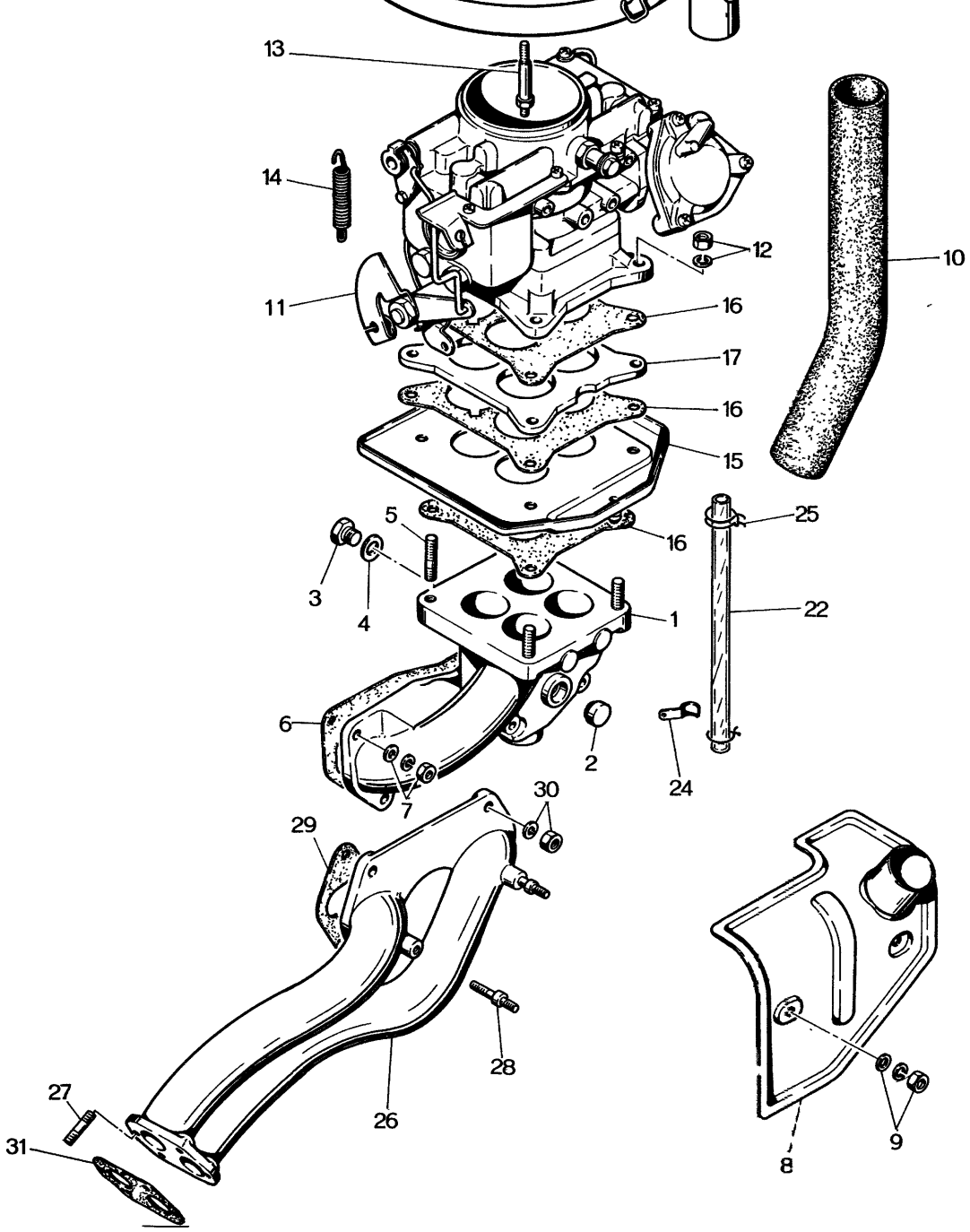
13
14
12
10
11
16
17
16
15
16
5
25
3
4
1
22
6
2
24
7
30
29
28
26
27
31
8
9

6	0844 13 112	Gasket, Manifold	1	
7	99901 0800	Nut, Manifold	6	
	99971 0800	Spring Washer	6	
	99953 0800	Plain Washer	5	
8	0820 13 330A	Hot Air Duct (R.H.D.) & For Okinawa	1	
	2113 13 330	Hot Air Duct (R.H.D.) & For Okinawa	1	Car No. 63909 $^{70}/_{7}$ ~ X
	2113 13 330	Hot Air Duct (L.H.D.)	1	
•	2113 13 330A	Hot Air Duct, All Model	1	Car No. 95677 $^{71}/_{4}$ ~ Δ
9	99906 0600	Nut, Hot Air Duct	2	
	99971 0600	Spring Washer	2	
	99953 0600	Plain Washer	2	
10	0820 13 341A	Hot Air Hose (R.H.D.) & For Okinawa	1	
	2113 13 341	Hot Air Hose (R.H.D.) & For Okinawa	1	Car No. 63909 $^{70}/_{7}$ ~ X
	2113 13 341	Hot Air Hose (L.H.D.)	1	
11	2113 13 200B	Carburettor (L.H.D.)	1	
	2113 13 200E	Carburettor (L.H.D.)	1	Car No. 63909 $^{70}/_{7}$ ~ X
	2113 13 200F	Carbutettor (L.H.D.)	1	Car No. 66996 $^{70}/_{0}$ ~ O
	2113 13 200G	Carburettor (L.H.D.)	1	Car No. 70537 $^{70}/_{11}$ ~ O
	2113 13 200H	Carburettor (L.H.D.)	1	Car No. 83040 $^{71}/_{1}$ ~ O
	2123 13 200B	Carburettor (R.H.D.)	1	
	2123 13 200D	Carburettor (R.H.D.)	1	Car No. 63909 $^{70}/_{7}$ ~ X
	2123 13 200E	Carburettor (R.H.D.)	1	Car No. 66996 $^{70}/_{9}$ ~ O
	2123 13 200F	Carburettor (R.H.D.)	1	Car No. 70537 $^{70}/_{11}$ ~ O
	2123 13 200G	Carburettor (R.H.D.)	1	Car No. 83040 $^{71}/_{1}$ ~ O
	2124 13 200	Carburettor (L.H.D.) For Okinawa	1	Car No. 63909 $^{70}/_{7}$ ~ Discarded
12	99901 0800	Nut, Carburettor	4	
	99971 0800	Spring Washer	4	
13	0820 13 201A	Stud, Air Cleaner	1	
14	0820 13 202B	Throttle Return Spring	1	
	0820 13 202C	Throttle Return Spring	1	Car No. 65573 $^{70}/_{9}$ ~ O
(N)	0820 13 203	Throttle Return Spring Cover	1	Car No. 66996 $^{70}/_{9}$ ~ Added Anew
15	0820 13 230F	Carburettor Tray	1	
	0820 13 230G	Carburettor Tray	1	Car No. 64505 $^{70}/_{7}$ ~ Δ
	0820 13 230H	Carburettor Tray	1	Car No. 65573 $^{70}/_{9}$ ~ O

		Air Cleaner Supporter	1	2063,2064,2123,2124,2334, 2418,2419,2797
	2113 13 311	Air Cleaner Supporter	1	2061,2062,2112,2113,2125, 2335,2336,2415,2416,2417
21	99901 0800	Nut, Supporter	2	
	99971 0800	Spring Washer	2	
	99952 0816	Plain Washer	2	
22	0820 13 235	Drain Pipe	1	
23	99295 1508	Clip	1	
24	0820 13 237	Clip	1	
25	0710 45 191	Clip	1	
26	0844 13 600	EXHAUST MANIFOLD	1	
27	99851 1025	Stud, Exhaust Pipe	4	
28	0180 13 459	Stud, Hot Air Duct	2	
29	0813 13 611B	Gasket, Exhaust Manifold	2	
30	0813 13 613	Nut, Exhaust Manifold	4	
	99971 1000	Spring Washer	4	
31	0844 13 621	Gasket, Exhaust Manifold	1	

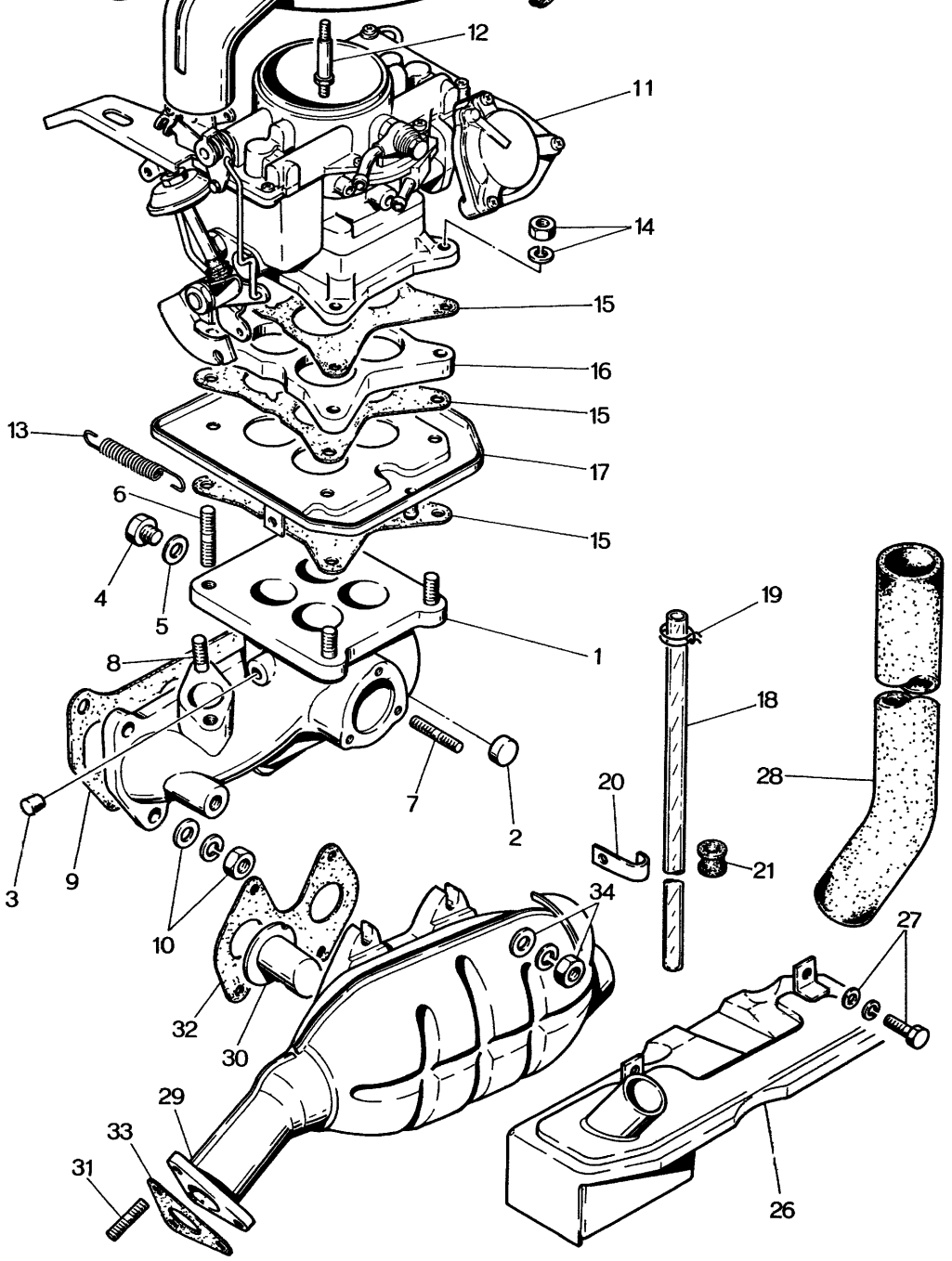
12
11
14
15
16
15
13
17
6
15
4
5
19
1
8
18
28
20
7
2
3
9
21
10
34
27
32
30
29
33
31
26

			3	
8	99851 0622	Stud	2	
9	2329 13 111A	Gasket, Inlet Manifold	1	
10	99901 0800	Nut, Inlet Manifold	6	
	99953 0800	Plain Washer	5	
	99971 0800	Spring Washer	6	
11	~~2329 13 200C~~	Carburettor	‡	
	~~2329 13 200D~~	Carburettor	‡	Car No. 62424 70/6 ~ ○ ※
	~~2329 13 200E~~	Carburettor	‡	Car No. 62138 70/6 ~ ○ ※
	2329 13 200F	Carburettor	1	Car No. 64215 70/7 ~ ○ ※
	2329 13 200G	Carburettor	1	Car No. 66996 70/9 ~ ○
	2329 13 230D	Carburettor Tray	1	Car No. 66996 70/9 ~ ○
12	0820 13 201A	Stud, Carburettor	1	
13	0820 13 202B	Return Spring, Throttle	1	
	0820 13 202C	Return Spring, Throttle	1	Car No. 66996 70/6 ~ ○
• Ⓝ	0820 13 204	Throttle Return Spring Cover	1	Car No. 66996 70/9 ~ Added Anew
14	99901 0800	Nut, Carburettor	4	
	99971 0800	Spring Washer	4	
	99953 0800	Plain Washer	4	
15	2329 13 221	Gasket, Carburettor	3	
16	2329 13 222	Insulator	1	
17	2329 13 230C	Carburettor Tray	1	
	2329 13 230D	Carburettor Tray	1	Car No. 66996 70/9 ~ ○
18	0820 13 235	Drain Pipe	1	
	2329 13 235	Drain Pipe	1	Car No. 62251 70/6 ~ ○
19	0710 45 191	Clip, Drain Pipe	1	
20	99295 1006	Clip, Drain Pipe, Tire House	1	

26	2329 13 330B	Hot Air Duct	1	
27	99801 0812	Bolt	2	
	99952 0800	Plain Washer	2	
	99971 0800	Spring Washer	2	
28	2329 13 341	Hot Air Hose	1	
29	2329 13 800F	REACTOR	1	
30	2329 13 810C	Inlet Pipe	2	☆
31	2329 13 876	Stud	3	
32	2329 13 804A	Gasket, Reactor	1	
33	2329 13 879	Gasket	1	
34	2158 40 355	Nut	4	
	~~99971 1000~~	Spring Washer	~~4~~	
	2329 13 882	Spring Washer	4	Car No. 58954 70/4 ~ ○ ※
	~~99952 1000~~	Plain Washer	~~4~~	
	0823 10 455	Plain Washer	4	Car No. 58954 70/4 ~ ○ ※
35	99295 1508	Clip	1	

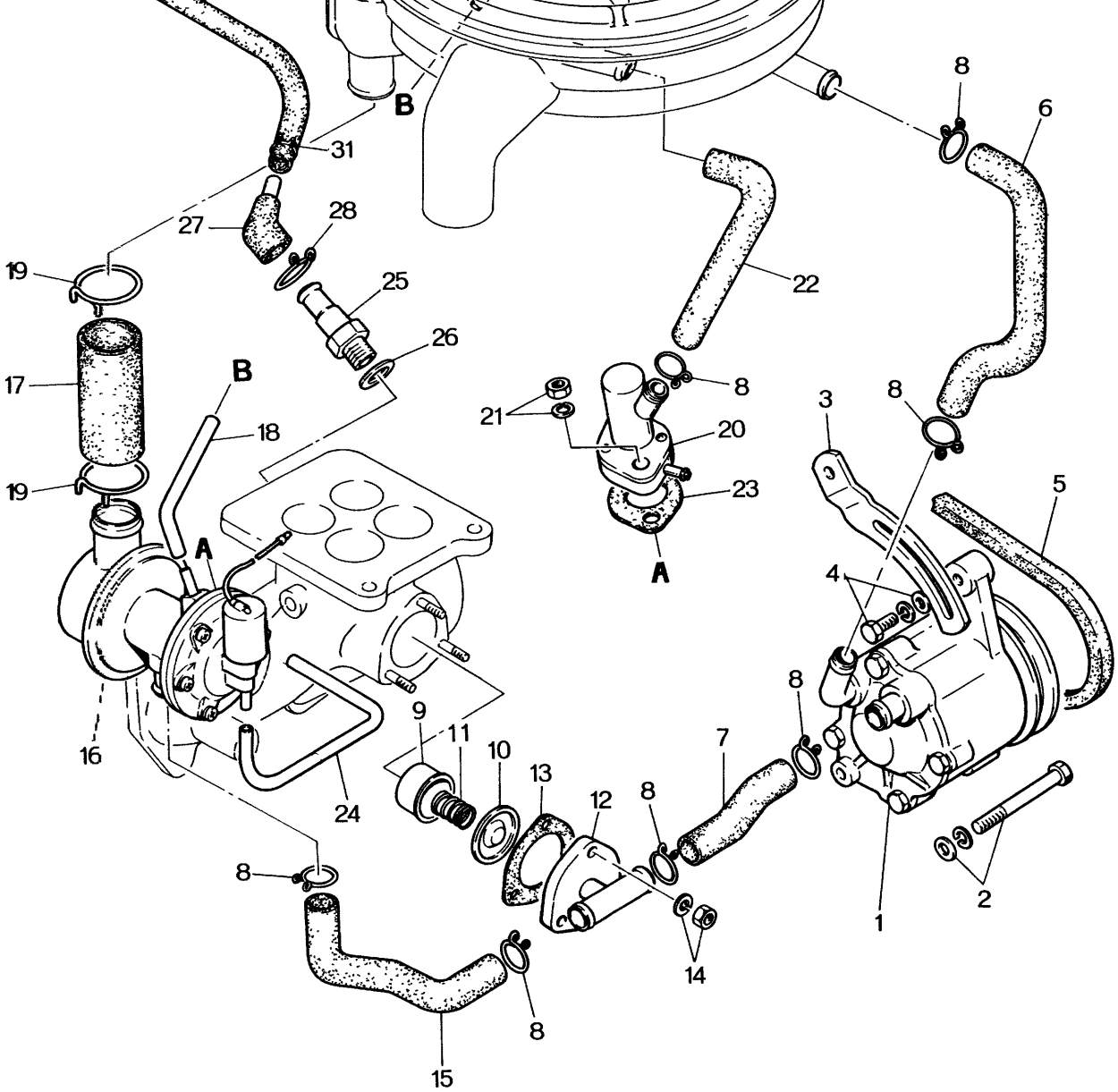
B
31
27
28
19
25
26
17
B
18
19
A
16
24
9
11
10
13
12
8
7
8
8
14
15
8
8
6
22
8
21
20
23
A
3
8
5
4
1
2

	99971 0800	Spring Washer	1		
5	2329 13 715	"V" Belt, Air Pump	1		
6	2329 13 721A	Air Hose, Air Cleaner ~ Air Pump	1		
7	2329 13 725B	Air Hose, Air Pump ~ Manifold	1		
8	2329 13 726	Clip, Air Hose	7		
9	2329 13 731A	Case, Check Valve	1		☆
10	2329 13 732A	Check Valve	1	Order Under 2329 13 730C	☆
11	2329 13 735A	Return Spring	1		☆
12	2329 13 740A	Joint Pipe Ass'y	1		
13	2329 13 744	Gasket	1		
14	99906 0600	Nut, Joint Pipe	3		
	99971 0600	Spring Washer	3		
15	2329 13 745B	Air Hose, Check Valve ~ Relief Valve	1		
16	2329 13 750C	Relief Valve	1		
17	2329 13 752C	Air Hose, Relief Valve ~ Air Cleaner	1		
18	2329 13 754A	Balance Tube, Relief Valve ~ Air Cleaner	1		
19	2329 13 756A	Clip, Air Hose	2		
20	2329 13 760D	Coasting Valve	1		
21	99906 0600	Nut, Coasting Valve	1		
	99971 0600	Spring Washer	2		
22	2329 13 761A	Air Hose, Coasting Valve ~ Air Cleaner	1		

	[illegible]	Ventilation Hose, Manifold ~ Oil Separator	1	
30	2329 13 786B	Ventilation Hose, I.M.H. ~ Air Cleaner	8	
31	2329 13 787	Clip, Ventilation Hose	8	
(N)	0813 13 641	Clip, A.A. Valve	2	
(N)	2329 13 770B	Anti-After Burn Valve	1	
(N)	2329 13 771A	Air Hose	1	
(N)	2329 13 772B	Air Hose	1	
• (N)	2329 13 773	Vacuum Tube	2	Car No. 62907 7%7 ~ Quantity
(N)	2329 13 910	Balance Valve	1	
(N)	2329 13 912	Balance Tube	1	
• (N)	2329 13 913	Balance Tube	1	Car No. 62907 7%7 ~ Discarded

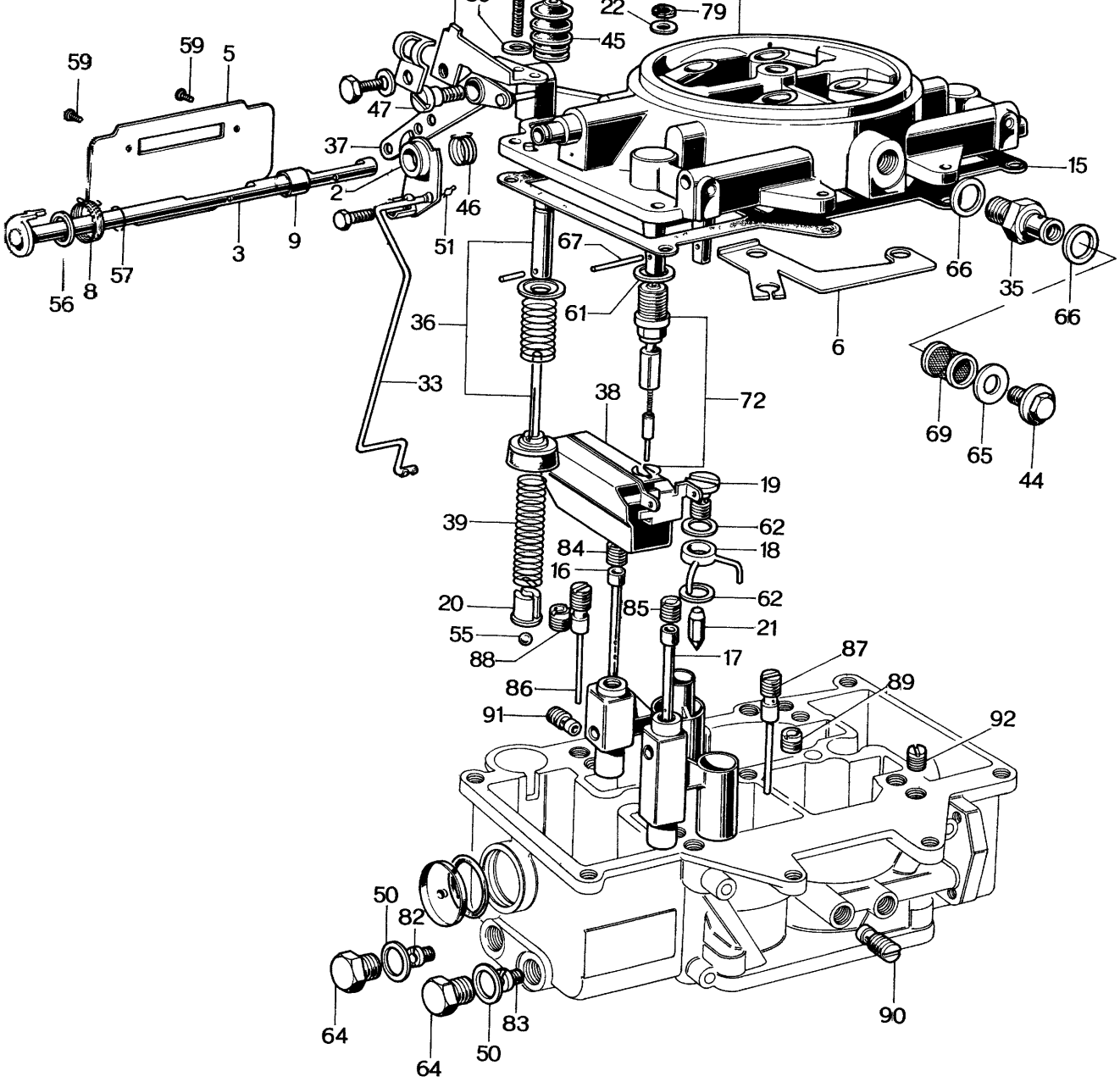
59
59
5
47
37
2
46
51
45
22
79
15
66
35
66
67
61
36
6
33
38
72
69
65
44
19
39
62
84
18
16
62
20
85
21
55
88
17
87
86
89
91
92
50
82
64
50
83
64
90
56
8
57
3
9

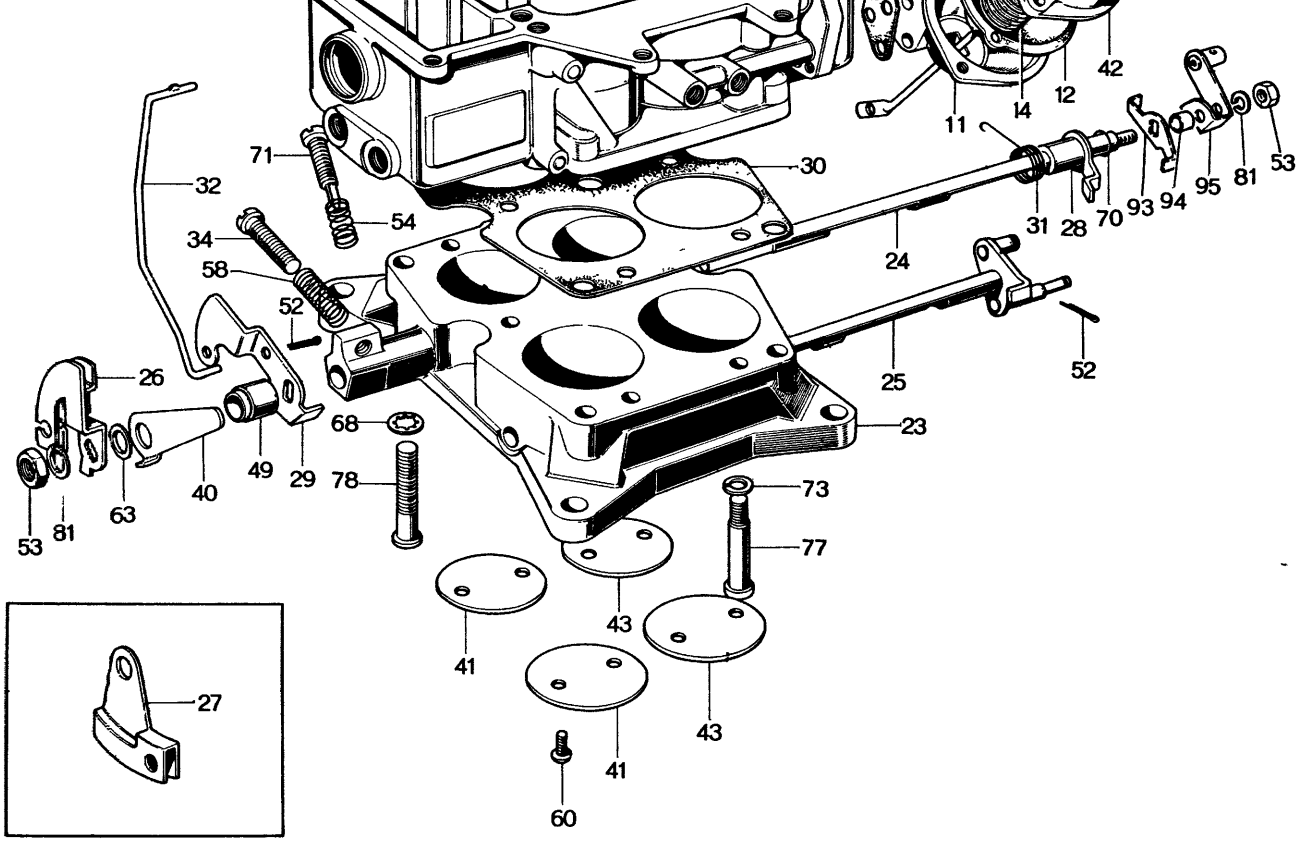
42
12
14
11
71
32
30
54
34
58
52
24
31
28
70
93
94
95
81
53
26
68
49
29
78
40
63
53
81
25
52
23
73
77
43
41
43
41
60
27

	2125 23 303	Choke Wire Arm (L.H.D.)	1
5	0820 23 306	Choke Valve	1
6	0820 23 305	Supporter (R.H.D.)	1
7	2125 23 305	Supporter (L.H.D.)	1
8	0820 23 309	Choke Valve Spring	1
9	0820 23 311	Sleeve	1
10	0820 23 321C	Float Chamber	1
11	0820 23 371A	Diaphragm Chamber	1
12	0820 23 372	Diaphragm	1
13	0820 23 373	Gasket, Diaphragm	1
14	0820 23 334A	Spring, Diaphragm	1
15	0820 23 327	Gasket, Float Chamber	1
16	0820 23 329A	Emulsion Tube (P)	2
17	0820 23 330	Emulsion Tube (S)	2
18	0820 23 338	Pump Injector	1
19	0813 23 328	Weight Set Screw	1
20	0820 23 337A	Distance Piece	1
21	0820 23 339	Injector Weight (D)	1
22	0820 23 416	5 ϕ Washer	2

29	0820 23 346A	Adjust Lever	1
30	0820 23 349	Gasket, Throttle Chamber	1
31	0820 23 353	Spring, Control Lever	1
32	0820 23 332	Pump Connecting Rod	1
33	0820 23 308	Choke Connecting Rod	1
34	0820 23 397B	Throttle Adjust Screw	1
35	0820 23 307	Connector	1
36	0813 23 323	Piston	1
37	0813 23 325	Pump Lever	1
38	0813 23 326	Float	2
39	0813 23 333	Piston Return Spring	1
40	0813 23 347	Starting Lever	1
41	0820 23 351	Throttle Valve (S)	2
42	0820 23 322B	Chamber Cover, Diaphragm	1
43	0268 23 317	Throttle Valve (P)	2
44	0118 23 398	Filter Set Screw	1
45	0118 23 342	Pump Cover	1
46	0813 23 361	Choke Spring	1
47	0820 23 362	Pump Lever Shaft (R.H.D.)	1
• 48	2125 23 362	5 ϕ Screw	1

56	0114 13 759	Sleeve	1
57	0114 13 757	Clip	1
58	0820 23 387A	Spring, Throttle Adjust Screw	1
59	0820 23 388	3 ϕ Screw	2
60	0820 23 389	3 ϕ Screw	8
61	0221 23 314	10 ϕ Washer	2
62	0187 23 356	7 ϕ Washer	2
63	0813 23 392	8 ϕ Washer	2
64	0221 23 395	Drain Plug	4
65	0813 23 395	8 ϕ Washer	1
66	0114 13 788A	12 ϕ Washer	2
67	0820 23 396	Float Shaft	2
68	0221 23 375	5 ϕ Washer	4
69	0813 23 401	Filter	1
70	0813 23 403	Clip	1
71	0820 23 405	Idle Adjust Screw	1
72	0268 23 372	2 ϕ Needle Valve	2
73	0820 23 399	5 ϕ Washer	1
74	0820 23 411	4 ϕ Screw	3

81	0221 23 368	8 ϕ Spring Washer	2
82	2125 23 421	# 82 Main Jet	2
83	0820 23 422A	# 130 Main Jet (P)	2
84	2125 23 423	#70 Main Air Bleed (P)	2
85	0813 23 424	# 140 Main Air Bleed (S)	2
86	0820 23 425	# 45 Slow Jet (P)	2
87	0820 23 426B	# 80 Slow Jet (S)	2
88	0820 23 427	# 220 Slow Air Bleed (P)	2
89	0820 23 428	# 150 Slow Air Bleed (S)	2
90	0820 23 431A	#180 Vacuum Jet (P) (R.H.D.) & For Okinawa	1
	2113 23 431	#190 Vacuum Jet (P) (L.H.D.)	1
91	0820 23 432B	# 140 Vacuum Jet (S)	1
92	0820 23 433	# 0 Slow Air Bleed	2
93	0820 23 358	Throttle Lever	1
94	0820 23 359	Spacer	1
95	0820 23 498	Pump Lever, Metering	1
96	2125 23 363	Guide (L.H.D.)	1

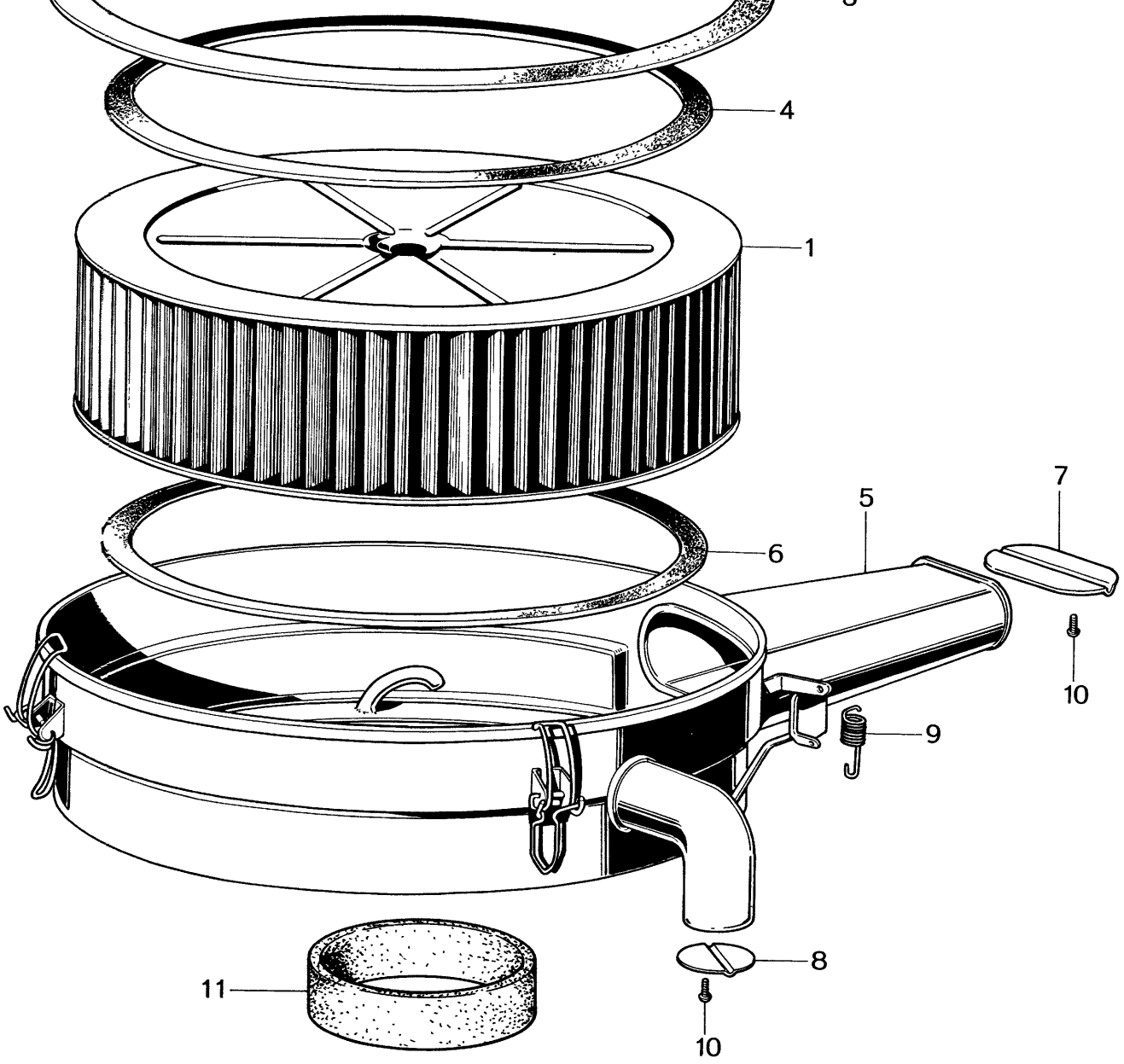
4
1
7
5
6
10
9
8
11
10

	2113 23 674	Packing, Cover (Felt)	1	Car No. 63909 $^{70}/_{7}$ ~ X
4	0820 23 675	Packing, Element (Rubber Sponge)	1	
	2113 23 675	Packing, Element (Rubber Sponge)	1	Car No. 63909 $^{70}/_{7}$ ~ X
5	0820 23 671B	BODY Ass'y	1	
•	0820 23 671D	BODY Ass'y	1	Car No. 69909 $^{70}/_{10}$ ~ O
6	0820 23 675	Packing, Element (Rubber Sponge)	1	
	2113 23 675	Packing, Element	1	Car No. 63909 $^{70}/_{7}$ ~ X
•	0820 23 687	Packing, Element No. 2	1	Car No. 69909 $^{70}/_{10}$ ~ X
7	0820 23 676A	Shutter (A)	1	
	2113 23 676	Shutter (A)	1	Car No. 63909 $^{70}/_{7}$ ~ X
8	0820 23 677	Shutter (B)	1	
	2113 23 677	Shutter (B)	1	Car No. 63909 $^{70}/_{7}$ ~ X
9	0820 23 678	Spring	2	
10	0221 23 201	Screw	2	
	0222 23 201	Screw	2	Car No. 63909 $^{70}/_{7}$ ~ X
11	0813 23 679	Dust Seal	1	
	2113 23 679	Dust Seal	1	Car No. 63909 $^{70}/_{7}$ ~ X
Ⓝ	2113 23 681	Wing Nut	1	Car No. 63909 $^{70}/_{7}$ ~ Added Anew
•	0305 23 613	Wing Nut	1	Car No. 69909 $^{70}/_{10}$ ~ O
Ⓝ	2113 23 682	Seal Washer	1	Car No. 63909 $^{70}/_{7}$ ~ Added Anew
•	0820 23 682	Seal Washer	1	Car No. 69909 $^{70}/_{10}$ ~ O

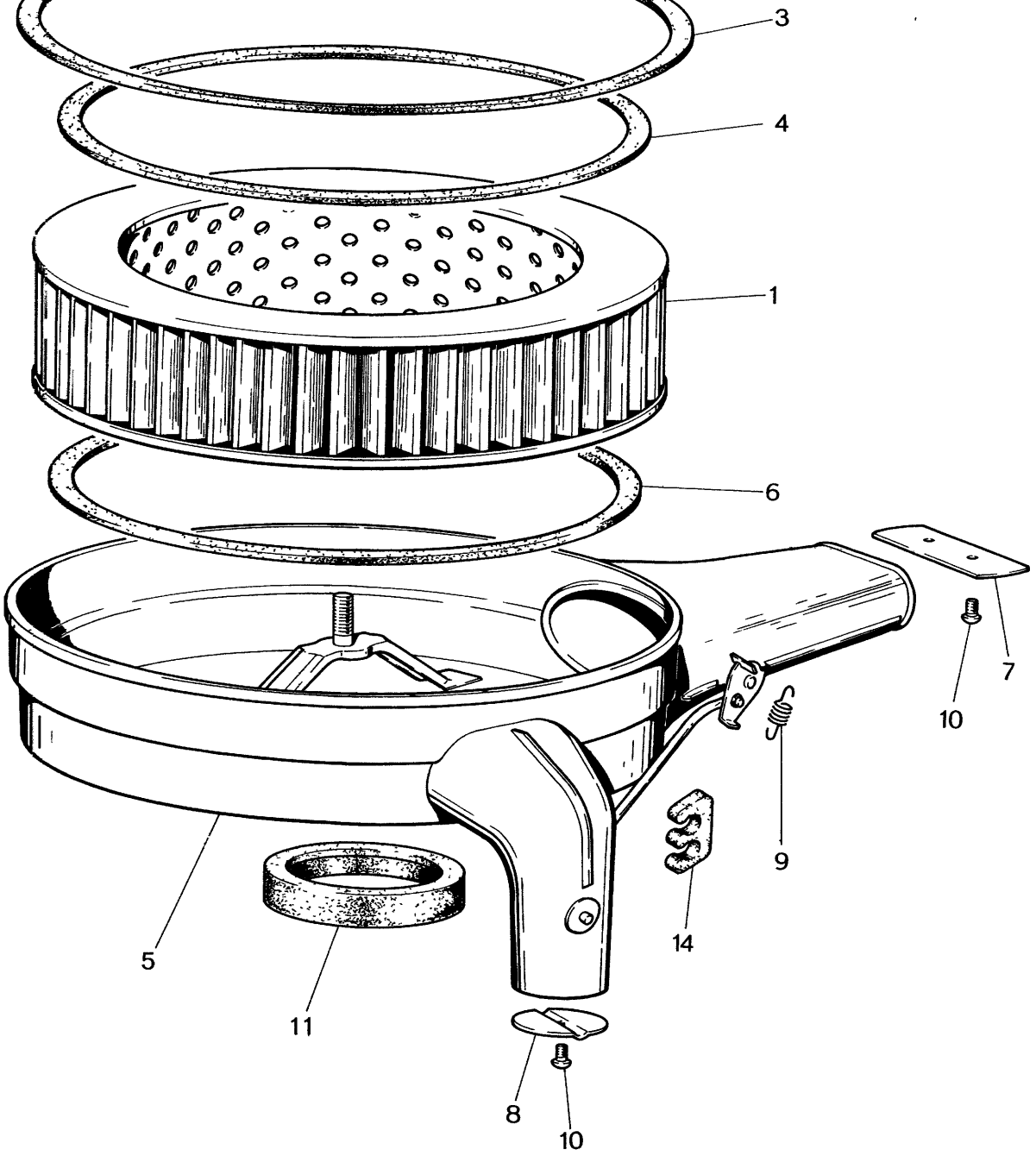
3
4
1
6
7
10
9
14
5
11
8
10

	3	2113 23 674	Packing, Cover (2125,2415~2417,2061,2062,2112 2335,2336)	1	Car No. 69909 $^{7}/_{10}$ ~ ○
	4	2113 23 675	Packing, Element	1	
	5	2113 23 671	BODY Ass'y	1	
•		2113 23 671A	BODY Ass'y	1	Car No. 69909 $^{7}/_{10}$ ~ ○
	6	2113 23 675	Packing, Element	1	
	7	2113 23 676	Shutter "A"	1	
	8	2113 23 677	Shutter "B"	1	
	9	0820 23 678	Spring	2	
	10	0222 23 201	Screw	2	
	11	2113 23 679	Dust Seal	1	
	12	2113 23 681	Wing Nut	1	
	13	2113 23 682	Seal Washer	1	
•	14	2113 23 683	Protector, HT. Cord.	1	

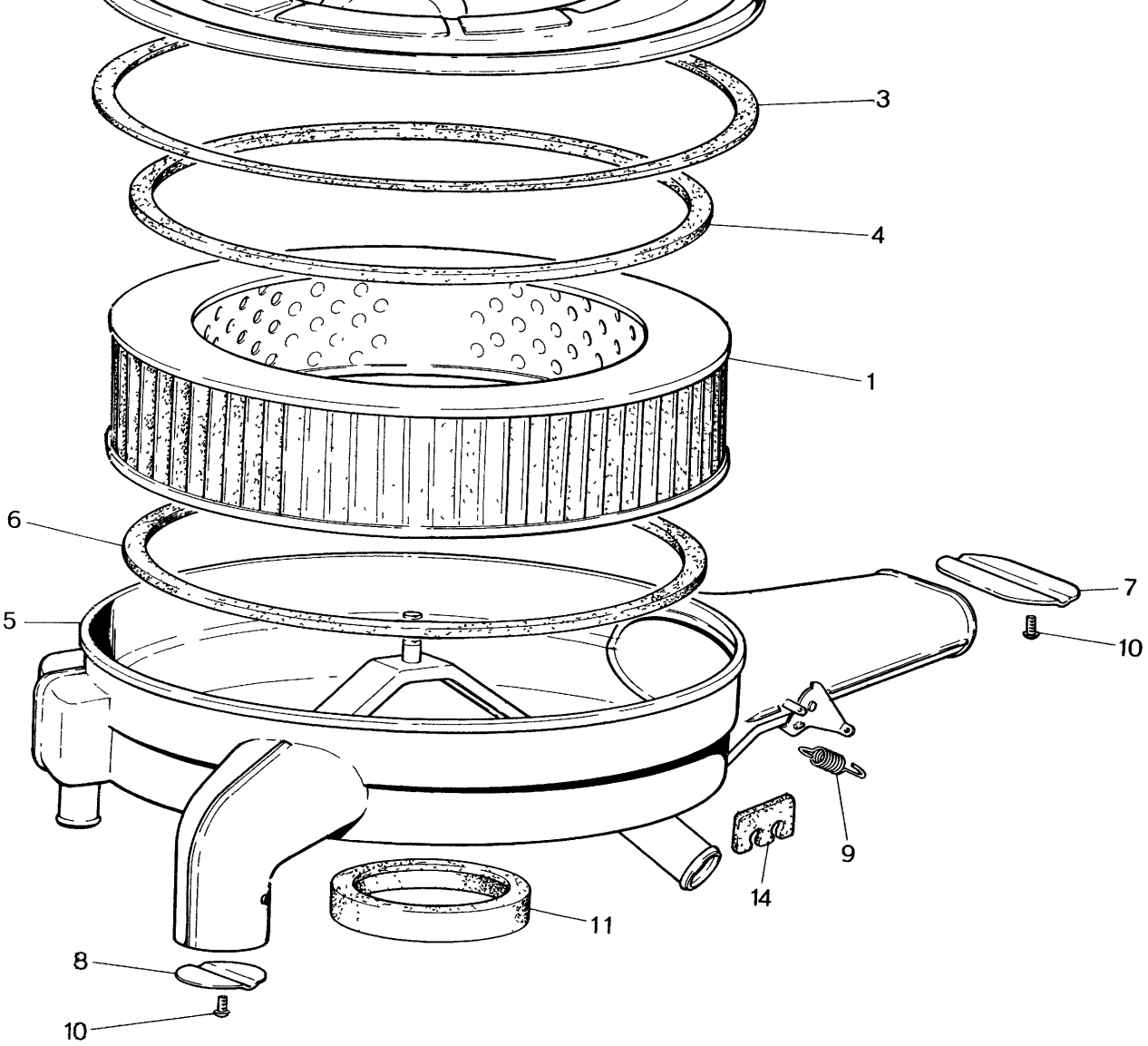
3
4
1
6
5
7
10
9
14
11
8
10

4	2113 23 675	Packing, Element	1
5	2329 23 671A	BODY Ass'y	1
6	2113 23 675	Packing, Element	1
7	2329 23 676	Shutter "A"	1
8	2329 23 677	Shutter "B"	1
9	0820 23 678	Spring	2
10	0222 23 201	Screw	2
11	2113 23 679	Dust Seal	1
12	2113 23 681	Wing Nut	1
13	2113 23 682	Seal Washer	1
14	2113 13 311	Supporter	1
	2113 23 683	Supporter	2
	2329 23 685	Supporter	1

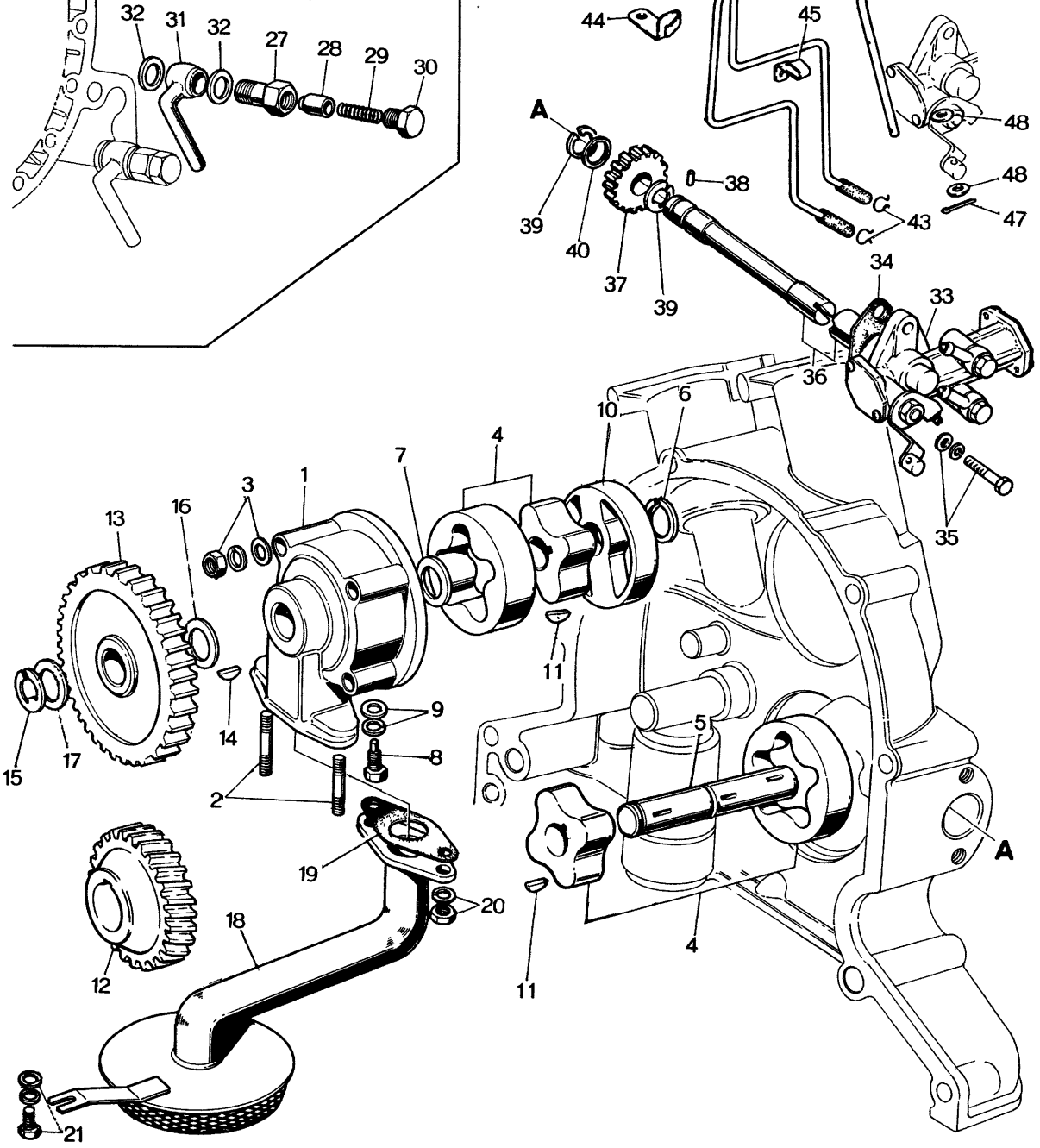
32
31
32
27
28
29
30
44
45
A
48
38
48
39
40
37
39
43
47
34
33
36
10
6
4
7
1
3
16
13
35
11
9
14
5
15
17
8
2
A
19
20
18
4
12
11
21

	99953 0600	Plain Washer	4
4	0820 23 882	Oil Pump Rotor Set	2
5	0820 14 112C	Shaft, Oil Pump	1
6	0810 14 113	Snap Ring	1
7	0810 14 114	Thrust Washer	1
8	0820 14 117A	Lock Bolt, Oil Pump	1
9	99953 0600	Plain Washer	1
	99971 0600	Spring Washer	1
10	0820 14 118	Middle Plate, Oil Pump	1
11	0820 14 119	Key	2
	0820 23 881	OIL PUMP GEAR SET	1
12	0820 11 521B	Oil Pump Drive Gear	1
13	0820 14 151C	Oil Pump Drive Gear	1
14	0107 18 274	Key	1
15	99573 1200	Snap Ring	1
16	0810 14 204	Adjust Shim t = 0.3	1

	99971 0800	Spring Washer	2	
21	908066 6 10	Set Bolt, Oil Strainer	1	Car No. 64913 $^{70}/_{8}$ ~ Discarded
	0820 14 300	OIL FILTER (R.H.D.)	1	
•	0820 14 300A	OIL FILTER (R.H.D.)	1	Car No. 63831 $^{70}/_{7}$ ~ ○
	2125 14 300A	OIL FILTER (L.H.D.)	1	
•	2125 14 300B	OIL FILTER (L.H.D.)	1	Car No. 70537 $^{70}/_{11}$ ~ ○
22	0820 23 801	Cover (R.H.D.)	1	
•	0820 23 801A	Cover (R.H.D.)	1	Car No. 63831 $^{70}/_{7}$ ~ ○
	2125 23 801A	Cover (L.H.D.)	1	
•	2125 23 801B	Cover (L.H.D.)	1	Car No. 70537 $^{70}/_{11}$ ~ ○
23	0813 23 802A	Cartridge, Oil Filter	1	
24	0813 23 803	Gasket	1	
25	99541 01601	"O" Ring, Oil Filter	2	
26	99901 0800	Nut, Oil Filter	2	
	99971 0800	Spring Washer	2	
	99953 0800	Plain Washer	2	
	0820 14 250	PRESSURE REGULATOR Ass'y	1	
	0820 14 250A	PRESSURE REGULATOR Ass'y	1	Car No. 64615 $^{70}/_{8}$ ~ ○
27	0820 14 251	Pressure Regulator Body	1	
	0820 14 251A	Pressure Regulator Body	1	Car No. 64615 $^{70}/_{8}$ ~ ○

33	0820 14 600D	Metering Oil Pump Cpt.	1	
	0839 14 600B	Metering Oil Pump Cpt.	1	Car NO. 68290 $^{70}/_{10}$ ~ ○
34	0810 14 611	Gasket, Metering Oil Pump	1	
35	99806 0630	Bolt, Metering Oil Pump	1	
	99806 0618	Bolt	1	
	99971 0600	Spring Washer	2	
	99953 0600	Plain Washer	2	
36	0820 14 620	Driven Gear Shaft Ass'y	1	
37	0820 14 625	Driven Gear	1	
38	0813 14 623	Pin	1	
39	99576 0800	Snap Ring	2	
40	0810 18 276	Adjust Shim t = 0.6	2	
	0810 18 277	Adjust Shim t = 0.3	2	
41	0820 14 630A	Metering Oil Tube Ass'y	1	
42	0820 14 640	Metering Oil Tube Ass'y	1	
43	0813 14 641	Clip	4	
44	0820 14 643	Clip	1	
45	0820 14 647	Clip	1	
46	2329 14 651	Connecting Rod	1	
47	99221 1212	Split Pin	2	
48	99953 0400	Plain Washer	3	

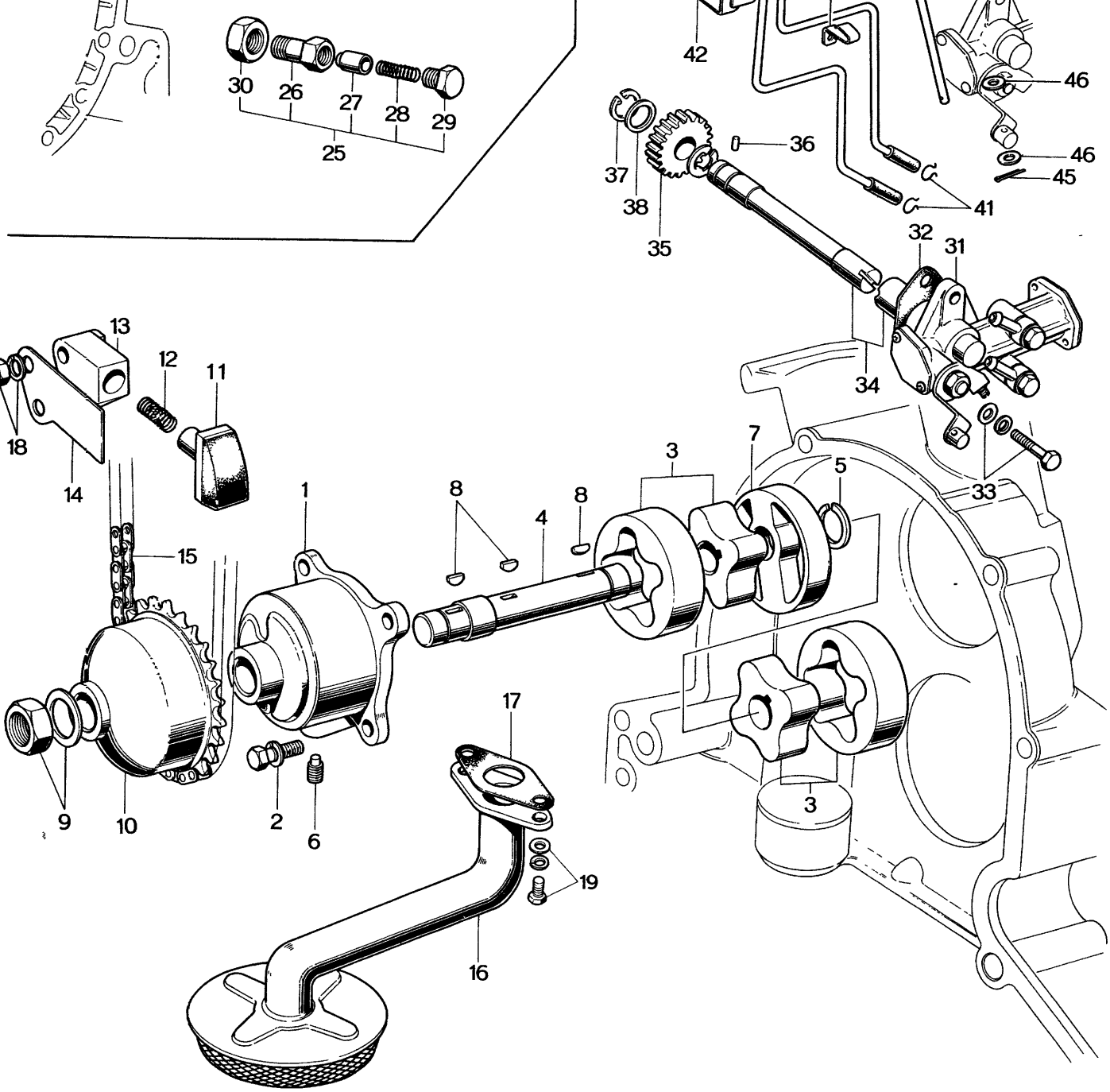
30
26
27
28
29
25
42
46
46
45
36
37
38
35
41
32
31
34
33
13
12
11
18
14
1
8
8
4
3
7
5
15
9
10
2
6
17
19
16
3

7	0820 14 118C	Plate, Middle Oil Pump	1	
8	0839 14 119A	Key	1	
•	0839 14 119B	Key	1	Car No. 95155 $7\frac{1}{4}$ ~ ○
9	99922 1200	Nut	1	
	99979 1200	Washer, Tab	1	
10	0839 14 141	Gear, Drive—Oil Pump	1	
	0839 14 141A	Gear, Drive—Oil Pump	1	Car No. 87858 $7\frac{1}{2}$ ~ ○
11	0823 14 130	Adjuster, Chain	1	
12	0823 14 131	Spring	1	
13	0839 14 132	Body	1	
14	0839 14 133	Plate, Giude	1	
15	0839 14 142	Chain	1	
16	0820 14 160C	Strainer, Oil	1	
	0820 14 160D	Strainer, Oil	1	Car No. 90655 $7\frac{1}{3}$ ~ ○
17	0810 14 171	Gasket, Oil Strainer	1	
18	99906 0600	Nut, Chain Adjust	2	
	99971 0600	Washer, Spring	2	
19	908062 6 16	Bolt, Set—Oil Strainer	2	
	0839 14 300	FILTER, Oil (R.H.D.)	1	
	2125 14 300B	FILTER, Oil (L.H.D.)	1	
20	0839 23 301	Cover, (R.H.D.)	1	
	2125 23 801B	Cover, (L.H.D.)	1	
21	0813 23 802A	Cartridge, Oil Filter	1	
22	0813 23 803	Gasket	1	

25	0820 14 250A	REGULATOR Ass'y, PRESSURE	1	
	0820 14 250C	REGULATOR Ass'y, PRESSURE	1	Car No. 92891 71/3 ~ ○
26	0820 14 251B	Body, Pressure Regulator	1	
	0820 14 251C	Body, Pressure Regulator	1	Car No. 92891 71/3 ~ ○
27	0221 14 115	Plunger, Pressure Control	1	
28	0221 14 116	Spring, Pressure Control	1	
29	0221 14 117	Plug	1	
30	0820 14 252	Nut	1	
	99267 0422	Pin	1	Car No. 92891 71/3 ~ Added Anew
31	0839 14 600B	Pump Cpt. Metering Oil	1	
•	2090 14 600	Pump Cpt. Metering Oil	1	Car No. 94190 71/3 ~ ○
32	0810 14 611	Gasket, Metering Oil Pump	1	
33	99806 0630	Bolt, Metering Oil Pump	1	
	99806 0618	Bolt	1	
	99971 0600	Washer, Spring	2	
	99953 0600	Washer, Plain	2	
34	0820 14 620	Shaft, Driven Gear	1	
35	0820 14 625	Gear, Driven	1	
36	0813 14 623	Pin	1	
37	99576 0800	Ring, Snap	2	
38	0810 18 276	Shim, (t = 0.6)—Adjust	2	
	0810 18 277	Shim, (t = 0.3)—Adjust	2	

46	99953 0400	Washer, Plain	3

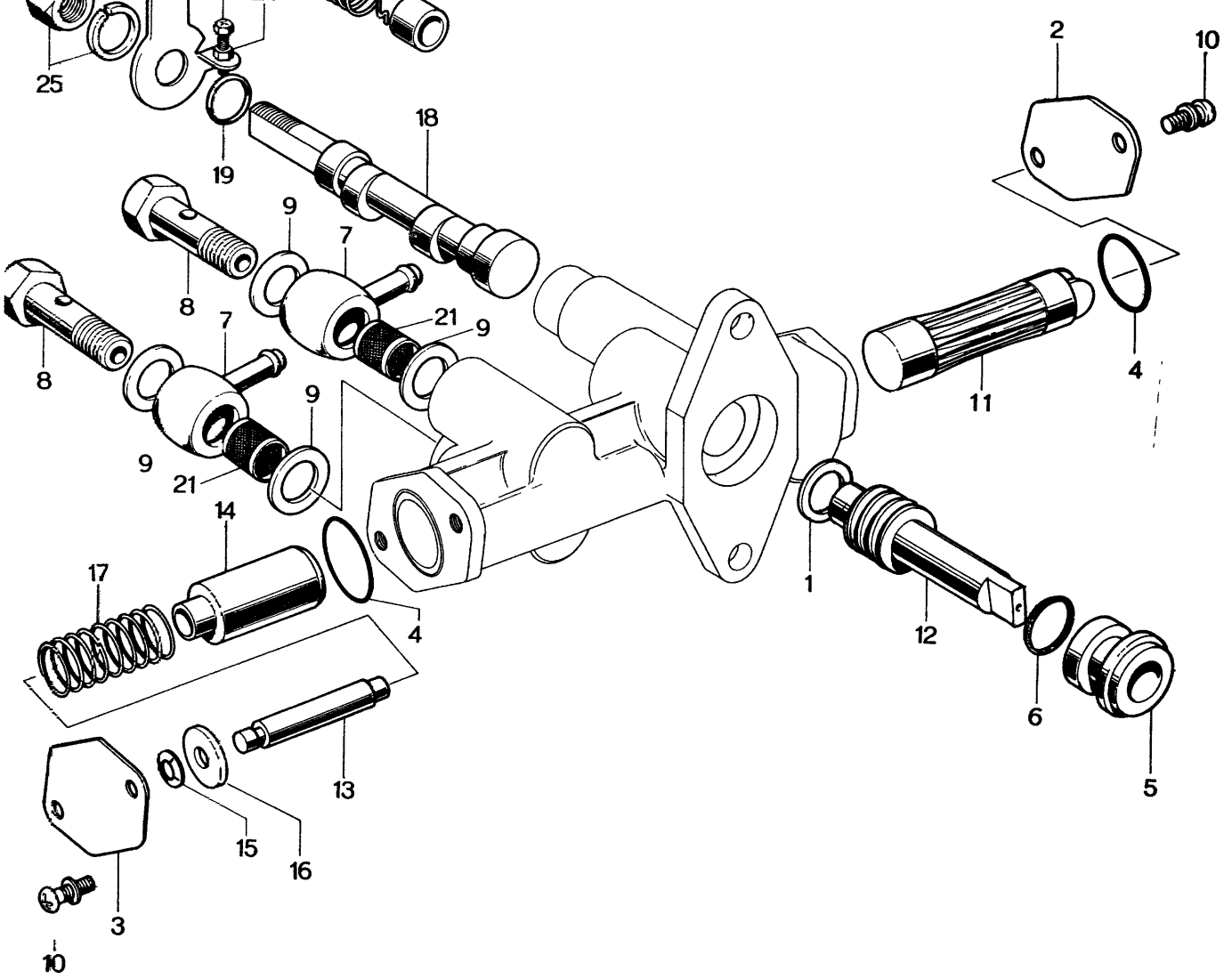
25
19
18
2
10
9
7
8
21
9
8
7
9
9
21
4
11
14
17
4
1
12
6
5
13
15
16
3
10

	6	0730 23 839	Ring, "O"	1	
	7	0820 23 836	Connector	2	
	8	0730 23 842	Bolt, Connector	2	
	9	0730 23 843	Washer, Connector	4	
	10	908332 4 08	Screw, Set—Plate	4	
	11	0730 23 845	Plunger	1	
	12	0730 23 846	Worm, Driveing	1	
	13	0820 23 837A	Plunger, Sub	1	
•		2090 23 837	Plunger, Sub	1	Car No. 94190 $^{71}/_{3}$ ~ O
	14	0820 23 838	Plunger, Differential	1	
•		2090 23 838	Plunger, Differential	1	Car No. 94190 $^{71}/_{3}$ ~ O
	15	0730 23 848	Nut, Push	1	
	16	0820 23 839A	Plate, Spring	1	
	17	0820 23 840	Spring, Plunger	1	
	18	0839 23 841	Pin, Control	1	
•		2090 23 841	Pin, Control	1	Car No. 94190 $^{71}/_{3}$ ~ O
	19	0730 23 854	Ring, "V"	1	
	20	0820 23 842	Cap	1	
	21	0820 23 843	Strainer	2	
	22	0820 23 844A	Lever, Control	1	
•		2090 23 844	Lever, Control	1	Car No. 94190 $^{71}/_{3}$ ~ O
	23	0820 23 845A	Screw, Adjust	1	
	24	0820 23 847A	Nut, Adjust Screw	1	
	25	99907 0600	Nut, Control Lever	1	

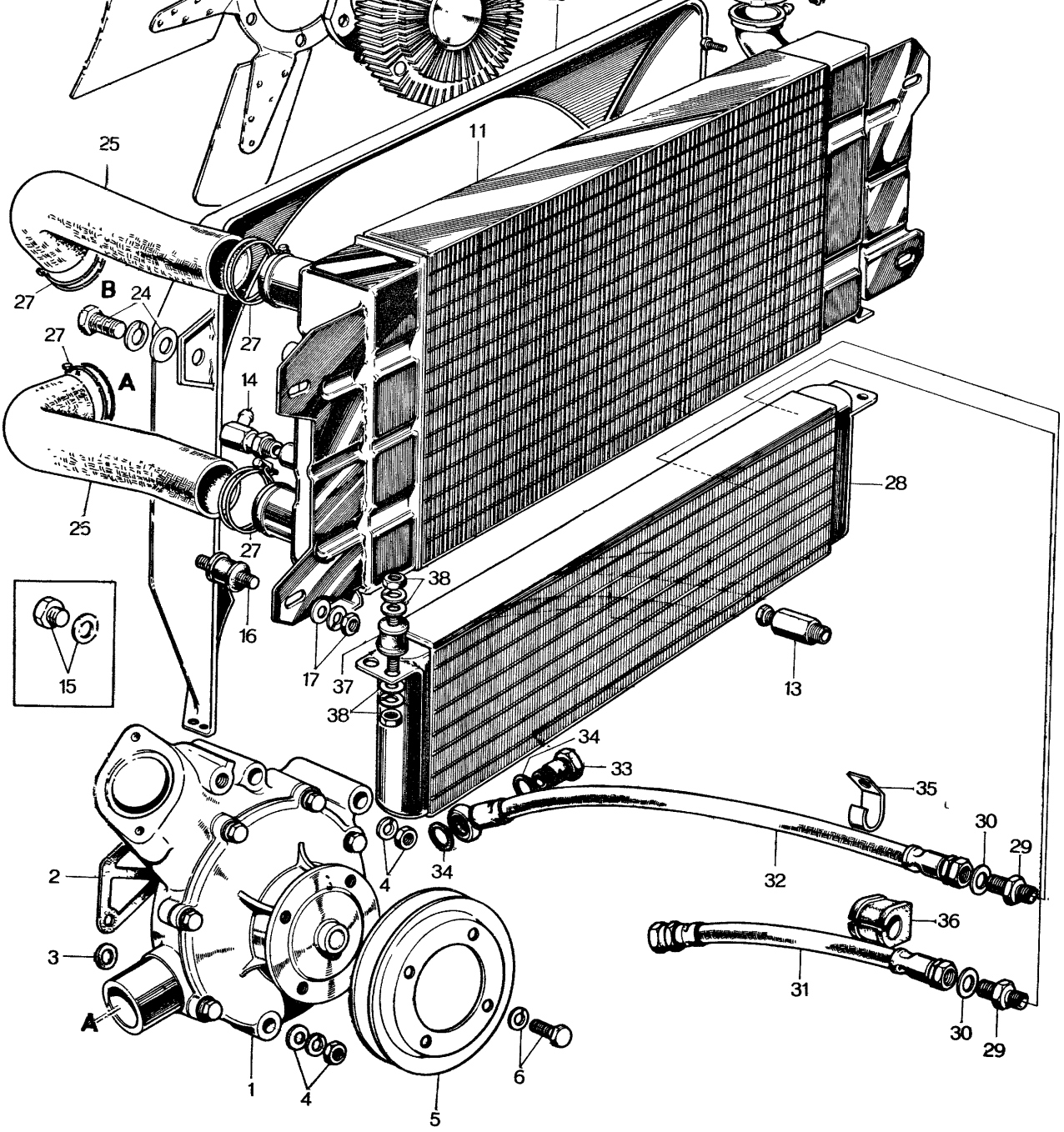
25
11
27
B
24
27
27
A
14
25
28
27
38
16
17
37
38
13
15
34
33
35
30
29
32
2
4
34
36
3
31
A
30
29
1
4
5
6

•		908012 8 30	Washer & Bolt	1	Car No. 83040 $^{71}/_{1}$ ~ Added Anew
	5	0820 15 151	Pulley, Water Pump	1	
	6	908062 6 10	Set Bolt, Pulley	4	Car No. 83039 $^{71}/_{10}$ ~ Discarded
•		99806 0610	Bolt	4	Car No. 83040 $^{71}/_{10}$ ~ Added Anew
•		99971 0600	Spring Washer	4	Car No. 83040 $^{71}/_{10}$ ~ Added Anew
		0820 15 250C	FAN & FAN DRIVE Ass'y	1	
		0820 15 250D	FAN & FAN DRIVE Ass'y	1	Car No. 58954 $^{70}/_{5}$ ~ ○
		0820 15 250E	FAN & FAN DRIVE Ass'y	1	Car No. 63245 $^{70}/_{7}$ ~ ○
•		0820 15 250F	FAN & FAN DRIVE Ass'y	1	Car No. 73747 $^{70}/_{12}$ ~ ○
	7	0820 15 200B	Cooling Fan	1	
		0820 15 200C	Cooling Fan	1	Car No. 58954 $^{70}/_{4}$ ~ ○
	8	0839 15 210	Fan Drive	1	
		0839 15 210A	Fan Drive	1	Car No. 63245 $^{70}/_{7}$ ~ ○
•		0820 15 210D	Fan Drive	1	Car No. 73747 $^{70}/_{12}$ ~ ○
	9	99906 0600	Nut, Fan & Fan Drive	6	
		99971 0600	Spring Washer	6	
	10	908066 6 18	Set Bolt, Fan Drive	4	
	11	0820 15 310G	RADIATOR (R.H.D.)	1	
		0820 15 310H	RADIATOR (R.H.D.)	1	Car No. 72696 $^{70}/_{11}$ ~ X
•		0820 15 310I	RADIATOR (R.H.D.)	1	Car No. 77243 $^{70}/_{12}$ ~ ○
		2113 15 310	RADIATOR (L.H.D.)	1	
		2113 15 310A	RADIATOR (L.H.D.)	1	Car No. 58501 $^{70}/_{4}$ ~ X
		2113 15 310B	RADIATRO (L.H.D.)	1	Car No. 64624 $^{70}/_{8}$ ~ X
•		2113 15 310C	RADIATOR (L.H.D.)	1	Car No. 77243 $^{70}/_{12}$ ~ ○
	12	0820 23 921A	Cap, Radiator	1	

		Nut, Radiator	4	
	99951 0822	Plain Washer	4	
	99971 0800	Spring Washer	4	
18	0820 15 350C	RESERVE TANK (R.H.D.)	1	
	2113 15 350A	RESERVE TANK (L.H.D.)	1	
19	0222 15 255	Cap, Reserve Tank	1	
20	0820 15 351E	Water Hose, Reserve Tank (R.H.D.)	1	
	2113 15 351	Water Hose, Reserve Tank (L.H.D.)	1	
	2329 15 351	Water Hose, Reserve Tank (L.H.D.)	1	Car No. 58501 $^{70}/_{4}$ ~ X
21	99285 0800	Clip, Water Hose	2	
22	908016 8 12	Set Bolt, Reserve Tank	4	Car No. 72759 $^{70}/_{11}$ ~ Quantity
23	0820 15 401G	Radiator Shroud	1	
	2329 15 401A	Radiator Shroud	1	Car No. 72759 $^{70}/_{11}$ ~ X
24	908016 8 16	Set Bolt, Radiator Shroud	2	Car No. 72759 $^{70}/_{11}$ ~ Discarded
25	0820 15 511B	Water Hose, Thermostat ~ Radiator	1	
26	0820 15 521C	Water Hose, Radiator ~ Water Pump	1	
27	99282 4900	Hose Band, Water Hose	4	
28	0820 14 700C	Oil Cooler	1	

			Slip, Oil Hose	1	
	36	0813 14 716	Protector, Oil Hose	1	
	37	0222 13 363	Insulation Rubber, Oil Cooler	4	
	38	99901 0600	Nut, Oil Cooler	8	
•		99906 0600	Nut, Oil Cooler	8	Car No. 63363 $^{7}/_{7}$ ~ X
		99952 0600	Plain Washer	8	
		99971 0600	Spring Washer	8	
•	(N)	2329 14 725	Tube (L.H.D.)	1	Car No. 69162 $^{7}/_{10}$ ~ Added Anew

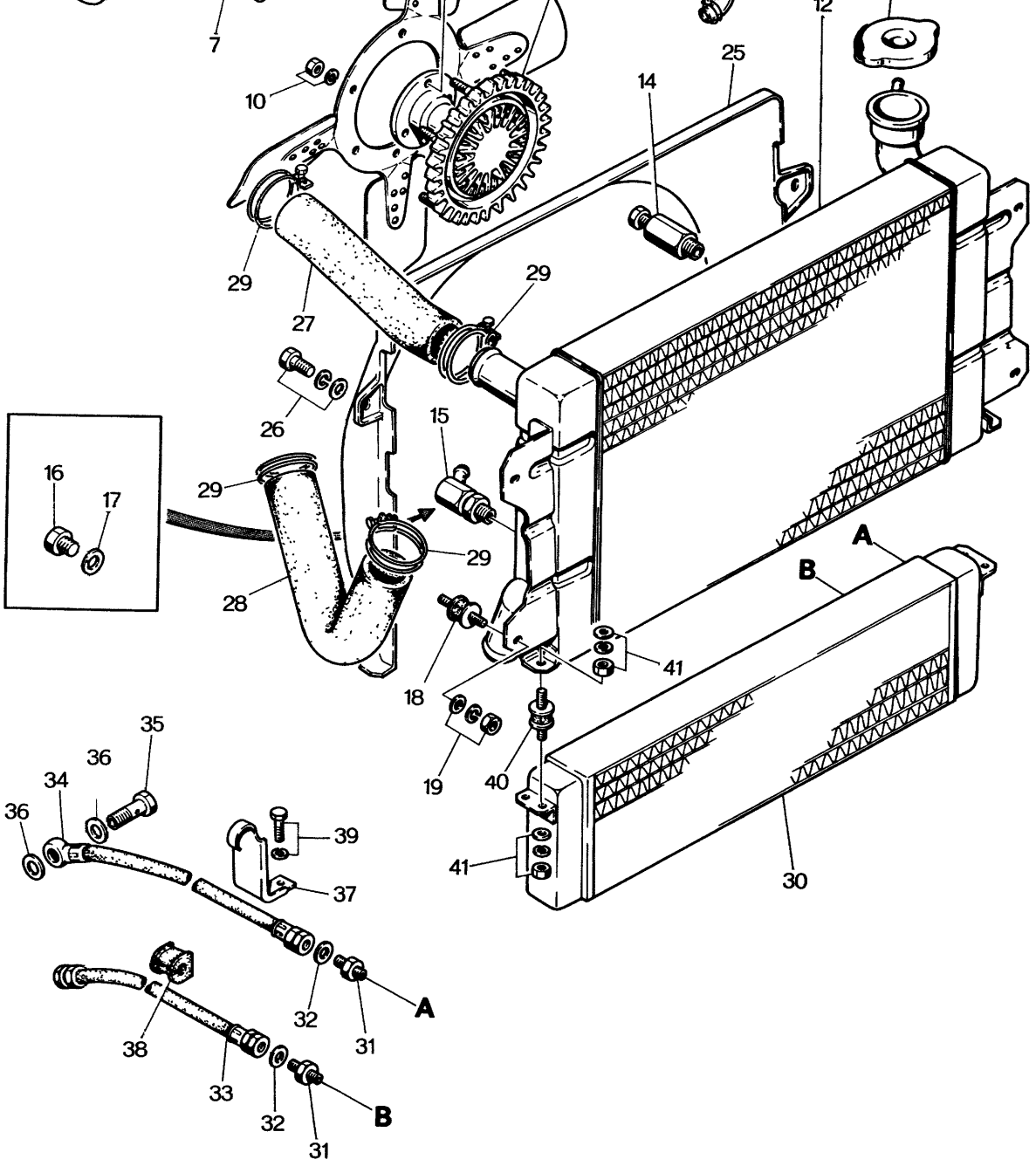
7
10
12
25
14
29
27
29
26
15
16
17
29
29
28
A
B
18
41
19
40
35
36
34
36
39
37
41
30
32
31
A
38
33
32
31
B

		Spring Washer	3
5	2329 15 151A	Pulley, Water Pump	1
6	908062 6 14	Set Bolt, Pulley	4
7	908012 8 30	Set Bolt, Water Pump	1
	2329 15 250B	**FAN & FAN DRIVE Ass'y**	1
8	2329 15 200A	Cooling Fan	1
9	2329 15 210	Fan Drive	1
10	99906 0600	Nut, Fan & Fan Drive	6
	99971 0600	Spring Washer	6
11	908062 6 16	Set Bolt, Fan Drive	4
12	2329 15 310C	**RADIATOR**	1
13	0820 23 921A	Cap, Radiator	1

	99951 0822	Plain Washer	4
	99971 0800	Spring Washer	4
20	2113 15 350A	RESERVE TANK	1
21	0222 15 255	Cap, Reserve Tank	1
22	2329 15 351	Water Hose, Reserve Tank	1
23	99285 0800	Clip, Water Hose	2
24	908016 8 12	Set Bolt, Reserve Tank	2
25	2329 15 401A	Radiator Shroud	1
26	908016 8 12	Set Bolt, Radiator Shroud	2
27	2329 15 511	Water Hose, Thermostat ~ Radiator	1
28	2329 15 521	Water Hose, Radiator ~ Water Pump	1
29	99282 4900	Hose Band, Water Hose	4
30	0820 14 700C	Oil Cooler	1
31	99384 1200	Union Joint, Oil Cooler	2
32	99562 1600	Packing	2
33	0820 14 720B	Oil Hose	1

		99971 1200	Spring Washer	1	
	40	0222 13 363	Insulation Rubber	4	
	41	99901 0600	Nut, Insulation Rubber	8	
•		99906 0600	Nut, Insulation Rubber	8	Car No. 63363 $^{70}/_{7}$ ~ X
		99952 0600	Plain Washer	8	
		99971 0600	Spring Washer	8	

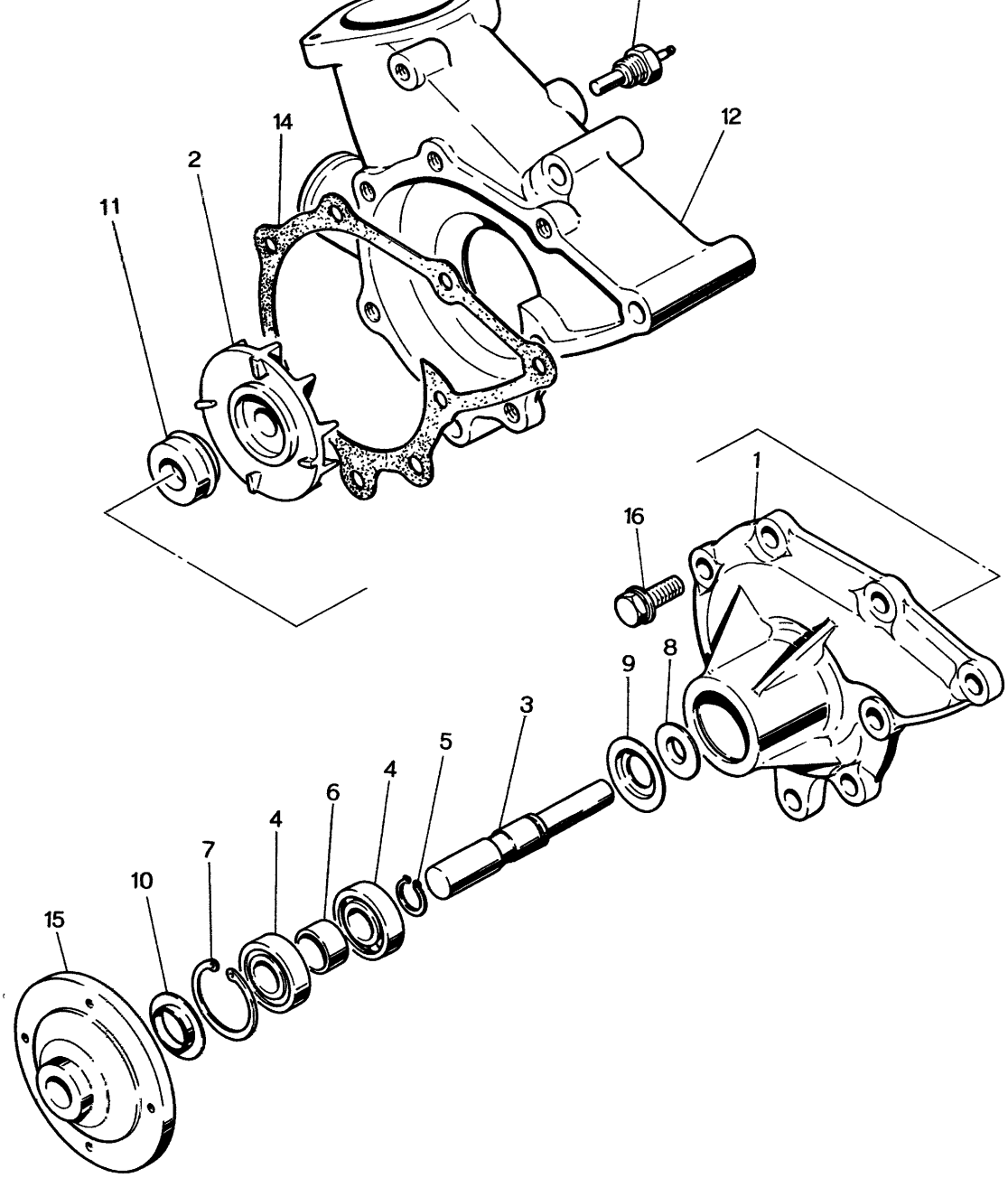
14
2
11
12
1
16
9
8
3
5
4
6
4
7
10
15

		Shaft	1	
4	0118 15 121	Ball Bearing	2	
5	0118 15 114	Stop Ring	1	
6	0820 15 115	Spacer	1	
7	99574 3500	Retaining Ring	1	
8	0813 15 117	Baffle Plate	1	
9	0118 15 118	Dust Seal Plate	1	
10	0810 15 119	Dust Seal Plate	1	
11	0820 15 120	Water Seal Cpt.	1	
12	0820 15 100D	WATER PUMP CASING Ass'y	1	
	0820 15 100E	"T" Type Dashboard use	1	Car No. 62480 70/6 ~ X
	0822 15 100A	WATER PUMP CASING Ass'y	1	
	0822 15 100B	Plain Type Dashboard use	1	Car No. 62480 70/6 ~ X
13	0118 18 510	Heat Gauge Unit "T" Type Dashboard use	1	
	0259 18 510	Heat Gauge Unit Plain Type Dashboard use	1	
14	0820 15 132A	Packing, Pump Cover	1	
15	0820 15 152	Pulley Boss	1	
16	908016 8 22	Set Bolt, Water Pump	5	

0820 99 150	WATER PUMP REPAIR KIT (Fig. No. 2~5, 7, 9, 10, 11 included)	2 1	)

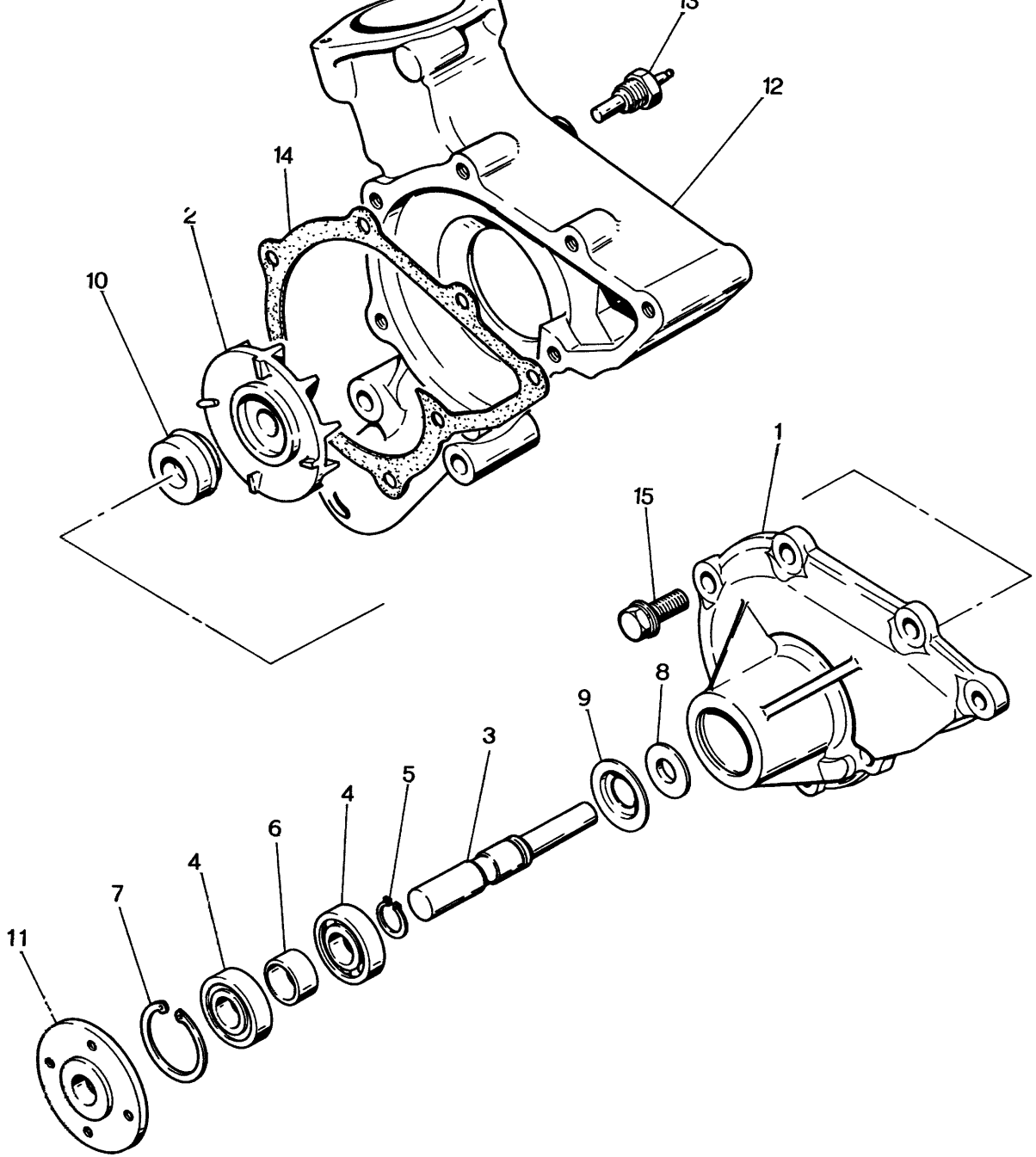
13
12
14
2
10
1
15
8
9
3
5
4
6
4
7
11

3	0820 15 112	Shaft	1	
4	0118 15 121	Ball Bearing	2	
5	0118 15 114	Stopper Ring	1	
6	0820 15 115	Spacer	1	
7	99574 3500	Snap Ring	1	
8	0813 15 117	Baffle Plate	1	
9	0118 15 118	Dust Seal Plate	1	
10	0820 15 120	Water Seal	1	
11	2329 15 152	Water Pump Pulley Boss	1	
12	2329 15 100B	CASING	1	
	2329 15 100C	"T" Type Dashboard use	1	Car No. 62472 ~ ○
	2339 15 100B	CASING Plain Type Dashboard use	1	
13	0118 18 510	Heat Gauge Unit "T" Type Dashboard use	1	
	0259 18 510	Heat Gauge Unit Plain Type Dashboard use	1	
	0110 18 515	"O" Ring	1	Car No. 62472 ~ Added Anew
14	2329 15 132A	Gasket	1	

18	908016 8 40	Set Bolt, Thermostat Cover	2
•	0820 99 150	**WATER PUMP REPAIR KIT** (Fig. No. 2~5, 7, 9, 10, 11 included)	1

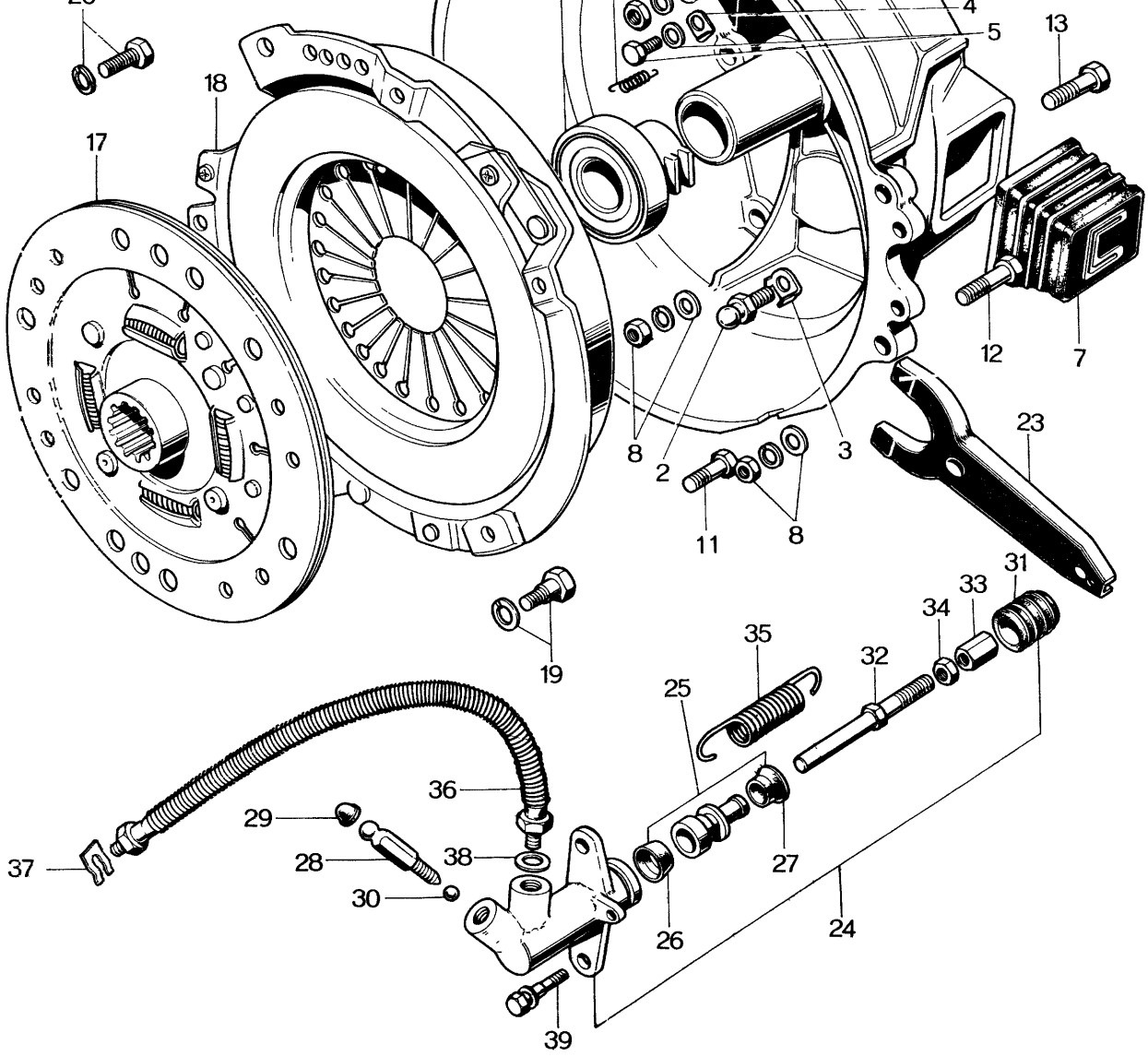
4
5
13
18
17
12
7
8
2
3
23
11
8
19
31
33
34
35
32
25
36
29
28
38
30
37
27
26
24
39

	8	0803 16 103	Oil Seal	1
	7	0155 16 104	Dust Cover	1
	8	99953 1200	Plain Washer, T/Mission Case	6
		99971 1200	Spring Washer	6
		99921 1200	Nut	6
	9	99811 1050	Bolt, Clutch Housing	1
	10	99295 1510	Clip	1
	11	99811 1048	Bolt, Clutch Housing	1
	12	99811 1045	Bolt, Clutch Housing	2
	13	99811 1055	Bolt, Clutch Housing	1
	14	99811 1075	Bolt, Clutch Housing	1
	15	99811 1032	Bolt, Clutch Housing	1
	16	99953 1000	Plain Washer	5
		99971 1000	Spring Washer	6
		99921 1000	Nut	4
	17	0820 16 150B	Clutch Disc	1
		0820 16 150C	Clutch Disc	1 Car No. 65573 $^{70}/_{9}$ ~ ○
•		4069 16 150D	Clutch Disc	1 Car No. 89498 $^{71}/_{2}$ ~ ○
	18	0222 16 180	Pressure Plate	1
		0820 16 410	Pressure Plate	1 Car No. 61910 $^{70}/_{6}$ ~ ○
	19	0180 16 215	Reamer Bolt	2
•		0839 16 432	Reamer Bolt	2 Car No. 89498 $^{71}/_{4}$ ~ ○

24	0820 41 920	CLUTCH RELEASE CYLINDER	1	
25	0603 41 320	CLUTCH PISTON	1	
26	0603 41 322A	Piston Cup	1	
	0603 41 322B	Piston Cup	1	Car No. 60429 7/5 ~ O
27	0603 41 323	Secondary Cup	1	
28	0259 33 691	Bleeder Valve	1	
29	0259 33 693	Cap	1	
30	99611 1500	Steel Ball	1	
31	0191 41 331	Boot	1	
32	0604 41 341	Clutch Release Rod	1	
33	0118 41 342	Adjusting Screw	1	
34	99922 0800	Nut	1	
35	0810 41 308	Return Spring	1	
36	0118 41 380A	Flexible Pipe	1	

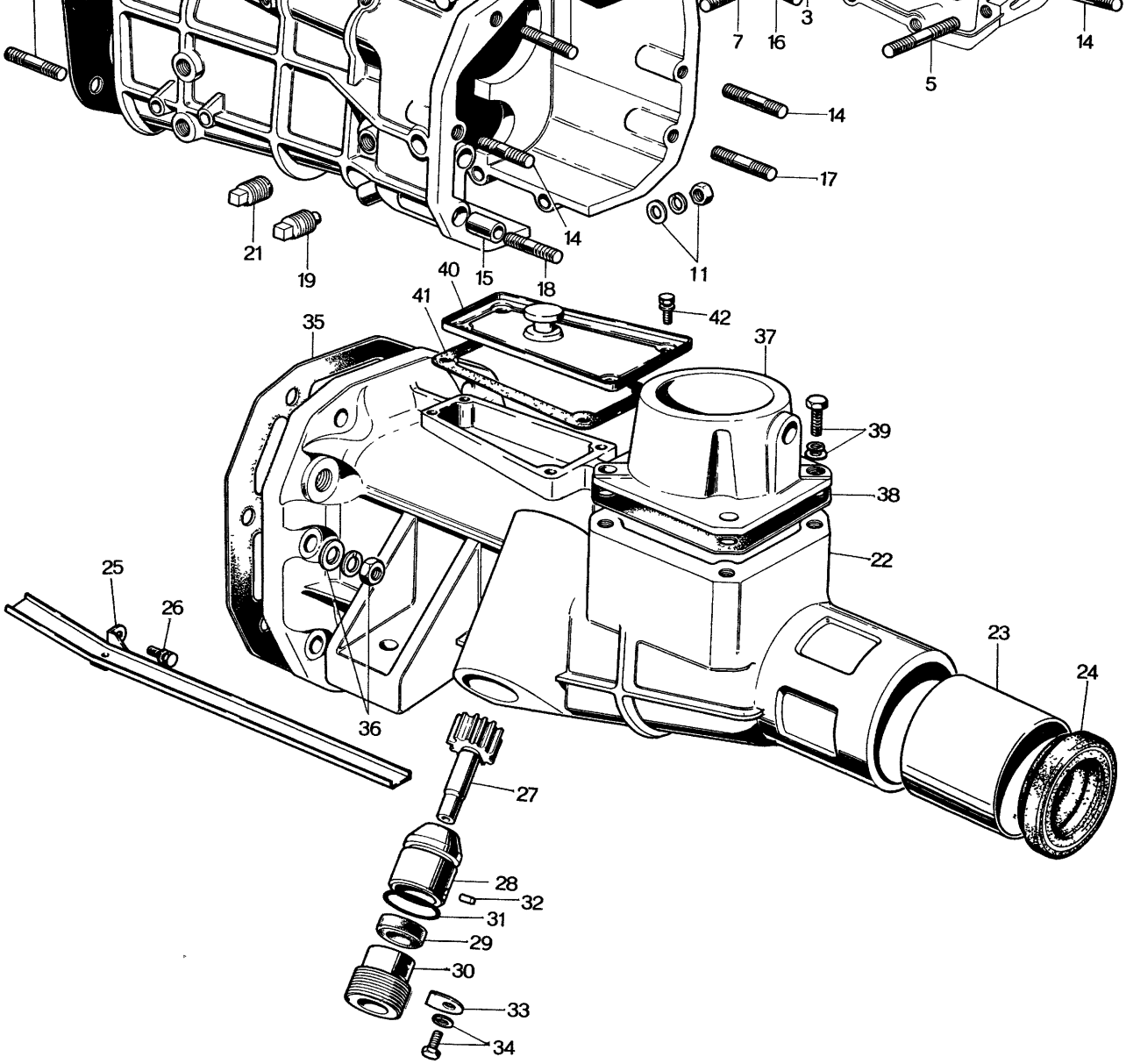
3
7
16
14
5
14
14
17
21
19
14
15
18
11
40
41
42
35
37
39
38
22
25
26
23
24
36
27
28
32
31
29
30
33
34

		Stud, T/Mission Case (R) (L)	1
8	99851 0860	Stud, T/Mission Case (R) (L)	1
9	99801 0845	Bolt, T/Mission Case (R) (L)	7
10	99921 1000	Nut, T/Mission Case (R) (L)	4
	99971 1000	Spring Washer	4
	99953 1000	Plain Washer	4
11	99901 0800	Nut, T/Mission Case (R) (L)	8
	99971 0800	Spring Washer	8
	99953 0800	Plain Washer	6
12	99295 0608	Clip, Reverse Lamp Cord	2
13	99855 1232	Stud, Front Side	6
14	99855 1025	Stud, Rear Side	3
15	0603 17 105	Tubular Pin, Extension Knock	2
16	99855 1035	Stud, Rear Side	1
17	99855 1028	Stud	1
18	99855 1038	Stud	1
19	0600 17 121	Magnet Plug	1
20	0603 17 131	Packing, T/Mission Case Front	1

24	0317 17 335	Oil Seal	1	
25	0820 17 540A	Oil–Pass	1	
•	0820 17 540B	Oil–Pass	1	Car No. 94253 $^{71}/_{4}$ ~ ○
26	908332 5 10	Set Screw, Oil Pass	1	Car No. 64883 $^{70}/_{8}$ ~ Discarded
	99833 0510	Screw, Oil Pass	1	
	99971 0500	Spring Washer	1	Car No. 64883 $^{70}/_{8}$ ~ Added Anew
27	0820 17 345	Driven Gear, Speedometer	1	
28	0187 17 346B	Sleeve, Speedometer	1	
29	99586 10207	Oil Seal	1	
30	0187 17 351A	Cable Joint	1	
31	99541 02101	"O" Ring	1	
32	0187 17 352	Knock Pin	1	
33	0111 17 354	Lock Plate	1	
34	99806 0614	Bolt, Lock Plate	1	
	908062 6 14	Bolt & Washer	1	Car No. 64913 $^{70}/_{8}$ ~ ○
	99971 0600	Spring Washer	1	Car No. 64913 $^{70}/_{8}$ ~ Discarded
35	0603 17 361	Packing, T/Mission Extension	1	
36	99921 1000	Nut, T/Mission Extension	6	
	99953 1000	Plain Washer	6	
	99971 1000	Spring Washer	6	
37	0221 17 471A	Case, Change Control	1	
38	0221 17 478	Packing, Change Control Case	1	
39	99953 0800	Plain Washer, Change Control Case	4	

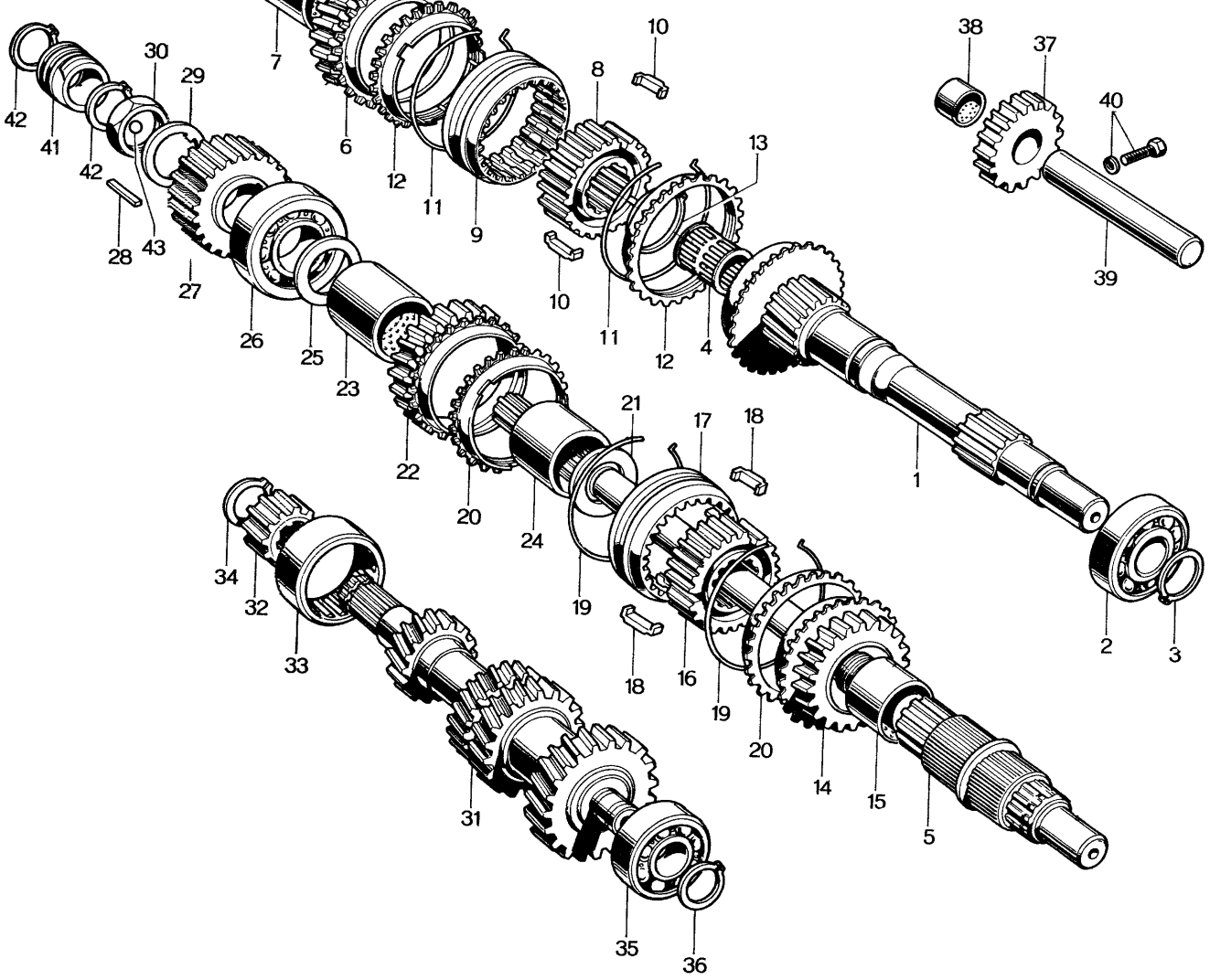
42
41
30
29
42
28
43
27
7
6
12
11
10
8
9
10
38
37
40
39
13
11
12
4
26
25
23
22
20
21
17
18
24
19
1
2
3
34
32
33
18
16
19
20
14
15
5
31
35
36

6	0603 17 230A	THIRD GEAR Ass'y	1	
7	0187 17 232	Bush	1	
8	0820 17 241	Clutch Hub, Third & Top	1	
	0820 17 241A	Clutch Hub, Third & Top	1	Car No. 68484 $^{70}/_{10}$ ~ ○
9	0187 17 242	Clutch Hub Sleeve	1	
10	0187 17 243	Synchronizer Key	3	
11	0103 17 244A	Synchronizer Key Spring	2	
12	4069 17 245	Synchronizer Ring	2	
13	99573 3200	Snap Ring	1	
•	0317 17 225	Snap Ring	1	Car No. 87150 $^{70}/_{2}$ ~ ○
14	0222 17 250A	SECOND GEAR Ass'y	1	
15	0187 17 272	Bush	1	
16	0820 17 261	Clutch Hub	1	
	0820 17 261A	Clutch Hub	1	Car No. 69117 $^{70}/_{10}$ ~ ○
17	0603 17 262	Clutch Hub Sleeve	1	
18	0187 17 243	Synchronizer Key	3	

24	0187 17 275A	Gear Sleeve	1	
25	0187 17 276	Thrust Washer	1	
26	99606 33060	Ball Bearing	1	
27	0603 17 281	Reverse Gear	1	
28	99236 0725	Key	1	
29	0187 17 283	Lock Washer	1	
30	0187 17 284	Nut	1	
31	0222 17 301A	Countershaft Gear	1	
	0222 17 301B	Countershaft Gear	1	Car No. 62759 $^{70}/_{7}$ ~ X
32	0603 17 302	Reverse Gear	1	
33	0603 17 303	Needle Roller Bearing	1	
34	99573 2200	Snap Ring	1	
35	0164 17 277	Ball Bearing	1	
	99606 63440	Ball Bearing	1	Car No. 62759 $^{70}/_{7}$ ~ X
36	0603 17 305	Snap Ring	1	
37	0603 17 310	REVERSE IDLE GEAR Ass'y	1	
38	0603 17 312	Bush	1	

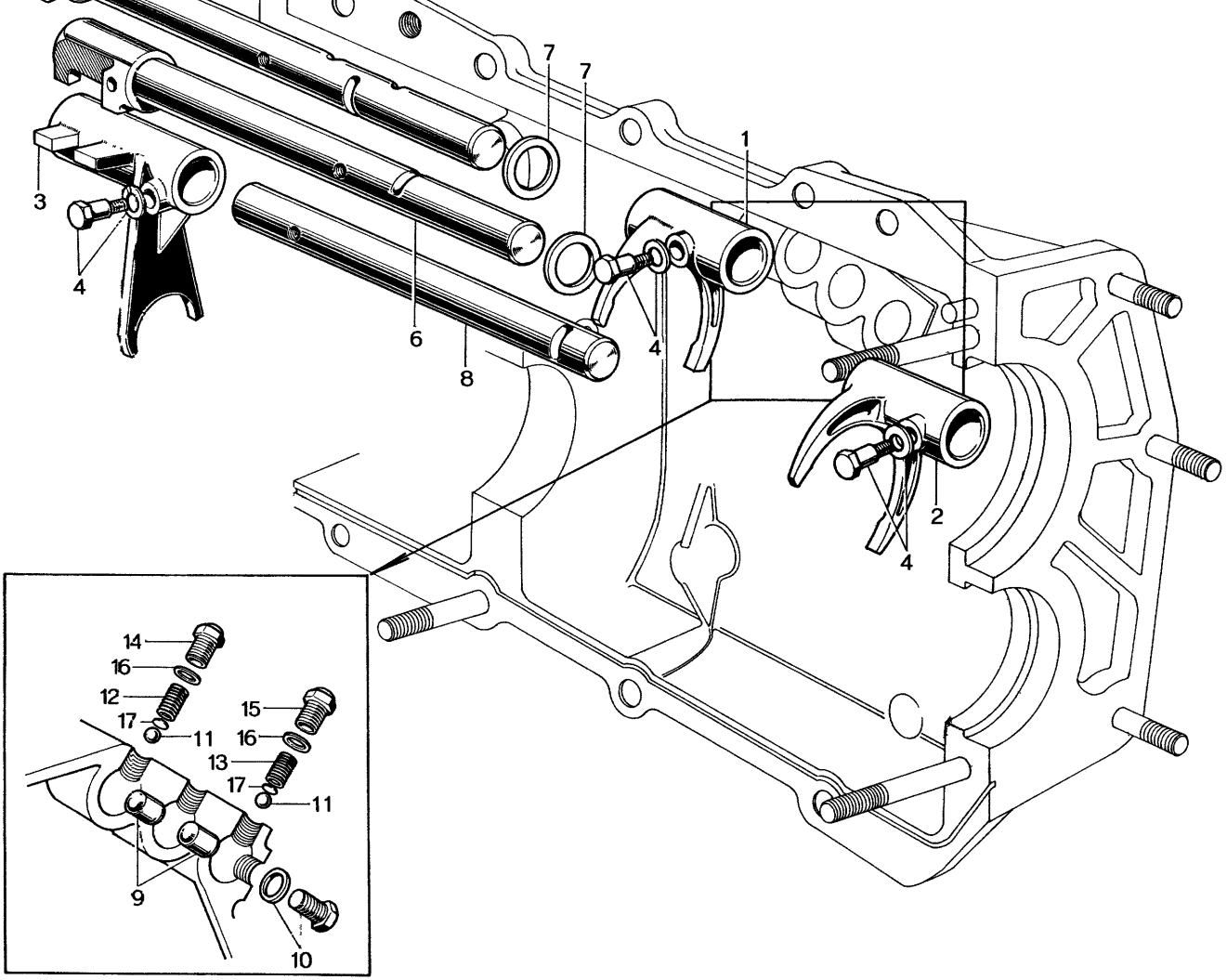
7
7
1
3
4
6
4
8
2
4
14
16
12
17
11
15
16
13
17
11
9
10

6	2981 17 420	Shift Fork Rod Ass'y, Third & Top	1
7	0118 17 316	Adjusting Spacer	2
8	2981 17 431	Shift Fork Rod, Reverse	1
9	0114 17 351	Interlock Pin	2
10	99510 1000	Plug	1
	99564 1000	Packing	1
11	99611 2500	Steel Ball	4
12	0103 17 411	Ball Spring, Shift Lock	2
13	0014 17 411	Ball Spring, Shift Lock Reverse	2
14	0221 17 441	Spring Cap	2
15	0221 17 441	Spring Cap, Reverse	2
16	99562 1400	Packing	4
17	0183 17 493	Adjust Plate	2

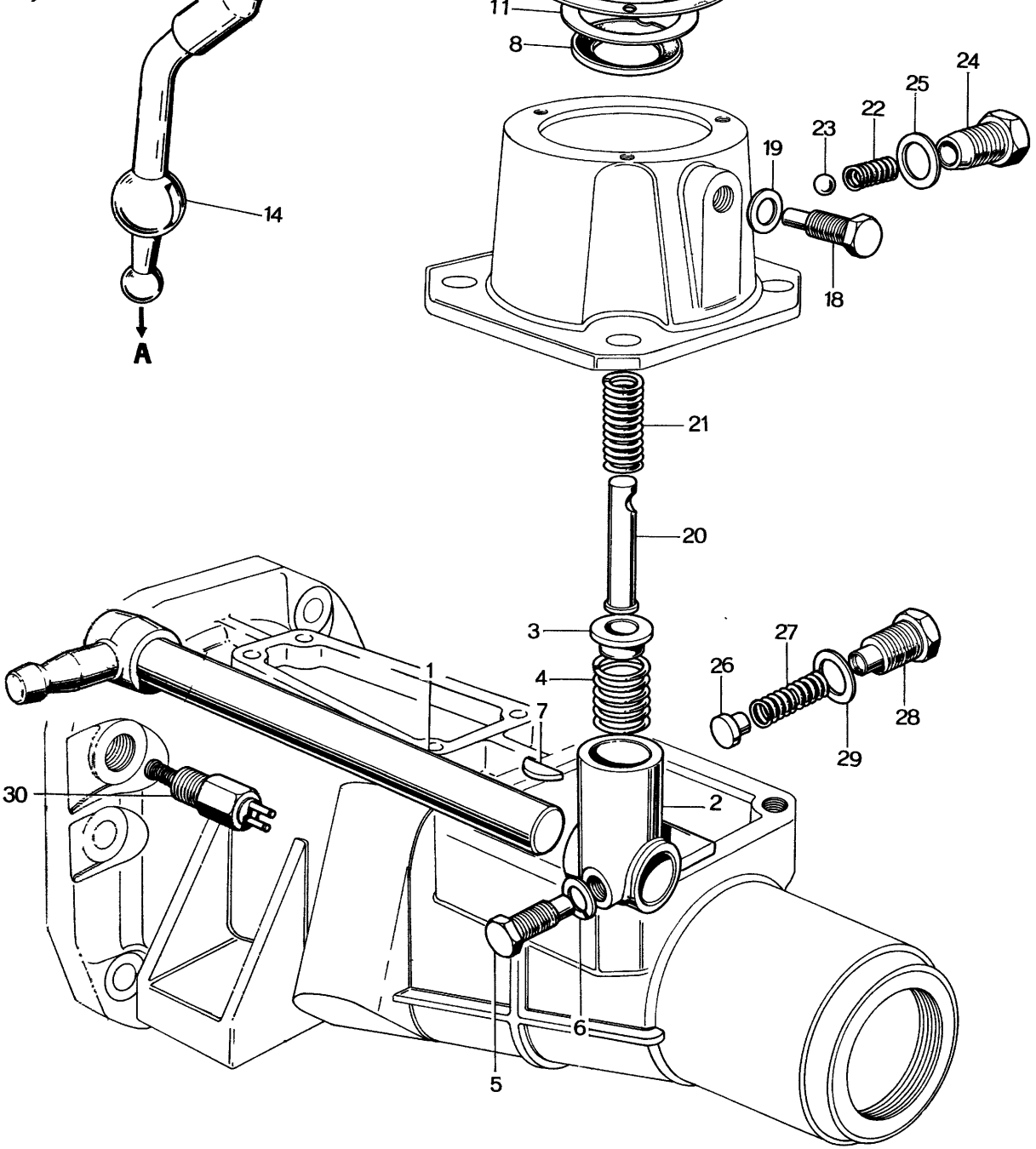
11
8
14
A
24
25
22
23
19
18
21
20
3
4
1
7
27
26
28
29
30
2
6
5

	8	0221 17 472	Bush	1	
•		0303 17 481	Bush	1	Car No. 87858 71/2 ~ X
	9	0221 17 473	Cover Plate	1	
	10	0221 17 474	Packing	1	
•		0303 17 474	Packing	1	Car No. 87858 71/2 ~ X
	11	99963 3310	Adjust Shim, Selective use	1	
		99963 3330	Adjust Shim, Selective use	1	70/6 ~ Added Anew
	12	2033 17 475	Dust Boot	1	
	13	99806 0614	Bolt	3	
		908062 6 14	Bolt & Washer	3	Car No. 64636 70/8 ~ O
		99971 0600	Spring Washer	3	Car No. 64636 70/8 ~ Discarded
•		0303 17 482	Washer—Wave	1	Car No. 87858 71/2 ~ Added Anew
•		99963 3330	Shim	1	Car No. 87858 71/2 ~ Added Anew
	14	0820 17 510B	CHANGE LEVER Ass'y	1	
	15	0810 17 512	Bush	1	☆
		0820 17 512	Bush	1	Car No. 67812 70/10 ~ O
	16	0329 17 520	Knob, Change Lever	1	
	17	0824 17 524	Nut, Change Lever	1	
	18	0221 17 541	Set Screw, Change Lever	1	
	19	99564 0800	Packing	1	
	20	0221 17 551A	Select Lock Spindle	1	
	21	0221 17 552	Return Spring	1	
	22	0103 17 411	Ball Spring, Shift Lock	1	

			1
30	0820 17 505	Switch, Reverse Lamp	1

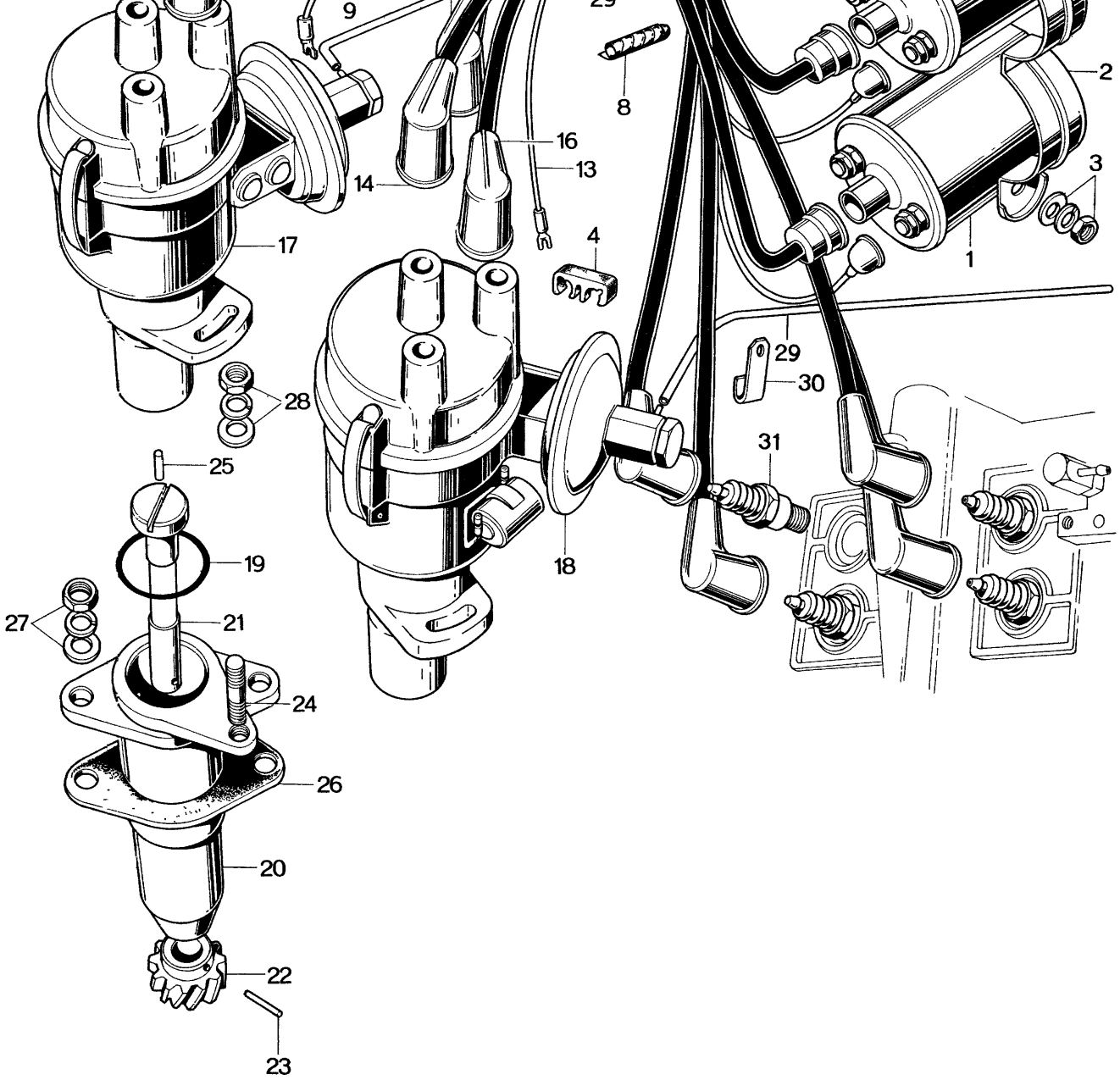
9
8
2
16
13
14
3
1
17
4
28
29
30
31
25
19
18
27
21
24
26
20
22
23

	99971 0500	Spring Washer	4	
	99952 0500	Plain Washer	4	Car No. 64636 $^{70}/_{8}$ ~ Added Anew
	0820 18 110C	HIGH TENSION CORD Ass'y R.H.D. &	1	
•	0820 18 110D	HIGH TENSION CORD Ass'y For OKINAWA	1	Car No. 87150 $^{71}/_{2}$ ~ X
4	0820 18 111B	Supporter	1	
5	0823 18 111	Supporter, ℓ = 124	1	Car No. 87150 $^{71}/_{2}$ ~ Discarded
6	0820 18 113	Supporter	2	
7	0820 18 114	Supporter	1	
8	0823 18 114	Supporter, ℓ = 92	1	
9	0820 18 115A	Cord, Coil ~ Distributor	1	
	0820 18 115B	Cord, (T)	1	Car No. 87150 $^{71}/_{2}$ ~ X
10	0820 18 120B	High Tension Cord, Coil ~ Distributor	1	
	0839 18 120	High Tension Cord, Coil ~ Distributor	1	Car No. 87150 $^{71}/_{2}$ ~ O
11	0820 18 130	High Tension Cord (T – 1)	1	Car No. 87150 $^{71}/_{2}$ ~ Discarded
12	0820 18 140	High Tension Cord (T – 2)	1	
13	0820 18 155	Cord, Coil ~ Distributor	1	
	0820 18 155A	Cord, (L)	1	Car No. 87150 $^{71}/_{2}$ ~ X
14	0820 18 160	High Tension Cord, Coil ~ Distributor	1	
	0839 18 160	High Tension Cord, Coil ~ Distributor	1	Car No. 87150 $^{71}/_{2}$ ~ O
15	0820 18 170	High Tension Cord (L – 1)	1	Car No. 87150 $^{71}/_{2}$ ~ Discarded
16	0820 18 180	High Tension Cord (L – 2)	1	

	2113 18 110	HIGH TENSION CORD Ass'y No. 1 (L.H.D.)	1	
	2113 18 110A	HIGH TENSION CORD Ass'y No. 1 (L.H.D.)	1	Car No. 63942 $^{70}/_{8}$ ~ X
4	0820 18 111B	Supporter	2	
5	0823 18 111	Supporter	2	Car No. 58954 $^{70}/_{4}$ ~ Discarded
9	2113 18 115	Cord, Coil Distributor (L.H.D.)	1	
	2113 18 115A	Cord, Coil Distributor (L.H.D.)	1	Car No. 63942 $^{70}/_{8}$ ~ X

		2329 18 150	HIGH TENSION CORD Ass'y No. 2 Emission Controlled Model	1	
	5	0823 18 111	Supporter	2	Car No. 58954 $^{70}/_{4}$ ~ Discarded
•	7	0820 18 114	Supporter	2	Car No. 87150 $^{71}/_{2}$ ~ Q'ty
	11	0820 18 130	High Tension Cord (T–1) (L.H.D.)	1	
•		0839 18 130	High Tension Cord (T–1) (L.H.D.)	1	Car No. 87150 $^{71}/_{2}$ ~ ○
		2329 18 130	High Tension Cord (T–1), Emission Controlled Model	1	
	12	0820 18 140	High Tension Cord (T–2) (L.H.D.)	1	
•		0839 18 140	High Tension Cord (T–2) (L.H.D.)	1	Car No. 87150 $^{71}/_{2}$ ~ ○
		2329 18 140	High Tension Cord (T–2), Emission Controlled Model	1	
	15	0820 18 170	High Tension Cord (L–1) (L.H.D.)	1	
•		0839 18 170	High Tension Cord (L–1) (L.H.D.)	1	Car No. 87150 $^{71}/_{2}$ ~ ○
		2329 18 170	High Tension Cord (L–1), Emission Controlled Model	1	
	16	0820 18 180	High Tension Cord (L–2) (L.H.D.)	1	
•		0839 18 180	High Tension Cord (L–2) (L.H.D.)	1	Car No. 87150 $^{71}/_{2}$ ~ ○
		2329 18 180	High Tension Cord (L–2), Emission Controlled Model	1	
	17	0820 18 200D	Distributor (Trailing)	1	
•		0820 18 200E	Distributor (Trailing)	1	Car No. 97194 $^{71}/_{5}$ ~ Δ
		2329 18 200	Distributor (Trailing), Emission Controlled Model	1	
	18	0820 18 700B	Distributor (Leading)	1	
		2329 18 700	Distributor (Leading), Emission Controlled Model	1	
	19	0107 18 201	"O" Ring	2	

	25	0813 18 288	Insert	2	
	26	0820 18 279A	Gasket, Distributor Socket	2	
	27	99901 0800	Nut, Distributor Socket	4	
		99971 0800	Spring Washer	4	
		99953 0800	Plain Washer	4	
	28	99906 0600	Nut, Distributor	2	
		99971 0600	Spring Washer	2	
		99952 0600	Plain Washer	2	
	29	0823 18 291	Vacuum Control Tube	2	
•	30	0820 18 296	Clip, General Export Model	1	Car No. 95206 $^{71}/_{4}$ ~ Discarded
	31	0823 18 600	Spark Plug (N.G.K.)	4	
		0839 18 600	Spark Plug (N.G.K.) B7EJ (NIPPON DENSO) W22EG2	4	Car No. 63909 $^{70}/_{7}$ ~ O
		2125 18 600	Spark Plug, (NIPPON DENSO, W 25EG)	4	
		0840 18 600	Spark Plug, (N.G.K.) B8EJ (NIPPON DENSO) W25EG2	4	Car No. 63909 $^{70}/_{7}$ ~ O
		2329 18 600	Spark Plug, Emission Controlled Model (NIPPON DENSO) W 22EH2 (N.G.K.) B7EJ2	4	
		2339 18 600	Spark Plug, Emission Controlled Model (NIPPON DENSO) W25EH2 (N.G.K.) B8EJ6	4	
		0848 18 600	Spark Plug (N.G.K.) B6EJ (NIPPON DENSO) W17EG2	4	$^{70}/_{7}$ ~ Added Anew

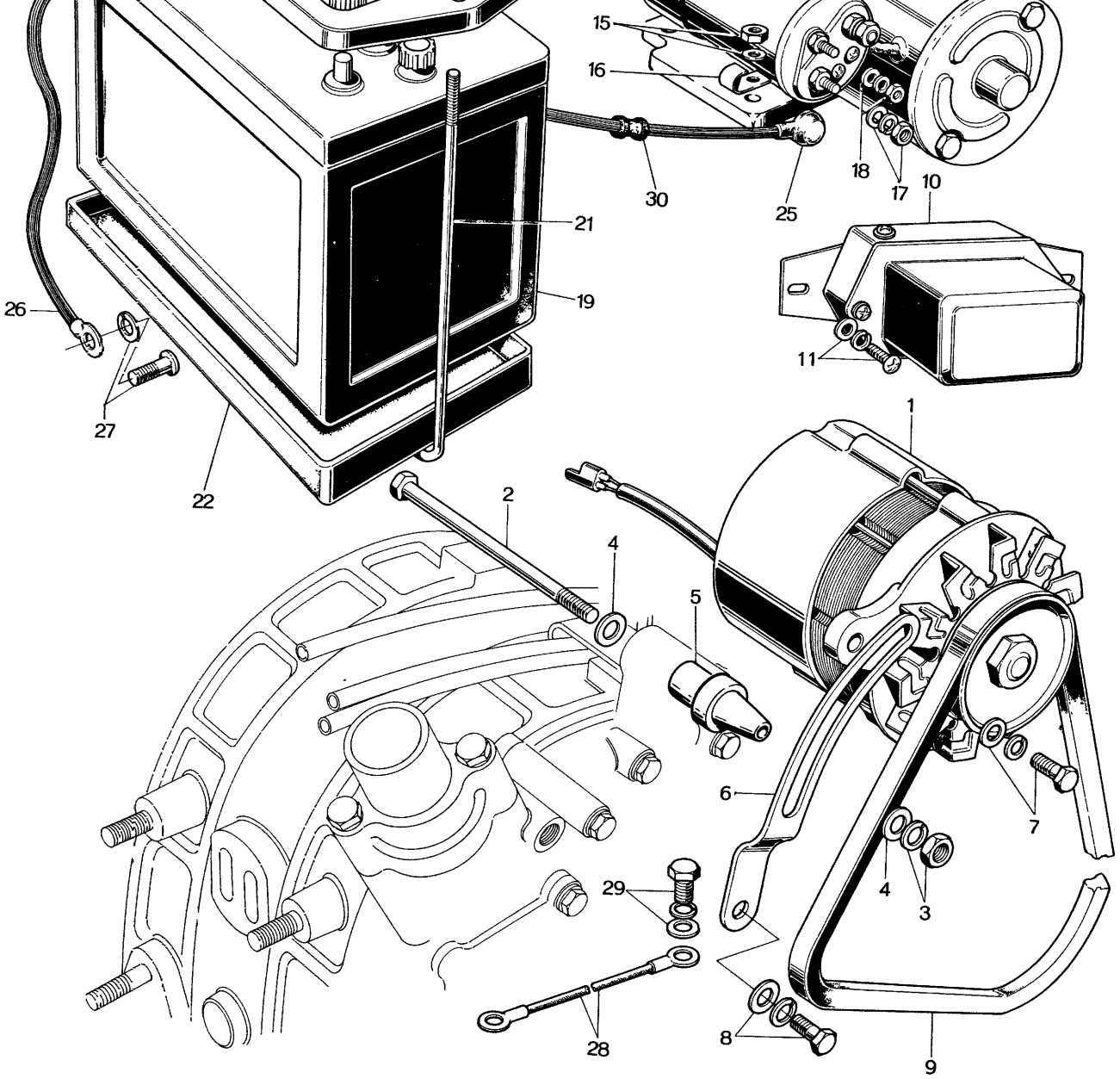
15
16
18
17
10
30
25
21
19
26
27
22
11
1
2
4
5
6
7
4
3
29
28
8
9

5	0820 18 311	Alternator Bracket	1	
6	0820 18 361	Alternator Strap, General Export Model	1	
	2329 18 361	Alternator Strap, Emission Controlled Model	1	
7	99801 0822	Bolt, Alternator	1	
	99951 0818	Plain Washer	1	
	99971 0800	Spring Washer	1	
8	908012 8 16	Set Bolt, Alternator Strap	1	
9	0820 18 381	"V" Belt, General Export Model	1	
	2123 18 381	"V" Belt, General Export Model	1	Car No. 64636 $^{7}0/_{8}$ ~ ○
•	2329 18 381	"V" Belt, General Export Model	1	Car No. 94734 $^{7}1/_{4}$ ~ ○
	2329 18 381	"V" Belt, Emission Controlled Model	1	
10	0222 18 391	Regulator	1	
	0222 18 391C	Regulator	1	Car No. 93826 $^{7}1/_{3}$ ~ ○
11	99834 0616	Screw, Regulator	2	
	99971 0600	Spring Washer	2	
	99953 0600	Plain Washer	2	
12	0820 18 400C	Starter, General Export Model	1	
	0845 18 400	Starter, General Export Model	1	Car No. 87150 $^{7}1/_{2}$ ~ X
	99295 2008	Clip	1	Car No. 87150 $^{7}1/_{2}$ ~ Added Anew
	2329 18 400	Starter, Emission Controlled Model	1	
13	99801 0828	Bolt, Starter	2	
	99971 0800	Spring Washer	2	
	99953 0800	Plain Washer	2	
14	99851 0814	Stud, Air Cleaner Supporter	1	
15	99901 0800	Nut, Starter	2	

	99952 0500	Plain Washer	1	
19	0820 18 520A	Battery (NS 60L), General Export Model	1	
	0845 18 520	Battery (NS 60L), (R.H.D. & Okinawa included)	1	Car No. 69162 $^{70}/_{9}$ ~ Added Aner
	2244 18 520	Battery (N50 ZL), Arctic Spec. Model	1	
	2329 18 520	Battery (N50 ZL)	1	
20	0820 53 291	Battery Clamp, NS 60L Battery use	1	
	2244 54 291	Battery Clamp , N50 ZL Battery use	1	
21	0223 54 225	Bolt, Clamp No. 1 ,NS 60L Battery use	2	
	0259 54 292	Bolt, Clamp, N50 ZL Battery use	1	
22	0810 56 863A	Battery Tray, NS 60L Battery use	1	
	2113 54 295	Battery Tray , N50 ZL Battery use	1	
23	99941 0600	Wing Nut, Battery	2	
	99952 0618	Plain Washer	2	
	99971 0600	Spring Washer	2	
24	0820 66 710B	BATTERY POSITIVE CABLE (R.H.D.)	1	
	0820 66 710C	BATTERY POSITIVE CABLE (R.H.D.)	1	Car No. 87858 $^{71}/_{2}$ ~ ○
	2113 66 710D	BATTERY POSITIVE CABLE (L.H.D.)	1	
	2329 66 710	BATTERY POSITIVE CABLE (L.H.D.)	1	Car No. 87150 $^{71}/_{2}$ ~ △
	2329 66 710	BATTERY POSITIVE CABLE (Emission Control Model)		
	2124 66 710	BATTERY POSITIVE CABLE For Okinawa	1	
	2124 66 710A	BATTERY POSITIVE CABLE For Okinawa	1	Car No. 87150 $^{71}/_{2}$ ~ △
25	0114 66 905	Rubber Cap, (R.H.D.) & For OKINAWA	1	
	0118 66 712	Rubber Cap (L.H.D.)	1	

30	99686 1000	Protector, Positive Cable (L.H.D.)	4	Car No. 87150 $^{71}/_{2}$ ~ Q'ty
•	0118 66 681	Protector, Positive Cable (L.H.D.)	4	Car No. 95858 $^{71}/_{4}$ ~ Δ
Ⓝ	2329 18 930A	Thermo Detector, Emission Control Model	1	
Ⓝ	2329 18 940B	Control Box, Emission Control Model	1	
Ⓝ	2329 18 910	Time Lag Relay, Emission Control Model	1	Car No. 62716 $^{70}/_{6}$ ~ Added Anew
Ⓝ	908066 6 12	Washer and Bolt, Emission Control Model	2	Car No. 62716 $^{70}/_{6}$ ~ Added Anew

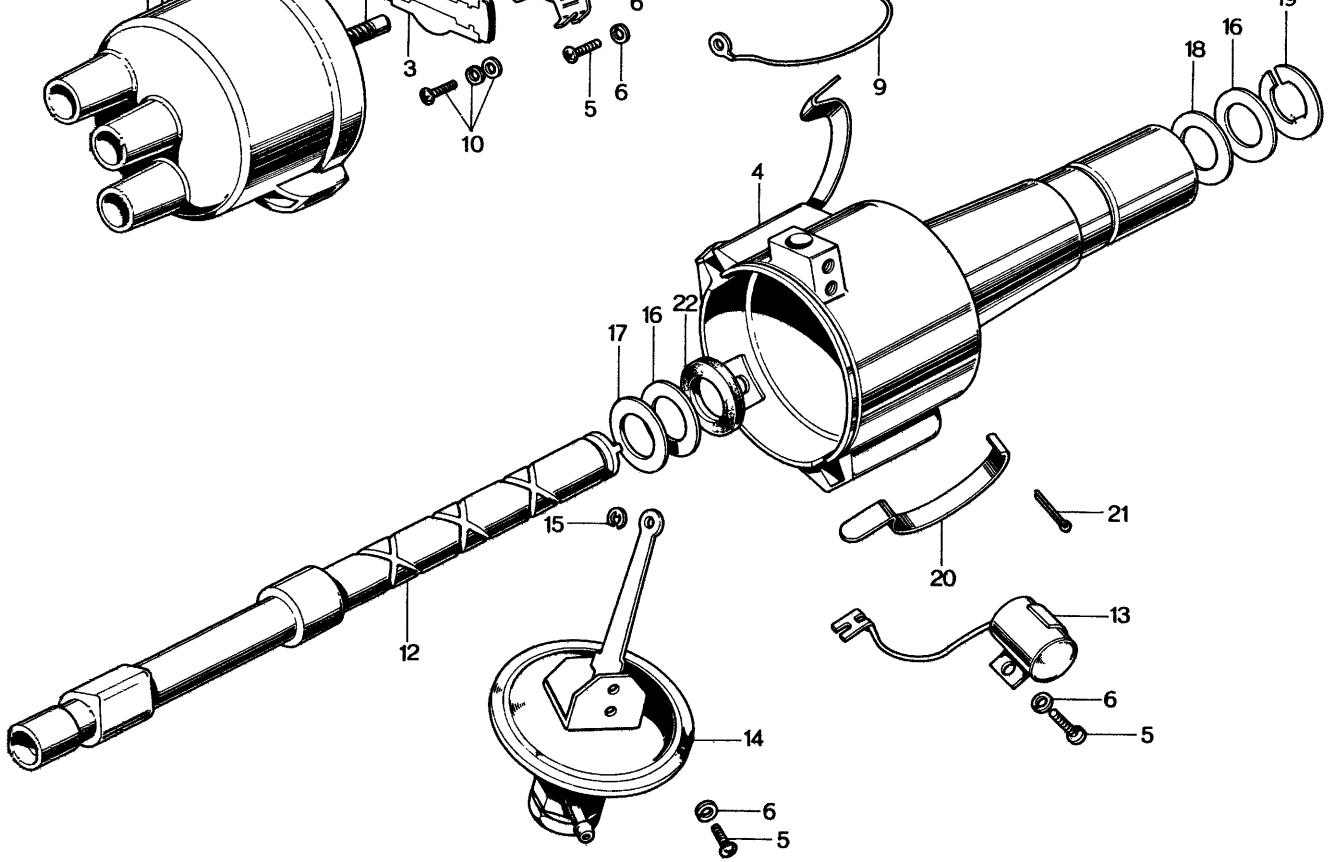
3
10
6
5
6
9
18
16
19
4
16
22
17
21
20
15
12
13
6
5
14
6
5

3	0813 24 303	Rotor	1
4	0820 24 304A	Housing	1
5	0249 24 367	Small Screw (4 x 8)	6
6	0107 18 208	Spring Washer	1
7	0820 24 315	Breaker Base	1
8	0813 24 316	Arm Support	1
9	0107 18 212	Earth Cord	1
10	0820 24 318	Screw	3
11	0820 24 319	Terminal	1
12	0820 24 321	Camshaft	1
13	0820 24 322	Condenser	1
14	0820 24 323	Vacuum Control	1
15	0107 18 266	Lock Washer	1
16	0107 18 226A	Washer (12.7 x 20 x 1.0)	2
17	0107 18 225	Washer (12.7 x 20 x 0.1)	1
18	0107 18 224	Washer (12.7 x 20 x 0.2)	1
19	0107 18 221A	Lock Washer	1
20	0813 24 329	Clamp	2
21	0107 18 253	Cotter Pin	2
22	0107 18 216A	Oil Seal	1

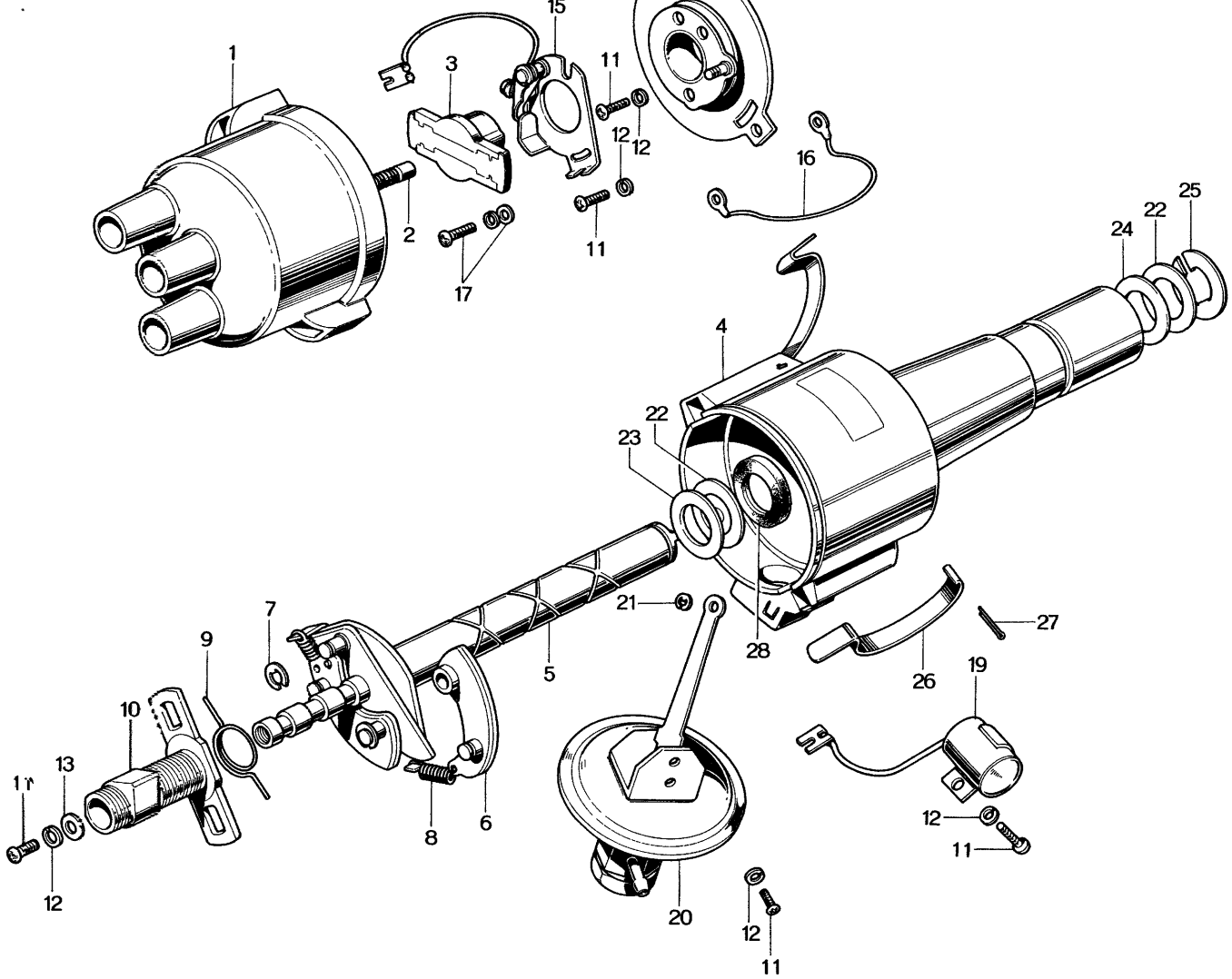
1
2
3
15
11
12
12
16
11
17
24
22
25
4
22
23
21
27
28
26
19
7
9
10
13
5
8
6
12
11
20
12
11

3	0813 24 303	Rotor	1
4	0820 24 404A	Housing	1
5	0820 24 405	Shaft	1
6	0813 24 306	Governor Weight	2
7	0107 18 231	Lock Washer	2
8	0813 24 308	Governor Spring	2
9	0813 24 309	Hair Pin Spring	1
10	0820 24 411	Cam	1
11	0249 24 367	Small Screw (4 x 8)	6
12	0107 18 208	Spring Washer (4.1 x 7.6 x 1.0)	6
13	0107 18 227	Washer (4.2 x 9.5 x 0.8)	1
14	0820 24 315	Breaker Base	1
15	0813 24 316	Arm Support	1
16	0107 18 212	Earth Cord	1
17	0820 24 318	Set Screw	3
18	0820 24 319	Terminal	1
19	0820 24 322	Condenser	1
20	0820 24 423	Vacuum Control	1
21	0107 18 266	Lock Washer	1
22	0107 18 226A	Washer (12.7 x 20 x 1.0)	2

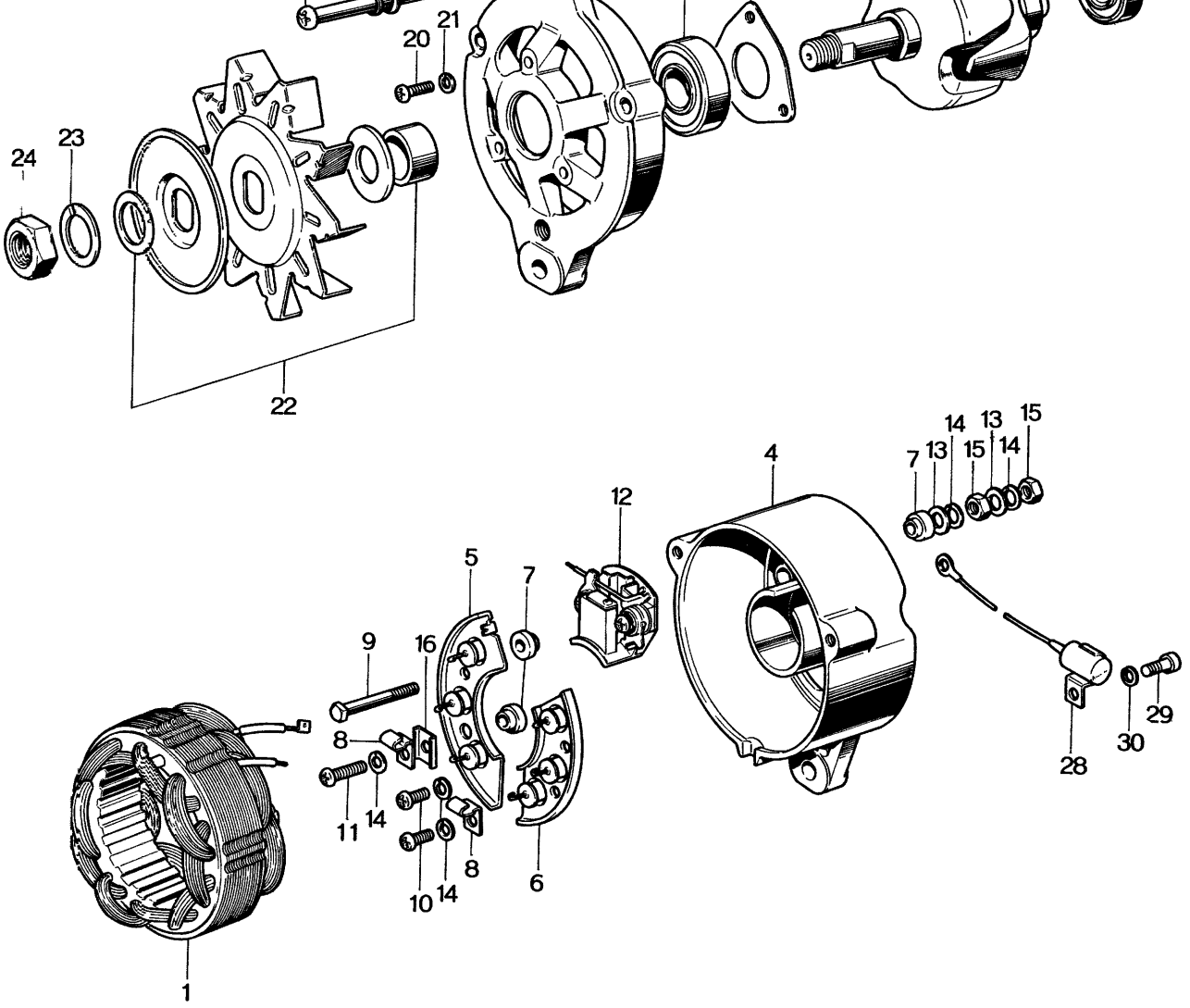
24
23
22
20
21
1
9
16
8
11
14
10
14
8
5
7
6
12
4
7
13
14
15
13
14
15
28
30
29

		0326 24 520	REAR BRACKET Ass'y	1	
	4	0326 24 522	Rear Bracket	1	
	5	0326 24 541	Heat Sink Cpt. ⊕	1	
	6	0326 24 542	Heat Sink Cpt. ⊖	1	
	7	0208 24 563A	Insulation Plate	3	
•	8	0820 24 519	Clamp	3	Car No. 62910 ~ Quantity
	9	0636 24 561A	Square Bolt (5 x 32)	1	
	10	0222 24 517	Small Screw (5 x 10)	2	
	11	0820 24 526	Small Screw (5 x 16)	1	
	12	0326 24 556	Bush Holder	1	
	13	0187 24 566	Washer (5.5 x 10 x 0.8)	5	
	14	0200 23 531	Spring Washer (5 x 1.3)	5	
	15	0222 24 568	Nut (5 x 8 x 4)	2	
	16	0820 24 513	"U" Insulation	1	

22	0820 24 530C	Pulley	1
23	0187 24 577	Spring Washer	1
24	0187 24 579A	Nut ($12 \times 22^{B} \times 7^{H}$)	1
25	0326 24 574	Small Screw (5 x 67)	3
26	0200 23 531	Spring Washer	3
27	0187 24 566	Washer (5.5 x 10 x 0.8t)	3
28	0290 24 581	Condenser	1
29	0636 24 524A	Screw	1
30	0200 23 531	Spring Washer	1

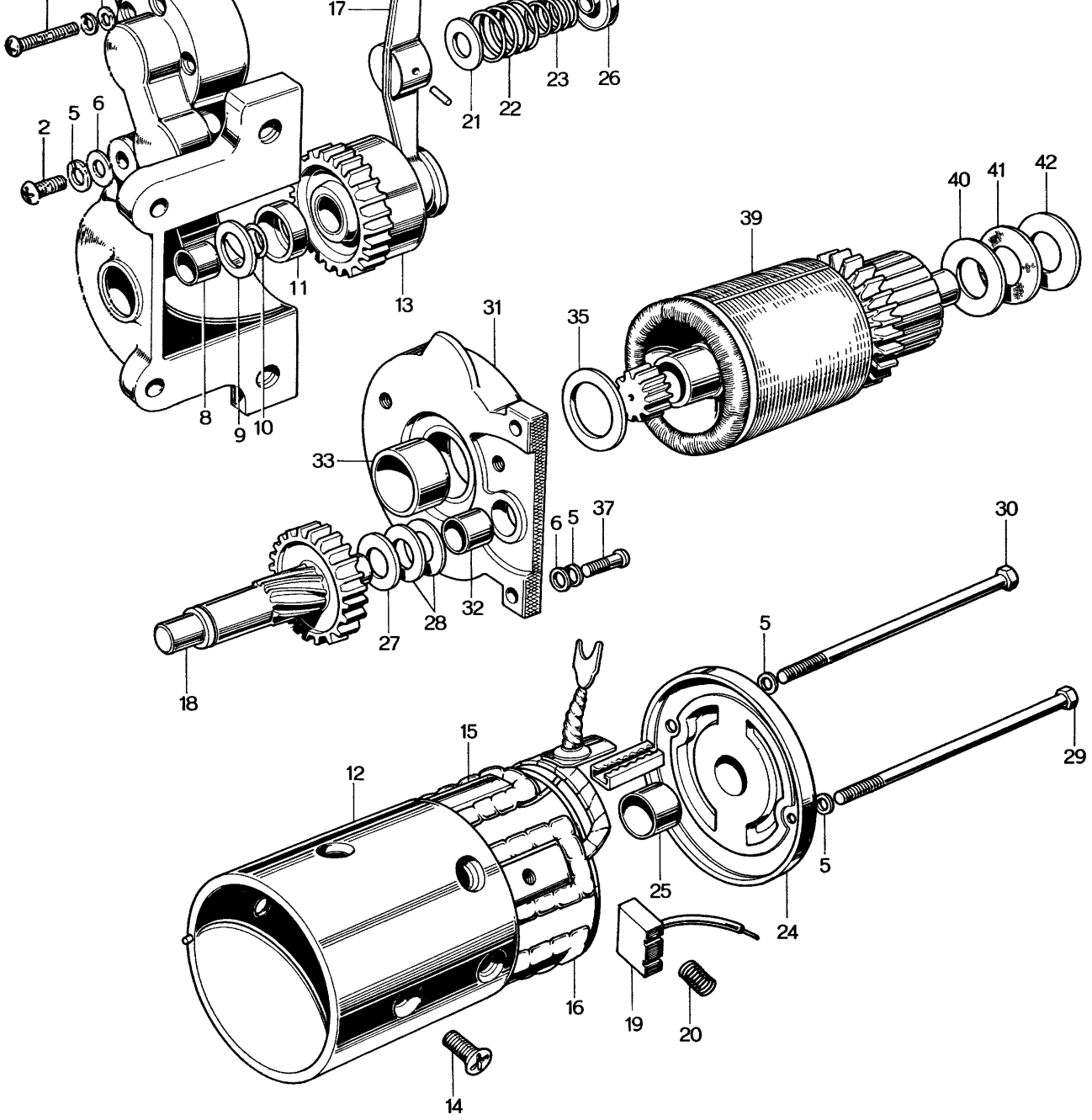
17
23
26
21
22
2
5
6
11
13
8
9
10
40
41
42
39
31
35
33
6
5
37
30
28
32
27
18
5
29
15
12
25
5
24
16
19
20
14

6	0813 24 726	Washer (6.5 x 13 x 1)	3
7	0820 24 710B	FRONT BRACKET	1
8	0249 24 731	Metal	1
9	0820 24 714	Washer (14.4 x 26 x 1.6)	1
10	0820 24 713	Ring	1
11	0820 24 712	Pinion Stopper	1
12	0820 24 701A	Yoke	1
13	0820 24 709	Over Running Clutch	1
14	0813 24 704	Screw (8 x 15)	4
15	0813 24 703	Pole Piece	4
16	0820 24 702	Field Coil	1
17	0820 24 716	Lever	1
18	0820 24 721	Pinion Shaft	1
19	0813 24 723A	Brush	4
20	0813 24 724	Brush Spring	4

26	0820 24 717	Spring Seat (B)	1
27	0820 24 747	Washer (14.4 x 26 x 0.8)	1
28	0820 24 748	Washer (14.4 x 26 x 0.2)	2
29	0603 23 617	Through Bolt (6 x 132)	1
30	0107 18 423A	Through Bolt (6 x 150)	1
31	0820 24 706A	CENTER BRACKET	1
32	0249 24 731	Metal	1
33	0820 24 707	Metal	1
34	0820 24 751	Plunger	1
35	0820 24 749	Washer (24.2 x 34 x 0.5)	2
36	0820 24 752	Spring	1
37	0820 24 759	Small Screw (6 x 22)	2
38	0820 24 736	Switch	1
39	0820 24 705	Armature	1
40	0820 24 741	Washer (14.5 x 30 x 1.2)	1

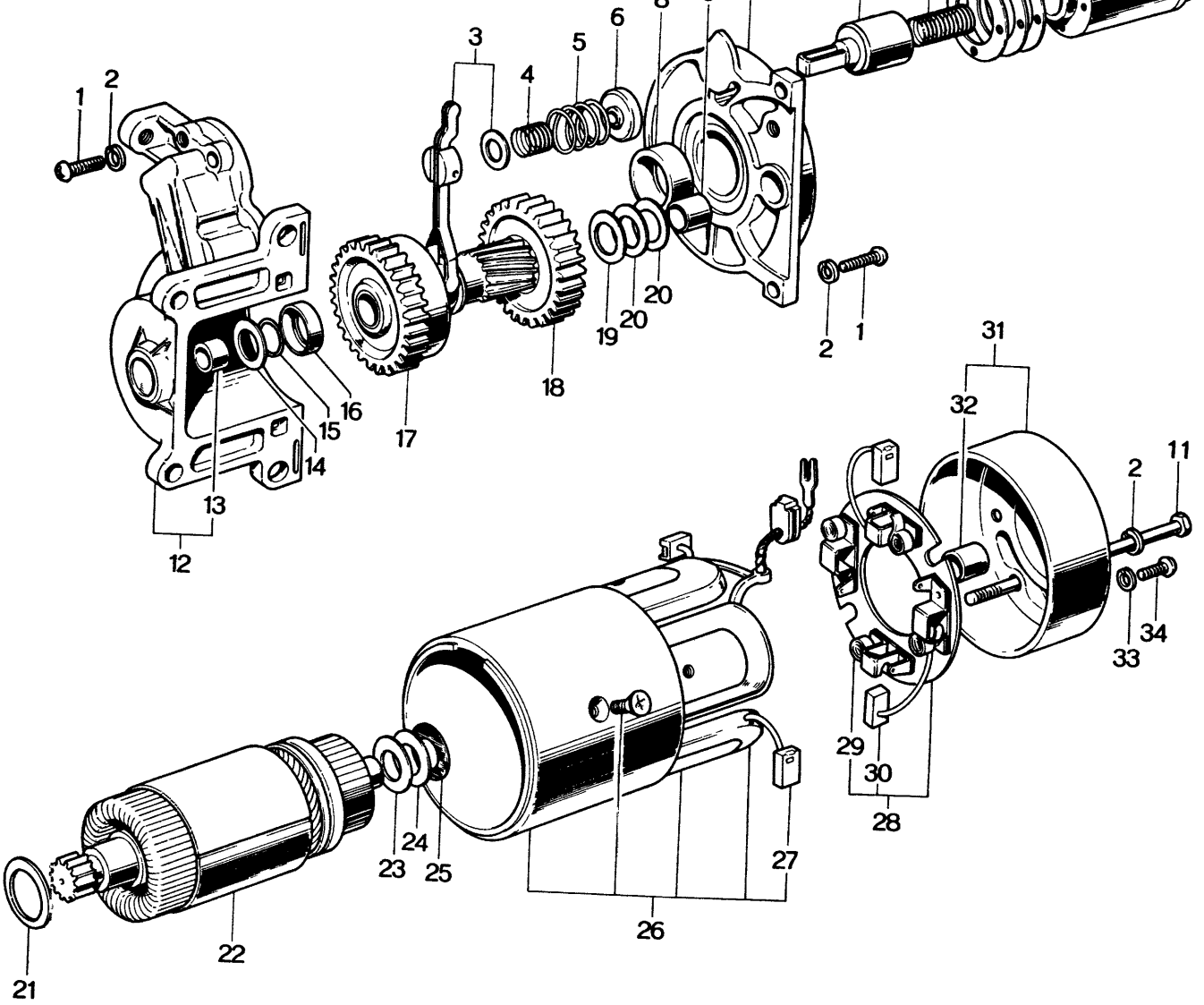
1
2
3
4
5
6
8
19
20
20
2
1
31
32
11
2
33
34
29
30
28
18
17
16
15
14
13
12
27
26
23
24
25
22
21

6	0845 24 717	Holder Ass'y	1
7	0845 24 706	Bracket Ass'y, Center	1
8	0820 24 707	Bearing, Sleeve (C)	1
9	0222 24 741	Bearing, Sleeve (R)	1
10	0222 24 760A	Switch Ass'y	1
11	0222 24 756	Bolt, (6 x 134)	2
12	0845 24 710	BRACKET Ass'y, Front	1
13	0222 24 741	Bearing, Sleeve (R)	1
14	0820 24 714	Washer (4.4 x 26 x 1.6)	1
15	0820 24 713	Ring	1
16	0845 24 712	Stopper	1
17	0845 24 709	Clutch, Over Running	1
18	0845 24 721	Shaft Ass'y, Gear	1
19	0820 24 747	Washer (14.4 x 26 x 0.8)	1
20	0820 24 748	Washer (14.4 x 26 x 0.2)	2

26	0845 24 701	YOKE Ass'y	1
27	0222 24 753	Brush	2
28	0222 24 750	HOLDER Ass'y, Brush	1
29	0222 24 752A	Brush, Spring	4
30	0222 24 753	Brush	2
31	0845 24 720	BRACKET Ass'y, Rear	1
32	0222 24 741	Bearing, Sleeve (R)	1
33	0200 23 531	Washer, Spring (5.9 x 9.2 x 1.3)	2
34	0222 24 517	Screw (5 x 10)	2

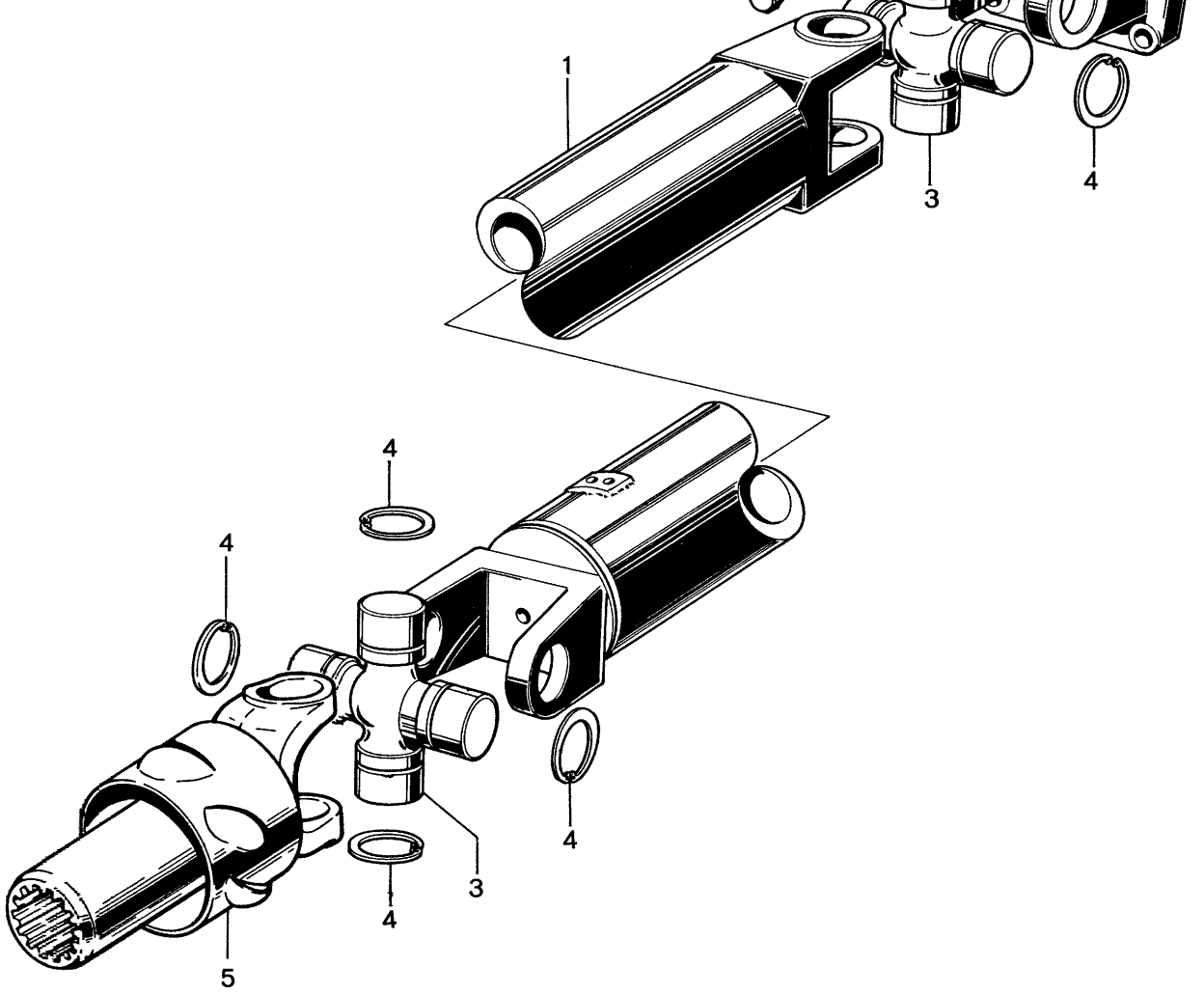
1
3
4
4
4
4
4
3
4
5

	0259 25 074A	Snap Ring		
	0259 25 075A	Snap Ring	Selective use	8
	0259 25 076A	Snap Ring		
	0259 25 077A	Snap Ring		
	0259 25 078A	Snap Ring		
	0259 25 079A	Snap Ring		
5	0324 25 130	Sliding Yoke		1
6	0710 25 024	Bolt		4
7	99971 0800	Spring Washer		4

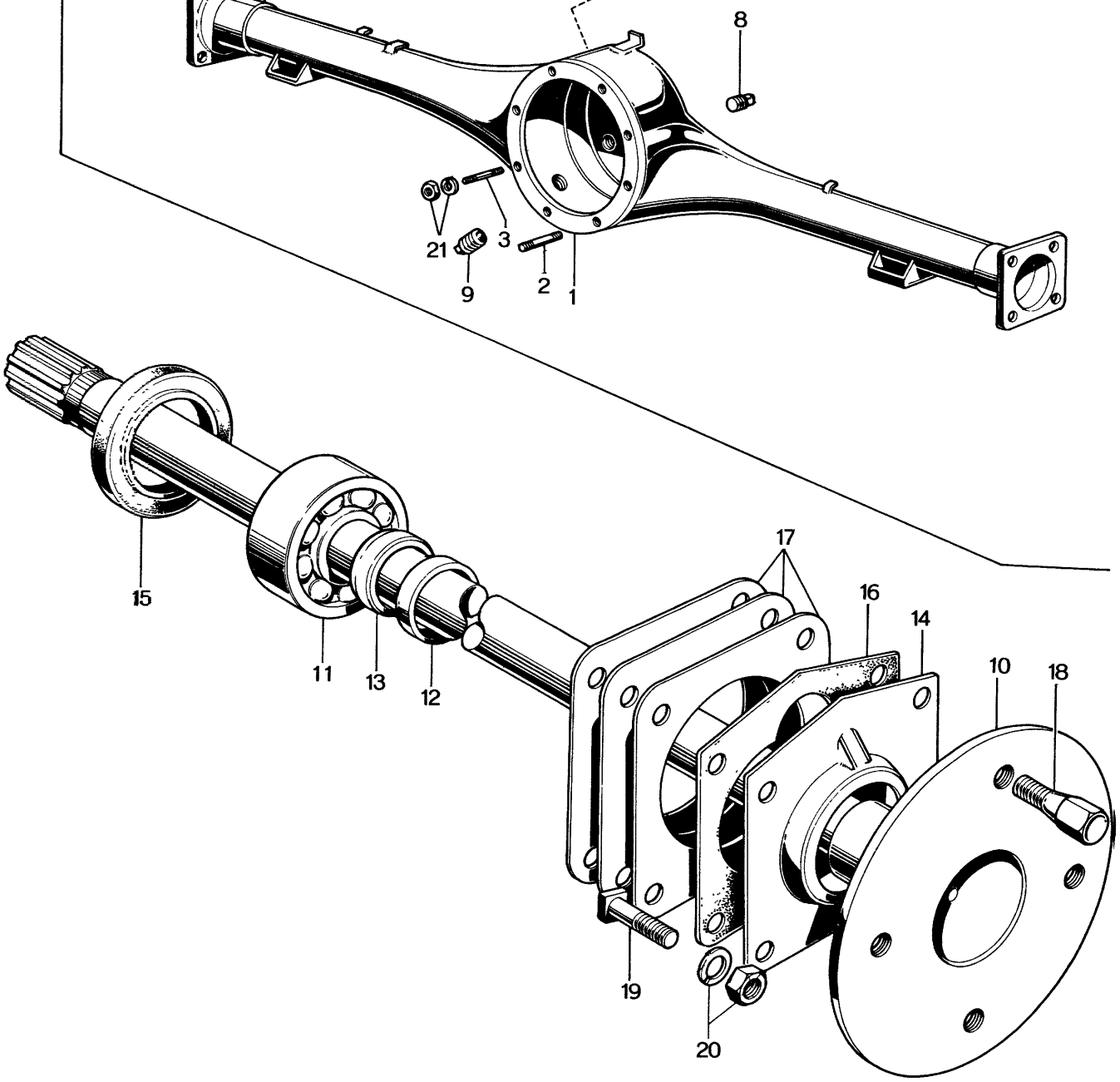
8
21
3
9
2
1
15
11
13
12
17
16
14
10
18
19
20

	5	0259 26 063	Breather Cap		1	
	6	0259 26 064	Breather Cap Rubber		1	
	7	0259 26 065A	Breather Cap Spring		1	
	8	0259 26 041	Plug, Oil Level		1	
	9	0259 26 051	Magnet Plug, Drain		1	
•	10	0820 26 115A	Rear Axle Shaft		2	
	11	0317 26 151	Rear Wheel Bearing		2	
•		0317 26 151A	Rear Wheel Bearing		2	Car No. 82291 $^{71}/_{1}$ ~ X
	12	0259 26 155	Bearing Spacer		2	
	13	0259 26 152	Bearing Collar		2	
	14	0259 26 121	Retaining Plate		2	
•		0317 26 121	Retaining Plate		2	Car No. 82291 $^{71}/_{1}$ ~ Δ
	15	0187 26 154	Oil Seal		2	
	16	0259 26 129	Packing, Wheel Bearing		2	
	17	0259 26 141	Adjust Shim, Wheel Bearing	Selective use	4	
		0259 26 142	Adjust Shim, Wheel Bearing			
	18	0259 33 165	Wheel Set Bolt		8	
	19	0259 26 132	Bolt, Retaining Plate		8	
	20	99901 0800	Nut, Retaining Plate		8	

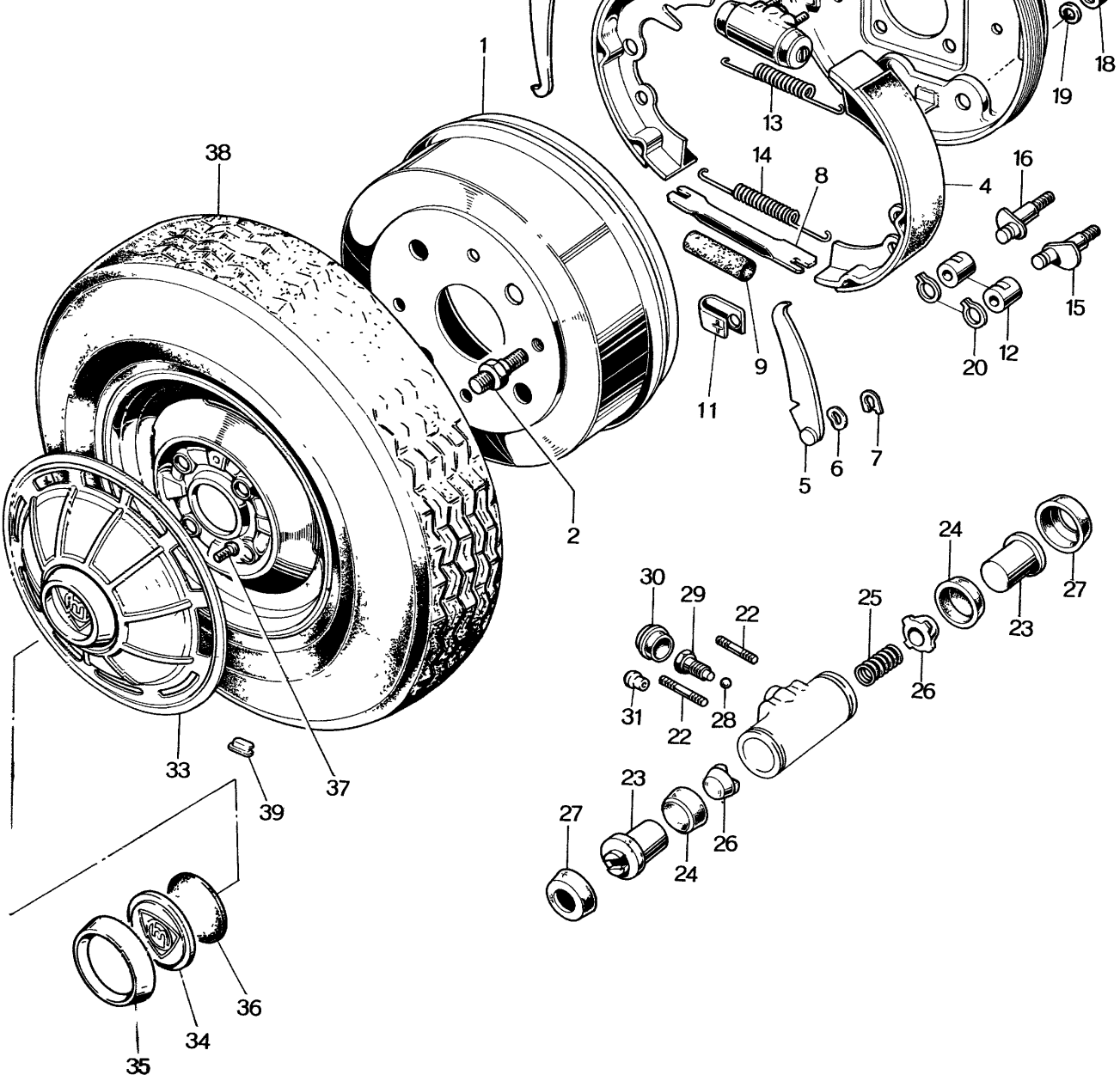
1
38
2
33
37
39
35
34
36
13
14
8
4
16
18
19
15
12
20
9
11
5
6
7
30
29
22
31
22
28
25
26
24
23
27
27
23
24
26

		Operating Lever (L)	1
6	0118 26 834	Wave Washer	2
7	99575 0600	"U" Stop Ring	2
8	0187 26 821	Operating Strut (R)	1
	0187 26 921	Operating Strut (L)	1
9	0118 26 897	Holder	2
10	0187 33 391	Brake Shoe Guide Pin	4
11	0110 26 345	Clip Spring	4
12	0118 33 331	Anchor Plate	4
13	0187 26 341	Return Spring	2
14	0118 26 342	Return Spring	2
15	0187 26 501	Anchor Pin (R)	2
16	0187 26 511	Anchor Pin (L)	2
17	99921 1200	Nut, Anchor Pin	2
	99971 1200	Spring Washer	2
18	99943 1200	Nut, Anchor Pin	2
19	0118 33 513	Spring Washer	2
20	99573 1200	Snap Ring	4

	[illegible]	Dust Cover	4	
28	99611 1500	Steel Ball	2	
29	0259 33 691	Bleeder Screw	2	
30	0259 33 693	Cap	2	
31	0613 26 922	Tube Seat	2	
32	99906 0600	Nut, Wheel Cylinder	4	
	99971 0600	Spring Washer	4	
33	2113 33 170A	WHEEL CAP	2	
	2113 33 170B	WHEEL CAP	2	Car No. 62706 $^{70}/_{7}$ ~ X
34	0813 33 175	Emblem, Wheel Cap	2	
35	0813 33 176A	Retainer	2	
36	0813 33 177	Pad	2	
37	908332 3 06	Set Screw	6	
38	9962 01 1454	145SR–14 Radial Tire, White Ring	Selective use	2
	9962 03 1454	145SR–14 Radial Tire		

	99655 30040	Balance Weight	Selective use —
	99655 30050	Balance Weight	
	99655 30060	Balance Weight	
•	99655 30015	Balance Weight	Car No. 94253 $^{71}/_{4}$ ~ Added Anew
•	99655 30025	Balance Weight	
•	99655 30035	Balance Weight	
•	99655 30045	Balance Weight	

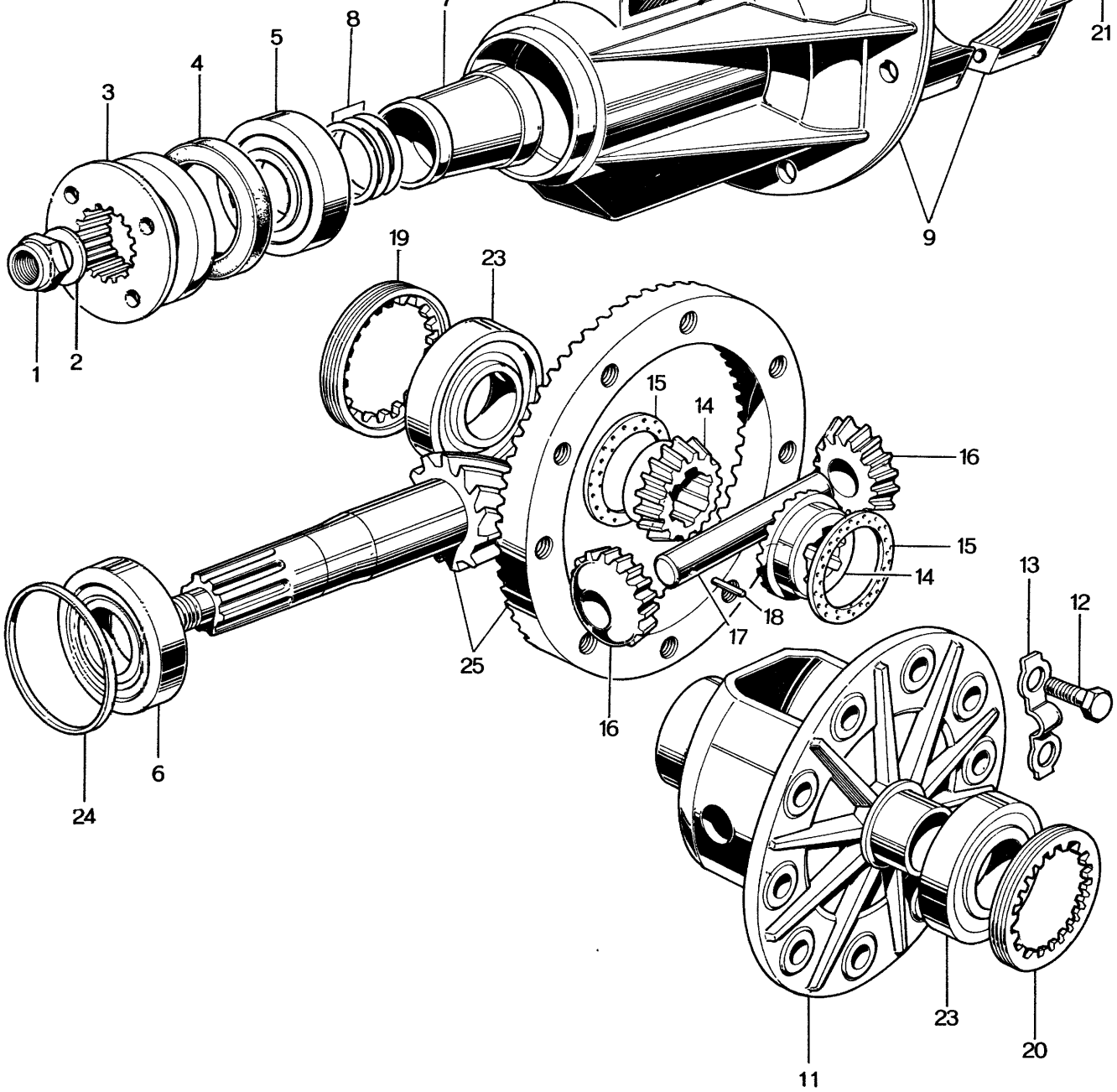
1
2
3
4
5
8
7
21
9
19
23
15
14
16
15
14
13
12
18
17
25
16
6
24
23
20
11

		2112 27 018	Oil Seal, High Speed Type		1	
	5	0755 27 141	Drive Pinion Bearing (Frt.)		1	
	6	0221 27 141	Drive Pinion Bearing (Rr.)		1	
•	Ⓝ	0305 27 171	Distance Piece		1	Car No. 94253 $^{71}/_{4}$ ~ Added Anew
•	7	0223 27 112	Distance Piece	Selective use	1	Car No. 94253 $^{71}/_{4}$ ~ Discarded
•		0223 27 113	Distance Piece			
•		0223 27 114	Distance Piece			
•		0223 27 115	Distance Piece			
•	8	0603 27 121	Adjust Shim	Selective use	—	
•		0603 27 122	Adjust Shim			
•		0221 27 123	Adjust Shim			
	9	0820 27 150A	DIFFERENTIAL CARRIER Ass'y		1	
	10	99811 1050	Bolt, Bearing Cap		4	
		99971 1000	Spring Washer		4	
	11	0290 27 231	Differential Gear Case		1	

16	0221 27 255	Differential Pinion	2	
17	0221 27 261	Pinion Shaft	1	
18	0114 27 262	Pin, Differential Pinion Shaft	1	
19	0290 27 301	Adjust Screw (R)	1	
20	0290 27 341	Adjust Screw (L)	1	
21	0290 27 302	Lock Plate	2	
22	99811 0812	Bolt, Lock Plate	2	
	99971 0800	Spring Washer	2	
23	0221 27 305	Differential Bearing	2	
24	0223 27 401	Spacer, Pinion Height (t = 3.08)	Selective use	–
	0223 27 402	Spacer (t = 3.11)		
	0223 27 403	Spacer (t = 3.14)		
	0223 27 404	Spacer (t = 3.17)		
	0223 27 405	Spacer (t = 3.20)		
	0223 27 406	Spacer (t = 3.23)		
	0223 27 407	Spacer (t = 3.26)		
	0223 27 408	Spacer (t = 3.29)		
	0223 27 409	Spacer (t = 3.32)		
	0223 27 411	Spacer (t = 3.35)		

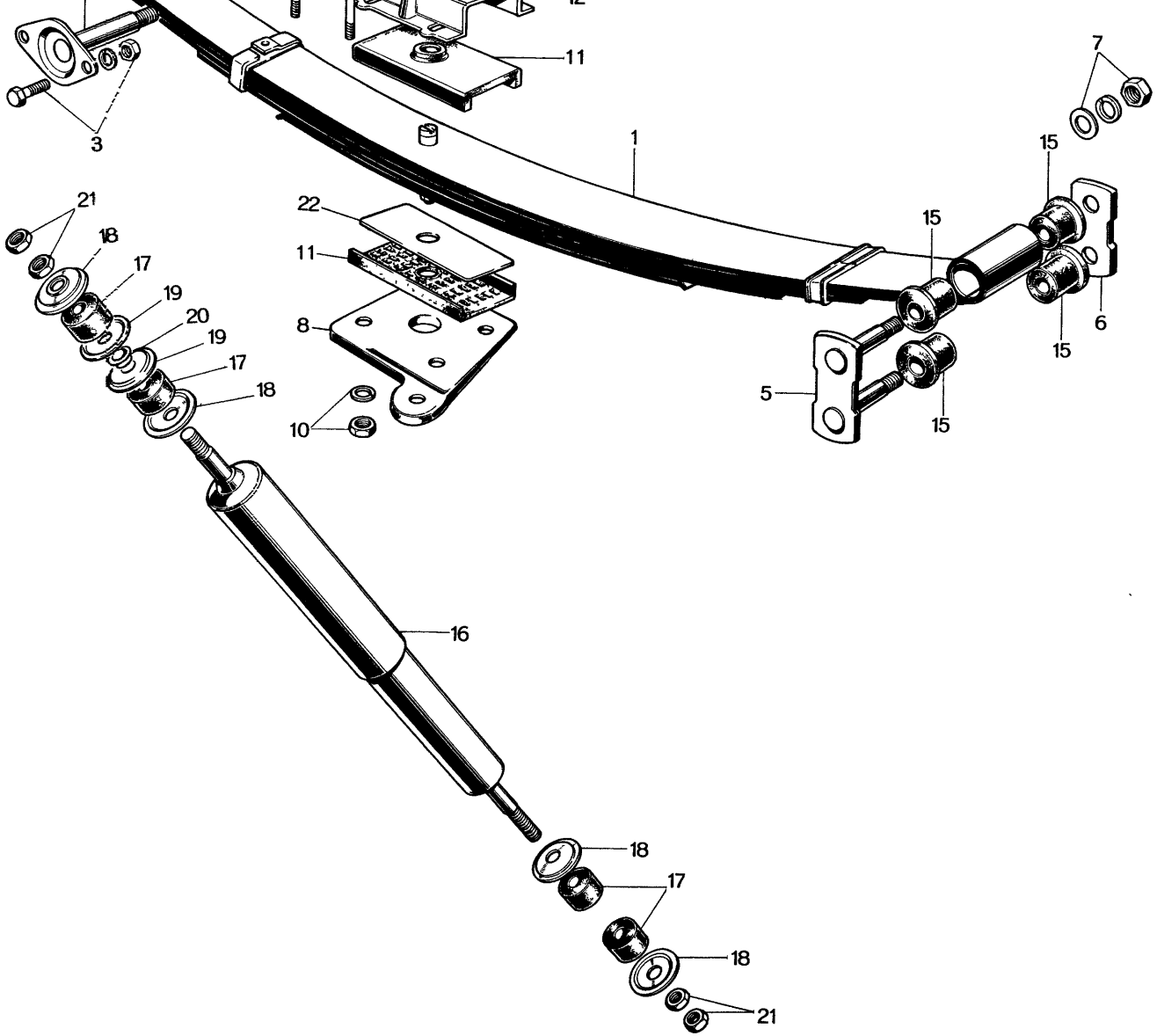
12
11
7
3
1
15
21
18
17
19
20
19
17
18
22
11
8
10
15
15
6
15
5
16
18
17
18
21

1	2160 28 010	REAR SPRING		2
	2160 28 011	Leaf Spring No.1		2
	2160 28 012	Leaf Spring No.2	Sedan use	2
	2160 28 013	Leaf Spring No.3		2
	2160 28 014	Leaf Spring No.4		2
2	0259 28 110	Spring Pin		2
3	99811 0820	Bolt, Spring Pin		4
	99971 0800	Spring Washer		4
	99921 0800	Nut		4
4	99921 1000	Nut, Spring Pin		2
	99952 1000	Plain Washer		2
	99971 1000	Spring Washer		2
5	0259 28 140	Shackle Plate		2
6	0259 28 143	Shackle Plate		2
7	99921 1000	Nut		6
	99971 1000	Spring Washer		4

		Rubber Pad	4	
12	0652 28 183	Holder, Rubber Pad	2	
13	0259 28 320	Bump Stopper	2	
14	0259 28 333	Bush, Front	4	
15	0259 28 343	Bush, Rear	8	
16	0662 28 700	Rear Damper	2	
•	0778 28 700	Rear Damper	2	Car No. 77243 $^{70}/_{12}$ ~ ○
17	0603 34 153	Rubber Bush	8	
18	0187 34 776	Retainer	8	
19	0187 34 777	Centering Washer	4	
20	0187 41 644	Bush	2	
	0259 28 778	Gromet	2	Car No. 69117 $^{70}/_{10}$ ~ ○
21	99921 1000	Nut, Damper	4	
	99922 1000	Nut	4	
22	0820 28 185	Plate, Coupe use	2	

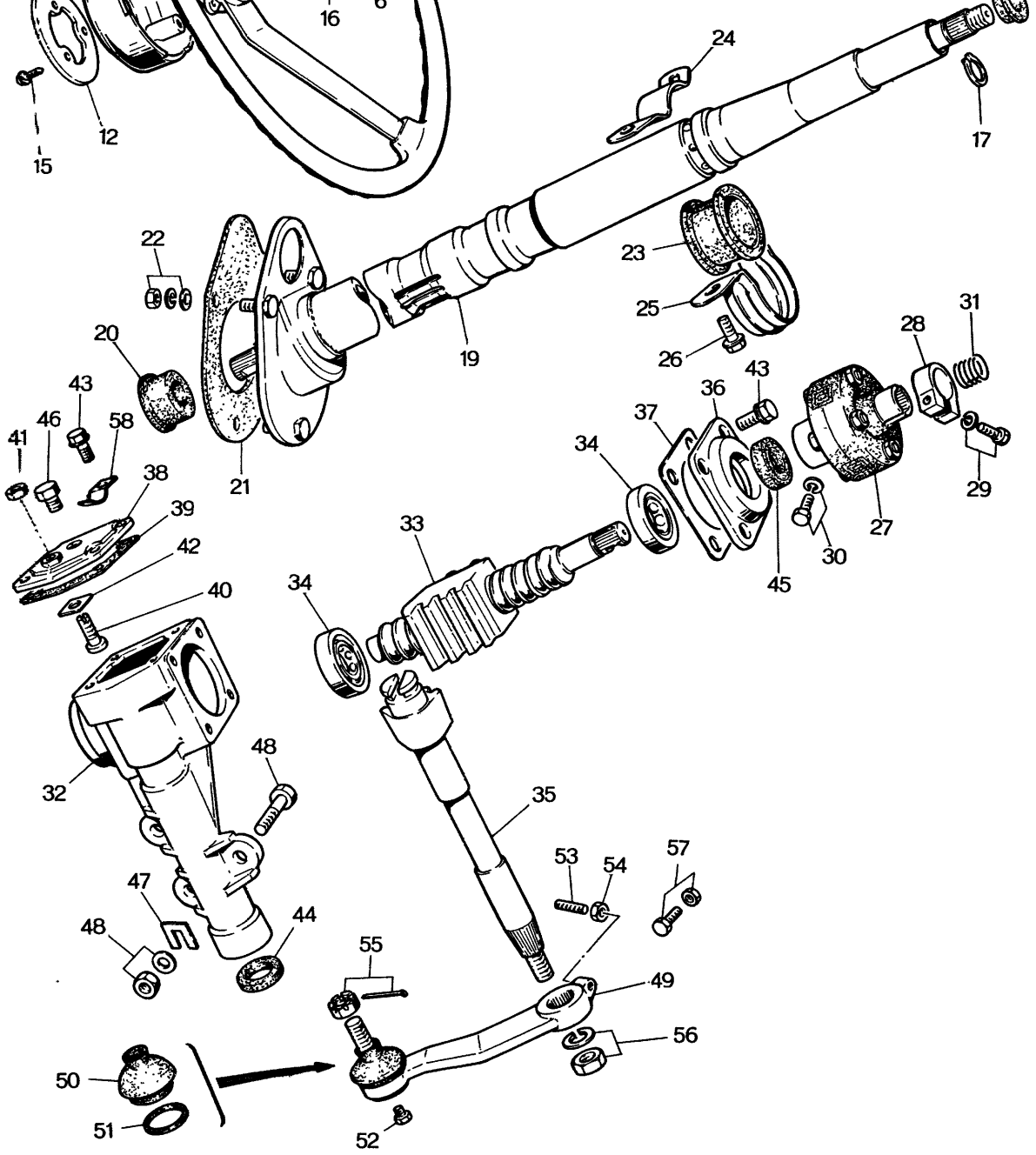
16
6
15
12
24
17
22
23
25
26
20
19
43
36
37
28
31
41
46
58
34
38
39
42
40
21
33
34
27
29
30
45
32
48
35
53
54
57
47
48
44
55
49
56
50
51
52

4	0329 32 980	STEERING WHEEL BOSS Ass'y Plain Type Dashboard use	1
	0820 32 980C	STEERING WHEEL BOSS Ass'y ("T" Type Dashboard Model)	1
5	0329 32 013 A	Cap Retainer	1
6	0329 32 014	Spring	1
7	0329 32 015	Insulator	1
8	0329 32 016	Contact Plate	1
9	0329 32 019	Spring	1
10	0329 32 031	Sub Retainer	1
11	0329 32 033	Insulator Pipe	1
12	0329 32 034	Terminal	1
13	0329 32 049	Core Cover Plain Type Dashboard use	1
	0820 32 049A	Core Cover, "T" Type Dashboard Model	1
14	99866 0420	Tapping Screw	3
15	99866 0308	Tapping Screw	3
16	99947 1200	Self Lock Nut	1
17	0208 32 059	Stop Ring	1
18	0259 32 071	Support Bush	1

		Dust Cover	1	
22	99901 0800	Nut, Dust Cover	3	
	99952 0800	Plain Washer	3	
	99971 0800	Spring Washer	3	
23	2244 32 423	Fixing Rubber	1	
24	2113 32 425A	Fixing Bracket, Upper ("T" Type Dashboard Model)	1	
	2244 32 425	Fixing Bracket, Upper Plain Type Dashboard Sedan use	1	
	2320 32 425	Fixing Bracket, Upper Plain Type Dashboard Coupe use	1	
25	2113 32 426A	Fixing Bracket, Lower ("T" Type Dashboard Model)	1	
	2244 32 426	Fixing Bracket, Lower Plain Type Dashboard Sedan use	1	
	2320 32 426	Fixing Bracket, Lower Plain Type Dashboard Coupe use	1	
26	908051 8 25	Set Bolt, Fixing Bracket ("T" Type Dashboard Model)	2	
	907831 8 30	Set Bolt, Fixing Bracket ("T" Type Dashboard Model)	2	Car No. 94253 $7\frac{1}{4}$ ~ ○
	908051 8 25B	Set Bolt (Plain Type Dashbaord use)	2	
	99952 0800B	Plain Washer (Plain Type Dashbaord use)	2	
27	0187 32 850A	STEERING JOINT Ass'y	1	
28	0187 32 886B	Clamp	1	
29	99781 0835	Bolt, Clamp	1	
	99971 0800	Spring Washer	1	

	0329 32 110A	STEERING GEAR Ass'y (R.H.D.)	1	Car No. 63893 $^{70}/_{7}$ ~ X
	0303 32 110	STEERING GEAR Ass'y (R.H.D.)	1	Car No. 64942 $^{70}/_{8}$ ~ X
	2244 32 110A	STEERING GEAR Ass'y (L.H.D.)	1	
	2350 32 110	STEERING GEAR Ass'y (L.H.D.)	1	Car No. 63893 $^{70}/_{7}$ ~ X
	2113 32 110	STEERING GEAR Ass'y (L.H.D.)	1	Car No. 64942 $^{70}/_{8}$ ~ X
32	0324 32 121	Gear Housing (R.H.D.)	1	
	0324 32 121A	Gear Housing (R.H.D.)	1	Car No. 63893 $^{70}/_{7}$ ~ X
	2158 32 121	Gear Housing (L.H.D.)	1	
	2350 32 121	Gear Housing (L.H.D.)	1	Car No. 63893 $^{70}/_{7}$ ~ X
•	2113 32 120	Gear Housing (L.H.D.)	1	Car No. 64942 $^{70}/_{8}$ ~ X
33	0820 32 130A	STEERING WORM BALL NUT Ass'y (R.H.D.)	1	
	0305 32 130B	STEERING WORM BALL NUT Ass'y (R.H.D.)	1	Car No. 64942 $^{70}/_{8}$ ~ X
	2244 32 130A	STEERING WORM BALL NUT Ass'y (L.H.D.)	1	
	2113 32 130	STEERING WORM BALL NUT Ass'y (L.H.D.)	1	Car No. 64942 $^{70}/_{8}$ ~ X
34	0259 32 182	Bearing	2	
35	0820 32 141	Sector Shaft	1	
	0820 32 141A	Sector Shaft	1	Car No. 63893 $^{70}/_{7}$ ~ X
	0305 32 141	Sector Shaft	1	Car No. 64942 $^{70}/_{8}$ ~ X
36	0820 32 151	End Cover	1	
37	0259 32 154	Shim, End Cover	Selective use	1
	0259 32 155	Shim		
	0259 32 156	Shim		
	0259 32 157	Shim		
38	0259 32 160	Side Cover	1	

43	908012 8 16	Set Bolt, Cover	8	
44	99583 22327	Oil Seal, Sector	1	
	0317 32 129	Oil Seal, Sector	1	Car No. 63893 70/7 ~ X
45	0180 32 184	Oil Seal, Worm	1	
46	0820 32 190	Oil Plug	1	
47	0208 32 188	Adjust Shim, Gear Housing, Selective use	1	
48	99781 1092	Bolt, Gear Housing	3	
	99951 1022	Plain Washer	2	
	99942 1000	Nut	3	
49	2334 32 220	PITMAN ARM Ass'y (R.H.D.)	1	
	2334 32 220A	PITMAN ARM Ass'y (R.H.D.)	1	Car No. 638939 70/7 ~ X
	2158 32 220	PITMAN ARM Ass'y (L.H.D.)	1	
	2350 32 220	PITMAN ARM Ass'y (L.H.D.)	1	Car No. 63839 70/7 ~ X
	2350 32 220A	PITMAN ARM Ass'y (L.H.D.)	1	Car No. 60429 70/5 ~ O
50	0259 32 279	Dust Seal	1	
51	0259 32 289	Set Ring	1	
52	0208 32 278	Plug	1	Car No. 60429 70/5 ~ Discarded
53	0187 32 235	Stopper Bolt	1	
	0603 32 315	Stopper Bolt, Turning Radius Adjust	1	Car No. 60429 70/5 ~ O
54	99922 1000	Nut, Turning Radius Adjust	1	

	0813 61 389A	Clamp No.2 (L.H.D.) Speedometer Cable	1	Car No. 64215 $^{70}/_{7}$ ~ ○
•	2113 55 556	Clip No. 2 (L.H.D.) Speedometer Cable	1	Car No. 72454 $^{70}/_{11}$ ~ ○

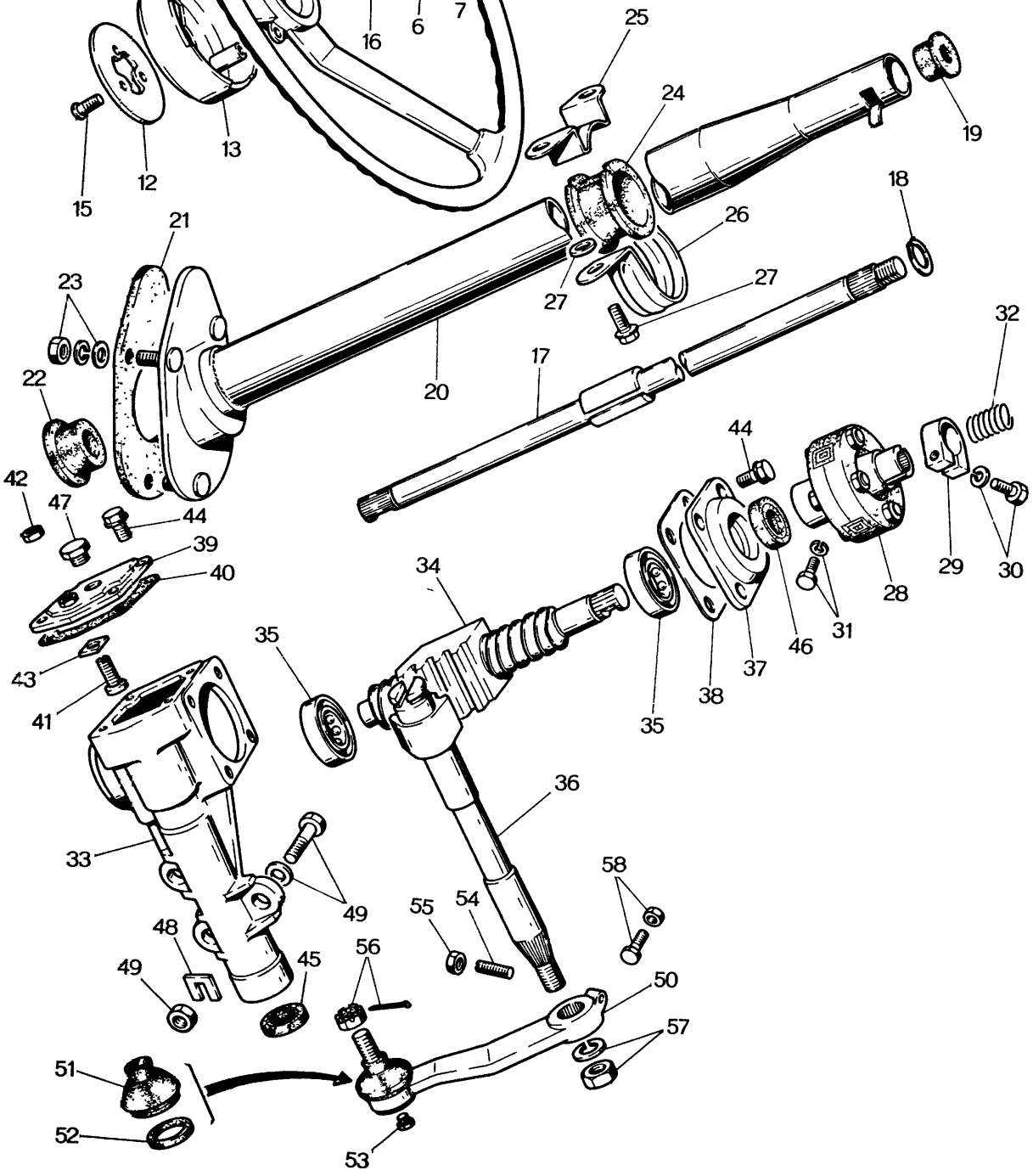
16
6
7
25
24
19
15
12
13
18
21
26
27
27
23
20
17
32
22
44
42
47
44
39
40
34
35
43
41
35
38
37
46
31
28
29
30
36
33
58
49
55
54
48
56
49
45
50
57
51
52
53

5	0329 32 013	Cap Retainer	1	
6	0329 32 014	Spring	1	
7	0329 32 015	Insulator	1	
8	0329 32 016	Contact	1	
9	0329 32 019	Spring	1	
10	0329 32 031	Sub Retainer	1	
11	0329 32 033	Insulator Plate	1	
12	0329 32 034	Terminal	1	
13	0329 32 049	Core Cover	1	
14	99866 0420	Tapping Screw	3	
15	99686 0308	Tapping Screw	3	
16	99947 1200	Self Lock Nut	1	
17	2334 32 050	Steering Shaft (R.H.D.) Coupe use	1	
	2336 32 050	Steering Shaft (L.H.D.) Coupe use	1	
	2372 32 050A	Steering Shaft (L.H.D.) Sedan use	1	
	2372 32 050B	Steering Shaft (L.H.D.) Sedan use	1	Car No. 63173 $^{70}/_{7}$ ~ Δ
	2372 32 050C	Steering Shaft (L.H.D.) Sedan use	1	Car No. 64615 $^{70}/_{8}$ ~ ○
	2399 32 050A	Steering Shaft (R.H.D.) Sedan use	1	
	2399 32 050B	Steering Shaft (R.H.D.) Sedan use	1	Car No. 63173 $^{70}/_{7}$ ~ Δ
	2372 32 050C	Steering Shaft (R.H.D.) Sedan use	1	Car No. 64615 $^{70}/_{8}$ ~ ○

23	99901 0800	Nut, Dust Cover	3	
	99971 0800	Spring Washer	3	
	99952 0800	Plain Washer	3	
24	2244 32 423	Fixing Rubber	1	
25	2244 32 425	Fixing Bracket, Upper	1	2062,2064,2334
	2320 32 425	Fixing Bracket, Upper	1	2336
26	2244 32 426	Fixing Bracket, Lower	1	2062,2064,2334
	2320 32 426	Fixing Bracket Lower	1	2336
27	908051 8 25B	Set Bolt, Fixing Bracket	2	
•	907831 8 30	Set Bolt, Fixing Bracket	2	Car No. 94253 $7\frac{1}{4}$ ~ O
	99952 0800B	Plain Washer	2	
28	0187 32 850A	STEERING JOINT	1	
29	0187 32 886B	Clamp	1	
30	99781 0835	Bolt, Clamp	1	
	99971 0800	Spring Washer	1	
31	99781 0825	Bolt, Joint	1	
	99971 0800	Spring Washer	1	

33	0324 32 121	Gear Housing (R.H.D.)	1	
	0324 32 121A	Gear Housing (R.H.D.)	1	Car No. 63893 $^{70}/_{7}$ ~ X
	0303 32 121	Gear Housing (R.H.D.)	1	Car No. 64942 $^{70}/_{8}$ ~ X
	2158 32 121	Gear Housing (L.H.D.)	1	
	2350 32 121	Gear Housing (L.H.D.)	1	Car No. 63893 $^{70}/_{7}$ ~ X
•	2113 32 120	Gear Housing (L.H.D.)	1	Car No. 64942 $^{70}/_{8}$ ~ X
34	0326 32 130	STEERING WORM BALL NUT Ass'y (R.H.D.) Sedan use	1	
	0820 32 130A	STEERING WORM BALL NUT Ass'y (R.H.D.)	1	
	0305 32 130B	STEERING WORM BALL NUT Ass'y Coupe use	1	Car No. 64942 $^{70}/_{8}$ ~ X
	2244 32 130A	STEERING WORM BALL NUT Ass'y (L.H.D.)	1	
	2113 32 130	STEERING WORM BALL NUT Ass'y (L.H.D.)	1	Car No. 64942 $^{70}/_{8}$ ~ X
35	0259 32 182	Bearing	2	
36	0259 32 141	Sector Shaft (R.H.D.) Sedan use	1	2064
	0317 32 141	Sector Shaft (R.H.D.) Sedan use	1	Car No. 63893 $^{70}/_{7}$ ~ X
	0305 32 141	Sector Shaft	1	Car No. 63893 $^{70}/_{8}$ ~ X
	0820 32 141	Sector Shaft	1	2062,2334,2336
	0820 32 141A	Sector Shaft	1	Car No. 63893 $^{70}/_{7}$ ~ X
	0305 32 141	Sector Shaft	1	Car No. 64942 $^{70}/_{8}$ ~ X
37	0820 32 151	End Cover	1	
38	0259 32 154	Shim, End Cover	Selective use	1
	0259 32 155	Shim		
	0259 32 156	Shim		
	0259 32 157	Shim		
39	0259 32 160	Side Cover	1	
40	0259 32 163	Gasket, Side Cover	1	

44	908012 8 16	Set Bolt, Cover	8	
45	99583 22327	Oil Seal, Sector	1	
	0317 32 129	Oil Seal, Sector	1	Car No. 63893 $^{70}/_{7}$ ~ X
46	0180 32 184	Oil Seal, Worm	1	
47	0820 32 190	Oil Plug	1	
48	0208 32 188	Adjust Shim, Gear Housing, Selective use	1	
49	99781 1092	Bolt, Gear Housing	3	
	99951 1022	Plain Washer	2	
	99921 1000	Nut	3	
50	2334 32 220	PITMAN ARM Ass'y (R.H.D.)	1	
	2334 32 220A	PITMAN ARM Ass'y (R.H.D.)	1	Car No. 63839 $^{70}/_{7}$ ~ X
	2158 32 220	PITMAN ARM Ass'y (L.H.D.)	1	
	2350 32 220	PITMAN ARM Ass'y (L.H.D.)	1	Car No. 63839 $^{70}/_{7}$ ~ X
	2350 32 220A	PITMAN ARM Ass'y (L.H.D.)	1	Car No. 60429 $^{70}/_{5}$ ~ O
51	0259 32 279	Dust Seal	1	
52	0259 32 289	Set Ring	1	
53	0208 32 278	Plug	1	Car No. 60429 $^{70}/_{5}$ ~ Discarded
54	0187 32 235	Stopper Bolt	1	
	0603 32 315	Stopper Bolt, Turning Radius Adjust	1	Car No. 60429 $^{70}/_{5}$ ~ O
55	99922 1000	Nut	1	

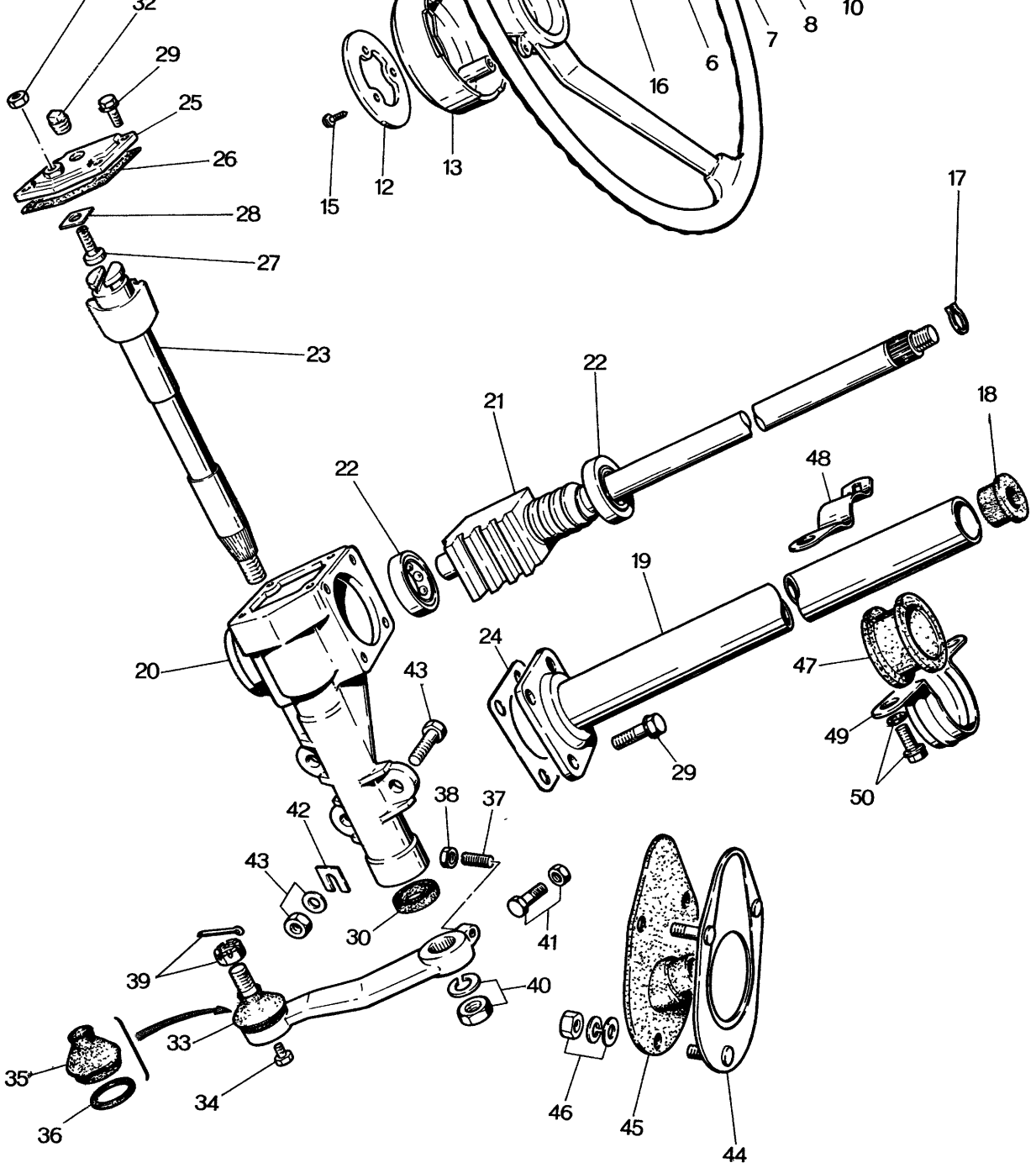
32
29
25
26
28
27
23
15
12
13
16
6
7
8
10
17
18
21
22
22
48
19
24
47
20
43
29
49
50
38
37
42
43
30
41
39
40
33
35
34
36
46
45
44

6	0329 32 014	Spring	1
7	0329 32 015	Insulator	1
8	0329 32 016	Contact Plate	1
9	0329 32 019	Spring	1
10	0329 32 031	Sub Retainer	1
11	0329 32 033	Pipe	1
12	0329 32 034	Terminal	1
13	0329 32 049	Wheel Core Cover	1
14	99866 0420	Tapping Screw	3
15	99868 0308	Tapping Screw	3
16	99947 1200	Self Lock Nut	1

	0324 32 110	STEERING GEAR Ass'y (R.H.D.)	
	0324 32 110A	STEERING GEAR Ass'y (R.H.D.)	Car No. 63893 $^{70}/_{7}$ ~ X
	0303 32 110	STEERING GEAR Ass'y (R.H.D.)	Car No. 64942 $^{70}/_{8}$ ~ X
	2371 32 110	STEERING GEAR Ass'y (L.H.D.)	
			1
17	0208 32 059	Stop Ring	1
18	0259 32 071	Support Bush	1

22	0259 32 182	Bearing		2	
23	0259 32 141	Sector Shaft (R.H.D.)		1	2063
	0317 32 141	Sector Shaft (R.H.D.)		1	Car No. 63893 $^{70}/_{7}$ ~ X
	0305 32 141	Sector Shaft (R.H.D.)		1	Car No. 64942 $^{70}/_{8}$ ~ X
	0820 32 141	Sector Shaft (L.H.D.)		1	2062
	0820 32 141A	Sector Shaft (L.H.D.)		1	Car No. 63893 $^{70}/_{7}$ ~ X
	0305 32 141	Sector Shaft (L.H.D.)		1	Car No. 64942 $^{70}/_{8}$ ~ X
24	0259 32 154	Adjust Shim, End Cover	Selective use	1	
	0259 32 155	Adjust Shim			
	0259 32 156	Adjust Shim			
	0259 32 157	Adjust Shim			
25	0259 32 160	Side Cover		1	
26	0259 32 163	Gasket, Side Cover		1	
27	0180 32 165A	Adjust Screw		1	
28	0180 32 171A	Adjust Shim	Selective use	1	
	0180 32 172A	Adjust Shim			
	0180 32 173A	Adjust Shim			
	0180 32 174A	Adjust Shim			
29	908012 8 16	Set Bolt, Cover		8	
30	99583 22327	Oil Seal		1	
	0317 32 129	Oil Seal		1	Car No. 63893 $^{70}/_{7}$ ~ X
31	99922 1000	Nut		1	
32	99502 2000	Plug		1	

38	99922 1000	Nut, Turning Radius Adjust	1	
39	99924 1000	Nut, Pitman Arm	1	
	99221 2020	Split Pin	1	
40	99921 1600	Nut, Pitman Arm	1	
	99921 1800	Nut, Pitman Arm	1	Car No. 63893 $^{70}/_{7}$ ~ X
	99971 1600	Spring Washer	1	
	99971 1800	Spring Washer	1	Car No. 63893 $^{70}/_{7}$ ~ X
41	0187 32 235	Bolt	1	
	99922 1000	Nut	1	
42	0208 32 188	Adjust Shim	2	
43	99781 1092	Bolt, Gear Housing	3	
	99951 1022	Plain Washer	2	
	99924 1000	Nut	3	
44	0324 32 410	Set Plate	1	
	0820 32 089	Dust Cover	1	Car No. 64942 $^{70}/_{8}$ ~ X
45	0324 32 411	Dust Cover	1	
	0326 32 411	Dust Cover	1	Car No. 64942 $^{70}/_{8}$ ~ X
46	99901 0800	Nut, Set Plate	3	
	99971 0800	Spring Washer	3	
	99952 0800	Plain Washer	3	
47	0259 32 423	Fixing Rubber	1	
48	0259 32 425	Fixing Bracket, Upper	1	

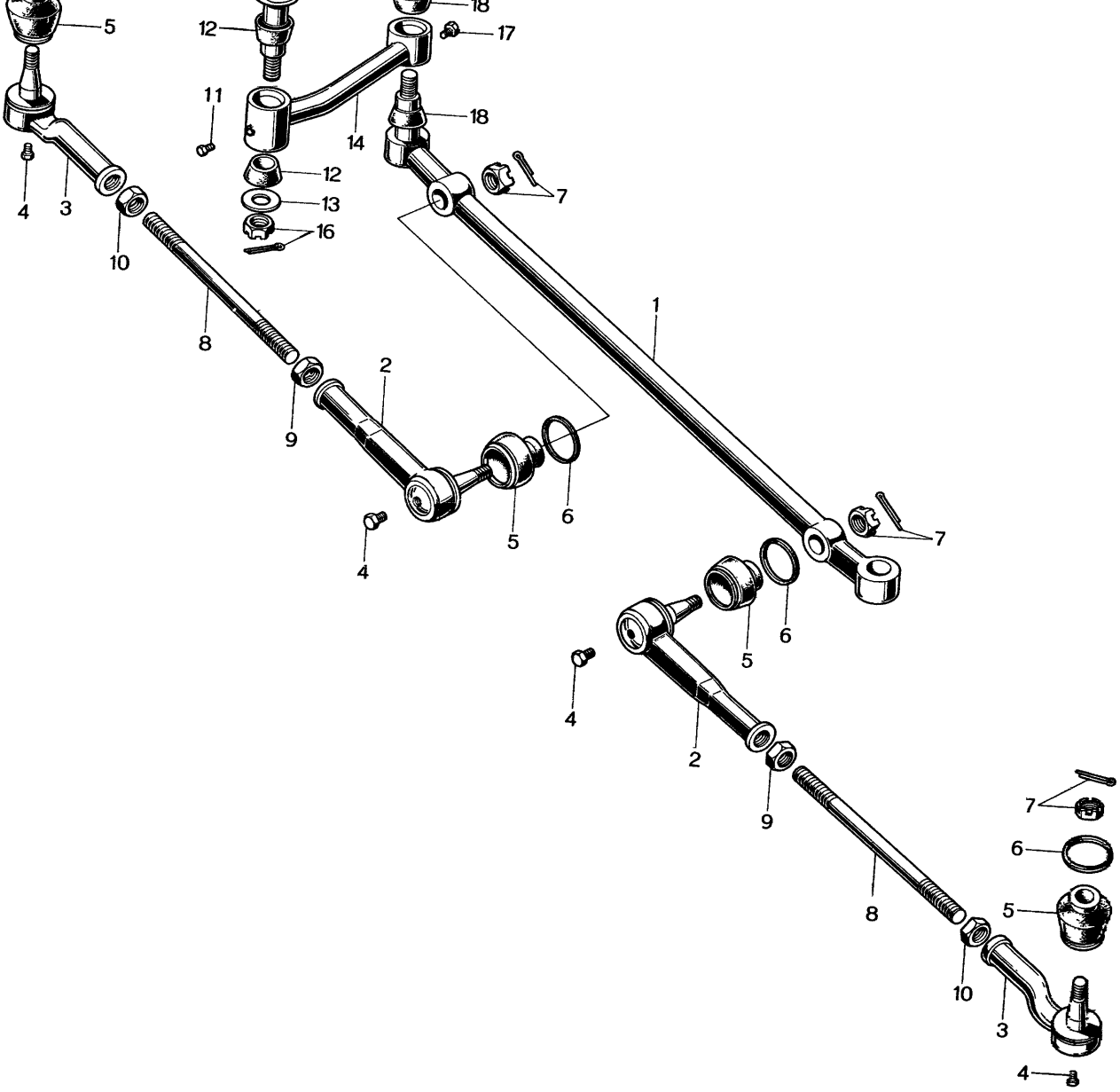
5
12
18
17
11
14
18
12
13
16
7
4
3
10
8
9
2
1
6
5
4
7
5
6
4
2
9
8
10
3
4
7
6
5

6	0259 32 289	Set Ring	4	
7	99924 1000	Nut, Socket	4	
	99221 2020	Split Pin	4	
	99221 2015	Split Pin	4	Car No. 61357 $^{70}/_{5}$ ~ O
8	0305 32 365	Tie Rod	2	
9	99922 1400	Lock Nut, Tie Rod	2	
10	99944 1400	Lock Nut, Tie Rod	2	
	0317 32 320	IDLER Ass'y	1	
11	0208 32 278	Plug	1	
12	0259 32 329	Tapered Bush	2	
13	0259 32 341	Washer	1	
14	0305 32 351	Idler Arm	1	
15	0259 32 352	Spindle	1	
16	99924 1200	Nut	1	
	99221 3020	Split Pin	1	

99942	1000	Nut	2

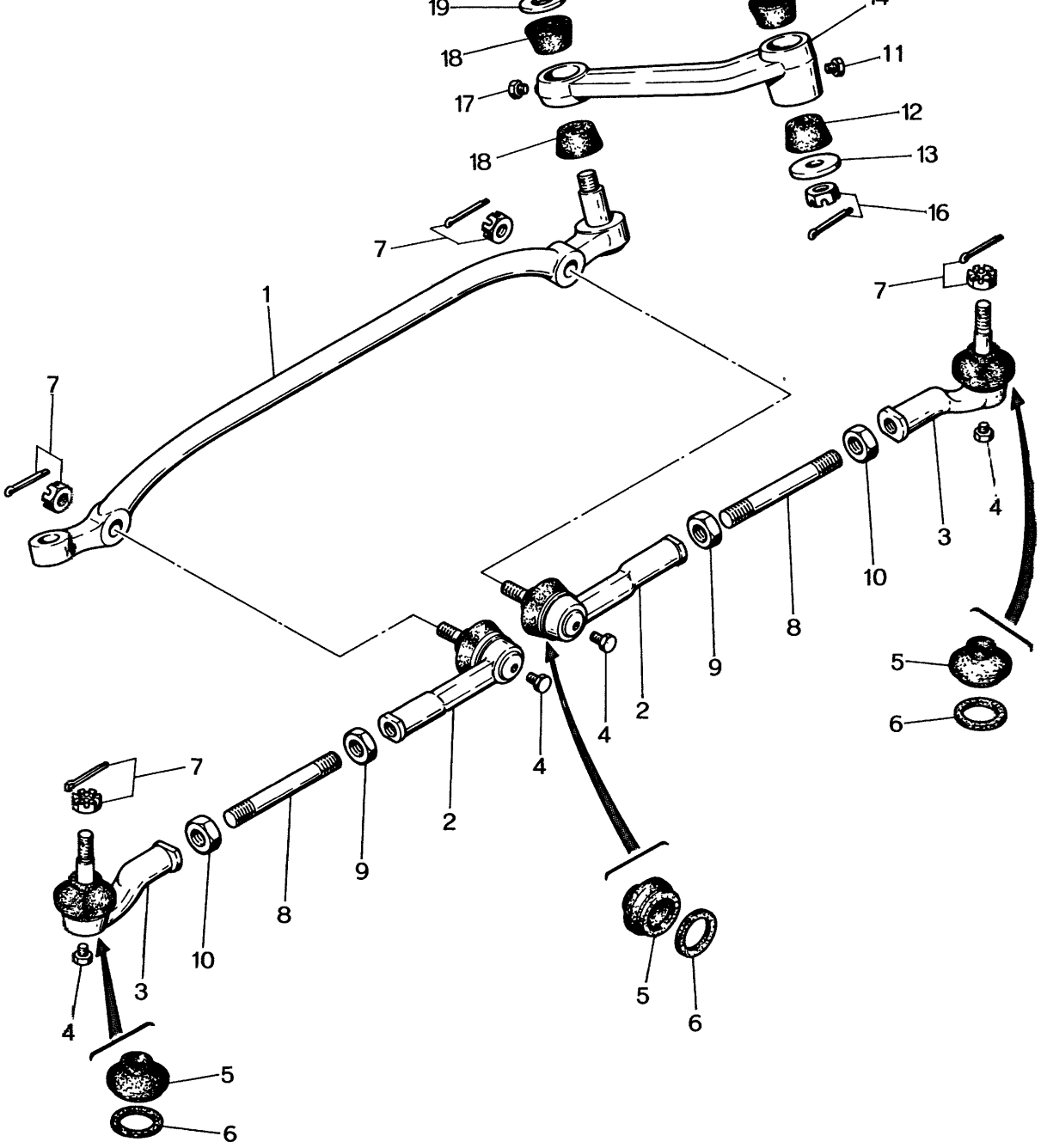
19
18
17
18
14
11
12
13
16
7
1
7
7
4
3
10
8
9
2
4
5
6
7
4
2
9
8
10
3
4
5
6

		Dust Seal	4	
6	0259 32 289	Set Ring	4	
7	99924 1000	Nut, Socket	4	
	99221 2020	Split Pin	4	
	99221 2015	Split Pin	4	Car No. 61357 $^{70}/_{5}$ ~ O
8	0305 32 365	Tie Rod	2	
9	99922 1400	Lock Nut, Tie Rod	2	
10	99944 1400	Lock Nut, Tie Rod	2	
	2370 32 320	IDLER Ass'y	1	
11	0208 32 278	Plug	1	
12	0259 32 329	Tapered Bush	2	
13	0259 32 341	Washer	1	
14	2370 32 351	Idler Arm	1	
15	0259 32 352	Spindle	1	
16	99924 1200	Nut	1	
	99221 3020	Split Pin	1	

99921	1000	Nut	2	
99942	1000	Nut	2	Car No. 57664 $^{70}/_{4}$ ~ ○
99971	1000	Spring Washer	2	Car No. 57664 $^{70}/_{4}$ ~ Discarded

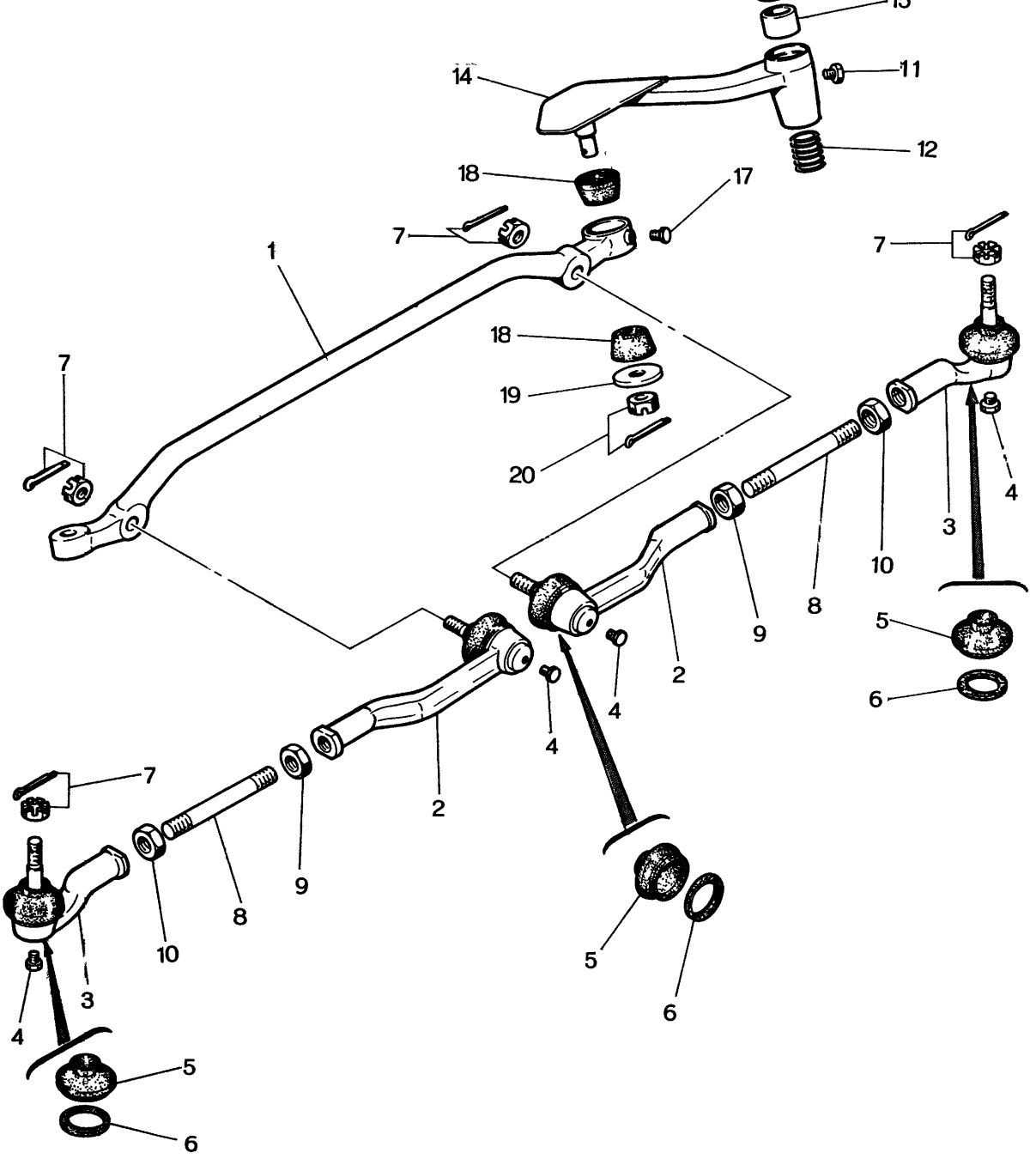
15
14
11
12
18
17
7
1
18
19
20
7
7
4
3
10
8
9
2
4
5
6
4
7
2
9
8
10
3
4
5
6

5	0259 32 279	Dust Seal	4	
6	0259 32 289	Set Ring	4	
7	99924 1000	Nut, Socket	4	
	99221 2020	Split Pin	4	
	99221 2015	Split Pin	4	Car No. 61357 $^{70}/_{5}$ ~ ○
8	2113 32 365	Tie Rod	2	
9	99922 1400	Lock Nut, Tie Rod	2	
10	99944 1400	Lock Nut, Tie Rod	2	
	2113 32 320B	STEERING LINK Ass'y	1	
	2080 32 320	STEERING LINK Ass'y 2112. 2124	1	Car No. 90655 $^{71}/_{3}$ ~ Added Anew
11	0208 32 278	Plug	1	
12	0111 32 173	Spring	1	
13	2113 32 330	Spindle	1	
14	2113 32 350B	IDLER ARM Ass'y	1	
	2113 32 350C	IDLER ARM Ass'y	1	Car No. 94253 $^{71}/_{4}$ ~ ○
15	2113 32 354	Bush	1	

	20	99924 1200	Nut, Idler	1	
		99221 3020	Split Pin	1	
	21	2113 32 359	Bolt, Idler	2	
		99811 1080	Bolt (2124, 2112)	2	
•		99783 1090	Bolt, Idler	2	Car No. 98036 $^{71}/_{5}$ ~ O
	22	99921 1000	Nut, Idler	2	
		99942 1000	Nut, Idler	2	Car No. 57664 $^{70}/_{4}$ ~ O
				2	Car No. 90655 $^{71}/_{3}$ ~ Discarded
		99971 1000	Spring Washer	2	Car No. 57664 $^{70}/_{4}$ ~ Discarded

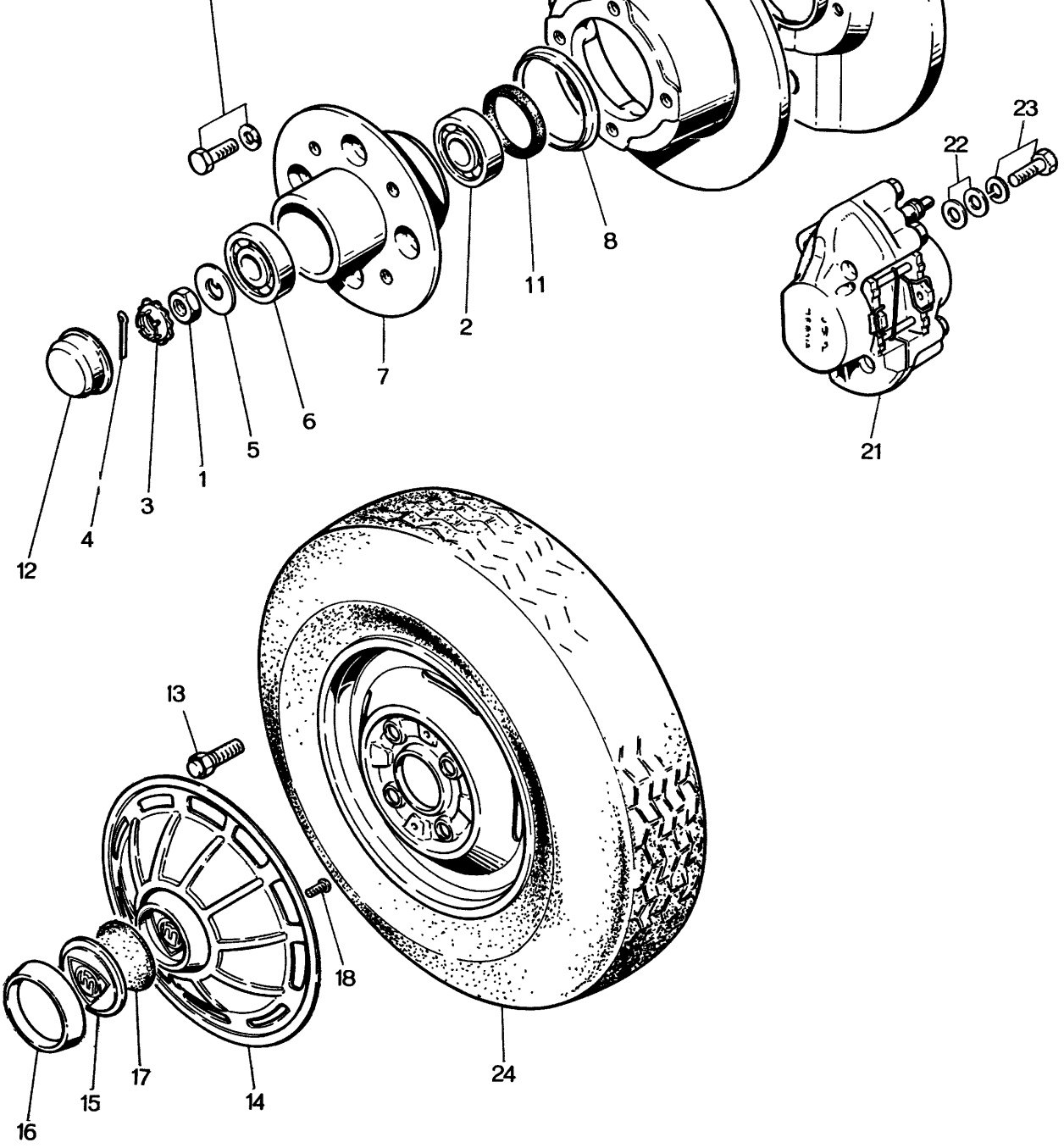
23
22
8
11
2
7
6
5
1
3
4
12
21
13
18
24
17
15
14
16

	2113 33 060A	FRONT WHEEL HUB Ass'y	2	☆
7	2113 33 061A	Front Wheel Hub	2	
8	0221 33 035	Dust Ring	2	
9	2113 33 251	Disc Plate	2	
	2113 33 251A	Disc Plate	2	Car No. 64871 $^{70}/_{8}$ ~ ○
10	0221 33 698	Bolt	8	
	99971 1000	Spring Washer	8	
11	0187 33 065A	Oil Seal, Wheel Bearing	2	
12	0259 33 071	Hub Cap	2	
13	0259 33 165	Wheel Set Bolt	8	
14	2113 33 170A	WHEEL CAP	2	
	2113 33 170B	WHEEL CAP	2	Car No. 62706 $^{70}/_{7}$ ~ ×
15	0813 33 175	Emblem	2	
16	0813 33 176A	Retainer	2	
17	0813 33 177	Pad	2	
18	908332 3 06	Set Screw	6	

22	0221 33 617	Adjust Shim t = 0.2	2	
	0221 33 618	Adjust Shim t = 0.6	2	
	0221 33 619	Adjust Shim t = 0.8	2	
23	0820 33 696	Bolt, Caliper	4	
	99971 1000	Spring Washer	4	
24	9962 01 1454	145SR–14 Radial Tire, White Ring	2	
	9962 03 1454	145SR–14 Radial Tire	2	
	9962 02 1454	145SR–14 Radial Tubeless Tire	2	
	9963 01 1454	145SR–14 Tube	2	
	9963 60 4140	Air Valve TR–414, Tubeless Tire use	2	
	9965 03 4040	4–J x 14WDC Disc Wheel	2	©
	9965 04 4040	4–J x 14WDC Disc Wheel	2	Car No. 62706 $^{70}/_{7}$ ~ △

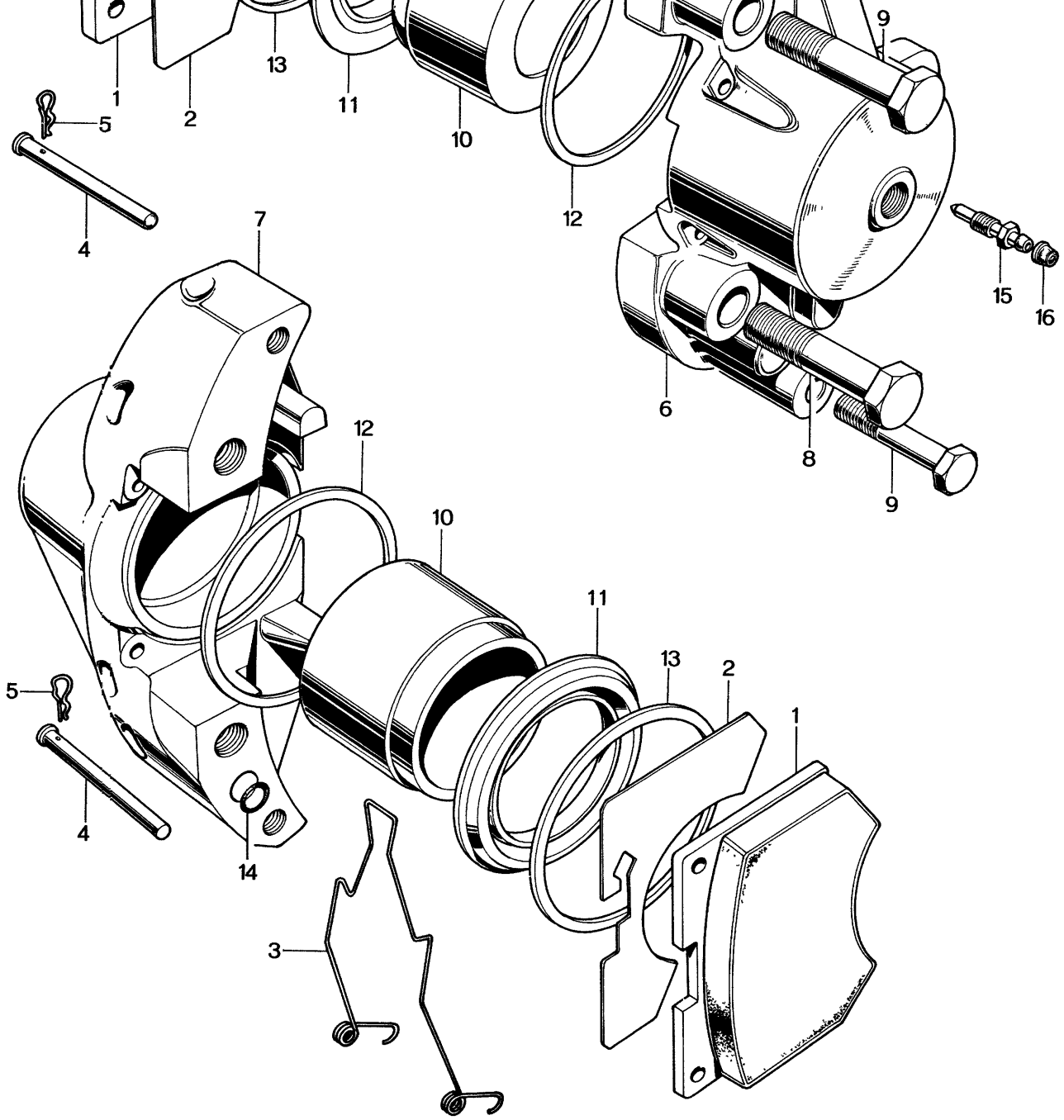
1
2
13
11
10
12
9
5
4
7
6
8
15
16
12
10
11
13
2
1
5
4
14
3

3	0820 33 636A	Pad Spring	2		
4	0820 33 695	Pin	4		
5	0820 33 698	Clip	4		
	0820 49 210	CYLINDER Ass'y (R)	1		
	0820 49 220	CYLINDER Ass'y (L)	1		
6	0820 33 621A	Inner Caliper (R)	1		☆
	0820 33 721A	Inner Caliper (L)	1		☆
7	0820 33 421	Outer Caliper	2	Order Under No. 0820 49 210 (R) 0820 49 220 (L)	☆
8	0820 33 697	Bridge Bolt (M = 10)	4		☆
9	0820 33 699	Bridge Bolt (M = 8)	4		☆
10	0820 33 651	Piston	4		☆
	0820 49 240	PISTON SEAL KIT	1 Set		

11	0820 33 671	Piston Seal	4	Order Under No. 0820 49 250	☆
	0820 49 251	Rubber Grease	—		
13	0820 33 682	Retaining Ring	4		
14	0820 33 623	Caliper Seal	4		☆
15	0820 33 691A	Bleeder Screw	2		
16	0221 33 693	Cap	2		
	0820 33 693	Cap	2	Car No. 61910 ~ ○	

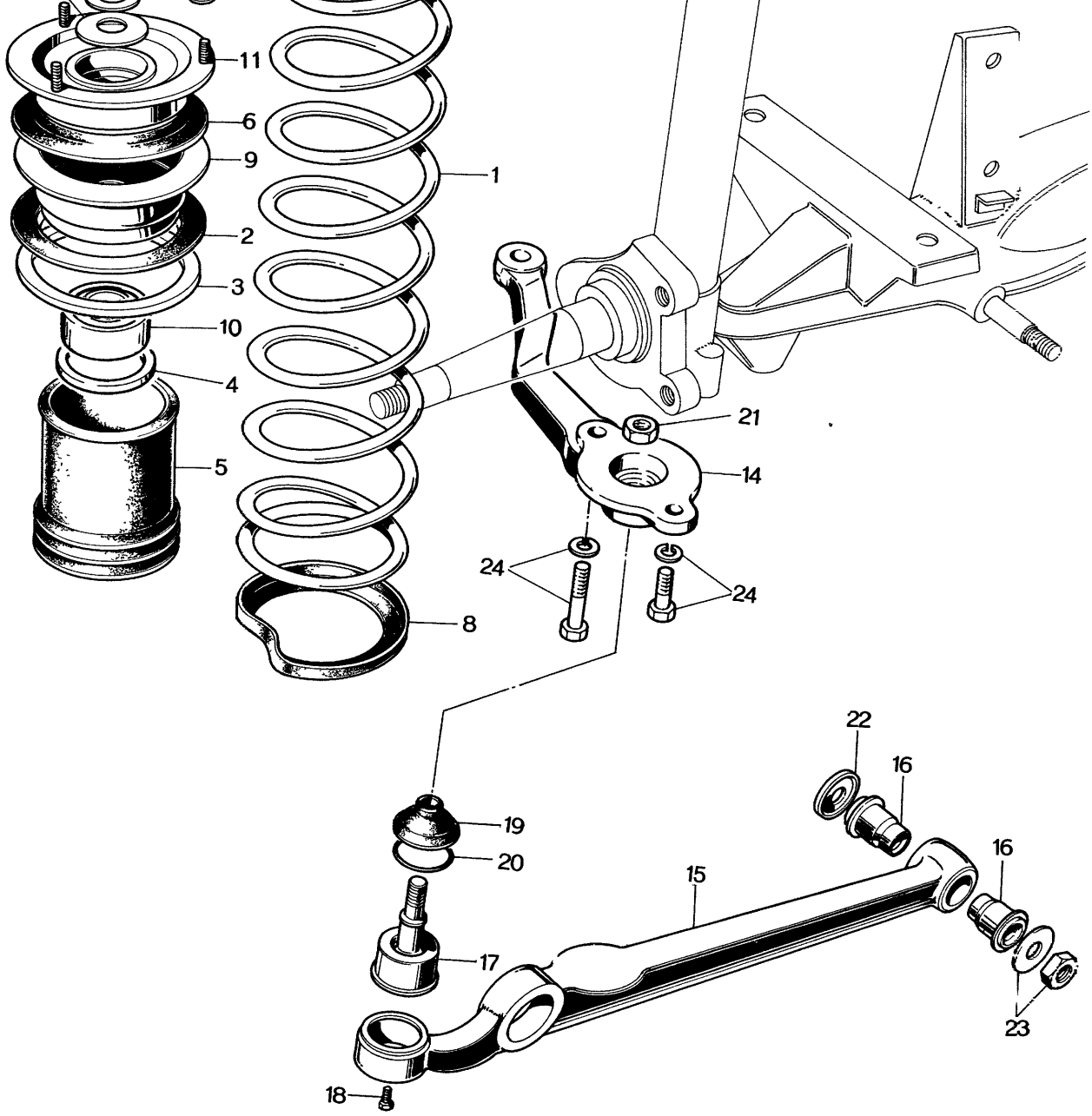
11
6
9
1
2
3
10
4
5
21
14
24
24
8
22
16
19
20
15
16
17
23
18

8	0259 34 021	Rubber Seat, Lower	2	
9	2158 34 340	Rubber Seat, Upper	2	
10	2158 34 381	Bearing	2	
11	2158 34 390	Mounting Rubber	2	
12	99901 0800	Nut, Mounting Rubber	6	
	99971 0800	Spring Washer	6	
	99952 0800	Plain Washer	6	
13	99921 1400	Nut, Damper Upper Side	2	
	99971 1400	Spring Washer	2	
	99951 1430	Plain Washer	2	
	0317 34 310A	ARM Ass'y (R)	1	
•	0317 34 310B	ARM Ass'y (R)	1	Car No. 87858 $^{71}/_{2}$ ~ ○
	0317 34 320A	ARM Ass'y (L)	1	
•	0317 34 320B	ARM Ass'y (L)	1	Car No. 87858 $^{71}/_{2}$ ~ ○
14	0305 34 311	Arm	2	
15	0305 32 301A	Knuckle Arm (R)	1	
	0317 32 301	Knuckle Arm (R)	1	Car No. 64131 $^{70}/_{7}$ ~ ○
	0305 32 311A	Knuckle Arm (L)	1	
	0317 32 311	Knuckle Arm (L)	1	Car No. 64131 $^{70}/_{7}$ ~ ○
16	0317 34 460	Rubber Bush	4	

22	0317 34 662	Washer No.1	2
23	0317 34 663	Washer No.2	2
	99947 1400	Self Lock Nut	2
24	99781 1225	Bolt, Socket	2
	99781 1240	Bolt	2
	99971 1200	Spring Washer	4

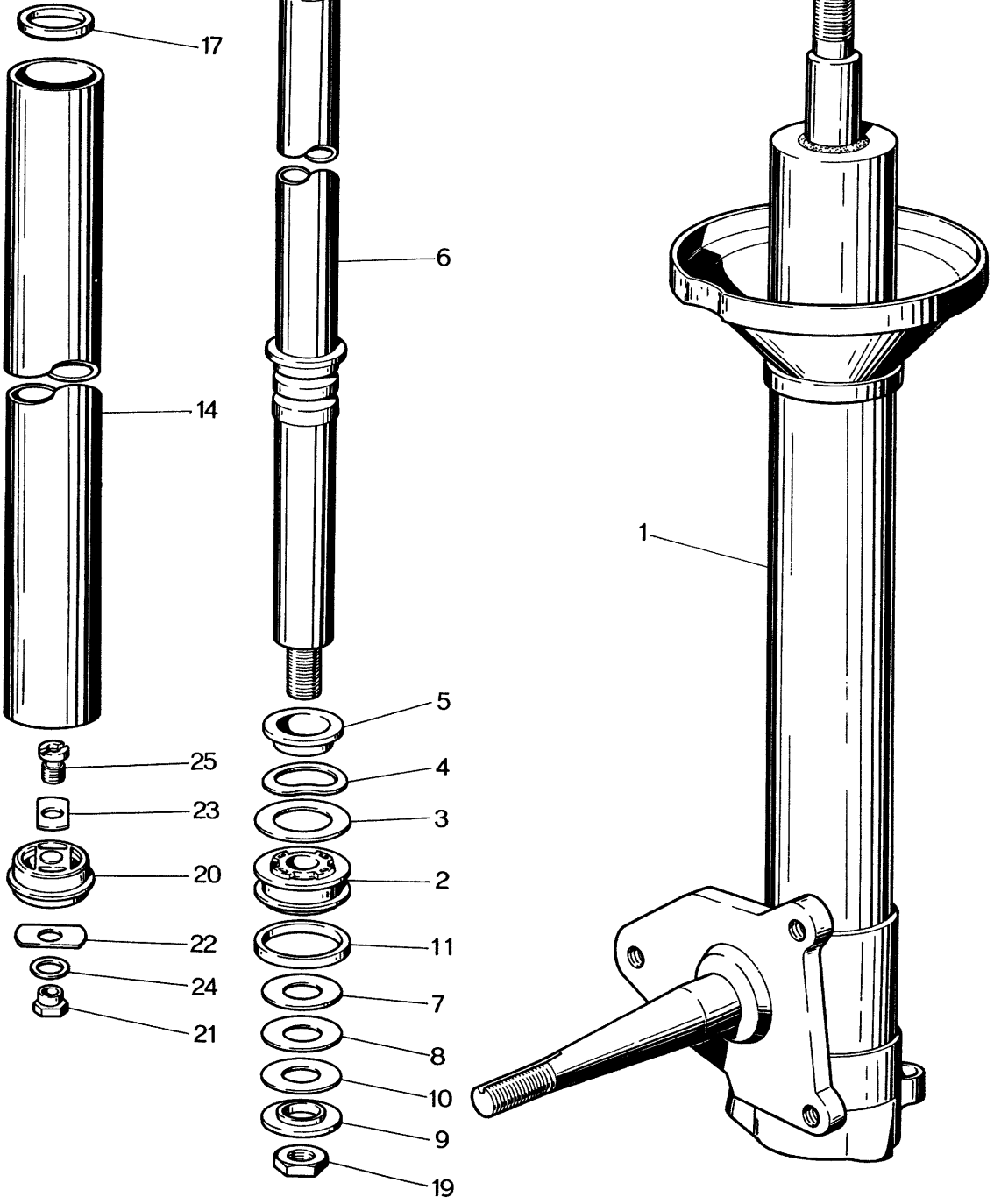
17
6
14
25
23
20
22
24
21
5
4
3
2
11
7
8
10
9
19
1

6	0305 34 710A	Piston Rod	2	
7	0259 34 712	Relief Valve	8	
8	0305 34 712	Relief Valve	2	
9	0305 34 713	Washer	2	
10	0305 34 714	Valve	2	
11	0259 34 719A	Piston Ring	2	
12	0259 34 730	Piston Rod Guide	2	
13	0183 34 731	"O" Ring	4	
14	0305 34 732A	Pressure Tube	2	
15	0305 34 760A	OIL SEAL Ass'y	2	
	0259 34 735A	Oil Seal	2	
16	0259 34 767	Ring	2	
17	0259 34 768	Guide Stopper	2	
18	0259 34 769B	Stopper	2	
19	99921 1200	Nut	2	
	0305 34 709	Nut	2	Car No. 68290 $^{70}/_{10}$ ~ O

25	0305 34 729A	Bolt	2

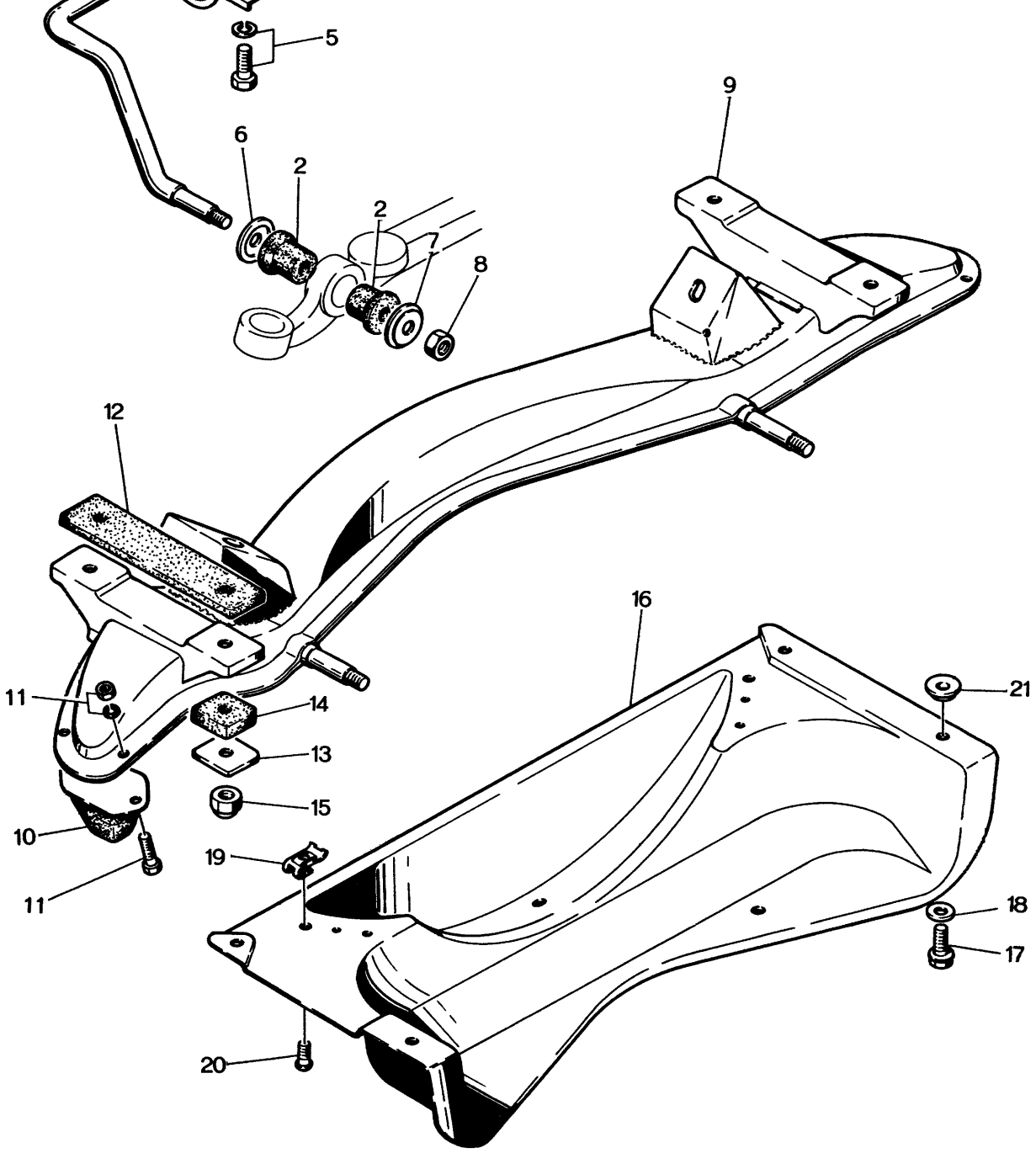
5
6
2
2
7
8
9
12
11
14
13
15
10
19
11
16
21
18
17
20

7	0259 34 158	Washer, Stabilizer (Rr.)	2
8	99947 1400	Nut	2
9	0820 34 800A	CROSS MEMBER, FRONT SUSPENSION General Export Model	1
	2329 34 800A	CROSS MEMBER, FRONT SUSPENSION Emission Controlled Model	1
	0317 34 810	Seat, Cabin Support (R)	1
	0317 34 820	Seat, Cabin Support (L)	1
10	0820 34 110	Bound Stopper	2
11	99806 0618	Bolt, Bump Stopper	4
	99971 0600	Spring Washer	4
	99906 0600	Nut	4
12	0259 34 896	Cushion, Upper	2
13	0259 34 897	Washer	4
14	0259 34 898	Cushion, Lower	4
15	99942 1000	Self Lock Nut	4

21	0820 56 906	Spacer	4

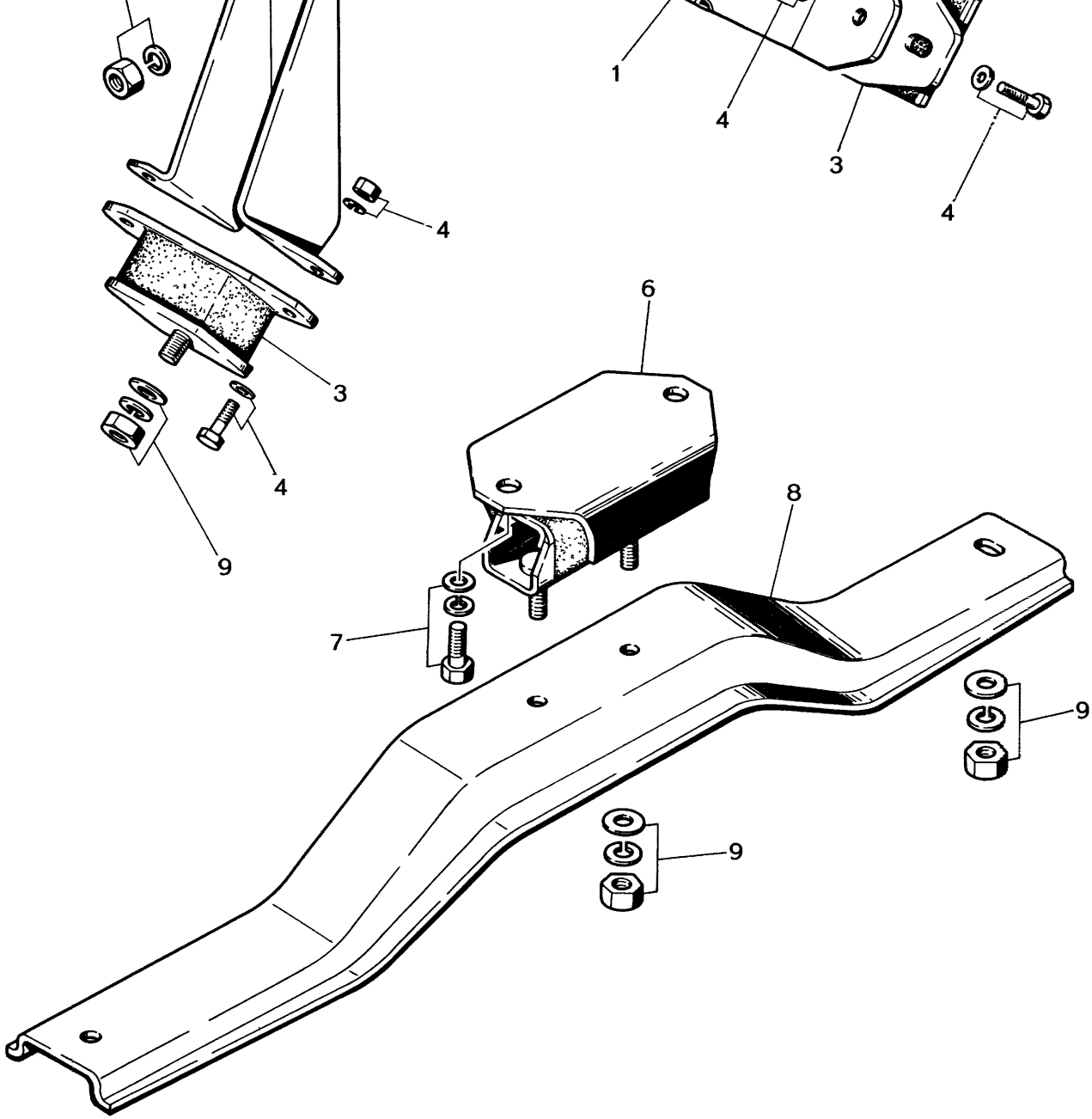
1
4
3
4
4
3
4
9
6
8
7
9
9

	99971 0800	Spring Washer	4
5	99971 1200	Spring Washer	4
	99921 1200	Nut	4
6	0259 39 340	T/Mission Mounting Rubber	1
7	908012 8 18	Set Bolt	2
8	0820 39 380	T/Mission Mount Member	1
9	99921 1000	Nut	6
	99951 1030	Plain Washer	6
	99971 1000	Spring Washer	6

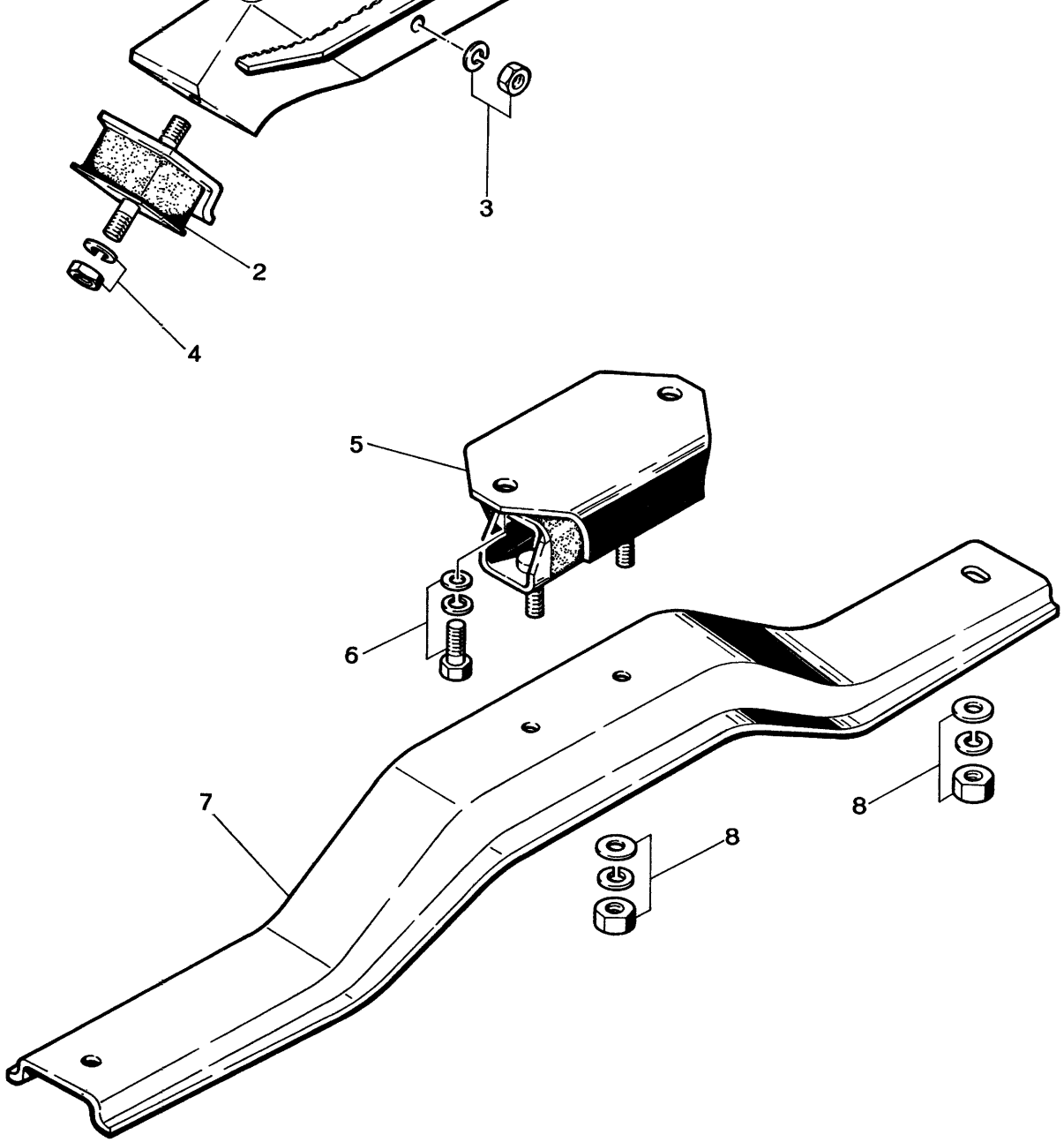
3
2
4
5
6
7
8
8

5	0259 39 340	T/Mission Mounting Rubber	1
6	908012 8 18	Set Bolt, Mounting Rubber	2
7	0820 39 380	T/Mission Mount Member	1
8	99921 1000	Nut, Mount Member	6
	99951 1030	Plain Washer	6
	99971 1000	Spring Washer	6

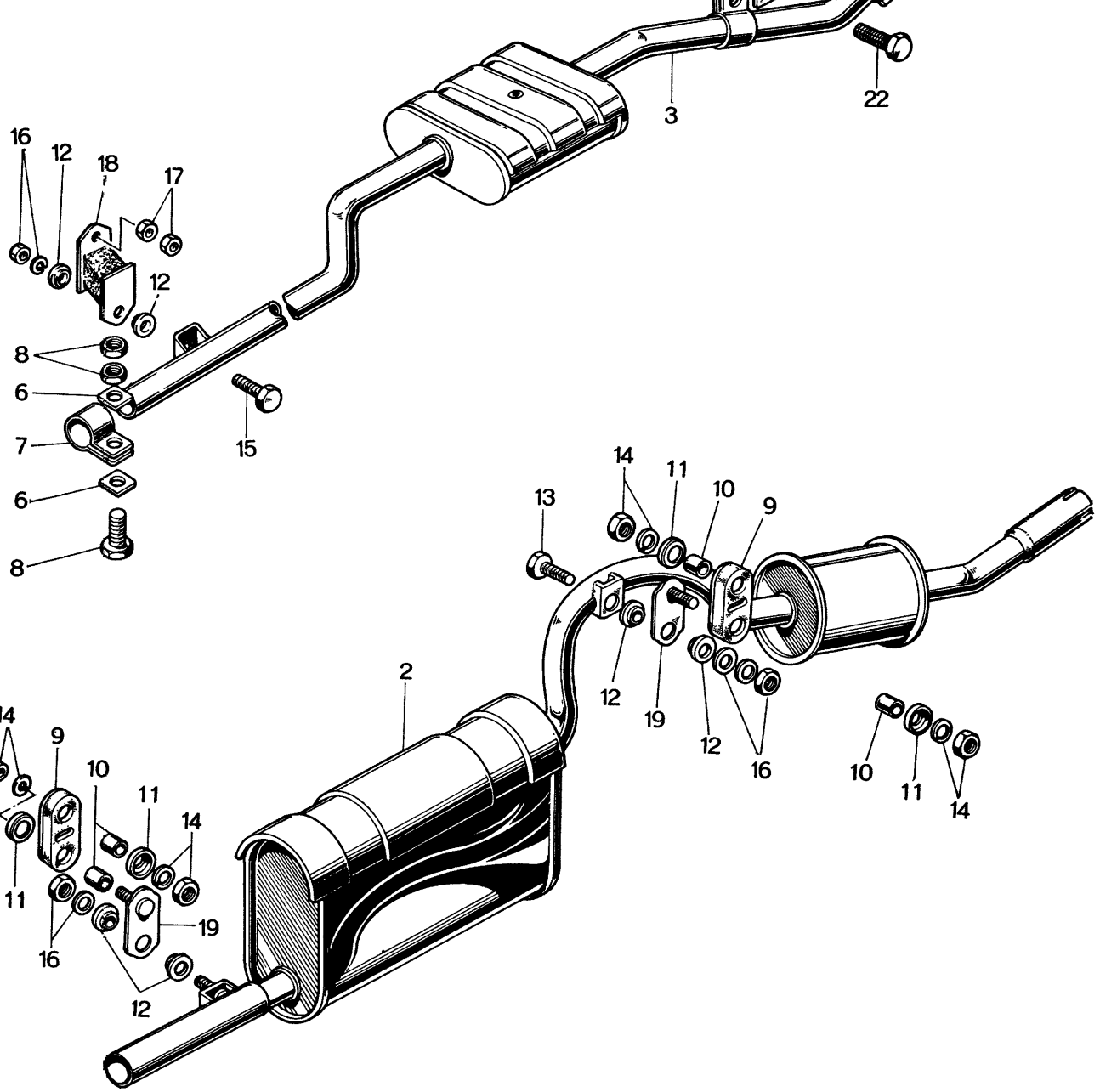
16
12
18
17
12
8
6
7
6
8
15
3
22
14
11
10
9
13
12
19
12
16
10
11
14
2
14
9
10
11
14
11
16
19
12

7	0183 40 356	Joint	1	
8	99801 0828	Bolt, Joint	1	
	99901 0800	Nut	1	
	99902 0800	Lock Nut	1	
9	0820 40 161	Silencer Hanger	2	
10	0820 40 165	Pipe	4	
11	0820 40 166	Washer	4	
12	0824 40 401	Insulator	6	
13	99801 0828	Bolt	1	
14	99901 0800	Nut	4	
	99971 0800	Spring Washer	4	
15	99801 0832	Bolt	1	
16	99949 0800	Nut	3	
	99952 0800	Plain Washer	3	
•	99951 0822	Plain Washer	3	Car No. 97194 $^{7}1/_{5}$ ~ ○
17	99901 0800	Nut	1	
	99902 0800	Nut	1	
18	0820 40 180	Silencer Hanger	1	
19	0820 40 170	Plate Ass'y	2	
20	0820 40 351A	Bracket	1	
21	0208 13 458	Clamp	1	

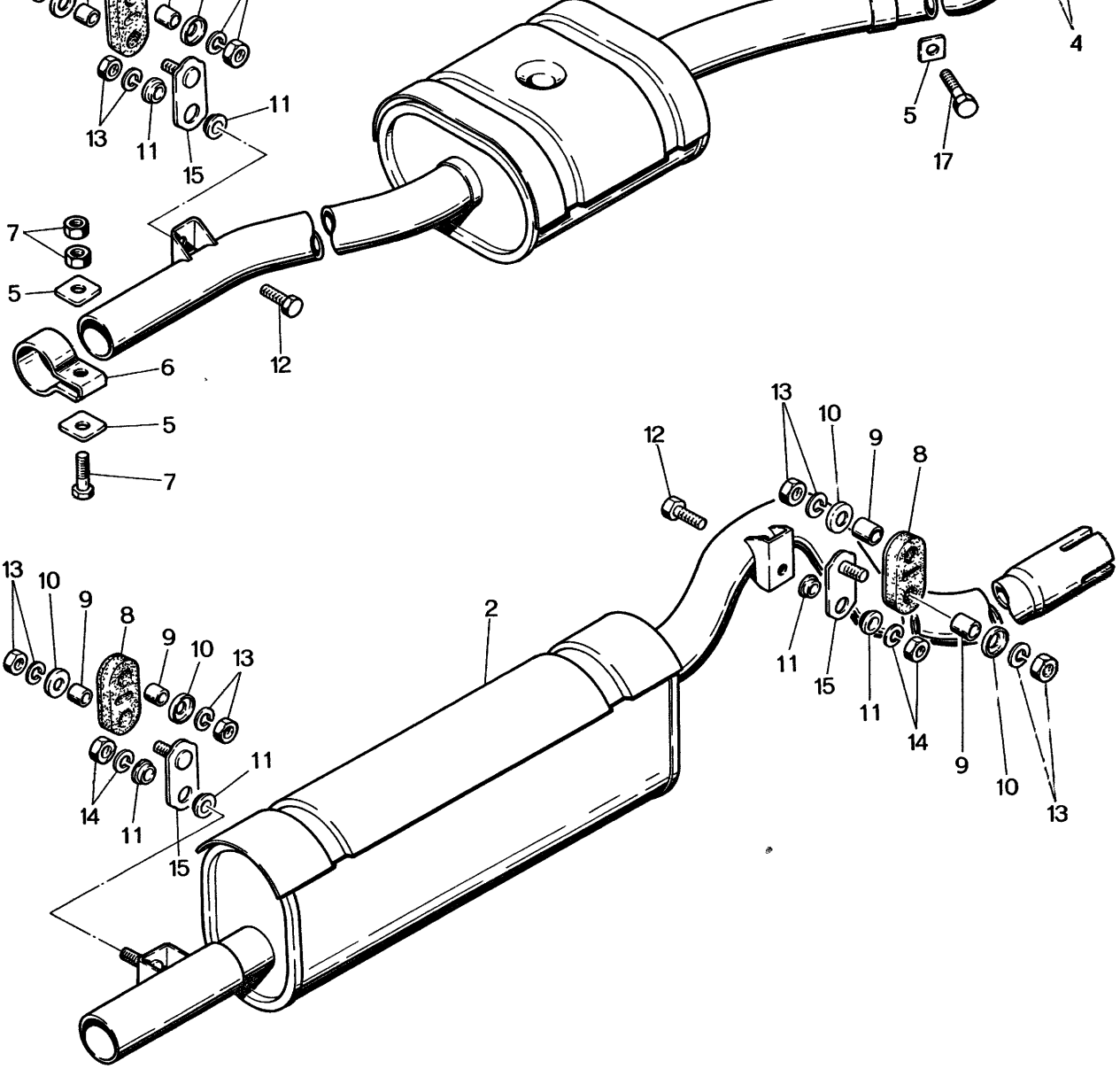
4
5
17
13
11
15
11
7
5
6
12
5
7
13
10
9
8
12
2
13
10
9
8
9
10
13
14
11
15
11
14
9
10
13

7	99801 0828	Bolt, Joint	1
	99901 0800	Nut	1
	99902 0800	Lock Nut	1
8	0820 40 161	Silencer Hanger	3
9	0820 40 165	Pipe	6
10	0820 40 166	Washer	6
11	0824 40 401	Insulator	6
12	99801 0828	Bolt, Silencer Hanger	2
13	99901 0800	Nut, Silencer Hanger	6
	99971 0800	Spring Washer	6
14	99949 0800	Nut, Silencer Hanger	3
	99953 0800	Plain Washer	3
15	0820 40 170	Plate Ass'y	3
16	0820 40 351A	Bracket	1
17	99801 0832	Bolt, Bracket	1
	99901 0800	Nut	1
	99902 0800	Nut	1

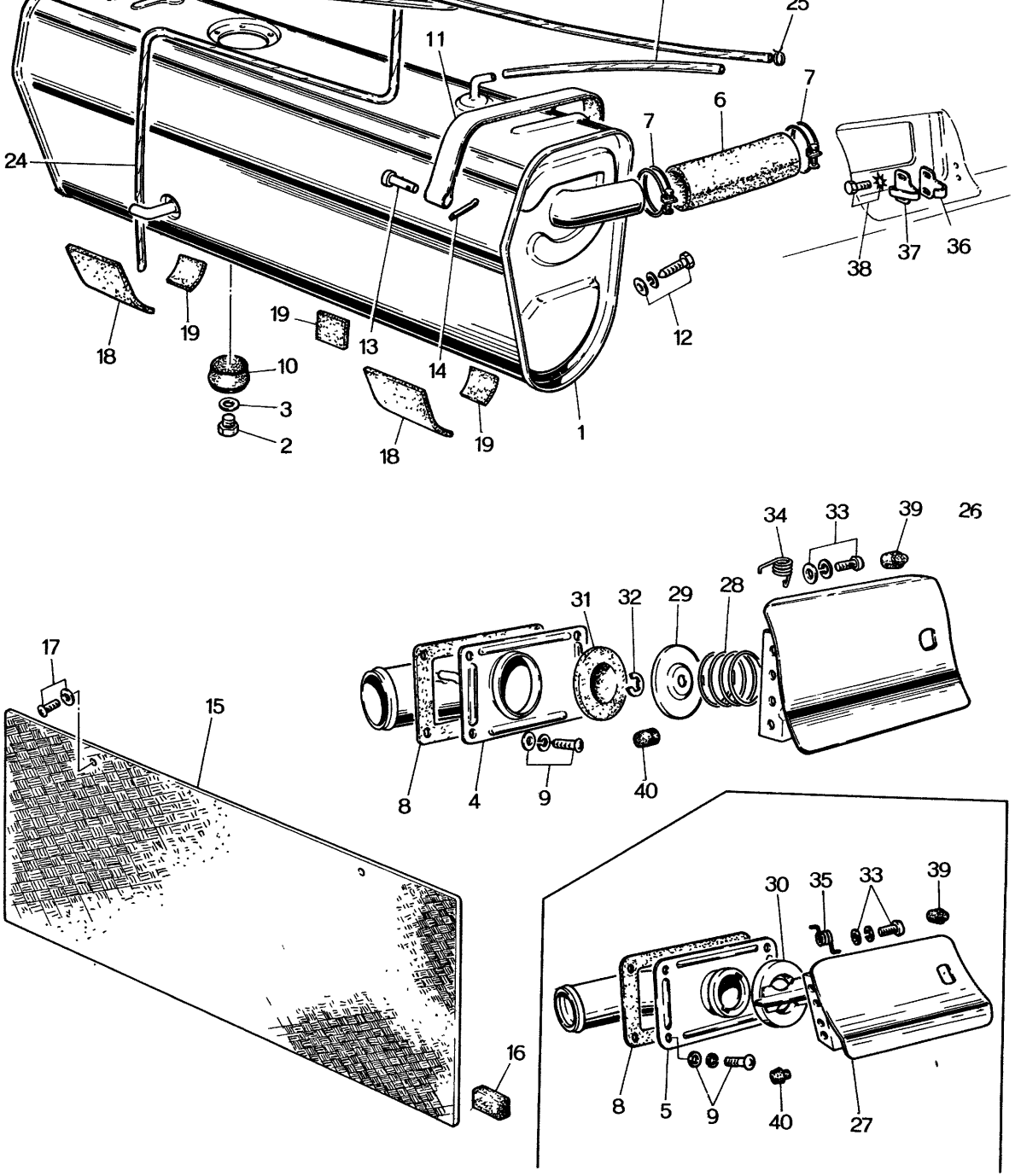
25
11
7
6
7
24
38
37
36
12
18
19
19
13
14
10
3
2
18
19
1
34
33
39
26
31
32
29
28
17
15
8
4
9
40
30
35
33
39
16
8
5
9
40
27

5	2244 42 360A	Filler Pipe Ass'y, For Canada & U.S.A.	1
6	0259 42 364	Joint Hose	1
	2329 42 364	Joint Hose, Emission Controlled Model	1
7	99282 5500	Hose Band	2
8	0259 42 366	Packing, Inlet Pipe	1
9	908337 5 12	Set Screw, Inlet Pipe	4
10	0187 42 371	Dust Seal Rubber	1
11	0820 42 370A	Fuel Tank Strap	2
12	908056 8 35	Set Screw, Tank Strap Set	2
13	99231 0636	Joint Pin	2
14	99221 1610	Split Pin	2
15	0820 42 380B	PARTITION BOARD Ass'y, COUPE TYPE	1
	0844 42 380	PARTITION BOARD Ass'y, SEDAN TYPE	1
16	0820 42 382	Spacer	3
17	99862 0416	Tapping Screw, Partition Board	2
	99968 0400	Washer	2

24	0259 42 395	Vent Tube		1
25	99285 0600	Wire Clip		2
26	0820 42 410	Filler Lid Ass'y, One Touch Type		1
27	2113 42 410A	Filler Lid Ass'y, For Canada & U.S.A.		1
28	0259 42 425	Spring, Filler Cap	One Touch Type	1
29	0223 42 426	Filler Cap		1
30	2280 42 460	Filler Cap, For Canada & U.S.A.		1
31	0223 42 427	Packing, Filler Cap	One Touch Type	1
32	99575 0500	Retaining Ring		1
33	908336 4 12	Set Screw, Hinge		2
34	0259 42 455A	Check Spring, One Touch Type		1
35	2244 42 455	Check Spring, For Canada & U.S.A.		1
36	0820 42 375	Back Up Plate		1
37	0820 42 376	Lock Plate		1
38	908066 4 12	Set Bolt		2
39	0187 70 491	Cushion Rubber		1
40	0259 42 459	Cushion Rubber		1
41	0820 66 770	FUEL TANK GAUGE, "T" TYPE DASHBOARD USE		1

		screw	
46	0259 66 735	Earth Cord, Tank Gauge	1

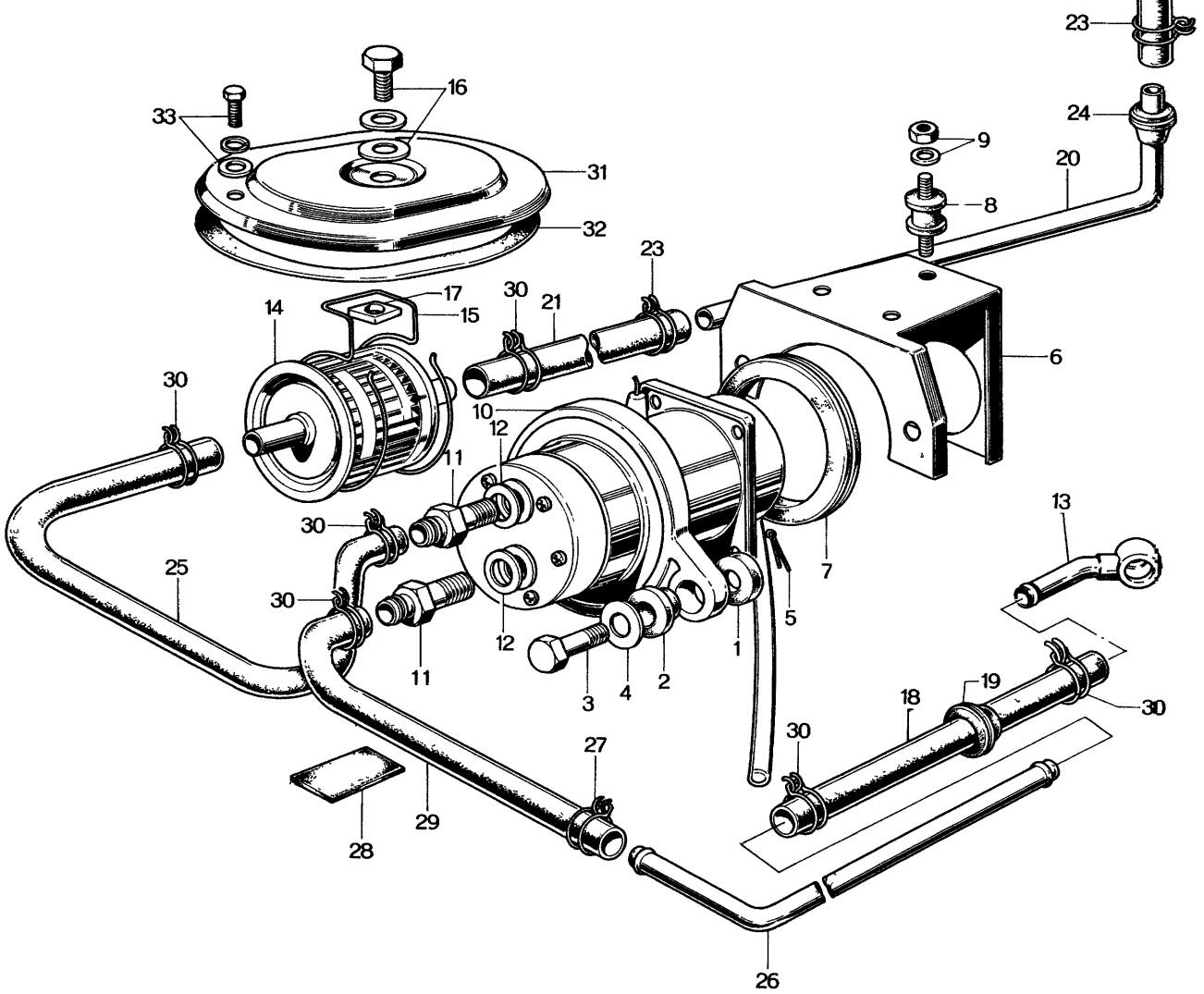
23
16
33
24
9
31
20
8
32
23
17
30
21
14
15
6
30
10
12
11
13
30
25
7
30
5
12
1
11
3
4
2
18
19
30
30
27
29
28
26

8	0222 13 363	Insulation Rubber	3	
9	99906 0600	Nut, Insulation Rubber	3	
	99971 0600	Spring Washer	3	
10	0820 13 400	Fuel Pump	1	
	0820 13 400A	Fuel Pump	1	Car No. 64905 $^{70}/_{8}$ ~ ○
•	0820 13 400C	Fuel Pump	1	Car No. 84459 $^{71}/_{1}$ ~ ○
11	0620 13 433	Gasoline Pipe Connector	2	
12	99564 1200	Gasket	2	
13	0820 13 440B	Gasoline Pipe Ass'y, Carburettor	1	
14	0222 13 470A	Gasoline Filter	1	
15	0222 13 481	Clamp, Gasoline Filter	1	
16	99801 0814	Bolt, Gasoline Filter	1	
	99952 0800	Plain Washer	1	
	99971 0800	Spring Washer	1	
17	99911 0800	Square Nut	1	
18	0813 45 021	Fuel Pipe	1	
19	0187 55 554	Protector	1	
	0820 45 020	FUEL PIPE Ass'y No.1	1	
20	0820 45 021	Main Fuel Pipe No.1	1	

25	0680 45 023	Fuel Pipe	1	
	0820 45 040E	FUEL PIPE Ass'y No.2 (Arctic Spec. Model Excluded)	1	
26	0820 45 041D	Main Fuel Pipe No.2	1	
	2112 45 041	Main Fuel Pipe No. 2, Arctic Spec. Model	1	Car No. 73747 $^{70}/_{12}$ ~ Added Anew
27	0222 13 493	Clip, Fuel Tank	1	
28	0208 66 949	Protector Pad	3	
29	0647 45 041	Fuel Pipe	1	
	2112 45 070	Fuel Pipe, Arctic Spec. Model	1	Car No. 73747 $^{70}/_{12}$ ~ Added Anew
30	0222 13 493	Clip, Gasoline Pipe	10	
31	0223 56 521	Cover	1	
32	0223 56 522	Seal Rubber	1	
33	908047 6 20	Set Bolt, Service Hole Cover	2	
	0034 13 373	Bolt, Arctic Spec. Model	1	Car No. 73747 $^{70}/_{12}$ ~ Added Anew

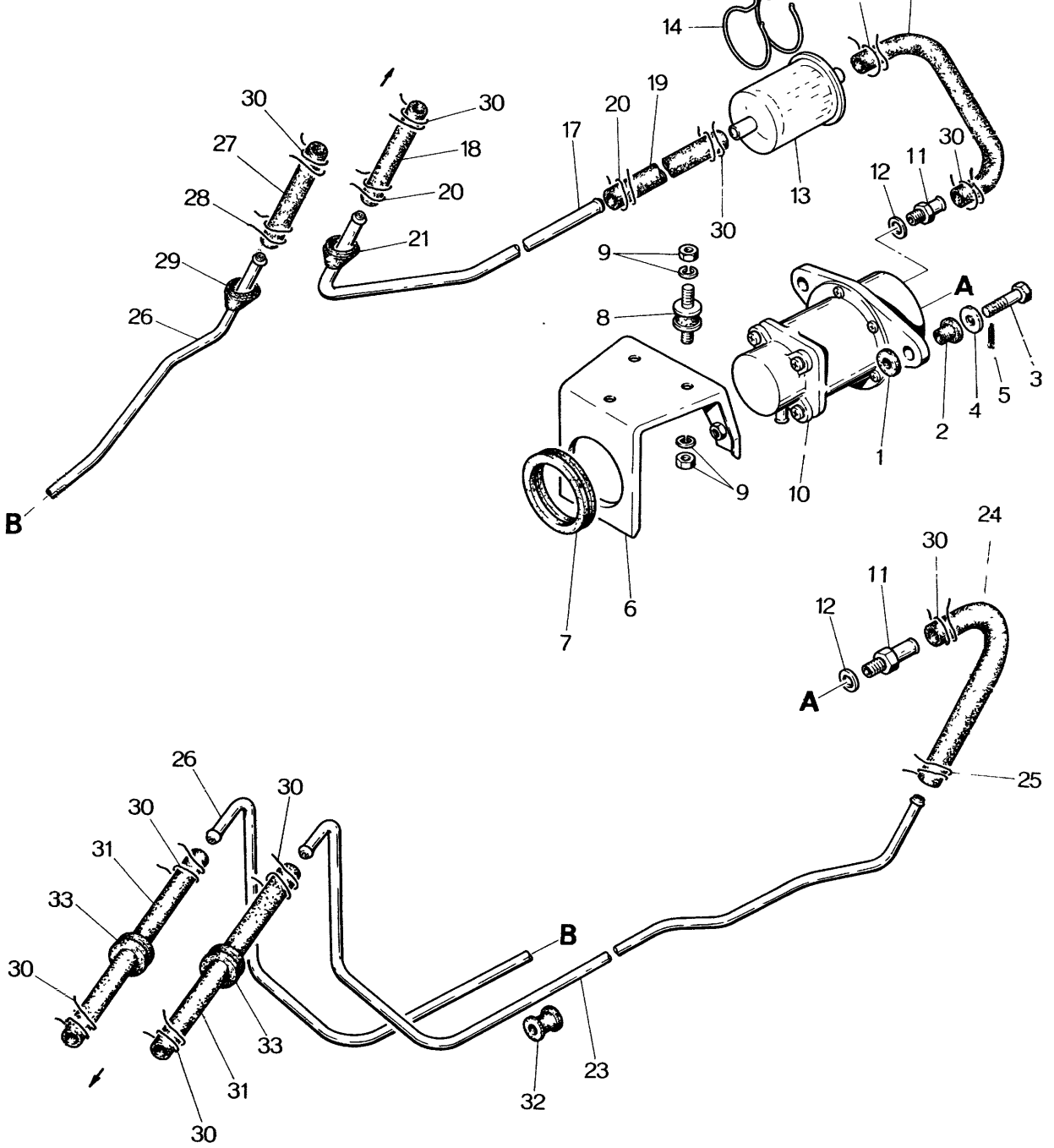
14
30
27
28
29
26
B
30
18
20
21
17
20
19
30
13
12
11
30
9
8
A
2
4
5
3
1
10
9
6
7
24
30
11
12
A
25
26
30
31
33
30
30
33
31
30
B
23
32

		Supporter, Bracket	1	
8	0222 13 363	Insulation Rubber	3	
9	99906 0600	Nut, Insulation Rubber	3	
	99971 0600	Spring Washer	3	
10	0820 13 400	Fuel Pump	1	
•	0820 13 400A	Fuel Pump	1	Car No. 64905 ~ ○
11	0620 13 433	Connector, Gasoline Pipe	2	
12	99564 1200	Gasket	2	
13	0222 13 470A	Gasoline Filter	1	
14	0222 13 481	Clamp, Gasoline Filter	1	
15	99801 0814	Bolt, Gasoline Filter	1	
	99952 0800	Plain Washer	1	
	99971 0800	Spring Washer	1	
16	99911 0800	Square Nut	1	
	2329 45 020	**FUEL PIPE Ass'y No.1**	1	
17	2329 45 021	Fuel Pipe No.1	1	
18	0813 45 021	Fuel Pipe, Tank Side	1	
19	0820 45 022	Fuel Pipe, Strainer Side	1	
20	0222 13 493	Clip, Fuel Pipe	2	

	2329 45 040A	FUEL PIPE Ass'y No.2	1	
23	2329 45 041B	Fuel Pipe No.2	1	
24	0647 45 041	Fuel Pipe, Fuel Pump Side	1	
25	0222 13 493	Clip, Fuel Pipe	2	
	2329 45 060	FUEL PIPE Ass'y No.3, RETURN	1	
	2329 45 060A	FUEL PIPE Ass'y No.3, RETURN	1	Car No. 59909 $^{70}/_{4}$ ~ ○
26	2329 45 061	Fuel Pipe No.3	1	
	2329 45 061A	Fuel Pipe No.3	1	Car No. 59909 $^{70}/_{4}$ ~ ○
27	0672 45 051	Fuel Pipe, Tank Side	1	
28	0222 13 493	Clip, Fuel Pipe	2	
29	0183 55 555	Protector	1	
30	0222 13 493	Clip, Fuel Pipe	15	
31	99340 06300	Fuel Pipe, Carburettor Side	2	
32	99686 1400	Protector	3	
33	0187 55 554	Protector, Fuel Pipe	2	
34	0223 56 521	Cover, Gasoline Filter	1	
35	0223 56 522	Seal Rubber	1	
36	908047 6 20	Set Bolt, Cover	2	

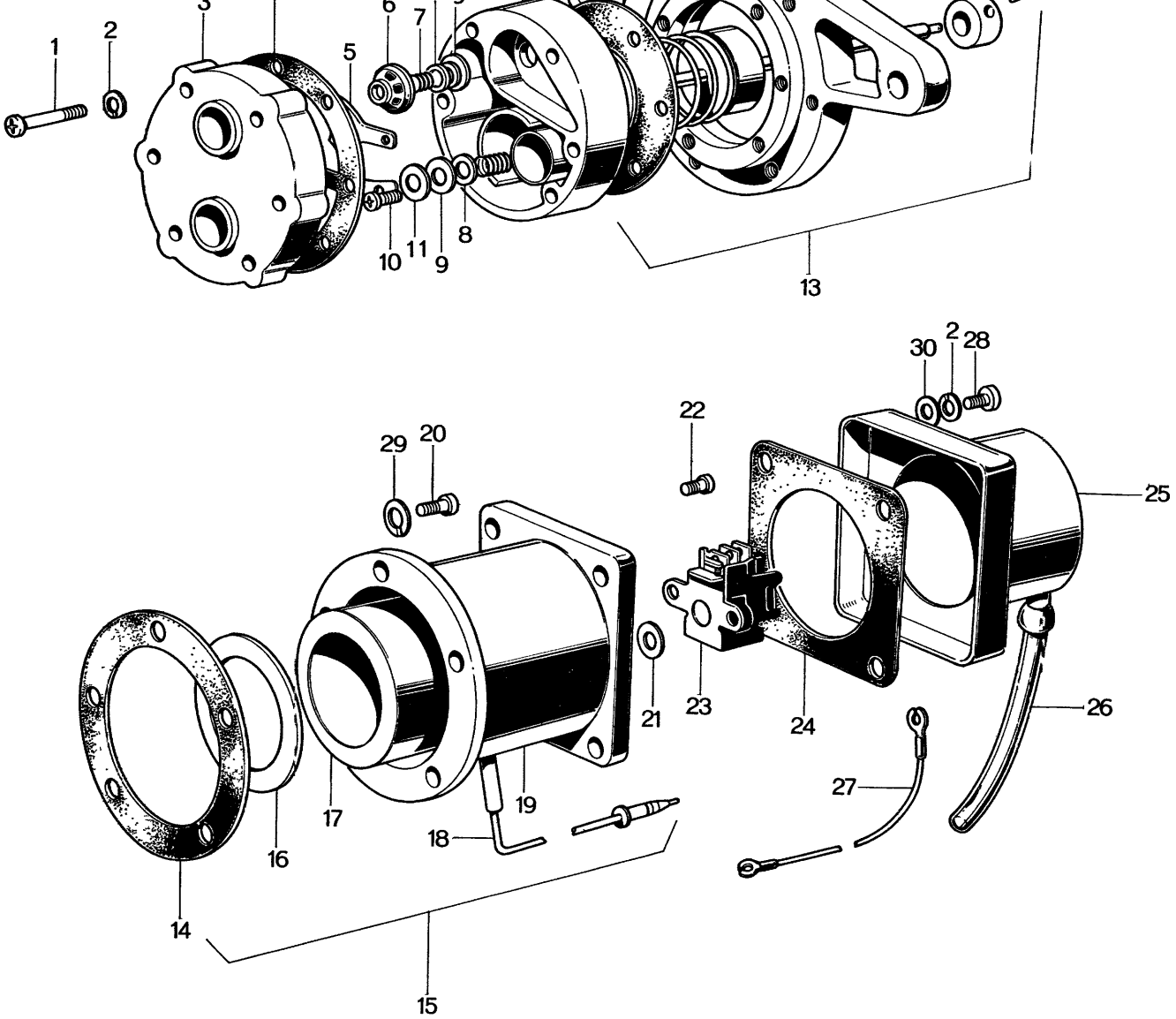
1
2
3
5
6
7
8
9
10
11
13
2
28
30
22
25
29
20
21
23
24
26
27
14
15
16
17
18
19

5	0137 13 369B	Valve Retainer	2
6	0137 13 368A	Valve Holder	1
7	0137 13 356A	Valve Spring	2
8	0137 13 355A	Valve	2
9	0137 13 357A	Valve Seat	2
10	0820 23 604	Screw (M4 x 0.7 x 6)	2
11	0137 13 361A	Retainer	1
12	0137 13 351B	Valve Chamber	1
13	0820 23 611	Diaphragm Ass'y	1
14	0221 23 229	Packing (0.5t)	1
	0221 23 231	Packing (0.25t)	1
	0221 23 232	Packing (0.1t)	1
15	0820 23 615	BODY Ass'y	1
16	0221 23 226	Magnetic Permeable Plate	1
17	0221 23 225	Coil	1

	0221 23 228	Adjusting Washer (0.6t)	1	
22	0820 23 625	Screw (M4 x 0.7 x 6)	2	Car No. 70537 $^{70}/_{11}$ ~ Quantity
23	0222 23 630	Switch	1	
	0222 23 630A	Switch	1	Car No. 64905 $^{70}/_{8}$ ~ O
	0222 23 630B	Switch	1	Car No. 69220 $^{70}/_{11}$ ~ O
24	0221 23 234	Cover Packing	1	
•	0222 23 234	Cover Packing	1	Car No. 82291 $^{7-}/_{1}$ ~ O
25	0221 23 233	Cover	1	
26	0820 23 628	Breather Pipe	1	
27	0820 23 626	Earth Wire	1	
28	0820 23 623	Screw (M4 x 0.7 x 10)	4	
29	0820 23 622	Toothed Washer	5	Car No. 82291 $^{71}/_{1}$ ~ Discarded
30	0820 23 624	Washer	4	

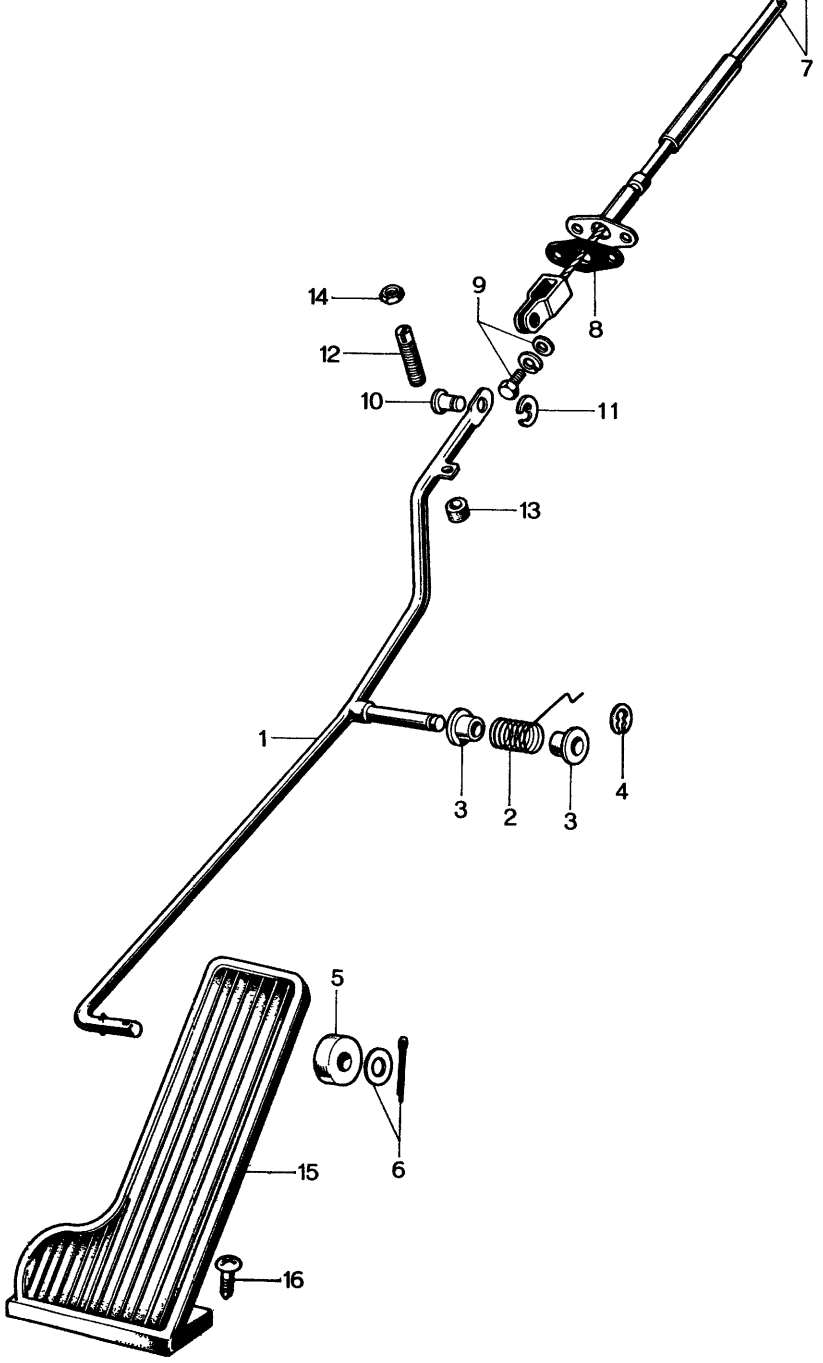
7
14
9
8
12
10
11
13
1
3
2
3
4
5
6
15
16

	99221 2012	Split Pin	1
7	0820 41 660	Accelerator Control Wire	1
8	0249 41 671	Rubber Seat, Accelerator Control Wire	1
9	908067 6 20	Set Bolt, Accelerator Control Wire	2
10	99230 0511	Pin, Accelerator Control Wire	1
11	99575 0300	"U" Stop Ring, Accelerator Control Wire	1
12	0118 41 681	Stopper	1
13	0118 41 682	Rubber	1
14	99907 0600	Lock Nut	1
15	0290 41 710	Accelerator Pedal	1
16	99743 0520	Screw	2

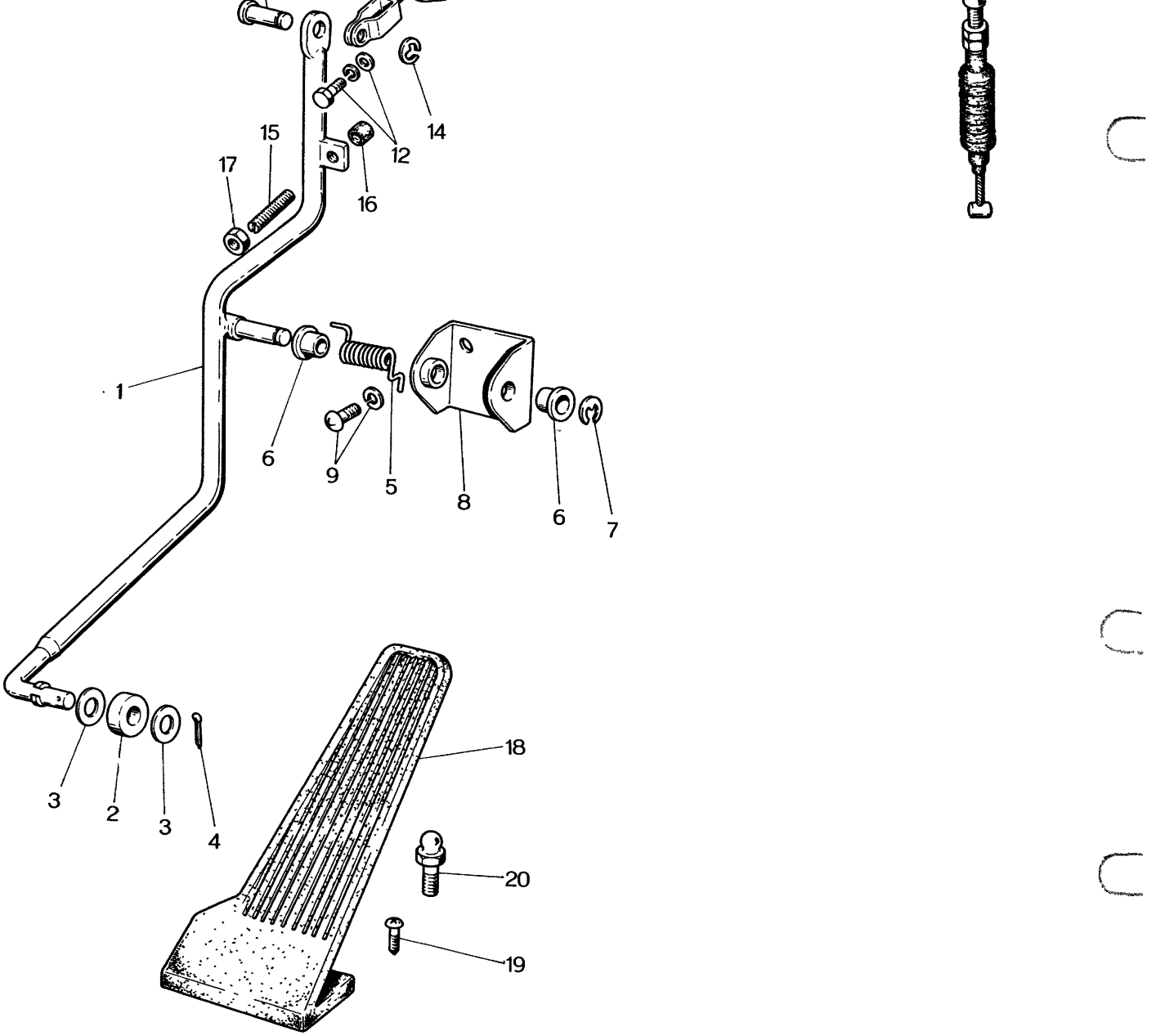
1
2
3
3
4
5
6
6
7
8
9
12
14
15
16
17
18
19
20

7	99575 0600	"U" Stop Ring	1	
8	0259 53 103	Accelerator Rod Retainer	1	
	0305 41 641	Accelerator Rod Retainer	1	Car No. 62716 $^{70}/_{6}$ ~ Δ
9	908332 6 12	Set Screw, Accel. Rod Retainer	2	
•	908332 6 16	Set Screw, Accel. Rod Retainer	2	Car No. 97194 $^{71}/_{5}$ ~ O
10	2113 41 660	Accelerator Control Wire	1	
	2113 41 660A	Accelerator Control Wire	1	Car No. 61910 $^{70}/_{6}$ ~ O
11	0249 41 671	Rubber Seat, Accel. Control Wire	1	
12	908067 6 20	Set Bolt, Accel. Control Wire	2	
13	99230 0511	Pin, Accel. Control Wire	1	
14	99575 0300	"U" Stop Ring	1	
15	0118 41 681	Stopper	1	
16	0118 41 682	Rubber	1	
17	99907 0600	Lock Nut	1	
18	0290 41 710	Accelerator Pedal	1	
19	99743 0520	Screw, Accel. Pedal	2	
20	0249 41 719	Ball Stud	2	

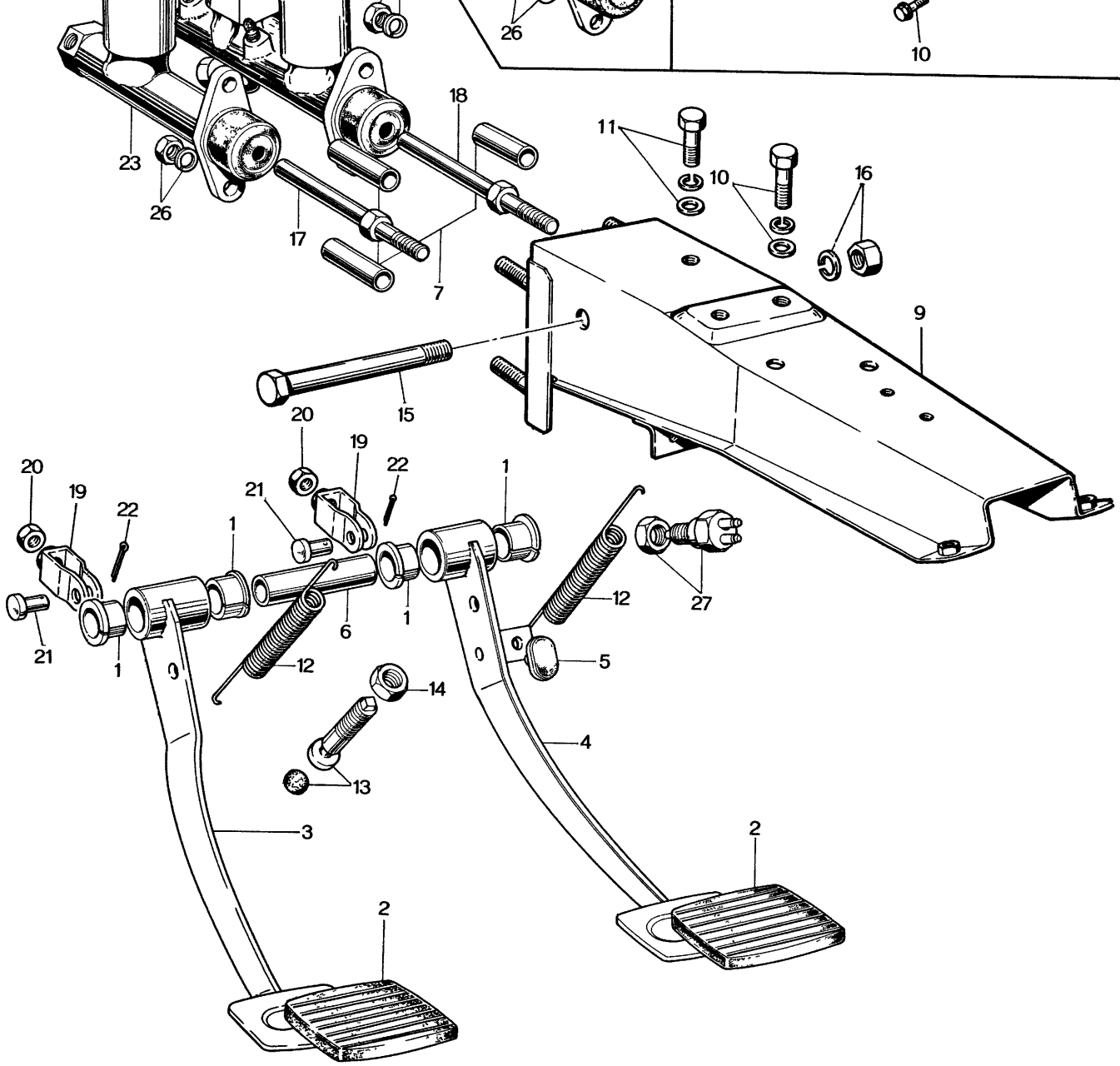
26
10
18
11
10
16
23
26
17
7
9
15
20
19
22
1
21
20
19
22
1
21
1
6
1
12
27
12
5
14
4
13
3
2
2

8	0317 43 070	Master Cylinder Bracket, Plain Type Dashboard Model	1	
	0846 43 070	Master Cylinder Bracket, Plain Type Dashboard Model	1	Car No. 61910 $^{70}/_{6}$ ~ X
	0846 43 070A	Master Cylinder Bracket, Plain Type Dashboard Model	1	Car No. 63363 $^{70}/_{7}$ ~ O
9	0820 43 070B	Master Cylinder Bracket, "T" Type Dashboard Model	1	
	0820 43 070C	Master Cylinder Bracket, "T" Type Dashboard Model	1	Car No. 61910 $^{70}/_{6}$ ~ X
	0820 43 070D	Master Cylinder Bracket, "T" Type Dashboard Model	1	Car No. 63363 $^{70}/_{7}$ ~ O
10	908016 8 16	Set Bolt, Master Cylinder Bracket	2	
11	908017 8 20	Set Bolt, Master Cylinder Bracket	1	
12	0114 41 081	Return Spring	1	Car No. 61910 $^{70}/_{6}$ ~ Quantity
	0183 41 081	Return Spring, Clutch	1	Car No. 61910 $^{70}/_{6}$ ~ Added Anew
13	0118 43 090	Pedal Stopper	1	
14	99922 1000	Lock Nut	1	
15	0118 43 521	Bolt, Pedal	1	
16	99922 1000	Nut, Pedal	1	
	99971 1000	Spring Washer	1	
17	0604 41 131	Push Rod, Clutch	1	
18	0603 43 131	Push Rod, Brake	1	
	0820 43 131	Push Rod, Brake, Tandem Master Cylinder use	1	
19	0259 43 140	Fork End	2	
20	99922 0800	Nut, Push Rod	2	
21	99231 0816	Pin, Fork End	1	Car No. 63173 $^{70}/_{7}$ ~ Quantity
	0223 46 683	Pin, Fork End (Clutch)	1	Car No. 63173 $^{70}/_{7}$ ~ Added Anew
22	99221 2020	Split Pin	1	Car No. 63173 $^{70}/_{7}$ ~ Quantity
23	0822 41 400	Clutch Master Cylinder	1	
24	0329 43 400A	Brake Master Cylinder	1	

(N)	0824 41 084	Spacer	1	
(N)	0183 41 043	Spring Seat	1	
(N)	0259 41 644	Bush	2	Car No. 61910 $^{70}/_{6}$ ~ Added Anew
(N)	0187 46 683	Pin	1	
(N)	99575 0600	Stop Ring	1	
(N)	99575 0500	Stop Ring	1	
(N)	99901 0800	Nut	1	
(N)	99575 0600	Stop Ring	1	
(N)	0727 41 023	Bush	1	Car No. 63173 $^{70}/_{7}$ ~ Added Anew
(N)	99972 0800	Wave Washer	1	

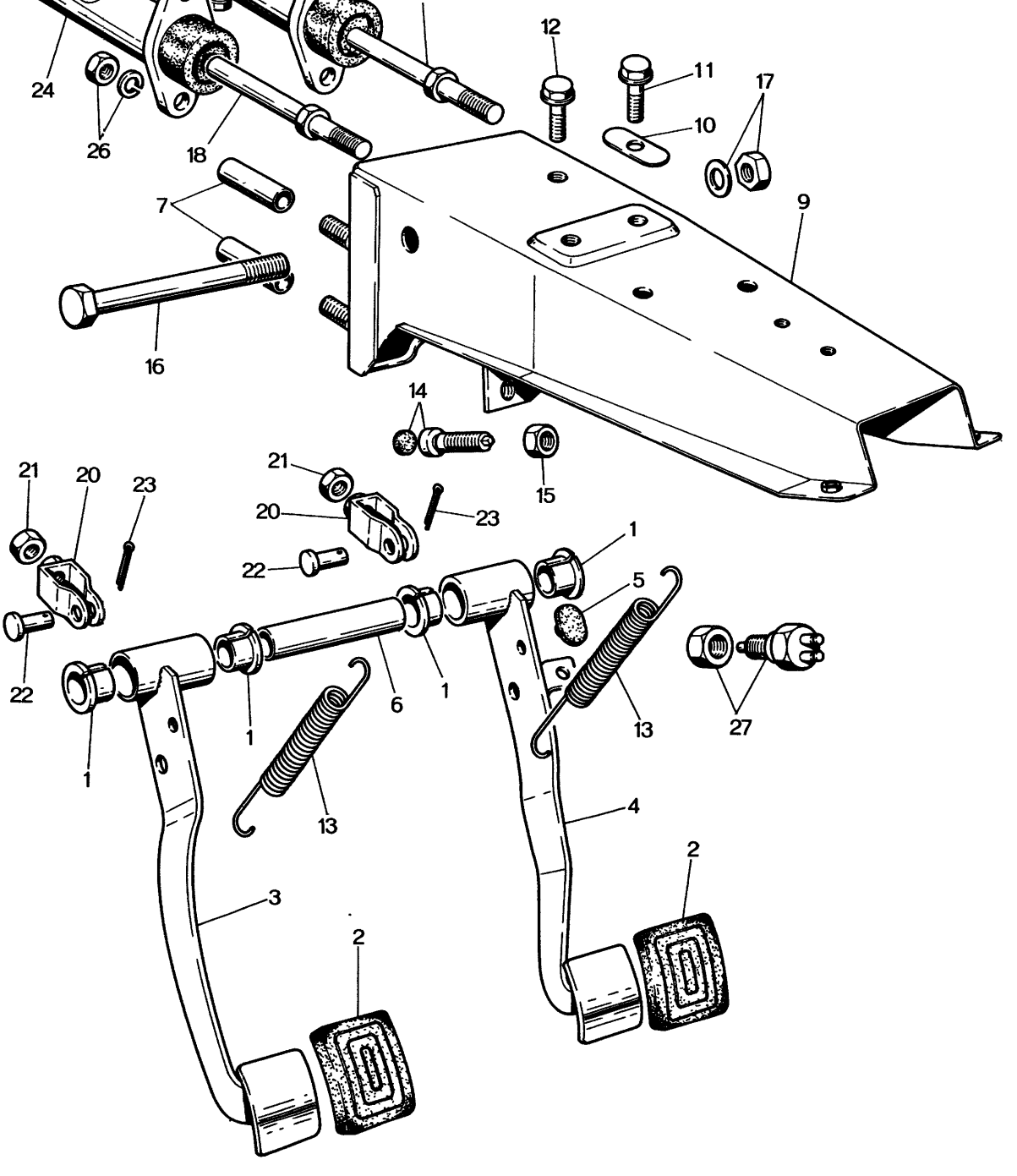
24
26
18
12
11
17
10
7
9
16
14
15
21
20
23
22
1
5
6
13
27
4
2
3

		Pipe, Master Cylinder Bracket	4	
8	0317 43 070	Master Cylinder Bracket, Plain Type Dashboard Model	1	
	0846 43 070	Master Cylinder Bracket, Plain Type Dashboard Model	1	Car No. 61910 $^{70}/_{6}$ ~ X
	0846 43 070A	Master Cylinder Bracket, "T" Type Dashboard Model	1	Car No. 63363 $^{70}/_{7}$ ~ O
9	2113 43 070B	Master Cylinder Bracket, "T" Type Dashboard Model	1	
	2113 43 070C	Master Cylinder Bracket, "T" Type Dashboard Model	1	Car No. 61910 $^{70}/_{6}$ ~ X
	2113 43 070D	Master Cylinder Bracket, "T" Type Dashboard Model	1	Car No. 63363 $^{70}/_{7}$ ~ O
10	0259 43 088	Seat, Master Cylinder Bracket, "T" Type Dashboard Model	2	
11	908016 8 16	Set Bolt, Master Cylinder Bracket	2	
12	908017 8 20	Set Bolt, Master Cylinder Bracket	1	
13	0114 41 081	Return Spring	1	Car No. 61910 $^{70}/_{6}$ ~ Quantity
	0183 41 081	Return Spring	1	Car No. 61910 $^{70}/_{6}$ ~ Added Anew
14	0118 43 090	Pedal Stopper Ass'y, Clutch	1	
15	99922 1000	Lock Nut, Stopper	1	
16	0118 43 521	Bolt, Pedal + Master Cylinder Bracket	1	
17	99922 1000	Nut, Pedal + Master Cylinder Bracket	1	
	99971 1000	Spring Washer	1	
18	0604 41 131	Push Rod, Clutch	1	
19	0820 43 131	Push Rod, Brake	1	
20	0259 43 140	Fork End	2	
21	99922 0800	Lock Nut, Push Rod	2	
22	99231 0816	Pin, Fork End	1	Car No. 61910 $^{70}/_{6}$ ~ Quantity
	0223 46 683	Pin, Fork End (Clutch)	1	Car No. 61910 $^{70}/_{6}$ ~ Added Anew
23	99221 2020	Split Pin, Fork End	1	Car No. 61910 $^{70}/_{6}$ ~ Quantity
24	0822 41 400	Clutch Master Cylinder Ass'y	1	
25	2350 43 400B	"3/4" Tandem Master Cylinder Ass'y	1	

Emission Controlled Model

(N)	0824 41 051	Rod	1	
(N)	99901 0800	Nut	1	
(N)	0824 41 084	Spacer	1	Car No. 61910 70/6 ~ Added Anew
(N)	0259 41 644	Bush	2	
(N)	0187 46 683	Pin	1	
(N)	99575 0500	Stop Ring	1	
(N)	99575 0600	Stop Ring	1	
(N)	99575 0600	Stop Ring	1	
(N)	0727 41 023	Bush	1	Car No. 63173 70/7 ~ Added Anew
(N)	99972 0800	Wave Washer	1	

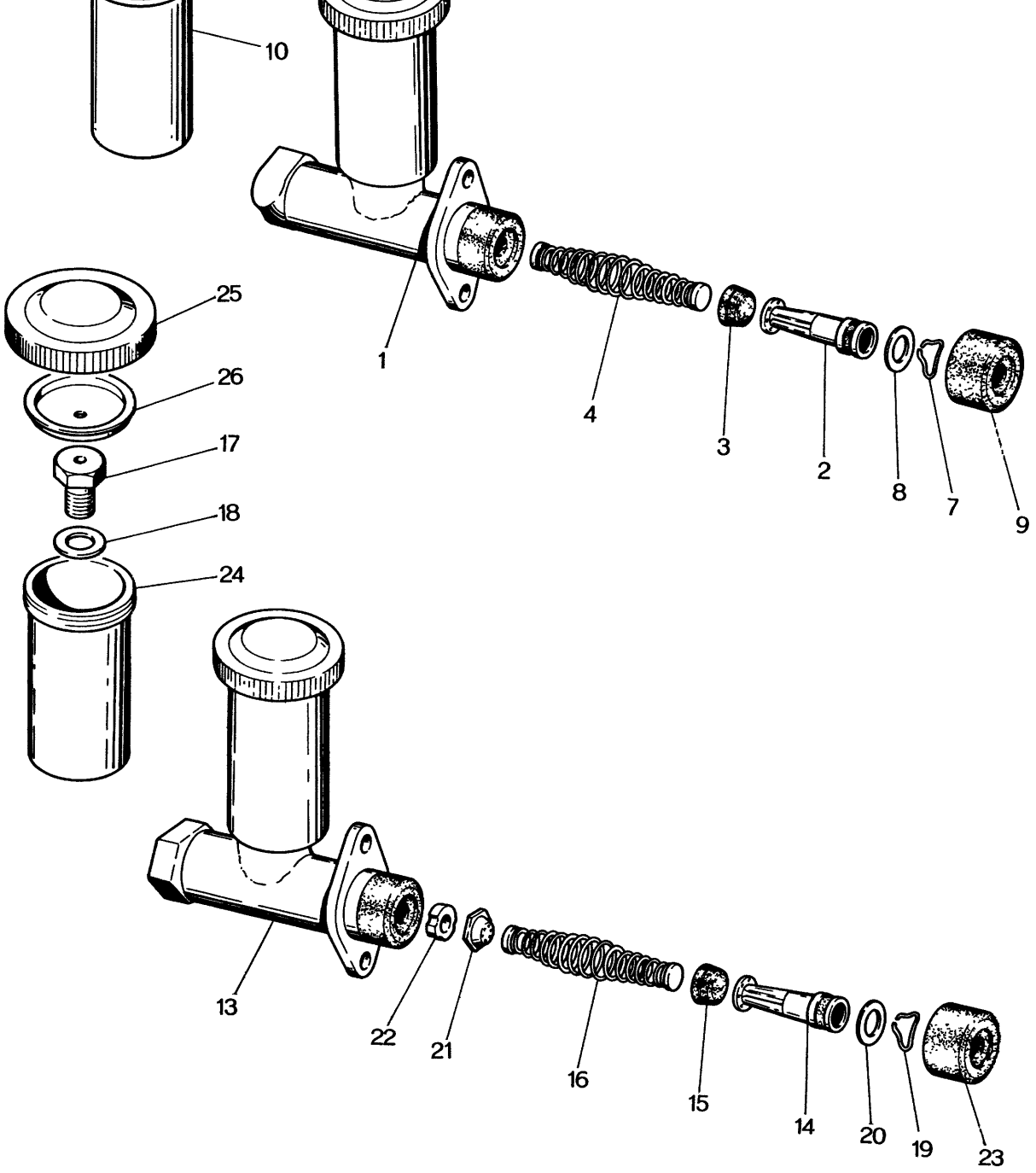
10
1
4
3
2
8
7
9
25
26
17
18
24
13
22
21
16
15
14
20
19
23

	0305 41 461	Primary Cup	1	Car No. 60429 $^{70}/_{5}$ ~ X
4	0110 41 470	Piston Return Spring	1	
5	0221 43 421	Plug	1	
	0317 43 421	Plug	1	Car No. 87594 $^{71}/_{2}$ ~ X
	0317 43 428	Spring – Corn	2	Car No. 87594 $^{71}/_{2}$ ~ Added Anew
6	0221 43 431	Washer	1	
7	0111 43 432	Piston Stop Wire	1	
8	0111 43 433	Piston Stop Washer	1	
9	0111 43 511	Boot	1	
10	0317 43 551	Reserve Tank	1	
11	0727 43 552	Cap, Reserve Tank	1	
12	0727 43 553	Baffle	1	
(N)	0727 41 442	Cup Spacer	1	
13	0329 43 400A	BRAKE MASTER CYLINDER (R.H.D.)	1	
14	0259 43 440A	MASTER CYLINDER PISTON	1	
	0187 43 451A	Secondary Cup	1	
15	0187 43 461A	Primary Cup	1	
16	0114 43 470	Piston Return Spring	1	

	0187 43 436	Washer		
21	0221 43 480	Check Valve	1	
22	0114 43 491	Valve Seat	1	
23	0111 43 511	Boot	1	
24	0329 43 551A	Reserve Tank	1	
25	0259 43 552	Cap	1	
26	0259 43 553	Baffle	1	

	0305 99 431	Repair Kit, Clutch Master Cylinder	1	Fig. No. 2~4 & 7~9 Included
•	0329 99 430	Repair Kit, Brake Master Cylinder	1	Fig. No. 14~16 & 19~23 Included

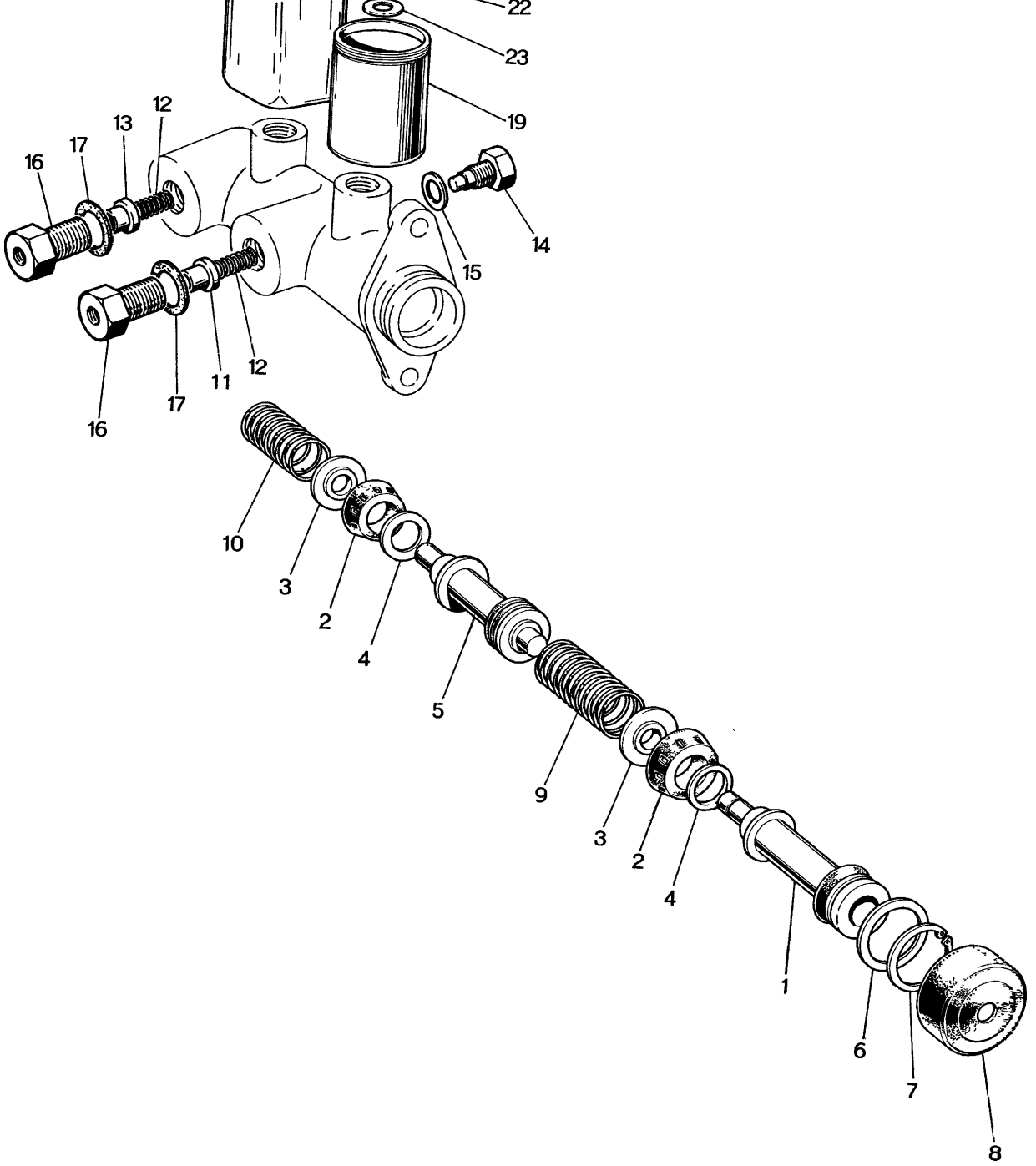
22
23
19
12
13
17
16
14
15
16
17
11
12
16
10
3
2
4
5
9
3
2
4
1
6
7
8

	0223 49 667	Piston Washer	Selective use	1
	0223 49 668	Piston Washer		
	0223 49 669	Piston Washer		
7	0233 49 638	Retaining Ring		1
8	0233 49 639	Boot		1
9	0223 49 641	Spring, Primary Piston		1
10	0223 49 642A	Spring, Floating Piston		1
11	0233 49 660	Check Valve		1
12	0233 49 665	Spring, Check Valve		2
13	0233 49 670	Outlet Valve		1
14	2046 49 676	Bolt, Stopper		
	2046 49 677	Bolt	Selective use	1
	2046 49 678	Bolt		
	2046 49 679	Bolt		
15	2046 49 696	Gasket		1
16	0233 49 650	Joint Bolt		2
17	0233 49 656	Gasket		2
18	2046 49 681	Reserve Tank "L"		1
19	0223 49 691	Reserve Tank "S"		1

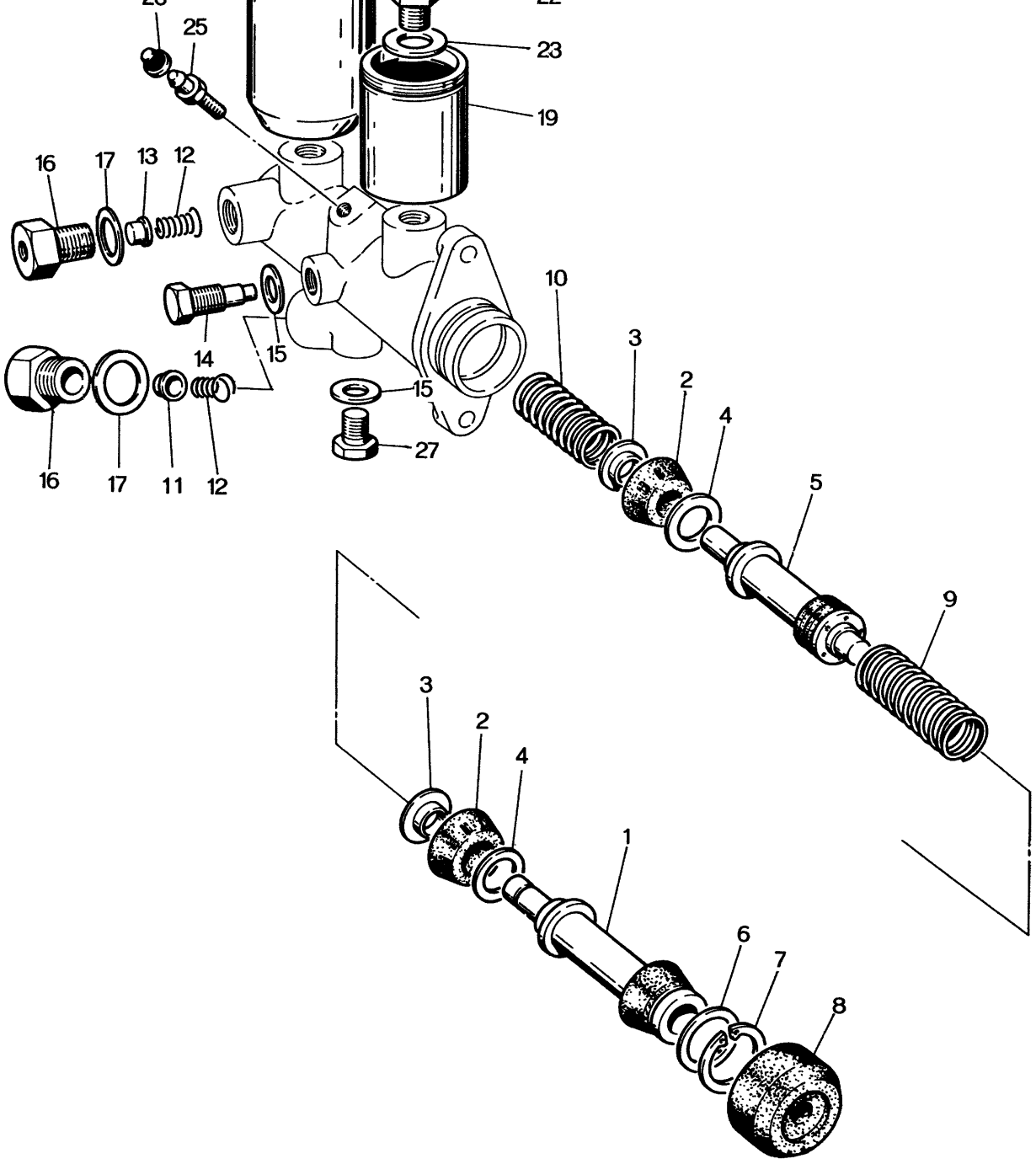
25
23
19
16
17
13
12
10
3
2
4
5
9
14
15
15
27
16
17
11
12
3
2
4
1
6
7
8

5	2370 49 630A	Floating Piston Ass'y		1	
6	0223 49 666	Piston Washer	Selective use	1	
	0223 49 667	Piston Washer			
	0223 49 668	Piston Washer			
	0223 49 669	Piston Washer			
7	0233 49 638	Retaining Ring		1	
8	0233 49 639	Boot		1	
9	0223 49 641	Spring, Primary Piston		1	
10	0223 49 642A	Spring, Floating Piston		1	
11	0233 49 660	Check Valve		1	
12	0233 49 665	Spring, Check Valve		2	
13	0233 49 670	Outlet Valve		1	
14	2046 49 676	Bolt, Stopper	Selective use	1	
	2046 49 677	Bolt			
	2046 49 678	Bolt			
	2046 49 679	Bolt			
15	2046 49 696	Gasket		2	
16	0233 49 650	Joint Bolt		2	(Emission Controlled Model)
				1	
	0813 49 651	Joint Bolt		1	(General Export Model)
17	0233 49 656	Gasket		2	

24	0221 43 554	Float	2	
25	0233 49 693	Bleeder Valve	1	
26	0233 49 694	Cap, Bleeder Valve	1	
27	2370 49 697	Screw Plug	1	
	2350 99 430	TANDEM MASTER CYLINDER REPAIR KIT (Fig No. 1~5, 7~10 included)	1	
●	0820 99 430A	TANDEM MASTER CYLINDER REPAIR KIT (Fig. No. 1~5, 7~10 included)	1	From Car No. 94253 $^{71}/_{4}$ ~ O

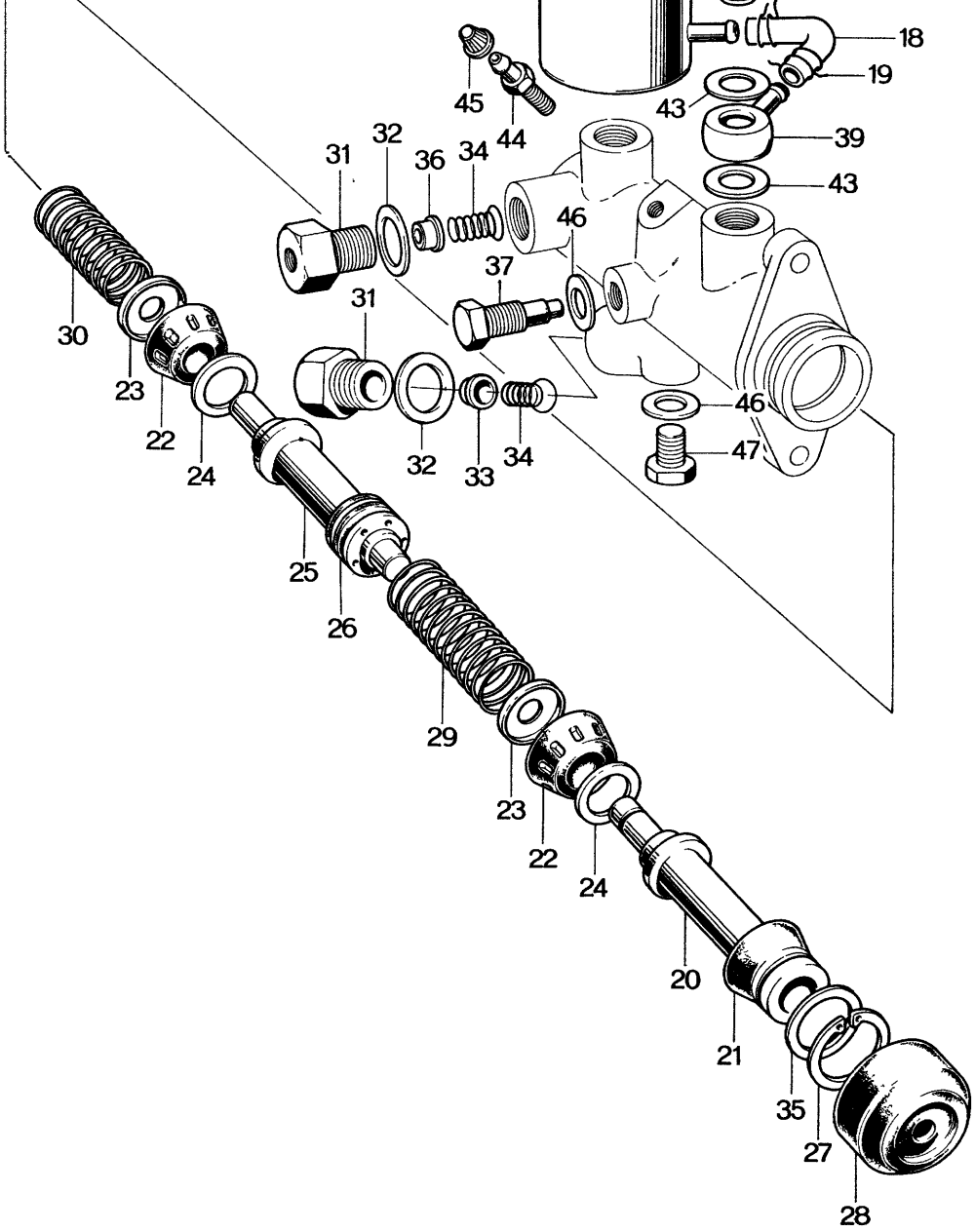
18
19
43
39
43
45
44
31
32
36
34
46
37
31
30
23
22
24
32
33
34
46
47
25
26
29
23
22
24
20
21
35
27
28

19	2046 49 555	Clip, Wire	2	
•	2835 49 685	Clip, Wire	2	Car No. 87858 $71\frac{1}{2}$ ~ Δ
20	0223 49 620B	PISTON Ass'y, Primary	1	
21	0223 49 625	Cup, Secondary	1	
22	0223 39 626A	Cup, Primary	2	
23	0223 49 627A	Seat, Spring	2	
24	0223 49 629	Spacer	2	
25	2370 49 630A	PISTON Ass'y, Floating	1	
26	0223 49 635A	Cup, Floating Secondary	2	
27	0233 49 638	Ring, Retaining	1	
28	0233 49 639	Boot	1	
29	0233 49 641	Spring, Primary	1	
30	0233 49 642A	Spring, Floating	1	
31	0233 49 650	Bolt, Joint	2	

	0223 49 669	Washer, (4)-Piston		
36	0233 49 670	Valve Cpt., Outlet	1	
37	2046 49 676	Bolt, (1)-Set	Selective use	
	2046 49 677	Bolt, (2)-Set		
	2046 49 678	Bolt, (3)-Set		
	2046 49 679	Bolt, (4)-Set		
38	2046 49 681A	Tank, Reserve	1	
39	2046 49 682	Union, Master Cylinder	1	
•	2835 49 682A	Union, Master Cylinder	1	Car No. 87858 $^{71}/_{2}$ ~ Δ
40	0233 49 686	Connector, Filler	1	
41	2835 49 686A	Bolt, Connector	1	
42	0222 49 687	Washer, Tank	1	
43	2835 49 687	Gasket	2	
44	0233 49 693	Valve, Bleeder (L.H.D.)	1	
45	0233 49 694	Cap, Bleeder Valve (L.H.D.)	1	
46	2046 49 696	Gasket, Set Bolt	2	
47	2370 59 697	Screw, Plug (L.H.D.)	1	
•	0820 99 430A	TANDEM MASTER CYLINDER REPAIR KIT (Fig. No. 20, 22, 23, 24, 25, 27, 28, 29, 30 included)	1	

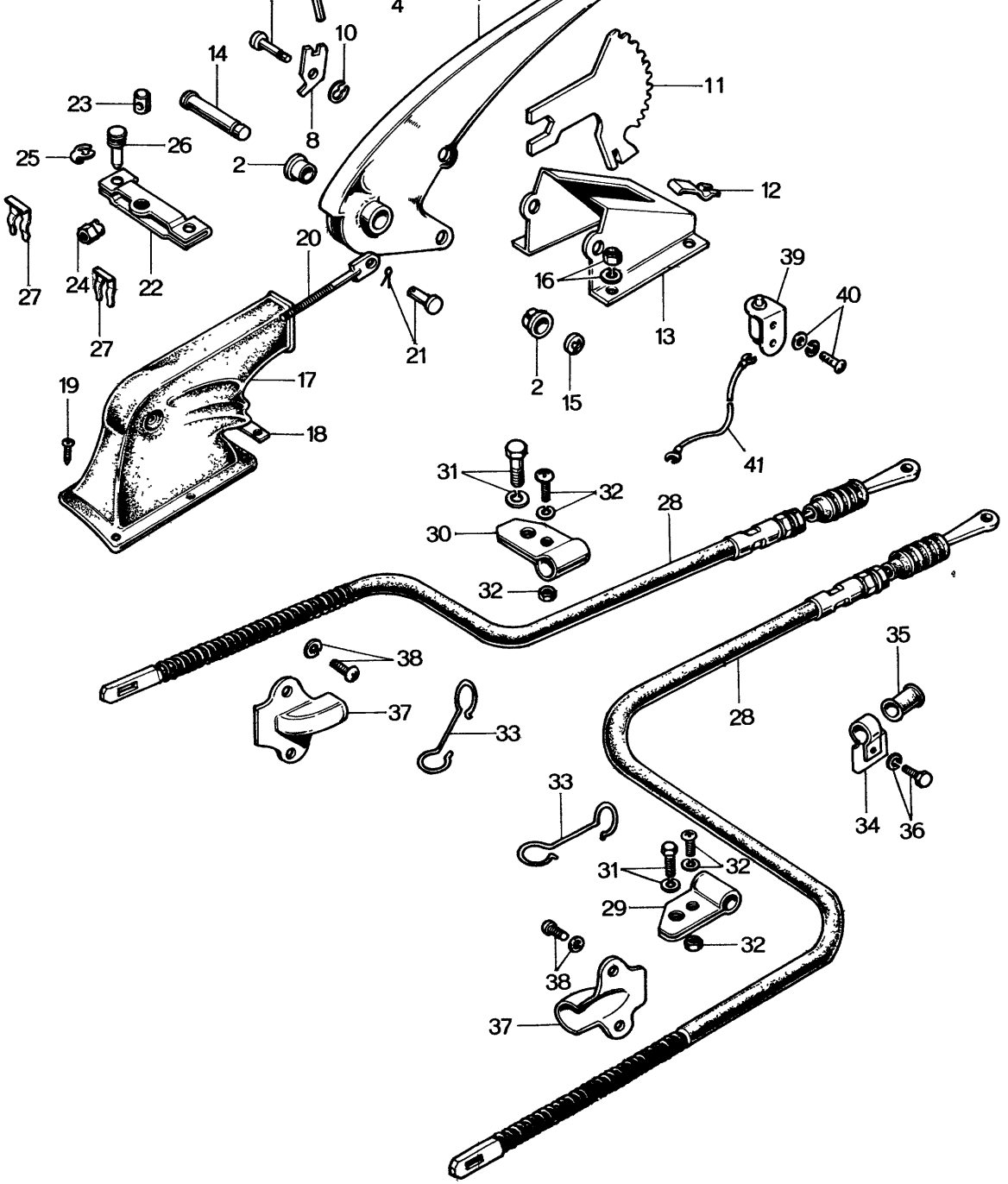
4
10
14
23
8
11
25
26
2
12
20
16
39
40
27
24
22
13
27
21
2
15
19
17
18
41
31
32
28
30
32
38
37
33
28
35
33
34
36
31
32
29
32
38
37

6	0813 44 034	Cap	1
7	0813 44 035	Spacer	1
8	0221 44 044	Ratchet	1
9	99230 0813	Pin	1
10	99575 0500	"U" Type Stop Ring	1
11	0820 44 051	Sector	1
12	0820 44 052	Clip	1
13	0820 44 111	Sector Support	1
14	99230 1039	Pin	1
15	99576 0700	"E" Type Stop Ring	1
16	99906 0600	Nut, Sector Support	4
	99971 0600	Spring Washer	4
17	0820 44 131	Boot	1
18	0820 44 132	Plate	1
19	908631 4 12	Set Screw	7
20	0820 44 250	Adjusting Rod	1
21	99231 0814	Pin	1
	99221 2012	Split Pin	1

28	0820 44 410	Rear Cable	2	
29	0820 44 431	Clip, Cable (R)	1	
30	0820 44 432	Clip, Cable (L)	1	
31	908012 8 12	Set Bolt, Clip	2	
32	908332 5 12	Set Screw, Clip	2	
	99906 0500	Nut	2	
33	0259 44 433	Set Bar	2	
34	0820 44 434	Clip, Cable	2	
35	0187 44 166	Protector, Clip	4	
36	908012 8 16	Set Bolt, Clip	2	
37	0118 44 461	Setting Plate	2	
38	99833 0510	Screw, Setting Plate	4	
	99971 0500	Spring Washer	4	
39	0820 66 840	Parking Switch	1	
40	99833 0408	Screw, Parking Switch	2	
	99971 0400	Spring Washer	2	
	99952 0400	Plain Washer	2	
41	0820 66 733	Cord, Parking Lamp, "T" Type Dashboard use	1	
•	0813 66 736	Card, Parking Lamp, "T" Type Dashboard use	1	Car No. 94415 $^{70}/_{12}$ ~ ○
	0845 67 551	Cord, Plain Type Dashboard use	1	

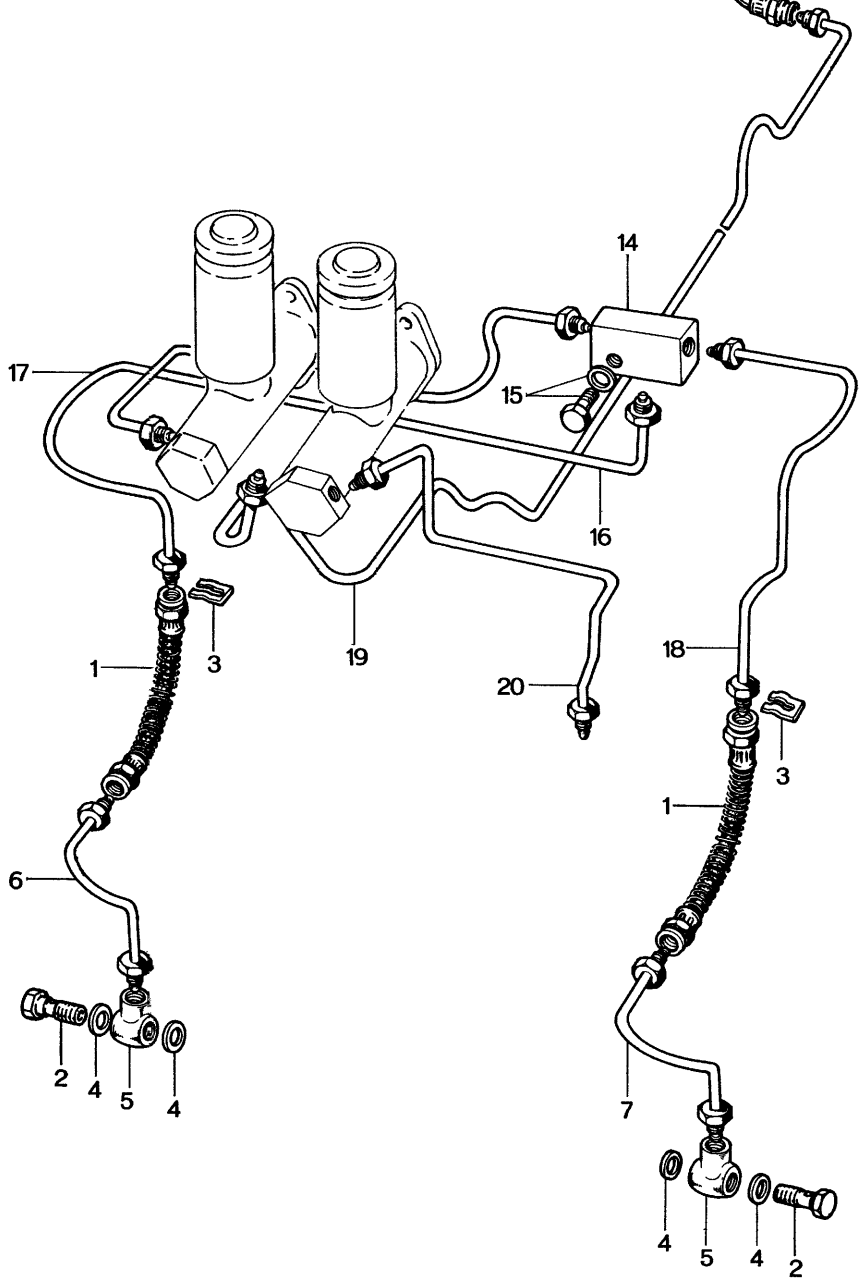
14
17
15
16
19
20
18
1
3
1
3
6
7
2
4
5
4
4
5
4
2

8	0187 43 820	Flexible Pipe	1
9	99562 1000	Packing	1
10	0187 43 642	Brake Pipe "T" Joint (Rr.)	1
11	908062 6 25	Set Bolt, Pipe Joint	1
12	0259 43 650A	Brake Pipe Rear (R)	1
13	0317 43 660	Brake Pipe Rear (L)	1
14	0259 45 291	Joint	1
15	907812 6 25	Set Bolt, Joint	1
16	0259 45 210A	Main Brake Pipe	1
17	0259 45 220A	Front Brake Pipe (R)	1
18	0317 45 230	Front Brake Pipe (L)	1
19	0822 45 240A	Rear Brake Pipe	1
20	0820 45 510	Clutch Pipe	1

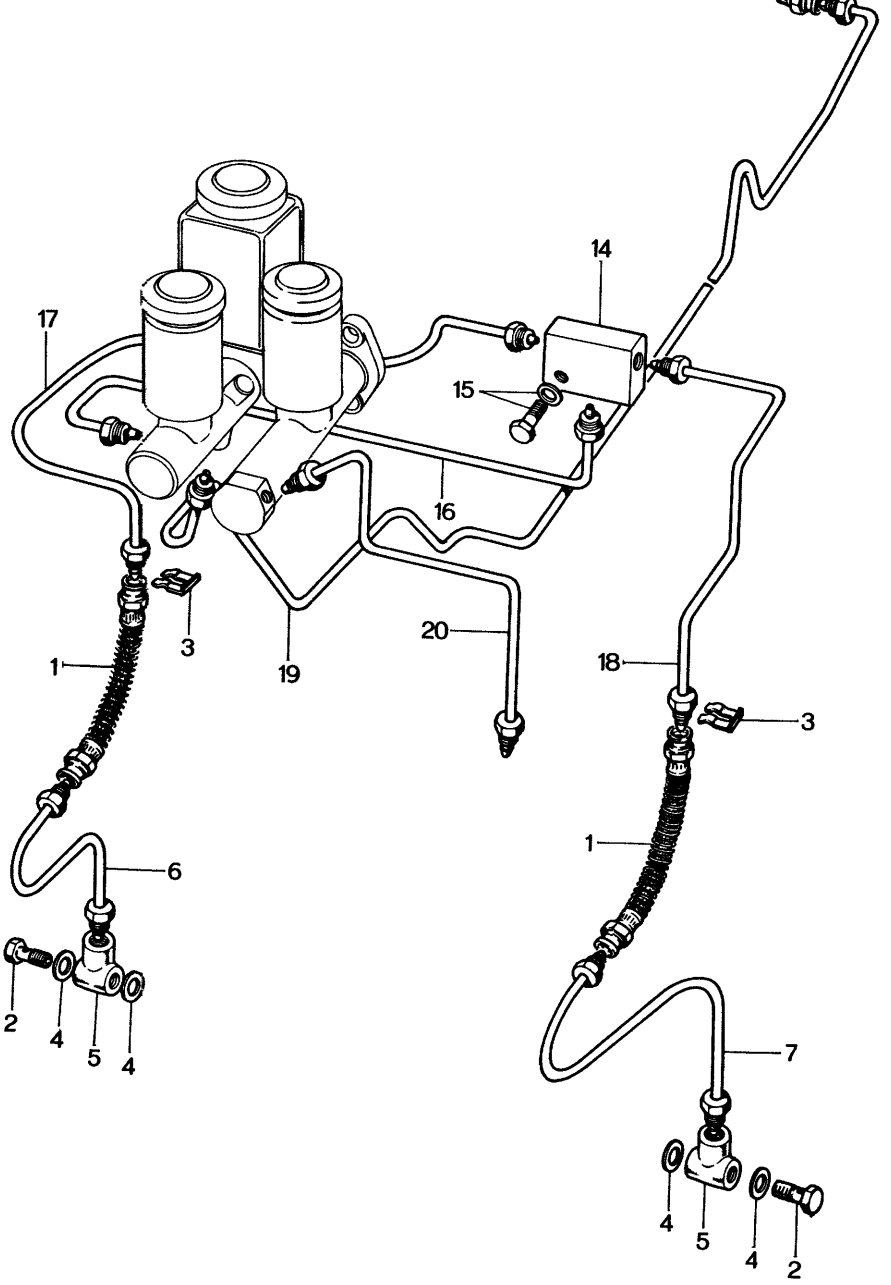
17
14
15
16
20
19
3
1
18
3
1
6
2
4
5
4
7
4
5
4
2

7	0820 43 720A	Brake Pipe, Front Wheel (L)	1
8	0187 43 820	Flexible Pipe	1
9	99562 1000	Packing	1
10	0187 43 642	Brake Pipe "T" Joint (Rr.)	1
11	908062 6 25	Set Bolt, Pipe Joint	1
12	0259 43 650A	Brake Pipe Rear (R)	1
13	0317 43 660	Brake Pipe Rear (L)	1
14	0259 45 291	Joint	1
15	907812 6 25	Set Bolt, Joint	1
16	0820 45 210	Main Brake Pipe	1
17	0820 45 220	Front Brake Pipe (R)	1
18	0259 45 230	Front Brake Pipe (L)	1
19	0820 45 240A	Rear Brake Pipe	1
20	0820 45 510	Clutch Pipe	1

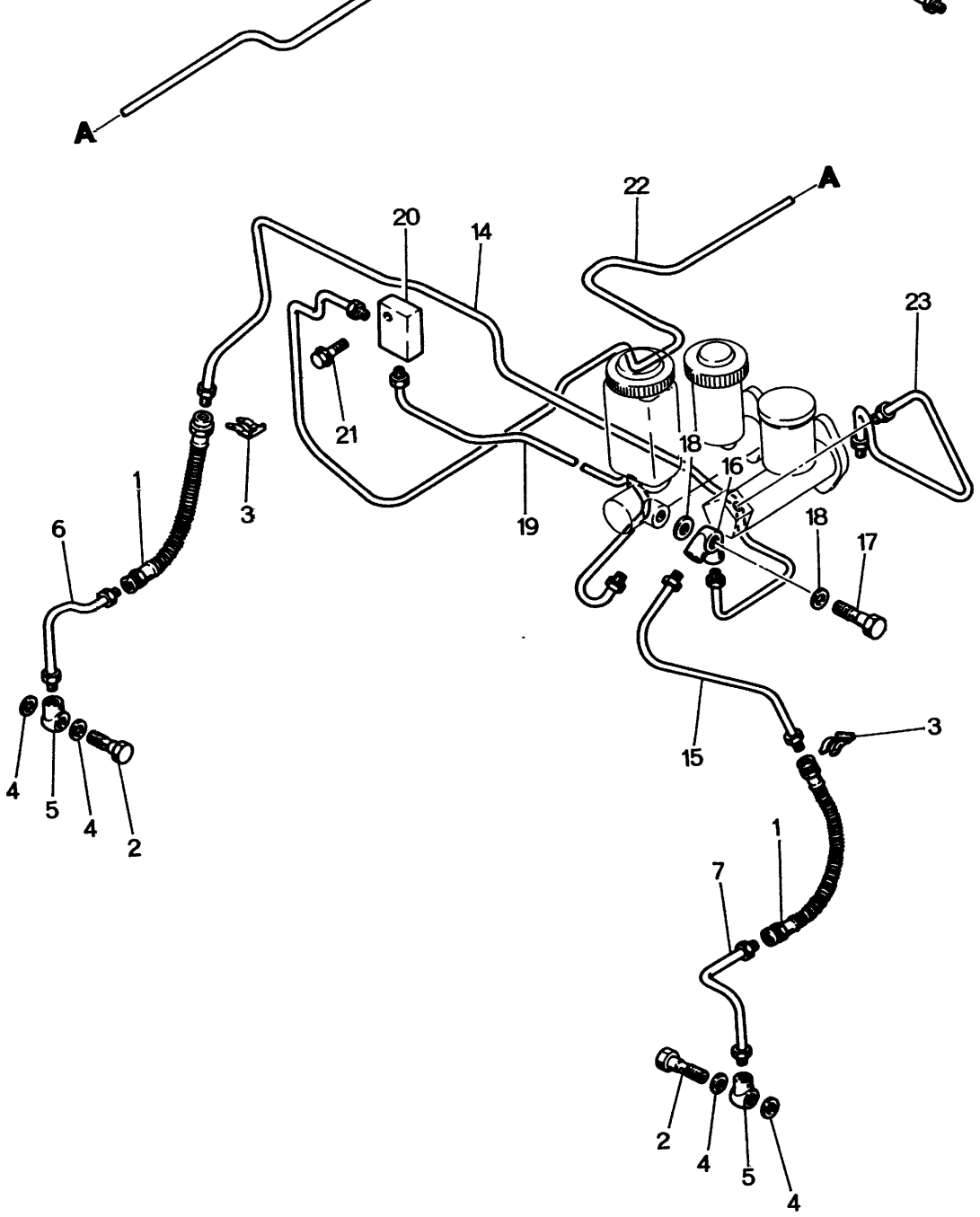
A
A
22
20
14
23
21
18
16
1
3
19
6
18
17
15
3
4
5
4
2
1
7
2
4
5
4

	8	0187 43 820	Flexible Pipe, Rear Side	1	
	9	99562 1000	Packing, Flexible Pipe	1	
	10	0187 43 642	"T" Joint, Brake Pipe Rear	1	
•		2113 43 900	Proportioning Valve, For Denmark	1	Car No. 65573 7/9 ~ Added Anew
	11	908062 6 25	Set Bolt, "T" Joint	1	
•		908062 6 40	Set Bolt, For Denmark	2	Car No. 65573 7/9 ~ Added Anew
	12	0259 43 650A	Brake Pipe (Rr.,R)	1	
•		2113 43 650	Brake Pipe No. 1 For Denmark	1	Car No. 65573 7/9 ~ Added Anew
	13	0317 43 660	Brake Pipe (Rr.,L)	1	
•		2113 43 660	Brake Pipe No. 2 For Denmark	1	Car No. 65573 7/9 ~ Added Anew
•		2113 43 670	Brake Pipe No. 3 For Denmark	1	Car No. 65573 7/9 ~ Added Anew
	14	2113 45 280C	Brake Pipe (Frt.,R)	1	
	15	2113 45 320	Brake Pipe (Frt.,L)	1	
	16	0187 43 504	Joint Pipe	1	
	17	0118 43 505	Connection Bolt, Joint Pipe	1	
	18	99562 1000	Packing, Connection Bolt	2	
	19	2113 45 350	Brake Pipe No.1	1	
	20	2113 45 452	Joint	1	
	21	907812 6 25	Set Bolt, Joint Pipe	1	
	22	2113 45 360B	Brake Pipe No.2	1	
	23	2113 45 510	Clutch Pipe	1	

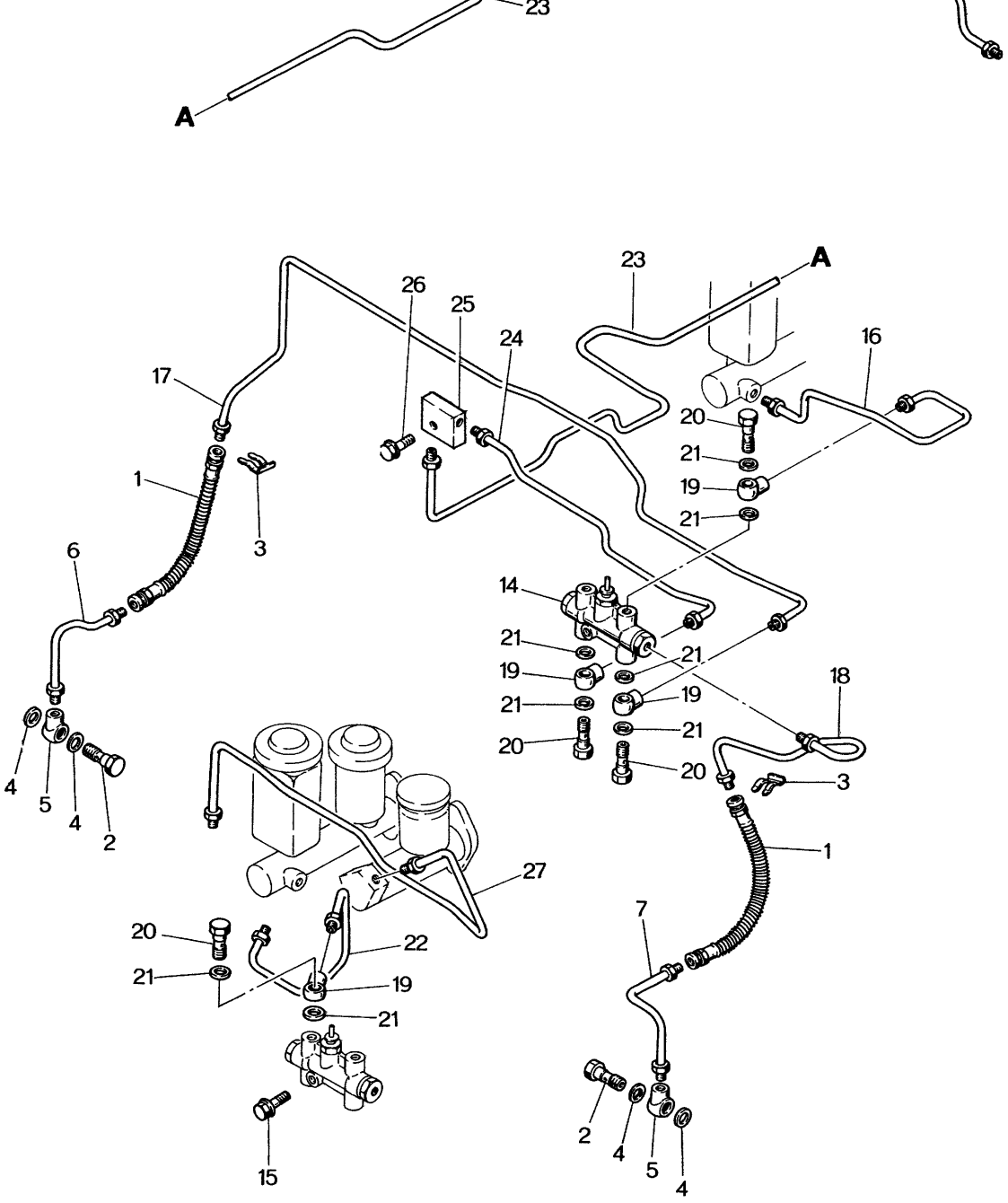
A
23
A
26
25
24
23
16
17
20
21
19
21
1
3
6
14
21
21
19
19
18
21
21
20
20
3
4
5
4
2
1
27
7
20
22
21
19
21
2
4
5
4
15

7	0820 43 720A	Brake Pipe (L), Front Wheel	1	
8	2306 43 820	Flexible Pipe, Rear Side	1	
9	99562 1000	Packing, Flexible Pipe	1	
10	0187 43 642	"T" Joint, Brake Pipe Rear	1	
11	908062 6 25	Set Bolt, "T" Joint	1	
12	0259 43 650A	Brake Pipe (Rr.,R)	1	
13	0317 43 660	Brake Pipe (Rr.,L)	1	
14	2329 43 890	Fail Indicator	1	
15	908062 6 35	Set Bolt, Fail Indicator	1	
16	2350 45 250A	Main Brake Pipe	1	
17	~~2350 45 280~~	Brake Pipe (Frt.,R)	~~1~~	
	2329 45 280A	Brake Pipe (Frt.,R)	1	Car No. 62138 7/6 ~ ○※
18	2350 45 320	Brake Pipe (Frt.,L)	1	
19	0604 41 504	Connector Pipe	4	
•	0118 41 375	Connector Pipe	4	Car No. 64636 7/8 ~ ○
20	0221 43 694	Connector Bolt	4	
21	99562 1000	Packing	8	
22	2350 45 350	Brake Pipe, Rear Main	1	
23	2113 45 360B	Brake Pipe No.2	1	
24	~~2329 45 360A~~	Brake Pipe No.1	~~1~~	
	2329 45 360B	Brake Pipe No.1	1	Car No. 62138 7/6 ~ ○※
25	2113 45 452	Joint	1	

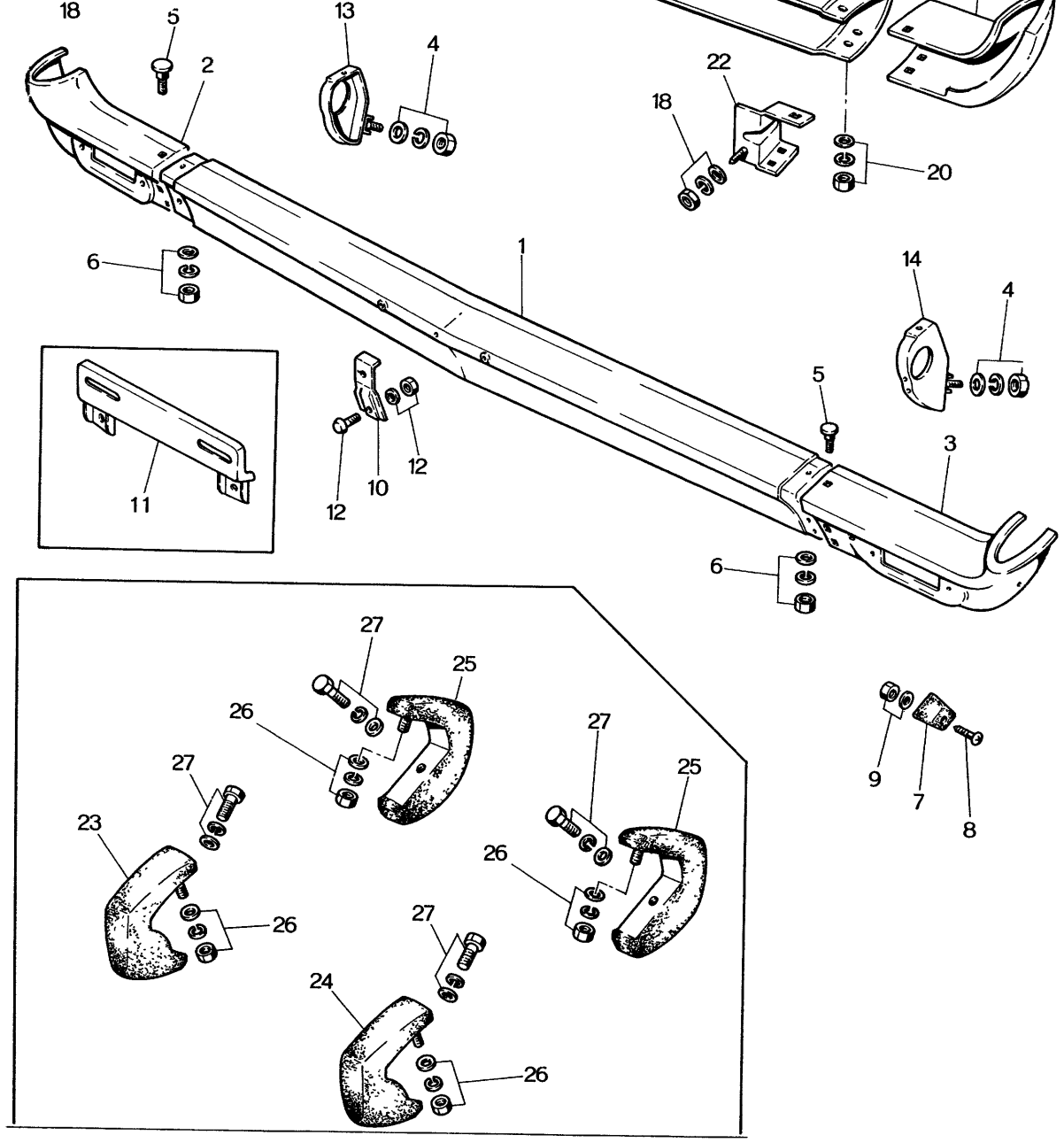
18
5
2
13
4
22
18
20
1
6
14
4
5
3
11
10
12
12
6
27
25
26
27
23
26
27
25
26
27
24
26
9
7
8

	99951 1022	Plain Washer	2
5	0223 50 275	Screw, Joint	6
6	99906 0600	Nut, Joint	6
	99951 0618	Plain Washer	6
	99971 0600	Spring Washer	6
7	0193 65 732A	Stop Rubber	2
8	0259 50 007	Screw, Stop Rubber	2
9	99906 0600	Nut, Stop Rubber	2
	99952 0816	Plain Washer	2
10	0820 50 050	Number Plate Holder	2
11	2113 50 051	Number Plate Holder	2
12	99806 0612	Screw, Holder	2
	99906 0600	Nut	2
	99971 0600	Spring Washer	1
13	0820 50 070	Front Bumper Stay (R)	1
14	0820 50 080	Front Bumper Stay (L)	1
15	0259 50 120	Rear Bumper Bar (C)	1
16	0259 50 131	Rear Bumper Bar Side (R), Sedan Model	1
	0820 50 131	Rear Bumper Bar Side (R), Coupe Model	1

20	99906 0600	Nut, Joint	6		
	99951 0618	Plain Washer	6		
	99971 0600	Spring Washer	6		
21	0259 50 170	Rear Bumper Stay (R)	1		
22	0259 50 180	Rear Bumper Stay (L)	1		
• 23	0820 79 910A-00	Front Bumper Guard (R)	1	Optional	© Black
• 24	0820 79 940A-00	Front Bumper Guard (L)	1		© Black
• 25	0317 78 760-00	Rear Bumper Guard	2		© Black
26	99906 0600	Nut, Bumper Guard	4		
	99951 0600	Plain Washer	4		
	99971 0600	Spring Washer	4		
27	908067 6 16	Set Bolt, Bumper Guard	4		

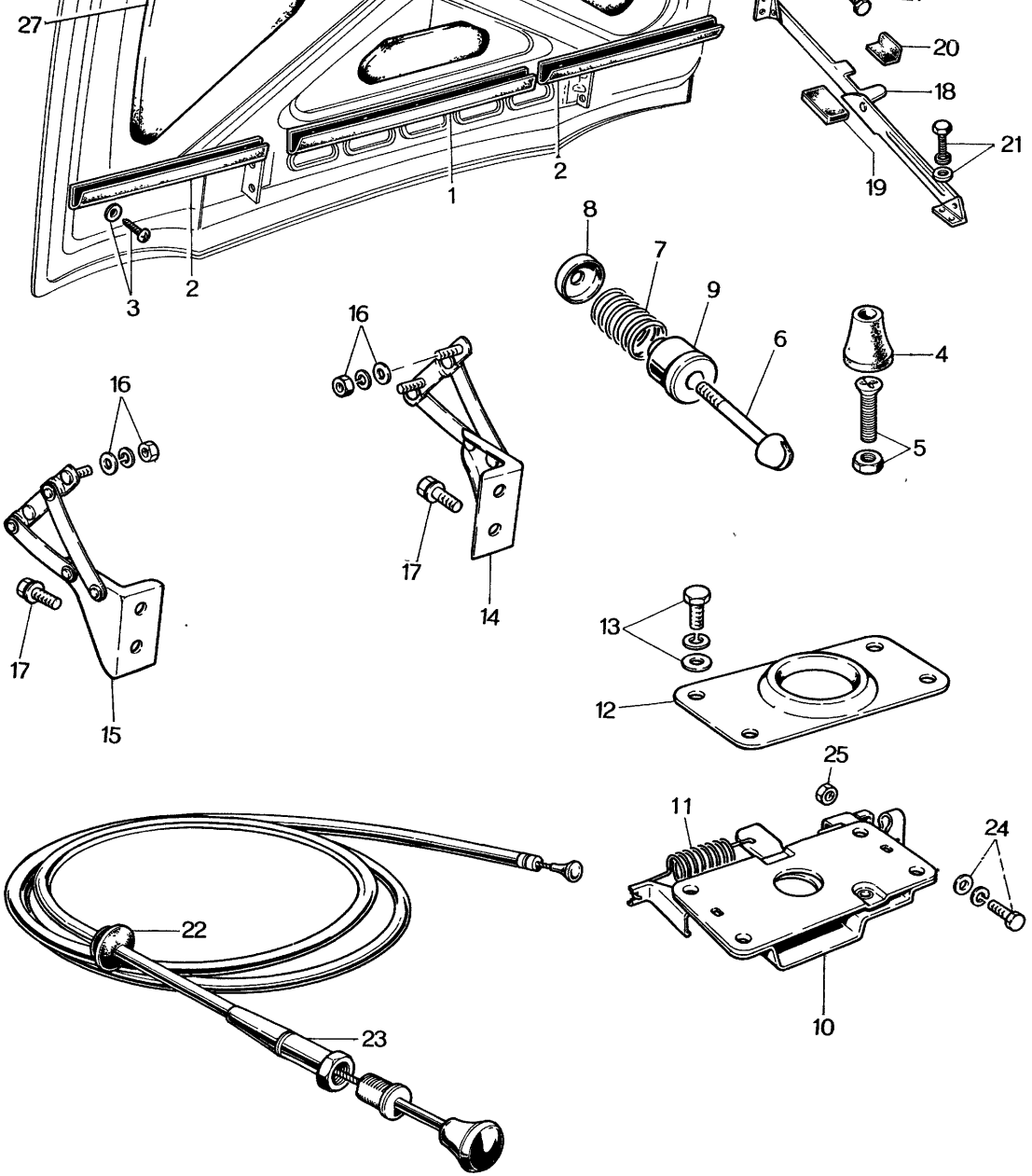
27
1
2
3
2
20
18
21
19
8
7
9
6
4
5
16
17
14
16
17
15
13
12
25
11
24
10
22
23

	99902 0800	Lock Nut	2	
6	0187 52 141	Bonnet Hook	1	
7	0305 52 312	Hook Lift Spring	1	
	0305 52 312A	Hook Lift Spring	1	Car No. 61900 $^{70}/_{6}$ ~ ○
	0305 52 312B	Hook Lift Spring	1	Car No. 82291 $^{71}/_{1}$ ~ ○
8	0305 52 440	Spring Seat, Upper	1	Car No. 61900 $^{70}/_{6}$ ~ Discarded
9	0305 52 320	Spring Seat, Lower	1	
	0305 52 320A	Spring Seat, Lower	1	Car No. 61900 $^{70}/_{6}$ ~ ○
	0305 52 322A	Spring Seat, Lower	1	Car No. 82291 $^{71}/_{1}$ ~ ○
10	0305 52 330	BONNET LOCK	1	
11	0187 52 145	Lock Return Spring	1	
12	0305 52 371	Lock Guide Plate	1	
	0305 52 371A	Lock Guide Plate	1	Car No. 61900 $^{70}/_{6}$ ~ ○
13	908067 6 16	Set Bolt	4	
14	0820 52 400B	Hinge Ass'y (R)	1	
15	0820 52 450B	Hinge Ass'y (L)	1	
16	99906 0600	Nut, Hinge Set	4	
	99971 0600	Spring Washer	4	
	99951 0618	Plain Washer	4	
17	908017 8 16	Set Bolt, Hinge Set	4	
18	0820 52 250	Stop Ass'y	1	
	2359 52 250	Stop Ass'y (L.H.D.)	1	Car No. 87150 $^{71}/_{2}$ ~ X

25	99906 0500	Nut, Release Wire Clamp	1	
26	0820 52 007	Insulation "A"	1	
27	0820 52 008	Insulation "B"	2	
•	0820 52 008A	Insulation "B"	2	Car No. 82300 $^{71}/_{A}$ ~ O
28	0820 52 009	Insulation "C"	1	

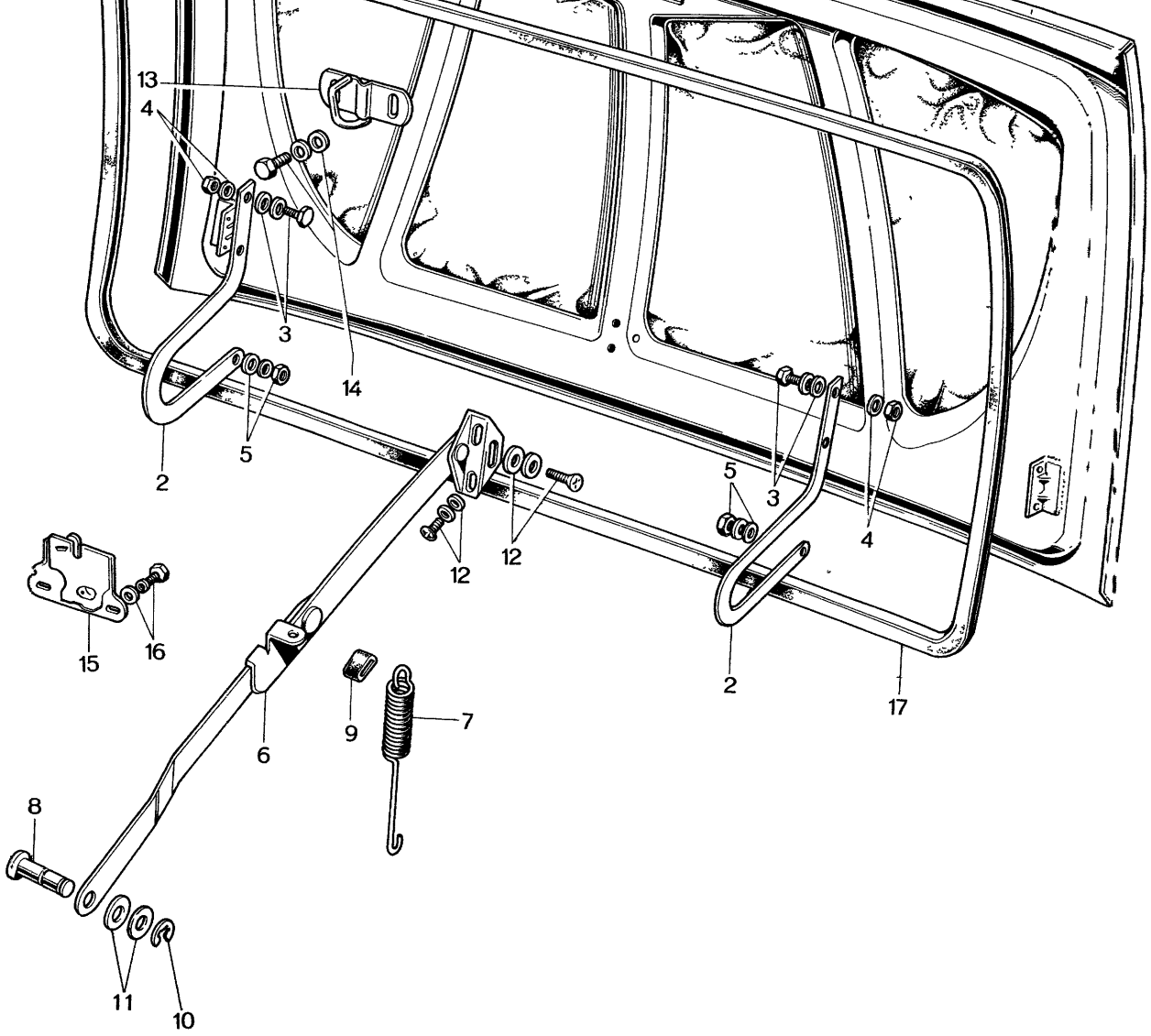
13
4
3
14
2
5
12
12
5
3
4
2
17
15
16
9
7
6
8
11
10

5	99906 0600	Nut, Hinge	2
	99952 0618	Plain Washer	2
	99971 0600	Spring Washer	2
6	0259 52 630	Lid Support	1
7	0208 70 875	Spring	1
8	0208 70 876	Pin "A"	1
9	0208 70 879	Stopper	1
10	99576 0500	Stop Ring, Lid Support	1
11	99952 0816	Washer	1
	99953 0800	Washer	1
12	908336 5 12	Set Screw	3
13	0259 52 750	Striker Ass'y	1
14	908066 8 18	Set Bolt, Striker	2
15	0259 52 850A	Lid Lock Ass'y	1
16	908062 8 14	Set Bolt, Lid Lock	2
	99951 0818	Plain Washer	2
17	0259 52 901	Weather Strip	1

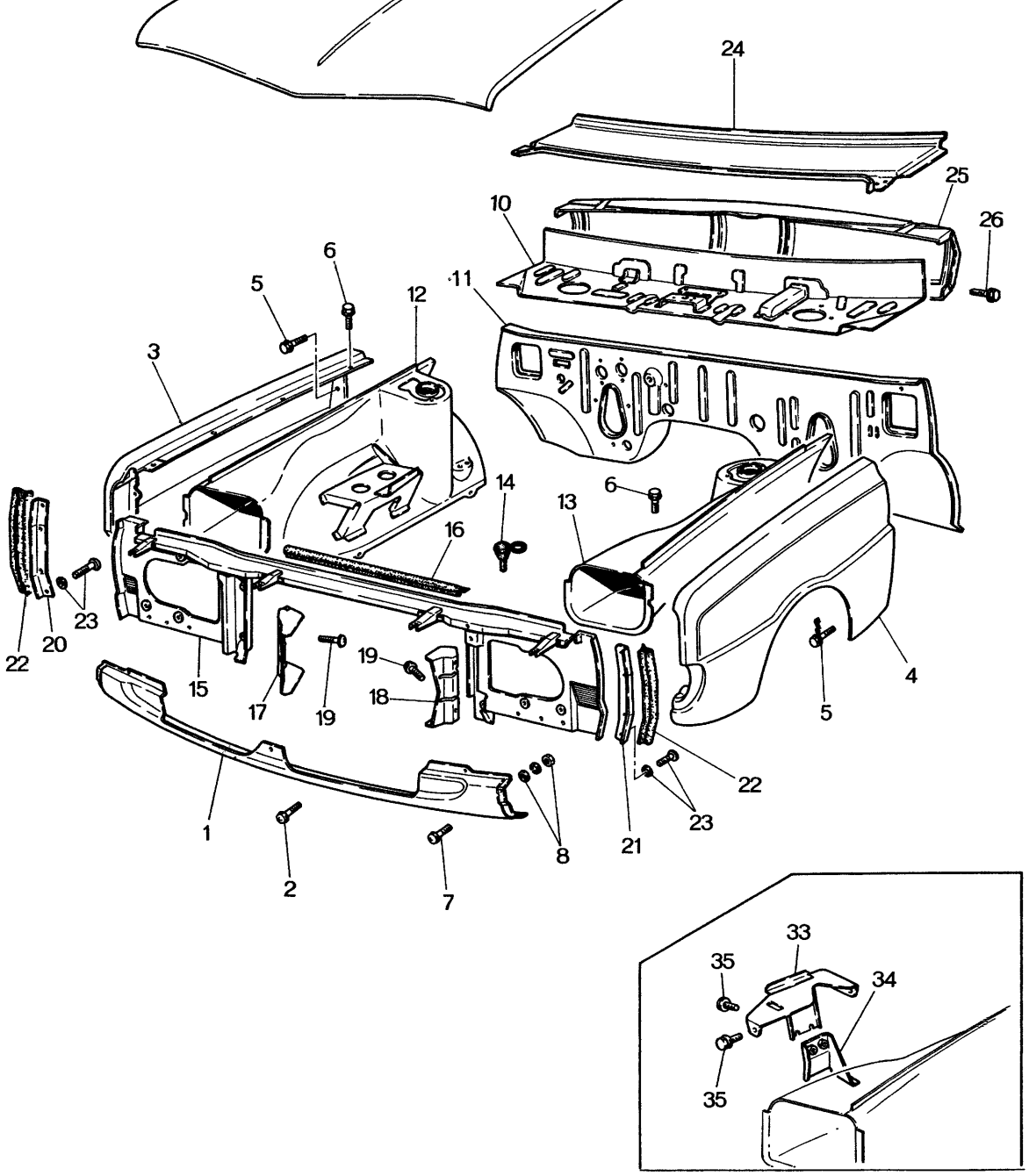
24
25
26
10
6
5
12
11
3
6
14
13
16
4
5
22
20
23
15
17
19
19
18
1
2
7
8
21
22
23
33
35
34
35

5	908067 6 14	Set Bolt, Front Pillar + Fender Panel	14	
6	908067 6 20	Set Bolt, Fender Panel	6	
7	908061 5 12	Set Screw, Skirt Panel + Fender Panel	4	
8	99952 0500	Plain Washer, Skirt Panel	4	
	99971 0500	Spring Washer	4	
	99906 0500	Nut	4	
9	0820 52 010C	Bonnet (R.H.D.) For General Spec. Model	1	
	2124 52 010	Bonnet (L.H.D.) For General Spec. Model	1	Car No. 87150 $^{71}/_{2}$ ~ Added Anew
	2113 52 010C	Bonnet, For U.S.A. & Canada	1	
10	0820 53 010B	Dash Panel Upper Ass'y (R.H.D.) } "T" Type Dashboard use	1	
•	0820 53 010C	Dash Panel Upper Ass'y (R.H.D.) } "T" Type Dashboard use	1	Car No. 94253 $^{71}/_{4}$ ~ Δ
	0845 53 010B	Dash Panel Upper Ass'y (R.H.D.) Plain Type Dashboard use	1	
	2113 53 010C	Dash Panel Upper Ass'y (L.H.D.)	1	
	2113 53 010D	"T" Type Dashboard use, with Car Heater	1	Car No. 65086 $^{70}/_{8}$ ~ ○
	2113 53 010E	Dash Panel Upper Ass'y (L.H.D.)	1	Car No. 67812 $^{70}/_{10}$ ~ ○
	2124 53 010A	Dash Panel Upper Ass'y (L.H.D.) "T" Type Dashboard use, without Car Heater	1	
	~~2329 53 010C~~	Dash Panel Upper Ass'y (L.H.D.)	~~1~~	
	2329 53 010D	"T" Type Dashboard use, Emission Controlled Model	1	Car No. 59444 $^{70}/_{4}$ ~ ○ ※
	2335 53 010B	Dash Panel Upper Ass'y (L.H.D.)	1	
	2335 53 010C	Plain Type Dashboard use	1	Car No. 65086 $^{70}/_{8}$ ~ ○
	2339 53 010B	Dash Panel Upper Ass'y (L.H.D.) Emission Controlled Model	1	
11	0820 53 100C	Dash Panel Lower Ass'y (R.H.D.) "T" Type DashBoard Coupe use	1	
	0845 53 100B	Dash Panel Lower Ass'y (R.H.D.) Plain Type Dashboard use	1	

	0820 53 210C	Wheel Apron Ass'y (R) (R.H.D.)	1	Car No. 94253 $^{71}/_{4}$ ~ Δ
	2113 53 210E	Wheel Apron Ass'y (R)	1	
	2113 53 210F	Wheel Apron Ass'y (R) (L.H.D.)	1	Car No. 87150 $^{71}/_{2}$ ~ X
	2112 53 210	Wheel Apron Ass'y (R)	1	Car No. 94253 $^{71}/_{4}$ ~ O
	2124 53 210A	Wheel Apron Ass'y (R)	1	
	2124 53 210B	Wheel Apron Ass'y (R) For Okinawa	1	Car No. 87150 $^{71}/_{2}$ ~ X
	2124 53 210C	Wheel Apron Ass'y (R)	1	Car No. 94253 $^{71}/_{4}$ ~ O
	2329 53 210H	Wheel Apron Ass'y (R) (L.H.D.) Emission Controlled Model	1	
13	0820 54 210B	Wheel Apron Ass'y (L)	1	
	0820 54 210C	Wheel Apron Ass'y (L) (R.H.D.)	1	Car No. 57664 $^{70}/_{4}$ ~ O
	0820 54 210D	Wheel Apron Ass'y (L)	1	Car No. 94253 $^{71}/_{4}$ ~ Δ
	2113 54 210E	Wheel Apron Ass'y (L)	1	
	2113 54 210F	Wheel Apron Ass'y (L) (L.H.D.)	1	Car No. 87150 $^{71}/_{2}$ ~ X
	2112 54 210	Wheel Apron Ass'y (L)	1	Car No. 94253 $^{71}/_{4}$ ~ O
	2124 54 210A	Wheel Apron Ass'y (L)	1	
	2124 54 210B	Wheel Apron Ass'y (L) For Okinawa	1	Car No. 87150 $^{71}/_{2}$ ~ X
	2124 54 210C	Wheel Apron Ass'y (L)	1	Car No. 94253 $^{71}/_{4}$ ~ O
	2329 54 210B	Wheel Apron Ass'y (L) (L.H.D.) Emission Controlled Model	1	
14	0259 58 931	Drain Valve	8	
15	0820 53 700B	Shroud Panel Ass'y For use with Square Type Head Lamp	1	
	2112 53 700C	Shroud Panel Ass'y, Arctic Spec. Model For use with Square Type Head Lamp	1	
	2113 53 700D	Shroud Panel Ass'y, For Canada & U.S.A. For use with Round Type Head Lamp	1	
16	0820 53 709	Seal Rubber	1	
17	0820 53 711B	Guide Vane (R) For use with Square Type Head Lamp	1	
	2113 53 711A	Guide Vane (R) For use with Round Type Head Lamp	1	
18	0820 54 711A	Guide Vane (L) For use with Square Type Head Lamp	1	
	2113 54 711A	Guide Vane (L) For use with Round Type Head Lamp	1	
19	908681 5 12B	Set Screw, Guide Valve	4	
20	0259 53 725	Shield "A" (R)	1	
21	0259 54 725	Shield "A" (L)	1	
22	0223 53 752	Seal Rubber	2	

27	0187 53 134	Dust Seal Rubber		2
28	2158 61 061	Packing		1
29	2158 61 070	Plate		1
30	2158 61 081	Packing	Without Car Heater	1
31	2158 61 090	Plate		1
32	99906 0600	Nut, Plate		7
	99952 0618	Plain Washer		7
33	2113 56 960	Battery Bracket		1
•			Large Type Battery use (L.H.D.) For Arctic Spec. Models	
35	908046 8 16	Set Bolt		4

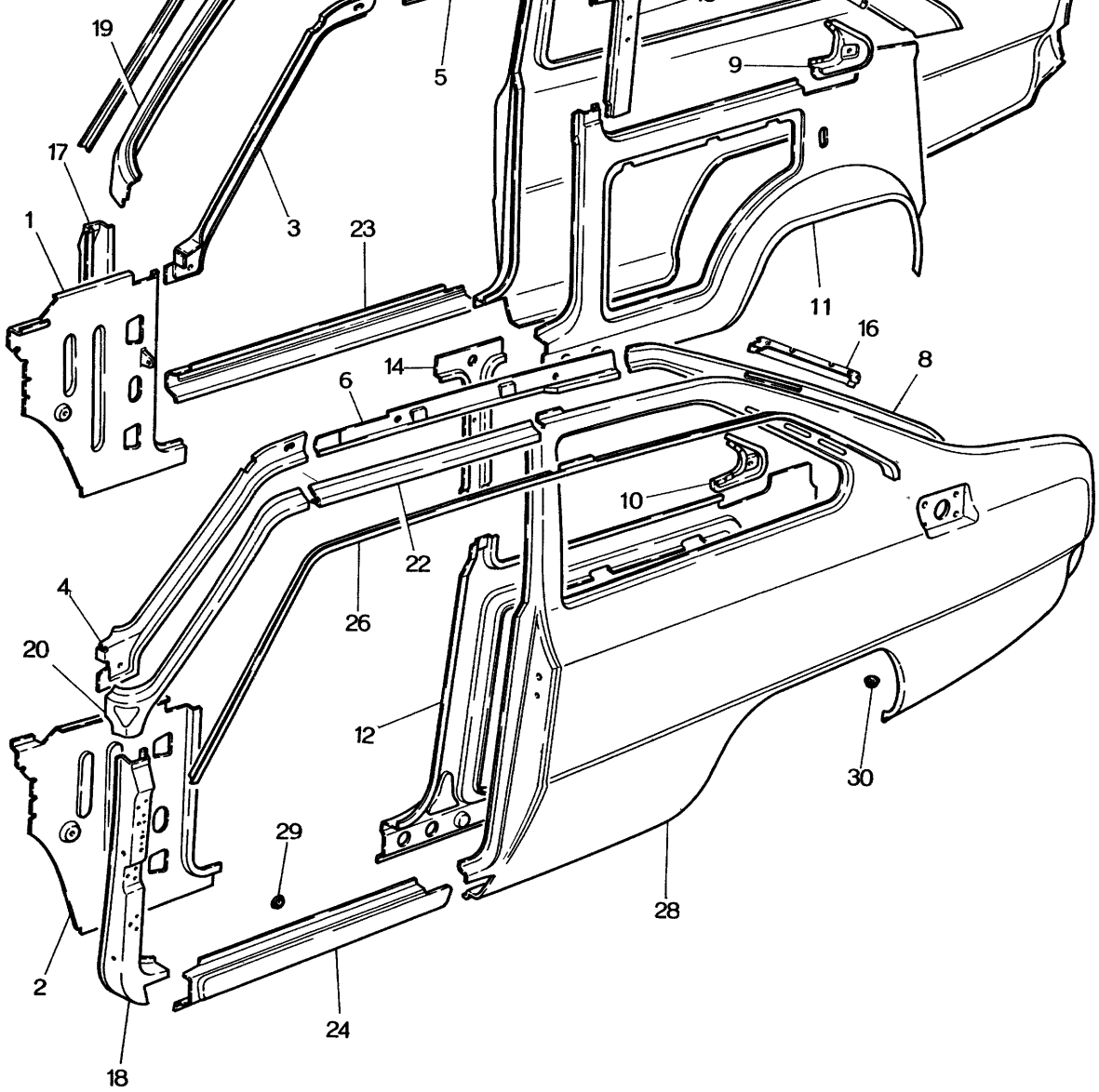
19
17
1
3
23
5
9
11
16
8
14
6
10
22
26
4
20
12
30
29
28
2
24
18

		WITH 2350 58 582 ANTIBURST BLOCK (R) & 2244 66 250A SIDE MARKER LAMP HOLE.		For Canada & U.S.A.
	2797 53 300 A	SIDE FRAME Ass'y (R), (R.H.D.) "T" TYPE DASHBOARD USE	1	
	2113 54 300 A	SIDE FRAME Ass'y (L), (L.H.D.) "T" TYPE DASHBOARD USE	1	For Canada & U.S.A.
	2123 54 300 B	SIDE FRAME Ass'y (L), (R.H.D.) "T" TYPE DASHBOARD USE WITH 2350 59 582 ANTIBURST BLOCK (L)	1	
	2124 54 300 A	SIDE FRAME Ass'y (L), (L.H.D.) "T" TYPE DASHBOARD USE	1	
•	2112 54 300	SIDE FRAME Ass'y (L), (L.H.D.)	1	Car No. 83263 $^{71}/_{1}$ ~ Δ
	2327 54 300 A	SIDE FRAME Ass'y (L), (L.H.D.) "T" TYPE DASHBOARD USE WITH 2350 59 582 ANTIBURST BLOCK (L)	1	For France
	2334 54 300 B	SIDE FRAME Ass'y (L), (R.H.D.) WITH 2350 59 582 ANTIBURST BLOCK (L)	1	
	2335 54 300 A	SIDE FRAME Ass'y (L), (L.H.D.) WITH 2350 59 582 ANTIBURST BLOCK (L)	1	For France
	2339 54 300 A	SIDE FRAME Ass'y (L), (L.H.D.) WITH 2350 59 582 ANTIBURST BLOCK & 2244 66 250A SIDE MARKER LAMP HOLE.	1	For Canada & U.S.A.
	2797 54 300 A	SIDE FRAME Ass'y (L), (R.H.D.) "T" TYPE DASHBOARD USE	1	
1	0259 53 320B	Cowl Side Panel (R) (R.H.D.)	1	
	0820 53 320A	Cowl Side Panel (R) (R.H.D.)	1	
	0820 53 320B	Cowl Side Panel (R) (R.H.D.) "T" Type Dashboard use	1	Car No. 67891 $^{70}/_{10}$ ~ X
•	0820 53 320C	Cowl Side Panel (R) (R.H.D.)	1	Car No. 94253 $^{71}/_{4}$ ~ Δ
	2113 53 320A	Cowl Side Panel (R) (L.H.D.) "T" Type Dashboard use	1	
	2113 53 320B	Cowl Side Panel (R) (L.H.D.) "T" Type Dashboard use	1	Car No. 70537 $^{70}/_{11}$ ~ X
	2158 53 320A	Cowl Side Panel (R) (L.H.D.)	1	
	2158 53 320B	Cowl Side Panel (R) (L.H.D.)	1	Car No. 67891 $^{70}/_{10}$ ~ X
2	0820 54 320A	Cowl Side Panel (L) (R.H.D.)	1	
	0820 54 320B	Cowl Side Panel (L) (R.H.D.)	1	Car No. 67891 $^{70}/_{10}$ ~ X
	2113 54 320A	Cowl Side Panel (L) (L.H.D.) "T" Type Dashboard use	1	
	2113 54 320B	Cowl Side Panel (L) (L.H.D.) "T" Type Dashboard use	1	Car No. 70537 $^{70}/_{11}$ ~ X
	2158 54 320A	Cowl Side Panel (L) (L.H.D.)	1	
	2158 54 320B	Cowl Side Panel (L) (L.H.D.)	1	
•	2158 54 320C	Cowl Side Panel (L) (L.H.D.)	1	Car No. 94253 $^{71}/_{4}$ ~ Δ
3	0820 53 331	Front Pillar Inner (R)	1	
4	0820 54 331	Front Pillar Inner (L)	1	
5	0329 53 340	Roof Rail Inner (R)	1	

12	0820 54 370C	Side Frame Inner Rear (L) (R.H.D.)	1	
	2113 54 370A	Side Frame Inner Rear (L) (L.H.D.)	1	
13	2113 53 380	Center Pillar Inner (R) (L.H.D.)	1	
	0820 53 381	Center Pillar Inner (R) (L.H.D.) For France	1	
	2316 53 380	Center Pillar Inner (R) (R.H.D.)	1	
14	0820 54 381	Center Pillar Inner (L) (R.H.D.)	1	
	2113 54 380	Center Pillar Inner (L) (L.H.D.)	1	
	2410 54 380	Center Pillar Inner (L) (L.H.D.) For France	1	
15	0820 53 390	Set Plate (R)	1	
16	0820 54 390	Set Plate (L)	1	
17	0329 53 410	Hinge Pillar Outer (R)	1	
18	0329 54 410	Hinge Pillar Outer (L)	1	
19	0820 53 421A	Front Pillar Outer (R)	1	
20	0820 54 421A	Front Pillar Outer (L)	1	
21	0820 53 430	Roof Rail Outer (R)	1	
22	0820 54 430	Roof Rail Outer (L)	1	
23	0254 53 451	Side Sill Outer (R)	1	
24	0254 54 451	Side Sill Outer (L)	1	
25	0820 53 591	Rain Rail (R)	1	
26	0820 54 591	Rain Rail (L)	1	
27	2113 53 600B	Rear Fender (R) (L.H.D.) For Canada & U.S.A. With 2350 58 582 Antiburst Block (R) & 2244 66 250A Side Marker Lamp Hole.	1	
	~~2124 53 600A~~	Rear Fender (R) (L.H.D.)	⇐	
	2413 53 600	Rear Fender (R) (L.H.D.)	1	Car No. 57990 $^{70}/_{4}$ ~ ○ ※

		2350 54 600A	Rear Fender (L) (R.H.D.) For France With 2350 59 582 Antiburst Block (L)	1	
		2797 54 600A	Rear Fender (L) (R.H.D.)	1	
	29	0259 53 455	Drain Plug, Side Sill	6	
	30	0118 56 242B	Drain Plug	2	
•	N	0259 53 328	Junction Plate (R)	1	Car No. 61649 70/6 ~ Added Anew
		0259 54 329	Junction Plate (L)	1	Car No. 61649 70/6 ~ Added Anew

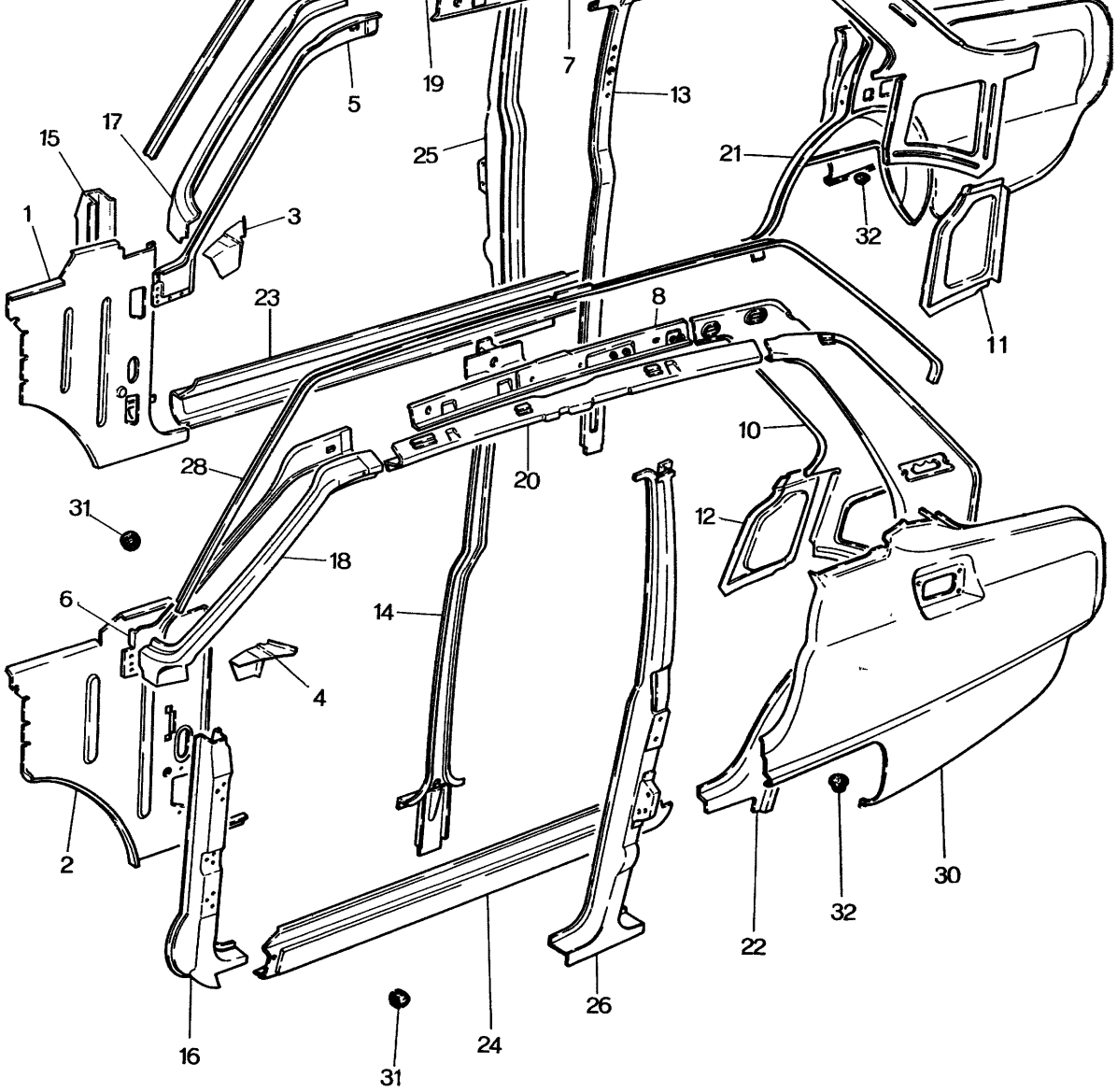
1
2
3
4
5
6
7
8
10
11
12
13
14
15
16
17
18
19
20
21
22
23
24
25
26
28
30
31
31
32
32

	2418 53 300	SIDE FRAME Ass'y (R) (R.H.D.) "T" TYPE DASHBOARD USE, WITH 2350 58 582 ANTIBURST BLOCK.	1
	2419 53 300	SIDE FRAME Ass'y (R) (R.H.D.) "T" TYPE DASHBOARD USE	1
	2061 54 300	SIDE FRAME Ass'y (L) (L.H.D.) WITH 2350 58 582 ANTIBURST BLOCK	1
	2062 54 300	SIDE FRAME Ass'y (L) (L.H.D.)	1
	2063 54 300	SIDE FRAME Ass'y (L) (R.H.D.) WITH 2350 58 582 ANTIBURST BLOCK	1
	2064 54 300	SIDE FRAME Ass'y (L) (R.H.D.)	1
	2415 54 300	SIDE FRAME Ass'y (L) (L.H.D.) "T" TYPE DASHBOARD USE, WITH 2350 58 582 ANTIBURST BLOCK.	1
	2416 54 300	SIDE FRAME Ass'v (L) (L.H.D.) "T" TYPE DASHBOARD USE	1
	2418 54 300	SIDE FRAME Ass'y (L) (R.H.D.) "T" TYPE DASHBOARD USE, WITH 2350 58 582 ANTIBURST BLOCK.	1
	2419 54 300	SIDE FRAME Ass'y (L) (R.H.D.) "T" TYPE DASHBOARD USE	1
1	0259 53 321C	Cowl Side Panel (R)	1
	0820 53 320B	Cowl Side Panel (R) (R.H.D.) "T" Type Dashboard use	1
	2113 53 320B	Cowl Side Panel (R) (L.H.D.) "T" Type Dashboard use	1
2	0820 54 320B	Cowl Side Panel (L) (R.H.D.)	1
	2113 54 320B	Cowl Side Panel (L) (L.H.D.) "T" Type Dashboard use	1
	2158 54 320B	Cowl Side Panel (L) (L.H.D.)	1
3	0259 53 328	Junction Plate (R)	1
4	0259 54 328	Junction Plate (L)	1
5	0259 53 331A	Side Frame Inner (R)	1
6	0259 54 331A	Side Frame Inner (L)	1

11	0259 53 371	Side Frame Inner (R)	1
12	0259 54 371	Side Frame Inner (L)	1
13	2370 53 380B	Center Pillar Inner (R) (L.H.D.)	1
	2404 53 380B	Center Pillar Inner (R) (R.H.D.)	1
14	2370 54 380B	Center Pillar Inner (L) (L.H.D.)	1
	2404 54 380B	Center Pillar Inner (L) (R.H.D.)	1
15	0317 53 410	Hinge Pillar Outer (R)	1
16	0317 54 410	Hinge Pillar Outer (L)	1
17	0259 53 421B	Front Pillar Outer (R)	1
18	0259 54 421B	Front Pillar Outer (L)	1
19	0259 53 430	Roof Rail Outer (R)	1
20	0259 54 430	Roof Rail Outer (L)	1
21	0259 53 440	Rear Pillar Outer (R)	1
	2352 53 440	Rear Pillar Outer (R) With 2350 58 582 Antiburst Block.	1
22	0259 54 440	Rear Pillar Outer (L)	1
	2352 54 440	Rear Pillar Outer (L) With 2350 58 582 Antiburst Block.	1
23	0257 53 451	Side Sill Outer (R)	1
24	0257 54 451	Side Sill Outer (L)	1
25	2370 53 500	Center Pillar Outer (R) With 2350 58 582 Antiburst Block.	1
	2399 53 500	Center Pillar Outer (R)	1

31	0259 53 455	Drain Plug, Side Sill	6
32	0118 56 242B	Drain Plug	2

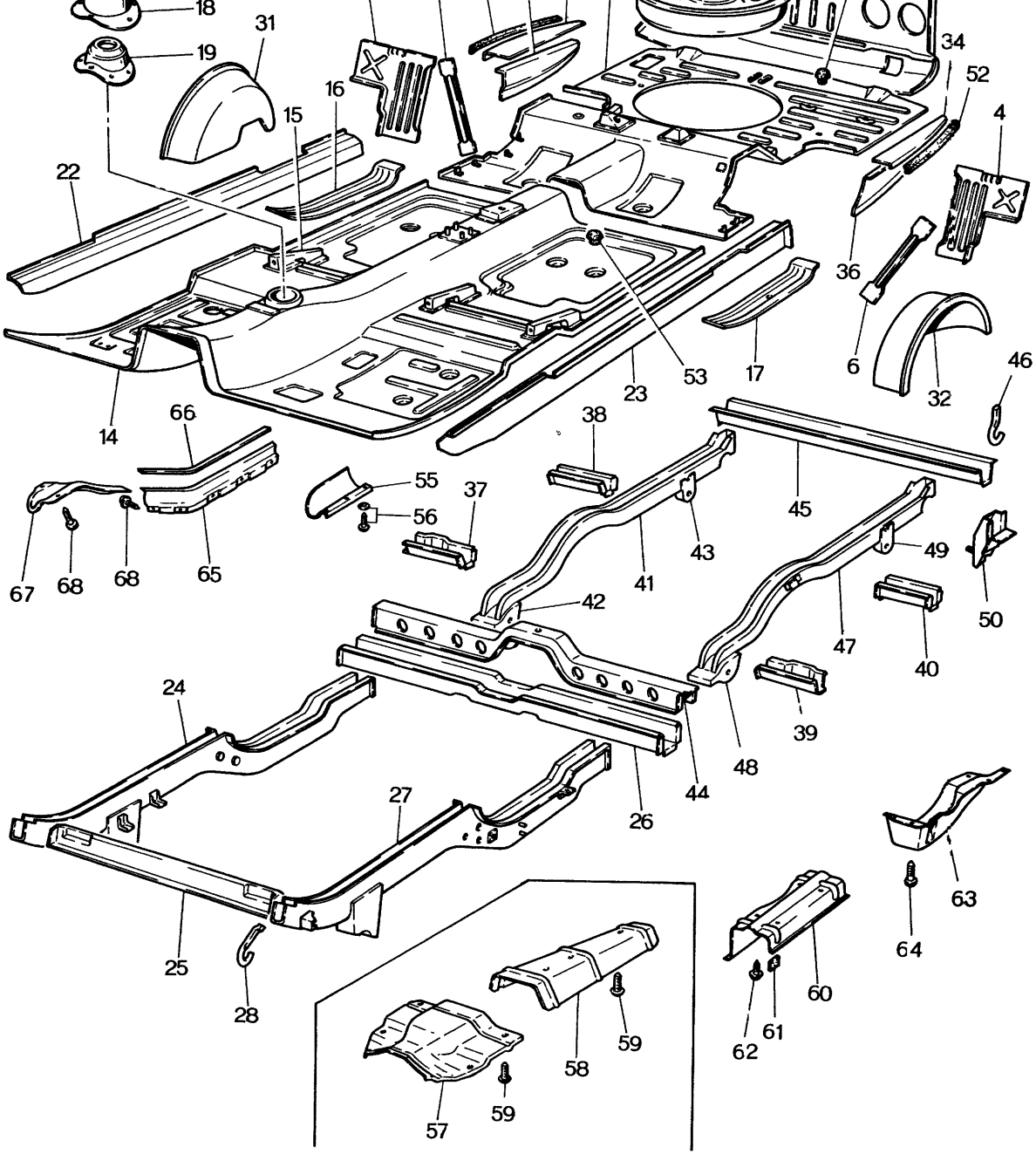
18
31
19
16
15
34
52
4
22
36
6
32
46
53
17
23
14
66
38
55
37
56
45
43
41
49
67
68
68
65
42
47
40
50
24
39
48
44
27
26
63
64
25
28
60
62
61
58
59
57
59

3	0259 53 830	Side Brace (R), Sedan use	1
	0820 53 830A	Side Brace (R), Coupe use	1
4	0259 54 830	Side Brace (L), Sedan use	1
	0820 54 830A	Side Brace (L), Coupe use	1
5	0259 53 835	Diagonal Brace (R), Sedan use	1
	0820 53 835A	Diagonal Brace (R), Coupe use	1
6	0259 54 835	Diagonal Brace (L), Sedan use	1
	0820 54 835A	Diagonal Brace (L), Coupe use	1
7	0259 53 827	Cushion Rubber, Sedan use	2
8	0259 53 901	Roof Panel, Sedan use	1
	0820 53 901	Roof Panel, Coupe use	1
9	0820 53 920A	Front Header, Coupe use	1
	2244 53 920	Front Header, Sedan use	1
10	0259 53 940	Rear Header, Sedan use	1
	0820 53 940	Rear Header, Coupe use	1
11	0259 53 951	Roof Stiffener, Sedan use	1
	0820 53 951	Roof Stiffener, Coupe use	1
12	0259 53 991	Rear Deck Panel , Sedan use	1

14	0846 56 010A	FRONT FLOOR PAN Ass'y (R.H.D.) Sedan use	1
	2113 56 010	FRONT FLOOR PAN Ass'y (L.H.D.) "T" Type Dashboard Model	1
	2339 56 010B	FRONT FLOOR PAN Ass'y (L.H.D.) "T" Type Dashboard Emission Controlled Model	1
	2334 56 010	FRONT FLOOR PAN Ass'y (R.H.D.) Coupe use	1
	2335 56 010	FRONT FLOOR PAN Ass'y (L.H.D.) Coupe use	1
	2329 56 010B	FRONT FLOOR PAN Ass'y (L.H.D.) Emission Controlled Model, Coupe use	1
	2418 56 010	FRONT FLOOR PAN Ass'y (R.H.D.) "T" Type Dashboard Model	1
15	0820 56 160	Seat Bracket Coupe & "T" Type Dashboard Model	2
	0259 56 160	Seat Bracket, Sedan use	4
	2113 56 170	Seat Bracket Coupe & "T" Type Dashboard Model	1
	2113 56 190	Seat Bracket (L.H.D.) Coupe & "T" Type Dashboard Model	1
	2316 56 190	Seat Bracket (R.H.D.) Coupe & "T" Type Dashboard Sedan Model	1
16	0259 56 230	Reinforcement (R)	1
17	0259 56 231	Reinforcement (L)	1

	0317 56 210	Side Sill Inner Panel (L), Sedan use	1	
	2123 56 020A	FRONT FRAME Ass'y (R.H.D.)	1	
	2112 56 020A	FRONT FRAME Ass'y (L.H.D.)	1	
	2112 56 020B		1	Car No. 63173 70/7 ~ O
	2113 56 020A	FRONT FRAME Ass'y (L.H.D.)	1	
	2113 56 020B	For Canada Round Type Head Lamp use	1	Car No. 63173 70/7 ~ O
	2124 56 020A	FRONT FRAME Ass'y (L.H.D.) For Okinawa	1	
	2329 56 020C	FRONT FRAME Ass'y (L.H.D.)	1	
	2329 56 020D	Emission Controlled Model, Round Type Head Lamp use	1	Car No. 63173 70/7 ~ O
24	0820 56 030A	SIDE MEMBER Ass'y (R) (R.H.D.)	1	
	2113 56 030A	SIDE MEMBER Ass'y (R) (L.H.D.)	1	
	2113 56 030B		1	Car No. 63173 70/7 ~ O
	2124 56 030A	SIDE MEMBER Ass'y (R) (L.H.D.) For Okinawa	1	
	2329 56 030C	SIDE MEMBER Ass'y (R) (L.H.D.)	1	
	2329 56 030D	Emission Controlled Model	1	Car No. 63173 70/7 ~ O
	0259 56 036	Jacking Bracket	1	
	0259 56 037	Bolt	2	
25	0820 56 110	Cross Member No. 1 Square Type Head Lamp use	1	
	2113 56 110	Cross Member No. 1 Round Type Head Lamp use	1	

	2124 56 530A	SIDE MEMBER (L), (L.H.D.) With Sub Tank Clip	1	
	2329 56 530B	SIDE MEMBER (L), (L.H.D.) Emission Controlled Model	1	
	0259 56 036	Jacking Bracket	1	
	0259 56 037	Bolt	1	
28	2119 56 539	Hook, Front (For Arctic Spec Model)	1	
29	0820 56 300B	REAR FLOOR PAN Ass'y	1	Coupe Use
	0820 56 300C	REAR FLOOR PAN Ass'y	1	Car No. 62706 $^{70}/_{7}$ ~ X
•	2112 56 300	REAR FLOOR PAN Ass'y For Arctic Spec. Model	1	Car No. 73747 $^{70}/_{12}$ ~ Added Anew
	0846 56 300	REAR FLOOR PAN Ass'y		Sedan Use
	0846 56 300A	REAR FLOOR PAN Ass'y	1	Car No. 62706 $^{70}/_{7}$ ~ X
•	2417 56 300	REAR FLOOR PAN Ass'y For Arctic Spec. Model	1	Car No. 73747 $^{70}/_{12}$ ~ Added Anew
	2329 56 300B	REAR FLOOR PAN Ass'y	1	Emission Controlled Model
	2329 56 300C	REAR FLOOR PAN Ass'y	1	Car No. 62706 $^{70}/_{7}$ ~ X
	2329 56 300C	Emission Controlled Model	1	
30	0259 56 310A	Spare Tire Pan	1	
31	0820 56 360	Wheel House Panel (R), Coupe use	1	
	0844 56 360	Wheel House Panel (R), Sedan use	1	
32	0259 56 860	Wheel House Panel (L)	1	
33	0259 56 381A	Filler Plate (R), Sedan use	1	
	0820 56 381	Filler Plate (R), Coupe use	1	
34	0259 56 881A	Filler Plate (L), Sedan use	1	
	0820 56 880	Filler Plate (L), Coupe use	1	

41	0820 56 330	REAR FRAME Ass'y (R)	1	
	2112 56 330	REAR FRAME Ass'y (R) For Arctic Spec. Model	1	Car No. 73747 $^{70}/_{12}$ ~ AddedAnew
42	0259 56 336	Spring Hanger (Frt., R)	1	
43	0259 56 370	Spring Hanger (Rr.)	1	
44	0820 56 420	Cross Member	1	
45	0259 56 451	Cross Member No. 4	1	
	2329 56 451	Cross Member No. 4 Emission Controlled Model	1	
46	2119 56 839	Hook, Rear (For Arctic Spec Model)	1	
47	0820 56 830	REAR FRAME Ass'y (L)	1	
48	0259 56 836	Spring Hanger (Frt., L)	1	
49	0259 56 370	Spring Hanger (Rr., L)	1	
50	0820 56 840	Silencer Hanger (Rr.)	1	
51	0118 56 241	Drain Plug	2	

57	2329 56 266B	Insulator No. 2	Emission Controlled Model	1
58	2329 56 267	Insulator No. 3		1
59	908047 6 14	Set Screw, Insulator		7
60	2329 56 269	Insulator No. 4		1
61	0111 40 358	Insulator		1
62	908047 6 14	Set Screw, Insulator		4
63	0820 56 791A	Protector		1
64	908681 5 12	Set Screw, Protector		6
65	0820 56 911	Pipe Protector No. 2		1
	2329 56 911	Pipe Protector No. 2 Emission Controlled Model		1
66	0820 56 912	Spacer		1
67	0820 56 913	Pipe Protector No. 1		1
	2329 56 913	Pipe Protector No. 1 Emission Controlled Model		1
68	908601 5 08	Set Screw, Pipe Protector		7
	99952 0500	Plain Washer		7

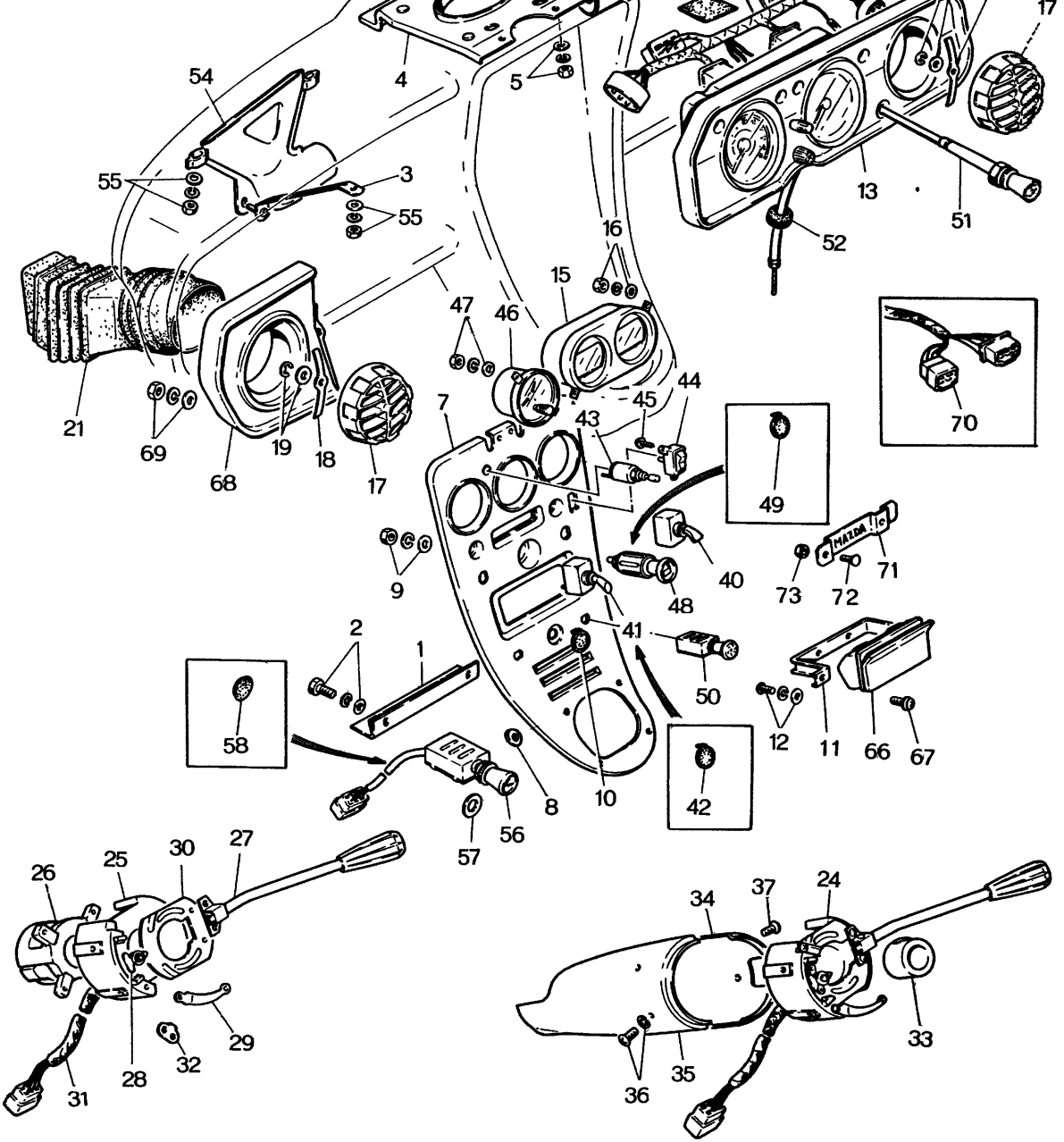
1
2
3
4
5
7
8
9
10
11
12
13
15
16
17
18
19
21
25
26
27
28
29
30
31
32
33
34
35
36
37
40
41
42
43
44
45
46
47
48
49
50
51
52
54
55
56
57
58
66
67
68
69
70
71
72
73
MAZDA

	99971 0500	Spring Washer	2
	99952 0500	Plain Washer	2
6	99805 0514	Bolt, Loud Speaker Bracket	2
	99952 0516	Plain Washer	2
	99971 0500	Spring Washer	2
7	0820 55 230B	Console Plate	1
8	0820 55 221	Washer, Console Plate	2
9	99906 0500	Nut, Console Plate	6
	99952 0516	Plain Washer	6
	99971 0500	Spring Washer	6
10	0820 55 225	Hole Cover, Cooler Switch	1
11	0820 55 240	Bracket, Ash Tray	1
12	99833 0508	Screw, Bracket	2
	99952 0500	Plain Washer	2
	99971 0500	Spring Washer	2
13	2123 55 260	Meter & Panel Ass'y (Km)	1
	2123 60 260	Meter & Panel Ass'y (Mile)	1
14	99906 0500	Nut, Meter & Panel	4
	99952 0516	Plain Washer	4

18	0820 55 362	Plate Spring	2	
19	99575 0400	Snap Ring, Louver	2	
	99952 0600B	Plain Washer	2	
20	0820 55 025B	Duct (R), Ventilator	1	
21	0820 55 026B	Duct (L), Ventilator	1	
22	0820 55 530I	Wire Harness	1	
•	0848 55 530	Wire Harness	1	Car No. 87931 $7\frac{1}{2}$ ~ X
23	0208 66 949	Protector Pad	2	
24	0820 55 580D	COMBINATION SWITCH Ass'y	1	
	0820 55 580E	COMBINATION SWITCH Ass'y	1	Car No. 65018 $70\frac{7}{8}$ ~ Δ
25	0208 55 581B	Body Upper	1	
26	0271 55 582	Body Lower	1	
27	2113 55 583	Switch Lever	1	
28	0275 75 563	Ratchet	1	
29	2981 75 565	Horn Contact	1	
30	2981 75 568	Support Plate	1	
31	2113 55 610	Switch Cord	1	
32	2113 55 584A	Bracket	1	

38	0820 55 550	SPEEDOMETER CABLE	1
39	0223 55 554	Grommet	1
40	0820 55 710B	Light Switch	1
	2119 55 710A	Light Switch (Side Lamps stay on when Head Lamps are Switched on)	1
41	0820 79 620	Fog Lamp Switch, Optional	1
42	0820 55 951	Hole Cover, Fog Lamp Switch Hole	1
43	0820 55 740	Map Lamp Switch	1
44	0820 55 750A	Antenna Switch	1
45	908336 4 12	Set Screw, Antenna Switch	2
46	0820 55 790A	Auto Clock	1
47	99906 0500	Nut, Auto Clock	1
	99952 0500	Plain Washer	1
	99971 0500	Spring Washer	1
48	0820 55 830A	Cigar Lighter	1
49	0257 55 952	Cover, Cigar Lighter Hole	1

	99952 0516	Plain Washer		8	
	99971 0500	Spring Washer		8	
56	0820 60 560	Hazard Warning Switch	Optional	1	Car No. 87150 $71/2 \sim X$
	0848 60 560	Hazard Warning Switch		1	
57	99951 0818	Plain Washer, Hazard Switch		1	
58	0187 53 202	Grommet, Hazard Switch Hole		1	
59	0820 60 870A	Wiper Relay		1	
60	908066 5 12	Set Screw, Wiper Relay		1	
	0820 66 330A	MAP LAMP Ass'y		1	
61	0820 66 331A	Body		1	
62	0820 66 332	Cover		1	
63	0820 66 333	Lens		1	
64	0820 66 334	Bulb		2	
65	908332 3 10	Set Screw, Map Lamp		2	
•	99833 0310	Screw, Map Lamp		2	Car No. 93414 $71/3 \sim O$
66	0820 68 180	Ash Tray		1	
67	908341 4 16	Set Screw, Ash Tray		2	
68	0820 68 531	Decoration Panel		1	

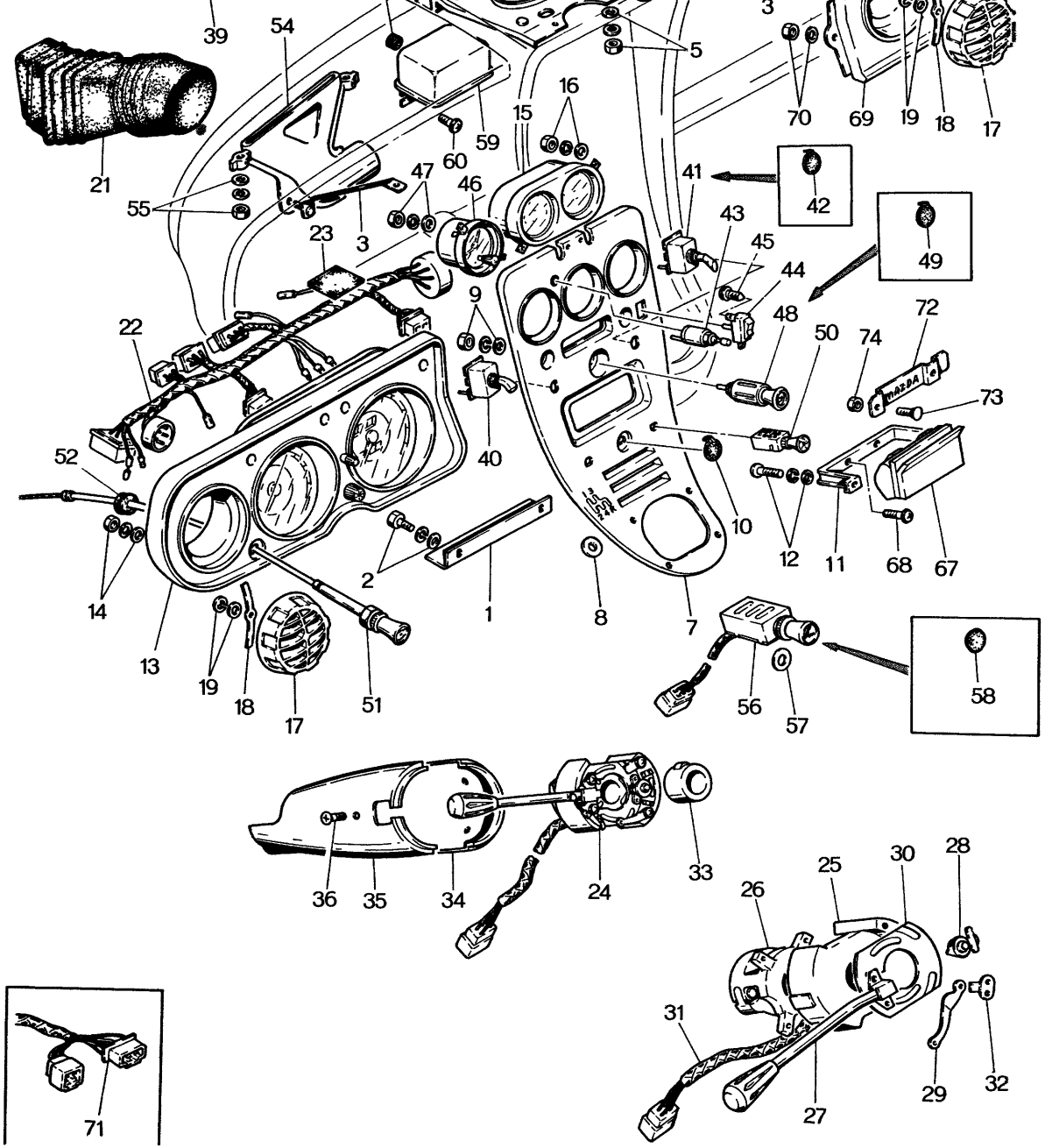
39
54
21
55
59
60
15
16
5
3
70
69
19
18
17
47
46
23
3
41
42
43
45
44
49
9
48
50
72
74
73
22
40
52
10
12
11
68
67
14
2
1
8
7
13
19
18
17
51
56
57
58
36
35
34
24
33
26
25
30
28
31
27
29
32
71

5	99906 0500	Nut, Loud Speaker Bracket	2
	99952 0500	Plain Washer	2
	99971 0500	Spring Washer	2
6	99805 0514	Bolt, Loud Speaker Bracket	2
	99952 0516	Plain Washer	2
	99971 0500	Spring Washer	2
7	0820 55 230B	Console Plate	1
8	0820 55 221	Washer	1
9	99906 0500	Nut, Console Plate	6
	99952 0516	Plain Washer	6
	99971 0500	Spring Washer	6
10	0820 55 225	Hole Cover	1
11	0820 55 240	Bracket, Ash Tray	1
12	99833 0508	Screw, Bracket	2
	99952 0500	Plain Washer	2
	99971 0500	Spring Washer	2
13	2112 55 260	Meter & Panel Ass'y (Km)	1
	2113 55 260	Meter & Panel Ass'y (Mile)	1
14	99906 0500	Nut, Meter & Panel	4
	99952 0516	Plain Washer	4

17	0820 55 361	Louver	2	
18	0820 55 362	Plate Spring	2	
19	99575 0400	Snap Ring	2	
	99952 0600B	Plain Washer	2	
20	0820 55 025B	Duct (R), Ventilator	1	
21	0820 55 026B	Duct (L), Ventilator	1	
22	2113 55 530E	Wire Harness	1	
23	0208 66 949	Protector Pad	2	
24	2113 55 580B	COMBINATION SWITCH Ass'y	1	
•	2113 55 580C	COMBINATION SWITCH Ass'y	1	Car No. 64215 $^{70}/_{7}$ ~ △
25	0208 55 581B	Body Upper	1	
26	0271 55 582	Body Lower	1	
27	2113 55 583	Switch Lever	1	
28	0275 75 563	Ratchet	1	
29	2981 75 565	Horn Contact	1	
30	2981 75 568	Support Plate	1	
31	2113 55 610	Switch Cord	1	
32	2113 55 584A	Bracket	1	

38	0111 66 692	Grommet	1	
39	2113 55 556	Clip	1	Car No. 87594 71½ ~ Discarded
40	0820 55 710B	Light Switch Side Lamp goes out when Head Lamp is lighted.	1	
	2119 55 710A	Light Switch Side Lamp stays on when Head Lamp is lighted.	1	
41	0820 79 620	Fog Lamp Switch, Optional	1	
42	0820 55 951	Cover, Fog Lamp Switch Hole	1	
43	0820 55 740	Map Lamp Switch	1	
44	0820 55 750A	Antenna Switch	1	
45	908336 4 12	Set Screw, Antenna Switch	2	
46	0820 55 790A	Auto Clock	1	
	2113 55 790	Auto Clock, Arctic Spec. Model	1	
47	99906 0500	Nut, Auto Clock	2	
	99952 0500	Plain Washer	2	
	99971 0500	Spring Washer	2	
48	0820 55 830A	Cigar Lighter	1	
49	0257 55 952	Cover, Cigar Lighter Hole	1	
50	0820 55 840A	Heater Switch	1	
51	0820 55 970	Choke Wire	1	
	2113 55 970	Choke Wire, Arctic Spec. Model	1	
52	0111 41 692	Grommet	1	

57	99951 0818	Plain Washer, Hazard Switch	1	
58	0187 53 202	Grommet, Hazard Switch Hole	1	
59	0820 60 870A	Wiper Relay	1	
60	908066 5 12	Set Screw, Wiper Relay	2	
61	99686 0800	Protector	1	
	0820 66 330A	MAP LAMP Ass'y	1	
62	0820 66 331A	Body	1	
63	0820 66 332	Cover	1	
64	0820 66 333	Lens	1	
65	0820 66 334	Bulb	2	
66	908332 3 10	Set Screw, Map Lamp	2	
•	99833 0310	Screw, Map Lamp	2	Car No. 93414 $71/3 \sim$ O
67	0820 68 180	Ash Tray	1	
68	908340 4 16	Set Screw, Ash Tray	2	
69	2113 68 531	Decoration Panel	1	
70	99906 0400	Nut, Decoration Panel	2	
	99971 0400	Spring Washer	2	

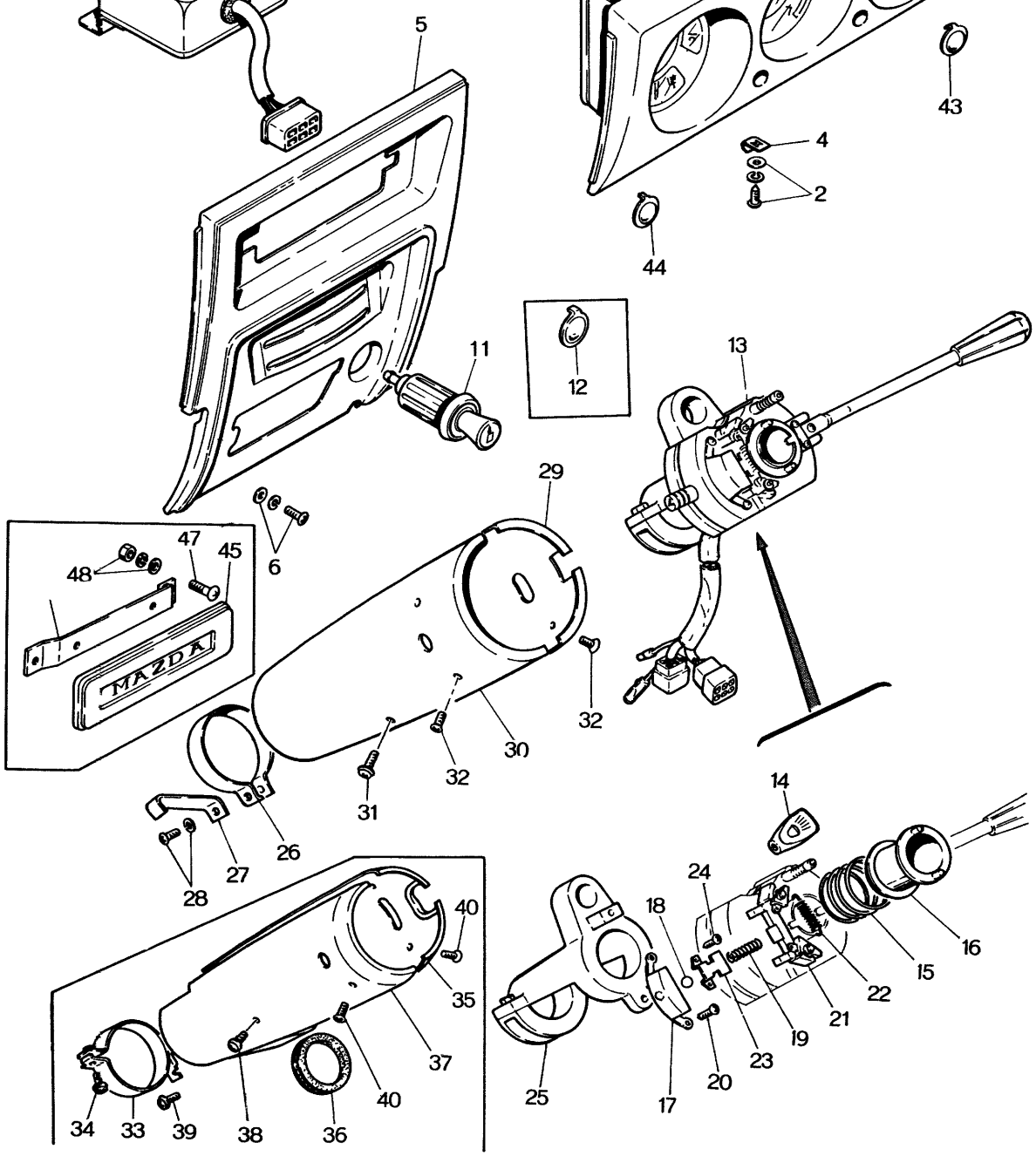
5
43
4
2
44
11
12
13
29
47
45
48
6
MAZDA
32
30
32
31
26
27
28
14
24
18
40
35
37
40
34
33
39
38
36
25
17
20
23
19
21
22
15
16

6	99839 0516B	Screw, Center Panel	2	
	908396 5 14B	Screw Set	2	Car No. 64624 7/8 ~ ○
	99952 0500B	Plain Washer	2	
	99971 0500	Spring Washer	2	Car No. 64624 7/8 ~ Discarded
7	0822 55 550	SPEEDOMETER CABLE	1	
8	0223 55 554	Grommet	1	
9	0845 60 050	Choke Wire	1	
10	0111 41 692	Grommet	1	
11	0317 60 720	CIGARETTE LIGHTER	1	
	0317 60 725	Protector	1	
12	0257 55 952	Hole Cover, Cigarette Lighter	1	

19	0317 60 256	Arm Set Spring		1	
20	0317 60 257	Tapping Screw		2	
21	0317 60 258	Arm		1	
22	0317 60 259	Ratchet Spring		1	
23	0317 60 261	Set Plate		1	
24	0317 60 262	Tapping Screw		2	
25	0324 60 265	Band		1	
• 26	0317 60 321	Support, Column Cover		1	Car No. 76792 $^{70}/_{12}$ ~ Discarded
• 27	0317 60 322	Clip		1	Car No. 76792 $^{70}/_{12}$ ~ Discarded
• 28	908332 4 12	Set Screw, Support		1	Car No. 76792 $^{70}/_{12}$ ~ Discarded
• 29	0324 60 335 00	Column Cover (R)		1	© Black
• 30	0324 60 345 00	Column Cover (L)		1	© Black
31	908332 4 12B	Set Screw, Column Cover		1	
32	99832 0408B	Screw, Column Cover		1	
33	0305 60 320A	Support, Column Cover	Steering Lock use	1	
34	908332 4 12	Set Screw		1	
• 35	2399 60 335 00	Column Cover (R)		1	© Black
36	2370 60 336	Grommet		1	

	99952 0600	Plain Washer	2
	99971 0600	Spring Washer	2
43	0259 55 951	Hole Cover, Fog Lamp Switch	1
44	0820 55 951	Hole Cover	1
45	0316 66 865	Ornament	1
46	0316 66 890	Bracket	1
47	908390 5 14B	Set Screw	2
48	99906 0500	Nut	1
	99952 0500	Plain Washer	1
	99971 0500	Spring Washer	1

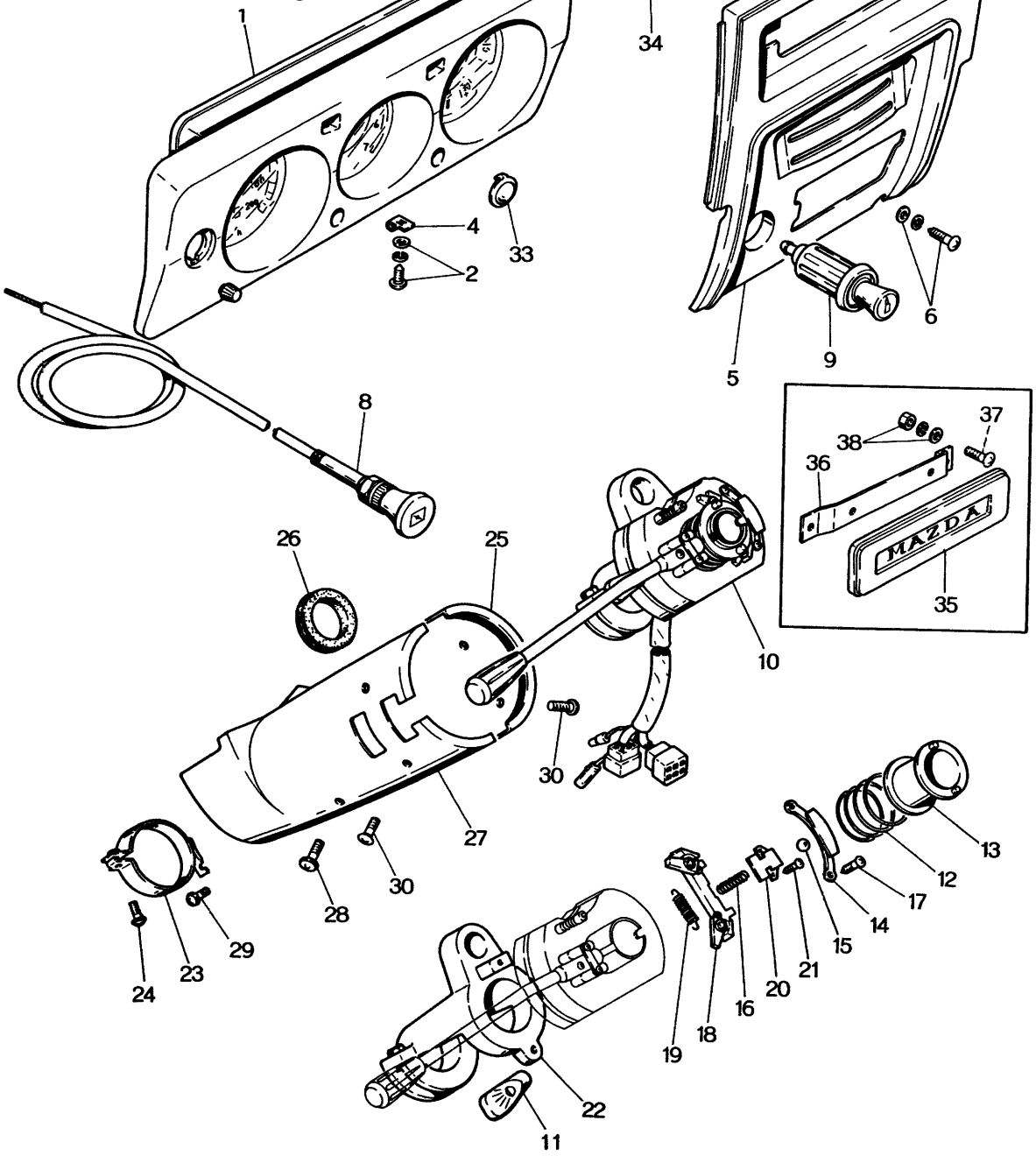
1
34
4
33
2
6
5
9
8
37
38
36
MAZDA
35
26
25
10
30
27
28
30
13
12
17
14
15
21
20
16
18
19
29
24
23
22
11

	5	2370 55 510	Center Panel	1	
	6	99839 0516B	Screw, Center Panel	2	
		908396 5 14B	Screw Set	2	Car No. 64624 $^{70}/_{8}$ ~ ○
		99952 0500B	Plain Washer	2	
		99971 0500	Spring Washer	2	Car No. 64624 $^{70}/_{8}$ ~ Discarded
	7	2045 55 550	Speedometer Cable	1	
	8	2113 55 970	Choke Wire	1	
		2124 55 970	Choke Wire	1	
•		2113 55 970	Choke Wire	1	Car No. 73747 $^{70}/_{12}$ ~ ○
•		0111 41 692	Grommet	1	
	9	0317 60 720	CIGARETTE LIGHTER	1	
		0317 60 725	Protecter	1	
	10	2350 60 250	COMBINATION SWITCH	1	
		2370 60 250	COMBINATION SWITCH With Passing Switch	1	
	11	0317 60 251	Knob, Light Switch	1	
	12	0317 60 252	Spring	1	

		Ratchet Spring	1	
20	0317 60 261	Set Plate	1	
21	0317 60 262	Tapping Screw	2	
22	0324 60 265	Band	1	
23	0305 60 320A	Support	1	
24	908332 4 12	Set Screw	1	
25	2370 60 335A-00	Column Cover (R)	1	© Black
	2410 60 335 - 00	Column Cover (R)	1	Car NO. 64624 $^{70}/_{8}$ ~ ○ © Black
26	2370 60 336	Grommet	1	
27	2370 60 345A-00	Column Cover (L)	1	© Black
	2410 60 345 - 00	Column Cover (L)	1	Car NO. 64624 $^{70}/_{8}$ ~ ○ © Black
28	908332 4 12B	Set Screw, Column Cover	3	
29	908336 4 08	Set Screw, Column Cover	1	
30	99832 0408B	Screw, Column Cover	4	
31	0820 60 870A	Wiper Switch Relay	1	
32	99906 0600	Nut, Wiper Switch Relay	2	
	99952 0600	Plain Washer	2	
	99971 0600	Spring Washer	2	
33	0259 55 951	Hole Cover, Fog Lamp Switch	1	
34	0187 66 991	Protector	1	

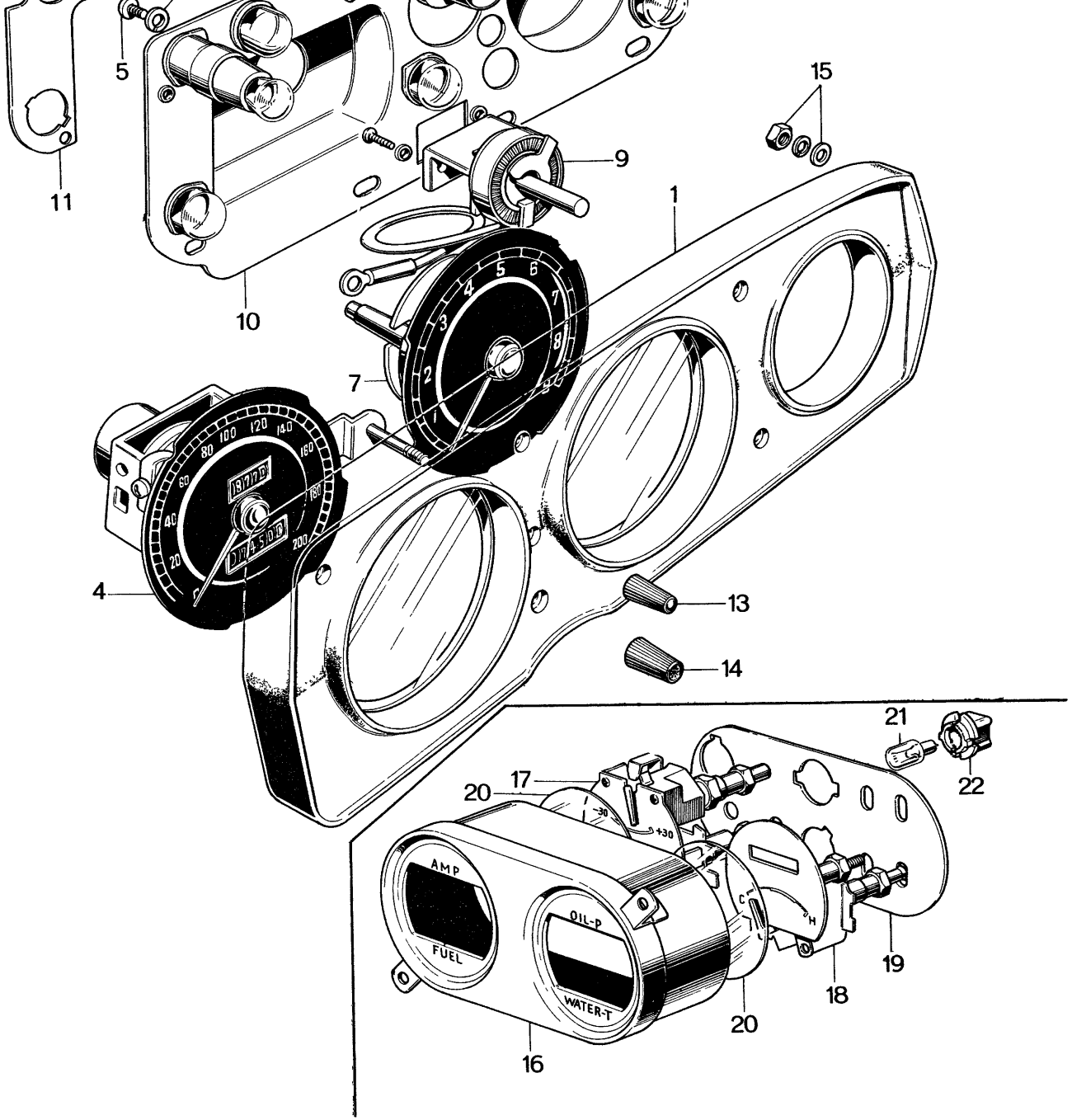
5
11
10
15
9
1
7
4
13
14
21
22
17
20
AMP
FUEL
OIL-P
WATER-T
C
H
19
18
20
16

	2123 60 310	Speedometer (Mile)	1
5	0820 55 311	Screw, Speedometer	2
6	99971 0400	Spring Washer	2
7	0820 55 320	Tachometer	1
8	99907 0500	Nut	2
	99971 0500	Spring	2
9	0820 55 770	Panel Light Resistor	1
10	0820 55 330	Bottom Plate	1
11	0820 55 344	Print Circuit	1
12	0820 55 331	Tapping Screw, Print Circuit	13
13	0820 55 275	Knob, Trip Meter	1
14	0233 55 522	Knob, Panel Resister	1
15	99906 0500	Nut, Meter Panel	4
	99952 0516	Plain Washer	4
	99971 0500	Spring Washer	4

21	99701 6030	Bulb	3
22	0259 55 261	Socket	3

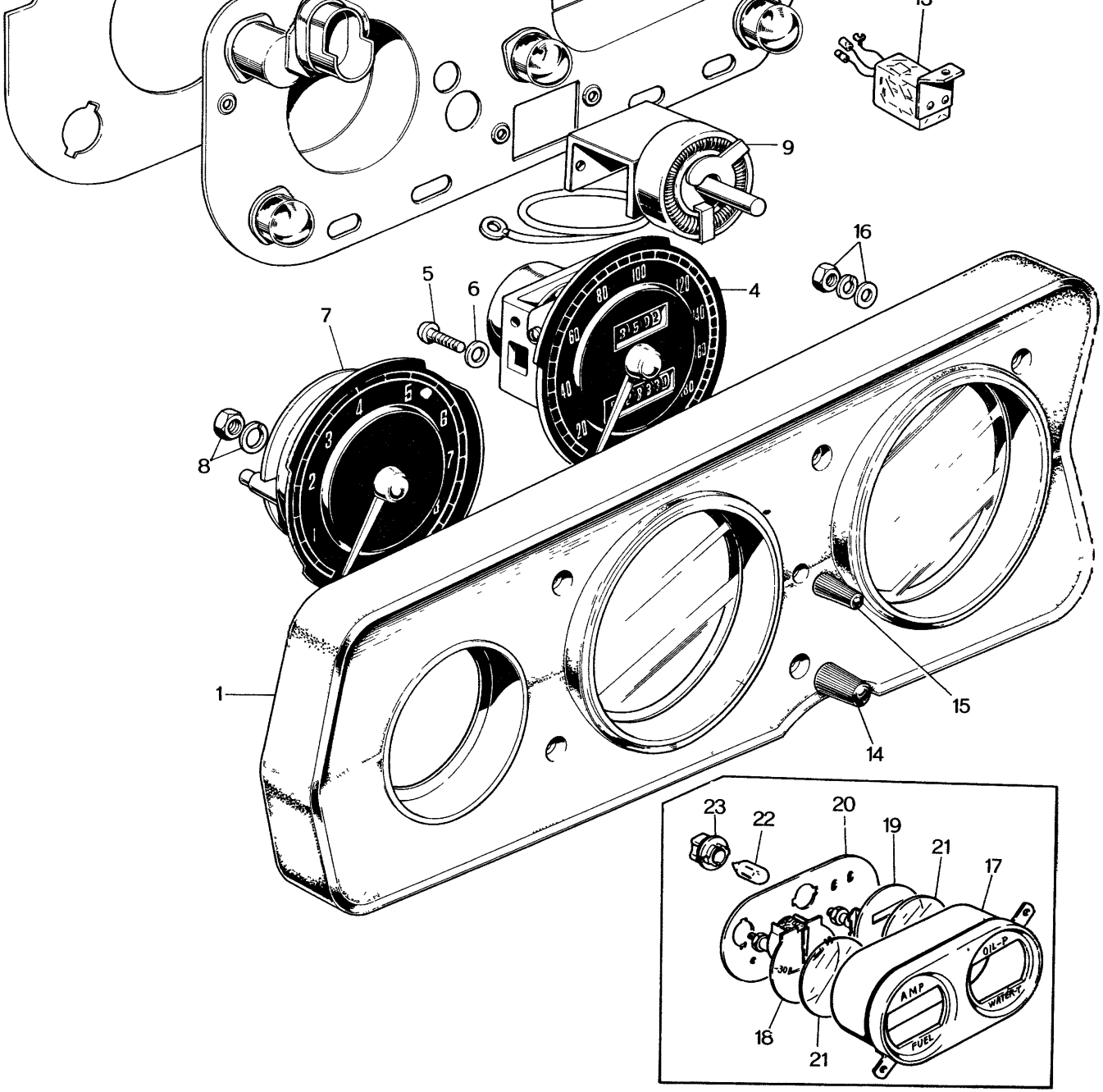
1
4
5
6
7
8
9
13
14
15
16
17
18
19
20
21
22
23
AMP
OIL-P
WATER-T
FUEL

	2113 55 310	Speedometer (Mile)	1
5	0820 55 311	Screw, Speedometer	2
6	99971 0400	Spring Washer	2
7	0820 55 320	Tachometer	1
8	99907 0500	Nut	2
	99971 0500	Spring Washer	2
9	0820 55 770	Panel Light Resistor	1
10	2113 55 330	Bottom Plate	1
11	2113 55 344	Print Circuit	1
12	0820 55 331	Tapping Screw, Print Circuit	13
14	0820 55 275	Knob, Trip Meter	1
15	0233 55 522	Knob, Panel Light Resistor	1
16	99906 0500	Nut, Meter Panel	4
	99952 0516	Plain Washer	4
	99971 0500	Spring Washer	4

21	0820 55 372	Front Glass	2
22	99701 6030	Bulb	3
23	0259 55 261	Socket	3

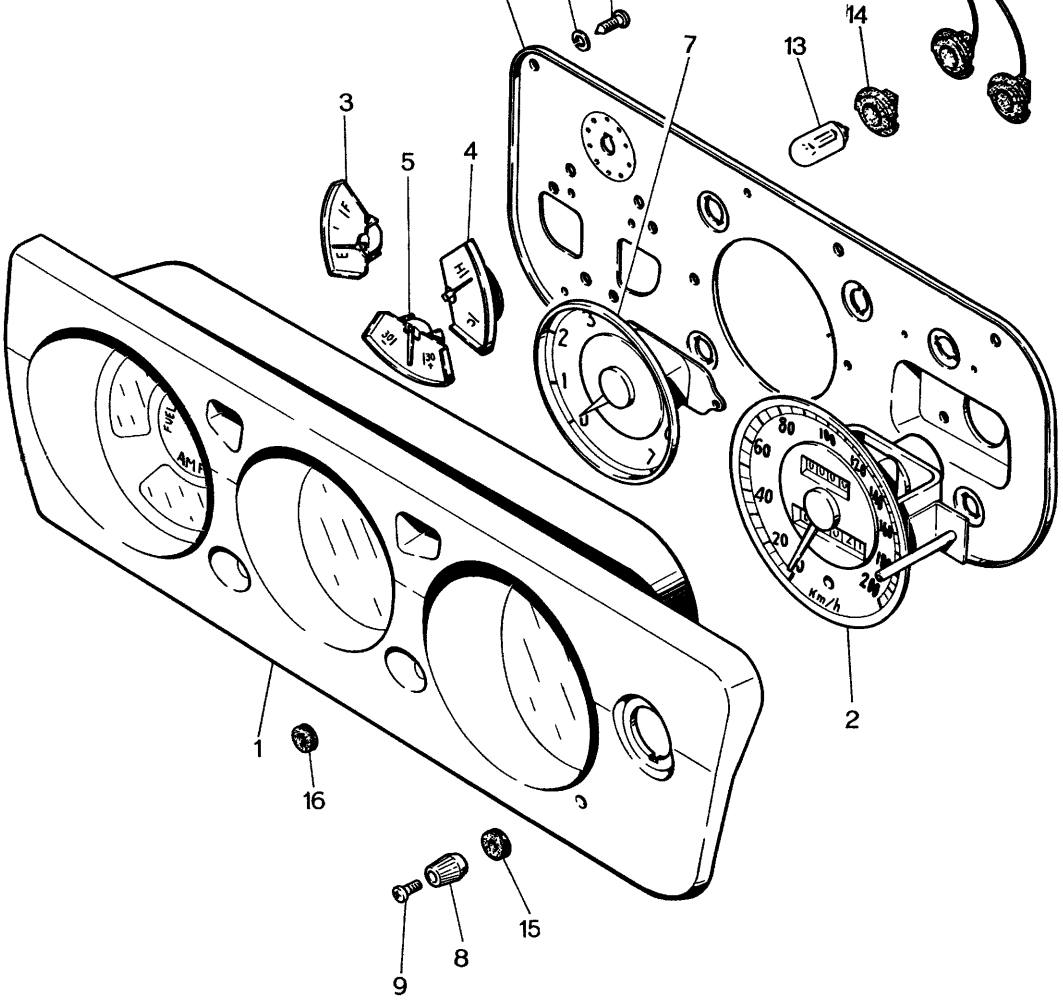
1
2
3
4
5
7
8
9
13
14
15
16
FUEL
AMP
Km/h

4	0317 75 023	Thermometer	1
5	0317 75 024	Ammeter	1
6	0326 75 025	Bottom Plate	1
7	0845 75 026	Tachometer	1
8	0824 75 149	Knob, Trip Meter	1
9	0824 75 150	Screw, Knob	1
10	0710 75 435	Spring Washer	7
11	0710 75 436	Tapping Screw	5
12	0326 75 060	Harness	1
13	99701 6030	Wedge Base Bulb 3W	11
14	0259 55 261	Wedge Base Socket	9
15	0326 75 011	Grommet	1
16	0326 75 012	Grommet	1

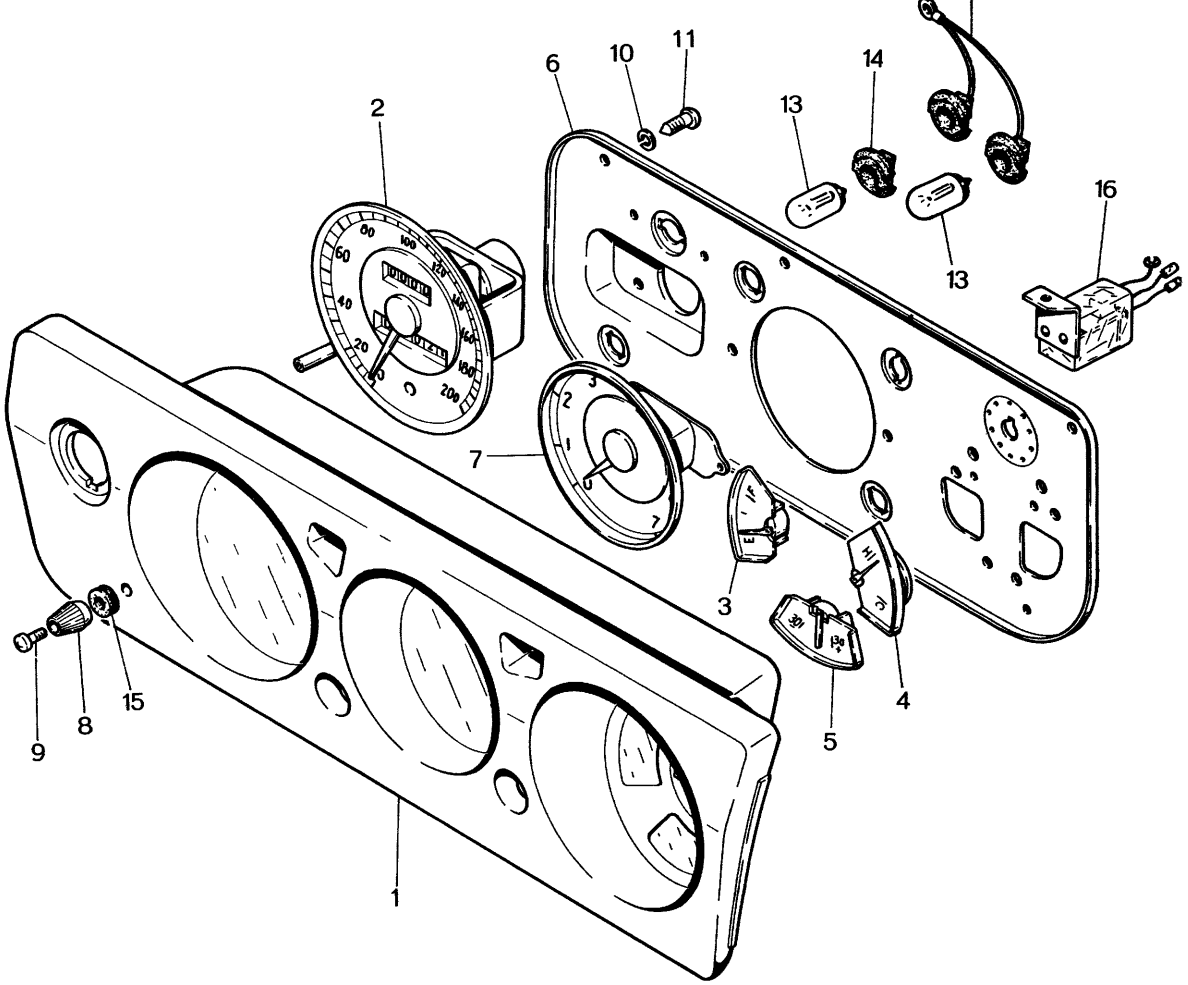
1
2
3
4
5
6
7
8
9
10
11
13
13
14
15
16

	2339 75 021	Speedometer (Mile),	Emission Controlled Model	1
3	0317 75 022	Fuel Meter		1
4	0317 75 023	Thermometer		1
5	0317 75 024	Ammeter		1
6	2410 75 025	Bottom Plate		1
7	0845 75 026	Tachometer		1
8	0824 75 149	Knob, Trip Meter		1
9	0824 75 150	Screw, Knob		1
10	0710 75 435	Spring Washer		5
11	0710 75 436	Tapping Screw		5
12	0326 75 060	Harness		1
13	99701 6030	Wedge Base Bulb		11
14	0259 55 261	Wedge Base Socket		9
15	0326 75 011	Grommet		1
16	2350 75 025	Relay, Emission Controlled Model		1

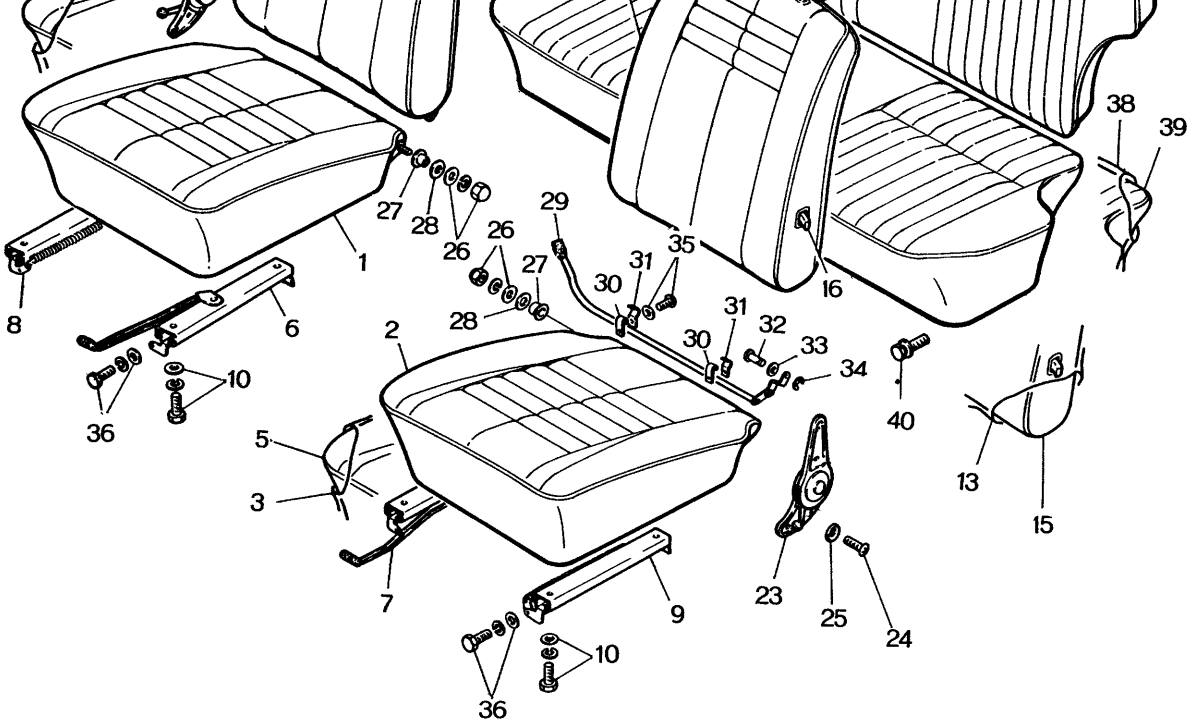
1
2
3
5
6
7
8
9
10
10
16
23
24
25
26
26
27
27
28
28
29
29
30
30
31
31
32
33
34
35
36
36
38
39
40
13
15

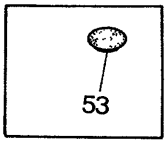
53

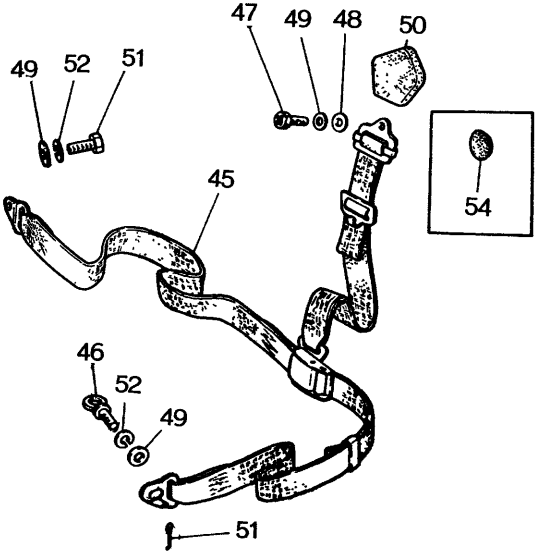
45
46
47
48
49
49
49
50
51
51
52
52
54

•	0820 57 700A 23 Black	FRONT SEAT (R) With Head Restraint "T" Type Dashboard Model	1	©
•	0820 57 700A 30 Brown			
•	0820 57 750B 23 Black	FRONT SEAT (L) With Head Restraint "T" Type Dashboard Model	1	©
•	0820 57 750B 30 Brown			
1		FRONT SEAT CUSHION (R)	1	©
•	0329 57 1100 27 Black			
•	0329 57 1100 28 Brown			
		FRONT SEAT CUSHION (R) "T" Type Dashboard Model	1	©
•	0820 57 310A 23 Black			
•	0820 57 310A 30 Brown			
2		FRONT SEAT CUSHION (L)	1	©
•	0329 57 1600 27 Black			
•	0329 57 1600 28 Brown			
		FRONT SEAT CUSHION (L) "T" Type Dashboard Model	1	©
•	0820 57 360A 23 Black			
•	0820 57 360A 30 Brown			
3	0820 57 114	Top Cover	2	
4		Trim (R)	1	©
•	0329 57 1150 27 Black			
•	0329 57 1150 28 Brown			
		Trim (R), "T" Type Dashboard Model	1	©
•	0820 57 315A 23 Black			
•	0820 57 315A 30 Brown			
5		Trim (L)	1	©
•	0329 57 1650 27 Black			
•	0329 57 1650 28 Brown			
		Trim (L), "T" Type Dashboard Model	1	©
•	0820 57 365A 23 Black			
•	0820 57 365A 30 Brown			
6	0820 57 125	Adjuster No. 1 (R)	1	
7	0820 57 175	Adjuster No. 1 (L)	1	
8	0820 57 126	Adjuster No. 2 (R)	1	
9	0820 57 176	Adjuster No. 2 (L)	1	
10	99801 0820	Bolt, Adjuster	8	
	0223 57 691	Spring Washer	8	

		FRONT SEAT BACK (L) "T" Type Dashboard Model	1	©
	0820 57 780A 23	Black		
	0820 57 780A 30	Brown		
13	0820 57 534	Top Cover	2	
14		Trim (R)	1	©
•	0329 57 1350 27	Black		
•	0329 57 1350 28	Brown		
		Trim (R), "T" Type Dashboard Model	1	©
•	0820 57 735B 23	Black		
•	0820 57 735B 30	Brown		
15		Trim (L)	1	©
•	0329 57 1850 27	Black		
•	0329 57 1850 28	Brown		
		Trim (L), "T" Type Dashboard Model	1	©
•	0820 57 785B 23	Black		
•	0820 57 785B 30	Brown		
16	0305 88 009	Knob, Head Restraint	2	
17		Head Restraint (R)	1	©
•	0275 57 730A 27	Black		
•	0275 57 730A 28	Brown		
		Head Restraint (R) "T" Type Dashboard Model	1	©
•	0275 57 730A 23	Black		
•	0275 57 730A 30	Brown		
18		Head Restraint (L)	1	©
•	0275 57 7800 27	Black		
•	0275 57 7800 28	Brown		
		Head Restraint (L) "T" Type Dashboard Model	1	©
•	0275 57 7800 23	Black		
•	0275 57 7800 30	Brown		
19	0257 57 109	Cap, Head Restraint	4	
20	0213 69 250	Ash Tray	1	
21	99862 0425	Screw, Ash Tray	2	
22	0263 57 140	Reclining Knuckle (R)	1	
	0820 57 140	Reclining Knuckle (L), "T" Type Dashboard Model	1	
23	0263 57 190	Reclining Knuckle (R)	1	
	0820 57 190	Reclining Knuckle (L), "T" Type Dashboard Model	1	
24	0275 57 107	Screw, Reclining Knuckle, "T" Type Dashboard Model	8	
	2155 57 109	Screw, Reclining Knuckle	8	

30	0820 57 571	Bracket No. 1	2	
31	0820 57 572	Bracket No. 2	2	
32	0820 57 573	Pin	1	
33	0820 57 574	Washer	2	
34	99576 0400	"E" Type Stop Ring	1	
35	99833 0512	Screw, Bracket	2	
	99971 0500	Spring Washer	2	
36	908046 8 25	Set Bolt, Front Seat	8	
37		REAR SEAT CUSHION	1	©
	0329 57 200A-27	Black		
	0329 57 200A-28	Brown		
		REAR SEAT CUSHION "T" Type Dashboard Model	1	©
	0820 57 400C-23	Black		
	0820 57 400C-30	Brown		
38	0820 57 204	Top Cover	1	
39		Trim	1	©
	0329 57 210A-27	Black		
	0329 57 210A-28	Brown		
		Trim, "T" Type Dashboard Model	1	©
	0820 57 410C-23	Black		
	0820 57 410C-30	Brown		

	0329 57 260A-27 Black 0329 57 260A-28 Brown	Trim	1	©
	0820 57 460D-23 Black 0820 57 460D-30 Brown	Trim, "T" Type Dashboard Model	1	©
44	907996 6 20	Set Screw, Rear Seat Back	2	
45	0820 57 900A-00	FRONT SAFETY BELT	2	© Black
•	0820 57 900B-00	FRONT SAFETY BELT	2	Car No. 69544 $^{70}/_{11}$ ~ ○© Black
46	99023 3524	Bolt	4	
47	2981 57 976	Screw	2	
48	2981 57 978	Spacer	2	
49	0223 78 147	Washer	6	
50	0223 78 149	Cover	2	
52	99201 3500	Spring Washer	4	
53	99301 1100	Cap, Rear Safety Belt Hole	6	
54	99302 1100	Cap, Front Safety Belt	2	

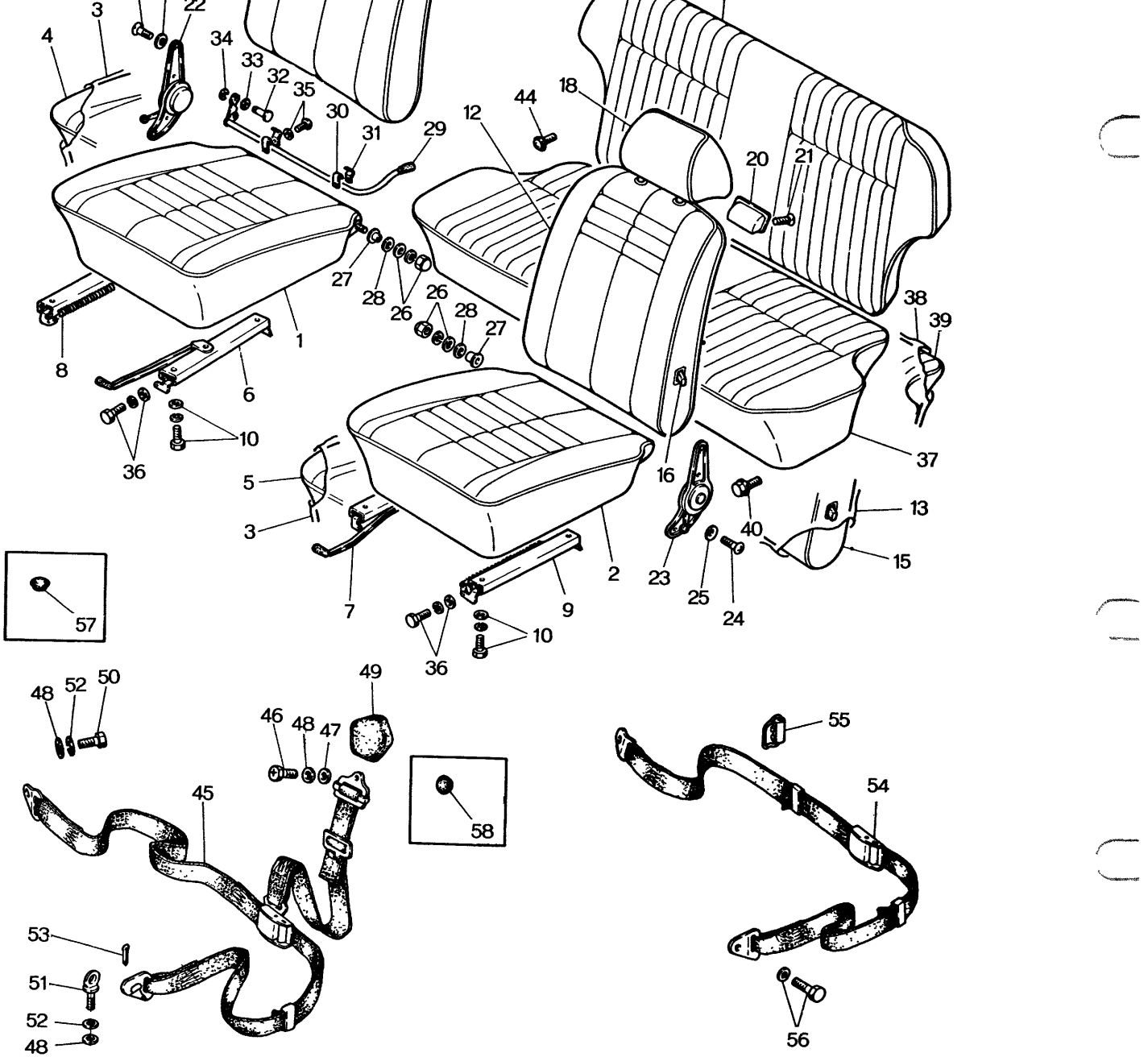
1
2
3
4
5
6
7
8
9
10
12
13
15
16
18
20
21
22
23
24
25
26
27
28
29
30
31
32
33
34
35
36
37
38
39
40
44
45
46
47
48
49
50
51
52
53
54
55
56
57
58

	2410 57 5000-27 Black 2410 57 5000-28 Brown	FRONT SEAT (R)	Without Head Restraint	1	©
	2410 57 5500-27 Black 2410 59 5500-28 Brown	FRONT SEAT (L)		1	©
	2113 57 700A-23 Black 2113 57 700A-30 Brown	FRONT SEAT (R)	"T" Type Dashboard Model With Head Restraint	1	©
	2113 57 750A-23 Black 2113 57 750A-30 Brown	FRONT SEAT (L)	Arctic Spec. Model	1	©
	2124 57 700A-23 Black 2124 57 700A-30 Brown	FRONT SEAT (R)	"T" Type Dashboard Model With Head Restraint	1	©
	2124 57 750A-23 Black 2124 57 750A-30 Brown	FRONT SEAT (L)		1	©
1	2410 57 1100-27 Black 2410 57 1100-28 Brown	FRONT SEAT CUSHION (R)		1	©
	2113 57 310A-23 Black 2113 57 310A-30 Brown	FRONT SEAT CUSHION (R)	"T" Type Dashboard, Arctic Spec. Model	1	©
	2124 57 310A-23 Black 2124 57 310A-30 Brown	FRONT SEAT CUSHION (R)	"T" Type Dashboard Model	1	©
2	2410 57 1600-27 Black 2410 57 1600-27 Brown	FRONT SEAT CUSHION (L)		1	©
	2113 57 360A-23 Black 2113 57 360A-30 Brown	FRONT SEAT CUSHION (L)	"T" Type Dashboard, Arctic Spec. Model	1	©
	2124 57 360A-23 Black 2124 57 360A-30 Brown	FRONT SEAT CUSHION (L)	"T" Type Dashboard Model	1	©
3	0820 57 114	Top Cover		2	
4	0329 57 1150-27 Black 0329 57 1150-28 Brown	Trim (R)		1	©
	0820 57 315A-23 Black 0820 57 315A-30 Brown	Trim (R)	"T" Type Dashboard Model	1	©
	2113 57 315A-23 Black 2113 57 315A-30 Brown	Trim (R)	"T" Type Dashboard, Arctic Spec. Model	1	©
5	0329 57 1650-27 Black 0329 57 1650-28 Brown	Trim (L)		1	©
	0820 57 365A-23 Black 0820 57 365A-30 Brown	Trim (L)	"T" Type Dashboard Model	1	©
	2113 57 365A-23 Black 2113 57 365A-30 Brown	Trim (L)	"T" Type Dashboard, Arctic Spec. Model	1	©

	0223 57 692	Plain Washer	8	
11		FRONT SEAT BACK (R)	1	©
	0329 57 1300-27	Black		
	0329 57 1300-28	Brown		
		FRONT SEAT BACK (R) "T" Type Dashboard, Arctic Spec. Model	1	©
	2113 57 730A-23	Black		
	2114 57 730A-30	Brown		
		FRONT SEAT BACK (R) "T" Type Dashboard Model	1	©
	2124 57 730A-23	Black		
	2124 57 730A-30	Brown		
12		FRONT SEAT BACK (L)	1	©
	0329 57 1800-27	Black		
	0329 57 1800-28	Brown		
		FRONT SEAT BACK (L) "T" Type Dashboard, Arctic. Spec. Model	1	©
	2113 57 780A-23	Black		
	2113 77 780A-30	Brown		
		FRONT SEAT BACK (L) "T" Type Dashboard Model	1	©
	2124 57 780A-23	Black		
	2124 57 780A-30	Brown		
13	0820 57 534	Top Cover	2	
14		Trim (R)	1	©
	0329 57 1350-27	Black		
	0329 57 1350-28	Brown		
		Trim (R) "T" Type Dashboard Model	1	©
	0820 57 735B-23	Black		
	0820 57 735B-30	Brown		
		Trim (R) "T" Type Dashboard, Arctic Spec. Model	1	©
	2113 57 735B-23	Black		
	2113 57 735B-30	Brown		
15		Trim (L)	1	©
	0329 57 1850-27	Black		
	0329 57 1850-28	Brown		
		Trim (L) "T" Type Dashboard Model	1	©
	0820 57 785B-23	Black		
	0820 57 785B-30	Brown		
		Trim (L) "T" Type Dashboard, Arctic Spec. Model	1	©
	2113 57 785B-23	Black		
	2113 57 785B-30	Brown		
16	0305 88 009	Knob, Head Restraint	2	©
17		Head Restraint (R)	1	©
	0275 57 730A-27	Black		
	0275 57 730A-28	Brown		
		Head Restraint (R) "T" Type Dashboard Model	1	©
	0275 57 730A-23	Black		
	0275 57 730A-30	Brown		

23	2113 57 190	Reclining Knuckle (L) "T" Type Dashboard Model	1
	2317 57 190	Reclining Knuckle (L)	1
24	0275 57 107	Screw, Reclining Knuckle "T" Type Dashboard Model	8
	2155 57 109	Screw, Reclining Knuckle	8
25	0820 57 109	Washer, Reclining Knuckle	4
26	99945 0800	Cap Nut, Hinge	2
	99952 0800	Plain Washer	2
	99971 0800	Spring Washer	2
27	0824 57 105	Bush, Hinge	2
28	0824 57 106	Washer, Hinge	2
29	2113 57 570	Knuckle Lever, Right Side	1
30	0820 57 571	Bracket No. 1	2
31	0820 57 572	Bracket No. 2	2
32	0820 57 573	Pin	1
33	0820 57 574	Washer	2
34	99576 0400	"E" Type Stop Ring	1
35	99833 0512	Screw, Bracket	2
	99971 0500	Spring Washer	2

38	0820 57 204	Top Cover	1		
39		Trim	1		©
•	0329 57 210A 17	Black			
•	0329 57 210A 18	Brown			
		Trim	1		©
•	0820 57 410C 23	Black "T" Type Dashboard Model			
•	0820 57 410C 30	Brown			
	2113 57 410C	Trim	1		©
•	2113 57 410C 23	Black "T" Type Dashboard, Arctic Spec. Model			
•	2113 57 410C 30	Brown			
40	908046 8 25	Set Bolt, Rear Seat Cushion	2		
41		REAR SEAT BACK	1		©
•	0329 57 2500 27	Black			
•	0329 57 2500 28	Brown			
	0820 57 450D	REAR SEAT BACK "T" Type Dashboard Model	1		©
		REAR SEAT BACK "T" Type Dashboard Model	1	Car No. 62706 $^{70}/_{7}$ ~ X	©
•	0820 57 450E 23	Black			
•	0820 57 450E 30	Brown			
	2113 57 450D	REAR SEAT BACK "T" Type Dashboard Arctic Spec.	1		©
		REAR SEAT BACK "T" Type Dashboard Model	1	Car No. 62706 $^{70}/_{7}$ ~ X	©
•	2113 57 450E 23	Black			
•	2113 57 450E 30	Brown			
42	0820 57 254	Top Cover	1		©
43		Trim	1		©
•	0329 57 260A 27	Black			
•	0329 57 260A 28	Brown			
		Trim "T" Type Dashboard Model	1		©
•	0820 57 460D 23	Black			
•	0820 57 460D 30	Brown			
		Trim "T" Type Dashboard, Arctic Spec. Model	1		©
•	2113 57 460D 23	Black			
•	2113 57 460D 30	Brown			
44	907996 6 20	Set Screw, Rear Seat Back	2		

51	2952 57 815	Eye Bolt	4	
52	99201 3500	Spring Washer	4	
53	99221 2010	Split Pin	4	
54	0223 78 200B-00	REAR SAFETY BELT	2	© Black
•	0223 78 200C-00	REAR SAFETY BELT	2	Car No. 69544 $^{70}/_{11}$ ~ ○ © Black
55	0813 57 955A	Belt Roller	2	
56	99023 3524	Bolt	4	
	99201 3500	Spring Washer	4	
57	99301 1100	Cap, Rear Safety Belt Hole	6	
58	99302 1100	Cap, Front Safety Belt Hole	2	

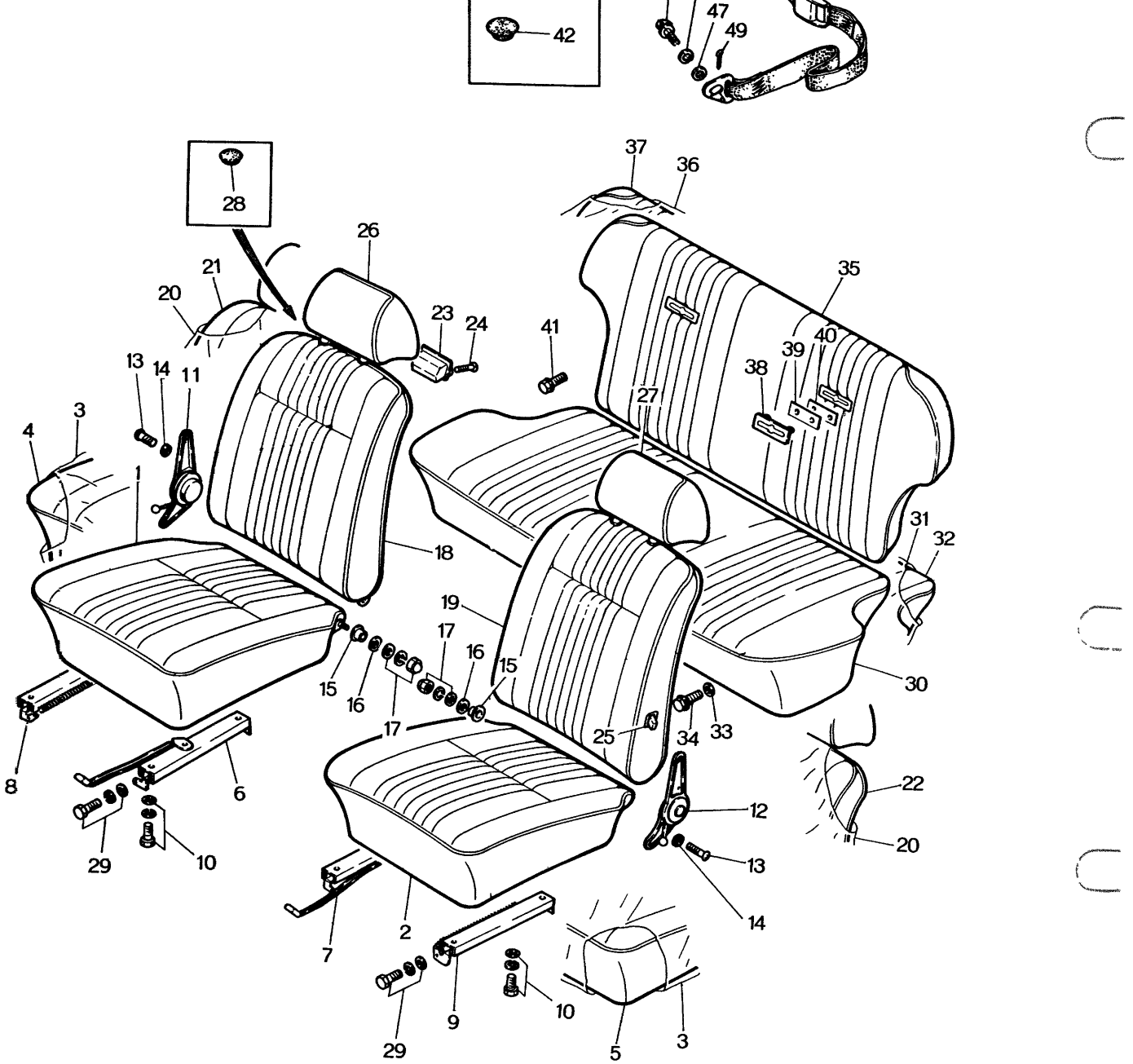
42
47
49
28
37
36
26
21
20
23
24
41
35
13
14
11
39
40
38
27
4
3
1
31
32
18
19
17
16
15
15
16
17
30
25
34
33
8
6
22
12
29
10
13
20
14
7
2
9
10
29
5
3

•	2417 57 7000 23 Black 2417 57 7000 30 Brown	FRONT SEAT (R)	With Head Restraint Arctic Spec. Model	1	©
•	2417 57 7500 23 Black 2417 57 7500 30 Brown	FRONT SEAT (L)		1	©
1		FRONT SEAT CUSHION (R)		1	©
•	0848 57 1100 23 Black 0848 57 1100 30 Brown				
		FRONT SEAT CUSHION (R)	Arctic Spec. Model	1	©
•	2417 57 1100 23 Black 2417 57 1100 30 Brown				
2		FRONT SEAT CUSHION (L)		1	©
•	0848 57 1600 23 Black 0848 57 1600 30 Brown				
		FRONT SEAT CUSHION (L)	Arctic Spec. Model	1	©
•	2417 57 1600 23 Black 2417 57 1600 30 Brown				
3	0820 57 114	Top Cover		2	
4		Trim (R)		1	©
•	0848 57 1150 23 Black 0848 57 1150 30 Brown				
		Trim (R)	Arctic Spec. Model	1	©
•	2417 57 1150 23 Black 2417 57 1150 30 Brown				
5		Trim (L)		1	©
•	0848 57 1650 23 Black 0848 57 1650 30 Brown				
		Trim (L)	Arctic Spec. Model	1	©
•	2417 57 1650 23 Black 2417 57 1650 30 Brown				
6	0820 57 125	Adjuster No. 1 (R)		1	
7	0820 57 175	Adjuster No. 1 (L)		1	
8	0820 57 126	Adjuster No. 2 (R)		1	
9	0820 57 176	Adjuster No. 2 (L)		1	

14	0820 57 109	Washer, Reclining Knuckle	4	
15	0824 57 105	Bush, Hinge	2	
16	0824 57 106	Washer, Hinge	2	
17	99945 0800	Cap Nut, Hinge	2	
	99952 0800	Plain Washer	2	
	99971 0800	Spring Washer	2	
18		FRONT SEAT BACK (R)	1	©
•	0848 57 1300 23	Black		
•	0848 57 1300 30	Brown		
		FRONT SEAT BACK (R) Arctic Spec. Model	1	©
•	2417 57 1300 23	Black		
•	2417 57 1300 30	Brown		
19		FRONT SEAT BACK (L)	1	©
•	0848 57 1800 23	Black		
•	0848 57 1800 30	Brown		
		FRONT SEAT BACK (L) Arctic Spec. Model	1	©
•	2417 57 1800 23	Black		
•	2417 57 1800 30	Brown		
20	0820 57 534	Top Cover	2	
21	0848 57 135	Trim (R)	1	©
		Trim (R)	1	Car No. 57510 $^{70}/_{4}$ ~ ○©
•	0848 57 135A 23	Black		
•	0848 57 135A 30	Brown		
		Trim (R) Arctic Spec. Model	1	©
•	2417 57 1350 23	Black		
•	2417 57 1350 30	Brown		
22	0848 57 185	Trim (L)	1	©
•		Trim (L)	1	Car No. 57510 $^{70}/_{4}$ ~ ○©
•	0848 57 185A 23	Black		
	0848 57 185A 30	Brown		
•		Trim (L) Arctic Spec. Model	1	©
•	2417 57 1850 23	Black		
	2417 57 1850 30	Brown		
23	0213 69 250	Ash Tray	1	
24	99862 0425	Screw, Ash Tray	2	
25	0305 88 009	Knob, Head Restraint	2	

30		REAR SEAT CUSHION	1		©
•	0326 57 4000 23	Black			
•	0326 57 4000 30	Brown			
		REAR SEAT CUSHION	1		©
•	2417 57 4000 23	Black Arctic Spec. Model			
•	2417 57 4000 30	Brown			
31	0259 88 209	Top Cover	1		
32		Trim	1		©
•	0326 88 4000 23	Black			
•	0326 88 4000 30	Brown			
		Trim	1		©
•	2417 88 4000 23	Black Arctic Spec. Model			
•	2417 88 4000 30	Brown			
33	0317 57 015	Washer, Rear Seat Cushion	2		
34	908042 8 25	Set Screw, Rear Seat Cushion	2		
35	0326 57 450	REAR SEAT BACK	1		
		REAR SEAT BACK	1	Car No. 62706 $^{70}/_{7}$ ~ X	©
•	0326 57 450A 23	Black			
•	0326 57 450A 30	Brown			
		REAR SEAT BACK, Arctic Spec Model	1		©
•	2417 57 4500 23	Black			
•	2417 57 4500 30	Brown			
36	0259 57 229	Top Cover	1		
37		Trim	1		©
•	0326 88 4500 23	Black			
•	0326 88 4500 30	Brown			
		Trim	1		©
•	2417 88 4500 23	Black Arctic Spec. Model			
•	2417 88 4500 30	Brown			
38	0317 88 081	Bottom	2		
39	0317 88 082	Spacer	2		

•	43	2981 57 970B 00	FRONT SAFETY BELT	2	© Black
	44	2952 57 815	Eye Bolt	4	
	45	2981 57 976	Screw	2	
	46	2981 57 978	Spacer	2	
	47	0223 78 147	Washer	6	
	48	0223 78 149	Cover	2	
	49	99221 2010	Split Pin	4	
	50	99201 3500	Spring Washer	4	

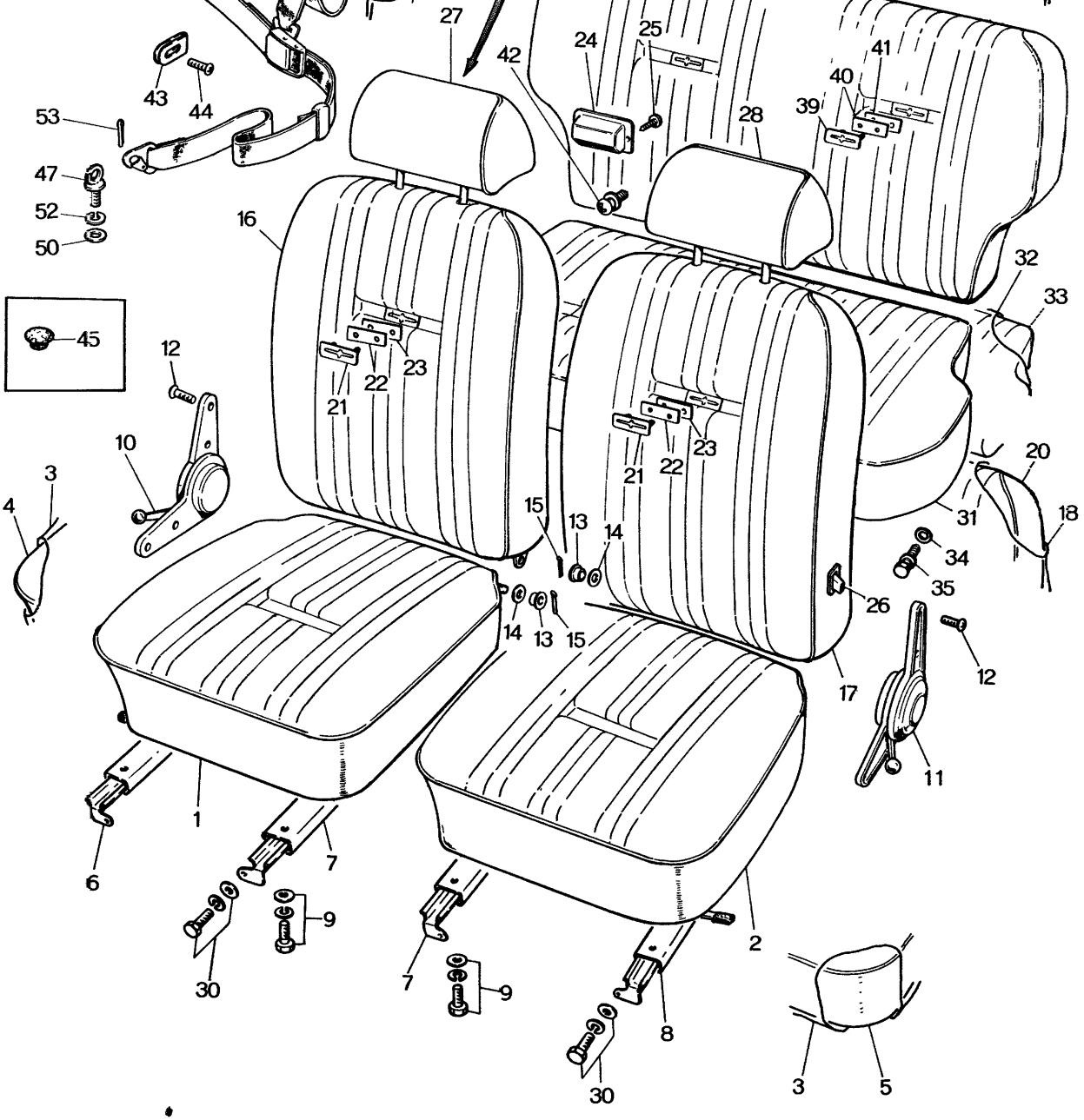
1
2
3
4
5
6
7
8
9
10
11
12
13
14
15
16
17
18
20
21
22
23
24
25
26
27
28
30
31
32
33
34
35
39
40
41
42
43
44
45
47
50
52
53

	2452 57 7000-27 Black 2452 57 7000-28 Brown	FRONT SEAT (R) } With Head Restraint Arctic Spec. Model	1	©
	2450 57 7500-27 Black 2450 57 7500-28 Brown	FRONT SEAT (L) } With Head Restraint Arctic Spec. Model	1	©
1	0317 57 7100-27 Black 0317 57 7100-28 Brown	FRONT SEAT CUSHION (R)	1	©
	2450 57 5100-27 Black 2450 57 5100-28 Brown	FRONT SEAT CUSHION (R) Arctic Spec. Model	1	©
2	0317 57 7600-27 Black 0317 57 7600-28 Brown	FRONT SEAT CUSHION (L)	1	©
	2450 57 5600-27 Black 2450 57 5600-28 Brown	FRONT SEAT CUSHION (L) Arctic Spec. Model	1	©
3	0259 88 250	Top Cover	2	
4	0317 88 2500-27 Black 0317 88 2500-28 Brown	Trim (R)	1	©
	2450 88 2500-27 Black 2450 88 2500-28 Brown	Trim (R) Arctic Spec. Model	1	©
5	0317 88 3500-28 Black 0317 88 3500-28 Brown	Trim (L)	1	©
	2450 88 3500-27 Black 2450 88 3500-28 Brown	Trim (L) Arctic Spec. Model	1	©
6	2158 88 270	Adjuster (R)	1	
7	2158 88 280	Adjuster	2	
8	2158 88 370	Adjuster (L)	1	
9	99801 0816	Bolt Adjuster	8	
	99971 0800	Spring Washer	8	
	99952 0816	Plain Washer	8	

16		FRONT SEAT BACK (R)	1		©
	0317 57 7200-27	Black			
	0317 57 7200-28	Brown			
		FRONT SEAT BACK (R) Arctic Spec. Model	1		©
	2450 57 5200-27	Black			
	2450 57 5200-28	Brown			
17		FRONT SEAT BACK (L)	1		©
	0317 57 7700-27	Black			
	0317 57 7700-28	Brown			
		FRONT SEAT BACK (L) Arctic Spec. Model	1		©
	2450 57 5700-27	Black			
	2450 57 5700-28	Brown			
18	0259 88 059	Top Cover	2		
19		Trim (R)	1		©
	0317 88 5500-27	Black			
	0327 88 5500-28	Brown			
		Trim (R) Arctic Spce. Model	1		©
	2450 88 5500-27	Black			
	2560 88 5500-28	Brown			
20		Trim (L)	1		©
	0317 88 6500-27	Black			
	0317 88 6500-28	Brown			
		Trim (L) Arctic Spec. Model	1		©
	2450 88 6500-27	Black			
	2450 88 6500-28	Brown			
21	0317 88 081	Bottom	2		
22	0317 88 082	Spacer	2		
23	0317 88 083	Stopper	2		
24	0259 68 250	Ash Tray	1		
25	99864 0408	Tapping Screw, Ash Tray	2		
•	99864 0406	Tapping Screw, Ash Tray	2	Car No. 97194 $^{71}/_{5}$ ~ ○	
26	0305 88 009	Knob, Head Restraint	2		
27		Head Restraint (R)	1		©
	2158 57 7900 27	Black			
	2158 57 7900 28	Brown			

				8	
31		REAR SEAT CUSHION			
	0317 57 2000-27	Black		1	©
	0317 57 2000-28	Brown			
		REAR SEAT CUSHION			
	2450 57 2000-27	Black	Arctic Spec. Model	1	©
	2450 57 2000-28	Brown			
32	0259 88 209		Top Cover	1	
33			Trim		
	0317 88 2000-27	Black		1	©
	0317 88 2000-28	Brown			
			Trim		
	2450 88 2000-27	Black	Arctic Spec. Model	1	©
	2450 88 2000-28	Brown			
34	0317 57 015		Washer, Rear Seat Cushion	2	
35	908042 8 25		Set Screw, Rear Seat Cushion	2	
36			REAR SEAT BACK		
	0317 57 2500-27	Black		1	©
	0317 57 2500-28	Brown			
	2450 57 250		REAR SEAT BACK	1	©
			REAR SEAT BACK	1	Car No. 62706 ⁷⁰/₇ ~ X ©
	2450 57 250A-27	Black			
	2450 57 250A-28	Brown			
37	0259 88 229		Top Cover	1	
38			Trim	1	©
	0317 57 2500-27	Black			
	0317 57 2500-28	Brown			
			Trim	1	©
	2450 88 2200-27	Black	Arctic Spec. Model		
	2450 88 2000-28	Brown			
39	0317 88 081		Bottom	2	

44	99861 0412	Tapping Screw, Belt Holder	2	
45	99301 1100	Cap	6	
46	2981 57 970B-00	FRONT SAFETY BELT	2	© Black
47	2952 57 815	Eye Bolt	4	
48	2981 57 976	Screw	2	
49	2981 57 978	Spacer	2	
50	0223 57 147	Washer	2	
51	0223 78 149	Cover	2	
52	99201 3500	Spring Washer	4	
53	99221 2010	Split Pin	4	
54	0223 78 200B-00	REAR SAFETY BELT	2	© Black
•	0223 78 200C-00	REAR SAFETY BELT	2	Car No. 69544 $^{70}/_{11}$ ~ ○© Black
55	0813 57 955A	Belt Roller	2	
56	99023 3524	Bolt	4	
	99201 3500	Spring Washer	4	

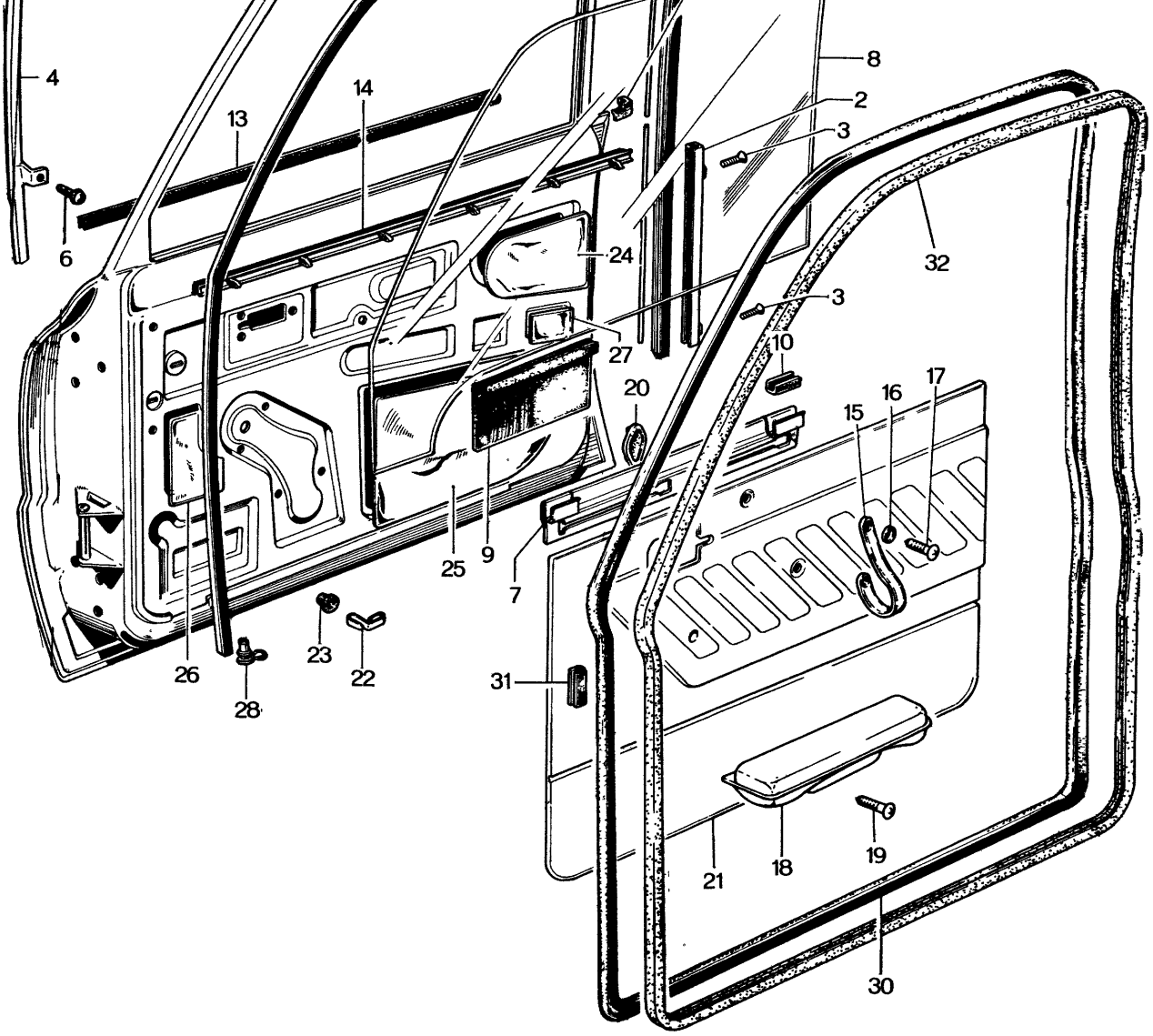
4
13
14
8
2
3
6
24
32
3
27
10
20
16
17
15
25
9
7
26
23
22
31
28
21
18
19
30

		"T" Type Dashboard Coupe Model	
	0848 59 010A	FRONT DOOR PANEL Ass'y (L) "T" Type Dashboard Sedan Model	1
	2329 59 010	FRONT DOOR PANEL Ass'y (L) With Door Mirror Hole "T" Type Dashboard Coupe Model	1
	2354 59 010C	FRONT DOOR PANEL Ass'y (L) With Door Mirror Hole Coupe Model	1
	0314 58 020	Outer Panel (R), Coupe Model	1
	0317 58 020	Outer Panel (R), Sedan Model	1
	0314 59 020	Outer Panel (L), Coupe Model	1
	0317 59 020	Outer Panel (L), Sedan Model	1
	2350 59 020	Outer Panel (L), Coupe Model With Door Mirror Hole	1
	0259 58 110C	Door Sash (R), Sedan Model	1
	0820 58 110	Door Sash (R), Coupe Model	1
	0259 59 110C	Door Sash (L), Sedan Model	1
	0820 59 110	Door Sash (L), Coupe Model	1
2	0314 58 120	Door Sash "B" (R), Rear Side, All Coupe Models	1
	0314 59 120	Door Sash "B" (L), Rear Side, All Coupe Models	1
3	908339 5 12	Set Screw, Sash "B"	4
4	0259 58 130B	Door Sash "C" (R), Front Side	1
	0259 59 130B	Door Sash "C" (L), Front Side	1

	0820 58 221A	Door Glass (R) Blue Pane		
	2113 58 221A	Door Glass (R) Transparent	All Coupe Models	1
	0257 59 221A	Door Glass (L) Transparent		
	0259 59 221A	Door Glass (L) Blue Pane	All Sedan Models	1
	0820 59 221A	Door Glass (L) Blue Pane		
	2113 59 221A	Door Glass (L) Transparent	All Coupe Models	1
9	0259 58 231A	Rubber Strip (R)		1
	0259 59 231A	Rubber Strip (L)		1
10	0259 58 232	Rubber Stop		2
11	0259 58 241	Run Channel , All Sedan Models		2
	0820 58 241	Rear Channel , All Coupe Models		2
12	0259 58 246	Adjuster, Selective use		–
13	0256 58 280A	Weather Strip "A" , Outer Side (R)	All Coupe Models	1
	0259 58 280A	Weather Strip "A" , Outer Side (R)	All Sedan Models	2
	0256 59 280A	Weather Strip "A" , Outer Side (L)	All Coupe Models	1
14	0259 58 290	Weather Strip "B" , Inner Side (R)	All Sedan Models	1
	0820 58 290	Weather Strip "B" Inner Side (R)	All Coupe Models	1
	0259 59 290	Western Strip "B" Inner Side (L)	All Sedan Models	1
	0820 59 290	Weather Strip "B" Inner Side (L)	All Coupe Models	1
15	0209 58 861	Pull Handle		2

	0329 58 9100-04	Black			©
	0329 58 9100-10	Brown			
		Door Trim (R)			
	0820 48 910E-03	Black "T" Type Dashboard Coupe Model		1	©
	0820 48 910E-06	Brown			
		Door Trim (R)			
	0848 58 910A-04	Black "T" Type Dashboard Sedan Model		1	©
	0848 58 910A-10	Brown			
		Door Trim (L), All Sedan Models			
	0326 59 9100-08	Black		1	©
	0326 59 9100-07	Brown			
		Door Trim (L), Plain Type Coupe Models			
	0329 59 9100-04	Black		1	©
	0329 59 9100-10	Brown			
		Door Trim (L)			
	0820 59 910E-03	Black "T" Type Dashboard Coupe Model		1	©
	0820 59 910E-06	Brown			
		Door Trim (L)			
	0848 59 910A-04	Black "T" Type Dashboard Sedan Model		1	©
	0848 59 910A-10	Brown			
22	0208 58 921	Fastener, Trim		16	
23	0223 58 925	Cap, Trim		16	
	0187 58 922	Cap, Trim		16	Car No. 63173 $^{70}/_{7}$ ~ ○
24	0256 58 925A	Door Screen "A" (R)	All Coupe Models	1	
	0256 59 925A	Door Screen "A" (L)			
	0259 58 921	Door Screen "A" (R)	All Sedan Models	1	
	0259 59 921	Door Screen "A" (L)			
25	0256 58 926	Door Screen "B" (R)	All Coupe Models	1	
	0256 59 926	Door Screen "B" (L)			
	0259 58 922	Door Screen "B" (R)	All Sedan Models	1	
	0259 59 922	Door Screen "B" (L)			
26	0259 58 923	Door Screen "C" (R)		1	
	0259 59 923	Door Screen "C" (L)		1	
27	0259 58 924	Door Screen "D"		2	

	0820 59 901	Weather Strip (L)]		
31	0209 58 902	Pad, Weather Strip	Selective use	–
32	0259 58 097	Seaming Welt, All Sedan Models		2
	0820 58 907A	Seaming Welt, All Coupe Models		2

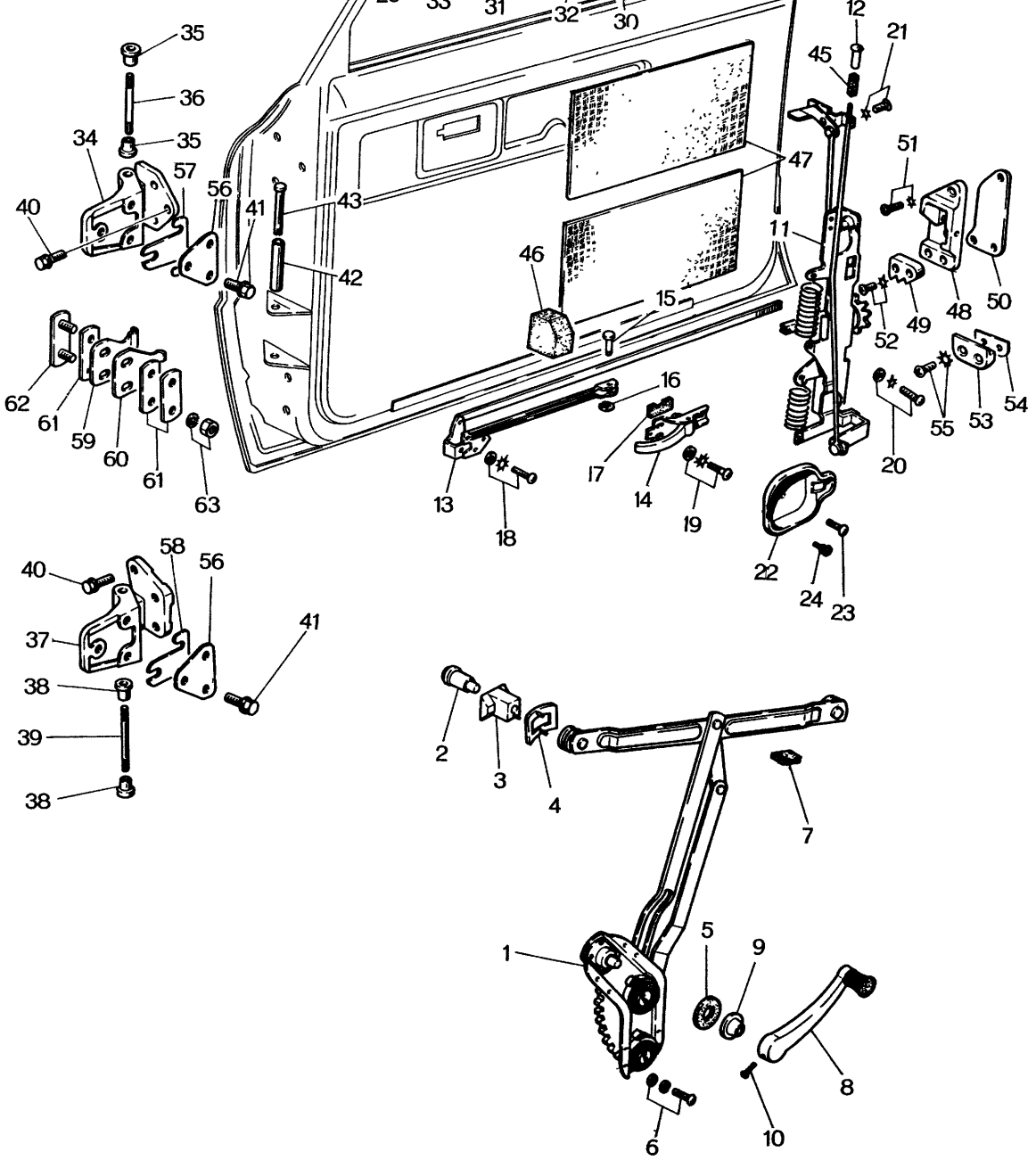
35
36
35
34
57
56
40
41
43
42
46
15
11
12
45
21
47
51
48
50
49
52
62
61
59
60
61
63
16
17
14
19
13
18
20
55
53
54
22
24
23
40
58
56
41
37
38
39
38
2
3
4
7
1
5
9
8
6
10

4	0223 58 311	Guide Spring	4	
5	0259 58 305	Packing, Regulator	2	
6	908339 6 12	Set Screw, Regulator	8	
7	0259 58 306	Cushion Rubber, Regulator	2	
8	0259 58 370C01	Regulator Handle	2	
9	0243 58 391	Escutcheon	2	
10	99862 0412C	Screw, Handle	2	
	99847 0410C	Tapping Screw, Handle	2	Car No. 64624 ⁷⁰/₈
11	0256 58 510	DOOR LOCK Ass'y (R) (R.H.D.), COUPE USE Locked door opens when inner Handle is pulled.	1	
	0259 58 510	DOOR LOCK Ass'y (R) (R.H.D.), SEDAN USE Locked door opens when inner Handle is pulled.	1	
	2152 58 510	DOOR LOCK Ass'y (R) (L.H.D.), COUPE USE	1	
	2158 58 510	DOOR LOCK Ass'y (R) (L.H.D.), SEDAN USE	1	
	2350 58 510	DOOR LOCK Ass'y (R) (L.H.D.), COUPE USE Arctic Spec. Model, with Antiburst Block.	1	
	2360 58 510	DOOR LOCK Ass'y (R) (R.H.D. & L.H.D.), COUPE USE Locked door does not open by pulling inner handle. with Antiburst Block For France	1	
	2370 58 510	DOOR LOCK Ass'y (R) (R.H.D. & L.H.D.), SEDAN USE Locked door does not open by pulling inner handle. with Antiburst Block.	1	
	0256 59 510	DOOR LOCK Ass'y (L) (R.H.D.), COUPE USE Locked door does not open by pulling inner handle.	1	

© Black

	2401 59 510	DOOR LOCK Ass'y (L) (R.H.D.), COUPE USE Locked door opens when inner handle is pulled.	1	
	2404 59 510	DOOR LOCK Ass'y (L) (R.H.D.), SEDAN USE Locked door opens when inner handle is pulled.	1	
12	0259 58 691	Knob	2	
13	0256 58 550	REMOTE CONTROL (R) COUPE USE	1	
	0256 59 550	REMOTE CONTROL (L) COUPE USE	1	
	0259 58 550	REMOTE CONTROL (R) SEDAN USE	1	
	0259 59 550	REMOTE CONTROL (L) SEDAN USE	1	
	0223 58 549A	Joint	2	
•	0223 58 549C	Joint	2	Car No. 90655 $^{71}/_{3}$ ~ O
14	0259 58 600	Inner Handle	2	
15	99230 0512	Joint Pin	2	
16	99576 0300	"E" Type Stop Ring	2	
17	0259 58 601A	Rubber Filler	2	
18	908338 5 10	Set Screw, Control Rod	4	
19	908324 6 14	Set Screw, Inner Handle	6	
20	908339 5 12	Set Screw, Door Lock	6	

	0317 58 670	OUTER HANDLE Ass'y (R)	Sedan use Arctic Spec. Models excluded	1
	0317 59 670	OUTER HANDLE Ass'y (L)		
	2352 58 670	OUTER HANDLE Ass'y (R)	Sedan use Arctic Spec. Model	1
	2352 59 670	OUTER HANDLE Ass'y (L)		
	0317 72 670	OUTER HANDLE Ass'y (R)	Coupe use Arctic Spec. Models excluded	1
	0317 73 670	OUTER HANDLE Ass'y (L)		
	2352 72 670	OUTER HANDLE Ass'y (R)	Coupe use Arctic Spec. Model & U.S.A.	1
	2352 73 670	OUTER HANDLE Ass'y (L)		
25	0259 58 671	Push Spring		2
26	0317 58 674	Handle Pad "A" (R)		1
	0317 59 674	Handle Pad "A" (L)		1
27	0317 58 675	Handle Pad "B" (R)		1
	0317 59 675	Handle Pad "B" (L)		1
28	0317 72 676	Push Button		2
	0317 72 676	Push Button		2
29	0317 58 680	Outer Handle		2
	0317 59 680	Outer Handle		2
30	0110 58 254A	Push Screw		2
31	99222 0216	Spring Pin		2
32	99907 0500	Nut		2

34	0317 58 700	UPPER HINGE Ass'y	2	
35	0223 58 721	Bush	4	
36	0187 58 731	Hinge Pin	2	
37	0317 58 750	LOWER HINGE Ass'y (R)	1	
	0317 59 750	LOWER HINGE Ass'y (L)	1	
38	0223 58 721	Bush	4	
39	0187 58 731	Hinge Pin	2	
40	907832 8 22	Set Bolt, Hinge	16	
41	907812 8 18	Set Bolt, Hinge	8	
42	0317 58 831	Roller, Checker	2	
	0317 58 831A	Roller, Checker	2	Car No. 72454 $^{70}/_{11}$ ~ ○
43	0317 58 832	Pin, Checker	2	
44	0200 72 692	Grommet, Knob—Coupe Use	2	
	0223 58 692	Grommet, Knob—Sedan Use	2	
•	0223 58 692A	Grommet, Knob—Sedan Use	2	Car No. 100099 $^{71}/_{5}$ ~ ○
45	0820 58 695	Adjuster, Knob	2	
46	0118 58 933	Rod Cushion	2	
47	0820 58 999	Insulation	4	

•		907614 6 30	Set Screw, Striker	4	Car No. 62251 $^{70}/_{6}$ ~ ○
	53	2350 58 582	Antiburst Block	1	
	54	2350 58 593	Shim	1	
	55	907614 6 25	Set Bolt	4	
	56	0317 58 785	Washer, Hinge	4	
	57	0259 58 736	Shim, Upper Hinge	Selective use –	
	58	0259 58 786	Shim, Lower Hinge	Selective use –	
	59	0317 58 811	Check Spring	2	
•		0317 58 850	Check Spring	2	Car No. 72454 $^{70}/_{11}$ ~ △
	60	0317 58 812	Check Spring	2	
•		0317 58 812A	Check Spring	2	Car No. 72454 $^{70}/_{11}$ ~ △
	61	0259 58 821	Washer "A", Check Spring	Selective use –	
		0259 58 822	Washer "B"		
	62	0259 58 840	Set Plate, Check Spring	2	
	63	99971 0600	Spring Washer, Set Plate	4	
		99906 0600	Nut	4	

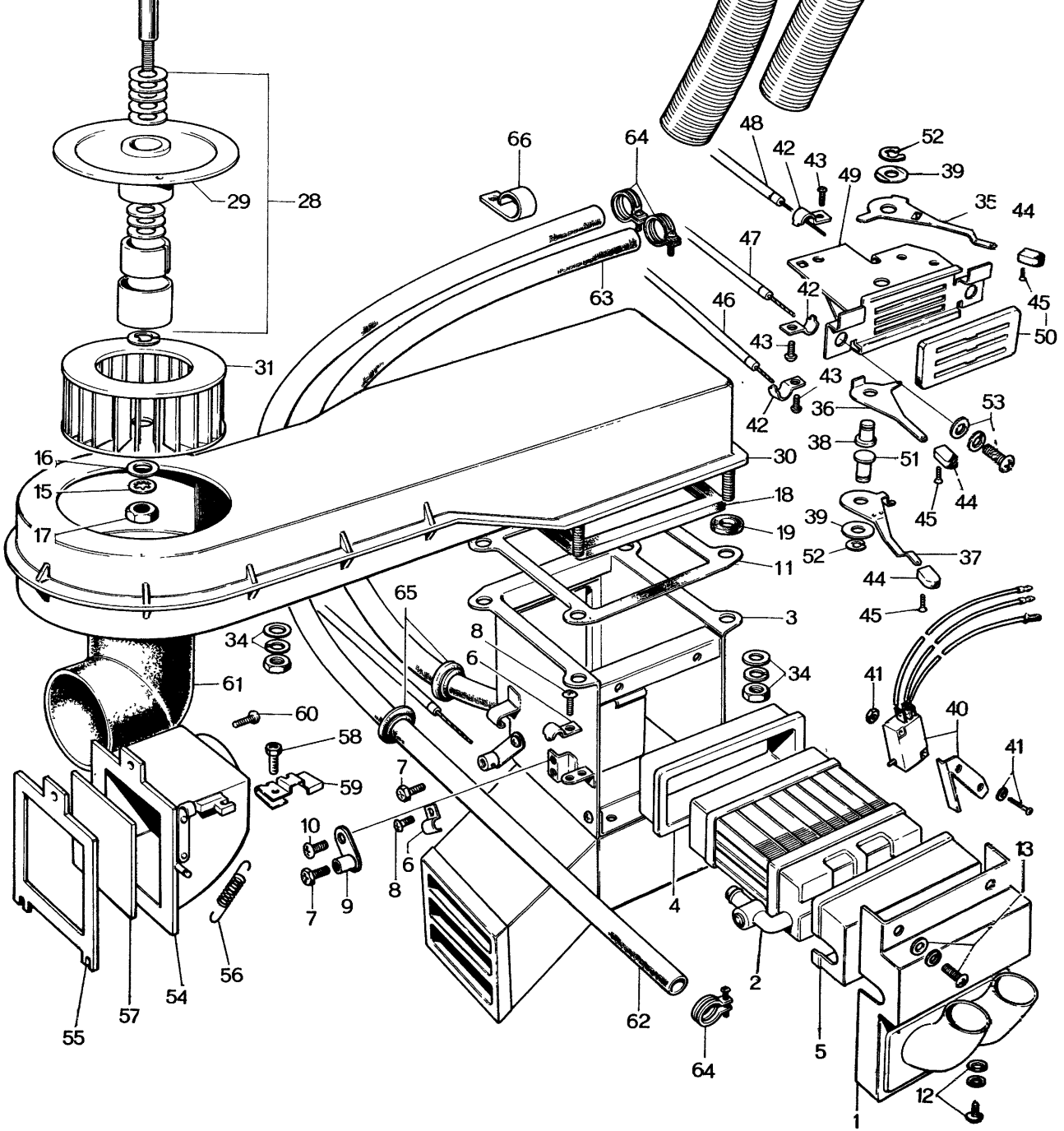
1
2
3
4
5
6
7
8
9
10
11
12
13
15
16
17
18
19
29
30
31
34
36
37
38
39
40
41
42
43
44
45
46
47
48
49
50
51
52
53
54
55
56
57
58
59
60
61
62
63
64
65
66

		Seal	1
5	0259 76 140	Packing	1
6	0259 76 147	Clip	2
7	0820 76 133	Screw	2
8	0259 76 134	Screw	2
9	0820 76 132	Lever	1
10	0820 76 134	Screw	1
11	0259 76 132	Packing	1
12	0259 76 138	Screw	2
	0259 76 144	Plain Washer	2
	0259 76 145	Spring Washer	2
13	0259 76 131	Screw	2
	0259 76 133	Spring Washer	2
	0259 76 136	Plain Washer	2
	0259 61 340	BLOWER Ass'y Fig. No. 14 to No. 46 included	1
14	0259 76 101	Sleeve	3
15	0259 76 102	Washer	1

61 76 CAR HEATER (R.H.D.)
("T" TYPE DASHBOARD MODEL)

	No.	Part Number	Description	Q'ty	Remarks
	16	0259 76 103	Plain Washer	1	
•	17	0259 76 104	Nut	1	
	18	0259 76 105	Packing	1	
	19	0259 76 106	Packing	7	
	20	0259 76 107	Clip	1	
		0259 61 360	MOTOR Ass'y	1	
	21	0259 76 121	Screw	2	
	22	0259 76 122	Plain Washer	2	
	23	0259 76 123	Packing	2	
	24	0259 76 124	Motor	1	
	25	0259 76 125	Spring	2	
	26	0259 76 126	Brush	2	
	27	0259 76 127	Rotor	1	
	28	0259 76 128	Parts Set	1	
	29	0259 76 129	Casing	1	

	36	0820 76 152	Control Lever No. 2	1
	37	0820 76 153	Control Lever No. 3	1
	38	0820 76 154	Shaft No. 1	1
	39	0820 76 155	Spring	2
	40	0820 76 156	Micro Switch	1
	41	0820 76 157	Screw	2
		0820 76 159	Spring Washer	2
		0820 76 158	Nut	2
	42	0259 76 154	Clip	3
	43	0259 76 153	Screw	3
	44	0820 61 374	Knob	3
	45	0820 76 161	Screw, Knob	3
	46	0820 61 371	Control Cable No. 3	1
	47	0820 61 372	Control Cable No. 2	1
	48	0820 61 373	Control Cable No. 1	1
	49	0820 61 375	Control Panel	1
	50	0820 61 376	Bezzel	1
•	51	0820 76 377	Shaft No. 2	1
•	52	0259 76 158	Snap Ring	2

54	0259 76 161	Air Intake	1	
55	0259 76 162	Seal	1	
56	0259 76 163	Spring	1	
57	0259 76 164	Intake Valve	1	
58	0259 76 165	Screw	1	
59	0259 61 381	Cable Clamp	1	
60	99863 0512	Tapping Screw, Air Intake	3	
61	0259 61 391	Duct	1	
• 62	0820 61 401	Water Hose No. 1	1	
63	0820 61 402	Water Hose No. 2	1	
64	99281 2200	Hose Band	4	
65	0188 61 446	Grommet	2	
66	0820 61 409	Clamp No. 3	1	
67	0820 61 408	Defroster Hose	2	

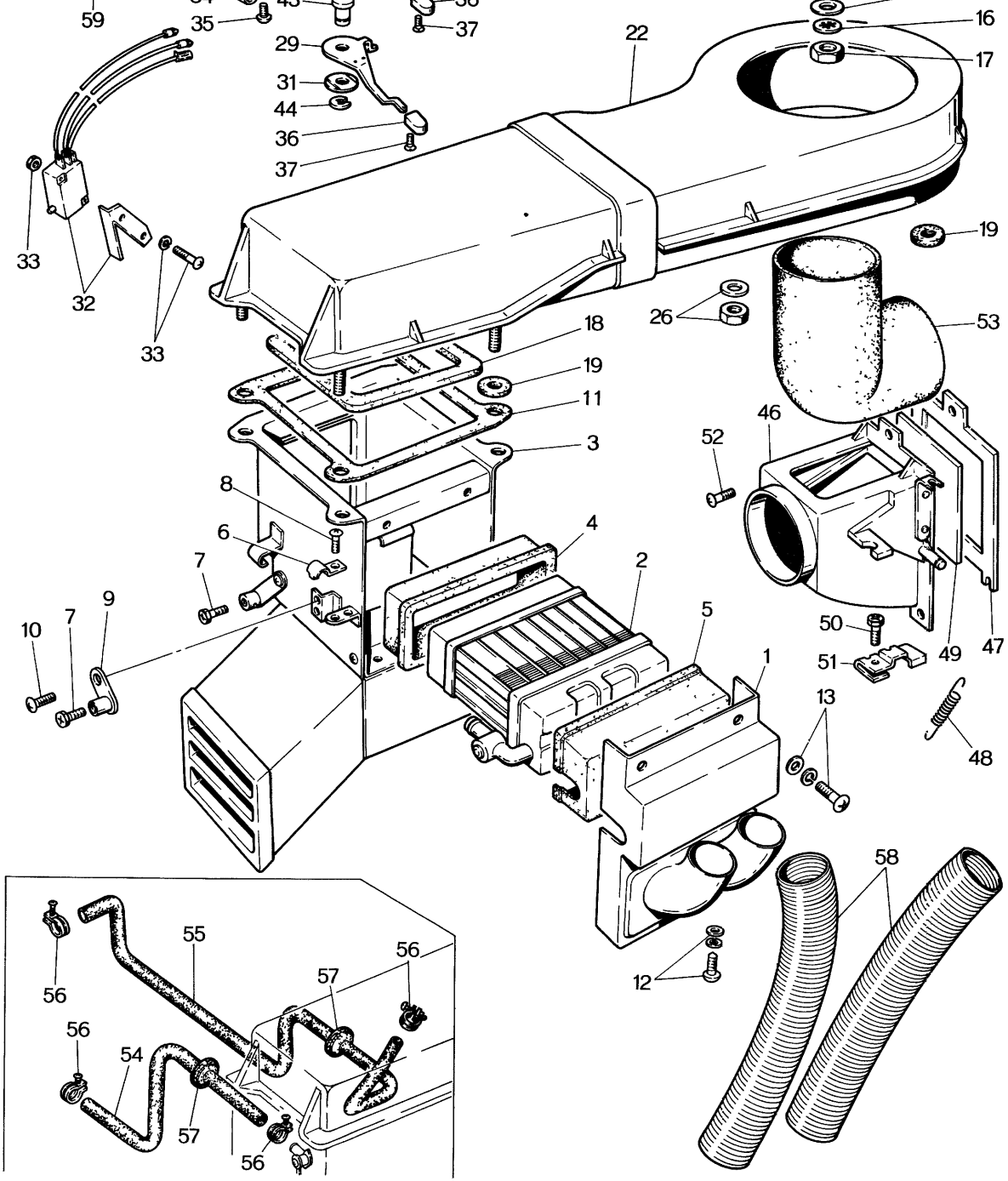
59
35
43
36
37
29
31
44
36
37
22
16
17
19
33
32
33
26
53
18
19
11
3
46
52
8
6
7
4
2
5
1
10
7
9
50
51
49
47
13
48
12
58
55
56
57
56
56
54
57
56

4	0259 76 137	Seal	1
5	0259 76 140	Packing	1
6	0259 76 147	Clip	2
7	0820 76 133	Screw	2
8	0259 76 134	Screw	2
9	0820 76 132	Lever	1
10	0820 76 134	Screw	1
11	0259 76 132	Packing	1
12	0259 76 138	Screw	2
	0259 76 144	Plain Washer	2
	0259 76 145	Spring Washer	2
13	0259 76 131	Screw	2
	0259 76 133	Spring Washer	2
	0259 76 136	Plain Washer	2
	2113 61 340	BLOWER Ass'y, Fig. No. 14 to No. 25 Included	1
14	0259 76 101	Sleeve	3
15	0259 76 102	Washer	1
16	0259 76 103	Plain Washer	1

23	2113 76 168	Fan	1
24	0259 61 352	Packing	1
25	99806 0612	Bolt	3
	99952 0618	Plain Washer	3
26	99906 0600	Nut, Blower	7
	99952 0618	Plain Washer	7
	0820 61 370	HEATER CONTROL Ass'y	1
27	0820 76 151	Control Lever No. 1	1
28	0820 76 152	Control Lever No. 2	1
29	0820 76 153	Control Lever No. 3	1
30	0820 76 154	Shaft No. 1	1
31	0820 76 155	Spring	2
32	0820 76 156	Micro Switch	1
33	0820 76 157	Screw	2
	0820 76 159	Spring Washer	2
	0820 76 158	Nut	2

40	0820 61 373	Control Cable No. 1	1
41	0820 61 375	Control Panel	1
42	0820 61 376	Bezzel	1
• 43	0820 76 377	Shaft No. 2	1
• 44	0259 76 158	Snap Ring	2
45	99833 0512	Screw	2
	99952 0500	Plain Washer	2
	99971 0500	Spring Washer	2
	2113 61 380	AIR INTAKE VALVE Ass'y	1
46	2113 76 161	Air Intake	1
47	0259 76 162	Seal	1
48	0259 76 163	Spring	1
49	0259 76 164	Air Intake Valve	1
50	0259 76 165	Screw	1

57	0188 61 446	Grommet	2
58	0820 61 408	Defroster Hose	2
59	0187 66 991	Rubber Clip	1
N	2329 61 404	Water Hose No. 3, Emission Controlled Model	1
N	2329 61 403	Water Hose, Emission Controlled Model	1

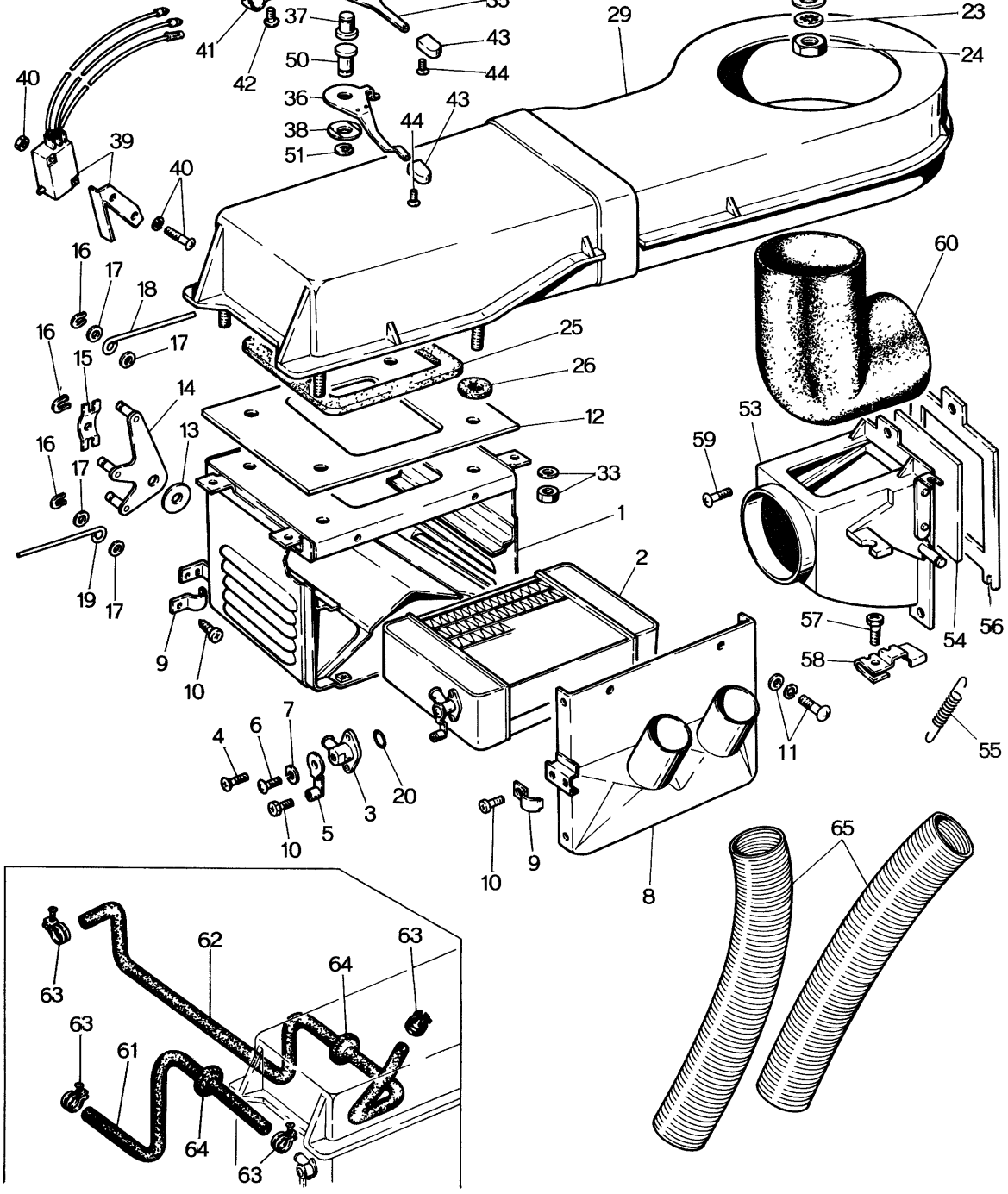
1
2
3
4
5
6
7
8
9
10
11
12
13
14
15
16
17
18
19
20
23
24
25
26
29
33
36
37
38
39
40
41
42
43
44
50
51
53
54
55
56
57
58
59
60
61
62
63
64
65

4	2113 76 138	Screw	2
5	2113 76 132	Control Cock Lever	1
6	2113 76 134	Screw	1
7	2113 76 133	Spring Washer	1
8	2113 76 136	Core Box No. 2	1
9	0259 76 154	Clip	2
10	0820 76 133	Screw	5
11	0259 76 153	Screw	8
	0259 76 133	Spring Washer	8
	0259 76 136	Plain Washer	8
12	2113 76 140	Packing	1
13	2113 76 142	Washer	1
14	2113 76 143	Valve Control Lever	1
15	2113 76 146	Spring	1
16	2113 76 137	Snap Ring	3
17	2113 76 144	Cushion	4
18	2113 76 139	Rod No. 2	1
19	2113 76 148	Rod No. 1	1
20	2113 76 149	"O" Ring	1

26	0259 76 106	Packing	7
27	2113 76 169	Clip	1
28	2113 76 167	Motor Ass'y	1
29	2113 76 166	Blower Case	1
30	2113 76 168	Fan	1
31	0259 61 352	Packing	1
32	99806 0612	Bolt	3
	99952 0618	Plain Washer	3
33	99906 0600	Nut, Blower	7
	99952 0618	Plain Washer	7
	2113 61 370	HEATER CONTROL Ass'y	1
34	0820 76 151	Control Lever No. 1	1
• 35	2113 76 151	Control Lever No. 2	1
36	0820 76 153	Control Lever No. 3	1
37	0820 76 154	Shaft No. 1	1
38	0820 76 155	Spring	2

43	0820 61 374	Knob	3
44	0820 76 161	Screw, Knob	3
45	2113 76 153	Control Cable No. 3	1
46	2113 76 154	Control Cable No. 2	1
47	0820 61 373	Control Cable No. 1	1
48	2113 76 155	Control Panel	1
49	0820 76 376	Bezzel	1
50	2113 76 156	Shaft No. 2	1
51	2113 76 157	Snap Ring	2
52	99833 0512	Screw	2
	99952 0500	Plain Washer	2
	99971 0500	Spring Washer	2
	2113 61 380	AIR INTAKE VALVE Ass'y	1
53	2113 76 161	Air Intake	1
54	0259 76 162	Seal	1
55	0259 76 163	Spring	1

60	0259 61 391	Duct	1	
61	2113 61 401	Water Hose No. 1	1	
62	2113 61 402A	Water Hose No. 2	1	
	2328 61 403	Water Hose	1	Car No. 60429 $^{70}/_{5}$ ~ ○
63	99281 2200	Hose Band	5	Car No. 60249 $^{70}/_{5}$ ~ Quantity
64	0188 61 446	Grommet	2	
65	2113 61 408	Defroster Hose	2	

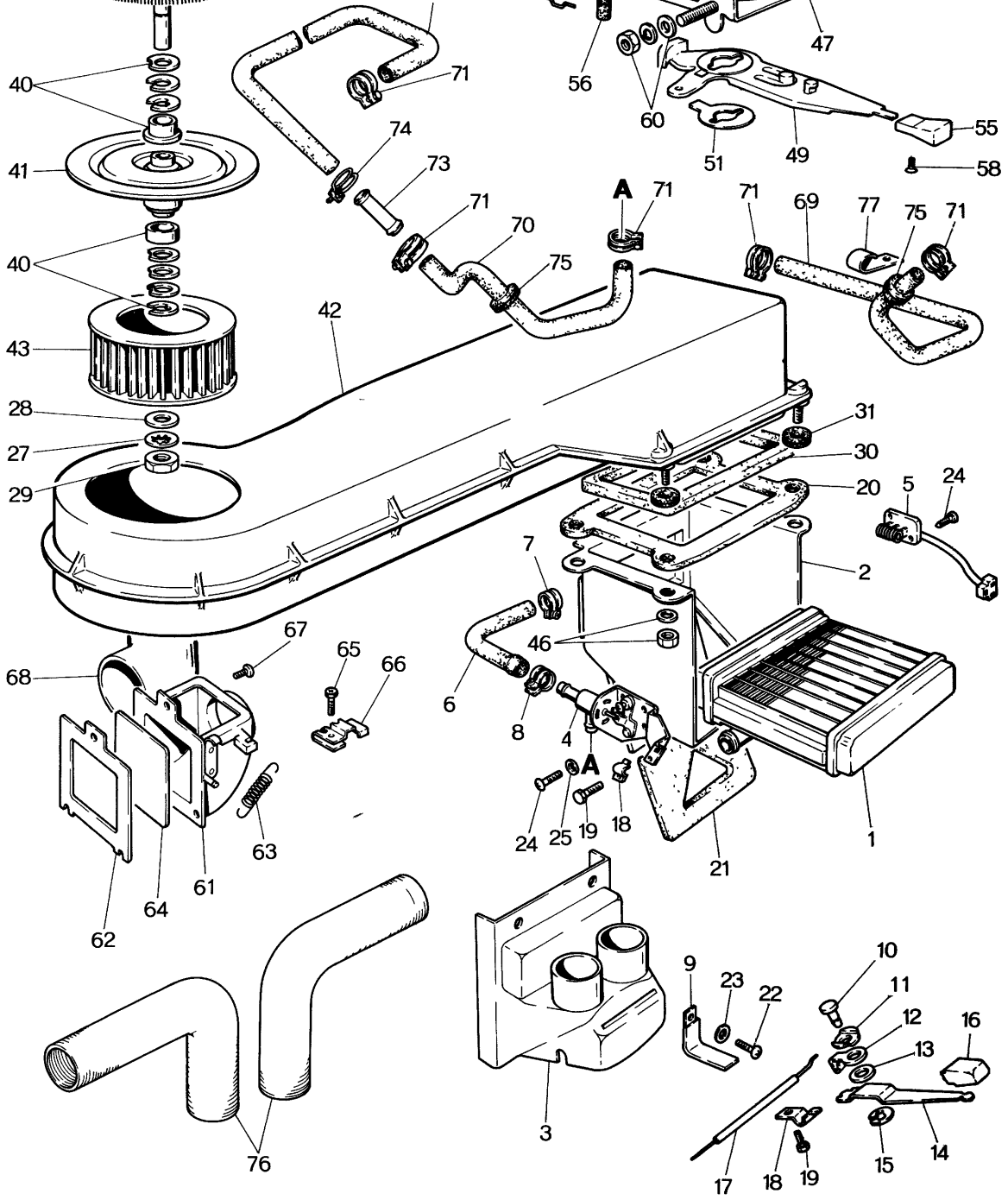
40
41
40
43
28
27
29
71
74
73
71
70
75
42
A
71
56
47
60
51
49
55
58
71
69
77
75
71
31
30
20
5
24
2
7
46
6
8
4
A
24
25
19
18
21
1
67
65
66
68
63
61
64
62
76
3
9
23
22
10
11
12
13
16
14
15
17
18
19

4	0845 76 014	Water Valve	1
5	0317 76 015	Resistor	1
6	0317 76 016	Water Hose	1
7	99282 2200	Hose Band	1
8	0223 61 275	Hose Band	1
9	0317 76 017	Clamp	2
10	0317 76 018	Pin	1
11	0317 76 019	Spring	1
12	0317 76 020	Spring	1
13	0317 76 021	Washer	1
14	0317 76 022	Lever	1
15	99576 0400	Snap Ring	1
16	0317 76 023	Knob	1
17	0317 76 024	Cable	1
18	0259 76 147	Clip	2
19	0275 76 128	Screw	2
20	0259 76 132	Packing	1
21	0259 76 139	Seal	1
22	99833 0410	Screw	2
23	99971 0400	Spring Washer	2

26	0259 76 101	Sleeve	3
27	0259 76 102	Washer	1
28	0259 76 103	Plain Washer	1
29	0259 76 104	Nut	1
30	0259 76 105	Packing	1
31	0259 76 106	Packing	7
32	0259 76 107	Clip	1
	0259 61 360	MOTOR Ass'y	1
33	0259 76 121	Screw	2
34	0259 76 122	Plain Washer	2
35	0259 76 123	Packing	2
36	0259 76 124	Motor	1
37	0259 76 125	Spring	2
38	0259 76 126	Brush	2
39	0259 76 127	Rotor	1
40	0259 76 128	Parts Set	1
41	0259 76 129	Casing	1

	99952 0618	Plain Washer	10	
	0317 61 190	HEATER CONTROL Ass'y	1	©
47	0317 76 051	Bracket	1	
48	0317 76 052	Switch Ass'y	1	
•	0317 76 052A	Switch Ass'y	1	Car No. 69735 $^{70}/_{10}$ ~ ○
49	0317 76 053	Lever	1	
50	0317 76 054	Spring	1	
•	0317 76 054A	Spring	1	Car No. 69735 $^{70}/_{10}$ ~ ○
51	0317 76 055	Stopper	1	
52	0317 76 056	Cable No. 1	1	
53	0317 76 057	Cable No. 2	1	
54	0317 76 058	Knob No. 1	1	
55	0317 76 059	Knob No. 2	1	
56	0317 76 060	Rubber	1	
57	0259 76 147	Clip	2	
58	0259 76 155	Screw	2	
59	0275 76 128	Screw	2	
60	99906 0500	Nut	2	
	99971 0500	Spring Washer	2	
	99952 0516	Plain Washer	2	

65	0259 76 165	Screw	1
66	0259 61 381	Cable Clamp	1
67	99863 0512	Tapping Screw	3
68	0259 61 391	Air Intake Duct	1
69	0845 61 211A	Water Hose No. 1	1
70	0845 61 212	Water Hose No. 2	1
71	99281 2200	Hose Clamp "B" Type	5
72	0845 61 221	Water Hose No. 3	1
73	0180 79 556	Hose Nipple	1
74	99282 2200	Clip	1
75	0188 61 446	Grommet	2
76	0317 61 250A	Defroster Hose	2
77	0820 61 409	Clip	1

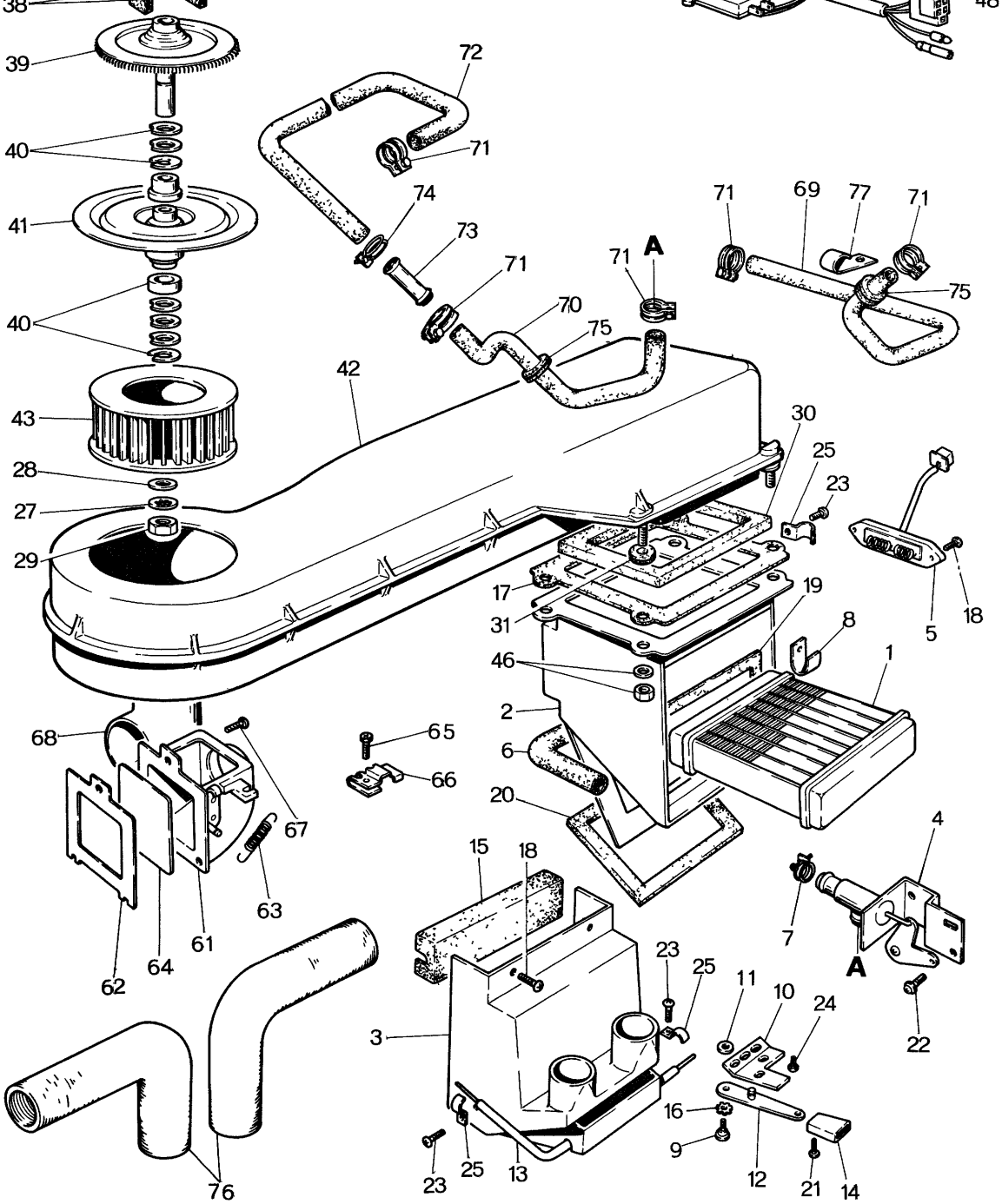
38
39
40
41
40
43
28
27
29
72
71
74
73
71
70
75
42
71
A
71
69
77
71
75
30
25
23
17
31
19
8
46
1
2
6
20
5
18
68
67
65
66
63
61
64
62
15
18
3
23
25
11
10
24
16
9
12
21
14
23
25
13
76
7
A
4
22

4	0315 76 014	Control Cock	1
5	0315 76 015	Resistor	1
6	0315 76 016	Water Hose	1
7	99282 2200	Hose Band	2
8	0315 76 018	Clip	1
9	0315 76 019	Pin, Control	1
10	0315 76 021	Bracket	1
11	0315 76 022	Washer	1
12	0315 76 023	Lever	1
13	0315 76 026	Cable	1
14	0315 76 025	Knob	1
15	0315 76 027	Packing	1
16	0315 76 028	Washer	1
17	0259 76 132	Packing	1
18	0259 76 135	Screw	6
19	0259 76 137	Seal	1
20	0259 76 139	Seal	1
21	0259 76 155	Screw	1
22	908331 4 10	Set Screw	2
23	99833 0408	Tapping Screw	3

26	0259 76 101	Sleeve	3
27	0259 76 102	Washer	1
28	0259 76 103	Plain Washer	1
29	0259 76 104	Nut	1
30	0259 76 105	Packing	1
31	0259 76 106	Packing	7
32	0259 76 107	Clip	1
	0259 61 360	MOTOR Ass'y	1
33	0259 76 121	Screw	2
34	0259 76 122	Plain Washer	2
35	0259 76 123	Packing	2
36	0259 76 124	Motor	1
37	0259 76 125	Spring	2
38	0259 76 126	Brush	2
39	0259 76 127	Rotor	1
40	0259 76 128	Parts Set	1
41	0259 76 129	Casing	1

	99952 0618	Plain Washer	10	
	0317 61 190	HEATER CONTROL Ass'y	1	©
47	0317 76 051	Bracket	1	
48	0317 76 052	Switch Ass'y	1	
•	0317 76 052A	Switch Ass'y	1	Car No. 69735 $^{70}/_{10}$ ~ ○
49	0317 76 053	Lever	1	
50	0317 76 054	Spring	1	
•	0317 76 054A	Spring	1	Car No. 69735 $^{70}/_{10}$ ~ ○
51	0317 76 055	Stopper	1	
52	0317 76 056	Cable No. 1	1	
53	0317 76 057	Cable No. 2	1	
54	0317 76 058	Knob No. 1	1	
55	0317 76 059	Knob No. 2	1	
56	0317 76 060	Rubber	1	
57	0259 76 147	Clip	2	
58	0259 76 155	Screw	2	
59	0275 76 128	Screw	2	
60	99906 0500	Nut	2	
	99971 0500	Spring Washer	2	
	99952 0516	Plain Washer	2	

	65	0259 76 165	Screw	1
	66	0259 61 381	Cable Clamp	1
	67	99863 0512	Tapping Screw, Air Intake Valve	3
	68	0259 61 391	Air Intake Duct	1
•	69	0845 61 211A	Water Hose No. 1	1
	70	0845 61 212	Water Hose No. 2	1
	71	99281 2200	Hose Clamp "B" Type	5
	72	0845 61 221	Water Hose No. 3	1
	73	0180 79 556	Hose Nipple	1
	74	99282 2200	Clip	1
	75	0188 61 446	Grommet	2
	76	0317 61 250A	Defroster Hose	2
	77	0820 61 409	Clip	1

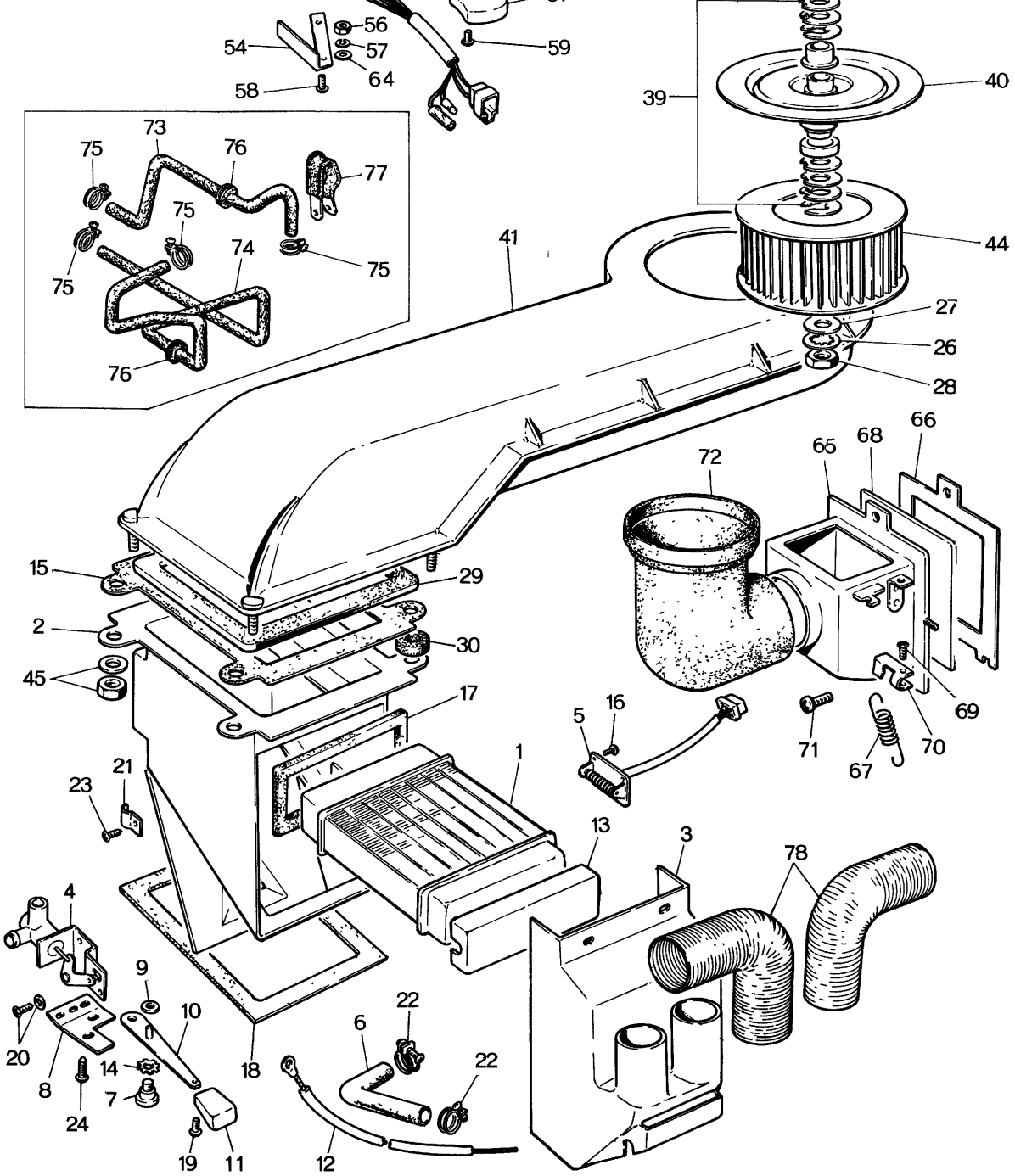
54
56
57
64
58
59
39
40
73
75
76
77
75
74
75
75
76
41
44
27
26
28
66
65
68
72
15
29
2
30
45
17
5
16
71
67
70
69
1
21
23
13
3
78
4
9
10
20
8
14
7
24
19
11
18
6
22
22
12

4	0315 76 014	Control Cock	1
5	0315 76 015	Resistor	1
6	0315 76 016	Water Hose	1
7	0315 76 019	Pin	1
8	0315 76 021	Bracket	1
9	0315 76 022	Washer	1
10	0315 76 023	Lever	1
11	0315 76 025	Knob	1
12	0315 76 026	Cable	1
13	0315 76 027	Packing	1
14	0315 76 028	Washer	1
15	0259 76 132	Packing	1
16	0259 76 135	Screw	6
17	0259 76 137	Packing	1
18	0259 76 139	Packing	1
19	0259 76 155	Screw	1
20	908331 4 10	Set Screw	2
21	99259 0606	Clip	3
22	99282 2200	Clamp	2
23	99833 0408	Screw	3

26	0259 76 102	Washer	1
27	0259 76 103	Plain Washer	1
28	0259 76 104	Nut	1
29	0259 76 105	Packing	1
30	0259 76 106	Packing	7
31	0259 76 107	Clip	1
	0259 61 360	MOTOR SET	1
32	0259 76 121	Screw	2
33	0259 76 122	Washer	2
34	0259 76 123	Packing	2
35	0259 76 124	Motor	1
36	0259 76 125	Spring	2
37	0259 76 126	Brush	2
38	0259 76 127	Rotor	1
39	0259 76 128	Parts Set	1
40	0259 76 129	Casing	1

45	99906 0600	Nut	7
	99952 0618	Plain Washer	7
	2370 61 190	HEATER CONTROL	1
46	0315 76 051	Control Panel	1
47	0315 76 052	Heater Switch	1
48	0315 76 053	Lever	1
49	0315 76 056	Control Cable No. 2	1
50	2370 76 057	Control Cable No. 1	1
51	0315 76 058	Knob No. 1	1
52	0315 76 059	Knob No. 2	1
53	0315 76 060	Rubber	1
54	0315 76 061	Plate	1
55	0315 76 062	Clamp	2
56	0315 76 063	Nut	2
57	0315 76 064	Spring Washer	2
58	0315 76 065	Screw	2
59	0259 76 155	Screw	2

64	99952 0300	Plain Washer	2
	0259 61 380	AIR INTAKE VALVE	1
65	0259 76 161	Air Intake	1
66	0259 76 162	Seal	1
67	0259 76 163	Spring	1
68	0259 76 164	Air Intake Valve	1
69	0259 76 165	Screw	1
70	0259 61 381	Cable Clip	1
71	99863 0512	Tapping Screw, Air Intake Valve	3
72	0259 61 391	Air Intake Duct	1
73	2335 61 211	Water Hose	1
74	2335 61 212A	Water Hose No. 1	1
75	99282 2200	Clamp	4
76	0259 61 405	Grommet	2
77	0259 61 406	Clamp	2
78	0317 61 250	Defroster Hose	2

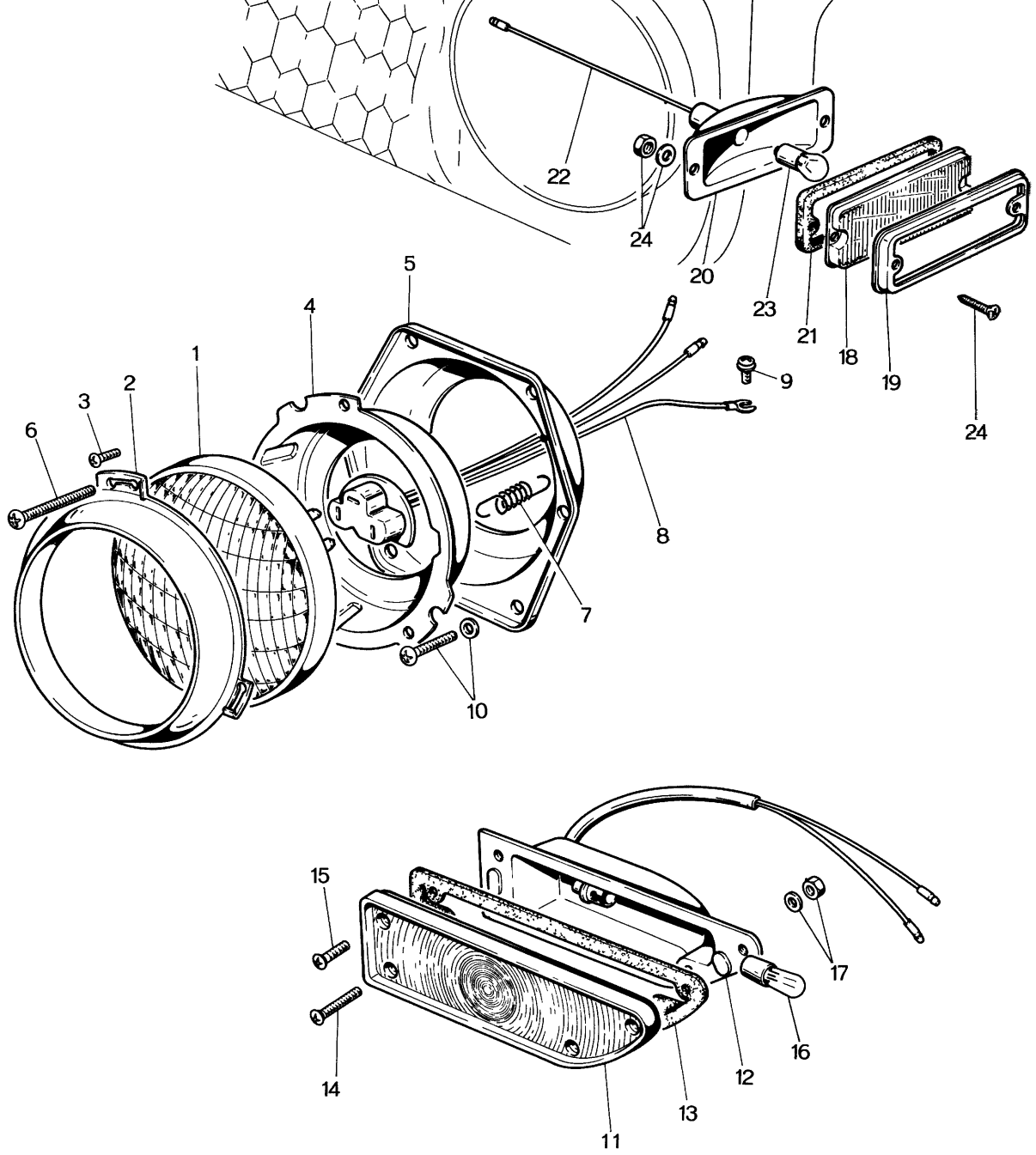
22
24
20
23
21
18
19
24
5
4
1
2
3
6
9
8
7
10
15
17
16
14
12
13
11

	2244 87 015	Mounting (L)	1
5	2244 87 016	Lamp Housing (R)	1
	2244 87 017	Lamp Housing (L)	1
6	2244 87 018	Adjust Screw	4
7	2244 87 019	Extension Spring	2
8	0259 66 070	Head Lamp Cord Ass'y	2
9	908336 5 12	Set Screw, Head Lamp	2
10	908336 6 20	Set Screw	8
	2244 66 090	FRONT TURN SIGNAL LAMP (R) Amber	1
	2244 66 110	FRONT TURN SIGNAL LAMP (L) Amber	1
11	2244 87 031	Globe (R), Amber	1
	2244 87 032	Globe (L), Amber	1
12	0259 66 093A	Lamp Body (R)	1
	0259 66 113	Lamp Body (L)	1
13	0259 66 094A	Seal Rubber (R)	1
	0259 66 114	Seal Rubber (L)	1

	99952 0500	Plain Washer	4
	2244 66 230	SIDE MARKER LAMP (R)	1
	2244 66 240	SIDE MARKER LAMP (L)	1
18	2244 87 191	Lamp Globe, Amber Color	2
19	2244 87 192	Lamp Rim	2
20	2244 87 193	Body	2
21	2244 87 194	Seat Rubber (R)	1
	2244 87 195	Seat Rubber (L)	1
22	2244 87 196	Cord Ass'y	2
23	99701 2080	Bulb (12V 8W)	2
24	99773 0420	Screw, Side Marker Lamp	4
	99906 0400	Nut	4
	99952 0400	Plain Washer	4

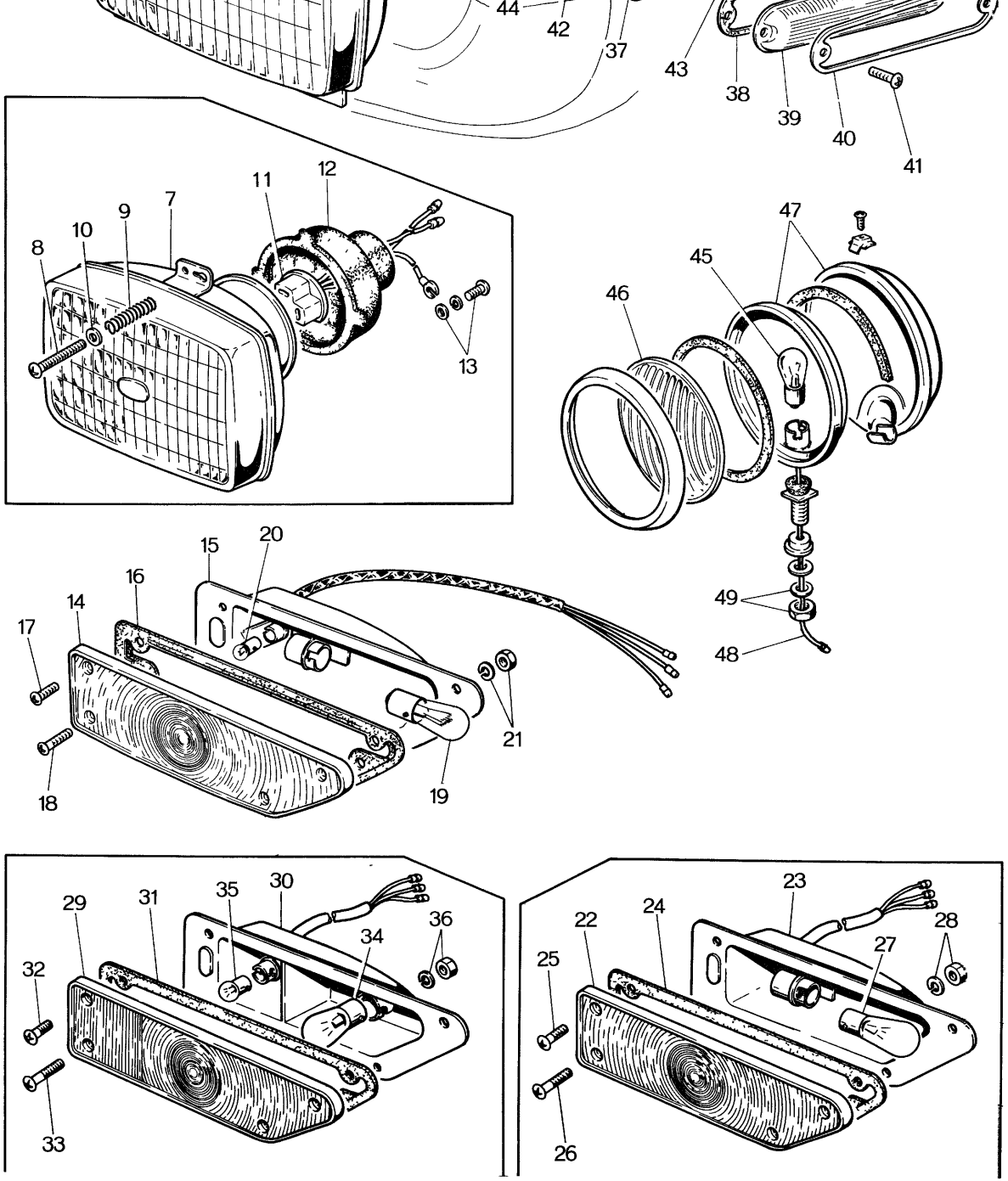
44
42
37
43
38
39
40
41
11
12
9
7
10
8
13
47
45
46
49
48
15
20
16
14
17
18
19
21
29
31
35
30
36
34
32
33
23
24
22
28
27
25
26

	0259 66 051	Metal Back Sealed Beam Unit (L),(R.H.D.)	1	
	2158 66 051	Metal Back Sealed Beam Unit (L),(L.H.D.)	1	
2	0259 66 015	Adjust Screw	6	
3	0259 66 016	Adjust Spring	6	
4	0248 66 028	Spring Holder	6	
5	0259 66 070	Head Lamp Cord	2	
6	99833 0512	Screw, Earth Cord	2	
	99952 0500	Plain Washer	2	
	99971 0500	Spring Washer	2	
		Semi–Sealed Beam Type		
•	2112 66 030	HEAD LAMP (R) With White Bulb } For General	1	Car No. 82291 $^{71}/_{1}$ ~ Added Anew
•	2112 66 060	HEAD LAMP (L) With White Bulb } For General	1	Car No. 82291 $^{71}/_{1}$ ~ Added Anew
•	2360 66 030	HEAD LAMP (R) With Amber Bulb } For France	1	Car No. 82291 $^{71}/_{1}$ ~ Added Anew
•	2360 66 060	HEAD LAMP (L) With Amber Bulb } For France	1	Car No. 82291 $^{71}/_{1}$ ~ Added Anew
	2325 66 020	HEAD LAMP (R)	1	Car No. 82291 $^{71}/_{1}$ ~ Discarded
		For Semi–Sealed Beam use, Without Lamp Bulb		
	2325 66 050	HEAD LAMP (L)	1	Car No. 82291 $^{71}/_{1}$ ~ Discarded
		For Semi–Sealed Beam use, Without Lamp Bulb		
7	2325 66 021	Semi–Sealed Beam (R)	1	Car No. 82291 $^{71}/_{1}$ ~ Discarded
	2325 66 051	Semi–Sealed Beam (L)	1	Car No. 82291 $^{71}/_{1}$ ~ Discarded
8	0259 66 015	Adjust Screw	6	
9	0259 66 016	Adjust Spring	6	
10	0248 66 028	Spring Holder	6	

		(For General, White Lens)		
	0268 66 090	FRONT TURN SIGNAL LAMP (R) White	1	
	2158 66 090	FRONT TURN SIGNAL LAMP (R) White With Ⓐ Mark	1	
	0268 66 110	FRONT TURN SIGNAL LAMP (L) White	1	
	2158 66 110	FRONT TURN SIGNAL LAMP (L) White With Ⓐ Mark	1	
14	0259 66 091A	Lamp Globe (R)	1	
	2325 66 091A	Lamp Globe (R) With Ⓐ Mark	1	Car No. 64215 $^{70}/_{7}$ ~ ○
	0259 66 111	Lamp Globe (L)	1	
	2325 66 111A	Lamp Globe (L) With Ⓐ Mark	1	Car No. 64215 $^{70}/_{7}$ ~ ○
15	0268 66 093	Lamp Case (R)	1	
	2158 66 093	Lamp Case (R) With Ⓐ Mark	1	
	0268 66 113	Lamp Case (L)	1	
	2158 66 113	Lamp Case (L) With Ⓐ Mark	1	
16	0259 66 094A	Seal Rubber	4	
	0259 66 114	Seal Rubber (L)	1	
17	0259 66 095	Screw	4	
18	0259 66 096	Screw	4	
	0259 66 095	Screw	4	Car No. 62024 $^{70}/_{6}$ ~ ○
19	99701 4237	Bulb	2	
20	99701 6030	Bulb	2	
21	99906 0500	Nut, Front Turn Signal Lamp	4	
	99952 0500	Plain Washer	4	

	2325 66 113	Lamp Case (L)	1	
	2325 66 113A	Lamp Case (R)	1	Car No. 64215 $^{70}/_{7}$ ~ ○
24	0259 66 094	Seal Rubber (R)	1	
	0259 66 094A	Seal Rubber (R)	1	Car No. 64215 $^{70}/_{7}$ ~ ○
	0259 66 114	Seal Rubber (L)	1	
25	0259 66 095	Screw	4	
26	0259 66 096	Screw	4	
27	99701 4237	Bulb	2	
28	99906 0500	Nut, Front Turn Signal Lamp	4	
	99952 0500	Plain Washer	4	

For All Models (Itary Excluded) Used From Car No. 82291 $^{71}/_{1}$
(Amber & White Lens)

	2256 66 090	**FRON TURN SIGNAL LAMP (R)**	1	
	2399 66 090	Lamp Glove, Amber & White	1	Car No. 67152 $^{70}/_{7}$ ~ ○
•	2360 66 110A		1	Car No. 82291 $^{71}/_{1}$ ~ ○
	2256 66 110	**FRONT TURN SIGNAL LAMP (L)**	1	
	2399 66 110	Lamp Glove, Amber & White	1	Car No. 67152 $^{70}/_{7}$ ~ ○
•	2360 66 130A		1	Car No. 82291 $^{71}/_{1}$ ~ ○
29	2256 66 091	Lamp Globe (R) Amber & White	1	
•	2399 66 091	Lamp Globe (R) Amber & White	1	Car No. 67152 $^{70}/_{7}$ ~ ○
•	2360 87 004A	Lamp Globe (R) Amber & White	1	Car No. 82291 $^{71}/_{1}$ ~ ○
	2256 66 111	Lamp Globe (L) Amber & White	1	
•	2399 66 111	Lamp Globe (L) Amber & White	1	Car No. 67152 $^{70}/_{7}$ ~ ○
•	2360 87 008A	Lamp Globe (L) Amber & White	1	Car No. 82291 $^{71}/_{1}$ ~ ○
30	2256 66 093	Lamp Body (R)	1	
•	2399 66 111	Lamp Body (R)	1	Car No. 67152 $^{70}/_{7}$ ~ ○
•	2360 87 002A	Lamp Body (R)	1	Car No. 82291 $^{71}/_{1}$ ~ ○
	2256 66 113	Lamp Body (L)	1	
•	2399 66 113	Lamp Body (L)	1	Car No. 67152 $^{70}/_{7}$ ~ ○
•	2360 87 006A	Lamp Body (L)	1	Car No. 82291 $^{71}/_{1}$ ~ ○
31	2256 66 094	Seal Rubber (R)	1	
•	0259 66 094A	Seal Rubber (R)	1	Car No. 82291 $^{71}/_{1}$ ~ ○
	2256 66 114	Seal Rubber (L)	1	
•	0259 66 114	Seal Rubber (L)	1	Car No. 82291 $^{71}/_{1}$ ~ ○

36	99906 0500	Nut, Front Turn Signal Lamp	4
	99952 0500	Plain Washer	4
	0274 66 480A	SIDE TURN SIGNAL LAMP (R)	1
	2212 66 480	SIDE TURN SIGNAL LAMP (R), WITH Ⓐ MARK	1
	0274 66 490A	SIDE TURN SIGNAL LAMP (L)	1
	2212 66 490	SIDE TURN SIGNAL LAMP (L), WITH Ⓐ MARK	1
37	0274 87 191	Case	2
	2212 87 191	Case, With Ⓐ Mark	2
38	0274 87 192	Gasket	2
39	0274 87 193	Lens	2
40	0274 87 194	Frame	2
41	0274 87 195	Screw	4
42	0274 87 196	Gasket (R)	1
	0274 87 206	Gasket (L)	1
43	99701 1030	Bulb	2
44	99906 0400	Nut, Side Turn Signal Lamp	4

47	0820 79 613	Lamp Body	Optional	2	
48	0259 79 614	Cord		2	
49	0191 79 615	Spring Washer		2	
	0191 79 616	Nut		2	
• Ⓝ	2360 66 110	FRONT TURN SIGNAL LAMP (R) Lamp Glove White & Amber	For Arctic Spec. Models	1	Car No. 70537 $^{70}/_{11}$ ~ Added Anew
	2360 66 140	FRONT TURN SINGAL LAMP (L) Lamp Glove White & Amber	For Arctic Spec. Models	1	
	2360 87 004	Lamp Lens (R)		1	
	2360 87 008	Lamp Lens (L)		1	
	2360 87 002	Lamp Case (R)		1	
	2360 87 006	Lamp Case (L)		1	
	99701 3210	Bulb		2	

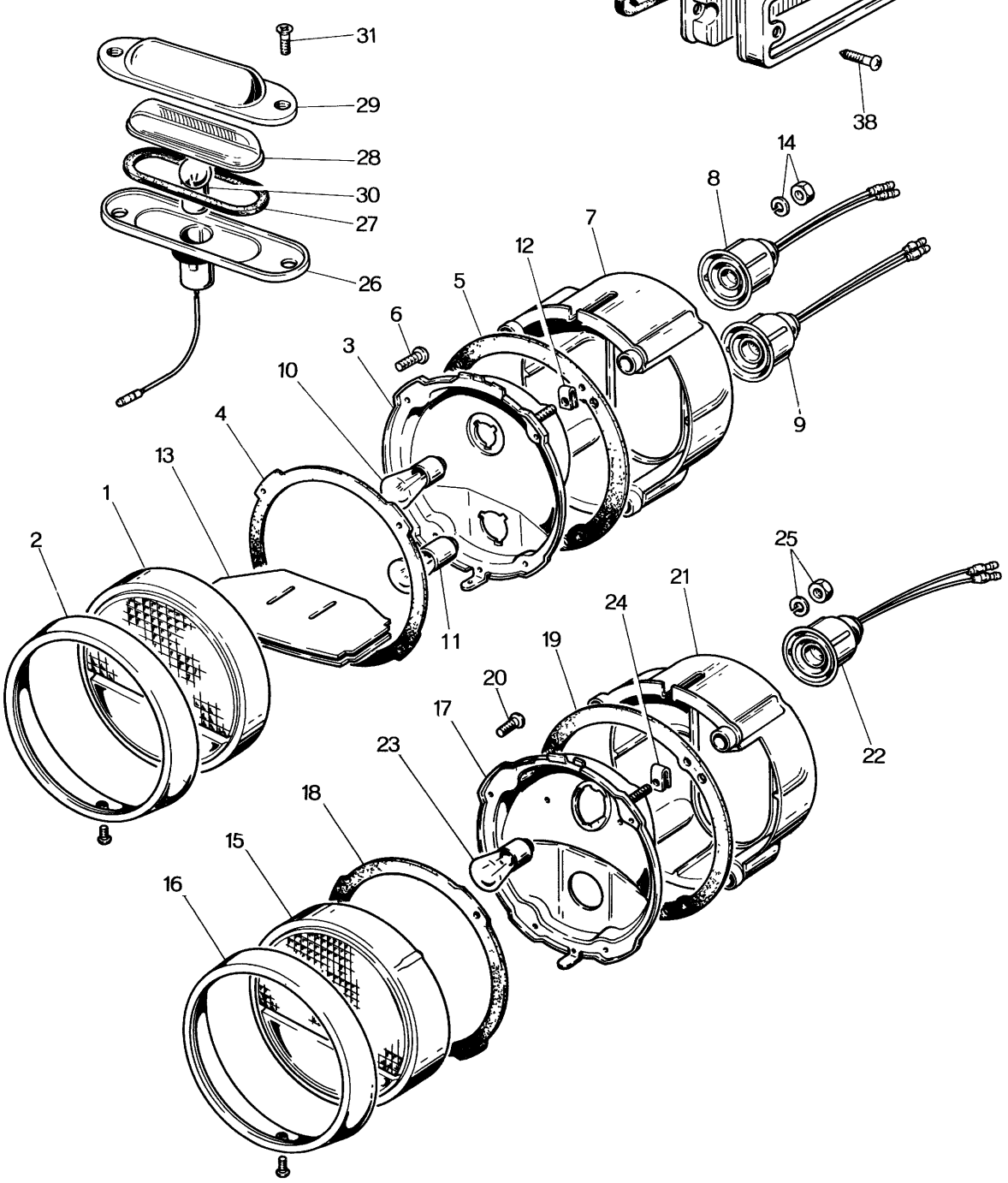
31
29
28
30
27
26
38
14
8
7
12
5
6
3
10
4
13
1
2
9
11
25
21
24
19
20
17
23
18
15
16
22

	0820 66 153	Body (L)	1
4	0820 66 174	Seal Rubber	2
5	0820 66 135	Seat Rubber	2
6	0820 66 136	Screw	8
7	0820 66 137	Lamp Cover	2
8	0820 66 138	Socket, Tail Stop	2
9	0820 66 159	Socket, Reverse Lamp	2
10	0223 66 037	Bulb, Tail Stop Lamp	2
11	0223 66 174	Bulb, Reverse Lamp	2
12	0820 66 139	Earth Clip	2
13	0820 66 141	Shade	2
14	99906 0500	Nut, Rear Combination Lamp	6
	99952 0500	Plain Washer	6

	2113 66 193	Body (L)	1
18	0820 66 174	Seal Rubber	2
19	0820 66 175	Seat Rubber	2
20	0820 66 136	Screw	8
21	0820 66 137	Lamp Cover	2
22	0820 66 138	Socket	2
23	99701 4237	Bulb	2
24	0820 66 139	Earth Clip	2
25	99906 0500	Nut, Rear Combination Lamp No. 2	6
	99952 0500	Plain Washer	6
	0275 66 370	**LICENCE LAMP**	1
26	0275 87 121	Body	1
27	0275 87 123	Gasket	1
28	0275 87 124	Lens	1
29	0275 87 125	Cover	1
30	99701 2080	Bulb	1

33	2244 87 192	Lamp Rim	2
34	2244 87 203	Lamp Body	2
35	2244 87 194	Seat Rubber (R)	1
	2244 87 195	Seat Rubber (L)	1
36	2244 87 206	Cord	2
37	99701 2080	Bulb (12V, 8W)	2
38	99773 0420	Screw, Side Marker Lamp	4
	99906 0400	Nut	4
39	2980 66 471	Cover, Side Marker Lamp	2

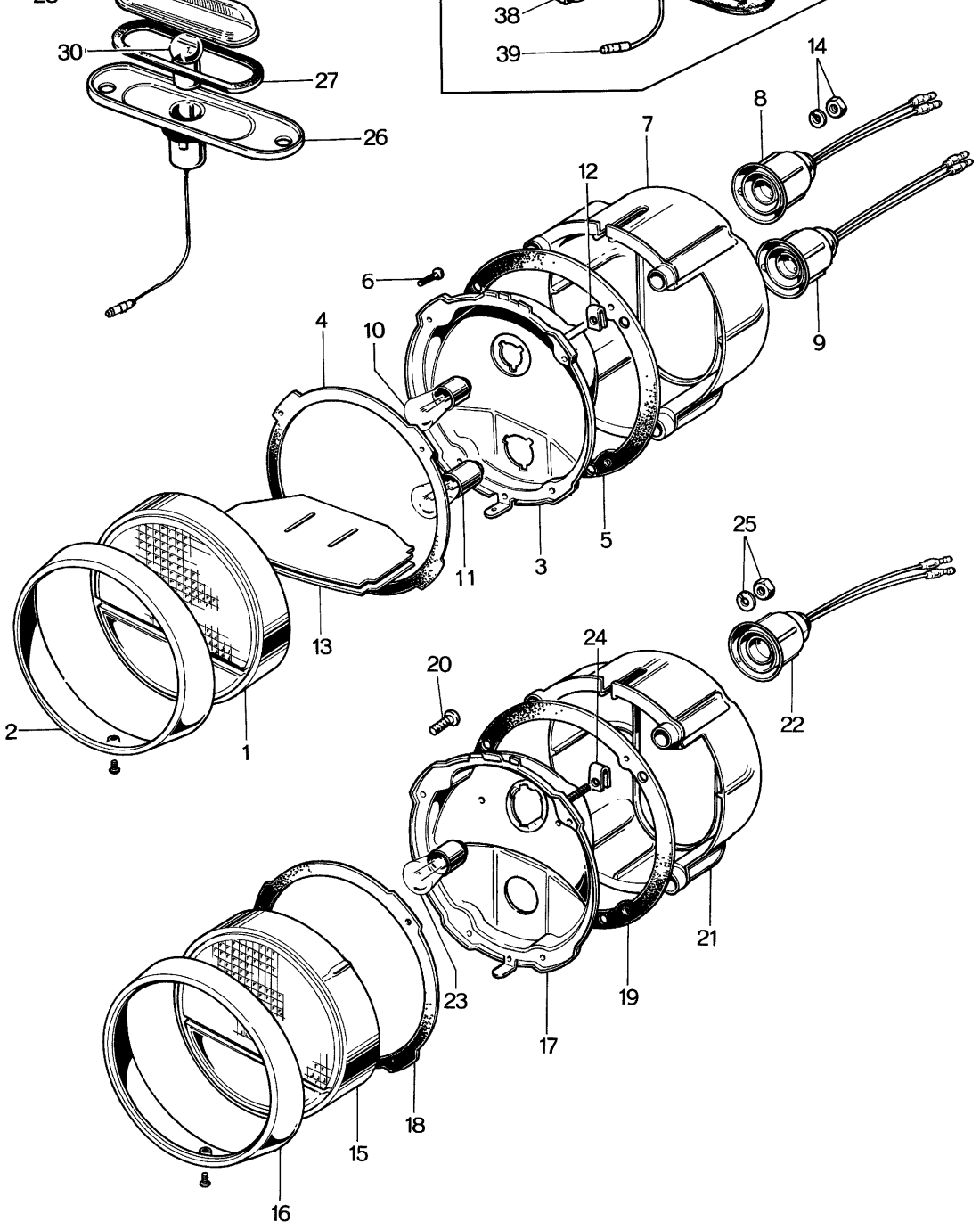
30
27
26
38
39
14
8
7
12
6
4
10
9
5
3
11
13
2
1
25
22
20
24
21
23
19
17
18
15
16

	2125 66 151	Globe (L) Lens Tail & Stop Red, Reverse Amber For France	1	
2	2325 66 132	Brim (R)	1	
	2113 66 132	Brim (R)	1	Car No. 70537 $^{70}/_{11}$ ~ X
	2325 66 152	Brim (L)	1	
	2113 66 152	Brim (L)	1	Car No. 70537 $^{70}/_{11}$ ~ X
3	0820 66 133	Body	2	
	2878 66 133	Body	2	Car No. 70537 $^{70}/_{11}$ ~ X
4	0820 66 134	Seal Rubber (R)	1	
	0820 66 154	Seal Rubber (L)	1	
	0820 66 174	Seal Rubber For (E2) Mark Lamp	2	
5	0820 66 135	Seat Rubber (R)	2	
	0820 66 175	Seat Rubber (R) For (E2) Mark Lamp	1	
	0820 66 195	Seat Rubber (L) For (E2) Mark Lamp	1	
6	0820 66 136	Screw	8	
7	0820 66 137	Lamp Cover	2	
8	0820 66 138	Socket, Tail & Stop	2	
9	0820 66 159	Socket, Reverse Lamp	2	
10	2325 66 156	Bulb, Tail & Stop	2	
11	2325 66 157	Bulb, Reverse Lamp	2	
12	0820 66 139	Earth Clip	2	
13	0820 66 141	Shade	2	

		Lens Red & Red With (E2) Mark		
	2080 66 250	Lens Amber & Red With (E2) Mark	1	Car No. 67812 70/10 ~ ○
	2334 66 190	**REAR COMBINATION LAMP No. 2 (L)**	1	
		Lens Amber & Red With (BS) Mark		
	2080 66 250	Lens Amber & Red With (BS) (E2) & (A) Mark	1	Car No. 65573 70/9 ~ ○
15	2325 66 171A	Globe, Red & Red	2	
	2334 66 171A	Globe, Amber & Red	2	
16	2113 66 132	Brim (R) } For (BS) Mark Lamp	1	
	2113 66 152	Brim (L) } For (BS) Mark Lamp	1	
	2325 66 172	Brim (R) } For (E2) Mark Lamp	1	
	2325 66 192	Brim (L) } For (E2) Mark Lamp	1	
17	2325 66 173	Body, For (E2) Mark Lamp	2	
	2334 66 173	Body, For (BS) Mark Lamp	2	
18	0820 66 174	Seal Rubber	2	
19	0820 66 175	Seat Rubber (R)	1	
	0820 66 195	Seat Rubber (L)	1	
20	0820 66 136	Screw	8	
21	0820 66 137	Lamp Cover	2	
22	0820 66 138	Socket, Tail Stop, For (E2) Mark Lamp	2	
	2124 66 139	Socket, Tail Stop, For (BS) Mark Lamp	2	
23	2325 66 156	Bulb, For (E2) Mark Lamp	2	
	99701 3210	Bulb, For (BS) Mark Lamp	2	
24	0820 66 139	Earth Clip	2	

27	0275 87 123	Gasket	1
28	0275 87 124	Lens	1
29	0275 87 125	Cover	1
30	99701 2080	Bulb	1
31	99772 0416	Screw	2
	2272 66 210	LICENCE LAMP With Ⓐ Mark	1
32	0223 66 211	Lens	1
33	0259 66 212	Cover	1
34	2272 66 213	Body With Ⓐ Mark	1
35	0223 66 214	Gasket, Lens	1
36	0223 66 215	Gasket, Body	1
37	0106 66 063	Bulb	1
38	0118 13 432	Earth Clip	2
39	0223 66 218	Cord	1
40	0259 66 219	Screw	2

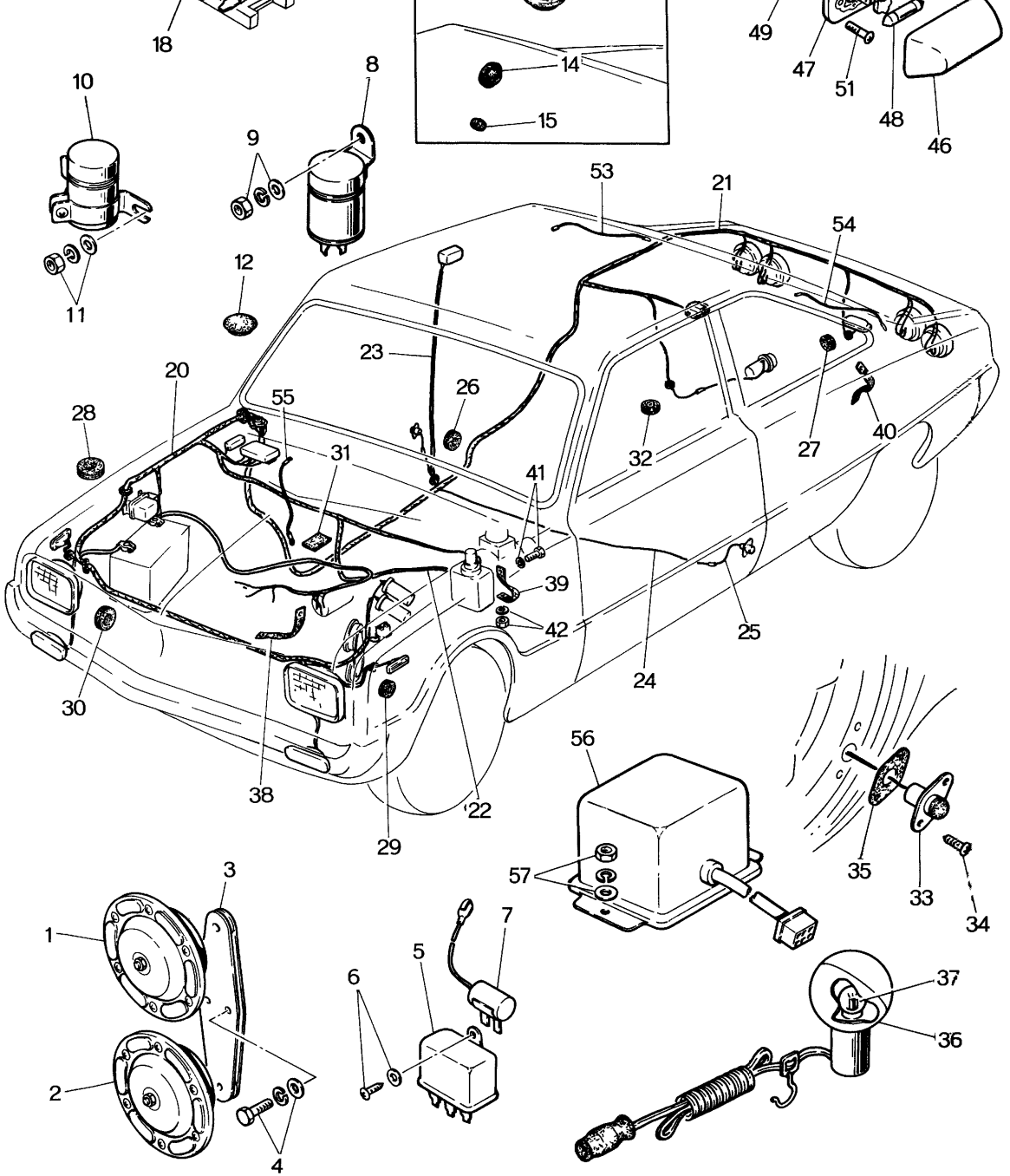
18
14
15
49
47
51
48
46
10
8
9
11
12
53
21
54
23
20
55
26
28
31
41
32
27
40
39
42
25
30
24
38
22
29
56
57
35
33
34
3
1
2
4
5
6
7
37
36

	4	99801 0820	Bolt, Horn		2	
		99952 0800	Plain Washer		2	
		99971 0800	Spring Washer		2	
	5	0259 66 438	Horn Relay		1	
	6	99863 0512	Tapping Screw		1	
		99952 0500	Plain Washer		1	
	7	0820 66 439	Condenser "T" Type Dashboard use		1	
	8	0820 66 470A	Flasher Unit		1	
•		0848 66 830	Flasher Unit – Hazzard		1	Car No. 87150 $^{71}/_{2}$ ~ X
	9	99906 0600	Nut, Flasher Unit		1	
•		99906 0500	Nut, Flasher Unit – Hazzard		1	Car No. 87150 $^{71}/_{2}$ ~ O
		99952 0600	Plain Washer		1	
•		99952 0500	Plain Washer		1	Car No. 87150 $^{71}/_{2}$ ~ O
		99971 0600	Spring Washer		1	
•		99971 0500	Spring Washer		1	Car No. 87150 $^{71}/_{2}$ ~ O
•	10	0223 66 580	Hazard Flasher Unit		1	Car No. 87150 $^{71}/_{2}$ ~ Discarded
•	11	99906 0600	Nut, Hazard Flasher Unit		1	
•		99952 0600	Plain Washer		1	
•		99971 0600	Spring Washer		1	
	12	0222 67 465	Hole Cover, Hazard Flasher Unit		1	
	13	0222 66 911	Hole Cover, Antenna Hole	Cars without Auto Radio	1	
	14	0222 66 971	Seal Rubber, Antenna Hole		1	
	15	0222 54 265	Cover, Antenna Hole		1	

		0813 66 498	Fuse (20A)	5	
	19	**908332 5 16**	Set Screw, Fuse Block	2 1	
•	20	**0845 67 010G**	Wire Harness (Frt.) Plain Type Dashboard use	1	
•		**0845 67 010I**	Wire Harness (Frt.) Plain Type Dashboard use	1	Car No. 87150 $^{71}/_{2}$ ~ X
		0848 66 600B	Wire Harness (Frt.) "T" Type Dashboard use	1	
•		**0848 66 600E**	Wire Harness (Frt.) "T" Type Dashboard use	1	Car No. 87858 $^{71}/_{2}$ ~ X
	21	**0845 67 030**	Wire Harness (Rr.) Plain Type Dashboard use	1	
		0845 67 030A	Wire Harness (Rr.) Plain Type Dashboard use } Selective use	1	Car No. 65573 $^{70}/_{9}$ ~ X
		0820 66 660E	Wire Harness (Rr.) "T" Type Dashboard use } Selective use	1	
	22	**0820 66 650**	Wire Harness, Reverse Lamp	1	
	23	**0259 66 731**	Cord, Room Lamp	1	
	24	**0256 66 732**	Cord, Door Switch	1	
	25	**0259 66 733**	Cord, Door Switch	2	
	26	**0114 43 625**	Cord Protector, Room Lamp	1	
	27	**0111 41 692**	Cord Protector, Licence Lamp	2	
	28	**0259 66 686**	Cord Protector, Wire Harness Front	1	
	29	**0820 67 151**	Cord Protector, Side Marker Lamp	2	
	30	**0259 66 685**	Cord Protector, Wire Harness Front	2	
	31	**0208 66 949**	Protector Pad, Reverse Lamp	6	
	32	**0208 66 683**	Cord Protector, Fuel Pump	1	

	38	0820 66 731	Earth Wire	1	
	39	0813 66 732A	Earth Wire, Silencer	1	
	40	0820 66 734	Earth Wire	1	
	41	99743 0616	Screw, Earth Wire	1	
		99971 0600	Spring Washer	1	
	42	99906 0600	Nut, Earth Wire	1	
		99971 0600	Spring Washer	1	
•	Ⓝ	0275 67 910	Relay – ignition Coil	1	Car No. 87150 $^{71}/_{2}$ ~ Added Anew
	43	0222 66 510A	FUSE BLOCK, MAIN	1	
		0222 66 510B	FUSE BLOCK, MAIN	1	Car No. 62266 $^{70}/_{6}$ ~ ○
	44	0222 66 511	Fuse (40A)	1	
		0222 66 511A	Fuse (40A)	1	Car No. 62266 $^{70}/_{6}$ ~ ○
•	45	908336 5 12	Set Screw, Fuse Block	1	
		0223 66 290	ROOM LAMP	1	
	46	0223 66 291	Globe	1	

	51	99863 0416	Tapping Screw, Room Lamp	1	
	52	99863 0412	Tapping Screw, Room Lamp	1	
	53	0820 67 131	Cord, Rear Window	1	
	54	0820 67 132	Cord, Rear Window	1	
•	55	0316 67 135	Cord, Stop Switch	1	Car No. 87150 $^{71}/_{2}$ ~ Discarded
	56	2113 60 910	Dimmer & Flasher Relay	1	
	57	99906 0600	Nut, Relay	2	
		99952 0600	Plain Washer	2	
		99971 0600	Spring Washer	2	
	(N)	0317 70 985	Water Proof Cover, For Ignition Coil	1	
	(N)	0317 70 990	Set Plate	1	
	(N)	998381 5 16	Set Screw	2	

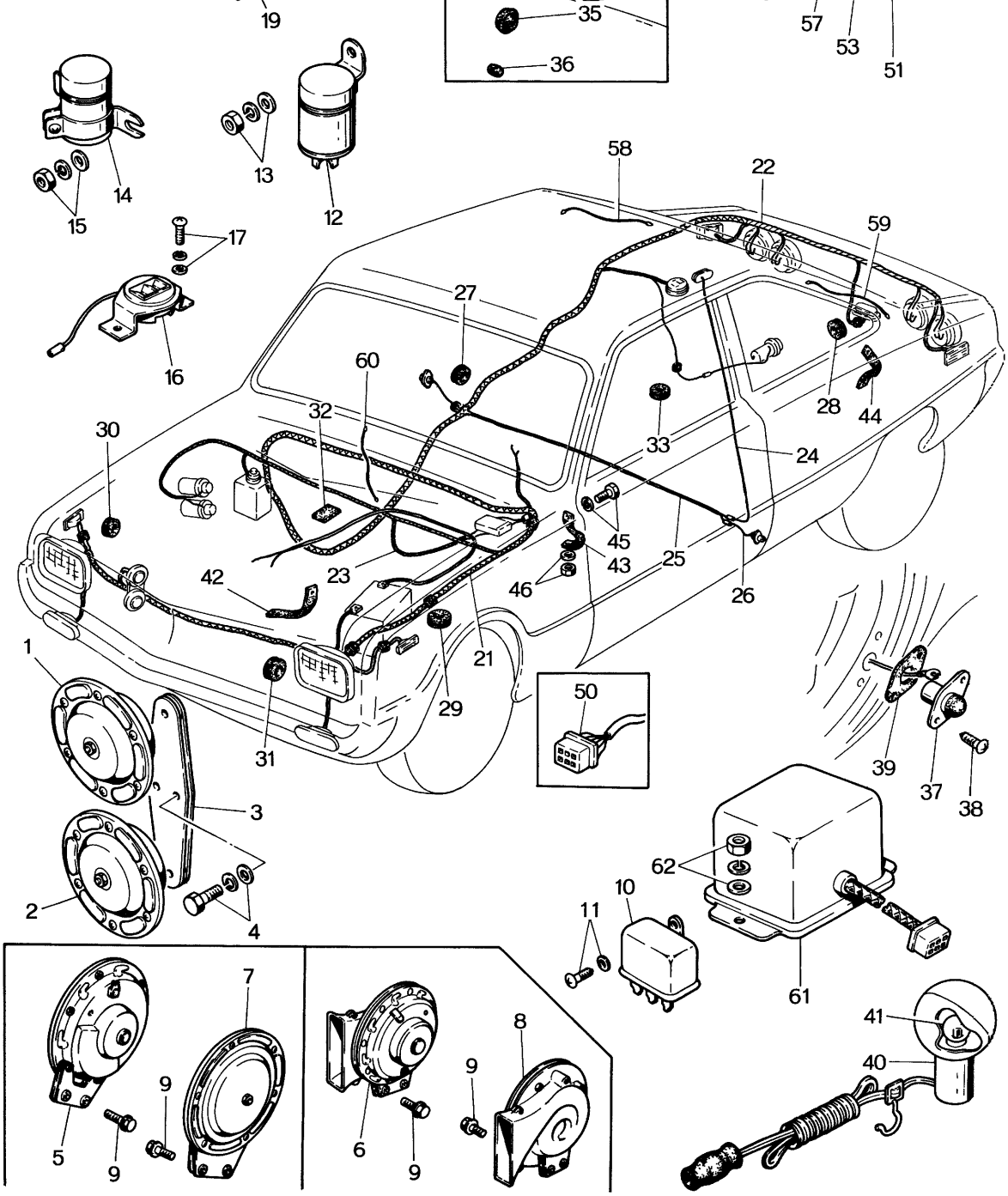
19
35
36
57
53
51
14
15
13
12
58
22
59
17
16
27
60
32
30
28
44
33
24
45
43
46
25
26
42
23
21
29
31
1
3
2
4
50
39
37
38
62
10
11
61
41
40
7
9
5
9
6
9
8
9

4	99801 0820	Bolt, Horn	2	
	99952 0800	Plain Washer	2	
	99971 0800	Spring Washer	2	
5	2254 66 420	Electric Horn, High Tone use Flat Type, With (E2) Mark	1	
6	2272 66 420	Electric Horn, High Tone use Vartical Type, With (A) Mark	1	
7	2254 66 430	Electric Horn, Low Tone use Flat Type, With (E2) Mark	1	
8	2272 66 430	Electric Horn, Low Tone use Vartical Type, With (A) Mark	1	
9	908047 8 25	Set Bolt, Horn	4	
10	0259 66 438	Horn Relay	1	
11	99863 0512	Tapping Screw, Horn Relay	1	
	99952 0500	Plain Washer	1	
12	0820 66 470A	Flasher Unit With (A) Mark	1	
	0824 66 830	Flasher Unit	1	
13	99906 0600	Nut, Flasher Unit	1	
	99952 0600	Plain Washer	1	
	99971 0600	Spring Washer	1	
14	0223 66 580	Hazard Flasher	1	
	0223 66 580A	Hazard Flasher With (A) Mark	1	Car No. 67812 $^{70}/_{10}$ ~ ○
15	99906 0600	Nut, Hazard Flasher	1	
	99952 0600	Plain Washer	1	
	99971 0600	Spring Washer	1	

	0820 66 730	FUSE BLOCK Ass'y	1	
18	0820 66 732	Cover	1	
19	2981 66 495	Fuse (10A)	1	
	2981 66 496	Fuse (15A)	1	
	0813 66 498	Fuse (20A)	1	
20	99833 0516	Screw, Fuse Block	2	
	99971 0500	Spring Washer	2	
21	2124 66 600F	Wire Harness (Frt.)	1	2124
	2124 66 600G	Wire Harness (Frt.)	1	Car No. 61649 $^{70}/_{6}$ ~ X
•	2124 66 600H	Wire Harness (Frt.)	1	Car No. 87150 $^{71}/_{2}$ ~ X
	2329 66 600D	Wire Harness (Frt.)	1	2112,2125
	2415 67 010	Wire Harness (Frt.)	1	Car No. 65086 $^{70}/_{8}$ ~ ○
•	2415 67 010A	Wire Harness (Frt.)	1	Car No. 87150 $^{71}/_{2}$ ~ X
	2335 67 010A	Wire Harness (Frt.)	1	2335,2336
	2335 67 010B	Wire Harness (Frt.)	1	Car No. 61649 $^{70}/_{6}$ ~ X
	2061 67 010	Wire Harness (Frt.)	1	Car No. 65573 $^{70}/_{9}$ ~ ○
22	2113 66 660C	Wire Harness (Rr.)	1	2112,2125
	2124 66 660A	Wire Harness (Rr.)	1	2124,2125
	2335 67 030	Wire Harness (Rr.)	1	2335,2336
	2336 67 030	Wire Harness (Rr.)	1	2336
23	0820 66 650	Wire Harness, Reverse Lamp	1	
24	0259 66 731	Cord, Room Lamp	1	
25	2158 66 731	Cord, Door Switch	1	
26	0259 66 733	Cord, Door Switch	2	

33	0208 66 683	Protector, Fuel Pump Cord		1	
34	0222 66 911	Hole Cover, Antenna Hole	Cars without Auto Radio	1	
35	0222 66 971	Seal Rubber, Antenna		1	
36	0200 54 265	Cover, Antenna Cord		1	
37	0209 66 820	Door Switch		2	
38	99864 0412	Tapping Screw, Door Switch		4	
39	0209 66 821	Adjust Washer		2	
• (N)	0275 67 910	Relay—ignition coil		1	Car No. 65086 $^{70}/_{8}$ ~ Added Anew
40	0259 66 930	INSPECTION LAMP		1	
41	99701 2080	Bulb		1	
42	0820 66 731	Earth Wire, Engine		1	
43	0813 66 732A	Earth Wire, Silencer		1	
44	0820 66 734	Earth Wire, Radio		1	
45	99743 0616	Screw, Earth Wire		1	
	99971 0600	Spring Washer		1	
46	99906 0600	Nut, Earth Wire		1	
	99971 0600	Spring Washer		1	

	0223 66 290	ROOM LAMP	1
51	0223 66 291	Globe	1
52	0223 66 292	Body	1
53	0114 66 154	Bulb, 12V/5W	1
54	0223 66 295	Cord	1
55	0223 66 296	Cord	1
56	99863 0416	Tapping Screw, Room Lamp	1
57	99863 0412	Tapping Screw, Room Lamp	1
58	0820 67 131	Cord, Rear Window	1
59	0820 67 132	Cord, Rear Window	1
60	0316 67 135	Cord, Stop Switch	1
61	2113 60 910	Flasher & Dimmer Relay	1
62	99906 0600	Nut, Relay	2
	99952 0600	Plain Washer	2
	99971 0600	Spring Washer	2
(N)	0317 70 985	Waterproof Cover, Ignition Coil	1
(N)	0317 70 990	Set Plate	1
(N)	99838 1516	Set Screw	2

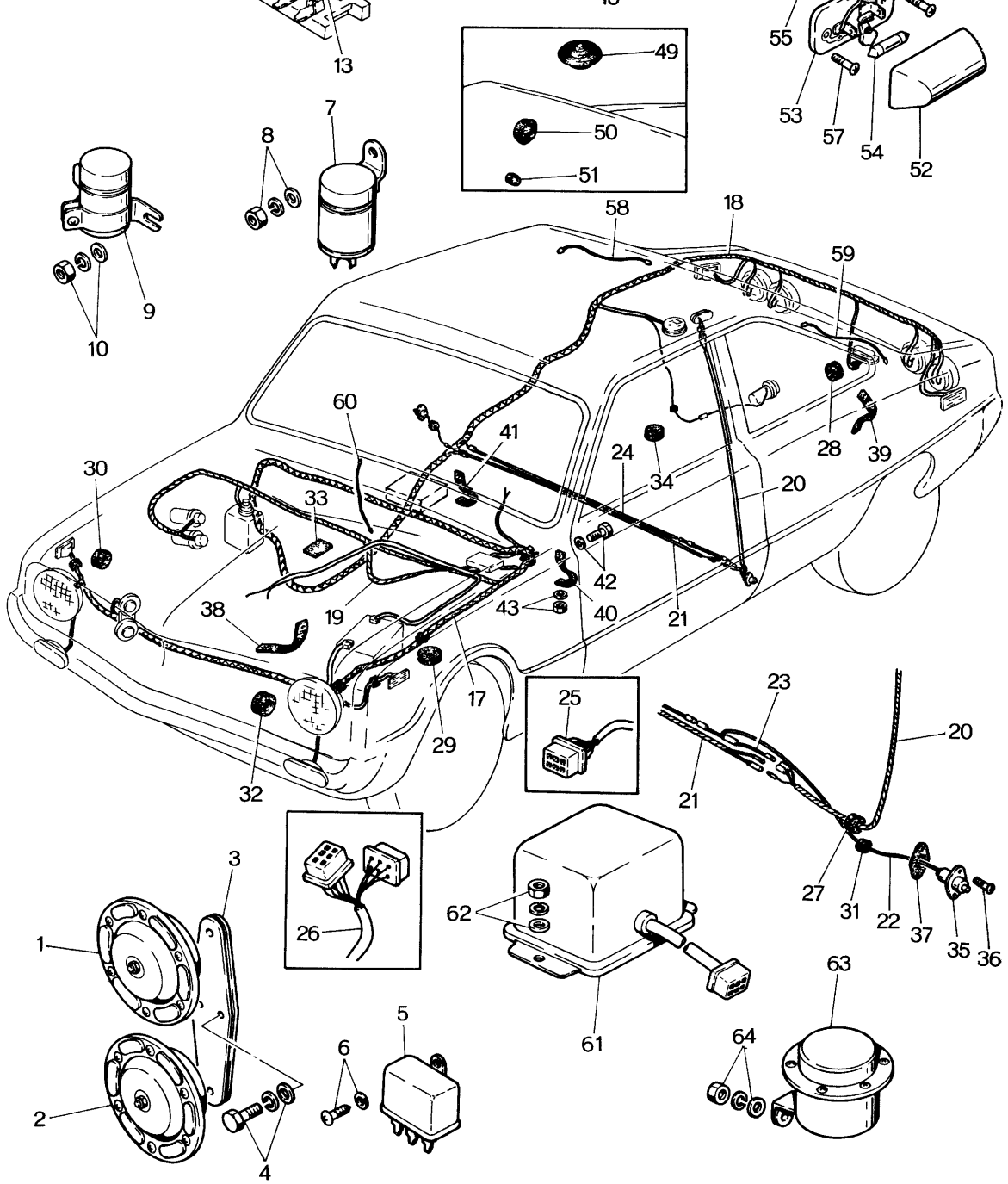
1
2
3
4
5
6
7
8
9
10
13
18
19
20
21
22
23
24
25
26
27
28
29
30
31
32
33
34
35
36
37
38
39
40
41
42
43
49
50
51
52
53
54
55
57
58
59
60
61
62
63
64

4	99801 0820	Bolt, Horn	2
	99952 0800	Plain Washer	2
	99971 0800	Spring Washer	2
5	0259 66 438	Horn Relay	1
6	99863 0512	Screw, Horn Relay	1
	99952 0500	Plain Washer	1
7	2113 66 470	Flasher Unit	1
8	99906 0500	Nut, Flasher Unit	1
	99952 0500	Plain Washer	1
	99971 0500	Spring Washer	1
9	0223 66 580	Hazard Unit	1
10	99906 0600	Nut, Hazard Unit	1
	99952 0600	Plain Washer	1
	99971 0600	Spring Washer	1
	0317 66 730B	FUSE BLOCK Plain Type Dashboard use	1
	0820 66 730	FUSE BLOCK "T" Type Dashboard use	1
11	0317 66 732	Cover Plain Type Dashboard use	1
12	0820 66 732	Cover "T" Type Dashboard use	1

15	2370 66 740	Bracket, Fuse Block, Plain Type Dashboard use	1	
16	99906 0500	Nut, Bracket . Plain Type Dashboard use	2	
	99952 0500	Plain Washer	2	
	99971 0500	Spring Washer	2	
17	2329 66 600E	Wire Harness (Frt.)	1	
	2329 66 600F	"T" Type Dashboard use	1	Car No. 59444 $^{70}/_{4}$ ~ O
	2335 67 010A	Wire Harness (Frt.)	1	
	2335 67 010C	Plain Type Dashboard use	1	Car No. 62247 $^{70}/_{6}$ ~ X
18	2113 66 660C	Wire Harness (Rr.) "T" Type Dashbaord use	1	
	2335 67 030	Wire Harness (Rr.) Plain Type Dashboard use	1	
19	0820 66 650	Wire Harness, Reverse Lamp	1	
20	0256 66 731	Cord, Room Lamp	1	
21	2158 66 731	Cord, Door Switch,	1	
22	0259 66 733	Cord, Door Switch	2	
23	2280 67 090	Cord, Door Switch, Lock Buzzer use	1	
24	2280 67 131A	Cord, Door Swtich, Lock Buzzer use	1	
25	2113 67 140	Cord, Ignition Switch	1	
26	2329 67 130	Cord, Ignition Switch Emission Controlled Model	1	
27	0114 43 625	Protector, Room Lamp	1	
28	0111 41 625	Protector, Licence Lamp Cord	1	
29	0259 66 686	Protector, Wire Harness Front	1	
30	0820 66 151	Protector,Side MarkerLamp Cord	2	
31	0114 66 683	Protector, Switch Cord	2	

38	0820 66 731	Earth Wire, Engine	1	
39	0813 66 732A	Earth Wire, Silencer	1	
40	0820 66 734	Earth Wire, Auto Radio	1	
41	2329 66 734	Earth Wire, T/Mission Case Emission Controlled Model	1	
42	99743 0616	Screw, Earth Wire	1	
	99971 0600	Spring Washer	1	
43	99906 0600	Nut, Earth Wire	1	
	99971 0600	Spring Washer	1	
44	0222 66 510A	FUSE BLOCK, MAIN	1	
	0222 66 510B	"T" Type Dashboard use	1	Car No. 62266 70/6 ~ O
45	0305 66 760A	FUSE BLOCK, MAIN	1	
	0305 66 760B	Plain Type Dashboard use	1	Car No. 62266 70/6 ~ O
46	0222 66 511	Fuse (40A)	1	
	0222 66 511A	Fuse (40A)	1	Car No. 62266 70/6 ~ O
47	908336 5 12	Set Screw, Fuse Block "T" Type Dashboard use	1	
48	907436 6 16	Set Screw, Fuse Block Plain Type Dashboard use	2	
49	0222 66 911	Hole Cover, Antenna Hole	1	
50	0222 66 971	Seal Rubber, Antenna	1	
51	0200 54 265	Cover, Antenna Cord	1	

57	99863 0412	Tapping Screw, Room Lamp	2
58	0820 67 131	Cord, Rear Window Wire Heated Glass use	1
59	0820 67 132	Cord, Rear Window Wire Heated Glass use	1
60	0316 67 135	Cord, Stop Switch	1
61	2113 60 910	Dimmer & Flasher Relay	1
62	99906 0600	Nut, Relay	2
	99952 0600	Plain Washer	2
	99971 0600	Spring Washer	2
63	0750 66 840	Lock Buzzer	1
64	99906 0600	Nut, Lock Buzzer	1
	99952 0600	Plain Washer	1
	99971 0600	Spring Washer	1
(N)	0317 70 985	Waterproof Cover, Ignition Coil	1
(N)	0317 70 990	Set Plate	1
(N)	998381 5 16	Set Screw	2

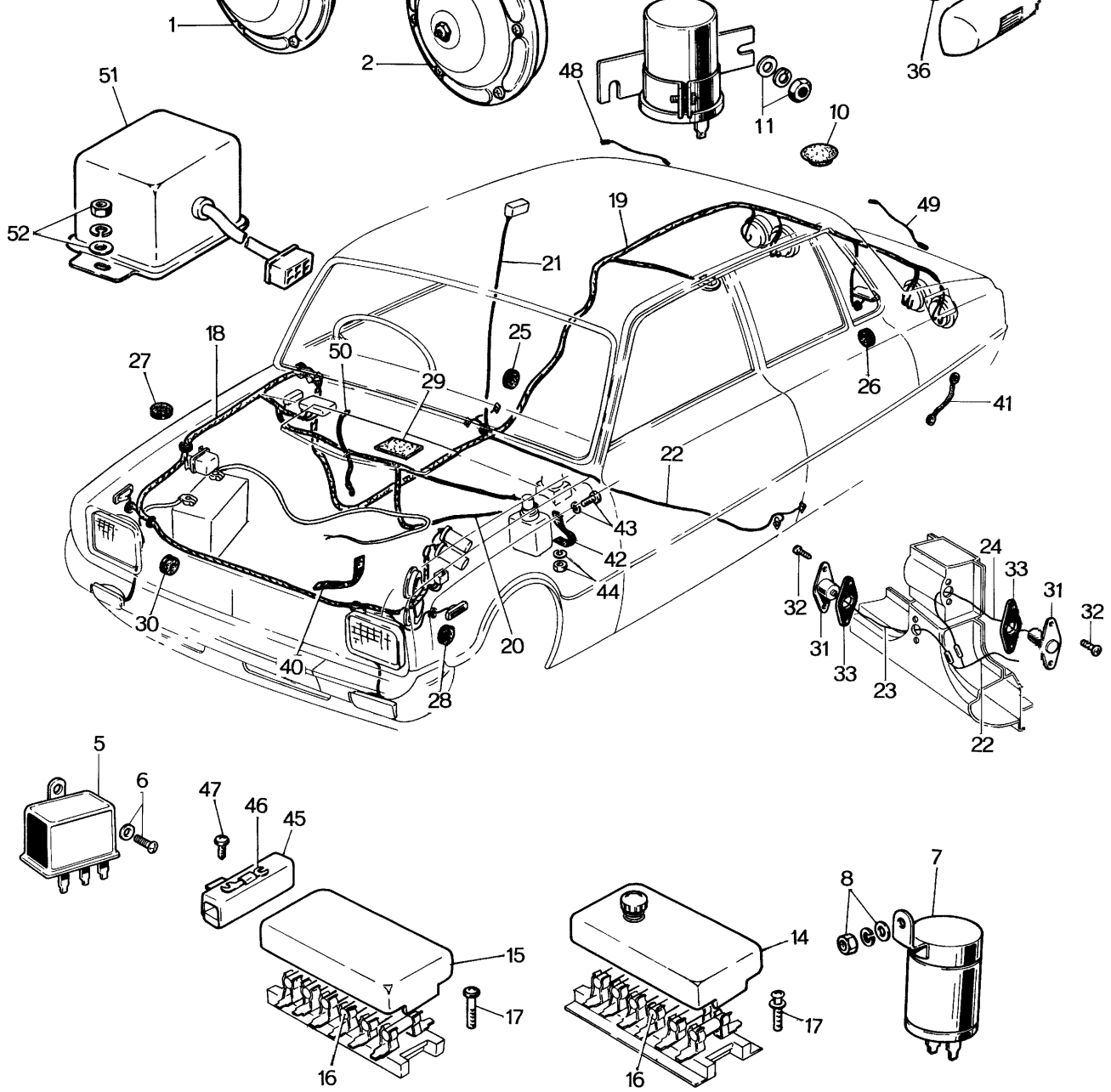
1
2
36
48
11
10
51
52
49
19
21
18
27
50
29
25
26
41
22
43
42
44
30
40
20
28
24
33
31
32
32
31
33
23
22
5
6
47
46
45
15
17
16
14
17
16
8
7

4	99801 0820	Bolt, Horn	2
	99952 0800	Plain Washer	2
	99971 0800	Spring Washer	2
5	0259 66 438	Horn Relay	1
6	99863 0512	Screw, Horn Relay	1
	99952 0500	Plain Washer	1
7	0820 66 470A	Flasher Unit, With Ⓐ Mark	1
	0824 66 830	Flasher Unit	1
8	99906 0600	Nut, Flasher Unit	1
	99952 0600	Plain Washer	1
	99971 0600	Spring Washer	1
9	0223 66 580	Hazard Flasher Unit	1
10	0222 67 465	Cover	1
11	99906 0600	Nut, Hazard Flasher Unit	1
	99952 0600	Plain Washer	1
	99971 0600	Spring Washer	1
12	0222 66 911	Hole Cover, Antenna Hole	1
13	0200 54 265	Cover, Antenna Cord	1

	2981 66 495	Fuse (10A)	1	
17	908332 5 16	Set Screw, Fuse Block	2	
18	0848 66 600B	Wire Harness (Frt.) "T" Type Dashboard use	1	
•	0848 66 600C	Wire Harness (Frt.) "T" Type Dashboard use	1	Car No. 87150 $^{71}/_{2}$ ~ X
	0845 67 010G	Wire Harness (Frt.) Plain Type Dashboard use	1	
•	0845 67 010H	Wire Harness (Frt.) Plain Type Dashboard use	1	Car No. 87150 $^{71}/_{2}$ ~ X
19	0820 66 660E	Wire Harness (Rr.) } "T" Type Dashboard use	1	
	2427 67 030	Wire Harness (Rr.) } "T" Type Dashboard use	1	
	2063 67 030	Wire Harness (Rr.) } Plain Type Dashboard use	1	
	2335 67 030	Wire Harness (Rr.) } Plain Type Dashboard use	1	
20	0820 66 650	Wire Harness, Reverse Lamp	1	
21	0259 66 731	Cord, Room Lamp	1	
22	0259 66 732	Cord, Door Switch	1	
23	0188 66 731A	Cord, Door Switch	2	
24	0259 66 733	Cord, Door Switch	2	
25	0114 43 625	Protector, Room Lamp Cord	1	
26	0111 41 692	Protector, Licence Lamp Cord	1	
27	0259 66 686	Protector, Wire Harness Front	1	
28	0820 67 151	Protector, Side Turn Signal Lamp Cord	2	
29	0259 66 949	Protector Pad, Reverse Lamp Cord	6	

	0223 66 290	ROOM LAMP	1	
34	0223 87 141	Globe	1	
35	0223 87 142	Body	1	
36	99701 5050	Bulb, 12V/15W	1	
37	0223 66 295	Cord	1	
38	0223 66 296	Cord	1	
39	99863 0412	Tapping Screw, Room Lamp	2	Car No. 62907 $^{70}/_{7}$ ~ Quantity
	99863 0416	Tapping Screw, Room Lamp	1	Car No. 62907 $^{70}/_{7}$ ~ Discarded
40	0820 66 731	Earth Wire, Engine	1	
41	0813 66 732A	Earth Wire, Silencer	1	
42	0820 66 734	Earth Wire, Auto Radio	1	
43	99743 0616	Screw, Earth Wire	1	
	99971 0600	Spring Washer	1	
44	99906 0600	Nut, Earth Wire	1	
	99971 0600	Spring Washer	1	
45	0222 66 510A	FUSE BLOCK, MAIN	1	
	0222 66 510B	FUSE BLOCK, MAIN	1	Car No. 62266 $^{70}/_{6}$ ~ O
46	0222 66 511	Fuse (40A)	1	
	0222 66 511A	Fuse (40A)	1	Car No. 62266 $^{70}/_{6}$ ~ O

		99952 0600	Plain Washer	2	
		99971 0600	Spring Washer	2	
	(N)	0317 70 985	Waterproof Cover, Ignition Coil	1	
	(N)	0317 70 990	Set Plate	1	
	(N)	998381 5 16	Set Screw	2	
•	N	0275 67 910	Relay – Ignition Coil	1	Car No. 87150 $^{71}/_{2}$ ~ Added Anew

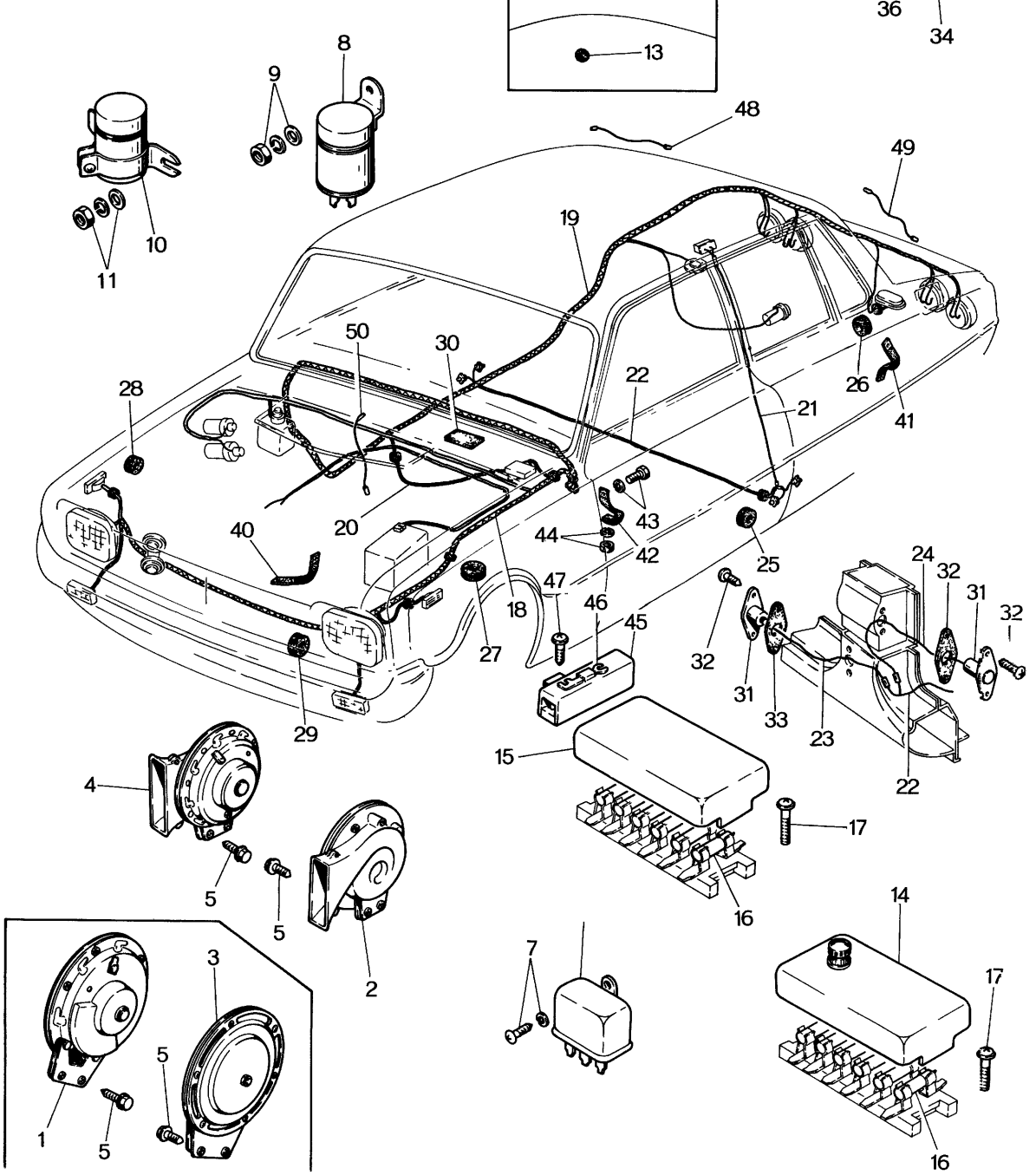
36
34
13
8
9
48
49
10
11
19
50
30
22
28
21
26
41
20
43
44
42
40
25
24
32
31
32
47
46
45
18
27
32
31
33
23
22
29
15
17
4
5
5
2
16
14
7
17
3
5
1
5
16

7	99863 0512	Screw, Horn Relay	1	
	99952 0500	Plain Washer	1	
8	0820 66 470A	Flasher Unit with Ⓐ Mark	1	
	0824 66 830	Flasher Unit	1	
9	99906 0600	Nut, Flasher Unit	1	
	99952 0600	Nut, Flasher Unit	1	
	99971 0600	Spring Washer	1	
10	0223 66 480	Hazard Flasher Unit	1	
•	0223 66 480A	Hazard Flasher Unit With Ⓐ Mark	1	Car No. 67812 $^{70}/_{10}$ ~ ○
11	99906 0600	Nut, Flasher Unit	1	
	99952 0600	Plain Washer	1	
	99971 0600	Spring Washer	1	
12	0222 66 911	Cover, Antenna Hole	1	
13	0200 54 265	Cover, Antenna Cord	1	
	0317 66 730B	**FUSE BLOCK Ass'y** Plain Type Dashboard Model	1	
	0820 66 730	**FUSE BLOCK Ass'y** "T" Type Dashboard Model	1	
14	0317 66 732	Cover Plain Type Dashboard Model	1	
15	0820 66 732	Cover, "T" Type Dashboard Model	1	
16	0813 66 498	Fuse (20A)	5	

			"T" Type Dashboard Model		
	2335 67 010A	Wire Harness (Frt.) Plain Type Dashboard Model		1	
•	2061 67 010	Wire Harness (Frt.) Plain Type Dashboard Model		1	Car No. 65086 $^{70}/_{8}$ ~ ○
19	2113 66 660C	Wire Harness (Rr.)	"T" Type Dashboard Model	1	
	2124 66 660A	Wire Harness (Rr.)	"T" Type Dashboard Model	1	
	2063 67 030	Wire Harness (Rr.)	Plain Type Dashboard Model	1	
	2335 67 030	Wire Harness (Rr.)	Plain Type Dashboard Model	1	
20	0820 66 650	Wire Harness, Reverse Lamp		1	
21	0259 66 731	Cord, Room Lamp		1	
22	2158 66 731	Cord, Door Switch		1	
23	0188 66 731A	Cord, Door Switch		2	
24	0259 66 733	Cord, Door Switch		2	
25	0114 43 625	Protector, Room Lamp Cord		1	
26	0111 41 692	Protector, Licence Lamp Cord		1	
27	0259 66 686	Protector, Wire Harness Front		1	
28	0820 67 151	Protector, Side Turn Signal Lamp Cord		2	
29	0259 66 685	Protector, Wire Harness Front		2	
30	0209 66 949	Protector Pad, Reverse Lamp Cord		6	
31	0209 66 820	Door Switch		4	
32	99864 0412	Tapping Screw, Door Switch		8	
33	0209 66 821	Adjust Washer, Door Switch		4	
• Ⓝ	0275 67 910	Pelay—ignition coil		1	Car No. 65086 $^{70}/_{8}$ ~ Added Anew

39	99863 0412	Tapping Screw, Room Lamp	1	
	99863 0416	Tapping Screw	1	
40	0820 66 731	Earth Wire, Engine	1	
41	0813 66 732A	Earth Wire, Silencer	1	
42	0820 66 734	Earth Wire, Auto Radio	1	
43	99743 0616	Screw, Earth Wire	1	
	99971 0600	Spring Washer	1	
44	99906 0600	Nut, Earth Wire	1	
	99971 0600	Spring Washer	1	
45	0222 66 510A	**FUSE BLOCK, MAIN**	1	
	0222 66 510B	**FUSE BLOCK, MAIN**	1	Car No. 62266 70/6 ~ O
46	0222 66 511	Fuse (40A)	1	
	0222 66 511A	Fuse (40A)	1	Car No. 62266 70/6 ~ O
47	908336 5 12	Set Screw, Fuse Block	1	
48	0820 67 131	Cord, Rear Window with Heating Wire	1	
49	0820 67 132	Cord, Rear Window with Heating Wire	1	
50	0316 67 135	Cord, Stop Switch	1	

N.	998381 5 16	Set Screw	2	
• Ⓝ	0275 67 910	Relay – ignition Coil	1	Car No. 87150 $^{71}/_{2}$ ~ Added Anew

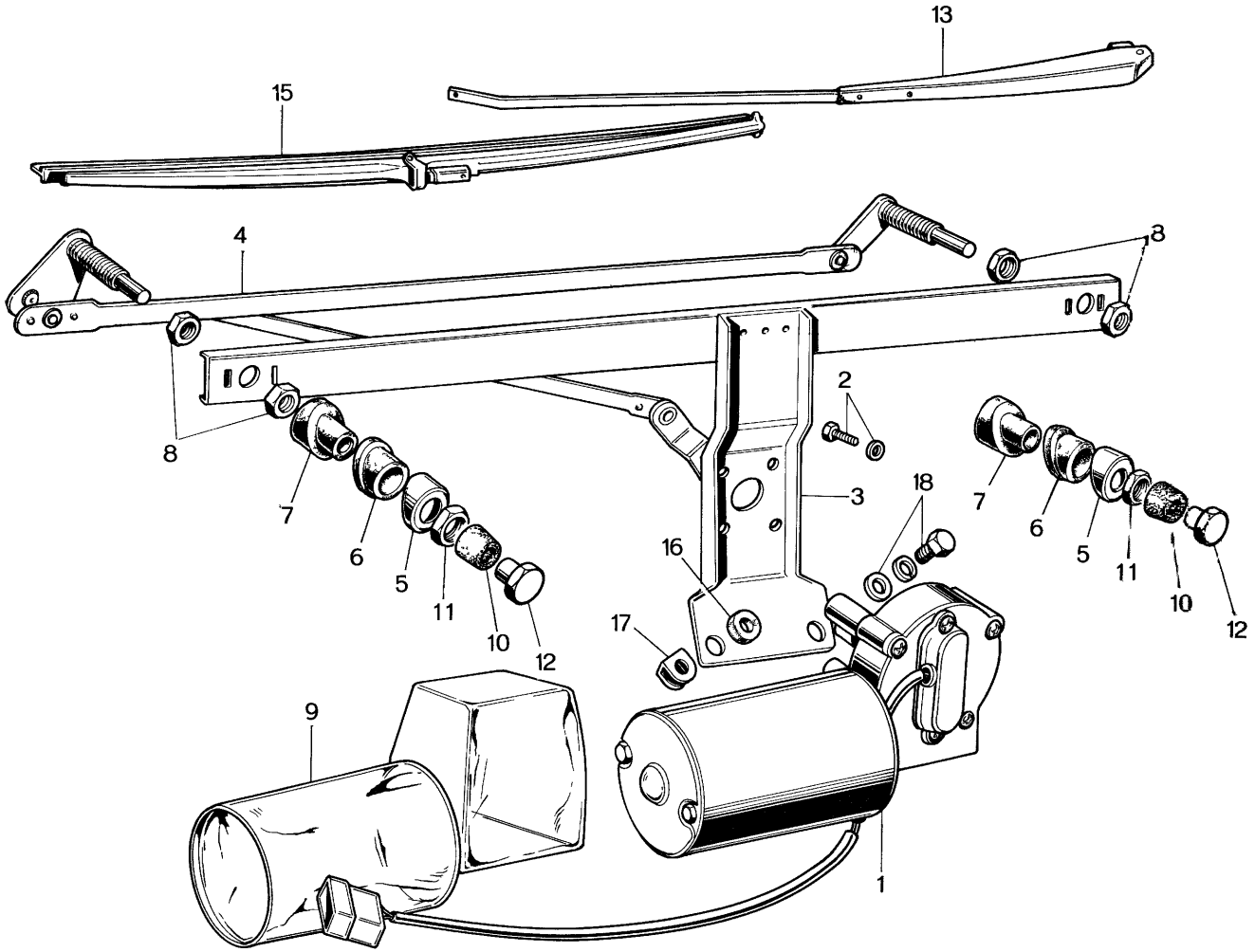
13
15
4
8
8
2
3
18
16
17
7
6
5
11
10
12
9
1
7
6
5
11
10
12

3	0259 66 401	Wiper Frame (R. H. D.)	1	
	2158 87 131	Wiper Frame (L. H. D.)	1	
4	0259 87 138	Wiper Link (R. H. D.)	1	
	2158 87 138	Wiper Link (L. H. D.)	1	
5	0259 87 131	Decoration Cap	2	
6	0259 87 132	Bush, Outer	2	
7	0259 87 133	Bush, Inner	2	
8	0259 87 134	Nut	4	
9	0259 87 139	Motor Cover (R. H. D.)	1	
	2158 87 139	Motor Cover (L. H. D.)	1	
10	0212 66 371	Cap	2	
11	0212 66 372	Nut	2	
12	0820 87 140	Setting Nut	2	
13	0820 66 365	Wiper Arm (L) (R. H. D.)	1	
•	0820 66 365A	Wiper Arm (L) (R. H. D.)	1	Car No. 70911 $^{70}/_{11}$ ~ ○
	0820 66 366	Wiper Arm (R) (R. H. D.) (w/o Fin)	1	
	2158 66 366B	Wiper Arm (R) (L. H. D.)	1	
14	0820 79 366	Wiper Arm (R) (R. H. D.) (with Fin) High Speed Type	1	
	2113 66 366A	Wiper Arm(L) (L. H. D.) (with Fin) High Speed Type	1	

99951 0618	Plain Washer	2
99971 0600	Spring Washer	2

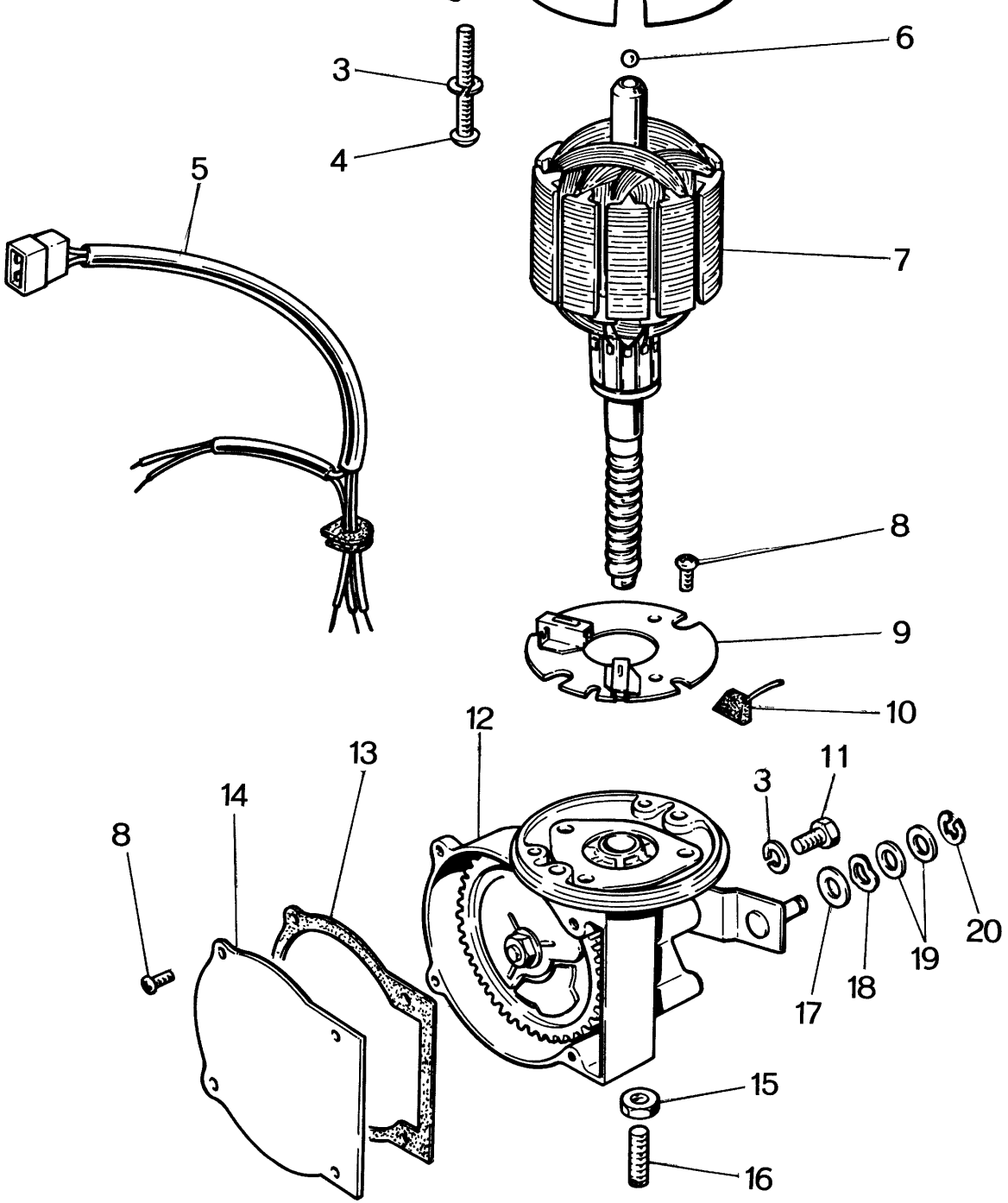
3
4
6
5
7
8
9
10
12
13
11
3
14
8
17
18
19
20
15
16

5	0259 87 112A	Wire Harness (R.H.D.)	1
	2158 87 112A	Wire Harness (L.H.D.)	1
6	0259 87 107	Ball	2
7	0259 87 108A	Rotor	1
8	0259 87 105	Screw	7
9	0259 87 101A	Plate, Brush Holder	1
10	0259 87 106	Brush	3
11	99806 0510	Bolt	4
12	0259 87 102A	Gear Box (R.H.D.)	1
	2158 87 102A	Gear Box (L.H.D.)	1
13	0259 87 103	Packing	1
14	0259 87 104A	End Plate (R.H.D.)	1
	2158 87 104	End Plate (L.H.D.)	1
15	0259 87 119	Nut	1
16	0259 87 120	Screw	1
17	0738 87 803	Felt	1
18	0702 87 135	Wave Washer	1
19	0738 87 804	Washer	2
20	0702 87 138	Retaining Ring	1

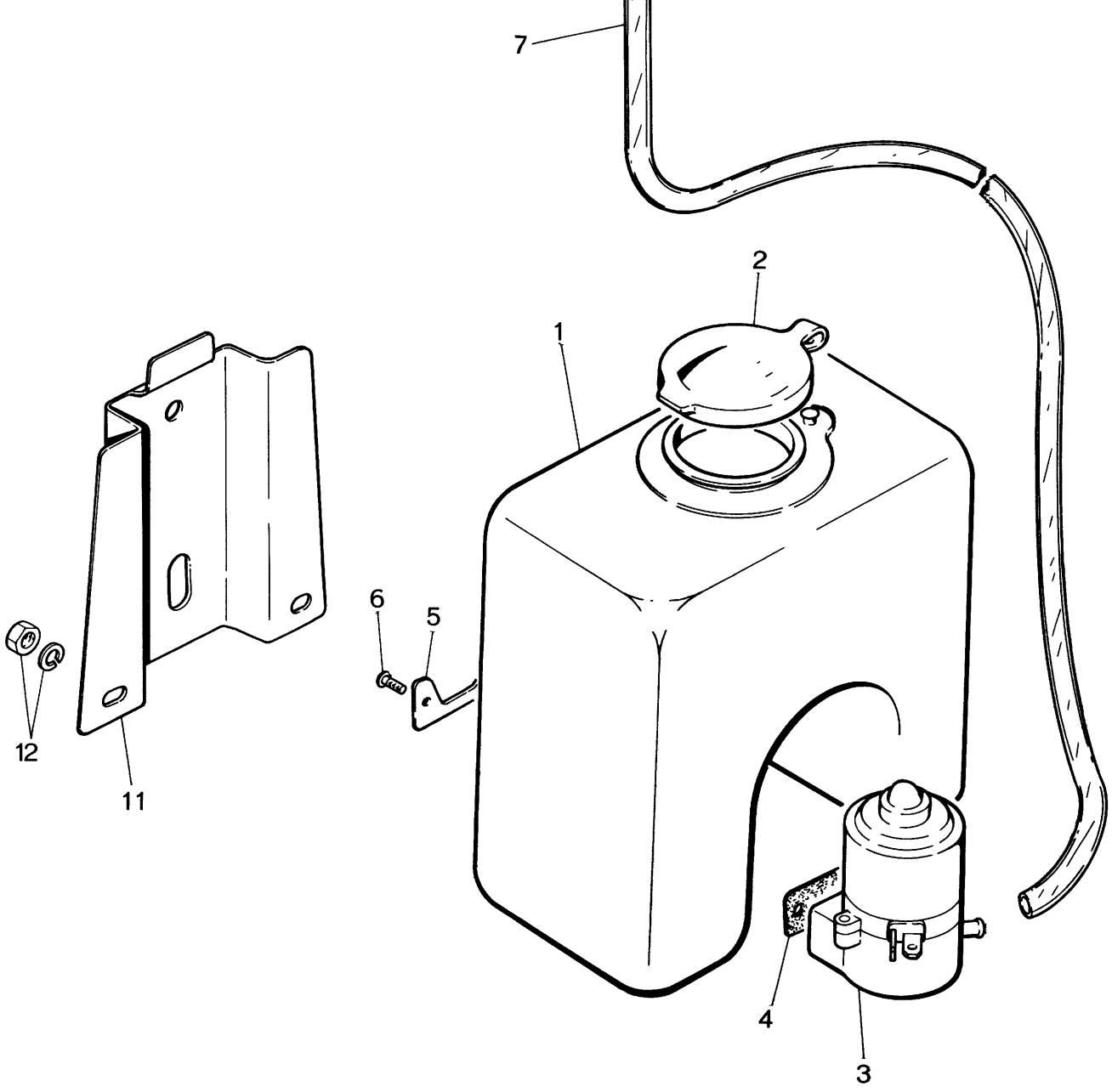
7
2
1
6
5
12
11
4
3

3	0305 87 993	Pump	1
4	0727 87 994	Packing	1
5	0727 87 995	Plate	1
6	0727 87 996	Screw	2
7	99335 04075	Pipe	1
8	0259 66 900	Nozzle	1
9	0259 66 905	Packing	1
10	0118 41 669	Clip	1
11	0317 67 521	Bracket	1
12	99906 0600	Nut, Bracket	2
	99971 0600	Spring Washer	2

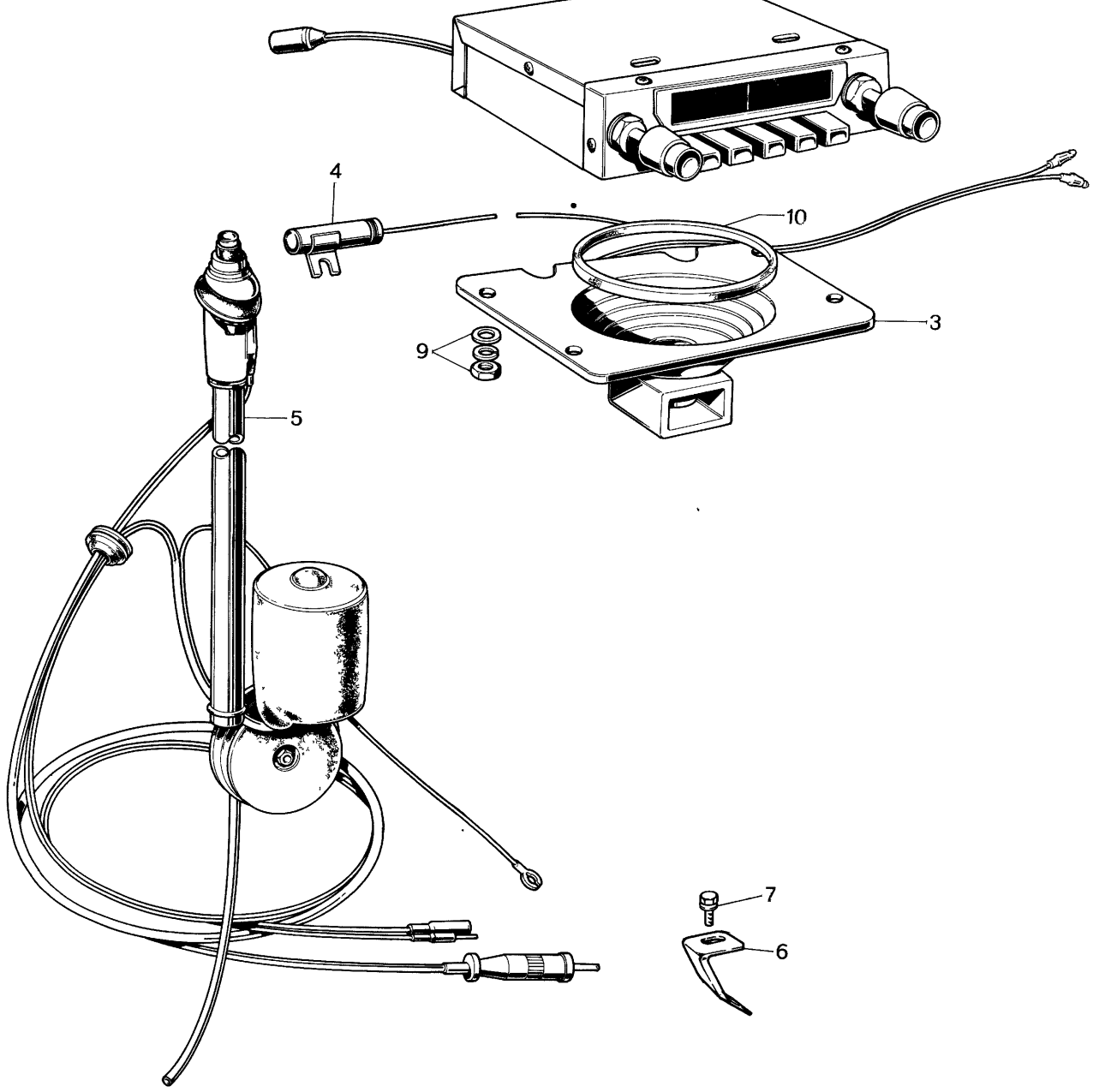
4
10
3
9
5
7
6

1	0820 66 531A	Tuner Medium Wave	1	
	2124 66 531	Tuner Medium Wave FM	1	
	2325 66 531	Tuner Medium, Short Wave	1	
2	0820 66 532A	Tuner Bracket Medium Wave use	1	
	2124 66 532	Tuner Bracket Medium Wave, FM use	1	
	2325 66 532	Tuner Bracket Medium, Short Wave use	1	
3	0820 66 538	Loud Speaker	1	
4	0209 66 542	Condenser, Coupe Model	1	
	0317 66 993	Condenser, Sedan Model	2	Car No. 65573 $^{70}/_{9}$ ~ Quantity
	0820 66 525B	Motor Antenna	1	Car No. 87149 $^{71}/_{2}$ ~ Discarded
•	0820 66 930	Motor Antenna	1	Car No. 87150 $^{71}/_{2}$ ~ Added Anew
	2113 66 525	Motor Antenna (2416, 2418, 2419)	1	Car No. 87149 $^{71}/_{2}$ ~ Discarded
•	2113 66 930	Motor Antenna (2416, 2418, 2419)	1	Car No. 87150 $^{71}/_{2}$ ~ Added Anew
	2113 66 525	Motor Antenna, Arctic Spec. Model	1	Car No. 87149 $^{71}/_{2}$ ~ Discarded
•	2113 66 930	Motor Antenna, Arctic Spec. Model	1	Car No. 87150 $^{71}/_{2}$ ~ Added Anew
6	0820 66 526B	Bracket, Motor Antenna	1	
7	908066 6 10	Set Bolt, Antenna Arctic Spec. Model	2	
	908336 6 12	Set Screw, Antenna	1	
8	99806 0512	Bolt, Tuner	1	
	99952 0516	Plain Washer	1	
	99971 0500	Spring Washer	1	
9	99906 0400	Nut, Loud Speaker	4	

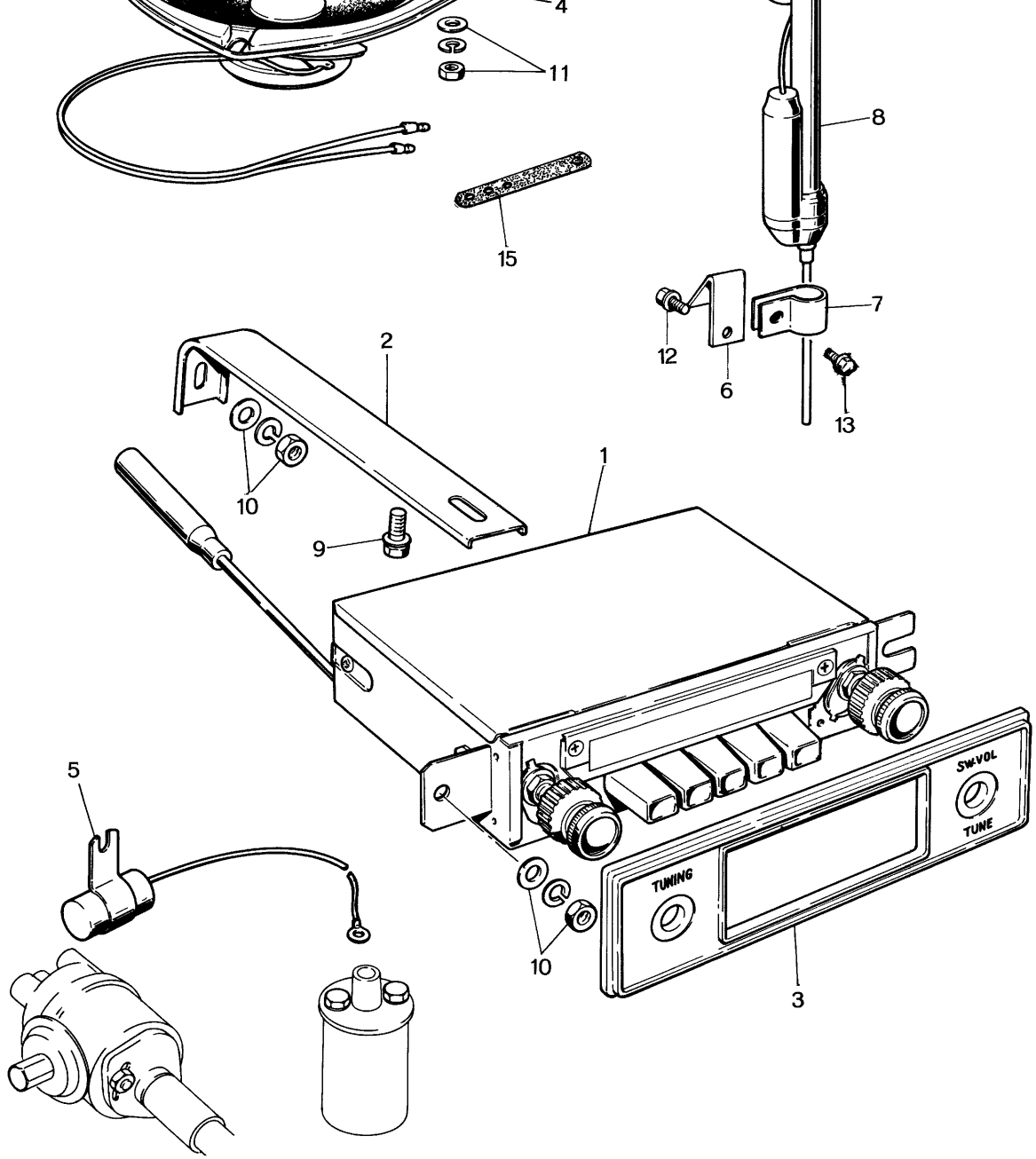
4
11
8
15
7
12
6
13
2
10
1
9
5
SW·VOL
TUNE
TUNING
10
3

•	2	0317 66 903	Bracket, Tuner, Medium Wave use (Use National Make)	1	Car No. 65573 7/9 ~ Added Anew
•		0326 66 903	Bracket, Tuner, Medium Wave use (Use CLARION Make)	1	Car No. 65573 7/9 ~ Added Anew
•		0332 66 903	Barcket, Tuner, Medium Wave use (Use Ten Make)	1	Car No. 65573 7/9 ~ Added Anew
		2360 66 903	Bracket, Tuner, Medium Wave FM use	1	
		2375 66 903	Bracket, Tuner, Medium, Short Wave	1	
	3	0317 66 905	Decoration Panel	1	
	4	0317 66 960	Loud Speaker	1	
	5	0846 66 992	Condenser	1	
	6	0822 66 536	Bracket No. 2	1	
	7	0259 66 537	Bracket No. 1	1	
	8	0822 66 535	Antenna	1	
•		0822 66 538	Feeder	1	
	9	908066 5 08	Set Bolt, Bracket Rear	1	
	10	99906 0500	Nut, Bracket Rear	1	
		99971 0500	Spring Washer	3	
		99952 0500	Plain Washer	3	
	11	99906 0400	Nut, Loud Speaker	8	
		99952 0400	Plain Washer	4	
		99971 0400	Spring Washer	4	
	12	908066 5 16	Set Bolt	1	
	13	908066 6 10	Set Bolt	1	

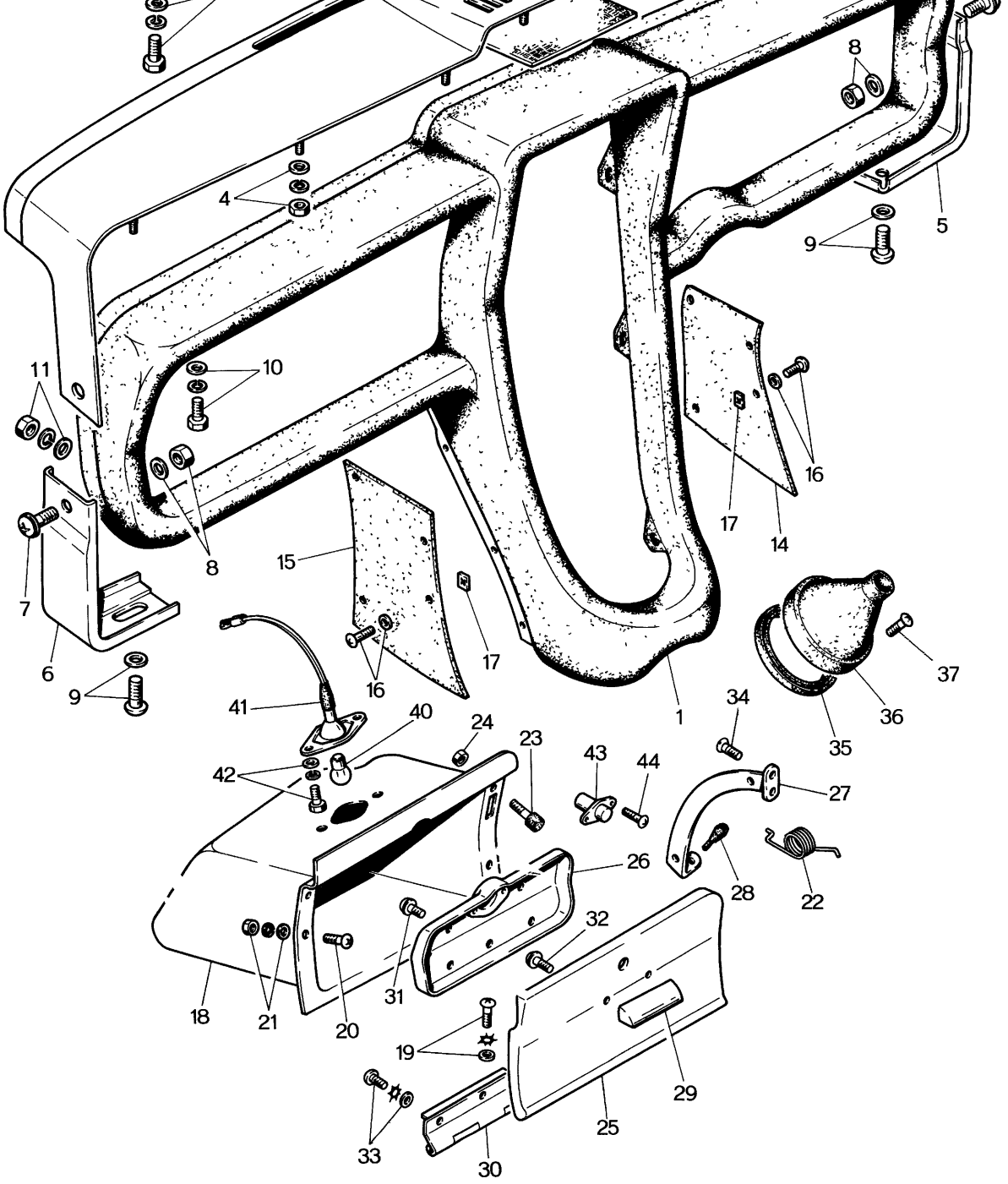
1
4
5
6
7
8
9
10
11
14
15
16
17
18
19
20
21
22
23
24
25
26
27
28
29
30
31
32
33
34
35
36
37
40
41
42
43
44

	4	99971 0400	Spring Washer, Garnish Upper	8	
		99906 0400	Nut	8	
		99952 0412	Plain Washer	8	
•	5	0820 68 1200 00	Parcel Shelf Bracket Black	1	©
•	6	0820 68 122A 00	Garnish Lower (L) Black	1	©
	7	908374 4 16B	Set Screw, Garnish Black	2	
	8	99906 0400	Nut	2	
		99952 0412	Plain Washer	2	
	9	908641 4 16B	Set Screw, Garnish Lower	2	
	10	99806 0818	Bolt, Crush Pad	2	
		99971 0800	Spring Washer	2	
		99952 0822	Plain Washer	2	
	11	99906 0800	Nut, Crush Pad	2	
		99971 0800	Spring Washer	2	
		99952 0822	Plain Washer	2	
	12	99805 0514	Bolt, Crush Pad	3	
		99952 0516	Plain Washer	3	
		99971 0500	Spring Washer	3	
	13	99906 0500	Nut, Crush Pad	4	
		99971 0500	Spring Washer	4	

•	18	0820 68 331A 00	Glove Box	1	© Black
	19	908399 4 12B	Set Screw, Glove Box	4	
	20	99832 0412B	Screw, Glove Box	1	
	21	99971 0400	Spring Washer	1	
		99952 0400	Plain Washer	1	
		99906 0400	Nut	1	
	22	0820 68 334	Spring	1	
	23	0820 68 335	Cushion	2	
	24	99907 0500	Lock Nut	1	
		0820 68 340A	LID, GLOVE BOX	1	©
•	25	0820 68 341A 05	Outer Lid	1	© Black
•	26	0820 68 342A 00	Inner Lid	1	© Balck
	27	0820 68 343A	Stay	1	©
	28	0110 52 265	Cushion Rubber	1	
•	29	0820 68 3540 00	Lid Handle	1	© Black
	30	0820 68 350	Hinge	1	
	31	908644 4 08B	Set Screw, Inner Lid	2	
	32	908644 4 12	Set Screw, Handle	2	

36	0820 68 560A-01	Boot		1	Car No. 57664 $^{70}/_{4}$ ~ ○ © Black
•	0820 68 560B-01	Boot		1	Car No. 90655 $^{71}/_{3}$ ~ ○ © Black
37	99833 0410	Screw, Boot		4	
	99952 0400	Plain Washer		4	Car No. 62917 $^{70}/_{7}$ ~ Added Anew
38	0820 69 811	Parcel Shelf	Optional	1	
39	908637 5 16	Screw, Parcel Shelf	Optional	3	

	0820 66 940A	GLOVE POCKET LAMP	1	
40	0223 55 194	Bulb 12V/5W	1	
41	0820 66 945A	Socket & Cord	1	
	0820 66 941	Lens	1	Car No. 71769 $^{70}/_{11}$ ~ Added Anew
42	99806 0410B	Bolt, Glove Pocket Lamp	2	
	99952 0400B	Plain Washer	2	
	99971 0400B	Spring Washer	2	
43	0820 66 950	Lamp Switch, Glove Pocket	1	
44	99864 0408	Tapping Screw, Lamp Switch	2	

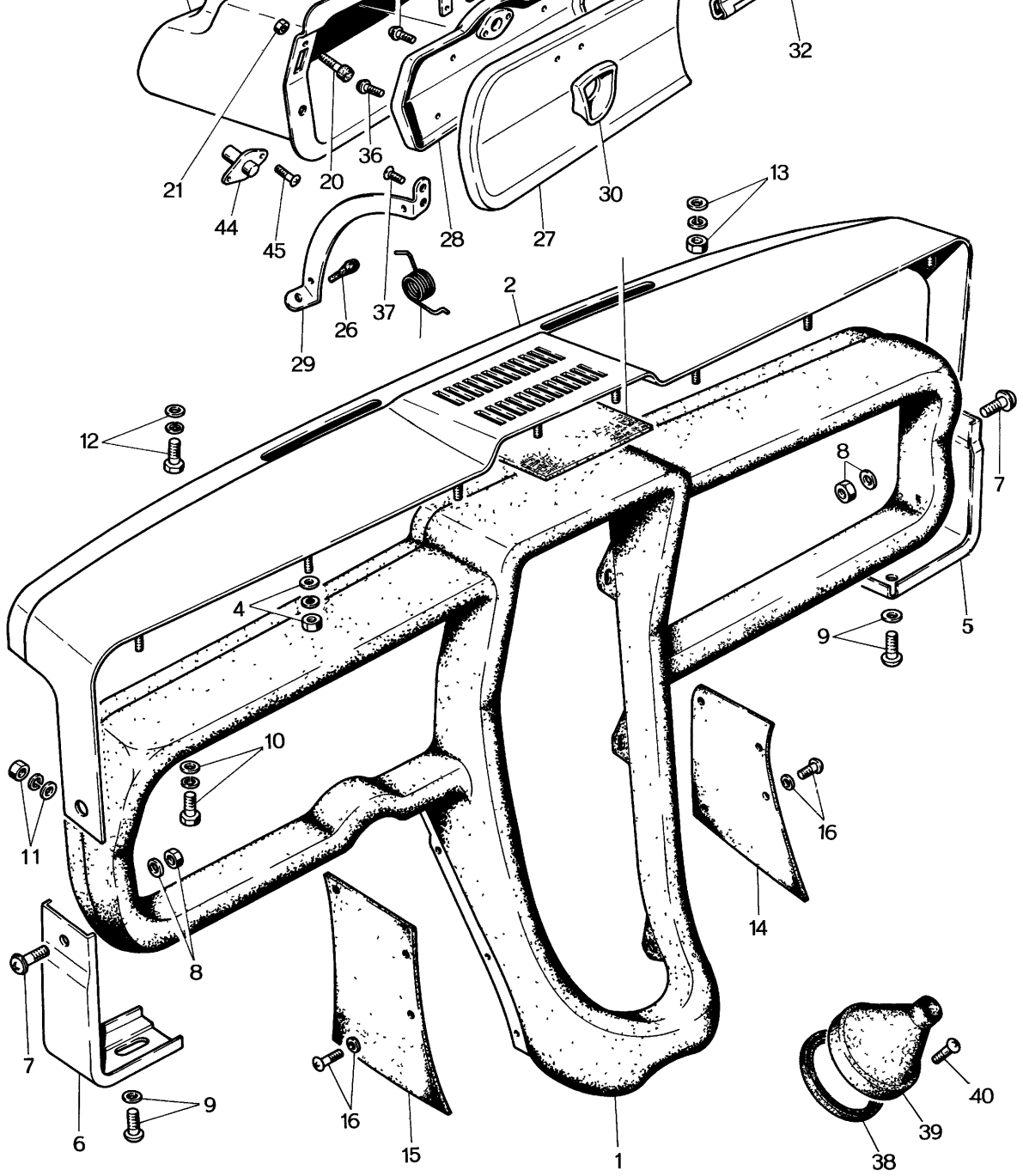
32
21
20
36
30
44
45
28
27
13
29
26
37
2
12
8
7
4
5
9
10
11
16
14
8
7
6
9
16
15
1
40
39
38

	4	99971 0400	Spring Washer, Garnish Upper	8	
		99906 0400	Nut	8	
		99952 0412	Plain Washer	8	
•	5	2113 68 121 00	Garnish Lower (R)	1	© Black
•	6	0820 68 122A 00	Garnish Lower (L)	1	© Black
	7	908374 4 16B	Set Screw	2	
	8	99906 0400	Nut, Garnish	2	
		99952 0412	Plain Washer	2	
	9	908641 4 16B	Set Screw, Garnish Lower	2	
	10	99806 0818	Bolt, Crush Pad	2	
		99971 0800	Spring Washer	2	
		99952 0822	Plain Washer	2	
	11	99906 0800	Nut, Crush Pad	2	
		99971 0800	Spring Washer	2	
		99952 0822	Plain Washer	2	
	12	99805 0514	Bolt, Crush Pad	3	
		99952 0516	Plain Washer	3	
		99971 0500	Spring Washer	3	
	13	99906 0500	Nut, Crush Pad	4	

	17	2113 68 328	Striker, Glove Box	1	
	18	2113 68 329	Set Plate, Striker	1	
•	19	2113 68 331A 00	Glove Box	1	© Black
	20	0820 68 335	Cushion	2	
	21	99907 0500	Lock Nut, Cushion	2	
	22	908399 4 16B	Set Screw, Hinge	4	
	23	99832 0412B	Screw, Glove Box	1	
	24	99906 0400	Nut, Glove Box	1	
		99971 0400	Spring Washer	1	
		99952 0400	Plain Washer	1	
	25	99906 0400	Nut, Striker	2	
		99971 0500	Spring Washer	2	
		2113 68 340A	LID Ass'y, GLOVE BOX	1	©
	26	0110 52 265	Cushion	1	
•	27	2113 68 341A 05	Outer Lid	1	© Black
•	28	2113 68 342A 00	Inner Lid	1	© Black
	29	2113 68 343A	Stay	1	©
	30	2113 68 348	Knob	1	©

37	99831 0408B	Screw, Stay	2	
38	0820 68 551	Boot Ring	1	
39	0820 68 560A-01	Boot (Black)	1	©
•	0820 68 560B-01	Boot (Black)	1	Car No. 91011 $^{71}/_{3}$ ~ ○
40	99833 0410	Screw, Boot Ring	4	
	99952 0400	Plain Washer	4	Car No. 62917 $^{70}/_{7}$ ~ Added Anew
	0820 66 940A	**GLOVE POCKET LAMP**	1	
41	0223 55 194	Bulb 12V/5W	1	
42	0820 66 945A	Socket & Cord	1	
	0820 66 941	Lens	1	Car No. 70537 $^{70}/_{11}$ ~ Added Anew
43	99806 0410B	Bolt, Glove Pocket Lamp	2	
	99952 0400B	Plain Washer	2	
	99971 0400B	Spring Washer	2	
44	0820 66 950	Lamp Switch, Glove Pocket	1	
45	99864 0408	Tapping Screw, Lamp Switch	2	

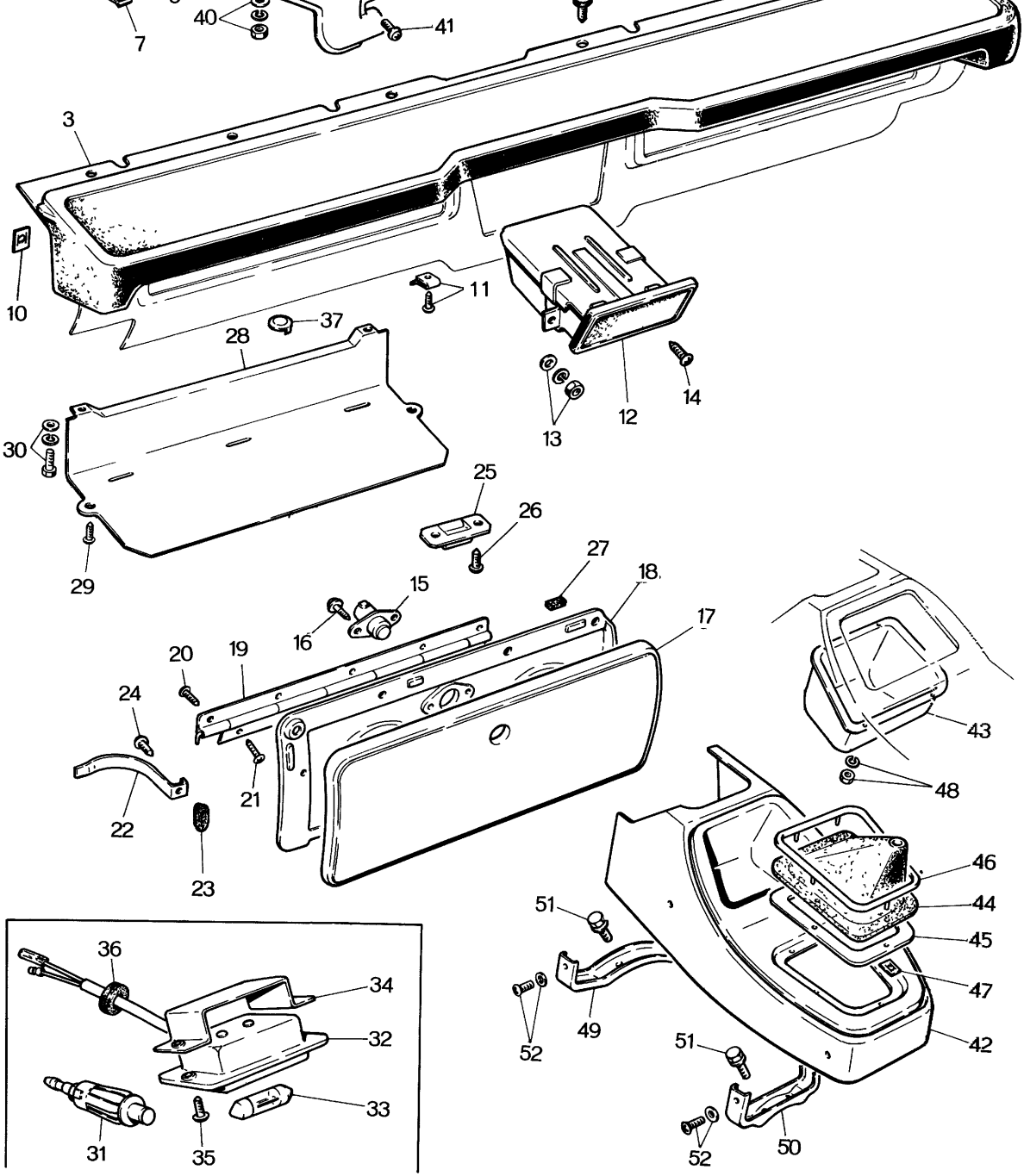
7
40
41
3
10
11
37
28
12
13
14
30
25
26
29
27
18
15
16
17
20
19
24
21
22
23
43
48
46
44
45
47
42
51
49
52
51
50
52
36
34
32
33
31
35

5	0317 68 013A	Spacer	4	
6	99863 0520B	Screw, Main Garnish	4	
7	99896 0500	Spring Nut, Main Garnish	4	
8	99839 0420	Screw, Main Garnish	2	
9	908641 5 12	Set Screw, Instrument Panel Pad	6	
10	99578 3000	Speed Nut, Instrument Panel Pad	2	
11	908641 5 12B	Set Screw, Instrument Panel Pad	4	
	99896 0500	Spring Nut, Instrument Panel Pad	4	
12	0317 68 180	ASH TRAY	1	©
	0317 68 200	Ash Tray, Inner	1	
13	99906 0500	Nut, Ash Tray	2	
	99951 0500	Plain Washer	2	
•	99952 0500	Plain Washer	2	Car No. 68789 $^{70}/_{10}$ ~ O
	99971 0500	Spring Washer	2	
14	908396 4 16	Set Screw, Ash Tray	1	

19	0317 70 240	Hinge Ass'y (R.H.D.)	1
	2370 70 240	Hinge Ass'y (L.H.D.)	1
20	99861 0410B	Screw, Hinge Ass'y & Glove Pocket Lid	9
21	99834 0410B	Set Screw, Hinge Ass'y	3
	99973 0400	Toothed Washer	3
22	0317 70 261	Stopper (R.H.D.)	1
	2370 70 261	Stopper (L.H.D.)	1
23	0603 53 305	Guide Stopper	1
24	908310 4 08B	Set Screw, Stopper	1
25	0317 70 262	Striker	1
26	908386 5 16B	Set Screw, Striker	2
27	0317 70 269	Cushion	3
28	0317 70 271A	Glove Tray	1
29	908630 5 12	Set Screw, Glove Tray	2
30	908067 6 12	Set Bolt, Glove Tray	2
31	0326 60 690A	Glove Box Switch	1
32	0326 60 670	GLOVE BOX LAMP	1
33	99701 5050	Bulb	1

40	99906 0500	Nut	4		
	99952 0516	Plain Washer	4		
	99971 0500	Spring Washer	4		
41	99799 0516	Bolt	2		
	99952 0500	Plain Washer	2		
	99971 0500	Spring Washer	2		
42	0845 68 860A	CONSOLE Ass'y	1		
•	2334 68 860	CONSOLE Ass'y	1	Car No. 87150 $^{71}/_{2}$ ~ ○ ©	
	2335 68 860	CONSOLE Ass'y, Without Car Heater use	1		
	2335 68 860A	CONSOLE Ass'y, Without Car Heater use	1	Car No. 67812 $^{70}/_{10}$ ~ ○	
43	0326 68 862	Pocket "A"	1		
44	0845 68 863	Boot	1		
•	2380 68 863	Boot	1	Car No. 87150 $^{71}/_{2}$ ~ ○	
45	0326 68 864	Plate	1		
46	0326 68 865	Mould	1		
	0326 68 867	Mould—pocket A	1	Car No. 67812 $^{70}/_{10}$ ~ Added Anew	
47	99579 3000	Speed Nut	5		
48	99906 0500	Nut, Pocket	4		
	99952 0500	Plain Washer	4		
N	2370 68 866	Console Tray, Without Car Heater use	1		
N	99861 0310B	Tapping Screw, Console Tray Fixing	3		
49	0845 68 870	Bracket Ass'y	1		
50	0845 68 880	Bracket Ass'y	1		

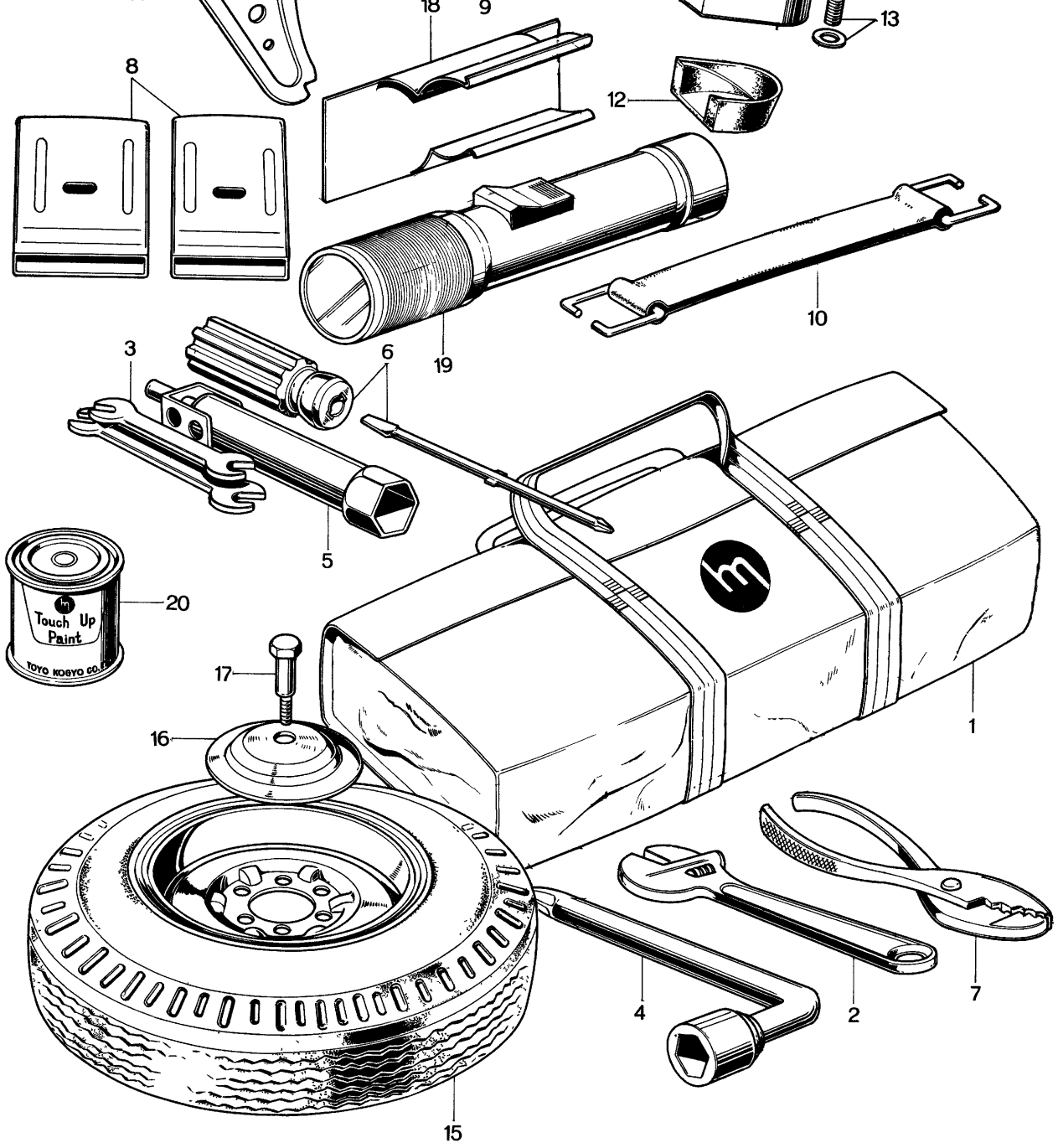
18
9
13
8
12
19
10
3
6
5
20
Touch Up
Paint
TOYO KOGYO CO.,LTD.
17
16
1
4
2
7
15

6	0187 68 110	Driver Set		1	
7	0118 68 180	Plier		1	
8	0208 68 230	Wheel Stopper		2	
9	0259 68 790	Bumper Jack		1	
	0317 68 790	Bumper Jack		1	Car No. 65086 $^{70}/_{8}$ ~ X
10	0223 56 950	Jack Clamp		1	
11	0208 56 942	Pad, Jack Holder Front		1	
12	0208 56 944	Jack Holder Rear		1	
13	908641 5 16	Set Screw, Jack Holder Rear		2	
14	0822 56 945	Pad, Jack		1	
15	9962 01 1454	145SR–14 Radial Tire, White Ring		2	
	9962 02 1454	145SR–14 Radial Tubeless Tire	Selective use	2	
	9962 03 1454	145SR–14 Radial Tire		2	
	9963 01 1454	145SR–14 Tube		2	
	9963 60 4140	Air Valve TR–414, Tubeless Tire use		2	
	9965 03 4040	4–J x 14 WDC Disc Wheel		2	©
16	0259 56 460	Jack Stand		1	
	0317 68 780	Jack Stand		1	Car No. 65086 $^{70}/_{8}$ ~ X
17	0259 56 463	Bolt		1	
	0223 56 463	Bolt		1	Car No. 65086 $^{70}/_{8}$ ~ Δ
18	0223 68 810	Holder, Signal Light Optional		1	

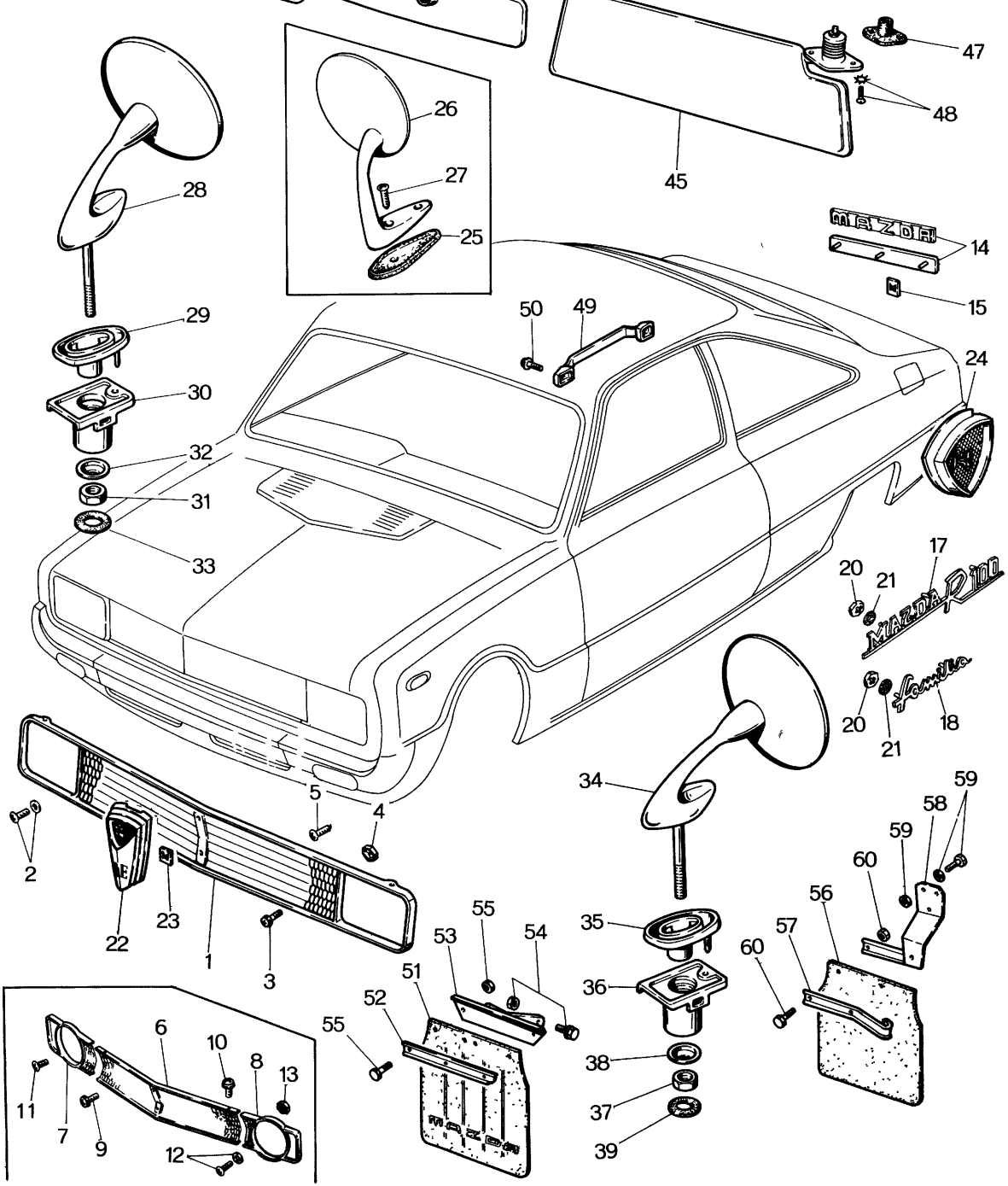
1
2
3
4
5
6
7
8
9
10
11
12
13
14
15
17
18
20
21
22
23
24
25
26
27
28
29
30
31
32
33
34
35
36
37
38
39
45
47
48
49
50
51
52
53
54
55
56
57
58
59
60
mazda
MAZDA RX-7
Familia

6	2113 50 510A	Radiator Grille	Round Type Head Lamp use	1	
7	2113 50 531A	Ring (R), Head Lamp		1	
8	2113 50 541A	Ring (L), Head Lamp		1	
9	908631 4 12B	Set Screw, Grille		3	
10	908641 4 08	Set Screw, Grille & Ring		2	
11	99767 0412	Screw, Ring		2	
12	99869 0408	Screw, Grille		2	
	99952 0412	Plain Washer		2	
13	99896 0400	Spring Nut, Grille		9	
14	0259 69 062	Rear Ornament		1	
15	0187 69 049A	Speed Nut Ornament		2	
16	0820 69 064B	Rear Ornament, Rotary Coupe		2	
17	2113 69 064	Side Ornament		3	
18	2158 69 064	Side Ornament, Familia		3	
19	99578 3000	Speed Nut		3	
20	99579 3000	Speed Nut		6	
21	0730 69 057A	Packing		9	
22		Front Emblem		1	
	0845 69 071A-00	Gold Brown			
	0845 69 071A-01	Blue			
23	99579 3000	Speed Nut, Emblem		2	
24	0820 69 066A	"RE" Mark		2	
• (N)	2835 69 059	Ornament (Automobiles) (For Frame)		3	Car No. 95155 $^{71}/_{4}$ ~ Added Anew

	0820 69 080A	**REAR VIEW MIRROR Ass'y (R)**	1	
	0820 69 080B	**REAR VIEW MIRROR Ass'y (R)**	1	Car No. 89949 $^{71}/_{2}$ ~ O
28	0820 69 110B	Rear View Mirror (R)	1	
29	0820 69 115	Gasket	1	
	0820 69 115A	Gasket	1	Car No. 89949 $^{71}/_{2}$ ~ O
30	0820 69 120	Spring	1	
31	99906 0500	Nut	1	
32	0820 69 101	Washer	1	
33	0820 69 102	Seat	1	
	0820 69 090A	**REAR VIEW MIRROR Ass'y (L)**	1	
	0820 69 090B	**REAR VIEW MIRROR Ass'y (L)**	1	Car No. 89949 $^{71}/_{2}$ ~ O
34	0820 69 130B	Rear View Mirror (L)	1	
35	0820 69 125	Gasket	1	
	0820 69 125A	Gasket	1	Car No. 89949 $^{71}/_{2}$ ~ O
36	0820 69 140	Spring	1	
37	99906 0500	Nut	1	
38	0820 69 101	Washer	1	
39	0820 69 102	Seat	1	
40	0263 69 170	Room Mirror	1	
41	0820 69 170A	Room Mirror, Day & Night Changing Type	1	
	2370 69 170	Room Mirror, for France	1	Car No. 70537 $^{70}/_{11}$ ~ Added Anew

		Black			
		SUN VISOR Ass'y (R)		1	©
•	0820 69 210A-02	Yellowish Gray "T" Type Dashboard use			
	0820 69 210A-03	Black			
45		SUN VISOR (L)		1	©
	0317 69 2400-04	Light Gray Plain Type Dashboard use			
	0317 69 2400-08	Black			
		SUN VISOR Ass'y (L), (R. H. D.)		1	©
	0820 69 240A-02	Yellowish Gray "T" Type Dashboard use			
	0820 69 240A-03	Black			
		SUN VISOR Ass'y (L), (L. H. D.)		1	©
	2113 69 240A-03	Black "T" Type Dashboard use		1	
		SUN VISOR Ass'y (L), (L.H.D.) 2125		1	Car No. 67812 $^{70}/_{10}$ ~ X
	0820 69 240A-02	Yellowish Gray			
	0820 69 240A-03	Black			
46	0223 69 212	Adapter (R)	"T" Type Dashboard use	1	
47	0223 69 242	Adapter (L)		1	
48	99837 0516C	Screw, Sun Visor		4	
	99975 0500	Toothed Washer		4	
49	0727 69 910	Asist Handle		1	©
50	908386 6 16	Set Screw, Asist Handle		2	
•	908382 6 16	Set Screw, Asist Handle		2	Car No. 64215 $^{70}/_{7}$ ~ O
	0259 99 792	FLAP SET		1	
51	0259 78 611	Flap		2	
52	0259 78 612	Washer "A"		2	

56	0259 78 611	Flap	2
57	0259 78 652	Washer "A"	2
58	0259 78 660	Rear Bracket (R)	1
	0259 78 680	Rear Bracket (L)	1
59	99806 0512	Bolt	4
	99952 0500	Plain Washer	4
	99906 0500	Nut	4
60	99806 0512	Bolt	4
	99906 0500	Nut	4

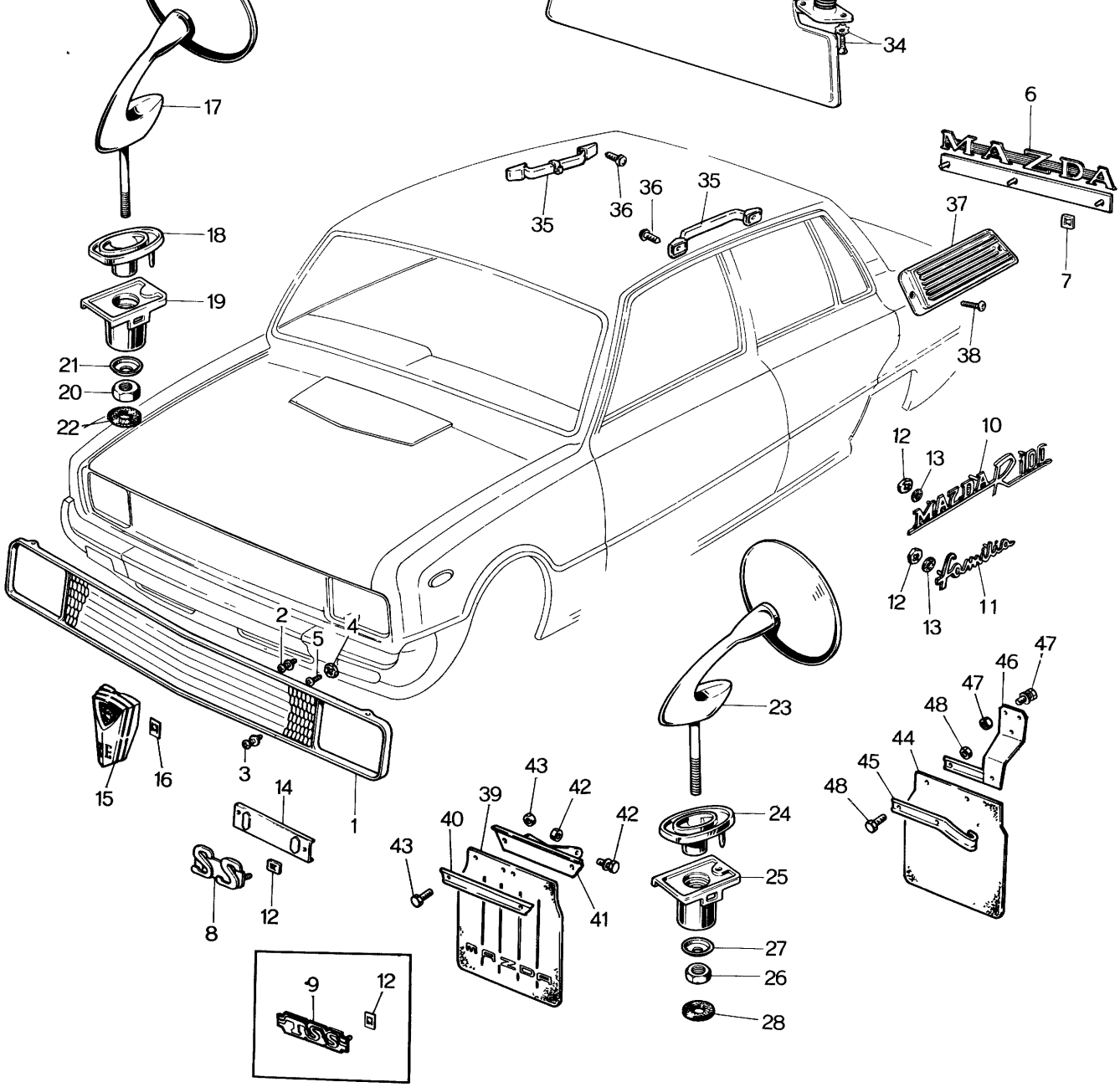
1
2
3
4
5
6
7
8
9
10
11
12
13
14
15
16
17
18
19
20
21
22
23
24
25
26
27
28
34
35
36
37
38
39
40
41
42
43
44
45
46
47
48
MAZDA
MAZDA RX-7
Familia
SS
mazda

6	0259 69 062	Rear Ornament	1	
7	0187 69 049A	Speed Nut, Ornament	2	
8	0233 69 064	Ornament, "SS"	2	
9	* 0848 69 064	Ornament, "TSS"	2	
10	2113 69 064	Side Ornament	2	
11	2158 69 064	Side Ornament, Familia	2	
12	99579 3000	Speed Nut	10	
13	0730 69 057	Packing	6	
14	0844 69 080	Set Plate, Ornament	1	
15		Front Emblem	1	
	0845 69 071A-00	Gold Brown		
	0845 69 071A-01	Blue		
16	99579 3000	Speed Nut, Emblem	2	
• (N)	2835 69 059	Ornament (Automobiles) (For France)	3	Car No. 95155 $^{71}/_{4}$ ~ Added Anew
	0820 69 080A	**REAR VIEW MIRROR Ass'y (R)**	1	
17	0820 69 110B	Rear View Mirror (R)	1	
18	0820 69 115	Gasket (R)	1	
19	0820 69 120	Spring (R)	1	
20	99906 0500	Nut	1	
21	0820 69 101	Washer	1	
22	0820 69 102	Seat	1	

28	0820 69 102	Seat	1	
29	2244 69 170	Room Mirror	1	
	2370 69 170	Room Mirror (for France)	1	Car No. 70537 $^{79}/_{11}$ ~ Added Anew
30	0820 69 161	Base	1	
31	99831 0516	Screw, Room Mirror	1	
	99831 0520	Screw	1	
	99975 0500	Toothed Washer	2	
32		Sun Visor (R)	2	
	0317 69 2100-04	Light Gray		
	0317 69 2100-08	Black		
33		Sun Visor (L)	1	
	0317 69 2400-04	Light Gray		
	0317 69 2400-08	Black		
34	99837 0516	Screw, Sun Visor	4	
	99975 0500	Toothed Washer	4	
35	0727 69 910	Asist Handle	3	
36	908386 6 16	Set Screw, Asist Handle	6	
	908382 6 16	Set Screw, Asist Handle	6	Car No. 64215 $^{70}/_{7}$ ~ ⊙
37	0844 70 361A	Air Flow Grille (R)	1	
	0844 71 361A	Air Flow Grille (L)	1	
38	99768 0410	Tapping Screw, Air Flow Grille	2	
	99863 0410B	Screw	2	

	0259 78 640	Washer "B" (L)	1
42	908066 5 12	Set Bolt	4
	99906 0500	Nut	4
43	99806 0512	Bolt	4
	99906 0500	Nut	4
44	0259 78 611	Flap	2
45	0259 78 652	Washer "A"	2
46	0259 78 660	Rear Bracket (R)	1
	0259 78 680	Rear Bracket (L)	1
47	99806 0512	Bolt	4
	99952 0500	Plain Washer	4
	99906 0500	Nut	4
48	99806 0512	Bolt	4
	99906 0500	Nut	4

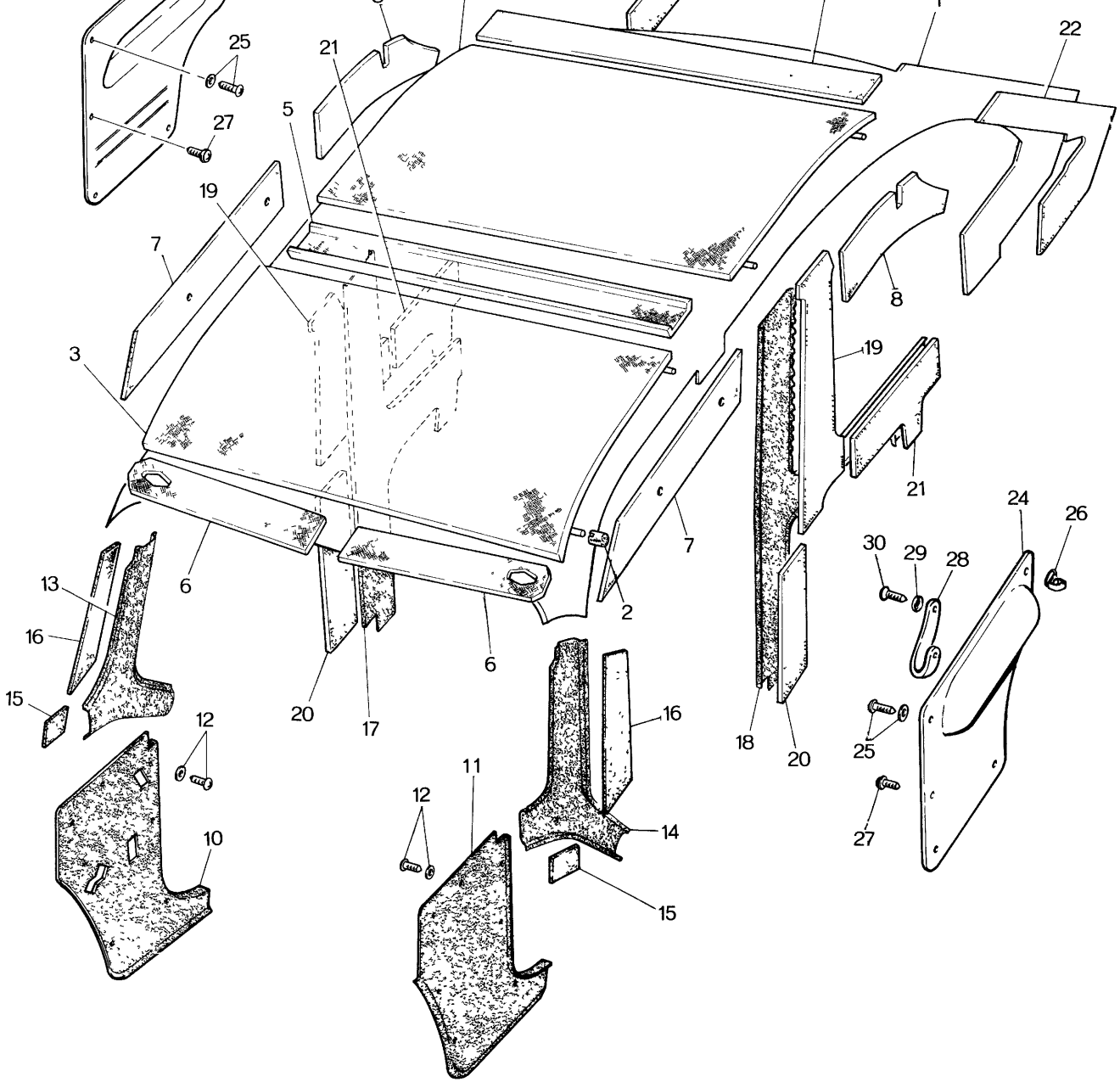
25
27
21
5
22
19
7
8
3
19
21
24
26
30
29
28
13
16
6
2
7
15
12
20
17
6
16
18
20
25
12
11
14
10
15
27

	5	0221 69 319	Top Insulation No. 3	1	
	6	0820 69 311	Pad No. 1	2	
	7	0820 69 312A	Pad No. 2	2	
	8	0820 69 313	Pad No. 3	2	
	9	0820 69 314	Pad No. 4	1	
	10	0820 69 360C 00	Front Side Trim (R.H.D.) Black	1	©
•		0820 69 360D 00	Front Side Trim (R.H.D.)	1	Car No. 68789 $^{7}/_{10}$ ~ ○
		2113 69 360A 00	Front Side Trim (L.H.D.) Black	1	©
•		2113 69 360B 00	Front Side Trim (L.H.D.)	1	Car No. 68789 $^{7}/_{10}$ ~ ○
	11	0820 69 380B 00	Front Side Trim (R.H.D.) Black	1	©
•		0820 69 380C 00	Front Side Trim (R.H.D.)	1	Car No. 68789 $^{7}/_{10}$ ~ ○
		2113 69 380A 00	Front Side Trim (L.H.D.) Black	1	©
•		2113 69 380B 00	Front Side Trim (L.H.D.)	1	Car No. 68789 $^{7}/_{10}$ ~ ○
	12	99862 0416B	Tapping Screw, Side Trim	10	Car No. 68789 $^{7}/_{10}$ ~ Quantity
		99968 0400B	Washer	10	Car No. 68789 $^{7}/_{10}$ ~ Quantity
•	13	0820 69 411A 05	Front Pillar Trim (R) Black	1	©
•	14	0820 69 421A 05	Front Pillar Trim (L) Black	1	©
	15	0820 69 413	Front Pillar Pad	2	
	16	0820 69 414	Front Pillar Pad, Upper	2	
	17		Trim (R), Center	1	©
•		0820 69 460B 01	Black		
•		0820 69 460B 04	Brown		
	18		Trim (L), Center	1	©
•		0820 69 480B 01	Black		
•		0820 69 480B 04	Brown		
	19	0820 69 451	Center Pillar Pad No. 1	2	
	20	0820 69 452	Pad No. 2	2	
	21	0820 69 453A	Pad No. 3	2	

27	908641 4 20	Set Screw, Side Trim	4
28	0209 58 861	Pull Handle	2
29	0209 58 862	Washer, Pull Handle	2
30	99837 0525C	Screw, Pull Handle	4

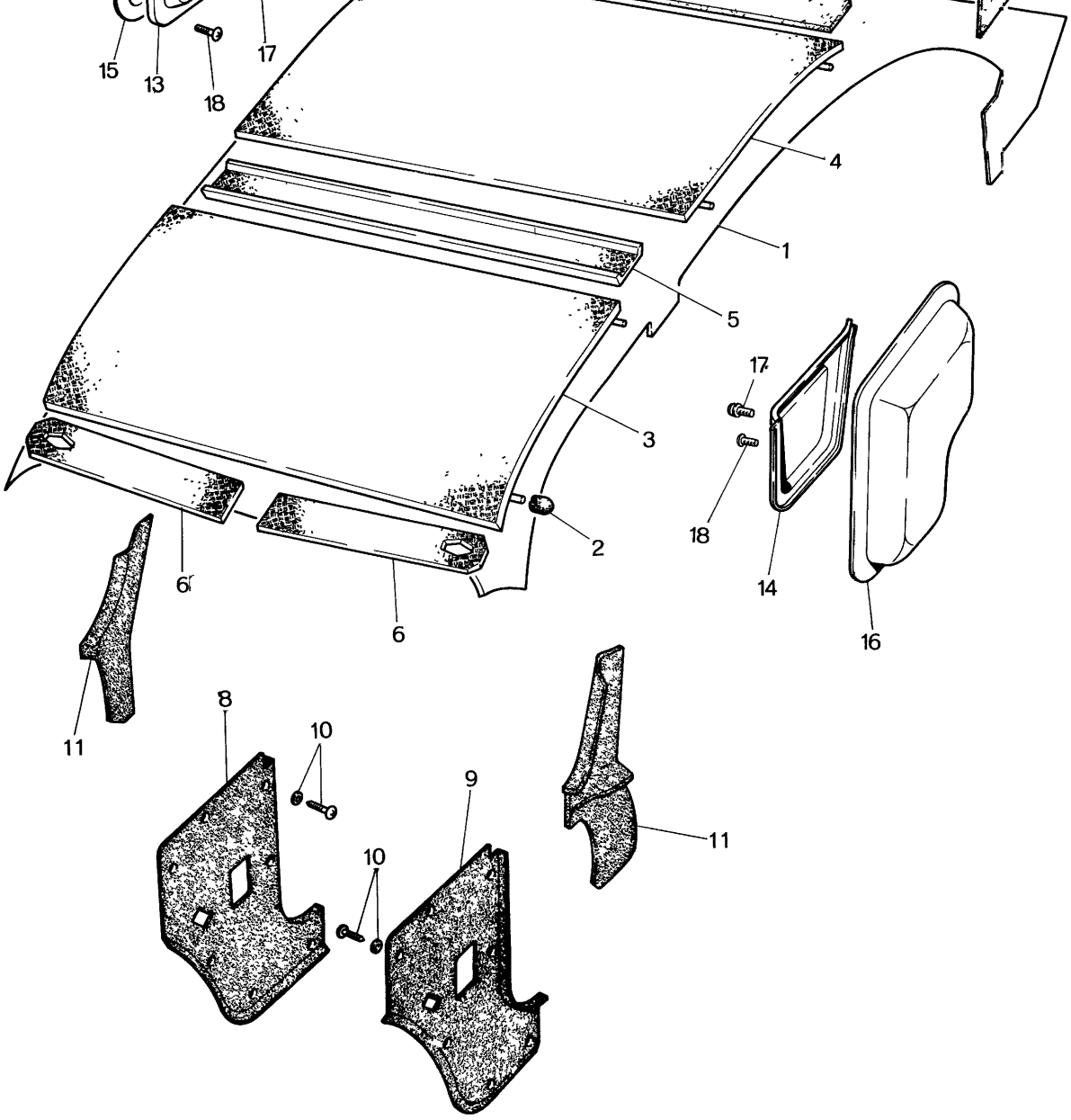
15
13
18
17
4
1
5
3
17
18
14
16
2
6
6
11
8
10
9
10
11

	5	0317 69 319	Top Insulation No. 3	1	
	6	0820 69 311	Pad No. 1	2	
	7	0820 69 314	Pad No. 4	1	
•	8	0259 69 360C 03	Front Side Trim (R.H.D.) Black	1	©
•		0259 69 360D 03	Front Side Trim (R.H.D.) Black	1	Car No. 68789 $^{70}/_{10}$ ~ O ©
•		2158 69 360A 03	Front Side Trim (L.H.D.) Black	1	
•		2158 69 360B 03	Front Side Trim (L.H.D.) Black	1	Car No. 68789 $^{70}/_{10}$ ~ O
•	9	0259 69 380C 03	Front Side Trim (R.H.D.) Black	1	©
•		0259 69 380D 03	Front Side Trim (R.H.D.) Black	1	Car No. 68789 $^{70}/_{10}$ ~ O
•		2158 69 380A 03	Front Side Trim (L.H.D.) Black	1	©
•		2158 69 380B 03	Front Side Trim (L.H.D.) Black	1	Car No. 68789 $^{70}/_{10}$ ~ O
	10	99862 0416B	Tapping Screw	10	Car No. 68789 $^{70}/_{10}$ ~ Quantity
		99968 0400B	Washer	10	Car No. 68789 $^{70}/_{10}$ ~ Quantity
•	11	0317 69 411A 00	Front Pillar Trim Black	2	©
	12	0820 69 501A	Rear Pillar Pad	2	
	13		Side Pocket Inner (R)	1	
•		0256 70 9010 03	Black		
•		0256 70 9010 05	Brown		
	14		Side Pocket Inner (L)	1	
•		0256 71 9010 03	Black		
•		0256 71 9010 05	Brown		
	15		Side Pocket Outer (R)	1	
•		0256 70 902A 03	Black		
•		0256 70 902A 05	Brown		
	16		Side Pocket Outer (L)	1	
•		0256 71 902A 03	Black		
•		0256 71 902A 05	Brown		
	17	99862 0420B	Screw	8	
	18	908461 4 20B	Set Screw	8	

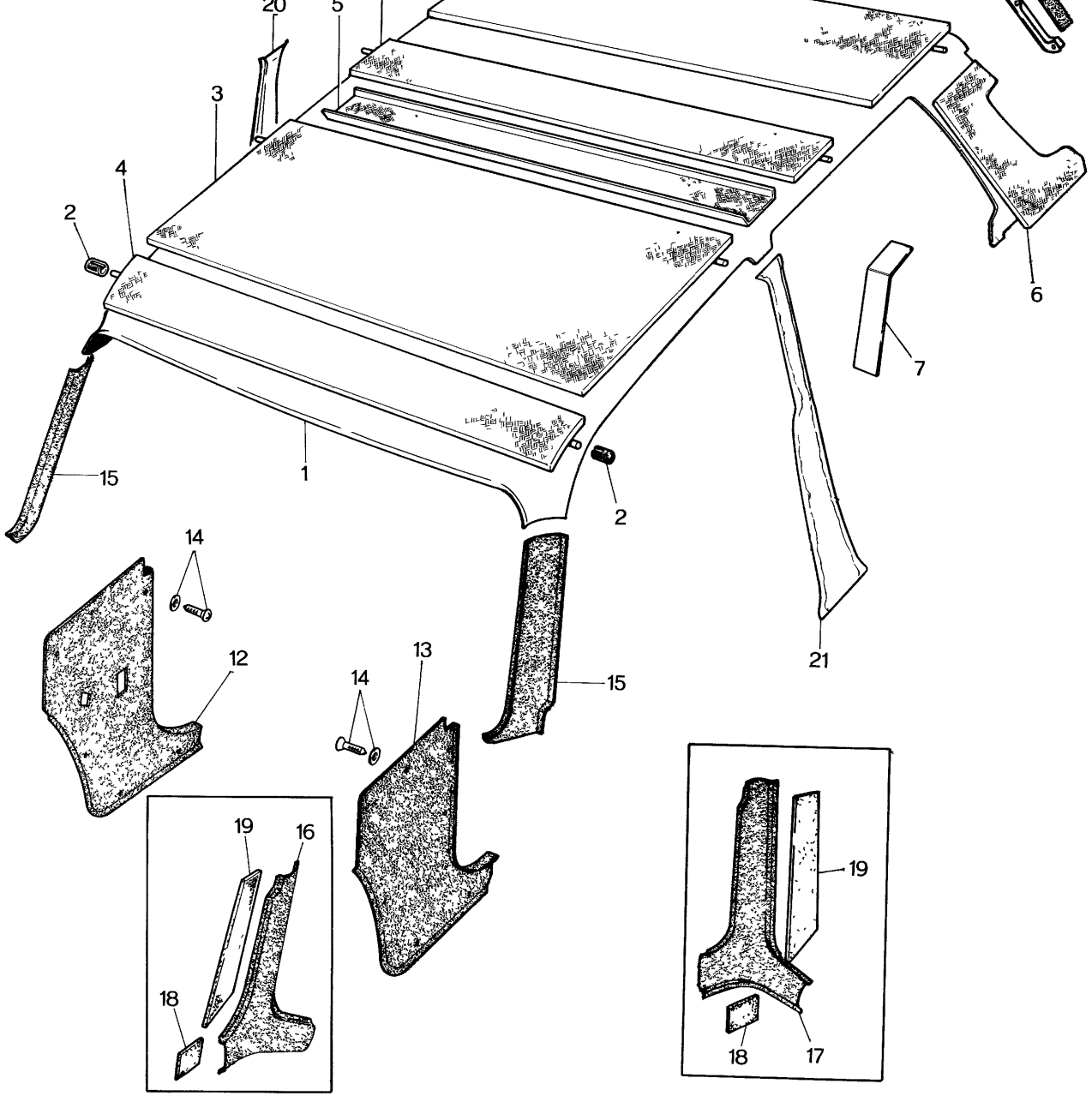
20
5
3
4
2
6
7
15
1
2
21
14
12
13
14
15
19
16
18
19
18
17

	5	0317 69 319	Top Insulation No. 3	1	
	6	0317 69 314	Pad, Rear Pillar	2	
	7	0317 69 315	Trim, Back Plate	2	©
	8	0259 69 320	Set Plate (R)	1	
	9	0259 69 330	Set Plate (L)	1	
	10	99863 0412	Tapping Screw, Set Plate	8	
		99971 0400	Spring Washer	8	
	11	0259 69 335	Trim	2	©
•	12	0259 69 360B 03	Front Side Trim (R),(R.H.D.) Black Plain Type Dashboard use	1	©
•		0259 69 360C 03		1	Car No. 68789 $^{70}/_{10}$ ~ O
•		0820 69 360C 00	Front Side Trim (R),(R.H.D.) Black "T" Type Dashboard Model	1	©
•		0820 69 360D 00		1	Car No. 68789 $^{70}/_{10}$ ~ O
•		2113 69 360A 00	Front Side Trim (R),(L.H.D.) Black "T" Type Dashboard Model	1	©
•		2113 69 360B 00		1	Car No. 68789 $^{70}/_{10}$ ~ O
•		2158 69 360A 03	Front Side Trim (R),(L.H.D.) Black Plain Type Dashboard use	1	©
•		2158 69 360B 03		1	Car No. 68789 $^{70}/_{10}$ ~ O
•	13	0259 69 380B 03	Front Side Trim (L),(R.H.D.) Black Plain Type Dashboard use	1	©
•		0259 69 360C 03		1	Car No. 68789 $^{70}/_{10}$ ~ O
•		0820 69 380B 00	Front Side Trim (L),(R.H.D.) Black "T" Type Dashboard Model	1	©
•		0820 69 380C 00		1	Car No. 68789 $^{70}/_{10}$ ~ O
•		2113 69 380A 00	Front Side Trim (L),(L.H.D.) Black "T" Type Dashboard Model	1	©
•		2113 69 380B 00		1	Car No. 68789 $^{70}/_{10}$ ~ O
•		2158 69 380A 03	Front Side Trim (L),(L.H.D.) Black Plain Type Dashboard use	1	©
•		2158 69 380B 03		1	Car No. 68789 $^{70}/_{10}$ ~ O
	14	99862 0416B	Tapping Screw, Trim	10	Car No. 68789 $^{70}/_{10}$ ~ Quantity
		99968 0400B	Washer	10	Car No. 68789 $^{70}/_{10}$ ~ Quantity
•	15	0317 69 411A 00	Front Pillar Trim Black	2	©
•	16	0820 69 411A 05	Front Pillar Trim (R) Black "T" Type Dashboard Model	1	©

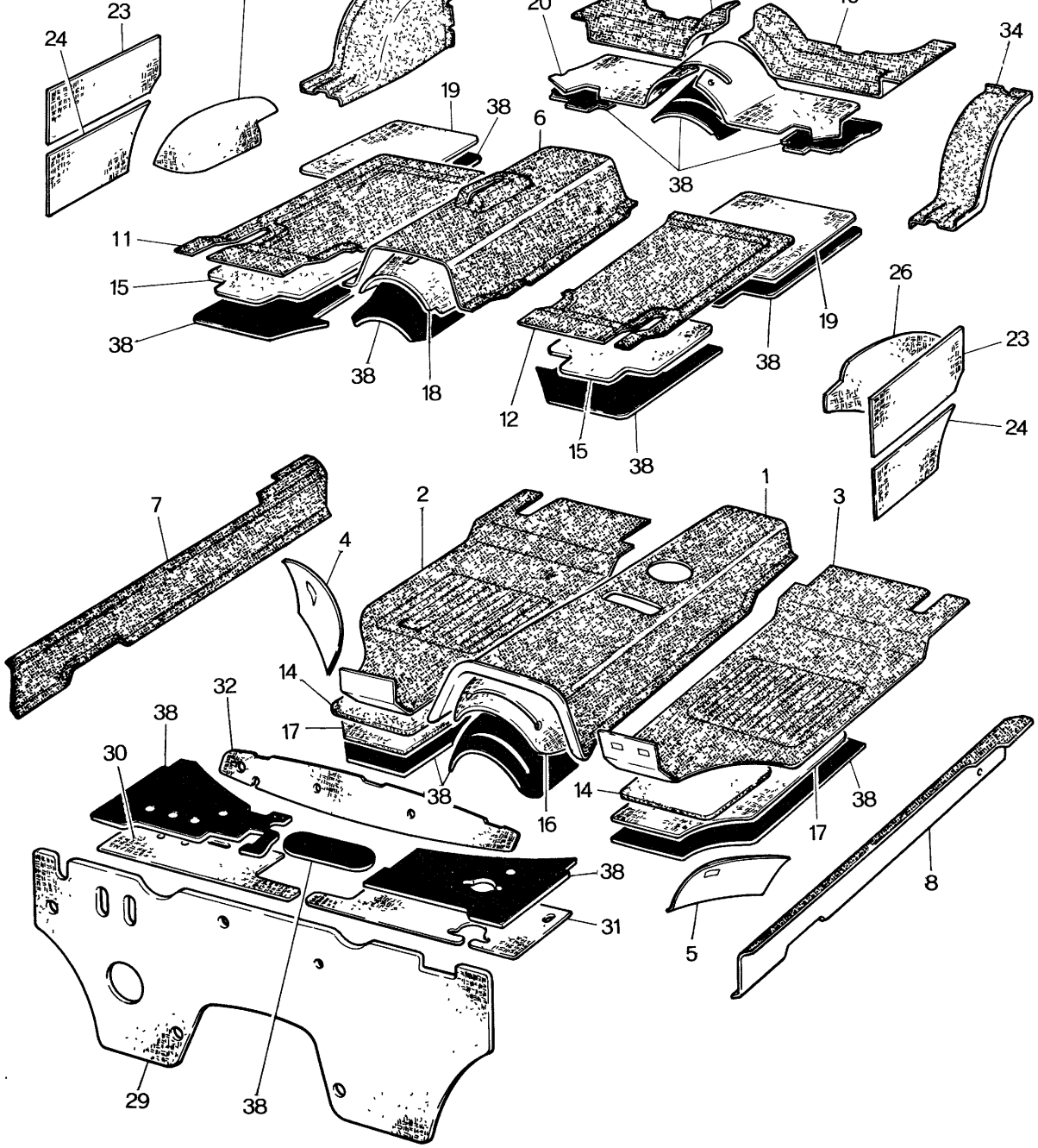
23
24
19
38
6
20
34
38
11
15
38
38
18
12
15
38
19
38
26
23
24
7
2
1
3
4
14
32
38
17
30
38
16
14
38
17
38
8
31
5
29
38

7	0254 69 6070-14	Mat Side (R) Without Seat Belt Fixing Hole Black	1	©
	0260 69 6070-14	Mat Side (R) Black	1	
8	0254 69 6080-14	Mat Side (L) Without Seat Belt Fixing Hole Black	1	©
	0820 69 6080-14	Mat Side (L) Black	1	
9	0257 69 611A-14	Mat End (R) Black	1	©
10	0257 69 612A-14	Mat End (L) Black	1	©
11	2123 69 6130-12	Mat (Rr., R) Black	1	©
	2123 69 613B-12	Mat (Rr., R) Black	1	Car No. 87858 $^{71}/_{2}$ ~ O
12	0820 69 6140-12	Mat (Rr., L) Black	1	©
	0820 69 614B-12	Mat (Rr., L) Black	1	Car No. 75049 $^{70}/_{12}$ ~ O
13	0259 69 615C 10	Mat, Trunk Room Black	1	©
14	0820 69 637	Pad (Frt.), Lower	2	
15	0820 69 638	Pad (Rr), Lower	2	
16	0820 69 641	Pad (Frt., C)	1	
17	0820 69 642A	Pad (Frt.)	2	
	0652 69 642A	Pad (Frt.)	2	Car No. 67812 $^{70}/_{10}$ ~ Added Anew
18	0820 69 643	Pad (Rr., C)	1	
19	2113 69 644	Pad (Rr.)	2	
20	0820 69 645	Pad End	1	
	~~0820 69 645A~~	~~Pad End~~	~~1~~	~~Car No. 62706 $^{70}/_{7}$ ~ X~~
21	0820 69 646	Pad, Back Plate	1	
22	0820 69 647A	Pad, Package Tray	1	
23	0820 69 654	Pad, Fender No. 1 Upper	2	
24	0820 69 655	Pad, Fender No. 2 Lower	2	
25	0820 69 656	Pad, Fender No. 2	1	
26	0820 69 657	Pad, Fender No. 3	1	

33		Trim (R) Tire House	1	©
	0820 69 550A-03	Black		
	0820 69 550A-06	Brown		
34		Trim (L), Tire House	1	©
	0820 69 570A-03	Black		
	0820 69 570A-06	Brown		
35	0820 69 870B-03	Trim, Package Tray Black	1	©
36	0820 69 881A-03	Trim, Upper Black	1	©
37	0259 69 885	Tacker, Trim	6	
38	0208 76 071	Silencer	-	

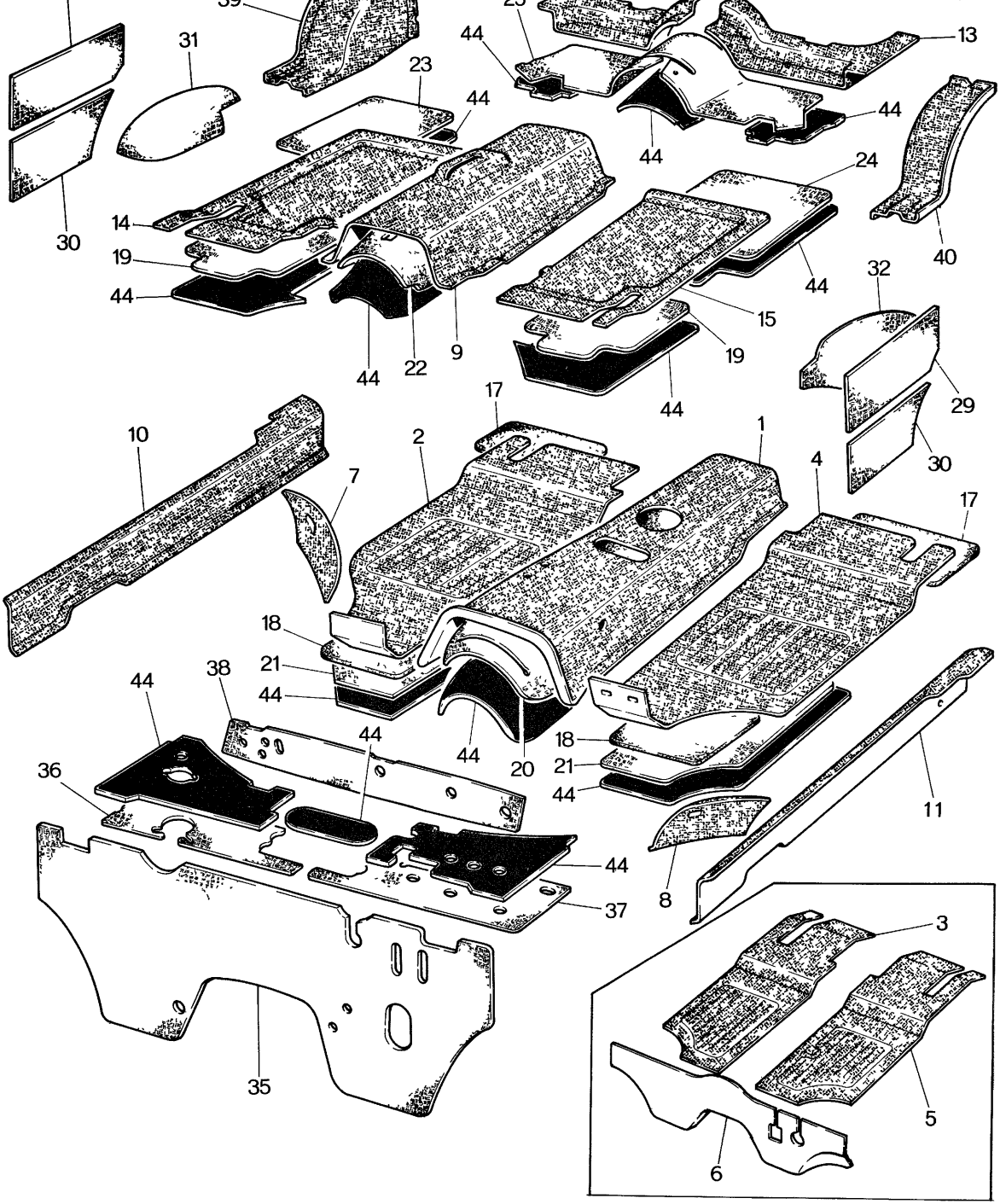
39
31
23
44
13
44
44
30
14
19
44
24
40
44
15
19
44
44
22
9
32
29
30
10
7
17
2
1
4
17
18
21
44
38
44
44
44
20
18
21
44
36
44
11
8
37
35
3
5
6

5	2113 69 623A-14	Mat (Frt., L), Arctic Spec. Model Black	1	©
6	2113 69 6250-14	Mat, Top, Arctic Spec. Model Black	1	©
7	2113 69 6040-12	Corner Mat (Frt., R) Black	1	©
8	0820 69 6060-12	Corner Mat (Frt., L) Black	1	©
•	0820 69 606A-12	Corner Mat (Frt., L) Black	1	Car No. 87858 $^{71}/_{2}$ ~ O
9	0820 69 605A-12	Mat (Rr., C) Black	1	©
•	0820 69 605B-12	Mat (Rr., C) Black	1	Car No. 87858 $^{71}/_{2}$ ~ O
10	0254 69 6070-14	Mat Side (R) Black	1	©
	0260 69 6070-14	Mat Side (R) Black With Safety Belt Hole	1	©
11	0254 69 6080-14	Mat Side (L) Black	1	©
	0820 69 6080-14	Mat Side (L) Black With Safety Belt Hole	1	©
12	0257 69 611A-14	Mat End (R) Black	1	©
13	0257 69 612A-14	Mat End (L) Black	1	©
14	0820 69 6130-12	Mat (Rr., R), Carpet Black	1	©
	0820 69 613B-12	Mat (Rr., R), Carpet Black	1	Car No. 72947 $^{70}/_{12}$ ~ O
	2113 69 6130-14	Mat (Rr., R), Sponge Rubber Black	1	©
	2329 69 6130-12	Mat (Rr., R), Carpet Black Emission Controlled Model	1	©
15	2113 69 614A-14	Mat (Rr., L), Sponge Rubber Black	1	©
	2329 69 6140-12	Mat (Rr., L), Carpet Black Emission Controlled Model	1	©
	2113 69 6190-12	Mat (Rr., L), Carpet Black	1	©
	2113 69 619B-12	Mat (Rr., L), Carpet Black	1	Car No. 72947 $^{70}/_{12}$ ~ O
16	0259 69 615C-10	Mat, Trunk Room Black	1	©
	2119 69 615-10	Mat, Trunk Room Black Arctic Spec. Model	1	©

	2113 69 642	Pad (Frt.) , t = 0.8 Rubber Mat use	2	
	2329 69 642	Pad (Frt.), t = 2.0 Emission Controlled Model	2	
22	0820 69 643	Pad (Rr., C) , t = 0.6	1	
	2329 69 643	Pad (Rr., C), t = 1.2 Emission Controlled Model	1	
23	2113 69 644	Pad (Rr.), t = 0.6	2	
	2329 69 644	Pad (Rr., R), t = 1.2 } Emission Controlled Model	1	
24	2329 69 648	Pad (Rr., L), t = 1.2 } Emission Controlled Model	1	
25	0820 69 645	Pad End, t = 0.6	1	
	0820 69 645A	Pad End, t = 0.6	1	Car No. 62706 ⁷⁰/₇ ~ X
	2329 69 645A	Pad End, t = 1.2 Emission Controlled Model	1	
26	0820 69 646	Pad, Back Plate	1	
27	0820 69 647A	Pad, Package Tray	1	
28	2329 69 653A	Wheel Cover	1	
29	0820 69 654	Pad, Fender No. 1 Upper	2	
30	0820 69 655	Pad, Fender No. 1 Lower	2	
31	0820 69 656	Pad, Fender No. 2 (R)	1	
	2113 69 656	Pad, Fender No. 2 (R)	1	
32	0820 69 657	Pad, Fender No. 2 (L)	1	
	2113 69 657	Pad Fender No. 2 (L)	1	
33	0820 69 658	Pad (R), Trunk Room t = 1.0	1	
	2329 69 658	Pad (R), Trunk Room t = 1.6 Emission Controlled Model	1	

	37	2113 69 686B	Insulation Top No. 6	1	
	38	2113 69 687A	Insulation Top No. 7	1	
	39		Trim (R), Tire House	1	©
•		0820 69 550A 03	Black		
•		0820 69 550A 06	Brown		
	40		Trim (L), Tire House	1	©
•		0820 69 570A 03	Black		
•		0820 69 570A 06	Brown		
•	41	0820 69 870B 03	Trim, Package Tray Black	1	©
•	42	0820 69 881A 03	Trim, Upper Black	1	©
	43	0259 69 885	Tacker, Trim	6	
	44	0208 69 071	Silencer	–	

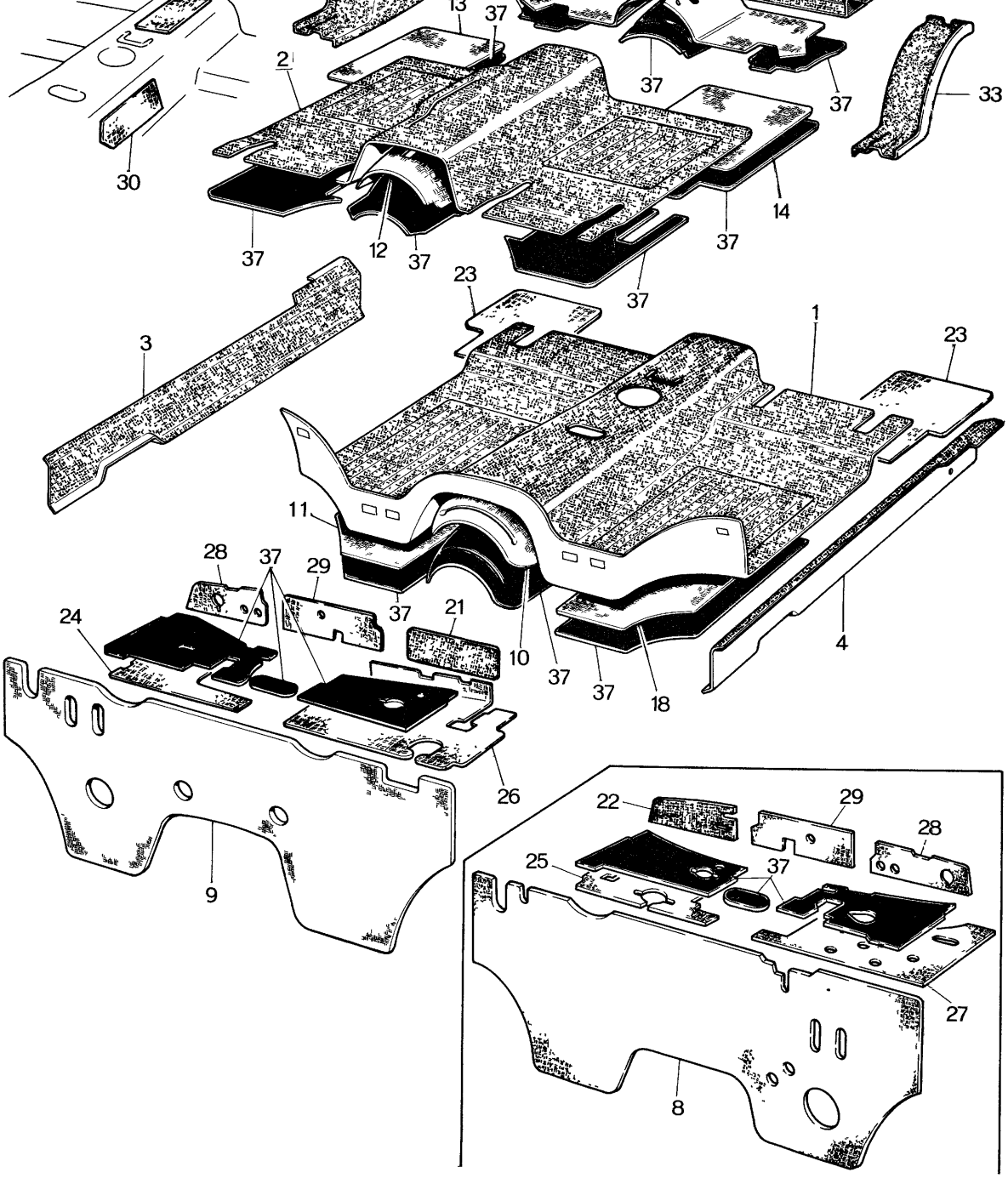
30
13
37
2
37
37
33
14
37
12
37
37
37
23
3
1
23
11
28
37
29
37
21
24
10
37
37
18
4
26
9
22
29
28
25
37
27
8

•	3	0254 69 6070 14	Mat Side (R) Without Seat Belt Fixing Hole Black	1	©
•		0260 69 6070 14	Mat Side (R) Black	1	©
•	4	0254 69 6080 14	Mat Side (L) Without Seat Belt Fixing Hole Black	1	©
•		0820 69 6080 14	Mat Side (L) Black	1	©
•	5	0257 69 611A 14	Mat End (R) Black	1	©
•	6	0257 69 612A 14	Mat End (L) Black	1	©
•	7	0259 69 615C 10	Mat, Trunk Room Black	1	©
	8	2062 69 660	Insulator Ass'y	1	
		2335 69 660A	Insulator Ass'y	1	
	9	2063 69 660	Insulator Ass'y	1	
		2334 69 660A	Insulator Ass'y	1	
	10	0845 69 641	Pad (Frt., C)	1	
	11	0822 69 642	Pad (Frt., R)	1	
	12	0820 69 643	Pad (Rr., C)	1	
	13	0822 69 644	Pad (Rr., R)	1	
	14	2335 69 644	Pad (Rr., L)	1	
	15	0820 69 645	Pad End	1	
		0820 69 645A	Pad End	1	Car No. 62706 $^{70}/_{7}$ ~ X
	16	0820 69 646	Pad, Back Plate	1	
	17	0820 69 647A	Pad, Package Tray	1	
	18	0822 69 648	Pad (Frt., L)	1	

	25	2370 69 685A	Pad (R), Top Lower (L.H.D.)	1	
•		2370 69 685B	Pad (R), Top Lower (L.H.D.)	1	Car No. 65086 $^{70}/_{8}$ ~ ○
	26	0317 69 686A	Pad (L), Top Lower (R.H.D.)	1	
	27	2370 69 686A	Pad (L), Top Lower (L.H.D.)	1	
	28	0317 69 687A	Pad (C)	1	
	29	0317 69 688A	Pad (R), Top Upper	1	
	30	0822 69 688	Pad, Tunnel Side	1	
	31	0822 69 689	Pad (R), Center Lower	1	
	32		Trim (R), Tire House	1	©
•		0820 60 550A 03	Black		
•		0820 69 550A 06	Brown		
	33		Trim (L), Tire House	1	©
•		0820 69 570A 03	Black		
•		0820 69 570A 06	Brown		
•	34	0820 69 870B 03	Trim, Package Tray Black	1	©
•	35	0820 69 881A 03	Trim, Upper Black	1	©
	36	0259 69 885	Tacker	6	
	37	0208 76 071	Silencer	–	

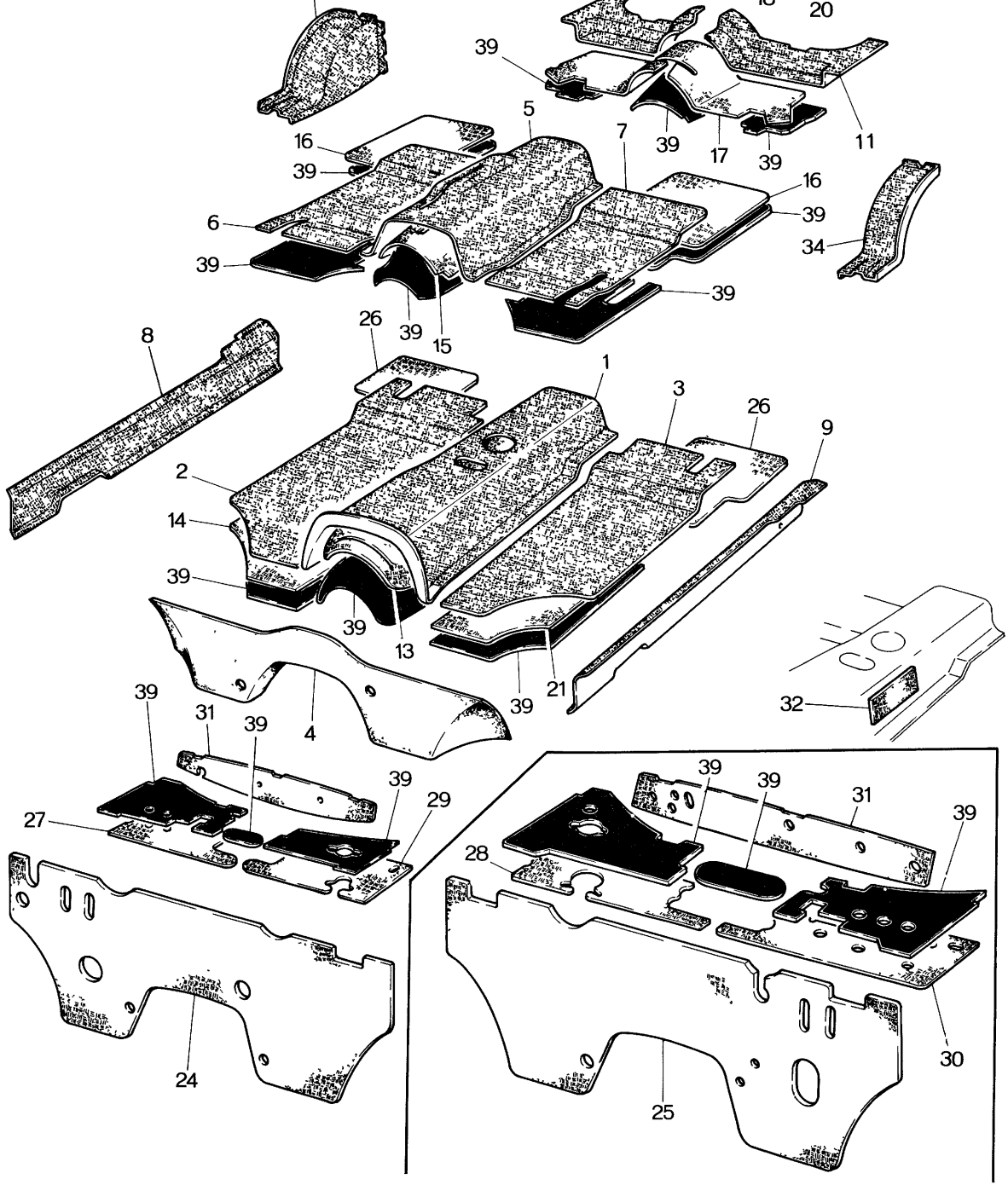
20
39
5
7
39
17
39
11
16
39
16
39
6
34
39
39
26
39
15
8
1
3
26
9
2
14
39
39
13
21
39
4
32
39
31
39
39
29
27
24
39
39
31
39
28
30
25

•	4	2415 69 6250 14	Mat, Top (L.H.D.) Black		1	©
•		2418 69 6250 14	Mat, Top (R.H.D.) Black		1	©
•	5	2415 69 6050 26	Mat (Rr., C) Black		1	©
•	6	2113 69 613 14	Mat (Rr., R) Black		1	©
•	7	2113 69 614A 14	Mat (Rr., L) Black		1	©
•	8	0254 69 6070 14	Mat Side (R) Black	Selective use	1	©
•		0260 69 6070 14	Mat Side (R) Black With Safety Belt Hole Black	Selective use	1	©
•	9	0254 69 6080 14	Mat Side (L) Black	Selective use	1	©
•		0820 69 6080 14	Mat Side (L) Black With Safety Belt Hole Black	Selective use	1	©
•	10	0257 69 611A 14	Mat End (R) Black		1	©
•	11	0257 69 612A 14	Mat End (L) Black		1	©
•	12	0259 69 615C 10	Mat, Trunk Room Black		1	©
		2119 69 615 10	Mat, Trunk Room Black Arctic Spec. Model		1	©
	13	0820 69 641	Pad (Frt., C)		1	
	14	0822 69 642	Pad (Frt., R)		1	
	15	0820 69 643	Pad (Rr., C)		1	
•	16	0822 69 644	Pad (Rr. R)		1	Car No. 70537 70/11 ~ Quantity
•		2335 69 648	Pad (Rr. L)		1	Car No. 70537 70/11 ~ Added Anew
	17	0820 69 645	Pad End		1	
		0820 69 645A	Pad End		1	Car No. 62706 70/7 ~ X
	18	0259 69 646	Pad End No. 1		1	
	19	0259 69 647	Pad End No. 2		2	

26	0844 69 684A	Pad, Seat Lower	2	
27	0820 69 685D	Insulation Top No. 5 , (R.H.D.)	1	
28	2113 69 685A	Insulation Top No. 5 , (L.H.D.)	1	
29	0820 69 686A	Insulation Top No. 6 , (R.H.D.)	1	
30	2113 69 686B	Insulation Top No. 6 , (L.H.D.)	1	
31	0820 69 687A	Insulation Top No. 7	1	
32	0822 69 688	Pad, Tunnel Side	1	
33		Trim (R), Tire House	1	©
•	0317 69 5500 00	Black		
•	0317 69 5500 02	Brown		
34		Trim (L), Tire House	1	©
•	0317 69 5700 00	Black		
•	0317 69 5700 02	Brown		
35	0259 69 870	Trim Package	1	©
36	0317 69 881	Trim Upper	1	©
37	0317 69 883	Pad, Trim Upper	2	
38	0259 69 885	Tacker	6	
39	0208 76 071	Silencer	–	

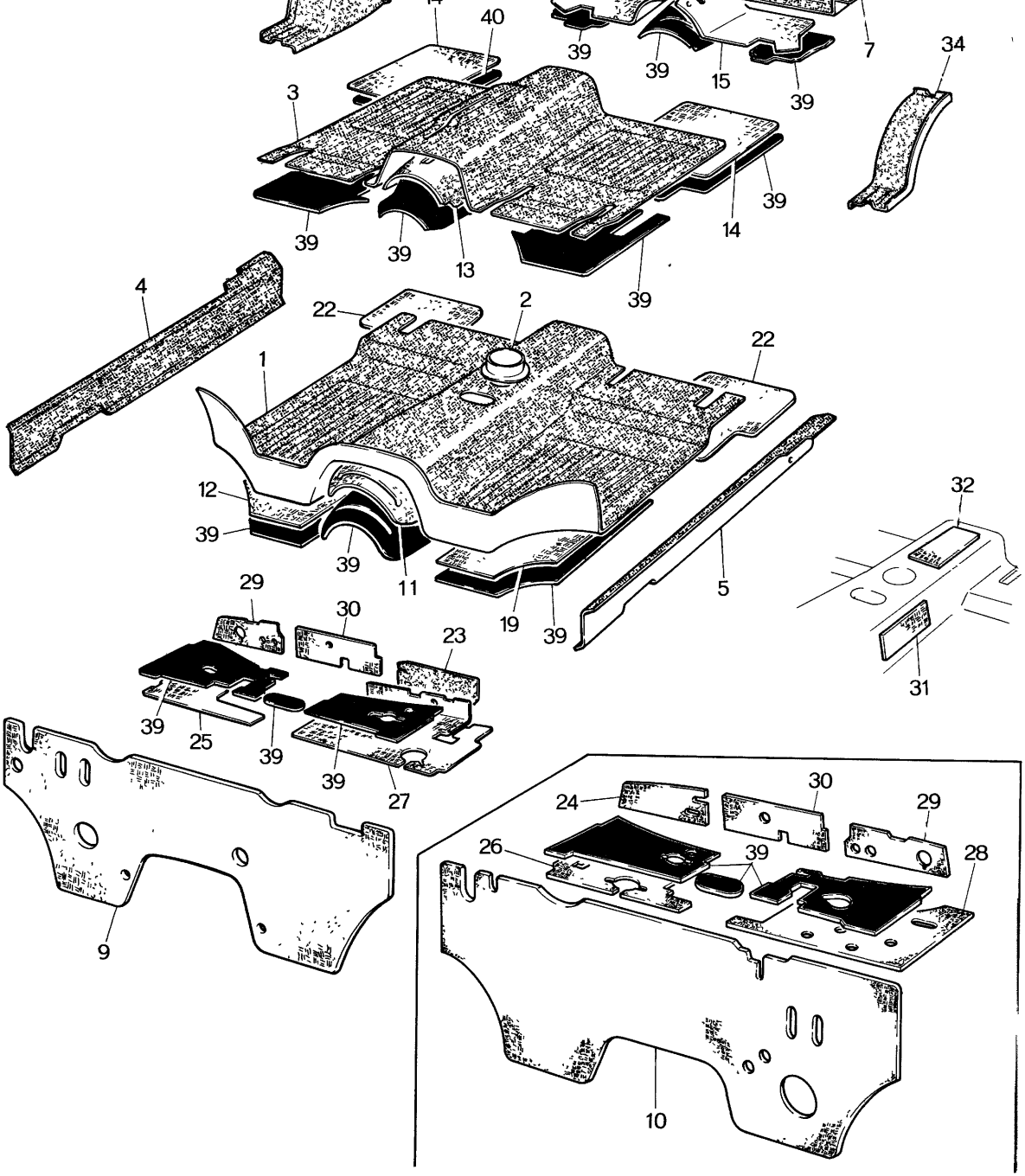
40
39
39
15
39
7
34
3
39
39
13
14
39
39
4
22
2
22
1
12
39
39
11
19
39
5
32
31
29
30
23
39
25
39
39
27
9
24
30
29
26
39
28
10

•	3	2061 69 6030 14	Mat (Rr.) Black		1	©
•	4	0317 69 6070 14	Mat Side (R) Black	Selective use	1	©
•		2370 69 6070 14	Mat Side (R) Black With Safety Belt Hole	Selective use	1	©
•	5	0317 69 6080 14	Mat Side (L) Black	Selective use	1	©
•		2370 69 6080 14	Mat Side (L) Black With Safety Belt Hole	Selective use	1	©
•	6	0257 69 611A 04	Mat End (R) Black		1	©
•	7	0257 69 612A 14	Mat End (L) Black		1	©
•	8	0259 69 615C 10	Mat, Trunk Room Black		1	©
	9	2063 69 660	Insulator Ass'y , (R.H.D.)		1	
		2334 69 660	Insulator Ass'y , (R.H.D.)		1	
	10	2062 69 660A	Insulator Ass'y , (L.H.D.)		1	
		2335 69 660	Insulator Ass'y , (L.H.D.)		1	
	11	0845 69 641A	Pad (Frt., C)		1	
	12	0822 69 642	Pad (Frt., R)		1	
	13	0844 69 643	Pad (Rr., C)		1	
•	14	0822 69 644	Pad (Rr. R)		1	Car No. 70537 $^{70}/_{11}$ ~ Quantity
•		2335 69 648	Pad (Rr. L)		1	Car No. 70537 $^{70}/_{11}$ ~ Added Anew
	15	0820 69 645A	Pad End		1	
		0820 69 645A	Pad End		1	Car No. 62706 $^{70}/_{7}$ ~ X
	16	0259 69 646	Pad End No. 1		1	
	17	0259 69 647	Pad End No. 2		2	
	18	0259 69 648	Pad End No. 3		2	

25	0317 69 685A	Pad (R), Top Lower (R.H.D.)	1		
26	2370 69 685A	Pad (R), Top Lower (L.H.D.)	1		
•	2370 69 685B	Pad (R), Top Lower (L.H.D.)	1	Car No. 65086 $^{70}/_{8}$ ~ O	
27	0317 69 686A	Pad (L), Top Lower (R.H.D.)	1		
28	2370 69 686A	Pad (L), Top Lower (L.H.D.)	1		
29	0317 69 687A	Pad (C), Top Upper	1		
30	0317 69 688A	Pad (R)	1		
31	0822 69 688	Pad, Tunnel Side	1		
32	0822 69 689	Pad, Center Lower	1		
33		Trim (R), Tire House	1		©
•	0317 69 5500 00	Black			
•	0317 69 5500 02	Brown			
34		Trim (L), Tire House	1		©
•	0317 69 5700 00	Black			
•	0317 69 5700 02	Brown			
35	0259 69 870	Trim, Package Tray	1		©
36	0317 69 881	Trim, Upper	1		©
37	0317 69 883	Pad, Trim Upper	2		
38	0259 69 885	Tacker	6		
39	0208 76 071	Silencer	–		

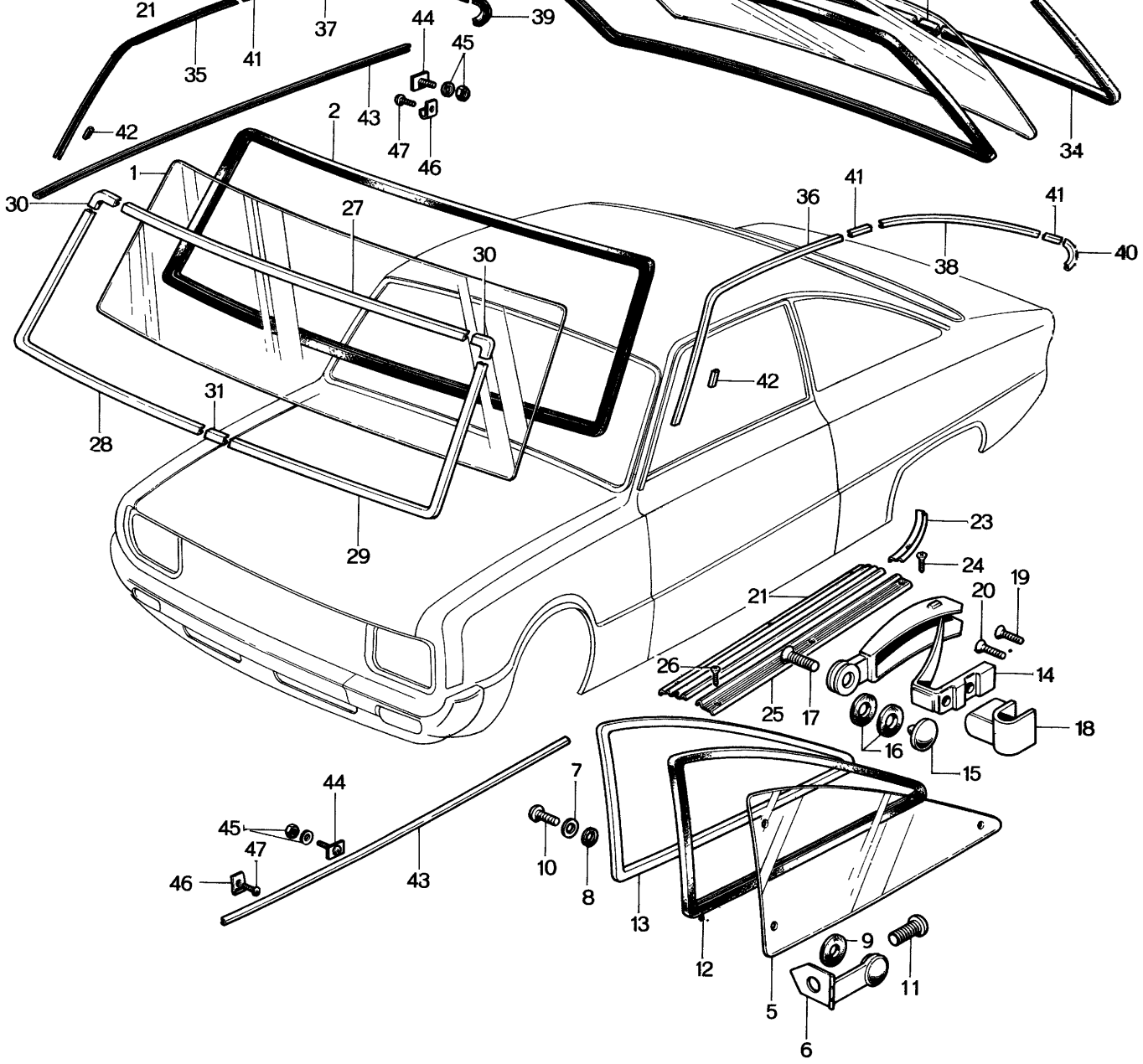
21
35
41
37
44
45
39
42
43
47
46
2
1
30
27
30
31
28
29
42
36
41
38
41
40
34
23
24
19
20
21
26
25
17
14
18
16
15
7
10
8
44
45
47
46
43
13
12
9
11
5
6

3	0820 70 451A	Back Window Glass, With Heating Wire Tempered, Blue Pane (4.0 mm)			
	2113 70 451A	Back Window Glass, With Heating Wire Tempered, Transparent (5.0 mm)	Optional	1	
•	2797 70 451	Back Window Glass, With Heating Wire	For Australia	1	Car No. 94253 $^{71}/_{4}$ ~ Added Anew
	0328 70 451	Back Window Glass, Transparent Tempered (4.0 mm)		1	
	0329 70 451	Back Window Glass, Blue Pane Tempered (4.0 mm)		1	
•	2409 70 451	Back Window Glass, Trans. (5.0 mm)	For Australia	1	Car No. 94253 $^{71}/_{4}$ ~ Added Anew
4	0820 70 452	Weather Strip		1	
5	0820 70 511	Quarter Window Glass (R), Blue Pane		1	
	0820 71 511	Quarter Window Glass (L), Blue Pane		1	
	2113 70 511	Quarter Window Glass (R), Transparent		1	
	2113 71 511	Quarter Window Glass (L), Transparent		1	
6	0256 70 520A	Hinge Ass'y (R) — Dull Black Finish		1	
	0256 71 520A	Hinge Ass'y (L) — Dull Black Finish		1	
	2247 70 520	Hinge Ass'y (R) — Chrome Plated		1	
	2247 71 520	Hinge Ass'y (L) — Chrome Plated		1	
7	0256 70 525A	Washer Strip, Quarter Window		4	
8	0256 70 526A	Seat "A", Hinge		4	
9	0256 70 528A	Seat "B", Hinge		4	
10	99832 0410B	Screw, Hinge		4	
11	99831 0412	Screw, Hinge		4	
12	0820 70 541	Weather Strip (R)		1	
	0820 71 541	Weather Strip (L)		1	

19	99832 0412B	Screw, Lock	2
20	99837 0416B	Screw, Lock	2
21	0256 70 712	Scarf Plate (Frt.)	2
22	0256 70 713	Scarf Plate (C., R)	1
23	0256 71 713	Scarf Plate (C., L)	1
24	99862 0412	Tapping Screw	8
25	0820 70 751	Step Garnish	2
26	99862 0412	Tapping Screw, Step Garnish	6
27	0820 70 801	Front Mould Upper	1
28	0820 70 802	Front Mould Lower (R)	1
29	0820 71 802	Front Mould Lower (L)	1
30	0820 70 803	Joint	4
31	0119 70 952	Mould Joint	2
32	0820 70 811	Rear Mould Upper	1
33	0820 70 812	Rear Mould Lower (R)	1
34	0820 71 812	Rear Mould Lower (L)	1
35	0820 70 821	Drip Mould (Frt., R)	1
36	0820 71 821	Drip Mould (Frt., L)	1
37	0820 70 822A	Drip Mould (Rr., R)	1
38	0820 71 822A	Drip Mould (Rr., L)	1

45	99906 0400	Nut, Step Mould	2
	99971 0400	Spring Washer	2
46	0223 70 861	Clip, Step Mould	8
47	908632 5 12	Set Screw, Step Mould	8

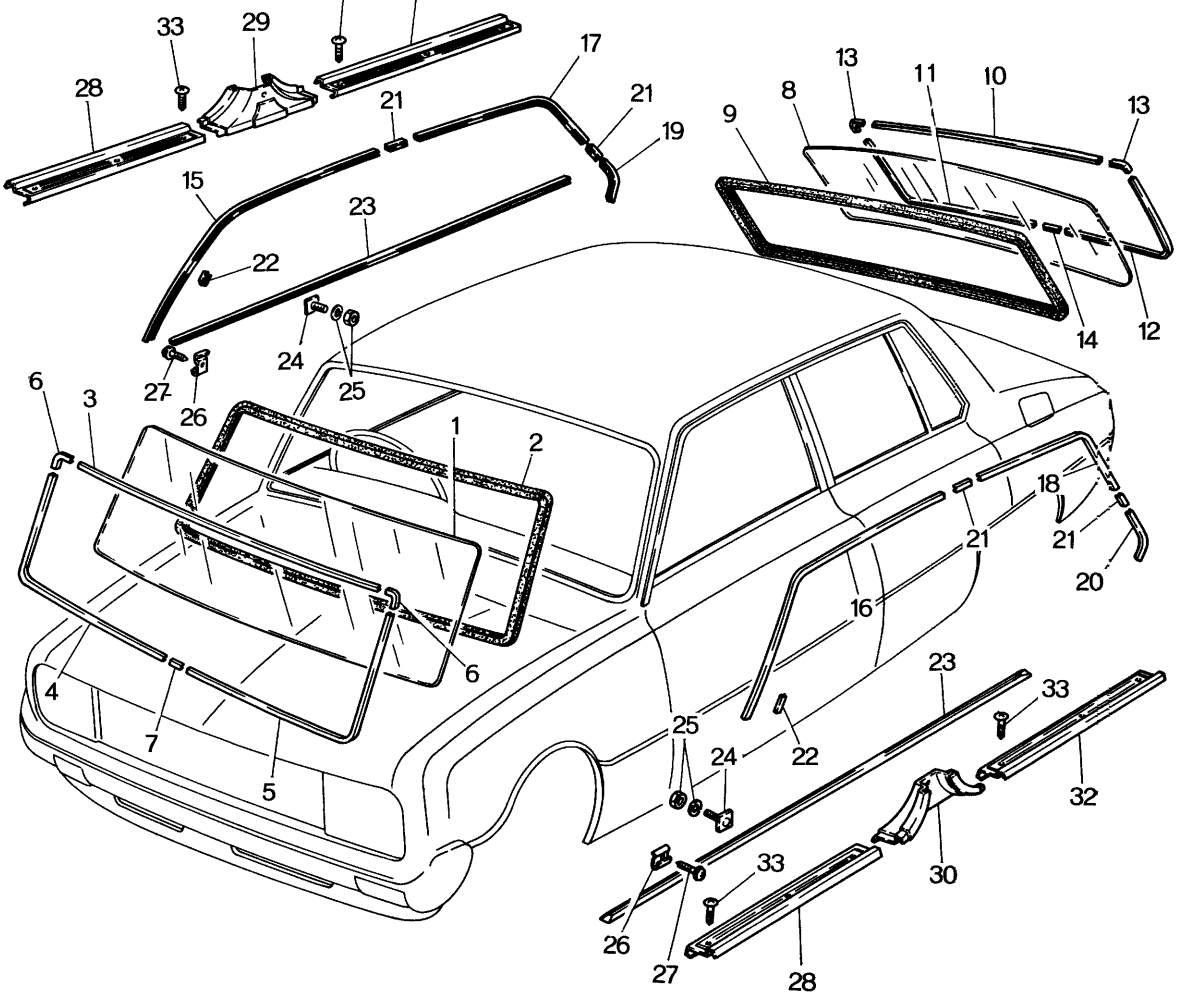
33
29
28
17
21
21
19
15
23
22
24
25
27
26
6
3
1
2
4
7
5
6
13
11
10
13
8
9
14
12
18
21
21
20
16
23
33
25
24
22
32
30
33
26
27
28

	4	0259 70 802	Mould Lower (Frt., R)		1	
	5	0259 71 802	Mould Lower (Frt., L)		1	
	6	0820 70 803	Joint		2	
	7	0119 70 952	Mould Joint, Front Window		1	
	8	2360 70 451	Back Window Glass (With Heating Wire) Tempered, Blue Pane (4.0 mm)	Optional	1	
		2352 70 451	Back Window Glass (With Heating Wire) Tempered, Transparent (4.0 mm)			
•		2404 70 451	Back Window Glass (With Heating Wire (5.0 mm)	For Australia	1	Car No. 94253 $^{71}/_{4}$ ~ Added Anew
		2350 70 451	Back Window Glass,Transparent (4.0 mm)		1	
		2370 70 451	Back Window Glass,Blue Pane (4.0 mm)		1	
•		2402 70 451	Back Window Glass, Trans. (5.0 mm)	For Australia	1	Car No. 94253 $^{71}/_{4}$ ~ Added Anew
	9	0259 70 452	Weather Strip		1	
	10	0259 70 811	Mould Upper (Rr.)		1	
	11	0259 70 812	Mould Lower (Rr., R)		1	
	12	0259 71 812	Mould Lower (Rr., L)		1	
	13	0259 70 813	Joint		2	
	14	0119 70 952	Mould Joint, Rear Window		1	
	15	0259 70 821	Drip Mould (Frt., R)		1	
	16	0259 71 821	Drip Mould (Frt., L)		1	
	17	0259 70 822	Drip Mould (Rr., R)		1	
	18	0259 71 822	Drip Mould (Rr., L)		1	
	19	0259 70 823	Drip Mould, End (R)		1	
	20	0259 71 823	Drip Mould, End (L)		1	

26	0223 70 861	Clip, Step Mould	8
27	908632 5 12	Set Screw	8
28	0259 70 712	Scarf Plate (Frt.)	2
29	0259 70 713	Scarf Plate, Center (R)	1
30	0259 71 713	Scarf Plate, Center (L)	1
31	0259 70 714	Scarf Plate (Rr., R)	1
32	0259 71 714	Scarf Plate (Rr., L)	1
33	99862 0412	Tapping Screw, Scarf Plate	12

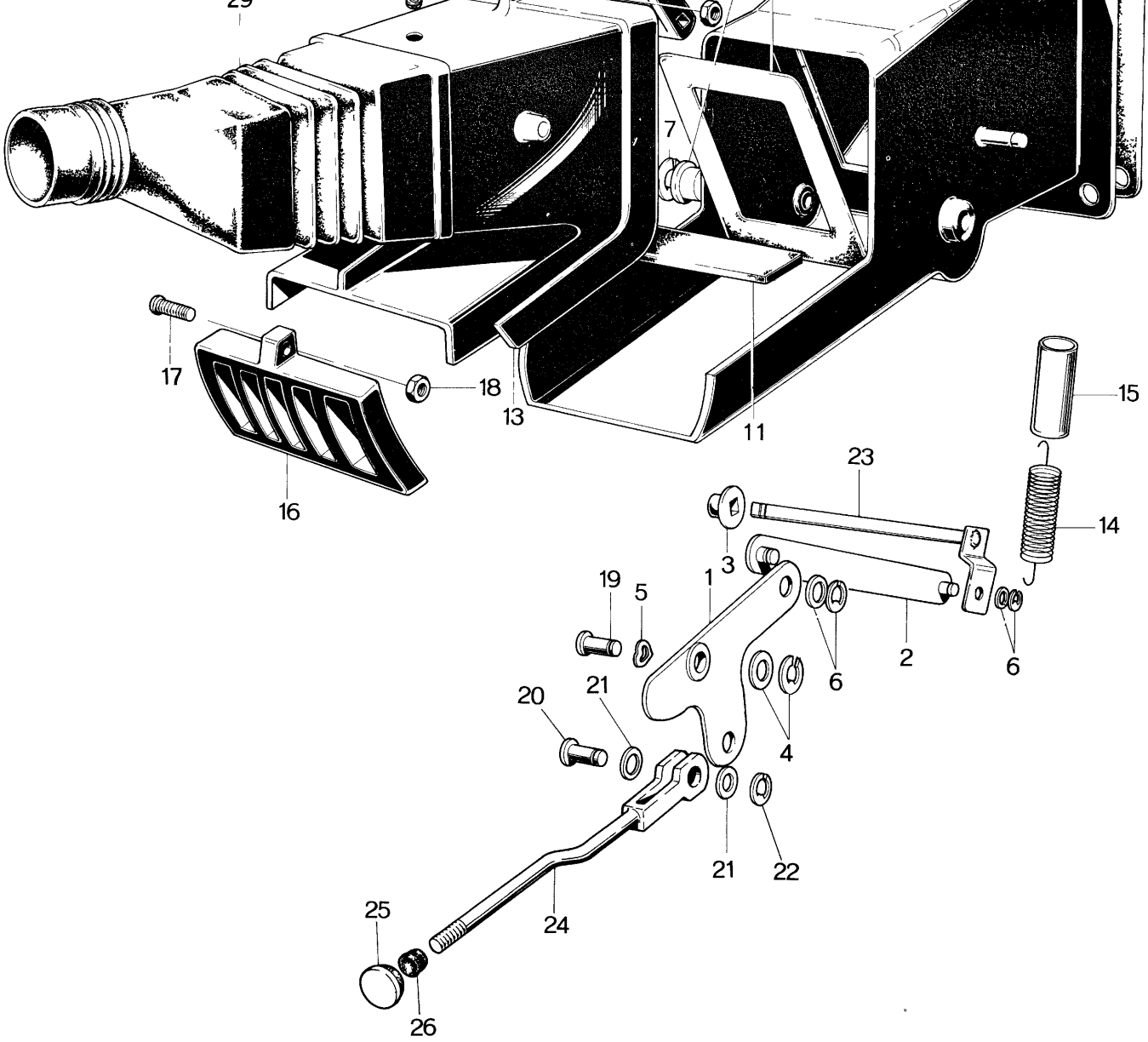
29
7
17
18
13
11
16
15
23
14
3
1
19
5
6
2
6
20
21
4
21
22
25
24
26

2	0820 70 305	Rod "B"		2
3	0259 70 307	Bush		4
4	99953 0800	Plain Washer		2
	99576 0500	"E" Type Stop Ring		2
5	99972 0800	Wave Washer		2
6	99952 0600	Plain Washer, Rod		4
	99576 0400	"E" Type Stop Ring		4
7	99576 0400	"E" Type Stop Ring		2
8	0259 70 311A	Ventilator Duct (R)	R.H.D	1
	0259 71 311A	Ventilator Duct (L)	R.H.D	1
	2158 70 311	Ventilator Duct (R)	L.H.D.	1
	0257 71 311	Ventilator Duct (L)	L.H.D.	1
9	0259 70 313	Gasket "A"		2
10	0259 70 314	Gasket "B"		2
11	0259 70 315	Cushion		2
12	0259 70 321A	Flap		2
13	0820 70 331A	Ventilator Duct (Rr., R)		1
	0820 71 331A	Ventilator Duct (Rr., L)		1
14	0820 70 342	Return Spring		1
15	99335 10005	Vinyl Pipe		2

21	0633 52 148	Washer	4
22	99576 0500	"E" Type Stop Ring	2
23	0259 70 350	Lever Ass'y	2
24	0820 70 350B	Rod Ass'y (R)	1
	0820 71 350A	Rod Ass'y (L)	1
25	0118 70 722A	Knob	2
26	0820 70 355	Grommet	2
• 27	908381 5 16	Set Screw, Duct	2
28	908046 5 20	Set Screw, Ventilator Duct	2
29	0820 55 025B	Duct, Ventilator (R)	1
	0820 55 026B	Duct, Ventilator (L)	1

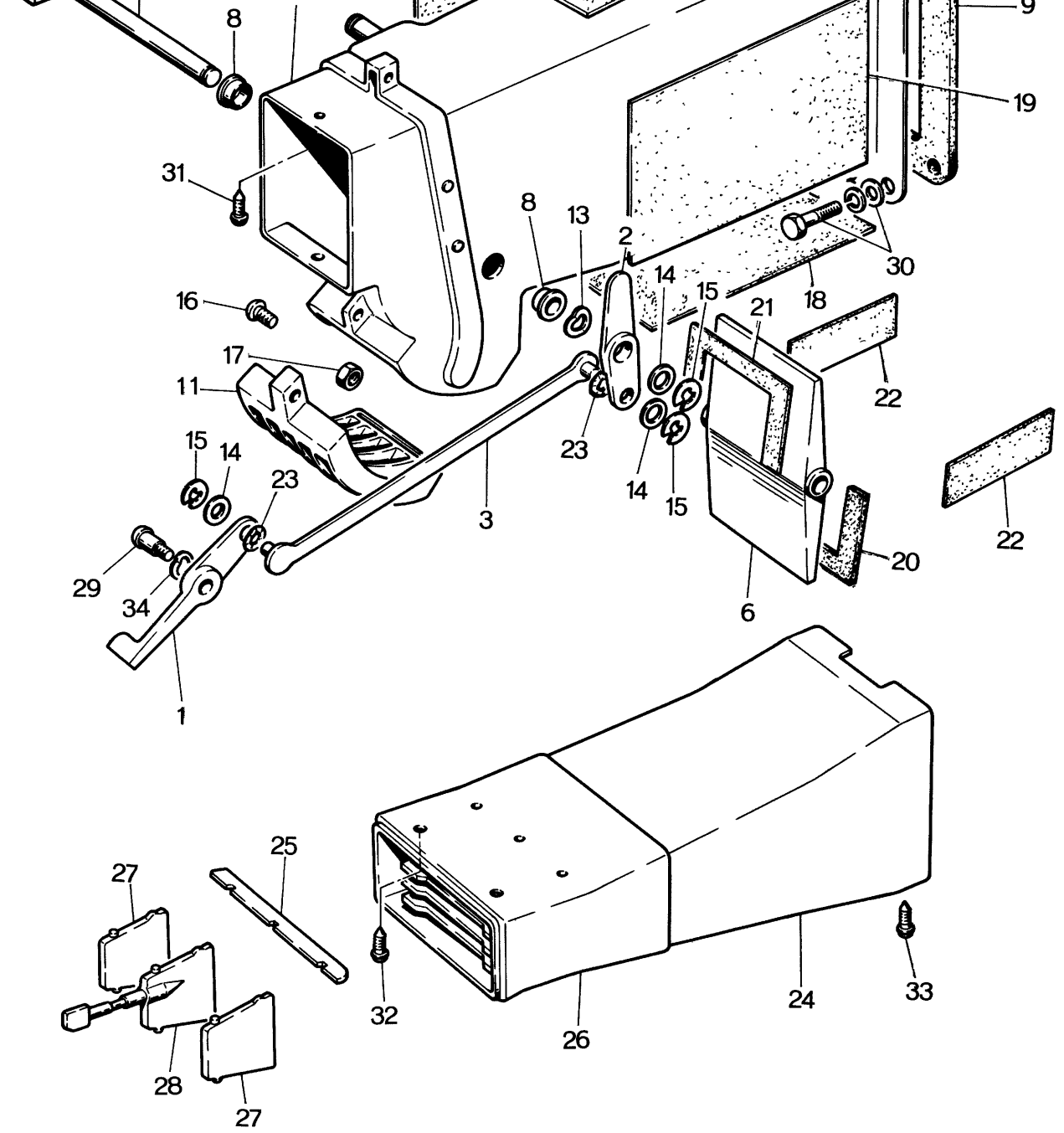
8
9
19
31
8
13
2
30
16
14
15
21
18
17
11
22
15
14
23
23
14
15
3
29
34
20
22
6
1
25
27
32
24
33
26
28
27

	0317 71 303	Link (L)	1	
3	0317 70 304	Rod "A"	2	
4	0317 70 311	Ventilator Duct Front (R),(R.H.D. & L.H.D.) Used for L.H.D. cars when without Car Heater	1	
	0317 71 311	Ventilator Duct Front (L),(R.H.D.)	1	
	2370 70 311	Ventilator Duct Front (R),(L.H.D.) With Car Heater	1	
	0316 71 311	Ventilator Duct Front (L),(R.H.D.) Without Car Heater	1	
5	0317 70 312	Ventilator Duct Center (R)	1	
	0317 71 312	Ventilator Duct Center (L)	1	
6	0317 70 321	Flap	2	
7	0317 70 352	Lever	2	
8	0317 70 307	Bush	4	
9	0259 70 313	Packing "A"	2	
10	0317 70 342	Spring	2	
11	0259 70 345	Second Louver (R)	1	©
	0259 71 345	Second Louver (L)	1	©
12	99335 08002	Vinyl Pipe	2	
13	99972 0800	Wave Washer	2	
14	99952 0600	Plain Washer	8	
15	99576 0400	Retaining Ring	6	
16	99833 0312B	+ Screw	4	

23	99972 0600	Wave Washer	2
	0317 70 330A	LOUVER Ass'y (R)	1
	0317 71 330A	LOUVER Ass'y (L)	1
24	0317 70 331	Ventilator Duct Rear (R)	1
	0317 71 331	Ventilator Duct Rear (L)	1
• 25	~~0223 70 339~~	~~Link~~	~~2~~
26	0317 70 341	Louver (R)	1
	0317 71 341	Louver (L)	1
27	0317 70 343	Louver Blade "B"	4
28	0317 70 360	Louver Blade "A"	2
29	0259 70 302A	Pin	2
30	908046 5 20	Set Bolt	6
31	908381 5 16	Set Screw	2
32	99838 0516B	Screw	4
33	99863 0508B	Screw	2
34	99972 0800	Wave Washer	2

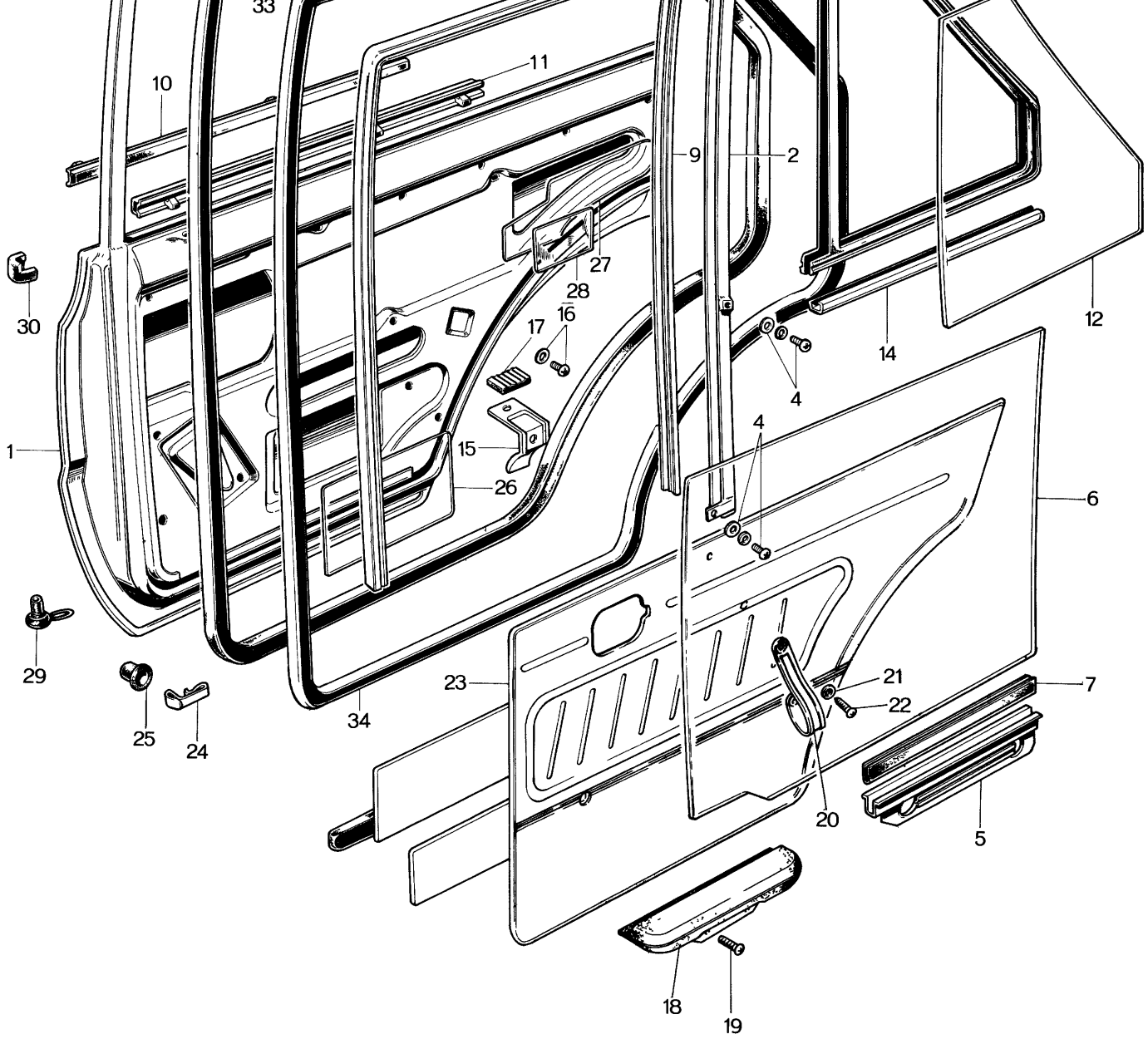
33
11
10
9
2
27
28
16
17
30
4
14
12
1
15
26
4
6
29
23
21
7
22
25
24
34
20
5
18
19

	0259 72 110	Door Sash (R)	1
	0259 73 110	Door Sash (L)	1
2	0259 72 120A	Center Channel Ass'y (R)	1
	0259 73 120A	Center Channel Ass'y (L)	1
3	99831 0412	Screw, Center Channel Upper	4
4	908334 6 08	Set Screw, Center Channel	4
5	0259 72 210	Lift Bracket	2
6	0257 72 221	Door Glass (R), Transparent	1
	0257 73 221	Door Glass (L), Transparent	1
	0259 72 221	Door Glass (R), Blue Pane	1
	0259 73 221	Door Glass (L), Blue Pane	1
7	0259 72 231	Rubber Strip	2
8	0259 72 241	Glass Run Channel "A"	2
9	0259 72 242	Glass Run Channel "B"	2
10	0259 72 280A	Weather Strip "A"	2
11	0259 72 290	Weather Strip "B"	2
12	0257 72 411	Quarter Window Glass (R)	1
	0257 73 411	Quarter Window Glass (L)	1

17	0187 56 235	Support Rubber	2	
18	0820 58 880B	Arm Rest	2	©
19	99833 0512	Screw, Arm Rest	4	
20	0209 58 861	Pull Handle	2	©
21	0209 58 862	Washer, Pull Handle	4	
22	99832 0516C	Screw, Pull Handle	4	
•	99832 0520C	Screw, Pull Handle	4	Car No. 94253 $^{71}/_{4}$ ~ ○
23		Rear Door Trim (R)	1	©
	0326 72 9100-08	Black		
	0326 72 9100-07	Brown		
		Rear Door Trim (L)	1	©
	0326 73 9100-08	Black		
	0326 73 9100-07	Brown		
	0848 72 910	Rear Door Trim (R) "T" Type Dashboard Model	1	
		Rear Door Trim (R) "T" Type Dashboard Model	1	Car No. 60429 $^{70}/_{5}$ ~ ○
	0848 72 910A-04	Black		
	0848 72 910A-10	Brown		
	0848 73 910	Rear Door Trim (L) "T" Type Dashboard Model	1	
		Rear Door Trim (L) "T" Type Dashboard Model	1	Car No. 60429 $^{70}/_{5}$ ~ ○
	0848 73 910A-04	Brown		
	0848 73 910A-10	Black		
24	0208 58 921	Fastener, Door Trim	20	
25	0223 58 925	Fastner Cap	20	
26	0259 72 921	Door Screen "A"	2	
27	0259 72 923	Door Screen "C"	2	
28	0259 72 924	Door Screen "D"	2	
29	0259 58 931	Drain Valve	2	
30	0259 72 951	Pad "A" (R)	1	
	0259 73 951	Pad "A" (L)	1	
31	0259 72 952	Pad "B" (R)	1	
	0259 73 952	Pad "B" (L)	1	

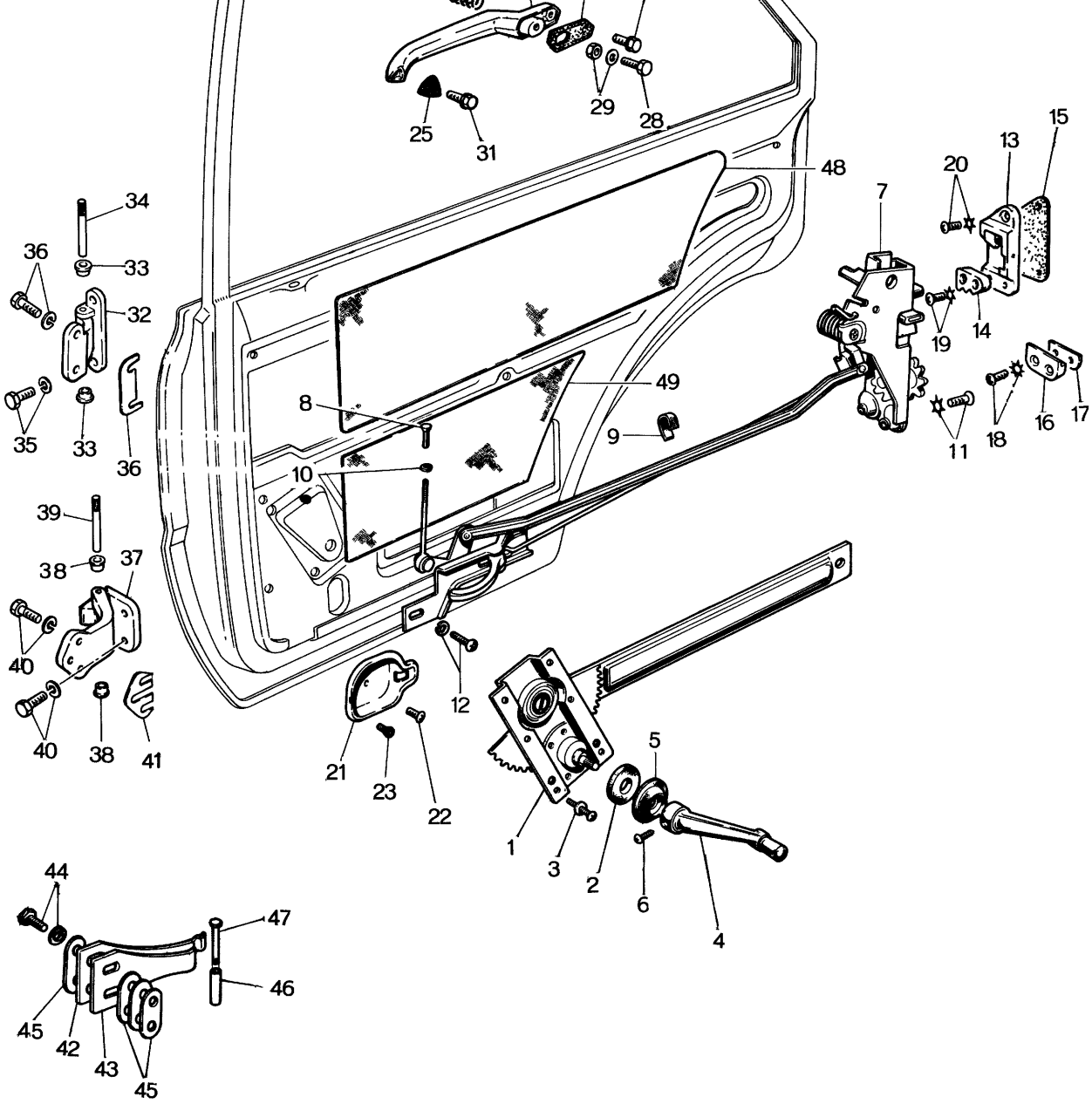
1
2
3
4
5
6
7
8
9
10
11
12
13
14
15
16
17
18
19
20
21
22
23
25
28
29
31
32
33
34
35
36
37
38
39
40
41
42
43
44
45
46
47
48
49

4	0259 58 370C	Regulator Handle	2	
5	0243 58 391	Door Escutcheon	2	
6	99862 0412C	Tapping Screw, Regulator Handle	2	
•	99847 0410C	Tapping Screw, Regulator Handle	2	Car No. 64624 $^{70}/_{8}$ ~
7	0259 72 500	REAR DOOR LOCK Ass'y (R)	1	
	0259 73 500	REAR DOOR LOCK Ass'y (L)	1	
	2119 72 500	REAR DOOR LOCK Ass'y (R) Arctic Spec. Model	1	
	2119 73 500	REAR DOOR LOCK Ass'y (L) Arctic Spec. Model	1	
8	0259 58 691	Knob	2	
9	0259 72 509	Pad	2	
10	0200 58 692	Grommet , Plain Type Dashboard use	2	
	0223 58 692	Grommet, "T" Type Dashboard use	2	
11	908324 6 14	Set Screw, Door Lock	6	
12	908339 5 12	Set Screw, Remote Control	4	
13	0259 58 570	Striker Ass'y (R)	1	
	0259 59 570	Striker Ass'y (L)	1	
14	0259 58 581	Rack (R)	1	

20	907614 6 25	Set Screw, Striker	4	
•	907614 6 30	Set Screw, Striker	4	Car No. 62251 70% ~ C
21	0259 58 611	Cover	2	
22	99832 0408B	Screw, Cover	2	
23	0259 58 612	Rubber Cushion	2	
	0317 72 670	OUTER HANDLE Ass'y (Rr., R)	1	
	0317 73 670	OUTER HANDLE Ass'y (Rr., L)	1	
	2352 72 670	OUTER HANDLE Ass'y (Rr., R) Arctic Spec. Model	1	
	2352 73 670	OUTER HANDLE Ass'y (Rr., L) Arctic Spec. Model	1	
24	0259 58 671	Spring	2	
25	0317 58 674	Handle Pad "A" (R)	1	
	0317 59 674	Handle Pad "A" (L)	1	
26	0317 58 675	Handle Pad "B" (R)	1	
	0317 59 675	Handle Pad "B" (L)	1	
27	0317 72 676	Push Button	2	
28	0110 58 254A	Push Screw	2	
29	99907 0500	Nut	2	
	99952 0516	Plain Washer	2	
30	0317 58 680	Door Outer Handle (R)	2	

32	0317 72 700	UPPER HINGE Ass'y (R)		1	
	0317 73 700	UPPER HINGE Ass'y (L)		1	
33	0223 58 721	Bush		4	
34	0187 58 731	Hinge Pin		2	
35	907832 8 25	Set Bolt, Hinge Upper		10	
36	0259 72 736	Shim, Hinge Upper	Selective use	–	
37	0317 72 750	LOWER HINGE		2	
	0317 72 750A	LOWER HINGE		2	Car No. 61563 $^{70}/_{5}$ ~ ○
38	0223 58 721	Bush		4	
39	0259 72 731	Hinge Pin		2	
40	907832 8 25	Set Bolt, Lower Hinge		10	
41	0259 72 786	Shim, Lower Hinge	Selective use	–	
42	0259 72 811	Check Spring		2	
43	0259 72 812	Check Sub Spring		2	
44	908062 6 25	Set Bolt, Check Spring		4	

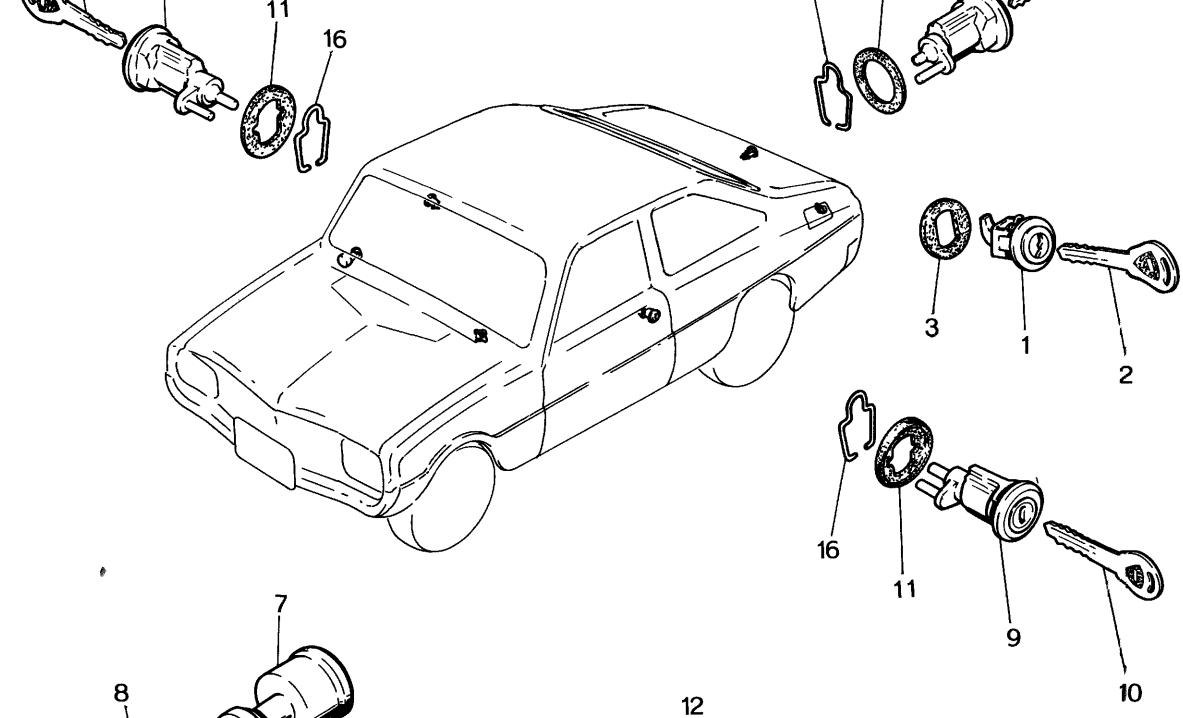
11
16
3
1
2
16
11
9
10
7
8
12
17
13
14
15

•		2124 09 050	KEY SET (For France)	1
•		2124 09 010C	KEY SET Steering Lock use (For France)	1
•		2124 58 668	Primary Key	2
	1	0820 74 940	FILLER KEY SUB SET	1
•		2124 74 940	FILLER KEY SUB SET (For France)	1
	2	2113 58 669	Secondary Key	1
•		2124 58 668	Primary Key (For France)	1
	3	0621 42 455	Packing	1
	4	0820 74 930	TRUNK KEY SUB SET	1
•		2124 74 930	TRUNK KEY SUB SET (For France)	1
	5	2113 58 668	Primary Key	1
•		2124 58 668	Primary Key (For France)	1
	6	0223 58 962	Packing	1
	7	2113 60 430	IGNITION SWITCH "T" Type Dashboard use	1
		2450 60 430	IGNITION SWITCH	1
	8	2113 58 668	Primary Key	1
•		2124 58 668	Primary Key (For France)	1
	9	0820 74 910	DOOR KEY SUB SET	2
•		2124 74 910	DOOR KEY SUB SET (For France)	2
	10	2113 58 669	Secondary Key	2
•		2124 58 668	Primary Key (For France)	2
	11	0259 58 662	Gasket	2

15	2280 60 430B	Steering Lock, With Key		1	
	2370 60 430	Steering Lock, With Key (For France)		1	
	2385 60 430	Steering Lock, With Key (For France)		1	Car No. 65573 $^{70}/_{8}$ ~ ○
•	2835 60 430A	Steering Lock, With Key (For France)		1	Car No. 87150 $^{71}/_{2}$ ~ ○
16	0223 58 961	Fastener, Key Cylinder		3	
17	99832 0410B	Screw, Key Cylinder		2	
•	2124 74 158A	Key – Blank, Primary (Key No. 1500 ~ 1999)	For France	1	Car No. 82291 $^{71}/_{1}$ ~ Added Anew
•	2124 74 168A	Key – Blank, Primary (Key No. 2000 ~ 2499)	For France	1	
•	2124 74 159A	Key – Blank, Secondary (Key No. 1500 ~ 1999)	For France	1	
•	2124 74 169A	Key – Blank, Secondary (Key No. 2000 ~ 2499)	For France	1	
•	2113 74 158	Key – Blank, Primary (Key No. 1500 ~ 1999)		1	Car No. 82291 $^{71}/_{1}$ ~ Added Anew
•	2113 74 168	Key – Blank, Primary (Key No. 2000 ~ 2499)		1	
•	2113 74 159	Key – Blank, Secondary (Key No. 1500 ~ 1999)		1	
•	2113 74 169	Key – Blank, Secondary (Key No. 2000 ~ 2499)		1	

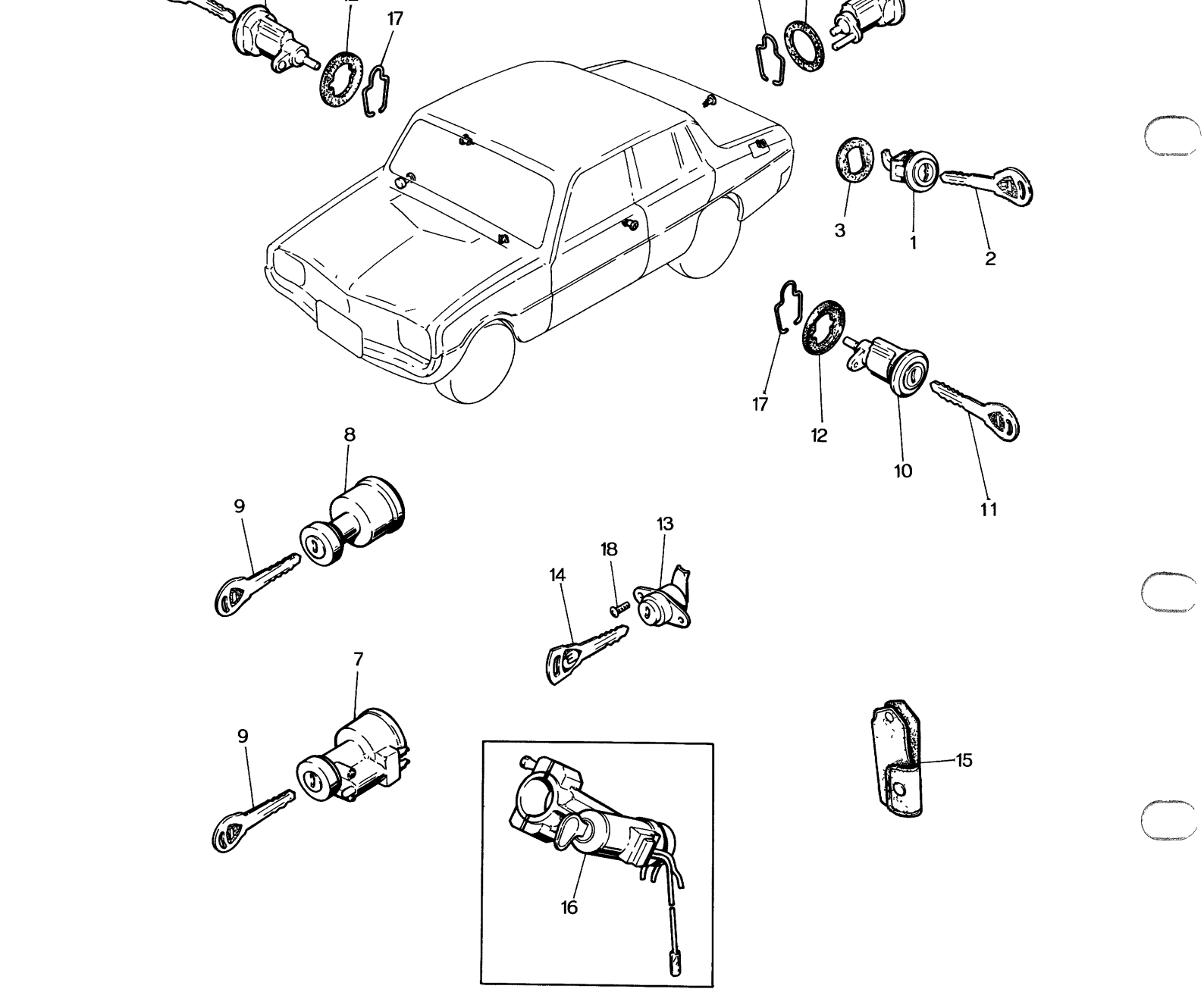
17
3
1
2
17
12
10
11
8
9
13
18
14
7
9
15
16

1	0820 74 940	FILLER KEY SUB SET	1
	2124 74 940	FILLER KEY SUB SET (For France)	1
2	2113 58 669	Secondary Key	1
	2124 58 668	Primary Key (For France)	1
3	0621 42 455	Packing	1
4	0820 74 930	TRUNK KEY SUB SET	1
	2124 74 930	TRUNK KEY SUB SET (For France)	1
5	2113 58 668	Primary Key	1
	2124 58 668	Primary Key (For France)	1
6	0223 58 962	Packing	1
7	0317 60 430B	IGNITION SWITCH (R.H.D.)	1
8	2113 60 430	IGNITION SWITCH "T" Type Dashboard use	1
	2450 60 430	IGNITION SWITCH (L.H.D.)	1
9	2113 58 668	Primary Key	1
	2124 58 668	Primary Key (For France)	1
10	0844 74 910	DOOR KEY SUB SET	1
	2415 74 910	DOOR KEY SUB SET	1
11	2113 58 669	Secondary Key	1
	2124 58 668	Primary Key	1
12	0259 58 662	Gasket	1

•		2301 60 439	Key, Steering Lock	1	
•		2370 60 439	Key, Steering Lock (For France)	1	
•		2835 60 439	Key, Steering Lock (For France)	1	Car No. 87150 $^{71}/_{2}$ ~ ○
	16	2280 60 430B	Steering Lock, with key	1	
		2370 60 430	Steering Lock, with Key (For France)	1	
	17	0223 58 961	Fastener, Key Cylinder	3	
	18	99832 0410B	Screw, Key Cylinder	2	
		2113 74 158	Key Blank, Primary Key (Key No. 1500 ~ 1999)	1	
		2113 74 168	Key Blank, Primary Key (Key No. 2000 ~ 2499)	1	
		2113 74 159	Key Blank, Secondary Key (Key No. 1500 ~ 1999)	1	
		2113 74 169	Key Blank, Secondary Key (Key No. 2000 ~ 2499)	1	
		2124 74 158A	Key – Blank, Primary (Key No. 1500 ~ 1999)	1	Car No. 82291 $^{71}/_{1}$ ~ Added Anew
		2124 74 168A	Key – Blank, Primary (Key No. 2000 ~ 2499)	1	For France
		2124 74 159A	Key – Blank, Secondary (Key No. 1500 ~ 1999)	1	For France
		2124 74 169A	Key – Blank, Secondary (Key No. 2000 ~ 2499)	1	For France
•		2280 75 641	Key – Blank, Steering Lock	1	

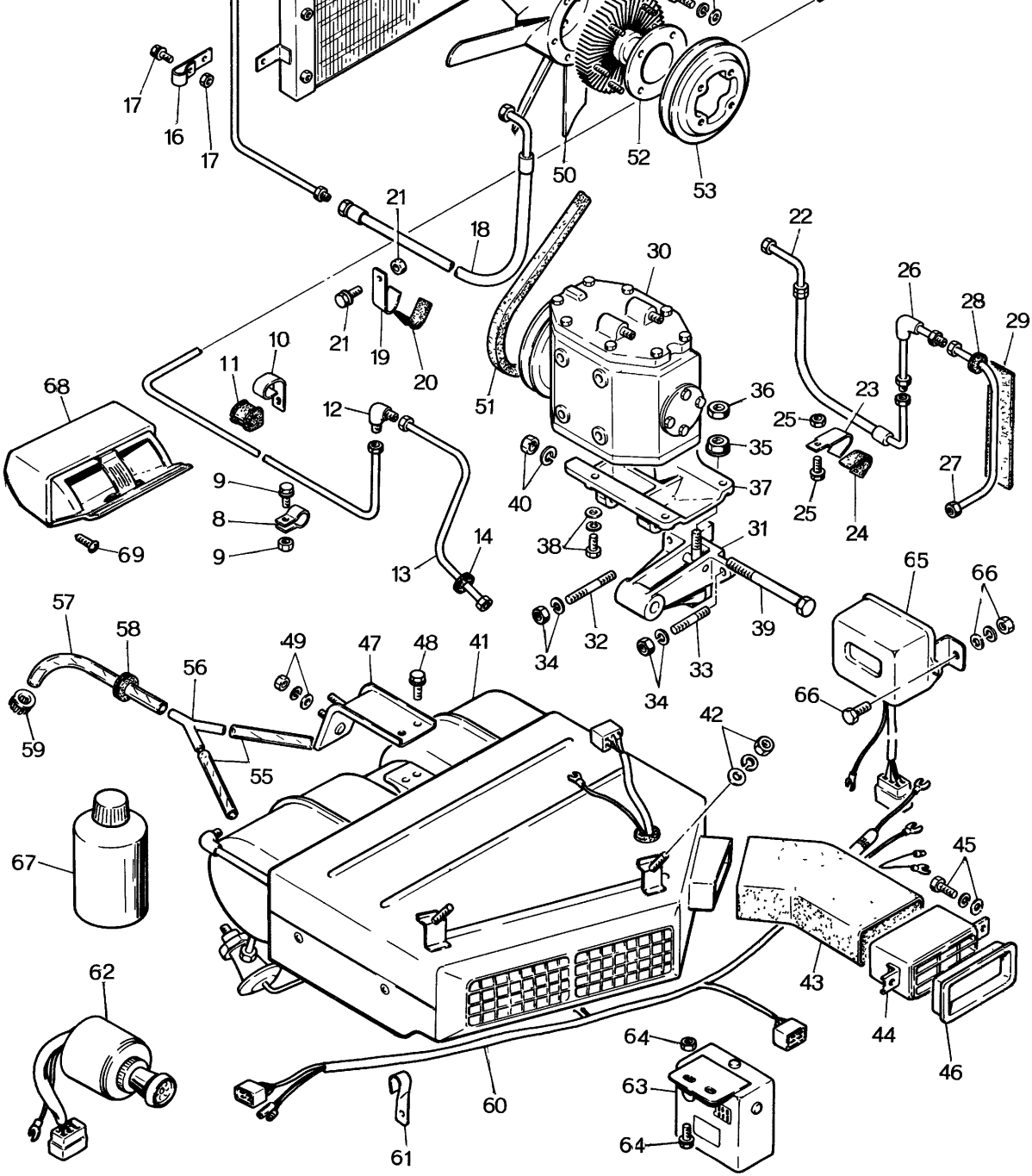
17
16
17
50
52
53
21
18
21
19
20
30
22
26
28
29
10
11
68
12
51
36
23
25
35
27
9
8
9
69
40
37
25
24
38
31
14
13
65
66
57
58
56
49
47
48
41
34
32
34
33
39
66
59
55
42
67
45
43
44
46
62
64
63
64
60
61

	99906 0800	Nut	2
6	908062 6 20	Set Bolt, Support Band	2
	99906 0600	Nut	2
7	0259 78 862	Pipe	1
8	0259 78 868	Clip, Pipe	1
9	907816 6 16	Set Bolt, Clip	1
	99906 0600	Nut	1
10	0820 14 735A	Clip, Pipe	1
11	0813 14 716	Protector	1
12	0259 78 867	Elbow	1
13	0820 78 864	Pipe	1
14	0208 78 875	Grommet	1
15	0820 78 861B	Pipe	1
16	0820 78 871	Clip, Pipe	1
17	907816 6 16	Set Bolt, Clip	1
18	0820 78 851	Flexible Hose No. 1	1
19	0259 78 857	Clip, Flexible Hose	1
20	0259 78 858	Rubber Seat	1
21	907816 6 16	Set Bolt	1
	99906 0600	Nut	1
22	0259 78 852A	Flexible Hose No. 2	1

28	0208 78 874	Grommet	1	
29	0208 78 857	Insulation	1	
30	0259 78 840A	Compressor	1	
31	0820 78 750B	Compressor Bracket No. 1	1	
•	0820 78 750C	Compressor Bracket No. 1	1	Car No. 60623 $^{70}/_{5}$ ~ X
32	99859 1025	Stud	1	
33	99859 1055	Stud	2	
•	99859 1050	Stud	2	Car No. 60623 $^{70}/_{5}$ ~ Δ
34	99921 1000	Nut	3	
	99971 1000	Spring Washer	3	
35	0820 78 756A	Adjust Screw	1	
36	0820 78 757	Lock Nut	1	
37	0820 78 755A	Compressor Bracket No. 2	1	
•	0820 78 755B	Compressor Bracket No. 2	1	Car No. 60623 $^{70}/_{5}$ ~ X
38	99807 0840	Bolt, Compressor Bracket No. 2	4	
	99952 0800	Plain Washer	4	
	99971 0800	Spring Washer	4	
39	0820 78 758	Bolt, Compressor Bracket	1	
•	0820 78 758A	Bolt, Compressor Bracket	1	Car No. 60623 $^{70}/_{5}$ ~ X
40	99921 1400	Nut, Compressor Bracket	1	
	99971 1400	Spring Washer	1	
41	0820 78 890A	Cooler Ass'y	1	
42	99906 0800	Nut, Cooler	2	
	99952 0800	Plain Washer	2	

	46	0820 78 904	Ornament	1	
	47	0820 78 893A	Support Bracket, Cooler	1	
	48	907816 6 16	Set Bolt, Support Bracket	2	
	49	99906 0600	Nut, Support Bracket	2	
		99952 0600	Plain Washer	2	
		99971 0600	Spring Washer	2	
	50	0813 15 200B	Cooling Fan	1	Car No. 90654 $^{71}/_{3}$ ~ Discarded
•		0820 78 761	Cooling Fan	1	Car No. 90655 $^{71}/_{3}$ ~ Added Anew
	51	0820 78 742	"V" Belt	1	
		0820 78 742A	"V" Belt	1	Car No. 60623 $^{70}/_{5}$ ~ X
	52	0820 78 746C	Fan Drive	1	Car No. 90654 $^{71}/_{3}$ ~ Discarded
•		2090 15 210	Fan Drive	1	Car No. 90655 $^{71}/_{3}$ ~ Added Anew
•		908062 6 12	Set Bolt	6	Car No. 90655 $^{71}/_{3}$ ~ Added Anew
	53	0820 78 745B	Pulley	1	
		0820 78 745C	Pulley	1	Car No. 60623 $^{70}/_{5}$ ~ X
	54	908062 6 30	Set Bolt, Pulley	4	
		908062 6 32	Set Bolt, Pulley	4	Car No. 60623 $^{70}/_{5}$ ~ Δ
•		99852 0630	Stud	4	Car No. 90655 $^{71}/_{3}$ ~ X
•		99906 0600	Nut	4	Car No. 90655 $^{71}/_{3}$ ~ Added Anew
•		99971 0600	Spring Washer	4	
•		99951 0618	Plain Washer	4	
	55	0259 78 874	Drain Hose	1	
	56	0259 78 876	Hose Connector	1	
	57	0820 78 880	Drain Hose	1	
	58	0820 78 883	Grommet	1	
	59	0820 78 884	Fastener	1	
	60	0820 78 911A	Wire Harness	1	
	61	0820 78 842	Clip, Wire Harness	1	
	62	0820 78 870	Switch, Cooler	1	
	63	0259 78 891	Stabilizer Amplifier	1	

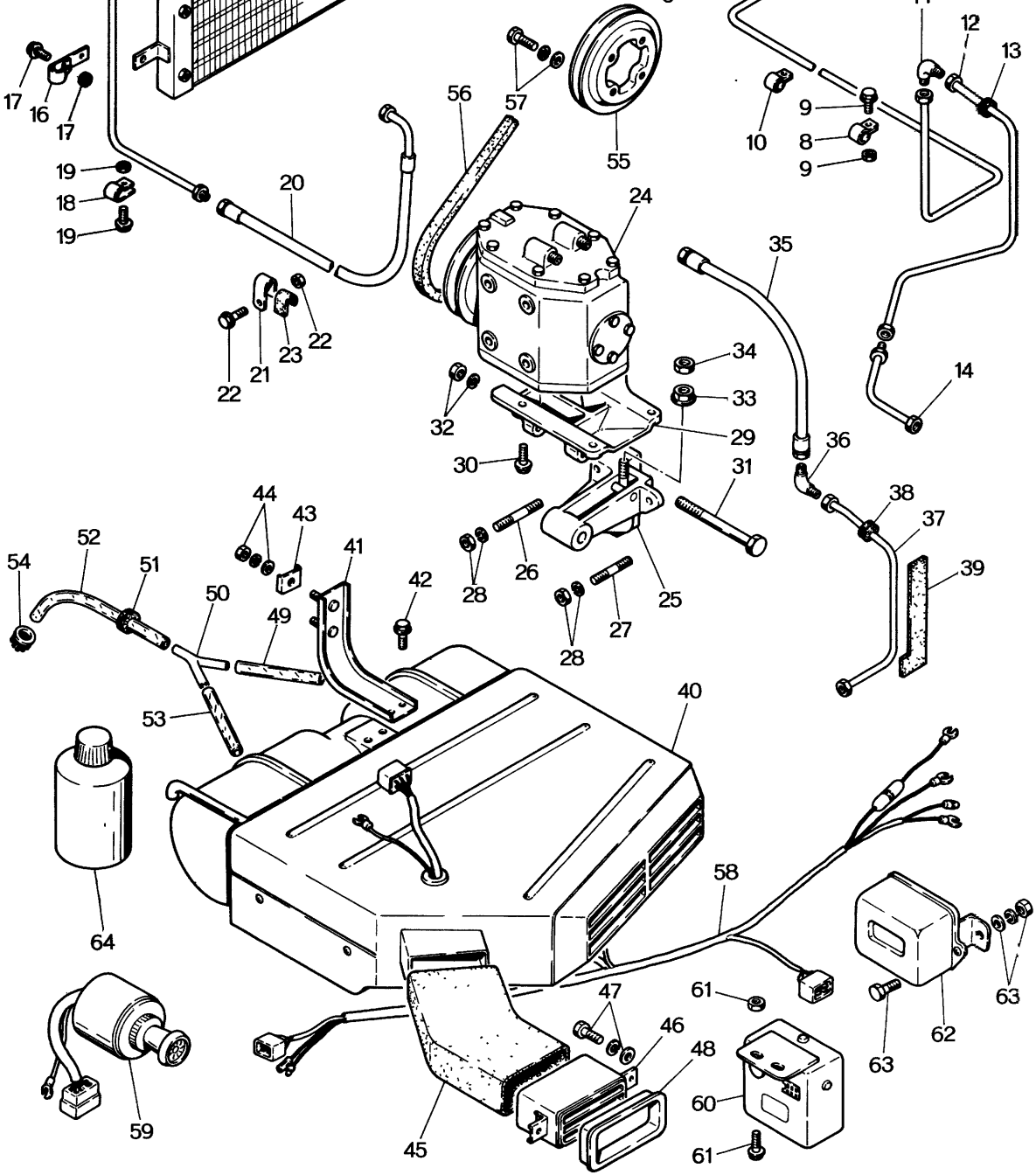
17
16
17
19
18
19
56
57
55
20
24
35
12
13
10
9
8
9
22
21
23
22
34
33
32
29
30
14
36
31
38
37
39
44
43
41
52
54
51
50
49
42
28
26
25
27
28
53
40
64
58
61
47
46
48
60
61
63
62
63
59
45

	99906 0800	Nut	2
6	99906 0616	Bolt, Receiver Tank	2
	99971 0600	Spring Washer	2
	99901 0600	Nut	2
7	2113 78 863	Pipe	1
8	0259 78 868	Clip	1
9	908066 6 16	Set Bolt, Clip	1
	99901 0600	Nut	1
10	2158 78 855	Clip	1
11	0259 78 867	Elbow	1
12	2113 78 864	Pipe No. 4	1
13	0208 78 875	Grommet	1
14	2113 78 853A	Pipe	1
15	0820 78 861B	Pipe	1
16	0820 78 871	Clip, Pipe	1
17	908066 6 16	Set Bolt, Clip	1
	99901 0600	Nut	1
18	0259 78 868	Clip, Pipe	1
19	908066 6 16	Set Bolt, Clip	1
	99901 0600	Nut	1

25	0820 78 750A	Compressor Bracket No. 1	1
26	99859 1025	Stud	1
27	99859 1055	Stud	2
28	99921 1000	Nut, Compressor Bracket	3
	99971 1000	Spring Washer	3
29	0820 78 755A	Compressor Bracket No. 2	1
30	907812 8 40	Set Bolt, Compressor Bracket	4
31	0820 78 765	Bolt, Compressor Bracket	1
32	99901 1200	Nut	1
	99971 1200	Spring Washer	1
33	0820 78 763	Adjust Screw, Compressor	1
34	0820 78 764	Lock Nut	1
35	2113 78 852A	Pipe	1
36	2158 78 866	Elbow	1
37	2113 78 865	Pipe	1
38	0208 78 874	Grommet	1
39	0208 78 857	Insulation	1
40	2113 78 890	Cooler Ass'y	1
41	2113 78 893	Bracket, Cooler	1
42	908066 6 16	Set Bolt	2

47	99806 0512	Bolt, Louver	2
	99952 0500	Plain Washer	2
	99971 0500	Spring Washer	2
48	0820 78 904	Ornament	1
49	0259 78 874	Drain Hose	1
50	0259 78 876	Hose Connector	1
51	0820 78 883	Grommet	1
52	0208 78 873	Drain Hose	1
53	0820 78 882	Drain Hose	1
54	0820 78 884	Fastener	1
55	0820 78 746	Pulley	1
56	0820 78 742	"V" Belt	1
57	99806 0630	Bolt, Pulley	4
	99952 0600	Plain Washer	4
	99971 0600	Spring Washer	4
58	2113 78 911A	Wire Harness	1
59	0820 78 870	Cooler Switch	1
60	0259 78 891	Stabilizer Amplifier	1
61	908066 6 16	Set Bolt, Stabilizer Amplifier	2
	99901 0600	Nut	2

0107 18 212	90	91	9
	92	93	16
0107 18 216A	90	91	22
	92	94	28
0107 18 221A	90	91	19
	92	94	25
0107 18 224	90	91	18
	92	94	24
0107 18 225	90	91	17
	92	94	23
0107 18 226A	90	91	16
	92	93	22
0107 18 227	92	93	13
0107 18 231	92	93	7
0107 18 253	90	91	21
	92	94	27
0107 18 266	90	91	15
	92	93	21
0107 18 274	45	46	14
0107 18 423A	98	100	30
0110 26 354	107	108	11
0110 41 470	191	192	4
0110 52 265	386	388	28
	390	392	26
0110 58 254A	295	298	30
	452	454	28
0110 68 050	399	400	2
0111 17 323	79	80	7
0111 17 354	69	71	33
0111 32 173	141	142	12
0111 40 358	232	238	61
0111 41 625	358	360	28
0111 41 691	239	243	52
0111 41 652	245	248	52
	251	252	10
	348	350	27
	353	356	28
	363	365	26
	368	370	26
0111 43 432	191	192	7
	191	193	19
0111 43 433	191	192	8
	191	193	20
0111 43 511	191	192	9
	191	193	23
0111 66 692	245	248	38
0114 13 715	33	37	51
0114 43 491	191	193	22
0114 43 625	348	350	26
	353	356	27
	358	360	27
	363	365	25
	368	370	25
0114 66 154	348	352	48
	353	357	53
	358	362	54
	363	366	36
	368	371	36
0114 66 683	358	360	31
0114 66 905	86	88	25
0118 10 320	51	53	13
	55	57	14
0118 13 432	344	347	38
	373	375	17
0118 15 114	59	60	5
	62	63	5
0118 15 118	59	60	9
	62	63	9
0118 15 121	59	60	4
	62	63	4
0118 17 313	77	78	4
0118 17 316	77	78	7
0118 18 510	59	60	13
	62	63	13
0118 23 342	33	36	45
0118 23 369	34	37	53
0118 23 398	33	36	44
0118 23 689	98	101	42
0118 23 691	98	101	41
0118 26 342	107	108	14
0118 26 672	107	109	25
0118 26 834	107	108	6
0118 26 897	107	108	9
0118 33 331	107	108	12
0118 33 513	107	108	19
0118 41 342	65	67	33
0118 41 375	203	204	5
	205	206	5
	207	208	5
	209	210	5
0118 41 669	378	379	10
0118 41 681	181	182	12
	183	184	15
0118 41 682	181	182	13

	228	231	32
0118 58 442	435	437	16
0118 58 933	295	299	46
0118 66 712	86	88	25
0118 66 722	86	89	28
0118 68 180	399	400	7
0118 70 722A	442	444	25
0119 70 952	435	437	31
	439	440	7
	439	440	14
0136 13 717A	34	37	52
0136 43 635	65	68	37
	203	204	3
	205	206	3
	207	208	3
	209	210	3
0137 13 351B	178	179	12
0137 13 355A	178	179	8
0137 13 356A	178	179	7
0137 13 357A	178	179	9
0137 13 361A	178	179	11
0137 13 368A	178	179	6
0137 13 369B	178	179	5
0137 13 394A	178	180	18
0137 16 114	65	66	3
0155 16 104	65	66	7
0164 17 277	73	75	35
0173 66 460	353	355	16
0180 13 459	24	26	28
0180 16 215	65	66	19
0180 32 165A	118	122	40
	124	128	41
	130	132	27
0180 32 171A	118	122	42
	124	128	43
	130	132	28
0180 32 172A	118	122	42
	124	128	43
	130	132	28
0180 32 173A	118	122	42
	124	128	43
	130	132	28
0180 32 174A	118	122	42
	124	128	43
	130	132	28
0180 32 184	118	122	45
	124	128	46

0187 17 272	73	74	15
	73	75	23
0187 17 275A	73	75	24
0187 17 216	73	75	21
	73	75	25
0187 17 283	73	75	29
0187 17 284	73	75	30
0187 11 323	73	76	40
0187 17 333	69	71	23
0187 17 346B	69	71	28
0187 17 351A	69	71	30
0187 17 352	69	71	32
0187 17 404	77	78	2
0187 17 441A	77	78	15
0187 17 492	79	80	5
0187 23 356	33	37	62
0187 24 566	95	96	13
	95	97	27
	98	99	4
0187 24 577	95	97	23
0187 24 579A	95	97	24
0187 26 154	104	105	15
0187 26 341	107	108	13
0187 26 501	107	108	15
0187 26 511	107	108	16
0187 26 800	107	108	5
0187 26 810	107	108	5
0187 26 821	107	108	8
0187 26 921	107	108	8
0187 32 235	118	123	57
	124	129	58
	130	133	41
0187 32 279A	150	152	19
0187 32 850A	118	120	27
	124	126	28
0187 32 860	118	121	31
	124	127	32
0187 32 886B	118	120	28
	124	126	29
0187 33 065A	144	145	11
0187 33 391	107	108	10
0187 34 776	115	117	18
0187 34 777	115	117	19
0187 41 644	115	117	20
0187 42 311	168	169	10
0187 43 029	185	186	5
	188	189	5

0187 53 134	220	223	27
0187 53 202	239	243	58
	245	249	58
0187 55 554	172	173	19
	175	177	33
0187 56 235	448	450	17
0187 58 592A	295	300	50
	452	454	15
0187 58 731	295	299	36
	295	299	39
	452	455	34
0187 66 721	86	89	26
0187 66 991A	255	257	34
	306	310	59
	383	385	15
0187 68 110	399	400	6
0187 69 049A	402	403	15
	407	408	7
0187 69 323	416	417	4
0187 70 491	168	170	39
0188 61 446	301	305	65
	306	310	57
	311	315	64
	316	320	75
	321	325	75
0188 66 731A	363	365	23
	368	370	23
0191 17 491	79	81	24
0191 41 331	65	67	31
0191 79 611	334	339	45
0191 79 612	334	339	46
0191 79 615	334	339	49
0191 79 616	334	339	49
0193 28 161	115	117	9
0193 65 732A	212	213	7
0200 23 519	98	99	5
0200 23 531	95	96	14
	95	97	21
	95	97	26
	95	97	30
	98	99	3
0200 54 265	353	356	36
	358	361	51
	363	364	13
	368	369	13
0200 58 692	452	453	10
	124	128	53
	130	133	34
	135	136	4
	135	136	11
	135	137	17
	138	139	4
	138	139	11
	138	140	17
	141	142	4
	141	142	11
	141	143	17
	150	152	18
0208 55 581B	239	241	25
	245	247	25
0208 56 615	232	238	53
0208 56 942	399	400	11
0208 56 944	399	400	12
0208 58 921	290	293	22
	411	413	26
	448	450	24
0208 66 683	348	350	32
	353	356	33
	358	361	34
0208 66 949	172	174	28
	239	241	23
	245	247	23
	348	350	31
	353	356	32
	358	361	33
0208 68 230	399	400	8
0208 69 071	422	425	44
0208 69 316	411	412	2
	414	415	2
	416	417	2
0208 69 317	411	412	3
0208 69 318	411	412	4
0208 70 875	218	219	7
0208 70 876	218	219	8
0208 70 879	218	219	9
0208 72 821	452	456	45
0208 72 822	452	456	45
0208 76 071	419	421	38
	426	428	37
	429	431	39
	432	434	39
0208 78 834A	463	467	67
	468	472	64

0209 66 542	380	381	4
0209 66 820	348	351	33
	353	356	37
	358	361	35
	363	366	31
	368	370	31
0209 66 821	348	351	35
	353	356	39
	358	361	37
	363	366	33
	368	370	33
0209 66 949	368	370	30
0212 66 371	373	374	10
0212 66 372	373	374	11
0212 70 361A	435	437	15
0213 69 250	269	271	20
	274	277	20
	280	282	23
0219 78 104	285	287	13
0221 10 309	9	10	14
	13	14	14
0221 14 115	45	48	28
0221 14 116	45	48	29
0221 14 117	45	48	30
0221 17 441	77	78	14
0221 17 461A	79	80	2
0221 17 462	79	80	3
0221 17 463	79	80	4
0221 17 471A	69	71	37
0221 17 472	79	80	8
0221 17 473	79	80	9
0221 17 474	79	80	10
0221 17 478	69	71	38
0221 17 541	79	80	18
0221 17 551A	79	80	20
0221 17 552	79	80	21
0221 23 201	39	40	10
0221 23 215	178	179	3
0221 23 225	178	179	17
0221 23 226	178	179	16
0221 23 227	178	180	21
0221 23 228	178	180	21
0221 23 229	178	179	14
0221 23 231	178	179	14
0221 23 232	178	179	14
0221 23 233	178	180	25
0221 23 234	178	180	24
0221 33 698	144	145	10
0221 43 421	191	192	5
	191	193	17
0221 43 431	191	192	6
	191	193	18
0221 43 480	191	193	21
0221 43 554	194	196	24
	197	199	24
0221 43 694	203	204	2
	205	206	2
	207	208	2
	209	210	2
	209	210	20
0221 44 033	200	201	5
0221 44 044	200	201	8
0221 69 319	411	412	5
	414	415	5
	416	417	5
0222 13 355	172	173	1
	175	176	1
0222 13 356	172	173	2
	175	176	2
0222 13 357	172	173	3
	175	176	3
0222 13 358	172	173	4
	175	176	4
0222 13 360	172	173	6
	175	176	6
0222 13 362	172	173	7
	175	176	7
0222 13 363	51	54	37
	55	58	40
	172	173	8
	175	176	8
0222 13 470A	172	173	14
	175	176	13
0222 13 481	172	173	15
	175	176	14
0222 13 493	9	12	47
	172	174	23
	172	174	27
	172	174	30
	175	176	20
	175	177	25
	175	177	28
	175	177	30
0222 15 255	51	53	19

0222 66 510A	348	351	43
	353	357	47
	358	361	44
	363	366	45
	368	371	45
0222 66 511	348	351	44
	353	357	48
	358	361	46
	363	366	46
	368	371	46
0222 66 685	245	250	73
0222 66 865	239	244	72
0222 66 911	348	349	13
	353	356	34
	358	361	49
	363	364	12
	368	369	12
0222 66 971	348	349	14
	353	356	35
	358	361	50
0222 67 465	348	349	12
	363	364	10
0223 25 024	102	103	6
0223 27 012	111	112	2
0223 27 018	111	112	4
0223 27 020B	111	112	3
0223 27 030	111	112	1
0223 27 112	111	112	7
0223 27 113	111	112	7
0223 27 114	111	112	7
0223 27 115	111	112	7
0223 27 401	111	113	24
0223 27 402	111	113	24
0223 27 403	111	113	24
0223 27 404	111	113	24
0223 27 405	111	113	24
0223 27 406	111	113	24
0223 27 407	111	113	24
0223 27 408	111	113	24
0223 27 409	111	113	24
0223 27 411	111	113	24
0223 27 412	111	114	24
0223 27 413	111	114	24
0223 27 414	111	114	24
0223 27 415	111	114	24
0223 42 426	168	170	29
0223 42 427	168	170	31
0223 49 667	194	195	6
	197	198	6
0223 49 668	194	195	6
	197	198	6
0223 49 669	194	195	6
	197	198	6
0223 49 691	194	195	19
	197	199	19
0223 50 275	212	213	5
	212	214	19
0223 52 007	156	158	18
0223 53 752	220	222	22
0223 54 225	86	88	21
0223 55 294	386	389	40
	390	393	41
0223 55 554	239	242	39
	251	252	8
0223 55 590	239	242	33
	245	248	33
0223 56 521	172	174	31
	175	177	34
0223 56 522	172	174	32
	175	177	35
0223 56 950	399	400	10
0223 57 147	285	289	50
0223 57 691	269	270	10
	274	276	10
	280	282	10
0223 57 692	269	271	—
	274	276	10
	280	282	10
0223 58 303A	295	296	2
0223 58 304A	295	296	3
0223 58 305	452	453	2
0223 58 311	295	296	4
0223 58 549	295	297	13
0223 58 692	295	299	44
	452	453	10
0223 58 721	295	299	35
	295	299	38
	452	455	33
	452	455	38
0223 58 925	290	293	23
	448	450	25
0223 58 961	457	459	16
	460	462	17

	353	357	51
	358	362	52
	363	366	34
	368	371	34
0223 66 292	348	352	47
	353	357	52
	358	262	53
	363	366	35
	368	371	35
0223 66 295	348	352	49
	353	357	54
	358	362	55
	363	366	37
	368	371	37
0223 66 296	348	352	50
	353	357	55
	358	362	56
	363	366	38
	368	371	38
0223 66 480	368	369	10
0223 66 580	348	349	10
	353	354	14
	358	359	9
	363	364	9
0223 68 780A	399	401	19
0223 68 781	399	401	19
0223 68 782	399	401	19
0223 68 810	399	400	18
0223 69 212	402	405	46
0223 69 242	402	405	47
0223 70 339	445	447	25
0223 70 826	435	438	41
	439	441	21
0223 70 827	435	438	42
	439	441	22
0223 70 861	435	438	46
	439	441	26
0223 70 870	435	438	44
	439	441	24
0223 78 147	269	273	49
	274	279	48
	280	284	47
0223 78 149	269	273	50
	274	279	49
	280	284	48
	285	289	51
0223 78 200B	274	279	54
0233 49 684	194	196	21
	197	199	21
0233 49 686	194	196	22
	197	199	22
0233 49 693	197	199	25
0233 49 694	197	199	26
0233 55 522	259	260	14
	262	263	15
0233 66 790	185	187	27
	188	190	27
0233 69 064	407	408	8
0240 95 715	269	270	—
0243 10 250B	9	11	30
	13	15	40
0243 58 391	295	296	9
	452	453	5
0243 66 773	168	171	44
0247 56 275	232	235	21
0248 66 028	334	335	4
	334	335	10
0249 24 367	90	91	5
	92	93	11
0249 24 731	98	99	8
	98	100	25
	98	100	32
0249 41 671	181	182	8
	183	184	11
0249 41 719	183	184	20
0254 53 451	224	226	23
0254 54 451	224	226	24
0254 69 607	419	420	7
	422	423	10
	426	427	3
	429	430	8
0254 69 608	419	420	8
	422	423	11
	426	427	4
	429	430	9
0256 56 201	232	235	22
0256 56 211	232	235	23
0256 56 332	232	237	37
0256 56 832	232	237	39
0256 56 833	232	237	40
0256 58 280A	290	292	13
0256 58 510	295	296	11
0256 58 550	295	297	13
0256 58 925A	290	293	24

0256 70 901	414	415	13
0256 70 902A	414	415	15
0256 71 520A	435	436	6
0256 71 713	435	437	23
0256 71 901	414	415	14
0256 71 902A	414	415	16
0257 53 451	228	230	23
0257 53 970B	220	223	24
0247 54 451	228	230	24
0257 55 952	239	242	49
	245	248	49
	251	252	12
0257 57 109	269	271	19
	274	277	19
	280	283	28
	285	288	29
0257 58 221A	290	292	8
0257 59 221A	290	292	8
0257 69 611A	419	420	9
	422	423	12
	426	427	5
	429	430	10
	432	433	6
0257 69 612A	419	420	10
	422	423	13
	426	427	6
	429	430	11
	432	433	7
0257 70 401	439	440	1
0257 71 311	442	443	8
0257 72 221	448	449	6
0257 72 411	448	449	12
0257 73 221	448	449	6
0257 73 411	448	449	12
0257 87 107	376	377	4
0257 87 108	376	377	2
0259 18 510	59	60	13
	62	63	13
0259 25 021B	102	103	2
0259 25 060	102	103	3
0259 25 071A	102	103	4
0259 25 072A	102	103	4
0259 25 073A	102	103	4
0259 25 074A	102	103	4
0259 25 075A	102	103	4
0259 25 076A	102	103	4
0259 25 077A	102	103	4

0259 26 155	104	105	12
0259 26 280	107	108	3
0259 26 290	107	108	3
0259 28 110	115	116	2
0259 28 140	115	116	5
0259 28 143	115	116	6
0259 28 151	115	117	8
0259 28 171	115	117	8
0259 28 182	115	117	11
0259 28 320	115	117	13
0259 28 333	115	117	14
0259 28 343	115	117	15
0259 32 071	118	119	18
	124	126	19
	130	131	18
0259 32 141	130	132	23
0259 32 154	118	121	37
	124	127	38
	130	132	24
0259 32 155	118	121	37
	124	127	38
	130	132	24
0259 32 156	118	121	37
	124	127	38
	130	132	24
0259 32 157	118	121	37
	124	127	38
	130	132	24
0259 32 160	118	121	38
	124	127	39
	130	132	25
0259 32 163	118	122	39
	124	127	40
	130	132	26
0259 32 182	118	121	34
	124	127	35
	130	132	22
0259 32 250A	135	136	1
0259 32 279	118	122	50
	124	128	51
	130	133	35
	135	136	5
	138	139	5
	141	142	5
0259 32 289	118	122	51
	124	128	52
	130	133	36

0259 32 423	130	133	47
0259 32 425	130	133	48
0259 32 426	130	134	49
0259 33 047	144	145	2
0259 33 071	144	145	12
0259 33 165	104	105	18
	144	145	13
0259 33 691	65	67	28
	107	109	29
0259 33 693	65	67	29
	107	109	30
0259 34 012	150	151	2
0259 34 013	150	151	3
0259 34 015	150	151	5
0259 34 016	150	151	6
0259 34 019	150	151	7
0259 34 021	150	151	8
0259 34 153	156	157	2
0259 34 155	156	157	3
0259 34 157	156	157	6
0259 34 158	156	157	7
0259 34 705	153	154	3
0259 34 708	153	154	5
0259 34 710A	153	154	6
0259 34 712	153	154	7
0259 34 719A	153	154	11
0259 34 730	153	154	12
0259 34 735A	153	154	15
0259 34 767	153	154	16
0259 34 768	153	154	17
0259 34 769B	153	154	18
0259 34 896	156	157	12
0259 34 897	156	157	13
0259 34 898	156	157	14
0259 39 340	159	160	6
	161	162	5
0259 41 030	185	186	3
0259 41 610B	181	182	1
0259 41 613	181	182	5
	183	184	2
0259 41 619	181	182	2
0259 41 644	181	182	3
	183	184	6
0259 42 360A	168	169	4
0259 42 364	168	168	6
0259 42 366	168	169	8
0259 42 390	168	170	21

	188	189	20
0259 43 440A	191	192	14
0259 43 552	191	193	25
0259 43 553	191	193	26
0259 43 650A	203	204	12
	205	206	12
	207	208	12
	209	210	12
0259 44 433	200	202	33
0259 45 201A	203	204	16
0259 45 220A	203	204	17
0259 45 230	205	206	18
0259 45 291	203	204	14
	205	206	14
0259 50 007	212	213	8
0259 50 120	212	213	15
0259 50 131	212	213	16
0259 50 141	212	214	17
0259 50 170	212	214	21
0259 50 180	212	214	22
0259 52 257	215	217	19
0259 52 258	215	217	20
0259 52 301	215	217	22
0259 52 310	215	217	23
0259 52 510	218	219	11
	232	233	1
0259 52 601	218	219	2
0259 52 630	218	219	6
0259 52 750	218	219	13
0259 52 850A	218	219	15
0259 52 901	218	219	17
0259 53 103	183	184	8
0259 53 320B	224	225	1
0259 53 321	228	229	1
0259 53 328	228	229	3
0259 53 331A	228	229	5
0259 53 350	228	230	9
0259 53 371	228	230	11
0259 53 421B	228	230	17
0259 53 430	228	230	19
0259 53 440	228	230	21
0259 53 455	224	227	29
	228	231	31
0259 53 591	228	231	27
0259 53 600	228	231	29
0259 53 725	220	222	20
0259 53 810	232	233	2

0259 54 591	228	231	28
0259 54 600	228	231	30
0259 54 725	220	222	21
0259 54 830	232	233	4
0259 54 835	232	233	6
0259 55 261	259	260	2
	259	261	22
	262	263	2
	262	264	23
	265	266	14
	267	268	14
0259 55 951	251	254	43
	255	257	33
0259 56 036	232	235	24
	232	236	27
0259 56 037	232	235	24
	232	236	27
0259 56 160	232	234	15
0259 56 230	232	234	16
0259 56 231	232	234	17
0259 56 304	232	238	52
0259 56 310A	232	236	30
0259 56 333	232	237	38
0259 56 336	232	237	42
0259 56 370	232	237	43
	232	237	49
0259 56 381A	232	236	33
0259 56 451	232	237	45
0259 56 460	399	400	16
0259 56 463	399	400	17
0259 56 836	232	237	48
0259 56 860	232	236	32
0259 56 881A	232	236	34
0259 56 891	232	237	36
0259 57 105	285	287	14
0259 57 109	285	287	12
0259 57 130	285	287	10
0259 57 180	285	287	11
0259 57 229	280	283	36
0259 58 097	290	294	32
0259 58 110C	290	291	1
0259 58 130B	290	291	4
0259 58 210	290	292	7
0259 58 221A	290	292	8
0259 58 231A	290	292	9
0259 58 232	290	292	10
0259 58 241	290	292	11

0259 58 601A	295	297	17
0259 58 611	295	298	22
	452	454	21
0259 58 612	295	298	24
	452	454	23
0259 58 662	457	458	11
	460	461	12
0259 58 671	295	298	25
	452	454	24
0259 58 691	295	297	12
	452	453	8
0259 58 736	295	300	57
0259 58 786	295	300	58
0259 58 821	295	300	61
0259 58 822	295	300	61
0259 58 840	295	300	62
0259 58 901	290	294	30
0259 58 906	290	293	20
0259 58 921	290	293	24
0259 58 922	290	293	25
0259 58 923	290	293	26
0259 58 924	290	293	27
0259 58 931	220	222	14
	290	294	28
	448	450	29
0259 58 952	290	294	29
0259 59 110C	290	291	1
0259 59 130B	290	291	4
0259 59 210	290	292	7
0259 59 221A	290	292	8
0259 59 231A	290	292	9
0259 59 290	290	292	14
0259 59 300C	295	296	1
0259 59 510	295	297	11
0259 59 550	295	297	13
0259 59 570	295	300	48
	452	453	13
0259 59 581	295	300	49
	452	454	14
0259 59 901	290	294	30
0259 59 921	290	293	24
0259 59 922	290	293	25
0259 59 923	290	293	26
0259 59 952	290	294	29
0259 61 340	301	302	—
	316	318	—
	321	323	—

	326	328	—
0259 61 380	301	305	—
	316	320	—
	321	325	—
	326	330	—
0259 61 381	301	305	59
	306	310	51
	311	315	58
	316	320	66
	321	325	66
	326	330	70
0259 61 391	301	305	61
	306	310	53
	311	315	60
	316	320	68
	321	325	68
	326	330	72
0259 61 405	326	330	76
0259 61 406	326	330	77
0259 66 015	334	335	2
	334	335	8
0259 66 016	334	335	3
	334	335	9
0259 66 021	334	335	1
0259 66 051	334	335	1
0259 66 070	331	332	8
	334	335	5
	334	336	11
0259 66 091A	334	336	14
0259 66 093A	331	332	12
0259 66 094A	331	332	13
	334	336	16
	334	337	24
0259 66 095	331	333	14
	334	336	17
	334	337	25
	334	338	32
0259 66 096	331	333	15
	334	336	18
	334	337	26
	334	338	33
0259 66 111	334	336	14
0259 66 113	331	332	12
0259 66 114	331	332	13
	334	336	16
	334	337	24
0259 66 212	344	347	33
	368	370	29
0259 66 686	348	350	28
	353	356	29
	358	360	29
	363	345	27
	368	370	27
0259 66 731	348	350	23
	353	355	24
	363	365	21
	368	370	21
0259 66 732	363	365	22
0259 66 733	348	350	25
	353	355	26
	358	360	22
	363	365	24
	368	370	24
0259 66 735	168	171	46
0259 66 860A	378	379	—
0259 66 900	378	379	8
0259 66 905	378	379	9
0259 66 930	348	351	36
	353	356	40
0259 66 949	363	365	29
0259 68 250	285	287	24
0259 68 790	399	400	9
0259 68 881	399	401	20
0259 69 062	402	403	14
	407	408	6
0259 69 320	416	417	8
0259 69 330	416	417	9
0259 69 335	416	417	11
0259 69 360C	414	415	8
	416	417	12
0259 69 380C	414	415	9
	416	417	13
0259 69 615C	419	420	13
	422	423	16
	426	427	7
	429	430	12
	432	433	8
0259 69 646	429	430	18
	432	433	16
0259 69 647	429	430	19
	432	433	17
0259 69 648	429	431	20
	432	433	18
0259 69 870	429	431	35

	445	446	11
0259 70 350	442	444	23
0259 70 401	439	440	1
0259 70 402	439	440	2
0259 70 452	439	440	9
0259 70 712	439	441	28
0259 70 713	439	441	29
0259 70 714	439	441	31
0259 70 801	439	440	3
0259 70 802	439	440	4
0259 70 811	439	440	10
0259 70 812	439	440	11
0259 70 813	439	440	13
0259 70 821	439	440	15
0259 70 822	439	440	17
0259 70 823	439	440	19
0259 70 851A	435	438	43
	439	441	23
0259 71 311A	442	443	8
0259 71 345	442	444	16
	445	446	11
0259 71 713	439	441	30
0259 71 714	439	441	32
0259 71 802	439	440	5
0259 71 812	439	440	12
0259 71 821	439	440	16
0259 71 822	439	440	18
0259 71 823	439	440	20
0259 72 036	448	450	14
0259 72 080	448	450	15
0259 72 110	448	449	1
0259 72 120A	448	449	2
0259 72 210	448	449	5
0259 72 221	448	449	6
0259 72 231	448	449	7
0259 72 241	448	449	8
0259 72 242	448	449	9
0259 72 280A	448	449	10
0259 72 290	448	449	11
0259 72 300C	452	453	1
0259 72 411	448	450	12
0259 72 500	452	453	7
0259 72 509	452	453	9
0259 72 731	452	455	39
0259 72 736	452	455	36
0259 72 786	452	455	41
0259 72 811	452	455	42

0259 73 500	452	453	7
0259 73 901	448	451	32
0259 73 951	448	450	30
0259 73 952	448	450	31
0259 76 101	301	302	14
	306	307	14
	311	313	21
	316	318	26
	321	323	26
	326	328	25
0259 76 102	301	302	15
	306	307	15
	311	313	22
	316	318	27
	321	323	27
	326	328	26
0259 76 103	301	303	16
	306	307	16
	311	313	23
	316	318	28
	321	323	28
	326	328	27
0259 76 104	301	303	17
	306	308	17
	311	313	24
	316	318	29
	321	323	29
	326	328	28
0259 76 105	301	303	18
	306	308	18
	311	313	25
	316	318	30
	321	323	30
	326	328	29
0259 76 106	301	303	19
	306	308	19
	311	313	26
	316	319	31
	321	323	31
	326	328	30
0259 76 107	301	303	20
	316	318	32
	321	323	32
	326	328	31
0259 76 121	301	303	21
	316	318	33
	321	323	33

	321	323	37
	326	328	36
0259 76 126	301	303	26
	316	318	38
	321	323	38
	326	328	37
0259 76 127	301	303	27
	316	318	39
	321	323	39
	326	328	38
0259 76 128	301	303	28
	316	318	40
	321	323	40
	326	328	39
0259 76 129	301	303	29
	316	318	41
	321	323	41
	326	328	40
0259 76 131	301	302	13
	306	307	13
0259 76 132	301	302	11
	306	307	11
	316	317	20
	321	322	17
	326	327	15
0259 76 133	301	302	13
	306	307	13
	311	312	11
0259 76 134	301	302	8
	306	307	8
0259 76 135	321	322	18
	326	327	16
0259 76 136	301	302	13
	306	307	13
	311	312	11
0259 76 137	301	302	4
	306	307	4
	321	322	19
	326	327	17
0259 76 138	301	302	12
	306	307	12
0259 76 139	316	317	21
	321	322	20
	326	327	18
0259 76 140	301	302	5
	306	307	5
0259 76 144	301	302	12
	311	314	41
0259 76 155	316	319	58
	321	322	21
	321	324	58
	326	327	19
	326	329	59
0259 76 157	326	330	60
0259 76 158	326	330	61
0259 76 161	301	305	54
	316	320	61
	321	325	61
	326	330	65
0259 76 162	301	305	55
	306	309	47
	311	314	54
	316	320	62
	321	325	62
	326	330	66
0259 76 163	301	303	56
	306	309	48
	311	314	55
	316	320	63
	321	325	63
	326	330	67
0259 76 164	301	305	57
	306	309	49
	311	315	56
	316	320	64
	321	325	64
	326	330	68
0259 76 165	301	305	58
	306	309	50
	311	315	57
	316	320	65
	321	325	65
	326	330	69
0259 76 610	402	405	–
	407	410	–
0259 78 611	402	405	51
	402	406	56
	407	410	39
	407	410	44
0259 78 612	402	405	52
	407	410	40
0259 78 620	402	406	53
	407	410	41
0259 78 630	402	405	

0259 78 840A	463	465	30
	468	470	24
0259 78 851A	468	470	20
0259 78 852A	463	464	22
0259 78 857	463	464	19
	463	465	23
	468	470	21
0259 78 858	463	464	20
	463	465	24
	468	470	23
0259 78 862	463	464	7
0259 78 865A	463	465	27
0259 78 867	463	464	12
	468	469	11
0259 78 868	463	464	8
	468	469	8
	468	469	18
0259 78 874	463	466	55
	468	471	49
0259 78 876	463	466	56
	468	471	50
0259 78 891	463	466	63
	468	471	60
0259 78 892	463	467	65
	468	472	62
0259 79 614	334	339	48
0259 87 101A	376	377	9
0259 87 102A	376	377	12
0259 87 103	376	377	13
0259 87 104A	376	377	14
0259 87 105	376	377	8
0259 87 106	376	377	10
0259 87 107	376	377	6
0259 87 108A	376	377	7
0259 87 109A	376	377	1
0259 87 112A	376	377	5
0259 87 119	376	377	15
0259 87 120	376	377	16
0259 87 131	373	374	5
0259 87 132	373	374	6
0259 87 133	373	374	7
0259 87 134	373	374	8
0259 87 138	373	374	4
0259 87 139	373	374	9
0259 88 059	285	287	18
0259 88 209	280	283	31
	285	288	32

0268 66 093	334	336	15
0268 66 110	334	336	—
0268 66 113	334	336	15
0271 55 582	239	241	26
	245	247	26
0272 70 401	435	436	1
0274 55 200	394	396	15
0274 66 480A	334	338	—
0274 66 490A	334	338	—
0274 87 191	334	338	37
0274 87 192	334	338	38
0274 87 193	334	338	39
0274 87 194	334	338	40
0274 87 195	334	338	41
0274 87 196	334	338	42
0274 87 206	334	338	42
0275 55 200	457	459	12
	460	462	13
0275 57 107	269	271	24
	274	277	24
0275 57 730A	269	271	17
	274	276	17
	280	283	26
0275 57 780	269	271	18
	274	277	18
	280	283	27
0275 66 370	340	342	—
	344	347	—
0275 75 563	239	241	28
	245	247	28
0275 76 128	316	317	19
	316	319	59
	321	324	59
0275 87 121	340	342	26
	344	347	26
0275 87 123	340	342	27
	344	347	27
0275 87 124	340	342	28
	344	347	28
0275 87 125	340	342	29
	344	347	29
0275 87 353	348	350	18
	353	355	19
	358	360	13
	363	365	15
	368	369	16
0290 17 402	77	78	1

0305 32 311A	150	151	15
0305 32 351	135	136	14
0305 32 365	135	136	8
	138	139	8
0305 34 311	150	151	14
0305 34 701	153	154	2
0305 34 707	153	154	4
0305 34 712	153	154	8
	153	154	8
0305 34 713	153	154	9
0305 34 714	153	154	10
0305 34 721A	153	155	20
0305 34 722A	153	155	21
0305 34 723	153	155	22
0305 34 724	153	155	23
0305 34 726A	153	155	24
0305 34 729A	153	155	25
0305 34 732A	153	154	14
0305 34 760A	153	154	15
0305 41 440	191	192	2
0305 41 451	191	192	2
0305 41 461	191	192	3
0305 52 312A	215	216	7
0305 52 320A	215	216	9
0305 52 330	215	216	10
0305 52 371A	215	216	12
0305 52 440	215	216	8
0305 57 909	285	289	43
0305 60 320A	251	253	33
	255	257	23
0305 66 760A	358	361	45
0305 87 993	378	379	3
0305 88 009	269	271	16
	274	276	16
	280	282	25
	285	287	26
0305 99 431	191	193	—
0314 58 020	290	291	1
0314 58 120	290	291	2
0314 59 020	290	291	1
0314 59 120	290	291	2
0315 76 011	321	322	1
	326	327	1
0315 76 012	321	322	2
0315 76 013	321	322	3
	326	327	3
0315 76 014	321	322	4
	326	327	11
0315 76 026	321	322	13
	326	327	12
0315 76 027	321	322	15
	326	327	13
0315 76 028	321	322	16
	326	327	14
0315 76 051	326	329	46
0315 76 052	326	329	47
0315 76 053	326	329	48
0315 76 056	326	329	49
0315 76 058	326	329	51
0315 76 059	326	329	52
0315 76 060	326	329	53
0315 76 061	326	329	54
0315 76 062	326	329	55
0315 76 063	326	329	56
0315 76 064	326	329	57
0315 76 065	326	329	58
0316 66 865	251	254	45
	255	258	35
0316 66 890	251	254	46
	255	258	36
0316 67 135	352	352	55
	353	357	60
	358	362	60
	363	367	50
	368	371	50
0316 70 220A	394	396	17
0316 71 300B	445	446	—
0316 71 311	445	446	4
0317 17 335	69	71	24
0317 26 151	104	105	11
0317 32 080	130	132	19
0317 32 129	118	122	44
	124	128	45
	130	132	30
0317 32 130	130	132	21
0317 32 141	124	127	36
0317 32 320	135	136	—
0317 33 043	144	145	5
0317 33 049	144	145	3
0317 33 075	144	145	6
0317 34 310A	150	151	—
0317 34 320A	150	151	—
0317 34 460	150	151	16
0317 34 662	150	152	22

0317 55 510	251	252	5
0317 56 200	232	235	22
0317 56 210	232	235	23
0317 57 015	280	283	33
	285	288	34
0317 57 200	285	288	31
0317 57 250A	285	288	36
0317 57 710	285	286	1
0317 57 720	285	287	16
0317 57 760	285	286	2
0317 57 770	285	287	17
0317 58 010A	290	291	1
0317 58 020	290	291	1
0317 58 480	457	459	14
	460	462	15
0317 58 670	295	298	
0317 58 674	295	298	26
	452	454	25
0317 58 675	295	298	27
	452	454	26
0317 58 680	295	298	29
	452	454	30
0317 58 700	295	299	34
0317 58 750	295	299	37
0317 58 785	295	300	56
0317 58 811	295	300	59
0317 58 812	295	300	60
0317 58 831	295	299	42
	452	456	46
0317 58 832	295	299	43
	452	456	47
0317 59 010A	290	291	1
0317 59 020	290	291	1
0317 59 670	295	298	—
0317 59 674	295	298	26
	452	454	25
0317 59 675	295	298	27
	452	454	26
0317 59 680	295	298	29
	452	455	30
0317 59 750	295	299	37
0317 60 101	394	397	38
0317 60 102	394	397	39
0317 60 251	251	253	14
	255	256	11
0317 60 252	251	253	15
	255	256	12
	255	257	20
0317 60 262	251	253	24
	255	257	21
0317 60 321	251	253	26
0317 60 322	251	253	27
0317 60 430B	460	461	70
0317 60 720	251	252	11
	255	256	9
0317 60 725	251	252	11
	255	256	9
0317 60 951	394	397	37
0317 61 190	316	319	—
	321	324	—
0317 61 250A	316	330	78
	316	320	76
	321	325	76
0317 66 480	378	379	—
0317 66 730B	348	350	—
	358	359	—
	363	365	—
	368	369	—
0317 66 732	348	350	16
	358	359	11
	363	365	14
	368	369	14
0317 66 862	383	385	14
0317 66 900	383	384	1
0317 66 903	383	384	2
0317 66 905	383	384	3
0317 66 960	383	384	4
0317 66 993	380	381	4
0317 67 511	378	379	1
0317 67 521	378	379	11
0317 68 012	394	395	1
0317 68 013A	394	395	5
0317 68 014	394	395	2
0317 68 020	394	395	3
0317 68 090B	394	395	4
0317 68 180	394	395	12
0317 68 200	394	395	12
0317 69 210	402	405	44
	407	409	32
0317 69 240	402	405	45
	407	409	33
0317 69 290	416	417	1
0317 69 311	414	415	4
	416	417	3

	432	434	25
0317 69 686A	426	428	26
	432	434	27
0317 69 687A	426	428	28
	432	434	29
0317 69 688A	426	428	29
	432	434	30
0317 69 881	429	431	36
	432	434	36
0317 69 883	429	431	37
	432	434	37
0317 70 021	220	221	1
0317 70 231A	394	396	18
0317 70 240	394	396	19
0317 70 261	394	396	22
0317 70 262	394	396	25
0317 70 296	394	396	27
0317 70 271A	394	396	28
0317 70 300	445	446	—
0317 70 301	445	446	1
0317 70 303	445	446	2
0317 70 304	445	446	3
0317 70 307	445	446	8
0317 70 311	445	446	4
0317 70 312	445	446	5
0317 70 315	445	447	18
0317 70 316	445	447	19
0317 70 321	445	446	6
0317 70 322	445	447	20
0317 70 323	445	447	21
0317 70 324	445	447	22
0317 70 330A	445	447	
0317 70 331	445	447	24
0317 70 341	445	447	26
0317 70 342	445	446	10
0317 70 343	445	447	27
0317 70 360	445	447	28
0317 71 300B	445	446	—
0317 71 303	445	446	2
0317 71 311	445	446	4
0317 71 312	445	446	5
0317 71 330A	445	447	—
0317 71 331	445	447	24
0317 71 341	445	447	26
0317 72 010	448	449	1
0317 72 020	448	449	1
0317 72 412	448	450	13

	267	268	4
0317 75 024	265	266	5
	267	268	5
0317 76 011	316	317	1
0317 76 013	316	317	3
0317 76 015	316	317	5
0317 76 016	316	317	6
0317 76 017	316	317	9
0317 76 018	316	317	10
0317 76 019	316	317	11
0317 76 020	316	317	12
0317 76 021	316	317	13
0317 76 022	316	317	14
0317 76 023	316	317	16
0317 76 024	316	317	17
0317 76 051	316	319	47
	321	324	47
0317 76 052	316	319	48
	321	324	48
0317 76 053	316	319	49
	321	324	49
0317 76 054	316	319	50
	321	324	50
0317 76 055	316	319	51
	321	324	51
0317 76 056	316	319	52
	321	324	52
0317 76 057	316	319	53
	321	324	53
0317 76 058	316	319	54
	321	324	54
0317 76 059	316	319	55
	321	324	55
0317 76 060	316	319	56
	321	324	56
0317 78 760	212	214	25
0317 88 081	280	283	38
	285	287	21
	285	288	39
0317 88 082	280	283	39
	285	287	22
	285	289	40
0317 88 083	280	284	40
	285	287	23
	285	289	41
0317 88 200	285	288	33
0317 88 220	285	288	38

0324 70 100B	220	223	25
0326 24 510	95	97	—
0326 24 512	95	97	17
0326 24 518	95	97	19
0326 24 520	95	96	—
0326 24 522	95	96	4
0326 24 541	95	96	5
0326 24 542	95	96	6
0326 24 556	95	96	12
0326 24 574	95	97	25
0326 32 110A	124	127	—
0326 32 130	124	127	34
0326 32 411	118	120	21
	124	126	21
0326 57 400	280	283	30
0326 57 450A	280	283	35
0326 58 910	290	293	21
0326 59 910	290	293	21
0326 60 670	394	396	32
0326 60 675	394	397	34
0326 60 690A	394	396	31
0326 68 862	394	397	43
0326 68 864	394	397	45
0326 68 865	394	397	46
0326 72 910	448	450	23
0326 73 910	448	450	23
0326 75 011	265	266	15
	267	268	15
0326 75 012	265	266	16
0326 75 025	265	266	6
0326 75 060	265	266	12
	267	268	12
0326 88 400	280	283	32
0326 88 450	280	283	37
0328 70 451	435	436	3
0329 17 520	79	80	16
0329 26 111	104	105	10
0329 32 013	118	119	5
	124	125	5
	130	131	5
0329 32 014	118	119	6
	124	125	6
	130	131	6
0329 32 015	118	119	7
	124	125	7
	130	131	7
	124	125	13
	130	131	13
0329 32 110A	118	121	—
	124	127	—
0329 32 980	118	119	4
	124	125	4
	130	131	4
0329 43 400A	185	186	24
	191	192	13
0329 43 551A	191	193	24
0329 53 340	224	225	5
0329 53 410	224	226	17
0329 54 340	224	226	6
0329 54 410	224	226	18
0329 57 100	269	270	—
0329 57 110	269	270	1
0329 57 115	269	270	4
	274	275	4
0329 57 130	269	271	11
	274	276	11
0329 57 135	269	271	14
	274	276	14
0329 57 150	269	270	—
0329 57 160	269	270	2
0329 57 165	269	270	5
	274	275	5
0329 57 180	269	271	12
	274	276	12
0329 57 185	269	271	15
	274	276	15
0329 57 200A	269	272	37
	274	278	37
0329 57 210A	269	272	39
	274	278	39
0329 57 250A	269	273	41
	274	278	41
0329 57 260A	269	273	43
	274	278	43
0329 58 010A	290	291	1
0329 58 910	290	293	21
0329 59 010A	290	291	1
0329 59 910	290	293	21
0329 69 290A	414	415	1
0329 69 311	414	415	3
0329 70 451	435	436	3
0329 99 430	191	193	—

0603 17 305	73	75	36
0603 17 310	73	75	37
0603 17 312	73	75	38
0603 17 321	73	76	39
0603 17 361	69	71	35
0603 23 617	98	100	29
0603 27 121	111	112	8
0603 27 122	111	112	8
0603 27 123	111	112	8
0603 32 315	118	122	53
	124	128	54
	130	133	37
0603 34 153	115	117	17
0603 41 320	65	67	25
0603 41 322A	65	67	26
0603 41 323	65	67	27
0603 43 131	185	186	18
0603 52 451A	215	216	4
0603 53 305	394	396	23
0604 41 131	185	186	17
	188	189	18
0604 41 341	65	67	32
0604 41 504	209	210	19
0604 66 393	373	375	16
0613 26 610A	107	109	21
0613 26 922	107	109	31
0613 33 681	107	109	27
0620 13 433	172	173	11
	175	176	11
0621 42 455	457	458	3
	460	461	3
0633 52 148	442	444	21
0636 24 524A	95	97	29
0636 24 561A	95	96	9
0636 24 568B	95	97	20
0647 45 041	172	174	29
	175	177	24
0652 28 161	115	117	9
0652 28 183	115	117	12
0652 69 642A	422	424	21
0662 28 700	115	117	16
0662 33 042	144	145	1
0662 39 040	159	160	3
0672 45 051	175	177	27
0680 45 023	172	174	25
	175	177	22
0702 87 135	376	377	18

0730 23 837	49	50	1
0730 23 839	49	50	2
0730 23 842	49	50	3
0730 23 843	49	50	4
0730 23 845	49	50	6
0730 23 846	49	50	7
0730 23 848	49	50	8
0730 23 852	49	50	9
0730 23 854	49	50	10
0730 69 057	402	403	21
	407	408	13
0738 87 803	376	377	17
0738 87 804	376	377	19
0750 66 840	358	362	63
0755 27 141	111	112	5
0810 10 171	1	2	8
	5	6	10
	9	10	7
	13	14	9
0810 11 403	21	23	24
0810 11 404	21	23	25
0810 11 711	21	23	32
0810 14 113	45	46	6
0810 14 114	45	46	7
0810 14 171	45	47	19
0810 14 204	45	46	16
0810 14 611	45	48	34
0810 15 119	59	60	10
0810 17 512	79	80	15
0810 18 276	45	48	40
0810 18 277	45	48	40
0810 41 308	65	67	35
0810 56 639	232	238	54
0810 56 863A	86	88	22
0810 68 070	399	400	4
0813 10 111	1	2	7
	5	6	9
	9	10	6
	13	14	8
0813 10 172	1	2	9
	5	6	11
	9	10	8
	13	14	10
0813 10 173	1	2	10
	5	6	12
	9	10	9
	13	14	11

	5	7	26
0813 10 611	1	3	35
	5	7	27
0813 10 612	1	3	36
	5	7	28
0813 10 613	1	3	37
	5	7	29
0813 11 405	21	23	26
0813 11 503	17	19	23
0813 11 505B	17	19	25
0813 11 541	17	19	32
0813 13 611B	24	26	29
0813 13 613	24	26	30
0813 14 623	45	48	38
0813 14 641	45	48	43
0813 14 716	51	54	36
	55	58	38
	463	464	11
0813 15 111	59	60	2
	62	63	2
0813 15 117	59	60	8
	62	63	8
0813 15 173	59	61	19
	62	64	18
0813 15 200B	463	466	50
0813 17 245	73	75	20
0813 18 100A	82	83	1
0813 18 288	82	85	25
0813 18 501	9	10	15
	13	14	15
0813 23 323	33	36	36
0813 23 325	33	36	37
0813 23 326	33	36	38
0813 23 328	33	35	19
0813 23 333	33	36	39
0813 23 347	34	36	40
0813 23 361	33	36	46
0813 23 383	34	37	54
0813 23 392	34	37	63
0813 23 395	33	37	65
0813 23 401	33	37	69
0813 23 403	34	37	70
0813 23 411	34	38	78
0813 23 415	34	38	79
0813 23 424	33	38	85
0813 23 679	39	40	11
0813 23 802A	45	47	23
0813 33 175	107	109	34
	144	145	15
0813 33 176A	107	109	35
	144	145	16
0813 33 177	107	109	36
	144	145	17
0813 44 031	200	201	3
0813 44 034	200	201	6
0813 44 035	200	201	7
0813 45 021	172	173	18
	175	176	18
0813 45 023	172	174	22
0813 49 651	197	198	16
0813 57 955A	274	279	55
	285	289	55
0813 61 389	118	123	58
0813 66 732A	348	351	39
	353	356	43
	358	361	39
	363	366	41
	368	371	41
0813 68 720	399	400	5
0820 09 010C	457	458	—
0820 10 203	1	2	13
	5	6	15
	9	10	12
	13	14	20
0820 10 305	9	11	23
	13	15	25
0820 10 410B	9	11	27
0820 10 500A	17	19	17
0820 10 504	17	19	20
0820 10 550	21	22	17
0820 10 556	21	23	20
0820 10 600E	1	3	25
0820 10 614	1	3	38
	5	7	30
0820 10 631A	1	3	31
	5	7	31
0820 10 641C	1	3	41
	5	7	42
0820 10 700B	9	11	34
	13	16	44
0820 10 711	9	12	37
	13	16	47
0820 10 721	9	12	38
	13	16	48

0820 11 317	17	18	8
	21	22	8
0820 11 321A	17	18	9
	21	22	9
0820 11 323	17	18	10
	21	22	10
0820 11 331	17	18	11
	21	22	11
0820 11 333	17	18	12
	21	22	12
0820 11 341	17	18	13
	21	22	13
0820 11 343	17	18	14
	21	22	14
0820 11 351	17	18	15
	21	22	15
0820 11 353	17	18	16
	21	22	16
0820 11 400	21	23	23
0820 11 501A	17	19	21
0820 11 504	17	19	24
0820 11 506	17	19	26
0820 11 507	17	19	27
0820 11 508	17	19	26
0820 11 509	17	19	26
0820 11 511E	17	19	28
0820 11 512A	17	19	29
0820 11 521B	17	19	30
	45	46	12
0820 11 531	17	19	31
0820 11 542	17	19	33
0820 11 601	17	19	34
0820 11 611A	17	19	37
0820 11 700F	21	23	28
0820 11 703	21	23	30
0820 11 705	21	23	31
0820 11 712	21	23	33
0820 13 100E	24	25	1
0820 13 201A	24	25	13
	27	28	12
0820 13 202B	24	25	14
	27	28	13
0820 13 221	24	26	16
0820 13 222	24	26	17
0820 13 230F	24	25	15
0820 13 235	24	26	22
	27	28	18

0820 14 119	45	46	11
0820 14 151C	45	46	13
0820 14 160A	45	47	18
0820 14 204	45	47	17
0820 14 205	45	47	17
0820 14 206	45	47	17
0820 14 250	45	47	—
0820 14 251	45	47	27
0820 14 260	45	48	31
0820 14 300	45	47	—
0820 14 600D	45	48	33
	49	50	—
0820 14 620	45	48	36
0820 14 625	45	48	37
0820 14 630A	45	48	41
0820 14 640	45	48	42
0820 14 642	1	4	47
	5	8	50
0820 14 643	45	48	44
0820 14 647	45	48	45
0820 14 700C	51	53	28
	55	57	30
0820 14 720B	51	54	31
	55	57	33
0820 14 730A	51	54	32
	55	58	34
0820 14 735A	51	54	35
	463	464	10
0820 15 010E	51	52	1
	59	60	—
0820 15 100E	59	60	12
0820 15 106	51	52	3
	55	56	3
0820 15 112	59	60	3
	62	63	3
0820 15 115	59	60	6
	62	63	6
0820 15 120	59	60	11
	62	63	10
0820 15 130A	59	60	—
0820 15 131A	59	60	1
0820 15 132A	59	60	14
0820 15 151	51	52	5
0820 15 152	59	60	15
0820 15 171	59	61	17
0820 15 200C	51	52	7
0820 15 250D	51	52	—

0820 17 201	73	74	1
0820 17 221B	73	74	5
0820 17 241	73	74	8
0820 17 261	73	74	16
0820 17 330A	69	71	22
0820 17 341	73	76	41
0820 17 345	69	71	27
0820 17 450A	79	80	1
0820 17 505	79	81	30
0820 17 510B	79	80	14
0820 17 520	69	72	40
0820 17 524	69	72	41
0820 17 540A	69	71	25
0820 18 106	82	83	2
0820 18 110C	82	83	2
0820 18 111B	82	83	4
	82	83	4
0820 18 113	82	83	6
0820 18 114	82	83	7
	82	84	7
0820 18 115A	82	83	9
0820 18 120B	82	83	10
0820 18 130	82	83	11
	82	84	11
0820 18 140	82	83	12
	82	84	12
0820 18 155	82	83	13
0820 18 160	82	83	14
0820 18 170	82	83	15
	82	84	15
0820 18 180	82	83	16
	82	84	16
0820 18 200D	82	84	17
	90	91	—
0820 18 270D	82	85	—
0820 18 271C	82	85	20
0820 18 272A	82	85	21
0820 18 273	82	85	22
0820 18 279A	82	85	26
0820 18 296	82	85	30
0820 18 300C	86	87	1
	95	96	—
0820 18 311	1	3	23
	5	7	24
	86	87	5
0820 18 361	86	87	6
0820 18 381	86	87	9
0820 23 308	33	36	33
0820 23 309	33	35	8
0820 23 311	33	35	9
0820 23 321C	34	35	10
0820 23 322B	34	36	42
0820 23 327	33	35	15
0820 23 329A	33	35	16
0820 23 330	33	35	17
0820 23 332	34	36	32
0820 23 334A	34	35	14
0820 23 337A	33	35	20
0820 23 338	33	35	18
0820 23 339	33	35	21
0820 23 341C	34	36	23
0820 23 342B	34	36	24
0820 23 343B	34	36	25
0820 23 344	34	36	26
0820 23 345A	34	36	28
0820 23 346A	34	36	29
0820 23 349	34	36	30
0820 23 351	34	36	41
0820 23 353	34	36	31
0820 23 358	34	38	93
0820 23 359	34	38	94
0820 23 362	33	36	47
0820 23 371A	34	35	11
0820 23 372	34	35	12
0820 23 373	34	35	13
0820 23 387A	34	37	58
0820 23 388	33	37	59
0820 23 389	34	37	60
0820 23 396	33	37	67
0820 23 397B	34	36	34
0820 23 399	34	37	73
0820 23 404	34	37	49
0820 23 405	34	37	71
0820 23 411	34	37	74
0820 23 412	34	38	75
0820 23 413	34	38	77
0820 23 416	33	35	22
0820 23 422A	33	38	83
0820 23 425	33	38	86
0820 23 426B	33	38	87
0820 23 427	33	38	88
0820 23 428	33	38	89
0820 23 431A	33	38	90
0820 23 432B	33	38	91

0820 23 626	178	180	27
0820 23 628	178	180	26
0820 23 671B	39	40	5
0820 23 672	39	40	1
0820 23 674	39	40	3
0820 23 675	39	40	4
	39	40	6
	41	42	9
0820 23 676A	39	40	7
0820 23 677	39	40	8
0820 23 678	39	40	9
	43	44	9
0820 23 801	45	47	22
0820 23 881	45	46	—
0820 23 882	45	46	4
0820 23 921A	51	52	12
	55	56	13
0820 24 301	90	91	1
	92	93	1
0820 24 304A	90	91	4
0820 24 315	90	91	7
	92	93	14
0820 24 318	90	91	10
	92	93	17
0820 24 319	90	91	11
	92	93	18
0820 24 321	90	91	12
0820 24 322	90	91	13
	92	93	19
0820 24 323	90	91	14
0820 24 404A	92	93	4
0820 24 405	92	93	5
0820 24 411	92	93	10
0820 24 423	92	93	20
0820 24 501A	95	96	1
0820 24 502B	95	96	2
0820 24 503	95	96	3
0820 24 513	95	96	16
0820 24 519	95	96	8
0820 24 526	95	96	11
0820 24 530C	95	97	22
0820 24 701A	98	99	12
0820 24 702	98	99	16
0820 24 705	98	100	39
0820 24 706A	98	100	31
0820 24 707	98	100	33
0820 24 709	98	99	13
0820 24 754	98	100	23
0820 24 755	98	100	22
0820 24 756	98	100	21
0820 24 757	98	99	1
0820 24 759	98	99	2
	98	100	37
0820 25 950D	102	103	1
0820 26 010D	104	105	1
0820 27 000D	111	112	—
0820 27 150A	111	112	9
0820 27 251	111	113	14
0820 27 950C	111	114	25
0820 28 010B	115	116	1
0820 28 011	115	116	1
0820 28 012	115	116	1
0820 28 013	115	116	1
0820 28 014	115	116	1
0820 28 015	115	116	1
0820 28 185	115	117	22
0820 32 049A	118	119	13
0820 32 130A	118	121	33
	124	127	34
0820 32 141A	118	121	35
	124	127	36
	130	132	23
0820 32 151	118	121	36
	124	127	37
0820 32 190	118	122	46
	124	128	47
0820 32 800A	118	119	1
	124	125	1
	130	131	1
0820 32 811A	118	119	2
	124	125	2
	130	131	2
0820 32 980C	118	119	4
0820 33 421	147	148	7
0820 33 621A	147	148	6
0820 33 623	147	149	14
0820 33 626	147	148	2
0820 33 636A	147	148	3
0820 33 651	147	148	10
0820 33 671	147	149	11
	147	149	11
0820 33 681	147	149	12
0820 33 682	147	149	13
0820 33 691A	147	149	15

	161	162	7
0820 40 010D	163	164	2
0820 40 161	163	164	9
	166	167	8
0820 40 165	163	164	10
	166	167	9
0820 40 166	163	164	11
	166	167	10
0820 40 170	163	164	19
	166	167	15
0820 40 180	163	164	18
0820 40 300C	163	164	3
0820 40 351A	163	164	20
	166	167	16
0820 40 357	163	164	5
0820 40 401	163	164	12
0820 41 300	65	67	24
0820 41 380	65	67	36
0820 41 660	181	182	7
0820 42 310C	168	169	1
0820 42 370A	168	169	11
0820 42 375	168	170	36
0820 42 376	168	170	37
0820 42 380B	168	169	15
0820 42 382	168	169	16
0820 42 410	168	170	26
0820 43 030	185	186	4
0820 43 070B	185	186	9
0820 43 131	185	186	18
	188	189	19
0820 43 400C	185	187	25
	194	195	—
0820 43 710A	203	204	6
	205	206	6
	207	208	6
	209	210	6
0820 43 720A	203	204	7
	205	206	7
	207	208	7
	209	210	7
0820 43 810B	203	204	1
	205	206	1
	207	208	1
0820 44 010	200	201	—
0820 44 020	200	201	1
0820 44 023	200	201	2
0820 44 032A	200	201	4
0820 45 040E	172	174	
0820 45 041D	172	174	26
0820 45 210	205	206	16
0820 45 220	205	206	17
0820 45 240A	205	206	19
0820 45 510	203	204	20
	205	206	20
0820 49 210	147	148	—
0820 49 220	147	148	—
0820 49 240	147	148	—
0820 49 250	147	149	—
0820 49 251	147	149	—
	147	149	—
0820 50 021	212	213	1
0820 50 031	212	213	2
0820 50 041	212	213	3
0820 50 050	212	213	10
0820 50 070	212	213	13
0820 50 080	212	213	14
0820 50 131	212	213	16
0820 50 141	212	214	17
0820 50 510	402	403	1
	407	408	1
0820 52 003	215	216	1
0320 52 004	215	216	2
0320 52 007	215	217	26
0320 52 008	215	217	27
0320 52 009	215	217	28
0820 52 010C	220	221	9
0820 52 250	215	216	18
0820 52 400B	215	216	14
0820 52 450B	215	216	15
0820 52 510A	218	219	1
	232	233	1
0820 53 010B	220	221	10
0820 53 100C	220	221	11
0820 53 210B	220	222	12
0820 53 291	86	88	20
0820 53 320B	224	225	1
	228	229	1
0820 53 331	224	225	3
0820 53 350	224	226	7
0820 53 360	224	226	9
0820 53 370C	224	226	11
0820 53 390	224	226	15
0820 53 421A	224	226	19
0820 53 430	224	226	21

0820 54 331	224	225	4
0820 54 350	224	226	8
0820 54 360	224	226	10
0820 54 370C	224	226	12
0820 54 381	224	226	14
0820 54 390	224	226	16
0820 54 421A	224	226	20
0820 54 430	224	226	22
0820 54 591	224	226	26
0820 54 711A	220	222	18
0820 54 830A	232	233	4
0820 54 835A	232	233	6
0820 55 021A	239	240	1
	245	246	1
0820 55 025B	239	241	20
	245	247	20
	442	444	29
0820 55 026B	239	241	21
	245	247	21
	442	444	29
0820 55 030A	239	240	3
0820 55 120C	239	240	4
	245	246	4
0820 55 221	239	240	8
	245	246	8
0820 55 225	239	240	10
	245	246	10
0820 55 230B	239	240	7
	245	246	7
0820 55 240	239	240	11
	245	246	11
0820 55 275	259	260	13
	262	263	14
0820 55 280	259	260	1
	262	263	1
0820 55 311	259	260	5
0820 55 320	259	260	7
	262	263	7
0820 55 330	259	260	10
0820 55 331	259	260	12
	262	263	12
0820 55 344	259	260	11
0820 55 350	239	241	15
	245	247	15
	259	261	—
	262	264	—
0820 55 351	259	261	17
0820 55 580D	239	241	24
0820 55 670	457	458	7
0820 55 710B	239	242	40
	245	248	40
0820 55 740	239	242	43
	245	248	43
0820 55 750A	239	242	44
	245	248	44
0820 55 770	259	260	9
	262	263	9
0820 55 790A	239	242	46
	245	248	46
0820 55 830A	239	242	48
	245	248	48
0820 55 840A	239	243	50
	245	248	50
0820 55 951	239	242	42
	245	248	42
	251	254	44
0820 55 970	239	243	51
	245	248	51
0820 55 981B	239	243	53
	245	249	53
0820 55 982B	239	243	54
	245	249	54
0820 56 030A	232	235	24
0820 56 110	232	235	25
0820 56 130	232	236	26
0820 56 160	232	234	15
0820 56 261	232	238	55
0820 56 300C	232	236	29
0820 56 330	232	237	41
0820 56 360	232	236	31
0820 56 381	232	236	33
0820 56 390	232	237	35
0820 56 400	232	237	44
0820 56 530A	232	236	27
0820 56 791A	232	238	63
0820 56 830	232	237	47
0820 56 840	232	237	50
0820 56 881A	232	236	34
0820 56 905	156	158	19
	251	252	4
	255	256	4
0820 56 906	156	158	21
0820 56 911	232	238	65
0820 56 912	232	238	66

0820 57 176	269	270	9
	274	276	9
	280	281	9
0820 57 190	269	271	23
0820 57 204	269	272	38
	274	278	38
0820 57 254	269	273	42
	274	278	42
0820 57 310A	269	270	1
0820 57 315A	269	270	4
	274	275	4
0820 57 360A	269	270	2
0820 57 365A	269	270	5
	274	275	5
0820 57 400C	269	272	37
	274	278	37
0820 57 410C	269	272	39
	274	278	39
0820 57 450E	269	273	41
	274	278	41
0820 57 460D	269	273	43
	274	278	43
0820 57 534	269	271	13
	274	276	13
	280	282	20
0820 57 570	269	272	29
0820 57 571	269	272	30
	274	277	30
0820 57 572	269	272	31
	274	277	31
0820 57 573	269	272	32
	274	277	32
0820 57 574	269	272	33
	274	277	33
0820 57 700A	269	270	—
0820 57 730A	269	271	11
0820 57 735B	269	271	14
	274	276	14
0820 57 750B	269	270	—
0820 57 780A	269	271	12
0820 57 785B	269	271	15
	274	276	15
0820 58 010D	290	291	1
0820 58 110	290	291	1
0820 58 221A	290	292	8
0820 58 241	290	292	11
0820 58 290	290	292	14

	245	249	56
0820 60 870A	239	243	59
	245	249	59
	251	254	41
	255	257	31
0820 61 300	301	302	—
0820 61 310	301	302	—
	306	307	—
0820 61 311	301	302	2
	306	307	2
0820 61 320	301	302	3
	306	307	3
0820 61 370	301	304	—
	306	308	—
0820 61 371	301	304	46
	306	309	38
0820 61 372	301	304	47
	306	309	39
0820 61 373	301	304	48
	306	309	40
	311	314	47
0820 61 374	301	304	44
	306	309	36
	311	314	43
0820 61 375	301	304	49
	306	309	41
0820 61 376	301	304	50
	306	309	42
0820 61 402	301	305	63
0820 61 408	301	305	67
	306	310	58
0820 61 409	301	305	66
	316	320	77
	321	325	77
0820 61 461	301	305	62
0820 66 020	334	335	—
0820 66 050	334	335	—
0820 66 130	340	341	—
0820 66 131A	340	341	1
0820 66 132	340	341	2
0820 66 133	340	341	3
0820 66 134	340	341	4
	344	345	4
0820 66 135	340	341	5
	344	345	5
0820 66 136	340	341	6
	340	342	20

	344	345	13
0820 66 150	340	341	—
0820 66 151	340	341	1
	353	356	30
	358	360	30
0820 66 152	340	341	2
0820 66 153	340	341	3
0820 66 154	340	341	4
	344	345	4
0820 66 159	340	341	9
	344	345	9
0820 66 171	340	342	15
0820 66 172	340	342	16
0820 66 174	340	342	18
	344	345	4
	344	346	18
0820 66 175	340	342	19
	344	345	5
	344	346	19
0820 66 192	340	342	16
0820 66 195	344	345	5
	344	346	19
0820 66 330A	239	243	—
	245	249	—
0820 66 331A	239	243	61
	245	249	62
0820 66 332	239	243	62
	245	249	63
0820 66 333	239	243	63
	245	249	64
0820 66 334	239	243	64
	245	249	65
0820 66 365	373	374	13
0820 66 366	373	374	13
0820 66 370	373	374	—
0820 66 420A	348	349	—
	353	354	—
	358	359	—
	363	364	—
0820 66 421	348	349	3
	353	354	3
	358	359	3
	363	364	3
0820 66 425A	348	349	1
	353	354	1
	358	359	1
	363	364	1

0820 66 538	380	381	3
0820 66 650	348	350	22
	353	355	23
	358	360	19
	363	365	20
	368	370	20
0820 66 660E	348	350	21
	363	365	19
0820 66 710B	86	88	24
0820 66 730	348	350	—
	353	355	—
	358	359	—
	363	365	—
	368	369	—
0820 66 731	348	351	38
	353	356	42
	358	361	38
	363	366	40
	368	371	40
0820 66 732	348	350	17
	353	355	18
	358	359	12
	363	365	15
	368	369	15
0820 66 733	200	202	41
0820 66 734	348	351	40
	353	356	44
	358	361	40
	363	366	42
	368	371	42
0820 66 770	168	170	41
0820 66 773	168	171	43
0820 66 840	200	202	39
0820 66 940A	386	389	—
	390	393	—
0820 66 945A	386	389	41
	390	393	42
0820 66 950	386	389	43
	390	393	44
0820 67 131	348	352	53
	353	357	58
	358	362	58
	363	367	48
	368	371	48
0820 67 132	348	352	54
	353	357	59
	358	362	59

0820 68 180	239	243	66
	245	249	67
0820 68 331A	386	388	18
0820 68 334	386	388	22
0820 68 335	386	388	23
	390	392	20
0820 68 340A	386	388	
0820 68 341A	386	388	25
0820 68 342A	386	388	26
0820 68 343A	386	388	27
0820 68 350	386	388	30
0820 68 354	386	388	29
0820 68 380	457	459	12
	460	462	13
0820 68 411A	411	412	13
0820 68 531	239	243	68
0820 68 551	386	389	35
	390	393	38
0820 68 560A	386	389	36
	390	393	39
0820 68 660	399	400	—
0820 68 670	399	400	1
0820 69 064B	402	403	16
0820 69 066A	402	403	24
0820 69 080A	402	404	—
	407	408	—
0820 69 090A	402	404	—
	407	409	—
0820 69 101	402	404	32
	402	404	38
	407	408	21
	407	409	27
0820 69 102	402	404	33
	402	404	39
	407	408	22
	407	409	28
0820 69 110B	402	404	28
	407	408	17
0820 69 115	402	404	29
	407	408	18
0820 69 120	402	404	30
	407	408	19
0820 69 125	402	404	35
	407	409	24
0820 69 130B	402	404	34
0820 69 380C	411	412	11
	416	417	13
0820 69 411A	416	417	16
0820 69 413	411	412	15
	416	418	18
0820 69 414	411	412	16
	416	418	19
0820 69 421A	411	412	14
	416	418	17
0820 69 451	411	412	19
0820 69 452	411	412	20
0820 69 453A	411	412	21
0820 69 460B	411	412	17
0820 69 480B	411	412	18
0820 69 501A	411	413	22
	414	415	12
0820 69 550A	419	421	33
	422	425	39
	426	428	32
0820 69 570A	419	421	34
	422	425	40
	426	428	33
0820 69 601	419	420	1
0820 69 603A	419	420	3
0820 69 604	419	420	4
0820 69 605A	419	420	6
	422	423	9
0820 69 606	419	420	5
	422	423	8
0820 69 608	422	423	11
	426	427	4
	429	430	9
0820 69 613	422	423	14
0820 69 614	419	420	12
0820 69 637	419	420	14
	422	424	18
0820 69 638	419	420	15
	422	424	19
0820 69 641	419	420	16
	422	424	20
	429	430	13
0820 69 642A	419	420	17
0820 69 643	419	420	18
	422	424	22
	426	427	12

0820 69 656	419	420	25
	422	424	31
0820 69 657	419	420	26
	422	424	32
0820 69 658A	422	424	33
	419	421	27
	426	428	19
	429	431	22
	432	434	20
0820 69 659A	419	421	28
	422	425	34
	426	428	20
	429	431	23
	432	434	21
0820 69 685D	419	421	30
	429	431	27
0820 69 686A	419	421	31
	429	431	29
0820 69 687A	419	421	32
	429	431	31
0820 69 811	386	389	38
0820 69 870B	419	421	35
	422	425	41
	426	428	34
0820 69 881A	419	421	36
	422	425	42
	426	428	35
0820 70 300C	442	443	—
0820 70 303	442	443	1
0820 70 305	442	443	2
0820 70 331A	442	443	13
0820 70 342	442	443	14
0820 70 350B	442	444	24
0820 70 355	442	444	26
0820 70 401	435	436	1
0820 70 402	435	436	2
0820 70 451A	435	436	3
0820 70 452	435	436	4
0820 70 511	435	436	5
0820 70 541	435	436	12
0820 70 546A	435	437	13
0820 70 571	435	437	18
0820 70 751	435	437	25
0820 70 801	435	437	27
0820 70 802	435	437	28
0820 70 803	435	437	30
	439	440	6

0820 71 822A	435	437	38
0820 71 823A	435	438	40
0820 71 900B	411	413	24
0820 74 910	457	458	9
0820 74 930	457	458	4
	460	461	4
0820 74 940	457	458	1
	460	461	1
0820 76 131	301	302	1
	306	307	1
0820 76 132	301	302	9
	306	307	9
0820 76 133	301	302	7
	306	307	7
	311	312	10
0820 76 134	301	302	10
	306	307	10
0820 76 151	301	304	35
	306	308	27
	311	313	34
0820 76 152	301	304	36
	306	308	28
0820 76 153	301	304	37
	306	308	29
	311	313	36
0820 76 154	301	304	38
	306	308	30
	311	313	37
0820 76 155	301	304	39
	306	308	31
	311	313	38
0820 76 156	301	304	40
	306	308	32
	311	314	39
0820 76 157	301	304	41
	306	308	33
	311	314	40
0820 76 158	301	304	41
	306	308	33
	311	314	40
0820 76 159	301	304	41
	306	308	33
	311	314	40
0820 76 161	301	304	45
	306	309	37
	311	314	44
0820 76 163	301	304	51

0820 78 757	463	465	36
0820 78 758	463	465	39
0820 78 763	468	470	33
0820 78 764	468	470	34
0820 78 765	468	470	31
0820 78 820A	463	464	1
	468	469	1
0820 78 830	463	467	68
0820 78 832	463	464	4
	468	469	4
0820 78 842	463	466	61
0820 78 851	463	464	18
0820 78 861B	463	464	15
	468	469	15
0820 78 862A	468	469	2
	463	464	2
0820 78 864	463	464	13
0820 78 866A	463	465	26
0820 78 870	463	466	62
	468	471	59
0820 78 871	463	464	16
	468	469	16
0820 78 882	468	471	53
0820 78 883	463	466	58
	468	471	51
0820 78 884	463	466	59
	468	471	54
0820 78 888	463	466	57
0820 78 890A	463	465	41
0820 78 893A	463	466	47
0820 78 900	463	466	44
	468	471	46
0820 78 904	463	466	46
	468	471	48
0820 78 906	463	466	43
0820 78 911A	463	466	60
0820 79 366	373	374	14
0820 79 367	373	375	15
0820 79 610	334	339	—
0820 79 613	334	339	47
0820 79 620	239	242	41
	245	248	41
0820 79 910A	212	214	23
0820 79 940A	212	214	24
0820 87 140	373	374	12
0822 10 100C	1	2	1
0822 10 150C	9	10	1
0822 45 240A	203	204	19
0822 55 550	251	252	7
0822 56 945	399	400	14
0822 66 535	383	384	8
0822 66 536	383	384	6
0822 66 770	168	171	42
0822 69 642	426	427	11
	429	430	14
	432	433	12
0822 69 643	429	430	15
0822 69 644	426	427	13
	429	430	16
	432	433	14
0822 69 648	426	427	18
	429	431	21
	432	434	19
0822 69 688	426	428	30
	429	431	32
	432	434	31
0822 69 689	426	428	31
	432	434	32
0823 10 455	9	11	33
	13	16	43
0823 11 612	17	20	39
0823 15 171	59	61	17
	62	64	16
0823 18 111	82	83	5
	82	83	5
	82	84	5
0823 18 114	82	83	8
0823 18 291	82	85	29
0823 18 600	82	85	31
0824 17 524	79	80	17
0824 40 401	166	167	11
0824 57 105	269	272	27
	274	277	27
	280	282	15
0824 57 106	269	272	28
	274	277	28
	280	282	16
0824 66 830	353	354	12
	363	364	7
	368	369	8
0824 75 149	265	266	8
	267	268	8
0824 75 150	265	266	9
	267	268	9

0844 71 361A	407	409	37
0844 74 910	460	461	10
0845 53 010B	220	221	10
0845 53 100B	220	221	11
0845 56 271	232	235	18
0845 56 276	232	235	19
0845 60 050	251	252	9
0845 61 070	316	317	—
0845 61 080	321	322	—
0845 61 130	316	317	—
	321	322	—
0845 61 211	316	320	69
	321	325	69
0845 61 212	316	320	70
	321	325	70
0845 61 221	316	320	72
	321	325	72
0845 66 870	383	384	—
0845 67 010G	348	350	20
	363	365	18
0845 67 030	348	350	21
0845 67 551	200	202	41
0845 68 860A	394	397	42
0845 68 863	394	397	44
0845 68 870	394	397	49
0845 68 880	394	397	50
0845 69 071A	402	403	22
	407	408	15
0845 69 641	426	427	10
	432	433	11
0845 75 010	265	266	1
0845 75 026	265	266	7
	267	268	7
0845 76 012	316	317	2
0845 76 014	316	317	4
0846 09 010B	460	461	—
0846 56 010A	232	234	14
0846 56 300A	232	236	29
0846 66 992	383	384	5
0846 69 602	432	433	2
0848 53 100A	220	222	11
0848 57 100	280	281	—
0848 57 110	280	281	1
0848 57 115	280	281	4
0848 57 130	280	282	18
0848 57 135	280	282	21
0848 57 150	280	281	—

2033 17 475	79	80	12
2045 55 550	255	256	7
2046 49 676	194	195	14
	197	198	14
2046 49 677	194	195	14
	197	198	14
2046 49 678	194	195	14
	197	198	14
2046 49 679	194	195	14
	197	198	14
2046 49 681	194	195	18
	197	199	18
2046 49 696	194	195	15
	197	198	15
2061 09 010	460	461	—
2061 53 300	228	229	—
2061 54 300	228	229	—
2061 66 870	383	384	—
2061 69 601	432	433	1
2061 69 603	432	433	3
2061 69 621	432	433	1
2061 70 050	232	234	13
2062 09 010	460	461	—
2062 53 300	228	229	—
2062 54 300	228	229	—
2062 69 660A	426	427	8
	432	433	10
2063 53 300	228	229	—
2063 54 300	228	229	—
2063 66 870	383	384	—
2063 67 030	363	365	19
	368	370	19
2063 69 601	432	433	1
2063 69 603	432	433	3
2063 69 621	432	433	1
2063 69 660	426	427	9
	432	433	9
2064 53 300	228	229	—
2064 54 300	228	229	—
2112 10 300E	9	10	11
2112 27 000D	111	112	—
2112 27 018	111	112	4
2112 53 700C	220	222	15
2112 53 991	232	234	12
2112 55 260	245	246	13
	262	263	—
2112 55 310	262	263	4

2113 15 350A	51	53	18
	55	57	20
2113 18 110	82	83	—
2113 18 115	82	83	9
2113 18 120	82	84	10
2113 18 150	82	84	—
2113 18 155	82	84	13
2113 18 160	82	84	14
2113 23 431	33	38	90
2113 23 671	41	42	5
2113 23 672	41	42	1
	43	44	1
2113 23 673	41	42	2
2113 23 674	41	42	3
	43	44	3
2113 23 675	41	42	4
	41	42	6
	43	44	4
	43	44	6
2113 23 676	41	42	7
2113 23 677	41	42	8
2113 23 679	41	42	11
	43	44	11
2113 23 681	41	42	12
	43	44	12
2113 23 682	41	42	13
	43	44	13
2113 26 310	107	108	4
2113 32 261	141	142	1
2113 32 320B	141	142	—
2113 32 329	141	143	18
2113 32 330	141	142	13
2113 32 350B	141	142	14
2113 32 354	141	142	15
2113 32 356	141	143	16
2113 32 359	141	143	21
2113 32 365	141	142	8
2113 32 425A	118	120	24
2113 32 426A	118	120	25
2113 32 800A	118	119	1
	124	125	1
2113 32 811A	118	119	2
	124	125	2
2113 33 035	144	145	8
2113 33 060A	144	145	—
2113 33 061A	144	145	7
2113 33 170A	107	109	33
2113 45 320	207	208	15
2113 45 350	207	208	19
2113 45 360B	207	208	22
	209	210	23
2113 45 452	207	208	20
	209	210	25
2113 45 510	207	208	23
2113 49 230	147	148	—
2113 50 031	212	213	2
2113 50 041	212	213	3
2113 50 051	212	213	11
2113 50 510A	402	403	6
2113 50 531A	402	403	7
2113 50 541A	402	403	8
2113 51 020	220	221	3
2113 52 010B	220	221	9
2113 53 010C	220	221	10
2113 53 100D	220	222	11
2113 53 210D	220	222	12
2113 53 300A	224	225	—
2113 53 320B	224	225	1
	228	229	1
2113 53 380	224	226	13
2113 53 600B	224	226	27
2113 53 700D	220	222	15
2113 53 711A	220	222	17
2113 54 210D	220	222	13
2113 54 295	86	88	22
2113 54 300A	224	225	—
2113 54 320B	224	225	2
	228	229	2
2113 54 370A	224	226	12
2113 54 380	224	226	14
2113 54 600B	224	227	28
2113 54 711A	220	222	18
2113 55 030A	245	246	3
2113 55 260	245	246	13
	262	263	—
2113 55 310	262	263	4
2113 55 330	262	263	10
2113 55 344	262	263	11
2113 55 350	245	247	15
	262	264	—
2113 55 530E	245	247	22
2113 55 550	245	248	37
2113 55 556	245	248	39
2113 55 580B	245	247	24

2113 56 020A	232	235	—
2113 56 030A	232	235	24
2113 56 110	232	235	25
2113 56 170	232	234	15
2113 56 190	232	234	15
2113 56 530A	232	236	27
2113 56 901A	156	158	16
2113 56 960	220	223	33
2113 56 970	220	223	34
2113 57 125	274	276	6
2113 57 140	274	277	22
2113 57 175	274	276	7
2113 57 190	274	277	23
2113 57 310A	274	275	1
2113 57 315A	274	275	4
2113 57 360A	274	275	2
2113 57 365A	274	275	5
2113 57 400C	274	278	37
2113 57 410C	274	278	39
2113 57 450E	274	278	41
2113 57 460D	274	278	43
2113 57 500	274	275	—
2113 57 550	274	275	—
2113 57 570	274	277	29
2113 57 700A	274	275	
2113 57 730A	274	276	11
2113 57 735B	274	276	14
2113 57 750A	274	275	
2113 57 780A	274	276	12
2113 57 785B	274	276	15
2113 58 221A	290	292	8
2113 58 668	457	458	5
	457	459	13
	460	461	5
2113 58 669	457	458	2
	457	458	8
	457	458	10
	460	461	2
	460	461	11
2113 59 221A	290	292	8
2113 60 430	457	458	7
	460	461	8
2113 60 910	348	352	56
	353	357	61
	358	362	61
	363	367	51
	318	372	51
2113 66 193	340	342	17
2113 66 366A	373	374	14
2113 66 470	358	359	7
2113 66 525	380	381	5
2113 66 600C	353	355	22
	368	370	19
2113 66 660C	358	360	18
2113 66 710D	86	88	24
2113 66 721	86	89	26
2113 67 130	353	357	50
	358	360	25
2113 68 020C	390	391	1
2113 68 121	390	391	5
2113 68 328	390	392	17
2113 68 329	390	392	18
2113 68 331A	390	392	19
2113 68 340A	390	392	—
2113 68 341A	390	392	27
2113 68 342A	390	392	28
2113 68 343A	390	392	29
2113 68 348	390	392	30
2113 68 349	390	393	31
2113 68 350A	390	393	32
2113 68 531	245	249	69
2113 68 668	460	462	14
2113 69 064	402	403	17
	407	408	10
2113 69 240A	402	405	45
2113 69 360B	411	412	10
	416	417	12
2113 69 380B	411	412	11
	416	417	13
2113 69 601	422	423	1
2113 69 602	422	423	2
2113 69 603A	422	423	4
2113 69 604	422	423	7
2113 69 613	422	423	14
2113 69 614A	422	423	15
2113 69 619	422	423	15
2113 69 622	422	423	3
2113 69 623A	422	423	5
2113 69 625	422	423	6
2113 69 642	422	424	21
2113 69 644	419	420	19
	422	424	23
2113 69 650C	422	425	35
2113 69 656	422	424	31

	460	462	—
2113 74 169	457	459	—
	460	462	—
2113 76 131	311	312	2
2113 76 132	311	312	5
2113 76 133	311	312	7
2113 76 134	311	312	6
2113 76 135	311	312	1
2113 76 136	311	312	8
2113 76 137	311	312	16
2113 76 138	311	312	4
2113 76 139	311	312	18
2113 76 140	311	312	12
2113 76 141	311	312	3
2113 76 142	311	312	13
2113 76 143	311	312	14
2113 76 144	311	312	17
2113 76 146	311	312	15
2113 76 148	311	312	19
2113 76 149	311	312	20
2113 76 152	311	313	35
2113 76 153	311	314	45
2113 76 154	311	314	46
2113 76 155	311	314	48
2113 76 156	311	314	50
2113 76 157	311	314	51
2113 76 161	306	309	46
	311	314	53
2113 76 166	306	308	22
	311	313	29
2113 76 167	306	308	21
	311	313	28
2113 76 168	306	308	23
	311	313	30
2113 76 169	306	308	20
	311	313	27
2113 78 710	468	469	—
2113 78 852A	468	470	35
2113 78 853A	468	469	14
2113 78 863	468	469	7
2113 78 864	468	469	12
2113 78 865	468	470	37
2113 78 890	468	470	40
2113 78 893	468	470	41
2113 78 906	468	471	45
2113 78 911A	468	471	58

2123 53 300B	224	225	—
2123 54 300B	224	225	—
2123 55 260	239	240	13
	259	260	—
2123 55 310	259	260	4
2123 55 641C	239	242	34
2123 55 651C	239	242	35
2123 56 020A	232	235	—
2123 57 500	269	270	—
2123 57 550	269	270	—
2123 60 260	239	240	13
	259	260	—
2123 60 310	259	260	4
2123 69 602	419	420	2
2123 69 613	419	420	11
2123 69 650A	419	421	29
2124 13 200	24	25	11
	33	35	—
2124 51 020A	220	221	3
2124 51 120A	220	221	4
2124 53 010	220	221	10
2124 53 210A	220	222	12
2124 53 300A	224	225	—
2124 53 600A	224	226	27
2124 54 210A	220	222	13
2124 54 300A	224	225	—
2124 54 600A	224	227	28
2124 55 550	245	248	37
2124 55 970	255	256	8
2124 56 020A	232	235	—
2124 56 030A	232	235	24
2124 56 530A	232	236	27
2124 57 310A	274	275	1
2124 57 360A	274	275	2
2124 57 500	274	275	—
2124 57 550	274	275	—
2124 57 700A	274	275	—
2124 57 730A	274	276	11
2124 57 750A	274	275	—
2124 57 780A	274	276	12
2124 61 300A	306	307	—
2124 61 401A	306	310	54
2124 66 020	334	335	—
2124 66 050	334	335	—
2124 66 139	344	346	22
2124 66 530	380	381	—

2125 23 155	21	22	7
2125 23 303	33	35	4
2125 23 305	33	35	7
2125 23 344	33	36	27
2125 23 363	33	38	96
2125 23 414	33	38	76
2125 23 421	33	38	82
2125 23 423	33	38	84
2125 23 801A	45	47	22
2125 66 130A	344	345	—
2125 66 131	344	345	1
2125 66 150A	344	345	—
2125 66 151	344	345	1
2152 58 510	295	296	11
2152 59 510	295	297	11
2155 23 673A	39	40	2
2155 57 109	269	271	24
	274	277	24
	280	282	13
2158 32 250A	138	139	1
2158 34 014	150	151	4
2158 34 340	150	151	9
2158 34 381	150	151	10
2158 34 390	150	151	11
2158 40 355	27	29	34
	163	164	4
	166	167	4
2158 41 030A	188	189	3
2158 41 610A	183	184	1
2158 41 619	183	184	5
2158 43 030A	188	189	4
2158 53 320B	224	225	1
2158 53 970A	220	223	24
2156 54 320B	224	225	2
	228	229	2
2158 57 740	285	288	28
2158 57 790	285	287	27
2158 58 510	295	296	11
2158 59 510	295	297	11
2158 61 061	220	223	28
2158 61 070	220	223	29
2158 61 081	220	223	30
2158 61 090	220	223	31
2158 61 340	326	328	—
2158 61 351	326	329	44
2158 66 021	334	335	1
2158 66 051	334	335	1
2158 69 380B	416	417	13
2158 70 311	442	443	8
2158 76 101	326	329	41
2158 78 855	468	469	10
2158 78 866	468	470	36
2158 78 904	468	471	43
2158 87 100A	373	374	1
	376	377	—
2158 87 102A	376	377	12
2158 87 104	376	377	14
2158 87 112A	376	377	5
2158 87 131	373	374	3
2158 87 138	373	374	4
2158 87 139	373	374	9
2158 88 270	285	286	6
2158 88 280	285	286	7
2158 88 370	285	286	8
2160 28 010	115	116	1
2160 28 011	115	116	1
2160 28 012	115	116	1
2160 28 013	115	116	1
2160 28 014	115	116	1
2192 67 130A	239	244	70
	245	250	71
2212 66 480	334	338	—
2212 66 490	334	338	—
2212 87 191	334	338	37
2228 10 300C	13	14	13
2229 69 090	402	404	—
2229 69 101	402	404	25
2229 69 120A	402	404	26
2234 66 173	344	346	17
2244 18 520	86	88	19
2244 32 130A	118	121	33
	124	127	34
2244 32 423	118	120	23
	124	126	24
2244 32 425	118	120	24
	124	126	25
2244 32 426	118	120	25
	124	126	26
2244 42 360A	168	169	5
2244 42 455	168	170	35
2244 53 920	232	233	9
2244 54 291	86	88	20
2244 57 740	285	288	28
2244 57 790	285	288	27

2244 87 017	331	332	5
2244 87 018	331	332	6
2244 87 019	331	332	7
2244 87 031	331	332	11
2244 87 032	331	332	11
2244 87 191	331	333	18
2244 87 192	331	333	19
	340	343	33
2244 87 193	331	333	20
2244 87 194	331	333	21
	340	343	35
2244 87 195	331	333	21
	340	343	35
2244 87 196	331	333	22
2244 87 201	340	343	32
2244 87 203	340	343	34
2244 87 206	340	343	36
2247 66 071	334	336	12
2247 70 520	435	436	6
2247 71 520	435	436	6
2254 66 420	353	354	5
	368	369	1
2254 66 430	353	354	7
	368	369	3
2256 66 090	334	337	—
2256 66 091	334	337	29
2256 66 093	334	337	30
2256 66 094	334	337	31
2256 66 110	334	337	—
2256 66 111	334	337	29
2256 66 113	334	337	30
2256 66 114	334	337	31
2272 66 210	344	347	—
2272 66 213	344	347	34
2272 66 420	353	354	6
	368	369	2
2272 66 430	353	354	8
	368	369	4
2272 68 881	399	401	20
2280 42 460	168	170	30
2280 60 430B	255	256	1
	267	268	—
	457	459	15
	460	462	16
2280 67 090	358	360	23
2280 67 131A	358	360	24

2325 66 090A	334	337	—
2325 66 091	334	337	22
2325 66 093	334	337	23
2325 66 110A	334	337	—
2325 66 111	334	337	22
2325 66 113	334	337	23
2325 66 130A	344	345	—
2325 66 131A	344	345	1
2325 66 132	344	345	2
2325 66 133	344	345	3
2325 66 150A	344	345	—
2325 66 152	344	345	2
2325 66 156	344	345	10
	344	346	23
2325 66 157	344	345	11
2325 66 170A	344	346	
2325 66 171A	344	346	15
2325 66 172	344	346	16
2325 66 173	344	346	17
2325 66 190A	344	346	—
2325 66 192	344	346	16
2325 66 531	380	381	1
2325 66 532	380	381	2
2327 53 300A	224	225	—
2327 54 300A	224	225	—
2327 66 870	380	381	—
2327 66 880	380	381	—
2327 66 890	380	381	—
2328 13 804A	27	29	32
2329 09 010B	457	458	
2329 10 100E	5	6	1
2329 10 103A	5	6	2
	13	14	2
2329 10 150B	13	14	1
2329 10 200C	5	6	14
2329 10 204	5	6	16
2329 10 410	13	15	28
2329 10 417	13	15	29
2329 10 600A	5	7	25
2329 10 864	5	8	48
2329 10 870	5	8	49
2329 11 400	21	23	23
2329 11 601A	17	19	35
2329 11 613	17	20	40
2329 13 100D	27	28	1
2329 13 111A	27	28	9

2329 13 732A	30	31	10
2329 13 735A	30	31	11
2329 13 740A	30	31	12
2329 13 744	30	31	13
2329 13 745B	30	31	15
2329 13 750B	30	31	16
2329 13 752B	30	31	17
2329 13 754A	30	31	18
2329 13 756	30	31	19
2329 13 760D	30	31	20
2329 13 761	30	31	22
2329 13 762	30	32	23
2329 13 763A	30	32	24
2329 13 780	30	32	25
2329 13 781A	30	32	27
2329 13 783	30	32	28
2329 13 785A	30	32	29
2329 13 786B	30	32	30
2329 13 787	30	32	31
2329 13 800D	27	29	29
2329 13 810A	27	29	30
2329 13 879	27	29	33
	166	167	1
2329 14 651	45	48	46
2329 14 735	55	58	37
2329 15 010C	55	56	1
	62	63	—
2329 15 100B	62	63	12
2329 15 130A	62	63	—
2329 15 131A	62	63	1
2329 15 132A	62	63	14
2329 15 151A	55	56	5
2329 15 152	62	63	11
2329 15 200A	55	56	8
2329 15 210	55	56	9
2329 15 250B	55	56	—
2329 15 310C	55	56	12
2329 15 351	51	53	22
	55	57	22
2329 15 401A	55	57	25
2329 15 511	55	57	27
2329 15 521	55	57	28
2329 18 130	82	84	11
2329 18 140	82	84	12
2329 18 150	82	84	—
2329 18 170	82	84	15
2329 18 180	82	84	16

2329 23 113	21	22	1
2329 23 671	43	44	5
2329 23 673	43	44	2
2329 23 676	43	44	7
2329 23 677	43	44	8
2329 32 100	118	120	19
2329 32 800A	156	157	9
2329 39 021	161	162	1
2329 39 040	161	162	2
2329 40 010	166	167	2
2329 40 300	166	167	3
2329 43 890	209	210	14
2329 45 020	175	176	—
2329 45 021	175	176	17
2329 45 040A	175	177	—
2329 45 041B	175	177	23
2329 45 060	175	177	—
2329 45 061	175	177	26
2329 45 360A	209	210	24
2329 45 510A	290	211	27
2329 52 010B	220	221	9
2329 53 010C	220	221	10
2329 53 210G	220	222	12
2329 54 210B	220	222	13
2329 56 010B	232	234	14
	232	234	14
2329 56 020B	232	235	—
2329 56 030B	232	235	24
2329 56 130A	232	236	26
2329 56 266B	232	238	57
2329 56 267	232	238	58
2329 56 269	232	238	60
2329 56 300C	232	236	29
2329 56 451	232	237	45
2329 56 530B	232	236	27
2329 56 901B	156	158	16
2329 56 911	232	238	65
2329 56 913	232	238	67
2329 59 010	290	291	1
2329 61 402A	306	310	55
2329 66 530	380	381	—
2329 66 600D	353	355	21
	358	360	17
	368	370	18
2329 66 734	358	361	41
2329 67 130	358	360	26
2329 69 602	422	423	2

2329 70 401	435	436	1
2334 09 010A	457	458	—
2334 32 050	124	125	17
2334 32 080	124	126	20
2334 32 220	118	122	49
	124	128	50
	130	133	33
2334 53 300B	224	225	—
2334 54 300B	224	225	—
2334 55 430A	251	252	1
	265	266	—
2334 56 010	232	234	14
2334 60 430	251	252	1
	265	266	—
2334 66 170	344	346	—
2334 66 171A	344	346	15
2334 66 190	344	346	—
2334 69 601	426	427	1
2334 69 603	426	427	2
2334 69 621	426	427	1
2334 69 660	432	433	9
2334 69 660A	426	427	9
2334 75 021	265	266	2
2334 75 121	265	266	2
	267	268	2
2335 53 010B	220	221	10
2335 53 100A	220	222	11
2335 53 300A	224	225	—
2335 54 300A	224	225	—
2335 55 430A	225	256	1
	267	268	—
2335 56 010	232	234	14
2335 61 080	326	327	—
2335 61 130	326	327	—
2335 61 211	326	330	73
2335 61 212A	326	330	74
2335 67 010	353	355	21
2335 67 010A	358	360	17
	368	370	18
2335 67 030	353	355	22
	358	360	18
	363	365	19
	368	370	19
2335 69 601	426	427	1
2335 69 603	426	427	2
2335 69 621	426	427	1
2335 69 644	426	427	14
2339 54 300A	224	225	—
2339 75 021	267	268	2
2350 32 110	118	121	—
	124	127	—
2350 32 121	118	121	32
	124	127	33
	130	132	—
2350 32 220	118	122	49
	124	128	50
	130	133	33
2350 43 400B	188	189	25
	197	198	—
2350 43 810	209	210	1
2350 45 250	209	210	16
2350 45 280	209	210	17
2350 45 320	209	210	18
2350 45 350	209	210	22
2350 51 120	220	221	4
2350 58 510	295	296	11
2350 58 582	295	300	53
	452	454	16
2350 58 593	295	300	54
	452	454	17
2350 59 020A	290	291	1
2350 59 510	295	297	11
2350 60 250	255	256	10
2350 70 451	439	440	8
2350 75 025	267	268	16
2352 53 440	228	230	21
2352 54 440	228	230	22
2352 58 670	295	298	—
2352 59 670	295	298	—
2352 72 670	295	298	—
	452	454	—
2352 73 670	295	298	—
	452	454	—
2354 59 010C	290	291	1
2358 55 315	262	263	13
2360 58 510	295	296	11
2360 59 510	295	297	11
2360 66 900	383	384	1
2360 66 903	383	384	2
2370 32 100	118	120	19
2370 32 320	138	139	—
2370 32 351	138	139	14
2370 43 400B	188	190	25
	197	198	—

2370 59 510	295	297	11
2370 60 250	255	256	10
2370 60 336	251	253	36
	255	257	26
2370 61 190	326	329	
2370 66 740	358	360	15
2370 69 607	432	433	4
2370 69 608	432	433	5
2370 69 684	426	428	22
	432	434	24
2370 69 685A	426	428	25
	432	434	26
2370 69 686A	426	428	27
	432	434	28
2370 70 100	220	223	25
2370 70 220A	394	396	17
2370 70 231A	394	396	18
2370 70 240	394	396	19
2370 70 261	394	396	22
2370 70 300A	445	446	—
2370 70 311	445	446	4
2370 70 401	439	440	1
2370 70 451	439	440	8
2370 76 012	326	327	2
2370 76 057	326	329	50
2370 99 322	135	136	2
	138	139	2
2370 99 324	135	136	3
	138	139	3
	141	142	3
2371 32 110	130	131	—
2372 32 050A	124	125	17
2375 66 900	383	384	1
2375 66 903	383	384	2
2399 32 050A	124	125	17
2399 32 080	124	126	20
2399 53 500	228	230	25
2399 54 500	228	231	26
2399 60 335	251	253	35
	255	257	25
2399 60 345	251	254	37
	255	257	27
2401 59 510	295	297	11
2404 53 380B	228	230	13
2404 54 380B	228	230	14
2404 59 510	295	297	11
2409 57 100	269	270	—

2415 57 550	280	281	—
2415 69 601	429	430	1
2415 69 605	429	430	5
2415 69 613	429	430	6
2415 69 614	429	430	7
2415 69 622	429	430	2
2415 69 623	429	430	3
2415 69 625	429	430	4
2416 53 300	228	229	—
2416 54 300	228	229	—
2417 57 110	280	281	1
2417 57 115	280	281	4
2417 57 130	280	282	18
2417 57 135	280	282	21
2417 57 160	280	281	2
2417 57 165	280	281	5
2417 57 180	280	282	19
2417 57 185	280	282	22
2417 57 400	280	283	30
2417 57 450	280	283	35
2417 57 500	280	281	—
2417 57 550	280	281	—
2417 57 700	280	281	—
2417 57 750	280	281	—
2417 88 400	280	283	32
2417 88 450	280	283	37
2418 09 010	460	461	—
2418 53 300	228	229	—
2418 54 300	228	229	—
2418 56 010	232	234	14
2418 69 601	429	430	1
2418 69 622	429	430	2
2418 69 623	429	430	3
2418 69 625	429	430	4
2418 69 660	429	431	24
2418 70 451	439	440	8
2419 09 010	460	461	—
2419 53 300	228	229	—
2419 54 300	228	229	—
2419 70 451	439	440	8
2427 32 100	118	120	19
2427 67 030	348	350	21
	363	365	19
2450 57 200	285	288	31
2450 57 250A	285	288	36
2450 57 510	285	286	1
2450 57 520	285	287	16

	92	93	2
2780 17 561	79	81	26
2797 53 300A	224	225	—
2797 53 600A	224	227	27
2797 54 300A	224	225	—
2797 54 600A	224	227	28
2952 57 815	269	273	46
	274	279	51
	280	284	44
	285	289	47
2980 66 471	340	343	39
2981 17 406	77	78	3
2981 17 410	77	78	5
2981 17 420	77	78	6
2981 17 431	77	78	8
2981 57 970A	269	273	45
	274	279	45
	280	284	43
	285	289	46
2981 57 976	269	273	47
	274	279	46
	280	284	45
	285	289	48
2981 57 978	269	273	48
	274	279	47
	280	284	46
	285	289	49
2981 66 495	348	350	18
	353	355	19
	358	360	13
	363	365	15
	368	370	16
2981 66 496	348	350	18
	353	355	19
	358	360	13
	363	365	15
	368	370	16
2981 75 565	239	241	29
	245	247	29
2981 75 568	239	241	30
	245	247	30
4069 17 245	73	74	12
4825 23 362	33	36	48
907431 4 12B	402	403	3
	407	408	3
907436 6 16	358	361	48
907614 6 16	295	300	51
	463	466	48
907816 6 20	463	467	66
907816 8 16	463	464	5
907832 8 22	295	299	40
907832 8 25	452	455	35
	452	455	40
907996 6 20	269	273	44
	274	278	44
	280	284	41
	285	289	42
908010 8 16	86	89	29
908012 8 12	200	202	31
908012 8 16	86	87	8
	118	122	43
	124	128	44
	130	132	29
	200	202	36
908012 8 18	9	12	44
	21	23	22
	159	160	7
	161	162	6
908012 8 25	13	15	39
908012 8 30	55	56	7
908016 8 12	51	53	22
	55	57	24
	55	57	26
908016 8 16	51	53	24
	185	186	10
	188	189	11
908016 8 18	13	16	54
908016 8 22	59	60	16
908016 8 25	62	64	15
908016 8 28	65	68	39
908016 8 35	1	3	42
	5	7	44
	59	61	20
908016 8 40	62	64	19
908016 8 45	5	8	45
908016 8 65	1	3	43
	1	3	44
	5	8	46
908016 8 75	1	4	45
	5	8	47
908017 8 16	215	216	17
908017 8 20	185	186	11
	188	189	12
908033 2 816	86	89	27

908047 6 20	172	174	33
	175	177	36
908047 8 25	353	354	9
	368	369	5
908051 5 16	442	444	27
908051 8 25	118	120	26
908051 8 25B	118	120	26
	124	126	27
	130	134	50
908056 8 35	168	169	12
908057 6 20	220	221	6
908061 5 12	220	221	7
908062 6 10	9	11	24
	13	15	26
	51	52	6
	69	72	42
908062 6 14	55	56	6
908062 6 16	55	56	11
908062 620	463	464	6
908062 625	203	204	11
	205	206	11
	207	208	11
	209	210	11
	452	455	44
908062 6 30	463	466	54
	463	467	64
908062 6 35	209	210	15
908062 8 14	218	219	16
908065 5 12	245	249	60
908066 4 12	168	170	38
908066 5 08	295	299	33
	383	384	9
908066 5 10	452	455	31
908066 5 12	239	243	60
	402	406	54
	407	410	42
908066 5 16	215	217	24
	383	384	12
908066 6 10	45	47	21
	380	381	7
	383	384	13
908066 6 12	394	396	30
908066 6 14	220	221	2
908066 6 16	215	217	21
	468	469	9
	468	469	17
	468	469	19
	452	453	11
908330 5 12	334	336	13
908330 5 16	358	360	14
908331 4 10	321	322	22
	326	327	20
908332 3 06	107	109	37
	144	145	18
908332 3 10	239	243	65
	245	249	66
908332 4 08	49	50	5
908332 4 12	251	253	28
	251	253	34
	255	257	24
	394	397	35
908332 4 12B	251	253	31
	251	254	38
	255	257	28
908332 5 10	69	71	26
908332 5 12	200	202	32
908332 5 16	348	350	19
	363	365	17
	368	370	17
908332 6 12	183	184	9
908334 6 08	448	449	4
908334 6 12	452	453	3
908336 4 08	255	257	29
908336 4 08B	251	254	39
908336 4 10	394	396	16
908336 4 12	168	170	33
	239	242	45
	245	248	45
908336 5 12	218	219	12
	331	332	9
	348	351	45
	353	357	49
	358	361	47
	363	367	47
	368	371	47
908336 6 12	380	381	7
908336 6 20	331	332	10
908337 5 12	168	169	9
908338 5 10	295	297	18
908338 6 12	295	298	21
908339 5 12	290	291	3
	295	297	20
	452	453	12
908339 6 12	290	292	6

908399 4 12B	386	388	19
908399 4 16B	390	392	22
908461 4 20	414	415	18
908601 5 08	232	238	68
908631 4 12	200	201	19
908631 4 12B	402	403	9
908631 5 12	394	396	29
908631 5 16	156	158	20
908632 5 12	435	438	47
	439	441	27
908641 4 08	402	403	10
908641 4 16B	386	387	9
	390	391	9
908641 4 20	411	413	27
908641 5 12	394	395	9
908641 5 12B	394	395	11
908641 5 16	399	400	13
908644 4 08B	386	388	31
908644 4 10B	386	389	33
	390	393	36
908644 4 12	386	388	32
908681 5 12	232	238	64
908681 5 12B	220	222	19
99023 3524	274	279	50
	274	279	56
	285	289	56
99201 3500	269	273	52
	274	279	52
	274	279	56
	280	284	50
	285	289	52
	285	289	56
99221 1012	172	173	5
	175	176	5
99221 1212	45	48	47
99221 1610	168	169	14
99221 2010	269	273	51
	274	279	53
	280	284	49
	285	289	53
99221 2012	181	182	6
	183	184	4
	200	201	21
99221 2020	118	123	55
	124	129	56
	130	133	39

	183	184	13
99230 0512	295	297	15
99230 0813	200	201	9
99230 0814	442	444	20
99230 0823	442	444	19
99230 1039	200	201	14
99231 0636	168	169	13
99231 0814	200	201	21
99231 0816	185	186	21
	188	189	22
99233 0816	69	70	2
99234 1208	9	10	13
	13	14	16
99236 0525	17	19	36
99236 0725	73	75	28
99259 0606	321	323	25
	326	327	21
99281 2200	301	305	64
	306	310	56
	311	315	63
	316	320	71
	321	325	71
99282 2200	316	317	7
	316	320	74
	321	322	7
	321	325	74
	326	327	22
	326	330	75
99282 4900	51	53	27
	55	57	29
99282 5500	168	169	7
99285 0600	168	170	25
99285 0800	51	53	21
	55	57	23
99295 0608	69	70	12
99295 1006	27	28	20
99295 1508	24	26	23
	27	29	35
99295 1510	65	66	10
99295 2008	86	88	16
99301 1100	269	273	53
	274	279	57
	280	284	42
	285	289	45
99302 1100	269	273	54
	274	279	58
99305 2800	9	11	28

	13	15	21
99307 1400	1	3	28
	5	7	34
99307 1800	24	25	2
	27	28	2
99335 04075	378	379	7
99335 08002	445	446	12
99335 10005	442	443	15
99336 06092	168	170	23
99336 06096	168	170	22
99336 10034	168	170	20
99340 0630	175	177	31
99381 1400	51	54	33
99384 1200	1	3	39
	5	7	35
	51	54	29
	55	57	31
99502 2000	130	132	32
99502 4000	69	71	21
99510 0800	9	11	29
	13	15	31
	24	25	3
	27	28	4
99510 1000	77	78	10
99511 1400	9	11	35
	13	16	45
99511 1600	9	10	17
	13	14	19
	51	53	15
	55	57	16
99541 01101	21	23	27
99541 01601	45	47	25
99541 02101	69	71	31
99560 1200	168	169	3
99562 1000	203	204	4
	203	204	9
	205	206	4
	205	206	9
	207	208	4
	207	208	9
	207	208	18
	209	210	4
	209	210	9
	209	210	21
99562 1400	9	11	36
	13	16	46
	77	78	16

99564 1200	5	6	3
	13	14	3
	172	173	12
	175	176	12
99564 1600	5	7	36
	9	10	17
	13	14	19
	30	32	26
	51	53	15
	55	57	17
99564 2200	45	48	32
99573 1200	45	46	15
	107	108	20
99573 2200	73	75	34
99573 2500	73	76	42
99573 3000	73	74	3
99573 3200	73	74	13
99574 3500	59	60	7
	62	63	7
99575 0300	181	182	11
	183	184	14
99575 0400	239	241	19
	245	247	19
99575 0500	168	170	32
	200	201	10
99575 0600	107	108	7
	181	182	4
	183	184	7
99576 0300	295	297	16
99576 0400	269	272	34
	274	277	34
	316	317	15
	442	443	6
	442	443	7
	445	446	15
99576 0500	218	219	10
	442	443	4
	442	444	22
99576 0700	200	201	15
99576 0800	45	48	39
99578 3000	402	403	19
99579 0400	386	388	17
99579 3000	118	119	3
	124	125	3
	130	131	3
	394	395	10
	394	397	47

9962 02 1454	107	110	38
	144	146	24
	399	400	15
9962 03 1454	107	109	38
	144	146	24
	399	400	15
9963 01 1454	107	110	38
	144	146	24
	399	400	15
9963 60 414	107	110	38
	144	146	24
	399	400	15
9965 03 404	107	110	38
	144	146	24
	399	400	15
99655 3001	107	110	39
99655 3002	107	110	39
99655 3003	107	110	39
99655 3004	107	110	39
99655 3005	107	110	39
99655 3006	107	110	39
99681 1001	27	29	21
99683 0600	394	397	36
99686 0308	118	119	15
	124	125	15
99686 0800	245	249	61
99686 1000	86	89	30
99686 1400	175	177	32
99701 1030	334	338	43
99701 2080	331	333	23
	340	342	30
	340	343	37
	344	347	30
	348	351	37
	353	356	41
99701 3210	344	346	23
99701 3250	334	338	34
99701 4237	331	333	16
	334	336	19
	334	337	27
	340	342	23
99701 5050	394	396	33
99701 6030	259	260	3
	259	261	21
	262	263	3
	262	264	22
	265	266	13
	407	408	5
99768 0410	407	409	38
99772 0416	340	343	31
	344	347	31
99772 0516	402	404	27
99773 0420	331	333	24
	340	343	38
99781 0825	118	121	30
	124	126	31
99781 0835	118	120	29
	124	126	30
99781 1022	156	157	5
99781 1090	135	137	21
	138	140	21
99781 1092	118	122	48
	124	128	49
	130	133	43
99781 1225	150	152	24
99781 1240	150	152	24
99799 0516	394	397	41
99801 0812	144	146	20
99801 0814	172	173	16
	175	176	15
99801 0816	27	29	27
	285	286	9
99801 0820	269	270	10
	274	276	10
	280	282	10
	348	349	4
	353	354	4
	358	359	4
	363	364	4
99801 0822	17	19	22
	86	87	7
	159	160	4
99801 0825	69	72	39
99801 0828	30	31	4
	86	87	13
	163	164	8
	163	164	13
	166	167	7
	166	167	12
99801 0832	163	164	15
	163	165	22
	166	167	17
99801 0845	69	70	9
99803 0810	30	31	2

	407	410	48
	463	466	45
	468	471	47
99806 0514	239	240	2
	245	246	2
99806 0612	65	66	5
	212	213	12
	301	303	33
	306	308	25
	311	313	32
	316	319	45
	321	324	45
	326	329	42
99806 0614	69	71	34
	79	80	13
99806 0616	373	375	18
99806 0618	45	48	35
	156	157	11
99806 0630	45	48	35
	468	471	57
99806 0635	468	472	63
99806 0818	386	387	10
	390	391	10
99807 0840	463	465	38
99811 0812	111	113	22
99811 0820	65	67	20
	115	116	3
99811 1032	65	66	15
99811 1045	65	66	12
99811 1048	65	66	11
99811 1050	65	66	9
	111	112	10
99811 1055	65	66	13
99811 1075	65	66	14
99811 1216	55	58	39
99816 1640	17	20	38
99831 0408	290	292	5
99831 0408B	386	389	34
	390	393	37
99831 0412	435	436	11
	448	449	3
99831 0516	402	405	43
	407	409	31
99831 0520	407	409	31
99831 0835	215	216	5
99831 1400	55	58	35
99832 0408B	251	253	32
99833 0312B	442	444	17
	445	446	16
99833 0408	168	171	45
	200	202	40
	321	322	23
	326	327	23
	326	330	62
99833 0408B	239	242	36
99833 0410	168	171	45
	316	317	22
	386	389	37
	390	393	40
99833 0508	239	240	12
	245	246	12
99833 0510	200	202	38
99833 0512	269	272	35
	274	277	35
	290	293	19
	301	305	53
	306	309	45
	311	314	52
	334	335	6
	353	355	17
	448	450	19
99833 0516	353	355	20
99833 0810	9	10	2
	13	14	4
99834 0410B	394	396	21
99834 0616	86	87	11
99837 0312B	239	242	37
99837 0416B	435	437	20
99837 0516	407	409	34
99837 0516C	402	405	48
99837 0525C	411	413	30
99838 0516B	445	447	32
99839 0420	394	395	8
99839 0516B	251	252	6
	255	256	6
99851 0614	1	2	5
	1	3	30
	5	6	5
	5	7	37
	9	10	5
	13	14	5
	27	28	7
99851 0618	82	85	24
99851 0622	27	28	8

99851 1025	24	26	27
99851 1028	1	2	4
	5	6	8
	9	10	4
	13	14	7
99852 0612	107	109	22
99852 0614	1	2	21
	5	6	17
	9	11	21
	9	11	26
	13	15	22
	13	15	33
	45	46	2
99852 0645	1	3	34
	5	7	41
99852 0820	104	105	2
99852 0822	1	2	20
	5	6	19
	9	11	20
	13	15	23
99852 0830	9	11	22
	13	15	24
99852 0850	1	2	18
99852 0865	5	6	20
99852 0878	1	2	19
	5	6	21
99852 0880	104	105	3
99852 1032	27	29	31
99855 0406	17	18	3
	21	22	3
99855 1025	69	70	14
99855 1028	69	70	17
99855 1035	69	70	16
99855 1038	69	70	18
99855 1040	69	70	7
99855 1055	69	70	6
99855 1078	69	70	5
99855 1085	69	70	4
99855 1232	69	70	13
99859 1025	463	465	32
	468	470	26
99859 1055	463	465	33
	468	470	27
99859 1220	1	2	22
99861 0410B	394	396	20
99861 0412	285	289	44
99862 0412	435	437	24
99863 0408	220	223	23
99863 0410B	407	409	38
99863 0412	316	318	24
	348	352	52
	353	357	57
	358	362	57
	363	366	39
	368	371	39
	416	417	10
99863 0416	348	352	51
	353	357	56
	363	366	39
	368	371	39
99863 0508	232	238	56
99863 0508B	445	447	33
99863 0512	301	305	60
	306	310	52
	311	315	59
	316	320	67
	321	323	24
	321	325	67
	326	328	24
	326	330	71
	348	349	6
	353	354	11
	358	359	6
	363	364	6
	368	369	7
99863 0516	386	389	39
99863 0520B	394	395	6
99864 0408	215	216	3
	285	287	25
	386	389	44
	390	393	45
99864 0412	348	351	34
	353	356	38
	358	361	36
	363	366	32
	368	370	32
99864 0512	232	235	20
99864 0516B	251	252	2
	255	256	2
99866 0420	118	119	14
	124	125	14
	130	131	14
99868 0308	130	131	15
99869 0408	402	403	2

	468	470	22
	468	471	61
	468	472	63
99901 0800	1	4	48
	5	8	51
	24	25	7
	24	25	12
	24	26	21
	27	28	10
	27	28	14
	27	29	25
	45	47	26
	51	52	4
	51	53	17
	55	56	4
	55	57	19
	69	70	11
	82	85	27
	86	87	3
	86	87	15
	86	88	17
	104	105	20
	104	106	21
	118	120	22
	124	126	23
	130	133	46
	150	151	12
	159	160	4
	163	164	8
	163	164	14
	163	164	17
	163	165	22
	166	167	7
	166	167	13
	166	167	17
	185	187	26
	188	190	26
	468	471	44
99901 1200	468	470	32
99902 0800	163	164	8
	163	164	17
	163	165	22
	166	167	7
	166	167	17
	215	216	5
99906 0300B	442	444	18
	445	447	17
	439	441	25
99906 0500	86	88	18
	200	202	32
	215	217	25
	220	221	8
	239	240	5
	239	240	9
	239	240	14
	239	241	16
	239	242	47
	239	243	55
	245	246	5
	245	246	9
	245	246	14
	245	247	16
	245	248	47
	245	249	55
	251	254	48
	255	258	38
	259	260	15
	262	263	16
	316	319	60
	321	324	60
	326	330	63
	331	333	17
	334	336	21
	334	337	28
	334	338	36
	340	341	14
	340	342	25
	344	346	14
	344	347	25
	348	349	11
	353	354	15
	358	359	8
	358	359	10
	358	360	16
	383	384	10
	386	387	13
	390	391	13
	394	395	13
	394	397	40
	394	397	48
	402	404	31
	402	404	37
	402	406	54
	402	406	55

	51	52	9
	55	56	10
	82	83	3
	82	85	28
	107	109	32
	156	157	11
	172	173	9
	175	176	9
	200	201	16
	212	213	6
	212	213	9
	212	213	12
	212	214	20
	212	214	26
	215	216	16
	218	219	4
	218	219	5
	220	223	32
	251	254	42
	255	257	32
	295	300	63
	301	304	34
	306	308	26
	311	313	33
	316	319	46
	321	324	46
	326	329	45
	348	349	9
	348	351	42
	348	352	57
	353	354	13
	353	356	46
	353	357	62
	358	361	43
	358	362	62
	358	362	64
	363	364	8
	363	364	11
	363	366	44
	363	367	52
	368	369	9
	368	369	11
	368	371	44
	318	372	52
	378	379	12
	463	464	6
	463	464	9

99907	0600	49	50	11
		181	182	14
		183	184	17
99911	0800	172	173	17
		175	176	16
99913	0600	239	244	73
		245	250	74
99921	0800	115	116	3
99921	1000	65	66	16
		69	70	10
		69	71	36
		115	116	4
		115	116	7
		115	117	10
		115	117	21
		124	128	49
		138	140	21
		141	143	22
		159	160	9
		161	162	3
		161	162	8
		212	213	4
		212	214	18
		463	465	34
		468	470	28
99921	1200	65	66	8
		107	108	17
		153	154	19
		159	160	5
		161	162	4
99921	1400	150	151	13
		463	465	40
99921	1800	118	123	56
		124	129	57
		130	133	40
99922	0800	65	67	34
		185	186	20
		188	189	21
99922	1000	115	117	21
		118	122	41
		118	122	54
		118	123	57
		124	128	42
		124	128	55
		124	129	58
		130	132	31
		130	133	38

99924 1200	135	136	16
	135	137	20
	138	139	16
	138	140	20
	141	143	20
99941 0600	86	88	23
99941 0800	27	29	23
99941 0801	24	26	19
99942 1000	118	122	48
	135	137	21
	156	157	15
99942 1200	150	152	21
99943 1200	107	108	18
99944 1400	135	136	10
	138	139	10
	141	142	10
99945 0800	269	272	26
	274	277	26
	280	282	17
99947 1200	118	119	16
	124	125	16
	130	131	16
99947 1400	150	152	23
	156	157	8
99949 0800	163	164	16
	166	167	14
99951 0500	394	395	13
99951 0600	212	214	26
99951 0618	212	213	6
	212	214	20
	215	216	16
	218	219	4
	373	375	18
99951 0818	27	29	25
	86	87	7
	218	219	16
	239	243	57
	245	249	57
99951 0822	51	53	17
	55	57	19
	159	160	4
99951 1022	118	122	48
	124	128	49
	130	133	43
	212	213	4
	212	214	18
99951 1030	159	160	9
	386	387	4
	386	387	8
	390	391	4
	390	391	8
	402	403	2
	402	403	12
	407	408	2
99952 0500	86	88	18
	220	221	8
	232	238	68
	239	240	5
	239	240	12
	239	241	16
	239	242	47
	245	246	5
	245	246	12
	245	247	16
	245	248	47
	251	254	48
	255	258	38
	301	305	53
	306	309	45
	311	314	52
	331	333	17
	334	335	6
	334	336	21
	334	337	28
	334	338	36
	340	341	14
	340	342	25
	344	346	14
	344	347	25
	348	349	6
	348	349	11
	353	354	11
	353	354	15
	353	355	17
	358	359	6
	358	359	8
	358	359	10
	358	360	16
	363	364	6
	368	369	7
	383	384	10
	394	397	41
	394	397	48
	402	406	59

	245	249	55
	259	260	15
	262	263	16
	295	299	32
	316	319	60
	321	324	60
	326	330	63
	380	381	8
	386	387	12
	386	388	13
	386	389	39
	390	391	12
	390	392	13
	394	397	40
	452	454	29
99952 0600	51	54	38
	55	58	41
	82	83	3
	82	85	28
	251	254	42
	255	257	32
	348	349	9
	348	352	57
	353	354	13
	353	357	62
	358	362	62
	358	362	64
	363	364	8
	363	364	11
	363	367	52
	368	369	9
	368	369	11
	318	372	52
	442	443	6
	445	446	14
	463	466	49
	468	471	57
	468	472	63
99952 0600B	239	241	19
	245	247	19
99952 0618	86	88	23
	218	219	5
	220	223	32
	301	303	33
	301	304	34
	306	308	25

	130	133	46
	150	151	12
	163	164	16
	172	173	16
	175	176	15
	269	272	26
	274	277	26
	280	282	17
	348	349	4
	353	354	4
	358	359	4
	363	364	4
	463	465	38
	463	465	42
	468	471	44
99952 0800B	118	120	26
	124	126	27
	130	134	50
99952 0816	24	26	21
	212	213	9
	218	219	11
	285	286	9
99952 0822	386	387	10
	386	387	11
	390	391	10
	390	391	11
99952 1000	27	29	34
	115	116	4
99953 0400	45	48	48
99953 0600	45	46	3
	45	46	9
	45	48	35
	86	87	11
99953 0800	24	25	7
	24	25	9
	27	28	10
	27	28	14
	30	31	2
	45	47	26
	51	52	4
	55	56	4
	69	70	11
	69	71	39
	82	85	27
	86	87	13
	166	167	14
	181	182	6

	416	417	14
99971 0400	200	202	40
	239	244	69
	245	249	70
	259	260	6
	262	263	6
	316	317	23
	380	392	9
	383	384	11
	386	387	4
	386	388	21
	390	391	4
	390	392	24
	416	417	10
	435	438	45
	439	441	25
99971 0400B	239	242	36
	386	389	42
	390	393	43
99971 0500	86	88	18
	200	202	38
	220	221	8
	239	240	2
	239	240	5
	239	240	6
	239	240	9
	239	240	12
	239	241	14
	239	241	16
	239	242	47
	239	243	55
	245	246	2
	245	246	5
	245	246	6
	245	246	9
	245	246	12
	245	247	14
	245	247	16
	245	248	47
	245	249	55
	251	252	6
	251	254	48
	255	256	6
	255	258	38
	259	260	8
	259	260	15
	262	263	8
	358	359	10
	358	360	16
	373	374	2
	376	377	3
	380	381	8
	383	384	10
	386	387	12
	386	387	13
	386	389	39
	390	391	12
	390	392	13
	390	392	25
	394	395	13
	394	397	40
	394	397	41
	463	466	45
	468	471	47
99971 0600	9	12	41
	13	16	51
	24	25	9
	30	31	14
	30	31	21
	45	46	3
	45	46	9
	45	47	20
	45	48	35
	49	50	11
	51	52	9
	51	54	38
	55	56	10
	55	58	41
	65	66	5
	69	71	34
	77	78	4
	79	80	13
	82	83	3
	82	85	28
	86	87	11
	86	88	23
	107	109	32
	156	157	11
	172	173	9
	175	176	9
	200	201	16
	212	213	6
	212	213	12
	212	214	20

	358	362	62
	358	362	64
	363	364	8
	363	364	11
	363	366	43
	363	366	44
	363	367	52
	368	369	9
	368	369	11
	368	371	43
	368	371	44
	318	372	52
	373	375	18
	378	379	12
	463	466	49
	468	469	6
	468	471	57
	468	472	63
99971 0800	1	4	48
	5	8	51
	24	25	7
	24	25	12
	24	26	21
	27	28	10
	27	28	14
	27	29	25
	27	29	27
	30	31	2
	30	31	4
	45	47	26
	51	52	4
	51	53	17
	55	56	4
	55	57	19
	65	67	19
	65	67	20
	69	70	11
	69	72	39
	79	80	6
	82	85	27
	86	87	3
	86	87	7
	86	87	13
	86	88	15
	86	88	17
	102	103	7
	166	167	13
	172	173	16
	175	176	15
	185	187	26
	188	190	26
	269	272	26
	274	277	26
	280	282	17
	285	286	9
	348	349	4
	353	354	4
	358	359	4
	363	364	4
	386	387	10
	386	387	11
	390	391	10
	390	391	11
	463	465	38
	463	466	42
	468	471	44
99971 1000	24	26	30
	27	29	34
	65	66	16
	69	70	10
	69	71	36
	111	112	10
	115	116	4
	115	116	7
	115	117	10
	138	140	21
	141	143	22
	144	145	10
	144	146	23
	156	157	5
	159	160	9
	161	162	3
	161	162	8
	166	167	4
	185	186	16
	188	189	17
	212	213	4
	212	214	18
	463	465	34
	468	470	28
99971 1200	55	58	39
	65	66	8
	107	108	17

	402	405	48
	407	409	31

TOYO KOGYO CO.,LTD.

Printed in Japan