ROTARY PICKUP
PARTS CATALOG



© 1973 by

TOYO KOGYO CO.,LTD.

ROTARY ENGINE: LICENSED BY NSU/WANKEL

DECEMBER, 1973

HOW TO USE THIS PARTS CATALOGUE

This Parts Catalogue is complied for the following models

Model : Rotary Pickup (1974 Models Manuf. from DEC. 1973)

1854	PA136	Rotary Pickup, U. S. A. Spec.
1856	PA136 - T	Rotary Pickup with Auto. Trans., U. S. A. Spec.
1858	PA136	Rotary Pickup, Canadian Spec.
1859	PA136 - T	Rotary Pickup with Auto. Trans., Canadian Spec.

(I) Layout of Parts Catalog

The spares relevent to each assembly are printed inset to the right, and parts that constitute a sub-assembly are indicated by illustrations and classified according to each assembly.
Therefore, if a spare part is not printed inset to the right, this shows that the part does not constitute a part of the assembly.
Moreover, to aid identification of spares, "exploded" illustrations are incorporated in this catalog.

(II) How to locate parts

1) When part number is not known

   A. Refer to index of groups and locate the group to which the part belongs.

   ⇓

   B. Open to group illustration page and locate part wanted.

   ⇓

   C. See the number given for the part in the illustration and find corresponding number in the parts composition lists.

   D. Then, you will find the name and the part number of the part on the right side of this number.

2) When part number is known but shape and name of part is unknown.

   A. See index given at back of the parts catalog and find pages where illustration, part number and figure number is listed.

   ⇓

   B. Open to page indicated and locate the part number in the parts composition list, and after this locate the part in the illustration by referring to figure number given at front of the part number.

   ⇓

   C. The corresponding figure number in the illustration is for the part required.

3) Moreover as an alphabetical index is incorporated after the index of groups, utilize for locating principal parts.

(III) **On Groups**

1) The figure enclosed by a triangle at the top of each page (Example ▲10) indicates group number.

2) Group numbers are determined according to structure and function of parts.

3) The group number given in the index of groups coincide with the numerals (Example ▲10) of the illustration and parts composition pages.

(IV) **Explanation of Parts Composition Lists**

1) Indication of composition of assembly.

(a) Only the description of the parts that comprise the assembly and are available as spares are inset to the right and given after the assembly part number and description. In this instance a wide space is taken in between for other spare parts.

(b) For parts of sub-assemblies that are included in an assembly and are available as spares, designation is made in the "Remarks" column, (Example : Fig. No. 9 included).

(c) When a part's description is not inset to the right, this signifies that the part is not included in any assembly or sub-assembly.

Example :

No.	Part Number	Description	Q'ty	Remarks
(a) — 1	**0866 18 300**	**Alternator**	1	
(b) — 2	**0866 24 533**	**Nut Set**	1	
⋮	⋮	⋮	⋮	
(b) — 8	**0866 24 540**	**Rotor**	1	**Fig. No. 9 included**
(c) — 9	**0820 24 503**	**Bearing, Ball**	1	
(d) — 19	**99906 0500**	**Nut, Alternator**	1	

(a) ..... Includes (b) to (c)
(b) ..... Includes (c)
(d) ..... Is not included in any ass'y nor sub ass'y

2) On parts number

A. Exclusive parts

Example :

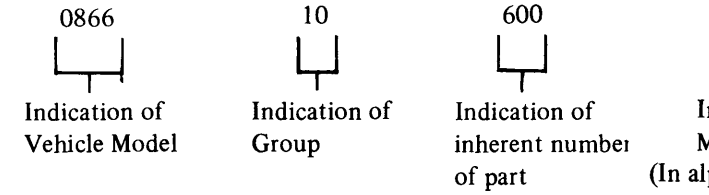

B. Standardized parts (General parts)

Example :

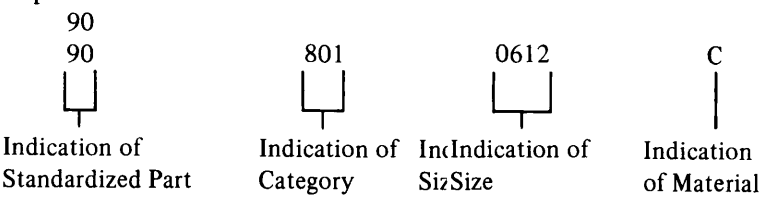

C. Standadized parts (Tires, Tubes, Disc Wheels, etc.)

Example :

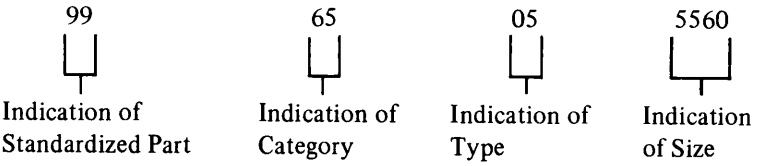

3) On Quantity

The quantity given in the parts composition list shows number of parts used per vehicle and does not indicate selling unit.

4) Other Precautions

☆ Mark ..... Parts marked thus are not available as replacement parts, therefore, when these parts are required, order in the form of assemblies (or sets) including these parts or in the form of parts interchangeable with these parts.

5) Abbreviations

(R)	Right	EX.	Exhaust
(L)	Left	IN.	Inlet
(C)	Center	T/mission	Transmission
(Frt.)	Front	©	Parts with Different Colours (Indicate colour when ordering)
(Rr.)	Rear	▲10	Indication of Group
Cpt.	Complete	Manual	Manual Transmission
Ass'y	Assembly	Automatic	Automatic Transmission
Std.	Standard	Air-Con	Air-Conditioner
O. S.	Over Size	P. S.	Power Steering
U. S.	Under Size		

BEIG	Beige	IVRY	Ivory
BLK	Black	L. BLU	Light Blue
BLU	Blue	L. GRN	Light Green
BLU. M	Blue Metallic	L. GRY	Light Gray
BLU/GRY	Bluish Gray	MRN	Maroon
BRN	Brown	PRPL/BLU	Purplish Blue
D. BLU	Dark Blue	PRPL/WHT	Purplish White
D. BRN	Dark Brown	RED	Red
D. GRN	Dark Green	SILV. M	Silver Metallic
D. GRY	Dark Grey	WHT	White

D. YLW	Dark Yellow	YLW	Yellow
GLD. M	Gold Metallic	YLW/D. GRN	Yellowish Dark Green
GRN	Green	YLW/GRN	Yellowish Green
GRN. M	Green Metalic	YLW/WHT	Yellowish White
GRY	Gry	DUL	Dull Finish
GRY/GRN	Grayish Green	S. DUL	Semi Dull Finish
GRY/YLW	Grayish Yellow		

(V) Precautions to be taken when placing orders for parts

1) Always specify part numbers, names of parts and quantity required.

2) Be sure to list the parts in order of part number, when filling in order sheet.

3) As processing of orders received by us is done by electronic computers, importance is attached to the part number. Therefore, in case the part number and name of part do not coincide with each other, the part will be sent to you in accordance with the part number.

4) Distinction of colour of spare parts by code number is done with figures number 11 and 12 of the parts number. Therefore add to the end of the applying part number and order.

Example :	Part Number	Code No.	Description
	1011 60 720A	00	
	← 10 Figures →	← 2 Figures →	
	1011 60 720A	05	
	← 10 Figures →	← 2 Figure →	

(VI) Replacement pages and purport

Page replacements are supplied once every 6 months as a rule, listing parts modified or newly added and month and year date will be printed in lower corner of each replacement page. Therefore it is essential that care be taken to check on these dates to confirm if the parts listed conforms to the car imported, before ordering.

1) Explanation on designation given in remarks column

a. Car No. ..... Chassis no. of car that modification becomes effective from.

b. $^{73}/_{12}$ ..... 73 designates year of modification and numerals 1 ~ 12 shows month of year.

c. ○ mark ..... Indicates that modified part and former part are interchangeable.

d. × mark ..... Indicates that modified part and old part are not interchangeable.

e. Δ mark ..... Indicates that new part is interchangeable with old part but that old part is not interchangeable as a replacement for cars utilizing the new part.

2) • mark ..... This dot at front of figure number of replacement pages show the parts that have been subject to modification.

(VII) Colour Code Nos.

1) Whenever there is a part with only one colour, and there is an increase to two or more colours, colour codes will be established only for the colours added. Therefore, there will be parts with and without colour codes. (However, the colour will be described in the "Description Column").
Therefore, care must be taken to attach the colour code after the part number if it is a colour code established afterwards, otherwise the part supplied will be the coloured part without the colour code.

Example :

1003 64 610	Tray (Black)	Part without colour code
1003 64 610-05	Tray (Brown)	Part with colour code

2) Location of © mark

As a precaution against dropping of the "Colour code No.", the "©" mark is located right after the part number.
Always attach the colour code when there is this "©" mark, moreover, be careful not to confuse it with the suffixes for part modifications.

Example :

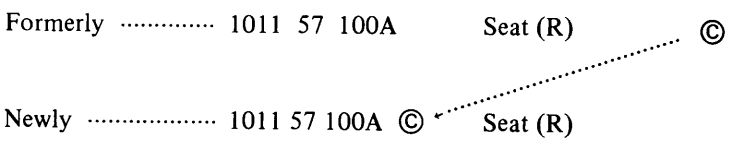

INDEX

Group No	Description	Fig	Page	Part No
	Engine Parts			
10	Rotor Housing	1	2 ~	8
10 . 11	Rotor	9	10 ~	13
13	IN. Manifold & Thermal Reactor	14	15 ~	16
13 . 23	Carburettor	17	18	
13 . 23	Air Cleaner	19	20	
13	Starting Assist System	21	22	
13	Emission Control System	23	24 ~	26
14	Oil Pump	27	28 ~	32
14 . 15	Cooling System	33	34 ~	38
16	Clutch (Manual)	39	40 ~	41
17	Manual T/mission (Case)	42	43 ~	45
17	Manual T/mission (Gear)	46	47 ~	49
17	Manual T/mission (Change Controls)	50	51 ~	53
18 . 24	Distributor	54	55 ~	57
18 . 24	Alternator	58	59 ~	60
18 . 24	Starter & Battery	61	62 ~	64
19	Automatic T/mission (Converter, Oil Pump & Piping)	65	66 ~	68
19	Automatic T/mission (Case & Main Control)	69	70 ~	73
19	Automatic T/mission (Clutch & Planetary Gear)	74	75 ~	79
19	Automatic T/mission (Low, Reverse & Governor)	80	81 ~	83
19	Automatic T/mission (Manual Linkage)	84	85	

INDEX

Group No	Description	Fig	Page	Part No
	Chassis Parts			
25	Propeller Shaft		86	87 ~ 88
26	Rear Axle		89	90 ~ 91
26	Rear Brake		92	93 ~ 95
27	Driving		96	97 ~ 99
28	Rear Suspension		100	101 ~ 102
32	Steering System (Wheel & Gear)		103	104 ~ 107
32	Steering System (Rod)		108	109 ~ 110
33	Front Axle		111	112 ~ 114
34	Front Suspension		115	116 ~ 119
34	Front Suspension (Stabilizer)		120	121
38	Main Frame		122	123
39	Engine & T/mission Support		124	125
40	Exhaust System		126	127 ~ 128
41	Accelerator Control System		129	130
13 . 42	Fuel Tank & Piping		131	132 ~ 135
41 . 43	Clutch & Brake Pedal		136	137 ~ 138
41	Clutch Release & Master Cylinder (Manual)		139	140 ~ 141
43 . 49	Tandem Master Cylinder & Vacuum Power Assist		142	143 ~ 144
43 . 45	Brake Piping		145	146 ~ 148
44	Parking Brake System		149	150 ~ 152
46	Change Control (Automatic)		153	154 ~ 155

INDEX

Group No	Description	Fig Page	Part No
	Body Parts		
50	Bumper & Grille	156	157 ~ 159
52	Bonnet	160	161 ~ 163
51 ~ 56	Body Panels (Front)	164	165 ~ 166
53 ~ 56	Body Panels (Side, Floor & Roof)	167	168 ~ 171
53 . 54	Ventilator, Glass & Moulding	172	173 ~ 174
55 ~ 70	Dashboard	175	176 ~ 182
57	Seat	183	184 ~ 185
58 . 59	Front Side Door (Glass)	186	187 ~ 189
58 . 59	Front Side Door (Lock)	190	191 ~ 194
61 . 76	Car Heater	195	196 ~ 198
65	Box	199	200 ~ 204
66 . 87	Lamps (Front Side)	205	206 ~ 207
66 . 87	Lamps (Rear Side)	208	209 ~ 211
66 . 67	Electric Equipment (Body)	212	213 ~ 217
66 . 68	Windshield Wiper	218	219 ~ 220
66 . 87	Screen Washer	221	222
66	Auto Radio	223	224 ~ 225
68	Service Tools	226	227 ~ 229
69	Attachment	230	231
69	Top Ceiling & Mat	232	233 ~ 234
09	Key Set	235	236
	INDEX		237 ~ 274

10 ROTOR HOUSING

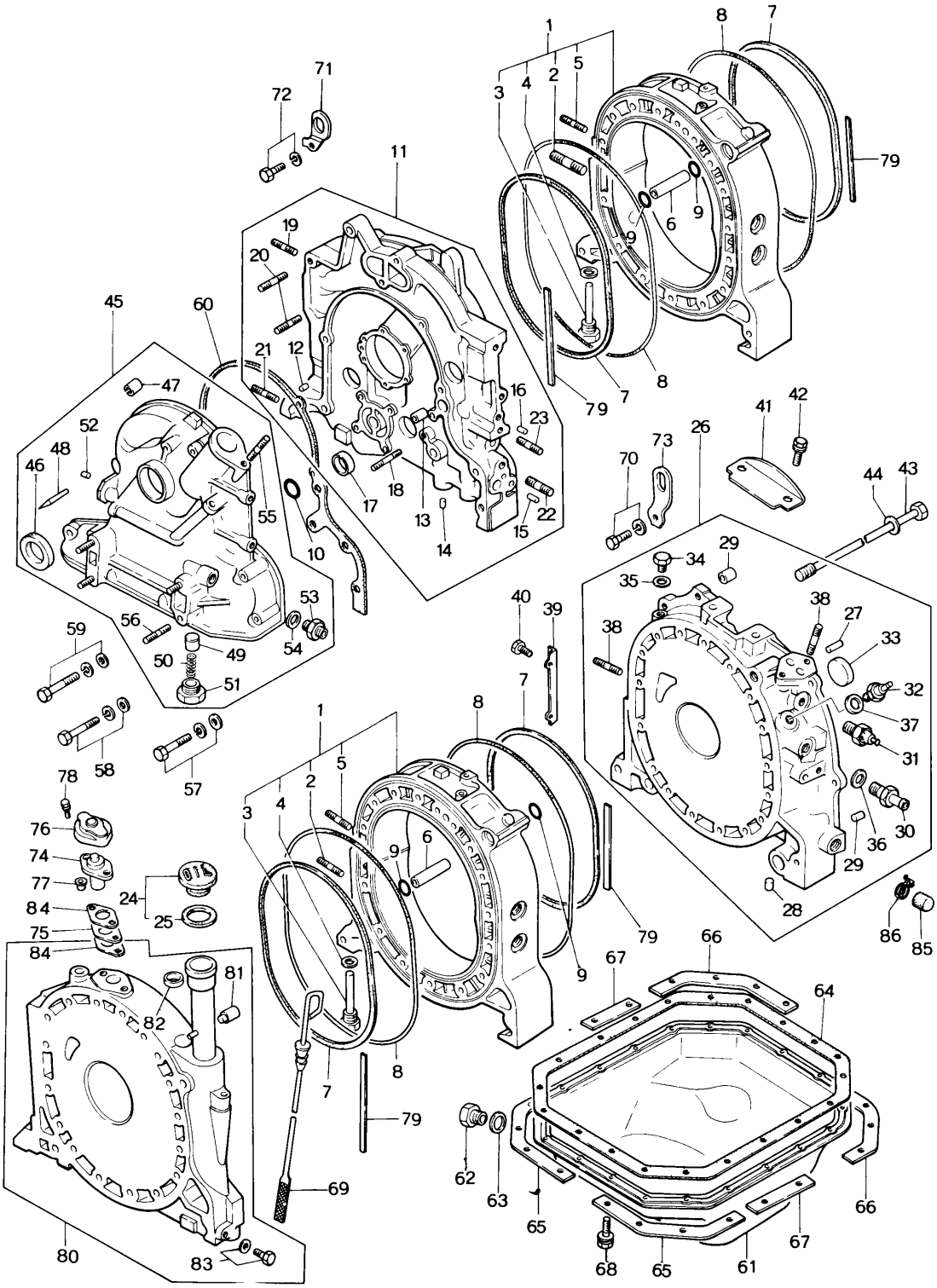

ROTOR HOUSING 10

No	Part Number	Description	Q'ty	Remarks
1	1757 10 100A	Housing, Rotor	2	
2	0839 10 105	Stud	4	
3	1757 10 120	Nozzle, Air	4	
4	99564 1400	Gasket	4	
5	99851 0822A	Stud	2	
6	1757 10 111	Dowel, Tubular	4	
7	1757 10 171A	Ring, Square	4	
8	0813 10 172	Ring, "O" - Outer	4	
9	0813 10 173	Ring, "O" - Tubular Dowel	4	
10	0813 10 174	Ring, "O" - Front Cover	1	
11	1757 10 200C	Housing, Front	1	
12	0839 10 203	Pin, Dowel	1	
13	2329 10 204	Dowel, Tubular	2	
14	0839 10 205	Plug, Blind	3	
15	1757 10 206A	Plug, Blind	1	
16	1757 10 207	Plug, Blind	1	
17	99306 3000	Plug, Blind - Water	3	
18	99852 0660	Stud	2	

10 ROTOR HOUSING

No	Part Number	Description	Q'ty	Remarks
19	99852 0822A	Stud, IN. Manifold	2	
20	1757 10 208	Stud, Water Pump	4	
21	99852 1016	Stud	1	
22	99859 1220A	Stud, Mounting	1	
23	99859 1225A	Stud	1	
24	0324 10 250	Cap, Oil Filler	1	
25	0324 10 252	Gasket	1	
26	1757 10 300A	Housing, Rear	1	
27	0839 10 203	Pin, Knock - Gear	1	
28	0839 10 205	Plug, Blind	1	
29	1757 10 309	Pin, Tubular	2	
30	0866 10 320A	Joint, Hose	1	
31	0866 18 501A	Switch, Oil Pressure	1	
32	1757 18 510	Gauge Unit, Heat	1	
33	99306 3000	Plug, Blind - Water	5	
34	99511 1200	Plug	1	
35	99562 1200	Gasket, Plug	1	
36	99562 1600	Gasket, Hose Joint	1	

No	Part Number	Description		Q'ty	Remarks
37	99564 0800	Gasket, Heat Gauge Unit		1	
38	99852 0822A	Stud, IN. Manifold & Oil Filler		4	
39	1757 10 305	Cover, Dust	(Manual)	1	
40	99796 0610	Bolt, Dust Cover	(Manual)	2	
41	1757 10 351	Cover, Dust	(Manual)	1	
42	99796 0816	Bolt, Dust Cover	(Manual)	2	
43	1757 10 451	Bolt, Tension		18	
	1757 10 452	Bolt, Tension		1	
44	0839 10 455	Washer, Seal		19	
45	1757 10 600B	Cover, Front		1	
46	0820 10 605	Oil Seal		1	
47	1757 10 609	Pin, Spring		1	
48	0820 10 631B	Pin, Top Indicator		1	
49	0839 14 115	Plunger, Press		1	
50	0839 14 273A	Spring, Press Plunger		1	
51	0839 14 274	Plug, Press Plunger		1	
52	99307 0600	Plug, Blind		2	
53	99384 1200	Joint, Union		1	

10 ROTOR HOUSING

No	Part Number	Description	Q'ty	Remarks
54	99562 1600	Gasket, Union Joint	1	
55	99851 0612A	Stud, Distributor	1	
56	99855 1020	Stud, Mounting	4	
57	99801 0840	Bolt, Front Cover	3	
	99952 0800	Washer, Plain	3	
	99971 0800	Washer, Spring	3	
58	99801 0865	Bolt, Front Cover	2	
	99952 0800	Washer, Plain	2	
	99971 0800	Washer, Spring	2	
59	99801 0875	Bolt, Front Cover	1	
	99952 0800	Washer, Plain	1	
	99971 0800	Washer, Spring	1	
60	1757 10 641	Gasket, Front Cover	1	
61	1757 10 700B	Pan, Oil	1	
62	99511 1400	Plug, Drain	1	
63	99562 1400	Gasket	1	
64	1757 10 711	Gasket, Oil Pan	1	

No	Part Number	Description	Q'ty	Remarks
65	0839 10 721	Stiffener	2	
66	1757 10 722	Stiffener	2	
67	1757 10 723	Stiffener	2	
68	99806 0616	Bolt, Oil Pan	22	
	99971 0600	Washer, Spring	22	
69	0866 10 830	Gauge, Oil Level	1	
70	1757 10 845	Bolt, Rear Housing + Engine Hanger	1	
	99971 1000	Washer, Spring	1	
71	1757 10 861	Hanger, Engine	1	
72	99801 0816	Bolt, Engine Hanger	1	
	99952 0800	Washer, Plain	1	
73	1757 10 862	Hanger, Engine	1	
74	1663 18 920	Senser, Thermo	1	
75	2329 18 922	Insulator, Thermo Senser	1	
76	2329 18 923	Cover, Thermo Senser	1	
77	2329 18 924	Washer, Insulator	2	
78	99801 0825	Bolt, Thermo Senser	2	
	99952 0800	Washer, Plain	2	
	99971 0800	Washer, Spring	2	
79	0866 23 025	Protector, "O" Ring	4	

10 ROTOR HOUSING

No	Part Number	Description	Q'ty	Remarks
80	1757 99 105	Housing, Intermediate	1	
81	2329 10 417	Joint, Pipe	1	
82	99305 2800	Plug, Expansion	1	
83	99510 1000	Plug	1	
	99564 1000	Gasket	1	
84	2329 18 921	Gasket	2	
85	0864 61 061A	Cover	1	Without Car Heater
86	99282 2600	Band, Hose	1	Without Car Heater
	1757 23 200	Short Engine (Manual)	1	
	1758 23 200	Short Engine (Automatic)	1	
	1758 99 100	Engine Gasket Set	1	
	1757 23 040	Ring Set	1	
	1757 10 171A	Ring, "O" - Inner	4	
	0813 10 172	Ring, "O" - Outer	4	
	0813 10 173	Ring, "O"	4	
	0813 10 174	Ring, "O"	1	Included in 1757 23 040
	0839 10 455	Ring, "O"	19	
	0813 10 555	Ring, "O"	1	

No.	Part Number	Description	Q'ty	Remarks
	99541 01601	Ring, "O"	2	
	99541 0240	Ring, "O"	2	
	99541 0350	Ring, "O"	1	
	1757 10 641	Gasket	1	
	1757 10 711	Gasket	1	
	1757 13 111	Gasket	1	
	1757 13 221	Gasket	1	
	1757 13 724	Packing	1	
	1757 13 889	Gasket	2	
	1757 13 891	Gasket	1	
	1757 15 105	Gasket	1	
	0820 15 106	Gasket	1	

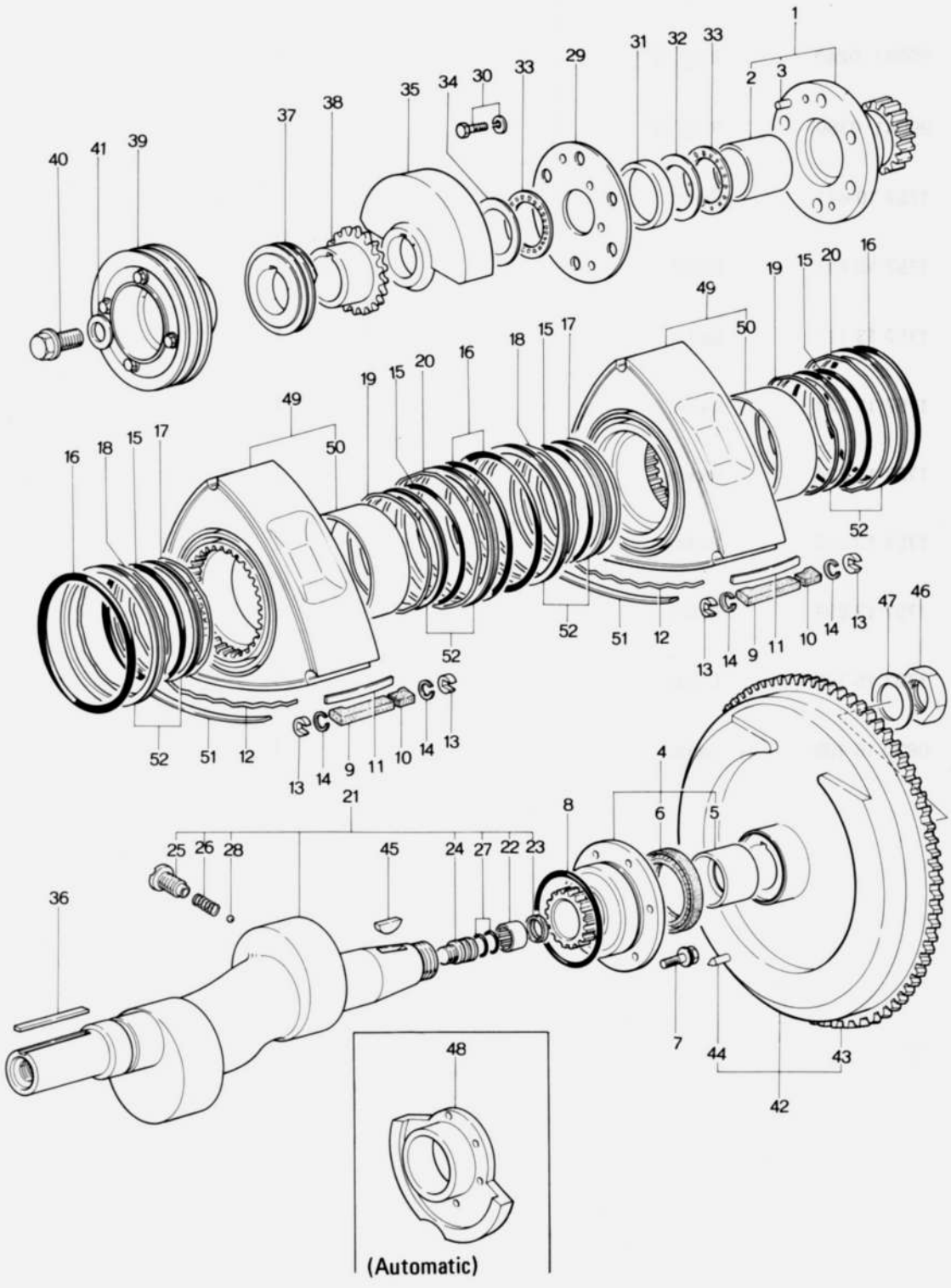
1
2
3
29
31
32
33
30
34
35
37
38
40
41
39
49
50
19
15
20
16
18
17
52
51
12
13
14
9
11
10
47
46
4
6
5
8
21
25
26
28
45
24
27
22
23
36
7
44
43
42
48
(Automatic)

No	Part Number	Description	Q'ty	Remarks
1	1757 10 500	Gear (Frt.), Stationary	1	
2	0820 10 502B	Bearing, Main	1	
3	0839 10 504	Pin, Knock	1	
4	1757 10 550	Gear (Rr.), Stationary	1	
5	0820 10 502B	Bearing, Main	1	
6	1668 10 556	Oil Seal	1	
7	99801 0818	Bolt, Stationary Gear	6	
	99971 0800	Washer, Spring	6	
8	0813 10 555	Ring, "O" - Stationary Gear	1	
9	1757 11 301B	Seal, Apex	6	
10	1011 11 302C	Piece, Side	6	
11	1757 11 304	Spring, Apex Seal	6	
12	0820 11 317	Spring, Side Seal	12	
13	1011 11 321	Seal, Corner (Std.)	12	
	1011 23 176	Seal, Corner (O.S. 0.03)	12	
14	0839 11 323A	Spring, Corner Seal	12	
15	0820 11 341	Ring, "O" - Inner	4	
16	0820 11 343	Ring, "O" - Outer	4	

No	Part Number	Description	Q'ty	Remarks
17	1011 11 351	Spring, Oil Seal Inner (Frt.)	2	
18	1011 11 353	Spring, Oil Seal Outer (Frt.)	2	
19	1011 11 361	Spring, Oil Seal Inner (Rr.)	2	
20	1011 11 363	Spring, Oil Seal Outer (Rr.)	2	
21	1757 11 400	Shaft, Eccentric (Manual)	1	
	1758 11 400	Shaft, Eccentric (Automatic)	1	
22	1881 11 403	Bearing, Needle	1	(Manual)
23	1881 11 404	Oil Seal	1	(Manual)
24	0813 11 405	Plug, Blind	1	
25	0839 11 411A	Plug, Oil Jet	2	
26	0839 11 412	Spring	2	
27	99541 01101	Ring, "O"	2	
28	99611 2000	Ball, Steel	2	
29	1011 11 501	Plate	1	
30	99801 0822	Bolt, Plate & Stationary Gear	6	
	99971 0800	Washer, Spring	6	
31	0839 11 502	Spacer (L = 8.02)	1	Selective use
	0839 11 506	Spacer (L = 8.08)	1	Selective use

No	Part Number	Description	Q'ty	Remarks
	0839 11 508	Spacer (L = 8.04)	1	
	0839 11 509	Spacer (L = 8.00)	1	
32	1011 11 504	Plate, Thrust	1	
33	0813 11 505B	Bearing, Needle	2	
34	1011 11 507	Washer, Thrust	1	
35	1757 11 511	Weight, Balance (Automatic)	1	
	1854 11 511	Weight, Balance (Manual)	1	
36	1757 11 512	Key	1	
37	0839 11 531	Gear, Drive - Distributor	1	
38	1757 11 551	Gear, Drive - Oil Pump	1	
39	1757 11 600D	Pulley	1	
40	0820 11 611B	Bolt, Pulley	1	
41	99564 2800	Gasket, Bolt	1	
42	1854 11 700	Wheel, Fly	1	
43	0866 11 702	Gear, Ring (Manual)	1	
44	99222 0610	Pin	1	
45	0820 11 705	Key, Fly Wheel	1	
46	0810 11 711	Nut, Lock	1	

10 11 ROTOR

No.	Part Number	Description	Q'ty	Remarks
47	0820 11 712	Washer, Lock	1	
48	1029 11 750	Weight, Counter (Automatic)	1	
49	1757 23 103	Rotor "C"	2	
50	1011 11 111	Bearing, Rotor	2	
51	1011 23 151A	Seal, Side	12	
52	0820 23 180C	Oil Seal Set	4	

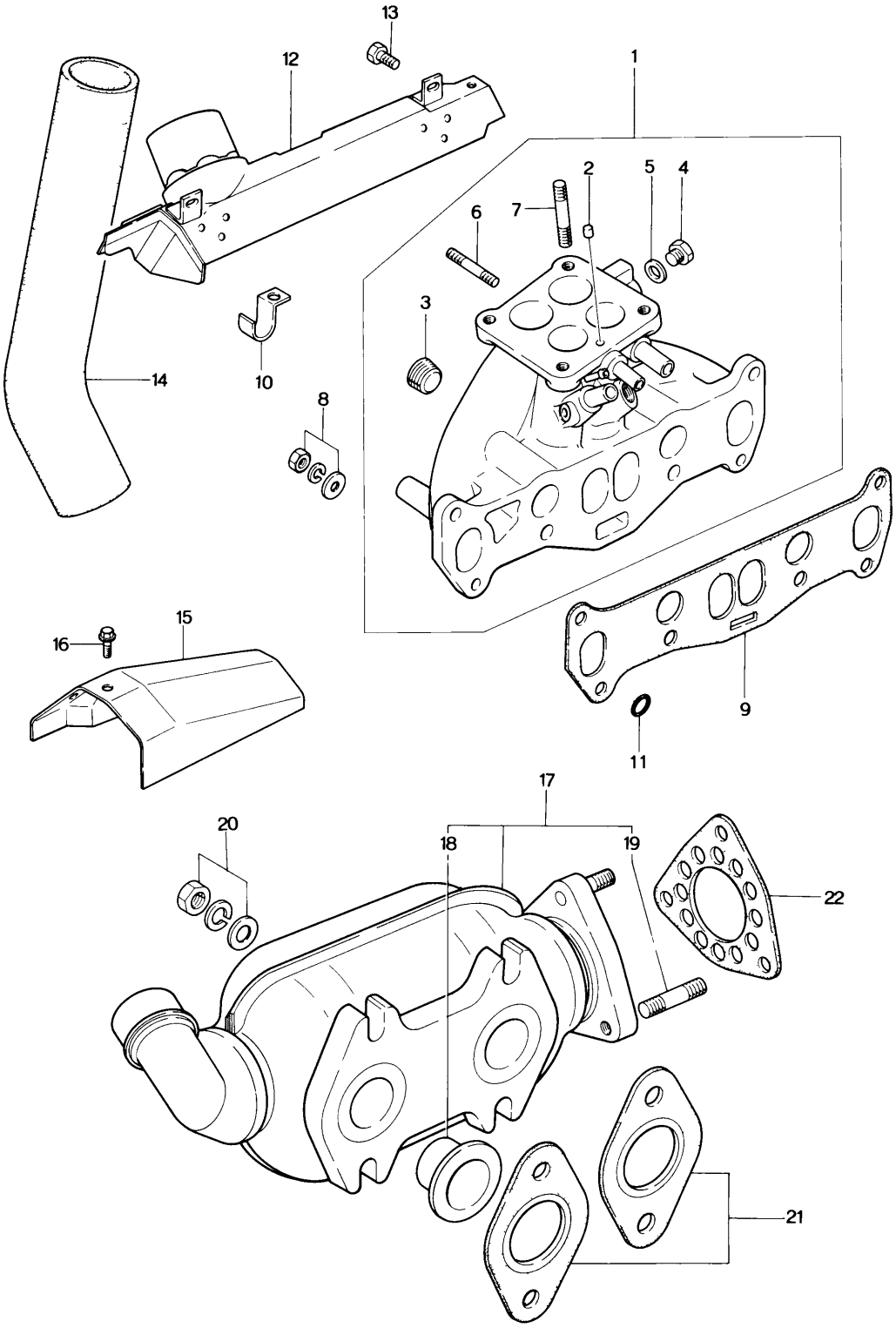
13
12
1
2
5
4
6
7
3
14
10
8
15
16
9
11
17
20
18
19
22
21

N. MANIFOLD & THERMAL REACTOR 13

No	Part Number	Description	Q'ty	Remarks
1	1757 13 100A	Manifold, IN.	1	
2	99307 0600	Plug, Blind	2	
3	99503 3000	Plug	3	
4	99511 1000	Plug	1	
5	99564 1000	Gasket	1	
6	99851 0622A	Stud, Control Valve	3	
7	99851 0830A	Stud, Carburettor	4	
8	99901 0800	Nut, IN. Manifold	6	
	99952 0800	Washer, Plain	6	
	99971 0800	Washer, Spring	6	
9	1757 13 111	Gasket, IN. Manifold	1	
10	1757 13 251A	Clip, Valve Wiring	2	
11	99541 0240	Ring, "O" - IN. Manifold	2	
12	1757 13 330A	Duct, Hot Air	1	
13	99796 0812	Bolt, Hot Air Duct	2	
14	1757 13 341A	Hose, Hot Air	1	
15	1757 13 371A	Insulator, Heat	1	
16	99786 0612	Bolt, Heat Insulator	2	
	99952 0618	Washer, Plain	2	

No	Part Number	Description	Q'ty	Remarks
17	1757 13 800	Reactor, Thermal	1	
18	2090 13 742A	Insert	1	
19	2329 13 876	Stud	3	
20	2158 40 355	Nut, Thermal Reactor	4	
	0839 13 614	Washer, Plain	4	
	2329 13 882	Washer, Spring	4	
21	1757 13 889	Gasket, Thermal Reactor	2	
22	1757 13 891	Gasket, Thermal Reactor	1	

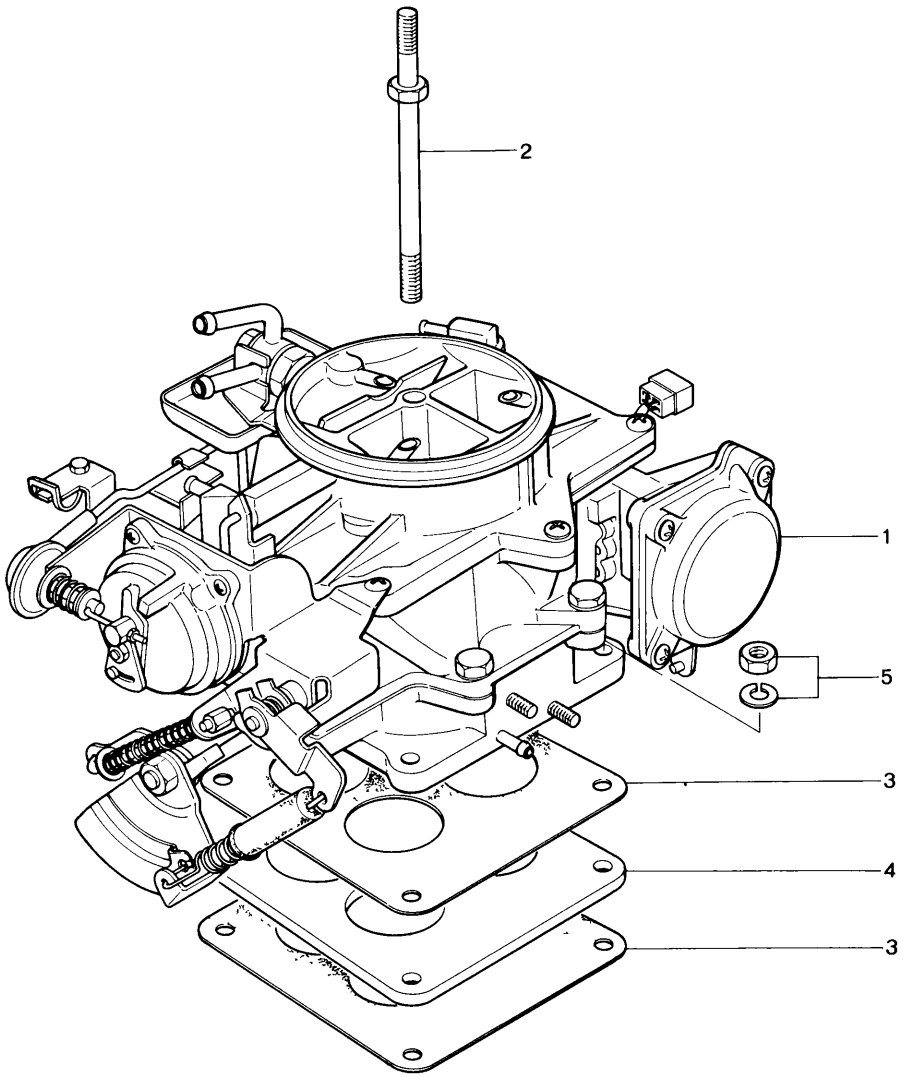
2
1
5
3
4
3

CARBURETTOR 13 23

No	Part Number	Description	Q'ty	Remarks
1	1854 13 200	Carburettor (Manual)	1	
	1856 13 200	Carburettor (Automatic)	1	
2	1757 13 201	Bolt, Cleaner Set	1	
3	1757 13 221	Gasket, Carburettor	2	
4	1757 13 222	Insulator, Carburettor	1	
5	99901 0800	Nut, Carburettor	4	
	99971 0800	Washer, Spring	4	
	1757 23 540	Repair Kit, Carburettor (Manual)	1	
	1758 23 540	Repair Kit, Carburettor (Automatic)	1	

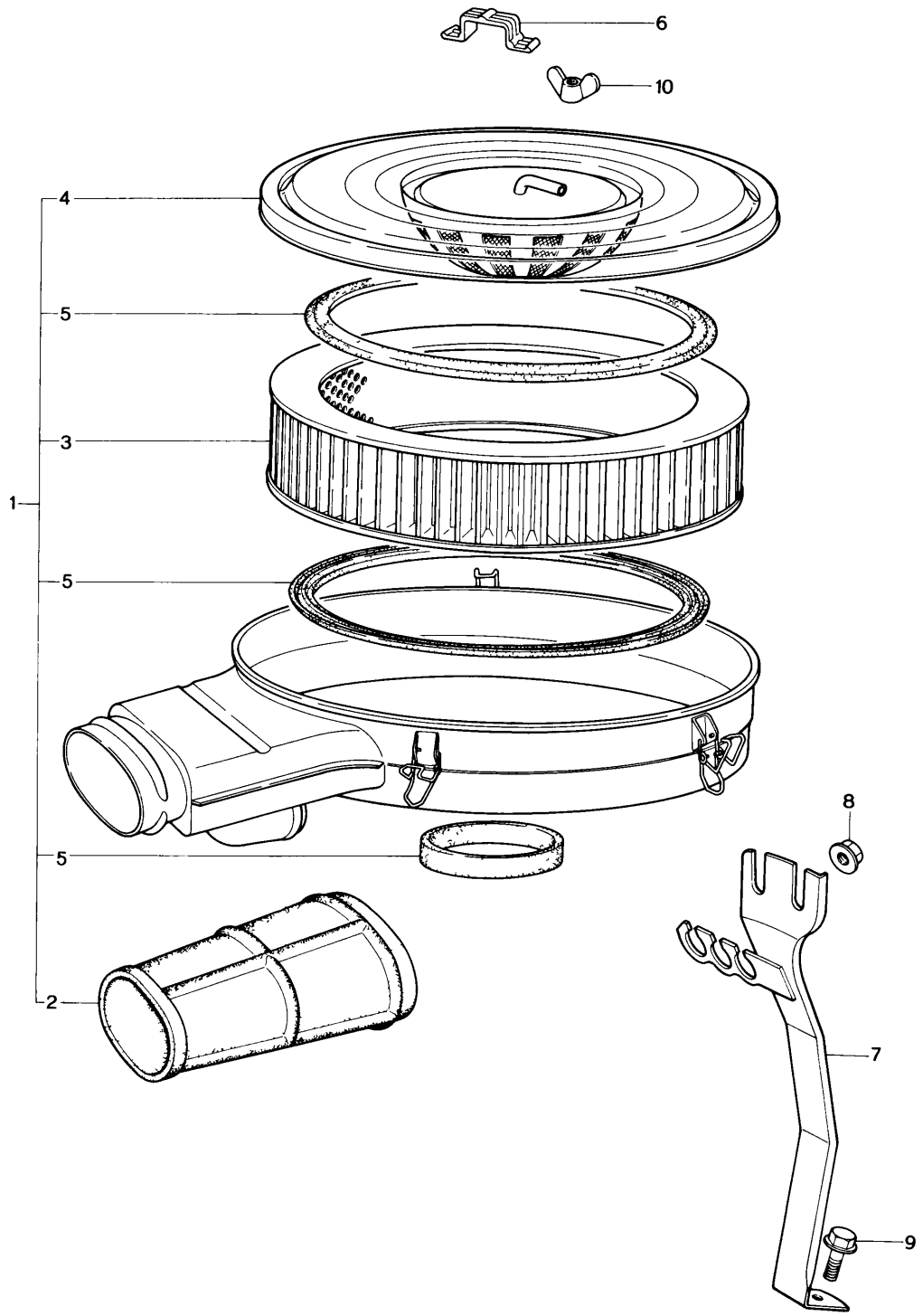
6
10
4
5
3
1
5
5
2
8
7
9

AIR CLEANER 13 23

No.	Part Number	Description	Q'ty	Remarks
1	1757 13 300	Cleaner, Air	1	
2	1757 13 351	Hose, Air	1	
3	1757 23 672	Element	1	
4	1113 23 673	Cover, with Charcoal Filter (BLU.)	1	
5	1757 23 680	Gasket Set	1	
6	1617 13 305A	Clip	1	
7	1757 13 310	Support, Air Cleaner	1	
8	99940 0802	Nut, Air Cleaner	2	
9	99786 0816	Bolt, Air Cleaner Support	1	
	99952 0822	Washer, Plain	1	
10	99941 0801	Nut, Wing - Air Cleaner	1	

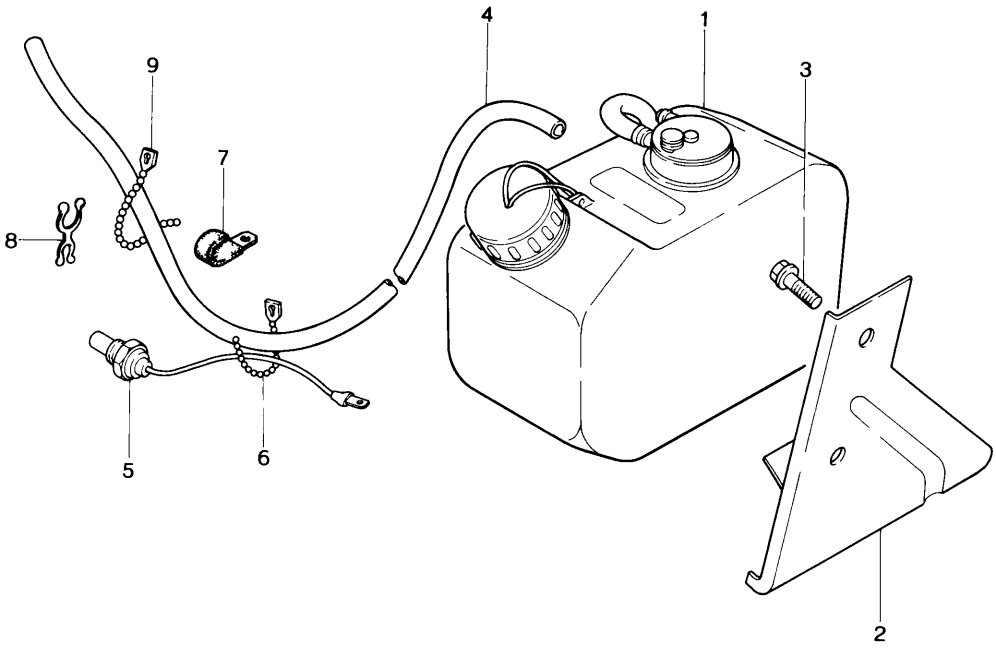
4
1
9
3
7
8
5
6
2

STARTING ASSIST SYSTEM 13

No	Part Number	Description	Q'ty	Remarks
1	1757 13 510A	Tank, Starting Fluid	1	
2	1881 13 515A	Bracket, Tank	1	
3	99786 0612	Screw, Tank Bracket	2	
4	1757 13 527B	Hose	1	
5	1668 13 531A	Unit, Thermo	1	
6	99709 0108	Band	1	
7	99276 1008	Clip	1	
8	99288 0808B	Clip	1	
9	99709 0255	Band	1	

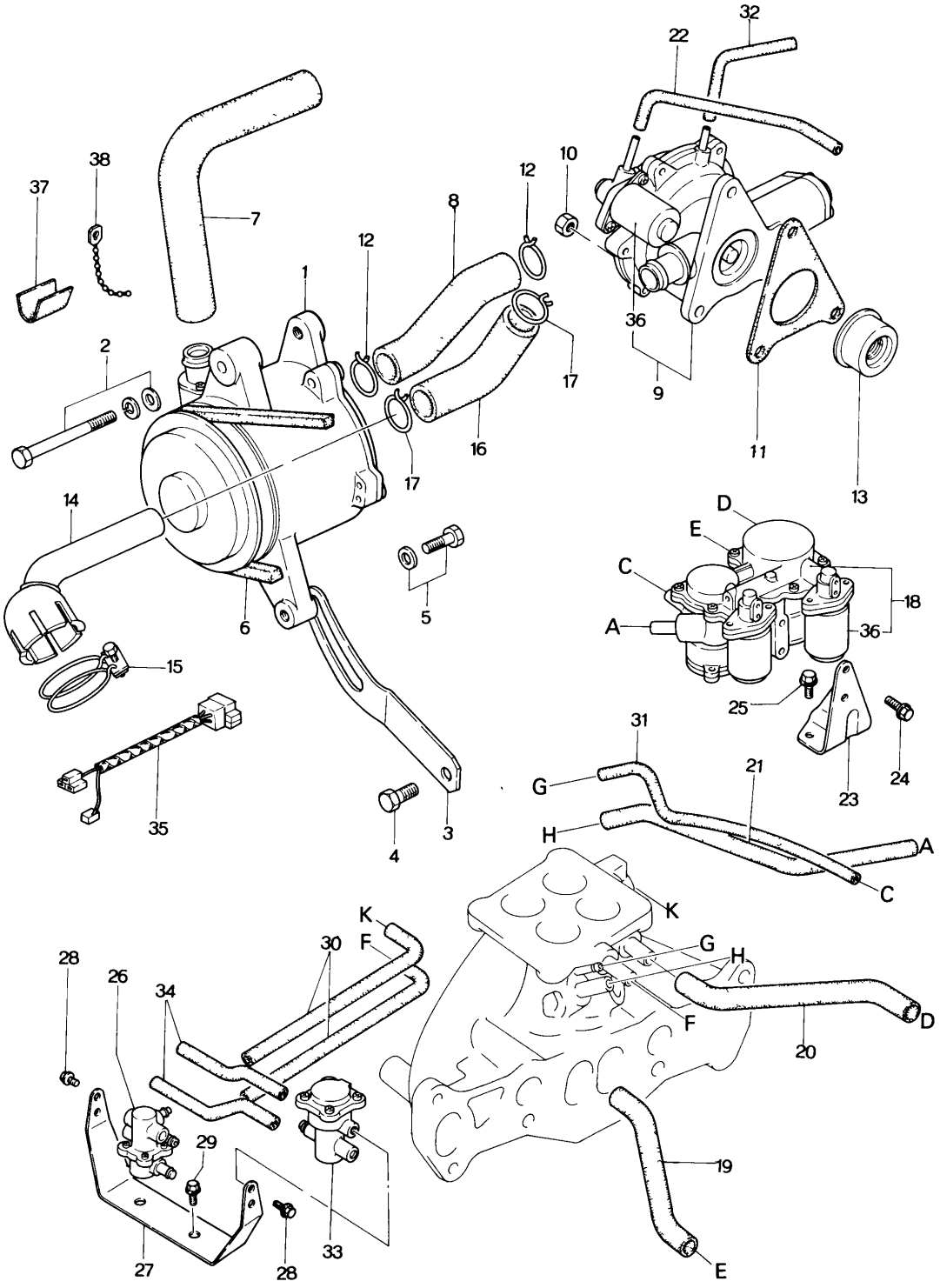
32
22
10
12
38
37
7
8
12
1
2
36
9
17
16
17
11
13
14
D
E
C
18
A
36
6
5
15
25
24
31
21
G
23
H
A
C
35
4
3
K
K
30
F
G
H
28
26
34
F
D
20
29
19
27
28
33
E

No.	Part Number	Description	Q'ty	Remarks
1	1757 13 710	Pump, Air	1	
2	99803 08100	Bolt, Air Pump	1	
	99952 0800	Washer, Plain	1	
	99971 0800	Washer, Spring	1	
3	1757 13 714	Strap, Air Pump	1	
4	99796 0814	Bolt, Strap	1	
5	99796 0820	Bolt, Strap	1	
	99952 0822	Washer, Plain	1	
6	1757 13 715	Belt, "V" - Air Pump	1	
7	1757 13 717	Hose, Air - Air Pump ~ Air Cleaner	1	
8	1757 13 718	Hose, Air - A. C. Valve ~ Air Pump	1	
9	1757 13 720	Valve, Air Control (Fig. No. 36 included) (Manual)	1	
	1758 13 720	Valve, Air Control (Fig. No. 36 Included) (Automatic)	1	
10	99940 0601	Nut, Air Control Valve	3	
11	1757 13 724	Gasket, Air Control Valve	1	
12	2329 13 726	Clip, Air Hose	2	
13	1758 13 730	Valve, Check	1	
14	1757 13 740	Pipe, Air - Reactor Side	1	
15	99282 4309	Band, Hose - Air Pipe	1	
16	1757 13 744	Hose, Air - Reactor ~ A. C. Valve	1	

No	Part Number	Description	Q'ty	Remarks
17	2090 13 746	Clip, Air Hose	2	
18	1757 13 750	Valve, Deceleration Control (Fig. No. 36 Included)	1	
19	1757 13 752	Hose, Air - D. C. Valve ~ Air Cleaner	1	
20	1757 13 753	Hose, Air - D. C. Valve ~ IN. Manifold	1	
21	1757 13 754A	Hose, Air - D. C. Valve ~ IN. Manifold	1	
22	2329 13 754A	Tube, Balance - A. C. Valve ~ Carburettor	1	
23	1757 13 757	Supporter, D. C. Valve	1	
24	99796 0610	Bolt, Supporter + D. C. Valve	2	
25	99796 0812	Bolt, D. C. Valve Supporter	2	
26	1757 13 770A	Compensator, Altitude	1	
27	1757 13 772A	Bracket, Alt. Compensator & E. C. Valve	1	
28	99796 0610	Bolt, Alt. Compensator & E. C. Valve	4	
29	99796 0812	Bolt, Bracket	2	
30	99346 08190	Hose, Air - Alt. Compensator ~ Carburettor & IN. Manifold	2	Order Under No. 99343 081 (15 m)
31	1757 13 778	Tube, Vacuum - D. C. Valve ~ IN. Manifold	1	
32	99340 04200	Hose, Air - A. C. Valve ~ Air Cleaner	1	Order Under No. 99344 061 (15 m)
33	1757 13 910	Valve, E. C.	1	
34	1757 13 912	Hose, Air - Alt. Compensator ~ E. C. Valve	2	
35	1757 18 860	Wiring, Valve	1	
36	1757 23 725	Valve, Solenoid	3	

No	Part Number	Description	Q'ty	Remarks
37	0208 66 949	Pad, Protector - Valve Wiring	1	
38	99709 0108	Band, Valve Wiring	1	

14 OIL PUMP

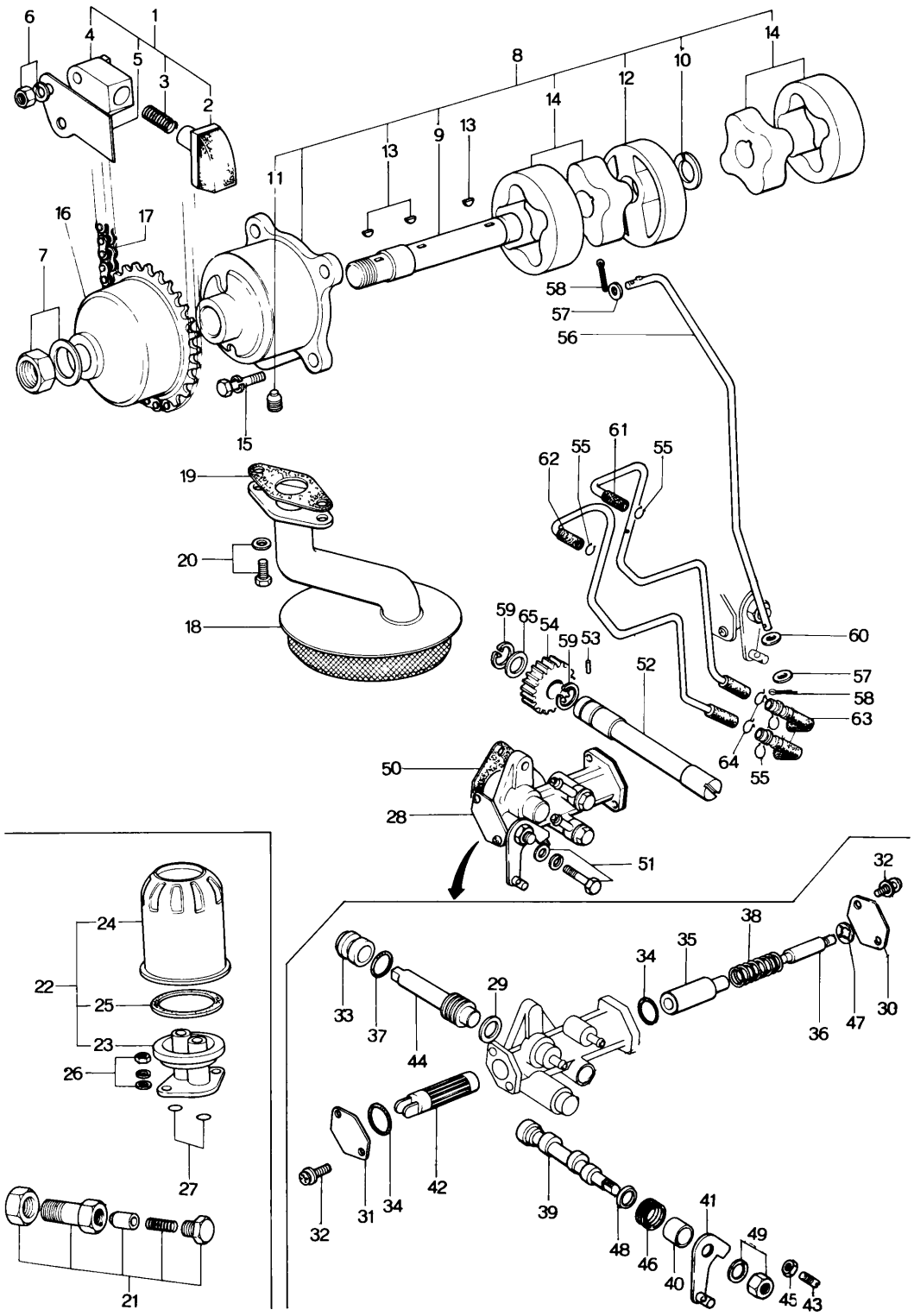
6
4
1
5
3
2
8
14
12
10
14
13
9
13
11
16
17
7
58
57
56
15
19
61
62
55
55
20
18
59
65
54
59
53
52
60
57
58
63
64
55
50
28
51
32
24
22
25
23
26
27
21
38
35
34
33
37
29
44
36
47
30
42
31
34
32
39
48
46
41
40
49
45
43

No.	Part Number	Description	Q'ty	Remarks
1	1757 14 020	Adjuster, Chain	1	
2	0823 14 130	Adjuster	1	
3	0823 14 131	Spring	1	
4	1757 14 132	Body	1	
5	0839 14 133	Plate, Guide	1	
6	99906 0600	Nut, Chain Adjuster	2	
	99971 0600	Washer, Spring	2	
7	99922 1200	Nut, Oil Pump Drive Gear	1	
	99979 1200	Washer, Tab	1	
8	1757 14 100	Pump, Oil	1	
9	1757 14 112	Shaft, Oil Pump	1	
10	0810 14 113	Ring, Snap	1	
11	0839 14 117	Bolt, Lock	1	
12	0820 14 118C	Plate, Middle - Oil Pump	1	
13	0839 14 119B	Key	3	
14	0820 23 882A	Rotor Set, Oil Pump	2	
15	99806 0618	Bolt, Oil Pump	4	

14 OIL PUMP

No	Part Number	Description	Q'ty	Remarks
	99952 0600	Washer, Plain	4	
	99971 0600	Washer, Spring	4	
16	0839 14 141A	Gear, Drive - Oil Pump	1	
17	0839 14 142	Chain	1	
18	0866 14 160E	Strainer, Oil	1	
19	0810 14 171	Gasket, Oil Strainer	1	
20	99806 0614	Bolt, Oil Strainer	2	
	99971 0600	Washer, Spring	2	
21	0820 14 250D	Regulator, Pressure	1	
22	0839 14 300	Filter, Oil	1	
23	0839 23 801	Cover	1	
24	0813 23 802B	Cartridge, Oil Filter	1	
25	0813 23 803	Gasket	1	
26	99901 0800	Nut, Oil Filter	2	
	99953 0800	Washer, Plain	2	
	99971 0800	Washer, Spring	2	
27	99541 01601	Ring, "O" - Oil Filter	2	

No	Part Number	Description	Q'ty	Remarks
28	1757 14 600	Pump, Metering Oil	1	
29	0820 23 832B	Washer, Thrust	1	
30	0820 23 833B	Plate, Cam Casing	1	
31	0820 23 834B	Plate, Cam Casing	1	
32	99833 0408	Screw, Cam Casing Plate	4	
	99971 0400	Washer, Plain	4	
33	0820 23 835A	Bearing, Worm	1	
34	0730 23 837	Ring, "O"	2	
35	1011 23 837	Plunger, Sub	1	
36	1011 23 838	Plunger, Differential	1	
37	0730 23 839	Ring, "O"	1	
38	0820 23 840	Spring, Plunger	1	
39	1011 23 841	Pin, Control	1	
40	0820 23 842	Cap	1	
41	1757 23 844	Lever, Control	1	
42	0730 23 845	Plunger	1	
43	0820 23 845A	Screw, Adjust	1	
44	0730 23 846	Bearing, Worm	1	
45	0820 23 847A	Nut, Adjust Screw	1	
46	0820 23 848A	Spring, Return	1	

No	Part Number	Description	Q'ty	Remarks
47	2090 23 853	Nut, Push	1	
48	0730 23 854	Ring, "V"	1	
49	99907 0600	Nut, Control Lever	1	
	99971 0600	Washer, Spring	1	
50	1757 14 611	Gasket, Metering Oil Pump	1	
51	99806 0618	Bolt	2	
	99953 0600	Washer, Plain	2	
	99971 0600	Washer, Spring	2	
52	0820 14 620A	Shaft, Driven Gear	1	
53	0813 14 623	Pin, Driven Gear	1	
54	0820 14 625A	Gear, Driven	1	
55	0813 14 641	Clip, Metering Oil Tube	4	
56	1757 14 651	Rod, Connecting	1	
57	99953 0400	Washer, Plain	1	
58	99221 1212	Pin, Split	2	
59	99576 0800	Ring, Snap - Driven Gear Shaft	2	
60	1757 14 652	Shim, Metering Adjust (t = 1.0)	1	
	1757 14 653	Shim, Metering Adjust (t = 2.0)	Selective use 1	
	1757 14 654	Shim, Metering Adjust (t = 3.0)	1	

No	Part Number	Description	Q'ty	Remarks
61	1757 14 660	Tube, Metering Oil	1	
62	1757 14 670	Tube, Metering Oil	1	
63	1757 14 680	Valve, Check	2	
64	1011 14 683	Clip, Metering Oil Tube + Check Valve	2	
65	0810 18 276	Shim, Adjust (t = 0.6)	2	Selective use
	0810 18 277	Shim, Adjust (t = 0.3)	2	Selective use

14 15 COOLING SYSTEM

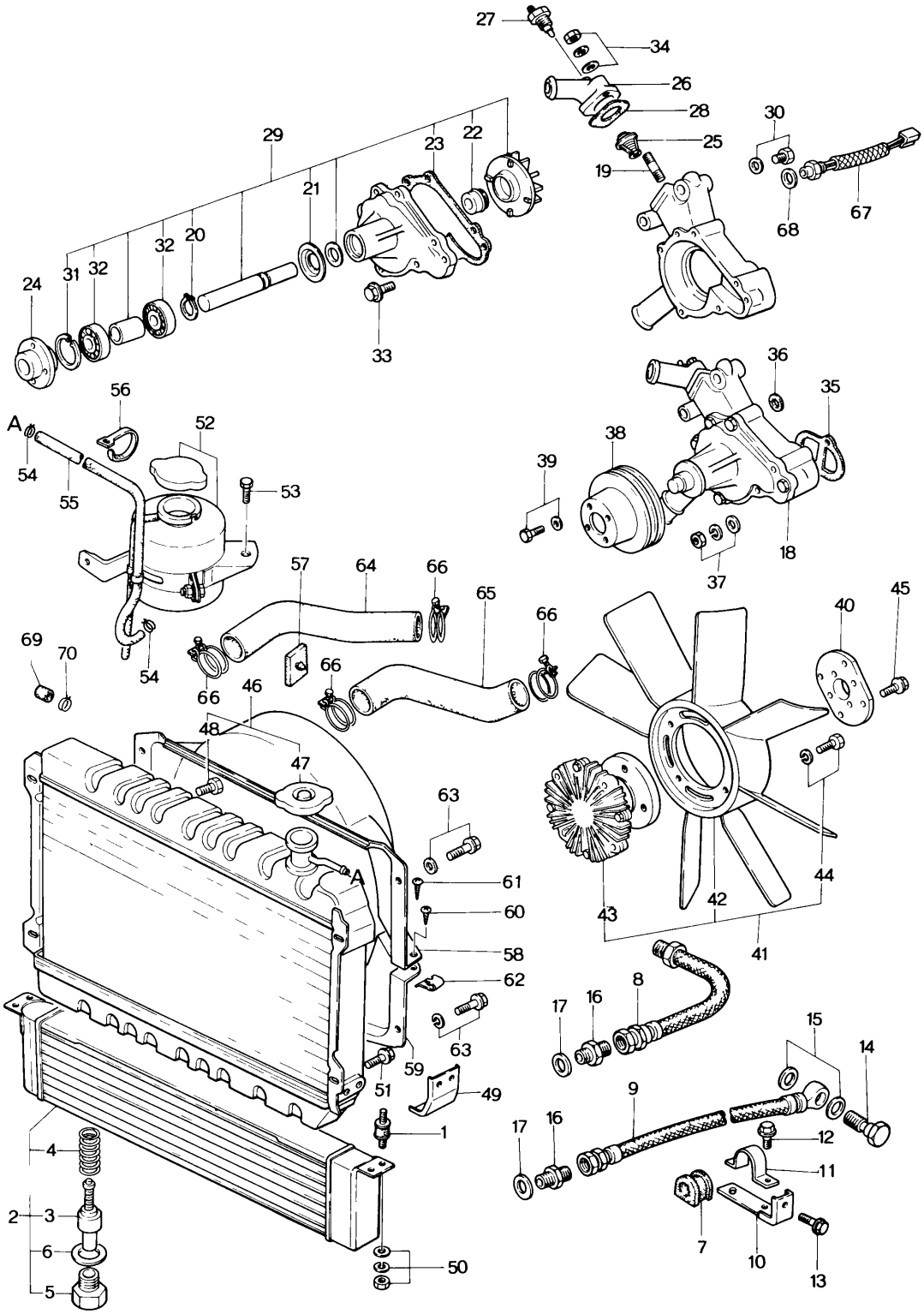

No	Part Number	Description	Q'ty	Remarks
1	0222 13 363	Rubber, Insulation	4	
2	1854 14 700	Cooler, Oil	1	
3	1757 14 810	Pellet, Thermo	1	
4	1757 14 821	Spring, Pellet	1	
5	1757 14 822	Nut, Stopper	1	
6	1757 14 823	Gasket	1	
7	0813 14 716	Protector, Oil Hose	1	
8	0865 14 720	Hose, Oil	1	
9	1570 14 730A	Hose, Oil	1	
10	1757 14 740	Bracket, Oil Hose	1	
11	0839 14 745	Clip, Oil Hose	1	
12	99806 0616	Bolt, Clip	1	
	99971 0600	Washer, Spring	1	
13	99796 0810	Bolt, Bracket	1	
14	99381 1400	Bolt, Connector - Oil Hose	1	
15	99562 1800	Gasket	2	
16	99384 1200F	Joint, Union	2	
17	99564 1600	Gasket	2	

14 15 COOLING SYSTEM

No.	Part Number	Description	Q'ty	Remarks
18	1757 15 010B	Pump, Water	1	
19	2090 15 104	Stud	2	
20	1757 15 114	Ring, Snap	1	
21	1757 15 118	Plate, Dust Seal	1	
22	1757 15 120	Seal, Water	1	
23	1757 15 132	Gasket, Pump Cover	1	
24	1757 15 152A	Boss, Pulley	1	
25	0823 15 171	Thermostat	1	
26	1907 15 170	Cover, Thermostat (Fig. No. 27 included)	1	
27	1114 61 581	Switch, Water Thermo	1	
28	0813 15 173	Gasket, Thermostat	1	
29	1757 99 150	Repair Kit, Water Pump	1	
30	99511 1200	Plug	1	
	99562 1200	Gasket	1	
31	99574 4000	Ring, Retaining	1	
32	99606 72030	Bearing, Ball	2	
33	99796 0820	Bolt, Pump Cover	2	
	99971 0800	Washer, Spring	2	
34	99901 0800	Nut, Thermostat Cover	2	
	99953 0800	Washer, Plain	2	

No	Part Number	Description	Q'ty	Remarks
	99971 0800	Washer, Spring	2	
35	1757 15 105	Gasket, Water Pump	1	
36	0820 15 106	Gasket	2	
37	99901 0800	Nut, Water Pump	4	
	99971 0800	Washer, Spring	4	
38	1757 15 151A	Pulley, Water Pump	1	
39	99796 0620	Bolt	4	
40	1907 15 211	Spacer, Fan Drive	1	
41	1907 15 250A	Fan & Fan Drive	1	
42	1097 15 200	Fan, Cooling	1	
43	1907 15 210	Fan Drive	1	
44	99806 0620	Bolt, Fan & Fan Drive	4	
	99971 0600	Washer, Spring	4	
45	99796 0620	Bolt, Fan Drive	4	
46	1854 15 310A	Radiator (Manual)	1	
	1856 15 310A	Radiator (Automatic)	1	

No	Part Number	Description	Q'ty	Remarks
47	0223 15 205	Cap	1	
48	1011 15 317	Cock, Water Drain	1	
49	1854 15 312	Bracket, Radiator & Oil Cooler	2	
50	99901 0600	Nut, Bracket	8	
	99952 0600	Washer, Plain	8	
	99971 0600	Washer, Spring	8	
51	99786 0816	Bolt, Radiator	4	
	99952 0800	Washer, Plain	4	
52	1854 15 350A	Tank, Sub	1	
53	99786 0814	Bolt, Sub Tank	1	
	99952 0822	Washer, Plain	1	
54	99285 0800	Clip, Water Hose	2	
55	1854 15 351A	Hose, Water - Sub Tank	1	
56	99289 0701	Clip, Water Hose	2	
57	0187 56 235	Supporter, Sub Tank	1	
58	1854 15 411A	Shroud, Radiator - Upper	1	
59	1854 15 421	Shroud, Radiator - Lower	1	
60	99863 0516	Bolt	4	
	99952 0500	Washer, Plain	4	

No	Part Number	Description	Q'ty	Remarks
61	99860 0514	Bolt	1	
	99952 0500	Washer, Plain	1	
62	0820 56 905	Nut, Spring	5	
63	99796 0812	Bolt, Radiator Shroud	4	
	99952 0800	Washer, Plain	4	
64	1854 15 511	Hose, Water - Thermostat ~ Radiator	1	
65	1854 15 521	Hose, Water - Radiator ~ Water Pump	1	
66	99282 4900	Band, Hose - Water Hose	4	
67	1757 18 880	Switch, Temperature	1	
68	99564 1600	Gasket	1	
69	0864 61 061A	Cover	1	Without Car Heater
70	99282 2600	Band, Hose	1	Without Car Heater

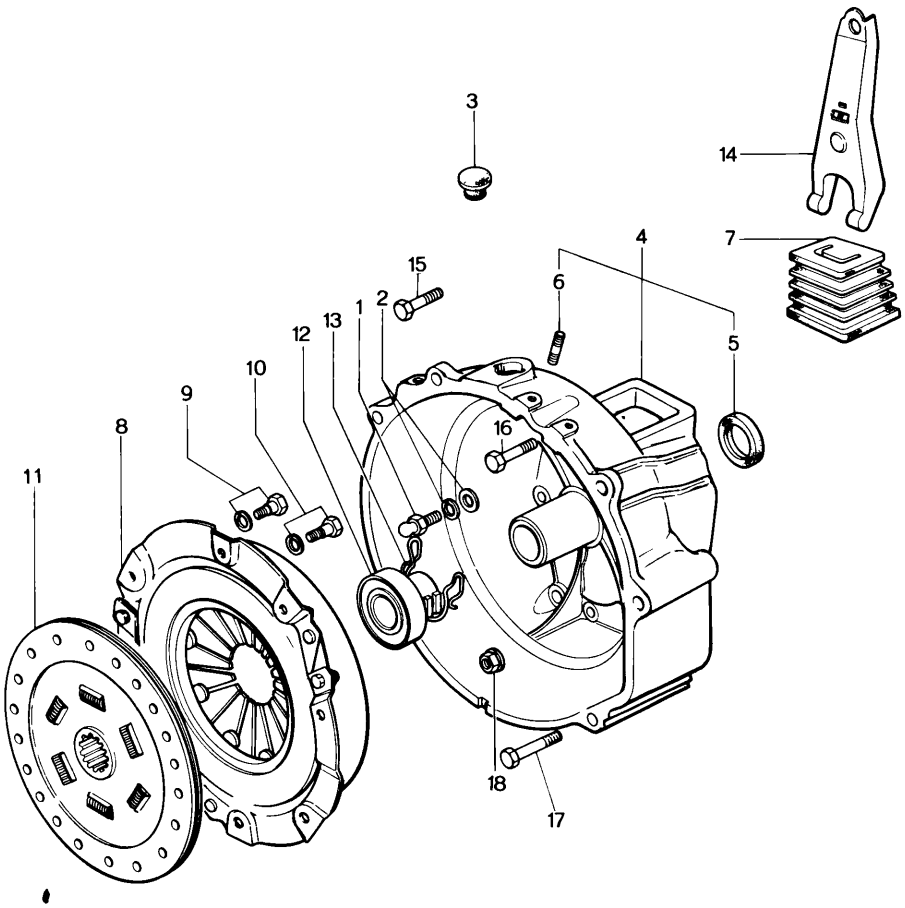
3
14
7
4
15
6
2
1
13
12
10
9
8
11
5
16
18
17

No	Part Number	Description	Q'ty	Remarks
1	0603 16 102B	Pin, Pivot	1	
2	99953 1000	Washer, Plain	1	
	99971 1000	Washer, Spring	1	
3	0813 16 112	Cover, Top Hole	1	
4	1881 16 210A	Housing, Clutch	1	
5	0603 16 103	Oil Seal	1	
6	0222 16 105	Stud	2	
7	0866 16 214A	Cover, Dust	1	
8	0895 16 410	Cover, Clutch	1	
9	0839 16 432	Bolt, Reamer - Clutch Cover	2	
	99971 0800	Washer, Spring	2	
10	99753 78118	Bolt, Clutch Cover	4	
	99971 0800	Washer, Spring	4	
11	0895 16 460	Disc, Clutch	1	
12	0820 16 510	Collar, Clutch Release	1	
13	0820 16 515	Spring, Clutch Release Collar	1	
14	0454 16 520	Fork, Clutch Release	1	
15	99796 1045	Bolt, Clutch Housing	1	

No	Part Number	Description	Q'ty	Remarks
16	99796 1035	Bolt, Clutch Housing	2	
17	99796 1090	Bolt, Clutch Housing	1	
18	99940 1001	Nut, Clutch Housing	8	

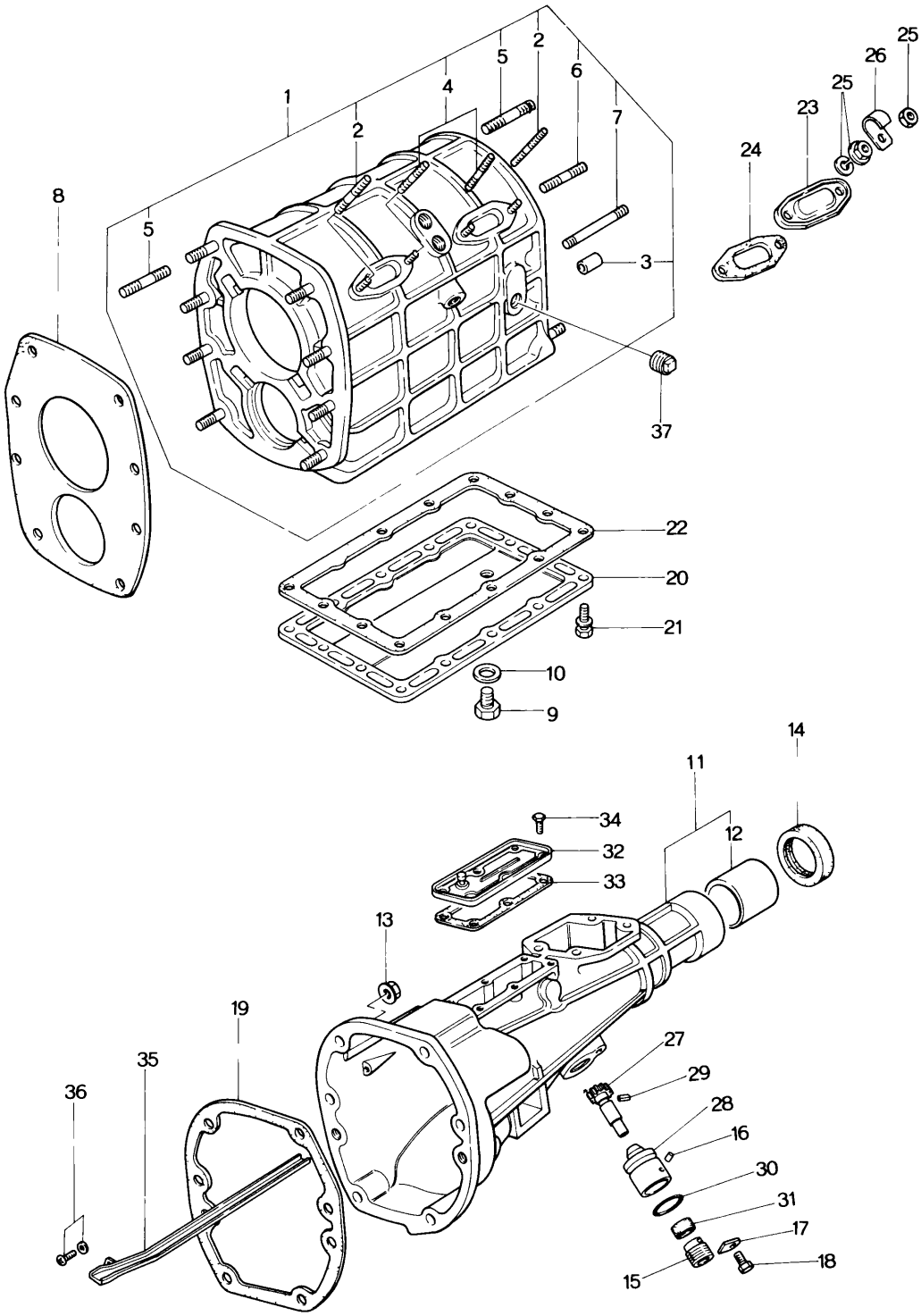
1
2
4
5
2
6
7
8
5
3
37
22
20
21
10
9
24
23
25
26
25
14
11
12
34
32
33
13
19
35
36
27
29
28
16
30
31
17
18
15

MANUAL T/MISSION (CASE) 17

No	Part Number	Description	Q'ty	Remarks
1	1853 17 100A	Case, T/mission	1	
2	0839 17 105	Stud, Blind Cover	2	
3	99233 1225	Pin, Knock	2	
4	99852 0610	Stud, Blind Cover	2	
5	99855 1025	Stud	11	
6	99855 1025	Stud	2	
7	99855 1085	Stud	1	
8	0839 17 111	Gasket, T/mission Case Front	1	
9	0810 17 121	Plug, Magnet	1	
10	99564 1800	Gasket, Magnet Plug	1	
11	1853 17 330A	Housing, Extension	1	
12	0398 22 333	Bush, Extension Housing	1	
13	99940 1001	Nut, Extension Housing + T/mission Case	6	
14	0376 17 335	Oil Seal, Extension Housing	1	
15	1011 17 351	Joint, Cable - Speedometer	1	
16	0187 17 352	Pin, Dowel - Speedometer Driven Gear	1	
17	0111 17 354	Plate, Lock - Cable Joint	1	

No	Part Number	Description	Q'ty	Remarks
18	99796 0614	Bolt, Lock Plate	1	
19	1853 17 361	Gasket, Extension Housing	1	
20	0862 17 371	Cover, Under	1	
21	99796 0620	Bolt, Under Cover	14	
22	0862 17 375	Gasket, Under Cover	1	
23	0810 17 381	Cover, Blind	2	
24	0810 17 385	Gasket, Blind Cover	2	
25	99906 0600	Nut, Blind Cover & Clip	6	
	99971 0600	Washer	4	
26	99276 0506	Clip, Wire Harness	2	
27	1011 17 441	Gear, Driven - Speedometer	1	
28	0862 17 442	Sleeve, Driven Gear	1	
29	99222 0216	Pin, Spring - Driven Gear	1	
30	99541 02211	Ring, "O" - Driven Gear	1	
31	99586 10207	Oil Seal, Driven Gear	1	
32	1011 17 530	Cover, Blind	1	
33	1011 17 535	Gasket, Blind Cover	1	
34	99796 0608	Bolt, Blind Cover	6	
35	1011 17 540A	Pass, Oil	1	
36	99806 0614	Bolt, Oil Pass	1	

No	Part Number	Description	Q'ty	Remarks
	99971 0600	Washer, Spring	1	
37	99502 4000	Plug	1	
	1853 89 175	Gasket Set, T/mission	1 Set	
	0839 17 111	Gasket	1	
	1853 17 361	Gasket	1	
	0862 17 375	Gasket	1	
	0810 17 385	Gasket	2	
	0303 17 474	Gasket	1	
	0271 17 478	Gasket	1	
	1011 17 535	Gasket	1	
	99562 1400	Gasket	3	
	99564 1000	Gasket	2	
	99564 1800	Gasket	1	

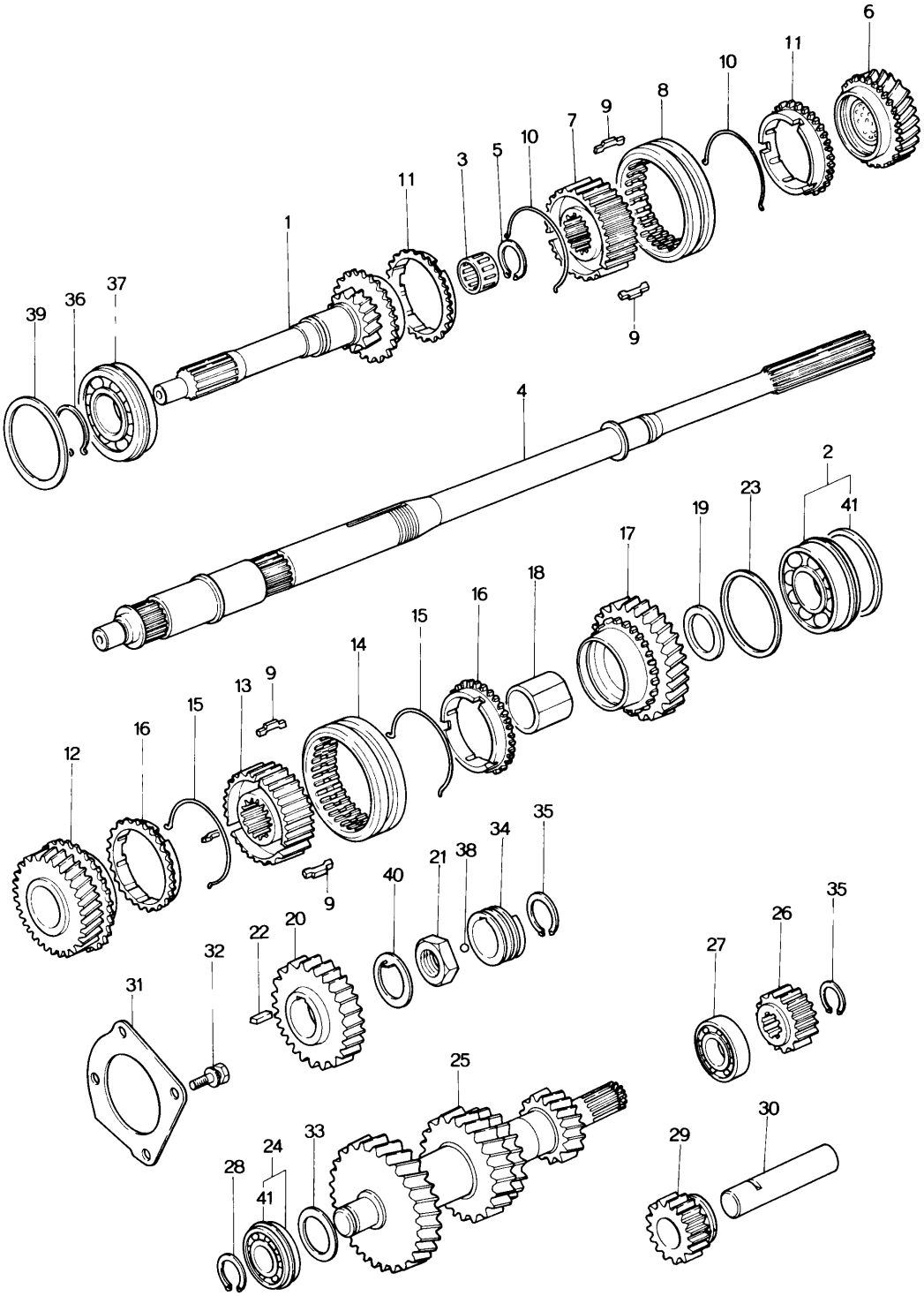
6
11
10
8
9
7
10
5
3
11
1
39
36
37
9
4
2
41
23
19
17
18
16
15
14
9
13
15
16
12
35
34
38
21
40
9
20
22
32
31
35
26
27
25
30
29
33
24
41
28

No	Part Number	Description	Q'ty	Remarks
1	1853 17 201	Gear, Main Drive	1	
2	0810 17 204	Bearing, Ball (Fig. No. 41 Included)	1	
3	0810 17 205	Bearing, Needle Roller	1	
4	1011 17 221A	Shaft, Main	1	
5	0317 17 225	Ring, Snap	1	
6	1853 17 230	Gear, (3rd)	1	
7	1853 17 241	Hub, Clutch (3rd & 4th)	1	
8	1853 17 242	Sleeve, Clutch Hub (3rd & 4th)	1	
9	1853 17 243	Key, Synchronizer	6	
10	1853 17 244	Spring, Synchronizer	2	
11	1853 17 245	Ring, Synchronizer	2	
12	1853 17 250	Gear, (2nd)	1	
13	1853 17 261A	Hub, Clutch (1st & 2nd)	1	
14	1853 17 262	Sleeve, Clutch Hub (1st & 2nd)	1	
15	1853 17 264	Spring, Synchronizer	2	
16	1853 17 265	Ring, Synchronizer	2	
17	1853 17 270	Gear, (1st)	1	
18	0839 17 275	Sleeve, Gear	1	
19	0839 17 276	Washer, Thrust (ℓ = 2.5)	Selective Use	1
	0839 17 277	Washer, Thrust (ℓ = 3.0)		

No	Part Number	Description	Q'ty	Remarks
	0839 17 278	Washer, Thrust (ℓ = 3.5)		
20	0839 17 281	Gear, Reverse	1	
21	0839 17 284	Nut, Lock	1	
22	0839 17 285	Key	1	
23	0839 17 287	Shim, Adjust (t = 0.1)	2	Selective use
	0839 17 288	Shim, Adjust (t = 0.3)	1	
24	0821 17 297	Bearing, Ball (Fig. No. 41 included)	1	
25	1853 17 301	Gear, Counter Shaft	1	
26	1853 17 302	Gear, Reverse - Counter	1	
27	0821 17 303	Bearing, Needle	1	
28	0839 17 305	Ring, Snap	1	
29	1853 17 310	Gear, Idle - Reverse	1	
30	1853 17 313	Shaft, Reverse Idle Gear	1	
31	0839 17 321A	Stopper, Bearing	1	
32	99801 0820	Bolt, Bearing Stopper	4	
	99971 0800	Washer, Spring	4	
33	0305 17 327	Shim, Adjust (t = 0.1)	2	Selective use
	0305 17328	Shim, Adjust (t = 0.3)	1	
34	0862 17 341	Gear, Drive - Speedometer	1	
35	99573 2500	Ring, Snap	2	

No	Part Number	Description	Q'ty	Remarks
36	99573 3500	Ring, Snap	1	
37	99606 33070	Bearing, Ball	1	
38	99611 1500	Ball, Steel	1	
39	99963 6910	Shim, Adjust (t = 0.1)	2	Selective use
	99963 6930	Shim, Adjust (t = 0.3)	1	
40	99978 3200	Washer, Lock	1	
41	0881 22 297	Clip, Ball Bearing (Included in Fig. No. 2 & 24)	1	

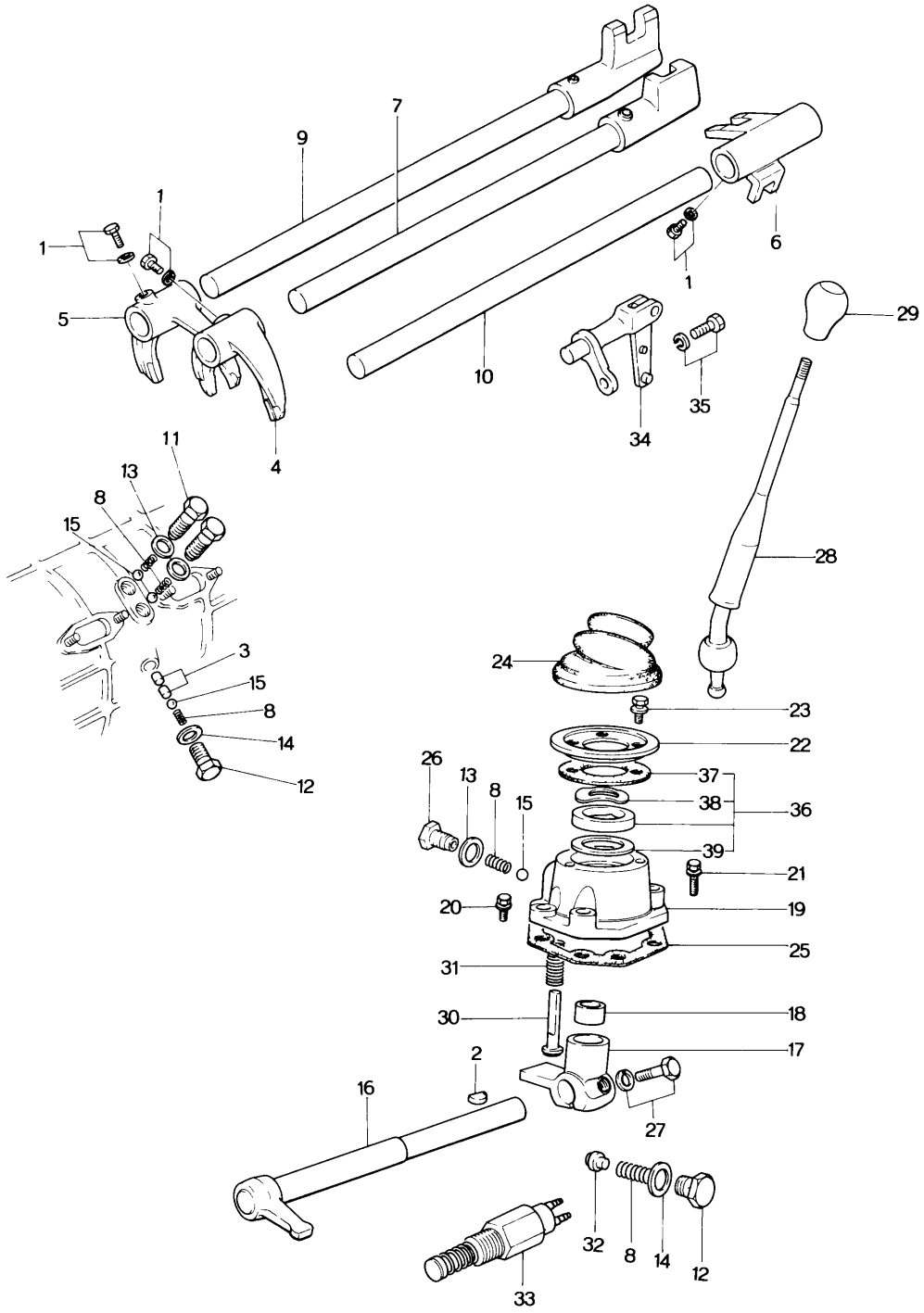
1
1
5
7
9
10
4
6
1
29
35
34
11
13
8
15
28
3
15
8
14
12
24
23
22
26
13
8
15
37
38
36
39
21
20
19
25
31
30
18
17
2
16
27
32
8
14
12
33

MANUAL T/MISSION (CHANGE CONTROLS)

No	Part Number	Description	Q'ty	Remarks
1	0118 17 313	Screw, Shift Fork & Rod	3	
	99971 0601	Washer, Spring	3	
2	0111 17 323	Key, Control Lever	1	
3	0114 17 351	Pin, Interlock	2	
4	1853 17 402	Fork, Shift (1st & 2nd)	1	
5	1853 17 404	Fork, Shift (3rd & 4th)	1	
6	1853 17 406	Fork, Shift (Reverse)	1	
7	1853 17 410	Rod, Shift (1st & 2nd)	1	
8	0103 17 411	Spring, Cap	5	
9	1853 17 420	Rod, Shift (3rd & 4th)	1	
10	1853 17 431	Rod, Shift (Reverse)	1	
11	0221 17 441	Plug, Cap - Spring	2	
12	0259 17 441	Plug, Cap - Spring	2	
13	99562 1400	Gasket, Cap Plug	3	
14	99564 1000	Gasket, Cap Plug	2	
15	99611 2500	Ball, Steel	4	
16	1853 17 450	Lever, Control	1	
17	0398 17 461A	End, Control	1	
18	0398 17 462A	Seat, Spring	1	
19	0303 17 470	Case, Change Control	1	

No	Part Number	Description	Q'ty	Remarks
20	99796 0822	Bolt, Change Control Case	2	
21	99796 0832	Bolt, Change Control Case	2	
22	0221 17 473	Plate, Cover	1	
23	99806 0614	Bolt, Cover Plate	3	
	99971 0600	Washer, Spring	3	
24	0221 17 475B	Boot, Dust	1	
25	0271 17 478	Gasket, Change Control Case	1	
26	0183 17 491	Plug, Cap - Spring	1	
27	0187 17 492	Bolt, Reamer - Control Rod End	1	
	99971 0800	Washer, Spring	1	
28	1853 17 510	Lever, Change	1	
29	1853 17 520	Knob, Change Lever	1	
30	0221 17 551A	Spindle, Select Lock	1	
31	0221 17 552	Spring, Select Lock Spindle	1	
32	0303 17 561	Piece, Friction	1	
33	0376 17 640A	Switch, Reverse Lamp	1	
34	1853 17 800	Lever, Shift	1	
35	99801 0820	Bolt, Shift Lever	1	
	99971 0800	Washer, Spring	1	

No	Part Number	Description	Q'ty	Remarks
36	0305 99 178	Change Bush Set	1	
37	0303 17 474	Gasket, Cover Plate	1	
38	0303 17 482	Washer, Wave	1	
39	99963 3310	Shim } Selective use	3	
	99963 3330	Shim }	1	

DISTRIBUTOR

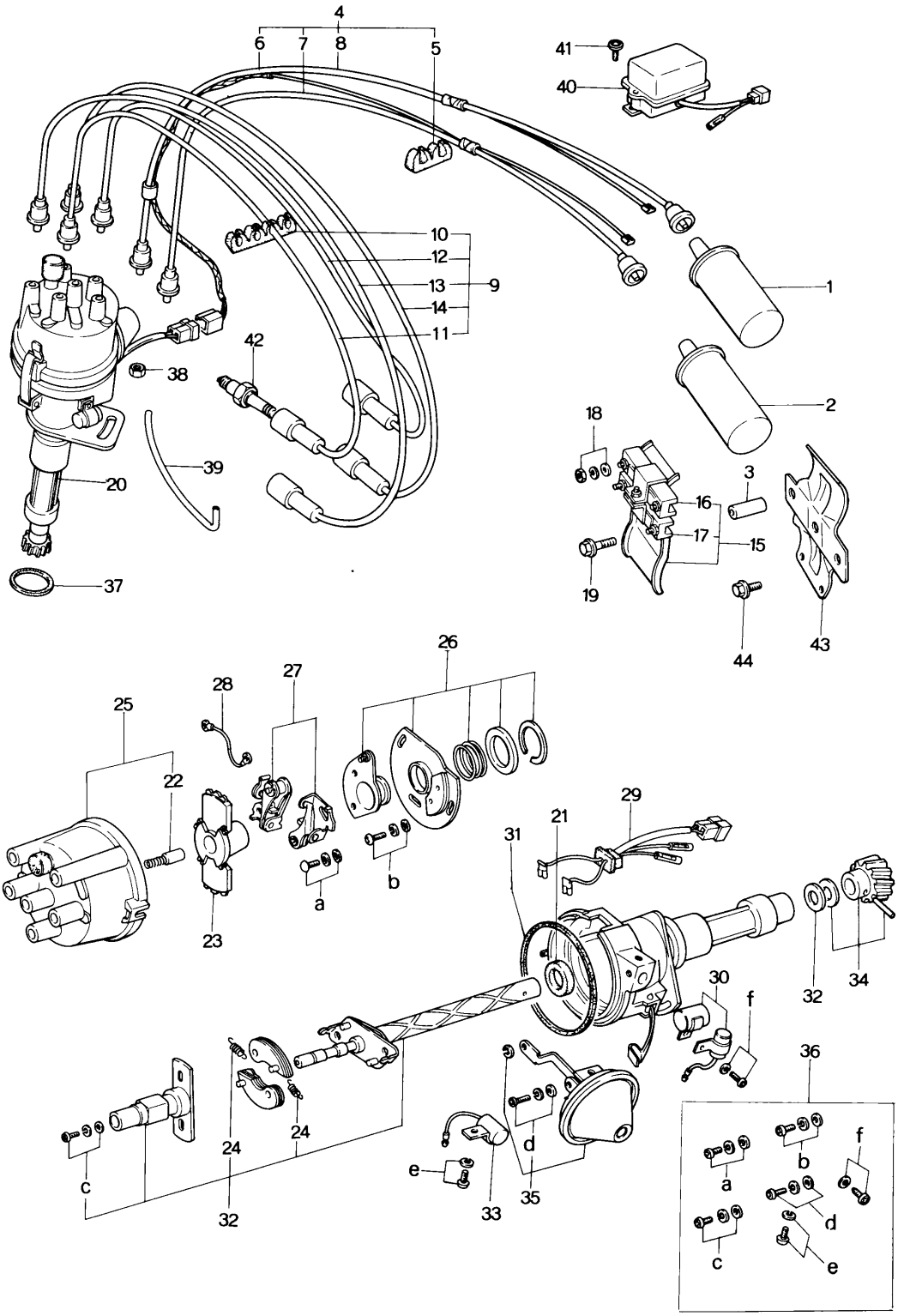

No	Part Number	Description	Q'ty	Remarks
1	1562 18 100	Coil, Ignition (HP 5 - 13E)	1	
2	1672 18 100	Coil, Ignition (HP 5 - 13J)	1	
3	0823 18 107	Pipe	1	
4	1854 18 110A	Cord, High Tension	1	
5	0820 18 111B	Supporter, High Tension	1	
6	1854 18 115	Cord	1	
7	1854 18 120	Cord, High Tension (Trailing)	1	
8	1854 18 160	Cord, High Tension (Leading)	1	
9	1757 18 150C	Cord, High Tensien	1	
10	0820 18 114	Supporter, High Tension	1	
11	1757 18 130A	Cord, High Tension (T - 1)	1	
12	1757 18 140A	Cord, High Tension (T - 2)	1	
13	1757 18 170A	Cord, High Tension (L - 1)	1	
14	1757 18 180A	Cord, High Tension (L - 2)	1	
15	1011 18 190	Bracket, Ignition Coil	1	
16	0845 18 101	Resistor	1	
17	0866 18 101	Resistor	1	

18 24 DISTRIBUTOR

No	Part Number	Description	Q'ty	Remarks
18	99906 0500	Nut, Ignition Coil & Resistor Terminal	6	
	99952 0500	Washer, Plain	6	
	99971 0500	Washer, Spring	6	
19	99786 0850	Bolt, Ignition Coil Bracket	1	
20	1757 18 200A	Distributor (Manual)	1	
	1758 18 200	Distributor (Automatic)	1	
21	0107 18 216A	Oil Seal	1	
22	1757 24 302	Contact	1	
23	1757 24 303	Rotor	1	
24	1757 24 308	Spring Set	1	
25	1757 24 310	Cap	1	
26	1757 24 313	Base, Breaker	1	
27	1757 24 314	Support, Arm	2	
28	1757 24 317	Wire (E), Lead	1	
29	1757 24 319	Wire, Lead	1	
30	1757 24 322	Condenser	2	
31	1757 24 328	Gasket	1	
32	1757 24 330	Governor Set	1	
33	1757 24 334	Condenser	1	

No	Part Number	Description	Q'ty	Remarks
34	1757 24 340	Coupling Set	1	
35	1757 24 350	Vacuum Set (Manual)	1	
	1758 24 350	Vacuum Set (Automatic)	1	
36	1757 24 360	Screw Set	1	
37	99541 0350	Ring, "O" - Distributor	1	
38	99940 0603	Nut, Distributor	1	
39	99340 06350	Tube, Vacuum Control	1	
40	0453 18 391	Regulator	1	
41	99797 0612	Bolt	2	
	99952 0600	Washer, Plain	2	
	99971 0600	Washer, Spring	2	
42	1757 18 600	Plug, Spark (STD)	4	
	1758 18 600	Plug, Spark (Cold Type)	4	
43	1011 18 810	Bracket, Ignition Coil	1	
44	99786 0612	Screw, Bracket	2	

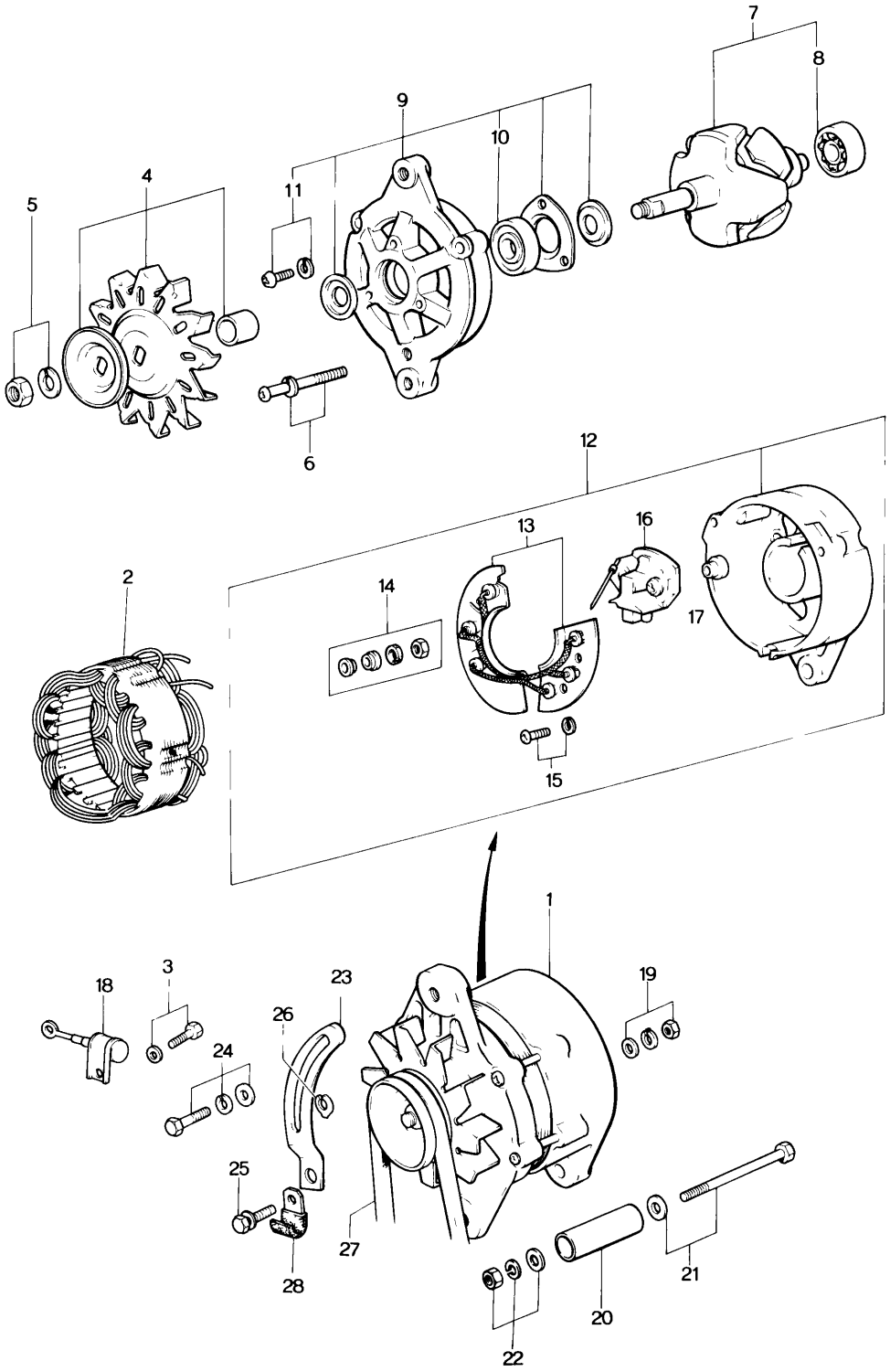
7
8
9
10
11
4
5
6
12
13
16
14
17
2
15
1
18
3
23
19
26
24
25
27
28
20
21
22

ALTERNATOR 18 24

No	Part Number	Description	Q'ty	Remarks
1	1011 18 300	Alternator	1	
2	1011 24 501	Stater	1	
3	1011 24 527	Screw	1	
4	0866 24 530	Pulley	1	
5	0866 24 533	Nut Set	1	
6	0866 24 535	Screw Set	1	
7	0866 24 540	Rotor (Fig. No. 8 included)	1	
8	0820 24 503	Bearing	1	
9	0866 24 550	Bracket, Front (Fig. No. 10 & 11 included)	1	
10	0208 24 514	Bearing	1	
11	0866 24 526	Screw	3	
12	1011 24 560	Bracket, Rear (Fig. No. 13 ~ 17 included)	1	
13	1011 24 510	Rectifier Ass'y	1	
14	1011 24 533	Nut Set	1	
15	1011 24 534	Screw	1	
16	1011 24 541	Holder, Brush	1	
17	1011 24 563	Mould	1	
18	0290 24 581	Condenser	1	
19	99906 0500	Nut, Alternator Terminal	1	

No	Part Number	Description	Q'ty	Remarks
	99952 0500	Washer, Plain	1	
	99971 0500	Washer, Spring	1	
20	1757 18 311	Bracket, Alternator	1	
21	99800 10115	Bolt, Alternator	1	
22	99940 1001	Nut, Alternator	1	
23	1881 18 361	Strap, Alternator	1	
24	99796 0825	Bolt, Strap	1	
25	99796 0820	Bolt, Strap	1	
	99952 0822	Washer, Plain	1	
26	0222 18 375	Shim (t = 0.3)		
	0222 18 376	Shim (t = 0.5) Selective use	1	
	0222 18 377	Shim (t = 0.7)		
27	1672 18 381A	Belt, "V"	1	
28	99276 2008	Clip, Wire Harness	1	

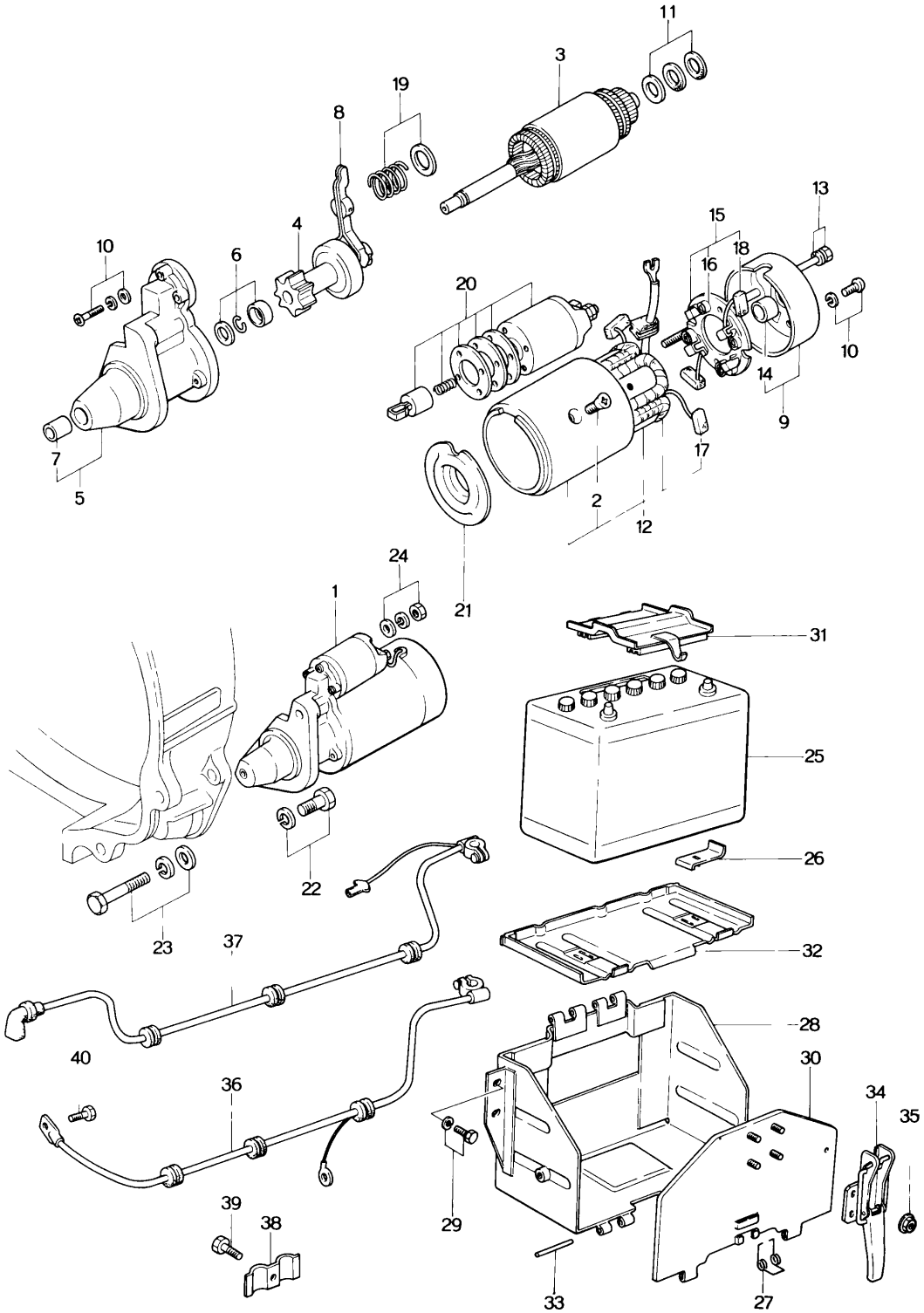
11
3
19
8
4
10
6
13
15
18
16
20
10
14
9
7
5
17
2
12
24
1
21
31
25
26
22
23
37
32
40
28
30
36
34
35
39
38
29
33
27

STARTER & BATTERY 18 24

No	Part Number	Description	Q'ty	Remarks
1	1757 18 400A	Starter (Manual)	1	
	1758 18 400	Starter (Automatic)	1	
2	0866 24 704	Screw	4	
3	1757 24 705	Armature (Manual)	1	
	1758 24 705	Armature (Automatic)	1	
4	1757 24 709	Clutch, Over Running	1	
5	1757 24 710	Bracket, Front (Manual)	1	
	1758 24 710	Bracket, Front (Automatic)	1	
6	0426 24 712	Stopper Set, Piston	1	
7	0426 24 715	Sleeve	1	
8	0866 24 716	Lever	1	
9	0845 24 720	Bracket, Rear	1	
10	0426 24 725	Screw Set	1	
11	0426 24 726	Washer Set (Manual)	1	
	1758 24 726	Washer Set (Automatic)	1	
12	1757 24 730	Yoke (Manual)	1	
	1758 24 730	Yoke (Automatic)	1	
13	0426 24 731	Bolt Set (Manual)	1	
	1758 24 731	Bolt Set (Automatic)	1	
14	0222 24 741	Sleeve	1	

18 24 STARTER & BATTERY

No	Part Number	Description	Q'ty	Remarks
15	0222 24 750	Holder (Manual)	1	
	1758 24 750	Holder (Automatic)	1	
16	0222 24 752A	Spring, Brush	4	
17	0222 24 753	Brush	2	
18	0426 24 753	Brush	2	
19	0426 24 754	Spring Set	1	
20	0324 24 760	Switch, Starter (Manual)	1	
	1758 24 736	Switch, Starter (Automatic)	1	
21	1758 24 706	Bracket, Center (Automatic)	1	
22	99801 1035	Bolt, Starter	1	
	99971 1000	Washer, Spring	1	
23	99803 10120	Bolt, Starter	1	
	99953 1000	Washer, Plain	1	
	99971 1000	Washer, Spring	1	
24	99901 0800	Nut, Starter Terminal	1	
	99952 0800	Washer, Plain	1	
	99971 0800	Washer, Spring	1	
25	1620 18 520	Battery (N70Z) (G.S. Make)	1	Selective use (Manual & Automatic, U.S.A.)
	1672 18 520	Battery (N70Z) (National Make)	1	

No	Part Number	Description	Q'ty	Remarks
	1689 18 520	Battery (Y110-5) (Uwasa Make) (Automatic, Canada)	1	
26	1859 38 551	Stopper, Battery (Automatic, Canada)	2	
27	1854 38 555A	Spring, Battery Carrier	1	
28	1854 38 560B	Carrier, Battery	1	
29	99784 1016	Bolt, Battery Carrier	4	
	99952 1000	Washer, Plain	4	
30	1854 38 570A	Cover, Front - Battery	1	
31	1854 38 580A	Cover, Upper - Battery	1	
32	1854 38 590	Tray, Battery	1	
33	99225 0563	Pin, Battery Carrier	4	
34	1854 38 880	Lock, Battery Carrier	1	
35	99940 0803	Nut, Lock	4	
36	0605 66 721	Wire, Battery Earth	1	
37	1854 67 100A	Cable, Battery Positive	1	
38	1011 67 293	Clip, Battery Positive Cable	1	
39	99786 0612	Bolt, Clip	1	
40	99786 0616	Bolt, Battery Earth Wire	1	

AUTOMATIC T/MISSION

(CONVERTER, OIL PUMP & PIPING)

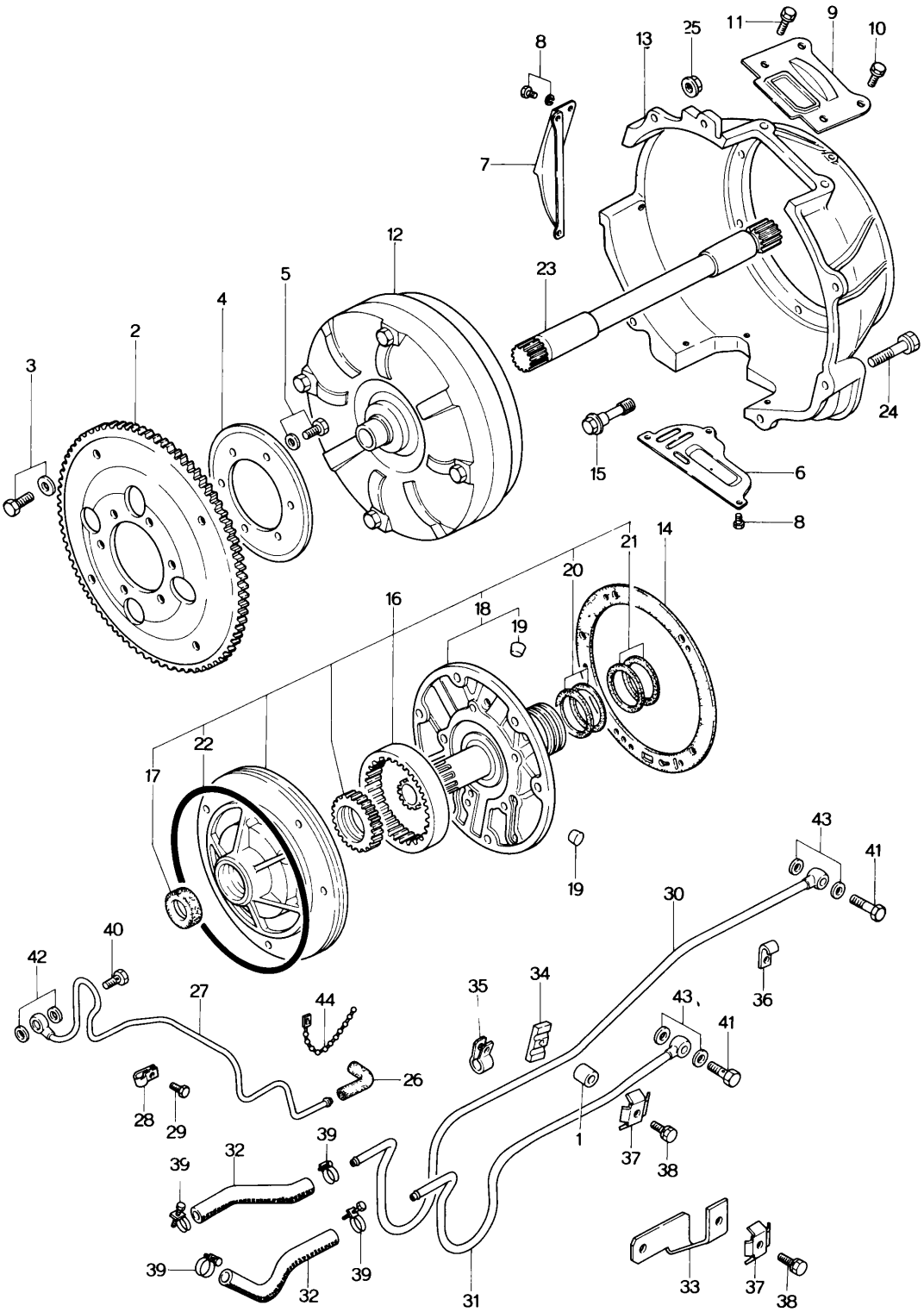

AUTOMATIC T/MISSION
(CONVERTER, OIL PUMP & PIPING)

No	Part Number	Description	Q'ty	Remarks
1	2850 13 331	Spacer, Oil Pipe	1	
2	1758 19 020	Plate, Drive	1	
3	99781 1012	Bolt, Drive Plate	4	
	99971 1000	Washer, Spring	4	
4	0842 19 025	Plate, Backing	1	
5	99781 1018	Bolt, Backing Plate	6	
	99971 1000	Washer, Spring	6	
6	1908 19 027	Cover, Under	1	
7	0454 19 028	Cover, Side	1	
8	99796 0610	Bolt, Under & Side Cover	7	
9	1758 19 028	Cover, Top	1	
10	99796 0610	Bolt, Top Cover	1	
11	99796 0816	Bolt, Top Cover	2	
12	0338 19 100A	Converter, Torque	1	
13	1758 19 211	Housing, Converter	1	
14	1758 19 215	Gasket, Oil Pump	1	
15	0338 19 216	Bolt, Housing	6	
16	1758 19 220	Pump, Oil	1	
17	0338 19 223	Oil Seal	1	

AUTOMATIC T/MISSION
(CONVERTER, OIL PUMP & PIPING)

No	Part Number	Description	Q'ty	Remarks
18	1758 19 240	Cover	1	
19	0338 19 245A	Ball	2	
20	0338 19 256	Ring, Seal	2	
21	0338 19 257	Ring, Seal	2	
22	0338 19 258	Seal, Lathe Cut Ring	1	
23	0338 19 678	Shaft, Input	1	
24	99796 1035	Bolt, Housing	2	
	99796 1040	Bolt	1	
	99796 1045	Bolt	1	
25	99940 1001	Nut, Housing	1	
26	0338 19 904A	Hose, Vacuum (Rr.)	1	
27	0808 19 910	Pipe, Vacuum	1	
28	0842 19 915A	Clip, Vacuum Pipe	1	
29	99796 0610	Bolt, Clip	3	
30	1053 19 920	Pipe, Oil	1	
31	1053 19 930	Pipe, Oil	1	
32	1015 19 934B	Hose, Oil	2	
33	1758 19 940	Bracket, Pipe	1	
34	1015 19 945A	Plate, Spacer	1	

No	Part Number	Description	Q'ty	Remarks
35	2579 19 989	Clip, Pipe	1	
36	99276 1006	Clip, Pipe	1	
37	0866 45 903A	Clip, Pipe	2	
38	99796 0620	Bolt, Clip	2	
39	99282 1700	Band, Hose	4	
40	99381 0600	Bolt, Connector - Vacuum Pipe	1	
41	99381 0800	Bolt, Connector - Oil Pipe	2	
42	99564 1000	Gasket, Connector Bolt	2	
43	99564 1200	Gasket, Connector Bolt	4	
44	99709 0108	Band, Oil Pipe	1	
	1758 19 090	Shipping T/mission	1	

AUTOMATIC T/MISSION
(CASE & MAIN CONTROL)

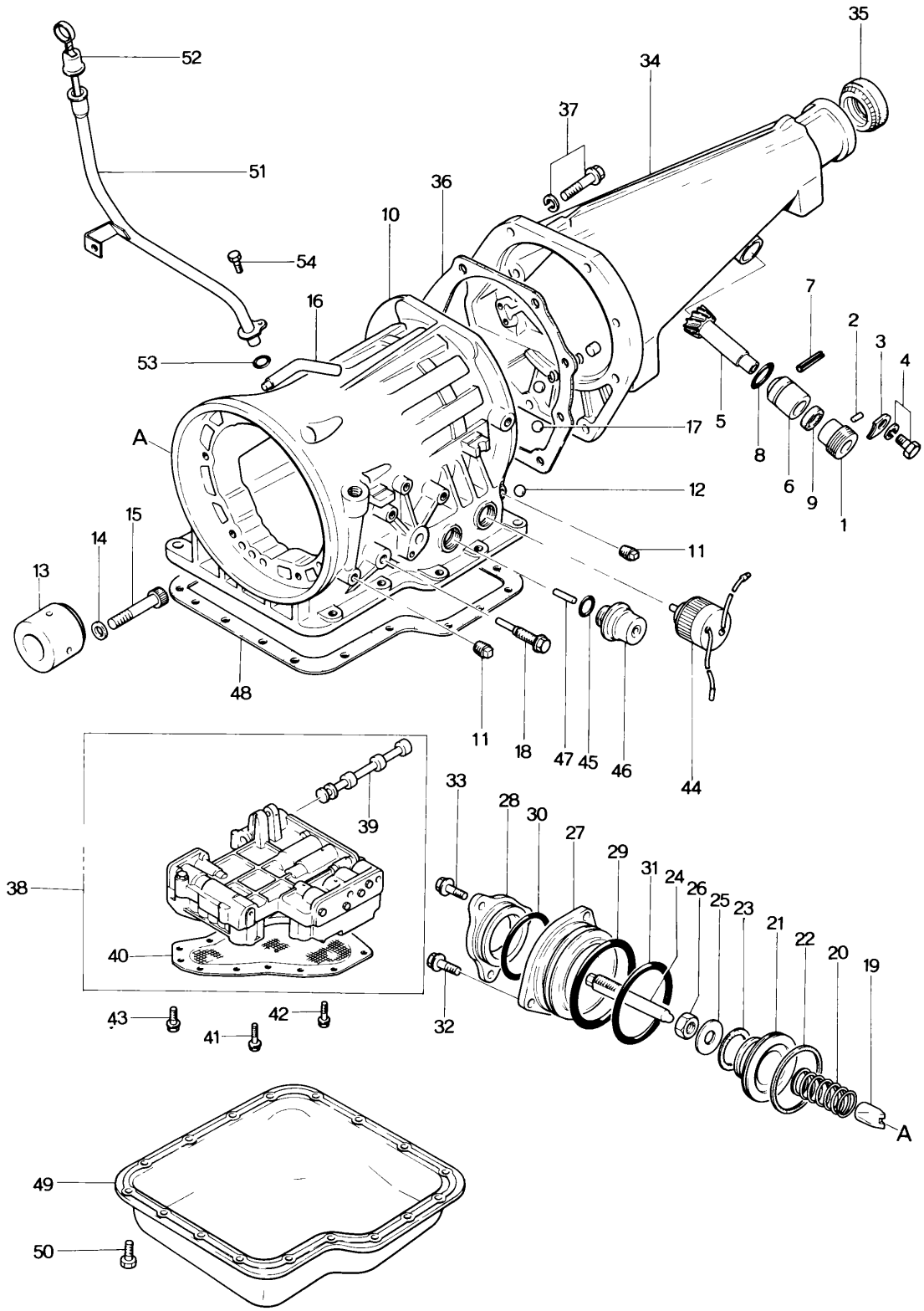

No	Part Number	Description	Q'ty	Remarks
1	1011 17 351	Joint, Cable - Speedometer	1	
2	0187 17 352	Pin, Dowel - Driven Gear	1	
3	0111 17 354	Plate, Lock - Cable Joint	1	
4	99806 0614	Bolt, Lock Plate	1	
	99971 0600	Washer, Spring	1	
5	1011 17 441	Gear, Driven - Speedometer	1	
6	0862 17 442	Sleeve, Speedometer Driven Gear	1	
7	99222 0216	Pin, Spring	1	
8	99541 02211	Ring, "O" - Driven Gear	1	
9	99586 10207	Oil Seal, Driven Gear	1	
10	1758 19 310	Case, T/mission	1	
11	0338 19 331A	Plug, Square Head	3	
12	99611 1750	Ball, Steel	3	
13	0338 19 336	Race, Inner	1	
14	0338 19 337	Washer, Plain	8	
15	0338 19 338	Bolt	8	
16	0378 19 344	Breather, Air	1	
17	99611 2000	Ball, Steel	2	

AUTOMATIC T/MISSION
(CASE & MAIN CONTROL)

No	Part Number	Description	Q'ty	Remarks
18	1758 19 341	Bolt, Anchor End	1	
19	0338 19 361	Strut, Band	1	
20	0338 19 363	Spring, Return - Piston	1	
21	0842 19 381	Piston, Band Servo	1	
22	0338 19 384	Seal, Piston	1	
23	0842 19 385	Seal, Piston	1	
24	1758 19 386	Stem, Piston	1	
25	0338 19 388A	Washer, Plain	1	
26	0338 19 389	Nut, Band Adjust	1	
27	1758 19 391	Retainer, Servo	1	
28	1758 19 392	Cover, Servo	1	
29	0842 19 394	Seal, Lathe Cut Ring	1	
30	1758 19 394	Ring, "O"	1	
31	0338 19 395	Seal, "O" Ring	1	
32	0338 19 397	Bolt	3	
33	1758 19 397	Bolt, Servo	3	
34	1840 19 710	Housing, Extension	1	
35	0376 17 335	Oil Seal	1	

No	Part Number	Description	Q'ty	Remarks
36	0338 19 735	Gasket, Extension Housing	1	
37	0338 19 737	Bolt, Extension Housing	8	
	0338 19 739	Washer, Plain	8	
38	1758 19 750	Valve, Control	1	
39	0338 19 768	Valve, Manual	1	
40	1758 19 815	Strainer, Oil	1	
41	0338 19 831	Bolt, Control Valve	3	
42	0338 19 832	Bolt, Control Valve	2	
43	0338 19 833	Bolt, Control Valve	2	
44	1675 19 821	Solenoid, Down Shift	1	
45	0338 19 822	Seal, "O" Ring	2	
46	0338 19 823	Diaphragm, Vacuum	1	
47	0338 19 825	Rod, Diaphragm (ℓ = 30.0)		
	0338 19 826	Rod (ℓ = 31.0)		
	0338 19 827	Rod (ℓ = 30.5)	Selective use	1
	0338 19 828	Rod (ℓ = 29.0)		
	0338 19 829	Rod (ℓ = 29.5)		

No	Part Number	Description	Q'ty	Remarks
48	1758 19 835	Gasket, Oil Pan	1	
49	1758 19 836	Pan, Oil	1	
50	0338 19 837	Bolt, Oil Pan	17	
51	1758 19 870	Tube, Oil Level	1	
52	1758 19 880	Gauge, Oil Level	1	
53	99541 01601	Ring, "O" - Oil Level Tube	1	
54	99796 0610	Bolt, Oil Level Tube	1	

AUTOMATIC T/MISSION
(CLUTCH & PLANETARY GEAR)

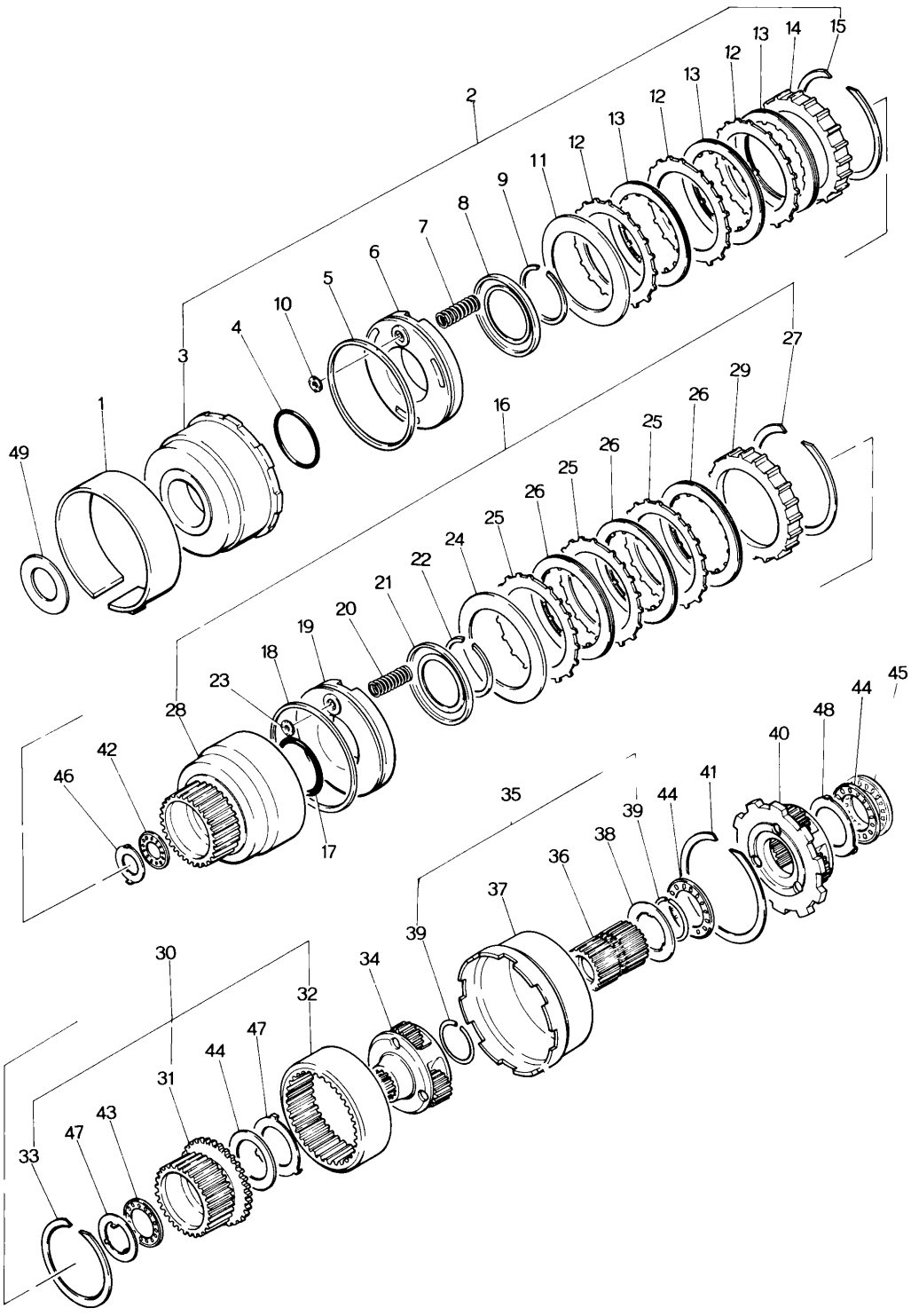

No	Part Number	Description	Q'ty	Remarks
1	0338 19 360	Band, Brake	1	
2	1758 19 460	Clutch, Front	1	
3	0338 19 470	Drum, Clutch	1	
4	0338 19 475	Seal, "O" Ring	1	
5	0338 19 476	Seal, Lathe Cut	1	
6	0338 19 480	Piston, Clutch	1	
7	0338 19 486	Spring, Piston Return	10	
8	0338 19 487	Retainer, Spring	1	
9	0338 19 488	Ring, Snap	1	
10	0338 19 493	Retainer, Ball	1	
11	0338 19 498	Plate, Dished	1	
12	0338 19 499	Plate, Driven	4	
13	0338 19 500	Plate, Drive	4	
14	1758 19 503	Plate, Retaining		
	1758 19 504	Plate, Retaining		
	1758 19 505	Plate, Retaining		
	1758 19 506	Plate, Retaining	Selective use	1
	1758 19 507	Plate, Retaining		
	1758 19 508	Plate, Retaining		

AUTOMATIC T/MISSION
(CLUTCH & PLANETARY GEAR)

No	Part Number	Description	Q'ty	Remarks
15	0338 19 509	Ring, Snap	1	
16	1758 19 510	Clutch, Rear	1	
17	0338 19 475	Seal, "O" Ring	1	
18	0338 19 476	Seal, Lathe Cut	1	
19	0338 19 480	Piston, Clutch	1	
20	0338 19 486	Spring, Piston Return	10	
21	0338 19 487	Retainer, Spring	1	
22	0338 19 488	Ring, Snap	1	
23	0338 19 493	Retainer, Ball	1	
24	0338 19 498	Plate, Dished	1	
25	0338 19 499	Plate, Driven	5	
26	0338 19 500	Plate, Drive	5	
27	0338 19 509	Ring, Snap	1	
28	1758 19 511	Drum, Rear Clutch	1	
29	0378 19 515	Plate, Retaining	1	
30	0338 19 530	Hub, Rear Clutch	1	
31	0338 19 531	Hub, Rear Clutch	1	
32	0338 19 533	Gear, Internal	1	

No	Part Number	Description	Q'ty	Remarks
33	0338 19 534	Ring, Snap	1	
34	0338 19 540	Carrier, Front	1	
35	0338 19 550	Shell & Sun Gear	1	
36	0338 19 560	Gear, Sun	1	
37	0338 19 565	Shell, Connecting	1	
38	0338 19 566	Race, Bearing - Shell	1	
39	0338 19 567	Ring, Snap	2	
40	0338 19 570	Carrier, Rear	1	
41	0338 19 598	Ring, Snap	1	
42	0338 19 621	Bearing, Needle	1	
43	0338 19 622	Bearing, Needle	1	
44	0338 19 623	Bearing, Needle	3	
45	0338 19 624	Bearing, Needle	1	
46	0338 19 631	Race, Bearing (t = 1.2)		
	0338 19 632	Race, Bearing (t = 1.4)		
	0338 19 633	Race, Bearing (t = 1.6)		
	0338 19 634	Race, Bearing (t = 1.8)	Selective use	1

No	Part Number	Description		Q'ty	Remarks
	0338 19 635	Race, Bearing (t = 2.0)			
	0338 19 636	Race, Bearing (t = 2.2)			
47	0338 19 638	Race, Bearing - Rear Clutch		1	
48	0338 19 639	Race, Bearing		2	
49	0338 19 641	Washer, Front Clutch (t = 1.90)			
	0338 19 642	Washer (t = 2.10)			
	0338 19 643	Washer (t = 2.30)			
	0338 19 644	Washer (t = 2.50)	Selective use	1	
	0338 19 645	Washer (t = 2.70)			
	0338 19 646	Washer (t = 1.50)			
	0338 19 647	Washer (t = 1.70)			
	0397 22 200	Clutch Repair Kit		1 Set	
	0338 19 475	Seal, "O" Ring		2	
	0338 19 476	Seal, Lathe Cut		2	
	0338 19 486	Spring, Piston Return		20	
	0338 19 487	Retainer, Spring		2	
	0338 19 488	Ring, Snap		2	
	0338 19 498	Plate, Dished		2	
	0338 19 499	Plate, Driven		7	

No	Part Number	Description	Q'ty	Remarks
	0338 19 500	Plate, Drive	7	
	0338 19 509	Ring, Snap	2	
	0338 19 621	Bearing, Needle	1	
	0338 19 638	Race, Bearing - Rear Clutch	1	

AUTOMATIC T/MISSION

(LOW, REVERSE & GOVERNOR)

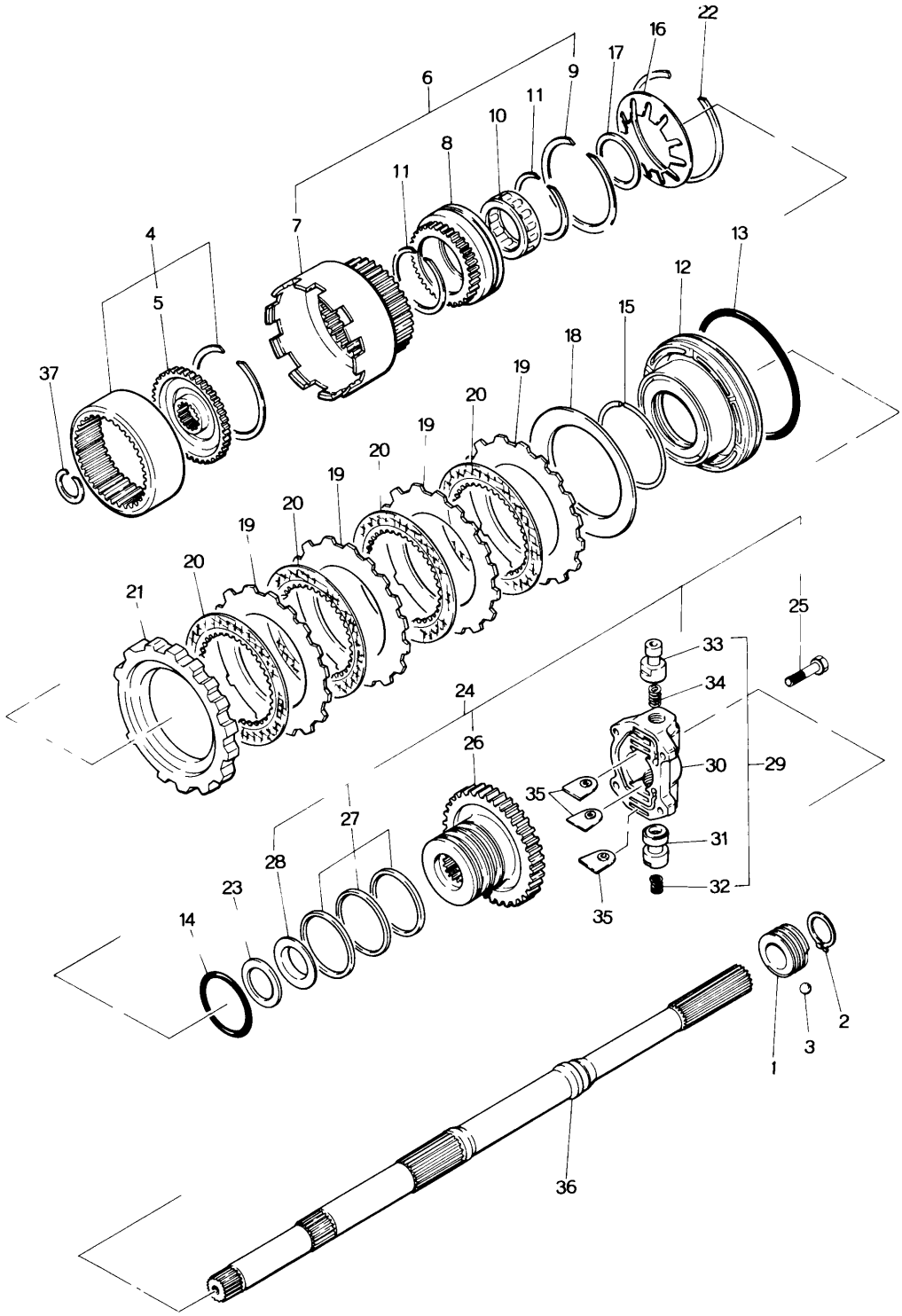

AUTOMATIC T/MISSION
(LOW, REVERSE & GOVERNOR)

No	Part Number	Description	Q'ty	Remarks
1	0862 17 341	Gear, Drive - Speedometer	1	
2	99573 2500	Ring, Snap - Drive Gear	1	
3	99611 1500	Ball, Steel	1	
4	0338 19 580	Flange	1	
5	0338 19 581	Flange, Drive	1	
6	0338 19 590	Drum, Connecting	1	
7	0338 19 591	Drum, Connecting	1	
8	0338 19 593	Race, Outer	1	
9	0338 19 594	Ring, Snap	1	
10	0338 19 595	Clutch, One Way	1	
11	0338 19 596	Ring, Snap	2	
12	0338 19 601	Piston, Low & Reverse	1	
13	0338 19 603	Seal, Piston	1	
14	0338 19 604	Seal, "O" Ring	1	
15	0338 19 605	Ring, Thrust Spring	1	
16	0338 19 606	Spring, Piston	1	
17	0338 19 607	Ring, Snap	1	

AUTOMATIC T/MISSION
(LOW, REVERSE & GOVERNOR)

No	Part Number	Description		Q'ty	Remarks
18	0338 19 608	Plate, Dished		1	
19	0338 19 609	Plate, Driven		4	
20	0338 19 610	Plate, Drive		4	
21	0338 19 613A	Plate, Retaining	(t = 15.8)	Selective use 1	
	0338 19 614A	Plate	(t = 16.0)		
	0338 19 615A	Plate	(t = 16.2)		
	0338 19 616A	Plate	(t = 16.4)		
	0338 19 617A	Plate	(t = 16.6)		
	0338 19 618A	Plate	(t = 16.8)		
22	0338 19 619	Ring, Snap		1	
23	0338 19 622	Bearing, Needle		1	
24	0842 19 650	Distributor, Oil		1	
25	0338 19 397	Bolt		4	
26	0338 19 651	Distributor		1	
27	0338 19 655	Ring, Seal		3	
28	0338 19 656	Race, Bearing		1	
29	0842 19 660	Governor, Fig. No. 30 ~ 33 included		1	
30	0338 19 661	Body		1	
31	0338 19 663	Valve		1	

No	Part Number	Description	Q'ty	Remarks
32	0338 19 664	Spring	1	
33	0842 19 665	Valve	1	
34	0338 19 666	Spring, Governor	1	
35	0338 19 667	Plate, Retainer	3	
36	0338 19 670A	Shaft	1	
37	0338 19 676	Ring	1	

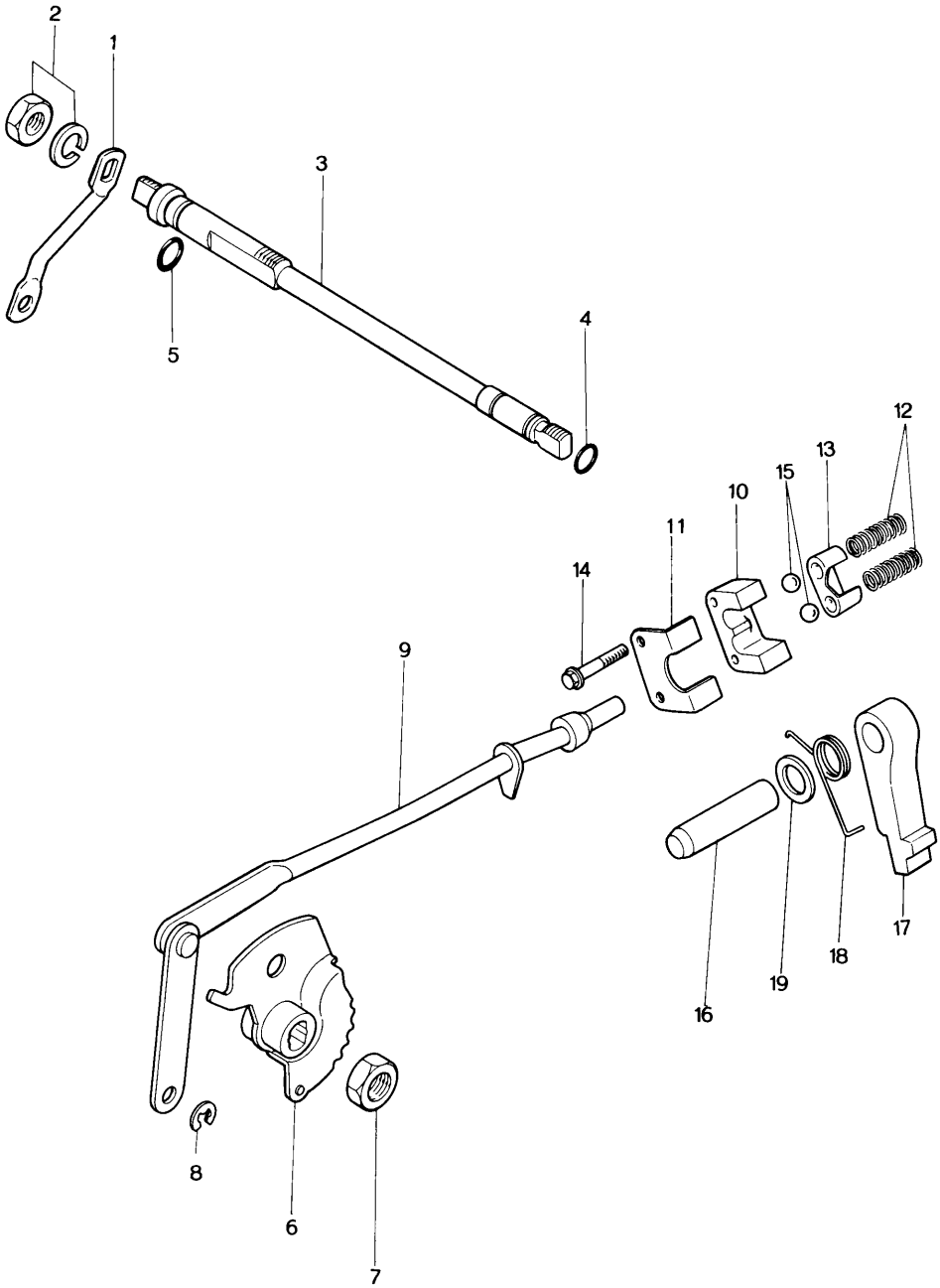
2
1
3
5
4
12
13
15
10
11
14
9
16
19
18
17
8
6
7

AUTOMATIC T/MISSION

(MANUAL LINKAGE)

No	Part Number	Description	Q'ty	Remarks
1	1015 19 031	Lever, Select	1	
2	99922 1400	Nut, Select Lever	1	
	99971 1400	Washer, Spring	1	
3	1758 19 431	Shaft, Manual	1	
4	99541 00901	Ring, "O"	1	
5	99541 01201	Ring, "O"	1	
6	1758 19 440	Plate, Manual	1	
7	1758 19 443	Nut, Shaft	1	
8	0338 19 449	Ring, Snap	2	
9	1758 19 450	Rod, Parking	1	
10	0338 19 701	Support, Actuator	1	
11	0338 19 702	Plate, Retaining	1	
12	0338 19 703	Spring, Ball Park	2	
13	0338 19 704	Retainer	1	
14	0338 19 706	Bolt	2	
15	99611 2750	Ball, Steel	2	
16	0338 19 731	Shaft, Parking Pawl	1	
17	0338 19 732	Pawl, Parking	1	
18	0338 19 733C	Spring, Pawl Return	1	
19	0338 19 734A	Spacer, Dowel	1	

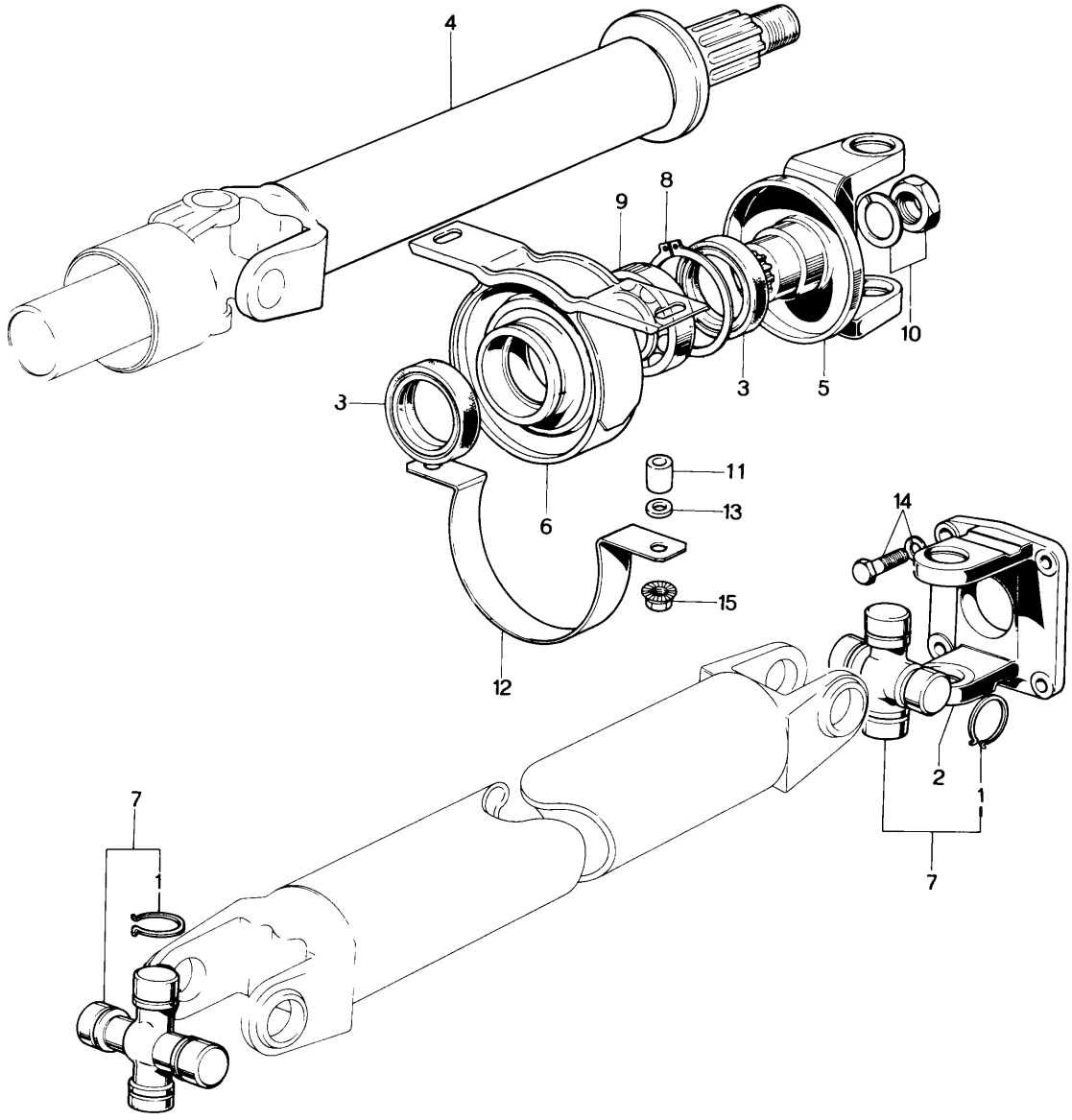
4
8
9
10
3
3
5
11
13
14
6
15
12
2
1
7
7
1

No	Part Number	Description		Q'ty	Remarks
	1856 25 100A	Shaft, Propeller		1	
1	2677 25 071	Ring, Snap	Selective use	8	
	2677 25 072	Ring, Snap			
	2677 25 073	Ring, Snap			
	2677 25 074	Ring, Snap			
	2677 25 075	Ring, Snap			
	2677 25 076	Ring, Snap			
	2677 25 077	Ring, Snap			
2	0578 25 121	Yoke, Universal		1	
3	0290 25 151	Oil Seal, Center Bearing		2	
4	1856 25 210	Shaft, Propeller		1	
5	2677 25 220	Yoke		1	
6	1856 25 300A	Support, Center Bearing		1	
7	0706 89 251	Joint Set, Universal		2	
8	99574 5200	Ring, Snap - Ball Bearing		1	
9	99606 62050	Bearing, Ball		1	
10	99922 1800	Nut, Yoke		1	
	99971 1800	Washer, Spring		1	
11	2783 18 368	Spacer, Protecter		2	

No.	Part Number	Description	Q'ty	Remarks
12	1856 25 314	Protecter	1	
13	0884 39 387	Washer, Protecter	2	
14	99750 11020	Bolt, Yoke Universal Joint	4	
	99971 1000	Washer, Spring	4	
15	99940 1001	Nut, Protecter	2	

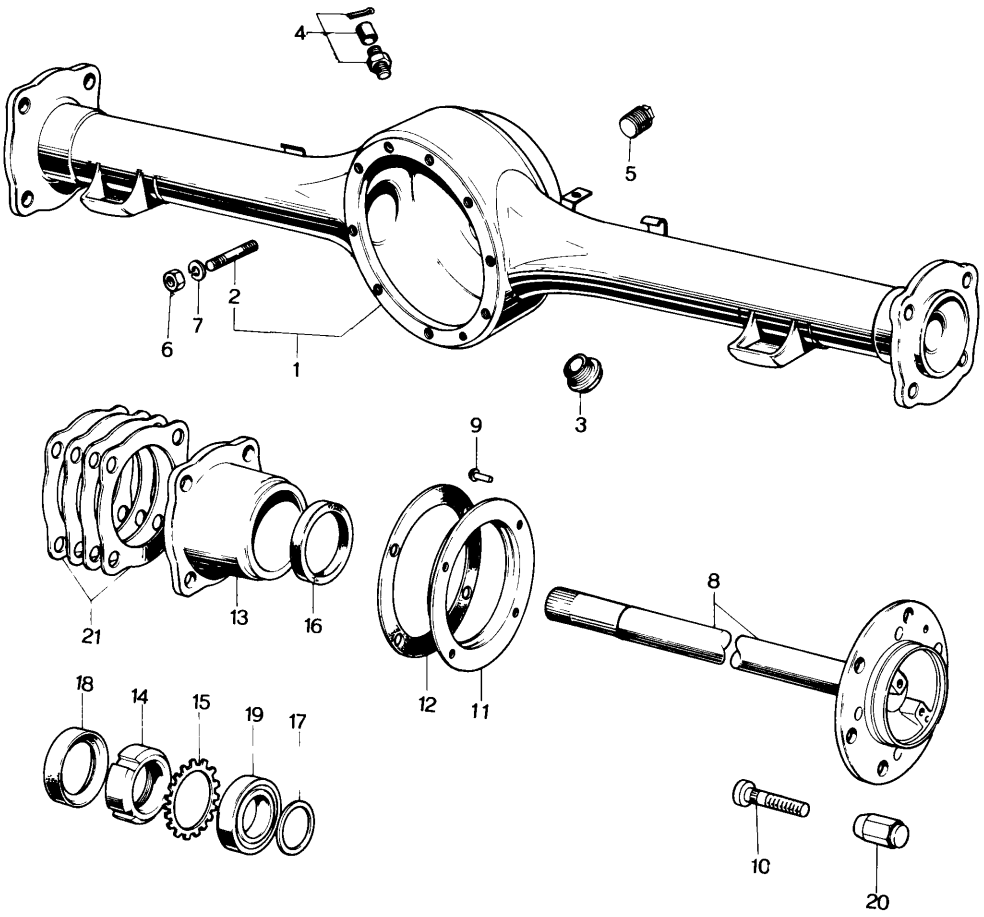
4
5
2
7
6
1
3
9
21
13
16
12
11
8
18
14
15
19
17
10
20

No	Part Number	Description	Q'ty	Remarks
1	1854 26 010A	Casing, Rear Axle	1	
2	99852 0820F	Stud, Rear Axle Casing	10	
3	0259 26 051	Plug, Drain - Magnet	1	
4	0419 26 060	Breather, Axle Casing	1	
5	99502 4000	Plug, Oil Level	1	
6	99901 0800	Nut, Rear Axle Casing	10	
7	99971 0800	Washer, Spring	10	
8	1854 26 111	Shaft (R), Rear Axle	1	
	1854 26 115	Shaft (L), Rear Axle	1	
9	99254 4014	Rivet, Rear Axle Shaft	8	
10	1854 26 113A	Bolt (R), Hub	6	
	1854 26 117A	Bolt (L), Hub	6	
11	0604 26 125B	Baffle, Oil	2	
12	0604 26 129	Packing, Oil Baffle	2	
13	0603 26 131A	Housing, Bearing	2	
14	0603 26 152	Nut (R), Lock	1	
	0603 26 156	Nut (L), Lock	1	
15	0603 26 153	Washer, Lock	2	
16	0603 26 154	Oil Seal, Inner	2	

No	Part Number	Description		Q'ty	Remarks
17	0603 26 155	Spacer, Bearing		2	
18	0603 26 157	Oil Seal, Outer		2	
19	99603 02080	Bearing, Rear Wheel		2	
20	1854 26 161A	Nut (R), Hub		6	
	1854 26 163A	Nut (L), Hub		6	
21	0603 26 165	Shim, Adjust (t = 0.1)			
	0603 26 166	Shim, Adjust (t = 0.15)	Selective use	4	
	0603 26 167	Shim, Adjust (t = 0.5)			
	0603 26 168	Shim, Adjust (t = 0.75)			

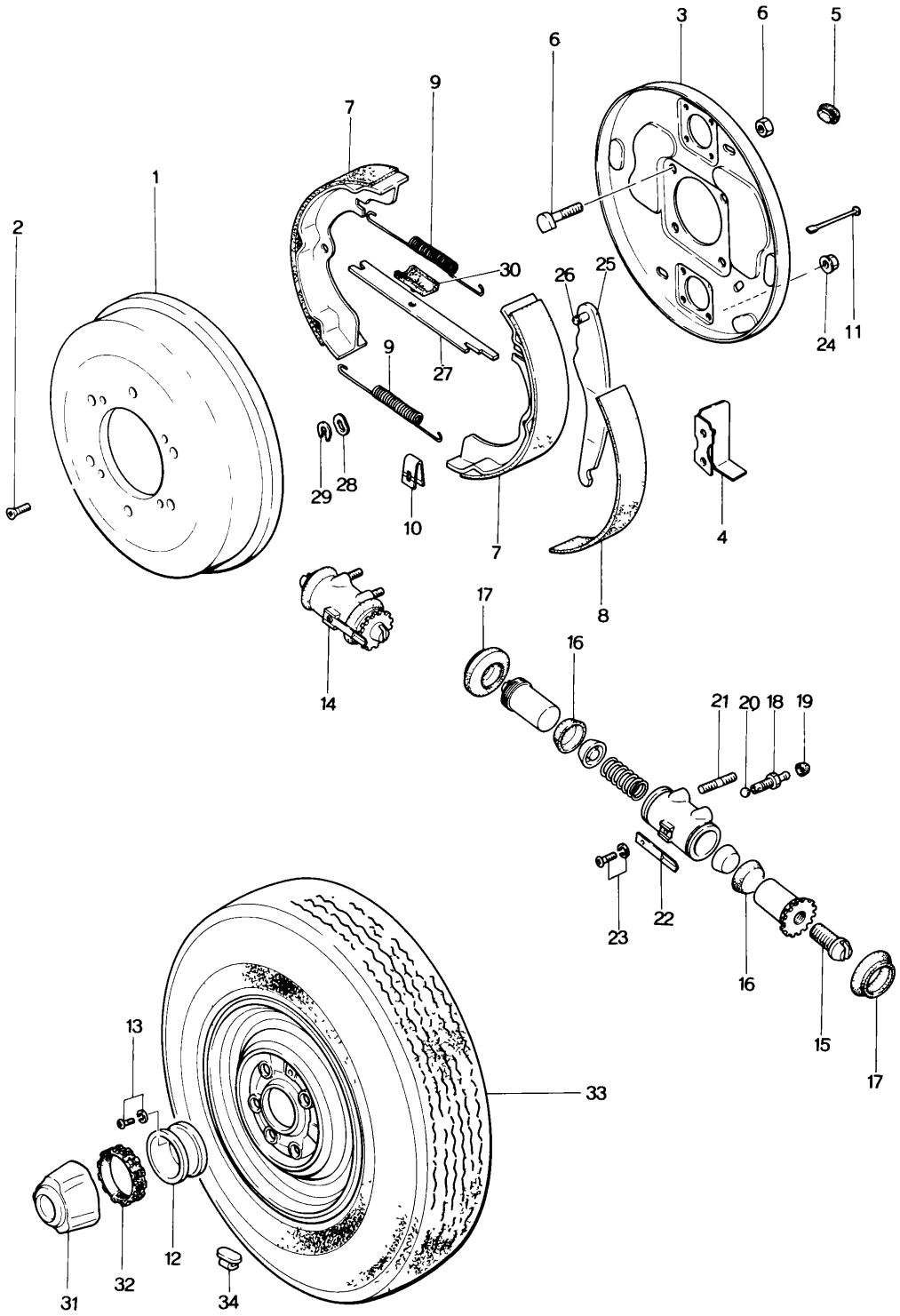
1
2
3
4
5
6
6
7
7
8
9
9
10
11
12
13
14
15
16
16
17
17
18
19
20
21
22
23
24
25
26
27
28
29
30
31
32
33
34

No	Part Number	Description	Q'ty	Remarks
1	0603 26 251A	Drum, Brake	2	
2	99831 0616	Screw, Brake Drum	1	
3	0603 26 280A	Cover (R), Brake Drum	1	
	0603 26 290A	Cover (L), Brake Drum	1	
4	0589 26 287A	Guard (R), Brake Pipe	1	
	0589 26 297A	Guard (L), Brake Pipe	1	
5	0603 26 288	Plug, Drum Cover	4	
6	0603 26 301	Bolt, Brake Drum Cover	8	
	99942 1000	Nut, Self Lock	8	
7	1823 26 310A	Shoe, Brake	4	
8	1823 26 312A	Lining, Brake	4	
9	0603 26 341	Spring, Return	4	
10	0223 26 345A	Spring, Clip	4	
11	0223 26 391	Pin, Brake Shoe Guide	4	
12	1854 26 570	Adapter, Center Emblem	2	
13	99833 0812	Screw, Adapter	4	
	99971 0800	Washer, Spring	4	

No	Part Number	Description	Q'ty	Remarks
14	0647 26 610	Cylinder, Wheel (R)	2	
	0647 26 710	Cylinder, Wheel (L)	2	
15	0604 26 465	Screw, Adjusting	4	
16	0208 26 671	Cup, Piston	8	
17	0603 33 681A	Cover, Dust	8	
18	0259 33 691	Screw, Bleeder	4	
19	0259 33 693	Cap, Bleeder Screw	4	
20	99611 1500	Ball, Steel	4	
21	99852 0614	Stud	16	
22	0304 33 352A	Spring	4	
23	99833 0406	Screw, Spring	4	
	99971 0400	Washer, Spring	4	
24	99940 0600	Nut, Flange Wheel Cylinder	16	
25	0603 26 800A	Lever, Operating (R)	1	
	0603 26 810A	Lever, Operating (L)	1	
26	0604 26 832	Pin	2	
27	0603 26 821A	Strut, Operating	2	

No	Part Number	Description	Q'ty	Remarks
28	0118 26 834	Washer, Wave	2	
29	99575 0600	Ring, "U" Stop	2	
30	0603 26 898	Holder, Strut	2	
31	1854 33 191	Emblem, Center Cap	2	
32	1854 33 192	Rubber Set, Center Cap	2	
33	9962 03 7314	Tire, - 7.35 - 14 - 6PR	2	
	9963 60 4130	Valve, Air - TR - 413	2	
	9965 05 5540	Wheel, Disc - 5½ - J x 14 WDC	2	
34	99655 30010	Weight, Balance		
	99655 30020	Weight, Balance		
	99655 30030	Weight, Balance		
	99655 30040	Weight, Balance	Selective use	–
	99655 30050	Weight, Balance		
	99655 30060	Weight, Balance		

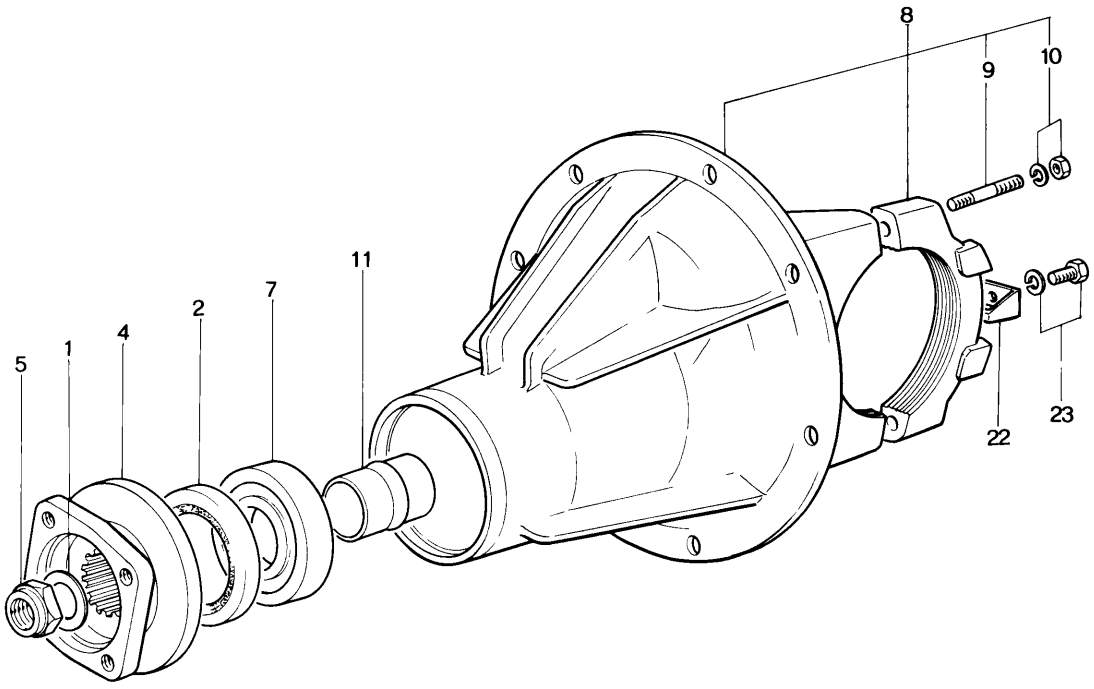
8
9
10
11
7
2
4
1
5
22
23

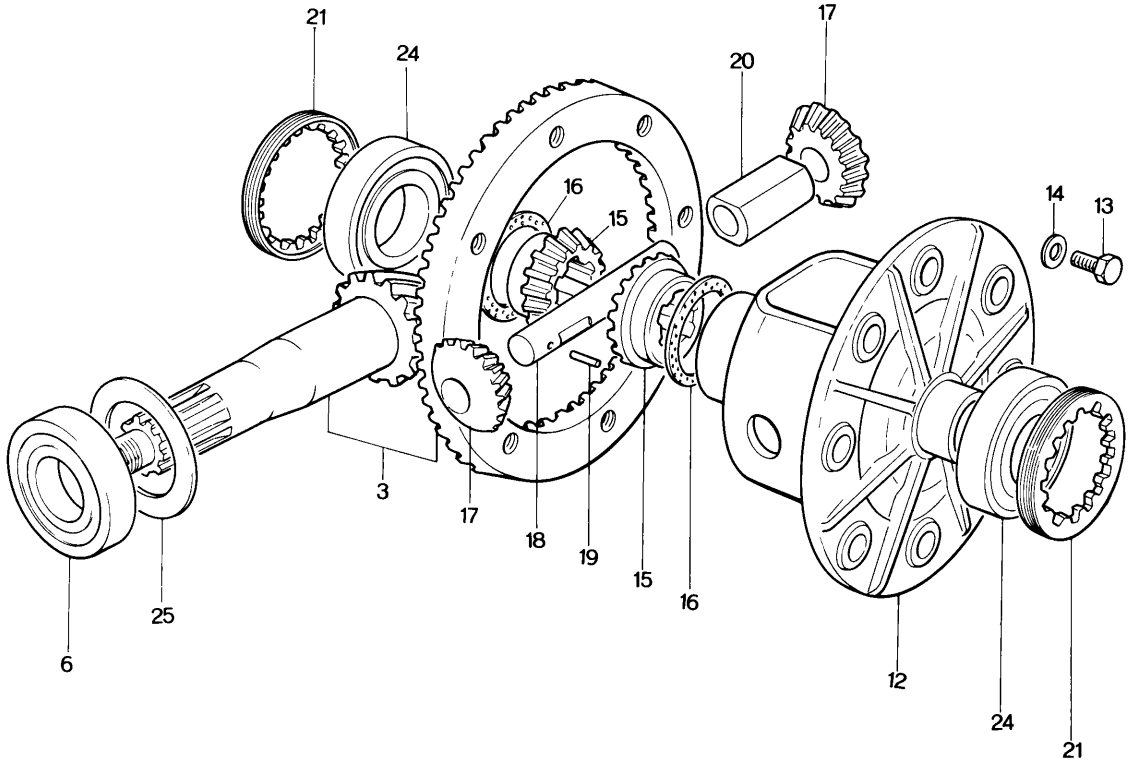
21
24
17
20
16
15
14
13
3
17
18
19
15
16
25
6
12
24
21

No	Part Number	Description		Q'ty	Remarks
	1854 27 100	Driving & Differential		1	
1	**0012 27 012**	Washer		1	
2	**0604 27 018**	Oil Seal		1	
3	**1854 27 110**	Gear Set, Final		1	
4	**0579 27 120**	Flange, Companion		1	
5	**0578 27 130A**	Nut, Lock		1	
6	**0540 27 141**	Bearing, Rear - Drive Pinion		1	
7	**0604 27 142**	Bearing, Front - Drive Pinion		1	
8	**1854 27 150**	Carrier, Differential		1	
9	**99859 1248**	Stud, Carrier		4	
10	**99921 1200**	Nut, Carrier		4	
	99971 1200	Washer, Spring		4	
11	**1854 27 171**	Piece, Distance		1	
12	**1854 27 231**	Case, Gear - Differential		1	
13	**99751 21225**	Bolt, Gear Case	Selective use	10	
	99751 61225	Bolt, Gear Case			
14	**99958 1220**	Washer, Lock		10	
15	**1854 27 251**	Gear, Side		2	
16	**0578 27 252**	Washer, Thrust - Side Gear		2	
	0578 27 253	Washer, Thrust - Side Gear	Selective use	2	

No	Part Number	Description	Q'ty	Remarks
	0578 27 254	Washer, Thrust - Side Gear	2	
17	0604 27 255A	Pinion, Differential	2	
18	1854 27 261	Shaft, Differential Pinion	1	
19	0114 27 262	Pin, Pinion Shaft	1	
20	1854 27 263	Block, Thrust Pinion Shaft	1	
21	0110 27 301	Screw, Adjust	2	
22	0578 27 302	Plate, Lock Carrier	2	
23	99811 0812	Bolt, Lock Plate	2	
	99971 0800	Washer, Spring	2	
24	0118 27 305	Bearing, Differential Gear	2	
25	0223 27 401	Spacer		
	0223 27 402	Spacer		
	0223 27 403	Spacer		
	0223 27 404	Spacer		
	0223 27 405	Spacer		
	0223 27 406	Spacer		
	0223 27 407	Spacer		
		Selective use	1	
	0223 27 408	Spacer		
	0223 27 409	Spacer		
	0223 27 411	Spacer		

No	Part Number	Description	Q'ty	Remarks
	0223 27 412	Spacer		
	0223 27 413	Spacer		
	0223 27 414	Spacer		
	0223 27 415	Spacer		

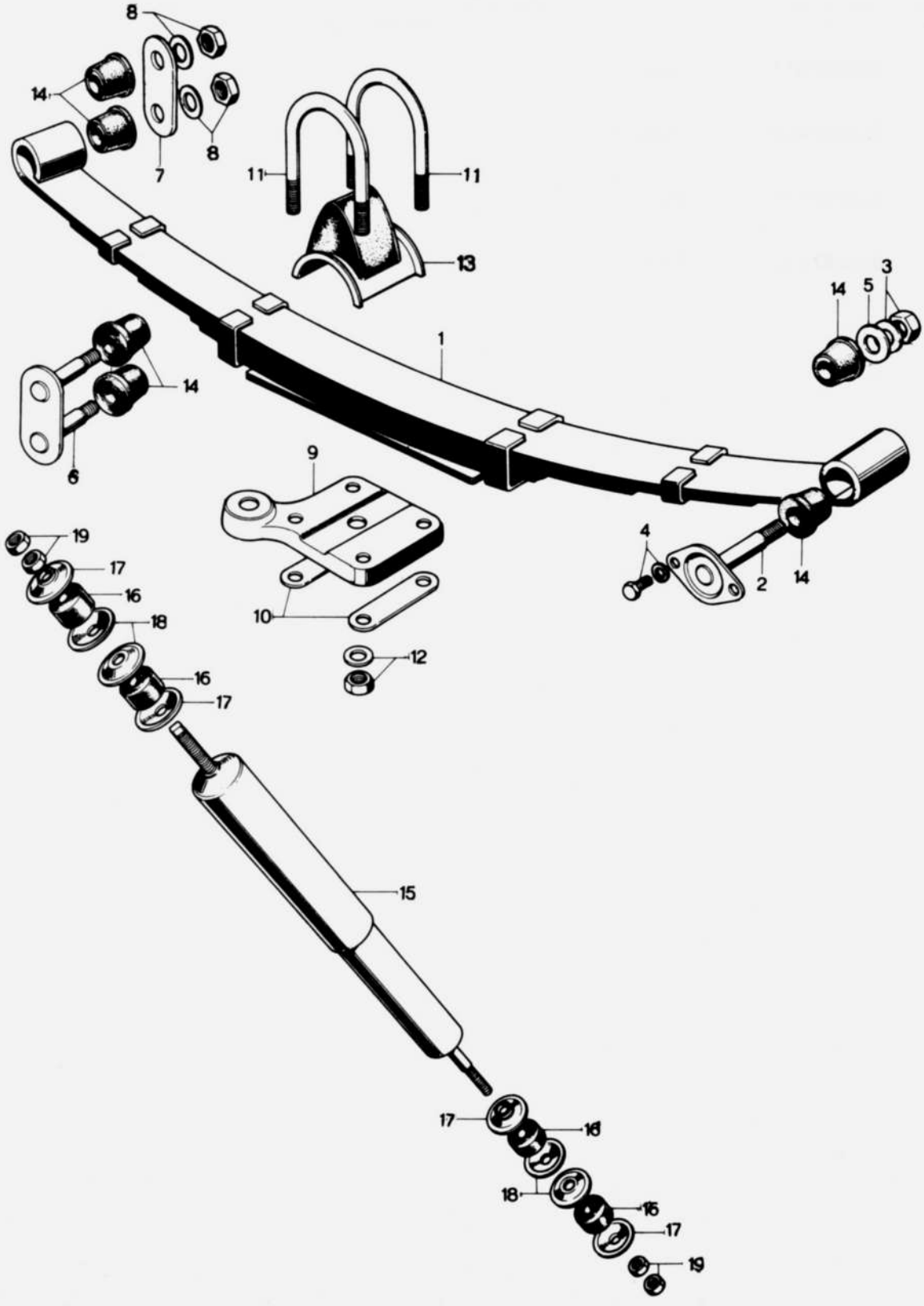
8
14
7
8
11
11
13
14
5
3
1
14
6
9
19
17
16
18
16
17
10
12
4
2
14
15
17
16
18
16
17
19

No	Part Number	Description	Q'ty	Remarks
1	1854 28 010	Spring, Rear	2	
	1854 28 011	Leaf No. 1	2	
	1854 28 012	Leaf No. 2	2	
	1854 28 013	Leaf No. 3	2	
	1854 28 014	Leaf No. 4	2	
	1854 28 015	Leaf No. 5	2	
	1854 28 016	Leaf No. 6	2	
2	0603 28 110	Pin, Spring	2	
3	99921 1400	Nut, Spring Pin	2	
	99971 1400	Washer, Spring	2	
4	99811 1020	Bolt, Spring Pin	4	
	99971 1000	Washer, Spring	4	
5	0603 28 114	Spacer	2	
6	0603 28 140	Plate, Shackle	2	
7	0603 28 142	Plate, Shackle	2	
8	99921 1400	Nut, Shackle Plate	4	
	99971 1400	Washer, Spring	4	
9	0603 28 151	Clamp (R), Spring	1	
	0603 28 171	Clamp (L), Spring	1	

No	Part Number	Description	Q'ty	Remarks
10	0603 28 152	Patch, Spring Clamp	4	
11	0603 28 161	Bolt, Lock	4	
12	99928 1200	Nut, Lock Bolt	8	
	99971 1200	Washer, Spring	8	
13	0603 28 320	Rubber, Stopper	2	
14	0191 28 330	Bush, Rubber	12	
15	0603 28 700X	Damper, Rear	2	
16	0110 34 775A	Bush, Rubber	8	
17	0110 34 776A	Retainer	8	
18	0110 34 777A	Washer, Centering	8	
19	99922 1000	Nut, Rear Damper	4	
	99921 1000	Nut	4	

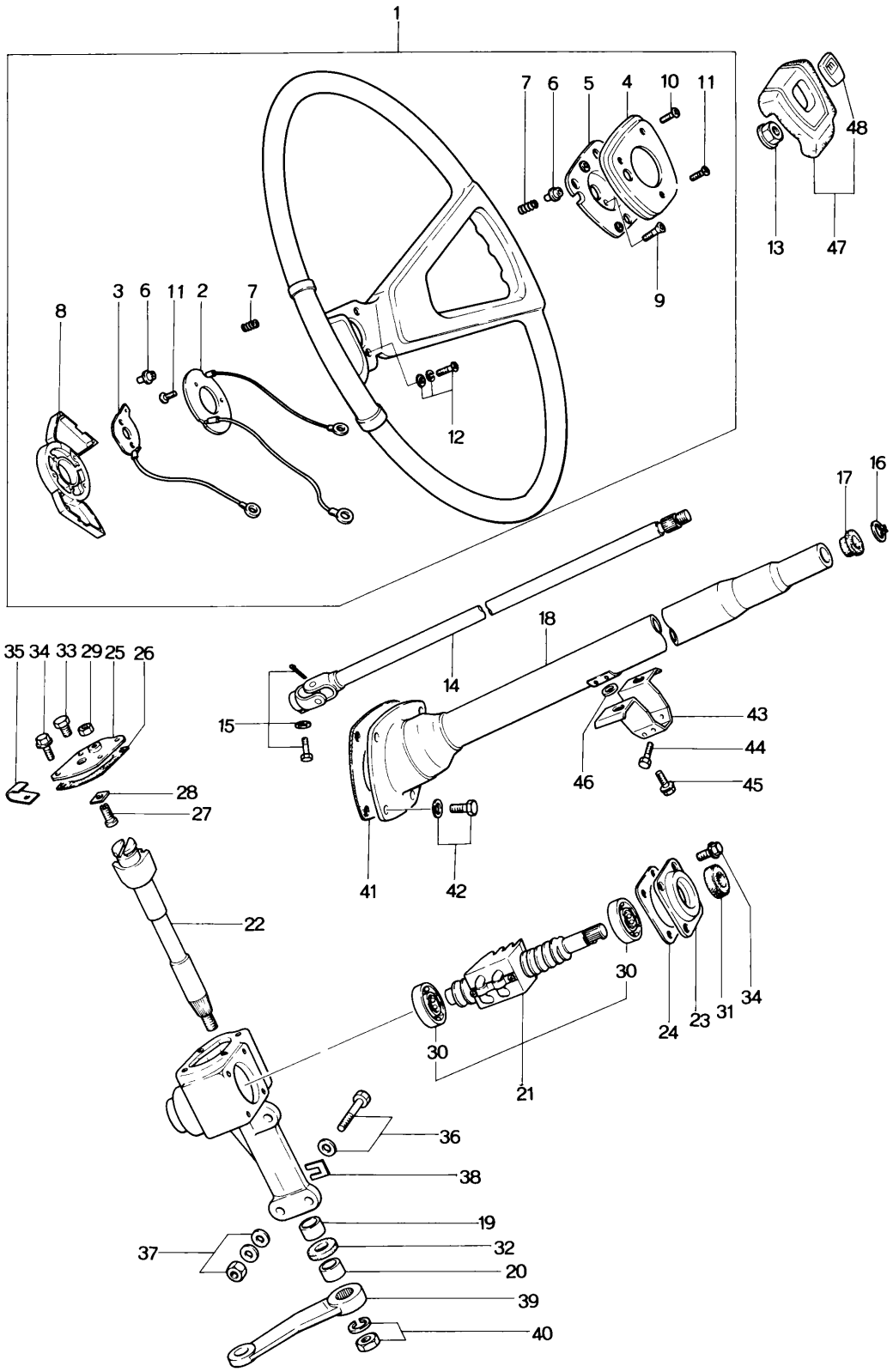
1
7
6
5
4
10
11
48
13
47
9
3
6
11
2
7
8
12
17
16
18
14
35
34
33
29
25
26
15
43
44
46
45
28
27
41
42
22
30
24
23
31
34
30
21
36
38
19
37
32
20
39
40

STEERING SYSTEM (WHEEL & GEAR) 32

No	Part Number	Description	Q'ty	Remarks
1	1854 32 980	Boss, Steering Wheel	1	
2	1854 32 018	Terminal	1	
3	1175 32 030	Plate, Earth "C"	1	
4	1175 32 041	Plate, Set	1	
5	1175 32 042	Cap	1	
6	1175 32 043	Insulator	3	
7	1175 32 044	Spring	3	
8	1854 32 049	Cover, Wheel Core	1	
9	99831 0310	Screw	2	
10	99833 0306	Screw	1	
11	99863 0308	Screw	6	
12	99863 0312	Screw	3	
	99953 0300	Washer, Plain	3	
	99971 0300	Washer, Spring	3	
13	99948 1200	Nut, Steering Wheel	1	
14	1854 32 050	Shaft, Column	1	
15	1854 32 888	Bolt, Column Shaft	1	
	99971 0800	Washer, Spring	1	
	99221 2012	Pin, Split	1	

No	Part Number	Description	Q'ty	Remarks
16	0208 32 059	Ring, Stop	1	
17	0259 32 071	Bush, Shaft Support	1	
18	1854 32 080	Jacket, Column Shaft	1	
	1854 32 110	Gear, Steering	1	
19	0603 32 122	Bush	1	
20	0603 32 123	Bush	1	
21	1854 32 130	Ball Nut, Worm	1	
22	1854 32 141	Shaft, Sector	1	
23	1854 32 151	Cover, End	1	
24	1854 32 154	Shim, End Cover (t = 0.05)	1	Selective use
	1854 32 155	Shim (t = 0.06)		
	1854 32 156	Shim (t = 0.07)		
	1854 32 157	Shim (t = 0.08)		
	1854 32 158	Shim (t = 0.10)		
	1854 32 159	Shim (t = 0.20)		
25	1854 32 161	Cover, Side - Steering Gear	1	
26	1854 32 163	Gasket, Side Cover	1	
27	0180 32 165A	Screw, Adjust - Sector	1	
28	0180 32 171A	Shim, Adjust (t = 1.95)		

No	Part Number	Description	Q'ty	Remarks
	0180 32 172A	Shim (t = 2.00)	1	Selective use
	0180 32 173A	Shim (t = 2.05)		
	0180 32 174A	Shim (t = 2.10)		
29	99922 1000	Nut, Lock - Adjust Screw	1	
30	0183 32 182	Bearing, Worm Ball Nut	2	
31	0180 32 184	Oil Seal, Worm	1	
32	99583 28388	Oil Seal, Sector Shaft	1	
33	0820 32 190	Plug, Oil	1	
34	99781 0822	Bolt, End + Side Cover	8	
	99971 0800	Washer, Spring	8	
35	99276 1008	Clip, Side Cover	1	
36	0603 32 186	Bolt, Gear Housing	3	
37	99921 1000	Nut, Gear Housing	3	
	99971 1000	Washer, Spring	3	
	99951 1022	Washer, Plain	2	
38	0208 32 188	Shim, Adjust - Selective use	3	
39	1854 32 226	Arm, Pitman	1	
40	99921 2000	Nut, Pitman Arm	1	
	99971 2000	Washer, Spring	1	

No.	Part Number	Description	Q'ty	Remarks
41	1757 32 411A	Cover, Dust	1	
42	99786 0620	Screw, Tapping - Dust Cover	4	
	99952 0618	Washer, Plain	4	
43	1854 32 421	Bracket, Column Fixing	1	
44	99801 0810	Bolt, Bracket + Jacket	4	
	99971 0800	Washer, Spring	4	
45	99805 0832	Bolt, Bracket + Body	2	
	99951 0822	Washer, Plain	2	
	99971 0800	Wahser, Spring	2	
46	99951 1030B	Washer, Plain - Bracket	2	
47	1793 32 800	Cap, Center - Steering Wheel	1	
48	1727 32 811	Emblem	1	

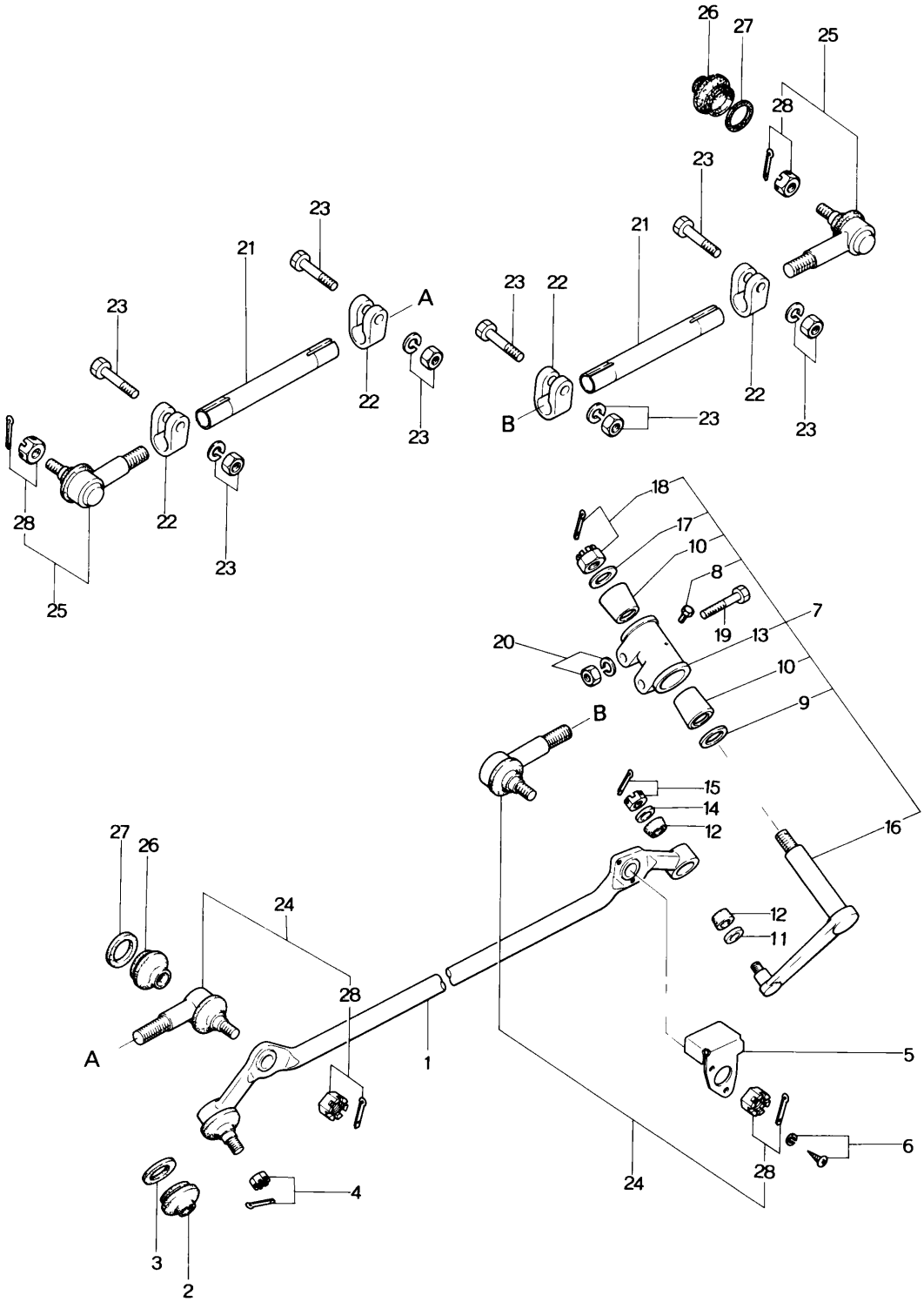
26
27
25
28
23
21
23
A
23
22
23
23
22
28
22
23
25
23
22
21
23
B
22
23
23
18
17
10
8
19
7
13
20
10
9
B
15
14
12
16
27
26
24
12
11
28
A
1
5
6
28
24
4
3
2

No	Part Number	Description	Q'ty	Remarks
1	1854 32 250	Link, Center	1	
2	1823 32 279	Seal, Dust	1	
3	1823 32 289	Ring, Dust Seal	1	
4	99924 1200	Nut, Center Link	1	
	99221 3020	Pin, Split	1	
5	1854 32 267	Insulator	1	
6	99833 0610	Screw, Insulator	2	
	99971 0600	Washer, Spring	2	
7	2541 32 320	Idler	1	
8	0208 32 278	Plug	2	
9	0208 32 324A	Seal, Dust	1	
10	0208 32 326	Bush, Tapered	2	
11	0208 32 328A	Seal, Dust	1	
12	0208 32 329	Bush, Tapered	2	
13	0208 32 331A	Bracket, Idler	1	
14	0208 32 340A	Seal, Dust	1	
15	99924 1200	Nut	1	
	99221 3020	Pin, Split	1	

No	Part Number	Description	Q'ty	Remarks
16	2541 32 351	Arm, Idler	1	
17	0208 32 360A	Seal, Dust	1	
18	99924 1400	Nut	1	
	99221 3025	Pin, Split	1	
19	0603 32 355	Bolt, Idler	2	
20	99921 1000	Nut, Idler	2	
	99971 1000	Washer, Spring	2	
21	0603 32 365A	Rod, Tie	2	
22	0180 32 366	Clamp, Tie Rod	4	
23	99781 1035	Bolt, Clamp	4	
	99921 1000	Nut	4	
	99971 1000	Washer, Spring	4	
24	2541 99 322A	Socket Set	2	
25	2541 99 324A	Socket Set	2	
26	1823 32 279	Seal, Dust	4	
27	1823 32 289	Ring, Dust Seal	4	
28	99924 1200	Nut	4	
	99221 3020	Pin, Split	4	

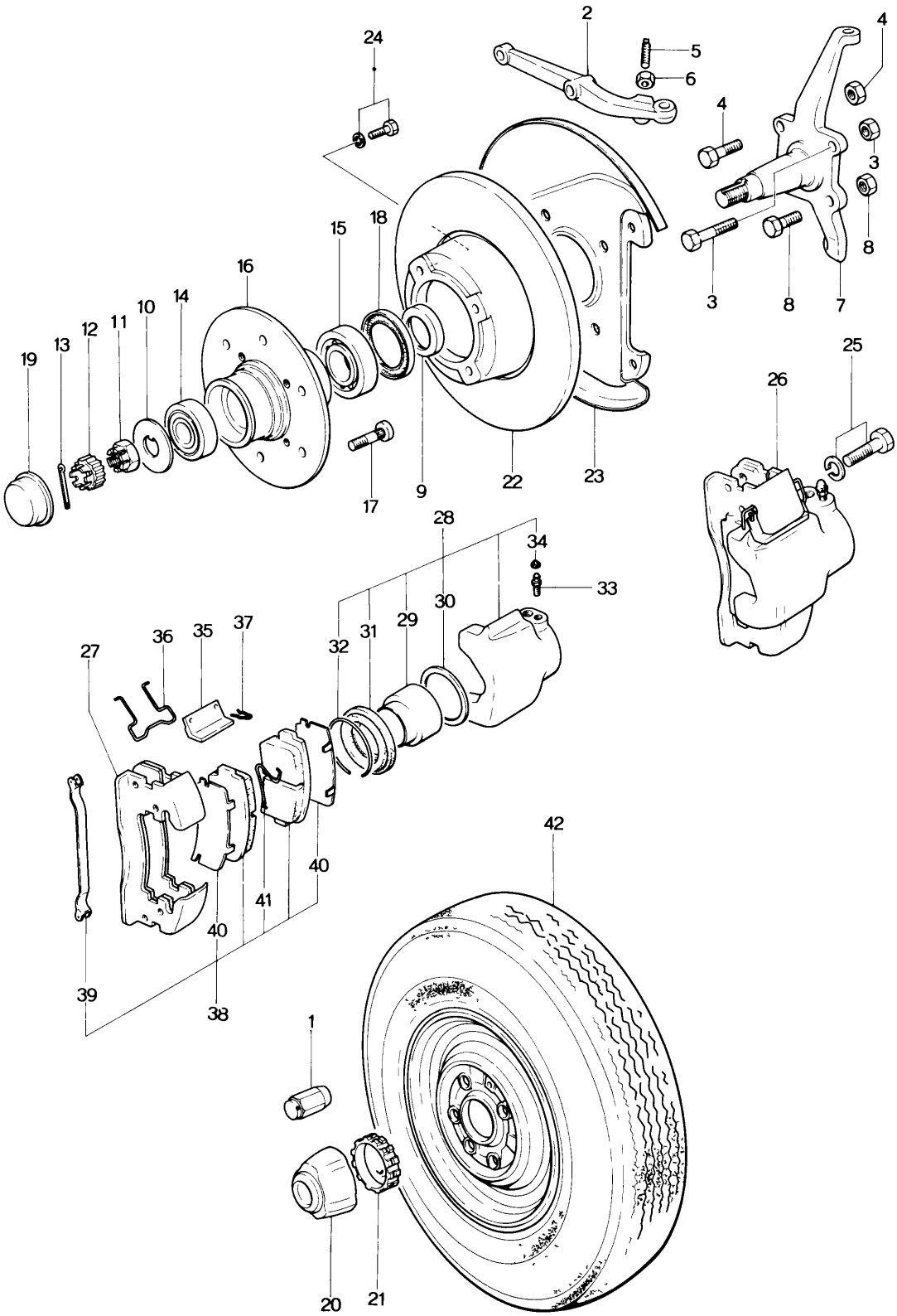
1
2
3
4
5
6
7
8
9
10
11
12
13
14
15
16
17
18
19
20
21
22
23
24
25
26
27
28
29
30
31
32
33
34
35
36
37
38
39
40
41
42

No	Part Number	Description	Q'ty	Remarks
1	1854 26 161A	Nut (R), Hub	6	
	1854 26 163A	Nut (L), Hub	6	
2	1854 32 301A	Arm (R), Knuckle	1	
	1854 32 311A	Arm (L), Knuckle	1	
3	99750 11260	Bolt, Steering Knuckle	2	
	99942 1200	Nut, Self Lock	2	
4	99750 11270	Bolt, Steering Knuckle	2	
	99942 1200	Nut, Self Lock	2	
5	0603 32 315	Bolt, Stopper	2	
6	99922 1000	Nut, Stopper	2	
7	1854 33 021	Knuckle (R), Steering	1	
	1854 33 031	Knuckle (L), Steering	1	
8	99811 1028	Bolt, Steering Knuckle	4	
	99942 1000	Nut, Self Lock	4	
9	0110 33 041	Spacer, Steering Knuckle	2	
10	99977 1845	Washer, Front Wheel	2	
11	0662 33 042	Nut, Front Wheel	2	
12	0662 33 049	Cover, Set	2	
13	99221 4030	Pin, Split - Front Wheel	2	
14	99603 0204	Bearing, Front Wheel Outer	2	

No.	Part Number	Description	Q'ty	Remarks
15	99603 0206	Bearing, Front Wheel Inner	2	
16	1854 33 061	Hub, Front Wheel	2	
17	1854 33 062A	Bolt (R), Hub	6	
	1854 33 092A	Bolt (L), Hub	6	
18	0603 33 065	Oil Seal, Front Wheel	2	
19	1854 33 071	Cap, Hub	2	
20	1854 33 191	Emblem, Center Cap	2	
21	1854 33 192	Rubber, Set	2	
22	1854 33 251	Plate, Disk	2	
23	1854 33 260	Adapter (R), Mounting	1	
	1854 33 270	Adapter (L), Mounting	1	
24	0221 33 698	Bolt, Disk Plate	8	
	99971 1000	Washer, Spring	8	
25	0305 33 699	Bolt, Disk Brake	4	
	99971 1200	Washer, Spring	4	
26	1854 33 980A	Brake (R), Disk	1	
	1854 33 990A	Brake (L), Disk	1	
27	1854 33 281	Support, Mounting	2	
28	0305 33 610D	Caliper (R) (Fig. No. 29 ~ 34 Included)	1	

No	Part Number	Description	Q'ty	Remarks
	0305 33 710D	Caliper (L) (Fig. No. 29 ~ 34 Included)	1	
29	2981 33 651	Piston	2	
30	2981 33 671	Seal, Piston	2	
31	2981 33 681	Boot	2	
32	0305 33 685	Ring, Boot	2	
33	0233 33 691	Screw, Bleeder	2	
34	0600 33 693	Cap	2	
35	1854 33 695	Plug (R), Stopper	2	
	1854 33 795	Plug (L), Stopper	2	
36	1854 33 696	Spring, Anti Rattle	4	
37	0305 33 698A	Pin	4	
38	0841 49 230	Pad Set (Fig. No. 39 ~ 41 Included)	2	
39	0305 33 235	Clip, Anti Rattle Pad	4	
40	0305 33 626A	Shim	4	
41	0296 33 636	Spring (R), Pad	1	
	0296 33 646	Spring (L), Pad	1	
42	9962 03 7314	Tire – 7.35 – 14 – 6 PR	2	
	9963 60 4130	Air Valve – TR – 413	2	
	9965 05 5540	Wheel, Disk – 5½ – J x 14 WDC	2	

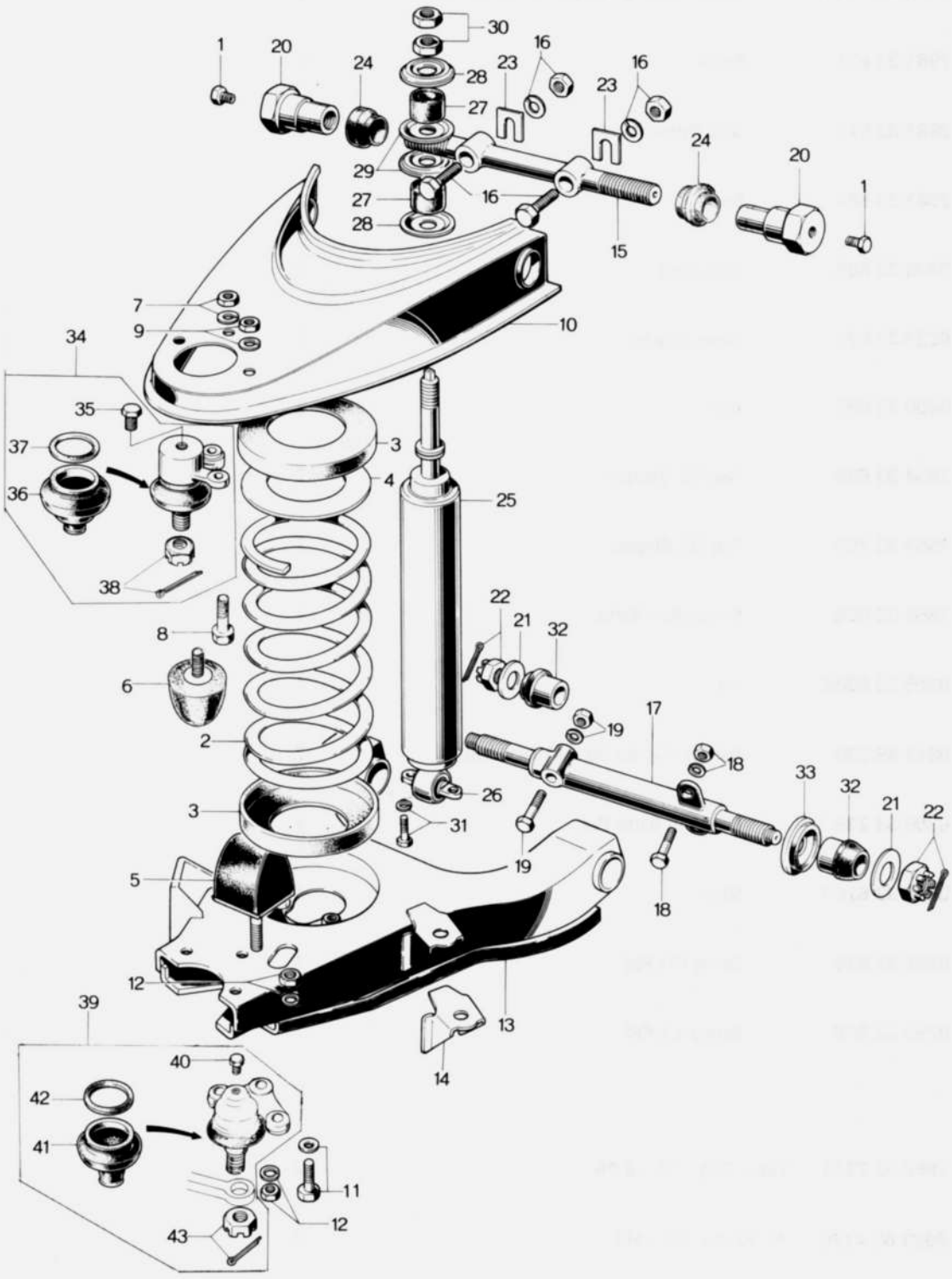
1
20
24
30
28
27
29
16
23
15
7
9
10
34
35
37
36
38
3
4
25
8
6
2
22
21
32
19
17
18
33
26
31
5
12
13
14
39
40
42
41
11
43

FRONT SUSPENSION (SPRING) 34

No	Part Number	Description	Q'ty	Remarks
1	0208 32 278	Plug, Hex – Head	4	
2	1845 34 011A	Spring, Coil	2	
3	0603 34 012	Seat, Rubber – Coil Spring	4	
4	0603 34 013	Plate, Adjusting	2	
5	0603 34 110C	Stopper, Bumper	2	
6	0603 34 130B	Stopper, Rebound	2	
7	99928 0800	Nut, Rebound Stopper	2	
	99971 0800	Washer, Spring	2	
8	99750 10825	Bolt, Upper Ball Joint	4	
9	99928 0800	Nut	4	
	99971 0800	Washer, Spring	4	
10	0223 34 211	Arm (R), Upper	1	
	0223 34 261	Arm (L), Upper	1	
11	0603 34 305	Bolt, Lower Ball Joint	4	
12	0603 34 307	Nut, Lower Ball Joint & Bumper Stopper	6	
	99958 1022	Washer, Plain - Lower Ball Joint	4	
	99971 1000	Washer, Spring	6	
13	1854 34 310	Arm (R), Lower	1	
	1854 34 360	Arm (L), Lower	1	

No	Part Number	Description	Q'ty	Remarks
14	0603 34 160	Bracket	2	
15	0223 34 411	Shaft, Upper Arm	2	
16	0603 34 416	Bolt, Upper Arm Shaft	4	
	99921 1200	Nut	4	
	99971 1200	Washer, Spring	4	
17	0603 34 431	Spindle, Lower Arm	2	
18	99781 1240	Bolt, Lower Spindle	4	
	99921 1200	Nut	4	
	99971 1200	Washer, Spring	4	
19	99781 1250	Bolt, Lower Spindle	2	
	99921 1200	Nut	2	
	99971 1200	Washer, Spring	2	
20	0662 34 471A	Bush, Thread - Upper Arm Shaft	4	
21	0193 34 662	Washer, Lower Arm Spindle	4	
22	99924 1400	Nut, Lower Arm Spindle	4	
	99221 3025	Pin, Split	4	
23	0187 34 665	Shim, Adjust (No. 1)		
	0187 34 666	Shim (No. 2)	Selective use	8
	0187 34 667	Shim (No. 3)		

No.	Part Number	Description	Q'ty	Remarks
	0187 34 668	Shim, Adjust (No. 4)		
24	0633 34 673	Seal, Dust - Upper Arm shaft	4	
25	0603 34 700A	Damper, Front	2	
26	0603 34 780	Bush, Rubber	2	
27	0187 34 797	Bush, Rubber	4	
28	0187 34 798	Retainer	4	
29	0187 34 799	Washer, Centering	4	
30	99921 1000	Nut	2	
	99922 1000	Nut	2	
31	99801 0822	Bolt, Front Damper Bush	4	
	99971 0800	Washer, Spring	4	
32	0193 34 820	Bush, Rubber - Lower Spindle	4	
33	0193 34 940	Stopper, Side - Lower Spindle	2	
34	0603 99 354A	Joint Set, Upper Ball	2	
35	0208 34 278	Plug	2	
36	0187 32 279A	Seal, Dust	2	
37	0187 32 289	Ring Set, Dust Seal	2	

No	Part Number	Description	Q'ty	Remarks
38	99924 1200	Nut	2	
	99221 3020	Pin, Split	2	
39	0603 99 356	Joint Set, Lower Ball	2	
40	0208 32 278	Plug	2	
41	0603 34 515	Seal, Dust	2	
42	0187 34 536	Ring Set, Dust Seal	2	
43	99923 1400	Nut	2	
	99221 3025	Pin, Split	2	

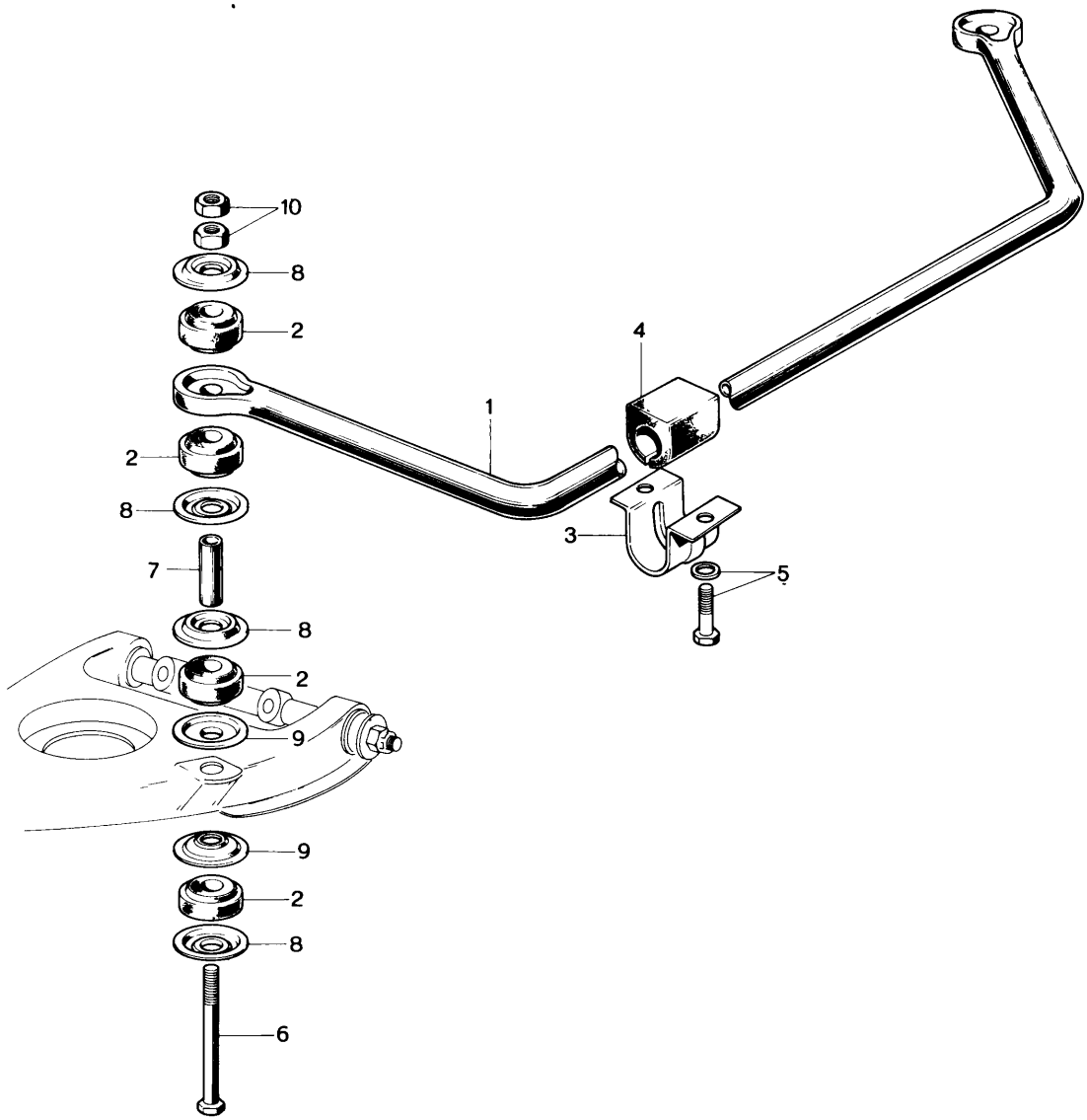
10
8
2
4
1
2
8
3
7
5
8
2
9
9
2
8
6

FRONT SUSPENSION (STABILIZER) 34

No.	Part Number	Description	Q'ty	Remarks
1	1854 34 151	Bar, Stabilizer	1	
2	0603 34 153	Bush, Rubber	8	
3	0603 34 155	Plate, Stabilizer	2	
4	0603 34 156	Rubber, Stabilizer	2	
5	99805 0830	Bolt, Plate	4	
	99971 0800	Washer, Spring	4	
6	0603 34 157	Bolt, Stabilizer	2	
7	0603 34 158	Spacer	2	
8	0187 34 776	Retainer	8	
9	0187 34 777	Washer, Centering	4	
10	99921 1000	Nut	2	
	99922 1000	Nut	2	

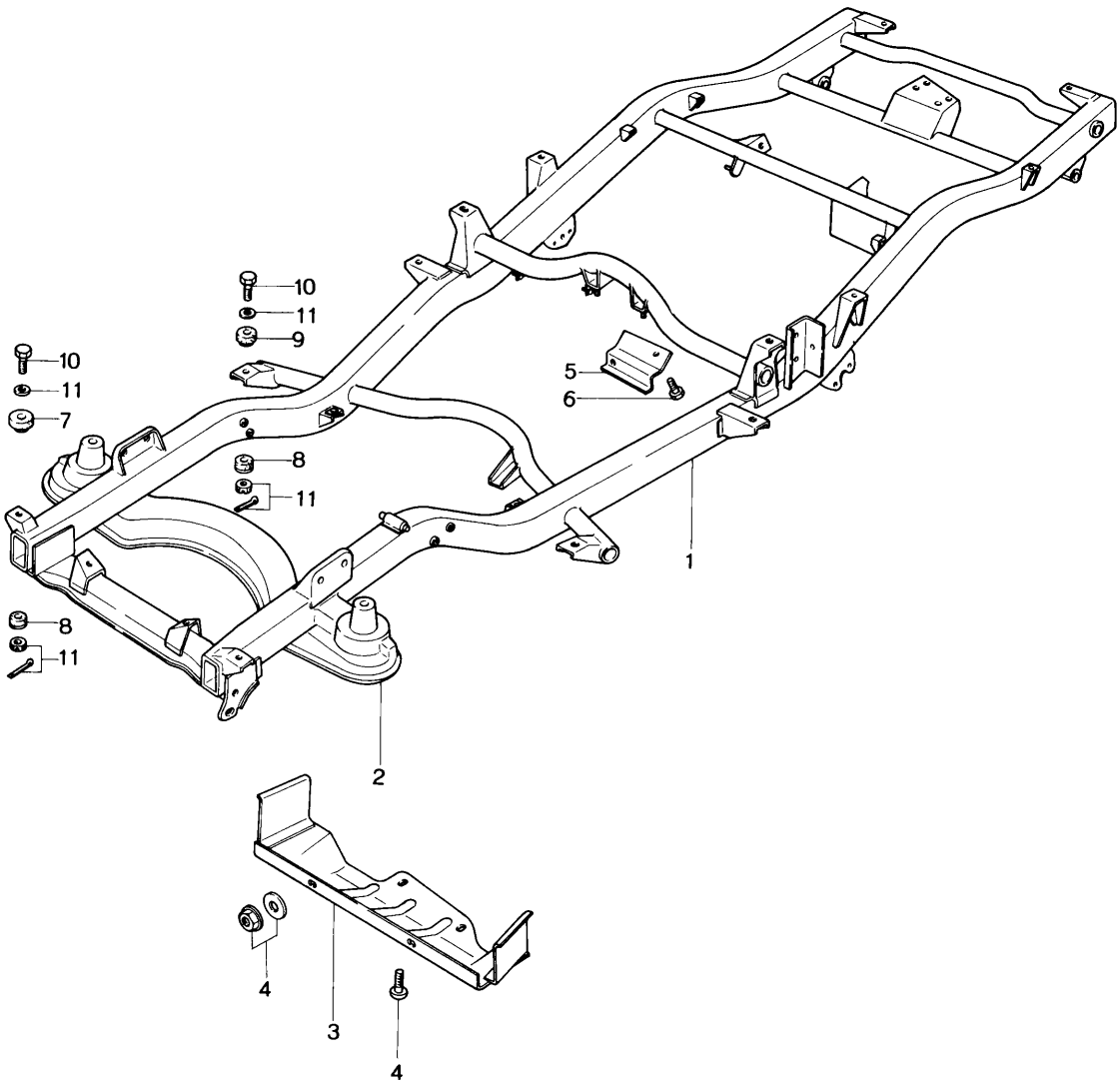
10
11
9
10
11
7
8
11
5
6
1
8
11
2
4
3
4

No	Part Number	Description	Q'ty	Remarks
1	1854 38 010F	Frame, Main	1	
2	1854 38 200	Member, Cross	1	
3	1854 38 810	Protector, Oil Pan	1	
4	99786 0816	Screw, Tapping - Protector	2	
	99940 0800	Nut	2	
	99952 0822	Washer, Plain	2	
5	1854 38 851	Insulator	1	
6	99796 0612	Bolt	2	
7	1854 38 910	Cushion	2	
8	1854 38 920	Insulator	6	
9	1854 38 930	Cushion	4	
10	0603 53 981B	Bolt, Mount Set	6	
11	99221 2015	Pin, Split	6	
	99903 0800	Nut	6	
	99951 1030	Washer	6	

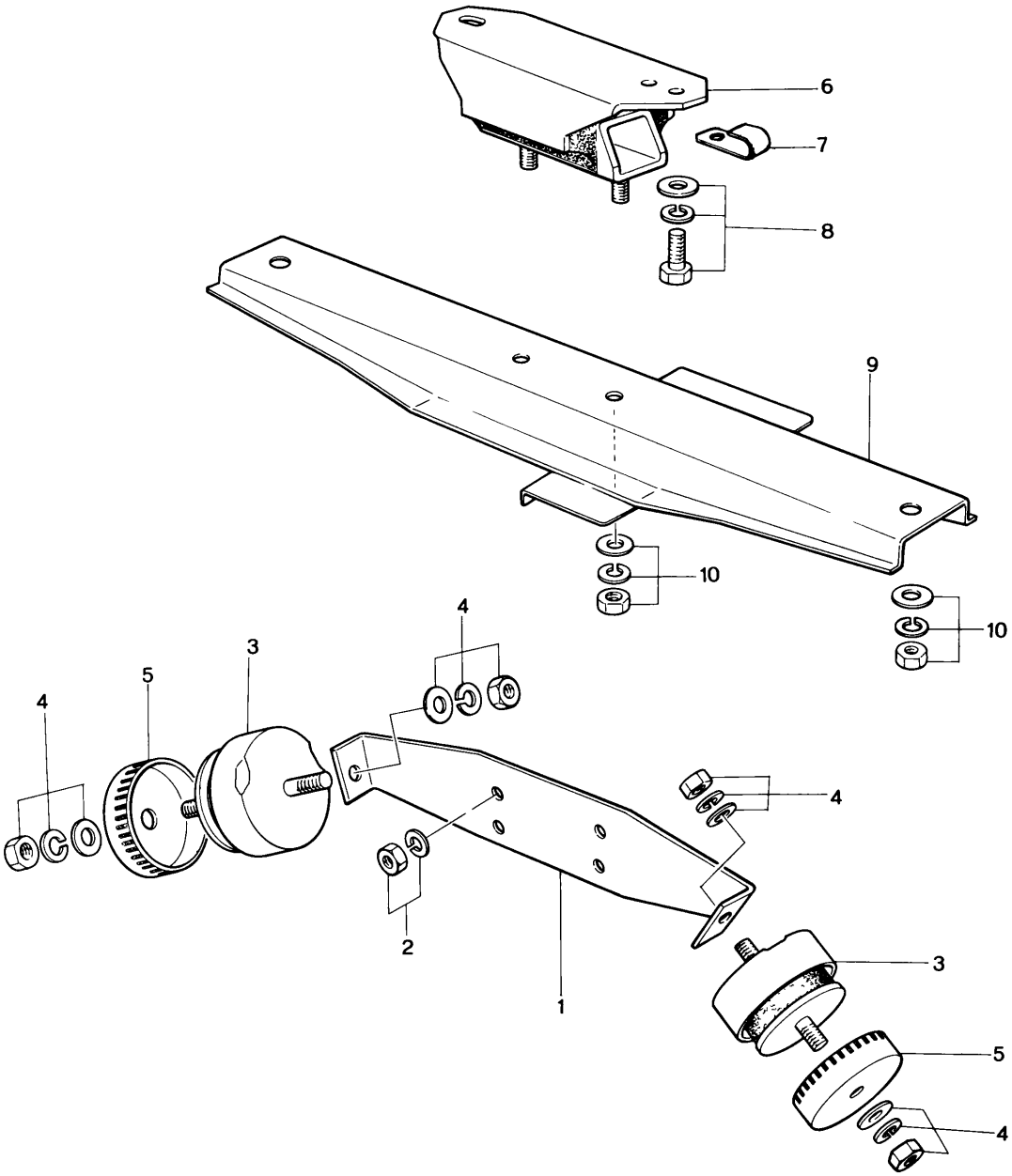
6
7
8
9
10
10
4
3
5
4
4
2
1
3
5
4

ENGINE & T/MISSION SUPPORT

39

No	Part Number	Description	Q'ty	Remarks
1	1011 39 021B	Bracket, Engine	1	
2	99921 1000	Nut, Engine Bracket	4	
	99971 1000	Washer, Spring	4	
3	1668 39 040C	Rubber, Engine Mounting	2	
4	99921 1000	Nut, Engine Mounting Rubber	4	
	99951 1030	Washer, Plain	4	
	99971 1000	Washer, Spring	4	
5	1668 39 045A	Casing, Stopper	2	
6	1011 39 340A	Rubber, Mounting	1	
7	99276 1208	Clip, Mounting Rubber	1	
8	99801 0820	Bolt, Mounting Rubber	2	
	99952 0800	Washer, Plain	2	
	99971 0800	Washer, Spring	2	
9	1854 39 380	Member, Mounting - T/Mission	1	
10	99921 1000	Nut, Mounting Member	4	
	99951 1030	Washer, Plain	4	
	99971 1000	Washer, Spring	4	

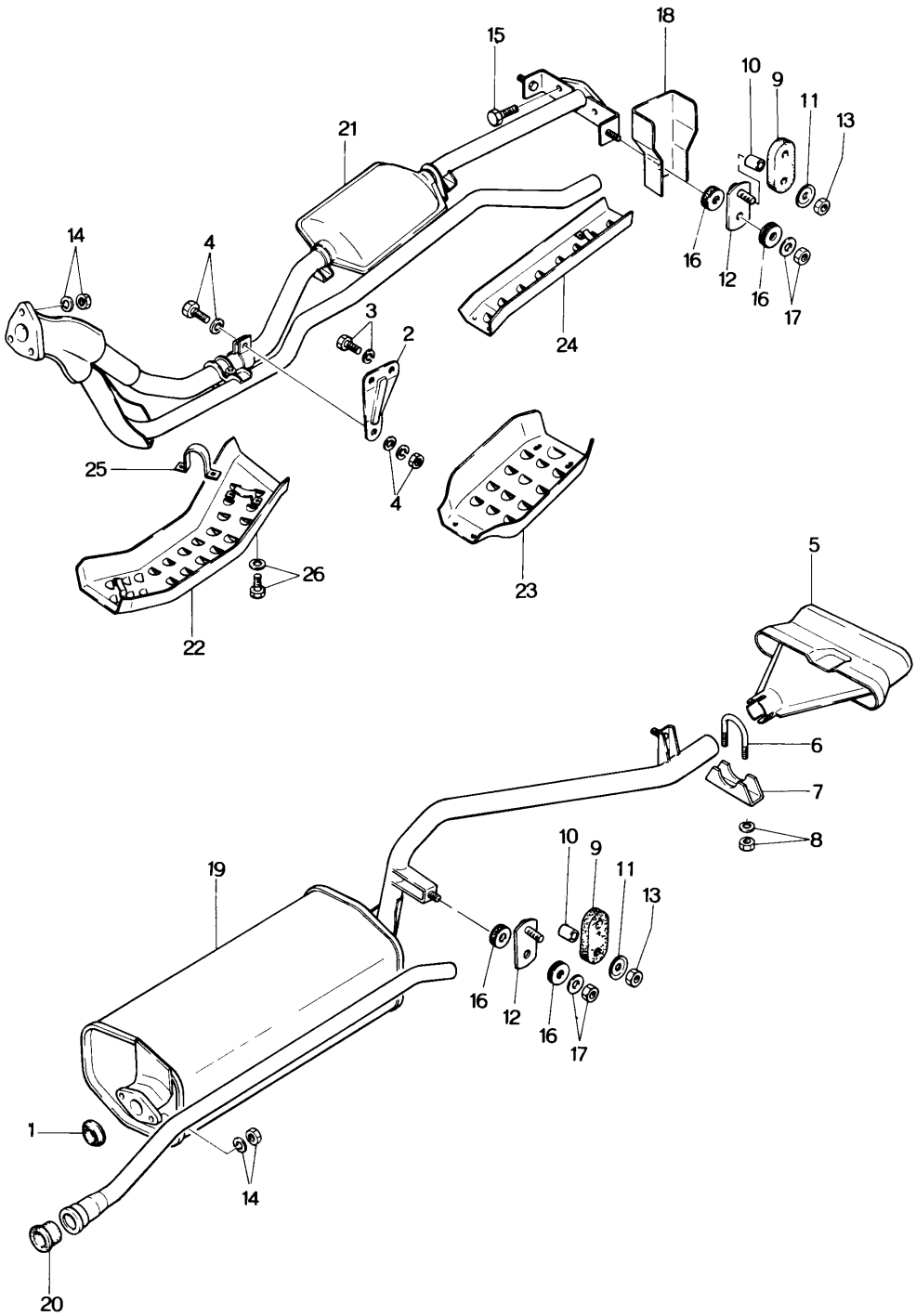
15
18
10
9
11
13
21
14
4
16
12
16
17
3
2
24
4
25
23
26
22
5
6
7
8
19
10
9
11
13
16
12
16
17
1
14
20

No	Part Number	Description	Q'ty	Remarks
1	0810 40 356	Gasket, EX. Pipe	1	
2	1854 40 081	Bracket, EX. Pipe	1	
3	99801 0818	Bolt, EX. Pipe Bracket	2	
	99971 0800	Washer, Spring	2	
4	99951 0822	Washer, Plain - EX. Pipe Bracket	2	
	99971 0800	Washer, Spring	1	
	99801 0832	Bolt	1	
	99901 0800	Nut	1	
5	1854 40 090	Diffuser, Main Silencer	1	
6	1854 40 096	Bolt, "U" Diffuser	1	
7	1854 40 097	Clamp, "U" Bolt	1	
8	99971 0800	Washer, Spring - "U" Bolt	2	
	99901 0800	Nut	2	
9	1114 40 161	Hanger, Silencer	4	
10	0820 40 165	Pipe, Silencer Hanger	8	
11	0820 40 166	Washer, Silencer Hanger	8	
12	1114 40 170	Plate, Silencer Hanger	4	
13	99940 0800	Nut, Silencer Hanger	8	
14	2158 40 355	Nut, Silencer & EX. Manifold	5	
	99971 1000	Washer, Spring	5	

No	Part Number	Description	Q'ty	Remarks
15	99801 1045	Bolt, Silencer	2	
16	0824 40 401	Insulator, Silencer Hanger Plate	8	
17	99951 0822	Washer, Plain - Silencer Hanger	4	
	99949 0800	Nut	4	
18	1854 40 405	Insulator	2	
19	1854 40 500E	Silencer, Main	1	
20	2090 40 508A	Joint, Rubber Silencer	1	
21	1854 40 600A	Silencer, Pre	1	
22	1854 40 810A	Protector No. 1	1	
23	1854 40 821	Protector No. 2	1	
24	1854 40 830	Protector No. 3	1	
25	1114 40 850B	Band, Protector	3	
26	99796 0616	Bolt, Protector Band	14	
	99952 0618	Washer, Plain	14	

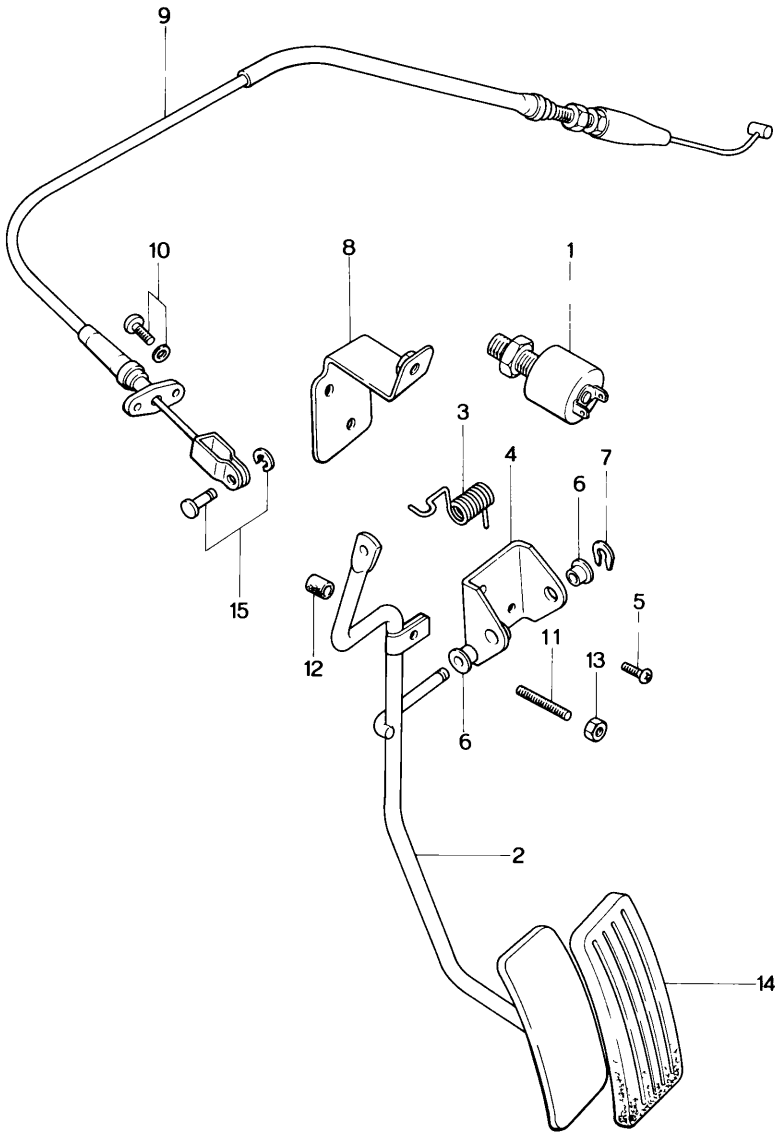
9
10
8
1
3
4
7
6
5
11
13
12
6
15
2
14

ACCLERATOR CONTROL SYSTEM 41

No	Part Number	Description	Q'ty	Remarks
1	2691 18 660	Switch, Kick Down (Automatic)	1	
2	1854 41 610A	Pedal, Accel.	1	
3	2158 41 619	Spring	1	
4	0305 41 641	Retainer, Accel. Rod	1	
5	99786 0616	Screw, Tapping - Retainer	2	
6	0259 41 644	Bush	2	
7	99575 0600	Ring, Retaining	1	
8	1856 41 650	Retainer, Accel. Rod (Automatic)	1	
9	1854 41 660B	Cable, Accel.	1	
10	99786 0620	Screw, Tapping - Accel. Cable	2	
	99952 0618	Washer, Plain	2	
11	0118 41 681	Stop, Pedal	1	
12	0118 41 682	Rubber, Stopper	1	
13	99940 0600	Nut, Stopper	1	
14	1708 41 711	Pad, Pedal	1	
15	99230 0511	Pin, Joint Cable & Pedal Rod	1	
	99575 0300	Ring, Snap	1	

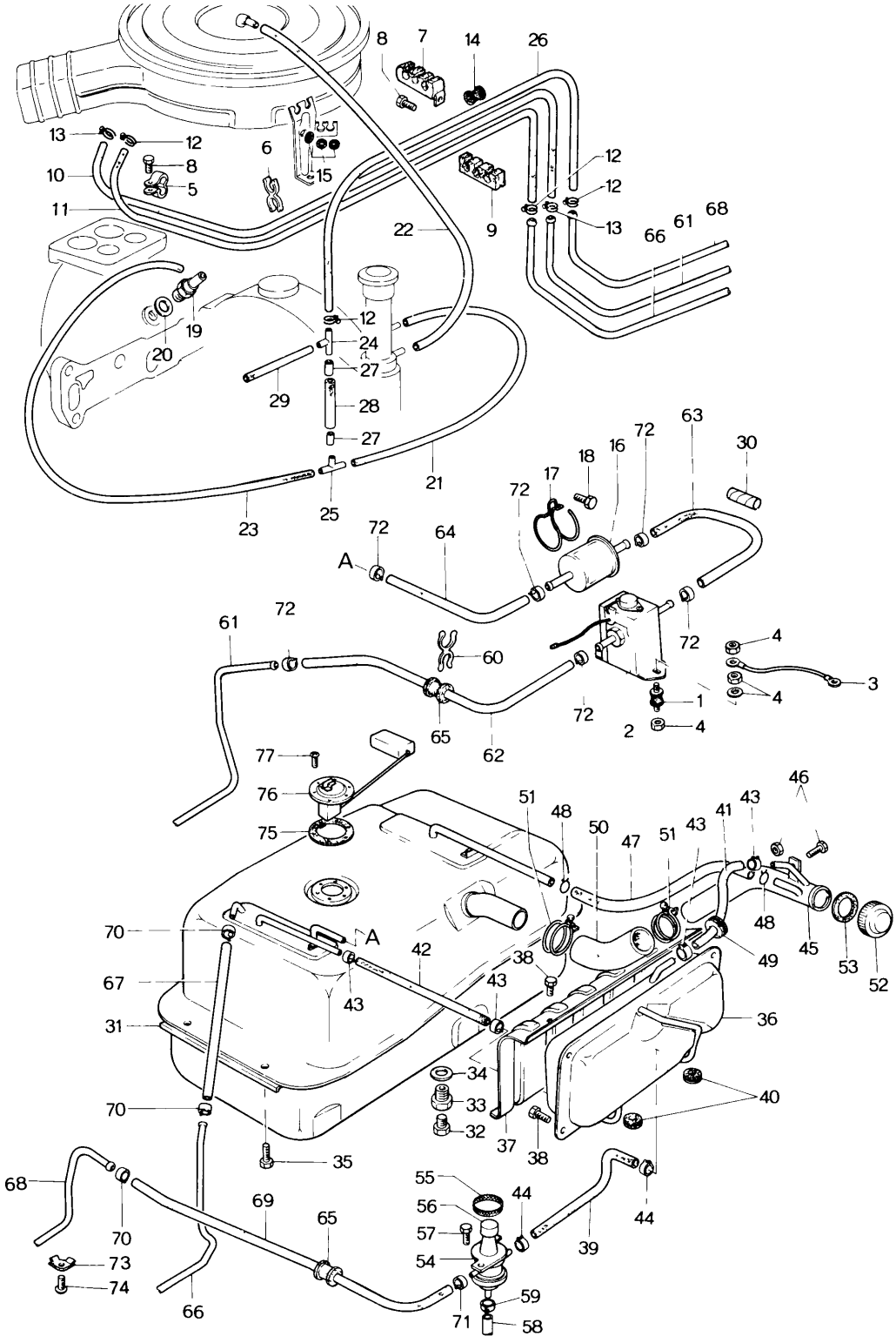
8
7
14
26
13
12
6
12
10
8
15
12
5
11
9
13
66
61
68
22
19
12
20
24
27
29
28
27
21
23
25
72
63
30
18
16
72
17
72
64
A
72
61
72
60
4
3
72
1
4
2
4
65
62
77
76
75
46
51
48
50
47
51
43
41
43
48
45
53
52
49
70
A
42
38
67
43
43
31
36
34
40
33
70
32
37
38
35
68
55
44
69
65
56
70
57
44
39
73
54
74
59
66
71
58

FUEL TANK & PIPING 13 42

No	Part Number	Description	Q'ty	Remarks
1	0223 13 363	Rubber, Insulation – Fuel Pump	2	
2	1854 13 400A	Pump, Fuel	1	
3	0866 13 402A	Wire, Earth – Fuel Pump	1	
4	99940 0600	Nut, Fuel Pump	4	
	99952 0600	Washer, Plain	2	
5	1757 13 446	Clip, Fuel Pipe	1	
6	1570 13 447	Clip, Fuel Pipe	1	
7	1757 13 447	Clip, Fuel Pipe	1	
8	99786 0612	Bolt, Clip	2	
9	1757 13 449	Protector, Pipe	1	
10	99348 08930	Pipe, Fuel Main	1	Order Under No. 99343 08150 (15 m)
11	99348 06930	Pipe, Fuel Return	1	Order Under No. 99343 06150 (15 m)
12	99283 1000	Clip, Fuel Pipe & Evaporation Pipe	4	
13	99283 1200	Clip, Fuel Pipe	2	
14	99681 1203	Protector, Pipe	1	
15	99681 1503	Protector, Pipe	3	
16	0222 13 470B	Filter, Fuel	1	
17	0381 13 481	Clamp, Fuel Filter	1	
18	99786 0612	Bolt, Fuel Filter	1	
19	1757 13 780	Valve, Ventilation – IN. Manifold	1	

No.	Part Number	Description	Q'ty	Remarks
20	99564 1600	Gasket, Ventilation Valve	1	
21	1757 13 785A	Hose, Ventilation – "T" Joint ~ Oil Filler Pipe	1	
22	1757 13 786A	Hose, Ventilation – Air Cleaner ~ Intermediate Housing	1	
23	1757 13 788A	Hose, Ventilation – "T" Joint ~ Ventilation Valve	1	
24	1029 13 790	Joint, "T"	1	
25	1757 13 790	Joint, "T"	1	
26	99346 06450	Hose, Evaporation – "T" Joint ~ Evaporation Pipe	1	Order Under No. 99343 06150 (15 m)
27	1757 13 795	Insert, "T" Joint	2	
28	99346 06055	Hose, Evaporation – "T" Joint ~ "T" Joint	1	Order Under No. 99343 06150 (15 m)
29	99340 04090	Tube, EVC Valve ~ "T" Joint	1	
30	0823 18 111	Supporter, Fuel Pipe	1	
31	1854 42 310	Tank, Fuel	1	
32	0647 42 044	Cock, Drain	1	
33	0647 42 046	Plug, Drain	1	
34	99560 1800	Gasket, Drain Plug	1	
35	99786 0820	Bolt, Fuel Tank	4	
36	1854 42 330	Tank, Condense	1	
37	1854 42 338A	Protector, Condense Tank	1	

No	Part Number	Description	Q'ty	Remarks
38	99786 0612	Bolt, Condense Tank & Protector	11	
39	1854 42 339	Tube, Vent – Condense Tank ~ Check Valve	1	
40	99681 1001	Protector, Condense Tank Pipe	2	
41	99340 06200	Tube, Vent – Condense Tank ~ Filler Pipe	1	Order Under No. 99344 06150 (15 m)
42	99348 06340	Tube, Vent – Condense Tank ~ Fuel Tank	1	Order Under No. 99343 06150 (15 m)
43	99283 1000	Clip, Tube	4	
44	99283 1100	Clip, Tube	2	
45	1854 42 350	Pipe, Filler	1	
46	99796 0820	Bolt, Filler Pipe	1	
	99940 0800	Nut	1	
47	99348 12350	Tube, Vent – Filler Pipe ~ Fuel Tank	1	Order Under No. 99340 12150 (15 m)
48	99282 1801	Clip, Vent Tube	2	
49	99681 1501	Protector, Vent Tube	1	
50	2677 42 441	Hose, Filler	1	
51	99282 5800	Clamp, Filler Hose	2	
52	1823 42 430	Cap, Filler	1	
53	0136 42 449	Supporter, Filler Pipe	1	
54	2691 42 710A	Valve, Check	1	
55	2677 42 716	Element, Check Valve	1	
56	2677 42 717	Cap, Check Valve	1	

No	Part Number	Description	Q'ty	Remarks
57	99786 0514	Bolt, Check Valve	1	
58	99346 06090	Tube, Vent – Check Valve ~ Floor	1	Order Under No. 99343 06150 (15 m)
59	99283 1100	Clip, Vent Tube	1	
60	0707 43 390	Clip, Fuel Pipe	1	
61	1854 45 061	Pipe, Fuel Main	1	
62	99348 08310	Pipe, Fuel – Fuel Pump ~ Fuel Pipe	1	Order Under No. 99343 08150 (15 m)
63	1854 45 071	Pipe, Fuel – Fuel Filter ~ Fuel Pump	1	
64	1854 45 072A	Pipe, Fuel – Fuel Tank ~ Fuel Filter	1	
65	99684 1400	Protector, Fuel Pipe & Evaporation Pipe	2	
66	1854 45 631	Pipe, Fuel Return	1	
67	99348 06250	Pipe, Fuel Return – Fuel Tank Side	1	Order Under No. 99343 06150 (15 m)
68	1854 45 731	Pipe, Evaporation	1	
69	99348 06150	Pipe, Evaporation – Check Valve Side	1	Order Under No. 99343 06150 (15 m)
70	99283 1000	Clip, Pipe – Fuel Return & Evaporation Pipe	3	
71	99283 1100	Clip, Pipe – Evaporation Pipe	1	
72	99283 1200	Clip, Pipe – Fuel Pipe	6	
73	0866 45 903A	Clip, Fuel Pipe	6	
74	99786 0612	Bolt, Clip	6	
75	0243 66 773	Gasket, Fuel Tank Gauge	1	
76	1854 67 180	Gauge, Fuel Tank	1	
77	99833 0408	Screw, Fuel Tank Gauge	6	

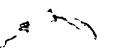

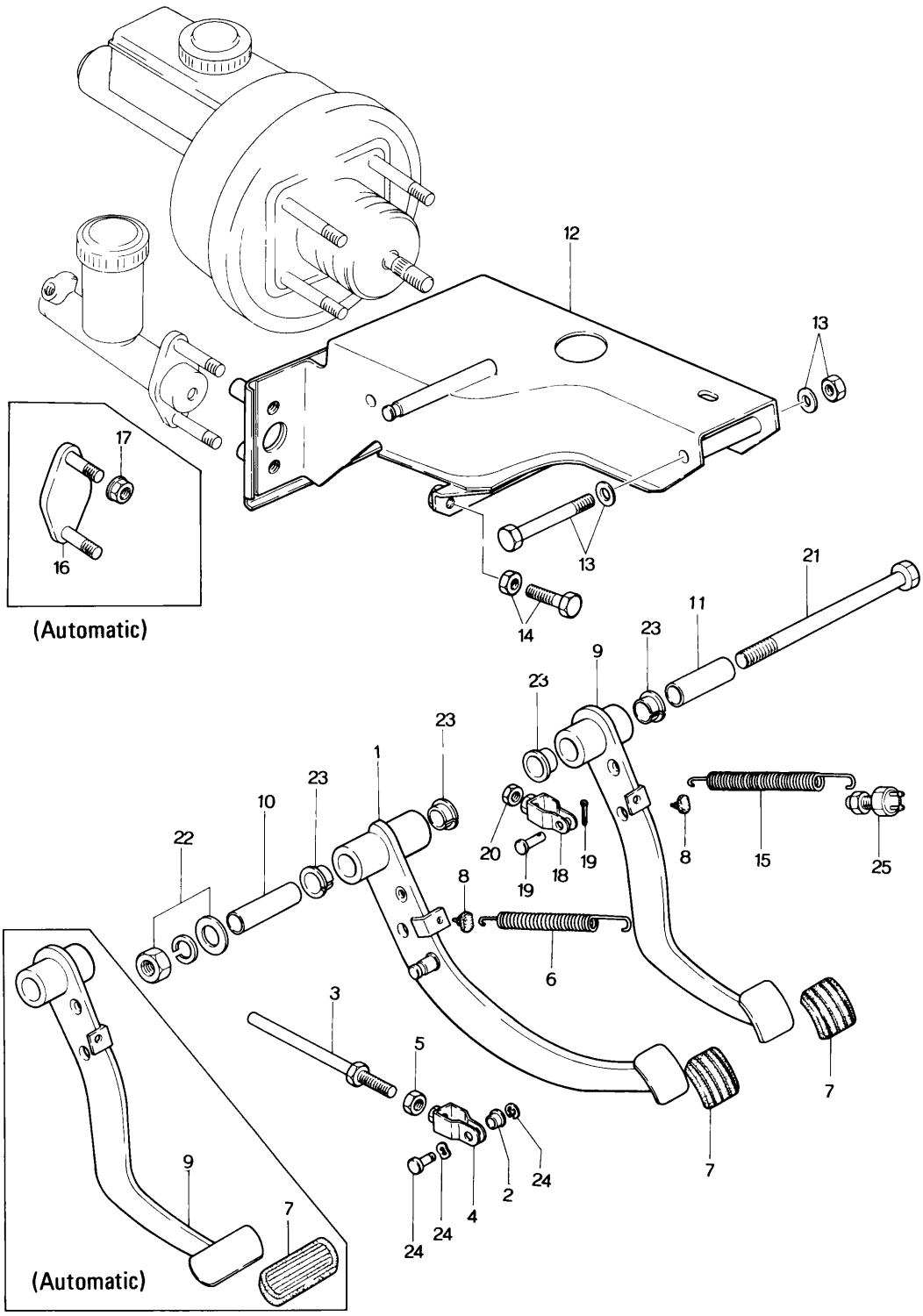
12
13
13
17
16
(Automatic)
14
21
11
23
9
23
23
1
23
10
22
20
19
18
19
8
8
15
25
6
3
5
7
7
9
7
(Automatic)
24
2
24
4
24
24

CLUTCH & BRAKE PEDAL 41 43

No	Part Number	Description	Q'ty	Remarks
1	1854 41 030	Pedal, Clutch	1	
2	0727 41 023	Bush, Push Rod Fork	1	
3	0824 41 131	Rod, Push	1	
4	1872 41 140	Fork, Clutch (Manual)	1	
5	1872 41 142	Nut, Push Rod & Fork	1	
6	0180 41 308	Spring, Clutch Pedal	1	
7	0118 43 028A	Pad, Pedal (Manual)	2	
	0225 43 028A	Pad, Pedal (Automatic)	1	
8	0187 43 029	Stopper	(Manual) 2 (Automatic) 1	
9	1854 43 030A	Pedal, Brake (Manual)	1	
	1856 43 030	Pedal, Brake (Automatic)	1	
10	0866 43 061	Pipe (Manual)	1	
11	0866 43 062	Pipe	1	
12	1854 43 070	Bracket, Master Cylinder	1	
13	99801 0890	Bolt, Bracket	1	
	99952 0822	Washer, Plain	2	
	99940 0800	Nut	1	
14	99795 1032	Bolt, Pedal Stopper (Manual)	1	
	99922 1000	Nut	1	
15	0603 43 081	Spring, Pedal	1	

CLUTCH & BRAKE PEDAL

No	Part Number	Description		Q'ty	Remarks
16	1015 43 090	Plate	(Automatic)	1	
17	99940 0800	Nut, Plate	(Automatic)	2	
18	1854 43 140	Fork, Brake		1	
19	99231 0822	Pin, Joint - Brake Pedal & Fork		1	
	99221 2020	Pin, Split		1	
20	99940 1000	Nut, Brake Fork		1	
21	99813 10180	Bolt, Pedal	(Manual)	1	
	99813 10140	Bolt, Pedal	(Automatic)	1	
22	99921 1000	Nut, Pedal Bolt		1	
	99952 1000	Washer, Plain		2	
	99971 1000	Washer, Spring		1	
23	1015 46 085	Bush, Pedal		(Manual) 4 (Automatic) 2	
24	0223 46 683	Pin, Joint - Pedal & Fork	(Manual)	1	
	99575 0600	Ring, Joint Pin	(Manual)	1	
	99972 0800	Washer, Wave	(Manual)	1	
25	0233 66 790	Switch, Stop		1	

CLUTCH RELEASE & MASTER CYLINDER (MANUAL)

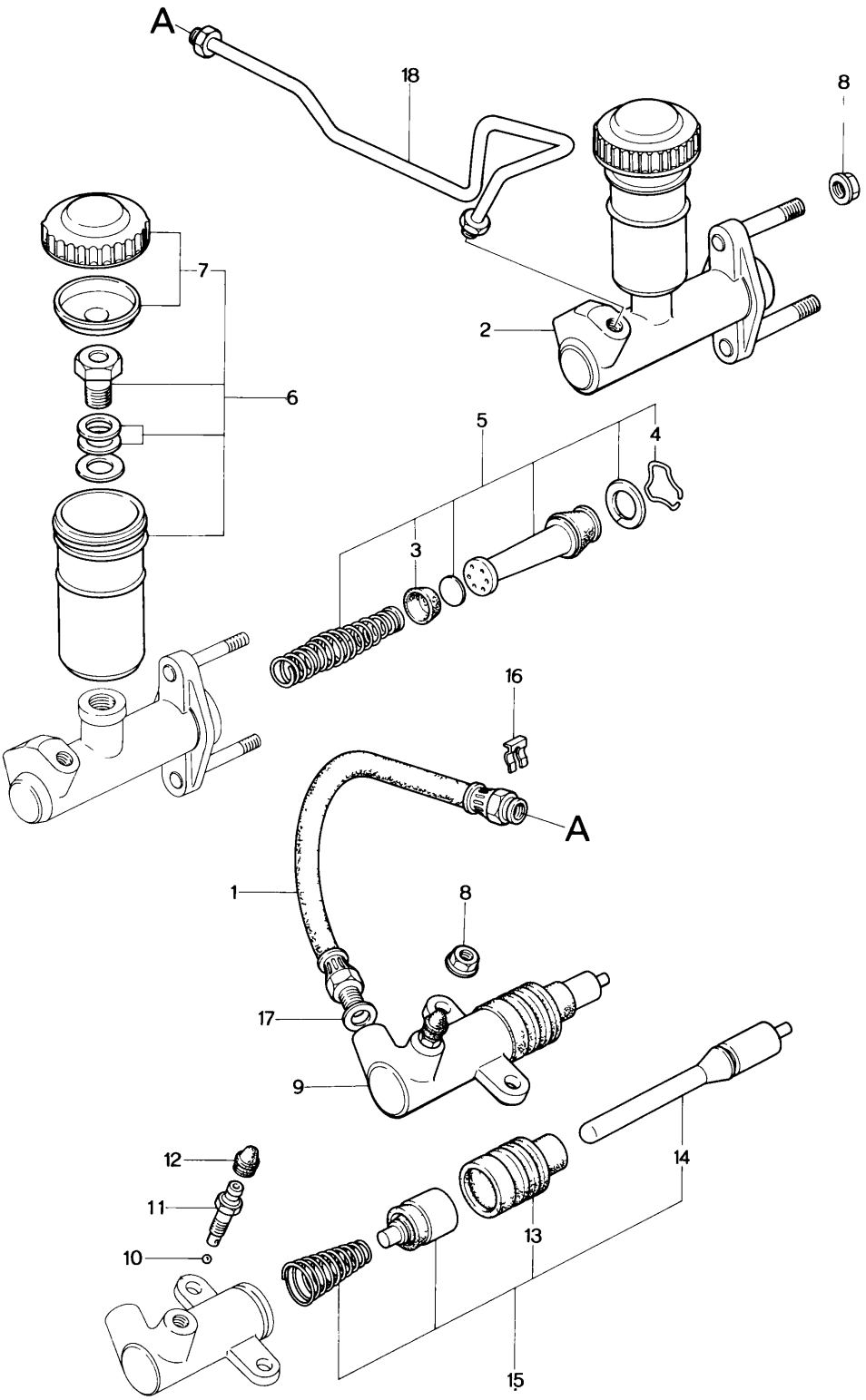

CLUTCH RELEASE & MASTER CYLINDER (MANUAL)

No	Part Number	Description	Q'ty	Remarks
1	0118 41 380A	Hose, Flexible	1	
2	1011 41 400A	Cylinder, Clutch Master	1	
3	0839 41 461	Cup, Primary	1	
4	0111 43 432	Wire, Piston Stop	1	
5	0839 89 431A	Repair Kit	1	
6	0317 89 435A	Tank Set, Reserve	1	
7	0317 89 436	Cap Set, Reserve Tank	1	
8	99940 0800	Nut, Cylinder	4	
9	1881 41 920A	Cylinder, Clutch Release	1	
10	99611 1500	Ball, Steel	1	
11	0259 33 691	Valve, Bleeder	1	
12	0259 33 693	Cap, Bleeder	1	
13	0603 41 331	Boot	1	
14	1881 41 341	Rod, Push	1	
15	1881 89 411	Repair Kit	1	
16	0136 43 635	Clip, Flexible Hose	1	

CLUTCH RELEASE & MASTER CYLINDER (MANUAL)

No	Part Number	Description	Q'ty	Remarks
17	99564 1000	Packing, Flexible Hose	1	
18	1854 45 550	Pipe, Clutch	1	

TANDEM MASTER CYLINDER & VACUUM POWER ASSIST

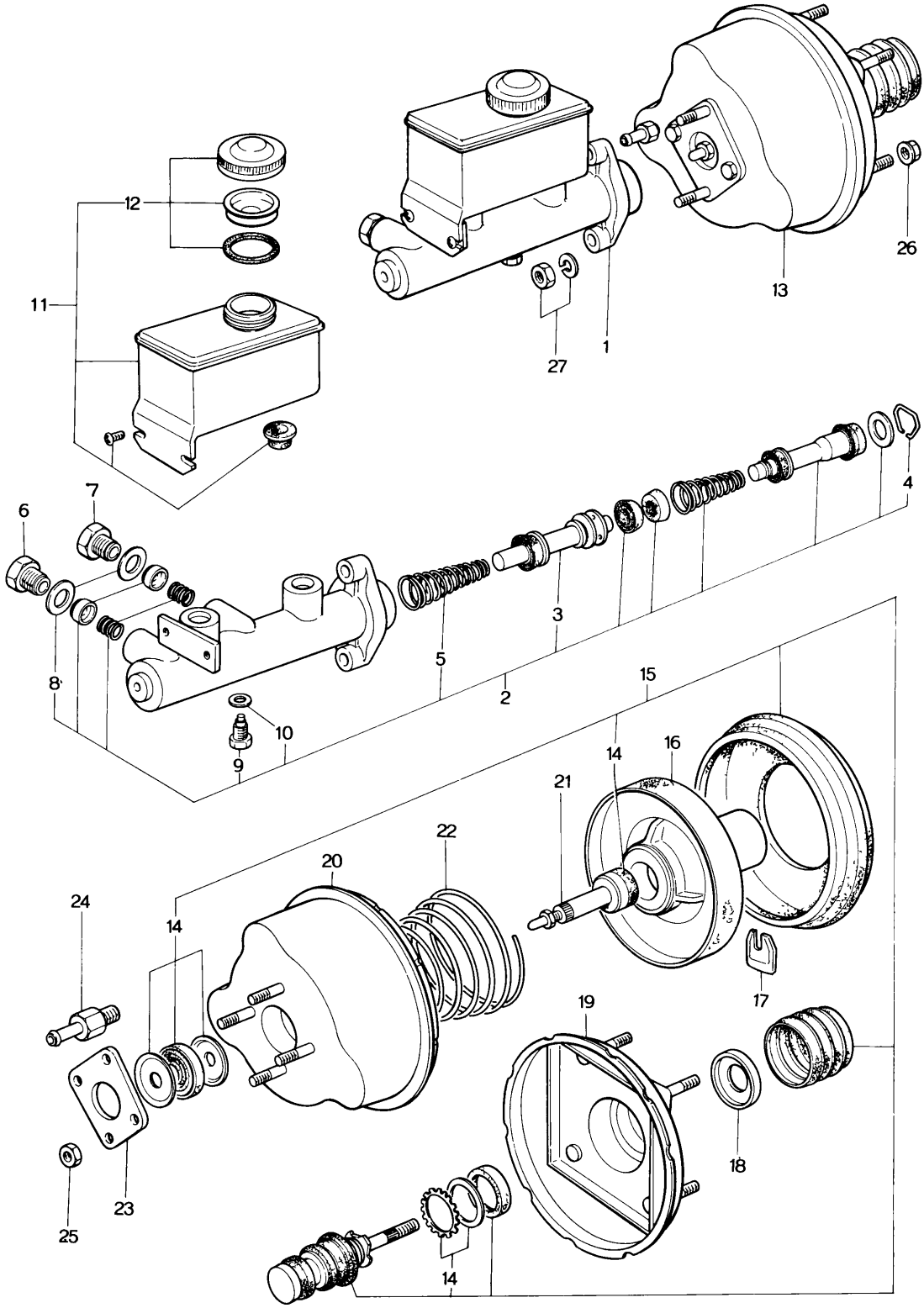

TANDEM MASTER CYLINDER & VACUUM POWER ASSIST

43 49

No	Part Number	Description	Q'ty	Remarks
1	1854 43 400	Cylinder, Tamdem Master	1	
2	1708 49 610	Parts Kit, Inner (Fig. No. 3 ~ 5, 8 ~ 10 Included)	1	
3	1708 49 630	Piston, Floating (Fig. No. 5 Included)	1	
4	0305 49 638	Wire, Piston Stop	1	
5	1708 49 642	Spring, Floating	1	
6	0512 49 651	Bolt, Joint	1	
7	0512 49 652	Bolt, Joint	1	
8	0305 49 656	Gasket, Joint Bolt	2	
9	0512 49 676	Bolt Set (A)	1	Selective use
	0512 49 677	Bolt Set (B)		
	0512 49 678	Bolt Set (C)		
10	0512 49 696	Gasket, Set Bolt	1	
11	0391 89 435	Tank Set	1	
12	0317 89 436	Cap Set, Tank	1	
13	1854 43 800	Vacuum Power Assist	1	
14	0824 49 710	Repair Kit (A)	1	
15	0824 49 720A	Repair Kit (B)	1	
16	0824 49 745	Plate, Diaphragm	1	
17	2046 49 746	Key, Plunger Stop	1	

43 49 TANDEM MASTER CYLINDER & VACUUM POWER ASSIST

No	Part Number	Description	Q'ty	Remarks
18	2046 49 747	Retainer, Silencer	1	
19	0824 49 750	Shell, Stud. (Rr.)	1	
20	1854 49 760	Shell, Stud. (Frt.)	1	
21	0824 49 770	Rod, Push	1	
22	0824 49 781	Spring	1	
23	0824 49 782	Flange	1	
24	0870 49 785	Valve, Check	1	
25	99940 0801	Nut, Flange	2	
26	99940 0801	Nut, Vacuum Power Assist	4	
27	99901 0800	Nut, Tandem Master Cylinder	2	
	99971 0800	Washer, Spring	2	

BRAKE PIPING

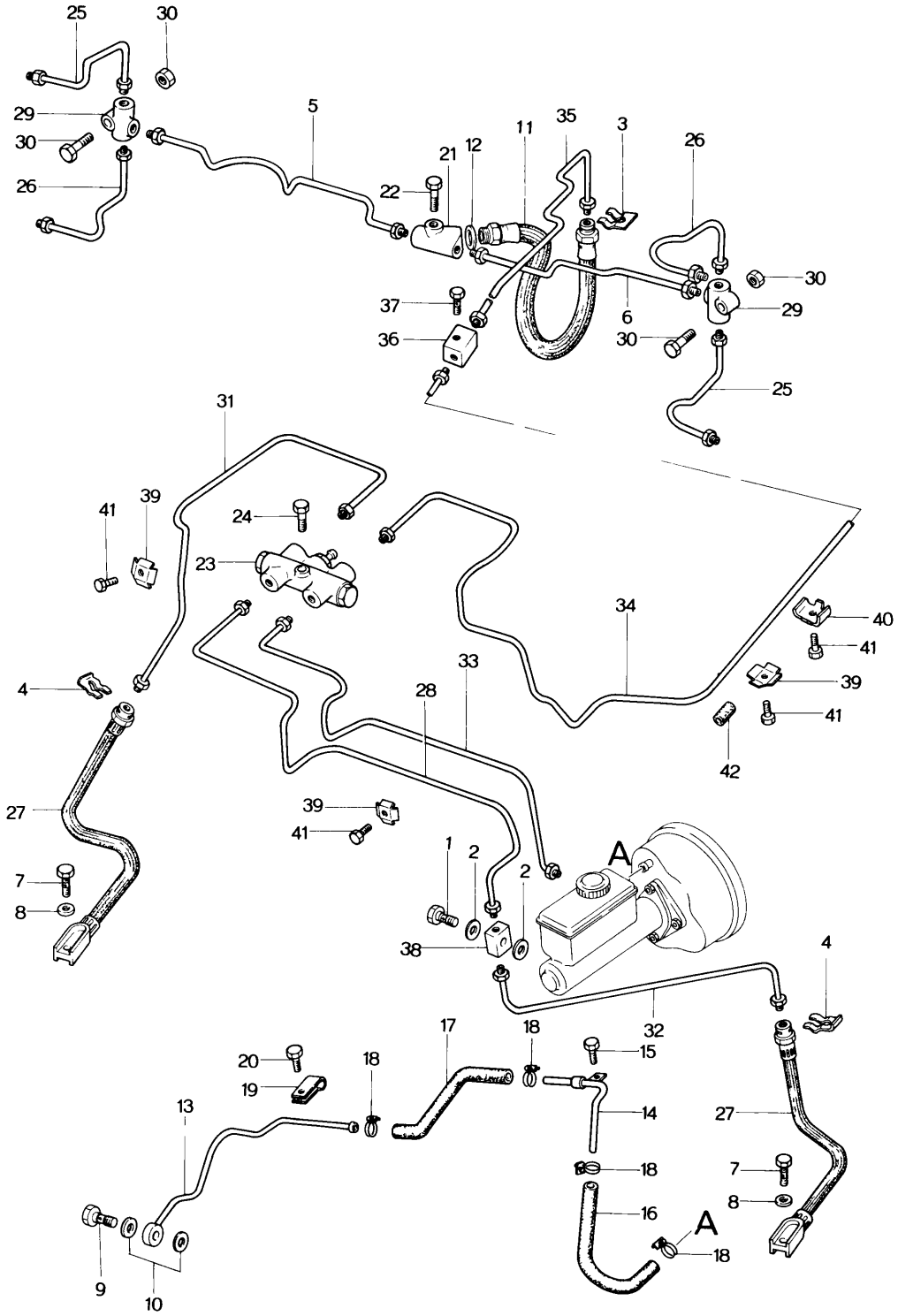

BRAKE PIPING 43 45

No	Part Number	Description	Q'ty	Remarks
1	0118 43 505A	Bolt, Connector	1	
2	99562 1000	Gasket, Connector Bolt	2	
3	0136 43 635	Clip, Flexible Hose	1	
4	0305 43 635	Clip, Flexible Hose	2	
5	1854 43 650A	Pipe, Brake Oil (R) - Rear	1	
6	1854 43 660	Pipe, Brake Oil (L) - Rear	1	
7	0221 43 694	Bolt, Connector - Front Flexible Hose	2	
8	99562 1000	Gasket	4	
9	1570 43 694A	Bolt, Connector	1	
10	99562 1200	Gasket, Connector Bolt	2	
11	1854 43 810	Hose, Flexible Rear	1	
12	99562 1000	Gasket, Flexible Rear Hose	1	
13	1757 43 830A	Pipe, Vacuum	1	
14	1854 43 830	Pipe, Vacuum	1	
15	99796 0610	Bolt, Vacuum Pipe	1	
16	1854 43 836	Hose, Vacuum	1	
17	1854 43 842	Hose, Vacuum	1	
18	99282 1901	Band, Hose Vacuum Hose	4	
19	1757 43 848	Holder, Pipe	1	
20	99796 0812	Bolt, Pipe Holder	1	

43 45 BRAKE PIPING

No	Part Number	Description	Q'ty	Remarks
21	0118 43 853	Joint, Pipe - Rear	1	
22	99796 0625	Bolt, Pipe Joint	1	
23	1011 43 890A	Indicator, Brake Fail	1	
24	99786 0635	Bolt, Indicator	1	
25	2677 43 950A	Pipe, Rear Brake Oil	2	
26	2677 43 960A	Pipe, Rear Brake Oil	2	
27	1854 43 970	Hose, Flexible	2	
28	1854 45 210	Pipe, Front Main Brake	1	
29	0187 45 221	Joint, Pipe - Rear	2	
30	99806 0625	Bolt, Pipe Joint	2	
	99940 0600	Nut	2	
31	1854 45 280	Pipe, Front Brake (R)	1	
32	1854 45 320	Pipe, Front Brake (L)	1	
33	1854 45 340	Pipe, Rear Main Brake	1	
34	1854 45 350	Pipe, Rear Brake No. 1	1	
35	1854 45 360	Pipe, Rear Brake No. 2	1	
36	0571 45 451	Joint, Pipe	1	
37	99786 0630	Bolt, Pipe Joint	1	
38	0866 45 452	Joint, Pipe	1	
39	0866 45 903A	Clip, Brake Pipe	6	

No	Part Number	Description	Q'ty	Remarks
40	1304 45 903	Clip, Pipe	6	
41	99786 0612	Screw, Tapping - Clip	12	
42	1854 45 995	Protector, Pipe	2	

44 PARKING BRAKE SYSTEM

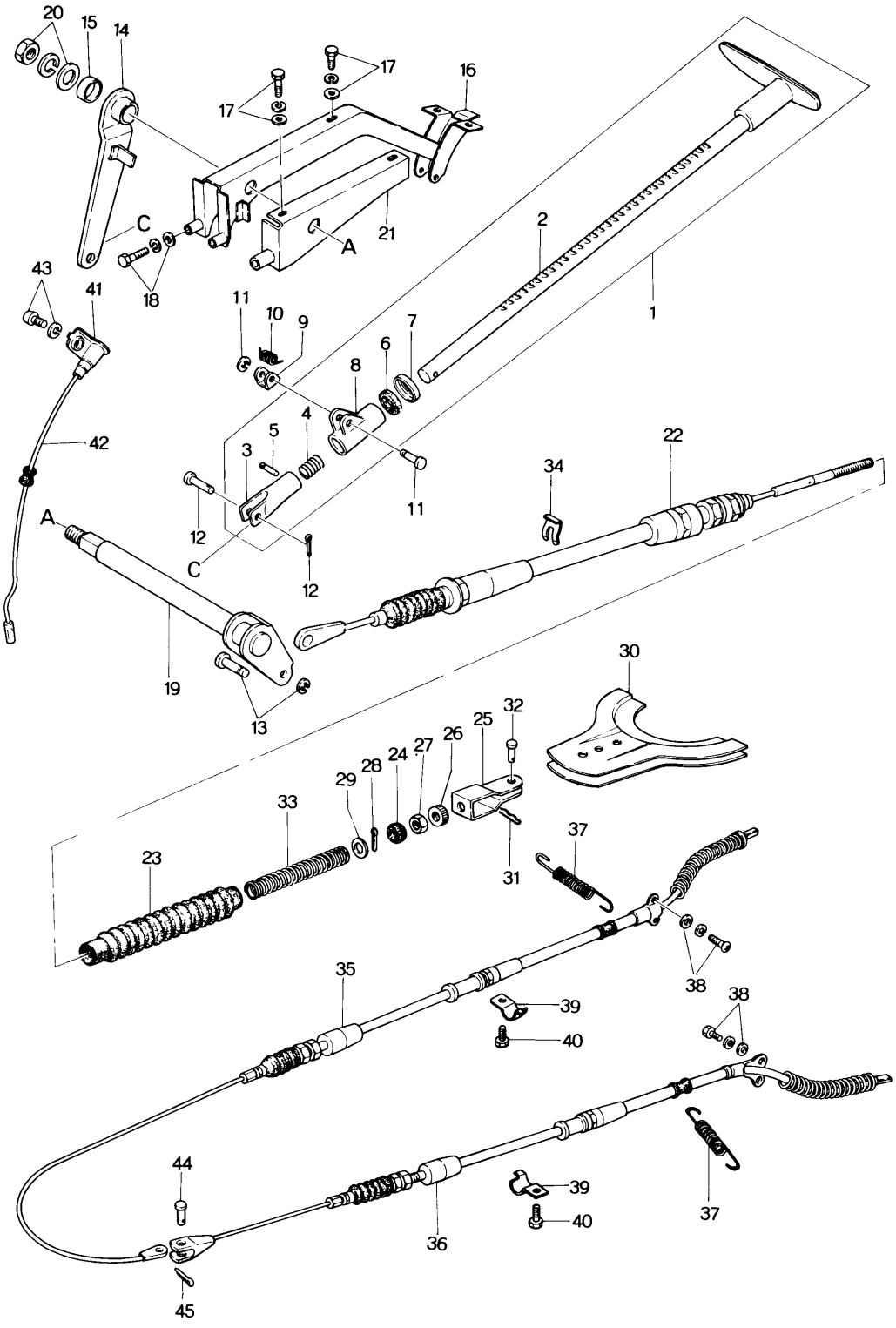

PARKING BRAKE SYSTEM 44

No	Part Number	Description	Q'ty	Remarks
1	1845 44 010	Rod, Parking Brake	1	
2	1845 44 020	Rod, Parking Brake	1	
3	2781 44 041	Joint, Fork	1	
4	2781 44 042	Spring	1	
5	0114 44 043	Pin, Knock	1	
6	0183 44 045	Stopper	1	
7	0114 44 046	Seat, Stop	1	
8	0114 44 051	Guide, Rack	1	
9	0114 44 052	Ratchet	1	
10	0114 44 053	Spring, Ratchet	1	
11	99230 0523	Pin, Ratchet	1	
	99575 0300	Ring, Snap	1	
12	0114 44 056	Pin, Parking Brake Rod	1	
	99221 2015	Pin, Split	1	
13	99230 0615	Pin, Wire End	1	
	99575 0400	Ring, Snap	1	
14	1845 44 060	Lever, Parking Brake	1	
15	2541 44 063	Spacer	1	
16	1854 44 080	Bracket, Parking Brake	1	

No	Part Number	Description	Q'ty	Remarks
17	99833 0614	Screw, Bracket	5	
	99951 0618	Washer, Plain	5	
	99971 0600	Washer, Spring	5	
18	99785 0645	Screw, Bracket	2	
	99951 0618	Washer, Plain	2	
	99971 0600	Washer, Spring	2	
19	1845 44 090	Lever, Spindle	1	
20	99922 1000	Nut, Spindle Lever	1	
	99952 1000	Washer, Plain	1	
	99971 1000	Washer, Spring	1	
21	1845 44 110	Bracket, Parking Brake	1	
22	1845 44 150	Cable, Front	1	
23	0603 44 158A	Boot	1	
24	0603 44 167	Ring, Guide	1	
25	0603 44 261	Joint, Fork	1	
26	0603 44 262	Nut, Adjust	1	
27	99906 0600	Nut	1	
28	99221 1610	Pin, Split	1	
29	99203 2000	Washer, Plain	1	
30	0603 44 270	Plate, Equalizer	1	

No	Part Number	Description	Q'ty	Remarks
31	99231 0822	Pin, Joint - Equalizer Plate	1	
32	0603 44 272	Pin	1	
33	0603 44 357	Spring, Joint Fork	1	
34	0118 44 375	Clip, Cable	1	
35	1854 44 410	Cable (R), Rear	1	
36	1854 44 420	Cable (L), Rear	1	
37	0578 44 431	Spring, Cable	2	
38	99833 0510	Screw, Setting Plate	4	
	99952 0500	Washer, Plain	4	
	99971 0500	Washer, Spring	4	
39	0866 44 439	Clip, Rear Cable	2	
40	99786 0616	Screw, Tapping - Clip	2	
41	0820 66 950	Switch, Parking Lamp	1	
42	0188 66 731A	Cord, Parking Lamp Switch	1	
43	99863 0410	Screw, Parking Lamp Switch	2	
	99952 0400	Washer, Plain	2	
	99971 0400	Washer, Spring	2	
44	99231 0620	Pin, Joint - Rear Cable	1	
45	99221 1610	Pin, Split - Joint Pin	1	

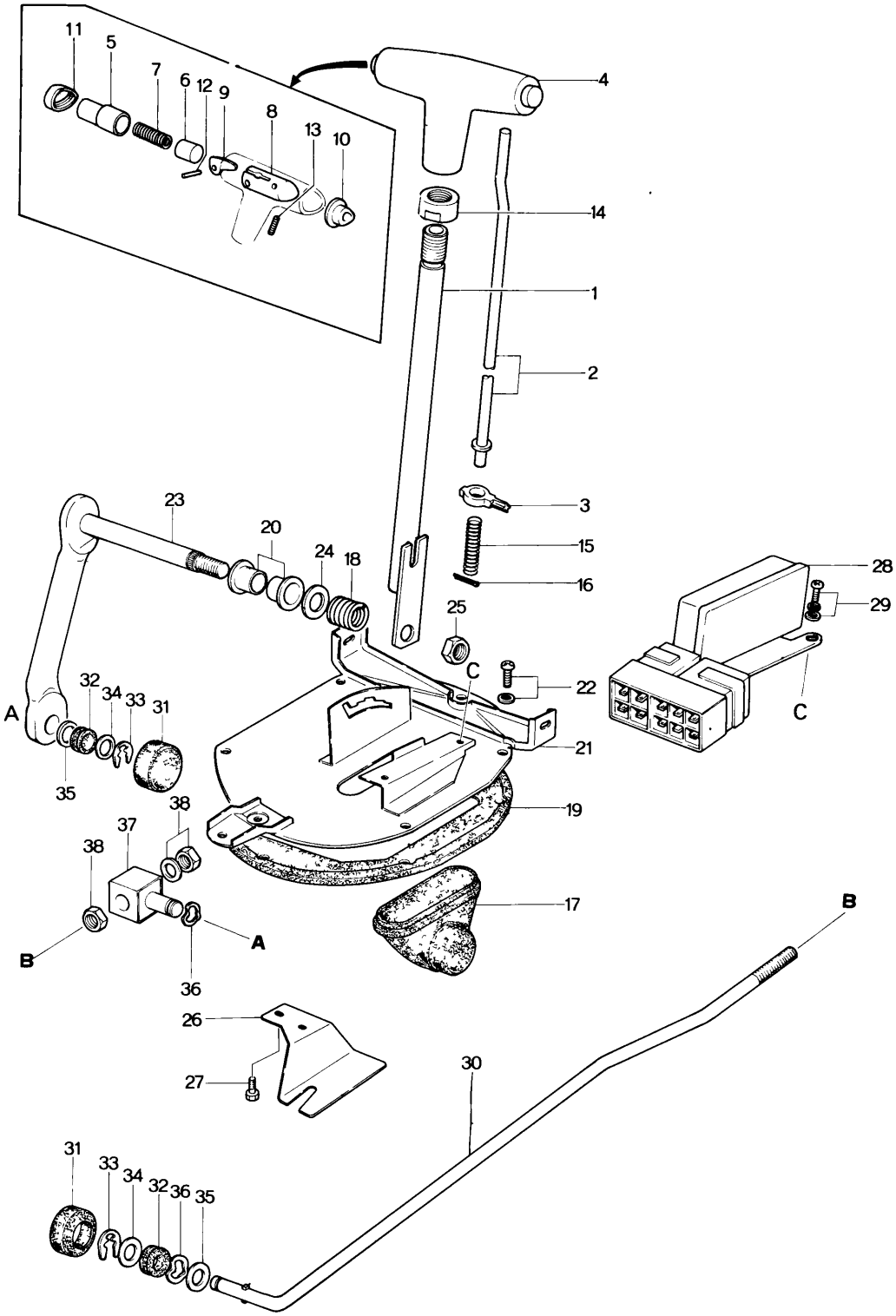
11
5
7
6
12
9
8
13
10
4
14
1
2
3
15
16
23
20
24
18
25
C
22
21
19
17
28
29
C
A
32
34
33
31
35
38
37
38
B
A
36
26
27
30
B
31
33
34
32
36
35

CHANGE CONTROL (AUTOMATIC)

No	Part Number	Description	Q'ty	Remarks
1	1015 46 010A	Lever, Selecter	1	
2	1840 46 021	Rod	1	
3	1840 46 022	Pin, Guide	1	
4	1736 46 030	Knob, Change Lever	1	
5	2375 46 051A	Knob	1	
6	2375 46 052	Piston	1	
7	2375 46 053	Spring	1	
8	2375 46 054	Supporter	1	
9	2375 46 055	Lever	1	
10	2375 46 056A	Plug	1	
11	0308 46 057A	Cap	1	
12	99225 0320	Pin	1	
13	99887 0412	Screw	1	
14	2375 46 061	Nut	1	
15	2375 46 062	Spring	1	
16	99221 2020	Pin, Split	1	
17	1015 46 081	Boot	1	
18	1015 46 082	Spring	1	

No.	Part Number	Description	Q'ty	Remarks
19	1015 46 083A	Rubber, Seal	1	
20	1015 46 085	Bush, Lever	2	
21	1856 46 110	Bracket, Selector Lever	1	
22	99865 0516	Screw, Lever Bracket	6	
23	1015 46 150A	Lever	1	
24	99953 1400	Washer, Plain	1	
25	99940 1000	Nut, Lever	1	
26	1856 46 201	Insulator, Heat	1	
27	99796 1016	Bolt, Heat Insulator	2	
28	1015 66 520A	Switch, Inhibitor	1	
29	99763 0610	Screw, Inhibitor Switch	2	
30	1856 46 571	Rod	1	
31	1015 46 648	Cover, Dust	2	
32	1015 46 684	Bush	2	
33	99575 0600	Ring, Retaining	2	
34	99952 0816	Washer, Plain	2	
35	99953 0800	Washer, Plain	2	
36	99972 0800	Washer, Wave	2	
37	1015 46 691	Joint, "T"	1	
38	99902 0800	Nut, "T" Joint	2	
	99971 0800	Washer, Spring	1	

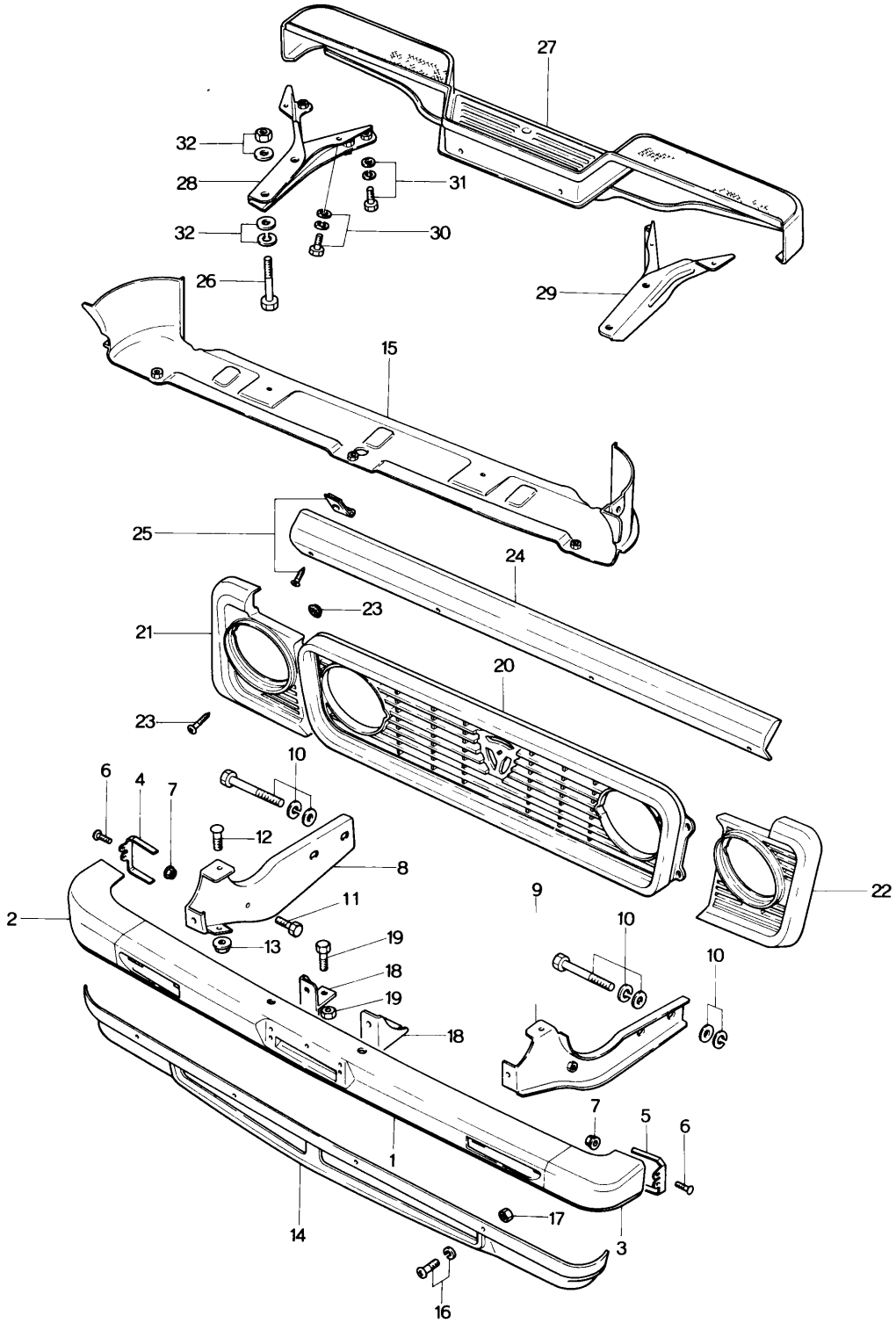
27
32
28
31
32
30
26
29
15
25
24
23
21
20
23
10
6
4
7
12
8
11
2
13
19
18
19
18
9
10
10
7
5
6
1
17
14
3
16

BUMPER & GRILLE 50

No	Part Number	Description	Q'ty	Remarks
1	1854 50 031	Bumper (C), Front	1	
2	1854 50 060	Bumper (R), Front	1	
3	1854 50 070	Bumper (L), Front	1	
4	1854 50 062	Extension (R)	1	
5	1854 50 072	Extension (L)	1	
6	0223 50 275	Screw, Extension	4	
7	99940 0602	Nut, Extension	4	
8	1854 50 110	Stay (R), Bumper	1	
9	1854 50 120	Stay (L), Bumper	1	
10	99811 1245	Bolt, Stay + Body	4	
	99951 1226	Washer, Plain	4	
	99971 1200	Washer, Spring	4	
11	99786 0825	Bolt, Stay + Bumper	2	
12	0223 50 275	Screw, Bumper	12	
13	99940 0602	Nut, Bumper	12	
14	1854 50 091	Panel, Front Skirt	1	
15	1854 50 130	Intake, Air	1	
16	99834 0512	Screw, Skirt Panel & Air Intake	13	

BUMPER & GRILLE

No	Part Number	Description	Q'ty	Remarks
	99951 0618	Washer, Plain	13	
17	99940 0502	Nut, Skirt Panel & Air Intake	8	
18	1823 50 098	Holder, Number Plate	2	
19	99806 0614	Bolt, Number Plate Holder	2	
	99940 0602	Nut	2	
20	1854 50 511	Grille, Radiator	1	
21	1854 50 521	Bezel (R), Head Lamp (BLK.)	1	
22	1854 50 531	Bezel (L), Head Lamp (BLK.)	1	
23	99769 0425B	Screw, Grille & Bezel	12	
	99910 0403	Grommet, Screw	12	
24	1854 50 551	Garnish, Upper	1	
25	99769 0414	Screw, Garnish	4	
	99896 0400	Nut, Spring	4	
26	1854 78 615	Bolt, Rear Bumper	4	
27	1823 78 620B	Bumper, Rear	1	
28	1854 78 640	Stay (R), Rear Bumper	1	
29	1854 78 650	Stay (L), Rear Bumper	1	
30	99781 1025	Bolt	6	
	99951 1022	Washer, Plain	6	
	99971 1000	Washer, Spring	6	

No	Part Number	Description	Q'ty	Remarks
31	99781 1040	Bolt, Rear Bumper	4	
	99951 1022	Washer, Plain	4	
	99971 1000	Washer, Spring	4	
32	99921 1200	Nut, Rear Bumper	4	
	99951 1226	Washer, Plain	4	
	99971 1200	Washer, Spring	4	
	99951 1236	Washer, Plain	6	

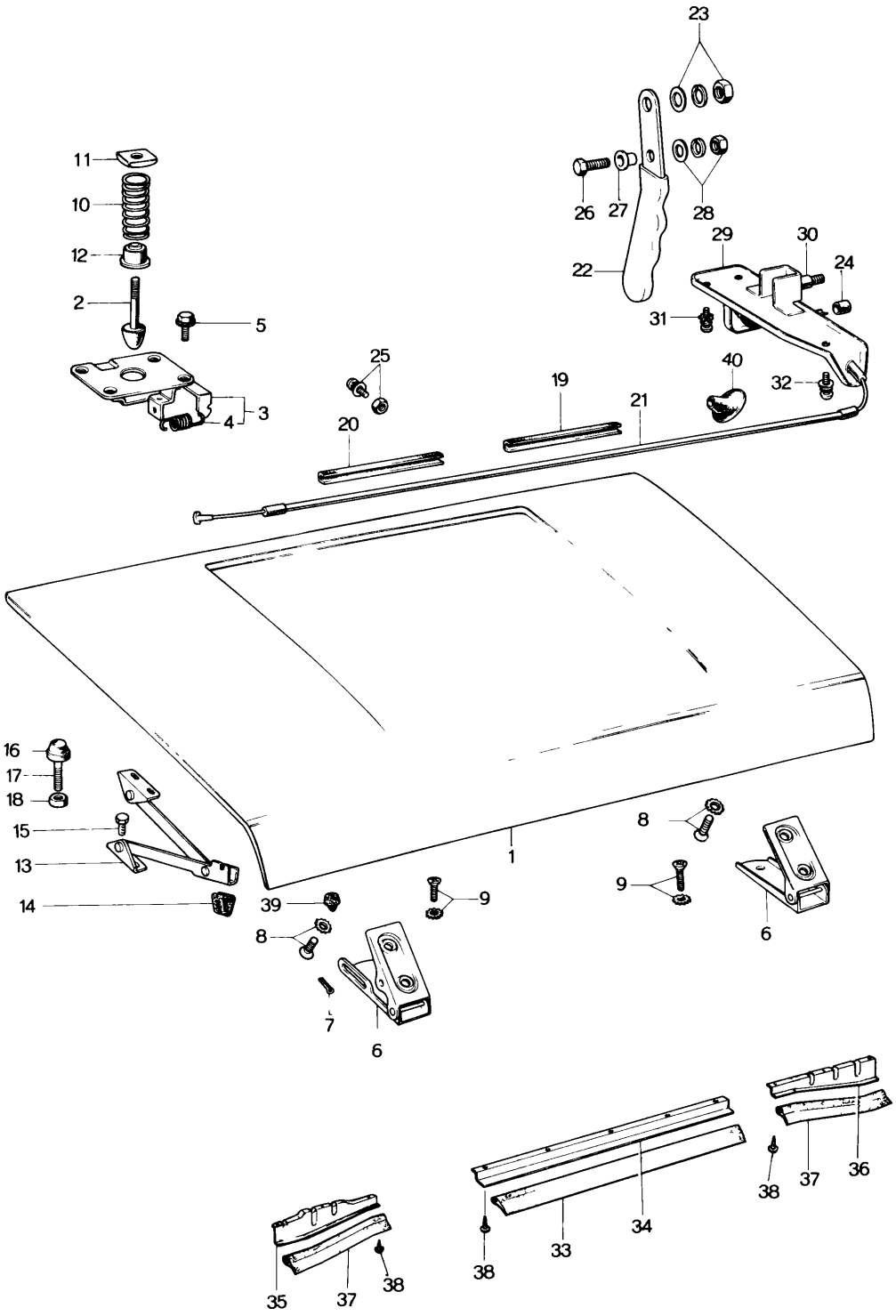
23
11
10
12
2
5
26
27
28
22
29
30
24
31
25
40
32
19
21
20
4
3
16
17
18
15
13
14
39
9
8
1
6
7
35
37
38
34
33
36

No	Part Number	Description	Q'ty	Remarks
1	1854 52 010A	Bonnet	1	
2	0187 52 141	Hook, Bonnet	1	
3	0603 52 160A	Lock, Bonnet	1	
4	0305 52 331	Spring, Return - Lock	1	
5	99796 0614	Bolt, Bonnet Lock	4	
6	0603 52 260	Hinge, Bonnet	2	
7	99221 1610	Pin, Split - Bonnet Hinge	1	
8	99831 0820	Screw, Hinge Upper	4	
	99975 0800	Washer, Toothed	4	
9	99836 0825	Screw, Hinge Lower	4	
	99975 0800	Washer, Toothed	4	
10	0305 52 312B	Spring, Lift	1	
11	0305 52 313	Seat, Upper - Spring	1	
12	0305 52 322A	Seat, Lower - Spring	1	
13	2370 52 390	Stopper, Bonnet	1	
14	0866 52 397A	Rubber, Cushion - Stopper	1	
15	99796 0614	Bolt, Bonnet Stopper	4	
16	0603 52 451A	Rubber, Cushion - Bonnet	2	

No	Part Number	Description	Q'ty	Remarks
17	99831 0830	Screw, Cushion Rubber	2	
18	99902 0800	Nut, Cushion Rubber	2	
19	0603 52 471	Rubber, Seal - Bonnet	1	
20	0603 52 472	Rubber, Seal - Bonnet	1	
21	0603 52 510	Wire, Release - Bonnet	1	
22	0208 52 520	Handle, Release Wire	1	
23	99906 0600	Nut, Release Handle	1	
	99952 0600	Washer, Plain	1	
	99971 0600	Washer, Spring	1	
24	0187 52 523	Rubber, Stopper - Release Handle	1	
25	99806 0516	Bolt, Release Wire	1	
	99952 0500	Washer, Plain	1	
	99971 0500	Washer, Spring	1	
	99906 0500	Nut	1	
26	0187 52 531	Bolt, Release Wire Handle	1	
27	0187 52 532	Spacer, Release Wire Stop	1	
28	99906 0600	Nut, Release Wire Handle	1	
	99952 0600	Washer, Plain	1	
	99971 0600	Washer, Spring	1	

No	Part Number	Description	Q'ty	Remarks
29	2677 52 540A	Bracket, Release Handle	1	
30	0603 52 543	Pin, Handle Set	1	
31	99834 0512	Screw, Release Handle Bracket	2	
	99975 0500	Washer, Toothed	2	
32	99834 0512	Screw, Release Handle Bracket	1	
	99952 0516	Washer, Plain	1	
	99971 0500	Washer, Spring	1	
33	1854 52 611	Rubber, Seal	1	
34	1854 52 612	Plate "A", Rubber Set	1	
35	1854 52 613	Plate "B", Rubber Set	1	
36	1854 52 614	Plate "C", Rubber Set	1	
37	1854 52 615	Rubber No. 2, Seal	2	
38	99863 0510	Screw, Plate	11	
	99952 0500	Washer, Plain	11	
	99971 0500	Washer, Spring	11	
39	0118 58 931	Rubber, Stop - Bonnet Hinge	1	
40	0118 70 531	Protector, Bonnet Release Wire	1	

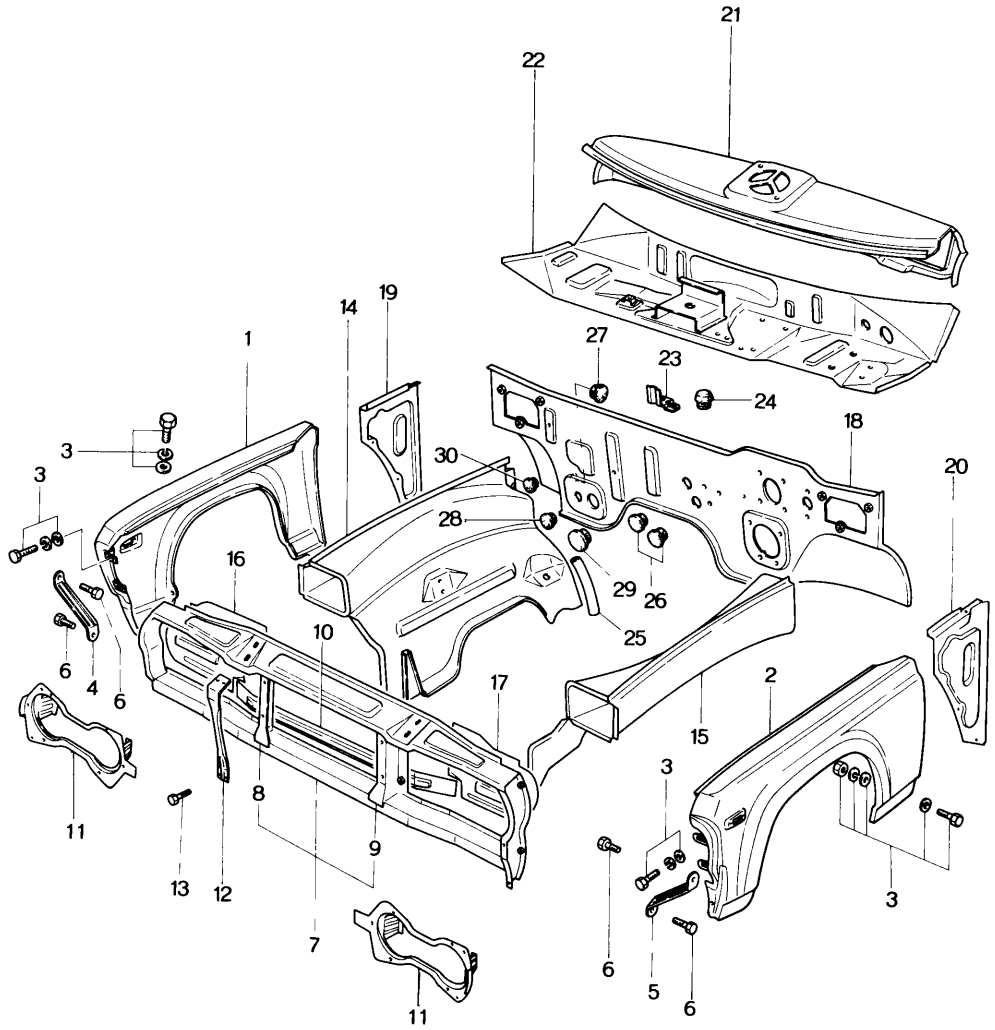
21
22
19
14
1
27
23
24
18
3
3
30
20
28
16
29
26
25
10
6
4
6
17
2
15
11
8
3
9
13
12
7
6
5
6
11
3

BODY PANELS (FRONT) 51 ~ 56

No	Part Number	Description	Q'ty	Remarks
	1857 07 010	Cabin Cpt.	1	
1	1854 51 020A	Panel (R), Fender	1	
2	1854 51 520A	Panel (L), Fender	1	
3	99806 0614	Bolt, Fender Panel	20	
	99952 0618	Washer, Plain	20	
	99951 0618	Washer, Plain	2	
	99971 0600	Washer, Spring	20	
	99906 0600	Nut	2	
4	1823 51 050	Plate (R), Junction	1	
5	1823 51 550	Plate (L), Junction	1	
6	99786 0510	Bolt, Junction	4	
7	1854 53 030	Panel, Shroud - Radiator (Fig. No. 8, 9 Included)	1	
8	1854 53 050	Member (R), Radiator	1	
9	1854 54 050	Member (L), Radiator	1	
10	1854 53 036	Member No. 2, Cross	1	
11	1854 53 070	Bracket, Head Lamp	2	
12	1854 53 091A	Member, Grille Set	4	
13	99796 0612	Bolt, Grille Set Member	8	
14	1854 53 110	Panel (R), Tire Apron - Front	1	
15	1854 54 110A	Panel (L), Tire Apron - Front	1	

BODY PANELS (FRONT)

No	Part Number	Description	Q'ty	Remarks
16	1854 53 160	Panel (R), Shroud	1	
17	1854 54 160	Panel (L), Shroud	1	
18	1854 53 200A	Panel, Dash - Lower	1	
19	2541 53 220A	Panel (R), Cowl Side	1	
20	1854 54 220	Panel (L), Cowl Side	1	
21	1854 53 230	Panel, Instrument	1	
22	1854 53 380	Panel, Dash - Upper	1	
23	1823 53 410A	Bracket, Tuner Set	1	
24	0187 53 134	Rubber, Dust Seal	1	
25	99336 08038	Pipe, Drain	2	
26	0208 56 615	Plug, Drain (Without Heater)	2	
27	0613 53 105A	Cover, Service Hole	1	
28	0187 53 134	Rubber, Dust Seal	1	(Without Cooler)
29	1708 61 031	Plug, Hole	1	
30	2511 69 115	Cover, Hole	2	

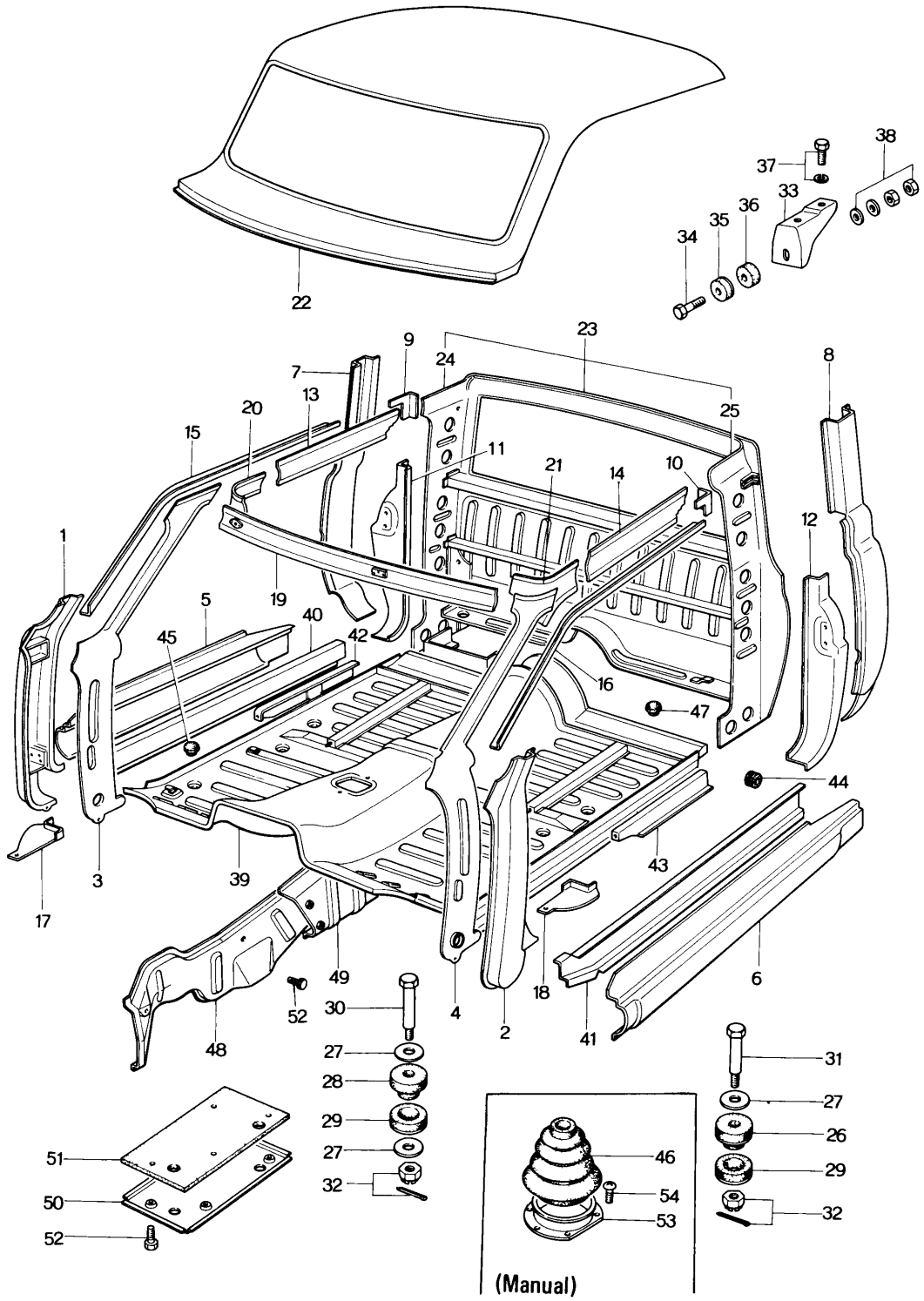
22
37
38
33
36
35
34
23
9
24
7
13
20
15
25
8
11
21
14
10
12
1
5
19
40
42
45
16
47
44
3
39
43
17
49
52
30
4
2
18
41
6
48
27
28
29
27
32
31
27
26
29
32
51
50
52
46
54
53
(Manual)

BODY PANELS (SIDE, FLOOR & ROOF) 53~56

No	Part Number	Description	Q'ty	Remarks
1	0603 53 510A	Pillar (R), Front - Lower	1	
2	0603 54 510A	Pillar (L), Front - Lower	1	
3	0603 53 520A	Pillar (R), Front - Inside	1	
4	0603 54 520A	Pillar (L), Front - Inside	1	
5	0603 53 531	Panel (R), Side Sill - Outer	1	
6	0603 54 531	Panel (L), Side Sill - Outer	1	
7	1854 53 551	Pillar (R), Rear - Outer	1	
8	1854 54 551	Pillar (R), Rear - Outer	1	
9	0603 53 552	Plate (R), Rear Pillar Corner	1	
10	0603 54 552	Plate (L), Rear Pillar Corner	1	
11	1854 53 560A	Pillar (R), Rear - Front Side	1	
12	1854 54 560A	Pillar (L), Rear - Front Side	1	
13	0603 53 571	Member (R), Roof Side	1	
14	0603 54 571	Member (L), Roof Side	1	
15	0603 53 572B	Rail (R), Rain	1	
16	0603 54 572B	Rail (L), Rain	1	
17	0603 53 573	Plate (R), Cowl Set	1	
18	0603 54 573	Plate (L), Cowl Set	1	
19	0603 53 600C	Member, Roof Cross	1	
20	0603 53 611	Plate (R), Junction	1	

No.	Part Number	Description	Q'ty	Remarks
21	0603 54 611	Plate (L), Junction	1	
22	2651 53 680D	Panel, Roof	1	
23	1854 53 700A	Plate, Back	1	
24	1854 53 710A	Pillar (R), Rear Inner	1	
25	1854 54 710B	Pillar (L), Rear Inner	1	
26	0603 53 920	Rubber, Mounting Lower	2	
27	0603 53 937	Washer, Plain - Mounting Rubber	6	
28	0603 53 950A	Rubber No. 3, Mounting Upper	4	
29	0603 53 970	Rubber, Mounting Lower	6	
30	0603 53 984A	Bolt No. 1, Mounting	4	
31	0614 56 575A	Bolt, Mounting	2	
32	99903 0800	Nut, Grooved	6	
	99221 2015	Pin, Split	6	
33	1854 53 960	Bracket, Mounting	2	
34	1854 53 962	Bolt, Mounting Bracket	2	
35	1854 53 965	Rubber, Mounting	2	
36	1854 53 966	Rubber, Mounting	2	
37	99805 0828	Bolt, Mounting Bracket	4	

BODY PANELS (SIDE, FLOOR & ROOF) 53~56

No	Part Number	Description	Q'ty	Remarks
	99971 0800	Washer, Spring	4	
38	99906 1000	Nut, Mounting Bracket	2	
	99907 1000	Nut	2	
	99952 1030	Washer, Plain	2	
	99952 1236	Washer, Plain	2	
	99953 1030	Washer, Plain	4	
39	1854 56 010A	Board, Floor	1	
40	0603 56 031	Panel (R), Side Sill - Inner	1	
41	0603 56 531	Panel (L), Side Sill - Inner	1	
42	0603 56 200	Bracket (R), Seat	1	
43	0603 56 700	Bracket (L), Seat	1	
44	0111 41 692	Protector, Cord	4	
45	0118 56 241	Plug, Drain	10	
46	0247 56 274A	Boot, Change Lever (Manual)	1	
47	0208 56 615	Plug, Drain	6	
48	1854 56 811	Insulator, Heat	1	
49	1854 56 840A	Insulator No. 2, Heat	1	
50	1854 56 851	Insulator No. 3, Heat	1	

No.	Part Number	Description	Q'ty	Remarks
51	1854 56 852	Pad, Heat Insulator	1	
52	99796 0610	Bolt, Heat Insulator	11	
53	1011 64 491	Seat, Boot	1	(Manual)
54	99865 0512	Screw, Boot Seat	6	(Manual)

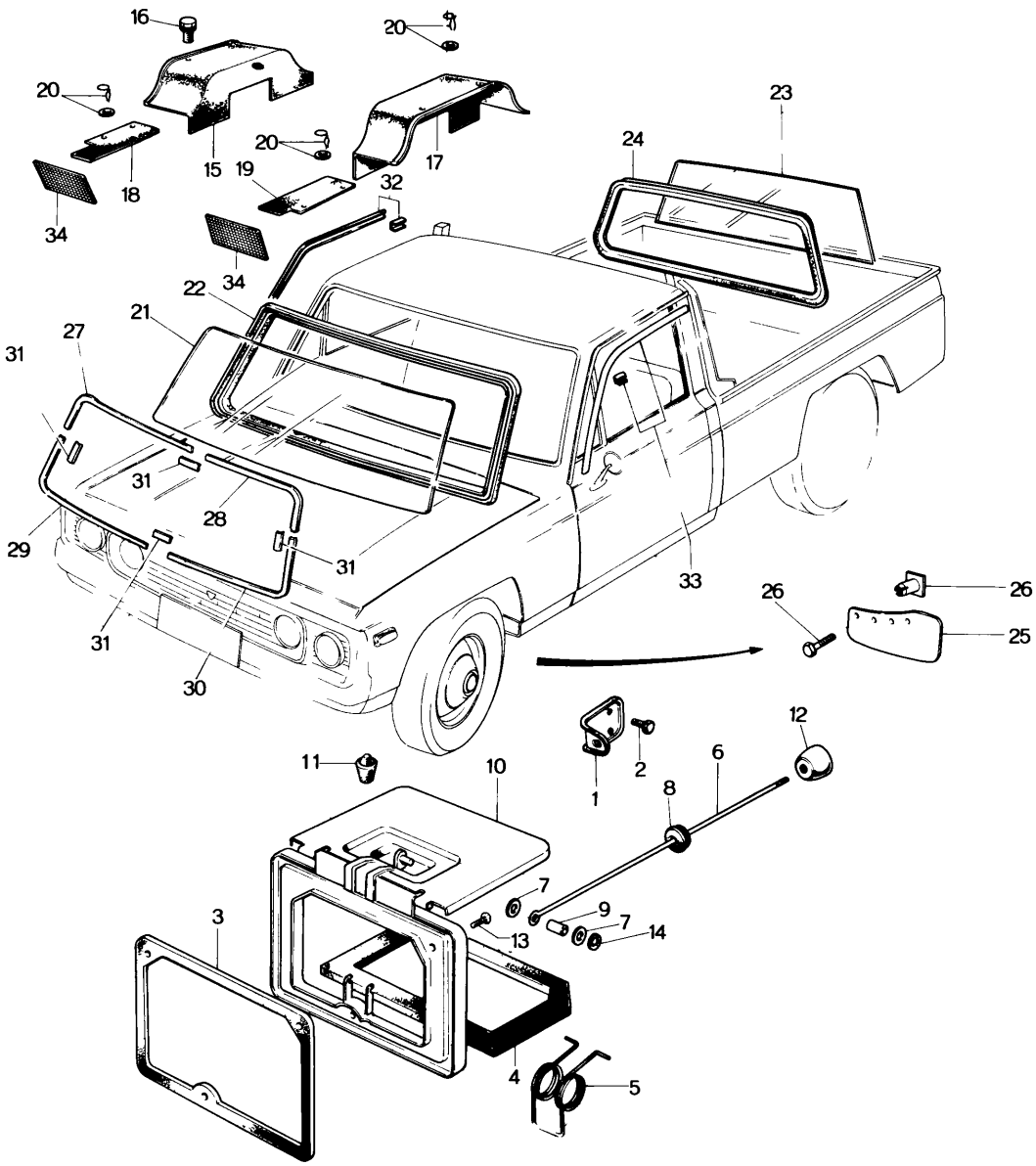
16
20
20
20
15
18
19
17
32
34
34
22
21
27
31
31
28
29
31
31
30
23
24
33
26
26
25
12
11
10
1
2
6
8
7
9
7
14
13
3
4
5

ENTILATOR, GLASS & MOULDING 53 54

No	Part Number	Description	Q'ty	Remarks
1	1854 54 234	Holder, Rod - (R) Side	1	
2	99796 0612	Bolt, Rod Holder	2	
3	0603 53 431C	Gasket, Ventilator	2	
4	0603 53 432A	Rubber, Seal	2	
5	0603 53 433A	Spring, Ventilator	2	
6	0603 53 434B	Rod (R), Ventilator	1	
	0617 54 434	Rod (L), Ventilator	1	
7	0603 53 435	Washer, Rod	4	
8	0603 53 436	Grommet, Rod	2	
9	0603 53 438	Bush, Ventilator Rod	2	
10	0603 53 440B	Ventilator	2	
11	0208 70 713	Rubber, Stopper - Ventilator	2	
12	0118 70 722A	Knob, Ventilator Rod	2	
13	99833 0512	Screw, Ventilator	6	
14	99576 0400	Ring, Stop - Rod	2	
15	2677 53 811	Cover (R), Dust	1	
16	99804 0514	Screw, Dust Cover	3	
	99952 0500	Washer, Plain	3	
17	0603 53 811B	Cover (L), Dust	1	
18	0603 53 821	Cover No. 2 (R), Dust	1	

No	Part Number	Description		Q'ty	Remarks
19	2677 54 821	Cover No. 2 (L), Dust		1	
20	0193 53 462	Fastener, Dust Cover		10	
	99953 0800	Washer, Plain		10	
21	1823 53 901	Glass, Front Window (Blue Pane)	Selective use	1	
	2651 53 901	Glass, Front Window (Transparent)		1	
22	2541 53 902	Weatherstrip, Front Window Glass		1	
23	1823 53 911	Glass, Back Window (Blue Pane)	Selective use	1	
	2545 53 911	Glass, Back Window (Transparent)		1	
24	0603 53 912	Weatherstrip, Back Window Glass		1	
25	1854 53 891A	Flap, Front		2	
26	99769 0616B	Bolt, Front Flap		8	
	99910 0601	Grommet, Screw		8	
27	2541 53 991	Mould (R), Upper - Front Window		1	
28	2541 54 991	Mould (L), Upper - Front Window		1	
29	2541 53 992	Mould (R), Lower - Front Window		1	
30	2541 54 992	Mould (L), Lower - Front Window		1	
31	0735 70 425A	Junction, Front Window Mould		4	
32	0589 99 731	Mould Set (R), Drip		1	
33	0589 99 736	Mould Set (L), Drip		1	
34	0208 58 925	Screen, Side Seal		2	

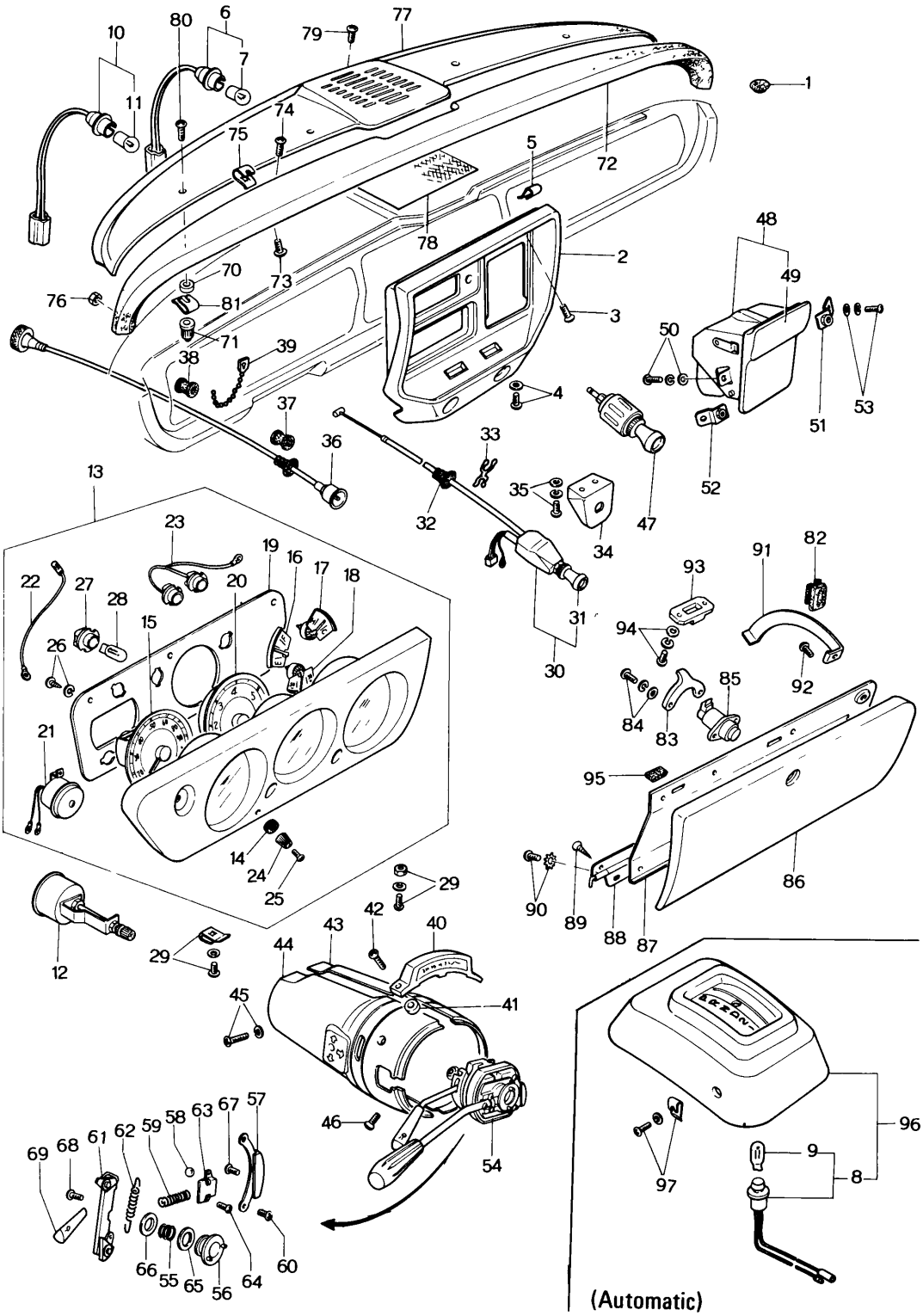
(Automatic)

DASHBOARD 55~70

No	Part Number	Description	Q'ty	Remarks
1	0613 53 105A	Cover, Service Hole	1	
2	1854 55 220	Panel, Center	1	
3	99862 0516B	Screw, Center Panel	2	
4	99860 0512	Screw, Center Panel	1	
	99952 0500	Washer, Plain	1	
5	99896 0500	Nut, Spring	3	
6	1011 55 240	Bulb & Socket	1	
7	99701 1030	Bulb	1	
8	1840 55 240	Bulb & Socket, Indicator	1	(Automatic)
9	99701 6030	Bulb	1	(Automatic)
10	1011 55 280	Lamp	1	
11	99701 6030	Bulb	1	
12	1854 55 490	Resistor	1	
13	1854 55 530A	Meter Set (GRY./BLK.)	1	
14	0326 75 011	Grommet	1	
15	1854 75 021	Speedometer	1	

No	Part Number	Description	Q'ty	Remarks
16	0483 75 022	Meter, Fuel	1	
17	0317 75 023	Meter, Temp.	1	
18	0483 75 024	Meter, Amp.	1	
19	1854 75 025	Plate, Bottom	1	
20	1854 75 026	Tachometer	1	
21	1568 75 029	Buzzer	1	
22	1854 75 030	Cord	1	
23	0492 75 060	Harness, Wiring	1	
24	0824 75 149	Knob, Trip Meter	1	
25	0824 75 150	Screw, Knob	1	
26	0710 75 435	Washer, Spring	5	
	0710 75 436	Screw, Tapping	5	
27	0259 55 261	Socket	9	
28	99701 6030	Bulb	11	
29	99864 0520B	Screw, Meter	4	
	99952 0500B	Washer, Plain	4	
	0820 56 905	Nut, Spring	2	
	99896 0500	Nut, Spring	2	
30	1854 60 050	Wire, Choke (Manual)	1	

No	Part Number	Description	Q'ty	Remarks
	1856 60 050	Wire, Choke (Automatic)	1	
31	1757 60 053	Knob, Choke Wire	1	
32	0259 52 301	Grommet, Choke Wire	1	
	99288 0808	Clip, Choke Wire	1	
34	1854 55 161	Bracket, Choke Wire	1	
35	99833 0510	Screw, Bracket	2	
	99952 0500	Washer, Plain	2	
	99971 0500	Washer, Spring	2	
36	1011 60 070A	Cable, Speedometer	1	
37	99682 0801	Grommet, Speedometer Cable	1	
38	99686 0800	Grommet, Speedometer Cable	3	
39	99709 0108	Band, Speedometer Cable	1	
40	1907 60 311	Plate, Name - Column Cover	1	
41	1611 60 312	Spacer, Name Plate	2	
42	99832 0414B	Screw, Name Plate	2	
43	1854 60 331	Cover (R), Column (BLK.)	1	
44	1854 60 341	Cover (L), Column (BLK.)	1	
45	90833 0412B	Screw, Column Cover	1	
	99971 0400B	Washer, Spring	1	

No	Part Number	Description	Q'ty	Remarks
46	99832 0412B	Screw, Column Cover	2	
47	0317 60 720	Lighter, Cigar	1	
48	1854 64 620A	Tray, Ash	1	
49	1854 64 640A	Case, Inner	1	
50	99833 0510	Screw, Ash Tray	2	
	99952 0500	Washer, Plain	2	
	99971 0500	Washer, Spring	2	
51	1854 64 650	Bracket, Ash Tray	1	
52	1854 64 660	Bracket, Ash Tray	1	
53	99833 0510	Screw, Bracket	2	
	99952 0500	Washer, Plain	2	
	99971 0500	Washer, Spring	2	
54	3514 66 120	Switch, Combination	1	
55	0317 60 252	Spring, Cancel Cam	1	
56	0317 60 253	Cam, Cancel	1	
57	1634 60 254	Bracket, Fixing	1	
58	0317 60 255	Ball, Steel	1	

No	Part Number	Description	Q'ty	Remarks
59	0317 60 256	Spring, Arm Set	1	
60	0317 60 257	Screw, Bracket	2	
61	0317 60 258	Arm	1	
62	0317 60 259	Spring, Ratchet	1	
63	0317 60 261	Plate, Set	1	
64	0317 60 262	Screw, Set Plate	2	
65	0866 60 263	Washer "A"	1	
66	0866 60 264	Washer "B"	1	
67	0866 60 266	Screw	2	
68	0866 60 267	Screw, Light Switch Knob	2	
69	1011 66 121	Knob, Light Switch	1	
70	0317 68 013A	Spacer, Garnish	4	
71	0317 68 018	Cap, Crush Pad & Garnish	4	
72	1854 68 020	Pad, Crush (BLK.)	1	
73	99862 0516B	Screw, Crush Pad	4	
74	99864 0512	Screw, Crush Pad	6	
75	99896 0500	Nut, Spring - Crush Pad	4	
76	99940 0502	Nut, Crush Pad	2	
77	1854 68 091	Garnish	1	

No	Part Number	Description	Q'ty	Remarks
78	0866 68 095	Cover, Cloth	1	
79	99863 0508B	Screw, Garnish	5	
80	99863 0520B	Screw, Garnish	4	
81	99869 0500	Nut, Spring - Garnish	4	
82	0603 53 305	Guide, Glove Box	1	
83	2280 55 182	Guide, Glove Box	1	
84	99833 0416	Screw, Guide	2	
	99952 0400	Washer, Plain	2	
	99971 0400	Washer, Spring	2	
85	0274 55 200	Lock, Glove Box	1	
86	1879 70 220A	Lid, Outer - Glove Box	1	
87	2370 70 231A	Lid, Inner - Glove Box	1	
88	1854 70 240	Hinge, Glove Box	1	
89	99861 0410B	Screw, Glove Box Lid & Hinge	9	
90	99834 0410B	Screw, Hinge + Body	3	
	99973 0400	Washer, Toothed	3	
91	2370 70 261	Stopper, Glove Box Lid	1	
92	99831 0408B	Screw, Stopper	1	
93	0317 70 262A	Striker, Glove Box Lid	1	
94	99838 0516B	Screw, Striker	2	

No	Part Number	Description	Q'ty	Remarks
	99952 0500B	Washer, Plain	2	
	99971 0500B	Washer, Spring	2	
95	0317 70 269	Cushion, Glove Box Lid	3	
96	1856 68 860	Indicator	1	
97	99862 0516B	Screw, Indicator	3	(Automatic)
	99967 0500B	Washer	3	
	99896 0500B	Nut, Spring	3	

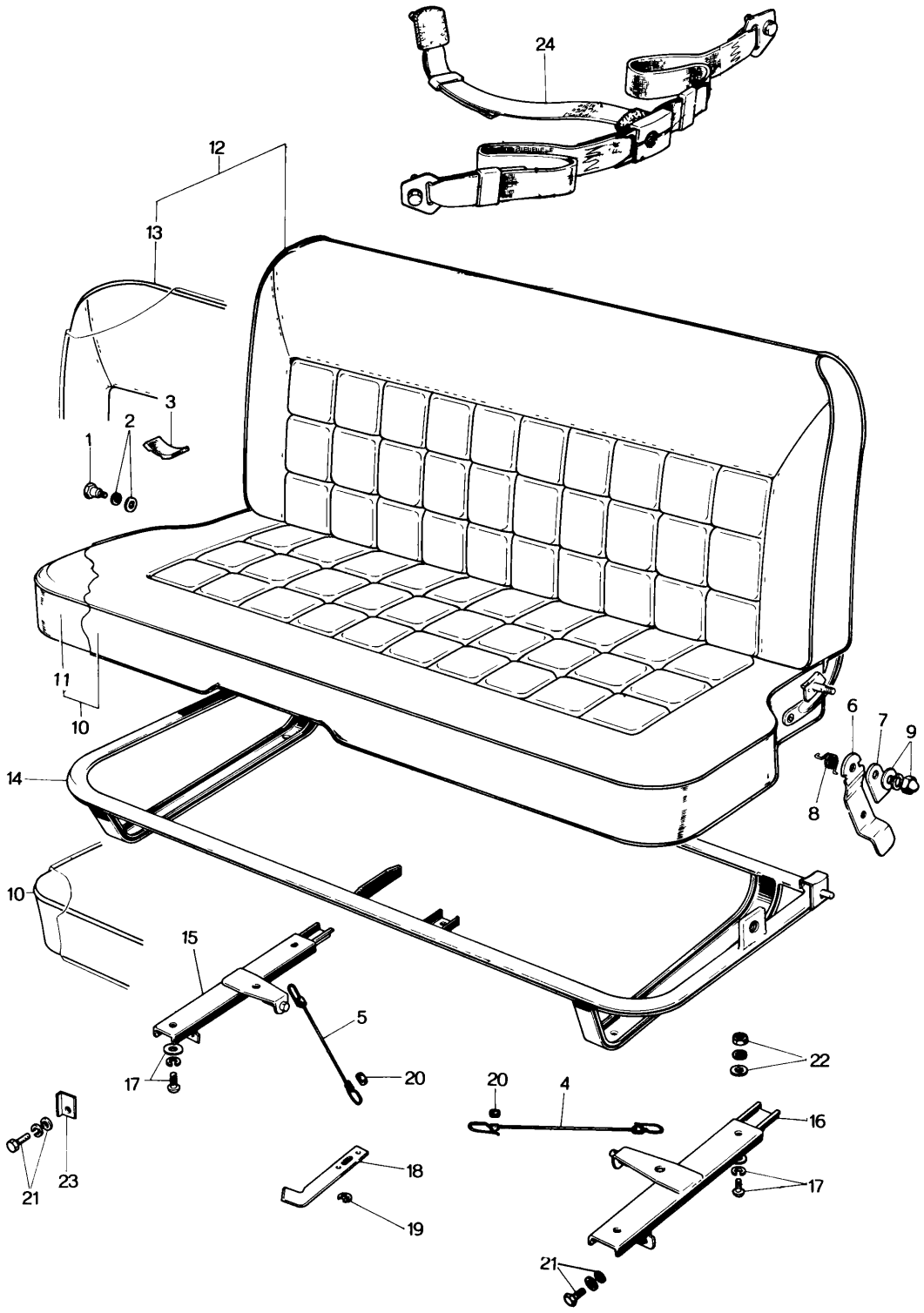
24
12
13
3
2
1
11
10
14
10
6
7
9
8
15
5
17
20
20
4
22
16
17
18
19
21
23
21

No	Part Number	Description	Q'ty	Remarks
	When ordering the following Seat & Trim Note : 1 Add – 00 (BLK) – 06 (GRY./YLW.) After the parts number as the colour code nos.			
	1825 57 100B ©	Seat	1	
1	0603 57 102	Pin, Hinge	2	
2	99951 0822	Washer, Plain - Hinge Pin	2	
	99952 1030	Washer, Plain	2	
3	0603 57 109	Rubber, Stop	2	
4	0603 57 111	Wire No. 1, Adjuster	1	
5	0603 57 112	Wire No. 2, Adjuster	1	
6	2541 57 121	Plate, Lock	2	
7	2541 57 122	Plate, Stopper	2	
8	2541 57 123	Spring (R), Return	1	
	2541 57 124	Spring (L), Return	1	
9	99945 0600	Nut, Cap	2	
	99952 0816	Washer, Plain	4	
	99971 0600	Washer, Spring	2	
10	1825 57 200 ©	Cushion, Seat	1	
11	2496 57 220A ©	Trim	1	
12	1825 57 300A ©	Seat, Back	1	

No	Part Number	Description	Q'ty	Remarks
13	1825 57 320A ©	Trim	1	
14	2541 57 400B	Frame	1	
15	2495 57 650	Slide (R)	1	
16	2495 57 680	Slide (L)	1	
17	99801 0816	Bolt, Slide	4	
	99952 0800	Washer, Plain	4	
	99971 0800	Washer, Spring	4	
18	0662 88 024	Lever, Adjuster	1	
19	99576 0700	Ring, Retaining - Adjuster Lever	1	
20	0259 88 025	Clip, Adjuster Wire	4	
21	99806 0820	Bolt, Seat	2	
	99952 0800	Washer, Plain	2	
	99971 0800	Washer, Spring	2	
22	99901 0800	Nut, Seat	2	
	99971 0800	Washer, Spring	2	
23	2469 57 016	Stopper	2	
24	0305 57 920B-00	Belt, Front Seat (BLK.)	2	

FRONT SIDE DOOR (GLASS)

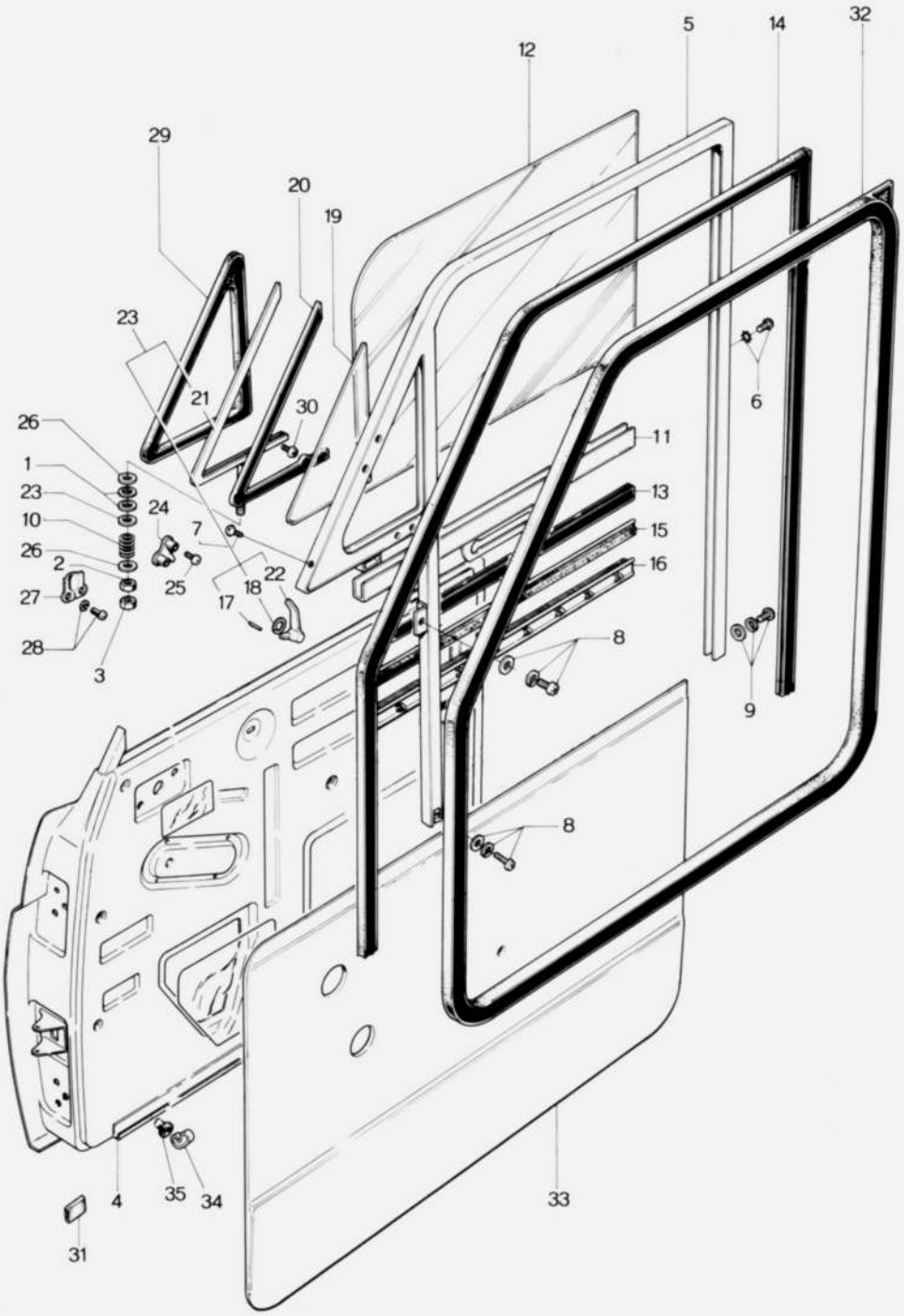

FRONT SIDE DOOR (GLASS) 58 59

No	Part Number	Description	Q'ty	Remarks
1	0820 52 403	Washer	4	
2	99906 0600	Nut	2	
3	99907 0600	Nut	2	
4	1819 58 010	Body (R), Door	1	
	1819 59 010	Body (L), Door	1	
5	0603 58 110A	Frame (R), Sash	1	
	0603 59 110A	Frame (L), Sash	1	
6	99834 0506	Screw, Sash Frame	4	
	99974 0500	Washer, Toothed	4	
7	99831 0612	Screw, Ventilator	4	
8	99833 0612	Screw, Sash Frame	4	
	99951 0618	Washer, Plain	4	
	99971 0600	Washer, Spring	4	
9	99834 0612	Screw, Sash Frame Lower	2	
	99952 0618	Washer, Plain	2	
	99974 0600	Washer, Toothed	2	
10	0115 58 171	Spring, Ventilator	2	
11	0603 58 210	Holder, Door Glass	2	
12	0588 58 221A	Glass, Door (Transparent)	2	Selective use
	1823 58 221A	Glass, Door (Blue Pane)	2	

58 59 FRONT SIDE DOOR (GLASS)

No	Part Number	Description		Q'ty	Remarks
13	0588 58 231	Rubber, Holding - Door Glass		2	
14	0588 58 241	Run Channel, Glass		2	
15	0603 58 280A	Weatherstrip, Outer		2	
16	0603 58 290A	Weatherstrip, Inner		2	
	0603 58 410B	Ventilator (R), Door (Transparent)	Selective use	1	Fig. No. 17 ~ 23 Included
	1823 58 410	Ventilator (R), Door (Blue Pane)		1	
	0603 59 410B	Ventilator (L), Door (Transparent)		1	
	1823 59 410	Ventilator (L), Door (Blue Pane)		1	
17	0115 58 214	Pin, Spring		2	
18	99972 1000	Washer, Wave		2	
19	0603 58 411A	Glass, Ventilator (Transparent)		2	
	1823 58 411	Glass, Ventilator (Blue Pane)		2	
20	0603 58 412A	Rubber (R), Holding - Glass		1	
	0603 59 412A	Rubber (L), Holding - Glass		1	
21	0603 58 420B	Sash (R), Ventilator		1	
	0603 59 420B	Sash (L), Ventilator		1	
22	0183 58 451	Handle (R), Ventilator Lock		1	
	0183 59 451	Handle (L), Ventilator Lock		1	
23	0603 58 460A	Sash (R), Ventilator		1	Fig. No. 17, 18, 21, 22 Inclu

FRONT SIDE DOOR (GLASS) 58 59

No	Part Number	Description	Q'ty	Remarks
	0603 59 460A	Sash (L), Ventilator	1	
24	0603 58 430A	Hinge (R), Ventilator	1	
	0603 59 430A	Hinge (L), Ventilator	1	
25	99711 0410	Screw, Ventilator Hinge	4	
26	0187 58 471	Washer	8	
27	0193 58 481	Plate, Lock	2	
28	99833 0408	Screw, Lock Plate	4	
	99971 0400	Washer, Spring	4	
29	0603 58 491C	Rubber (R), Sash - Ventilator	1	
	0603 59 491C	Rubber (L), Sash - Ventilator	1	
30	99772 0514	Screw, Ventilator	2	
31	0208 58 497	Cushion	2	
32	0603 58 901B	Weatherstrip (R)	1	
	0603 59 901B	Weatherstrip (L)	1	
33	1823 58 910A00	Trim (R), Door (BLK.)	1	
	1823 58 910A06	Trim (R), Door (GRY./YLW.)	1	
	1823 59 910A00	Trim (L), Door (BLK.)	1	
	1823 59 910A06	Trim (L), Door (GRY./YLW.)	1	
34	0208 58 921	Fastener, Door Trim	16	
35	0187 58 922	Rubber, Seal - Fastener	16	

FRONT SIDE DOOR (LOCK)

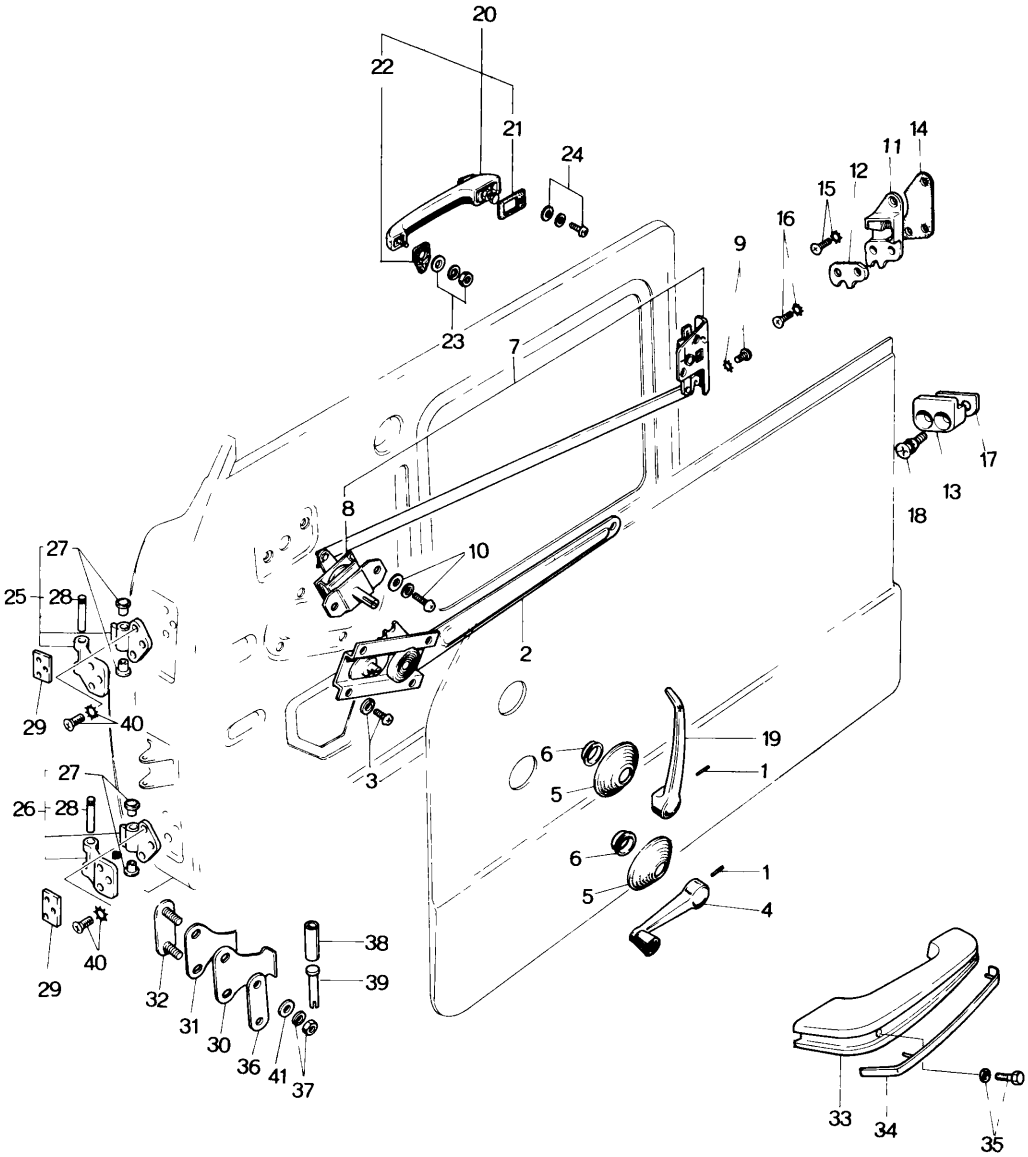

FRONT SIDE DOOR (LOCK) 58 59

No	Part Number	Description	Q'ty	Remarks
1	0100 58 272A	Pin, Tapered	4	
2	0603 58 300A	Regulator (R), Window	1	
	0603 59 300A	Regulator (L), Window	1	
3	99833 0612	Screw, Regulator	8	
	99971 0600	Washer, Spring	8	
4	0118 58 370A01	Handle (R), Regulator (BLK.)	1	
	0118 59 370A01	Handle (L), Regulator (BLK.)	1	
5	0118 58 931-01	Escutcheon, Regulator Handle (BLK.)	4	
6	0118 58 392	Crown, Escutcheon	4	
7	2651 58 500B	Lock (R), Door	1	
	2651 59 500B	Lock (L), Door	1	
8	2651 58 600	Lock, Inner	2	
9	99832 0612	Screw, Door Lock	6	
	99974 0600	Washer, Toothed	6	
10	99833 0616	Screw, Inner Lock	4	
	99952 0600	Washer, Plain	4	
	99971 0600	Washer, Spring	4	
11	0259 58 570	Striker (R), Door Lock	1	

58 59 FRONT SIDE DOOR (LOCK)

No	Part Number	Description	Q'ty	Remarks
	0259 59 570	Striker (L), Door Lock	1	
12	0259 58 581	Rack (R), Door Striker	1	
	0259 59 581	Rack (L), Door Striker	1	
13	2350 58 582	Block, Antiburst	2	
14	0187 58 592A	Seat, Striker	2	
15	99761 0620	Screw, Door Striker	2	
	99974 0600	Washer, Toothed	2	
16	99761 0630	Screw, Door Striker	4	
	99974 0600	Washer, Toothed	4	
17	2350 58 593	Shim, Antiburst Block	2	
18	99761 0630	Screw, Antiburst Block	4	
	99974 0600	Washer, Toothed	4	
19	0115 58 651B	Handle (R), Inner	1	
	0115 59 651B	Handle (L), Inner	1	
20	2651 58 670	Handle, Outer	2	
21	0603 58 674	Seat No. 1	2	
22	0603 58 675	Seat No.2	2	
23	99906 0600	Nut, Outer Handle	2	

FRONT SIDE DOOR (LOCK) 58 59

No	Part Number	Description	Q'ty	Remarks
	99952 0600	Washer, Plain	2	
	99971 0600	Washer, Spring	2	
24	99833 0612	Screw, Outer Handle	2	
	99952 0600	Washer, Plain	2	
	99971 0600	Washer, Spring	2	
25	0588 58 710	Hinge "A", Upper	2	
26	0588 58 760	Hinge "B", Lower	2	
27	0223 58 721	Bush	8	
28	0187 58 731	Pin, Hinge	4	
29	0603 58 741A	Spacer	4	
30	0603 58 811	Spring, Check - Door	2	
31	0603 58 812	Spring, Check Sub - Door	2	
32	0603 58 820A	Plate, Set - Door Checker	2	
33	0398 58 821A-00	Rest, Arm (BLK.)	2	
	0398 58 821A-01	Rest, Arm (BEIG.)	2	
34	0398 58 822A-00	Garnish (BLK.)	2	
	0398 58 822A-01	Garnish (BEIG.)	2	
35	99833 0520	Screw, Arm Rest	4	

58 59 FRONT SIDE DOOR (LOCK)

No	Part Number	Description		Q'ty	Remarks
	99952 0500	Washer, Plain		4	
36	0603 58 823A	Washer, Door Checker		2	
37	99906 0600	Nut, Door Checker		4	
	99971 0600	Washer, Spring		4	
38	0317 58 831A	Roller, Door Checker		2	
39	0317 58 832	Pin, Door Checker		2	
40	99761 0825	Screw, Door Hinge		24	
	99975 0800	Washer, Toothed		24	
41	0208 72 821	Washer No. 1, Adjuster	Selective use	–	
	0208 72 822	Washer No. 2, Adjuster		–	

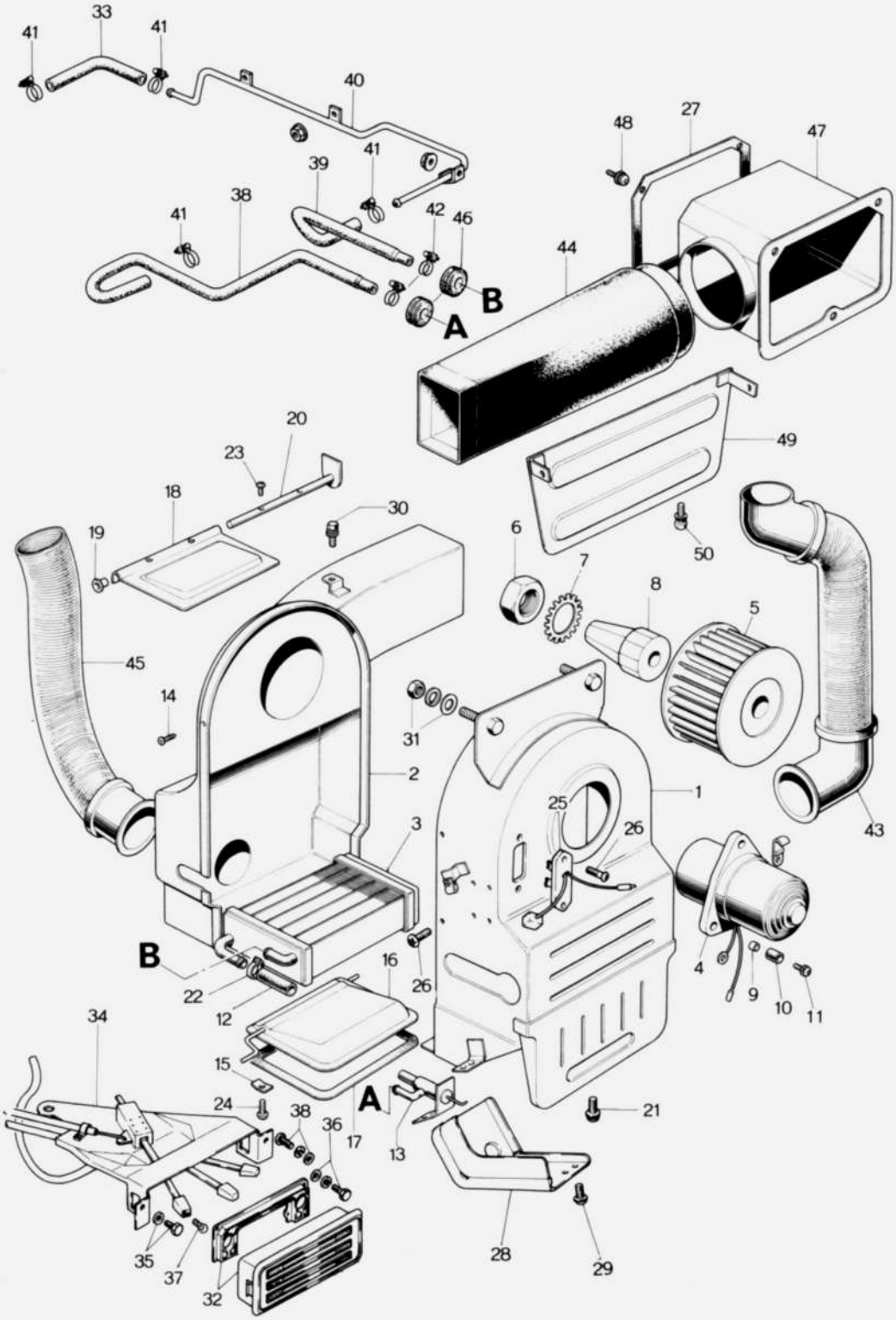
41
33
41
40
39
41
38
41
42
46
48
27
47
44
A
B
20
23
18
30
19
49
50
6
7
8
5
45
14
31
2
1
25
26
43
3
B
22
12
16
26
4
9
10
11
34
15
24
38
36
A
17
13
21
35
37
32
28
29

No	Part Number	Description	Q'ty	Remarks
	1854 61 080B	Heater Set	1	
	2677 61 140B	Unit, Heater (Fig. No. 1 ~ 25 Included)	1	
1	2677 76 121A	Case	1	
2	2677 76 122	Plate	1	
3	2677 76 123	Core	1	
4	2677 76 124A	Motor	1	
5	2677 76 125	Fan	1	
6	2677 76 126	Nut	1	
7	2677 76 127	Washer, Toothed	1	
8	2677 76 128	Adapter	1	
9	2677 76 129	Bush	3	
10	2677 76 130	Ring, Rubber	3	
11	2677 76 131	Screw Set	3	
12	2677 76 133	Hose, Water	1	
13	2677 76 134A	Valve, Water	1	
14	0259 76 135	Screw	9	
15	2677 76 135	Spring	2	
16	2677 76 136A	Valve, Air	1	
17	2677 76 143	Gasket	1	
18	2677 76 145	Valve, Air	1	

No	Part Number	Description	Q'ty	Remarks
19	2677 76 146	Bush	2	
20	2677 76 147	Shaft	1	
21	99833 0412	Screw	2	
	99971 0400	Washer, Spring	2	
22	99282 2200	Band, Hose	2	
23	99833 0306	Screw	2	
24	99833 0410	Screw	2	
25	2677 76 150	Resistance	1	
26	99833 0510	Screw	3	
27	0617 61 135	Gasket	1	
28	2677 61 145	Cover	1	
29	99830 0412	Screw, Cover	3	
30	99786 0814	Bolt, Heater Unit & Body	1	
31	99940 0800	Nut, Heater Unit	2	
32	1823 61 170B-00	Panel, Decoration (BLK.)	1	
33	0824 61 183B	Hose, Water	1	
34	1854 61 190B	Control, Heater	1	
35	99797 0510	Bolt, Heater Control	1	
	99952 0512	Washer, Plain	1	

No	Part Number	Description	Q'ty	Remarks
	99971 0500	Washer, Spring	1	
36	99797 0510	Bolt, Heater Control	1	
	99952 0516	Washer, Plain	1	
	99971 0500	Washer, Spring	1	
37	99701 1030	Bulb, Illumination	2	
38	1854 61 211	Hose No. 1, Water	1	
39	1854 61 212	Hose No. 2, Water	1	
40	1854 61 220	Pipe, Water	1	
41	99282 2600	Band, Hose	4	
42	99282 2200	Band, Hose	2	
43	2677 61 240A	Hose (R), Defroster	1	
44	2677 61 250	Duct, Air	1	
45	2677 61 260A	Hose (L), Defroster	1	
46	0233 61 479	Grommet	2	
47	2541 61 573	Junction, Air Duct	1	
48	99740 0512	Screw, Air Duct Junction	3	
49	2651 61 650	Cover, Duct	1	
50	99830 0412	Screw	2	

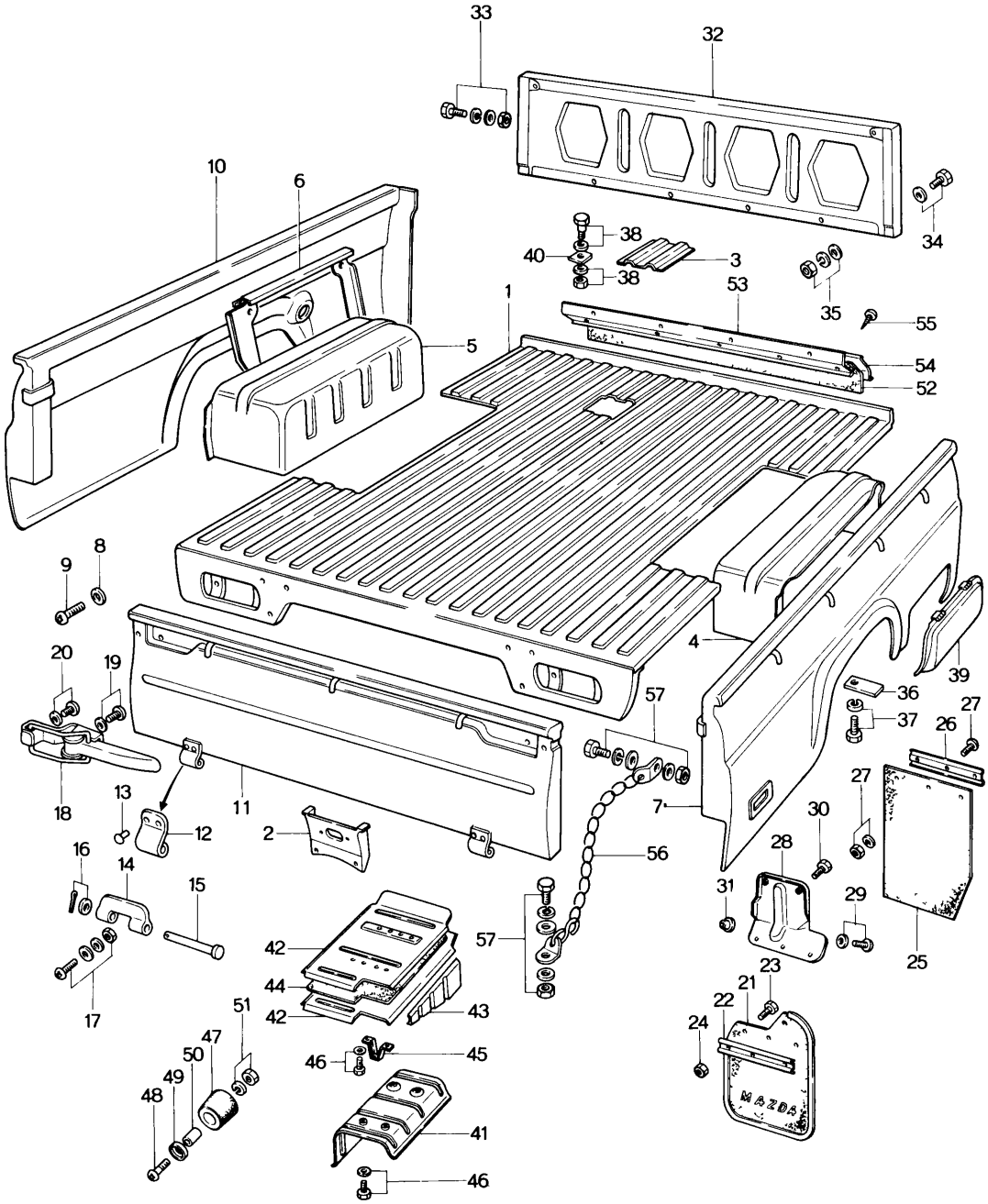
MAZDA

BOX 65

No	Part Number	Description	Q'ty	Remarks
	1854 65 010C	Box	1	
1	1854 65 020B	Board, Floor	1	
2	2651 65 140	Bracket, Rear Number Plate Holder	1	
3	0603 65 150	Cover, Hole - Service	1	
4	1854 65 201A	House (R), Tire	1	
5	1854 65 210A	House (L), Tire	1	
6	1854 65 310	Bracket, Condence Tank	1	
7	1854 65 430	Plate (R), Side	1	
8	1823 65 431A	Protector	2	
9	99864 0406	Screw, Tapping - Protector	2	
10	1854 65 460	Plate (L), Side	1	
11	0603 65 490B	Door, Rear	1	
12	0183 65 551	Hinge	2	
13	99251 0818	Rivet	4	
14	0183 65 552	Hinge, Box Rear Door	2	
15	0183 65 553	Pin, Hinge	2	
16	0024 65 554	Washer, Hinge	2	
	99221 3032	Pin, Split	2	
17	99833 0820	Screw, Door Hinge	4	
	99901 0800	Nut	4	

No	Part Number	Description	Q'ty	Remarks
	99952 0800	Washer, Plain	4	
	99971 0800	Washer, Spring	4	
18	0603 65 560A	Shutter, Door	2	
19	99834 0820	Screw, Shutter	2	
	99971 0800	Washer, Spring	2	
20	99834 0835	Screw, Shutter	2	
	99971 0800	Washer, Spring	2	
21	1854 65 851A	Flap (R), Mud Guard	1	
	1854 65 951A	Flap (L), Mud Guard	1	
22	1854 65 853	Washer, Flap Set	2	
23	99796 0614	Screw, Flap	6	
24	99940 0600	Nut, Flap	6	
25	1854 65 855B	Flap	1	
26	1854 65 856	Washer	1	
27	99833 0618	Screw, Flap	3	
	99906 0600	Nut	3	
	99971 0600	Washer, Spring	3	
28	1854 65 870	Bracket (R), Flap	1	
	1854 65 970	Bracket (L), Flap	1	
29	99796 0614B	Bolt, Bracket	2	

No	Part Number	Description	Q'ty	Remarks
	99952 0618B	Washer, Plain	2	
30	99796 0614	Bolt, Bracket	4	
31	99910 0601	Grommet, Screw	2	
32	1823 65 900	Plate, Front	1	
33	99806 0820	Bolt, Front Plate	6	
	99906 0800	Nut	6	
	99952 0800	Washer, Plain	12	
	99971 0800	Washer, Spring	6	
34	99806 0816	Bolt, Front Plate	4	
	99952 0800	Washer, Plain	4	
35	99906 0800	Nut	4	
	99952 0800	Washer, Plain	4	
	99971 0800	Washer, Spring	4	
36	0603 65 011A	Shim, Box Set	4	
37	99806 0620	Bolt, Box Set	8	
	99951 0618	Washer, Plain	8	
38	1823 65 012A	Bolt, Box Set	8	
	99940 1002	Nut	8	
	99952 1400	Washer, Plain	8	

No	Part Number	Description	Q'ty	Remarks
	99952 1426	Washer, Plain	2	
	99951 1030	Washer, Plain	8	
39	1854 65 500	Cover, Service	1	
40	1823 65 625A	Shim, Box Set	8	
41	1854 65 711A	Insulator, Lower	1	
42	1854 65 721	Insulator No. 1 - Upper	2	
43	1854 65 722	Insulator No. 2 - Upper	1	
44	1854 65 725	Pad, Insulator	1	
45	1854 65 730	Bracket, Insulator	1	
46	99796 0616	Bolt, Insulator	12	
	99952 0618	Washer, Plain	12	
47	0604 65 731	Rubber, Stop - Door	2	
48	99833 0835	Screw, Stop Rubber	2	
49	0014 65 734	Seat, Screw - Door Stop Rubber	2	
50	0604 65 735	Spacer, Door Stop Rubber	2	
51	99901 0800	Nut, Door Stop Rubber	2	
	99971 0800	Washer, Spring	2	
52	1854 65 751	Rubber, Seal	1	
53	1854 65 752	Plate, Seal No. 1	1	
54	1854 65 753	Plate, Seal No. 2	1	

No	Part Number	Description	Q'ty	Remarks
55	99864 0512	Screw, Tapping	6	
56	1823 65 810C	Chain	2	
57	99811 1025	Bolt	4	
	99921 1000	Nut	4	
	99951 1030	Washer, Plain	4	
	99952 1000	Washer, Plain	4	
	99971 1000	Washer, Spring	4	

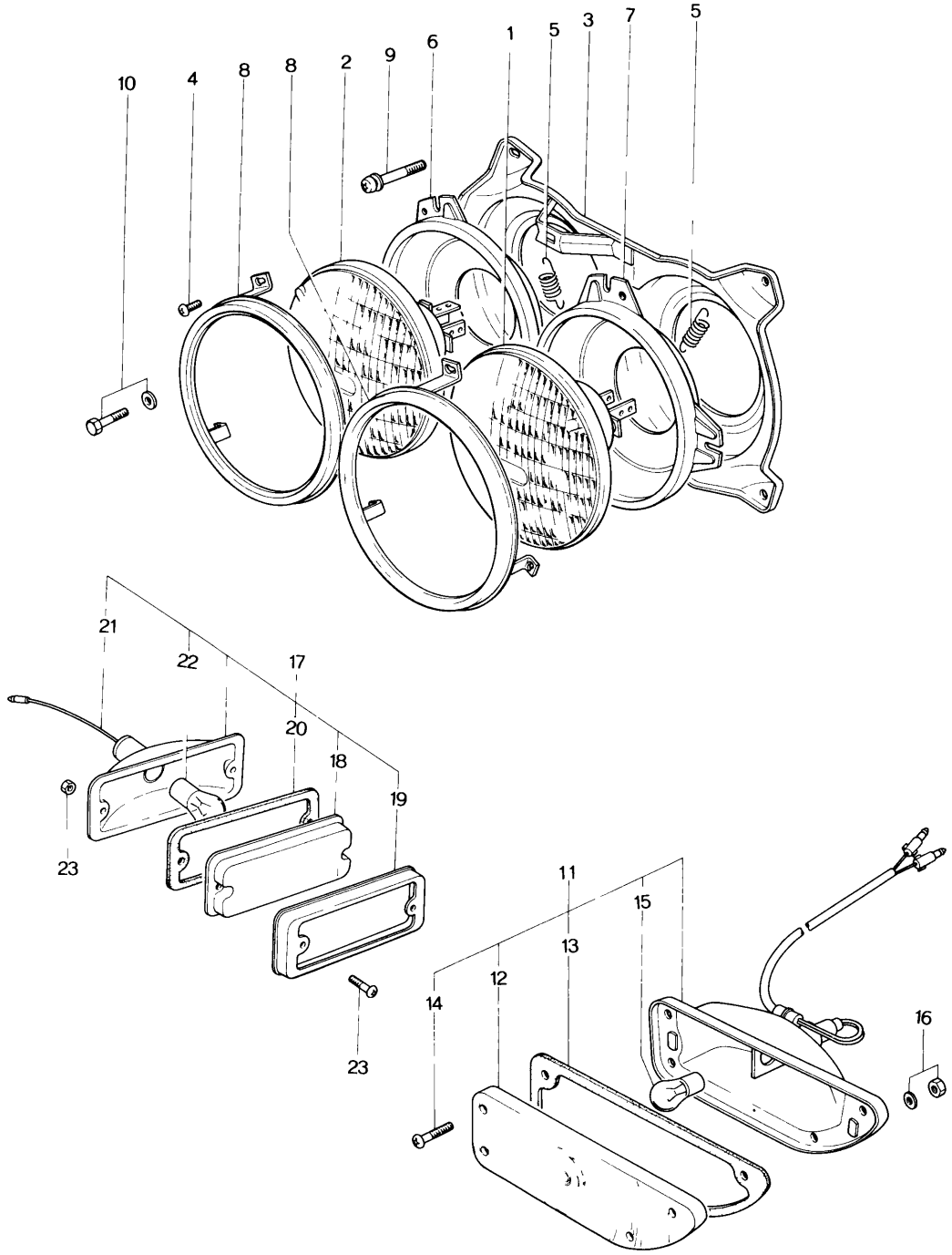
10
4
8
8
2
9
6
1
5
3
7
5
21
22
17
20
18
19
23
23
11
15
13
12
14
16

LAMPS (FRONT SIDE)

No	Part Number	Description	Q'ty	Remarks
1	G.E. No. 4001	Beam, Sealed (Upper Beam 12V, 37.5W) (G.E. Make)	2	Order from G.E. Agent
2	G.E. No. 4000	Beam, Sealed ("Plus 25" Lower & Upper Beam, 12V, 60/37.5W) (G.E. Make)	2	
3	1854 66 031	Housing (R)	1	
	1854 66 041	Housing (L)	1	
4	0275 87 007	Screw	12	
5	2850 87 012	Spring	4	
6	0727 87 012	Holder (R), Lamp	1	
	0727 87 022	Holder (L), Lamp	1	
7	0727 87 013	Holder (R), Lamp	1	
	0727 87 023	Holder (L), Lamp	1	
8	0727 87 014	Holder, Lamp - Front	4	
9	0727 87 016	Screw, Adjuster	8	
10	99786 0612B	Screw	8	
	99952 0618B	Washer, Plain	8	
11	1854 89 662	Lamp (R), Front Turn Signal	1	
	1854 89 667	Lamp (L), Front Turn Signal	1	
12	2244 66 091	Globe (R)	1	
	2244 66 111	Globe (L)	1	
13	0259 66 094A	Rubber (R), Seal	1	

No	Part Number	Description	Q'ty	Remarks
	0259 66 114	Rubber (L), Seal	1	
14	0259 66 095	Screw, Lamp Globe	8	
15	99701 4278	Bulb	2	
16	99906 0500	Nut, Front Turn Signal Lamp	4	
	99952 0500	Washer, Spring	4	
17	2244 89 663	Lamp (R), Side Marker	1	
	2244 89 668	Lamp (L), Side Marker	1	
18	2244 87 191	Globe	2	
19	2244 87 192	Rim	2	
20	2244 87 194	Rubber (R), Seal	1	
	2244 87 195	Rubber (L), Seal	1	
21	2244 87 196	Cord	2	
22	99701 2080	Bulb	2	
23	99773 0420	Screw, Side Marker Lamp	4	
	99906 0400	Nut	4	

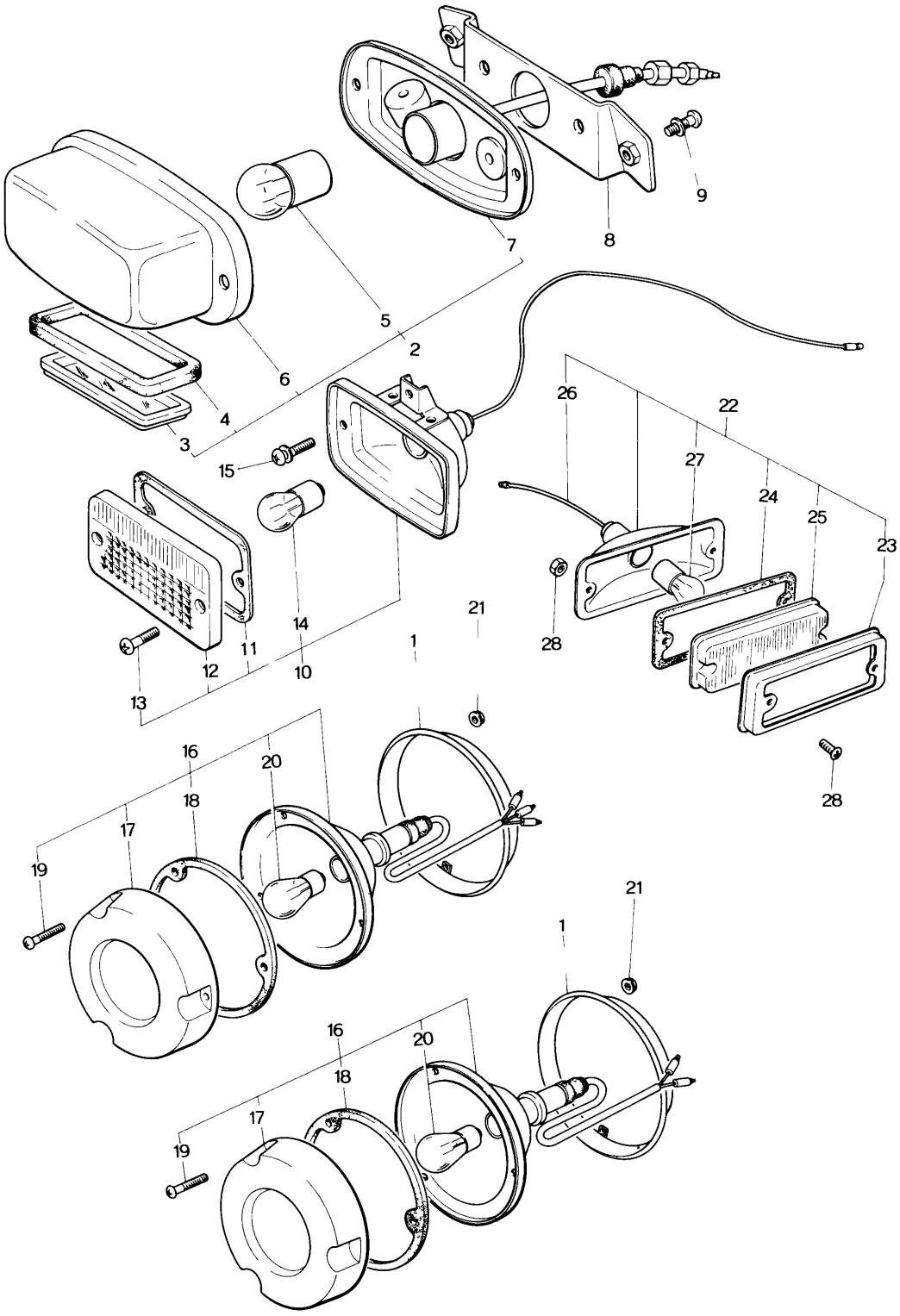
1
2
3
4
5
6
7
8
9
10
11
12
13
14
15
16
17
18
19
20
21
22
23
24
25
26
27
28
28
21
1
16
20
18
17
19
21
1
16
20
18
17
19

LAMPS (REAR SIDE) 66 87

No	Part Number	Description	Q'ty	Remarks
1	2627 66 201A	Ring, Rear Combination Lamp	4	
2	2651 66 210	Lamp, Licence	1	
3	0136 66 091A	Lens	1	
4	0136 66 092	Gasket	1	
5	99701 2080	Bulb	1	
6	0136 66 094A	Cover	1	
7	0136 66 097	Cord & Bottom Plate	1	
8	2651 66 220A	Holder, Licence Lamp	1	
9	99833 0620	Screw, Holder	2	
	99971 0600	Washer, Spring	2	
	99906 0600	Nut	2	
10	1823 66 330	Lamp, Reverse	1	
11	0710 87 102	Gasket	1	
12	0710 87 103	Lens	1	
13	0710 87 104	Screw	2	
14	99700 8120	Bulb	1	

LAMPS (REAR SIDE)

No.	Part Number	Description	Q'ty	Remarks
15	99797 0512	Bolt, Reverse Lamp	1	
	99952 0516	Washer, Plain	1	
16	1854 89 664	Lamp, Rear Combination	4	
17	2627 66 222A	Lens	4	
18	0738 87 063	Gasket	4	
19	0710 87 126	Screw	12	
20	99701 4237	Bulb	4	
21	99940 0500	Nut, Rear Combination Lamp	12	
22	2244 89 673	Lamp (R), Side Marker	1	
	2244 89 678	Lamp (L), Side Marker	1	
23	2244 87 192	Rim	2	
24	2244 87 194	Rubber (R), Seal	1	
	2244 87 195	Rubber (L), Seal	1	
25	2244 87 201	Globe	2	
26	2244 87 206	Cord	2	
27	99701 2080	Bulb	1	

No	Part Number	Description	Q'ty	Remarks
28	99773 0420	Screw. Side Marker Lamp	4	
	99906 0400	Nut	4	

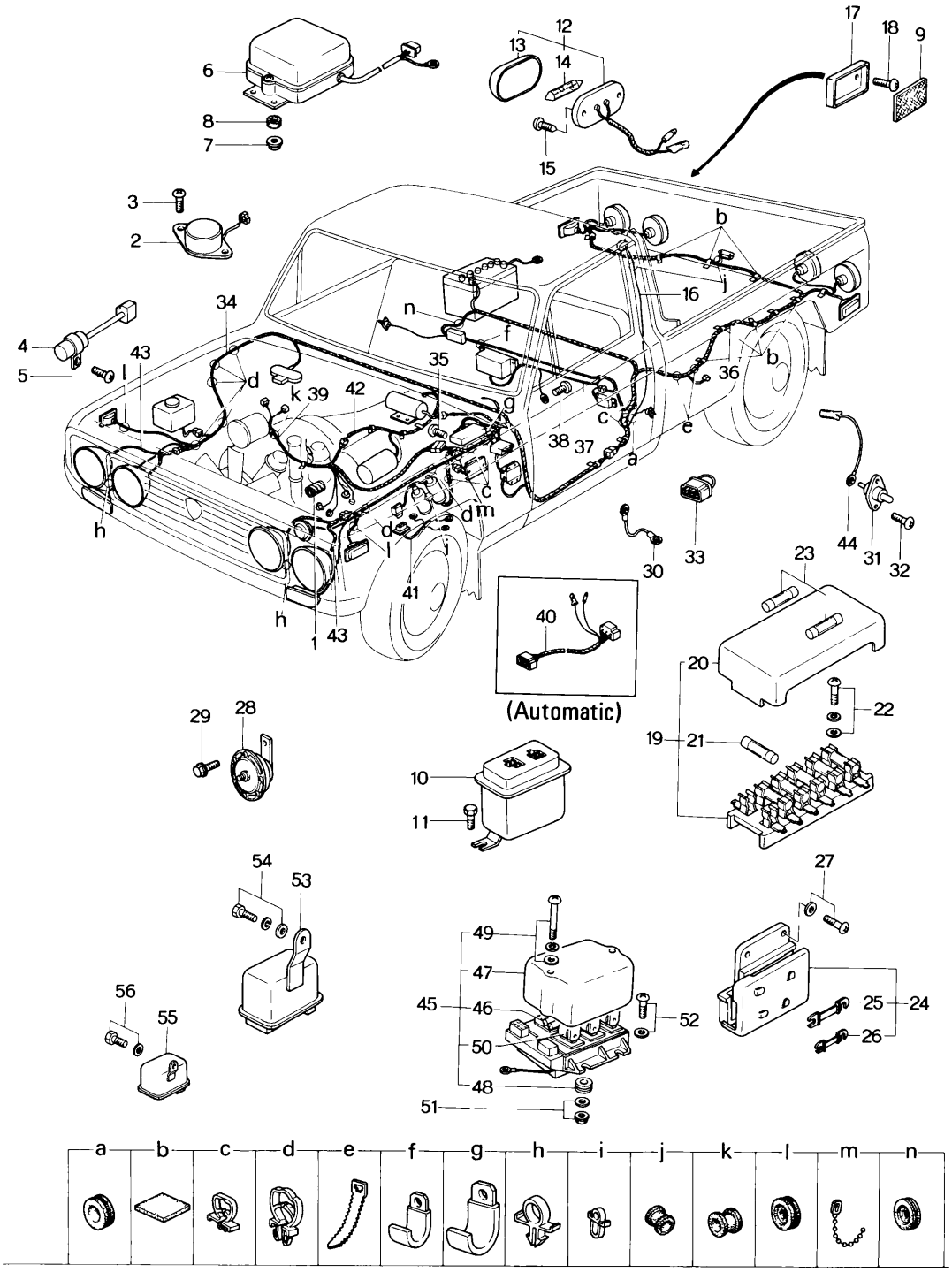
(Automatic)

ELECTRIC EQUIPMENT (BODY) 66 67

No	Part Number	Description	Q'ty	Remarks
1	0823 18 111A	Supporter, Engine Wire Harness	4	
2	1114 18 890A	Switch, Thermo	1	
3	99868 0510	Screw, Thermo Switch	2	
	99971 0500	Washer, Plain	2	
4	2329 18 930B	Detector, Thermo	1	
5	99865 0508	Screw, Thermo Detector	1	
6	1757 18 940A	Unit, Control (Manual)	1	
	1758 18 940A	Unit, Control (Automatic)	1	
7	99940 0600	Nut, Control Unit	2	
8	1011 72 616	Spring, Rubber - Control Unit	2	
9	0419 51 571A	Reflector, Reflex	2	
10	1540 60 930	Relay, Turn Signal	1	
11	99796 0612	Bolt, Turn Signal Relay	2	
12	0702 66 290	Lamp, Interior	1	
13	0243 66 152	Globe	1	
14	99701 5050	Bulb	1	
15	99863 0412	Screw, Interior Lamp	2	
16	1854 66 295	Cord, Interior Lamp	1	

No	Part Number	Description	Q'ty	Remarks
17	2627 66 601	Base, Reflex Reflector	2	
18	99869 0412	Screw, Reflex Reflector	4	
19	1820 66 730	Block, Fuse	1	
20	1820 66 732	Cover	1	
21	99706 0120	Fuse (20A)	1	
	99706 0115	Fuse (15A)	4	
	99706 0110	Fuse (10A)	1	
22	99833 0516	Screw, Fuse Block	4	
	99952 0500	Washer, Plain	2	
	99971 0500	Washer, Spring	4	
23	1011 66 130	Spare Fuse Set	1	
24	1708 66 760	Block, Main Fuse	1	
25	2852 66 763	Fuse (50A)	2	
26	1708 66 765	Fuse (5A)	1	
27	99833 0516	Screw, Main Fuse Block	2	
	99971 0500	Washer, Spring	2	

No.	Part Number	Description	Q'ty	Remarks
28	1011 66 790A	Horn, Electric	1	
29	99786 0812	Bolt, Electric Horn	1	
30	0223 66 722	Wire, Earth	1	
31	0209 66 820	Switch, Door	2	
32	99863 0510	Screw, Door Switch	4	
	99952 0500	Washer, Plain	4	
	99971 0500	Washer, Spring	4	
33	1010 66 980	Cord, Short (Manual)	1	
34	1854 67 010	Harness (Frt.), Wiring	1	
35	99864 0625	Screw, Wire Harness (Frt.)	1	
36	1854 67 030A	Harness (Rr.), Wiring	1	
37	1854 67 040	Harness, Wiring - Emission	1	
38	99831 0540	Screw, Emission Wire Harness	1	
39	1854 67 060	Harness, Wire - Engine	1	
40	1854 67 070	Harness, Wire - Inhibitor (Automatic)	1	
41	1854 67 080	Harness, Wire - IG. Coil	1	
42	1011 67 090	Harness, Wire - T/mission	1	
43	1854 67 130	Harness, Wire - Head Lamp	2	
44	0317 67 551	Cord, Door Switch	2	

No	Part Number	Description	Q'ty	Remarks
45	1011 67 560A	Unit, Central Control	1	
46	1011 67 562	Unit, Flasher	1	
47	0866 67 716	Cover	1	
48	0866 67 717	Bush	4	
49	0866 67 718	Screw	2	
	99952 0500	Washer, Plain	2	
	99971 0500	Washer, Spring	2	
50	0866 67 619	Relay	4	
51	99940 0600	Nut, Central Control Unit	3	
	99952 0618	Washer, Plain	3	
52	99794 0530	Screw, Central Control Unit	3	
	99952 0500	Washer, Plain	3	
53	1078 67 800	Relay, Choke	1	
54	99849 0512	Screw, Choke Relay	1	
	99952 0500	Washer, Plain	1	
	99971 0500	Washer, Spring	1	
55	0862 67 880	Relay, Ignition Coil 4 Term.	1	
56	99849 0512	Screw, Ignition Coil Relay	1	
	99952 0500	Washer, Plain	1	

No	Part Number	Description	Q'ty	Remarks
	99971 0500	Washer, Spring	1	
a	0208 66 683	Protector, Cord	1	
b	0208 66 949	Pad, Protector	20	
c	1011 67 911	Clip, Wire Harness	5	
d	1011 67 912	Clip, Wire Harness	9	
e	0305 67 994	Supporter, Wire Harness	2	
f	99276 1006	Clip, Wire Harness	1	
g	99276 1206	Clip, Wire Harness	1	
h	99279 0833	Clip, Wire Harness	2	
i	99279 1105	Clip, Wire Harness	1	
j	99682 1001	Protector, Cord	2	
k	99682 2001	Protector, Cord	2	
l	99684 1000	Protector, Cord	2	
m	99709 0108	Band	7	
n	99681 1501	Protector	1	

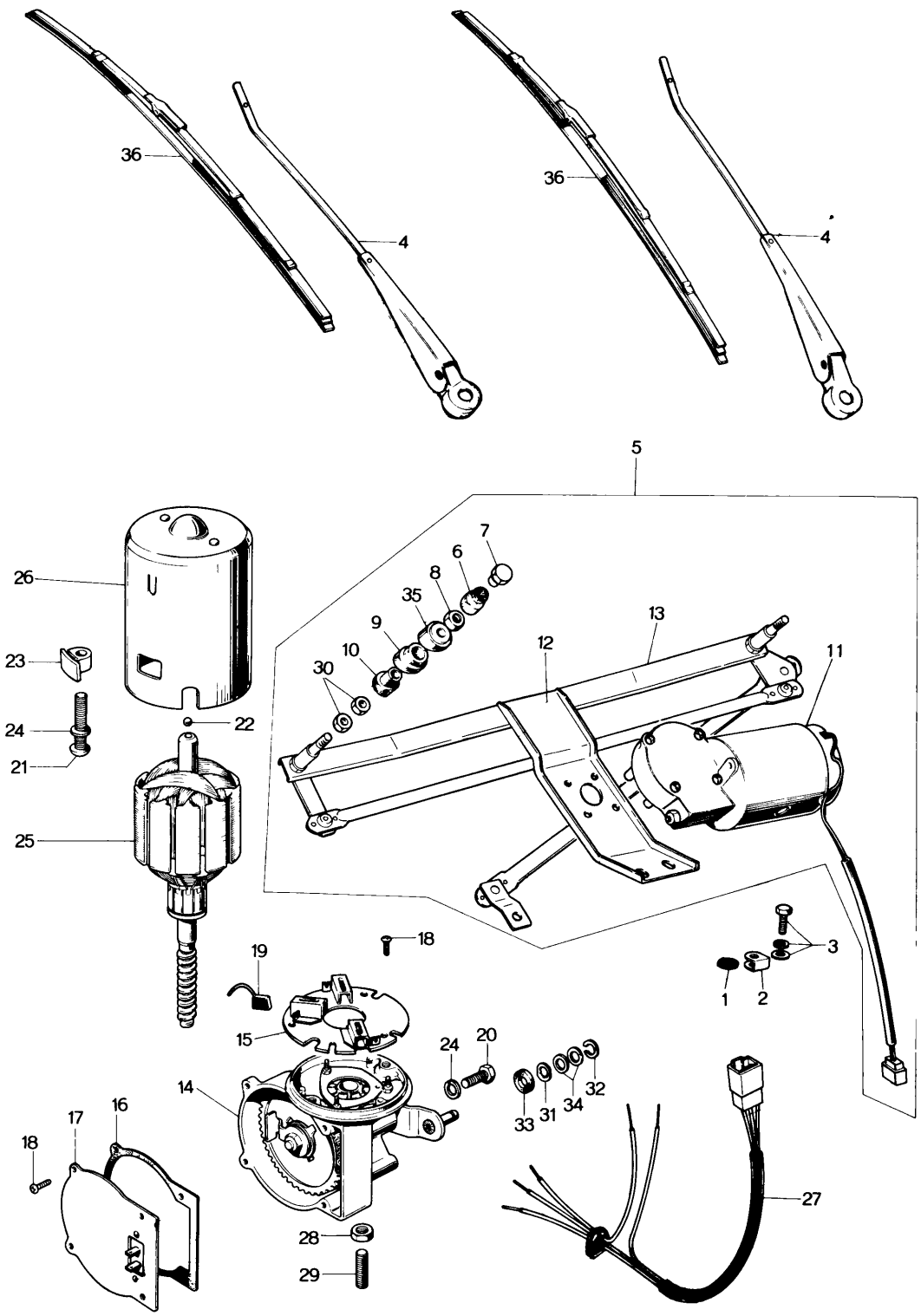
36
4
36
4
5
26
23
24
21
22
25
7
6
8
35
9
10
30
12
13
11
3
1
2
18
19
15
24
20
14
33
31
34
32
16
17
18
28
29
27

WINDSHIELD WIPER 66 87

No	Part Number	Description	Q'ty	Remarks
1	0118 13 431	Washer, Rubber	2	
2	0118 13 432	Clip, Earth	1	
3	99794 0616	Bolt, Wiper	2	
	99952 0618	Washer, Plain	2	
	99971 0600	Washer, Spring	2	
4	2158 66 366B	Arm, Wiper	2	
5	1823 67 350	Motor & Link	1	
6	0212 66 371	Cap, Rubber	2	
7	0223 66 371	Nut	2	
8	0212 66 372	Nut, Decoration	2	
9	1823 67 351	Bush	2	
10	1823 67 352	Bush	2	
11	1823 67 370	Motor, Wiper	1	
12	1823 67 380	Frame	1	
13	1823 67 390	Link, Wiper	1	
14	1823 76 602	Box, Gear	1	
15	0259 87 101A	Plate, Holder	1	
16	0259 87 103	Gasket	1	
17	2158 87 104	Plate, End	1	

No	Part Number	Description	Q'ty	Remarks
18	0259 87 105	Screw	7	
19	0259 87 106	Brush	3	
20	99806 0510	Bolt		
21	0257 87 107	Screw	2	
22	0259 87 107	Ball	2	
23	0257 87 108	Nut	2	
24	99971 0500	Washer	6	
25	0259 87 108A	Rotor	1	
26	0259 87 109A	Stator	1	
27	2158 87 112A	Wire, Harness	1	
28	0259 87 119	Nut	1	
29	0259 87 120	Screw	1	
30	0259 87 134	Nut	4	
31	0702 87 135	Washer, Wave	1	
32	0702 87 138	Ring, Retaining	1	
33	0738 87 803	Felt	1	
34	0738 87 804	Washer	2	
35	0305 87 906	Washer, Cap	2	
36	2158 67 367	Blade, Wiper	2	

SCREEN WASHER

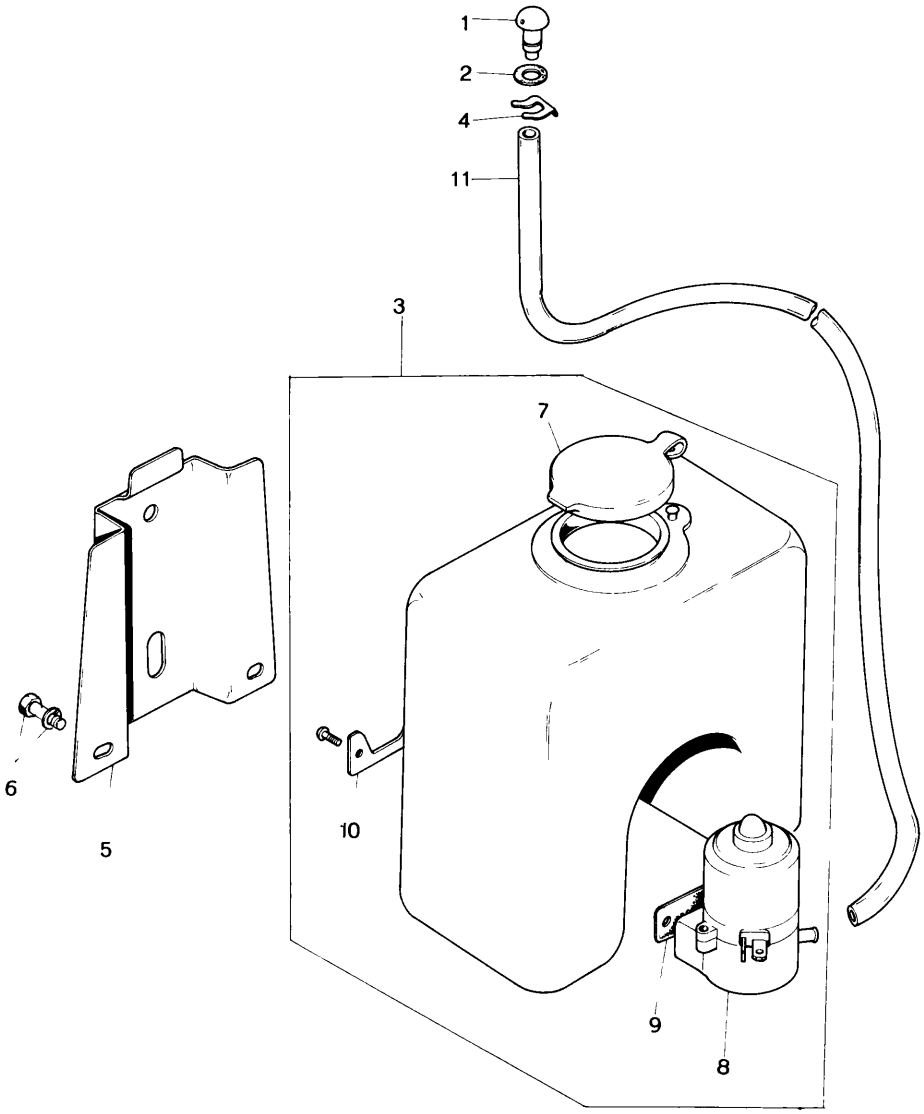

SCREEN WASHER 66 87

No.	Part Number	Description	Q'ty	Remarks
1	0259 66 900A	Nozzle, Washer	1	
2	0259 66 905	Gasket	1	
3	0317 67 480	Tank	1	
4	1011 67 515	Clip	1	
5	0866 67 521	Bracket	1	
6	99786 0612	Bolt, Bracket	2	
7	0727 87 992	Cap	1	
8	0305 87 993	Pump	1	
9	0727 87 994	Gasket	1	
10	0727 87 995	Plate	1	
11	99335 04185	Pipe	1	

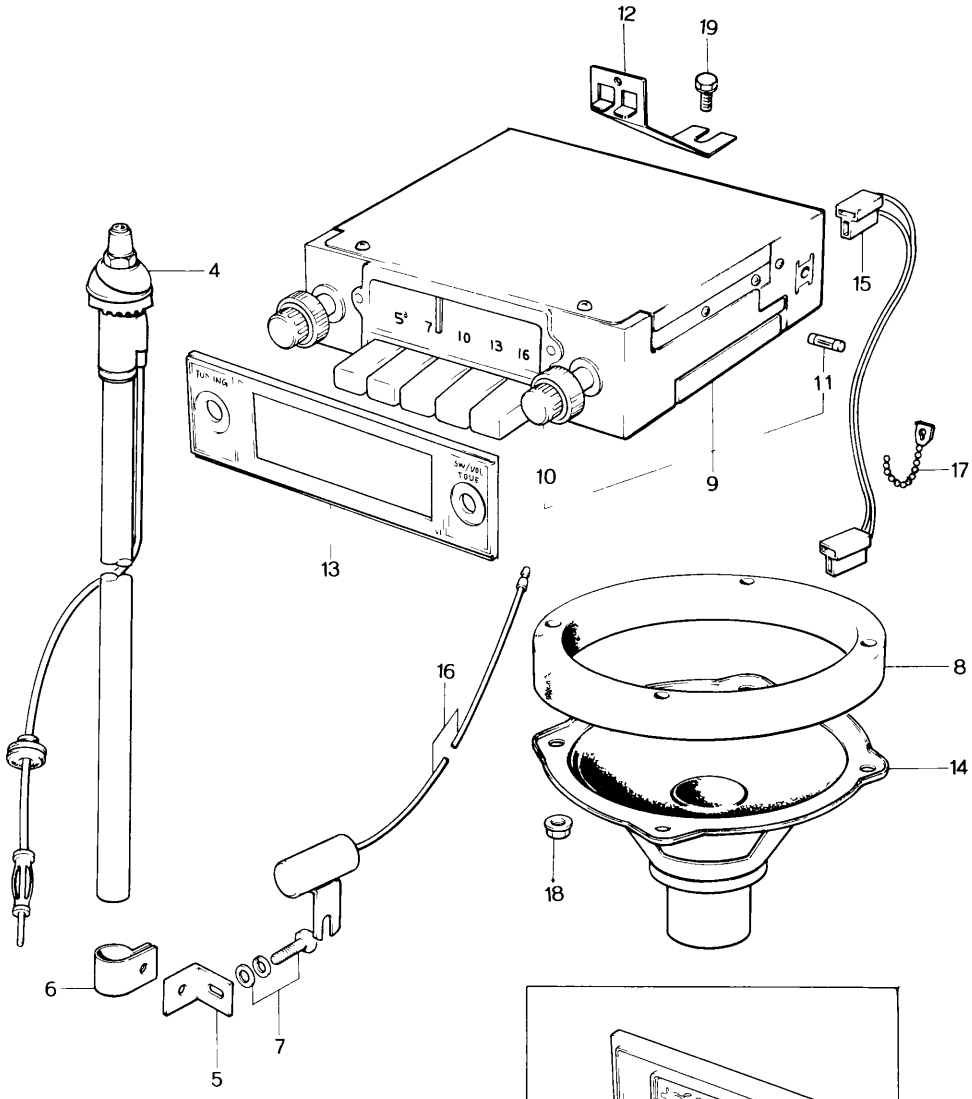

Without Auto Radio

No	Part Number	Description		Q'ty	Remarks
1	0118 56 242B	Plug, Hole		1	
2	0222 66 911	Cover, Antenna	Without Auto Radio	1	
3	0398 68 875	Ornament		1	
	1854 66 870	Auto Radio (AM)		1	
	1857 66 870	Auto Radio (AM/FM)		1	
4	0617 66 534	Antenna		1	
5	0617 66 535	Bracket No. 1, Antenna		1	
6	0617 66 536	Bracket No. 2, Antenna		1	
7	99833 0512	Screw, Bracket		1	
	99952 0516	Washer, Plain		1	
	99971 0500	Washer, Spring		1	
8	0317 66 862	Partition, Speaker		1	
9	1854 66 900	Tuner (AM)		1	
	1857 66 900	Tuner (AM/FM)		1	
10	0305 87 084	Knob		2	
11	0398 66 965	Fuse		1	
12	1854 66 903	Bracket, Tuner		1	
13	1854 66 905	Panel, Decoration		1	
14	0866 66 960	Loud Speaker		1	

No	Part Number	Description	Q'ty	Remarks
15	0866 66 965	Cord, Loud Speaker	1	
16	0820 66 992	Condenser	2	
17	99709 0108	Band	1	
18	99940 0500	Nut	3	
19	99786 0510	Bolt, Bracket	2	

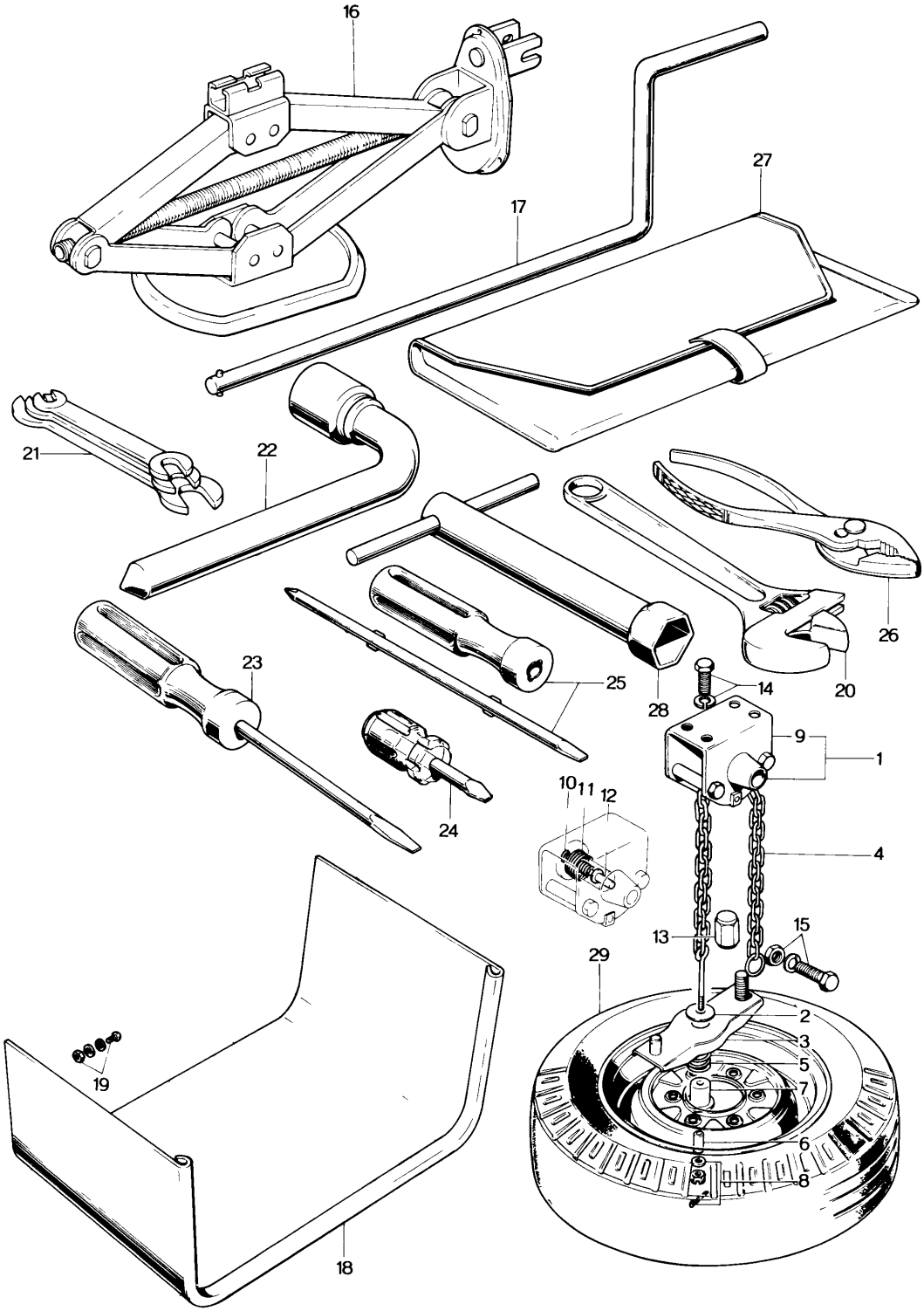
16
27
17
21
22
26
23
25
28
14
20
9
1
10
11
12
24
4
15
13
29
2
3
5
7
6
8
19
18

No	Part Number	Description	Q'ty	Remarks
1	1854 38 610B	Carrier, Tire	1	
2	0559 38 640	Washer	1	
3	1854 38 650A	Plate, Anchor	1	
4	1854 38 660	Chain	1	
5	0559 38 661	Spring	1	
6	0559 38 665	Spacer	1	
7	0559 38 670	Sheet, Spring	1	
8	99924 1000	Nut	1	
	99952 1000	Washer, Plain	1	
	99221 2020	Pin, Split	1	
9	0193 69 770A	Bracket, Hanger	1	
10	0600 69 784	Spring, Return	1	
11	0727 69 785	Spring, Release	1	
12	0193 69 786	Pin, Release	1	
13	1854 26 161A	Nut, Tire Carrier	1	
14	99801 0816	Bolt, Tire Carrier	4	
	99971 0800	Washer, Spring	4	
15	99806 0630	Bolt, Tire Carrier	1	
	99906 0800	Nut	1	

No.	Part Number	Description	Q'ty	Remarks
	99971 0600	Washer, Spring	1	
16	1854 37 790	Jack, Pantograph	1	
17	0603 68 240	Lever, Jack Crank	1	
18	2541 68 610-00	Shelf, Parcel (BLK.) (Without Car Heater)	1	Selective use
	2651 68 610-00	Shelf, Parcel (BLK.)	1	
19	99834 0512	Screw, Parcel Shelf	5	
	99971 0500	Washer, Spring	5	
	99952 0500	Washer, Plain	10	
	99906 0500	Nut	5	
	1854 68 660	Tools	1	
20	0110 68 050A	Wrench, Monkey	1	
21	0672 68 060A	Spanner Set	1	
22	0603 68 070A	Wrench, Hub Nut	1	
23	0187 68 110A	Screw Driver Set	1	
24	2677 68 110	Screw Driver Set	1	
25	0672 68 120A	Screw Driver Set	1	
26	0118 68 180A	Plier	1	
27	1854 68 670	Bag, Tool	1	
28	0839 68 720	Wrench, Spark Plug	1	

No	Part Number	Description	Q'ty	Remarks
29	9962 03 7314	Tire - 7.35 - 14 - 6PR	1	
	9963 60 4130	Valve, Air - TR - 413	1	
	9965 05 5540	Wheel, Disc - 5½ - J x 14 WDC	1	

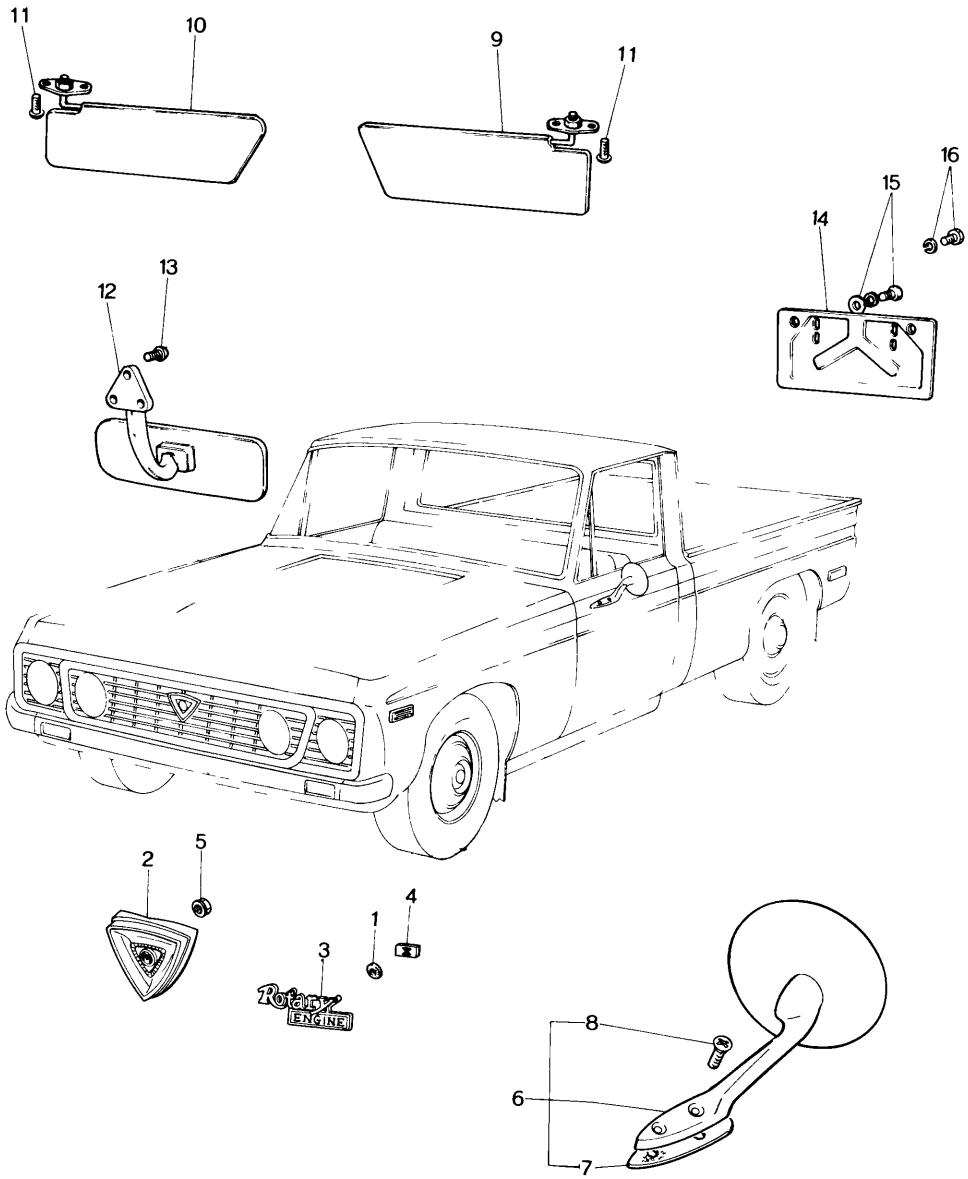
11
10
9
11
16
15
14
13
12
2
5
4
1
3
Rotary ENGINE
8
6
7

ATTACHMENT 69

No	Part Number	Description	Q'ty	Remarks
1	0730 69 057A	Gasket	2	
2	1128 69 071A02	Emblem, Front (SILV. M)	1	
3	1881 69 076	Mark, Rotary Engine	1	
4	99578 3000	Nut, Speed	2	
5	99940 0500	Nut, Front Emblem	1	
6	2229 69 130	Mirror, Rear View	1	
7	2229 69 101	Gasket	1	
8	99772 0516	Screw	2	
9	1823 69 150A-07	Visor (R), Sun (L. GRY.)	1	
10	1823 69 170A-07	Visor (L), Sun (L. GRY.)	1	
11	99764 0416	Screw, Tapping - Sun Visor	4	
12	0617 69 190	Mirror, Interior	1	
13	99862 0416B	Screw Set, Interior Mirror	3	
14	2651 69 810	Holder, Number Plate	1	
15	99806 0616	Bolt, Number Plate Holder	2	
	99971 0600	Washer, Spring	2	
16	99806 0612	Bolt, Number Plate Holder	2	
	99971 0600	Washer, Spring	2	

69 TOP CEILING & MAT

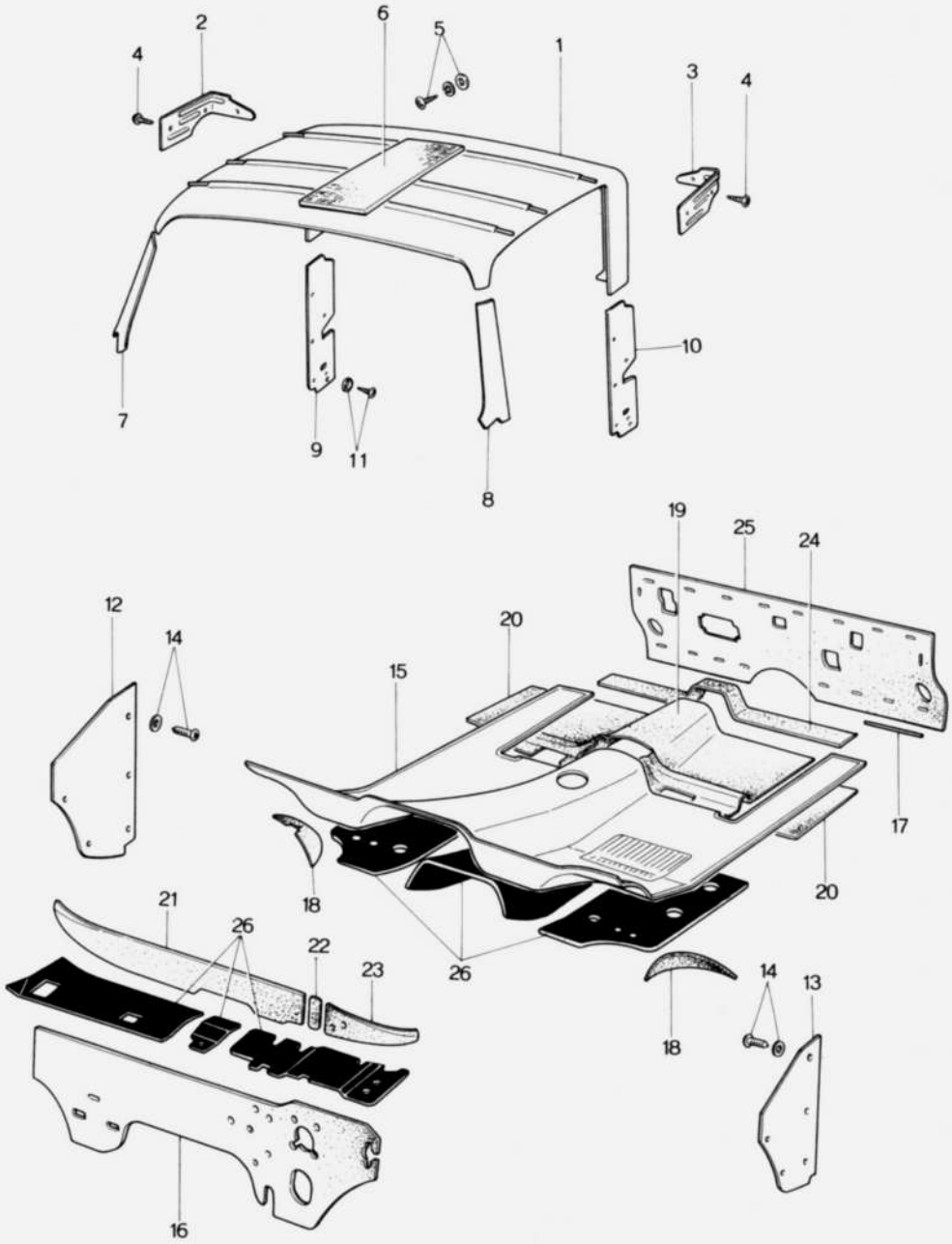

TOP CEILING & MAT 69

No	Part Number	Description	Q'ty	Remarks
1	1823 69 310-07	Ceiling, Top (L. GRY.)	1	
2	0603 69 321	Plate (R), Fixing - Top Trim	1	
3	0603 69 322	Plate (L), Fixing - Top Trim	1	
4	99862 0408	Screw, Tapping - Fixing Plate	6	
5	99863 0512	Screw, Tapping	3	
	99952 0500	Washer, Plain	3	
	99971 0500	Washer, Spring	3	
6	0603 69 323A	Cushion, Listing	1	
7	1854 69 411	Trim (R), Pillar (L. GRY.)	1	
8	1854 69 412	Trim (L), Pillar (L. GRY.)	1	
9	1854 69 461A	Trim (R), Rear Pillar (L. GRY.)	1	
10	1854 69 471A	Trim (L), Rear Pillar (L. GRY.)	1	
11	99867 0514B	Screw	8	
	99967 0500B	Washer	8	
12	0617 69 510B-00	Trim (R), Cowl Side (BLK.)	1	
13	0617 69 520B-00	Trim (L), Cowl Side (BLK.)	1	
14	99862 0412	Screw, Tapping - Cowl Side Trim	10	
	99968 0400	Washer	10	
15	1854 69 611A	Mat, Floor (Manual)	1	
	1856 69 611A	Mat, Floor (Automatic)	1	

No	Part Number	Description	Q'ty	Remarks
16	1854 69 660	Insulation	1	
17	0727 69 662	Wire, No. 2	4	
18	1854 69 683	Pad, Tire House	2	
19	1854 69 684A	Pad, Seat Lower	1	
20	1854 69 685	Pad, Floor Seat Side	2	
21	1854 69 686	Pad, Dashborad No. 1	1	
22	1854 69 688	Pad, Dashboard No. 3	1	
23	1854 69 689	Pad, Dashboard No. 4	1	
24	1854 69 691A	Pad, Seat Lower Rear	1	
25	1854 69 692	Pad, Back Plate	1	
26	0208 76 071	Silencer Revised Piece	–	

Order Under No. 0208 76 071 (Floor Silencer)
Dimensions (300 mm x 300 mm x 2 m)

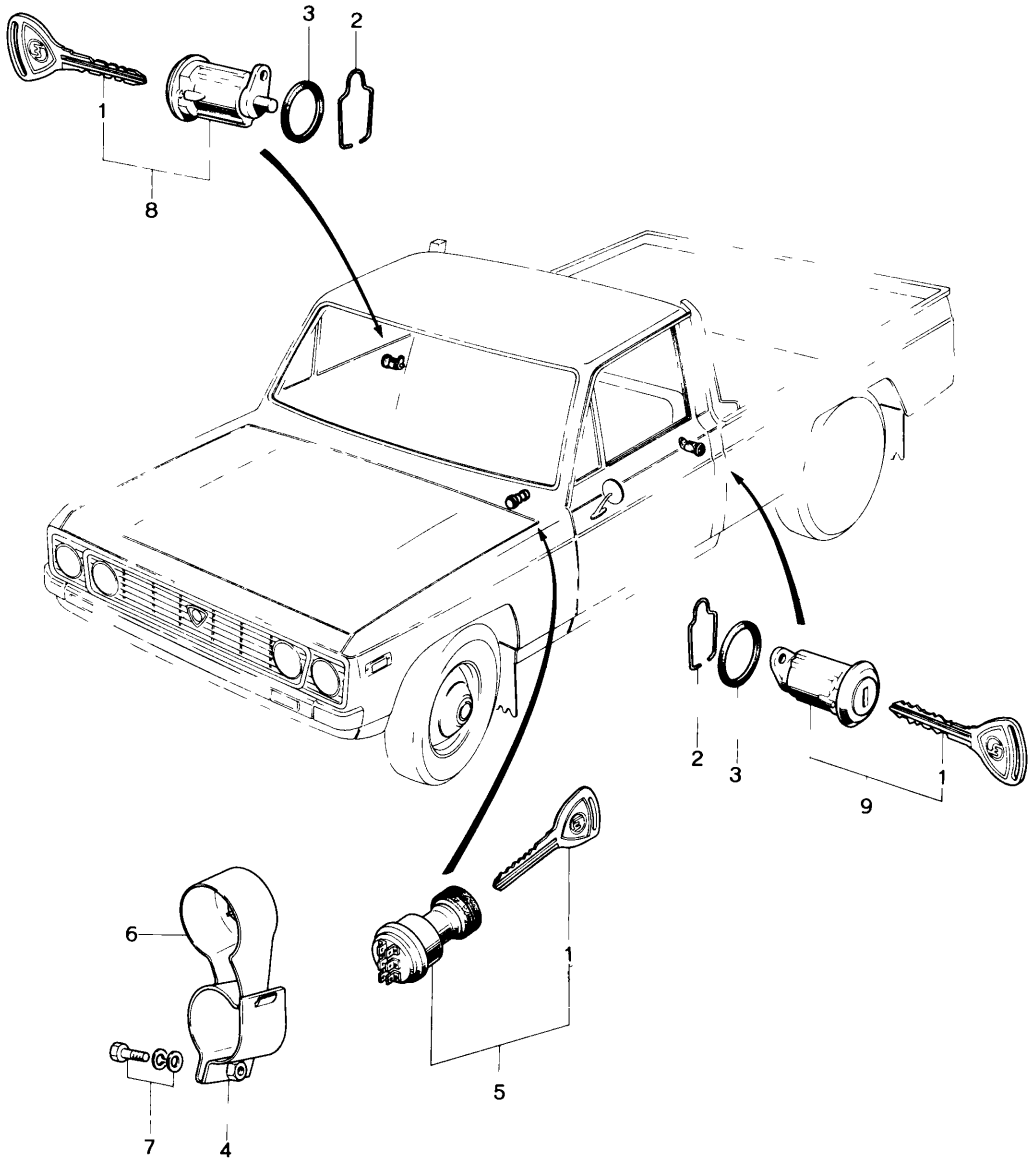
3
2
1
8
2
3
1
9
6
1
5
7
4

No	Part Number	Description	Q'ty	Remarks
	1854 09 010	Key Set	1	
1	2113 58 668A	Key	2	
2	0223 58 961	Fastener Key Cylinder	2	
3	0223 58 962	Gasket, Key Cylinder Door	2	
4	0370 60 425A	Bracket, Ignition Switch	1	
5	1854 75 980	Key Sub Set, Ignition Switch	1	
6	0370 60 500B	Bracket, Ignition Switch	1	
7	99806 0620	Bolt, Bracket	1	
	99952 0600	Washer, Plain	1	
	99971 0600	Washer, Spring	1	
8	1854 75 910	Key Sub Set (R), Door	1	
9	1854 75 920	Key Sub Set (L), Door	1	
	2113 74 158	Blank Key (No. 1500 ~ 1999)	1	
	2113 74 168	Blank Key (No. 2000 ~ 2499)	1	

INDEX. 1857 07 010～0839 11 323A

Parts Number	Parts Composition List Page	Fig. No.
1857 07 010	165	–
1854 09 010	236	–
1757 10 100A	2	1
0839 10 105	2	2
1757 10 111	2	6
1757 10 120	2	3
1757 10 171A	2	7
	7	–
0813 10 172	2	8
	7	–
0813 10 173	2	9
	7	–
0813 10 174	2	10
	7	–
1757 10 200C	2	11
0839 10 203	2	12
	3	27
2329 10 204	2	13
0839 10 205	2	14
	3	28
1757 10 206A	2	15
1757 10 207	2	16
1757 10 208	3	20
0324 10 250	3	24
0324 10 252	3	25
1757 10 300A	3	26
1757 10 305	4	39
1757 10 309	3	29
0866 10 320A	3	30
1757 10 351	4	41
2329 10 417	7	81
1757 10 451	4	43
1757 10 452	4	43
0839 10 455	4	44
	7	–
1757 10 500	10	1
0820 10 502B	10	2
	10	5
0839 10 504	10	3
1757 10 550	10	4
0813 10 555	7	–
	10	8
1668 10 556	10	6
1757 10 600B	4	45
0820 10 605	4	46
1757 10 609	4	47
0820 10 631B	4	48
1757 10 641	5	60
	8	–
1757 10 700B	5	61
1757 10 711	5	64
	8	–
0839 10 721	6	65
1757 10 722	6	66
1757 10 723	6	67
0866 10 830	6	69
1757 10 845	6	70
1757 10 861	6	71
1757 10 862	6	73
1011 11 111	13	50
1757 11 301B	10	9
1011 11 302C	10	10
1757 11 304	10	11
0820 11 317	10	12
1011 11 321	10	13
0839 11 323A	10	14

0820 11 341～1757 13 720 INDEX.

0820 11 341	10	15
0820 11 343	10	16
1011 11 351	11	17
1011 11 353	11	18
1011 11 361	11	19
1011 11 363	11	20
1757 11 400	11	21
1758 11 400	11	21
1881 11 403	11	22
1881 11 404	11	23
0813 11 405	11	24
0839 11 411A	11	25
0839 11 412	11	26
1011 11 501	11	29
0839 11 502	11	31
1011 11 504	12	32
0813 11 505B	12	33
0839 11 506	11	31
1011 11 507	12	34
0839 11 508	12	31
0839 11 509	12	31
1757 11 511	12	35
1854 11 511	12	35
1757 11 512	12	36
0839 11 531	12	37
1757 11 551	12	38
1757 11 600D	12	39
0820 11 611B	12	40
1854 11 700	12	42
0866 11 702	12	43
0820 11 705	12	45
0810 11 711	12	46
0820 11 712	13	47
1029 11 750	13	48
1757 13 100A	15	1
1757 13 111	8	–
	15	9
1854 13 200	18	1
1856 13 200	18	1
1757 13 201	18	2
1757 13 221	8	–
	18	3
1757 13 222	18	4
1757 13 251A	15	10
1757 13 300	20	1
1757 13 310	20	7
1757 13 330A	15	12
2850 13 331	66	1
1757 13 341A	15	14
1757 13 351	20	2
0222 13 363	34	1
0223 13 363	132	1
1757 13 371A	15	15
1854 13 400A	132	2
0866 13 402A	132	3
0118 13 431	219	1
0118 13 432	219	2
1757 13 446	132	5
1570 13 447	132	6
1757 13 447	132	7
1757 13 449	132	9
0222 13 470B	132	16
0381 13 481	132	17
1757 13 510A	22	1
1881 13 515A	22	2
1757 13 527B	22	4
1668 13 531A	22	5
0839 13 614	16	20
1617 13 305A	20	6
1757 13 710	24	1
1757 13 714	24	3
1757 13 715	24	6
1757 13 717	24	7
1757 13 718	24	8
1757 13 720	24	9

INDEX. 1758 13 720~1757 14 810

1758 13 720	24	9
1757 13 724	8	–
	24	11
2329 13 726	24	12
1758 13 730	24	13
1757 13 740	24	14
2090 13 742A	16	18
1757 13 744	24	16
2090 13 746	25	17
1757 13 750	25	18
1757 13 752	25	19
1757 13 753	25	20
1757 13 754A	25	21
2329 13 754A	25	22
1757 13 757	25	23
1757 13 770A	25	26
1757 13 772A	25	27
1757 13 778	25	31
1757 13 780	132	19
1757 13 785A	133	21
1757 13 786A	133	22
1757 13 788A	133	23
1029 13 790	133	24
1757 13 790	133	25
1757 13 795	133	27
1757 13 800	16	17
2329 13 876	16	19
2329 13 882	16	20
1757 13 889	8	–
	16	21
1757 13 891	8	–
	16	22
1757 13 910	25	33
1757 13 912	25	34
1757 14 020	28	1
1757 14 100	28	8
1757 14 112	28	9
0810 14 113	28	10
0839 14 115	4	49
0839 14 117	28	11
0820 14 118C	28	12
0839 14 119B	28	13
0823 14 130	28	2
0823 14 131	28	3
1757 14 132	28	4
0839 14 133	28	5
0839 14 141A	29	16
0839 14 142	29	17
0866 14 160E	29	18
0810 14 171	29	19
0820 14 250D	29	2
0839 14 273A	4	5
0839 14 274	4	5
0839 14 300	29	2
1757 14 600	30	2
1757 14 611	31	5
0820 14 620A	31	5
0813 14 623	31	5
0820 14 625A	31	5
0813 14 641	31	5
1757 14 651	31	5
1757 14 652	31	6
1757 14 653	31	6
1757 14 654	31	6
1757 14 660	32	6
1757 14 670	32	6
1757 14 680	32	6
1011 14 683	32	6
1854 14 700	34	2
0813 14 716	34	7
0865 14 720	34	8
1570 14 730A	34	9
1757 14 740	34	10
0839 14 745	34	11
1757 14 810	34	3

1757 14 821～0839 17 287 INDEX.

1757 14 821	34	4
1757 14 822	34	5
1757 14 823	34	6
1757 15 010B	35	18
2090 15 104	35	19
1757 15 105	8	–
	36	35
0820 15 106	8	–
	36	36
1757 15 114	35	20
1757 15 118	35	21
1757 15 120	35	22
1757 15 132	35	23
1757 15 151A	36	38
1757 15 152A	35	24
1907 15 170	35	26
0823 15 171	35	25
0813 15 173	35	28
1097 15 200	36	42
0223 15 205	37	47
1907 15 210	36	43
1907 15 211	36	40
1907 15 250A	36	41
1854 15 310A	36	46
1856 15 310A	36	46
1854 15 312	37	49
1011 15 317	37	48
1854 15 350A	37	52
1854 15 351A	37	55
1854 15 411A	37	58
1854 15 421	37	59
1854 15 511	38	64
1854 15 521	38	65
0603 16 102B	40	1
0603 16 103	40	5
0222 16 105	40	6
0813 16 112	40	3
1881 16 210A	40	4
0866 16 214A	40	7
0895 16 410	40	8
0839 16 432	40	9
0895 16 460	40	11
0820 16 510	40	12
0820 16 515	40	13
0454 16 520	40	14
1853 17 100A	43	1
0839 17 105	43	2
0839 17 111	43	8
	45	–
0810 17 121	43	9
1853 17 201	47	1
0810 17 204	47	2
0810 17 205	47	3
1011 17 221A	47	4
0317 17 225	47	5
1853 17 230	47	6
1853 17 241	47	7
1853 17 242	47	8
1853 17 243	47	9
1853 17 244	47	10
1853 17 245	47	11
1853 17 250	47	12
1853 17 261A	47	13
1853 17 262	47	14
1853 17 264	47	15
1853 17 265	47	16
1853 17 270	47	17
0839 17 275	47	18
0839 17 276	47	19
0839 17 277	47	19
0839 17 278	48	19
0839 17 281	48	20
0839 17 284	48	21
0839 17 285	48	22
0839 17 287	48	23

INDEX. 0839 17 288～0823 18 107

0839 17 288	48	23
0821 17 297	48	24
1853 17 301	48	25
1853 17 302	48	26
0821 17 303	48	27
0839 17 305	48	28
1853 17 310	48	29
0118 17 313	51	1
1853 17 313	48	30
0839 17 321A	48	31
0111 17 323	51	2
0305 17 327	48	33
0305 17 328	48	33
1853 17 330A	43	11
0376 17 335	43	14
	71	35
0862 17 341	48	34
	81	1
0114 17 351	51	3
1011 17 351	43	15
	70	1
0187 17 352	43	16
	70	2
0111 17 354	43	17
0111 17 354	70	3
1853 17 361	44	19
	45	–
0862 17 371	44	20
0862 17 375	44	22
	45	–
0810 17 381	44	23
0810 17 385	44	24
	45	–
1853 17 402	51	4
1853 17 404	51	5
1853 17 406	51	6
1853 17 410	51	7
0103 17 411	51	8
1853 17 420	51	9
1853 17 431	51	10
0221 17 441	51	11
0259 17 441	51	12
1011 17 441	44	27
	70	5
0862 17 442	44	28
0862 17 442	70	6
1853 17 450	51	16
0398 17 461A	51	17
0398 17 462A	51	18
0303 17 470	51	19
0221 17 473	52	2
0303 17 474	45	–
	53	3
0221 17 475B	52	2
0271 17 478	45	–
	52	2
0303 17 482	53	3
0183 17 491	52	2
0187 17 492	52	2
1853 17 510	52	2
1853 17 520	52	2
1011 17 530	44	3
1011 17 535	44	3
	45	–
1011 17 540A	44	3
0221 17 551A	52	3
0221 17 552	52	3
0303 17 561	52	3
0376 17 640A	52	3
1853 17 800	52	3
1562 18 100	55	
1672 18 100	55	
0845 18 101	55	1
0866 18 101	55	1
0823 18 107	55	

1854 18 110A	55	4
0820 18 111B	55	5
0823 18 111	133	30
	213	1
0820 18 114	55	10
1854 18 115	55	6
1854 18 120	55	7
1757 18 130A	55	11
1757 18 140A	55	12
1757 18 150C	55	9
1854 18 160	55	8
1757 18 170A	55	13
1757 18 180A	55	14
1011 18 190	55	15
1757 18 200A	56	20
1758 18 200	56	20
0107 18 216A	56	21
0810 18 276	32	65
0810 18 277	32	65
1011 18 300	59	1
1757 18 311	60	20
1881 18 361	60	23
2783 18 368	87	11
0222 18 375	60	26
0222 18 376	60	26
0222 18 377	60	26
1672 18 381A	60	27
0453 18 391	57	40
1757 18 400A	62	1
1758 18 400	62	1
0866 18 501A	3	31
1757 18 510	3	32
1620 18 520	63	25
1672 18 520	63	25
1689 18 520	64	25
1757 18 600	57	42
1758 18 600	57	42
2691 18 660	130	1
1011 18 810	57	43
1757 18 860	25	35
1757 18 880	38	67
1114 18 890A	213	2
1663 18 920	6	74
2329 18 921	7	84
2329 18 922	6	75
2329 18 923	6	76
2329 18 924	6	77
2329 18 930B	213	4
1757 18 940A	213	6
1758 18 940A	213	6
1758 19 020	66	2
0842 19 025	66	4
1908 19 027	66	6
0454 19 028	66	7
1758 19 028	66	9
1015 19 031	85	1
1758 19 090	68	–
0338 19 100A	66	12
1758 19 211	66	13
1758 19 215	66	14
0338 19 216	66	15
1758 19 220	66	16
0338 19 223	66	17
1758 19 240	67	18
0338 19 245A	67	19
0338 19 256	67	20
0338 19 257	67	22
0338 19 258	67	22
1758 19 310	70	10
0338 19 331A	70	11
0338 19 336	70	13
0338 19 337	70	14
0338 19 338	70	15
1758 19 341	71	18
0378 19 344	70	16

INDEX. 0338 19 360~0338 19 570

0338 19 360	75	1
0338 19 361	71	19
0338 19 363	71	20
0842 19 381	71	21
0338 19 384	71	22
0842 19 385	71	23
1758 19 386	71	24
0338 19 388A	71	25
0338 19 389	71	26
1758 19 391	71	27
1758 19 392	71	28
0842 19 394	71	29
1758 19 394	71	30
0338 19 395	71	31
0338 19 397	71	32
	82	25
1758 19 397	71	33
1758 19 431	85	3
1758 19 440	85	6
1758 19 443	85	7
0338 19 449	85	8
1758 19 450	85	9
1758 19 460	75	2
0338 19 470	75	3
0338 19 475	75	4
0338 19 475	76	17
	78	–
0338 19 476	75	5
	76	18
	78	–
0338 19 480	75	6
	76	19
0338 19 486	75	7
	76	20
	78	–
0338 19 487	75	8
	76	21
	78	–
0338 19 488	75	9
	76	22
	78	–
0338 19 493	75	10
0338 19 493	76	23
0338 19 498	75	11
	76	24
	78	–
0338 19 499	75	12
	76	25
	78	–
0338 19 500	75	13
0338 19 500	76	26
	79	–
1758 19 503	75	14
1758 19 504	75	14
1758 19 505	75	14
1758 19 506	75	14
1758 19 507	75	14
1758 19 508	75	14
0338 19 509	76	15
	76	27
	79	–
1758 19 510	76	16
1758 19 511	76	28
0378 19 515	76	29
0338 19 530	76	30
0338 19 531	76	31
0338 19 533	76	32
0338 19 534	77	33
0338 19 540	77	34
0338 19 550	77	35
0338 19 560	77	36
0338 19 565	77	37
0338 19 566	77	38
0338 19 567	77	39
0338 19 570	77	40

0338 19 580~1758 19 750 INDEX.

0338 19 580	81	4
0338 19 581	81	5
0338 19 590	81	6
0338 19 591	81	7
0338 19 593	81	8
0338 19 594	81	9
0338 19 595	81	10
0338 19 596	81	11
0338 19 598	77	41
0338 19 601	81	12
0338 19 603	81	13
0338 19 604	81	14
0338 19 605	81	15
0338 19 606	81	16
0338 19 607	81	17
0338 19 608	82	18
0338 19 609	82	19
0338 19 610	82	20
0338 19 613A	82	21
0338 19 614A	82	21
0338 19 615A	82	21
0338 19 616A	82	21
0338 19 617A	82	21
0338 19 618A	82	21
0338 19 619	82	22
0338 19 621	77	42
	79	–
0338 19 622	77	43
	82	23
0338 19 623	77	44
0338 19 624	77	45
0338 19 631	77	46
0338 19 632	77	46
0338 19 633	77	46
0338 19 634	77	46
0338 19 635	78	46
0338 19 636	78	46
0338 19 638	78	47
	79	–
0338 19 639	78	48
0338 19 641	78	49
0338 19 642	78	49
0338 19 643	78	49
0338 19 644	78	49
0338 19 645	78	49
0338 19 646	78	49
0338 19 647	78	49
0842 19 650	82	24
0338 19 651	82	26
0338 19 655	82	27
0338 19 656	82	28
0842 19 660	82	29
0338 19 661	82	30
0338 19 663	82	31
0338 19 664	83	32
0842 19 665	83	33
0338 19 666	83	34
0338 19 667	83	35
0338 19 670A	83	36
0338 19 676	83	37
0338 19 678	67	23
0338 19 701	85	10
0338 19 702	85	11
0338 19 703	85	12
0338 19 704	85	13
0338 19 706	85	14
1840 19 710	71	34
0338 19 731	85	16
0338 19 732	85	17
0338 19 733C	85	18
0338 19 734A	85	19
0338 19 735	72	36
0338 19 737	72	37
0338 19 739	72	37
1758 19 750	72	38

INDEX. 0338 19 768~1757 24 319

0338 19 768	72	39
1758 19 815	72	40
1675 19 821	72	44
0338 19 822	72	45
0338 19 823	72	46
0338 19 825	72	47
0338 19 826	72	47
0338 19 827	72	47
0338 19 828	72	47
0338 19 829	72	47
0338 19 831	72	41
0338 19 832	72	42
0338 19 833	72	43
1758 19 835	73	48
1758 19 836	73	49
0338 19 837	73	50
1758 19 870	73	51
1758 19 880	73	52
0338 19 904A	67	26
0808 19 910	67	27
0842 19 915A	67	28
1053 19 920	67	30
1053 19 930	67	31
1015 19 934B	67	32
1758 19 940	67	33
1015 19 945A	67	34
2579 19 989	68	35
0397 22 200	78	–
0881 22 297	49	41
0398 22 333	43	12
0866 23 025	6	79
1757 23 040	7	–
1757 23 103	13	49
1011 23 151A	13	51
1011 23 176	10	13
0820 23 180C	13	52
1757 23 200	7	–
1758 23 200	7	–
1757 23 540	18	–
1758 23 540	18	–
1757 23 672	20	3
1113 23 673	20	4
1757 23 680	20	5
1757 23 725	25	36
0839 23 801	29	23
0813 23 802B	29	24
0813 23 803	29	25
0820 23 832B	30	29
0820 23 833B	30	30
0820 23 834B	30	31
0820 23 835A	30	33
0730 23 837	30	34
1011 23 837	30	35
1011 23 838	30	36
0730 23 839	30	37
0820 23 840	30	38
1011 23 841	30	39
0820 23 842	30	40
1757 23 844	30	41
0730 23 845	30	42
0820 23 845A	30	43
0730 23 846	30	44
0820 23 847A	30	45
0820 23 848A	30	46
2090 23 853	31	47
0730 23 854	31	48
0820 23 882A	28	14
1757 24 302	56	22
1757 24 303	56	23
1757 24 308	56	24
1757 24 310	56	25
1757 24 313	56	26
1757 24 314	56	27
1757 24 317	56	28
1757 24 319	56	29

1757 24 322	56	30
1757 24 328	56	31
1757 24 330	56	32
1757 24 334	56	33
1757 24 340	57	34
1757 24 350	57	35
1758 24 350	57	35
1757 24 360	57	36
1011 24 501	59	2
0820 24 503	59	8
1011 24 510	59	13
0208 24 514	59	10
0866 24 526	59	11
1011 24 527	59	3
0866 24 530	59	4
0866 24 533	59	5
1011 24 533	59	14
1011 24 534	59	15
0866 24 535	59	6
0866 24 540	59	7
1011 24 541	59	16
0866 24 550	59	9
1011 24 560	59	12
1011 24 563	59	17
0290 24 581	59	18
0866 24 704	62	2
1757 24 705	62	3
1758 24 705	62	3
1758 24 706	63	21
1757 24 709	62	4
1757 24 710	62	5
1758 24 710	62	5
0426 24 712	62	6
0426 24 715	62	7
0866 24 716	62	8
0845 24 720	62	9
0426 24 725	62	10
0426 24 726	62	11
1758 24 726	62	11
1757 24 730	62	12
1758 24 730	62	12
0426 24 731	62	13
1758 24 731	62	13
1758 24 736	63	20
0222 24 741	62	14
0222 24 750	63	15
1758 24 750	63	15
0222 24 752A	63	16
0222 24 753	63	17
0426 24 753	63	18
0426 24 754	63	19
0324 24 760	63	20
2677 25 071	87	1
2677 25 072	87	1
2677 25 073	87	1
2677 25 074	87	1
2677 25 075	87	1
2677 25 076	87	1
2677 25 077	87	1
1856 25 100A	87	–
0578 25 121	87	2
0290 25 151	87	3
1856 25 210	87	4
2677 25 220	87	5
1856 25 300A	87	6
1856 25 314	88	12
1854 26 010A	90	1
0259 26 051	90	3
0419 26 060	90	4
1854 26 111	90	8
1854 26 113A	90	10
1854 26 115	90	8
1854 26 117A	90	10
0604 26 125B	90	11
0604 26 129	90	12

INDEX. 0603 26 131A～0223 27 415

0603 26 131A	90	13
0603 26 152	90	14
0603 26 153	90	15
0603 26 154	90	16
0603 26 155	91	17
0603 26 156	90	14
0603 26 157	91	18
1854 26 161A	91	20
	112	1
	227	13
1854 26 163A	91	20
	112	1
0603 26 165	91	21
0603 26 166	91	21
0603 26 167	91	21
0603 26 168	91	21
0603 26 251A	93	1
0603 26 280A	93	3
0589 26 287A	93	4
0603 26 288	93	5
0603 26 290A	93	3
0589 26 297A	93	4
0603 26 301	93	6
1823 26 310A	93	7
1823 26 312A	93	8
0603 26 341	93	9
0223 26 345A	93	10
0223 26 391	93	11
0604 26 465	94	15
1854 26 570	93	12
0647 26 610	94	14
0208 26 671	94	16
0647 26 710	94	14
0603 26 800A	94	25
0603 26 810A	94	25
0603 26 821A	94	27
0604 26 832	94	26
0118 26 834	95	28
0603 26 898	95	30
0012 27 012	97	1
0604 27 018	97	2
1854 27 100	97	–
1854 27 110	97	3
0579 27 120	97	4
0578 27 130A	97	5
0540 27 141	97	6
0604 27 142	97	7
1854 27 150	97	8
1854 27 171	97	11
1854 27 231	97	12
1854 27 251	97	15
0578 27 252	97	16
0578 27 253	97	16
0578 27 254	98	16
0604 27 255A	98	17
1854 27 261	98	18
0114 27 262	98	19
1854 27 263	98	20
0110 27 301	98	21
0578 27 302	98	22
0118 27 305	98	24
0223 27 401	98	25
0223 27 402	98	25
0223 27 403	98	25
0223 27 404	98	25
0223 27 405	98	25
0223 27 406	98	25
0223 27 407	98	25
0223 27 408	98	25
0223 27 409	98	25
0223 27 411	98	25
0223 27 412	99	25
0223 27 413	99	25
0223 27 414	99	25
0223 27 415	99	25

1854 28 010～0208 32 340A INDEX.

1854 28 010	101	1
1854 28 011	101	1
1854 28 012	101	1
1854 28 013	101	1
1854 28 014	101	1
1854 28 015	101	1
1854 28 016	101	1
0603 28 110	101	2
0603 28 114	101	5
0603 28 140	101	6
0603 28 142	101	7
0603 28 151	101	9
0603 28 152	102	10
0603 28 161	102	11
0603 28 171	101	9
0603 28 320	102	13
0191 28 330	102	14
0603 28 700X	102	15
1854 32 018	104	2
1175 32 030	104	3
1175 32 041	104	4
1175 32 042	104	5
1175 32 043	104	6
1175 32 044	104	7
1854 32 049	104	8
1854 32 050	104	14
0208 32 059	105	16
0259 32 071	105	17
1854 32 080	105	18
1854 32 110	105	–
0603 32 122	105	19
0603 32 123	105	20
1854 32 130	105	21
1854 32 141	105	22
1854 32 151	105	23
1854 32 154	105	24
1854 32 155	105	24
1854 32 156	105	24
1854 32 157	105	24
1854 32 158	105	24
1854 32 159	105	24
1854 32 161	105	25
1854 32 163	105	26
0180 32 165A	105	27
0180 32 171A	105	28
0180 32 172A	106	28
0180 32 173A	106	28
0180 32 174A	106	28
0183 32 182	106	30
0180 32 184	106	31
0603 32 186	106	36
0208 32 188	106	38
0820 32 190	106	33
1854 32 226	106	39
1854 32 250	109	1
1854 32 267	109	5
0208 32 278	109	8
	116	1
	119	40
0187 32 279A	118	36
1823 32 279	109	2
	110	26
0187 32 289	118	37
1823 32 289	109	3
	110	27
1854 32 301A	112	2
1854 32 311A	112	2
0603 32 315	112	5
2541 32 320	109	7
0208 32 324A	109	9
0208 32 326	109	10
0208 32 328A	109	11
0208 32 329	109	12
0208 32 331A	109	13
0208 32 340A	109	14

INDEX. 2541 32 351~0223 34 411

2541 32 351	110	16
0603 32 355	110	19
0208 32 360A	110	17
0603 32 365A	110	21
0180 32 366	110	22
1757 32 411A	107	41
1854 32 421	107	43
1793 32 800	107	47
1727 32 811	107	48
1854 32 888	104	15
1854 32 980	104	1
1854 33 021	112	7
1854 33 031	112	7
0110 33 041	112	9
0662 33 042	112	11
0662 33 049	112	12
1854 33 061	113	16
1854 33 062A	113	17
0603 33 065	113	18
1854 33 071	113	19
1854 33 092A	113	17
1854 33 191	95	31
	113	20
1854 33 192	95	32
	113	21
0305 33 235	114	39
1854 33 251	113	22
1854 33 260	113	23
1854 33 270	113	23
1854 33 281	113	27
0304 33 352A	94	22
0305 33 610D	113	28
0305 33 626A	114	40
0296 33 636	114	41
0296 33 646	114	41
2981 33 651	114	29
2981 33 671	114	30
0603 33 681A	94	17
2981 33 681	114	31
0305 33 685	114	32
0233 33 691	114	33
0259 33 691	94	18
	140	11
0259 33 693	94	19
	140	12
0600 33 693	114	34
1854 33 695	114	35
1854 33 696	114	36
0221 33 698	113	24
0305 33 698A	114	37
0305 33 699	113	2
0305 33 710D	114	2
1854 33 795	114	3
1854 33 980A	113	2
1854 33 990A	113	2
1845 34 011A	116	
0603 34 012	116	
0603 34 013	116	
0603 34 110C	116	
0603 34 130B	116	
1854 34 151	121	
0603 34 153	121	
0603 34 155	121	
0603 34 156	121	
0603 34 157	121	
0603 34 158	121	
0603 34 160	117	1
0223 34 211	116	1
0223 34 261	116	1
0208 34 278	118	3
0603 34 305	116	1
0603 34 307	116	1
1854 34 310	116	1
1854 34 360	116	1
0223 34 411	117	1

0603 34 416~1872 41 140 INDEX.

0603 34 416	117	16
0603 34 431	117	17
0662 34 471A	117	20
0603 34 515	119	41
0187 34 536	119	42
0193 34 662	117	21
0187 34 665	117	23
0187 34 666	117	23
0187 34 667	117	23
0187 34 668	118	24
0633 34 673	118	24
0603 34 700A	118	25
0110 34 775A	102	16
0110 34 776A	102	17
0187 34 776	121	8
0110 34 777A	102	18
0187 34 777	121	9
0603 34 780	118	26
0187 34 797	118	27
0187 34 798	118	28
0187 34 799	118	29
0193 34 820	118	32
0193 34 940	118	33
1854 37 790	228	16
1854 38 010F	123	1
1854 38 200	123	2
1859 38 551	64	26
1854 38 555A	64	27
1854 38 560B	64	28
1854 38 570A	64	30
1854 38 580A	64	31
1854 38 590	64	32
1854 38 610B	227	1
0559 38 640	227	2
1854 38 650A	227	3
1854 38 660	227	4
0559 38 661	227	5
0559 38 665	227	6
0559 38 670	227	7
1854 38 810	123	3
1854 38 851	123	5
1854 38 880	64	34
1854 38 910	123	7
1854 38 920	123	8
1854 38 930	123	9
1011 39 021B	125	1
1668 39 040C	125	3
1668 39 045A	125	5
1011 39 340A	125	6
1854 39 380	125	9
0884 39 387	88	13
1854 40 081	127	2
1854 40 090	127	5
1854 40 096	127	6
1854 40 097	127	7
1114 40 161	127	9
0820 40 165	127	10
0820 40 166	127	11
1114 40 170	127	12
2158 40 355	16	20
	127	14
0810 40 356	127	1
0824 40 401	128	16
1854 40 405	128	18
1854 40 500B	128	19
2090 40 508A	128	20
1854 40 600A	128	21
1854 40 810A	128	22
1854 40 821	128	23
1854 40 830	128	24
1114 40 850B	128	25
0727 41 023	137	2
1854 41 030	137	1
0824 41 131	137	3
1872 41 140	137	4

INDEX. 1872 41 142～0114 44 053

1872 41 142	137	5
0180 41 308	137	6
0603 41 331	140	13
1881 41 341	140	14
0118 41 380A	140	1
1011 41 400A	140	2
0839 41 461	140	3
1854 41 610A	130	2
2158 41 619	130	3
0305 41 641	130	4
0259 41 644	130	6
1856 41 650	130	8
1854 41 660B	130	9
0118 41 681	130	11
0118 41 682	130	12
0111 41 692	170	44
1708 41 711	130	14
1881 41 920A	140	9
0647 42 044	133	32
0647 42 046	133	33
1854 42 310	133	31
1854 42 330	133	36
1854 42 338A	133	37
1854 42 339	134	39
1854 42 350	134	45
1823 42 430	134	52
2677 42 441	134	50
0136 42 449	134	53
2691 42 710A	134	54
2677 42 716	134	55
2677 42 717	134	56
0118 43 028A	137	7
0225 43 028A	137	7
0187 43 029	137	8
1854 43 030A	137	9
1856 43 030	137	9
0866 43 061	137	10
0866 43 062	137	11
1854 43 070	137	12
0603 43 081	137	15
1015 43 090	138	16
1854 43 140	138	18
0707 43 390	135	60
1854 43 400	143	1
0111 43 432	140	4
0118 43 505A	146	1
0136 43 635	140	16
	146	3
0305 43 635	146	4
1854 43 650A	146	5
1854 43 660	146	
0221 43 694	146	
1570 43 694A	146	
1854 43 800	143	1
1854 43 810	146	1
1757 43 830A	146	1
1854 43 830	146	1
1854 43 836	146	1
1854 43 842	146	1
1757 43 848	146	1
0118 43 853	147	2
1011 43 890A	147	2
2677 43 950A	147	2
2677 43 960A	147	2
1854 43 970	147	2
1845 44 010	150	
1845 44 020	150	
2781 44 041	150	
2781 44 042	150	
0114 44 043	150	
0183 44 045	150	
0114 44 046	150	
0114 44 051	150	
0114 44 052	150	
0114 44 053	150	1

0114 44 056～0512 49 677 INDEX.

0114 44 056	150	12
1845 44 060	150	14
2541 44 063	150	15
1854 44 080	150	16
1845 44 090	151	19
1845 44 110	151	21
1845 44 150	151	22
0603 44 158A	151	23
0603 44 167	151	24
0603 44 261	151	25
0603 44 262	151	26
0603 44 270	151	30
0603 44 272	152	32
0603 44 357	152	33
0118 44 375	152	34
1854 44 410	152	35
1854 44 420	152	36
0578 44 431	152	37
0866 44 439	152	39
1854 45 061	135	61
1854 45 071	135	63
1854 45 072A	135	64
1854 45 210	147	28
0187 45 221	147	29
1854 45 280	147	31
1854 45 320	147	32
1854 45 340	147	33
1854 45 350	147	34
1854 45 360	147	35
0571 45 451	147	36
0866 45 452	147	38
1854 45 550	141	18
1854 45 631	135	66
1854 45 731	135	68
0866 45 903A	68	37
	135	73
	147	39
1304 45 903	148	40
1854 45 995	148	42
1015 46 010A	154	1
1840 46 021	154	2
1840 46 022	154	3
1736 46 030	154	4
2375 46 051A	154	5
2375 46 052	154	6
2375 46 053	154	7
2375 46 054	154	8
2375 46 055	154	9
2375 46 056A	154	10
0308 46 057A	154	11
2375 46 061	154	14
2375 46 062	154	15
1015 46 081	154	17
1015 46 082	154	18
1015 46 083A	155	19
1015 46 085	138	23
	155	20
1856 46 110	155	21
1015 46 150A	155	23
1856 46 201	155	26
1856 46 571	155	30
1015 46 648	155	31
0223 46 683	138	24
1015 46 684	155	32
1015 46 691	155	37
0841 49 230	114	38
1708 49 610	143	2
1708 49 630	143	3
0305 49 638	143	4
1708 49 642	143	5
0512 49 651	143	6
0512 49 652	143	7
0305 49 656	143	8
0512 49 676	143	9
0512 49 677	143	9

INDEX. 0512 49 678~1854 53 230

0512 49 678	143	9
0512 49 696	143	10
0824 49 710	143	14
0824 49 720A	143	15
0824 49 745	143	16
2046 49 746	143	17
2046 49 747	144	18
0824 49 750	144	19
1854 49 760	144	20
0824 49 770	144	21
0824 49 781	144	22
0824 49 782	144	23
0870 49 785	144	24
1854 50 031	157	1
1854 50 060	157	2
1854 50 062	157	4
1854 50 070	157	3
1854 50 072	157	5
1854 50 091	157	14
1823 50 098	158	18
1854 50 110	157	8
1854 50 120	157	9
1854 50 130	157	15
0223 50 275	157	6
	157	12
1854 50 511	158	20
1854 50 521	158	21
1854 50 531	158	22
1854 50 551	158	24
1854 51 020A	165	1
1823 51 050	165	4
1854 51 520A	165	2
1823 51 550	165	5
0419 51 571A	213	9
1854 52 010A	161	1
0187 52 141	161	2
0603 52 160A	161	3
0603 52 260	161	6
0259 52 301	178	32
0305 52 312B	161	10
0305 52 313	161	11
0305 52 322A	161	12
0305 52 331	161	4
2370 52 390	161	13
0866 52 397A	161	14
0820 52 403	187	1
0603 52 451A	161	16
0603 52 471	162	19
0603 52 472	162	20
0603 52 510	162	21
0208 52 520	162	2
0187 52 523	162	2
0187 52 531	162	2
0187 52 532	162	2
2677 52 540A	163	2
0603 52 543	163	3
1854 52 611	163	3
1854 52 612	163	3
1854 52 613	163	3
1854 52 614	163	3
1854 52 615	163	3
1854 53 030	165	7
1854 53 036	165	1
1854 53 050	165	8
1854 53 070	165	1
1854 53 091A	165	1
0613 53 105A	166	2
0613 53 105A	176	1
1854 53 110	165	1
0187 53 134	166	2
	166	2
1854 53 160	166	1
1854 53 200A	166	1
2541 53 220A	166	1
1854 53 230	166	2

0603 53 305~1011 55 280 INDEX.

0603 53 305	181	82
1854 53 380	166	22
1823 53 410A	166	23
0603 53 431C	173	3
0603 53 432A	173	4
0603 53 433A	173	5
0603 53 434B	173	6
0603 53 435	173	7
0603 53 436	173	8
0603 53 438	173	9
0603 53 440B	173	10
0193 53 462	174	20
0603 53 510A	168	1
0603 53 520A	168	3
0603 53 531	168	5
1854 53 551	168	7
0603 53 552	168	9
1854 53 560A	168	11
0603 53 571	168	13
0603 53 572B	168	15
0603 53 573	168	17
0603 53 600C	168	19
0603 53 611	168	20
2651 53 680D	169	22
1854 53 700A	169	23
1854 53 710A	169	24
0603 53 811B	173	17
2677 53 811	173	15
0603 53 821	173	18
1854 53 891A	174	25
1823 53 901	174	21
2651 53 901	174	21
2541 53 902	174	22
1823 53 911	174	23
2545 53 911	174	23
0603 53 912	174	24
0603 53 920	169	26
0603 53 937	169	27
0603 53 950A	169	28
1854 53 960	169	33
1854 53 962	169	34
1854 53 965	169	35
1854 53 966	169	36
0603 53 970	169	29
0603 53 981B	123	10
0603 53 984A	169	30
2541 53 991	174	27
2541 53 992	174	29
1854 54 050	165	9
1854 54 110A	165	15
1854 54 160	166	17
1854 54 220	166	20
1854 54 234	173	1
0617 54 434	173	6
0603 54 510A	168	2
0603 54 520A	168	4
0603 54 531	168	6
1854 54 551	168	8
0603 54 552	168	10
1854 54 560A	168	12
0603 54 571	168	14
0603 54 572B	168	16
0603 54 573	168	18
0603 54 611	169	21
1854 54 710B	169	25
2677 54 821	174	19
2541 54 991	174	28
2541 54 992	174	30
1854 55 161	178	34
2280 55 182	181	83
0274 55 200	181	85
1854 55 220	176	2
1011 55 240	176	6
1840 55 240	176	8
0259 55 261	177	27
1011 55 280	176	10

INDEX. 1854 55 490～2113 58 668A

1854 55 490	176	12
1854 55 530A	176	13
1854 56 010A	170	39
0603 56 031	170	40
0603 56 200	170	42
0187 56 235	37	57
0118 56 241	170	45
0118 56 242B	224	1
0247 56 274A	170	46
0603 56 531	170	41
0614 56 575A	169	31
0208 56 615	166	26
	170	47
0603 56 700	170	43
1854 56 811	170	48
1854 56 840A	170	49
1854 56 851	170	50
1854 56 852	171	51
0820 56 905	38	62
	177	29
2469 57 016	185	23
1825 57 100B	184	–
0603 57 102	184	1
0603 57 109	184	3
0603 57 111	184	4
0603 57 112	184	5
2541 57 121	184	6
2541 57 122	184	7
2541 57 123	184	8
2541 57 124	184	8
1825 57 200	184	10
2496 57 220A	184	11
1825 57 300A	184	12
1825 57 320A	185	13
2541 57 400B	185	14
2495 57 650	185	15
2495 57 680	185	16
0305 57 920B00	185	24
1819 58 010	187	4
0603 58 110A	187	5
0115 58 171	187	10
0603 58 210	187	11
0115 58 214	188	17
0588 58 221A	187	12
1823 58 221A	187	12
0588 58 231	188	13
0588 58 241	188	14
0100 58 272A	191	1
0603 58 280A	188	15
0603 58 290A	188	16
0603 58 300A	191	
0118 58 370A01	191	
0118 58 392	191	
0603 58 410B	188	–
1823 58 410	188	–
0603 58 411A	188	1
1823 58 411	188	1
0603 58 412A	188	2
0603 58 420B	188	2
0603 58 430A	189	2
0183 58 451	188	2
0603 58 460A	188	2
0187 58 471	189	2
0193 58 481	189	2
0603 58 491C	189	2
0208 58 497	189	3
2651 58 500B	191	7
0259 58 570	191	1
0259 58 581	192	1
2350 58 582	192	1
0187 58 592A	192	1
2350 58 593	192	1
2651 58 600	191	8
0115 58 651B	192	1
2113 58 668A	236	1

2651 58 670~0864 61 061A INDEX.

2651 58 670	192	20
0603 58 674	192	21
0603 58 675	192	22
0588 58 710	193	25
0223 58 721	193	27
0187 58 731	193	28
0603 58 741A	193	29
0588 58 760	193	26
0603 58 811	193	30
0603 58 812	193	31
0603 58 820A	193	32
0398 58 821A00	193	33
0398 58 821A01	193	33
0398 58 822A00	193	34
0398 58 822A01	193	34
0603 58 823A	194	36
0317 58 831A	194	38
0317 58 832	194	39
0603 58 901B	189	32
1823 58 910A00	189	33
1823 58 910A06	189	33
0208 58 921	189	34
0187 58 922	189	35
0208 58 925	174	34
0118 58 931 01	163	39
0118 58 931 01	191	5
0223 58 961	236	2
0223 58 962	236	3
1819 59 010	187	4
0603 59 110A	187	5
0603 59 300A	191	2
0118 59 370A01	191	4
0603 59 410B	188	–
1823 59 410	188	–
0603 59 412A	188	20
0603 59 420B	188	21
0603 59 430A	189	24
0183 59 451	188	22
0603 59 460A	189	23
0603 59 491C	189	29
2651 59 500B	191	7
0259 59 570	192	11
0259 59 581	192	12
0115 59 651B	192	19
0603 59 901B	189	32
1823 59 910A06	189	33
1823 59 910A00	189	33
1854 60 050	177	30
1856 60 050	178	30
1757 60 053	178	31
1011 60 070A	178	36
0317 60 252	179	55
0317 60 253	179	56
1634 60 254	179	57
0317 60 255	179	58
0317 60 256	180	59
0317 60 257	180	60
0317 60 258	180	61
0317 60 259	180	62
0317 60 261	180	63
0317 60 262	180	64
0866 60 263	180	65
0866 60 264	180	66
0866 60 266	180	67
0866 60 267	180	68
1907 60 311	178	40
1611 60 312	178	41
1854 60 331	178	43
1854 60 341	178	44
0370 60 425A	236	4
0370 60 500B	236	6
0317 60 720	179	47
1540 60 930	213	10
1708 61 031	166	29
0864 61 061A	7	85

INDEX. 0864 61 061A～3514 66 120

0864 61 061A	38	69	1823 65 012A	202	38	0604 65 735	203	5
1854 61 080B	196	–	1854 65 020B	200	1	1854 65 751	203	5
0617 61 135	197	27	2651 65 140	200	2	1854 65 752	203	5
2677 61 140B	196	–	0603 65 150	200	3	1854 65 753	203	5
2677 61 145	197	28	1854 65 201A	200	4	1823 65 810C	204	5
1823 61 170B00	197	32	1854 65 210A	200	5	1854 65 851A	201	2
0824 61 183B	197	33	1854 65 310	200	6	1854 65 853	201	2
1854 61 190B	197	34	1854 65 430	200	7	1854 65 855B	201	2
1854 61 211	198	38	1823 65 431A	200	8	1854 65 856	201	2
1854 61 212	198	39	1854 65 460	200	10	1854 65 870	201	2
1854 61 220	198	40	0603 65 490B	200	11	1823 65 900	202	3
2677 61 240A	198	43	1854 65 500	203	39	1854 65 951A	201	2
2677 61 250	198	44	0183 65 551	200	12	1854 65 970	201	2
2677 61 260A	198	45	0183 65 552	200	14	1854 66 031	206	3
0233 61 479	198	46	0183 65 553	200	15	1854 66 041	206	3
2541 61 573	198	47	0024 65 554	200	16	0136 66 091A	209	3
1114 61 581	35	27	0603 65 560A	201	18	2244 66 091	206	1
2651 61 650	198	49	1823 65 625A	203	40	0136 66 092	209	4
1011 64 491	171	53	1854 65 711A	203	41	0136 66 094A	209	6
1854 64 620A	179	48	1854 65 721	203	42	0259 66 094A	206	1
1854 64 640A	179	49	1854 65 722	203	43	0259 66 095	207	1
1854 64 650	179	51	1854 65 725	203	44	0136 66 097	209	7
1854 64 660	179	52	1854 65 730	203	45	2244 66 111	206	1
1854 65 010C	200	–	0604 65 731	203	47	0259 66 114	207	1
0603 65 011A	202	36	0014 65 734	203	49	3514 66 120	179	5

1011 66 121	180	69
1011 66 130	214	23
0243 66 152	213	13
2627 66 201A	209	1
2651 66 210	209	2
2651 66 220A	209	8
2627 66 222A	210	17
0702 66 290	213	12
1854 66 295	213	16
1823 66 330	209	10
2158 66 366B	219	4
0212 66 371	219	6
0223 66 371	219	7
0212 66 372	219	8
1015 66 520A	155	28
0617 66 534	224	4
0617 66 535	224	5
0617 66 536	224	6
2627 66 601	214	17
0208 66 683	217	A
0605 66 721	64	36
0223 66 722	215	30
1820 66 730	214	19
0188 66 731A	152	42
1820 66 732	214	20
1708 66 760	214	24
2852 66 763	214	25
1708 66 765	214	26
0243 66 773	135	75
0233 66 790	138	25
1011 66 790A	215	28
0209 66 820	215	31
0317 66 862	224	8
1854 66 870	224	–
1857 66 870	224	–
0259 66 900A	222	1
1854 66 900	224	9
1857 66 900	224	9
1854 66 903	224	12
0259 66 905	222	2
1854 66 905	224	13
0222 66 911	224	2
0208 66 949	26	37
	217	B
0820 66 950	152	41
0866 66 960	224	14
0398 66 965	224	11
0866 66 965	225	15
1010 66 980	215	33
0820 66 992	225	16
1854 67 010	215	34
1854 67 030A	215	36
1854 67 040	215	37
1854 67 060	215	39
1854 67 070	215	40
1854 67 080	215	41
1011 67 090	215	42
1854 67 100A	64	37
1854 67 130	215	43
1854 67 180	135	76
1011 67 293	64	38
1823 67 350	219	5
1823 67 351	219	9
1823 67 352	219	10
2158 67 367	220	36
1823 67 370	219	11
1823 67 380	219	12
1823 67 390	219	13
0317 67 480	222	3
1011 67 515	222	4
0866 67 521	222	5
0317 67 551	215	44
1011 67 560A	216	45
1011 67 562	216	46
0866 67 619	216	50

INDEX. 0866 67 716～0208 72 821

0866 67 716	216	47
0866 67 717	216	48
0866 67 718	216	49
1078 67 800	216	53
0862 67 880	216	55
1011 67 911	217	C
1011 67 912	217	D
0305 67 994	217	E
0317 68 013A	180	70
0317 68 018	180	71
1854 68 020	180	72
0110 68 050A	228	20
0672 68 060A	228	21
0603 68 070A	228	22
1854 68 091	180	77
0866 68 095	181	78
0187 68 110A	228	23
2677 68 110	228	24
0672 68 120A	228	25
0118 68 180A	228	26
0603 68 240	228	17
2541 68 610 00	228	18
2651 68 610 00	228	18
1854 68 660	228	–
1854 68 670	228	27
0839 68 720	228	28
1856 68 860	182	96
0398 68 875	224	3
0730 69 057A	231	1
1128 69 071A02	231	2
1881 69 076	231	3
2229 69 101	231	7
2511 69 115	166	30
2229 69 130	231	6
1823 69 150A07	231	9
1823 69 170A07	231	10
0617 69 190	231	12
1823 69 310 07	233	1
0603 69 321	233	2
0603 69 322	233	3
0603 69 323A	233	6
1854 69 411	233	7
1854 69 412	233	8
1854 69 461A	233	9
1854 69 471A	233	10
0617 69 510B00	233	12
0617 69 520B00	233	13
1854 69 611A	233	15
1854 69 660	234	16
0727 69 662	234	17
1854 69 683	234	1
1854 69 684A	234	1
1854 69 685	234	2
1854 69 686	234	2
1854 69 688	234	2
1854 69 689	234	2
1854 69 691A	234	2
1854 69 692	234	2
0193 69 770A	227	
0600 69 784	227	1
0727 69 785	227	1
0193 69 786	227	1
2651 69 810	231	1
1879 70 220A	181	8
2370 70 231A	181	8
1854 70 240	181	8
2370 70 261	181	9
0317 70 262A	181	9
0317 70 269	182	9
0735 70 425A	174	3
0118 70 531	163	4
0208 70 713	173	1
0118 70 722A	173	1
1011 72 616	213	8
0208 72 821	194	4

0208 72 822	194	41
2113 74 158	236	–
2113 74 168	236	
0326 75 011	176	14
1854 75 021	176	15
0483 75 022	177	16
0317 75 023	177	17
0483 75 024	177	18
1854 75 025	177	19
1854 75 026	177	20
1568 75 029	177	21
1854 75 030	177	22
0492 75 060	177	23
0824 75 149	177	24
0824 75 150	177	25
0710 75 435	177	26
0710 75 436	177	26
1854 75 910	236	8
1854 75 920	236	9
1854 75 980	236	5
0208 76 071	234	26
2677 76 121A	196	1
2677 76 122	196	2
2677 76 123	196	3
2677 76 124A	196	4
2677 76 125	196	5
2677 76 126	196	6
2677 76 127	196	7
2677 76 128	196	8
2677 76 129	196	9
2677 76 130	196	10
2677 76 131	196	11
2677 76 133	196	12
2677 76 134A	196	13
0259 76 135	196	14
2677 76 135	196	15
2677 76 136A	196	16
2677 76 143	196	17
2677 76 145	196	18
2677 76 146	197	19
2677 76 147	197	20
2677 76 150	197	25
1823 76 602	219	14
1854 78 615	158	26
1823 78 620B	158	27
1854 78 640	158	28
1854 78 650	158	29
0275 87 007	206	4
0727 87 012	206	6
2850 87 012	206	5
0727 87 013	206	7
0727 87 014	206	8
0727 87 016	206	9
0727 87 022	206	6
0727 87 023	206	7
0738 87 063	210	18
0305 87 084	224	10
0259 87 101A	219	15
0710 87 102	209	11
0259 87 103	219	16
0710 87 103	209	12
0710 87 104	209	13
2158 87 104	219	17
0259 87 105	220	18
0259 87 106	220	19
0257 87 107	220	21
	220	22
0257 87 108	220	23
	220	25
0259 87 109A	220	26
2158 87 112A	220	27
0259 87 119	220	28
0259 87 120	220	29
0710 87 126	210	19

INDEX. 0259 87 134～99230 0511

0259 87 134	220	30
0702 87 135	220	31
0702 87 138	220	32
2244 87 191	207	18
2244 87 192	207	19
	210	23
2244 87 194	207	20
	210	24
2244 87 195	207	20
	210	24
2244 87 196	207	21
2244 87 201	210	25
2244 87 206	210	26
0738 87 803	220	33
0738 87 804	220	34
0305 87 906	220	35
0727 87 992	222	7
0305 87 993	222	8
0727 87 994	222	9
0727 87 995	222	10
0662 88 024	185	18
0259 88 025	185	20
1853 89 175	45	–
0706 89 251	87	7
1881 89 411	140	15
0839 89 431A	140	5
0317 89 435A	140	6
0391 89 435	143	11
0317 89 436	140	7
	143	12
1854 89 662	206	11
2244 89 663	207	17
1854 89 664	210	16
1854 89 667	206	11
2244 89 668	207	17
2244 89 673	210	22
2244 89 678	210	22
1758 99 100	7	–
1757 99 105	7	80
1757 99 150	35	29
0305 99 178	53	36
2541 99 322A	110	24
2541 99 324A	110	25
0603 99 354A	118	34
0603 99 356	119	39
0589 99 731	174	32
0589 99 736	174	33
90833 0412B	178	45
99203 2000	151	29
99221 1212	31	58
99221 1610	151	28
	152	45
	161	7
99221 2012	104	15
99221 2015	123	11
	150	12
	169	32
99221 2020	138	19
	154	16
	227	8
99221 3020	109	4
	109	15
	110	28
	119	38
99221 3025	110	18
	117	22
	119	44
99221 3032	200	16
99221 4030	112	13
99222 0216	44	29
	70	7
99222 0610	12	44
99225 0320	154	12
99225 0563	64	33
99230 0511	130	15

99230 0523	150	11
99230 0615	150	13
99231 0620	152	44
99231 0822	138	19
	152	31
99233 1225	43	3
99251 0818	200	13
99254 4014	90	9
99276 0506	44	26
99276 1006	68	36
	217	F
99276 1008	22	7
	106	35
99276 1206	217	G
99276 1208	125	7
99276 2008	60	28
99279 0833	217	H
99279 1105	217	I
99282 1700	68	39
99282 1801	134	48
99282 1901	146	18
99282 2200	197	22
	198	42
99282 2600	7	86
	38	70
	198	41
99282 4309	24	15
99282 4900	38	66
99282 5800	134	51
99283 1000	132	12
	134	43
	135	70
99283 1100	134	44
	135	59
	135	71
99283 1200	132	13
	135	72
99285 0800	37	54
99288 0808	178	33
99288 0808B	22	8
99289 0701	37	56
99305 2800	7	82
99306 3000	2	17
	3	33
99307 0600	4	52
	15	2
99335 04185	222	11
99336 08038	166	25
99340 04090	133	29
99340 04200	25	32
99340 06200	134	41
99340 06350	57	39
99346 06055	133	28
99346 06090	135	58
99346 06450	133	26
99346 08190	25	30
99348 06150	135	69
99348 06250	135	67
99348 06340	134	42
99348 06930	132	11
99348 08310	135	62
99348 08930	132	10
99348 12350	134	47
99381 0600	68	40
99381 0800	68	41
99381 1400	34	14
99384 1200	4	53
99384 1200F	34	16
99502 4000	45	37
	90	5
99503 3000	15	3
99510 1000	7	83
99511 1000	15	4
99511 1200	3	34
	35	30

INDEX. 99511 1400～99611 2750

99511 1400	5	62
99541 00901	85	4
99541 01101	11	27
99541 01201	85	5
99541 01601	8	—
	29	27
	73	53
99541 02211	44	30
	70	8
99541 0240	8	—
	15	11
99541 0350	8	—
	57	37
99560 1800	133	34
99562 1000	146	2
	146	8
	146	12
99562 1200	3	35
	35	30
	146	10
99562 1400	5	63
	45	—
	51	13
99562 1600	3	36
	5	54
99562 1800	34	15
99564 0800	4	37
99564 1000	7	83
	15	5
	45	—
	51	14
	68	42
99562 1000	141	17
99564 1200	68	43
99564 1400	2	4
99564 1600	34	17
	38	68
	133	20
99564 1800	43	10
	45	—
99564 2800	12	41
99573 2500	48	35
	81	2
99573 3500	49	36
99574 4000	35	31
99574 5200	87	8
99575 0300	130	15
	150	11
99575 0400	150	13
99575 0600	95	29
	130	7
	138	24
	155	33
99576 0400	173	14
99576 0700	185	19
99576 0800	31	59
99578 3000	231	4
99583 28388	106	32
99586 10207	44	31
	70	9
99603 02040	112	14
99603 02060	113	15
99603 02080	91	19
99606 33070	49	37
99606 62050	87	9
99606 72030	35	32
99611 1500	49	38
	81	3
	94	20
	140	10
99611 1750	70	12
99611 2000	11	28
	70	17
99611 2500	51	15
99611 2750	85	15

9962 03 7314～99781 1035 INDEX.

9962 03 7314	95	33
	114	42
	229	29
9963 60 4130	95	33
	114	42
	229	29
9965 05 5540	95	33
	114	42
	229	29
99655 30010	95	34
99655 30020	95	34
99655 30030	95	34
99655 30040	95	34
99655 30050	95	34
99655 30060	95	34
99681 1001	134	40
99681 1203	132	14
99681 1501	134	49
	217	N
99681 1503	132	15
99682 0801	178	37
99682 1001	217	J
99682 2001	217	K
99684 1000	217	L
99684 1400	135	65
99686 0800	178	38
99700 8120	209	14
99701 1030	176	7
	198	37
99701 2080	207	22
	209	5
	210	27
99701 4237	210	20
99701 4278	207	15
99701 5050	213	14
99701 6030	176	9
	176	11
	177	28
99706 0110	214	21
99706 0115	214	21
99706 0120	214	21
99709 0108	22	6
	26	38
	68	44
	178	39
	217	M
	225	17
99709 0255	22	9
99711 0410	189	25
99740 0512	198	48
99750 10825	116	8
99750 11020	88	14
99750 11260	112	3
99750 11270	112	4
99751 21225	97	13
99751 61225	97	13
99753 78118	40	10
99671 0620	192	15
99671 0630	192	16
	192	18
99671 0825	194	40
99763 0610	155	29
99764 0416	231	11
99769 0414	158	25
99769 0425B	158	23
99769 0616B	174	26
99772 0514	189	30
99772 0516	231	8
99773 0420	207	23
	211	28
99781 0822	106	34
99781 1012	66	3
99781 1018	66	5
99781 1025	158	30
99781 1035	110	23

INDEX. 99781 1040～99796 0820

99781 1040	159	31
99781 1240	117	18
99781 1250	117	19
99784 1016	64	29
99785 0645	151	18
99786 0510	165	6
	225	19
99786 0514	135	57
99786 0612	15	16
	22	3
	57	44
	64	39
	132	8
	132	18
	134	38
	135	74
	148	41
	222	6
99786 0612B	206	10
99786 0616	64	40
	130	5
	152	40
99786 0620	107	42
	130	10
99786 0630	147	37
99786 0635	147	24
99786 0812	215	29
99786 0814	37	53
	197	30
99786 0816	20	9
	37	51
	123	4
99786 0820	133	35
99786 0825	157	11
99786 0850	56	19
99794 0530	216	52
99794 0616	219	3
99795 1032	137	14
99796 0608	44	34
99796 0610	4	40
	25	24
	25	28
	66	8
	66	10
	67	29
	73	54
	146	15
	171	52
99796 0612	123	6
	165	13
99796 0612	173	2
	213	11
99796 0614	44	18
	161	5
	161	15
	201	23
	202	30
99796 0614B	201	29
99796 0616	128	26
	203	46
99796 0620	36	39
	36	45
	44	21
	68	38
99796 0625	147	22
99796 0810	34	13
99796 0812	15	13
	25	25
	25	29
	38	63
	146	20
99796 0814	24	4
99796 0816	4	42
	66	11
99796 0820	24	5

99796 0820	35	33
	60	25
	134	46
99796 0822	52	20
99796 0825	60	24
99796 0832	52	21
99796 1016	155	27
99796 1035	41	16
	67	24
99796 1040	67	24
99796 1045	40	15
	67	24
99796 1090	41	17
99797 0510	197	35
	198	36
99797 0512	210	15
99797 0612	57	41
99800 10115	60	21
99801 0810	107	44
99801 0816	6	72
	185	17
	227	14
99801 0818	10	7
	127	3
99801 0820	48	32

99801 0820	52	35
	125	8
99801 0822	11	30
	118	31
99801 0825	6	78
99801 0832	127	4
99801 0840	5	57
99801 0865	5	58
99801 0875	5	59
99801 0890	137	13
99801 1035	63	22
99801 1045	128	15
99803 08100	24	2
99803 10120	63	23
99804 0514	173	16
99805 0828	169	37
99805 0830	121	5
99805 0832	107	45
99806 0510	220	20
99806 0516	162	25
99806 0612	231	16
99806 0614	29	20
	44	36
	52	23
	70	4

99806 0614	158	19
	165	3
99806 0616	6	68
	34	12
	231	15
99806 0618	28	15
	31	51
99806 0620	36	44
	202	37
	236	7
99806 0625	147	30
99806 0630	227	15
99806 0816	202	34
99806 0820	185	21
	202	33
99811 0812	98	23
99811 1020	101	4
99811 1025	204	57
99811 1028	112	8
99811 1245	157	10
99813 10140	138	21
99813 10180	138	21
99830 0412	197	29
	198	50
99831 0310	104	9

INDEX. 99831 0408B～99862 0412

99831 0408B	181	92
99831 0540	215	38
99831 0612	187	7
99831 0616	93	2
99831 0820	161	8
99831 0830	162	17
99832 0412B	179	46
99832 0414B	178	42
99832 0612	191	9
99833 0306	104	10
	197	23
99833 0406	94	23
99833 0408	30	32
	135	77
	189	28
99833 0410	197	24
99833 0412	197	21
99833 0416	181	84
99833 0510	152	38
	178	35
	179	50
	179	53
	197	26
99833 0512	173	13
	224	7
99833 0516	214	22
	214	27
99833 0520	193	35
99833 0610	109	6
99833 0612	187	8
	191	3
	193	24
99833 0614	151	17
99833 0616	191	10
99833 0618	201	27
99833 0620	209	9
99833 0812	93	13
99833 0820	200	17
99833 0835	203	48
99834 0410B	181	90
99834 0506	187	6
99834 0512	157	16
	163	31
	163	32
	228	19
99834 0612	187	9
99834 0820	201	19
99834 0835	201	20
99836 0825	161	9
99838 0516B	181	94
99849 0512	216	5
	216	5
99851 0612A	5	5
99851 0622A	15	
99851 0822A	2	
99851 0830A	15	
99852 0610	43	
99852 0614	94	2
99852 0660	2	1
99852 0820F	90	
99852 0822A	3	1
	4	3
99852 1016	3	2
99855 1020	5	5
99855 1025	43	
	43	
99855 1085	43	
99859 1220A	3	2
99859 1225A	3	2
99859 1248	97	
99860 0512	176	
99860 0514	38	6
99861 0410B	181	8
99862 0408	233	
99862 0412	233	1

99862 0416B	231	13
99862 0516B	176	3
	180	73
	182	97
99863 0308	104	11
99863 0312	104	12
99863 0410	152	43
99863 0412	213	15
99863 0508B	181	79
99863 0510	163	38
	215	32
99863 0512	233	5
99863 0516	37	60
99863 0520B	181	80
99864 0406	200	9
99864 0512	180	74
	204	55
99864 0520B	177	29
99864 0625	215	35
99865 0508	213	5
99865 0512	171	54
99865 0516	155	22
99867 0514B	233	11
99868 0510	213	3
99869 0412	214	18
99869 0500	181	81
99887 0412	154	13
99896 0400	158	25
99896 0500	176	5
	177	29
	180	75
99896 0500B	182	97
99901 0600	37	50
99901 0800	15	8
	18	5
	29	26
	35	34
	36	37
	63	24
	90	6
	127	4
	127	8
	144	27
	185	22
	200	17
	203	51
99902 0800	155	38
	162	18
99903 0800	123	11
	169	32
99906 0400	207	23
	211	28
99906 0500	56	18
	59	19
	162	25
	207	16
	228	19
99906 0600	28	6
	44	25
	151	27
	162	23
	162	28
	165	3
	187	2
	192	23
	194	37
	201	27
	209	9
99906 0800	202	33
	202	35
	227	15
99906 1000	170	38
99907 0600	31	49
	187	3
99907 1000	170	38

INDEX. 99910 0403～99940 1001

99910 0403	158	23
99910 0601	174	26
	202	31
99921 1000	102	19
	106	37
	110	20
	110	23
	118	30
	121	10
	125	2
	125	4
	125	10
	138	22
	204	57
99921 1200	97	10
	117	16
	117	18
	117	19
	159	32
99921 1400	101	3
	101	8
99921 2000	106	40
99922 1000	102	19
	106	29
	112	6
99922 1000	118	30
	121	10
	137	14
	151	20
99922 1200	28	7
99922 1400	85	2
99922 1800	87	10
99923 1400	119	43
99924 1000	227	8
99924 1200	109	4
	109	15
	110	28
	119	38
99924 1400	110	18
	117	22
99928 0800	116	7
	116	9
99928 1200	102	12
99940 0500	210	21
	225	18
	231	5
99940 0502	158	17
	180	76
99940 0600	94	24
	130	13
99940 0600	132	4
	147	30
	201	24
	213	7
	216	51
99940 0601	24	10
99940 0602	157	7
	157	13
	158	19
99940 0603	57	38
99940 0800	123	4
	127	13
	134	46
	137	13
	138	17
	140	8
	197	31
99940 0801	144	25
	144	26
99940 0802	20	8
99940 0803	64	35
99940 1000	138	20
	155	25
99940 1001	41	18
	43	13

99940 1001～99952 0600 INDEX.

99940 1001	60	22
	67	25
	88	15
99940 1002	202	38
99941 0801	20	10
99942 1000	93	6
	112	8
99942 1200	112	3
	112	4
99945 0600	184	9
99948 1200	104	13
99949 0800	128	17
99951 0618	151	17
	151	18
	158	16
	165	3
	187	8
	202	37
99951 0822	107	45
	127	4
	128	17
	184	2
99951 1022	106	37
	158	30
	159	31
99951 1030	123	11
	125	4
	125	10
	203	38
	204	57
99951 1030B	107	46
99951 1226	157	10
	159	32
99951 1236	159	32
99952 0400	152	43
	181	84
99952 0500	37	60
	38	61
	56	18
	60	19
	152	38
	162	25
	163	38
	173	16
	176	4
	178	35
	179	50
	179	53
	194	35
	207	16
99952 0500	214	22
	215	32
	216	49
	216	52
	216	54
	216	56
	228	19
	233	5
99952 0500B	177	29
	182	94
99952 0512	197	35
99952 0516	163	32
	198	36
	210	15
	224	7
99952 0600	29	15
	37	50
	57	41
	132	4
	162	23
	162	28
	191	10
	193	23
	193	24
	236	7

INDEX. 99952 0618～99971 0500

99952 0618	15	16
	107	42
	128	26
	130	10
	165	3
	187	9
	203	46
	216	51
	219	3
99952 0618B	202	29
	206	10
99952 0800	5	57
	5	58
	5	59
	6	72
	6	78
	15	8
	24	2
	37	51
	38	63
	63	24
	125	8
	185	17
	185	21
	201	17
99952 0800	202	33
	202	34
	202	35
99952 0816	155	34
	184	9
99952 0822	20	9
	24	5
	37	53
	60	25
	123	4
	137	13
99952 1000	64	29
	138	22
	151	20
	204	57
	227	8
99952 1030	170	38
	184	2
99952 1236	170	38
99952 1400	202	38
99952 1426	203	38
99953 0300	104	12
99953 0400	31	57
99953 0600	31	51
99953 0800	29	26
99953 0800	35	3
	155	3
	174	2
99953 1000	40	
	63	2
99953 1030	170	3
99953 1400	155	2
99958 1022	116	1
99958 1220	97	1
99963 3310	53	3
99963 3330	53	3
99963 6910	49	3
99963 6930	49	3
99967 0500B	182	9
	233	1
99968 0400	233	1
99971 0300	104	1
99971 0400	30	3
	94	2
	152	4
	181	8
	189	2
	197	2
99971 0400B	178	4
99971 0500	56	1

99971 0500～99971 0800 INDEX.

99971 0500	60	19
	152	38
	162	25
	163	32
	163	38
	178	35
	179	50
	179	53
	198	35
	198	36
	213	3
	214	22
	214	27
	215	32
	216	49
	216	54
	217	56
	220	24
	224	7
	228	19
	233	5
99971 0500B	182	94
99971 0600	6	68
	28	6
	29	15

99971 0600	29	20
	31	49
	31	51
	34	12
	36	44
	37	50
	44	25
	45	36
	52	23
	57	41
	70	4
	109	6
	151	17
	151	18
	162	23
	162	28
	165	3
	184	9
	187	8
	191	3
	191	10
	193	23
	193	24
	194	37
	201	27

99971 0600	209	9
	219	3
	228	15
	231	15
	231	16
	236	7
99971 0601	51	1
	5	57
	5	58
	5	59
	6	78
	10	7
	11	30
	15	8
	18	5
	24	2
	29	26
	35	33
	36	34
	36	37
	40	9
99971 0800	40	10
	48	32
	52	27
	52	35

INDEX. 99971 0800～99975 0500

99971 0800	63	24
	90	7
	93	13
	98	23
	104	15
	106	34
	107	44
	107	45
	116	7
	116	9
	118	31
	121	5
	125	8
	127	3
	127	4
	127	8
	144	27
	155	38
	170	37
	185	17
	185	21
	185	22
	201	17
	201	19
	201	20

99971 0800	202	33
	202	35
	203	51
	227	14
99971 1000	6	70
	40	2
	63	22
	63	23
	66	3
	66	5
	88	14
	101	4
	106	37
	110	20
	110	23
	113	24
	116	12
	125	2
	125	4
	125	10
	127	14
	138	22
	151	20
	158	30
	159	31

99971 1000	204	5
99971 1200	97	1
	102	1
	113	2
	117	1
	117	1
	117	1
	157	1
	159	3
99971 1400	85	2
	101	3
	101	8
99971 1800	87	1
99971 2000	106	4
99972 0800	138	24
	155	3
99972 1000	188	1
99973 0400	181	9
99974 0500	187	6
99974 0600	187	9
	191	9
	192	15
	192	16
	192	18
99975 0500	163	31

99975 0800	161	8
	161	9
	194	40
99977 1845	112	10
99978 3200	49	40
99979 1200	28	7

TOYO KOGYO CO.,LTD.

Printed in Japan