WORKSHOP MANUAL

mazda

FOREWORD

This workshop manual was prepared as reference material of the service personnel of authorized Mazda dealers to enable them to correctly carry out the task of rendering services and maintenance on Mazda vehicles.

In order to ensure that the customers are satisfied with Mazda products, proper servicing and maintenance must be provided. For this purpose, the service personnel must fully same time, are recommended to keep the manual in a place where reference can readily be made.

The information, photographs, drawings and specifications entered in this manual were the best available at the time of printing this manual. All alterations to this manual occurring as the result of modifications will be notified by the issuance of Service Informations or supplementary volumes. It is, therefore, requested that the manual be kept up to date by carefully maintaining a follow-up of these materials.

Toyo Kogyo reserves the right to alter the specifications and contents of this manual without any obligation and advance notice.

All rights reserved. No part of this book may be reproduced or utilized in any form or by any means, electronic or mechanical, including photocopying, recording, or by any informational storage and retrieval system, without permission in writing.

Emission Control System	1A
Lubricating System	2
Cooling System	3
Fuel System	4
Electrical System (Engine)	5
Clutch	6
Transmission	7
Automatic Transmission	7B
Propeller Shaft	8
Rear Axle	9
Steering	10
Brakes	11
Wheels and Tires	12
Suspension	13
Body	14
Electrical System (Body)	15
Technical Data	T

Toyo Kogyo Co.,Ltd.
HIROSHIMA JAPAN

© 1973 TOYO KOGYO CO., LTD.
PRINTED IN JAPAN 3L
1010010

0–A. PRE-DELIVERY SERVICE GUIDE ..... 0 : 1
0–B. PRE-DELIVERY SERVICE OPERATION ..... 0 : 2
0–B–1. Under Hood-Engine Off ..... 0 : 2
0–B–2. Under Hood-Engine Operating and Hot ..... 0 : 2
0–B–3. On Outside ..... 0 : 3
0–B–4. On Inside ..... 0 : 3
0–B–5. On Hoist ..... 0 : 4
0–B–6. Road Test ..... 0 : 4
0–B–7. After Road Test ..... 0 : 5
0–C. SCHEDULED MAINTENANCE SERVICE GUIDE ..... 0 : 5
0–C–1. Emission Control Systems Required Maintenance Service ..... 0 : 5
0–C–2. Normal Systems Required Maintenance Service ..... 0 : 7

		Clean and check spark plug	0 : 2

2. Under Hood – Engine Operating and Hot

Check distributor dwell	0 : 3	Fuel, vacuum, coolant and hydraulic lines, fittings	
Check initial ignition timing	0 : 3	connections and components for leaks	0 : 3
Alternator and regulator – operation	–	Automatic transmission fluid level	0 : 3
Carburetor idle mixture and speed adjustments	0 : 3	Exhaust emission air pump – operation	0 : 3
		Exhaust emission idle switch – operation	–

3. On Outside

Latches, keys and locks – operation	0 : 4	Weatherstrips – adhesion and fit	0 : 4
Bonnet, door panels and tail gate for fit, alignment		Wheel nut torque	0 : 4
and operation	0 : 4	Wheel caps – install	0 : 4
Bumpers – alignment	0 : 4	Headlight alignment – adjust if necessary	0 : 4

4. On Inside

Brake & clutch pedal free play	0 : 4	Seat and shoulder belt	0 : 4
Operation of all lights	0 : 4	Inside locks and door latch releases – operation	–
Check uphostery and internal finish	–	Windows and vents – operation and fit	0 : 4
Manual seat control – operation	0 : 4	Cigar lighter – install and test	–

5. On Hoist

Transmission oil level	0 : 4	Tire pressures and inspect tires	0 : 4
Rear axle oil level	0 : 4	Steering linkage and connections	0 : 4
Fuel, coolant and hydraulic lines, fittings, connections			
and components on underside for leaks	–		

6. Road Test

Ignition switch – operation	–	Automatic transmission shift points and kick down	0 : 5
Neutral switch – operation	0 : 5	Accelerator pedal – operation	0 : 5
Parking brake – operation	0 : 5	Engine performance	0 : 5
Horn, windshield wipers and washers – operation	0 : 5	Steering control	0 : 5
Heater and defroster – operation	0 : 5	Check for noise, squeaks and rattles	0 : 5
Radio and antenna – operation and set push buttons	0 : 5	Speedometer, odometer, fuel and temperature	
Brake operation	0 : 5	gauges and ammeter – operation	0 : 5
Clutch operation	–	General performance and handling characteristics	0 : 5
Transmission shift lever – operation	0 : 5		

7. After Road Test

Remove seat protectors, windshield markings and tapes	0 : 5	Check soft trim for soilage and excess sealer	0 : 5
Wash car and check for leaks	0 : 5	Check tool kit, jack and owner's handbook, service	
Glass condition	0 : 5	coupons and manufacture's warranty booklet	0 : 5
Inspect for exterior and interior metal and paint damage	0 : 5		

specifications if necessary.

c. Brake and clutch fluid level
The fluid level should be kept at least 2/3 full in the reservoir. After checking, the reservoir cap should be neatly cleaned and reinstalled.
Use only brake fluid meeting specifications.

d. Windshield washer fluid level
Fill with water and solvent meeting specifications. Plain water can be used, but a good grade of windshield washer solvent will help it clean better and prevent freezing in cold weather. Do not use radiator anti-freeze as this will cause paint damage.

e. Sub-zero starting assist fluid
The fluid reservoir is installed to the right-hand side of the engine compartment. Check the fluid level and add a 90/10 mixture of high-quality ethylene glycol anti-freeze and water if necessary.

f. Radiator coolant
The coolant should be filled full in the radiator and 1/3 full in the expansion tank. Use recommended mixture of Long Life Coolant (Part No. 0844 77 264) and water to keep the freeze protection at an adequate level for the temperatures which may occur in the area in which the car will be operated. Refer to Par. 3–C and check the specific gravity.

Note:
Avoid injury when checking a hot engine. If the cap must be removed when the engine is hot, let the engine cool down by idling for a few moments before removing the cap. Place a rag or towel wrapped over the cap and turn it slowly counterclockwise and remove.

g. Battery fluid level and state of charge
Remove the caps on top of the battery and check that the level is 10 ~ 20 mm (0.4 ~ 0.8 in) above the plates. Ordinary tap water can be used except in areas where the water is known to be hard or to have a high mineral or alkali content – use distilled water in these areas. Be careful not to overfill the battery.

Note: Keep fire away from the top of open battery cells. Combustible gas is always present and could explode. Battery fluid is a corrosive acid. Do not wear. If the belt appears badly worn, cracked or frayed, it should be changed with a new belt. To check the belt tension, depress the belt halfway with your thumb (approximately 22 lbs) and check the deflection.

	New belt	Used belt
Alternator drive belt	13 mm (0.51 in)	15 mm (0.59 in)
Air pump drive belt	8 mm (0.31 in)	10 mm (0.39 in)

To adjust the alternator drive belt:
Loosen the alternator mounting bolt and adjusting bar bolt on the alternator strap. Move the alternator away from the engine or toward the engine until the tension of belt is sufficient. Tighten the bolts.

To adjust the air pump drive belt:
Loosen the air pump mounting bolt and adjusting bar bolt. Move the air pump on its mounting bracket until the proper deflection is obtained. Tighten the bolts.

j. Fuel level
Refer to Par. 4–A and check the float level, and adjust if necessary.

k. Carburator linkage
Inspect the throttle linkage for proper installation. Remove the air cleaner, and with the accelerator full depressed, observe the position of the carburetor throttle valve. They should be vertical (wide open position). Check accelerator for sticking or binding and for full return and sufficient height to fully open throttle. Examine the choke control for free operation. Operate the choke valve manually to make sure that it moves freely.

l. Spark plug
Refer to Par. 5–E and check the spark plug.

0–B–2. Under Hood-Engine Operating and Hot

a. Distributor dwell angle
Refer to Par. 5–C and check the dwell angle, and adjust if necessary.

and tanks for seepage or leaks. Check all fittings to see that they are tight and in good condition. Examine the hoses at the fittings for cuts or weakness. Replace the hose in questionable condition.

e. Fuel lines and filter
With the engine off, examine the fuel line connections for wetness or washed or stained areas that might indicate a fuel leak. Start the engine and observe all the connections for fuel seepage. Tighten or replace fuel lines as necessary.

f. Automatic transmission fluid level
Make sure that the vehicle is standing level. Then firmly apply the parking brake.

1. Run the engine approximately two minutes at 1,200 rpm. Do not stop engine. Run at slow idle during fluid check.
2. Shift the selector lever through all positions, and place the lever at P. Apply service brake as an extra pre-caution while running selector lever.
3. Clean all dirt from the transmission fluid dipstick cap before removing the dipstick from the filler tube.
4. Pull the dipstick out of the tube, wipe it clean, and push it all the way back into the tube. Be sure it is properly seated.
5. Pull the dipstick out of the tube again, and check the fluid level. Fluid level should be above the "L" mark. If necessary, add enough fluid to the transmission through the filler tube to bring the fluid level between the "L" and "F" marks on the dipstick. Use only fluid meeting specifications. Do not overfill the transmission. Install the dipstick, making sure it is free seated in the tube.

h. Exhaust emission air pump
Check the air pump as follows. (Refer to Group 1A)
1. Disconnect the air pump outlet hose from the air control valve.
2. Connect the T-fitting (49 2113 011) with the plug (49 2113 012) and pressure gauge (49 2113 014).
3. Be sure that the choke knob is pulled all the way in, and then start the engine and run it at specified idling speed.
4. Check the pressure reading. If the reading is less than the following, replace the pump.

b. Bonnet, door panels and tail gate
Check fit and alignment. Adjust as required.

c. Bumper
Check condition, fit and alignment. Adjust as required.

d. Weatherstrip
Check fit and retention and correct as required.

e. Wheel nut torque
Wheel nuts should be inspected and tightened to specifications at pre-delivery. Loose wheel nuts may cause shimmy and vibration.

f. Wheel caps
Check for correct type of cap and install. Caution should be exercised when installing not to damage cap. Use rubber mallet on outer perimeter.

g. Headlight aiming
Check and adjust the headlight aiming according to the traffic regulation of each country.

0–B–4. On Inside

a. Brake and clutch pedal free play
Refer to Par. 6–A and 11–A and check, and adjust if necessary.

b. Operation of all light
Check for proper operation of switches and brightness of lights, including operation of oil pressure, alternator warning lights and high beam indicator light. Check detent action and return of turn signal lever by making full left and right turns during road test. Check operation of emergency flasher system.

c. Manual seat control
Check lever for ease of operation. Test freeness of seat movement on track and for solid engagement on both sides with lever released.

d. Seat and shoulder belt
Check belt anchors for secure fit. Check buckle and clasp for proper retention, release, and length adjustment.

filler plug, and remove the filler plug.
2. The oil level should be maintained at the bottom of the filler plug. If additional oil is required, use only the specified type.

c. Tires and air pressure
Inspect the tire treads, and remove all stones, nails, glass, or other objects that may be wedged in the tread. Check for holes or cuts that may permit air leakage from the tire, and make the necessary repairs. Inspect the tire side walls for cuts, bruises, and other damage. If internal damage is suspected, remove the tire from the wheel for further inspection and repair or replacement. Check the tire valve for air leaks, and replace the valve if necessary. Replace any missing valve caps. The tires should be checked frequently to be sure that the air pressures agree with those specified for the tires and vehicle model.

d. Steering linkage and connections
Check for looseness at the tie-rod ends. Looseness can affect the toe-in readings and adjustment. Check the front suspension ball joints and mountings for looseness. Check the brake caliper attaching bolts. Troque all loose nuts and bolts to specifications. Be sure all cotter pins are correctly installed. Check the steering gear mountings and all steering linkage connections for looseness. Torque all loose mountings to specifications.

0–B–6. Road Test

a. Neutral start switch operation (Automatic transmission)
Check ability to start engine with selector lever in both Neutral and Park position only. Adjust Neutral switch if necessary.

b. Parking brake operation
Check the operation of the parking brake. With the vehicle on a hoist and the parking brake fully released, the cable should not have any slack. Also, the rear brakes should not drag when the wheels are turned. If either of the above conditions exist, adjust as required.

f. Radio and antenna operation
Check type and location specified, and install using installation instructions and template supplied with antenna kit. Do not break plastic adapter when tightening nut. Adjust the antenna trimmer. Set push buttons as follows.
Pull out the push button to be set to unlock the push button mechanism. Tune in the desired station with the manual tuning knob. After the station is clearly tuned in, push the button straight in until it stops, then release it. Repeat this procedure for the remaining buttons. Check for objectionable noise.

g. Brake operation
Depress foot brake pedal to assure good pedal height before road testing. Check and correct, if required, the following conditions: pull in either direction, harshness or noise, excess pedal effort, or spongy feel and operation of the brake warning light.
Avoid sudden hard stops – make slow, gradual stops.

h. Transmission shift lever operation
Check and adjust, if necessary, for smooth crossover action.

i. Automatic transmission shift operation
Check to see that the upshifts and downshifts occur within the specified range, following the Par. 7B–C.

j. Steering control
Check steering wheel return from both directions. Test for steering effort required and inconsistent effort in different directions. If the steering is exceptionally stiff, check the steering effort with a scale on the rim of the steering wheel and with pitman arm desconnected. The effort required to rotate the steering wheel should not exceed the specifications. Check for harshness, noise wander or free play.

k. Running condition
Check speedometer, odometer, fuel and temperature gauges, all warning and convenience lights, and all special optional equipment for proper operation. Test windshield washers and wipers. Operate all heater, defroster and ventilating controls. After road test, repair or adjust all malfunctions noted during road test.

0–C–1. Emission Control Systems Required Maintenance Services

Maintenance Operations \ Service Intervals	Reference Group	Number of months or thousands of miles whichever comes first												
		2	6	10	14	18	22	26	30	34	38	42	46	50
1. Engine														
Engine oil	0	R	R	R	R	R	R	R	R	R	R	R	R	R
Engine oil filter	2		R		R		R		R		R		R	
Drive belts including air pump drive belt	1	I	I	I	I	I	I	I	I	I	I	I	I	I
Metering oil	2	I	I	I	I	I	I	I	I	I	I	I	I	I
Compression pressure	0			I			I			I			I	
Starting assist system	4	Sub-zero weather use only. Inspect seasonally.												
2. Fuel and Evaporative Emission Control Systems														
Idle speed	4	I	I	I	I	I	I	I	I	I	I	I	I	I
Idle mixture	4	I			I			I			I			I
Fuel filter	4			R			R			R			R	
Air cleaner element (*)	4	I	I	I	I	I	R	I	I	I	I	I	R	I
Carburetor float level	4	I			I			I			I			I
Carburetor linkage and choke mechanism	4			I			I			I			I	
Fuel line and connections	4	I	I	I	I	I	I	I	I	I	I	I	I	I
Canister	1A						I						I	
Evaporative emission control system, fuel tank and vapor lines	1A			I			I			I			I	
Check valve	1A						I						I	
3. Ignition System														
Ignition timing and advance system	5	I	I	I	I	I	I	I	I	I	I	I	I	I
Distributor breaker points	5	I	I	I	I	I	I	I	I	I	I	I	I	I
Distributor cap, rotor and condenser	5			I			I			I			I	

* Under dusty conditions clean the air cleaner element every 1,000 miles and replace it every 12,000 miles.

Ventilation hoses	1A						I						I					I				

5. Exhaust Emission Control System

Air pump	1A						I						I					I				
Air hoses and vacuum sensing tubes	1A						I						I					I				
Idle switch	1A		I		I		I		I		I		I		I		I		I		I	
Air control valve	1A						I						I					I				
Check valve	1A						I						I					I				
Control unit	1A		I				I						I					I				
Deceleration control valve	1A						I						I					I				
Thermosensor and thermodetector	1A						I						I					I				
Thermal reactor	1A						I						I					I				
Exhaust pipe flange bolts	1A						A						A					A				
Choke switch, choke relay and carburetor heater	1A						I						I					I				
Automatic throttle release system	1A						I						I					I				
Water temperature switch	1A						I						I					I				
Heat hazard warning system	1A						I						I					I				
Downshift solenoid (automatic transmission)	1A						I						I					I				
Altitude compensator	1A												I					I				

Maintenance operations: I = Inspect, Correct – Replace if necessary
A = Adjust R = Replace or change

3. Chassis and Body

Clutch pedal	6	I	I	I	I	I	I	I	I	I	I	I	I	I
Clutch fluid	6	I	I	I	I	I	I	I	I	I	I	I	I	I
Manual transmission oil	7	R			R			R			R			R
Automatic transmission fluid	7B	I	I	I	I	I	I	I	I	I	I	I	I	I
Rear axle oil	9	R			R			R			R			R
Steering gear oil	0			I			I			I			I	
Steering wheel play	10	I	I	I	I	I	I	I	I	I	I	I	I	I
Brake pedal	11	I	I	I	I	I	I	I	I	I	I	I	I	I
Brake fluid	11	I	I	I	I	I	I	I	I	I	I	I	I	I
Parking brake	11	I	I	I	I	I	I	I	I	I	I	I	I	I
Drum brake lining	11			I			I			I			I	
Disk brake pad	11		I		I		I		I		I		I	
Hoses (automatic transmission)	7B	Replace every four years												
Piston cups of master cylinders and wheel cylinders	11	Replace every two years												
Brake hoses (vacuum hoses of power brake)	11	Replace every four years												
Front wheel bearings	12	Lubricate or replace every 30,000 miles or two years												
Front suspension ball joints and upper arm shafts	13													
Steering ball joints and idler arm	10													

Maintenance operations: I = Inspect, Correct – Replace if necessary
A = Adjust R = Replace or change

1–A. ENGINE DISASSEMBLY ..... 1 : 4
1–B. INSPECTION AND REPAIR ..... 1 : 8
1–B–1. Inspecting Front, Intermediate and Rear Housing ..... 1 : 8
1–B–2. Regrinding Side Housings ..... 1 : 9
1–B–3. Inspecting Front Stationary Gear and Main Bearing ..... 1 : 9
1–B–4. Inspecting Rear Stationary Gear and Main Bearing ..... 1 : 10
1–B–5. Inspecting Rotor Housing ..... 1 : 10
1–B–6. Inspecting Rotor ..... 1 : 11
1–B–7. Inspecting Rotor Bearing ..... 1 : 12
1–B–8. Inspecting Seal Springs ..... 1 : 12
1–B–9. Inspecting Rotor Oil Seal ..... 1 : 13
1–B–10. Inspecting Apex Seal ..... 1 : 13
1–B–11. Inspecting Side Seal ..... 1 : 14
1–B–12. Inspecting Corner Seal ..... 1 : 14
1–B–13. Inspecting Eccentric Shaft ..... 1 : 15
1–B–14. Inspecting Needle Bearing ..... 1 : 16
1–C. ENGINE ASSEMBLY ..... 1 : 17
1–C–1. Installing Oil Seal ..... 1 : 17
1–C–2. Installing Each Seal ..... 1 : 17
1–C–3. Installing Front Rotor ..... 1 : 18
1–C–4. Installing Eccentric Shaft ..... 1 : 18
1–C–5. Installing Front Rotor Housing ..... 1 : 18
1–C–6. Installing Intermediate Housing ..... 1 : 19
1–C–7. Installing Rear Rotor and Rotor Housing ..... 1 : 20
1–C–8. Installing Rear Housing ..... 1 : 20
1–C–9. Tightening Tension Bolts ..... 1 : 20
1–C–10. Installing Flywheel or Counter Weight ..... 1 : 20
1–C–11. Adjusting Eccentric Shaft End Play ... 1 : 21
1–C–12. Installing Front Cover and Eccentric Shaft Pulley ..... 1 : 22
1–C–13. Installing Oil Strainer and Oil Pan .... 1 : 22
1–C–14. Installing Water Pump ..... 1 : 23
1–C–15. Installing Distributor ..... 1 : 23
1–C–16. Installing Exhaust Manifold ..... 1 : 24
1–C–17. Installing Intake Manifold ..... 1 : 24
1–C–18. Installing Alternator and Air Pump ... 1 : 24
SPECIAL TOOLS ..... 1 : 25

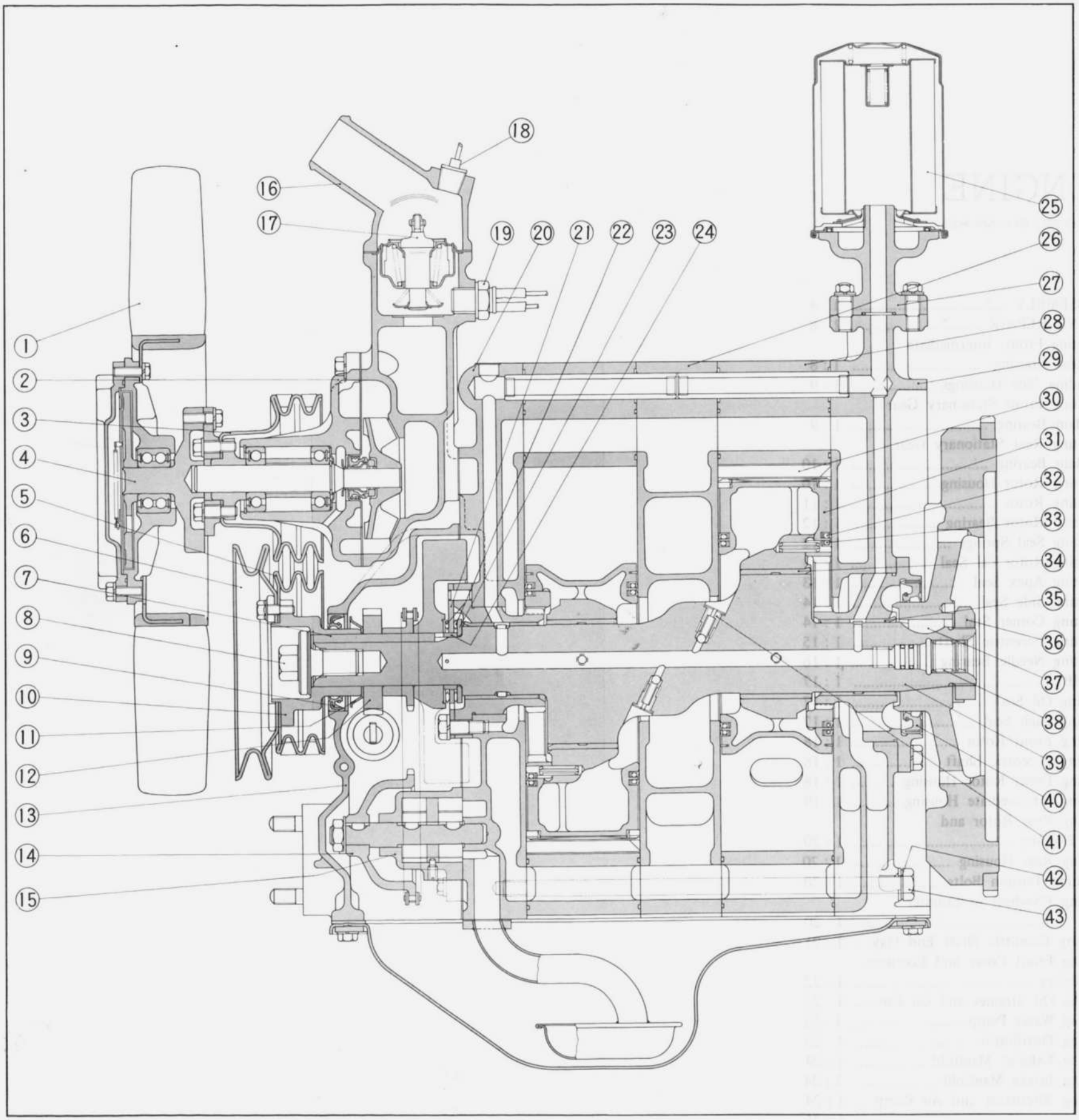

1. Cooling fan
2. Water pump body
3. Water pump pulley
4. Cooling fan drive
5. Eccentric shaft pulley
6. Eccentric shaft pulley
7. Key
8. Eccentric shaft pulley bolt
9. Eccentric shaft front oil seal
10. Eccentric shaft pulley boss
11. Oil thrower
12. Distributor drive gear
13. Front cover
14. Oil pump driven sprocket
15. Oil pump body
16. Thermostat cover
17. Thermostat
18. Water thermo switch (for air conditioner)
19. Water thermo switch (for choke control)
20. Front housing
21. Thrust washer
22. Needle bearing
23. Thrust plate
24. Spacer
25. Oil filter
26. Intermediate housing
27. Oil filter cover
28. Rear rotor housing
29. Rear housing
30. Apex seal
31. Rear rotor
32. Oil seal (outer)
33. Oil seal (inner)
34. Rear rotor bearing
35. Rear main bearing
36. Flywheel lock nut
37. Key
38. Needle bearing
39. Eccentric shaft
40. Eccentric shaft rear oil seal
41. Oil jet
42. Sealing washer
43. Tension bolt

Fig. 1–1 Engine cross section (1)

1 : 1

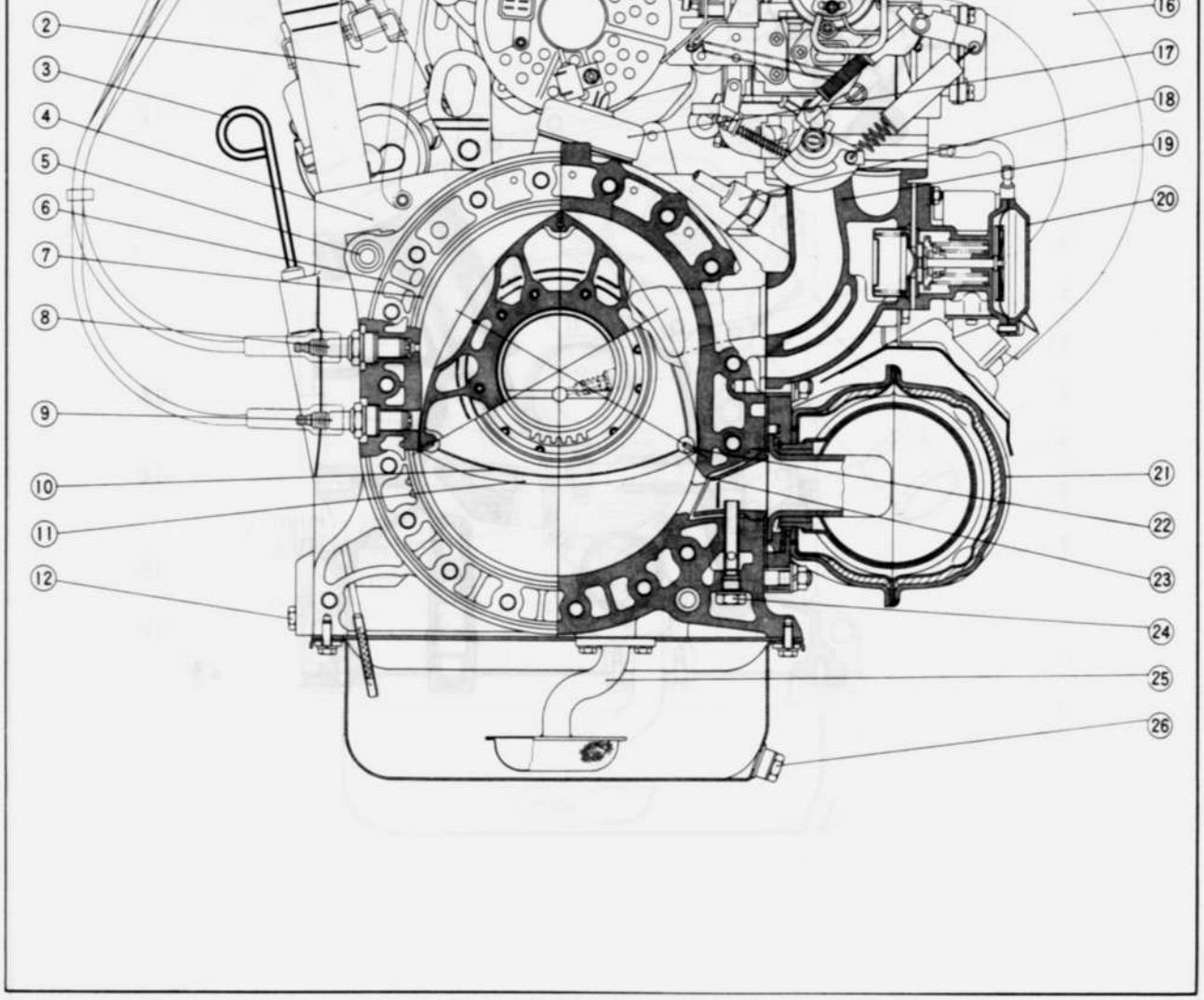

Fig. 1–2 Engine cross section (2)

1. Oil filler cap
2. Distributor
3. Dipstick gauge
4. Rotor housing
5. Tubular dowel
6. Sealing rubber (outer)
7. Sealing rubber (inner)
8. Trailing spark plug
9. Leading spark plug
10. Side seal
11. Rotor
12. Coolant drain plug
13. Air cleaner
14. Alternator
15. Carburetor
16. Hot air hose
17. Water thermo senser
18. P.C.V. valve
19. Intake manifold
20. Air control valve
21. Thermal reactor
22. Apex seal
23. Corner seal
24. Air injection nozzle
25. Oil strainer
26. Oil drain plug

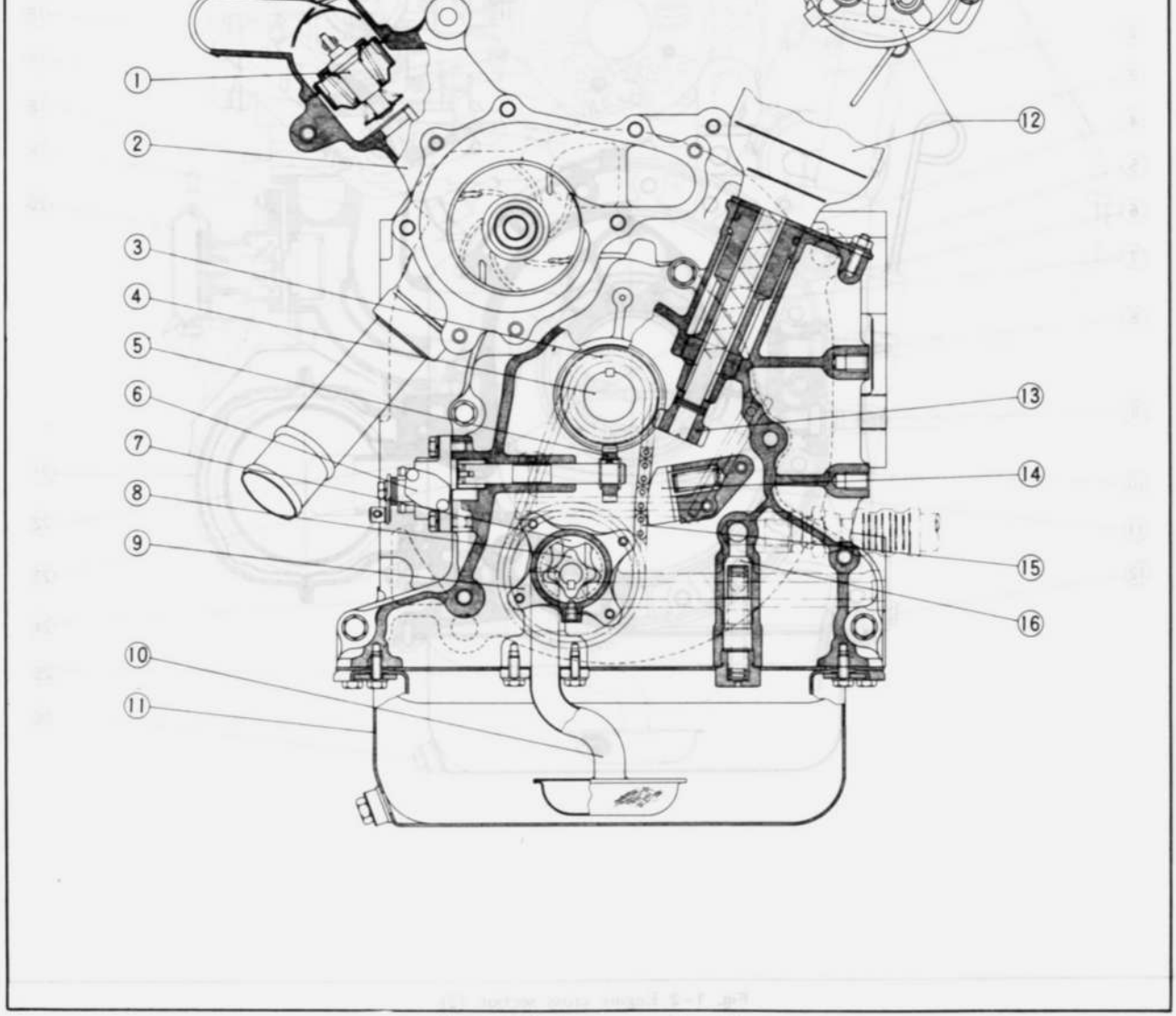

Fig. 1–3 Engine cross section (3)

1. Thermostat
2. Water pump casing
3. Distributor drive gear
4. Eccentric shaft
5. Metering pump drive gear
6. Metering pump
7. Oil pump outer gear
8. Oil pump inner gear
9. Oil pump body
10. Oil strainer
11. Oil pan
12. Distributor
13. Distributor driven gear
14. Oil pump chain adjuster
15. Oil pump chain
16. Pressure control valve



Fig. 1–4 Engine work stand

1. Remove the oil hose support bracket from the front housing.
2. Mount the engine on the **engine work stand** (49 0839 000) with the **hanger** (49 1114 005).
3. Remove the engine hanger bracket from the front cover.
4. Disconnect the vacuum hoses, air hoses and wires, then remove the deceleration valve.
5. Remove the air pump attaching bolts and bar, and remove the air pump and the V-belt.
6. Remove the alternator attaching bolts, and remove the alternator and V-belt.
7. Disconnect the metering oil pump connecting rod, oil tubes and vacuum sensing tube from the carburetor.
8. Remove the intake manifold attaching nuts, and remove the carburetor and intake manifold assembly.



Fig. 1–5 Removing intake manifold ass'y



Fig. 1–6 Removing distributor

11. Remove the water pump attaching bolts, and remove the pump and gasket.



Fig. 1–7 Removing water pump

12. Invert the engine on the work stand.
13. Remove the bolts attaching the oil pan, and remove the oil pan and gasket.



Fig. 1–8 Removing oil pan



Fig. 1–9 Removing oil strainer

15. Apply identification marks onto the front rotor housing and rear rotor housing, which are common parts, so that they will be as they were when reassembling the engine.

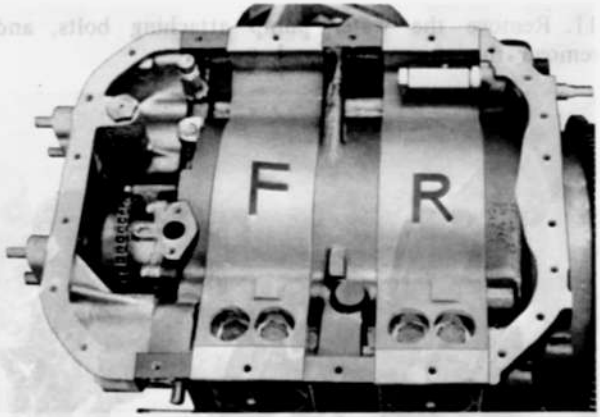

Fig. 1–10 Putting identification marks

16. Turn the engine on the work stand so that the top of the engine is up. Then remove the nuts attaching the engine mounting bracket to the front cover and remove the mounting bracket.
17. Attach the **ring gear brake** (49 1881 060 or 49 1881 055) to the flywheel or drive plate.
18. Remove the eccentric shaft pulley bolt and remove the pulley.

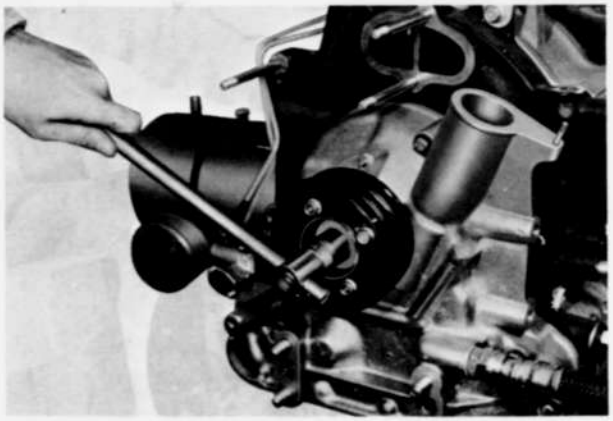

Fig. 1–11 Removing eccentric shaft pulley



Fig. 1–12 Removing front cover

21. Remove the "O" ring from the oil passage on the front housing.
22. Slide the oil thrower and distributor drive gear off the shaft.
23. Remove the nuts attaching the chain adjuster and remove the chain adjuster.

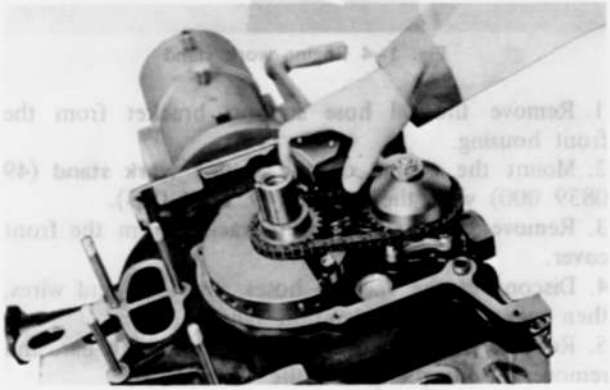

Fig. 1–13 Removing chain adjuster

24. Remove the lock nut and washer for the oil pump driven sprocket.
25. Slide the oil pump drive sprocket and driven sprocket together with the drive chain off the eccentric shaft and oil pump shaft simultaneously.



Fig. 1–14 Removing chain and sprockets

the flywheel nut using the **special wrench** (49 0820 035).

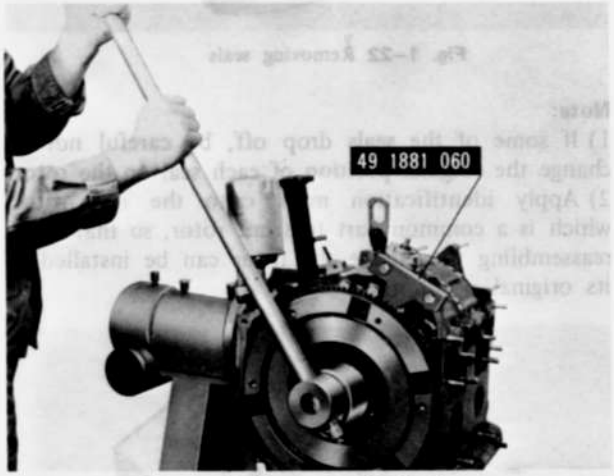

Fig. 1–15 Removing flywheel nut

3) Remove the flywheel by using the **flywheel puller** (49 0823 300), turning the handle of the puller and lightly hitting the head of the puller.

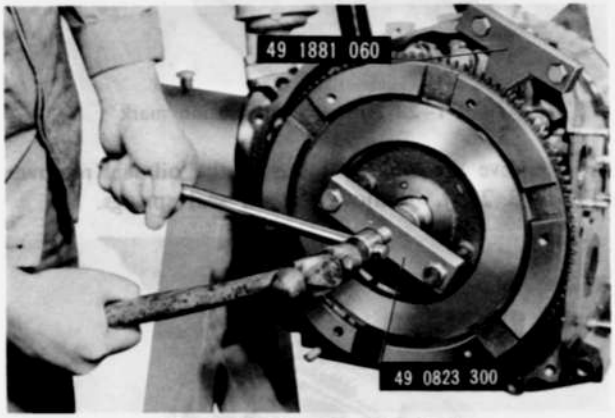

Fig. 1–16 Removing flywheel

31. To remove the counter weight in case of engine mounted with automatic transmission, proceed as follows.
1) Remove the drive plate, and then remove the **ring gear brake** (49 1881 060).
2) Attach the **counter weight brake** (49 1881 055). Then straighten the tab of the lock washer and remove

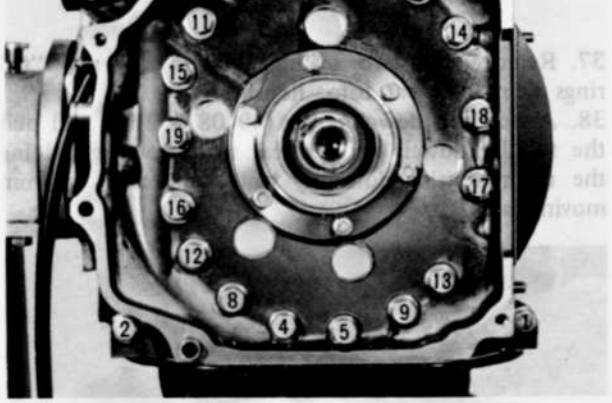

Fig. 1–17 Tension bolts loosening order

Note:
Do not loosen the tension bolts at one time. Perform the removal in two or three procedures.

34. Lift the rear housing off the shaft.

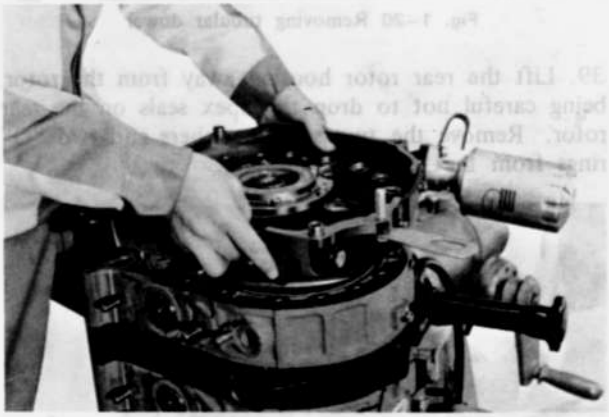

Fig. 1–18 Removing rear housing

35. Remove any seals stuck to the rotor sliding surface of the rear housing and place them back into their respective original positions.
36. Remove the all corner seals, corner seal springs, side seals and side seal springs from the rear side of the rotor, and place them in the **seal case** (49 0813 250), in accordance with the numbers near each respective groove on the face of the rotor. These marks are made in order to prevent each seal from changing its original position in reassembling.

Fig. 1–19 Removing seals

37. Remove the two sealing rubbers and two "O" rings from the rear rotor housing.
38. Attach the **dowel puller** (49 0813 215), and pull the tubular dowels off the rear rotor housing holding the rotor housing down by hand to prevent it from moving up.



Fig. 1–20 Removing tubular dowel

39. Lift the rear rotor housing away from the rotor, being careful not to drop the apex seals on the rear rotor. Remove the two sealing rubbers and two "O" rings from the rear rotor housing.

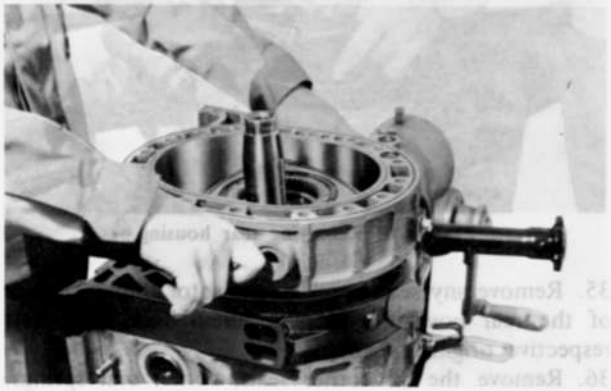

Fig. 1–21 Removing rear rotor housing

40. Remove the each apex seal, side piece and spring from the rear rotor and place them in the seal case.
41. Remove the rear rotor away from the eccentric shaft and place it upside down on a clean sheet of



Fig. 1–22 Removing seals

Note:
1) If some of the seals drop off, be careful not to change the original position of each seal on the rotor.
2) Apply identification mark onto the rear rotor, which is a common part to front rotor, so that when reassembling the engine the rotor can be installed in its original position.



Fig. 1–23 Putting identification mark

43. Remove the oil seals by using the **oil seal remover** (49 0813 225). Remove the oil seal springs.



Fig. 1–24 Removing oil seal

the intermediate housing up and at the same time pushing up the eccentric shaft.

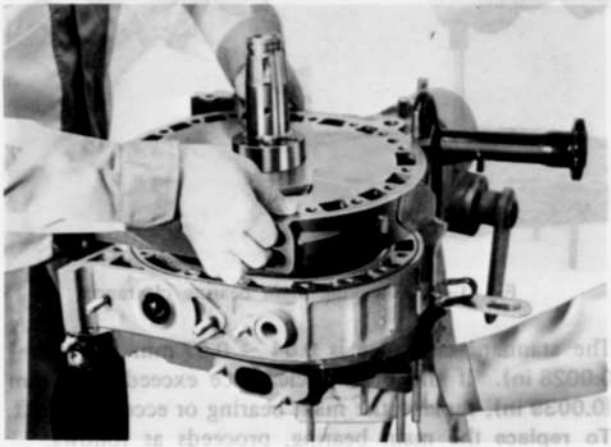

Fig. 1–25 Removing intermediate housing

46. Lift out the eccentric shaft.
47. Repeat the above procedures to remove the front rotor housing and the front rotor assembly.

1–B. INSPECTION AND REPAIR

1–B–1. Inspecting Front, Intermediate and Rear Housing

1. Check the side housings for traces of gas or water leakage.
2. Remove all carbon on the housings with an extra-



Fig. 1–26 Removing sealing agent

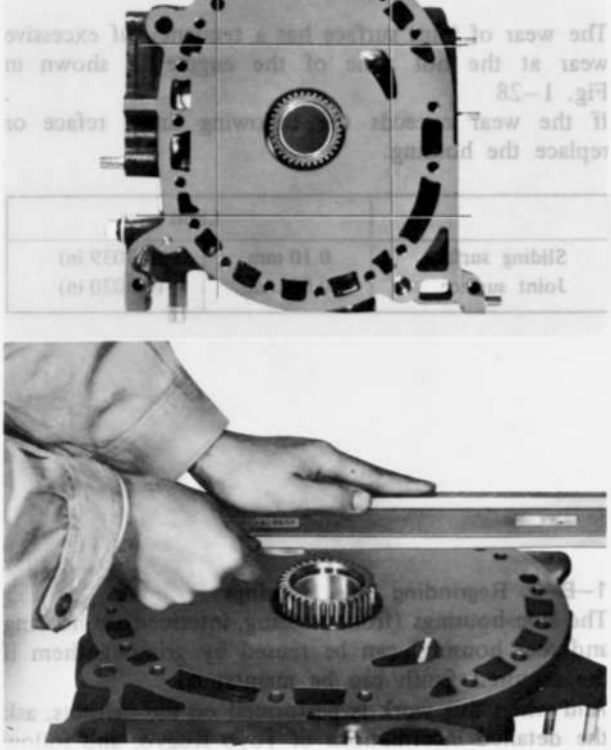

Fig. 1–27 Checking distortion

5. Check for wear on the rotor sliding surfaces of the housing and joint surfaces with rotor housing. The wear of sliding surface has a tendency of excessive wear occurring at following minor axis area of the housing.

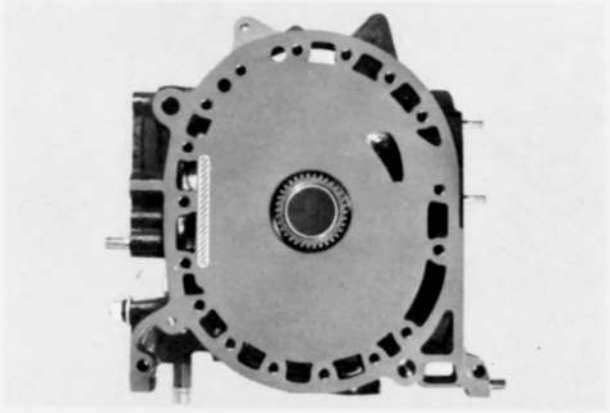

Fig. 1–28 Checking position of wear

The wear of joint surface has a tendency of excessive wear at the hot zone of the engine as shown in Fig. 1–28
If the wear exceeds the following limit, reface or replace the housing.

	Limit	
Sliding surface	0.10 mm	(0.0039 in)
Joint surface	0.05 mm	(0.0020 in)

1–B–2. Regrinding Side Housings

The side housings (front housing, intermediate housing and rear housing) can be reused by grinding them if the required finish can be maintained.
And when this work is performed on the markets, ask the detailed informations of Toyo Kogyo, and follow them.

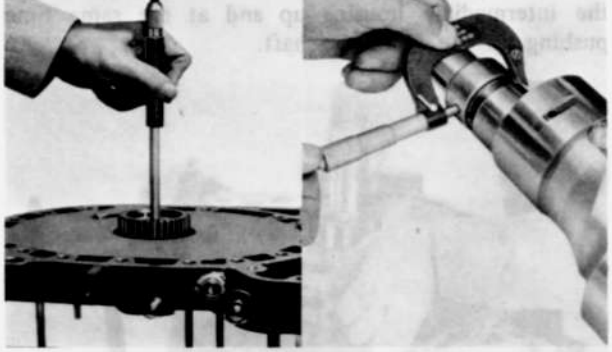

Fig. 1–30 Checking main bearing clearance

The standard clearance is **0.04 ~ 0.07 mm (0.0016 ~ 0.0028 in)**. If the bearing clearance exceeds **0.10 mm (0.0039 in)**, replace the main bearing or eccentric shaft.
To replace the main bearing, proceeds as follows:
1) Remove the stationary gear and main bearing assembly from the housing, using the **main bearing replacer** (49 0813 235), shown in Fig. 1–31.

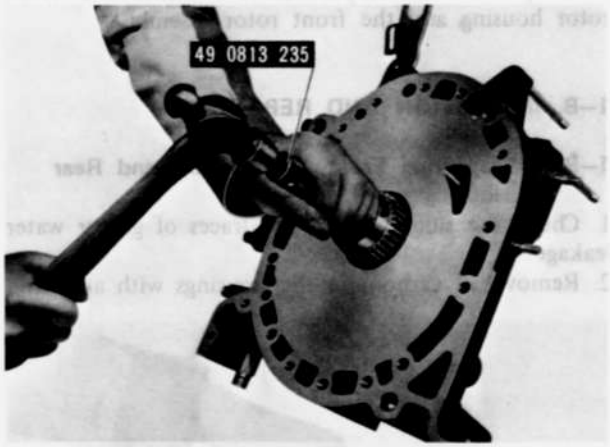

Fig. 1–31 Removing stationary gear assembly

2) Remove the adaptor on the main bearing replacer and press the main bearing out of the stationary gear by using the **main bearing replacer** (49 0813 235), as shown in Fig. 1–32.
3) Attach the adaptor onto the **main bearing replacer** (49 0813 235), aligning the tang of the bearing and the slot of the stationary gear, and press fit the main bearing into the stationary gear until the adaptor touches the stationary gear flange.



Fig. 1–33 Installing main bearing

4. Press in the stationary gear to the housing with the **main bearing replacer** (49 0813 235), aligning the slot of the stationary gear flange and the dowel pin on the housing, as shown in Fig. 1–34

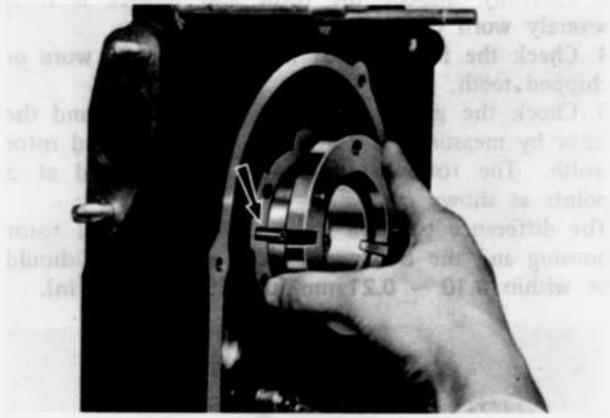

Fig. 1–34 Installing stationary gear

1–B–4. Inspecting Rear Stationary Gear and Main Bearing

1. Check the rear stationary gear and main bearing according to Par. 1–B–3.
2. Check the "O" ring in the stationary gear for a damage. Replace the "O" ring if necessary.

To remove and install the stationary gear, proceed as follows:

1) Remove the bolts attaching the stationary gear to



Fig. 1–35 Assembling stationary gear

4) Apply sealing agent onto the stationary gear flange.
5) Install the stationary gear to the rear housing being careful not to damage the "O" ring and aligning the slot of the stationary gear with the dowel pin on the rear housing.
6) Tighten the bolts attaching the stationary gear.

1–B–5 Inspecting Rotor Housing

1. Check for traces of gas or water leakage along the inner margin of each side face of the rotor housing.
2. Remove all carbon from the inner surface of the rotor housing by wiping with cloth. Soak the cloth in a solution of ketone or thinner if the carbon is difficult to remove.
3. Remove all deposits and rust from the cooling water passages on the housing.
4. Remove sealing agent by wiping with a cloth or brush soaked in a solution of ketone or thinner.

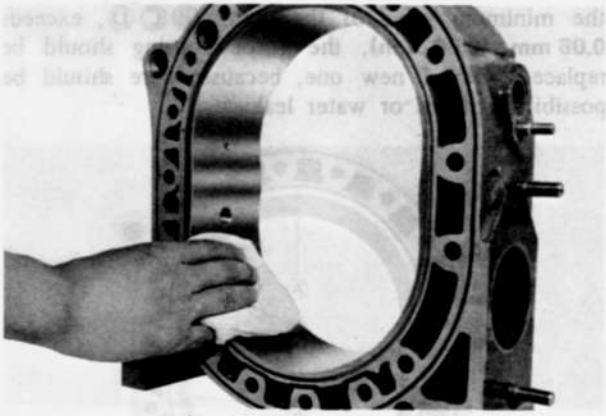

Fig. 1–36 Removing carbon

5. Check the chromium plated surface on the rotor housing for scoring, flaking or any other damage. If any of these condition exists, replace the rotor housing.

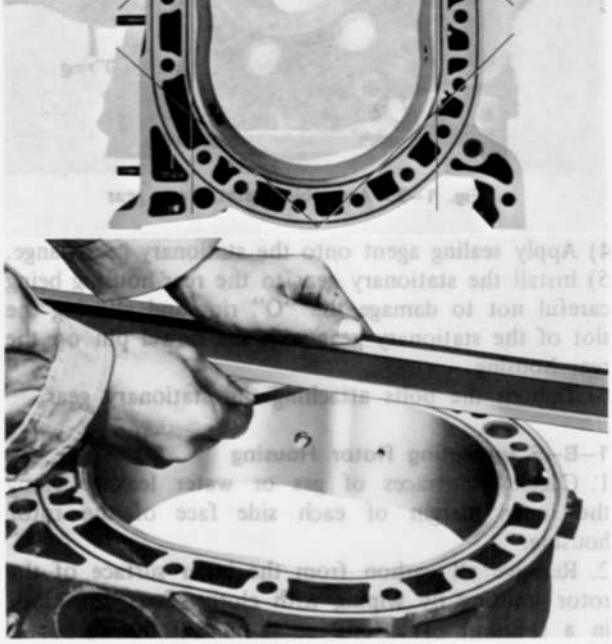

Fig. 1–37 Checking distortion

7. Check the rotor housing width at points close to the trochoid surface by using a micrometer. The measurements should be taken at least at 4 points. If the difference between the value of Ⓐ point and the minimum value of the points ⒷⒸⒹ, exceeds **0.06 mm (0.0024 in)**, the rotor housing should be replaced with a new one, because there should be possibility of gas or water leakage.

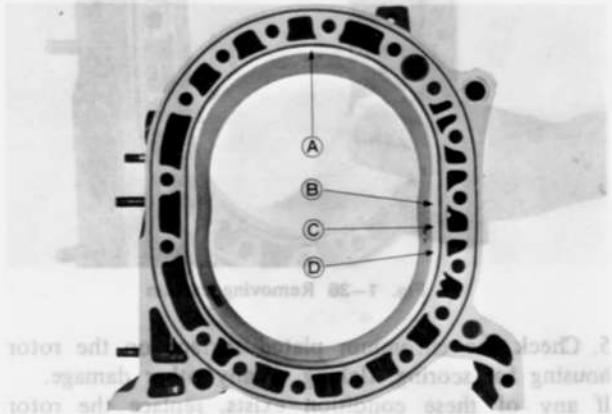

Fig. 1–38 Checking points

1–B–6. Inspecting Rotor

1. Check the combustion condition and gas leakage. To a certain extent, the combustion condition can be judged as in the case of reciprocating engines by the color and quantity of carbon on the rotor. Combustion can be said to be good if the color of carbon is brown. Generally carbon on the leading side seen from the direction of rotation is brown, while the trailing side shows black color. It should be noted that this color varies according to operating conditions just before the engine is removed.
The gas leakage can be judged by checking the color of the rotor side surface for blow-by traces originating from the side seals and corner seals.
2. Remove the carbon on the rotor by using a carbon remover or emery paper. Carbon in the seal grooves of the rotor should be removed with a carbon remover being careful not to damage the grooves. Wash the rotor in cleaning solution and dry by blowing with compressed air.
3. Carefully inspect the rotor and replace if it is severely worn or damaged.
4. Check the internal gear for cracks, score, worn or chipped teeth.
5. Check the gap between the side housing and the rotor by measuring the rotor housing width and rotor width. The rotor width should be measured at 3 points as shown in Fig. 1–40.
The difference between the minimum width of rotor housing and the maximum width of the rotor should be within **0.10 ~ 0.21 mm (0.0039 ~ 0.0083 in).**

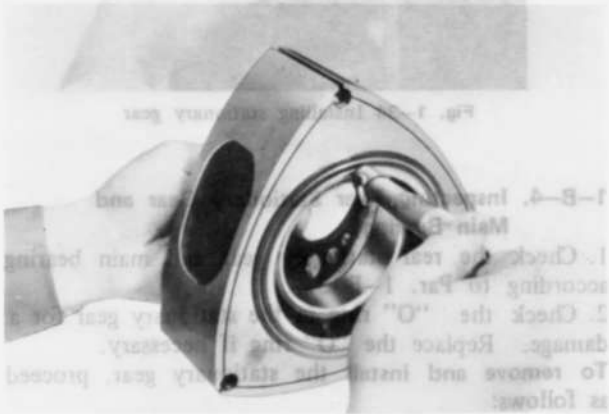

Fig. 1–40 Checking rotor width

0.10 mm (0.0039 in).

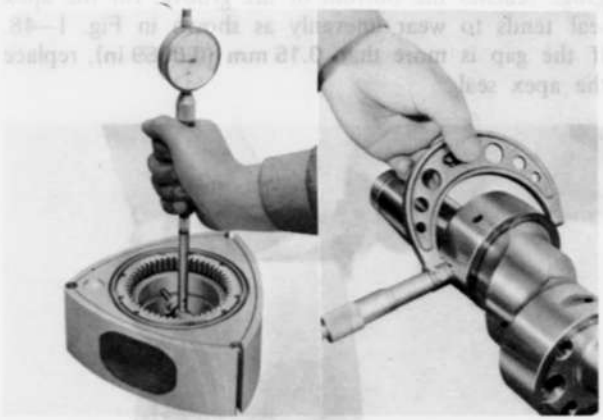

Fig. 1–41 Checking rotor bearing clearance

To replace the rotor bearing, proceed as follows:
1) Place the rotor on the support so that the internal gear is facing downward. Using the **rotor bearing replacer** (49 0813 240) without the adaptor ring, press the bearing out of the rotor, being careful not to damage the internal gear. If the bearing bore in the rotor is damaged, finish the bore with emery paper and blow with compressed air.

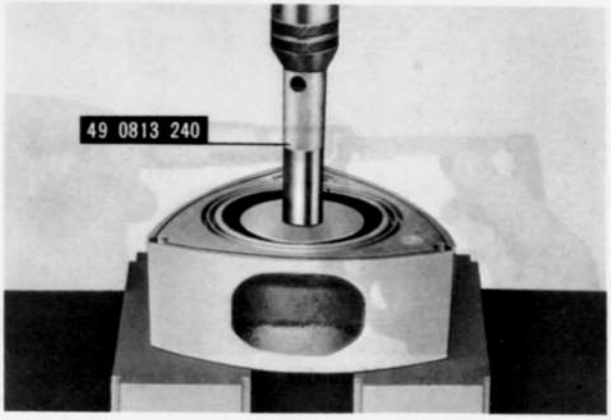

Fig. 1–42 Removing rotor bearing

2) Place the rotor on the support with internal gear faced upward. And place the new rotor bearing on the rotor so that the rotor bore is in line with the bearing lug.
3) Press fit the new bearing using the **rotor bearing**



Fig. 1–43 Installing rotor bearing

4) Wash the rotor thoroughly and blow with compressed air.

Note:
The rotors are classified into five grades according to their weight and marked a, b, c, d, and e on the internal gear side.
In order to balance the front rotor and rear rotor, the following combinations are adopted in the factory.

Combination of rotor

a – b	c – b, c, d	e – e
b – a, b, c	d – c, d, e	

If it becomes necessary to replace a rotor, use the rotor marked "C" in all cases.



Fig. 1–44 Rotor weight mark

1–B–8. Inspecting Seal Springs

1. Check for weakness, wear or damage of the seal springs, especially the sections of the springs contacting the rotor or seal.
2. Check the free height of the apex seal spring. It should be more than **3.8 mm (0.15 in).**

Note:
About the springs of oil seal, side seal and corner seal, confirm the protrusion of seals when installing seals to the rotor.

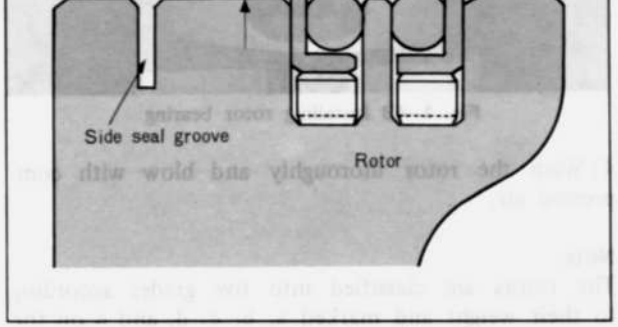

Fig. 1–45 Checking oil seal

Note:
When installing oil seal, refer to Par. 1–C–1.

1–B–10. Inspecting Apex Seal

1. Remove all carbon from the apex seal and spring, being careful not to damage the apex seal. **Never use** emery paper as it will damage the apex seal. Wash them with cleaning solution.
2. Check the apex seal for wear, crack or any damage. If any of these conditions is found, replace the apex seal. Check the spring for weakness.
3. Measure the height of the apex seal with a micrometer at two positions shown in Fig. 1–46. Replace if the height is less than **7.0 mm (0.275 in)**.

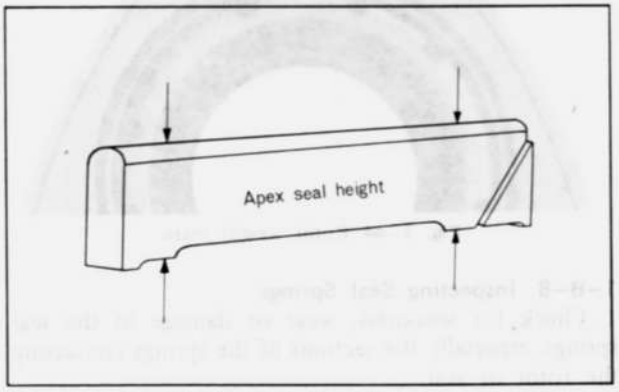

Fig. 1–46 Apex seal height

4. Check the gap between the apex seal and the groove. To check the gap, place the apex seal in its respective groove on the rotor and measure the gap between the apex seal and the groove with a feeler gauge. The feeler gauge should be inserted until the tip of the gauge reaches the bottom of the groove, for the apex seal tends to wear unevenly as shown in Fig. 1–48. If the gap is more than **0.15 mm (0.0059 in)**, replace the apex seal.

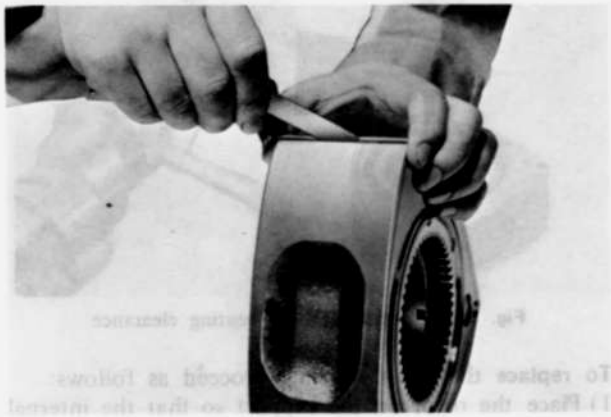

Fig. 1–48 Checking apex seal and groove

5. Check the gap between the apex seal and side housing. To check, measure the length of the apex seal with a micrometer.

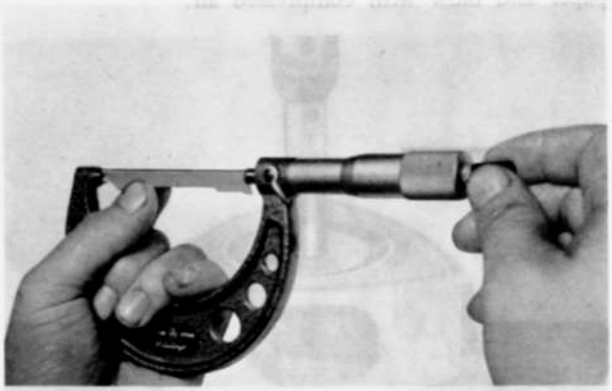

Fig. 1–49 Measuring apex seal length

Compare the measured apex seal length with the minimum value among Ⓑ Ⓒ and Ⓓ points of the rotor housing (see Fig. 1–38). The standard gap is **0.13 ~ 0.17 mm (0.0051 ~ 0.0067 in)**.
If it is more than **0.30 mm (0.0118 in)**, replace the apex seal. If necessary, correct the apex seal length with emery paper.

Corner seal, Groove

Fig. 1–50 Clearance of seals

1–B–11. Inspecting Side Seal

1. Remove all carbon from the side seal and spring with a carbon remover.
2. Check the side seal for wear, crack or any other damage and replace if any of these conditions is found.
3. Check the side seal protrusion from the rotor surface, and also confirm the free movement by pressing with finger. The protrusion should be more than **0.5 mm (0.02 in)**.
4. Check the gap between the side seal and the groove with a feeler gauge as shown in Fig. 1–51. The standard gap is **0.04 ~ 0.07 mm (0.0016 ~ 0.0028 in)**. If the gap exceeds **0.10 mm (0.0040 in)**, replace the side seal.
5. Check the gap between the side seal and the corner seal with these seals installed on the rotor.

To check, insert a feeler gauge between the end of the side seal (against the rotating direction of rotor) and the corner seal. If the gap exceeds **0.4 mm (0.016 in)**, replace the side seal.

When the side seal is replaced, adjust the gap between the side seal and the corner seal by grinding the one end of the side seal along the round shape of the corner seal with a fine file so that the gap will be **0.05 ~ 0.15 mm (0.002 ~ 0.006 in)**. And then make respective identification notches on the reverse side of the side seal. If this gap is too large, gas-sealing performance will deteriorate.



Fig. 1–51 Checking side seal gap

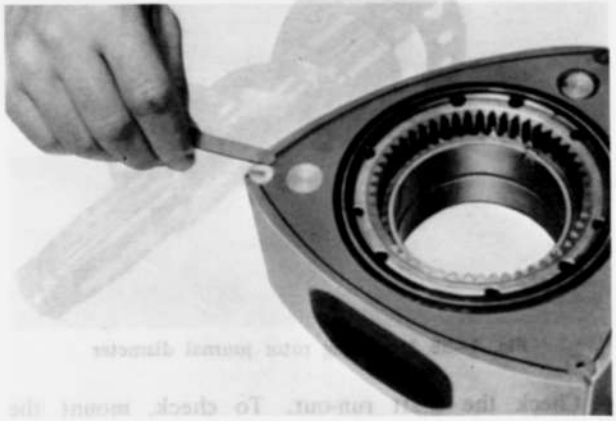

Fig. 1–52 Checking corner seal and side seal gap

1–B–12. Inspecting Corner Seal

1. Remove carbon from the corner seal.
2. Check the corner seal for wear or damage.
3. Check the corner seal protrusion from the rotor surface, and also confirm the free movement by pressing with finger. The protrusion should be more than **0.5 mm (0.02 in)**.
4. Check the gap between the corner seal and the corner seal groove. The standard gap is **0.020 ~ 0.048 mm (0.0008 ~ 0.0019 in)** and the limit is **0.08 mm (0.0031 in)**. This gap enlargement shows uneven wear of the corner seal groove, which occur when the engine is operated with dust entering through a clogged element, damaged air cleaner or any other cause. When the wear is permitted to increase, the engine power will be reduced and the engine will become hard to start. The extent of wear of the corner seal groove is determined by the **bar limit gauge** (49 0839 165) and classified into three conditions.

a. Neither end of the gauge goes into the groove. This means that the gap conforms to the specifications.

b. While the go-end of the gauge goes into the groove,

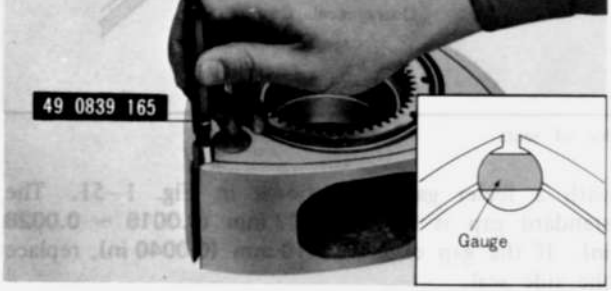

Fig. 1–53 Checking corner seal groove

Note:

a. As the corner seal groove tends to show a heavy wear in the direction of the rotation, the side arcs on the gauge are partially cut off. Be sure to take the measurement in the direction of the maximum wear of the groove.

b. If the gauge is not available, use a feeler gauge.

c. The dimensions of the outer diameter of the gauge are as follows:

Go-end	$11.0\ ^{+0.019}_{+0.021}$ mm (0.4331 $^{+0.0007}_{+0.0008}$ in)
Not-go-end	$11.0\ ^{+0.044}_{+0.046}$ mm (0.4331 $^{+0.0017}_{+0.0018}$ in)

To rebore the corner seal groove, proceed as follows:

1) Remove carbon, rust and other deposits from the groove, being careful not to damage.

2) Install the **jig** (49 2113 030) onto the rotor and tighten the correct bar being careful not to damage

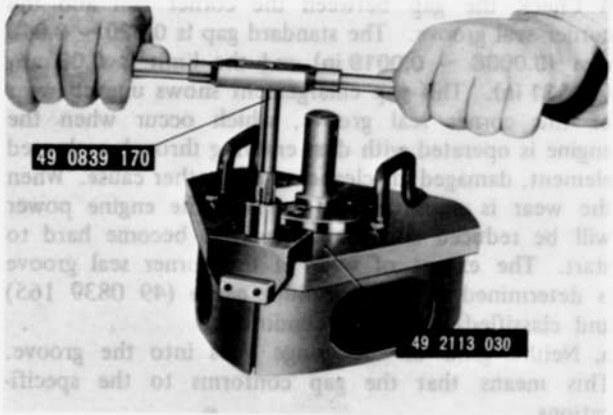

Fig. 1–54 Reaming corner seal groove

0.048 mm (0.0008 ~ 0.0019 in).

Note:

a. When installing or removing the jig, be careful not to hit the rotor.

b. If the reaming is carried out without applying oil, it will be difficult to obtain the proper surface roughness no matter how many times the reaming may be repeated.

c. Avoid two stage reaming, that is, drawing the reamer halfway during the reaming work and then resuming the reaming, because chips may affect the surface roughness.

d. Before starting the reaming work, it must be confirmed that the reamer diameter is up to specifications, because the reamer could be worn in excess of the limit if it was used many times.

1–B–13. Inspecting Eccentric Shaft

1. Wash the shaft in a cleaning solution and blow the oil passage with compressed air.

2. Check the shaft for cracks, scratches, wear or any other damage. Be sure that the oil passages are open.

3. Measure the diameter of the shaft journals with a micrometer. Replace the shaft if the wear is excessive. The standard diameter is **43 mm (1.6929 in)** on the main journal and **74 mm (2.9134 in)** on the rotor journal.

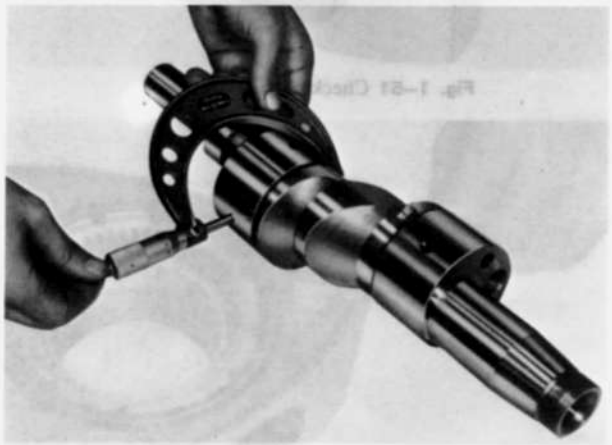

Fig. 1–55 Measuring rotor journal diameter

4. Check the shaft run-out. To check, mount the shaft on "V"-blocks and apply a dial indicator. Slowly

Fig. 1–56 Checking run-out

5. Check the blind plug in the shaft end for oil leakage or looseness. If any oil leakage is found, remove the blind plug with a hexagonal Allen key and replace the "O" ring.

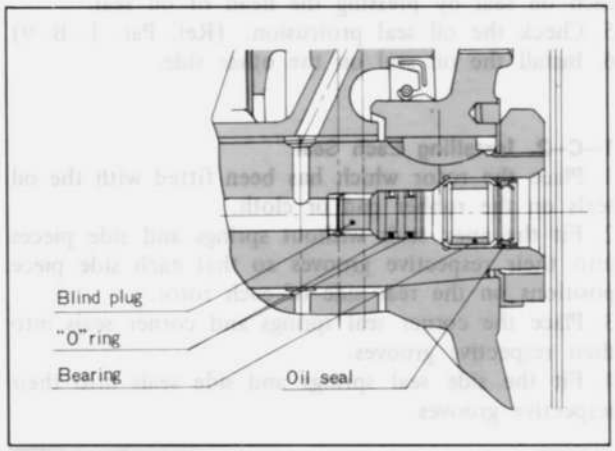

Fig. 1–57 Blind plug

6. Check the needle roller bearing in the shaft end for wear or any damage. Then insert the main drive shaft into the needle roller bearing and check the needle bearing for smooth operation and proper clearance. (Only the car with manual transmission)

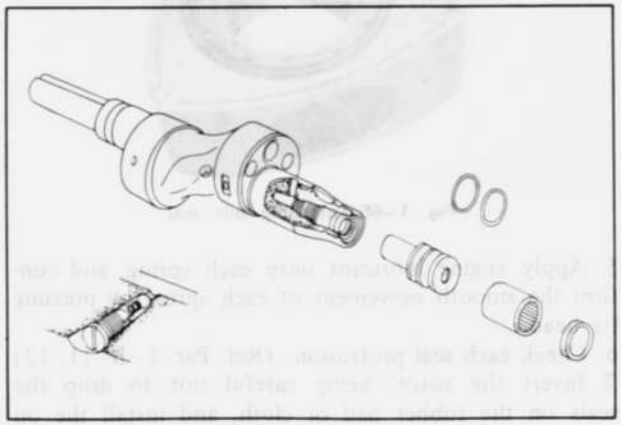

Fig. 1–58 Roller bearing and oil jet



Fig. 1–59 Removing roller bearing

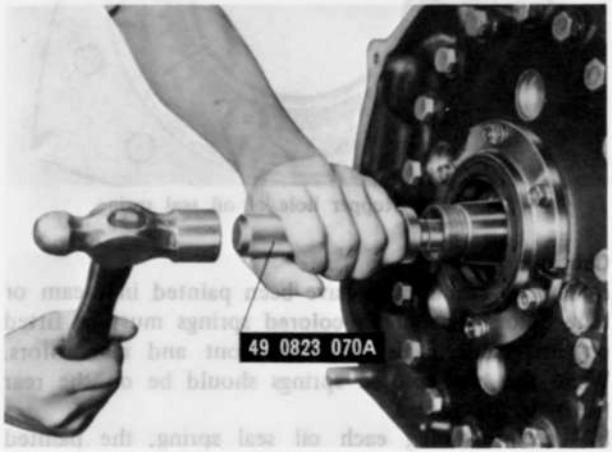

Fig. 1–60 Installing roller bearing

7. The oil jets are installed in the eccentric shaft. The oil jets open when the number of engine revolutions increases and the oil pressure rises. Check for spring weakness, stick or damage of the steel ball. (Fig. 1–58)

1–B–14. Inspecting Needle Bearing

Check the needle bearing for wear or damage.
Inspect the bearing housing and thrust plate for wear or any damage.

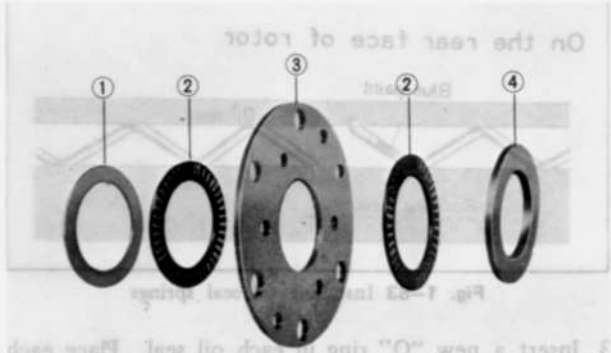

Fig. 1–61 Needle bearings

1. Thrust washer
2. Needle bearing
3. Bearing housing
4. Thrust plate



Fig. 1–62 Stopper hole of oil seal spring

Caution:

a. The oil seal springs have been painted in cream or blue color. The **cream-colored** springs must be fitted on the front faces of both front and rear rotors. While the **blue-colored** springs should be on the rear faces of the rotors.

b. When installing each oil seal spring, the painted side of spring must be faced to the oil seal (upward), that is the square edge of spring faces to the oil seal (upward).

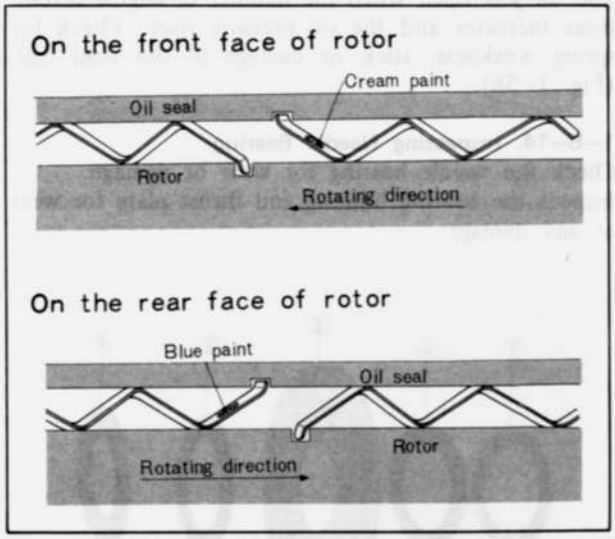

Fig. 1–63 Installing oil seal springs

3. Insert a new "O" ring in each oil seal. Place each oil seal to the groove so that the square edge of spring fit in the stopper hole of the oil seal and push the head of the oil seal slowly with fingers. Be careful not to deform the oil seal.

Note:

When replacing the oil seal, confirm the smooth movement of oil seal by placing the oil seal on the oil seal spring in the groove before inserting the "O" ring.

4. Apply sufficient engine lubricant onto each oil seal and groove, and confirm the smooth movement of each oil seal by pressing the head of oil seal.
5. Check the oil seal protrusion. (Ref. Par. 1–B–9)
6. Install the oil seal on the other side.

1–C–2. Installing Each Seal

1. Place the rotor which has been fitted with the oil seals on the rubber pad or cloth.
2. Fit the apex seals without springs and side pieces into their respective grooves so that each side piece positions on the rear side of each rotor.
3. Place the corner seal springs and corner seals into their respective grooves.
4. Fit the side seal springs and side seals into their respective grooves.

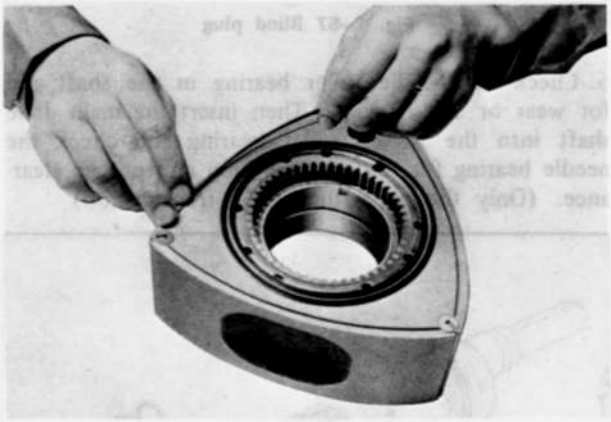

Fig. 1–65 Installing side seal

5. Apply engine lubricant onto each spring, and confirm the smooth movement of each spring by pressing its head.
6. Check each seal protrusion. (Ref. Par. 1–B–11, 12)
7. Invert the rotor, being careful not to drop the seals on the rubber pad or cloth, and install the oil seals on the other side in the same manner as above.



Fig. 1–66 Installing front rotor assembly

5. Mesh the internal gear and stationary gear so that one of the rotor apexes is set to any one of the four places shown in Fig. 1–67, and remove the used "O" ring.

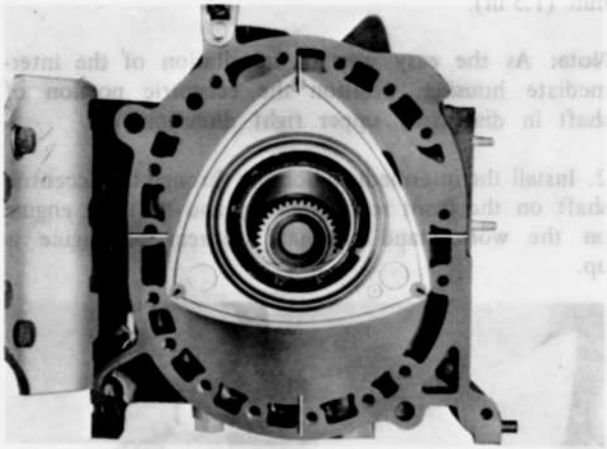

Fig. 1–67 Positioning front rotor

Note:
In this case, be careful not to drop the corner seal into the ports.

1–C–4. Installing Eccentric Shaft

1. Lubricate the front rotor journal and main journal on the shaft with engine lubricant.
2. Insert the eccentric shaft being careful not to damage the rotor bearing and main bearing.

Fig. 1–68 Installing eccentric shaft

1–C–5. Installing Front Rotor Housing

1. Apply sealing agent onto the front side of the rotor housing, as shown in Fig. 1–69.

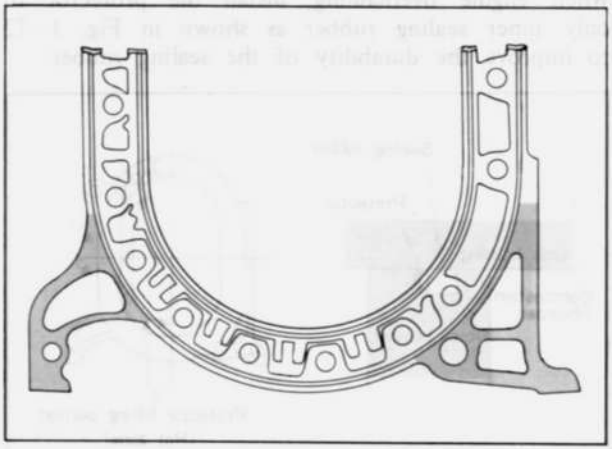

Fig. 1–69 Applying sealing agent

2. Slightly apply vaseline or petrolatum onto new "O" rings and sealing rubbers to prevent them from coming off, and place the "O" rings and sealing rubbers on the front side of the rotor housing.

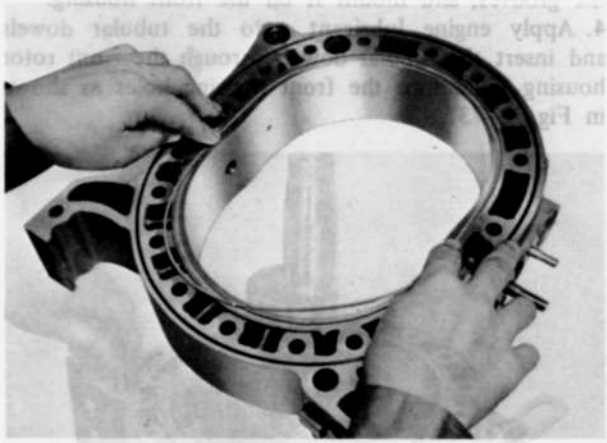

Fig. 1–70 Installing sealing rubber

Note:
The inner sealing rubber is square type. The wider white line of the sealing rubber should face with

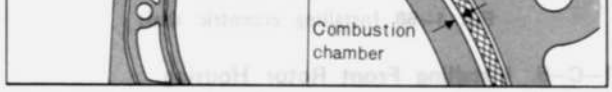

Fig. 1–71 Positioning inner sealing rubber

When engine overhauling, install the protector to only inner sealing rubber as shown in Fig. 1–72 to improve the durability of the sealing rubber.

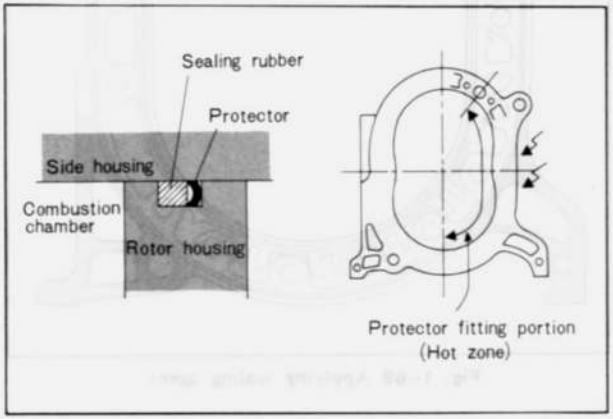

Fig. 1–72 Installing sealing rubber protector

3. Invert the front rotor housing being careful not to let the sealing rubbers and "O" rings drop out of the grooves, and mount it on the front housing.
4. Apply engine lubricant onto the tubular dowels and insert the tubular dowels through the front rotor housing holes into the front housing holes as shown in Fig. 1–73.



Fig. 1–73 Installing tubular dowel



Fig. 1–74 Fitting side piece and spring

9. Apply engine lubricant on the side pieces. And make sure that the front rotor housing is free from any foreign matter and apply some engine lubricant onto the sliding surface of the front housing.

1–C–6. Installing Intermediate Housing

1. Turn the front housing with rotor assembly so that the top of the housing is up, and pull the eccentric shaft about 25 mm (1 in), but do not pull over 35 mm (1.5 in).

Note: As the easy way of installation of the intermediate housing, position the eccentric portion of shaft in diagonally upper right direction.

2. Install the intermediate housing through the eccentric shaft on the front rotor housing, and turn the engine on the work stand so that the rear of engine is up.

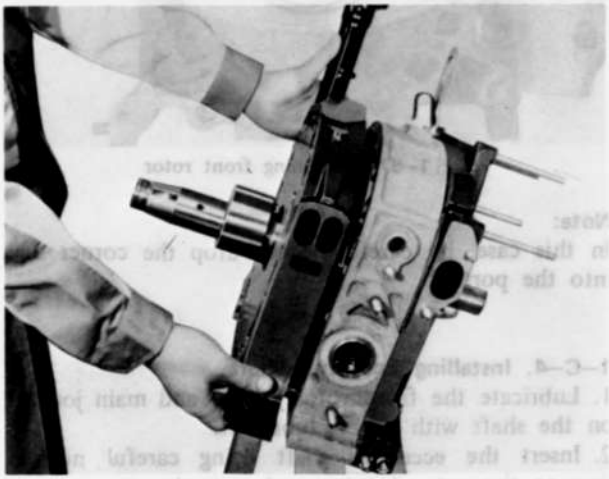

Fig. 1–75 Installing intermediate housing

Fig. 1–76 Installing rear rotor assembly



Fig. 1–77 Installing rear rotor housing

1–C–8. Installing Rear Housing

1. Turn the engine on the work stand so that the rear of engine is up.
2. Apply sufficient engine lubricant onto the stationary gear and main bearing.
3. Install the rear housing on the rear rotor housing. If necessary, turn the rear rotor slightly to engage the rear housing stationary gear with the rear rotor internal gear.

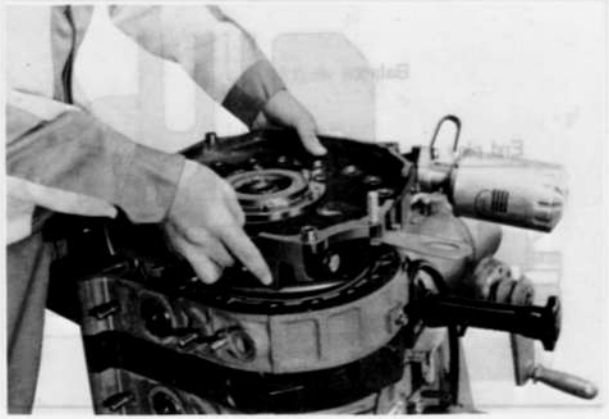

Fig. 1–78 Installing rear housing

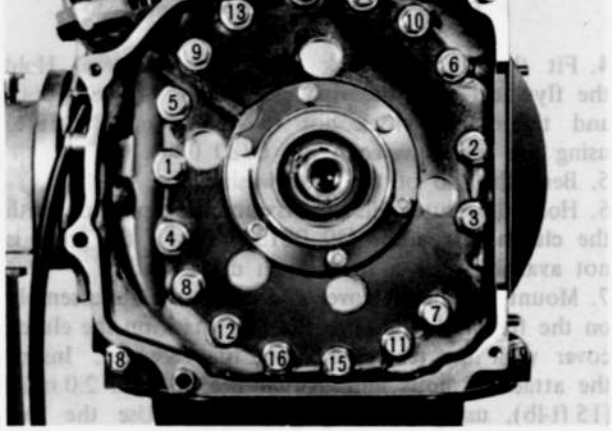

Fig. 1–79 Tension bolt tightening order

4. After tightening, turn the eccentric shaft and make sure that the rotation is light and smooth.

1–C–10. Installing Flywheel or Counter Weight

a. Manual transmission

1. Apply lubricant to the oil seal in the rear housing.
2. Mount the flywheel to the rear end of the eccentric shaft so that the key fits into the keyway of the flywheel.

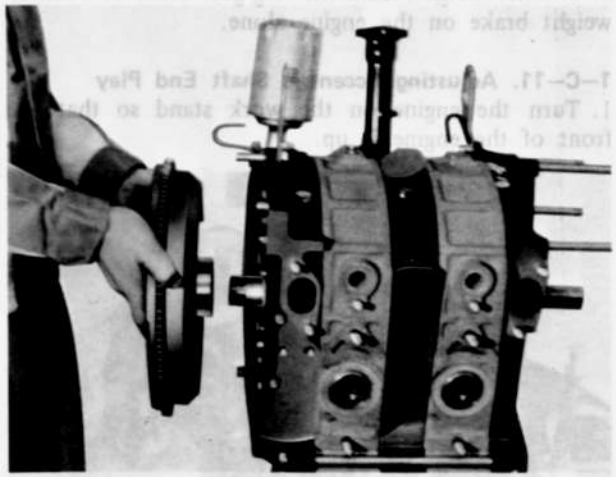

Fig. 1–80 Installing flywheel

3. Apply sealing agent to both sides of the flywheel lock washer and place the lock washer in position.

Fig. 1–81 Tightening flywheel nut

4. Fit the flywheel lock nut by the fingers. Hold the flywheel with the **ring gear brake** (49 1881 060) and tighten the lock nut to **45.0 m-kg (350 ft-lb)** using the **special wrench** (49 0820 035).
5. Bent the tab of the lock washer.
6. Hold the clutch disc in its mounting position with the **clutch disc arbor** (49 0813 310). If the arbor is not available, use a spare main drive shaft.
7. Mount the clutch cover and pressure plate assembly on the flywheel, and align the "O" mark on the clutch cover with the reamed hole of the flywheel. Install the attaching bolts and tighten the bolts to 2.0 m-kg (15 ft-lb), using the ring gear brake. Use the two reamer bolts in the reamed holes.

b. Automatic transmission

1. Referring to the above manners (1–C–10. a), fit the key, counter weight, lock washer and nut on the eccentric shaft.
2. Hold the counter weight with the **counter weight brake** (49 1881 055) and tighten the lock nut to **45.0 m-kg (350 ft-lb)** using the **special wrench** (49 0820 035).
3. Fit the drive plate on the counter weight and tighten attaching nuts. After installing the flywheel or counter weight, leave the ring gear brake or counter weight brake on the engine alone.

1–C–11. Adjusting Eccentric Shaft End Play

1. Turn the engine on the work stand so that the front of the engine is up.

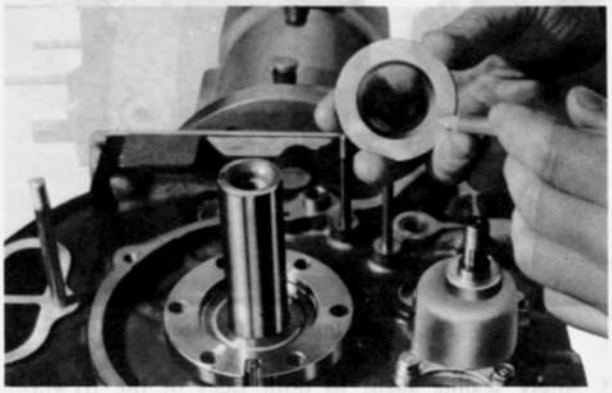

Fig. 1–82 Fitting thrust plate

4. Slide the needle bearing onto the shaft, and apply engine lubricant onto it.
5. Slide the balance weight together with the thrust washer onto the shaft.
6. Engage the oil pump drive chain with the driven sprocket and drive sprocket, and then slide the sprockets with chain onto the eccentric shaft and oil pump shaft simultaneously aligning the keyway of the driven gear sprocket with the key on the oil pump shaft. Fit the key onto the eccentric shaft.



Fig. 1–83 Installing chain and sprockets

7. Slide the distributor drive gear onto the eccentric shaft with "F" mark on the gear faced the front of

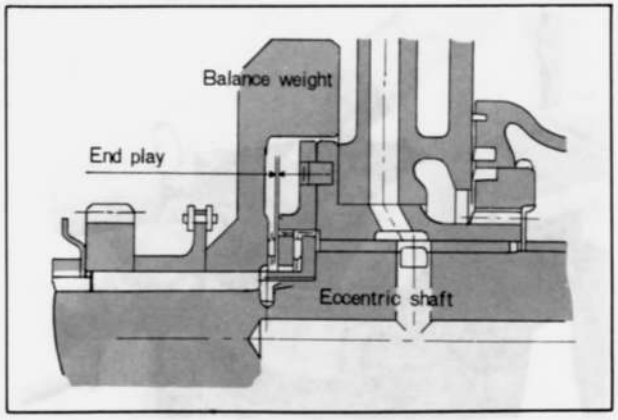

Fig. 1–84 Eccentric shaft end play

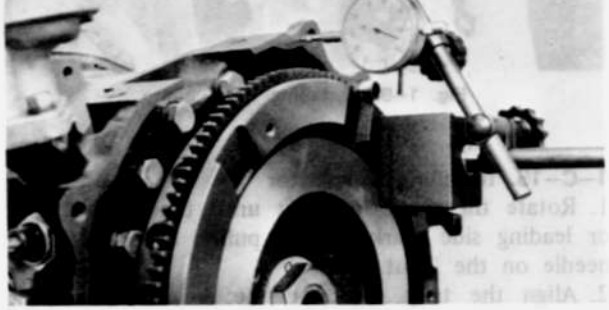

Fig. 1–85 Checking end play

If the end play is more than **0.09 mm (0.0035 in)**, adjust it by grinding the spacer on a surface plate using an emery paper or replace the spacer. And then recheck the end play in the same manner as above.



Fig. 1–86 Adjusting spacer

Note :
(1) If the end play is below the specified amount, the spacer thickness is too small. If the end play is above the specified amount, the spacer thickness is too big.
(2) The spacers are available in the following thicknesses :

Identification Mark	Thickness
X	8.08 ± 0.01 mm (0.3181 ± 0.0004 in)
Y	8.04 ± 0.01 mm (0.3165 ± 0.0004 in)
V	8.02 ± 0.01 mm (0.3158 ± 0.0004 in)
Z	8.00 ± 0.01 mm (0.3150 ± 0.0004 in)



Fig. 1–87 Placing "O" ring

5. Place the gasket and front cover on the front housing, and tighten the attaching bolts.



Fig. 1–88 Installing front cover

6. Apply engine lubricant onto the oil seal in the front cover.
7. Install the eccentric shaft pulley onto the shaft and tighten the pulley bolt to 8.5 m-kg (60 ft-lb).

1–C–13. Installing Oil Strainer and Oil Pan

1. Turn the engine on the work stand so that the bottom of the engine is up.
2. Cut off the excess gasket on the front cover along the mounting surface of the oil pan.

3. Place the oil strainer gasket and strainer on the front housing and tighten the attaching bolts.

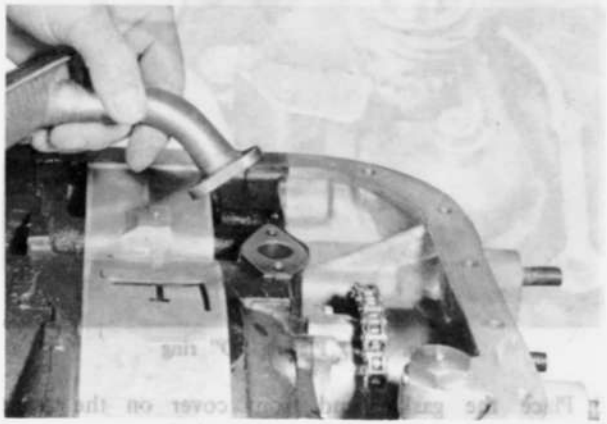

Fig. 1–90 Installing oil strainer

4. Apply the sealing agent onto the joint surfaces of each housing.

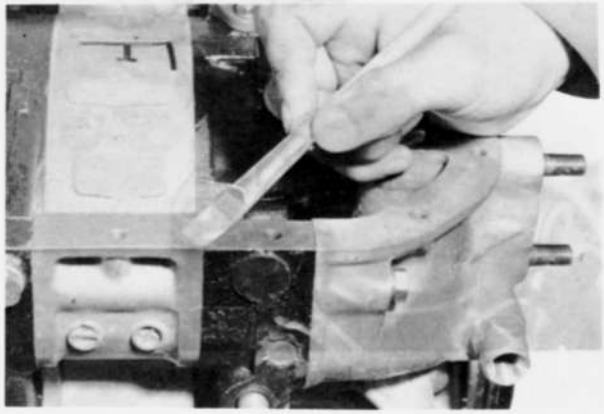

Fig. 1–91 Applying sealing agent

5. Place the gasket and oil pan in position.
6. Insert the bolts through the stiffeners, and tighten the bolts little by little in turn until the torque becomes 0.55 m-kg (3.5 ft-lb) evenly.

1–C–14. Installing Water Pump

1. Turn the engine on the work stand so that the top of the engine is up.



Fig. 1–92 Installing water pump

1–C–15. Installing Distributor

1. Rotate the eccentric shaft until the yellow mark or leading side mark on the pulley aligns with the needle on the front cover.
2. Align the tally mark on the distributor housing and driven gear as shown in Fig. 1–93.

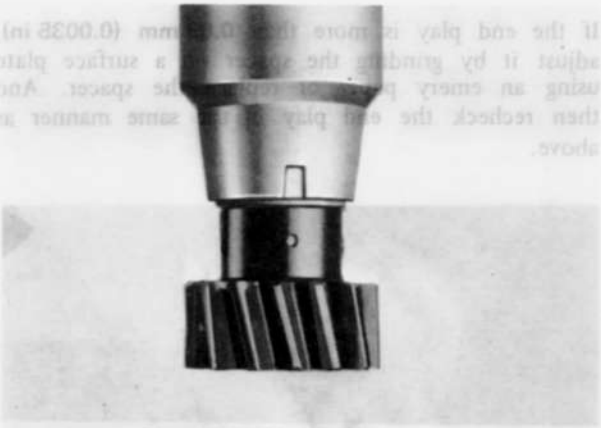

Fig. 1–93 Aligning tally mark

3. Insert the distributor so that the distributor lock bolt is located in the center of the slit, and engage the gears.

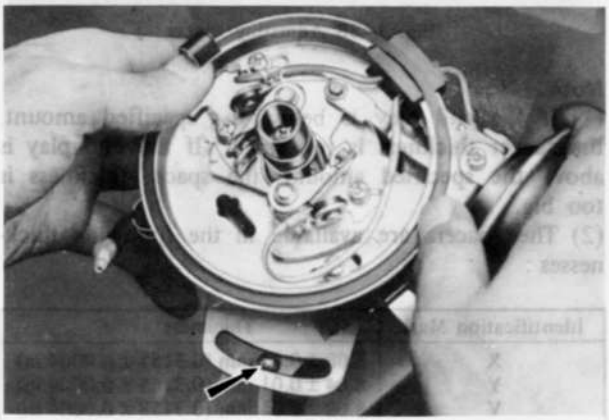

Fig. 1–94 Installing distributor

1–C–17. Installing Intake Manifold

1. Place the carburetor and intake manifold assembly, with the gaskets in position and tighten the attaching nuts.



Fig. 1–95 Installing intake manifold assembly

2. Connect the oil tubes, vacuum tube and metering oil pump connecting rod with the carburetor.
3. Install the deceleration valve and connect the vacuum hoses, air hoses and wires.

1–C–18. Installing Alternator and Air Pump

1. Place the alternator to the bracket with the bolt, and check the clearance Ⓐ as shown in Fig. 1–96.

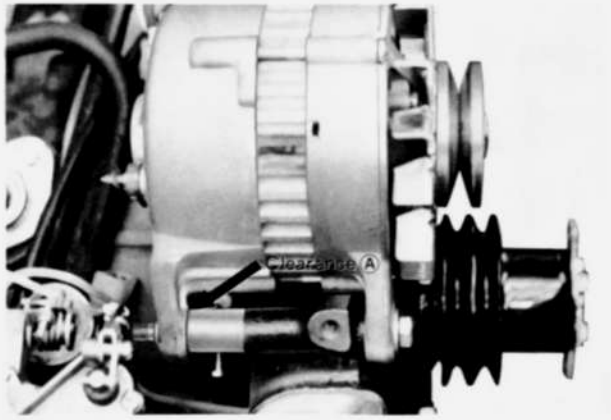

Fig. 1–96 Adjusting alternator fitting

tighten the bolts and nuts.

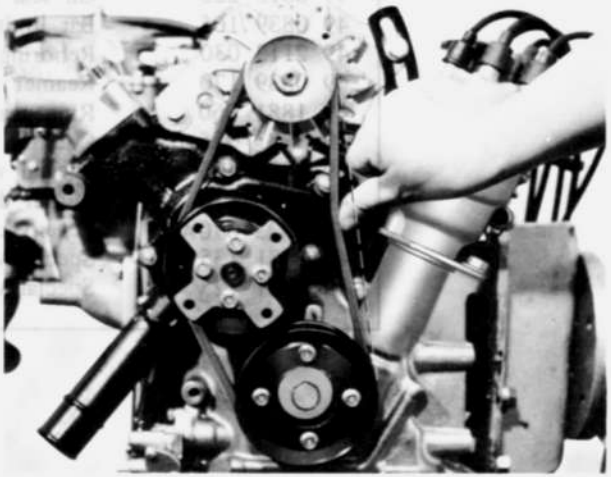

Fig. 1–97 Adjusting alternator belt

4. Install the air pump with the attaching bar and bolts. Fit the "V" belt.
5. To adjust the "V" belt tension, push the "V" belt with about 10 kg (22 lb) as shown in Fig. 1–98. The belt deflection should be **10 mm (0.39 in)**. On the new belt, it should be **8 mm (0.31 in)**. After adjusting, tighten the bolts and nuts.



Fig. 1–98 Adjusting air pump belt

6. Before removing the engine from the work stand, install the engine hanger bracket to the front cover.

49 0813 240	Rotor bearing replacer
49 0813 225	Oil seal remover
49 0839 165	Bar limit gauge (for corner seal groove)
49 2113 030	Reboring jig (for corner seal groove)
49 0839 170	Reamer (for corner seal groove)
49 1881 060	Ring gear brake
49 1881 055	Counter weight brake
49 0877 435	Special wrench (for automatic transmission)
49 0813 310	Clutch disk arbor
49 0823 070A	Eccentric shaft bearing replacer
49 1881 135	Special wrench (for P.C.V. valve)
49 1881 125	Special wrench (for thermal reactor)

DESCRIPTION ..... 1A : 2
1A–A. EXHAUST EMISSION CONTROL SYSTEM ..... 1A : 2
1A–A–1. Air Injection and Thermal Reactor System ..... 1A : 2
a. Air pump ..... 1A : 3
b. Check valve ..... 1A : 3
c. Air injection nozzles ..... 1A : 3
d. Air control valve ..... 1A : 3
e. Thermal reactor ..... 1A : 5
1A–A–2. Ignition and Air Flow Control System ..... 1A : 5
a. Thermosensor ..... 1A : 6
b. Thermodetector ..... 1A : 6
c. Control unit ..... 1A : 7
d. Idle switch ..... 1A : 8
1A–A–3. Additional Air Control System ..... 1A : 8
a. Deceleration control valve .. 1A : 8
b. Altitude compensator ..... 1A : 9
1A–A–4. Kick-down Control System (For automatic transmission only) ..... 1A . 10
a. Water temperature switch ... 1A : 11
b. Choke switch (Semi-automatic choke system .... 1A : 11
1A–B. CRANKCASE EMISSION CONTROL SYSTEM (VENTILATION SYSTEM) ... 1A : 11
1A–B–1. Ventilation Valve ..... 1A : 11
1A–C. EVAPORATIVE EMISSION CONTROL SYSTEM ..... 1A : 12
1A–C–1. Charcoal Canister ..... 1A : 12
1A–C–2. Condense Tank ..... 1A : 13
1A–C–3. Check Valve ..... 1A : 13
1A–D. PROTECTIVE SYSTEM ..... 1A : 14
1A–D–1. Heat Hazard Sensor and Heat Hazard Warning Lamp ..... 1A : 14
1A–E. MAINTENANCE SCHEDULE ..... 1A : 15
1A–E–1. Air Pump ..... 1A : 15
1A–E–2. Check Valve (Air injection system) ..... 1A : 15
1A–E–3. Thermal Reactor ..... 1A : 15
1A–E–4. Air Control Valve ..... 1A : 16
1A–E–5. Thermosensor ..... 1A : 16
1A–E–6. Thermodetector ..... 1A : 17
1A–E–7. Control Unit ..... 1A : 17
1A–E–8. Deceleration Control Valve ..... 1A . 18
1A–E–9. Altitude Compensator ..... 1A : 19
1A–E–10. Water Temperature Switch ..... 1A . 20
1A–E–11. Idle Switch ..... 1A : 20
1A–E–12. Choke Switch (For semi-automatic choke system) ... 1A : 21
1A–E–13. Ventilation Valve ..... 1A : 21
1A–E–14. Evaporative Line ..... 1A : 21
1A–E–15. Charcoal Canister ..... 1A : 22
1A–E–16. Condense Tank ..... 1A : 22
1A–E–17. Check Valve (Evaporative emission control system) ... 1A : 22
1A–E–18. Heat Hazard Warning System ..... 1A : 22
1A–E–19. Hoses and Tubes (All systems) ..... 1A : 23
1A–F. TROUBLE SHOOTING ..... 1A . 24
SPECIAL TOOLS ..... 1A : 29

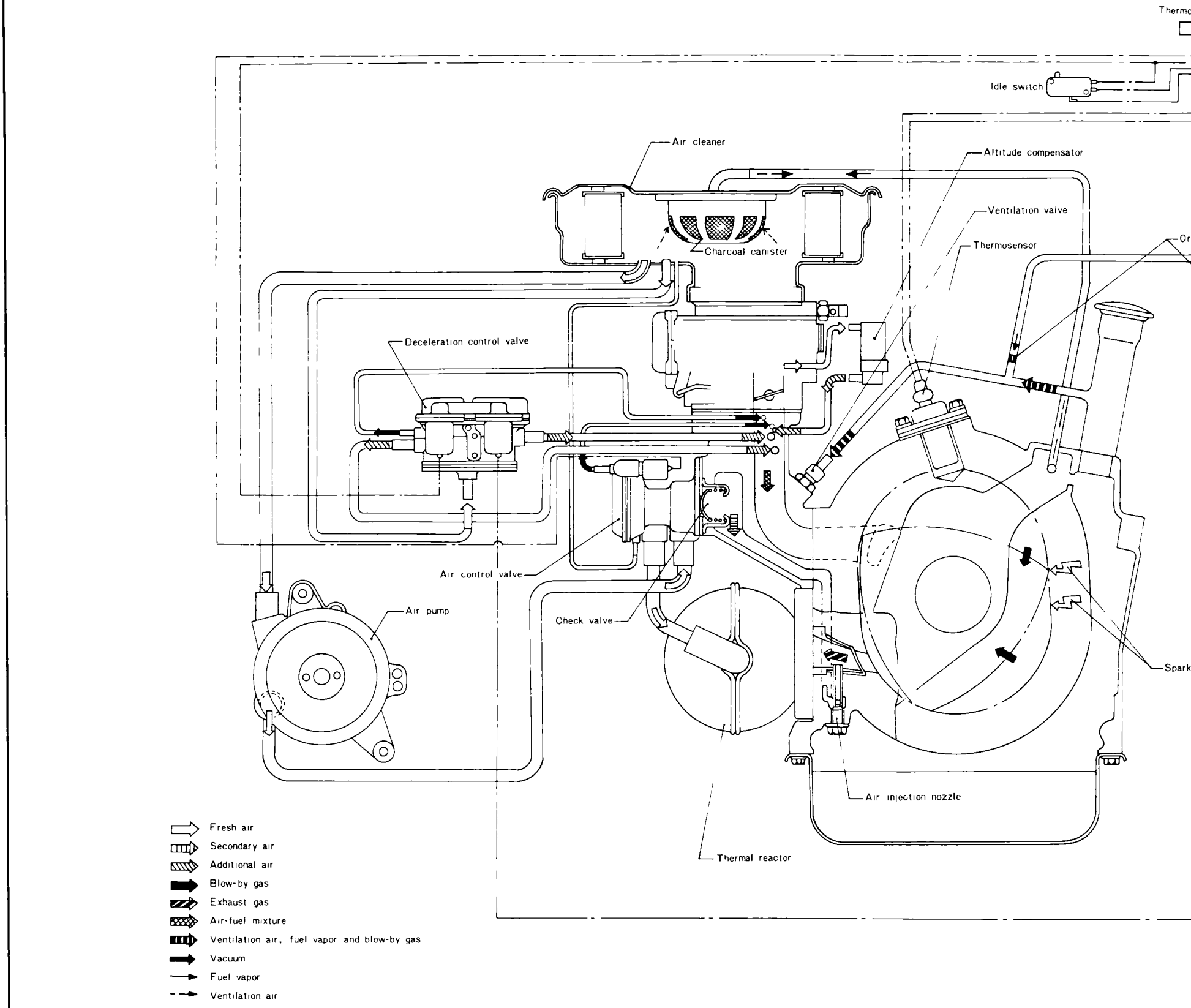

Fig. 1A–1 Emission control system

1A–A–1. Air Injection and Thermal Reactor System and Secondary Air Control System

The air injection and thermal reactor system, consisting of a thermal reactor, an air pump, a check valve, air injection nozzles and an air control valve, injects into the exhaust ports secondary air necessary for oxidation

cold and 3,400 rpm when engine is hot) – operation of ignition and air flow control system

2. When the engine speed is over 1,200 rpm during deceleration (1,400 rpm in case of automatic transmission) – operation of ignition and air flow control system
3. When running under full load (throttle valve is nearly wide open)
4. When the floor temperature is over approximately

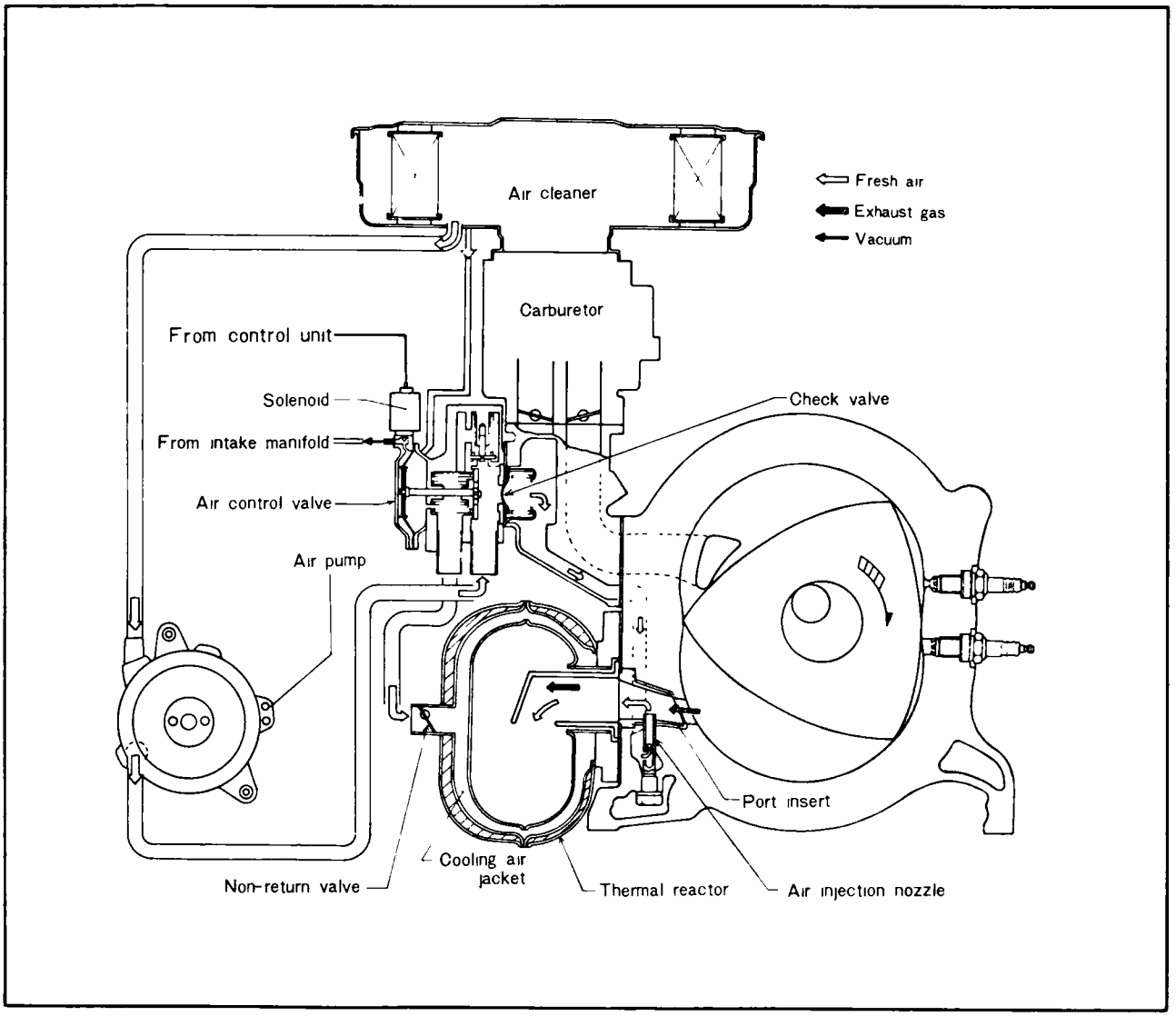

Fig. 1A–2 Air injection and thermal reactor system



Fig. 1A–3 Air pump

b. Check valve

The check valve opens and closes according to the front and rear rotor housings. The secondary air channeled via the air pump and the check valve is injected through the nozzles into the exhaust ports adjacent to the thermal reactor.

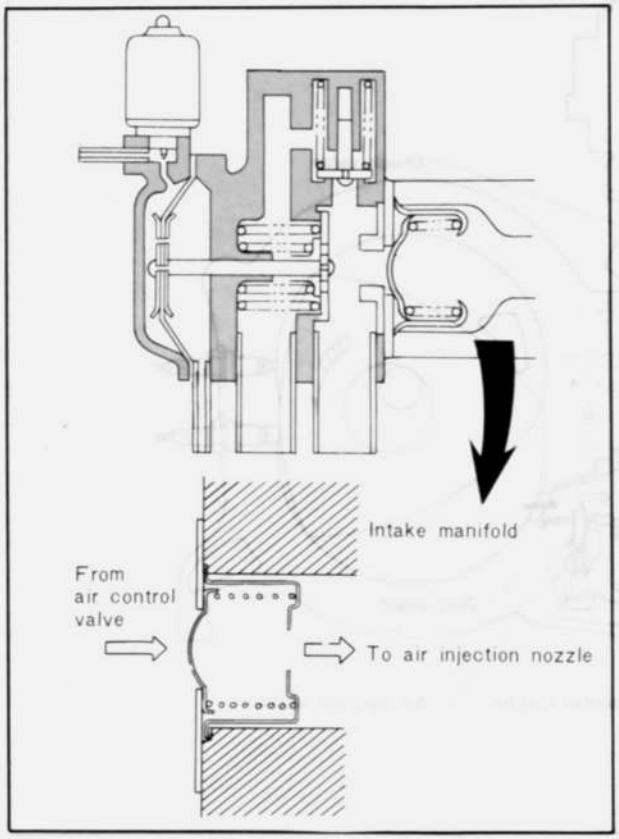

Fig. 1A–4 Check valve

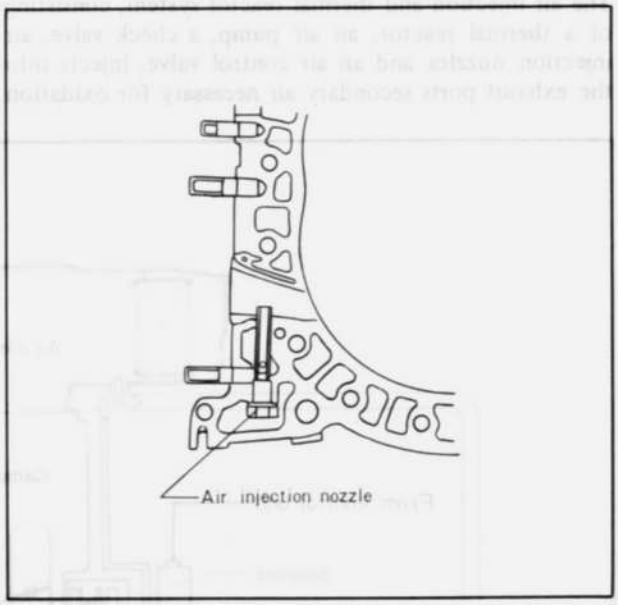

Fig. 1A–5 Air injection nozzle

d. Air control valve

The air control valve, consisting of an air cut valve, a No. 1 relief valve and a No. 2 relief valve, has the following functions.

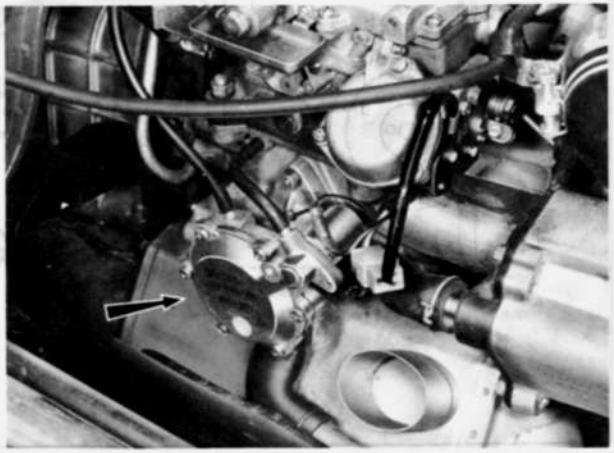

Fig. 1A–6 Air control valve

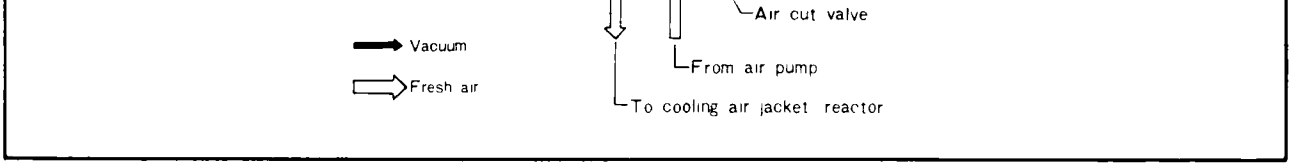

Fig. 1A–7 Air control valve cross section

1. When the air cut valve is not operating, it becomes the passage of the secondary air from the air pump into the exhaust ports through the check valve and air injection nozzles. – operation of air control vlave –

2. When the engine speed is over 4,000 rpm (in case of automatic transmission, 3,400 rpm when the engine is hot and 4,800 rpm when it is cold), the supply of the secondary air into the exhaust ports stops and the secondary air (cooling air) flows into the thermal reactor cooling air jacket to cool the reactor to properly maintain the temperature of the reactor. – operation of air cut valve –

3. When the engine speed is over 1,200 rpm during deceleration (1,400 rpm in case of automatic transmission), supply of the secondary air into the exhaust ports stops and the secondary air (cooling air) flows to the thermal reactor cooling air jacket. The secondary air cutting in this instance prevents excessive supply of the secondary air into the exhaust ports and deteriorated reaction efficiency of the exhaust gas in the reactor. – operation of air cut valve –

4. When the air pressure in the air injection system exceeds, the supply of the secondary air into the exhaust ports is adjusted properly and the excessive secondary air (cooling air) is relieved to the thermal reactor cooling air jacket to cool the reactor. – operation of No. 1 relief valve and No. 2 relief valve –

The air cut vlave opens and closes according to the difference of pressure between the vacuum chamber and the air chamber. This valve, which is connected to the diaphragm, is closed during normal operation by the intake manifold vacuum.

When the engine speed exceeds 4,000 rpm (in case of automatic transmission 3,400 rpm at warm condition, 4,800 rpm at cold condition), the control unit actuates the solenoid to close the vacuum sensing way. This equalizes the pressures in the two chambers, the spring force causes the valve to open and the air in the air injection system is channeled to the thermal reactor cooling air jacket before being expelled to the atmosphere. At the same time, the air cut valve closes the secondary air passage to cut secondary air supply into the exhaust ports.

During deceleration with the accelerator pedal released completely when the engine speed is over 1,200 rpm (1,400 rpm in case of automatic transmission), the solenoid of the air control valve closes the vacuum sensing way between the intake manifold and the air control valve by means of the low speed switch in the control unit and the idle switch. Consequently, the spring force causes the valve to open and the air in the air injection system is channeled to the thermal reactor cooling air jacket before being expelled to the atmosphere. At the same time, the air cut valve closes the secondary air passage to cut secondary air supply into the exhaust ports.

When the engine is running with full load, the difference of pressure between the vacuum chamber and the air chamber of the air control valve diminishes because the intake manifold vacuum which is led to the vacuum chamber decreases. Consequently, the spring force causes the valve to open and the air in the air injection system is channeled to the thermal reactor cooling air jacket before being expelled to the atmosphere. At the same time, the air cut valve closes the secondary air passage to cut secondary air supply into the exhaust ports.

The No. 1 relief valve is opened and closed in accordance with air pressure in the air injection system and the force of the return spring. When the air pressure in the air injection system increases, the No. 1 relief valve is opened and the air is led to the thermal reactor cooling air jacket to cool it before being expelled to the atmosphere, thus the secondary air flow rate being controlled. When the air pressure decreases, the spring closes the valve.

The No. 2 relief valve is opened and closed in accordance with air pressure in the air injection system and the force of the return spring. When the air pressure in the air injection system exceeds the specified value, the No. 2 relief valve is opened and the air is led to

reactor is attached at the air inlet of the reactor.

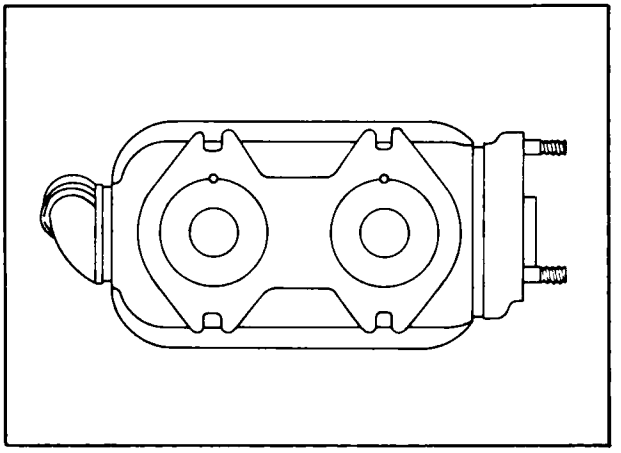

Fig. 1A–8 Thermal reactor



Fig. 1A–9 Cooling air circuit

1A–A–2. Ignition and Air Flow Control System

The ignition and air flow control system consists of a thermosensor, a thermodetector, an idle switch, and a control unit including high speed switch, low speed switch, thermoswitch and trailing ignition switch. This system ignites and cuts the trailing spark plug to suit engine temperature and engine speed in order to enhance the reactivity of the thermal reactor when the engine is cold. This system has an additional function of regulating the air control vlave and the deceleration control valve.

The operating time of the ignition and air flow control system is shown by the following table.

Secondary Air Injection Cut

Manual transmission

Operating time	Parts that operate coordinately
When engine speed is over 4,000 rpm	solenoid of air control valve, air cut valve, high speed switch
During deceleration when engine speed is over 1,200 rpm	solenoid of air control valve, air cut valve, low speed switch, idle switch
When running under full load (throttle valve is nearly wide open)	air cut valve
When floor temperature is over approximately 120°C (248°F) (Protective system)	heat hazard sensor, control unit, solenoid of air control valve, air cut valve

Automatic transmission

Operating time	Parts that operate coordinately
When engine speed is over the specified value 4,800 rpm when cold 3,400 rpm when hot	solenoid of air control valve, air cut valve, high speed switch, thermosensor, thermoswitch (the last two parts when engine is hot)
During deceleration when engine speed is 1,400 rpm	solenoid of air control valve, air cut valve, low speed switch, idle switch
When running with full load (throttle valve is nearly wide open)	air cut valve
When floor temperature is over approximately 120°C (248°F) (Protective system)	heat hazard sensor, control unit, solenoid of air control valve, air cut valve

Automatic transmission

Operating time	Parts that operate coordinately
1. Trailing spark plug does not ignite. (Only leading spark plug ignites.)	
During cruising and acceleration (deceleration excluded) when engine speed is 1,400 ~ 4,800 rpm at cold condition	low speed switch, high speed switch, idle switch, trailing ignition switch
2. Trailing spark plug ignites. (Both leading and trailing spark plugs ignite.)	
When engine is hot	thermosensor, thermoswitch, trailing ignition switch
During cruising, acceleration and deceleration when engine speed is below 1,400 rpm or over 4,800 rpm at cold condition	low speed switch, high speed switch, trailing ignition switch, idle switch

a. Thermosensor

The thermosensor, which is placed in the cooling water passage, detects the water temperature and sends the signal to the control unit.

When the water temperature rises to the specified value, the thermoswitch and the trailing ignition switch in the control unit close by means of the thermosensor. The electric current then flows to the trailing side ignition coil and the trailing spark plug is ignited. In case of automatic transmission, the opening/closing time of the high speed switch in the control unit becomes from 4,800 rpm when the engine is cold to 3,400 rpm when it is hot. Consequently, when the engine speed is over 3,400 rpm at hot condition, the high speed switch closes and the electric current flows to the solenoid of the air control valve and the solenoid cuts the vacuum sensing way between the intake manifold and the air chamber of the air control valve. The air cut valve of the air control valve then stops the supply of the secondary air into the exhaust ports by means of the spring force. The secondary air flows into the thermal reactor cooling air jacket to cool the reactor.

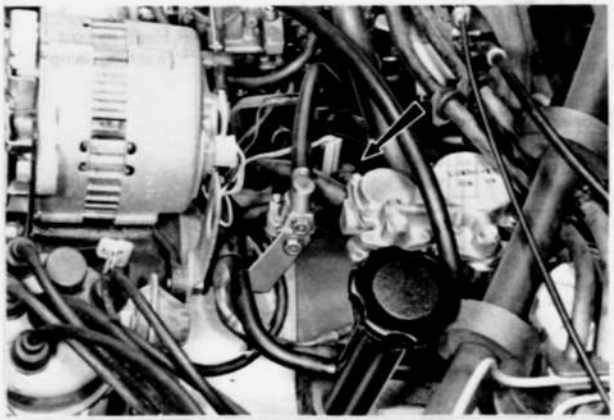

Fig. 1A–10 Thermosensor

b. Thermodetector

The thermodetector which detects the ambient temperature corrects the operating temperature of the thermosensor to resume the ignition of the trailing spark plug after the minimum time required for the thermal reactor warm-up.



Fig. 1A–11 Thermodetector



Fig. 1A–12 Control unit

1. In the whole operating range at hot condition, the thermoswitch and the trailing ignition switch close and the electric current flows to the trailing side ignition coil and the trailing spark plug is ignited. – operation of thermoswitch and trailing ignition switch –

2. When the engine speed is over 3,400 rpm at hot condition, the thermoswitch and the high speed switch close and the electric current flows to the solenoid of the air control valve. Consequently, the solenoid cuts the vacuum sensing way between the intake manifold and the vacuum chamber. This actuated the air cut valve to stop the supply of the secondary air into the exhaust ports and the air flows into the thermal reactor cooling transmission), point (A) of the low speed switch closes and the electric current flows to the idle switch, during deceleration when the accelerator pedal is relieved completely, point (A) of the idle switch closes, and so the electric current from the low speed switch flows to the solenoid of the air control valve. The solenoid then closes the vacuum sensing way between the intake manifold and the air control valve, and this actuates the air cut valve to stop the supply of the secondary air into the exhaust port and the air flows into the thermal reactor cooling air jacket. At the same time, since the electric current to the solenoid of the coasting valve stops, the solenoid opens the atmospheric pressure sensing line. This actuates the coasting valve and the fresh air from the air cleaner enters the intake manifold and prevents afterburn. – operation of low speed switch –

5. When the engine speed is below 1,200 rpm (1,400 rpm in case of automatic transmission), point (B) of the

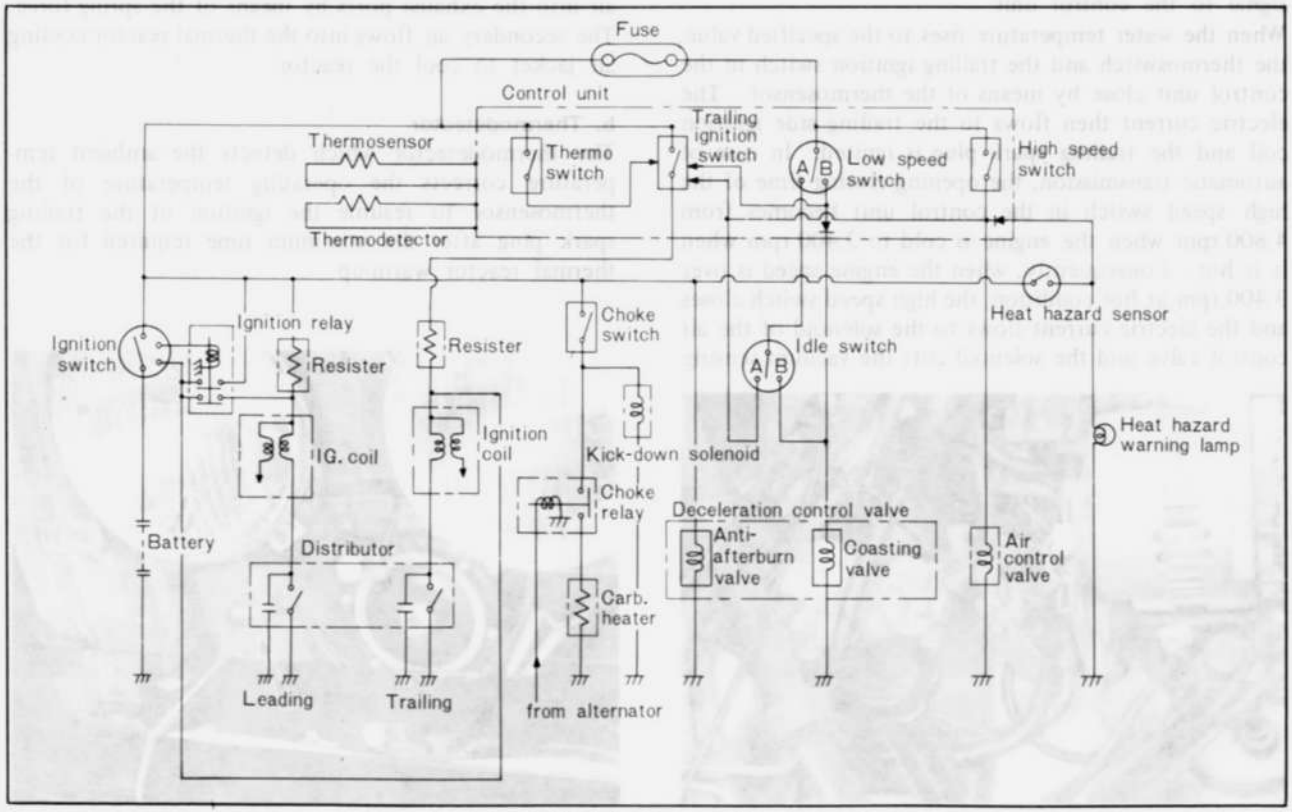

Fig. 1A–13 Electric diagram of control unit



Fig. 1A–14 Idle switch

The functions are as follows. (Refer to electric diagram in Fig. 1A–14)

1. While deceleration (with the accelerator pedal released) when the engine speed is over 1,200 rpm (1,400 rpm in case of automatic transmission), point Ⓐ of the idle switch closes and the electric current flows to the air control valve solenoid from the low speed switch. The solenoid consequently cuts the vacuum sensing way between the intake manifold and the vacuum chamber of the air control valve. This actuates the air cut valve to stop the supply of the secondary air into the exhaust ports and the air flows to the thermal reactor cooling air jacket.
2. At the same time, since the electric current to the solenoid of the coasting valve stops, the solenoid opens the atmospheric pressure sensing line. This actuates the coasting valve and the fresh air from the air cleaner enters the intake manifold and prevents afterburn.
3. When the point Ⓑ of the low speed switch and point Ⓐ of the idle switch are closed, the electric current flows to the trailing side ignition coil through the trailing ignition switch, and ignites the trailing spark plug.

1A–A–3. Additional Air Control System

The additional air control system consists of the deceleration control valve and the altitude compensator. During deceleration and gear shifting and immediately after turning off the ignition switch, the additional air control system sends the fresh air from the air cleaner to the intake manifold and adjusts the excessively rich fuel-air mixture preventing afterburn and reducing emissions during deceleration. (operation of deceleration control valve) In order to adjust the excessively rich fuel-air mixture in running in the highland area, the air is supplied to the intake manifold to improve the



Fig. 1A–15 Deceleration control valve

1. When the engine speed is over 1,200 rpm (1,400 rpm in case of automatic transmission), and during deceleration when the accelerator pedal is relieved completely, the deceleration control valve sends the fresh air from the air cleaner to the intake manifold. – operation of coasting valve –
2. Immediately after deceleration and during gear shifting, the deceleration control valve sends the fresh air from the air cleaner to the intake manifold. – operation of anti-afterburn valve –
3. Immediately after turning off the ignition switch, the deceleration control valve sends the fresh air from the air cleaner to the intake manifold. – operation of anti-afterburn valve and coasting valve –

The anti-afterburn valve operates by pressure difference between the vacuum chamber and the air chamber, and the spring force. The balance hole in the diaphragm connects the vacuum chamber and the air chamber to control the duration of valve opening.

The intake manifold vacuum rises during deceleration and gear shifting, and the pressure difference between the two chambers opens the valve connected to the diaphragm, so that fresh air from the air cleaner is led into the intake manifold to correct overrich mixture, thus preventing afterburn. When the balance hole equalizes pressure difference, the valve is closed to shut off air. When the ignition switch is turned on, the solenoid shuts the atmospheric pressure sensing line leading to the air chamber. When the engine is switched off the solenoid opens the sensing line, and, due to the resulting pressure difference between the vacuum chamber and the air chamber, the valve connected to the diaphragm is opened, and fresh air is led from the air cleaner into the intake manifold to prevent afterburn.

The coasting valve operates by pressure difference between the vacuum chamber and the air chamber, and the spring force. The rise of intake manifold vacuum

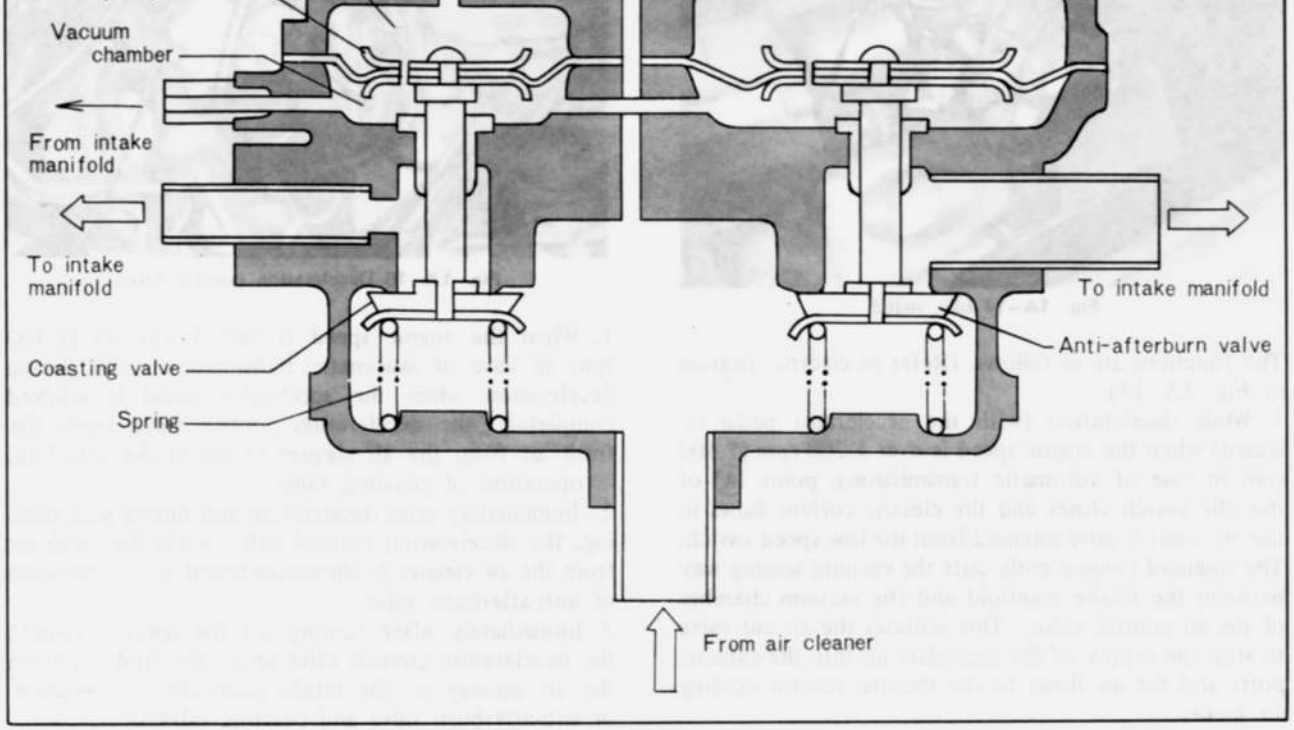

Fig. 1A–16 Deceleration control valve cross section

during deceleration and gear shifting causes the valve to open, and air from the air cleaner is supplied into the intake manifold to prevent afterburn and to keep the thermal reactor operating.

During deceleration when the engine speed is above 1,200 rpm (1,400 rpm for automatic transmission), the control unit and idle switch command solenoid to open the atmospheric pressure sensing line leading to the air chamber, and, due to resulting pressure difference between the vacuum chamber and the air chamber, the valve connected to the diaphragm is opened, and fresh air is led from the air cleaner into the intake manifold to prevent afterburn. When the ignition switch is turned on, the solenoid shuts the atmospheric pressure sensing line leading to the air chamber. When the engine is switched off the solenoid opens the sensing line, and, due to the resulting pressure difference between the vacuum chamber and the air chamber, the valve connected to the diaphragm is opened, and fresh air is led from the air cleaner into the intake manifold to prevent afterburn.

b. Altitude compensator

In order to prevent the fuel-air mixture from becoming excessively rich because of the low atmospheric pressure in the highland area, the altitude compensator sends the air to the intake manifold and adjusts the fuel-air mixture.

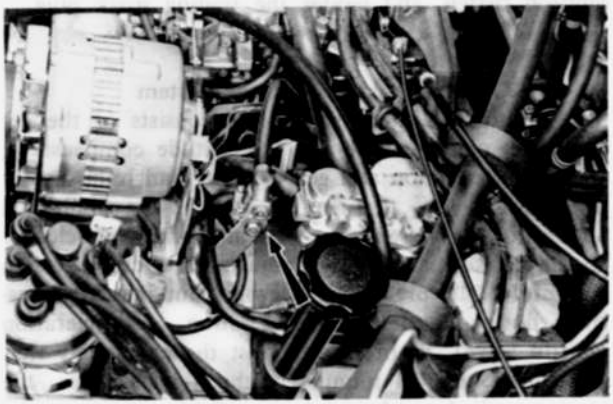

Fig. 1A–17 Altitude compensator

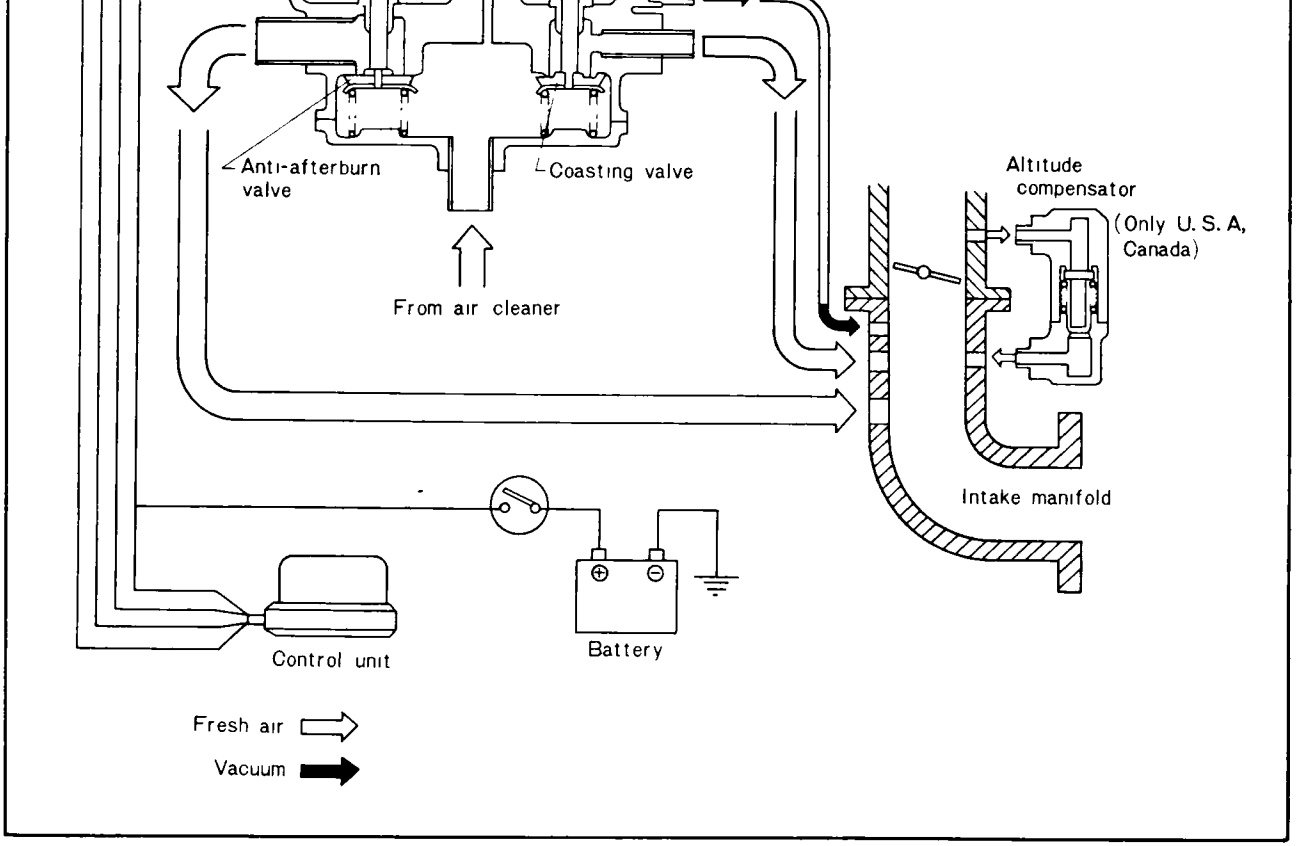

Fig. 1A–18 Additional air control system

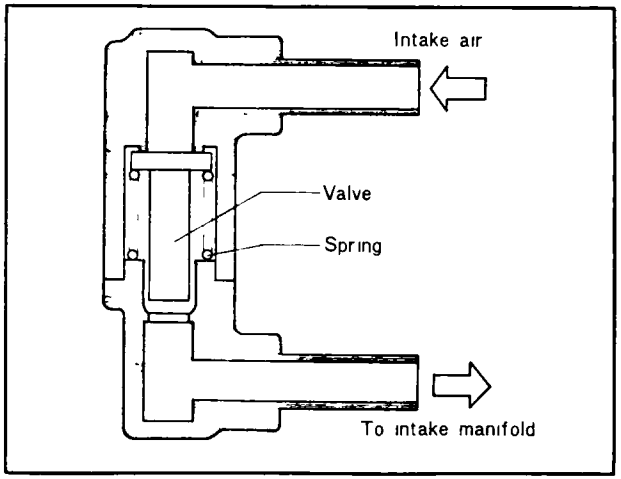

Fig. 1A–19 Altitude compensator cross section

In the highland area, especially during idling, part of the inhaled air is controlled by the altitude compensator and enters the intake manifold directly. This enables the overrich mixture to be properly adjusted. The hoses for altitude compensator are colored in Blue for identification.

1A–A–4. Kick-down Control System (For automatic transmission only)

As well as the normal kick-down operation for the transmission shifting, the kick-down solenoid is energized to cause the kick-down when the choke system is in operating condition (the choke switch is closed) for semi-automatic choke system or when the engine water temperature is cold (the water temperature switch is closed) for full-automatic choke system, in order to



Fig. 1A–20 Water temperature switch

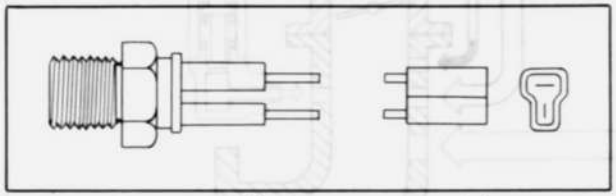

Fig. 1A–21 Water temperature switch

b. Choke switch (Semi-automatic choke system)

The choke switch is equipped in order to detect whether the choke knob is pulled or not and it sends the signal to the kick-down solenoid. The choke switch has the function to operate the kick-down solenoid when the choke knob is pulled.



Fig. 1A–22 Choke switch

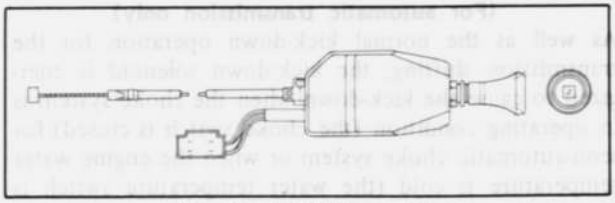

Fig. 1A–23 Choke switch

the engine.

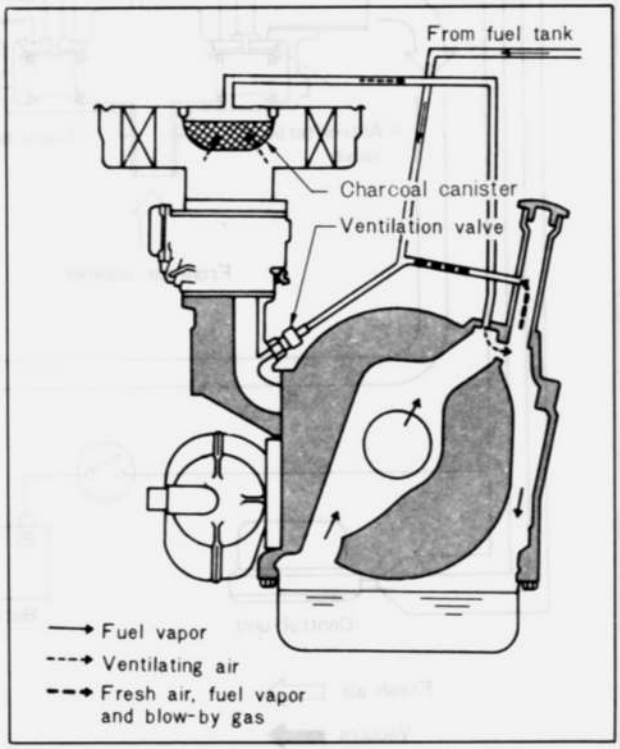

Fig. 1A–24 Crankcase emission control system

1A–B–1. Ventilation Valve

The ventilation valve is operated by the difference of the pressure between the intake manifold and engine air space. When there is no difference of the pressure (engine at stall condition) or the pressure of the intake manifold is more than that of the engine air space

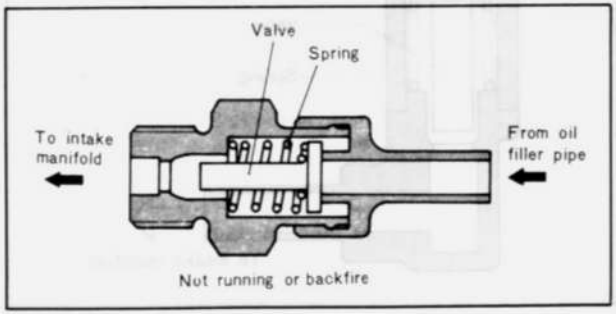

Fig. 1A–25 Ventilation valve operation (1)

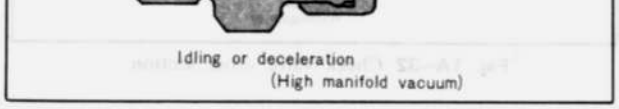

Fig. 1A–26 Ventilation valve operation (2)

When the difference is small (at normal operation), the valve is balanced by the tension of valve spring and intake manifold vacuum. This increases the flow of blow-by gas. (Fig. 1A–28)

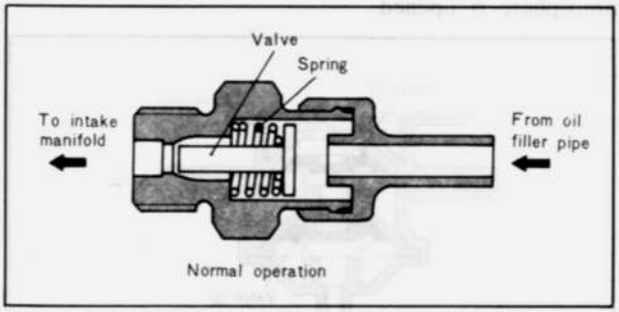

Fig. 1A–27 Ventilation valve operation (3)

into the intake manifold together with the full vapor trapped in the air space of engine and blow-by gas to be burned up in the combustion chamber.
The fuel vapor from the condense tank when the engine is running is directly sucked into the intake manifold via the ventilation valve to be burned up in the combustion chamber.
All connecting hoses in an evaporative emission control system are colored in Red for identification as same as ventilation hoses.

1A–C–1. Charcoal Canister

While the engine is stopped, some of the fuel vapor generated in the fuel tank does not condense in the condense tank and, when channeled into the engine air space without being fed back to the fuel tank, still cannot be trapped in the air space. Such vapor is absorbed by the charcoal canister.
While the engine is running, the fuel vapor trapped in the charcoal canister is released into the intake manifold together with fresh air from the air cleaner and burned

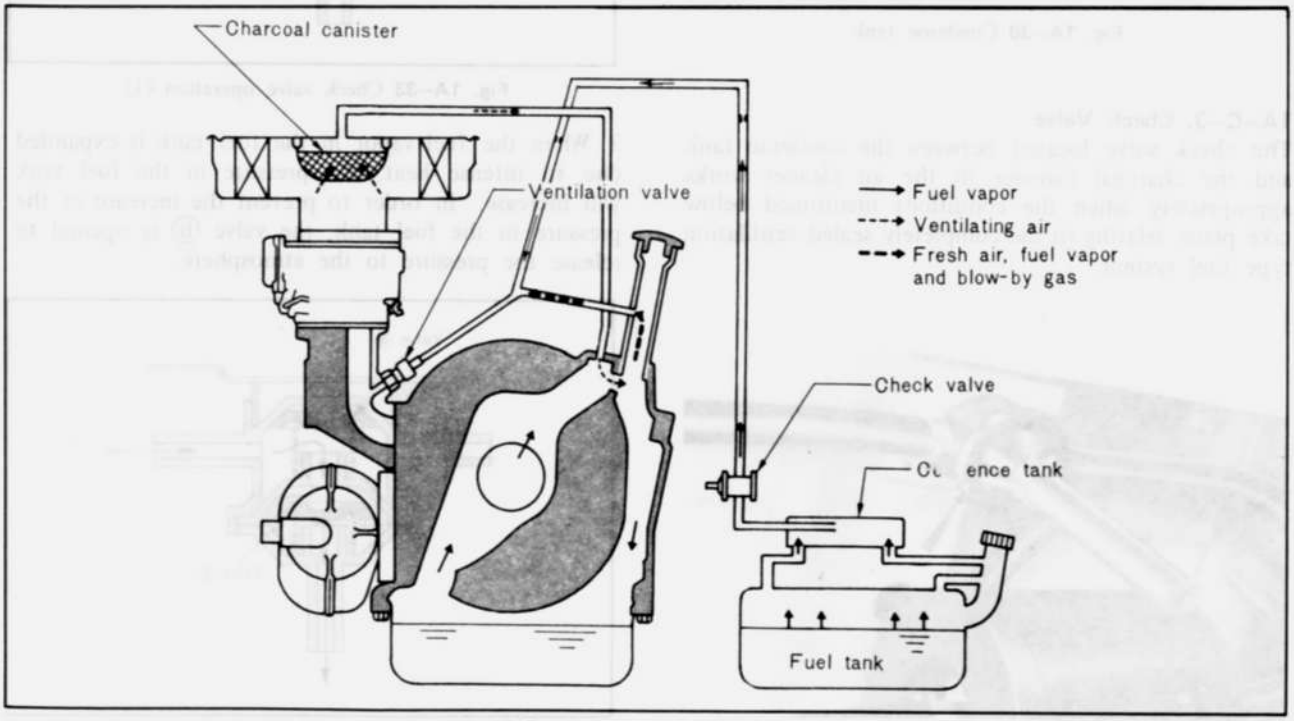

Fig. 1A–28 Evaporative emission control system

up in the engine. The canister is always being purged by fresh air during engine operation.

1A–C–2. Condense Tank

The condense tank condenses the fuel vapor coming from the fuel tank and returns it to the fuel tank.

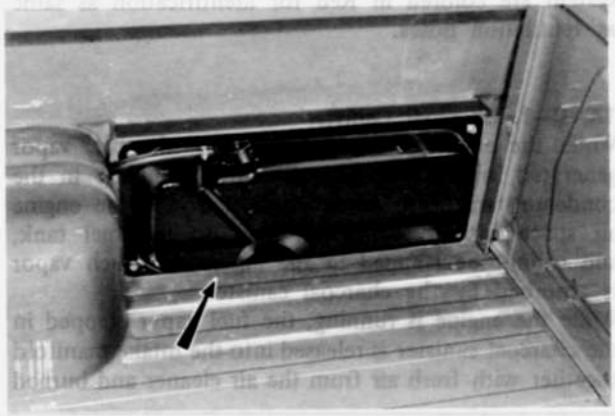

Fig. 1A–30 Condense tank

1A–C–3. Check Valve

The check valve located between the condense tank and the charcoal canister in the air cleaner works appropriately when the conditions mentioned below take place, relating to the completely sealed ventilation type fuel system.

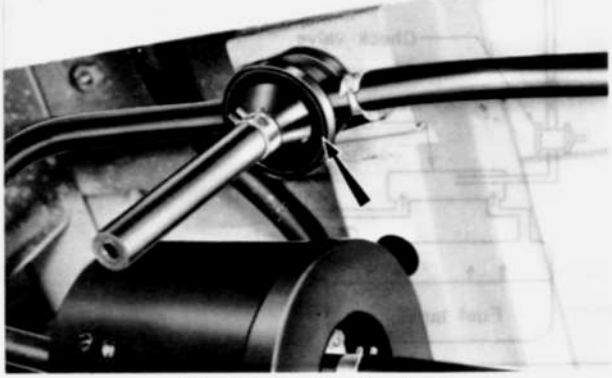

Fig. 1A–31 Check valve

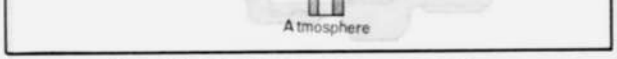

Fig. 1A–32 Check valve cross section

2. If the hose between the check valve and the canister is clogged or frozen, system would not be ventilated at all and as the result, the fuel supply to the engine is cut off. Therefore, when the evaporative line is clogged, the valve ⓐ is opened by the negative pressure in the fuel tank and the ventilation passage to the atmosphere is opened.

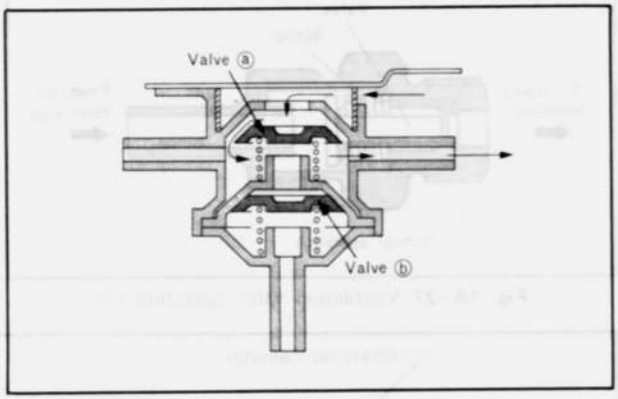

Fig. 1A–33 Check valve operation (1)

3. When the fuel vapor in the fuel tank is expanded due to intense heat, the pressure in the fuel tank will increase. In order to prevent the increase of the pressure in the fuel tank, the valve ⓑ is opened to release the pressure to the atmosphere.

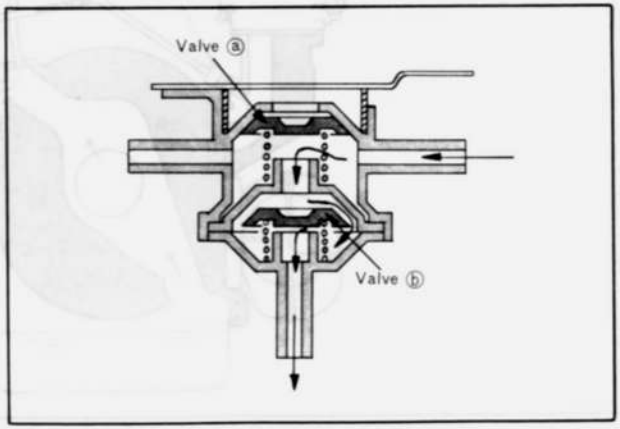

Fig. 1A–34 Check valve operation (2)

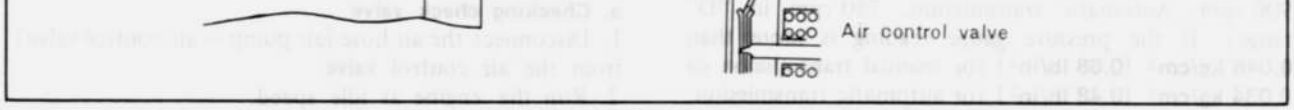

Fig. 1A–35 Protective system

This system consisting of a heat hazard sensor and a heat hazard warning lamp is employed to prevent potential heat hazard to the vehicle due to excessive heat radiation from the exhaust system under specific driving conditions. This system is not operative under a normal driving condition, but it is operative under such a specific driving condition as the engine idle speed is kept raised intentionally for a considerable period so that efficient air conditioning may be obtained while the vehicle is standing.

1A–D–1. Heat Hazard Sensor and Heat Hazard Warning Lamp

When the floor temperature becomes more than 120°C (248°F), the heat hazard sensor becomes operative and the heat hazard warning lamp on the instrument panel lights up. At the same time, the electric current from the heat hazard sensor flows to the solenoid of the air control valve through the control unit. Consequently, the solenoid closes the vacuum sensing way between the intake manifold and the air control valve, and so the air cut valve of the air control valve actuates and stops the supply of the secodnary air into the exhaust ports, which prevents the floor temperature from rising. When the floor temperature becomes lower than the specified value (approximately 120°C), the heat hazard sensor becomes inoperative and the heat hazard lamp goes off and at the same time, the electric current stops flowing to the solenoid of the air control valve, and so the secondary air is injected into the exhaust ports.

The heat hazard sensor is located under the seat as shown in Fig. 1A–37.

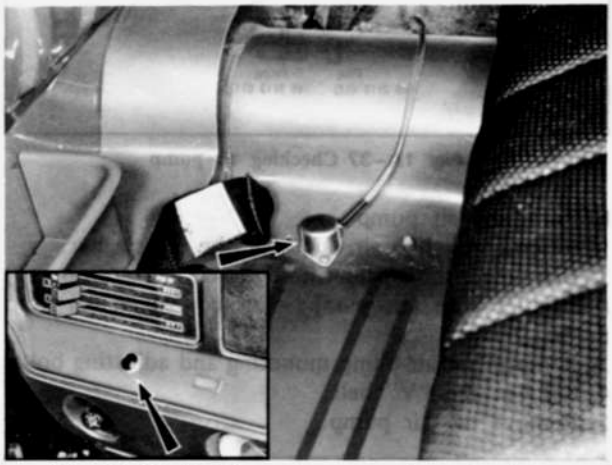

Fig. 1A–36 Heat hazard sensor and warning lamp

900 rpm, Automatic transmission: 750 rpm in "D" range). If the pressure gauge reading is more than **0.048 kg/cm² (0.68 lb/in²)** for manual transmission or **0.034 kg/cm² (0.48 lb/in²)** for automatic transmission, the air pump is normal.

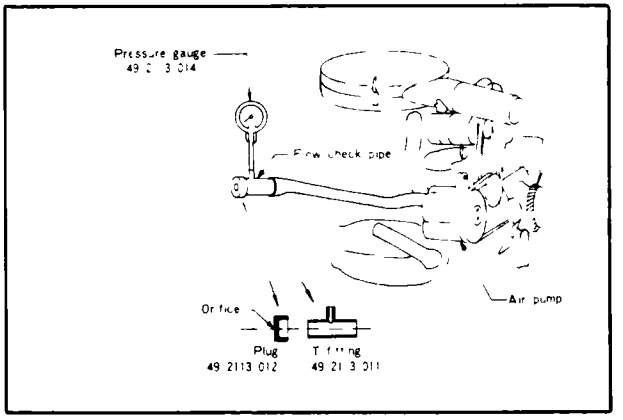

Fig. 1A–37 Checking air pump

b. Removing air pump

1. Remove the hot air duct for the air cleaner.
2. Disconnect the air inlet hose (air cleaner ~ air pump) and outlet hose (air pump ~ air control valve) from the air pump.
3. Remove the air pump mounting and adjusting bolts.
4. Remove the "V" belt.
5. Remove the air pump.

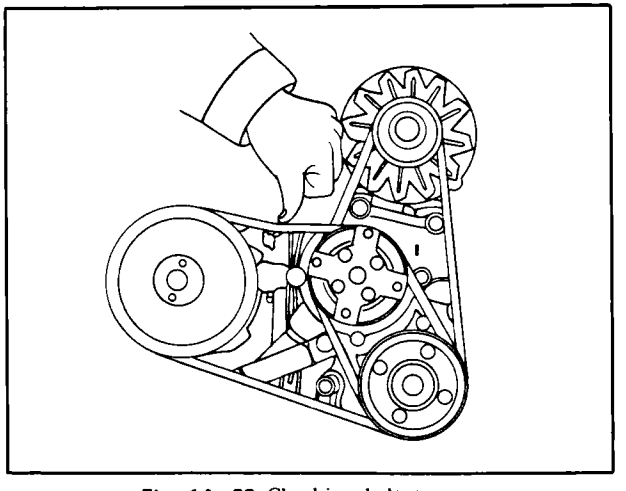

Fig. 1A–38 Checking belt tension

a. Checking check valve

1. Disconnect the air hose (air pump ~ air control valve) from the air control valve.
2. Run the engine at idle speed.
3. Hold a finger over the inlet of the air control valve (the inlet from which the air hose is removed).

If exhaust gas flow is felt, replace the check valve, spring and gasket.

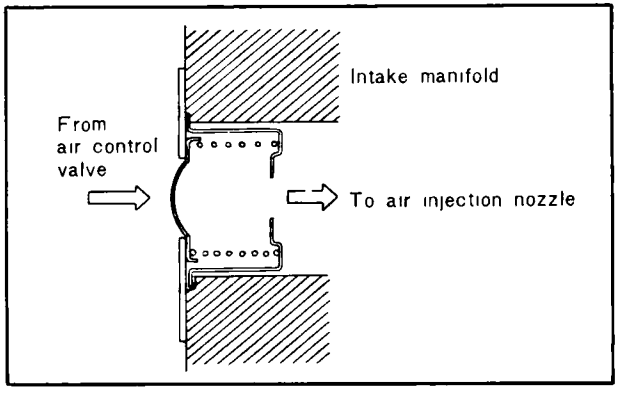

Fig. 1A–39 Check valve

b. Removing check valve

1. Remove the air control valve as described in Par. 1A–E–4.
2. Remove the gasket, valve and spring.

c. Installing check valve

Install the check valve in the reverse sequence.

1A–E–3. Thermal Reactor

a. Checking thermal reactor

1. Check to see that the thermal reactor is not damaged or cracked.

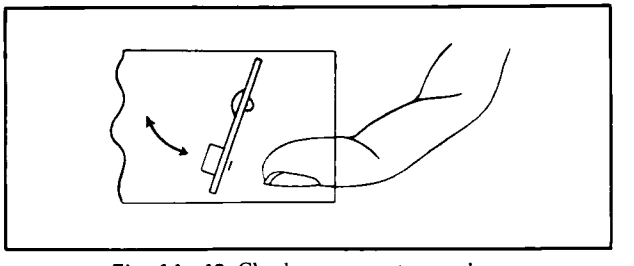

Fig. 1A–40 Checking non-return valve

remove the engine under cover.
6. Remove the nuts attaching the thermal reactor to the engine.
Note: The upper nuts should be removed with the **thermal reactor remover** (49 1881 125).
7. Remove the thermal reactor.

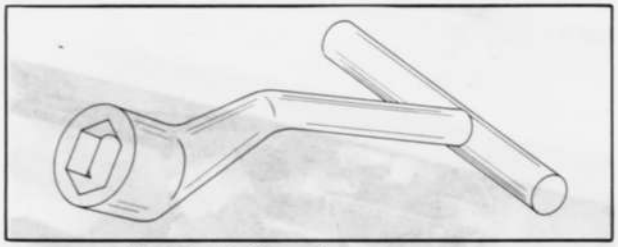

Fig. 1A–41 Thermal reactor remover

1A–E–4. Air Control Valve

a. Checking air control valve

1. Check the air pump according to the procedures in Par. 1A–E–1.
2. Connect the connector of the solenoid terminal to the battery and check the operation of the solenoid. If the clicking sound is audible, the solenoid is normal.
3. Attach the pressure gauge as shown in Fig. 1A–43.
4. Remove the air hose from outlet (A) of the air control valve.
5. Start the engine and keep it running at idle speed (900 rpm for manual transmission, 750 rpm in "D" range for automatic transmission). Check to see that there is no air leak from outlet (A) of the air control valve.

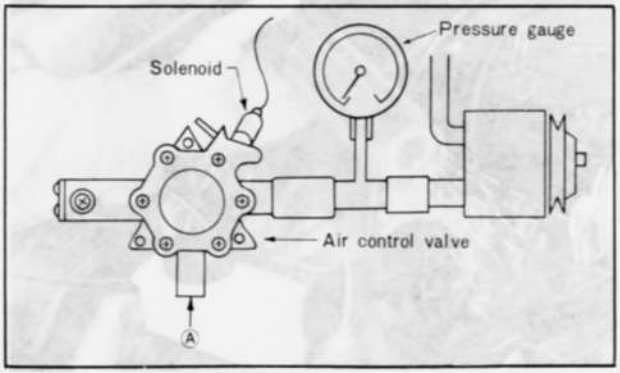

Fig. 1A–42 Checking air control valve

valve incorporated). When the No. 1 relief valve, No. 2 relief valve or the air cut valve is faulty, the air sent from the air pump during idling flows into the air cooling pipe.

b. Removing air control valve

1. Remove the hot air duct for the air cleaner.
2. Disconnect the air hose (air pump ~ air control valve) from the air control valve.
3. Disconnect the cooling air hose (air control valve ~ thermal reactor) from the air control valve.
4. Disconnect the vacuum and atmospheric sensing tubes from the air control valve.
5. Disconnect the lead wire for the air control valve solenoid at the quick disconnect.
6. Remove the air control valve attaching nuts and remove the air control valve.

c. Installing air control valve

Install the air control valve in the reverse sequence.

1A–E–5. Thermosensor

a. Checking thermosensor

1. Make sure that there is no boot breakage.
2. Connect the ohm meter as shown in Fig. 1A–44, and check the resistance. The readings as shown below indicate that the thermosensor is normal;
Over 7 kΩ before warm-up the engine [when ambient and water temperatures are under 30°C (86°F)].

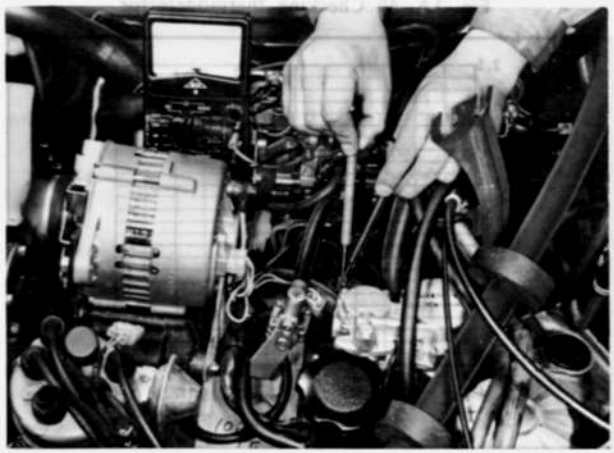

Fig. 1A–43 Checking thermosensor

perature is over 70°C (156°F)].

b. Removing thermosensor

1. Remove the air cleaner.
2. Remove the deceleration control valve and remove the starting motor if necessary.
3. Disconnect the multiple coupler from the thermosensor.
4. Remove the rubber boot from the thermosensor.
5. Remove the nuts attaching the thermosensor to the engine and remove the thermosensor.

c. Installing thermosensor

Install the thermosensor in the reverse sequence.

1A–E–6. Thermodetector



Fig. 1A–45 Checking thermodetector

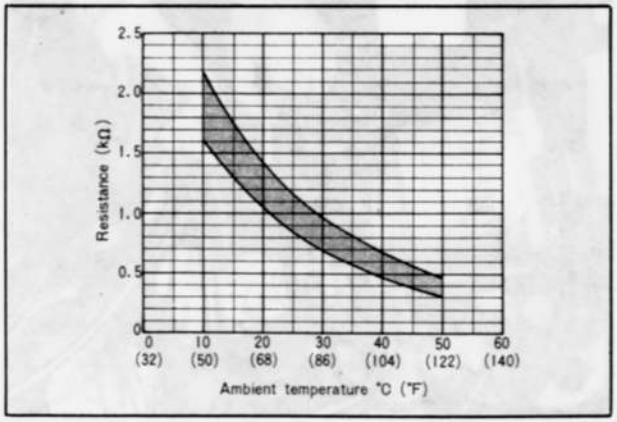

Fig. 1A–46 Resistance of thermodetector

1A–E–7. Control Unit

a. Checking control unit

1. Make sure that the fuse of the control unit is in good condition.

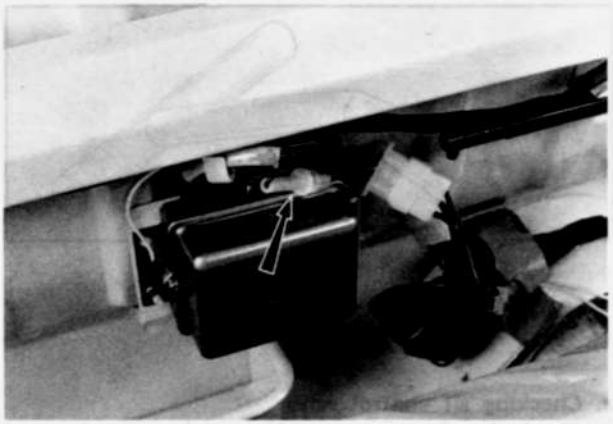

Fig. 1A–47 Checking control unit fuse

2. Disconnect the couplers of thermosensor and idle switch. And check the following points:
1) Connect the timing light to the high tension cord of the trailing side distributor. Check to see that the timing light does not go on when the engine speed is under **3,600 ~ 4,400 rpm** (Automatic transmission: **4,320 ~ 5,280 rpm**), and goes on when the engine speed is raised to more than **3,600 ~ 4,400 rpm** (Automatic transmission: **4,320 ~ 5,280 rpm**).

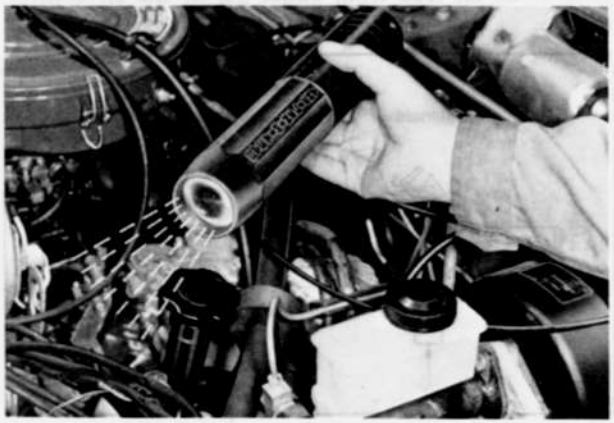

Fig. 1A–48 Checking control unit (1)

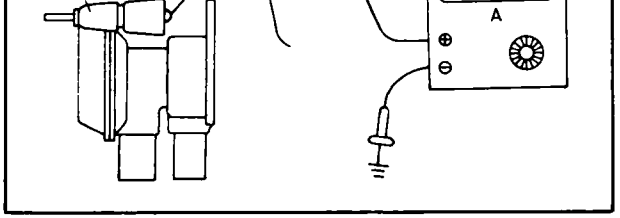

Fig. 1A–49 Checking contorl unit (2)

3. With the thermosensor connector terminal short-circuited as shown in Fig. 1A–51, check the following points:

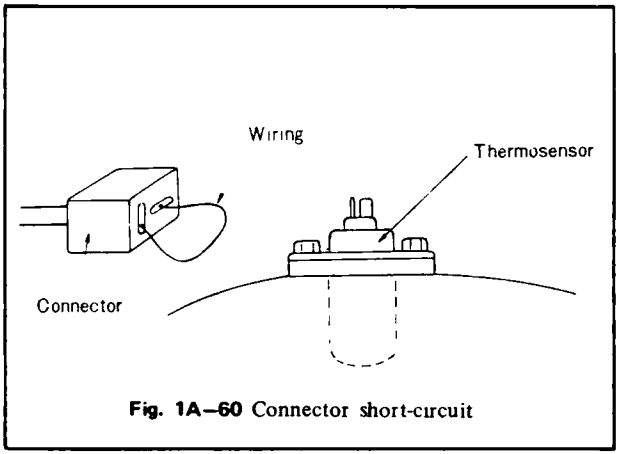

Fig. 1A–60 Connector short-circuit

Fig. 1A–50 Connector short-circuit

1) Connect the timing light to the high tension cord of the trailing side distributor and check to see that the timing light goes on in the whole range of revolution including under **3,600 ~ 4,400 rpm** (Automatic transmission: **4,320 ~ 5,280 rpm**).
2) Only automatic transmission:
Connect an ammeter to the air control valve solenoid. Check to see that the current does not flows to the solenoid when the engine speed is under **3,060 ~ 3,740 rpm**, and there is flow to the solenoid when the engine speed is above **3,060 ~ 3,740 rpm.**
4. Connect the thermosensor coupler as before. With the idle switch coupler removed, check the following point:
1) Connect an ammeter to the coasting valve solenoid and check to see that there is current flows to the ammeter when idling.

2) Disconnect the hose (air cleaner~deceleration control valve) from the deceleration control valve and plug the air suction port of the deceleration control valve.

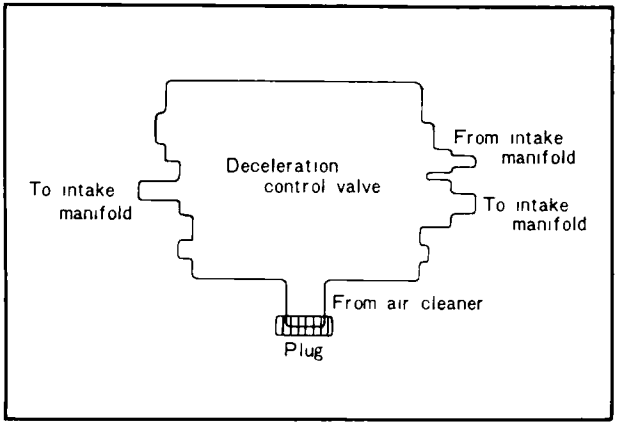

Fig. 1A–52 Blinding deceleration control valve

3) When the engine speed is gradually lowered from 2,000 ~ 3,000 rpm, the current begins to flow at **1,100 ~ 1,450 rpm** (Automatic transmission: **1,250 ~ 1,650 rpm**).
4. Connect the idle switch coupler as before.
5. Connect the hose to the deceleration control valve.

b. Removing control unit
1. Fold the seat back forward.
2. Disconnect the multiple coupler of control unit.
3. Remove the control unit attaching nuts and remove the control unit.

c. Installing control unit
Install the control unit in the reverse sequence.

1A–E–8. Deceleration Control Valve

a. Checking deceleration control valve
1. Disconnect the hose (air cleaner ~ deceleration control valve) from the air cleaner.
2. Run the engine at idle speed.
3. Make sure that air is not sucked in through the air suction hose of the deceleration control valve.
4. Stop the engine.
5. Disconnect the hose (coasting valve ~ intake mani-

1A–E–10. Water Temperature Switch

a. Checking water temperature switch

1. Make sure that the conduction between the terminals under the normal temperature (20°C or 68°F).
2. Start and warm up the engine. If the two terminals of the switch are disconducted, the water temperature switch is in good condition.
3. If there is something extraordinary in the steps 1 and 2, replace the switch with a new one.

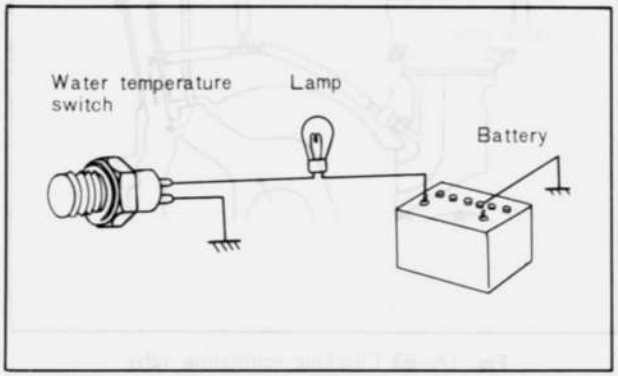

Fig. 1A–57 Checking water temperature switch

b. Removing water temperature switch

1. Drain the coolant from the radiator until the coolant level is below water temperature switch.
2. Remove the alternator and "V" belt if necessary.
3. Disconnect the multiple coupler from the water temperature switch.
4. Loosen and remove the water temperature switch.

c. Installing water temperature switch

Install the water temperature switch in the reverse sequence.

1A–E–11. Idle Switch

a. Checking idle switch

1. Remove the idle switch coupler.
2. If there is conduction between terminal Ⓐ and Ⓒ (Fig. 1A–59), and there is no conduction between terminal Ⓐ and Ⓑ when an external force is applied (when the primary throttle valve is open), the idle switch is normal.

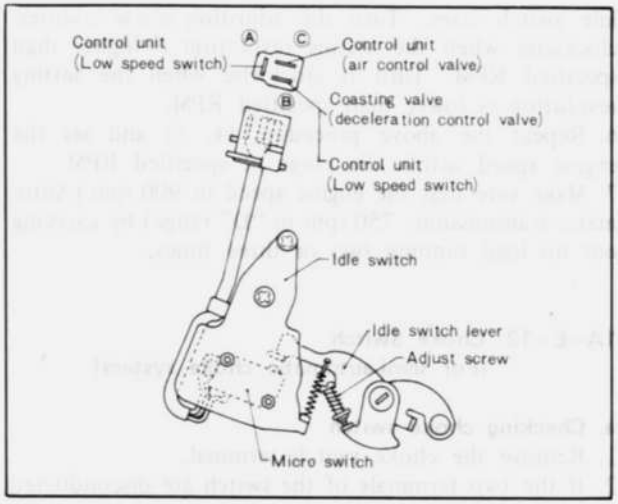

Fig. 1A–59 Checking idle switch (2)

b. Removing idle switch

1. Remove the air cleaner.
2. Disconnect the multiple coupler of idle switch.
3. Remove the bolts attaching the idle switch and remove the idle switch.

c. Installing idle switch

Install the idle switch in the reverse sequence.

d. Adjusting idle switch

1. Install the idle switch in the reverse sequence.
2. Warm up the engine until the water temperature rises about 70°C (159°F).
3. Set the engine speed to **900 rpm** (Automatic transmission: **750 rpm** in "D" range) by turning the air adjusting screw.
4. By increasing and decreasing the engine speed with the accelerator pedal, make sure that switch changes over from "OFF" to "ON" or "ON" to "OFF" at the engine speed of **1,000 ~ 1,100 rpm** (1,100 ~

idle switch lever. Turn the adjusting screw counter-clockwise when the setting revolution is higher than specified RPM. Turn it clockwise when the setting revolution is lower than specified RPM.
6. Repeat the above procedure (4, 5) and set the engine speed within the range of specified RPM.
7. Make sure that the engine speed in 900 rpm (Automatic transmission: 750 rpm in "D" range) by carrying out no load running two or three times.

1A–E–12. Choke Switch (For semi-automatic choke system)

a. Checking choke switch
1. Remove the choke switch terminal.
2. If the two terminals of the switch are disconducted by pulling the choke control knob about 10 mm (0.4 in) or 25 mm (1.0 in) for automatic transmission and conducted by returning the knob, the choke switch is normal.

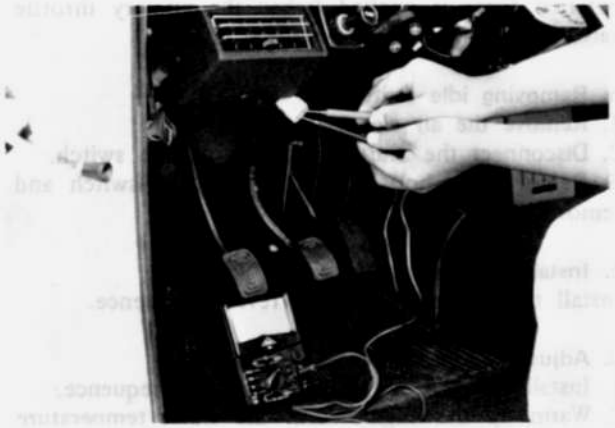

Fig. 1A–61 Checking choke switch (1)

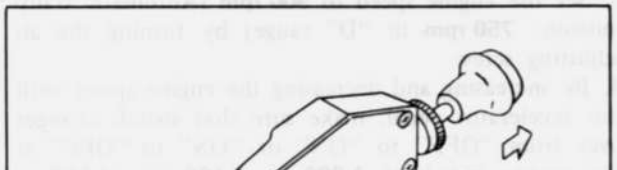

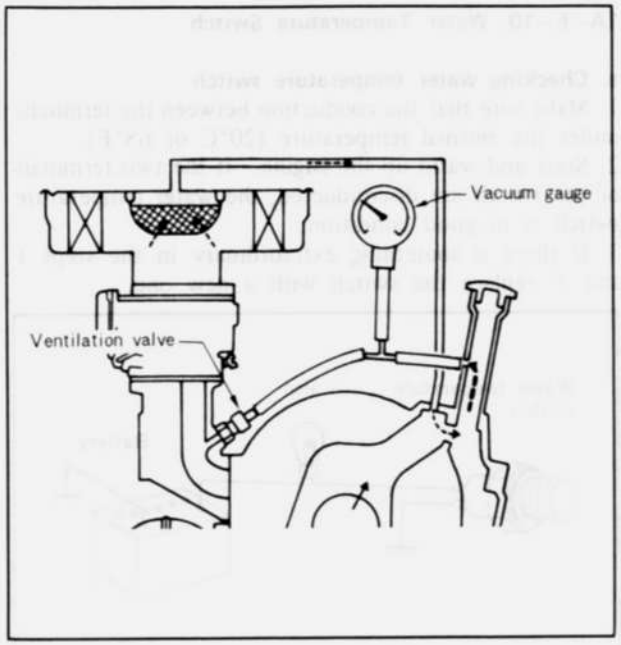

Fig. 1A–63 Checking ventilation valve

to 2,500 ~ 3,000 rpm, the vacuum reading must be under **60 mm-Hg**.

b. Removing ventilation valve
1. Remove the deceleration control valve, as described in Par. 1A–E–8.
2. Remove the starting motor if necessary.
3. Disconnect the ventilation hose at the ventilation valve.
4. Loosen and remove the ventilation valve with the **ventilation valve wrench** (49 1881 135).

c. Installing ventilation valve
Install the ventilation valve in the reverse sequence.

1A–E–14. Evaporative Line

a. Checking evaporative line

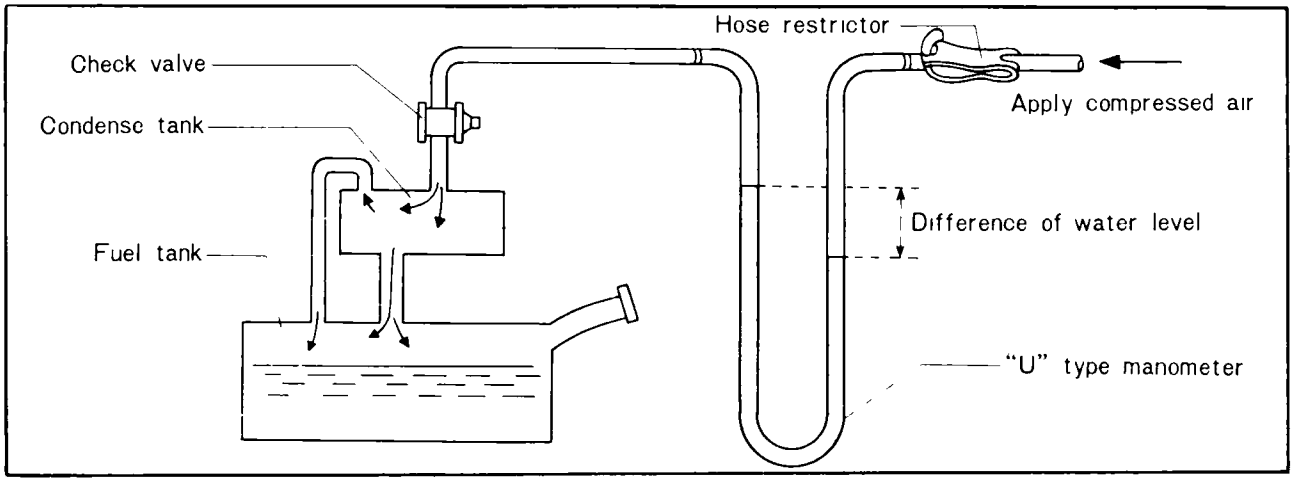

Fig. 1A–64 Checking evaporative line

1A–E–15. Charcoal Canister

a. Checking charcoal canister

1. Check to see that the air cleaner element is not clogged.
2. Visually check the adhering condition of oil. When the whole surface is damp with oil, measure the ventilation resistance.
3. Attach a vacuum gauge as shown in Fig. 1A–66. Check to see that when the engine speed is raised to 2,500 ~ 3,000 rpm, the vacuum gauge reads under **60 mm-Hg**.

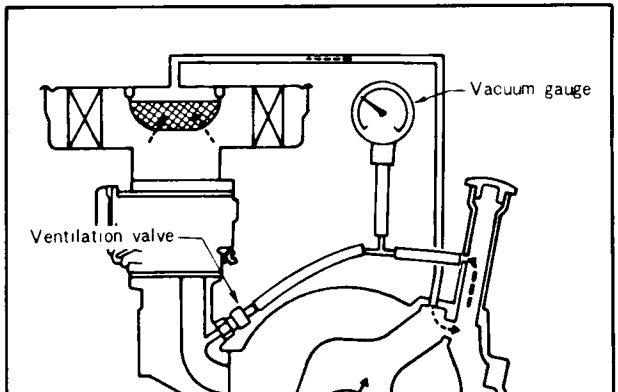

1A–E–17. Check Valve (Evaporative emission control system)

a. Checking check valve

1. Remove the check valve.
2. Blind one end of the check valve by hand, and install the pressure gauge to the other end as shown in Fig. 1A–67.

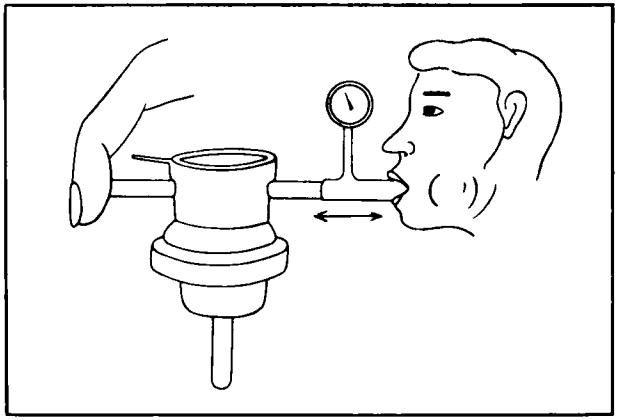

Fig. 1A–66 Checking check valve

3. Breath in and out the check valve with the pressure

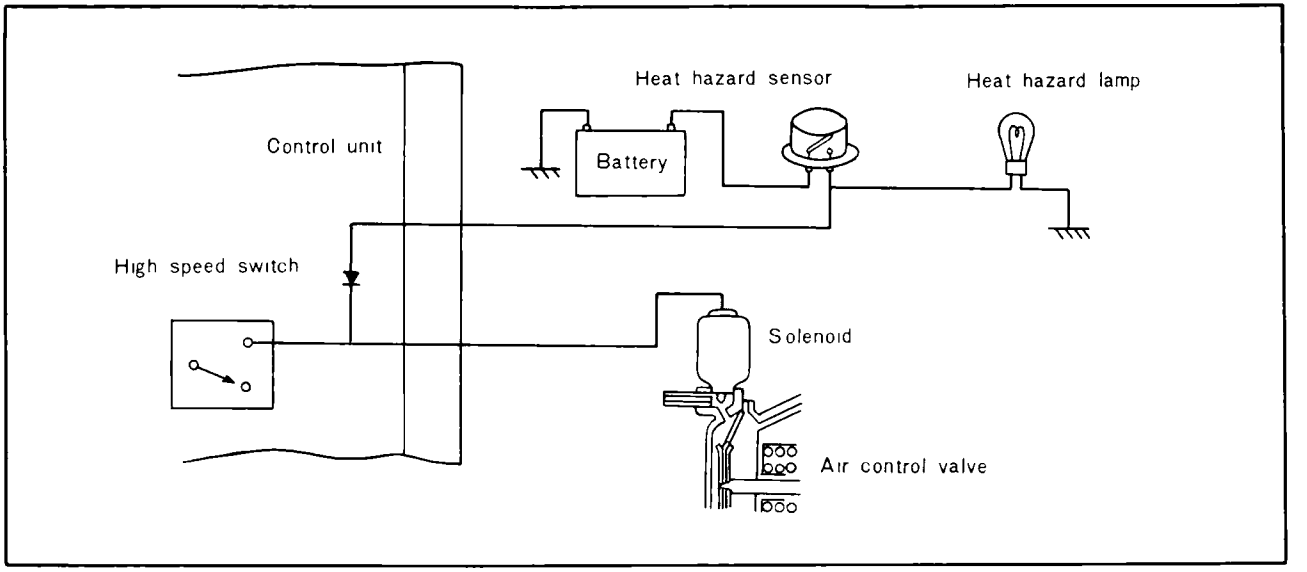

Fig. 1A–67 Checking heat hazard warning system

2. Disconnect the air control valve lead and connect the test light as shown in Fig. 1A–69.

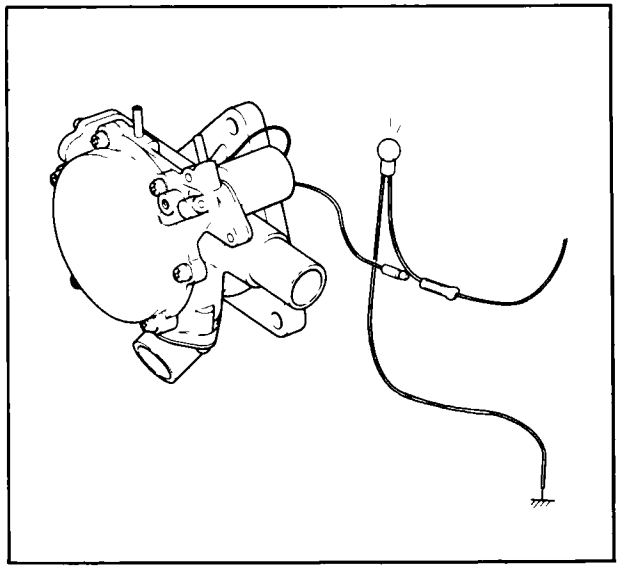

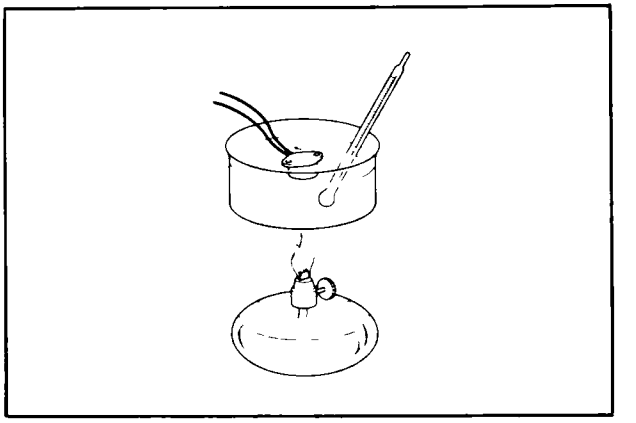

Fig. 1A–69 Heating up heat hazard sensor

b. Removing heat hazard sensor

1. Remove the seat.
2. Disconnect the multiple coupler from the heat hazard sensor.
2. Remove the screws attaching the heat hazard sensor and remove the heat hazard sensor.

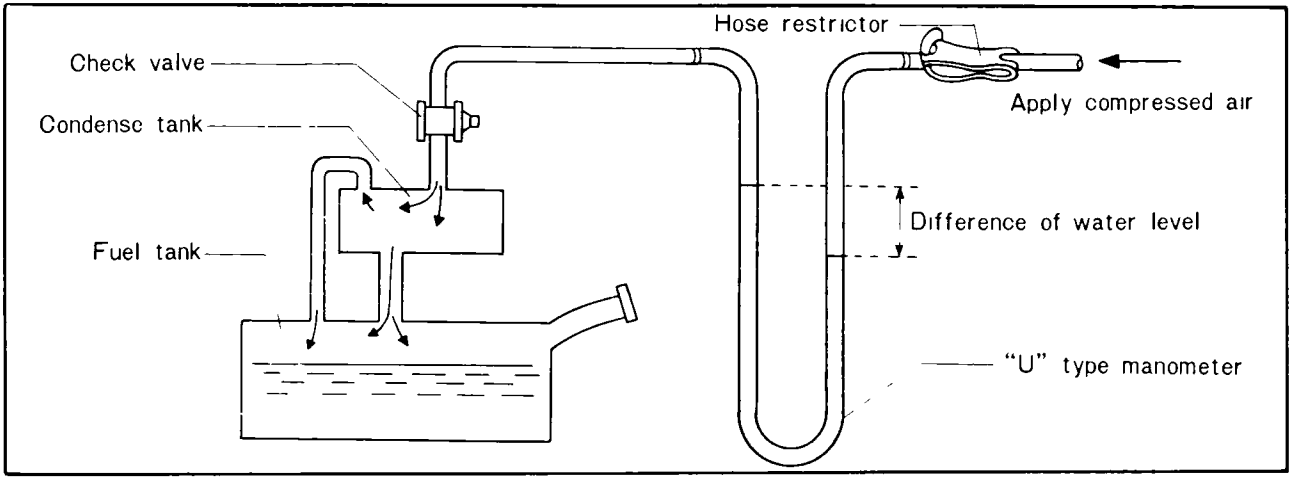

Fig. 1A–64 Checking evaporative line

1A–E–15. Charcoal Canister

a. Checking charcoal canister

1. Check to see that the air cleaner element is not clogged.
2. Visually check the adhering condition of oil. When the whole surface is damp with oil, measure the ventilation resistance.
3. Attach a vacuum gauge as shown in Fig. 1A–66. Check to see that when the engine speed is raised to 2,500 ~ 3,000 rpm, the vacuum gauge reads under **60 mm-Hg**.

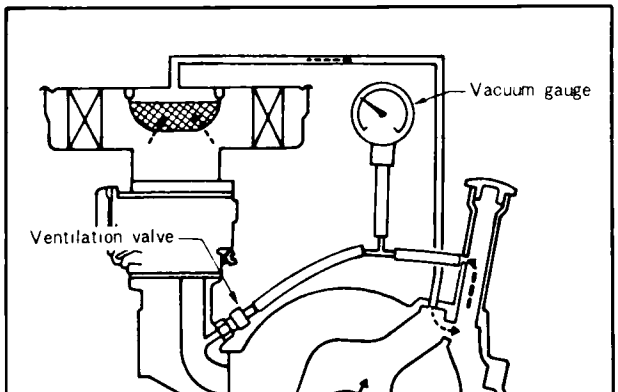

1A–E–17. Check Valve (Evaporative emission control system)

a. Checking check valve

1. Remove the check valve.
2. Blind one end of the check valve by hand, and install the pressure gauge to the other end as shown in Fig. 1A–67.

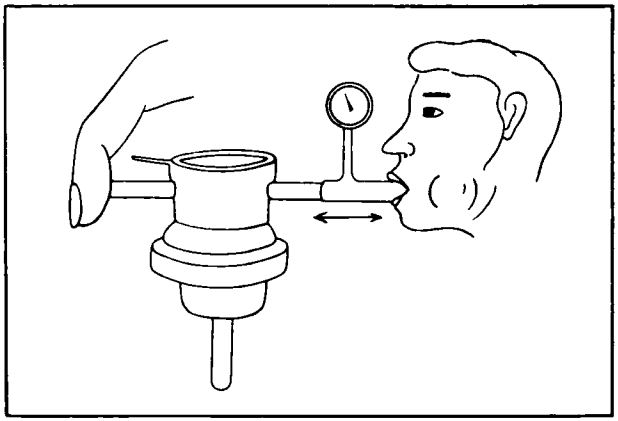

Fig. 1A–66 Checking check valve

3. Breath in and out the check valve with the pressure

3) Fouling and excessive gap of spark plugs (Fouling by lead or carbon)	See 5-E	Clean or replace
4) Burned or improperly adjusted distributor contact point	See 5-C-1	Replace if necessary
5) Lack of fuel supply at high speed running	See 4-B	Replace if necessary
6) Clogging of air cleaner	Clean	
2. Rough engine idling and hard starting		
* The idling speed can not be lowered.		
* Too much engine vibration at idling.		
* The engine starting is too hard.		
* The engine stalls immediately even if it starts.		
1) Air leak from each hose	See 1A-E-19	Replace if necessary
2) Clogging of carburetor jets	Clean	
3) Imporper seating of carburetor secondary throttle valve	Check	
4) Fouled spark plug	See 5-E-3	Clean or replace
5) Burned or improperly adjusted distributor contact point	See 5-C-1	Clean or replace
6) Improper ignition timings of leading and trailing plugs	See 5-C-2	Adjust
7) Defective ventilation valve	See 1A-E-13	Replace if necessary
8) Internal disconnection of leading and trailing ignition coils	Replace	
9) Air leak from air intake system	Repair or replace if necessary	
10) Defective deceleration control valve	See 1A-E-8	Replace if necessary
11) Low compression pressure	Repair	
12) Defective altitude compensator	See 1A-E-9	Replace if necessary
3. Noisy air pump		
* The noise is generated by the air pump when the engine is idling.		
* The noise is generated by the air pump when the engine is racing.		
1) Improperly adjusted "V" belt	See 1A-E-1	Adjust
2) Defective air pump	See 1A-E-1	Replace
3) Disconnected or leaky air hose	Connect and replace	
4) Insufficient tightening of pump attaching bolts	Tighten	
4. Improper fuel connection between slow and main zones (Flat spot)		
* Shock is felt when depressing the accelerator pedal to accelerate from the low speed cruising condition.		
* Shock is felt when depressing the accelerator pedal after turning left at low speed.		
1) Improper injection of carburetor accelerator pump	See 4-A-5	
2) Clogging of carburetor jets	Clean	
3) Fouled leading spark plug	See 5-E-3	
4) Excessively low carburetor fuel level	See 4-A-3	Adjust
5) Continuously opened anti-afterburn valve	See 1A-E-8	Replace if necessary
5. Improper fuel connection between primary and secondary zones		
* Shock is caused when accelerating from running at around 3,000 rpm by depressing the accelerator pedal.		
* Shock is caused when promptly accelerating from the middle speed or the decelerating condition.		

1) Clogging of carburetor jets or excessively low fuel level	Clean or adjust (See 4-A-3)
2) Trailing side ignition does not occur.	Check and replace if necessary
3) Air leak from each hose	See 1A-E-19 Repair and replace if necessary
4) Air leak from each valve	Replace if necessary
5) Fouled spark plug	See 5-E-3 Clean or replace
6) Improper distributor vacuum advance (no advance)	See 5-C-4 Repair and replace parts
7. Abnormally large engine knocking	
1) Improper ignition timings of leading and trailing sides (excessive advance)	See 5-C-2 Adjust
2) Excessive distributor vacuum advance	See 5-C-4 Adjust
3) Excessive distributor centrifugal advance	See 5-C-4 Adjust
4) Too poor fuel	Clean
5) Insufficient heat range or extreme gap erosion of spark plug	See 5-E-1 Adjust or replace
8. Pre-ignition or spit back * Large noise comes from the engine compartment at high speed running, e.g. on the free way, and the engine horsepower falls. **Note:** If the car is run continuously under the condition mentioned above, the insulator of the spark plug is broken and bites into the combustion chamber, causing the vehicle to be inoperable.	
Pre-ignition, Spit back → 1) Excessive spark plug gap for trailing side	
2) Excessive advance of trailing side ignition	
3) Excessive advance of leading side ignition	
4) Insufficient heat range of spark plug	
5) Inusfficient metering oil	
6) Sticky apex seal	
7) Improper alignment of high tension cords	
9. Large car bucking or deceleration vibration * Within the range where the coasting valve should operate (when decelerating from 1,200 rpm [automatic transmission: 1,400 rpm] or over) large car bucking occurs. **Note:** Even if the car bucking happens to occur within the range of engine speed less than 1,200 rpm (automatic transmission: 1,400 rpm) where the coasting valve does not operate, it may be regarded as normal.	
1) Improper operation of coasting valve (deceleration control valve)	See 1A-E-8 Replace
2) Defective control unit	See 1A-E-7 Replace
3) Improper idle fuel flow or idle speed	See 4-A-1 Adjust
4) Air leak from each hose	See 1A-E-19 Repair and replace if necessary
5) Air leak form each valve	Repair and replace if necessary
6) Defective idle switch	See 1A-E-11 Replace
7) Improperly adjusted idle switch	See 1A-E-11 Adjust
8) Fouled spark plug	Clean and replace

4) Large fuel pressure of fuel pump	Adjust and replace parts See 4–B	Replace if necessary
12. The engine brake does not work even if the accelerator pedal is released. * Even if the accelerator pedal is released when running, the engine brake does not work, which causes the overrunning and makes the driver uneasy.		
1) Improper returning of carburetor primary throttle valve	Clean	
2) Improper returning of carburetor secondary throttle valve	Clean	
13. The air jets out from the tail pipe for the forced air cooling during idling.		
1) Improper operation of air control valve	See 1A–E–4	Replace if necessary
2) Electric current flowing from the control unit to air control valve	See 1A–E–7	Replace
14. Factors which adversely affect overall emissions under proper procedure		
1) Improper operation of air control valve (Air cut valve, No. 1 relief valve and No. 2 relief valve)	See 1A–E–4	Replace if necessary
2) Defective control unit	See 1A–E–7	Replace
3) Trailing side spark plug is not controlled. (when the engine is cold)	See 1A–E–7	Replace if necessary
4) Improper ignition timings of leading and trailing plugs	See 5–C–2	Adjust
5) Improper engine idling speed	See 4–A–1	Adjust
6) Defective carburetor (improper fuel level, jet, etc.)	See 4–A	Adjust or repair
7) Improper operation of deceleration control valve	See 1A–E–8	Replace if necessary
8) Fouled spark plug	See 5–E–3	Clean or replace
9) Breakage of reactor	See 1A–E–3	Replace
10) Air leak from secondary air passage	Repair and replace	
11) Air leak from each sensing tube to intake manifold	Repair and replace	
15. Factors which adversely affect idling emissions		
1) Improper idling speed or mixture	See 4–A–1	Adjust
2) Defective spark plug	See 5–E	Clean or replace
3) Improper ignition timings of leading and trailing sides	See 5–C–2	Adjust
4) Defective distributor contact point	See 5–C–1	Clean or replace
5) Deteriorated air pump	See 1A–E–1	Replace
6) Improper operation of air control valve	See 1A–E–4	Replace if necessary
7) Defective control unit	See 1A–E–7	Replace
8) Air leak from each valve into intake manifold	Repair and replace	
9) Breakage of reactor	See 1A–E–3	Replace
16. Factors which adversely affect deceleration emissions		
1) Improper idling speed and fuel flow	See 4–A–1	Adjust
2) Improper operation of deceleration control valve	See 1A–E–8	Replace if necessary
3) Improper operation of air control valve (Air cut valve, No. 1 relief valve and No. 2 relief valve)	See 1A–E–4	Replace if necessary
4) Defective idle switch	See 1A–E–11	Replace
5) Breakage of reactor	See 1A–E–3	Replace

1A–F–2. Detects, Conditions of Trouble and Causes of Defects Related to Each System

a. Air control valve

Possible troubles	Corresponded item
1. Number of revolutions during idling decreases.	B
2. Emission during idling becomes unfavourable.	B, C
3. Emission during acceleration becomes unfavourable	B
4 Emission during cruising becomes unfavourable.	B
5. Emission during deceleration becomes unfavourable.	B
6. Damage is liable to occur on reactor.	A
7. Rough engine idling	B
Conditions of trouble of system	**Corresponded item**
A. Remains constantly open (air inject)	a, b
B. Remains constantly closed (air cut)	a, b
C. Excessive air leakage from valve	b
Probable causes	
a Defective control unit	
b Defective air control valve	

b. Thermosensor

Possible troubles	Corresponded item
1 Exhaust emission becomes abnormally unfavourable	A
2 Possibility of the reactor being damaged is great	B
3 Penalty in fuel economy	B
4 Power drop	B
Conditions of trouble of system	**Corresponded item**
A Trailing ignition does not cut off in driving ranges other than "idling, deceleration or wide open throttle" at normal temperature cold start.	a, b
B Trailing ignition remains constantly off in driving ranges other than "idling, deceleration, or wide open throttle" when the engine is warm	a, b
Probable causes	
a Defective control unit	
b Defective thermosensor	

c. Thermodetector

Possible trouble	Corresponded item
1 Trailing ignition does not cut off at normal temperature cold condition and 4 plugs are in operation.	A, B
Conditions of trouble of system	**Corresponded item**
A Disconnection of connector	a
B Broken connection of wires inside thermodetector	a
Probable cause	
a Defective thermodetector	

e. Fuse of the control unit

Possible troubles	Corresponded item
1. Possibility of the reactor being damage	A
2. Rough engine idling	B
3. Abnormal CO, HC readings at engine idling and decelerating	B
4. Flat spot occurs during driving.	B
5. Excessive periodical engine knocks (Serzing)	B
6. Flat spot occurs during light acceleration from low speed running or deceleration condition.	B
7. Engine idle speed becomes high.	B
Conditions of trouble of system	**Corresponded item**
A. Air control valve remains open (air injection).	a, b, c
B. Deceleration control valve (coasting valve) remains open.	a, b, d,
Probable causes	
a. Fuse of control unit blows b. Defective control unit c. Defective air control valve d. Defective deceleration control valve	

f. Deceleration control valve

Possible troubles	Corresponded item
1. Extremely annoying afterburning occurs during deceleration or after turning off the ignition switch.	B, C
2. Rough engine idling	A, C
3. Hard engine starting	A, C
4. Abnormal CO, HC readings at engine idling and decelerating	A, C
5. Flat spot occurs during driving.	A, C
6. Excessive periodical engine knocks (Serzing)	A, C
7. Flat spot occurs during light acceleration from low speed running or deceleration condition.	A, C
8. Engine idle speed becomes high	A, C
Conditions of trouble of system	**Corresponded item**
A. Valve stay open or delay to close	a, b, c
B. Valve stay closed or delay to open	a, b, c
C. Excessive air leak at valve	a
Probable causes	
a. Defective idle switch b. Defective control unit c. Defective deceleration control valve	

a. Defective control unit
b. Defective coasting valve solenoid
c Defective idle switch
d. Improper return of the carburetor primary throttle valve

h. Ventilation valve

Possible troubles	Corresponded item
1. Misfiring frequently occurs during idling and fluctuations in number of revolutions increase.	B
2. Number of revolutions at idling decreases.	A
3. Dilution of engine oil with gasoline increases.	B
4. Defective purging occurs in charcoal canister.	A
Conditions of trouble of system	**Corresponded item**
A. Remains constantly close	a
B. Remains constantly open	a
Probable cause	
a. Defective ventilation valve	

SPECIAL TOOLS

49 2113 010	Air pump gauge set
49 2113 011	T-fitting
49 2113 012	Plug
49 2113 014	Pressure gauge
49 1881 125	Thermal reactor remover
49 1881 135	Ventilation valve wrench

2–A. LUBRICATING CIRCUIT ..... 2 : 1
2–B. OIL PUMP ..... 2 : 2
2–B–1. Disassembling Oil Pump ..... 2 : 2
2–B–2. Inspecting Oil Pump ..... 2 : 2
2–B–3. Assembling Oil Pump ..... 2 : 3
2–C. OIL PUMP DRIVING ..... 2 : 3
2–C–1. Chain Adjuster Inspection ..... 2 : 3
2–C–2. Oil Pump Chain and Sprocket Inspection ..... 2 : 3
2–D. PRESSURE CONTROL VALVE ..... 2 : 4
2–D–1. Checking Pressure Control Valve ..... 2 : 4
2–E. OIL COOLER ..... 2 : 4
2–E–1. Repairing Oil Cooler ..... 2 : 4
2–F. BY-PASS VALVE ..... 2 : 4
2–F–1. Checking By-pass Valve ..... 2 : 4
2–G. PRESSURE REGULATOR ..... 2 : 5
2–G–1. Checking Pressure Regulator ..... 2 : 5
2–G–2. Checking Oil Pressure ..... 2 : 5
2–H. OIL PRESSURE SWITCH ..... 2 : 5
2–I. OIL FILTER ..... 2 : 5
2–I–1. Replacing Oil Filter ..... 2 : 6
2–J. METERING OIL PUMP ..... 2 : 6
2–J–1. Checking Metering Oil Pump ..... 2 : 6
2–J–2. Adjusting Metering Oil Pump ..... 2 : 7
2–J–3. Disassembling Metering Oil Pump ..... 2 : 7
2–J–4. Assembling Metering Oil Pump ..... 2 : 7
2–K. CHECK VALVE ..... 2 : 9
2–L. OIL PAN ..... 2 : 9
2–L–1. Oil Pan Removal ..... 2 : 9
2–L–2. Oil Pan Inspection ..... 2 : 9
SPECIAL TOOL ..... 2 : 9

and regulate the temperature of the oil circulating in the engine. The oil is sent directly to the engine without passing through the oil cooler when the difference of the oil pressure of inlet and outlet pipes is more than 3.56 kg/cm² (50.7 lb/in²) at 70°C (158°F) and/or the temperature of the oil is under 60°C (140°F).

4. The oil from the oil cooler is forced to the pressure regulator on the rear housing.
5. The oil of which pressure is regulated to 5 kg/cm² (71.1 lb/in²), is forced to the oil filter.
6. The oil that has been filtered by the oil filter is forced to the front main bearing through the tubular jected through the oil jets into the front and rear rotors and cools the rotors.
11. Stationary gears and internal gears are lubricated by the oil coming after cooling the rotors and after lubricating the main bearings.
12. The oil passing through the tubular dowel is sent to the front cover and led to the metering oil pump.
13. From the metering oil pump, the oil is forced to the carburetor and is supplied into the combustion chambers together with the air-fuel mixture to lubricate the apex seals, corner seals, side seals and housings.

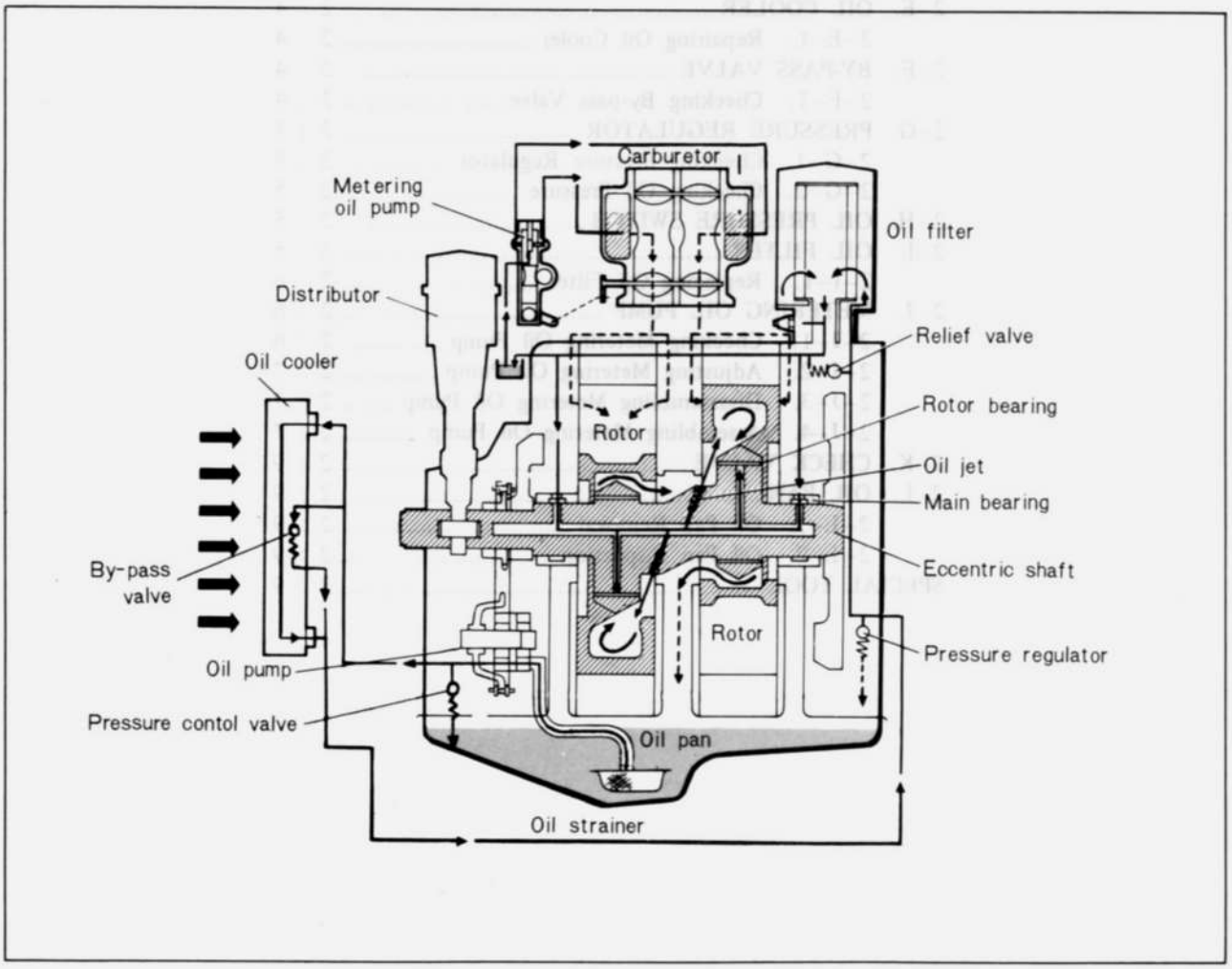

Fig. 2–1 Lubricating circuit

2–B–2. Inspecting Oil Pump

1. Check the clearance between the lobes of the rotors with a feeler gauge, as shown in Fig. 2–3. The standard clearance is 0.01 ~ 0.09 mm (0.0004 ~ 0.0035 in). If the clearance exceeds **0.15 mm (0.006 in)**, replace both inner rotor and outer rotor.

2. Check the clearance between the outer rotor and pump body with a feeler gauge as shown in Fig. 2–4. The specified clearance is 0.20 ~ 0.25 mm (0.008 ~ 0.01 in). If the clearance is more than **0.30 mm**



Fig. 2–2 Removing oil pump



Fig. 2–4 Checking outer rotor clearance

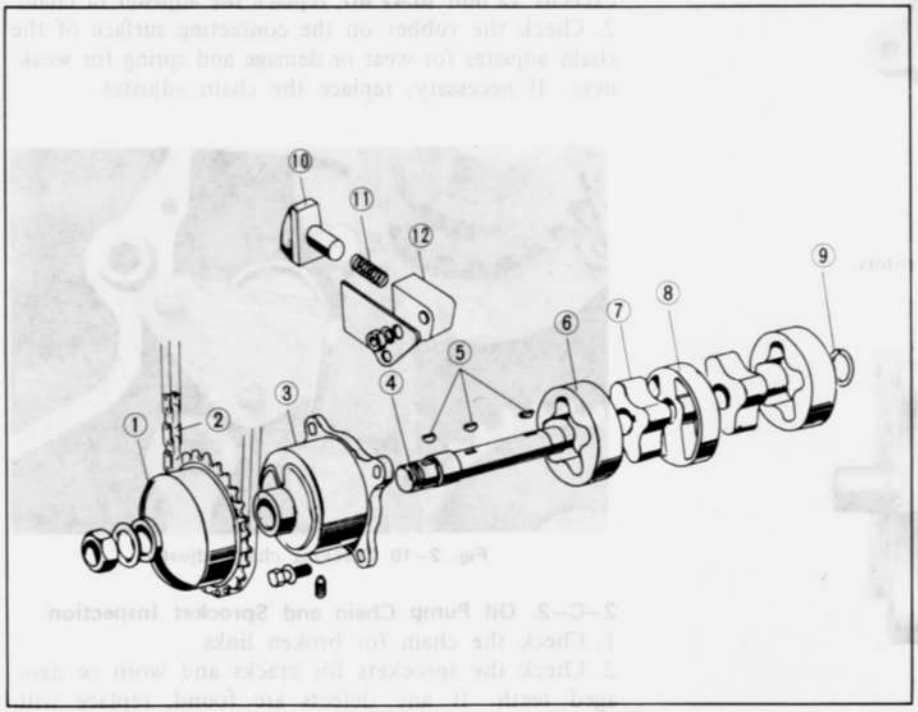

Fig. 2–5 Oil pump components

1. Oil pump driven sprocket
2. Oil pump chain
3. Pump body
4. Shaft
5. Keys
6. Outer rotor
7. Inner rotor
8. Middle plate
9. Snap ring
10. Slipper head
11. Spring
12. Body



Fig. 2–6 Checking end float

2–B–3. Assembling Oil Pump

1. Attach the key of the front side rotor to the shaft.
2. Install the front side inner rotor to the shaft so as to align the key groove of the inner rotor with the key on the shaft.
3. Mount the inner rotor and shaft assembly to the

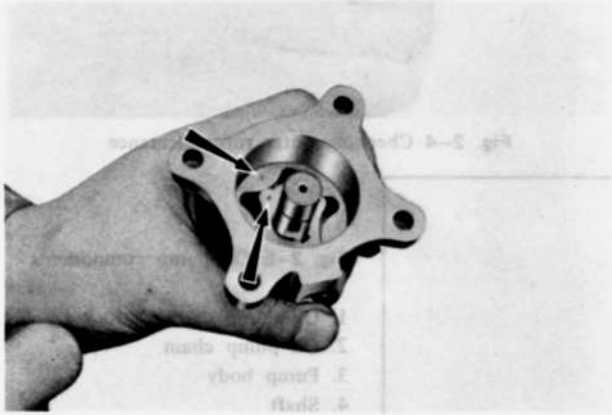

Fig. 2–7 Installing rotors

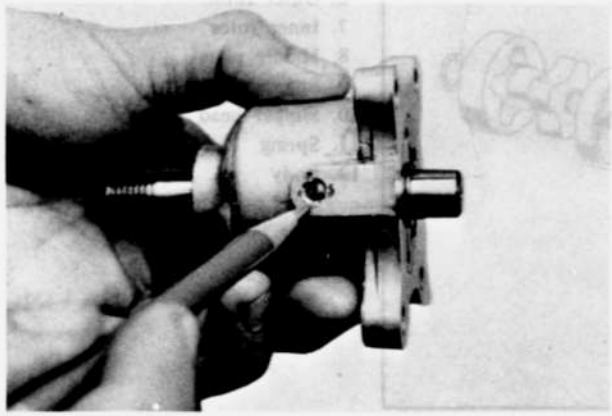

Fig. 2–8 Tightening intermediate plate

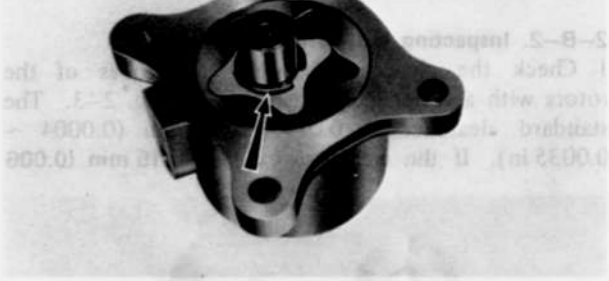

Fig. 2–9 Fitting snap ring

9. Mount the oil pump assembly on the front housing and fix it with the bolts. Rotate the shaft by hand to see whether it rotates smoothly.

2–C. OIL PUMP DRIVING

2–C–1. Chain Adjuster Inspection

1. Check the amount of protrusion of the chain adjuster, as shown in Fig. 2–10. If the protrusion exceeds **12 mm (0.47 in)**, replace the adjuster or chain.
2. Check the rubber on the contacting surface of the chain adjuster for wear or damage and spring for weakness. If necessary, replace the chain adjuster.

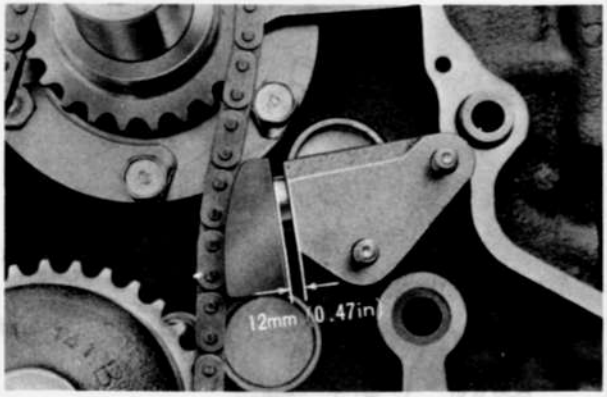

Fig. 2–10 Checking chain adjuster

2–C–2. Oil Pump Chain and Sprocket Inspection

1. Check the chain for broken links.
2. Check the sprockets for cracks and worn or damaged teeth. If any defects are found, replace with new parts.



Fig. 2–11 Pressure control valve

2–D–1. Checking Pressure Control Valve

Remove the cap of the pressure control valve from the front cover.
Examine the spring and the plunger for corrosion or any damage. If it is severe, replace with new ones. Measure the free length and replace with new spring if it is not in the specifications.

2–E. OIL COOLER

The rotor is cooled by the lubricating oil, and the oil cooler is employed to cool the oil.
The oil cooler is of the corrugated fin type like a water radiator and is mounted under the radiator through insulation rubber. The oil cooler is made of aluminum which has outstanding cooling efficiency.

2–E–1. Repairing Oil Cooler

The inner pressure of the oil cooler is much higher than the cooling radiator, so it should be repaired by

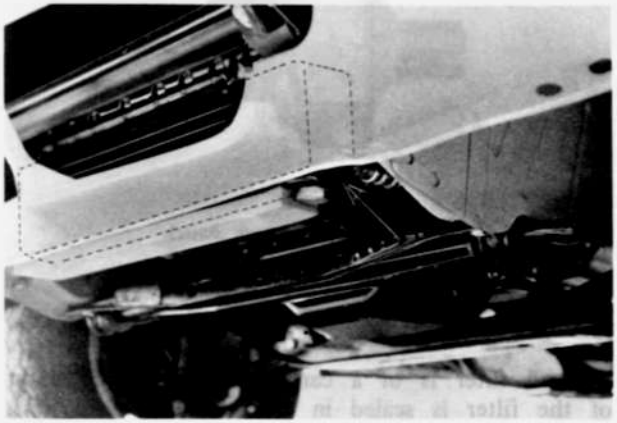

Fig. 2–12 Oil cooler

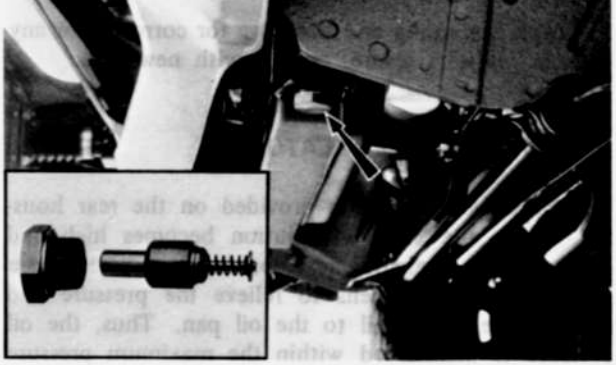

Fig. 2–13 By-pass valve

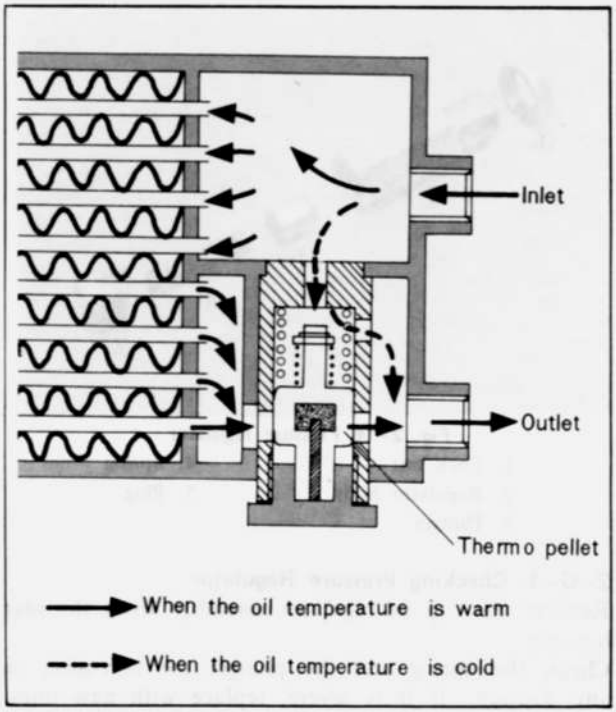

Fig. 2–14 By-pass valve

2–F–1. Checking By-pass Valve

1. Remove the cap nut and pull out the by-pass valve.
2. Soak the by-pass valve in hot oil of 75°C ~ 80°C (167°F ~ 176°C). If the protrusion of piston is more than 5 mm (0.2 in), the by-pass valve is normal. (Fig. 2–15)

3. Check the spring and the valve for corrosion or any damage. If it is severe, replace with new ones.

2–G. PRESSURE REGULATOR

The pressure regulator is provided on the rear housing. When the engine revolution becomes high and excessive oil pressure develops in the system, the pressure regulator opens to relieve the pressure and to send the excess oil to the oil pan. Thus, the oil pressure is maintained within the maximum pressure of 5 kg/cm² (71.1 lb/in²).

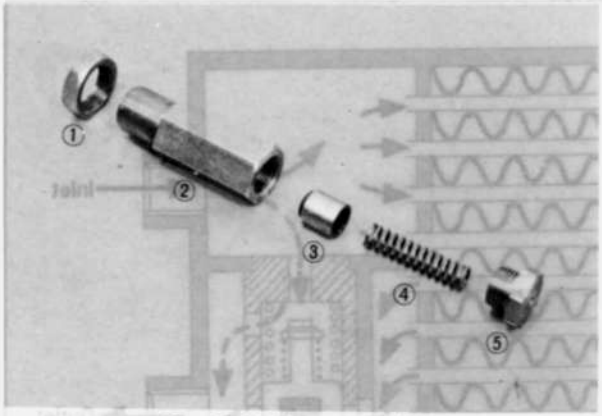

Fig. 2–16 Pressure regulator

1. Lock nut
2. Regulator body
3. Plunger
4. Spring
5. Plug

2–G–1. Checking Pressure Regulator

Remove the cap or regulator assembly from the rear housing.

Check the spring and the plunger for corrosion or any damage. If it is severe, replace with new ones. Measure the free length and replace with new spring if it is not in specifications.

2–G–2. Checking Oil Pressure

To check the oil pressure, proceed as follows :

1. Warm up the engine to the normal operating temperature and remove the oil pressure switch and install an oil pressure gauge (**49 0187 280**) in its place.

2. Run the engine at **3,000 rpm** and take a reading of the gauge. If the reading of the gauge is **5.0 kg/cm² (71.1 lb/in²)**, the oil pressure is normal.

3. Run the engine at idling speed and take a reading of the gauge. If the reading of the gauge is **2.5 kg/cm² (35.6 lb/in²)**, the idling pressure is normal.

If the oil pressure is extremely low, check the following points :

1. Ensure that the oil level is between the "F" and "L" marks of the dipstick gauge.
2. Check the oil pump, as described in **Par. 2–B–2.**
3. Check the pressure regulator for wear on the plunger and fatigue on the spring. The free length of the spring is **46.4 mm (1.827 in).**

2–H. OIL PRESSURE SWITCH

The oil pressure switch fitted to the rear housing is connected by the wiring to the oil pressure warning lamp. The safe minimum pressure is **0.3 kg/cm² (4.3 lb/in²)** at idle. If the oil pressure drops below 0.3 kg/cm² (4.3 lb/in²) the warning lamp lights up to indicate a trouble in the lubricating system. Therefore, when the warning lamp goes on, the oil pressure should be checked immediately.



Fig. 2–18 Oil pressure switch

2–I. OIL FILTER

The oil filter is of a cartridge type. The element of the filter is sealed in the container as a unit. The oil filter is provided with a relief valve. If the



Fig. 2–19 Removing oil filter

2. Apply oil onto the rubber gasket on the new filter cartridge.
3. Place the cartridge on the cover and screw in until it just touches the cover.
4. Tighten the cartridge further 2/3 turn but absolutely no more.
Do not use the oil filter wrench.
5. Start the engine and check to see that the oil is not leaking from the joints. Top up with oil if necessary.

2–J. METERING OIL PUMP

The oil enters the metering oil pump from the lubricating oil passage in the front cover and the oil which is measured and discharged from the metering oil pump enters the carburetor through a hose. The oil entering the carburetor is discharged from a portion of venturi to the working chamber to lubricate

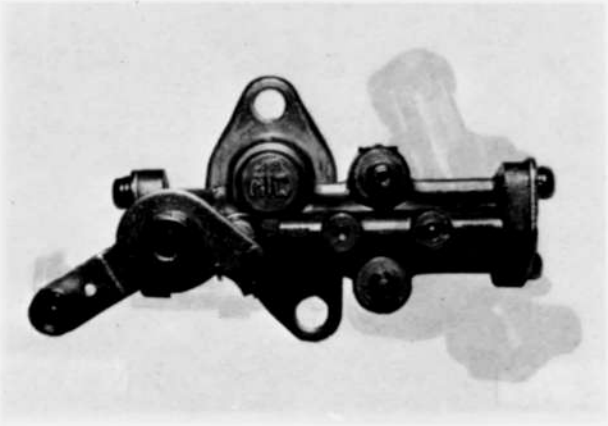

Fig. 2–20 Metering oil pump

as white smoke.
Therefore, the amount of oil discharge should always be within the proper range.
In case the engine tends to show any of the above troubles, the amount of oil discharge should be checked, proceeding as follows.
1. Disconnect the connecting rod by removing the cotter pin.
2. Disconnect the 2 metering oil hoses from the carburetor.
3. Install the tachodwell tester and set the engine at a constant speed of **2,000 rpm.** Wait until the oil discharge from the end of the metering oil hoses becomes steady and, when it is steady receive the oil in the measuring cylinder and start measuring the time simultaneously.
4. Stop the engine after **6 minutes** and check the amount of oil discharge. If it is within the proper range shown below, the discharge is satisfactory. Otherwise, adjust the oil metering pump.

2.2 cc /6 min. /2,000 rpm

Note :
As lubricating oil is not being supplied to the gas seals while the measurements are being taken, a proper amount of clean engine oil should be added into the carburetor or the engine should be run on mixed gasoline into which oil has been mixed at the ratio of 100 : 1.

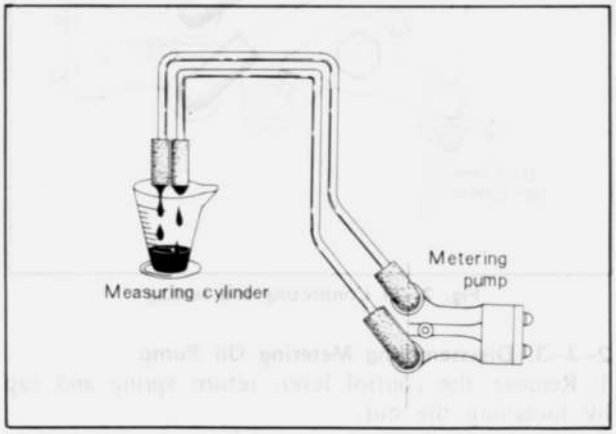

Fig. 2–21 Checking oil discharge



Fig. 2–22 Adjusting screw of metering oil pump

The amount of oil discharge increases when the adjusting screw is tightened, and decreases when loosened. As the amount of oil discharge changes by **0.2 ~ 0.3 cc/6 min./2,000 rpm** per rotation of the screw, adjust the screw after calculating the number of rotations necessary to obtain the proper adjustment.
Also check to ensure that the lock nut of the adjusting screw will lock without fail and be sure not to bend the lever when adjusting. After adjustment has been completed, measure the amount of oil discharge again and make sure that it is within the proper range.
In case the metering oil pump cannot be adjusted, it should be replaced as a damaged parts or a pump assembly.

Connecting rod setting

Set the clearance of connecting rod stopper pin and metering oil pump lever to **0 ~ 1.0 mm (0 ~ 0.04 in)** by using a suitable washer.

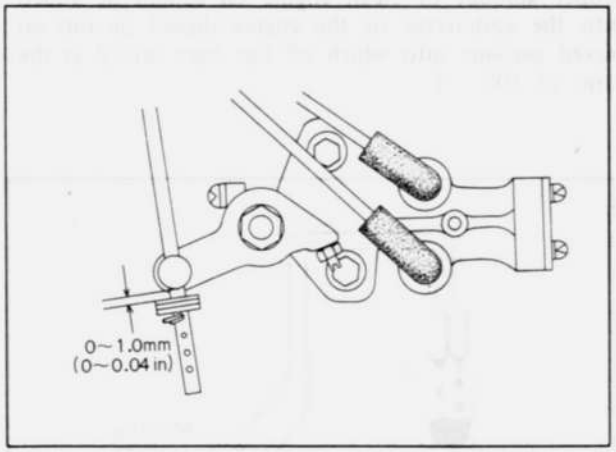

Fig. 2–23 Connecting rod setting

2–J–3. Disassembling Metering Oil Pump

1. Remove the control lever, return spring and cap by loosening the nut.
2. Remove the front plate carefully as it is the spring-

mechanism, the greatest possible care should be taken in reassembling the pump not to admit any foreign matter in it and not to cause any small scar.
1. Apply the clean oil in the cylinder. Slide the plunger into the body from front side of the body and then slide the differential plunger into the body until the gear of the plunger reaches the position of the hole for the driving worm.



Fig. 2–24 Assembling plunger

Note :
Make sure that the slot of the differential plunger matches the key of the plunger.

2. Carefully insert the thrust plate, driving worm and worm bearing.



Fig. 2–25 Assembling drive worm

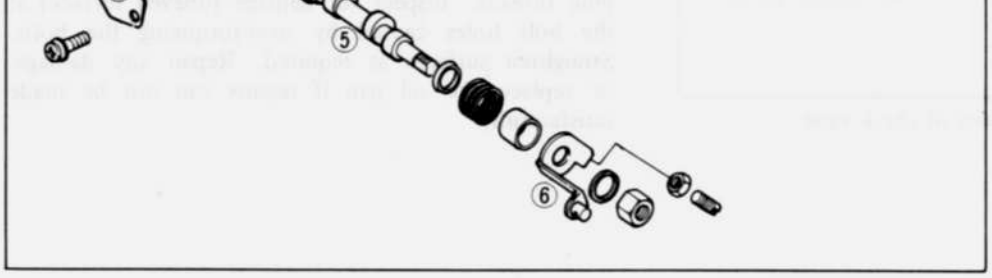

3. Insert the control pin.



Fig. 2–27 Inserting control pin

4. Place the oil seal ring on the groove.
5. Fit the rear plate on the body making sure the stopper for the control pin facing the control lever.



Fig. 2–28 Fitting rear plate

6. Insert the plunger spring and sub plunger from the front side of the body.

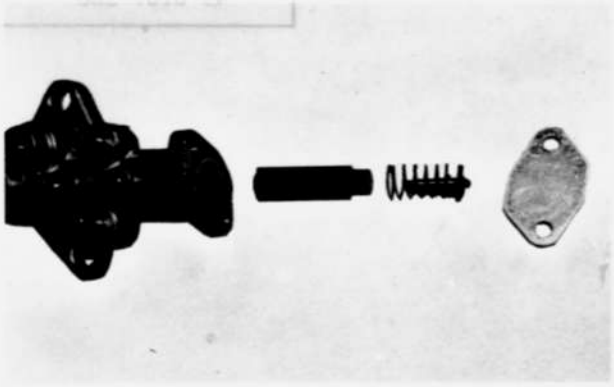

Fig. 2–29 Inserting sub plunger

7. Place the oil seal ring on the groove and fit the front plate.
8. Install the spring, control lever and connectors.

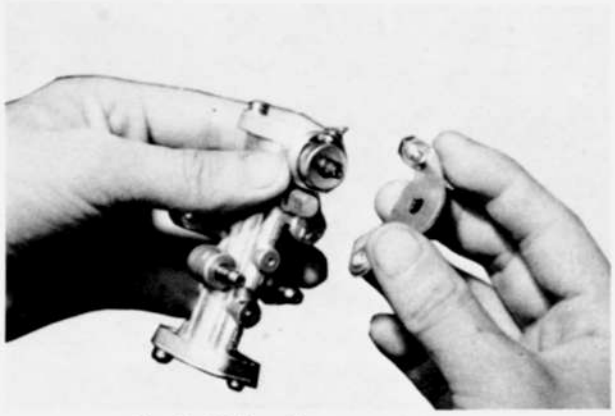

Fig. 2–30 Installing control lever

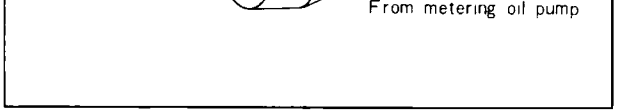

Fig. 2–31 Direction of check valve

plug threads. Inspect for damage (uneven surface) at the bolt holes caused by over-torqueing the bolts. Straighten surfaces as required. Repair any damage, or replace the oil pan if repairs can not be made satisfactorily.

SPECIAL TOOL

49 0187 280	Oil pressure gauge

3–B. FLUSHING OF COOLING SYSTEM ..... 3 : 1
3–C. COOLANT ..... 3 : 2
3–C–1. Checking Coolant Leakage ..... 3 : 2
3–D. RADIATOR ..... 3 : 2
3–D–1. Checking Radiator ..... 3 : 2
3–D–2. Repairing Radiator ..... 3 : 2
3–D–3. Radiator pressure cap ..... 3 : 2
3–E. FAN DRIVE ..... 3 : 2
3–E–1. Checking Fan Drive ..... 3 : 2
3–F. THERMOSTAT ..... 3 : 3
3–F–1. Removing Thermostat ..... 3 : 3
3–F–2. Inspecting Thermostat ..... 3 : 3
3–G. WATER PUMP ..... 3 : 4
3–G–1. Inspecting Water Pump ..... 3 : 4
3–G–2. Removing Water Pump ..... 3 : 4
3–G–3. Disassembling Water Pump ..... 3 : 5
3–G–4. Assembling Water Pump ..... 3 : 5
SPECIAL TOOL ..... 3 : 5

3–A. COOLANT CIRCULATION

The water pump is driven by the eccentric shaft pulley over a V-belt and discharges the cooling water to the front housing. The water circulates from the front housing through the water passage provided in each housing and flows to the rear housing. From the rear housing, the water is returned to the front housing. At low engine temperature, the thermostat is closed to keep the water from entering the radiator. The water is then recirculated directly to the water pump and discharged to each housing. As the thermostat opens when the engine is warmed up, the water flows into the radiator. The cooled water flows from the radiator to the water pump through the connecting



Fig. 3–2 Radiator drain plug

Note:
If necessary, use cleaning solution to loosen rust and scale, by following the instructions given by the maker of the cleaning solution.

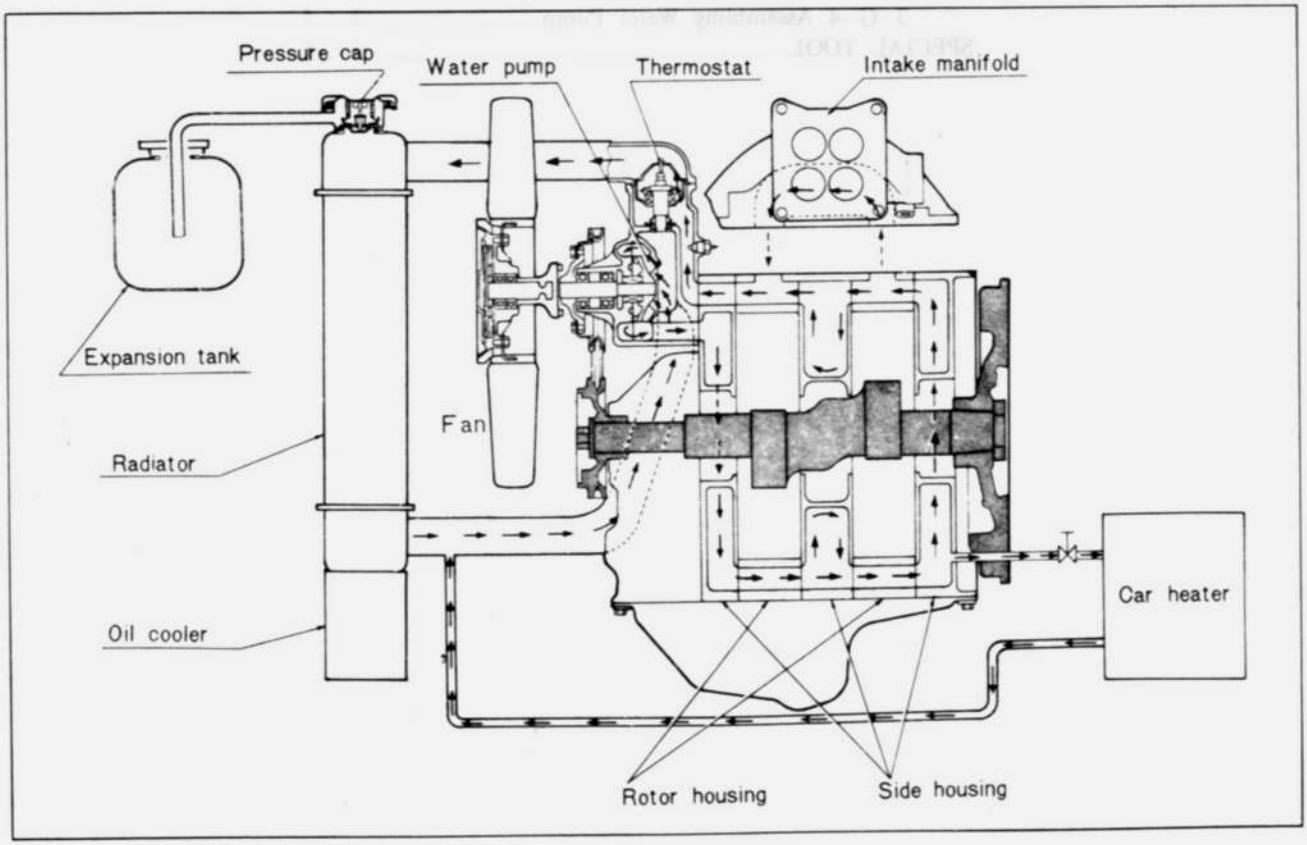

Fig. 3–1 Cooling circuit

Fig. 3–3 Engine drain plug

3. Run the engine for about one hour, at the normal operating temperature.
4. Drain the water completely.
5. Fill with soft water (demineralized water) and genuine long life coolant, referring to **Par. 3–C.**

3–C. MAZDA GENUINE LONG LIFE COOLANT

MAZDA genuine **long life coolant** (Part No. 0880 77 264) is used in the cooling system of MAZDA ROTARY PICKUP. This coolant includes the anti-freeze solution and anti-corrosive solution. The mixing rate of water and genuine long life coolant is shown in the following table.

Freezing point	Mixture ratio %		Specific gravity of mixture at 20°C (68°F)
	Coolant	Water	
– 20°C (– 4°F)	35	65	1.051
– 45°C (– 49°F)	55	45	1.078

Note:
(a) Always use soft water (demineralized water) in the cooling system.
(b) If the MAZDA genuine long life solution is not available, use anti-freeze solution (for aluminum engine, Ethylene-Glycol based) or anti-corrosive solution on the market in accordance with the season and the maker's instructions.

3–C–1. Checking Coolant Leakage

Carefully check the various parts for any leakage of cooling water by using a radiator cap tester. Refill the coolant full in the radiator and between the "FULL" and "LOW" marks on the expansion tank. Run the engine until it reaches normal operating temperature. With the engine running and tester installed, pump up the system to approximately 0.9 kg/cm² (13 lb/in²).

Note: Never allow the pressure to build up to more than 1.1 kg/cm² (14 lb/in²)

If pressure drops rapidly, visually inspect all external parts for leaks. If no external leaks appear and pressure continues to drop, inspect the engine oil to

compressed air.

3–D–2. Repairing Radiator

The radiator used on this model is made of copper. Any minor leakage must be completely eliminated by soldering.

3–D–3. Radiator Pressure Cap

The radiator has a pressure cap. The pressure increases the boiling point of the coolant and prevents over heating and reduces overflow losses.
When the pressure in the radiator exceeds 0.9 kg/cm² (13 lb/in²), the pressure valve opens. A vacuum release valve is employed to prevent undesirable vacuum build-up when the system cools down.

Note:
To remove the radiator pressure cap when the coolant temperature is high or boiling, place a cloth on the pressure cap and turn counter-clockwise one step. Keep it in this position until all pressure is released. Then, turn the cap further until it can be removed. To install the cap, place in position and turn it clockwise as far as it will go.

3–E. FAN DRIVE

As shown in Fig. 3–4, the fan drive is driven with the water pump pulley, and by the work of the silicon oil in the body, prevents the fan from marking more than a certain number of rotations.
As may be seen from this structure, the number of fan rotations will presumably drop if a defect, such as oil leakage, should occur on the fan drive.
If an engine has the tendency to overheat, the number of fan rotations should be checked in the following manner.

3–E–1. Checking Fan Drive

Testers to be used : Photoelectric revolution counter and tochodwell tester.
1. Apply scotch tape to the positions on the fan as shown in Fig. 3–4.
2. Set the tachodwell tester to the engine. Then start the engine and run it at 1,500 rpm.
3. Then turn the photoelectric revolution counter

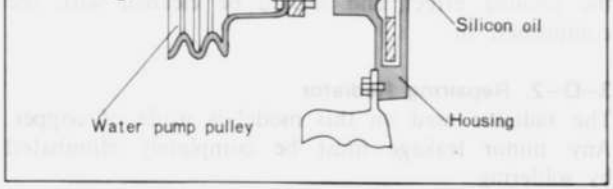

Fig. 3–4 Fan drive

toward the fan and read the speed of the fan rotation. The fan speed should be within the standards shown in the following table.

Prescribed Revolution	
Engine	Fan
1,500 rpm	1,400 rpm or more
5,000 rpm	2,000 rpm ~ 2,500 rpm

If the reading is below the standard, replace the fan drive assembly.
If the reading is more than the standard–Make a recheck in the following manner.
4. When the reading exceeds the standard, warm up the engine for five minutes at engine speed of more than 3,000 rpm, and then read the speed of the fan rotation at engine speed of 5,000 rpm. If the speed of the fan rotation is within the standard shown in the above table, the operation of the fan drive is satisfactory.

3–F. THERMOSTAT

To regulate the temperature of the cooling water circulating in the engine, a wax type thermostat is adopted. The thermostat is of a bottom by-pass type, which has outstanding cooling efficiency, and is different from the conventional in-line type thermostat in the undermentioned points. Therefore, it should be handled with particular care.

As shown in Fig. 3–5, a by-pass hole is provided at the bottom of the thermostat. The by-pass hole on the bottom by-pass type thermostat is larger than that on the in-line type. The bottom by-pass type thermostat, therefore, has the following advantages: when the thermostat is fully closed, a large amount of cooling water circulates, thus preventing any local rise in the cooling water temperature, and, when the thermostat is fully opened, the valve of the thermostat closes the by-pass hole and so all of the cooling water flows into the radiator, making effective use of the radiator. But, if the thermostat is removed, a large amount of cooling water flows through the by-pass hole because the hole is large, and so the amount of cooling water flowing into the radiator decreases to half, causing the cooling water temperature to rise.



Fig. 3–6 Thermostat

Therefore, **the thermostat should never be removed** and **no other type of thermostat should be used.**

3–F–1. Removing Thermostat

1. Drain the cooling system.
2. Remove the bolts attaching the thermostat cover to the water pump and remove the cover.
3. Lift out the thermostat.

3–F–2. Inspecting Thermostat

To inspect the thermostat, place it in water with a thermometer and gradually heat the water.
Check the temperature when the thermostat starts to open and when it is fully opened, and also, measure the lift height when the thermostat is fully opened. If the reading shows a large difference from the standard specifications, replace the thermostat. The specifications of the thermostat are shown in the following table:

Starts to open	82°C (180°F)
Fully opens	95°C (203°F)
Lift height	8 mm (0.31 in)



Fig. 3–7 Checking thermostat

3–G. WATER PUMP

The water pump employs a centrifugal impeller. In the pump body, the shaft is supported by two bearings. The impeller is fitted to the rear end of the shaft. The seal assembly prevents water leakage.

3–G–1. Inspecting Water Pump

Check the water pump for leaks and excessive end play or looseness of the shaft and bearings. If there is evidence of excessive play when the pulley is manually moved up and down, this indicates that the bearings are rough. If water leaks from the hole located on the body, this is an indication of a defective seal necessitating overhaul of the pump and check of the seal and seat surface. If defective, replace the seal assembly.



Fig. 3–8 Removing fan drive

4. Loosen the bolts attaching the water pump pulley to the water pump boss if it is necessary to disassemble the water pump.
5. Remove the air pump and disengage the air pump

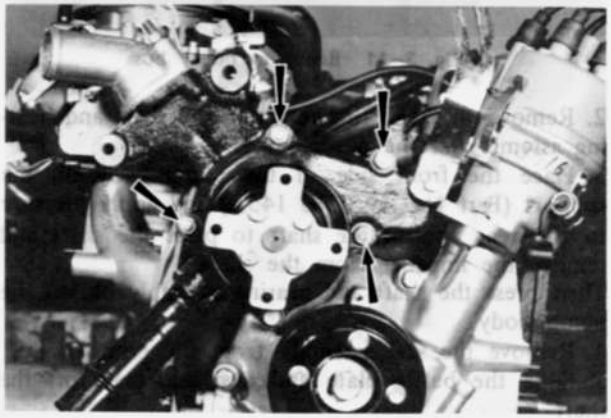

Fig. 3–9 Pump body attaching bolts

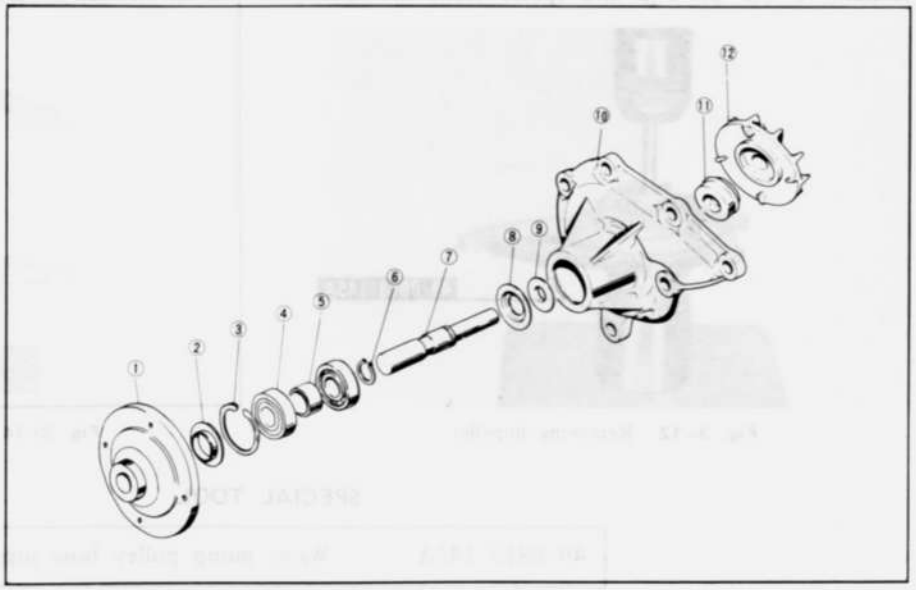

Fig. 3–10
Water pump components

1. Pulley boss
2. Dust seal plate
3. Snap ring
4. Bearing
5. Spacer
6. Stop ring
7. Shaft
8. Dust seal
9. Baffle plate
10. Pump body
11. Seal assembly
12. Impeller

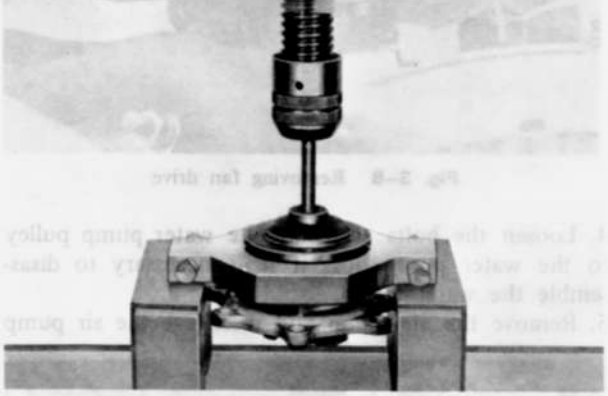

Fig. 3–11 Removing pulley boss

2. Remove the snap ring retaining the shaft and bearing assembly in the pump body.
3. Place the front side of the pump body on the **support** (Part No. 49 0813 145A) and apply pressure to the rear end of the shaft to press the shaft and remove the impeller from the shaft.
Then press the shaft and bearing assembly out of the pump body.
4. Remove the seal assembly from the pump body.
5. Slide the baffle plate and dust seal plate off the shaft.
6. Remove the bearing stop ring from the shaft.
7. Remove the bearings and spacer from the shaft.

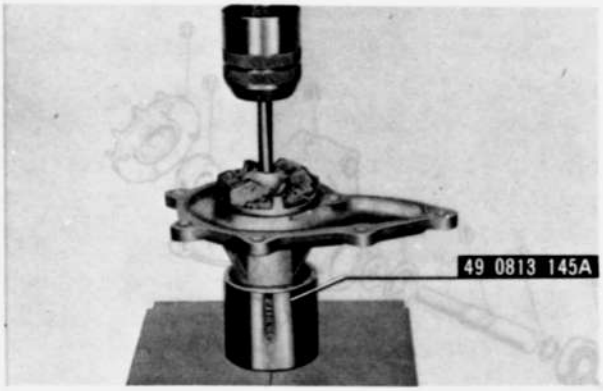

Fig. 3–12 Removing impeller



Fig. 3–13 Assembling impeller

5. Press the shaft and bearing into the pump body.
6. Slide the spacer onto the shaft and **fill 1/3 of the space** between the two bearings with grease.
7. Press fit the bearing onto the shaft with the sealed side forward until the snap ring can be installed.
8. Install the snap ring onto the groove of the pump body to retain the shaft and bearing assembly in position.
9. Slide the dust seal plate onto the shaft, and press the pulley boss onto the shaft until it is flush with the front end of the shaft.
10. Apply lubricant onto the seal assembly and install the seal assembly into the pump body.
11. Press the impeller onto the shaft until it is flush with the end of the shaft.

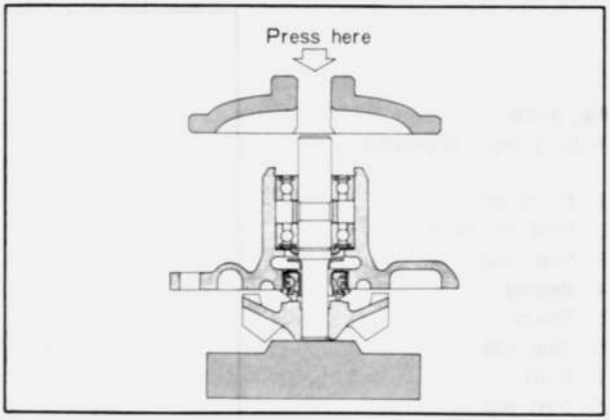

Fig. 3–14 Assembling pulley

SPECIAL TOOL

49 0813 145A	Water pump pulley boss support

FUEL SYSTEM ..... 4 : 1
4–A. CARBURETOR ..... 4 : 1
4–A–1. Idle Adjustment ..... 4 : 2
4–A–2. Fast Idle Adjustment ..... 4 : 3
4–A–3. Float Adjustment ..... 4 : 3
4–A–4. Automatic Choke System (Semi-auto) ..... 4 : 4
4–A–5. Automatic Choke System (Full-auto) ..... 4 : 5
4–A–6. Accelerator Pump ..... 4 : 5
4–A–7. Fuel Inlet Fitting ..... 4 : 7
4–A–8. Sub-Zero Starting Assist Device ..... 4 : 7
4–A–9. Safety Throttle Return System ..... 4 : 8
4–A–10. Disassembling Carburetor ..... 4 : 9
4–A–11. Inspecting Carburetor ..... 4 : 11
4–A–12. Carburetor Assembly ..... 4 : 11
4–B. FUEL PUMP ..... 4 : 12
4–C. FUEL FILTER ..... 4 : 12
4–D. FUEL LINES ..... 4 : 12
4–E. FUEL TANK ..... 4 : 12
4–F. AIR CLEANER ..... 4 : 12
4–F–1. Air Cleaner Element ..... 4 : 12
4–F–2. Intake Air Temperatire Control System ..... 4 : 13

portions for different operating conditions. As the air passes through the carburetor before entering the engine, fuel is supplied into the engine through the various circuits of the carburetor.

The air cleaner operates primarily to remove dust and dirt from the air which is drawn into the carburetor and then into the engine.

stage barrels and controls the air supply to the intake manifold at low atmospheric pressure such as high altitudes driving.

The secondary stage includes a secondary operating diaphragm system, step system and main metering system. Choking action is accomplished by means of a semi-automatic choke or full automatic choke.

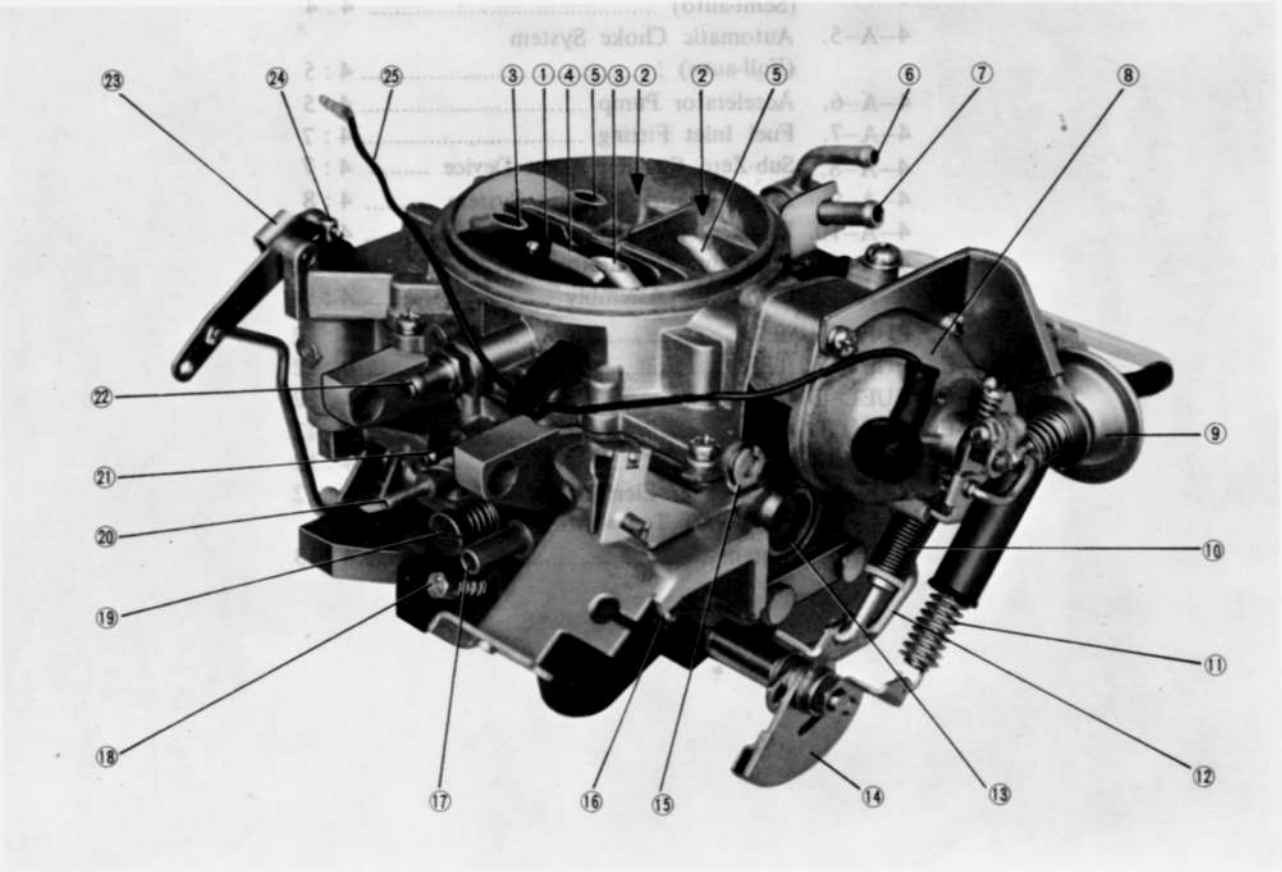

Fig. 4–1 Carburetor

1. Primary stage
2. Secondary stage
3. Primary air vent
4. Choke valve
5. Secondary air vent
6. Fuel inlet fitting (return side)
7. Fuel inlet fitting (inlet side)
8. Bimetal spring housing
9. Vacuum break diaphragm
10. Safety return spring
11. Throttle return spring
12. Fast idle connecting rod
13. Fuel bowl sight glass
14. Throttle lever
15. Choke lever
16. Throttle adjust screw (locked)
17. To altitude compensator
18. Idle adjust screw (locked)
19. Air adjust screw (for idle adjustment)
20. To distributor vacuum control diaphragm
21. From metering oil pump
22. From sub-zero starting assist fluid tank
23. Accelerator pump lever
24. Accelerator pump piston
25. Lead wire of bimetal



Fig. 4–2 Idle adjustment

Note :
To measure the engine revolution, be sure to use a revolution counter intended for general servicing instead of the tachometer equipped on the vehicle.

Specifications – Idling Speed :

Car with Manual Transmission	900 rpm
Car with Automatic Transmission	750 rpm in "D" range

b. Particular adjustment
Idle adjust screw and throttle adjust screw are adjusted by the manufacturer. These screws should not be adjusted. However, if the idle adjust screw and/or throttle adjust screw get out of order for some reason, or after overhauling the carburetor, adjust them in the following procedures.

b-1.
1. Adjust throttle opening to specifications from fully closed position by the throttle adjust screw. Lock the screw lock nut firmly after adjustment.
2. Start the engine and adjust the idling speed to the specified value by the air adjust screw.

b-2.
It is better for the idle adjustment to use the fuel flow checker (49 2113 015) than to use the gas analyzer. The adjustment by the fuel flow checker should be done as follows.

1. Adjust throttle opening angle to specifications from fully closed position by the throttle adjust screw. Lock the screw lock nut firmly after adjustment.
2. Set the fuel flow checker (49 2113 015) as shown in Fig. 4–3.
3. Start the engine and adjust the idling speed approximately to specifications by the air adjust screw.
4. Adjust the idle fuel flow to specifications by the idle adjust screw.
5. Adjust the idle speed to specifications by the air adjust screw.
6. Recheck the idle fuel flow and the idle speed.

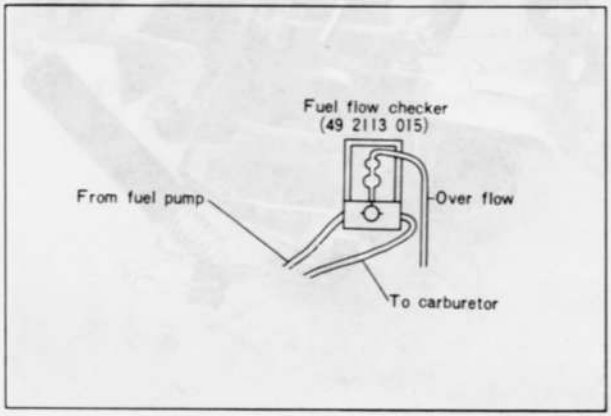

Fig. 4–3 Fuel flow check

Specifications – Idling fuel adjustment :

	Throttle opening angle	Idling fuel flow	Time required to consume 50 cc
Car with Manual Transmission	2 ± 0.5 degrees	2.2 ~ 2.4 liters/h (0.57 ~ 0.62 U.S. gallons/h)	75 sec ~ 82 sec/50 cc
Car with Automatic Transmission	2 ± 0.5 degrees	2.25 ~ 2.45 liters/h (0.59 ~ 0.63 U.S. gallons/h)	73 sec ~ 80 sec/50 cc

2. If the clearance is not within specifications, adjust the fast idle by bending the connecting rod.

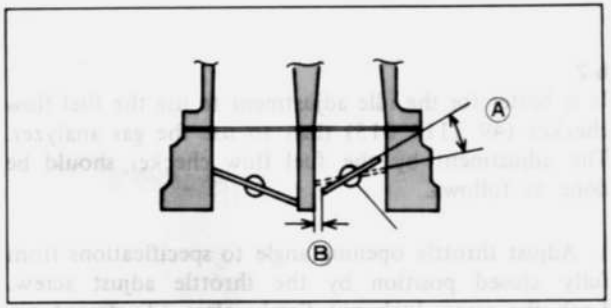

Fig. 4–4 Fast idle

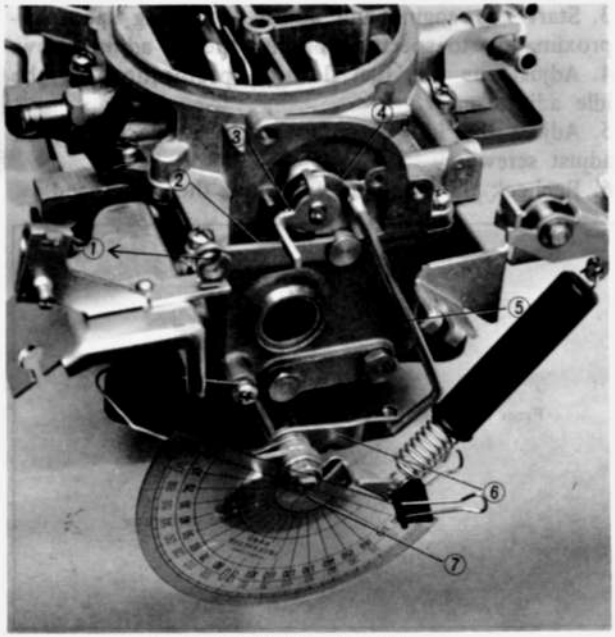

Fig. 4–5 Adjusting fast idle

1. Pulled by choke wire
2. Link
3. Choke shaft lever
4. Choke lever
5. Fast idle rod (Bend this rod for adjustment)
6. Fast idle lever
7. Throttle lever



Fig. 4–6 Fuel bowl sight glass

2. If the fuel levels are not within the specified mark in the sight glasses, remove the air horn with the floats. Then adjust the float level as follows.
3. Invert the air horn on a stand, lift the float and let it down quietly until the float seat lip just touches the needle valve. By keeping this position, take measurement of clearance (H) between the float and the face of air horn gasket. Standard of this clearance (H) is 11 mm (0.43 in).

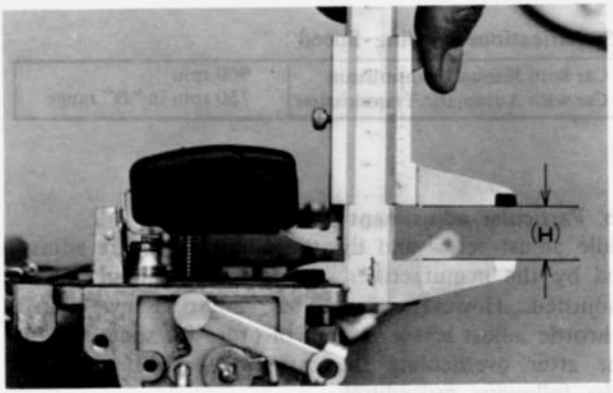

Fig. 4–7 Checking float level

4. If the clearance is not within specification, adjust the clearance (H) by bending the float seat lip (A) shown in Fig. 4–9.
5. Install the air horn and recheck the fuel levels through the sight glasses.

b. Float drop adjustment

Allow the float to lower by its own weight, and measure the distance between the bottom of float and the face of air horn gasket. The distance should be 52 ± 0.5 mm (2.05 ± 0.02 in). (Fig. 4–8)

Specifications – Fast Idle Adjustment :

	Throttle valve opening angle (A)	Clearance between throttle valve and bore (B)
Car with Manual Transmission	14.0 ~ 17.0 degrees	1.01 ~ 1.33 mm (0.0398 ~ 0.0524 in)
Car with Automatic Transmission	16.0 ~ 19.0 degrees	1.22 ~ 1.57 mm (0.0480 ~ 0.0618 in)

If the distance is not within specifications, adjust it by bending the float stopper (B) shown in Fig. 4–9.

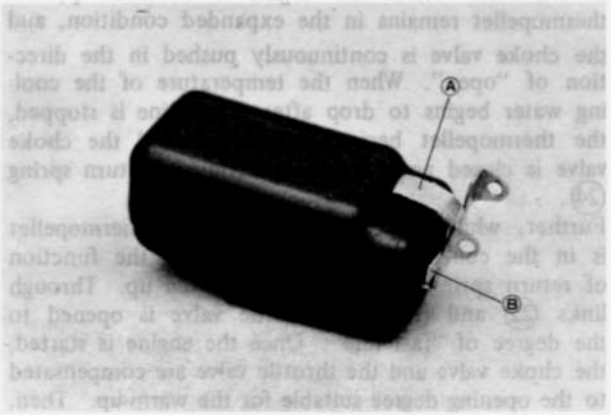

Fig. 4–9 Adjusting float
A. Float seat lip
B. Float stopper

a. Vacuum break diaphragm adjustment

Push the diaphragm plunger in until seated and check the stroke of it. This stroke should be in the following specifications.

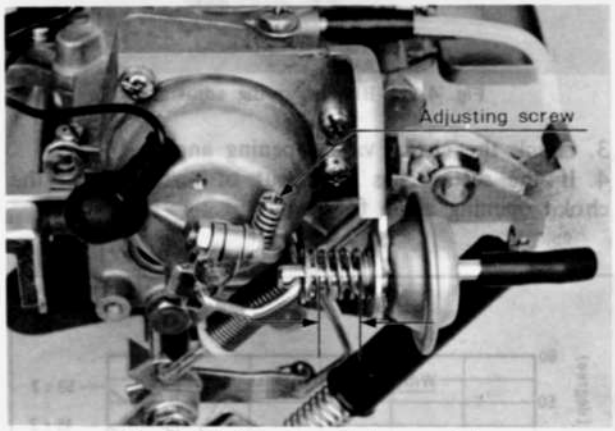

Fig. 4–10 Adjusting diaphragm stroke

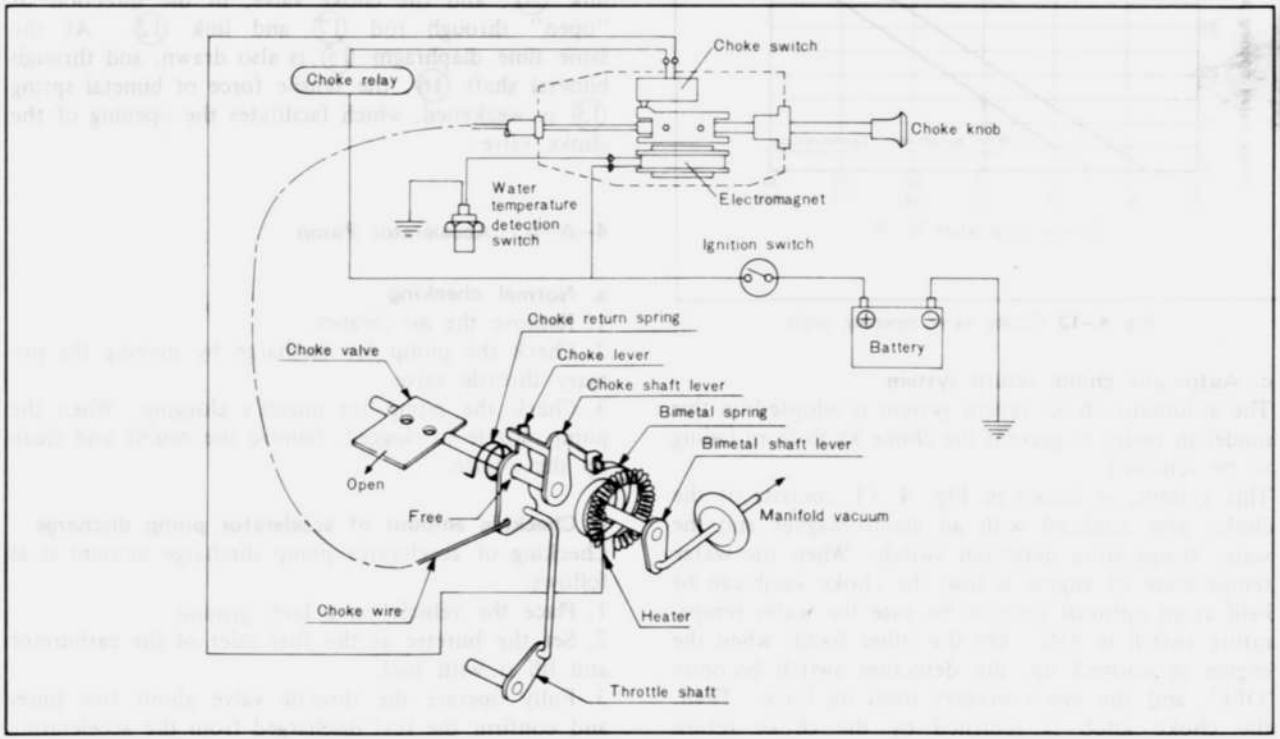

Fig. 4–11 Automatic choke system



Fig. 4–12 Bimetal spring adjustment

3. Check the choke valve opening angle.
4. If the setting has been out of order, adjust the choke opening angle following Fig. 4–13.

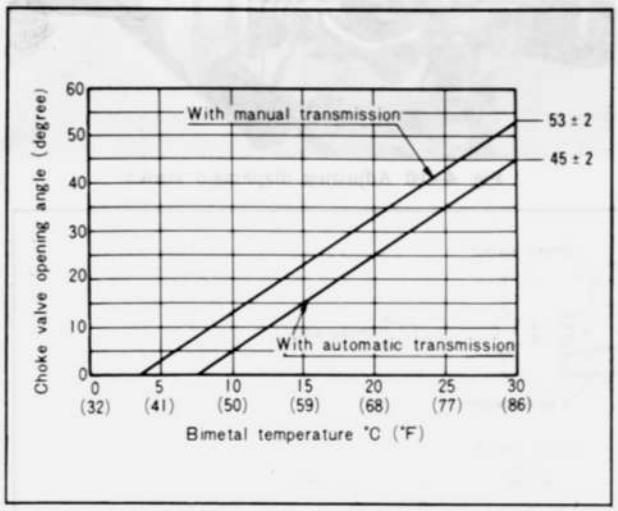

Fig. 4–13 Choke valve opening angle

c. Automatic choke return system

The automatic choke return system is adopted on this model in oeder to prevent the choke knob from failing to be returned.

This system, as shown in Fig. 4–11, consists of the choke wire attahced with an electromagnet and the water temperature detection switch. When the water temperature of engine is low, the choke knob can be held at an optional position because the water temperature switch is 'ON'. On the other hand, when the engine is warmed up, the detection switch becomes 'OFF', and the electromagnet loses its force. Then, the choke knob is returned by the choke return spring.

thus pushing the choke valve in the direction of "open" through the medium of links ⑤, ⑥, camshaft ④, link ⑩, rod ⑪, and link ⑫.

In the state where the engine is warmed up, the thermopellet remains in the expanded condition, and the choke valve is continuously pushed in the direction of "open". When the temperature of the cooling water begins to drop after the engine is stopped, the thermopellet begins to contract and the choke valve is closed again by the function of return spring ㉔.

Further, while the engine is cold, the thermopellet is in the contracted condition and by the function of return spring ㉔, rod ㉓ is pulled up. Through links ㉒ and ⑳, the throttle valve is opened to the degree of "fast idle". Once the engine is started, the choke valve and the throttle valve are compensated to the opening degree suitable for the warm-up. Then, under the negative pressure of the inlet manifold, the diaphragm is pulled. Thus, the throttle valve is compulsorily moved in the direction of "close" through link ⑳; and the choke valve, in the direction of "open" through rod ⑰ and link ⑫. At the same time diaphragm ⑮ is also drawn, and through bimetal shaft ⑯, the tensile force of bimetal spring ⑬ is weakened, which facilitates the opening of the choke valve.

4–A–6. Accelerator Pump

a. Normal checking

1. Remove the air cleaner.
2. Check the pump for discharge by moving the primary throttle valve.
3. Check the pump for nozzle's clogging. When the pump nozzle is clogged, remove the nozzle and clean up the nozzle.

b. Checking amount of accelerator pump discharge

Checking of accelerator pump discharge amount is as follows:

1. Place the vehicle on a level ground.
2. Set the burette at the fuel inlet of the carburetor and fill it with fuel.
3. Fully operate the throttle valve about five times and confirm the fuel discharged from the accelerating pump jet.

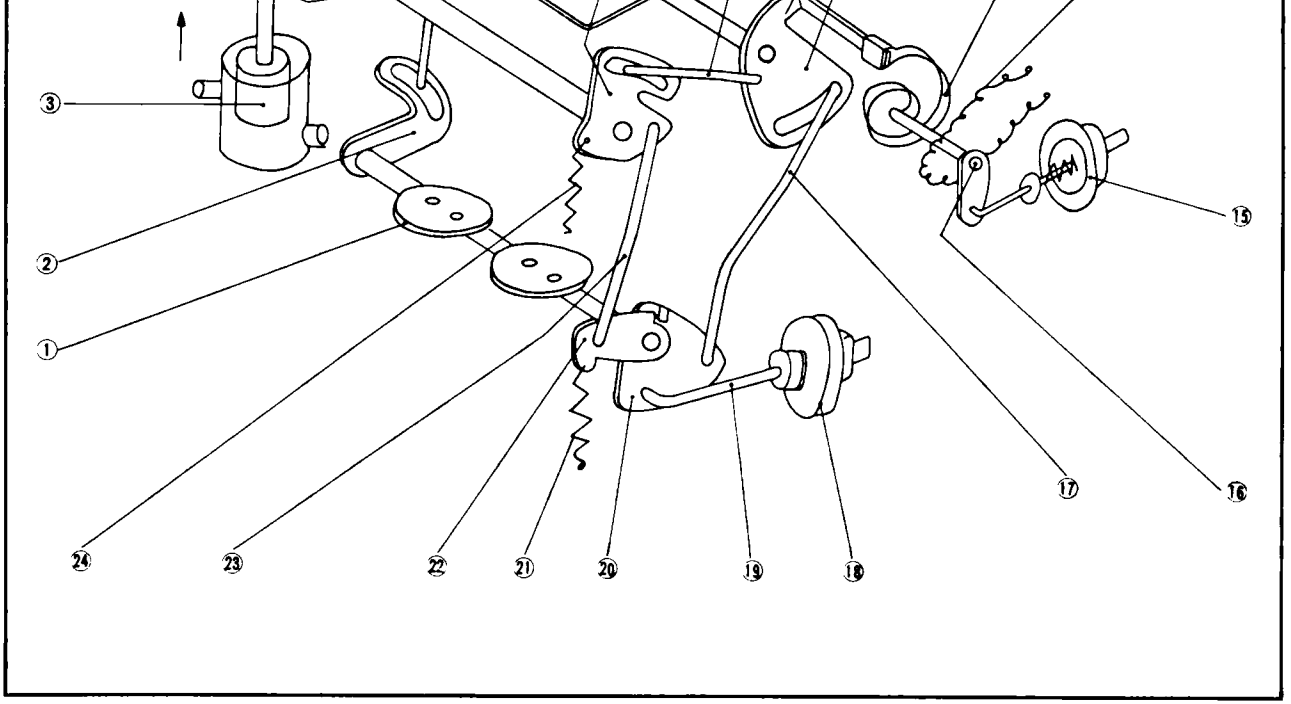

Fig. 4–14 Full automatic choke system

4. Set the fuel level in the burette at 300 mm (11.8 in) above the fuel inlet, as shown in Fig. 4–15.

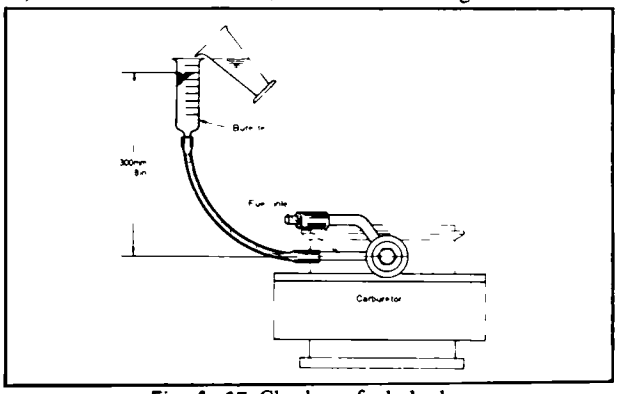

Fig. 4–15 Checking fuel discharge

5. Fully operate the throttle valve ten times according to the cycle as shown in Fig. 4–15 by means of the throttle lever or accelerator pedal and check the amount of discharge by reading the decrease of fuel in the burette.

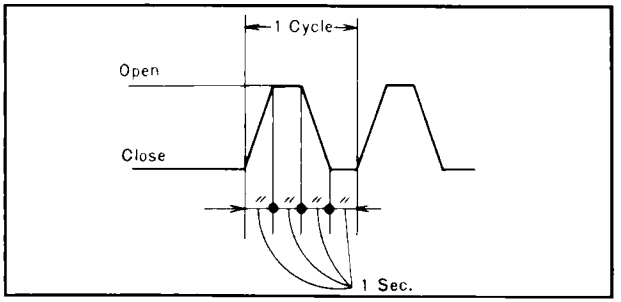

Fig. 4–16 Test pattern

6. If the discharged amount is not within specifications, check the accelerating pump piston and etc.

Specifications – Standard amount of fuel discharged out of accelerating pump

	Manual transmission	Automatic transmission
Standard	0.8 cc ± 15%/stroke	0.8cc ± 15%/stroke
Measurement	6.8 ~ 9.2 cc/10 strokes	6.8 ~ 9.2 cc/10 strokes

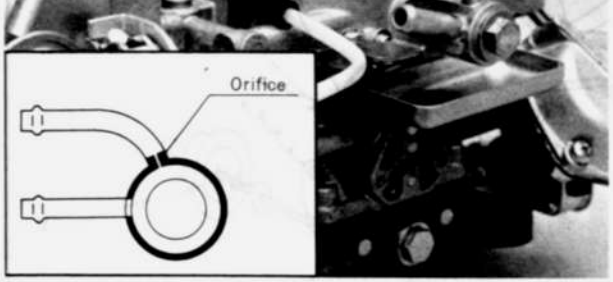

Fig. 4–17 Fuel inlet fitting

4–A–8. Sub-Zero Starting Assist Device

This is the device for increasing the starting ability of the engine in extreme cold. When the ignition key is turned to the position of "start" under the circumstances where the temperature is below −18°C (0°F), a certain amount of starting assist fluid is supplied into the carburetor by a pump installed for supplying the starting assist fluid.

Check whether the device is operating normally or not by the following procedure.

1. Make sure that there is sufficient starting assist fluid in the tank. Replenish if necessary.
2. Disconnect the hose on the side of the carburetor.
3. Disconnect the lead line of (S) terminal connected to the starter magnetic switch. This is to prevent the engine from revolving when the ignition key is turned to "start".
4. Disconnect the connector of the lead line of the thermo-unit and connect the body with the earth.
5. Turn the ignition key to the position of "start" and make sure that the starting assist fluid sprouts out from the tip of a hose for about 5 seconds.
6. Make sure that the check valve fitted on the carburetor is in proper working condition by blowing through it with your mouth.
7. Reinstall the rubber hose and wires, which have been removed for the check-up to their proper positions.

Note :

a. Check the level of the starting assist fluid at suitable internals and replenish as required so that it will not run short.

b. The mixture proportion of starting assist fluid should be 90% of anti-freeze solution for Aluminum engine plus 10% of water.

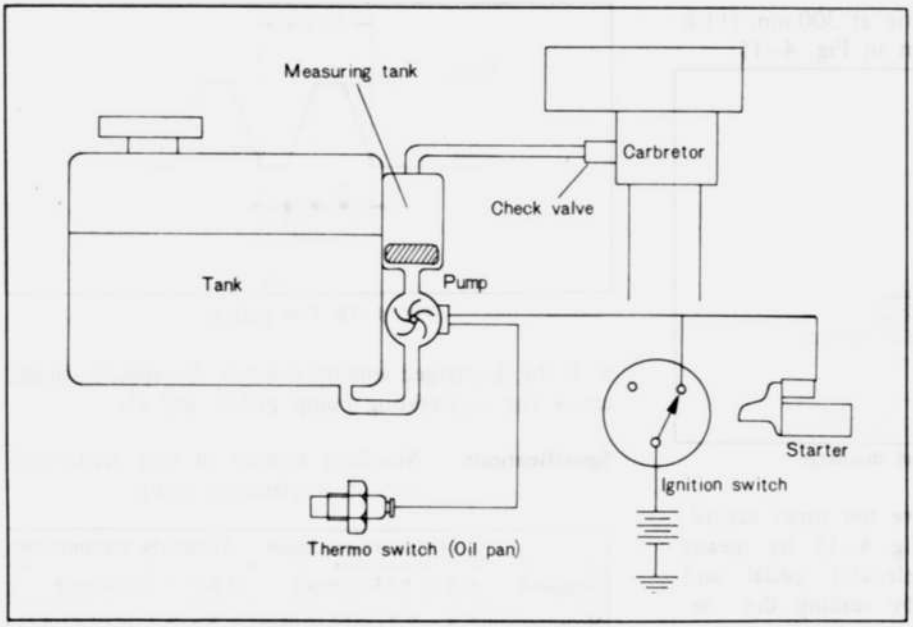

Fig. 4–19
Sub-zero starting assist system

Compression spring Ⓑ works as an accelerator return spring with the same force as when spring Ⓐ is in operation. Consequently even if spring Ⓐ should become broken during operation, no adverse effects will occur in the operation of the accelerator control.

Checking :

1. Check that the throttle valve opens compeltely with the safety return system in set position.
2. Turn the counter ① by hand anticlockwise and make sure that the upper end of rod ② slips off of counter ① instantaneously.



Fig. 4–20 Safety throttle return system
A. Throttle return spring
B. Safety return spring
1. Counter
2. Safety return spring rod
3. Link
4. Throttle lever

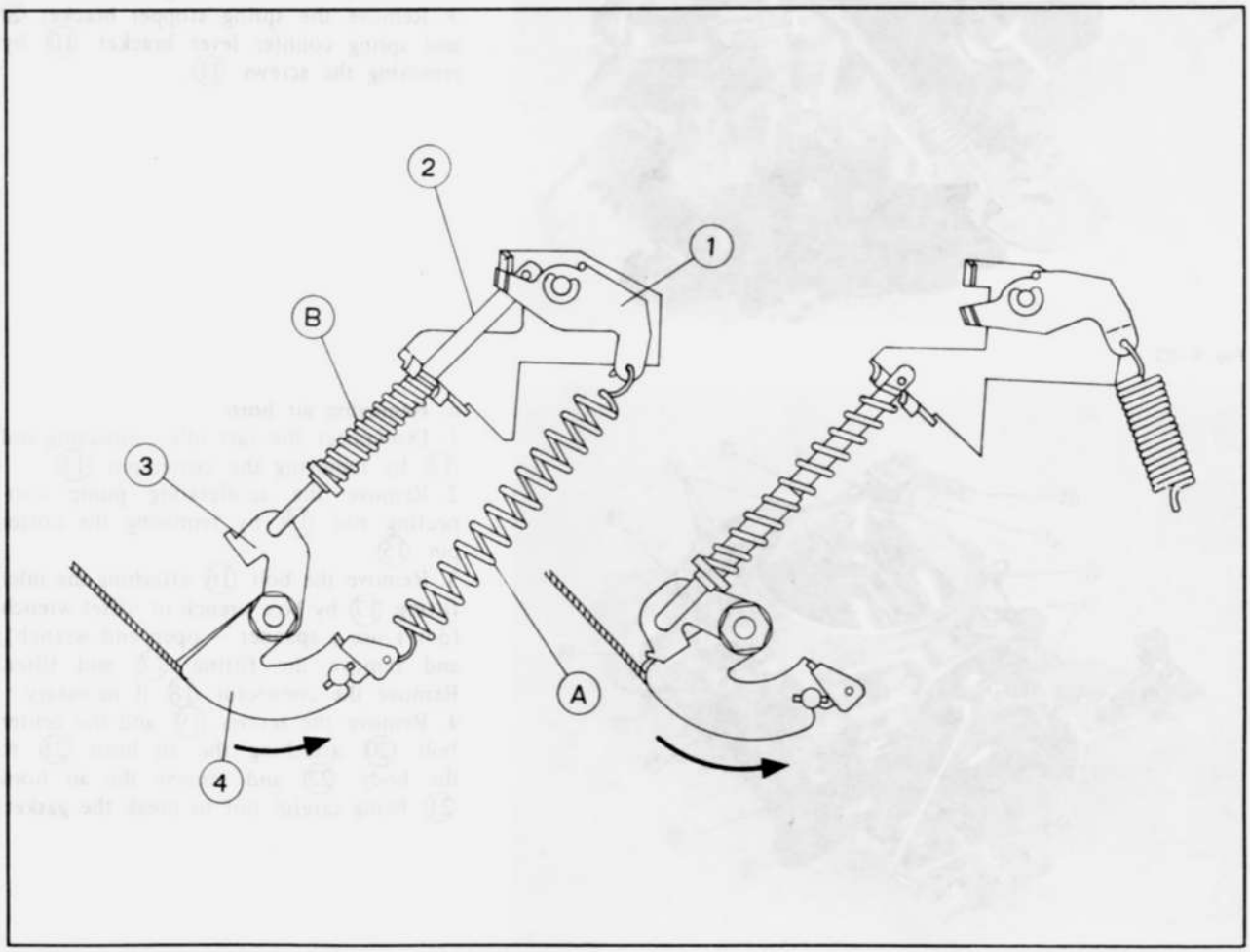

Fig. 4–21 Safety throttle return system

Fig. 4–22

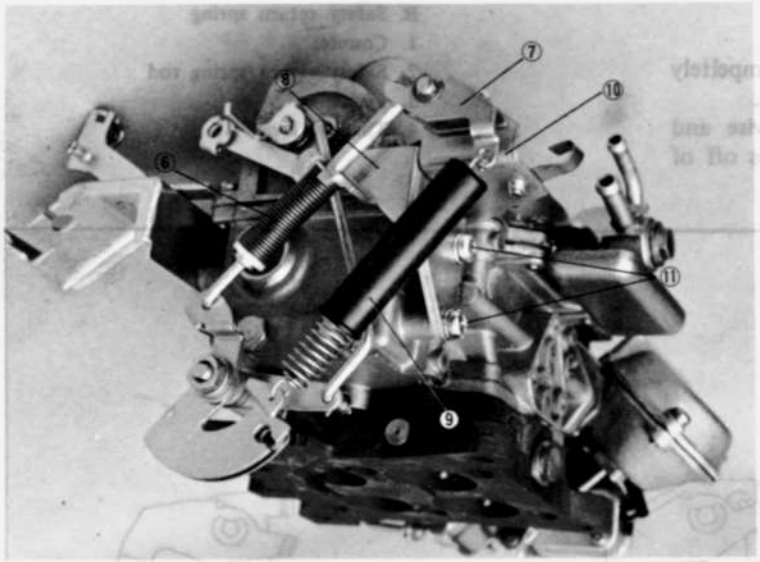

Fig. 4–23

b. Removing throttle return springs

1. Dislocate the safety return spring ⑥ by turning the counter lever ⑦ anticlockwise and remove the spring ⑥ from the spring stopper bracket ⑧.
2. Remove the throttle return spring ⑨ deliberately so as not to get hurt.
3. Remove the spring stopper bracket ⑧ and spring counter lever bracket ⑩ by removing the screws ⑪.

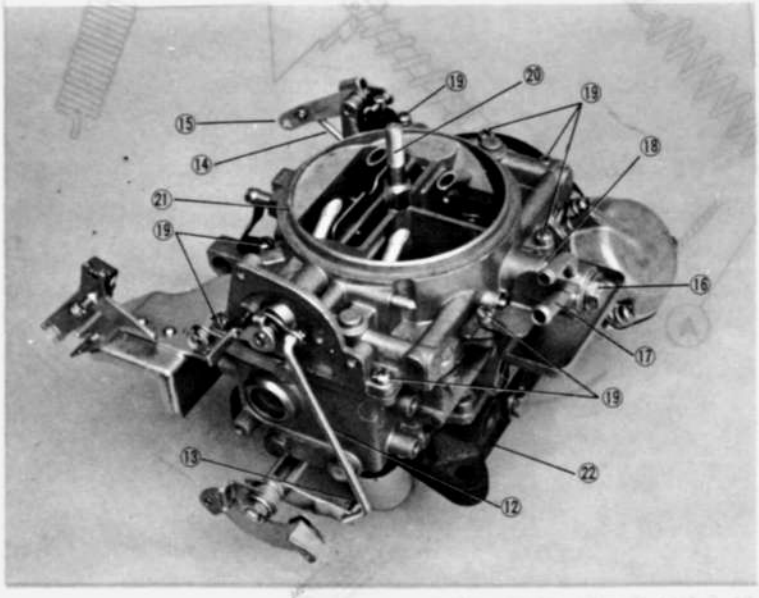

Fig. 4–24

c. Removing air horn

1. Disconnect the fast idle connecting rod ⑫ by removing the cotter pin ⑬.
2. Remove the accelerating pump connecting rod ⑭ by removing the cotter pin ⑮.
3. Remove the bolt ⑯ attaching the inlet fitting ⑰ by box wrench or offset wrench (don't use a spanner – open end wrench), and remove the fitting ⑰ and filter. Remove the connector ⑱ if necessary.
4. Remove the screws ⑲ and the center bolt ⑳ attaching the air horn ㉑ to the body ㉒ and remove the air horn ㉑ being careful not to break the gasket.

4. Remove the screws attaching the throttle body (30) to the carburetor body (22) and remove the body.

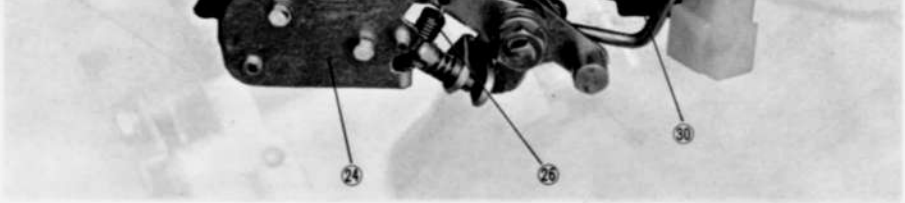

Fig. 4–25

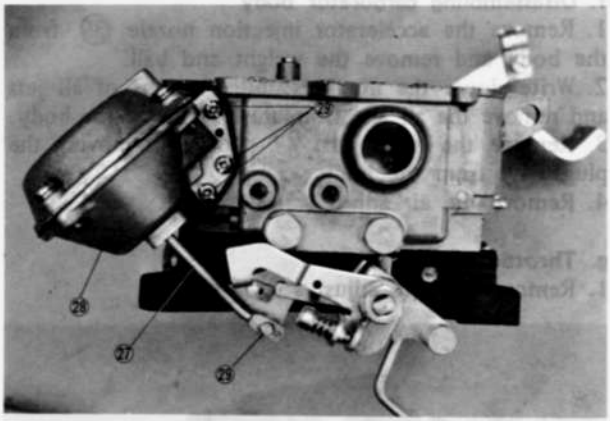

Fig. 4–26

e. Disassembling air horn

1. Remove the float retaining pin (31), float (32) and needle valve (33).
2. Remove the accelerator pump lever (34) by removing the screw (35) and pull out the pump piston (36).
3. Remove the starting assist fluid inlet fitting (37).
4. Remove the slow air bleeds (38).

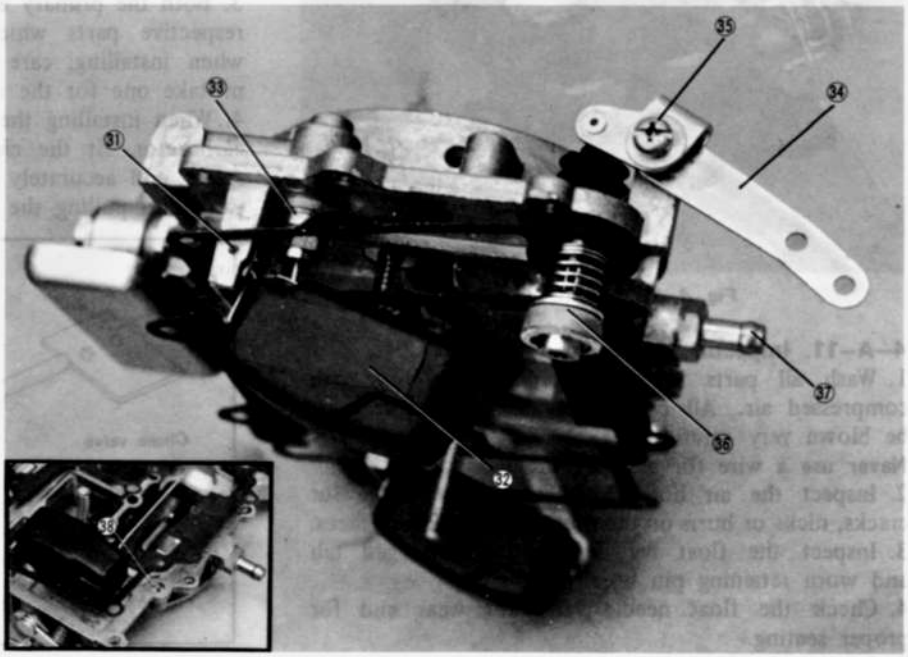

Fig. 4–27



48. Secondary main jet

f. Disassembling carburetor body

1. Remove the accelerator injection nozzle (39) from the body and remove the weight and ball.
2. Write down the numbers and positions of all jets and remove the all jets from the surface of the body.
3. Remove the main jets (47) (48) by removing the plugs (49) from the body.
4. Remove the air adjust screws (50).

g. Throttle chamber

1. Remove the idle adjust screw (51).

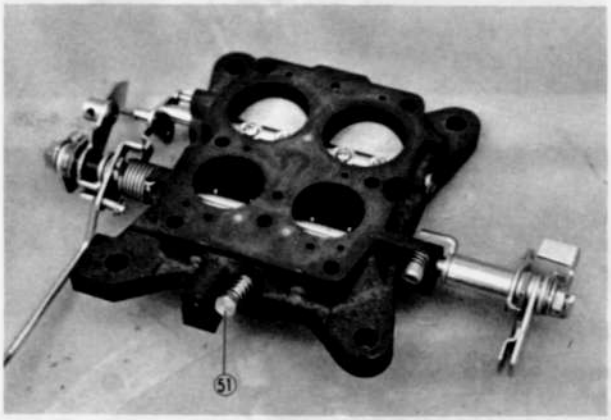

Fig. 4–29 Throttle chamber

4–A–11. Inspecting Carburetor

1. Wash all parts in clean gasoline and dry with compressed air. All passages of the carburetor must be blown very carefully.
Never use a wire for cleaning the jets.
2. Inspect the air horn, body and body flange for cracks, nicks or burrs on their respective gasket surfaces.
3. Inspect the float for deformation, damaged tab and worn retaining pin bore.
4. Check the float needle valve for wear and for proper seating.
5. Inspect the filter for rust and damage.
6. Check the choke valve for proper choking, smooth movement and excessive play of choke shaft.
7. Check all jets and air bleeds for clog, damaged threads, damaged head slots and damaged holes.
8. Check the primary and secondary throttle valves if these close firmly or not, check them for smooth movement and excessive play of the shafts.
9. Check the diaphragm of vacuum control unit for damage. Check the spring for weakness.

4–A–12. Carburetor Assembly

To assemble, follow the disassembly procedures in the reverse order with the following cautions.
1. Discard the old gaskets and use new ones.
2. Confirm that all parts are in good condition and clean.
3. Both the primary and secondary systems have their respective parts which are of a shape. Therefore, when installing, care should be taken so as not to mistake one for the other.
4. When installing the bimetal spring housing to the carburetor, fit the choke shaft lever to the bimetal spring end accurately by means of closing the choke valve and pulling the vacuum break diaphragm shaft.

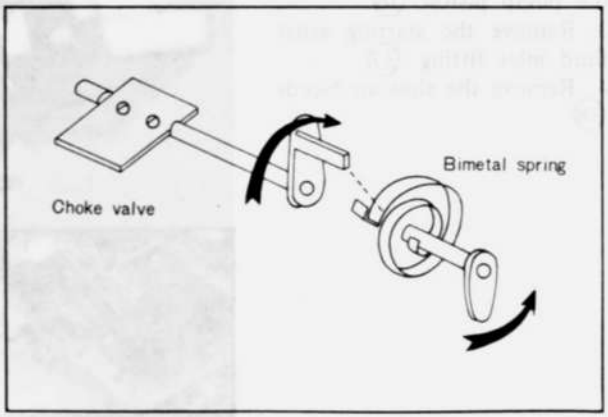

Fig. 4–30 Installing bimetal spring housing

3. Connect the pressure gauge to the fuel inlet hose.

Note:
It is recommended to place the pressure gauge outside the engine compartment using a hose of adequate length. In this case, place the gauge almost at the height of carburetor.

4. Turn the ignition switch on and note the pressure reading.
If the reading is not within the specifications mentioned below, the pump is damaged and should be repaired or replaced.
If the pump pressure is within the specifications, perform the test for volume.

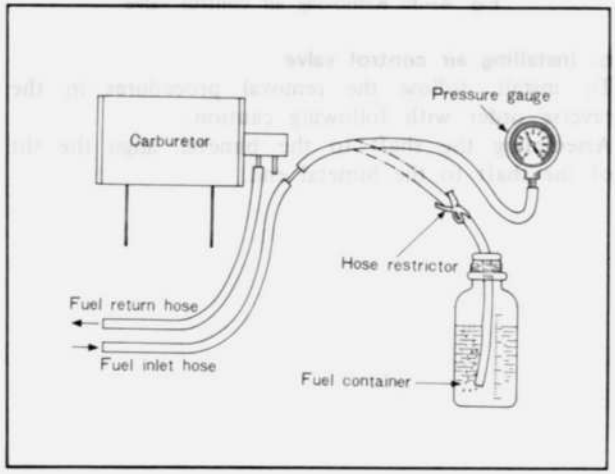

Fig. 4–31 Testing fuel pump

b. Volume test
Turn the ignition switch on, open the hose restrictor and expel the fuel into the container, while observing the expelling amount for one minute. Close the restrictor and read the amount.

Specification – Fuel pump

Fuel pressure	0.25 ~ 0.35 kg/cm² (3.55 ~ 4.98 lb/in²)
Feeding capacity	More than 1,150 cc/min (1.22 U.S. quart/min)

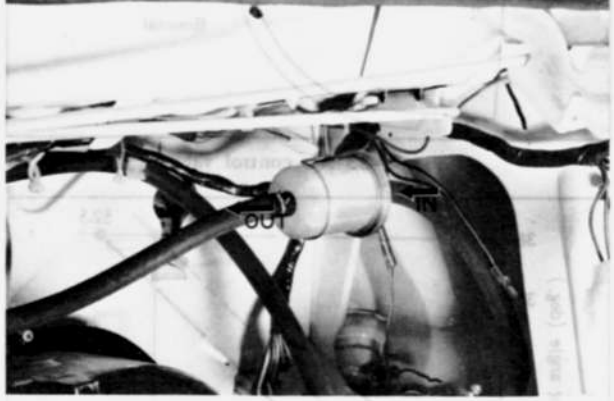

Fig. 4–32 fuel filter

4–D. FUEL LINES

Inspect the fuel lines for leaks and tighten the fuel line connections to prevent leakage. It is important that the fuel system should be kept clean and free from water. In an excessive amount of dirt or water is found, drain the fuel from the tank and blow out the fuel lines with compressed air.

4–E. FUEL TANK

Inspect the fuel tank for cracks and corrosion. If any defect is present, repair or replace as necessary.

Note :
Before repairing, clean the fuel tank thoroughly with steam and sufficiently to remove all explosive gas.

4–F. AIR CLEANER

4–F–1. Air Cleaner Element
The air cleaner is of a paper filter type. The element should be serviced following the maintenance schedule. To clean, blow the element with compressed air at low pressure.



Fig. 4–33 Air control valve

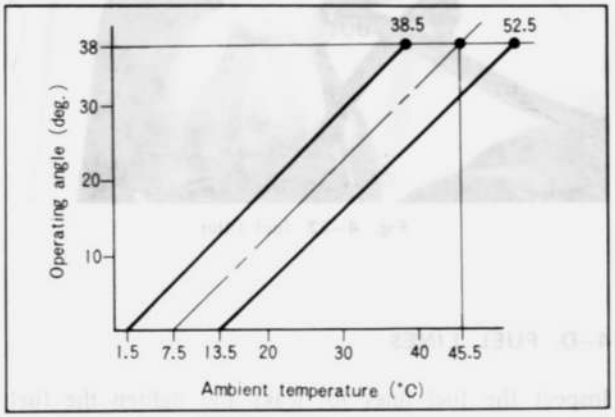

Fig. 4–34 Valve opening angle

3. Remove the bimetal by removing the set screw.



Fig. 4–35 Removing air control valve

b. Installing air control valve

To install, follow the removal procedures in the reverse order with following caution.

Assembling the shaft to the bimetal, align the slit of the shaft to the bimetal end.

5-A-1. Checking Battery ..... 5 : 1
5-A-2. Charging Battery ..... 5 : 1
5-B. IGNITION SYSTEM ..... 5 : 2
5-C. DISTRIBUTOR ..... 5 : 3
5-C-1. Adjusting Point Gap ..... 5 : 3
5-C-2. Adjusting Ignition Timing ..... 5 : 3
5-C-3. Removing Distributor ..... 5 : 4
5-C-4. Testing Distributor ..... 5 : 4
5-C-5. Disassembling Distributor ..... 5 : 5
5-C-6. Inspecting Distributor ..... 5 : 5
5-C-7. Assembling Distributor ..... 5 : 6
5-C-8. Installing Distributor ..... 5 : 6
5-D. IGNITION COIL ..... 5 : 7
5-E. SPARK PLUG ..... 5 : 7
5-E-1. Spark Plug Heat Range ..... 5 : 7
5-E-2. Removing Spark Plug ..... 5 : 7
5-E-3. Checking Spark Plug ..... 5 : 7
5-E-4. Installing Spark Plug ..... 5 : 7
5-F. ALTERNATOR ..... 5 . 8
5-F-1. Precautions on Service ..... 5 · 8
5-F-2 Checking Charging System on Car .... 5 : 8
5-F-3. Disassembling Alternator ..... 5 . 9
5-F-4. Inspecting Alternator 5 9
5-F-5. Assembling Alternator ..... 5 . 10
5-G. REGULATOR ..... 5 : 11
5-G-1. Checking Constant Voltage Relay ..... 5 : 11
5-G-2. Checking Pilot Lamp Relay ..... 5 : 11
5-G-3. Adjusting Regulator ..... 5 : 11
5-H. STARTING MOTOR ..... 5 : 12
5-H-1. Checking Starting Circuit ..... 5 : 12
5-H-2. Testing Starting Motor ..... 5 : 12
5-H-3. Disassembling Starting Motor ..... 5 : 12
5-H-4. Inspecting Starting Motor ..... 5 : 13
5-H-5. Magnetic Switch Test ..... 5 : 14
5-H-6. Assembling Starting Motor ..... 5 : 15
SPECIAL TOOLS ..... 5 : 15

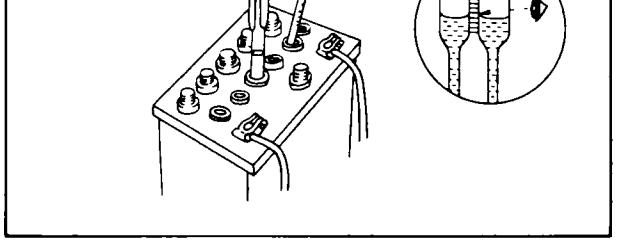

Fig. 5–1 Checking specific gravity

1. Check the electrolyte level in each cell of the battery, and add distilled water to maintain the solution 10 ~ 20 mm (0.4 ~ 0.8 in) above the plates.
Do not overfill.

ric acid or dust and dirt, wash these off with clean water and dry thoroughly before charging the battery.
2. Check the electrolyte level and add distilled water if necessary.

Note:
If addition of distilled water is neglected, the plates and separators will become exposed to air, causing a sulphation to occur on the plates.
Do not add dilute sulphuric acid unless the electrolyte has overflown or led out.

3. Connect the battery to the charger ensuring that the polarities are correct.

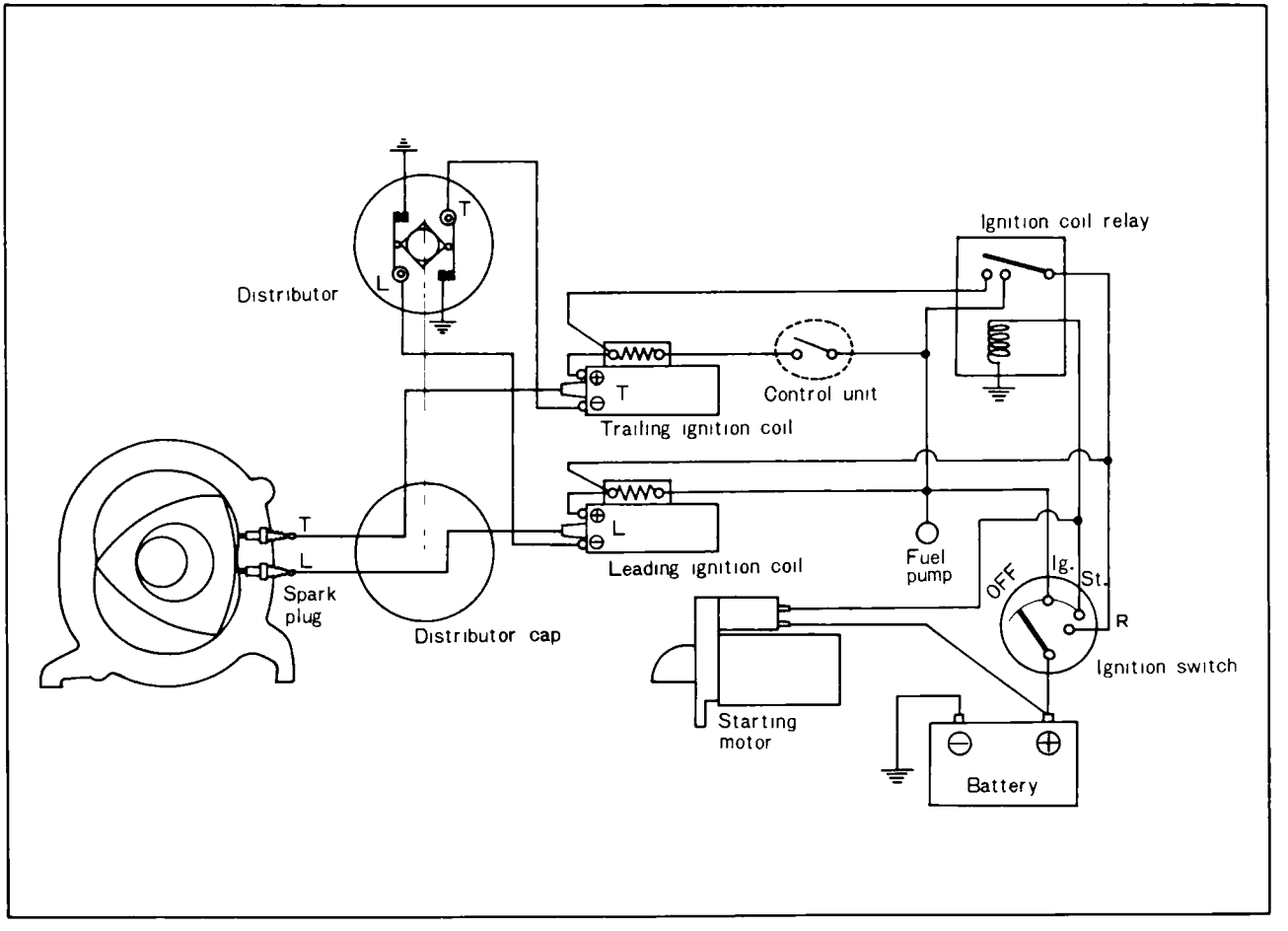

Fig. 5–2 Ignition system

The battery should be kept by the use of cooling water to prevent the temperature of the electrolyte from exceeding 55°C (131°F), otherwise the charging should be discontinued temporarily when the temperature rises above this point.

5–B. IGNITION SYSTEM

In the rotary engine, two spark plugs are provided in

The coil with external resistor is used.

The ignition coil relay is equipped to short-circuit the external resistor in starting (when the starter is running) so as to increase the secondary voltage and improve the startability.

Short-circuiting of resistor by the ignition coil relay is made on the trailing side only and that on the leading side by the ignition switch. The ignition coil relay has another contact point which serves to energize the ignition circuit for the fuel pump, etc.

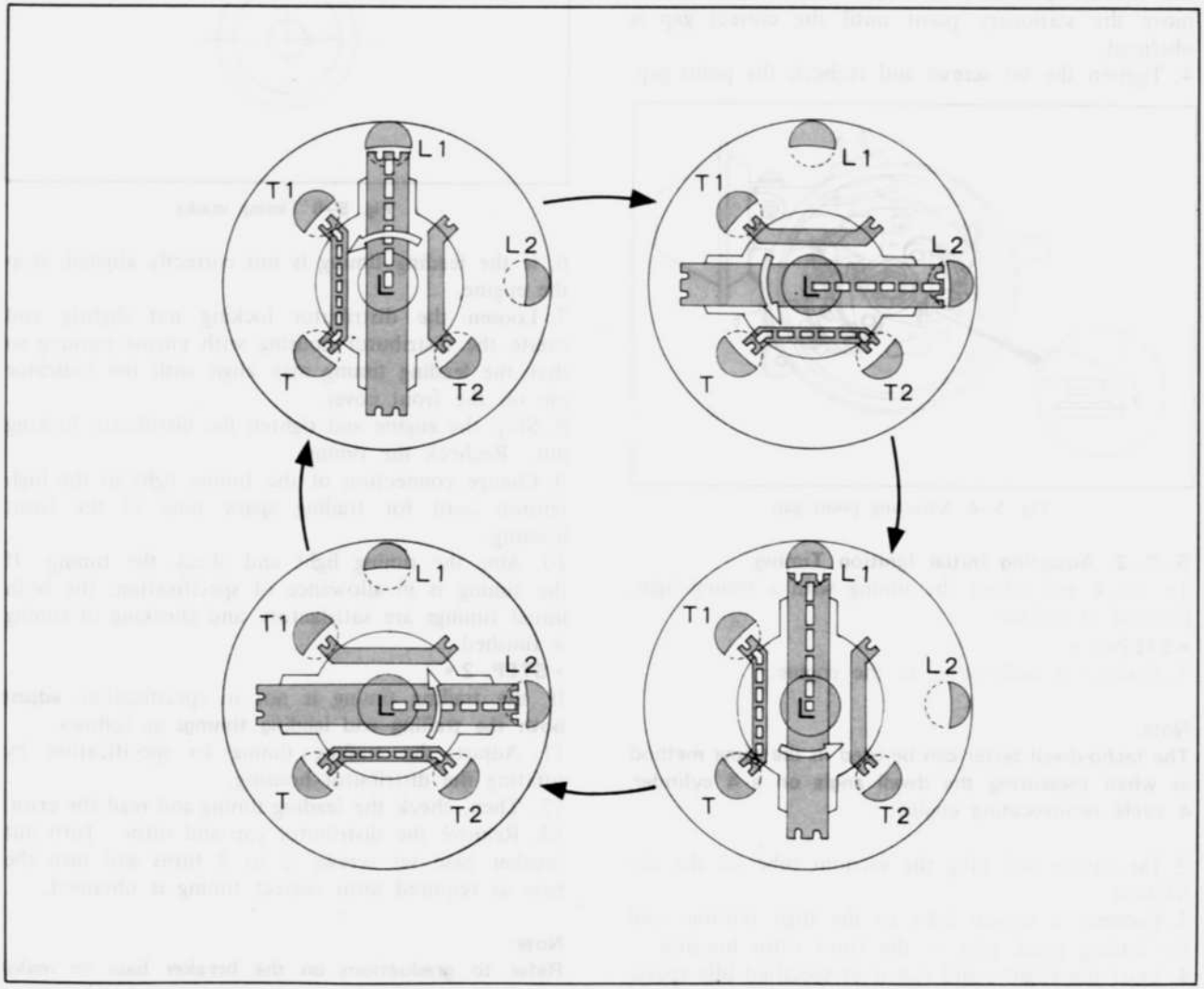

Fig. 5–3 Distribution of ignition

gauge to check the gap.
To check and adjust the breaker points with a feeler gauge:
1. Check the breaker points alignment. If necessary, bend the stationary point bracket so as to obtain contact in the center of the breaker points.
2. Crank and stop the engine when the rubbing block on the breaker arm just rests on the highest point of the cam.
3. Insert a feeler gauge of 0.45 mm (0.018 in) between the breaker points, loosen the two set screws and move the stationary point until the correct gap is obtained.
4. Tighten the set screws and recheck the point gap.

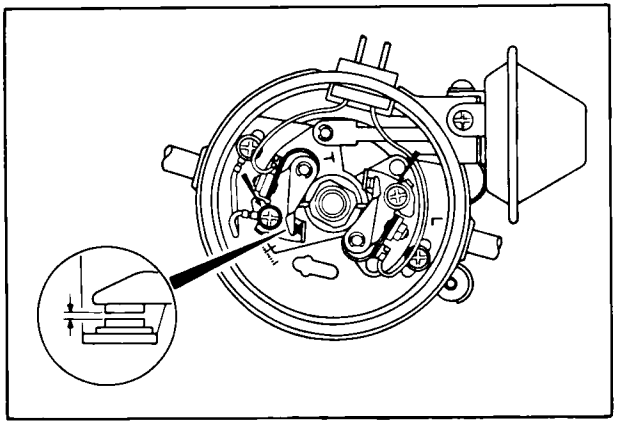

Fig. 5–4 Adjusting point gap

5–C–2. Adjusting Initial Ignition Timing
To check and adjust the timing with a timing light, proceed as follows:
*** STEP–1 ***
1. Connect a tachometer to the engine.

Note:
The tacho-dwell tester can be used in the same method as when measuring the dwell angle on a 4 cylinder, 4 cycle reciprocating engine.

2. Disconnect and plug the vacuum tube on the distributor.
3. Connect a timing light to the high tension cord for leading spark plug of the front rotor housing.
4. Start the engine, and run it at specified idle speed.
(See page 4 : 2)

5. Aim the timing light at the timing indicator pin on the front cover.

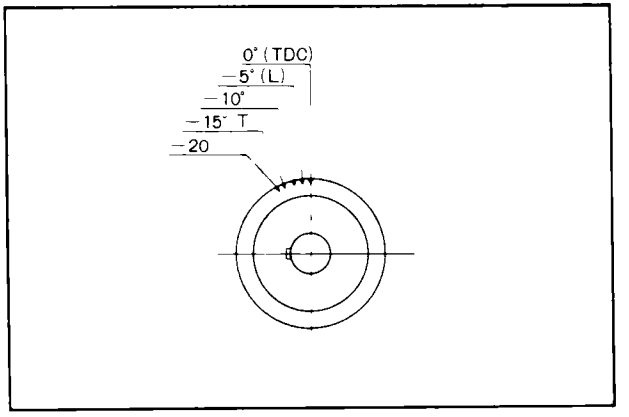

Fig. 5–6 Timing marks

6. If the leading timing is not correctly aligned, stop the engine.
7. Loosen the distributor locking nut slightly and rotate the distributor housing with engine running so that the leading timing may align with the indicator pin on the front cover.
8. Stop the engine and tighten the distributor locking nut. Recheck the timing.
9. Change connection of the timing light to the high tension cord for trailing spark plug of the front housing.
10. Aim the timing light and check the timing. If the timing is in allowance of specification, the both initial timings are satisfactory and checking of timing is finished.
*** STEP–2 ***
If the trailing timing is not in specification, **adjust both the trailing and leading timings** as follows:
11. Adjust the trailing timing to specification by rotating the distributor housing.
12. Then, check the leading timing and read the error.
13. Remove the distributor cap and rotor. Turn out breaker base set screws ½ to 2 turns and turn the base as required until correct timing is obtained.

Note:
Refer to graduations on the breaker base to make adjustment easier.

One graduation correspond to eccentric shaft angular displacement of 4 degrees.

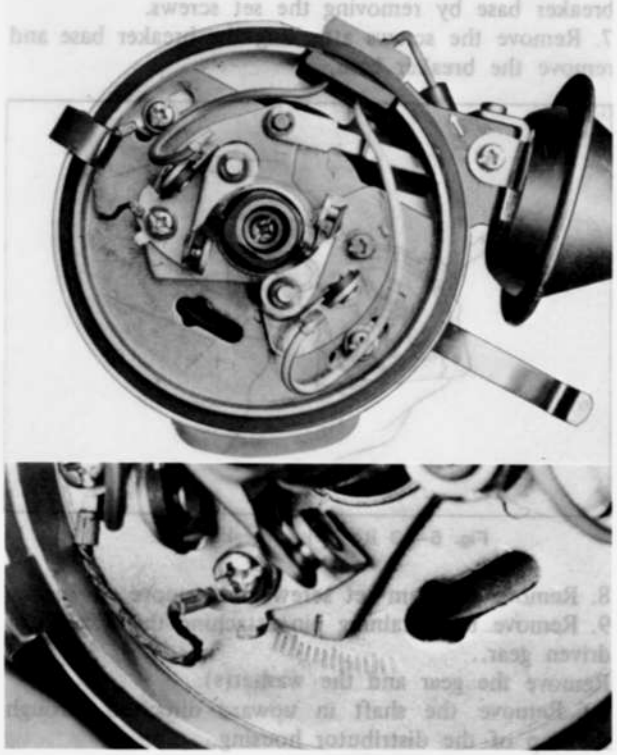

Fig. 5–8 Adjusting timing

14. Recheck the timing. If the timing mark is not correctly aligned, repeat this performing until the correct timing is obtained.

Specifications — Initial timing

Leading	−5° at idle speed
Trailing	−15° ± 4° at idle speed

5–C–3. Removing Distributor

1. Remove the distributor cap and disconnect the vacuum tube from the vacuum advance unit.
2. Disconnect the coupler of primary wires from the distributor.
3. Remove the distributor attaching nut.
4. Pull the distributor out of the front cover.

5–C–4. Testing Distributor

a. Dwell angle test

1. Disconnect and plug the distributor vacuum tube and connect the tester following the instructions of the manufacturer. Then start the engine and let it idle.
2. Turn the cylinder selector to the **4 cylinder, 4 cycle** position.
3. Read the dwell angle on the dwell meter and compare the reading to specification. (55 ~ 61° in this case)
4. If the dwell angle is below specification, the breaker point gap is too wide. If the dwell angle is above specification, the breaker point gap is too close.

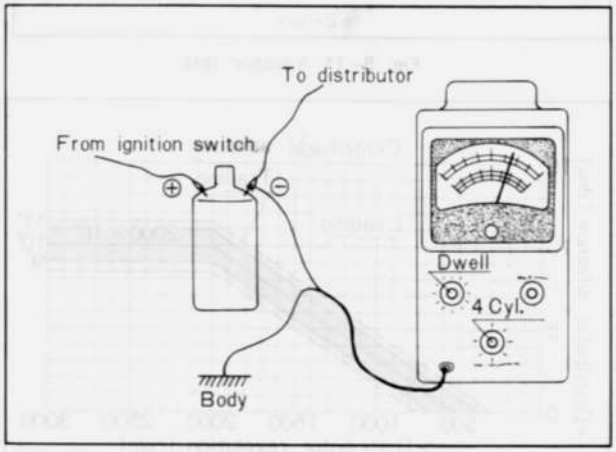

Fig. 5–10 Checking dwell angle

b. Dwell angle adjustment

If the dwell angle is not within specifications, proceed as follows:

1. Remove the coil high tension cords from the distributor and ground them.
2. Remove the distributor cap and place them out of the way.
3. Connect the **remote starter switch** (49 0242 685A) in the circuit.
4. Loosen the breaker point attaching screws.
5. With the ignition switch on, crank the engine with a remote starter switch and adjust the gap to specification.
6. Release the remote starter switch and tighten the breaker point attaching screws.
7. Since the adjustment may have changed when the attaching screw was tightened, crank the engine again

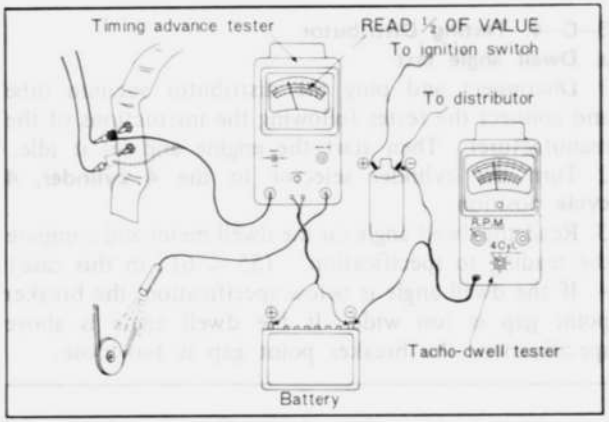

Fig. 5–11 Advance test

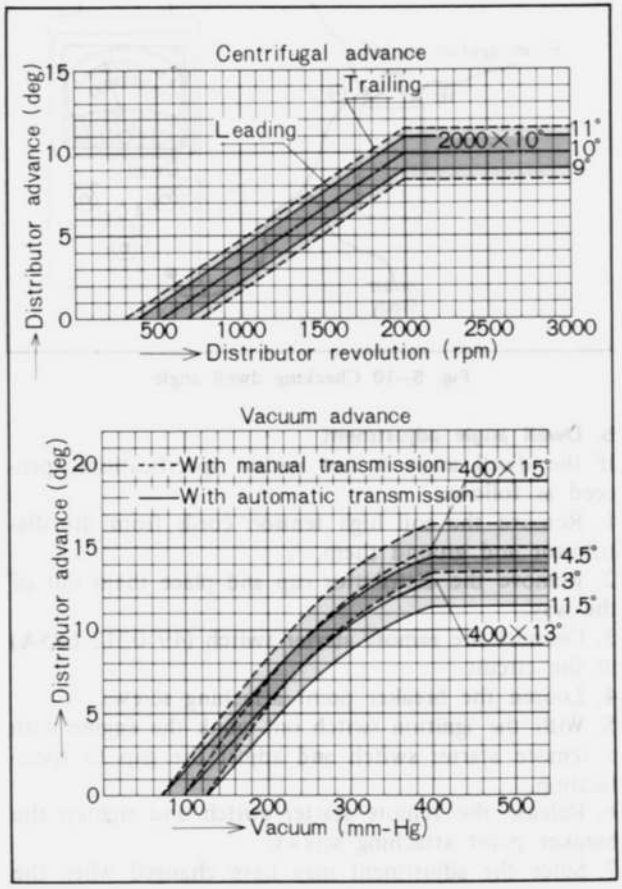

Fig. 5–12 Advance characteristic

4. Remove the screws attaching the condensers.
5. Remove the primary wires (rubber block) from the housing.
6. Remove the contact point assemblies from the breaker base by removing the set screws.
7. Remove the screws attaching the breaker base and remove the breaker base.

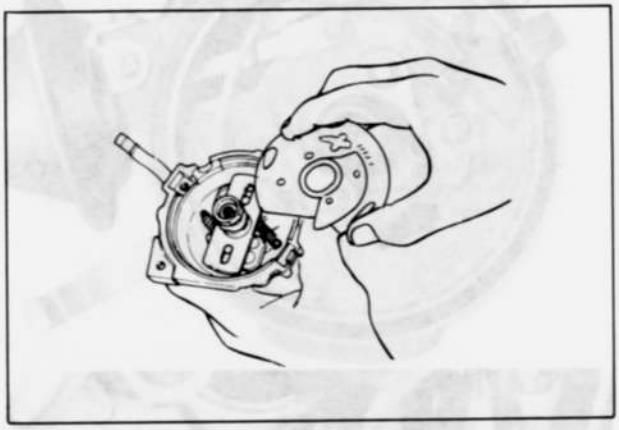

Fig. 5–13 Removing breaker base

8. Remove the cam set screw and remove the cam.
9. Remove the retaining pin attaching the distributor driven gear.
Remove the gear and the washer(s).
10. Remove the shaft in upward direction through the top of the distributor housing.
11. Remove the governors by removing the springs and clips.

5–C–6. Inspecting Distributor

a. Checking cap

Inspect the distributor cap for crack, carbon runners and evidence of arcing. If any of these conditions exists, the cap should be replaced. Clean any corroded high tension terminals.

b. Checking rotor

Inspect the rotor for cracks or evidence of excessive burning at the end of the metal strip. If any of these conditions exists, the rotor should be replaced.

c. Checking contact points

Inspect the points for wear, burning, transferred metal and pitting. If they are slight, the points can be

sence of a tester, check by substituting a new condenser.

5–C–7. Assembling Distributor

Assemble the distributor in the reverse order of disassembling.

5–C–8. Installing Distributor

1. Turn the eccentric shaft until the TDC mark on the drive pulley aligns with the indicator pin on the front cover. (See Fig. 5–6)
2. Align the tally mark on the distributor housing and driven gear as shown in Fig. 5–14.
3. Insert the distributor so that the distributor lock bolt is located in the center of the slit, and engage the gears.
4. Rotate the distributor clockwise until the leading contact point starts to separate, and tighten the distributor attaching nut.
5. Install the distributor cap and connect the primary wires coupler.
6. Set the timing with a timing light, then tighten the distributor attaching nut. (Refer to Par. 5–C–2)
7. Connect the vacuum tube to the vacuum advance unit.

Fig. 5–14 Aligning tally mark

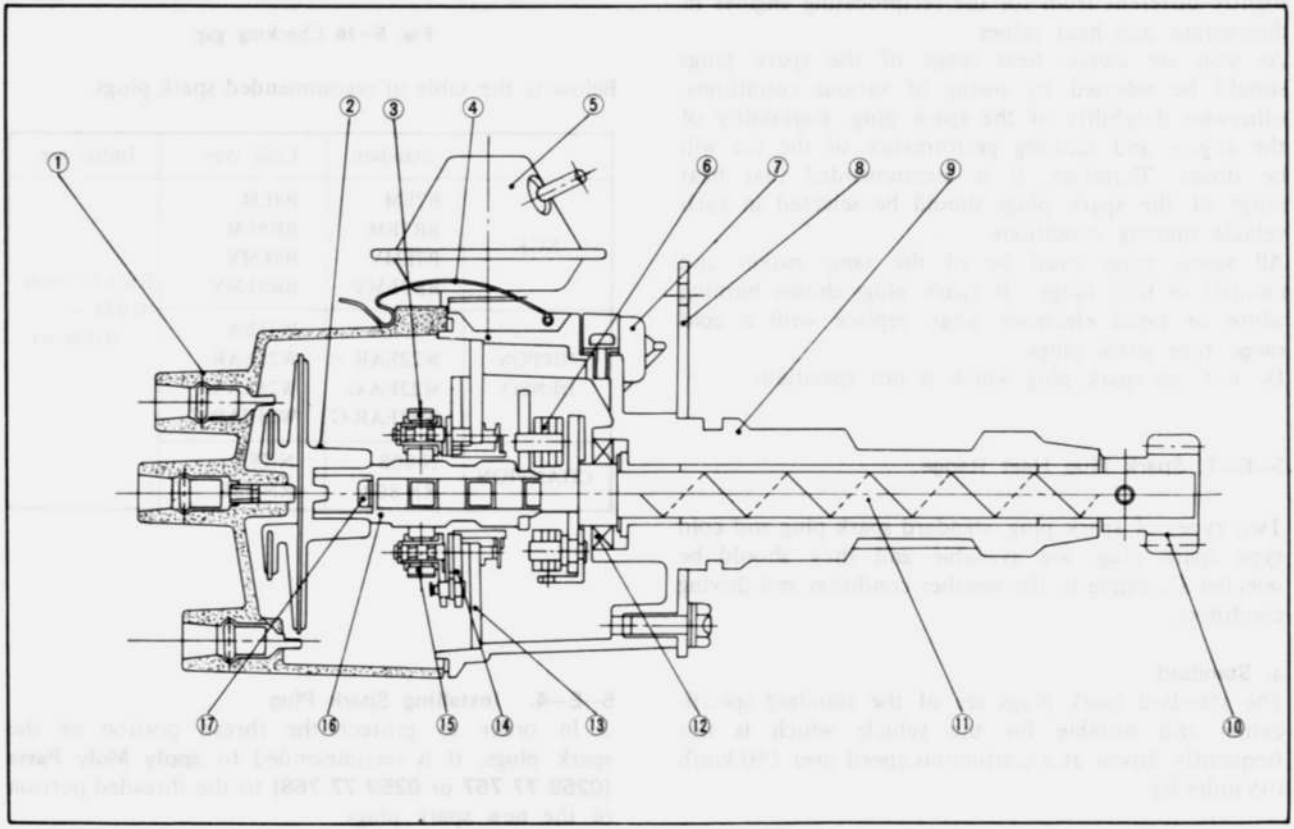

Fig. 5–15 Distributor components

1. Cap
2. Rotor
3. Leading breaker point
4. Clamp
5. Vacuum diaphragm
6. Governor
7. Condenser
8. Lock plate
9. Distributor body
10. Distributor driven gear
11. Shaft
12. Oil seal
13. Breaker base (Leading)
14. Breaker base (Trailing)
15. Trailing breaker point
16. Cam
17. Cam set screw

Coil	Type	Resistance	Resistance
Leading	HP5-13J	1.4 Ω/20°C	1.35 Ω/20°C
Trailing	HP5-13E	1.6 Ω/20°C	1.46 Ω/20°C

5–E. SPARK PLUG

On this engine, 2 spark plugs are provided in each working chamber so as to enable the engine to obtain the optimum combustion efficiency under any operating condition. These spark plugs for this engine are slightly different from for the reciprocating engines in dimensions and heat values.

As you are aware, heat range of the spark plugs should be selected by owing of various conditions, otherwise durability of the spark plug, startability of the engine and running performance of the car will be down. Therefore, it is recommended that heat range of the spark plugs should be selected in each vehicle running conditions.

All spark plugs must be of the same maker and number or heat range. If spark plugs shown burning white or rapid electrode wear, replace with a **cold range type** spark plugs.

Do not use spark plug which is not specified.

5–E–1. Spark Plug Heat Range

Two types of spark plug, standard spark plug and cold type spark plug, are available and they should be selected according to the weather condition and driving condition.

a. Standard

The standard spark plugs are of the standard specification and suitable for the vehicle which is not frequently driven at a continuous speed over 150 km/h (95 miles/h).

b. Cold type

The cold type spark plugs are of a heat range higher than the standard spark plugs. They should be used in case the standard spark plugs are overheated, or for the vehicles which is frequently driven at a continuous speed of over 150 km/h (95 miles/h).

cleaner.

3. Inspect each spark plug for make, and heat range.

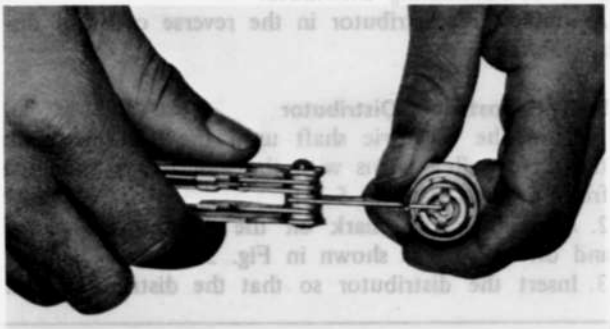

Fig. 5–16 Checking gap

Below is the table of recommended spark plugs.

	Standard	Cold type	Initial gap
NGK	B7EM BR7EM B7EMV BR7EMV	B8EM BR8EM B8EMV BR8EMV	0.6 ~ 0.7 mm (0.024 ~ 0.028 in)
NIPPON-DENSO	W22EA W22EAR W22EA-G W22EAR-G	W25EA W25EAR W25EA-G W25EAR-G	
CHAMPION	N-80B RN-80B	N-78B RN-78B	

5–E–4. Installing Spark Plug

1. In order to protect the thread portion of the spark plugs, it is recommended to **apply Moly Paste (0259 77 767 or 0259 77 768)** to the threaded portion of the new spark plugs.
2. Thread the spark plugs into the rotor housing finger tight until the gaskets contact the housing. If the plugs cannot be installed with finger pressure, clean the threads with a suitable greased thread chaser. Torque each plug to specifications.
3. Connect the spark plug wires.

as reverse polarity current flow will damage the diodes in the alternator.

5. When charging the battery with a fast charger, disconnect the positive cable at the battery.

2,000 rpm.

4. Make the short circuit for a moment by connecting "B" terminal and "F" terminal of the alternator with the suitable wire as shown in Fig. 5–18.

5. If the meter reading increases remarkably, the trouble is in the regulator and if there is no change in current, it is in the alternator.

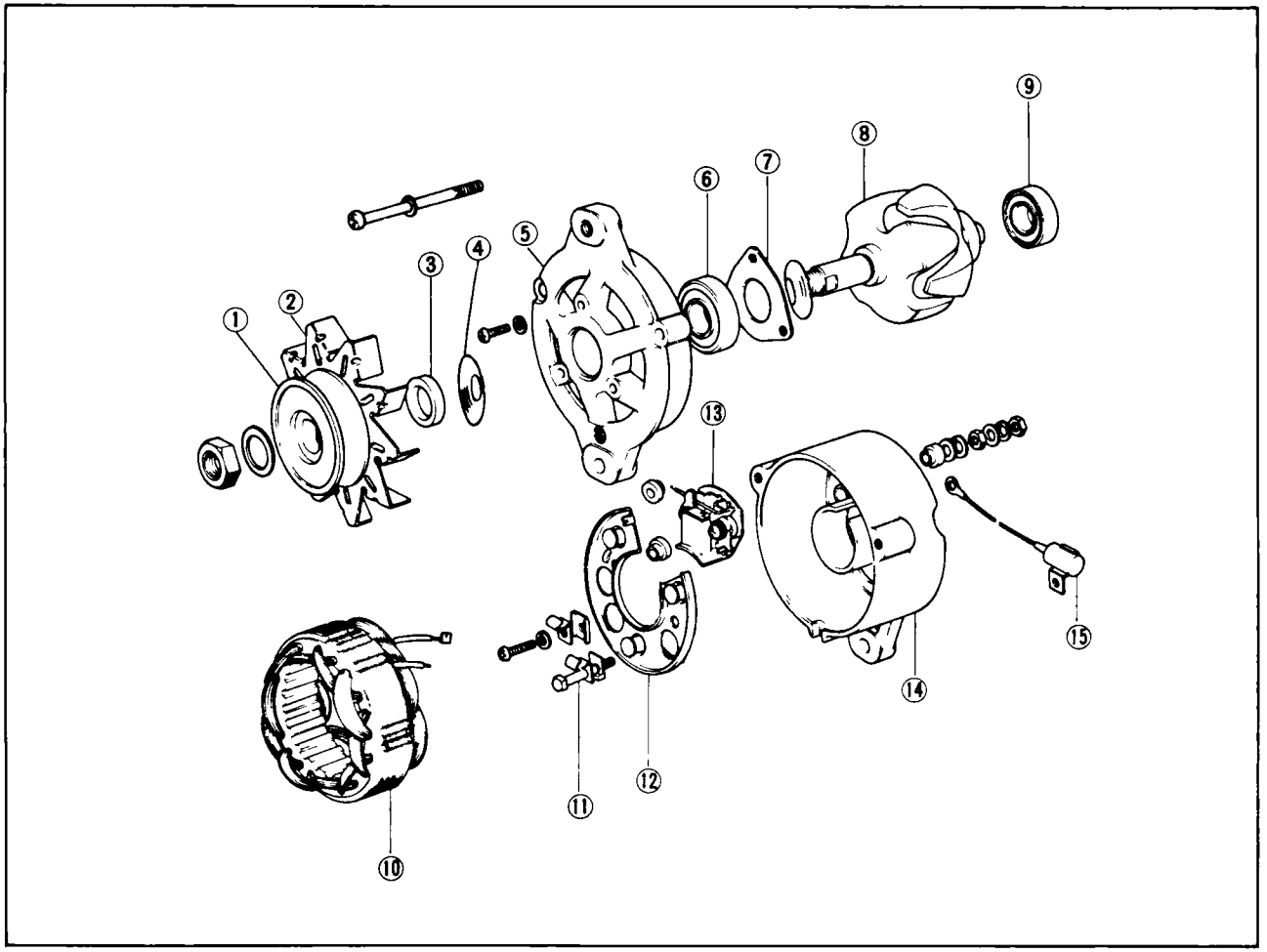

Fig. 5–17 Alternator components

1. Pulley
2. Fan
3. Spacer
4. Slinger
5. Front housing
6. Front bearing
7. Bearing retainer
8. Rotor
9. Rear bearing
10. Stator
11. Terminal bolt
12. Rectifier
13. Brush and holder
14. Rear housing
15. Condenser

Fig. 5–18 Checking charging system

5–F–3. Disassembling Alternator

1. Remove the radio noise suppression condenser from the rear of the alternator.
2. Remove the through bolts.
3. Separate the front housing assembly by prying apart with a screwdriver at the slots of the front housing.
4. Hold the front housing and rotor assembly, clamping the rotor.

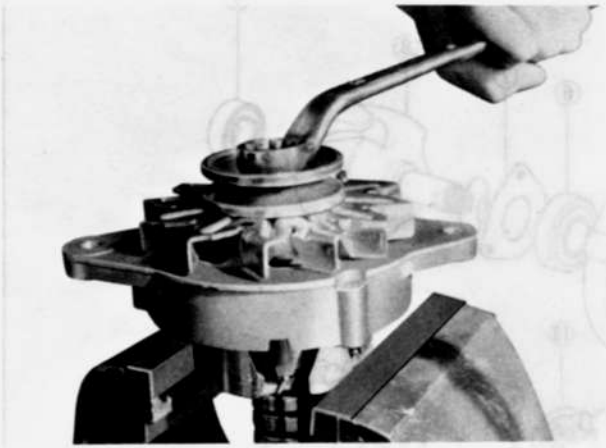

Fig. 5–19 Loosening pulley nut

5. Loosen the pulley retaining nut and remove the nut, washer, pulley, fan, spacer and front slinger.
6. Remove the front housing with bearing and remove the rear slinger.
7. Remove the nut, washers and insulator from the "B" terminal at the rear of the alternator.
8. Remove the screw attaching the rectifier to the rear housing and remove two screws attaching brush holder and rectifier.
9. Carefully remove the stator, rectifier and brush holder assembly from the rear housing. Use care to keep the brush holder assembly intact during removal from the rear housing.
10. Remove the brush holder assembly.
11. Unsolder the stator leads from the rectifier.
12. If bearing replacement is necessary, remove the rear bearing from the rotor shaft with a puller.

To replace the front bearing, remove the bearing retainer attaching screws, and press the bearing from the front housing



Fig. 5–20 Checking stator coil for open

To check for ground, connect one prod to the core and the other to each lead wire, as shown in Fig. 5–21. If a ground is present the current will flow and the stator coil must be repaired or replaced.

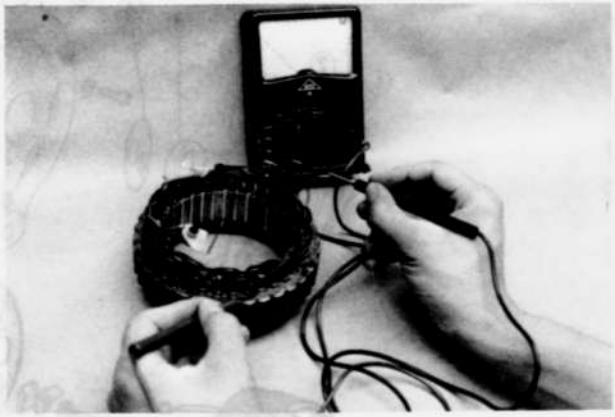

Fig. 5–21 Checking stator coil for ground

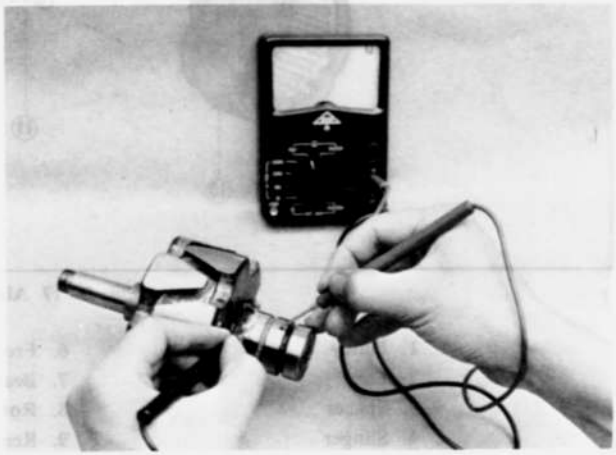

Fig. 5–22 Checking rotor for open

or replaced.

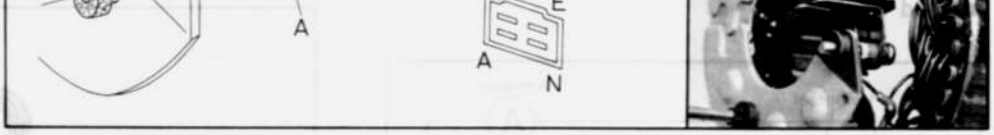

Fig. 5- 25 Brush holder assembly

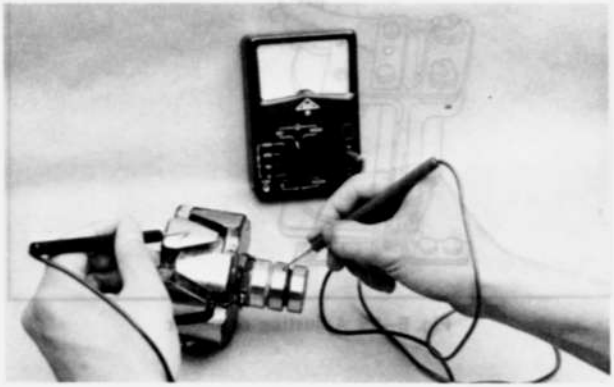

Fig. 5–23 Checking rotor for ground

c. Checking diodes

Diodes for use in the alternator are available in two different types, the positive diode which allows current to flow from the lead wire to the case but not from the case to the lead wire and the negative diode which has the opposite properties.

To check, read the resistance between the lead wire and case with a tester. Then reverse the tester leads and note the reading. If both readings are very low or high, the diode is defective.

A good diode will give one low reading and one high reading.

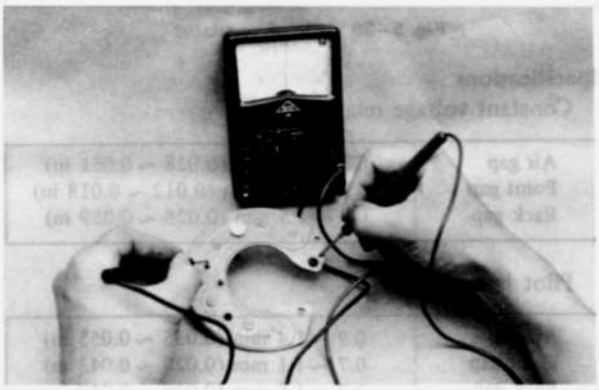

Fig. 5–24 Checking diode

d. Checking brushes and springs

The brushes should be replaced when one-third of the original length is worn away. This is indicated by a wear limit line on the side surface of each brush. Check the brush spring tension. The tension should be between 330 and 450 gr (12 and 16 oz). Replace the springs if the tension is less than 330 gr (12 oz) or if excessive corrosion exists.

e. Checking bearings

There is no need of lubricating as the bearing is pre-lubricated. In a long spell of use, when the bearing is worn or damaged, replace it with a new one.

5–F–5. Assembling Alternator

Assemble the alternator in the reverse order of disassembling, noting the following points.

1. When installing the rotor assembly to the rear housing and stator assembly, hold the brushes in position by inserting a piece of stiff wire into the hole of the brush through the rear housing as shown in Fig. 5–26.

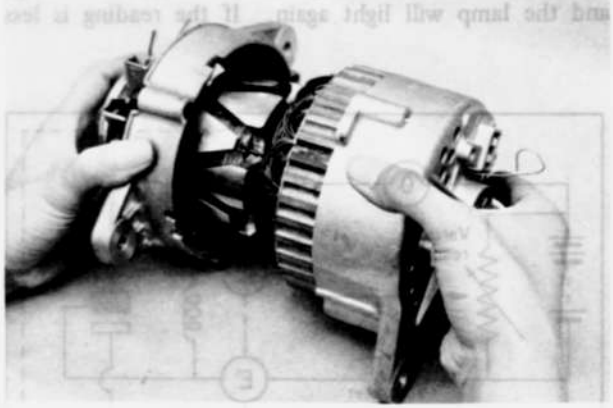

Fig. 5–26 Installing rotor assembly

2. The soldering of the diode leads should be performed in **less than twenty seconds** as the excessive heat may damage the diode.

structed in Par. 5–G–3.

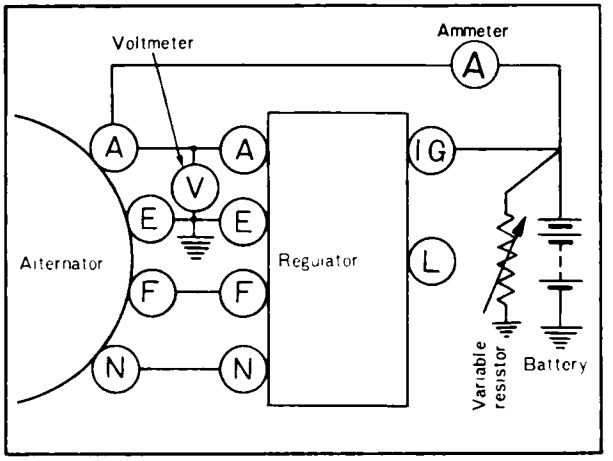

Fig. 5–27 Checking constant voltage relay

5–G–2. Checking Pilot Lamp Relay

Make a circuit, as shown in Fig. 5–28, using a voltmeter and variable resistor, and light up the pilot lamp. Then, slide the knob of the variable resistor so that the voltage gradually increases.

Read the voltage between the (N) and (E) terminal when the lamp goes out. If this voltage is 3.7 to 5.7 volts, it is normal.

Next, slide the knob to gradually reduce the voltage and the lamp will light again. If the reading is less

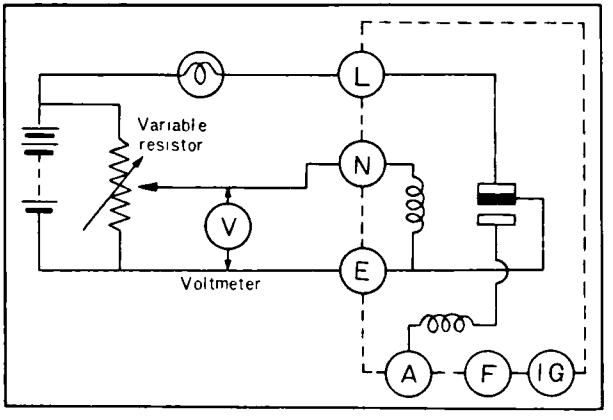

Fig. 5–28 Checking pilot lamp relay

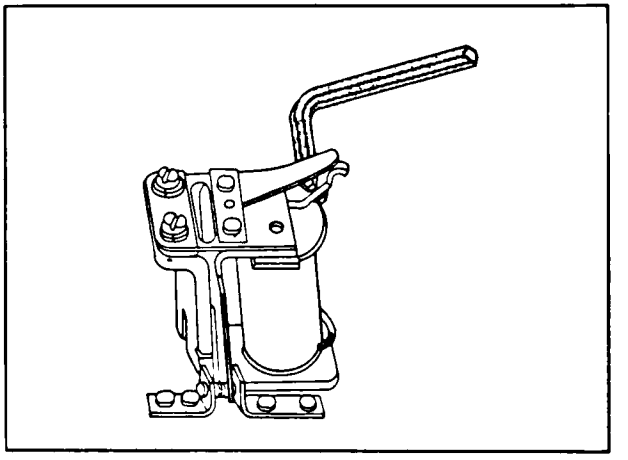

Fig. 5–29 Adjusting regulator

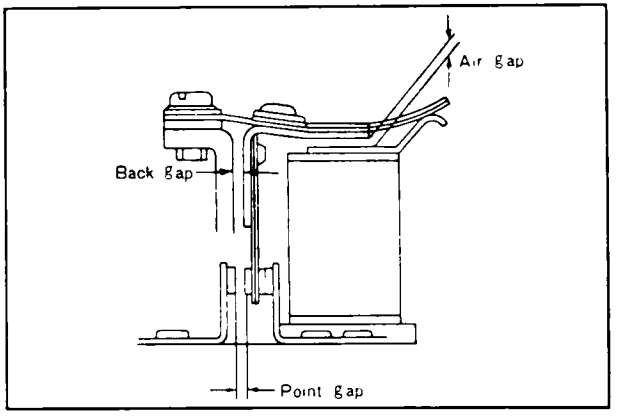

Fig. 5–30 Gaps of regulator

Specifications

Constant voltage relay

Air gap	0.7 ~ 1.3 mm (0.028 ~ 0.051 in)
Point gap	0.3 ~ 0.45 mm (0.012 ~ 0.018 in)
Back gap	0.7 ~ 1.5 mm (0.028 ~ 0.059 in)

Pilot lamp relay

Air gap	0.9 ~ 1.4 mm (0.035 ~ 0.055 in)
Point gap	0.7 ~ 1.1 mm (0.028 ~ 0.043 in)
Back gap	0.7 ~ 1.5 mm (0.028 ~ 0.059 in)

jaws and connect a fully-charged 12 volt battery to the starting motor.

2. Connect an ammeter between the (B) terminal of the starting motor and the battery.

3. Operate the starting motor and take a reading. On 1.2 KW starting motor, the current draw should be less than 75 amperes at 4,900 rpm or more. [2.0 KW: less than 100 amperes at 7,800 rpm or more]

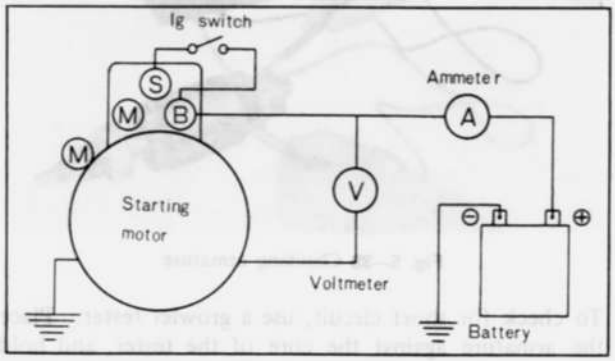

Fig. 5–31 Free running test

b. Lock resistance test

1. Install the starting motor on a test bench.

2. Test the lock resistance of the starting motor, following the instructions of the test equipment manufacturer.

3. With applied battery voltage adjusted to 5.0 volts, the current flow should be 780 amperes [1.2 KW: 1,100 amperes] or less and the torque should be 1.1 m-kg (7.95 ft-lb) [1.2 KW: 2.4 m-kg (17.3 ft-lb)] or more.

If the starting motor does not perform to the above test requirements, repair it referring to the following list.

1) Starter rotates slowly with a large current at free running.
   a) Worn, dirty or defective bearings
   b) Short circuit of armature
   c) Grounded armature and field coil
2) Starter does not rotate with a large current.
   a) Defective field circuit
   b) Defective armature circuit
   c) Burnt commutator
3) Low torque and low current flow. Low free running speed.
   a) Breakage of field circuit



Fig. 5–32 Removing magnetic switch

3. Remove the plunger from the driving lever.



Fig. 5–33 Removing plunger

4. Remove the through bolts and brush holder attaching screws. Then, remove the rear cover.



Fig. 5–34 Removing rear cover



Fig. 5–35 Removing yoke assembly

8. Remove the rubber packing, springs and spring seat.
9. Remove the armature and over-running clutch assembly from the driving housing.

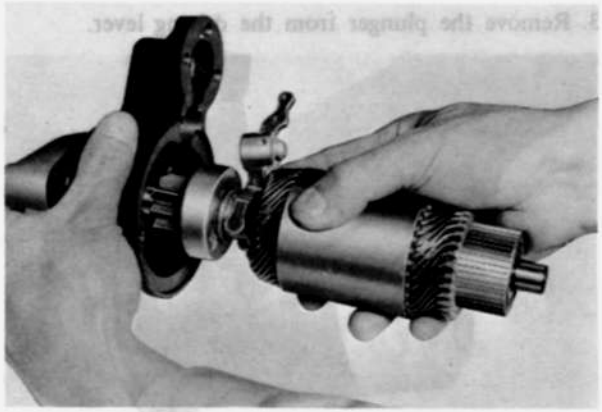

Fig. 5–36 Removing armature assembly

10. Remove the driving lever.
11. Drive the pinion stop collar toward the armature, and remove the stop ring. Then, slide the stop collar

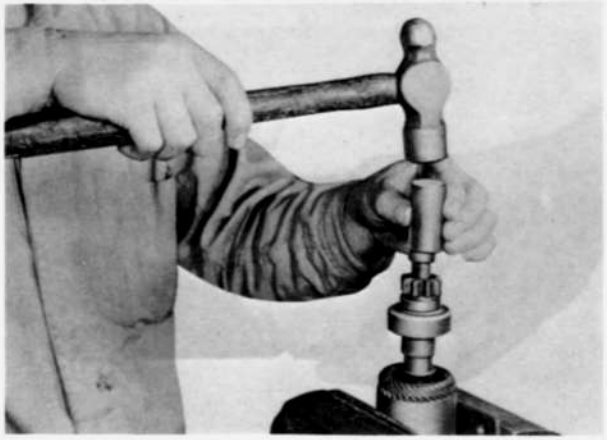

Fig. 5–37 Removing pinion stop collar

the armature must be replaced.

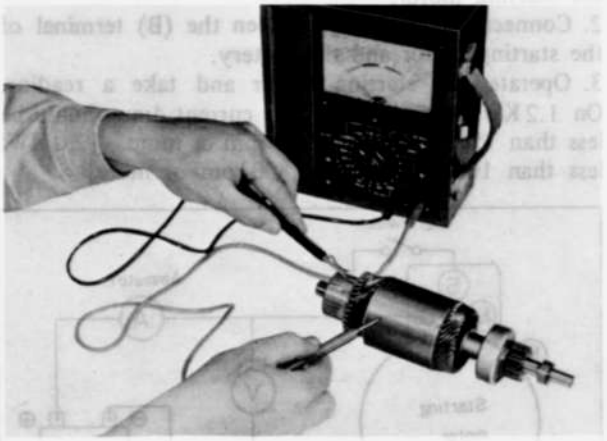

Fig. 5–38 Checking armature

To check for short circuit, use a growler tester. Place the armature against the core of the tester, and hold a steel strip on the armature. Then, rotate the armature slowly by hand. If the armature coil is shorted, the steel strip will become magnetized and vibrate. Replace the armature if a short is found.

b. Checking commutator

If the commutator is dirty, discolored or worn, clean it with emery paper and wash with clean solvent. After cleaning, undercut the mica between the segments to the depth of 0.5 ~ 0.8 mm (0.020 ~ 0.031 in), as shown in Fig. 5–39.

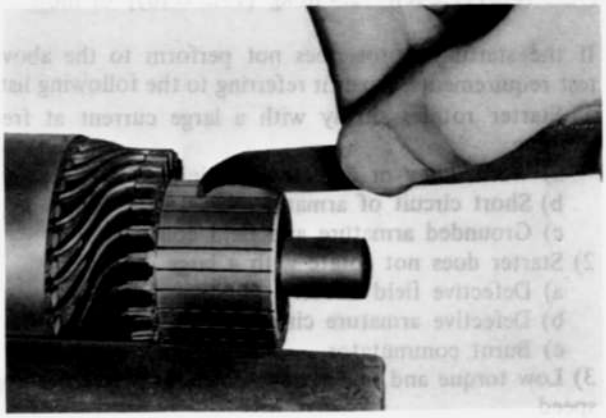

Fig. 5–39 Undercutting mica

Fig. 5–40 Commutator mica depth

c. Checking field coil

To test the field coil for ground with an ohmmeter, place one prod on the yoke or pole core and the other prod to the field terminal. An infinite meter reading should be obtained. If a reading other than infinite is found, replace the field windings.

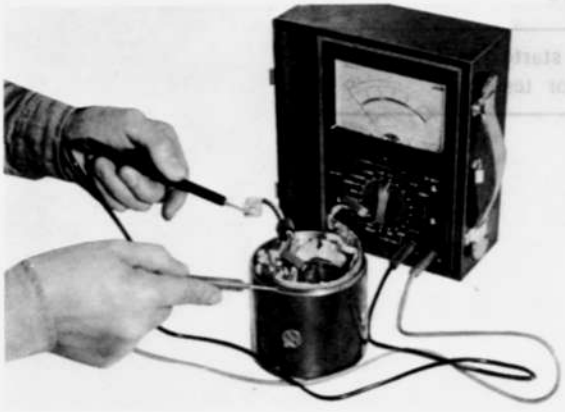

Fig. 5–41 Checking field coil for ground

d. Checking brush holder

Check the brush holder for ground. Touch one prod of an ohmmeter to the insulated brush holder and the other prod to the brush holder frame.

If the meter reading is other than infinite, the brush holder assembly is shorted and must be replaced. Repeat this test for the other insulated brush holder. Do not use this test on the two grounded brush holders.

e. Checking brushes and brush springs

Check the brushes and replace if they are worn down more than one third of their original length. Otherwise, the brush spring tension will be reduced, leading to an increase in the brush-commutator contact resistance. This will lower the torque and cause the burnt commutator surface.

The spring tension is 1.4 ~ 1.8 kg (49 ~ 63 oz). If the tension is too low, replace the springs.

f. Checking bushes

Check the clearance between the armature shaft and the bush. If it exceeds 0.2 mm (0.08 in), replace the bush.

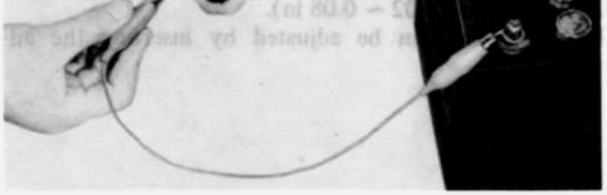

Fig. 5–42 Pull-in coil test

b. Holding coil test

Ground the (M) terminal to the magnetic switch body with a lead and impose the specified voltage (12V) upon the (S) terminal to pull in the plunger. If the plunger remains attracted after disconnecting the lead from the (M) terminal, there is no trouble with the holding coil.

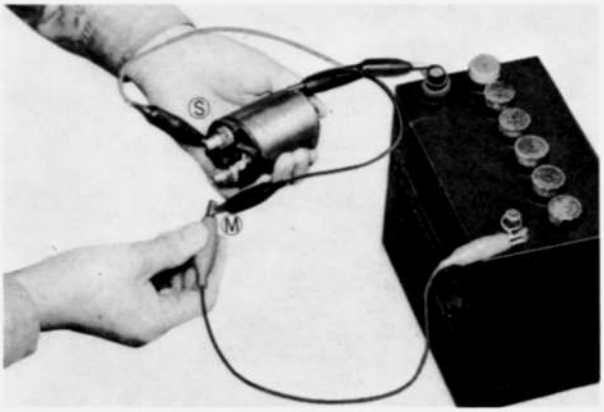

Fig. 5–43 Holding coil test

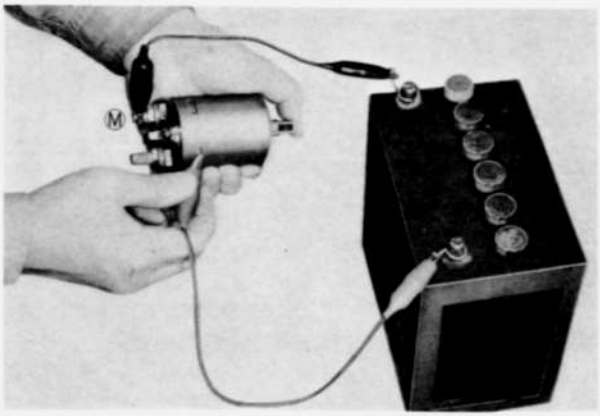

Fig. 5–44 Return test

0.5 ~ 2.0 mm (0.02 ~ 0.08 in).

This clearance can be adjusted by inserting the ad-



Fig. 5–45 Checking pinion position

SPECIAL TOOLS

49 0242 685A	Remote starter switch
49 0370 290	Alternator tester

6–A. CLUTCH PEDAL ADJUSTMENT ..... 6 : 1
6–B. CLUTCH REMOVAL ..... 6 : 1
6–C. CLUTCH INSPECTION ..... 6 : 1
6–C–1. Checking Release Bearing and Fork ..... 6 : 1
6–C–2. Checking Pressure Plate and Cover Assembly ..... 6 : 2
6–C–3. Checking Clutch Disc ..... 6 : 2
6–C–4. Flywheel Inspection ..... 6 : 2
6–C–5. Ring Gear Replacement ..... 6 : 3
6–C–6. Checking Pilot Bearing ..... 6 : 3
6–C–7. Pilot Bearing Replacement ..... 6 : 3
6–C–8. Checking Eccentric Shaft Rear Oil Seal ..... 6 : 3
6–D. CLUTCH INSTALLATION ..... 6 : 3
6–E. CLUTCH MASTER CYLINDER ..... 6 : 4
6–E–1. Removing Clutch Master Cylinder ..... 6 : 4
6–E–2. Disassembling Clutch Master Cylinder ..... 6 : 4
6–E–3. Checking Clutch Master Cylinder ..... 6 : 4
6–E–4. Assembling Clutch Master Cylinder ..... 6 : 4
6–E–5. Installing Clutch Master Cylinder ..... 6 : 5
6–F. CLUTCH RELEASE CYLINDER ..... 6 : 5
6–F–1. Removing Clutch Release Cylinder ..... 6 : 5
6–F–2. Disassembling Clutch Release Cylinder ..... 6 : 5
6–F–3. Checking Clutch Release Cylinder ..... 6 : 5
6–F–4. Assembling Clutch Release Cylinder ..... 6 : 5
6–F–5. Installing Clutch Release Cylinder ..... 6 : 5
6–G. AIR BLEEDING ..... 6 : 5
SPECIAL TOOLS ..... 6 : 5

To adjust the free travel, loosen the lock nut and turn the push rod until the proper adjustment is made. Tighten the lock nut after adjustment is completed.

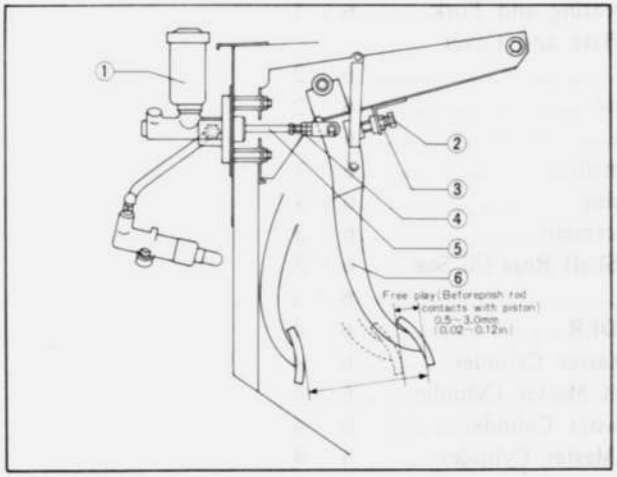

Fig. 6–1 Clutch pedal adjustment

1. Master cylinder
2. Height adjusting bolt
3. Lock nut
4. Lock nut
5. Rod
6. Pedal

6–B. CLUTCH REMOVAL

To remove the clutch from the vehicle, proceed as follows:

1. Remove the transmission.
2. Install the **ring gear brake** (49 0118 271A).
3. Remove the 4 standard bolts and 2 reamer bolts holding the clutch cover assembly to the flywheel, and remove the clutch cover assembly and the clutch disc.
4. Straighten the tab of the lockwasher. With the **wrench** (49 0820 035), loosen the nut that attaches the flywheel to the eccentric shaft and remove the nut.
5. Using the **puller** (49 0823 300), remove the flywheel from the eccentric shaft.

Note:
After removing the flywheel, inspect for oil leaking through the engine rear oil seal.

6. Pull the release fork outward until the spring clip of the fork releases from the ball pivot. Remove the fork release bearing from the clutch housing.

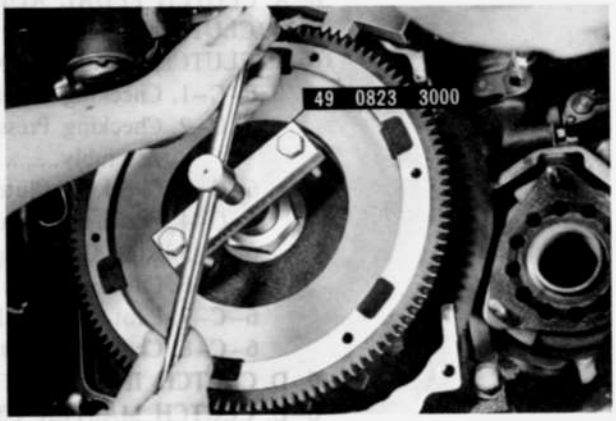

Fig. 6–3 Removing flywheel

6–C. CLUTCH INSPECTION

6–C–1. Checking Release Bearing and Fork

Note: The release bearing is packed with lubricant which is intended to last the whole life time of the bearing. Therefore, the bearing must not be washed in gasoline or any other solvent.

Check the release bearing by pressing and turning the front race slowly by hand. Replace if the bearing feels rough or seems noisy when turning.



Fig. 6–4 Checking release bearing

Examine the clutch housing carefully to be certain there are no burrs on the outer surface of the clutch

Inspect the clutch disc for warpage with a dial indicator or a feeler gauge, as shown in Fig. 6–5.
If it is **more than 1.0 mm (0.039 in)**, replace with a new one.



Fig. 6–5 Checking clutch disc for warpage



Fig. 6–6 Checking clutch disc for wear

If oil is evident on the facing, clean or replace the facing and eliminate the cause of oil leakage.
Make certain that the clutch disc slides easily on the main drive shaft without any excessive play.

6–C–4. Flywheel Inspection

Inspect the contact surface of the flywheel with the clutch facing for burnt surface, scored surface or rivet grooves.
If it is slight, it can be reconditioned by grinding in

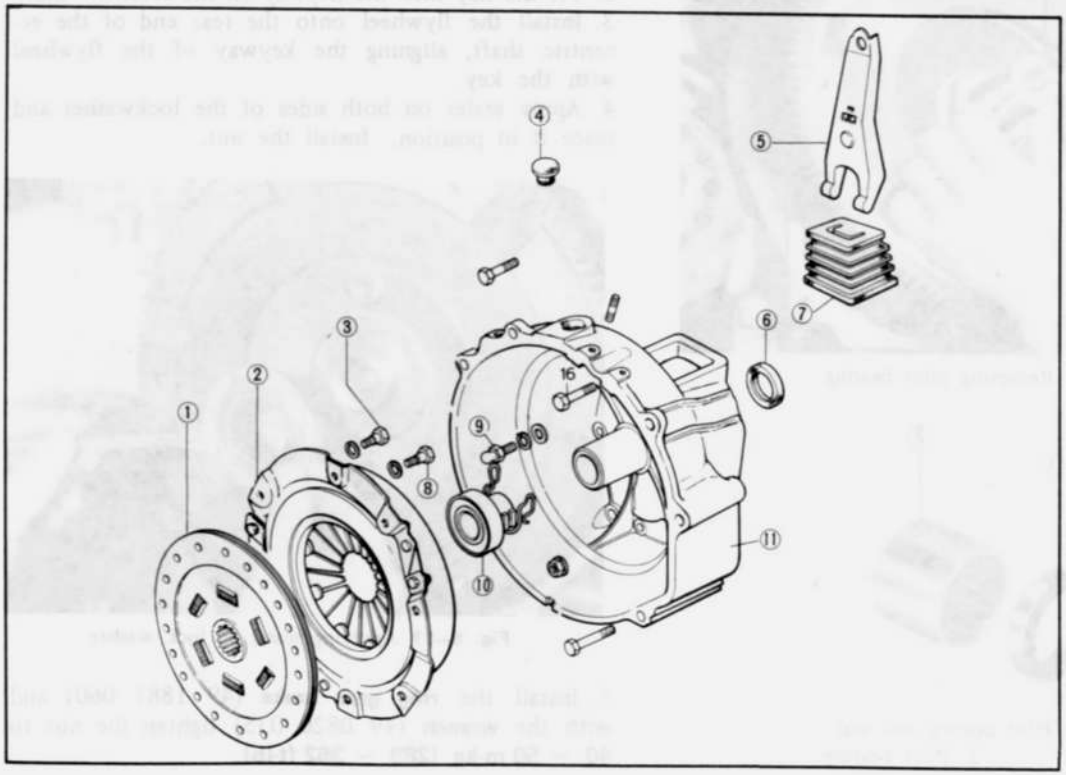

Fig. 6–7
Clutch components
1. Clutch disc
2. Clutch cover
3. Reamer bolt
4. Top hole cover
5. Release fork
6. Oil seal
7. Dust cover
8. Bolt
9. Pivot pin
10. Release bearing
11. Clutch housing

1. Heat the old ring gear and remove it from the flywheel.
2. Heat a new ring gear **evenly 250 to 300°C (480 to 570°F)**.
3. Place the ring gear on the cold flywheel, making sure that the **chamfer on the teeth is faced to the transmission.**
4. Allow the ring gear to cool slowly to shrink it onto the flywheel.

6–D–6. Checking Pilot Bearing

Check the transmission main drive shaft pilot bearing which is pressed into the rear end of the eccentric shaft.
If the bearing is loose or rough, it should be replaced.

6–D–7. Pilot Bearing Replacement

1. Remove the bearing and seal from the rear end of the eccentric shaft with the **remover** (49 0823 071A).

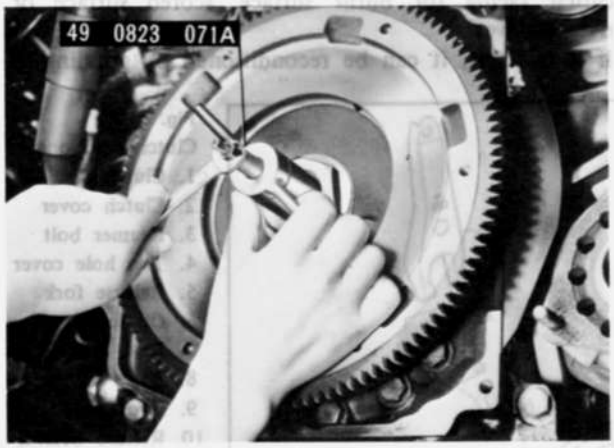

Fig. 6–8 Removing pilot bearing

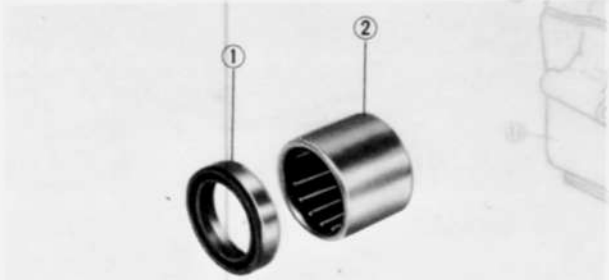

Fig. 6–9 Pilot bearing and seal
1. Seal 2. Pilot bearing



Fig. 6–10 Installing pilot bearing

6–C–8. Checking Eccentric Shaft Rear Oil Seal

Check the oil seal fitted into the rear stationary gear for wear or damage.
If traces of oil leakage are found, replace the oil seal.

6–D. CLUTCH INSTALLATION

1. Clean the contact surfaces of the flywheel, pressure plate and disc thoroughly with fine sandpaper or crocus cloth.

Note:
Avoid touching the clutch disc facing, dropping the parts or contaminating them with oil or grease as a clutch chatter may result.

2. Fit the key into the keyway on the eccentric shaft.
3. Install the flywheel onto the rear end of the eccentric shaft, aligning the keyway of the flywheel with the key.
4. Apply sealer on both sides of the lockwasher and place it in position. Install the nut.



Fig. 6–11 Applying sealer to lock washer

5. Install the **ring gear brake** (49 1881 060) and with the **wrench** (49 0820 035) tighten the nut to **40 ~ 50 m-kg (289 ~ 362 ft-lb)**.

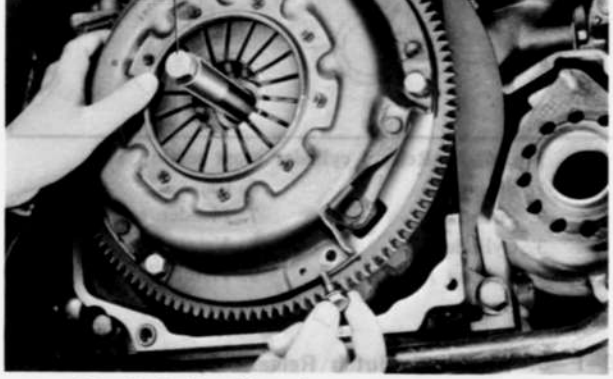

Fig. 6–12 Installing clutch cover assembly

9. Torque the bolts to **1.8 ~ 2.7 m-kg (13 ~ 20 ft-lb).**
10. Remove the disc centering tool and ring gear brake.
11. Apply grease to the pivot pin. Insert the release fork through the dust boot and press it inward so that the spring clip of the fork fits to the ball pivot.
12. Apply a light film of grease to the face of the release bearing and the bearing retainer of the clutch housing. Install the release bearing and the return spring. Operate the release fork to ensure that the bearing slides on the retainer back and forth smoothly.
13. Install the transmission and propeller shaft. Care should be taken in order not to bend the clutch disc by allowing the transmission to hang.

1. Clean the outside of the master cylinder thoroughly and drain the brake fluid.
2. Remove the reservoir from the cylinder.
3. Remove the dust boot from the cylinder.
4. Remove the piston stop wire with a screwdriver and remove the stop washer.
5. Remove the piston assembly, primary cup and return spring from the cylinder.
6. Carefully remove and disassemble the one-way valve.

6–E–3. Checking Clutch Master Cylinder

1. Wash the parts in clean alcohol or brake fluid. **Never** use gasoline or kerosene. Blow the parts dry with compressed air.
2. Check the piston cups and replace if they are damaged, worn, softened, or swelled.
3. Examine the cylinder bore and piston for wear, roughness or scoring.
4. Check the clearance between the cylinder bore and the piston. If it is **more than 0.15 mm (0.006 in),** replace the cylinder or piston.
5. Ensure that the compensating port on the cylinder is open.
6. Check the one-way valve parts for freedom of operation.

6–E–4. Assembling Clutch Master Cylinder

1. Before assembling, dip the piston and cups in clean brake fluid.

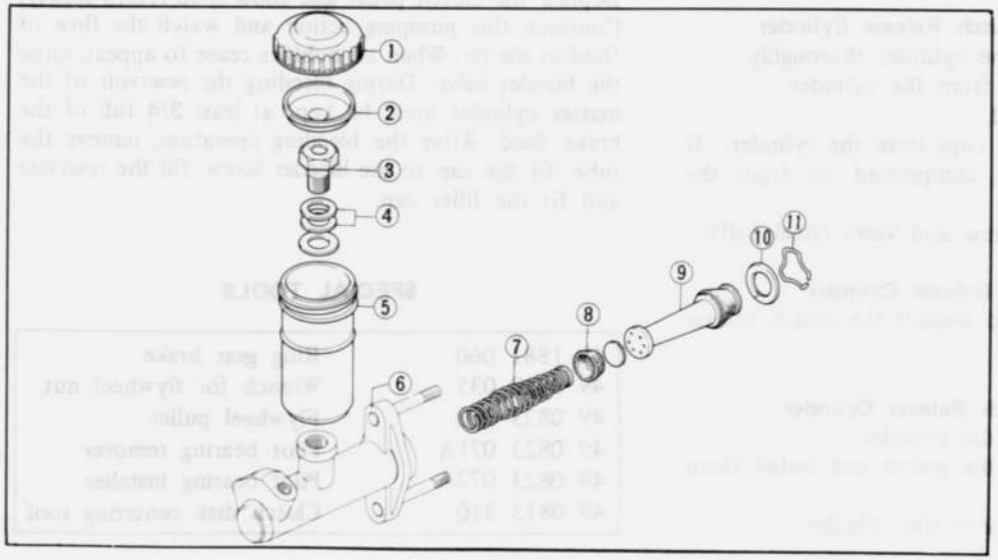

Fig. 6–13
Clutch master cylinder components
1. Cap
2. Fluid baffle
3. Bolt
4. Washer
5. Reservoir
6. Cylinder
7. Spring
8. Primary piston cup
9. Piston and secondary cup assembly
10. Piston stop washer
11. Piston stop wire

2. Connect the fluid pipe to the cylinder.
3. Fill with brake fluid.
4. Bleed the clutch hydraulic system, as described in Par 6–G.

6–F. CLUTCH RELEASE CYLINDER

6–F–1. Removing Clutch Release Cylinder

1. Disconnect the fluid pipe at the clutch release cylinder.
2. Remove the nuts attaching the cylinder to the clutch housing. Remove the release cylinder.

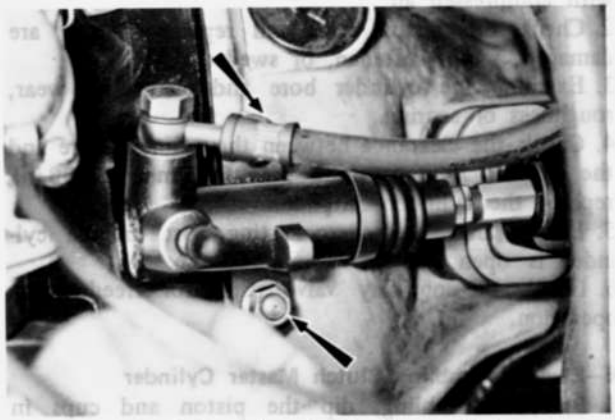

Fig. 6–14 Removing clutch release cylinder

6–F–2. Disassembling Clutch Release Cylinder

1. Clean the outside of the cylinder thoroughly.
2. Remove the dust boot from the cylinder.
3. Remove the release rod.
4. Remove the piston and cups from the cylinder. If necessary, blow out with compressed air from the fluid passage.
5. Remove the bleeder screw and valve (steel ball).

6–F–3. Checking Clutch Release Cylinder

Refer to Par. 6–E–3 and inspect the clutch release cylinder.

6–F–4. Assembling Clutch Release Cylinder

1. Install the spring into the cylinder.
2. Fit the piston cup to the piston and install them into the cylinder.
3. Install the release rod into the cylinder.

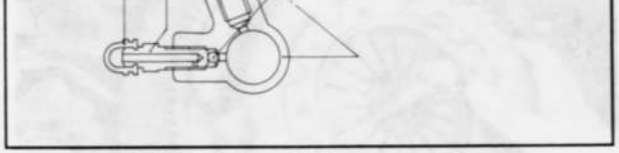

Fig. 6–15 Release cylinder cross section

1. Spring	6. Cap
2. Piston cup	7. Bleeder screw
3. Cylinder	8. Valve
4. Release rod	9. Piston
5. Boot	

6–F–5. Installing Clutch Release Cylinder

1. Install the clutch release cylinder assembly to the clutch housing with two nuts.
2. Connect the fluid pipe.
3. Fill the reservoir of the master cylinder with brake fluid and bleed the system, as described in Par. 6–G.

6–G. AIR BLEEDING

The clutch hydraulic system must be bled whenever a fluid line has been disconnected or air enters the system. **To bleed** the clutch system, remove the rubber cap from the bleeder screw and attach the bleeder tube and fixture of the bleeder screw.
Place the end of the tube in the glass jar and submerge in brake fluid. Open the bleeder valve.
Depress the clutch pedal and allow it to return slowly. Continue this pumping action and watch the flow of fluid in the jar. When air bubbles cease to appear, close the bleeder valve. During bleeding the reservoir of the master cylinder must be kept at least **3/4** full of the brake fluid. After the bleeding operation, remove the tube, fit the cap to the bleeder screw, fill the reservoir and fit the filler cap.

SPECIAL TOOLS

49 1881 060	Ring gear brake
49 0820 035	Wrench for flywheel nut
49 0823 300	Flywheel puller
49 0823 071A	Pilot bearing remover
49 0823 072A	Pilot bearing installer
49 0813 310	Clutch disk centering tool

7–A. TRANSMISSION REMOVAL..... 7 : 1
7–B. TRANSMISSION DISASSEMBLY..... 7 : 1
7–C. TRANSMISSION INSPECTION..... 7 : 3
7–C–1. Checking Transmission Case and Clutch Housing..... 7 : 3
7–C–2. Checking Bearings..... 7 : 3
7–C–3. Checking Gears..... 7 : 3
7–C–4. Checking Main Shaft and Main Drive Shaft..... 7 : 3
7–C–5. Checking Counter Shaft..... 7 : 3
7–C–6. Checking Control Lever and Shift Fork Shaft..... 7 : 3
7–C–7. Checking Shift Fork..... 7 : 3
7–C–8. Checking Clutch Sleeve..... 7 : 4
7–C–9. Checking Synchronizer Ring..... 7 : 4
7–C–10. Checking Synchronizer Key and Spring..... 7 : 5
7–C–11. Checking Clutch Hub..... 7 : 5
7–C–12. Checking Extension Housing..... 7 : 5
7–C–13. Checking Speedometer Gears..... 7 : 5
7–D. TRANSMISSION ASSEMBLY..... 7 : 5
7–E. TRANSMISSION INSTALLATION..... 7 : 11
SPECIAL TOOLS..... 7 : 11

7–A. TRANSMISSION REMOVAL

When removing the transmission from the vehicle, proceed as follows:

1. Remove the gearshift lever knob.
2. Remove the boot for the gearshift lever.
3. Remove the bolts attaching the retainer cover to the gearshift lever retainer.
4. Pull the gearshift lever, shim and bush straight up and away from the gearshift lever retainer.
5. Disconnect the earth wire of the battery.
6. Remove the bolt attaching the power brake vacuum pipe clip to the clutch housing.
7. Remove the earth wire from the transmission case.
8. Remove the nuts attaching the clutch release cylinder and remove the clutch release cylinder.
9. Remove the one upper bolt securing the starting motor, then remove the three upper bolts and nuts securing the transmission to the engine rear end.
10. Raise the vehicle and support with stands.
11. Disconnect the wires of the starting motor and the reverse lamp switch.
12. Disconnect the speedometer cable from the extension housing.
13. Remove the bolts attaching the heat insulator to the exhaust front pipe, and remove the heat insulator.
14. Disconnect the exhaust front pipe from the exhaust pipe brackets by removing the bolts and nuts. Disconnect the exhaust front pipe flange from the exhaust manifold by removing the nuts. Remove the bolts and nuts attaching the front pipe flange to the main silencer, and remove the exhaust front pipe.
15. Remove the propeller shaft, as described in Par. 8–A–1, and insert the **transmission oil plug** (49 0259 440) into the extension housing.
16. Remove the lower bolt securing the starting motor to the clutch housing and remove the starting motor.
17. Place a jack under the front side of the engine and support the engine with the jack.
18. Remove the bolts securing the transmission support to the body.
19. Remove the two lower bolts securing the transmission to the engine rear end.
20. Slide the transmission rearward until the main drive shaft clears the clutch disc and carefully with-
4. Remove the nuts attaching the clutch housing, and remove the clutch housing and gasket.

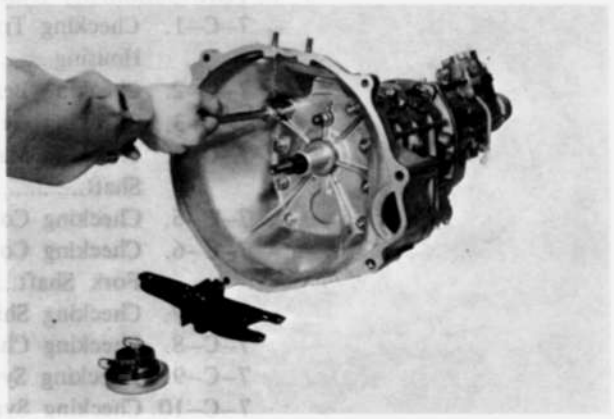

Fig. 7–1 Removing clutch housing

5. Remove the adjusting shim from the bearing bore of the clutch housing.
6. Remove the bolts attaching the gearshift lever retainer to the extension housing and remove the retainer and gasket.
7. Remove the nuts attaching the extension housing to the transmission case. With the control lever end in neutral, press the end to the left as far as it will go, and slide the extension housing off the transmission.
8. Remove the spring cap bolt and remove the spring and friction piece from the extension housing.
9. Remove the neutral switch from the extension housing.
10. Remove the bolt that attach the gearshift control lever end to the gearshift control lever, and remove the control lever end, key and control lever.

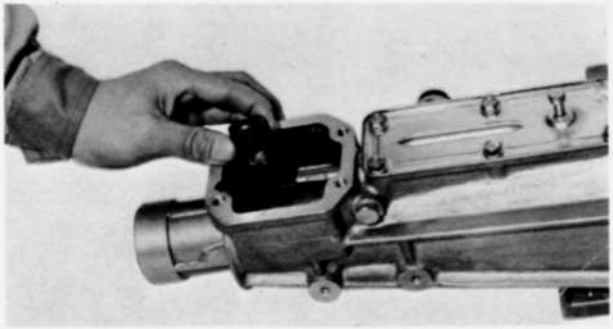

Fig. 7–2 Removing control lever end

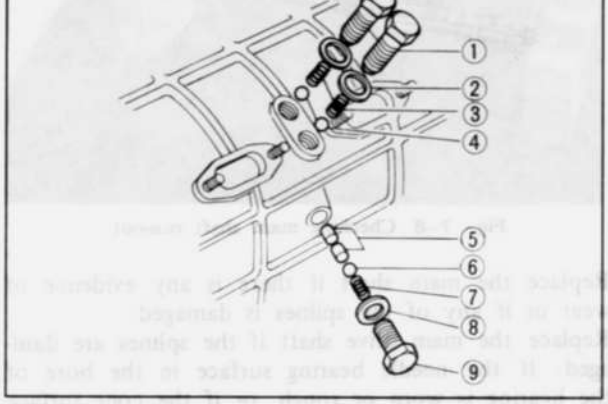

Fig. 7–3 Spring cap bolts

1. Spring cap bolt
2. Washer
3. Detent spring
4. Detent ball
5. Shift inter-lock pin
6. Detent ball
7. Detent spring
8. Washer
9. Spring cap bolt

16. Remove the nuts attaching the two blind covers to the transmission case and remove the blind covers and gaskets.
17. Remove the bolt attaching the reverse shift lever to the transmission case. Slide the reverse shift fork shaft with the reverse shift lever and reverse idle gear out the rear of the transmission case. Remove the attaching bolt from the reverse shift fork and remove the shift fork.
18. Remove the attaching bolt from the third-and-fourth shift fork. Slide the third-and-fourth shift fork shaft out the rear of the transmission case.
19. Remove the attaching bolt from the first-and-second shift fork. Slide the first-and-second shift fork shaft out the rear of the transmission case.
20. Straighten the tab of the lock washer, hold the rear end of the main shaft with the **holder** (Part No. 49 0259 440) as shown in Fig. 7–4 and loosen the main shaft lock nut. Slide the reverse gear off the rear of the main shaft, and remove the key.
21. Remove the snap ring from the rear end of the counter shaft and remove the counter reverse gear.
22. Remove the bolts attaching the bearing cover to the transmission case and remove the bearing cover.
23. Remove the reverse idler gear shaft from the transmission case.
24. Install the **synchronizer ring holder** between the fourth synchronizer ring and the synchromesh gear on the main drive shaft.
25. Remove the snap ring that secures the counter shaft front bearing to the front end of the counter shaft. Using the **bearing puller** (Part No. 49 0839 425B) shown in Fig. 7–5, remove the counter shaft front bearing.

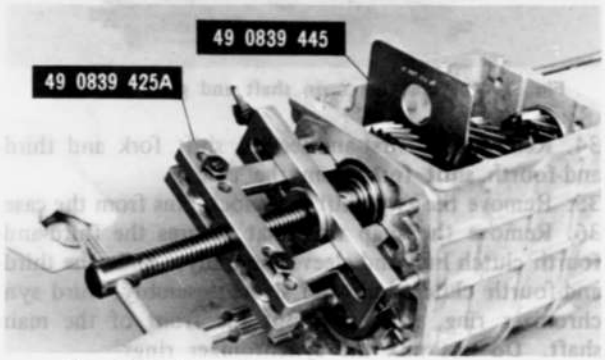

Fig. 7–5 Removing counter shaft front bearing

26. Remove the adjusting shim from the counter shaft front bearing bore of the transmission case.
27. Remove the counter shaft rear bearing from the counter shaft with the **puller** (Part No. 49 0839 425B).
28. Using the **puller** (Part No. 49 0839 425B) shown in Fig. 7–6, remove the main shaft bearing.
29. Remove the adjusting shim from the main shaft bearing bore of the transmission case.
30. Remove the snap ring that secures the main drive shaft bearing to the main drive shaft. Remove the main drive shaft bearing with the **puller** (Part

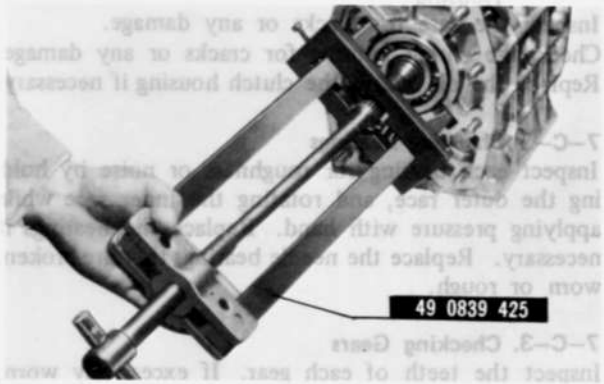

Fig. 7–6 Removing main drive shaft bearing

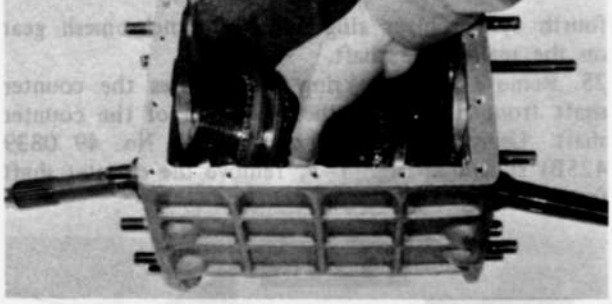

Fig. 7–7 Removing main shaft and gears assembly

34. Remove the first-and-second shift fork and third-and-fourth shift fork from the case.
35. Remove the two shift inter-lock pins from the case.
36. Remove the snap ring that secures the third-and-fourth clutch hub and sleeve assembly. Slide the third-and-fourth clutch hub and sleeve assembly, third synchronizer ring, third gear out the front of the main shaft. **Do not** mix the synchronizer rings.
37. Slide the first gear, first synchronizer ring and first gear sleeve out the rear of the main shaft.
38. Remove the second gear, second synchronizer ring, first-and-second clutch hub and sleeve assembly from the main shaft.

7–C. TRANSMISSION INSPECTION

Thoroughly clean all the parts. Inspect the parts for wear, damage and other defects. The parts found defective must be repaired or replaced.

7–C–1. Checking Transmission Case and Clutch Housing

Inspect the case for cracks or any damage.
Check the clutch housing for cracks or any damage. Replace the oil seal in the clutch housing if necessary.

7–C–2. Checking Bearings

Inspect each bearing for roughness or noise by holding the outer race, and rotating the inner race while applying pressure with hand. Replace the bearings if necessary. Replace the needle bearings that are broken, worn or rough.

7–C–3. Checking Gears

Inspect the teeth of each gear. If excessively worn, broken or chipped, replace with new gear. Excessive

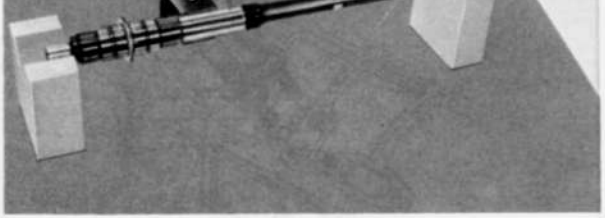

Fig. 7–8 Checking main shaft run-out

Replace the main shaft if there is any evidence of wear or if any of the splines is damaged.
Replace the main drive shaft if the splines are damaged. If the needle bearing surface in the bore of the bearing is worn or rough, or if the cone surface is damaged, replace with a new shaft.

7–C–5. Checking Counter Shaft

Check the teeth of the counter shaft gear for wear or damage. Replace the counter shaft if it is bent, scored or worn.

7–C–6. Checking Control Lever and Shift Fork Shaft

Check the contact surface of the shift fork shaft with the detent ball for wear or damage.
Check the contact surface of the shift fork shaft with the control lever for wear. The clearance between the shift fork shaft and the control lever should be **more than 0.8 mm (0.031 in).**

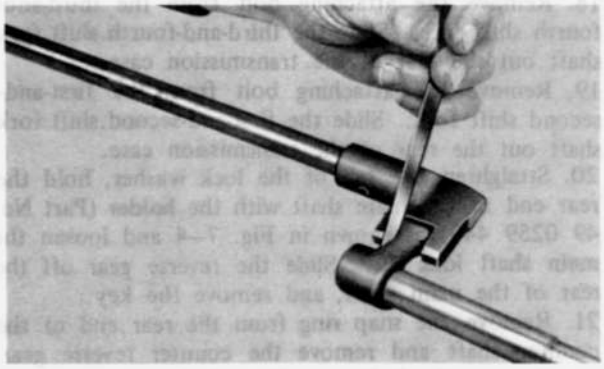

Fig. 7–9 Checking clearance

7–C–7. Checking Shift Fork

Check the contact surface of the shift forks with the clutch sleeve for wear or damage. The clearance

Fig. 7–10 Checking clearance

7–C–8. Checking Clutch Sleeve

Check the clutch sleeves for free movement on their hubs.

Check the splines of the clutch sleeve for wear or damage.



Fig. 7–11 Checking clearance

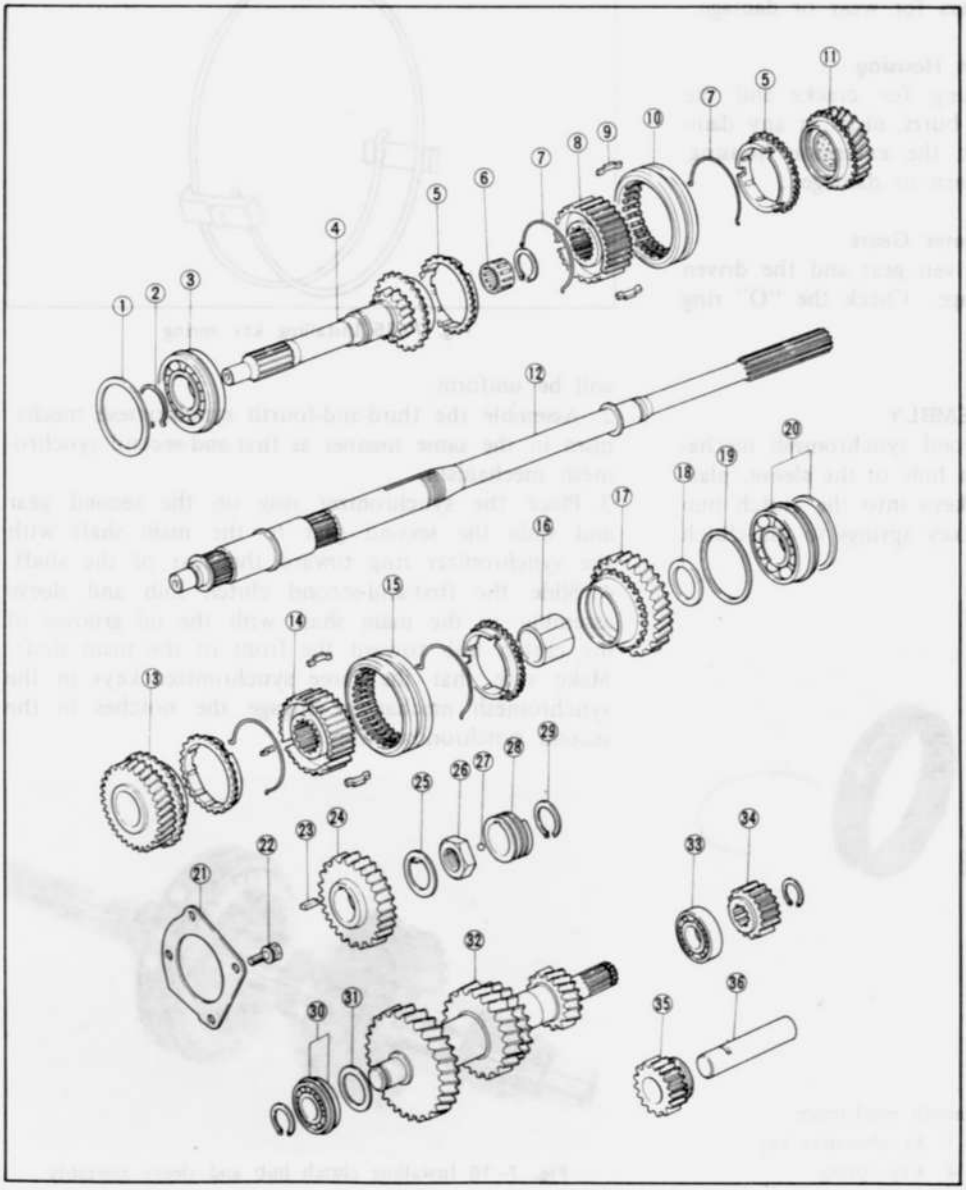

Fig. 7–12

Shafts and gears

1. Adjusting shim
2. Snap ring
3. Main drive shaft bearing
4. Main drive shaft
5. Synchronizer ring
6. Needle bearing
7. Synchronizer key spring
8. Third-and-fourth clutch hub
9. Synchronizer key
10. Clutch hub sleeve
11. Third gear
12. Main shaft
13. Second gear
14. First-and-second clutch hub
15. Clutch hub sleeve
16. Gear sleeve
17. First gear
18. Thrust washer
19. Adjust shim
20. Ball bearing and clip
21. Bearing stopper
22. Bolt
23. Key
24. Reverse gear
25. Lock washer
26. Lock nut
27. Steel ball
28. Speedometer drive gear
29. Snap ring
30. Ball bearing and clip
31. Adjust shim
32. Counter shaft
33. Needle bearing
34. Counter reverse gear
35. Reverse idler gear
36. Reverse idler gear shaft

2. Check the synchronizer key spring for wear or weakness.

7–C–11. Checking Clutch Hub

Check the splines for wear or damage.
Check the contact surface of the clutch hub with the synchronizer ring for wear or damage.
Check the contact surface of the clutch hub with the thrust surface of the gears for wear or damage.

7–C–12. Checking Extension Housing

Inspect the extension housing for cracks and the machined mating surface for burrs, nicks or any damage. Inspect the oil seal in the extension housing. Replace them if they are worn or damaged.

7–C–13. Checking Speedometer Gears

Check the drive gear and driven gear and the driven gear shaft for wear or damage. Check the "O" ring for weakness or damage.

7–D. TRANSMISSION ASSEMBLY

1. Assemble the first-and-second synchromesh mechanism by installing the clutch hub to the sleeve, placing the three synchronizer keys into the clutch hub key slots and installing the key springs to the clutch hub.

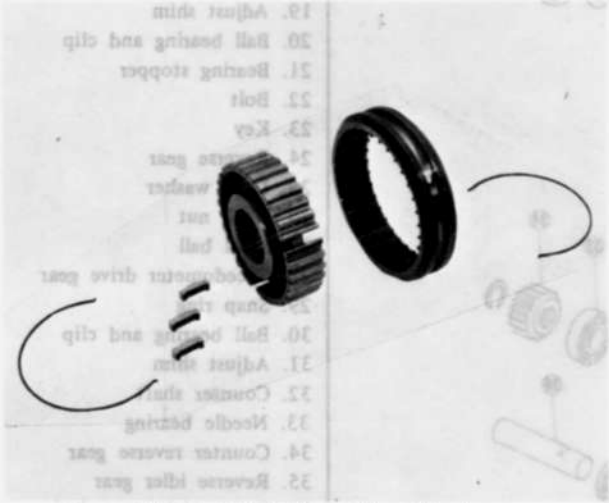

Fig. 7–13 Synchromesh mechanism

1. Clutch sleeve
2. Clutch hub
3. Synchronizer key
4. Key spring

Fig. 7–14 Installing synchronizer key spring

Note :
When installing the key springs, the open ends of the springs should be kept 120° apart as shown in Fig. 7–15, so that the spring tension on each key

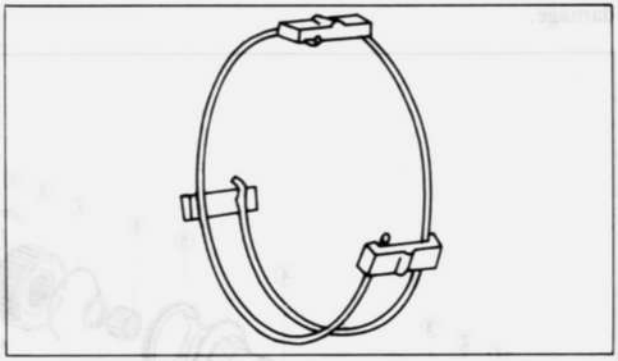

Fig. 7–15 Installing key spring

will be uniform.
2. Assemble the third-and-fourth synchromesh mechanism in the same manner as first-and-second synchromesh mechanism.
3. Place the synchronizer ring on the second gear and slide the second gear to the main shaft with the synchronizer ring toward the rear of the shaft.
4. Slide the first-and-second clutch hub and sleeve assembly to the main shaft with the oil grooves of the clutch hub toward the front of the main shaft. Make sure that the three synchronizer keys in the synchromesh mechanism engage the notches in the second synchronizer ring.

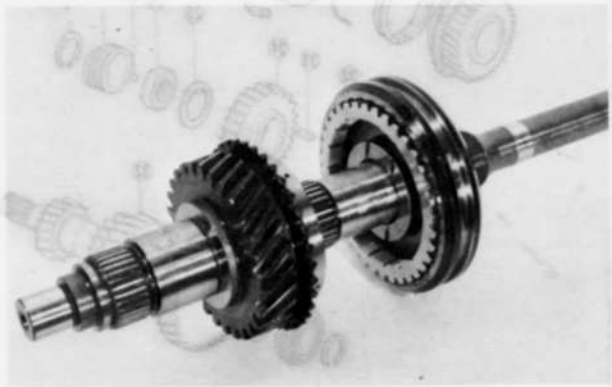

Fig. 7–16 Installing clutch hub and sleeve assembly



Fig. 7–17 Installing first gear

8. Place the synchronizer ring on the third gear and slide the third gear to the front of the main shaft with the synchronizer ring toward the front.
9. Slide the third-and-fourth clutch hub and sleeve assembly to the front of the main shaft making sure

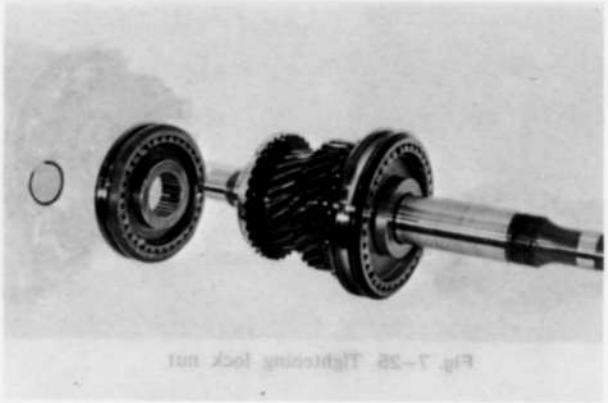

Fig. 7–18 Installing clutch hub and sleeve assembly

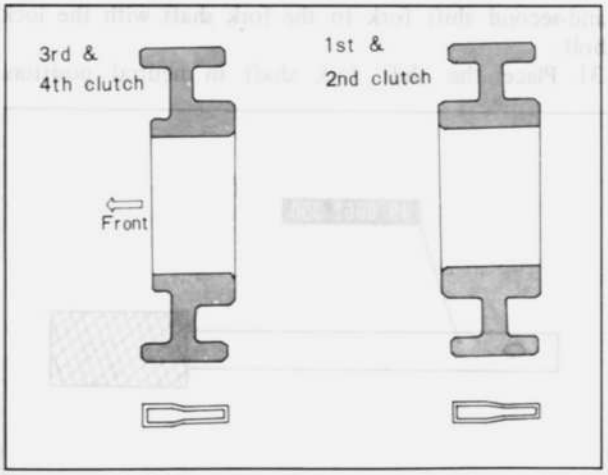

Fig. 7–19 Direction of clutch hub assembly

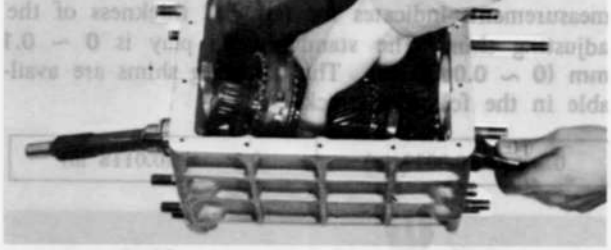

Fig. 7–20 Installing main shaft and gears assembly

12. Place the needle bearing to the front end of the main shaft.
13. Place the synchronizer ring on the third-and-fourth clutch hub making sure that the three synchronizer keys in the third-and-fourth synchromesh mechanism engage the notches in the synchronizer ring.
14. Install the main shaft and gears assembly into the transmission case. Then, engage the main shaft and gears assembly with the main drive shaft.
15. Position the first-and-second shift fork and third-and-fourth shift fork in the groove of the clutch hub and sleeve assembly, as shown in Fig. 7–21.

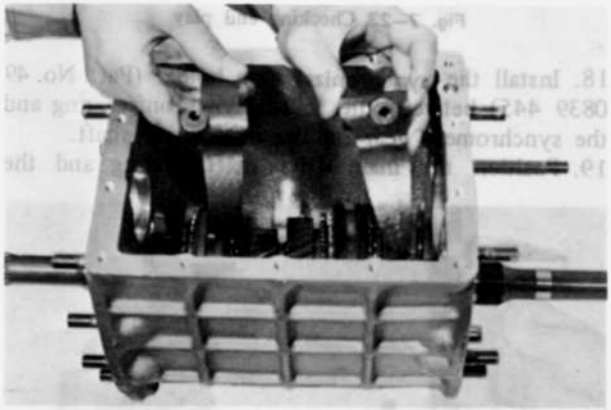

Fig. 7–21 Installing shift forks

16. Position the counter shaft gear in the case, making sure that the counter shaft gear engage each gear of the main shaft assembly.
17. Check the main shaft bearing end play, proceed as follows: Measure the depth of the main shaft bearing bore in the clutch housing by using a depth gauge. Then, measure the main shaft bearing height shown in Fig. 7–23. The difference between the two

measurements indicates the required thickness of the adjusting shim. The standard end play is **0 ~ 0.1 mm (0 ~ 0.0039 in).** The adjusting shims are available in the following thickness :

0.1 mm (0.0039 in)	0.3 mm (0.0118 in)

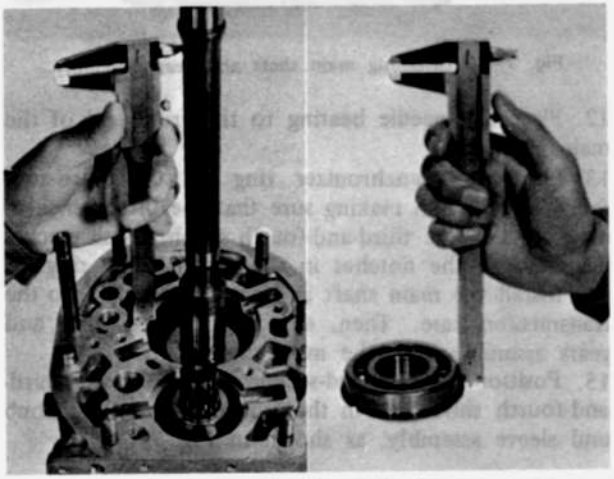

Fig. 7–23 Checking end play

18. Install the **synchronizer ring holder** (Part No. 49 0839 445) between the fourth synchronizer ring and the synchromesh gear on the main drive shaft.
19. Position the main drive shaft bearing and the rear bearing in their respective bearing bore, and press them in by using a press.
24. Install the snap ring to secure the front bearing.
25. Remove the synchronizer ring holder.
26. Install the counter reverse gear to the rear end of the counter shaft and secure it with the snap ring.
27. Install the reverse idler gear shaft to the transmission case.
28. Install the bearing cover to the transmission case and tighten the attaching bolts.
29. Install the reverse gear with the key to the main shaft. Tighten the main shaft lock nut to **21.0 ~ 25.0 m-kg (151.0 ~ 180.0 ft-lb),** by using the **holder** (Part No. 49 0259 440).

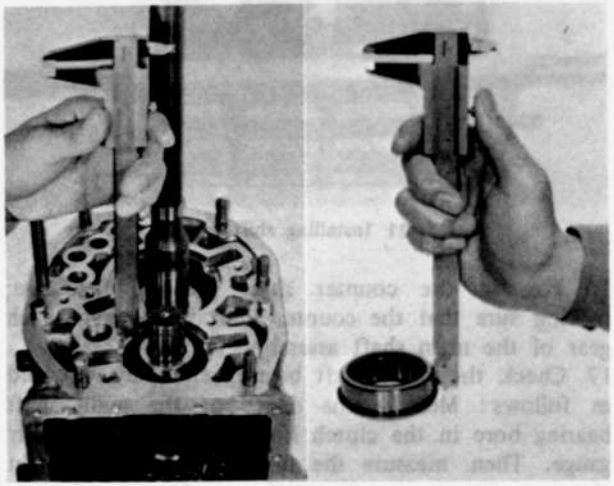

Fig. 7–24 Checking end play

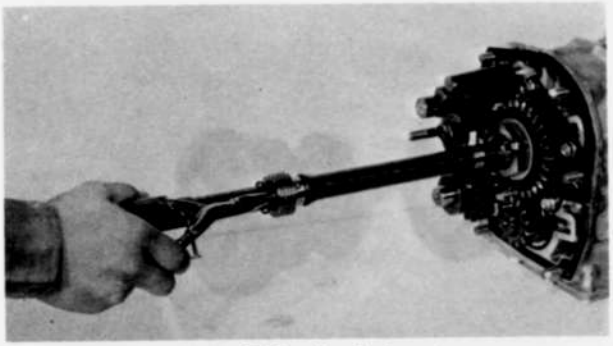

Fig. 7–25 Tightening lock nut

30. Slide the first-and-second shift fork shaft into the case from the rear of the case. Secure the first-and-second shift fork to the fork shaft with the lock bolt.
31. Place the shift fork shaft in neutral position.

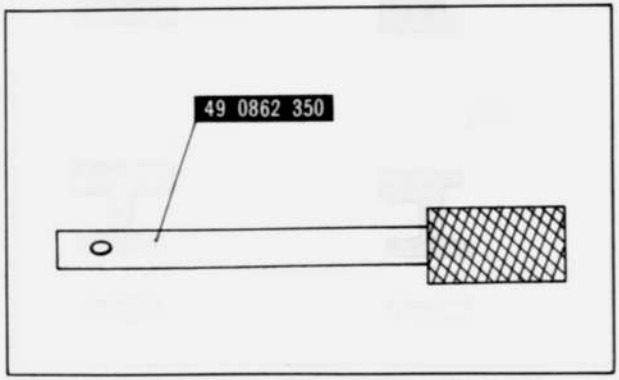

Fig. 7–26 Shift inter-lock pin installer

Fig. 7–27 Inserting shift inter-lock pin

Using the **shift inter-lock pin installer** (Part No. 49 0862 350) shown in Fig. 7–27, insert the shift inter-lock pin into the case.

32. Slide the third-and-fourth shift fork shaft into the case from the rear of the case. Secure the third-and-fourth shift fork to the fork shaft with the lock bolt.

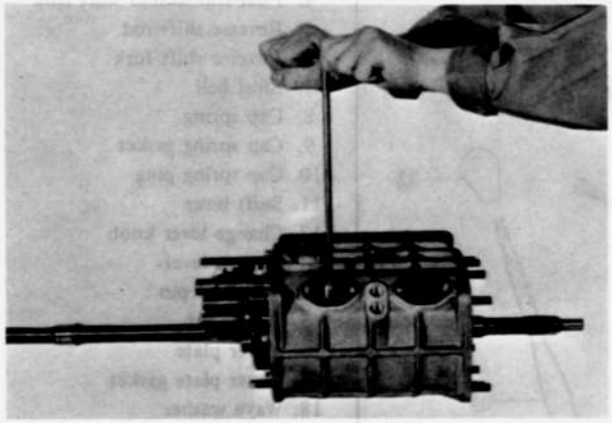

Fig. 7–28 Securing shift fork

33. Insert the shift inter-lock pin into the case by using the **installer** (Part No. 49 0862 350).

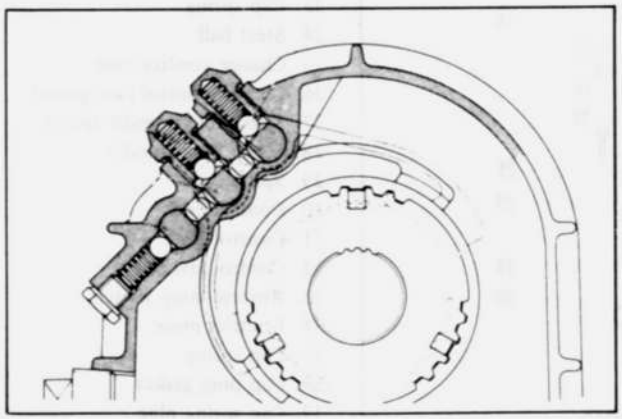

Fig. 7–29 Inserting shift inter-lock pin

34. Install the reverse shift fork to the reverse shift fork shaft and secure the shift fork with the lock bolt.

1. Spring cap bolt
2. Washer
3. Detent spring
4. Detent ball
5. Shift inter-lock pin
6. Detent ball
7. Detent spring
8. Washer
9. Spring cap bolt

35. Slide the reverse shift fork shaft with the reverse shift lever and reverse idler gear into the case from the rear of the case. Secure the reverse shift lever to the case with the bolt.

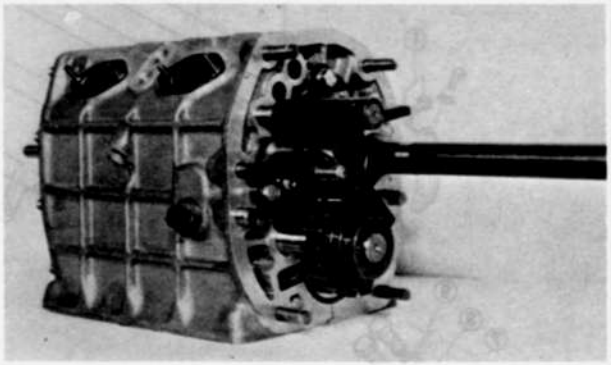

Fig. 7–31 Installing reverse idle gear

36. Position the three detent balls and three springs into the case and install the spring cap bolts.

37. Place the third-and-fourth clutch sleeve in the third gear.

38. Check the clearance between the synchronizer key and the exposed edge of the synchronizer ring with a feeler gauge. This measurement should be

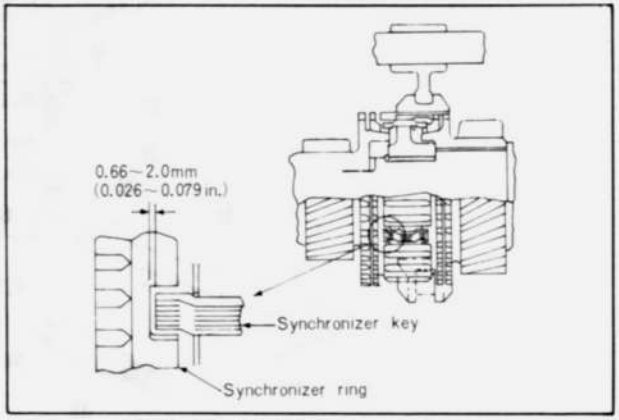

Fig. 7–32 Checking clearance

and tighten the attaching bolts.

41. Install the lock ball, speedometer drive gear and snap ring to the main shaft from the rear of the main shaft.

the woodruff key in place and slide the gearshift control lever end to the gearshift control lever. Secure the lever end to the control lever with the bolt.

43. Install the neutral switch to the extension housing.

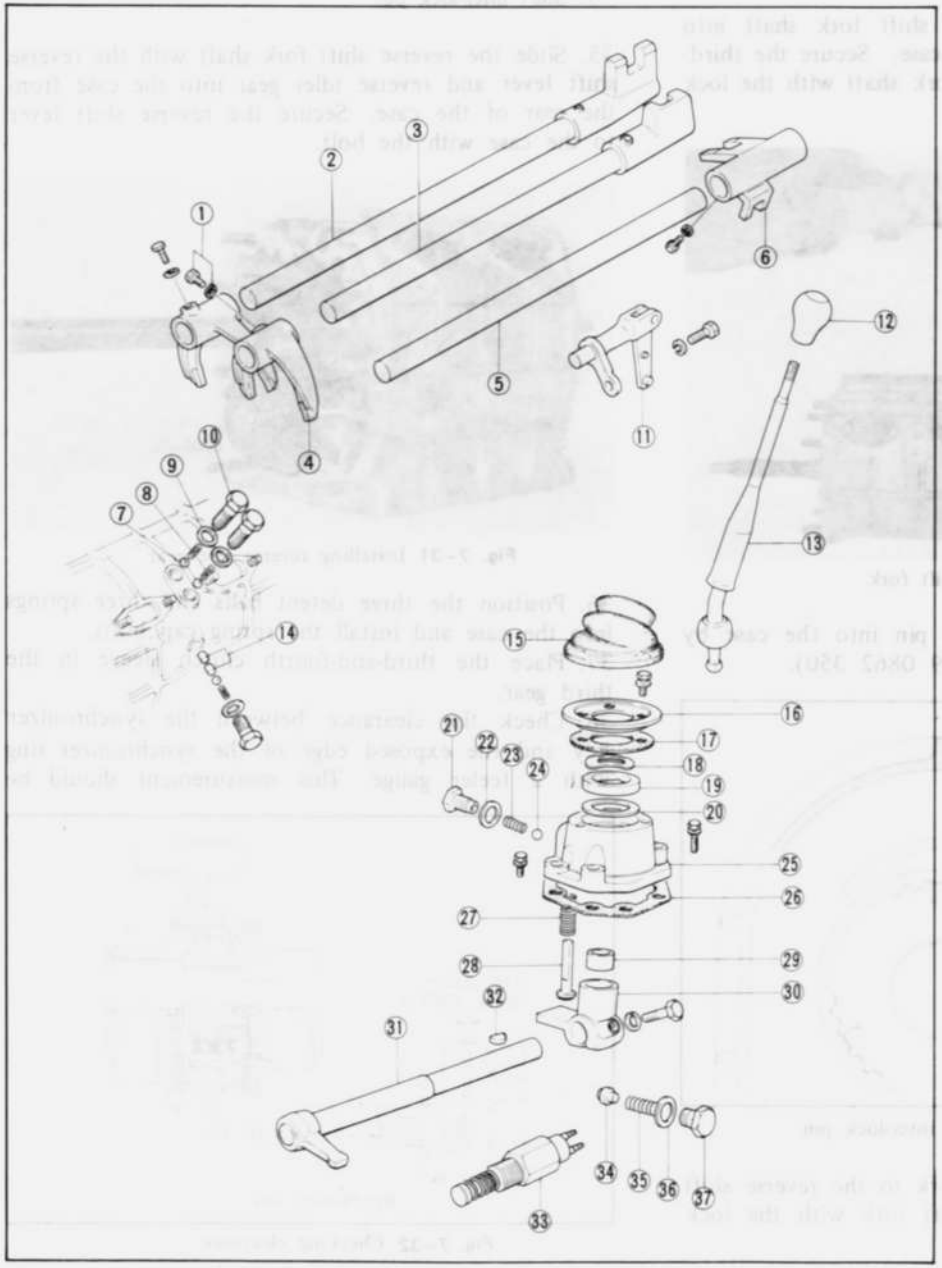

Fig. 7–34 Gear shift mechanism

1. Third-and-fourth shfit fork
2. Third-and-fourth shift rod
3. First-and-second shift rod
4. First-and-second shift fork
5. Reverse shift rod
6. Reverse shift fork
7. Steel ball
8. Cap spring
9. Cap spring gasket
10. Cap spring plug
11. Shift lever
12. Change lever knob
13. Change lever
14. Interlock pin
15. Dust boot
16. Cover plate
17. Cover plate gasket
18. Wave washer
19. Bush
20. Shim
21. Cap spring plug
22. Cap spring gasket
23. Cap spring
24. Steel ball
25. Change control case
26. Change control case gasket
27. Select lock spindle spring
28. Select lock spindle
29. Spring seat
30. Control end
31. Control lever
32. Control lever key
33. Reverse lamp switch
34. Friction piece
35. Cap spring
36. Cap plug gasket
37. Cap spring plug

and tighten the switch.
44. Position the spring and friction piece in the extension housign and tighten the spring cap bolt to the extension housing.
45. Install the back-up lamp switch to the extension housing and tighten the switch.
46. Insert the speedometer driven gear assembly to the extension housing and secure it with the bolt and lock plate.

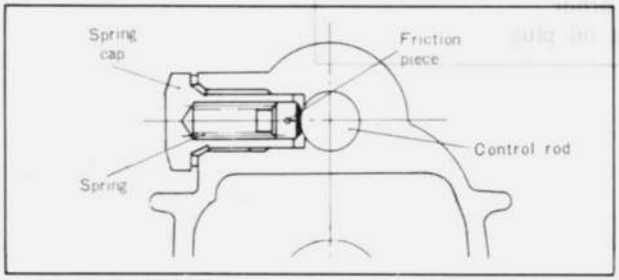

Fig. 7–36 Friction piece

47. Place the gasket on the rear of the transmission case and position the extension housing on the transmission case with the gearshift control lever end laid down to the left as far as it will go. Tighten the attaching nuts.

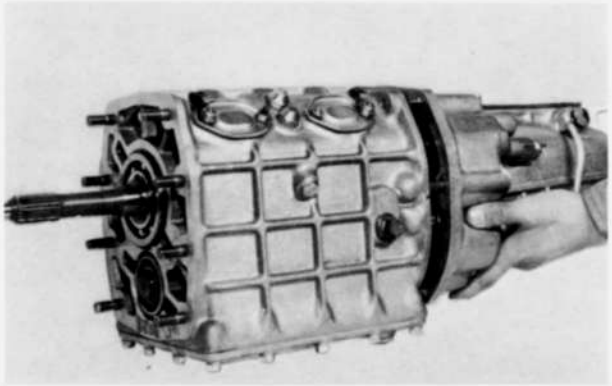

Fig. 7–37 Installing extension housing

48. Check to ensure that the gearshift control lever operates properly.
49. Insert the select lock spindle and spring from the inside of the gearshift lever retainer. Position the lock ball and spring in alignment with the select lock spindle and tighten the spring cap bolt.

Fig. 7–38 Gearshift lever retainer

1. Retainer
2. Locking ball
3. Spring
4. Spring cap bolt
5. Spring
6. Select lock spindle

50. Position the gasket and gearshift lever retainer to the extension housing, and tighten the attaching bolts.
51. Check the bearing end play as follows:
Measure the depth of the main drive shaft bearing bore in the clutch housing using a depth gauge. Then, measure the bearing height shown in Fig. 7–39. The difference between two measurements indicates the

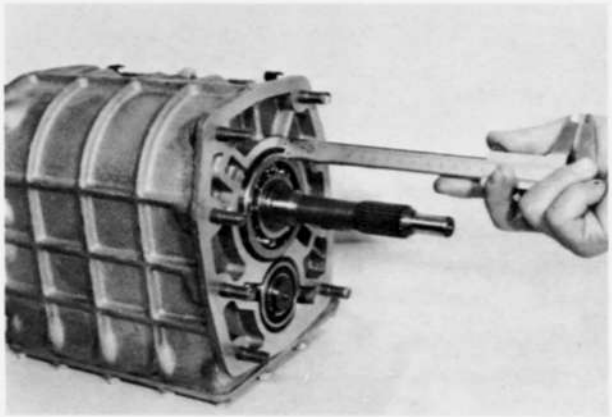

Fig. 7–39 Measuring bearing height

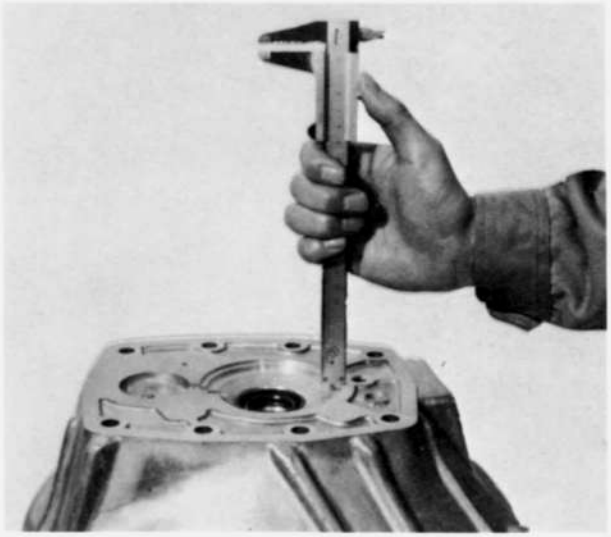

Fig. 7–40 Measuring bearung bore depth

SPECIAL TOOLS

49 0839 425B	Bearing puller seat
49 0259 440	Main shaft holder
49 0839 445	Synchronizer ring holder
49 0862 350	Shift inter-lock pin installer
49 0813 310	Clutch disc arbor
49 0259 440	Transmission oil plug

7B–A. TROUBLE DIAGNOSIS AND ADJUSTMENT ..... 7B : 2
7B–B. ITEMS TO CHECK AND ADJUST .... 7B : 2
7B–B–1. Torque Converter Oil ..... 7B : 2
a. Oil level check ..... 7B : 2
b. Oil leakage check ..... 7B : 2
c. Oil condition check ..... 7B : 2
7B–B–2. Engine Idling Speed ..... 7B : 2
7B–B–3. Kick-Down Switch and Down Shift Solenoid ..... 7B : 2
7B–B–4. Manual Linkage ..... 7B : 3
7B–B–5. Inhibitor Switch ..... 7B : 3
7B–C. DIAGNOSTIC TEST ITEMS ..... 7B : 4
7B–C–1. Stall Test ..... 7B : 4
a. Stall test procedure ..... 7B : 4
b. Judgement ..... 7B : 4
7B–C–2. Road Test ..... 7B : 5
a. Shift point check ..... 7B : 5
b. Shift point check procedure ..... 7B : 5
c. Other checks in driving ..... 7B : 5
7B–C–3. Oil Pressure Test ..... 7B : 6
a. Line pressure test ..... 7B : 6
b. Line pressure test procedures ..... 7B : 6
c. Diagnosis from measurements ..... 7B : 6
d. Governor pressure test ..... 7B : 6
7B–D. TROUBLE DIAGNOSIS CHART ..... 7B : 7
7B–D–1. Items to Check ..... 7B : 7
7B–D–2. Trouble Diagnosis Chart .... 7B : 7
7B–E. REMOVAL OF TRANSMISSION ..... 7B : 9
7B–F. DISASSEMBLY OF TRANSMISSION COMPLETE ..... 7B : 10
7B–F–1. Disassemble Procedure ..... 7B : 10
7B–G. OVERHAUL OF MAIN COMPONENTS ..... 7B : 11
7B–G–1. Torque Converter ..... 7B : 11
7B–G–2. Front Clutch Assembly ..... 7B : 11
7B–G–3. Rear Clutch Assembly ..... 7B : 12
7B–G–4. Low and Reverse Brake Assembly ..... 7B : 13
7B–G–5. Band Servo ..... 7B : 14
7B–G–6. Governor Valve Assembly.. 7B : 15
7B–G–7. Oil Pump Assembly ..... 7B : 16
7B–G–8. Control Valve Assembly .... 7B : 17
7B–G–9. Bearing and Bearing Race... 7B : 18
7B–G–10. Other Component Parts ..... 7B : 18
a. Front planet carrier assembly rear planet carrier assembly, input shaft and output shaft ..... 7B : 18
b. Shell and sun gear assembly ..... 7B : 19
c. Internal drive flange assembly ..... 7B : 19
d. Connecting drum assembly ..... 7B : 19
e. Manual control system and parking lock system ..... 7B : 19
7B–H. REASSEMBLY OF TRANSMISSION ... 7B : 19
7B–I. INSTALLATION AND ADJUSTMENT OF TRANSMISSION ..... 7B : 22
SERVICE SPECIAL TOOLS ..... 7B : 23

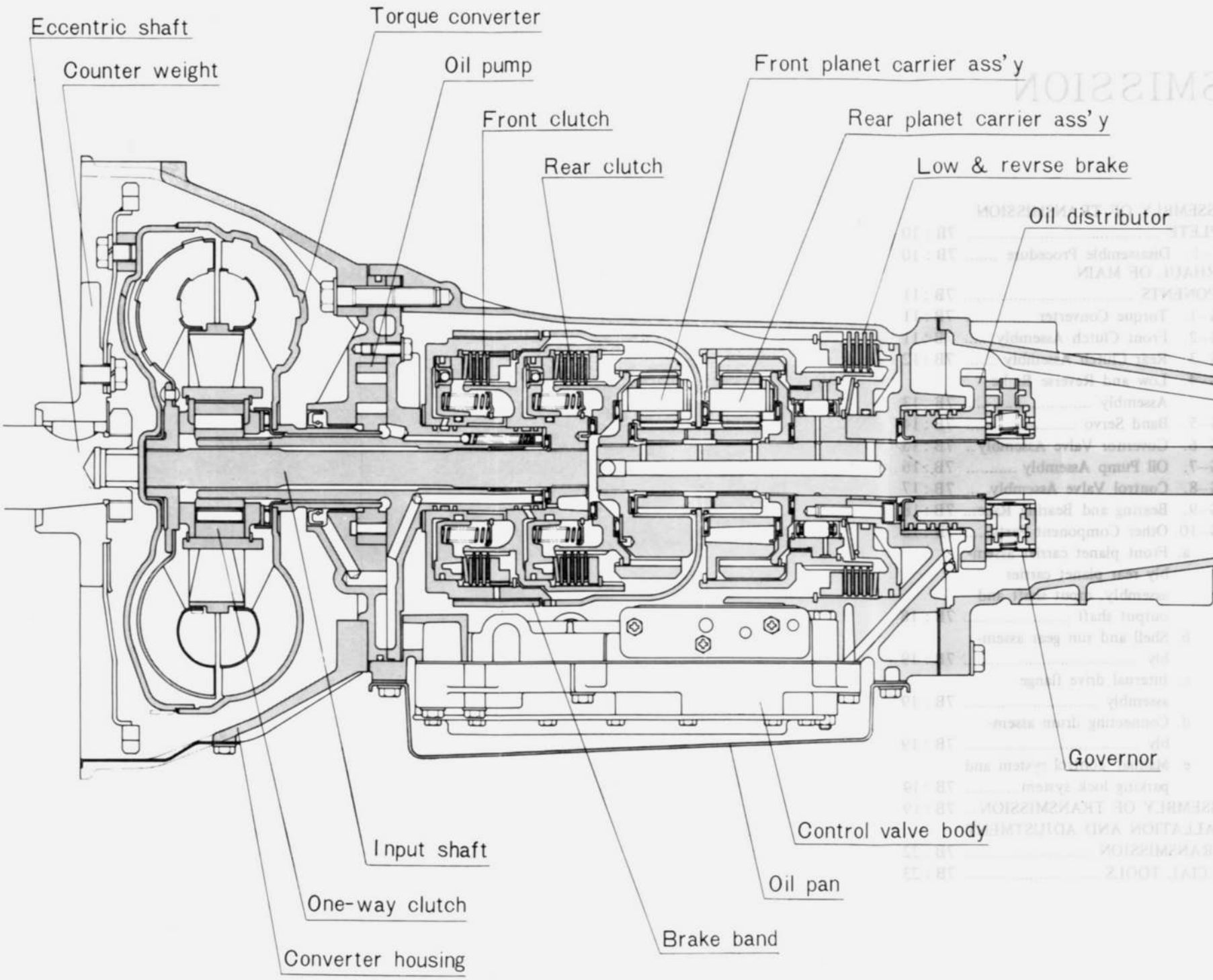

AUTOMATIC TRANSMISSION MODEL R3A (JATCO)

the following items (described in 7B–B):

1. Oil level
2. Idling speed
3. Down-shift solenoid and kickdown switch
4. Manual linkage
5. Inhibitor switch

It is meaningless to proceed to check other items without checking the above items carefully.
In the case of the automatic transmission particularly, there are a great number of troubles which can be solved by inspecting and regulating the above items with the transmission mounted on the vehicle.
So do not remove or disassemble the transmission without checking such items first. Also there are some troubles which require further detailed diagnostic tests including stall test, road test and hydraulic pressure test before removing the transmission from the vehicle. Such tests are described in 7B–C.
If a trouble should prove not correctable by inspection, adjustments and repairs made according to TROUBLE DIAGNOSIS CHART with the transmission installed, that is, if removal and overhauling are indicated by diagnosis, only then, the transmission should be removed and overhauled in the procedure mentioned later.

7B–B. ITEMS TO CHECK AND ADJUST

7B–B–1. Torque Converter Oil

a. Oil level check

Put the vehicle on a level surface and run the engine approximately two minutes at 1,200 rpm. Then move the manual lever through all driving ranges applying brake with the engine idling condition. Place the manual lever in "P". Insert the dipstick fully and take it out quickly before splashing oil adheres to the gauge, and then observe the level on the dipstick. The oil level must be somewhere between L and F marks and never be outside the limits.

Note :

1. The recommended oil is Genuine Automatic Transmission Fluid M2C33F (Type F) or Automatic Transmission Fluid M2C33F (Type F) of any make. Do

Note :

1. Torque converter oil is of a red-wine color and is distinguishable from engine oil.
2. In checking for possible leak from the transmission breather pipe, jack up one of the rear wheels and run the engine to simulate the running condition. When the oil level is over the "F" limit, the oil never fails to spurt out from the breather pipe. When water is contained in it, the oil sometimes spurts out even when the oil level is within the specified range.

c. Oil condition check

In checking the condition of oil by the oil sticking on the dipstick, note that, if the oil appears like varnish, it might cause control values to stick, and if it is black, it shows that linings of clutch or brake band have been scorched. In case such oil deterioration is found severe, it sometimes indicates that overhaul should be made without conducting tests listed in TROUBLE DIAGNOSIS CHART. If it is difficult to readily determine whether or not to make such tests, oil should be drained for confirmation.

7B–B–2. Engine Idling Speed

The engine idling speed should be properly adjusted to the specified revolution by using a tachometer for servicing rather than the one installed on the vehicle. If the engine idling speed is too low, the engine cannot revolve smoothly and when it is too high, shifts from "N" or "P" to other ranges will be harsh with increased shock or creep. Adjust the engine idling speed to 750 rpm in "D" range.

7B–B–3. Kick-down Switch and Downshift Solenoid

Position the ignition switch at the first stage after making sure that the accelerator pedal goes through the entire stroke properly. Depress the accelerator pedal as far as it goes. As the throttle nears the wide-open position, the contact point of the kick-down switch is closed with a light click from the solenoid.

The kick-down switch must begin to operate in between 7/8–15/16 of the entire pedal travel or full

Fig. 7B–2 Kick-down switch and down shift solenoid

throttle. If not, adjust the kick-down switch. If the solenoid should not make any clicking sound it indicates some abnormality, so check with a tester must be made.

Note :
When the solenoid is removed for replacing, some one liter of fluid leaks out. So a receptacle should be made ready to catch it.

7B–B–4. Manual Linkage
The adjustment of linkage is equally important as "Inspection of oil level" for the automatic transmission. Therefore, great care should be exercised because defective adjustment will result in the breakdown of the transmission.
Pull the manual lever toward you and turn it so far as "P" to "1" range, where clicks will be felt by hand. This is the detent of manual valve in the body, and indicates the correct position of the lever. Inspect whether the pointer of selector dial corresponds to this point, and also whether the lever comes in alignment with the stepping of position plate when it is released.
When the position of the manual lever is found incorrect, disconnect the T joint on the lower rod, and place in "N" the range select lever on the transmission (where the slot of the manual shaft is positioned vertically).

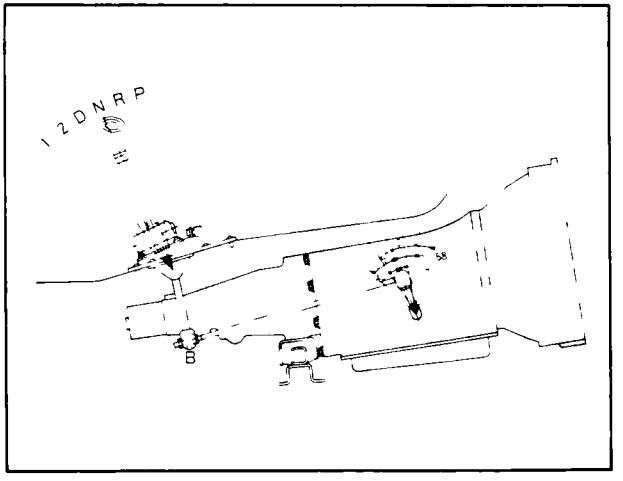

Fig. 7B–3 Manual linkage

found normal, then check the inhibitor switch.
Engage the manual lever in each range and check the connection of the inhibitor switch with a tester. Check also the extent through which the electrical connection is made for "R", "N" and "P". If anything wrong is revealed as a result of the conductivity check of the inhibitor switch, make adjustments in the following procedures.

1. Adjust the select lever so that the clearance between pin and guide plate will be 0 ~ 0.3 mm when the lever is in "N" position by using the adjusting nut "B" of the rod.
2. Adjust the inhibitor switch so that the pin hole of the switch body will be aligned with the pin hole of the sliding plate when the select lever is in "N" position.
3. The starter switch should turn on only when "N" and "P" range are selected.

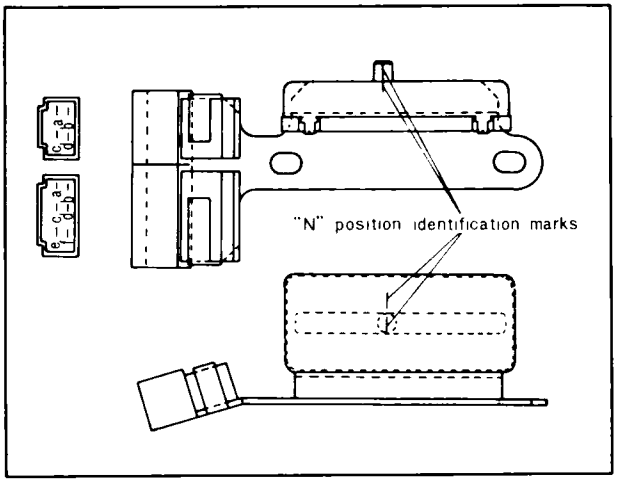

Fig. 7B–4 Inhibitor wiring

Color	
GL	Warning lamp "P" ~ Inhibitor switch
GB	Warning lamp "N" ~ Inhibitor switch
GR	Warning lamp "D" ~ Inhibitor switch
GW	Warning lamp "2" ~ Inhibitor switch
G	Warning lamp "1'. ~ Inhibitor switch
BY	Starter switch ~ Inhibitor switch
RY	Reverse lamp ~ Inhibitor switch
GY	Fuse box Ig. ~ Inhibitor switch
BY	Key switch St. ~ Inhibitor switch

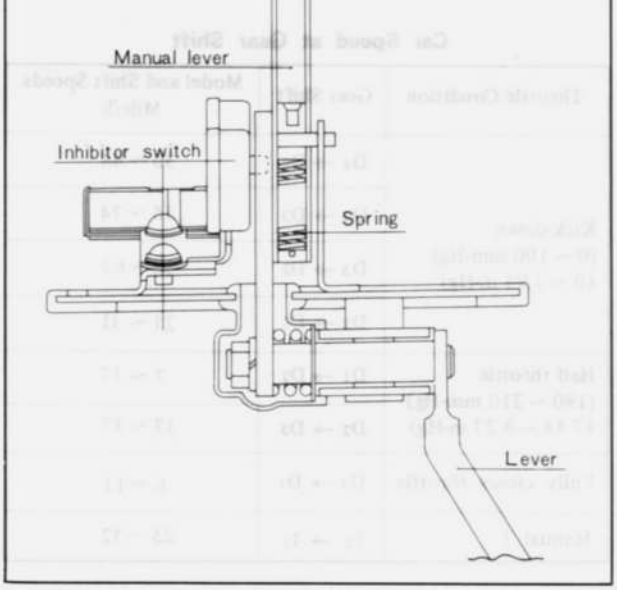

Fig. 7B–6 Inhibitor switch

7B–C. DIAGNOSTIC TEST ITEMS

Make sure that all the inspection items described in 7B–B are normal before starting the diagnostic tests– stall test, road test and oil pressure test.

7B–C–1. Stall Test

The purpose of this test is to check the transmission and engine for trouble by measuring the maximum numbers of the engine revolutions while the vehicle is held in a stalled condition and the carburetor is in full throttle operation with the manual lever in ranges "D", "2", "1" and "R" respectively and by comparing the measured results with the standard values.

The specified stall revolution is in the following table.

Stall revolution (rpm)	
In breaking in	After breaking in
2,400 ~ 2,650	2,450 ~ 2,700

a. Stall test procedure

1. Check the levels of engine coolant, engine oil and torque converter oil. Warm up the engine at about 1,200 rpm for several minutes with the manual lever

engine at about 1,200 rpm for more than one minute to cool down the torque converter oil and coolant.

7. Proceed to do the stall test for "2", "1'. and "R" in the same manner as for "D".

Note :

The stall test operation as specified in the item (5) should be made within five seconds. If it takes too long, the oil deteriorates and the clutches, brake and band are adversely affected. Sufficient cooling time should be given between each test for the four ranges "D", "2", "1" and "R".

b. Judgement

By comparing the measured stall speed and the specified one, troubles can be surmised as follows :

1. Standard stall revolution

Both transmission control elements and engine performance are normal, and the one-way clutch of the torque converter is not slipping though whether or not there is sticking is unknown.

* In the road test, if the maximum speed cannot be attained and the torque converter oil is found to be at unusually high temperature, the one-way clutch of the torque converter is diagnosed to be sticking.

2. High stall revolution more than standard revolution.

If the engine revolution in stall condition is higher than the standard values, it indicates that one or more clutches in the transmission are slipping and, therefore, no further test is required. For the following abnormalities, the respective causes are presumed.

High rpm in all ranges

Line pressure is low or all clutches, brake and band are slipping.

High rpm in "D", "2" and "1" (normal in "R")

The rear clutch is slipping.

High rpm in "D" (normal in "2", "1" and "R")

The one-way clutch is slipping.

High rpm in "R" (normal in "D", "2" and "1")

The front clutch or the low and reverse brake is slipping.

* In the road test, if there is no engine braking in "1" range, the low and reverse brake is slipping, and if there is engine braking in "1" range, the front clutch is slipping.

High rpm in "2" (normal in "D", "1" and "R")

The band is slipping.

conditions to detect and analyze troubles and to clear up the cause of troubles.

a. Shift Point Check

Check to see that the up-shift and down-shift occur within the range specified in the shift point table below, following the checking procedures.

b. Shift point check procedure

1. Make sure that the tire air pressure is in the standard range and preheat the converter oil to appropriate temperature about 60 ~ 100°C (140 ~ 212°F) in engine idling condition.
2. Place the manual lever in "D" range and accelerate in wide open throttle (kick-down switch energized), and read the car speed at the instant of $D_1 \rightarrow D_2$ and $D_2 \rightarrow D_3$ up-shifts with speedometer which is installed on this car.
3. Drive the car with the manual lever in "D". When it is running at a constant speed in D_3, depress the accelerator pedal to the full (the kickdown switch energized) and make sure that $D_3 \rightarrow D_2$ shift occurs. Continue this check at higher speeds until a critical speed from which that down-shift does not occur any more is reached. Proceed to check the critical speed for $D_2 \rightarrow D_1$ kick-down by using the same method. Shift-down can be noted by a shift shock or change in engine sound.
4. When the car is running in D_3 at a speed about 60 km/h (45 mile/h), release the accelerator pedal completely and read the car speed just when $D_3 \rightarrow D_1$ down shift occurs at the fully closes throttle condition.
5. When the car is running in D_3 at a speed more than 60 km/h (45 mile/h), place the manual lever from "D" into "1", and read the car speed just when $1_2 \rightarrow 1_1$ downshift occurs.

Note :

Care must be taken not to shift from "D" to "1" (from "2" to "1") in exceeding the speed in "2" range ("1" range) shown below to avoid the engine overrun.

Engine Max. speed (rpm)	"1" Range	"2" Range
	Mile/h	Mile/h
6,500	40	70

Car Speed at Gear Shift

Throttle Condition	Gear Shift	Model and Shift Speeds Mile/h
Kick-down (0 ~ 100 mm-Hg) (0 ~ 3.94 in-Hg)	$D_1 \rightarrow D_2$	30 ~ 44
	$D_2 \rightarrow D_3$	55 ~ 74
	$D_3 \rightarrow D_2$	48 ~ 62
	$D_2 \rightarrow D_1$	21 ~ 31
Half throttle (190 ~ 210 mm-Hg) (7.48 ~ 8.27 in-Hg)	$D_1 \rightarrow D_2$	7 ~ 17
	$D_2 \rightarrow D_3$	17 ~ 37
Fully closes throttle	$D_3 \rightarrow D_1$	6 ~ 11
Manual 1	$1_2 \rightarrow 1_1$	25 ~ 32

Note :

The shift speeds in the above table include the permissible allowance of a speedometer on the car. Therefore check the shift speed with the speedometer on the car.

c. Other checks in driving

1. Check each range for faulty performance or shifting. Check to see, for instance, that :
(1) Firm locking is effected when "P" is selected.
(2) Reversing is effected when "R" is selected.
(3) Completely neutral condition is attained by selecting "N".
(4) $D_1 \leftrightarrow D_2 \leftrightarrow D_3$ shifts take place in "D" range.
(5) Kick-down takes place.
(6) When "1" is selected from "D", there occur $D_3 \rightarrow 1_2 \rightarrow 1_1$ or $D_3 \rightarrow 1_1$ shifts with engine braking effected in I_2 and I_1.
(7) The transmission does not shift up in "I" range.
(8) In "2" range, the transmission is fixed to 2nd speed.
2. Check to see that shifting is smooth without conspicuous shock and there is no marked creep. (Slight creep in each range is normal.)
3. Check to see that shifts are effected promptly without drag.
4. Check for abnormal gear noise, clutch, band squeal, poor acceleration or oil leak.

"2"	8.0 ~ 12.0 (114 ~ 170)	10.0 ~ 12.0 (142 ~ 170)
"1"	3.0 ~ 4.0 (43 ~ 57)	9.5 ~ 11.0 (135 ~ 156)

a. Line pressure test

Place the transmission in "D", "2", "1" and "R", and check respective line pressure at engine idling and stall conditions. Compare the results with specified pressures to trace the cause of trouble.

b. Line pressure test procedures

1. Warm up the engine to bring the converter oil to operating temperature 60°~ 100°C (140 ~ 212°F).
2. Line pressure for "R" range is taken out at an inspection hole at the right front of the transmission case, and for "D", "2" and "1" ranges the inspection hole is at the right rear. Connect a pressure gauge to the inspection hole and put it where it is visible from the driver's seat.
3. Firmly check the front and rear wheels and apply the hand brake as in the stall test.
4. With the manual lever put in the range to be checked, run the engine at engine idling condition and read the pressure gauge.
5. With the brake pedal depressed fully, press the accelerator pedal gradually to the wide open position. While checking whether the pressure rises smoothly, read the pressure gauge at the stall condition. The test time from starting accelerator depression to its release must not exceed 5 seconds.
6. Measure line pressure for each of other ranges in the same manner. Be sure to interpose more than one minute cooling time at 1,200 rpm with the manual lever placed in "P" or "N".
7. After aboves, check whether the cut-back function to release the shock at gear shifting is operative properly. The cut-back function can be judged normal if the line pressure drops suddenly when the car is accelerated gradually and reaches to the certain running speed.

c. Diagnosis from measurements

1. When line pressure at idling is low in all of "R", "D", "2" and "1", possible causes include a fault in the pressure supply system, e.g. increased side clearance in the oil pump, reduced pump output because

A. For line pressure in "R" range
B. For line pressure in forward ranges
C. For governor pressure

of bolts left untightened, oil leak from pump, valve body or transmission case, and sticking of regulator valve or vacuum throttle valve.
2. In case line pressure at idling is low in one range only, there probably are pressure leaks in some devices or oil passages for the relevant range.
3. In case line pressure at idling is high in all ranges, possible cause is throttle pressure rise due to leak from vacuum tube or vacuum diaphragm, or regulator valve sticking.
4. When pressure does not rise at stall condition, the vacuum rod possibly may not be installed.
5. When pressure rise is not smooth or pressure at stall condition does not come within the specified range, possible cause is sticking of vacuum throttle valve, pressure regulator valve or pressure regulator plug.

D. Governor pressure test

Governor pressure has only to be measured when shift point is different from the specified.
Connect a pressure gauge in the inspection hole on the left rear of transmission case, and put it where it is visible during driving. Read governor pressure when the car is going at required speeds for each model. If the result is out of the specified range shown in the following table, disassemble and check the governor valve.

Governor Pressure (1)

Driving speed	Output shaft speed rpm	Standard governor pressure kg/cm²	lb/in²
20 mile/h	1,150 ~ 1,240	0.9 ~ 1.4	13 ~ 20
35 mile/h	2,030 ~ 2,150	1.7 ~ 2.4	24 ~ 34
55 mile/h	3,190 ~ 3,350	3.5 ~ 4.5	50 ~ 64

Governor Pressure (2)

Break point	at 1,000 rpm	at 2,000 rpm	at 3,000 rpm
400~600 rpm	0.9~1.3 kg/cm² (13~18 lb/in²)	1.6~2.2 kg/cm² (23~28 lb/in²)	3.0~3.8 kg/cm² (43~54 lb/in²)

L. Band servo
M. Transmission air check
N. Oil drain check
O. Ignition switch and starter motor
P. Engine adjustment and brake inspection

k. Planetary gear

7B–D–2. Trouble Diagnosis Chart

The numerals show the sequence of inspection for detecting trouble.

Trouble	A	B	C	D	E	F	G	H	I	J	K	L	M	N	O	P	a	b	c	d	e	f	g	h	i	j	k
Engine won't start in "N" and "P" ranges		2	3												1												
Engine starts in other ranges than "N" and "P" ranges		1	2																								
Excessive shock on "N" →"D" range shift				2		1	3			4							⑤										
Car won't move in "D" range (but moves in "2", "1" and "R" ranges)		1					2			3														④			
No drive, excessive slip or very poor acceleration in "D", "2" or "1" range (Driver in "R" range)	1	2					4			5			6	3		7	⑧	⑩				⑨					
No drive, excessive slip or very poor acceleration in "R" range (but Drives in "D", "2" and "1" ranges)	1	2					3			5			6	4			⑨	⑧		⑦		⑩			⑪		
Car won't move in any range	1	2					3			5			6	4							⑦	⑧				⑨	
Tendency to slip when starting	1	2		6			3			5			7	4							⑧	⑨					
Car moves in "N" range		1								3				2			④										
Maximum speed too low and poor acceleration	1	2					4	5		7		6		3		8	⑪	⑫	⑨	⑩	⑬						
Car braked when "R" range is selected												3	2	1			④		⑤							⑥	
Excessive creep						1																					
No creep at all	1	2				3				5				4			⑧	⑨			⑥	⑦					
No $D_1 \rightarrow D_2$ change		1		2	3					5	6	8	7	4					⑨			⑩					
No $D_2 \rightarrow D_3$ change		1		2	3					5	6	8	7	4				⑨				⑩			⑪		
$D_1 \rightarrow D_2$ and $D_2 \rightarrow D_3$ shift-points too high				1	2		3			5	6			4								⑦					
$D_1 \rightarrow D_3$ change without through D_2										2	4		3	1				⑤				⑥					
Excessive shock on $D_1 \rightarrow D_2$ change				1				2		4		5		3					⑥								

| | | |

converter to the drive plate by using the **special wrench** (49 0877 435). At the same time, make aligning mark across torque converter and drive plate.
4. Jack up the vehicle and support it with safety stands.
5. Remove the screws attaching the heat insulator to the exhaust pipe and remove the heat insulator.
6. Remove the bolt and nut attaching the exhaust front pipe to the exhaust pipe bracket. Disconnect the exhaust front pipe flange from the exhaust manifold by removing nuts. Remove the bolts and nuts attaching the exhaust front pipe flange to the main silencer, and remove the exhaust front pipe.
7. Remove the bolts attaching the heat insulator to the underbody and remove the heat insulator.
8. Remove the four propeller shaft attaching bolts and remove the center bearing attaching bolts. Then pull it out from the extension housing. Apply a plug to prevent oil leak.

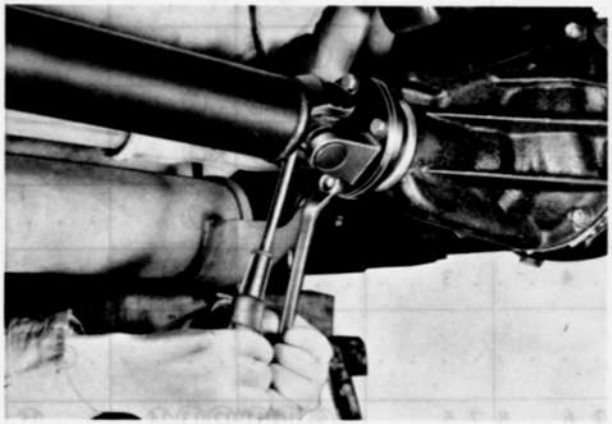

Fig. 7B–8 Removing propellar shaft

9. Disconnect the speedometer cable from the extension housing.
10. Disconnect the control rod by removing snap ring.
11. Disconnect the wirings from the starting motor. Loosen the upper and lower bolt attaching the starting motor to the converter housing and remove the starting motor.
12. Remove the undercover (or service cover) on the converter housing.
13. With the transmission supported with the transmission holder, remove the tightening nuts of the transmission member and take out the member. Then lower the transmission holder, widen the clearance between the transmission and the floor.
14. Remove the vacuum union bolt from the inlet manifold. Remove the vacuum pipe clips from the converter housing, transmission case and extension housing. Disconnect the vacuum hose from the vacuum diaphragm and remove the vacuum pipe.
15. Disconnect the wire connections of down-shift solenoid and remove the wires from the clip.
16. Disconnect the feed pipe and return pipe for cooling on the left side of the transmission. Remove the feed pipe and return pipe clips from the converter housing and transmission case.

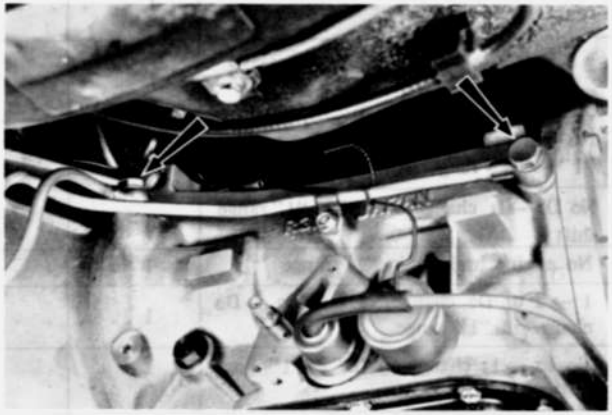

Fig. 7B–10 Removing pipes

17. Loosen and remove the bolts that connect the engine and the torque converter housing to disconnect the transmission and engine.

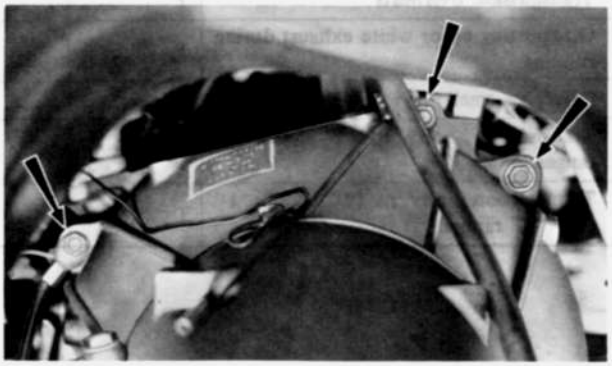

Fig. 7B–11 Bolts on engine & converter housing

is not used in using rubber parts.
(2) Disassembly should be made in a clean workshop, preferably in a dust-proof workshop.

7B–F–1. Disassembly Procedure

1. Remove the torque converter from the housing taking care not to have the converter oil spill.
Then tilt the transmission housing and drain the oil in the oil pan through the end of the extension housing into a vessel.
2. Loosen the bolt for the oil gauge tube and remove it together with the "O" ring.
3. Remove the connecting rod attached to the range select lever.
4. Loosen and remove the bolts that attach the converter housing and the transmission case, and remove the converter housing.

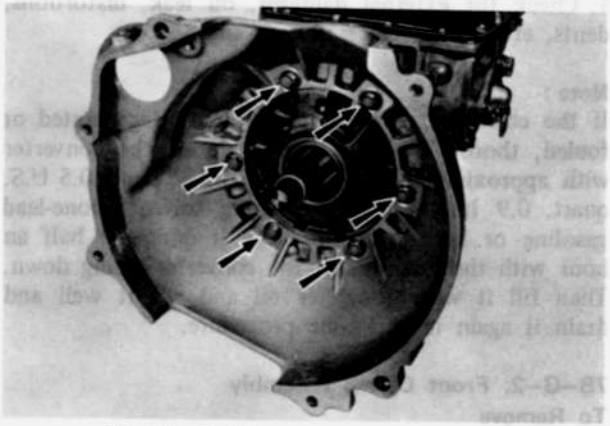

Fig. 7B–12 Bolts on converter housing

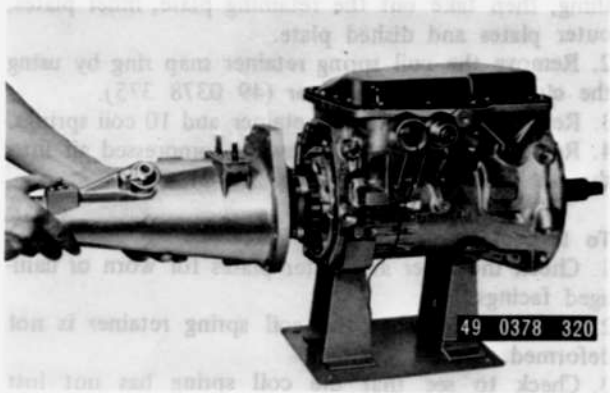

Fig. 7B–13 Removing extension housing



Fig. 7B–14 Removing downshift solenoid

8. Remove the control valve assembly by loosening out nine attaching bolts.

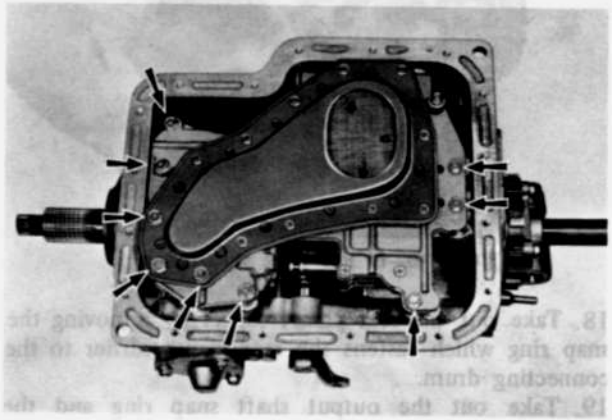

Fig. 7B–15 Control valve body ass'y setting bolts

9. Remove the nut attaching the range select lever to the manual shaft and remove the select lever.
10. Disconnect the parking rod from the parking lever by removing snap ring.
Loosen the nut attaching the manual plate to the manual shaft and remove the manual shaft from the transmission case tapping the manual shaft with the plastic hammer. Then, take out the manual plate, washer, nut and parking rod.
11. Pull out the input shaft.
12. Remove the bolts that attach the band servo cover to the servo retainer and remove the servo cover.
13. Loosen lock nut on piston stem. Then tighten piston stem in order to prevent to fall front clutch drum down when oil pump is withdrawn.



Fig. 7B–16 Removing oil pump

15. Loosen the piston stem and take out the band strut.
16. Loosen and remove the anchor bolt from the transmission case.
17. Remove the following as one set : band, front clutch assembly, rear clutch assembly, front planet carrier assembly with sun gear.

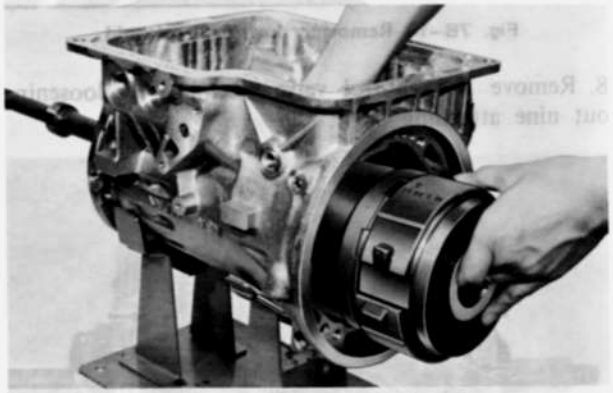

Fig. 7B–17 Removing clutch ass'y

18. Take out the rear planet carrier by removing the snap ring which fastens the rear planet carrier to the connecting drum.
19. Take out the output shaft snap ring and the internal drive flange.

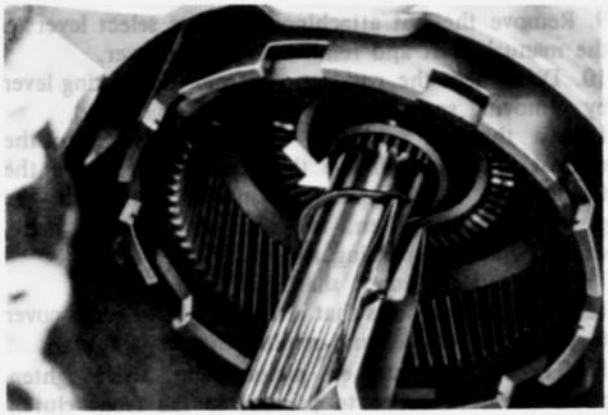

Fig. 7B–18 Removing snap ring

the transmission case but the disassembling operations of it are described in the next section dealing with overhaul of principal components.

7B–G. OVERHAUL OF MAIN COMPONENTS

The principal components each include a large number of similar parts finished to high precision. So all related parts of each component should be placed apart from others to avoid confusion. Overhaul should be made in the following sequence. (Bearings and bearing races must be checked with respect to parts to which they are mounted.)

7B–G–1. Torque Converter

1. The torque converter is welded all along the circumference and so cannot be disassembled.

To Inspect

1. Check for external damages, oil leak, distortions, dents, etc., and replace if necessary.

Note :

If the converter oil is found markedly degenerated or fouled, thoroughly rinse the inside of the converter with approximately 0.5 liter (1.0 U.S. pints, 0.5 U.S. quart, 0.9 Imp. pint) of cleaning solvent (none-lead gasoline or kerosene) and make it drain for half an hour with the rear side of the converter facing down. Then fill it with converter oil and stir it well and drain it again in the same procedure.

7B–G–2. Front Clutch Assembly

To Remove

1. Remove the snap ring with a screw driver or something, then take out the retaining plate, inner plates, outer plates and dished plate.
2. Remove the coil spring retainer snap ring by using the **clutch spring compressor** (49 0378 375).
3. Remove the coil spring retainer and 10 coil springs.
4. Remove the piston by blowing compressed air into the oil hole as shown in Fig. 7B–21.

To Inspect

1. Check the inner and outer plates for worn or damaged facings.
2. Check to see that the coil spring retainer is not deformed.
3. Check to see that the coil spring has not lost tension.

Fig. 7B–19 Front clutch ass'y

1. Piston
2. Front clutch drum
3. Outer plate
4. Snap ring
5. Retaining plate
6. Inner plate
7. Snap ring
8. Spring retainer
9. Coil spring
10. Dished plate

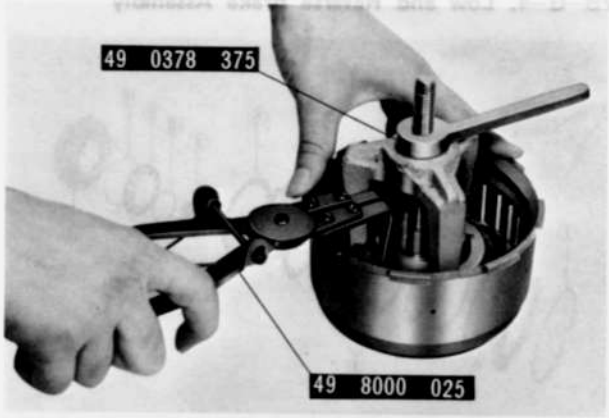

Fig. 7B–20 Removing snap ring



Fig. 7B–21 Blowing out piston

4. Check to see that the seal around the piston and the "O" ring inside the clutch drum are not damaged.
5. If defective parts are found, replace them with new ones.

To Reassemble

1. All parts are smeared with converter oil and reassembled in the reverse sequence of the disassembly.



Fig. 7B–22 Measuring clearance

Note :

To adjust above clearance, the retaining plate comes in the following six thicknesses.

7.2 mm (0.283 in), 7.4 mm (0.291 in)
7.6 mm (0.299 in), 7.8 mm (0.307 in)
8.0 mm (0.315 in), 8.2 mm (0.323 in)

3. Install the front clutch assembly to the oil pump. Blow compressed air into the oil hole as shown in Fig. 7B–23 and check the clutch operation.

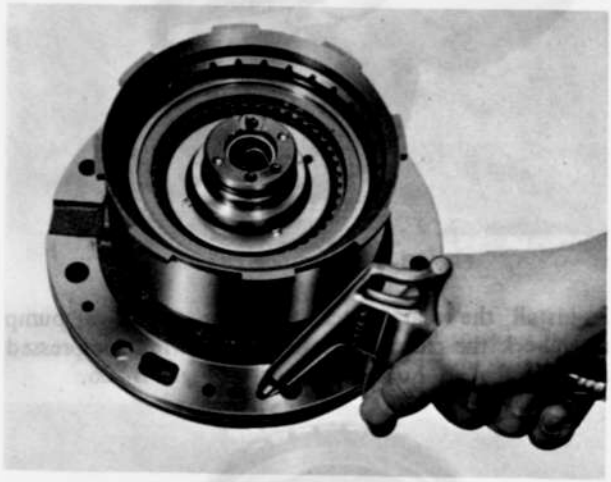

Fig. 7B–23 Testing front clutch

7B–G–3. Rear Clutch Assembly

To Remove

1. Remove the snap ring, retaining plate, outer plates, inner plates and dished plate in the same procedure as for the front clutch assembly.
2. Remove the coil spring retainer snap ring by the use of the **clutch spring compressor** (49 0378 375). Then remove the coil spring retainer and 10 coil springs.
3. Remove the piston by blowing compressed air into the oil hole.

To Inspect

1. Make the same inspection as for the front clutch

assembly and replace any defective parts with new ones.

To Reassemble

1. All parts are reassembled with converter oil smeared in the reverse sequence of the disassembly, as in the case of the front clutch.
2. After reassembly, check to see that the clearance between the snap ring and retaining plate is within the standard range of **0.8 ~ 1.5 mm (0.032 ~ 0.059 in)**.



Fig. 7B–25 Measuring clearance

3. Install the rear clutch assembly to the oil pump and check the clutch operation by blowing compressed air into the oil hole as shown in Fig. 7B–26.

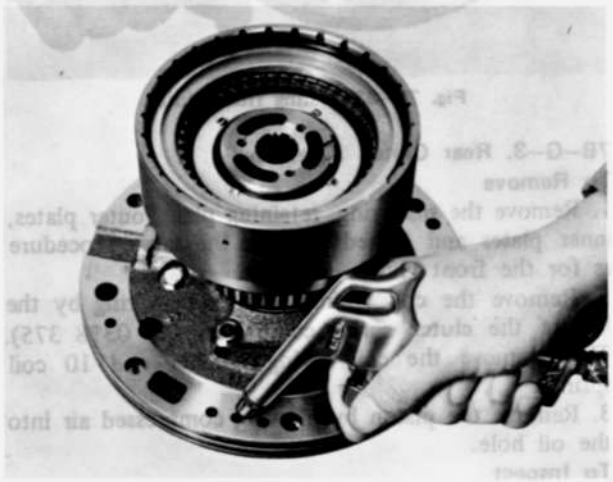

Fig. 7B–26 Testing rear clutch

Fig. 7B–27 Rear clutch ass'y

1. Piston
2. Rear clutch drum
3. Outer plate
4. Snap ring
5. Retaining plate
6. Inner plate
7. Snap ring
8. Spring retainer
9. Coil spring
10. Dished plate

7B–G–4. Low and Reverse Brake Assembly

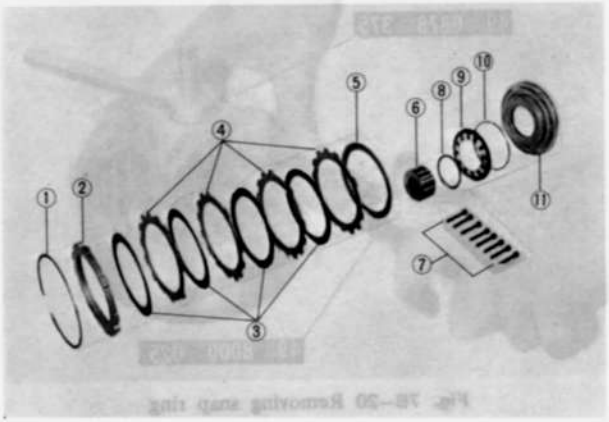

Fig. 7B–28 Low & reverse brake

1. Snap ring
2. Retaining plate
3. Friction plate
4. Steel plate
5. Dished plate
6. Inner race
7. Bolt
8. Snap ring
9. Piston return spring
10. Spring ring
11. Piston

To Remove

1. Remove the snap ring of the low and reverse brake. Remove the retaining plate, friction plates, steel plates and dished plate.
2. The inner race of the one-way clutch is tightened with 8 bolts from the rear of the case. Loosen and remove all the bolts using the **hex-head extension** (49 8000 040), then remove the inner race, snap ring, piston return spring and ring.
3. Remove the piston by blowing compressed air into the low and reverse brake oil hole located at the rear of the transmission case.

To Inspect

1. Check the friction and steel plates for worn or damaged facing.

2. Check to see that the piston return spring has not lost tension.
3. Check to see that there is no deformation on the snap ring (stopper) for piston return spring, attached on the one-way clutch inner race.
4. Check to see that the seal rubber on the inside and outside of the piston are not damaged.
5. If any defective part is found, replace with new one.

To Reassemble

1. Lubricate the piston with converter oil and install it into the transmission case.
2. Install the return spring support ring, return spring, snap ring and one-way clutch inner race on the piston in this order. Then tighten the inner race, from rear of the case, with eight bolts by using the **hex-head extension** (49 8000 040) to a specified torque of **1.3 ~ 1.8 m-kg (10 ~ 13 ft-lb)**.

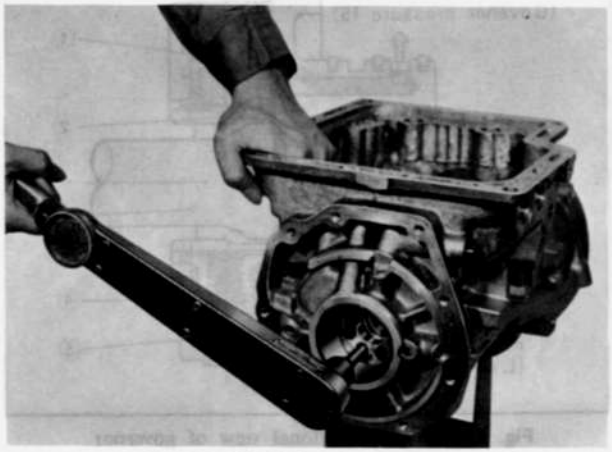

Fig. 7B–30 Tightening inner race

3. Reassemble the dished plate, steel plates, friction plates and retaining plate in the reverse order, smearing each with converter oil. Then fit the snap ring.
4. After reassembly, measure the clearance between the snap ring and retaining plate and select the retaining plate to provide a standard clearance of **0.8 ~ 1.05 mm (0.032 ~ 0.042 in)**.

Note :
To adjust above clearance the retaining plate is available in the following six thicknesses.



Fig. 7B–31 Measuring clearance

5. Check the operation of the low and reverse brake by blowing air into the oil hole as shown in Fig. 7B–29.

7B–G–5. Band Servo

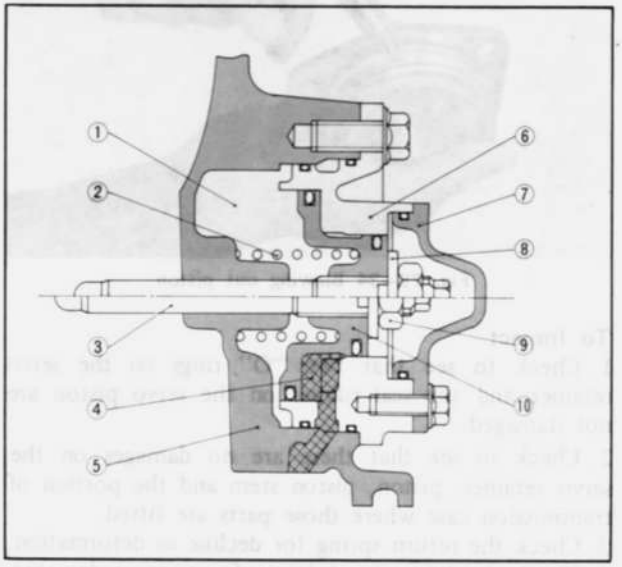

Fig. 7B–32 Cross-sectional of servo

1. Release pressure
2. Return spring
3. Piston stem
4. Apply pressure
5. Transmission case
6. Retainer
7. Cover
8. Washer
9. Adjust nut
10. Piston

To Remove

1. Loosen and remove three bolts that attach the band servo retainer to the transmission case, and remove the band servo retainer together with the servo piston. Take out the return spring. If the servo retainer is difficult to disconnect from the case, it can be readily removed by blowing air into the oil hole on the piston release side.
2. Blow compressed air into the oil hole on the apply side of the servo piston to remove the piston from the retainer.

Fig. 7B–33 Band servo

1. Retainer
2. Piston
3. Return spring
4. Adjust nut
5. Washer
6. Piston stem



Fig. 7B–34 Blowing out piston

To Inspect

1. Check to see that two "O" rings on the servo retainer and the seal rubber on the servo piston are not damaged.
2. Check to see that there are no damages on the servo retainer, piston, piston stem and the portion of transmission case where those parts are fitted.
3. Check the return spring for decline or deformation.
4. Check the brake band lining for wear or damages.

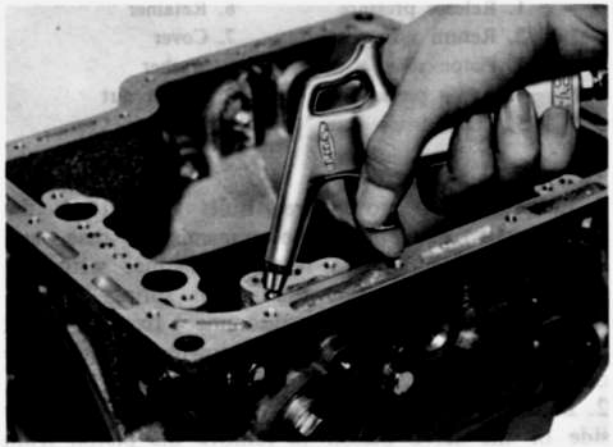

Fig. 7B–35 Checking band servo (1)



Fig. 7B–36 Checking band servo (2)

7B–G–6. Governor Valve Assembly

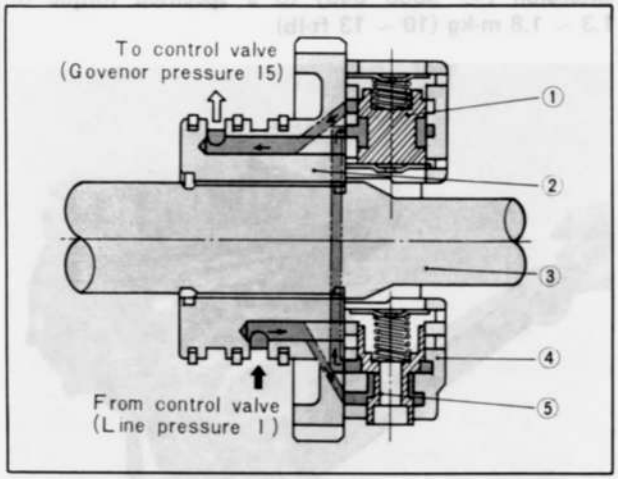

Fig. 7B–37 Cross-sectional view of governor

1. Primary valve
2. Oil distributor
3. Output shaft
4. Governor valve body
5. Secondary valve

To Remove

1. Loosen and remove four bolts that attach the governor. Remove the governor from the oil distributor.
2. Remove the secondary governor retainer plate. Then remove the spring and secondary governor valve from the body.
3. Remove the primary governor valve in the same procedure as for the secondary, if primary governor is to be disassembled for any purpose.

Fig. 7B–38 Governor valve

1. Oil distributor
2. Secondary valve
3. Spring
4. Valve body
5. Primary valve
6. Spring
7. Retainer plate

To Inspect

1. Check the valve and the body to see that there is nothing that may cause valve sticking or catching.
2. Check to see that the spring has not lost tension and the retainer plates are not deformed.
3. Check the side clearance between the sealing and gloove as shown in Fig. 7B–39. The standard clearance is **0.04 ~ 0.16 mm (0.002 ~ 0.006 in)**. When disassembling the seal ring, squeeze it up so that its joint will rise above the groove, and disconnect the joint.

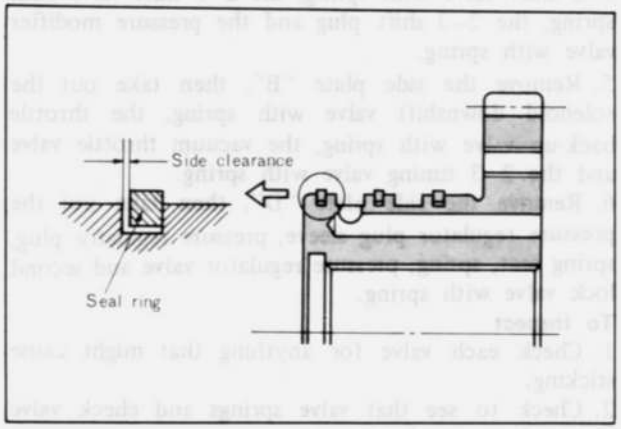

Fig. 7B–39 Clearance of oil seal ring

To Reassemble

1. Lubricate all parts with converter oil and reinstall them in the reverse order of disassembly so as not to confuse primary with secondary. After reassembly, make sure that the governor spring is straight and there is no catch in the governor valve movement.
2. Tighten the governor to the oil distributor with four bolts to a standard torque of **0.50 ~ 0.70 m-kg (3.6 ~ 5.1 ft-lb)**.
3. To determine if secondary governor is in good condition, blow air under light pressure into line pressure hole in Fig. 7B–37 to listen for noise like a model plane.

(0.001 ~ 0.002 in). If the clearance exceeds **0.08 mm (0.003 in)**, replace the gears with those selected from the three kinds. Make sure that the inner and outer gears are replaced as a set.



Fig. 7B–40 Measuring clearance (1)

3. Check the clearance between the outer gear teeth and crescent. The standard valve is **0.14 ~ 0.21 mm (0.006 ~ 0.008 in)**. If the clearance exceeds **0.25 mm (0.010 in)**, replace the gears.



Fig. 7B–41 Measuring clearance (2)

4. Check the clearance between the outer gear and the housing. The standard valve is **0.05 ~ 0.20 mm (0.002 ~ 0.008 in)**. If the clearance exceeds **0.25 mm (0.010 in)**, replace the gears as a set.

Fig. 7B–42 Measuring clearance (3)

5. Check to see that the seal rubber attached on the pump housing periphery is not damaged.
6. Check to see that the oil seal lip is not damaged and the spring has not lost tension.
7. Check to see that the seal rings of oil feed grooves for the front and rear clutches are not damaged or lost tension. Measure the side clearance of the seal ring. The standard valve is **0.04 ~ 0.16 mm (0.002 ~ 0.006 in)**. When replacing seal ring refer to part 7B–G–6.
8. Check to see that the pump housing and the cover are not damaged.
9. If any defective part is found, replace with new one.

To Reassemble

1. Fix the pump housing to the **oil pump assembling guide** (49 0378 405) and fit the inner gear and outer gear in the pump housing as were installed in original. Then fit the pump cover as shown in Fig. 7B–43 and tighten it temporarily with five bolts.



Fig. 7B–43 Assembling oil pump

2. After removing the pump assembly from the oil pump assembling guide, tighten the bolts finally with specified torque **0.6 ~ 0.8 m-kg (4.3 ~ 5.8 ft-lb)**.

7B–G–8. Control Valve Assembly

The control valves are composed of the most accurate of the automatic transmission parts and so particular care must be paid in disassembly and reassembly. Also, since a number of similar parts are used, they

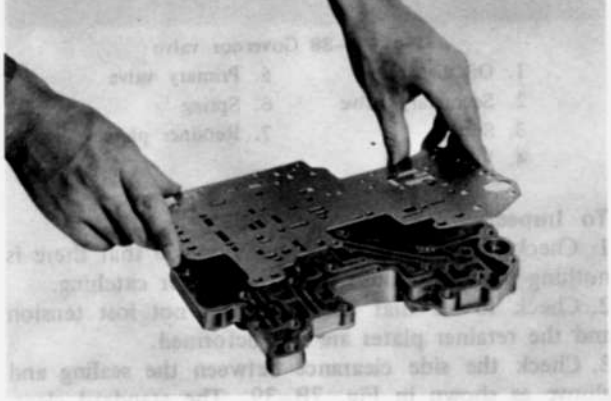

Fig. 7B–44 Removing separate plate

3. Take out the manual valve.
4. Remove the side plate "A", then take out the 1–2 shift valve with spring, the 2–3 shift valve with spring, the 2–3 shift plug and the pressure modifier valve with spring.
5. Remove the side plate "B", then take out the solenoid downshift valve with spring, the throttle back-up valve with spring, the vacuum throttle valve and the 2–3 timing valve with spring.
6. Remove the side plate "D", then take out the pressure regulator plug sleeve, pressure regulator plug, spring seat, spring, pressure regulator valve and second lock valve with spring.

To Inspect

1. Check each valve for anything that might cause sticking.
2. Check to see that valve springs and check valve springs have not lost tension.
3. Check to see that the oil strainer is not damaged.
4. Check for possible abnormal oil passage developing on the separate plate.
5. Check for possible damages or other abnormalities in the oil passages of valve body.
6. If any defective part is found, replace with new one.

To Reassemble

1. Reassemble in the reverse order to disassembly paying special attention to the following points :

a. Install small valves and springs by referring to the components parts of control valve Fig. 7B–45.
b. Lubricate all valves and springs with converter oil before installing.

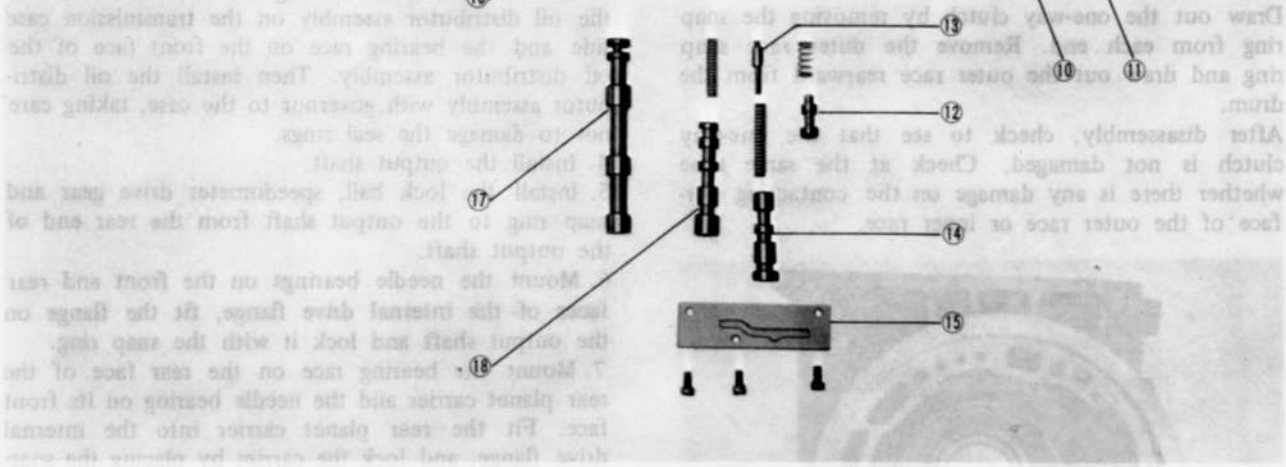

Fig. 7B–45 Component parts of control valve

1. Side plate "D"
2. Plug sleeve
3. Regulator pressure plug
4. Spring seat
5. Regulator pressure valve
6. Second lock valve
7. 2–3 timing valve
8. Vacuum throttle valve
9. Side plate "B"
10. Throttle back-up valve
11. Down-shift valve
12. Modifier valve
13. 2–3 shift plug
14. 2–3 shift valve
15. Side plate "A"
16. Upper valve body
17. Manual valve
18. 1–2 shift valve

c. If there is any valve that is difficult to insert, do not force it in but give it a light, straight push.
d. Make sure that the followings are strictly tightened to **0.25 ~ 0.35 m-kg (1.8 ~ 2.5 ft-lb)**.
Side plate to valve body
Lower valve body to upper valve body
Oil strainer to lower valve body

7B–G–9. Bearing and Bearing Race

Check each bearing and bearing race after cleaning carefully. Also check to see that the mating parts of each bearing and bearing race are not damaged. If any defective part is found, replace it.

7B–G–10. Other Component Parts

Check to see by sight that the following parts are not damaged. Disassembly, if indicated, should be made in the procedure below.

a. Front planet carrier assembly, rear planet carrier assembly, input shaft and output shaft

The planetary carrier cannot be divided into its individual components.
If any part or component is defective, replace the carrier as a unit.
Check the clearance between pinion washer and planetary carrier with a feeler.
The standard clearance is **0.20 ~ 0.70 mm (0.008 ~ 0.027 in)**.

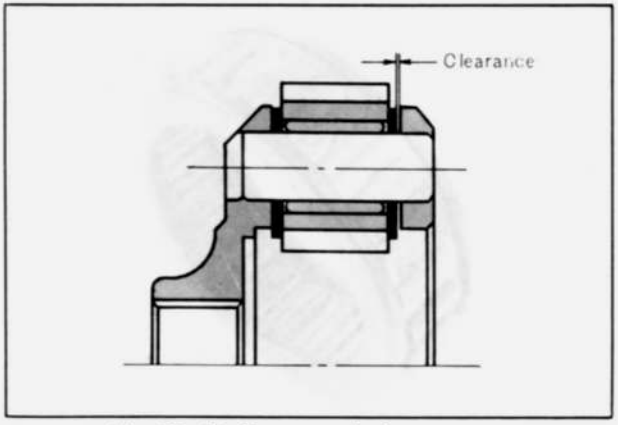

Fig. 7B–46 Clearance of planetary gear

If the clearance exceeds **0.80 mm (0.032 in)**, replace with new one.

Draw out the one-way clutch by removing the snap ring from each end. Remove the outer race snap ring and draw out the outer race rearward from the drum.

After disassembly, check to see that the one-way clutch is not damaged. Check at the same time whether there is any damage on the contacting surface of the outer race or inner race.

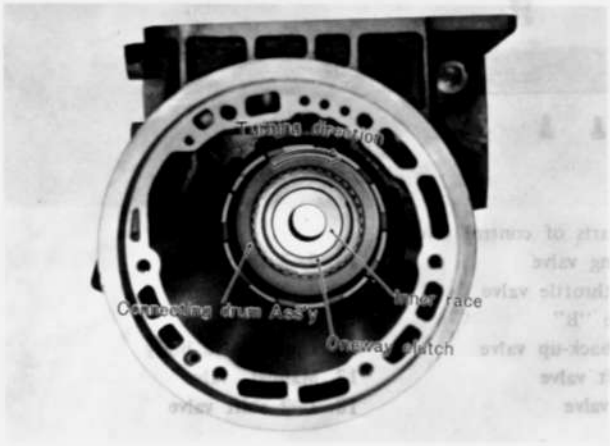

Fig. 7B–47 One-way clutch

When installing the one-way clutch, make sure that it is fitted with the arrow mark "→" on the front of vehicle.



Fig. 7B–48 Mark on the one-way clutch

e. Manual control system and parking lock system

Removal and disassembly of these parts are omitted.

3. Mount the needle bearing for the front face of the oil distributor assembly on the transmission case side and the bearing race on the front face of the oil distributor assembly. Then install the oil distributor assembly with governor to the case, taking care not to damage the seal rings.
4. Install the output shaft.
5. Install the lock ball, speedometer drive gear and snap ring to the output shaft from the rear end of the output shaft.
6. Mount the needle bearings on the front and rear faces of the internal drive flange, fit the flange on the output shaft and lock it with the snap ring.
7. Mount the bearing race on the rear face of the rear planet carrier and the needle bearing on its front face. Fit the rear planet carrier into the internal drive flange, and lock the carrier by placing the snap ring on the connecting drum.
8. Install the band servo on the case. (7B–G–5)
9. Mount the needle bearing on the rear face of the rear clutch hub and the bearing race on the front face of the front planet carrier. Assemble the rear clutch hub and the planet carrier, and install its assembly on the sun gear and connecting shell.
10. Put the above assembly with the rear clutch hub side facing upward. Mount the needle bearing on the front face of the rear clutch hub and the bearing race on the rear face of the rear clutch assembly, and install the rear clutch assembly downward on the rear clutch hub. In doing so, turn it a little so that the teeth of the clutch plates may come into engagement with the clutch hub spline.
11. Install the front clutch assembly into the rear one as in the case of the rear clutch assembly.
12. Install the assembly including the connecting shell, front clutch, rear clutch and front planet carrier into the transmission case.
13. Install the brake band on the front clutch drum.
14. Install the anchor blot to the transmission case and tighten it to **5.6 ~ 8.2 m-kg (41 ~ 59 ft-lb)**.
15. Install the band strut between the piston stem and the brake band.
16. Set the front clutch thrust washer, which adjusts the end play of the front clutch drum, on the rear face of the oil pump cover assembly, and also set the bearing race, which adjusts the total end play, on the rear end of the oil pump cover. Apply some amount of vaseline to prevent bearing race falling.

Install the oil pump assembly with gasket to the

transmission case. Then install and tighten the converter housing onto the transmission case with six bolts to **4.5 ~ 5.5 m-kg (33 ~ 39 ft-lb)**. Insert the input shaft.

Note :
Above two end plays should be checked after the oil pump is properly installed and adjusted following 17 and 18.

17. Push the front clutch drum back and forth and insert a thickness gauge in the clearance between the front clutch drum and connecting shell in order to measure the end play between the rear face of the oil pump cover and the front face of the front clutch drum. Select a thrust washer from the following seven washers to adjust the clearance to specified **0.5 ~ 0.8 mm (0.020 ~ 0.032 in)**.

1.50 mm (0.059 in),	1.70 mm (0.067 in),
1.90 mm (0.075 in),	2.10 mm (0.083 in),
2.30 mm (0.091 in),	2.50 mm (0.098 in),
2.70 mm (0.106 in)	

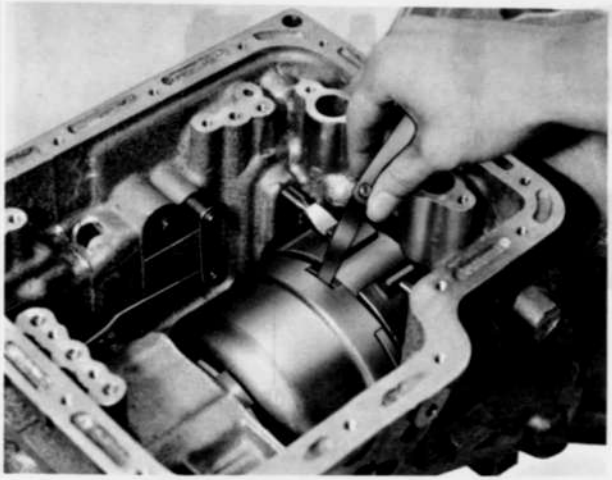

Fig. 7B–50 Checking end play

18. In measuring the total end play, apply the dial gauge on the tip of the input shaft and move the connecting shell fore and aft, and read the needle vibration. The standard clearance is **0.25 ~ 0.50 mm (0.010 ~ 0.020 in)**. Adjust end play by selecting a proper race in the followings.



Fig. 7B–51 Checking end play

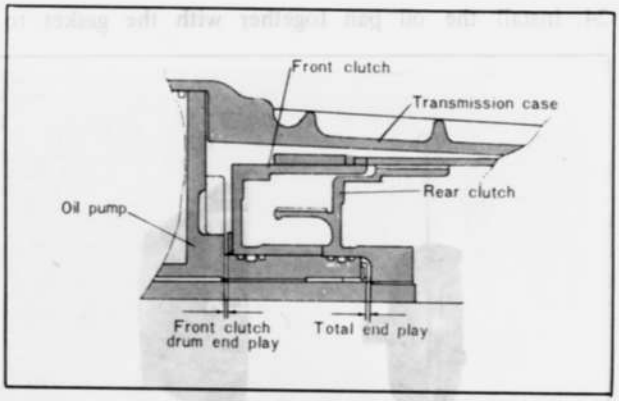

Fig. 7B–52 End plays

19. Tighten the stem of the servo piston to a torque of **1.2 ~ 1.5 m-kg (8.6 ~ 11.0 ft-lb)**. Then loosen it by two turns and lock with the lock nut to a tightening torque of **1.5 ~ 4.0 m-kg (11 ~ 29 ft-lb)**.
Install and tighten the band servo cover to the retainer.

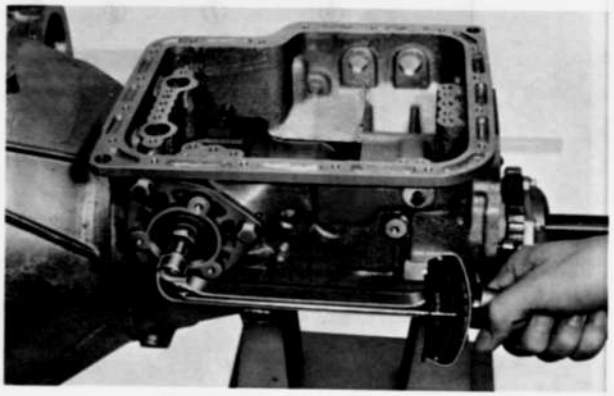

Fig. 7B–53 Tightening stem

20. Push in the manual shaft into the case with manual plate, washer and nut and tighten the nut. Then mount the parking lever and parking rod.
21. Install the range select lever to the manual shaft with the washer and nut then tighten the nut.

27.3 ~ 27.7 mm (1.075 ~ 1.091 in)	29.5 mm (1.160 in)
27.8 ~ 28.2 mm (1.095 ~ 1.110 in)	30.0 mm (1.180 in)
28.3 ~ 28.7 mm (1.114 ~ 1.130 in)	30.5 mm (1.200 in)
Over 28.8 mm (1.134 in)	31.0 mm (1.220 in)

24. Install the oil pan together with the gasket to a tightening torque of **0.50 ~ 0.70 m-kg (3.6 ~ 5.0 ft-lb)**.

25. Install the spacer, return spring and parking pawl on the shaft. Fit the rear end of the parking rod between the two steel balls in the supporter, then install the extension housing onto the case. Tighten the bolts to a specified torque of **2.0 ~ 2.5 m-kg (15 ~ 18 ft-lb)**.

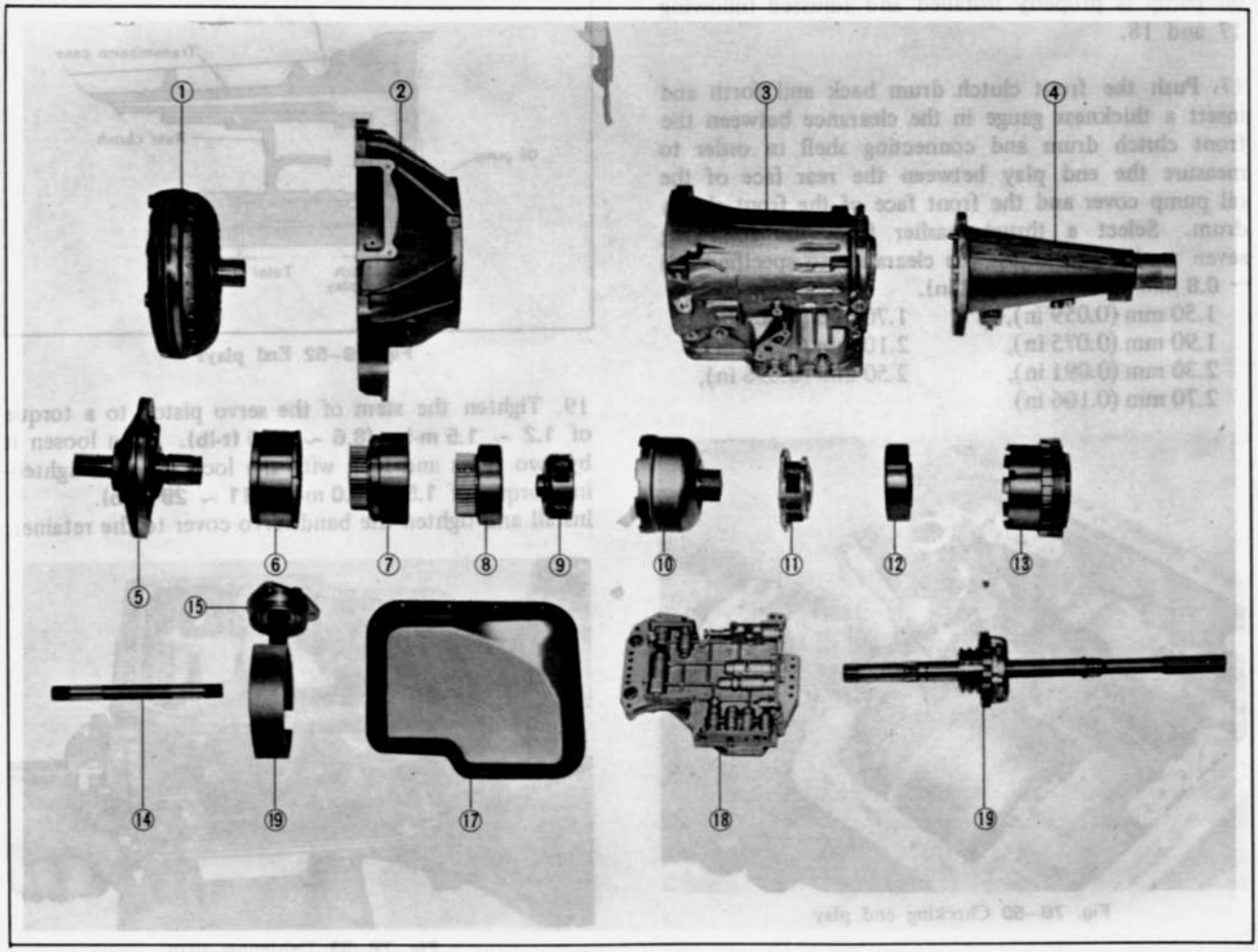

Fig. 7B–55 Main components of transmission

1. Torque converter
2. Converter housing
3. Case
4. Extension housing
5. Oil pump ass'y
6. Front clutch ass'y
7. Rear clutch ass'y
8. Rear clutch hub ass'y
9. Front planet carrier ass'y
10. Shell & sun gear ass'y
11. Rear planet carrier ass'y
12. Drive flange ass'y
13. Low & reverse brake ass'y
14. Input shaft
15. Brake band
16. Servo piston ass'y
17. Oil pan
18. Control valve ass'y
19. Governor valve ass'y and output shaft

7B–I. INSTALLATION AND ADJUSTMENT OF TRANSMISSION

1. Before installing the transmission, measure the run-out of the torque converter drive plate with a dial gauge. The runout must be within **0.3 mm (0.012 in)**. In case the runout exceeds **0.5 mm (0.020 in)**, replace the drive plate.
2. When combining the converter with oil pump, check whether they are rightly combined with each other by measuring the distance shown in Fig. 7B–57. The distance is approximately **19.5 mm (0.78 in)**. If there is great difference in the measurement, the converter should be rightly combined again.

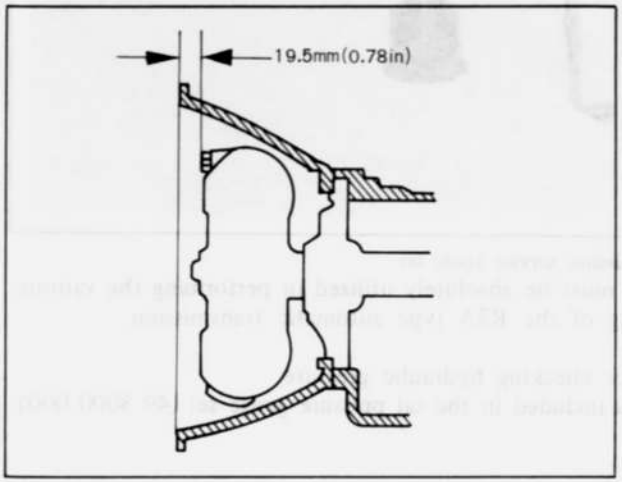

Fig. 7B–57 Checking torque converter fit

3. Installation procedure for the transmission is reverse to the removing procedure, referring to "REMOVAL OF TRANSMISSION" in 7B–E. In tightening the torque converter and the drive plate, temporarily tighten four bolts first, then lock the drive plate by applying the wrench to the drive pulley lock bolt. And tighten the four bolts to a specified torque of **3.7 ~ 5.5 m-kg (27 ~ 40 ft-lb)**. In case of confirming the tightening torque accurately, it is recommendable to proceed as follows:
Install a torque wrench to the hole in the center of the **special wrench** (49 0877 435), and tighten the bolt until the reading on the torque wrench comes to the value to be obtained by the undermentioned formula.

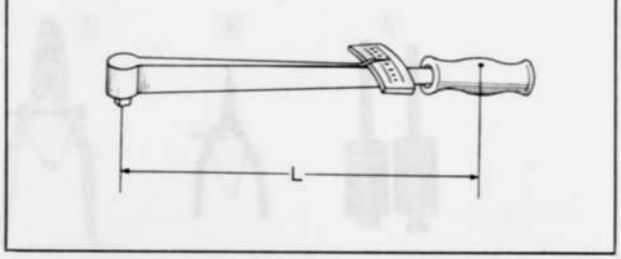

Fig. 7B–58 "L" length of torque wrench

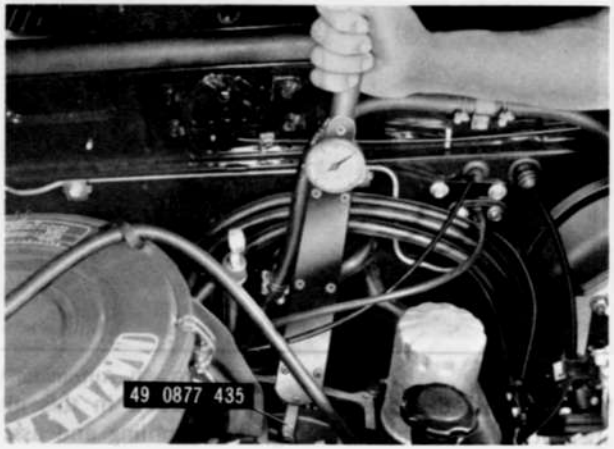

Fig. 7B–59 Tightening torque converter

4. When the installation is finished, rotate the torque converter and check to see that there is no interference in the transmission. Then make the following check:
(1) Fill converter oil. The converter, when empty, can hold **6.2 liters (13.1 U.S. pints, 10.9 Imp. pints, 6.6 U.S. quarts)**. (7B–B–1)
(2) Check and regulate the manual linkage. (7B–B–4)
(3) Check and regulate the inhibitor switch. (7B–B–5)
(4) Check and regulate the engine idling. (7B–B–2)
Apply the hand brake. With the engine idling, place the manual lever in "N", "D", "2", "1" and "R", and check to see that there is a slight shock of the transmission.
(5) Confirm the operation of the kick-down switch and downshaft solenoid. (7B–B–3)
(6) Check the oil level again.
5. When checking and regulating are over, conduct stall test, road test and hydraulic test referring to diagnostic test items (7B–C) in order to make sure that the transmission works normally.

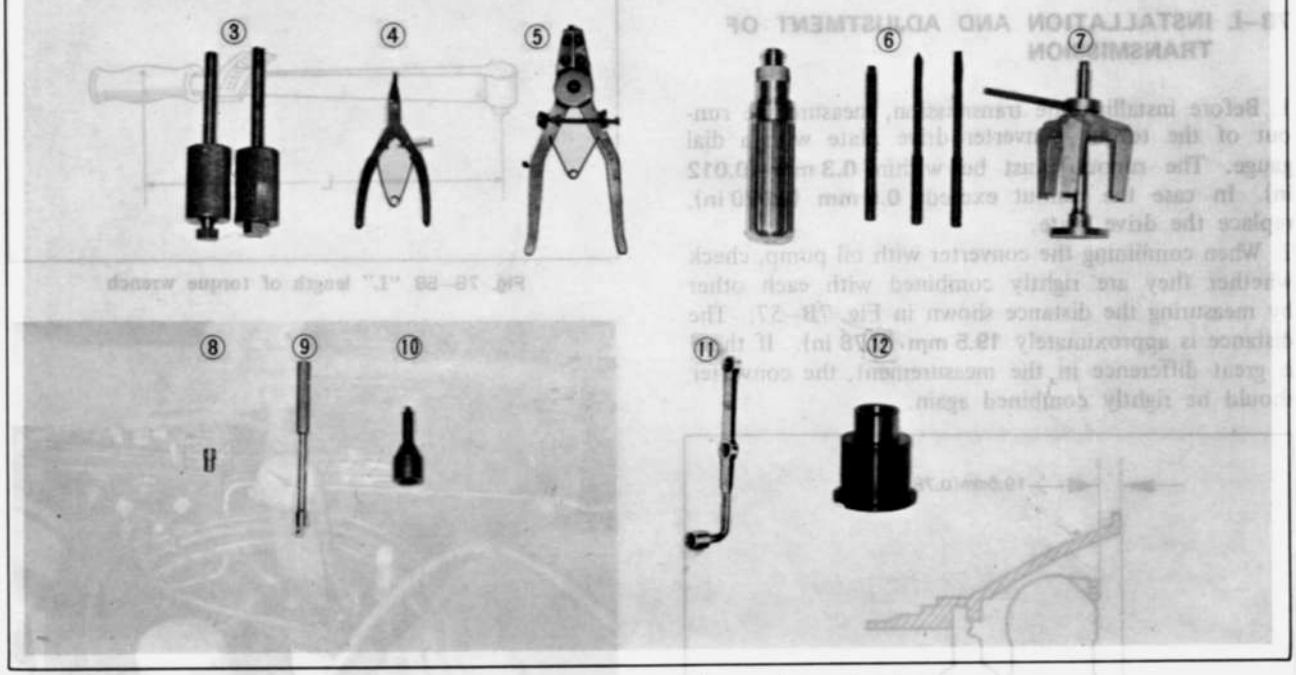

Fig. 7B–60 Automatic transmission service tools set

It is essential that the service special tools in this manual must be absolutely utilized in performing the various operations of trouble shooting, disassembling and assembling of the R3A type automatic transmission.

1.	Oil pressure gauge set	49 0378 400	Use for checking hydraulic pressure
a.	Oil pressure gauge	49 8000 001	This is included in the oil pressure gauge set (49 8000 000)
b.	Rubber hose	49 0378 401	– do –
c.	Joint pipe	49 0378 402	– do –
d.	Hose adaptor	49 0378 403	– do –
e.	Hose adaptor	49 0378 404	– do –
2.	Transmission case stand	49 0378 320	Use for setting transmission
3.	Puller oil pump	49 0378 390	Use for removing oil pump
4.	Snap ring remover	49 8000 015	Use for removing or installing snap ring
5.	Snap ring remover	49 8000 025	Use for removing or installing snap ring
6.	Torque driver	49 8000 021	Use for tightening in accurate torque Max. torque 1.04 m-kg (90 lb-in)
7.	Clutch spring compressor	49 0378 375	Use for assembling or disassembling front and rear clutch
8.	Hexagon wrench	49 8000 031	Use for disassembling and assembling control valve
9.	Spinner handle	49 8000 035	Use for disassembling and assembling control valve
10.	Hex-head extension	49 0378 346	Use for removing and installing one-way clutch inner race with torque wrench. Drive angle 1/2″ square and 5 mm (across flat width)
11.	Special wrench	49 0877 435	A tool used for removing the bolt that attaches the drive-plate to the torque converter
12.	Oil pump assembling gauge	49 0378 405	Use for centering oil pump

8–C. DISASSEMBLING UNIVERSAL JOINT ..... 8 : 2
8–D. CHECKING UNIVERSAL JOINT ..... 8 : 2
8–E. ASSEMBLING UNIVERSAL JOINT ..... 8 : 2
8–F. INSTALLING PROPELLER SHAFT ..... 8 : 3
SPECIAL TOOLS ..... 8 : 3

8–A. REMOVING PROPELLER SHAFT

1. To maintain drive line balance, mark the mating parts of the companion flange, yokes and propeller shafts so that they may be installed in their original positions.
2. Remove the bolts that attach the propeller shaft to the companion flange of the rear axle.
3. Remove the center support bearing bracket from the underbody.
4. Pull the propeller shaft assembly rearward and remove from the transmission.



Fig. 8–1 Holder installed into extension housing

6. Remove the universal joints, as described in Par. 8–C.
7. Remove the nut attaching the yoke and bearing to the front propeller shaft. Remove the yoke and bearing support.

Note: Do not remove the oil seals and bearing from

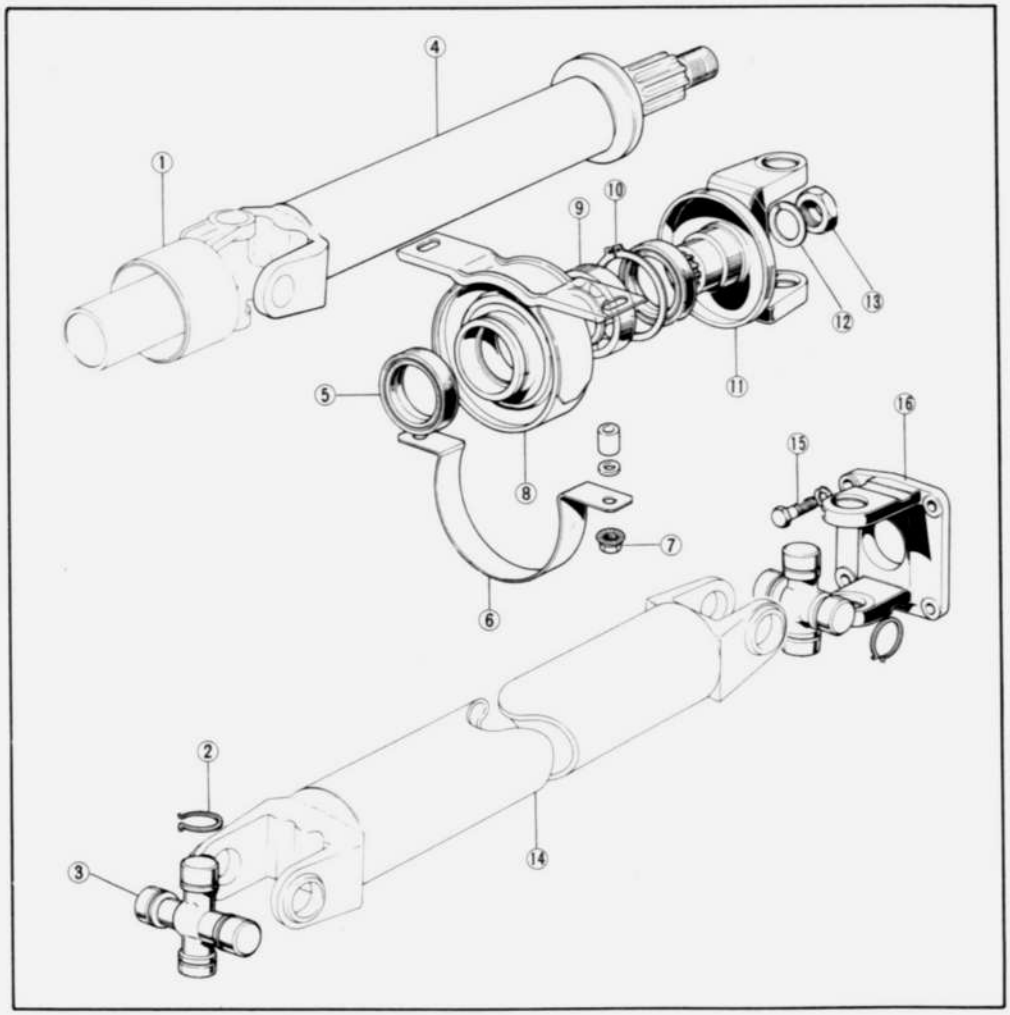

Fig. 8–2
Propeller shaft components

1. Sliding yoke
2. Snap ring
3. Universal joint
4. Front shaft
5. Grease seal
6. Protector
7. Nut and washer
8. Center bearing support
9. Bearing
10. Snap ring
11. Yoke (Center)
12. Washer
13. Nut
14. Rear shaft
15. Bolt
16. Yoke (Rear)



Fig. 8–3 Checking propeller shaft for run-out

2. Check the propeller shaft for dynamic unbalance. The maximum permissible unbalance is shown in the following table. If the unbalance is more than the specifications, correct or replace the propeller shaft assembly.

	Max. permissible unbalance at 4,000 rpm
At front	15 cm-gr (0.21 in-oz)
At center	30 cm-gr (0.42 in-oz)
At rear	30 cm-gr (0.42 in-oz)

Note :
As the looseness on the front universal joint may cause the increase of the unbalance, resulting the seizure of the extension housing bush, the front universal joint and propeller shaft should be replaced as an assembly. But, if the unbalance of the propeller shaft assembly can be checked and corrected within the specifications, the universal joint only may be replaced.

3. Check the center bearing for wear, looseness or any damage.

8–C. DISASSEMBLING UNIVERSAL JOINT

1. Place the propeller shaft in a vise being careful not to damage it.
2. Remove the snap rings retaining the bearings in the yoke and in the propeller shaft.
3. Position the **universal joint replacer** (49 0259 460A) on the yoke and screw in the center bolt until the bearing comes out of the yoke.
4. Remove the replacer and remove the bearing.
5. Reposition the replacer to press on the yoke to remove the bearing from the opposite side of the yoke.
6. Remove the opposite side bearing in the same manner.
7. Remove the yoke and spider assembly from the propeller shaft.
8. Using the same replacer, remove the remaining two



Fig. 8–4 Removing universal joint

bearings in the same manner.
9. Remove the spider from the yoke.

8–D. CHECKING UNIVERSAL JOINT

1. Examine the bearing surfaces of the spider. They should be smooth and free from pits.
2. Measure the diameter of the spider. If it is **under 16.549 mm (0.6515 in)**, replace with a new universal joint assembly.

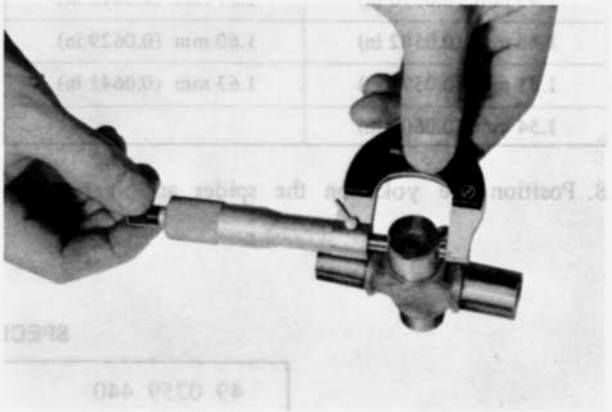

Fig. 8–5 Measuring spider diameter

3. Check the needle rollers for wear or any damage. The rollers should have a uniformly good appearance and roll freely inside the bearing cup.

8–E. ASSEMBLING UNIVERSAL JOINT

1. Place the bearing into the yoke at the end of the propeller shaft.
2. Position the spider in the yoke.
3. Position the replacer and press the bearing, while guiding the spider into the bearing, until the snap ring can be installed.
4. Remove the replacer and install the snap ring.
5. Place the bearing into the opposite side of the yoke.
6. Install the replacer and press on the bearing until

2. Spider
3. Grease seal
5. Propeller shaft
6. Snap ring

the snap ring can be installed.
7. Remove the replacer and install the snap ring.

Note:
Select the snap rings so as to place the spider in the center of the yoke and to give a suitable slight drag fit (not binding).
Be sure to use same sized snap rings to both sides of the yoke.
Snap rings are available in seven thicknesses as shown in the following table.

1.45 mm (0.0570 in)	1.57 mm (0.0618 in)
1.48 mm (0.0582 in)	1.60 mm (0.0629 in)
1.51 mm (0.0594 in)	1.63 mm (0.0641 in)
1.54 mm (0.0606 in)	

8. Position the yoke on the spider and install two



Fig. 8–7 Installing universal joint

8–F. INSTALLING PROPELLER SHAFT

Install the propeller shaft in the reverse order of removing, noting the following points.
1. Be sure to observe location marks on the companion flange, yokes and propeller shafts for correct assembly.
2. Torque the nut attaching the yoke and center bearing to the front shaft to 16.0 ~ 18.0 m-kg (116 ~ 130 ft-lb).
3. The tightening torque of the nuts attaching the center bearing support is 2.0 ~ 2.9 m-kg (14 ~ 21 ft-lb).
4. The tightening torque of the nuts attaching the yoke to companion flange is 5.5 ~ 6.5 m-kg (40 ~ 47 ft-lb).

SPECIAL TOOLS

49 0259 440	Main shaft holder
49 0259 460A	Universal joint replacer

9–A. REAR AXLE SHAFT ..... 9 : 1
9–A–1. Removing Rear Axle Shaft ..... 9 : 1
9–A–2. Disassembling Rear Axle Shaft ..... 9 : 1
9–A–3. Assembling Rear Axle Shaft ..... 9 : 1
9–A–4. Installing Rear Axle Shaft ..... 9 : 1
9–B. REAR AXLE REMOVAL ..... 9 : 2
9- C. REAR AXLE DISASSEMBLY ..... 9 : 2
9–C–1. Removing Differential ..... 9 : 2
9–C–2. Disassembling Differential ..... 9 : 2
9–C–3. Removing Drive Pinion ..... 9 : 3
9–D. REAR AXLE INSPECTION ..... 9 : 3
9–D–1. Checking Drive Pinion and Ring Gear ..... 9 : 3
9–D–2. Checking Differential Gears ..... 9 : 3
9–D–3. Checking Bearings ..... 9 : 3
9–D–4. Replacing Pinion Bearing Outer Race ..... 9 : 3
9–D–5. Checking Collapsible Spacer ..... 9 : 3
9–D–6. Checking Oil Seal ..... 9 : 3
9–D–7. Checking Companion Flange ..... 9 : 3
9- E. REAR AXLE ASSEMBLY ..... 9 : 3
9–E–1. Adjusting Drive Pinion ..... 9 : 3
9–E–2. Adjusting Pinion Bearing Preload ..... 9 : 4
9–E–3. Assembling Differential ..... 9 : 5
9–E–4. Installing Differential ..... 9 : 7
9–E–5. Adjusting Backlash ..... 9 : 7
9–F. REAR AXLE INSTALLATION ..... 9 : 7
SPECIAL TOOLS ..... 9 : 8

Par 11–C..
5. Remove the parking brake cable retainer.
6. Disconnect the brake fluid pipes at the wheel cylinders.
7. Remove the nuts holding the backing plate and bearing housing to the axle housing.
8. Pull the axle shaft, backing plate, bearing housing assembly and shims off the axle housing.

9–A–2. Disassembling Rear Axle Shaft

1. Straighten the tabs of the lock washer.
2. With the **spanner** (49 0603 621A), loosen the lock nut and remove the lock nut and lock washer.
3. Using a suitable puller, remove the bearing and housing assembly from the rear axle shaft.
4. Remove the backing plate.
5. Remove the bearing and oil seal from the bearing housing, if necessary.

9–A–3. Assembling Rear Axle Shaft

Assemble the rear axle shaft in the reverse order of disassembling.

9–A–4. Installing Rear Axle Shaft

1. Install the rear axle shaft, backing plate and bearing housing assembly to the rear axle housing.
2. Using two bolts and nuts, temporarily assemble the bearing housing and backing plate to the axle



Fig. 9–1 Checking end play

If only one axle shaft has been removed, the end play should be 0.05 ~ 0.15 mm (0.002 ~ 0.006 in).
A very special procedure is required if both axle shafts have been removed. When installing the shafts, the end play should be checked when the first shaft is installed (don't wait until after both shafts are installed).
The end play for the first shaft should be 0.65 ~ 0.85 mm (0.026 ~ 0.033 in). The second shaft should then be 0.05 ~ 0.15 mm (0.002 ~ 0.006 in). Use the adjusting shims to arrive at these results.
4. After adjusting the end play, install all bolts and nuts and torque to specifications.
5. Install the brake shoe assembly and drum, as described in Par. 11–E.
6. Connect the brake fluid pipes to the wheel cylinder.
7. Bleed the brake system.
8. Install the wheel.
9. Lower the vehicle.

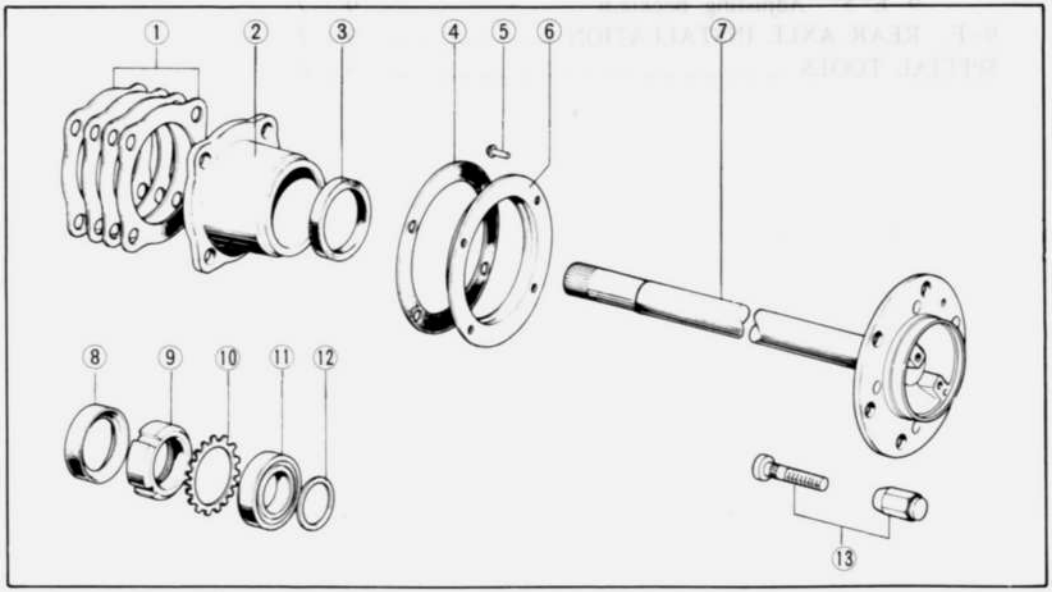

Fig. 9–2
Rear axle shaft components

1. Shims
2. Bearing housing
3. Oil seal (Outer)
4. Gasket
5. Rivet
6. Baffle
7. Axle shaft
8. Oil seal (Inner)
9. Lock nut
10. Lock washer
11. Bearing
12. Spacer
13. Hub bolt and nut

9–C–1. Removing Differential

1. Mount the rear axle on the **stand** (49 0164 550D and 49 0164 562B).

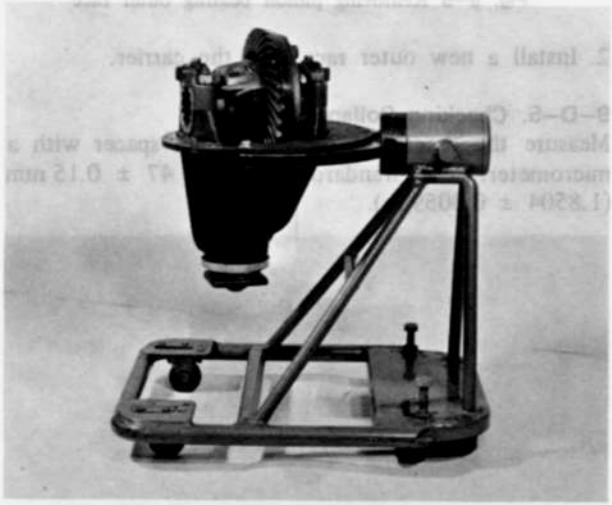

Fig. 9–3 Stand for rear axle

2. Apply identification punch marks on the carrier, differential bearing cap, and adjuster for reassembly purpose.

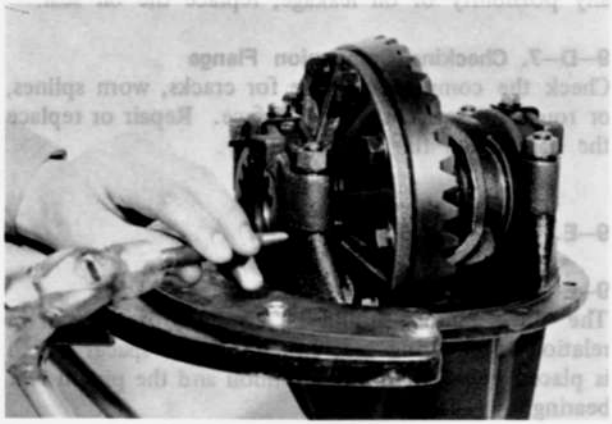

Fig. 9–4 Applying identification marks

3. Remove the adjuster lock plates.
4. Loosen the bearing cap attaching nuts and back off the adjuster slightly with the **spanner** (49 0259 720) to relieve differential bearing preload.



Fig. 9–5 Removing differential assembly

9–C–2. Disassembling Differential

1. If the bearing replacement is necessary, remove the bearings from the differential gear case with a suitable puller.
2. Remove the bolts and washers that attach the ring gear to the gear case. Remove the ring gear.



Fig. 9–6 Removing ring gear

3. From the back side of the gear case flange, drive the pinion shaft lock pin out of the gear case with a suitable drift, as shown in Fig. 9–7.



Fig. 9–7 Removing pinion shaft lock pin

4. Remove the pinion shaft and thrust block.



Fig. 9–8 Loosening pinion nut

2. Remove the companion flange.
3. Remove the drive pinion and rear bearing from the carrier. If necessary, tap the pinion out with a plastic hammer, while being careful to guide the pinion with hand to avoid damage.
4. Remove the oil seal and the front bearing.

9–D. REAR AXLE INSPECTION

9–D–1. Checking Drive Pinion and Ring Gear

Check the drive pinion for damaged or excessively worn teeth, damaged bearing journals and splines. Inspect the ring gear for worn or chipped teeth. If any of above conditions is found, replace both drive pinion and ring gear as they are available only in set.

9–D–2. Checking Differential Gears

Inspect the differential side gears and pinion gears for cracks, chipped teeth or any damage. Replace the side gears, pinion gears or thrust washers if necessary. Check the clearance between the pinion gear and shaft. If excessive clearance is found due to wear, replace with new parts.
Check the spline fit of the side gear and rear axle shaft. If excessive clearance is found, replace the side gear or rear axle shaft.

9–D–3. Checking Bearings

Inspect the differential bearings and pinion bearings for wear, flaking or any damage. If inspection reveals that either bearing cones or outer race are unfit for further service, replace the bearing.

9–D–4. Replacing Pinion Bearing Outer Race

If it becomes necessary to replace the pinion bearing



Fig. 9–9 Removing pinion bearing outer race

2. Install a new outer race into the carrier.

9–D–5. Checking Collapsible Spacer

Measure the length of the collapsible spacer with a micrometer. The standard length is 47 ± 0.15 mm (1.8504 ± 0.0059 in).

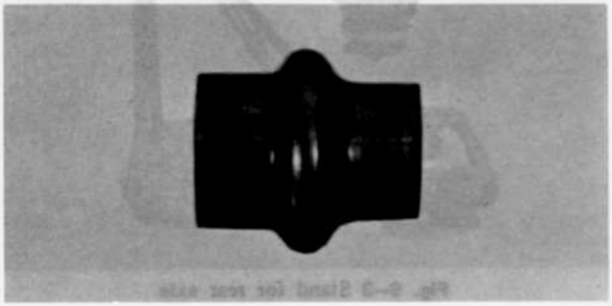

Fig. 9–10 Collapsible spacer

9–D–6. Checking Oil Seal

Check the oil seal for wear or damage. If there is any possibility of oil leakage, replace the oil seal.

9–D–7. Checking Companion Flange

Check the companion flange for cracks, worn splines, or rough oil seal contacting surface. Repair or replace the companion flange if necessary.

9–E. REAR AXLE ASSEMBLY

9–E–1. Adjusting Drive Pinion

The drive pinion should be correctly positioned in relation to the ring gear by the use of spacer which is placed between the drive pinion and the pinion rear bearing.
To adjust the drive pinion position, use the **special gauge** (49 0727 570 and 49 0603 555A) and proceed as follows:
1. Install the dial indicator to the gauge body. Place the gauge body on the surface plate as shown in Fig. 9–11 and lock the dial indicator by the screw so

ring of the indicator.
2. Make certain that the differential bearing support bores are free of dirt and burrs.
3. Install the pinion and **bearing model** (49 0603 555A) together with a spacer into the carrier.

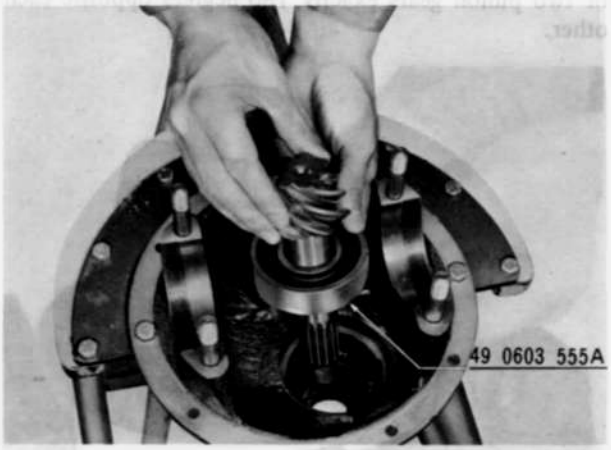

Fig. 9–12 Installing pinion and bearing model

4. Place the gauge block on the pinion and carefully place the gauge body adjusted in Step 1 on the gauge block so that the feeler of the indicator comes in contact with the lowest portion of the differential bearing support bore.

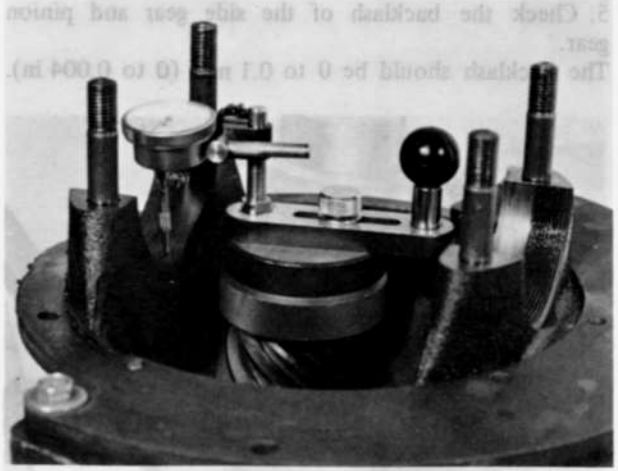

Fig. 9–13 Measuring pinion height

5. Record the number of hundredths dial indicator shown in Fig. 9–14.
(a) If the bearing is higher than the model, subtract the amount equivalent to the difference.
(b) If the bearing is lower than the model, add the amount equivalent to the difference.



Fig. 9–14 Measuring bearing height

8. Finally select the correct pinion spacer to be used during pinion assembly by adding or subtracting the amount determined in Step 5, 6 and 7 from the thickness of the spacer used in Step 3.
The spacers are available in the following thickness:

Identification mark	Thickness
08	3.08 mm (0.1213 in)
11	3.11 mm (0.1224 in)
14	3.14 mm (0.1236 in)
17	3.17 mm (0.1248 in)
20	3.20 mm (0.1260 in)
23	3.23 mm (0.1271 in)
26	3.26 mm (0.1283 in)
29	3.29 mm (0.1295 in)
32	3.32 mm (0.1307 in)
35	3.35 mm (0.1319 in)
38	3.38 mm (0.1331 in)
41	3.41 mm (0.1343 in)
44	3.44 mm (0.1354 in)
47	3.47 mm (0.1366 in)

9. Position the correct spacer on the pinion and install the rear pinion bearing.

9–E–2. Adjusting Pinion Bearing Preload

1. Position the pinion assembly in the carrier and

Fig. 9–15 Installing pinion and collapsible spacer

install the collapsible spacer as shown in Fig. 9–15.
2. Place the front pinion bearing in position on the pinion. Hold the pinion fully forward and drive the pinion bearing over the pinion until seated.
3. Apply gear lubricant to the lip of the pinion oil seal and install the pinion oil seal into the carrier.
4. Install the companion flange on the pinion by tapping with a soft hammer.
5. Install the pinion washer and nut. Before tightening the nut (When the pinion preload is Zero), check the drag by the oil seal by using a torque wrench.
6. Tighten the pinion nut to **20 m-kg (145 ft-lb)** and check the preload as shown in Fig. 9–16.

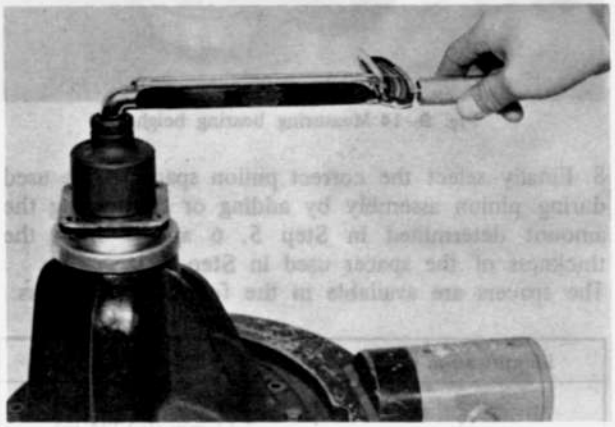

Fig. 9–16 Checking pinion bearing preload

Note; After preload has been checked, final tightening should be done very cautiously.
The pinion nut should be further tightened only a little at a time and preload should be checked after each slight amount of tightening. Exceeding preload specifications will compress the collapsible spacer too far and requires its replacement. The maximum tightening torque of the nut is 35 m-kg (253 ft-lb).

7. While observing the proceeding caution, carefully set the preload drag at **13 to 18 cm-kg (11.3 to 15.6 in-lb)** plus the oil seal drag determined in Step 5.

Note: If the preload is measured by using a spring scale at the bolt hole of the companion flange, the reading should be 3.3 ~ 4.6 kg (7.3 ~ 10.1 lb).



Fig. 9–17 Installing side gear and thrust washer

2. Through the openings of the gear case, insert each of two pinion gears exactly 180 degrees opposite each other.



Fig. 9–18 Installing differential gears

3. Rotate the gears 90 degrees so that the pinion shaft holes of the case come into alignment with the holes in the pinion gears.
4. Insert the pinion shaft through the case and pinion gears.
5. Check the backlash of the side gear and pinion gear.
The backlash should be 0 to 0.1 mm (0 to 0.004 in).

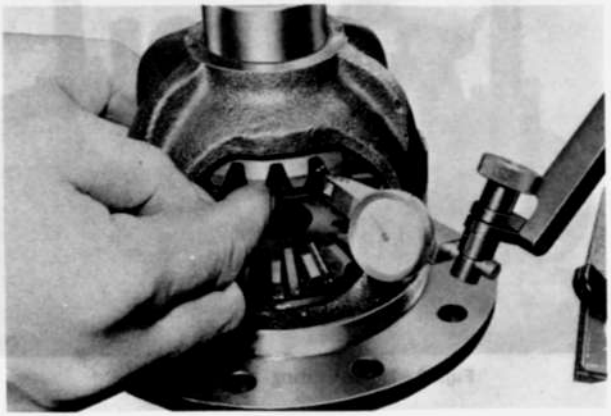

Fig. 9–19 Checking backlash of pinion and side gear

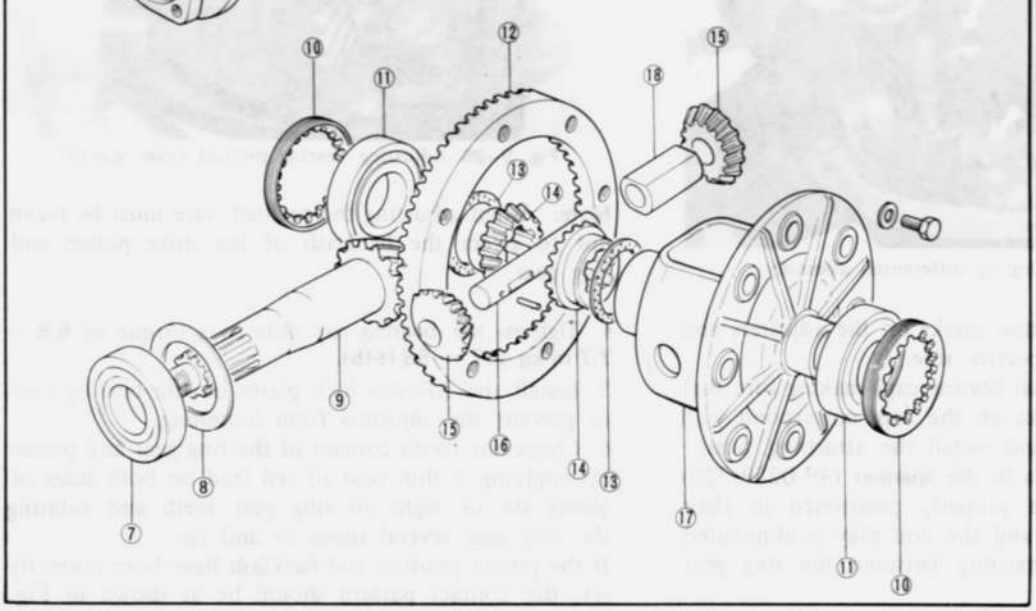

If it is **more than 0.2 mm (0.008 in)**, adjustment can be made with the side gear thrust washers.
The following thrust washers are available:

Identification mark	Thickness
0	2.0 mm (0.0789)
1	2.1 mm (0.0827)
2	2.2 mm (0.0866)

6. After adjustment, remove the pinion shaft and install the thrust block so that the hole is centered between the side gears. Reinstall the pinion into the case until the lock pin hole in the pinion shaft is exact alignment with the hole in the case.
7. Install the lock pin to secure the pinion shaft. Stake the lock pin into position with a punch to prevent it from working out.
8. Install the ring gear to the case and torque the bolts to **9.0 ~ 11.0 m-kg (65 ~ 80 ft-lb)**;



Fig. 9–20 Installing thrust block and pinion shaft

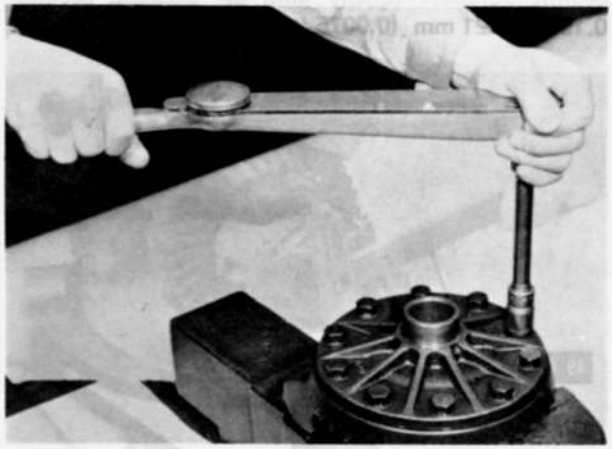

Fig. 9–22 Tightening ring gear bolts



Fig. 9–23 Installing of differential assembly

2. Note the identification marks on the adjusters and install each to its respective side.
3. Install the differential bearing caps making sure that the identification marks on the caps correspond with those on the carrier and install the attaching nuts.
4. Turn the adjusters with the **spanner** (49 0259 720) until the bearings are properly positioned in their respective outer races and the end play is eliminated with some backlash existing between the ring gear and drive pinion.
5. Slightly tighten one of the bearing cap nuts on each side and adjust the backlash, as instructed in the following paragraph.

9–E–5. Adjusting Backlash

1. Secure a dial indicator to the carrier flange so that the feeler comes in conatct at right angles with one of the ring gear teeth.
2. Check the backlash between the ring gear and drive pinion. With the **spanner** (49 0259 720), turn both bearing adjusters equally until the backlash becomes **0.19 to 0.21 mm (0.0075 to 0.0083 in).**

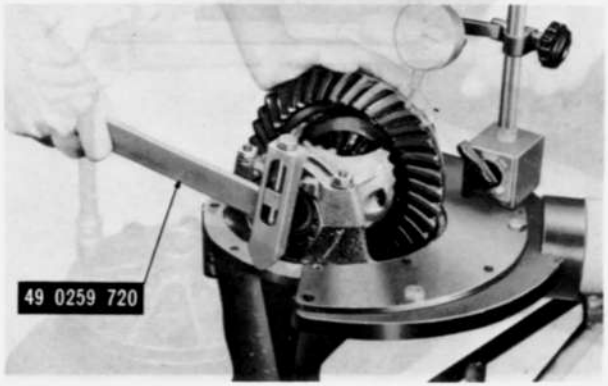

Fig. 9–24 Adjusting backlash



Fig. 9–25 Adjusting bearing preload (case spread)

Note: When adjusting the preload, care must be taken not to affect the backlash of the drive pinion and ring gear.

4. Tighten the bearing cap nuts to a torque of **6.5 ~ 7.7 m-kg (47 ~ 56 ft-lb).**
5. Install the adjuster lock plates on the bearing caps to prevent the adjusters from loosening.
6. Check the tooth contact of the ring gear and pinion by applying a thin coat of red lead on both sides of about six or eight of ring gear teeth and rotating the ring gear several times to and fro.

If the pinion position and backlash have been correctly set, the contact pattern should be as shown in Fig. 9–26.

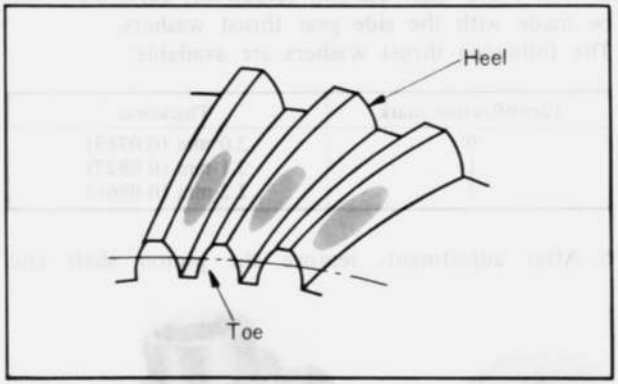

Fig. 9–26 Correct tooth contact

9–F. REAR AXLE INSTALLATION

1. Clean the sealing surface of the carrier and the housing. No gesket is required.
2. Apply oil resistant sealer to the surfaces.
3. Position the carrier to the housing.
4. Tighten the nuts.
5. Connect the propeller shaft following the markings closely to prevent any out of balance condition. Torque the bolts to 5.5 ~ 6.5 m-kg (40 ~ 47 ft-lb).

49 0727 570	Pinion adjusting gauge
49 0603 555A	Gauge block and bearing model

STEERING ..... 10 : 1
10–A. STEERING WHEEL ..... 10 : 1
10–A–1. Checking Steering Wheel Play ..... 10 : 1
10–A–2. Steering Wheel Removal ..... 10 : 1
10–A–3. Steering Wheel Inspection ..... 10 : 2
10–A–4. Steering Wheel Installation ..... 10 : 2
10–B. STEERING GEAR ..... 10 : 2
10–B–1. Steering Gear Removal ..... 10 : 2
10–B–2. Steering Gear Disassembly ..... 10 : 3
10–B–3. Steering Gear Inspection ..... 10 : 3
10–B–4. Steering Gear Assembly ..... 10 : 4
10–B–5. Steering Gear Installation ..... 10 : 5
10–C. STEERING LINKAGE ..... 10 : 5
10–C–1. Checking Ball Joint ..... 10 : 5
10–C–2. Idler Arm ..... 10 : 5
a. Removing idler arm ..... 10 : 5
b. Disassembling idler arm ..... 10 : 6
c. Checking idler arm ..... 10 : 6
d. Assembling idler arm ..... 10 : 6
e. Installing idler arm ..... 10 : 6
10–C–3. Replacing Pitman Arm ..... 10 : 6
10–C–4. Replacing Tie-rod ..... 10 : 6
10–C–5. Replacing Center Link ..... 10 : 7
10–D. FRONT WHEEL ALIGNMENT ..... 10 : 7
10–D–1. Toe-in ..... 10 : 8
a. Checking toe-in ..... 10 : 8
b. Adjusting toe-in ..... 10 : 8
10–D–2. Camber ..... 10 : 8
10–D–3. Caster ..... 10 . 8
10–D–4. Adjusting Turning Angle ..... 10 : 9
SPECIAL TOOLS ..... 10 : 9

wheels.

If excessive play is found, the following points should be carefully checked.

1. Fit of the ball joints of the steering linkage
2. Looseness of the wheel bearings

under the instrument panel.

5. Remove the retaining ring that secures the combination switch assembly and lift the switch assembly over the column shaft.

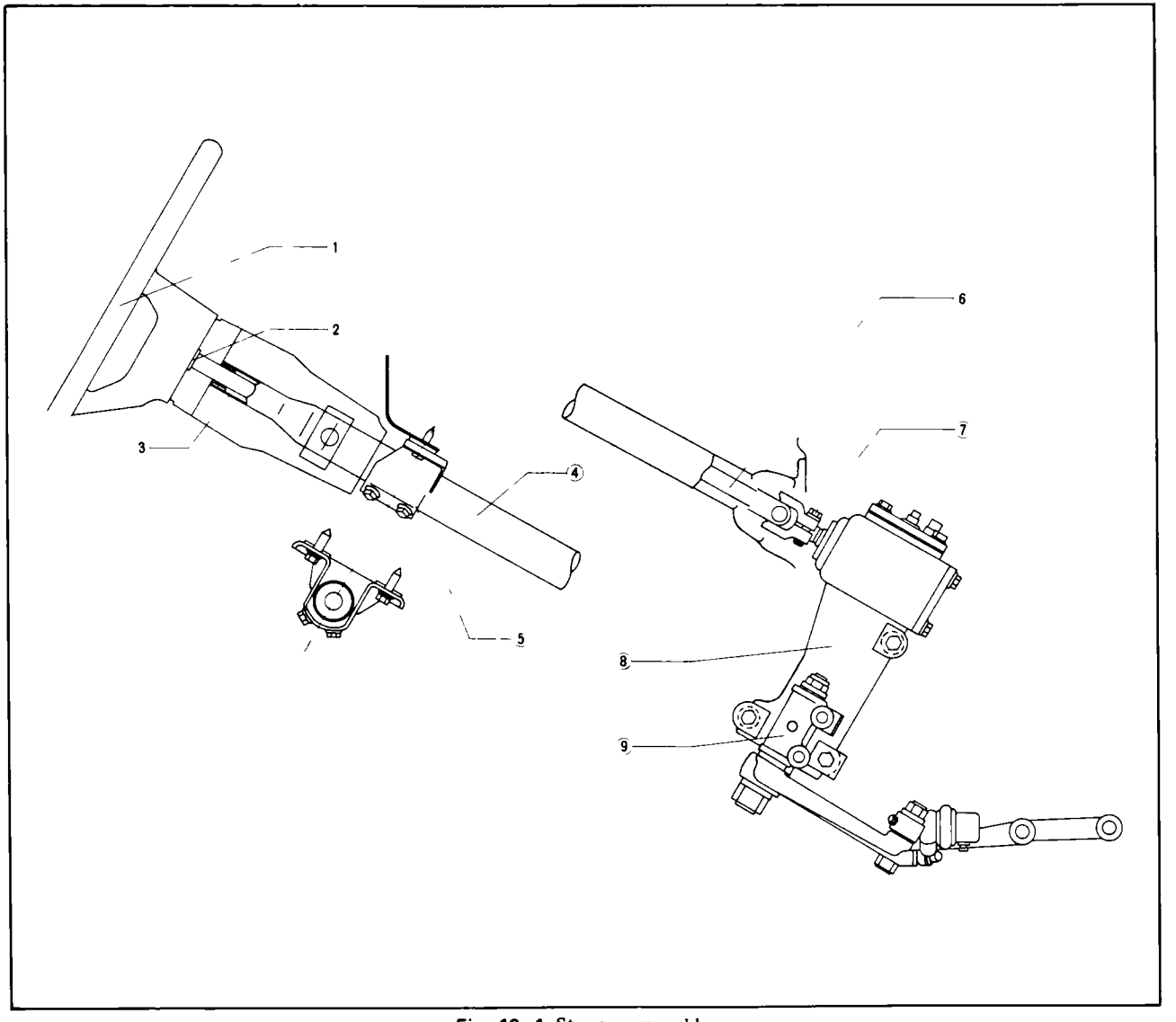

Fig. 10–1 Steering assembly

1. Steering wheel
2. Stop ring
3. Shaft support bush
4. Shaft jacket
5. Bracket
6. Shaft ass'y
7. Bolt
8. Steering gear housing
9. Idler arm

with stands.
2. Loosen the bolt securing the worm shaft to the steering joint.

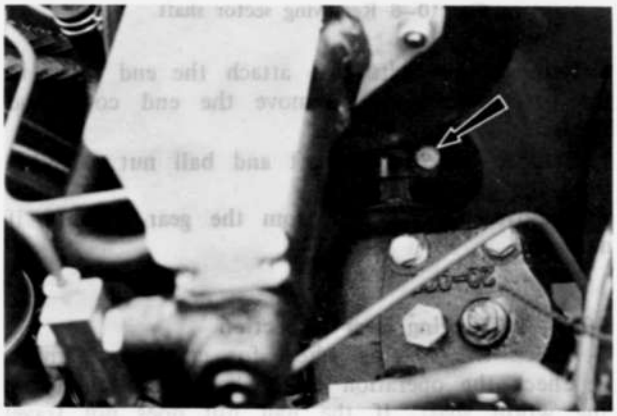

Fig. 10–3 Loosening securing bolt



Fig. 10–4 Disconnecting center link

5. Remove the screws attaching the insulator to the pitman arm and remove the insulator.
6. Remove the bolts and nuts retaining the steering

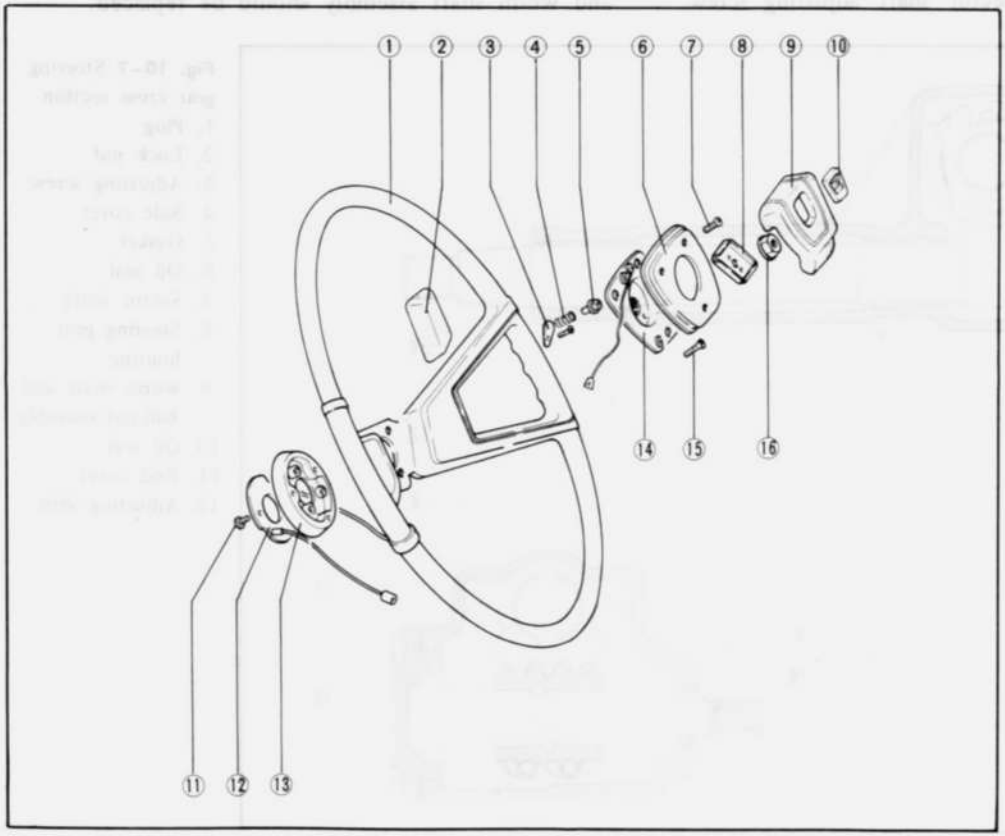

Fig. 10–2 Steering wheel components
1. Steering wheel
2. Horn button
3. Earth plate
4. Spring
5. Insulator
6. Cap set
7. Screw
8. Spring cap
9. Horn cap
10. Emblem
11. Tapping screw
12. Terminal
13. Wheel core cover
14. Set plate
15. Screw
16. Steering wheel nut

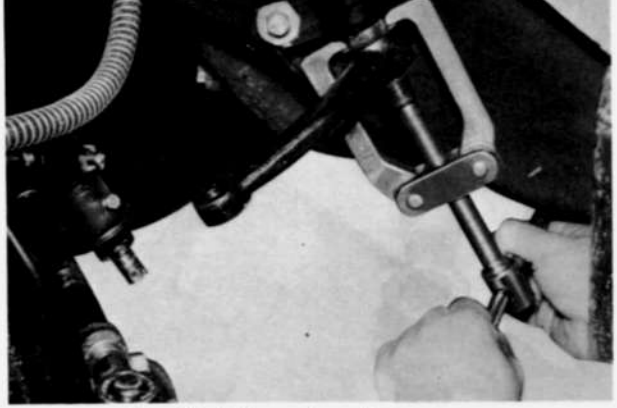

Fig. 10–5 Removing pitman arm

3. Remove the bolts that attach the side cover to the gear housing and loosen the sector shaft adjusting screw lock nut, then remove the sector shaft side cover screwing in the sector shaft adjusting screw.

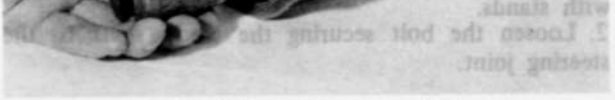

Fig. 10–6 Removing sector shaft

6. Remove the bolts that attach the end cover to the gear housing and remove the end cover and shims.
7. Remove the worm shaft and ball nut assembly from the gear housing.
8. Remove the oil seal from the gear housing, if necessary.

10–B–3. Steering Gear Inspection

1. Check the steering wheel for cracks or damage.
2. Check the operation of the ball nut assembly on the worm shaft. If the ball nut does not travel smoothly and freely on the worm shaft, the ball nut and worm shaft assembly should be replaced.

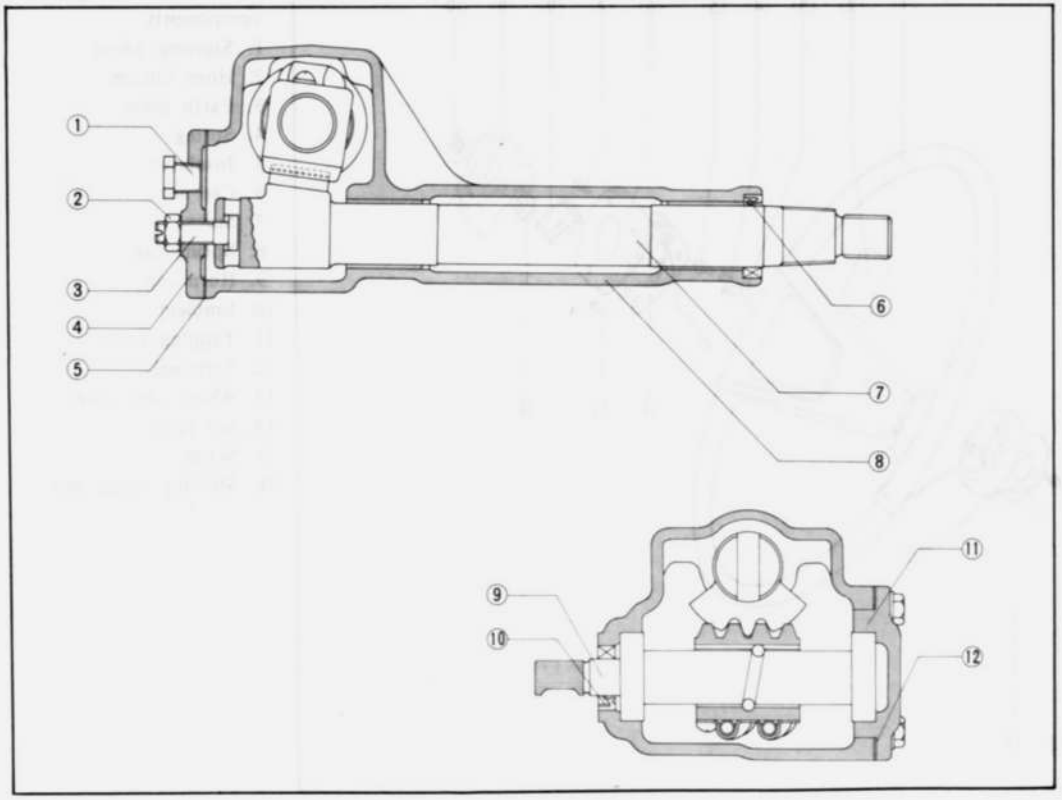

Fig. 10–7 Steering gear cross section
1. Plug
2. Lock nut
3. Adjusting screw
4. Side cover
5. Gasket
6. Oil seal
7. Sector shaft
8. Steering gear housing
9. Worm shaft and ball nut assembly
10. Oil seal
11. End cover
12. Adjusting shim

Fig. 10–8 Worm shaft and ball nut assembly

3. Check the sector shaft for wear or damage at the gear surface.
4. Check the oil seal for wear, flaw, or any damage. If there is any possibility of oil leakage, replace the oil seal.

10–B–4. Steering Gear Assembly

1. Install the oil seal to the gear housing.
2. Insert the worm shaft and ball nut assembly into the gear housing.
3. Install the end cover and the bearing preload adjusting shims to the gear housing and tighten the end cover attaching bolts to **1.6 ~ 2.3 m-kg (12.0 ~ 17.0 ft-lb).**



Fig 10–9 Installing end cover and adjusting shim

4. Adjust the bearing preload. To check the preload, attach the **preload checking tool** (Part No. 49 0180 510A) onto the worm shaft and connect a pull scale to the preload checking tool. Pull the scale gradually, and read the scale keeping the worm shaft rotating. If the reading is less than **0.1 kg (0.22 lb)**, reduce the shim, and add the shim if the preload is more than **0.4 kg (0.88 lb)**.
The following shims are available.

0.050 mm (0.002 in)	0.100 mm (0.004 in)
0.075 mm (0.003 in)	0.200 mm (0.008 in)

5. Insert the sector shaft into the gear housing, being careful not to damage the oil seal, and ensuring that the center of the sector gear is in alignment



Fig. 10–11 Position of sector gear and worm gear

with the center of the worm gear as shown in Fig. 10–11.
6. Install the sector shaft adjusting screw into the slot at the end of the sector shaft. Check the end clearance between the sector shaft and adjusting screw with a feeler gauge and adjust this clearance to **0 ~ 0.1 mm (0 ~ 0.004 in)** by inserting appropriate thrust washer.
The thrust washers are available in the following four thicknesses :

1.95 mm (0.077 in)	2.05 mm (0.081 in)
2.00 mm (0.079 in)	2.10 mm (0.083 in)

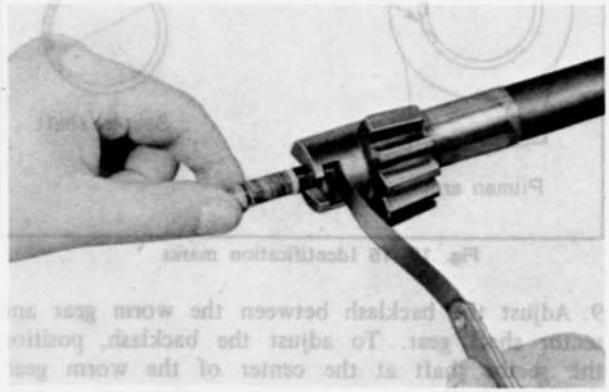

Fig. 10–12 Checking end clearance



Fig. 10–13 Installing side cover

8. Install the pitman arm onto the sector shaft, aligning the identification marks of the pitman arm and sector shaft. Install the pitman arm attaching nut and tighten the nut to **15.0 ~ 18.0 m-kg (108.0 ~ 130.0 ft-lb).**



Fig. 10–14 Installing pitman arm

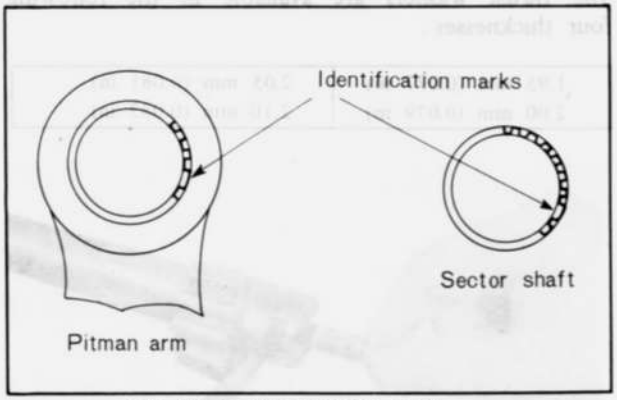

Fig. 10–15 Identification marks

9. Adjust the backlash between the worm gear and sector shaft gear. To adjust the backlash, position the sector shaft at the center of the worm gear, then, gradually screw in or out the sector shaft



Fig. 10–16 Adjusting backlash

10. Check the worm shaft rotating torque. To check, attach the **checking tool** (Part No. 49 0180 510A) onto the worm shaft and connect a pull scale to the checking tool. Pull the scale and check the worm shaft rotating torque. If the rotating torque is less than **0.9 kg (1.98 lb)** or more than **1.5 kg (3.30 lb)**, readjust the bearing preload.

10–B–5. Steering Gear Installation

Follow the removal procedures in the reverse order.

Note :

(a) Align the steering worm shaft cut portion with the and install the steering gear housing to the body, and tighten the securing bolts and nuts.
(b) Place the shim in original position to obtain proper shaft alignment.
(c) Install the pitman arm to the sector shaft aligning the identification marks and secure with the nut. Tighten the nut to 15.0 ~ 18.0 m-kg (108.0 ~ 130.0 ft-lb).
(d) Fill the gear housing with gear lubricant.

10–C. STEERING LINKAGE

10–C–1. Checking Ball Joint

1. Check the dust seal for wear, flaw or any damage. If the dust seal is defective, this will allow entry of water and dust, resulting in ball joint wear. Replace the dust seal if necessary.
2. The end play of the ball stud is preadjusted at the factory to be from **0 ~ 0.2 mm (0 ~ 0.08 in).** If it exceeds **1.0 mm (0.040 in),** replace the ball joint in its assembled form.

10–C–2. Ider Arm

a. Removing idler arm

1. Raise the front end of the vehicle and support

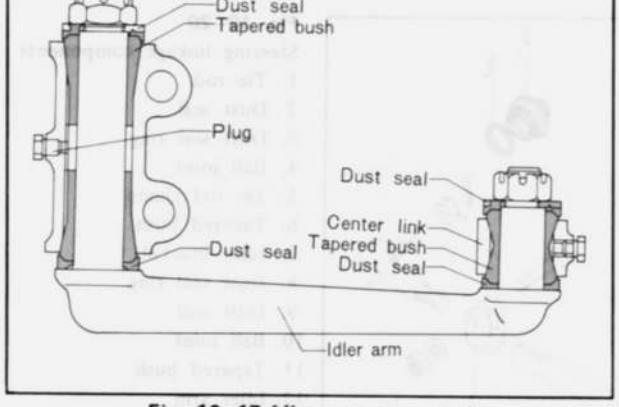

Fig. 10–17 Idler arm cross section

c. Checking idler arm

1. Inspect the bush for wear or damage.
2. Check the end play of the ball stud. If necessary, replace the idler arm assembly.

d. Assembling idler arm

Follow the disassembly procedures in the reverse order.

Note :

Apply grease to the bracket and bushes.

e. Installing idler arm

Follow the removal procedures in the reverse order.

Note :

Tighten the idler arm attaching bolts to **4.4 ~ 5.5 m-kg (32.0 ~ 40.0 ft-lb).**

10–C–3. Replacing Pitman Arm

1. Raise the front end of the vehicle and support with stands.
2. Remove the cotter pin and castellated nut that attach the steering center link to the pitman arm.
3. Disconnect the steering center link from the pitman arm with the **ball joint puller** (Part No. 49 0727 575).
4. Remove the pitman arm attaching nut.
5. Remove the pitman arm from the sector shaft using the **pitman arm puller** (Part No. 49 0223 695C).
6. Install the pitman arm onto the sector shaft, aligning the identification marks of the pitman arm and sector shaft.

Fig. 10–18 Identification marks

7. Install the pitman arm attaching nut and tighten the nut to **15.0 ~ 18.0 m-kg (108.0 ~ 130.0 ft-lb).**
8. Secure the steering center link to the pitman arm with the castellated nut. Tighten the nut and install the cotter pin.

Note :

Always tighten the nut to the next castellation if necessary to install the cotter pin.

10–C–4. Replacing Tie-rod

The tie-rod should be replaced, if it becomes worn or damaged. **Do not** attempt to straighten the tie-rod if damaged.

1. Raise the front end of the vehicle and support with stands.
2. Remove the cotter pins and castellated nuts that attach both tie-rod ends to the center link and steering knuckle.
3. Disconnect the tie-rod ends from the center link and steering knuckle with the **ball joint puller** (Part No. 49 0727 575).

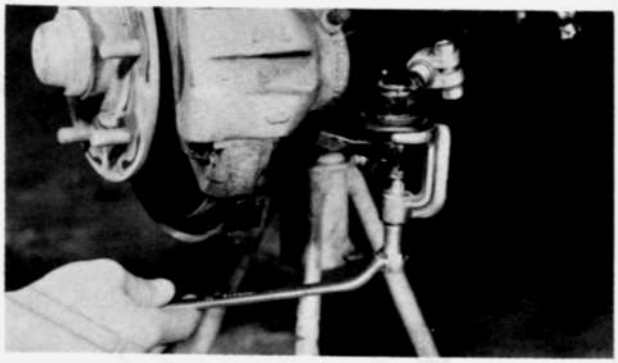

Fig. 10–19 Disconnecting tie-rod end

4. Remove the tie-rod.
5. Secure the tie-rod to the center link and steering knuckle with castellated nut. Tighten the nut and install the cotter pin.
6. Check and, if necessary, adjust toe-in.

Note :

Whenever the tie-rod or ball joint is replaced, the toe-in is reset.

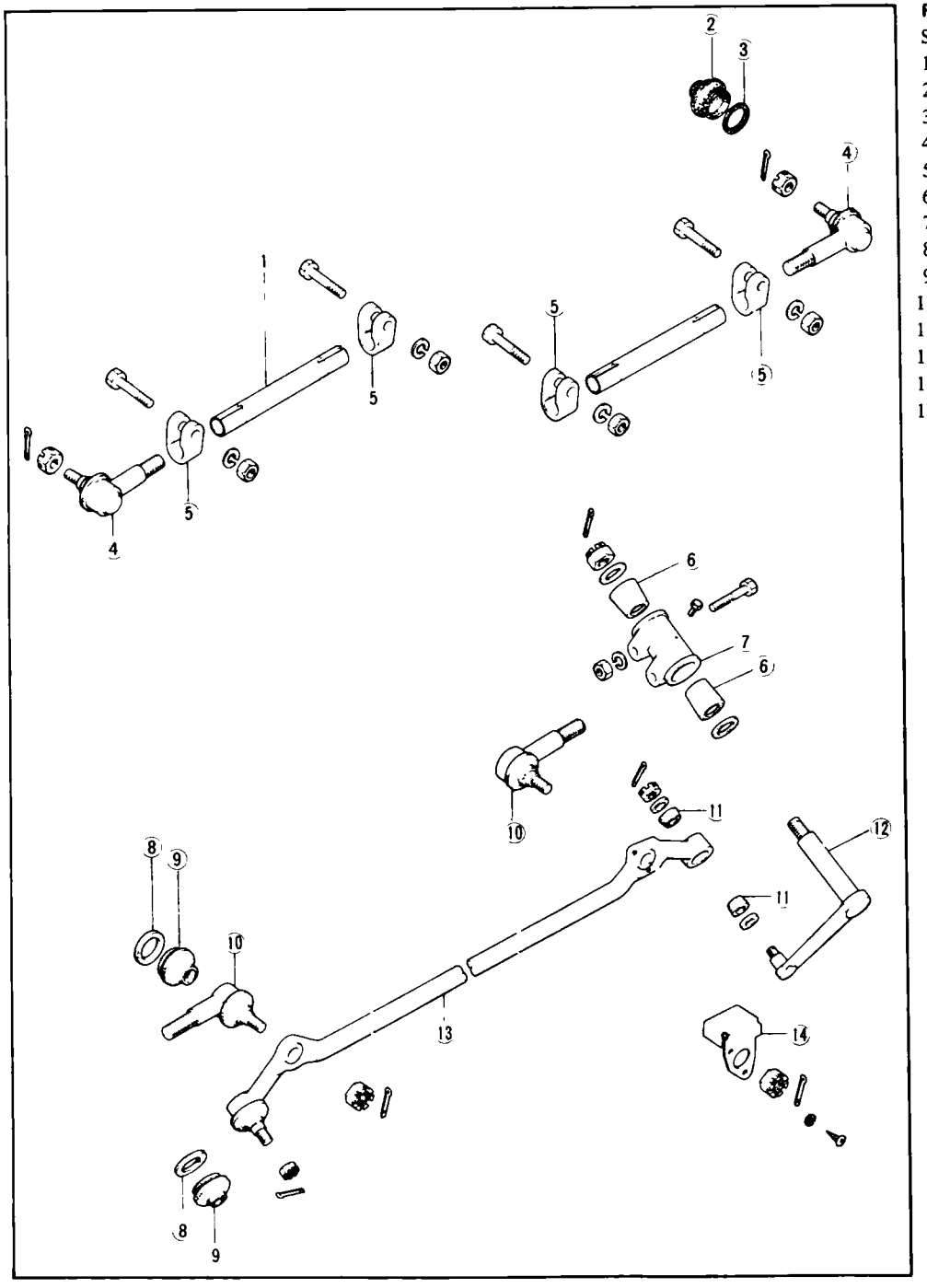

Fig. 10–20
Steering linkage components
1. Tie rod
2. Dust seal
3. Dust seal ring
4. Ball joint
5. Tie rod clamp
6. Tapered bush
7. Idler bracket
8. Dust seal ring
9. Dust seal
10. Ball joint
11. Tapered bush
12. Idler arm
13. Center link
14. Insulator

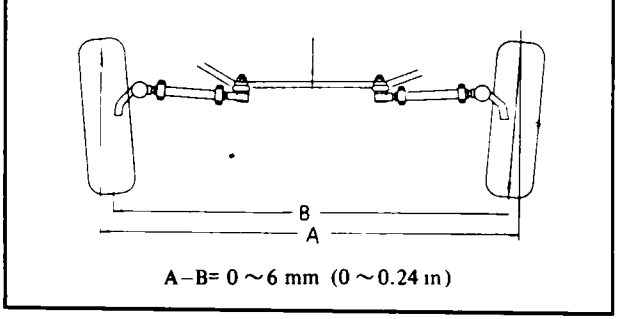

Fig. 10–21 Toe-in

b. Adjusting toe-in

If the toe-in is incorrect, proceed as follows :

1. Loosen the tie-rod clamp bolts at each end of the tie-rod.
2. Check that the tie-rod ends are in the same position on each rod, thus ensuring that the tie-rods are the same length.
3. Turn the both tie-rods an equal amount until the correct toe-in is obtained.

Note :

The tie-rod is threaded with right and left hand threads.

Note:

The cramps on the tie-rods must be positioned as Fig. 10–22 to prevent interference with the center link when the toe-in is readjusted.

4. Tighten the tie-rod locking nuts and recheck the toe-in.

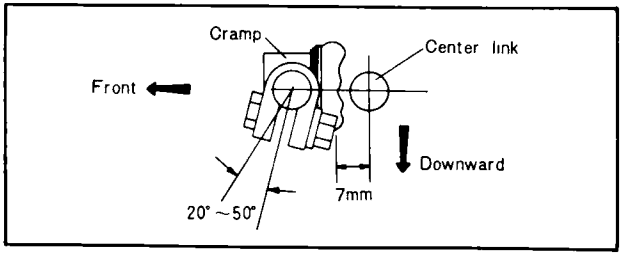

Fig. 10–22 The tightening position of cramp

10–D–2. Camber

Camber is the outward tilting of the front wheel at the top from the vertical as shown in Fig. 10–23. The



Fig. 10–23 Camber and kingpin inclination
A. Camber
B. Camber trail
C. Kingpin inclination

standard camber angle is 15′ ± 20′. The purpose of camber is to place the weight of the vehicle, as near as possible, directly above the tire contact on the road to facilitate ease of steering. Excessive camber tends to cause uneven wear of the tires and negative camber, hard steering and a possible wandering condition. Tires will wear out at the inside shoulders.

To check the camber, use a wheel aligning gauge in accordance with the manufacturer's instructions. The camber is adjusted by adding or subtracting the shim between the upper arm shaft and the support bracket. The shims are available in thicknesses of 1.0, 1.6, 2.0 and 3.2 mm (0.039, 0.063, 0.079 and 0.126 in).

10–D–3. Caster

Caster is the inclination of the upper ball joint towards the rear of the vehicle. The standard caster angle is 1° 57′ ± 20′. The purpose of caster is to provide steering stability by keeping the front wheels in a straight ahead position and also assisting in returning the wheels to straight ahead when coming out of a turn.

To check the caster, use a wheel aligning gauge following the manufacturer's instructions. If found incorrect, adjust the shims between the upper arm shaft and the support bracket or turn the upper arm shaft until the correct adjustment is obtained.

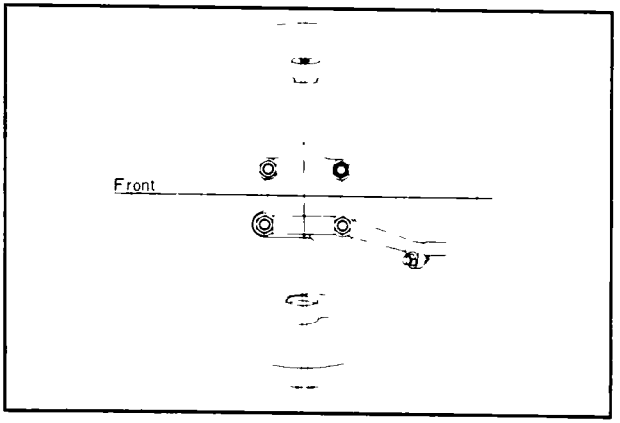

Fig. 10–24 Caster

DESCRIPTION ..... 11 : 1
11–A. BRAKE ADJUSTMENT ..... 11 : 1
11–A–1. Adjusting Brake Pedal ..... 11 : 1
11–A–2. Bleeding Hydraulic System .. 11 : 1
11–A–3. Adjusting Rear Brake Shoe ..... 11 : 2
11–B. DUAL MASTER CYLINDER ..... 11 : 2
11–B–1. Removing Dual Master Cylinder ..... 11 : 2
11–B–2. Disassembling Dual Master Cylinder ..... 11 : 3
11–B–3. Checking Dual Master Cylinder ..... 11 : 4
11–B–4. Assembling Dual Master Cylinder ..... 11 : 4
11–B–5. Installing Dual Master Cylinder ..... 11 : 4
11–C. POWER BRAKE UNIT ..... 11 : 5
11–C–1. Checking Power Brake Unit on Vehicle ..... 11 : 5
11–C–2. Removing Power Brake Unit ..... 11 : 5
11–C–3. Disassembling Power Brake Unit ..... 11 : 5
11–C–4. Checking Power Brake Unit ..... 11 : 7
11–C–5. Assembling Power Brake Unit ..... 11 : 8
11–C–6. Installing Power Brake Unit ..... 11 : 8
11–D. HYDRAULIC LINES ..... 11 : 8
11–D–1. Checking Brake Lines ..... 11 : 8
11–E. FRONT BRAKE ..... 11 : 9
11–E–1. Disc Brake Shoe ..... 11 : 9
a. Replacing disc brake shoe ..... 11 : 9
11–E–2. Caliper ..... 11 : 10
a. Removing caliper ..... 11 : 10
b. Disassembling caliper ..... 11 : 10
c. Checking caliper ..... 11 : 10
d. Assembling caliper ..... 11 : 10
e. Installing caliper ..... 11 : 11
11–E–3. Rotor (Brake Disc) and Front Wheel Hub Assembly ..... 11 : 12
a. Checking rotor assembly ..... 11 : 12
b. Replacing rotor assembly ..... 11 : 12
11–F. REAR BRAKE ..... 11 : 12
11–F–1. Rear Brake Drum and Shoe ..... 11 : 12
a. Removing rear brake drum and shoe ..... 11 : 12
b. Inspecting rear brake drum and shoe ..... 11 : 14
c. Installing rear brake drum and shoe ..... 11 : 14
11–F–2. Wheel Cylinder ..... 11 : 14
a. Removing wheel cylinder ..... 11 : 14
b. Disassembling wheel cylinder ..... 11 : 14
c. Checking wheel cylinder ..... 11 : 14
d. Assembling wheel cylinder ..... 11 : 14
e. Installing wheel cylinder ..... 11 : 15
11–G. PARKING BRAKE ..... 11 : 15
11–G–1. Parking Brake Adjustment.. 11 : 15
SPECIAL TOOL ..... 11 : 15

2. Loosen the lock nut and adjust the pedal height to **190 mm (7.5 in)** between the pedal and the floor mat by turning the stop light switch and push rod. Next, tighten the lock nut.

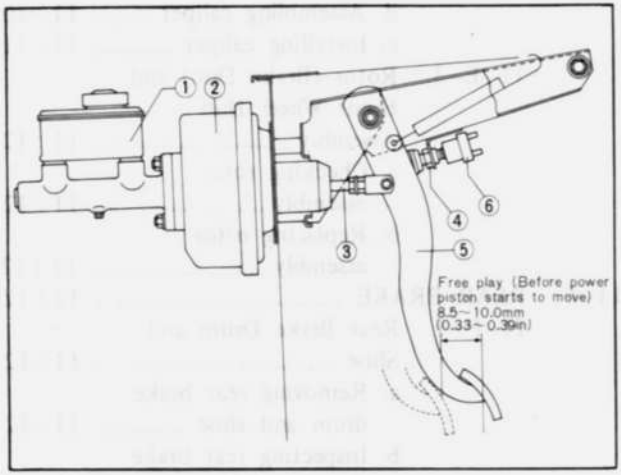

Fig. 11–1 Adjusting brake pedal

1. Master cylinder
2. Power brake unit
3. Push rod
4. Lock nut
5. Brake pedal
6. Stop light switch

11–A–2. Bleeding Hydraulic System

When any parts of the hydraulic system has been disconnected for repair or replacement, air may enter into the lines, and causes spongy pedal action.
This requires the bleeding of the hydraulic system after it has been properly connected to be sure that all air is expelled from the brake cylinders and lines. When bleeding the brake system, bleed one brake bleeder screw at a time, beginning at the bleeder screw with the longest hydraulic line first. **Never use** brake fluid which has been drained from the hydraulic system.
The bleeding procedures are as follows :
1. Keep the brake master cylinder reservoir filled with new brake fluid during bleeding operation.

Note :
Never allow the brake fluid to drop on any painted surface.

2. Remove the rubber cap from the bleeder screw, and connect a vinyl drain tube onto the bleeder screw. Submerge the other end of the vinyl tube into a suitable container while bleeding the brake system.
3. Depress the brake pedal slowly several times to bleed the air, and with the brake pedal depressed, loosen the bleeder screw one-third to half of a turn, then close the bleeder screw before brake pedal is released.

Note :
Do not release the brake pedal until the bleeder screw is tightened as additional air may enter into the wheel cylinder.

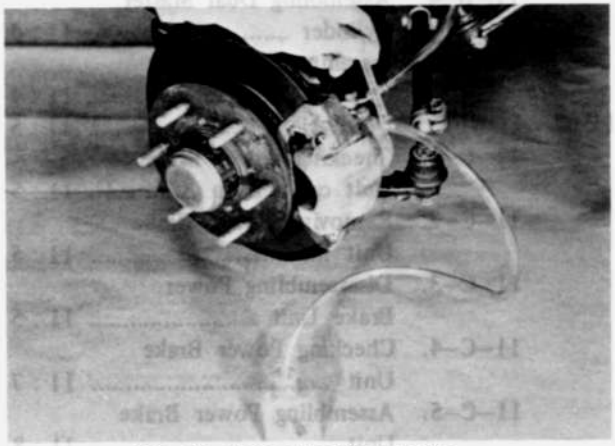

Fig. 11–3 Bleeding front brake

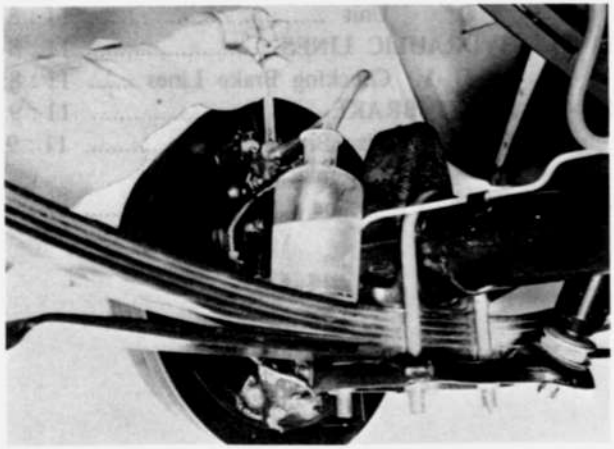

Fig. 11–4 Bleeding rear brake

on the backing plate until the wheel locks. At this time, pump the brake pedal several times to make sure that the shoes contact the drum on the entire surface. If the wheel turns after removing the foot from the brake pedal, turn the adjuster further until the wheel locks firmly.

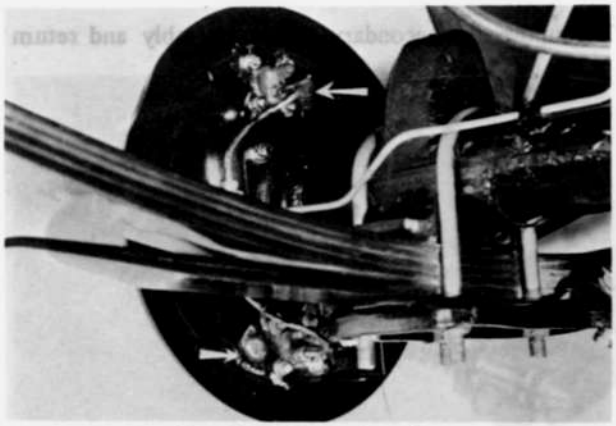

Fig. 11–5 Removing plug

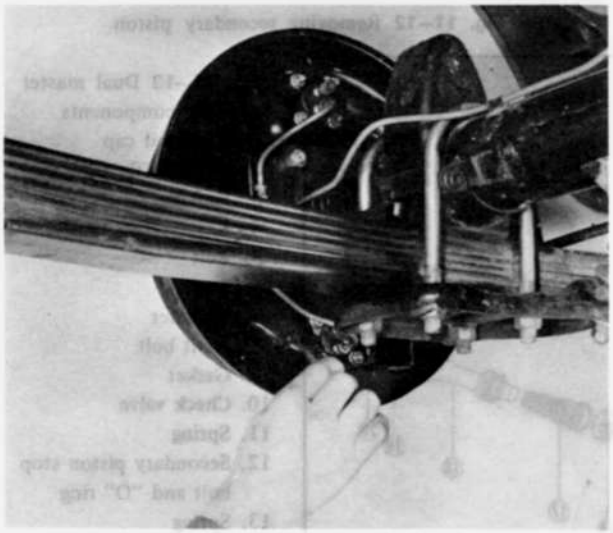

Fig. 11–6 Adjusting rear brake shoe

4. Back off the adjuster 5 notches so that the drum rotates freely without any drag.
5. Check that the wheel rotates freely after pumping the brake pedal several times. Next, install the adjusting hole plug onto the backing plate.

to the power brake unit.
3. Remove the master cylinder.

Note :
Never allow the brake fluid to drop on any painted surface.

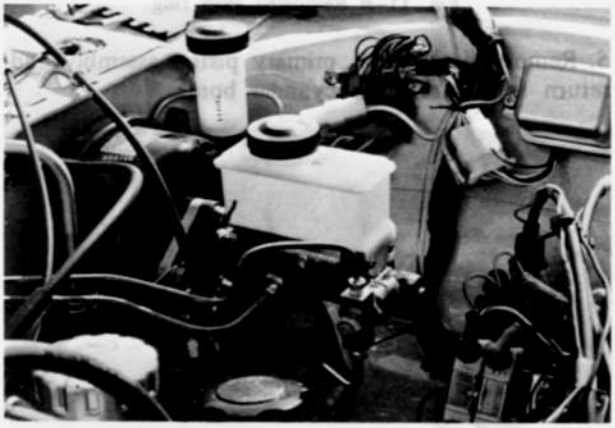

Fig. 11–7 Removing dual master cylinder

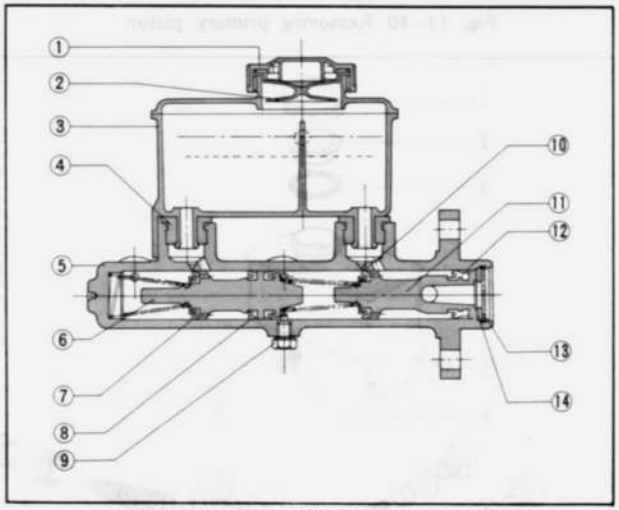

Fig. 11–8 Master cylinder cross section

1. Reservoir cap
2. Fluid baffle
3. Reservoir
4. Bush
5. Cylinder
6. Secondary piston
7. Primary cup
8. Secondary cup
9. Stop bolt
10. Primary cup
11. Primary piston
12. Secondary cup
13. Stop wire
14. Stop washer



Fig. 11–9 Removing snap ring

5. Remove the washer, primary piston assembly and return spring from the cylinder bore.

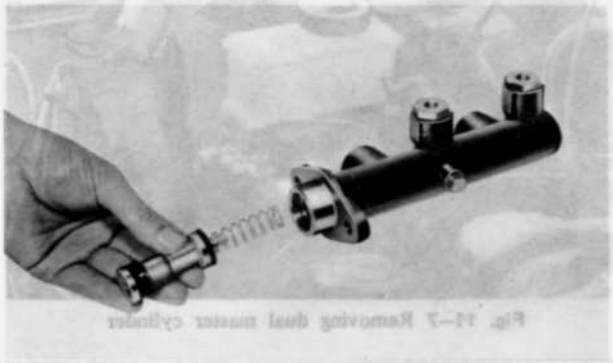

Fig. 11–10 Removing primary piston

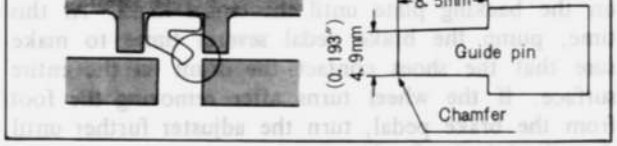

Fig. 11–11 Piston guide pin

7. Remove the secondary piston assembly and return

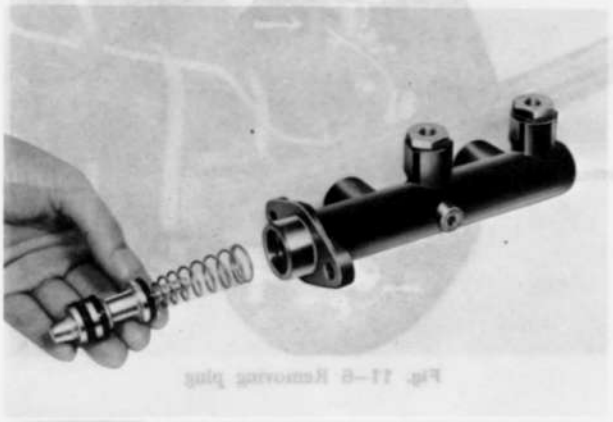

Fig. 11–12 Removing secondary piston

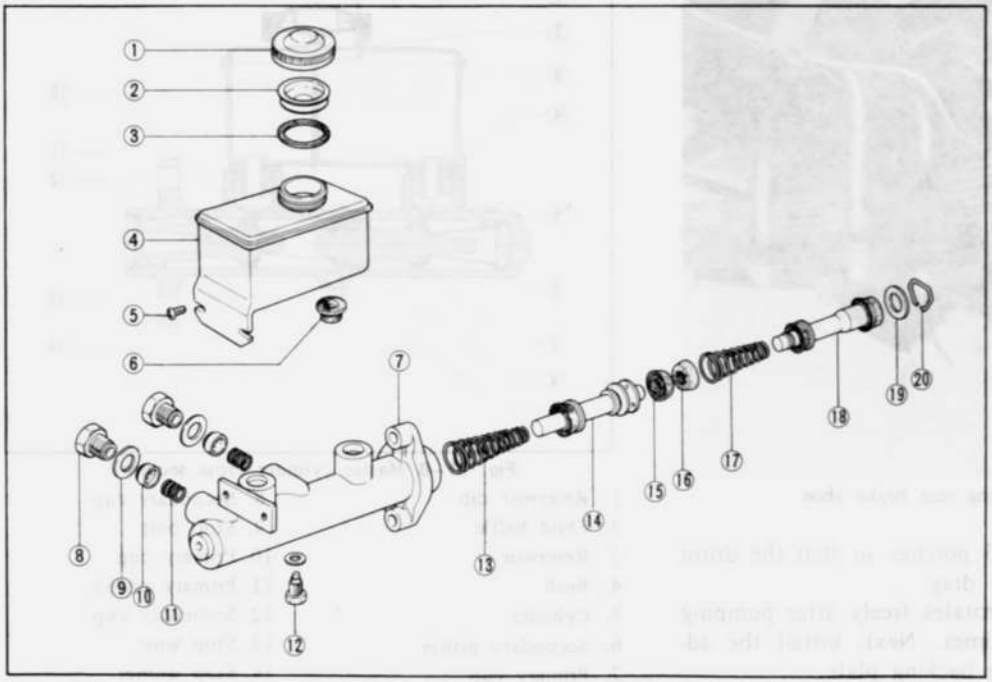

Fig. 11–13 Dual master cylinder components

1. Reservoir cap
2. Fluid baffle
3. Packing
4. Reservoir
5. Bolt
6. Bush
7. Cylinder
8. Joint bolt
9. Gasket
10. Check valve
11. Spring
12. Secondary piston stop bolt and "O" ring
13. Spring
14. Secondary piston
15. Secondary piston cup
16. Secondary piston cup
17. Spring
18. Primary piston
19. Stop washer
20. Snap ring

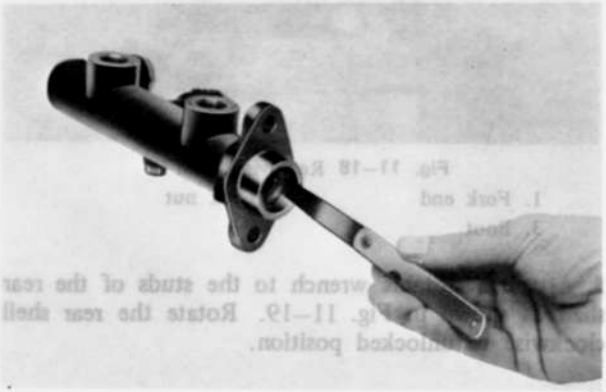

Fig. 11–14 Checking piston clearance

4. Check all recesses, openings and internal passages to be sure they are open and free of foreign matter. Use compressed air to blow out dirt and cleaning solvent.
5. Check the piston return spring for weakness.

11–B–4. Assembling Dual Master Cylinder

1. Dip all parts except the cylinder in clean brake fluid.
2. Insert the check valve springs into the outlets and place the check valves over the springs. Install the joint bolts and tighten them.
3. Insert the valve and secondary piston return spring assembly into the cylinder.
4. Fit the secondary piston guide pin into the secondary piston stop bolt hole and insert the secondary piston into the cylinder. Depress the secondary piston with a suitable rod and remove the guide pin. Then, install the secondary piston stop bolt.

Fig. 11–15 Installing stop bolt

5. Insert the primary piston return spring and the primary piston assembly into the cylinder.



Fig. 11–16 Installing primary piston

6. Hold the primary piston down and install the snap ring into position in groove of the cylinder bore.

Note :
Make sure that the piston cups do not cover the compensating port.

7. Install the reservoir to the cylinder.

11–B–5. Installing Dual Master Cylinder

Follow the removal procedures in the reverse order.

Note :
Fill the reservoir and bleed the air at each bleeder screw.

will be required to hold pedal in applied position. If no action is felt, vacuum system is not functioning.
3. Stop the engine. Again deplete all vacuum reverse in system. Depress the brake pedal and hold foot pressure on the pedal. If pedal gradually falls away under foot pressure, hydraulic system is leaking internally or externally.
4. Start the engine with brakes off and transmission in neutral. Run the engine to medium speed and turn off ignition switch. Immediately close throttle. This build up vacuum. Wait no less than 90 seconds, then try brake action. If not vacuum assisted for two or more applications, vacuum check valve is faulty or there is a leak in vacuum system.

11–C–2. Removing Power Brake Unit

1. Remove the brake master cylinder, as described in Par. 11–B–1.
2. Disconnect the vacuum hose at the power brake unit.
3. Disconnect the push rod from the brake pedal by removing the cotter pin at the fork end.

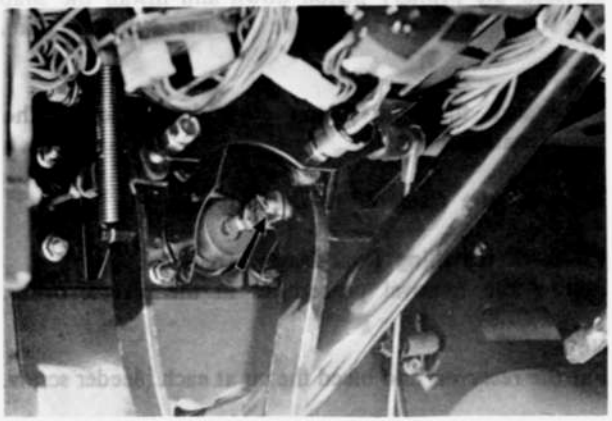

Fig. 11–17 Removing cotter pin

4. Remove the nuts that attach the power brake unit to the dash panel.
5. Remove the power brake unit from the dash panel.

11–C–3. Disassembling Power Brake Unit

1. Remove the check valve from the power brake unit.
2. Place the power brake unit in a vice with push rod up. Clamp the unit firmly on the flange.



Fig. 11–18 Removing boot

1. Fork end
2. Lock nut
3. Boot

5. Attach a suitable wrench to the studs of the rear shell as shown in Fig. 11–19. Rotate the rear shell clockwise to unlocked position.

Note :
Loosen the rear shell carefully as it is spring-loaded.



Fig. 11–19 Removing rear shell

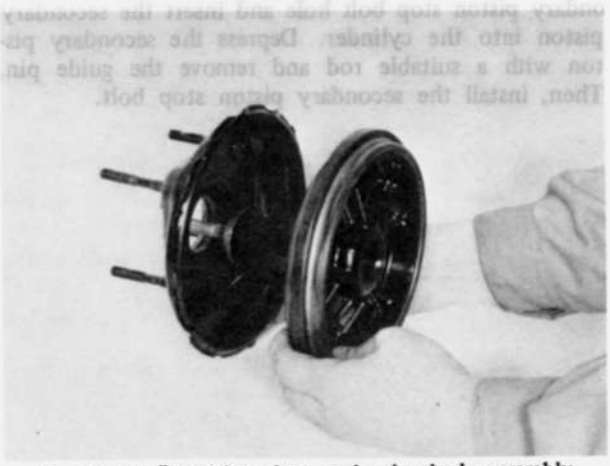

Fig. 11–20 Removing plate, and valve body assembly

11. Press the reaction disc out of the valve body.

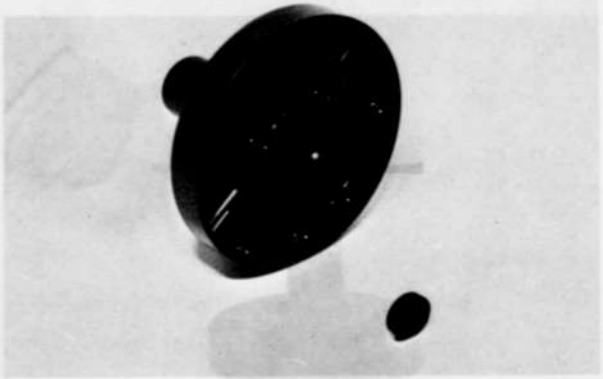

Fig. 11–26 Reaction disc

12. Remove the push rod.
13. Remove the front seal from the front shell if necessary.

11–C–4. Checking Power Brake Unit

1. Check the clearance between primary piston and the push rod of the master cylinder and if necessary, adjust the push rod so that the correct clearance is obtained. The standard clearance is **0.1 ~ 0.5 mm (0.004 ~ 0.020 in).**

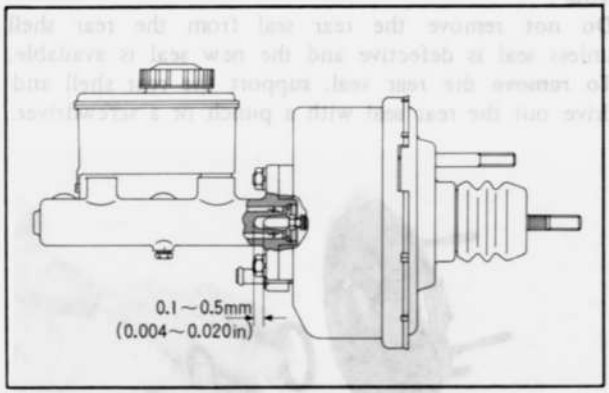

Fig. 11–27 Clearance between piston and rod

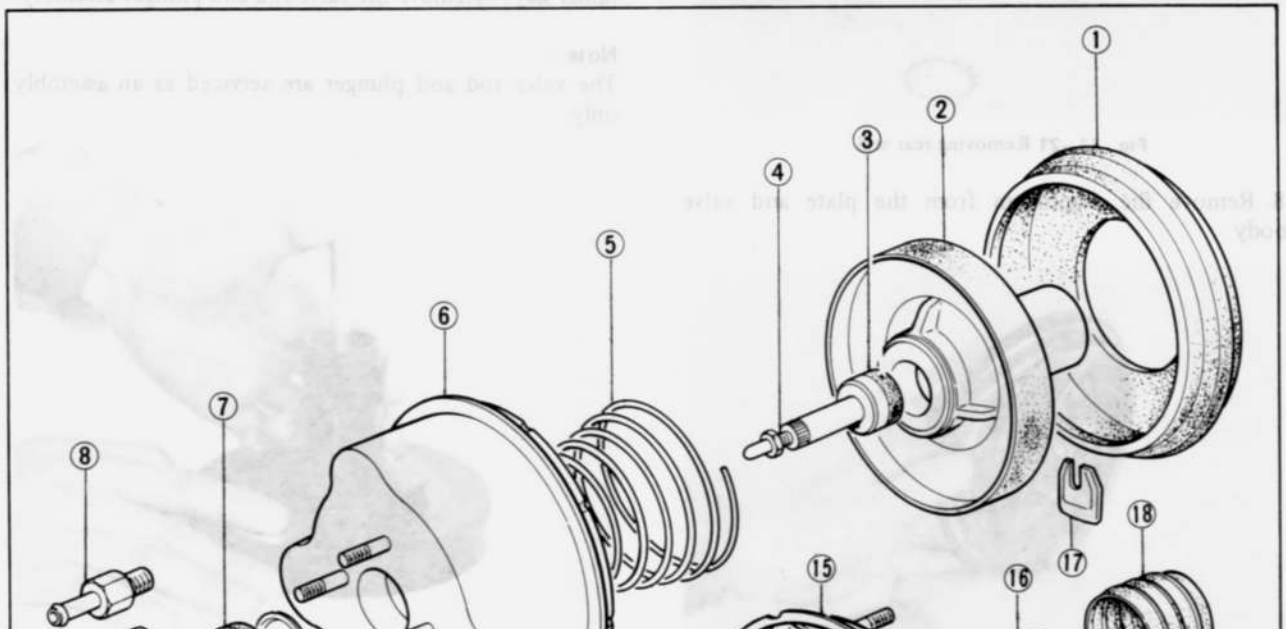

6. Lift the rear shell and plate and valve body, valve rod and plunger assembly from the unit. Then, remove the return spring.
7. Remove the plate, valve body, valve rod and plunger assembly from the rear shell.

Note :
Do not remove the rear seal from the rear shell unless seal is defective and the new seal is available. **To remove** the rear seal, support the rear shell and drive out the rear seal with a punch or a screwdriver.

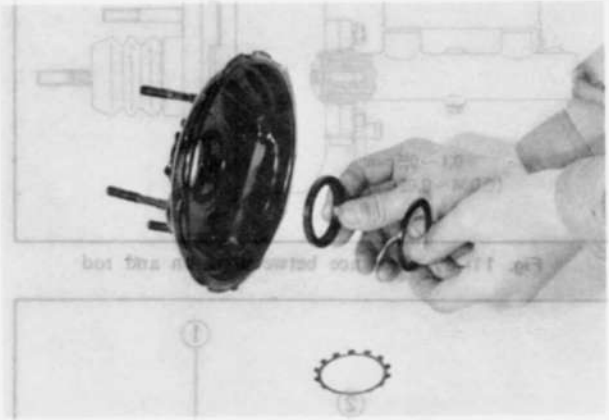

Fig. 11–21 Removing rear seal

8. Remove the diaphragm from the plate and valve body.



9. Remove the air silencer with the air filter from the plate and valve body, being careful not to chip plastic.

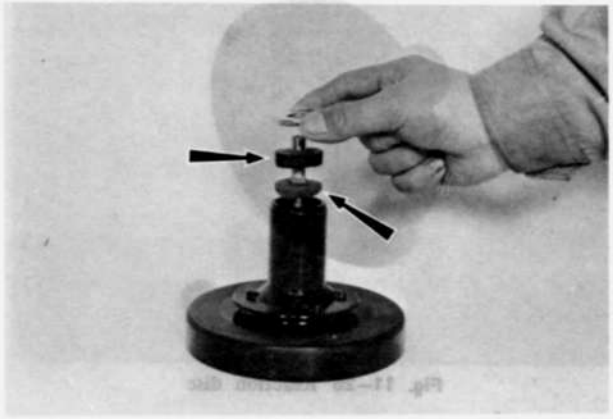

Fig. 11–23 Removing air filter

10. Press in on the valve rod to remove the valve retainer key. Remove the valve rod and plunger assembly.

Note :
The valve rod and plunger are serviced as an assembly only.



of the tube section of the plate and valve body and to the surfaces of the valve rod and plunger.
2. Insert the valve rod and plunger assembly into the tube section of the plate and valve body.
3. Press down on the valve rod and align the groove in the valve plunger with the slot of the valve body. Insert the retainer key.
4. Install the diaphragm on the plate and valve body making certain the diaphragm is seated in the groove.
5. Assemble the air filter and the air silencer over the rod and position in the valve body.
6. Apply power brake lubricant liberally to the entire surface of the reaction disc and install the reaction disc into the plate and valve body.
7. Coat the outer bead of the diaphragm with power brake lubricant where it bears against the outer rims of the front and rear shells to aid in assembly.
8. Apply power brake lubricant to the seal in the rear shell and carefully guide tube end of the plate and valve body, through the seal in the rear shell.

11–C–6. Installing Power Brake Unit

Follow the removal procedures in the reverse order.

Note :

After installing the unit, bleed the hydraulic system according to the procedure described in Par. 11–A–2.

11–D. HYDRAULIC LINES

11–D–1. Checking Brake Lines

Inspect all brake lines for any leakage with the foot brakes applied. Check all brake pipes, hoses and connections for signs of chafing, deterioration or replaced or repaired, always air bleed the hydraulic system.

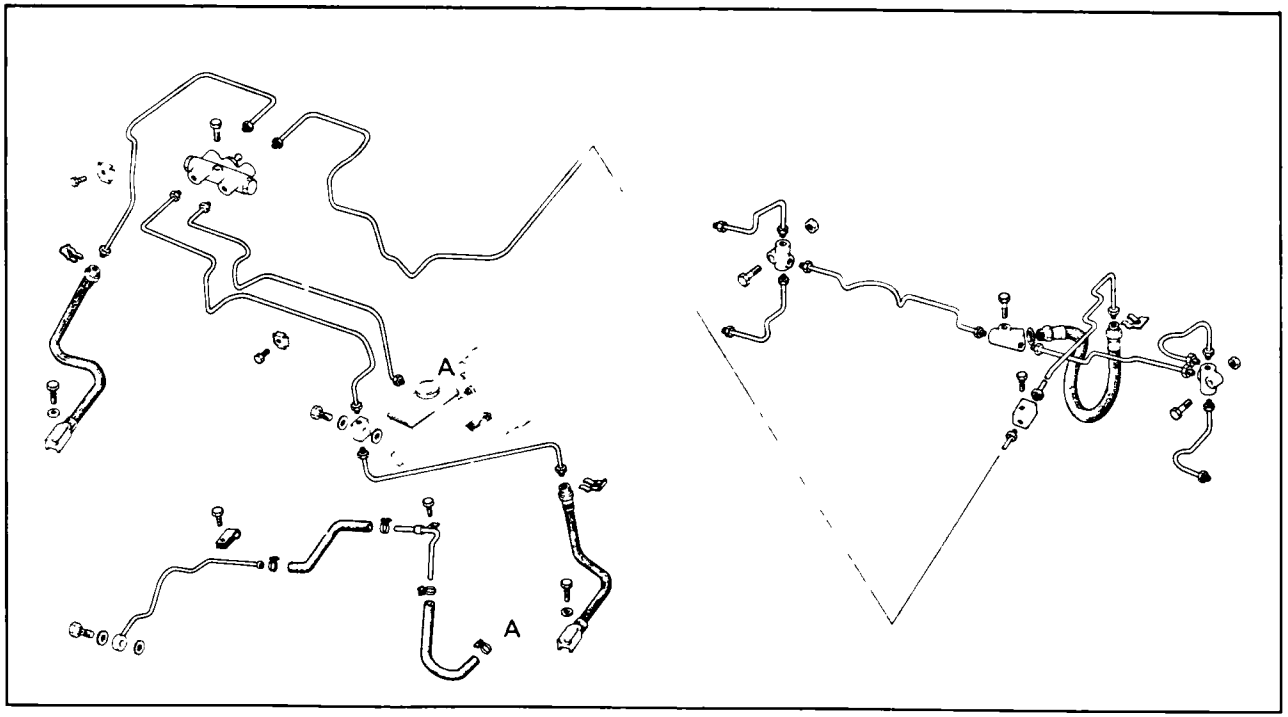

Fig. 11–29 Hydraulic lines

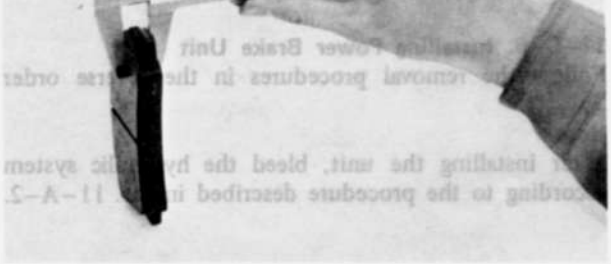

Fig. 11–30 Checking lining thickness

To replace the disc brake shoes, proceed as follows:
1. Raise the front end of the vehicle and support with stands.
2. Remove the front wheel.
3. Remove the hair pin retainers and pull out the stopper plates.

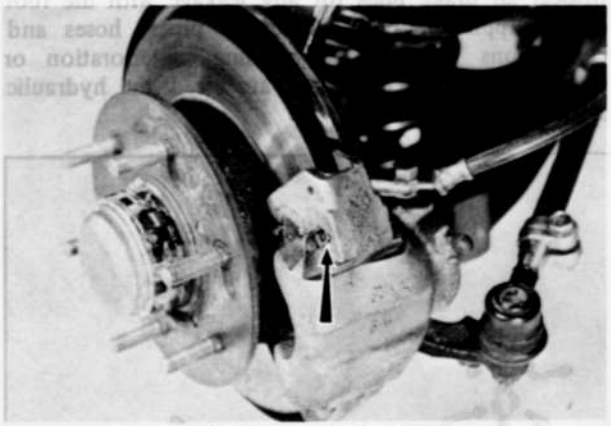

Fig. 11–31 Removing hair pin retainers

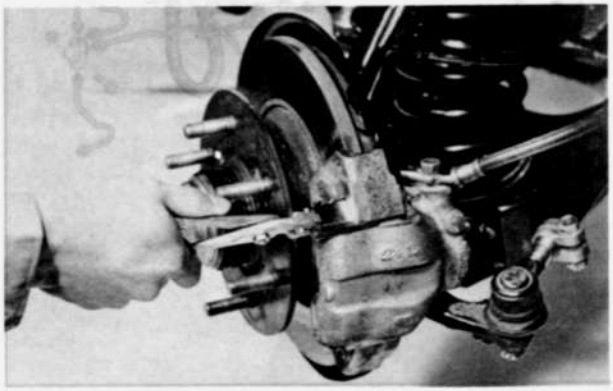

Fig. 11–32 Removing stopper plates



Fig. 11–33 Removing caliper



Fig. 11–34 Removing brake shoe

5. Remove the rubber cap from the bleeder screw, and connect a vinyl drain tube onto the bleeder screw. Submerge the other end of the vinyl tube into a suitable container.
6. Open the bleeder screw and press the piston into the cylinder with the **piston retracting tool** (Part No. 49 0221 600B).
7. Tighten the bleeder screw and remove the vinyl tube and retracting tool.

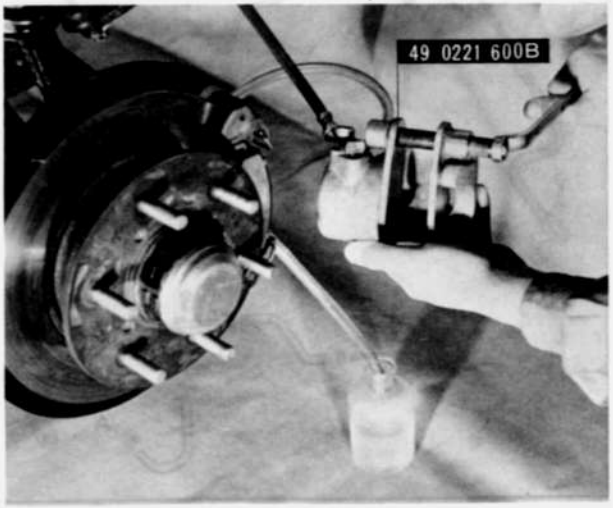

Fig. 11–35 Piston retracting tool

1. Raise the front end of the vehicle and support with stands.
2. Remove the front wheel.
3. Remove the shoe and lining assembly as described in Par. 11–E–1.
4. Disconnect the brake fluid pipe from the caliper and plug the end of the fluid pipe to prevent entrance of dirt and loss of fluid.
5. Remove the caliper.

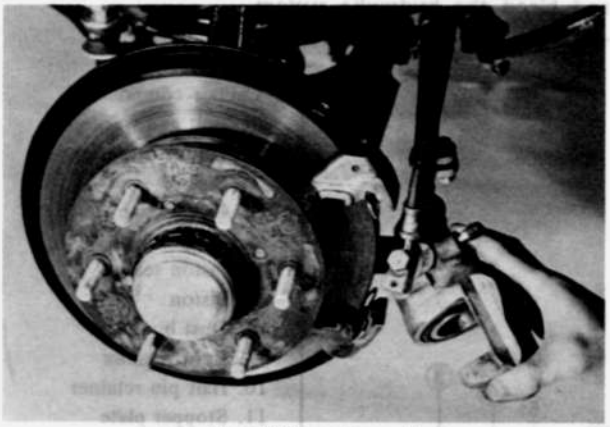

Fig. 11–36 Removing caliper

6. If necessary, remove the caliper bracket by removing the two bolts.

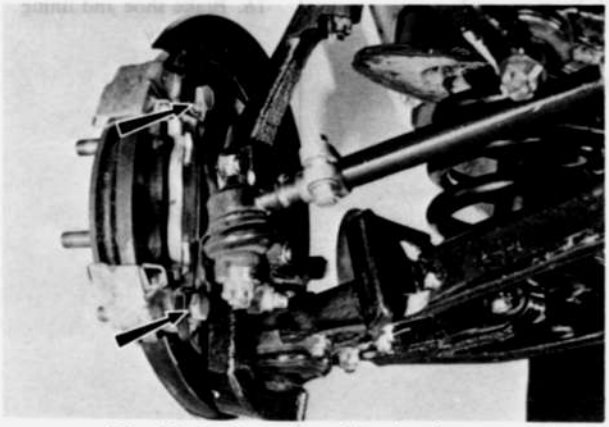

Fig. 11–37 Removing caliper bracket

b. Disassembling caliper

1. Clean outside of the caliper.
2. Place a hardwood in front of piston to prevent



Fig. 11–38 Removing piston

3. Remove the retainer and dust boot from the caliper.
4. Remove the piston seal from the caliper bore.

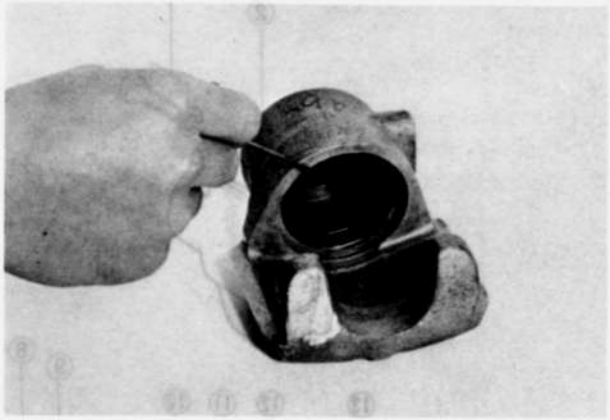

Fig. 11–39 Removing piston seal

5. Remove the bleeder screw, if necessary.

c. Checking caliper

1. Clean the disassembled parts in clean brake fulid or alcohol and dry with compressed air.

Note :
Never use gasoline or kerosene.

2. Inspect the caliper bore and piston for scoring, scratches or rust. If any of these conditions are found, replace with a new piston or caliper. Minor damage can be eliminated by polishing with crocus cloth.
3. Discard the old piston seal and dust boot, and use new ones when reassembling.

d. Assembling caliper

1. Apply brake fluid to the piston seal and install



Fig. 11–40 Inserting piston



Fig. 11–41 Installing retainer

e. Installing caliper

Follow the removal procedures in the reverse order and bleed the hydraulic system.

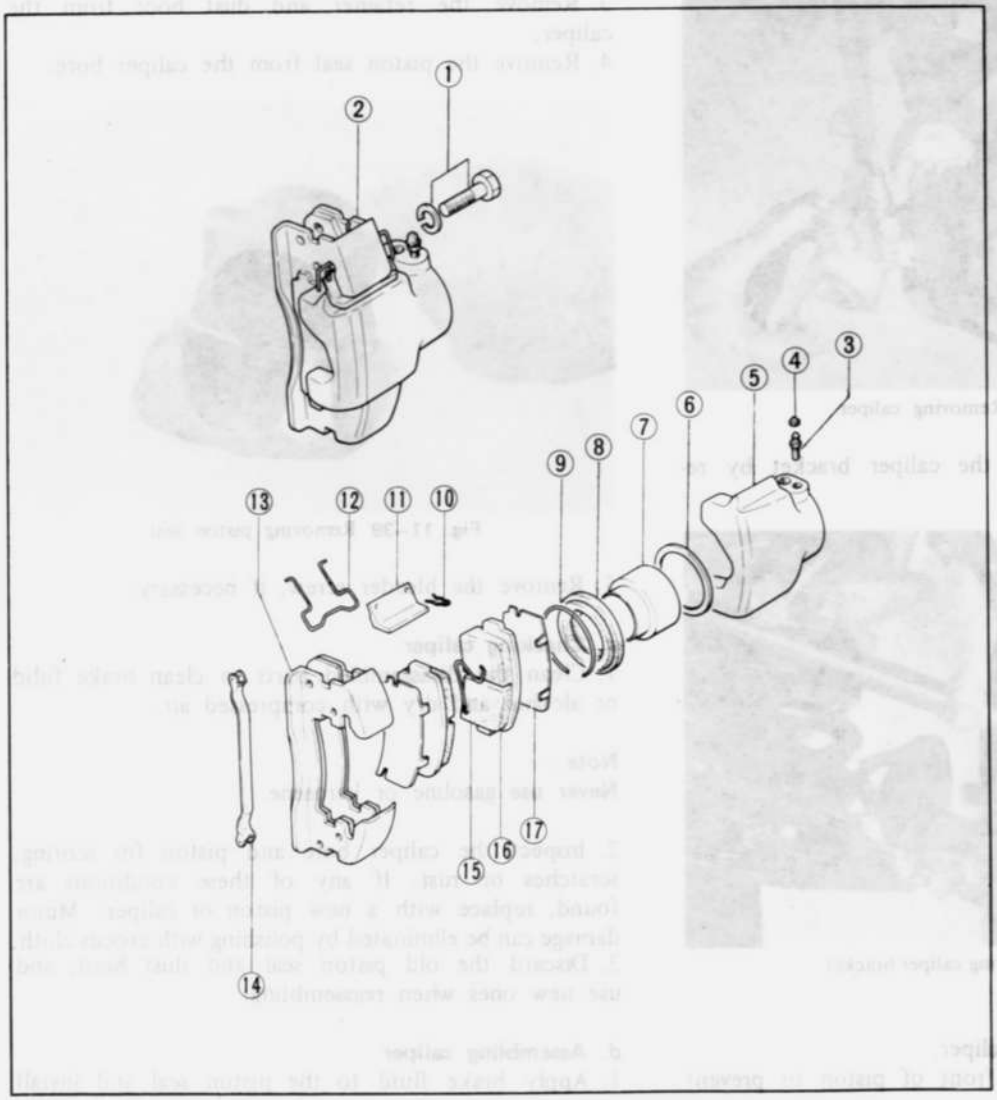

Fig. 11–42
Caliper components
1. Bolt and washer
2. Caliper assembly
3. Bleeder screw
4. Bleeder cap
5. Caliper body
6. Piston seal
7. Piston
8. Dust boot
9. Boot retainer
10. Hair pin retainer
11. Stopper plate
12. Spring
13. Caliper bracket
14. Anti-rattle spring clip
15. Anti-rattle spring
16. Brake shoe and lining assembly
17. Shim

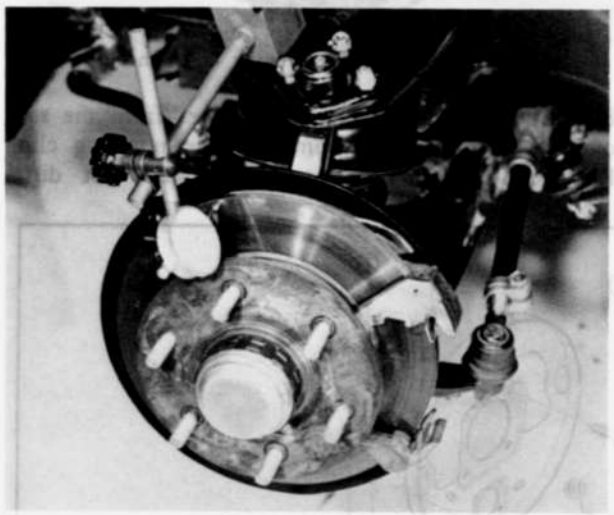

Fig. 11–43 Checking rotor run-out

3. Check the rotor for thickness. If the thickness of the rotor becomes less than **11 mm (0.433 in)** from excessive refacing, the rotor should be replaced.

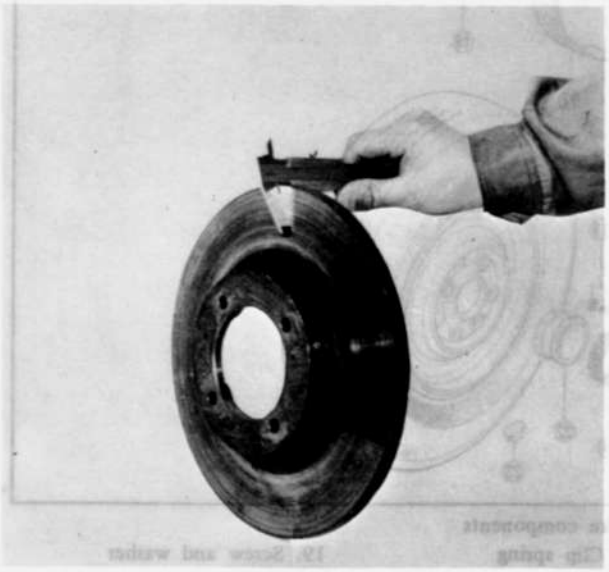

Fig. 11–44 Checking rotor thickness

b. Replacing rotor assembly

Replace the rotor and front wheel hub assembly, as described in Par. 12–F–1.

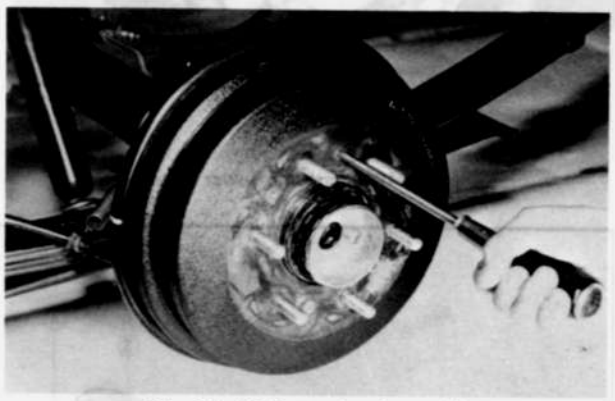

Fig. 11–45 Removing drum (1)



Fig. 11–46 Removing drum (2)

5. Remove the return spring located on the upper

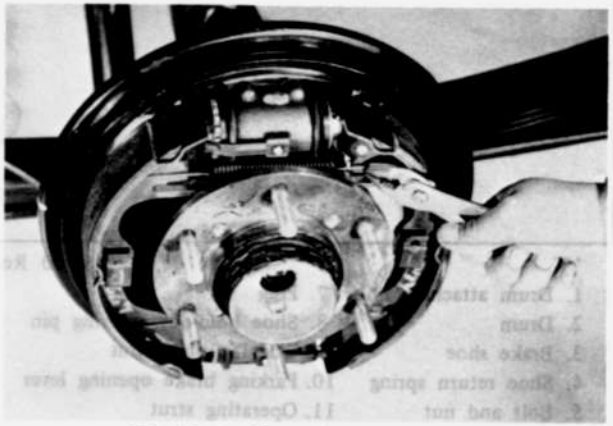

Fig. 11–47 Removing upper spring



Fig. 11–48 Removing lower spring



Fig. 11–49 Removing primary brake shoe

8. Disconnect the parking brake lever from the secondary brake shoe by removing the retaining clip. Remove the secondary brake shoe. **Do not** dirty

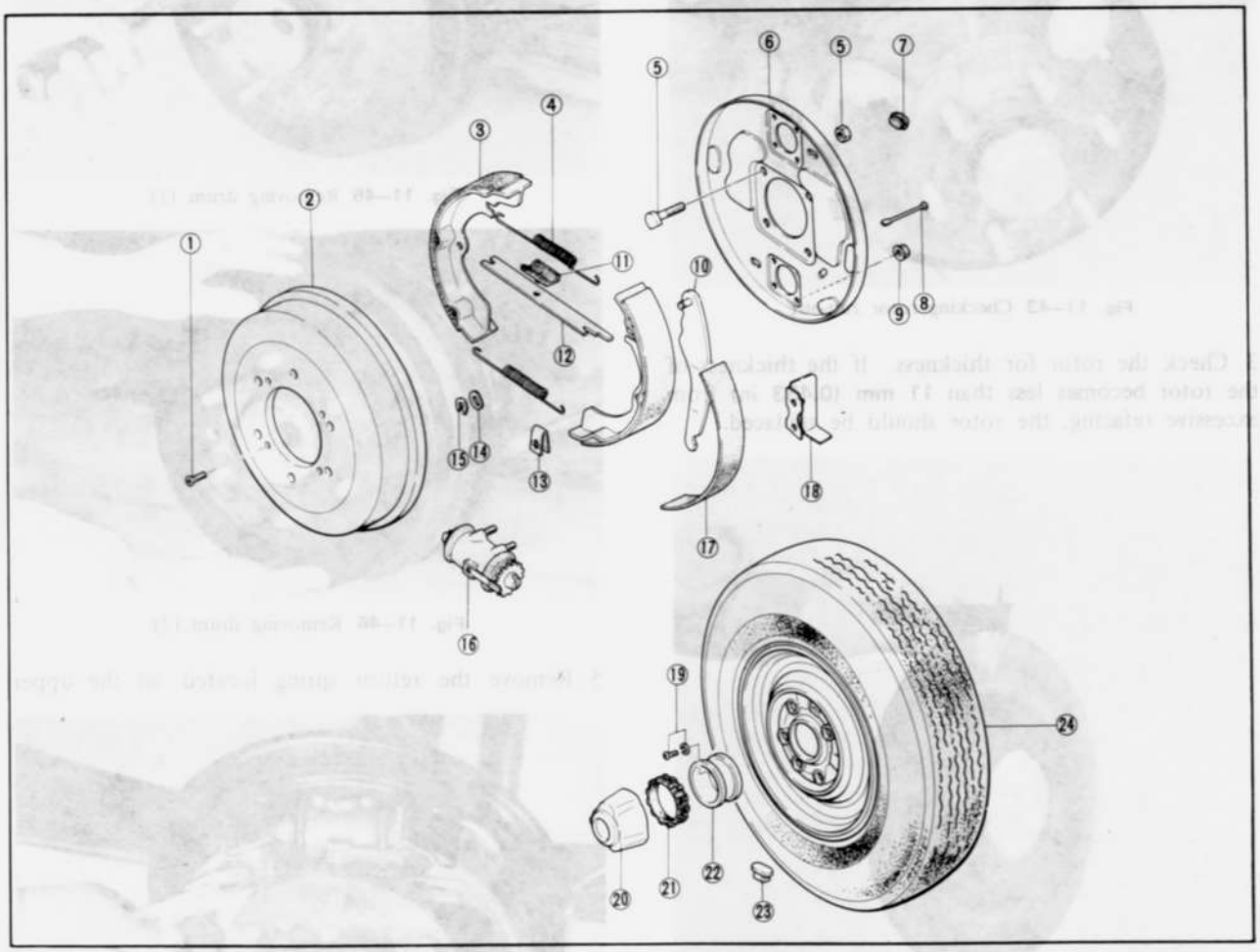

Fig. 11–50 Rear brake components

1. Drum attaching bolt
2. Drum
3. Brake shoe
4. Shoe return spring
5. Bolt and nut
6. Backing plate
7. Plug
8. Shoe hold-down spring pin
9. Wheel cylinder nut
10. Parking brake opening lever
11. Operating strut
12. Male-push rod
13. Clip spring
14. Wave washer
15. Brake shoe retaining clip
16. Wheel cylinder
17. Brake lining
18. Brake pipe guard
19. Screw and washer
20. Wheel center cap
21. Set rubber
22. Wheel center cap adaptor
23. Balance weight
24. Rear wheel

Fig. 11–51 Removing secondary brake shoe

b. Inspecting rear brake drum and shoe

1. Brush all dust from the backing plate and interior of the brake drum.
2. Inspect the springs for weakness.
3. Inspect the brake shoes for excessive lining wear or shoe damage. If the lining is excessively worn or if the shoes are damaged, they must be replaced. Replace any lining that had been contaminated with oil, grease or brake fluid.
4. Examine the lining contact pattern. To inspect, chalk the entire inner surface of the drum and slide the lining along the chalked surface. The lining should show a uniform contact across the entire width, extending from toe to heel. Shoes having sufficient lining but improper contact should be re-ground to obtain proper contact.



Fig. 11–52 Rear brake shoe

5. Inspect the brake drum and, if necessary, refinish. Minor scores on the brake drum can be removed with sandpaper. The drum that is excessively scored or shows an out of roundness over **0.15 mm (0.0059 in)** should be turned down. Remove only enough stock to eliminate the scores and true up the drum. The refinished diameter must not exceed 261 mm (10.2758 in). The standard inner diameter of the drum is 260 mm (10.2364 in). After the drum is turned down, wipe the refinished surface with a cloth soaked in clean denatured alcohol. If one drum is turn down, the opposite drum on the same axle should

a. Removing wheel cylinder

1. Remove the rear brake shoes, as described in Par. 11–F–1.
2. Disconnect the brake fluid pipe from the wheel cylinder by removing the flare nut located on the rear side of the backing plate.
3. Remove the nuts that attach the wheel cylinder to the backing plate and remove the wheel cylinder.

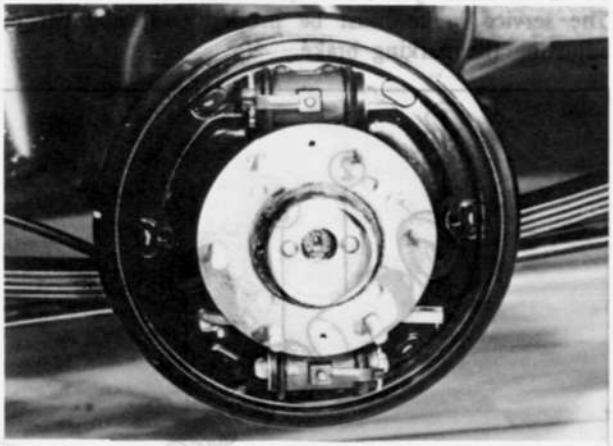

Fig. 11–53 Removing wheel cylinder

b. Disassembling wheel cylinder

1. Remove the boots from both ends of the wheel cylinder.
2. Remove the piston and piston cup assemblies and return spring.
3. Remove the bleeder screw and steel ball, if necessary.

c. Checking wheel cylinder

1. Wash all parts in clean alcohol or brake fluid. **Never use** gasoline or kerosene.
2. Examine the cylinder bore, and piston for wear, roughness, or score.
3. Check the clearance between the piston and the cylinder. If it is **more than 0.15 mm (0.0059 in)**, replace with new parts.
4. Check the piston cups for wear, softening, swelling, or any damage. If any of these conditions exists, replace the cups.

d. Assembling wheel cylinder

1. Apply clean brake fluid to the cylinder bore,

Note :
Bleed the hydraulic system and adjust the brake shoe clearance

11–G. PARKING BRAKE

11–G–1. Parking Brake Adjustment

The service brake must be properly adjusted before adjusting the parking brake.



Fig. 11–54 Adjusting parking brake

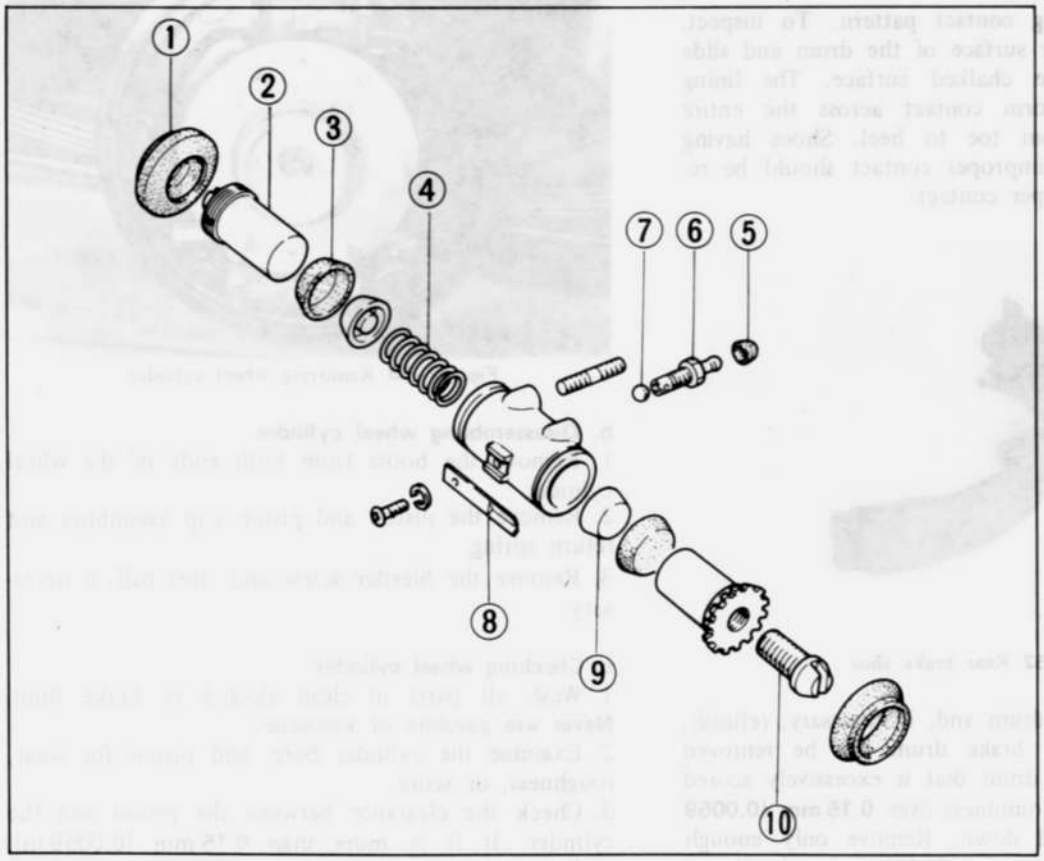

Fig. 11–55
Wheel cylinder component
1. Boot
2. Piston
3. Piston cup
4. Spring
5. Bleeder cap
6. Bleeder screw
7. Steel ball
8. Spring
9. Filling block
10. Adjusting screw

SPECIAL TOOL

49 0221 600B	Piston retracting tool

12–A. INFLATION OF TIRES.....12 : 1
12–B. TIRE LOTATION.....12 : 1
12–C. CHANGING WHEELS.....12 : 2
12–D. WHEEL AND TIRE RUN-OUT.....12 : 2
12–E. WHEEL BALANCING.....12 : 2
12–F. FRONT WHEEL HUB.....12 : 3
12–F–1. Removing Front Wheel Hub.....12 : 3
12–F–2. Checking Front Wheel Hub.....12 : 4
12–F–3. Installing Front Wheel Hub.....12 : 4
12–G. FRONT WHEEL BEARING.....12 : 5
12–G–1. Checking Front Wheel Bearing.....12 : 5
12–G–2. Adjusting Front Wheel Bearing.....12 : 5
12–H. REAR WHEEL BEARING.....12 : 5

2. Rapid and uneven wear on the edges of tire tread
3. Increased cord fatigue or broken tire cords
4. High tire temperature
5. Blow outs

Check the inflation pressure with a reliable gauge when the tires are cold.
The standard pressure is as follows:

	Front	Rear
Rotary Pickup	24 psi	36 psi

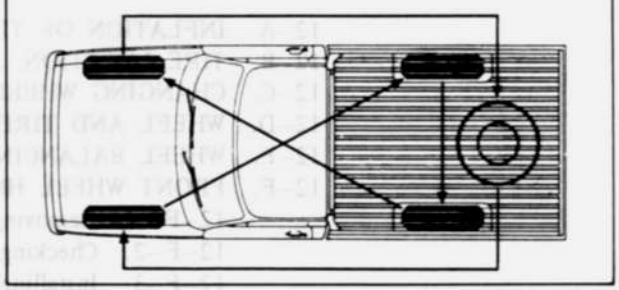

Fig. 12–1 Tire rotation

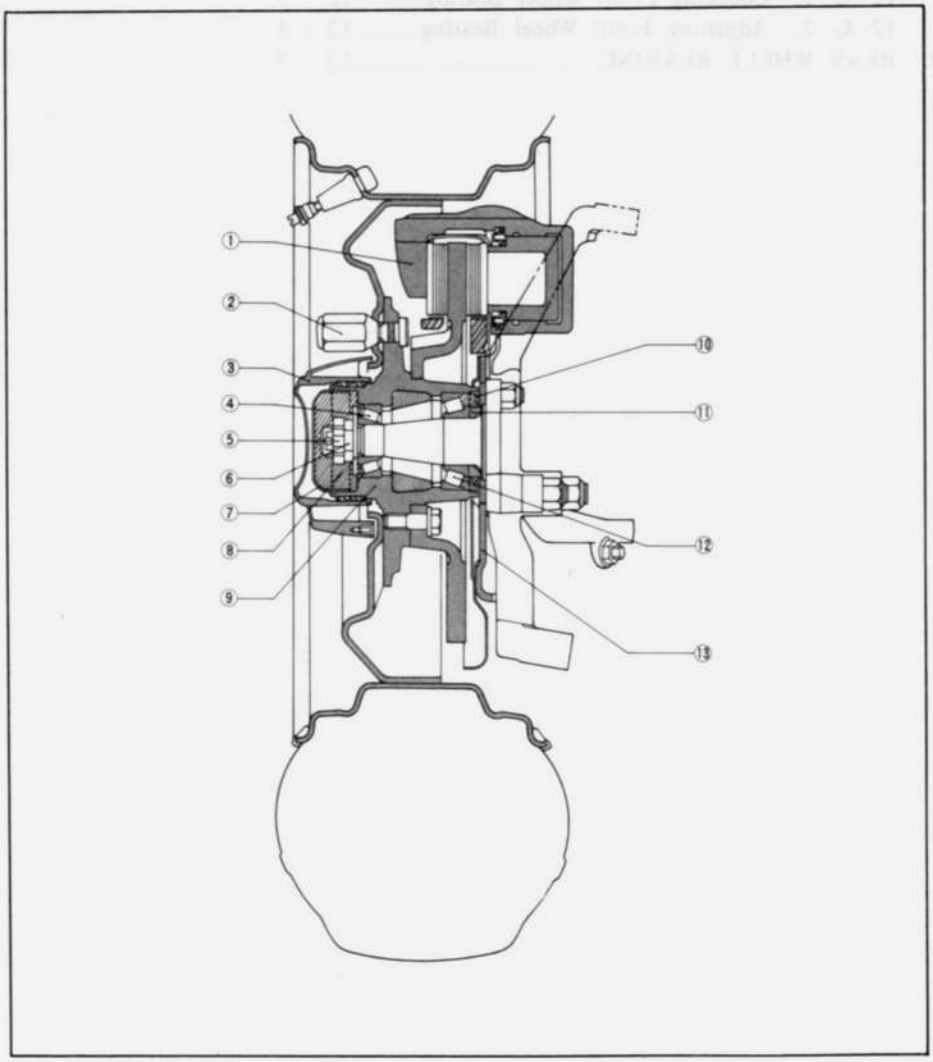

Fig. 12–2 Front wheel cross section
1. Caliper
2. Wheel bolt
3. Center cap
4. Hub outer bearing
5. Nut lock
6. Bearing preload adjusting nut
7. Grease cap
8. Flat washer
9. Hub
10. Grease seal
11. Spacer
12. Hub inner bearing
13. Mounting adaptor

5. Lower the vehicle and firmly tighten the nuts to a torque of **8.0 ~ 9.0 m-kg (58 ~ 65 ft-lb)**.
6. Refit the center cap.

12–D. WHEEL AND TIRE RUN-OUT

Wheel and tire should be measured for both radial and lateral run-out. The radial run-out is the difference between the high and low points on the tread of tire; while the lateral run-out is the wobble of the wheel.

To measure the radial run-out, apply a dial indicator against the center rib of the tire tread and rotate the wheel slowly. This measurement should not exceed

Balancing weight

Part No.	Weight	Length
99655 30010	10 g (0.35 oz)	16 ± 1 mm (0.63 ± 0.04 in)
99655 30015	15 g (0.53 oz)	22 ± 2 mm (0.86 ± 0.04 in)
99655 30020	20 g (0.71 oz)	29 ± 2 mm (1.14 ± 0.04 in)
99655 30025	25 g (0.81 oz)	34 ± 2 mm (1.34 ± 0.04 in)
99655 30030	30 g (1.05 oz)	40 ± 2 mm (1.57 ± 0.08 in)
99655 30035	35 g (1.23 oz)	45 ± 2.5 mm (1.77 ± 0.10 in)
99655 30040	40 g (1.41 oz)	51 ± 2.5 mm (2.01 ± 0.10 in)
99655 30045	45 g (1.50 oz)	56 ± 2.5 mm (2.20 ± 0.10 in)
99655 30050	50 g (1.75 oz)	62 ± 2.5 mm (2.44 ± 0.10 in)
99655 30060	60 g (2.12 oz)	73 ± 2.5 mm (2.87 ± 0.10 in)

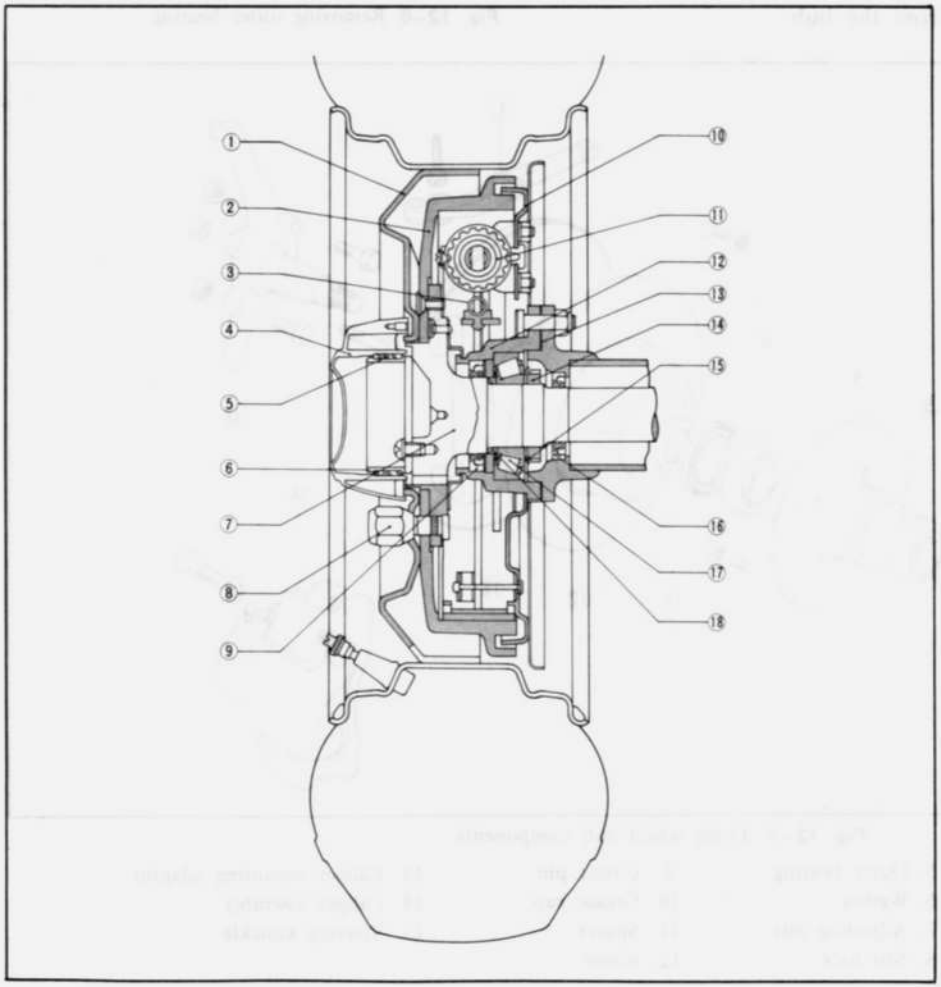

Fig. 12–3 Rear wheel cross section
1. Wheel
2. Brake drum
3. Brake shoe return spring
4. Center cap
5. Set rubber
6. Center cap adaptor
7. Rear axle shaft
8. Wheel bolt
9. Oil seal
10. Backing plate
11. Wheel cylinder
12. Hub
13. Adjusting shim
14. Lock nut
15. Lock washer
16. Oil seal
17. Bearing
18. Spacer

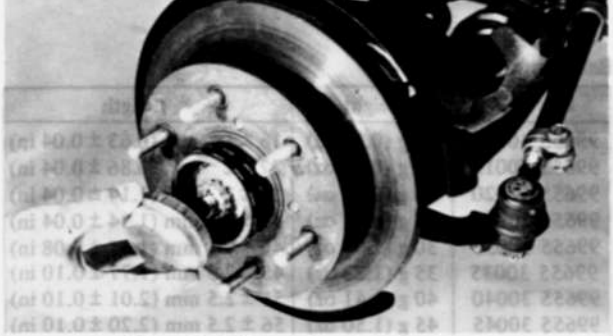

Fig. 12–4 Removing grease cap

5. Pull the hub and rotor assembly off the spindle.
6. Remove the outer bearing from the hub.



Fig. 12–6 Removing outer bearing

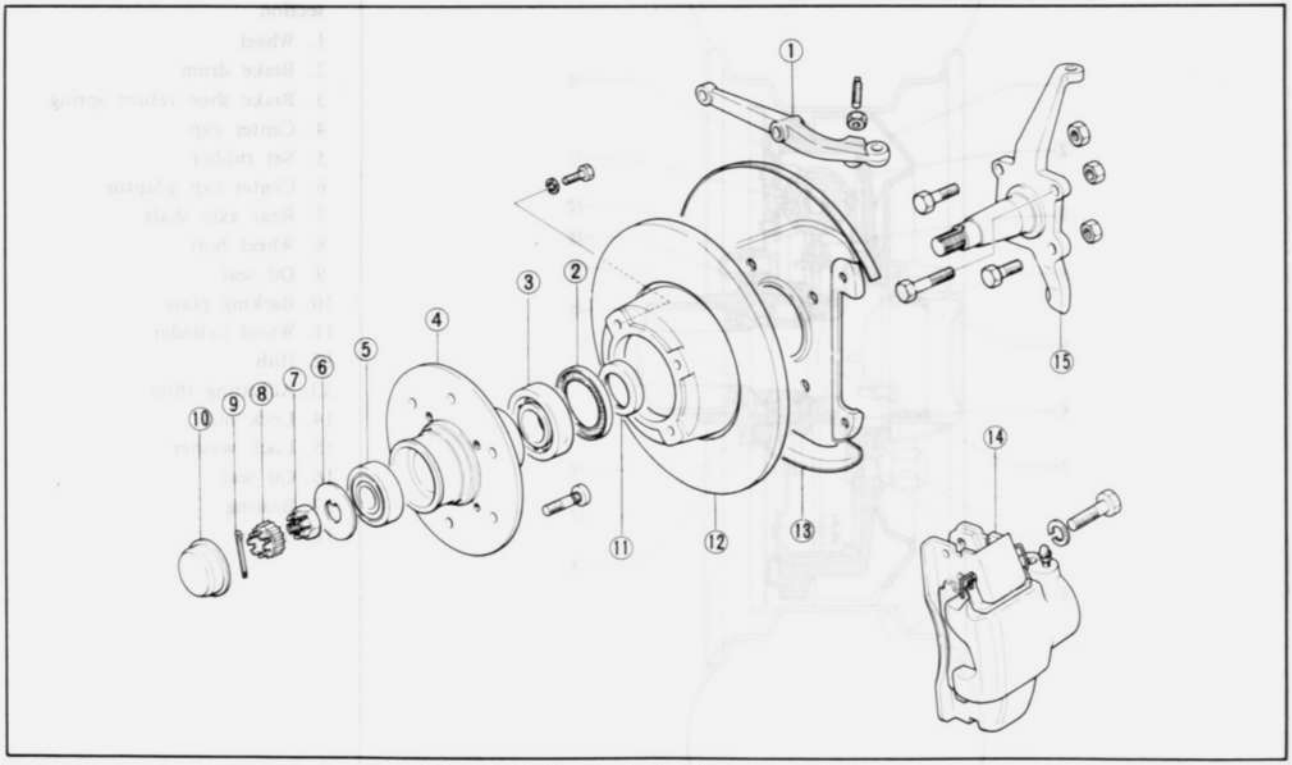

Fig. 12–7 Front wheel hub components

1. Knuckle	5. Outer bearing	9. Cotter pin	13. Caliper mounting adaptor
2. Grease seal	6. Washer	10. Grease cap	14. Caliper assembly
3. Inner bearing	7. Adjusting nut	11. Spacer	15. Steering knuckle
4. Hub	8. Nut lock	12. Rotor	



Fig. 12–8 Applying identification marks

9. Remove the bolts that attach the hub to the rotor. Remove the hub from the rotor.
10. Drive out the grease seal and remove the spacer and inner bearing from the hub.
11. Clean the lubricant off the outer and inner bear-



Fig. 12–9 Removing inner bearing cup



Fig. 12–10 Installing outer bearing cup

Do not spin the bearings dry with compressed air.

Inspect the bearing for wear and damage, and replace them if necessary. The bearing and bearing cup should be replaced as a set if damage to either is encountered.

Check the rotor for thickness. If the thickness of the rotor is less than **11 mm (0.433 in)**, rotor should be replaced.



Fig. 12–11 Checking rotor thickness

Thoroughly clean the spindle and the hub cavity with solvent to remove all old lubricant.

12–F–3. Installing Front Wheel Hub

1. Pack the inside of the hub with lithium grease.
2. Pack the inner and outer bearings with lithium grease, taking care to fill between rollers.



Fig. 12–12 Tightening hub attaching bolts



Fig. 12–13 Installing nut lock

9. Install the caliper to the mounting adaptor and tighten the attaching bolts.
10. Position the wheel on the hub. Install the wheel bolts and tighten them alternately in order to draw the wheel evenly against the hub.
11. Install the center cap.
12. Pump the brake pedal several times to obtain normal brake lining to rotor clearance and restore normal brake pedal travel.

12–G. FRONT WHEEL BEARING

12–G–1. Checking Front Wheel Bearing

To check the front wheel bearings, raise the vehicle with a jack until the wheels clear the ground.
Grip the tire and shake it sideways. If considerable play is noticed, this indicates that the bearings are rough.
When disassembled, check the wheel bearings for pits, brinell marks or any damage. If any of above conditions exists, replace with new bearings.

12–G–2. Adjusting Front Wheel Bearing

The front wheel bearings should be adjusted if the wheel is loose on the spindle or if the wheel does not rotate freely.

The bearing preload should be **4 ~ 8 kg-cm (3.5 ~ 7.0 in-lb)** when the hub and rotor assembly is pulled using a pull scale to read the preload.

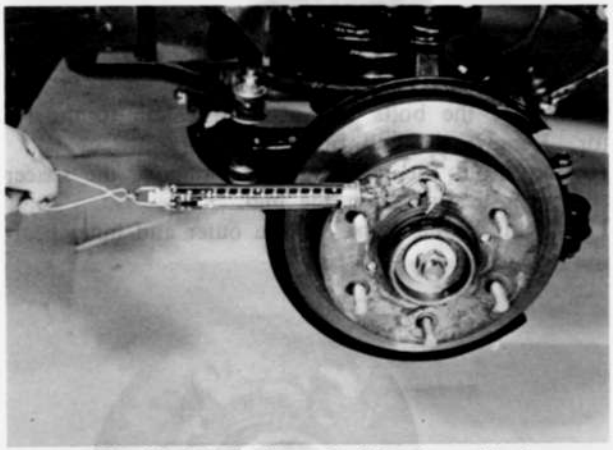

Fig. 12–14 Checking wheel bearing preload

8. Locate the nut lock on the adjusting nut so that the castellations on the lock are aligned with the cotter pin hole in the spindle.
9. Install a new cotter pin and bend the ends of the cotter pin.
10. Check the wheel rotation. If the wheel rotates properly, install the grease cap. If the wheel still rotates roughly or noisily, clean or replace the bearings and cups as required.
11. Install the grease cap.
12. Install the wheel and tighten the wheel nuts to **8.0 ~ 9.0 m-kg (58.0 ~ 65.0 ft-lb).**
13. Install the center cap.
14. Pump the brake pedal several times to obtain normal brake lining to rotor clearance and restore normal brake pedal travel.

12–H. REAR WHEEL BEARING

Servicing the rear wheel bearing is explained in Par. 9–A on page 9 : 1.

SUSPENSION.....13 : 3
13–A. FRONT SHOCK ABSORBER.....13 : 3
13–A–1. Removing Front Shock Absorber.....13 : 3
13–A–2. Checking Front Shock Absorber.....13 : 3
13–A–3. Installing Front Shock Absorber.....13 : 3
13–B. FRONT SUSPENSION.....13 : 3
13–B–1. Removing Front Suspension.....13 : 3
13–B–2. Checking Front Suspension.....13 : 3
13–B–3. Installing Front Suspension.....13 : 4
13–B–4. Greasing Front Suspension.....13 : 4
13–C. REAR SHOCK ABSORBER.....13 : 4
13–C–1. Removing Rear Shock Absorber.....13 : 4
13–C–2. Checking Rear Shock Absorber.....13 : 4
13–C–3. Installing Rear Shock Absorber.....13 : 4
13–D. REAR SPRING.....13 : 5
13–D–1. Removing Rear Spring.....13 : 5
13–D–2. Checking Rear Spring.....13 : 5
13–D–3. Installing Rear Spring.....13 : 5
SPECIAL TOOLS.....13 : 5

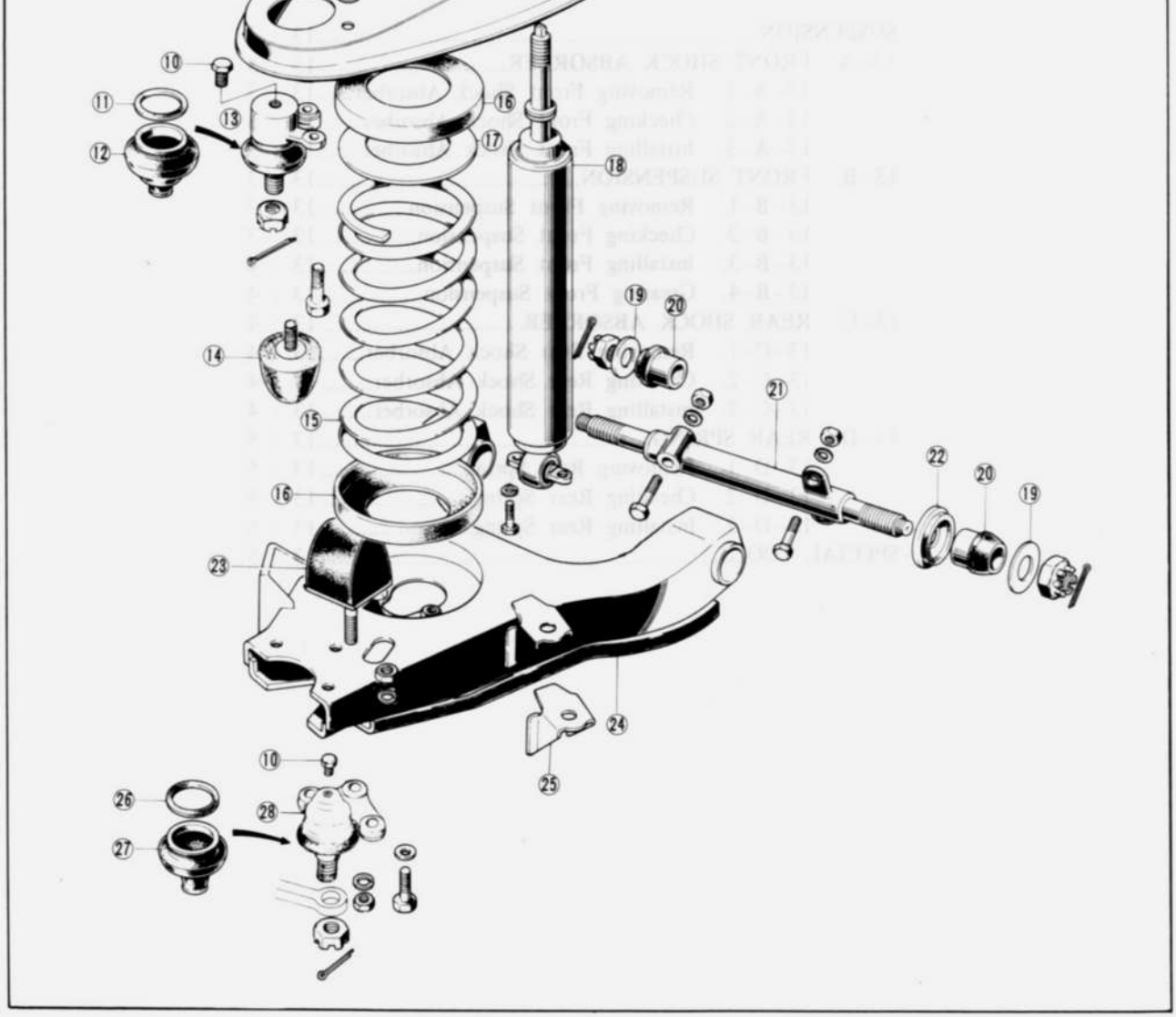

Fig. 13–1 Front suspension components

1. Plug
2. Thread bush
3. Dust seal
4. Retainer
5. Bush
6. Retainer
7. Adjusting shim
8. Upper arm shaft
9. Upper arm
10. Plug
11. Set ring
12. Dust seal
13. Ball joint assembly
14. Stopper
15. Coil spring
16. Seat
17. Adjusting plate
18. Shock absorber
19. Washer
20. Bush
21. Lower arm shaft
22. Stopper
23. Stopper
24. Lower arm
25. Bracket
26. Set ring
27. Dust seal
28. Ball joint

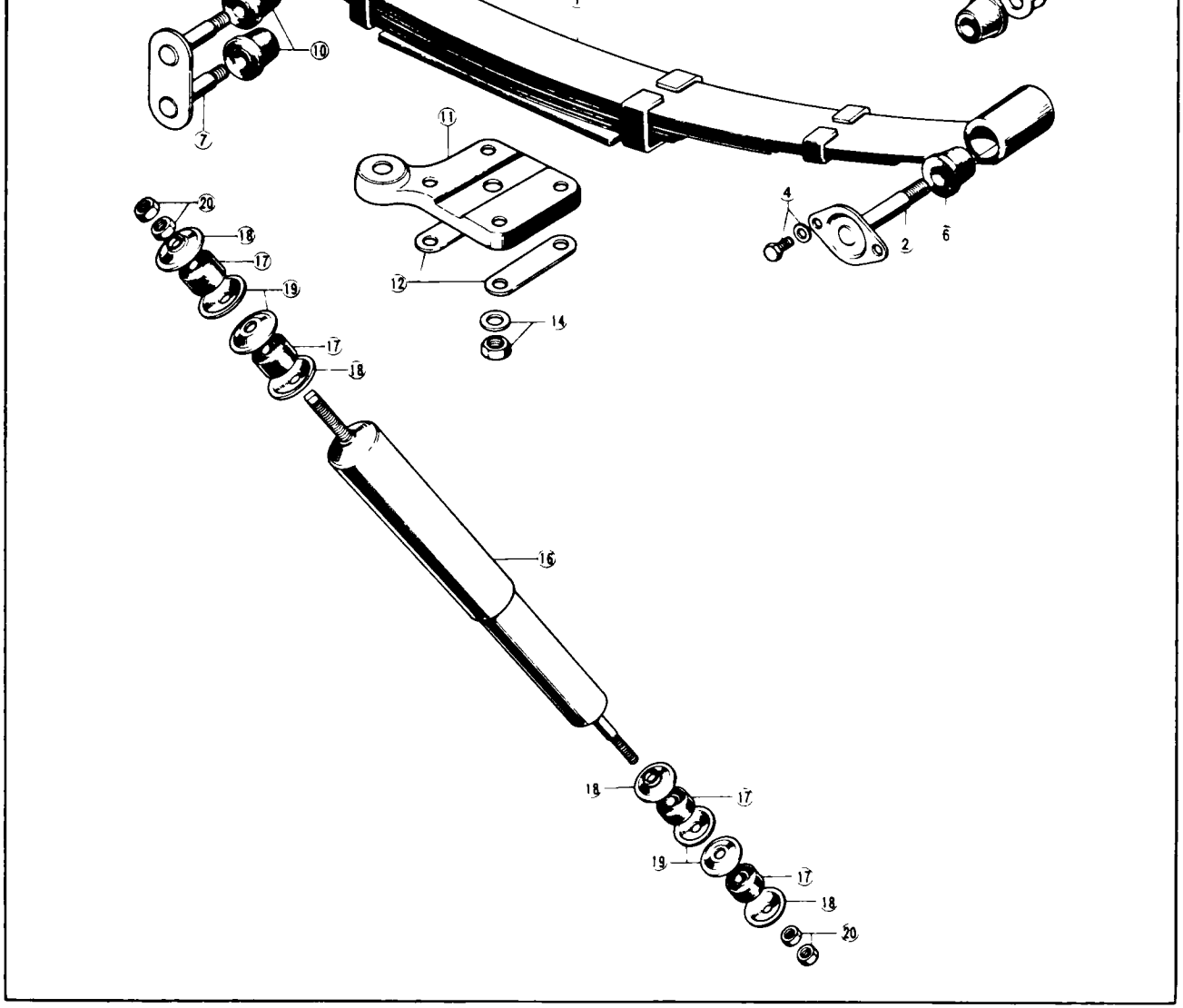

Fig. 13–2 Rear suspension components

1. Rear spring
2. Spring pin assembly
3. Nut
4. Bolt
5. Spacer
6. Bush
7. Shackle plate assembly
8. Shackle plate
9. Nut and washer
10. Bush
11. Spring clamp
12. Pach
13. "U" bolt
14. Nut and washer
15. Stopper rubber
16. Shock absorber
17. Bush
18. Retainer
19. Centering washer
20. Nut

shock absorber to the lower arm.
4. Remove the shock absorber from under the lower arm.
5. Worn or damaged rubber bushes should be discarded.

13–A–2. Checking Front Shock Absorber

To test the shock absorber, remove from the vehicle. Hold the shock absorber in an upright position and work it up and down in its full length of travel, four or five times.
If a strong resistance is felt due to hydraulic pressure, the shock absorber is functioning properly.
If no resistance is felt or there is a sudden free movement in travel, the shock absorber should be renewed.
If excessive amount of oil is evident on the exterior of the shock absorber, replace with a new shock absorber.

13–A–3. Installing Front Shock Absorber

Install the shock absorber in the reverse order of removing.

Note :
Tighten the shock absorber nut to the dimension shown in Fig. 13–3.

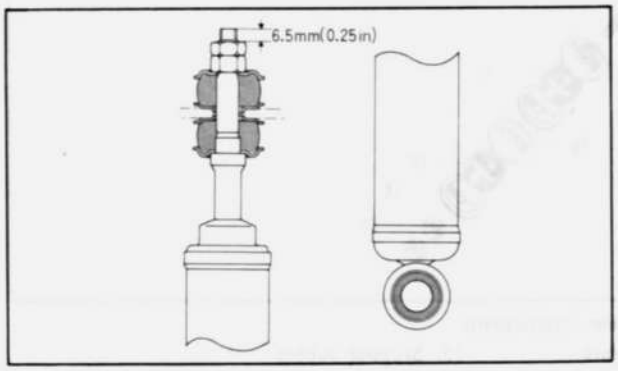

Fig. 13–3 Tightening shock absorber nut

13–B. FRONT SUSPENSION

13–B–1. Removing Front Suspension

1. Jack up the vehicle until the front wheels are clear of the ground.



Fig. 13–4 Disconnecting stabilizer

8. With the **Spring lifter** (49 0223 640A and 49 0223 641), compress the coil spring.

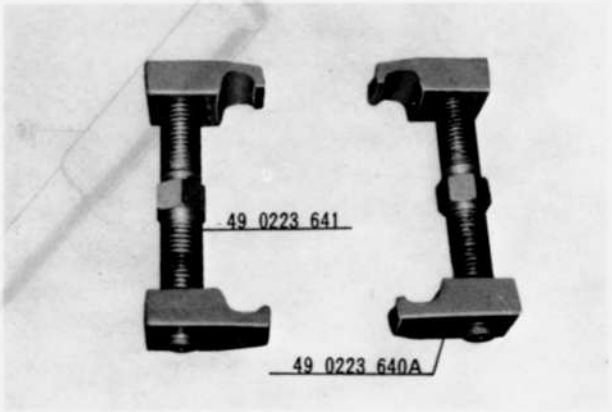

Fig. 13–5 Coil spring lifter

9. Remove the lower ball joint nut and disconnect the ball stud from the steering knuckle.
10. Remove the bolts that attach the lower arm to the cross member and remove the lower arm assembly and coil spring from the vehicle.

13–B–2. Checking Front Suspension

1. Check for any crack, bend or torsion on both upper and lower arms.
2. Inspect the coil spring for signs of fatigue, crack and any damage.
3. Check the dust seal of the ball joint and replace if it is defective.
4. Check end play of the upper and lower ball joints. If it **exceeds 1.0 mm (0.039 in)**, replace with a new one.

13–B–4. Greasing Front Suspension

The ball joints and the thread bushes (upper arm shaft bushes) of the suspension arms require no greasing for 32,000 miles. When greasing becomes necessary, supply Molybdenum Disulfide Lithium Grease to the ball joints and the thread bushes, proceeding as follows:

Ball Joints:

1. Remove the set ring from the groove on the dust seal and turn the dust seal inside out.
2. Remove the plug and fit the grease nipple in its stead.
3. Remove all of the used grease in the socket and the dust seal by gradually supplying new **lithium grease** through the nipple.

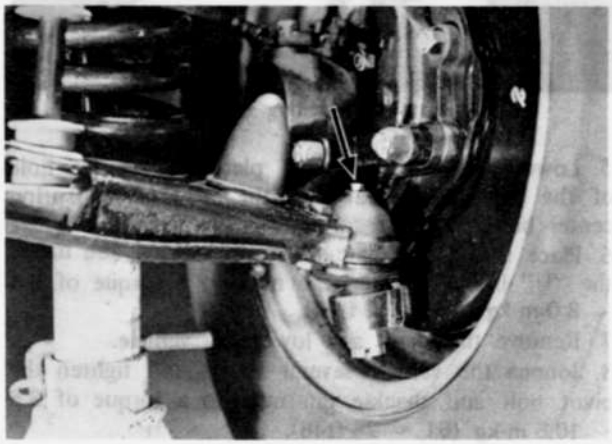

Fig. 13–6 Greasing ball joint

4. When the used grease is thoroughly removed, fit the dust seal and secure it in place with the set ring.
5. Add new grease until the dust seal begins to balloon. Then, depress the dust seal with the fingers so that about half of the grease remains in the dust seal.
6. Wipe off excess grease around the ball joint.
7. Remove the grease nipple and fit the plug.

Thread Bushes:

1. Remove the plug from one end of the thread bush and fit the grease nipple in its stead.
2. Remove all of the used grease in the thread bush and the dust seal by gradually supplying new grease



Fig. 13–7 Greasing thread bushes

13–C. REAR SHOCK ABSORBER

13–C–1. Removing Rear Shock Absorber

1. Remove the nuts, washers, and rubber bushes from both the upper and lower ends of the shock absorber.

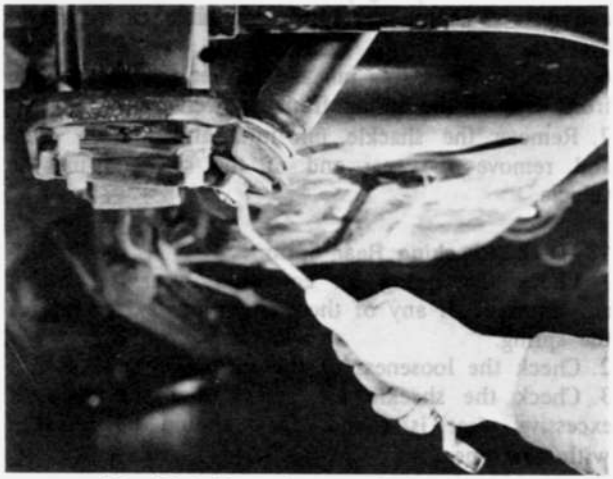

Fig. 13–8 Removing rear shock absorber

2. Compress the shock absorber and remove it from the vehicle.
3. If the rubber bushes appear to be worn, damaged, or deteriorated, replace with new ones.

13–C–2. Checking Rear Shock Absorber

Check the rear shock absorber by referring to Par. 13–A–2.

13–C–3. Installing Rear Shock Absorber

Install the rear shock absorber in the reverse order of removing.

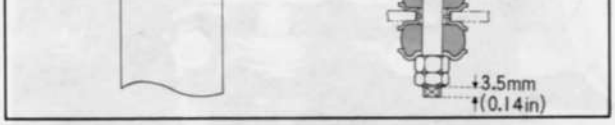

Fig. 13–9 Tightening shock absorber nut

13–D. REAR SPRING

13–D–1. Removing Rear Spring

1. Raise the vehicle and place a stand under the frame side rail, permitting the spring to hang free.
2. Support the rear axle in this position with the jack.
3. Disconnect the rear shock absorber at the lower mounting point.
4. Remove the "U" bolt nuts and the spring clamp.
5. Remove the spring pin nut and remove two bolts and nuts attaching the spring pin plate to the frame bracket.
6. Remove the spring pin and bushes and remove the front end of the spring from the vehicle.
7. Remove the shackle pin nuts and shackle plate and remove the rear end of the spring from the vehicle.

13–D–2. Checking Rear Spring

1. Check the spring for corrosion, wear, fatigue or any damage. If any of these conditions exists, replace the spring.
2. Check the looseness of the spring center bolt.
3. Check the shackle pin and bushes for wear. If excessive wear is found, they should be replaced with new ones.

13–D–3. Installing Rear Spring

1. Install the rubber bushes into the front eye of the spring and position it in the frame bracket so as to align the holes of the rubber bushes with the hole of the frame bracket.
2. Insert the spring pin from the outside through the rubber bushes.
3. Tighten the nuts and bolts attaching the spring pin plate to the frame bracket with a torque of **2.0 ~ 2.5 m-kg (14 ~ 18 ft-lb)**. **Do not** tighten the spring pin nut.
4. Fit the rubber bushes to the rear eye of the spring and the shackle pin. Install the spring and the shackle pin to the frame bracket. **Do not** tighten the nuts.

Fig. 13–10 Inserting spring pin



Fig. 13–11 Installing shackle pin

5. Lower the rear axle and place the center hole of the axle spring seat over the head of the spring center bolt.
6. Place the spring plate under the spring and install the "U" bolts. Tighten the nuts to a torque of **6.4 ~ 8.0 m-kg (46 ~ 58 ft-lb)**.
7. Remove the stand and lower the vehicle.
8. **Jounce** the vehicle several times, and tighten the pivot bolt and shackle pin nuts to a torque of **8.5 ~ 10.5 m-kg (61 ~ 76 ft-lb)**.

Note :
According to the size of camber, the rear springs are classified into the three categories of –, 0, and +. They are marked on the main leaf. Since difference in camber between the right and left springs results in a difference in road clearance causing inclination of the vehicle, those with the same mark should be installed on both sides.

SPECIAL TOOLS

49 0727 575	Ball joint puller
49 0223 640 and 641	Coil spring lifter

14–A. WINDSHIELD GLASS ..... 14 : 1
14–A–1. Removing Windshield Glass ..... 14 : 1
14–A–2. Installing Windshield Glass ..... 14 : 1
14–B. BACK WINDOW ..... 14 : 1
14–C. DOOR ..... 14 : 1
14–C–1. Disassembling Door ..... 14 : 1
14–C–2. Assembling Door ..... 14 : 2
14–C–3. Adjusting Door ..... 14 : 2
14–D. HEADLINING (Top ceiling) ..... 14 : 3
14–D–1. Removing Headlining ..... 14 : 3
14–D–2. Installing Headlining ..... 14 : 4
14–E. INSTRUMENT PANEL ..... 14 : 5
14–E–1. Removing Meter Set ..... 14 : 5
14–E–2. Installing Meter Set ..... 14 : 5
14–E–3. Removing Center Panel ..... 14 : 5
14–E–4. Installing Center Panel ..... 14 : 5



Fig. 14–1 Pushing out inner lip of weatherstrip

5. Remove the windshield glass together with the weatherstrip.
6. Remove the weatherstrip from the windshield glass.

14–A–2. Installing Windshield Glass

Before installing the windshield glass, clean off an old adhesive cement thoroughly from the windshield glass and the body.
1. Install the weatherstrip along the circumference of the windshield glass as shown in Fig. 14–2.



Fig. 14–2 Installing weatherstrip

2. Apply a liberal amount of liquid soap in the groove of the weatherstrip, which is fitted to the body flange.
3. Fit a string of 4 mm (0.16 in) in diameter to the groove of the weatherstrip as shown in Fig. 14–3.

Fig. 14–3 Fitting string

4. Place the windshield glass and weatherstrip assembly into position on the body flange.
5. Pull the string so as to place the inner lip over the flange as shown in Fig. 14–4. At the same, tap the glass from the outside to settle it into position.

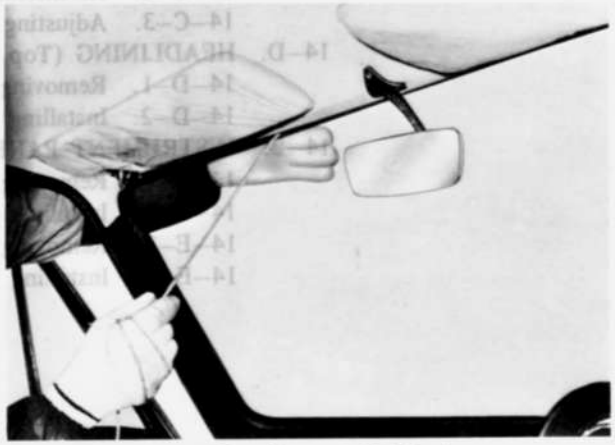

Fig. 14–4 Installing windshield glass

6. Make the weatherstrip and the body flange contact properly with a screwdriver.
7. Seal the weatherstrip against the glass and the body flange by carefully applying a thin coat of Rubber Sealer.

14–B. BACK WINDOW

Remove the back window and install it applying the same method as the windshield glass.

14–C. DOOR

14–C–1. Disassembling Door

1. Remove the arm rest and garnish plate.
2. Remove the inside door handle and the window regulator handle by pressing in the escutcheon and removing the holding pin as shown in Fig. 14–5.
3. Remove the trim board and the inside screen (water shield).
4. Remove the screws holding the window sash assembly to the door. Lower the door glass and slide



Fig. 14–6 Removing trim board

the window sash up out of the door.

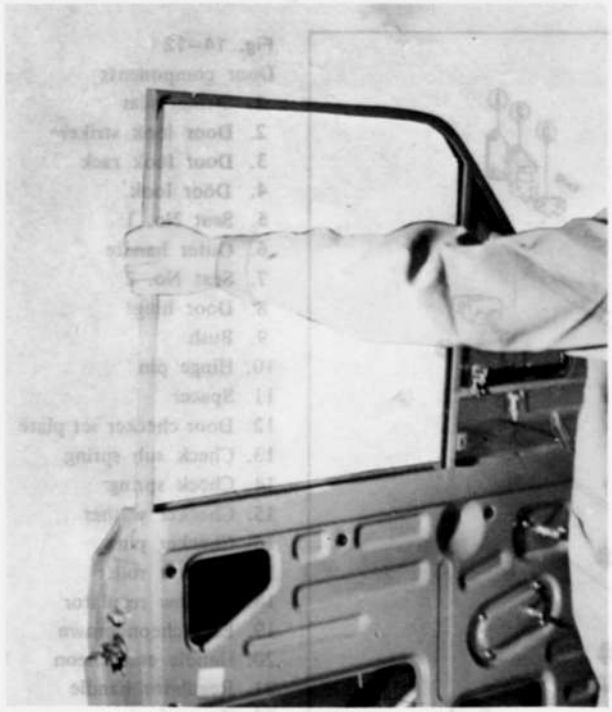

Fig. 14–7 Removing window sash

5. Disengage the guide groove at the glass from the regulator arm and remove the glass.
6. Remove the screws attaching the door handle and remove the outer handle.



Fig. 14–8 Removing glass

7. Using a screw driver, pry the retainer off from the key cylinder groove and remove the key cylinder.

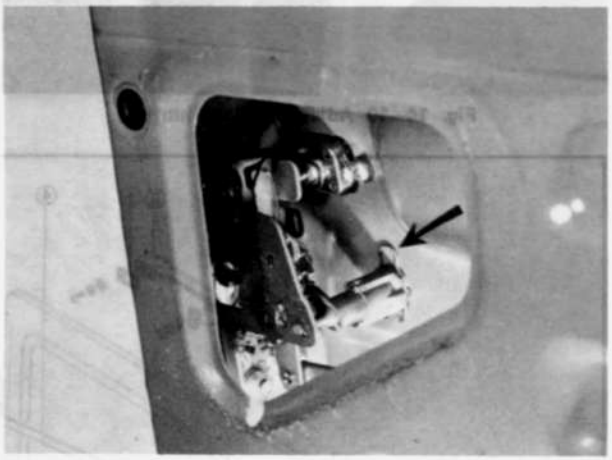

Fig. 14–9 Prying cylinder retainer

8. Remove the screws that attach the door lock assembly to the door. Remove the screws that attach the remote control assembly to the door inner panel, and remove the door lock and remote control assembly.
9. Remove the four screws attaching the regulator assembly to the door inner panel, and remove the regulator assembly.

14–C–2. Assembling Door

Assemble the door in the reverse order of disassembling noting the following point.
Install each water shield securely and apply Sealer to the screw threads, as faulty sealing will cause water leaks.

14–C–3. Adjusting Door

The door hinges are constructed to permit **up and**

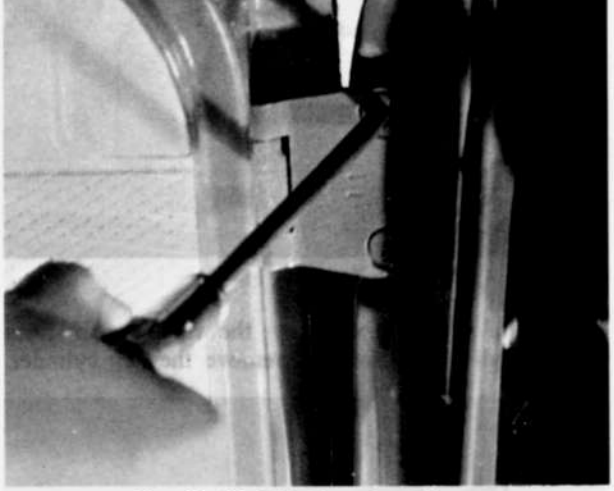

Fig. 14–10 Adjusting door hinge



Fig. 14–11 Adjusting door striker

14–D. HEADLINING (Top ceiling)

14–D–1. Removing Headlining

If it becomes necessary to remove the headlining, proceed as follows :

1. Remove the windshield glass and the rear window,

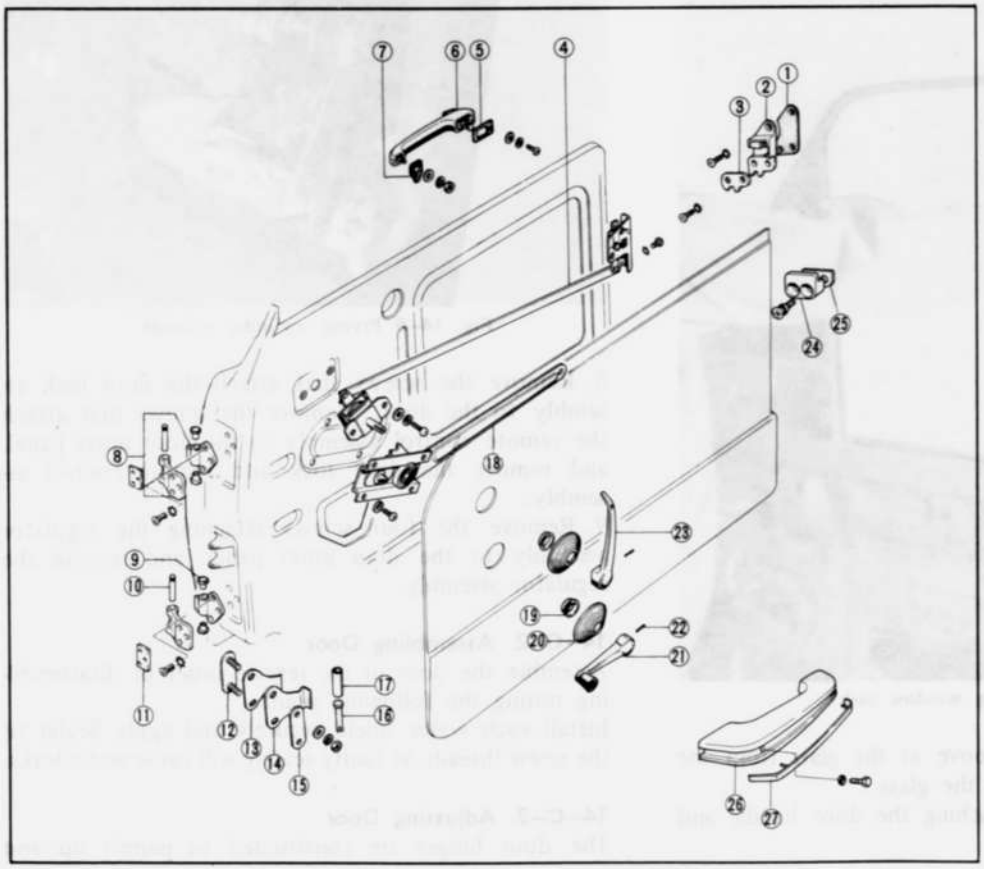

Fig. 14–12
Door components

1. Striker seat
2. Door look striker
3. Door look rack
4. Door look
5. Seat No. 1
6. Outer handle
7. Seat No. 2
8. Door hinge
9. Bush
10. Hinge pin
11. Spacer
12. Door checker set plate
13. Check sub spring
14. Check spring
15. Checker washer
16. Checker pin
17. Checker roller
18. Window regulator
19. Escutcheon crown
20. Handle escutcheon
21. Regulator handle
22. Tapered pin
23. Inner handle
24. Anti-burst block
25. Anti-burst block shim
26. Arm rest
27. Garnish

listing wire into the holes of the back plate, as shown in Fig. 14–13.

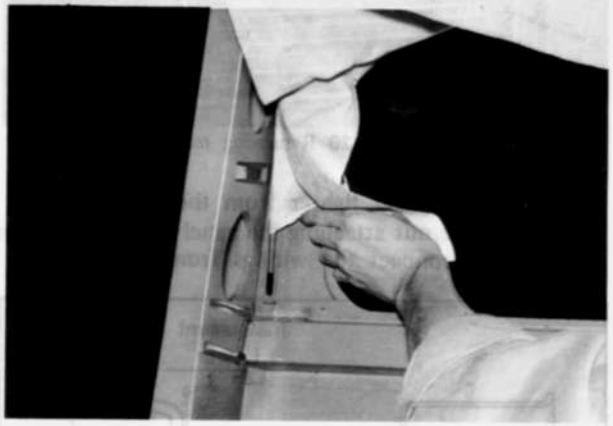

Fig. 14–13 Inserting rear listing wire

2. Install the fixing brackets, attached to rear listing wire, to the back plate with screws.



Fig. 14–14 Installing listing wire bracket

3. Cut a hole in the headlining material for the interior lamp and connect the wire through the headlining.
4. Install the remaining two listing wires into the side roof rails, making sure to stretch the headlining evenly as shown in Fig. 14–15.
5. Apply cement to the front and rear headers.



Fig. 14–15 Installing listing wire



Fig. 14–16 Gluing headlining

7. Trim the material properly at the corners to prevent wrinkling, as shown in Fig. 14–17, and cement to the pillars.



Fig. 14–17 Trimming headlining material

8. Tighten the interior lamp attaching screws.
9. Trim the excess material at the front and rear.
10. Install the rear view mirror and sun visor.
11. Install the windshield glass and the rear window, as described in Par. 14–A–2.

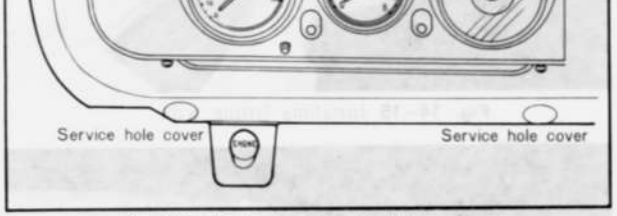

Fig. 14–18 Meter set attaching screws

3. Reach under the instrument panel and disconnect the speedometer cable by pressing on the flat surface of the plastic connector and pulling the cable away from the head.

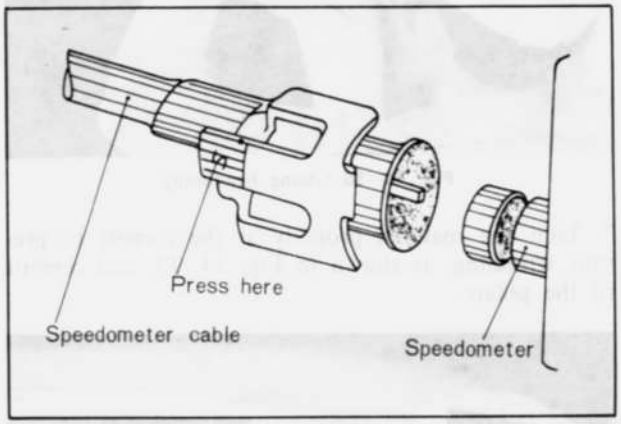

Fig. 14–19 Disconnecting speedometer cable

4. Disconnect the wiring connectors from the meter set and remove the meter set.



Fig. 14–20 Removing nuts

3. Remove the cigar lighter from the center panel.
4. Remove the nut attaching the panel resistor to center panel and disconnect the wirings from the resistor.

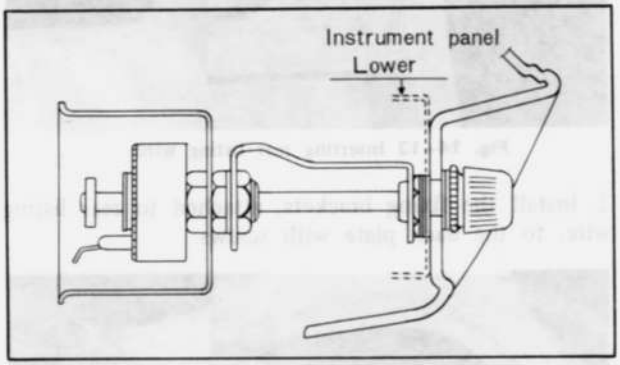

Fig. 14–21 Removing panel resister

5. Loosen the two screws attaching the center panel to the instrument panel and remove the center panel.

14–E–4. Installing Center Panel

Follow the removal procedures in the reverse order.

DESCRIPTION.....15 : 1
15–A. COMBINATION SWITCH.....15 : 1
15–A–1. Checking Combination Switch.....15 : 1
15–B. IGNITION SWITCH.....15 : 2
15–B–1. Checking Ignition Switch.....15 : 2
15–C. INHIBITOR SWITCH.....15 : 2
15–C–1. Checking Inhibitor Switch.....15 : 2
15–D. HEATER FAN SWITCH.....15 : 2
15–D–1. Checking Heater Fan Switch.....15 : 2
15–E. CENTRAL CONTROL UNIT.....15 : 2
15–E–1. Checking Central Control Unit.....15 : 2
15–F. WIPER MOTOR.....15 : 3
15–F–1. Checking Wiper Motor.....15 : 3
15–G. METER.....15 : 3
15–G–1. Checking Meter Set Print Panel.....15 : 3
15–G–2. Checking Fuel Meter.....15 : 3
15–G–3. Checking Water Thermometer.....15 : 3

Terminal / Switch Position	TIG	HBA	FB	TFU	HFU	HFB	TL	TR	
Left Turn	●		●	●				●	Turn Signal
Neutral	●		●						
Right Turn	●		●	●			●		
OFF	●		●						Hazard
ON		●	●		●	●	●	●	

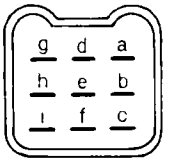

a : TFU ..... Turn signal flasher unit (GR)
b : HFU ..... Hazard flasher unit (WG)
c : TR ..... Turn signal right (GW)
d : TL ..... Turn signal left (GB)
e : HBA ..... Hazard switch power source (WL)
f : TIG ..... Turn signal switch power source (GY)
g : FB ..... Turn signal flasher unit power source (GL)
h : HO ..... Horn switch power source (G)
i : HFB ..... Hazard flasher unit power source (WR)

Fig. 15–1 Turn signal and hazard switch interconnection diagram

2. Light, Dimmer and Passing Switch

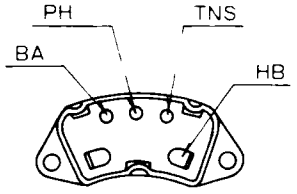

Light switch terminal

Terminal / Switch Position	BA	PH	TNS	HB	HU	HL	
OFF	●	●					Light
Tail, Side, Number	●	●	●				
Head Lamp	●		●	●			
Upper				●	●		Dimmer
Lower				●		●	
OFF		●					Passing
ON		●			●		

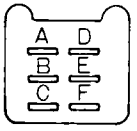

A : HU ..... Head lamp upper (RW)
B : HL ..... Head lamp lower (RB)
C . TNS ..... Tail, number and side lamp (RG)
D . Vacant
E : Vacant
F : E ..... Earth (B)



A : BA ..... Power source (R)

Note:
The terminals PH and HB are connected inside the light switch and are not on the coupler.

Fig. 15–2 Light, dimmer and passing switch interconnection diagram

Fig. 15–3 Wiper and washer switch interconnection diagram

15–B. IGNITION SWITCH

15–B–1. Checking Ignition Switch

Check the continuity between the switch terminals using the circuit tester according to Fig. 15–4, interconnecting diagram.

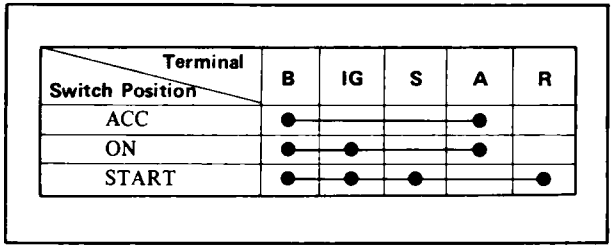

Fig. 15–4 Ignition switch interconnection diagram

15–C. INHIBITOR SWITCH

15–C–1. Checking Inhibitor Switch

Check the continuity between the coupler terminals using the circuit tester according to the following diagram.

Inhibitor Switch Interconnection Diagram

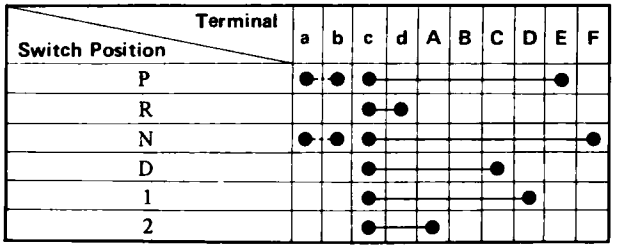

Notes:

a. Solid lines show the connection for indicator light circuit.

b. Dotted lines show the connection for starting circuit.

Fig. 15–5 Inhibitor switch coupler

15–D. HEATER FAN SWITCH

15–D–1. Checking Heater Fan Switch

Check the continuity between the coupler terminals using the circuit tester according to Fig. 15–6.

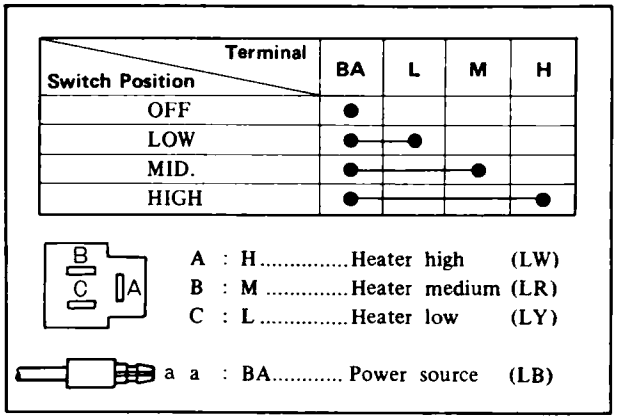

Fig. 15–6 Heater fan switch interconnection diagram

15–E. CENTRAL CONTROL UNIT

The central control unit is composed of wiper relay (R1 and R2), flasher relay (R3), horn relay (R4) and flasher unit (U1), each of which is a plug-socket connection type. Each relay and unit are easy to replace. In replacing the flasher unit, care should be taken that its capacity differs depending upon area. Also, the "multi-grade relay" has been prepared which is applicable as replacement of any of the relays.

15–E–1. Checking Central Control Unit

Check the central control unit using the battery and circuit tester as follows:

1. Wiper relay (R1)

When the battery ⊕ is connected to the WIG terminal and the battery ⊖ to the S2 terminal, LOW terminal and unit body should be in continuity with each other.

2. Wiper relay (R2)

(a) When the battery ⊕ is connected to the WIG terminal and the battery ⊖ to the S2 and S3 terminals, H1 terminal and unit body should be in continuity with each other.

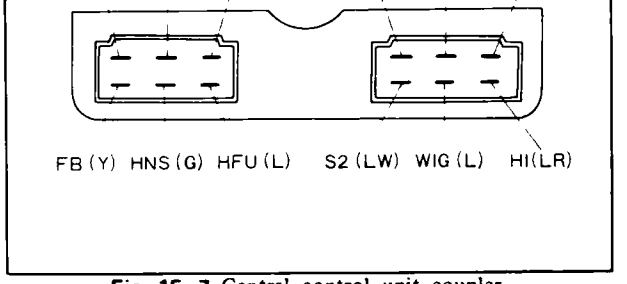

Fig. 15–7 Central control unit coupler

4. Flasher unit (U1)

In checking the flasher unit, connect a prescribed lamp as indicated on the central control unit cover between the unit (with the flasher relay R3) and battery as shown in Fig. 15–8.

(a) Turn signal

When the battery ⊕ is connected to the FB terminal and a prescribed lamp between the battery ⊖ and TFU terminal, the lamp must turn on and off **90 ± 10** times per minute with interval between flasher under **1.5** second.

(b) Hazard

When the battery ⊕ is connected to the HFU terminal and a prescribed lamp between the battery ⊖ and TFU terminal, the lamp must turn on and off **90 ± 10** times per minute with the interval between flasher under **1.5** second.

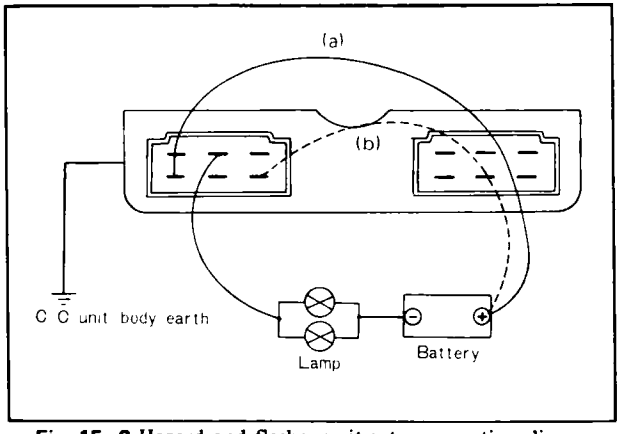

Fig. 15–8 Hazard and flasher unit interconnection diagram

Note:

The flashing on and off of the lamp varies depending upon the lamp capacity and the central control unit earth condition as follows:

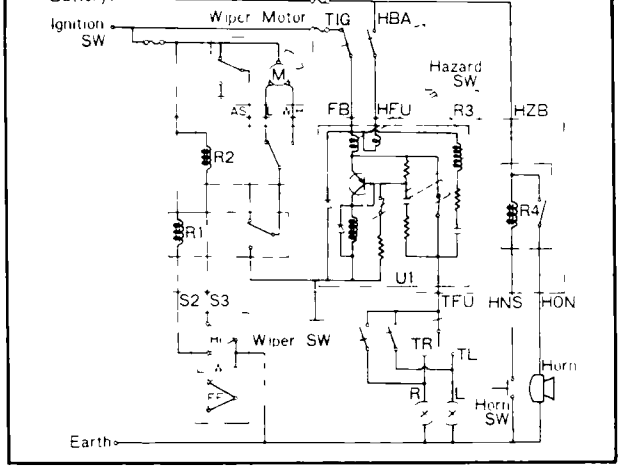

Fig. 15–9 Central control unit circuit

15–F. WIPER MOTOR

15–F–1. Checking Wiper Motor

Connect the wiper motor, ammeter and battery according to the following diagram, and check the number of wiping revolutions and amperage.

Wiper motor	Wiping revolution number	Amperage
Low	42 ~ 55 RPM	Less than 2.5A
High	62 ~ 85 RPM	Less than 2.5A

Notes:

a. The difference in number of revolutions between Low and High should be more than **15 RPM**.

b. The Auto Stop does not work in the case of faulty wiper motor earth.

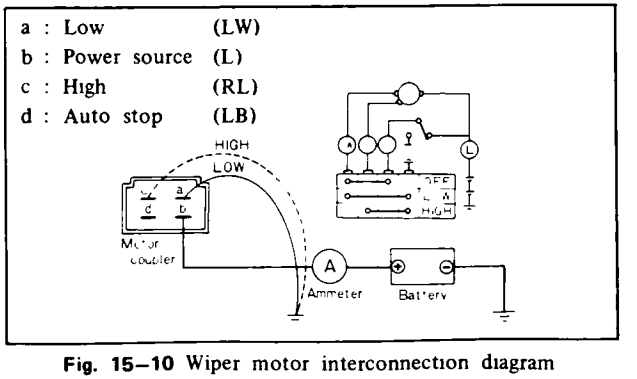

Fig. 15–10 Wiper motor interconnection diagram

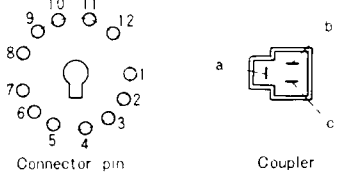

Fig. 15–11 Print panel interconnection diagram

15–G–2. Checking Fuel Meter

Connect the battery, meter and resistor according to the following diagram, and check the meter indicator in the order of F, 1/2 and E.

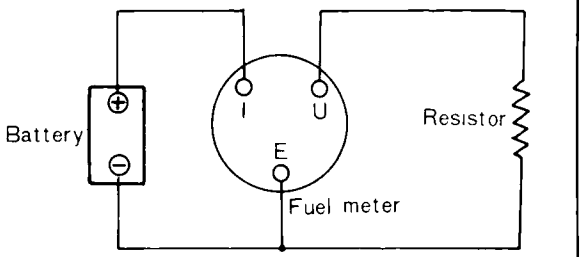

Fuel meter graduation	E	½	F
Unit resistance (Ω)	82.5	43	12

Fig. 15–12 Fuel meter interconnection diagram

Note:
The permissible error of the fuel meter indication is a width of the indicator needle to either upper or lower side as shown in Fig. 15–13.

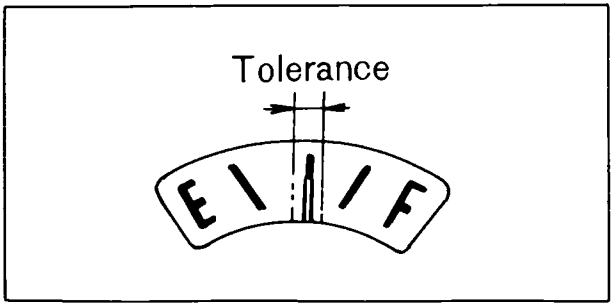

Fig. 15–13 Fuel meter

15–G–3. Checking Water Thermometer

Connect the battery, meter and resistor according to the following diagram, and check the meter indicator in the order of 35°, 110° and 120°C.

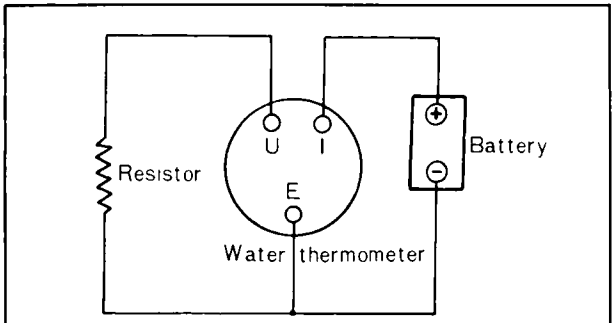

Water thermometer graduation	C (35°C)	60°C	110°C	H (120°C)
Unit resistance (Ω)	670	240	47.5	36.2

Fig. 15–14 Water thermometer interconnection diagram

Note:
The permissible error of the water thermometer indication is a width of the indicator needle to either upper or lower side as shown in Fig. 15–15.

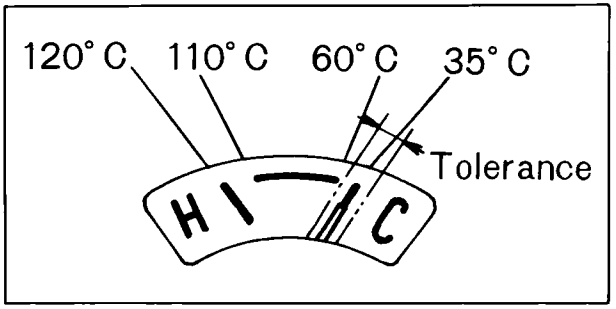

Fig. 15–15 Water thermometer

Exhaust closes	38° ATDC

ENGINE

Side housings (Front, intermediate and rear housings)	
Limit of distortion	0.04 mm (0.0016″)
Limit of wear	
Sliding surface	0.10 mm (0.0039″)
Joint surface	0.05 mm (0.0020″)
Rotor housing	
Width	80 mm (3.1497″)
Max. permissible difference in width	0.06 mm (0.0024″)
Limit of distortion	0.04 mm (0.0016″)
Limit of wear	0.07 mm (0.0028″)
Rotor	
Width	79.85 mm (3.1438″)
Clearance of side housing and rotor (ΔR)	
New	0.12 ~ 0.21 mm (0.0047 ~ 0.0083″)
Minimum	0.10 mm (0.0039″)
Protrusion of land (ΔH)	
New	0.10 ~ 0.15 mm (0.004 ~ 0.006″)
Limit	Minimum : 0.085 mm (0.003″) Maximum : 0.20 mm (0.008″)
Apex seal	
Length	79.85 mm (3.1438″)
Width	3 mm (0.1181″)
Height	
New	8.5 mm (0.335″)
Limit	7.0 mm (0.276″)
Clearance of apex seal and side housing (ΔS)	
New	0.13 ~ 0.17 mm (0.0051 ~ 0.0067″)
Limit	(0.30 mm (0.012″)
Clearance of apex seal and rotor groove (ΔG)	
New	0.051 ~ 0.089 mm (0.0020 ~ 0.0035″)
Limit	0.15 mm (0.006″)
Apex seal spring	
Free height	
New	4 7 mm (0.185″) or more
Limit	3.8 mm (0.150″)
Side seal	
Thickness	1.0 mm (0.039″)
Height	5.6 mm (0.220)
Contact width of oil seal lip	
New	0.2 mm (0.008″)
Wear limit	0.8 mm (0.031″)
Oil seal spring	
Free height	
New	Inner : 2 8 mm (0.110″) Outer . 2 6 mm (0.102″)
Limit	2 0 mm (0.079″)
Corner seal	
Outer diameter	
Standard	$11.0^{-0.020}_{-0.030}$ mm $(0.4331^{-0.0008}_{-0.0012}$″)
0.03 over size	$11.0^{+0}_{-0.015}$ mm $(0.4331^{+0}_{-0.0006}$″)
0.20 over size	$11.2^{-0.020}_{-0.030}$ mm $(0.4410^{-0.0008}_{-0.0012}$″)
Height	
Standard	$7.0^{+0}_{-0.2}$ mm $(0.2756^{+0}_{-0.0079}$″)
0.03 over size	$6.8^{+0}_{-0.2}$ mm $(0.2677^{+0}_{-0.0079}$″)
0.20 over size	$(7.0^{+0}_{-0.2}$ mm) $(0.2756^{+0}_{-0.0079}$″)
Clearance of corner seal and rotor groove (ΔC)	
New	0.020 ~ 0.048 mm (0.0008 ~ 0.0019″)
Limit	0.08 mm (0.0031″)
Corner seal spring	
Free height	
New	2.5 mm (0.098″)
Limit	1.7 mm (0.067″)
Main bearing	
Inner diameter (Installed)	$43^{+0\ 050}_{+0.025}$ mm $(1.6929^{+0.0020}_{+0\ 0010}$″)

Main journal diameter	$43^{-0.015}_{-0.030}$ mm $(1.6929^{-0.0006''}_{-0.0012''})$
Rotor journal diameter	$74^{-0.015}_{-0.030}$ mm $(2.9134^{-0.0006''}_{-0.0012''})$
Max. permissible run-out	0.06 mm (0.0024")
End play	
New	0.04 ~ 0.07 mm (0.0016 ~ 0.0028")
Limit	0.09 mm (0.0035")
Oil capacity	
Oil pan	5.0 liters (5.3 U.S. quarts)
Full capacity	6.4 liters (6.8 U.S. quarts)

LUBRICATING SYSTEM

Oil pump	
Type	Rotor
Feeding capacity at 1000 rpm (Engine revolution)	6 liter/min (1.59 U.S. gal/min)
Oil pump driven by	Chain and sprockets
Limit of chain adjuster protrusion	12 mm (0.47")
Outer rotor and body clearance	
New	0.20 ~ 0.25 mm (0.008 ~ 0.010")
Wear limit	0.30 mm (0.012")
Clearance between rotor lobes	
New	0.01 ~ 0.09 mm (0.0004 ~ 0.0035")
Wear limit	0.15 mm (0.006")
Rotor end float	
New	0.03 ~ 0.13 mm (0.001 ~ 0.005")
Wear limit	0.15 mm (0.006")
Oil pressure at 3000 rpm of engine	5.0 kg/cm^2 (71 lb/in^2)
Safe minimum pressure at idle	0.3 kg/cm^2 (4.3 lb/in^2)
Pressure regulator valve (Rear housing)	
Relief valve opens at	0.8 ~ 1.2 kg/cm^2 (11 ~ 17 lb/in^2)
Oil metering pump	
Feeding capacity of 2000 rpm of engine	2.2 cc/6min. (0.074 U.S. oz/6 min.)
Lubricant	
-10°C ~ 40°C (15°F ~ 100°F)	SAE 20W-40 or 20W-50
-18°C ~ 50°C (0°F ~ 120°F)	SAE 10W-50
-18°C ~ 40°C (0°F ~ 100°F)	SAE 10W-40
-18°C ~ 30°C (0°F ~ 85°F)	SAE 10W-30
Below -18°C (0°F)	SAE 5W-20 or 5W-30

COOLING SYSTEM

Water pump	
Type	Centrifugal impeller
Feeding capacity at 6500 rpm of engine	160 ~ 170 liter/min. (42 ~ 45 U.S. gal/min.)
Pump driven by	"V" belt
Pulley ratio of eccentric sahft and pump	1 : 1.18
Fan	
Fan diameter	390 mm (15.4")
Number of blades	8
Fan drive	
Standard revolution of fan	1400 rpm or more at 1500 rpm of engine 2000 ~ 2500 rpm at 5000 rpm of engine
"V" belt tension (Slack)	
New belt	13 mm (0.51")
Used belt	15 mm (0.59")
Thermostat	
Type	Wax pellet
Starts to open	82 ± 1.5°C (180 ± 2.7°F)
Fully opens at	95°C (203°F)
Lift	8 mm (0.315") or more
Radiator	
Type	Corrugated fin, with expansion tank
Pressure cap opens at	0.9 kg/cm^2 (13 lb/in^2)
Cooling capacity	
With heater	10.2 liters (10.8 U.S. quarts)

Throat diameter	
Primary	28 mm (1.10″)
Secondary	34 mm (1 34″)
Venturi diameter	
Primary	22 x 13 x 6.5 mm (0.87 x 0.51 x 0 26″)
Secondary	28 x 10 mm (1.10 x 0.39″)
Mian nozzle	
Primary	2 5 mm (0.0984″)
Secondary	3 0 mm (0.1181″)
Main jet	
Primary	#106
Secondary	#140
Main air bleed	
Pnamry	# 80
Secondary	#160
Slow jet	
Primary	# 50
Secondary	# 90
Slow air bleed	
Primary	#190
Secondary	#150
Vacuum jet	
Primary	# 2 2
Secondary	# 1.2
Fast idle adjustment	M/T: 1.01 ~ 1 33 mm (0 040 ~ 0.052″)
(Clearance between Primary throttle valve and bore when choke valve is fully closed)	A/T. 1 22 ~ 1.57 mm (0.048 ~ 0.062″)
Secondary throttle valve adjustment	7.1 mm (0.280″)
(Clearance between primary throttle valve and bore when secondary throttle valve starts to open)	
Idle speed	
Manual transmission	900^{+70}_{-0} rpm
Automatic transmission (D range)	750^{+75}_{-0} rpm
CO concentration at idle	0.1 ~ 2 0 %
HC concentration at idle	Less than 200 ppm

ELECTRICAL SYSTEM

	U.S.A	Canada	
		M/T	A/T
Voltage		14 volt	
Current		0 amp	
Revolution		1050 rpm or less	
Load test			
Voltage		14 volt	
Current		40 amp	
Revolution		2500 rpm or less	
Number of brushes		2	
Brush length			
New		16 mm (0.63″)	
Wear limit		10 mm (0.39″)	
Brush spring pressure		330 ~ 450 gr (12 ~ 16 oz)	
Slip ring diameter			
New		33 ± 0.2 mm (1.299 ± 0.008″)	
Limit		32 5 mm (1.280″)	
Pulley ratio of eccentric shaft and alternator		1 2.08	
Regulator			
Constant voltage relay			
Air gap		0.7 ~ 1.3 mm (0.028 ~ 0.051″)	
Point gap		0.3 ~ 0.45 mm (0.012 ~ 0.018″)	
Back gap		0.7 ~ 1.5 mm (0.028 ~ 0.059″)	
Regulated voltage without load at 4000 rpm of alternator		14.5 ± 0.5 volt	
Pilot lamp relay			
Air gap		0.9 ~ 1.4 mm (0.035 ~ 0.055″)	
Point gap		0.7 ~ 1.1 mm (0.028 ~ 0.043″)	
Back gap		0.7 ~ 1 5 mm (0.028 ~ 0.059″)	
Pilot lamp lights on		3 5 volt or less	
Pilot lamp light out		3.5 ~ 5.7 volt	
Ignition coil			
Primary resistance			
Leading		1.35 Ω at 20°C (68°F)	
Trailing		1.46 Ω at 20°C (68°F)	
Secondary resistance			
Leading		8.7 KΩ at 20°C (68°F)	
Trailing		9.5 KΩ at 20°C (68°F)	
External resistance			
Leading		1.4 Ω at 20°C (68°F)	
Trailing		1 6 Ω at 20°C (68°F)	

Brush length		
New	18.5 mm (0.73″)	18.5 mm (0.73″)
Wear limit	11 5 mm (0.45″)	11.5 mm (0.45″)
Brush spring pressure	1.4 ~ 1.8 kg (49 ~ 63 oz)	1.4 ~ 1.8 kg (49 ~ 63 oz)
Control switch	Solenoid	Solenoid
Voltage required to close solenoid contacts	8 volt or less	8 volt or less

	Manual transmission	Automatic transmission
Distributor		
Number of contact points	2	2
Contact point gap	0.45±0.05 mm (0.018± 0.002″)	0.45±0.05 mm (0.018± 0.002″)
Contact point pressure	500 ~ 650 gr (18~23 oz)	500~650 gr (18~23 oz)
Dwell angel	55~61°	55~61°
Centrifugal advance		
Leading	Starts : 0±1° at 500 rpm Maximum 10±1° at 2000 rpm	Starts 0±1° at 500 rpm Maximum : 10±1° at 2000 rpm
Trailing	Starts; 0±1.5° at 500 rpm Maximum : 10±1.5° at 1500 rpm	Starts . 0±1.5° at 500 rpm Maximum . 10±1.5° at 2000 rpm
Vacuum advance		
Leading	–	–
Trailing	Starts : 0±1.5° at 100 mm-Hg (3.94 in-Hg) Maximum : 15±1.5° at 400 mm-Hg (15.75 in-Hg)	Starts : 0±1.5° at 100 mm-Hg (3 94 in-Hg) Maximum : 13±1.5° at 400 mm-Hg (15.75 in-Hg)
Condenser capacity	0.24~0.30μF	0.24~0.30μF
Firing order	1 – 2	1 – 2
Ignition timing		
Leading	5° ATDC	5° ATDC
Trailing	15° ATDC	15° ATDC

Type	Single dry plate, diaphragm spring
Pressure plate	
Permissible lateral run-out	0.05 mm (0.0020″)
Clutch disc	
Lateral run-out of clutch disc	
Limit	1 0 mm (0.039″)
Clutch release mechanism	Hydraulic
Release fork free play	–
Clutch pedal free play (Before push rod contacts with piton)	0.5 ~ 3 0 mm (0.02 ~ 0 12″)
Master cylinder bore	15.87 mm (5/8″)
Clearance between piston and master cylinder bore	
New	0.032 ~ 0.102 mm (0 0013 ~ 0 0040″)
Wear limit	0.15 mm (0 006″)
Release cylinder bore	19 05 mm (3/4″)
Clearance between piston and release cylinder bore	
New	0 040 ~ 0.125 mm (0 0016 ~ 0 0049″)
Wear limit	0.15 mm (0.006″)

MANUAL TRANSMISSION

Type	4-speed manual transmission
Gear ratio	
First	3.683
Second	2.263
Third	1.397
Top	1.000
Reverse	3.692
Main shaft	
Max. permissible run-out	0.03 mm (0.0012″)
Clearance between main shaft and gear (or bush)	
Wear limit	0 15 mm (0.006″)
Reverse idle gear	
Clearance between reverse idle gear bush and shaft	
Wear limit	0.15 mm (0.006″)
Shift fork and rod	
Clearance between shift fork and clutch sleeve	
Wear limit	0.5 mm (0.020″)
Clearance between shift fork and reverse idle gear	

	(1.8 U.S. quarts)

AUTOMATIC TRANSMISSION

Model	JATCO R3A
Gear ratio	
Low	2.458
Second	1.458
Top	1.000
Reverse	2.181
Torque converter	
Type	Symmetrical 3-element 1 - stage 2 - phase torque converter coupling
Stall torque ratio	2.0 : 1
Fluid type	M2C33F (Type F)
Fluid capacity	6.2 liters 6.6 U.S. quarts (5.5 Imp. quarts)
Oil pump	
Side play of inner gear and outer gear	
New	0.02 ~ 0.04 mm (0.001 ~ 0.002")
Limit	0.08 mm (0.003")
Clearance between outer gear and crest	
New	0.14 ~ 0.21 mm (0.006 ~ 0.008")
Limit	0.25 mm (0.010")
Clearance between outer gear and housing	
New	0.05 ~ 0.20 mm (0.002 ~ 0.008")
Limit	0.25 mm (0.010")
Side clearance between oil seal ring and groove on oil pump cover	0 04 ~ 0.16 mm (0.002 ~ 0.006")
Front clutch	
Number of drive plates or driven plates	4
Thickness of drive plate	1.60 mm (0.063")
Total clearance measured between retaining plate and stopper	1.0 ~ 1.5 mm (0.039 ~ 0.059")
End play of front clutch drum	0.5 ~ 0.8 mm (0.020 ~ 0.031")
Governor	
Type	38 type
Total clearance measured between retaining plate and stopper	(0.031 ~ 0 041")
Gear assembly	
Total end play	0.25 ~ 0.50 mm (0.010 ~ 0 020")
Planetary gear side play	
New	0.2 ~ 0.7 mm (0.008 ~ 0.028")
Limit	0.8 mm (0.031")
Engine stall speed	
In break-in period	2400 ~ 2650 rpm
After break-in period	2450 ~ 2700 rpm
Shift speed (1)	
Throttle condition (Manifold vacuum)	

Kickdown (0~100mm-Hg / 0~3.94 in-Hg)	D1 → D2 D2 → D3 D3 → D2 D2 → D1	30~44 mph 55~74 mph 48~62 mph 21~31 mph
Half throttle (200 mm-Hg / 7.87 in-Hg)	D1 → D2 D2 → D3	7~17 mph 17 ~37 mph
Fully closed throttle	D3 → D1	6~11 mph
Manual 1	I2 → I1	25~32 mph

Governor pressure

Driving speed	Output shaft speed	Governor pressure	
mph	rpm	kg/cm^2	lb/in^2
20	1150 ~ 1240	0.9 ~ 1.4	13 ~ 20
35	2030 ~ 2150	1.7 ~ 2.4	24 ~ 34
55	3190 ~ 3350	3.5 ~ 4 5	50 ~ 64

Line pressure

	Engine idling condition	Engine stall condition
R	4.0~7.0 kg/cm^2 (57 ~ 100 lb/in^2)	15.5 ~ 19.0 kg/cm^2 (220 ~ 270 lb/in^2)
D	3 0 ~ 4.0 kg/cm^2 (43 ~ 57 lb/ in^2)	9.5 ~ 11.0 kg/cm^2 (135 ~ 156 lb/in^2)
2	8.0 ~ 12.0 kg/cm^2 (114 ~ 170 lb/in^2)	10.0 ~ 12.0 kg/cm^2 (142 ~ 171 lb/in^2)
1	3.0 ~ 4.0 kg/cm^2 (43 ~ 57 lb/in^2)	9 5 ~ 11.0 kg/cm^2 (135 ~156 lb/in^2)

WHEELS AND TIRES

Wheel disc	
Front	5½J x 14 WDC
Rear	5½J x 14 WDC
Tire	
Front	7.35-14-6PR
Rear	7.35-14-6PR
Inflation pressure	
Front	24 psi
Rear	36 psi

FRONT SUSPENSION

Type	Wishbone, coil spring
Coil spring	
Spring constant	9.13 kg/mm (511 lb/in)
Wire diameter	16.5 mm (0.65")
Coil diameter	100.5 mm (3.96")
Free length	298 mm (11.73")
Fitting length	218 mm (8.58")
Fitting load	694 ~ 766 kg (1530 ~ 1689 lb)

Note :
When replacing the coil spring, install an adjusting plate/plates to get equal road clearance both on the right and left. But, do not use more than two plates at one side.

REAR SUSPENSION

Type	Leaf spring
Leaf spring	
Spring constant	5.54 kg/mm (310 lb/in)
Number of leaves	6
Length	1200 mm (47.24")
Width	60 mm (2.36")
Thickness	No. 1, 2, 3, & 4 : 6 mm (0.24")
	No. 5 : 5 mm (0.20")
	Helper : 12 mm (0.47")

Engine		
Oil pumpe sprocket	3.0 ~ 3.5	22 ~ 25
Oil pan	0.7 ~ 1.0	5 ~ 7
Eccentric shaft pulley	7.5 ~ 9.5	54 ~ 69
Inlet manifold	1.6 ~ 2.3	12 ~ 17
Exhaust manifold	4.4 ~ 5.9	32 ~ 43
Spark plugs	1.3 ~ 1.8	9 ~ 13
Oil filter cartridge	0.7 ~ 1.0	5.~ 7
Oil pressure switch	1.2 ~ 1.8	9 ~ 13
Temperature gauge unit	0.7 ~ 0.8	5 ~ 6
Tension bolts	3.2 ~ 3.8	23 ~ 27
Clutch		
Flywheel	40.0 ~ 50.5	289 ~ 362
Clutch cover	1.8 ~ 2.7	13 ~ 20
Transmission		
Shift lock spring cap	4.5 ~ 5.5	33 ~ 40
Plug for interlock pin hole	1.0 ~ 1.5	7 ~ 11
Reverse lock spring cap	4.5 ~ 5.5	33 ~ 40
Control lever to control rod	1.8 ~ 2.7	13 ~ 20
Shift fork set bolts	0.8 ~ 1.2	6 ~ 9
Main shaft lock nut	20.0 ~ 28.0	145 ~ 203
Under cover	0.6 ~ 0.9	4 ~ 7
Reverse lamp switch	2.8 ~ 4.5	20 ~ 33
Automatic transmission		
Drive plate to crankshaft	14.0 ~ 16.0	101 ~ 116
Drive plate to torque converter	4.0 ~ 5.0	29 ~ 36
Converter housing to engine	4.0 ~ 5.0	29 ~ 36
Converter housing to transmission case	4.5 ~ 5.5	33 ~ 40
Extension housing to tranasmission case	2.0 ~ 2.5	14 ~ 18
Pil pan	0.5 ~ 2.7	3.6 ~ 5.1
Piston stem (When adjusting band brake	1.2 ~ 1.5	9 ~ 11
Piston stem lock nut	3.0 ~ 4.0	22 ~ 29
Servo piston retainer	0.5 ~ 0.7	3.6 ~ 5.1
One-way clutch inner race	1.3 ~ 1.8	9 ~ 13
Control valve body	0.55 ~ 0.75	4.0 ~ 5.4
Lower valve body to upper valve body	0.25 ~ 0.35	1.8 ~ 2.5

Type	Semi-floating, hypoid gears
Reduction ratio	4.625
Number of gear teeth	37 . 8
Backlash of ring gear and pinion	0.19 ~ 0.21 mm (0.0075 ~ 0.0083")
Max allowable variation of backlash	0.08mm (0.0031")
Pinion bearing preload (Without pinion oil seal)	13 ~ 18 cm-kg (11.3 ~ 15.6 in-lb)
Differential side bearing preload (Without pinion)	5 ~ 15 cm-kg (4.3 ~ 13.0 in-lb)

Note :
The above preload on the differential side bearings is obtained by tightening the adjusters until the distance between both pilot sections on the bearing caps ("L" shown in figure) becomes as follows :

"L" (Case spread)	$204.5^{+0}_{-0.072}$ mm $(8.0513^{+0}_{-0.0028}")$
Backlash of side gear and pinion gear	0 ~ 0.2 mm (0 ~ 0.008")
Clearance between rear axle shaft and thrust block (Rear axle shaft end play)	
First installed	0.65 ~ 0 85 mm (0.026 ~ 0.033")
Second installed	0.05 ~ 0.15 mm (0.002 ~ 0.006")
Rear wheel bearing end play	–
Lubricant	
Above -18°C (0°F)	HP SAE 90
Below -18°C (0°F)	HP. SAE 80
Oil capacity	1.3 liters (1.4 U S. quarts)

STEERING

Type	Recirculating ball nut
Reduction ratio	20.2 : 1
Free play of steering wheel (Turning direction)	
New	20 ~ 30 mm (0.8 ~ 1.2")
Limit	50 mm (2.0")
Backlash between rack and sector gear	0 ~ 0.1 mm (0.~ 0 004")
Worm bearing preload	
Without sector	1 ~ 4 cm-kg
lock	
Wheel on inside of curve	33°18'
Wheel on outside of curve	32°36'
Minimum turning radius	5.5 m (18"1')
Steering geometry	
King pin inclination	8°38'
Camber	15' ± 20'
Max permissible difference in camber between sides	20'
Camber offset	52.5 mm (2.07")
Caster	1°57' ± 20'
Max permissible difference in caster between sides	20'
Caster trail	5.0 mm (0.20")
Toe-in	0 ~ 6 mm (0 ~ 0.24")

BRAKES

Brake pedal free travel	
Before push rod contacts with piston	–
Before power brake piston operates	8.5 ~ 10 mm (0.33 ~ 0.39")
Master cylinder	
Type	Tandem
Bore	22.22 mm (7/8")
Clearance between piston and bore	
New	0.040 ~ 0.125 mm (0.0016 ~ 0.0049")
Wear limit	0 15 mm (0.006")
Front disk brake	
Brake disk outer diameter	256 mm (10.079")
Thickness of brake disk	
New	12 mm (0.4724")
Limit	11 mm (0.4331")
Max. allowable lateral run-out of brake disk	0.10 mm (0.0039")
Thickness of lining and shoe	
New	14 mm (0 551")
Wear limit	7 mm (0.276")
Wheel cylinder bore	53.97 mm (2.1248")
Rear drum brake	
Type	Dual-acting two-leading shoes
Drum diameter	
New	260 mm (10.2364")

(9 ~ 11 ft-lb), and then loosen it by two turns.

Propeller shaft		
Yoke to rear axle companion flange	5 5 ~ 6.5	40 ~ 47
Yoke to front propeller shaft	16.0 ~ 18.0	116 ~ 130
Center bearing support	2.0 ~ 2.9	14 ~ 21
Rear axle		
Ring gear	5.5 ~ 6.5	40 ~ 47
Differential side bearing caps	6.5 ~ 7.7	47 ~ 56
Companion flange to pinion	20.0 ~ 35.0	145 ~ 253
Steering		
Steering wheel nut	3.0 ~ 4.0	22 ~ 29
Steering gear housing to frame	4.5 ~ 5.7	33 ~ 41
Pitman arm to sector shaft	15.0 ~ 18.0	108 ~ 130
Idler arm bracket to frame	4.5 ~ 5.7	33 ~ 41
Lower suspension arm shaft to frame	8.5 ~ 10.5	61 ~ 76
"U" bolts	6 4 ~ 8 0	46 ~ 58
Spring pin nuts	8.5 ~ 10.5	61 ~ 76
Spring pin to frame bracket	2 0 ~ 2.5	14 ~ 18
Shackle pin nuts	6 0 ~ 8.0	46 ~ 58

Unless otherwise specified

	6T		8T	
	m-kg	ft-lb	m-kg	ft-lg
6mm bolt/nut	0 7~ 1.0	5~ 7	0.8~1.2	6~ 9
8mm bolt/nut	1.6~ 2.3	12~17	1.8~2 7	13~20
10mm bolt/nut	3.2~ 4.7	23~34	3.7~5.5	27~40
12mm bolt/nut	5.6~ 8.2	41~59	6.4~9.5	46~69
14mm bolt/nut	7 7~10.5	56~76	10.4~14.0	75~101

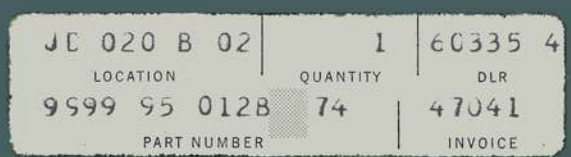
JC 020 B 02
LOCATION
1
QUANTITY
60335 4
DLR
9599 95 0128 74
PART NUMBER
47041
INVOICE