1975
MAZDA
ROTARY PICKUP

WORKSHOP MANUAL

1975 MAZDA ROTARY PICKUP WORKSHOP MANUAL

SECTION INDEX	
Name	Section
Engine	1
Emission Control System	1A
Lubricating System	2
Cooling System	3
Fuel System	4
Electrical System (Engine)	5
Clutch	6
Transmission	7
Automatic Transmission	7A
Propellar Shaft	8
Rear Axle	9
Steering	10
Brakes	11
Wheels and Tires	12
Suspension	13
Body	14
Electrical System (Body)	15
Technical Data	T

FOREWORD

This workshop manual was prepared as reference material for the service personnel of authorized Mazda dealers to enable them to correctly carry out the task of rendering services and maintenance on Mazda vehicles.

In order to ensure that the customers are satisfied with Mazda products, proper servicing and maintenance must be provided. For this purpose, the service personnel must fully understand the contents of this workshop manual and at the same time, are recommended to keep the manual in a place where reference can readily be made.

The information, photographs, drawings and specifications entered in this manual were the best available at the time of printing this manual. All alterations to this manual occurring as the result of modifications will be notified by the issuance of Service Informations or supplementary volumes. It is, therefore, requested that the manual be kept up to date by carefully maintaining a follow-up of these materials.

Toyo Kogyo reserves the right to alter the specifications and contents of this manual without any obligation and advance notice.

All rights reserved. No part of this book may be reproduced or utilized in any form or by any means, electronic or mechanical, including photocopying, recording, or by any informational storage and retrieval system, without permission in writing.

TOYO KOGYO CO.,LTD.
HIROSHIMA JAPAN

© 1974 TOYO KOGYO CO., LTD.
PRINTED IN JAPAN DEC., '74
MAZDA ROTARY ENGINE;
LICENSE NSU-WANKEL
1010410

ENGINE

1–A. ENGINE DISASSEMBLY ..... 1 : 4
1–B. INSPECTION AND REPAIR ..... 1 : 8
1–B–1. Inspecting Front, Intermediate and Rear Housing ..... 1 : 8
1–B–2. Inspecting Front Stationary Gear and Main Bearing ..... 1 : 9
1–B–3. Inspecting Rear Stationary Gear and Main Bearing ..... 1 : 10
1–B–4. Inspecting Rotor Housing ..... 1 : 10
1–B–5. Inspecting Rotor ..... 1 : 10
1–B–6. Inspecting Rotor Bearing ..... 1 : 11
1–B–7. Inspecting Rotor Oil Seal and Spring ..... 1 : 11
1–B–8. Inspecting Apex Seal, Side Piece and Spring ..... 1 : 12
1–B–9. Inspecting Side Seal and Spring ..... 1 : 13
1–B–10. Inspecting Corner Seal and Spring ..... 1 : 13
1–B–11. Inspecting Eccentric Shaft ..... 1 : 14
1–B–12. Inspecting Needle Bearing ..... 1 : 15
1–B–13. Inspecting Eccentric Shaft Front and Rear Oil Seals ..... 1 : 15
1–C. ENGINE ASSEMBLY ..... 1 : 16
1–C–1. Installing Oil Seal ..... 1 : 16
1–C–2. Installing Each Seal ..... 1 : 16
1–C–3. Installing Front Rotor ..... 1 : 17
1–C–4. Installing Eccentric Shaft ..... 1 : 17
1–C–5. Installing Front Rotor Housing ..... 1 : 17
1–C–6. Installing Intermediate Housing ..... 1 : 18
1–C–7. Installing Rear Rotor and Rear Rotor Housing ..... 1 : 19
1–C–8. Installing Rear Housing ..... 1 : 19
1–C–9. Tightening Tension Bolts ..... 1 : 19
1–C–10. Installing Flywheel or Counter Weight ..... 1 : 19
1–C–11. Adjusting Eccentric Shaft End Play ..... 1 : 20
1–C–12. Installing Front Cover and Eccentric Shaft Pulley ..... 1 : 21
1–C–13. Installing Oil Strainer and Oil Pan ..... 1 : 22
1–C–14. Installing Water Pump ..... 1 : 22
1–C–15. Installing Distributor ..... 1 : 23
1–C–16. Installing Exhaust Manifold ..... 1 : 23
1–C–17. Installing Intake Manifold ..... 1 : 23
1–C–18. Installing Alternator and Air Pump ..... 1 : 23
SPECIAL TOOLS ..... 1 : 24

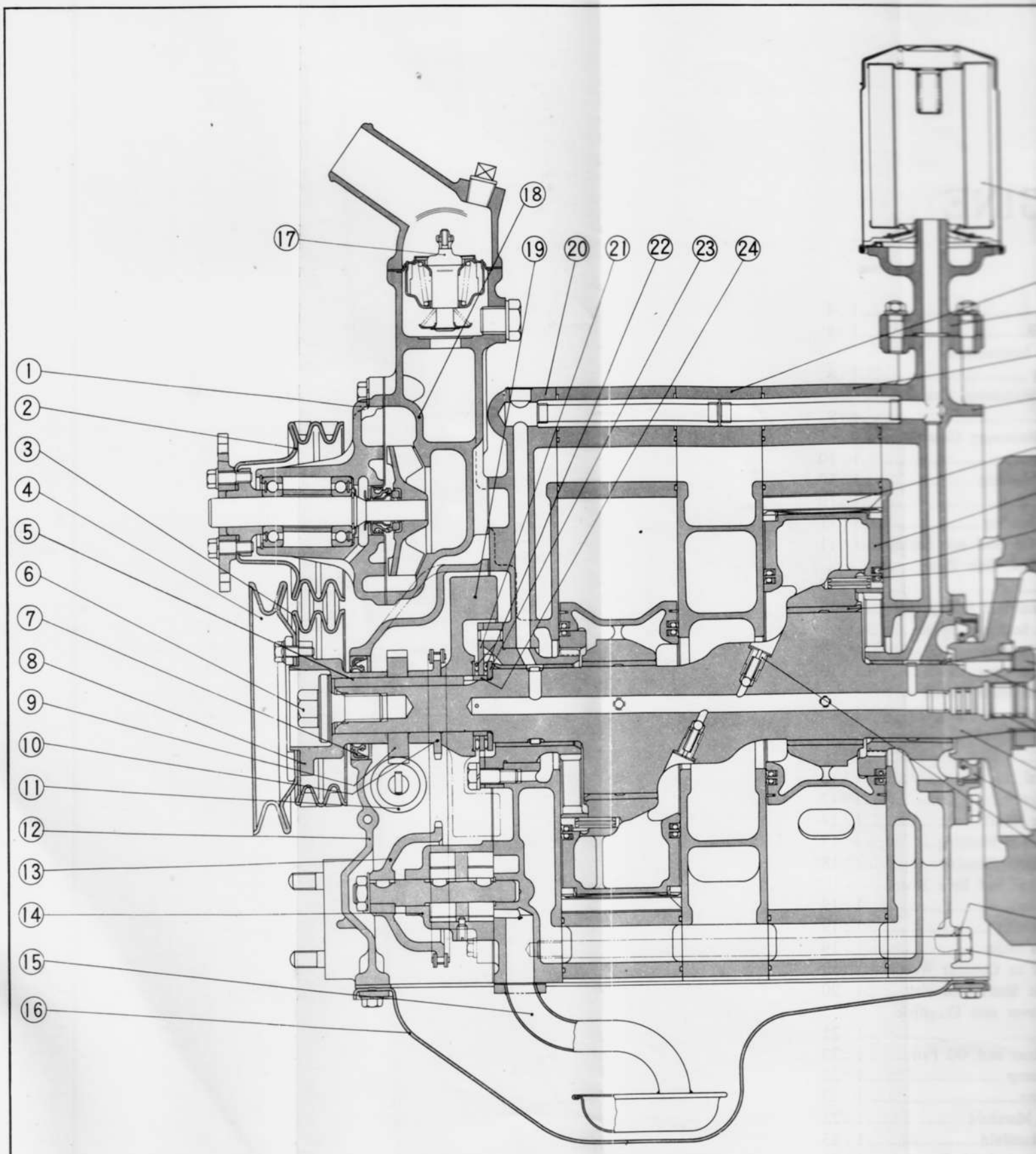

Fig. 1–1 Engine cross section (1)

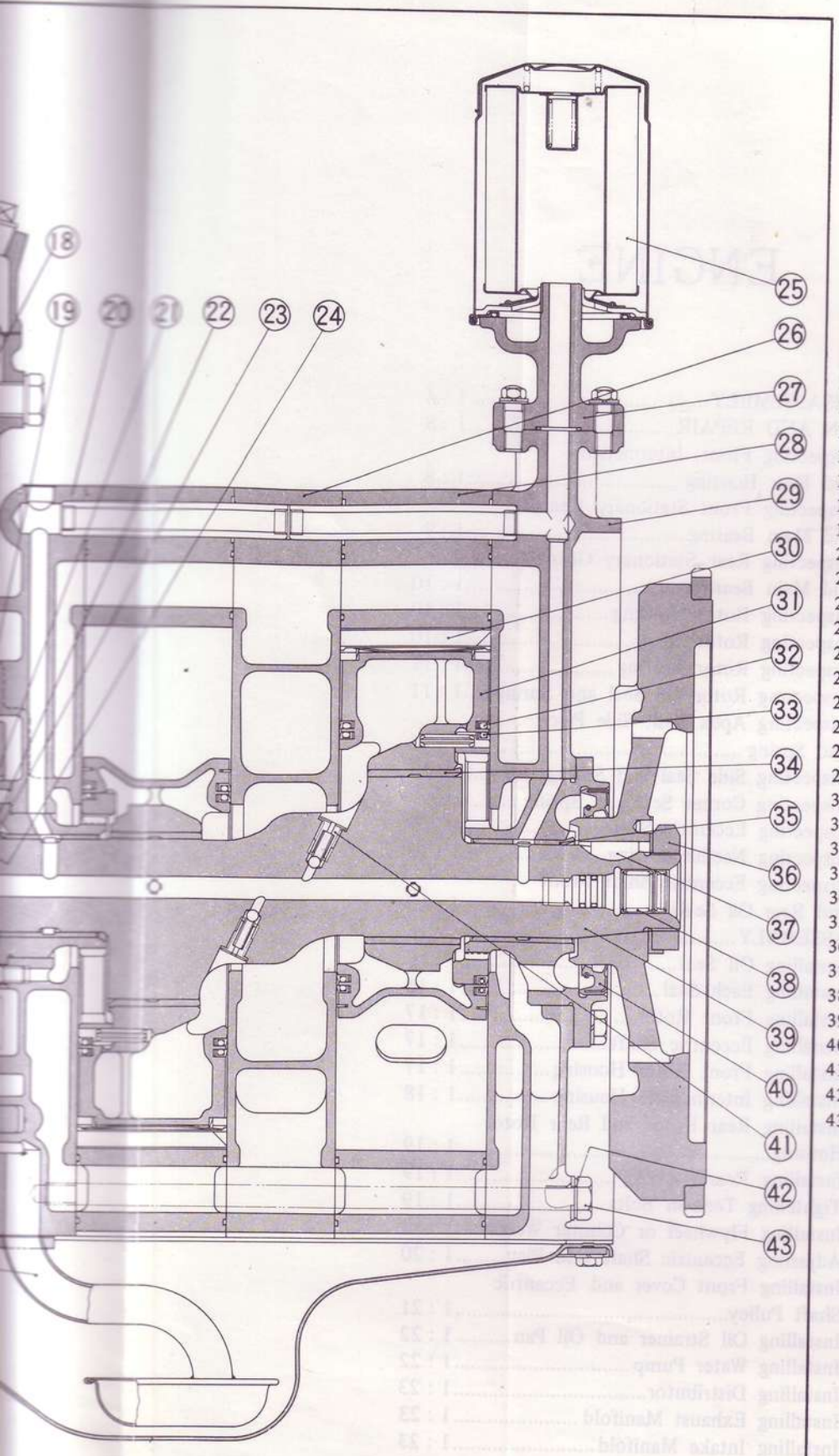

1. Water pump body
2. Water pump pulley
3. Eccentric shaft pulley
4. Eccentric shaft pulley (for compressor)
5. Key
6. Eccentric shaft pulley bolt
7. Eccentric shaft front oil seal
8. Eccentric shaft pulley boss
9. Distributor drive gear
10. Oil pump drive sprocket
11. Driven gear (for metering oil pump)
12. Front cover
13. Oil pump driven sprocket
14. Oil pump body
15. Oil strainer
16. Oil pan
17. Thermostat
18. Water pump casing
19. Balance weight
20. Front housing
21. Bearing housing
22. Needle bearing
23. Thrust plate
24. Spacer
25. Oil filter
26. Intermediate housing
27. Oil filter cover
28. Rear rotor housing
29. Rear housing
30. Apex seal
31. Rear rotor
32. Oil seal (outer)
33. Oil seal (inner)
34. Rear rotor bearing
35. Rear main bearing
36. Flywheel lock nut
37. Key
38. Needle bearing
39. Eccentric shaft
40. Eccentric shaft rear oil seal
41. Oil jet
42. Sealing washer
43. Tension bolt

1 Engine cross section (1)

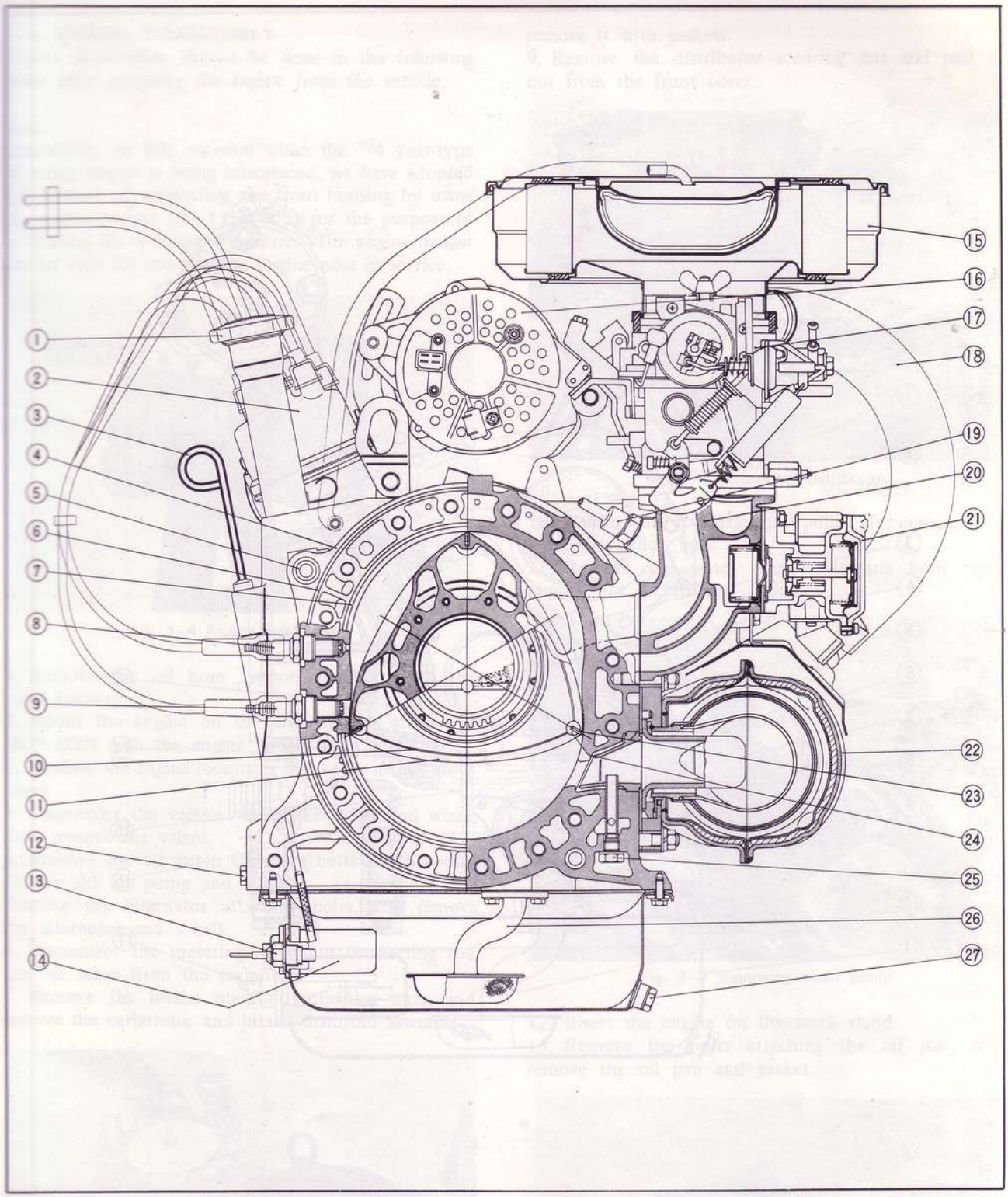

Fig. 1–2 Engine cross section (2)

1. Oil filler cap
2. Distributor
3. Dipstick gauge
4. Rotor housing
5. Tubular dowel
6. Sealing rubber (outer)
7. Sealing rubber (inner)
8. Trailing spark plug
9. Leading spark plug
10. Side seal
11. Rotor
12. Coolant drain plug
13. Oil thermo unit
14. Oil level sensor
15. Air cleaner
16. Alternator
17. Carburetor
18. Hot air hose
19. PCV valve
20. Intake manifold
21. Air control valve
22. Thermal reactor
23. Apex seal (side piece)
24. Corner seal
25. Air injection nozzle
26. Oil strainer
27. Oil drain plug

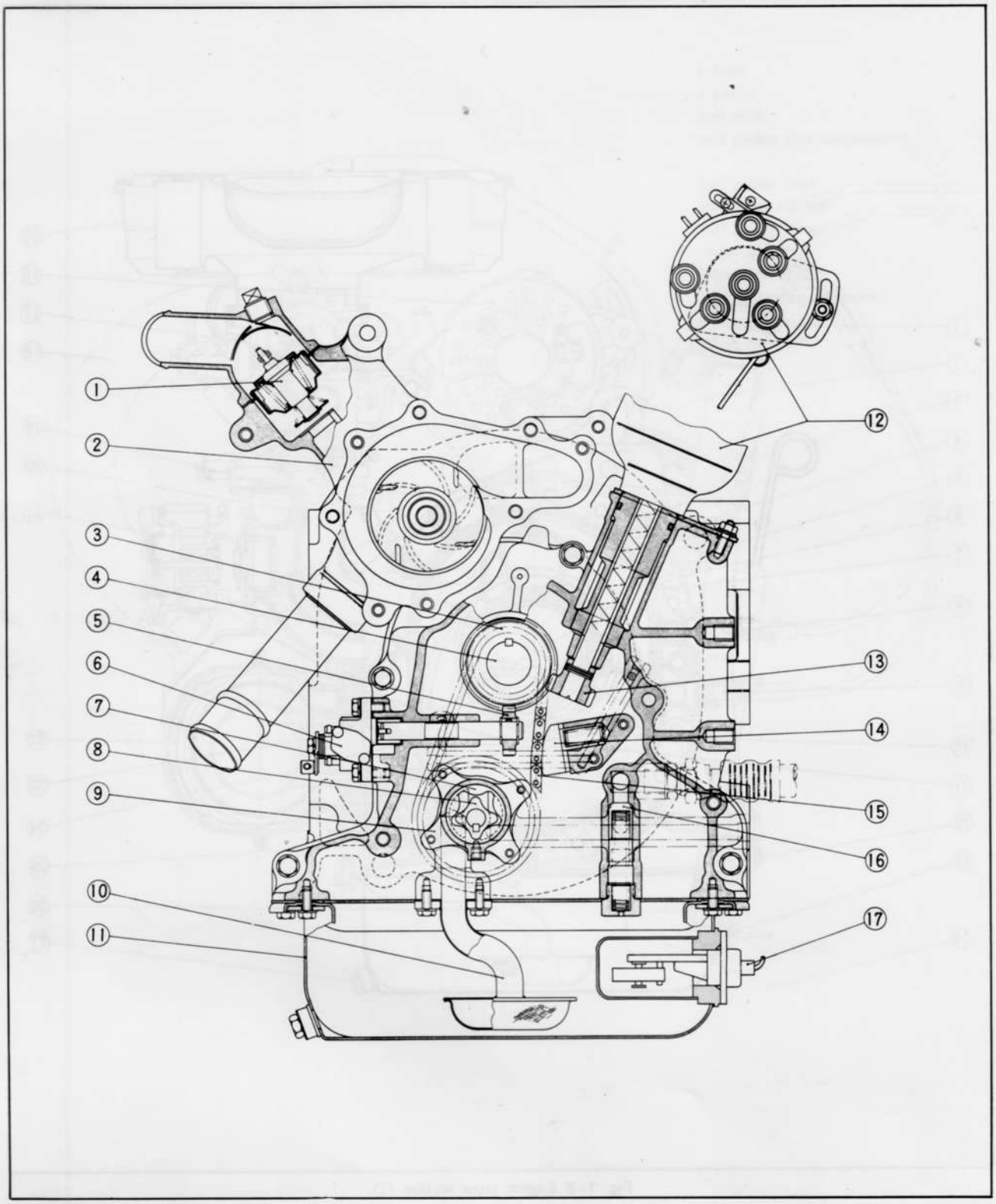

Fig. 1–3 Engine cross section (3)

1. Thermostat
2. Water pump casing
3. Distributor drive gear
4. Eccentric shaft
5. Metering pump drive gear
6. Metering pump
7. Oil pump outer gear
8. Oil pump inner gear
9. Oil pump body
10. Oil strainer
11. Oil pan
12. Distributor
13. Distributor driven gear
14. Oil pump chain adjuster
15. Oil pump chain
16. Pressure control valve
17. Oil level sensor

1–A. ENGINE DISASSEMBLY

Engine disassembly should be done in the following order after removing the engine from the vehicle.

Note:
Henceforth, on this occasion when the '74 year-type of rotary engine is being introduced, we have adopted the method of supporting the front housing by using the **engine hanger** (49 1114 005) for the purpose of facilitating the working procedure. The **engine hanger** can be used for any type of engine now in service.



Fig. 1–4 Engine work stand

1. Remove the oil hose support bracket from the front housing.
2. Mount the engine on the **engine work stand** (49 0839 000) with the **engine hanger** (49 1114 005).
3. Remove the engine mounting bracket from the front cover.
4. Disconnect the vacuum hoses, air hoses and wires, then remove the valves.
5. Remove the air pump attaching bolts and bar, and remove the air pump and V-belt.
Remove the alternator attaching bolts, and remove the alternator and V-belt.
6. Disconnect the metering oil pump connecting rod and oil tubes from the carburetor.
7. Remove the intake manifold attaching nuts, and remove the carburetor and intake manifold assembly.

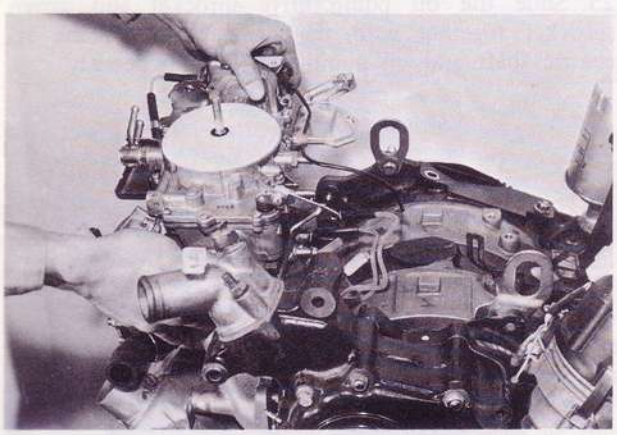

Fig. 1–5 Removing intake manifold ass'y

Then remove the gasket and two rubber rings.
8. Remove the thermal reactor attaching nuts and remove it with gaskets.
9. Remove the distributor securing nut and pull it out from the front cover.

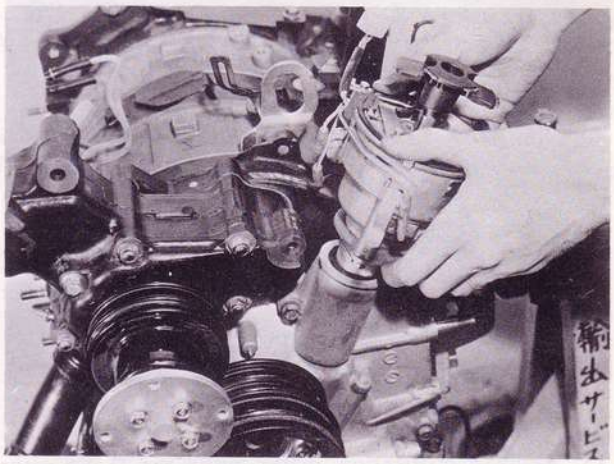

Fig. 1–6 Removing distributor

10. Remove the eccentric shaft pulley (for compressor) from the pulley boss.
11. Remove the water pump attaching bolts, and remove the pump and gasket.

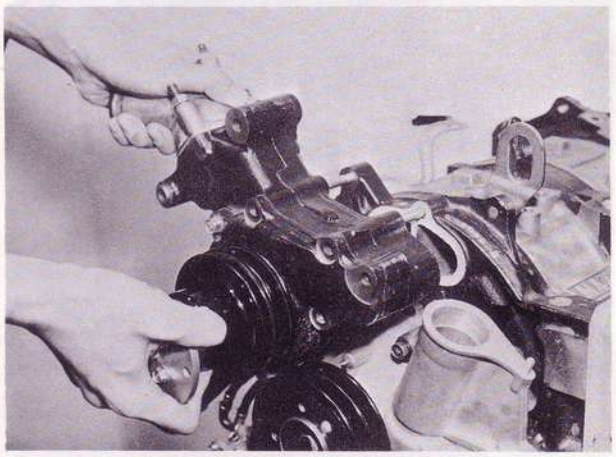

Fig. 1–7 Removing water pump

12. Invert the engine on the work stand.
13. Remove the bolts attaching the oil pan, and remove the oil pan and gasket.



Fig. 1–8 Removing oil pan

14. Remove the bolts attaching the oil strainer, and remove the oil strainer and gasket.

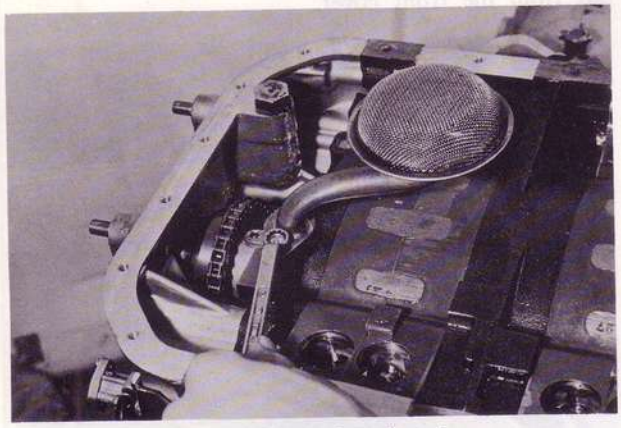

Fig. 1–9 Removing oil strainer

15. Apply identification marks onto the front rotor housing and rear rotor housing, which are common parts, so that they will be as they were when re-assembling the engine.

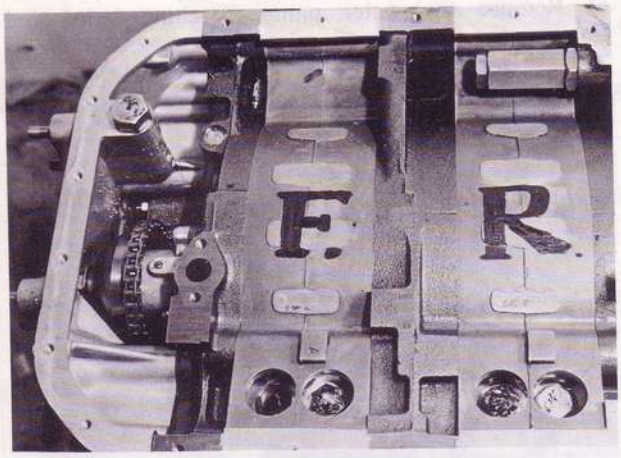

Fig. 1–10 Putting identification marks

16. Turn the engine on the work stand so that the top of the engine is up.
17. Attach the **ring gear brake** (49 1881 060) to the flywheel or drive plate.
18. Remove the eccentric shaft pulley bolt and remove the pulley.

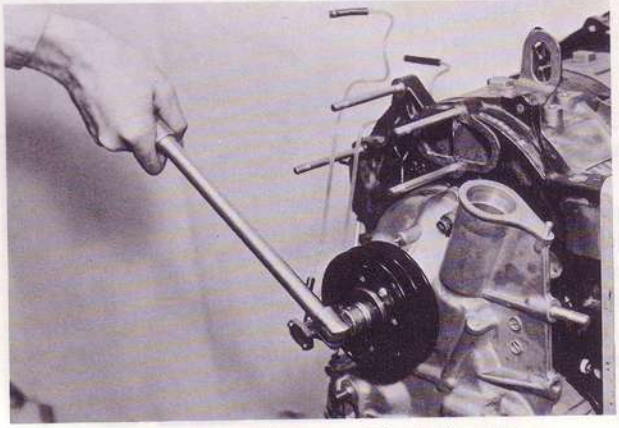

Fig. 1–11 Removing eccentric shaft pulley

19. Turn the engine on the work stand so that the front end of the engine is up.
20. Remove the front cover attaching bolts, and remove the front cover and gasket.

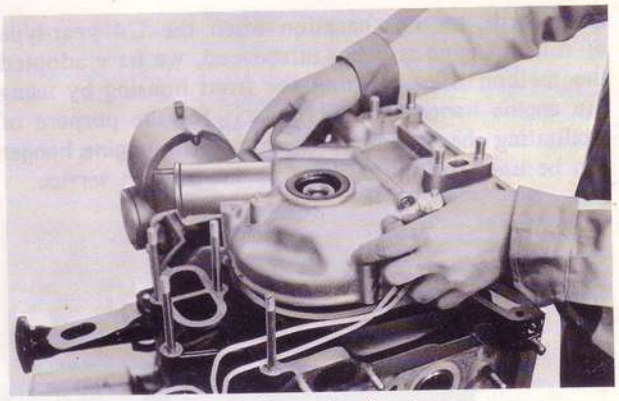

Fig. 1–12 Removing front cover

21. Remove the "O" ring from the oil passage on the front housing.
22. Slide the distributor drive gear off the shaft.
23. Remove the nuts attaching the chain adjuster and remove the chain adjuster.

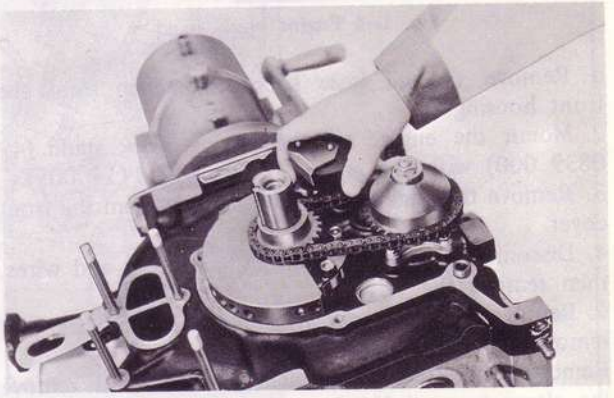

Fig. 1–13 Removing chain adjuster

24. Straighten the tab of the lock washer and remove the nut and lock washer from the oil pump driven sprocket.
25. Slide the oil pump drive sprocket and driven sprocket together with the drive chain off the eccentric shaft and oil pump shaft simultaneously.

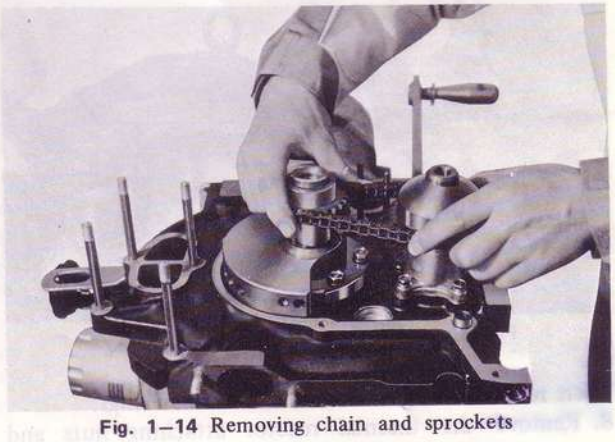

Fig. 1–14 Removing chain and sprockets

26. Remove the keys on the eccentric shaft and oil pump shaft.
27. Slide the balance weight, thrust washer and needle bearing off the shaft.
28. Remove the bolts attaching the bearing housing, and slide the bearing housing, needle bearing, spacer and thrust plate off the shaft.
29. Turn the engine on the work stand so that the top of the engine is up.
30. To remove the flywheel in case of engine mounted with manual transmission, proceed as follows:
1) Remove the clutch pressure plate assembly attaching bolts, and remove the pressure plate assembly and clutch disk.
2) Straighten the tab of the lock washer and remove the flywheel nut using the **special wrench** (49 0820 035).

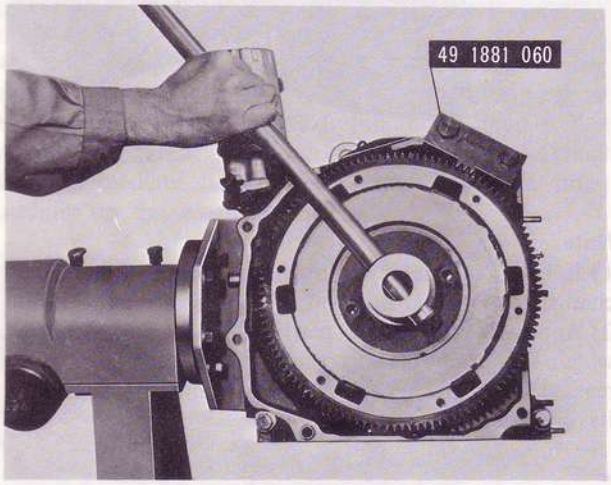

Fig. 1–15 Removing flywheel nut

3) Remove the flywheel by using the **flywheel puller** (49 0823 300A), turning the handle of the puller and lightly hitting the head of the puller.

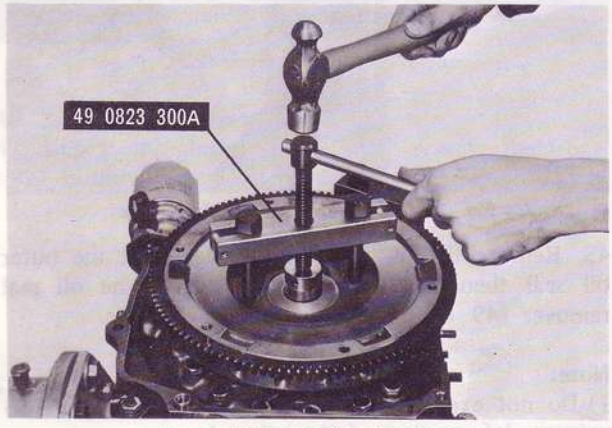

Fig. 1–16 Removing flywheel

31. To remove the counter weight in case of engine mounted with automatic transmission, proceed as follows.
1) Remove the drive plate, and then remove the **ring gear brake** (49 1881 060).
2) Attach the **counter weight brake** (49 1881 055). Then straighten the tab of the lock washer and remove the counter weight nut using the **special wrench** (49 0820 035).
3) Remove the counter weight by using the **counter weight puller** (49 0839 305A), turning the handle of the puller and lightly hitting the head of the puller.
32. Remove the key on the eccentric shaft and turn the engine on the work stand so that the rear of the engine is up.
33. Loosen the tension bolts in the sequence shown in Fig. 1–17, and remove the tension bolts.

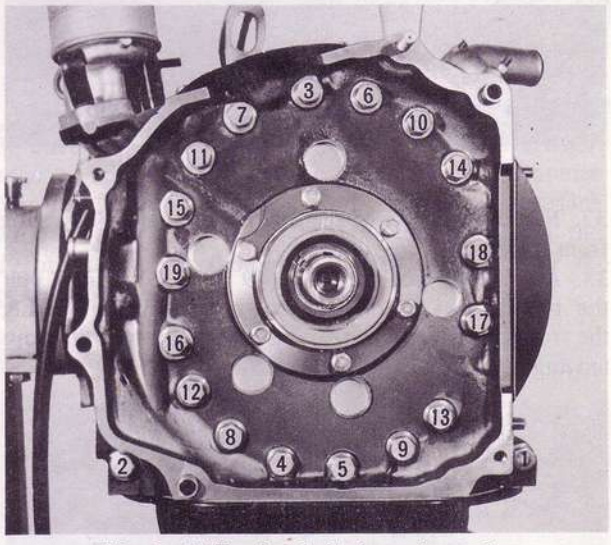

Fig. 1–17 Tension bolts loosening order

Note:
Do not loosen the tension bolts at one time. Perform the removal in two or three procedures.

34. Lift the rear housing off the shaft.

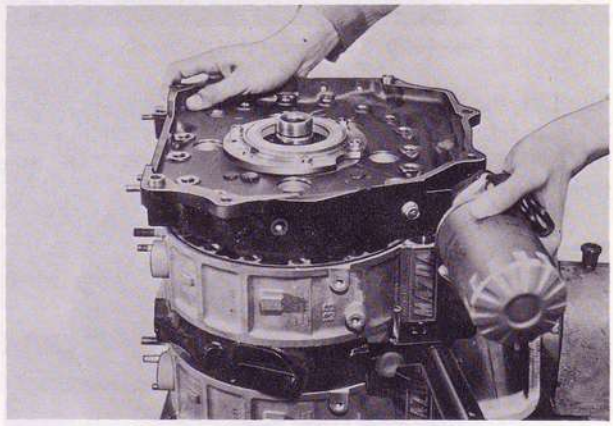

Fig. 1–18 Removing rear housing

35. Remove any seals stuck to the rotor sliding surface of the rear housing and place them back into their respective original positions.
36. Remove the all corner seals, corner seal springs, side seals, side seal springs and side pieces from the rear side of the rotor, and place them in the **seal case** (49 0813 250), in accordance with the numbers near each respective groove on the face of the rotor. These marks are made in order to prevent each seal from

changing its original position in reassembling.

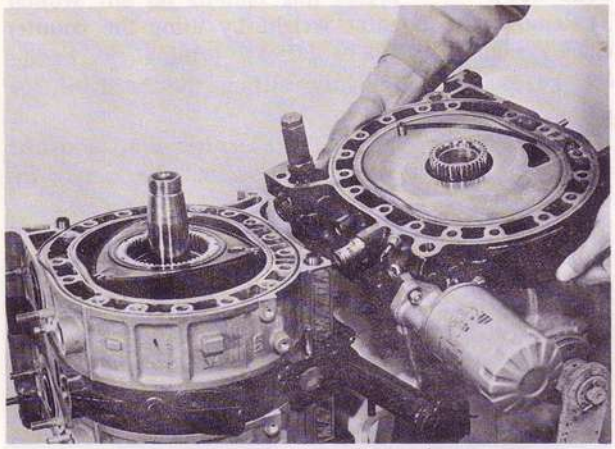

Fig. 1–19 Removing seals

37. Remove the two sealing rubbers and "O" ring from the rear rotor housing.
38. Attach the **dowel puller** (49 0813 215), and pull the tubular dowels off the rear rotor housing holding the rotor housing down by hand to prevent it from moving up.

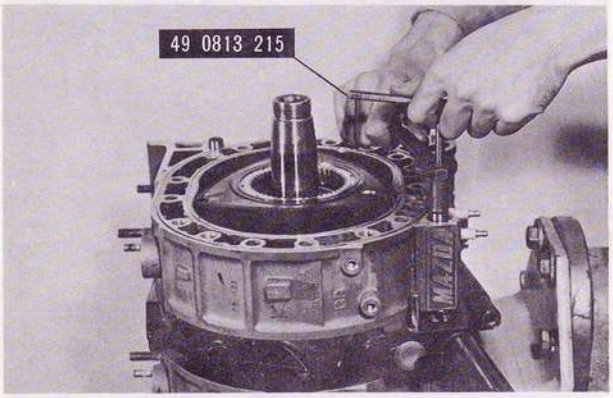

Fig. 1–20 Removing tubular dowel

39. Lift the rear rotor housing away from the rotor, being careful not to drop the apex seals on the rear rotor. Remove the two sealing rubbers and "O" ring from the rear rotor housing.

Note:
Replace the sealing rubbers and the "O" rings when the engine is overhauled.

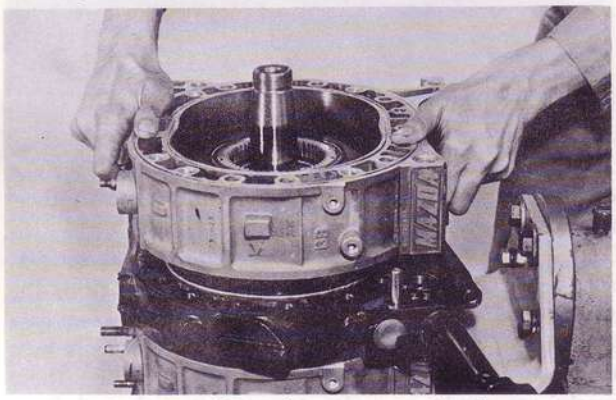

Fig. 1–21 Removing rear rotor housing

40. Remove the each apex seal and spring from the rear rotor and place them in the seal case.
41. Remove the rear rotor away from the eccentric shaft and place it upside down on a clean sheet of cloth.
42. Remove each seal and spring on the other side of the rear rotor, and place them in the seal case as shown in Fig. 1–22.



Fig. 1–22 Removing seals

Note:
1) If some of the seals drop off, be careful not to change the original position of each seal on the rotor.
2) Apply identification mark onto the rear rotor, which is a common part to front rotor, so that when reassembling the engine the rotor can be installed in its original position.

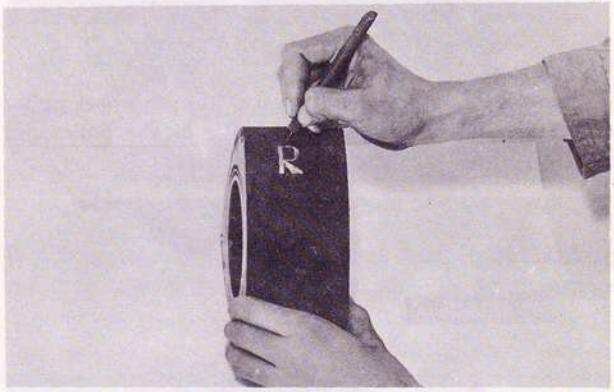

Fig. 1–23 Putting identification mark

43. Remove the oil seals and springs, first the outer oil seal then the inner oil seal, using the **oil seal remover** (49 0813 225).

Note:
1) Do not exert strong pressure at only one place to prevent deformation of the oil seal.
2) Be careful not to damage the oil seal lip. Use a suitable protector shown in Fig. 1–24.
3) Replace the "O" rings in the oil seals when the engine is overhauled.
4) Apply identification mark onto rear oil seal springs of each rotor so that, when reassembling the engine, oil seal springs can be installed in their respective face of the rotor as described in Par. 1–C–1.



Fig. 1–24 Removing oil seal

44. Holding the intermediate housing down by hand, pull the tubular dowel off the intermediate housing using the **dowel puller** (49 0813 215).
45. Lift the intermediate housing off the shaft being careful not to damage the shaft. The intermediate housing should be removed by sliding it beyond the rear rotor journal on the eccentric shaft while holding the intermediate housing up and at the same time pushing up the eccentric shaft.

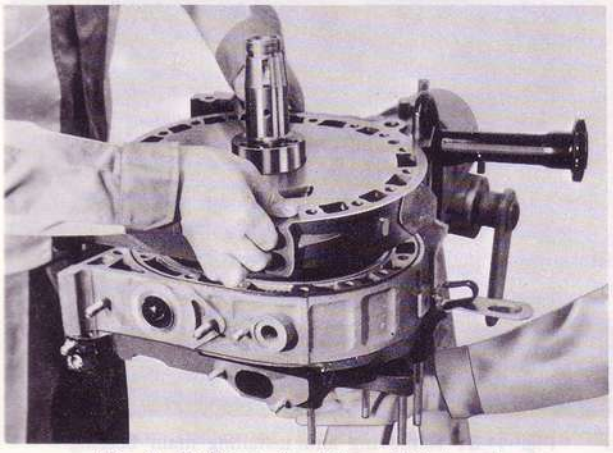

Fig. 1–25 Removing intermediate housing

46. Lift out the eccentric shaft.
47. Repeat the above procedures to remove the front rotor housing and the front rotor assembly.

1–B. INSPECTION AND REPAIR

1–B–1. Inspecting Front, Intermediate and Rear Housing

1. Remove all carbon on the housings with an extra-fine emery paper. When using a carbon scraper, be careful not to damage the finished surfaces of the housings.
2. Remove the sealing agent on the housings by using a cloth or a brush soaked in a solution of ketone or thinner.

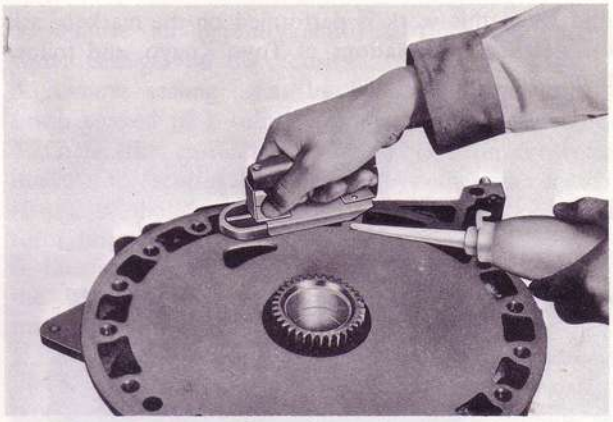

Fig. 1–26 Removing sealing agent

3. Check for housing distortion by placing a straight edge on the housing surface. Measure the clearance between the straight edge and the housing surface with a feeler gauge, as shown in Fig. 1–27. If the distortion exceeds **0.04 mm (0.0016 in)**, reface or replace the housing.

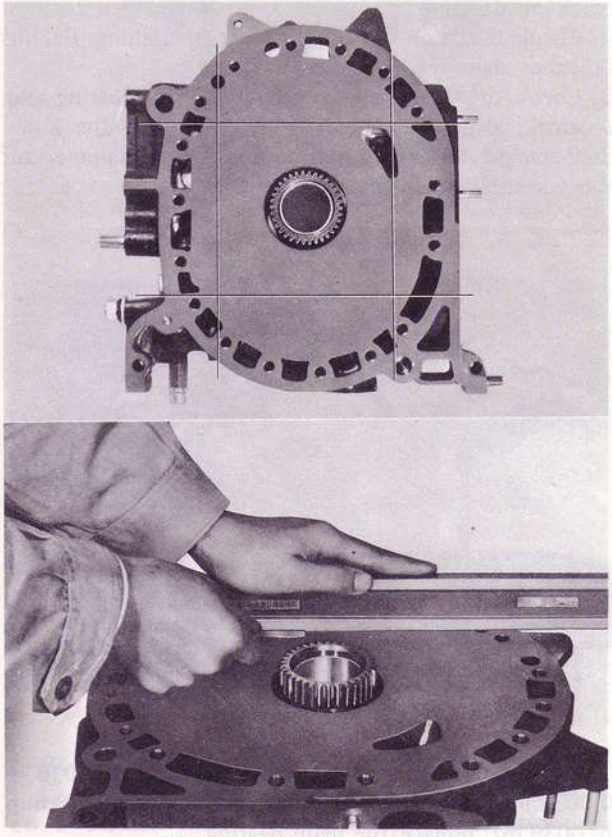

Fig. 1–27 Checking distortion

4. Check for wear on the rotor sliding surfaces of the housing and joint surfaces with rotor housing as shown in Fig. 1–28.
If the wear exceeds 0.10 mm (0.0039 in), reface or replace the housing.

Caution:
The side housings (front housing, intermediate housing and rear housing) can be reused by grinding them if the required finish can be maintained.

And when this work is performed on the markets, ask the detailed informations of Toyo Kogyo, and follow them.

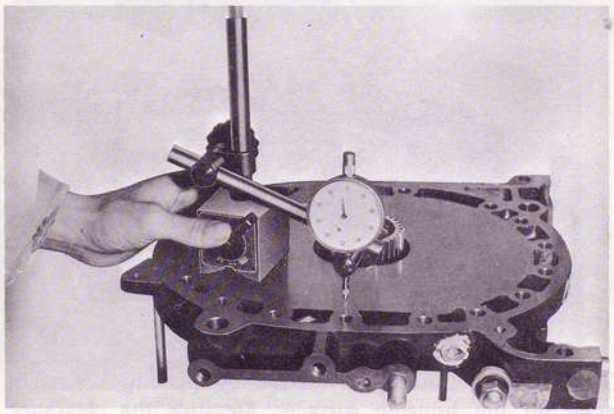

Fig. 1–28 Checking wear

1–B–2. Inspecting Front Stationary Gear and Main Bearing

1. Check the teeth on the stationary gear for wear, crack or damage.
2. Check the main bearing for wear, scratching, flaking or other damages.
3. Check the clearance between the main bearing and eccentric shaft main journal by measuring the inner diameter of the main bearing and outer diameter of the eccentric shaft main journal.

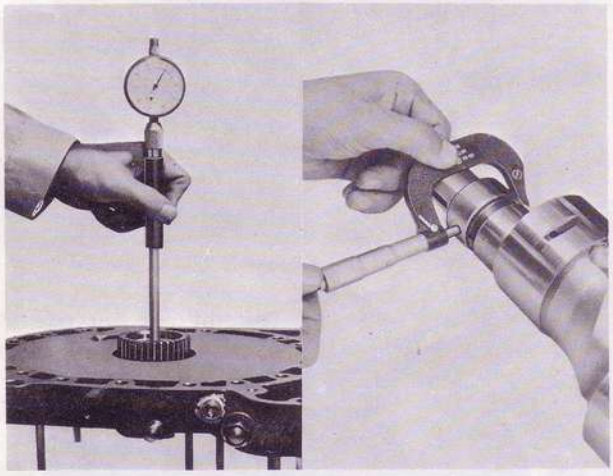

Fig. 1–29 Checking main bearing clearance

The standard clearance is **0.04 ~ 0.07 mm (0.0016 ~ 0.0028 in)**. If the bearing clearance exceeds **0.10 mm (0.0039 in)**, replace the main bearing.

Note:

To replace the main bearing, proceeds as follows:

1) Remove the stationary gear and main bearing assembly from the housing, using the **main bearing replacer** (49 0813 235), shown in Fig. 1–30.

2) Remove the adaptor on the main bearing replacer and press the main bearing out of the stationary gear by using the **main bearing replacer** (49 0813 235), as shown in Fig. 1–31.

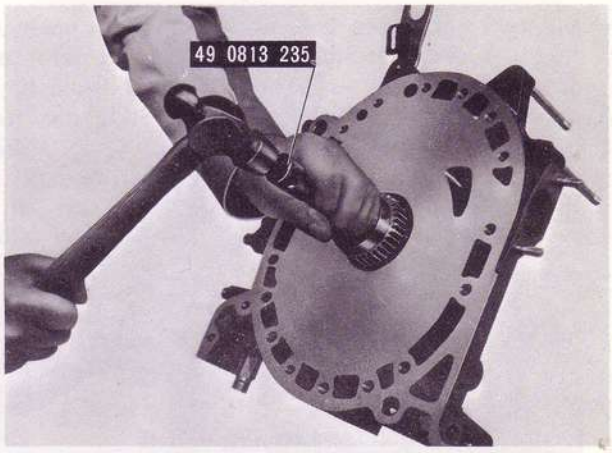

Fig. 1–30 Removing stationary gear assembly

3) Attach the adaptor onto the **main bearing replacer** (49 0813 235), aligning the tang of the bearing and the slot of the stationary gear, and press fit the main bearing into the stationary gear until the adaptor touches the stationary gear flange.

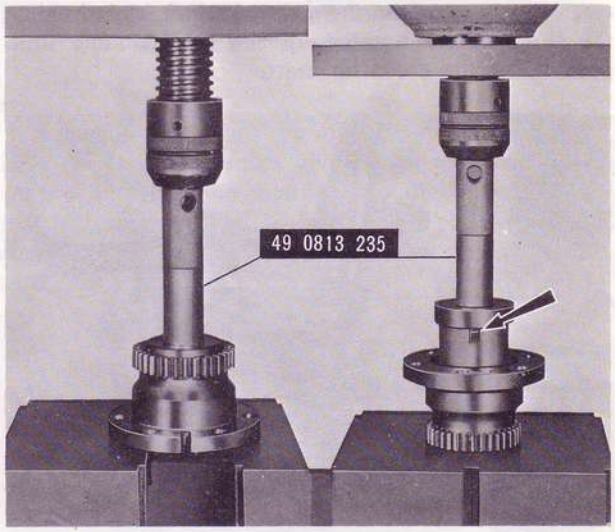

Fig. 1–31 Removing and installing main bearing

4) Press in the stationary gear to the housing with the **main bearing replacer** (49 0813 235), aligning the slot of the stationary gear flange and the dowel pin on the housing, as shown in Fig. 1–32.

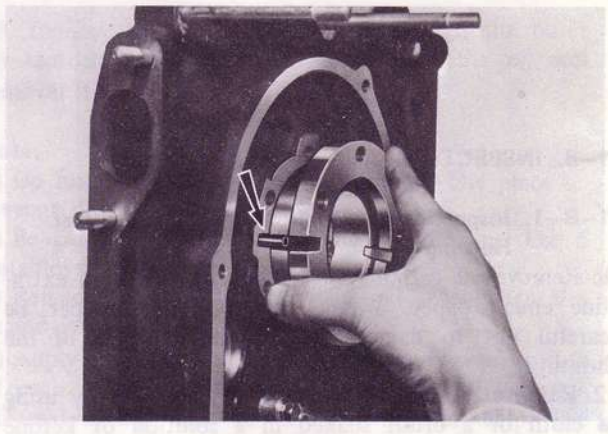

Fig. 1–32 Aligning stationary gear

1–B–3. Inspecting Rear Stationary Gear and Main Bearing

Check the rear stationary gear and main bearing according to Par. 1–B–2.

To remove and install the stationary gear, proceed as follows:

1) Remove the bolts attaching the stationary gear to the rear housing.
2) Using the **main bearing replacer** (49 0813 235), remove the stationary gear from the rear housing.
3) Check the "O" ring in the stationary gear for a damage. Replace the "O" ring if necessary.
4) Apply a thin coat of vaseline on the "O" ring and place it in the groove of the stationary gear.

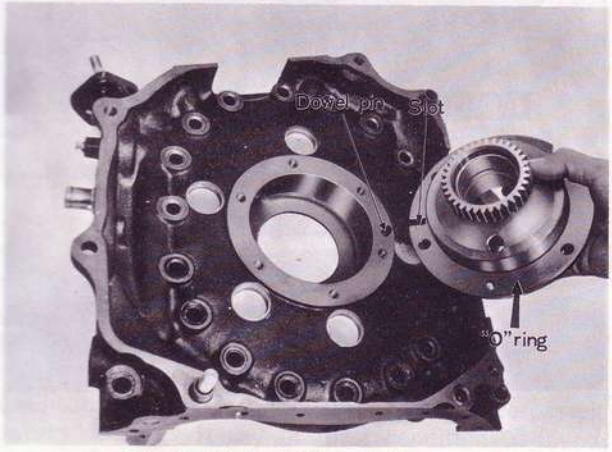

Fig. 1–33 Assembling stationary gear

5) Apply sealing agent onto the stationary gear flange.
6) Install the stationary gear to the rear housing being careful not to damage the "O" ring and aligning the slot of the stationary gear with the dowel pin on the rear housing.
7) Tighten the bolts attaching the stationary gear.

1–B–4. Inspecting Rotor Housing

1. Check for traces of gas or water leakage along the inner margin of each side face of the rotor housing.
2. Remove all carbon from the inner surface of the rotor housing by wiping with cloth. Soak the cloth in a solution of ketone or thinner if the carbon is difficult to remove.

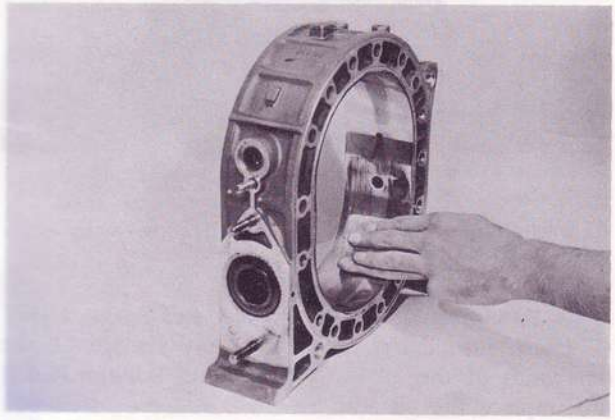

Fig. 1–34 Removing carbon

3. Remove all deposits and rust from the cooling water passages on the housing.
4. Remove sealing agent by wiping with a cloth or brush soaked in a solution of ketone or thinner.
5. Check the chromium plated surface on the rotor housing for scoring, flaking or any other damage. If any of these excessive condition exists, replace the rotor housing.
6. Check the rotor housing width at points close to the trochoid surface by using a micrometer. The measurements should be taken at least at 4 points. If the difference between the value of Ⓐ point and the minimum value of the points ⒷⒸⒹ, exceeds **0.06 mm (0.0024 in)**. the rotor housing should be replaced with a new one.

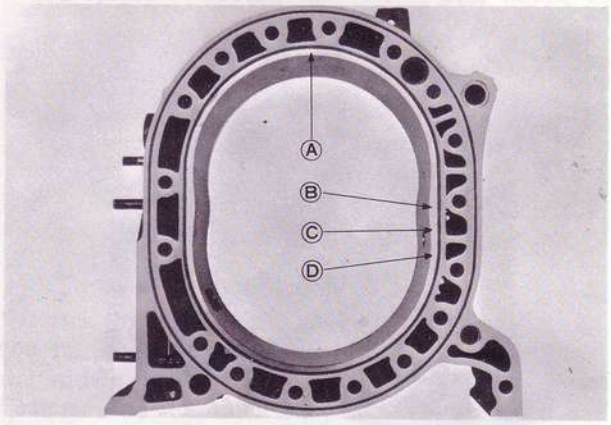

Fig. 1–35 Checking points

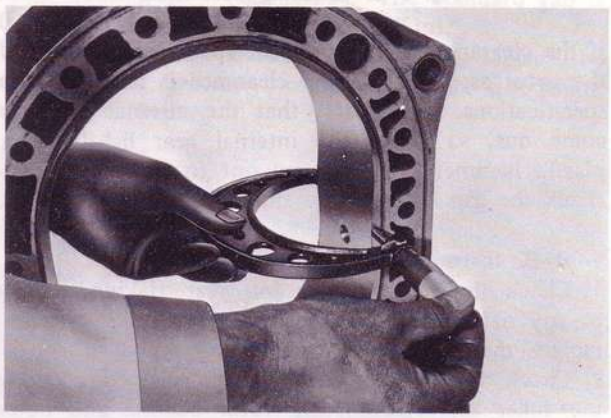

Fig. 1–36 Checking rotor housing width

1–B–5. Inspecting Rotor

1. Check the combustion condition and gas leakage. To a certain extent, the combustion condition can be judged as in the case of reciprocating engines by the color and quantity of carbon on the rotor. Combustion can be said to be good if the color of carbon is brown. Generally carbon on the leading side seen from the direction of rotation is brown, while the trailing side shows black color. It should be noted that this color varies according to operating conditions just before the engine is removed.
The gas leakage can be judged by checking the color of the rotor side surface for blow-by traces originating from the side seals and corner seals.
2. Remove the carbon on the rotor by using a carbon

remover or emery paper. Carbon in the seal grooves of the rotor should be removed with a carbon remover being careful not to damage the grooves. Wash the rotor in cleaning solution and dry by blowing with compressed air.
3. Carefully inspect the rotor and replace if it is severely worn or damaged.
4. Check the internal gear for cracks, score, worn or chipped teeth.
5. Check the gap between the side housing and the rotor by measuring the rotor housing width and rotor width. The rotor width should be measured at 3 points as shown in Fig. 1–37.
The difference between the minimum width of rotor housing and the maximum width of the rotor should be within **0.10 ~ 0.21 mm (0.0039 ~ 0.0083 in).**

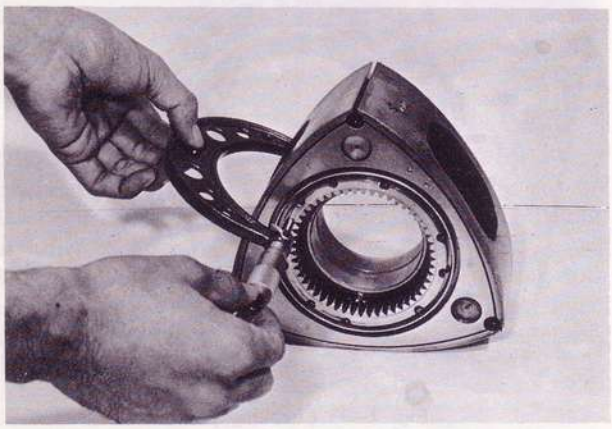

Fig. 1–37 Checking rotor width

If the clearance is more than the specifications, replace the rotor assembly. If the clearance is less than the specifications, it indicates that the internal gear has come out, so strike the internal gear lightly with plastic hammer being careful not to damage and re-check the gap between the side housing and the rotor.

1–B–6. Inspecting Rotor Bearing

1. Check the rotor bearing for wear, flaking, scoring or any damage. If any of these conditions is found, replace the bearing.
2. Check the rotor bearing clearance by measuring the inner diameter of the rotor bearing and outer diameter of the eccentric shaft rotor journal.

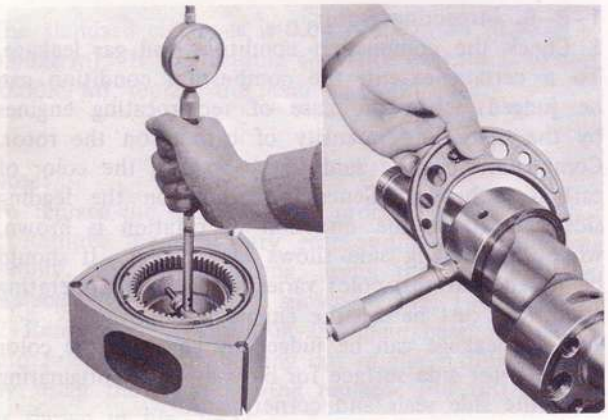

Fig. 1–38 Checking rotor bearing clearance

The standard clearance is **0.04 ~ 0.08 mm (0.0016 ~ 0.0031 in)**. Replace the bearing if it is more than **0.10 mm (0.0039 in)**.

Note:
To replace the rotor bearing, proceed as follows:
1) Place the rotor on the support so that the internal gear is facing downward. Using the **rotor bearing replacer** (49 0813 240) without the adaptor ring, press the bearing out of the rotor, being careful not to damage the internal gear. If the bearing bore in the rotor is damaged, finish the bore with emery paper and blow with compressed air.

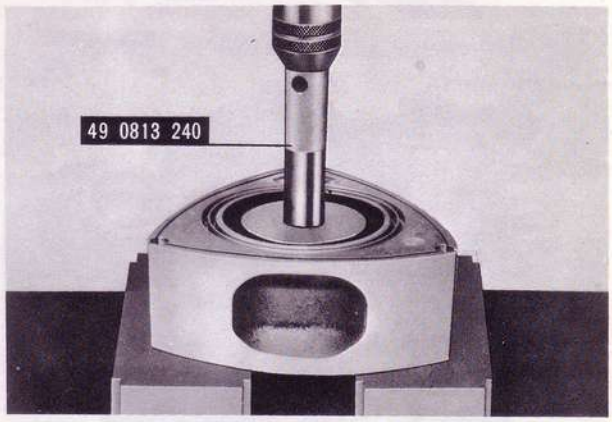

Fig. 1–39 Removing rotor bearing

2) Place the rotor on the support with internal gear faced upward. And place the new rotor bearing on the rotor so that the rotor bore is in line with the bearing lug.
3) Press fit the new bearing using the **rotor bearing replacer** (49 0813 240) with the adaptor removed attaching screws, until the bearing is flush with the rotor boss.

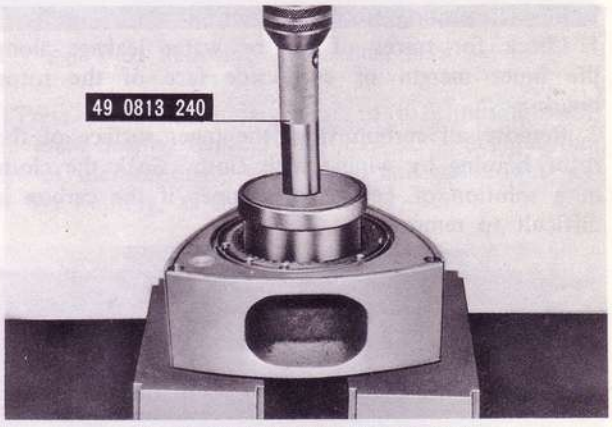

Fig. 1–40 Installing rotor bearing

4) Wash the rotor thoroughly and blow with compressed air.

1–B–7. Inspecting Rotor Oil Seal and Spring

1. Check the oil seal for wear or any damage. If the lip width of the oil seal is more than **0.8 mm (0.031 in)**, replace the oil seal.
2. Check the oil seal protrusion as shown in Fig.

1–41 and confirm the free movement by pressing with finger. The protrusion should be more than **0.5 mm (0.02 in)**.

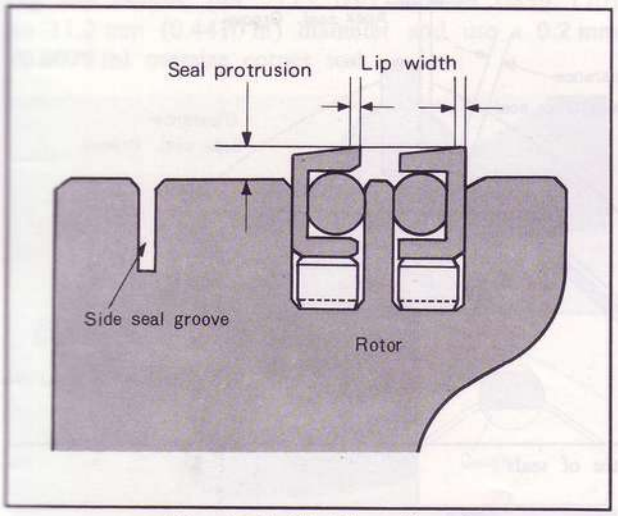

Fig. 1–41 Checking oil seal

1–B–8. Inspecting Apex Seal, Side Piece and Spring

1. Remove all carbon from the apex seal, side piece and spring, being careful not to damage the apex seal. **Never use** emery paper as it will damage the apex seal. Wash them with cleaning solution.
2. Check the apex seal and side piece for wear, crack on any damage. If any of these conditions is found, replace the seal. Check the spring for wear.
3. Measure the height of the apex seal with a micrometer at two positions shown in Fig. 1–42. Replace if the height is less than **7.0 mm (0.275 in)**.

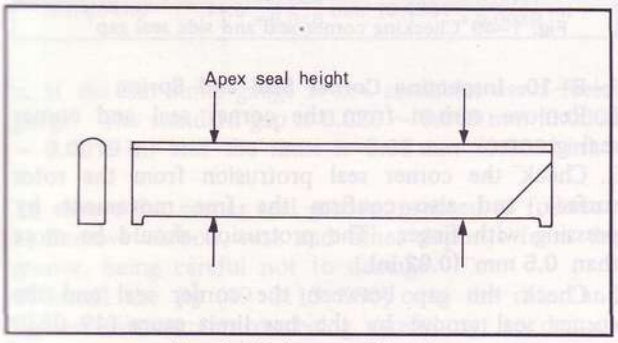

Fig. 1–42 Apex seal height



Fig. 1–43 Checking apex seal

4. Check the gap between the apex seal and the groove. To check the gap, place the apex seal in its respective groove on the rotor and measure the gap between the apex seal and the groove with a feeler gauge. The feeler gauge should be inserted until the tip of the gauge reaches the bottom of the groove. The standard gap is **0.05 ~ 0.09 mm (0.0020 ~ 0.0035 in)**. If the gap is more than **0.15 mm (0.0059 in)**, replace the apex seal.

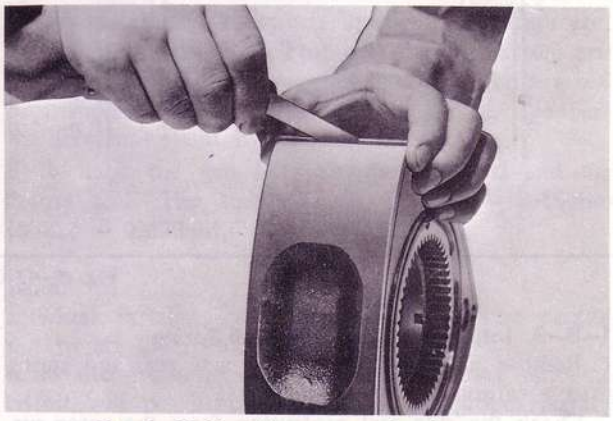

Fig. 1–44 Checking apex seal and groove

5. Check the gap between the apex seal and side housing. To check, measure the length of the apex seal with a micrometer.
Compare the measured apex seal length with the minimum value among Ⓑ Ⓒ and Ⓓ points of the rotor housing (see Fig. 1–35). The standard gap is **0.13 ~ 0.17 mm (0.0051 ~ 0.0067 in)**.
If it is more than **0.30 mm (0.0118 in)**, replace the apex seal. If necessary, correct the apex seal length with emery paper.

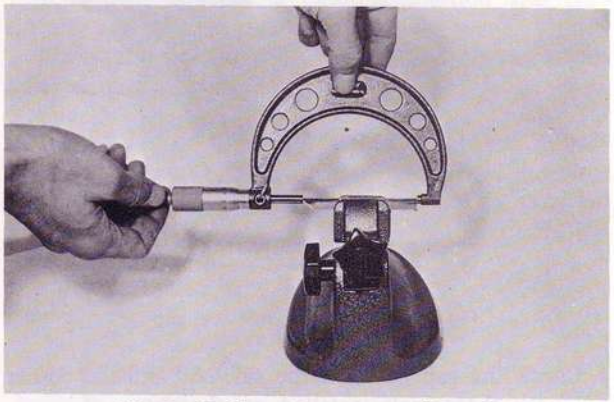

Fig. 1–45 Measuring apex seal length

6. Check the free height of the apex seal spring as shown in Fig. 1–46. It should be more than **3.8 mm (0.15 in)**.

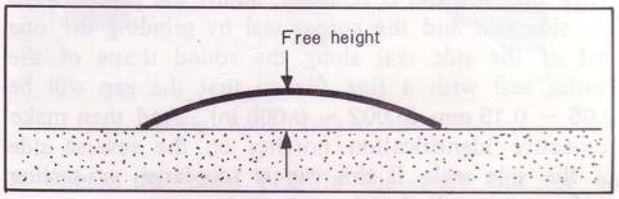

Fig. 1–46 Apex seal spring

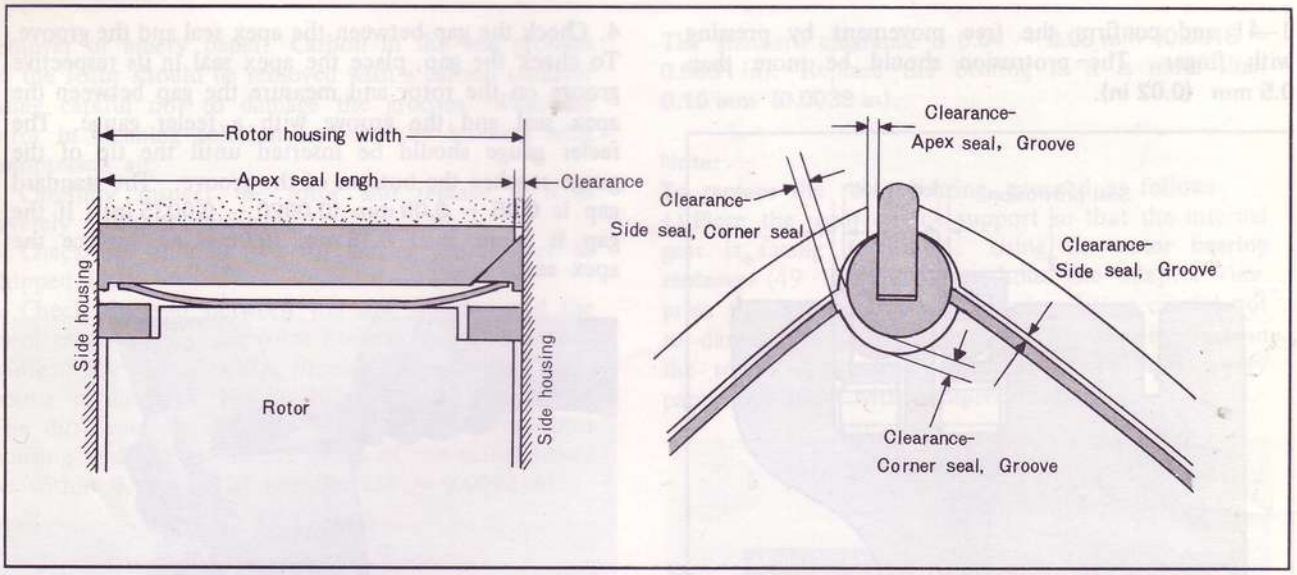

Fig. 1–47 Clearance of seals

1–B–9. Inspecting Side Seal and Spring

1. Remove all carbon from the side seal and spring with a carbon remover.
2. Check the side seal protrusion from the rotor surface, and also confirm the free movement by pressing with finger. The protrusion should be more than **0.5 mm (0.02 in)**.
3. Check the gap between the side seal and the groove with a feeler gauge as shown in Fig. 1–48. The standard gap is **0.04 ~ 0.07 mm (0.0016 ~ 0.0028 in)**. If the gap exceeds **0.10 mm (0.0040 in)**, replace the side seal.

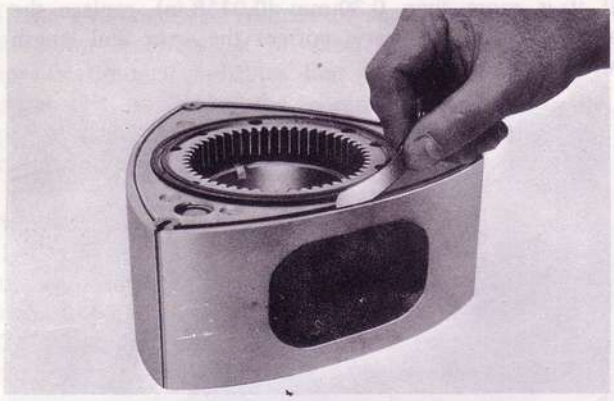

Fig. 1–48 Checking side seal gap

4. Check the gap between the side seal and the corner seal with these seals installed on the rotor.

To check, insert a feeler gauge between the end of the side seal (against the rotating direction of rotor) and the corner seal. If the gap exceeds **0.4 mm (0.016 in)**, replace the side seal.

When the side seal is replaced, adjust the gap between the side seal and the corner seal by grinding the one end of the side seal along the round shape of the corner seal with a fine file so that the gap will be **0.05 ~ 0.15 mm (0.002 ~ 0.006 in)**. And then make respective identification notches on the reverse side of the side seal. If this gap is too large, gas-sealing performance will deteriorate.

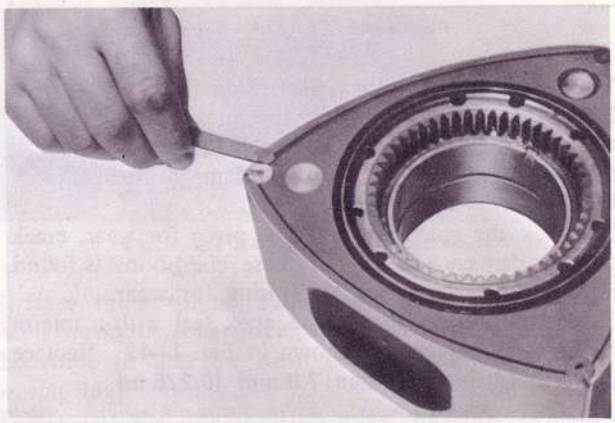

Fig. 1–49 Checking corner seal and side seal gap

1–B–10. Inspecting Corner Seal and Spring

1. Remove carbon from the corner seal and corner seal groove.
2. Check the corner seal protrusion from the rotor surface, and also confirm the free movement by pressing with finger. The protrusion should be more than **0.5 mm (0.02 in)**.
3. Check the gap between the corner seal and the corner seal groove by the **bar limit gauge** (49 0839 165). This gap enlargement shows uneven wear of the corner seal groove, which occurs when the engine is operated with dust entering through a clogged element, damaged air cleaner or any other cause. When the wear is permitted to increase, the engine power will be reduced and the engine will become hard to start. The decision whether the gap has correct dimension is made by examining wear of the corner seal groove with **bar limit gauge** (49 0839 165). The wear is classified into three conditions.

a. Neither end of the gauge goes into the groove. This means that the gap conforms to the specifications.

b. While the go-end of the gauge goes into the groove, the not-go-end does not. In this case, replace the corner seal with a **0.03 mm (0.0012 in)** oversize one. **Do not** rebore the groove.

c. If the both ends of the gauge go into the bore, it means that the gap exceeds the limit of **0.08 mm (0.0031 in)**. **Rebore** the corner seal groove with the **jig and reamer** (49 2113 030 and 49 0839 170) to 11.2 mm (0.4410 in) diameter and use a **0.2 mm (0.0079 in)** oversize corner seal.

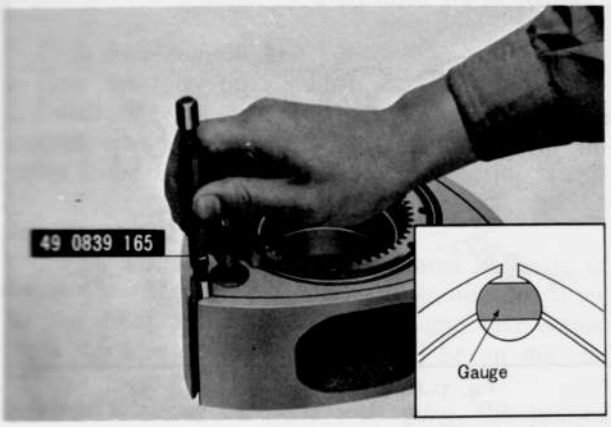

Fig. 1–50 Checking corner seal groove

Note:
a. As the corner seal groove tends to show a heavy wear in the direction of the rotation, the side arcs on the gauge are partially cut off. Be sure to take the measurement in the direction of the maximum wear of the groove.
b. The dimensions of the outer diameter of the gauge are as follows:

Go-end	$11.0\ ^{+0.019}_{+0.021}$ mm (0.4331 $^{+0.0007}_{+0.0008}$ in)
Not-go-end	$11.0\ ^{+0.044}_{+0.046}$ mm (0.4331 $^{+0.0017}_{+0.0018}$ in)

c. If the bar limit gauge is not available, use a feeler gauge. The standard gap is **0.020 ~ 0.048 mm (0.0008 ~ 0.0019 in)** and the limit is **0.08 mm (0.0031 in).**

To rebore the corner seal groove, proceed as follows:
1) Remove carbon, rust and other deposits from the groove, being careful not to damage.
2) Install the **jig** (49 2113 030) onto the rotor and tighten the correct bar being careful not to damage the rotor bearing and apex seal groove.

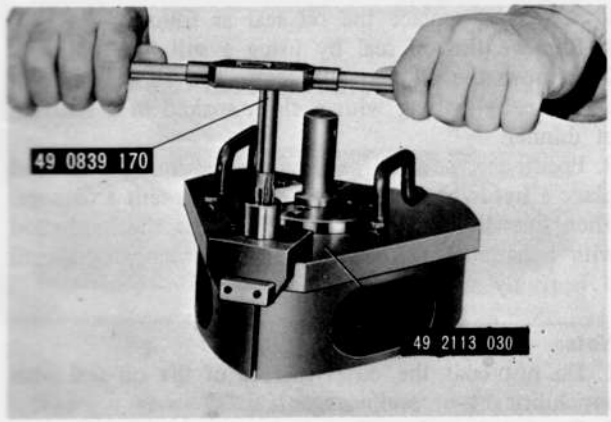

Fig. 1–51 Reaming corner seal groove

3) Ream the groove with the **Reamer** (49 0839 170) by hand applying sufficient engine oil as a coolant. When feeding the reamer, it must be turned by about 20 rotations or over before the reaming work is accomplished completely.
4) Remove the reamer and jig from the rotor.
5) Repeat the same procedure when reaming the other grooves of the rotor.
6) Thoroughly clean the rotor, and check and confirm by visual inspection the condition of the reaming groove and to see if there is any damage to the rotor.
7) Fit a **0.2 mm (0.0079 in)** oversize corner seal and a spring into the groove, and check the corner seal protrusion from the rotor surface, and also confirm the free movement by pressing with finger.
8) Recheck the gap between the side seal and the corner seal. The standard gap is **0.05 ~ 0.15 mm (0.002 ~ 0.006 in).**

Note:
a. When installing or removing the jig, be careful not to hit the rotor.
b. If the reaming is carried out without applying oil, it will be difficult to obtain the proper surface roughness no matter how many times the reaming may be repeated.
c. Avoid two stage reaming, that is, drawing the reamer halfway during the reaming work and then resuming the reaming, because chips may affect the surface roughness.
d. Before starting the reaming work, it must be confirmed that the reamer diameter is up to specifications, because the reamer could be worn in excess of the limit if it was used many times.

1–B–11. Inspecting Eccentric Shaft

1. Wash the shaft in a cleaning solution and blow the oil passage with compressed air.
2. Check the shaft for cracks, scratches, wear or any other damage. Be sure that the oil passages are open.
3. Check the shaft run-out. To check, mount the shaft on "V"-blocks and apply a dial indicator. Slowly rotate the shaft and note the reading on the indicator. If the run-out is more than **0.06 mm (0.0024 in)**, replace the shaft with a new one.

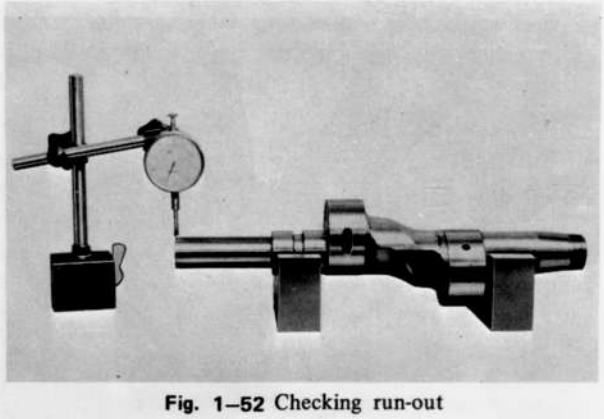

Fig. 1–52 Checking run-out

4. Check the blind plug in the shaft end for oil leakage or looseness. If any oil leakage is found,

remove the blind plug with a hexagonal Allen key and replace the "O" ring.

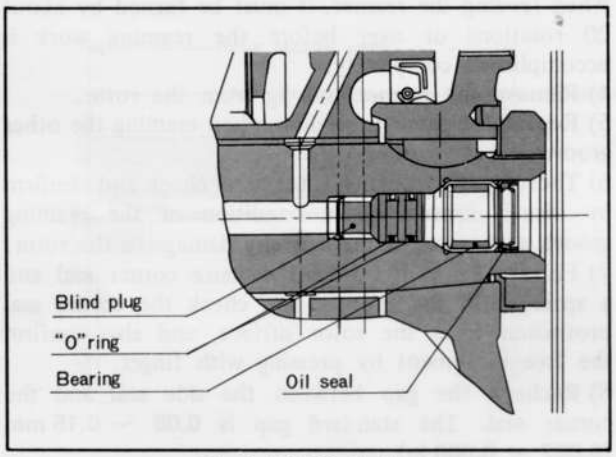

Fig. 1–53 Blind plug

5. Check the needle roller bearing in the shaft end for wear or any damage. If any of these conditions is found, replace the needle roller bearing. If necessary, supply a lithium grease onto the roller bearing. (Only the car with manual transmission)

Note:
To replace the bearing, use the **bearing replacer** (49 0823 070A).

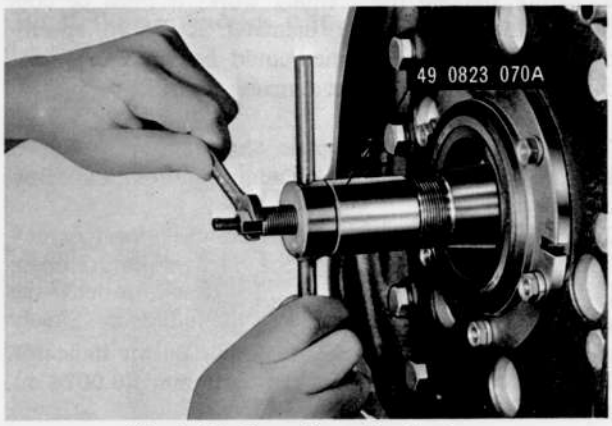

Fig. 1–54 Removing roller bearing

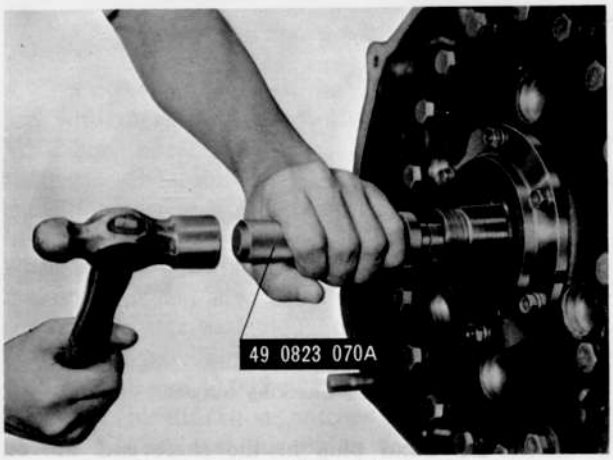

Fig. 1–55 Installing roller bearing

6. The oil jets are installed in the eccentric shaft. The oil jets open when the number of engine revolutions increases and the oil pressure rises. Check for spring weakness, stick or damage of the steel ball.

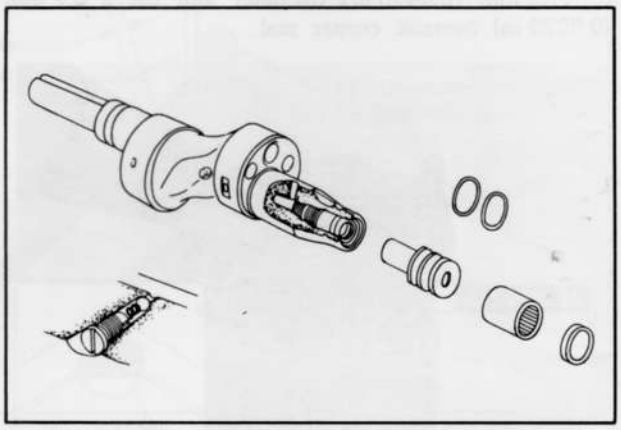

Fig. 1–56 Roller bearing and oil jet

1–B–12. Inspecting Needle Bearing

Check the needle bearing for wear or damage.
Inspect the bearing housing and thrust plate for wear or any damage.

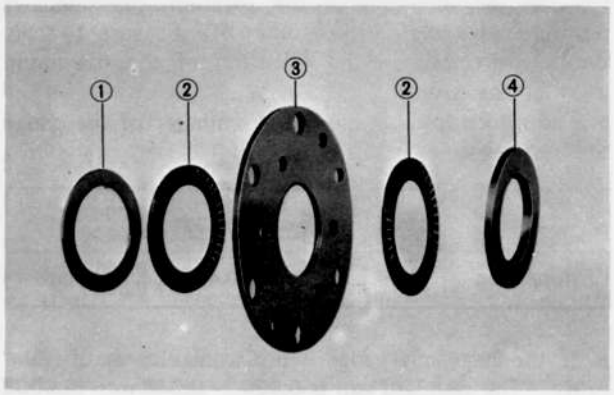

Fig. 1–57 Needle bearings

1. Thrust washer
2. Needle bearing
3. Bearing housing
4. Thrust plate

1–B–13. Inspecting Eccentric Shaft Front and Rear Oil Seals

Check for oil leaks of the front oil seal fitted into the front cover and the rear oil seal fitted into the rear staionary gear.
If necessary, replace the oil seal as follows:
1. Remove the oil seal by using a suitable tool.
2. Remove the oil that adheres to the oil seal mounting bore by wiping with a cloth soaked in a solution of thinner.
3. Position a new oil seal on its mounting bore and place a hardwood on the oil seal to prevent a damage. Then, install the oil seal while tapping the hardwood with a hammer. Drive the oil seal into position until it is firmly seated.

Note:
1. Do not coat the outer surface of the oil seal with any lubricant or sealing agent.
2. Do not tap the oil seal directly with a hammer.

3. When installing the flywheel or front pulley, apply a small amount of engine lubricant to the oil seal lip.

1–C. ENGINE ASSEMBLY

The procedures for assembling the engine when the engine is to be completely overhauled are as follows:

1–C–1. Installing Oil Seal

1. Place the rotor on a rubber pad or cloth.
2. Install the oil seal springs in their respective grooves on the rotor with each round edge of the spring fitted in the stopper hole shown in Fig. 1–58.

Caution:

a. The oil seal springs have been painted in cream or blue color. The **cream-colored** springs must be fitted on the front faces of both front and rear rotors. While the **blue-colored** springs should be on the rear faces of the rotors.

b. When installing each oil seal spring, the painted side of spring must be faced to the oil seal (upward), that is the square edge of spring faces to the oil seal (upward).

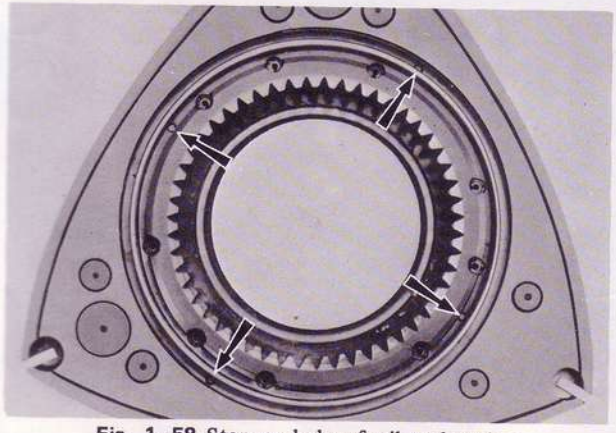

Fig. 1–58 Stopper hole of oil seal spring

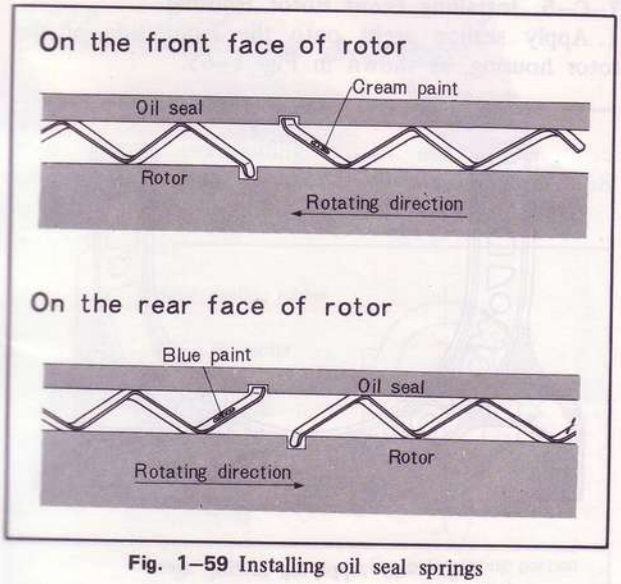

Fig. 1–59 Installing oil seal springs

3. Insert a new "O" ring in each oil seal. For each side of the rotor, install the oil seals, first the inner oil seal then the outer oil seal.

To install the inner oil seal, the following steps should be taken:

1) Place the oil seal to the groove so that the square edge of spring fits in the stopper notch of the oil seal.
2) Press the inner oil seal by using a used inner oil seal so that the lip surface of the inner oil seal sinks into a position approximately 0.4 mm (0.016 in) below the surface of the rotor as shown in Fig. 1–60.

Caution:

Apply the above method to the inner oil seal only.

To install the outer oil seal, proceed as follows.

1) Place the oil seal to the groove so that the square edge of spring fits in the stopper notch of the oil seal.
2) Push the head of the oil seal slowly with fingers.

Note:

a. When replacing the oil seal, confirm the smooth movement of oil seal by placing the oil seal on the oil seal spring in the groove before inserting the "O" ring.

b. Be careful not to deform the lip of the oil seal.

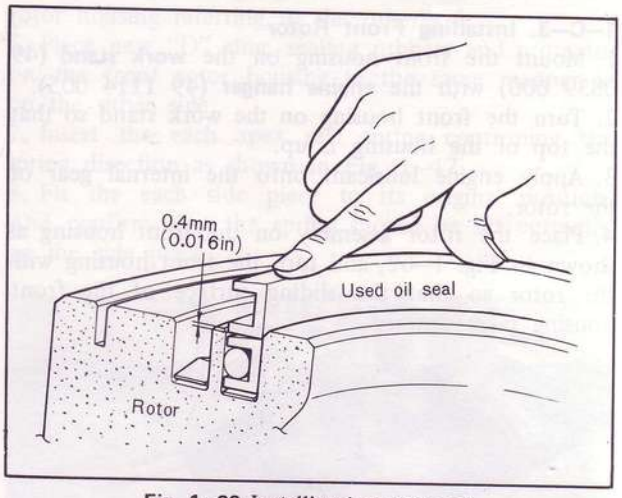

Fig. 1–60 Installing inner oil seal

4. Apply sufficient engine lubricant onto each oil seal and groove, and confirm the smooth movement of each oil seal by pressing the head of oil seal.
5. Check the oil seal protrusion. (Ref. Par. 1–B–7)
6. Install the oil seal springs and oil seals on the other side of the rotor.

1–C–2. Installing Each Seal

1. Place the rotor which has been fitted with the oil seals on the rubber pad or cloth.
2. Fit the apex seals without springs and side pieces into their respective grooves so that each side piece positions on the rear side of each rotor.
Hold the apex seals by using the used "O" ring to keep the apex seals in position.
3. Place the corner seal springs and corner seals into their respective grooves.
4. Fit the side seal springs and side seals into their respective grooves as shown in Fig. 1–61.

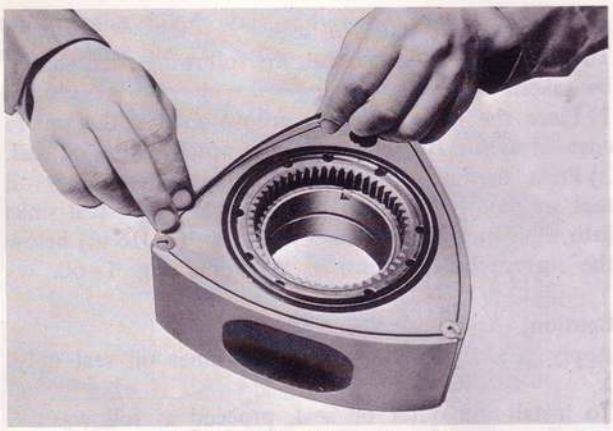

Fig. 1–61 Installing side seal

5. Apply engine lubricant onto each seal, and confirm the smooth movement of each seal by pressing its head.
6. Check each seal protrusion. (Ref. Par. 1–B–9, 10)
7. Invert the rotor, being careful not to drop the seals on the rubber pad or cloth, and install the corner seals, side seals and springs on the other side in the same manner as above.

1–C–3. Installing Front Rotor

1. Mount the front housing on the **work stand** (49 0839 000) with the **engine hanger** (49 1114 005).
2. Turn the front housing on the work stand so that the top of the housing is up.
3. Apply engine lubricant onto the internal gear of the rotor.
4. Place the rotor assembly on the front housing as shown in Fig. 1–62, and turn the front housing with thr rotor so that the sliding surface of the front housing faces upward.

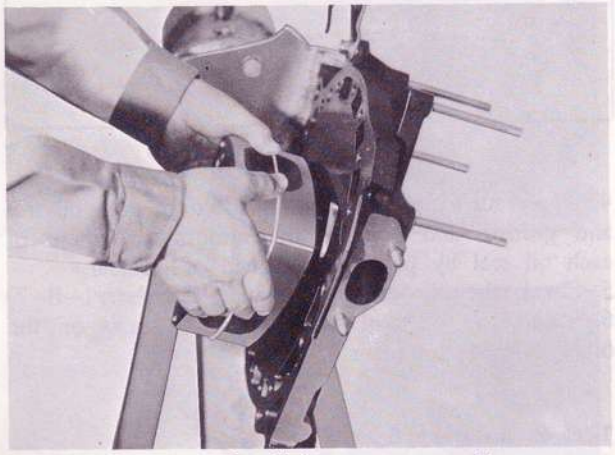

Fig. 1–62 Install front rotor assembly

5. Mesh the internal gear and stationary gear so that one of the rotor apexes is set to any one of the four places shown in Fig. 1–63, and remove the used "O" ring.

Note:
In this case, be careful not to drop the corner seal into the port.

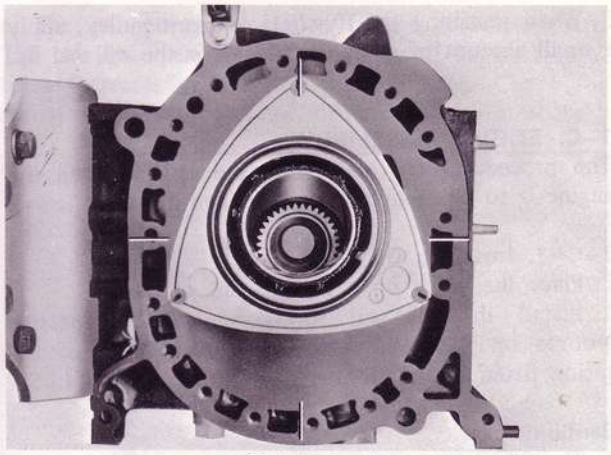

Fig. 1–63 Positioning front rotor

1–C–4. Installing Eccentric Shaft

1. Lubricate the front rotor journal and main journal on the shaft with engine lubricant.
2. Insert the eccentric shaft being careful not to damage the rotor bearing and main bearing.

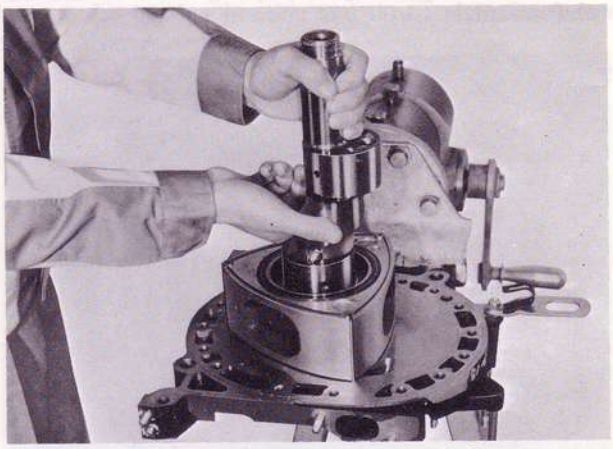

Fig. 1–64 Installing eccentric shaft

1–C–5. Installing Front Rotor Housing

1. Apply sealing agent onto the front side of the rotor housing, as shown in Fig. 1–65.

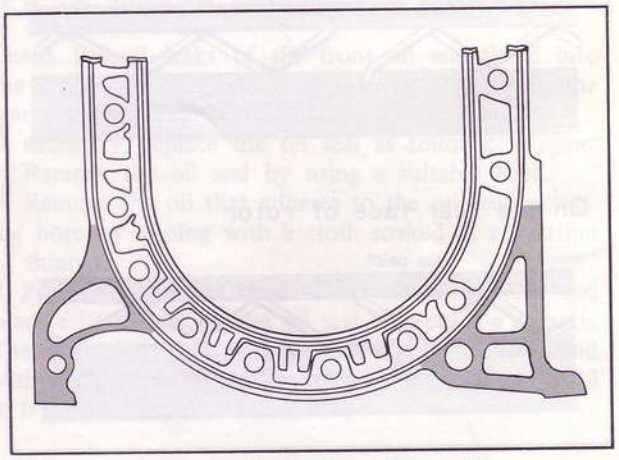

Fig. 1–65 Applying sealing agent

2. Slightly apply vaseline or petrolatum onto new "O" ring and sealing rubbers to prevent them from coming

off, and place the "O" ring and sealing rubbers on the front side of the rotor housing.

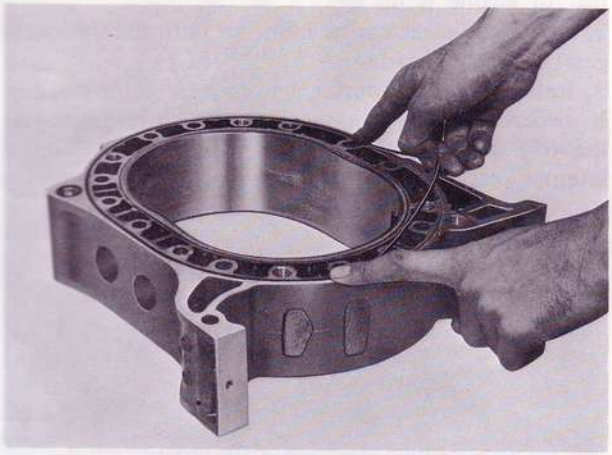

Fig. 1–66 Installing sealing rubber

Note:
The inner and outer sealing rubbers are square type. The wider line of the inner sealing rubber should face with combustion chamber and the seam of the sealing rubber should be placed at the position as shown in Fig. 1–67.
Do not stretch the inner sealing rubber.

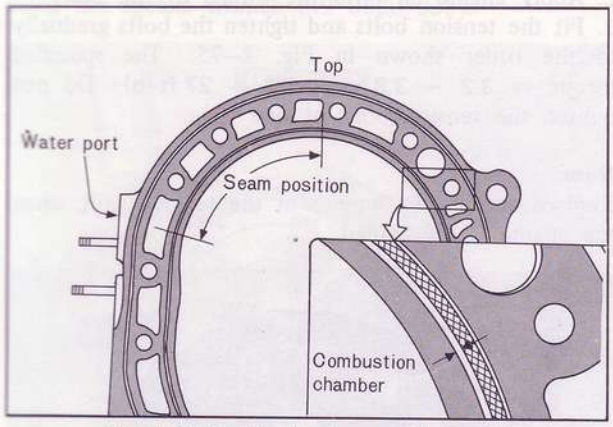

Fig. 1–67 Positioning inner sealing rubber

Note:
When engine overhauling, install the protector to only inner sealing rubber as shown in Fig. 1–68 to improve the durability of the sealing rubber.

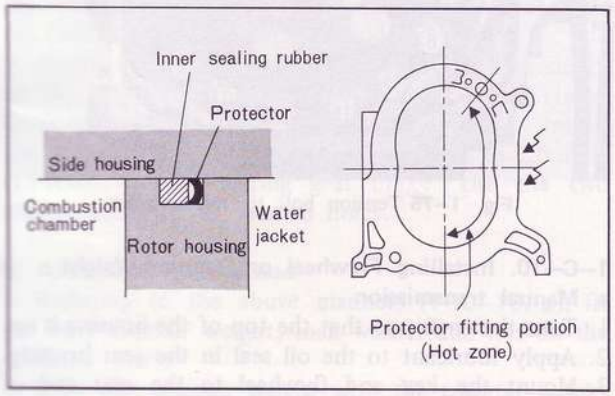

Fig. 1–68 Installing sealing rubber protector

3. Invert the front rotor housing being careful not to let the sealing rubbers and "O" ring drop out of the grooves, and mount it on the front housing.
4. Apply engine lubricant onto the tubular dowels and insert the tubular dowels through the front rotor housing holes into the front housing holes as shown in Fig. 1–69.

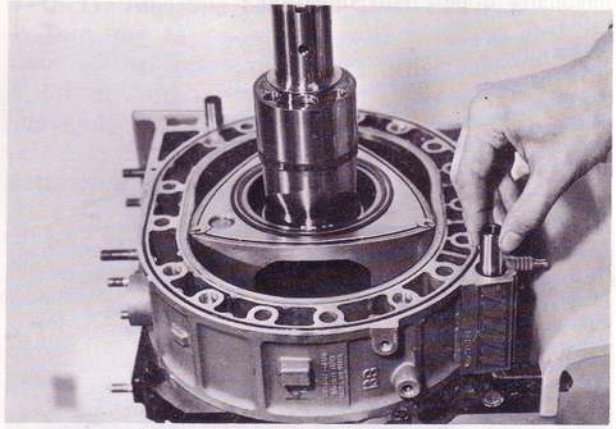

Fig. 1–69 Installing tubular dowel

5. Apply the sealing agent on the rear side of the rotor housing referring to the other side.
6. Place new "O" ring, sealing rubbers and protector on the front rotor housing in the same manner as on the other side.
7. Insert the each apex seal spring confirming the spring direction as shown in Fig. 1–47.
8. Fit the each side piece to its original position. And confirm that the spring should be set correctly on the side piece.

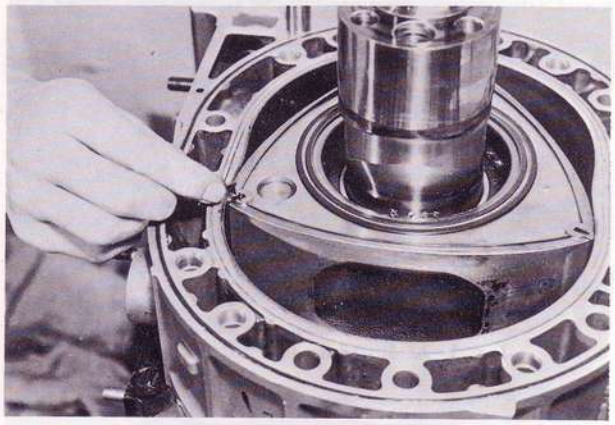

Fig. 1–70 Fitting side piece and spring

9. Apply engine lubricant on the side pieces. And make sure that the front rotor housing is free from any foreign matter and apply some engine lubricant onto the sliding surface of the front rotor housing.

1–C–6. Installing Intermediate Housing

1. Turn the front housing with rotor assembly so that the top of the housing inclines to upward, and pull the eccentric shaft about 25 mm (1 in), but do not pull over 35 mm (1.5 in).

2. Install the intermediate housing through the eccentric shaft on the front rotor housing, and turn the engine on the work stand so that the rear of engine is up.

Note:
As the easy way of installation of the intermediate housing, position the eccentric portion of shaft in diagonally upper right direction.

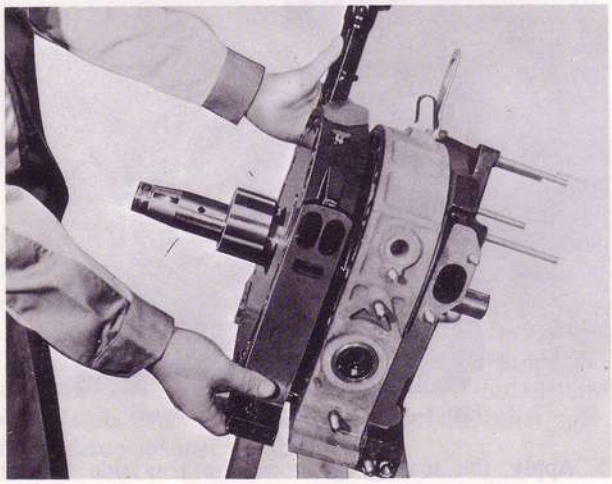

Fig. 1–71 Installing intermediate housing

1–C–7. Installing Rear Rotor and Rear Rotor Housing

Refer to steps 1–C–1 to 1–C–5 and install the rear rotor and rear rotor housing.

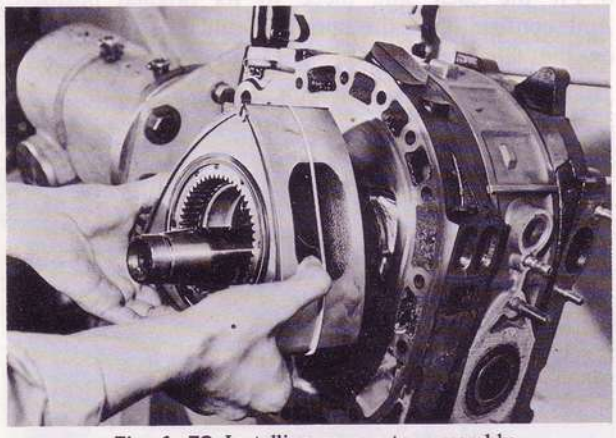

Fig. 1–72 Installing rear rotor assembly

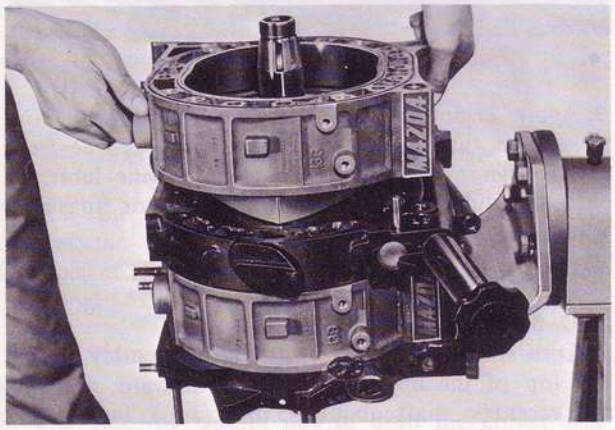

Fig. 1–73 Installing rear rotor housing

1–C–8. Installing Rear Housing

1. Turn the engine on the work stand so that the rear of engine is up.
2. Apply sufficient engine lubricant onto the stationary gear and main bearing.
3. Install the rear housing on the rear rotor housing. If necessary, turn the rear rotor slightly to engage the rear housing stationary gear with the rear rotor internal gear.

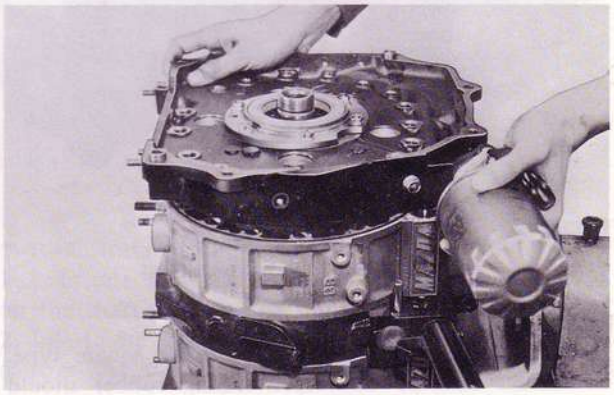

Fig. 1–74 Installing rear housing

1–C–9. Tightening Tension Bolts

1. Place a new sealing washer in each tension bolt.
2. Apply engine oil onto the thread of the bolt.
3. Fit the tension bolts and tighten the bolts gradually in the order shown in Fig. 1–75. The specified torque is **3.2 ~ 3.8 m-kg (23 ~ 27 ft-lb)**. Do not tighten the tension bolts at one time.

Note:
Replace the sealing washer in the tension bolt when the engine is overhauled.

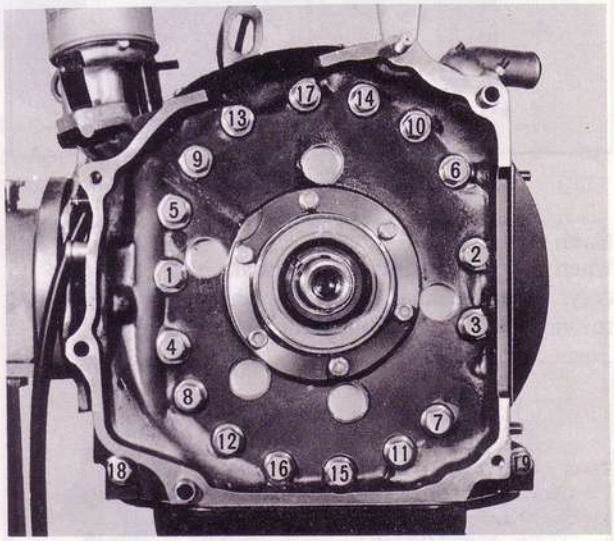

Fig. 1–75 Tension bolt tightening order

1–C–10. Installing Flywheel or Counter Weight

a. Manual transmission

1. Turn the engine so that the top of the housing is up.
2. Apply lubricant to the oil seal in the rear housing.
3. Mount the key and flywheel to the rear end of the eccentric shaft so that the key fits into the

keyway of the flywheel.

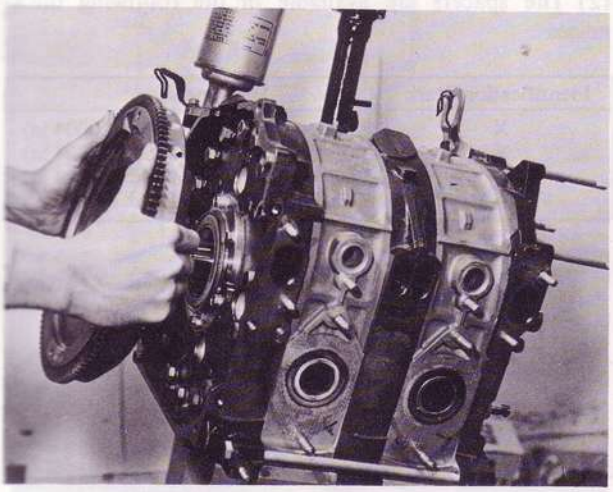

Fig. 1–76 Installing flywheel

4. After mounting, turn the eccentric shaft and make sure that the rotation is light and smooth.
5. Apply sealing agent to both sides of the flywheel lock washer and place the lock washer in position.
6. Fit the flywheel lock nut by the fingers. Hold the flywheel with the **ring gear brake** (49 1881 060) and tighten the lock nut to **45.0 m-kg (350 ft-lb)** using the **special wrench** (49 0820 035).

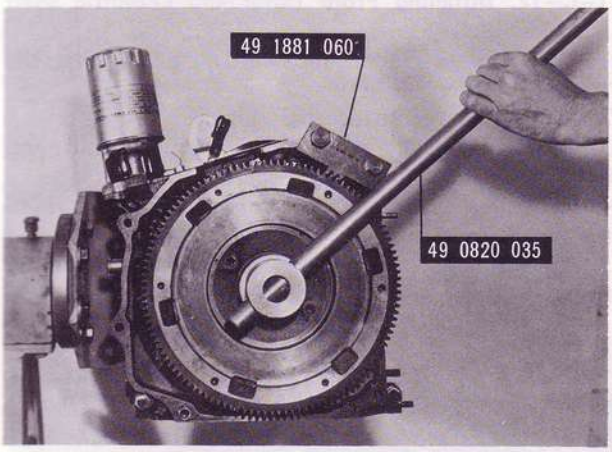

Fig. 1–77 Tightening flywheel nut

7. Bent the tab of the lock washer.
8. Hold the clutch disc in its mounting position with the **clutch disc arbor** (49 0813 310). If the arbor is not available, use a spare main drive shaft.
9. Mount the clutch cover and pressure plate assembly on the flywheel, and align the "O" mark on the clutch cover with the reamed hole of the flywheel. Install the attaching bolts and tighten the bolts to 2.0 m-kg (15 ft-lb), using the ring gear brake. Use the two reamer bolts in the reamed holes.

b. Automatic transmission

1. Referring to the above manners (1–C–10. a), fit the key, counter weight, lock washer and nut on the eccentric shaft.
2. Hold the counter weight with the **counter weight brake** (49 1881 055) and tighten the lock nut to **45.0 m-kg (350 ft-lb)** using the **special wrench** (49 0820 035).
3. Fit the drive plate on the counter weight and tighten attaching nuts. After installing the flywheel or counter weight, leave the ring gear brake or counter weight brake on the engine alone.

1–C–11. Adjusting Eccentric Shaft End Play

1. Turn the engine on the work stand so that the front of the engine is up.
2. Fit the thrust plate with the tapered face down, and slide the spacer and needle bearing onto the eccentric shaft. Then apply sufficient engine lubricant onto them.

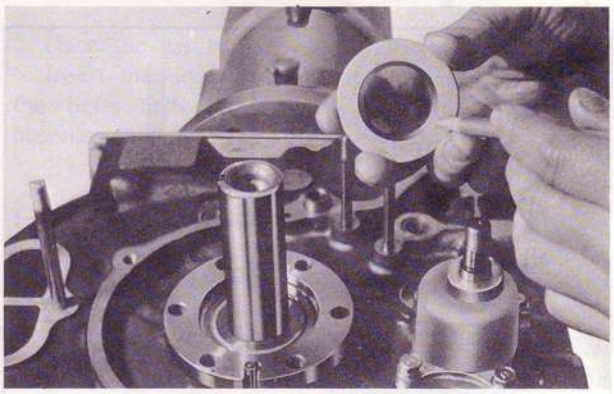

Fig. 1–78 Fitting thrust plate

3. Place the bearing housing on the front housing. Tighten the attaching bolts with washers.

Note :

If the bearing housing has been installed to the front housing, special care should be taken when installing the spacer.
Install the spacer so that the center of the needle bearing in the bearing housing comes to the center of eccentric shaft, and the spacer should be seated to the thrust plate.

4. Slide the needle bearing onto the shaft, and apply engine lubricant onto it.
5. Slide the balance weight together with the thrust washer onto the shaft.

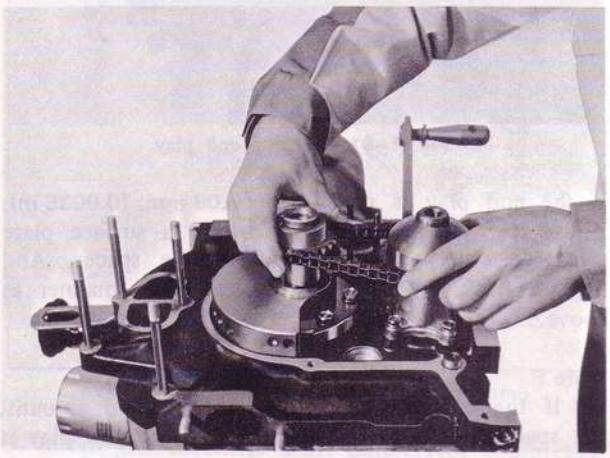

Fig. 1–79 Installing chain and sprockets

6. Engage the oil pump drive chain with the driven sprocket and drive sprocket, and then slide the sprockets with chain onto the eccentric shaft and oil pump shaft simultaneously aligning the keyway of the driven gear sprocket with the key on the oil pump shaft. Fit the key onto the eccentric shaft.
7. Slide the distributor drive gear onto the eccentric shaft with "F" mark on the gear faced the front of engine.
8. Install the eccentric shaft pulley onto the shaft aligning the keyway of the pulley with the key.
9. Tighten the pulley bolt with washer to **7.5 ~ 9.5 m-kg (54 ~ 69 ft-lb).**
10. Turn the engine on the work stand so that the top of the engine is up.

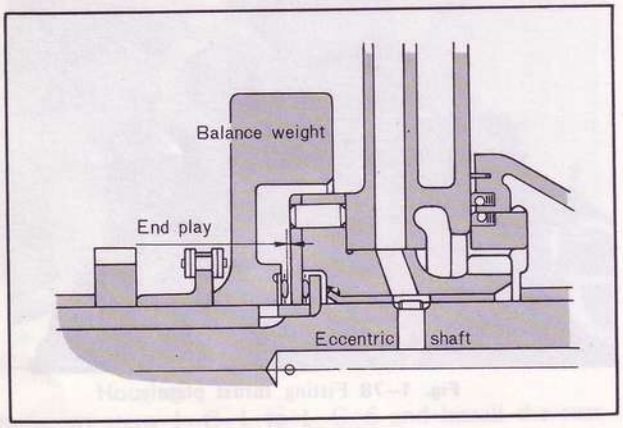

Fig. 1–80 Eccentric shaft end play

11. Apply a dial indicator onto the flywheel as shown in Fig. 1–81. Move the flywheel fore and aft, and note the reading of the indicator. The standard end play is **0.04 ~ 0.07 mm (0.0016 ~ 0.0028 in).**

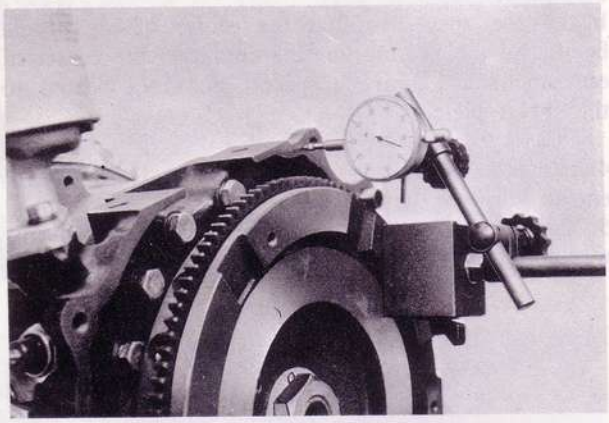

Fig. 1–81 Checking end play

If the end play is more than **0.09 mm (0.0035 in),** adjust it by grinding the spacer on a surface plate using an emery paper or replace the spacer. And then recheck the end play in the same manner as above.

Note :
(1) If the end play is below the specified amount, the spacer thickness is too small. If the end play is above the specified amount, the spacer thickness is too big.
(2) The spacers are available in the following thicknesses :

Identification Mark	Thickness
X	8.08 ± 0.01 mm (0.3181 ± 0.0004 in)
Y	8.04 ± 0.01 mm (0.3165 ± 0.0004 in)
V	8.02 ± 0.01 mm (0.3158 ± 0.0004 in)
Z	8.00 ± 0.01 mm (0.3150 ± 0.0004 in)



Fig. 1–82 Adjusting spacer

12. If the end play is 0.04 ~ 0.09 mm (0.0016 ~ 0.0035 in), proceed as follows to install the front cover.

1–C–12. Installing Front Cover and Eccentric Shaft Pulley

1. Turn the engine on the work stand so that the front of the engine is up.
2. Remove the eccentric shaft pulley.
3. Tighten the oil pump driven sprocket nut and bend the tab of the lock washer.
4. Place the chain adjuster in position and tighten the attaching nuts.
5. Place a new "O" ring on the oil passage of the front housing.

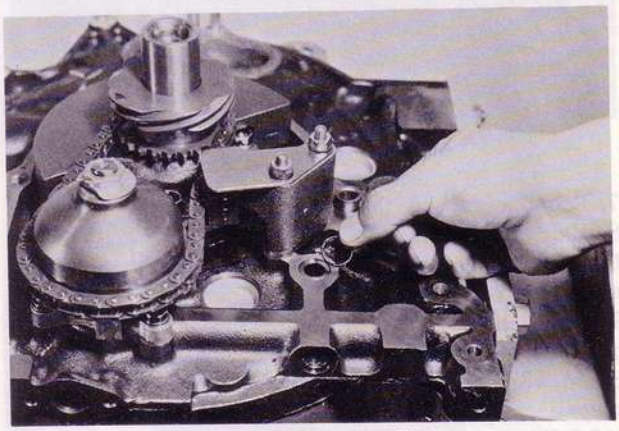

Fig. 1–83 Placing "O" ring

6. Place the gasket and front cover on the front housing, and tighten the attaching bolts.
7. Apply engine lubricant onto the oil seal in the front cover.
8. Install the eccentric shaft pulley onto the shaft and tighten the pulley bolt with washer to 7.5 ~ 9.5 m-kg (54 ~ 69 ft-lb).

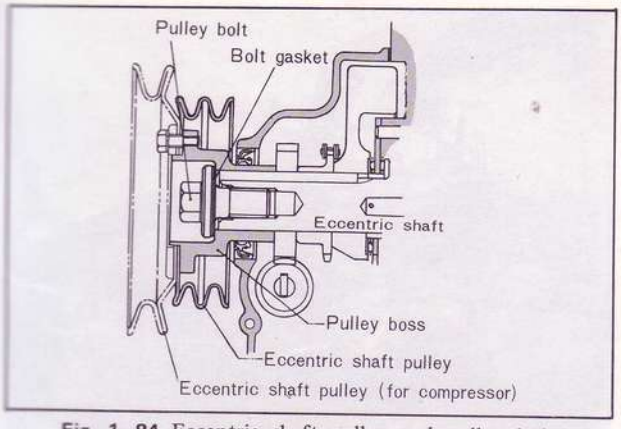

Fig. 1–84 Eccentric shaft pulley and pulley bolt

Note:
When tightening the pulley bolt, be careful not to slip the washer from the bolt.

1–C–13. Installing Oil Strainer and Oil Pan

1. Turn the engine on the work stand so that the bottom of the engine is up.
2. Cut off the excess gasket on the front cover along the mounting surface of the oil pan.

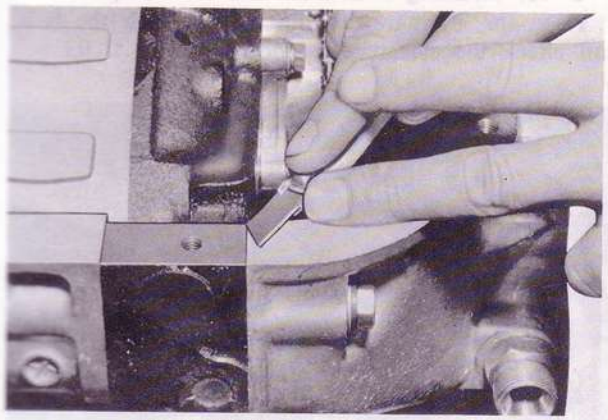

Fig. 1–85 Cutting off excess gasket

3. Place the oil strainer gasket and strianer on the front housing and tighten the attaching bolts.

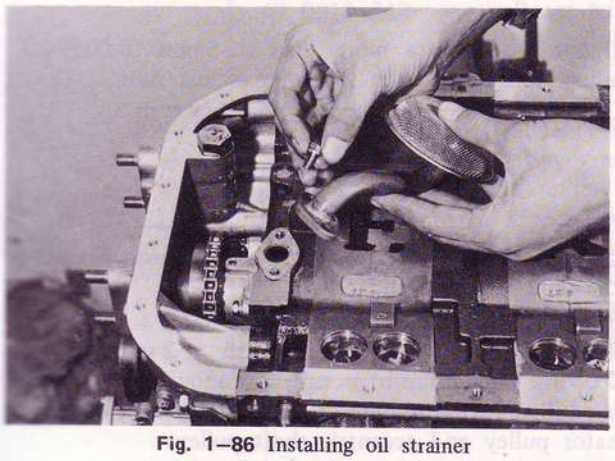

Fig. 1–86 Installing oil strainer

4. Apply the sealing agent onto the joint surfaces of each housing.

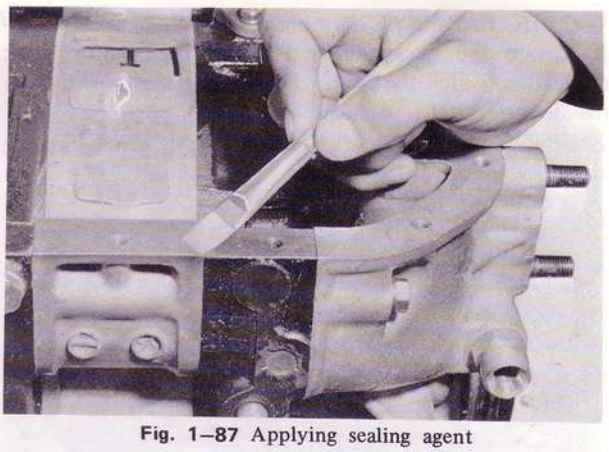

Fig. 1–87 Applying sealing agent

5. Place the gasket and oil pan in position.
6. Insert the bolts through the stiffeners, and tighten the bolts little by little in turn until the torque becomes 0.85 m-kg (6.1 ft-lb) evenly.

1–C–14. Installing Water Pump

1. Turn the engine on the work stand so that the top of the engine is up.
2. Place the gaskets and water pump on the front housing, and tighten the attaching nuts evenly to 2.75 m-kg (20 ft-lb) in the sequence shown in Fig. 1–89.

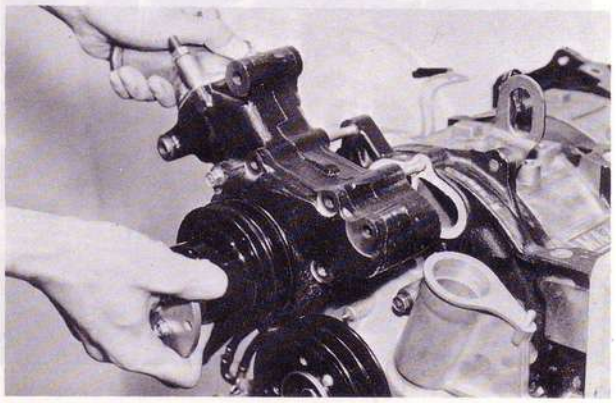

Fig. 1–88 Installing water pump

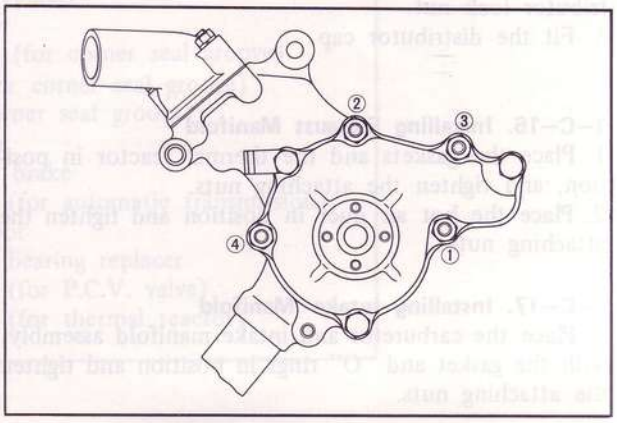

Fig. 1–89 Tightening order of water pump

3. Install the eccentric shaft pulley (for compressor) to the pulley boss.

1–C–15. Installing Distributor

1. Rotate the eccentric shaft until the yellow mark or leading side mark on the pulley aligns with the needle on the front cover.
2. Align the tally mark on the distributor housing and driven gear as shown in Fig. 1–90.

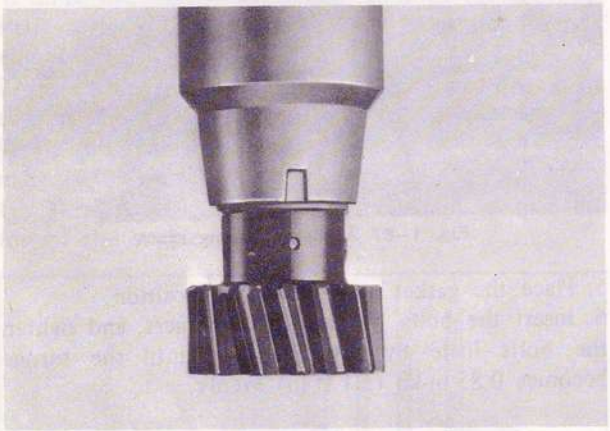

Fig. 1–90 Aligning tally mark

3. Insert the distributor so that the distributor lock bolt is located in the center of the slit, and engage the gears.

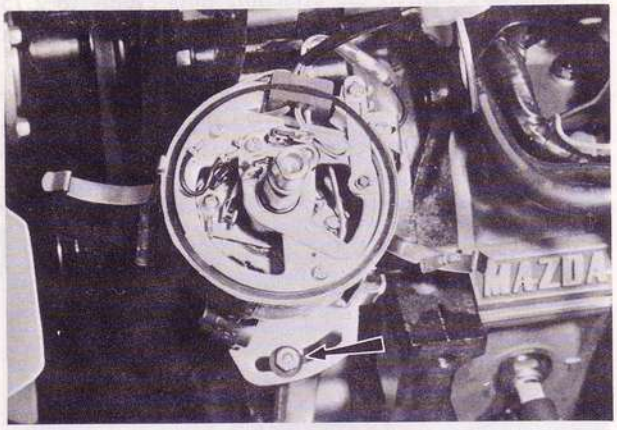

Fig. 1–91 Installing distributor

4. Rotate the distributor clockwise until the leading contact point starts to separate, and tighten the distributor lock nut.
5. Fit the distributor cap.

1–C–16. Installing Exhaust Manifold

1. Place the gaskets and the thermal reactor in position, and tighten the attaching nuts.
2. Place the hot air duct in position and tighten the attaching nuts.

1–C–17. Installing Intake Manifold

1. Place the carburetor and intake manifold assembly, with the gasket and "O" rings in position and tighten the attaching nuts.

Note:
Slightly apply vaseline onto "O" rings to prevent them from coming off.

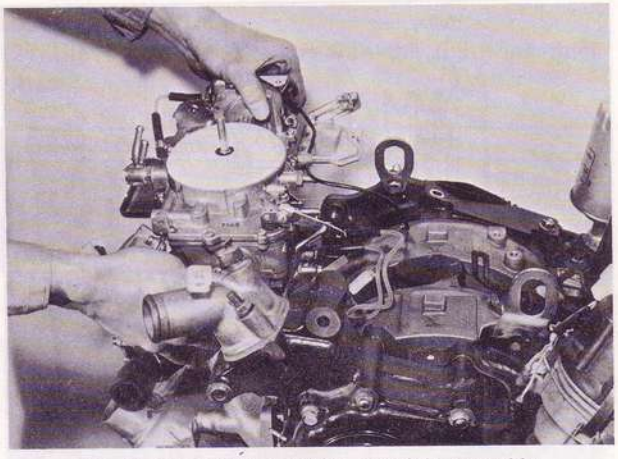

Fig. 1–92 Installing intake manifold assembly

2. Connect the oil tubes and metering oil pump connecting rod with the carburetor as described in Par. 2–I–2.
3. Install the deceleration valve, altitude compensator and evapo compensator valve and connect the vacuum hoses, air hoses and wires with the carburetor.

1–C–18. Installing Alternator and Air Pump

1. Place the alternator to the bracket with the bolt, and check the clearance as shown in Fig. 1–93.

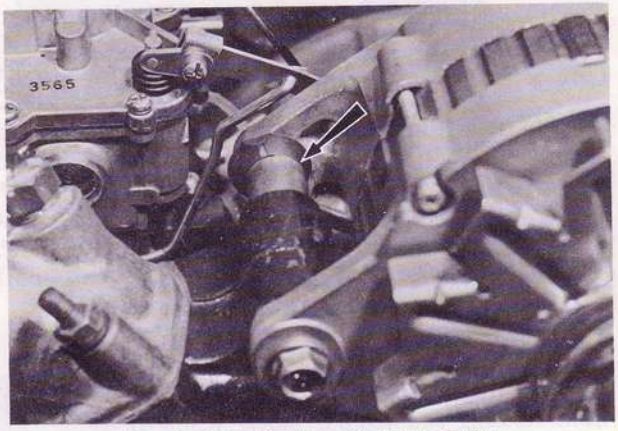

Fig. 1–93 Adjusting alternator fitting

If the clearance is more than 0.15 mm (0.0059 in), adjust it by using the following adjust shim.

0.15	mm	(0.0059 in)
0.3	mm	(0.0118 in)
0.5	mm	(0.0197 in)

2. Attach the upper end of the alternator flange to the adjusting bar, and fit the "V" belt.
3. Adjust the belt deflection.
The belt deflection should be **15 ± 2 mm (0.60 ± 0.08 in)** when thumb pressure of about 10 kg (22 lb) is applied to the middle of the belt between the alternator pulley and eccentric shaft pulley.
After adjusting, tighten the bolts and nuts.
4. Install the air pump with the attaching bar and bolts. Fit the "V" belt.

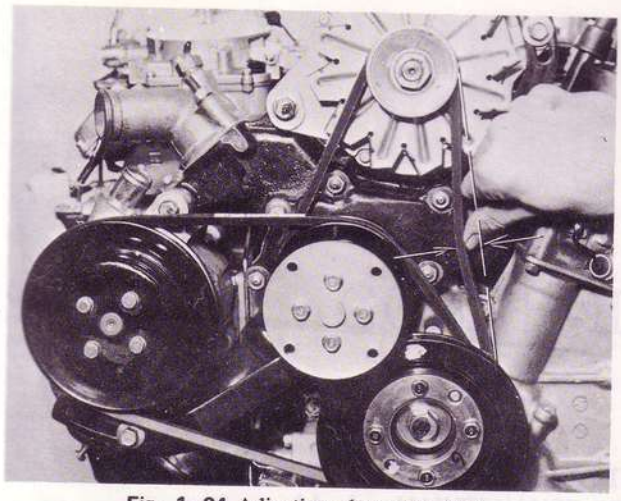

Fig. 1–94 Adjusting alternator belt

5. To adjust the "V" belt tension, push the "V" belt with about 10 kg (22 lb) as shown in Fig. 1–95. The belt deflection should be **10 ± 1 mm (0.40 ± 0.04 in).**

After adjusting, tighten the bolts and nuts.

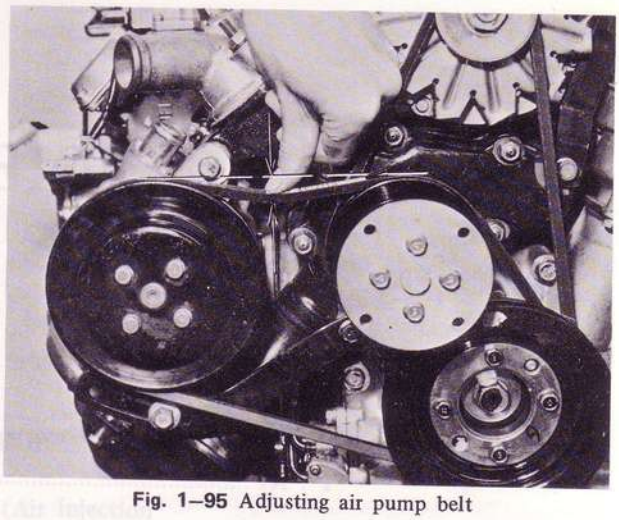

Fig. 1–95 Adjusting air pump belt

6. Before removing the engine from the work stand, install the engine mounting bracket to the front cover.

SPECIAL TOOLS

49 0839 000	Engine work stand
49 1114 005	Engine hanger
49 0820 035	Special wrench
49 0823 300	Flywheel puller
49 0839 305A	Counter weight puller
49 0813 250	Seal case
49 0813 215	Tubular dowel puller
49 0813 235	Main bearing replacer
49 0813 240	Rotor bearing replacer
49 0813 225	Oil seal remover
49 0839 165	Bar limit gauge (for corner seal groove)
49 2113 030	Reboring jig (for corner seal groove)
49 0839 170	Reamer (for corner seal groove)
49 1881 060	Ring gear brake
49 1881 055	Counter weight brake
49 0877 435	Special wrench (for automatic transmission)
49 0813 310	Clutch disk arbor
49 0823 070A	Eccentric shaft bearing replacer
49 1881 135	Special wrench (for P.C.V. valve)
49 1881 125	Special wrench (for thermal reactor)

EMISSION CONTROL SYSTEM

EMISSION CONTROL SYSTEM ..... 1A : 1
1A–A. MAINTENANCE PROCEDURE ..... 1A : 1
1A–A–1. Air Pump ..... 1A : 1
1A–A–2. Check Valve (Air Injection System) ..... 1A : 1
1A–A–3. Thermal Reactor ..... 1A : 2
1A–A–4. Air Control Valve ..... 1A : 2
1A–A–5. Deceleration Control Valve ..... 1A : 3
1A–A–6. Altitude Compensator ..... 1A : 5
1A–A–7. Evapo Compensator Valve ..... 1A : 5
1A–A–8. Ignition Control System ..... 1A : 5
1A–A–9. Retard Switch ..... 1A : 7
1A–A–10. Kick-down Control System (car with automatic transmission only) .. 1A : 7
1A–A–11. Heat Hazard Protective and Warning System ..... 1A : 8
1A–A–12. Automatic Throttle Release System ..... 1A : 9
1A–A–13. Control Unit ..... 1A : 9
1A–A–14. Water Temperature Switch ..... 1A : 9
1A–A–15. Idle Switch ..... 1A : 10
1A–A–16. Choke Switch ..... 1A : 11
1A–A–17. Choke Relay ..... 1A : 11
1A–A–18. Ventilation Valve ..... 1A : 12
1A–A–19. Charcoal Canister ..... 1A : 12
1A–A–20. Evaporative Line ..... 1A : 12
1A–A–21. Condense Tank ..... 1A : 13
1A–A–22. Check Valve (Evaporative Emission Control System) ..... 1A : 13
1A–A–23. Hoses and Connections (All Systems) ..... 1A : 13
1A–B. TROUBLE CHECK GUIDE ..... 1A : 14
1A–C. TROUBLE SHOOTING ..... 1A : 21
SPECIAL TOOLS ..... 1A : 26

EMISSION CONTROL SYSTEM

This section explains the procedures for checking, adjusting and replacing the parts of the emission control system.

1A–A. MAINTENANCE PROCEDURE

1A–A–1. Air Pump

a. Checking air pump

1. Check for cracks or damages on the body of the air pump and for looseness of the attaching bolts and nuts.
2. Check to see that the air pump belt tension is proper.
3. Run the engine at idle speed.
4. Check to see that the air hoses are free of air leaks.
5. Stop the engine.
6. Attach the **air pump gauge set** (49 2113 010A) as shown in Fig. 1A–1.

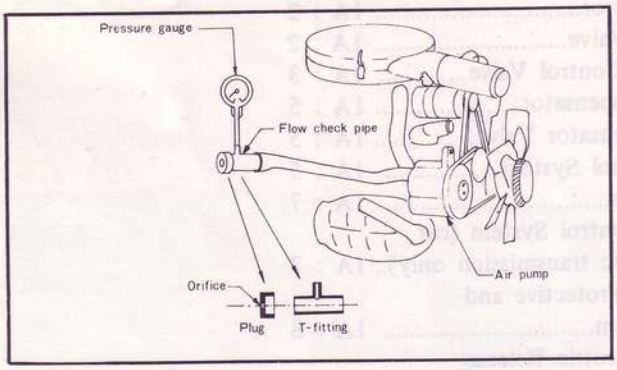

Fig. 1A–1 Checking air pump

7. Run the engine.
8. If the pressure gauge reading is not within the range of each of the following specifications, replace the air pump.

Manual transmission	more than 0.039 kg/cm² (0.55 lb/in²) at 800 rpm
Automatic transmission	more than 0.034 kg/cm² (0.48 lb/in²) at 750 rpm

b. Removing air pump

1. Remove the hot air duct for the air cleaner.
2. Disconnect the air inlet hose (air cleaner ~ air pump) and outlet hose (air pump ~ air control valve) from the air pump.
3. Remove the air pump mounting and adjusting bolts.
4. Remove the air pump drive belt and air pump.

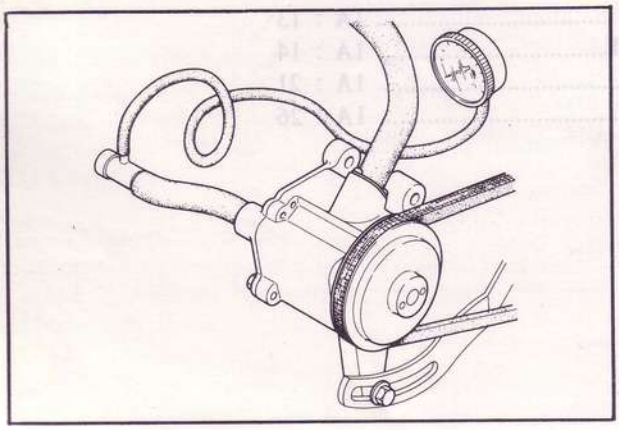

Fig. 1A–2 Air pump gauge set

c. Installing air pump

Follow the removal procedures in the reverse order.

d. Adjusting air pump drive belt

When a **10 kg (22 lb) pressure** is given to a spot midway between the air pump pulley and water pump pulley, belt deflection should be **10 ± 1 mm (0.40 ± 0.04 in).**

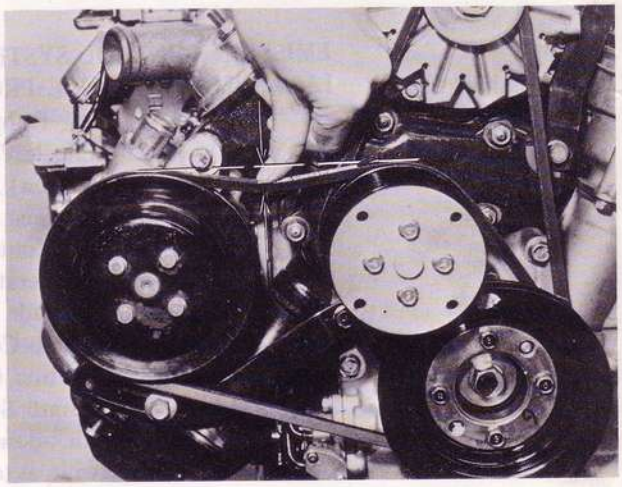

Fig. 1A–3 Adjusting pump belt tension

1A–A–2. Check Valve (Air Injection System)

a. Checking check valve

1. Disconnect the air hose (air pump ~ air control valve) from the air control valve.
2. Run the engine **at 1,500 rpm.**
3. Hold a finger over the inlet of the air control valve. If exhaust gas flow is felt, replace the check valve, spring and gasket.

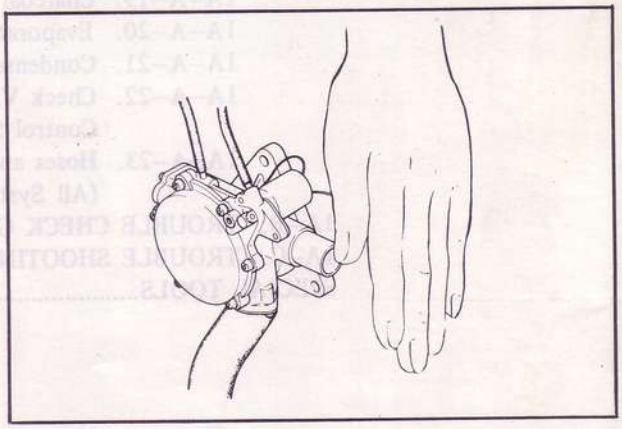

Fig. 1A–4 Checking check valve

b. Replacing check valve

1. Remove the air control valve, as described in Par. 1A–A–4.
2. Remove the gasket, valve and spring.
3. Install the check valve by following the removal

procedures in the reverse order.

1A–A–3. Thermal Reactor

a. Checking thermal reactor

1. Check to see that the appearance of the thermal reactor is not damaged or cracked by visual inspection or striking it with the hammer lightly.
2. Remove the air pipe (thermal reactor ~ air control valve) from the thermal reactor.
3. Check to see that the non-return valve works smoothly. If the foreign substance or sludge exists, remove it. If the sticking exists, replace the thermal reactor.

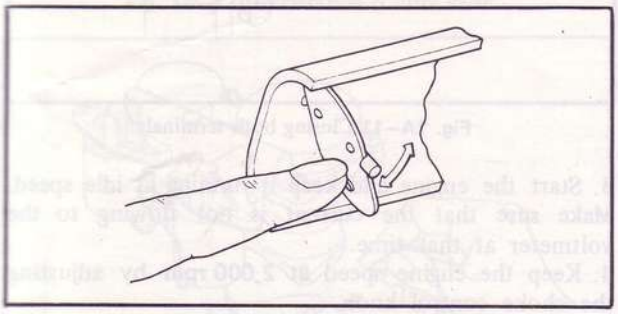

Fig. 1A–5 Checking non-return valve

4. Connect the air pipe to the thermal reactor.
5. Start the engine and keep it running at idle speed.
6. Make sure that most exhaust gas is not released from the tail of cooling air pipe. If the most exhaust gas releases, replace the thermal reactor.

b. Replacing thermal reactor

1. Remove the air control valve, as described in Par. 1A–A–4.
2. Remove the bolts attaching the heat insulator to the intake manifold and remove the heat insulator.
3. Raise the front of vehicle and support with stands.
4. Remove the bolts attaching the engine under cover and remove the cover.
5. Remove the bolts attaching the thermal reactor cover and remove the cover.

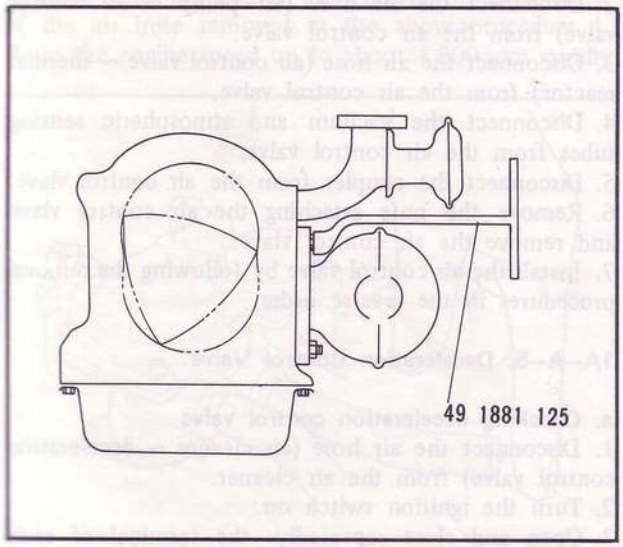

Fig. 1A–6 Removing thermal reactor

6. Disconnect the exhaust pipe from the thermal reactor.
7. Remove the nuts attaching the thermal reactor to the engine.

Note:
The upper nuts should be removed with the **thermal reactor remover** (49 1881 125).

8. Remove the thermal reactor.
9. Install the thermal reactor by following the removal procedures in the reverse order.

1A–A–4. Air Control Valve

a. Checking air control valve

1. Remove the air pipe (air control valve ~ thermal reactor) from the thermal reactor.

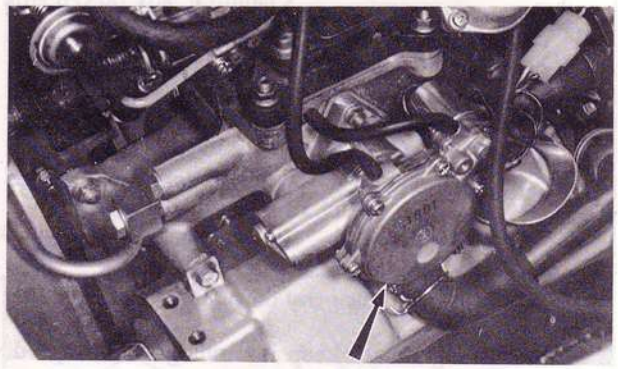

Fig. 1A–7 Air control valve

2. Remove the coupler from the solenoid of the air control valve. Apply the voltage (12V) of the battery directly on the coupler. Make sure that the clicking sound is audible from the solenoid on that occasion. If not, replace the solenoid.
3. Connect the coupler to the air control valve.
4. Start the engine and keep it running at idle speed. Make sure that the air hardly flows out of the air pipe.

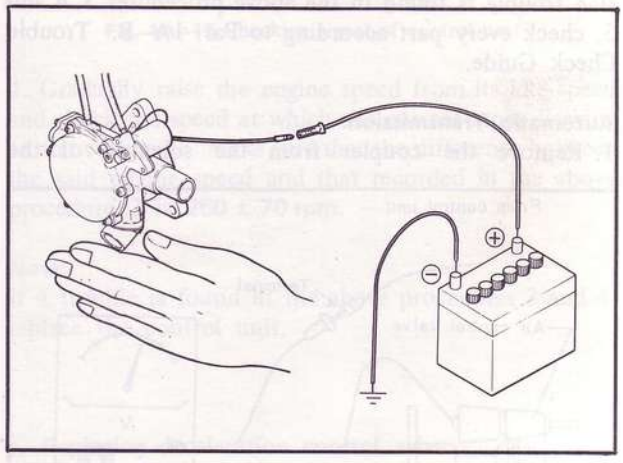

Fig. 1A–8 Checking air control valve

5. Remove the coupler from the solenoid of the air control valve. Apply the voltage (12V) of the battery directly on the coupler and make sure that the air flows out of the air pipe.

Note:
1. If a trouble is found in the above procedure 4, check every part according to Par. 1A–B. Trouble Check Guide.
2. If a trouble is found in the above procedure 5, replace the air control valve.

b. Checking signal of control unit

Manual transmission:
1. Remove the coupler from the solenoid of the air control valve and connect the voltmeter to the coupler.

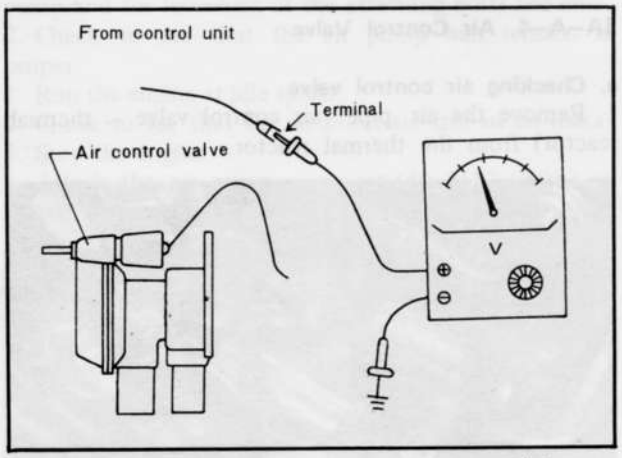

Fig. 1A–9 Checking signal of control unit (M/T)

2. Start the engine and keep it running at idle speed.
3. Make sure that the current is not flowing to the voltmeter at this time.
4. Gradually raise the engine speed and make sure that the current begins flowing to the voltmeter at **4,000 ± 400 rpm.**
5. Make sure that the current begins flowing to the voltmeter when the idle switch is pushed with the engine speed kept **at 2,000 rpm .**

Note:
If a trouble is found in the above procedures 3, 4 and 5, check every part according to Par. 1A–B. Trouble Check Guide.

Automatic Transmission:
1. Remove the coupler from the solenoid of the air control valve and connect the voltmeter to the coupler.
2. Remove the coupler from the water temperature switch and close both terminals in the coupler.

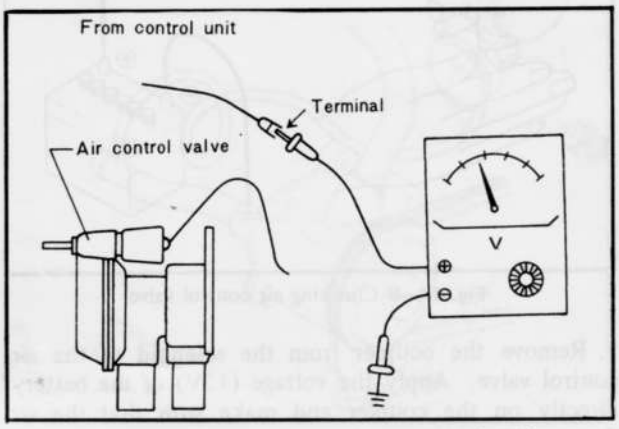

Fig. 1A–10 Checking signal of control unit (A/T)

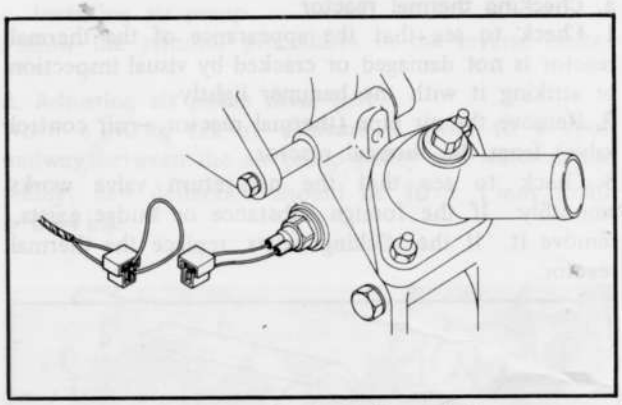

Fig. 1A–11 Closing both terminals

3. Start the engine and keep it running at idle speed. Make sure that the current is not flowing to the voltmeter at that time.
4. Keep the engine speed **at 2,000 rpm** by adjusting the choke control knob.
5. Next, gradually raise the engine by operating the throttle speed and make sure that the current begins flowing to the voltmeter **at 4,800 ± 400 rpm.**
6. Push the choke control knob in to idle the engine.
7. Raise the engine speed from its idle speed by operating throttle and make sure that the current begins flowing to the voltmeter **at 4,000 ± 400 rpm.**
8. Make sure that the current begins flowing to the voltmeter when the idle switch is pushed with the engine speed kept **at 2,000 rpm.**

Note:
If a trouble is found in the above procedures 3, 5, 7 and 8, check every part according to Par. 1A–B. Trouble Check Guide.

c. Replacing air control valve
1. Remove the hot air duct for the air cleaner.
2. Disconnect the air hose (air pump ~ air control valve) from the air control valve.
3. Disconnect the air hose (air control valve ~ thermal reactor) from the air control valve.
4. Disconnect the vacuum and atmospheric sensing tubes from the air control valve.
5. Disconnect the coupler from the air control vlave.
6. Remove the nuts attaching the air control vlave and remove the air control vlave.
7. Install the air control valve by following the removal procedures in the reverse order.

1A–A–5. Deceleration Control Valve

a. Checking deceleration control valve
1. Disconnect the air hose (air cleaner ~ deceleration control valve) from the air cleaner.
2. Turn the ignition switch on.
3. Open and close repeatedly the terminal of each solenoid of the deceleration control valve, and make

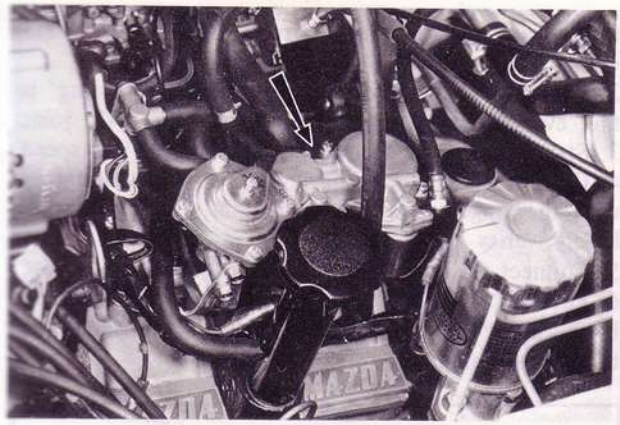

Fig. 1A–12 Deceleration control valve

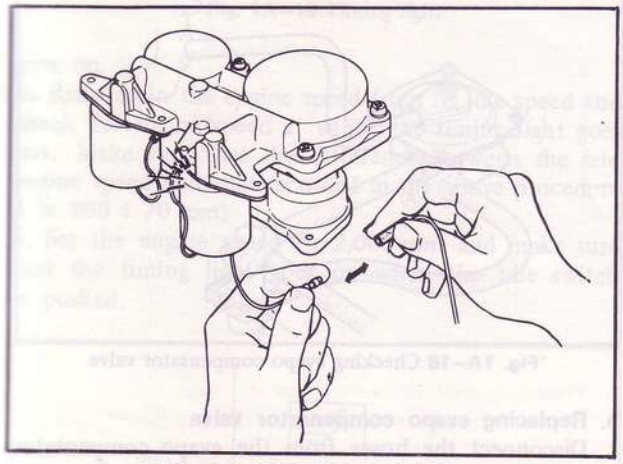

Fig. 1A–13 Checking solenoid

sure that the clicking sound from each solenoid is audible on that occasion.
4. Start the engine and keep it running at idle speed.
5. Close with the figners the air hose removed in the above procedure 1 and make sure that the engine speed hardly varies.
6. Make sure that the air is drawn into the air hose removed in the above procedure 1 when the terminal of the solenoid for the coasting valve is removed. Check the anti-afterburn valve in the same procedure.
7. Close with the fingers three-fourth of the opening of the air hose removed in the above procedure 1. Raise the engine speed up to about 4,000 rpm rapidly and then release the acceleration abruptly. Make sure that the fingers feel a large amount of air being drawn into the air hose for **1 ~ 1.5 seconds** just after the engine speed begins to drop and afterwards feel less amount of air being drawn until the speed drops to 1,150 rpm.

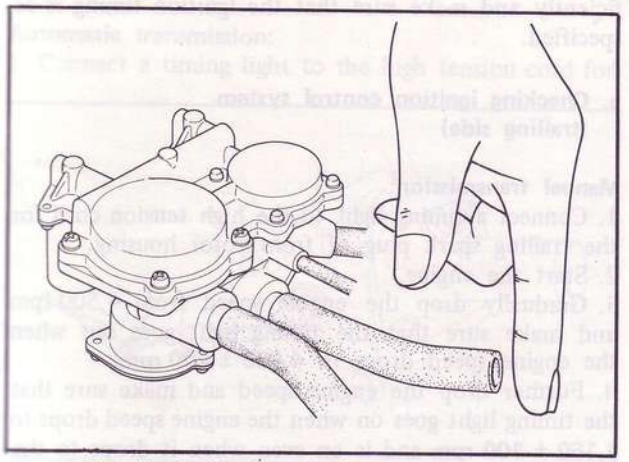

Fig. 1A–14 Checking deceleration control valve

Note:
1. If a trouble is found in the above procedures 3, 5 and 7, check every part according to Par. 1A–B. Trouble Check Guide.
2. If a trouble is found in the above procedure 6, replace the deceleration control valve.

b. Checking signal of control unit
1. Start the engine and keep it running at idle speed.
2. Remove the terminal of the solenoid for the coasting valve and apply the voltage (12V) of the battery directly on the terminal.
3. Remove the coupler of the idle switch and connect the voltmeter to the power lead of coasting valve solenoid. Make sure that the current begins to flow to the voltmeter when the engine speed is gradually dropped from 2,000 rpm to **1,150 ± 100 rpm** and continues to flow even when the speed is dropped to the idle speed. Record the engine speed at which the current begins to flow.

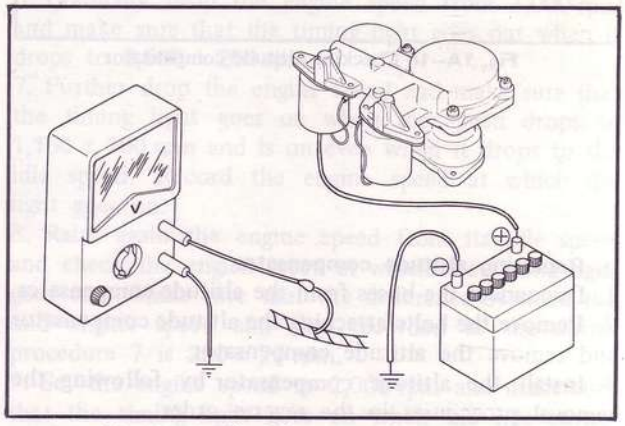

Fig. 1A–15 Checking signal of control unit

4. Gradually raise the engine speed from its idle speed and check the speed at which the current stops flowing to the voltmeter. Make sure that the difference between the said engine speed and that recorded in the above procedure 3 is **250 ± 70 rpm.**

Note:
If a trouble is found in the above procedures 3 and 4, replace the control unit.

c. Replacing deceleration control valve
1. Disconnect the hoses and lead wires from the deceleration control valve.
2. Remove the bolts attaching the deceleration control valve and remove the deceleration control valve.
3. Install the deceleration control valve by following the removal procedures in the reverse order.

1A–A–6. Altitude Compensator

a. Checking altitude compensator

1. Disconnect the hoses (carburetor ~ altitude compensator, altitude compensator ~ evapo compensator valve) from the altitude compensator.
2. Start the engine and keep it running at idle speed.
3. Close with the fingers the mouths of the altitude compensator from which the hoses indicated in the above procedure 1 are disconnected.

If the engine speed drops on that occasion, the altitude compensator is in normal conditions.

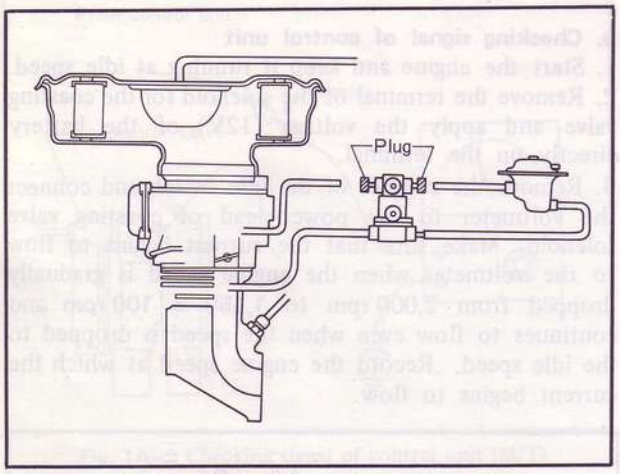

Fig. 1A–16 Checking altitude compensator

b. Replacing altitude compensator

1. Disconnect the hoses from the altitude compensator.
2. Remove the bolts attaching the altitude compensator and remove the altitude compensator.
3. Install the altitude compensator by following the removal procedures in the reverse order.



Fig. 1A–17 Altitude compensator

1A–A–7. Evapo Compensator Valve

a. Checking evapo compensator valve

1. Disconnect the hose Ⓐ (altitude compensator ~ evapo compensator valve) from evapo compensator valve.
2. Disconnect the pressure sensing hose leading to the evapo compensator valve from the "T" joint.
3. Start the engine and keep it running at idle speed.
4. Close the inlet of the evapo compensator valve with the fingers and make sure that the engine speed hardly varies at that time.
5. Connect the hose Ⓐ to the evapo compensator valve.
6. Put the mouth on the pressure sensing hose and blow. Make sure that the engine speed rises up on that occasion.

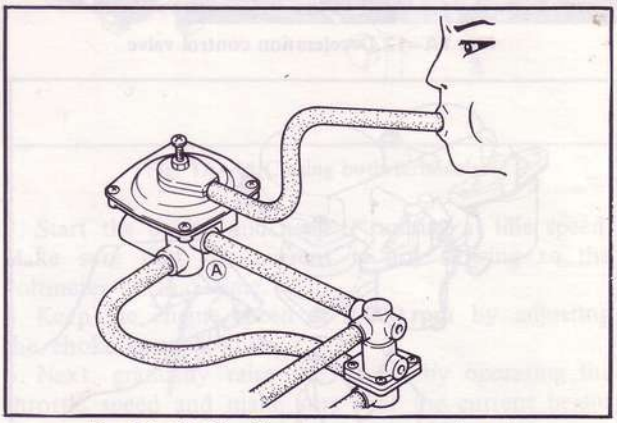

Fig. 1A–18 Checking evapo compensator valve

b. Replacing evapo compensator valve

1. Disconnect the hoses from the evapo compensator valve.
2. Remove the bolts attaching the evapo compensator valve and remove the evapo compensator valve.
3. Install the evapo compensator valve by following the removal procedures in the reverse order.

1A–A–8. Ignition Control System

In this item, inspect the operation of each of the idle switch, choke switch, control unit and retard switch relating to the ignition control system.

If a trouble is found, check defective parts according to Par. 1A–B. Trouble Check Guide.

Note:

Before this inspection, warm up the engine sufficiently and make sure that the ignition timing is as specified.

a. Checking ignition control system (trailing side)

Manual transmission:

1. Connect a timing light to the high tension cord for the trailing spark plug of front rotor housing.
2. Start the engine.
3. Gradually drop the engine speed from 4,500 rpm and make sure that the timing light goes out when the engine speed drops to **4,000 ± 400 rpm.**
4. Further drop the engine speed and make sure that the timing light goes on when the engine speed drops to **1,150 ± 100 rpm** and is on even when it drops to the idle speed. Record the engine speed at which the light

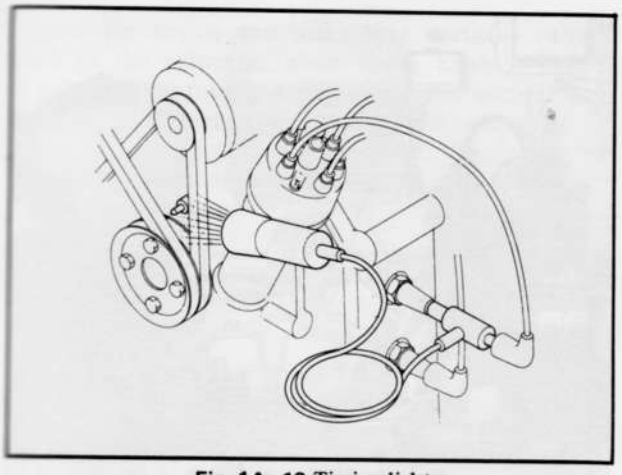

Fig. 1A–19 Timing light

goes on.
5. Raise again the engine speed from its idle speed and check the engine speed at which the timing light goes out. Make sure that the difference between the said engine speed and that recorded in the above procedure 4 is **250 ± 70 rpm.**
6. Set the engine speed to **2,000 rpm** and make sure that the timing light goes on when the idle switch is pushed.

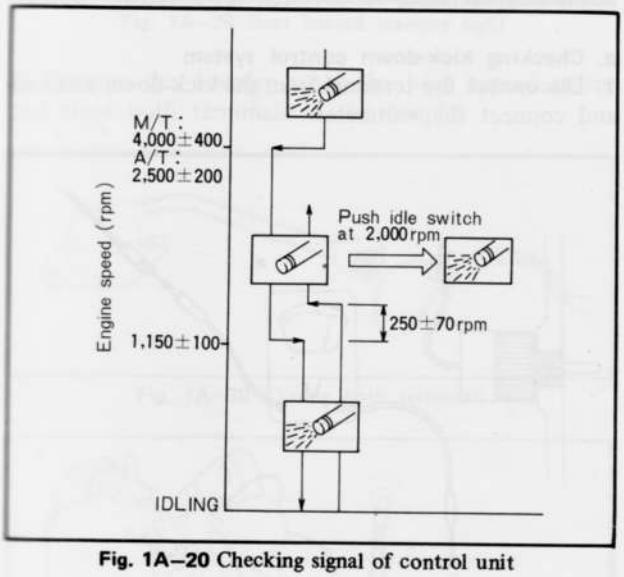

Fig. 1A–20 Checking signal of control unit

Automatic transmission:
1. Connect a timing light to the high tension cord for

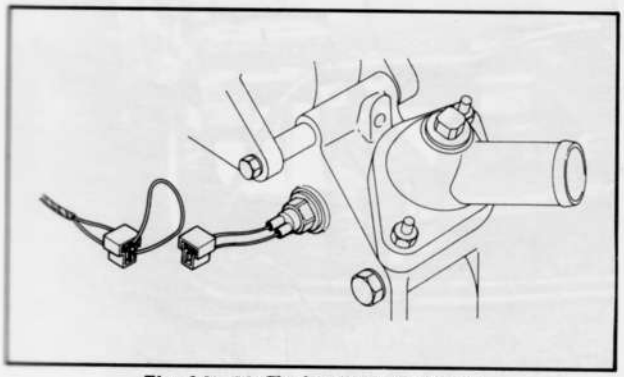

Fig. 1A–21 Closing both terminals

the trailing spark plug of front rotor housing.
2. Remove the coupler from the water temperature switch and close both terminals in the coupler.
3. Start the engine and set the engine speed to **2,000 rpm** by adjusting the choke control knob.
4. Gradually raise the engine speed by operating the throttle and make sure that the timing light goes on when it reaches to **4,800 ± 400 rpm.**

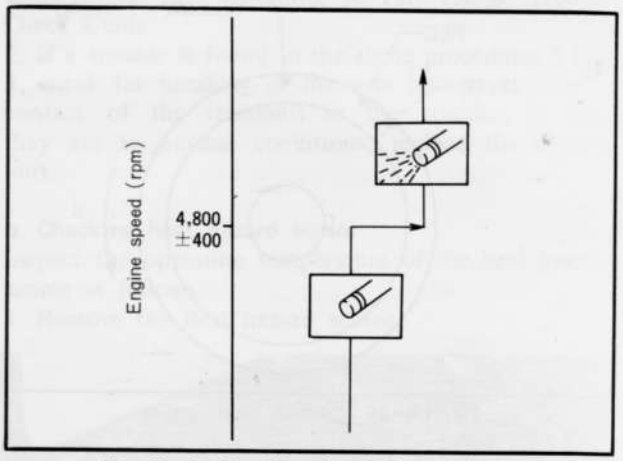

Fig. 1A–22 Checking signal of control unit

5. Push the choke control knob in.
6. Gradually drop the engine speed from 3,000 rpm and make sure that the timing light goes out when it drops to **2,500 ± 200 rpm.**
7. Further drop the engine speed and make sure that the timing light goes on when the speed drops to **1,150 ± 100 rpm** and is on even when it drops to the idle speed. Record the engine speed at which the light goes on.
8. Raise again the engine speed from its idle speed and check the engien speed at which the timing light goes out. Make sure that the difference between the said engine speed and that recorded in the above procedure 7 is **250 ± 70 rpm.**
9. Set the engine speed to 2,000 rpm and make sure that the timing light goes on when the idle switch is pushed.

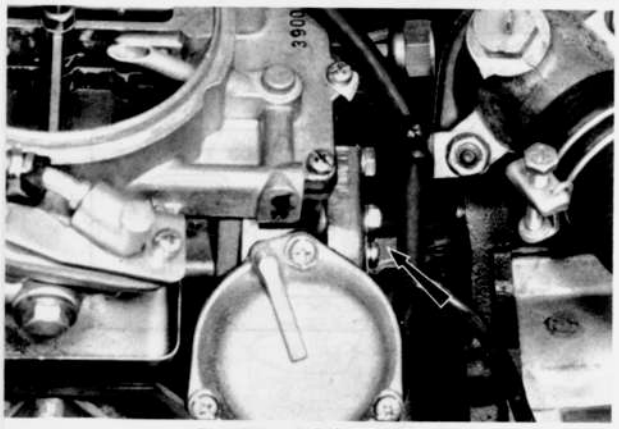

Fig. 1A–23 Idle switch

b. Checking ignition control system (leading side)
1. Connect a timing light to the high tension cord for the leading spark plug of front rotor housing.

2. Remove the coupler from the water temperature switch and close both terminals in the coupler.
3. Start the engine and set the engine speed to 2,000 rpm by adjusting the choke control knob.
4. Next, make sure that the timing indicator pin points between the yellow and red marks notched on the eccentric shaft pulley.

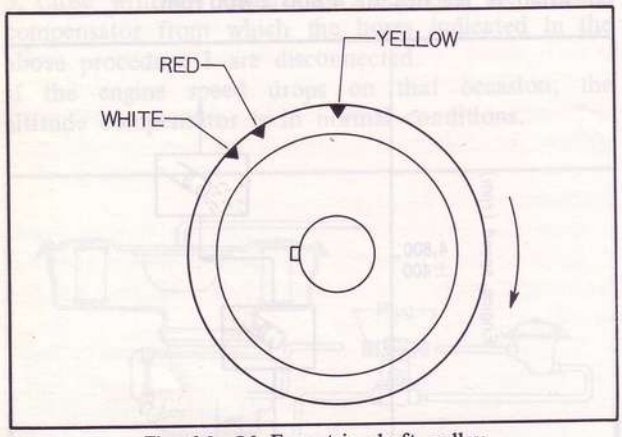

Fig. 1A–24 Eccentric shaft pulley

5. Make sure that the engine speed rises up by several hundred rpm when it is **120 ± 24 seconds** since the engine was started.

1A–A–9. Retard Switch

a. Checking retard switch

1. Remove the coupler from retard switch.
2. Using the ohmmeter, make sure of continuity between the terminals (B) – (NC) in the coupler and of non-continuity between (B) – (NO) .
3. Apply the voltage (12V) of the battery on (SD_1) terminal in the coupler, and ground (E) terminal.
4. Using the ohmmeter, make sure of continuity between the terminals (B) – (NO) in the coupler and of non-continuity between (B) – (NC) .

Note:
If a trouble is found in the above check, replace the retard switch.

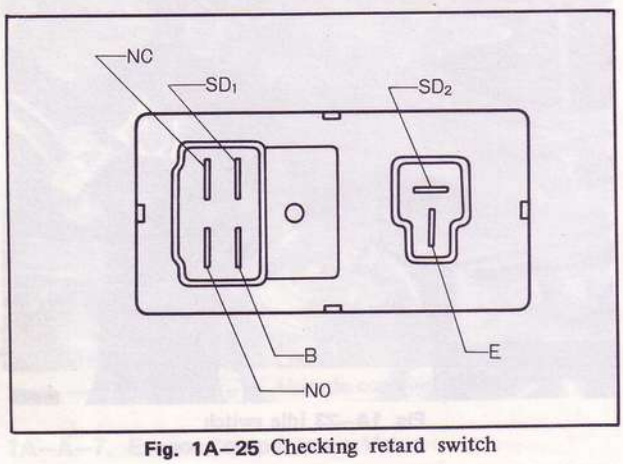

Fig. 1A–25 Checking retard switch

b. Replacing retard switch

1. Disconnect the couplers from the retard switch.



Fig. 1A–26 Retard switch

2. Remove the bolt attaching the retard switch and remove the switch.
3. Install the retard switch by following the removal procedures in the reverse order.

1A–A–10. Kick-down Control System (car with automatic transmission only)

In this item, inspect the operation of each of the choke switch, control unit, kick-down switch and kick-down relay relating to the kick-down control system.

a. Checking kick-down control system

1. Disconnect the terminal from the kick-down solenoid and connect the voltmeter.

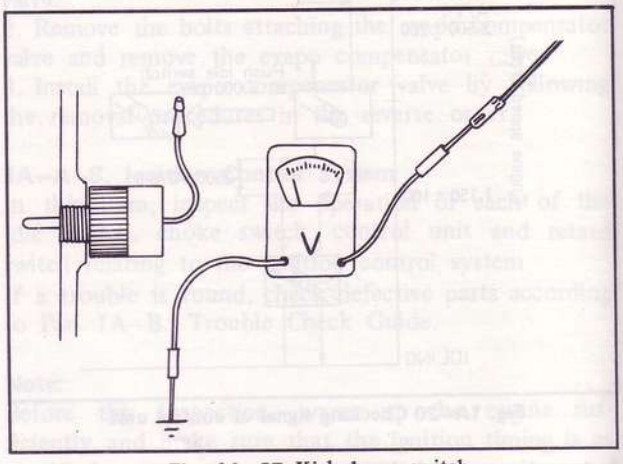

Fig. 1A–27 Kick-down switch

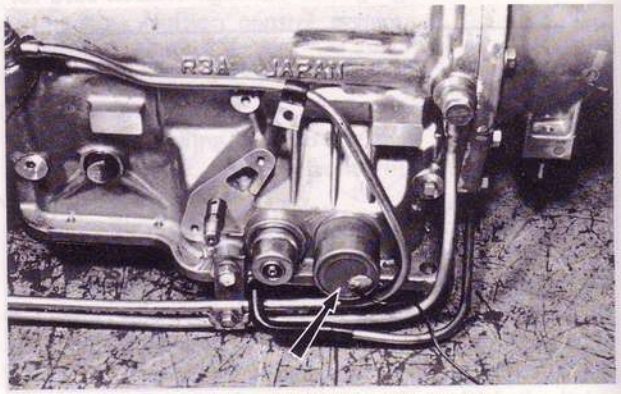

Fig. 1A–28 Kick-down solenoid

2. Start the engine and make sure that the current flows to the voltmeter when choke knob is pulled. If a trouble is found, check every part according to Par. 1A–B. Trouble Check Guide.

1A–A–11. Heat Hazard Protective and Warning System

a. Checking heat hazard protective and warning system

1. Turn the ignition switch on and make sure that the warning light is on.



Fig. 1A–29 Heat hazard warning light

2. Remove the coupler from the heat hazard sensor and close both terminals in the coupler.

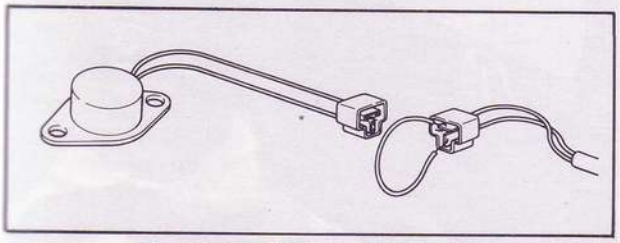

Fig. 1A–30 Closing both terminals

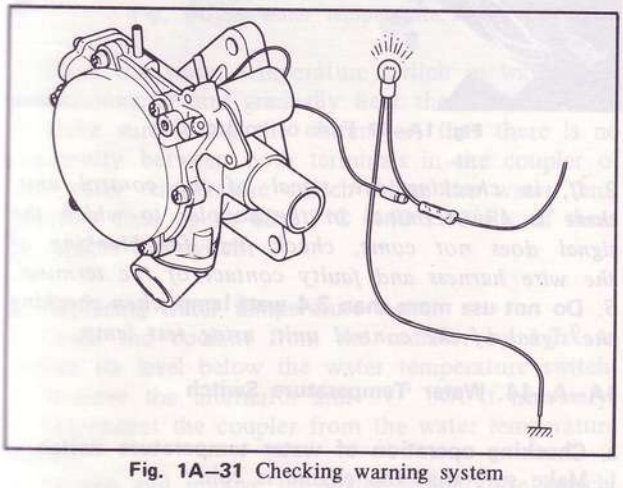

Fig. 1A–31 Checking warning system

3. Start the engine and keep it running at idle speed. Make sure that the warning light is on at this time.
4. Remove the coupler from the air control valve, connect the test lamp as shown in Fig. 1A–31. and make sure that the current flows to it.
5. Connect a timing light to the high tension cord for the trailing spark plug of front rotor housing.
6. Make sure that the timing light is on when the engine speed is set to **2,000 rpm.**

Note:

1. If a trouble is found in the above procedure 1, check every part according to Par. 1A–B. Trouble Check Guide.
2. If a trouble is found in the above procedures 3 and 4, check for breaking of the wire harness and faulty contact of the terminals in the coupler; in case they are in normal conditions, replace the control unit.

b. Checking heat hazard sensor

Inspect the operating temperature of the heat hazard sensor as follows:

1. Remove the heat hazard sensor.

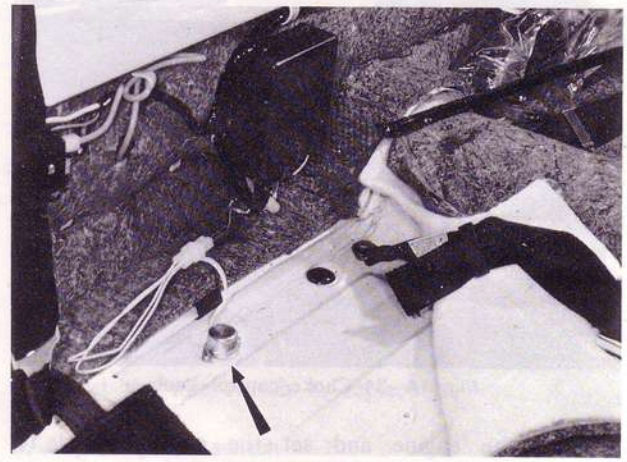

Fig. 1A–32 Heat hazard sensor

2. Wrap the sensor together with the thermometer in aluminum foil to prevent oil ingress.
3. Attach the test lamp to the sensor as shown in Fig. 1A–33. Submerge the wrapped sensor and thermometer in oil and gradually heat the oil.
4. Measure the temperature at which the lamp attached to the sensor lights up. The sensor should operate at **120 ± 10°C (248 ± 18°F).** If the sensor should operate at a temperature deviating from the standard temperature, replace the sensor.

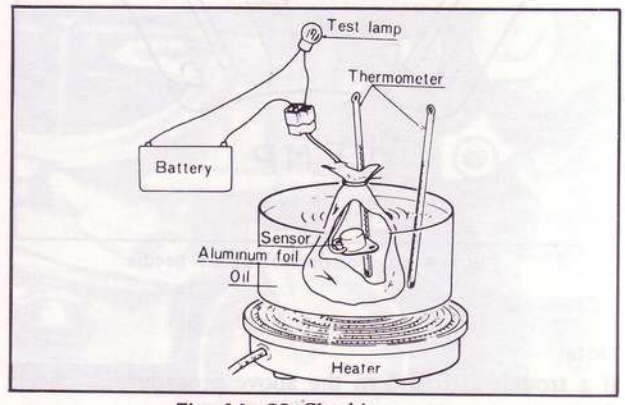

Fig. 1A–33 Checking sensor

Note:
Avoid heating the oil to **more than 130°C (266°F).**

c. Replacing heat hazard sensor
1. Remove the seat.
2. Disconnect the coupler from the heat hazard sensor.
3. Remove the screws attaching the heat hazard sensor and remove the sensor.
4. Install the heat hazard sensor by following the removal procedures in the reverse order.

1A–A–12. Automatic Throttle Release System

a. Checking automatic throttle release system
1. Make sure that the engine is cold.
Pull the choke control knob out with the ignition switch off and make sure that the knob returns automatically. If the trouble is found, check choke wire and choke return spring, replace if necessary.



Fig. 1A–34 Choke control knob

2. Start the engine and set the engine speed to **2,000 rpm** by adjusting the choke control knob.
Warm up the engine under the above condition.
3. Make sure that the choke control knob returns automatically when the needle of the water temperature gauge indicates the point shown in Fig. 1A–35.

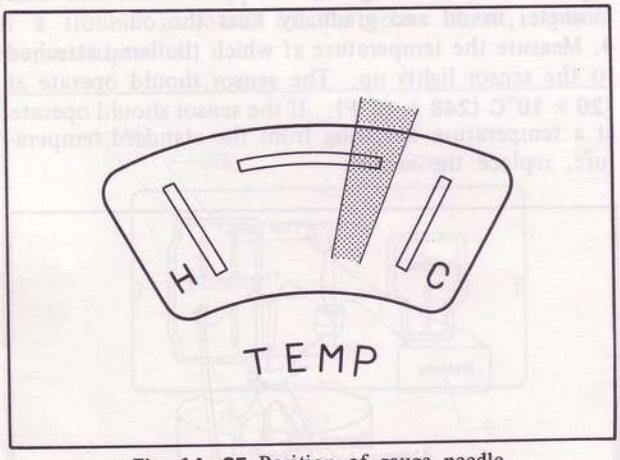

Fig. 1A–35 Position of gauge needle

Note:
If a trouble is found in the above procedure 3, check the water temperature switch.

1A–A–13. Control Unit

a. Checking control unit
The control unit controls the air control valve, deceleration control valve, ignition system, solenoid of the carburetor, and heat hazard warning system. So the checking procedure of the control unit is described together in the item of each part and each system.



Fig. 1A–36 Control unit

Warning:
1. When the fuse of the control unit is burnt out, use a **5-amp. fuse** *when replacing.*

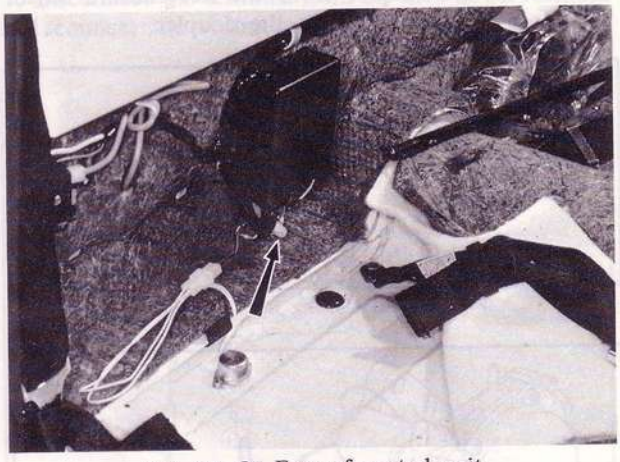

Fig. 1A–37 Fuse of control unit

2. If, in checking the signal of the control unit, there is any terminal in the coupler to which the signal does not come, check first for breaking of the wire harness and faulty contact of the terminal.
3. **Do not use more than 3.4 watt lamp** *when checking the signal of the control unit, using test lamp.*

1A–A–14. Water Temperature Switch

a. Checking operation of water temperature switch
1. Make sure that the engine is cold.
2. Remove the coupler from the water temperature switch, and make sure of continuity between both terminals in the coupler, using the ohmmeter.
3. Connect the coupler to the water temperature switch.

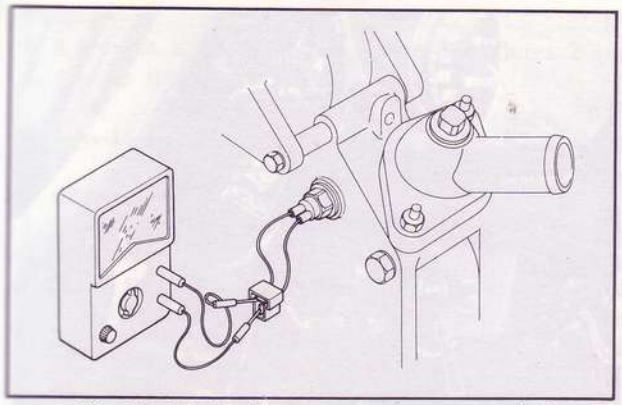

Fig. 1A–38 Checking water temperature switch

4. Fully warm up the engine.
5. Remove the coupler from the water temperature switch and make sure of non-continuity between both terminals in the coupler, using the ohmmeter.

Note:
If a trouble is found in the above procedures 2 and 5, replace the water temperature switch.

b. Checking operating temperature of water temperature switch
1. Remove the water temperature switch.

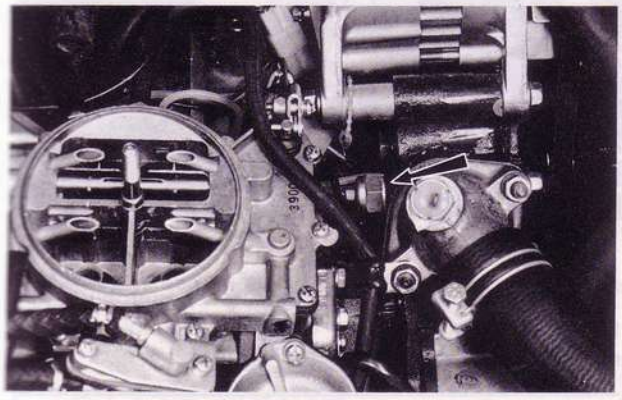

Fig. 1A–39 Water temperature switch

2. Place the water temperature switch in water with a thermometer and gradually heat the water.
3. Make sure, using the ohmmeter, that there is no continuity between both terminals in the coupler of the water temperature switch when the water temperature rises up to **60 ± 7°C (140 ± 13°F).** If there is, replace the switch.

c. Replacing water temperature switch
1. Drain the coolant from the radiator by 1.7 ℓ to reduce its level below the water temperature switch.
2. Remove the alternator and "V" belt if necessary.
3. Disconnect the coupler from the water temperature switch.
4. Loosen and remove the water temperature switch.
5. Install the water temperature switch by following the removal procedures in the reverse order.
6. Refill the radiator with the coolant. Check to see that the level of the subtank is proper, add the coolant if necessary.

1A–A–15. Idle Switch

a. Checking idle switch
1. Disconnect the coupler from the idle switch.
2. Start the engine and keep it running at idle speed.
3. Using the ohmmeter, make sure of continuity between the terminals Ⓐ – Ⓑ in the coupler and of non-continuity between Ⓒ – Ⓑ.

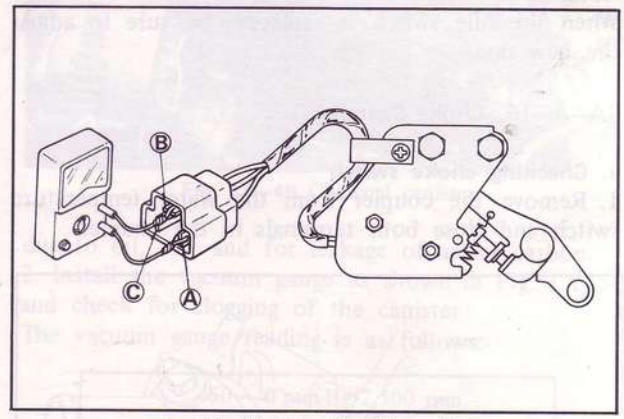

Fig. 1A–40 Checking idle switch

4. Next, gradually raise the engine speed up to **1,000 ± 50 rpm** (with the gear selector lever in "N" range in case of the car with automatic transmission). Make sure that continuity between the terminals Ⓐ – Ⓑ stops but continuity between Ⓒ – Ⓑ begins.

Note:
If a trouble is found in the above procedures 3 and 4, adjust the idle switch or replace it.

b. Adjusting idle switch
Adjust the idle switch, using the adjusting screw, so as to turn from "ON" to "OFF" (between Ⓐ terminal and Ⓑ terminal) when the engine speed gradually raised up to **1,000 ± 50 rpm** (with the gear selector lever in "N" range in case of the car with automatic transmission).

Note:
1. Turn the adjusting screw counter-clockwise when the setting revolution is higher than specified rpm.
2. Turn it clockwise when the setting revolution is lower than specified rpm.

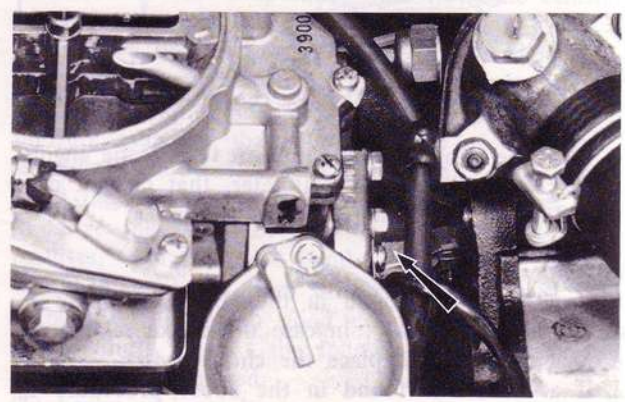

Fig. 1A–41 Idle switch

c. Replacing idle switch

1. Remove the air cleaner.
2. Disconnect the coupler from the idle switch.
3. Remove the bolts attaching the idle switch and remove the idle switch.
4. Install the idle switch by following removal procedures in the reverse order.

Note:
When the idle switch is replaced, be sure to adjust the new one.

1A–A–16. Choke Switch

a. Checking choke switch

1. Remove the coupler from the water temperature switch and close both terminals in the coupler.

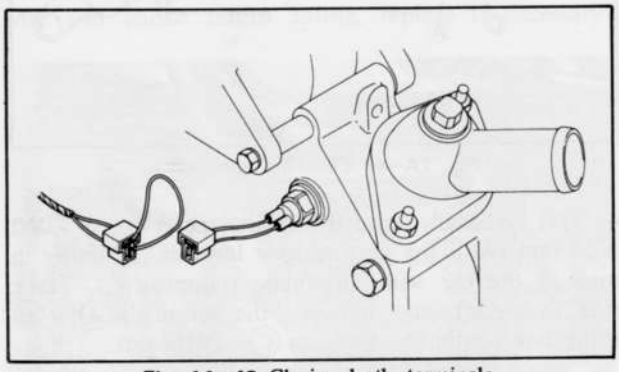

Fig. 1A–42 Closing both terminals

2. Pull the choke control knob out all the way and start the engine.
3. Make sure, using the voltmeter, that the current flows to the bimetal of the carburetor when the engine speed is set to 2,000 rpm by adjusting the choke control knob.

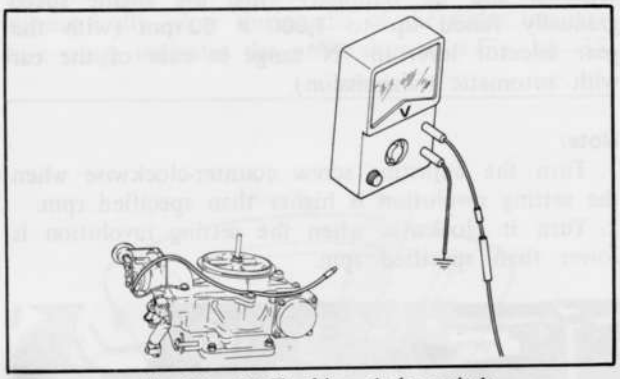

Fig. 1A–43 Checking choke switch

4. Push the choke control knob in to idle the engine.
5. Make sure, using the voltmeter, that current does not flow to the bimetal of the carburetor.

Note:
1. If a trouble is found in the above procedure 3, check the choke relay; in case the choke relay is in normal conditions, replace the choke switch.
2. If a trouble is found in the above procedure 5, replace the choke switch.



Fig. 1A–44 Choke switch

1A–A–17. Choke Relay

a. Checking choke relay

1. Disconnect the coupler from the choke relay.

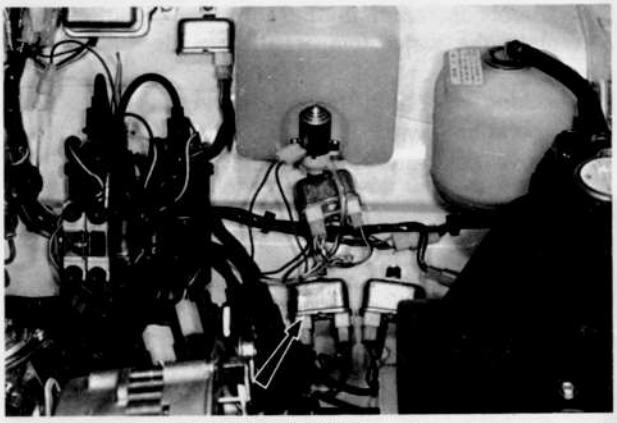

Fig. 1A–45 Choke relay

2. Using the ohmmeter, make sure of continuity between the terminals (B) – (NC) in the coupler and of non-continuity between (B) – (NO).

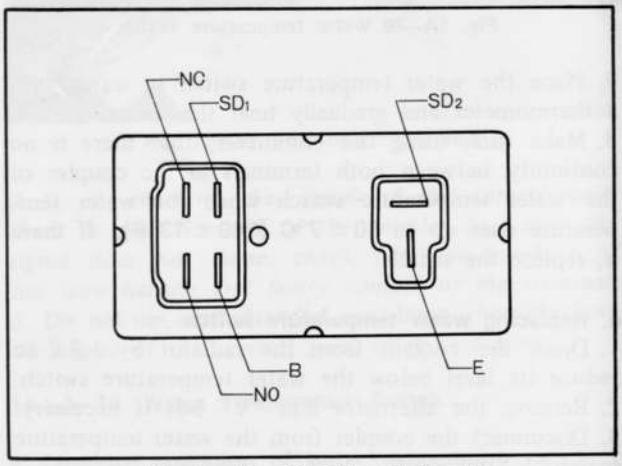

Fig. 1A–46 Checking choke relay

3. Apply the voltage (12V) of the battery on (SD1) terminal in the coupler, and ground (E) terminal.
4. Using the ohmmeter, make sure of continuity between the terminals (B) – (NO) in the coupler and of non-continuity between (B) – (NC).

Note:
If a trouble is found in the above procedures 2 and 4, replace the choke relay.

1A–A–18. Ventilation Valve

a. Checking ventilation valve
1. Start the engine and keep it running at idle speed.
2. Disconnect the ventilation hose from the filler pipe.
3. Make sure that the engine speed drops when the evaporative hose is squeezed by hand as shown in Fig. 1A–47 and then the ventilation hose removed in the above procedure 2 is closed with the fingers. If the engine stalls on that occasion, replace the ventilation valve.

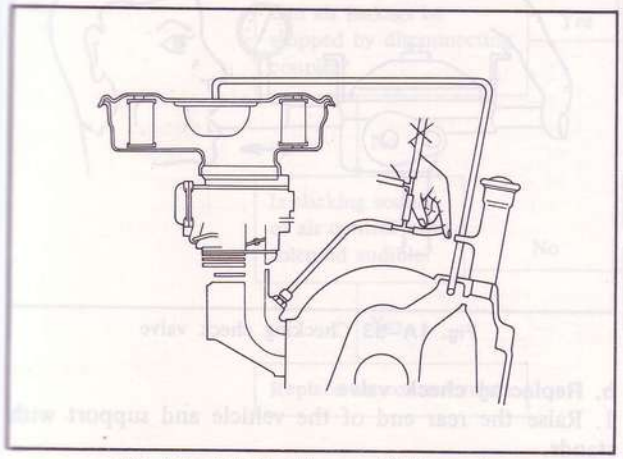

Fig. 1A–47 Checking ventilation valve

b. Replacing ventilation valve
1. Remove the deceleration control valve.
2. Disconnect the ventilation hose at the ventilation valve.
3. Loosen and remove the ventilation valve with the **wrench** (49 1011 120).

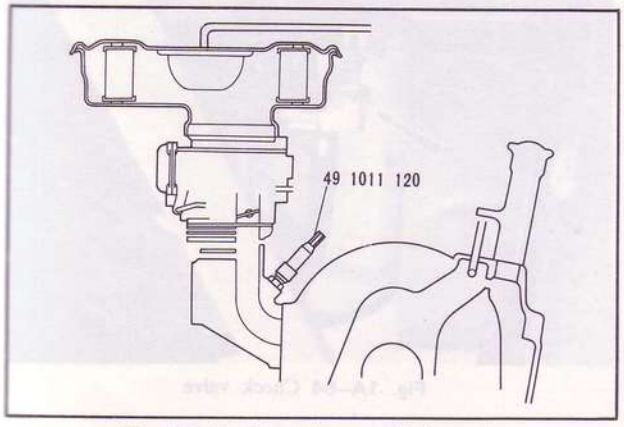

Fig. 1A–48 Removing ventilation valve

4. Install the ventilation valve by following the removal procedures in the reverse order.

1A–A–19. Charcoal Canister

a. Checking charcoal canister
1. Check by sight for stains of the charcoal canister due to oil, etc. and for leakage of active carbon.
2. Install the vacuum gauge as shown in Fig. 1A–50 and check for clogging of the canister.
The vacuum gauge reading is as follows:

−60 ~ 0 mm-Hg/2,500 rpm

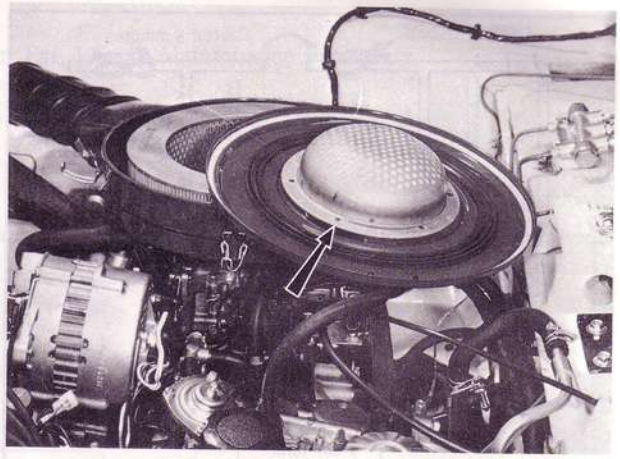

Fig. 1A–49 Charcoal canister

Note:
If a trouble is found in the above procedures 1 and 2, replace the canister and air cleaner cover assembly.

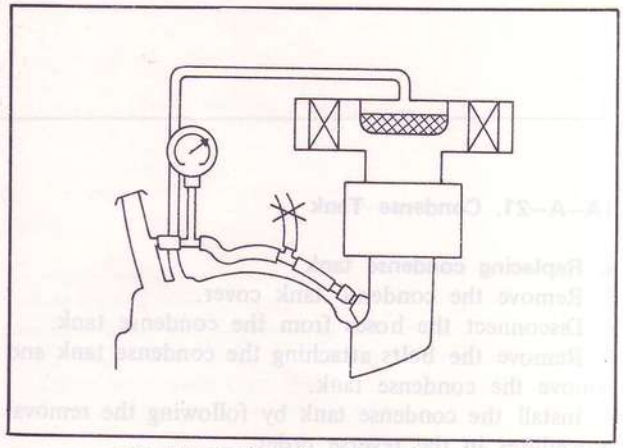

Fig. 1A–50 Checking charcoal canister

1A–A–20. Evaporative Line

a. Checking evaporative line
1. Disconnect the evaporative hose from the canister which is connected to the check valve.
2. Connect the disconnected hose to the "U" tube pressure gauge, as shown in Fig. 1A–51.
3. Apply compressed air gradually into the "U" tube pressure gauge so that the difference of water level should be **356 ± 12 mm (14 ± 0.5 in).** After that, blind the inlet of the "U" tube pressure gauge.
4. Leave the "U" tube pressure gauge stand for five minutes, with the inlet blind. If the water level is within the hatched lines shown in Fig. 1A–51, the evaporative line is in good condition. If it is not within limits, inspect the following parts, and repair or replace as required.
(1) Leaky or loose hoses

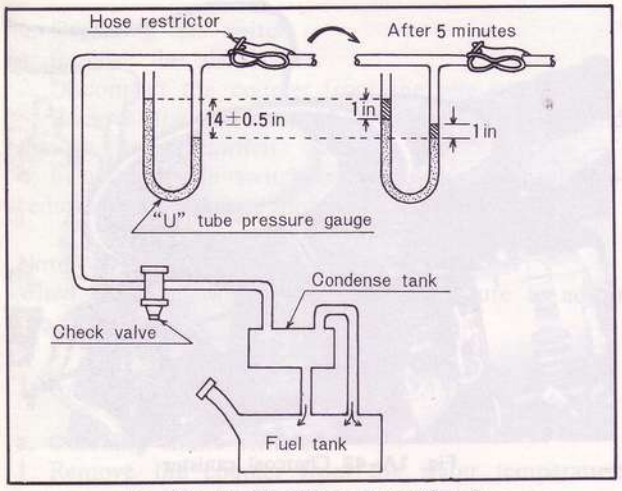

Fig. 1A–51 Checking evaporative line

(2) Leaky condense tank
(3) Leaky fuel tank
(4) Leaky or loose fuel line
(5) Leaky filler cap
(6) Leaky fuel gauge unit

1A–A–21. Condense Tank

a. Replacing condense tank

1. Remove the condense tank cover.
2. Disconnect the hoses from the condense tank.
3. Remove the bolts attaching the condense tank and remove the condense tank.
4. Install the condense tank by following the removal procedures in the reverse order.

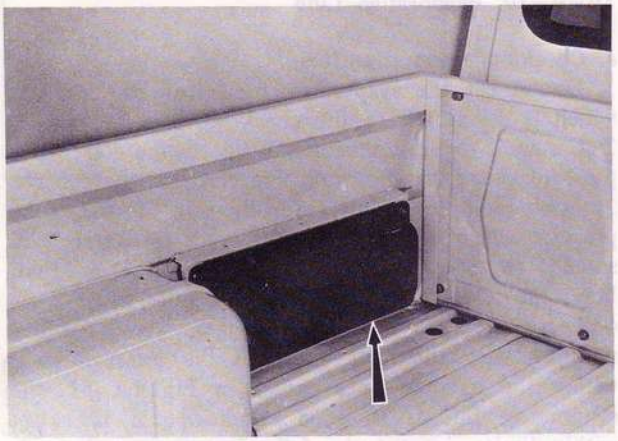

Fig. 1A–52 Condense tank

1A–A–22. Check Valve (Evaporative Emission Control System)

a. Checking check valve

1. Blind one end of the check valve and install the pressure and vacuum gauge to the other end.
2. Next, breathe out with the pressure of **more than 0.04 kg/cm² (0.57 lb/in²)** and in with the negative pressure of **more than 0.01 kg/cm² (0.14 lb/in²)** and make sure that the check valve operates then. If a trouble is found, replace the valve.

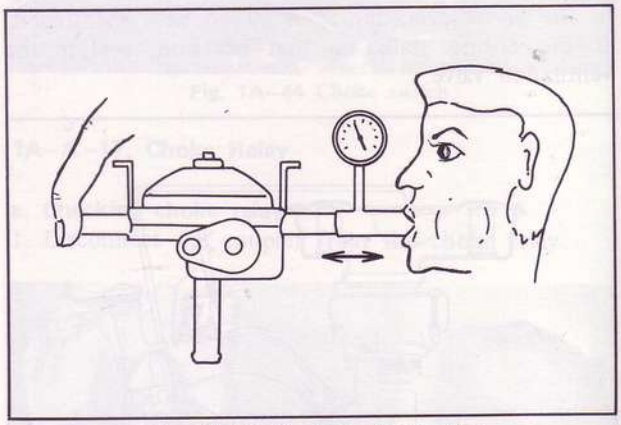

Fig. 1A–53 Checking check valve

b. Replacing check valve

1. Raise the rear end of the vehicle and support with stands.
2. Disconnect the hoses from the check valve.
3. Remove the bolts attaching the check valve and remove the check valve.
4. Install the check valve by following the removal procedures in the reverse order.

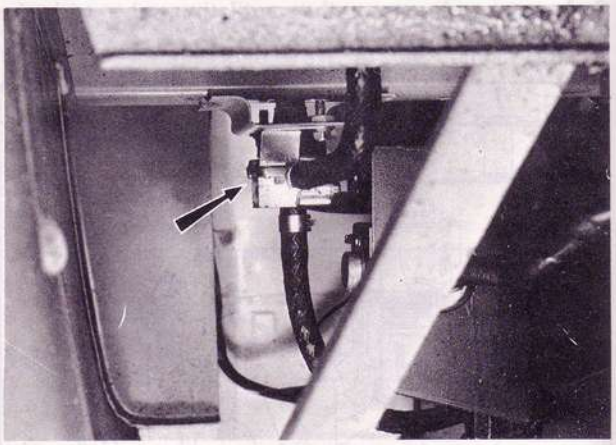

Fig. 1A–54 Check valve

1A–A–23. Hoses and Connections (All Systems)

a. Inspecting hoses and connections

1. Inspect all hoses for deterioration, holes or cracks.
2. Check all hoses for improper connection.
3. If any defect is suspected, fit properly or replace if necessary.

1A–B. TROUBLE CHECK GUIDE

Trouble Check Guide should be used following instructions in Par. 1A–A. Maintenance Procedure.

AIR CONTROL VALVE

Checking Air Control Valve

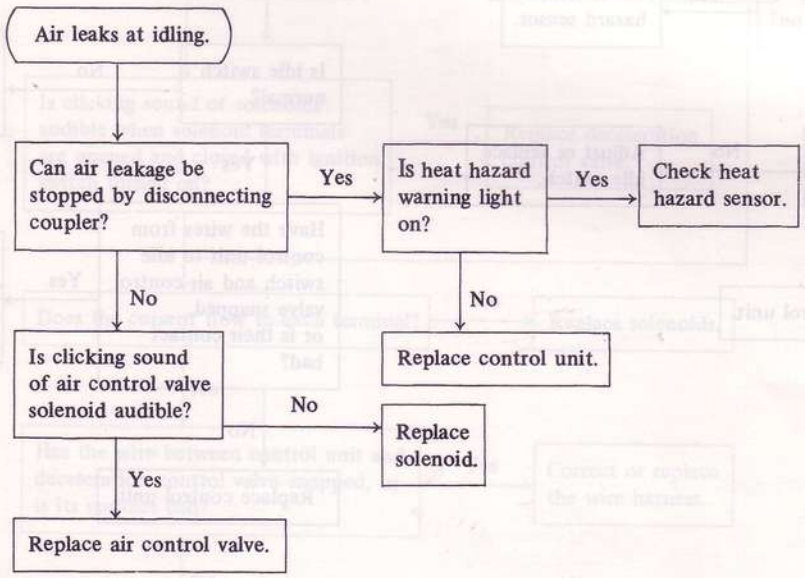

Checking Signal of Control Unit

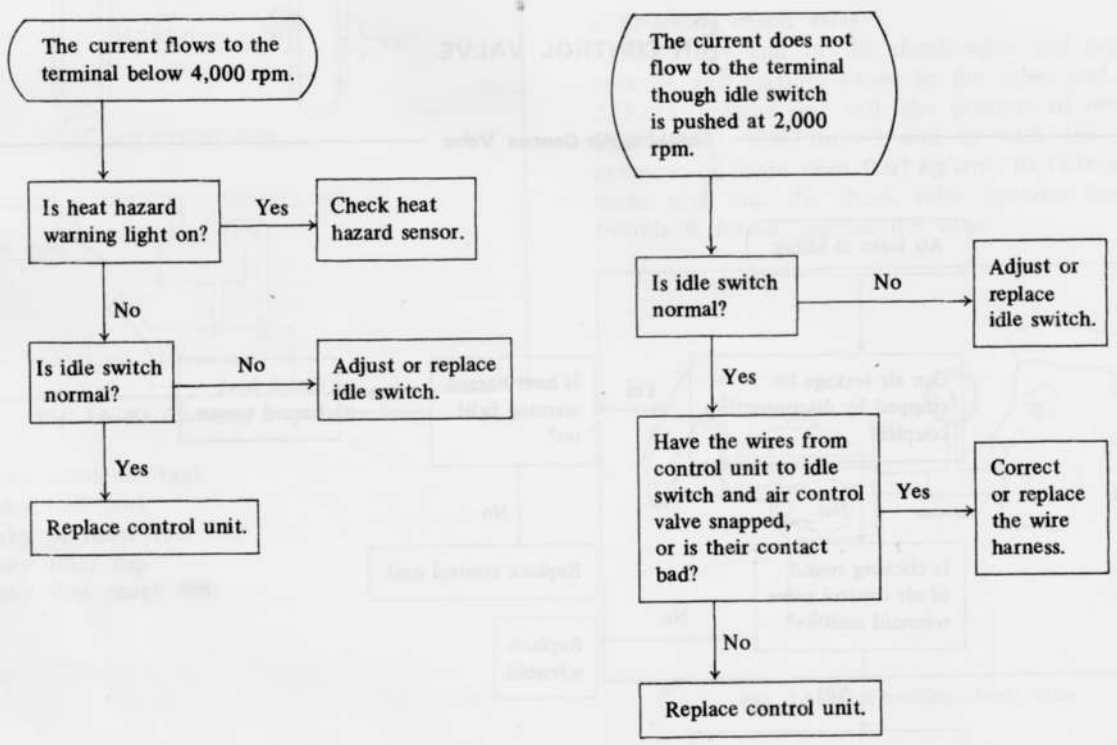

Only for automatic transmission

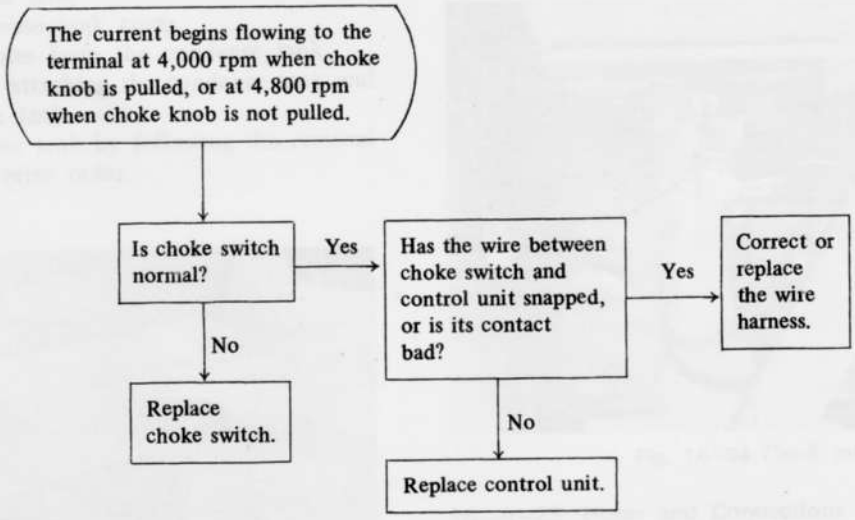

DECELERATION CONTROL VALVE

Checking Deceleration Control Valve

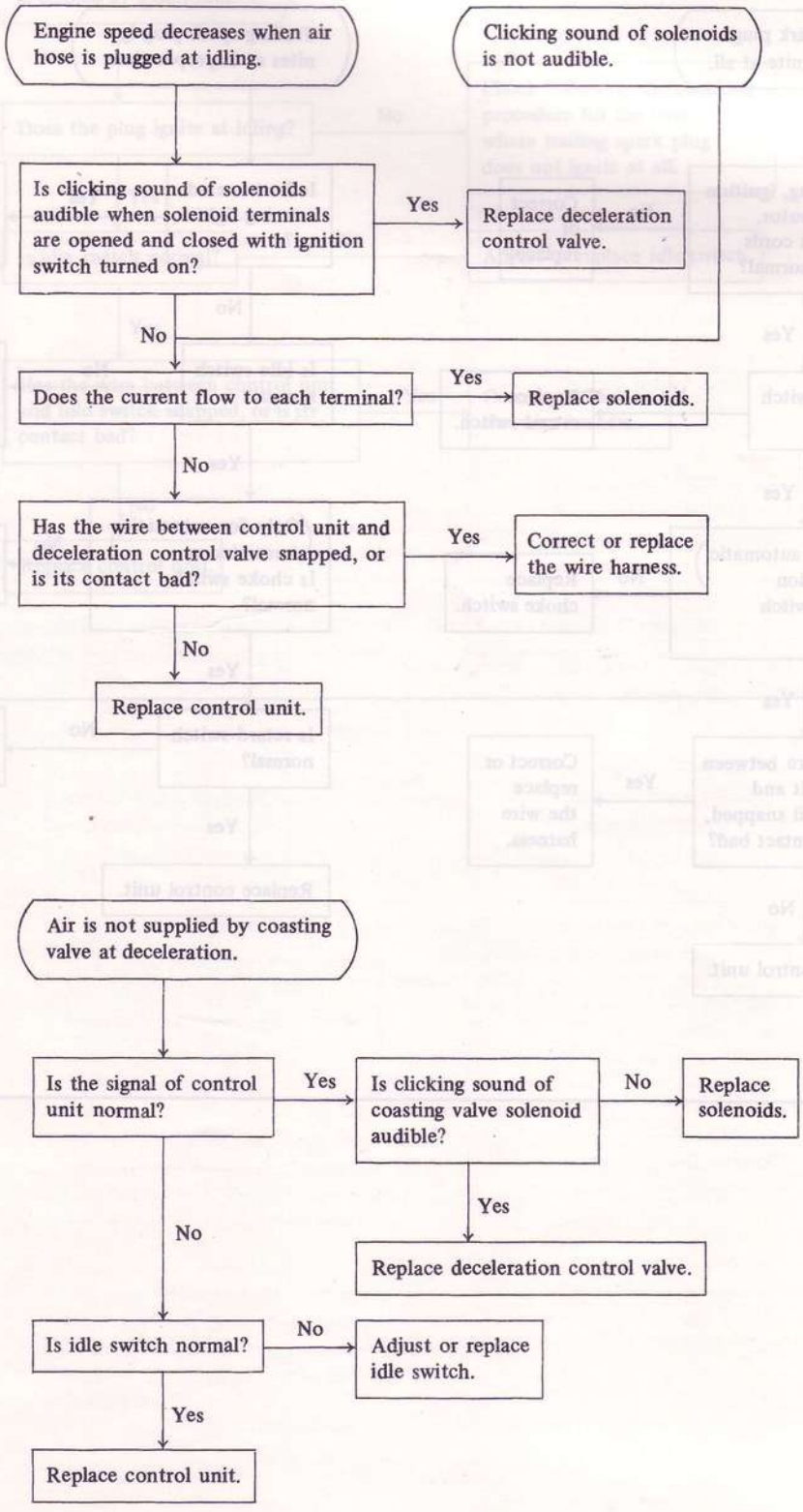

IGNITION CONTROL SYSTEM

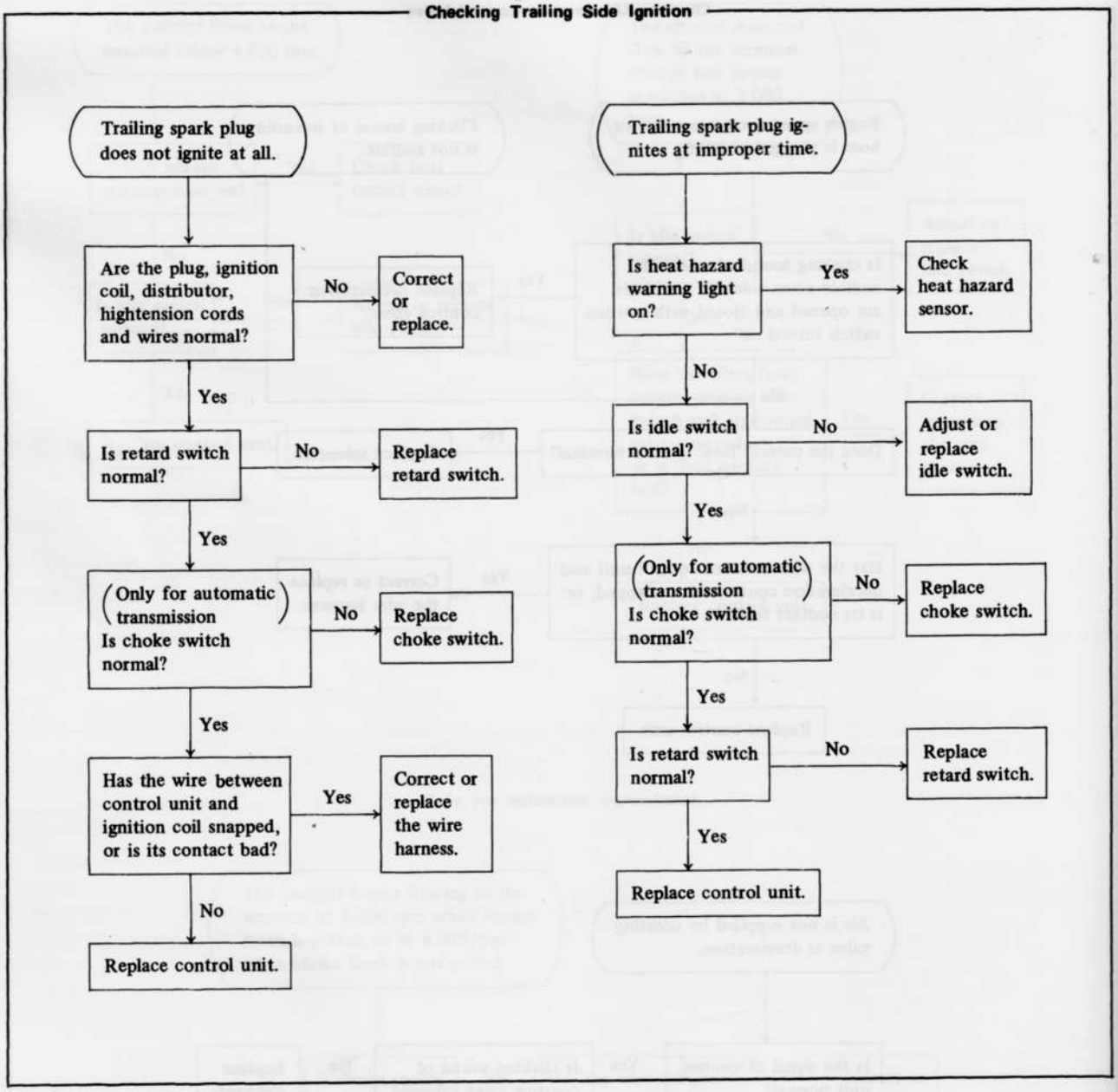

Checking Trailing Side Ignition

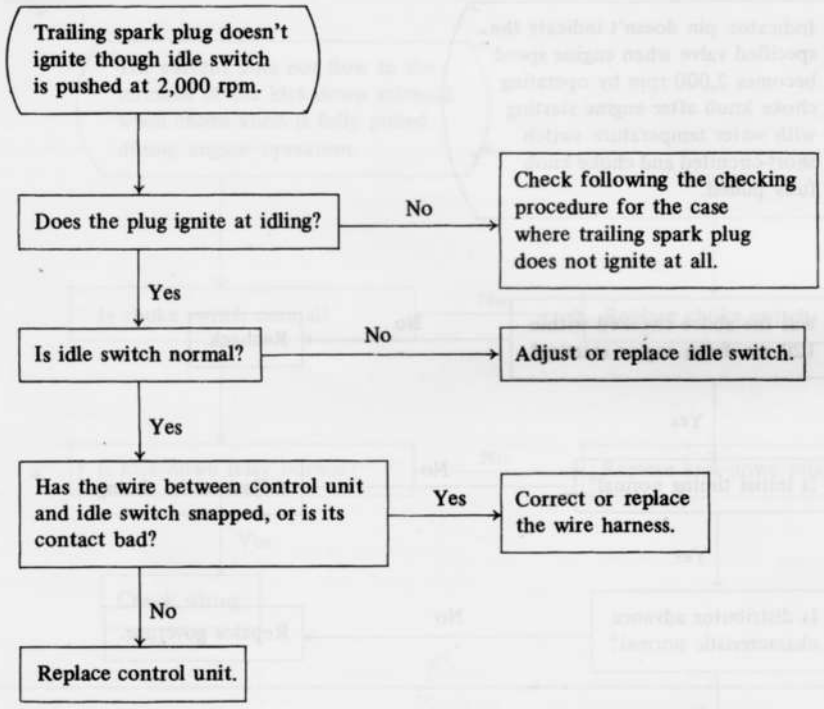

Checking Leading Side Ignition

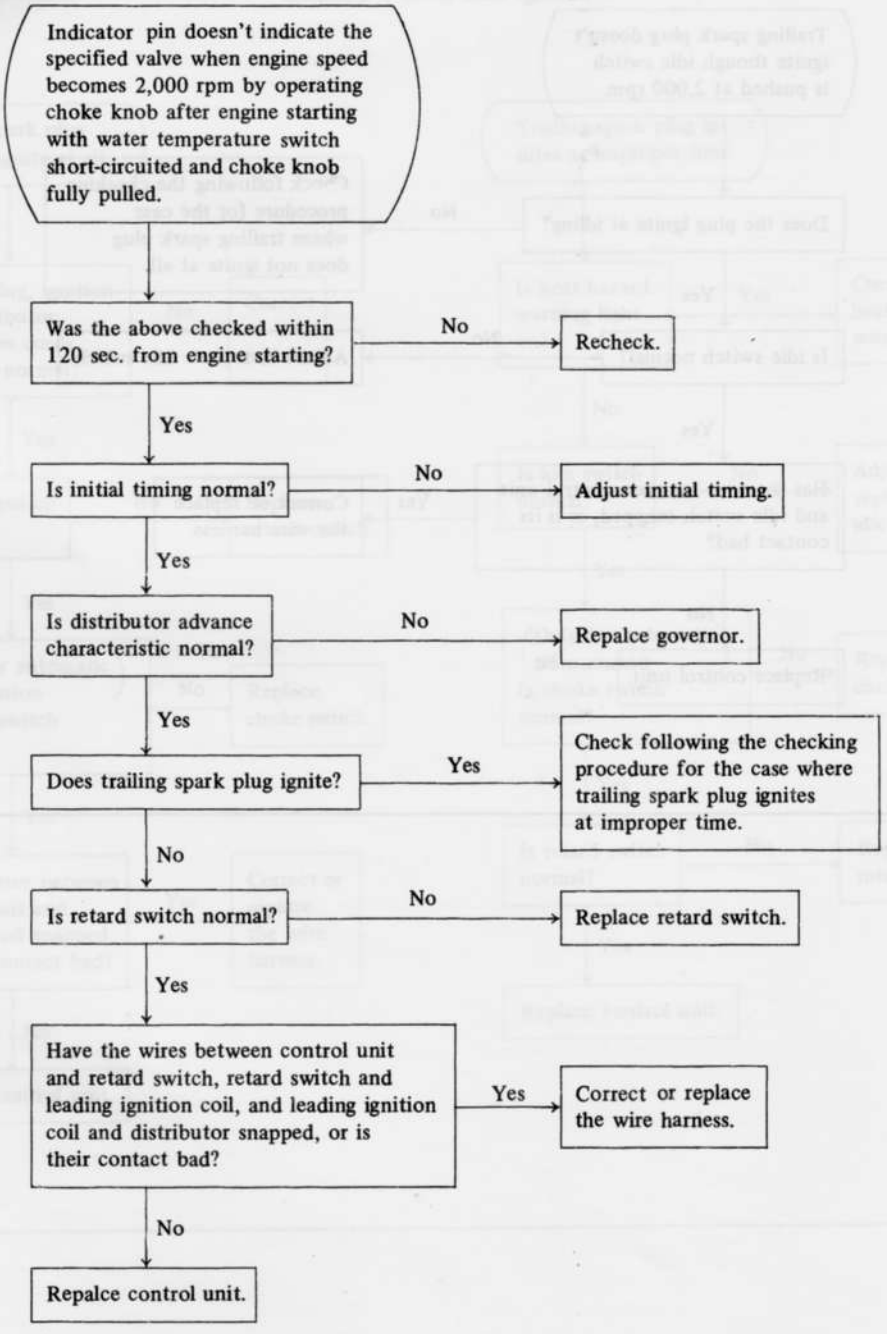

KICK-DOWN CONTROL SYSTEM

(only for automatic transmission)

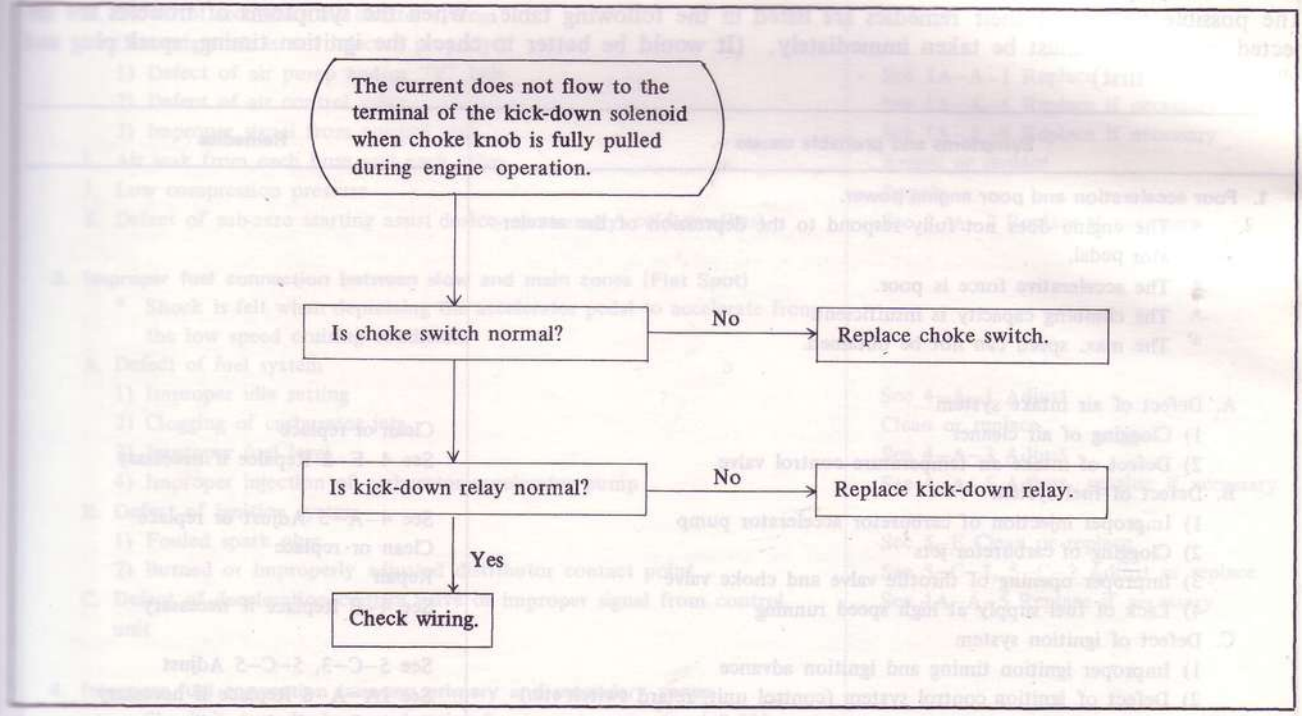

HEAT HAZARD PROTECTIVE AND WARNING SYSTEM

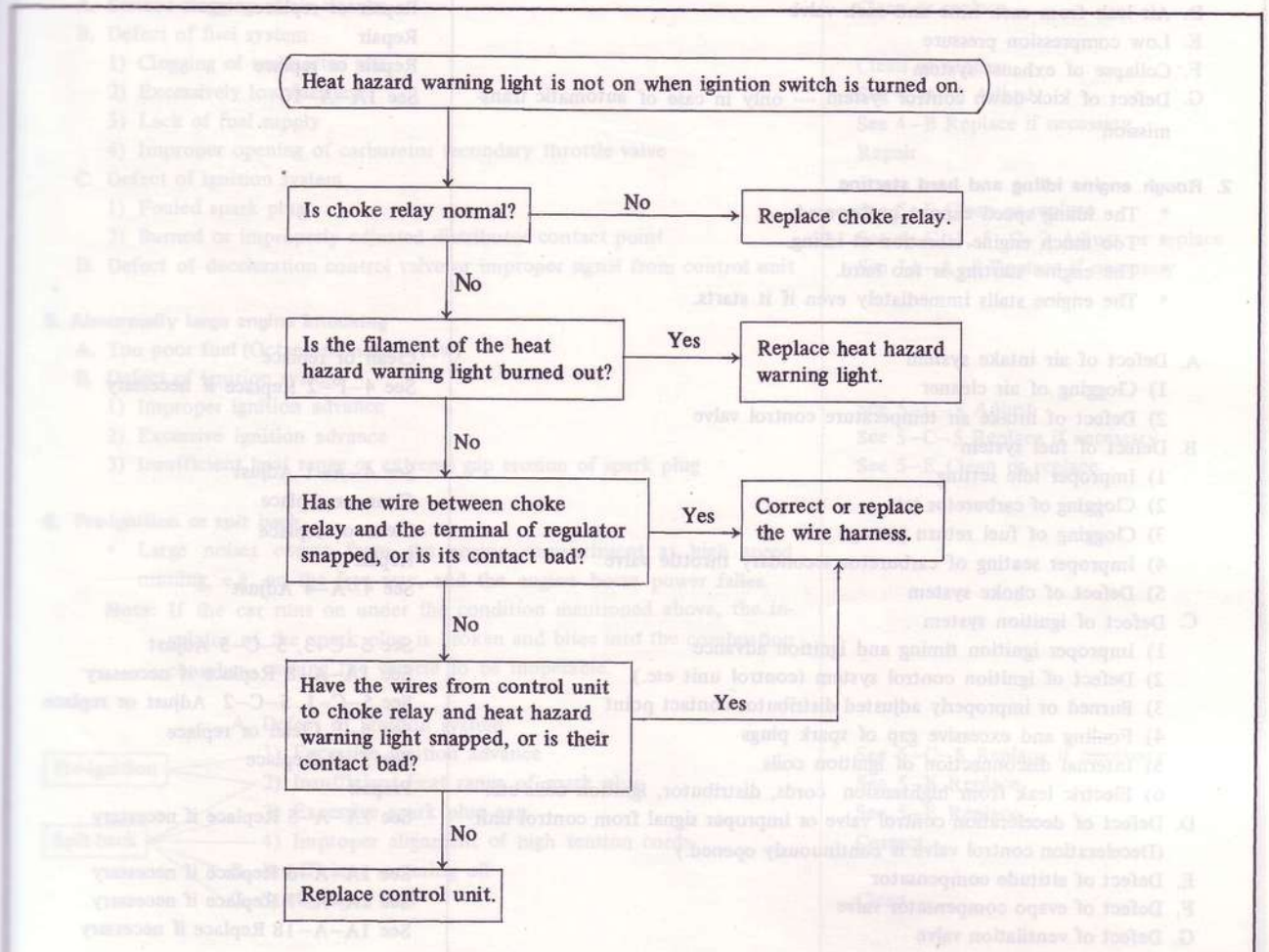

1A–C. TROUBLE SHOOTING

1A–C–1. Symptoms, Causes and Remedies

The possible faults and their remedies are listed in the following table. When the symptoms of troubles are detected, proper care must be taken immediately. (It would be better to check the ignition timing, spark plug and idle setting at first)

Symptoms and probable causes	Remedies
1. Poor acceleration and poor engine power.	
* The engine does not fully respond to the depression of the accelerator pedal.	
* The accelerative force is poor.	
* The climbing capacity is insufficient.	
* The max. speed can not be obtained.	
A. Defect of air intake system	
1) Clogging of air cleaner	Clean or replace
2) Defect of intake air temperature control valve	See 4–F–2 Repalce if necessary
B. Defect of fuel system	
1) Improper injection of carburetor accelerator pump	See 4–A–5 Adjust or replace
2) Clogging of carburetor jets	Clean or replace
3) Improper opening of throttle valve and choke valve	Repair
4) Lack of fuel supply at high speed running	See 4–B Replace if necessary
C. Defect of ignition system	
1) Improper ignition timing and ignition advance	See 5–C–3, 5–C–5 Adjust
2) Defect of ignition control system (control unit, retard switch etc.)	See 1A–A–8 Replace if necessary
3) Burned or improperly adjusted distributor contact point	See 5–C–1, 5–C–2 Adjust or replace
4) Fouling and excessive gap of spark plugs	See 5–E Clean or replace
D. Air leak from each hose and each valve	Repair or replace
E. Low compression pressure	Repair
F. Collapse of exhaust system	Repair or replace
G. Defect of kick-down control system ···· only in case of automatic transmission	See 1A–A–10
2. Rough engine idling and hard starting	
* The idling speed cannot be lowered.	
* Too much engine vibration at idling.	
* The engine starting is too hard.	
* The engine stalls immediately even if it starts.	
A. Defect of air intake system	Clean or replace
1) Clogging of air cleaner	See 4–F–2 Replace if necessary
2) Defect of intake air temperature control valve	
B. Defect of fuel system	
1) Improper idle setting	See 4–A–1 Adjust
2) Clogging of carburetor jets	Clean or replace
3) Clogging of fuel return passage	Clean or replace
4) Improper seating of carburetor secondary throttle valve	Repair
5) Defect of choke system	See 4–A–4 Adjust
C. Defect of ignition system	
1) Improper ignition timing and ignition advance	See 5–C–3, 5–C–5 Adjust
2) Defect of ignition control system (control unit etc.)	See 1A–A–8 Replace if necessary
3) Burned or improperly adjusted distributor contact point	See 5–C–1, 5–C–2 Adjust or replace
4) Fouling and excessive gap of spark plugs	See 5–E Clean or replace
5) Internal disconnection of ignition coils	See 5–D Replace
6) Electric leak from hightension cords, distributor, ignition coils etc.	Prepair
D. Defect of deceleration control valve or improper signal from control unit (Deceleration control valve is continuously opened.)	See 1A–A–5 Replace if necessary
E. Defect of altitude compensator	See 1A–A–6 Replace if necessary
F. Defect of evapo compensator valve	See 1A–A–7 Replace if necessary
G. Defect of ventilation valve	See 1A–A–18 Replace if necessary

Symptoms and probable causes	Remedies
H. Defect of secondary air control system (Secondary air is not injected properly.)	
1) Defect of air pump and/or "V" belt	See 1A–A–1 Replace if necessary
2) Defect of air control valve	See 1A–A–4 Replace if necessary
3) Improper signal from control unit	See 1A–A–4 Replace if necessary
I. Air leak from each hose and each valve	Repair or replace
J. Low compression pressure	Repair
K. Defect of sub-zero starting assist device (extremely cold weather)	See 4–A–7 Replace if necessary
3. Improper fuel connection between slow and main zones (Flat Spot)	
* Shock is felt when depressing the accelerator pedal to accelerate from the low speed cruising condition.	
A. Defect of fuel system	
1) Improper idle setting	See 4–A–1 Adjust
2) Clogging of carburetor jets	Clean or replace
3) Improper fuel level	See 4–A–3 Adjust
4) Improper injection of carburetor accelerator pump	See 4–A–5 Adjust, repalce if necessary
B. Defect of ignition system	
1) Fouled spark plug	See 5–E Clean or replace
2) Burned or improperly adjusted distributor contact point	See 5–C–1, 5–C–2 Adjust or replace
C. Defect of deceleration control valve or improper signal from control unit	See 1A–A–5 Replace if necessary
4. Improper fuel connection between primary and secondary zones	
* Shock is caused when accelerating from running at around 3,000 rpm by depressing the accelerator pedal fully.	
A. Serious clogging of air cleaner	Clean or replace
B. Defect of fuel system	
1) Clogging of carburetor jets	Clean or replace
2) Excessively low fuel level	See 4–A–3 Adjust
3) Lack of fuel supply	See 4–B Replace if necessary
4) Improper opening of carburetor secondary throttle valve	Repair
C. Defect of ignition system	
1) Fouled spark plug	See 5–E Clean or replace
2) Burned or improperly adjusted distributor contact point	See 5–C–1, 5–C–2 Adjust or replace
D. Defect of deceleration control valve or improper signal from control unit	See 1A–A–5 Replace if necessary
5. Abnormally large engine knocking	
A. Too poor fuel (Octane number is low)	
B. Defect of ignition system	
1) Improper ignition advance	See 5–C–3 Adjust
2) Excessive ignition advance	See 5–C–5 Replace if necessary
3) Insufficient heat range or extreme gap erosion of spark plug	See 5–E Clean or replace
6. Pre-ignition or spit back	
* Large noises comes from the engine compartment at high speed running, e.g. on the free way, and the engine horse power falles.	
Note: If the car runs on under the condition mentioned above, the insulator of the spark plug is broken and bites into the combustion chamber, causing the vehicle to be inoperable.	
A. Defect of ignition system	
Pre-ignition — 1) Excessive ignition advance	See 5–C–5 Replace if necessary
Pre-ignition — 2) Insufficient heat range of spark plug	See 5–E Replace
3) Excessive spark plug gap	See 5–E Replace
Spit-back — 4) Improper alignment of high tension cords	Correct
Spit-back — B. Insufficient metering oil	
Spit-back — C. Sticky apex seal	Clean

Symptoms and probable causes	Remedies
7. Large car bucking (deceleration surging)	
* Large car bucking occurs at deceleration.	
A. Improper idle setting	See 4–A–1 Adjust
B. Defect of ignition system	
1) Improper ignition timing and ignition advance	See 5–C–3, 5–C–5 Adjust or replace
2) Fouled spark plug	See 5–E Clean or replace
3) Burned or improperly adjusted distributor contact point	See 5–C–1, 5–C–2 Adjust or replace
C. Defect of deceleration control valve or improper signal from control unit (Deceleration control valve does not operate properly at deceleration.)	See 1A–A–5 Replace if necessary
D. Defect of secondary air control system (Secondary air is not injected properly.)	
1) Defect of air pump and/or "V" belt	See 1A–A–1 Adjust or replace
2) Defect of air control valve	See 1A–A–4 Replace if necessary
3) Improper signal from control unit	See 1A–A–4 Replace if necessary
E. Air leak from each hose and each valve	Repair or replace
8. Afterburning (Back fire)	
* Extremely annoying afterburning occurs during deceleration.	
* Afterburning occurs when turning off the ignition switch.	
A. Improper idle setting	See 4–A–1 Adjust
B. Defect of ignition system	
1) Improper ignition timing and ignition advance	See 5–C–3, 5–C–5 Adjust or replace
2) Fouled spark plug	See 5–E Clean or replace
3) Burned or improperly adjusted distributor contact point	See 5–C–1, 5–C–2 Adjust or replace
C. Defect of deceleration control valve or improper signal from control unit (Deceleration control valve does not operate properly at deceleration or when ignition switch is turned off.)	See 1A–A–5 Replace if necessary
D. Defect of secondary air control system (Secondary air is not injected properly.)	
1) Defect of air pump and/or "V" belt	See 1A–A–1 Adjust or replace
2) Defect of air control valve	See 1A–A–4 Replace if necessary
3) Improper signal from control unit	See 1A–A–4 Replace if necessary
E. Defect of altitude compensator	See 1A–A–6 Replace if necessary
F. Defect of evopo compensator valve	See 1A–A–7 Replace if necessary
G. Defect of ventilation valve	See 1A–A–18 Replace if necessary
H. Air leak from each hose and each valve.	Repair or replace
I. Gas leak from exhaust system	Repair or replace
9. Overflow from carburetor	
A. Defect of fuel system	
1) Dust fiting into needle valve	See 4–A–3 Clean
2) Improper seating of needle valve	See 4–A–3 Clean or replace
3) Improper movement of float	See 4–A–3 Adjust or replace
4) Clogging of fuel return passage	See 4–A–8 Clean or replace
5) Large fuel pressure of fuel pump	See 4–B Replace if necessary
10. The engine brake does not work even if the accelerator pedal is released	
* Even if the accelerator pedal is released when running, the engine brake does not work, which causes the overrunning and makes the driver uneasy.	
A. Clogging of air cleaner	Clean or replace
B. Defect of fuel system	
1) Improper returning of carburetor primary throttle valve	Repair
2) Improper returning of carburetor secondary throttle valve	Repair
C. Defect of deceleration control valve (The opening period of anti-afterburn valve is too long.)	See 1A–A–5 Replace if necessary

Symptoms and probable causes	Remedies
11. Over heat	
* Indicating "H" of the thermometer on the instrument panel denotes overheating. Running on with such an overheated engine may lead to serious damage of the engine.	
A. Defect of cooling system	
1) Lack of coolant	Replenish
2) Coolant leak from water pump, radiator, car heater, water hose etc.	Repair or replace if necessary
3) Defect of fan drive	Replace if necessary
4) Defect of thermostat	Replace if necessary
5) Clogging of radiator	Clean
B. Loosening or breakage of "V" belt	Adjust or replace
C. Lack of engine oil	Replenish if necessary
D. Defect of water thermo switch for car cooler	Replace if necessary
E. Defect of thermometer or heat gauge unit	Replace if necessary
12. Improper operation of choke control knob	
* Choke knob cannot remain pulled.	
* Choke knob does not return automatically.	
A. Defect of water temperature switch	See 1A–A–14 Replace if necessary
B. Defect of choke wire (electromagnet etc.)	See 1A–A–12 Replace if necessary
C. Defect of choke return spring	See 1A–A–12 Replace if necessary
13. Abnormal fast idle speed	
* Fast idle speed is abnormally high or low.	
A. Defect of ignition system	
1) Improper ignition timing and ignition advance	See 5–C–3, 5–C–5 Adjust or replace
2) Defect of ignition control system (control unit, retard switch etc.)	See 1A–A–8 Replace if necessary
B. Defect of fuel system	
1) Improper opening of carburetor throttle valve	Repair
2) Defect of choke system	See 1A–A–12 Replace if necessary
14. Abnormal exhaust emission under proper procedure	
A. Defect of air intake system	
1) Serious clogging to air cleaner	Clean or replace
2) Defect of intake air temperature control valve	See 4–F–2 Replace if necessary
B. Defect of fuel system	
1) Improper idle setting	See 4–A–1 Adjust
2) Improper fuel level	See 4–A–3 Adjust
3) Clogging of carburetor jets	Clean or replace
4) Defect of choke system	See 4–A–4 Adjust
5) Defect of power valve ····· only in case of automatic transmission	See 4–A–6 Replace if necessary
C. Defect of ignition system	
1) Improper ignition timing and ignition advance	See 5–C–3, 5–C–5 Adjust or replace
2) Defect of ignition control system (control unit etc.)	See 1A–A–8 Replace if necessary
3) Burned or improperly adjusted distributor contact point	See 5–C–1, 5–C–2 Adjust or replace
4) Fouled spark plug etc.	See 5–E Clean or replace
D. Defect of secondary air control system	
1) Defect of air pump and/or "V" belt	See 1A–A–1 Adjust or replace
2) Defect of air control valve	See 1A–A–4 Replace if necessary
3) Improper signal from control unit	See 1A–A–4 Replace if necessary
E. Defect of deceleration control valve or improper signal from control unit	See 1A–A–5 Replace if necessary
F. Defect of altitude compensator	See 1A–A–6 Replace if necessary
G. Defect of evapo compensator	See 1A–A–7 Replace if necessary
H. Defect of ventilation valve	See 1A–A–18 Replace if necessary
I. Defect of evaporative emission control system	See 1A–A–20, 1A–A–21, 1A–A–22 Replace if necessary
J. Defect of thermal reactor	See 1A–A–3 Replace if necessary
K. Air leak from each hose and each valve	Repair or replace
L. Defect of heat hazard sensor	See 1A–A–11 Replace if necessary

1A–C–2. Possible Troubles Caused by Defects of Each Device

Air control valve

* Exhaust emission becomes unfavourable.
* Rough engine idling
* Afterburning
* Car bucking (Deceleration surging)
* Damage is liable to occur on reactor.

Deceleration control valve

* Extremely annoying afterburning occurs during deceleration or after turning off the ignition switch.
* Hard engine starting
* Rough engine idling
* Engine speed becomes high.
* Exhaust emission becomes unfavourable.
* Car bucking (Deceleration surging)
* Flat spot occurs during driving.
* Flat spot occurs during light acceleration from low speed running or deceleration condition.

Altitude compensator

* Hard engine starting
* Rough engine idling
* Afterburning
* Car bucking (Deceleration surging)
* Exhaust emission becomes unfavourable.

Evapo compensator valve

* Hard engine starting
* Rough engine idling
* Afterburning
* Car bucking (Deceleration surging)
* Exhaust emission becomes unfavourable.

Ventilation valve

* Misfiring frequently occurs during idling
* Rough engine idling
* Afterburning
* Car bucking (Deceleration surging)
* Dilution of engine oil with gasoline increases.
* Defective purging occurs in charcoal canister
* Exhaust emission becomes unfavourable.

Air pump

* Exhaust emission becomes unfavourable.
* Noisy air pump

Power valve (Automatic transmission only)

* Exhaust emission becomes unfavourable.
* Poor acceleration

Kick-down switch (Automatic transmission only)

* Improper operation of kick-down control system

Water temperature switch

* Improper operation of automatic throttle release system
* Improper operation of ignition control system

Idle switch

* Improper operation of deceleration control valve
* Improper operation of air control valve
* Improper operation of ignition control system

Retard switch

- Improper operation of ignition control system

Choke switch

- Improper operation of choke system
- Improper operation of kick-down control system (Automatic transmission only)
- Improper operation of ignition control system (Automatic transmission only)
- Improper operation of air control valve (Automatic transmission only)

Control unit

- Improper operation of air control valve
- Improper operation of deceleration control valve
- Improper operation of ignition control system
- Improper operation of heat hazard protective and warning system
- Improper operation of power valve (Automatic transmission only)

Fuse of control unit

- Hard strting, rough idling and large car knocking may be caused by leaving deceleration control valve open.

SPECIAL TOOLS

49 2113 010	Air pump gauge set
49 1881 125	Thermal reactor remover
49 1011 120	Ventilation valve wrench

LUBRICATING SYSTEM

2–A. LUBRICATING CIRCUIT ..... 2 : 1
2–B. OIL PUMP ..... 2 : 2
2–B–1. Disassembling Oil Pump ..... 2 : 2
2–B–2. Inspecting Oil Pump ..... 2 : 2
2–B–3. Assembling Oil Pump ..... 2 : 3
2–C. OIL PUMP DRIVING ..... 2 : 3
2–C–1. Chain Adjuster Inspection ..... 2 : 3
2–C–2. Oil Pump Chain and Sprocket Inspection ..... 2 : 3
2–D. PRESSURE CONTROL VALVE ..... 2 : 4
2–D–1. Checking Pressure Control Valve ..... 2 : 4
2–E. OIL COOLER ..... 2 : 4
2–E–1. Repairing Oil Cooler ..... 2 : 4
2–F. BY-PASS VALVE ..... 2 : 4
2–F–1. Checking By-pass Valve ..... 2 : 4
2–G. PRESSURE REGULATOR ..... 2 : 5
2–G–1. Checking Pressure Regulator ..... 2 : 5
2–G–2. Checking Oil Pressure ..... 2 : 5
2–H. OIL FILTER ..... 2 : 5
2–H–1. Replacing Oil Filter ..... 2 : 5
2–I. METERING OIL PUMP ..... 2 : 6
2–I–1. Checking Metering Oil Pump ..... 2 : 6
2–I–2. Adjusting Metering Oil Pump ..... 2 : 6
2–J. OIL PAN ..... 2 : 7
2–J–1. Oil Pan Removal ..... 2 : 7
2–J–2. Oil Pan Inspection ..... 2 : 7
2–J–3. Oil Pan Installation ..... 2 : 7
2–K. OIL LEVEL SENSOR ..... 2 : 7
2–K–1. Removing Oil Level Sensor ..... 2 : 7
2–K–2. Checking Oil Level Sensor ..... 2 : 7
2–K–3. Installing Oil Level Sensor ..... 2 : 7
SPECIAL TOOL ..... 2 : 7

2

2–A. LUBRICATING CIRCUIT

1. The oil pump which is driven by the eccentric shaft, draws up the oil from the oil pan through the strainer and sends it to the oil cooler through the pressure control valve.
2. The pressure control valve sends the surplus oil back to the oil pan when the oil pressure exceeds 11 kg/cm² (156 lb/in²) in order to prevent the oil cooler and the oil hose from damage by the exceeding pressure which is generated at the starting in the very cold weather.
3. The by-pass valve is installed on the oil cooler in order to prevent drop of oil supply which is caused by resistance of oil cooler in the cold weather and regulate the temperature of the oil circulating in the engine. The oil is sent directly to the engine without passing through the oil cooler when the difference of the oil pressure of inlet and outlet pipes is more than 3.56 kg/cm² (50.7 lb/in²) at 70°C (158°F) and/or the temperature of the oil is under 60°C (140°F).
4. The oil from the oil cooler is forced to the pressure regulator on the rear housing.
5. The oil of which pressure is regulated to 5 kg/cm² (71.1 lb/in²), is forced to the oil filter.
6. The oil that has been filtered by the oil filter is forced to the front main bearing through the tubular dowel and to the rear main bearing through the passage of the rear housing.
7. The oil that has passed through the oil holes of the bearings, lubricate the front and rear main bearings and enters the oil passage provided in the eccentric shaft.
8. The oil passing through the eccentric shaft passage lubricates the rotor bearings.
9. Needle bearings which are provided in front of the front housing are lubricated by the oil forced through the little hole led to the oil passage of the eccentric shaft and the oil coming after lubricating the front main bearing.
10. The eccentric shaft is equipped with two oil jets. The oil in the passage of the eccentric shaft is injected through the oil jets into the front and rear rotors and cools the rotors.
11. Stationary gears and internal gears are lubricated by the oil coming after cooling the rotors and after lubricating the main bearings.
12. The oil passing through the tubular dowel is sent to the front cover and led to the metering oil pump.
13. From the metering oil pump, the oil is forced to the carburetor and is supplied into the combustion chambers together with the air-fuel mixture to lubricate the apex seals, corner seals, side seals and housings.

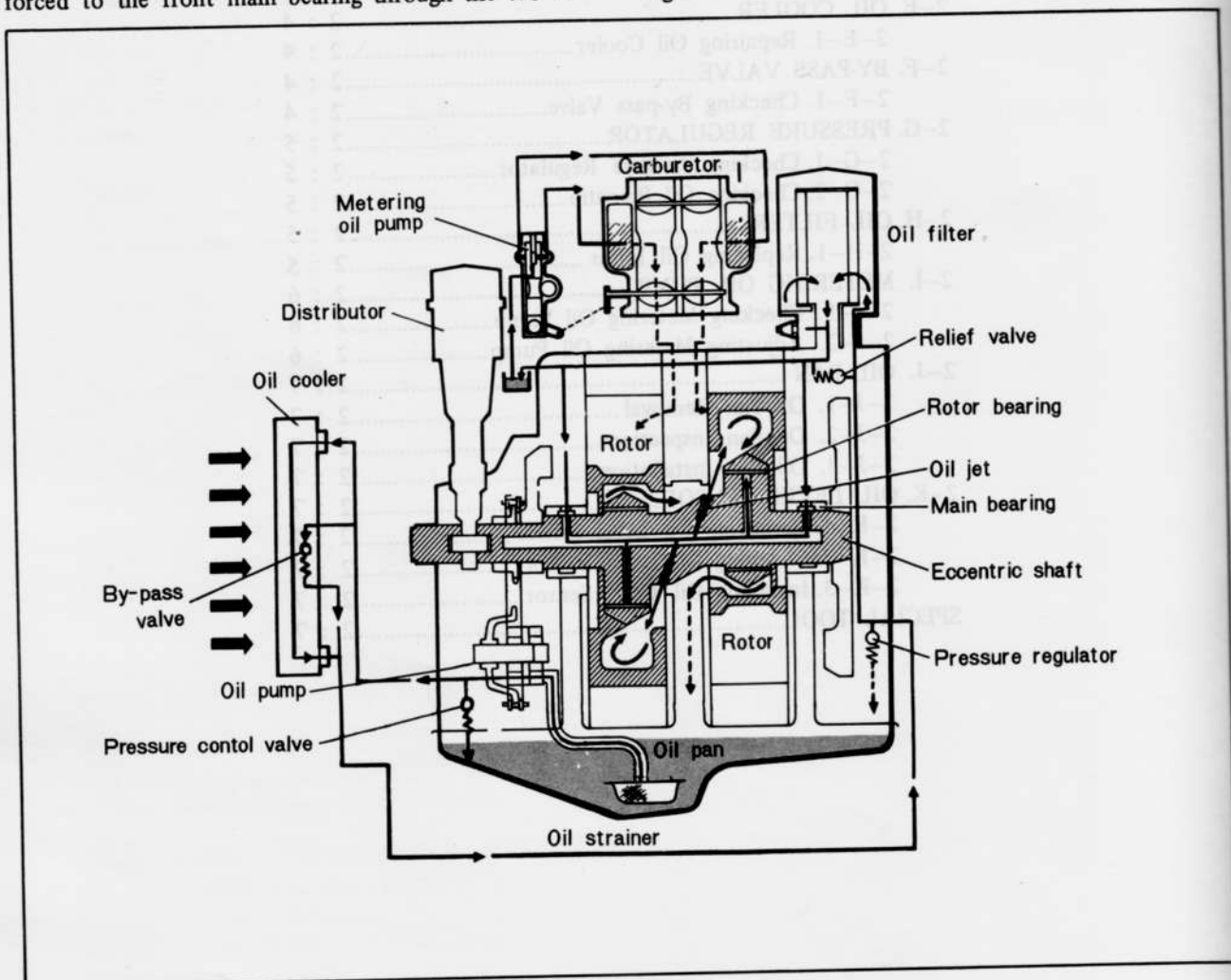

Fig. 2–1 Lubricating circuit

2–B. OIL PUMP

The oil pump is of a rotor type based on a trochoid curve and consists of the parts as shown in Fig. 2–5. The feeding capacity is 6 liters/min. (1.56 U.S. gal/min.) at 1,000 rpm of engine speed.

2–B–1. Disassembling Oil Pump

1. Remove the oil pump from the front housing.
2. Remove the snap ring from the shaft, and remove the rear rotors and key.
3. Remove the middle plate attaching screw and remove the middle plate.
4. Remove the front rotors and key from the shaft.

2–B–2. Inspecting Oil Pump

1. Check the clearance between the lobes of the rotors with a feeler gauge, as shown in Fig. 2–3. The standard clearance is 0.01 ~ 0.09 mm (0.0004 ~ 0.0035 in). If the clearance exceeds **0.15 mm (0.006 in)**, replace both inner rotor and outer rotor.

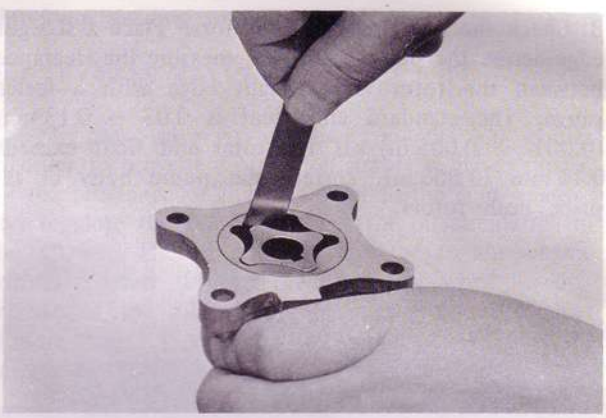

Fig. 2–3 Checking rotor clearance

2. Check the clearance between the outer rotor and pump body with a feeler gauge as shown in Fig. 2–4. The specified clearance is 0.20 ~ 0.25 mm (0.008 ~ 0.01 in). If the clearance is more than **0.30 mm (0.012 in)**, replace the rotor(s) or body.

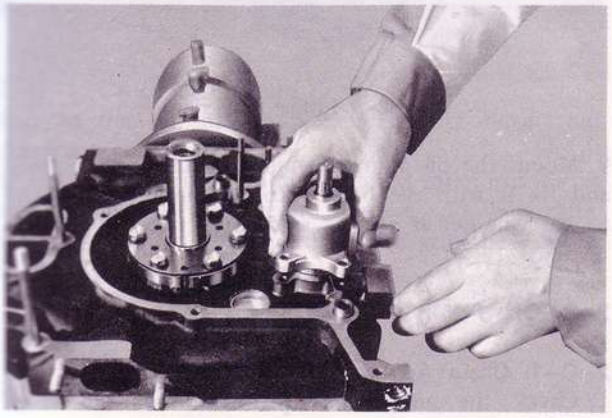

Fig. 2–2 Removing oil pump

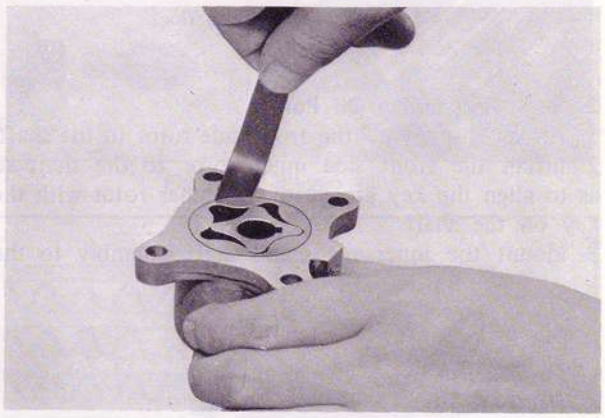

Fig. 2–4 Checking outer rotor clearance

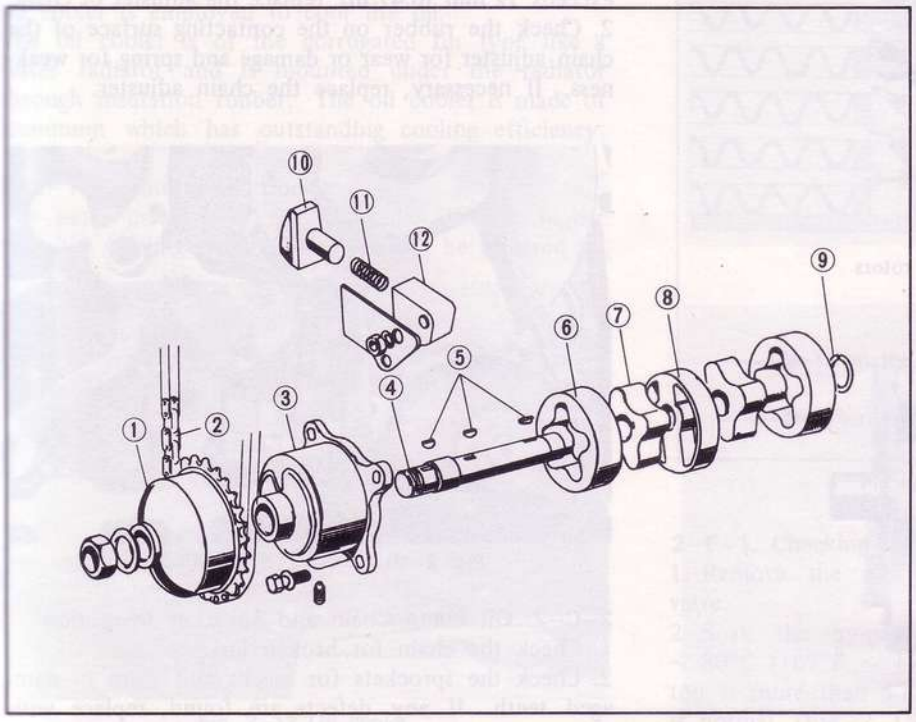

Fig. 2–5 Oil pump components

1. Oil pump driven sprocket
2. Oil pump chain
3. Pump body
4. Shaft
5. Keys
6. Outer rotor
7. Inner rotor
8. Middle plate
9. Snap ring
10. Adjuster
11. Spring
12. Body

3. Check the end float of the rotors. Place a straight edge across the pump body and measure the clearance between the rotor and straight edge with a feeler gauge. The standard end float is 0.03 ~ 0.13 mm (0.001 ~ 0.005 in). If the total end float exceeds **0.15 mm (0.006 in)**, correct the pump body or replace both rotors.

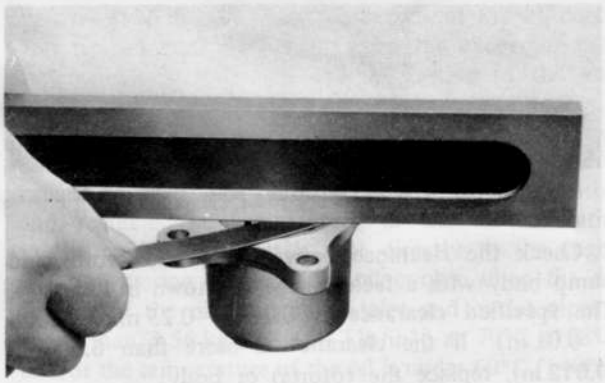

Fig. 2–6 Checking end float

2–B–3. Assembling Oil Pump

1. Attach the key of the front side rotor to the shaft.
2. Install the front side inner rotor to the shaft so as to align the key groove of the inner rotor with the key on the shaft.
3. Mount the inner rotor and shaft assembly to the pump body.
4. Install the outer rotor to the body so as to see the identification marks of triangle. Apply oil to the rotors. (Fig. 2–7)
5. Install the middle plate to the body. Tighten the set screw. (Fig. 2–8)
6. Attach the key of the rear side rotor to the shaft.
7. Install the rear side inner rotor and outer rotor.
8. Fit the snap ring on the shaft. Apply oil to the rotors.

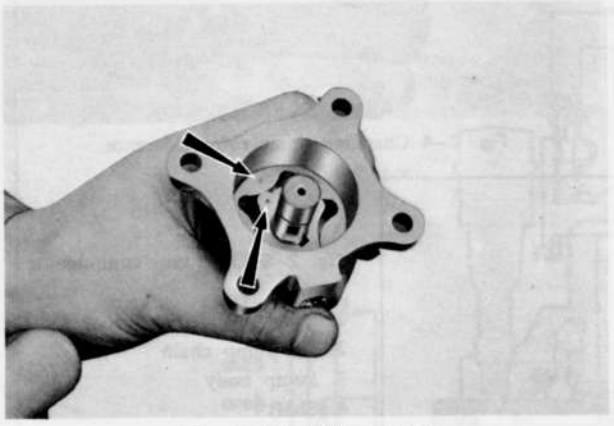

Fig. 2–7 Installing rotors

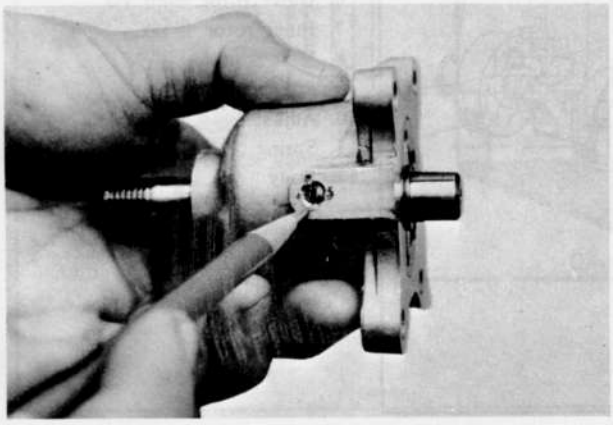

Fig. 2–8 Tightening intermediate plate

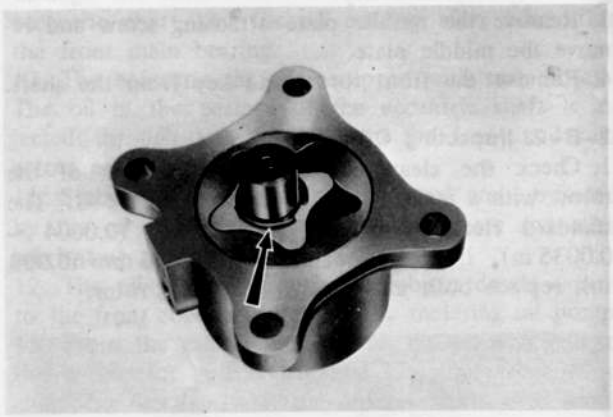

Fig. 2–9 Fitting snap ring

9. Mount the oil pump assembly on the front housing and fix it with the bolts. Rotate the shaft by hand to see whether it rotates smoothly.

2–C. OIL PUMP DRIVING

2–C–1. Chain Adjuster Inspection

1. Check the amount of protrusion of the chain adjuster, as shown in Fig. 2–10. If the protrusion exceeds **12 mm (0.47 in)**, replace the adjuster or chain.
2. Check the rubber on the contacting surface of the chain adjuster for wear or damage and spring for weakness. If necessary, replace the chain adjuster.

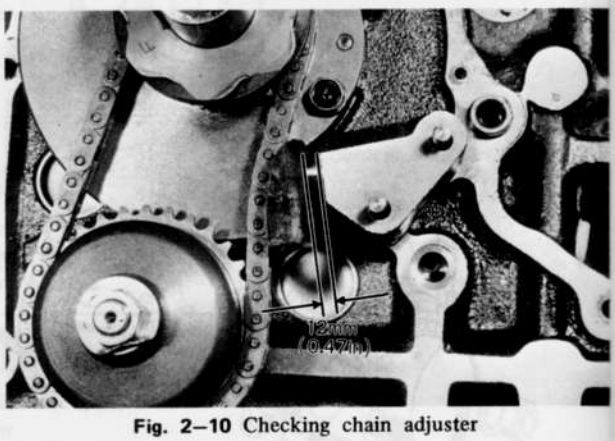

Fig. 2–10 Checking chain adjuster

2–C–2. Oil Pump Chain and Sprocket Inspection

1. Check the chain for broken links.
2. Check the sprockets for cracks and worn or damaged teeth. If any defects are found, replace with new parts.

2–D. PRESSURE CONTROL VALVE

The pressure control valve mounted on the front cover sends the surplus oil back to the oil pan when the pressure exceeds 11 kg/cm² (156 lb/in²) in order to prevent the oil cooler and the oil hose from damage by the exceeding pressure which is generated at the starting in the very cold weather.

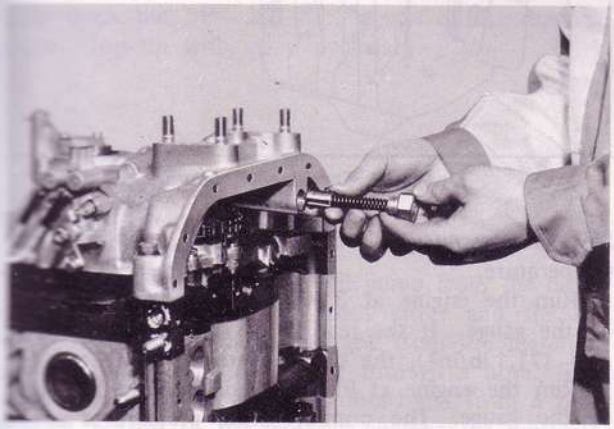

Fig. 2–11 Pressure control valve

2–D–1. Checking Pressure Control Valve

Remove the cap of the pressure control valve from the front cover.
Examine the spring and the plunger for corrosion or any damage. If it is severe, replace with new ones. Measure the free length and replace with new spring if these are not in the specification.

2–E. OIL COOLER

The rotor is cooled by the lubricating oil, and the oil cooler is employed to cool the oil.
The oil cooler is of the corrugated fin type like a water radiator and is mounted under the radiator through insulation rubber. The oil cooler is made of aluminum which has outstanding cooling efficiency.

2–E–1. Repairing Oil Cooler

The inner pressure of the oil cooler is much higher than the cooling radiator, so it should be repaired by **aluminum welding** when damaged.

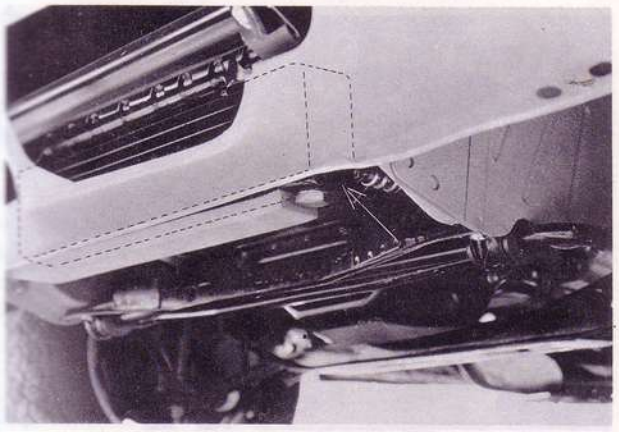

Fig. 2–12 Oil cooler

2–F. BY-PASS VALVE

The by-pass valve is installed on the oil cooler in order to prevent drop of oil supply which is caused by the resistance of the oil cooler in the cold weather and regulate the temperature of the oil circulating in the engine. The oil is sent directly to the engine without passing through the oil cooler when the difference of the oil pressure of inlet and outlet pipes is more than 3.56 kg/cm² (50.7 lb/in²) at 70°C (158°F) and/or the temperature of the oil is under 60°C (140°F).

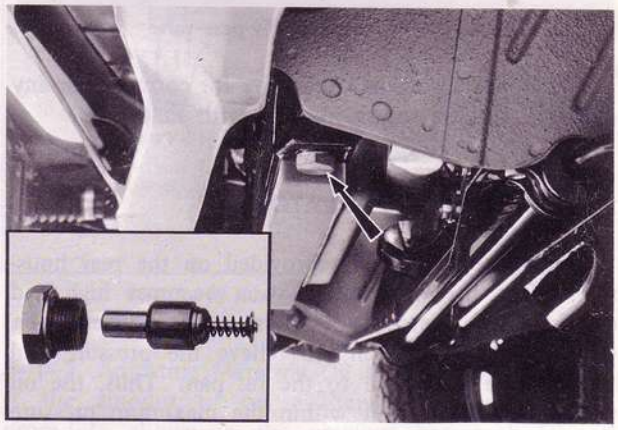

Fig. 2–13 By-pass valve

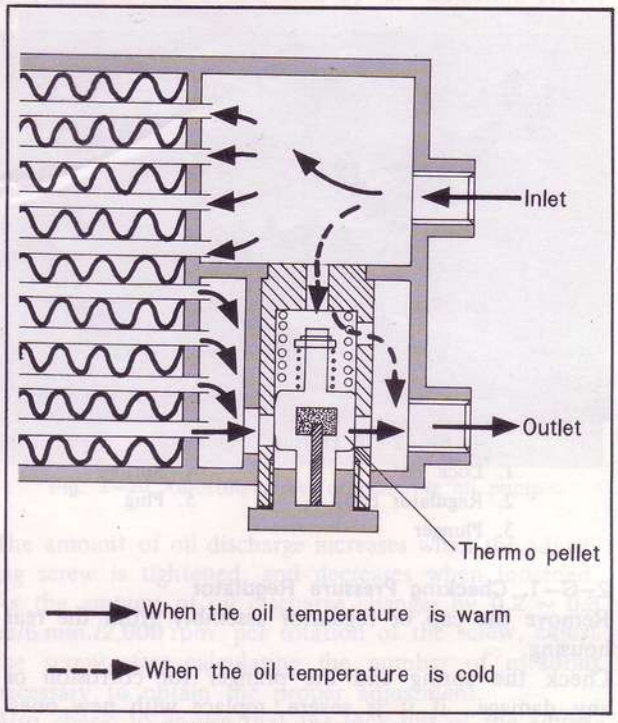

Fig. 2–14 By-pass valve

2–F–1. Checking By-pass Valve

1. Remove the cap nut and pull out the by-pass valve.
2. Soak the by-pass valve in hot oil of 75°C ~ 80°C (167°F ~ 176°C). If the protrusion of piston is more than 5 mm (0.2 in), the by-pass valve is normal. (Fig. 2–15)

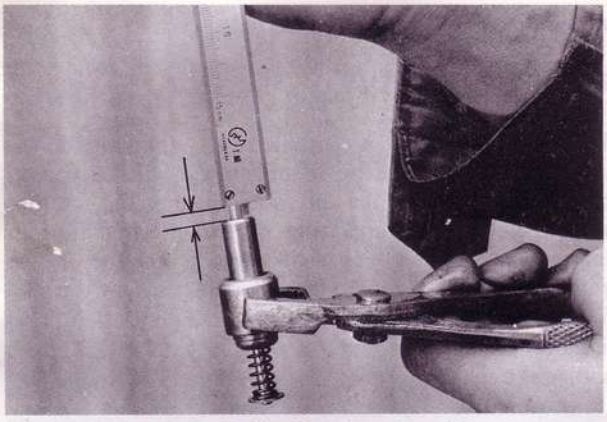

Fig. 2–15 Checking by-pass valve

3. Check the spring and the valve for corrosion or any damage. If it is severe, replace with new ones.

2–G. PRESSURE REGULATOR

The pressure regulator is provided on the rear housing. When the engine revolution becomes high and excessive oil pressure develops in the system, the pressure regulator opens to relieve the pressure and to send the excess oil to the oil pan. Thus, the oil pressure is maintained within the maximum pressure of 5 kg/cm² (71.1 lb/in²).

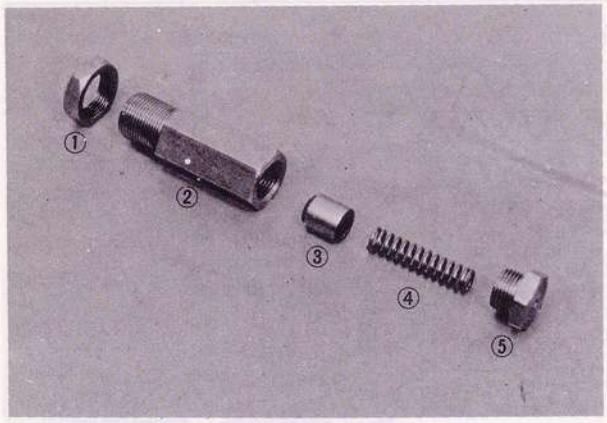

Fig. 2–16 Pressure regulator

1. Lock nut
2. Regulator body
3. Plunger
4. Spring
5. Plug

2–G–1. Checking Pressure Regulator

Remove the cap or regulator assembly from the rear housing.

Check the spring and the plunger for corrosion or any damage. If it is severe, replace with new ones. Measure the free length, set length and set pressure. Replace with new spring if these are not in specifications.

2–G–2. Checking Oil Pressure

To check the oil pressure, proceed as follows:

1. Remove the blind plug under the oil filter of rear housing and install an **oil pressure gauge** (Part No. 49 0187 280) in its place.

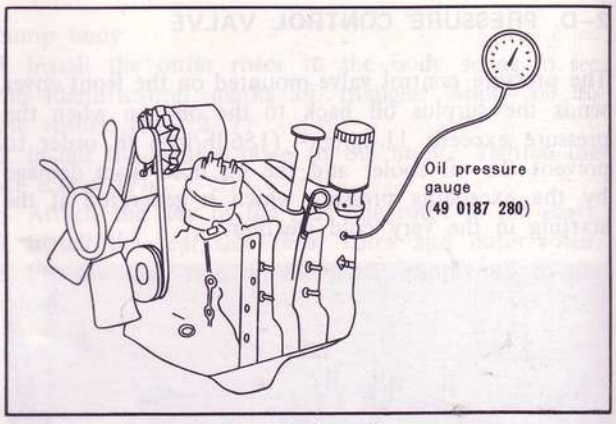

Fig. 2–17 Checking oil pressure

Start and warm up the engine to the normal operating temperature.

2. Run the engine at **3,000 rpm** and take a reading of the gauge. If the reading of the gauge is **5.0 kg/cm² (71.1 lb/in²)**, the oil pressure is normal.

3. Run the engine at idling speed and take a reading of the gauge. The normal idling pressure is about **2.4 kg/cm² (34.1 lb/in²).**

If the oil pressure is less than **1 kg/cm² (14.2 lb/in²)**, check the following points:

a. Ensure that the oil level is between the "F" and "L" marks of the dipstick gauge.

b. Check the oil pump, as described in **Par. 2–B–2.**

c. Check the pressure regulator for wear on the plunger and fatigue on the spring. The free length of the spring is **46.4 mm (1.827 in).**

2–H. OIL FILTER

The oil filter is of a cartridge type. The element of the filter is sealed in the container as a unit. The oil filter is provided with a relief valve. If the oil filter is clogged by impurities in the oil and the filtering resistance reaches **0.8 ~ 1.2 kg/cm² (11 ~ 17 lb/in²)**, the oil can not pass through the element. In this case, the oil pushes the relief valve open and unfiltered oil is supplied to the engine.

2–H–1. Replacing Oil Filter

1. Remove the oil filter cartridge with a suitable oil filter wrench.

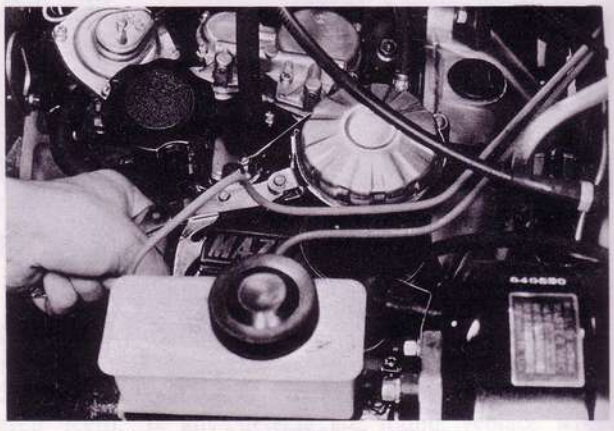

Fig. 2–18 Removing oil filter

2. Apply oil onto the rubber gasket on the new filter cartridge.
3. Place the cartridge on the cover and screw it on until it just touches the cover.
Then tighten the cartridge fully by hand.
4. Start the engine and check to see that the oil is not leaking from the joints.
5. After stopping the engine, ensure that the oil level is between the "F" and "L" marks of the dipstick gauge. Top up with oil if necessary.

2–I. METERING OIL PUMP

The oil enters the metering oil pump from the lubricating oil passage in the front cover and the oil which is measured and discharged from the metering oil pump enters the carburetor through a hose. The oil entering the carburetor is discharged from a portion of venturi to the working chamber to lubricate the gas seals. The plunger type metering oil pump is provided to send the proper amount of oil to the carburetor and is driven by the distributor drive gear.

2–I–1. Checking Metering Oil Pump

As sufficient consideration is being given on the performance and durability of the metering oil pump in its production process, generally there is no need of adjustment.
But as previously mentioned, the metering oil pump is the heart of the operation of the gas seals and insufficient amount of oil discharge could cause troubles such as drop in engine power and development of noise, because of insufficient lubrication, while excessive amount of oil discharge could cause problems as white smoke.
Therefore, the amount of oil discharge should always be within the proper range.
In case the engine tends to show any of the above troubles, the amount of oil discharge should be checked, proceeding as follows.
1. Disconnect the connecting rod by removing the cotter pin.
2. Disconnect the 2 metering oil hoses from the carburetor.
3. Install the tachodwell tester and set the engine at a constant speed of **2,000 rpm.** Wait until the oil discharge from the end of the metering oil hoses becomes steady and, when it is steady receive the oil in the measuring cylinder and start measuring the time simultaneously.
4. Stop the engine after **6 minutes** and check the amount of oil discharge. If it is within the proper range shown below, the discharge is satisfactory. Otherwise, adjust the oil metering pump.

2.0 ~ 2.5 cc/6 min.
(0.122 ~ 0.153 cu. in/6 min.)
at 2,000 rpm

Note :
As lubricating oil is not being supplied to the gas seals while the measurements are being taken, a proper amount of clean engine oil should be added into the carburetor or the engine should be run on mixed gasoline into which oil has been mixed at the ratio of 100 : 1.

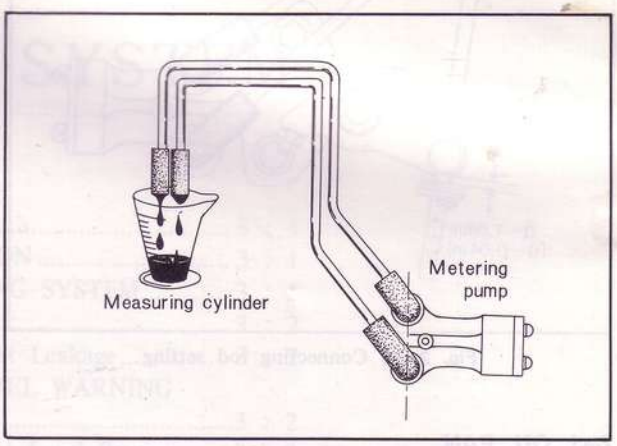

Fig. 2–19 Checking oil discharge

2–I–2. Adjusting Metering Oil Pump

If the amount of oil discharge measured by the procedure shown in the previous paragraph is not proper it would be adjusted by the adjusting screw.

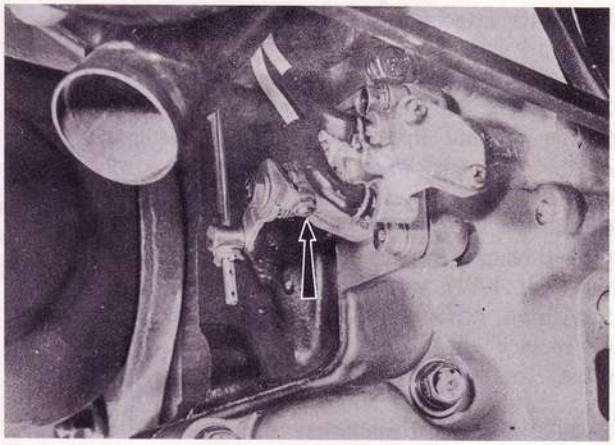

Fig. 2–20 Adjusting screw of metering oil pump

The amount of oil discharge increases when the adjusting screw is tightened, and decreases when loosened. As the amount of oil discharge changes by **0.2 ~ 0.3 cc/6 min./2,000 rpm** per rotation of the screw, adjust the screw after calculating the number of rotations necessary to obtain the proper adjustment.
Also check to ensure that the lock nut of the adjusting screw will lock without fail and be sure not to bend the lever when adjusting. After adjustment has been completed, measure the amount of oil discharge again and make sure that it is within the proper range.
In case the metering oil pump cannot be adjusted, check the oil leakage from pump body or tubes.
If the oil leakage cannot be found, replace a pump assembly.

Connecting rod setting
Set the clearance of connecting rod stopper pin and metering oil pump lever to **0 ~ 1.0 mm (0 ~ 0.04 in)** by using a suitable washer.

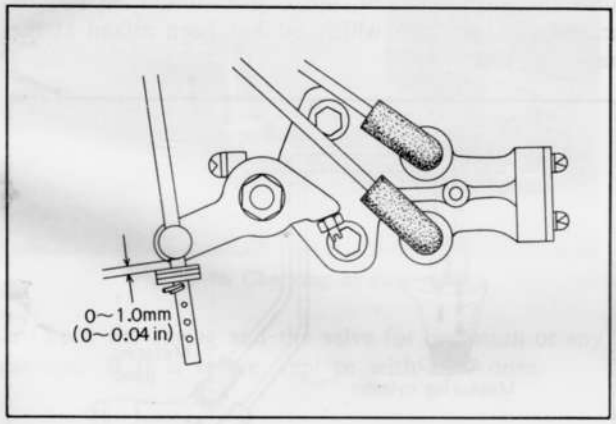

Fig. 2–21 Connecting rod setting

2–J. OIL PAN

2–J–1. Oil Pan Removal
1. Raise the vehicle and support with stands.
2. Drain the engine lubricant.
3. Remove the bolts attaching the engine under cover, and remove the engine under cover.
4. Remove the coupler of the oil level sensor and the bolts attaching the oil pan, and remove the oil pan and gasket.

2–J–2. Oil Pan Inspection
Scrape off any dirt or metal particles from the inside of the oil pan. Wash the oil pan in a solvent and dry it with compressed air.
Check the oil pan for any cracks and damaged drain plug threads. Inspect for damage (uneven surface) at the bolt holes caused by over-torqueing the bolts. Straighten surfaces as required. Repair any damage, or replace the oil pan if repairs can not be made satisfactorily.

2–J–3. Oil Pan Installation
Follow the removal procedures in the reverse order.

2–K. OIL LEVEL SENSOR

The oil level sensor fitted to the oil pan is connected by the wiring to the oil level warning lamp.
The oil level sensor is switched on to light the warning lamp when the engine lubricant level in the oil pan goes down to around "L" mark of the dipstick gauge.
When the ignition is switched on, the warning lamp goes on to check for its failure even under the normal lubricant level, but the lamp goes out under the normal level when the engine is started. So if the lamp comes on while the engine is operating, it means a drop of the engine lubricant level and warns necessity of replenishment of the engine lubricant.

2–K–1. Removing Oil Level Sensor
1. Remove the bolts attaching the engine under cover, and remove the engine under cover.
2. Remove the drain plug, and drain the lubricant from the oil pan. Refit the drain plug after draining lubricant.
3. Disconnect the coupler from the oil level sensor.
4. Remove the screws attaching the oil level sensor to the oil pan, and remove the oil level sensor.

2–K–2. Checking Oil Level Sensor
1. Connect the circuit tester to the level sensor as shown in Fig. 2–22, and check the continuity by moving the float up and down. When the float is on the upper side, the circuit tester should not show any continuity, and when moved to the lower side, it should show a continuity of the circuit. If it is found not to be so, replace the oil level sensor.
2. Check the oil chamber with finger that deposits aren't piled up and the oil hole isn't clogged.

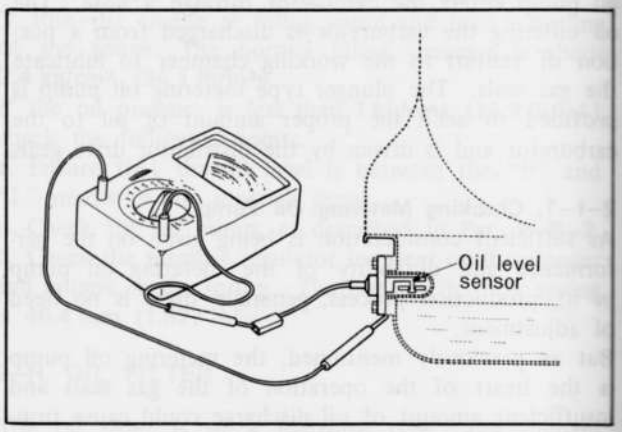

Fig. 2–22 Checking oil level sensor

Note:
1. If the oil hole should be clogged, the float of the oil level sensor can't work correctly, so take care to clean up the oil chamber.
2. To check the function of the oil level sensor on the car, the following steps should be taken:
a. Disconnect the coupler from the oil level sensor.
b. Connect the circuit tester to the level sensor as shown in Fig. 2–22.
c. Make sure that the oil level is between "F" and "L" marks of the dipstick gauge, and check to see that there is no continuity of the circuit.
d. Drain the lubricant from the oil pan, and check to see that there is a continuity of the circuit tester.

2–K–3. Installing Oil Level Sensor
Follow the removal procedures in the reverse order. Fill the lubricant in the engine and check to see that the oil is not leaking from the joining faces of the level sensor.

SPECIAL TOOL

49 0187 280	Oil pressure gauge

COOLING SYSTEM

DESCRIPTION ..... 3 : 1
3–A. COOLANT CIRCULATION ..... 3 : 1
3–B. FLUSHING OF COOLING SYSTEM ..... 3 : 1
3–C. COOLANT ..... 3 : 2
3–C–1. Checking Coolant Leakage ..... 3 : 2
3–D. CHECK COOLANT LEVEL WARNING SYSTEM ..... 3 : 2
3–D–1. Checking Coolant Level Sensor ..... 3 : 2
3–E. RADIATOR ..... 3 : 3
3–E–1. Checking Radiator ..... 3 : 3
3–E–2. Repairing Radiator ..... 3 : 3
3–E–3. Checking Radiator Pressure Cap ..... 3 : 3
3–F. FAN DRIVE ..... 3 : 3
3–F–1. Checking Fan and Fan Drive ..... 3 : 4
3–G. THERMOSTAT ..... 3 : 4
3–G–1. Removing Thermostat ..... 3 : 4
3–G–2. Inspecting Thermostat ..... 3 : 4
3–H. WATER PUMP ..... 3 : 5
3–H–1. Inspecting Water Pump ..... 3 : 5
3–H–2. Removing Water Pump ..... 3 : 5
3–H–3. Disassembling Water Pump ..... 3 : 6
3–H–4. Assembling Water Pump ..... 3 : 6
3–H–5. Installing Water Pump ..... 3 : 6
SPECIAL TOOL ..... 3 : 6

3

DESCRIPTION

The completely sealed cooling system consists of a radiator with a pressure cap, an expansion chamber (sub-tank), centrifugal water pump, a thermostat and a fan.
The radiator and the expansion chamber are connected by hose. When the engine is heated sufficiently, the coolant in the radiator flows out and is led into the expansion chamber through the hose. The coolant is then returned to the radiator by negative pressure which builds up in the cooling system when the engine cools down.

3–A. COOLANT CIRCULATION

The water pump is driven by the eccentric shaft pulley over a V-belt and discharges the cooling water to the front housing. The water circulates from the front housing through the water passage provided in each housing and flows to the rear housing. From the rear housing, the water is returned to the front housing. At low engine temperature, the thermostat is closed to keep the water from entering the radiator. The water is then recirculated directly to the water pump and discharged to each housing. As the thermostat opens when the engine is warmed up, the water flows into the radiator. The cooled water flows from the radiator to the water pump through the connecting hose and cools the engine by circulation.

3–B. FLUSHING OF COOLING SYSTEM

Caution:
Avoid injury when checking a hot engine. Muffle the radiator cap in a thick cloth and turn it slowly counter-clockwise only until the pressure starts to escape.
After the pressure has completely dissipated, finish removing the cap.

The flushing procedures are as follows:
1. Open the drain plugs and drain the coolant.
2. Close the drain plugs and supply clean soft water.

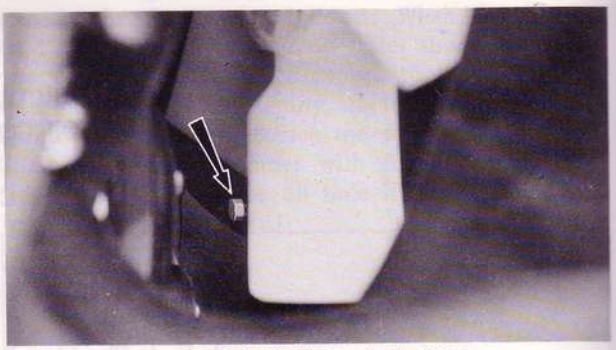

Fig. 3–2 Radiator drain plug

Note:
If necessary, use cleaning solution to loosen rust and scale, by following the instructions given by the maker of the cleaning solution.

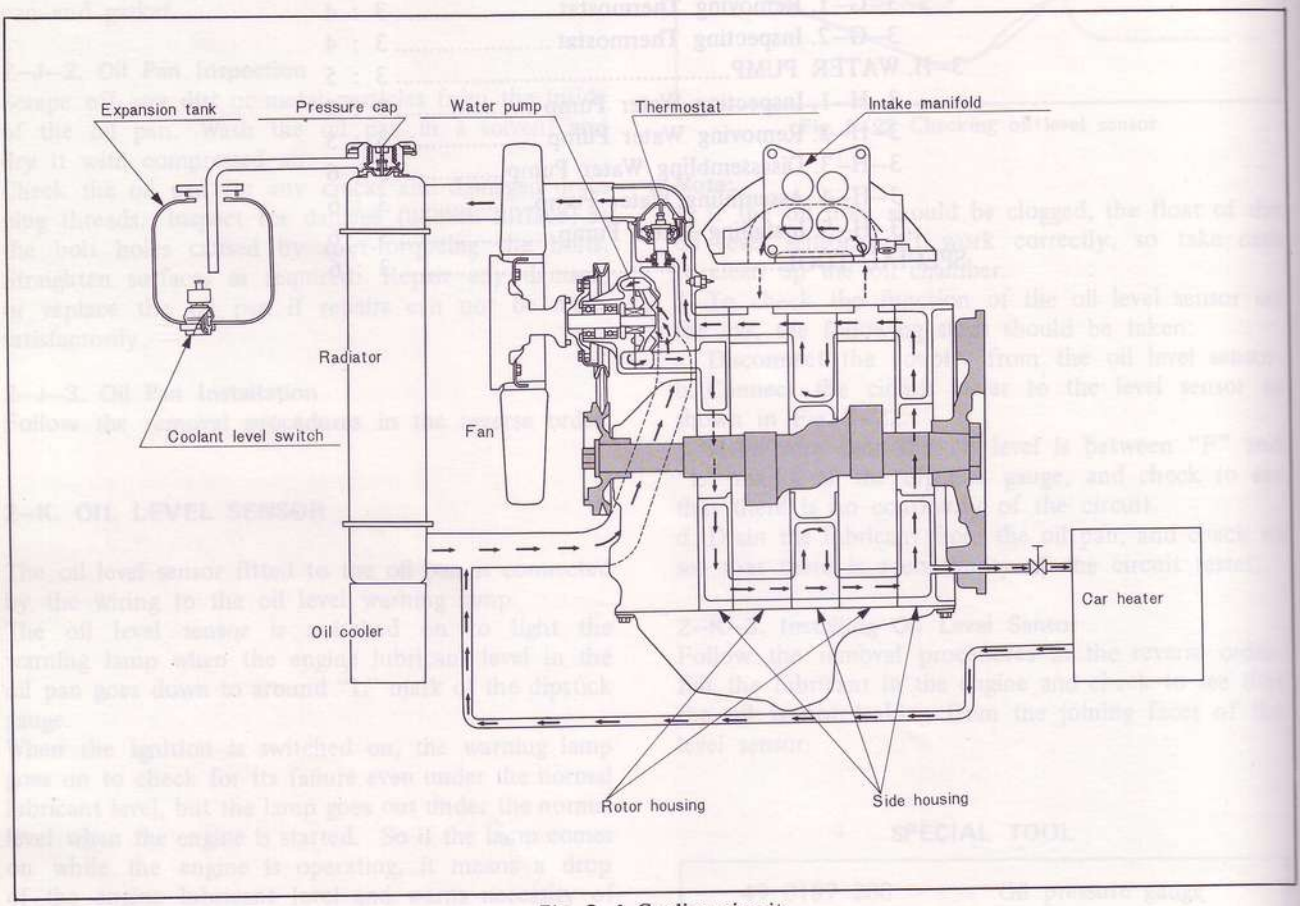

Fig. 3–1 Cooling circuit

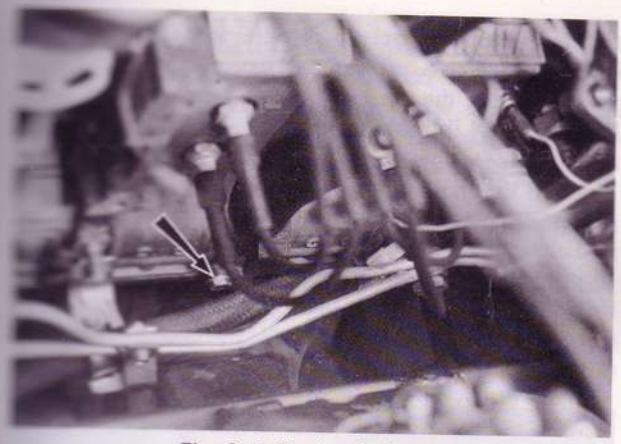

Fig. 3–3 Engine drain plug

3. Run the engine for about one hour, at the normal operating temperature.
4. Drain the water completely.
5. Fill with soft water (demineralized water) and high quality ethylene glycol anti-freeze, referring to **Par. 3–C.**
6. Run the engine at idle with the radiator cap removed and slowly add coolant in accordance with drop of coolant level.
7. When the engine reaches normal operating temperature, pump the accelerator pedal 2 or 3 times and add coolant as required. Install the radiator cap.
8. Inspect all connections for leaks and stop the engine to recheck the coolant level.

3–C. COOLANT

The high quality ethylene glycol anti-freeze which is suitable for aluminum engine is used in the cooling system.
Use recommended mixture of 50% anti-freeze solution (Ethylene glycol base for aluminum engine) and 50% water.
For proper system protection in regions where the temperature goes below –20°F, add the amount of ethylene glycol base coolant recommended by the coolant manufacturer. However, be careful so that the proportion of ethylene glycol anti-freeze contained in the coolant may not exceed 60%; higher proportion than that only has a bad effect upon the engine.

Note:
Always use soft water (demineralized water) in the cooling system.

3–C–1. Checking Coolant Leakage

Carefully check the various parts for any leakage of cooling water by using a radiator cap tester. Refill the coolant full in the radiator and between the "FULL" and "LOW" marks on the expansion tank. Run the engine until it reaches normal operating temperature. With the engine running and tester installed, pump up the system to approximately 0.9 kg/cm^2 (13 lb/in^2).

Note: Never allow the pressure to build up to more than 1.1 kg/cm^2 (14 lb/in^2)

If pressure drops rapidly, visually inspect all external parts for leaks. If no external leaks appear and pressure continues to drop, inspect the engine oil to determine whether or not coolant is leaking into the rotor housing due to a cracked rotor housing or leaking "O" rings.

3–D. CHECK COOLANT LEVEL WARNING SYSTEM

The coolant level sensor, installed on the expansion tank, turns on the warning light on the instrument panel to warn the driver to replenish the coolant when the coolant level becomes lower than "Low" mark while the car is running.
When hard brakes are applied or the car corners hard, however, the warning light may go on momentarily in some cases even if the coolant level is higher than "Low" mark.
When the ignition is switched on, the warning light goes on even under the normal level of the coolant so that fault of the light itself may be easily checked, but it goes out when the engine is started in case the coolant is at the normal level.

3–D–1. Checking Coolant Level Sensor

1. Check for fault of the warning light with the ignition switched on. When its fault is found, replace the bulb with a new one.
2. Start the engine, keep it idling and, after removing the expansion tank cap, push the float of the coolant level sensor down to its lowest position, using the stick of the cap. The warning light is normal if it goes on while the float is pushed down for scores of seconds.
3. If the warning light does not go on that occasion, check for faulty contact of the coupler and short circuit of the wire harness.

(a) Check for the breaking down of the wire harness by connecting the circuit tester with the harness as shown in Fig. 3–4 and switching the ignition on; if the tester is energized on that occasion, the harness is not broken.

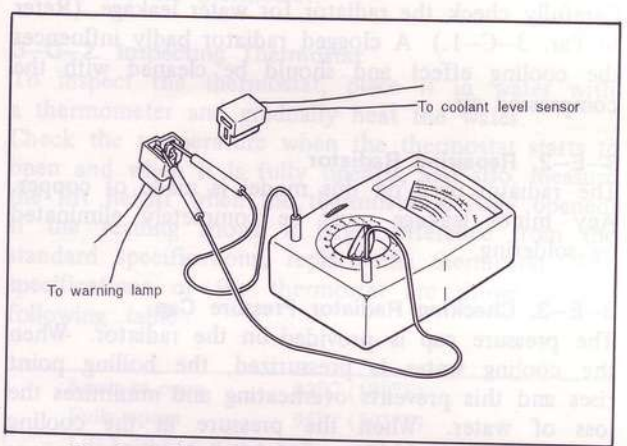

Fig. 3–4 Checking coolant level warning system

(b) If the harness is not broken, connect the circuit tester with the coolant level sensor as shown in Fig. 3–4 and then push the float of the sensor down to its lowest position using the stick of the expansion tank cap, as indicated in the above 2.
Confirm whether the tester is gradually energized while the float is pushed down for scores of seconds. If the tester is not energized at that time, replace the coolant level sensor with a new one. In case the warning light does not go on though the tester is energized, the trouble is due to faulty contact of the coupler.

4. In case the warning light is on all the time while the vehicle is running even when the coolant level is around "Full" mark, check for the short circuit of the wire harness. If the short circuit is not found, connect the circuit tester with the wire harness in the same way as that indicated in the abofe 3–(a) and confirm whether the tester is energized when the float of the coolant level sensor is above "Low" mark; if the tester is energized, replace the coolant level sensor with a new one.

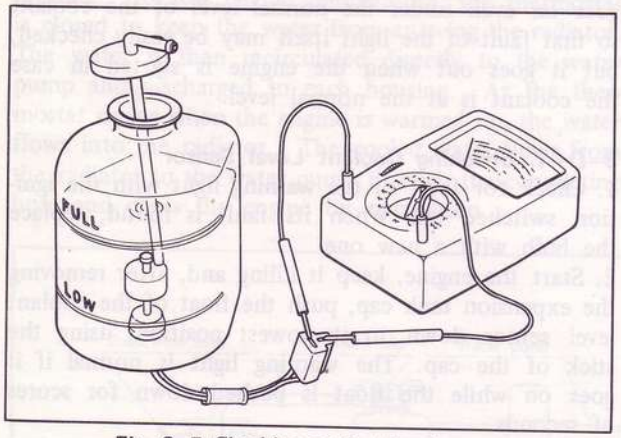

Fig. 3–5 Checking coolant level sensor

3–E. RADIATOR

The radiator is of the corrugated fin type with a pressure cap.

3–E–1. Checking Radiator

Carefully check the radiator for water leakage. (Refer to Par. 3–C–1.) A clogged radiator badly influences the cooling effect and should be cleaned with the compressed air.

3–E–2. Repairing Radiator

The radiator used on this model is made of copper. Any minor leakage must be completely eliminated by soldering.

3–E–3. Checking Radiator Pressure Cap

The pressure cap is provided on the radiator. When the cooling water is pressurized, the boiling point rises and this prevents overheating and minimizes the loss of water. When the pressure in the cooling system exceeds 0.9 kg/cm² (13.0 lb/in²), the cap opens to prevent the radiator and water hose from damage by the excessive pressure. When the coolant temperature falls, the vacuum release valve opens at −0.1 kg/cm² (−1.4 lb/in²) to prevent vacuum from building up in the cooling system.
To test the radiator cap, first check the cap rubber gasket. Replace with a new cap if the rubber gasket is damaged.
If not, first wet the rubber gasket to insure an air tight seal then attach the radiator cap tester. The cap should be capable of retaining pressure 0.9 kg/cm² (13 lb/in²).



Fig. 3–6 Checking radiator pressure cap

3–F. FAN DRIVE

The fan drive is driven with the water pump pulley. The fan speed is adjusted by the work of the silicon oil to prevent the fan from making more than a certain number of rotations. In addition, the fan speed is changed into two steps, as shown in Fig. 3–7, according to operation of the bimetal which senses the temperature of the air passing through the radiator.
The temperature of the air passing through the radiator becomes higher with rise of the temperature of engine coolant; when the temperature of this air becomes higher than about 80°C (176°F), the bimetal opens the silicon oil passage and, as a result, the contacting area of the fan drive and silicon oil is extended and the fan speed is increased, to bring higher cooling efficiency of the engine at the time of its high temperature.

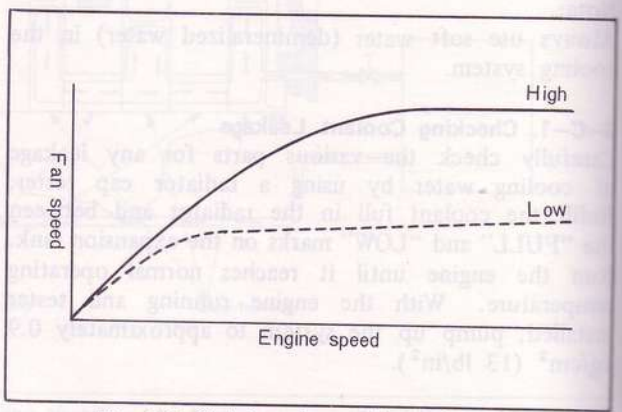

Fig. 3–7 Rotating characteristic of the fan

3–F–1. Checking fan and fan drive

1. Check for damage and deformation of the fan and fan drive and also check for looseness or deflection of the fan by shaking it by hand in the axial direction; if such troubles are so serious, replace the fan and fan drive assembly with new one.
2. Check for seepage of the silicon oil; if it is found, replace the fan drive assembly with a new one.
3. Check the rotating characteristic of the fan according to the following procedure, using the photoelectric revolution counter and tachodwell tester.

(a) Apply scotch tape to the positions on the fan.
(b) Set the tachodwell tester to the engine. Then start and warm up the engine for about a minute at engine speed of 3,000 rpm.
(c) Then turn the photoelectric revolution counter toward the fan and read the speed of the fan rotation at engine speed of 4,200 rpm. The fan speed should be within the standards shown in the following table.

Prescribed Revolution	
Engine	Fan
4,200 rpm	1,500 ± 200 rpm

If the reading is below the standard, replace the fan drive assembly.

Note:
When the photoelectric revolution counter is not prepared, the revolution of the fan will be also checked by the procedure as follows:

1. Prepare another car, and set the tachodwell tester and the timing light to the engine.
2. Regulate the engine speed of the car to make the timing light coincide with the fan speed, and read the engine speed on the tachodwell tester, which is the speed of fan revolution.

3–G. THERMOSTAT

To regulate the temperature of the cooling water circulating in the engine, a wax type thermostat is adopted. The thermostat is of a bottom by-pass type, which has outstanding cooling efficiency, and is different from the conventional in-line type thermostat in the undermentioned points. Therefore, it should be handled with particular care.

As shown in Fig. 3–8, a by-pass hole is provided at the bottom of the thermostat. The by-pass hole on the bottom by-pass type thermostat is larger than that on the in-line type. The bottom by-pass type thermostat, therefore, has the following advantages: when the thermostat is fully closed, a large amount of cooling water circulates, thus preventing any local rise in the cooling water temperature, and, when the thermostat is fully opened, the valve of the thermostat closes the by-pass hole and so all of the cooling water flows into the radiator, making effective use of the radiator. But, if

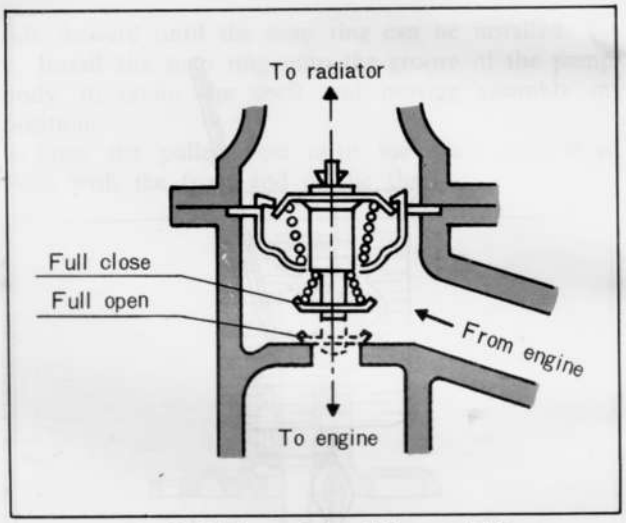

Fig. 3–8 Thermostat and by-pass hole

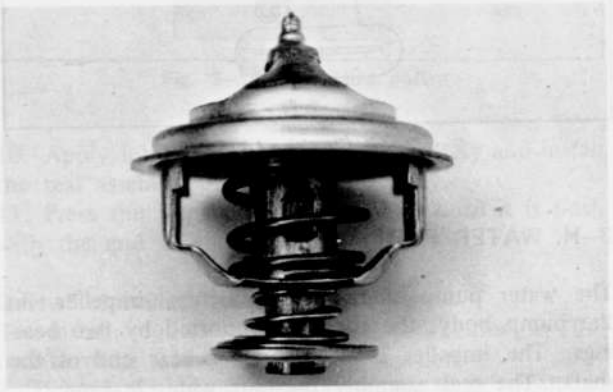

Fig. 3–9 Thermostat

the thermostat is removed, a large amount of cooling water flows through the by-pass hole because the hole is large, and so the amount of cooling water flowing into the radiator decreases to half, causing the cooling water temperature to rise.
Therefore, **the thermostat should never be removed** and **no other type of thermostat should be used.**

3–G–1. Removing Thermostat

1. Drain the cooling system.
2. Remove the bolts attaching the thermostat cover to the water pump and remove the cover.
3. Lift out the thermostat.

3–G–2. Inspecting Thermostat

To inspect the thermostat, place it in water with a thermometer and gradually heat the water.
Check the temperature when the thermostat starts to open and when it is fully opened, and also, measure the lift height when the thermostat is fully opened. If the reading shows a large difference from the standard specifications, replace the thermostat. The specifications of the thermostat are shown in the following table:

Starts to open	82°C (180°F)
Fully opens	95°C (203°F)
Lift height	8 mm (0.31 in) or more

FUEL SYSTEM

FUEL SYSTEM ..... 4 : 1
4–A. CARBURETOR ..... 4 : 1
4–A–1. Idle Adjustment ..... 4 : 1
4–A–2. Fast Idle Adjustment ..... 4 : 2
4–A–3. Float Adjustment ..... 4 : 2
4–A–4. Choke System ..... 4 : 3
4–A–5. Accelerator Pump ..... 4 : 4
4–A–6. Power Valve Solenoid Inspection ..... 4 : 5
4–A–7. Sub-Zero Starting Assist Device ..... 4 : 5
4–A–8. Fuel Inlet Fitting ..... 4 : 6
4–A–9. Safety Throttle Return System ..... 4 : 6
4–A–10. Disassembling Carburetor ..... 4 : 7
4–A–11. Inspecting Carburetor ..... 4 : 9
4–A–12. Carburetor Assembly ..... 4 : 9
4–B. FUEL PUMP ..... 4 : 10
4–C. FUEL FILTER ..... 4 : 10
4–D. FUEL LINES ..... 4 : 10
4–E. FUEL TANK ..... 4 : 10
4–F. AIR CLEANER ..... 4 : 11
4–F–1. Air Cleaner Element ..... 4 : 11
4–F–2. Intake Air Temperature Control System ..... 4 : 11
4–F–3. Checking Control Valve ..... 4 : 11

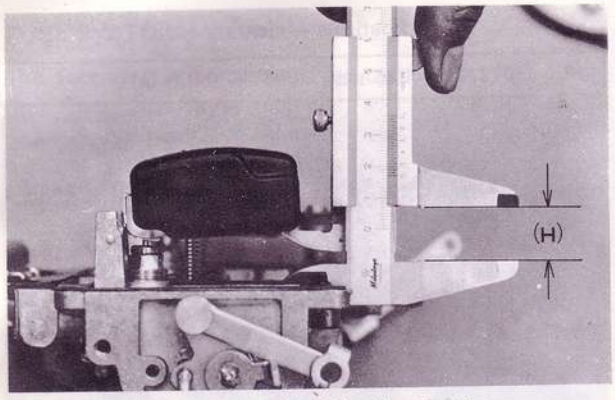

Fig. 4–6 Checking float level

b. Adjusting float drop

Allow the float to lower by its own weight, and measure the distance (L) between the bottom of float and the face of air horn gasket. The distance (L) should be 52 ± 0.5 mm (2.05 ± 0.02 in).

If the distance (L) is not within specifications, adjust it by bending the float stopper shown in Fig. 4–8.

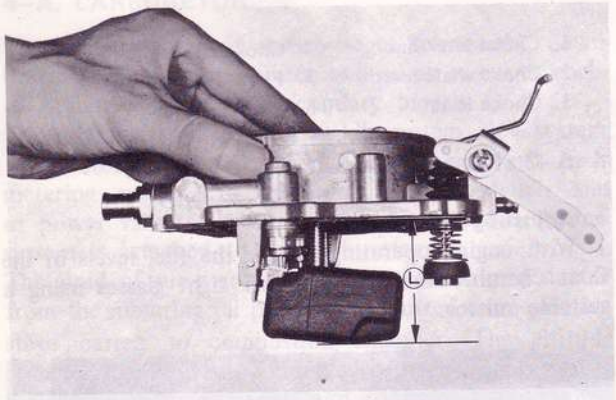

Fig. 4–7 Checking float drop

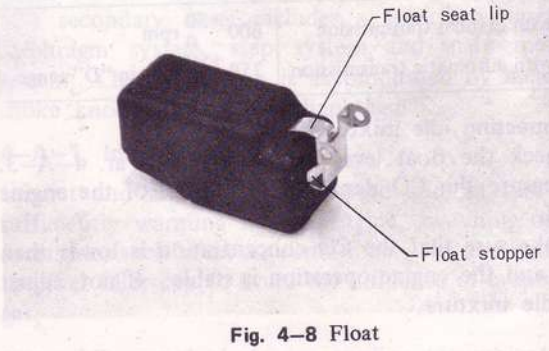

Fig. 4–8 Float

4–A–4. Choke System

a. Adjusting vacuum diaphragm

1. First, confirm that the diaphragm plunger has been pulled out during the engine idling.
2. Push the diaphragm plunger in until seated and check the stroke of it.

This stroke should be in the following specifications.

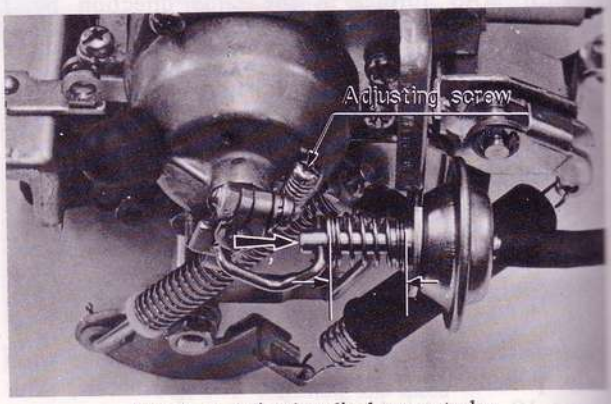

Fig. 4–9 Adjusting diaphragm stroke

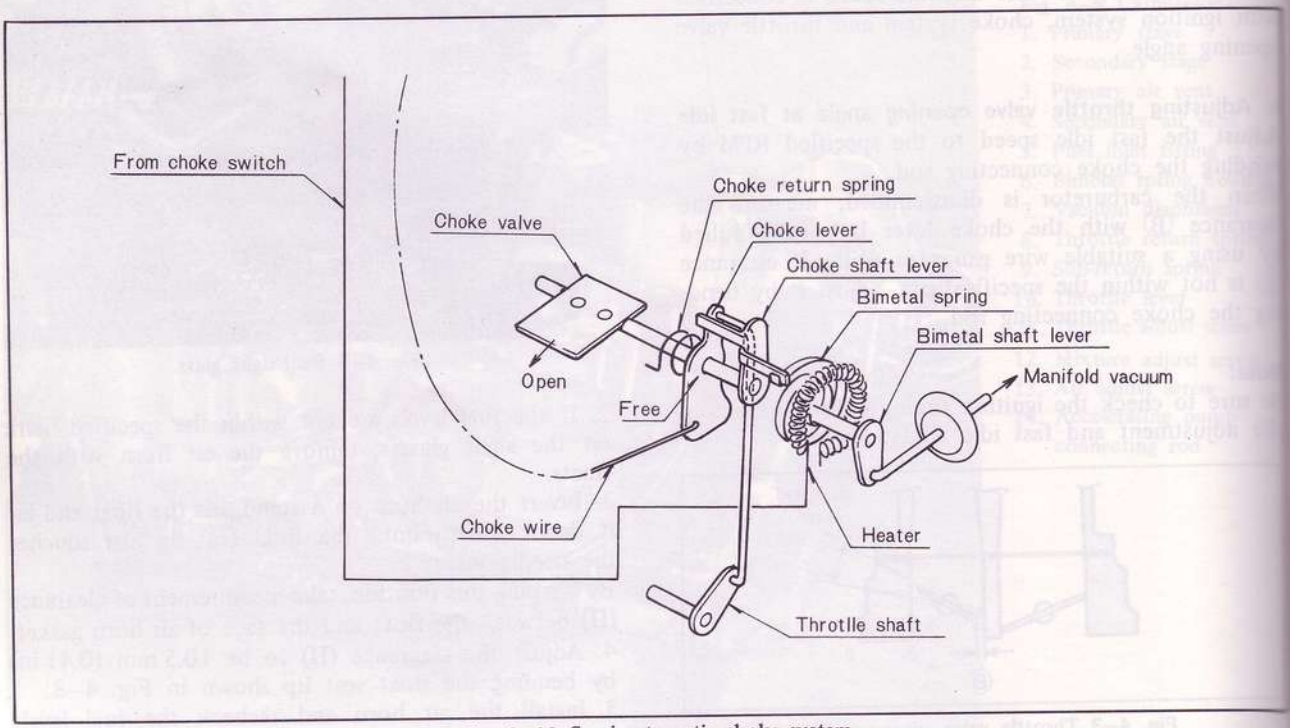

Fig. 4–10 Semi-automatic choke system

Specifications — diaphragm stroke

Car with manual transmission	4.5 ± 0.1 mm (0.177 ± 0.004 in)
Car with automatic transmission	5.8 ± 0.1 mm (0.228 ± 0.004 in)

b. Adjusting bimetal spring

1. Fully pull out the choke lever link and keep its position by wire.
2. Push the diaphragm plunger in fully and keep its position by wire as shown in Fig. 4–11.

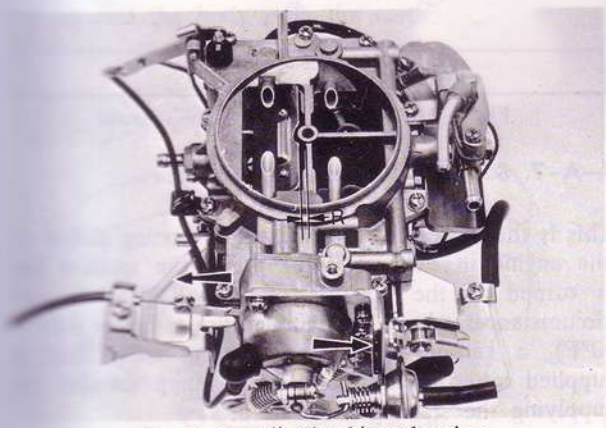

Fig. 4–11 Adjusting bimetal spring

3. Check the choke valve clearance (R) as shown in Fig. 4–11.
4. If the clearance (R) is not within specifications, first loosen Ⓐ then turn Ⓑ to adjust the clearance (R).

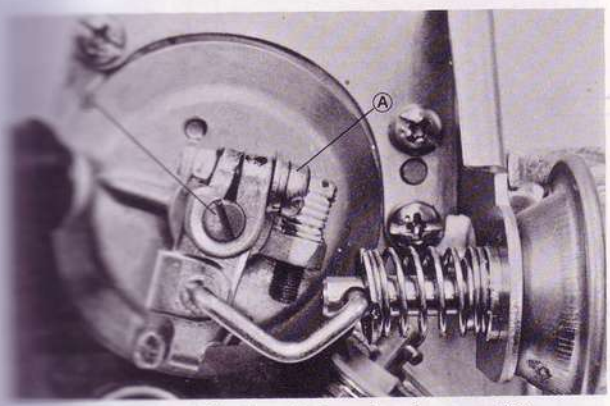

Fig. 4–12 Adjusting choke valve clearance (R)

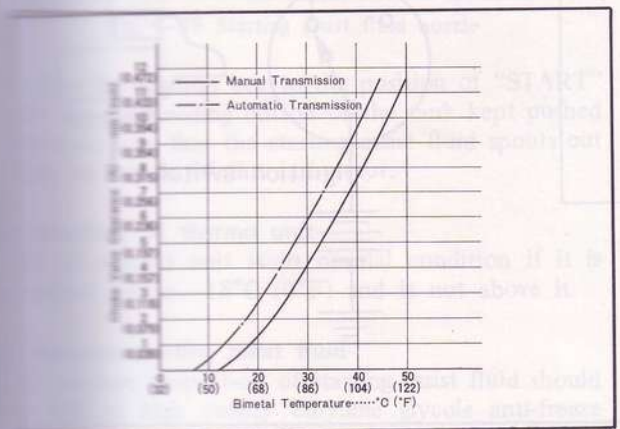

Fig. 4–13 Choke valve clearance (R)

4–A–5. Accelerator Pump

a. Checking accelerator pump

1. Remove the air cleaner.
2. Check the pump for discharge by moving the primary throttle valve.
3. Check the pump for nozzle's clogging.

When the pump nozzle is clogged, remove the nozzle and clean up the nozzle.

b. Checking amount of accelerator pump discharge

Checking of accelerator pump discharge amount is as follows:

1. Make sure that the pump connecting rod is set inside hole of the pump lever.
2. Place the vehicle on a level ground.
3. Set the burette at the fuel inlet of the carburetor and fill it with fuel.
4. Fully operate the throttle valve about five times and confirm the fuel discharged from the accelerating pump jet.
5. Set the fuel level in the burette at 300 mm (11.8 in) above the fuel inlet, as shown in Fig. 4–14.

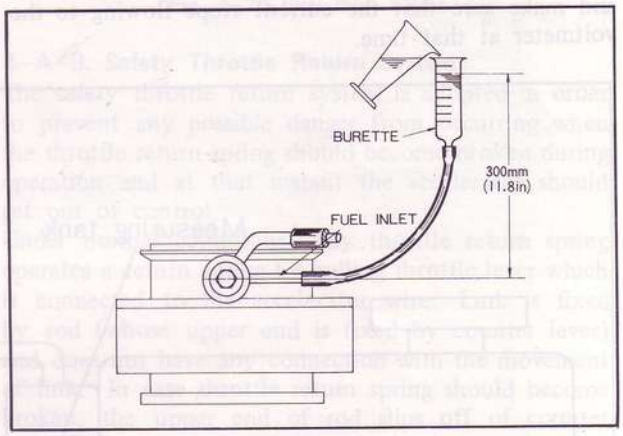

Fig. 4–14 Checking fuel discharge

6. Fully operate the throttle valve ten times according to the cycle as shown in Fig. 4–15 by means of the throttle lever or accelerator pedal and check the amount of discharge by reading the decrease of fuel in the burette.
7. If the discharge amount is not within specifications, check the accelerator pump piston and etc.

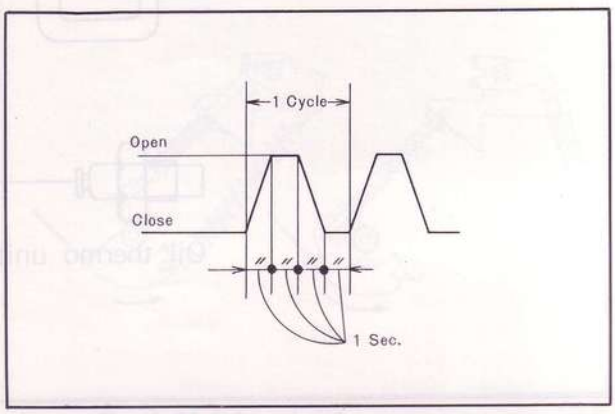

Fig. 4–15 Test pattern

Specifications — diaphragm stroke

Car with manual transmission	4.5 ± 0.1 mm (0.177 ± 0.004 in)
Car with automatic transmission	5.8 ± 0.1 mm (0.228 ± 0.004 in)

b. Adjusting bimetal spring

1. Fully pull out the choke lever link and keep its position by wire.
2. Push the diaphragm plunger in fully and keep its position by wire as shown in Fig. 4–11.

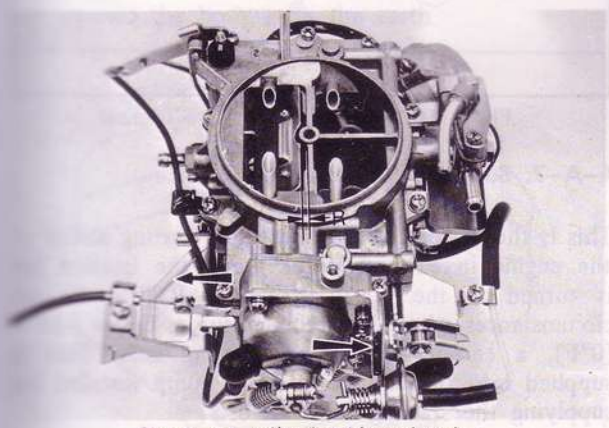

Fig. 4–11 Adjusting bimetal spring

3. Check the choke valve clearance (R) as shown in Fig. 4–11.
4. If the clearance (R) is not within specifications, first loosen Ⓐ then turn Ⓑ to adjust the clearance (R).

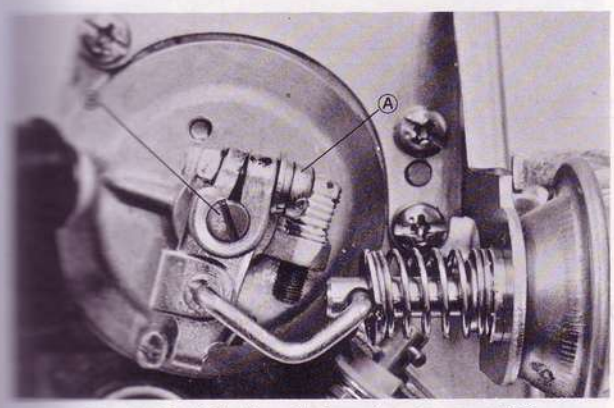

Fig. 4–12 Adjusting choke valve clearance (R)

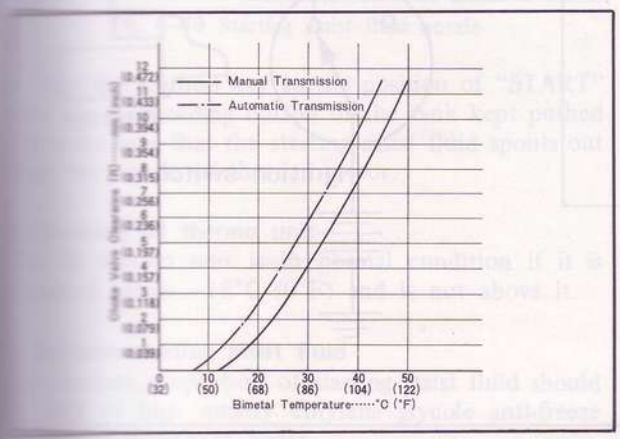

Fig. 4–13 Choke valve clearance (R)

4–A–5. Accelerator Pump

a. Checking accelerator pump

1. Remove the air cleaner.
2. Check the pump for discharge by moving the primary throttle valve.
3. Check the pump for nozzle's clogging.

When the pump nozzle is clogged, remove the nozzle and clean up the nozzle.

b. Checking amount of accelerator pump discharge

Checking of accelerator pump discharge amount is as follows:

1. Make sure that the pump connecting rod is set inside hole of the pump lever.
2. Place the vehicle on a level ground.
3. Set the burette at the fuel inlet of the carburetor and fill it with fuel.
4. Fully operate the throttle valve about five times and confirm the fuel discharged from the accelerating pump jet.
5. Set the fuel level in the burette at 300 mm (11.8 in) above the fuel inlet, as shown in Fig. 4–14.

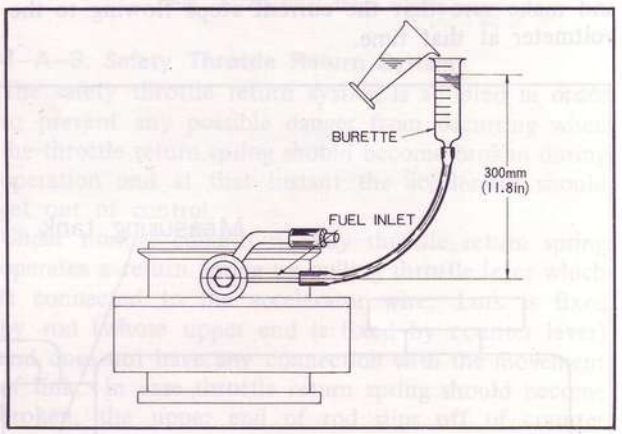

Fig. 4–14 Checking fuel discharge

6. Fully operate the throttle valve ten times according to the cycle as shown in Fig. 4–15 by means of the throttle lever or accelerator pedal and check the amount of discharge by reading the decrease of fuel in the burette.
7. If the discharge amount is not within specifications, check the accelerator pump piston and etc.

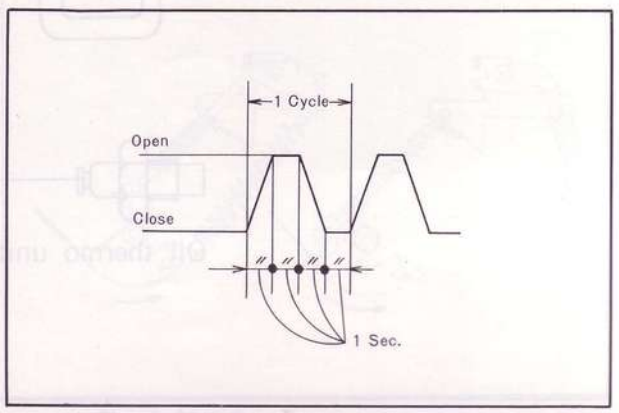

Fig. 4–15 Test pattern

Specifications – amount of fuel discharged out of accelerator pump

6.8 ~ 9.2 cc/10 strokes

4–A–6. Power Valve Solenoid Inspection (Car with automatic transmission only)

a. Checking power valve solenoid

1. Apply 12V directly on Ⓐ solenoid of the air control valve.
2. Set the CO meter.
3. Set the engine speed at 2,000 rpm; the operation of the solenoid is normal if the CO density varies when the coupler is opened and shut repeatedly.
4. If the CO density does not vary on that occasion, confirm the operating noise of the solenoid and check the power valve and power jet of the carburetor.

b. Checking signal of control unit

1. Connect a voltmeter with the coupler of the wire harness.
2. Run the engine at the idle speed again. Then gradually raise the engine speed up to 2,500 ± 200 rpm and make sure that the current stops flowing to the voltmeter at that time.

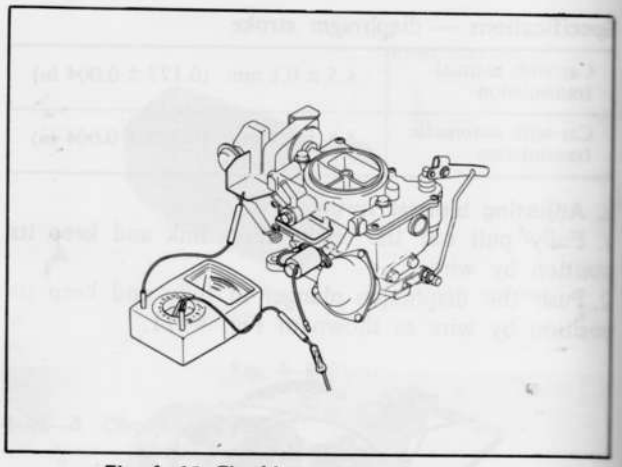

Fig. 4–16 Checking power valve solenoid

4–A–7. Sub-Zero Starting Assist Device

This is the device for increasing the starting ability of the engine in extreme cold. When the ignition key is turned to the position of "START" under the circumstances where the temperature is below –18°C (0°F), a certain amount of starting assist fluid is supplied into the carburetor by a pump installed for supplying the starting assist fluid.

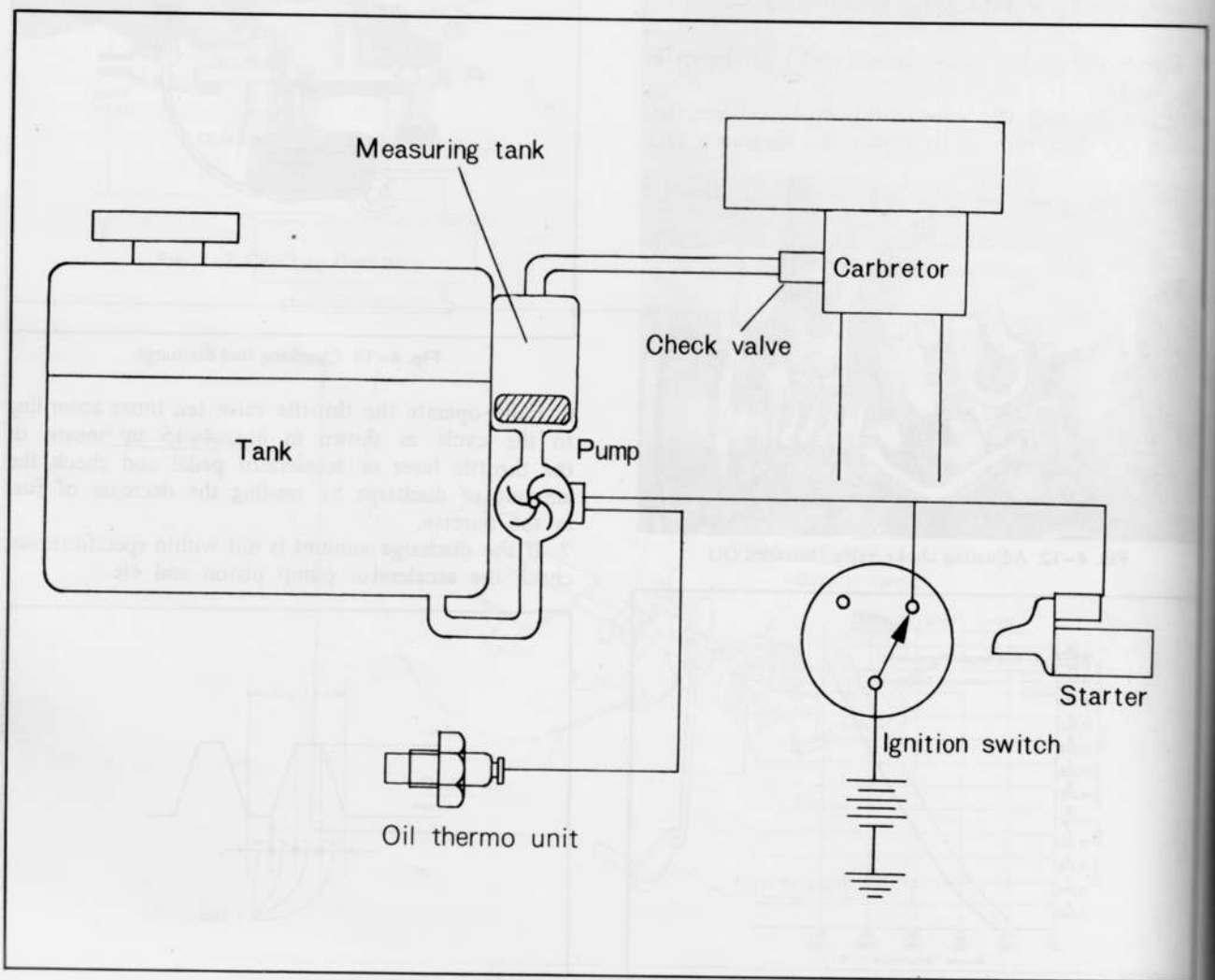

Fig. 4–17 Sub-zero starting assist system

sub-zero starting assist device

that there is sufficient starting assist in the tank. Replenish if necessary.

the coupler of S terminal connected to magnetic switch. This is to prevent the from revolving when the ignition key is turned

the air cleaner cover.

the ignition key to the position of "START" and make sure that the starting assist fluid does not spouts out from the nozzle of the carburetor. [Ambient temperature should be above −18°C (0°F)].

the coupler of the oil thermo unit and connect the body with the earth.

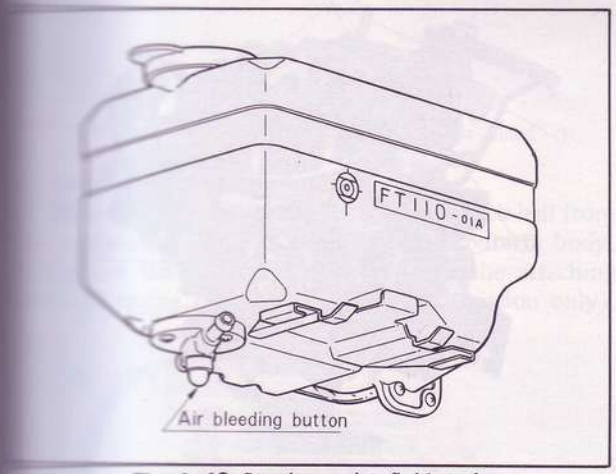

Fig. 4–18 Starting assist fluid tank

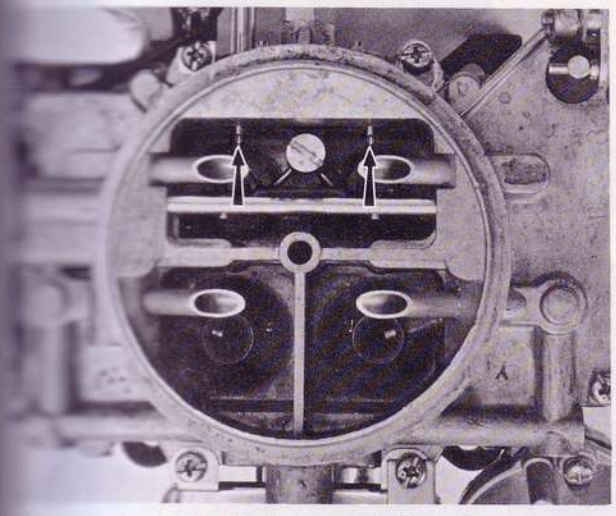

Fig. 4–19 Starting assist fluid nozzle

the ignition key to the position of "START" the air bleeding button of the tank kept pushed and make sure that the starting assist fluid spouts out the nozzle of the carburetor.

oil thermo unit

thermo unit is in normal condition if it is below −18°C (0°F) and is not above it.

starting assist fluid

mixture proportion of starting assist fluid should of high quality ethylene glycole anti-freeze plus 10% of water.

4–A–8. Fuel Inlet Fitting

With the rise of fuel temperature, the bimetal opens the valve to bring the greater part of fuel back to the fuel tank and lower the temperature.

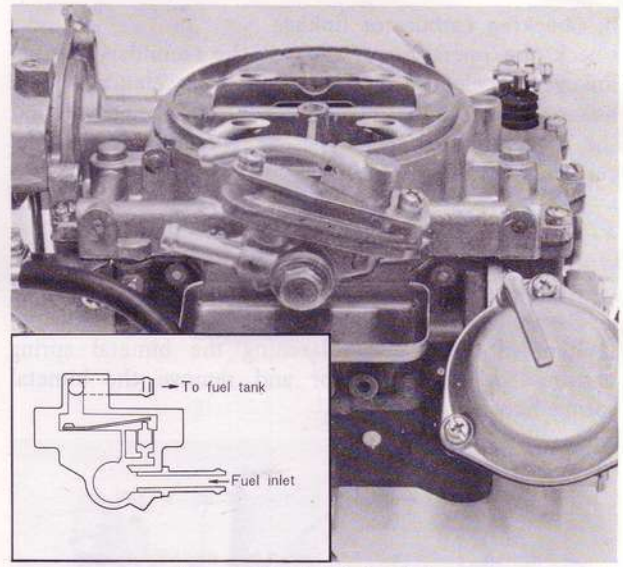

Fig. 4–20 Fuel inlet fitting

4–A–9. Safety Throttle Return System

The safety throttle return system is adopted in order to prevent any possible danger from occurring when the throttle return spring should become broken during operation and at that instant the accelerator should get out of control.

Under normal conditions, only throttle return spring operates a return spring by pulling throttle lever which is connected to the accelerator wire. Link is fixed by rod (whose upper end is fixed by counter lever) and does not have any connection with the movement of link. In case throttle return spring should become broken, the upper end of rod slips off of counter lever by sub-spring and throttle lever is pushed by the movement of link instantaneously.

Compressed sub-spring works as an accelerator return spring with the same force as when throttle return spring is in operation. Consequently even if throttle return spring should become broken during operation, no adverse effects will occur in the operation of the accelerator control.

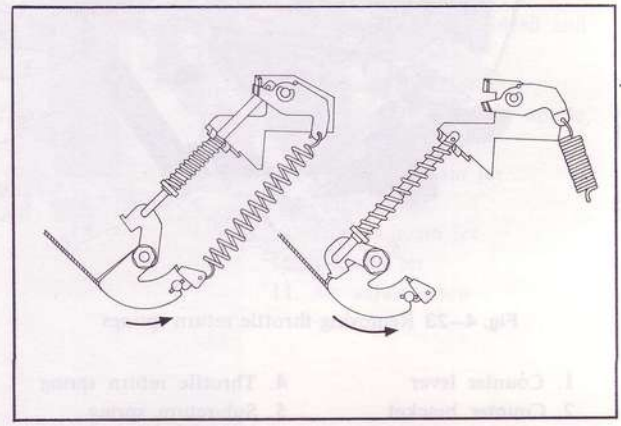

Fig. 4–21 Safety throttle return system

a. Checking throttle return system

Make sure that the sub-return spring and the rod are arranged properly as shown in Fig. 4–21. The throttle return lever should not be stressed by the rod.

b. Checking carburetor linkage

Check the operation of each of the secondary system linkage, accelerating pump linkage, accelerating wire linkage and choke linkage, and also check whether the accelerating wire and choke wire are not on the verge of breaking or coming off.

4–A–10. Disassembling Carburetor

a. Removing bimetal spring housing assembly

1. Disconnect the vacuum sensing tube.
2. Remove the screws attaching the bimetal spring housing to the carburetor and remove the bimetal spring housing assembly.

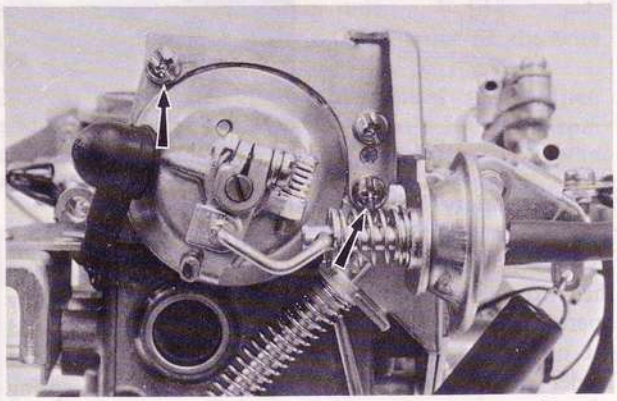

Fig. 4–22 Removing bimetal spring housing assembly

b. Removing throttle return springs

1. Dislocate the sub-return spring by turning the counter lever counter-clockwise and remove the sub-return spring from the spring stopper bracket set.
2. Remove the throttle return spring.
3. Remove the spring stopper bracket set by removing the attaching screws.

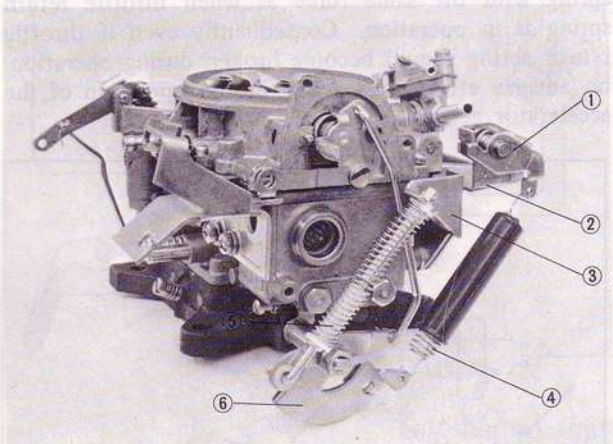

Fig. 4–23 Removing throttle return springs

1. Counter lever
2. Counter bracket
3. Stopper bracket
4. Throttle return spring
5. Sub-return spring
6. Throttle lever

c. Removing air horn

1. Disconnect the choke connecting rod by removing the cotter pin, plain washer and spring.
2. Remove the accelerating pump connecting rod by removing the cotter pin.
3. Remove the bolt attaching the fuel inlet fitting by box wrench or offset wrench (don't use a spanner – open end wrench), and remove the fitting and filter. Remove the connector if necessary.
4. Remove the screws attaching the air horn to the carburetor body and remove the air horn being careful not to break the gasket.

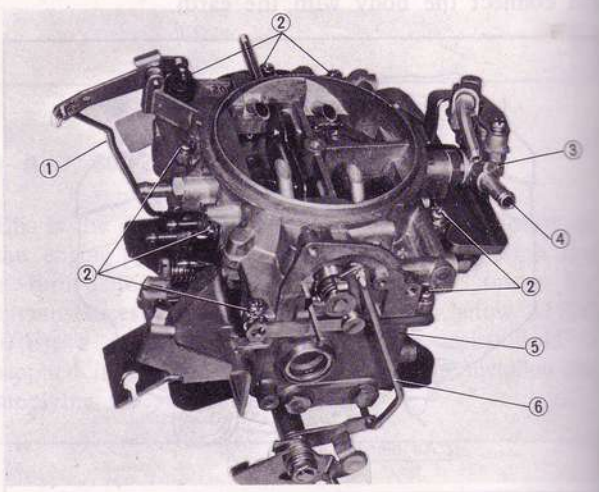

Fig. 4–24 Removing air horn

1. Pump connecting rod
2. Attaching screw
3. Bolt
4. Fuel inlet fitting
5. Carburetor body
6. Choke connecting rod

d. Disassembling air horn

1. Remove the float retaining pin, float and remove the needle valve assembly.
2. Remove the accelerating pump lever by removing the attaching screw and pull out the pump piston.
3. Remove the starting assist fluid inlet fitting if necessary.

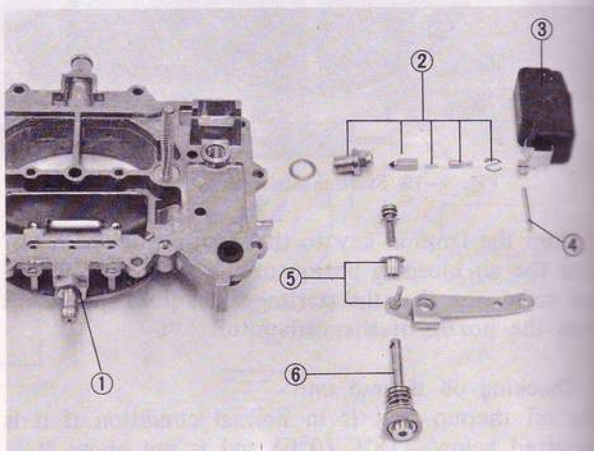

Fig. 4–25 Disassembling air horn

1. Inlet fitting (for starting assist)
2. Needle valve assembly
3. Float
4. Retaining pin
5. Accelerating pump lever
6. Accelerating pump piston

remove the primary slow air bleeds.

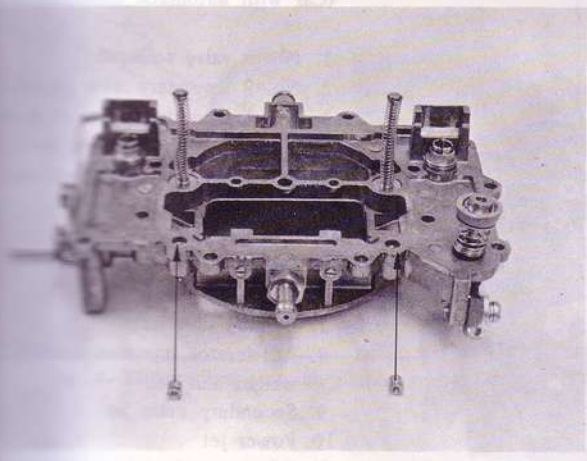

Fig. 4–26 Removing primary slow air bleed

removing carburetor body

remove the spring, retainer plate and check ball from the accelerating pump cylinder of the carburetor body.
remove the idle switch by removing the attaching bolt and spring (Car with manual transmission only).

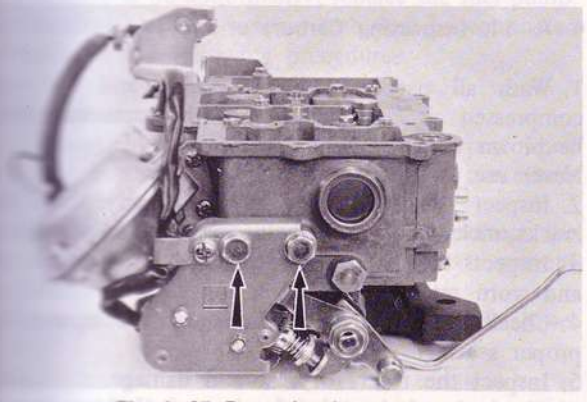

Fig. 4–27 Removing idle switch

3. Disconnect the connecting rod of the diaphragm chamber by removing the cotter pin and remove the diaphragm chamber by removing the screws.

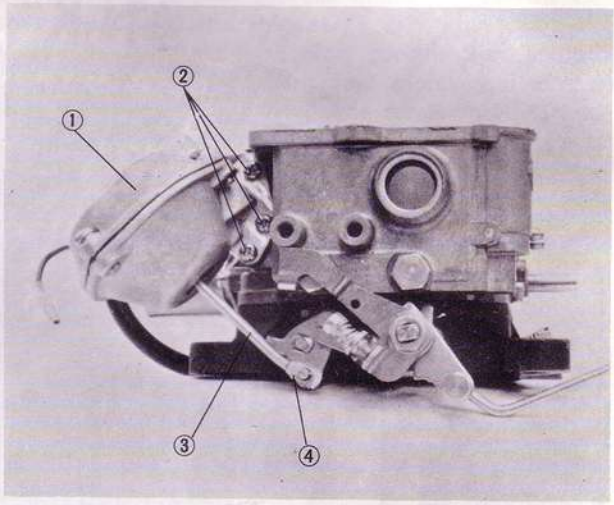

Fig. 4–28 Removing diaphragm chamber

1. Diaphragm chamber
2. Attaching screw
3. Connecting rod
4. Cotter pin

4. Remove the screws attaching the throttle body to the carburetor body and remove the carburetor body.

f. Disassembling carburetor body

1. Remove the accelerator injection nozzle, weight and ball from the carburetor body.
2. Write down the numbers and positions of all jets and air bleeds.
3. Remove the all jets and air bleeds from the surface of the carburetor body.
4. Remove the power valve solenoid by removing the attaching screws (Car with automatic transmission only).
5. Remove the air adjust screw.

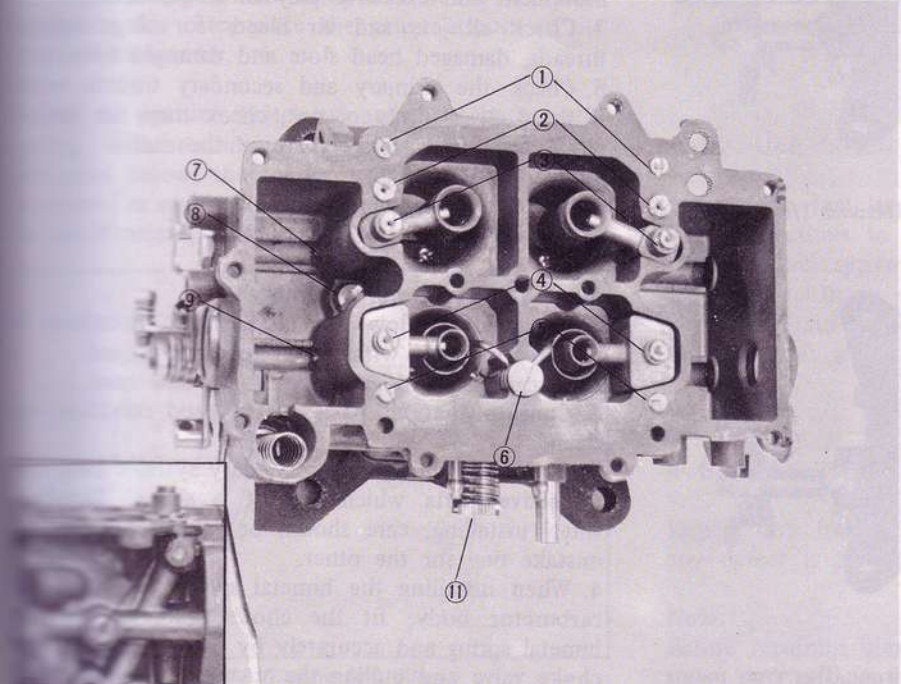

Fig. 4–29 Carburetor body (Car with manual transmission)

1. No. 2 secondary slow air bleed
2. No. 1 secondary slow air bleed and secondary slow jet
3. Secondary main air bleed and emulsion tube
4. Primary main air bleed and emulsion tube
5. Primary slow jet
6. Accelerator injection nozzle, weight and ball
7. Secondary main jet
8. Plug
9. Primary main jet
10. Vacuum jet
11. Air adjust screw

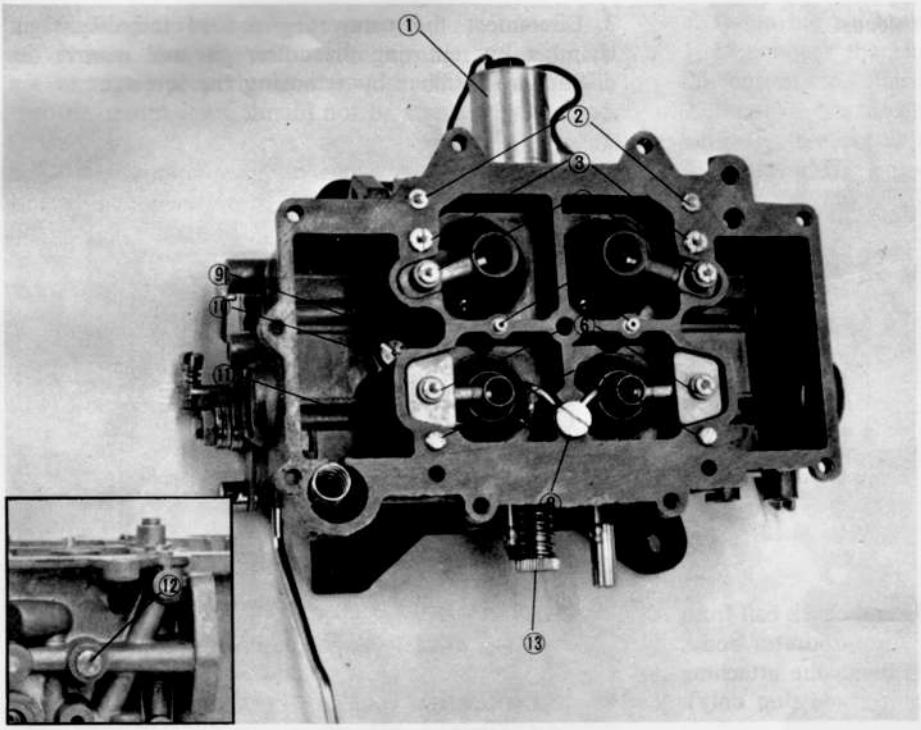

Fig. 4–30 Carburetor body
(Car with automatic transmission)

1. Power valve solenoid
2. No. 2 secondary slow air bleed
3. No. 1 secondary slow air bleed and secondary slow jet
4. Secondary main air bleed and emulsion tube
5. Vacuum passage
6. Primary main air bleed and emulsion tube
7. Primary slow jet
8. Accelerator injection nozzle, weight and ball
9. Secondary main jet
10. Power jet
11. Primary main jet
12. Vacuum jet
13. Air adjust screw

g. Disassembling throttle chamber

1. Remove the mixture adjust screw.
2. Remove the throttle adjust screw.
3. Remove the front lever set by removing the attaching nut.
4. Remove the rear lever set by removing the attaching nut.

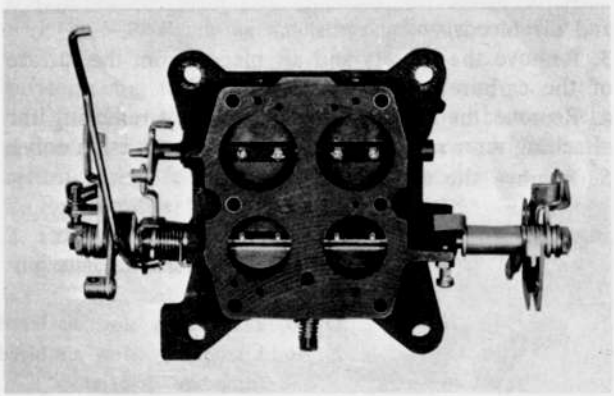

Fig. 4–31 Throttle chamber (Manual T/M)

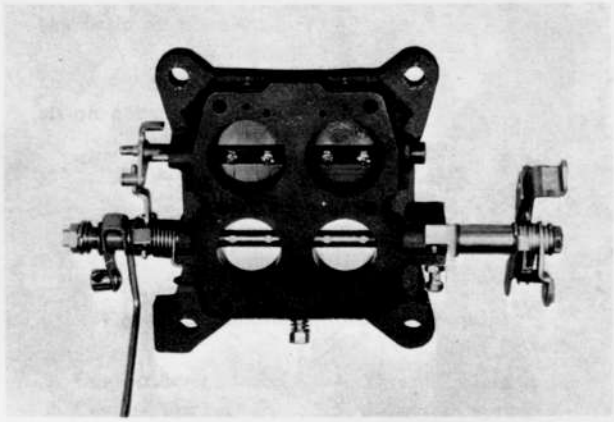

Fig. 4–32 Throttle chamber (Automatic T/M)

4–A–11. Inspecting Carburetor

1. Wash all parts in clean gasoline and dry with compressed air. All passages of the carburetor must be blown very carefully.
Never use a wire for cleaning the jets.
2. Inspect the air horn, body and body flange for cracks, nicks or burrs on their respective gasket surfaces.
3. Inspect the float for deformation, damaged tab and worn retaining pin bore.
4. Check the float needle valve for wear and for proper seating.
5. Inspect the filter for rust and damage.
6. Check the choke valve for proper choking, smooth movement and excessive play of choke shaft.
7. Check all jets and air bleeds for clog, damaged threads, damaged head slots and damaged holes.
8. Check the primary and secondary throttle valves if these close firmly or not, check them for smooth movement and excessive play of the shafts.

4–A–12. Carburetor Assembly

To assemble, follow the disassembly procedures in the reverse order with the following cautions.
1. Discard the old gaskets and use new ones.
2. Confirm that all parts are in good condition and clean.
3. Both the primary and secondary systems have their respective parts which are of a shape. Therefore, when installing, care should be taken so as not to mistake one for the other.
4. When installing the bimetal spring housing to the carburetor body, fit the choke shaft lever to the bimetal spring and accurately by means of closing the choke valve and pulling the vacuum diaphragm shaft

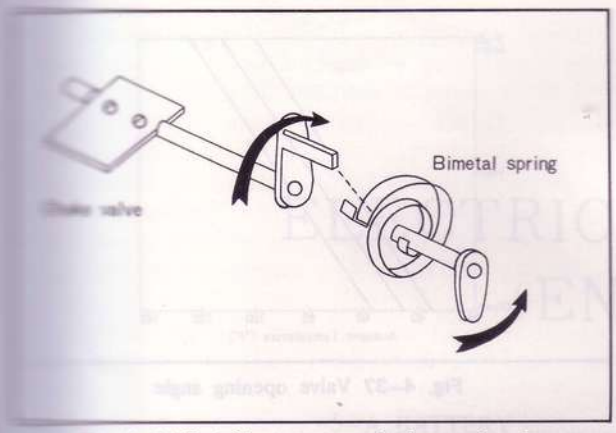

Fig. 4–33 Installing vacuum diaphragm housing

4–B. FUEL PUMP

Turn the ignition key "ON" and check the operational noise of the fuel pump. In case that there is no operational noise from the fuel pump, check the disconnection of the harness.
And if there is no abnormality, replace the fuel pump. The pressure test and volume test shall be conducted according to the following procedures.

a. Pressure test
1) It is required that measurement should be performed while the engine is in cold condition, and make sure that there is no fire around.
2) Remove the air cleaner assembly. Disconnect the fuel inlet hose at the carburetor. Use care to prevent combustion due to fuel spillage.
3) Connect the pressure gauge to the fuel inlet hose.

Note:
It is recommended to place the pressure gauge outside the engine compartment using a hose of adequate length. In this case, place the gauge almost at the height of carburetor.

4) Turn the ignition switch on and note the pressure reading. If the reading is not within the specifications mentioned below, the pump is damaged and should be repaired or replaced. If the pump pressure is within the specifications, perform the test for volume.

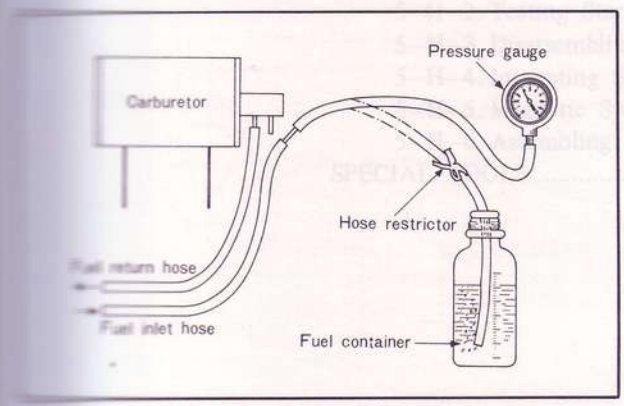

Fig. 4–34 Testing fuel pump

b. Volume test
Turn the ignition switch on, open the hose restrictor and expel the fuel into the container, while observing the expelling amount for one minute. Close the restrictor and read the amount.
If the pump volume is below specifications, repeat the test using an auxiliary fuel supply and a new fuel filter. If the pump volume meets specifications while using the auxiliary fuel supply, check for a restriction in the fuel supply from the tank and for the tank not venting properly.

Specifications — fuel pump

Fuel pressure	0.3 ~ 0.38 kg/cm² (4.26 ~ 5.41 lb/in²)
Feeding capacity	More than 1,150 cc/min (1.2 U.S. quart/min)

4–C. FUEL FILTER

The fuel filter is of a cartridge type. The element of the filter is sealed cartridge and should be replaced following the maintenance schedule.

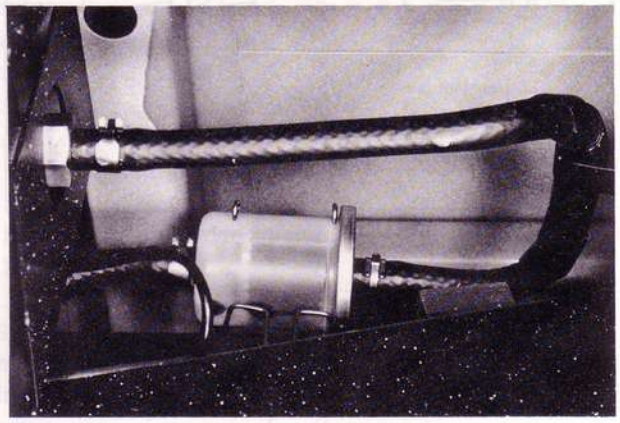

Fig. 4–35 Fuel filter

4–D. FUEL LINES

Inspect the fuel lines for leaks and tighten the fuel line connections to prevent leakage. It is important that the fuel system should be kept clean and free from water. In an excessive amount of dirt or water is found, drain the fuel from the tank and blow out the fuel lines with compressed air.

4–E. FUEL TANK

Inspect the fuel tank for cracks and corrosion. If any defect is present, repair or replace as necessary.

Note:
Before repairing, clean the fuel tank thoroughly with steam and sufficiently to remove all explosive gas.

4–F. AIR CLEANER

4–F–1. Air Cleaner Element

The air cleaner is of a paper filter type. The element should be serviced following the maintenance schedule. To clean, blow the element with compressed air at low pressure.

4–F–2. Intake Air Temperature Control System

Intake air temperature control system consisting of a control valve and a bimetal is located within the air cleaner and senses the engine room temperature for a stabilized intake air temperature.

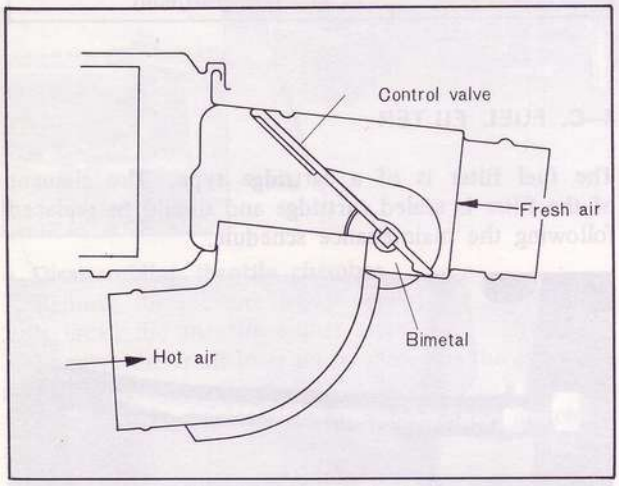

Fig. 4–36 Control valve

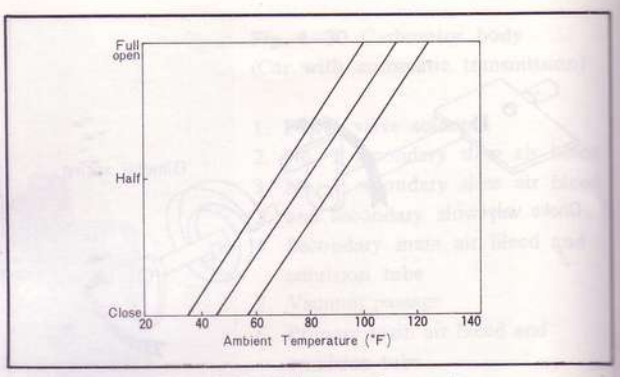

Fig. 4–37 Valve opening angle

4–F–3. Checking Control Valve

Move the control valve up and down inside the air cleaner and if there is no difficulty to move and also the spring force of the bimetal is felt, it is in good order.

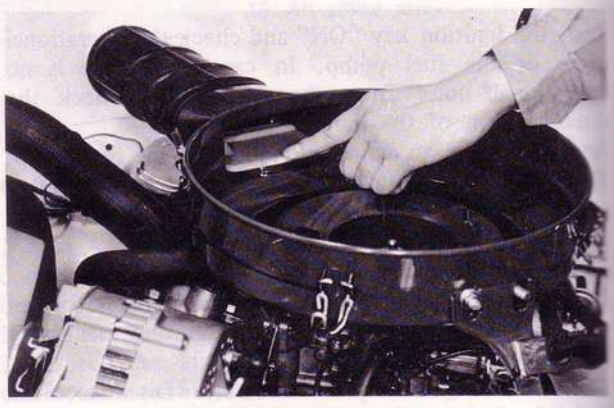

Fig. 4–38 Control valve

ELECTRICAL SYSTEM (ENGINE)

5–A. BATTERY ..... 5 : 1
5–A–1. Checking Battery ..... 5 : 1
5–A–2. Charging Battery ..... 5 : 1
5–B. IGNITION SYSTEM ..... 5 : 2
5–C. DISTRIBUTOR ..... 5 : 2
5–C–1. Checking Breaker Points ..... 5 : 2
5–C–2. Adjusting Breaker Points ..... 5 : 2
5–C–3. Adjusting Initial Ignition Timing ..... 5 : 2
5–C–4. Removing Distributor ..... 5 : 3
5–C–5. Testing Distributor ..... 5 : 3
5–C–6. Disassembling Distributor ..... 5 : 4
5–C–7. Inspecting Distributor ..... 5 : 5
5–C–8. Assembling Distributor ..... 5 : 5
5–C–9. Installing Distributor ..... 5 : 5
5–D. IGNITION COIL ..... 5 : 6
5–E. SPARK PLUG ..... 5 : 6
5–E–1. Spark Plug Heat Range ..... 5 : 6
5–E–2. Removing Spark Plug ..... 5 : 6
5–E–3. Checking Spark Plug ..... 5 : 6
5–E–4. Installing Spark Plug ..... 5 : 6
5–F. ALTERNATOR ..... 5 : 7
5–F–1. Precautions on Service ..... 5 : 7
5–F–2 Checking Charging System on Car .... 5 : 7
5–F–3. Disassembling Alternator ..... 5 : 8
5–F–4. Inspecting Alternator ..... 5 : 8
5–F–5. Assembling Alternator ..... 5 : 9
5–G. REGULATOR ..... 5 : 10
5–G–1. Checking Constant Voltage Relay ..... 5 : 10
5–G–2. Checking Pilot Lamp Relay ..... 5 : 10
5–G–3. Adjusting Regulator ..... 5 : 10
5–H. STARTING MOTOR ..... 5 : 11
5–H–1. Checking Starting Circuit ..... 5 : 11
5–H–2. Testing Starting Motor ..... 5 : 11
5–H–3. Disassembling Starting Motor ..... 5 : 11
5–H–4. Inspecting Starting Motor ..... 5 : 12
5–H–5. Magnetic Switch Test ..... 5 : 13
5–H–6. Assembling Starting Motor ..... 5 : 14
SPECIAL TOOLS ..... 5 : 14

5

5–A. BATTERY

5–A–1. Checking Battery

As the battery has an important influence on startability, ignition and lighting, check the following points periodically and always keep the battery in perfect condition.

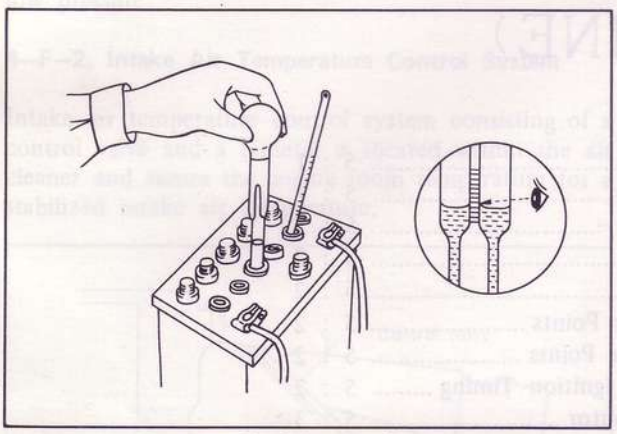

Fig. 5–1 Checking specific gravity

1. Check the electrolyte level in each cell of the battery, and add distilled water to maintain the solution 10 ~ 20 mm (0.4 ~ 0.8 in) above the plates.
Do not overfill.
2. Check the specific gravity of the electrolyte with a hydrometer, as shown in Fig. 5–1. If the reading is 1.28 or more, it indicates that the battery is fully charged. If the reading is below 1.22, the battery requires recharging.
3. Check the tightness of the terminals to ensure good electrical connections. Clean the terminals and coat the terminals with grease.
4. Inspect for corroded or frayed battery cables.

5–A–2. Charging Battery

a. Constant current charge

1. If the exterior of the battery is dirty with sulphuric acid or dust and dirt, wash these off with clean water and dry thoroughly before charging the battery.
2. Check the electrolyte level and add distilled water if necessary.

Note:
If addition of distilled water is neglected, the plates and separators will become exposed to air, causing a sulphation to occur on the plates.
Do not add dilute sulphuric acid unless the electrolyte has overflown or led out.

3. Connect the battery to the charger ensuring that the polarities are correct.

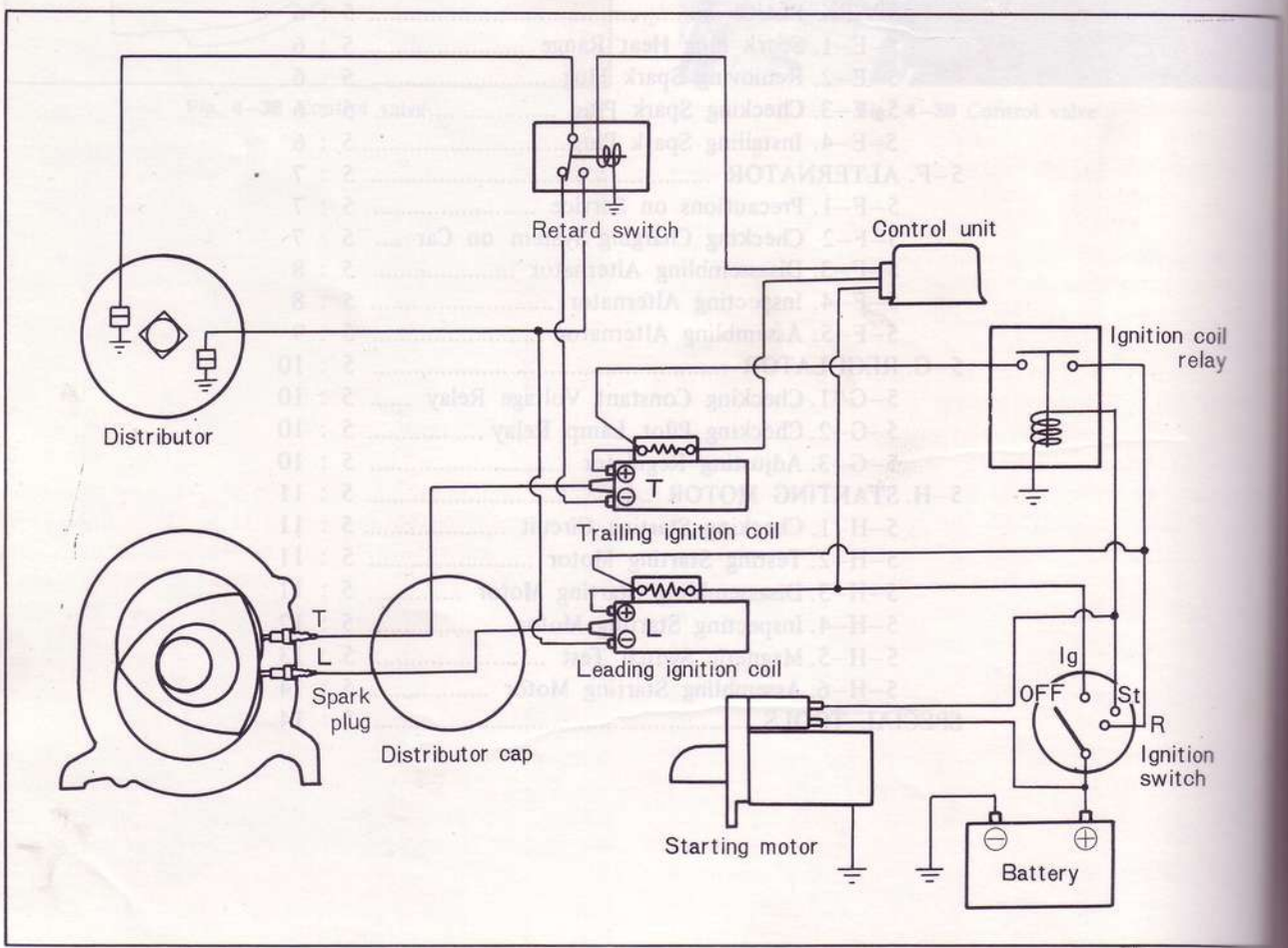

Fig. 5–2 Ignition system

4. To charge, apply an electric current of approximately 7A until the specific gravity of the electrolyte reaches 1.27 ~ 1.29.

b. Fast charge

As a fast charge causes both the temperature and the level of the electrolyte to rise suddenly, it does not have a favorable effect on the battery. Therefore, this should not be performed unless in the case of an emergency.

When a fast charge is being applied with the battery mounted on the vehicle, ensure that the cables are removed from the battery terminals before the charge is applied. If this is neglected, it could cause a damage to the diodes on the alternator.

The battery should be kept by the use of cooling water to prevent the temperature of the electrolyte from exceeding 55°C (131°F), otherwise the charging should be discontinued temporarily when the temperature rises above this point.

5-B. IGNITION SYSTEM

In the rotary engine, two spark plugs are provided in each working chamber, one above the minor axis (called the trailing side) and the other below the minor axis (called leading side) of the epitrochoid surface, so as to enable the engine to obtain the optimum combustion efficiency under any operating condition.

The primary wires from the individual breaker points for trailing and leading plugs are led to the two separate coils and the secondary wires also are separately led via the distributor to the trailing and leading plugs.

Both the leading and trailing points coexist in the distributor and they are used independently by the directions from the control unit according to the driving conditions.

The coil with external resistor is used.

The ignition coil relay is equipped to short-circuit the external resistor in starting (when the starter is running) so as to increase the secondary voltage and improve the startability.

Short-circuiting of resistor by the ignition coil relay is made on the trailing side only and that on the leading side by the ignition switch. The ignition coil relay has another contact point which serves to energize the ignition circuit for the fuel pump, etc.

5-C. DISTRIBUTOR

The distributor for this model had two breaker points, one for leading spark plugs and the other for trailing spark plugs.

The distributor consists of distributing mechanism, contact breaker mechanism, and ignition timing advance control of centrifugal.

5-C-1. Checking Breaker Points

Check the conditions of wear, burning, transferred metal and pitting of the breaker points.

In case any abnormality is found in those checking in the above, clean or replace them.

If there is an abnormal damage on the contact face, check the condenser.

5-C-2. Adjusting Breaker Points

1. Check the dwell angle of each point following the instructions of 5-C-5. a.
2. If the dwell angle is within specifications, adjustment of breaker points is not required. If not, adjust the breaker points following the instructions of 5-C-5. b.

Point gap	0.45 ± 0.05 mm (0.018 ± 0.002 in)

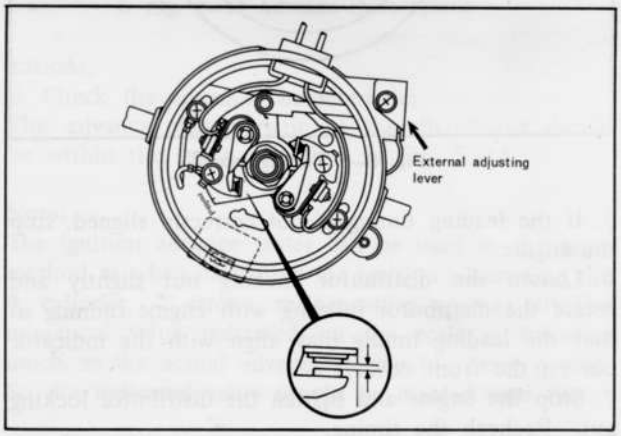

Fig. 5-3 Adjusting breaker points

5-C-3. Adjusting Initial Ignition Timing

To check and adjust the timing with a timing light, proceed as follows:

*** STEP-1 ***

1. Connect a tacho-dwell tester to the engine.

Note:

The tacho-dwell tester can be used in the same method as when measuring the dwell angle on a 4 cylinder, 4 cycle reciprocating engine.

2. Connect a timing light to the high tension cord for leading spark plug of the front rotor housing.
3. Start the engine, and run it at specified idle speed.

(See page 4 : 2)

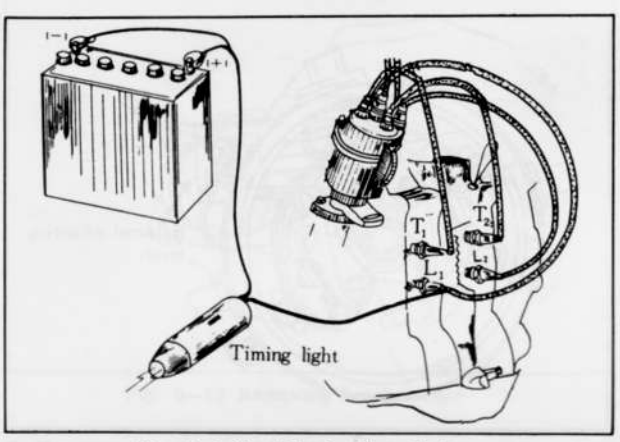

Fig. 5-4 Checking ignition timing

4. Check the ignition timing by aiming the timing light at the timing indicator pin on the front cover and specified timing mark on the pulley.

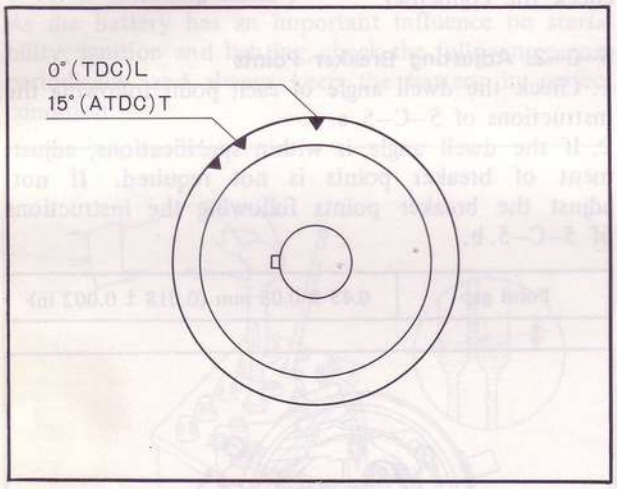

Fig. 5–5 Timing marks

5. If the leading timing is not correctly aligned, stop the engine.
6. Loosen the distributor locking nut slightly and rotate the distributor housing with engine running so that the leading timing may align with the indicator pin on the front cover.
7. Stop the engine and tighten the distributor locking nut. Recheck the timing.
8. Change connection of the timing light to the high tension cord for trailing spark plug of the front housing.
9. Aim the timing light and check the timing. If the timing is in allowance of specification, the both initial timings are satisfactory and checking of timing is finished.

*** STEP–2 ***

If the trailing timing is not in specification, **adjust the trailing timing** as follows:

10. Keep the engine revolution to the idling condition and loosen the screw of the external adjusting lever (for trailing timing) and adjust the timing by operating the lever and tighten the screw again. Then confirm the timing.

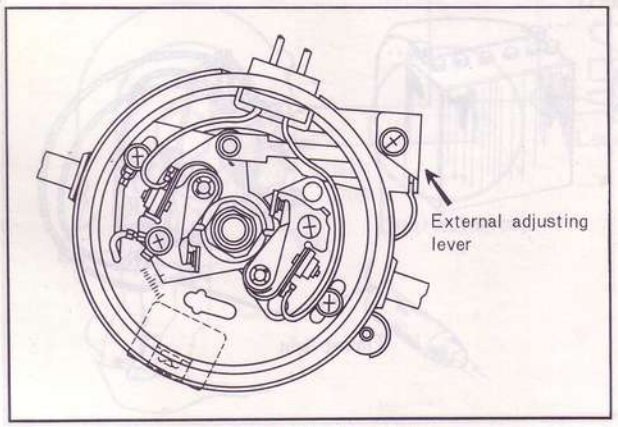

Fig. 5–6 Adjusting timing

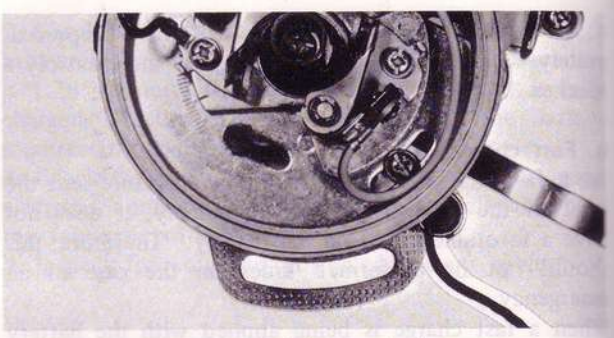

Fig. 5–7 Adjusting timing

11. Recheck the timing. If the timing mark is not correctly aligned, repeat this performing until the correct timing is obtained.

Specifications — Initial timing

Leading	0° ± 1° TDC
Trailing	15° ± 2° ATDC

5–C–4. Removing Distributor

1. Remove the high tension cords.
2. Disconnect the coupler of primary wires from the distributor.
3. Remove the distributor attaching nut.
4. Pull the distributor out of the front cover.

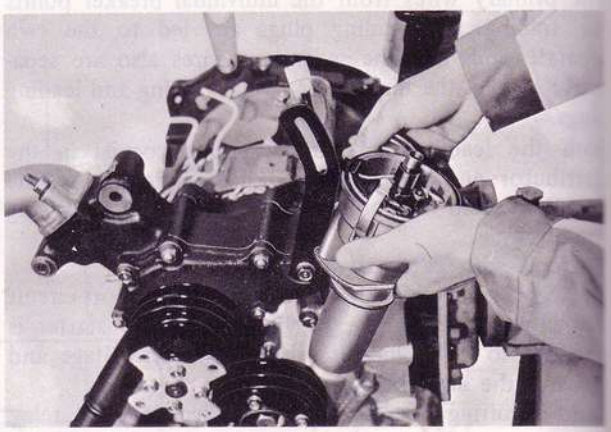

Fig. 5–8 Removing distributor

5–C–5. Testing Distributor

a. Dwell angle test

1. Connect the tester following the instructions of the manufacturer. Then start the engine and let it idle.
2. Turn the cylinder selector to the **4 cylinder, 4 cycle** position.
3. Read the dwell angle on the dwell meter and compare the reading to specification.
4. If the dwell angle is below specification, the breaker point gap is too wide. If the dwell angle is above specification, the breaker point gap is too close.

Specifications — Dwell angle

Leading Trailing	58° ± 3°

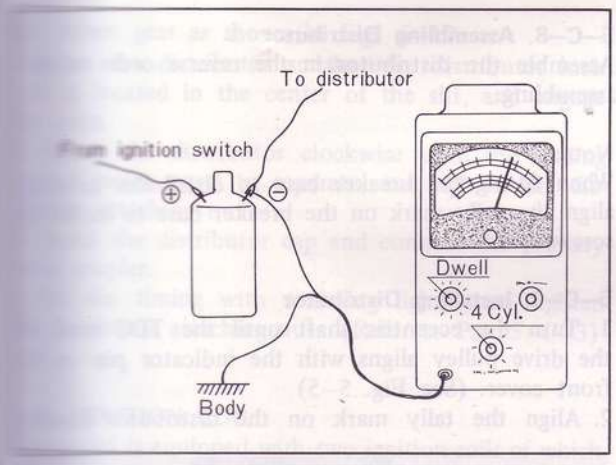

Fig. 5–9 Checking dwell angle

Dwell angle adjustment

If the dwell angle is not within specifications, proceed as follows:

Remove the high tension cord (ignition coil to distributor) from the ignition coil.

Remove the distributor cap and place them out of the way.

Connect the **remote starter switch** (49 0242 685A) in the circuit.

Loosen the breaker point attaching screw.

With the ignition switch on, crank the engine with the remote starter switch and adjust the gap to specification.

Release the remote starter switch and tighten the breaker point attaching screw.

Since the adjustment may have changed when the attaching screw was tightened, crank the engine again with the remote starter switch and check the dwell angle. When the dwell is properly adjusted, remove the remote starter switch and tester leads.

Advance test

Since the centrifugal advance device is provided to both the leading and trailing sides of the distributor, the advance is checked to determine if the ignition timing advances in proper relation to engine speed.

Check the dwell angle. If the angle is not within the specifications, adjust the breaker points.

Check the breaker arm spring tension and replace the points if the spring tension is not within specifications.

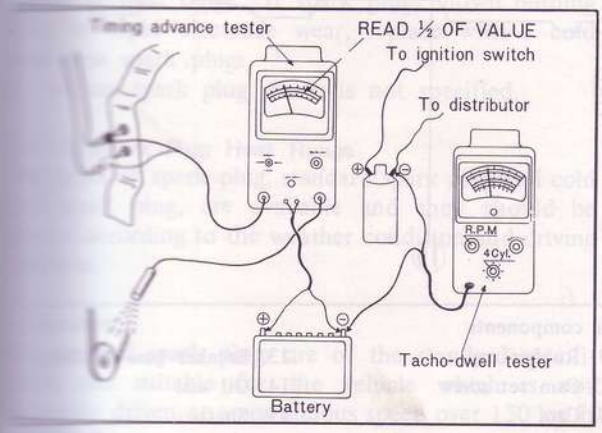

Fig. 5–10 Advance test

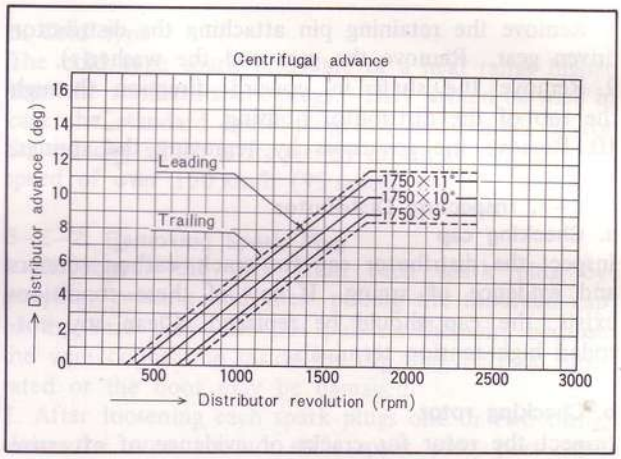

Fig. 5–11 Advance characteristic

cations.

3. Check the advance characteristic.

The advance characteristic of the distributor should be within the range as shown in Fig. 5–11.

Note:

The ignition advance tester can be used in the same method as when measuring the ignition advance on the **4 cylinder, 4 stroke reciprocating engine** but the numerical value indicated on the scale is twice as much as the actual advance degree of rotary engine. So the **indicated value should be divided into two.**

5–C–6. Disassembling Distributor

1. Loosen the cap retaining clips and lift off the cap.
2. Remove the rotor.
3. Remove a clip and a fitting screw of the external adjusting lever for the trailing timing.

Then remove the fitting screws for lever bracket and remove the lever and lever bracket.

4. Remove the condensers upon removing the fitting screws.
5. Remove the primary wires from the leading and trailing points and then remove them with rubber block from the distributor housing. Next, remove the set screws of each point and take away the each point assembly from its breaker base.
6. Remove the fitting screws of the breaker base and take out the breaker base toward upper direction.

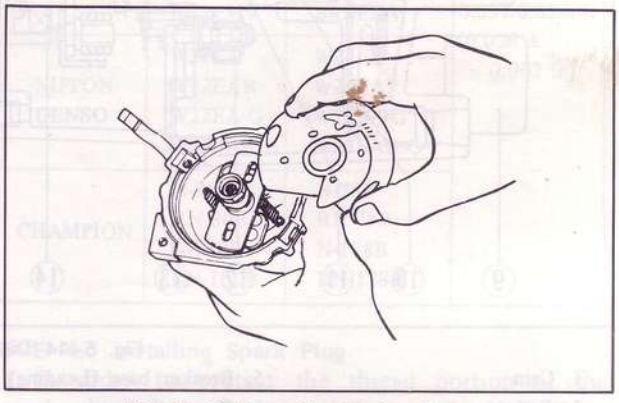

Fig. 5–12 Removing breaker base

7. Remove the cam set screw and remove the cam.

8. Remove the retaining pin attaching the distributor driven gear. Remove the gear and the washer(s).
9. Remove the shaft in upward direction through the top of the distributor housing.
10. Remove the governors by removing the springs.

5–C–7. Inspecting Distributor

a. Checking cap

Inspect the distributor cap for crack, carbon runners and evidence of arcing. If any of these conditions exists, the cap should be replaced. Clean any corroded high tension terminals.

b. Checking rotor

Inspect the rotor for cracks or evidence of excessive burning at the end of the metal strip. If any of these conditions exists, the rotor should be replaced.

c. Checking tension of contact arm spring

For inspection, hook a spring scale on the contact arm and pull in a straight line at a right angle to the contact arm. Take a reading when the contact points start to separate. The reading should be between 0.5 ~ 0.65 kg (1.1 ~ 1.4 lb).

d. Checking condenser

If the condenser is leaky, it will cause a weak spark or burned contact points. Check the capacity of the condenser with a condenser tester.
The capacity is 0.24 ~ 0.30μF.

5–C–8. Assembling Distributor

Assemble the distributor in the reverse order of disassembling.

Note:
When fitting the breaker base to distributor housing, align the tally mark on the breaker base to its fitting screw.

5–C–9. Installing Distributor

1. Turn the eccentric shaft until the TDC mark on the drive pulley aligns with the indicator pin on the front cover. (See Fig. 5–5)
2. Align the tally mark on the distributor housing



Fig. 5–13 Aligning tally mark

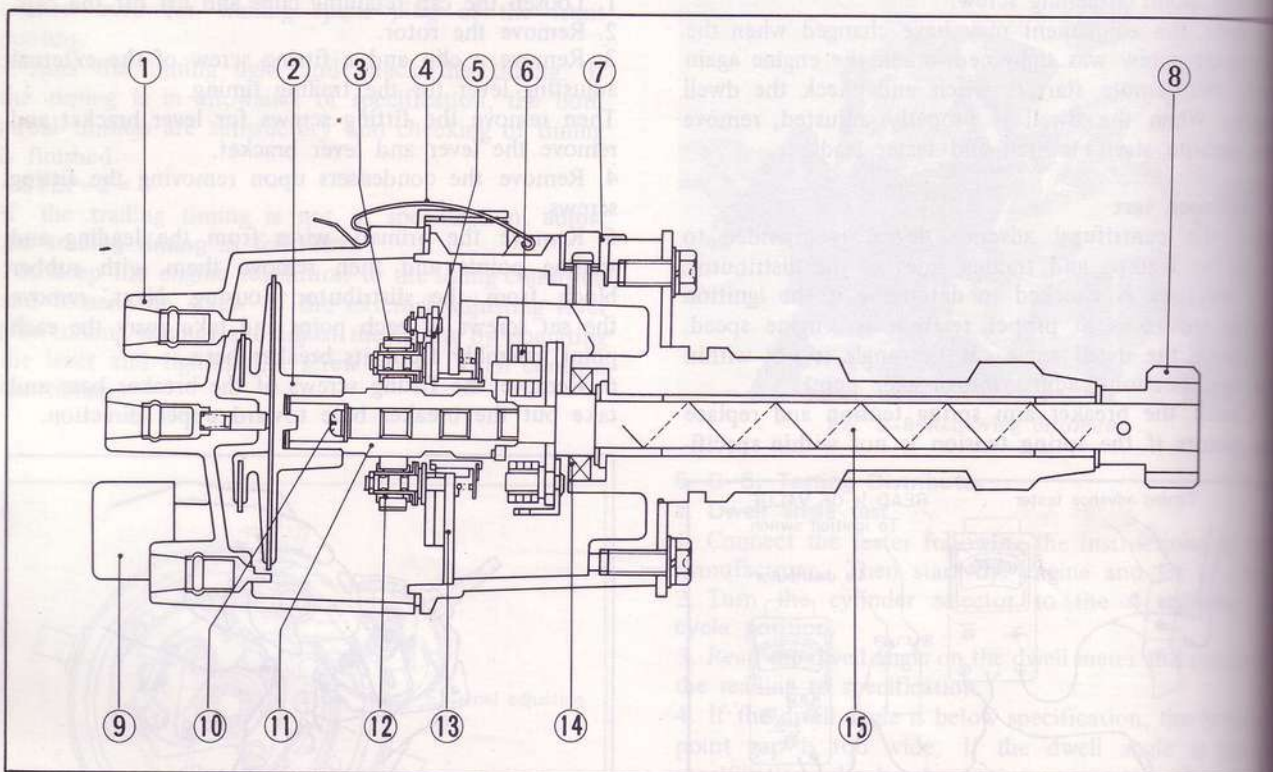

Fig. 5–14 Distributor components

1. Cam
2. Rotor
3. Leading breaker point
4. Clamp
5. Breaker base (Leading)
6. Governor
7. Condenser
8. Distributor driven gear
9. Rubber cap
10. Cam set screw
11. Cam
12. Trailing breaker point
13. Breaker base (Trailing)
14. Oil seal
15. Shaft

and driven gear as shown in Fig. 5–13.
3. Insert the distributor so that the distributor lock bolt is located in the center of the slit, and engage the gears.
4. Rotate the distributor clockwise until the leading contact point starts to separate, and tighten the distributor attaching nut.
5. Install the distributor cap and connect the primary wires coupler.
6. Set the timing with a timing light, then tighten the distributor attaching nut. (Refer to Par. 5–C–3)

5–D. IGNITION COIL

This model is equipped with two ignition coils of which is the oil cooling type. On this type of ignition coil, oil is sealed within the insulator inside the coil and, therefore, if by any chance an oil leakage should occur, this would cause a drop in the efficiency of the coil, resulting in deteriorating the performance of the engine. Therefore check the ignition coil to ensure that the terminals are clean and that there are no cracks or oil leakages. Also, check the external and primary resistance.

Ignition Coil	Type	External Resistance	Primary Resistance
Leading	HP5-13J	1.4 Ω/20°C	1.35 Ω/20°C
Trailing	HP5-13E	1.6 Ω/20°C	1.5 Ω/20°C

5–E. SPARK PLUG

On this engine, 2 spark plugs are provided in each working chamber so as to enable the engine to obtain the optimum combustion efficiency under any operating condition. These spark plugs for this engine are slightly different from for the reciprocating engines in dimensions and heat values.
As you are aware, heat range of the spark plugs should be selected by owing of various conditions, otherwise durability of the spark plug, startability of the engine and running performance of the car will be down. Therefore, it is recommended that heat range of the spark plugs should be selected in each vehicle running conditions.
All spark plugs must be of the same maker and number or heat range. If spark plugs shown burning white or rapid electrode wear, replace with a **cold range type** spark plugs.
Do not use spark plug which is not specified.

5–E–1. Spark Plug Heat Range

Two types of spark plug, standard spark plug and cold type spark plug, are available and they should be selected according to the weather condition and driving condition.

a. Standard
The standard spark plugs are of the standard specification and suitable for the vehicle which is not frequently driven at a continuous speed over 150 km/h (95 miles/h).

b. Cold type
The cold type spark plugs are of a heat range higher than the standard spark plugs. They should be used in case the standard spark plugs are overheated, or for the vehicles which is frequently driven at a continuous speed of over 150 km/h (95 miles/h).

5–E–2. Removing Spark Plug

1. Disconnect the wire from each spark plug by grasping, twisting and then pulling the moulded cap of the wire only. Do not pull on the wire because the wire connection inside the cap may become separated or the boot may be damaged.
2. After loosening each spark plugs one or two turns, clean the area around each spark plug port with compressed air, then remove the spark plugs.

5–E–3. Checking Spark Plug

1. Inspect each plug individually for badly worn electrodes, glazed, broken or blistered porcelain, and replace the plug as necessary.
2. Clean the spark plugs throughly using a sand blast cleaner.
3. Inspect each spark plug for make, and heat range.

Note:
Don't adjust the plug gap because the porcelain may be cracked or broken.
If broken pieces of the porcelain should enter working chambers, they may cause serious damage to the engine.

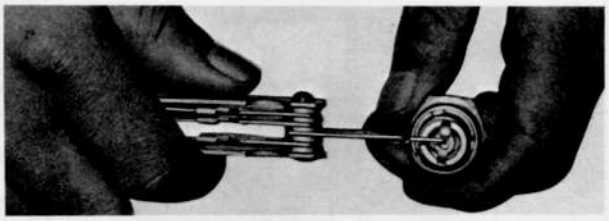

Fig. 5–15 Checking gap

Below is the table of recommended spark plugs.

	Standard	Cold type	Initial gap
NGK	B7EM BR7EM B7EMV BR7EMV	B8EM BR8EM B8EMV BR8EMV	0.65±0.05mm (0.026 ± 0.002 in)
NIPPON-DENSO	W22EA W22EAR W22EA-G W22EAR-G	W25EA W25EAR W25EA-G W25EAR-G	
CHAMPION	N-80B RN-80B N-180B RN-180B	N-78B RN-78B N-178B RN-178B	

5–E–4. Installing Spark Plug

1. In order to protect the thread portion of the spark plugs, it is recommended to **apply Moly Paste (0259 77 767 or 0259 77 768)** to the threaded portion of the new spark plugs.

2. Thread the spark plugs into the rotor housing finger tight until the gaskets contact the housing. If the plugs cannot be installed with finger pressure, clean the threads with a suitable greased thread chaser. Torque each plug to 1.3 ~ 1.8 m-kg (9 ~ 13 ft-lb).
3. Connect the spark plug wires.

5–F. ALTERNATOR

5–F–1. Precautiosn on Service

When servicing the charging system, observe the following precaution. If not followed, the result will be in serious damage of the system.
1. **Do not** short across or ground any of the terminals on the alternator or regulator.
2. **Never** operate the alternator on with an open circuit (with the field terminal connected and the armature terminal disconnected).
3. When installing a battery, always make sure that the negative post of the battery is attached securely to the ground strap.
4. **Never** reverse battery cables, not even for an instant, as reverse polarity current flow will damage the diodes in the alternator.
5. When charging the battery with a fast charger, disconnect the positive cable at the battery.
6. Do not remove the A terminal from the alternator or regulator while the engine is running.

5–F–2. Checking Charging System on Car

If the electrical system is not charging properly, check all electrical connections and the fan belt tension prior to performing any test of the charging system, then determine whether the trouble is in the alternator or regulator before removing the alternator.
Check the alternator by using a **alternator tester** (49 0370 290). If the checker is not available, check as follows:
1. Disconnect the wire from "B" terminal of the alternator and connect the negative lead of the ammeter to the wire and the positive lead to the "B" terminal.
2. Remove the regulator couplers and connect them by using the proper lead wire as shown in Fig. 5–17.
3. Start the engine and hold the engine revolution to 2,000 rpm.
4. Remove the lead wire for "F" terminal of the regulator and make the short circuit for a moment by connecting the lead wire removed to the lead wire for "A" terminal.
5. If the meter reading increases remarkably, the trouble is in the regulator and if there is no change in current, it is in the alternator.

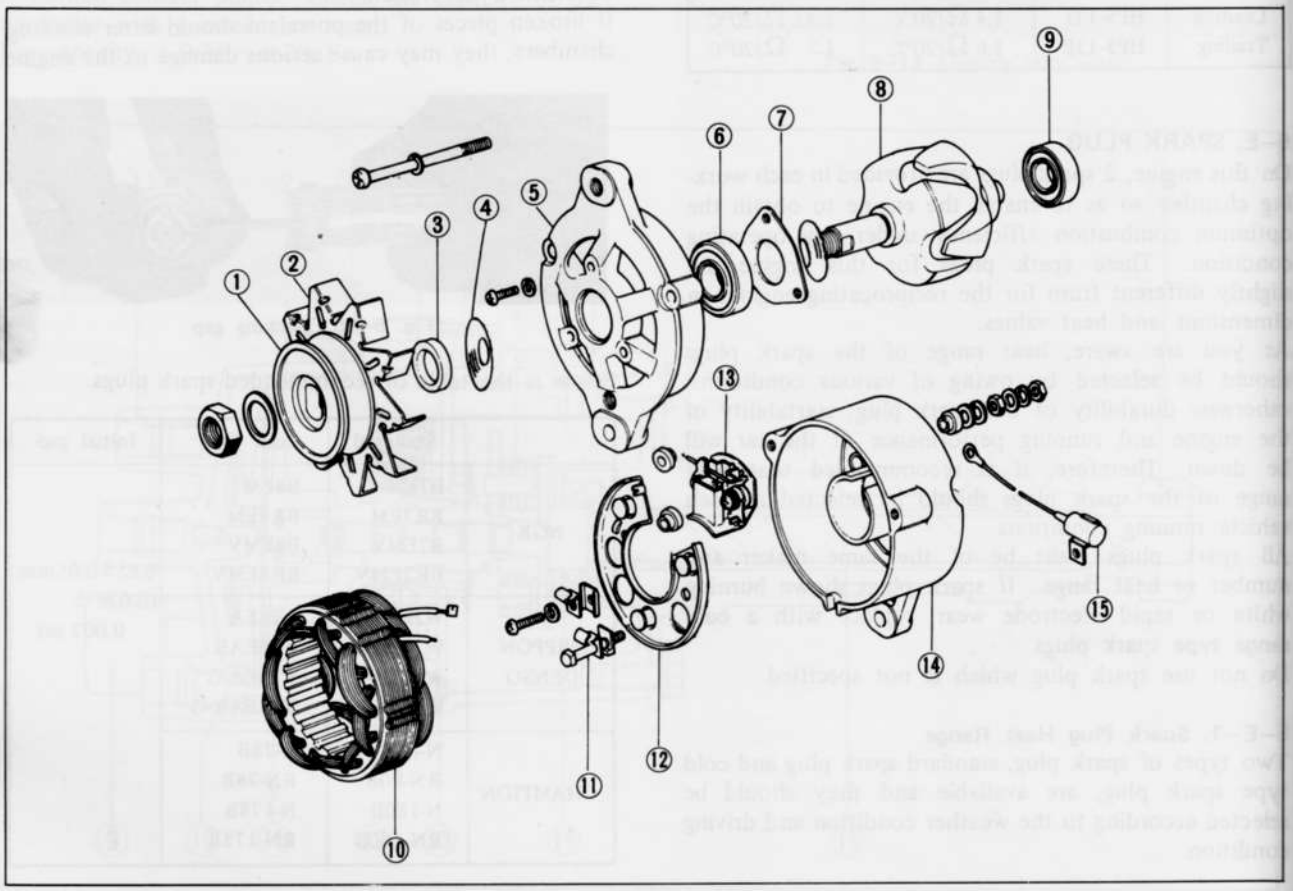

Fig. 5–16 Alternator components

1. Pulley
2. Fan
3. Spacer
4. Slinger
5. Front housing
6. Front bearing
7. Bearing retainer
8. Rotor
9. Rear bearing
10. Stator
11. Terminal bolt
12. Rectifier
13. Brush and holder
14. Rear housing
15. Condenser

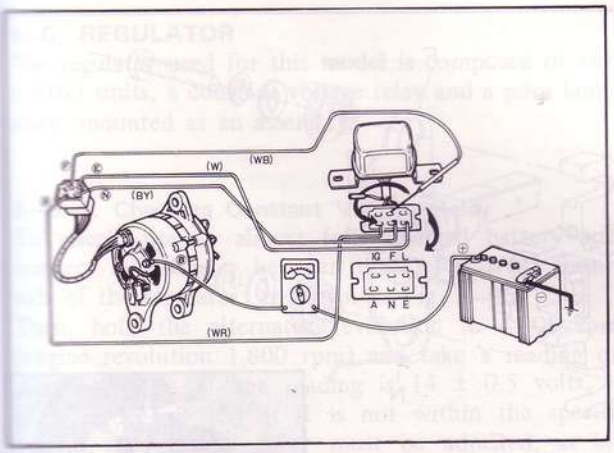

Fig. 5–17 Checking charging system

5–F–3. Disassembling Alternator

1. Remove the radio noise suppression condenser from the rear of the alternator.
2. Remove the through bolts.
3. Separate the front housing assembly by prying apart with a screwdriver at the slots of the front housing.
4. Hold the front housing and rotor assembly, clamping the rotor.

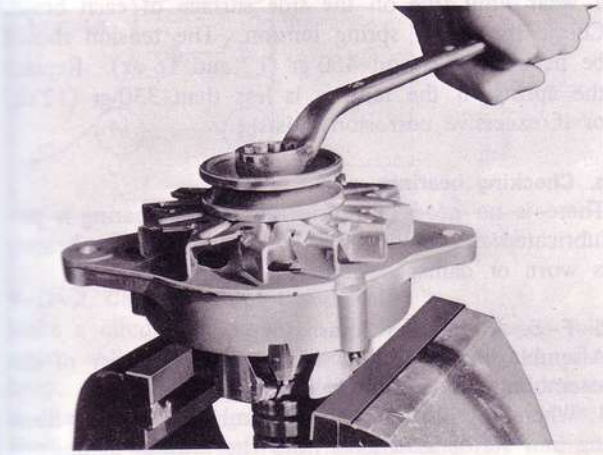

Fig. 5–18 Loosening pulley nut

5. Loosen the pulley retaining nut and remove the nut, washer, pulley, fan, spacer and front slinger.
6. Remove the front housing with bearing and remove the rear slinger.
7. Remove the nut, washers and insulator from the "B" terminal at the rear of the alternator.
8. Remove the screw attaching the rectifier to the rear housing and remove two screws attaching brush holder and rectifier.
9. Carefully remove the stator, rectifier and brush holder assembly from the rear housing. Use care to keep the brush holder assembly intact during removal from the rear housing.
10. Remove the brush holder assembly.
11. Unsolder the stator leads from the rectifier.
12. If bearing replacement is necessary, remove the rear bearing from the rotor shaft with a puller.

To replace the front bearing, remove the bearing retainer attaching screws, and press the bearing from the front housing

5–F–4. Inspecting Alternator

a. Checking stator coil

Check the stator coil for both open and grounded circuits with a tester.

To check for open, connect the prods to each of the two leads, as shown in Fig. 5–19. If there is no flow of current, the coil is open circuit and must be repaired or replaced.

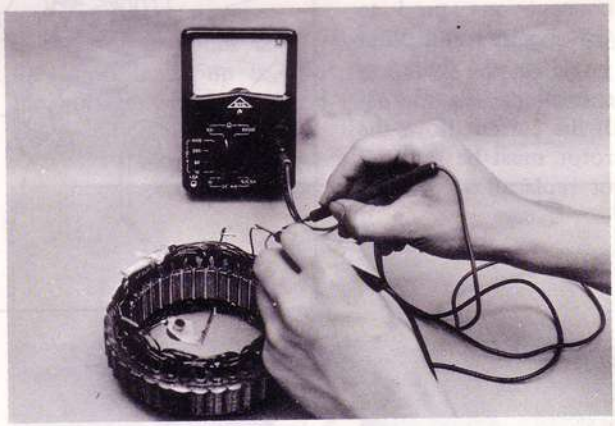

Fig. 5–19 Checking stator coil for open

To check for ground, connect one prod to the core and the other to each lead wire, as shown in Fig. 5–21. If a ground is present the current will flow and the stator coil must be repaired or replaced.

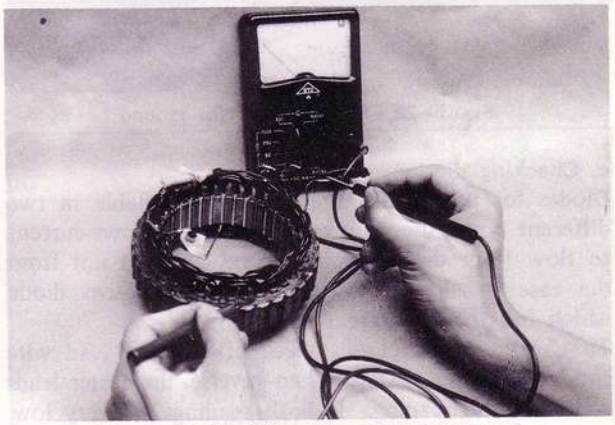

Fig. 5–20 Checking stator coil for ground

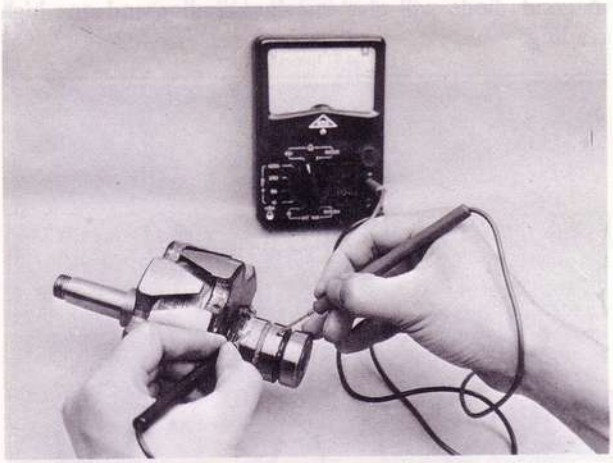

Fig. 5–21 Checking rotor for open

b. Checking rotor

To check for open circuit, place both prods of a tester on the slip rings, as shown in Fig. 5–21. If the reading is 4 to 6 ohms, there is no trouble in the rotor. To check for ground, connect one prod to the slip ring and other prod to the core, as shown in Fig. 5–22. If the current flows the rotor must be repaired or replaced.

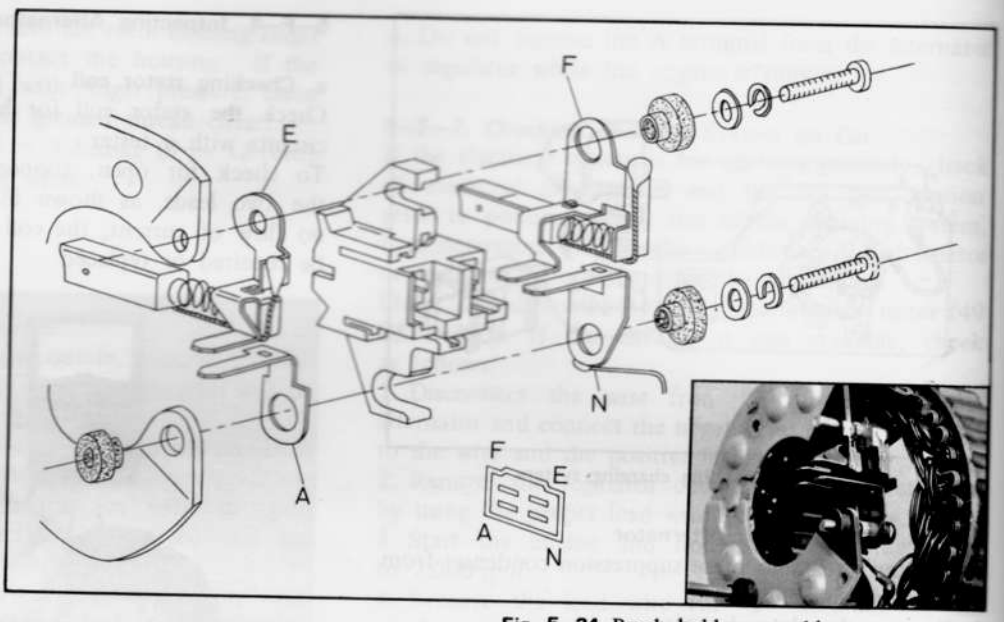

Fig. 5–24 Brush holder assembly

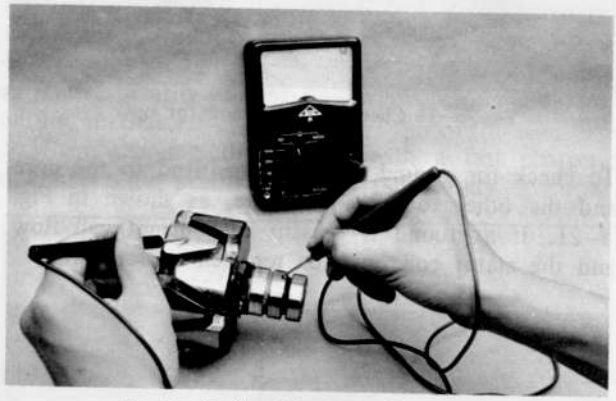

Fig. 5–22 Checking rotor for ground

c. Checking diodes

Diodes for use in the alternator are available in two different types, the positive diode which allows current to flow from the lead wire to the case but not from the case to the lead wire and the negative diode which has the opposite properties.

To check, read the resistance between the lead wire and case with a tester. Then reverse the tester leads and note the reading. If both readings are very low or high, the diode is defective.

A good diode will give one low reading and one high reading.



Fig. 5–23 Checking diode

d. Checking brushes and springs

The brushes should be replaced when one-third of the original length is worn away. This is indicated by a wear limit line on the side surface of each brush. Check the brush spring tension. The tension should be between 330 and 450 gr (12 and 16 oz). Replace the springs if the tension is less than 330 gr (12 oz) or if excessive corrosion exists.

e. Checking bearings

There is no need of lubricating as the bearing is prelubricated. In a long spell of use, when the bearing is worn or damaged, replace it with a new one.

5–F–5. Assembling Alternator

Assemble the alternator in the reverse order of disassembling, noting the following points.

1. When installing the rotor assembly to the rear housing and stator assembly, hold the brushes in position by inserting a piece of stiff wire into the hole of the brush through the rear housing as shown in Fig. 5–25.

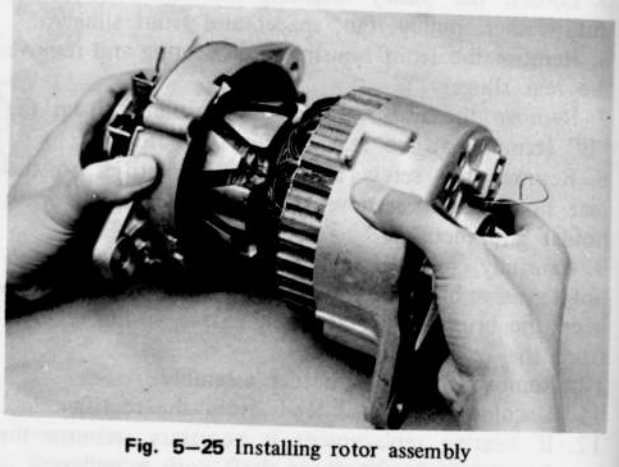

Fig. 5–25 Installing rotor assembly

2. The soldering of the diode leads should be performed in **less than twenty seconds** as the excessive heat may damage the diode.

5–G. REGULATOR

The regulator used for this model is composed of two control units, a constant voltage relay and a pilot lamp relay, mounted as an assembly.

5–G–1. Checking Constant Voltage Relay

To check, use an almost fully charged battery and connect a voltmeter between the (A) and (E) terminals of the regulator, as shown in Fig. 5–26.

Then, hold the alternator revolution to 4,000 rpm (engine revolution 1,800 rpm) and take a reading of the voltmeter. If the reading is 14 ± 0.5 volts, it is in proper order. If it is not within the specifications, the voltage relay must be adjusted, as instructed in Par. 5–G–3.

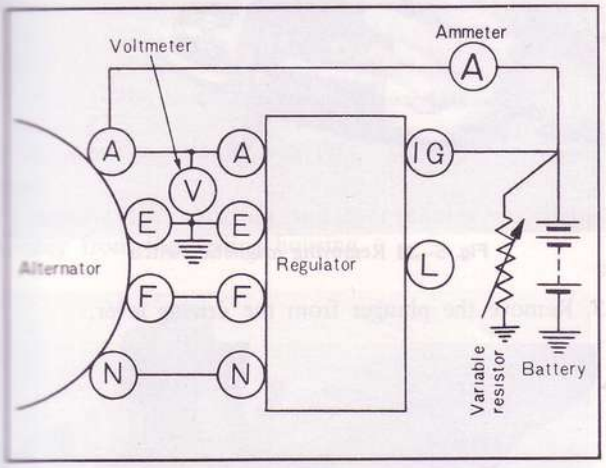

Fig. 5–26 Checking constant voltage relay

5–G–2. Checking Pilot Lamp Relay

Make a circuit, as shown in Fig. 5–27, using a voltmeter and variable resistor, and light up the pilot lamp. Then, slide the knob of the variable resistor so that the voltage gradually increases.

Read the voltage between the (N) and (E) terminal when the lamp goes out. If this voltage is 4.2 to 5.2 volts, it is normal.

Next, slide the knob to gradually reduce the voltage and the lamp will light again. If the reading is 0.5 ~ 3.0 volts at this time, it is proper.

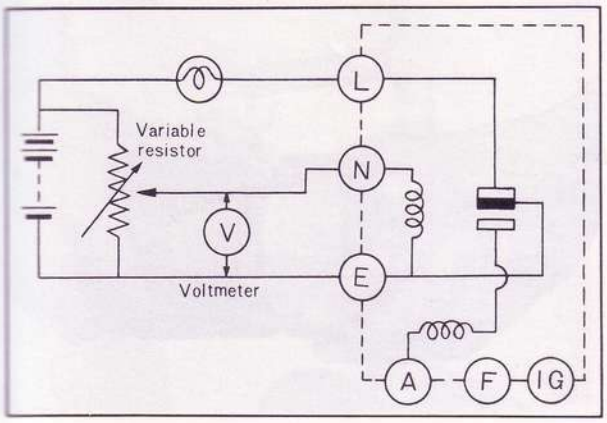

Fig. 5–27 Checking pilot lamp relay

5–G–3. Adjusting Regulator

First, check the air gap, back gap and point gap with a wire gauge. If they are not within the specifications, adjust by bending the stationary contact bracket. After correct gaps are obtained, adjust the voltage setting. Bend the upper plate down to decrease the voltage setting, up to increase the voltage setting.

In case of the pilot lamp relay, if the voltage when the lamp lights up is adjusted to the specification, the voltage when the lamp goes out may be within the specification.

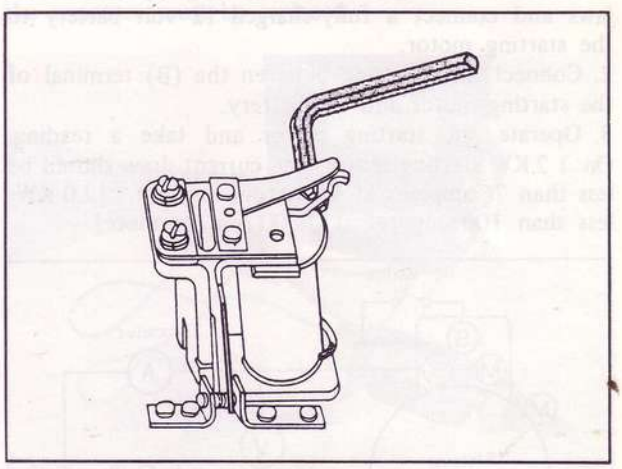

Fig. 5–28 Adjusting regulator

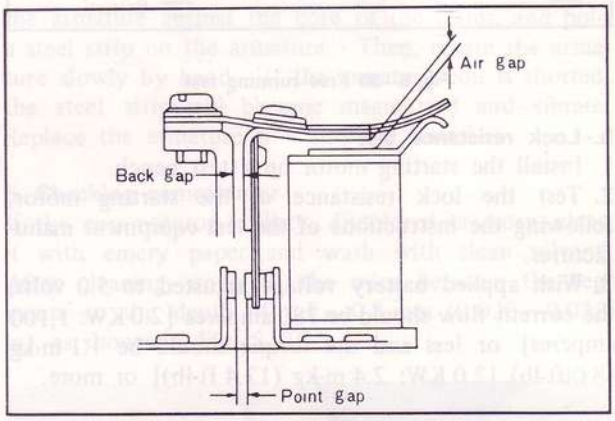

Fig. 5–29 Gaps of regulator

Specifications

Constant voltage relay

Air gap	0.7 ~ 1.3 mm (0.028 ~ 0.051 in)
Point gap	0.3 ~ 0.45 mm (0.012 ~ 0.018 in)
Back gap	0.7 ~ 1.5 mm (0.028 ~ 0.059 in)

Pilot lamp relay

Air gap	0.9 ~ 1.4 mm (0.035 ~ 0.055 in)
Point gap	0.7 ~ 1.1 mm (0.028 ~ 0.043 in)
Back gap	0.7 ~ 1.5 mm (0.028 ~ 0.059 in)

5–H. STARTING MOTOR

5–H–1. Checking Starting Circuit

When the starting motor fails to operate or does not satisfactorily operate, check the following points before removing the starting motor:

1. Weak battery
2. Corroded or loose battery terminal
3. Loose starting motor terminal
4. Broken or loose wires of the starting circuit
5. Faulty ignition switch

5–H–2. Testing Starting Motor

a. Free running test

1. Place the starting motor in a vise equipped with soft jaws and connect a fully-charged 12 volt battery to the starting motor.
2. Connect an ammeter between the (B) terminal of the starting motor and the battery.
3. Operate the starting motor and take a reading. On 1.2 KW starting motor, the current draw should be less than 75 amperes at 4,900 rpm or more. [2.0 KW: less than 100 amperes at 7,800 rpm or more]

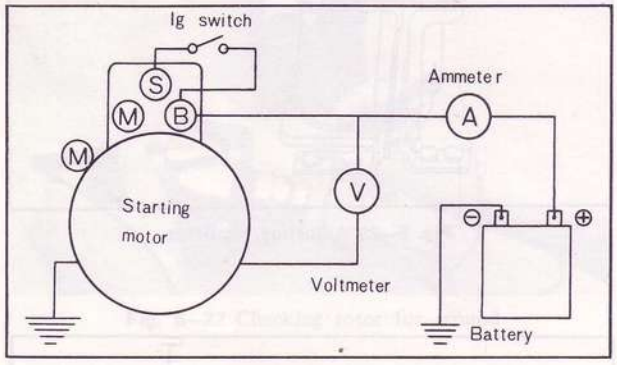

Fig. 5–30 Free running test

b. Lock resistance test

1. Install the starting motor on a test bench.
2. Test the lock resistance of the starting motor, following the instructions of the test equipment manufacturer.
3. With applied battery voltage adjusted to 5.0 volts, the current flow should be 780 amperes [2.0 KW: 1,100 amperes] or less and the torque should be 1.1 m-kg (8.0ift-lb) [2.0 KW: 2.4 m-kg (17.4 ft-lb)] or more.

If the starting motor does not perform to the above test requirements, repair it referring to the following list.

1) Starter rotates slowly with a large current at free running.
   a) Worn, dirty or defective bearings
   b) Short circuit of armature
   c) Grounded armature and field coil
2) Starter does not rotate with a large current.
   a) Defective field circuit
   b) Defective armature circuit
   c) Burnt commutator
3) Low torque and low current flow. Low free running speed.
   a) Breakage of field circuit
   b) Excessive internal resistance
4) Low torque. High free running speed.
   a) Short circuit of field coil

5–H–3. Disassembling Starting Motor

1. Disconnect the field strap from the terminal on the magnetic switch.
2. Remove the magnetic switch attaching screws and remove the magnetic switch, spring and washers from the driving housing.

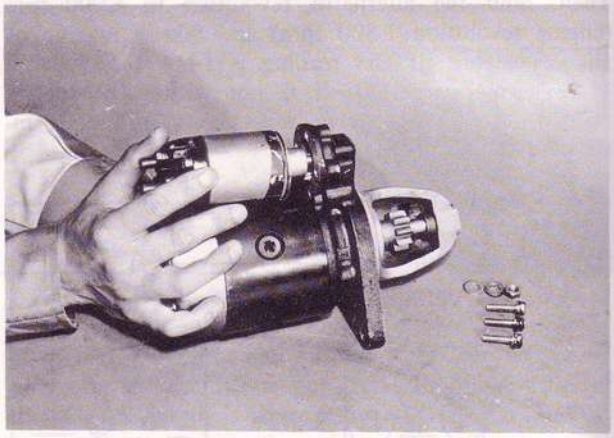

Fig. 5–31 Removing magnetic switch

3. Remove the plunger from the driving lever.

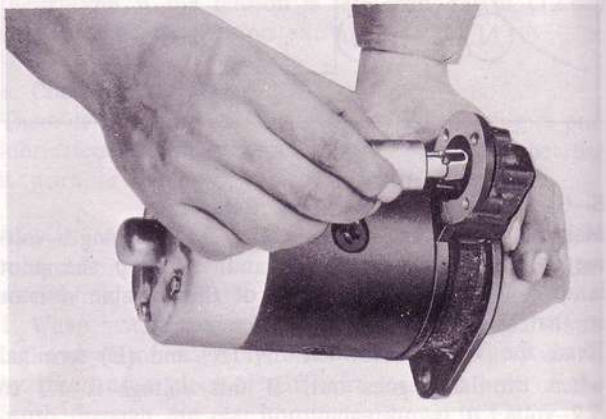

Fig. 5–32 Removing plunger

4. Remove the through bolts and brush holder attaching screws. Then, remove the rear cover.



Fig. 5–33 Removing rear cover

5. Remove the insulator and washers from the rear end of the armature shaft.
6. Remove the brush holder.
7. Separate the yoke from the driving housing.

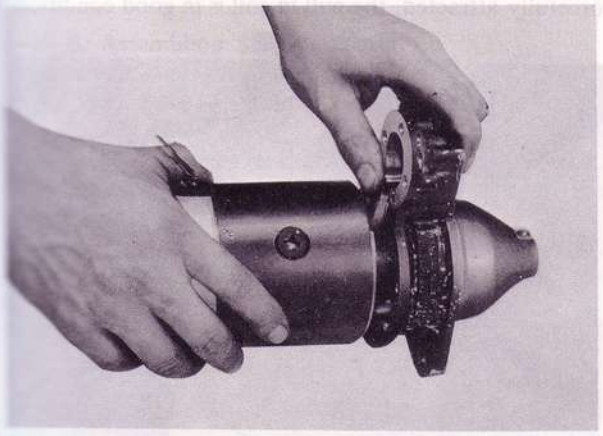

Fig. 5–34 Removing yoke assembly

8. Remove the rubber packing, springs and spring seat.
9. Remove the armature and over-running clutch assembly from the driving housing.

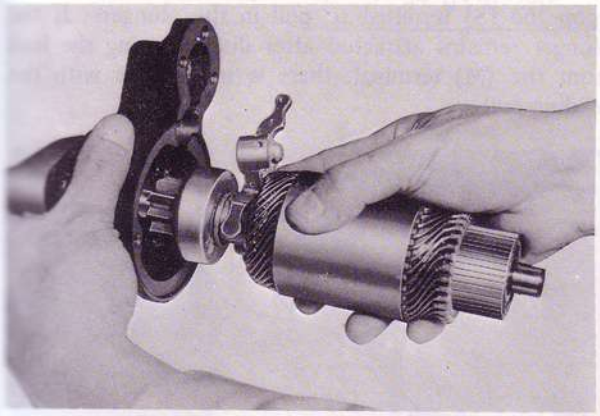

Fig. 5–35 Removing armature assembly

10. Remove the driving lever.
11. Drive the pinion stop collar toward the armature, and remove the stop ring. Then, slide the stop collar and over-running clutch off the armature shaft.
12. If the field coil removal is necessary, remove the pole shoe retaining screws. Then, remove the pole shoes and field coil from the yoke.

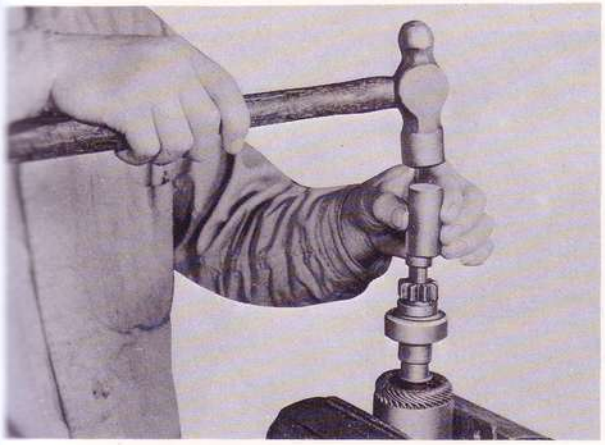

Fig. 5–36 Removing pinion stop collar

5–H–4. Inspecting Starting Motor

a. Checking armature

Check the armature for both ground and short circuit. To check for ground, touch one prod of an ohmmeter to each segment and the other prod to the core or shaft.

An infinite reading should be obtained for each segment. If the meter reading is not infinite, the armature windings are shorted to the core or shaft and the armature must be replaced.

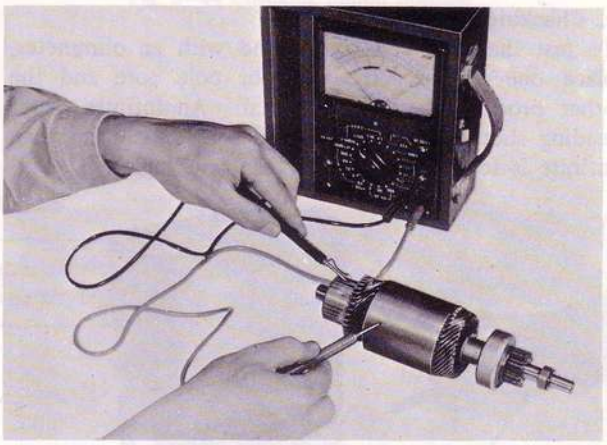

Fig. 5–37 Checking armature

To check for short circuit, use a growler tester. Place the armature against the core of the tester, and hold a steel strip on the armature. Then, rotate the armature slowly by hand. If the armature coil is shorted, the steel strip will become magnetized and vibrate. Replace the armature if a short is found.

b. Checking commutator

If the commutator is dirty, discolored or worn, clean it with emery paper and wash with clean solvent. After cleaning, undercut the mica between the segments to the depth of 0.5 ~ 0.8 mm (0.020 ~ 0.032 in), as shown in Fig. 5–38.

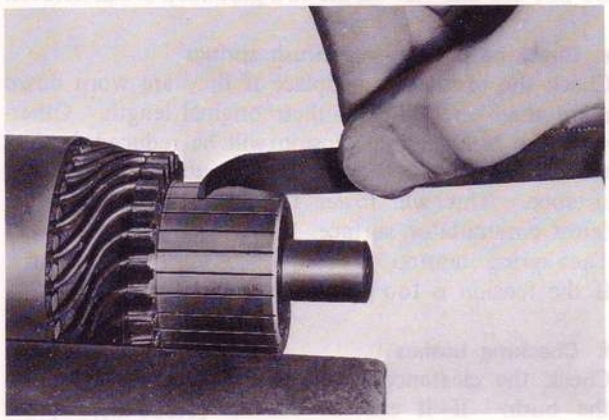

Fig. 5–38 Undercutting mica

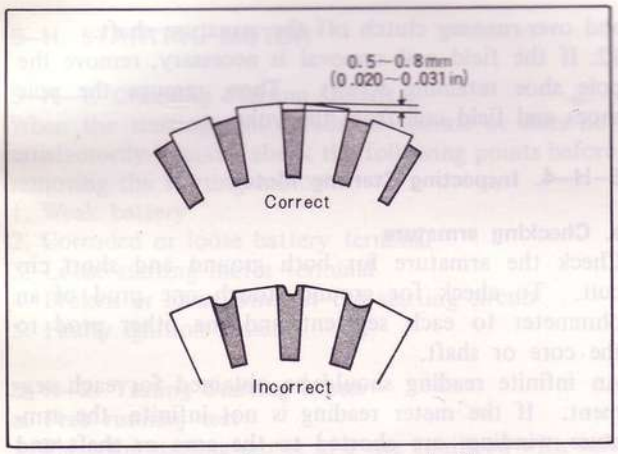

Fig. 5–39 Commutator mica depth

c. Checking field coil

To test the field coil for ground with an ohmmeter, place one prod on the yoke or pole core and the other prod to the field terminal. An infinite meter reading should be obtained. If a reading other than infinite is found, replace the field windings.



Fig. 5–40 Checking field coil for ground

d. Checking brush holder

Check the brush holder for ground. Touch one prod of an ohmmeter to the insulated brush holder and the other prod to the brush holder frame.
If the meter reading is other than infinite, the brush holder assembly is shorted and must be replaced. Repeat this test for the other insulated brush holder. Do not use this test on the two grounded brush holders.

e. Checking brushes and brush springs

Check the brushes and replace if they are worn down more than one third of their original length. Otherwise, the brush spring tension will be reduced, leading to an increase in the brush-commutator contact resistance. This will lower the torque and cause the burnt commutator surface.
The spring tension is 1.4 ~ 1.8 kg (49 ~ 63 oz). If the tension is too low, replace the springs.

f. Checking bushes

Check the clearance between the armature shaft and the bush. If it exceeds 0.2 mm (0.008 in), replace the bush.

5–H–5. Magnetic Switch Test

a. Pull-in coil test

Apply the specified voltage (12V) between the (S) termianl and (M) terminal. If the magnetic switch is forcefully attracted, the pull-in coil is in good condition.

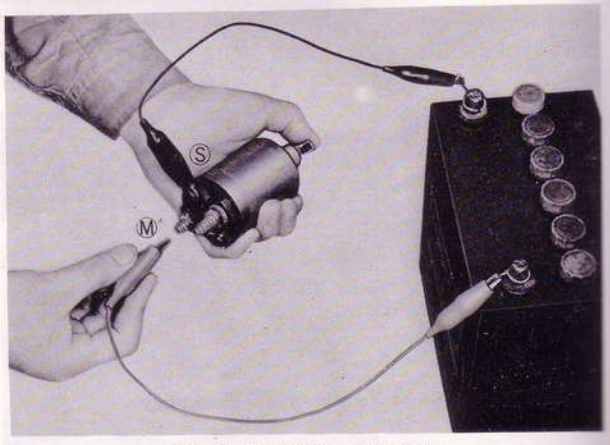

Fig. 5–41 Pull-in coil test

b. Holding coil test

Ground the (M) terminal to the magnetic switch body with a lead and impose the specified voltage (12V) upon the (S) terminal to pull in the plunger. If the plunger remains attracted after disconnecting the lead from the (M) terminal, there is no trouble with the holding coil.

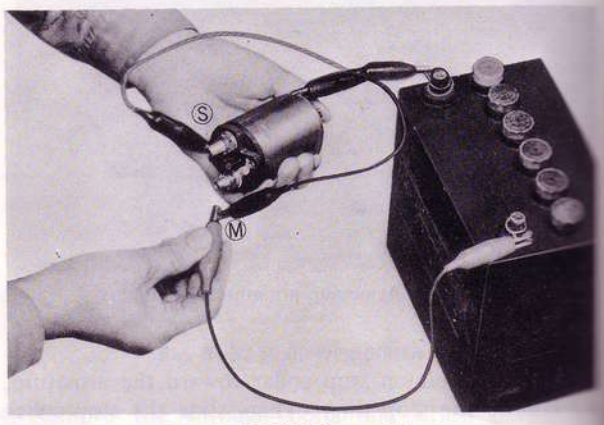

Fig. 5–42 Holding coil test

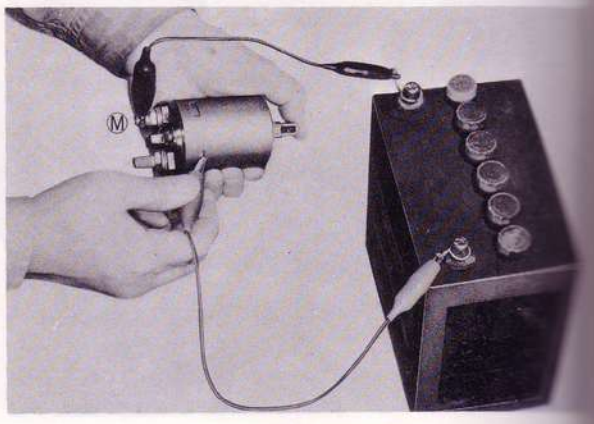

Fig. 5–43 Return test

c. **Return test**
Push in the plunger by hand and apply the specified voltage (12V) between the (M) terminal and the magnetic switch body. If the plunger is not attracted, there is no trouble.

5–H–6. Assembling Starting Motor
To assemble the starting motor, reverse the procedure of Par. 5–H–3, **noting** the following points.

1. Adjust the armature shaft end play to 0.1 ~ 0.4 mm (0.004 ~ 0.016 in) with a thrust washer on the rear end of the shaft.
2. When the magnetic switch is engaged, the clearance between the pinion and stop collar should be 0.5 ~ 2.0 mm (0.020 ~ 0.079 in).
This clearance can be adjusted by inserting the adjusting washer between the magnetic switch body and the driving housing.

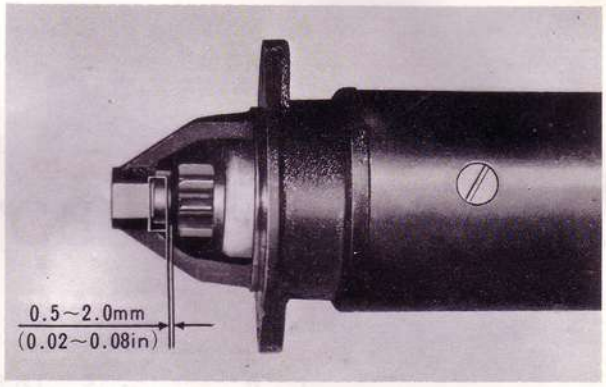

Fig. 5–44 Checking pinion position

SPECIAL TOOLS

49 0242 685A	Remote starter switch
49 0370 290	Alternator tester

CLUTCH

6–A. CLUTCH PEDAL ADJUSTMENT..... 6 : 1
6–B. CLUTCH REMOVAL..... 6 : 1
6–C. CLUTCH INSPECTION..... 6 : 1
6–C–1. Checking Release Bearing and Fork..... 6 : 1
6–C–2. Checking Pressure Plate and Cover Assembly..... 6 : 2
6–C–3. Checking Clutch Disc..... 6 : 2
6–C–4. Flywheel Inspection..... 6 : 2
6–C–5. Ring Gear Replacement..... 6 : 3
6–C–6. Checking Pilot Bearing..... 6 : 3
6–C–7. Pilot Bearing Replacement..... 6 : 3
6–C–8. Checking Eccentric Shaft Rear Oil Seal..... 6 : 3
6–D. CLUTCH INSTALLATION..... 6 : 3
6–E. CLUTCH MASTER CYLINDER..... 6 : 4
6–E–1. Removing Clutch Master Cylinder..... 6 : 4
6–E–2. Disassembling Clutch Master Cylinder..... 6 : 4
6–E–3. Checking Clutch Master Cylinder..... 6 : 4
6–E–4. Assembling Clutch Master Cylinder..... 6 : 4
6–E–5. Installing Clutch Master Cylinder..... 6 : 5
6–F. CLUTCH RELEASE CYLINDER..... 6 : 5
6–F–1. Removing Clutch Release Cylinder..... 6 : 5
6–F–2. Disassembling Clutch Release Cylinder..... 6 : 5
6–F–3. Checking Clutch Release Cylinder..... 6 : 5
6–F–4. Assembling Clutch Release Cylinder..... 6 : 5
6–F–5. Installing Clutch Release Cylinder..... 6 : 5
6–G. AIR BLEEDING..... 6 : 5
SPECIAL TOOLS..... 6 : 5

CLUTCH

The clutch is of the single dry disc type. The clutch assembly consists of the clutch disc assembly, clutch cover and pressure plate assembly, and clutch release mechanism.

The clutch operating mechanism is of the hydraulic type, consisting of a dash mounted master cylinder and a clutch release cylinder mounted on the clutch housing.

6–A. CLUTCH PEDAL ADJUSTMENT

The free travel of the clutch pedal before the push rod contacts with the piston should be **0.5 to 3.0 mm (0.02 to 0.12 in).**

To adjust the free travel, loosen the lock nut and turn the push rod until the proper adjustment is made. Tighten the lock nut after adjustment is completed.

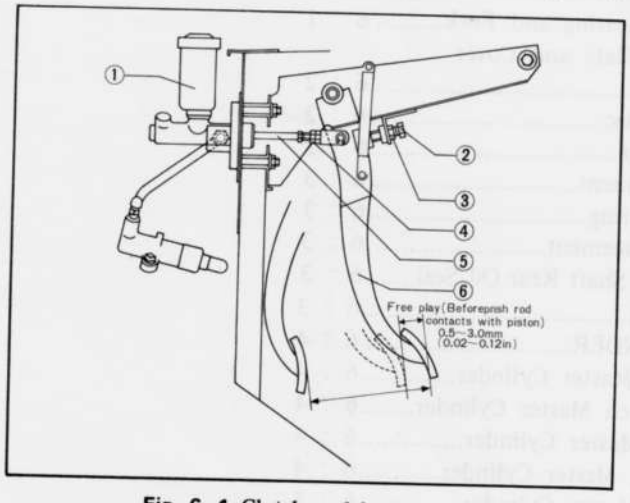

Fig. 6–1 Clutch pedal adjustment

1. Master cylinder
2. Height adjusting bolt
3. Lock nut
4. Lock nut
5. Rod
6. Pedal

6–B. CLUTCH REMOVAL

To remove the clutch from the vehicle, proceed as follows:

1. Remove the transmission.
2. Install the **ring gear brake** (49 0118 271A).
3. Remove the 4 standard bolts and 2 reamer bolts holding the clutch cover assembly to the flywheel, and remove the clutch cover assembly and the clutch disc.
4. Straighten the tab of the lockwasher. With the **wrench** (49 0820 035), loosen the nut that attaches the flywheel to the eccentric shaft and remove the nut.
5. Using the **puller** (49 0823 300), remove the flywheel from the eccentric shaft.

Note:
After removing the flywheel, inspect for oil leaking through the engine rear oil seal.

6. Pull the release fork outward until the spring clip of the fork releases from the ball pivot. Remove the fork release bearing from the clutch housing.

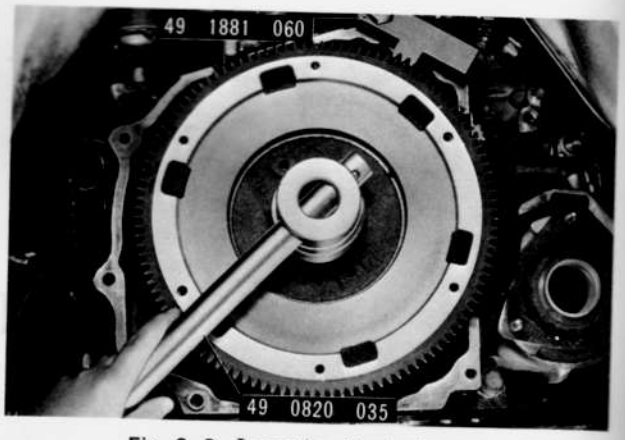

Fig. 6–2 Loosening flywheel nut

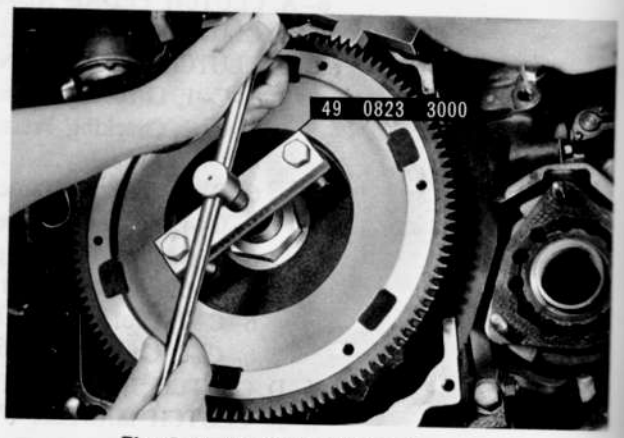

Fig. 6–3 Removing flywheel

6–C. CLUTCH INSPECTION

6–C–1. Checking Release Bearing and Fork

Note: The release bearing is packed with lubricant which is intended to last the whole life time of the bearing. Therefore, the bearing must not be washed in gasoline or any other solvent.

Check the release bearing by pressing and turning the front race slowly by hand. Replace if the bearing feels rough or seems noisy when turning.



Fig. 6–4 Checking release bearing

Examine the clutch housing carefully to be certain there are no burrs on the outer surface of the clutch

housing which pilots the release bearing.
Check the release fork for crack or bend. If necessary, replace the fork.

6–C–2. Checking Pressure Plate and Cover Assembly
Check the contact surfaces of the pressure plate with the clutch facing for wear, damage or warpage.
If it is slight, correct it by lapping with compound or by turning a lathe. But if severe, replace with a new one.
Check the diaphragm spring and cover and if any wear or damage is found, replace the pressure plate and cover assembly.

6–C–3. Checking Clutch Disc
Inspect the clutch disc for warpage with a dial indicator or a feeler gauge, as shown in Fig. 6–5.
If it is **more than 1.0 mm (0.039 in)**, replace with a new one.



Fig. 6–5 Checking clutch disc for warpage

Excessively worn facing will cause slippage or score the pressure plate and flywheel due to the projected heads of rivets.

Check the depth between the facing surface and the rivet using a depth gauge, as shown in Fig. 6–6. If the reading is **less than 0.30 mm (0.012 in)**, replace the clutch disc.

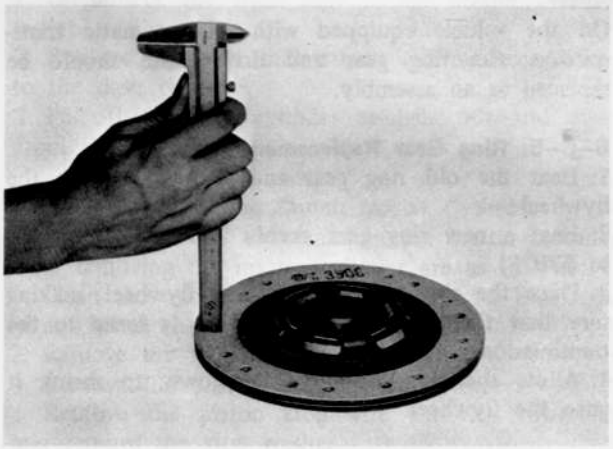

Fig. 6–6 Checking clutch disc for wear

If oil is evident on the facing, clean or replace the facing and eliminate the cause of oil leakage.
Make certain that the clutch disc slides easily on the main drive shaft without any excessive play.

6–C–4. Flywheel Inspection
Inspect the contact surface of the flywheel with the clutch facing for burnt surface, scored surface or rivet grooves.
If it is slight, it can be reconditioned by grinding in

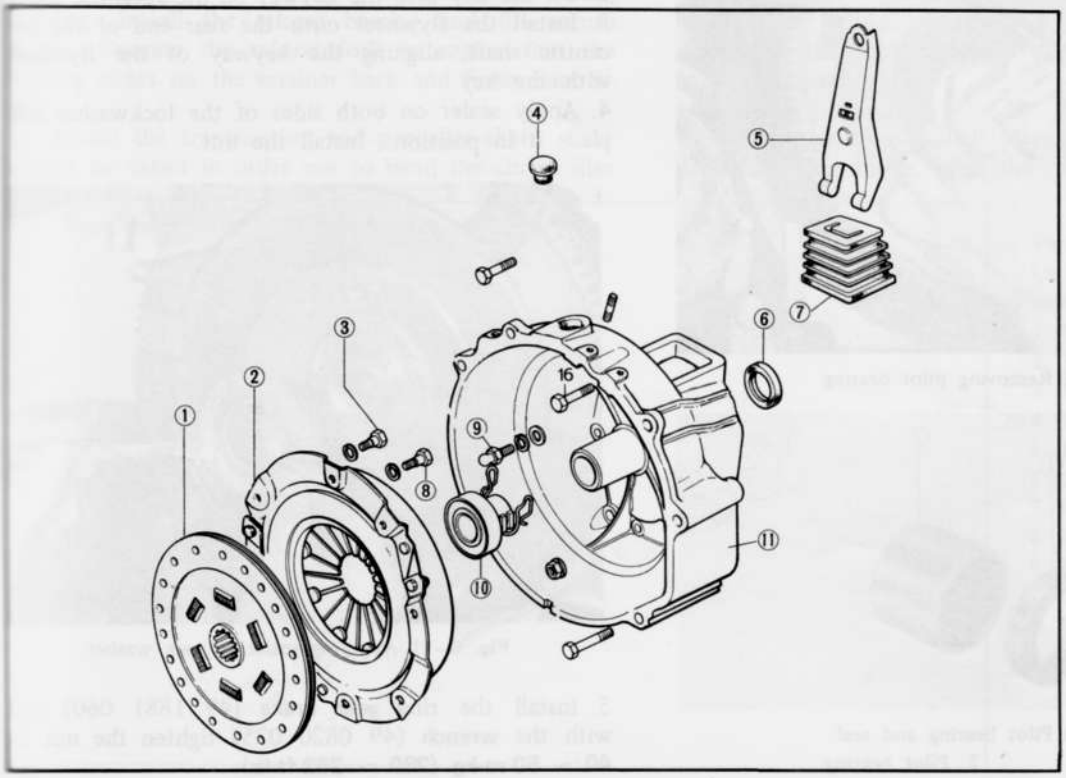

Fig. 6–7
Clutch components
1. Clutch disc
2. Clutch cover
3. Reamer bolt
4. Top hole cover
5. Release fork
6. Oil seal
7. Dust cover
8. Bolt
9. Pivot pin
10. Release bearing
11. Clutch housing

clean brake fluid.
2. Install the reservoir to the cylinder.
3. Insert the return spring into the cylinder.
4. Install the primary cup so that the flat side of the cup goes toward the piston.
5. Fit the secondary cup onto the piston and install them into the cylinder.
6. Install the stop washer and stop wire.
7. Fill with brake fluid and operate the piston with a screwdriver until the fluid is ejected at the outlet.
8. Install the dust boot to the cylinder.

6–E–5. Installing Clutch Master Cylinder

1. Install the clutch master cylinder assembly onto the dash panel and tighten the nuts.
2. Connect the fluid pipe to the cylinder.
3. Fill with brake fluid.
4. Bleed the clutch hydraulic system, as described in Par 6–G.

6–F. CLUTCH RELEASE CYLINDER

6–F–1. Removing Clutch Release Cylinder

1. Disconnect the fluid pipe at the clutch release cylinder.
2. Remove the nuts attaching the cylinder to the clutch housing. Remove the release cylinder.

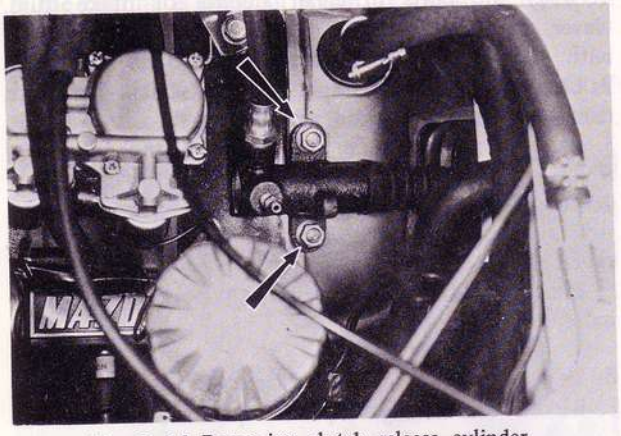

Fig. 6–14 Removing clutch release cylinder

6–F–2. Disassembling Clutch Release Cylinder

1. Clean the outside of the cylinder thoroughly.
2. Remove the dust boot from the cylinder.
3. Remove the release rod.
4. Remove the piston and cups from the cylinder. If necessary, blow out with compressed air from the fluid passage.
5. Remove the bleeder screw and valve (steel ball).

6–F–3. Checking Clutch Release Cylinder

Refer to Par. 6–E–3 and inspect the clutch release cylinder.

6–F–4. Assembling Clutch Release Cylinder

1. Install the spring into the cylinder.
2. Fit the piston cup to the piston and install them into the cylinder.
3. Install the release rod into the cylinder.
4. Install the dust boot.
5. Install the valve (steel ball) and bleeder screw into the bleeder hole. Fit the bleeder cap.

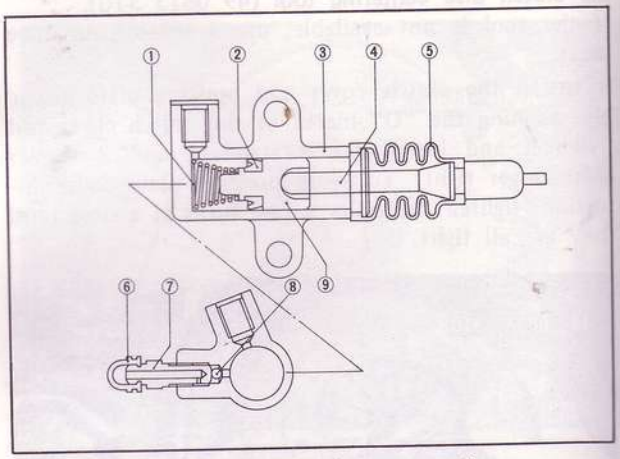

Fig. 6–15 Release cylinder cross section

1. Spring
2. Piston cup
3. Cylinder
4. Release rod
5. Boot
6. Cap
7. Bleeder screw
8. Valve
9. Piston

6–F–5. Installing Clutch Release Cylinder

1. Install the clutch release cylinder assembly to the clutch housing with two nuts.
2. Connect the fluid pipe.
3. Fill the reservoir of the master cylinder with brake fluid and bleed the system, as described in Par. 6–G.

6–G. AIR BLEEDING

1. Remove the rubber cap from the bleeder screw and attach a vinyl tube to the bleeder screw.
2. Insert the free end of the vinyl tube into a suitable container while bleeding the clutch system.
3. Depress the clutch pedal several times quickly, then with the clutch pedal depressed, open the bleeder screw to expel the air.
Close the screw, then return the pedal to the full-released position.
4. Repeat this operation until air bubbles cease to appear at the free end of the vinyl tube.

Note:
a. During bleeding operation, the reservoir of the master cylinder must be kept at least 3/4 full of the brake fluid.
b. Never re-use brake fluid which has been drained from the clutch hydraulic system.

SPECIAL TOOLS

49 1881 060	Ring gear brake
49 0820 035	Wrench for flywheel nut
49 0823 300	Flywheel puller
49 0823 070A	Pilot bearing replacer
49 0813 310	Clutch disk centering tool

TRANSMISSION

7–A. TRANSMISSION REMOVAL ..... 7 : 1
7–B. TRANSMISSION DISASSEMBLY ..... 7 : 1
7–C. TRANSMISSION INSPECTION ..... 7 : 3
- 7–C–1. Checking Transmission Case and Clutch Housing ..... 7 : 3
- 7–C–2. Checking Bearings ..... 7 : 3
- 7–C–3. Checking Gears ..... 7 : 3
- 7–C–4. Checking Main Shaft and Main Drive Shaft ..... 7 : 3
- 7–C–5. Checking Counter Shaft ..... 7 : 3
- 7–C–6. Checking Control Lever and Shift Fork Shaft ..... 7 : 3
- 7–C–7. Checking Shift Fork ..... 7 : 3
- 7–C–8. Checking Clutch Sleeve ..... 7 : 4
- 7–C–9. Checking Synchronizer Ring ..... 7 : 4
- 7–C–10. Checking Synchronizer Key and Spring ..... 7 : 5
- 7–C–11. Checking Clutch Hub ..... 7 : 5
- 7–C–12. Checking Extension Housing ..... 7 : 5
- 7–C–13. Checking Speedometer Gears ..... 7 : 5

7–D. TRANSMISSION ASSEMBLY ..... 7 : 5
7–E. TRANSMISSION INSTALLATION ..... 7 : 10
SPECIAL TOOLS ..... 7 : 11

TRANSMISSION

MAZDA Rotary pickup is equipped with a four speed manual transmission which is of the fully synchronized type with all gears except the reverse gear being in constant mesh.
The gearshift mechanism is a direct control with a floor-shift type.
The transmission gear ratio is as follows:

	Gear ratio
First	3.683
Second	2.263
Third	1.397
Top	1.000
Reverse	3.692

7–A. TRANSMISSION REMOVAL

When removing the transmission from the vehicle, proceed as follows:
1. Remove the gearshift lever knob.
2. Remove the boot for the gearshift lever.
3. Remove the bolts attaching the retainer cover to the gearshift lever retainer.
4. Pull the gearshift lever, shim and bush straight up and away from the gearshift lever retainer.
5. Disconnect the earth wire of the battery.
6. Remove the bolt attaching the power brake vacuum pipe clip to the clutch housing.
7. Remove the earth wire from the transmission case.
8. Remove the nuts attaching the clutch release cylinder and remove the clutch release cylinder.
9. Remove the one upper bolt securing the starting motor, then remove the three upper bolts and nuts securing the transmission to the engine rear end.
10. Raise the vehicle and support with stands.
11. Disconnect the wires of the starting motor and the reverse lamp switch.
12. Disconnect the speedometer cable from the extension housing.
13. Remove the bolts attaching the heat insulator to the exhaust front pipe, and remove the heat insulator.
14. Disconnect the exhaust front pipe from the exhaust pipe brackets by removing the bolts and nuts. Disconnect the exhaust front pipe flange from the exhaust manifold by removing the nuts. Remove the bolts and nuts attaching the front pipe flange to the main silencer, and remove the exhaust front pipe.
15. Remove the propeller shaft, as described in Par. 8–A–1, and insert the **transmission oil plug** (49 0259 440) into the extension housing.
16. Remove the lower bolt securing the starting motor to the clutch housing and remove the starting motor.
17. Place a jack under the front side of the engine and support the engine with the jack.
18. Remove the bolts securing the transmission support to the body.
19. Remove the two lower bolts securing the transmission to the engine rear end.
20. Slide the transmission rearward until the main drive shaft clears the clutch disc and carefully withdraw it downward from the vehicle.

7–B. TRANSMISSION DISASSEMBLY

The procedures for disassembling the transmission after removing the transmission from the vehicle are as follows:
1. Place the transmission on a work stand.
2. Remove the drain plug, and drain the lubricant from the transmission. Clean the metal fillings adhered on the magnet of the drain plug if necessary. Refit the drain plug after draining lubricant.
3. Pull the release fork outward until the fork retaining spring release itself from the ball stud. Remove the fork and boot from the clutch housing.
4. Remove the nuts attaching the clutch housing, and remove the clutch housing and gasket.

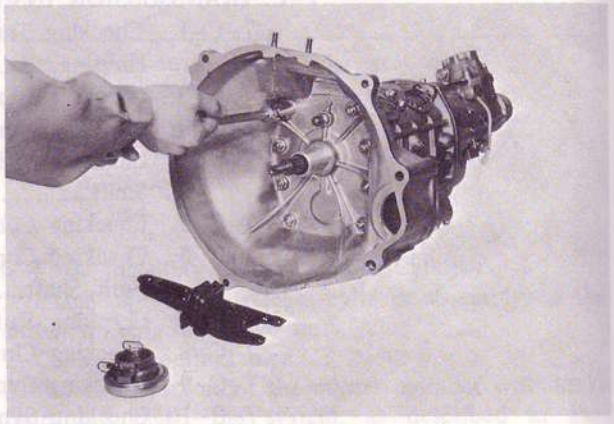

Fig. 7–1 Removing clutch housing

5. Remove the adjusting shim from the bearing bore of the clutch housing.
6. Remove the bolts attaching the gearshift lever retainer to the extension housing and remove the retainer and gasket.
7. Remove the nuts that attach the extension housing to the transmission case. Slide the extension housing off the main shaft, with control lever end laid down to the left as far as it will go.
8. Remove the spring cap bolt and remove the spring and friction piece from the extension housing.
9. Remove the neutral switch from the extension housing.
10. Remove the bolt that attach the gearshift control lever end to the gearshift control lever, and remove the control lever end, key and control lever.

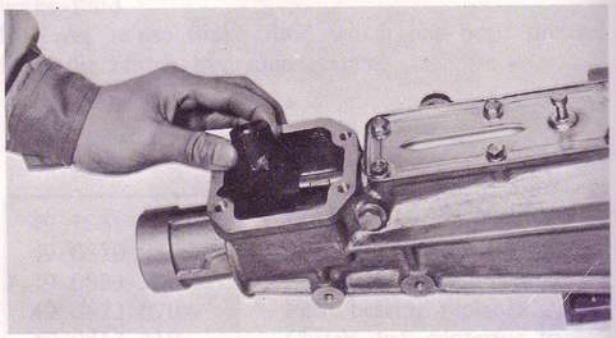

Fig. 7–2 Removing control lever end

11. Remove the speedometer sleeve lock plate, and remove the sleeve and driven gear assembly from the extension housing.
12. Remove the back-up lamp switch from the extension housing.
13. Remove the snap ring that secures the speedometer drive gear to the main shaft. Slide the drive gear off the main shaft, and remove the lock ball.
14. Evenly loosen the bolts securing the case cover to the transmission case and remove the cover and gasket.
15. Remove the three spring cap bolts and remove the detent springs and detent balls (locking balls) from the transmission case.

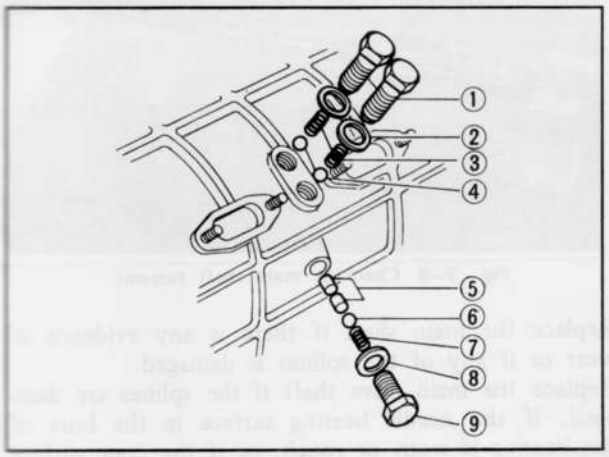

Fig. 7–3 Spring cap bolts

1. Spring cap bolt
2. Washer
3. Detent spring
4. Detent ball
5. Shift inter-lock pin
6. Detent ball
7. Detent spring
8. Washer
9. Spring cap bolt

16. Remove the nuts attaching the two blind covers to the transmission case and remove the blind covers and gaskets.
17. Remove the bolt attaching the reverse shift lever to the transmission case. Slide the reverse shift fork shaft with the reverse shift lever and reverse idle gear out the rear of the transmission case. Remove the attaching bolt from the reverse shift fork and remove the shift fork.
18. Remove the attaching bolt from the third-and-fourth shift fork. Slide the third-and-fourth shift fork shaft out the rear of the transmission case.
19. Remove the attaching bolt from the first-and-second shift fork. Slide the first-and-second shift fork shaft out the rear of the transmission case.
20. Straighten the tab of the lock washer, hold the rear end of the main shaft with the **holder** (Part No. 49 0259 440) as shown in Fig. 7–4 and loosen the main shaft lock nut. Slide the reverse gear off the rear of the main shaft, and remove the key.
21. Remove the snap ring from the rear end of the counter shaft and remove the counter reverse gear.
22. Remove the bolts attaching the bearing cover to the transmission case and remove the bearing cover.
23. Remove the reverse idler gear shaft from the transmission case.
24. Install the **synchronizer ring holder** between the fourth synchronizer ring and the synchromesh gear on the main drive shaft.

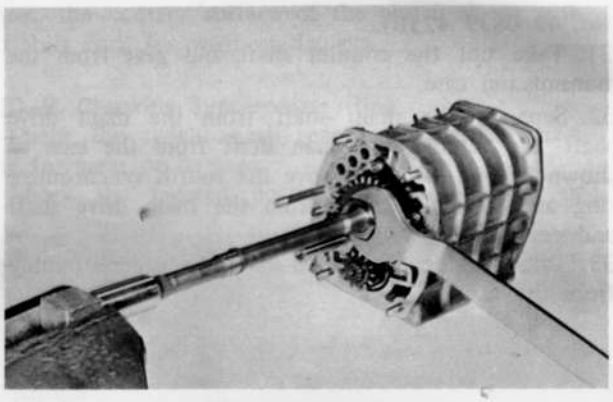

Fig. 7–4 Removing lock nut

25. Remove the snap ring that secures the counter shaft front bearing to the front end of the counter shaft. Using the **bearing puller** (Part No. 49 0839 425B) shown in Fig. 7–5, remove the counter shaft front bearing.

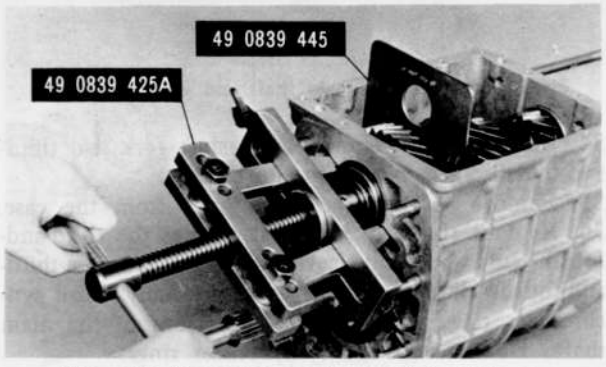

Fig. 7–5 Removing counter shaft front bearing

26. Remove the adjusting shim from the counter shaft front bearing bore of the transmission case.
27. Remove the counter shaft rear bearing from the counter shaft with the **puller** (Part No. 49 0839 425B).
28. Using the **puller** (Part No. 49 0839 425B) shown in Fig. 7–6, remove the main shaft bearing.
29. Remove the adjusting shim from the main shaft bearing bore of the transmission case.
30. Remove the snap ring that secures the main drive shaft bearing to the main drive shaft. Remove the main drive shaft bearing with the **puller** (Part

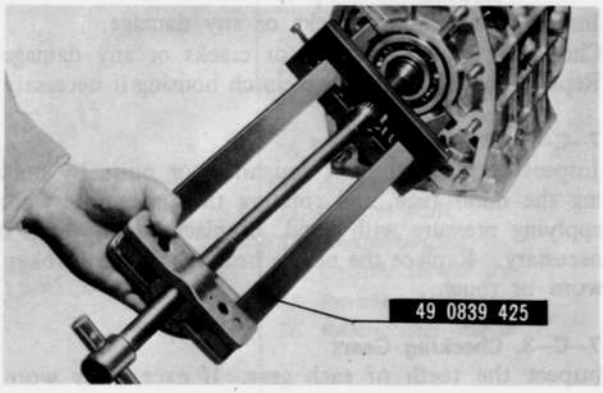

Fig. 7–6 Removing main drive shaft bearing

No. 49 0839 425B).
31. Take out the counter shaft and gear from the transmission case.
32. Separate the main shaft from the main drive shaft and remove the main shaft from the case as shown in Fig. 7–7. Remove the fourth synchronizer ring and needle bearing from the main drive shaft and gears assembly.
33. Take out the main drive shaft and gears assembly from the case.

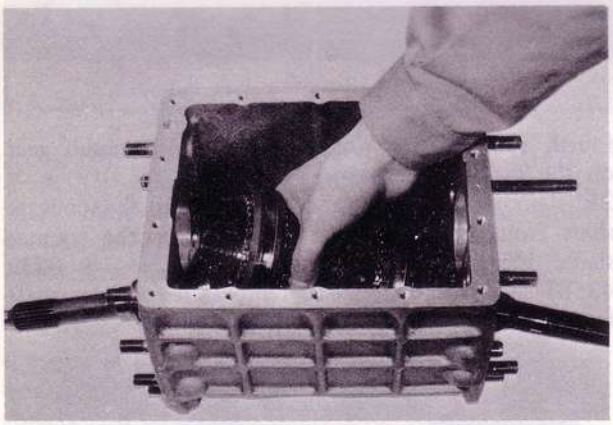

Fig. 7–7 Removing main shaft and gears assembly

34. Remove the first-and-second shift fork and third-and-fourth shift fork from the case.
35. Remove the two inter-lock pins from the case.
36. Remove the snap ring that secures the third-and-fourth clutch hub and sleeve assembly. Slide the third-and-fourth clutch hub and sleeve assembly, third synchronizer ring, third gear out the front of the main shaft. **Do not** mix the synchronizer rings.
37. Slide the first gear, first synchronizer ring and first gear sleeve out the rear of the main shaft.
38. Remove the second gear, second synchronizer ring, first-and-second clutch hub and sleeve assembly from the main shaft.

7–C. TRANSMISSION INSPECTION

Thoroughly clean all the parts. Inspect the parts for wear, damage and other defects. The parts found defective must be repaired or replaced.

7–C–1. Checking Transmission Case and Clutch Housing

Inspect the case for cracks or any damage.
Check the clutch housing for cracks or any damage.
Replace the oil seal in the clutch housing if necessary.

7–C–2. Checking Bearings

Inspect each bearing for roughness or noise by holding the outer race, and rotating the inner race while applying pressure with hand. Replace the bearings if necessary. Replace the needle bearings that are broken, worn or rough.

7–C–3. Checking Gears

Inspect the teeth of each gear. If excessively worn, broken or chipped, replace with new gear. Excessive wear of the gears causes increase of backlash, which results in producing noises or may cause the gear to work off while running.

7–C–4. Checking Main Shaft and Main Drive Shaft

Check the main shaft run-out with a dial indicator. If the run-out exceeds **0.03 mm (0.0012 in),** correct with a press or replace with a new one.

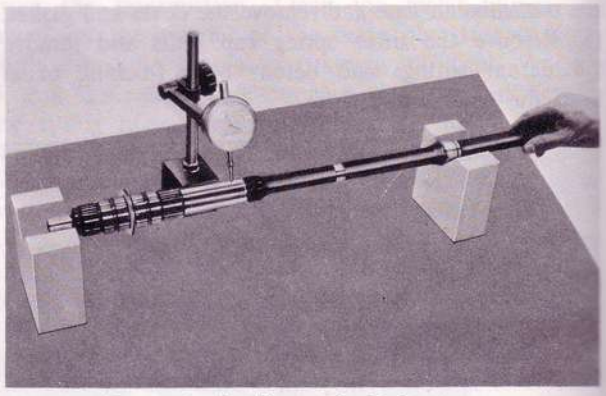

Fig. 7–8 Checking main shaft run-out

Replace the main shaft if there is any evidence of wear or if any of the splines is damaged.
Replace the main drive shaft if the splines are damaged. If the needle bearing surface in the bore of the bearing is worn or rough, or if the cone surface is damaged, replace with a new shaft.

7–C–5. Checking Counter Shaft

Check the teeth of the counter shaft gear for wear or damage. Replace the counter shaft if it is bent, scored or worn.

7–C–6. Checking Control Lever and Shift Fork Shaft

Check the contact surface of the shift fork shaft with the detent ball for wear or damage.
Check the contact surface of the shift fork shaft with the control lever for wear. The clearance between the shift fork shaft and the control lever should be **less than 0.8 mm (0.031 in).**

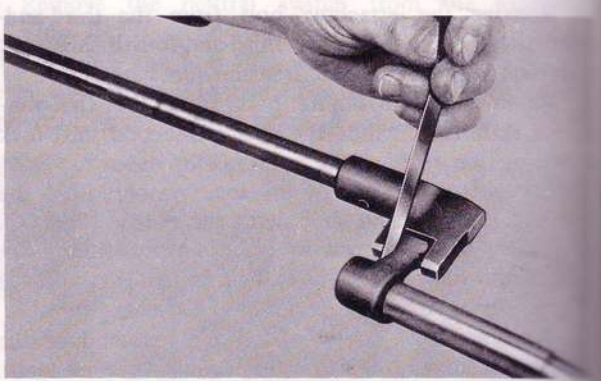

Fig. 7–9 Checking clearance

7–C–7. Checking Shift Fork

Check the contact surface of the shift forks with the clutch sleeve for wear or damage. The clearance

between the shift fork and the clutch sleeve should be **less than 0.5 mm (0.020 in).**

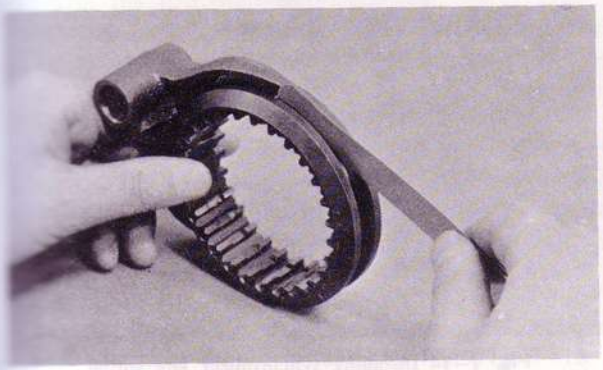

Fig. 7–10 Checking clearance

7–C–8. Checking Clutch Sleeve

Check the clutch sleeves for free movement on their hubs.

Check the splines of the clutch sleeve for wear or damage.

Check the contact surface of the clutch sleeve with the shift fork for wear or damage.

7–C–9. Checking Synchronizer Ring

1. Check the synchromesh gear on the synchronizer ring for wear or damage.
2. Check the tapered portion for uneven wear or

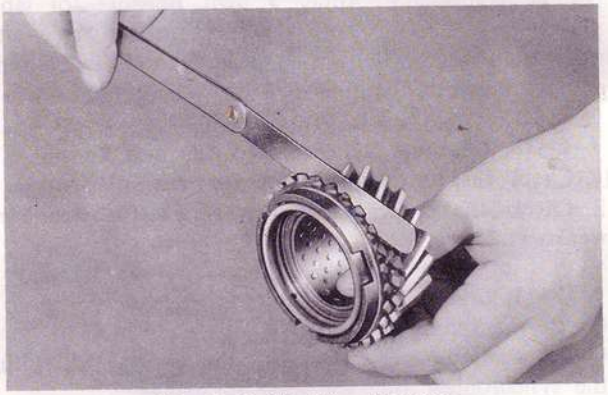

Fig. 7–11 Checking clearance

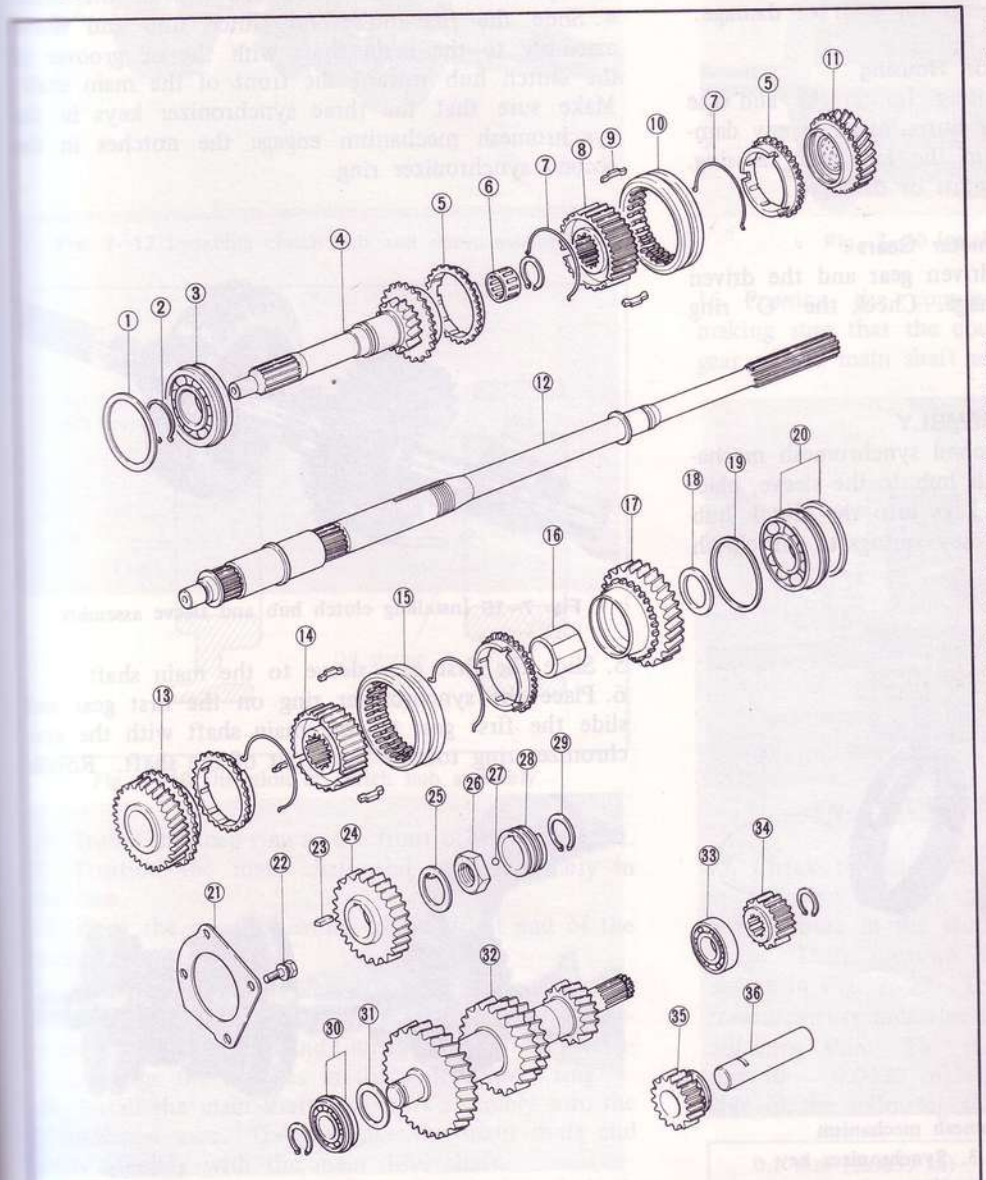

Fig. 7–12
Shafts and gears
1. Adjusting shim
2. Snap ring
3. Main drive shaft bearing
4. Main drive shaft
5. Synchronizer ring
6. Needle bearing
7. Synchronizer key spring
8. Third-and-fourth clutch hub
9. Synchronizer key
10. Clutch hub sleeve
11. Third gear
12. Main shaft
13. Second gear
14. First-and-second clutch hub
15. Clutch hub sleeve
16. Gear sleeve
17. First gear
18. Thrust washer
19. Adjust shim
20. Ball bearing and clip
21. Bearing stopper
22. Bolt
23. Key
24. Reverse gear
25. Lock washer
26. Lock nut
27. Steel ball
28. Speedometer drive gear
29. Snap ring
30. Ball bearing and clip
31. Adjust shim
32. Counter shaft
33. Needle bearing
34. Counter reverse gear
35. Reverse idler gear
36. Reverse idler gear shaft

damage. Also place the ring on the gear cone, and check the clearance between the gear and the ring. If the clearance is **less than 0.8 mm (0.031 in)**, replace the synchronizer ring.

3. If the contact between the ring and the gear cone is incorrect, or if a new synchronizer ring is used, lap the synchronizer ring with the gear cone using a lapping compound. Apply a light pressure for lapping. After lapping, clean the ring and the gear cone with a suitable solvent, then check the clearance and contact between the ring and the gear cone.

7–C–10. Checking Synchronizer Key and Spring

1. Check the synchronizer key for wear or damage.
2. Check the synchronizer key spring for wear or weakness.

7–C–11. Checking Clutch Hub

Check the splines for wear or damage.
Check the contact surface of the clutch hub with the synchronizer ring for wear or damage.
Check the contact surface of the clutch hub with the thrust surface of the gears for wear or damage.

7–C–12. Checking Extension Housing

Inspect the extension housing for cracks and the machined mating surface for burrs, nicks or any damage. Inspect the oil seal in the extension housing. Replace them if they are worn or damaged.

7–C–13. Checking Speedometer Gears

Check the drive gear and driven gear and the driven gear shaft for wear or damage. Check the "O" ring for weakness or damage.

7–D. TRANSMISSION ASSEMBLY

1. Assemble the first-and-second synchromesh mechanism by installing the clutch hub to the sleeve, placing the three synchronizer keys into the clutch hub key slots and installing the key springs to the clutch hub.

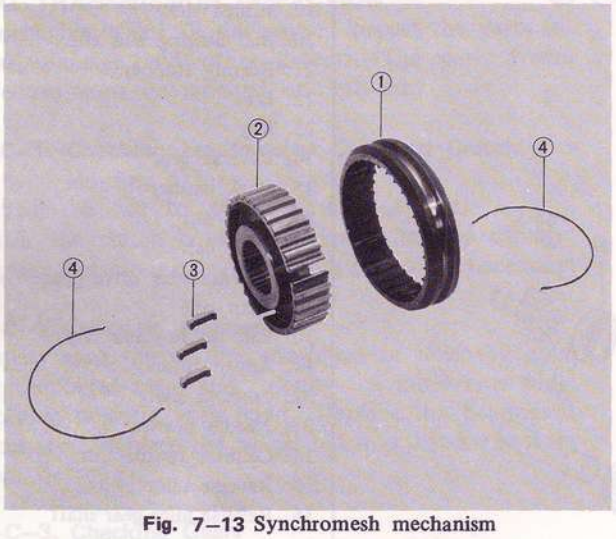

Fig. 7–13 Synchromesh mechanism

1. Clutch sleeve
2. Clutch hub
3. Synchronizer key
4. Key spring



Fig. 7–14 Installing synchronizer key spring

2. Assemble the third-and-fourth synchromesh mechanism in the same manner as first-and-second synchromesh mechanism.
3. Place the synchronizer ring on the second gear and slide the second gear to the main shaft with the synchronizer ring toward the rear of the shaft.
4. Slide the first-and-second clutch hub and sleeve assembly to the main shaft with the oil grooves of the clutch hub toward the front of the main shaft. Make sure that the three synchronizer keys in the synchromesh mechanism engage the notches in the second synchronizer ring.

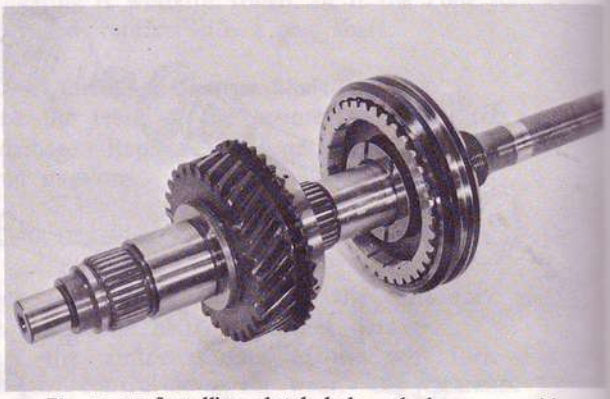

Fig. 7–15 Installing clutch hub and sleeve assembly

5. Slide the first gear sleeve to the main shaft.
6. Place the synchronizer ring on the first gear and slide the first gear to the main shaft with the synchronizer ring toward the front of the shaft. Rotate

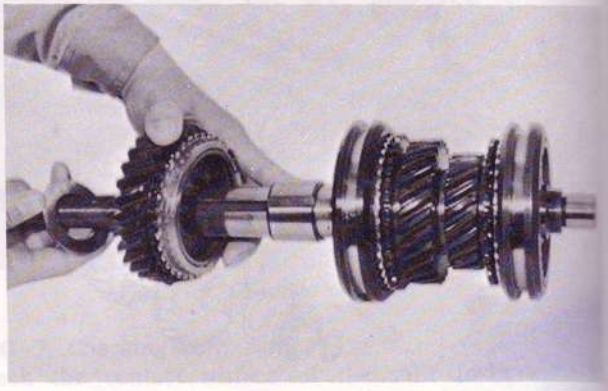

Fig. 7–16 Installing first gear

the first gear as necessary to engage the three notches shaft in the synchronizer ring with the synchronizer keys in the first-and-second.
7. Install the original thrust washer to the main shaft.
8. Place the synchronizer ring on the third gear and slide the third gear to the front of the main shaft with the synchronizer ring toward the front.
9. Slide the third-and-fourth clutch hub and sleeve assembly to the front of the main shaft making sure that the three synchronizer keys in the synchromesh mechanism engage the notches in the synchronizer ring.

Note :
The direction of the third-and-fourth clutch hub and sleeve assembly should be as shown in Fig. 7–18.

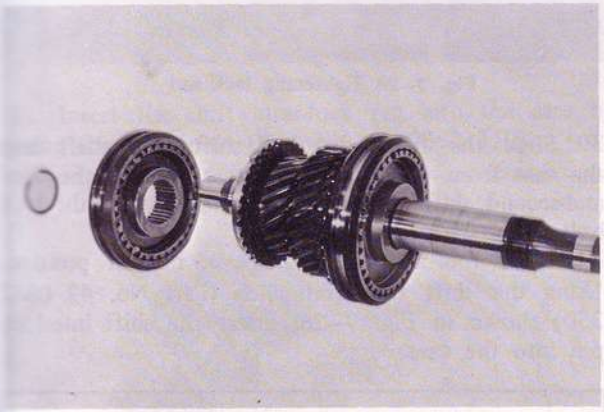

Fig. 7–17 Installing clutch hub and sleeve assembly

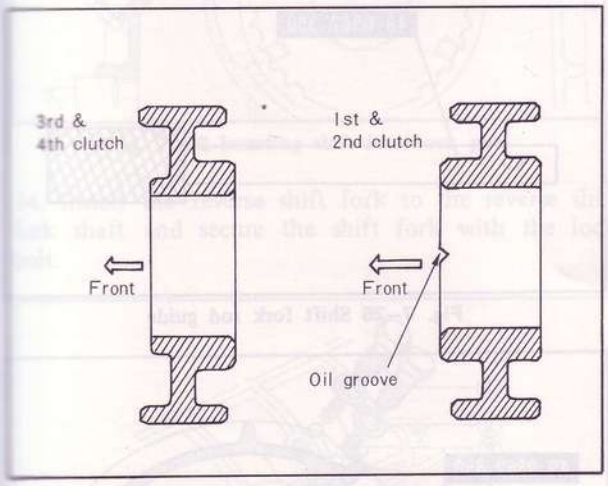

Fig. 7–18 Direction of clutch hub assembly

10. Install the snap ring to the front of the main shaft.
11. Position the main shaft and gears assembly in the case.
12. Place the needle bearing to the front end of the main shaft.
13. Place the synchronizer ring on the third-and-fourth clutch hub making sure that the three synchronizer keys in the third-and-fourth synchromesh mechanism engage the notches in the synchronizer ring.
14. Install the main shaft and gears assembly into the transmission case. Then, engage the main shaft and gears assembly with the main drive shaft.
15. Position the first-and-second shift fork and third-and-fourth shift fork in the groove of the clutch hub and sleeve assembly, as shown in Fig. 7–20.

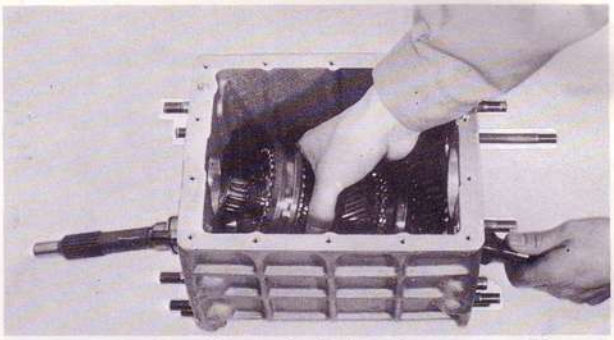

Fig. 7–19 Installing main shaft and gears assembly

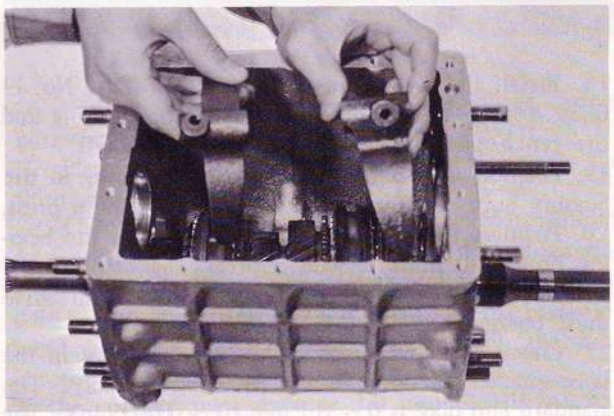

Fig. 7–20 Installing shift forks

16. Position the counter shaft gear in the case, making sure that the counter shaft gear engage each gear of the main shaft assembly.

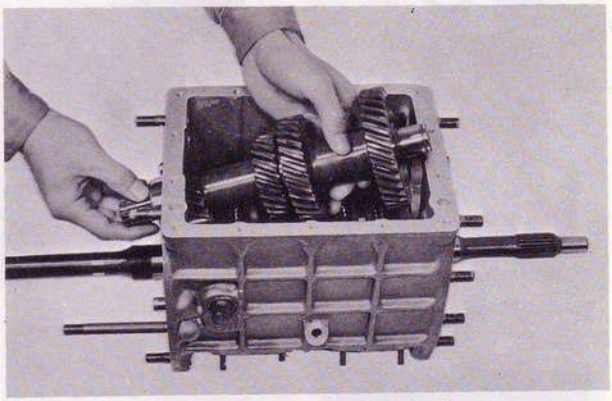

Fig. 7–21 Installing counter shaft gear

17. Check the main shaft bearing end play, proceed as follows : Measure the depth of the main shaft bearing bore in the clutch housing by using a depth gauge. Then, measure the main shaft bearing height shown in Fig. 7–22. The difference between the two measurements indicates the required thickness of the adjusting shim. The standard end play is **0 ~ 0.1 mm (0 ~ 0.0039 in).** The adjusting shims are available in the following thickness :

0.1 mm (0.0039 in)	0.3 mm (0.0118 in)

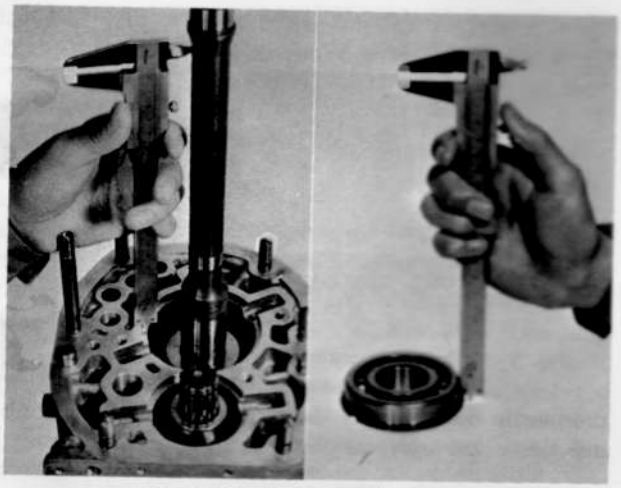

Fig. 7–22 Checking end play

18. Install the **synchronizer ring holder** (Part No. 49 0839 445) between the fourth synchronizer ring and the synchromesh gear on the main drive shaft.
19. Position the shims and main shaft bearing in the bearing bore, and press the bearing by using a press.
20. Position the main drive shaft bearing in the bearing bore, and press it with a press.
21. Install the snap ring to secure the main drive shaft bearing.
22. Check the counter shaft bearing end play in the same manner for the main shaft bearing end play. The standard end play is 0 ~ 0.1 mm (0 ~ 0.0039 in). The adjusting shims are available in the following thickness :

0.1 mm (0.0039 in)	0.3 mm (0.0118 in)

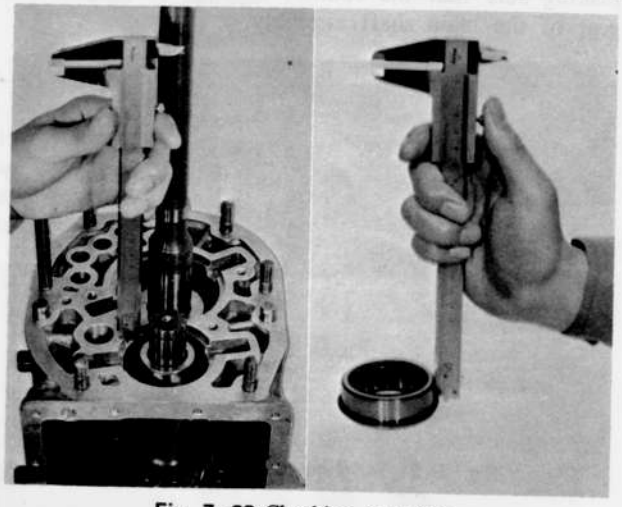

Fig. 7–23 Checking end play

23. Position the counter shaft front bearing and the rear bearing in their respective bearing bore, and press them in by using a press.
24. Install the snap ring to secure the front bearing.
25. Remove the synchronizer ring holder.
26. Install the counter reverse gear to the rear end of the counter shaft and secure it with the snap ring.
27. Install the reverse idler gear shaft to the transmission case.
28. Install the bearing cover to the transmission case and tighten the attaching bolts.
29. Install the reverse gear with the key to the main shaft. Tighten the main shaft lock nut to **20.0 ~ 28.0 m-kg (145 ~ 203.0 ft-lb)**, by using the **holder** (Part No. 49 0259 440).

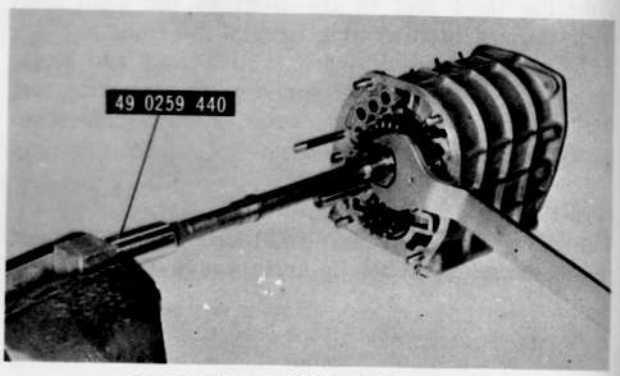

Fig. 7–24 Tightening lock nut

30. Slide the first-and-second shift fork shaft into the case from the rear of the case. Secure the first-and-second shift fork to the fork shaft with the lock bolt.
31. Place the shift fork shaft in neutral position. Using the **shift fork rod guide** (Part No. 49 0862 350) shown in Fig. 7–26, insert the shift interlock pin into the case.

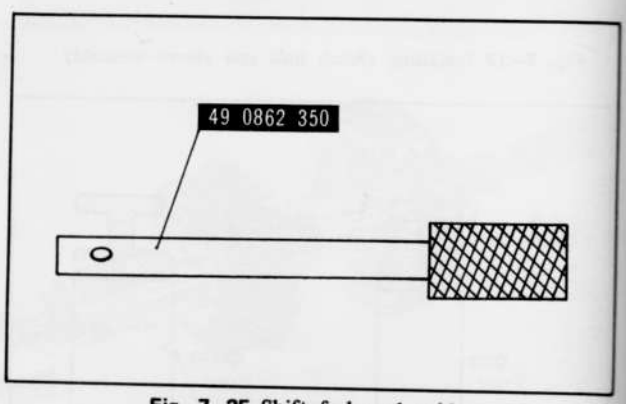

Fig. 7–25 Shift fork rod guide

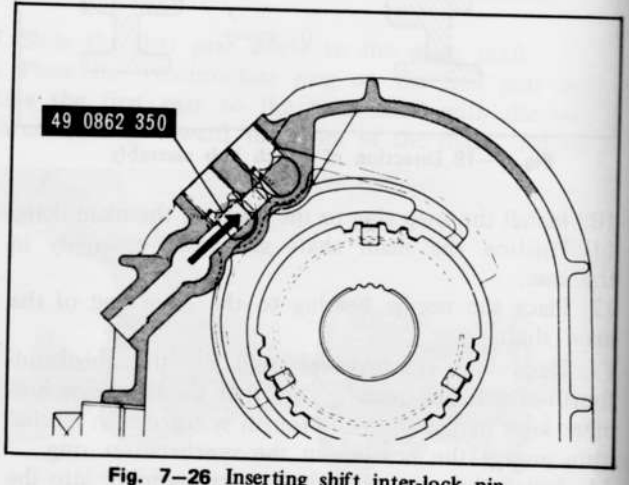

Fig. 7–26 Inserting shift inter-lock pin

32. Slide the third-and-fourth shift fork shaft into the case from the rear of the case. Secure the third-

and-fourth shift fork to the fork shaft with the lock bolt.

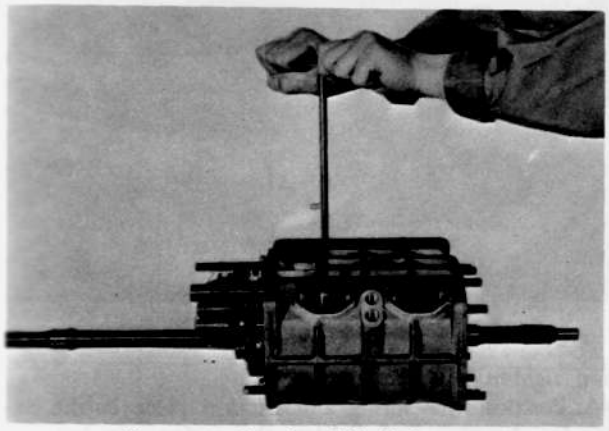

Fig. 7–27 Securing shift fork

33. Insert the shift inter-lock pin into the case by using the **rod guide** (Part No. 49 0862 350).

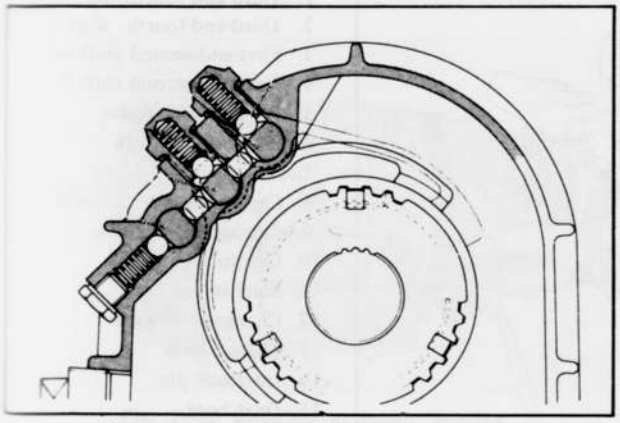

Fig. 7–28 Inserting shift inter-lock pin

34. Install the reverse shift fork to the reverse shift fork shaft and secure the shift fork with the lock bolt.

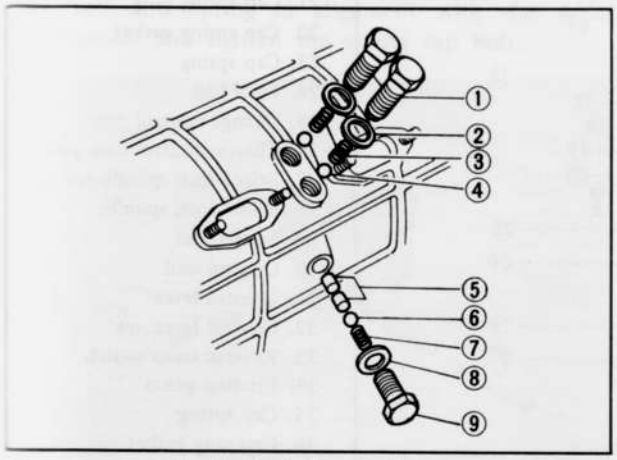

Fig. 7–29 Spring cap bolts

1. Spring cap bolt
2. Washer
3. Detent spring
4. Detent ball
5. Shift inter-lock pin
6. Detent ball
7. Detent spring
8. Washer
9. Spring cap bolt

35. Slide the reverse shift fork shaft with the reverse shift lever and reverse idler gear into the case from the rear of the case. Secure the reverse shift lever to the case with the bolt.

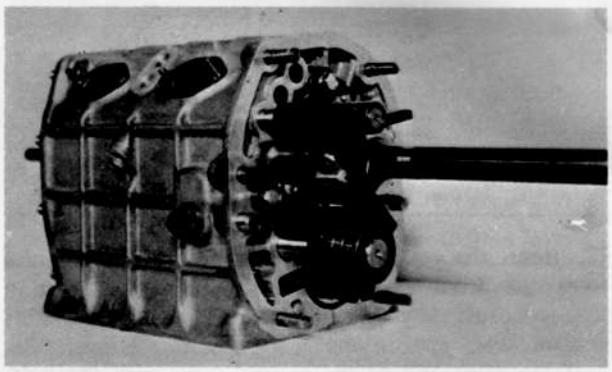

Fig. 7–30 Installing reverse idle gear

36. Position the three detent balls and three springs into the case and install the spring cap bolts.
37. Place the third-and-fourth clutch sleeve in the third gear.
38. Check the clearance between the synchronizer key and the exposed edge of the synchronizer ring with a feeler gauge. This measurement should be **0.66 ~ 2.0 mm (0.026 ~ 0.079 in).** If the measurement is greater than 2.0 mm (0.079 in), the synchronizer key could pop out of position.
If the measurement exceeds 2.0 mm (0.079 in), exchange the thrust washer (selective fit). The thrust washers are available as in the following table.

2.5 mm (0.098 in)	3.5 mm (0.138 in)
3.0 mm (0.118 in)	

If the measurement corrects, bend the tab of the lock washer.

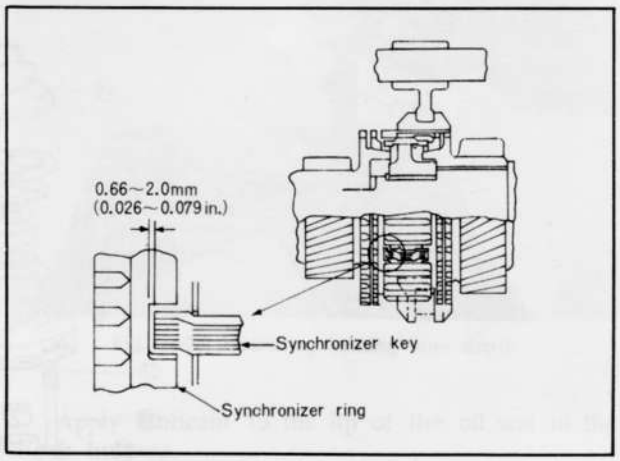

Fig. 7–31 Checking clearance

39. Install the two blind covers and gaskets to the case and tighten the attaching nuts.
40. Install the transmission case cover to the case and tighten the attaching bolts.
41. Install the lock ball, speedometer drive gear and snap ring to the main shaft from the rear of the main shaft.

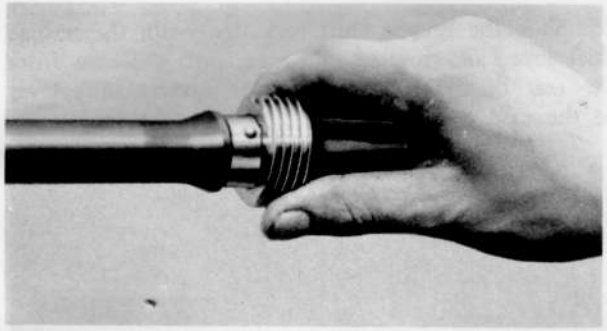

Fig. 7–32 Installing drive gear

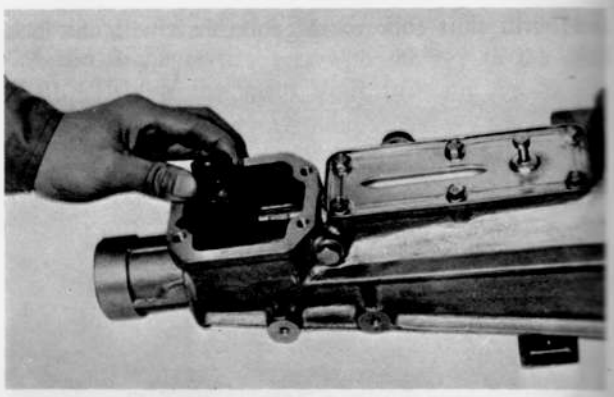

Fig. 7–33 Installing control lever end

42. Insert the gearshift control lever through the holes from the front of the extension housing. Position the woodruff key in place and slide the gearshift control lever end to the gearshift control lever. Secure the lever end to the control lever with the bolt.
43. Install the neutral switch to the extension housing. and tighten the switch.
44. Position the spring and friction piece in the extension housign and tighten the spring cap bolt to the extension housing.

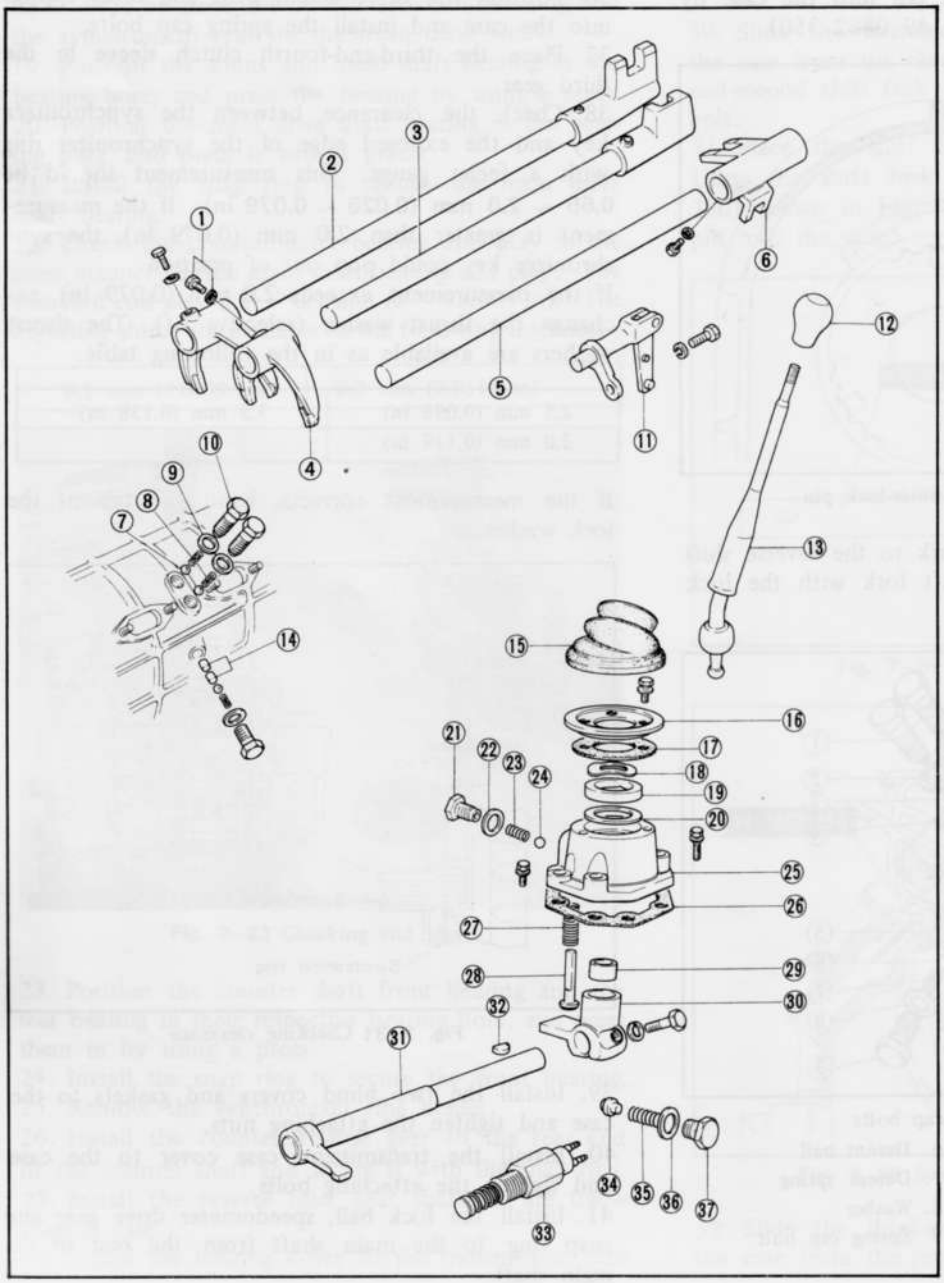

Fig. 7–34 Gear shift mechanism
1. Third-and-fourth shfit fork
2. Third-and-fourth shift rod
3. First-and-second shift rod
4. First-and-second shift fork
5. Reverse shift rod
6. Reverse shift fork
7. Steel ball
8. Cap spring
9. Cap spring gasket
10. Cap spring plug
11. Shift lever
12. Change lever knob
13. Change lever
14. Interlock pin
15. Dust boot
16. Cover plate
17. Cover plate gasket
18. Wave washer
19. Bush
20. Shim
21. Cap spring plug
22. Cap spring gasket
23. Cap spring
24. Steel ball
25. Change control case
26. Change control case gasket
27. Select lock spindle spring
28. Select lock spindle
29. Spring seat
30. Control end
31. Control lever
32. Control lever key
33. Reverse lamp switch
34. Friction piece
35. Cap spring
36. Cap plug gasket
37. Cap spring plug

45. Install the back-up lamp switch to the extension housing and tighten the switch.
46. Insert the speedometer driven gear assembly to the extension housing and secure it with the bolt and lock plate.

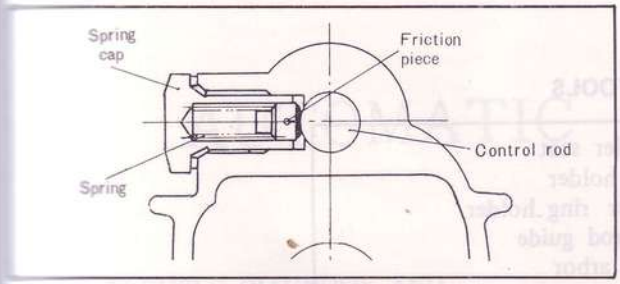

Fig. 7–35 Friction piece

47. Place the gasket on the rear of the transmission case and position the extension housing on the transmission case with the gearshift control lever end laid down to the left as far as it will go. Tighten the attaching nuts.

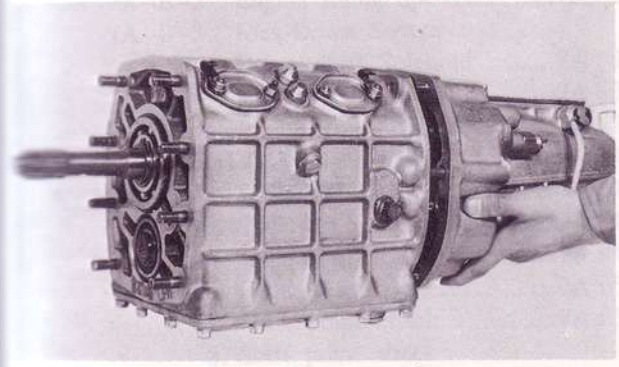

Fig. 7–36 Installing extension housing

48. Check to ensure that the gearshift control lever operates properly.
49. Insert the select lock spindle and spring from the inside of the gearshift lever retainer. Position the lock ball and spring in alignment with the select lock spindle and tighten the spring cap bolt.

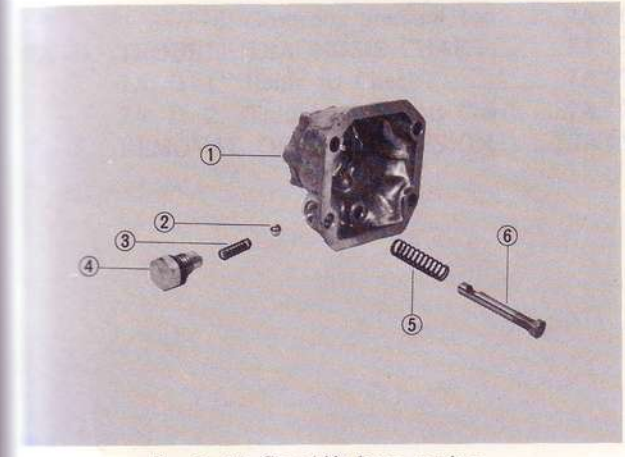

Fig. 7–37 Gearshift lever retainer

1. Retainer
2. Locking ball
3. Spring
4. Spring cap bolt
5. Spring
6. Select lock spindle

50. Position the gasket and gearshift lever retainer to the extension housing, and tighten the attaching bolts.
51. Check the bearing end play as follows:
Measure the depth of the main drive shaft bearing bore in the clutch housing using a depth gauge. Then, measure the bearing height shown in Fig. 7–38. The difference between two measurements indicates the required thickness of the adjusting shim. The standard clearance is **0 ~ 0.1 mm (0 ~ 0.0039 in)**. If necessary, select and use the properly sized shim. The shims are available in the following thickness:

0.1 mm (0.0039 in)	0.3 mm (0.0118 in)

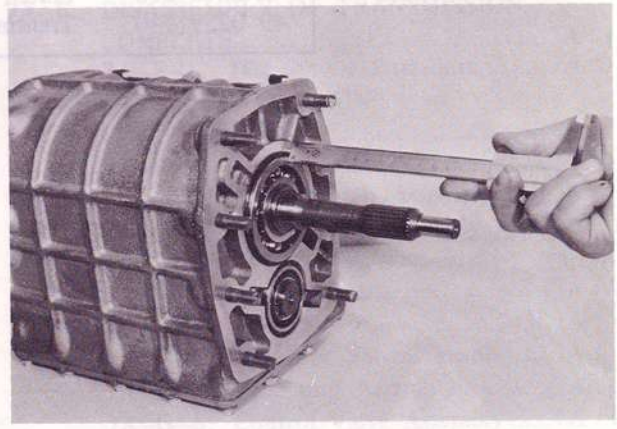

Fig. 7–38 Measuring bearing height

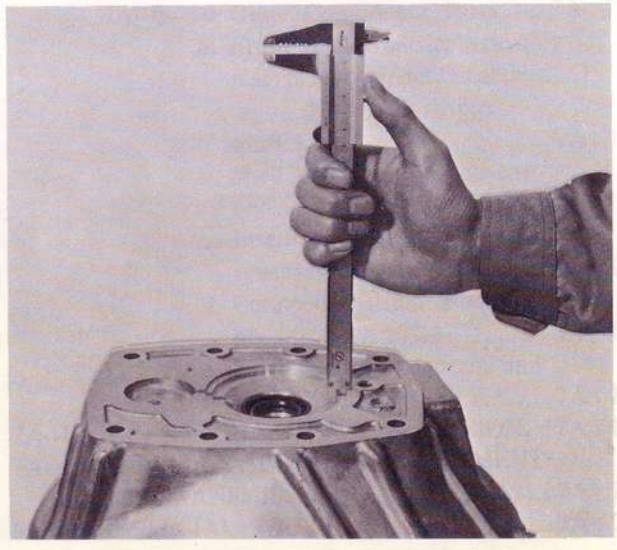

Fig. 7–39 Measuring bearing bore depth

52. Apply lubricant to the lip of the oil seal in the clutch housing.
53. Place the gasket on the fornt side of the case and install the clutch housing to the case. Tighten the attaching uts.
54. Install the release bearing, release fork and release fork boot to the clutch housing.

7–E. TRANSMISSION INSTALLATION

Follow the removal procedures in the reverse order.

Note:
(a) Apply a thin coat of grease to the aplines of the main drive shaft.
(b) Use the **clutch disc arbor** (Part No. 49 0813 310) to align the splines of the main drive shaft and clutch disc.
(c) Fill the transmission case with lubricant until the lubricant overflows from the level hole.

SPECIAL TOOLS

49 0839 425B	Bearing puller seat
49 0259 440	Main shaft holder
49 0839 445	Synchronizer ring holder
49 0862 350	Shift fork rod guide
49 0813 310	Clutch disc arbor
49 0259 440	Transmission oil plug

AUTOMATIC TRANSMISSION

7A–A. TROUBLE DIAGNOSIS AND ADJUSTMENT ..... 7A : 2
7A–B. ITEMS TO CHECK AND ADJUST ..... 7A : 2
7A–B–1. Torque Converter Oil ..... 7A : 2
a. Oil level check ..... 7A : 2
b. Oil leakage check ..... 7A : 2
c. Oil condition check ..... 7A : 2
7A–B–2. Engine Idling Speed ..... 7A : 2
7A–B–3. Kick-Down Switch and Down Shift Solenoid ..... 7A : 2
7A–B–4. Manual Linkage ..... 7A : 3
7A–B–5. Inhibitor Switch ..... 7A : 3
7A–C. DIAGNOSTIC TEST ITEMS ..... 7A : 4
7A–C–1. Stall Test ..... 7A : 4
a. Stall test procedure ..... 7A : 4
b. Judgement ..... 7A : 4
7A–C–2. Road Test ..... 7A : 5
a. Shift point check ..... 7A : 5
b. Shift point check procedure ..... 7A : 5
c. Other checks in driving ..... 7A : 5
7A–C–3. Oil Pressure Test ..... 7A : 6
a. Line pressure test ..... 7A : 6
b. Line pressure test procedures ..... 7A : 6
c. Diagnosis from measurements ..... 7A : 6
d. Governor pressure test ..... 7A : 6
7A–D. TROUBLE DIAGNOSIS CHART ..... 7A : 7
7A–D–1. Items to Check ..... 7A : 7
7A–D–2. Trouble Diagnosis Chart ..... 7A : 7
7A–E. REMOVAL OF TRANSMISSION ..... 7A : 9
7A–F. DISASSEMBLY OF TRANSMISSION COMPLETE ..... 7A : 10
7A–F–1. Disassemble Procedure ..... 7A : 10
7A–G. OVERHAUL OF MAIN COMPONENTS ..... 7A : 11
7A–G–1. Torque Converter ..... 7A : 11
7A–G–2. Front Clutch Assembly ..... 7A : 11
7A–G–3. Rear Clutch Assembly ..... 7A : 12
7A–G–4. Low and Reverse Brake Assembly ..... 7A : 13
7A–G–5. Band Servo ..... 7A : 14
7A–G–6. Governor Valve Assembly ..... 7A : 15
7A–G–7. Oil Pump Assembly ..... 7A : 16
7A–G–8. Control Valve Assembly ..... 7A : 17
7A–G–9. Bearing and Bearing Race ..... 7A : 18
7A–G–10. Other Component Parts ..... 7A : 18
a. Front planet carrier assembly rear planet carrier assembly, input shaft and output shaft ..... 7A : 18
b. Shell and sun gear assembly ..... 7A : 19
c. Internal drive flange assembly ..... 7A : 19
d. Connecting drum assembly ..... 7A : 19
e. Manual control system and parking lock system ..... 7A : 19
7A–H. REASSEMBLY OF TRANSMISSION ..... 7A : 19
7A–I. INSTALLATION AND ADJUSTMENT OF TRANSMISSION ..... 7A : 22
SERVICE SPECIAL TOOLS ..... 7A : 23

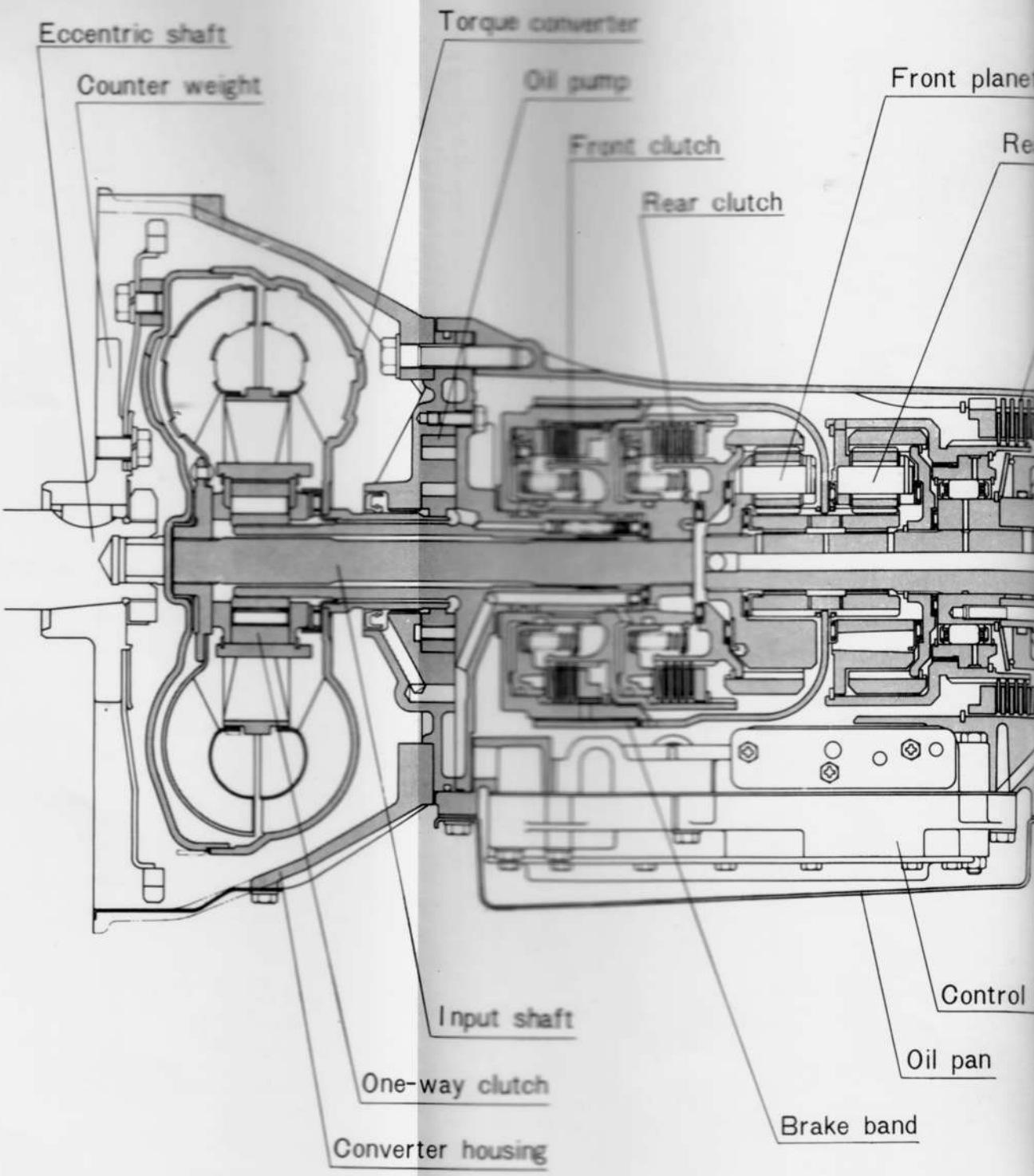
Eccentric shaft
Counter weight
Torque converter
Oil pump
Front clutch
Rear clutch
Front planet
Re
Control
Oil pan
Input shaft
One-way clutch
Converter housing
Brake band

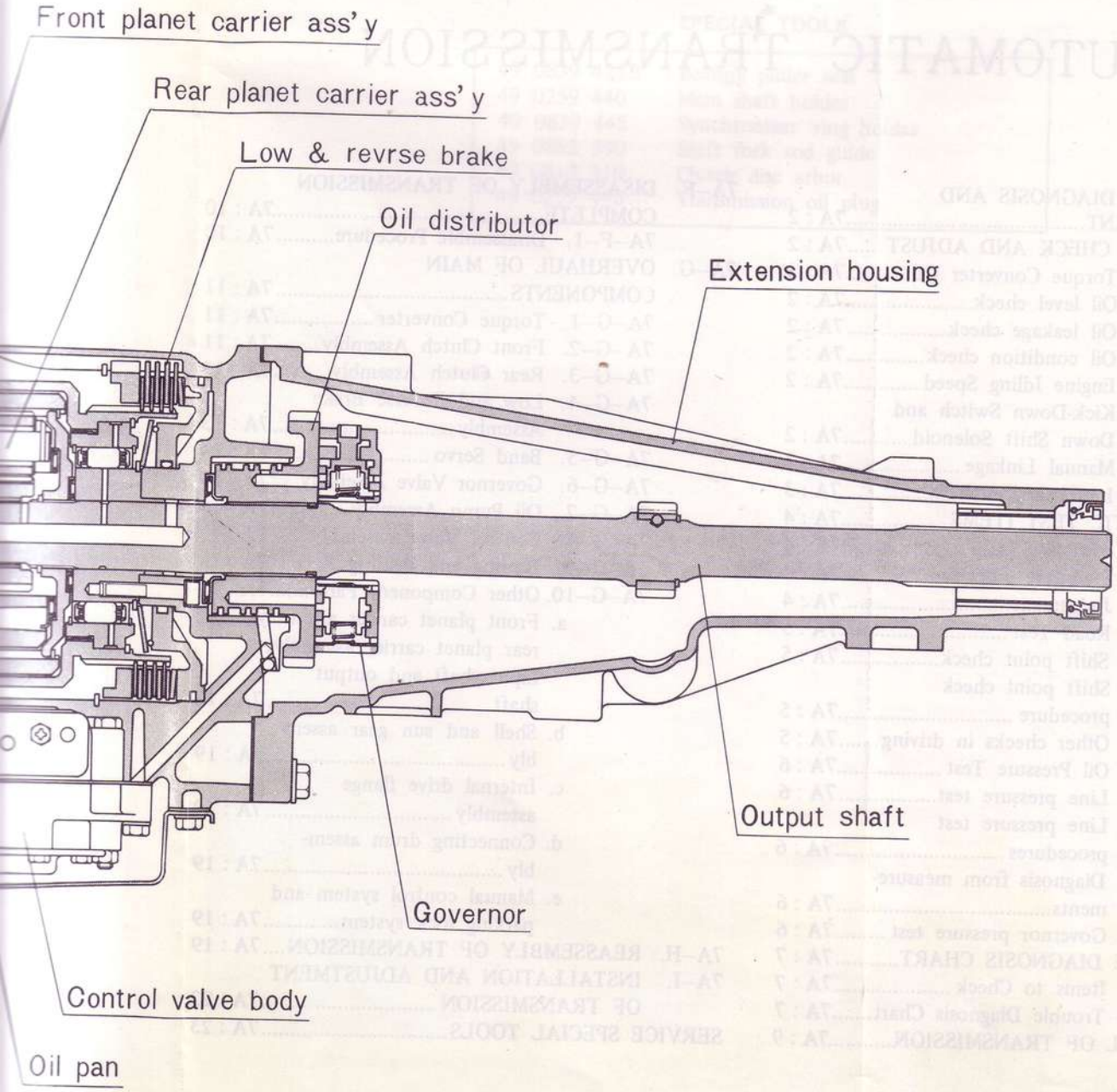
Front planet carrier ass'y
Rear planet carrier ass'y
Low & revrse brake
Oil distributor
Extension housing
Output shaft
Governor
Control valve body
Oil pan

7A–A. TROUBLE DIAGNOSIS AND ADJUSTMENT

In trouble-shooting an automatic transmission it is necessary first of all to correctly define a faulty phenomenon, and then make efficient and orderly check to determine possible causes so that a proper remedy can be effected.

To grasp a faulty phenomenon, check whether the automatic transmission functions normally in all aspects under all conditions including starting, running and stopping. Find out a corresponding trouble from among the troubles in the TROUBLE DIAGNOSIS CHART, and check "Items to Check" in the sequence as indicated.

In diagnosing according to the TROUBLE DIAGNOSIS CHART, make sure to first check and adjust the following items (described in 7A–B):

1. Oil level
2. Idling speed
3. Down-shift solenoid and kickdown switch
4. Manual linkage
5. Inhibitor switch

It is meaningless to proceed to check other items without checking the above items carefully.

In the case of the automatic transmission particularly, there are a great number of troubles which can be solved by inspecting and regulating the above items with the transmission mounted on the vehicle.

So do not remove or disassemble the transmission without checking such items first. Also there are some troubles which require further detailed diagnostic tests including stall test, road test and hydraulic pressure test before removing the transmission from the vehicle. Such tests are described in 7A–C.

If a trouble should prove not correctable by inspection, adjustments and repairs made according to TROUBLE DIAGNOSIS CHART with the transmission installed, that is, if removal and overhauling are indicated by diagnosis, only then, the transmission should be removed and overhauled in the procedure mentioned later.

7A–B. ITEMS TO CHECK AND ADJUST

7A–B–1. Torque Converter Oil

a. Oil level check

Put the vehicle on a level surface and run the engine approximately two minutes at 1,200 rpm. Then move the manual lever through all driving ranges applying brake with the engine idling condition. Place the manual lever in "P". Insert the dipstick fully and take it out quickly before splashing oil adheres to the gauge, and then observe the level on the dipstick. The oil level must be somewhere between L and F marks and never be outside the limits.

Note :

1. The recommended oil is Genuine Automatic Transmission Fluid M2C33F (Type F) or Automatic Transmission Fluid M2C33F (Type F) of any make. Do not mix with other type of automatic transmission fluid than mentioned above.
2. Periodic oil change is not necessary, but the oil level must be checked at least every 6,250 miles (10,000 km).
3. The total amount of oil is 6.2 liters (13.1 U.S. pints, 10.9 Imp. pints, 6.6 U.S. quarts) and the difference between the amounts shown by L and F marks on the dipstick is about 0.45 liter (1.0 U.S. pints, 0.8 Imp. pints, 0.5 U.S. quart).

b. Oil leakage check

When the oil level is lower than specified, add it and at the same time check carefully for possible leaks and repair any if found.

Note :

1. Torque converter oil is of a red-wine color and is distinguishable from engine oil.
2. In checking for possible leak from the transmission breather pipe, jack up one of the rear wheels and run the engine to simulate the running condition. When the oil level is over the "F" limit, the oil never fails to spurt out from the breather pipe. When water is contained in it, the oil sometimes spurts out even when the oil level is within the specified range.

c. Oil condition check

In checking the condition of oil by the oil sticking on the dipstick, note that, if the oil appears like varnish, it might cause control values to stick, and if it is black, it shows that linings of clutch or brake band have been scorched. In case such oil deterioration is found severe, it sometimes indicates that overhaul should be made without conducting tests listed in TROUBLE DIAGNOSIS CHART. If it is difficult to readily determine whether or not to make such tests, oil should be drained for confirmation.

7A–B–2. Engine Idling Speed

The engine idling speed should be properly adjusted to the specified revolution by using a tachometer for servicing rather than the one installed on the vehicle. If the engine idling speed is too low, the engine cannot revolve smoothly and when it is too high, shifts from "N" or "P" to other ranges will be harsh with increased shock or creep. Adjust the engine idling speed to specification described in Par. 4–A–1.

7A–B–3. Kick-down Switch and Downshift Solenoid

Position the ignition switch at the first stage after making sure that the accelerator pedal goes through the entire stroke properly. Depress the accelerator pedal as far as it goes. As the throttle nears the wide-open position, the contact point of the kick-down switch is closed with a light click from the solenoid.

The kick-down switch must begin to operate in between 7/8–15/16 of the entire pedal travel or full

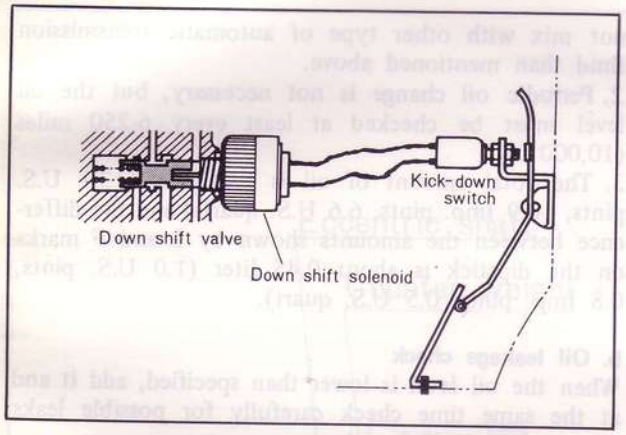

Fig. 7A–2 Kick-down switch and down shift solenoid

throttle. If not, adjust the kick-down switch. If the solenoid should not make any clicking sound it indicates some abnormality, so check with a tester must be made.

Note :
When the solenoid is removed for replacing, some one liter of fluid leaks out. So a receptacle should be made ready to catch it.

7A–B–4. Manual Linkage

The adjustment of linkage is equally important as "Inspection of oil level" for the automatic transmission. Therefore, great care should be exercised because defective adjustment will result in the breakdown of the transmission.

Pull the manual lever toward you and turn it so far as "P" to "1" range, where clicks will be felt by hand. This is the detent of manual valve in the body, and indicates the correct position of the lever. Inspect whether the pointer of selector dial corresponds to this point, and also whether the lever comes in alignment with the stepping of position plate when it is released.

When the position of the manual lever is found incorrect, disconnect the T joint on the lower rod, and place in "N" the range select lever on the transmission (where the slot of the manual shaft is positioned vertically).

Adjust the position of the manual lever by turning the T joint so as to position the manual lever in "N". Finally make sure that the lever travels to "P" and "1" ranges correctly. Check at the same time to see that the linkage has no looseness.

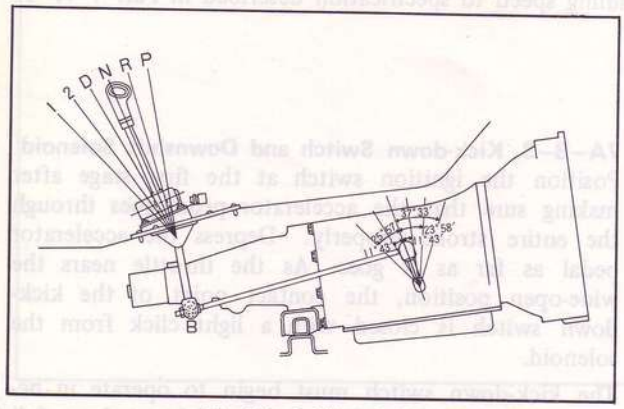

Fig. 7A–3 Manual linkage

7A–B–5. Inhibitor Switch

The inhibitor switch permits the reverse lamp to light up only when "R" range is selected and the starter motor to revolve only when the lever is in "N" or "P" position, so that when "D", "2" or "1" is selected, the reverse lamp does not light up and the starter motor cannot revolve.

If any abnormality is found in any range, check and adjust the manual linkage; if the manual linkage is found normal, then check the inhibitor switch.

Engage the manual lever in each range and check the connection of the inhibitor switch with a tester. Check also the extent through which the electrical connection is made for "R", "N" and "P". If anything wrong is revealed as a result of the conductivity check of the inhibitor switch, make adjustments in the following procedures.

1. Adjust the select lever so that the clearance between pin and guide plate will be 0 ~ 0.3 mm when the lever is in "N" position by using the adjusting nut "B" of the rod.

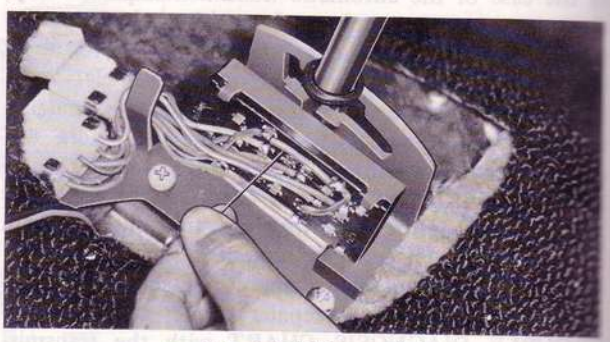

Fig. 7A–4 Inhibitor switch

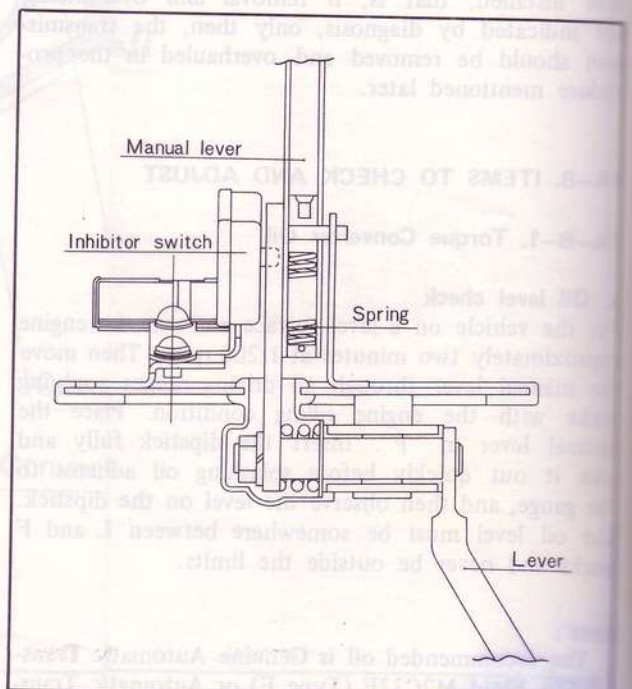

Fig. 7A–5 Inhibitor switch

2. Adjust the inhibitor switch so that the pin hole of the switch body will be aligned with the pin hole of the sliding plate when the select lever is in "N" position.
3. The starter switch should turn on only when "N" and "P" range are selected.

7A–B–6. Select Lever Knob

When the select lever knob is removed, it should be adjusted properly in the following manner.
1) Position the select lever at "N" or "D" range.
2) Loosen the lock nut and screw the select lever knob in until there is no play of the push button.
3) Screw back the select lever knob within one turn to the position where the push button is on the driver's side.
4) Push the push button and confirm that the select lever can be shifted to "P" range.
5) In case the select lever cannot be shifted to "P" range, screw in the select lever knob by one turn.
6) Repeat items (4) and (5) until the select lever can be shifted to "P" range smoothly.
7) Confirm that the select lever cannot, without pushing the push button, be shifted from "N" to "R" or from "D" to "2" range.
8) In case, in item (7), the select lever can be shifted to "R" or "2" range without pushing the push button, it means that the select lever knob is excessively screwed in and so screw back the knob.
9) Make final confirmation on whether the function of the push button is perfect when shifting the select lever to each range.
10) Finally lock the lever by the lock nut under the select lever knob. Tightening torque 1.5 ~ 2.0 m-kg (10.8 ~ 14.5 ft-lb).

7A–C. DIAGNOSTIC TEST ITEMS

Make sure that all the inspection items described in 7A–B are normal before starting the diagnostic tests–stall test, road test and oil pressure test.

7A–C–1. Stall Test

The purpose of this test is to check the transmission and engine for trouble by measuring the maximum numbers of the engine revolutions while the vehicle is held in a stalled condition and the carburetor is in full throttle operation with the manual lever in ranges "D", "2", "1" and "R" respectively and by comparing the measured results with the standard values.

The specified stall revolution is in the following table.

Stall revolution (rpm)	
In breaking in	After breaking in
2,400 ~ 2,650	2,450 ~ 2,700

a. Stall test procedure

1. Check the levels of engine coolant, engine oil and torque converter oil. Warm up the engine at about 1,200 rpm for several minutes with the manual lever in "P" in order to heat the torque converter oil to a suitable temperature of 60° ~ 100°C (140° ~ 212°F).
2. Mount the engine tachometer at a location that allows good visibility from the driver's seat and put a mark on specified revolutions on the meter.
3. Secure the front and rear wheels completely with chocks and apply the hand brake. Be sure to depress the brake pedal firmly with the left foot before depressing down the accelerator pedal.
4. Place the manual lever in "D" range.
5. Gradually step on the accelerator pedal to the wide-open position. As soon as the engine speed becomes constant, read the engine speed and release the accelerator pedal.
6. Place the manual lever in "N" or "P" and run the engine at about 1,200 rpm for more than one minute to cool down the torque converter oil and coolant.
7. Proceed to do the stall test for "2", "1'. and "R" in the same manner as for "D".

Note :
The stall test operation as specified in the item (5) should be made within five seconds. If it takes too long, the oil deteriorates and the clutches, brake and band are adversely affected. Sufficient cooling time should be given between each test for the four ranges "D", "2", "1" and "R".

b. Judgement

By comparing the measured stall speed and the specified one, troubles can be surmised as follows :
1. Standard stall revolution.
Both transmission control elements and engine performance are normal, and the one-way clutch of the torque converter is not slipping though whether or not there is sticking is unknown.

* In the road test, if the maximum speed cannot be attained and the torque converter oil is found to be at unusually high temperature, the one-way clutch of the torque converter is diagnosed to be sticking.

2. High stall revolution more than standard revolution.
If the engine revolution in stall condition is higher than the standard values, it indicates that one or more clutches in the transmission are slipping and, therefore, no further test is required. For the following abnormalities, the respective causes are presumed.

High rpm in all ranges
Line pressure is low or all clutches, brake and band are slipping.

High rpm in "D", "2" and "1" (normal in "R")
The rear clutch is slipping.

High rpm in "D" (normal in "2", "1" and "R")
The one-way clutch is slipping.

High rpm in "R" (normal in "D", "2" and "1")
The front clutch or the low and reverse brake is slipping.

* In the road test, if there is no engine braking in "1" range, the low and reverse brake is slipping, and if there is engine braking in "1" range, the front clutch is slipping.

High rpm in "2" (normal in "D", "1" and "R")
The band is slipping.

3. Low stall revolution less than standard
The one-way clutch of the torque converter is slipping, or the engine performance is poor.
* In the road test, if poor acceleration is noted at various speeds, indicates poor engine performance or incorrect engine adjustment. In case the starting acceleration is poor while acceleration at high speeds is normal, the one-way clutch of the torque converter is slipping.

7A–C–2. Road Test
An accurate knowledge of the automatic transmission is prerequisite to its exact diagnosis by a road test.
The purpose of road test is to make a comprehensive check of the transmission under varying running conditions to detect and analyze troubles and to clear up the cause of troubles.

a. Shift Point Check
Check to see that the up-shift and down-shift occur within the range specified in the shift point table below, following the checking procedures.

b. Shift point check procedure
1. Make sure that the tire air pressure is in the standard range and preheat the converter oil to appropriate temperature about 60 ~ 100°C (140 ~ 212°F) in engine idling condition.
2. Place the manual lever in "D" range and accelerate in wide open throttle (kick-down switch energized), and read the car speed at the instant of $D_1 \rightarrow D_2$ and $D_2 \rightarrow D_3$ up-shifts with speedometer which is installed on this car.
3. Drive the car with the manual lever in "D". When it is running at a constant speed in D_3, depress the accelerator pedal to the full (the kickdown switch energized) and make sure that $D_3 \rightarrow D_2$ shift occurs. Continue this check at higher speeds until a critical speed from which that down-shift does not occur any more is reached. Proceed to check the critical speed for $D_2 \rightarrow D_1$ kick-down by using the same method. Shift-down can be noted by a shift shock or change in engine sound.
4. When the car is running in D_3 at a speed about 60 km/h (45 mile/h), release the accelerator pedal completely and read the car speed just when $D_3 \rightarrow D_1$ down shift occurs at the fully closes throttle condition.
5. When the car is running in D_3 at a speed more than 60 km/h (45 mile/h), place the manual lever from "D" into "1", and read the car speed just when $1_2 \rightarrow 1_1$ downshift occurs.

Note :
Care must be taken not to shift from "D" to "1" (from "2" to "1") in exceeding the speed in "2" range ("1" range) shown below to avoid the engine overrun.

Engine Max. speed (rpm)	"1" Range	"2" Range
	Mile/h	Mile/h
6,500	40	70

6. Connect a vacuum gauge into the socket in the intake manifold and set it so that it is visible while driving. Place the manual lever in "D" and accelerate with accelerator pressure controlled so that the vacuum gauge will show 200 mm-Hg, and read car speed at the instant of $D_1 \rightarrow D_2$ and $D_2 \rightarrow D_3$ upshifts.

Note :
1. In reading car speeds at shifting, acceleration and deceleration around shift points must be made gently except for (2) above.
2. Checks of (2), (3) and (4) above should indicate general condition of shift point except in very rare instances. Item (6) should be carried out only when the condition in partial throttle must be known.

Car Speed at Gear Shift

Throttle Condition	Gear Shift	Model and Shift Speeds Mile/h
Kick-down (0 ~ 100 mm-Hg) (0 ~ 3.94 in-Hg)	$D_1 \rightarrow D_2$	30 ~ 44
	$D_2 \rightarrow D_3$	57 ~ 77
	$D_3 \rightarrow D_2$	50 ~ 64
	$D_2 \rightarrow D_1$	20 ~ 30
Half throttle (190 ~ 210 mm-Hg) (7.48 ~ 8.27 in-Hg)	$D_1 \rightarrow D_2$	8 ~ 18
	$D_2 \rightarrow D_3$	18 ~ 39
Fully closed throttle	$D_3 \rightarrow D_1$	6 ~ 12
Manual 1	$1_2 \rightarrow 1_1$	23 ~ 32

Note :
The shift speeds in the above table include the permissible allowance of a speedometer on the car. Therefore check the shift speed with the speedometer on the car.

c. Other checks in driving
1. Check each range for faulty performance or shifting. Check to see, for instance, that :
(1) Firm locking is effected when "P" is selected.
(2) Reversing is effected when "R" is selected.
(3) Completely neutral condition is attained by selecting "N".
(4) $D_1 \leftrightarrow D_2 \leftrightarrow D_3$ shifts take place in "D" range.
(5) Kick-down takes place.
(6) When "1" is selected from "D", there occur $D_3 \rightarrow 1_2 \rightarrow 1_1$ or $D_3 \rightarrow 1_1$ shifts with engine braking effected in 1_2 and 1_1.
(7) The transmission does not shift up in "I" range.
(8) In "2" range, the transmission is fixed to 2nd speed.
2. Check to see that shifting is smooth without conspicuous shock and there is no marked creep. (Slight creep in each range is normal.)
3. Check to see that shifts are effected promptly without drag.
4. Check for abnormal gear noise, clutch, band squeal, poor acceleration or oil leak.

7A–C–3. Oil Pressure Test

When there is slippage in the gear train or when shifts do not feel proper, line pressure and governor pressure must be checked.
The following chart shows standard line pressures (before cut back).

Manual Range	Line Pressure kg/cm² (lb/in²)	
	Engine Idling	Stall
"R"	4.0 ~ 7.0 (57 ~ 100)	15.5 ~ 19.0 (220 ~ 270)
"D"	3.0 ~ 4.0 (43 ~ 57)	9.5 ~ 11.0 (135 ~ 156)
"2"	10.0 ~ 12.0 (142 ~ 171)	10.0 ~ 12.0 (142 ~ 171)
"1"	3.0 ~ 4.0 (43 ~ 57)	9.5 ~ 11.0 (135 ~ 156)

a. Line pressure test

Place the transmission in "D", "2", "1" and "R", and check respective line pressure at engine idling and stall conditions. Compare the results with specified pressures to trace the cause of trouble.

b. Line pressure test procedures

1. Warm up the engine to bring the converter oil to operating temperature 60°~ 100°C (140 ~ 212°F).
2. Line pressure for "R" range is taken out at an inspection hole at the right front of the transmission case, and for "D", "2" and "1" ranges the inspection hole is at the right rear. Connect a pressure gauge to the inspection hole and put it where it is visible from the driver's seat.
3. Firmly check the front and rear wheels and apply the hand brake as in the stall test.
4. With the manual lever put in the range to be checked, run the engine at engine idling condition and read the pressure gauge.
5. With the brake pedal depressed fully, press the accelerator pedal gradually to the wide open position. While checking whether the pressure rises smoothly, read the pressure gauge at the stall condition. The test time from starting accelerator depression to its release must not exceed 5 seconds.
6. Measure line pressure for each of other ranges in the same manner. Be sure to interpose more than one minute cooling time at 1,200 rpm with the manual lever placed in "P" or "N".
7. After aboves, check whether the cut-back function to release the shock at gear shifting is operative properly. The cut-back function can be judged normal if the line pressure drops suddenly when the car is accelerated gradually and reaches to the certain running speed.

c. Diagnosis from measurements

1. When line pressure at idling is low in all of "R", "D", "2" and "1", possible causes include a fault in the pressure supply system, e.g. increased side clearance in the oil pump, reduced pump output because of bolts left untightened, oil leak from pump, valve body or transmission case, and sticking of regulator valve or vacuum throttle valve.
2. In case line pressure at idling is low in one range only, there probably are pressure leaks in some devices or oil passages for the relevant range.
3. In case line pressure at idling is high in all ranges, possible cause is throttle pressure rise due to leak from vacuum tube or vacuum diaphragm, or regulator valve sticking.
4. When pressure does not rise at stall condition, the vacuum rod possibly may not be installed.
5. When pressure rise is not smooth or pressure at stall condition does not come within the specified range, possible cause is sticking of vacuum throttle valve, pressure regulator valve or pressure regulator plug.

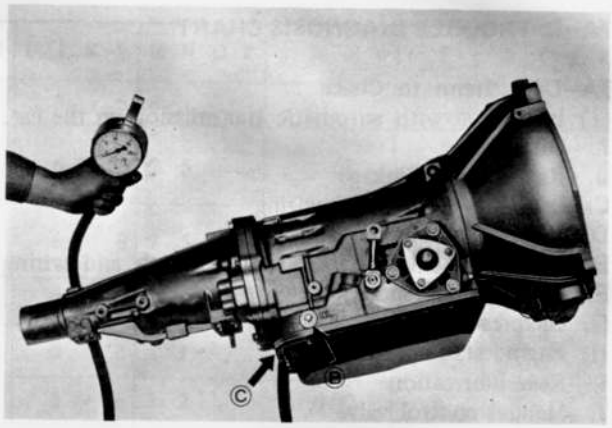

Fig. 7A–6 Oil pressure test
A. For line pressure in "R" range
B. For line pressure in forward ranges
C. For governor pressure

d. Governor pressure test

Governor pressure has only to be measured when shift point is different from the specified.
Connect a pressure gauge in the inspection hole on the left rear of transmission case, and put it where it is visible during driving. Read governor pressure when the car is going at required speeds for each model. If the result is out of the specified range shown in the following table, disassemble and check the governor valve.

Governor Pressure (1)

Driving speed	Output shaft speed	Standard governor pressure	
	rpm	kg/cm²	lb/in²
20 mile/h	1,100 ~ 1,200	0.9 ~ 1.4	13 ~ 20
35 mile/h	1,940 ~ 2,070	1.6 ~ 2.3	23 ~ 33
55 mile/h	3,060 ~ 3,210	3.2 ~ 4.2	46 ~ 60

Governor Pressure (2)

Break point	at 1,000 rpm	at 2,000 rpm	at 3,000 rpm
400~600 rpm	0.9~1.3 kg/cm² (13~18 lb/in²)	1.6~2.2 kg/cm² (23~28 lb/in²)	3.0~3.8 kg/cm² (43~54 lb/in²)

7A–D. TROUBLE DIAGNOSIS CHART

7A–D–1. Items to Check

(1) Inspection with automatic transmission on the car.

A. Oil level
B. Range select linkage
C. Inhibitor switch and wiring
D. Vacuum diaphragm and piping
E. Downshift solenoid, kick-down switch and wiring
F. Engine idling speed
G. Oil pressure
H. Engine stall speed
I. Rear lubrication
J. Manual control valve
K. Governor valve
L. Band servo
M. Transmission air check
N. Oil drain check
O. Ignition switch and starter motor
P. Engine adjustment and brake inspection

(2) Inspection after inspecting automatic transmission on the car.

a. Rear clutch
b. Front clutch
c. Band brake
d. Low & reverse brake
e. Oil pump
f. Leak from hydraulic passages
g. One-way clutch in torque converter
h. One-way clutch in power train
i. Front clutch check ball
j. Parking linkage
k. Planetary gear

7A–D–2. Trouble Diagnosis Chart

The numerals show the sequence of inspection for detecting trouble.

Trouble	A	B	C	D	E	F	G	H	I	J	K	L	M	N	O	P	a	b	c	d	e	f	g	h	i	j	k
Engine won't start in "N" and "P" ranges		2	3												1												
Engine starts in other ranges than "N" and "P" ranges		1	2																								
Excessive shock on "N" →"D" range shift				2		1	3			4							⑤										
Car won't move in "D" range (but moves in "2", "1" and "R" ranges)		1					2			3														④			
No drive, excessive slip or very poor acceleration in "D", "2" or "1" range (Driver in "R" range)	1	2					4			5			6	3		7	⑧	⑩				⑨					
No drive, excessive slip or very poor acceleration in "R" range (but Drives in "D", "2" and "1" ranges)	1	2					3			5			6	4			⑨	⑧		⑦		⑩			⑪		
Car won't move in any range	1	2					3			5			6	4							⑦	⑧				⑨	
Tendency to slip when starting	1	2		6			3			5			7	4							⑧	⑨					
Car moves in "N" range		1								3				2			④										
Maximum speed too low and poor acceleration	1	2					4	5		7		6		3		8	⑪	⑫	⑨	⑩	⑬						
Car braked when "R" range is selected												3	2	1			④		⑤							⑥	
Excessive creep						1																					
No creep at all	1	2				3				5				4			⑧	⑨			⑥	⑦					
No $D_1 \rightarrow D_2$ change		1		2	3					5	6	8	7	4				⑨				⑩					
No $D_2 \rightarrow D_3$ change		1		2	3					5	6	8	7	4				⑨				⑩			⑪		
$D_1 \rightarrow D_2$ and $D_2 \rightarrow D_3$ shift-points too high				1	2		3			5	6			4								⑦					
$D_1 \rightarrow D_3$ change without through D_2										2	4		3	1				⑤				⑥					
Excessive shock on $D_1 \rightarrow D_2$ change				1				2		4		5		3					⑥								

Trouble	A	B	C	D	E	F	G	H	I	J	K	L	M	N	O	P	a	b	c	d	e	f	g	h	i	j	k
Excessive shock on $D_2 \rightarrow D_3$ change				1			2			3		5	4					⑥									
Practically no shift shock or excessive slip on $D_1 \rightarrow D_2$ change	1	2		3			4			6		8	7	5					⑨			⑩					
Practically no shock; or excessive slip; or engine runaway on $D_2 \rightarrow D_3$ change	1	2		3			4			6		8	7	5				⑨				⑩			⑪		
Car braked on $D_1 \rightarrow D_2$ change										2				1				④		③				⑤			
Car braked on $D_2 \rightarrow D_3$ change										3		2		1					④								
No $D_3 \rightarrow D_2$ change				1						3	4	6	5	2				⑦	⑧			⑨					
No $D_2 \rightarrow D_1$ or $D_3 \rightarrow D_1$ change				1						3	4	6	5	2					⑦					⑧			
Shift shock felt when accelerator is released and deceleration occurs		1		2	3		4			5	6											⑦					
$D_3 \rightarrow D_2$ and $D_2 \rightarrow D_1$ shift-points too high		1		2	3		4			5	6											⑦					
No kick-down on accelerator depression in D_3 (within kick-down speed limits)				2	1					4	5			3					⑥			⑦					
Abnormal rise of engine speed on accelerator depression in D_3 (above kick-down upper limit)		1		2			3			5	6		7	4				⑧				⑨					
Engine runaway or slip on $D_3 \rightarrow D_2$ change				1			2			4		6	5	3				⑦	⑧			⑨			⑩		
No $D_3 \rightarrow 2$ change on "D" → "2" range shift		1					2			4		5		3					⑥			⑦					
$2 \rightarrow 1$, $2 \rightarrow D$, or $2 \rightarrow D_3$ change in "2" range		1					2			3																	
No shift shock or engine run-away on "1" → "2" range shift	1	2		3		4		1		6			7	5					⑨		⑩						
No $D_3 \rightarrow 1_1$ change on "D" → "1" range shift		1					2			4	5	7	6	3				⑧	⑨			⑩					
No engine braking in "1" range		1					2			4			5	3						⑥		⑦					
$1 \rightarrow 2$ or D_2 change, or 2 or $D_2 \rightarrow D_3$ change in "1" range		1								2												③					
No $1_2 \rightarrow 1_1$ change on "D" → "1" range shift	1	2								4	5	6	7	3						⑧		⑨					
Excessive shift shock on $1_2 \rightarrow 1_1$ change in "1" range				1				2		4				3						⑤							
Car moves in "P" range, and parking gear not removed when "P" range is disengaged.		1																								②	
Transmission overheats	1						3	4	2	6		8	7	5				⑨	⑩	⑪	⑫	⑬	⑭				⑮
Oil spurting up or white exhaust during running	1			3			5	6	2	7			8	4				⑨	⑩	⑪	⑫	⑬	⑭				⑮
Offensive smell from oil charging pipe	1										2		③	④	⑤	⑥	⑦	⑧	⑨								⑩
Transmission noisy in "P" and "N" ranges	1						2														③						
Transmission noisy in "D", "2", "1" and "R" ranges	1						2						③								④			⑤			⑥

7A–E. REMOVAL OF TRANSMISSION

When dismounting the automatic transmission from a vehicle, pay attention to the following point.
Before dismounting the transmission, rigidly inspect it by aid of the "Trouble Diagnosis Chart", and dismount it only when considered to be necessary. The transmission should be removed in the following sequence :

1. Remove the battery earth.
2. Remove the power brake vacuum pipe clip from the converter housing.
3. Remove the service hole cover. To lock the drive plate, apply the wrench to the drive pulley lock bolt. Loosen and remove four bolts that attach the torque converter to the drive plate by using the **special wrench** (49 0877 435). At the same time, make aligning mark across torque converter and drive plate.
4. Jack up the vehicle and support it with safety stands.
5. Remove the screws attaching the heat insulator to the exhaust pipe and remove the heat insulator.
6. Remove the bolt and nut attaching the exhaust front pipe to the exhaust pipe bracket. Disconnect the exhaust front pipe flange from the exhaust manifold by removing nuts. Remove the bolts and nuts attaching the exhaust front pipe flange to the main silencer, and remove the exhaust front pipe.
7. Remove the bolts attaching the heat insulator to the underbody and remove the heat insulator.
8. Remove the four propeller shaft attaching bolts and remove the center bearing attaching bolts. Then pull it out from the extension housing. Apply a plug to prevent oil leak.



Fig. 7A–7 Removing propellar shaft

9. Disconnect the speedometer cable from the extension housing.
10. Disconnect the control rod by removing snap ring.
11. Disconnect the wirings from the starting motor. Loosen the upper and lower bolt attaching the starting motor to the converter housing and remove the starting motor.
12. Remove the undercover (or service cover) on the converter housing.
13. With the transmission supported with the transmission holder, remove the tightening nuts of the

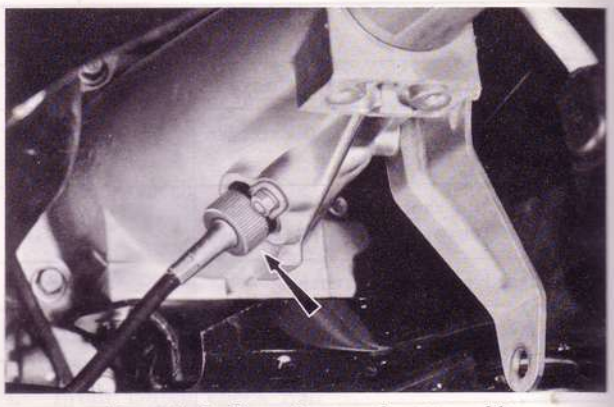

Fig. 7A–8 Removing speedometer cable

transmission member and take out the member. Then lower the transmission holder, widen the clearance between the transmission and the floor.
14. Remove the vacuum union bolt from the inlet manifold. Remove the vacuum pipe clips from the converter housing, transmission case and extension housing. Disconnect the vacuum hose from the vacuum diaphragm and remove the vacuum pipe.
15. Disconnect the wire connections of down-shift solenoid and remove the wires from the clip.
16. Disconnect the feed pipe and return pipe for cooling on the left side of the transmission. Remove the feed pipe and return pipe clips from the converter housing and transmission case.

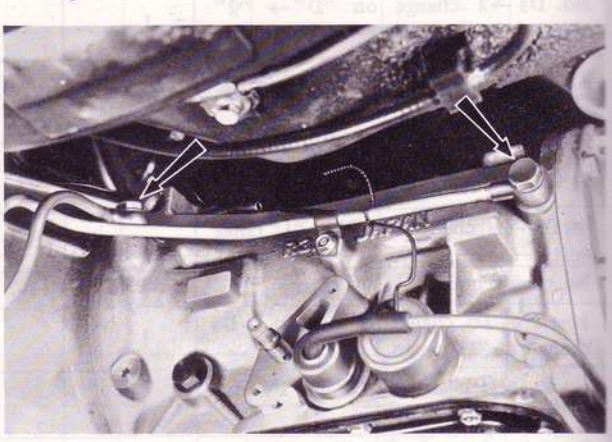

Fig. 7A–9 Removing pipes

17. Loosen and remove the bolts that connect the engine and the torque converter housing to disconnect the transmission and engine.



Fig. 7A–10 Bolts on engine & converter housing

18. Return the transmission to the level position. While slowly plying a screw driver or something between the converter and the drive plate, pull out the transmission rearward with the converter attached to it. Then lower the holder and dismount the transmission.

7A–F. DISASSEMBLY OF TRANSMISSION COMPLETE

Attention must be paid to the following matter in disassembling the transmission :

(1) Clean the outside of the transmission thoroughly before overhauling. In case of that, see that the steam does not enter the transmission and the gasoline is not used in using rubber parts.

(2) Disassembly should be made in a clean workshop, preferably in a dust-proof workshop.

7A–F–1. Disassembly Procedure

1. Remove the torque converter from the housing taking care not to have the converter oil spill. Then tilt the transmission housing and drain the oil in the oil pan through the end of the extension housing into a vessel.
2. Loosen the bolt for the oil gauge tube and remove it together with the "O" ring.
3. Remove the connecting rod attached to the range select lever.
4. Loosen and remove the bolts that attach the converter housing and the transmission case, and remove the converter housing.

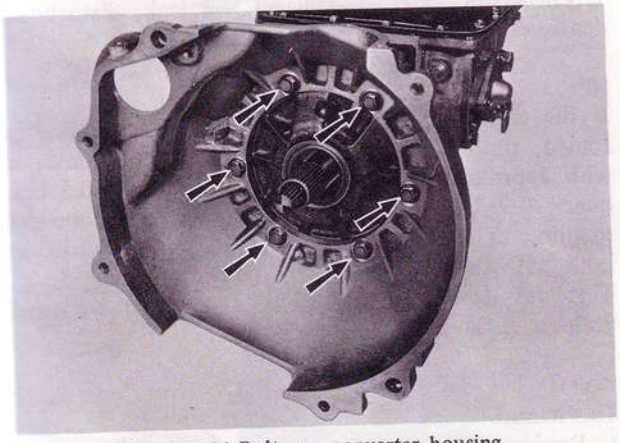

Fig. 7A–11 Bolts on converter housing

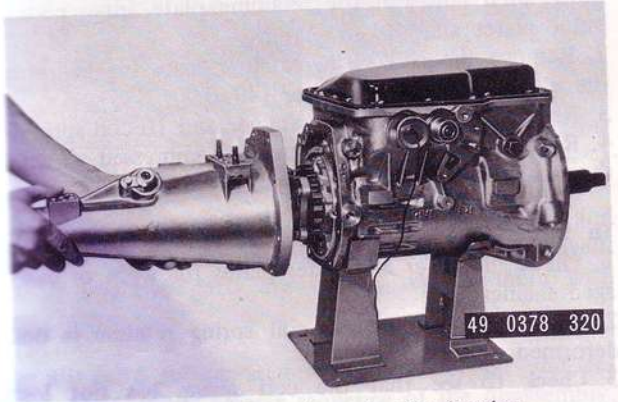

Fig. 7A–12 Removing extension housing

5. Loosen and remove the bolts that attach the extension housing and the transmission case, and pull out the extension housing rearward taking care so that the washer does not fall down. Then remove the parking pawl, spring and washer. Remove the gasket from the transmission case.
6. Loosen and remove out the oil pan bolts and take out the oil pan and the gasket.
7. Turn the downshift solenoid and the vacuum diaphragm unit by hand and remove them together with "O" rings. Take care not to forget taking out the vacuum diaphragm rod.

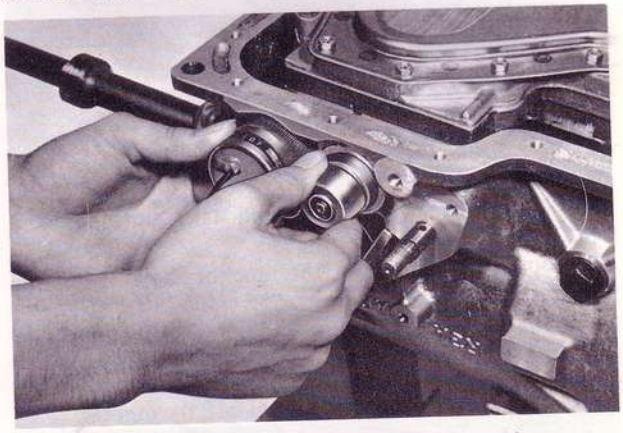

Fig. 7A–13 Removing downshift solenoid

8. Remove the control valve assembly by loosening out nine attaching bolts.

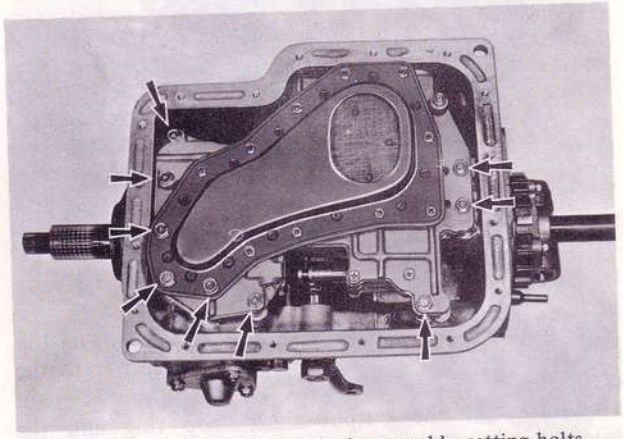

Fig. 7A–14 Control valve body assembly setting bolts

9. Remove the nut attaching the range select lever to the manual shaft and remove the select lever.
10. Disconnect the parking rod from the parking lever by removing snap ring.
Loosen the nut attaching the manual plate to the manual shaft and remove the manual shaft from the transmission case tapping the manual shaft with the plastic hammer. Then, take out the manual plate, washer, nut and parking rod.
11. Pull out the input shaft.
12. Remove the bolts that attach the band servo cover to the servo retainer and remove the servo cover.
13. Loosen lock nut on piston stem. Then tighten piston stem in order to prevent to fall front clutch drum down when oil pump is withdrawn.

14. Pull out the oil pump with the **oil pump remover** (49 0378 390) and remove the gasket.

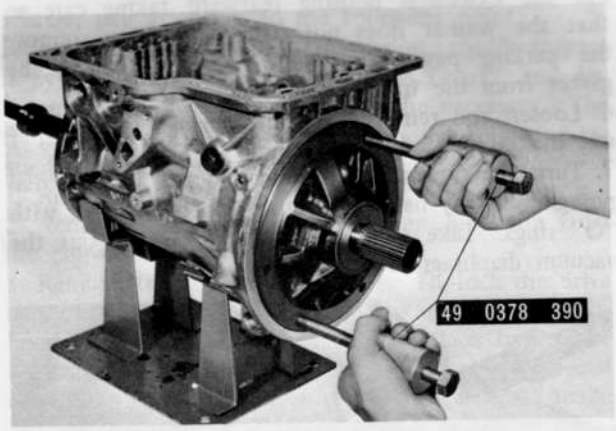

Fig. 7A–15 Removing oil pump

15. Loosen the piston stem and take out the band strut.
16. Loosen and remove the anchor bolt from the transmission case.
17. Remove the following as one set : band, front clutch assembly, rear clutch assembly, front planet carrier assembly with sun gear.

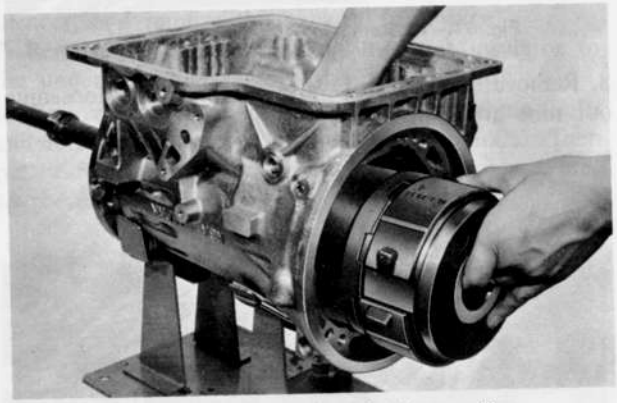

Fig. 7A–16 Removing clutch assembly

18. Take out the rear planet carrier by removing the snap ring which fastens the rear planet carrier to the connecting drum.
19. Take out the output shaft snap ring and the internal drive flange.

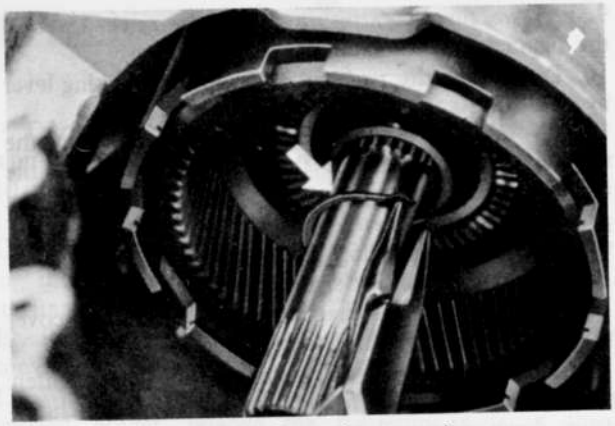

Fig. 7A–17 Removing snap ring

20. Turn left the connecting drum as far as it goes and make sure it is firmly locked. Then turn it right and remove together with the one-way clutch.
21. Remove the snap ring that secures the speedometer drive gear to the output shaft. Slide the drive gear off the output shaft, and remove the lock ball.
22. Pull out the output shaft rearward. Then remove the oil distributor together with governor and take out the needle bearing remaining on the transmission case side.

The above operations complete the disassembly of the principal transmission parts excepting the low-reverse brake which still remain on the transmission case. The low-reverse brake can of course be removed from the transmission case but the disassembling operations of it are described in the next section dealing with overhaul of principal components.

7A–G. OVERHAUL OF MAIN COMPONENTS

The principal components each include a large number of similar parts finished to high precision. So all related parts of each component should be placed apart from others to avoid confusion. Overhaul should be made in the following sequence. (Bearings and bearing races must be checked with respect to parts to which they are mounted.)

7A–G–1. Torque Converter

1. The torque converter is welded all along the circumference and so cannot be disassembled.

To Inspect

1. Check for external damages, oil leak, distortions, dents, etc., and replace if necessary.

Note :

If the converter oil is found markedly degenerated or fouled, thoroughly rinse the inside of the converter with approximately 0.5 liter (1.0 U.S. pints, 0.5 U.S. quart, 0.9 Imp. pint) of cleaning solvent (none-lead gasoline or kerosene) and make it drain for half an hour with the rear side of the converter facing down. Then fill it with converter oil and stir it well and drain it again in the same procedure.

7A–G–2. Front Clutch Assembly

To Remove

1. Remove the snap ring with a screw driver or something, then take out the retaining plate, inner plates, outer plates and dished plate.
2. Remove the coil spring retainer snap ring by using the **clutch spring compressor** (49 0378 375).
3. Remove the coil spring retainer and 10 coil springs.
4. Remove the piston by blowing compressed air into the oil hole as shown in Fig. 7A–20.

To Inspect

1. Check the inner and outer plates for worn or damaged facings.
2. Check to see that the coil spring retainer is not deformed.
3. Check to see that the coil spring has not lost tension.

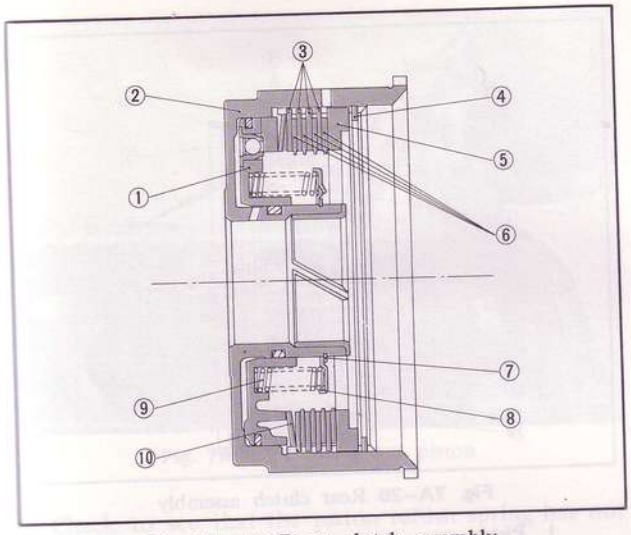

Fig. 7A–18 Front clutch assembly

1. Piston
2. Front clutch drum
3. Outer plate
4. Snap ring
5. Retaining plate
6. Inner plate
7. Snap ring
8. Spring retainer
9. Coil spring
10. Dished plate

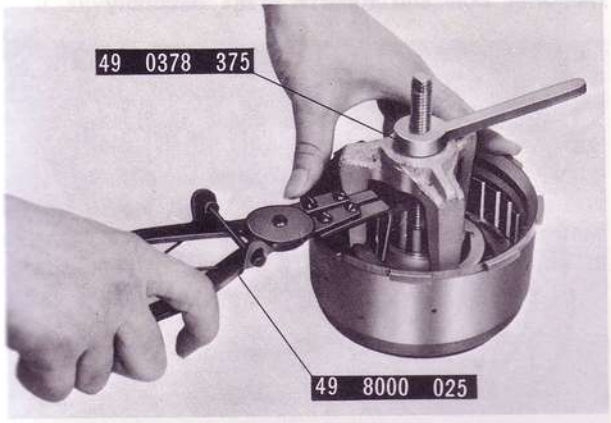

Fig. 7A–19 Removing snap ring

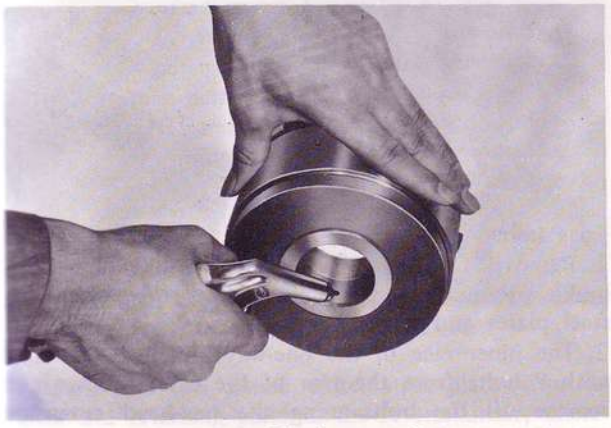

Fig. 7A–20 Blowing out piston

4. Check to see that the seal around the piston and the "O" ring inside the clutch drum are not damaged.
5. If defective parts are found, replace them with new ones.

To Reassemble

1. All parts are smeared with converter oil and re-assembled in the reverse sequence of the disassembly.
2. Measure the clearance between the snap ring and retaining plate with a thickness gauge after reassembly and selectively use a retaining plate to provide the standard clearance **1.6 ~ 1.8 mm (0.063 ~ 0.071 in).**



Fig. 7A–21 Measuring clearance

Note :

To adjust above clearance, the retaining plate comes in the following six thicknesses.

7.2 mm (0.283 in), 7.4 mm (0.291 in)
7.6 mm (0.299 in), 7.8 mm (0.307 in)
8.0 mm (0.315 in), 8.2 mm (0.323 in)

3. Install the front clutch assembly to the oil pump. Blow compressed air into the oil hole as shown in Fig. 7A–22 and check the clutch operation.

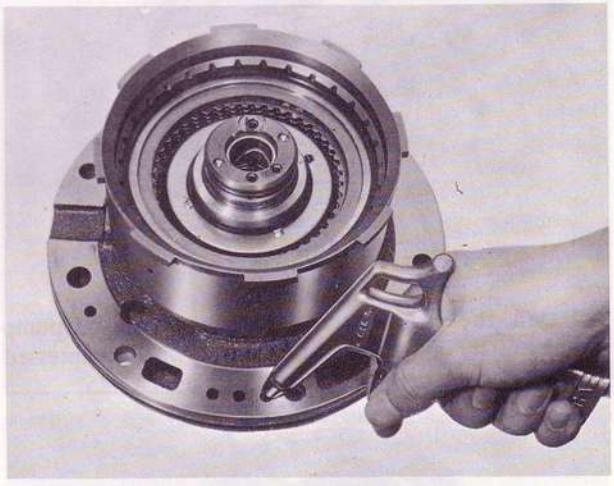

Fig. 7A–22 Testing front clutch

7A–G–3. Rear Clutch Assembly

To Remove

1. Remove the snap ring, retaining plate, outer plates, inner plates and dished plate in the same procedure as for the front clutch assembly.
2. Remove the coil spring retainer snap ring by the use of the **clutch spring compressor** (49 0378 375). Then remove the coil spring retainer and 10 coil springs.
3. Remove the piston by blowing compressed air into the oil hole.

To Inspect

1. Make the same inspection as for the front clutch

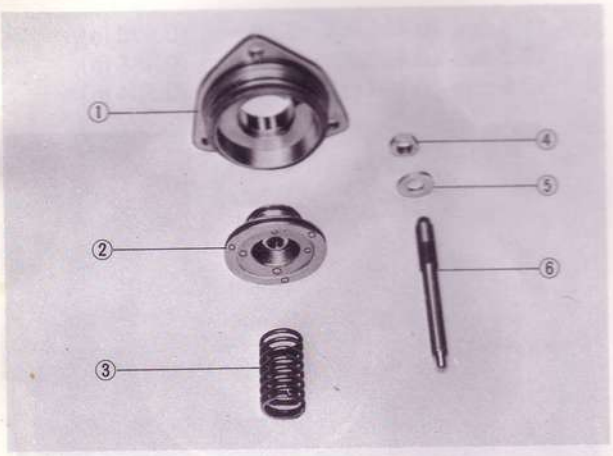

Fig. 7A–32 Band servo

1. Retainer
2. Piston
3. Return spring
4. Adjust nut
5. Washer
6. Piston stem

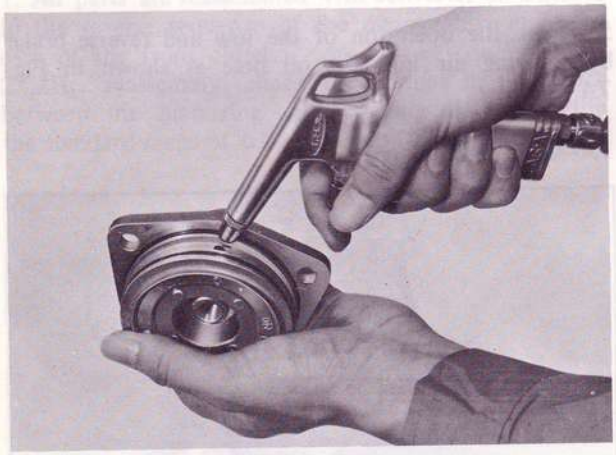

Fig. 7A–33 Blowing out piston

To Inspect

1. Check to see that two "O" rings on the servo retainer and the seal rubber on the servo piston are not damaged.
2. Check to see that there are no damages on the servo retainer, piston, piston stem and the portion of transmission case where those parts are fitted.
3. Check the return spring for decline or deformation.
4. Check the brake band lining for wear or damages.

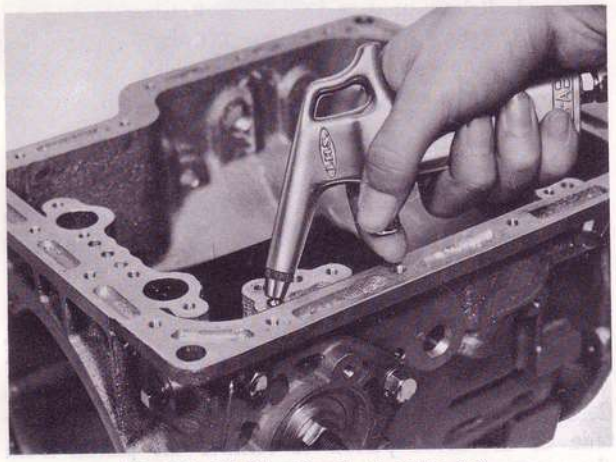

Fig. 7A–34 Checking band servo (1)

To Reassemble

1. Apply converter oil on all parts and reinstall them in the reverse order of disassembly.
2. Blow compressed air into the oil hole on the servo piston apply side to make sure that the piston operates properly, as in Fig. 7A–34.
3. Back off the three attaching bolts slightly and uniformly, and apply compressed air into the oil hole on the servo piston release side, as in Fig. 7A–35. If the retainer rises by the extent of bolt backing off, the piston operation on release is normal. Tightening torque of the servo retainer is **1.0 ~ 1.5 m-kg (7.2 ~ 10.8 ft-lb).**

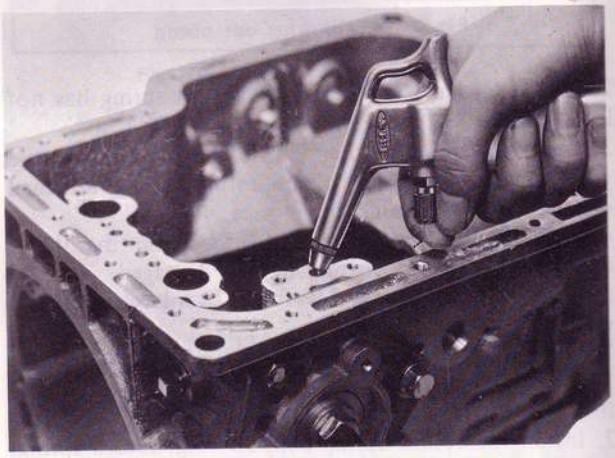

Fig. 7A–35 Checking band servo (2)

7A–G–6. Governor Valve Assembly

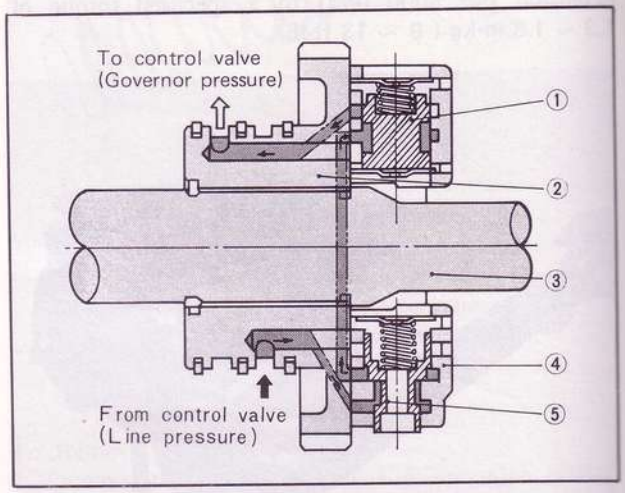

Fig. 7A–36 Cross-sectional view of governor

1. Primary valve
2. Oil distributor
3. Output shaft
4. Governor valve body
5. Secondary valve

To Remove

1. Loosen and remove four bolts that attach the governor. Remove the governor from the oil distributor.
2. Remove the secondary governor retainer plate. Then remove the spring and secondary governor valve from the body.
3. Remove the primary governor valve in the same procedure as for the secondary, if primary governor is to be disassembled for any purpose.

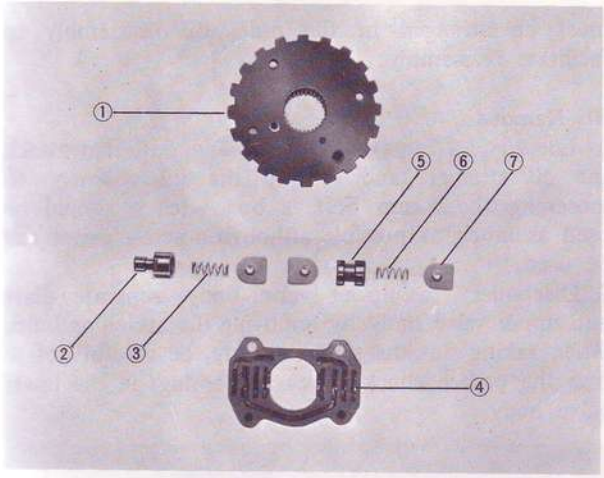

Fig. 7A–37 Governor valve

1. Oil distributor
2. Secondary valve
3. Spring
4. Valve body
5. Primary valve
6. Spring
7. Retainer plate

To Inspect

1. Check the valve and the body to see that there is nothing that may cause valve sticking or catching.
2. Check to see that the spring has not lost tension and the retainer plates are not deformed.
3. Check the side clearance between the sealing and gloove as shown in Fig. 7A–38. The standard clearance is **0.04 ~ 0.16 mm (0.002 ~ 0.006 in)**. When disassembling the seal ring, squeeze it up so that its joint will rise above the groove, and disconnect the joint.

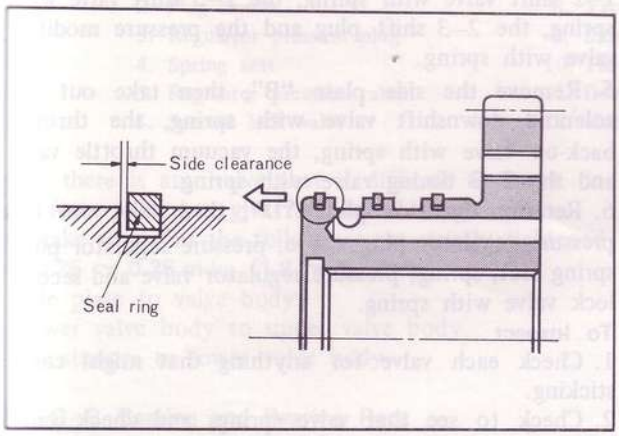

Fig. 7A–38 Clearance of oil seal ring

To Reassemble

1. Lubricate all parts with converter oil and reinstall them in the reverse order of disassembly so as not to confuse primary with secondary. After reassembly, make sure that the governor spring is straight and there is no catch in the governor valve movement.
2. Tighten the governor to the oil distributor with four bolts to a standard torque of **0.50 ~ 0.70 m-kg (3.6 ~ 5.1 ft-lb)**.
3. To determine if secondary governor is in good condition, blow air under light pressure into line pressure hole in Fig. 7A–36 to listen for noise like a model plane.

7A–G–7. Oil Pump Assembly

To Remove

1. Disconnect the pump cover from the pump housing by loosening five bolts that attach them.
2. Take out the inner gear and the outer gear from the pump housing. At the same time, put a sign indicating the installing side with quick-dry ink or something and not with a punch, to avoid erroneous assembly.

To Inspect

1. Check to see that tooth faces of the inner and outer gears are not damaged or worn.
2. Check the side play of the inner (or outer) gear by using a straight edge and thickness gauge as in Fig. 7A–39. The standard value is **0.02 ~ 0.04 mm (0.001 ~ 0.002 in)**. If the clearance exceeds **0.08 mm (0.003 in)**, replace the gears with those selected from the three kinds. Make sure that the inner and outer gears are replaced as a set.

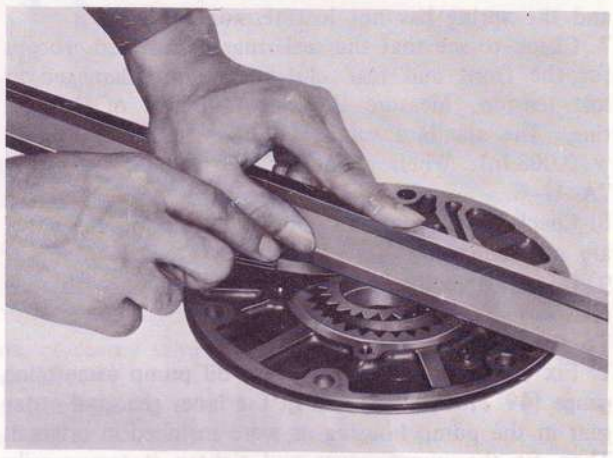

Fig. 7A–39 Measuring clearance (1)

3. Check the clearance between the outer gear teeth and crescent. The standard value is **0.14 ~ 0.21 mm (0.006 ~ 0.008 in)**. If the clearance exceeds **0.25 mm (0.010 in)**, replace the gears.

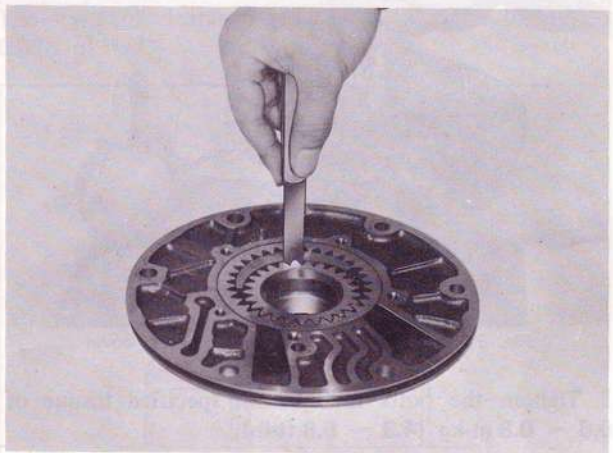

Fig. 7A–40 Measuring clearance (2)

4. Check the clearance between the outer gear and the housing. The standard value is **0.05 ~ 0.20 mm (0.002 ~ 0.008 in)**. If the clearance exceeds **0.25 mm (0.010 in)**, replace the gears as a set.



Fig. 7A–41 Measuring clearance (3)

5. Check to see that the seal rubber attached on the pump housing periphery is not damaged.
6. Check to see that the oil seal lip is not damaged and the spring has not lost tension.
7. Check to see that the seal rings of oil feed grooves for the front and rear clutches are not damaged or lost tension. Measure the side clearance of the seal ring. The standard value is **0.04 ~ 0.16 mm (0.002 ~ 0.006 in)**. When replacing seal ring refer to part 7A–G–6.
8. Check to see that the pump housing and the cover are not damaged.
9. If any defective part is found, replace with new one.

To Reassemble

1. Fix the pump housing to the **oil pump assembling gauge** (49 2113 025A) and fit the inner gear and outer gear in the pump housing as were installed in original. Then fit the pump cover and tighten it temporarily with five bolts.
2. Set the runout of pump cover within 0.07 mm (0.0028 in) total indicator reading by tapping the cover with a plastic hammer.

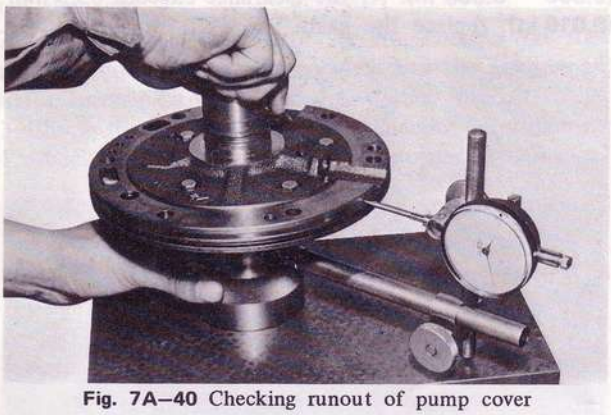

Fig. 7A–40 Checking runout of pump cover

3. Tighten the bolts finally with specified torque of **0.6 ~ 0.8 m-kg (4.3 ~ 5.8 ft-lb).**

7A–G–8. Control Valve Assembly

The control valves are composed of the most accurate of the automatic transmission parts and so particular care must be paid in disassembly and reassembly. Also, since a number of similar parts are used, they must be arranged in the order of disassembly to facilitate reassembly.

To Remove

1. Loosen and remove the bolts and nut, that attach the oil strainer, and remove the oil strainer. In loosening the 8 mm bolt, a box wrench should be used as much as possible although a screw driver can be used.
2. Disconnect the lower valve body, separate plate and upper valve body by removing the attaching bolts. When taking out the separate plate, be careful not to lose the orifice check valves and springs in the lower valve body.

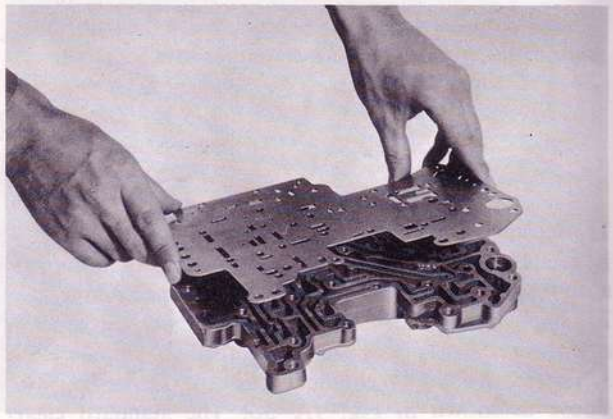

Fig. 7A–43 Removing separate plate

3. Take out the manual valve.
4. Remove the side plate "A", then take out the 1–2 shift valve with spring, the 2–3 shift valve with spring, the 2–3 shift plug and the pressure modifier valve with spring.
5. Remove the side plate "B", then take out the solenoid downshift valve with spring, the throttle back-up valve with spring, the vacuum throttle valve and the 2–3 timing valve with spring.
6. Remove the side plate "D", then take out the pressure regulator plug sleeve, pressure regulator plug, spring seat, spring, pressure regulator valve and second lock valve with spring.

To Inspect

1. Check each valve for anything that might cause sticking.
2. Check to see that valve springs and check valve springs have not lost tension.
3. Check to see that the oil strainer is not damaged.
4. Check for possible abnormal oil passage developing on the separate plate.
5. Check for possible damages or other abnormalities in the oil passages of valve body.
6. If any defective part is found, replace with new one.

To Reassemble

1. Reassemble in the reverse order to disassembly paying special attention to the following points :

a. Install small valves and springs by referring to the components parts of control valve Fig. 7A–44.
b. Lubricate all valves and springs with converter oil before installing.

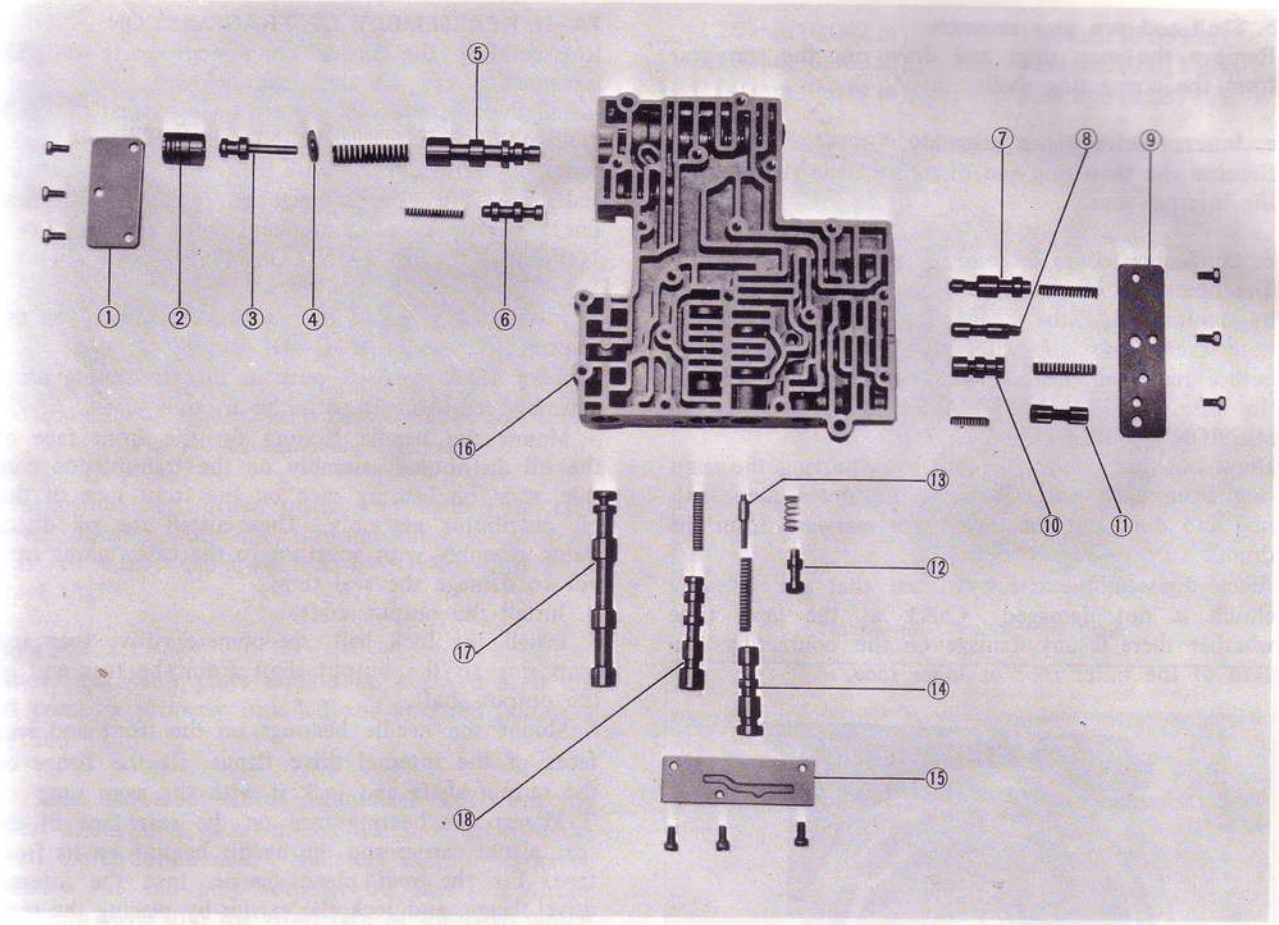

Fig. 7A–44 Component parts of control valve

1. Side plate "D"
2. Plug sleeve
3. Regulator pressure plug
4. Spring seat
5. Regulator pressure valve
6. Second lock valve
7. 2–3 timing valve
8. Vacuum throttle valve
9. Side plate "B"
10. Throttle back-up valve
11. Down-shift valve
12. Modifier valve
13. 2–3 shift plug
14. 2–3 shift valve
15. Side plate "A"
16. Upper valve body
17. Manual valve
18. 1–2 shift valve

c. If there is any valve that is difficult to insert, do not force it in but give it a light, straight push.
d. Make sure that the followings are strictly tightened to **0.25 ~ 0.35 m-kg (1.8 ~ 2.5 ft-lb)**.
Side plate to valve body
Lower valve body to upper valve body
Oil strainer to lower valve body

7A–G–9. Bearing and Bearing Race

Check each bearing and bearing race after cleaning carefully. Also check to see that the mating parts of each bearing and bearing race are not damaged. If any defective part is found, replace it.

7A–G–10. Other Component Parts

Check to see by sight that the following parts are not damaged. Disassembly, if indicated, should be made in the procedure below.

a. **Front planet carrier assembly, rear planet carrier assembly, input shaft and output shaft**

The planetary carrier cannot be divided into its individual components.
If any part or component is defective, replace the carrier as a unit.
Check the clearance between pinion washer and planetary carrier with a feeler.
The standard clearance is **0.20 ~ 0.70 mm (0.008 ~ 0.028 in)**.

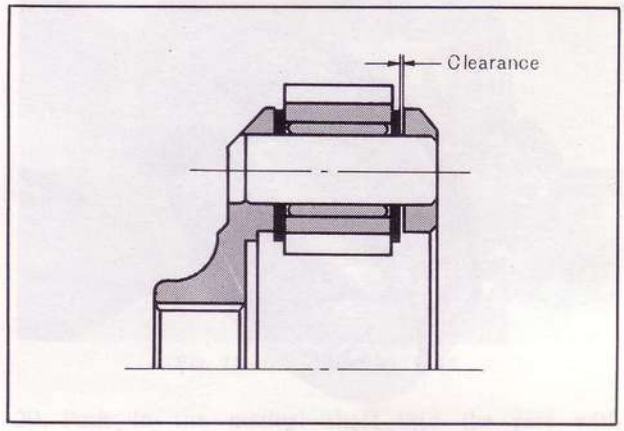

Fig. 7A–45 Clearance of planetary gear

If the clearance exceeds **0.80 mm (0.031 in)**, replace with new one.

b. Shell and sun gear assembly
Remove the snap rings and draw out the sun gear from the connecting shell.

c. Internal drive flange assembly
Remove the snap ring and disconnect the flange from the internal gear.

d. Connecting drum assembly
The operation of the one-way clutch can be checked by assuring that the connecting drum assembly (or outer race) turns clockwise and not counter-clockwise, before removing the connecting drum assembly from the case. See 7A–F "DISASSEMBLY OF TRANSMISSION COMPLETE"–20.
Draw out the one-way clutch by removing the snap ring from each end. Remove the outer race snap ring and draw out the outer race rearward from the drum.
After disassembly, check to see that the one-way clutch is not damaged. Check at the same time whether there is any damage on the contacting surface of the outer race or inner race.

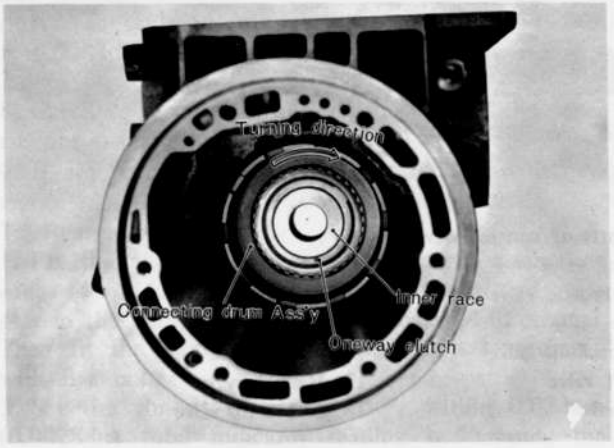

Fig. 7A–46 One-way clutch

When installing the one-way clutch, make sure that it is fitted with the arrow mark "→" on the front of vehicle.



Fig. 7A–47 Mark on the one-way clutch

e. Manual control system and parking lock system

7A–H. REASSEMBLY OF TRANSMISSION

Reassembling the major component parts on the transmission case are described below.
Install them in the procedure reverse to that of 7A–F "DISASSEMBLY OF TRANSMISSION" and make sure to lubricate each with converter oil before installation. All gaskets must be replaced with new ones. As to various component parts, refer to 7A–G "OVERHAUL OF MAIN COMPONENTS".

1. Install the low and reverse brake assembly on the transmission case. (7A–G–4)
2. Turn clockwise and push in the connecting drum assembly, engaging it with the friction plates.
3. Mount the needle bearing for the front face of the oil distributor assembly on the transmission case side and the bearing race on the front face of the oil distributor assembly. Then install the oil distributor assembly with governor to the case, taking care not to damage the seal rings.
4. Install the output shaft.
5. Install the lock ball, speedometer drive gear and snap ring to the output shaft from the rear end of the output shaft.
6. Mount the needle bearings on the front and rear faces of the internal drive flange, fit the flange on the output shaft and lock it with the snap ring.
7. Mount the bearing race on the rear face of the rear planet carrier and the needle bearing on its front face. Fit the rear planet carrier into the internal drive flange, and lock the carrier by placing the snap ring on the connecting drum.
8. Install the band servo on the case. (7A–G–5)
9. Mount the needle bearing on the rear face of the rear clutch hub and the bearing race on the front face of the front planet carrier. Assemble the rear clutch hub and the planet carrier, and install its assembly on the sun gear and connecting shell.
10. Put the above assembly with the rear clutch hub side facing upward. Mount the needle bearing on the front face of the rear clutch hub and the bearing race on the rear face of the rear clutch assembly, and install the rear clutch assembly downward on the rear clutch hub. In doing so, turn it a little so that the teeth of the clutch plates may come into engagement with the clutch hub spline.
11. Install the front clutch assembly into the rear one as in the case of the rear clutch assembly.
12. Install the assembly including the connecting shell, front clutch, rear clutch and front planet carrier into the transmission case.
13. Install the brake band on the front clutch drum.
14. Install the anchor blot to the transmission case and tighten it to **5.6 ~ 8.2 m-kg (41 ~ 59 ft-lb)**.
15. Install the band strut between the piston stem and the brake band.
16. Set the front clutch thrust washer, which adjusts the end play of the front clutch drum, on the rear face of the oil pump cover assembly, and also set the bearing race, which adjusts the total end play, on the rear end of the oil pump cover. Apply some amount of vaseline to prevent bearing race falling.

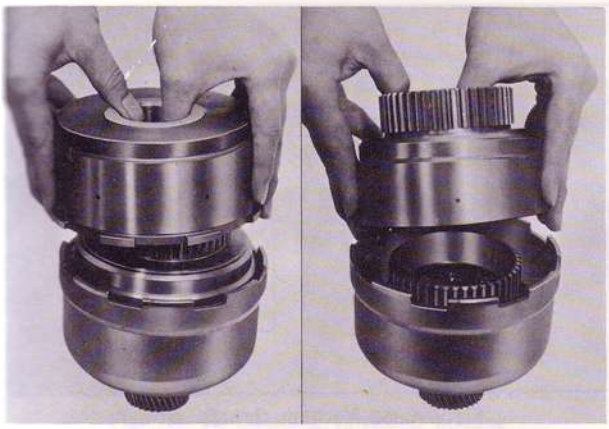

Fig. 7A–48 Assembling clutches

transmission case. Then install and tighten the converter housing onto the transmission case with six bolts to **4.5 ~ 5.5 m-kg (33 ~ 40 ft-lb)**. Insert the input shaft.

Note :
Above two end plays should be checked after the oil pump is properly installed and adjusted following 17 and 18.

17. Push the front clutch drum back and forth and insert a thickness gauge in the clearance between the front clutch drum and connecting shell in order to measure the end play between the rear face of the oil pump cover and the front face of the front clutch drum. Select a thrust washer from the following seven washers to adjust the clearance to specified **0.5 ~ 0.8 mm (0.020 ~ 0.031 in)**.

1.50 mm (0.059 in), 1.70 mm (0.067 in),
1.90 mm (0.075 in), 2.10 mm (0.083 in),
2.30 mm (0.091 in), 2.50 mm (0.098 in),
2.70 mm (0.106 in)

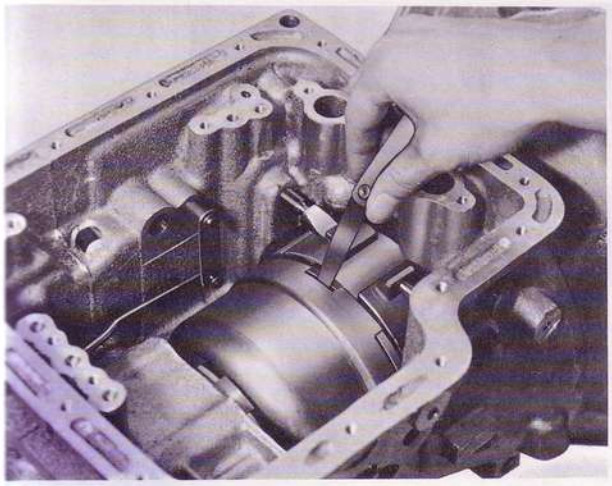

Fig. 7A–49 Checking end play

18. In measuring the total end play, apply the dial gauge on the tip of the input shaft and move the connecting shell fore and aft, and read the needle vibration. The standard clearance is **0.25 ~ 0.50 mm (0.010 ~ 0.020 in)**. Adjust end play by selecting a proper race in the followings.

1.20 mm (0.047 in), 1.40 mm (0.055 in),
1.60 mm (0.063 in), 1.80 mm (0.071 in),
2.00 mm (0.079 in), 2.20 mm (0.087 in)

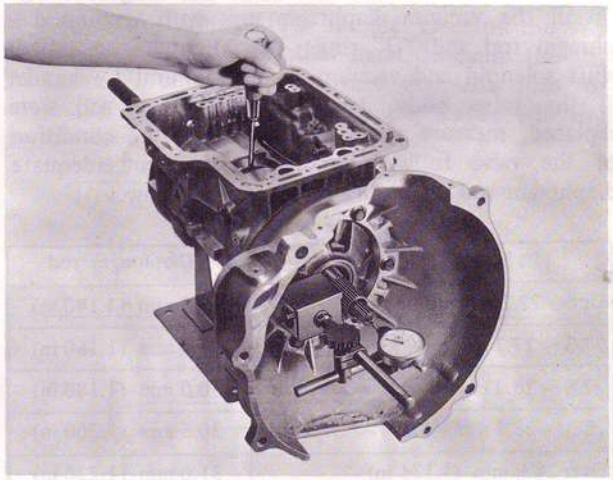

Fig. 7A–50 Checking end play

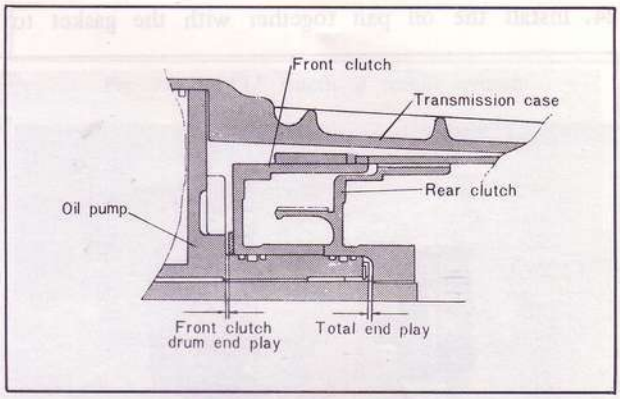

Fig. 7A–51 End plays

19. Tighten the stem of the servo piston to a torque of **1.2 ~ 1.5 m-kg (9 ~ 11 ft-lb)**. Then loosen it by two turns and lock with the lock nut to a tightening torque of **3.0 ~ 4.0 m-kg (22 ~ 29 ft-lb)**.
Install and tighten the band servo cover to the retainer.

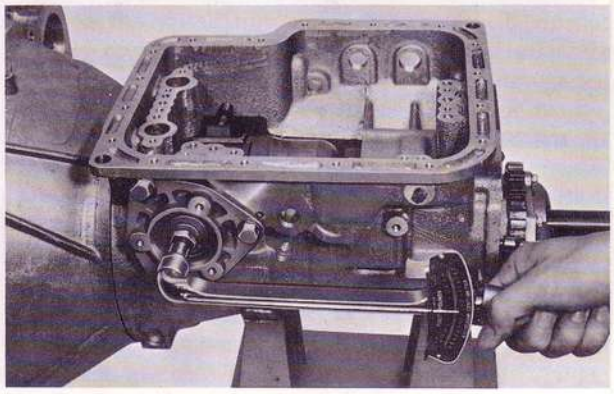

Fig. 7A–52 Tightening stem

20. Push in the manual shaft into the case with manual plate, washer and nut and tighten the nut. Then mount the parking lever and parking rod.
21. Install the range select lever to the manual shaft with the washer and nut then tighten the nut.

22. Install the control valve assembly onto the transmission case with nine bolts to a specified tightening torque of **0.55 ~ 0.75 m-kg (4.0 ~ 5.4 ft-lb)**.
23. Install the downshift solenoid with "O" ring. Install the vacuum diaphragm unit with vacuum diaphragm rod and "O" ring. Then tighten the downshift solenoid and vacuum diaphragm unit by hand. If the valve body, transmission case or rod were replaced, measure the distance "L" in the condition of the valve fully compressed and select adequate diaphragm rod according to the table below.

Measurement "L"	Diaphragm rod
Under 27.2 mm (1.071 in)	29.0 mm (1.140 in)
27.3 ~ 27.7 mm (1.075 ~ 1.091 in)	29.5 mm (1.160 in)
27.8 ~ 28.2 mm (1.095 ~ 1.110 in)	30.0 mm (1.180 in)
28.3 ~ 28.7 mm (1.114 ~ 1.130 in)	30.5 mm (1.200 in)
Over 28.8 mm (1.134 in)	31.0 mm (1.220 in)

24. Install the oil pan together with the gasket to a tightening torque of **0.50 ~ 0.70 m-kg (3.6 ~ 5.1 ft-lb)**.
25. Install the spacer, return spring and parking pawl on the shaft. Fit the rear end of the parking rod between the two steel balls in the supporter, then install the extension housing onto the case. Tighten the bolts to a specified torque of **2.0 ~ 2.5 m-kg (14 ~ 18 ft-lb)**.

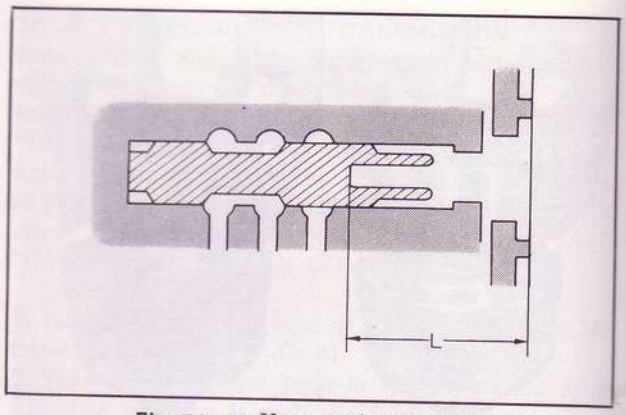

Fig. 7A–53 Vacuum throttle valve

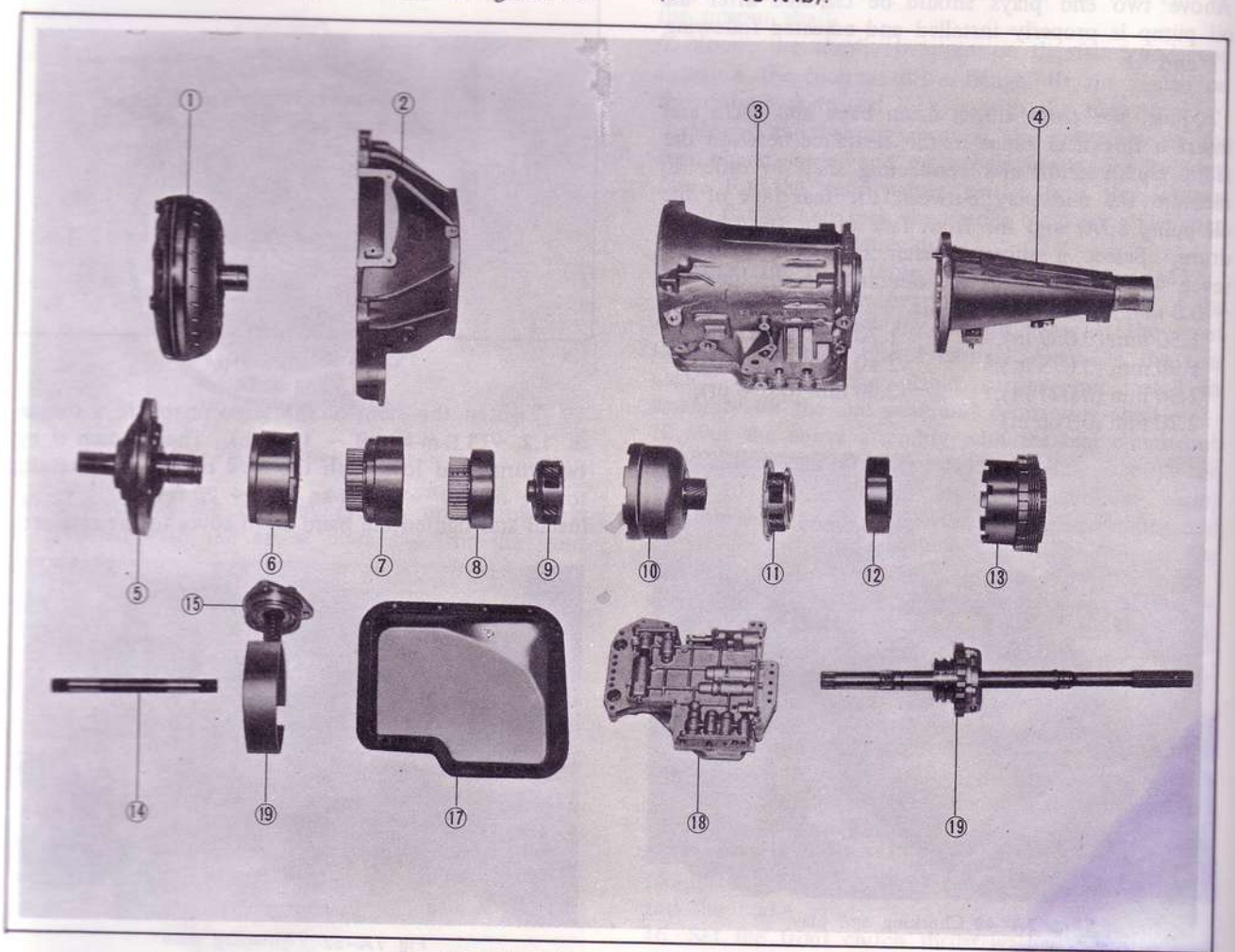

Fig. 7A–54 Main components of transmission

1. Troque converter
2. Converter housing
3. Case
4. Extension housing
5. Oil pump assembly
6. Front clutch assembly
7. Rear clutch assembly
8. Rear clutch hub assembly
9. Front planet carrier assembly
10. Shell & sun gear assembly
11. Rear planet carrier assembly
12. Drive flange assembly
13. Low & reverse brake assembly
14. Input shaft
15. Brake band
16. Servo piston assembly
17. Oil pan
18. Control valve assembly
19. Governor valve assembly and output shaft

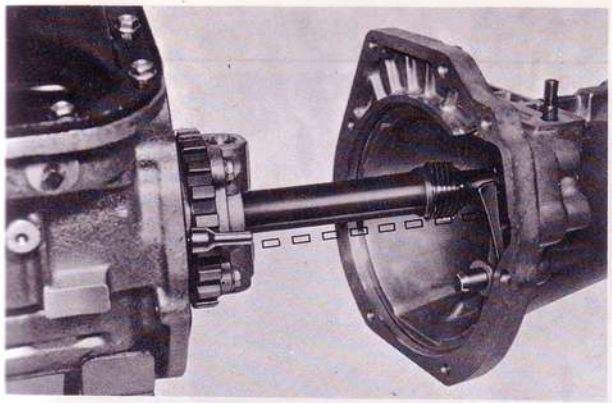

Fig. 7A–55 Installing extension housing

7A–I. INSTALLATION AND ADJUSTMENT OF TRANSMISSION

1. Before installing the transmission, measure the runout of the torque converter drive plate with a dial gauge. The runout must be within **0.3 mm (0.012 in)**. In case the runout exceeds **0.5 mm (0.020 in)**, replace the drive plate.

2. When combining the converter with oil pump, check whether they are rightly combined with each other by measuring the distance shown in Fig. 7A–56. The distance is approximately **19.5 mm (0.78 in)**. If there is great difference in the measurement, the converter should be rightly combined again.

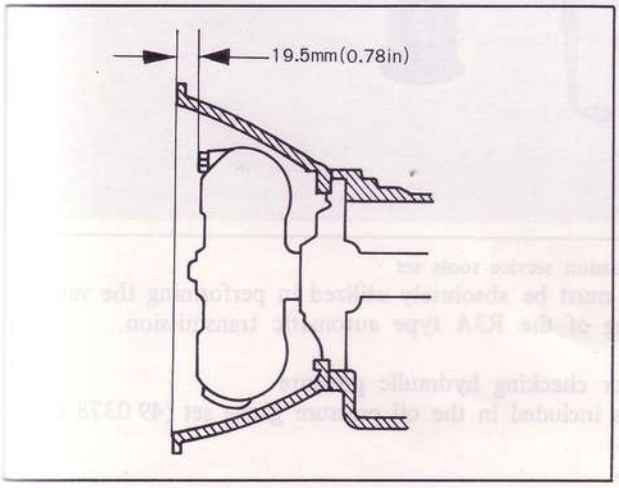

Fig. 7A–56 Checking torque converter fit

3. Installation procedure for the transmission is reverse to the removing procedure, referring to "REMOVAL OF TRANSMISSION" in 7A–E. In tightening the torque converter and the drive plate, temporarily tighten four bolts first, then lock the drive plate by applying the wrench to the drive pulley lock bolt. And tighten the four bolts to a specified torque of **3.7 ~ 5.5 m-kg (27 ~ 40 ft-lb)**. In case of confirming the tightening torque accurately, it is recommendable to proceed as follows:

Install a torque wrench to the hole in the center of the **special wrench** (49 0877 435), and tighten the bolt until the reading on the torque wrench comes to the value to be obtained by the undermentioned formula.

"L" indicates the effective length of the torque wrench. In the case of the torque wrench expressed in the m-kg unit, measure the "L" in terms of cm, and substitute the value (for example, 30 in case of 30 cm) into formula (1). In the case of the ft-lb torque wrench, on the other hand, measure the "L" in the inch unit, and substitute the value into formula (2). The prescribed tightening torque will thus be obtained.

$$\frac{5L}{10+L} \text{ . m-kg} \quad \text{.....(1)}$$

$$\frac{35L}{4+L} \text{ . ft-lb} \quad \text{..... (2)}$$

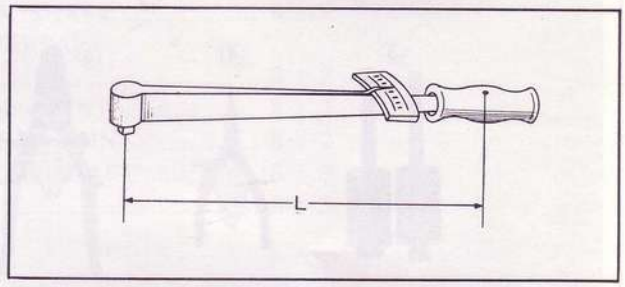

Fig. 7A–57 "L" length of torque wrench

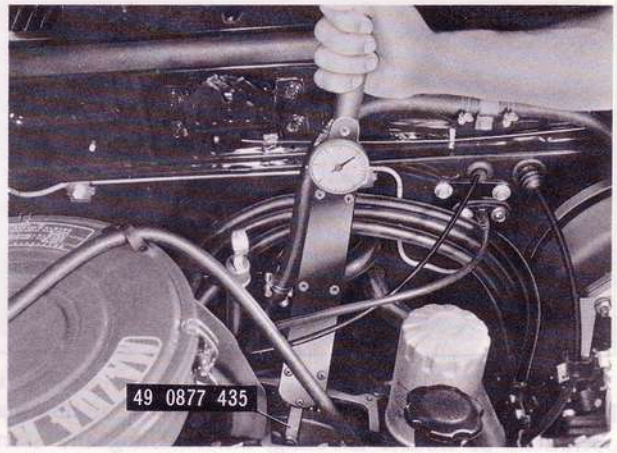

Fig. 7A–58 Tightening torque converter

4. When the installation is finished, rotate the torque converter and check to see that there is no interference in the transmission. Then make the following check:

(1) Fill converter oil. The converter, when empty, can hold **6.2 liters (13.1 U.S. pints, 10.9 Imp. pints, 6.6 U.S. quarts)**. (7A–B–1)
(2) Check and regulate the manual linkage. (7A–B–4)
(3) Check and regulate the inhibitor switch. (7A–B–5)
(4) Check and regulate the engine idling. (7A–B–2)
Apply the hand brake. With the engine idling, place the manual lever in "N", "D", "2", "1" and "R", and check to see that there is a slight shock of the transmission.
(5) Confirm the operation of the kick-down switch and downshaft solenoid. (7A–B–3)
(6) Check the oil level again.

5. When checking and regulating are over, conduct stall test, road test and hydraulic test referring to diagnostic test items (7A–C) in order to make sure that the transmission works normally.

SERVICE SPECIAL TOOLS

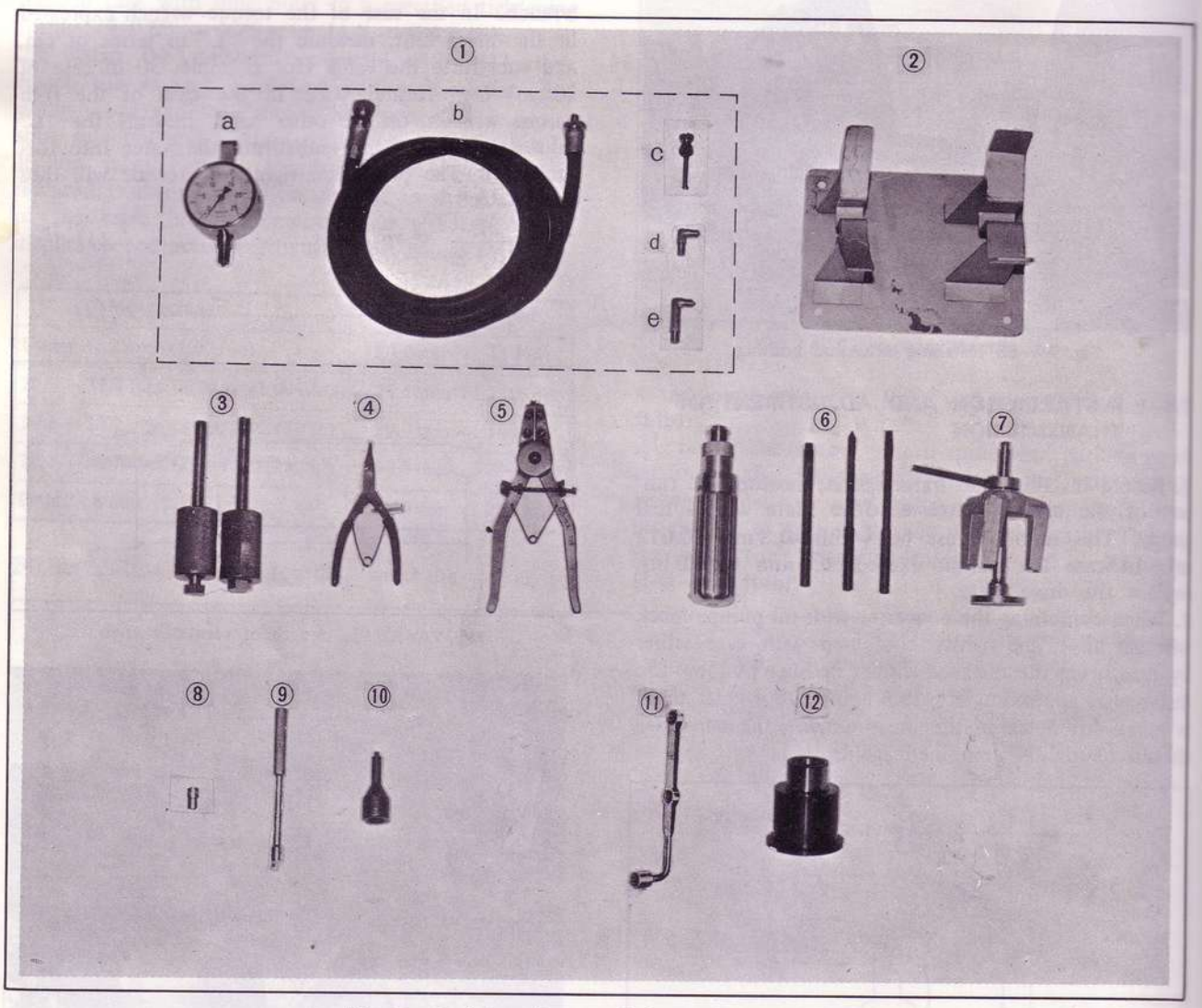

Fig. 7A–59 Automatic transmission service tools set

It is essential that the service special tools in this manual must be absolutely utilized in performing the various operations of trouble shooting, disassembling and assembling of the R3A type automatic transmission.

1. Oil pressure gauge set	49 0378 400	Use for checking hydraulic pressure
a. Oil pressure gauge	49 8000 001	This is included in the oil pressure gauge set (49 0378 400)
b. Rubber hose	49 0378 401	– do –
c. Joint pipe	49 0378 402	– do –
d. Hose adaptor	49 0378 403	– do –
e. Hose adaptor	49 0378 404	– do –
2. Transmission case stand	49 0378 320	Use for setting transmission
3. Oil pump puller	49 0378 390	Use for removing oil pump
4. Snap ring remover	49 8000 015	Use for removing or installing snap ring
5. Snap ring remover	49 8000 025	Use for removing or installing snap ring
6. Torque driver	49 8000 021	Use for tightening in accurate torque Max. torque 1.1 m-kg (95 lb-in)
7. Clutch spring compressor	49 0378 375	Use for assembling or disassembling front and rear clutch
8. Hexagon wrench	49 8000 031	Use for disassembling and assembling control valve
9. Spinner handle	49 8000 035	Use for disassembling and assembling control valve
10. Hex-head extension	49 0378 346	Use for removing and installing one-way clutch inner race with torque wrench. Drive angle 1/2" square and 5 mm (across flat width)
11. Special wrench	49 0877 435	A tool used for removing the bolt that attaches the drive-plate to the torque converter
12. Oil pump assembling gauge	49 2113 025A	Use for centering oil pump

PROPELLER SHAFT

8–A. REMOVING PROPELLER SHAFT ..... 8 : 1
8–B. CHECKING PROPELLER SHAFT ..... 8 : 2
8–C. DISASSEMBLING UNIVERSAL JOINT ..... 8 : 2
8–D. CHECKING UNIVERSAL JOINT ..... 8 : 2
8–E. ASSEMBLING UNIVERSAL JOINT ..... 8 : 2
8–F. INSTALLING PROPELLER SHAFT ..... 8 : 3
SPECIAL TOOLS ..... 8 : 3

PROPELLER SHAFT

The propeller shaft assembly consists of the front propeller shaft, rear propeller shaft, center support bearing, universal joints and yokes.

The rear end of the propeller shaft is attached to the companion flange of the rear axle through the universal joint and the front end is attached to the main shaft of the transmission by means of the splined sliding yokes, which permits fore and aft movement of the propeller shaft when the rear axle moves up and down.

The center of the propeller shaft is supported by the bearing attached to the underbody.

The universal joints are lubricated for life, so do not require lubricating.

8–A. REMOVING PROPELLER SHAFT

1. To maintain drive line balance, mark the mating parts of the companion flange, yokes and propeller shafts so that they may be installed in their original positions.
2. Remove the bolts that attach the propeller shaft to the companion flange of the rear axle.
3. Remove the center support bearing bracket from the underbody.
4. Pull the propeller shaft assembly rearward and remove from the transmission.
5. Install the holder (49 0259 440) into the extension housing to prevent lubricant from running out of the housing.



Fig. 8–1 Holder installed into extension housing

6. Remove the universal joints, as described in Par. 8–C.
7. Remove the nut attaching the yoke and bearing to the front propeller shaft. Remove the yoke and bearing support.

Note: Do not remove the oil seals and bearing from

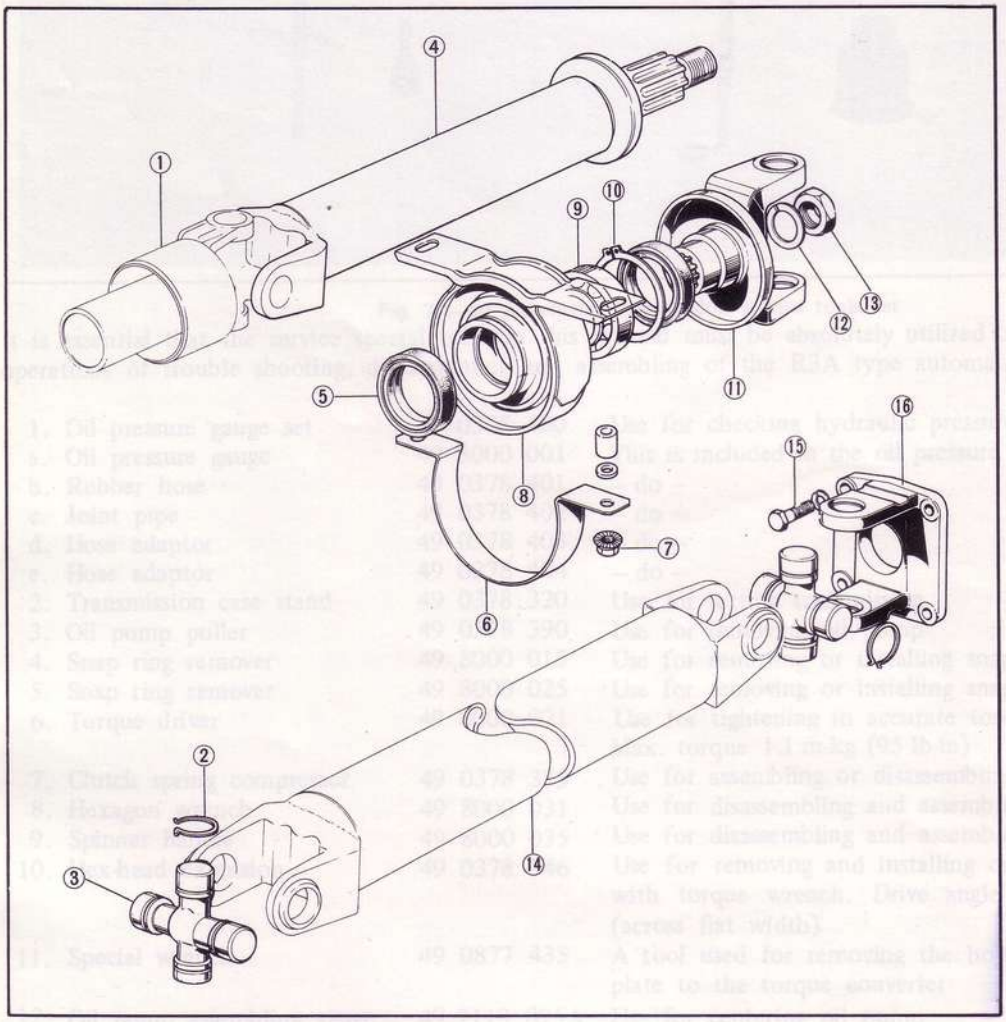

Fig. 8–2
Propeller shaft components

1. Sliding yoke
2. Snap ring
3. Universal joint
4. Front shaft
5. Grease seal
6. Protector
7. Nut and washer
8. Center bearing support
9. Bearing
10. Snap ring
11. Yoke (Center)
12. Washer
13. Nut
14. Rear shaft
15. Bolt
16. Yoke (Rear)

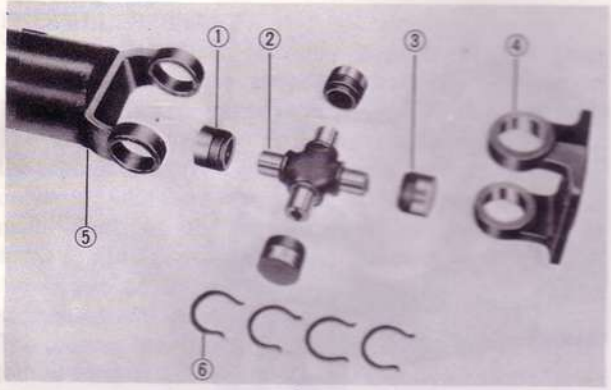

Fig. 8–6 Universal joint components

1. Bearing
2. Spider
3. Grease seal
4. Yoke
5. Propeller shaft
6. Snap ring

the snap ring can be installed.

7. Remove the replacer and install the snap ring.

Note:

Select the snap rings so as to place the spider in the center of the yoke and to give a suitable slight drag fit (not binding).

Be sure to use same sized snap rings to both sides of the yoke.

Snap rings are available in seven thicknesses as shown in the following table.

1.45 mm (0.0570 in)	1.57 mm (0.0618 in)
1.48 mm (0.0582 in)	1.60 mm (0.0629 in)
1.51 mm (0.0594 in)	1.63 mm (0.0641 in)
1.54 mm (0.0606 in)	

8. Position the yoke on the spider and install two bearings and snap rings in the same manner as instructed above.

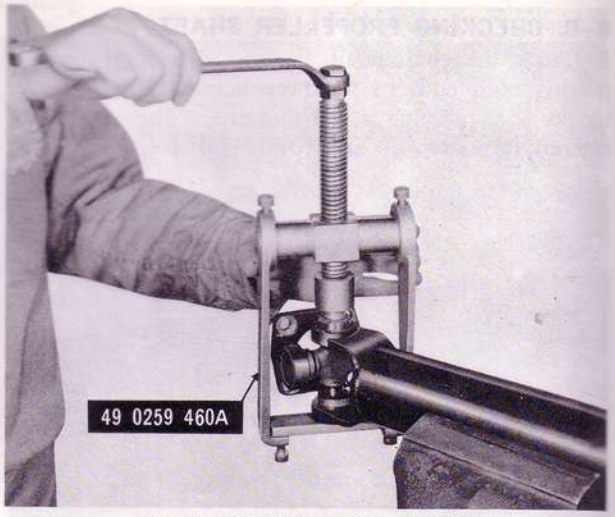

Fig. 8–7 Installing universal joint

8–F. INSTALLING PROPELLER SHAFT

Install the propeller shaft in the reverse order of removing, noting the following points.

1. Be sure to observe location marks on the companion flange, yokes and propeller shafts for correct assembly.
2. Torque the nut attaching the yoke and center bearing to the front shaft to 16.0 ~ 18.0 m-kg (116 ~ 130 ft-lb).
3. The tightening torque of the nuts attaching the center bearing support is 2.0 ~ 2.9 m-kg (14 ~ 21 ft-lb).
4. The tightening torque of the nuts attaching the yoke to companion flange is 5.5 ~ 6.5 m-kg (40 ~ 47 ft-lb).

SPECIAL TOOLS

49 0259 440	Main shaft holder
49 0259 460A	Universal joint replacer

REAR AXLE

9–A. REAR AXLE SHAFT ..... 9 : 1
9–A–1. Removing Rear Axle Shaft ..... 9 : 1
9–A–2. Disassembling Rear Axle Shaft ..... 9 : 1
9–A–3. Assembling Rear Axle Shaft ..... 9 : 1
9–A–4. Installing Rear Axle Shaft ..... 9 : 1
9–B. REAR AXLE REMOVAL ..... 9 : 2
9–C. REAR AXLE DISASSEMBLY ..... 9 : 2
9–C–1. Removing Differential ..... 9 : 2
9–C–2. Disassembling Differential ..... 9 : 2
9–C–3. Removing Drive Pinion ..... 9 : 3
9–D. REAR AXLE INSPECTION ..... 9 : 3
9–D–1. Checking Drive Pinion and Ring Gear ..... 9 : 3
9–D–2. Checking Differential Gears ..... 9 : 3
9–D–3. Checking Bearings ..... 9 : 3
9–D–4. Replacing Pinion Bearing Outer Race ..... 9 : 3
9–D–5. Checking Collapsible Spacer ..... 9 : 3
9–D–6. Checking Oil Seal ..... 9 : 3
9–D–7. Checking Companion Flange ..... 9 : 3
9–E. REAR AXLE ASSEMBLY ..... 9 : 3
9–E–1. Adjusting Drive Pinion ..... 9 : 3
9–E–2. Adjusting Pinion Bearing Preload ..... 9 : 5
9–E–3. Assembling Differential ..... 9 : 5
9–E–4. Installing Differential ..... 9 : 7
9–E–5. Adjusting Backlash ..... 9 : 7
9–F. REAR AXLE INSTALLATION ..... 9 : 7
SPECIAL TOOLS ..... 9 : 8

REAR AXLE

Rotary pickup is equipped with a semi-floating type rear axle with a hypoid ring gear and pinion set. The final reduction ratio is 4.375 for manual transmission and 4.111 for automatic transmission.

9–A. REAR AXLE SHAFT

9–A–1. Removing Rear Axle Shaft

1. Raise the rear end of the vehicle and support the rear axle housing with stands.
2. Remove the wheel, and remove the center cap adaptor from the rear axle shaft flange.
3. Remove the rear wheel and brake drum.
4. Remove the brake shoe assembly, as detailed in Par 11–C.
5. Remove the parking brake cable retainer.
6. Disconnect the brake fluid pipes at the wheel cylinders.
7. Remove the nuts holding the backing plate and bearing housing to the axle housing.
8. Pull the axle shaft, backing plate, bearing housing assembly and shims off the axle housing.

9–A–2. Disassembling Rear Axle Shaft

1. With the **spanner** (49 0603 622A), loosen the lock nut and remove the lock nut and lock washer.
2. Using a suitable puller, remove the bearing and housing assembly from the rear axle shaft.
3. Remove the backing plate.
4. Remove the bearing and oil seals, if necessary.

9–A–3. Assembling Rear Axle Shaft

Assemble the rear axle shaft in the reverse order of disassembling.

9–A–4. Installing Rear Axle Shaft

1. Install the rear axle shaft, backing plate and bearing housing assembly to the rear axle housing.
2. Using two bolts and nuts, temporarily assemble the bearing housing and backing plate to the axle housing flange.
3. Mount a dial indicator to the backing plate to check end play (Fig. 9–1).

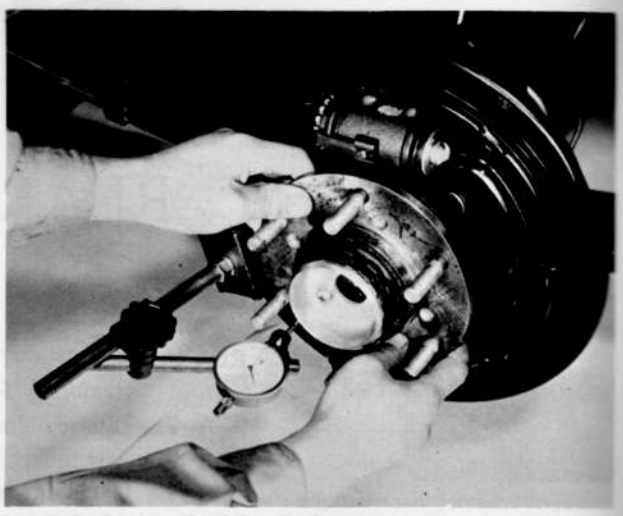

Fig. 9–1 Checking end play

If only one axle shaft has been removed, the end play should be 0.05 ~ 0.15 mm (0.002 ~ 0.006 in).
A very special procedure is required if both axle shafts have been removed. When installing the shafts, the end play should be checked when the first shaft is installed (don't wait until after both shafts are installed).
The end play for the first shaft should be 0.65 ~ 0.85 mm (0.026 ~ 0.033 in). The second shaft should then be 0.05 ~ 0.15 mm (0.002 ~ 0.006 in). Use the adjusting shims to arrive at these results.
4. After adjusting the end play, install all bolts and nuts and torque to specifications.
5. Install the brake shoe assembly and drum, as described in Par. 11–E.
6. Connect the brake fluid pipes to the wheel cylinder.
7. Bleed the brake system.
8. Install the wheel.
9. Lower the vehicle.

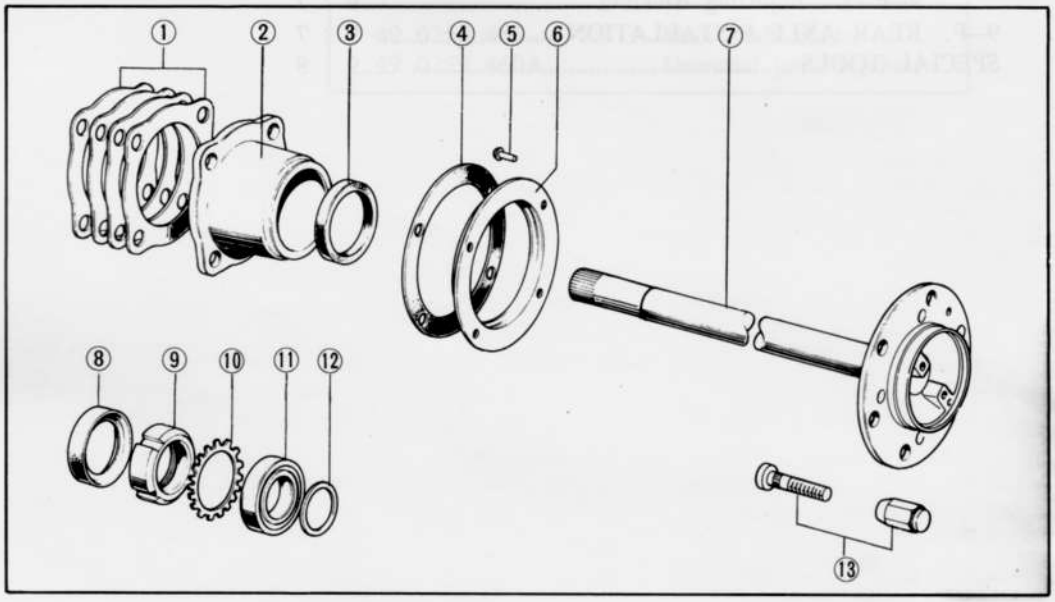

Fig. 9–2
Rear axle shaft components

1. Shims
2. Bearing housing
3. Oil seal (Outer)
4. Gasket
5. Rivet
6. Baffle
7. Axle shaft
8. Oil seal (Inner)
9. Lock nut
10. Lock washer
11. Bearing
12. Spacer
13. Hub bolt and nut

9–B. REAR AXLE REMOVAL

1. Jack up the vehicle until the rear wheels are clear of the ground.
2. Drain the oil by removing the drain plug. Reinstall the drain plug after all oil is out. (As the plug is magnetic, it should be cleaned.)
3. Remove the rear axle shafts, referring to Par. 9–A–1.
4. Mark the companion flange and propeller shaft for correct reassembly; then disconnect the propeller shaft.
5. Remove the nuts supporting the rear axle to the rear axle housing and remove the rear axle.

9–C. REAR AXLE DISASSEMBLY

9–C–1. Removing Differential

1. Mount the rear axle on the **stand** (49 0164 550D and 49 0164 562B).

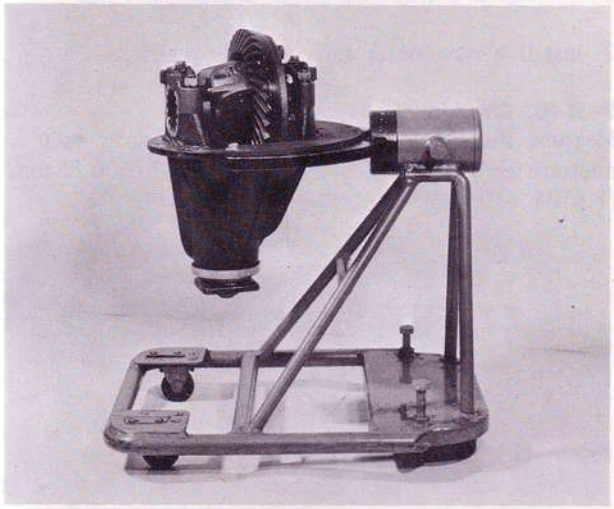

Fig. 9–3 Stand for rear axle

2. Apply identification punch marks on the carrier, differential bearing cap, and adjuster for reassembly purpose.

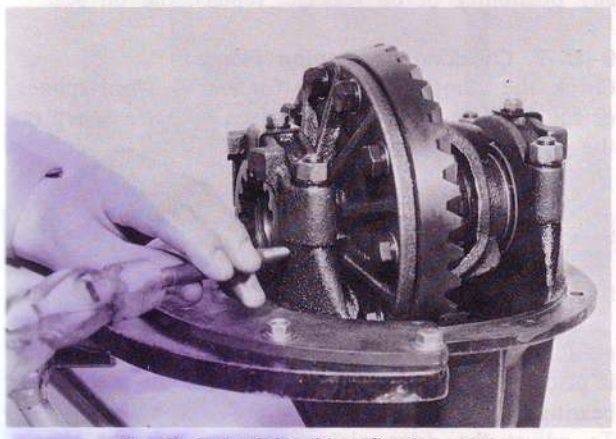

Fig. 9–4 Applying identification marks

3. Remove the adjuster lock plates.
4. Loosen the bearing cap attaching nuts and back off the adjuster slightly with the **spanner** (49 0259 720) to relieve differential bearing preload.
5. Remove the nuts, bearing caps, and adjusters.
6. Remove the differential assembly together with the bearing outer races. Make certain that each bearing outer race remains with its respective bearing.

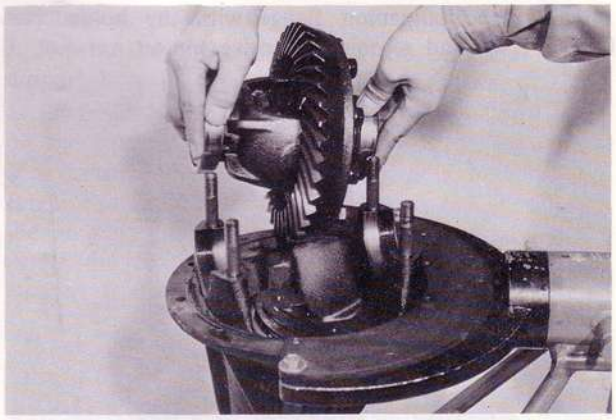

Fig. 9–5 Removing differential assembly

9–C–2. Disassembling Differential

1. If the bearing replacement is necessary, remove the bearings from the differential gear case with a suitable puller.
2. Remove the bolts and washers that attach the ring gear to the gear case. Remove the ring gear.

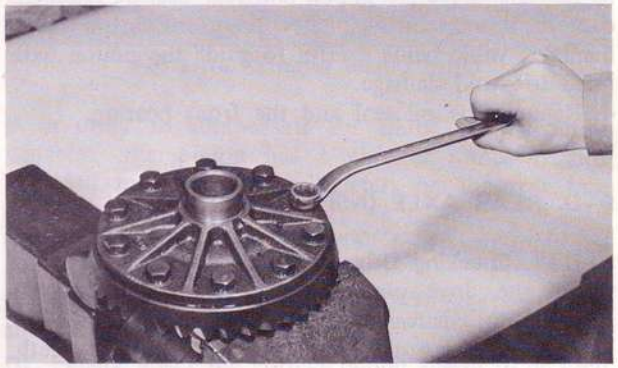

Fig. 9–6 Removing ring gear

3. From the back side of the gear case flange, drive the pinion shaft lock pin out of the gear case with a suitable drift, as shown in Fig. 9–7.

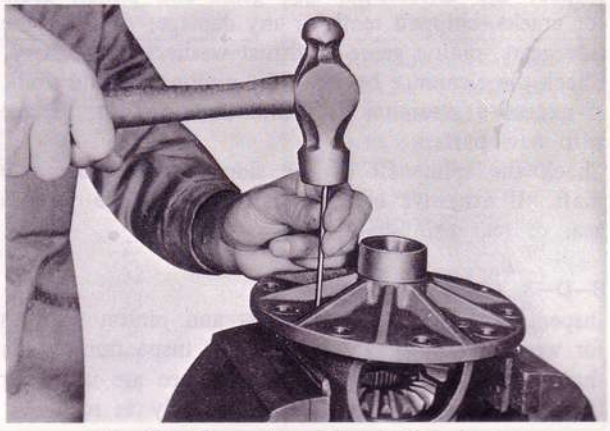

Fig. 9–7 Removing pinion shaft lock pin

4. Remove the pinion shaft and thrust block.

5. Rotate the differential pinion gears 90 degrees and remove each pinion gear.
6. Remove the differential side gears and thrust washers.

9–C–3. Removing Drive Pinion

1. Hold the companion flange with the **holder** (49 0259 710A) and remove the drive pinion nut.

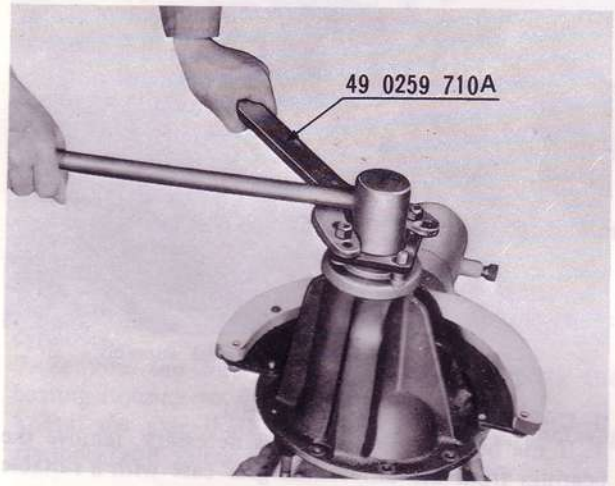

Fig. 9–8 Loosening pinion nut

2. Remove the companion flange.
3. Remove the drive pinion and rear bearing from the carrier. If necessary, tap the pinion out with a plastic hammer, while being careful to guide the pinion with hand to avoid damage.
4. Remove the oil seal and the front bearing.

9–D. REAR AXLE INSPECTION

9–D–1. Checking Drive Pinion and Ring Gear

Check the drive pinion for damaged or excessively worn teeth, damaged bearing journals and splines. Inspect the ring gear for worn or chipped teeth. If any of above conditions is found, replace both drive pinion and ring gear as they are available only in set.

9–D–2. Checking Differential Gears

Inspect the differential side gears and pinion gears for cracks, chipped teeth or any damage. Replace the side gears, pinion gears or thrust washers if necessary. Check the clearance between the pinion gear and shaft. If excessive clearance is found due to wear, replace with new parts.
Check the spline fit of the side gear and rear axle shaft. If excessive clearance is found, replace the side gear or rear axle shaft.

9–D–3. Checking Bearings

Inspect the differential bearings and pinion bearings for wear, flaking or any damage. If inspection reveals that either bearing cones or outer race are unfit for further service, replace the bearing only in sets.

9–D–4. Replacing Pinion Bearing Outer Race

If it becomes necessary to replace the pinion bearing outer race(s), proceed as follows:
1. Remove the old outer race from the carrier by using a drift in slots provided for this purpose.

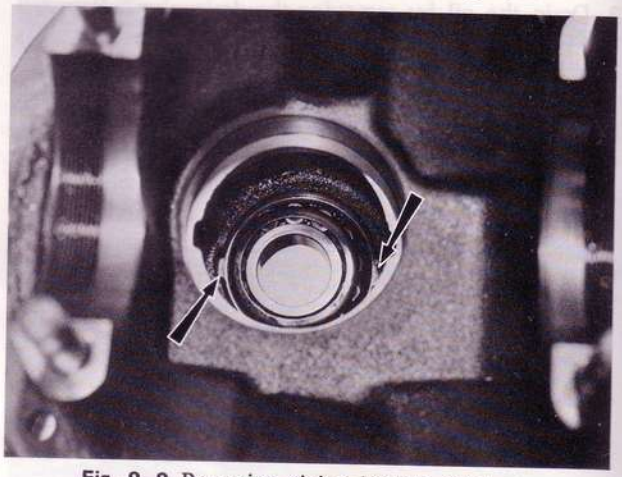

Fig. 9–9 Removing pinion bearing outer race

2. Install a new outer race into the carrier.

9–D–5. Checking Collapsible Spacer

Measure the length of the collapsible spacer with a micrometer. The standard length is 47 ± 0.15 mm (1.8504 ± 0.0059 in).



Fig. 9–10 Collapsible spacer

9–D–6. Checking Oil Seal

Check the oil seal for wear or damage. If there is any possibility of oil leakage, replace the oil seal.

9–D–7. Checking Companion Flange

Check the companion flange for cracks, worn splines, or rough oil seal contacting surface. Repair or replace the companion flange if necessary.

9–E. REAR AXLE ASSEMBLY

9–E–1. Adjusting Drive Pinion

The drive pinion should be correctly positioned in relation to the ring gear by the use of spacer which is placed between the drive pinion and the pinion rear bearing.
To adjust the drive pinion position, use the **special gauge** (49 0727 570 and 49 0603 555A) and proceed as follows:
1. Install the dial indicator to the gauge body. Place the gauge body on the surface plate as shown in Fig. 9–11 and lock the dial indicator by the screw so



Fig. 9–11 ZERO setting

that the needle is pointing toward 1 to 3 mm. Then, set the reading to "Zero" by turning the outer ring of the indicator.

2. Make certain that the differential bearing support bores are free of dirt and burrs.

3. Install the pinion and **bearing model** (49 0603 555A) together with a spacer into the carrier.

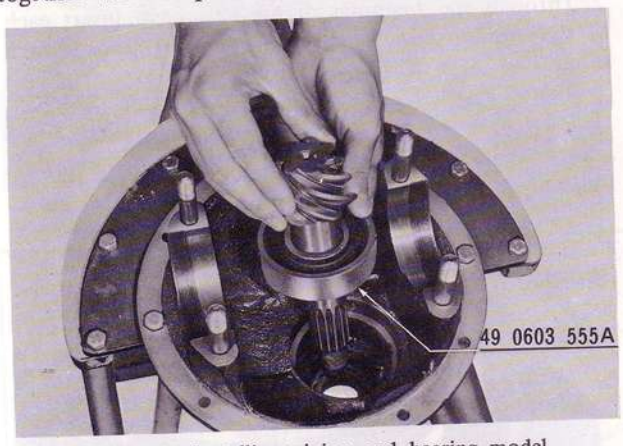

Fig. 9–12 Installing pinion and bearing model

4. Place the gauge block on the pinion and carefully place the gauge body adjusted in Step 1 on the gauge block so that the feeler of the indicator comes in contact with the lowest portion of the differential bearing support bore.

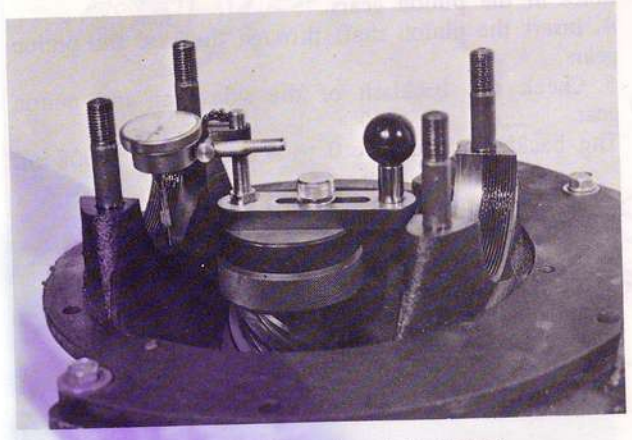

Fig. 9–13 Measuring pinion height

5. Record the number of hundredths dial indicator moves in a "+" (plus) or "–" (minus) direction from zero.

(a) If the dial indicator shows "+" (plus), add the amount equivalent to the reading.

(b) If the dial indicator shows "–" (minus), subtract the amount equivalent to the reading.

6. Remove the gauge body and dial indicator from the carrier and check zero setting on the surface plate to make sure this setting was not disturbed by handling.

7. Repeat the measurement on the opposite bearing support bore in the same manner as above.

8. Place the bearing model and the rear pinion bearing on the surface plate facing the inner race downward and compare their heights as shown in Fig. 9–14.

(a) If the bearing is higher than the model, subtract the amount equivalent to the difference.

(b) If the bearing is lower than the model, add the amount equivalent to the difference.



Fig. 9–14 Measuring bearing height

9. In order to compensate for all of the machining variables, the pinion has a plus or minus reading recorded in hundredth millimeters on the rear face of the pinion.

(a) If the pinion is marked "+" (plus), subtract the amount specified on the pinion.

(b) If the pinion is marked "–" (minus), add the amount specified on the pinion.

10. Finally select the correct pinion spacer to be used during pinion assembly by adding or subtracting the amount determined in Step 5, 6 and 7 from the thickness of the spacer used in Step 3.

The spacers are available in the following thickness:

Identification mark	Thickness
08	3.08 mm (0.1213 in)
11	3.11 mm (0.1224 in)
14	3.14 mm (0.1236 in)
17	3.17 mm (0.1248 in)
20	3.20 mm (0.1260 in)
23	3.23 mm (0.1271 in)
26	3.26 mm (0.1283 in)
29	3.29 mm (0.1295 in)
32	3.32 mm (0.1307 in)
35	3.35 mm (0.1319 in)
38	3.38 mm (0.1331 in)
41	3.41 mm (0.1343 in)
44	3.44 mm (0.1354 in)
47	3.47 mm (0.1366 in)

11. Position the correct spacer on the pinion and install the rear pinion bearing.

9–E–2. Adjusting Pinion Bearing Preload

1. Position the pinion assembly in the carrier and install the collapsible spacer as shown in Fig. 9–15.

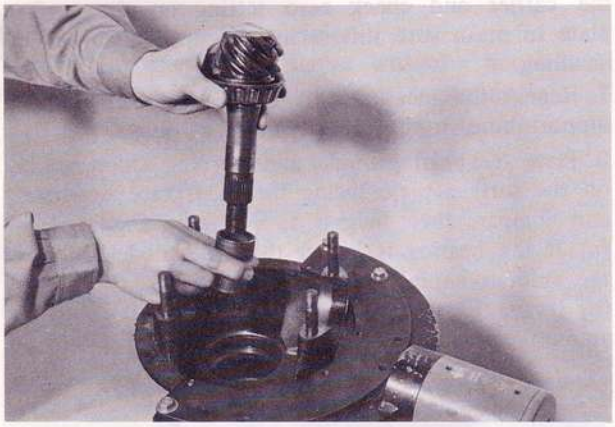

Fig. 9–15 Installing pinion and collapsible spacer

2. Place the front pinion bearing in position on the pinion. Hold the pinion fully forward and drive the pinion bearing over the pinion until seated.
3. Apply gear lubricant to the lip of the pinion oil seal and install the pinion oil seal into the carrier.
4. Install the companion flange on the pinion by tapping with a soft hammer.
5. Install the pinion washer and nut. Before tightening the nut (When the pinion preload is Zero), check the drag by the oil seal by using a torque wrench.
6. Tighten the pinion nut to **20 m-kg (145 ft-lb)** and check the preload as shown in Fig. 9–16.

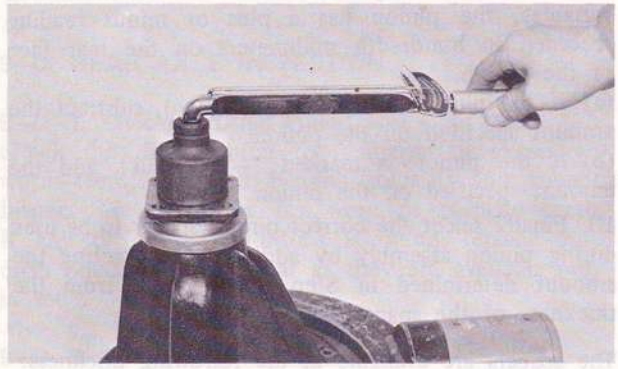

Fig. 9–16 Checking pinion bearing preload

Note: After preload has been checked, final tightening should be done very cautiously.
The pinion nut should be further tightened only a little at a time and preload should be checked after each slight amount of tightening. Exceeding preload specifications will compress the collapsible spacer too far and requires its replacement. The maximum tightening torque of the nut is 35 m-kg (253 ft-lb).

7. While observing the proceeding caution, carefully set the preload drag at **13 to 18 cm-kg (11.3 to 15.6 in-lb)** plus the oil seal drag determined in Step 5.

Note: If the preload is measured by using a spring scale at the bolt hole of the companion flange, the reading should be 3.3 ~ 4.6 kg (7.3 ~ 10.1 lb).

9–E–3. Assembling Differential

1. Install the thrust washer on each differential side gear and install these in the gear case.

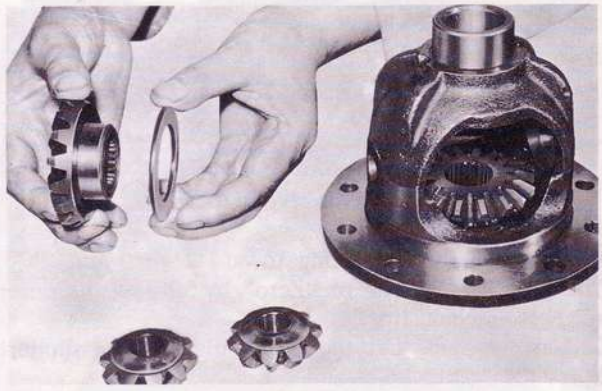

Fig. 9–17 Installing side gear and thrust washer

2. Through the openings of the gear case, insert each of two pinion gears exactly 180 degrees opposite each other.



Fig. 9–18 Installing differential gears

3. Rotate the gears 90 degrees so that the pinion shaft holes of the case come into alignment with the holes in the pinion gears.
4. Insert the pinion shaft through the case and pinion gears.
5. Check the backlash of the side gear and pinion gear.
The backlash should be 0 to 0.2 mm (0 to 0.008 in).



Fig. 9–19 Checking backlash of pinion and side gear

If it is **more than 0.2 mm (0.008 in)**, adjustment can be made with the side gear thrust washers.
The following thrust washers are available:

Identification mark	Thickness
0	2.0 mm (0.0789)
1	2.1 mm (0.0827)
2	2.2 mm (0.0866)

6. After adjustment, remove the pinion shaft and install the thrust block so that the hole is centered between the side gears. Reinstall the pinion into the case until the lock pin hole in the pinion shaft is exact alignment with the hole in the case.
7. Install the lock pin to secure the pinion shaft. Stake the lock pin into position with a punch to prevent it from working out.
8. Install the ring gear to the case and torque the bolts to **5.5 ~ 6.5 m-kg (40 ~ 47 ft-lb).**



Fig. 9–20 Installing thrust block and pinion shaft

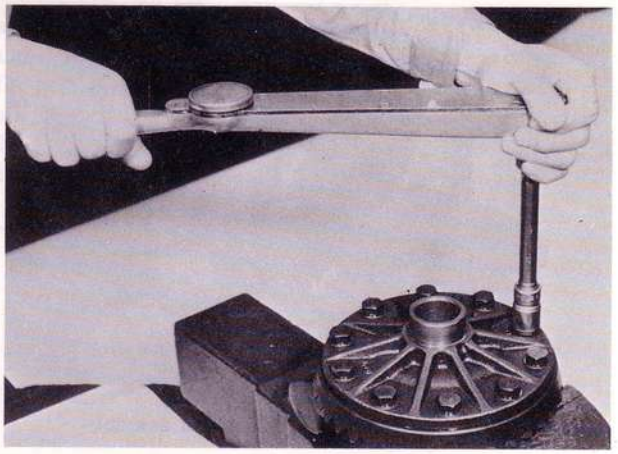

Fig. 9–22 Tightening ring gear bolts

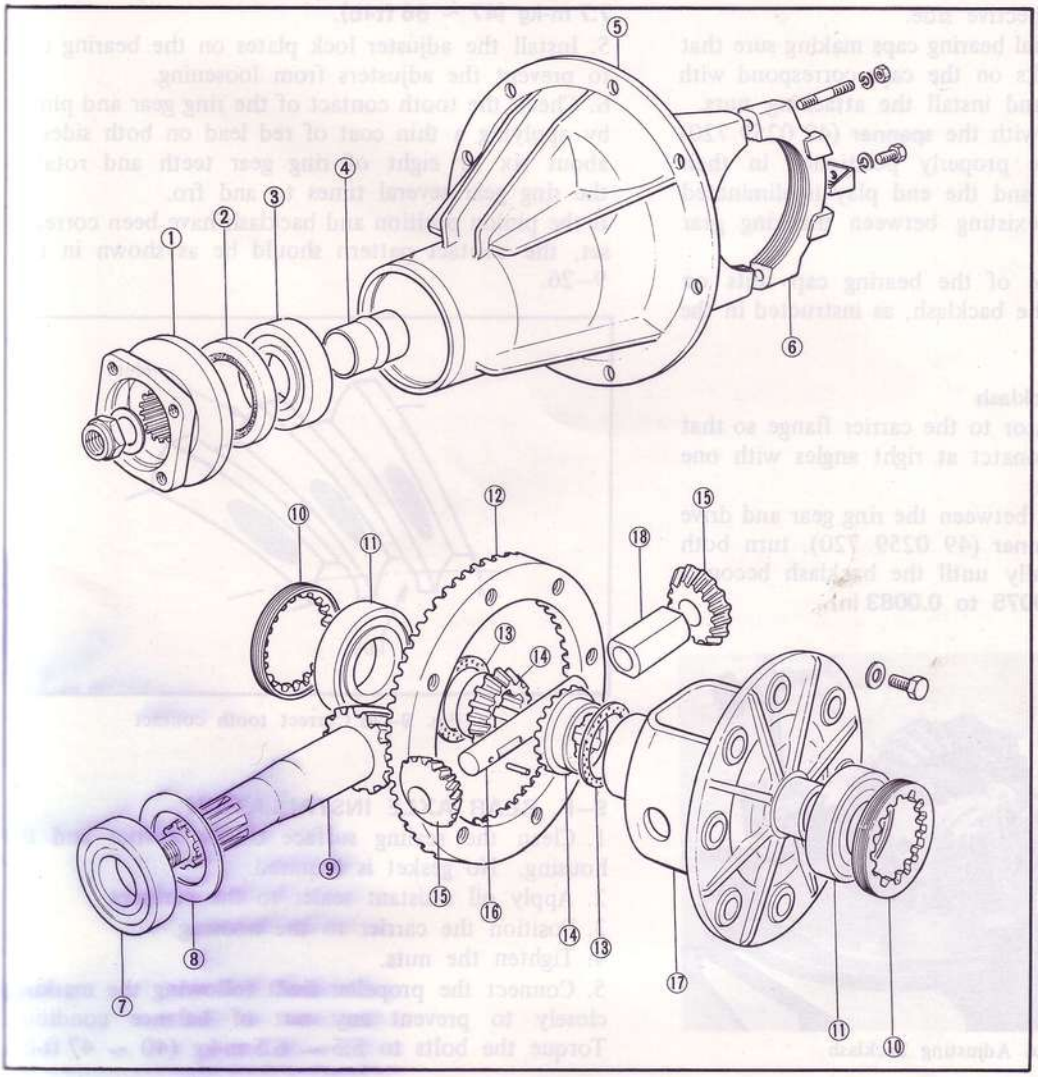

Fig. 9–21
Rear axle components

1. Companion flange
2. Oil seal
3. Front bearing
4. Collapsible spacer
5. Carrier
6. Bearing cap
7. Rear bearing
8. Spacer
9. Drive pinion
10. Adjusting screw
11. Differential bearing
12. Ring gear
13. Thrust washer
14. Side gear
15. Pinion gear
16. Pinion shaft
17. Gear case
18. Thrust block

9. Install each differential bearing to the gear case.
10. Install the differential bearing outer races to their respective bearings.

9–E–4. Installing Differential

1. Place the differential gear assembly in the carrier, making ensure that the marks for backlash adjustment on the face of the pinion and ring gear teeth are aligned each other.

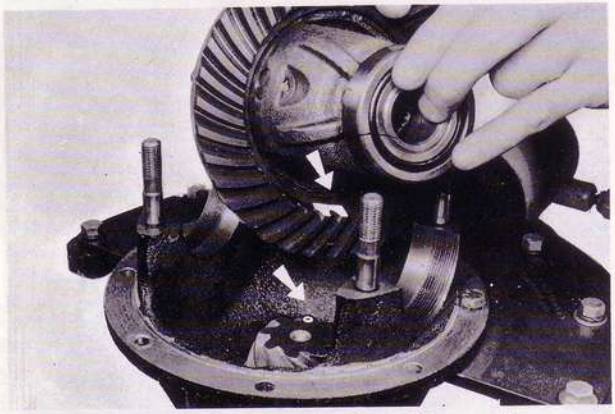

Fig. 9–23 Installing of differential assembly

2. Note the identification marks on the adjusters and install each to its respective side.
3. Install the differential bearing caps making sure that the identification marks on the caps correspond with those on the carrier and install the attaching nuts.
4. Turn the adjusters with the **spanner** (49 0259 720) until the bearings are properly positioned in their respective outer races and the end play is eliminated with some backlash existing between the ring gear and drive pinion.
5. Slightly tighten one of the bearing cap nuts on each side and adjust the backlash, as instructed in the following paragraph.

9–E–5. Adjusting Backlash

1. Secure a dial indicator to the carrier flange so that the feeler comes in conatct at right angles with one of the ring gear teeth.
2. Check the backlash between the ring gear and drive pinion. With the **spanner** (49 0259 720), turn both bearing adjusters equally until the backlash becomes **0.19 to 0.21 mm (0.0075 to 0.0083 in).**

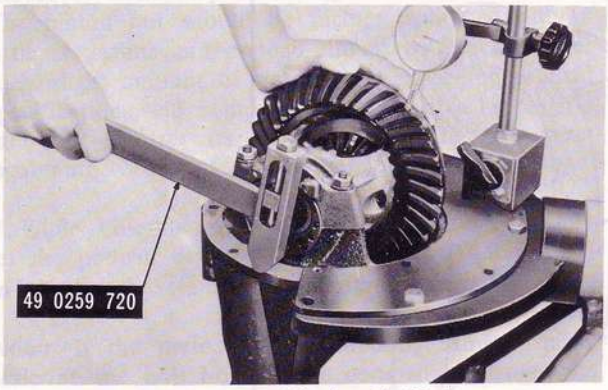

Fig. 9–24 Adjusting backlash

3. The preload on the differential bearings is obtained by tightening the adjusters. Tighten the adjusters until the distance between both pilot sections on the bearing caps becomes **204.428 ~ 204.5 mm (8.0485 ~ 8.0513 in)**, as shown in Fig. 9–25.

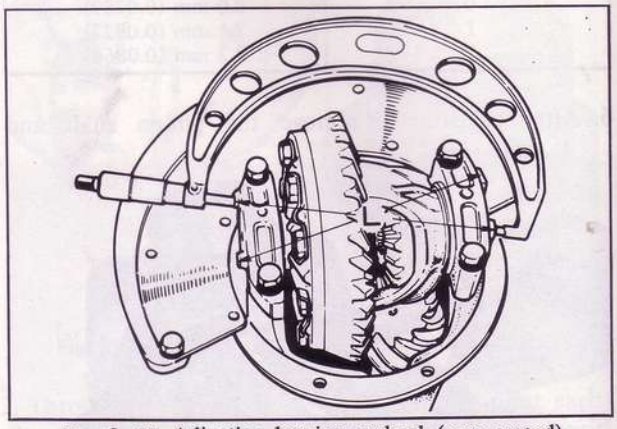

Fig. 9–25 Adjusting bearing preload (case spread)

Note: When adjusting the preload, care must be taken not to affect the backlash of the drive pinion and ring gear.

4. Tighten the bearing cap nuts to a torque of **6.5 ~ 7.7 m-kg (47 ~ 56 ft-lb)**.
5. Install the adjuster lock plates on the bearing caps to prevent the adjusters from loosening.
6. Check the tooth contact of the ring gear and pinion by applying a thin coat of red lead on both sides of about six or eight of ring gear teeth and rotating the ring gear several times to and fro.
If the pinion position and backlash have been correctly set, the contact pattern should be as shown in Fig. 9–26.

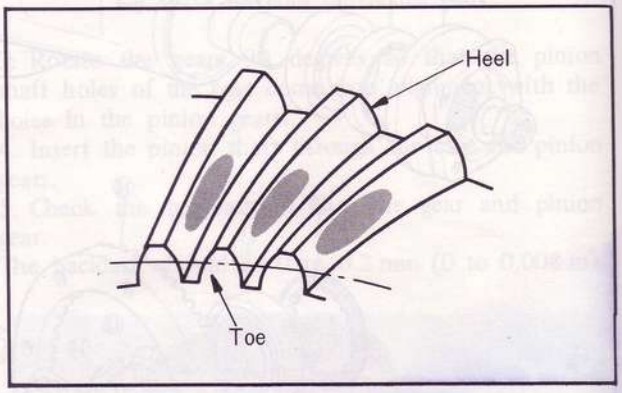

Fig. 9–26 Correct tooth contact

9–F. REAR AXLE INSTALLATION

1. Clean the sealing surface of the carrier and the housing. No gesket is required.
2. Apply oil resistant sealer to the surfaces.
3. Position the carrier to the housing.
4. Tighten the nuts.
5. Connect the propeller shaft following the markings closely to prevent any out of balance condition. Torque the bolts to 5.5 ~ 6.5 m-kg (40 ~ 47 ft-lb).

6. Install the axle shafts, drums and wheels.
7. Fill the axle with the correct grade and quantity of lubricant.
8. Lower the vehicle.

SPECIAL TOOLS

49 0603 622A	Spanner for axle shaft bearing lock nut
49 0164 550D	Rear axle stand
49 0164 562B	Attachment for rear axle stand
49 0259 720	Backlash adjusting spanner
49 0259 710A	Companion flange holding tool
49 0727 570	Pinion adjusting gauge
49 0603 555A	Gauge block and bearing model

STEERING

STEERING ..... 10 : 1
10–A. STEERING WHEEL ..... 10 : 1
10–A–1. Checking Steering Wheel Play ..... 10 : 1
10–A–2. Steering Wheel Removal ..... 10 : 1
10–A–3. Steering Wheel Inspection ..... 10 : 1
10–A–4. Steering Wheel Installation ..... 10 : 2
10–B. STEERING GEAR ..... 10 : 2
10–B–1. Steering Gear Removal ..... 10 : 2
10–B–2. Steering Gear Disassembly ..... 10 : 3
10–B–3. Steering Gear Inspection ..... 10 : 3
10–B–4. Steering Gear Assembly ..... 10 : 4
10–B–5. Steering Gear Installation ..... 10 : 5
10–C. STEERING LINKAGE ..... 10 : 5
10–C–1. Checking Ball Joint ..... 10 : 5
10–C–2. Idler Arm ..... 10 : 5
a. Removing idler arm ..... 10 : 5
b. Disassembling idler arm ..... 10 : 6
c. Checking idler arm ..... 10 : 6
d. Assembling idler arm ..... 10 : 6
e. Installing idler arm ..... 10 : 6
10–C–3. Replacing Pitman Arm ..... 10 : 6
10–C–4. Replacing Tie-rod ..... 10 : 6
10–C–5. Replacing Center Link ..... 10 : 7
10–D. FRONT WHEEL ALIGNMENT ..... 10 : 7
10–D–1. Toe-in ..... 10 : 8
a. Checking toe-in ..... 10 : 8
b. Adjusting toe-in ..... 10 : 8
10–D–2. Camber ..... 10 : 8
10–D–3. Caster ..... 10 : 8
10–D–4. Adjusting Turning Angle ..... 10 : 9
SPECIAL TOOLS ..... 10 : 9

10

STEERING

The steering system consists of the steering gear, steering column, steering wheel and steering linkage. The steering gear is of a recirculating ball nut type and the steering gear ratio 20.2 : 1.

10–A. STEERING WHEEL

10–A–1. Checking Steering Wheel Play

The steering wheel play should be **20 ~ 30 mm (0.8 ~ 1.2 in).** With the front wheels on the ground and in the straight ahead position, move the steering wheel in both directions without moving the front wheels.

If excessive play is found, the following points should be carefully checked.

1. Fit of the ball joints of the steering linkage
2. Looseness of the wheel bearings
3. Backlash between the sector gear and ball nut.

10–A–2. Steering Wheel Removal

1. Pull the steering wheel pad toward the top of the wheel.
2. Punch the mating marks on the steering wheel hub and the column shaft.
3. Remove the steering wheel attaching nut and then remove the steering wheel assembly.

Note :

Do not use any hammer for removal and **never** pound on the column shaft.

4. Disconnect the wiring harness at the connector under the instrument panel.
5. Remove the retaining ring that secures the combination switch assembly and lift the switch assembly over the column shaft.

10–A–3. Steering Wheel Inspection

1. Cracks and damage of the steering wheel

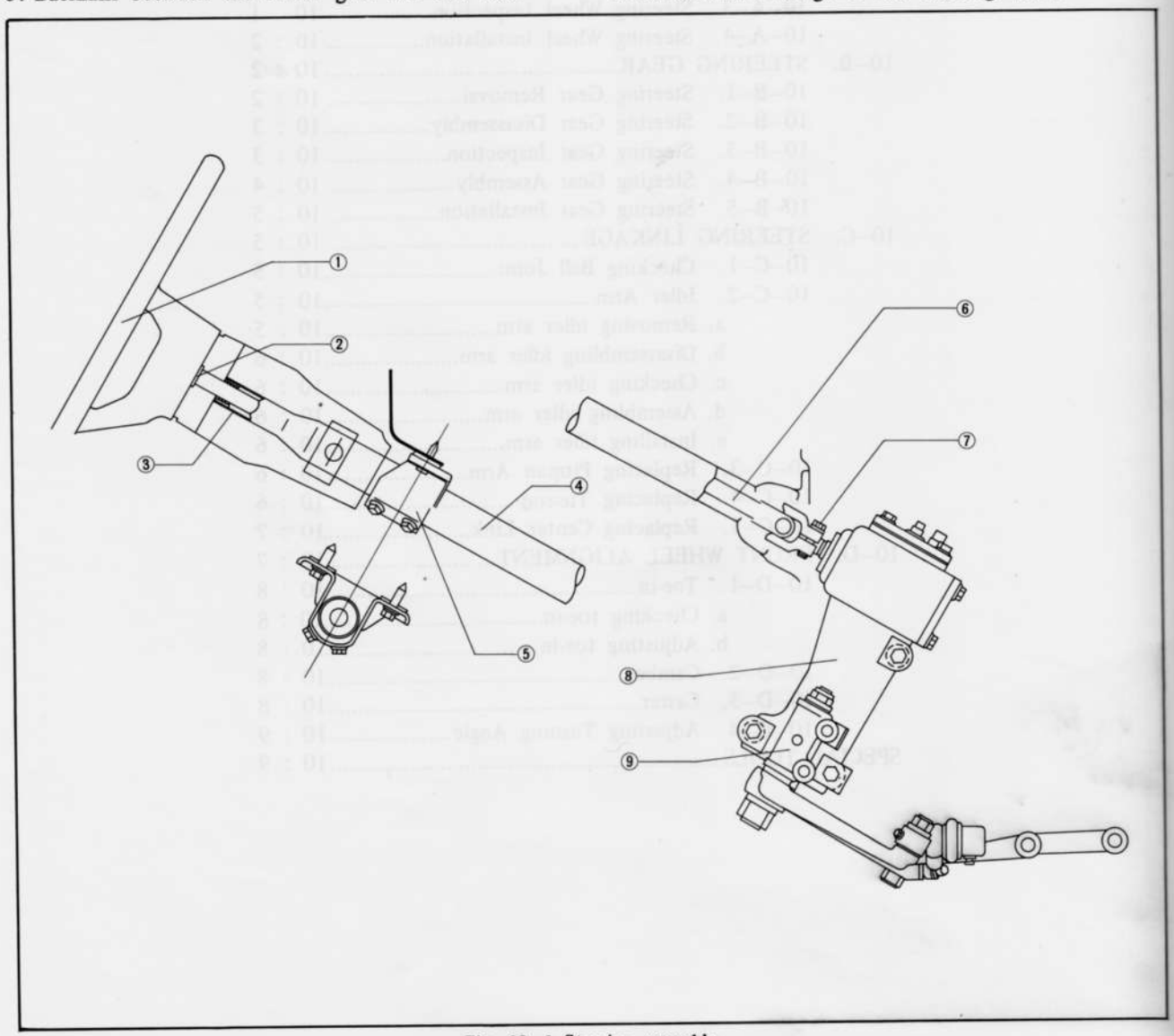

Fig. 10–1 Steering assembly

1. Steering wheel
2. Stop ring
3. Shaft support bush
4. Shaft jacket
5. Bracket
6. Shaft ass'y
7. Bolt
8. Steering gear housing
9. Idler arm

2. Damage of the horn button contact plate, seat, washer, cushion and the spring
3. Cracks and damage of the horn button
4. Function of the combination switch assembly

10–A–4. Steering Wheel Installation

Follow the removal procedures in the reverse order.

10–B. STEERING GEAR

10–B–1. Steering Gear Removal

1. Raise the front end of the vehicle and support with stands.
2. Loosen the bolt securing the worm shaft to the steering joint.

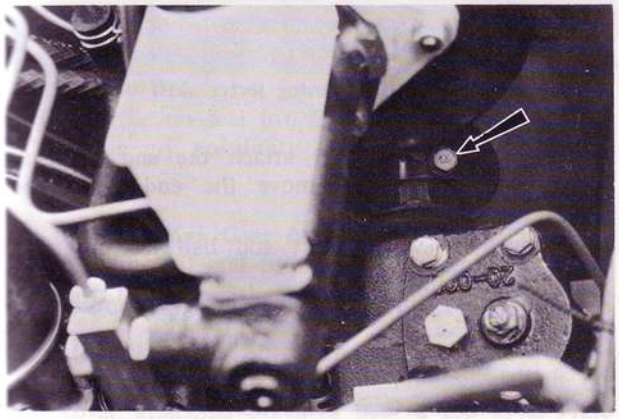

Fig. 10–2 Loosening securing bolt

3. Remove the cotter pin and castellated nut attaching the center link to the pitman arm.
4. Disconnect the center link from the pitman arm with the **ball joint puller** (Part No. 49 0727 575).

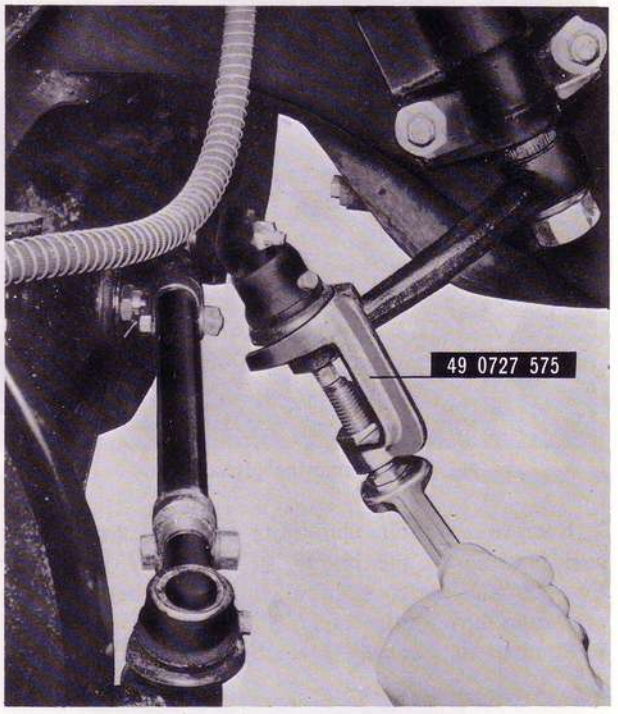

Fig. 10–3 Disconnecting center link

5. Remove the screws attaching the insulator to the pitman arm and remove the insulator.
6. Remove the nut attaching the pitman arm and

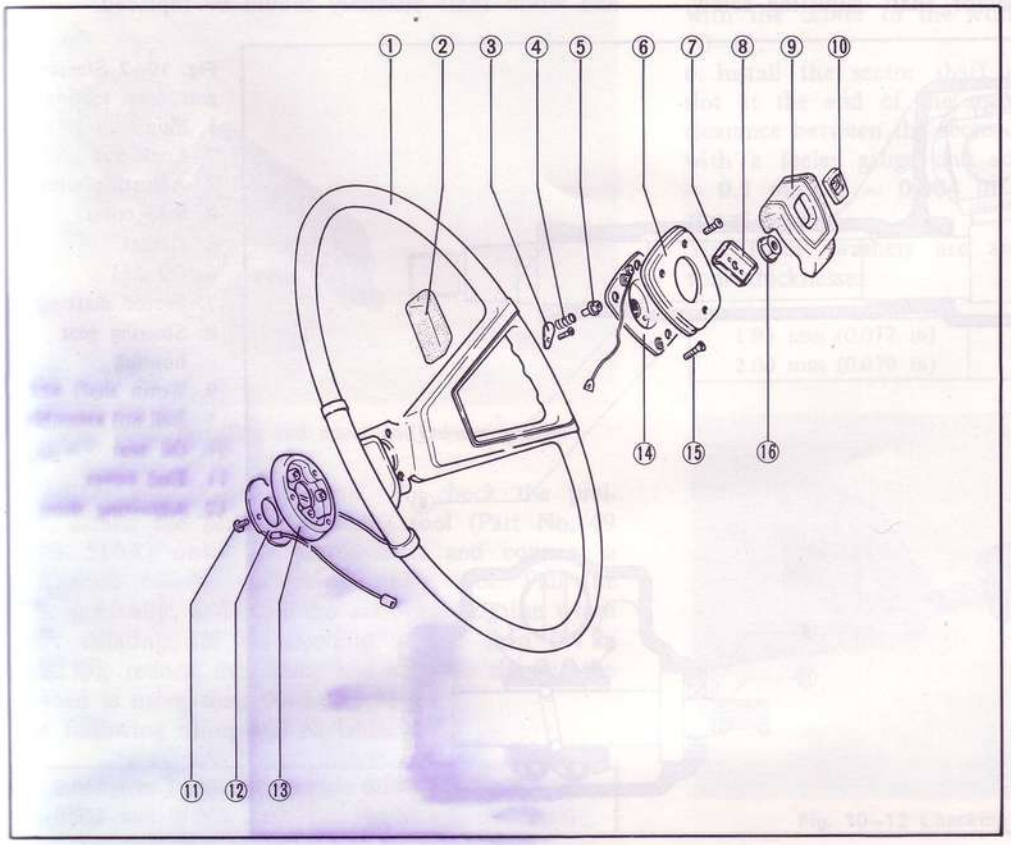

Fig. 10–4 Steering wheel components
1. Steering wheel
2. Horn button
3. Earth plate
4. Spring
5. Insulator
6. Cap set
7. Screw
8. Spring cap
9. Horn cap
10. Emblem
11. Tapping screw
12. Terminal
13. Wheel core cover
14. Set plate
15. Screw
16. Steering wheel nut

remove the pitman arm with the **pitman arm puller** (Part No. 49 0223 695D), as shown in Fig. 10–5.

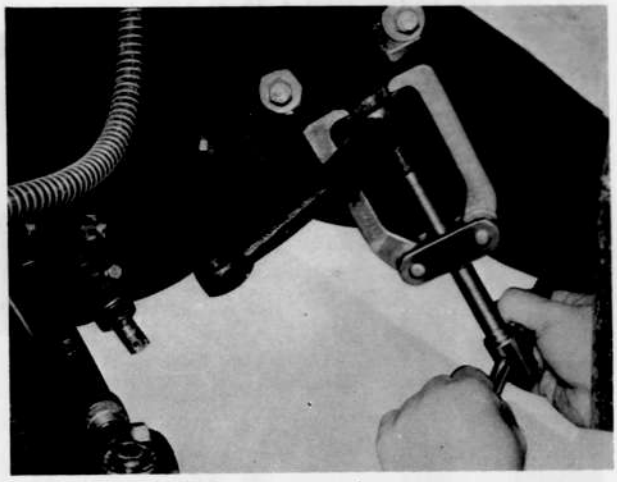

Fig. 10–5 Removing pitman arm

7. Remove the bolts and nuts retaining the steering gear housing to the body. At this point, check for the possible presence of aligning shim between the gear housing and the body.
8. Remove the steering gear from the vehicle.

10–B–2. Steering Gear Disassembly

1. Drain lubricant from the gear housing by removing the plug.
2. Remove the bolts that attach the side cover to the gear housing and loosen the sector shaft adjusting screw lock nut, then remove the sector shaft side cover screwing in the sector shaft adjusting screw.
3. Remove the sector shaft adjusting screw and shim from the slot at the end of the sector shaft.
4. Remove the sector shaft from the gear housing.



Fig. 10–6 Removing sector shaft

5. Remove the bolts that attach the end cover to the gear housing and remove the end cover and shims.
6. Remove the worm shaft and ball nut assembly from the gear housing.
7. Remove the oil seal from the gear housing, if necessary.

10–B–3. Steering Gear Inspection

1. Check the operation of the ball nut assembly on the worm shaft. If the ball nut does not travel smoothly and freely on the worm shaft, the ball nut and worm shaft assembly should be replaced.

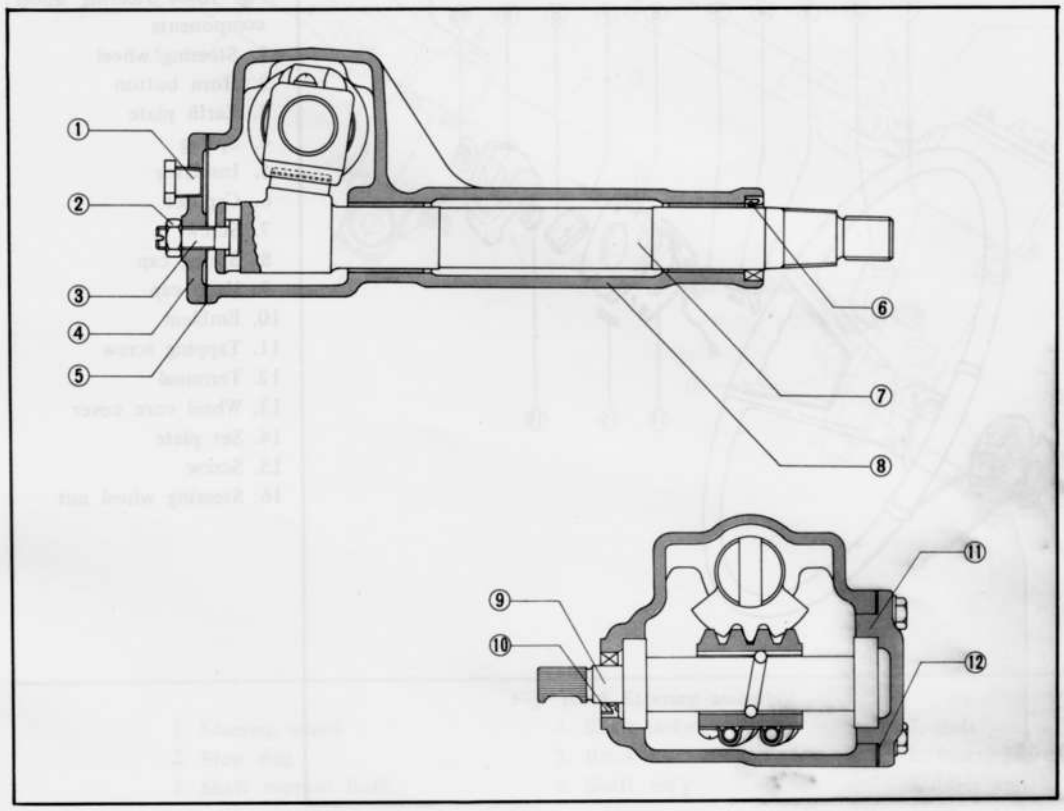

Fig. 10–7 Steering gear cross section
1. Plug
2. Lock nut
3. Adjusting screw
4. Side cover
5. Gasket
6. Oil seal
7. Sector shaft
8. Steering gear housing
9. Worm shaft and ball nut assembly
10. Oil seal
11. End cover
12. Adjusting shim

Note :
The worm shaft and ball nut are serviced as an assembly only.

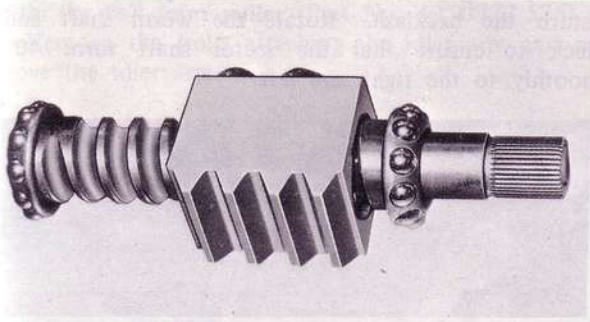

Fig. 10–8 Worm shaft and ball nut assembly

2. Check the bearing and cups for wear or any damage. If defective, replace with a new one.
3. Check the sector shaft for wear or damage at the gear surface.
4. Check the oil seal for wear, flaw, or any damage. If there is any possibility of oil leakage, replace the oil seal.

10–B–4. Steering Gear Assembly
1. Install the oil seal to the gear housing.
2. Insert the worm shaft and ball nut assembly into the gear housing.
3. Install the end cover and the bearing preload adjusting shims to the gear housing and tighten the end cover attaching bolts to **1.6 ~ 2.3 m-kg (12.0 ~ 17.0 ft-lb).**



Fig. 10–9 Installing end cover and adjusting shim

4. Adjust the bearing preload. To check the preload, attach the **preload checking tool** (Part No. 49 0180 510A) onto the worm shaft and connect a pull scale to the preload checking tool. Pull the scale gradually, and read the scale keeping the worm shaft rotating. If the reading is less than **0.1 kg (0.22 lb)**, reduce the shim, and add the shim if the preload is more than **0.4 kg (0.88 lb).**
The following shims are available.

0.050 mm (0.002 in)	0.100 mm (0.004 in)
0.075 mm (0.003 in)	0.200 mm (0.008 in)

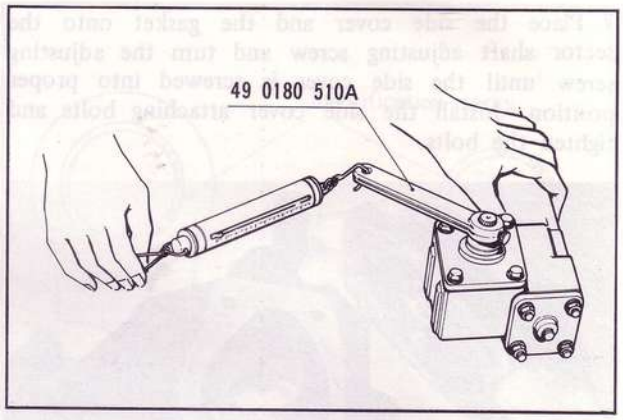

Fig. 10–10 Checking bearing preload

5. Insert the sector shaft into the gear housing, being careful not to damage the oil seal, and ensuring that the center of the sector gear is in alignment

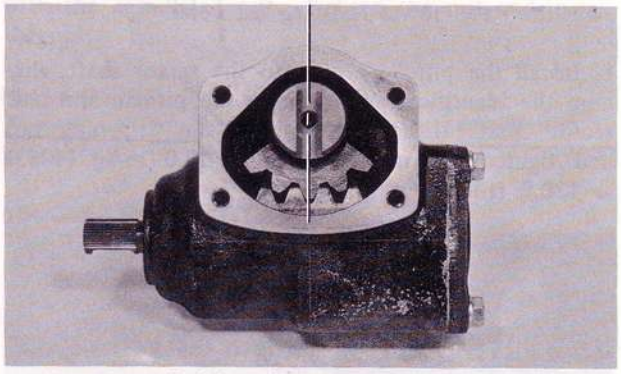

Fig. 10–11 Position of sector gear and worm gear

with the center of the worm gear as shown in Fig. 10–11.
6. Install the sector shaft adjusting screw into the slot at the end of the sector shaft. Check the end clearance between the sector shaft and adjusting screw with a feeler gauge and adjust this clearance to **0 ~ 0.1 mm (0 ~ 0.004 in)** by inserting appropriate thrust washer.
The thrust washers are available in the following four thicknesses :

1.95 mm (0.077 in)	2.05 mm (0.081 in)
2.00 mm (0.079 in)	2.10 mm (0.083 in)

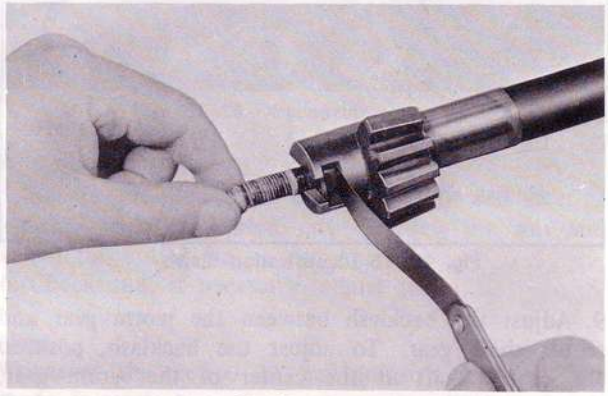

Fig. 10–12 Checking end clearance

7. Place the side cover and the gasket onto the sector shaft adjusting screw and turn the adjusting screw until the side cover is screwed into proper position. Install the side cover attaching bolts and tighten the bolts.

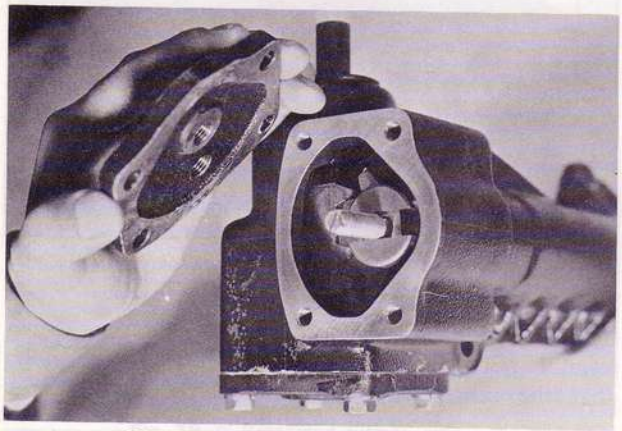

Fig. 10–13 Installing side cover

8. Install the pitman arm onto the sector shaft, aligning the identification marks of the pitman arm and sector shaft. Install the pitman arm attaching nut and tighten the nut to **15.0 ~ 18.0 m-kg (108.0 ~ 130.0 ft-lb).**

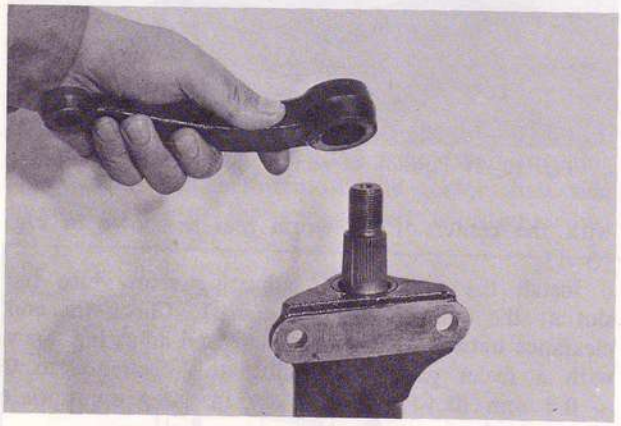

Fig. 10–14 Installing pitman arm

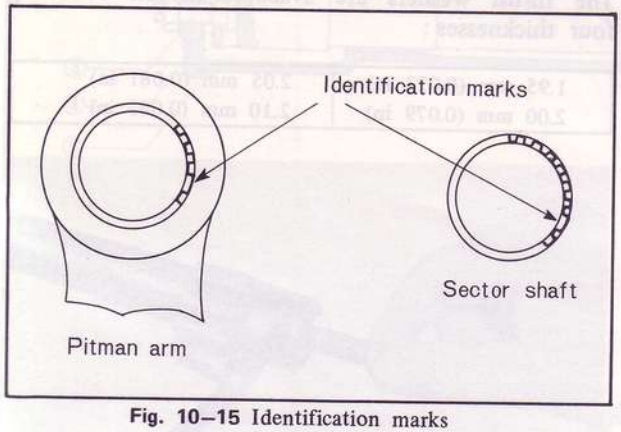

Fig. 10–15 Identification marks

9. Adjust the backlash between the worm gear and sector shaft gear. To adjust the backlash, position the sector shaft at the center of the worm gear, then, gradually screw in or out the sector shaft adjusting screw until the backlash is obtained 0 mm at the pitman arm end. Turn out the adjusting screw so as to give 30 degrees (1/12 of a turn). Tighten the adjusting screw lock nut, taking care not to disturb the backlash. Rotate the worm shaft and check to ensure that the sector shaft **turns 40°** smoothly to the right and left.



Fig. 10–16 Adjusting backlash

10. Check the worm shaft rotating torque. To check, attach the **checking tool** (Part No. 49 0180 510A) onto the worm shaft and connect a pull scale to the checking tool. Pull the scale and check the worm shaft rotating torque. If the rotating torque is less than **0.9 kg (1.98 lb)** or more than **1.2 kg (2.65 lb)**, readjust the bearing preload.

10–B–5. Steering Gear Installation

Follow the removal procedures in the reverse order.

Note :

(a) Align the steering worm shaft cut portion with the and install the steering gear housing to the body, and tighten the securing bolts and nuts.
(b) Place the shim in original position to obtain proper shaft alignment.
(c) Install the pitman arm to the sector shaft aligning the identification marks and secure with the nut. Tighten the nut to 15.0 ~ 18.0 m-kg (108.0 ~ 130.0 ft-lb).
(d) Fill the gear housing with gear lubricant.

10–C. STEERING LINKAGE

10–C–1. Checking Ball Joint

1. Check the dust seal for wear, flaw or any damage. If the dust seal is defective, this will allow entry of water and dust, resulting in ball joint wear. Replace the dust seal if necessary.
2. The end play of the ball stud is preadjusted at the factory to be from **0 ~ 0.25 mm (0 ~ 0.01 in).** If it exceeds **1.0 mm (0.039 in)**, replace the ball joint in its assembled form.

10–C–2. Ider Arm

a. Removing idler arm

1. Raise the front end of the vehicle and support

with stands.
2. Remove the cotter pin and nut attaching the center link at the idler arm.
3. Disconnect the center link from the idler arm with the **ball joint puller** (Part No. 49 0727 575).
4. Remove the bolts attaching the idler arm and remove the idler arm.

b. Disassembling idler arm
1. Hold the idler arm in a vise, protecting with aluminum plates, remove the cotter pin and remove the bracket attaching nut.
2. Remove the washers, bushes and bracket.

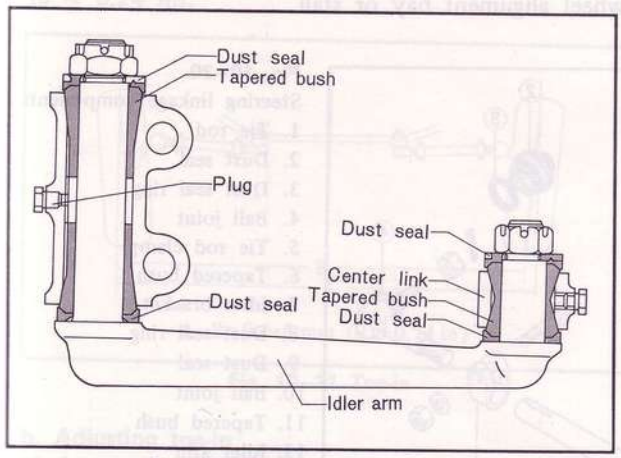

Fig. 10–17 Idler arm cross section

c. Checking idler arm
1. Inspect the bush for wear or damage.
2. Check the end play of the ball stud. If necessary, replace the idler arm assembly.

d. Assembling idler arm
Follow the disassembly procedures in the reverse order.

Note :
Apply grease to the bracket and bushes.

e. Installing idler arm
Follow the removal procedures in the reverse order.

Note :
Tighten the idler arm attaching bolts to **4.5 ~ 5.7 m-kg (33 ~ 41 ft-lb).**

10–C–3. Replacing Pitman Arm
1. Raise the front end of the vehicle and support with stands.
2. Remove the cotter pin and castellated nut that attach the steering center link to the pitman arm.
3. Disconnect the steering center link from the pitman arm with the **ball joint puller** (Part No. 49 0727 575).
4. Remove the pitman arm attaching nut.
5. Remove the pitman arm from the sector shaft using the **pitman arm puller** (Part No. 49 0223 695D).
6. Install the pitman arm onto the sector shaft, aligning the identification marks of the pitman arm and sector shaft.

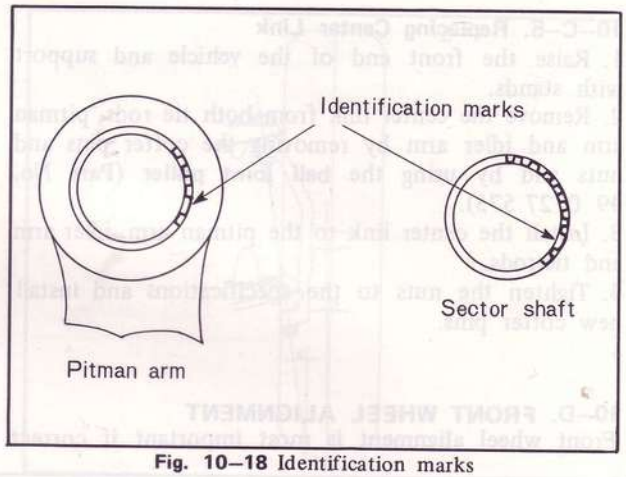

Fig. 10–18 Identification marks

7. Install the pitman arm attaching nut and tighten the nut to **15.0 ~ 18.0 m-kg (108.0 ~ 130.0 ft-lb).**
8. Secure the steering center link to the pitman arm with the castellated nut. Tighten the nut and install the cotter pin.

Note :
Always tighten the nut to the next castellation if necessary to install the cotter pin.

10–C–4. Replacing Tie-rod
The tie-rod should be replaced, if it becomes worn or damaged. **Do not** attempt to straighten the tie-rod if damaged.
1. Raise the front end of the vehicle and support with stands.
2. Remove the cotter pins and castellated nuts that attach both tie-rod ends to the center link and steering knuckle.
3. Disconnect the tie-rod ends from the center link and steering knuckle with the **ball joint puller** (Part No. 49 0727 575).

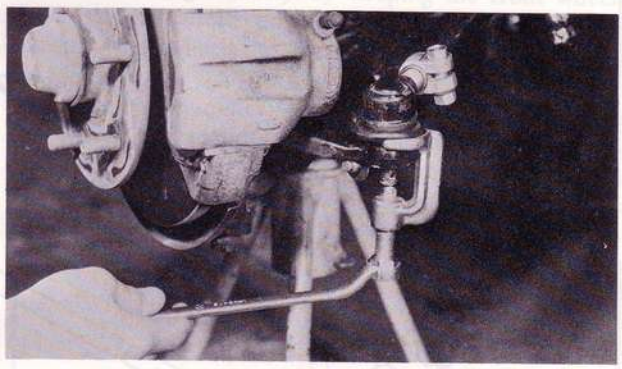

Fig. 10–19 Disconnecting tie-rod end

4. Remove the tie-rod.
5. Secure the tie-rod to the center link and steering knuckle with castellated nut. Tighten the nut and install the cotter pin.
6. Check and, if necessary, adjust toe-in.

Note :
Whenever the tie-rod or ball joint is replaced, the toe-in is reset.

10–C–5. Replacing Center Link

1. Raise the front end of the vehicle and support with stands.
2. Remove the center link from both tie rods, pitman arm and idler arm by removing the cotter pins and nuts and by using the **ball joint puller** (Part No. 49 0727 575).
3. Install the center link to the pitman arm, idler arm and tie-rods.
4. Tighten the nuts to the specifications and install new cotter pins.

10–D. FRONT WHEEL ALIGNMENT

Front wheel alignment is most important if correct steering, and reasonable tire wear are to be obtained. Before attempting to check the wheel alignment, the following points should be investigated, and if necessary, corrected.

1. Tires for correct inflation
2. Unbalanced tires
3. Wobbling wheels
4. Front wheel bearing adjustment
5. Ball joints, and tie-rod end for looseness
6. Front coil springs for correct seating

When the above points are all in order, the vehicle should be stood on a perfectly level surface in the wheel alignment bay or stall.

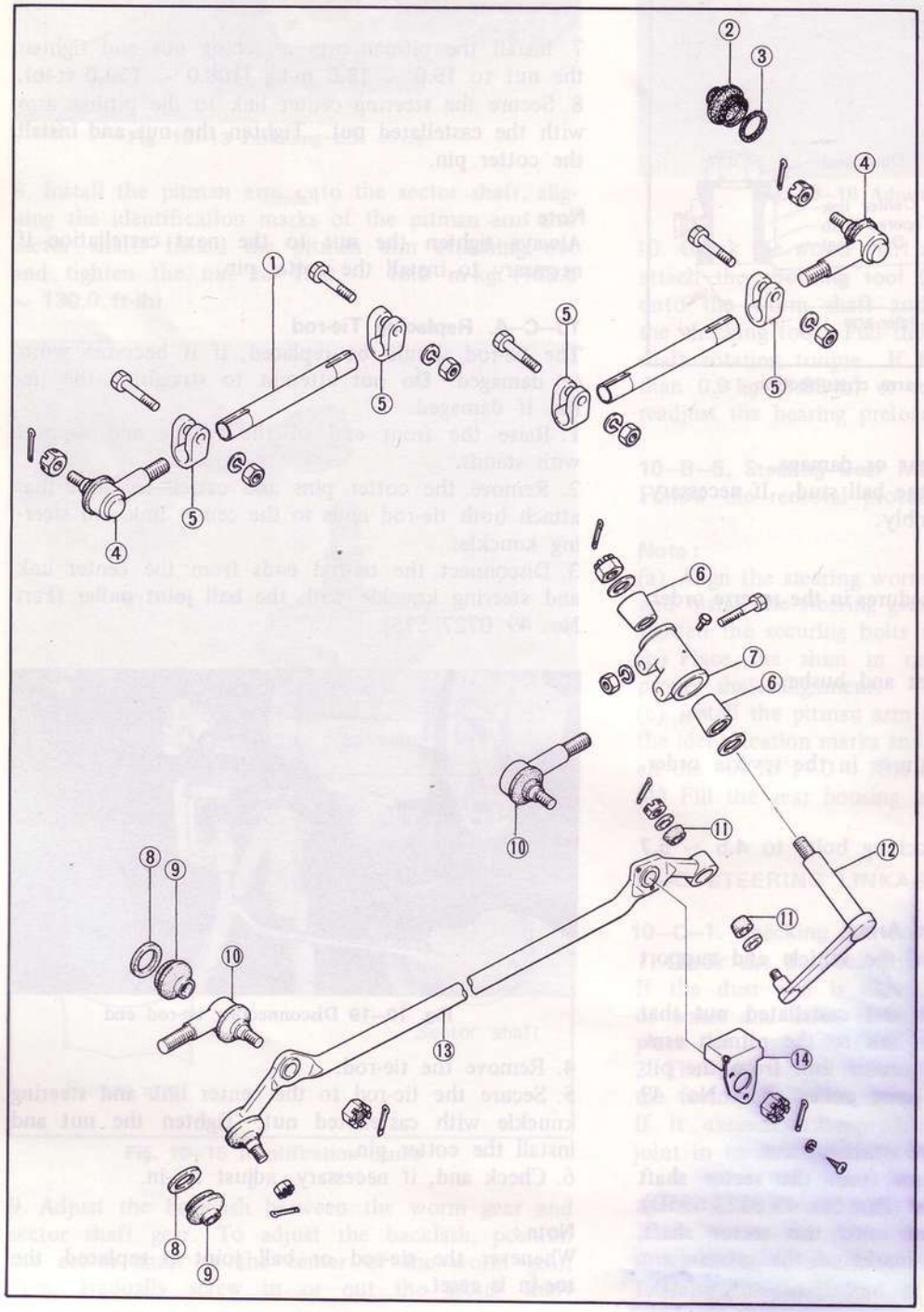

Fig. 10–20
Steering linkage components
1. Tie rod
2. Dust seal
3. Dust seal ring
4. Ball joint
5. Tie rod clamp
6. Tapered bush
7. Idler bracket
8. Dust seal ring
9. Dust seal
10. Ball joint
11. Tapered bush
12. Idler arm
13. Center link
14. Insulator

10–D–1. Toe-in

a. Checking toe-in

1. Raise the front end of the vehicle until the wheels clear the ground.
2. Turning the wheel by hand, mark a line in the center of the wheel with a scribing block.
3. Lower the vehicle and place the front wheels in the straight-ahead position.
4. Measure the distances between the marked lines at the front and rear of the wheels with a suitable toe-in gauge. The difference between these two distances is the toe-in. The standard toe-in is **0 ~ 6 mm (0 ~ 0.24 in).**

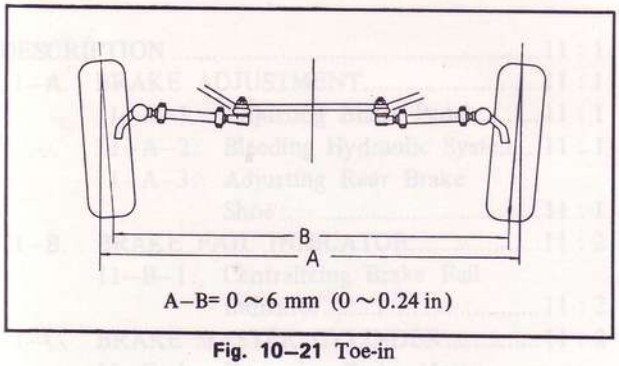

Fig. 10–21 Toe-in

b. Adjusting toe-in

If the toe-in is incorrect, proceed as follows :

1. Loosen the tie-rod clamp bolts at each end of the tie-rod.
2. Check that the tie-rod ends are in the same position on each rod, thus ensuring that the tie-rods are the same length.
3. Turn the both tie-rods an equal amount until the correct toe-in is obtained.

Note :

The tie-rod is threaded with right and left hand threads.

Note:

The cramps on the tie-rods must be positioned as Fig. 10–22 to prevent interference with the center link when the toe-in is readjusted.

4. Tighten the tie-rod locking nuts and recheck the toe-in.

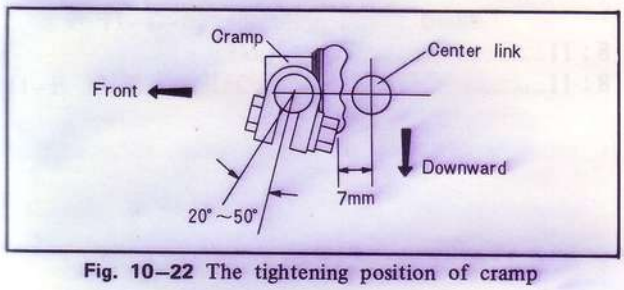

Fig. 10–22 The tightening position of cramp

10–D–2. Camber

Camber is the outward tilting of the front wheel at the top from the vertical as shown in Fig. 10–23. The

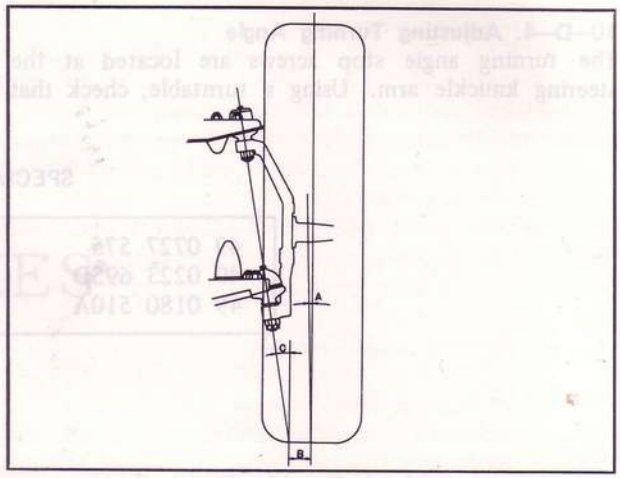

Fig. 10–23 Camber and kingpin inclination

A. Camber
B. Camber trail
C. Kingpin inclination

standard camber angle is 15′ ± 20′. The purpose of camber is to place the weight of the vehicle, as near as possible, directly above the tire contact on the road to facilitate ease of steering. Excessive camber tends to cause uneven wear of the tires and negative camber, hard steering and a possible wandering condition. Tires will wear out at the inside shoulders.

To check the camber, use a wheel aligning gauge in accordance with the manufacturer's instructions. The camber is adjusted by adding or subtracting the shim between the upper arm shaft and the support bracket. The shims are available in thicknesses of 1.0, 1.6, 2.0 and 3.2 mm (0.039, 0.063, 0.079 and 0.126 in).

10–D–3. Caster

Caster is the inclination of the upper ball joint towards the rear of the vehicle. The standard caster angle is 1° 12′ ± 20′. The purpose of caster is to provide steering stability by keeping the front wheels in a straight ahead position and also assisting in returning the wheels to straight ahead when coming out of a turn.

To check the caster, use a wheel aligning gauge following the manufacturer's instructions. If found incorrect, adjust the shims between the upper arm shaft and the support bracket or turn the upper arm shaft until the correct adjustment is obtained.

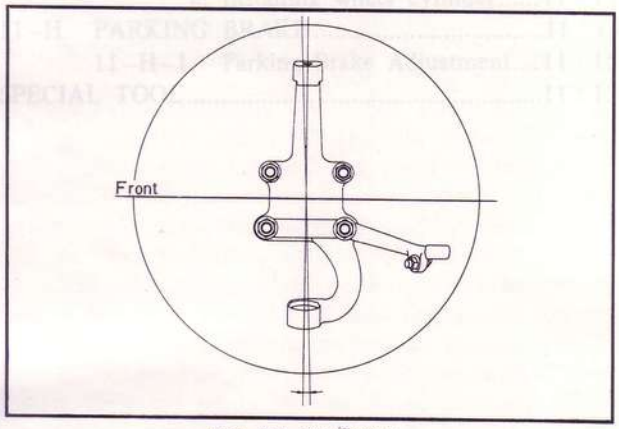

Fig. 10–24 Caster

10–D–4. Adjusting Turning Angle

The turning angle stop screws are located at the steering knuckle arm. Using a turntable, check that the front wheels turn 33° 18′ inward and 32° 26′ outward. If necessary, adjust the turning angle by the stop screws.

SPECIAL TOOLS

49 0727 575	Ball joint puller
49 0223 695D	Pitman arm puller
49 0180 510A	Preload checking tool

BRAKES

DESCRIPTION ..... 11 : 1
11–A. BRAKE ADJUSTMENT ..... 11 : 1
11–A–1. Adjusting Brake Pedal ..... 11 : 1
11–A–2. Bleeding Hydraulic System ... 11 : 1
11–A–3. Adjusting Rear Brake Shoe ..... 11 : 1
11–B. BRAKE FAIL INDICATOR ..... 11 : 2
11–B–1. Centralizing Brake Fail Indicator ..... 11 : 2
11–C. BRAKE MASTER CYLINDER ..... 11 : 2
11–C–1. Removing Brake Master Cylinder ..... 11 : 2
11–C–2. Disassembling Brake Master Cylinder ..... 11 : 3
11–C–3. Checking Brake Master Cylinder ..... 11 : 4
11–C–4. Assembling Brake Master Cylinder ..... 11 : 4
11–C–5. Installing Brake Master Cylinder ..... 11 : 4
11–D. POWER BRAKE UNIT ..... 11 : 5
11–D–1. Checking Power Brake Unit on Vehicle ..... 11 : 5
11–D–2. Removing Power Brake Unit ..... 11 : 5
11–D–3. Disassembling Power Brake Unit ..... 11 : 5
11–D–4. Checking Power Brake Unit ..... 11 : 7
11–D–5. Assembling Power Brake Unit ..... 11 : 8
11–D–6. Installing Power Brake Unit ..... 11 : 8
11–E. HYDRAULIC LINES ..... 11 : 8
11–E–1. Checking Brake Lines ..... 11 : 8
11–F. FRONT BRAKE ..... 11 : 9
11–F–1. Disc Brake Shoe ..... 11 : 9
a. Replacing disc brake shoe ..... 11 : 9
11–F–2. Caliper ..... 11 : 10
a. Removing caliper ..... 11 : 10
b. Disassembling caliper ..... 11 : 10
c. Checking caliper ..... 11 : 10
d. Assembling caliper ..... 11 : 10
e. Installing caliper ..... 11 : 11
11–F–3. Brake Disc and Front Wheel Hub Assembly ..... 11 : 12
a. Checking disc assembly ..... 11 : 12
b. Replacing disc assembly ..... 11 : 12
11–G. REAR BRAKE ..... 11 : 12
11–G–1. Rear Brake Drum and Shoe ..... 11 : 12
a. Removing rear brake drum and shoe ..... 11 : 12
b. Inspecting rear brake drum and shoe ..... 11 : 14
c. Installing rear brake drum and shoe ..... 11 : 14
11–G–2. Wheel Cylinder ..... 11 : 14
a. Removing wheel cylinder ..... 11 : 14
b. Disassembling wheel cylinder ..... 11 : 14
c. Checking wheel cylinder ..... 11 : 14
d. Assembling wheel cylinder ..... 11 : 14
e. Installing wheel cylinder ..... 11 : 15
11–H. PARKING BRAKE ..... 11 : 15
11–H–1. Parking Brake Adjustment ..... 11 : 15
SPECIAL TOOL ..... 11 : 15

DESCRIPTION

The brakes consist of two systems, the foot brake, and the parking brake. The front brakes are of a disc brake type.

The rear brakes are of a drum type with leading and trailing shoes. The brake pedal is of a pendant type.

The parking brake operates the brake shoes of the rear wheels through the wire linkage.

11–A. BRAKE ADJUSTMENT

11–A–1. Adjusting Brake Pedal

There should always be **8.5 to 10.0 mm (0.33 to 0.39 in)** free travel before the power piston starts to move. To adjust the free travel, loosen the lock nut and turn the push rod connected to the brake pedal. After proper adjustment is obtained, tighten the lock nut.

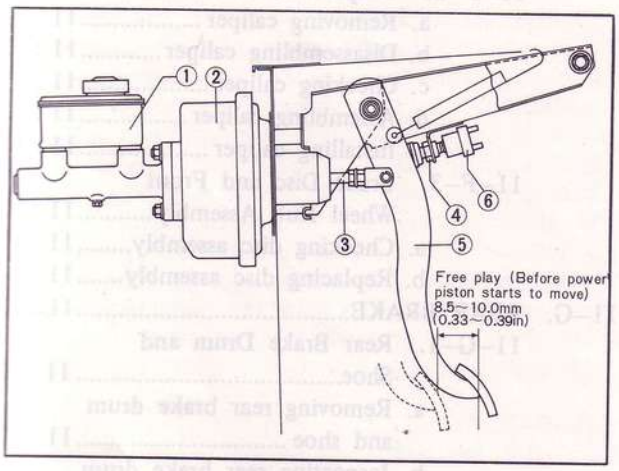

Fig. 11–1 Adjusting brake pedal

1. Master cylinder
2. Power brake unit
3. Push rod
4. Lock nut
5. Brake pedal
6. Stop light switch

11–A–2. Bleeding Hydraulic System

The front and rear hydraulic brake systems are individual system and are bled separately. When bleeding the brake system, bleed one bleeder screw at a time, begining at the bleeder screw with the longest hydraulic line first.

1. Remove the rubber cup from the bleeder screw on the right rear lower wheel cylinder and attach a vinyl tube to the bleeder screw.
2. Insert the free end of the vinyl tube into a suitable container while bleeding the brake system.
3. Depress the brake pedal several times quickly, then with the brake pedal depressed, open the bleeder screw to expel the air. Close the screw, then return the pedal to the full-released position.
4. Repeat this operation until air bubbles cease to appear at the free end of the vinyl tube.
5. Repeat this procedure at the upper right wheel cylinder and left rear wheel cylinders.
6. If the rear brake system is to be bled, repeat Step 1 through 4 at both sides of the front wheel cylinders.
7. Centralize the brake fail indicator as described in par 11–B–1.

Note:

a. During bleeding operation, the reservoir of the master cylinder must be kept at least 3/4 full of the brake fluid.

b. Do not mix low temperature brake fluid with the specified fluid.

c. Never re-use brake fluid which has been drained from the hydraulic system.

d. Do not use the secondary piston stop screw, located on the side of the master cylinder to bleed the brake system.

Loosening or removing this screw could result in damage to the secondary piston or stop screw.

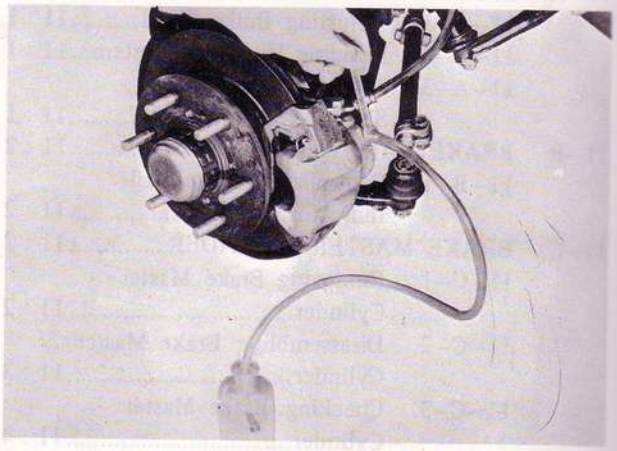

Fig. 11–2 Bleeding front brake

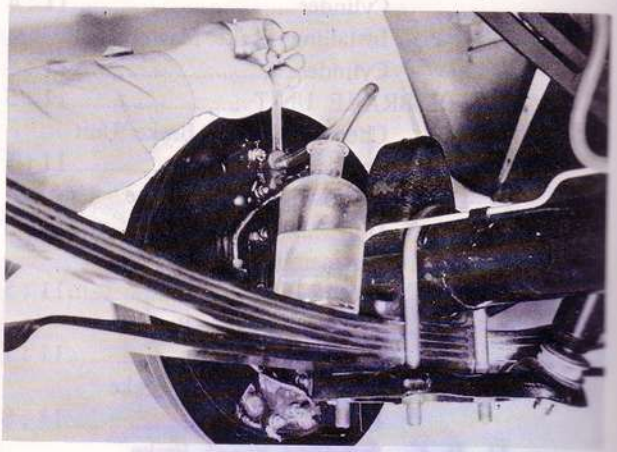

Fig. 11–3 Bleeding rear brake

11–A–3. Adjusting Rear Brake Shoe

To adjust the brake shoe, proceed as follows :

1. Jack the rear end of the vehicle, then support with stands.
2. Make sure that the parking brake is fully released.
3. Remove the shoe adjusting hole plug from the backing plate, and expand the brake shoe by turning the adjuster toward the arrow direction (⇐) marked on the backing plate until the wheel locks. At this time, pump the brake pedal several times to make

sure that the shoes contact the drum on the entire surface. If the wheel turns after removing the foot from the brake pedal, turn the adjuster further until the wheel locks firmly.

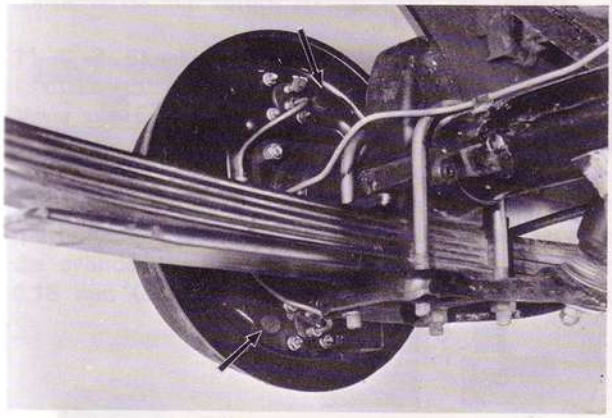

Fig. 11–4 Removing plug

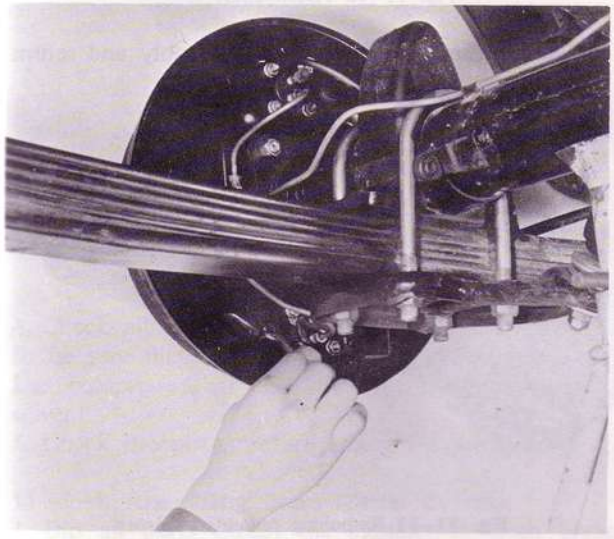

Fig. 11–5 Adjusting rear brake shoe

4. Back off the adjuster 5 notches so that the drum rotates freely without any drag.
5. Check that the wheel rotates freely after pumping the brake pedal several times. Next, install the adjusting hole plug onto the backing plate.

Note:
If the wheel does not rotate freely, check and repair the drum, shoes or other necessary parts.

6. Perform the same adjustment on the other side shoes of the rear wheels. The adjustments must be equal at all shoes.

11–B. BRAKE FAIL INDICATOR

11–B–1. Centralizing Brake Fail Indicator

After any repair or bleeding of the front or rear brake system, the brake warning light will usually continue to be illuminated due to the brake fail indicator remaining in the off center position. To centralize the brake fail indicator, turn off the warning light after repair operation.
1. Turn the ignition switch to the ON position.
2. Check the fluid level in the master cylinder reservoir and fill them to 3/4 full of the brake fluid.
3. Depress the brake pedal and the piston will center itself cousing the brake warning light to go out.
4. Turn the ignition switch to the OFF position.
5. Before driving the vehicle, check operation of the brakes and be sure that a firm pedal is obtained.

11–C. BRAKE MASTER CYLINDER

11–C–1. Removing Brake Master Cylinder

1. Disconnect the fluid pipes at the master cylinder outlets.
2. Remove the nuts that attach the master cylinder to the power brake unit.
3. Remove the master cylinder.

Note :
Never allow the brake fluid to drop on any painted surface.

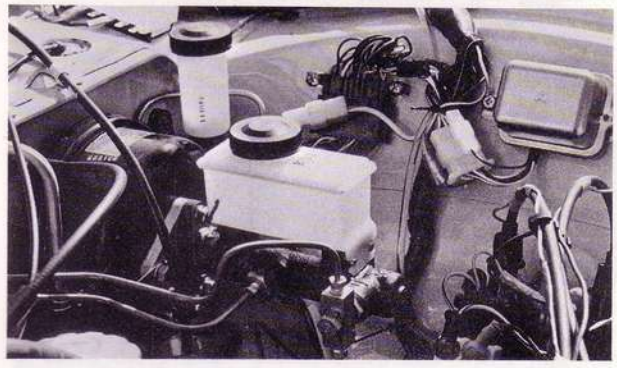

Fig. 11–6 Removing brake master cylinder

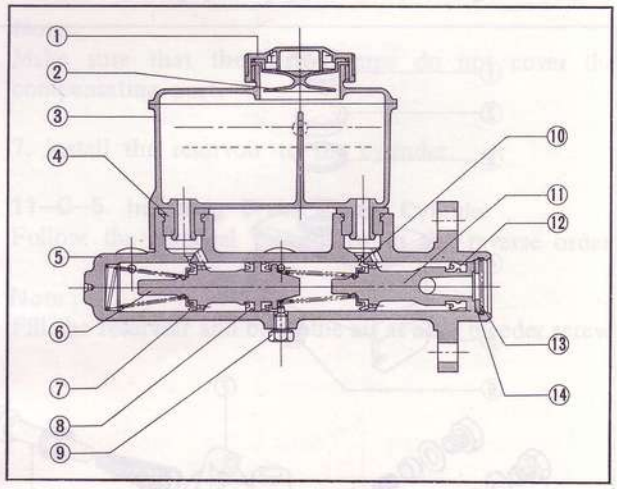

Fig. 11–7 Master cylinder cross section

1. Reservoir cap
2. Fluid baffle
3. Reservoir
4. Bush
5. Cylinder
6. Secondary piston
7. Primary cup
8. Secondary cup
9. Stop bolt
10. Primary cup
11. Primary piston
12. Secondary cup
13. Stop wire
14. Stop washer

11–C–2. Disassembling Brake Master Cylinder

1. Clean the outside of the master cylinder.
2. Pour out any brake fluid that remains in the cylinder. Discard the old brake fluid.
3. Remove the bolts attaching the reservoir and remove the reservoir from the cylinder.
4. Depress the primary piston assembly and remove the snap ring from the retaining groove at the rear of the cylinder bore.

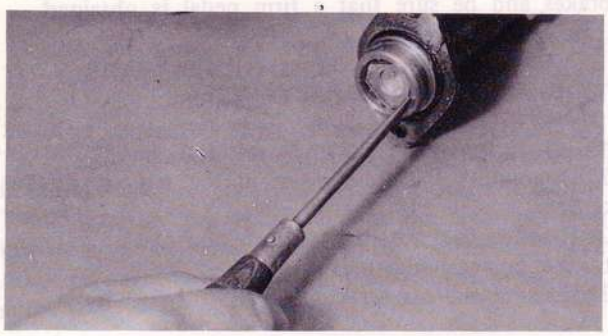

Fig. 11–8 Removing snap ring

5. Remove the washer, primary piston assembly and return spring from the cylinder bore.

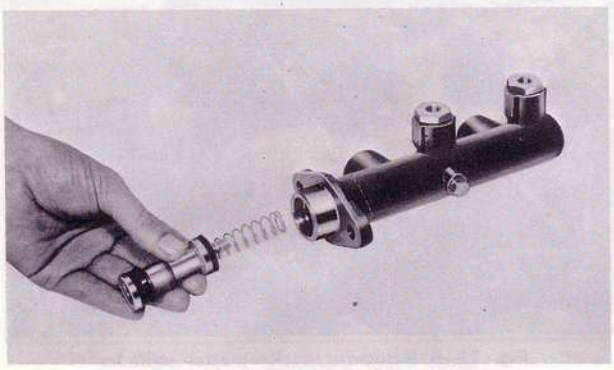

Fig. 11–9 Removing primary piston

6. Depress the secondary piston assembly with a suitable rod and remove the secondary piston stop bolt from the outside of the cylinder, and insert a guide pin in its place.

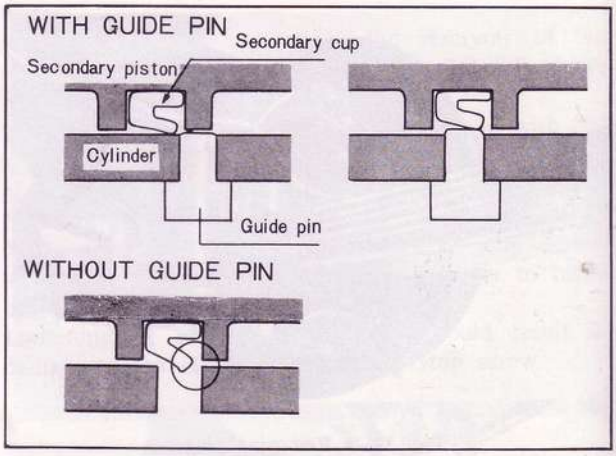

Fig. 11–10 Piston guide pin

7. Remove the secondary piston assembly and return

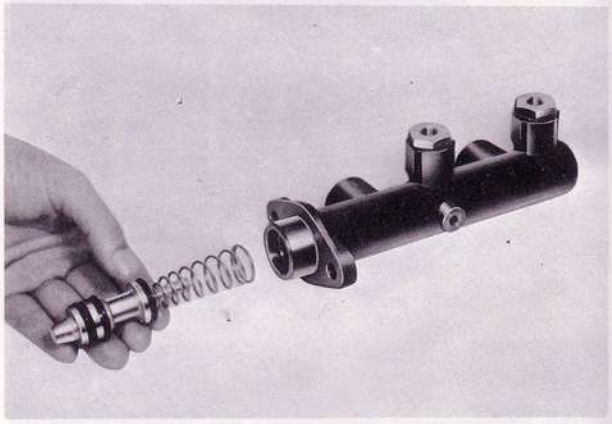

Fig. 11–11 Removing secondary piston

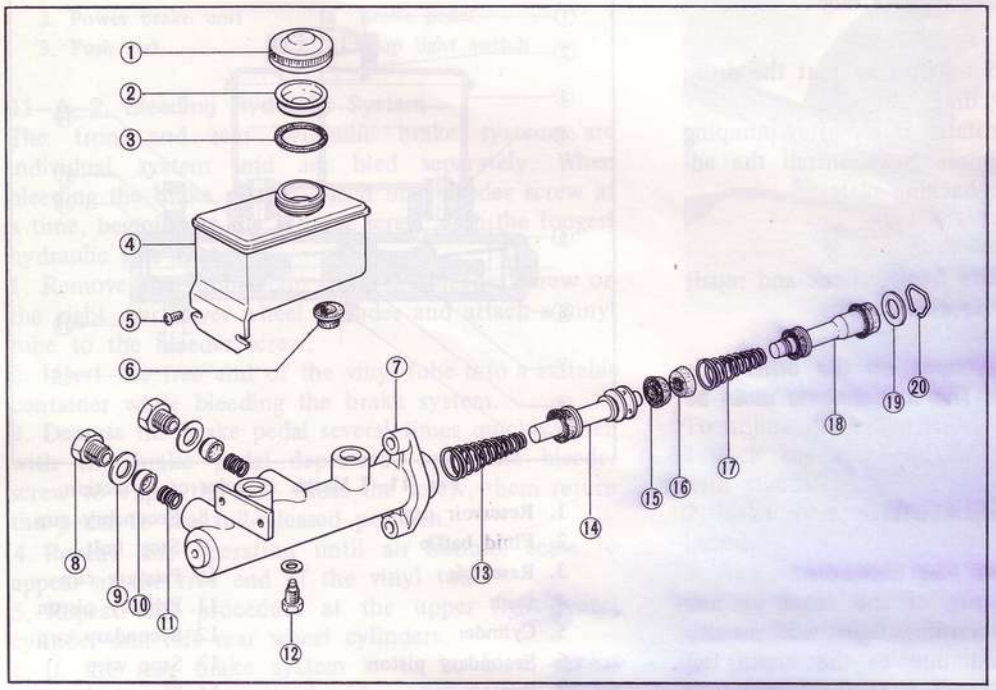

Fig. 11–12 Brake master cylinder components

1. Reservoir cap
2. Fluid baffle
3. Packing
4. Reservoir
5. Bolt
6. Bush
7. Cylinder
8. Joint bolt
9. Gasket
10. Check valve
11. Spring
12. Secondary piston stop bolt and "O" ring
13. Spring
14. Secondary piston
15. Secondary piston cup
16. Secondary piston cup
17. Spring
18. Primary piston
19. Stop washer
20. Snap ring

spring. If necessary, blow out with compressed air from the secondary brake system outlet.
8. Remove the joint bolts from the primary and secondary brake system outlets. Then, remove the check valves and return springs from the outlets.

11–C–3. Checking Brake Master Cylinder

1. Clean all parts in clean alcohol or brake fluid. **Never use** gasoline or kerosene.
2. Check the piston cups and replace if they are damaged, worn, softened, or swelled.
3. Examine the cylinder bore and piston for wear, roughness or scoring. Check the clearance between the cylinder bore and the piston. If it is more than **0.15 mm (0.006 in)**, replace the cylinder or piston.

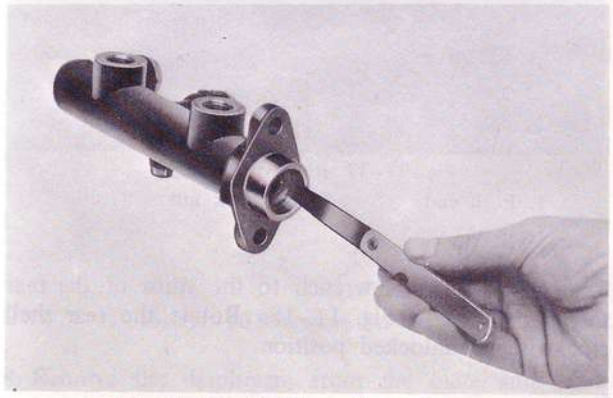

Fig. 11–13 Checking piston clearance

4. Check all recesses, openings and internal passages to be sure they are open and free of foreign matter. Use compressed air to blow out dirt and cleaning solvent.
5. Check the piston return spring for weakness.

11–C–4. Assembling Brake Master Cylinder

1. Dip all parts except the cylinder in clean brake fluid.
2. Insert the check valve springs into the outlets and place the check valves over the springs. Install the joint bolts and tighten them.
3. Insert the valve and secondary piston return spring assembly into the cylinder.
4. Fit the secondary piston guide pin into the secondary piston stop bolt hole and insert the secondary piston into the cylinder. Depress the secondary piston with a suitable rod and remove the guide pin. Then, install the secondary piston stop bolt.

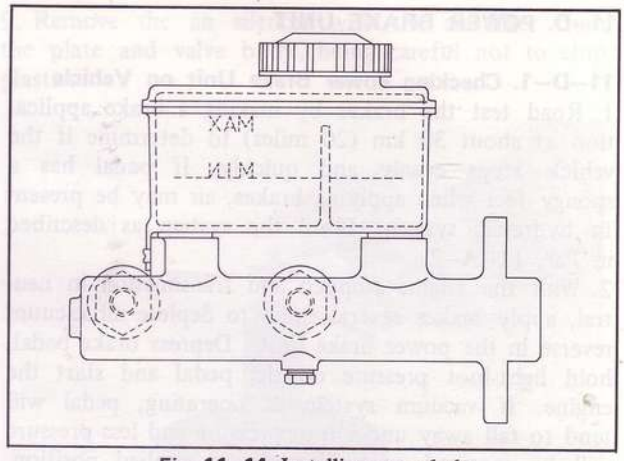

Fig. 11–14 Installing stop bolt

5. Insert the primary piston return spring and the primary piston assembly into the cylinder.

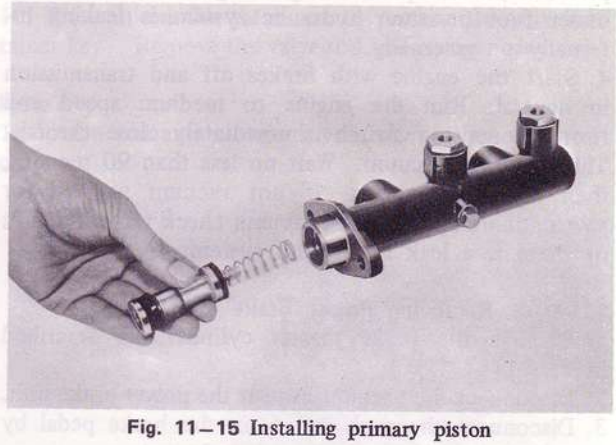

Fig. 11–15 Installing primary piston

6. Hold the primary piston down and install the snap ring into position in groove of the cylinder bore.

Note :
Make sure that the piston cups do not cover the compensating port.

7. Install the reservoir to the cylinder.

11–C–5. Installing Brake Master Cylinder

Follow the removal procedures in the reverse order.

Note :
Fill the reservoir and bleed the air at each bleeder screw.

11–D. POWER BRAKE UNIT

11–D–1. Checking Power Brake Unit on Vehicle

1. Road test the brakes by making a brake application at about 30 km (20 miles) to determine if the vehicle stops evenly and quickly. If pedal has a spongy feel when applying brakes, air may be present in hydraulic system. Bleed the system as described in Par. 11–A–2.
2. With the engine stopped and transmission in neutral, apply brakes several times to deplete all vacuum reverse in the power brake unit. Depress brake pedal, hold light-foot pressure on the pedal and start the engine. If vacuum system is operating, pedal will tend to fall away under foot pressure and less pressure will be required to hold pedal in applied position. If no action is felt, vacuum system is not functioning.
3. Stop the engine. Again deplete all vacuum reverse in system. Depress the brake pedal and hold foot pressure on the pedal. If pedal gradually falls away under foot pressure, hydraulic system is leaking internally or externally.
4. Start the engine with brakes off and transmission in neutral. Run the engine to medium speed and turn off ignition switch. Immediately close throttle. This build up vacuum. Wait no less than 90 seconds, then try brake action. If not vacuum assisted for two or more applications, vacuum check valve is faulty or there is a leak in vacuum system.

11–D–2. Removing Power Brake Unit

1. Remove the brake master cylinder, as described in Par. 11–C–1.
2. Disconnect the vacuum hose at the power brake unit.
3. Disconnect the push rod from the brake pedal by removing the cotter pin at the fork end.

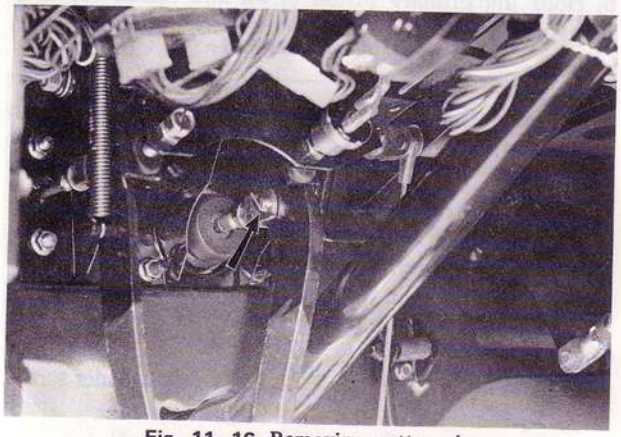

Fig. 11–16 Removing cotter pin

4. Remove the nuts that attach the power brake unit to the dash panel.
5. Remove the power brake unit from the dash panel.

11–D–3. Disassembling Power Brake Unit

1. Remove the check valve from the power brake unit.
2. Place the power brake unit in a vice with push rod up. Clamp the unit firmly on the flange.
3. Scribe a mark on the bottom center of the front and rear shells to facilitate reassembly.
4. Remove the fork end, lock nut and dust boot.

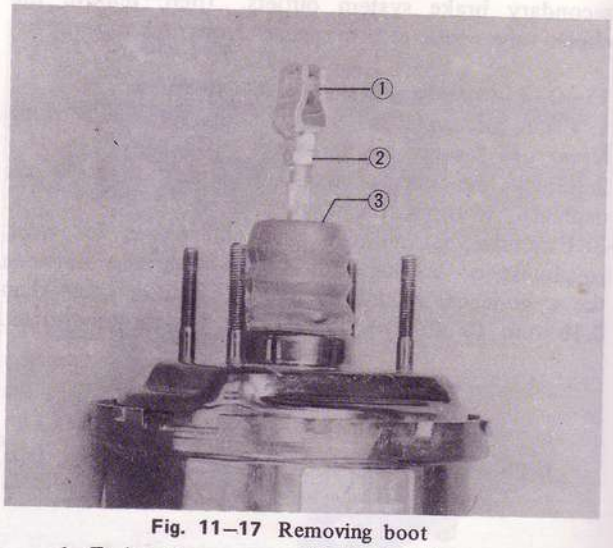

Fig. 11–17 Removing boot
1. Fork end
2. Lock nut
3. Boot

5. Attach a suitable wrench to the studs of the rear shell as shown in Fig. 11–18. Rotate the rear shell clockwise to unlocked position.

Note :
Loosen the rear shell carefully as it is spring-loaded.



Fig. 11–18 Removing rear shell

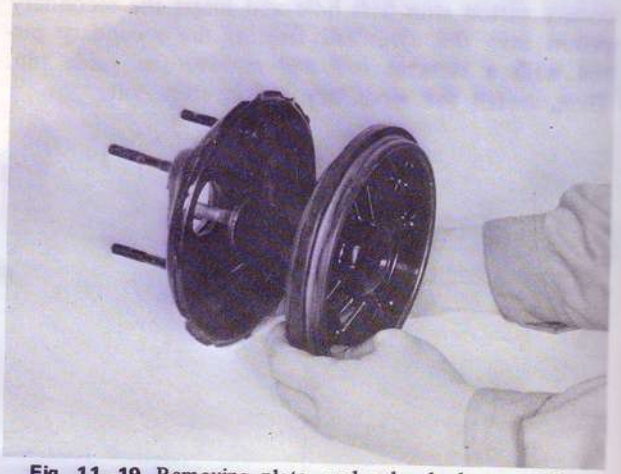

Fig. 11–19 Removing plate, and valve body assembly

6. Lift the rear shell and plate and valve body, valve rod and plunger assembly from the unit. Then, remove the return spring.
7. Remove the plate, valve body, valve rod and plunger assembly from the rear shell.

Note :
Do not remove the rear seal from the rear shell unless seal is defective and the new seal is available. **To remove** the rear seal, support the rear shell and drive out the rear seal with a punch or a screwdriver.

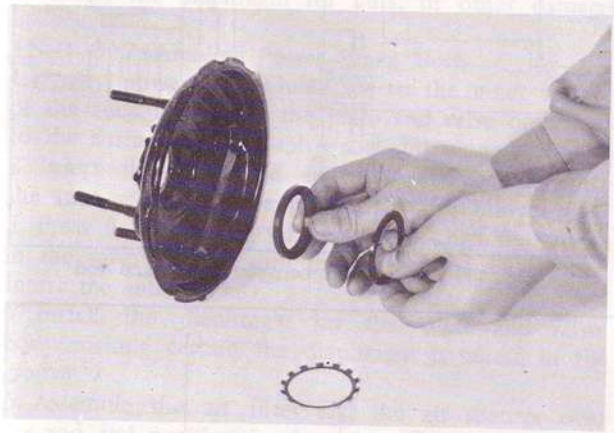

Fig. 11–20 Removing rear seal

8. Remove the diaphragm from the plate and valve body.



Fig. 11–21 Removing diaphragm

9. Remove the air silencer with the air filter from the plate and valve body, being careful not to chip plastic.

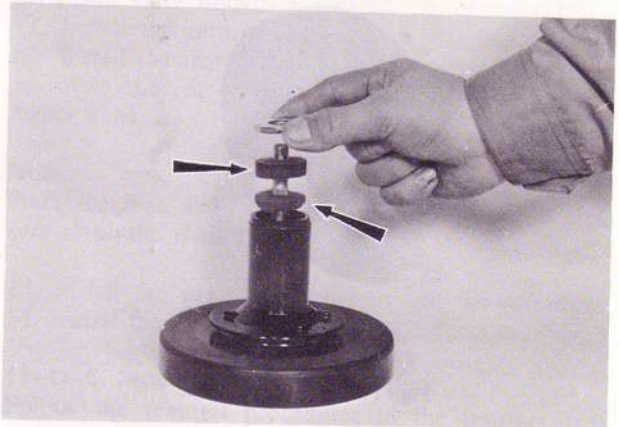

Fig. 11–22 Removing air filter

10. Press in on the valve rod to remove the valve retainer key. Remove the valve rod and plunger assembly.

Note :
The valve rod and plunger are serviced as an assembly only.



Fig. 11–23 Removing retainer key

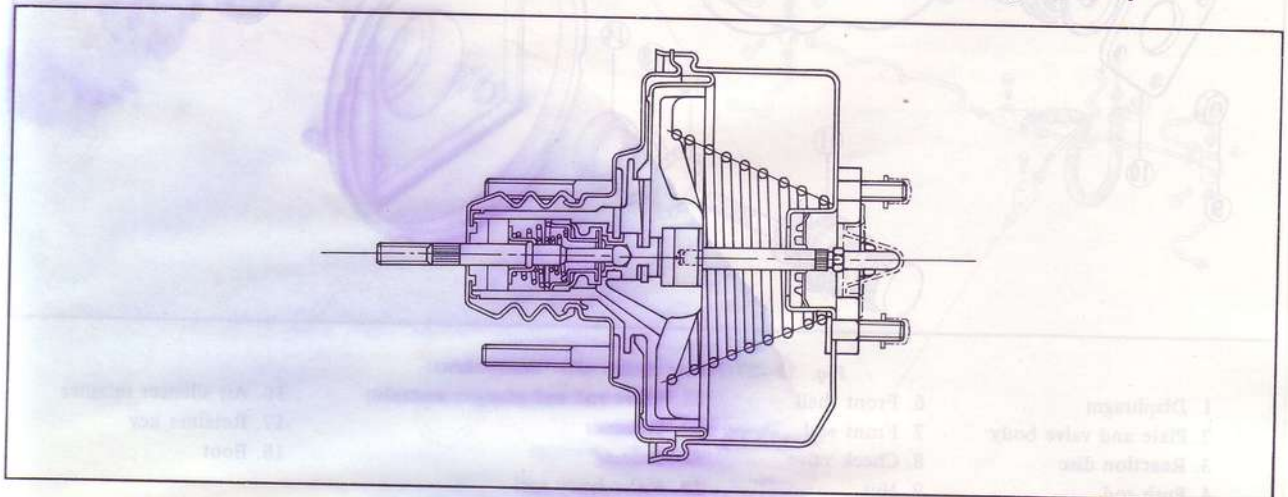

Fig. 11–24 Power brake unit cross section

11. Press the reaction disc out of the valve body.

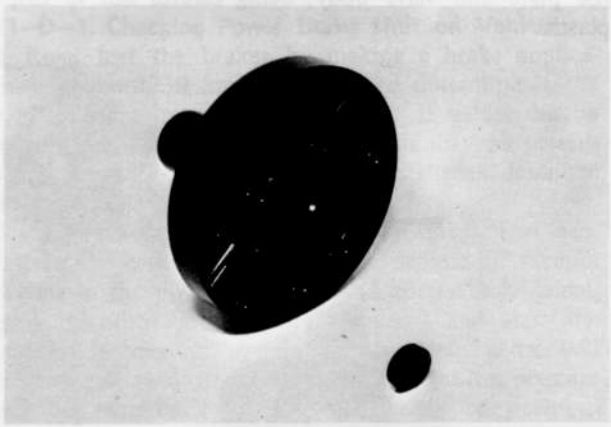

Fig. 11–25 Reaction disc

12. Remove the push rod.
13. Remove the front seal from the front shell if necessary.

11–D–4. Checking Power Brake Unit

1. Check the clearance between primary piston and the push rod of the master cylinder and if necessary, adjust the push rod so that the correct clearance is obtained. The standard clearance is **0.1 ~ 0.5 mm (0.004 ~ 0.020 in).**

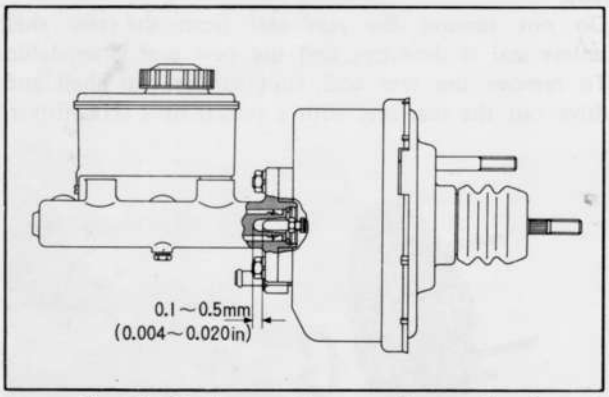

Fig. 11–26 Clearance between piston and rod

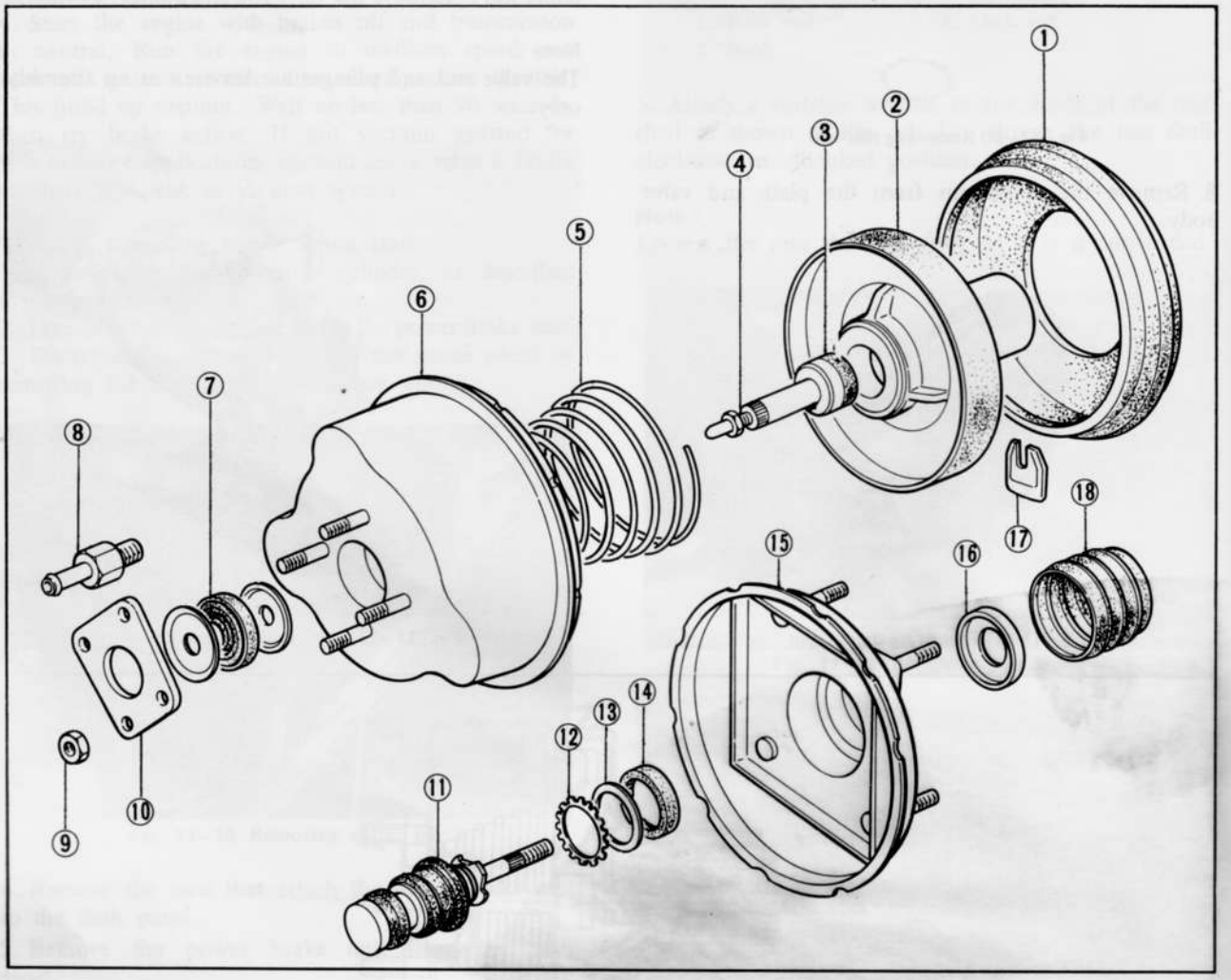

Fig. 11–27 Power brake unit components

1. Diaphragm
2. Plate and valve body
3. Reaction disc
4. Push rod
5. Spring
6. Front shell
7. Front seal
8. Check valve
9. Nut
10. Flange
11. Valve rod and plunger assembly
12. Retainer
13. Bearing
14. Valve body seal
15. Rear shell
16. Air silencer retainer
17. Retainer key
18. Boot

2. Inspect all rubber parts. Wipe free of fluid and carefully inspect each rubber part for cuts, nicks or other damage.
3. Check the plate and valve body for cracks, distortion, chipping and damaged seats.
4. Inspect the reaction disc for deterioration of rubber.
5. Check the valve rod and plunger for all seats to be smooth and free of nicks and dents. Replace with a new one if defective.
6. Inspect the front and rear shells for scratches, scores, pits, dents or other damage.
7. Check the diaphragm for cuts, or other damage.

11–D–5. Assembling Power Brake Unit

1. Apply power brake lubricant to the inner surface of the tube section of the plate and valve body and to the surfaces of the valve rod and plunger.
2. Insert the valve rod and plunger assembly into the tube section of the plate and valve body.
3. Press down on the valve rod and align the groove in the valve plunger with the slot of the valve body. Insert the retainer key.
4. Install the diaphragm on the plate and valve body making certain the diaphragm is seated in the groove.
5. Assemble the air filter and the air silencer over the rod and position in the valve body.
6. Apply power brake lubricant liberally to the entire surface of the reaction disc and install the reaction disc into the plate and valve body.
7. Coat the outer bead of the diaphragm with power brake lubricant where it bears against the outer rims of the front and rear shells to aid in assembly.
8. Apply power brake lubricant to the seal in the rear shell and carefully guide tube end of the plate and valve body, through the seal in the rear shell.
9. Install the plate and valve body into the front shell.
10. Install the push rod through the front of the plate and valve body.
11. Install the return spring.
12. Install the rear shell assembly by using the wrench to rotate the rear shell counter-clockwise until scribe marks align.

Note :
Press the rear shell down firmly, maintaining a pressure until the shell flanges are fully locked.

13. Install the dust boot down against the rear shell.
14. Install the check valve.

11–D–6. Installing Power Brake Unit

Follow the removal procedures in the reverse order.

Note :
After installing the unit, bleed the hydraulic system according to the procedure described in Par. 11–A–2.

11–E. HYDRAULIC LINES

11–E–1. Checking Brake Lines

Inspect all brake lines for any leakage with the foot brakes applied. Check all brake pipes, hoses and connections for signs of chafing, deterioration or replaced or repaired, always air bleed the hydraulic system.

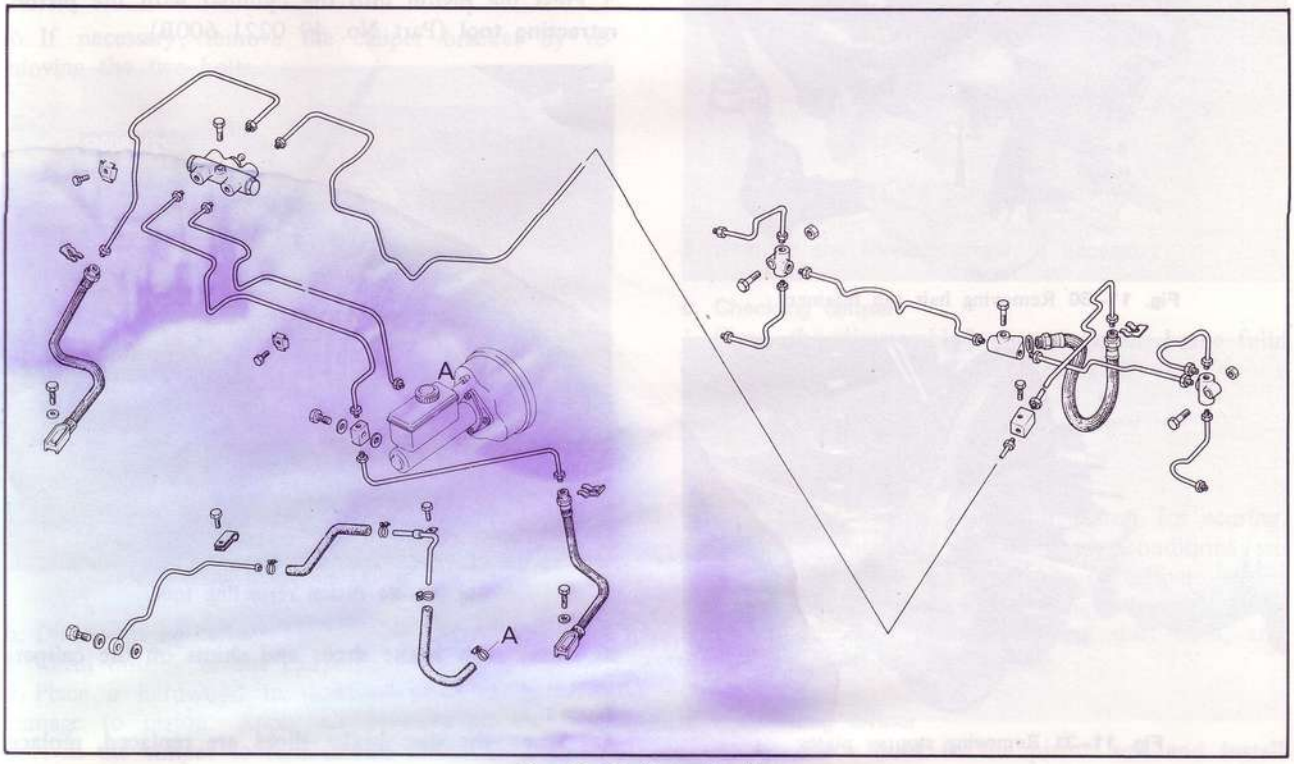

Fig. 11–28 Hydraulic lines

11–F. FRONT BRAKE

11–F–1. Disc Brake Shoe

a. Replacing disc brake shoe

The lining should be inspected whenever the wheels are removed for any reason. The shoe and lining assembly should be replaced, if the thickness of the shoe and lining assembly is **7.0 mm (0.276 in)** or less due to wear.

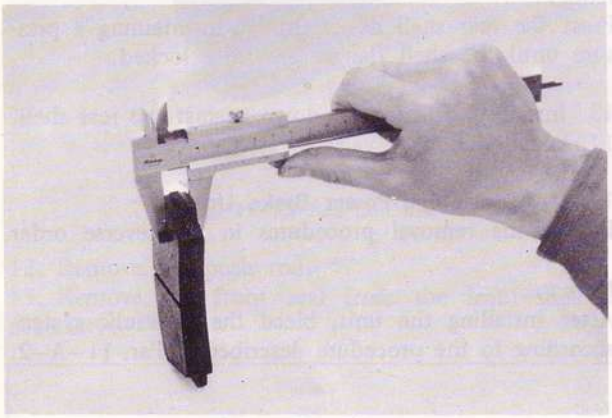

Fig. 11–29 Checking lining thickness

To replace the disc brake shoes, proceed as follows:

1. Raise the front end of the vehicle and support with stands.
2. Remove the front wheel.
3. Remove the hair pin retainers and pull out the stopper plates.

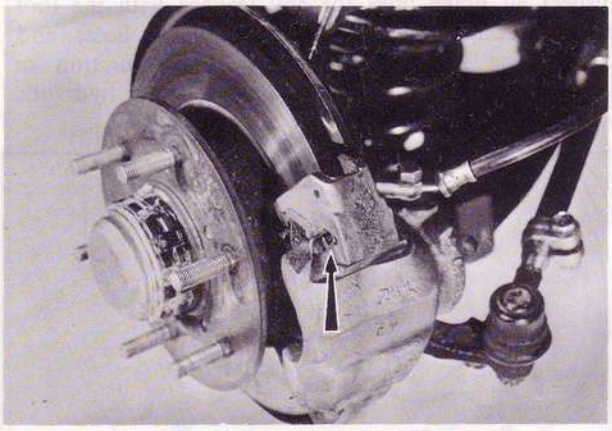

Fig. 11–30 Removing hair pin retainers

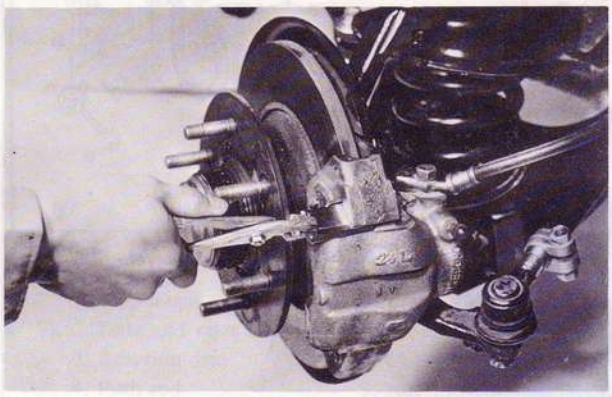

Fig. 11–31 Removing stopper plates

4. Remove the caliper and anti-rattle spring and pull out the brake shoes.

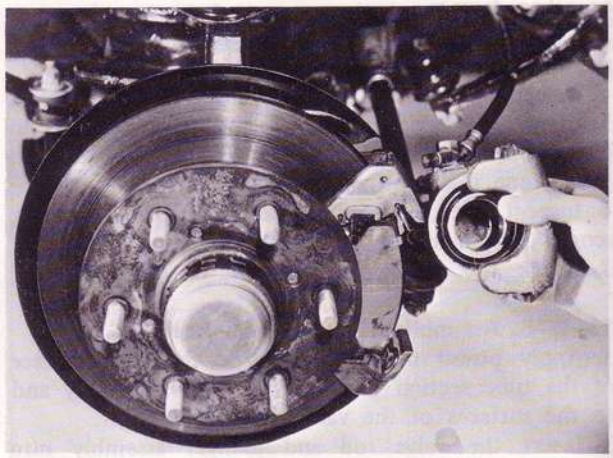

Fig. 11–32 Removing caliper

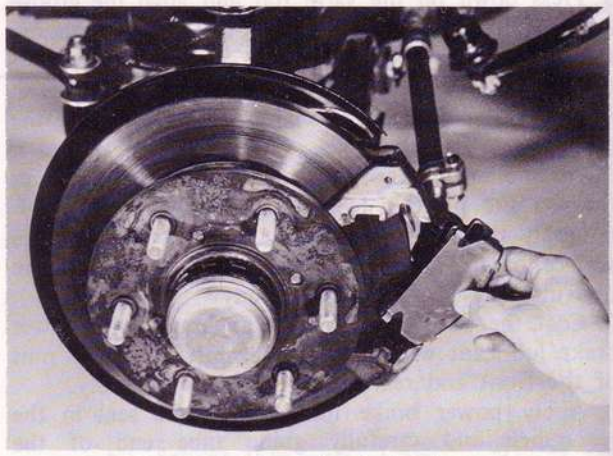

Fig. 11–33 Removing brake shoe

5. Press the piston into the cylinder with the **piston retracting tool** (Part No. 49 0221 600B).

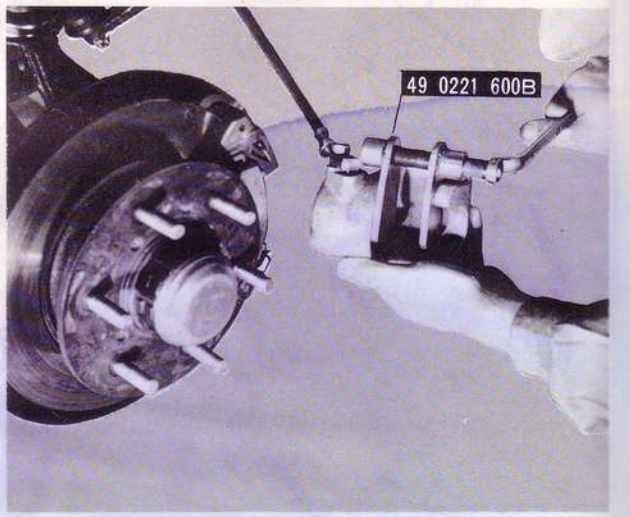

Fig. 11–34 Piston retracting tool

6. Install new brake shoes and shims on the caliper.

Note :

(a) When the disc brake shoes are replaced, replace

all shoes on both wheels at the same time.
(b) **Do not** mix different types of linings when replacing.

7. Install the anti-rattle spring, caliper, stopper plates and hair pin retainers.
8. Install the front wheel and lower the vehicle.

11–F–2. Caliper

a. Removing caliper

1. Raise the front end of the vehicle and support with stands.
2. Remove the front wheel.
3. Remove the shoe and lining assembly as described in Par. 11–F–1.
4. Disconnect the brake fluid pipe from the caliper and plug the end of the fluid pipe to prevent entrance of dirt and loss of fluid.
5. Remove the caliper.

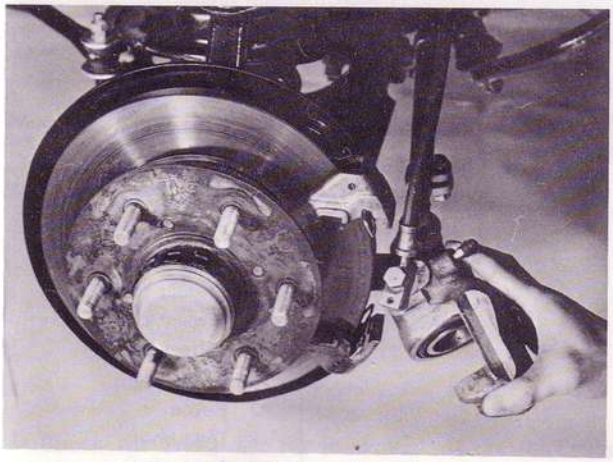

Fig. 11–35 Removing caliper

6. If necessary, remove the caliper bracket by removing the two bolts.

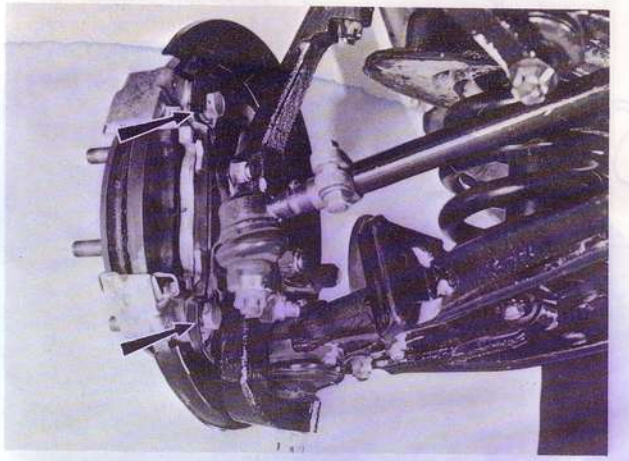

Fig. 11–36 Removing caliper bracket

b. Disassembling caliper

1. Clean outside of the caliper.
2. Place a hardwood in front of piston to prevent damage to piston. Apply air pressure to the fluid port in the caliper to remove the piston.

Remove the dust boot from the piston.

Note :
If the piston is seized and cannot be forced from the caliper, tap lightly around the piston while applying air pressure.



Fig. 11–37 Removing piston

3. Remove the retainer and dust boot from the caliper.
4. Remove the piston seal from the caliper bore.

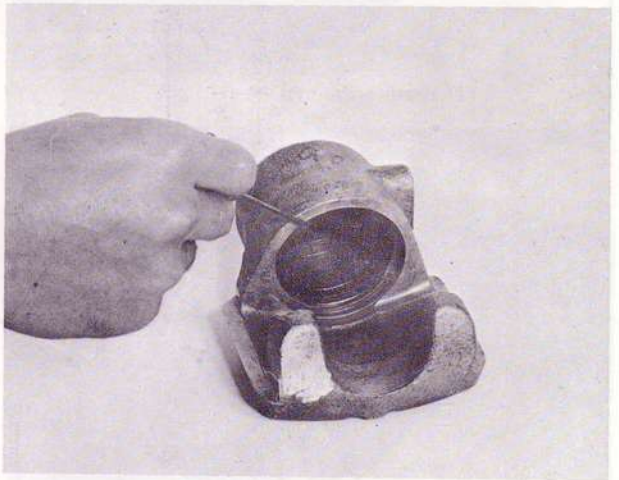

Fig. 11–38 Removing piston seal

5. Remove the bleeder screw, if necessary.

c. Checking caliper

1. Clean the disassembled parts in clean brake fulid or alcohol and dry with compressed air.

Note :
Never use gasoline or kerosene.

2. Inspect the caliper bore and piston for scoring, scratches or rust. If any of these conditions are found, replace with a new piston or caliper. Minor damage can be eliminated by polishing with crocus cloth.
3. Discard the old piston seal and dust boot, and use new ones when reassembling.

d. Assembling caliper

1. Apply brake fluid to the piston seal and install

it into the groove of the caliper bore.

Note :
Be sure the piston seal does not become twisted and that it is seated fully in the groove.

2. Lubricate the piston and caliper bore.
3. Insert the piston into the caliper bore.



Fig. 11–39 Inserting piston

4. Install the dust boot by setting the flange squarely in the inner groove of the caliper bore. Install the dust boot retainer.



Fig. 11–40 Installing retainer

e. Installing caliper
Follow the removal procedures in the reverse order and bleed the hydraulic system.

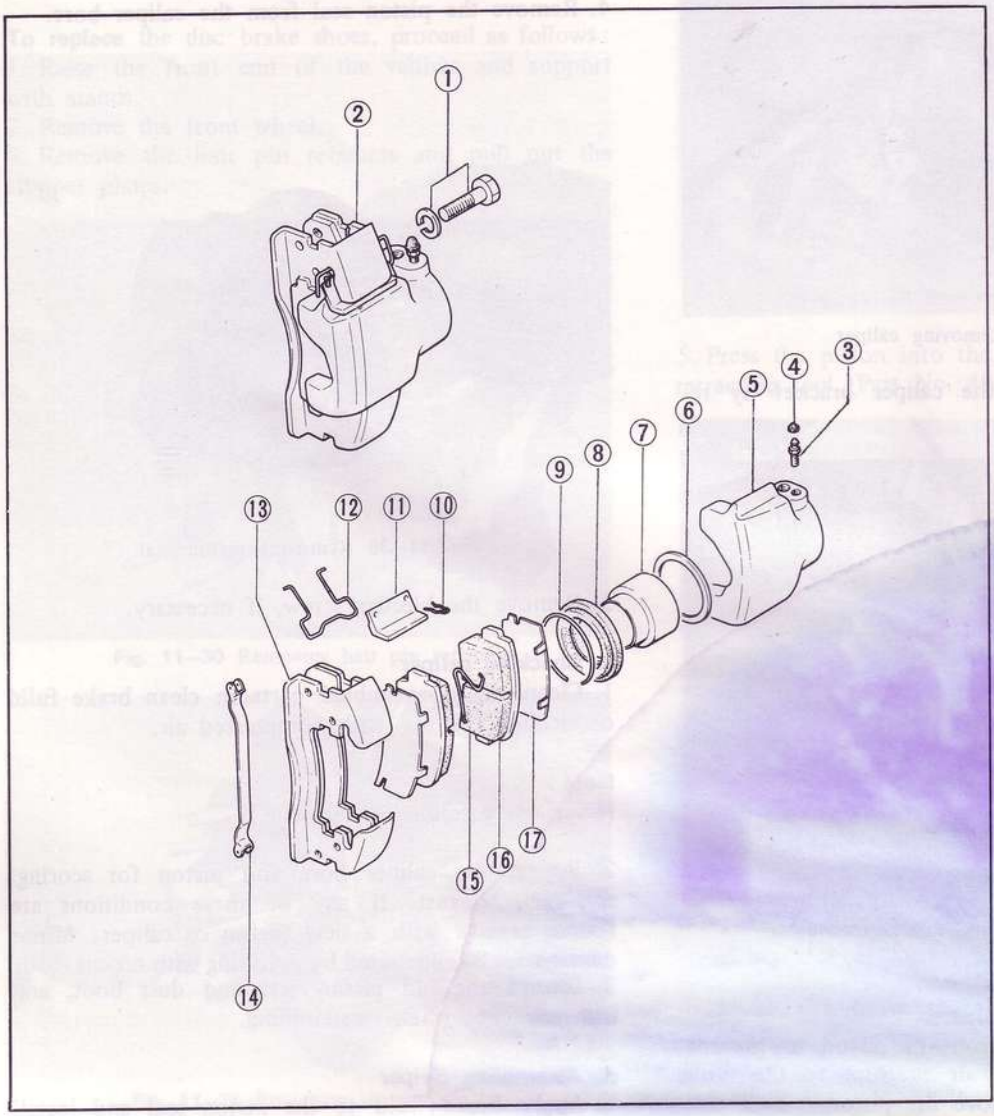

Fig. 11–41
Caliper components
1. Bolt and washer
2. Caliper assembly
3. Bleeder screw
4. Bleeder cap
5. Caliper body
6. Piston seal
7. Piston
8. Dust boot
9. Boot retainer
10. Hair pin retainer
11. Stopper plate
12. Spring
13. Caliper bracket
14. Anti-rattle spring clip
15. Anti-rattle spring
16. Brake shoe and lining assembly
17. Shim

11–F–3. Brake Disc and Front Wheel Hub Assembly

a. Checking brake disc assembly

1. Inspect the friction surface of the brake disc and recondition if it is scored, scratched or rusted.
2. Check the run-out of the brake disc with a dial indicator.

Note:
Make sure that the wheel bearings are correctly adjusted, before checking the run-out of the brake disc.

If the run-out is more than **0.10 mm (0.0039 in)**, reface the brake disc. **Do not** reface any more than is necessary to clean up the brake disc.

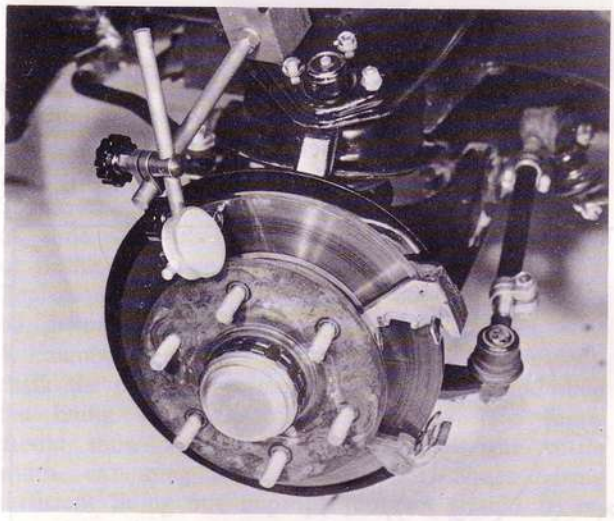

Fig. 11–42 Checking brake disc run-out

3. Check the brake disc for thickness. If the thickness of the brake disc becomes less than **11 mm (0.4331 in)** from excessive refacing, the brake disc should be replaced.

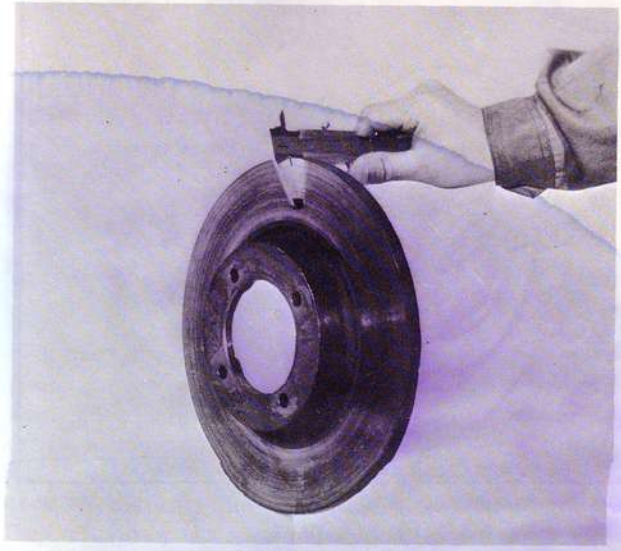

Fig. 11–43 Checking brake disc thickness

b. Replacing brake disc assembly

Replace the brake disc and front wheel hub assembly, as described in Par. 12–G–1.

11–G. REAR BRAKE

11–G–1. Rear Brake Drum and Shoe

a. Removing rear brake drum and shoe

1. Raise the rear end of the vehicle and support with stands.
2. Remove the rear wheel.
3. Make sure that the parking brake is fully released.
4. Remove the bolts that attach the brake drum to the rear axle shaft flange and pull the drum off the axle shaft flange. If the drum will not come off, place the drum attaching bolts into the tapped holes on the drum. Then, tighten in evenly to force the drum away from the axle shaft flange.



Fig. 11–44 Removing drum (1)

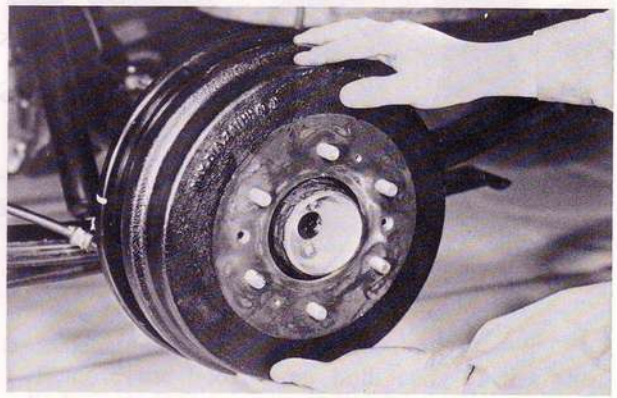

Fig. 11–45 Removing drum (2)

5. Remove the return spring located on the upper

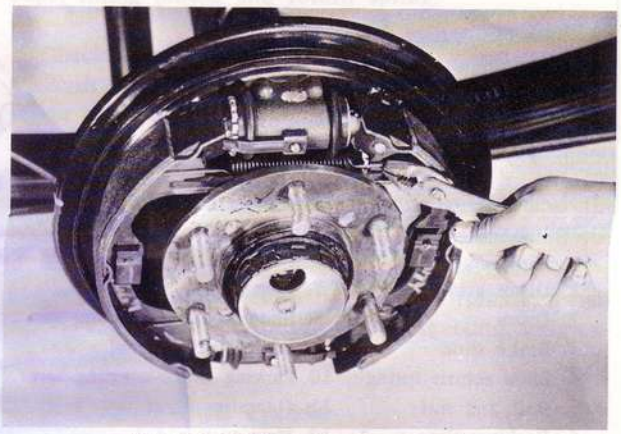

Fig. 11–46 Removing upper spring

side of the brake shoes using a suitable tool, then remove the return spring located on the lower side of the brake shoes.

6. Remove the shoe hold-down spring from the brake shoe by removing the shoe hold-down spring pin with a plier.

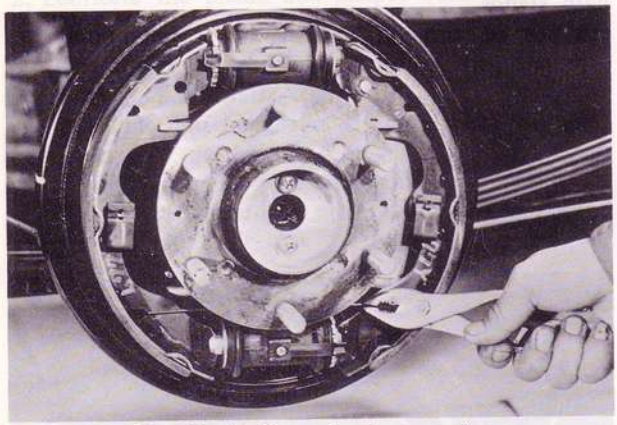

Fig. 11–47 Removing lower spring

7. Remove the primary brake shoe and the parking brake link.

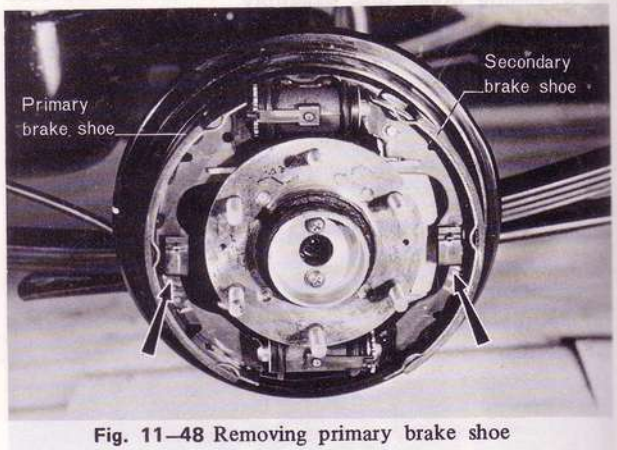

Fig. 11–48 Removing primary brake shoe

8. Disconnect the parking brake lever from the secondary brake shoe by removing the retaining clip. Remove the secondary brake shoe. **Do not** dirty

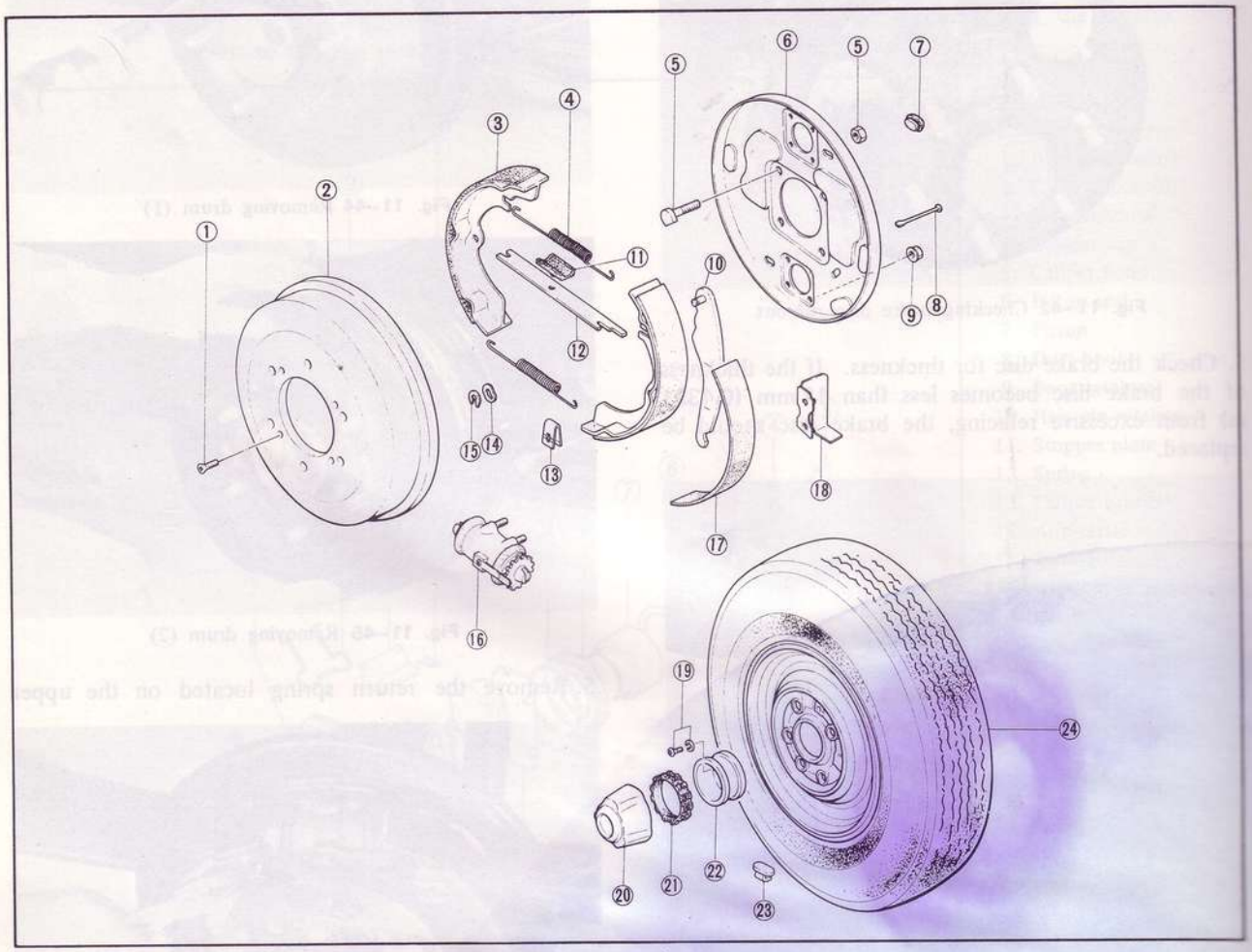

Fig. 11–49 Rear brake components

1. Drum attaching bolt
2. Drum
3. Brake shoe
4. Shoe return spring
5. Bolt and nut
6. Backing plate
7. Plug
8. Shoe hold-down spring pin
9. Wheel cylinder nut
10. Parking brake opening lever
11. Operating strut
12. Male-push rod
13. Clip spring
14. Wave washer
15. Brake shoe retaining clip
16. Wheel cylinder
17. Brake lining
18. Brake pipe guard
19. Screw and washer
20. Wheel center cap
21. Set rubber
22. Wheel center cap adaptor
23. Balance weight

the brake lining with oil.

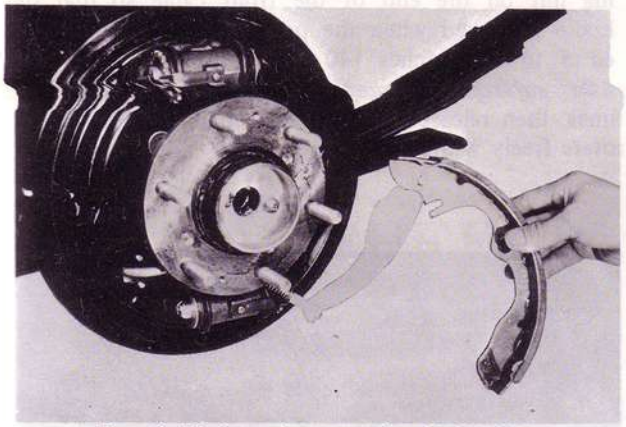

Fig. 11–50 Removing secondary brake shoe

b. Inspecting rear brake drum and shoe

1. Brush all dust from the backing plate and interior of the brake drum.
2. Inspect the springs for weakness.
3. Inspect the brake shoes for excessive lining wear or shoe damage. If the lining is excessively worn or if the shoes are damaged, they must be replaced. Replace any lining that had been contaminated with oil, grease or brake fluid.
4. Examine the lining contact pattern. To inspect, chalk the entire inner surface of the drum and slide the lining along the chalked surface. The lining should show a uniform contact across the entire width, extending from toe to heel. Shoes having sufficient lining but improper contact should be re-ground to obtain proper contact.



Fig. 11–51 Rear brake shoe

5. Inspect the brake drum and, if necessary, refinish. Minor scores on the brake drum can be removed with sandpaper. The drum that is excessively scored or shows an out of roundness over **0.15 mm (0.0059 in)** should be turned down. Remove only enough stock to eliminate the scores and true up the drum. The refinished diameter must not exceed 261 mm (10.2758 in). The standard inner diameter of the drum is 260 mm (10.2364 in). After the drum is turned down, wipe the refinished surface with a cloth soaked in clean denatured alcohol. If one drum is turn down, the opposite drum on the same axle should also be cut down to the same size.
6. Check the condition of the brake shoes, return springs, hold-down springs and drum for signs of overheating. If the shoes and drums are heat spotted, indicating a overheated condition, replace with new ones.

c. Installing rear brake drum and shoe

Follow the removal procedures in the reverse order.

Note :

Adjust the brake shoe clearance.

11–G–2. Wheel Cylinder

a. Removing wheel cylinder

1. Remove the rear brake shoes, as described in Par. 11–G–1.
2. Disconnect the brake fluid pipe from the wheel cylinder by removing the flare nut located on the rear side of the backing plate.
3. Remove the nuts that attach the wheel cylinder to the backing plate and remove the wheel cylinder.

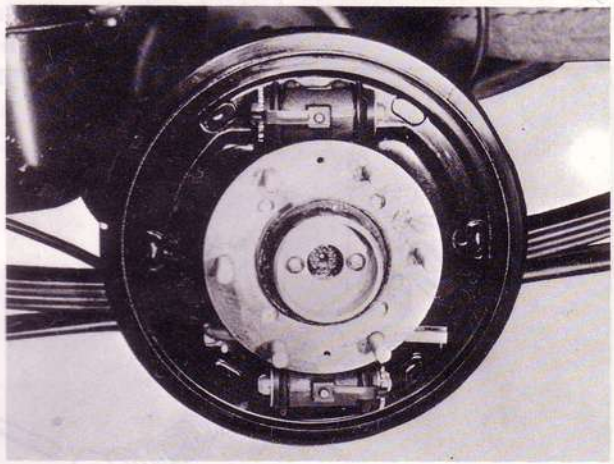

Fig. 11–52 Removing wheel cylinder

b. Disassembling wheel cylinder

1. Remove the boots from both ends of the wheel cylinder.
2. Remove the piston and aduster.
3. Press in the piston cup and force out the piston cups, filling blocks and return spring.

c. Checking wheel cylinder

1. Wash all parts in clean alcohol or brake fluid. **Never use** gasoline or kerosene.
2. Examine the cylinder bore, and piston for wear, roughness, or score.
3. Check the clearance between the piston and the cylinder. If it is **more than 0.15 mm (0.0059 in)**, replace with new parts.
4. Check the piston cups for wear, softening, swelling, or any damage. If any of these conditions exists, replace the cups.

d. Assembling wheel cylinder

1. Apply clean brake fluid to the cylinder bore,

12

WHEELS AND TIRES

12–A. INFLATION OF TIRES

Maintenance of correct inflation pressure is one of the most important elements of tire care.

Excessive inflation pressure will cause:
1. Hard rides
2. Damage to tire carcass
3. Poor traction
4. Premature tread wear in center of tire

Low inflation pressure will cause:
1. Hard steering
2. Rapid and uneven wear on the edges of tire tread
3. Increased cord fatigue or broken tire cords
4. High tire temperature
5. Blow outs

Check the inflation pressure with a reliable gauge when the tires are cold.
The standard pressure is as follows:

	Front	Rear
Rotary Pickup	24 psi	36 psi

After checking or inflating the pressure, place the valve cap back on and tighten by hand. It helps to maintain the air pressure in the tires in case of any valve leak and keeps dust and water out of the valve.

12–B. TIRE ROTATION

To equalize wear and make a set of tires last longer, it is recommended that the tires be rotated, as shown in Fig. 12–1. every 6,000 km (4,000 miles).
When rotating the tires, check for signs of abnormal wear and bulging and any stone, nail, glass, etc. should be removed.

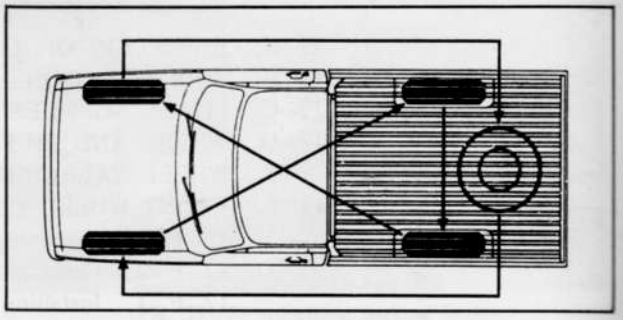

Fig. 12–1 Tire rotation

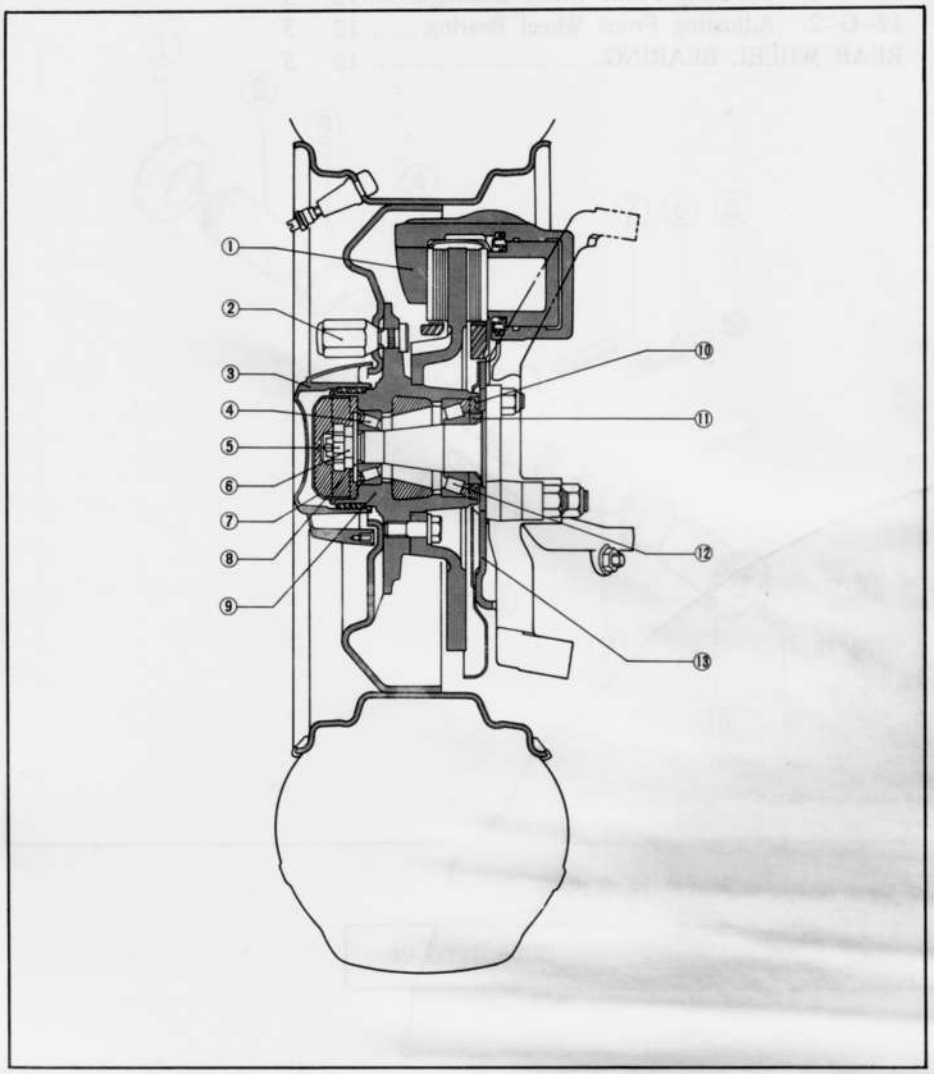

Fig. 12–2 Front wheel cross section
1. Caliper
2. Wheel bolt
3. Center cap
4. Hub outer bearing
5. Nut lock
6. Bearing preload adjusting nut
7. Grease cap
8. Flat washer
9. Hub
10. Grease seal
11. Spacer
12. Hub inner bearing
13. Mounting adaptor

12–C. CHANGING WHEELS

1. Remove the center cap and loosen the wheel nuts.

Note :
The wheel nuts are loosened by turning these in the counter-clockwise direction on the right side wheels and in the clockwise direction on the left side wheels.

2. Jack up the vehicle until the wheel clears the ground.
3. Remove the wheel nuts and change the wheel.
4. Install the wheel nuts and alternately tighten the diametrically opposite nuts until the wheel closely touches the hub flange.
5. Lower the vehicle and firmly tighten the nuts to a torque of **8.0 ~ 9.0 m-kg (58 ~ 65 ft-lb)**.
6. Refit the center cap.

12–D. WHEEL AND TIRE RUN-OUT

Wheel and tire should be measured for both radial and lateral run-out. The radial run-out is the difference between the high and low points on the tread of tire; while the lateral run-out is the wobble of the wheel.
To measure the radial run-out, apply a dial indicator against the center rib of the tire tread and rotate the wheel slowly. This measurement should not exceed 2.0 mm (0.08 in).
To measure the lateral run-out, position a dial indicator against the side of the tire. The reading of the indicator should be within 2.5 mm (0.10 in).

12–E. WHEEL BALANCING

The allowable unbalance is 600 cm-gr (8.3 in-oz), which is less than 30 gr (1.1 oz) at the rim.
Excessive wheel unbalance causes shimmy at high speed. If unbalance exceeds 600 cm-gr (8.3 in-oz) or when a tire is disassembled for repair, the tire and wheel assembly should be statically and dynamically balanced with a wheel balancer in accordance with the manufacturer's instructions.

Balancing weight

Part No.	Weight	Length
99655 30010	10 g (0.35 oz)	16 ± 1 mm (0.63 ± 0.04 in)
99655 30015	15 g (0.53 oz)	22 ± 2 mm (0.86 ± 0.04 in)
99655 30020	20 g (0.71 oz)	29 ± 2 mm (1.14 ± 0.04 in)
99655 30025	25 g (0.81 oz)	34 ± 2 mm (1.34 ± 0.04 in)
99655 30030	30 g (1.05 oz)	40 ± 2 mm (1.57 ± 0.08 in)
99655 30035	35 g (1.23 oz)	45 ± 2.5 mm (1.77 ± 0.10 in)
99655 30040	40 g (1.41 oz)	51 ± 2.5 mm (2.01 ± 0.10 in)
99655 30045	45 g (1.50 oz)	56 ± 2.5 mm (2.20 ± 0.10 in)
99655 30050	50 g (1.75 oz)	62 ± 2.5 mm (2.44 ± 0.10 in)
99655 30060	60 g (2.12 oz)	73 ± 2.5 mm (2.87 ± 0.10 in)

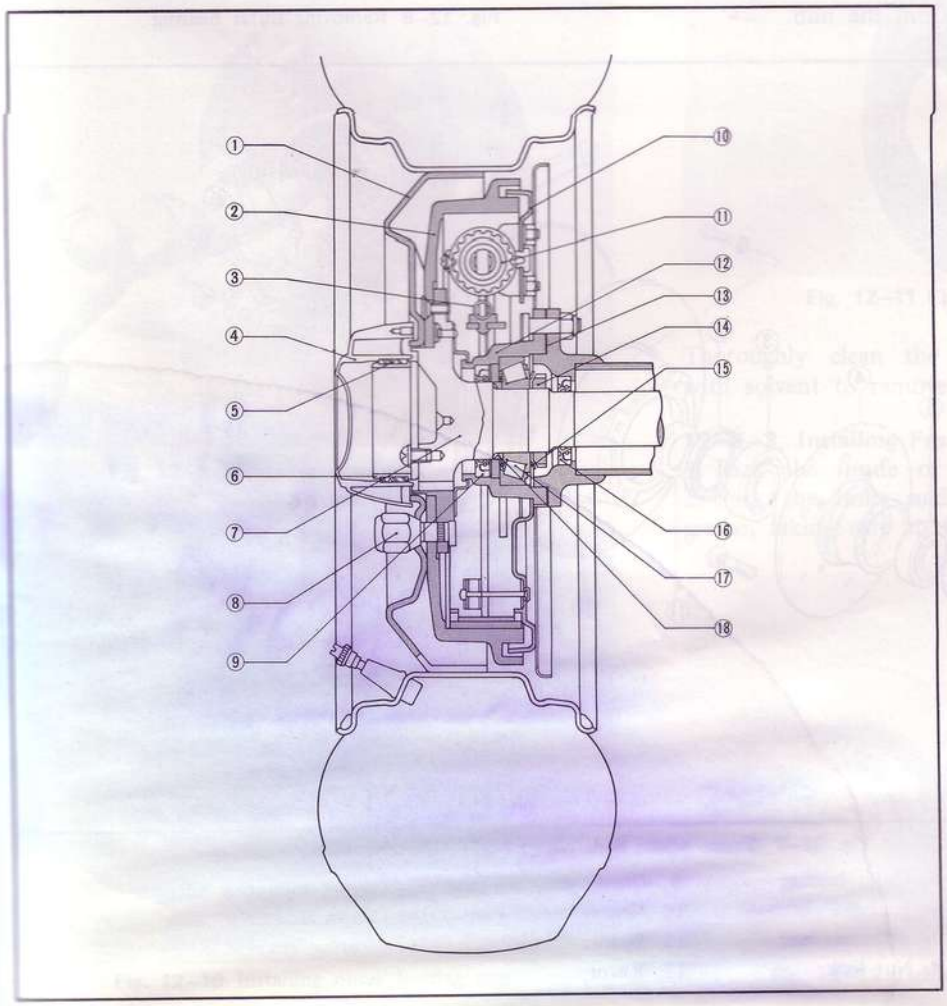

Fig. 12–3 Rear wheel cross section
1. Wheel
2. Brake drum
3. Brake shoe return spring
4. Center cap
5. Set rubber
6. Center cap adaptor
7. Rear axle shaft
8. Wheel bolt
9. Oil seal
10. Backing plate
11. Wheel cylinder
12. Hub
13. Adjusting shim
14. Lock nut
15. Lock washer
16. Oil seal
17. Bearing
18. Spacer

12–F. FRONT WHEEL HUB

12–F–1. Removing Front Wheel Hub

1. Raise the vehicle with a jack until the front wheels clear the ground.
2. Remove the center cap and remove the wheel.
3. Remove the bolts that attach the caliper and bracket assembly and remove the caliper and bracket assembly.
4. Remove the grease cap from the hub. Remove the cotter pin, nut lock, adjusting nut and flat washer from the spindle.

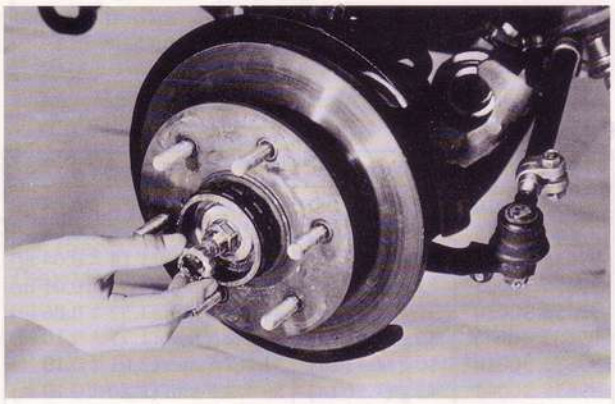

Fig. 12–4 Removing grease cap

5. Pull the hub and rotor assembly off the spindle.
6. Remove the outer bearing from the hub.

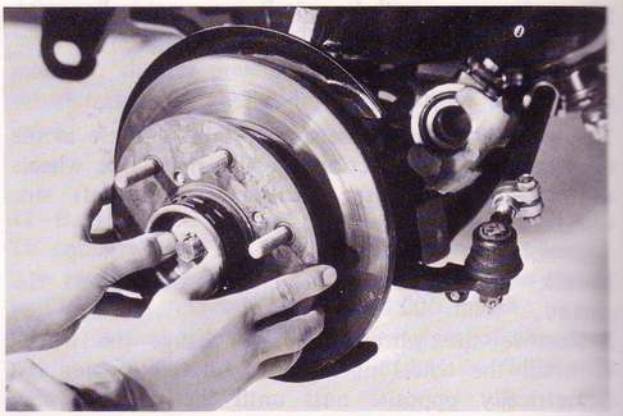

Fig. 12–5 Removing hub and rotor assembly



Fig. 12–6 Removing outer bearing

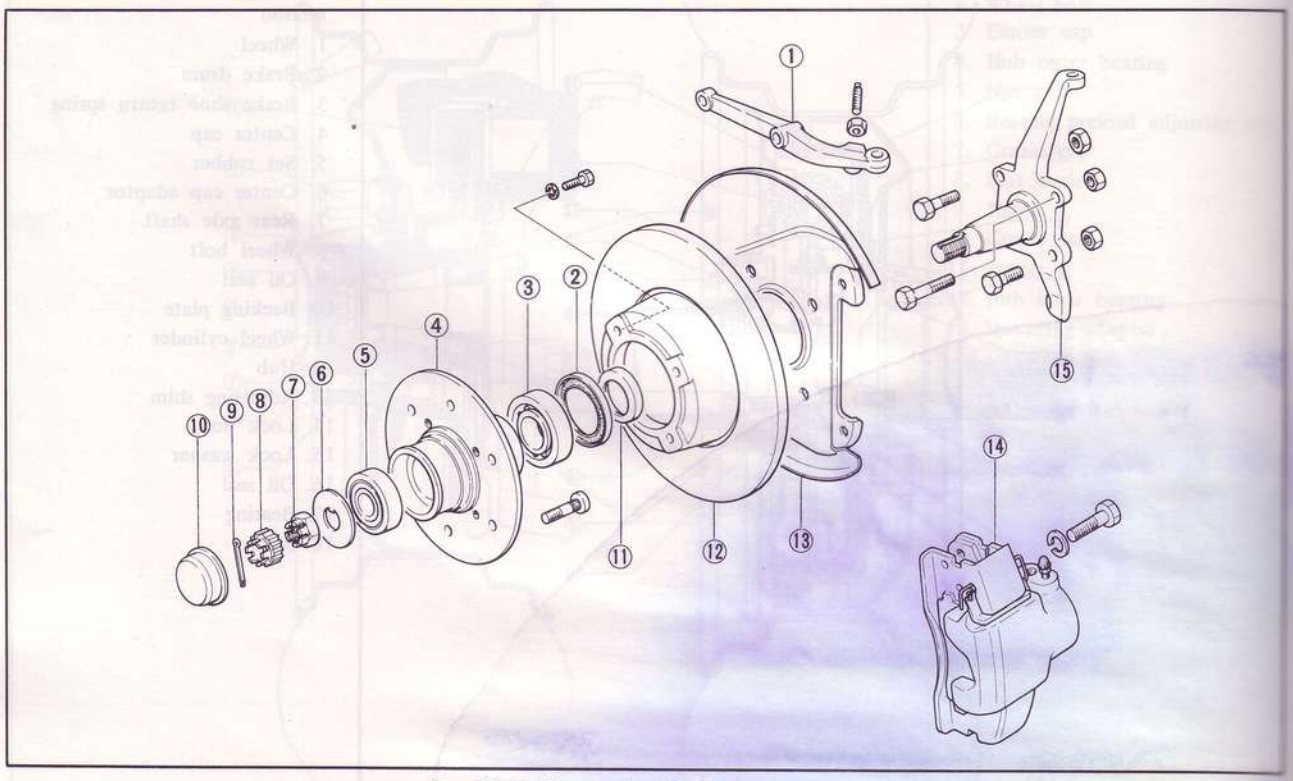

Fig. 12–7 Front wheel hub components

1. Knuckle	5. Outer bearing	9. Cotter pin	13. Caliper mounting adaptor
2. Grease seal	6. Washer	10. Grease cap	14. Caliper assembly
3. Inner bearing	7. Adjusting nut	11. Spacer	15. Steering knuckle
4. Hub	8. Nut lock	12. Rotor	

7. Thoroughly clean the spindle and the inside of the hub with solvent to remove all old grease.
8. Apply the identification marks on the hub and rotor for convenience in reassembly.

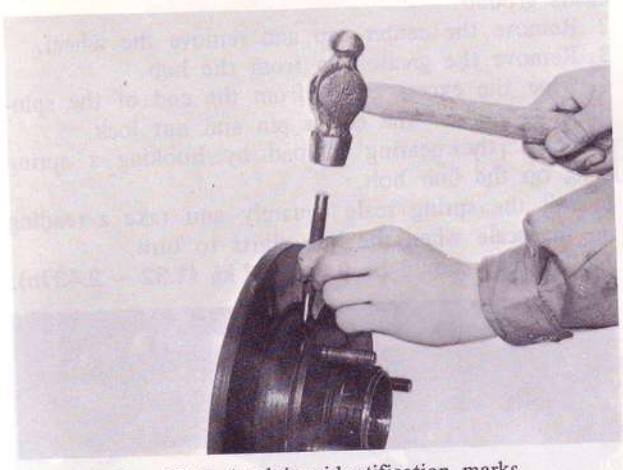

Fig. 12–8 Applying identification marks

9. Remove the bolts that attach the hub to the rotor. Remove the hub from the rotor.
10. Drive out the grease seal and remove the spacer and inner bearing from the hub.
11. Clean the lubricant off the outer and inner bearing cups with solvent and inspect the bearing cups for scratches, pits, excessive wear, and other damage.

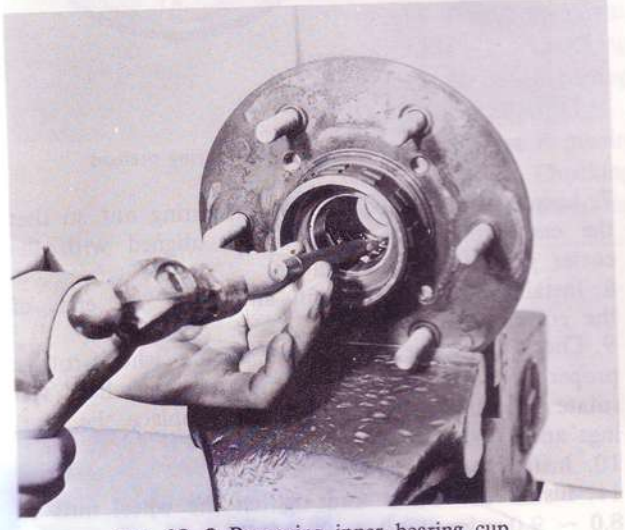

Fig. 12–9 Removing inner bearing cup



Fig. 12–10 Installing outer bearing cup

If necessary, replace the cup as follows:
1) Remove the outer and inner bearing cups from the hub using a suitable brass rod.
2) Install the inner and outer bearing cups into the hub using a suitable tool. Be sure to seat the cups properly in the hub.

12–F–2. Checking Front Wheel Hub

Thoroughly clean the inner and outer bearings with solvent, and dry them thoroughly.

Note :
Do not spin the bearings dry with compressed air.

Inspect the bearing for wear and damage, and replace them if necessary. The bearing and bearing cup should be replaced as a set if damage to either is encountered.
Check the rotor for thickness. If the thickness of the rotor is less than **11 mm (0.4331 in),** rotor should be replaced.



Fig. 12–11 Checking rotor thickness

Thoroughly clean the spindle and the hub cavity with solvent to remove all old lubricant.

12–F–3. Installing Front Wheel Hub

1. Pack the inside of the hub with lithium grease.
2. Pack the inner and outer bearings with lithium grease, taking care to fill between rollers.

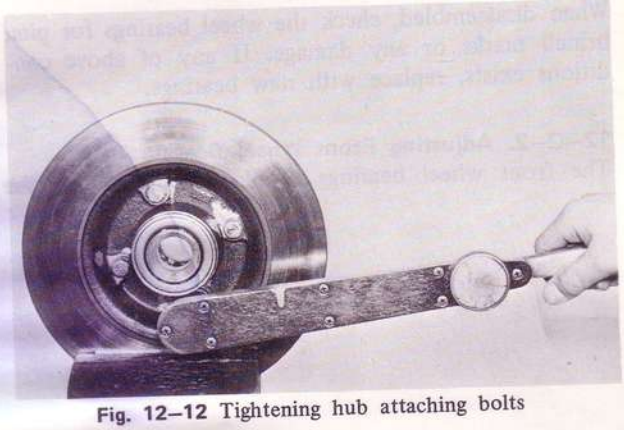

Fig. 12–12 Tightening hub attaching bolts

3. Place the inner bearing in the inner bearing cup.
4. Install the spacer and grease seal into the hub.
5. Install the hub to the rotor. Install the attaching bolts and tighten the bolts to **4.5 ~ 5.7 m-kg (32.5 ~ 41.2 ft-lb)**.
6. Install the hub and rotor assembly on the spindle.
7. Install the outer bearing, flat washer and adjusting nut.
8. Adjust the wheel bearing preload as described in Par. 12–G–2 on page 12 : 5 and install the nut lock and a new cotter pin. Pack the grease cap with lithium grease and install the grease cap.

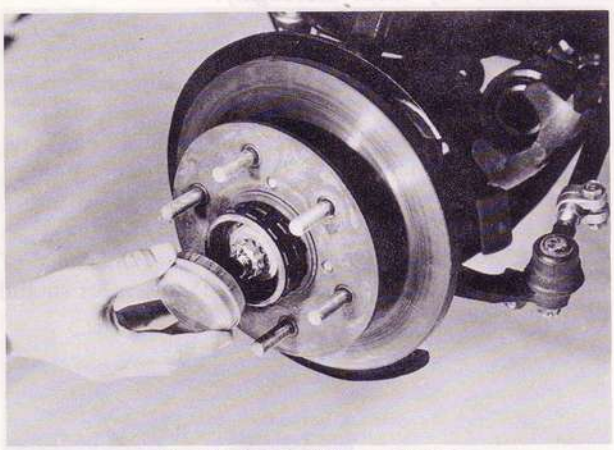

Fig. 12–13 Installing nut lock

9. Install the caliper to the mounting adaptor and tighten the attaching bolts.
10. Position the wheel on the hub. Install the wheel bolts and tighten them alternately in order to draw the wheel evenly against the hub.
11. Install the center cap.
12. Pump the brake pedal several times to obtain normal brake lining to rotor clearance and restore normal brake pedal travel.

12–G. FRONT WHEEL BEARING

12–G–1. Checking Front Wheel Bearing

To check the front wheel bearings, raise the vehicle with a jack until the wheels clear the ground.
Grip the tire and shake it sideways. If considerable play is noticed, this indicates that the bearings are rough.
When disassembled, check the wheel bearings for pits, brinell marks or any damage. If any of above conditions exists, replace with new bearings.

12–G–2. Adjusting Front Wheel Bearing

The front wheel bearings should be adjusted if the wheel is loose on the spindle or if the wheel does not rotate freely.
Adjusting procedures are as follows :
1. Raise the vehicle with a jack until the wheel clears ground.
2. Remove the center cap and remove the wheel.
3. Remove the grease cap from the hub.
4. Wipe the excess grease from the end of the spindle, and remove the cotter pin and nut lock.
5. Check the bearing preload by hooking a spring scale on the hub bolt.
6. Pull the spring scale squarely and take a reading on the scale when the hub starts to turn.
This reading should be **0.6 ~ 1.1 kg (1.32 ~ 2.43 lb)**.

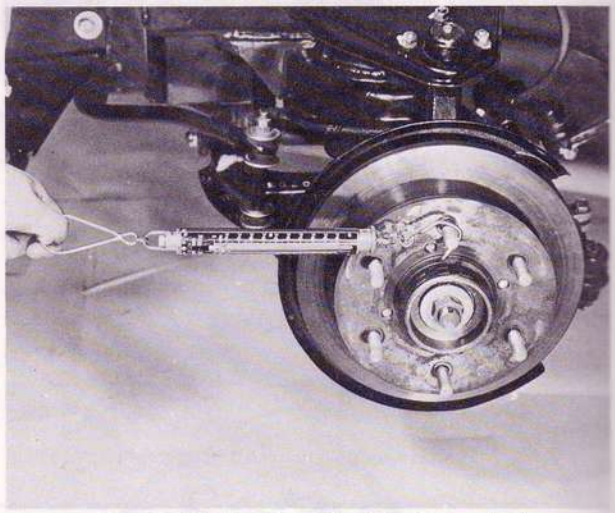

Fig. 12–14 Checking wheel bearing preload

7. Locate the nut lock on the adjusting nut so that the castellations on the lock are aligned with the cotter pin hole in the spindle.
8. Install a new cotter pin and bend the ends of the cotter pin.
9. Check the wheel rotation. If the wheel rotates properly, install the grease cap. If the wheel still rotates roughly or noisily, clean or replace the bearings and cups as required.
10. Install the grease cap.
11. Install the wheel and tighten the wheel nuts to **8.0 ~ 9.0 m-kg (58.0 ~ 65.0 ft-lb)**.
12. Install the center cap.
13. Pump the brake pedal several times to obtain normal brake lining to rotor clearance and restore normal brake pedal travel.

12–H. REAR WHEEL BEARING

Servicing the rear wheel bearing is explained in Par. 9–A on page 9 : 1.

SUSPENSION

SUSPENSION.....13 : 3
13–A. FRONT SHOCK ABSORBER.....13 : 3
13–A–1. Removing Front Shock Absorber.....13 : 3
13–A–2. Checking Front Shock Absorber.....13 : 3
13–A–3. Installing Front Shock Absorber.....13 : 3
13–B. FRONT SUSPENSION.....13 : 3
13–B–1. Removing Front Suspension.....13 : 3
13–B–2. Checking Front Suspension.....13 : 3
13–B–3. Installing Front Suspension.....13 : 4
13–B–4. Greasing Front Suspension.....13 : 4
13–C. REAR SHOCK ABSORBER.....13 : 4
13–C–1. Removing Rear Shock Absorber.....13 : 4
13–C–2. Checking Rear Shock Absorber.....13 : 4
13–C–3. Installing Rear Shock Absorber.....13 : 4
13–D. REAR SPRING.....13 : 5
13–D–1. Removing Rear Spring.....13 : 5
13–D–2. Checking Rear Spring.....13 : 5
13–D–3. Installing Rear Spring.....13 : 5
SPECIAL TOOLS.....13 : 5

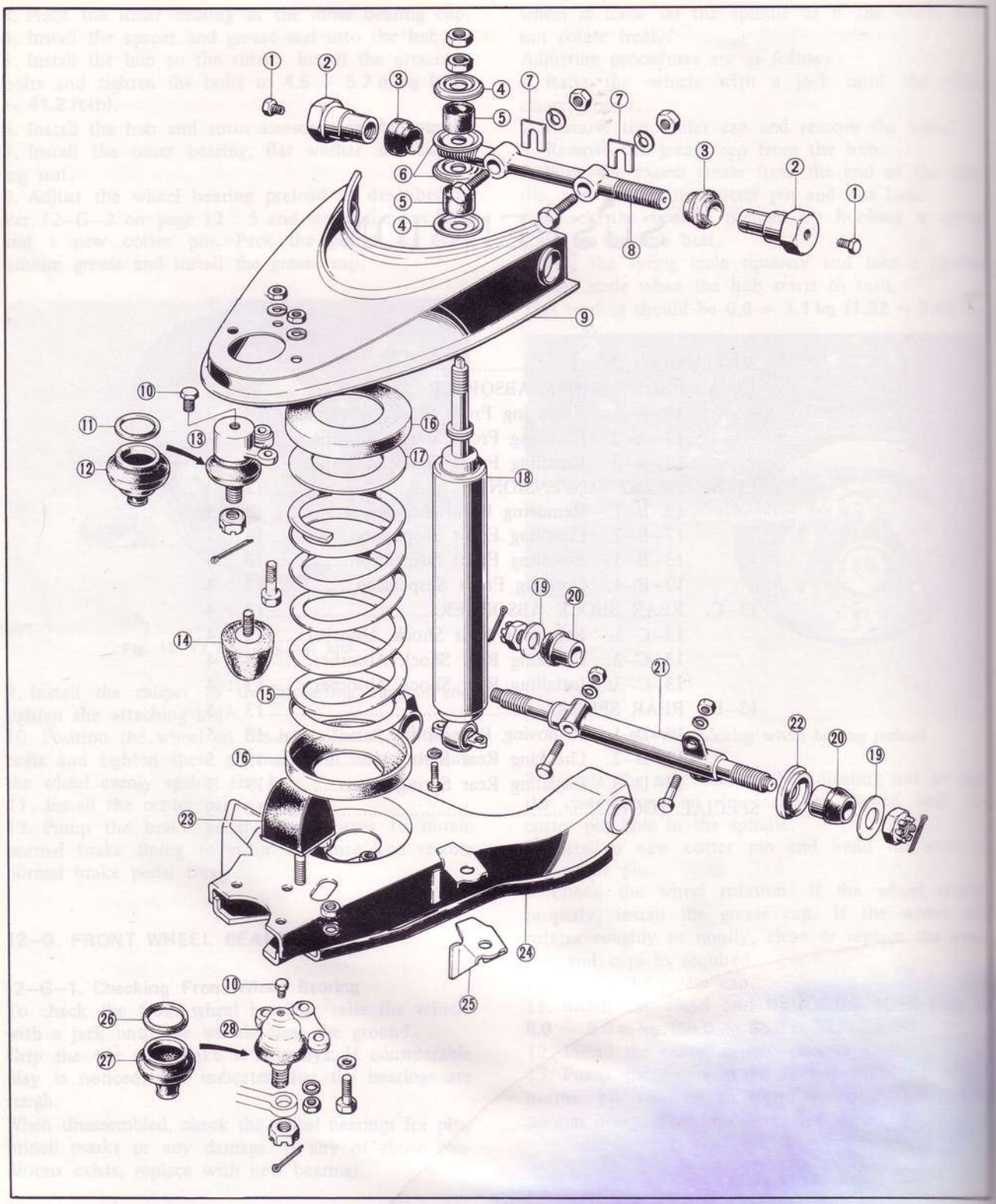

Fig. 13–1 Front suspension components

1. Plug
2. Thread bush
3. Dust seal
4. Retainer
5. Bush
6. Retainer
7. Adjusting shim
8. Upper arm shaft
9. Upper arm
10. Plug
11. Set ring
12. Dust seal
13. Ball joint assembly
14. Stopper
15. Coil spring
16. Seat
17. Adjusting plate
18. Shock absorber
19. Washer
20. Bush
21. Lower arm shaft
22. Stopper
23. Stopper
24. Lower arm
25. Bracket
26. Set ring
27. Dust seal
28. Ball joint

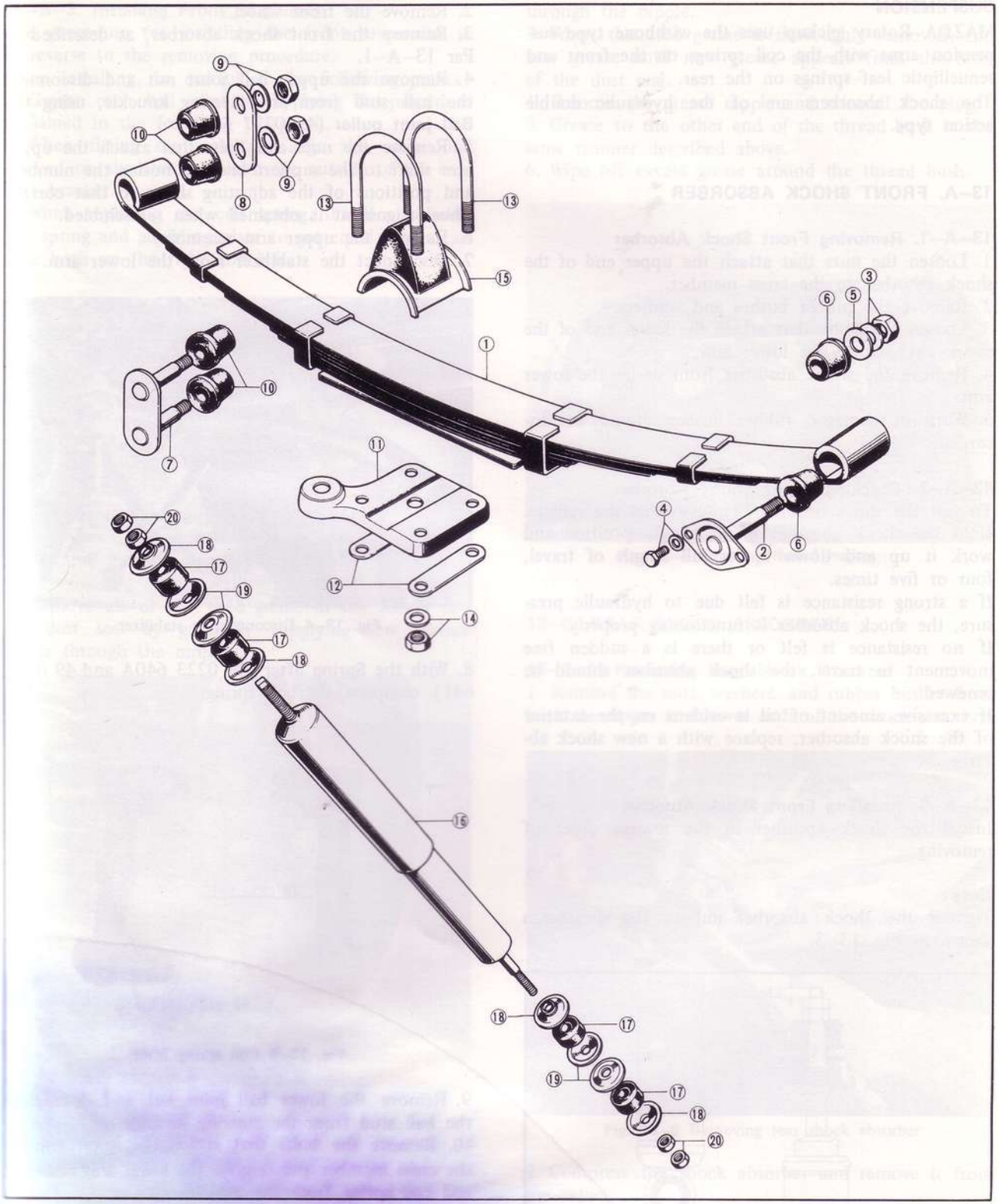

Fig. 13–2 Rear suspension components

1. Rear spring
2. Spring pin assembly
3. Nut
4. Bolt
5. Spacer
6. Bush
7. Shackle plate assembly
8. Shackle plate
9. Nut and washer
10. Bush
11. Spring clamp
12. Pach
13. "U" bolt
14. Nut and washer
15. Stopper rubber
16. Shock absorber
17. Bush
18. Retainer
19. Centering washer
20. Nut

SUSPENSION

MAZDA Rotary pickup uses the wishbone type suspension arms with the coil springs on the front and semielliptic leaf springs on the rear.
The shock absorbers are of the hydraulic double action type.

13–A. FRONT SHOCK ABSORBER

13–A–1. Removing Front Shock Absorber

1. Loosen the nuts that attach the upper end of the shock absorber to the cross member.
2. Remove the rubber bushes and washers.
3. Loosen the bolts that attach the lower end of the shock absorber to the lower arm.
4. Remove the shock absorber from under the lower arm.
5. Worn or damaged rubber bushes should be discarded.

13–A–2. Checking Front Shock Absorber

To test the shock absorber, remove from the vehicle. Hold the shock absorber in an upright position and work it up and down in its full length of travel, four or five times.
If a strong resistance is felt due to hydraulic pressure, the shock absorber is functioning properly.
If no resistance is felt or there is a sudden free movement in travel, the shock absorber should be renewed.
If excessive amount of oil is evident on the exterior of the shock absorber, replace with a new shock absorber.

13–A–3. Installing Front Shock Absorber

Install the shock absorber in the reverse order of removing.

Note :
Tighten the shock absorber nut to the dimension shown in Fig. 13–3.

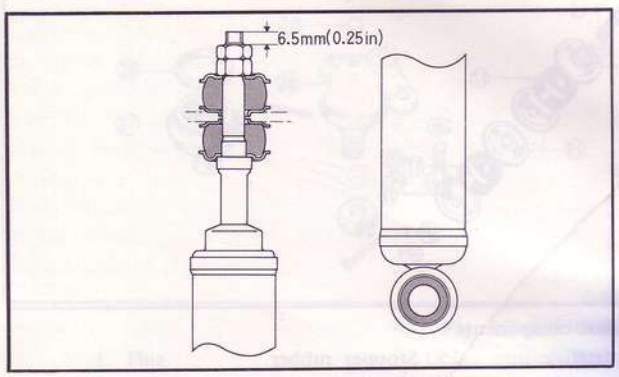

Fig. 13–3 Tightening shock absorber nut

13–B. FRONT SUSPENSION

13–B–1. Removing Front Suspension

1. Jack up the vehicle until the front wheels are clear of the ground.
2. Remove the front wheel.
3. Remove the front shock absorber, as described in Par 13–A–1.
4. Remove the upper ball joint nut and disconnect the ball stud from the steering knuckle, using the **Ball joint puller** (49 0727 575).
5. Remove the nuts and bolts that attach the upper arm shaft to the support bracket, noting the numbers and positions of the adjusting shims so that correct wheel alignment is obtained when reassembled.
6. Remove the upper arm assembly.
7. Disconnect the stabilizer from the lower arm.

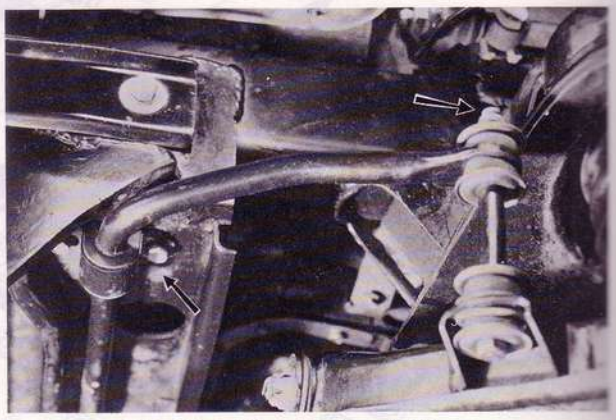

Fig. 13–4 Disconnecting stabilizer

8. With the **Spring lifter** (49 0223 640A and 49 0223 641), compress the coil spring.



Fig. 13–5 Coil spring lifter

9. Remove the lower ball joint nut and disconnect the ball stud from the steering knuckle.
10. Remove the bolts that attach the lower arm to the cross member and remove the lower arm assembly and coil spring from the vehicle.

13–B–2. Checking Front Suspension

1. Check for any crack, bend or torsion on both upper and lower arms.
2. Inspect the coil spring for signs of fatigue, crack and any damage.
3. Check the dust seal of the ball joint and replace if it is defective.
4. Check end play of the upper and lower ball joints. If it **exceeds 1.0 mm (0.039 in)**, replace with a new one.

13–B–3. Installing Front Suspension

The procedure for installing the front suspension is in reverse to the removing procedure.
When installing, be careful in the following points :
1. Grease each ball joint by applying the procedure explained in the following paragraph.
2. When fitting the stabilizer, align the white line marked on the stabilizer with the outside of the support bracket.
3. When replacing the coil spring, install a suitable coil spring and adjusting plate to get equal road clearance both on the right and left.

13–B–4. Greasing Front Suspension

The ball joints and the thread bushes (upper arm shaft bushes) of the suspension arms require no greasing for 32,000 miles. When greasing becomes necessary, supply Molybdenum Disulfide Lithium Grease to the ball joints and the thread bushes, proceeding as follows:

Ball Joints:

1. Remove the set ring from the groove on the dust seal and turn the dust seal inside out.
2. Remove the plug and fit the grease nipple in its stead.
3. Remove all of the used grease in the socket and the dust seal by gradually supplying new **lithium grease** through the nipple.

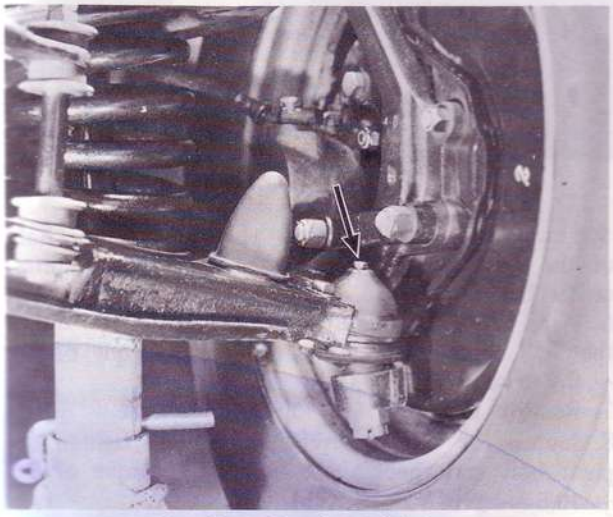

Fig. 13–6 Greasing ball joint

4. When the used grease is thoroughly removed, fit the dust seal and secure it in place with the set ring.
5. Add new grease until the dust seal begins to balloon. Then, depress the dust seal with the fingers so that about half of the grease remains in the dust seal.
6. Wipe off excess grease around the ball joint.
7. Remove the grease nipple and fit the plug.

Thread Bushes:

1. Remove the plug from one end of the thread bush and fit the grease nipple in its stead.
2. Remove all of the used grease in the thread bush and the dust seal by gradually supplying new grease through the nipple.
3. When the used grease is thoroughly removed, add new grease until new grease appears from the brim of the dust seal.
4. Remove the grease nipple and reinstall the plug.
5. Grease to the other end of the thread bush in the same manner described above.
6. Wipe off excess grease around the thread bush.

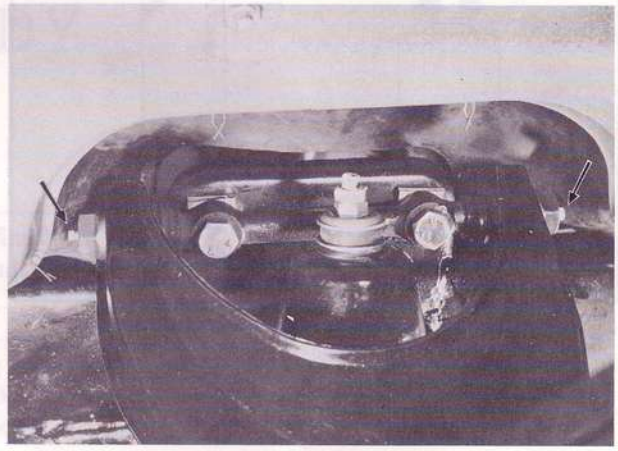

Fig. 13–7 Greasing thread bushes

13–C. REAR SHOCK ABSORBER

13–C–1. Removing Rear Shock Absorber

1. Remove the nuts, washers, and rubber bushes from both the upper and lower ends of the shock absorber.

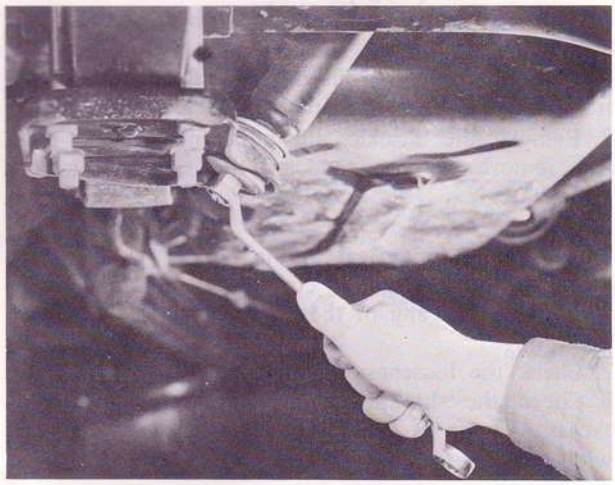

Fig. 13–8 Removing rear shock absorber

2. Compress the shock absorber and remove it from the vehicle.
3. If the rubber bushes appear to be worn, damaged, or deteriorated, replace with new ones.

13–C–2. Checking Rear Shock Absorber

Check the rear shock absorber by referring to Par. 13–A–2.

13–C–3. Installing Rear Shock Absorber

Install the rear shock absorber in the reverse order of removing.

Note :
Tighten the shock absorber nuts to the dimension shown in Fig. 13–9.

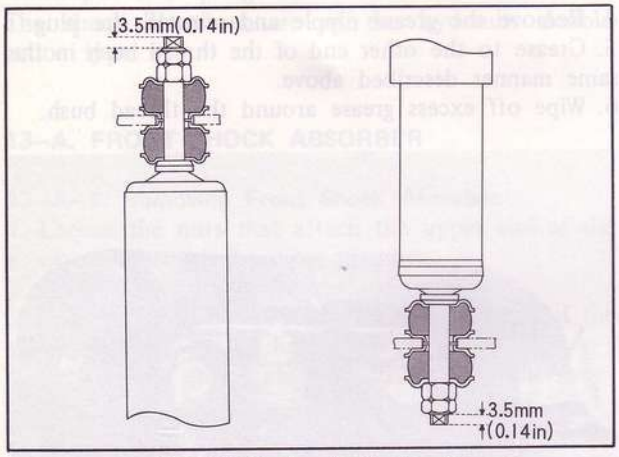

Fig. 13–9 Tightening shock absorber nut

13–D. REAR SPRING

13–D–1. Removing Rear Spring

1. Raise the vehicle and place a stand under the frame side rail, permitting the spring to hang free.
2. Support the rear axle in this position with the jack.
3. Disconnect the rear shock absorber at the lower mounting point.
4. Remove the "U" bolt nuts and the spring clamp.
5. Remove the spring pin nut and remove two bolts and nuts attaching the spring pin plate to the frame bracket.
6. Remove the spring pin and bushes and remove the front end of the spring from the vehicle.
7. Remove the shackle pin nuts and shackle plate and remove the rear end of the spring from the vehicle.

13–D–2. Checking Rear Spring

1. Check the spring for corrosion, wear, fatigue or any damage. If any of these conditions exists, replace the spring.
2. Check the looseness of the spring center bolt.
3. Check the shackle pin and bushes for wear. If excessive wear is found, they should be replaced with new ones.

13–D–3. Installing Rear Spring

1. Install the rubber bushes into the front eye of the spring and position it in the frame bracket so as to align the holes of the rubber bushes with the hole of the frame bracket.
2. Insert the spring pin from the outside through the rubber bushes.
3. Tighten the nuts and bolts attaching the spring pin plate to the frame bracket with a torque of **2.0 ~ 2.5 m-kg (14 ~ 18 ft-lb)**. **Do not** tighten the spring pin nut.
4. Fit the rubber bushes to the rear eye of the spring and the shackle pin. Install the spring and the shackle pin to the frame bracket. **Do not** tighten the nuts.

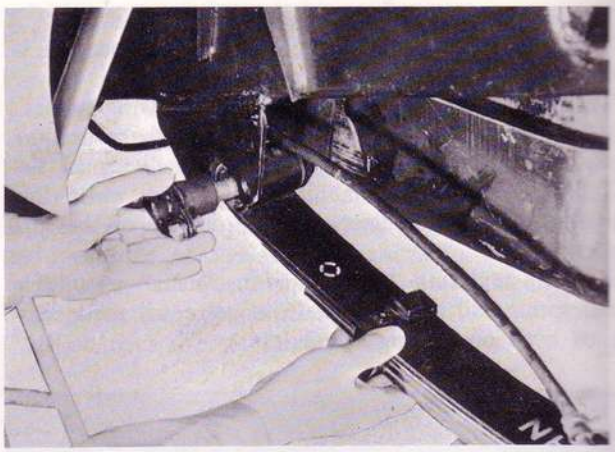

Fig. 13–10 Inserting spring pin



Fig. 13–11 Installing shackle pin

5. Lower the rear axle and place the center hole of the axle spring seat over the head of the spring center bolt.
6. Place the spring plate under the spring and install the "U" bolts. Tighten the nuts to a torque of **6.4 ~ 8.0 m-kg (46 ~ 58 ft-lb)**.
7. Remove the stand and lower the vehicle.
8. **Jounce** the vehicle several times, and tighten the pivot bolt and shackle pin nuts to a torque of **8.5 ~ 10.5 m-kg (61 ~ 76 ft-lb)**.

Note :
According to the size of camber, the rear springs are classified into the three categories of –, 0, and +. They are marked on the main leaf. Since difference in camber between the right and left springs results in a difference in road clearance causing inclination of the vehicle, those with the same mark should be installed on both sides.

SPECIAL TOOLS

49 0727 575	Ball joint puller
49 0223 640A and 641	Coil spring lifter

BODY

14–A. WINDSHIELD GLASS ..... 14 : 1
14–A–1. Removing Windshield Glass ..... 14 : 1
14–A–2. Installing Windshield Glass ..... 14 : 1
14–B. BACK WINDOW ..... 14 : 1
14–C. DOOR ..... 14 : 1
14–C–1. Disassembling Door ..... 14 : 1
14–C–2. Assembling Door ..... 14 : 2
14–C–3. Adjusting Door ..... 14 : 2
14–D. HEADLINING (Top ceiling) ..... 14 : 3
14–D–1. Removing Headlining ..... 14 : 3
14–D–2. Installing Headlining ..... 14 : 4
14–E. INSTRUMENT PANEL ..... 14 : 5
14–E–1. Removing Meter Set ..... 14 : 5
14–E–2. Installing Meter Set ..... 14 : 5
14–E–3. Removing Center Panel ..... 14 : 5
14–E–4. Installing Center Panel ..... 14 : 5
BODY CHECKING DIMENSION ..... 14 : 6

BODY

14–A. WINDSHIELD GLASS

14–A–1. Removing Windshield Glass

1. Remove the windshield wiper arms and blades.
2. Remove the windshield mould from weatherstrip.
3. Detach the adhesive cement between the weatherstrip and the body flange with a wooden spatula.
4. Push out the inner lip of the weatherstrip along the edge of the windshield with a suitable tool from inside the vehicle while pushing the windshield glass outwards.

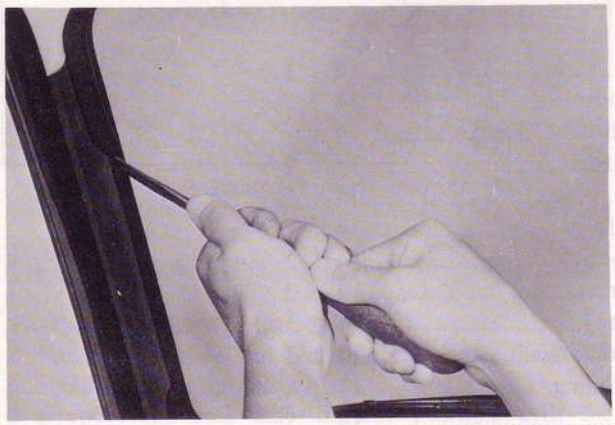

Fig. 14–1 Pushing out inner lip of weatherstrip

5. Remove the windshield glass together with the weatherstrip.
6. Remove the weatherstrip from the windshield glass.

14–A–2. Installing Windshield Glass

Before installing the windshield glass, clean off an old adhesive cement thoroughly from the windshield glass and the body.

1. Install the weatherstrip along the circumference of the windshield glass as shown in Fig. 14–2.

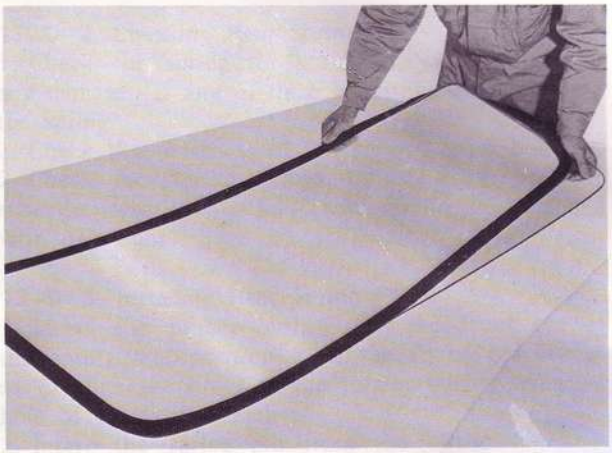

Fig. 14–2 Installing weatherstrip

2. Apply a liberal amount of liquid soap in the groove of the weatherstrip, which is fitted to the body flange.
3. Fit a string of 4 mm (0.16 in) in diameter to the groove of the weatherstrip as shown in Fig. 14–3.

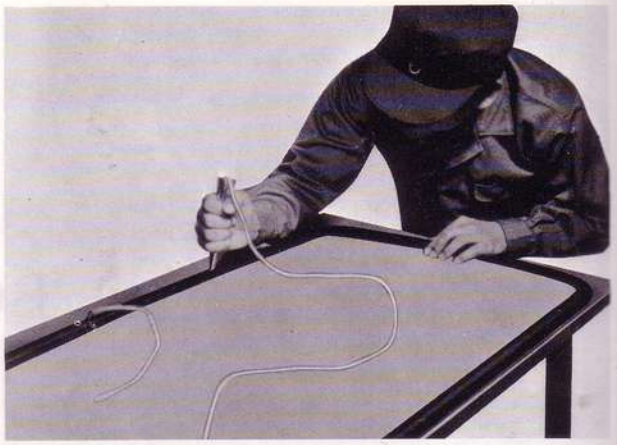

Fig. 14–3 Fitting string

4. Place the windshield glass and weatherstrip assembly into position on the body flange.
5. Pull the string so as to place the inner lip over the flange as shown in Fig. 14–4. At the same, tap the glass from the outside to settle it into position.

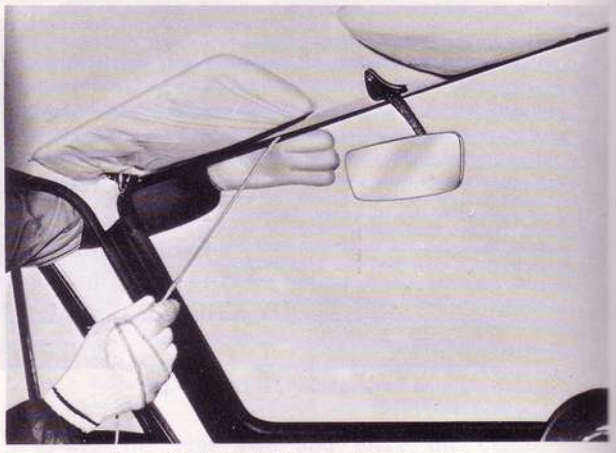

Fig. 14–4 Installing windshield glass

6. Make the weatherstrip and the body flange contact properly with a screwdriver.
7. Seal the weatherstrip against the glass and the body flange by carefully applying a thin coat of Rubber Sealer.

14–B. BACK WINDOW

Remove the back window and install it applying the same method as the windshield glass.

14–C. DOOR

14–C–1. Disassembling Door

1. Remove the arm rest and garnish plate.
2. Remove the inside door handle and the window regulator handle by pressing in the escutcheon and removing the holding pin as shown in Fig. 14–5.
3. Remove the trim board and the inside screen (water shield).
4. Remove the screws holding the window sash assembly to the door. Lower the door glass and slide

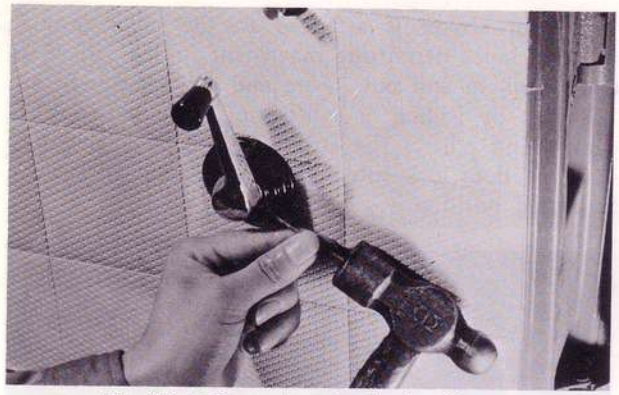

Fig. 14–5 Removing regular handle

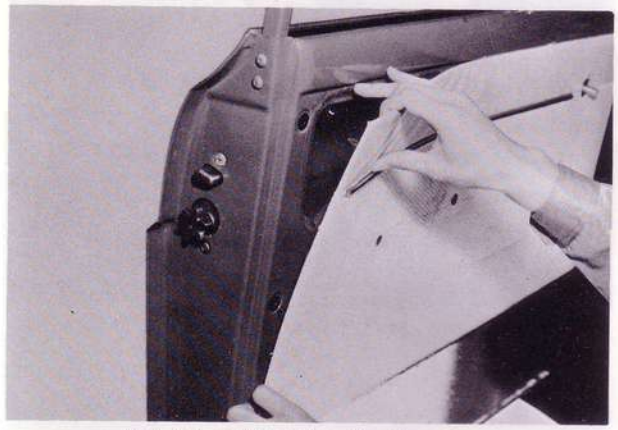

Fig. 14–6 Removing trim board

the window sash up out of the door.



Fig. 14–7 Removing window sash

5. Disengage the guide groove at the glass from the regulator arm and remove the glass.
6. Remove the screws attaching the door handle and remove the outer handle.



Fig. 14–8 Removing glass

7. Using a screw driver, pry the retainer off from the key cylinder groove and remove the key cylinder.

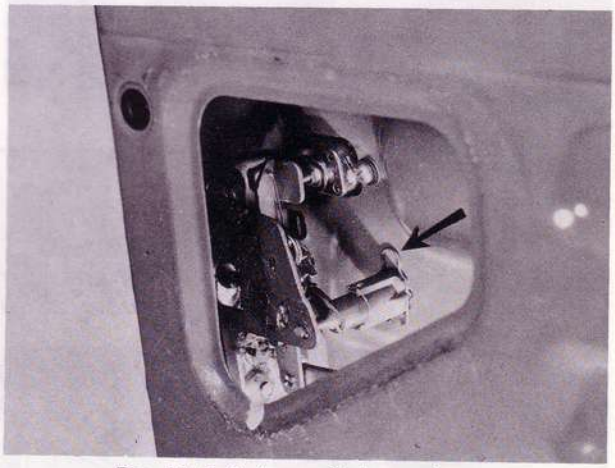

Fig. 14–9 Prying cylinder retainer

8. Remove the screws that attach the door lock assembly to the door. Remove the screws that attach the remote control assembly to the door inner panel, and remove the door lock and remote control assembly.
9. Remove the four screws attaching the regulator assembly to the door inner panel, and remove the regulator assembly.

14–C–2. Assembling Door

Assemble the door in the reverse order of disassembling noting the following point.
Install each water shield securely and apply Sealer to the screw threads, as faulty sealing will cause water leaks.

14–C–3. Adjusting Door

The door hinges are constructed to permit **up and**

down, and **in and out** adjustments. **To adjust,** loosen the upper and lower door hinge attaching screws and move the door up or down, in or out until correct alignment is obtained. **Fore and aft** door adjustments are also possible through the use of shims between the hinge and hinge pillar.

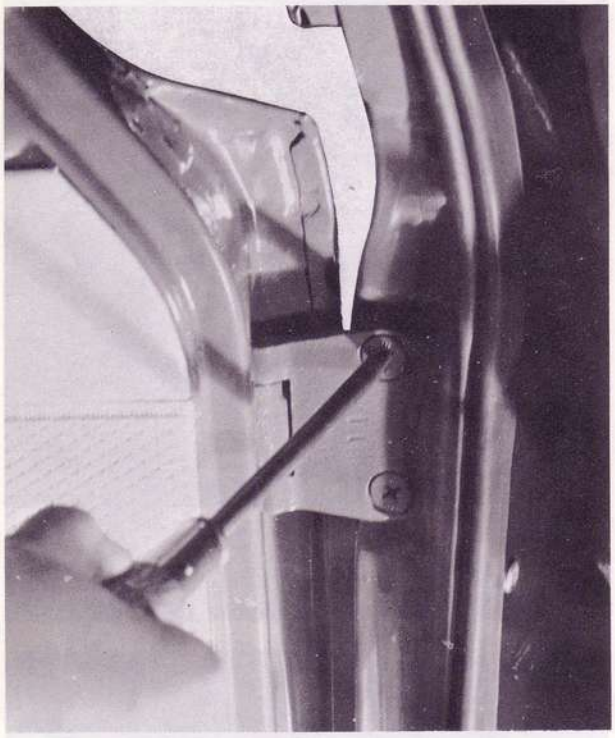

Fig. 14–10 Adjusting door hinge

The door striker is attached to the pillar through oversize holes permitting movement of the striker **up and down, in and out. Fore and aft** adjustment can be made by adding or subtracting shims between the striker and piller. The striker should be adjusted so that the door lock enters freely and door will remain in closed position.

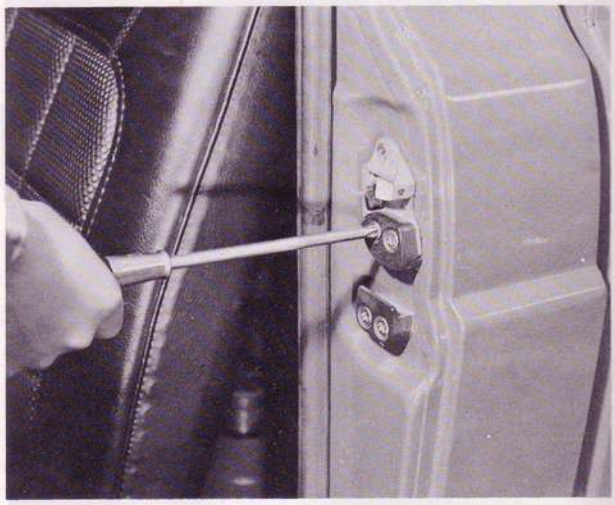

Fig. 14–11 Adjusting door striker

14–D. HEADLINING (Top ceiling)

14–D–1. Removing Headlining

If it becomes necessary to remove the headlining, proceed as follows :

1. Remove the windshield glass and the rear window,

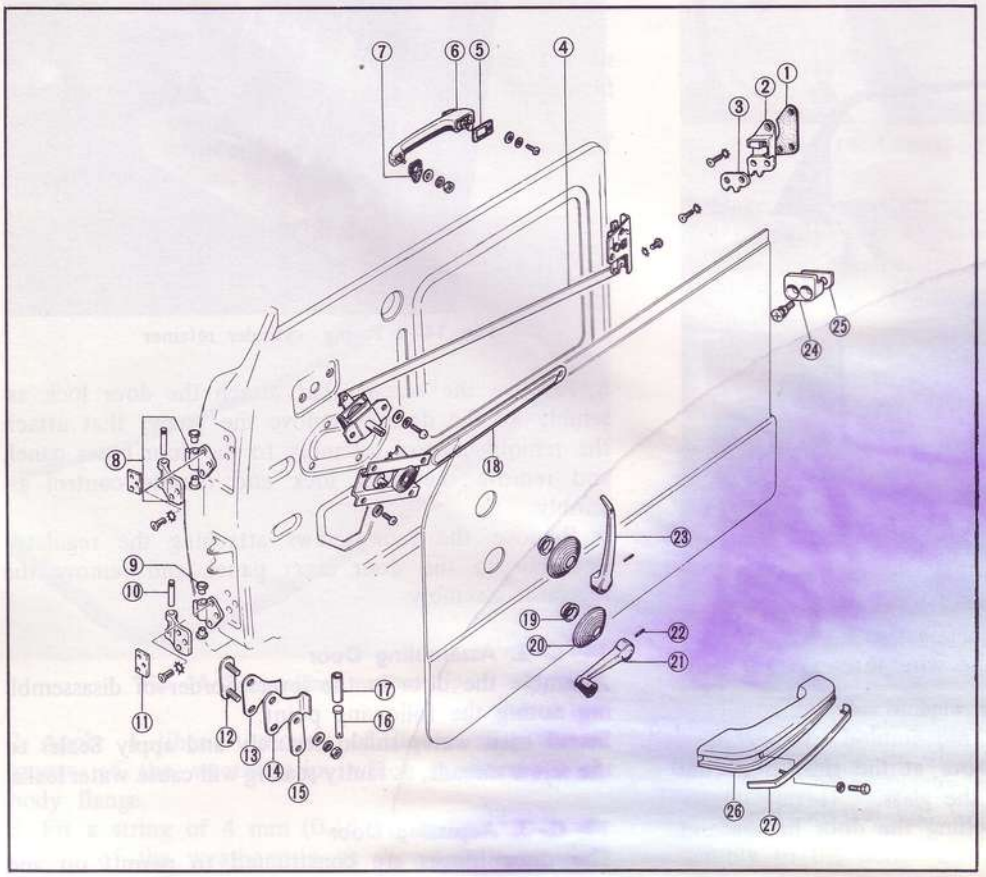

Fig. 14–12
Door components

1. Striker seat
2. Door look striker
3. Door look rack
4. Door look
5. Seat No. 1
6. Outer handle
7. Seat No. 2
8. Door hinge
9. Bush
10. Hinge pin
11. Spacer
12. Door checker set plate
13. Check sub spring
14. Check spring
15. Checker washer
16. Checker pin
17. Checker roller
18. Window regulator
19. Escutcheon crown
20. Handle escutcheon
21. Regulator handle
22. Tapered pin
23. Inner handle
24. Anti-burst block
25. Anti-burst block shim
26. Arm rest
27. Garnish

as described in Par. 14–A and 14–B.
2. Remove the rear view mirror and sun visor.
3. Pull the headlining loose from the cemented area at the windshield headers and the door openings.
4. Disengage the front and center listing wires from the holes in the left and right roof rails.
5. Remove the interior lamp attaching screws, disconnect the wire and remove the interior lamp.
6. Remove the screws that attach the rear listing wire brackets to the back plate.
7. Pull the rear listing wire upward and remove the headlining from the vehicle.

14–D–2. Installing Headlining

1. Beginning at the rear, insert both ends of rear listing wire into the holes of the back plate, as shown in Fig. 14–13.

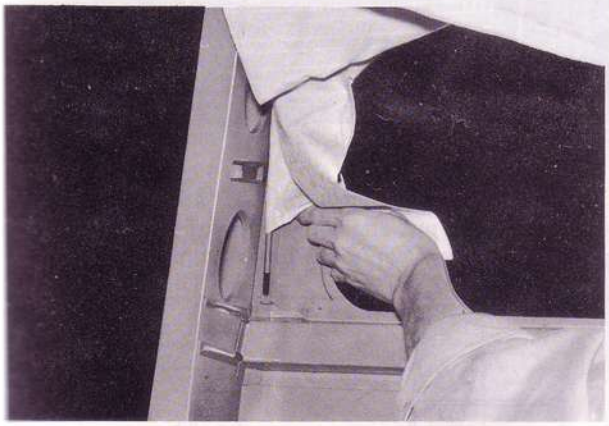

Fig. 14–13 Inserting rear listing wire

2. Install the fixing brackets, attached to rear listing wire, to the back plate with screws.

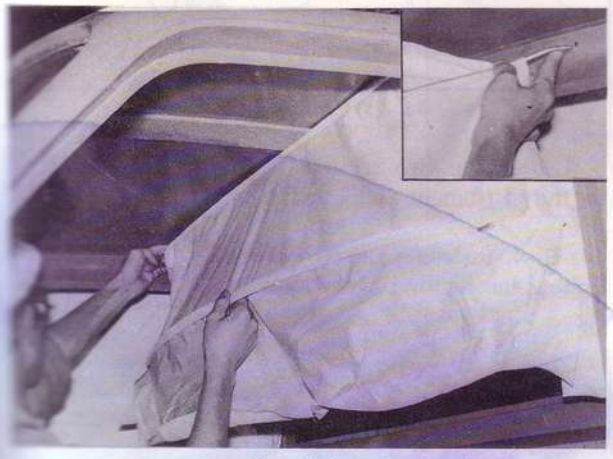

Fig. 14–14 Installing listing wire bracket

3. Cut a hole in the headlining material for the interior lamp and connect the wire through the headlining.
4. Install the remaining two listing wires into the side roof rails, making sure to stretch the headlining evenly as shown in Fig. 14–15.
5. Apply cement to the front and rear headers.
6. Wait until it becomes tacky, then cement the headlining in place at front and rear, stretching the headlining to make it taut.

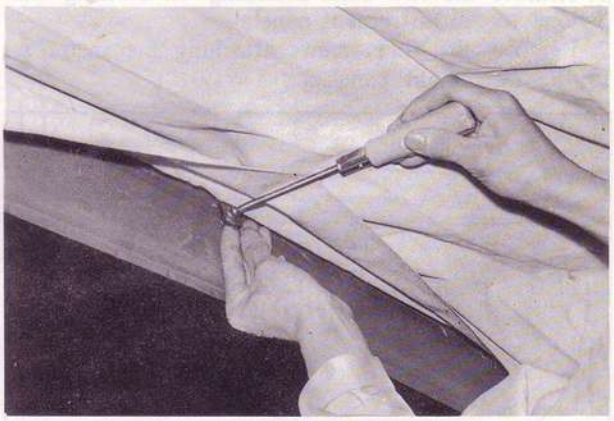

Fig. 14–15 Installing listing wire

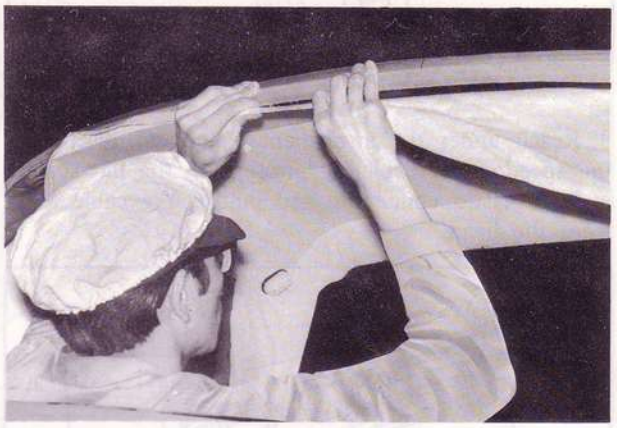

Fig. 14–16 Gluing headlining

7. Trim the material properly at the corners to prevent wrinkling, as shown in Fig. 14–17, and cement to the pillars.



Fig. 14–17 Trimming headlining material

8. Tighten the interior lamp attaching screws.
9. Trim the excess material at the front and rear.
10. Install the rear view mirror and sun visor.
11. Install the windshield glass and the rear window, as described in Par. 14–A–2.

14–E. INSTRUMENT PANEL

14–E–1. Removing Meter Set

1. Remove the two bolts attaching the steering shaft bracket to the instrument panel.
2. Remove the four screws attaching the meter set to the instrument panel.

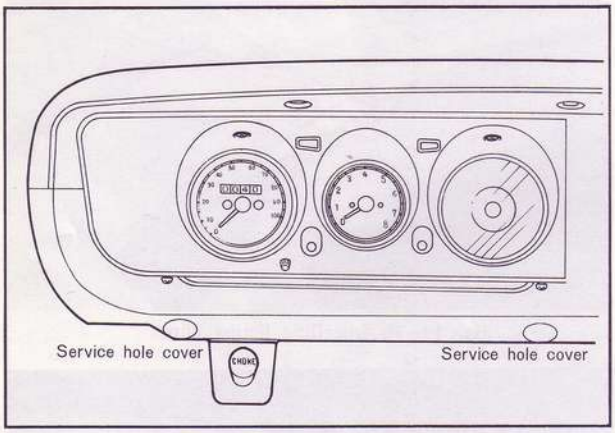

Fig. 14–18 Meter set attaching screws

3. Reach under the instrument panel and disconnect the speedometer cable by pressing on the flat surface of the plastic connector and pulling the cable away from the head.

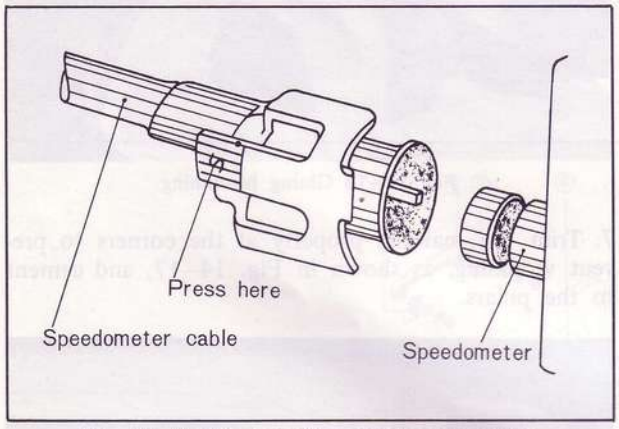

Fig. 14–19 Disconnecting speedometer cable

4. Disconnect the wiring connectors from the meter set and remove the meter set.

14–E–2. Installing Meter Set

Follow the removal procedures in the reverse order.

14–E–3. Removing Center Panel

1. Pull and remove the heater control knobs, radio control knobs and resistor knob.
2. Remove the nuts attaching the radio to the center panel.

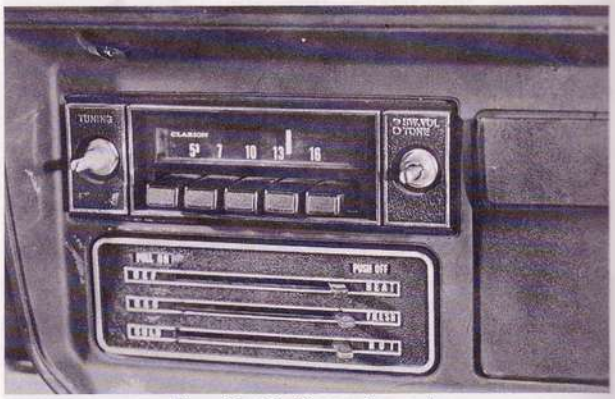

Fig. 14–20 Removing nuts

3. Remove the cigar lighter from the center panel.
4. Remove the nut attaching the panel resistor to center panel and disconnect the wirings from the resistor.

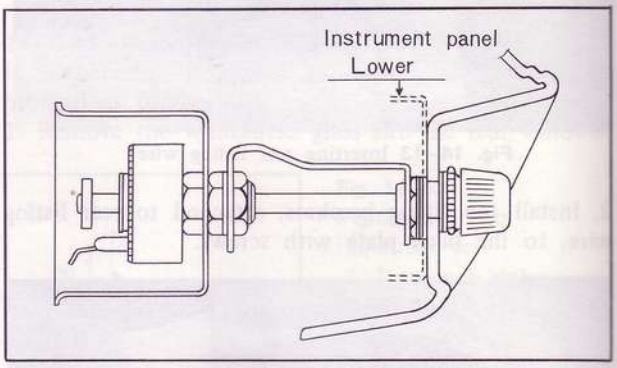

Fig. 14–21 Removing panel resister

5. Loosen the two screws attaching the center panel to the instrument panel and remove the center panel.

14–E–4. Installing Center Panel

Follow the removal procedures in the reverse order.

BODY CHECKING DIMENSION

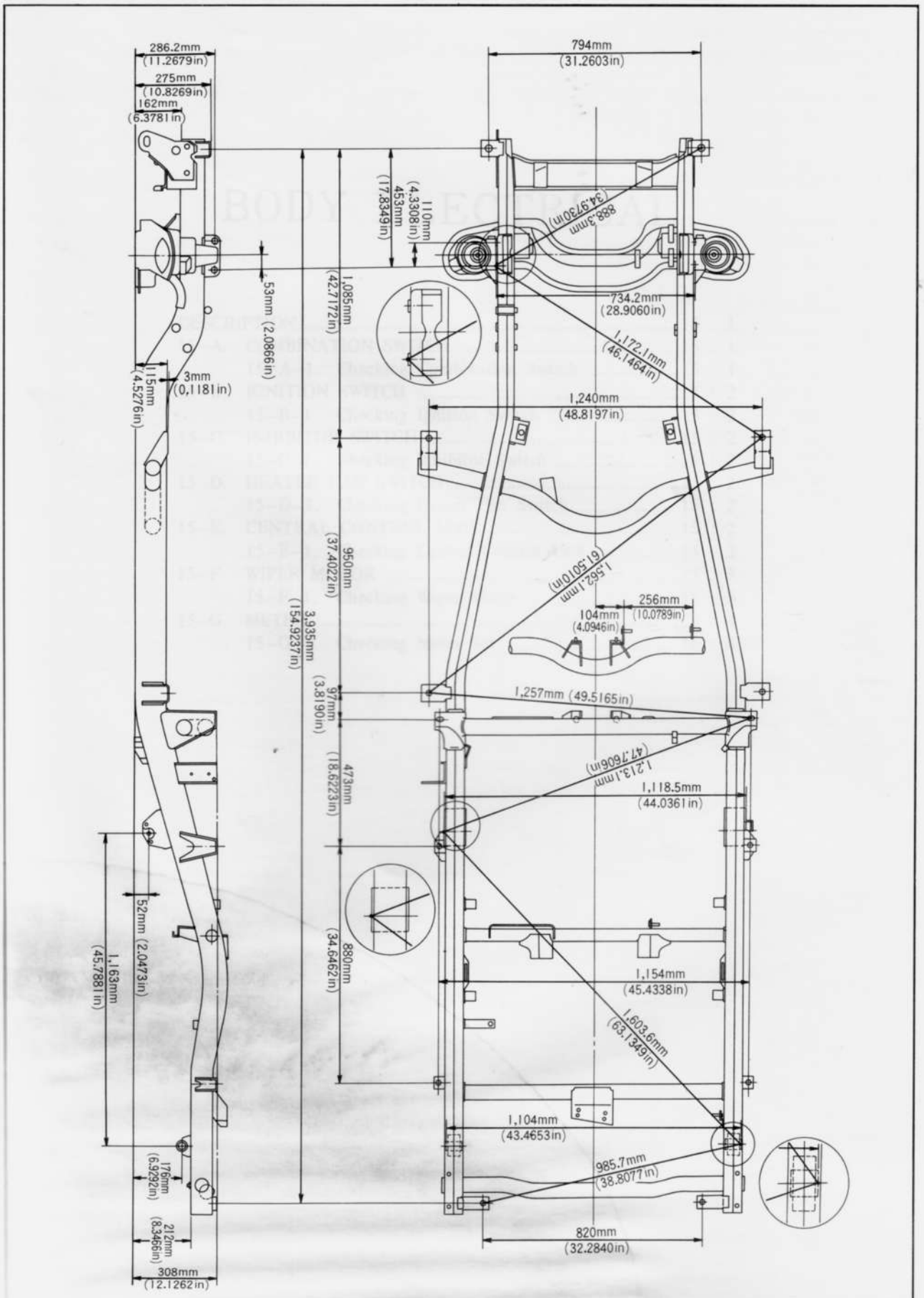

BODY ELECTRICAL

DESCRIPTION ..... 15 : 1
15–A. COMBINATION SWITCH ..... 15 : 1
15–A–1. Checking Combination Switch ..... 15 : 1
15–B. IGNITION SWITCH ..... 15 : 2
15–B–1. Checking Ignition Switch ..... 15 : 2
15–C. INHIBITOR SWITCH ..... 15 : 2
15–C–1. Checking Inhibitor Switch ..... 15 : 2
15–D. HEATER FAN SWITCH ..... 15 : 2
15–D–1. Checking Heater Fan Switch ..... 15 : 2
15–E. CENTRAL CONTROL UNIT ..... 15 : 2
15–E–1. Checking Central Control Unit ..... 15 : 2
15–F. WIPER MOTOR ..... 15 : 3
15–F–1. Checking Wiper Motor ..... 15 : 3
15–G. METER ..... 15 : 4
15–G–1. Checking Meter Set ..... 15 : 4

DESCRIPTION

As a simple method of inspecting each unit of the body electrical equipment, a circuit tester has been taken up in the Workshop Manual. In this case, however, possible contact resistance is not taken into account. Accordingly, please note that even when the circuit tester shows that the continuity to a unit is satisfactory, in case constant resistance has increased, there is a possibility of the unit not working properly. So pay due attention to this point.

15–A. COMBINATION SWITCH

15–A–1. Checking Combination Switch

Check the continuity between the coupler terminals using the circuit tester according to the following switch interconnection diagram.

1. Turn Signal and Hazard Switch

Switch Position \ Terminal	TFU	HFU	TL	TR	TIG	TFB	HBA	HFB	SS	SS	
Right Turn	●			●	●	●					Turn Signal
Neutral					●	●					
Left Turn	●		●		●	●					
OFF							●				Hazard
ON		●	●	●			●	●	●		

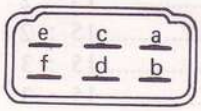

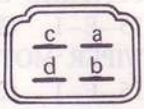

a : TIG ..... Turn signal switch power source (GY)
b : TFB ..... Turn signal flasher switch power source (GL)
c : TL ..... Turn signal left (GB)
d : HFB ..... Hazard flasher power source (WG)
e : HBA ..... Hazard switch power source (WL)
f : TR ..... Turn signal right (GW)

a : TFU ..... Turn signal flasher unit (GR)
b : E ..... Earth (B)
c : HFU ..... Hazard flasher unit (WB)
d : HO ..... Horn switch power source (G)
SS ..... Stop switch (Lg) } Refer to Fig. 15–2
SS ..... Stop switch (Lg) }

Fig. 15–1 Turn signal and hazard switch interconnection diagram

2. Light, Dimmer and Passing Switch

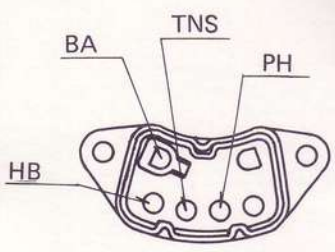

Switch Position \ Terminal	BA	PH	TNS	HB	HU	HL	
OFF	●	●					Light
Tail, Side, Number	●	●	●				
Head Lamp	●		●	●			
Upper				●	●		Dimmer
Lower				●		●	
OFF		●					Passing
ON		●			●		

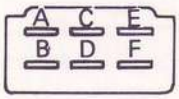

A : BA ..... Power source (R)
B : TNS ..... Tail, licence and side lamp (RG)
C : SS ..... Stop switch (Lg)
D : SS ..... Stop switch (Lg)
E : HU ..... Head lamp upper (RW)
F : HL ..... Head lamp lower (RB)

Note:
The terminals PH and HB are connected inside the light switch and are not on the coupler.

Fig. 15–2 Light, dimmer and passing switch interconnection diagram

3. Wiper and Washer Switch

Switch Position \ Terminal	E	SWL	SWH	INT	SW	
OFF	•					Wiper
LOW	•	—				
HIGH	•	—	—			
INT	•	—		—		
OFF	•					Washer
ON	•	—	—	—	—	

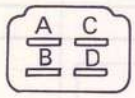

A : SW ..... Washer switch (L)
B : SWL ..... Wiper LOW (W)
C : SWH ..... Wiper HIGH (R)
D : INT ..... Wiper INTERMIT (G)

E ..... Earth (B) Refer to Fig. 15–1

Fig. 15–3 Wiper and washer switch interconnection diagram

15–B. IGNITION SWITCH

15–B–1. Checking Ignition Switch

Check the continuity between the switch terminals using the circuit tester according to Fig. 15–4, interconnecting diagram.

Switch Position \ Terminal	BAT	IG	R	ST	ACC	P
ACC	•				—	
OFF	•					—
ON	•	—			—	
START	•		—		—	

15–C. INHIBITOR SWITCH

15–C–1. Checking Inhibitor Switch

Check the continuity between the coupler terminals using the circuit tester according to the following diagram.

Inhibitor Switch Interconnection Diagram

Switch Position \ Terminal	B	S	IG	R	1	2	D	N	P	W
P	•···•		•						—	
R			•	—						—
N	•···•		•					—		
D			•				—			—
2			•			—				—
1			•		—					—

Notes:

a. Solid lines show the connection for indicator light circuit.

b. Dotted lines show the connection for starting circuit.

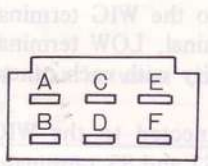

A : Indicator light P (GL)
B : Vacant
C : Indicator light D (GR)
D : Indicator light N (GB)
E : Indicator light 1 (G)
F : Indicator light 2 (GW)

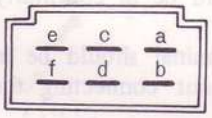

a : Ignition switch S (BY)
b : Starter S (BY)
c : Power source (GY)
d : Indicator light R (RY)
e : E.I.S. unit (LO)
f : Vacant

Fig. 15–5 Inhibitor switch coupler

15–D. HEATER FAN SWITCH

15–D–1. Checking Heater Fan Switch

Check the continuity between the coupler terminals using the circuit tester according to Fig. 15–6.

Switch Position \ Terminal	BA	H	M	L
OFF	•			
HIGH	•	—		
MID	•	—	—	
LOW	•	—	—	—

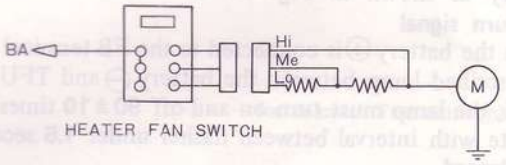

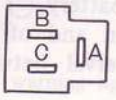

A : H Heater high (LW)
B : M Heater medium (LR)
C : L Heater low (LY)

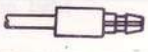

a : BA Power source (LB)

Fig. 15–6 Heater fan switch interconnection diagram

15–E. CENTRAL CONTROL UNIT

The central control unit is composed of wiper relay (R1 and R2), flasher relay (R3), horn relay (R4) and flasher unit (U1), each of which is a plug-socket connection type. Each relay and unit are easy to replace. In replacing the flasher unit, care should be taken that its capacity differs depending upon area. Also, the "multi-grade relay" has been prepared which is applicable as replacement of any of the relays.

15–E–1. Checking Central Control Unit

Check the central control unit using the battery and circuit tester as follows:

1. Wiper relay (R1)
When the battery ⊕ is connected to the WIG terminal and the battery ⊖ to the S2 terminal, LOW terminal and unit body should be in continuity with each other.

2. Wiper relay (R2)
(a) When the battery ⊕ is connected to the WIG terminal and the battery ⊖ to the S2 and S3 terminals, HI terminal and unit body should be in continuity with each other.
(b) AS terminal and LOW terminal should be in continuity with each other without connecting the battery to them.

3. Horn relay (R4)
When the battery ⊕ is connected to the HZB terminal and the battery ⊖ to the HNS terminal, HZB terminal and HON terminal should be in continuity with each other.

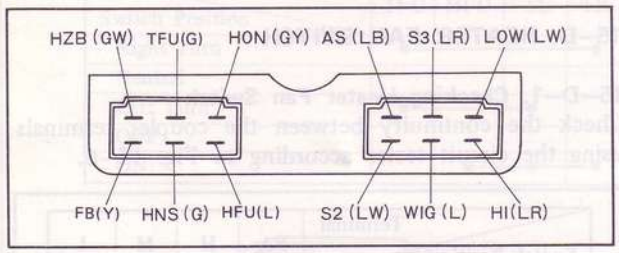

Fig. 15–7 Central control unit coupler

4. Flasher unit (U1)
In checking the flasher unit, connect a prescribed lamp as indicated on the central control unit cover between the unit (with the flasher relay R3) and battery as shown in Fig. 15–8.

(a) Turn signal
When the battery ⊕ is connected to the FB terminal and a prescribed lamp between the battery ⊖ and TFU terminal, the lamp must turn on and off **90 ± 10** times per minute with interval between flasher under **1.5** second.

(b) Hazard
When the battery ⊕ is connected to the HFU terminal and a prescribed lamp between the battery ⊖ and TFU terminal, the lamp must turn on and off **90 ± 10** times per minute with the interval between flasher under **1.5** second.

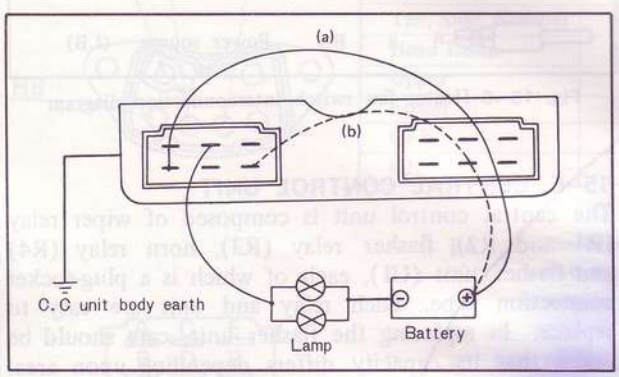

Fig. 15–8 Hazard and flasher unit interconnection diagram

Note:
The flashing on and off of the lamp varies depending upon the lamp capacity and the central control unit earth condition as follows:

Flasher

Faulty unit earth	Lamp remains lighted
Lamp capacity decreased	Flash becomes slower or lamp remains lighted
Lamp capacity increased	Number of flashes remains unchanged

Hazard

Faulty unit earth	Lamp remains lighted
Lamp capacity decreased	Number of flashes remains unchanged
Lamp capacity increased	Number of flashes remains unchanged

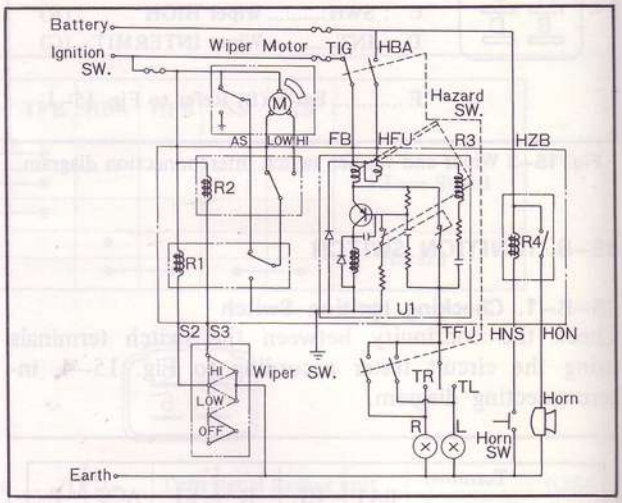

Fig. 15–9 Central control unit circuit

15–F. WIPER MOTOR

15–F–1. Checking Wiper Motor

Connect the wiper motor, ammeter and battery according to the following diagram, and check the number of wiping revolutions and amperage.

Wiper motor	Wiping revolution number	Amperage
Low	40 ~ 55 RPM	Less than 2.5A
High	60 ~ 85 RPM	Less than 2.5A

Notes:
a. The difference in number of revolutions between Low and High should be more than **15 RPM**.
b. The Auto Stop does not work in the case of faulty wiper motor earth.

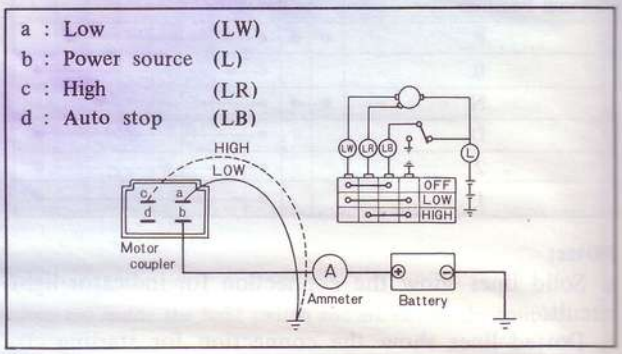

Fig. 15–10 Wiper motor interconnection diagram

15–G. METER

15–G–1. Checking Meter Set

Check the continuity between connector pin and lamp, and that between connector pin and meter using the circuit tester according to the interconnection diagram below.

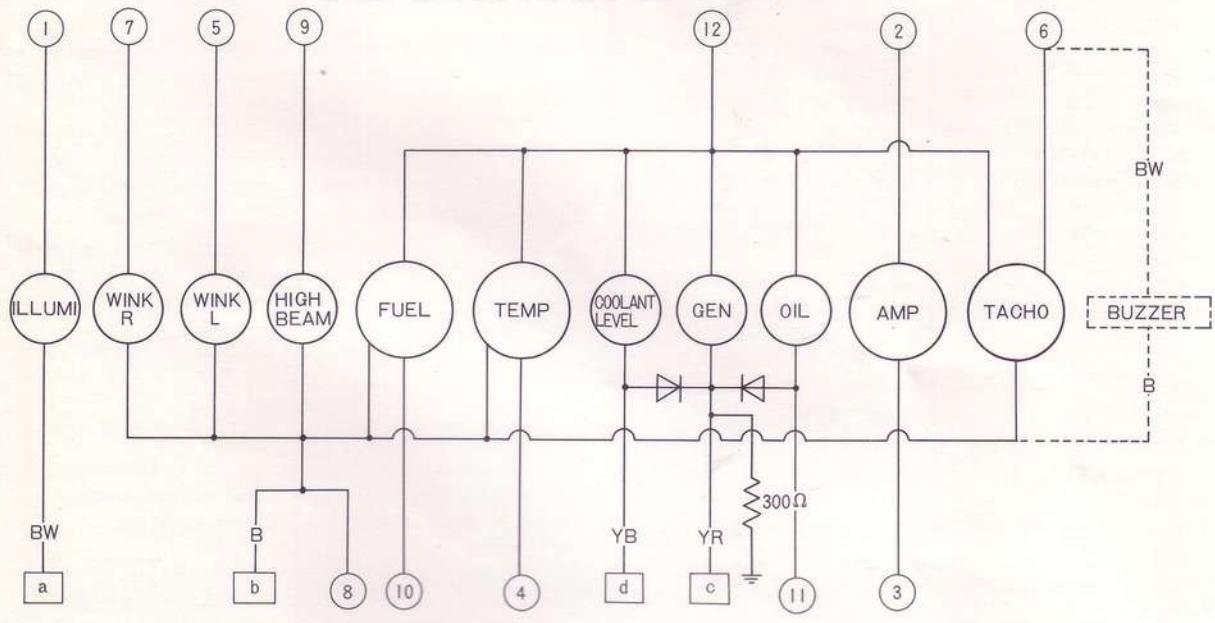

(------ for Manual Transmission)

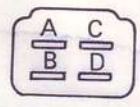

[a] Illumination light ⊖ ~ Panel light resister ⊕
[b] Battery ⊖ ~ Meter earth
[c] Regulator ~ Generator warning light
[d] Coolant level senser ~ Coolant level warning light

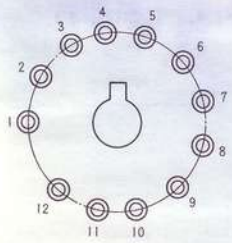

① Combination switch ~ Illumination light
② Main fuse ~ Ammeter
③ Main fuse ~ Ammeter
④ Water thermo unit ~ Water temperature meter
⑤ C.C. unit (Turn signal relay) ~ Turn signal indicator light
⑥ Ignition coil ⊖ ~ Tachometer
⑦ C.C. unit (Turn signal relay) ~ Turn signal indicator light
⑧ Battery ⊖ ~ Meter earth
⑨ Combination switch ~ High beam indicator light
⑩ Fuel tank gauge unit ~ Fuel meter
⑪ Oil level sensor ~ Oil level warning light
⑫ Fuse box ~ Meter

Fig. 15–11 Print panel interconnection diagram

TECHNICAL DATA

ENGINE

Type	Rotary piston engine, 2 rotors in line, water cooled
Displacement	654 cc (40.0 cu-in) x 2 rotors
Compression ratio	9.2 : 1
Compression pressure	
Limit	6 kg/cm² (85 lb/in²) at 250 rpm
Max. permissible difference between chambers	0.5 kg/cm² (7 lb/in²)
Part timing	
Intake opens	32° ATDC
Intake closes	50° ABDC
Exhaust opens	75° BBDC
Exhaust closes	38° ATDC
Side housing (Front, intermediate and rear housing)	
Limit of distortion	0.04 mm (0.0016 in)
Limit of wear (Sliding surface)	0.10 mm (0.0039 in)
Rotor housing	
Width	80 mm (3.150 in)
Max. permissible difference in width	0.06 mm (0.0024 in)
Rotor	
Width	79.85 mm (3.144 in)
Clearance of side housing and rotor (△R)	0.10 ~ 0.21 mm (0.0039 ~ 0.0083 in)
Apex seal	
Length	79.85 mm (3.144 in)
Width	3.0 mm (0.118 in)
Height	over 7.0 mm (0.276 in)
Clearance of apex seal and side housing (△S)	0.13 ~ 0.30 mm (0.0051 ~ 0.0118 in)
Clearance of apex seal and rotor groove (△G)	0.05 ~ 0.15 mm (0.0020 ~ 0.0059 in)
Apex seal spring	
Free height	more than 3.8 mm (0.150 in)
Side seal	
Thickness	1.0 mm (0.039 in)
Height	3.5 mm (0.138 in)
Clearance of side seal and rotor groove (△W)	0.04 ~ 0.10 mm (0.0016 ~ 0.0040 in)
Clearance of side seal and corner seal (△E)	
Standard	0.05 ~ 0.15 mm (0.0020 ~ 0.0059 in)
Limit	0.40 mm (0.0157 in)
Side seal protrusion	more than 0.5 mm (0.020 in)
Oil seal	
Height	5.6 mm (0.220 in)
Contact width of oil seal lip	less than 0.8 mm (0.031 in)
Oil seal protrusion	more than 0.5 mm (0.020 in)
Corner seal	
Outer diameter (standard)	11.0 mm (0.433 in)
Height (Standard)	7.0 mm (0.276 in)
Corner seal protrusion	more than 0.5 mm (0.020 in)
Eccentric shaft	
Eccentricity of rotor journal	15.0 mm (0.591 in)
Main journal diameter	43 mm (1.692 in)
Rotor journal diameter	74 mm (2.913 in)
Max. permissible run-out	0.06 mm (0.0024 in)
End play	0.04 ~ 0.09 mm (0.0016 ~ 0.0035 in)
Bearing clearance	
Clearance of main journal and main bearing	0.04 ~ 0.10 mm (0.0016 ~ 0.0039 in)
Clearance of rotor journal and rotor bearing	0.04 ~ 0.10 mm (0.0016 ~ 0.0039 in)
Alternator belt tension (slack) (Between alternator and eccentric shaft)	15 ± 2 mm (0.60 ± 0.08 in)
Air pump belt tension (Slack) (Between air pump and water pump)	10 ± 1 mm (0.40 ± 0.04 in)

LUBRICATING SYSTEM

Oil pump	
Type	Rotor
Feeding capacity at 1,000 rpm of engine	6 liter/min (1.56 U.S. gal/min)
Oil pump driven by	Chain and sprockets
Limit of chain adjuster protrusion	12 mm (0.47 in)
Outer rotor and body clearance	0.20 ~ 0.30 mm (0.008 ~ 0.012 in)
Clearance between rotor lobes	0.01 ~ 0.15 mm (0.0004 ~ 0.006 in)
Rotor end float	0.03 ~ 0.15 mm (0.001 ~ 0.006 in)
Oil pressure at 3,000 rpm of engine	5.0 kg/cm² (71.1 lb/in²)
Oil pressure at idling	2.5 kg/cm² (35.6 lb/in²)
Pressure regulator valve (Rear housing)	
Operating pressure	5.0 kg/cm² (71.1 lb/in²)
Free length of spring	46.4 mm (1.83 in)
Pressure control valve (Front cover)	
Operating pressure	11.0 kg/cm² (156 lb/in²)
Free length of spring	73.0 mm (2.874 in)
By-pass valve (Oil cooler)	
Starts to close	60 ~ 65°C (140 ~ 149°F)
Fully closes	70 ~ 75°C (158 ~ 167°F)
Opening pressure	3.56 kg/cm² at 70°C (50.7 lb/in² at 158°F)
Oil filter	
Type	Full flow, cartridge
Relief valve opens at	0.8 ~ 1.2 kg/cm² (11 ~ 17 lb/in²)
Oil metering pump	
Feeding capacity at 2,000 rpm of engine	2.0 ~ 2.5 cc/6 min (0.068 ~ 0.085 U.S. oz/6 min)
Lubricant	
-10°C ~ 50°C (15°F ~ 120°F)	MS, SAE 20W-50
-10°C ~ 40°C (15°F ~ 100°F)	MS, SAE 20W-40

Timing mark location	Eccentric shaft pulley
Spark plug initial gap	0.65 ± 0.05 mm (0.026 ± 0.002 in)
Alternator	
Ground	Negative
Rated output	12V 50A
Number of poles	12
No load test	
Voltage	14V
Current	0 amp
Revolution	less than 1,050 rpm
Load test	
Voltage	14 V
Current	40 amp
Revolution	less than 2,500 rpm
Number of brushes	2
Brush length	16 mm (0.63 in)
Wear limit	10 mm (0.39 in)
Brush spring pressure	330 ~ 450 gr (12 ~ 16 oz)
Pulley ratio of eccentric shaft and alternator	1 : 2.08
Regulator	
Constant voltage relay	
Air gap	0.7 ~ 1.3 mm (0.028 ~ 0.051 in)
Point gap	0.3 ~ 0.45 mm (0.012 ~ 0.018 in)
Back gap	0.7 ~ 1.5 mm (0.028 ~ 0.059 in)
Regulated voltage without load at 4,000 rpm of alternator	14.5 ± 0.5 V
Pilot lamp relay	
Air gap	0.9 ~ 1.4 mm (0.035 ~ 0.055 in)
Point gap	0.7 ~ 1.1 mm (0.028 ~ 0.043 in)
Back gap	0.7 ~ 1.5 mm (0.028 ~ 0.059 in)
Pilot lamp lights on	0.5 ~ 3.0 V
Pilot lamp lights out	4.2 ~ 5.2 V
Ignition coil (Leading)	
Type	HP5-13J
Primary resistance	1.35 Ω at 20°C (68°F)
External resistance	1.4 Ω at 20°C (68°F)
Ignition coil (Trailing)	
Type	HP5-13E
Primary resistance	1.5 Ω at 20°C (68°F)
External resistance	1.6 Ω at 20°C (68°F)
Starting motor	
Capacity	1.2kw or 2.0kw

	1.2kw	2.0kw
Lock test		
Voltage	5.0 volt	5.0 volt
Current	less than 780 amp	less than 1,100 amp
Torque	1.1 m-kg (8.0 ft-lb)	2.4 m-kg (17.4 ft-lb)
Free running test		
Voltage	11.5 volt	11.5 volt
Current	less than 75 amp	less than 100 amp
Speed	more than 4,900 rpm	more than 7,800 rpm
Number of brushes	4	4
Brush length	18.5 mm (0.73 in)	18.5 mm (0.73 in)
Wear limit	11.5 mm (0.45 in)	11.5 mm (0.45 in)
Brush spring pressure	1.4 ~ 1.8 kg (49 ~ 63 oz)	1.4 ~ 1.8 kg (49 ~ 63 oz)
Control switch	Solenoid	Solenoid
Voltage required to close solenoid contacts	less than 8 volt	less than 8 volt
Undercutting mica	0.5 ~ 0.8 mm (0.020 ~ 0.032 in)	0.5 ~ 0.8 mm (0.020 ~ 0.032 in)
Clearance between armature shaft and brush	less than 0.2 mm (0.008 in)	less than 0.2 mm (0.008 in)
Armature shaft end play	0.1 ~ 0.4 mm (0.004 ~ 0.016 in)	0.1 ~ 0.4 mm (0.004 ~ 0.016 in)
Clearance between pinion and stop collar	0.5 ~ 2.0 mm (0.020 ~ 0.079 in)	0.5 ~ 2.0 mm (0.020 ~ 0.079 in)

CLUTCH

Type	Single dry plate, diaphragm spring
Pressure plate	
Permissible lateral run-out	0.05 mm (0.0020 in)
Clutch disc	
Lateral run-out of clutch disc	
Limit	1.0 mm (0.039 in)
Clutch release mechanism	Hydraulic
Clutch pedal free play (Before push rod contacts with piton)	0.5 ~ 3.0 mm (0.02 ~ 0.12 in)
Master cylinder bore	15.87 mm (5/8 in)
Clearance between piston and master cylinder bore	
New	0.032 ~ 0.102 mm (0.0013 ~ 0.0040 in)
Wear limit	0.15 mm (0.006 in)
Release cylinder bore	19.05 mm (3/4 in)
Clearance between piston and release cylinder bore	
New	0.040 ~ 0.125 mm (0.0016 ~ 0.0049 in)
Wear limit	0.15 mm (0.006 in)

Governor pressure

Driving speed	Output shaft speed	Governor pressure	
mph	rpm	kg/cm²	lb/in²
20	1100 ~ 1200	0.9 ~ 1.4	13 ~ 20
35	1940 ~ 2070	1.6 ~ 2.3	23 ~ 33
55	3060 ~ 3210	3.2 ~ 4.2	46 ~ 60

Line pressure

	Engine idling condition	Engine stall condition
R	4.0 ~ 7.0 kg/cm² (57 ~ 100 lb/in²)	15.5 ~ 19.0 kg/cm² (220 ~ 270 lb/in²)
D	3.0 ~ 4.0 kg/cm² (43 ~ 57 lb/in²)	9.5 ~ 11.0 kg/cm² (135 ~ 156 lb/in²)
2	10.0 ~ 12.0 kg/cm² (142 ~ 171 lb/in²)	10.0 ~ 12.0 kg/cm² (142 ~ 171 lb/in²)
1	3.0 ~ 4.0 kg/cm² (43 ~ 57 lb/in²)	9.5 ~ 11.0 kg/cm² (135 ~ 156 lb/in²)

PROPELLER SHAFT

Max. permissible run-out	0.4 mm (0.016 in)
Max. permissible unbalance at 4,000 rpm	
At front	15 cm-gr (0.21 in-oz)
At center	30 cm-gr (0.42 in-oz)
At rear	30 cm-gr (0.42 in-oz)
Universal joint	
Spider diameter	
Wear limit	16.549 mm (0.6515 in)

REAR AXLE

Type	Semi-floating, hypoid gears
Reduction ratio	Manual transmission 4.375 Automatic transmission 4.111
Number of gear teeth	Manual transmission 35:8 Automatic transmission 37:9
Backlash of ring gear and pinion	0.19 ~ 0.21 mm (0.0075 ~ 0.0083 in)
Max. allowable variation of backlash	0.08 mm (0.0031 in)
Pinion bearing preload (Without pinion oil seal)	13 ~ 18 cm-kg (11.3 ~ 15.6 in-lb)
Differential side bearing preload (Without pinion)	5 ~ 15 cm-kg (4.3 ~ 13.0 in-lb)

Note:
The above preload on the differential side bearings is obtained by tightening the adjusters until the distance between both pilot sections on the bearing caps ("L" shown in figure) becomes as follows:

"L" (Case spread)	$204.5\ ^{+0}_{-0.072}$ mm $(8.0513\ ^{+0}_{-0.0028}$ in)
Backlash of side gear and pinion gear	0 ~ 0.2 mm (0 ~ 0.008 in)
Clearance between rear axle shaft and thrust block (Rear axle shaft end play)	
First installed	0.65 ~ 0.85 mm (0.026 ~ 0.033 in)
Second installed	0.05 ~ 0.15 mm (0.002 ~ 0.006 in)
Lubricant	
Above −18°C (0°F)	HP. SAE 90
Below −18°C (0°F)	HP. SAE 80
Oil capacity	1.3 liters (1.4 U.S. quarts)

STEERING

Type	Recirculating ball nut
Reduction ratio	20.2 : 1
Free play of steering wheel (Turning direction)	
New	20 ~ 30 mm (0.8 ~ 1.2 in)
Limit	50 mm (2.0 in)
Backlash between rack and sector gear	0 ~ 0.1 mm (0 ~ 0.004 in)
Worm bearing preload	
Without sector shaft and column bush	1 ~ 4 cm-kg (0.9 ~ 3.5 in-lb)
With sector shaft and column bush	9 ~ 12 cm-kg (6.5 ~ 8,7 in-lb)
Clearance between sector shaft and housing (or bush)	
New	0.028 ~ 0.049 mm (0.0011 ~ 0.0019 in)
Wear limit	0.20 mm (0.008 in)
End clearance of adjusting screw and sector shaft	0 ~ 0.1 mm (0 ~ 0.004 in)
Lubricant	EP. SAE 90
End play of ball stud of center link and tie rods	
New	0 ~ 0.25 mm (0 ~ 0.010 in)
Limit	1.0 mm (0.039 in)
Max. wheel angle on full lock	
Wheel on inside of curve	33° 18′
Wheel on outside of curve	32° 36′
Minimum turning radius	5.5 m (18 ft 1 in)
Steering geometry	
King pin inclination	8° 45′
Camber	15′ ± 20′
Max. permissible difference in camber between sides	20′
Camber offset	52.5 mm (2.07 in)
Caster	1° 12′ ± 20′
Max. permissible difference in caster between sides	20′
Caster trail	5.0 mm (0.20 in)
Toe-in	0 ~ 6 mm (0 ~ 0.24 in)

BRAKES

Brake pedal free travel	
Before push rod contacts with piston	—
Before power brake piston operates	8.5 ~ 10 mm (0.33 ~ 0.39 in)
Master cylinder	
Type	Tandem
Bore	22.22 mm (7/8 in)
Clearance between piston and bore	
New	0.040 ~ 0.125 mm (0.0016 ~ 0.0049 in)

Wear limit	0.15 mm (0.006 in)
Front disk brake	
Brake disk outer diameter	256 mm (10.079 in)
Thickness of brake disk	
New	12 mm (0.4724 in)
Limit	11 mm (0.4331 in)
Max. allowable lateral run-out of brake disk	0.10 mm (0.0039 in)
Thickness of lining and shoe	
New	14 mm (0.551 in)
Wear limit	7 mm (0.276 in)
Wheel cylinder bore	53.97 mm (2.1248 in)
Rear drum brake	
Type	Dual-acting two-leading shoes
Drum diameter	
New	260 mm (10.2364 in)
Max. permissible diameter	261 mm (10.2758 in)
Thickness of lining	
New	5.5 mm (0.217 in)
Limit	1.0 mm (0.039 in)
Rear wheel cylinder	
Bore	19.05 mm (3/4 in)
Clearance between piston and bore	
New	0.040 ~ 0.125 mm (0.0016 ~ 0.0049 in)
Wear limit	0.15 mm (0.006 in)
Parking brake	
Type	Mechanical
Operates at	Rear wheels

WHEELS AND TIRES

Wheel disc	
Front	5½J x 14WDC
Rear	5½J x 14WDC
Tire	
Front	7.35–14–6PR
Rear	7.35–14–6PR
Inflation pressure	
Front	24 psi
Rear	36 psi

FRONT SUSPENSION

Type	Wishbone, coil spring
Coil spring	
Spring constant	9.13 kg/mm (511 lb/in)
Wire diameter	16.5 mm (0.65 in)
Coil diameter	100.5 mm (3.96 in)
Free length	298 mm (11.73 in)
Fitting length	218 mm (8.58 in)
Fitting load	694 ~ 766 kg (1530 ~ 1689 lb)

Note:
When replacing the coil spring, install an adjusting plate/plates to get equal road clearance both on the right and left.

REAR SUSPENSION

Type	Leaf spring
Leaf spring	
Spring constant	5.54 kg/mm (310 lb/in)
Number of leaves	6
Length	1200 mm (47.24 in)
Width	60 mm (2.36 in)
Thickness	No. 1, 2, 3, & 4: 6 mm (0.24 in) No. 5: 5 mm (0.20 in) Helper: 12 mm (0.47 in)

DIMENSIONS

Overall length	4402 mm (173 in)
Overall width	1695 mm (67 in)
Overall height	1540 mm (61 in)
Wheelbase	2650 mm (104 in)
Tread	
Front	1450 mm (57 in)
Rear	1430 mm (56 in)
Min. road clearance	195 mm (8 in)
Min. turning radius	5.5 m (18' 1 in)
Seating capacity	2

TIGHTENING TORQUE

	m-kg	ft-lb
Engine		
Oil pump sprocket	3.0 ~ 3.5	22 ~ 25
Oil pan	0.7 ~ 1.0	5 ~ 7
Eccentric shaft pulley	10 ~ 12	72 ~ 87
Inlet manifold	1.6 ~ 2.3	12 ~ 17
Exhaust manifold	4.4 ~ 5.9	32 ~ 43
Spark plugs	1.3 ~ 1.8	9 ~ 13
Oil filter cartridge	0.7 ~ 1.0	5 ~ 7
Oil pressure switch	1.0 ~ 1.8	7 ~ 13
Temperature gauge unit	0.7 ~ 0.8	5 ~ 6
Tension bolts	3.2 ~ 3.8	23 ~ 27
Clutch		
Flywheel	40.0 ~ 50.5	289 ~ 362
Clutch cover	1.8 ~ 2.7	13 ~ 20
Transmission		
Shift lock spring cap	4.5 ~ 5.5	33 ~ 40
Plug for interlock pin hole	1.0 ~ 1.5	7 ~ 11
Reverse lock spring cap	4.5 ~ 5.5	33 ~ 40
Control lever to control rod end	2.8 ~ 3.4	20 ~ 25
Shift fork set bolts	0.8 ~ 1.2	6 ~ 9
Main shaft lock nut	20.0 ~ 28.0	145 ~ 203
Under cover	0.6 ~ 0.9	4 ~ 7
Reverse lamp switch	2.8 ~ 4.5	20 ~ 33
Automatic transmission		
Drive plate to counter weight	3.7 ~ 5.5	27 ~ 40
Drive plate to torque converter	3.7 ~ 5.5	27 ~ 40
Converter housing to engine	3.2 ~ 4.7	23 ~ 34
Converter housing to transmission case	4.5 ~ 5.5	33 ~ 40
Extension housing to transmission case	2.0 ~ 2.5	14 ~ 18
Oil pan	0.5 ~ 0.7	3.6 ~ 5.1

	m-kg	ft-lb
Piston stem lock nut	1.5 ~ 4.0	11 ~ 29
Servo piston retainer	1.0 ~ 1.5	7.2 ~ 10.8
Servo cover	0.5 ~ 0.7	3.6 ~ 5.1
One-way clutch inner race	1.3 ~ 1.8	9 ~ 13
Control valve body to transmission case	0.55 ~ 0.75	4.0 ~ 5.4
Lower valve body to upper valve body	0.25 ~ 0.35	1.8 ~ 2.5
Side plate to control valve body	0.25 ~ 0.35	1.8 ~ 2.5
Reamer bolt of control valve body	0.5 ~ 0.7	3.6 ~ 5.1
Oil strainer	0.25 ~ 0.35	1.8 ~ 2.5
Governor valve body to oil distributor	0.5 ~ 0.7	3.6 ~ 5.1
Oil pump cover	0.6 ~ 0.8	4.3 ~ 5.8
Inhibitor switch	0.5 ~ 0.7	3.6 ~ 5.1
Manual shaft lock nut	3.0 ~ 4.0	22 ~ 29
Oil cooler pipe set bolt	1.6 ~ 2.4	12 ~ 17
Oil pressure test plug	0.5 ~ 1.0	3.6 ~ 7.2
Actuator for parking rod to extension housing	0.8 ~ 1.1	5.8 ~ 8.0

Note:
When adjusting the band brake, tighten the piston stem to a torque of 1.2 ~ 1.5 m-kg (9 ~ 11 ft-lb), and then loosen it by two turns.

	m-kg	ft-lb
Propeller shaft		
Yoke to rear axle companion flange	5.5 ~ 6.5	40 ~ 47
Yoke to front propeller shaft	16.0 ~ 18.0	116 ~ 130
Center bearing support	3.2 ~ 4.7	23 ~ 34
Rear axle		
Ring gear	9.0 ~ 11.0	65 ~ 80
Differential side bearing caps	5.6 ~ 8.2	41 ~ 59
Compansion flange to pinion	20.0 ~ 35.0	145 ~ 253
Steering		
Steering wheel nut	3.0 ~ 4.0	22 ~ 29

	m-kg	ft-lb
Steering gear housing to frame	4.5 ~ 5.7	33 ~ 41
Pitman arm to sector shaft	15.0 ~ 18.0	108 ~ 130
Idler arm bracket to frame	4.5 ~ 5.7	33 ~ 41
Idler arm to bracket	5 ~ 8	36 ~ 58
Idler arm to center link	5 ~ 8	36 ~ 58
Pitman arm to center link	3.0 ~ 4.0	22 ~ 29
Tie rod to center link	3.0 ~ 4.0	22 ~ 29
Tie rod to knuckle arm	3.0 ~ 4.0	22 ~ 29
Tie rod lock nut	1.8 ~ 2.5	13 ~ 18
Wheels		
Wheel nuts	8.0 ~ 9.0	58 ~ 65
Suspension		
Ball joints to knuckle	7.0 ~ 9.0	51 ~ 65
Ball joint to lower suspension arm	8.3 ~ 9.7	60 ~ 70
Upper suspension arm shaft to frame	8.5 ~ 10.5	61 ~ 76
Lower suspension arm shaft to frame	7.5 ~ 9.5	54 ~ 69
"U" bolts	6.4 ~ 8.0	46 ~ 58
Spring pin nuts	8.5 ~ 10.5	61 ~ 76
Spring pin to frame bracket	2.0 ~ 2.5	14 ~ 18
Shackle pin nuts	6.0 ~ 8.0	46 ~ 58

Unless otherwise specified		
6T		
6 mm bolt/nut	0.7 ~ 1.0	5 ~ 7
8 mm bolt/nut	1.6 ~ 2.3	12 ~ 17
10 mm bolt/nut	3.2 ~ 4.7	23 ~ 34
12 mm bolt/nut	5.6 ~ 8.2	41 ~ 59
14 mm bolt/nut	7.7 ~ 10.5	56 ~ 76
8T		
6 mm bolt/nut	0.8 ~ 1.2	6 ~ 9
8 mm bolt/nut	1.8 ~ 2.7	13 ~ 20
10 mm bolt/nut	3.7 ~ 5.5	27 ~ 40
12 mm bolt/nut	6.4 ~ 9.5	46 ~ 69
14 mm bolt/nut	10.4 ~ 14.0	75 ~ 101

MAZDA