Parts Catalog

Mazda
Rotary Pickup
(U.S.A., '77 Model
Final Edition)



MAZDA ROTARY ENGINE

Toyo Kogyo Co., Ltd.

©1978 Toyo Kogyo Co., Ltd.
Sept 1978

Model & Feature

This parts catalog was compiled for the following model :
Mazda Rotary Pickup for the U.S.A.
(production period 1977)

Model No.	Model/TYPE	State		T/Mission		Remarks
		Federal	California	Manual	Automatic	
3787	PA136-P	●		●		
3789	PA136-TC	●			●	
3790	PA136-PC		●	●		
3791	PA136-TC		●		●	

HOW TO USE THIS PARTS CATA

(I) Outline of Parts Catalog

This parts catalog consists of parts group index,
number index.

(II) How to locate parts

1) When part number is not known

A. Refer to a parts group index and locate t
be located.

B. Open to the illustration page accordin
part wanted.

C. See the key number given for the part
number in the parts composition list.

D. Then, you will find the part number
key number.

2) When part number is known

A. See a part number index at back of parts c
and the key number are listed.

B. Open to the page indicated and locate t
then you will see the description, the

C. Moreover, you can see the illustration of
tion list by referring the key number.

(III) On Groups

1) The number enclosed with a triangle at t
group number.

2) Group numbers are determined according t

3) The group numbers given in the parts grou
with the numbers (Example ▲) in the ill

(IV) Explanation on Parts Composition Lists

1) Relation between an assembly and components

A. A description of component parts that comprises an assembly is set to the right and listed after an assembly part.

B. In other words, when a part description is not set to the right, it means that a part is not included in any assembly.

Example:

No.	Part Number	Description	Q'ty	Remarks
1	0866 18 300	Alternator	1	
2	0866 24 533	Nut Set	1	
⋮	⋮	⋮	⋮	
8	0866 24 540	Rotor	1	Fig. No. 9 included
9	0820 24 503	Bearing, Ball	1	
10	99906 0500	Nut, Alternator	1	

(a) 1 includes 2 thru 9.
(b) 8 includes 9.
(c) 10 is not included in any part.

2) On part numbers

A. General parts

Example:

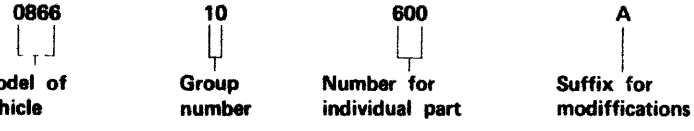

B. Standard parts (General)

Example:

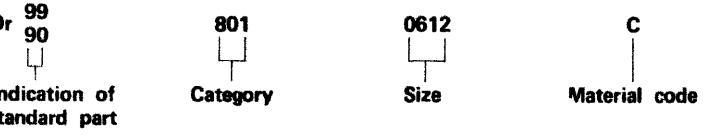

C. Standard parts (Tires, Tubes, Disc Wheels, etc.)

Example:

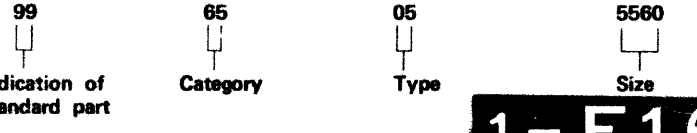

3) On Quantities

The quantity given in the parts compositio
shown by illustration and does not mean

4) Abbreviations

(R) ..... Right
(L) ..... Left
(C) ..... Center

(Frt.) ..... Front
(Rr.) ..... Rear

Cpt. ..... Complete
Ass'y ..... Assembly

Std. ..... Standard
O.S. ..... Over Size
U.S. ..... Under Size

EX. ..... Exhaust
IN. ..... Inlet

T/M ..... Transmission
T/Mission .... Transmission
Trans. ..... Transmission
Manual ..... Manual Transmission
Automatic ... Automatic Transmission

EM. ..... Emission Control System
W/O EM. .... Without Emission Control System

W/Chassis .... Windshield Chassis
C.K.D. ..... Complete Knock Down

U.K. ..... The United Kingdom of Great Britain and Norther Ireland

(V) Precautions to be taken when placing an or

1) Always specify part number, name of pa

2) It is a part number t... is important as y reads a part number only.
Therefore, in case that a part name does sent to you in accordance with a part n

3) Distinction of colour on parts is done part number.
Therefore, add a colour code to the end o

Example: 1011 60 720A 00
Colo

(VI) Definition of the following marks

1) 73/7 ..... This is an example for an effective date of modification.
73 shows 1973 year and 7 means July (7th month of year).

2) ○ ..... A new part and an old part are completely interchangeable.

3) × ..... A new part and an old part are not interchangeable.

4) △ ..... A new part can be used in place of old part but an old part can not be used in place of new part.

5) ● ..... This dot at front of part number shows the part that is concerned in modifications since the last edision.

6) C ..... The part with C is required to put a colour code after the part number in order to specify a colour.

7) ☆ ..... The part marked thus is not available as a spare part, therefore order by the assembly unit or the set including this part.

8) ▲ ..... Indication of Group.

(VII) Exhaust system certification regulations
(Applicable to California & Florida, U.S.A.)

All sound modifying divices listed within this catalogue are certified to comply with the exhaust system certification regulations contained in the California Administrative Code Title 13, Sections 1050 through 1054 and Florida Administrative Code Chapter 17–18, Part III for use on vehicles for which they are listed.

(Frame concerned : C_7 ~ D_7)

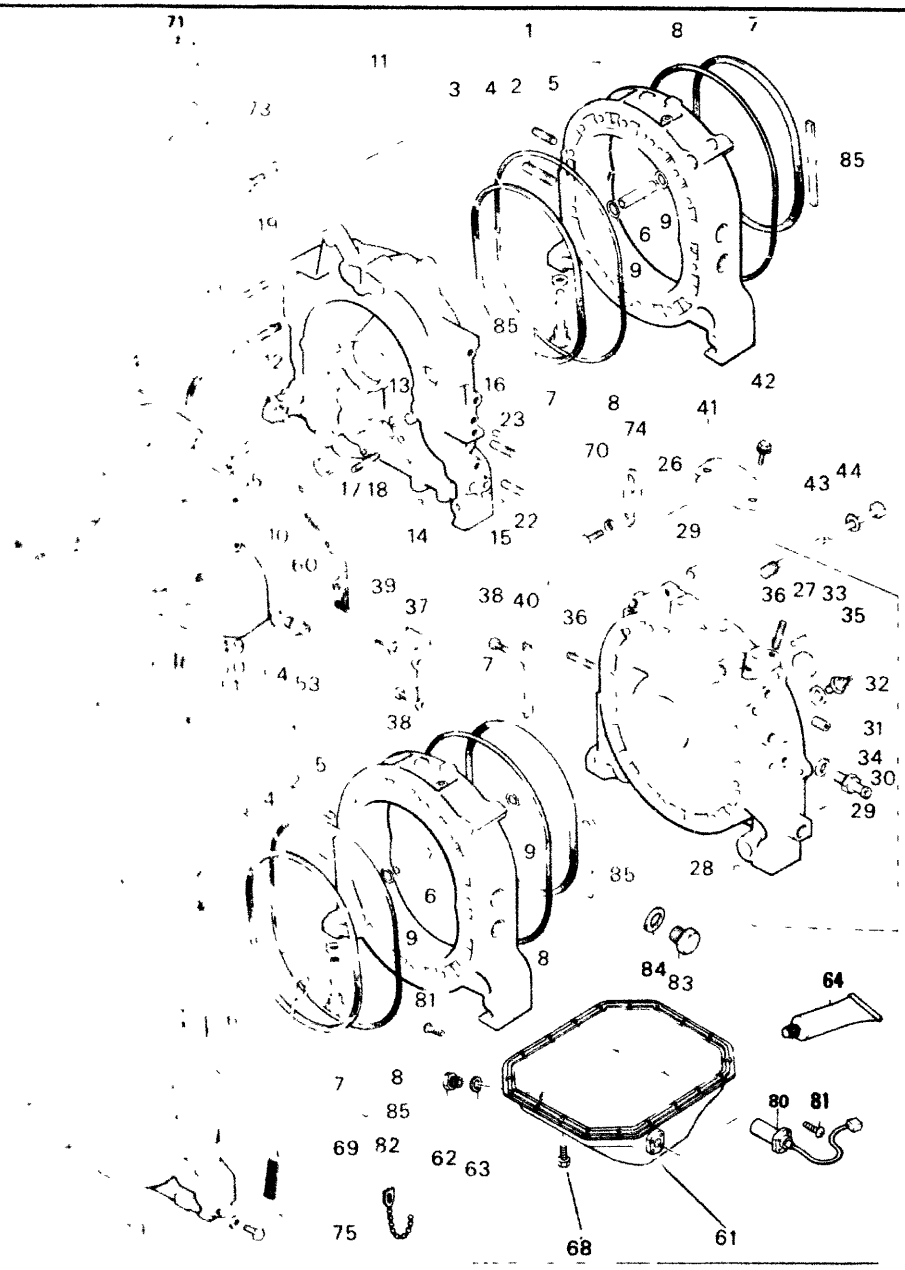

No.	Part Number	Description
1	3775 10 100	Housing, Rotor
2	0839 10 105	Stud
3	1757 10 120	Nozzle Air
4	99564 1400	Gasket
5	99851 0822A	Stud
6	1757 10 111	Dowel Tubular
7	1757 10 171A	Ring Square
8	1757 10 172	Ring 'O - Outer
9	0813 10 173	Ring O - Tubular Dowe
10	8527 10 174	Ring "O - Front Cover
11	3646 10 200	Housing Front
12	0839 10 203	Pin Dowel
13	2329 10 204	Dowel Tubular
14	0839 10 205	Plug Blind
15	1757 10 206A	Plug Blind
16	1757 10 207	Plug, Blind
17	99306 3000	Plug Blind - Water
18	99852 0660	Stud

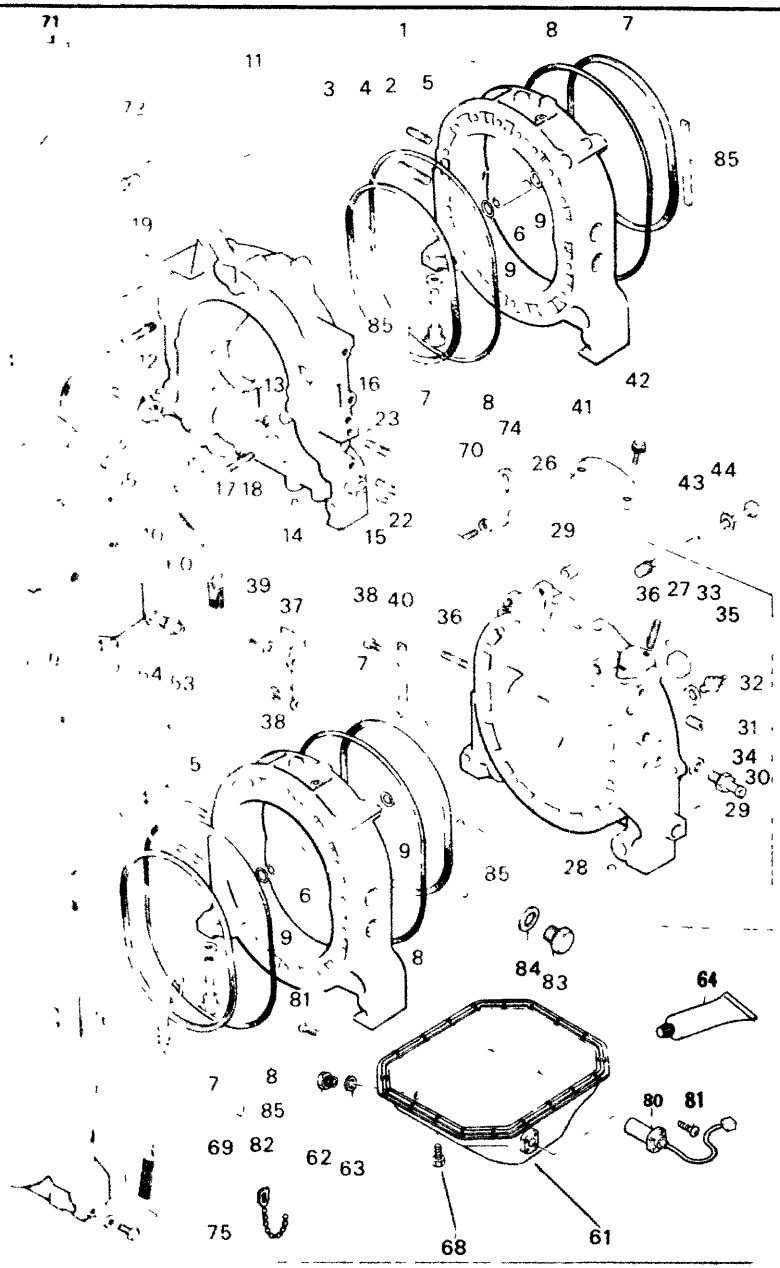

No.	Part Number	Description
19	99852 0822A	Stud IN Manifold
20	1757 10 208	Stud Water Pump
21	99852 1016	Stud
22	99859 1220A	Stud Mounting
23	99859 1225A	Stud
24	0324 10 250	Cap Oil Filler
•	**0453 10 250**	**Cap, Oil Filler**
25	0324 10 252	Gasket
26	**3648 23 050A**	Housing Rear
27	0820 10 203	Pin Knock-Gear
28	0839 10 205	Plug Blind
29	1757 10 309	Pin Tubular
30	0866 10 320A	Joint Hose
31	99503 1000F	Plug
32	1757 18 510A	Gauge Unit Heat
	1881 18 510	Gauge Unit Heat
33	99306 3000	Plug Blind-Water
34	99562 1600	Gasket Hose Joint
35	99564 0800	Gasket Heat Gauge U

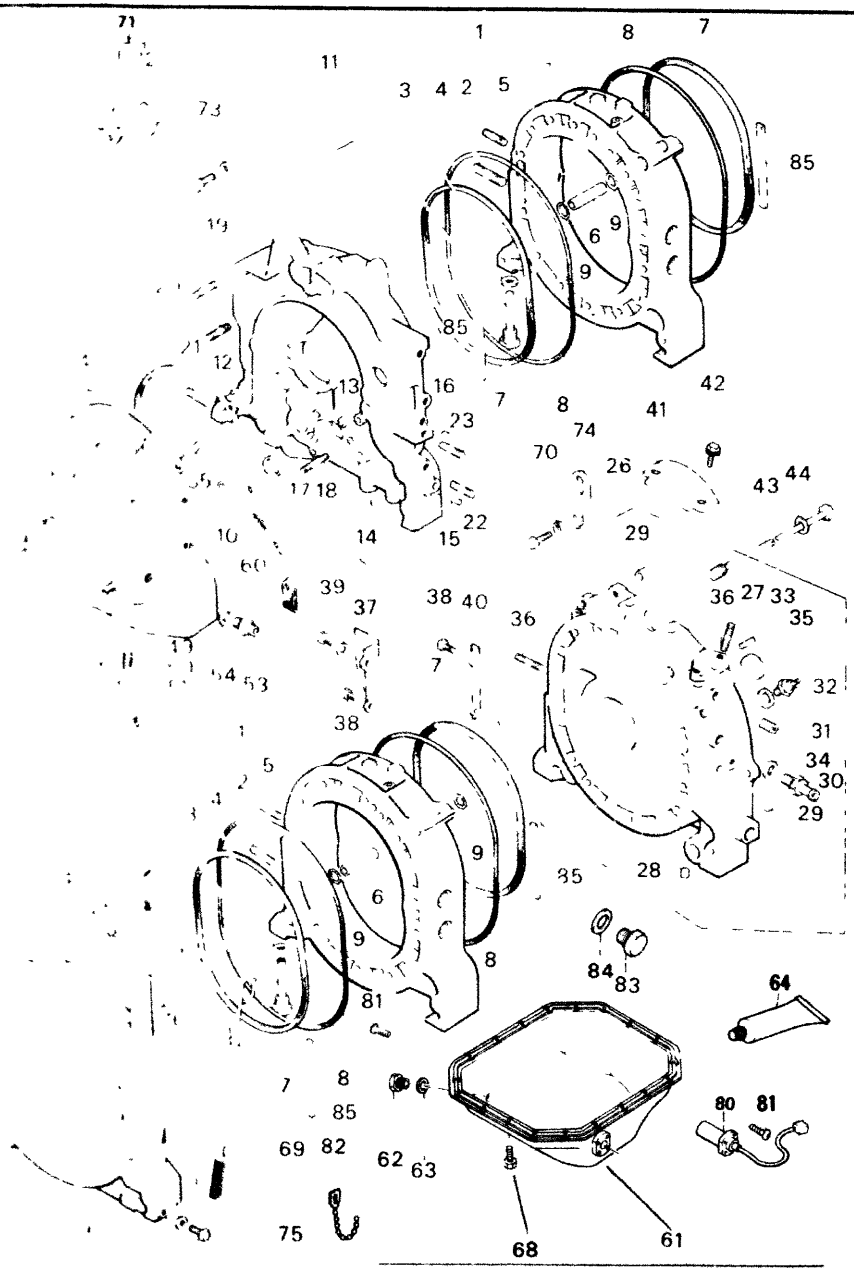

No.	Part Number	Description
36	99852 0822A	Stud IN Manifold & C
37	1029 10 305	Cover Side Lower Auto
38	99796 0610	Bolt Side Lower Cover
39	99811 1010	Bolt Automa
	99971 1000	Washer Spring
40	1757 10 305	Cover Dust
41	1757 10 351	Cover Dust Manu
42	99796 0816	Bolt Dust Cover
43	1757 10 451	Bolt Tension
	1757 10 452	Bolt Tension
44	0839 10 455	Washer Seal
45	1757 10 600B	Cover Front
46	0820 10 605	Oil Seal
47	1757 10 609	Pin Spring
48	0820 10 631B	Pin Top Indicator
49	0839 14 115	Plunger Press
50	0839 14 273A	Spring Press Plunger
51	0839 14 274	Plug, Press Plunger

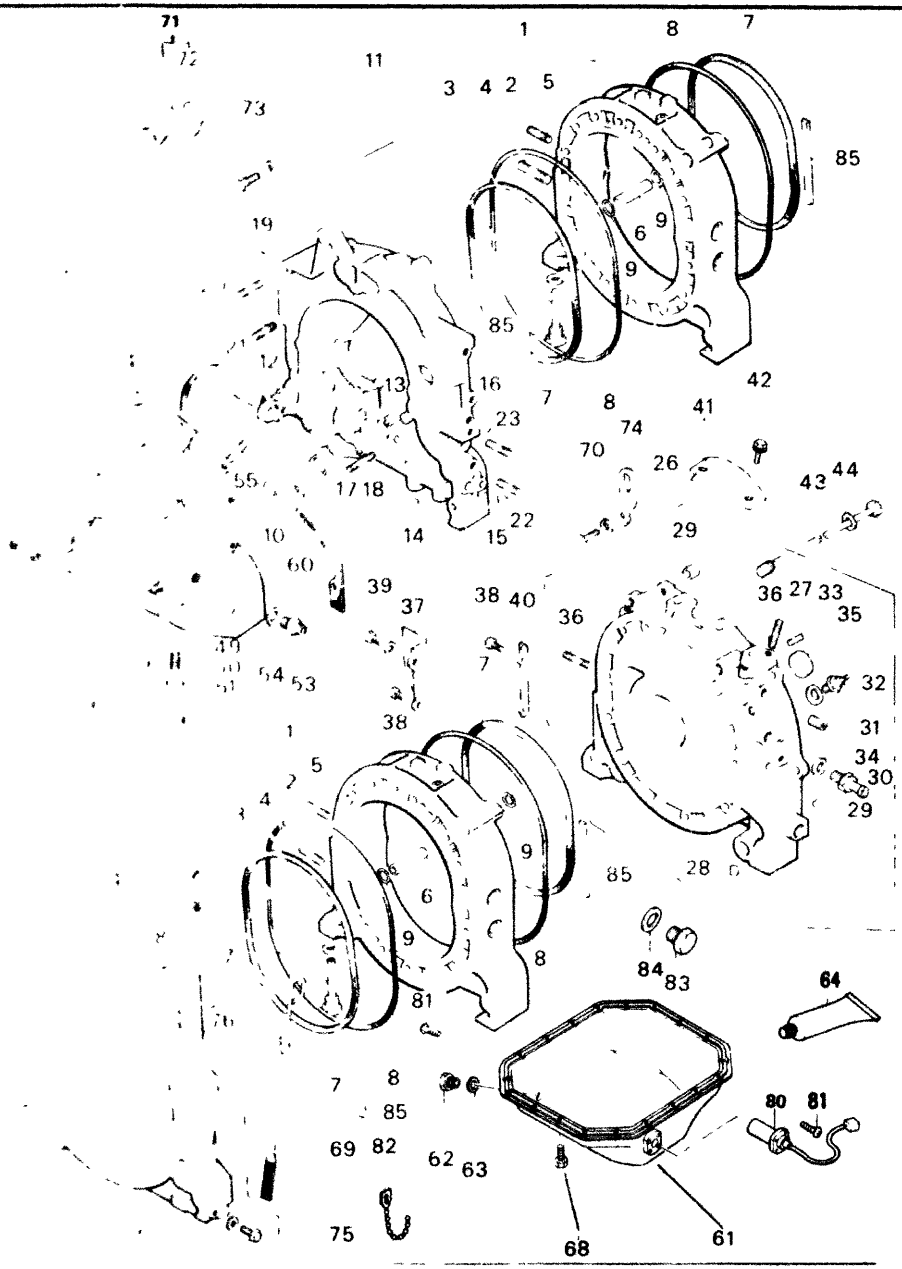

10 ROTOR HOUSING

No.	Part Number	Description
52	99307 0600	Plug Blind
53	99384 1200	Joint Union
54	99562 1600	Gasket Union Joint
55	99851 0612A	Stud Distributor
56	99855 1020	Stud Mounting
57	99801 0840	Bolt Front Cover
	99952 0800	Washer Plain
	99971 0800	Washer Spring
58	99801 0865	Bolt Front Cover
	99952 0800	Washer Plain
	99971 0800	Washer Spring
59	99801 0875	Bolt Front Cover
	99952 0800	Washer Spring
	99971 0800	Washer Spring
60	8527 10 641	Gasket Front Cover
61	8712 23 075	Pan Oil
62	99511 1400	Plug, Drain

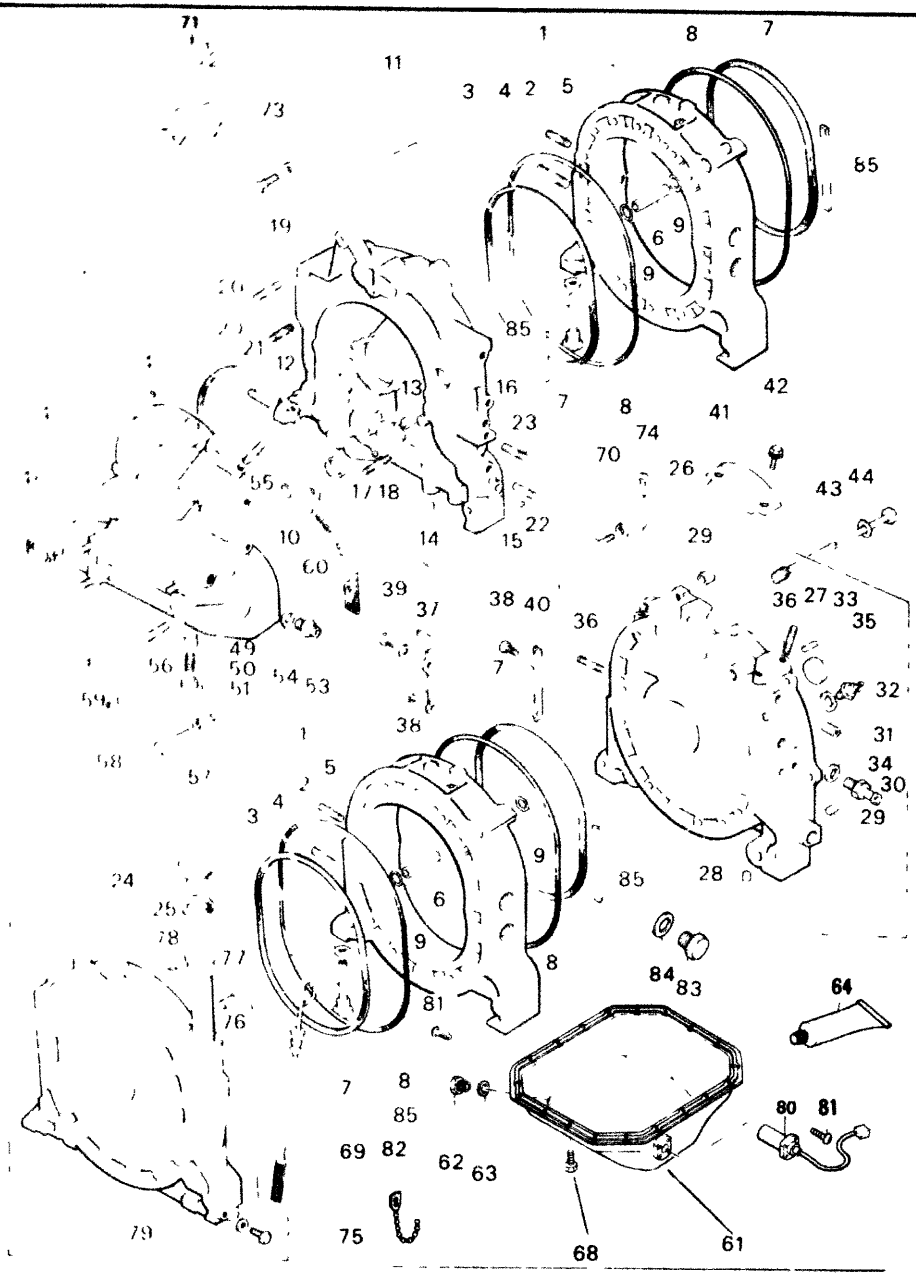

No.	Part Number	Description
63	99562 1400	Gasket
64	8527 77 739	Tube, Silicone
	~~1757 10 711~~	~~Gasket, Oil Pan~~
	~~0839 10 721~~	~~Stiffener~~
	~~1757 10 722~~	~~Stiffener~~
	~~1757 10 723~~	~~Stiffener~~
68	99806 0616	Bolt, Oil Pan
	99971 0600	Washer, Spring
69	3565 10 830	Gauge Oil Level
70	1757 10 845	Bolt, Rear Housing + Engi
	99971 1000	Washer, Spring
71	3565 10 860 B	Hanger, Engine
72	3565 10 865 B	Clip
73	99801 0820	Bolt, Engine Hanger
	99952 0800	Washer, Plain
	99971 0800	Washer, Spring
74	1757 10 862	Hanger, Engine
75	3648 23 070	Housing, Intermediate (Except

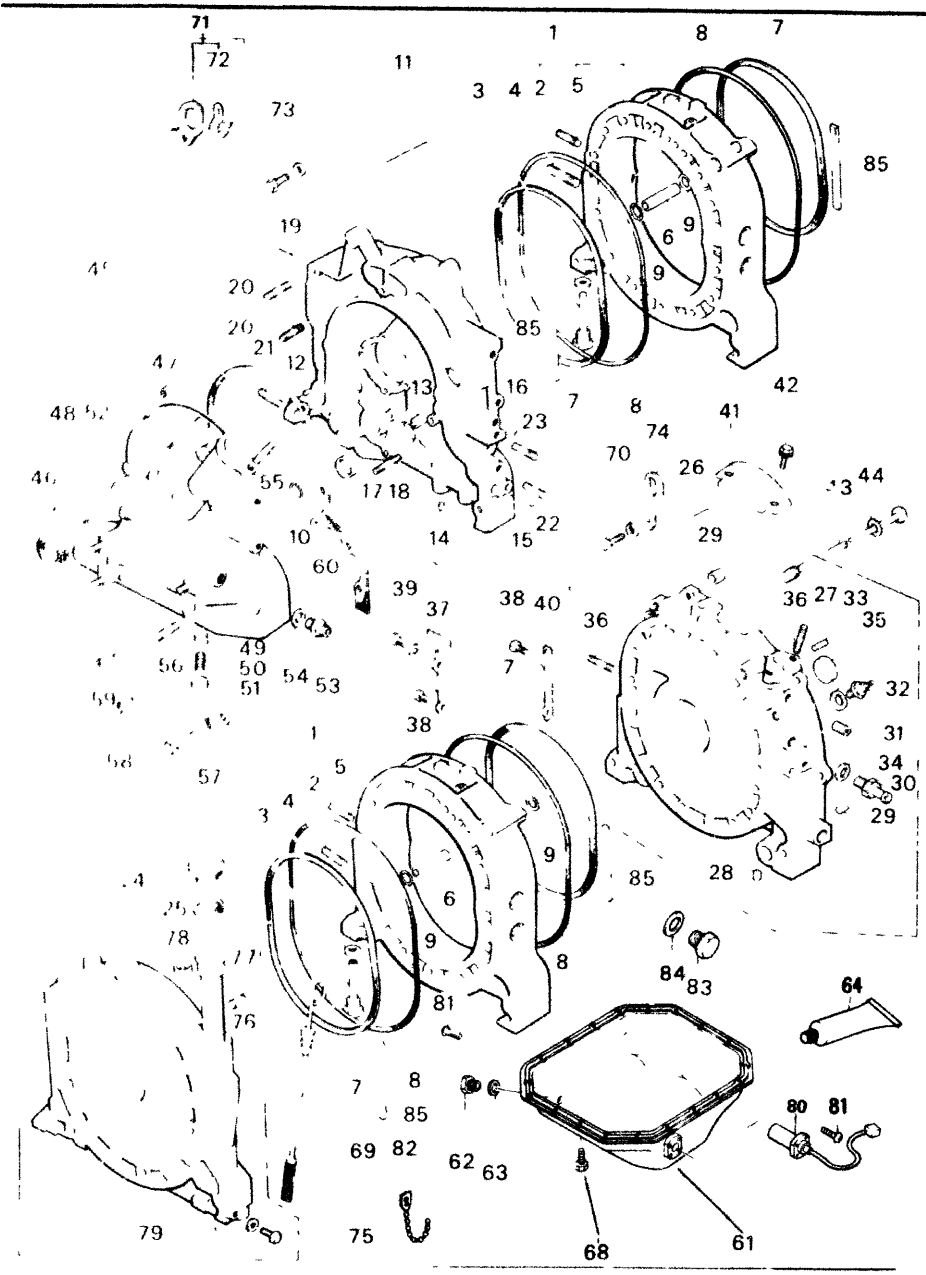

No.	Part Number	Description
76	3565 10 410A	Pipe, Oil Filler
77	2329 10 417	Joint, Pipe
78	99305 2800	Plug, Expansion
79	99510 1000	Plug
	99564 1000	Gasket
80	3565 10 730A	Senser, Oil Level
81	99830 0610	Screw Oil Level Senser
82	99709 0108	Band (Calif.)
83	99511 1600	Plug (W/O Car Heate
84	99564 1600	Gasket (W/O Car Heate
85	0866 23 025	Protector
	3790 23 200	Short Engine (Manual)
	3791 23 200	Short Engine (Automatic,
	3565 99 100C	Engine Gasket Set
	1757 23 040A	Ring Set
•	1757 23 040B	Ring Set
	1757 10 171A	Ring, Square
	1757 10 172	Ring, Square Outer (Inc 17

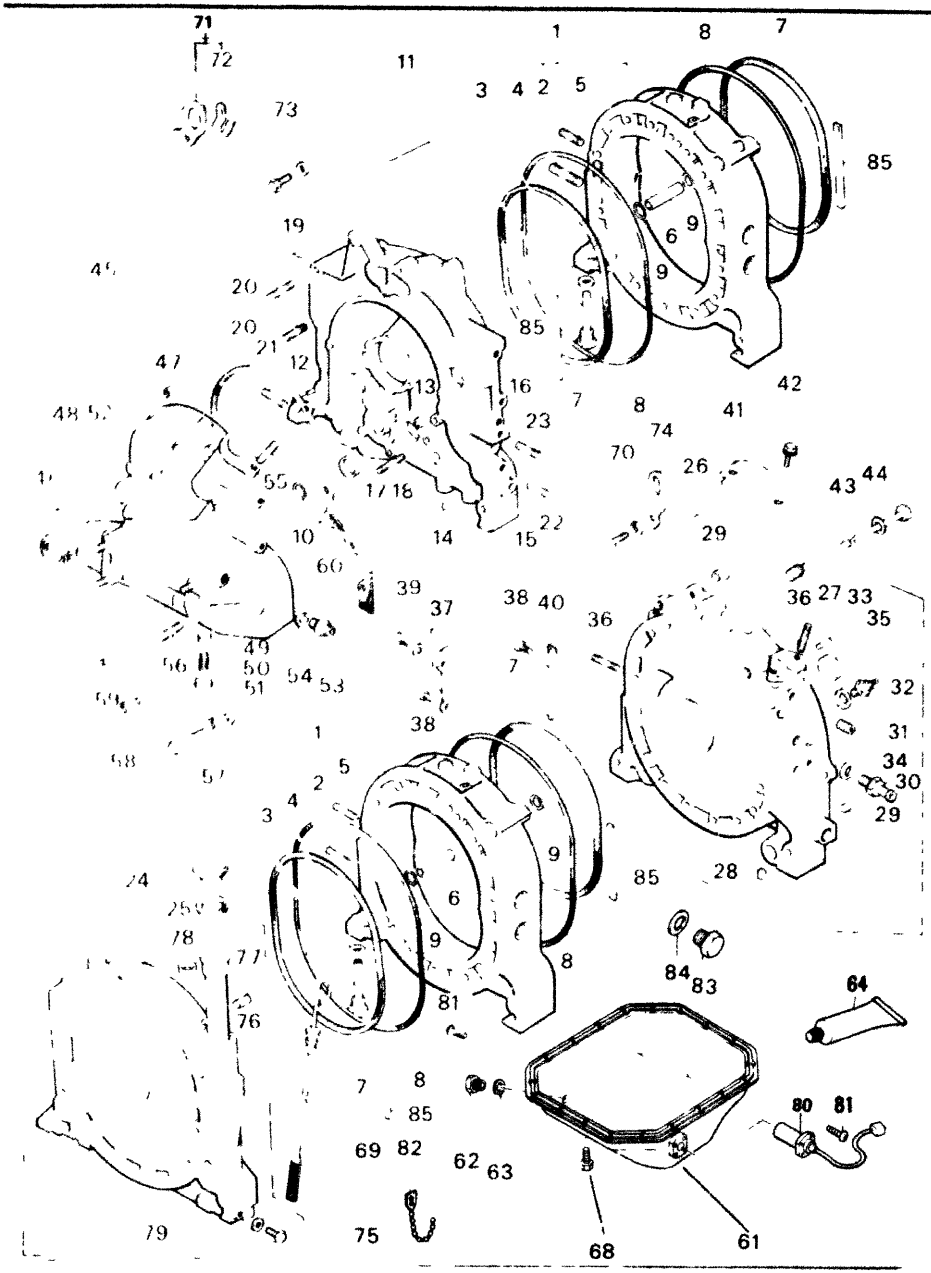

No.	Part Number		Description
	0813 10 173	Ring, "O"	
	8527 10 174	Ring, "O"	
	0839 10 455	Ring, "O"	
	0813 10 555	Ring, "O"	Included in 1757 23 0
	99541 01601	Ring, "O"	
	99541 02401	Ring, "O"	
	99541 0350	Ring, "O"	
	8527 10 641	Gasket	
	1757 10 711	Gasket	
	1757 13 111A	Gasket	
	1757 13 221A	Gasket	
	3565 13 724	Packing	
	1757 13 889B	Gasket	
	1757 13 891	Gasket	
	1757 15 105A	Gasket	
	1757 15 106	Gasket	
	0866 23 025	Protector, "O" Ring	
	0820 11 341	Ring "O"	
	1202 11 343	Ring, "O"	

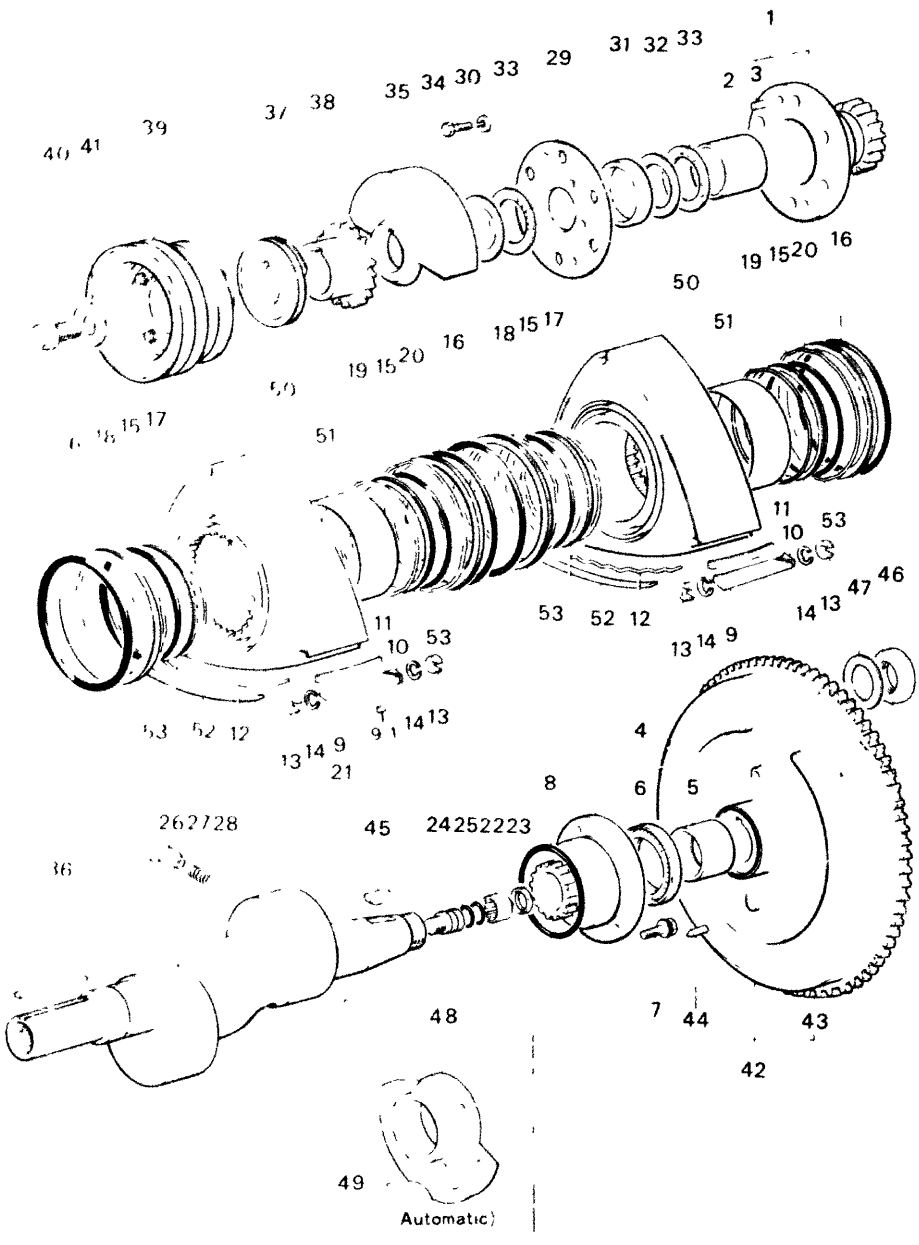

No.	Part Number	Description
1	3648 10 500	Gear (Frt.), Stationary
2	0820 10 502B	Bearing, Main
3	0839 10 504	Pin, Knock
4	3648 10 550	Gear (Rr.), Stationary
5	0820 10 502B	Bearing, Main
6	1668 10 556	Oil Seal
7	99801 0820	Bolt, Stationary Gear
	99971 0800	Washer, Spring
8	0813 10 555	Ring, "O" - Stationary Gear
9	1202 11 300A	Seal, Apex
9-1	1056 11 307A	Piece, Assist
10	1202 11 302	Piece, Side
11	1757 11 304	Spring, Apex Seal
12	0820 11 317	Spring, Side Seal
13	1202 11 321	Seal, Corner (Std.)
14	1202 11 323	Spring, Corner Seal
15	0820 11 341	Ring, "O" - Inner
16	1202 11 343	Ring, "O" - Outer

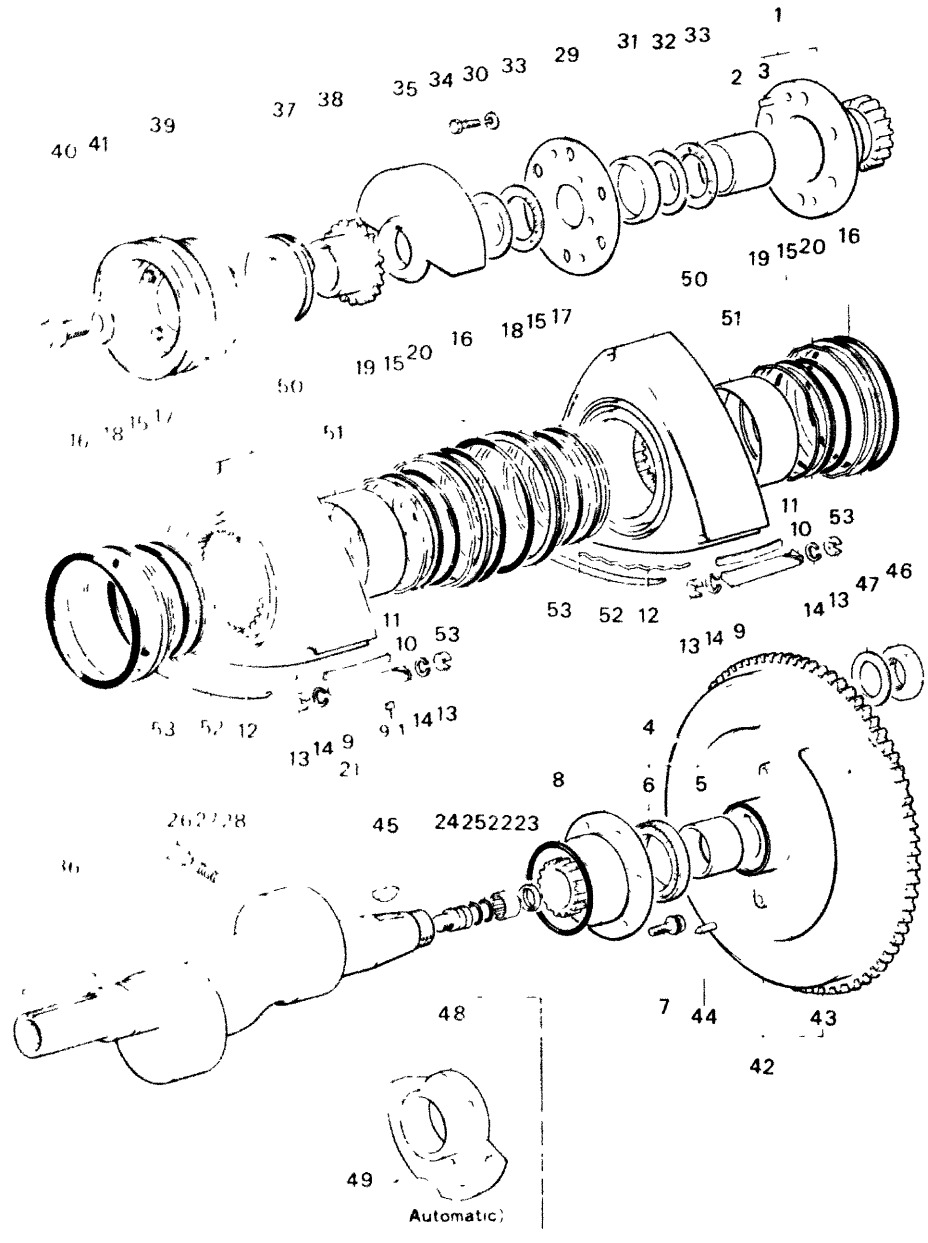

No	Part Number	Description
17	1011 11 351	Spring Oil Seal Inner Fr
18	1011 11 353A	Spring Oil Seal Outer Fr
19	1011 11 361	Spring Oil Seal Inner Rr
20	1011 11 363A	Spring Oil Seal Outer Rr
21	3648 11 400	Shaft Eccentric Manual
	8501 11 400	Shaft Eccentric Automat
22	1881 11 403	Bearing Needle | Man
23	1881 11 404	Oil Seal | Man
24	0813 11 405	Plug, Blind
25	99541 01101	Ring 'O
26	0839 11 411A	Plug Oil Jet
27	0839 11 412	Spring
28	99611 2000	Ball Steel
29	1011 11 501	Plate
30	99801 0825	Bolt Plate & Stationary G
	99971 0800	Washer Spring
31	0839 11 502	Spacer (L 8 02) | Selecti
	0839 11 506	Spacer (L 8 08) | Selecti

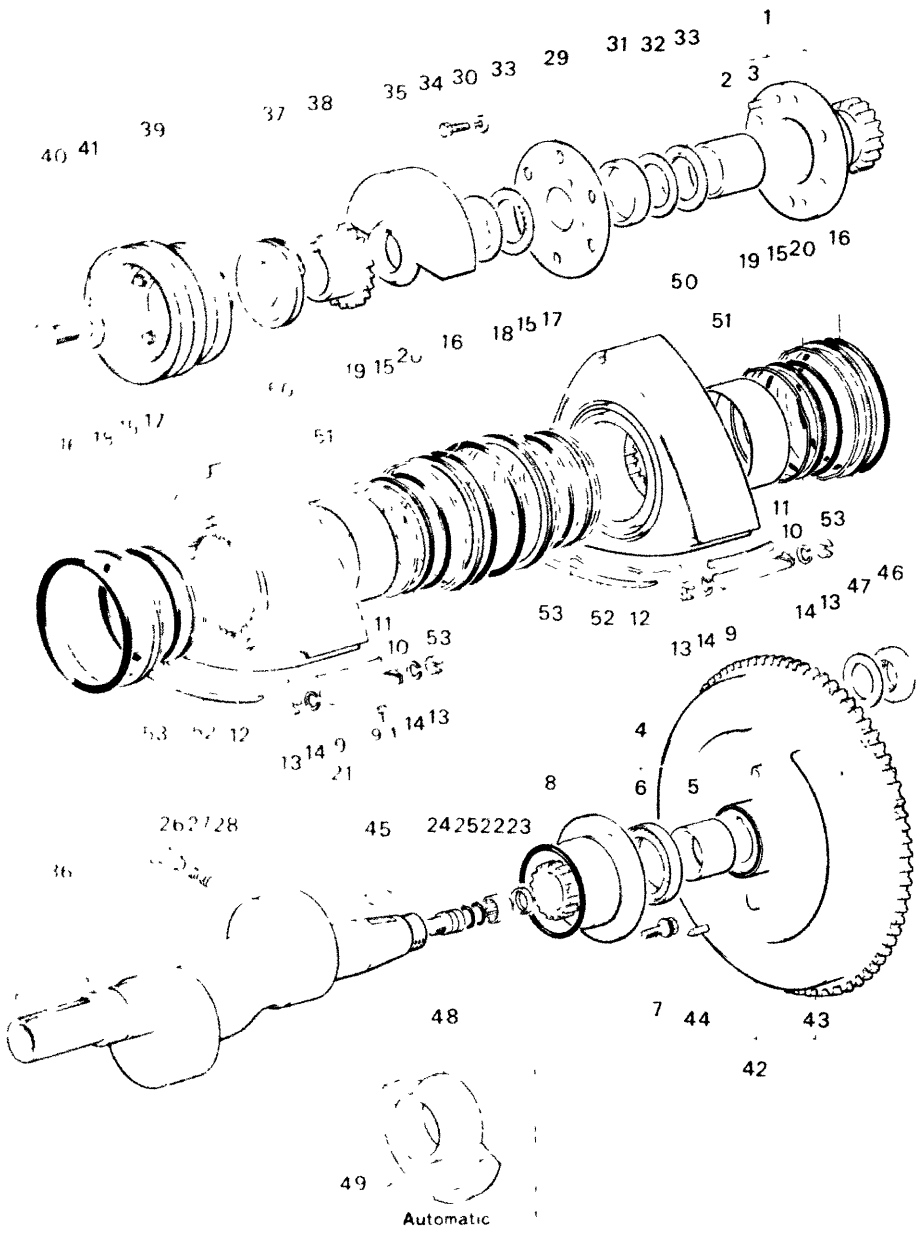

No	Part Number	Description
	0839 11 508	Spacer (L 8 04) | Sele
	0839 11 509	Spacer (L 8 00) | Sele
32	1011 11 504	Plate, Thrust
33	0813 11 505B	Bearing, Needle
34	1011 11 507	Washer Thrust
35	1757 11 511	Weight, Balance (Automa
	1854 11 511	Weight Balance (Manual)
36	99236 0571	Key
37	0839 11 531	Gear, Drive-Distributor
38	0839 11 551A	Gear Drive-Oil Pump
39	3790 11 600	Pulley
40	0820 11 611B	Bolt Pulley
41	99562 2800	Gasket Bolt
42	1854 11 700	Wheel Fly
43	0866 11 702	Gear, Ring | Manual
44	99222 0610	Pin
45	0820 11 705	Key Fly Wheel

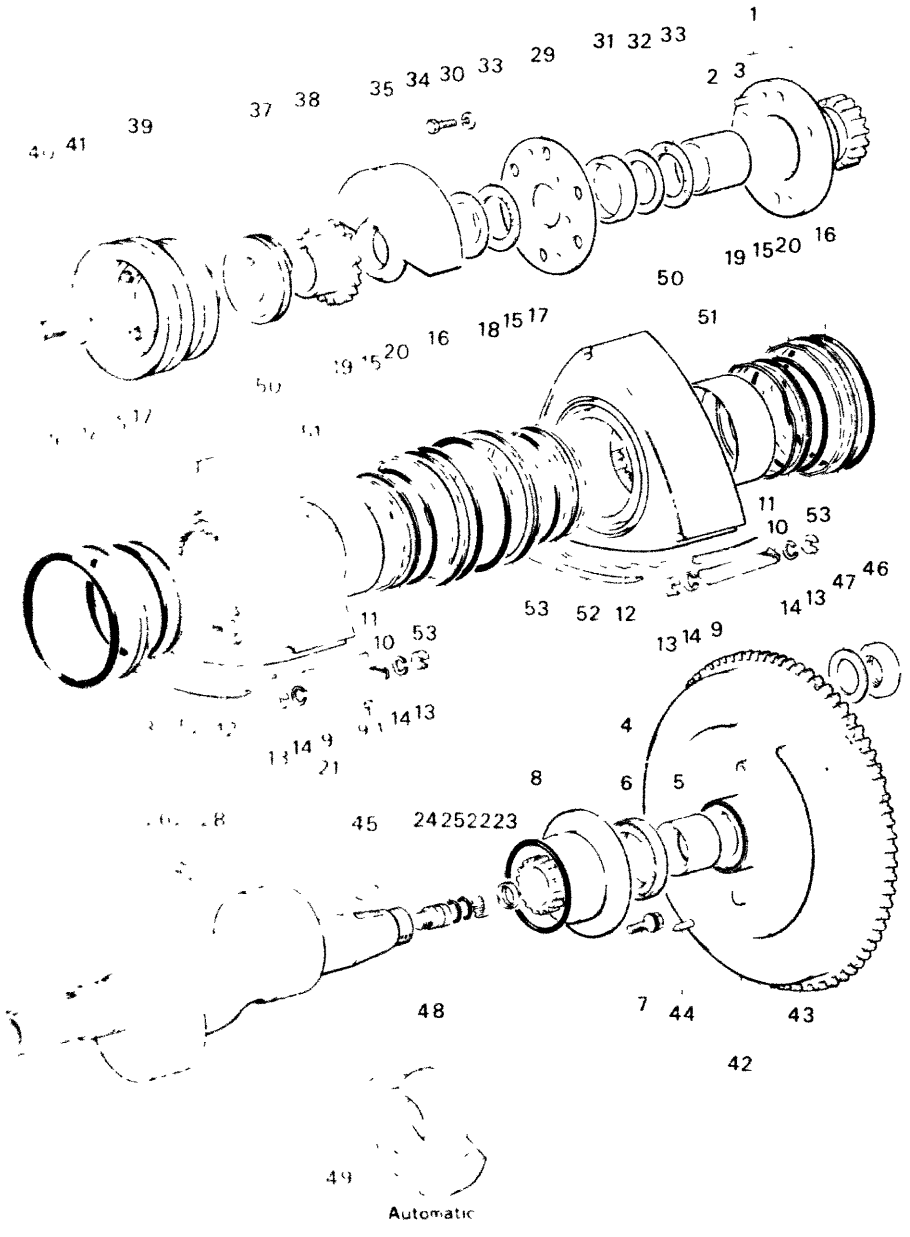

10 11 ROTOR

No.	Part Number	Description
46	0810 11 711	Nut Lock
47	0820 11 712	Washer Lock
48	1029 11 750	Weight Counter
49	99222 0610	Pin
50	1757 23 103	Rotor "C"
51	1011 11 111	Bearing Rotor
52	1011 23 151A	Seal Side
53	8735 23 180	Oil Seal Set

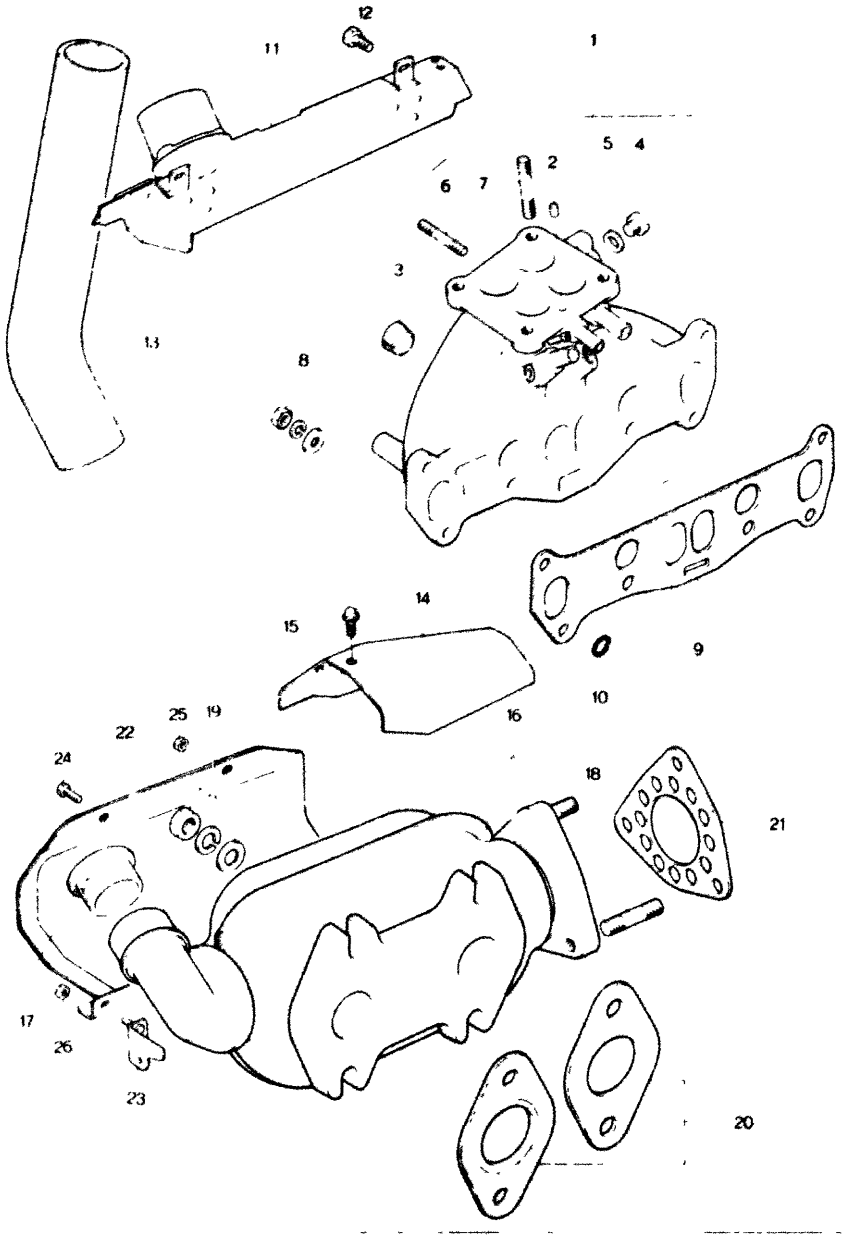

No.	Part Number	Description
1	3565 13 100C	Manifold, IN
2	99307 0600	Plug, Blind (Except
	99307 0800	Plug, Blind (Except
	99307 1000	Plug Blind
3	99503 3000	Plug
4	99511 1000	Plug
5	99564 1000	Gasket
6	99851 0622A	Stud, Control Valve
7	99851 0832A	Stud, Carburettor
8	99940 0801	Nut IN Manifold
9	1757 13 111A	Gasket, IN Manifold
10	99541 2401	Ring, "O" - IN Manifold
11	3565 13 330A	Duct, Hot Air
12	99796 0812	Bolt, Hot Air Duct
13	1757 13 341A	Hose, Hot Air
14	1757 13 371B	Insulator, Heat
15	99786 0616	Bolt, Heat Insulator
	99952 0600	Washer, Plain

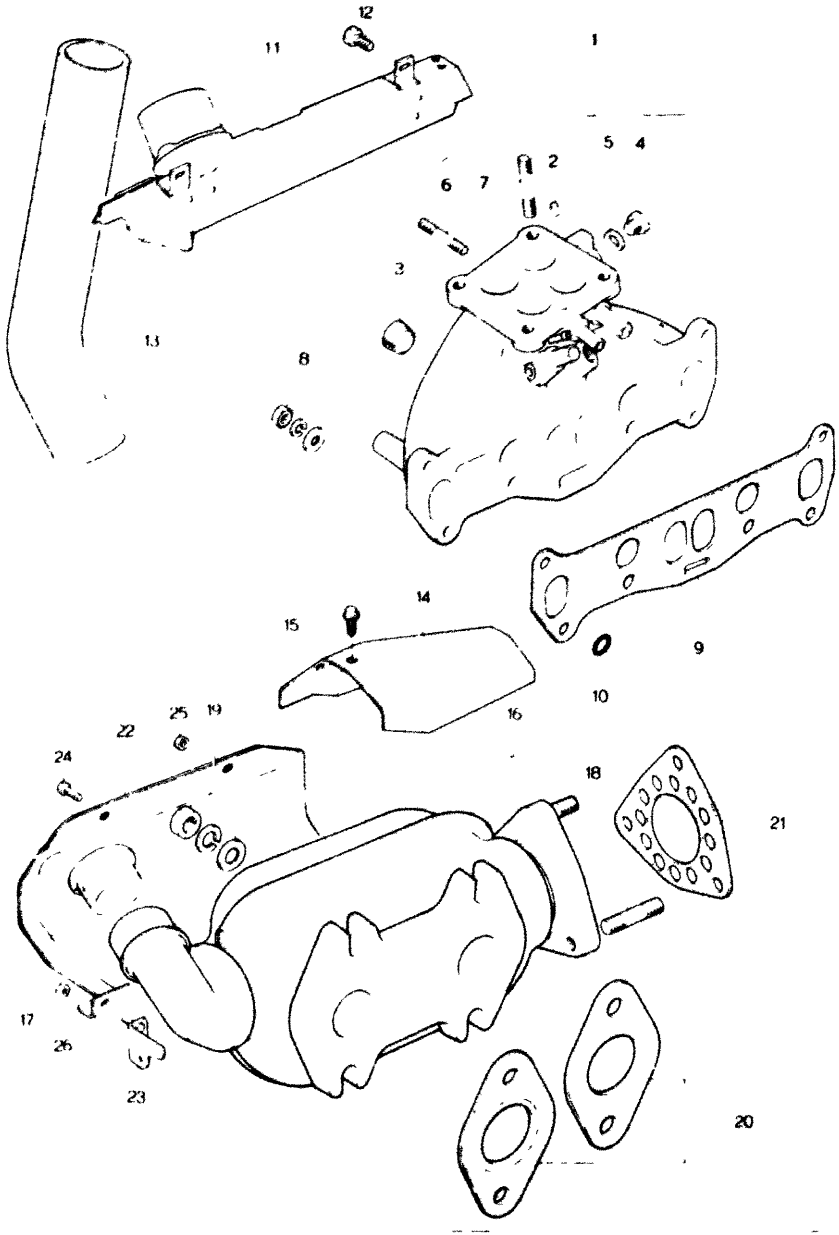

No.	Part Number	Description
16	3567 13 800A	Reactor Thermal
17	2090 13 742B	Insert
18	2329 13 876	Stud
19	2158 40 355	Nut, Thermal Reactor
	0839 13 614	Washer, Plain
	2329 13 882	Washer, Spring
20	1757 13 889B	Gasket, Thermal Reactor
21	1757 13 891	Gasket, Thermal Reactor
22	3565 13 380B	Plate, Absorber
23	3565 13 390	Bracket
24	99796 0812	Bolt, Absorber Plate
25	99940 0600	Nut, Absorber Plate
26	99940 0800	Nut, Bracket

FAST IDLING KIT & EMISSION CONTROL SYSTEM

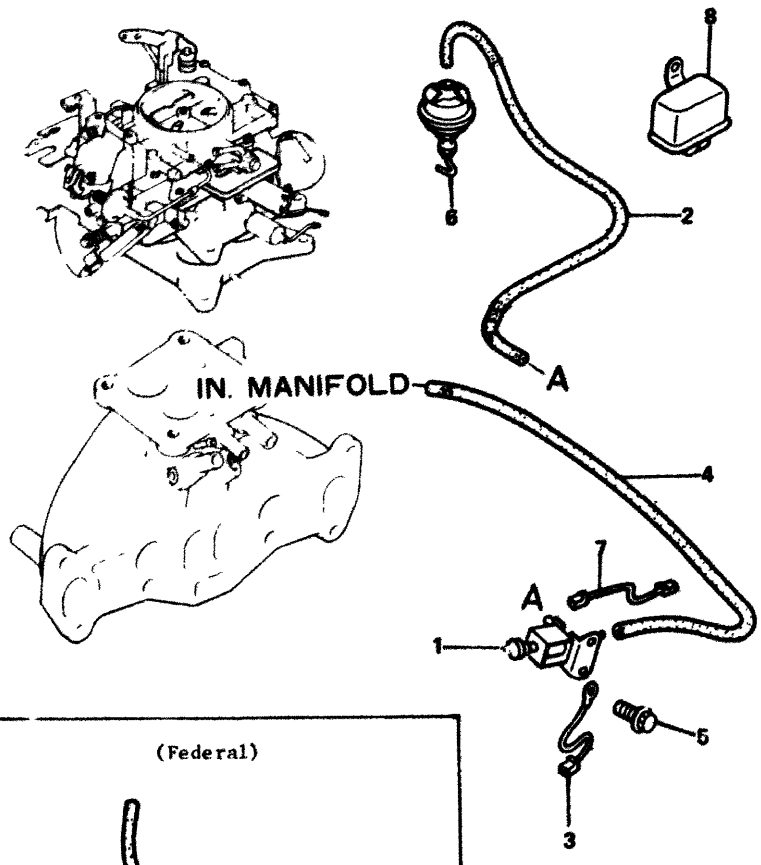

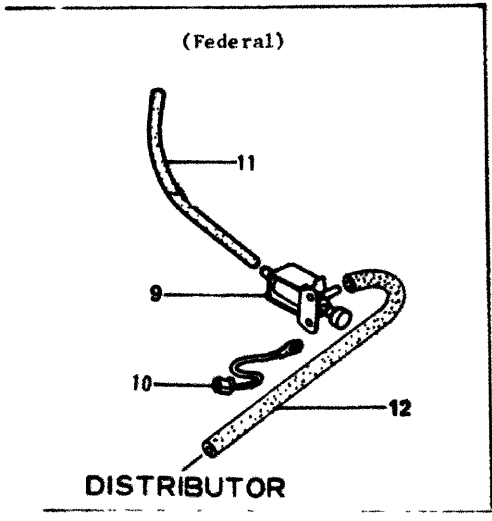

No.	Part Number	Description
1	3597 13 240	Valve, 3 Way
•	**3597 13 240A**	**Valve, 3 Way**
2	8501 13 296D	Hose, Air
3	3597 18 862	Cord, Earth
4	99340 04270	Hose
5	99796 0812	Bolt
6	3648 13 290	Actuator
7	3597 13 863	Cord
8	1016 67 620	Relay
9	8735 13 240	Valve, 3 Way
•	**8735 13 240A**	**Valve, 3 Way**
10	3597 18 862	Cord, Earth
11	99340 04130	Hose
12	99340 04270	Hose

(Fe

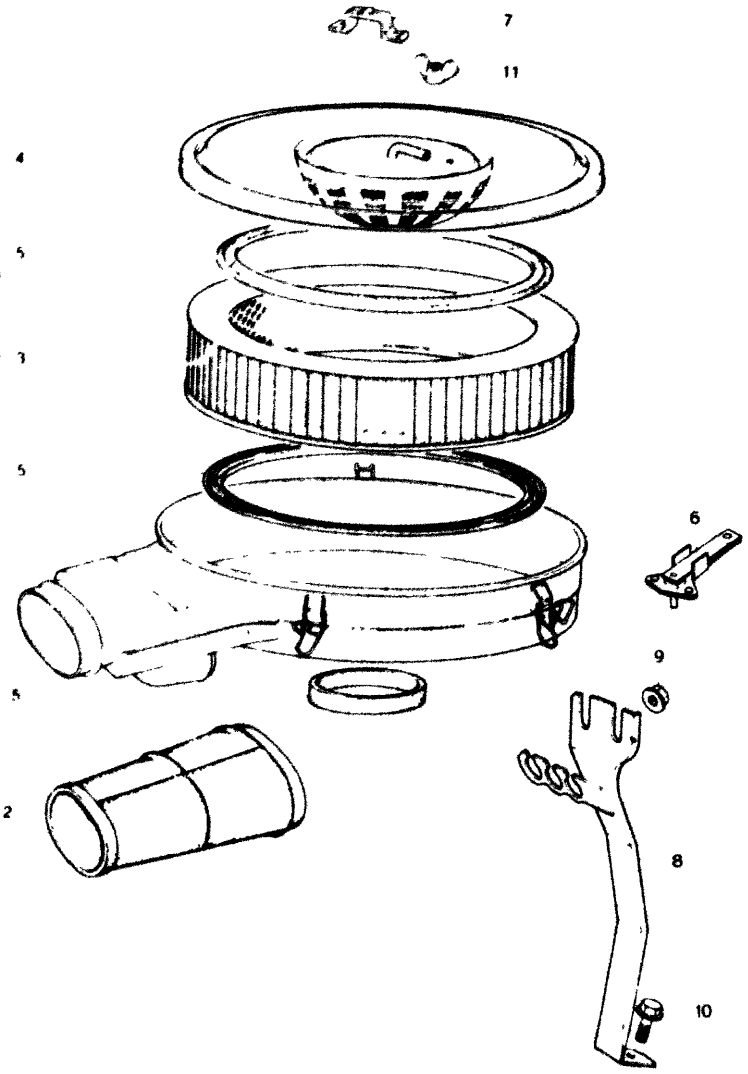

No.	Part Number	Description
1	3648 13 300B	Cleaner, Air
2	1757 13 351A	Hose, Air
3	1757 23 672	Element
4	3648 23 673	Cover, With Charcoal
5	1757 23 680	Gasket Set
6	3648 23 693A	Compensator
7	1617 13 305A	Clip
8	3648 13 310A	Support, Air Cleaner
9	99940 0802	Nut, Air Cleaner
10	99786 0816	Bolt, Air Cleaner Suppor
	99952 0822	Washer, Plain
11	99941 0801	Nut, Wing-Air Cleaner

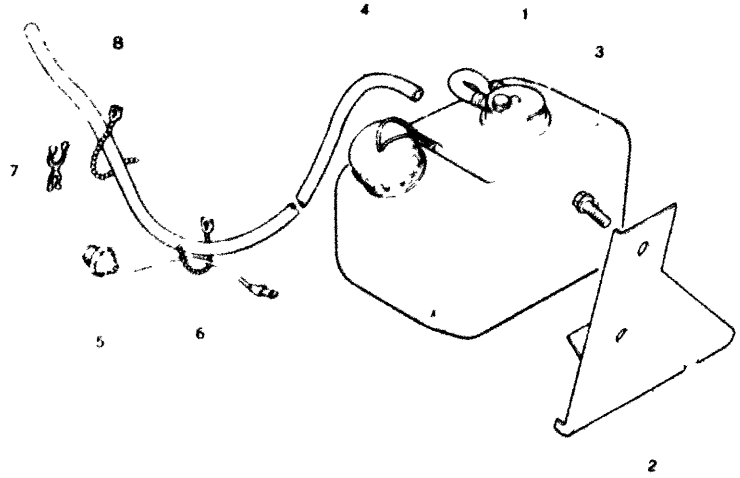

STARTING ASS

No.	Part Number	Descriptio
1	1757 13 510B	Tank, Starting Fluid
2	1881 13 515A	Bracket, Tank
3	99786 0612	Screw, Tank Bracke
4	1757 13 527B	Hose
5	8712 13 531	Unit, Thermo
6	99709 0108	Band
7	99268 0808B	Clip
8	99709 0255	Band

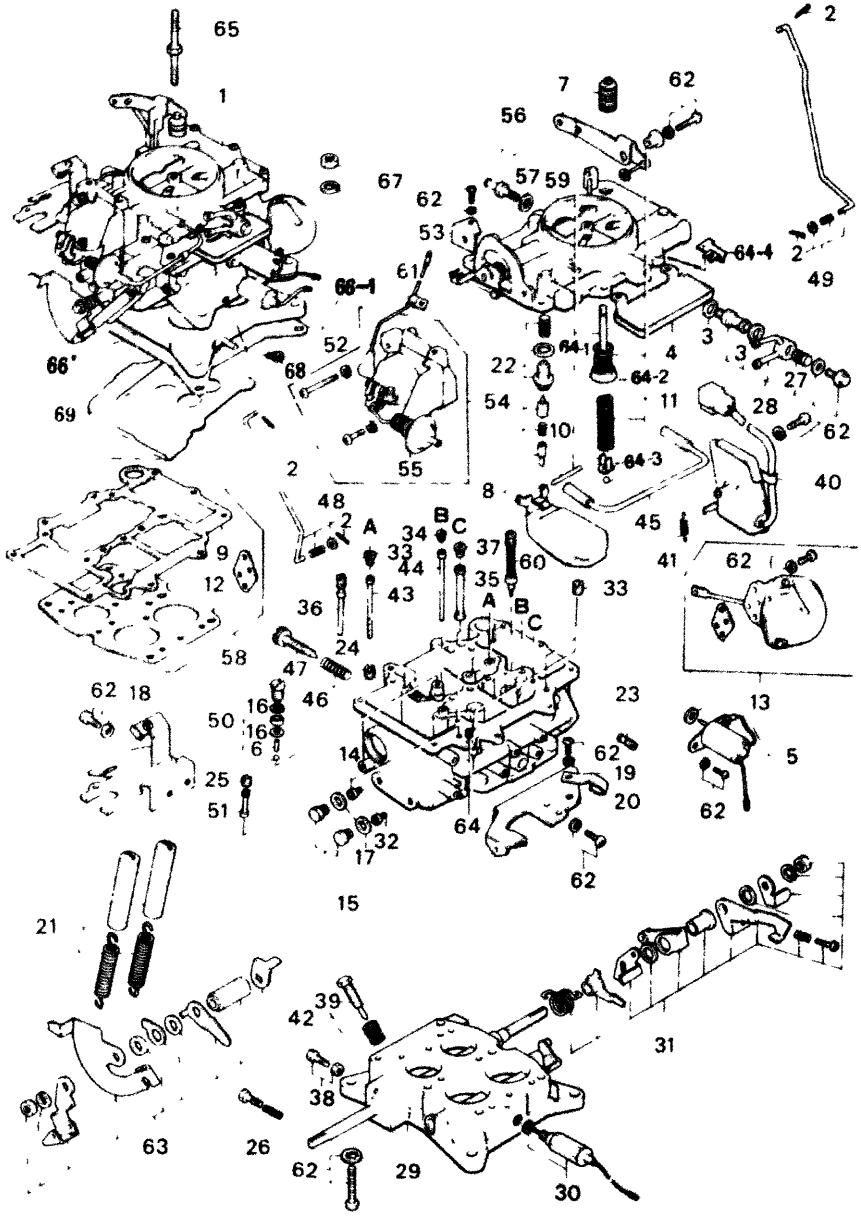

No.	Part Number	Description
1	3787 13 200	Carburettor (Manual)
	3789 13 200	Carburettor (Automatic)
2	0136 13 717A	Pin, Cotter
3	0114 13 788A	Washer
4	8503 23 318	Tray-Fuel
~~5~~	~~3567 23 322~~	~~Valve Kit, Power (Automati~~
6	3648 23 324	Weight, 1.6
7	3565 23 325	Lever, Pump
8	3565 23 326	Float Set
9	3565 23 327	Gasket, Float Chamber
10	3787 23 331	Pump Sub Ass'y "A"
11	3565 23 332	Pump Sub Ass'y "B"
12	3565 23 349	Gasket, Throttle Chamber
13	8527 23 350	Chamber Set, DIAPH.
14	3787 23 353	Jet, Main-Primary
15	3565 23 354	Plug Set, Drain
16	0187 23 356	Washer-7
17	0291 23 366	Washer-9
18	3648 23 370	Bracket, Throttle Wire
19	8501 23 374	Clip, Vacuum Pipe

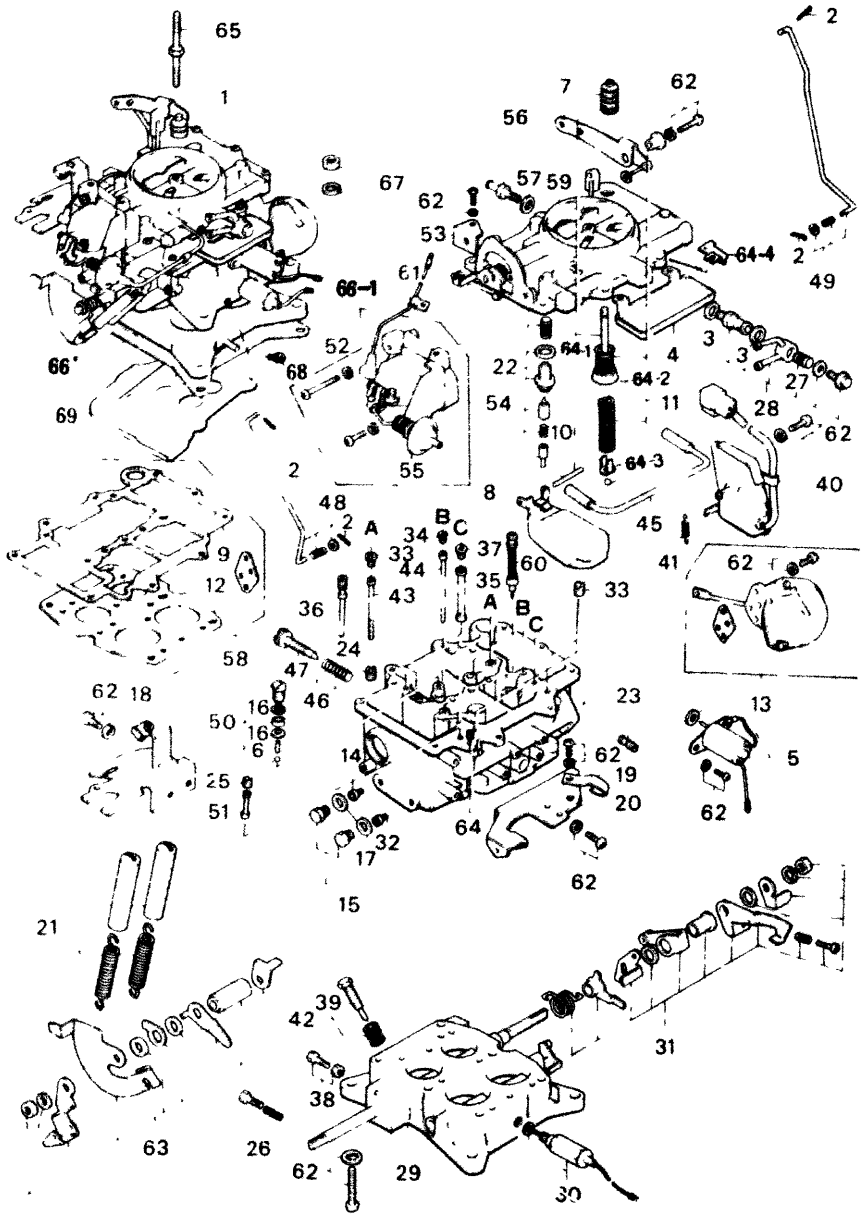

No.	Part Number	Description
20	3648 23 375	Bracket
21	8712 23 380	Spring Set, Return
22	8504 23 390	Valve Set, Needle
23	8712 23 393	Jet, Vacuum
24	3565 23 394	Jet, Slow Air Bleed Prima
25	1208 23 395	Jet, Richer Air Bleed No.
~~26~~	~~3775 23 397~~	~~Screw, Throttle Adjust (C~~
27	8503 23 401	Filter
28	3787 23 409	Connector Set, Fuel
29	3787 23 410	Flange Set (Manual)
	3789 23 410	Flange Set (Automatic)
30	1029 23 411	Solenoid Set (Manual)
31	8712 23 420	Lever Set, Front
32	8712 23 422	Jet, Main-Secondary
33	3565 23 423	Jet, Main Air Bleed Prima
34	3626 23 424	Jet, Main Air Bleed Secon
35	3565 23 426	Jet, Slow-Secondary
36	3565 23 427	Jet, Slow-Primary
37	3565 23 428	Jet, Slow-Air Bleed-Secon
38	8501 23 440	Screw Set, Throttle Adjust

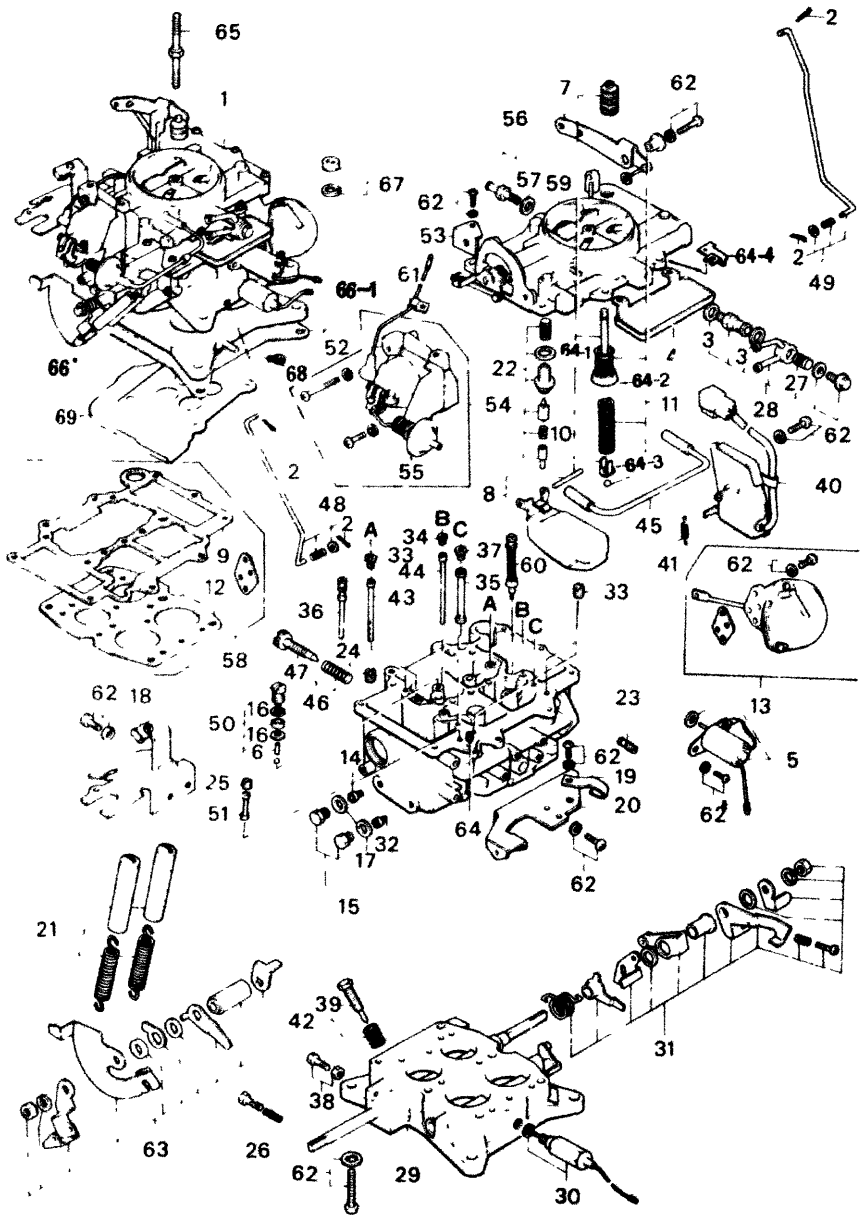

No	Part Number	Description
39	3565 23 446	Screw, Idle Adjust (Autom
	3787 23 446	Screw, Idle Adjust (Manual
40	1757 23 450	Switch, Set, Idle
41	1757 23 455	Spring
42	3565 23 460	Screw Set, Idle Adjust (Au
	3787 23 460	Screw Set, Idle Adjust (Ma
43	3787 23 461	Tube, Emulsion (P)
44	3565 23 462	Tube, Emulsion (S)
45	3565 23 464	Pipe, Rubber
46	1757 23 470	Screw Set, Air Adjust
47	3900 23 471	Screw, Air Adjust
48	1029 23 480	Rod Set, Choke
49	1757 23 481	Rod Set, Accel
50	3565 23 490	Nozzle Set, Accel
51	8501 23 491	Jet, Richer
52	3565 23 495	Holder, Pipe Clip
53	3565 23 496	Stopper, Choke Rod
54	3787 23 500	Choke Set, Semi Auto
55	3565 23 501	Piston, Choke
56	1767 23 507	Valve Set, Check

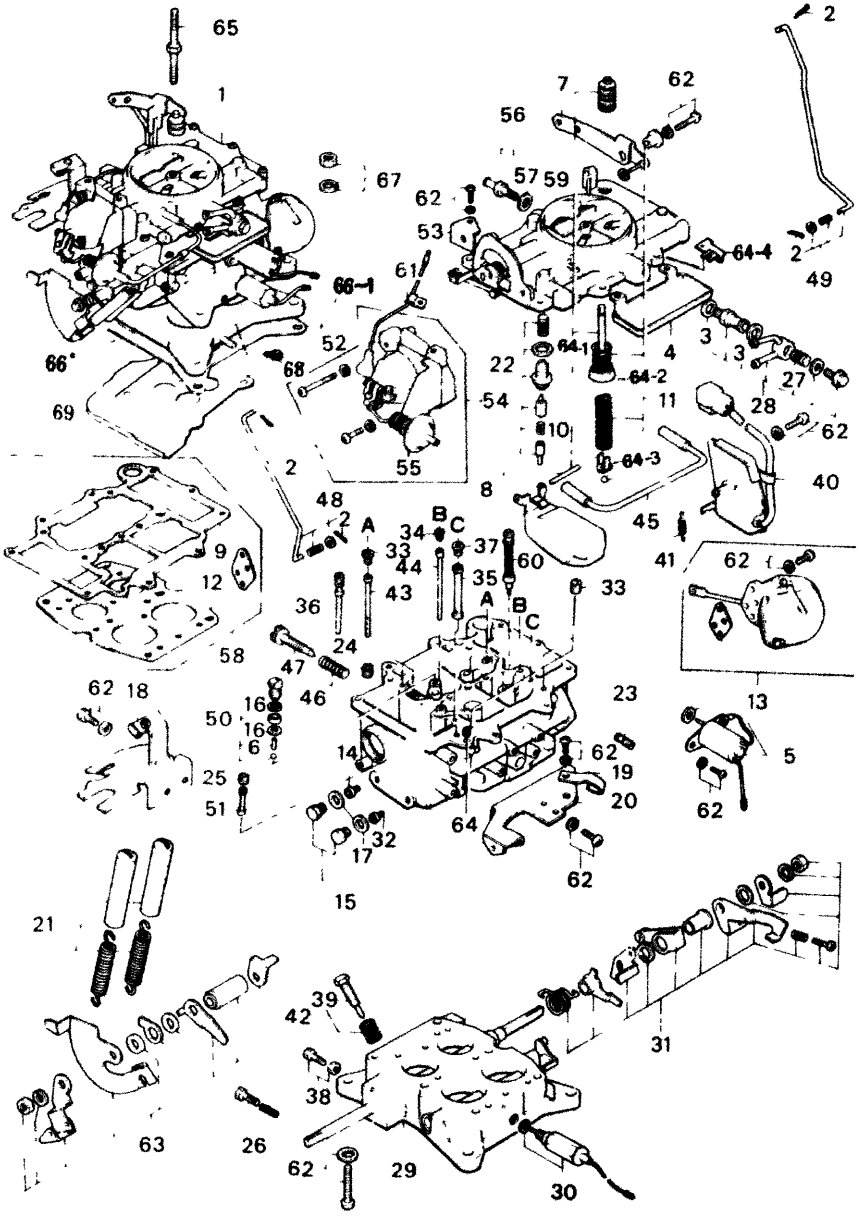

No.	Part Number	Description
57	3565 23 508	Washer-10
58	3787 23 510	Gasket Set
59	3787 23 520	Horn Set, Air
~~60~~	~~3567 23 541~~	~~Jet, Power Valve (Automa~~
61	3565 23 549	Stopper, Lead Wire
62	3565 23 652	Screw & Washer Set
63	8712 23 430	Lever Set, Rear
64	1757 23 433	Jet, Slow Air Breed-Second
64-1	8527 23 519	Washer
64-2	3787 23 323	Piston, Accel Pump
64-3	3648 23 337	Piece, Distance
64-4	8712 23 319	Stopper, Connector
65	1757 13 201A	Bolt, Cleaner Set
66	8712 13 220A	Insulator, Carburettor
66-1	1757 13 221A	Gasket, Carburettor
67	99901 0800	Nut, Carburettor
	99971 0800	Washer, Spring
68	8527 13 205	Cap, Idle Limiter
69	8712 13 231A	Tray, Carburettor

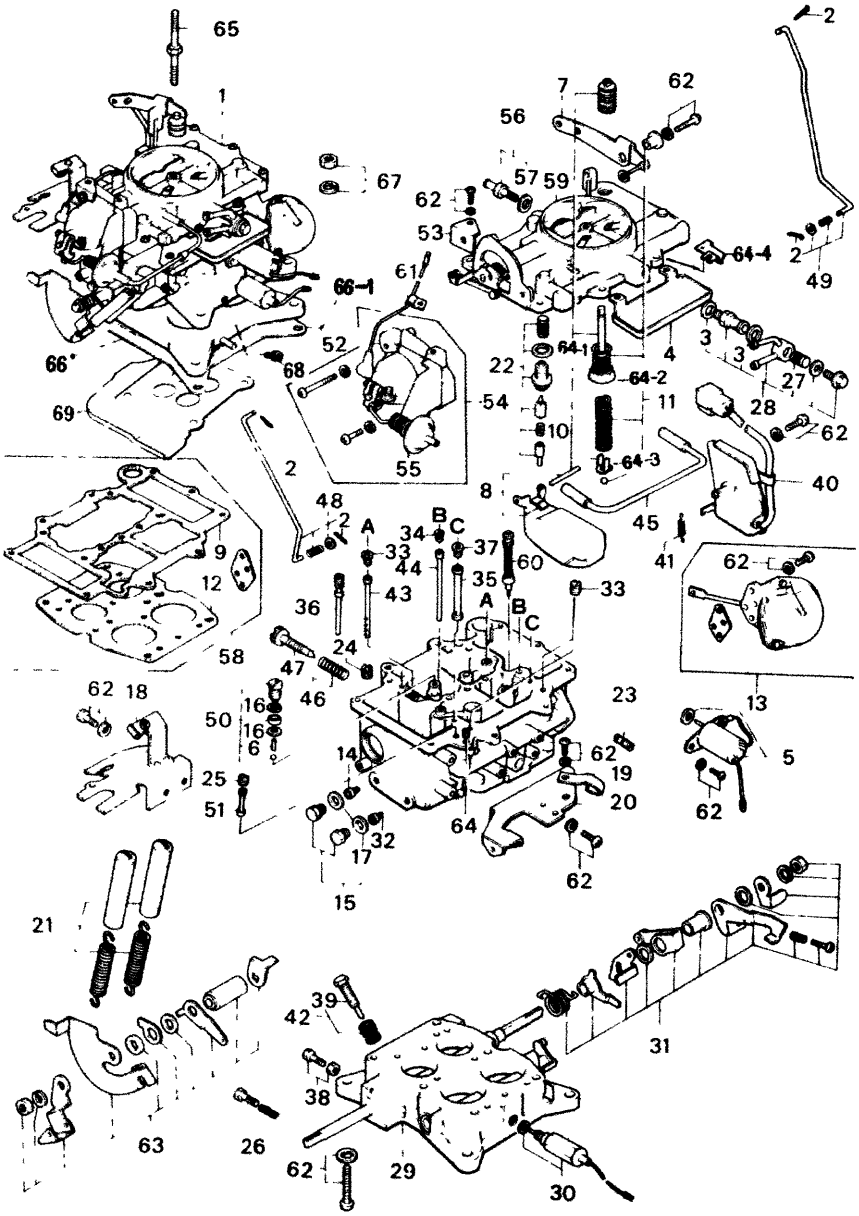

No.	Part Number	Description
	3787 23 540	Repairkit, Carburettor (Fig No. 2, 10, 11, 22 & 58
	3788 23 522	Label, High Attitude (Fed. Manual)

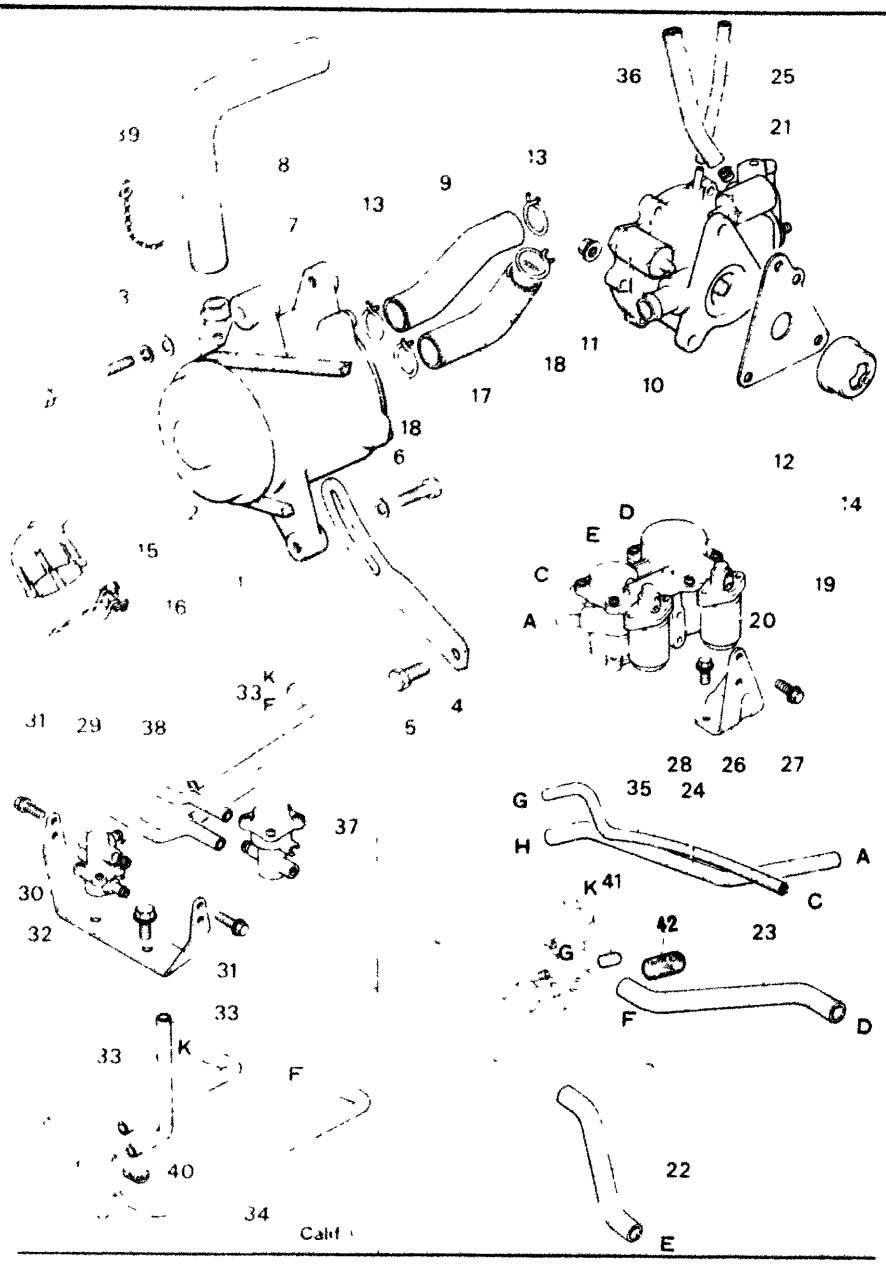

No.	Part Number	Description
1	1757 13 710A	Pump, Air
2	1757 23 713	Pulley, Air Pump
3	99803 08100	Bolt, Air Pump
	99952 0800	Washer, Plain
	99971 0800	Washer, Spring
4	1757 13 714	Strap, Air Pump
5	99796 0814	Bolt, Strap
6	90796 0820	Bolt, Strap
7	1757 13 715	Belt, "V"-Air Pump
8	1757 13 717	Hose, Air-Air Pump ~ Air Cle
9	3565 13 718	Hose, Air-A.C. Valve ~ Air Pu
10	8712 13 720	Valve, Air Control
11	99940 0801	Nut, Air Control Valve
12	3790 13 724	Gasket, A.C. Valve
13	2329 13 726	Clip, Air Hose
14	3790 13 730	Valve, Check
15	8501 13 740	Pipe, Air-Reactor Side
16	99282 4309	Band, Hose-Air Pipe
17	1757 13 744	Hose, Air-Reactor ~ A.C. Valv

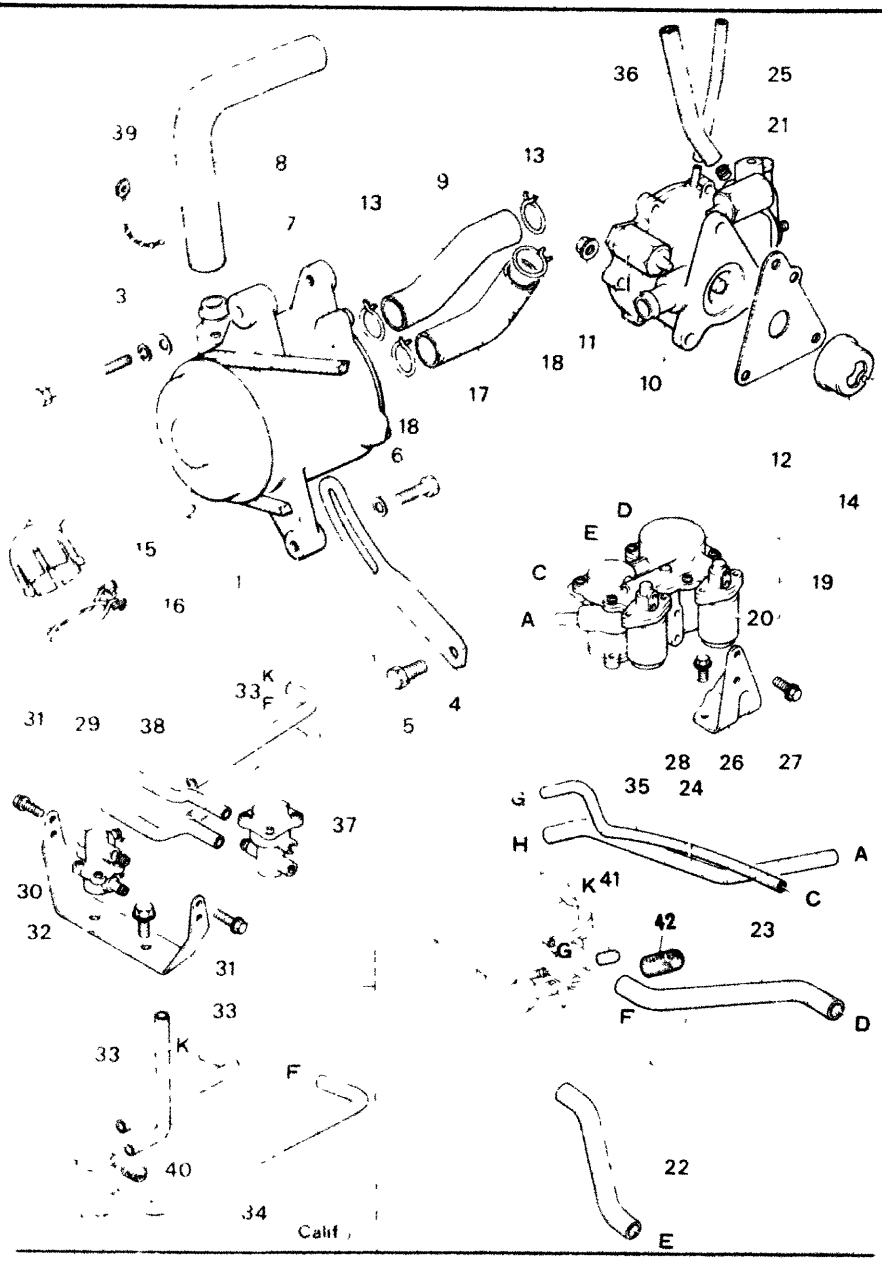

No.	Part Number	Description
18	2090 13 746	Clip, Air Hose
19	1757 13 750	Valve, Deceleration Control (M
	8715 13 750	Valve, Deceleration Control (A
20	1757 23 725	Valve, Solenoid
21	3790 13 759A	Insert (Manual)
	3648 13 759	Insert (Automatic)
22	8712 13 752	Hose, Air-D.C. Valve ~ Air Cl
23	1757 13 753C	Hose, Air-D.C. Valve ~ IN. Ma
24	8735 13 754	Hose, Air-D.C Valve ~ IN. Ma
25	3648 13 725	Hose, Air-A.C. Valve ~ Air Cl
26	8712 13 757	Supporter, D.C. Valve
27	99796 0610	Bolt, Supporter + D.C. Valve
28	99796 0812	Bolt, D.C. Valve Supporter
~~29~~	~~1757 13 770B~~	~~Compensator, Altitude~~
30	8735 13 772B	Bracket (Fed.)
31	99796 0610	Bolt, Alti. Compensator
32	99796 0812	Bolt, Bracket
~~33~~	~~1757 13 775A~~	~~Hose, Air-Alti. Compensator & IN. Manifold~~

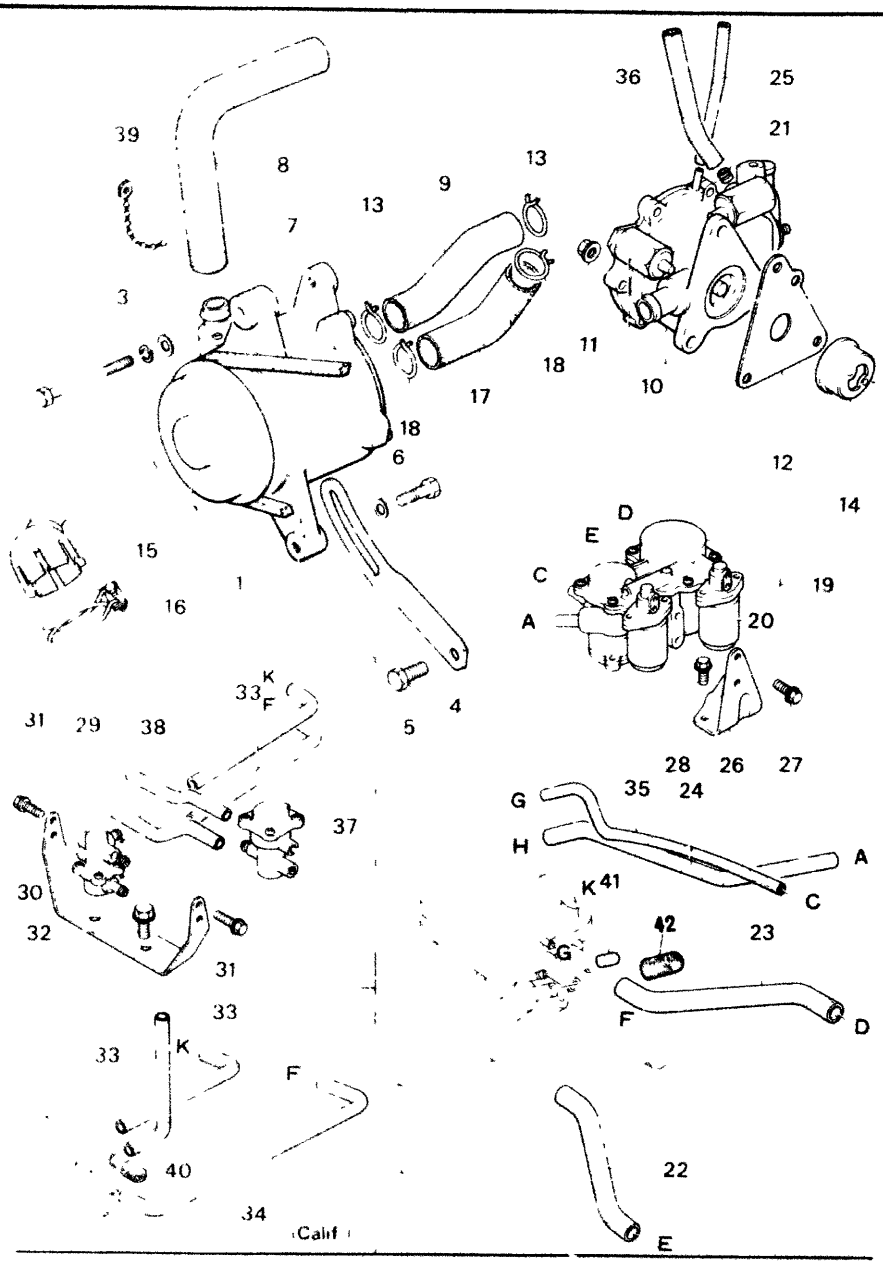

EMISSION CONTROL

No.	Part Number	Description
34	99340 06230	Hose, Air-Alti. Compensator ~ IN. Manifold
35	99340 04200	Hose, Air-D.C. Valve ~ IN. M
36	99340 04200	Hose, Air-A.C. Valve ~ Air C
~~37~~	~~1757 13 910~~	~~Valve, Emission Control (Exc~~
~~38~~	~~1757 13 912A~~	~~Hose, Air-Alti. Compensator ~ E.C. Valve (Except Calif.)~~
39	99709 0255	Band
40	2306 10 481	Cap, Evaporation (Calif.)
41	1010 13 104	Cap, IN. Manifold
42	8712 13 104	Cap, IN. Manifold (Automati

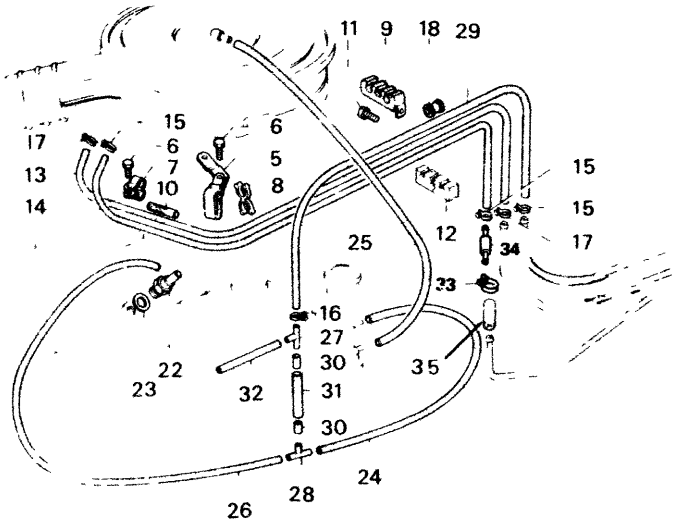

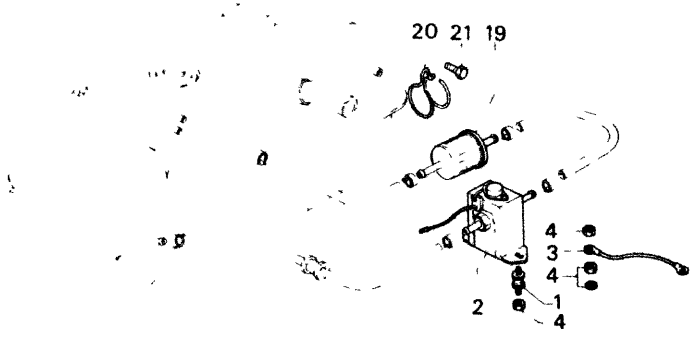

No.	Part Number	Description
1	0223 13 363	Rubber, Insulation-Fuel
2	1854 13 400A	Pump, Fuel
●	1854 13 400B	Pump, Fuel
3	0866 13 402B	Wire, Earth-Fuel Pump
4	99940 0600	Nut, Fuel Pump
	99952 0600	Washer, Plain
5	1757 13 445	Clip
6	99796 0610	Bolt, Clip
7	8503 13 446A	Clip, Fuel Pipe
8	1570 13 447	Clip, Fuel Pipe
9	8527 13 447	Clip, Fuel Pipe
10	1883 13 448	Protector
11	99786 0616	Bolt, Clip
	99952 0600	Washer, Plain
12	1757 13 449	Protector, Pipe
13	99348 08930	Pipe, Fuel Main
14	99348 06930	Pipe, Fuel Return
15	99283 1000	Clip, Fuel Pipe & Evapor
16	99283 1100	Clip, Fuel Pipe
17	99283 1200	Clip, Fuel Pipe
18	99681 1503	Protector, Pipe

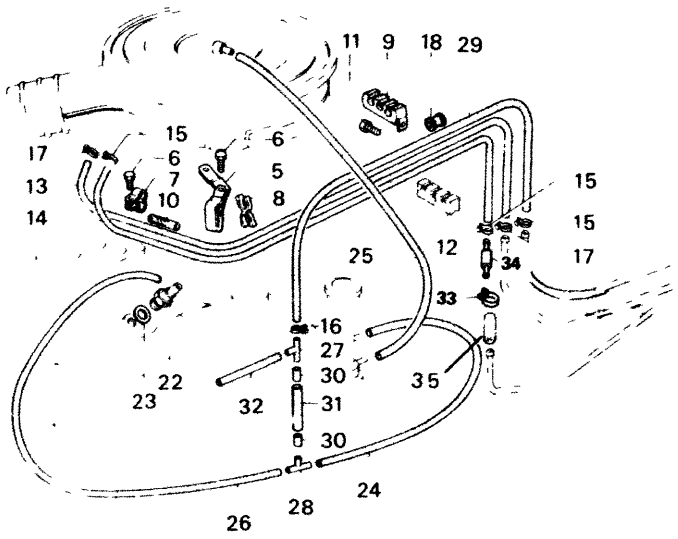

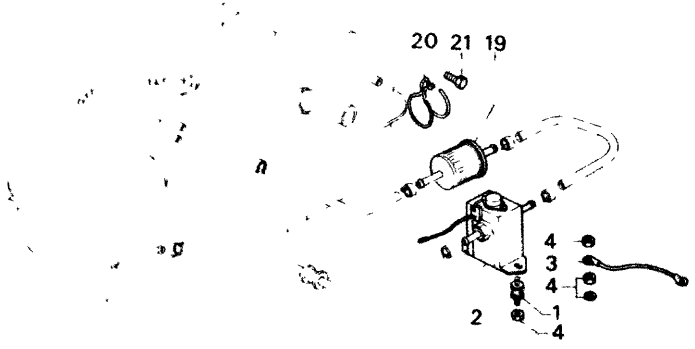

No.	Part Number	Description
19	0222 13 470B	Filter, Fuel
20	0381 13 481	Clamp, Fuel Filter
21	99786 0612	Bolt, Fuel Filter
22	1757 13 780	Valve, Ventilation - IN Manifo
23	99564 1600	Gasket, Ventilation Valve
24	3565 13 785	Hose, Ventilation - "T" Joint - Oil F
25	1757 13 786B	Hose, Ventilation - Air Cleaner Intermedia
26	3565 13 788A	Hose, Ventilation - "T" Joint Ventilation
~~27~~	~~1029 13 790~~	~~Joint, "T" (Except Calif.)~~
28	1757 13 790	Joint, "T"
•	1757 13 790A	Joint, "T"
29	1854 13 792A	Hose, Evaporation - "T" Joint - Evaporatio
30	3565 13 795	Insert, "T" Joint
~~31~~	~~1757 13 797~~	~~Hose, Evaporation - "T" Joint - "T" Joint~~
~~32~~	~~3565 13 815~~	~~Tube, E.C.V. Valve - "T" Joint (Ex~~
33	8527 13 449	Clip, Hose
•	8527 13 459	Clip, Hose
34	3648 13 270	Valve, Check
35	99348 06100	Pipe, Fuel

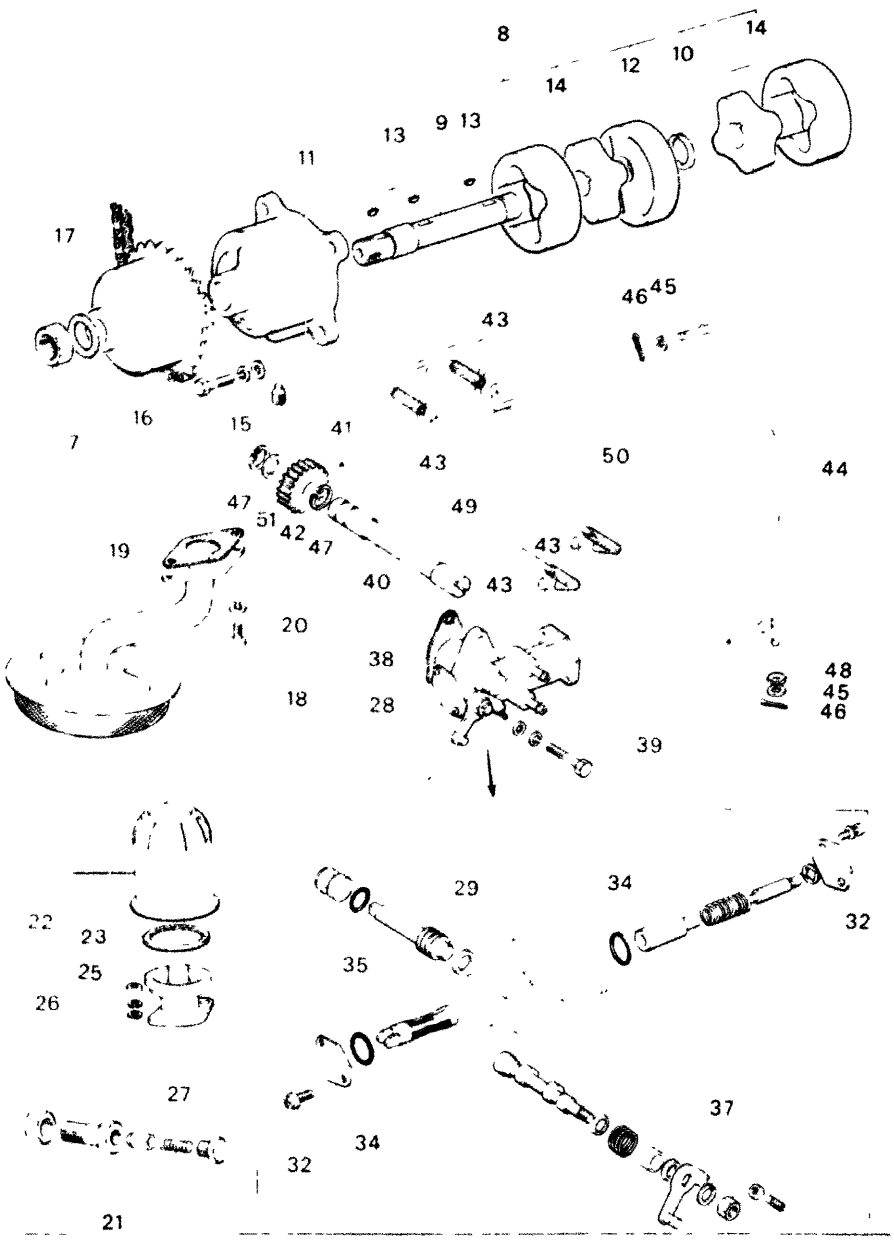

No.	Part Number	Description
~~1~~	~~1757 14 020~~	~~Adjuster, Chain~~
~~2~~	~~0823 14 130~~	~~Adjuster~~
~~3~~	~~0823 14 131~~	~~Spring~~
~~4~~	~~1757 14 132~~	~~Body~~
~~5~~	~~0839 14 133~~	~~Plate, Guide~~
~~6~~	~~99906 0600~~	~~Nut, Chain Adjuster~~
	~~99971 0600~~	~~Washer Spring~~
7	99922 1200	Nut Oil Pump Drive Gear
	99979 1200	Washer, Tab
8	8501 14 100	Pump Oil
9	1757 14 112	Shaft Oil Pump
10	0810 14 113	Ring Snap
11	0839 14 117	Bolt Lock
12	8501 14 1[illegible]	Plate Middle-Oil Pump
13	0839 14 119B	Key
14	8501 23 882	Rotor Set Oil Pump
•	8501 14 110	**Rotor Set, Oil Pump**
15	99796 0616	Bolt Oil Pump

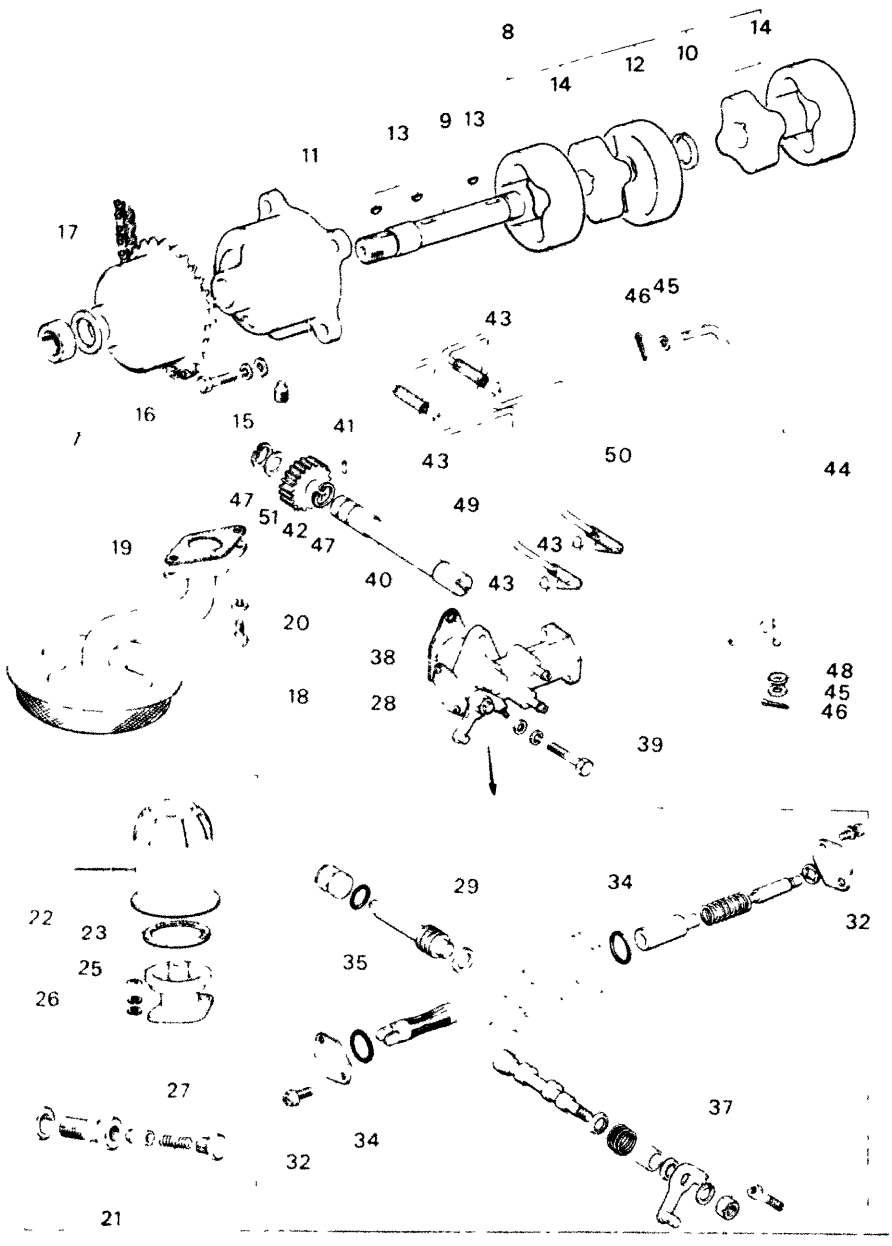

No.	Part Number	Description
16	0839 14 141A	Gear Drive-Oil Pump
17	0839 14 142	Chain
18	0866 14 160E	Strainer Oil
19	0810 14 171	Gasket Oil Strainer
20	99806 0616	Bolt Oil Strainer
	99971 0600	Washer Spring
21	3648 14 250	Regulator Pressure
22	0813 23 802B	Cartridge, Oil Filter
23	0813 23 803	Gasket
25	0839 23 801	Cover
26	99901 0800	Nut Oil Filter
	99953 0800	Washer Plain
	99971 0800	Washer Spring
27	99541 01601	Ring, "O" - Oil Filter
28	1757 14 600	Pump, Metering Oil
29	0820 23 832B	Washer Thrust

14 OIL PUMP

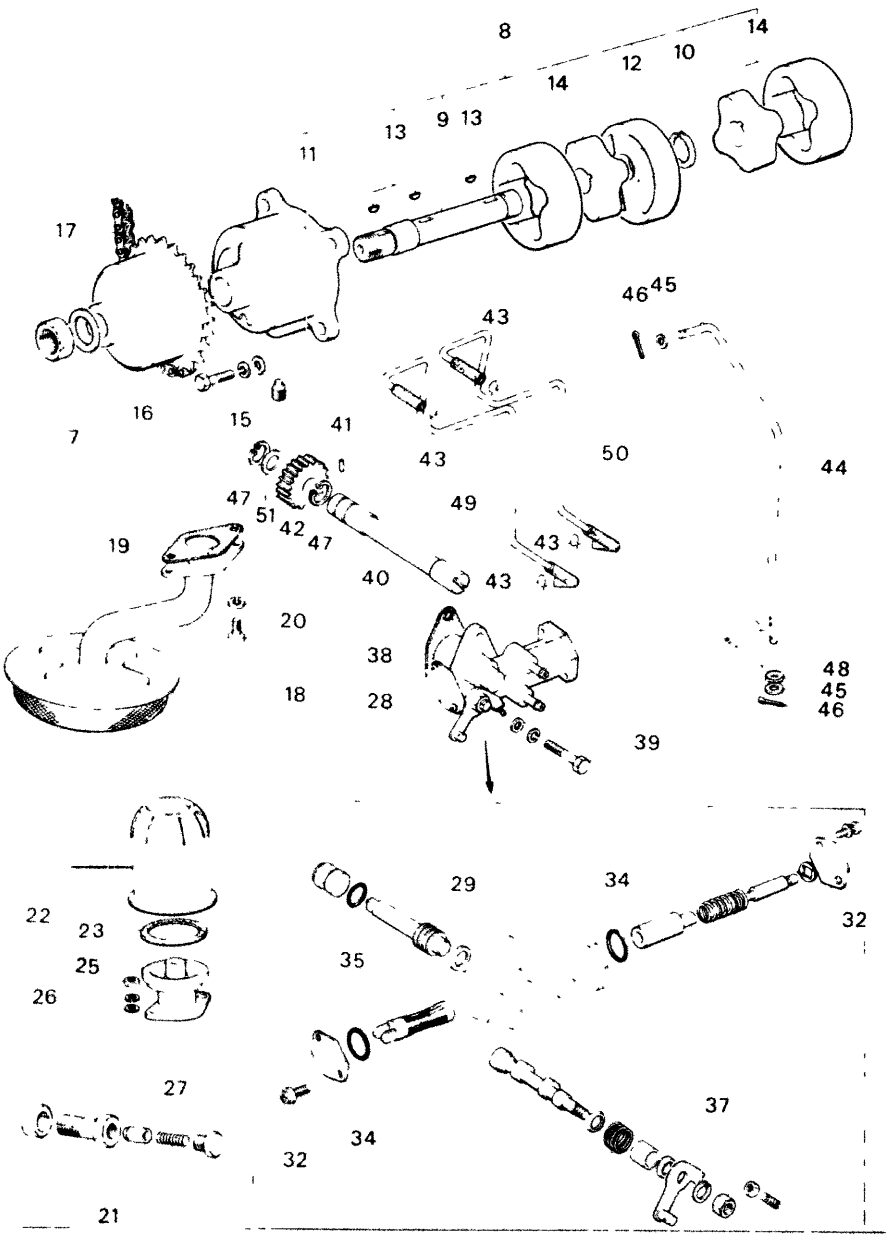

No.	Part Number	Description
~~30~~	~~0820 23 833B~~	~~Plate Cam Casing~~
~~31~~	~~0820 23 834B~~	~~Plate, Cam Casing~~
32	99833 0408	Screw Cam Casing Pl
	99971 0400	Washer Plain
~~33~~	~~0820 23 835A~~	~~Bearing Worm~~
34	0730 23 837	Ring 'O'
35	0730 23 839	Ring, 'O'
~~36~~	~~0820 23 848A~~	~~Spring Return~~
37	99907 0600	Nut Control Lever
	99971 0600	Washer Spring
38	1757 14 611	Gasket Metering Oil Pump
39	99796 0616	Bolt, Metering Oil Pump
40	0820 14 620A	Shaft Driven Gear
41	0813 14 623	Pin Driven Gear
42	0820 14 625A	Gear Driven
43	0813 14 641	Clip, Metering Oil Tube
44	1757 14 651	Rod Connecting
45	99953 0400	Washer Plain
46	99221 1212	Pin Split

1-E5

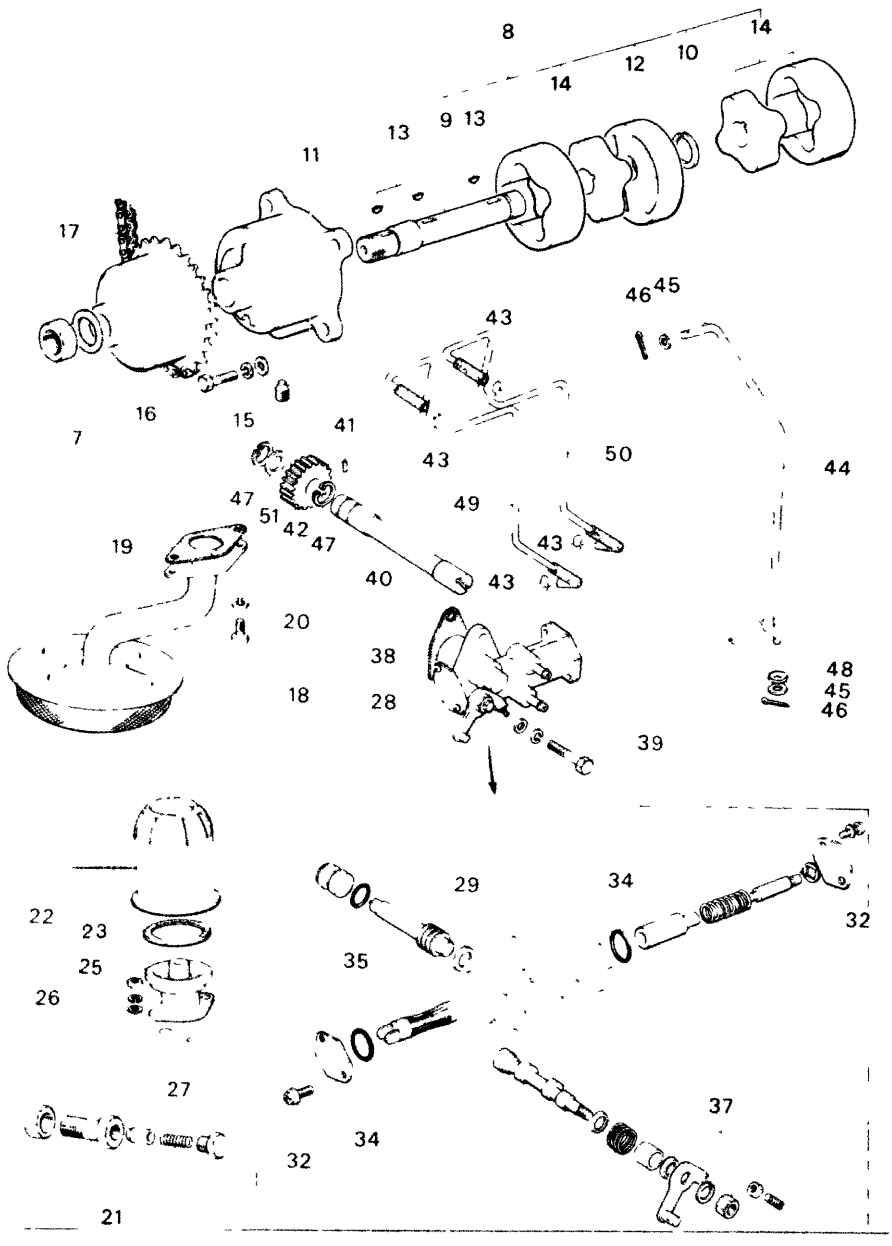

No.	Part Number	Description
47	99576 0800	Ring, Snap-Driven Gear Sha
48	1757 14 652	Shim (t=1.0) } Selective use
	1757 14 653	Shim (t=2.0) }
49	3565 14 660A	Tube, Metering Oil
50	3565 14 670A	Tube, Metering Oil
51	0810 18 276	Shim, Adjust (t 0.6) } Selec
	0810 18 277	Shim, Adjust (t 0 3) }

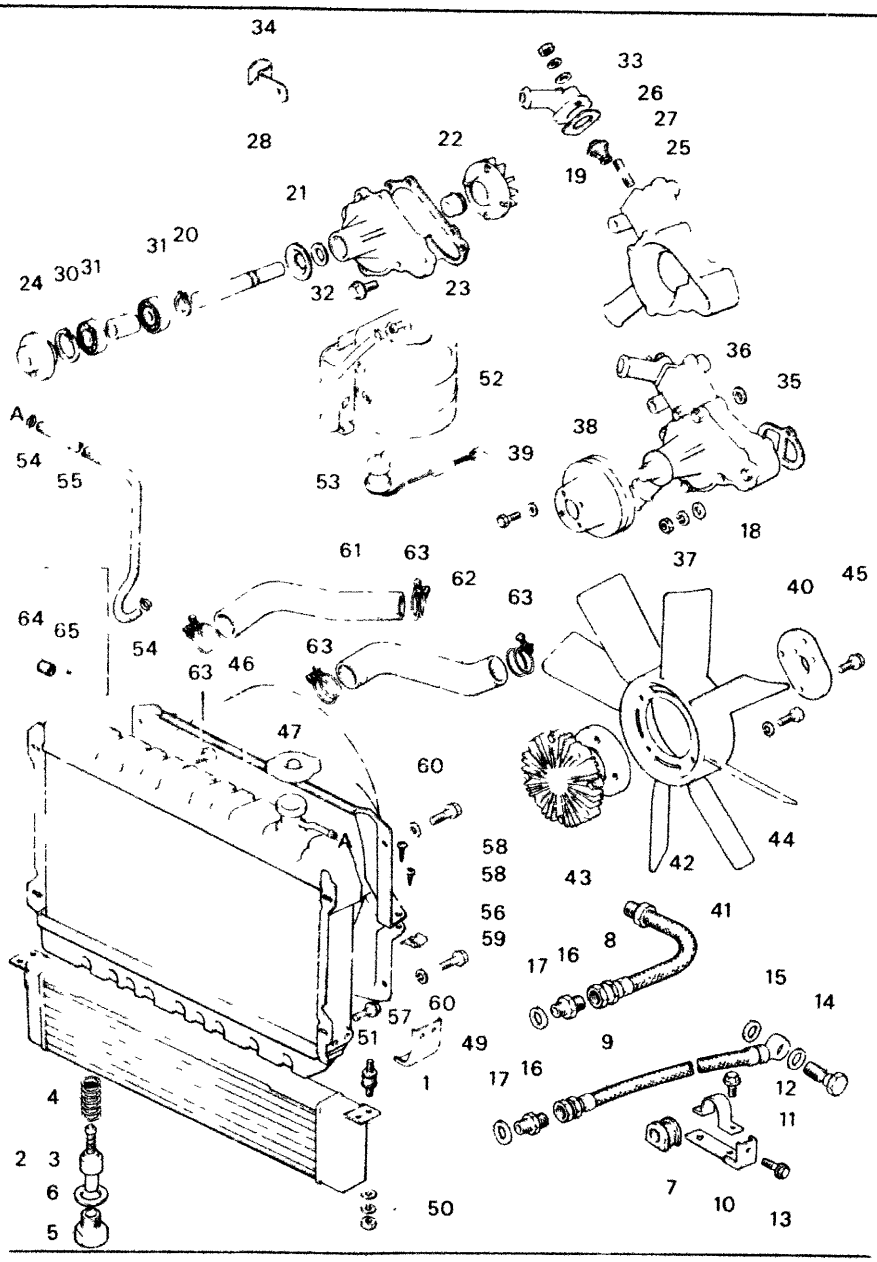

No.	Part Number	Description
1	1715 15 312	Rubber, Insulation
2	1854 14 700	Cooler, Oil
3	1757 14 810	Pellet, Thermo
4	1757 14 821	Spring, Pellet
5	1757 14 822	Nut, Stopper
6	1757 14 823	Gasket
7	0813 14 716	Protector, Oil Hose
8	0865 14 720	Hose, Oil
9	1570 14 730A	Hose, Oil
10	1757 14 740	Bracket, Oil Hose (Manu
	1758 14 740	Bracket, Oil Hose (Auto
11	0839 14 745	Clip, Oil Hose
12	99806 0616	Bolt, Clip
	99971 0600	Washer, Spring
13	99796 0812	Bolt, Bracket
14	99381 1400	Bolt, Connector-Oil Hose
15	99562 1800	Gasket

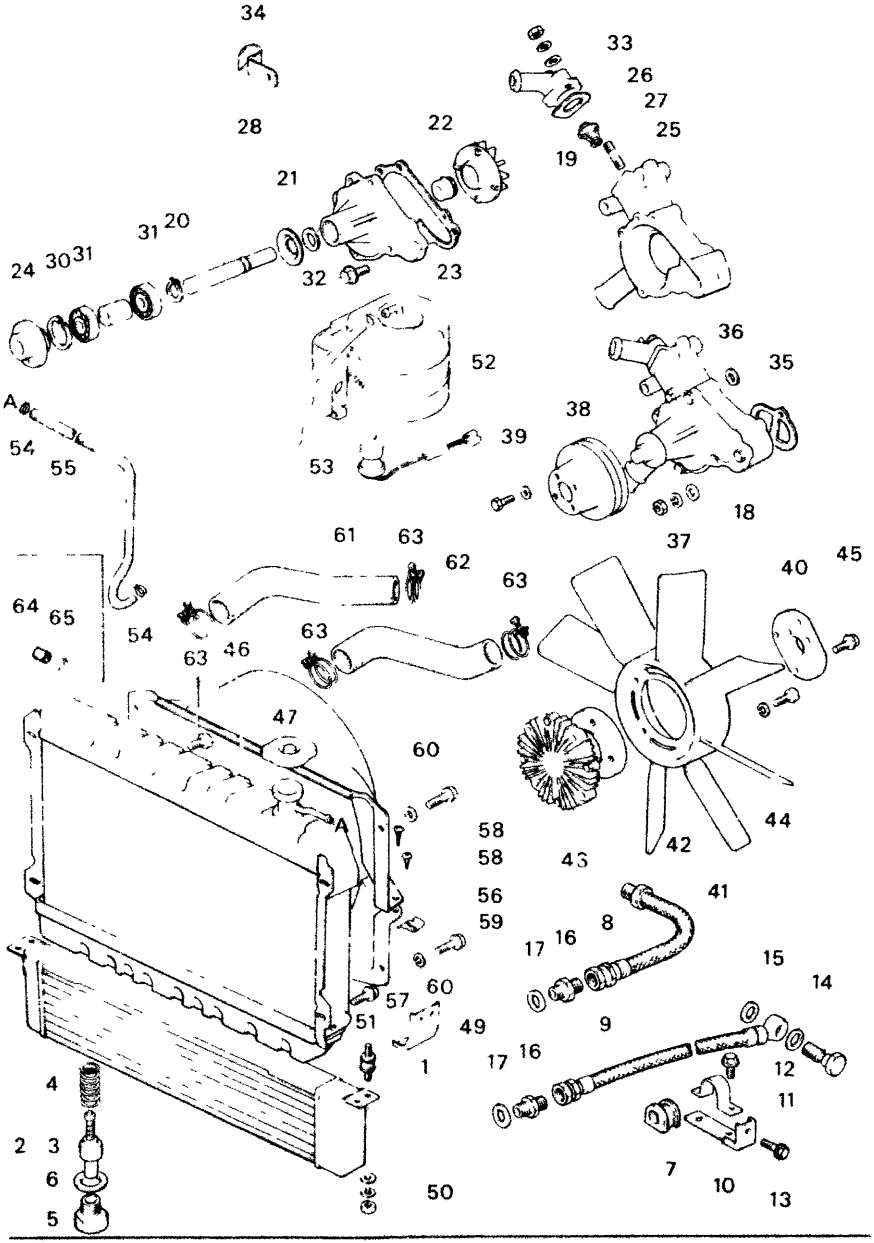

No.	Part Number	Description
16	99384 1200F	Joint, Union
17	99564 1600	Gasket
18	8527 15 010	Pump, Water
•	8527 15 010A	Pump, Water
•	8553 15010B	Pump, Water
19	2090 15 104	Stud
20	1757 15 114	Ring, Snap
21	1757 15 118	Plate, Dust Seal
22	1757 15 120	Seal, Water
23	1757 15 132	Gasket, Pump Cover
24	1757 15 152A	Boss, Pulley
•	1757 15 152B	Boss, Pulley
25	0839 15 171A	Thermostat
•	8553 15 171	Thermostat
26	8519 15 172	Cover, Thermostat
27	1757 15 173	Gasket, Thermostat
28	3648 15 130	Cover, Pump
•	3648 15 130A	Cover, Pump
•	3648 15 130B	Cover, Pump

1-D6

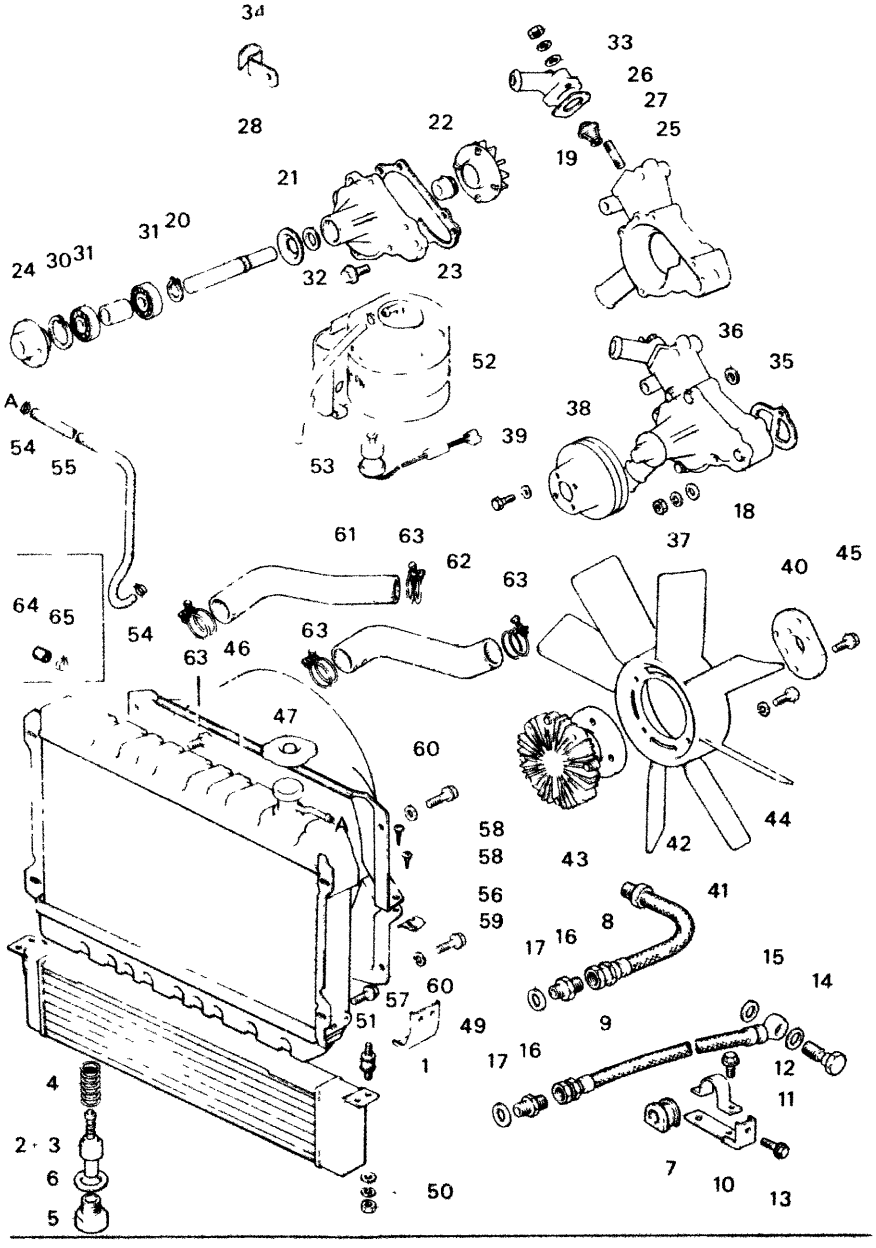

No.	Part Number	Description
~~29~~	~~3648 15 180B~~	~~Valve, Control~~
30	99574 3000	Ring, Retaining
31	99606 72030	Bearing, Ball
32	99796 0820	Bolt, Pump Cover
	99951 0816	Washer, Plain
33	99901 0800	Nut, Thermostat C
	99953 0800	Washer, Plain
	99971 0800	Washer, Spring
34	3565 14 662A	Clip
35	1757 15 105A	Gasket, Water Pump
36	1757 15 106	Gasket
37	99901 0800	Nut, Water Pump
	99971 0800	Washer, Spring
38	1757 15 151B	Pulley, Water Pump
39	99796 0620	Bolt
40	1907 15 211	Spacer, Fan Drive
•	1907 15 211A	Spacer, Fan Drive
41	3648 15 250	Fan & Fan Drive
42	3648 15 200	Fan, Cooling

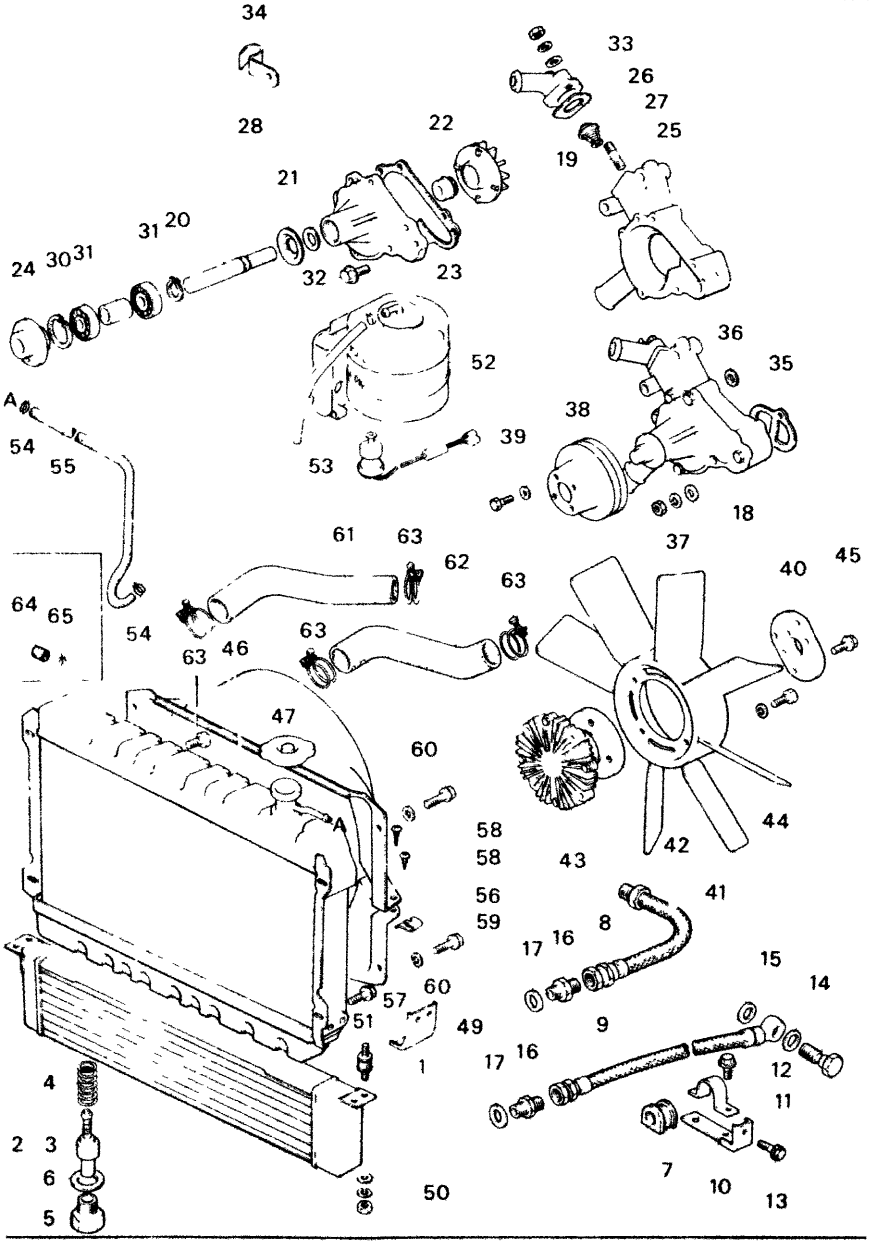

No.	Part Number	Description
43	1202 15 210	Fan Drive
44	99806 0614	Bolt, Fan & Fan Drive
	99952 0600	Washer, Plain
	99971 0600	Washer, Spring
45	99796 0620	Bolt, Fan Drive
46	1854 15 310D	Radiator (Manual)
	1856 15 310E	Radiator (Automatic)
47	0766 15 205	Cap
~~48~~	~~1011 15 317~~	~~Cock, Water Drain~~
49	1854 15 312	Bracket, Radiator & Oil Cooler
50	99940 0600	Nut, Bracket
51	99786 0816	Bolt, Radiator
	99952 0800	Washer, Plain
52	3565 15 350B	Tank, Sub
53	3565 15 370	Switch, Level
54	99283 1300	Clip, Water Hose

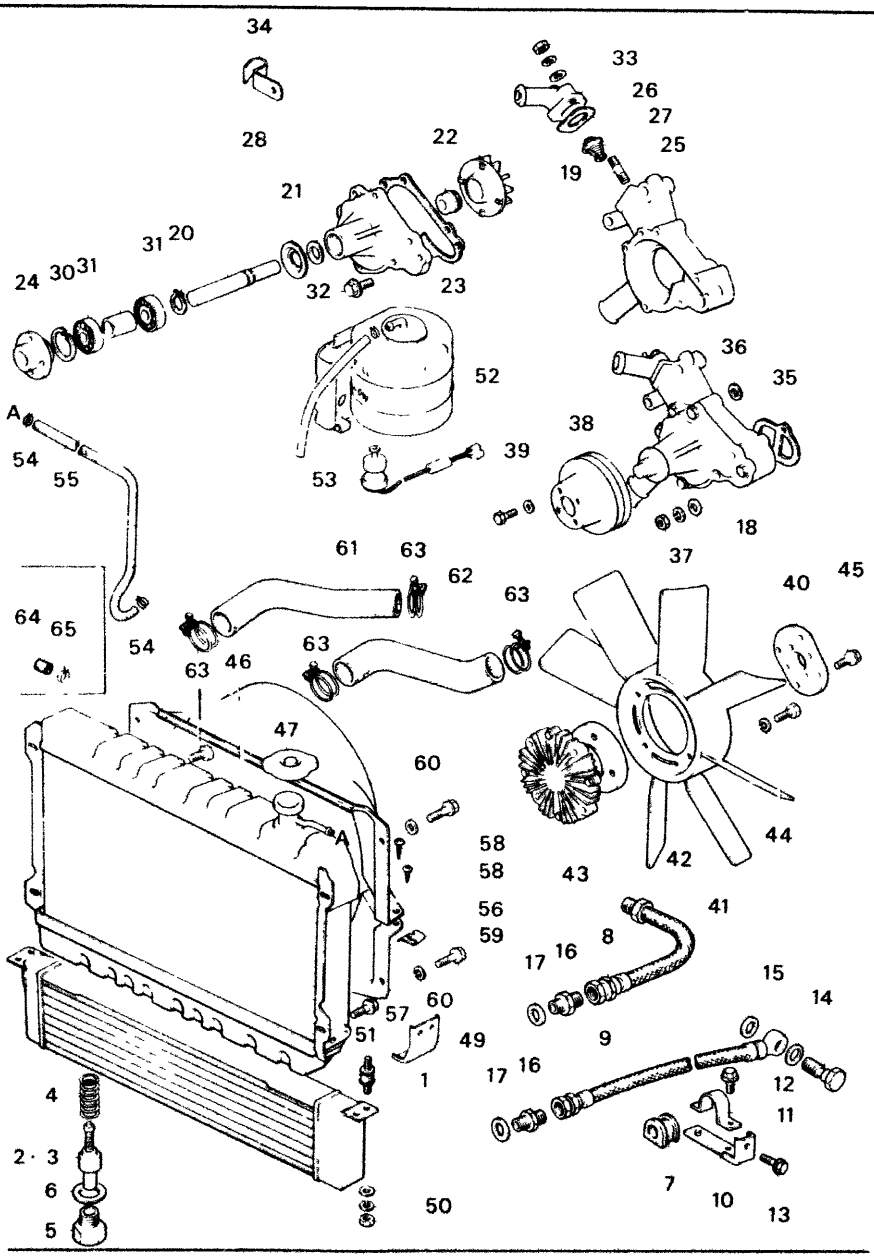

COOLING

No.	Part Number	Descript
55	1854 15 351C	Hose, Water-Sub Tank
56	3900 15 411	Shroud, Radiator-Upp
57	3900 15 421	Shroud, Radiator-Low
58	99865 0516	Screw
59	0820 56 905	Nut, Spring
60	99796 0812	Bolt, Radiator Shroud
	99952 0818	Washer, Plain
61	1854 15 511	Hose, Water-Thermost
62	1854 15 521	Hose, Water-Radiator-
63	99282 4900	Band, Hose-Water Hos
64	0864 61 061A	Cover (W/O) Car Heat
65	99282 2600	Band, Hose (W/O Car

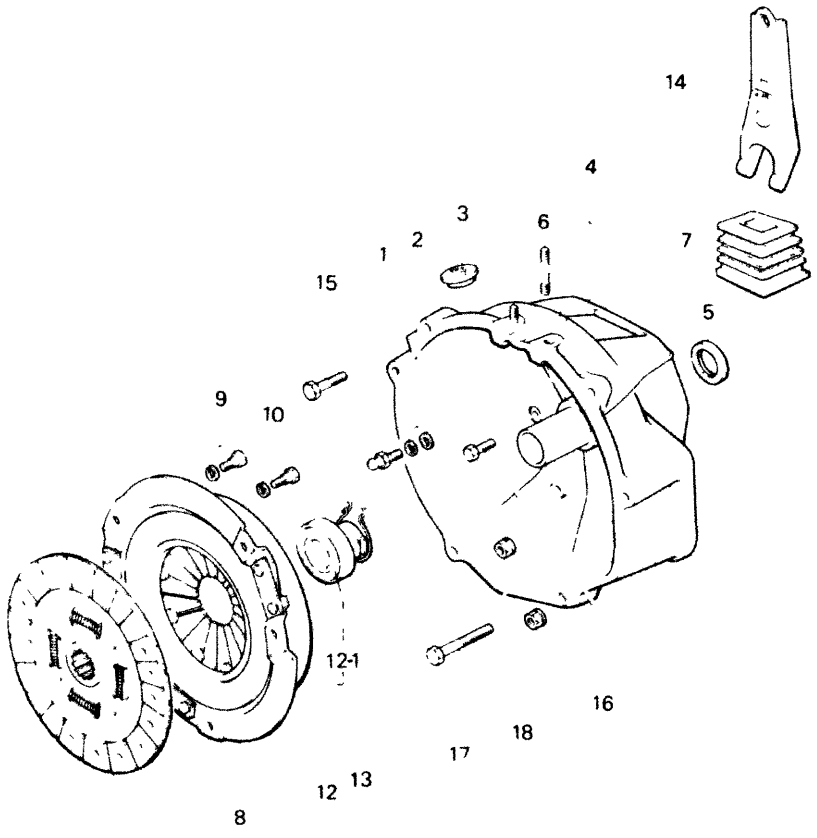

CLUT

No.	Part Number	Description
1	0603 16 102B	Pin, Pivot
2	99953 1000	Washer, Plain
	99971 1000	Washer, Spring
3	0813 16 112	Cover, Top Hole
4	1881 16 210B	Housing, Clutch
5	0603 16 103	Oil Seal
6	0222 16 105	Stud
7	0866 16 214A	Cover, Dust
8	0895 16 410	Cover, Clutch
9	0839 16 432	Bolt, Reamer - Clutch Cove
	99971 0800	Washer, Spring
10	99753 78118	Bolt, Clutch Cover
	99971 0800	Washer, Spring
11	0895 16 460B	Disc, Clutch
12	0820 16 510	Collar, Clutch Release
12-1	0222 16 222	Bearing

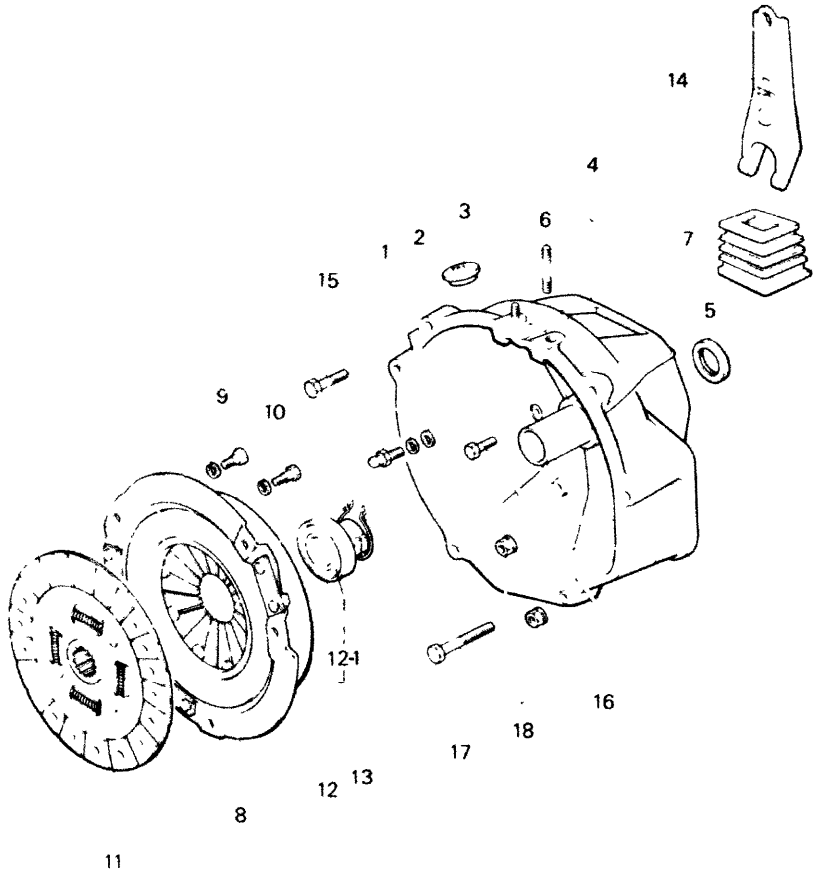

16 CLUTCH (MANUAL)

No.	Part Number	Description
13	0820 16 515	Spring, Clutch Release Co
14	0414 16 520	Fork, Clutch Release
15	99796 1045	Bolt, Clutch Housing
16	99796 1035	Bolt, Clutch Housing
17	99796 1090	Bolt, Clutch Housing
18	99940 1001	Nut, Clutch Housing

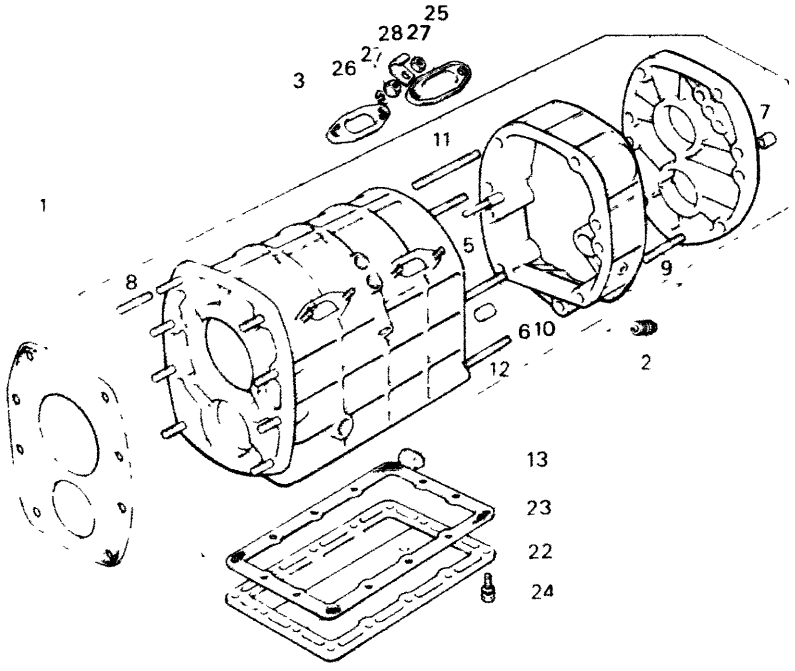

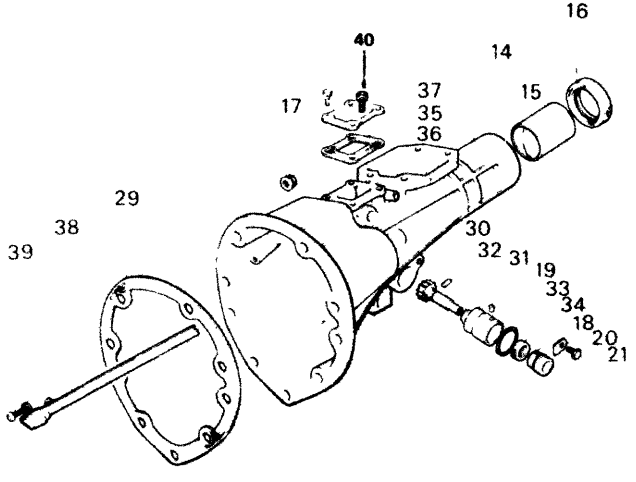

No.	Part Number	Description
1	0839 17 111	Gasket, Front
2	0107 17 121	Plug, Magnet - Center Ho
3	3778 17 200A	Case Set, T mission
~~4~~	~~0839 17 105~~	~~Stud, Blind Cover~~
	~~99852 0610F~~	~~Stud~~
5	0862 17 660A	Pass, Oil
6	99233 1225	Pin, Knock
7	99246 1232	Pin, Dowel - Bearing Ho
8	99855 1025	Stud
9	99855 1045	Stud, Center Housing
10	99857 10135	Stud
11	99857 10160	Stud
12	90857 10135	Stud
13	99502 4000	Plug, Oil
14	3778 17 330B	Housing, Extension
• 15	0398 17 333	Bush

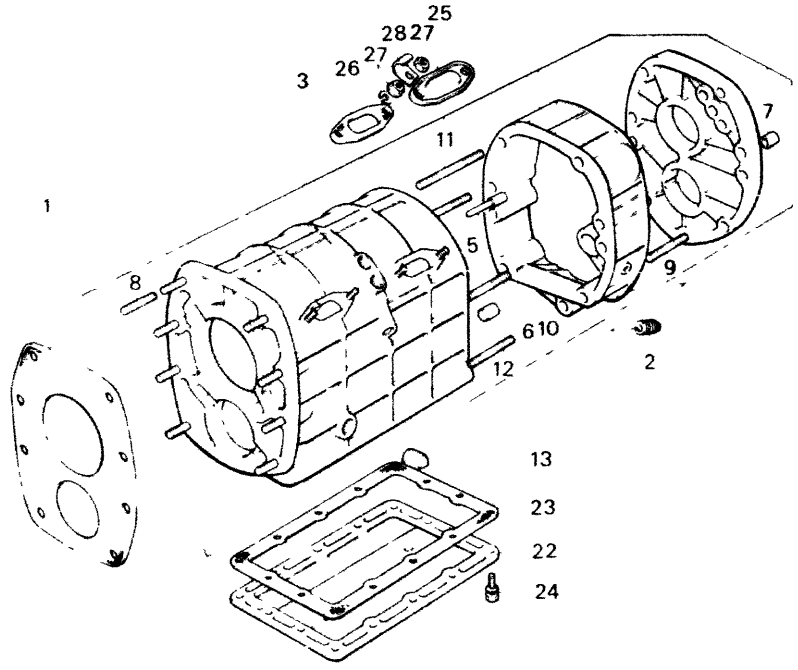

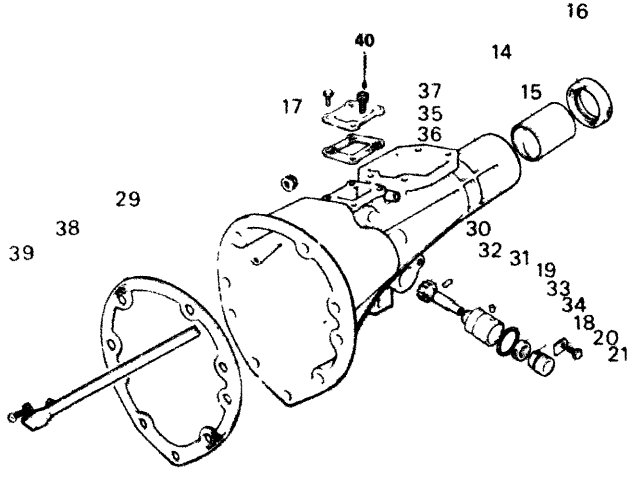

17 MANUAL T / MISSION
(CASE, 5 SPEED)

No	Part Number	Description
16	0437 17 335	Oil Seal, Extension Housin
17	99940 1001	Nut Extension Housing - T m
18	0862 17 351	Joint Speedometer Cable
19	0187 17 352	Pin Dowel - Speedometer
20	0111 17 354	Plate Lock - Speedometer
21	99796 0612	Bolt Lock Plate
22	1281 17 371	Cover Under
23	0862 17 375	Gasket Under Cover
24	99796 0620	Bolt Under Cover
25	0810 17 381A	Cover Blind
26	0810 17 385	Gasket Blind Cover
27	99906 0600	Nut Blind Cover
	99971 0600	Washer Spring
28	99276 0506	Clip Wire Harness
29	3778 17 393	Gasket Rear
30	3790 17 441	Gear Driven - Speedometer
31	0862 17 442	Sleeve Gear - Speedometer
32	99222 0216	Pin Spring - Speedometer
33	99541 02211	Ring O'
34	99586 10207	Oil Seal

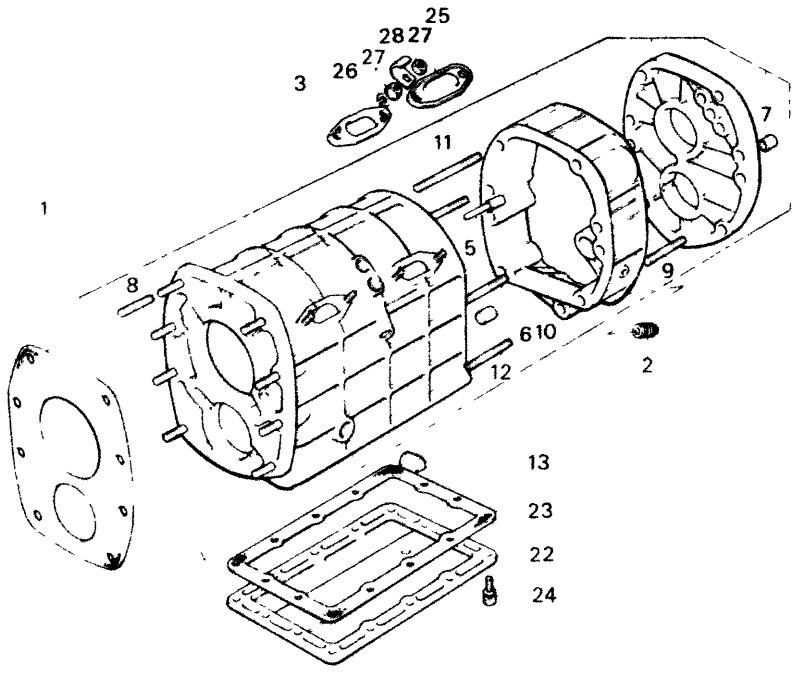

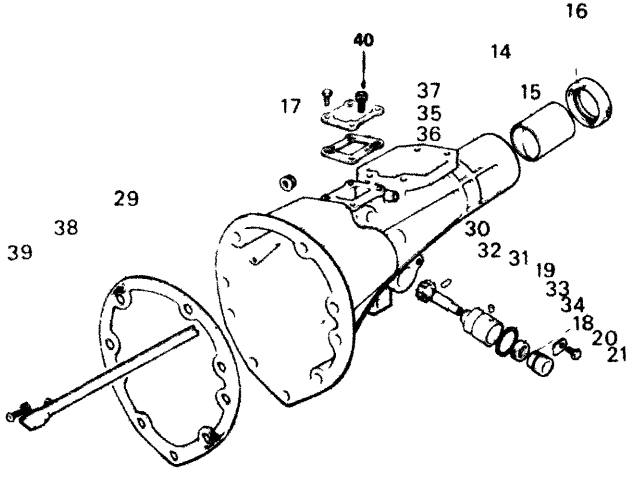

No.	Part Number	Description
35	0862 17 531A	Cover, Blind
36	0862 17 535	Gasket
37	99796 0608	Bolt, Blind Cover
38	0862 17 540B	Pass, Oil
39	99806 0612	Bolt Oil Pass
	99971 0600	Washer, Spring
40	0884 17 530	Breather, Air
	3778 89 175	Gasket Set T mission
	0839 17 111	Gasket Case Front
	0862 17 375	Gasket, Under Cover
	0810 17 385	Gasket, Blind Cover
	3778 17 393	Gasket Extension
	0303 17 474	Gasket, Control Case
	0271 17 478	Gasket, Control Case
	0862 17 535	Gasket Blind Cover
	99562 1400	Gasket, Spring Cap
	99564 0800	Gasket Gear Set
	99564 1000	Gasket, Spring Cap
	99564 1800	Gasket Magnet Plug

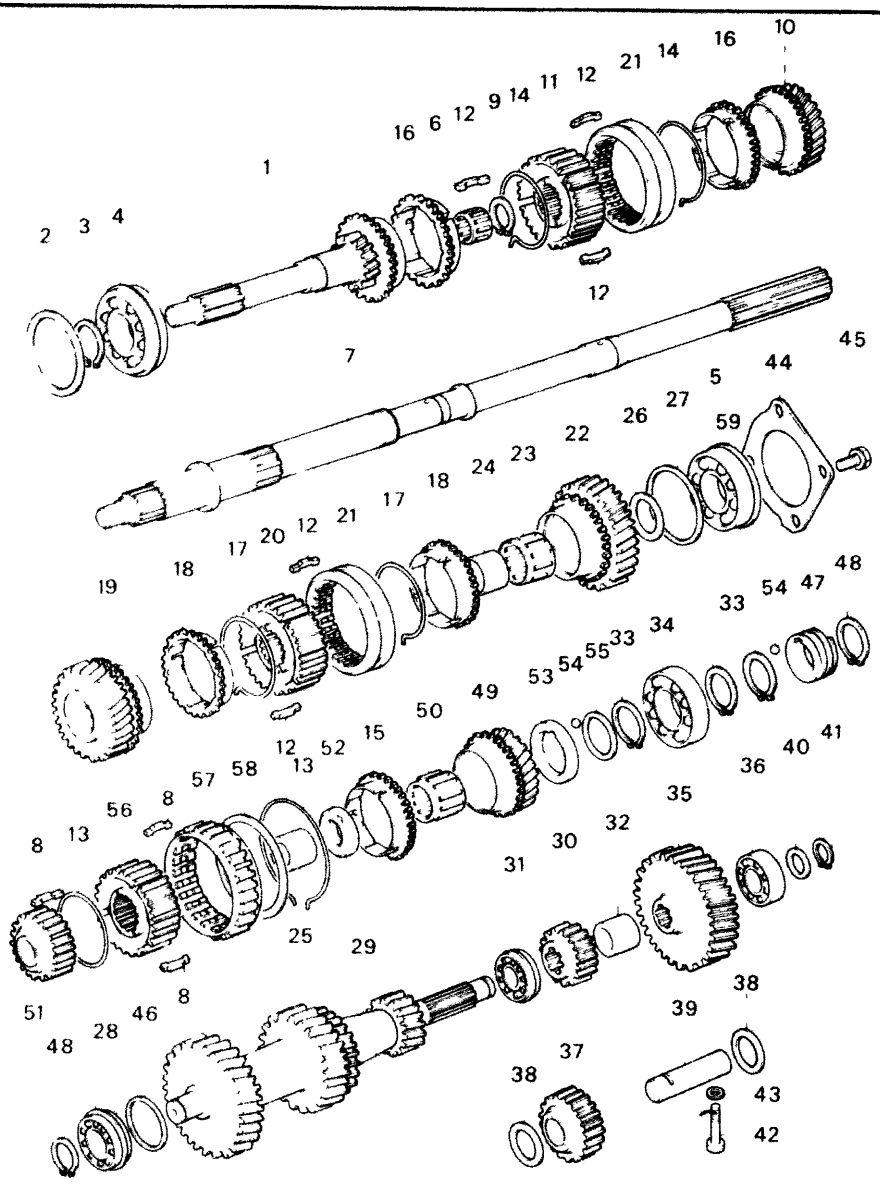

No.	Part Number	Description
1	1853 17 201	Gear Main Drive
2	99963 6910	Shim Adjust t 0 1
	99963 6930	Shim Adjust t 0 3
3	99573 3500	Ring Snap
4	99606 33070	Bearing Ball
5	0810 17 204	Bearing Ball Fig No 59 in
6	0810 17 205	Bearing Needle Roller
7	3648 17 221	Shaft Main
8	0187 17 243	Key Synchronizer
9	0317 17 225	Ring Snap
10	3778 17 231	Gear 3rd
11	1853 17 241	Hub Clutch 3rd & 4th
12	1853 17 243	Key Synchronizer
13	0103 17 244 A	Spring Synchronizer
14	1853 17 244	Spring Synchronizer
15	0862 17 245 A	Ring Synchronizer
16	1853 17 245	Ring Synchronizer
17	1853 17 264	Spring Synchronizer
18	1853 17 265	Ring Synchronizer
19	3778 17 251	Gear 2nd

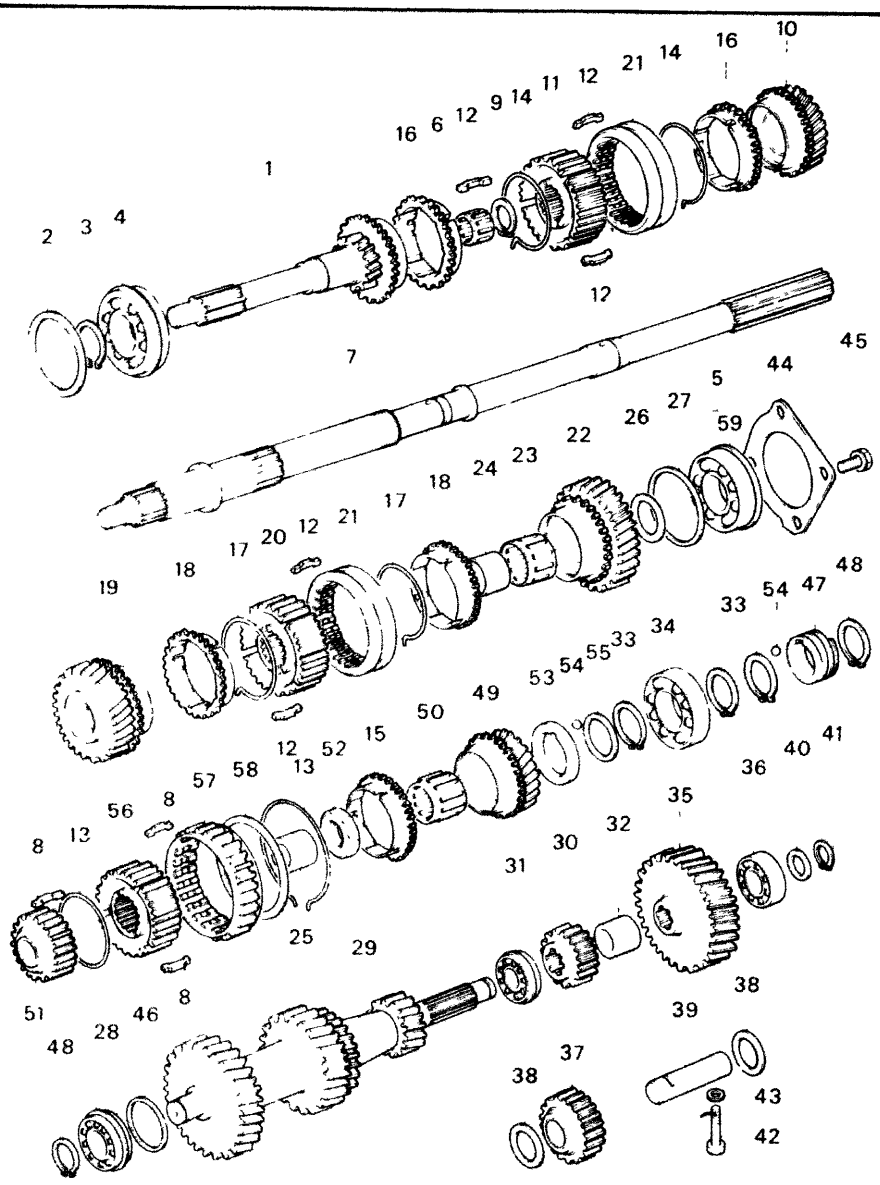

17 MANUAL T/MISSION (GEAR, 5 SPEED)

No.	Part Number	Description
20	1853 17 261A	Hub, Clutch (1st & 2nd)
21	1853 17 262	Sleeve, Clutch Hub
22	3778 17 271	Gear (1st)
23	0884 17 274	Bearing, Needle
24	0884 17 275A	Race, Inner
25	3648 17 275	Race Inner
26	0839 17 276	Washer, Thrust (L 2.5)
	0839 17 277	Washer, Thrust (L 3.0)
	0839 17 278	Washer, Thrust (L 3.5)
27	0839 17 287	Shim, Adjust (t 0.1)
	0839 17 288	Shim Adjust (t 0.3)
28	0821 17 297	Bearing, Ball
29	0862 17 301A	Gear Counter Shaft
30	3648 17 302	Gear Counter Reverse
•	0821 17 302	**Gear, Counter Reverse**
31	0821 17 303	Bearing, Needle
32	0884 17 304	Spacer
33	0839 17 305	Ring, Retaining
•	0839 17 305A	**Ring, Retaining**
34	99606 63050	Bearing, Ball
35	3648 17 308	Gear, Counter
36	99606 63440	Bearing, Ball

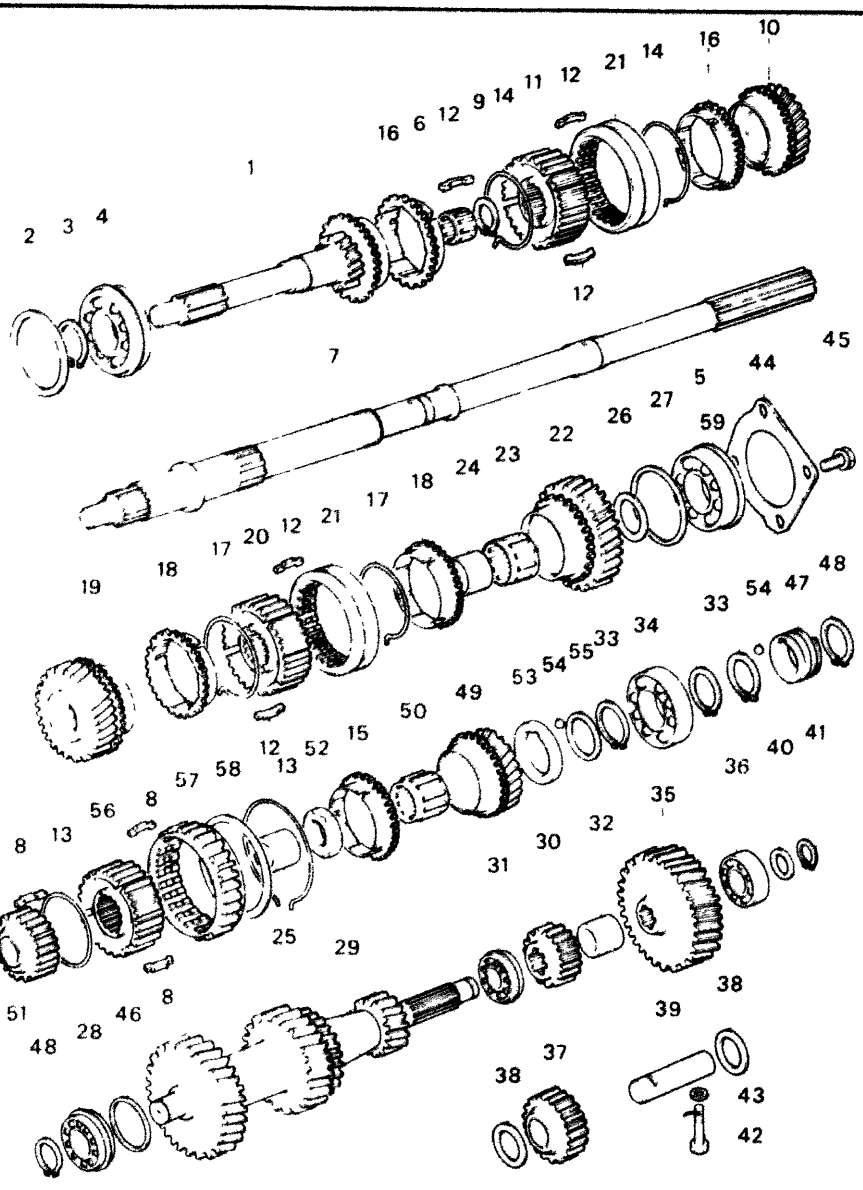

No.	Part Number	Description
37	3648 17 310	Gear, Reverse Idle
38	0821 17 313	Washer Thrust
39	0884 17 315	Shaft Reverse Idle Ge
40	0884 17 316A	Washer Adjust (t 2.00)
	0884 17 317A	Washer Adjust (t 2.15
	0884 17 318A	Washer Adjust t 2.30
41	99573 2200	Ring, Snap
42	4069 17 323	Bolt Set
43	99564 0800	Gasket Set Bolt
44	0884 17 325B	Stopper, Bearing
45	99781 0820	Bolt, Bearing Stopper
	99952 0800	Washer Plain
46	0305 17 327	Shim, Adjust (t 0.1)
	0305 17 328	Shim Adjust (t 0.3
47	0862 17 341	Gear Drive-Speedometer
48	99573 2500	Ring, Snap
49	3648 17 611	Gear Over Top
50	0884 17 612	Bearing, Needle
51	3648 17 281B	Gear, Reverse
•	3648 17 281C	Gear, Reverse
52	3648 17 629	Nut, Lock

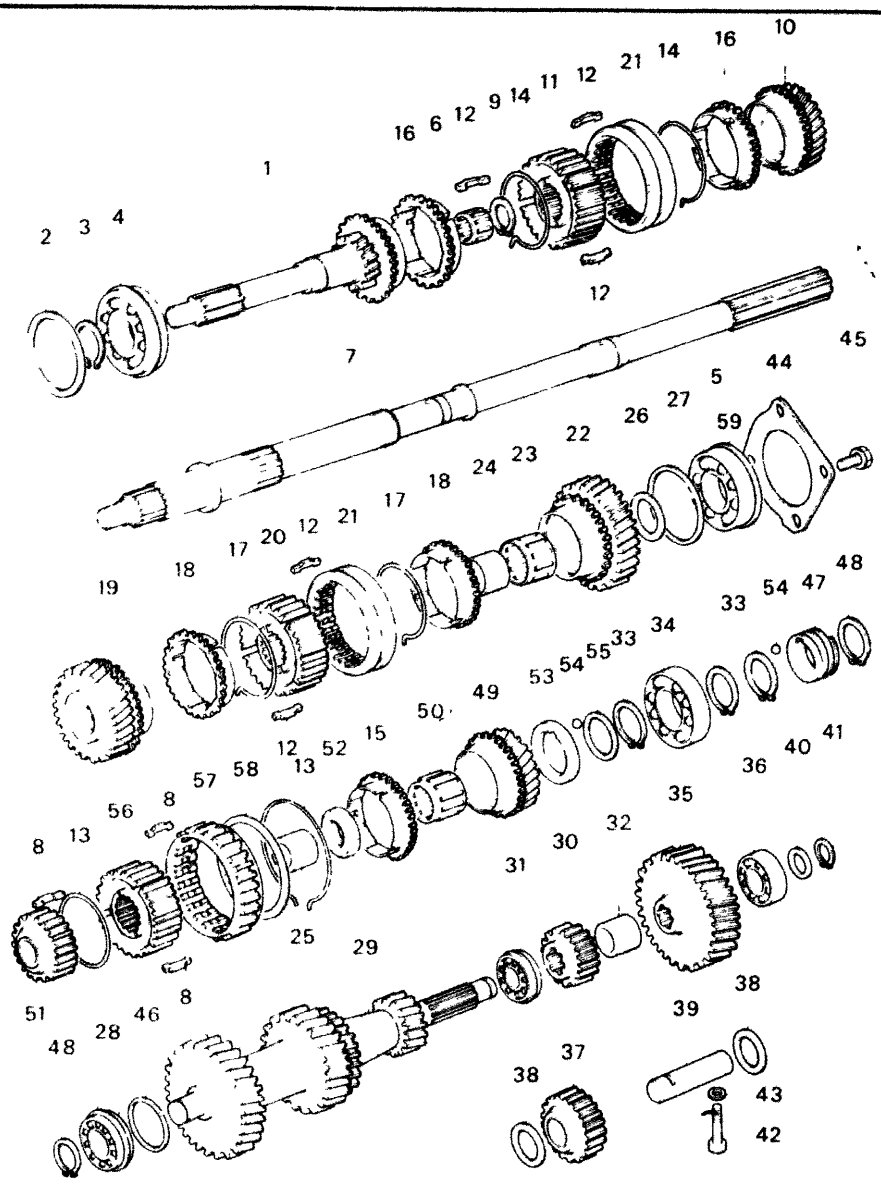

17 MANUAL T/MISSION
(GEAR, 5 SPEED)

No.	Part Number	Description
53	0884 17 633A	Washer Thrust Lock (t 6.4)
	0884 17 634A	Washer Thrust Lock (t 6.5)
	0884 17 635A	Washer Thrust Lock t 6.6
	0884 17 636A	Washer Thrust Lock t 6.7
54	99611 1500	Ball, Steel
55	0862 17 641	Washer, Adjust (t 1.9)
	0862 17 642	Washer Adjust (t 2.0)
	0862 17 643	Washer, Adjust (t 2.1)
	0862 17 644	Washer, Adjust (t 2.2)
56	3648 17 621	Hub, Clutch
57	3648 17 622A	Sleeve, Clutch Hub
58	3648 17 626	Ring, Retaining
59	0881 22 297	Clip, Ball Bearing (included in Fig M

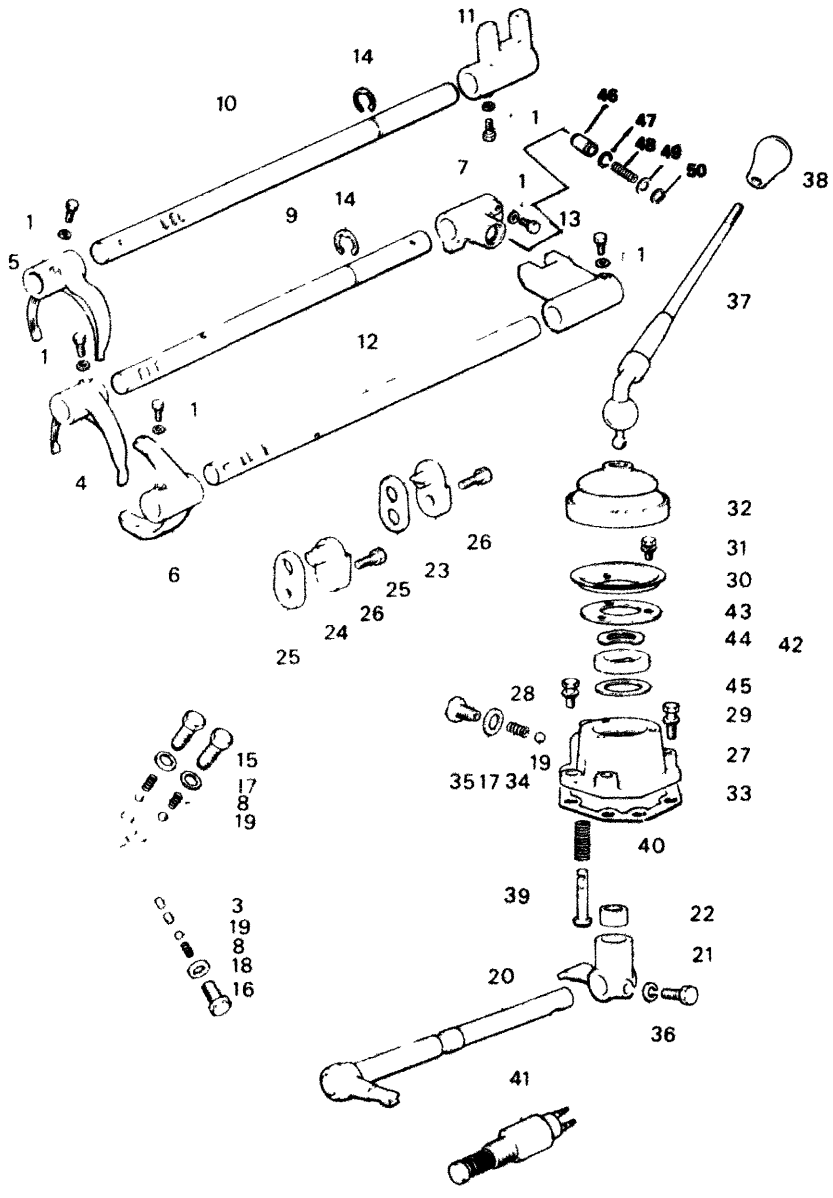

No.	Part Number	Description
1	0118 17 313	Screw Shift Fork & Ro
	99971 0601	Washer Spring
~~2~~	~~0111 17 329~~	~~Key, Control Lever~~
3	0114 17 351	Pin, Interlock
4	1853 17 402A	Fork, Shift (1st & 2nd
5	1853 17 404	Fork, Shift (3rd & 4th
6	3778 17 406	Fork, Shift (Over Top &
7	3648 17 410	Gate, Shift (1st & 2nd
8	0103 17 411	(Fig.No. 46,47,48,49,50 i Spring Cap
9	0498 17 411A	Rod, Shift (1st & 2nd)
10	0498 17 421B	Rod, Shift (3rd & 4th)
11	0498 17 422	Gate, Shift (3rd & 4th
12	3648 17 431	Rod, Shift (Over Top &
13	3648 17 432	Gate, Shift (Over Top &
14	0821 17 435	Ring, Snap
15	0221 17 441	Plug, Cap-Spring
16	0259 17 441	Plug Cap-Spring
17	99562 1400	Gasket, Cap Plug
18	99564 1000	Gasket, Cap Plug
19	99611 2500	Ball, Steel

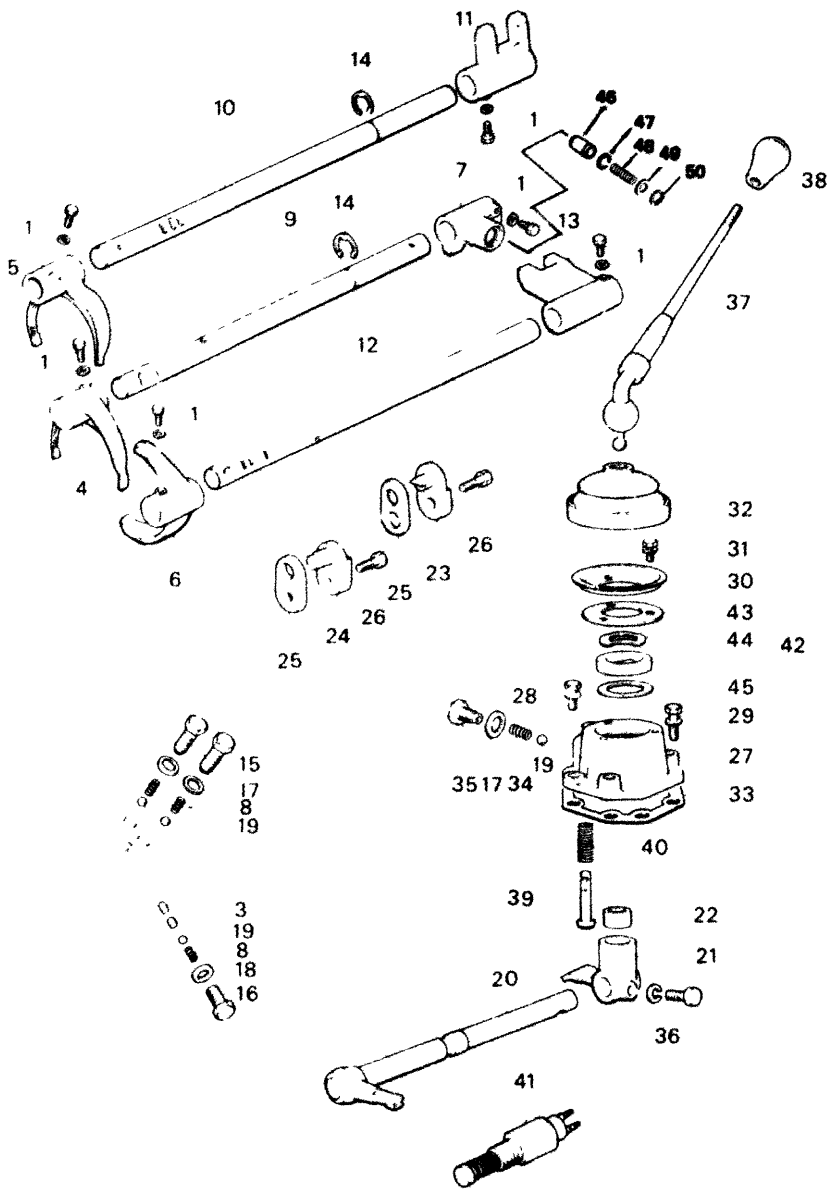

No.	Part Number	Description
20	3778 17 450A	Lever, Control
21	8601 17 461	End Control Rod
22	0398 17 462A	Seat Spring
23	3648 17 463	Pin Stopper
•	3648 17 463A	Pin, Stopper
24	3648 17 464	Pin Stopper
25	3648 17 465	Gasket, Stopper Pin
26	99796 0816	Bolt, Stopper Pin
27	0498 17 470	Case Change Control
28	99796 0822	Bolt Change Control Case
29	99796 0832	Bolt Change Control Case
30	0647 17 473	Plate Cover
31	99796 0612	Bolt, Cover Plate
32	0862 17 475	Boot, Dust
33	0271 17 478	Gasket Change Control Case
34	0824 17 483	Spring
35	0183 17 491	Plug, Cap-Spring
36	0118 17 313	Bolt, Reamer-Control Rod End
	99971 0601	Washer Spring
37	3794 17 510	Lever Change
38	1274 17 520	Knob Change Lever

MANUAL T/MISSI
(CHANGE CONTRO

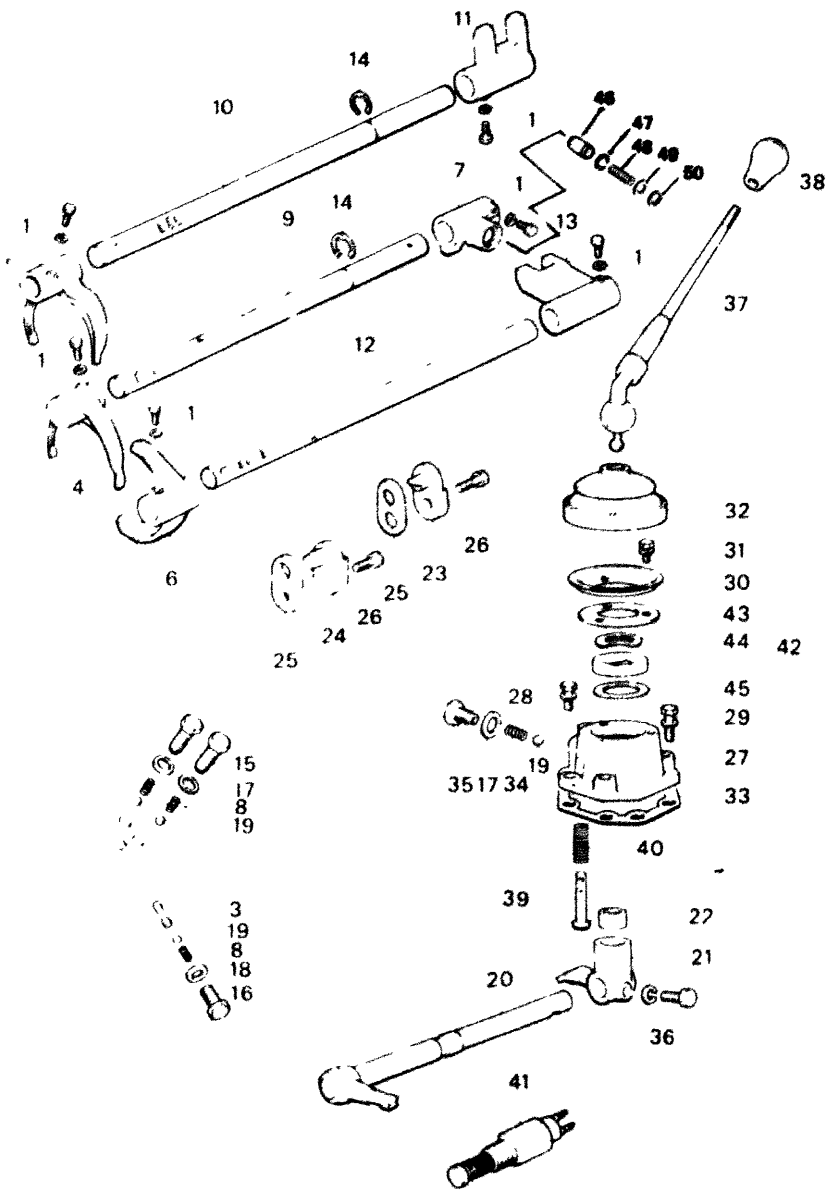

No.	Part Number	Description
39	3648 17 551A	Spindle Select Lock
40	0221 17 552	Spring Select Lock Spin
41	0821 17 505A	Switch Reverse Lamp
42	0305 99 178	Change Bush Set
43	0303 17 474	Gasket Cover Plate
44	0303 17 482	Washer Wave
45	99963 3310	Shim t 0 1 Selecti
	99963 3330	Shim t 0 3
46	3648 17 414	Pin, Bush
47	3648 17 415	Ring, Retaining
48	3648 17 416	Spring
49	99574 1300	Ring, Snap
50	99952 0412	Washer, Plain

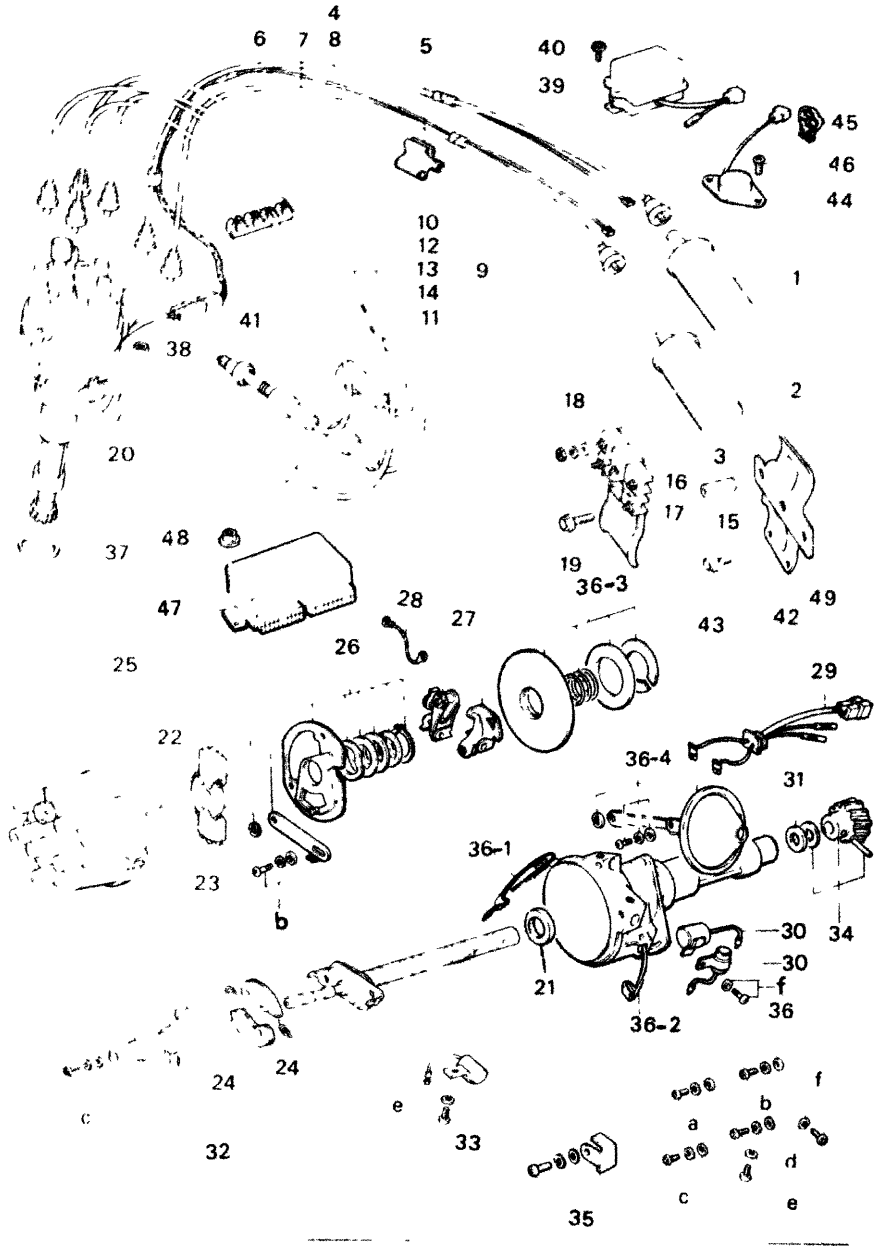

DISTR

No.	Part Number	Description
1	1562 18 100A	Coil Ignition
2	1672 18 100A	Coil Ignition HP 5 13
3	0823 18 107	Pipe
4	3790 18 110A	Cord High Tension
5	3648 18 111	Supporter High Tens
6	3790 18 115	Cord
7	1854 18 120	Cord High Tension
8	1854 18 160	Cord High Tension
9	1757 18 150D	Cord, High Tension
10	0820 18 114	Supporter High Tens
11	1757 18 130A	Cord High Tension
12	1757 18 140B	Cord High Tension
13	1757 18 170A	Cord High Tension
14	1757 18 180A	Cord, High Tension
15	3648 18 190	Bracket Ignition Coil

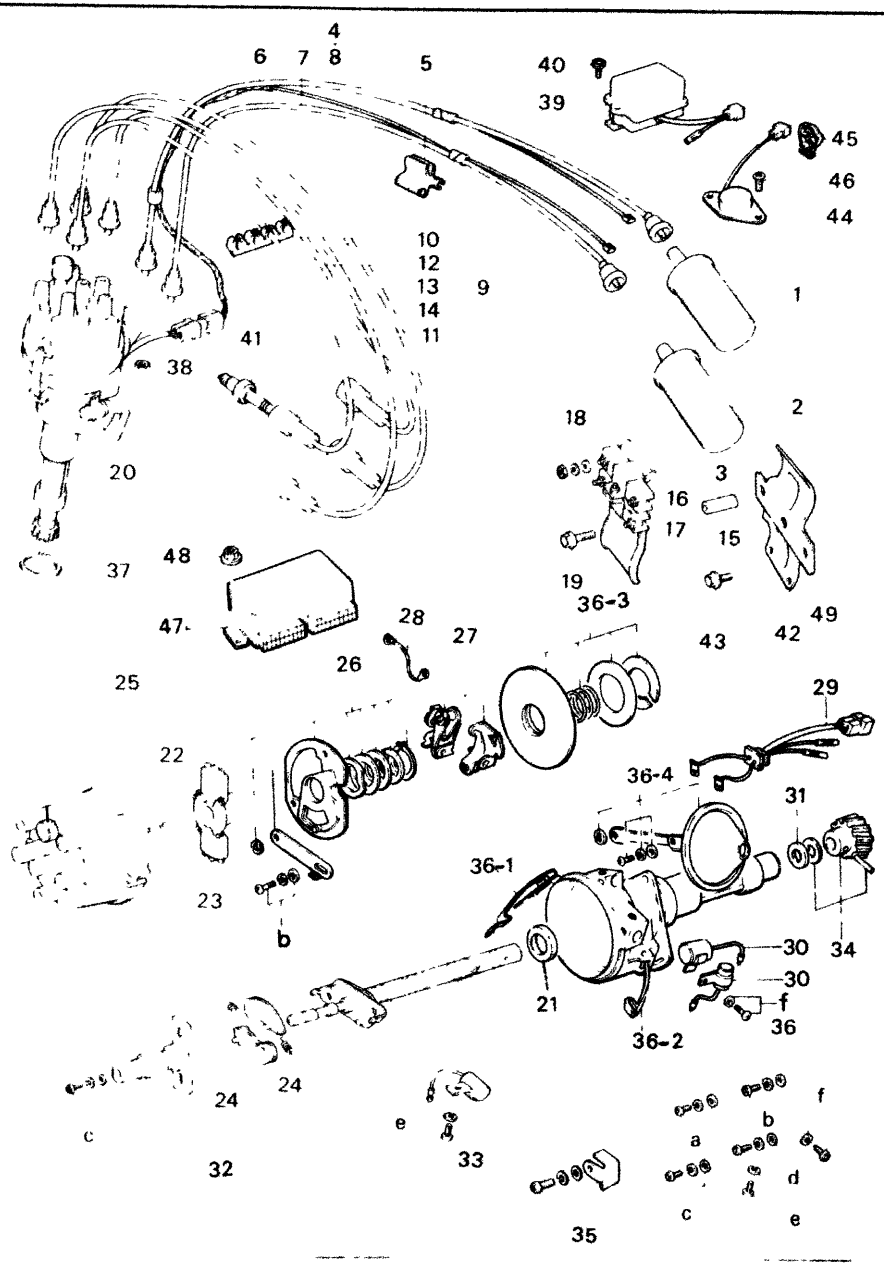

No.	Part Number	Description
•	~~18 0845 18 101~~	~~Resistor~~
•	16 0578 18 101	Resistor
	17 3648 18 101	Resistor
	18 99906 0500	Nut Ignition Coil & Resist
	99952 0500	Washer, Plain
	99971 0500	Washer Spring
	19 99786 0850	Screw Ignition Coil Brack
	20 3790 18 200	Distributor
	21 0107 18 216A	Oil Seal
	22 1757 24 302	Contact
	23 3648 24 303	Rotor
	24 8735 24 308	Spring Set
	25 1757 24 310	Cap
	26 8735 24 313	Base Breaker
	27 1757 24 314	Support, Arm
	28 1757 24 317	Wire (E), Lead
•	29 8735 24 319	Wire, Lead

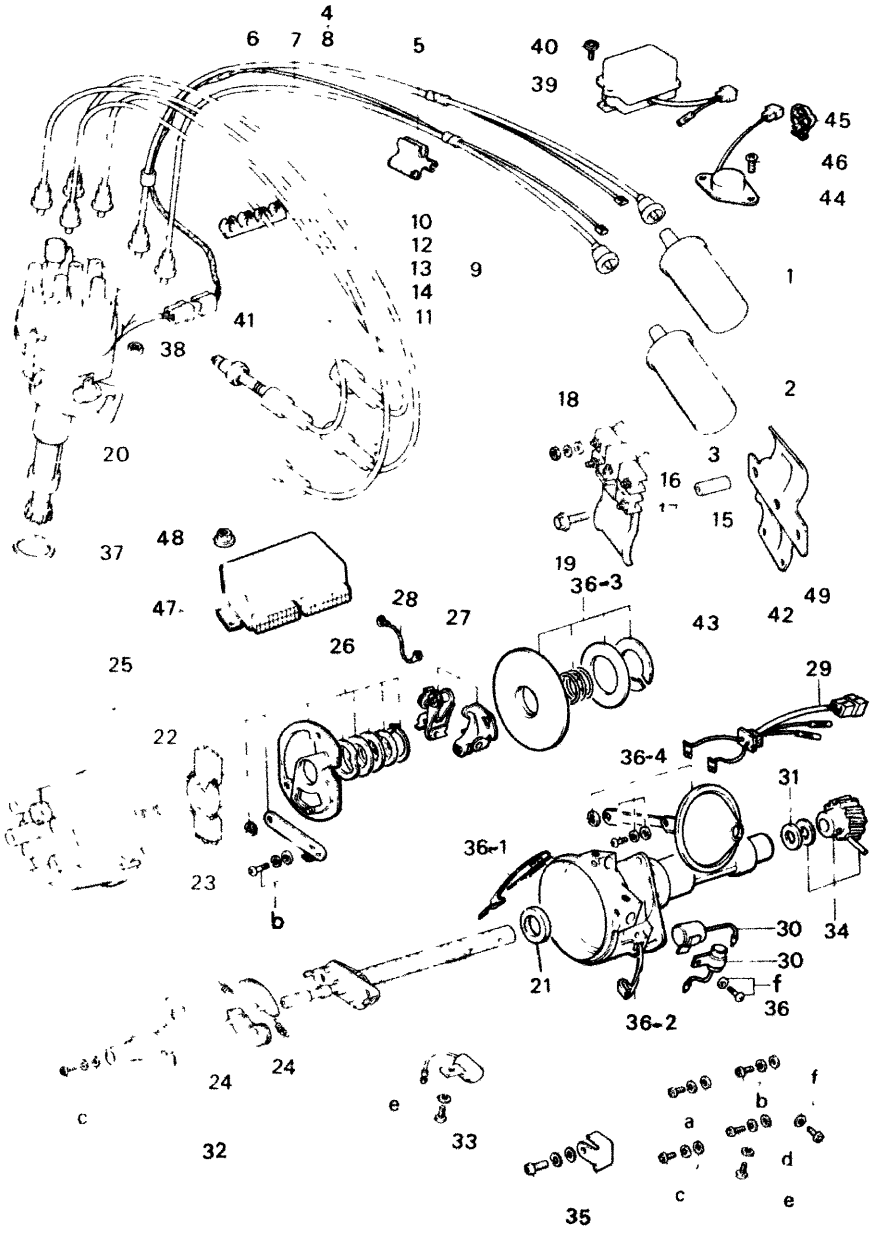

No.	Part Number	Description
30	1757 24 322	Condenser
~~31~~	~~1757 24 328~~	~~Gasket~~
32	8735 24 330	Governor Set
33	1757 24 334	Condenser
34	3648 24 340	Coupling Set
35	3775 24 350	Holder Set
36	8650 24 351	Screw Set
36-1	3648 24 304	Clamp
36-2	3648 24 305	Clamp
36-3	3648 24 323	Base Assy, Breaker
36-4	3790 24 351	Vacuum Set
37	99541 0350	Ring, "O" - Distributor
38	99940 0603	Nut Distributor
39	0453 18 391	Regulator
40	99786 0612	Bolt
	99971 0600	Washer Spring
41	3743 18 600	Plug Spark NGK MAKE (B
42	3648 18 810	Bracket, Ignition Coil
43	99786 0612	Screw Bracket
44	1259 18 890	Switch, Thermo
45	1011 67 911	Clip

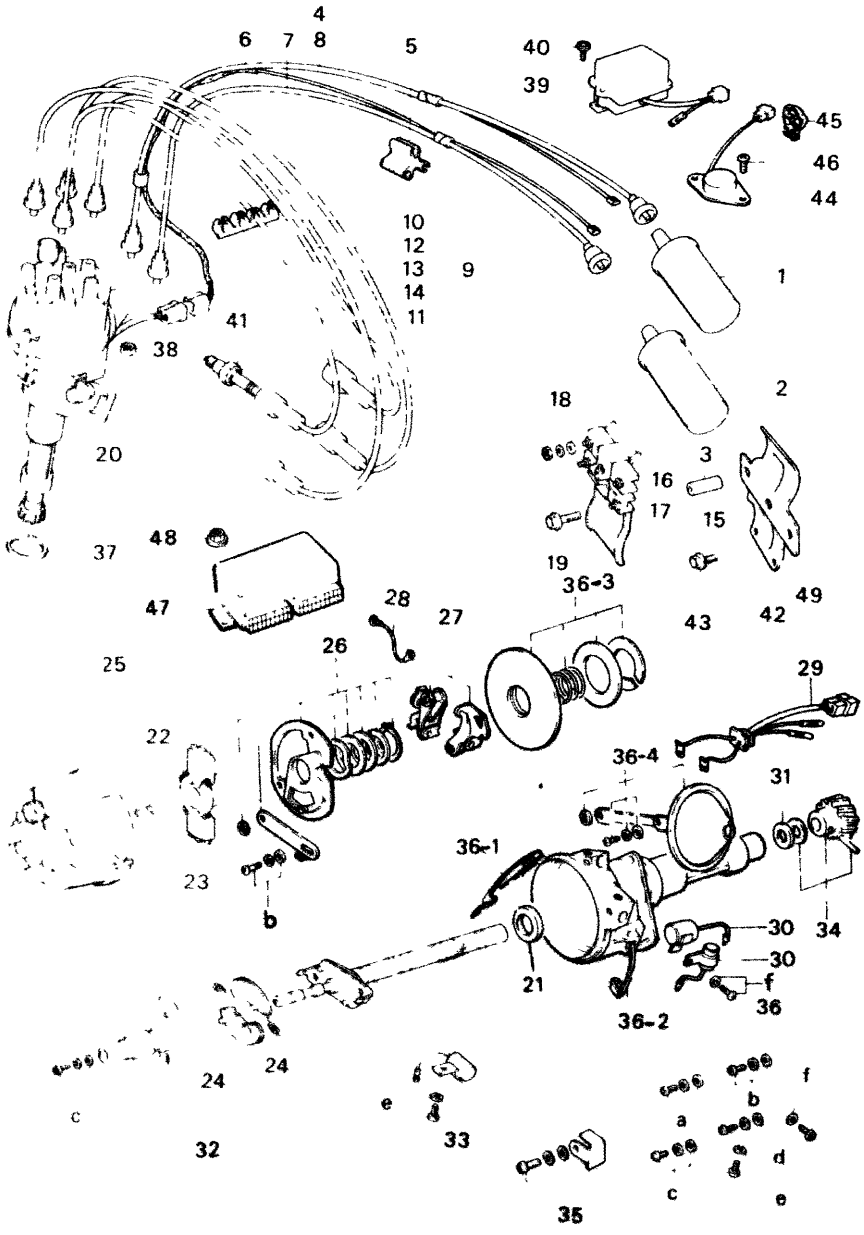

No.	Part Number	Description
46	99865 0510	Screw
47	8712 18 940B	Control Unit (Fed.)
	8735 18 940A	Control Unit (Calif Manu
	8736 18 940A	Control Unit (Calif Autor
48	99940 0600	Nut, Control Unit
~~49~~	~~1011 72 616~~	~~Spring, Rubber~~

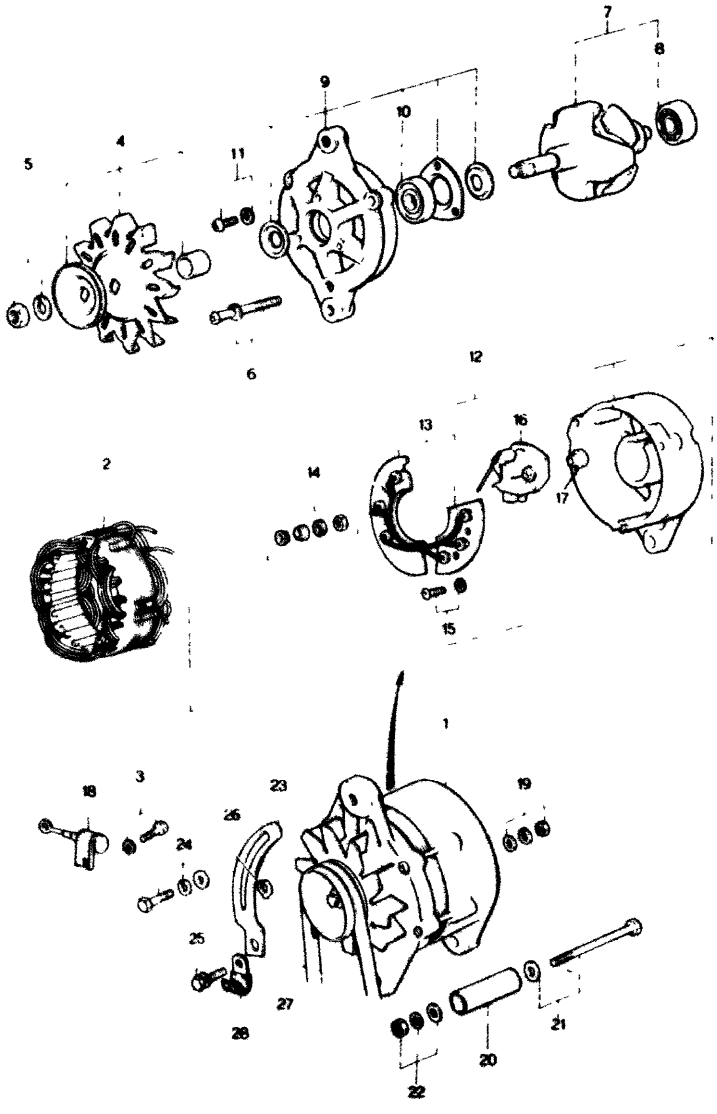

No.	Part Number	Description
1	1011 18 300	Alternator
2	1011 24 501	Stator
3	1011 24 527	Screw
4	0866 24 530	Pulley
5	0866 24 533	Nut Set
6	0866 24 535	Screw Set
7	0866 24 540A	Rotor (Fig. No. 8 included)
8	0820 24 503	Bearing
9	0866 24 550	Bracket, Front (Fig. No. 10 & 11 included)
10	0208 24 514	Bearing
11	0866 24 526	Screw
12	1011 24 560	Bracket, Rear (Fig. No. 13 ~ 17 included)
13	1011 24 510	Rectifier Ass'y
14	1011 24 533	Nut Set
15	1011 24 534	Screw
16	1011 24 541	Holder, Brush
17	1011 24 563	Mould
18	8028 24 581	Condenser
19	99906 0500	Nut, Alternator Terminal

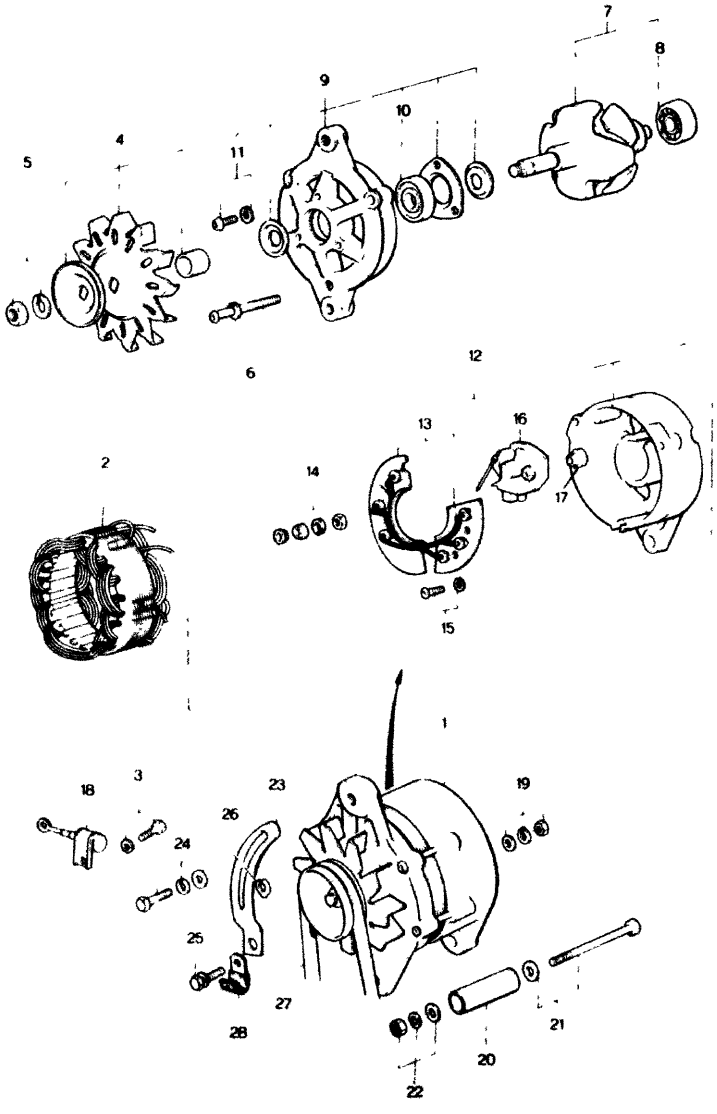

18 24 ALTERNATOR

No.	Part Number	Description	
	99952 0500	Washer, Plain	
	99971 0500	Washer, Spring	
20	1757 18 311	Bracket, Alternator	
21	99800 10115	Bolt, Alternator	
22	99940 1001	Nut, Alternator	
23	1881 18 361A	Strap, Alternator	
24	99796 0825	Bolt, Strap	
25	99796 0820	Bolt, Strap	
	99952 0822	Washer, Plain	
26	0222 18 375	Shim (t = 0.3)	Selective use
	0222 18 376	Shim (t = 0.5)	
	0222 18 377	Shim (t = 0.7)	
27	1672 18 381A	Belt, "V"	
28	99276 2008	Clip, Wire Harness	

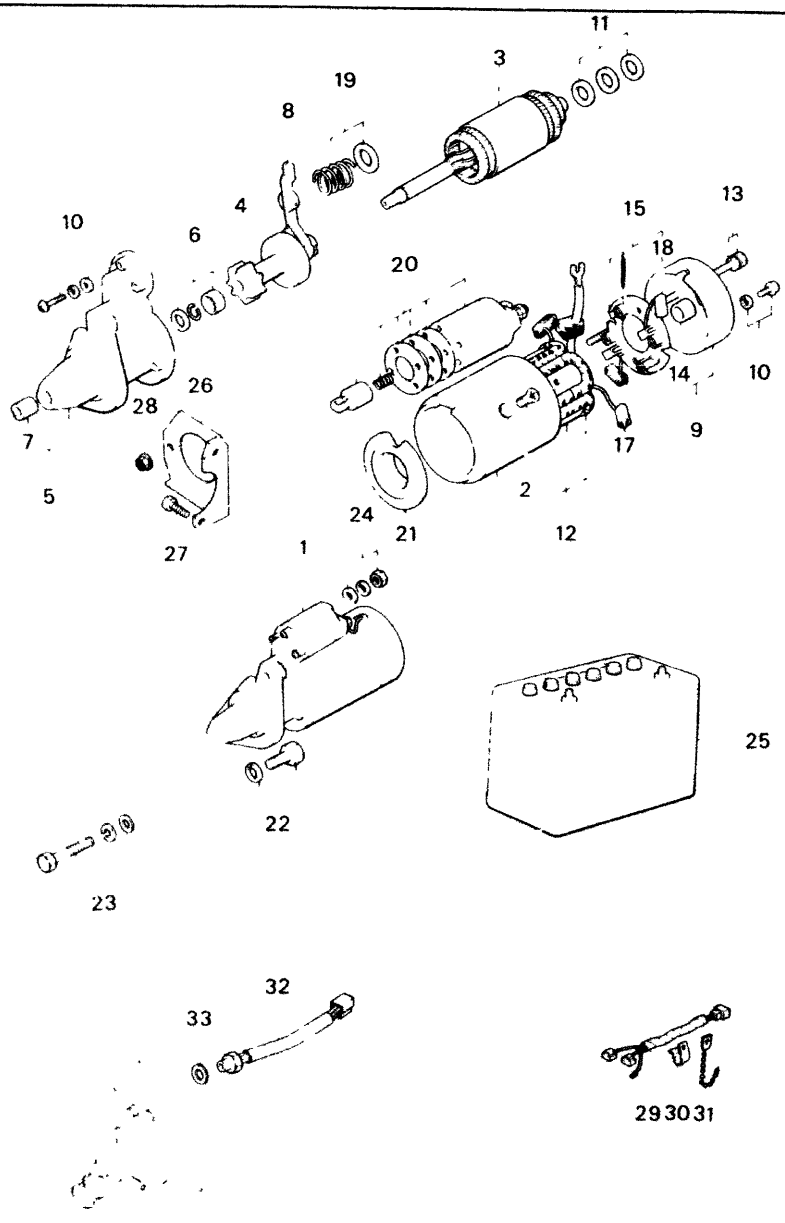

STARTER & BA

No.	Part Number	Description
1	1757 18 400C	Starter (Manual)
•	1757 18 400D	**Starter (Manual)**
	1758 18 400C	Starter (Automatic)
2	0866 24 704	Screw (Automatic)
3	3648 24 705	Armature (Manual)
	1758 24 705	Armature (Automatic
4	1757 24 709	Clutch, Over Running
	3648 24 709	Clutch Over Running
5	1757 24 710B	Bracket, Front (Man
•	1757 24 710C	**Bracket, Front (Manu**
	1758 24 710A	Bracket, Front (Auto
6	0426 24 712	Stopper Set, Piston
7	0426 24 715A	Sleeve
8	0866 24 716	Lever (Automatic)
	0222 24 730	**Lever (Manual)**
9	0845 24 720	Bracket, Rear (Auton
	0222 24 740	**Bracket, Rear (Manua**
10	0426 24 725	Screw Set
11	0426 24 726	Washer Set (Manual)
	1758 24 726	Washer Set (Automa
12	1757 24 730A	Yoke (Manual)
	1758 24 730B	Yoke (Automatic)
13	0426 24 731	Bolt Set (Manual)
	1758 24 731A	Bolt Set (Automatic)

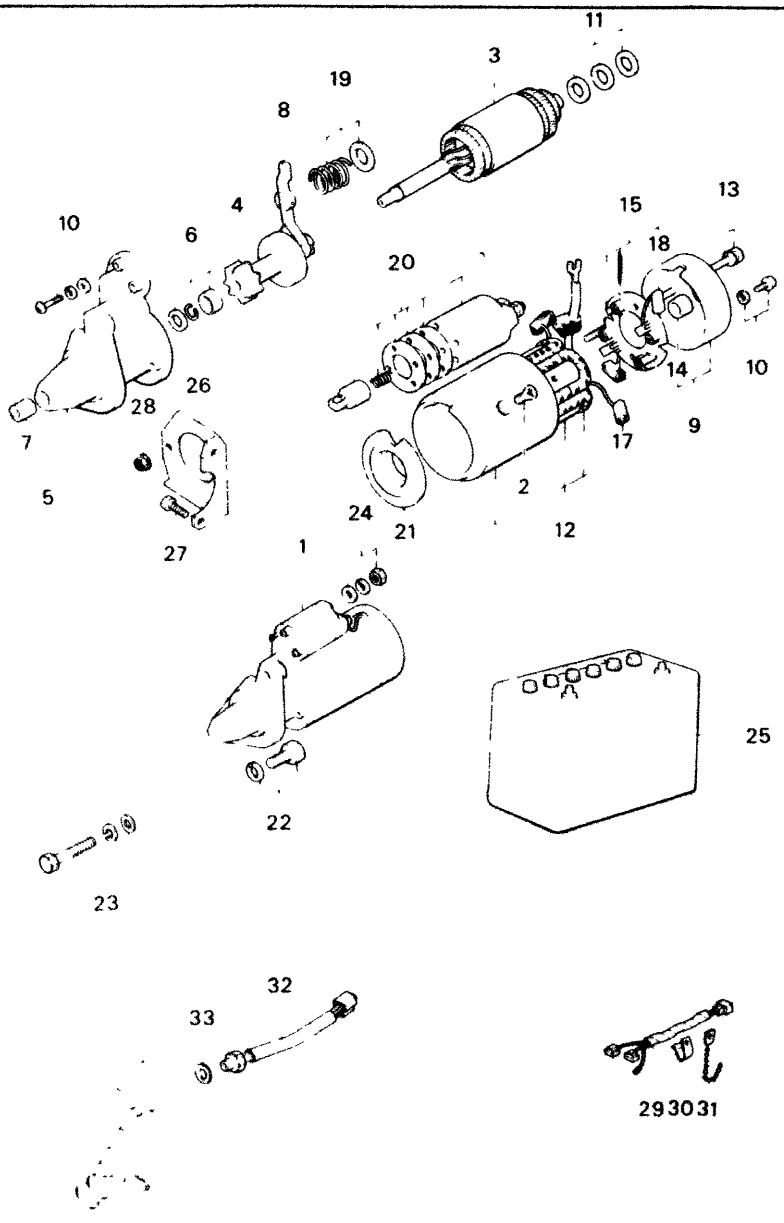

No.	Part Number	Description
14	0222 24 741	Sleeve
15	1758 24 750	Holder
~~16~~	~~0222 24 752 A~~	~~Spring, Brush (Manual)~~
17	0222 24 753	Brush (Manual)
18	0426 24 753	Brush (Automatic)
19	0426 24 754	Spring Set
20	1757 24 760	Switch Starter (Manual)
	1758 24 736	Switch Starter (Automatic
21	1758 24 706	Bracket, Center (Automati
22	99801 1032	Bolt, Starter
23	99803 10120	Bolt, Starter Manual
	99801 1075	Bolt, Starter (Automatic
	99953 1000	Washer, Plain
	99971 1000	Washer, Spring
24	99901 0800	Nut, Starter Terminal
	99952 0800	Washer, Plain
	99971 0800	Washer, Spring
~~25~~	~~1620 18 520~~	~~Battery (N70Z) (G.S. Make) Selective us~~

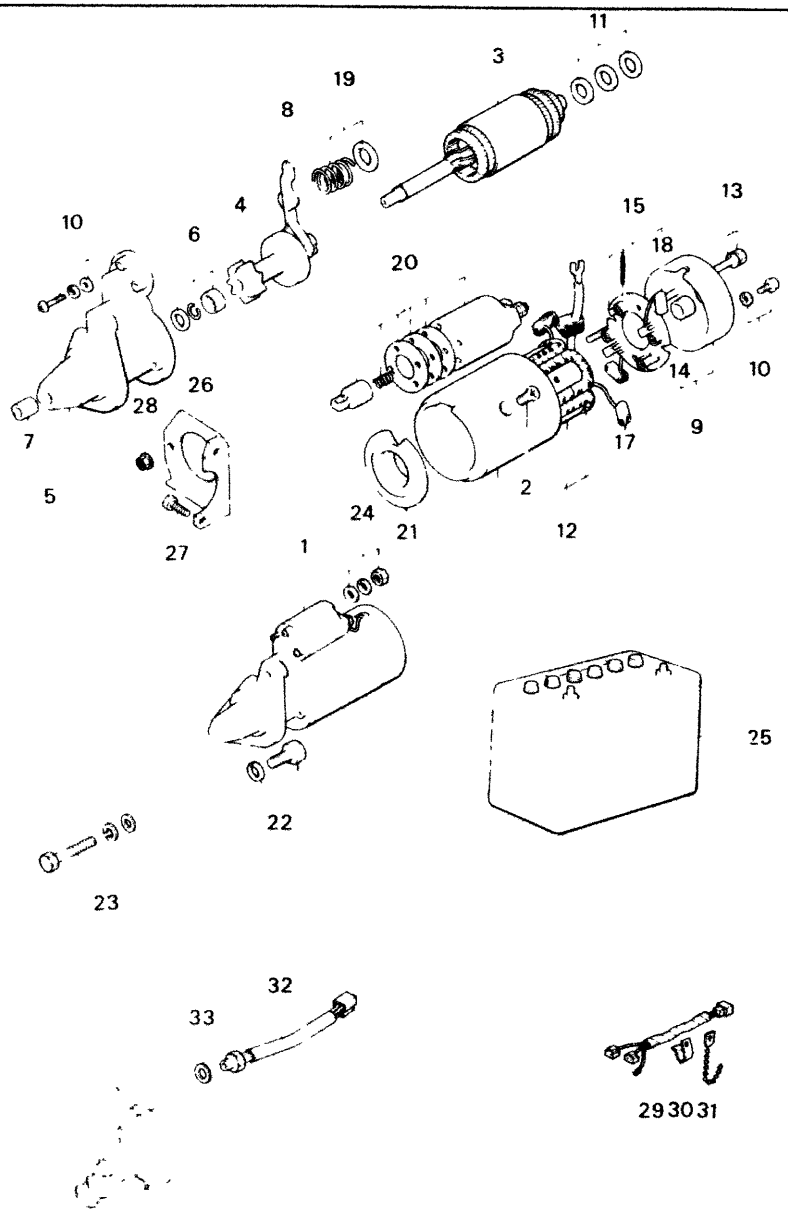

STARTER & BA

No.	Part Number	Description	
	8715 18 520	Battery (NS70S)	(Fed.
	0504 18 520B	Battery (G60) (Except Fed.	
26	1758 18 401A	Stay, Starter	(Automati
27	99796 0610	Bolt, Stay	
28	99940 0602	Nut	
29	3648 18 860	Wiring, Valve	
30	3648 18 861A	Clip, Valve Wiring	
31	99709 0108	Band, Valve Wiring	
32	1881 18 880A	Switch, Temperature	
33	99564 1600	Gasket	

AUTOMATIC T / MISSION (CONVERTER, OIL PUMP & PIPING)

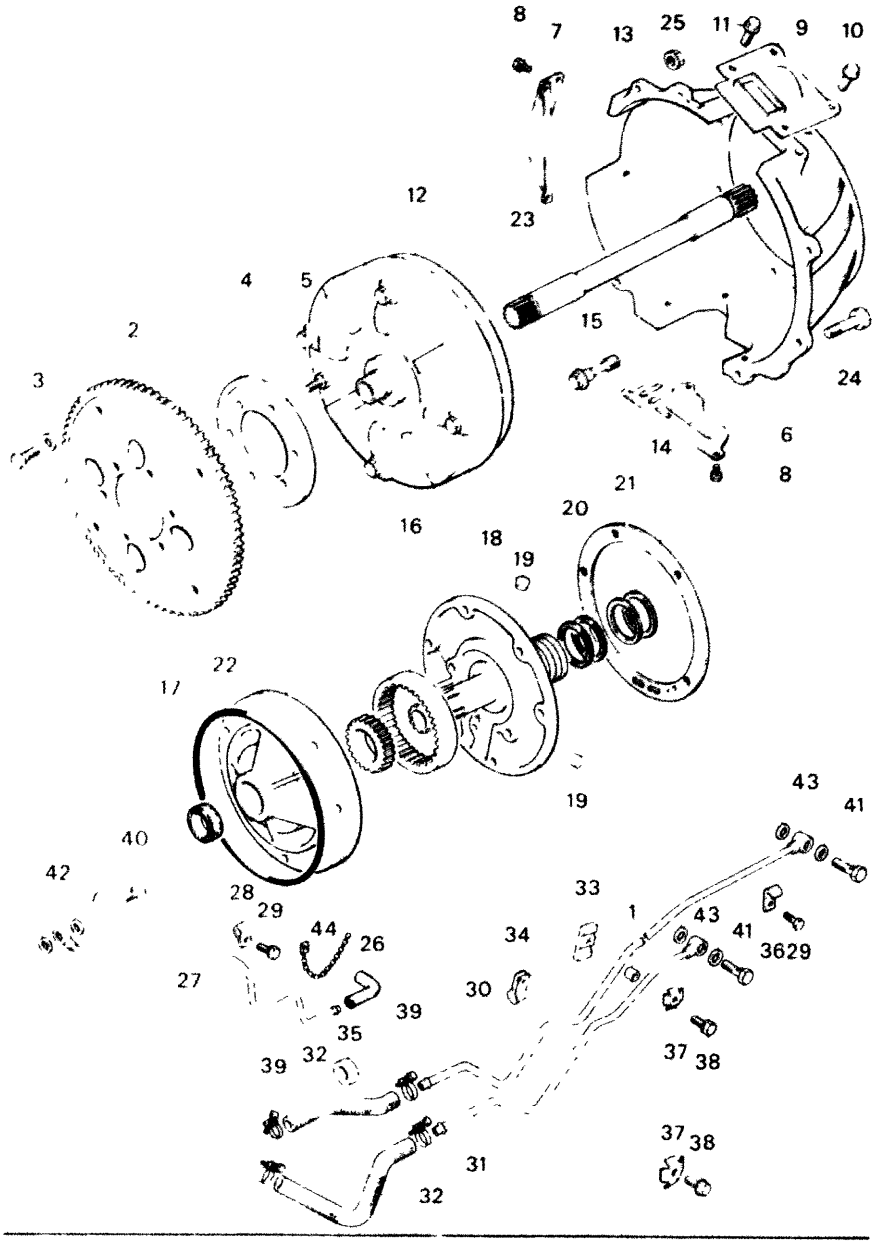

AUTOMATIC T / MISS (CONVERTER, OIL PU

No.	Part Number	Descript
1	2850 13 331	Spacer Oil Pipe
2	1758 19 020	Plate, Drive
3	3649 19 064	Bolt, Drive Plate
4	0842 19 025	Plate Backing
5	99784 1016	Bolt Backing Plate
6	1908 19 027	Cover Under
7	0454 19 028A	Cover Side
8	99796 0610	Bolt Under & Side Co
9	1758 19 028	Cover Top
10	99796 0610	Bolt Top Cover
11	99796 0816	Bolt Top Cover
12	8501 19 100	Converter Torque
13	1758 19 211B	Housing, Converter
14	1758 19 215	Gasket, Oil Pump
15	0338 19 216	Bolt, Housing
16	1758 19 220	Pump, Oil
17	0338 19 223	Oil Seal
18	1758 19 240	Cover

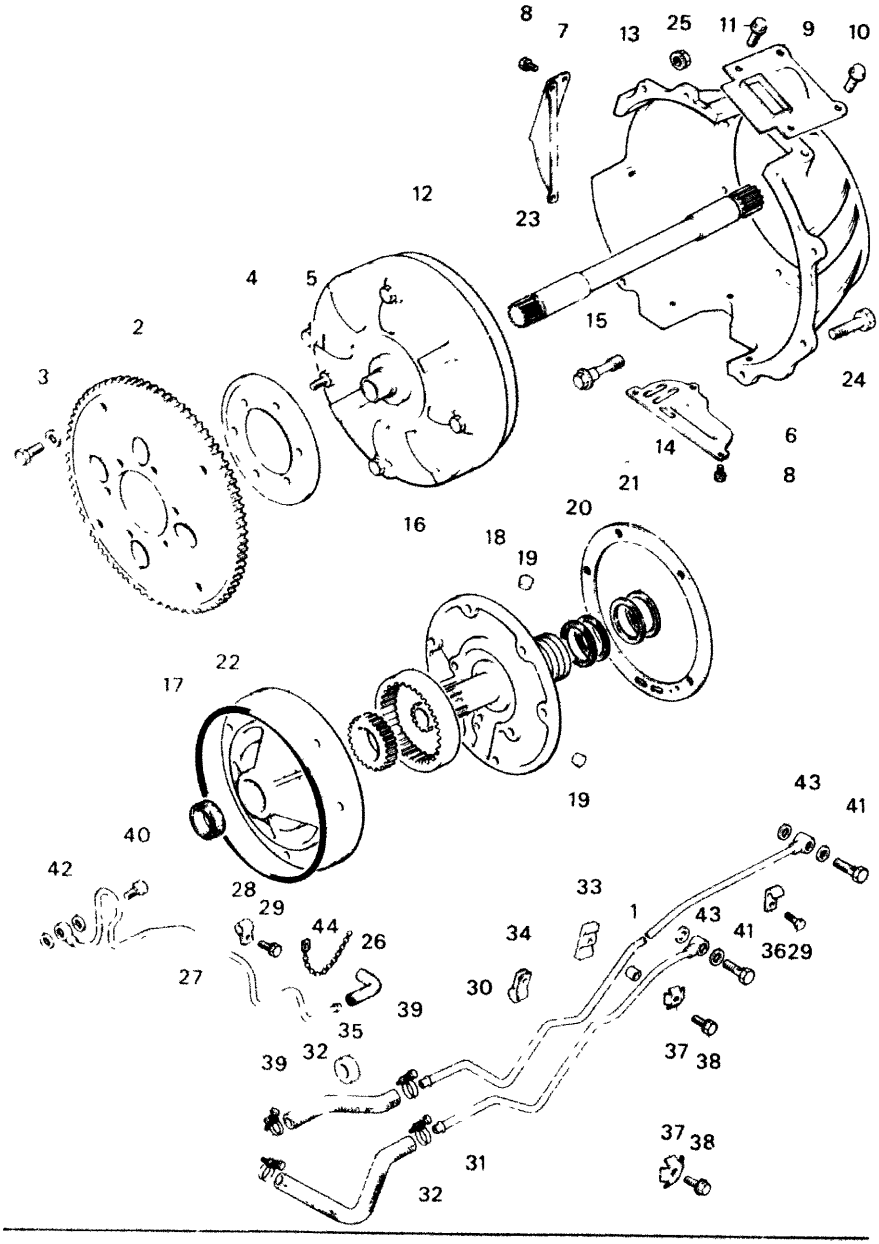

No.	Part Number	Description
19	0338 19 245A	Ball
20	0338 19 256	Ring, Seal
21	0338 19 257	Ring, Seal
22	0338 19 258	Seal, Lathe Cut Ring
23	0338 19 678	Shaft, Input
24	99796 1035	Bolt Housing
	99796 1050	Bolt
	99796 1045	Bolt
25	99940 1001	Nut, Housing
26	0338 19 904A	Hose, Vacuum (Rr)
27	0808 19 910	Pipe, Vacuum
28	0842 19 915A	Clip, Vacuum Pipe
29	99796 0610	Bolt, Clip
30	1053 19 920B	Pipe, Oil
31	1053 19 930B	Pipe, Oil
32	1015 19 934C	Hose, Oil
33	1015 19 945A	Plate, Spacer
34	2579 19 989	Clip Pipe
35	1098 19 939	Guide, Oil Hose

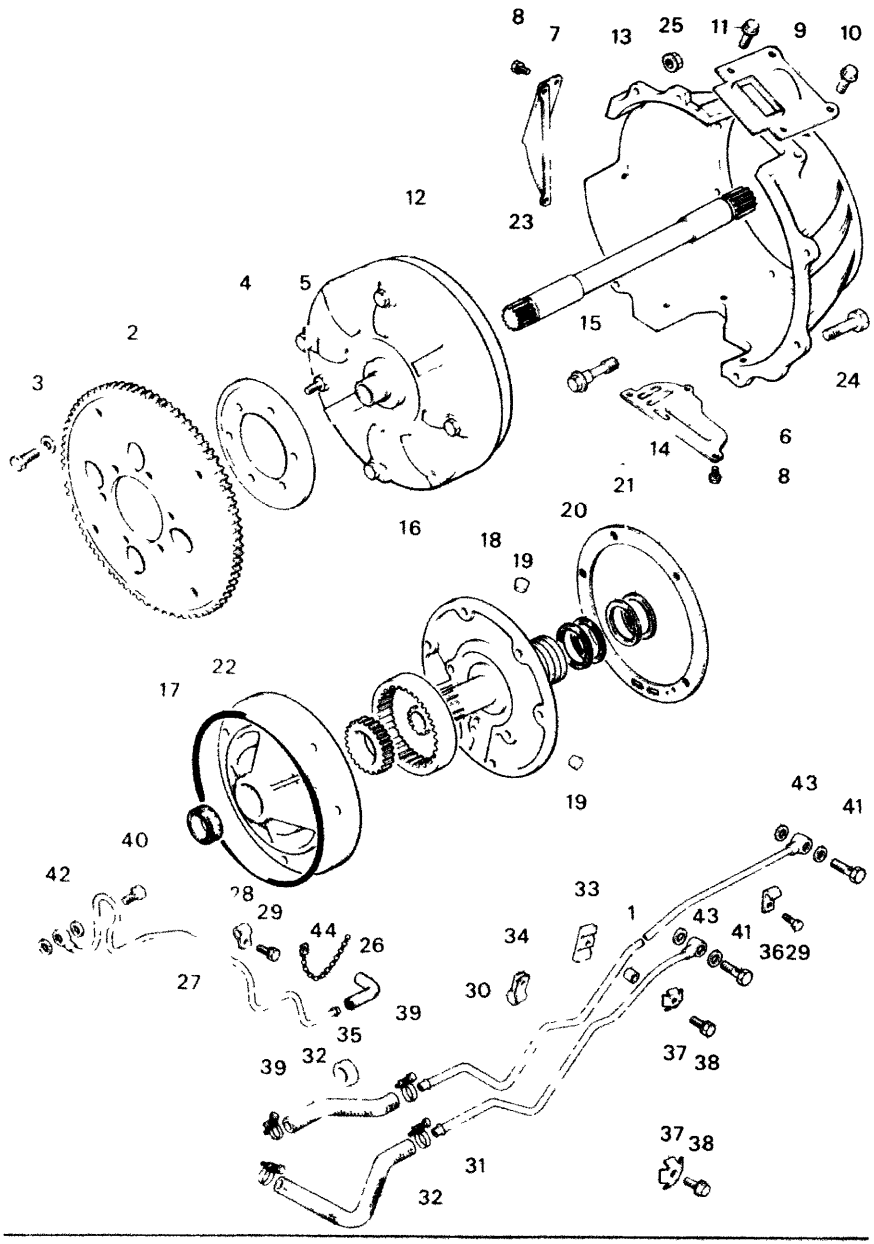

No.	Part Number	Description
36	99276 1C06	Clip, Pipe
37	0866 45 903A	Clip Pipe
38	99796 0620	Bolt, Clip
39	99282 1700	Band Hose
40	99381 0600	Bolt, Connector - Vacuum
41	99381 0800	Bolt Connector - Oil Pipe
42	99564 1000	Gasket, Connector Bolt
43	99564 1200	Gasket Connector Bolt
44	99709 0108	Band Oil Pipe
	3649 19 090A	T mission Cpt

AUTOMATIC T/MISSION (CASE & MAIN CONTROL)

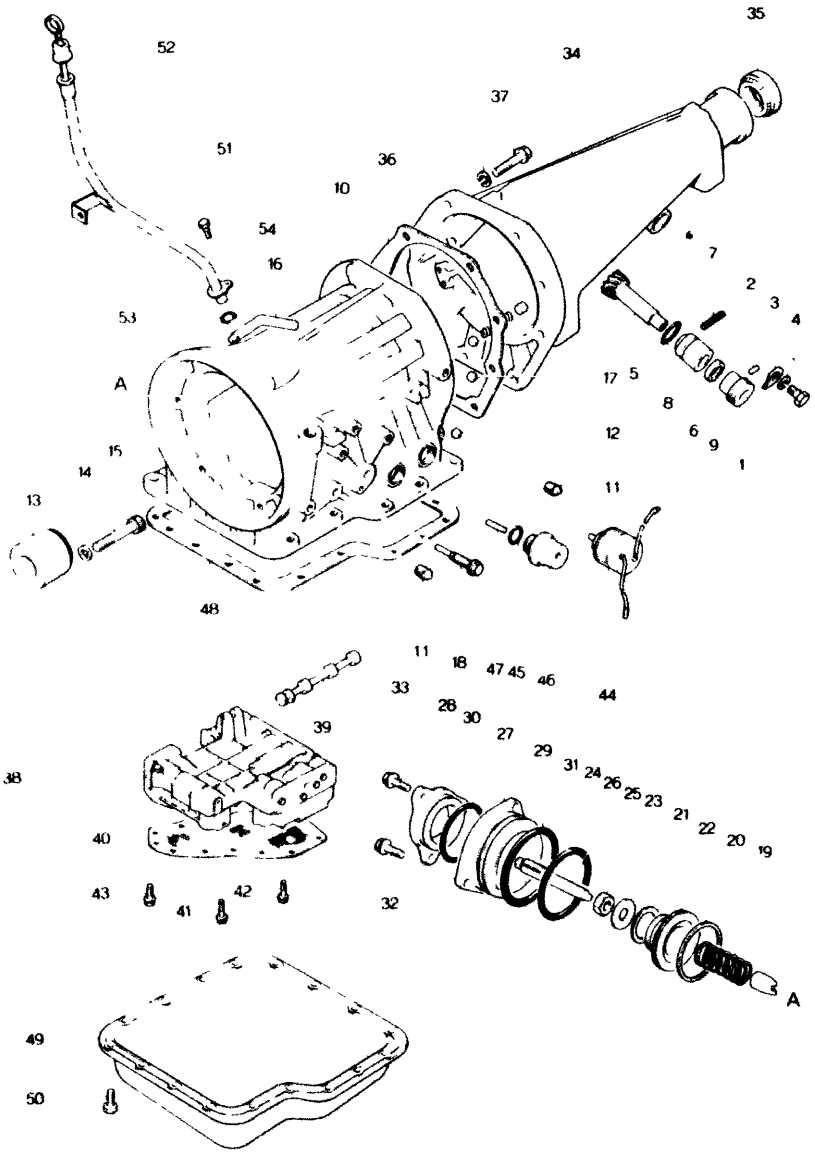

No.	Part Number	Description
1	0862 17 351	Joint Cable-Speedometer
2	0187 17 352	Pin, Dowel-Driven Gear
3	0111 17 354	Plate Lock-Cable Joint
4	99796 0612	Bolt Lock Plate
5	3790 17 441	Gear Driven-Speedometer
6	0862 17 442	Sleeve Speedometer Dri
7	99222 0216	Pin Spring
8	99541 02211	Ring "O"-Driven Gear
9	99586 10207	Oil Seal Driven Gear
10	1181 19 310B	Case T mission
11	0338 19 331A	Plug Square Head
12	99611 1750	Ball Steel
13	0338 19 336	Race Inner
14	0338 19 337	Washer Plain
15	0338 19 338	Bolt
16	0378 19 344	Breather Air
17	99611 2000	Ball Steel
18	1758 19 341	Bolt Anchor End

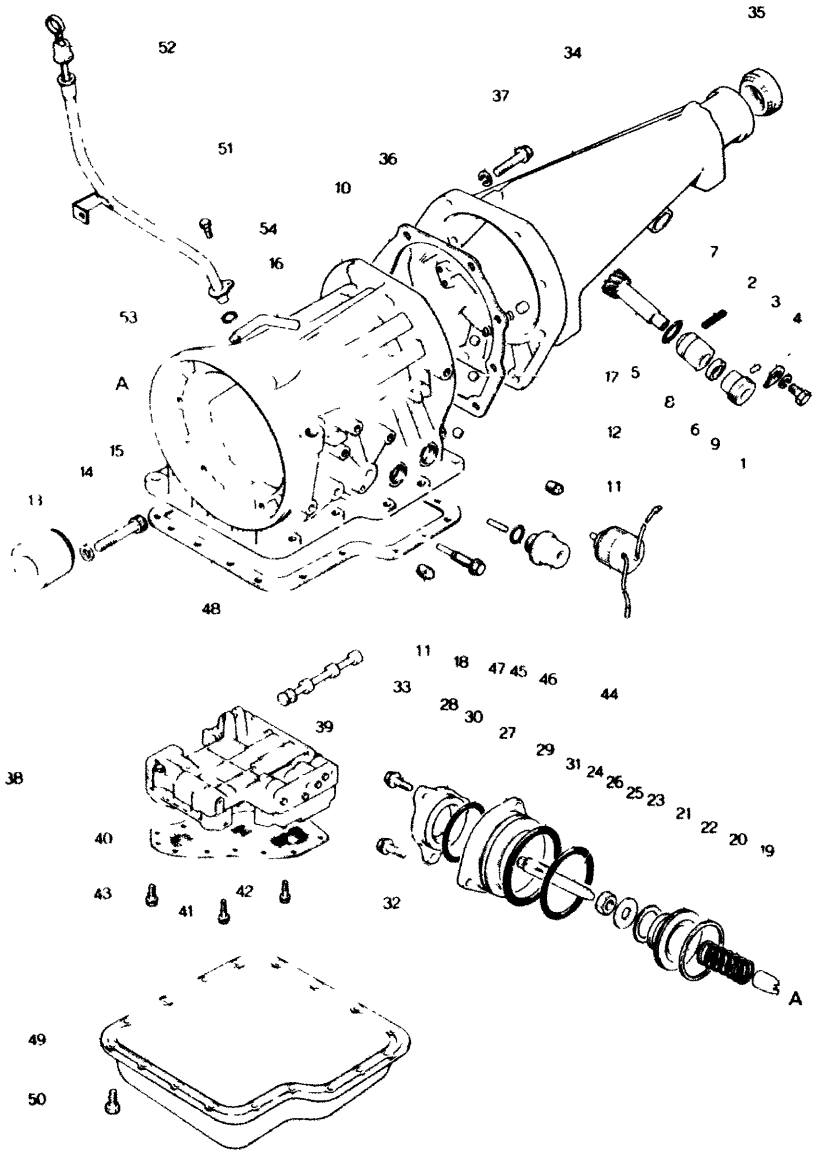

No.	Part Number	Description
19	0338 19 361	Strut, Band
20	0338 19 363	Spring, Return-Piston
21	0842 19 381	Piston, Band Servo
22	0338 19 384	Seal, Piston
23	0842 19 385	Seal, Piston
24	1758 19 386	Stem, Piston
25	0338 19 388A	Washer, Plain
26	0338 19 389	Nut, Band Adjust
27	1758 19 391A	Retainer, Servo
28	1758 19 392A	Cover, Servo
29	0842 19 394	Seal, Lathe Cut Ring
30	1758 19 394A	Ring, "O"
31	0338 19 395	Seal, "O" Ring
32	0338 19 397	Bolt
33	1758 19 397	Bolt, Servo
34	1840 19 710	Housing, Extension
35	0437 17 335	Oil Seal
36	0338 19 735	Gasket, Extension Housing

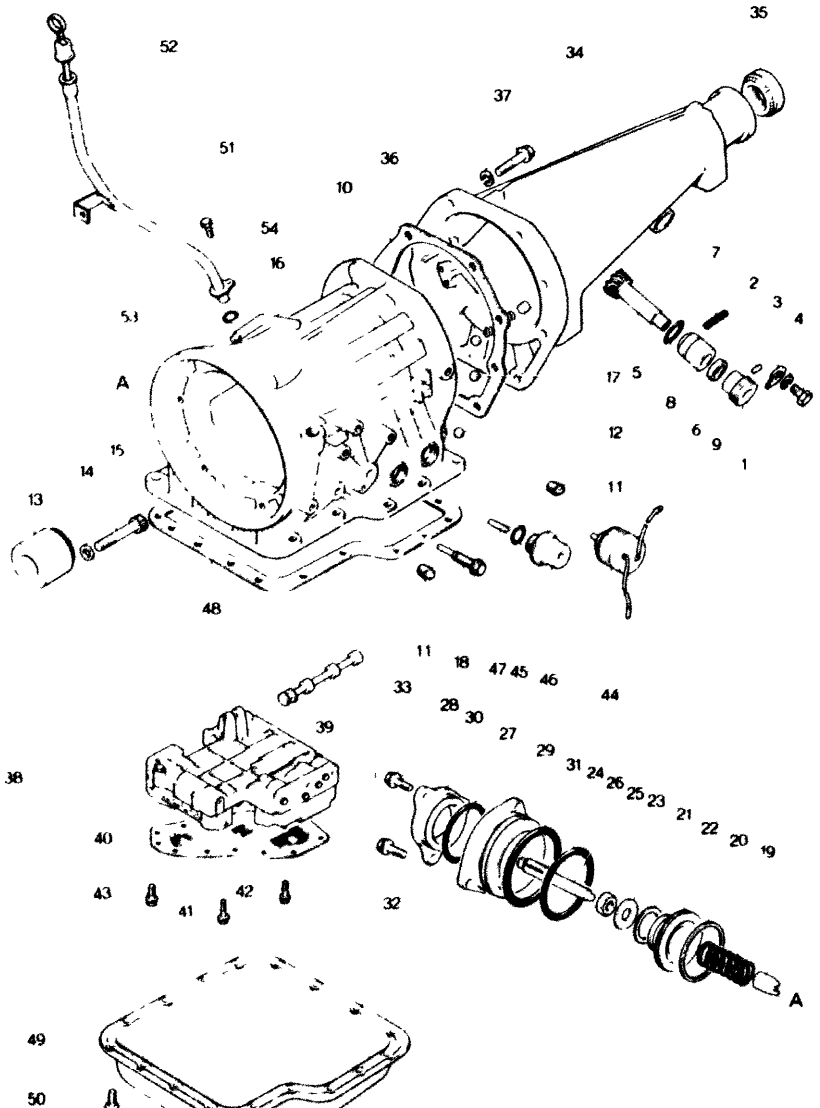

No.	Part Number	Descriptn
37	0338 19 737	Bolt Extension Housing
	0338 19 739	Washer, Plain
38	3649 19 750	Valve, Control
39	0338 19 768	Valve Manual
40	1758 19 815	Strainer, Oil
41	0338 19 831	Bolt, Control Valve
12	0338 19 832	Bolt, Control Valve
43	0338 19 833	Bolt, Control Valve
44	1675 19 821	Solenoid, Down Shift
45	0338 19 822	Seal "O" Ring
46	1758 19 823	Diaphragm, Vacuum
47	0338 19 825	Rod, Diaphragm (ℓ 30.0
	0338 19 826	Rod (ℓ 31.0
	0338 19 827	Rod (ℓ 30.5
	0338 19 828	Rod (ℓ 29 0
	0338 19 829	Rod (ℓ 29 5
48	1758 19 835	Gasket, Oil Pan

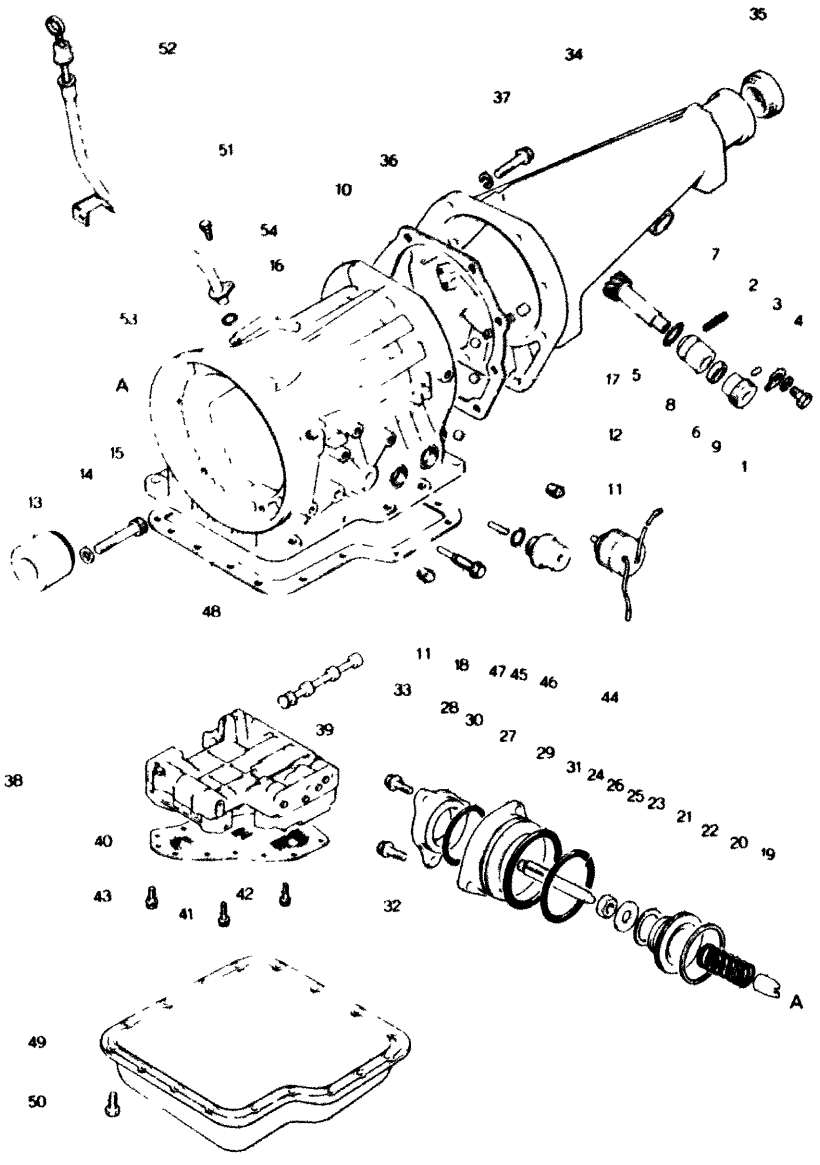

19 AUTOMATIC T / MISSION
(CASE & MAIN CONTROL

No.	Part Number	Description
49	1758 19 836	Pan, Oil
50	0338 19 837	Bolt, Oil Pan
51	1856 19 870A	Tube, Oil Level
52	1758 19 880	Gauge, Oil Level
53	99541 01601	Ring, "O" - Oil Level Tube
54	99796 0610	Bolt, Oil Level Tube

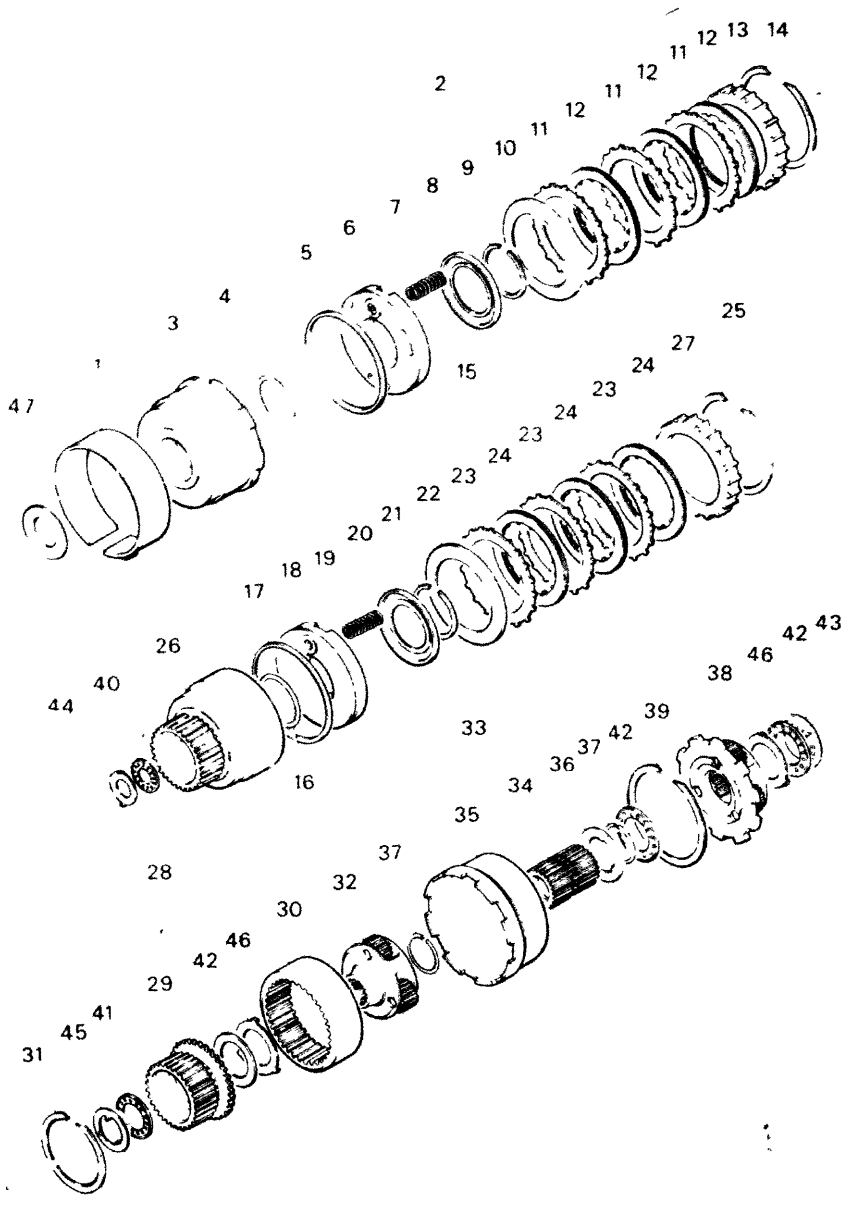

No.	Part Number	Description
1	0338 19 360	Band Brake
•	0338 19 360A	**Band, Brake**
2	1758 19 460	Clutch Front
3	0338 19 470	Drum Clutch
4	0338 19 475	Seal 'O' Ring
5	0338 19 476	Seal Lathe Cut
6	0338 19 480	Piston Clutch
7	0338 19 486	Spring Piston Return
8	0338 19 487	Retainer Spring
9	0338 19 488	Ring Snap
10	0338 19 498	Plate, Dished
11	0338 19 499	Plate Driven
12	0338 19 500	Plate Drive
•	0338 19 500A	**Plate, Drive**
13	1758 19 503	Plate Retaining
	1758 19 504	Plate Retaining
	1758 19 505	Plate Retaining
	1758 19 506	Plate, Retaining
	1758 19 507	Plate, Retaining
	1758 19 508	Plate Retaining
14	0338 19 509	Ring, Snap

Selec

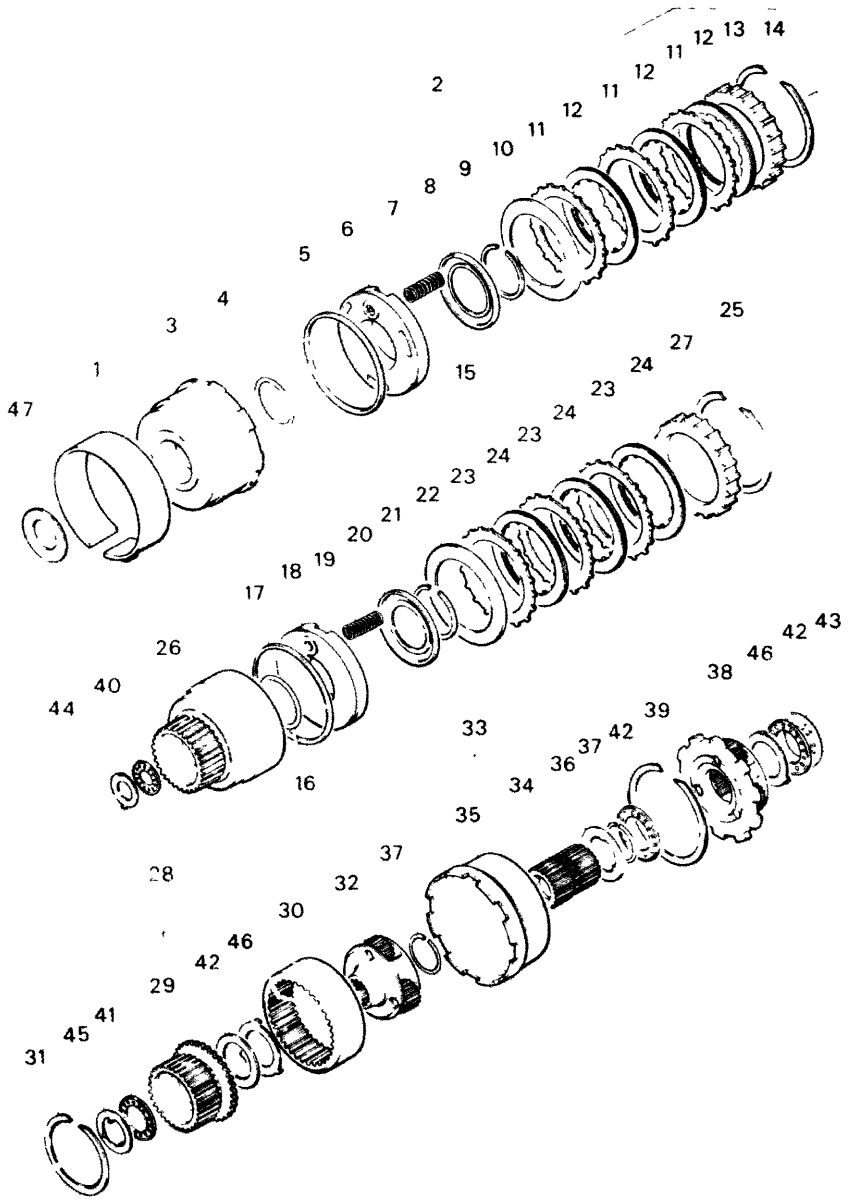

19 AUTOMATIC T/MISSION (CLUTCH & PLANETARY G

No.	Part Number	Description
15	1758 19 510	Clutch, Rear
16	0338 19 475	Seal, "O" Ring
17	0338 19 476	Seal, Lathe Cut
18	0338 19 480	Piston, Clutch
19	0338 19 486	Spring, Piston Return
20	0338 19 487	Retainer, Spring
21	0338 19 488	Ring, Snap
22	0338 19 498	Plate, Dished
23	0338 19 499	Plate, Driven
24	0338 19 500	Plate, Drive
•	0338 19 500A	**Plate, Drive**
25	0338 19 509	Ring, Snap
26	1758 19 511	Drum, Rear Clutch
27	0378 19 515	Plate, Retaining
28	0338 19 530	Hub, Rear Clutch
29	0338 19 531	Hub, Rear Clutch
30	0338 19 533	Gear Internal
31	0338 19 534	Ring, Snap

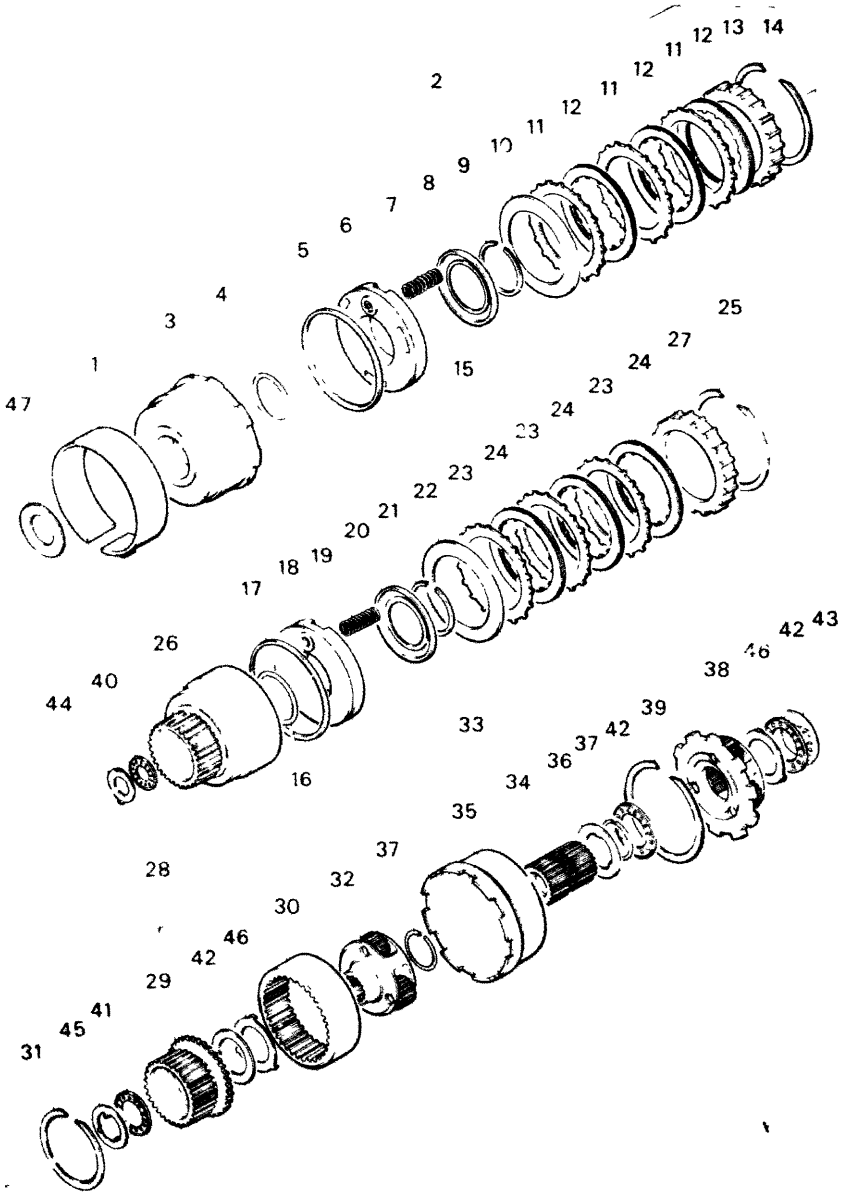

No.	Part Number	Description
32	0338 19 540	Carrier, Front
33	0338 19 550	Shell & Sun Gear
34	0338 19 560	Gear Sun
35	0338 19 565	Shell, Connecting
36	0338 19 566	Race, Bearing-Shell
37	0338 19 567	Ring Snap
38	0338 19 570	Carrier Rear
39	0338 19 598	Ring, Snap
40	0338 19 621	Bearing, Needle
41	0338 19 622	Bearing Needle
42	0338 19 623	Bearing, Needle
43	0338 19 624	Bearing, Needle
44	0338 19 631	Race, Bearing (t-1.2)
	0338 19 632	Race, Bearing (t 1.4)
	0338 19 633	Race, Bearing (t 1.6)
	0338 19 634	Race, Bearing (t 1.8)
	0338 19 635	Race, Bearing (t 2.0)
	0338 19 636	Race, Bearing (t-2.2)

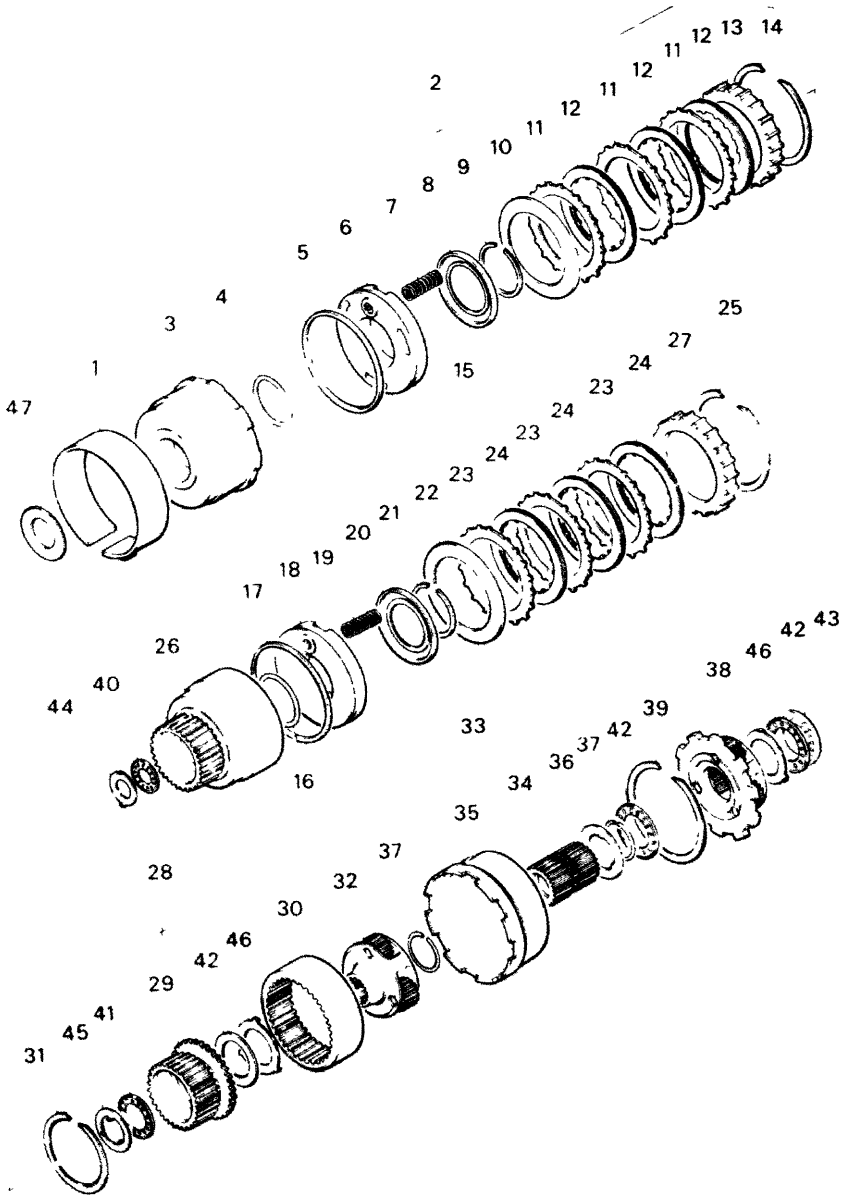

19 AUTOMATIC T/MISSION
(CLUTCH & PLANETARY G

No.	Part Number	Description
45	0338 19 638	Race, Bearing-Rear Clutch
●	0436 19 656	**Race, Bearing-Oil Distributor**
46	0338 19 639	Race, Bearing
47	0338 19 641	Washer, Front Clutch (t=1.90)
	0338 19 642	Washer (t=2.10)
	0338 19 643	Washer (t=2.30)
	0338 19 644	Washer (t=2.50)
	0338 19 645	Washer (t=2.70)
	0338 19 646	Washer (t=1.50)
	0338 19 647	Washer (t=1.70)
	0397 22 200	Clutch Repair Kit
	0338 19 475	Seal, "O" Ring
	0338 19 476	Seal, Lathe Cut
	0338 19 486	Spring, Piston Return
	0338 19 487	Retainer, Spring
	0338 19 488	Ring, Snap
	0338 19 498	Plate, Dished
	0338 19 499	Plate, Driven
	0338 19 500	Plate, Drive
●	0338 19 500A	**Plate, Drive**
	0338 19 509	Ring, Snap

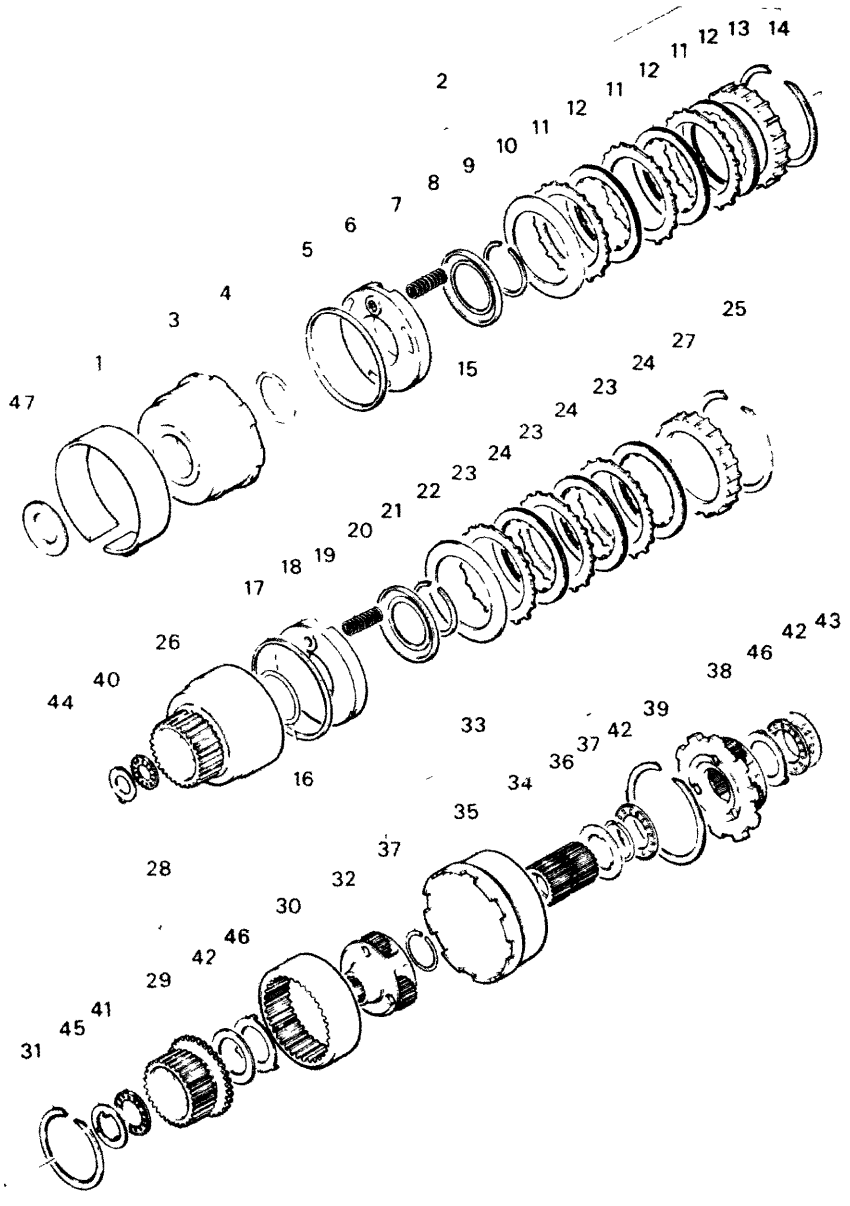

No.	Part Number	Description
	0338 19 621	Bearing, Needle
	0338 19 638	Race Bearing-Rear
●	0436 19 656	Race, Bearing-Oil Dist

AUTOMATIC T/M
(LOW, REVERSE &

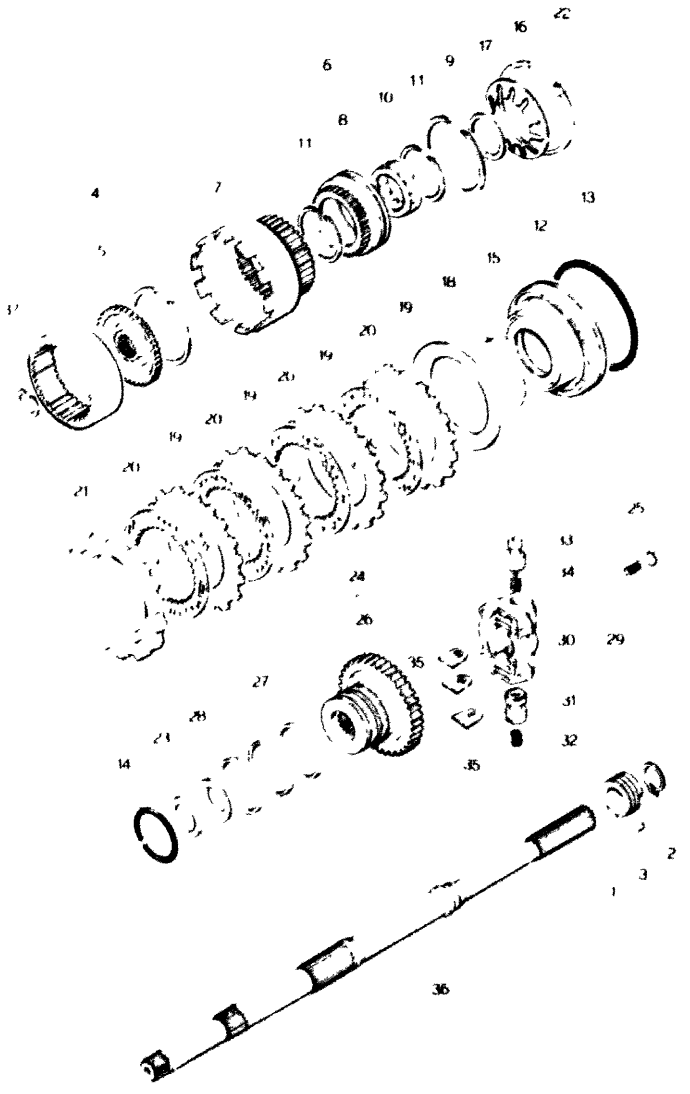

No.	Part Number	Description
1	1281 17 341	Gear, Drive-Speedomete
2	99573 2500	Ring, Snap-Drive Gear
3	99611 1500	Ball, Steel
4	0338 19 580	Flange
5	0338 19 581	Flange, Drive
6	0338 19 590	Drum, Connecting
7	0338 19 591	Drum Connecting
8	0338 19 593	Race, Outer
9	0338 19 594	Ring, Snap
10	0338 19 595	Clutch One Way
11	0338 19 596	Ring, Snap
12	0338 19 601	Piston Low & Reverse
13	0338 19 603	Seal, Piston
14	0338 19 604	Seal "O" Ring
15	0338 19 605	Ring, Thrust Spring
16	0338 19 606	Spring, Piston
17	0338 19 607	Ring, Snap

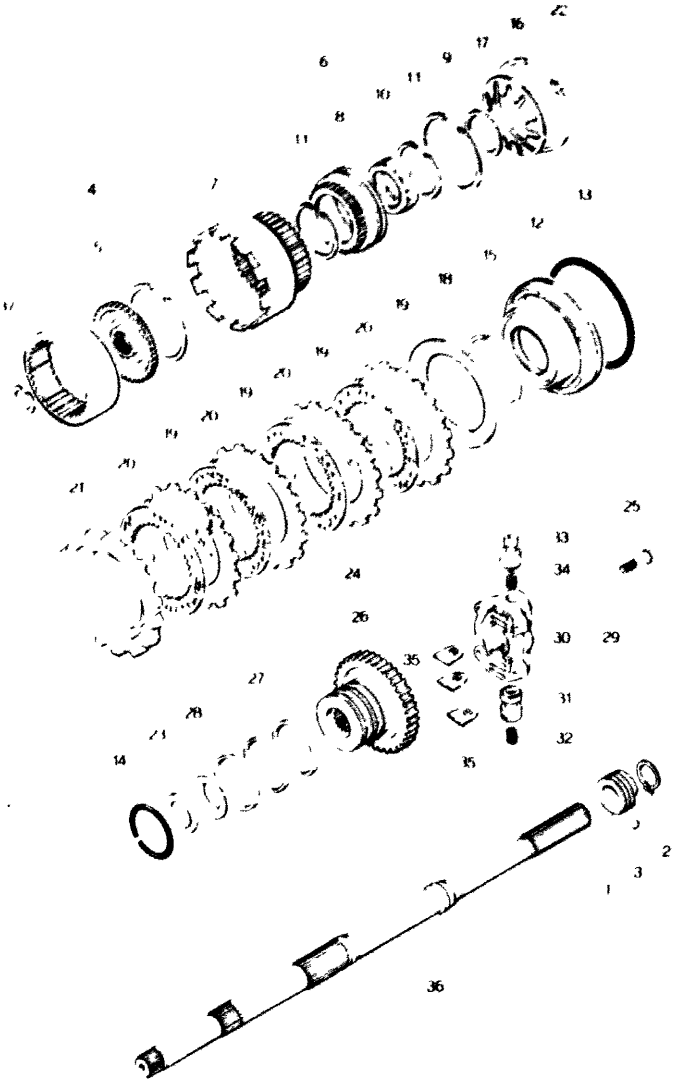

No.	Part Number	Description
18	0338 19 608	Plate, Dished
19	0338 19 609	Plate, Driven
20	0338 19 610	Plate, Drive
●	0338 19 610A	Plate, Drive
21	1758 19 613	Plate, Retaining (t 7.8)
	1758 19 614	Plate (t 8.0)
	1758 19 615	Plate (t 8.2)
	1758 19 616	Plate (t 8.4)
	1758 19 617	Plate (t 8.6)
	1758 19 618	Plate (t 8.8)
22	0338 19 619	Ring, Snap
23	0338 19 622	Bearing, Needle
24	0842 19 650	Distributor, Oil
25	0338 19 397	Bolt
26	0338 19 651	Distributor
27	0338 19 655	Ring, Seal
28	0338 19 656	Race, Bearing
29	0842 19 660	Governor, Fig No 30 35
30	0338 19 661	Body
31	0338 19 663	Valve

AUTOMATIC T/MI
(LOW, REVERSE &

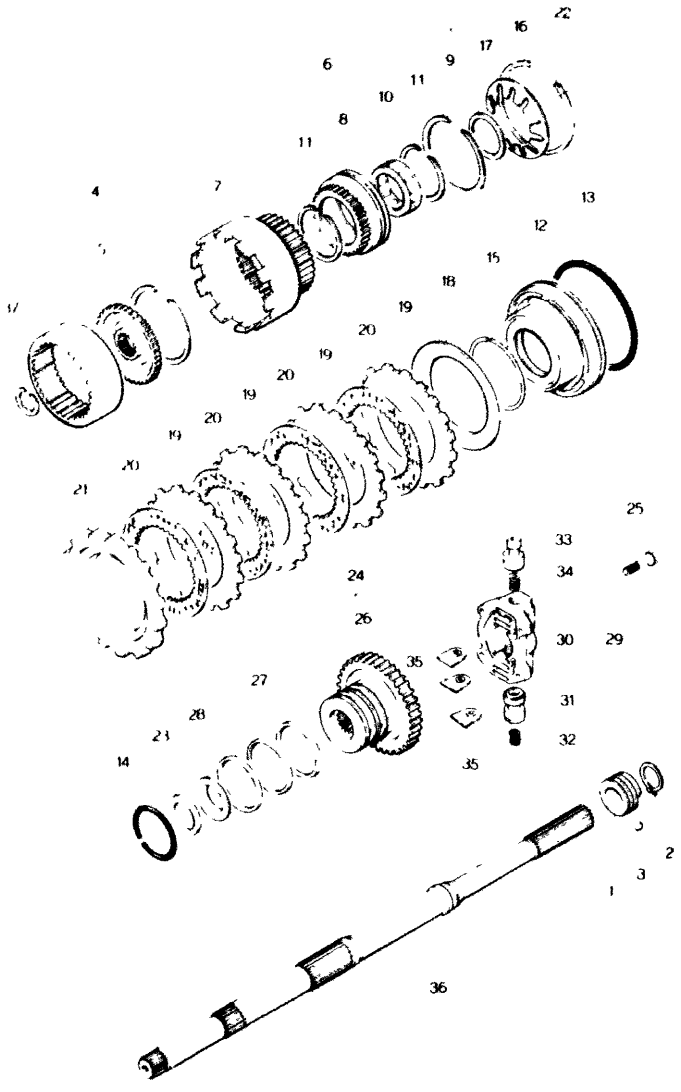

No.	Part Number	Description
32	0338 19 664	Spring
33	0842 19 665	Valve
34	0338 19 666	Spring, Governor
35	0338 19 667	Plate, Retainer
36	0338 19 670A	Shaft
37	0338 19 676	Ring

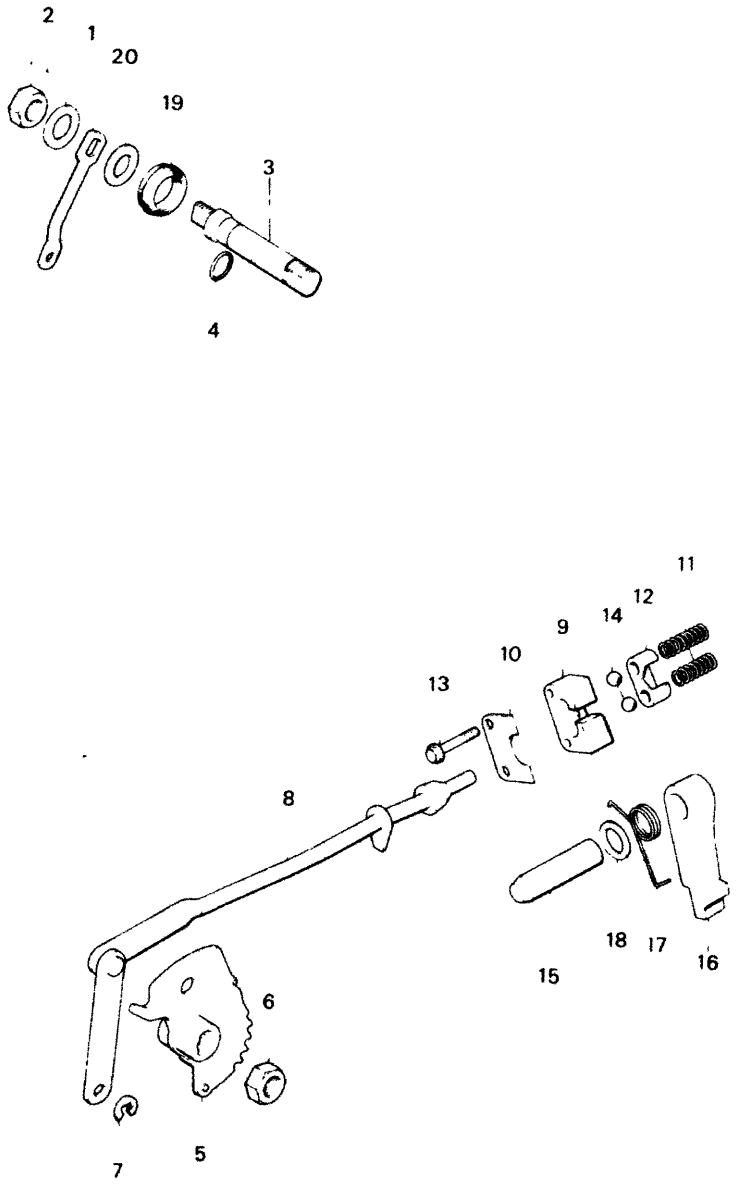

No.	Part Number	Description
1	1015 19 031	Lever, Select
2	99922 1400	Nut, Select Lever
	99971 1400	Washer Spring
3	1181 19 431B	Shaft, Manual
4	99541 01201	Ring "O"
5	1758 19 440A	Plate, Manual
6	1758 19 443	Nut, Shaft
7	0338 19 449	Ring, Snap
8	1758 19 450	Rod Parking
9	0338 19 701A	Support Actuator
10	0338 19 702A	Plate, Retaining
11	0338 19 703	Spring, Ball Park
12	0338 19 704	Retainer
13	0338 19 706	Bolt
14	99611 2750	Ball, Steel
15	0338 19 731	Shaft, Parking Pawl
16	0338 19 732	Pawl, Parking
17	0338 19 733C	Spring, Pawl Return

19 AUTOMATIC T/MISSION
(MANUAL LINKAGE)

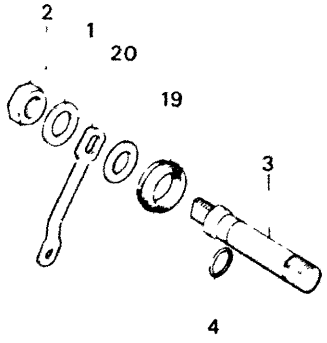

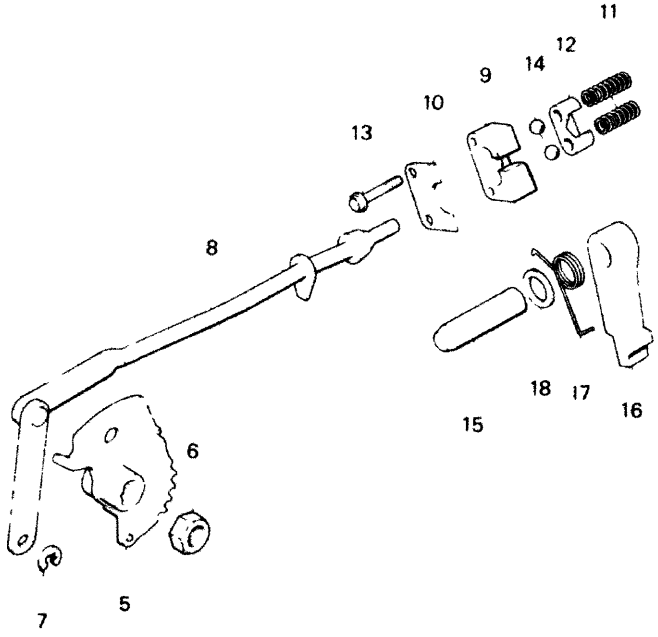

No.	Part Number	Description
18	0338 19 734A	Spacer, Dowel
19	1758 19 036A	Seal, Dust
20	1758 19 055	Washer

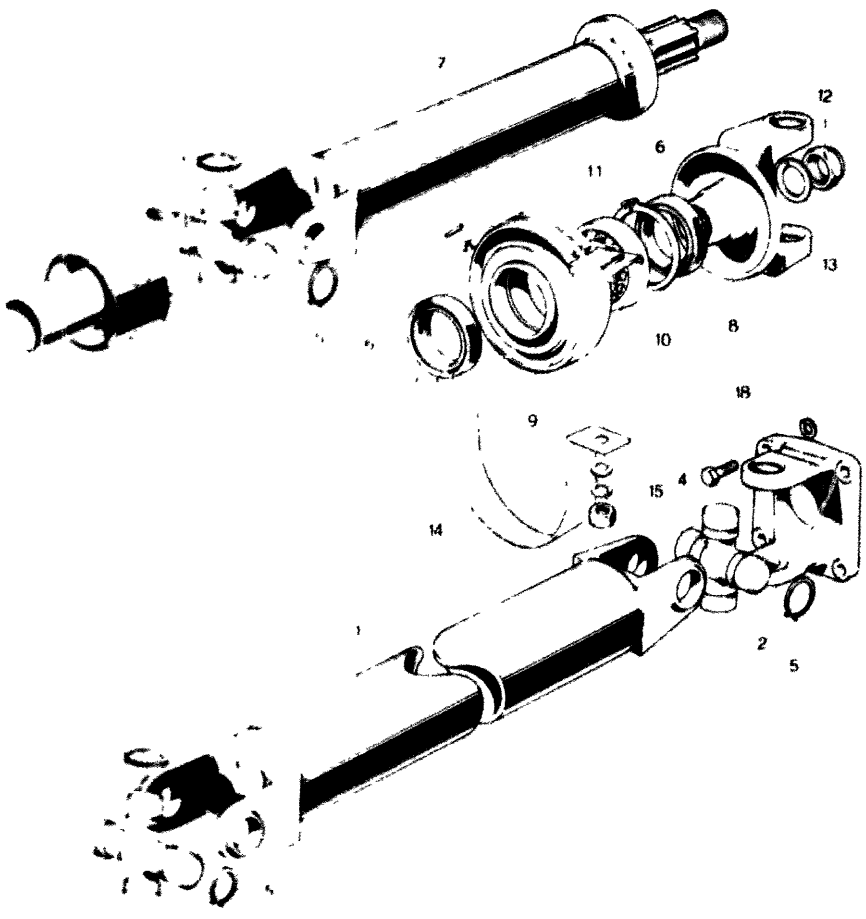

No.	Part Number	Description
	3790 25 100	Shaft Propeller
~~1~~	~~2677 25 010~~	~~Shaft, Propeller~~
2	2677 25 015	Yoke, Universal Joint
3	0578 25 130	Yoke Sliding
4	0706 89 251	Joint Set Universal Fig
5	2677 25 071	Ring, Snap (t 1.45)
	2677 25 072	Ring, Snap (t 1.48
	2677 25 073	Ring, Snap (t 1.51)
	2677 25 074	Ring, Snap (t 1.54)
	2677 25 075	Ring, Snap (t 1.57)
	2677 25 076	Ring, Snap (t 1.60)
	2677 25 077	Ring, Snap (t 1.63)
6	0290 25 151	Oil Seal
7	3790 25 210	Shaft, Propeller
8	2677 25 220	Yoke

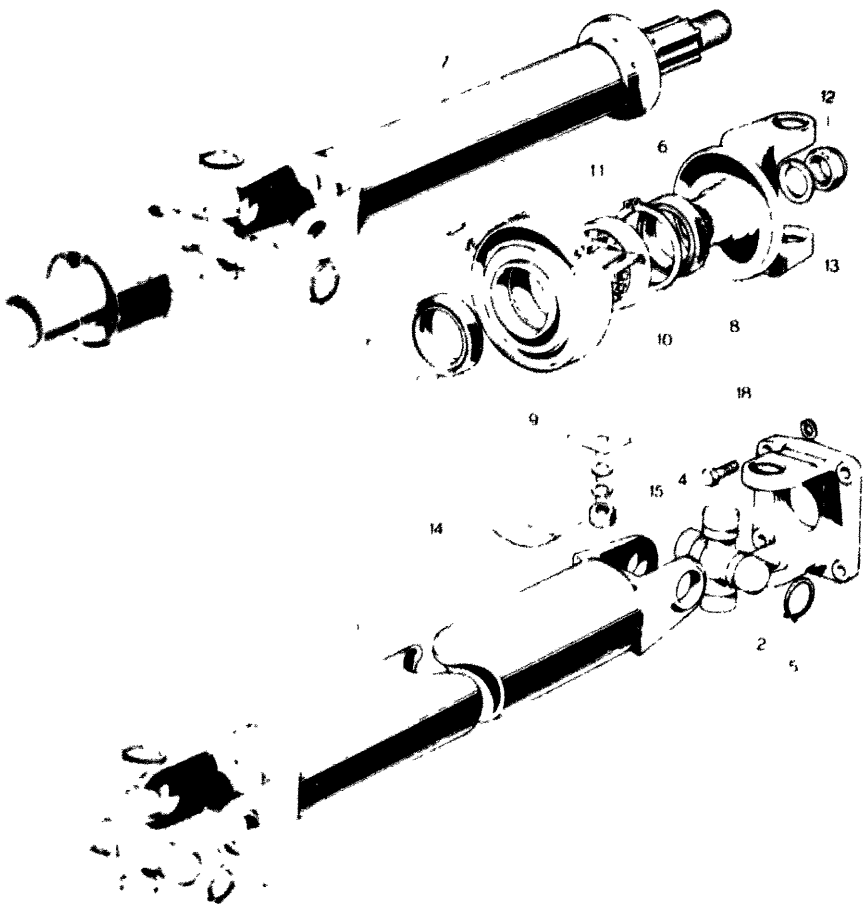

25 PROPELLER SHAFT

No.	Part Number	Description
9	1856 25 300A	Support Center Bearing
10	99574 5200	Ring, Snap
11	99606 62050	Bearing Ball
12	99922 1800	Nut Yoke
13	99971 1800	Washer Spring
14	1856 25 314	Protector
15	99940 1001	Nut Protector
~~16~~	~~2783 18 368~~	~~Spacer, Protector~~
~~17~~	~~0684 39 387~~	~~Washer Protector~~
18	99750 11020	Bolt Propeller Shaft
	99971 1000	Washer, Spring

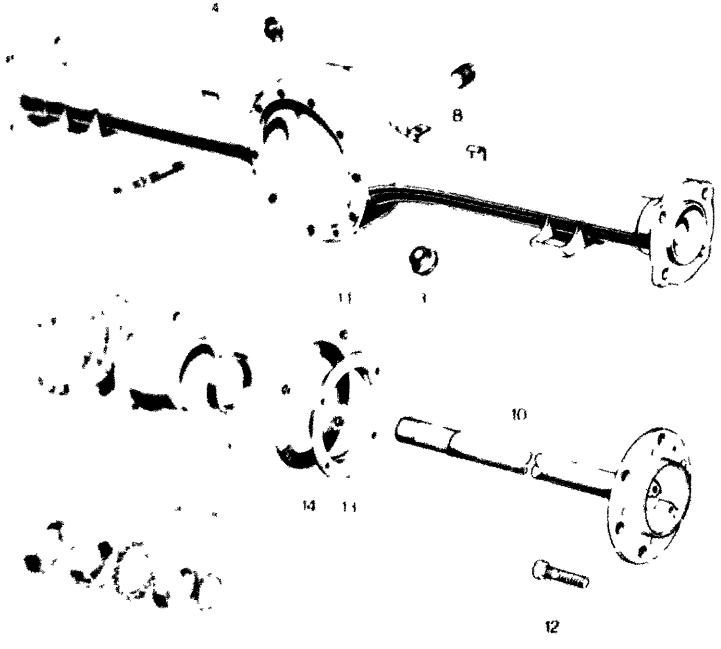

No.	Part Number	Description
1	3790 26 010	Casing, Rear Axle
2	99789 0820F	Stud
3	0259 26 051	Plug Drain Magnet
4	0419 26 060	Breather Axle Casing
5	~~0187 26 062~~	~~Screw Breather~~
6	~~0088 26 063~~	~~Cap Breather~~
7	~~99221 1622~~	~~Pin Split-Breather~~
8	99502 4000	Plug Oil Level
9	99901 0800	Nut Casing
	99971 0800	Washer Spring
10	1854 26 111A	Shaft R Rear Axle
	1854 26 115A	Shaft L Rear Axle
11	99254 4014	Rivet Rear Axle Shaft
12	1854 26 113A	Bolt, Hub

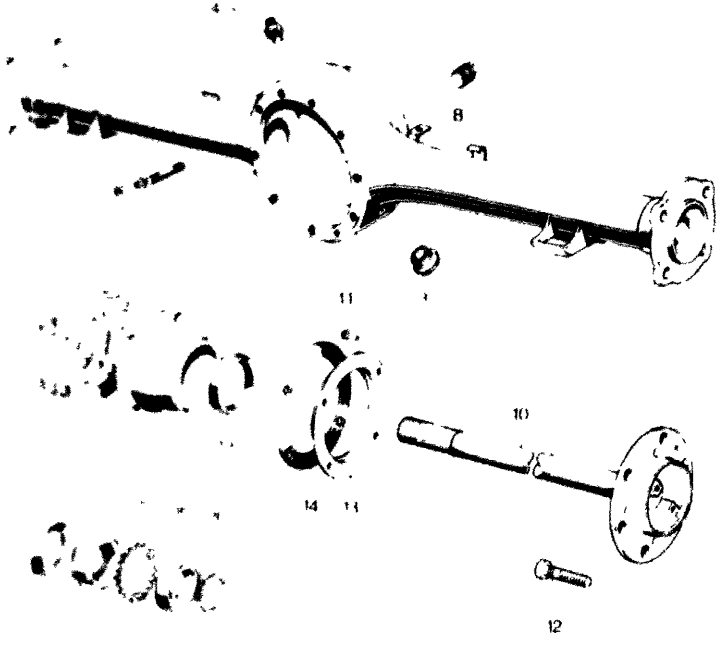

26 REAR AXLE

No.	Part Number	Description
13	0604 26 125B	Baffle Oil
14	0604 26 129	Gasket, Oil Baffle
15	0603 26 131A	Housing, Bearing
16	99603 02080	Bearing, Axle Shaft
17	0603 26 152	Nut R Lock
	0603 26 156	Nut L Lock
18	0603 26 153	Washer Lock
19	0603 26 154	Oil Seal Inner
20	0603 26 155	Spacer, Bearing
21	0603 26 157	Oil Seal Outer
22	0603 26 165	Shim Adjust
	0603 26 166	Shim Adjust
	0603 26 167	Shim Adjust
	0603 26 168	Shim Adjust

Selective use



No.	Part Number	Description
1	0603 26 251A	Drum, Brake
2	99831 0616	Screw, Brake Drum
3	0603 26 281B	Plate (R), Brake Drum
	0603 26 291B	Plate (L), Brake Drum
4	0589 26 287A	Guard (R), Brake Pipe
	0589 26 297A	Guard (L), Brake Pipe
5	0603 26 288	Plug, Drum Cover
6	0603 26 301	Bolt, Brake Drum Cover
	99942 1000	Nut, Self Lock
7	1823 26 310B	Shoe, Brake
8	1823 26 312B	Lining, Brake
9	0603 26 341	Spring, Return
10	0223 26 345A	Spring, Clip
11	0223 26 391	Pin, Guide-Brake Shoe
12	0647 26 610A	Cylinder (R)

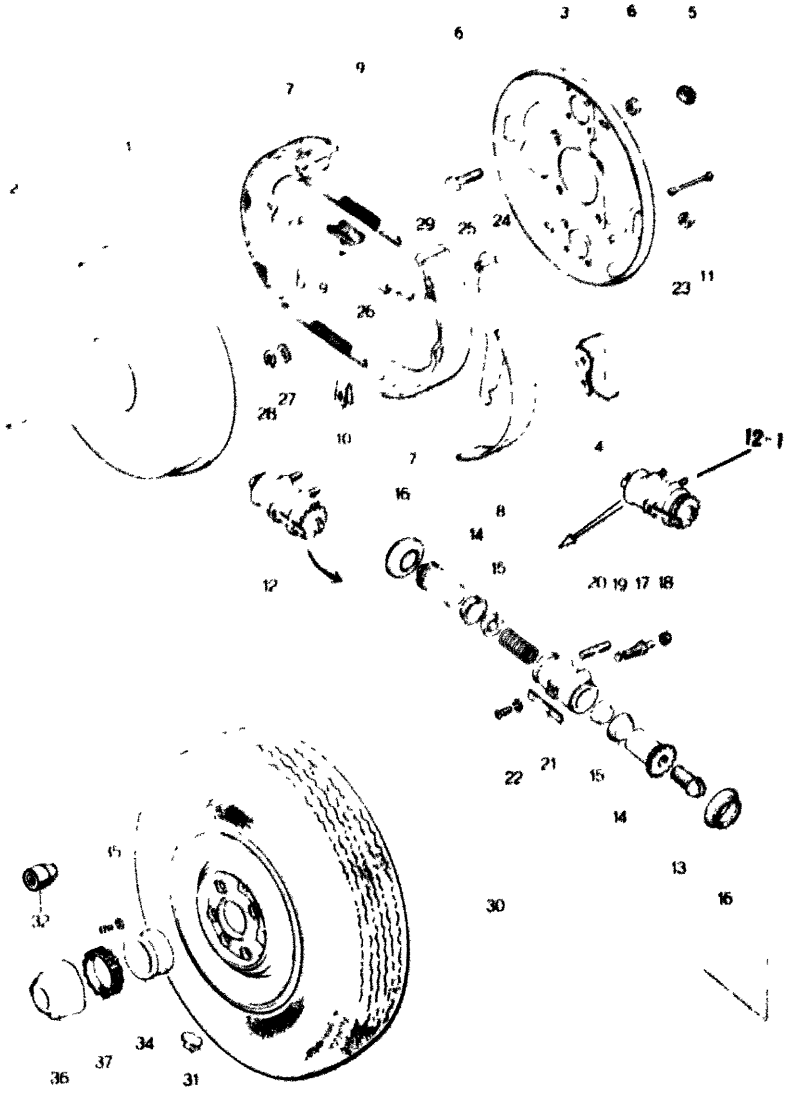

No.	Part Number	Description
	0647 26 710A	Cylinder (L)
12-1	3874 26 510	Cylinder
13	0604 26 465	Screw, Adjusting
14	0187 33 671A	Cup, Piston (Recipro)
	0206 26 671	Cup, Piston (Rotary)
15	1312 33 673	Block, Filling
16	0603 33 681A	Cover, Dust
17	0259 33 691	Screw, Bleeder
18	0259 33 693	Cap, Bleeder Screw
19	99611 1500	Ball, Steel
20	99852 0614	Stud
21	0304 33 352A	Spring
22	99833 0406	Screw, Spring
	99971 0400	Washer, Spring
23	99940 0600	Nut, Wheel Cylinder
24	0603 26 800A	Lever (R), Operating
	0603 26 810A	Lever (L), Operating
25	0604 26 832	Pin

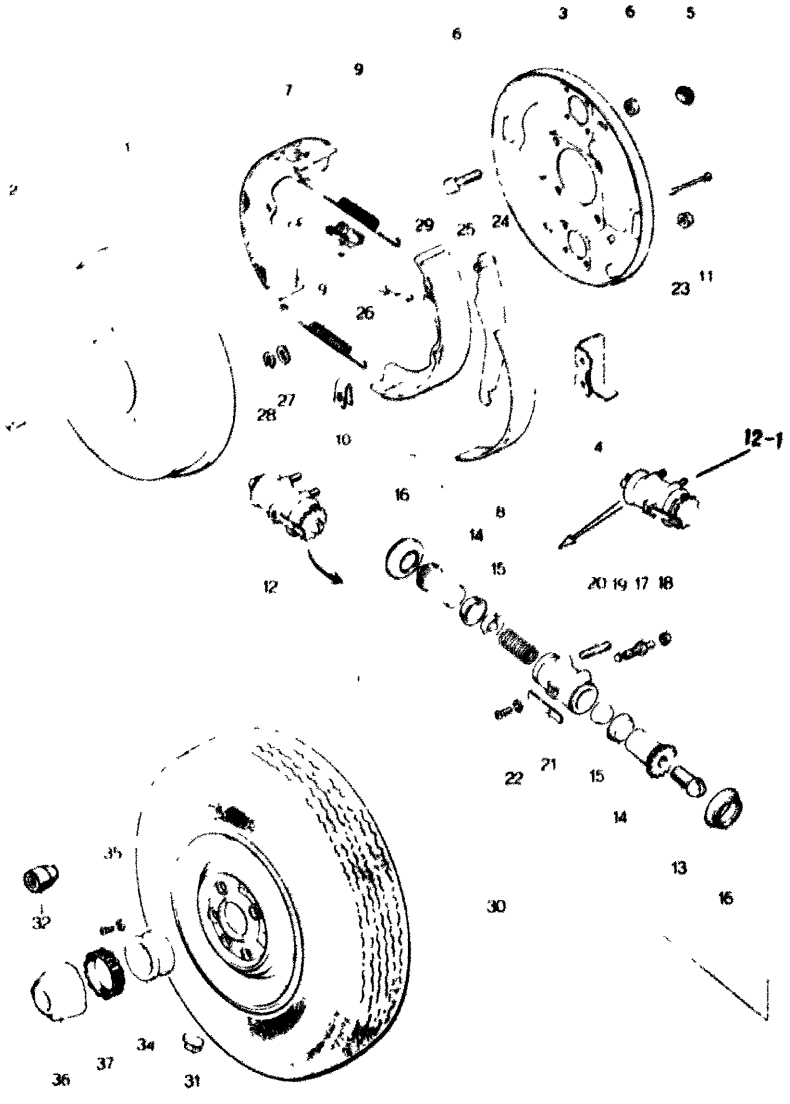

No.	Part Number	Description
26	0603 26 821A	Strut, Operating
27	0118 26 834	Washer, Wave
28	99575 0600	Ring, "U" Stop
29	0603 26 898	Holder, Strut
30	9962 03 7314	Tire, Tubeless-7.35 14 6PR
	9963 60 4130	Valve, Air-TR413
	9965 05 5540	Wheel, Disc-5 1/2 J×14WDC
31	99655 30010	Weight, Balance (10g)
	99655 30020	Weight, Balance (20g)
	99655 30030	Weight, Balance (30g)
	99655 30040	Weight, Balance (40g)
	99655 30050	Weight, Balance (50g)
	99655 30060	Weight, Balance (60g)
32	1854 26 161B	Nut, Hub

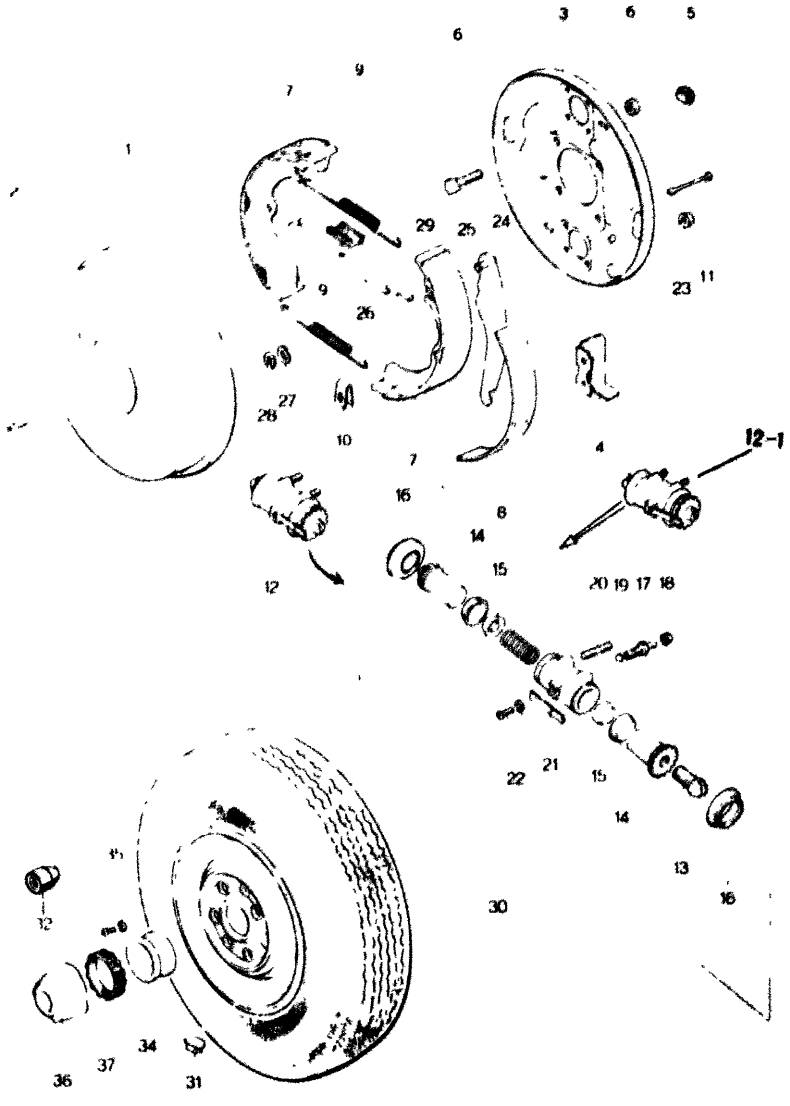

26 REAR BRAKE

No.	Part Number	Description
34	1854 26 570A	Adapter, Center Emblem
35	99833 0812	Screw, Adapter
	99971 0800	Washer, Spring
36	1854 33 191	Emblem, Center Cap
37	1854 33 192	Rubber, Set-Center Cap

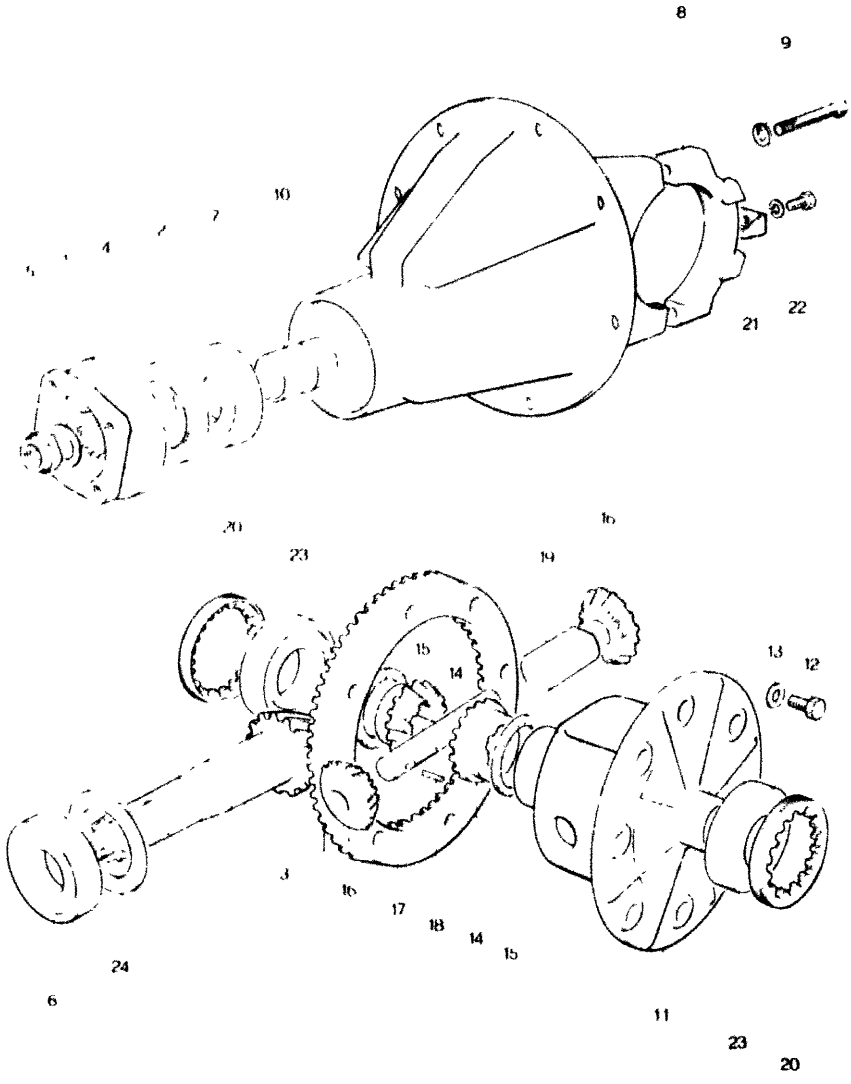

No.	Part Number	Description
	3790 27 100	Driving & Differential
1	**0012 27 012**	Washer
2	**0604 27 018**	Oil Seal
3	**3790 27 110**	Gear Set, Final (Rat
4	**0579 27 120A**	Flange, Companion
5	**0578 27 130A**	Nut, Lock
6	**0603 27 141**	Bearing, Rear-Drive Pini
7	**0604 27 142**	Bearing, Front-Drive
8	**0578 27 150D**	Carrier, Differential
9	**99811 1255A**	Bolt, Carrier
	99971 1200	Washer Spring
10	**0305 27 171**	Piece, Distance

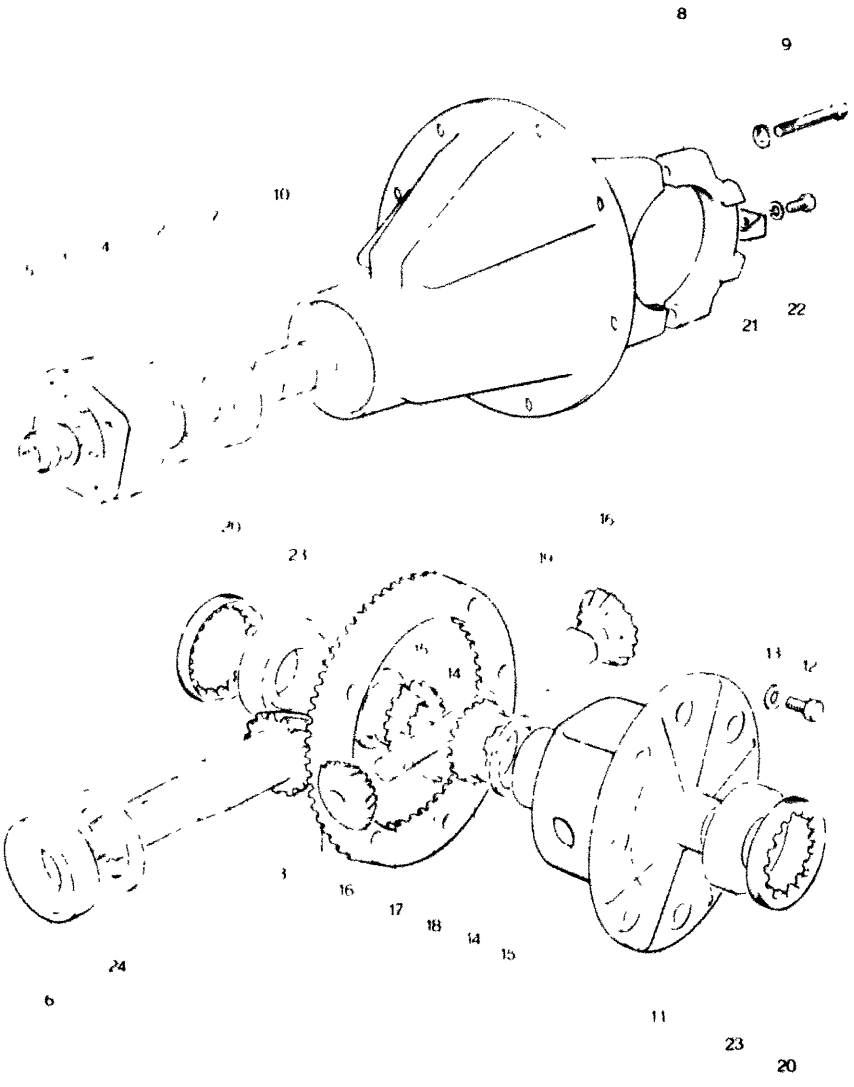

27 DRIVING

No.	Part Number	Description
11	3874 27 231	Case, Gear - Differential
12	99753 21022	Bolt, Gear Case
	99753 61022	Bolt, Gear Case
13	99958 1018	Washer, Lock
14	0603 27 251	Gear, Side
15	0578 27 252	Washer Thrust - Side Gear
	0578 27 253	Washer Thrust - Side Gear
	0578 27 254	Washer Thrust - Side Gear
16	0603 27 255	Pinion, Differential
17	0578 27 261	Shaft, Differential Pinion
18	0114 27 262	Pin, Pinion Shaft
19	0603 27 263	Block, Thrust Pinion Shaft

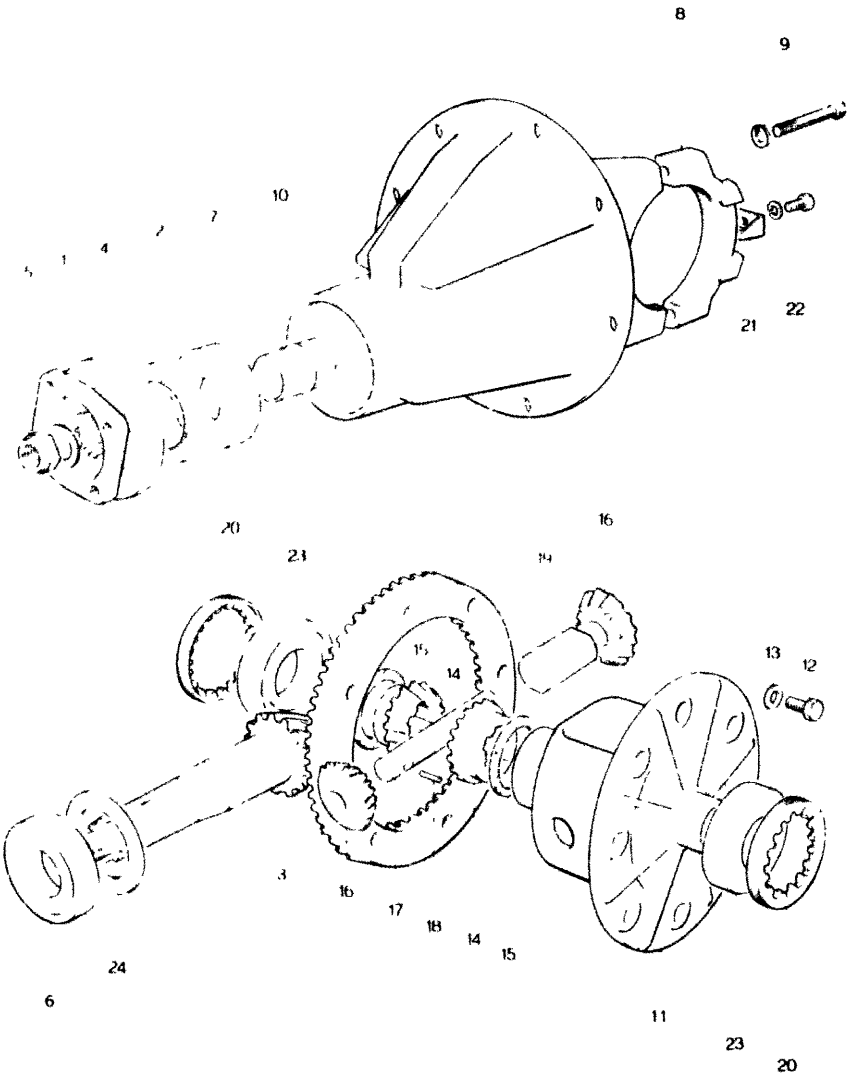

No.	Part Number	Description
20	0110 27 301	Screw, Adjust
21	0578 27 302	Plate, Lock Carrier
22	99796 8112	Bolt, Lock Plate
23	0118 27 305	Bearing, Differential
24	0223 27 401A	Spacer (t 3.08)
	0223 27 402A	Spacer (t 3.11)
	0223 27 403A	Spacer (t 3.14)
	0223 27 404A	Spacer (t 3.17)
	0223 27 405A	Spacer (t 3.20)
	0223 27 406A	Spacer (t 3.23)
	0223 27 407A	Spacer (t 3.26)
	0223 27 408A	Spacer (t 3.29)
	0223 27 409A	Spacer (t 3.32
	0223 27 411A	Spacer (t 3.35)
	0223 27 412A	Spacer (t 3.38)
	0223 27 413A	Spacer (t 3.41)
	0223 27 414A	Spacer (t= 3.44)
	0223 27 415A	Spacer (t 3.47)

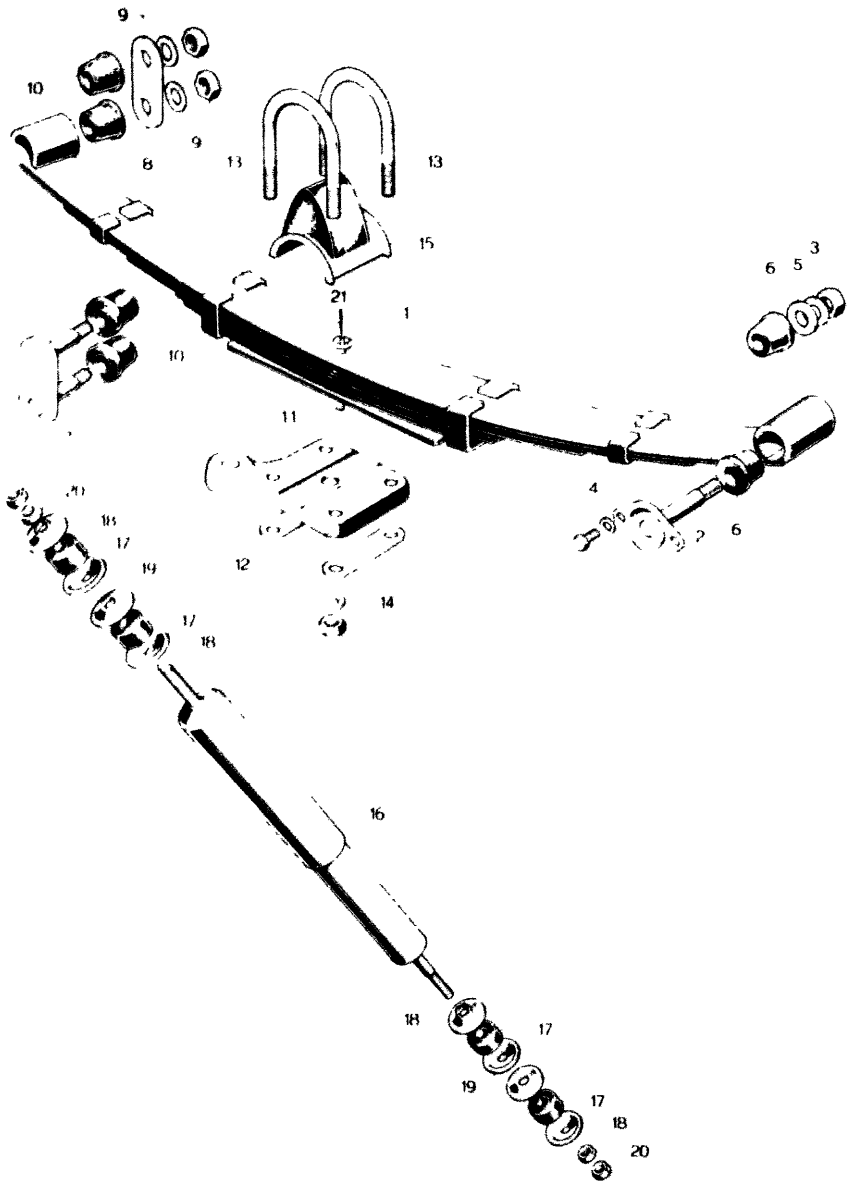

No.	Part Number	Description
1	3874 28 010A	Spring, Rear
	3874 28 011	Leaf No. 1
	3874 28 012	Leaf No. 2
	3874 28 013	Leaf No. 3
	3874 28 014	Leaf No. 4
	3874 28 015	Leaf No. 5
	3874 28 016	Leaf No. 6
2	0603 28 110	Pin, Spring
3	99921 1400	Nut
	99971 1400	Washer, Spring
4	99811 1020	Bolt
	99971 1000	Washer, Spring
5	0603 28 114	Spacer
6	3874 28 330	Bush, Rubber
7	0603 28 140	Plate, Shackle
8	0603 28 142	Plate, Shackle
9	99921 1400	Nut
	99971 1400	Washer, Spring
10	3874 28 330	Bush, Rubber

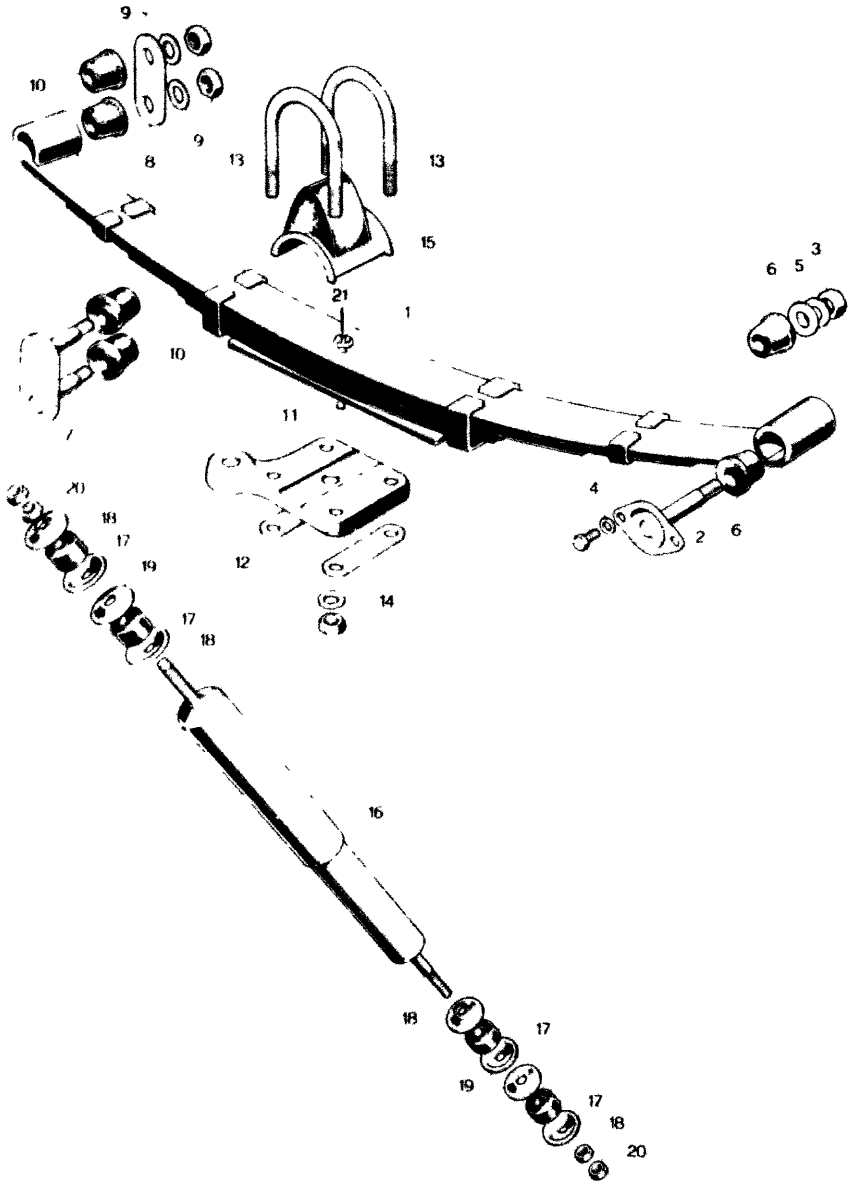

No.	Part Number	Description
11	0603 28 151	Clamp (R), Spring
	0603 28 171	Clamp (L), Spring
12	0603 28 152	Patch, Spring Clamp
13	0603 28 161	Bolt, Lock
14	99928 1200	Nut, Lock Bolt
	99971 1200	washer, Spring
15	0603 28 320	Rubber, Stopper
16	3874 28 700	Damper, Rear
17	0603 34 153	Bush, Rubber
18	0187 34 776	Retainer
19	0187 34 777	Washer, Centering
20	99922 1000	Nut, Rear Damper
	99921 1000	Nut
21	3874 28 981	Bolt, Center

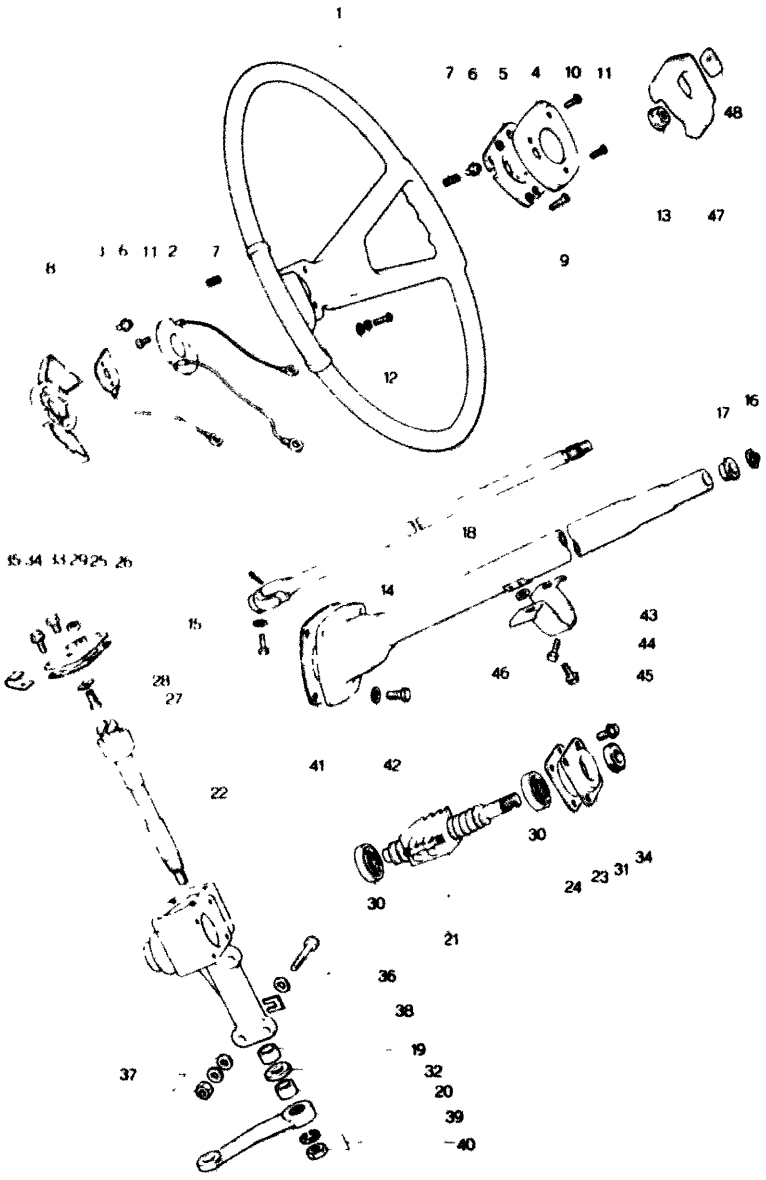

No.	Part Number	Description
1	1854 32 980	Boss, Steering Wheel
2	1854 32 018	Terminal
3	1175 32 030	Plate, Earth "C"
4	1175 32 041	Plate, Set
5	1175 32 042	Cap
6	1175 32 043	Insulator
7	1175 32 044	Spring
8	1854 32 049	Cover, Wheel Core
9	99831 0310	Screw
10	99833 0308	Screw
11	99863 0308	Screw
12	99863 0312	Screw
	99953 0300	Washer, Plain
	99971 0300	Washer Spring
13	99948 1200	Nut, Steering Wheel
14	1854 32 050A	Shaft, Column
15	1854 32 888	Bolt, Column Shaft
	99971 0800	Washer, Spring
	99221 2012	Pin, Split

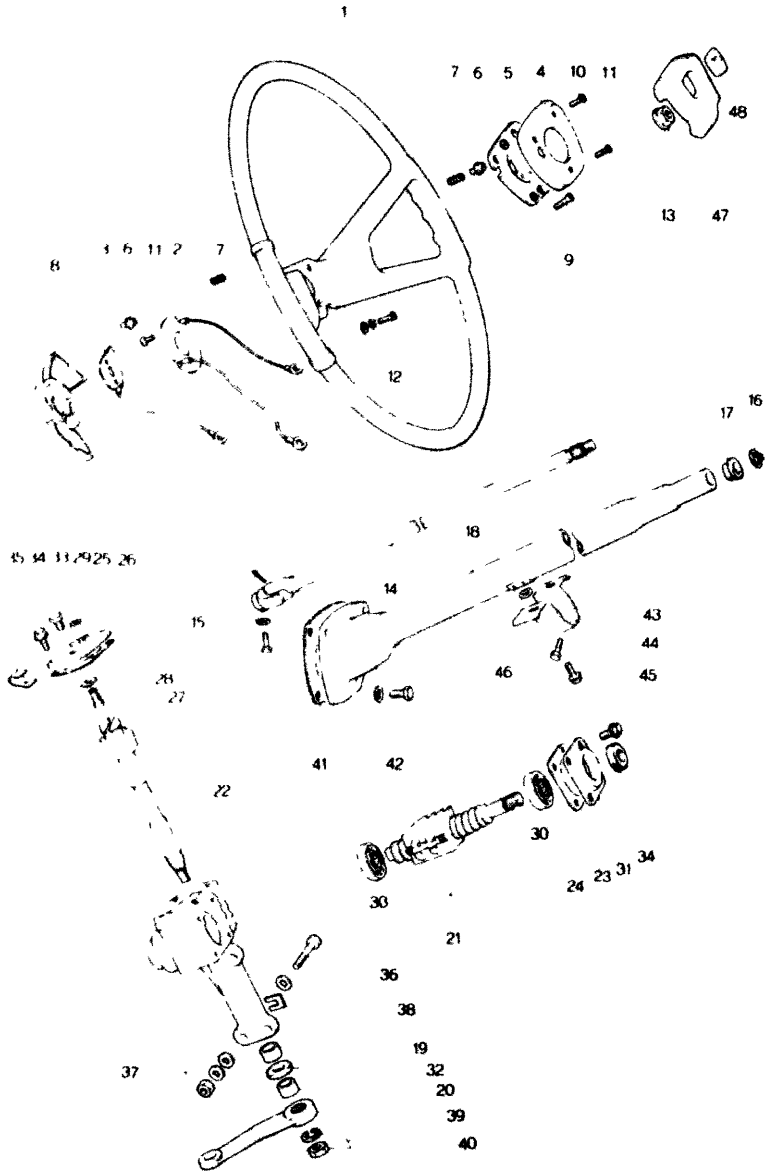

No.	Part Number	Description
16	0208 32 059	Ring Stop
17	0259 32 071	Bush Shaft Support
18	1854 32 080	Jacket Column Shaft
	1854 32 110	Gear, Steering
19	0603 32 122	Bush
20	0603 32 122	Bush
21	1854 32 130	Ball Nut Worm Fig No 30
22	1854 32 141	Shaft Sector
23	1854 32 151	Cover End
24	1854 32 154	Shim End Cover t 0 05
	1854 32 155	Shim t 0 06
	1854 32 156	Shim t 0 07
	1854 32 157	Shim t 0.08
	1854 32 158	Shim t 0.10
	1854 32 159	Shim t 0 20
25	1854 32 161	Cover, Side-Steering Gea
26	1854 32 103	Gasket Side Cover
27	0180 32 165A	Screw, Adjust-Sector
28	0180 32 171A	Shim, Adjust t 1 95

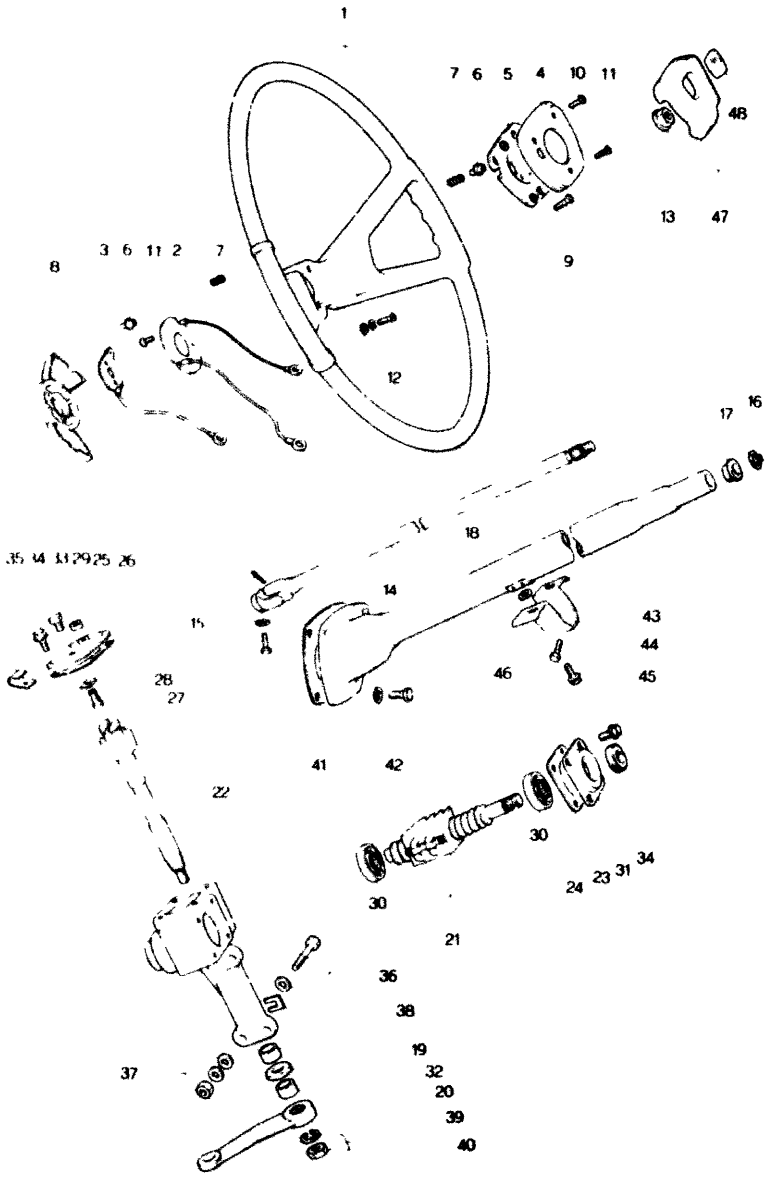

No.	Part Number		Description
	0180 32 172A	Shim	(t=2.00
	0180 32 173A	Shim	(t=2.05
	0180 32 174A	Shim	(t=2.10
29	99922 1000	Nut, Lock-Adjust Sc	
30	0183 32 182	Bearing, Worm Ball N	
31	0180 32 184	Oil Seal Worm	
32	99583 28388	Oil Seal, Sector Shaf	
33	0820 32 190	Plug Oil	
34	99781 0822	Bolt, End-Side Cover	
	99971 0800	Washer Spring	
35	95276 1008	Clip, Side Cover	
36	0603 32 186	Bolt, Gear Housing	
37	99921 1000	Nut, Gear Housing	
	99971 1000	Washer Spring	
	99951 1022	Washer Plain	
38	0208 32 188	Shim, Adjust-Selective u	
39	3874 32 226	Arm, Pitman	
40	99921 2000	Nut, Pitman Arm	
	99971 2000	Washer, Spring	

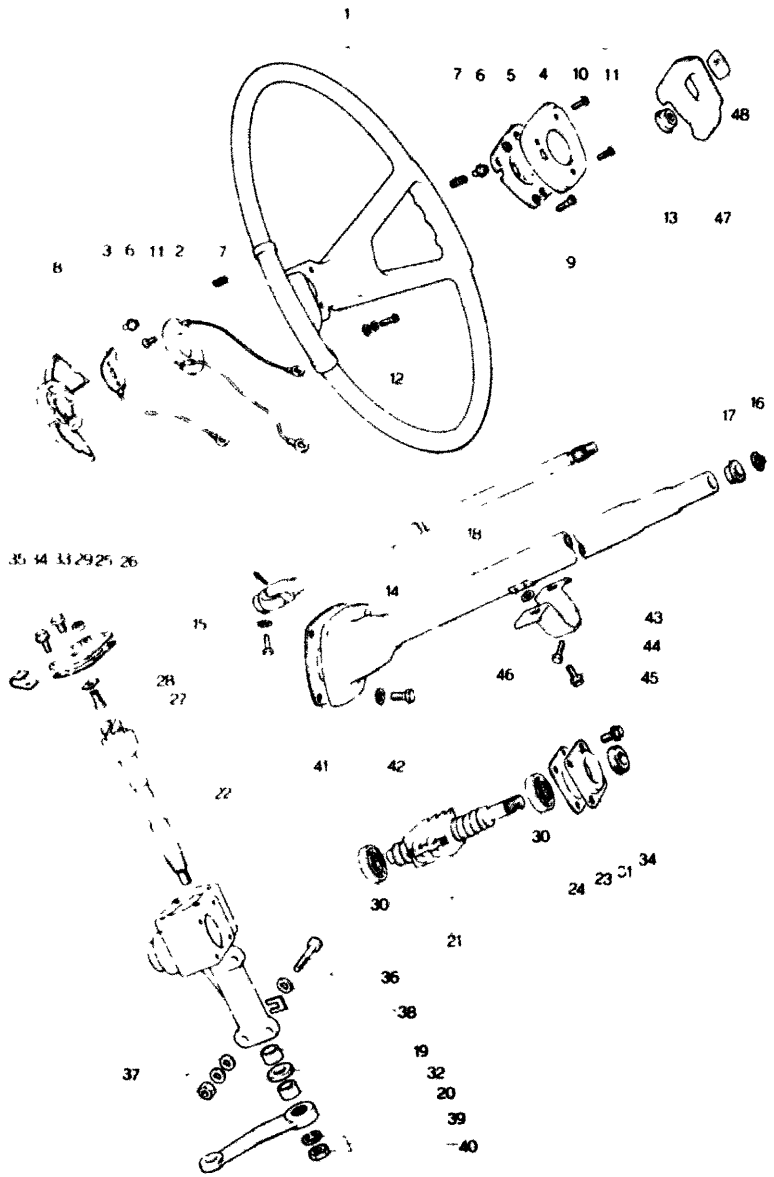

32 STEERING SYSTEM (WHEEL & GEAR)

No.	Part Number	Description
41	1757 32 411A	Cover Dust
●	1757 32 411B	**Cover, Dust**
42	99786 0620	Screw, Tapping-Dust Cover
	99952 0618	Washer Plain
43	1854 32 421	Bracket Column Fixing
44	99801 0810B	Bolt Bracket - Jacket
	99971 0800	Washer Spring
45	99794 0825B	Bolt Bracket - Body
	99951 0822	Washer, Plain
	99971 0800	Washer, Spring
46	99951 1030B	Washer, Plain-Bracket
47	1793 32 800	Cap Center-Steering Wheel
48	1727 32 811	Emblem

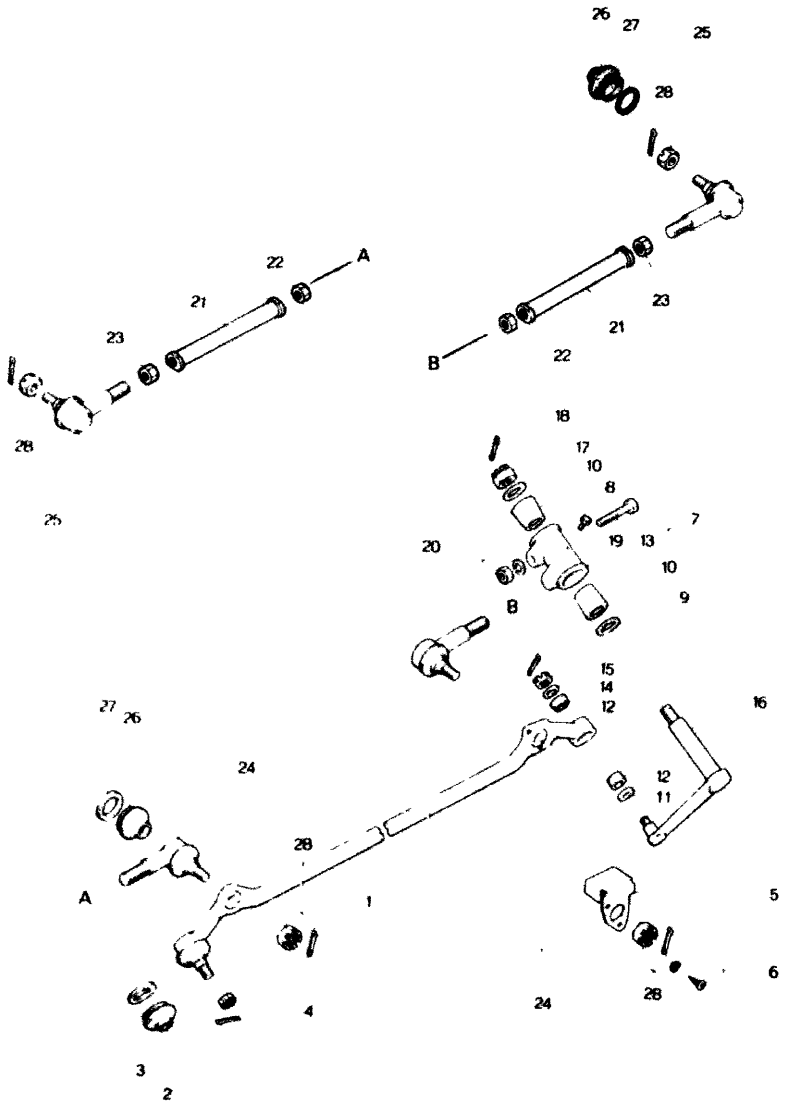

No.	Part Number	Description
1	3790 32 250	Link Center
2	1823 32 279	Seal Dust
3	1823 32 289	Ring Dust Seal
4	99924 1200	Nut Center Link
	99221 3020	Pin Split
5	1854 32 267	Insulator
6	99833 0612	Screw Insulator
	99971 0600	Washer Spring
7	2541 32 320	Idler
8	0208 32 278	Plug
9	0208 32 324 B	Seal, Dust
10	0208 32 326	Bush Tapered
11	0208 32 328 A	Seal Dust
12	0208 32 329	Bush Tapered
13	0208 32 331 A	Bracket Idler
14	0208 32 340 A	Seal, Dust
15	99924 1200	Nut
	99221 3020	Pin, Split

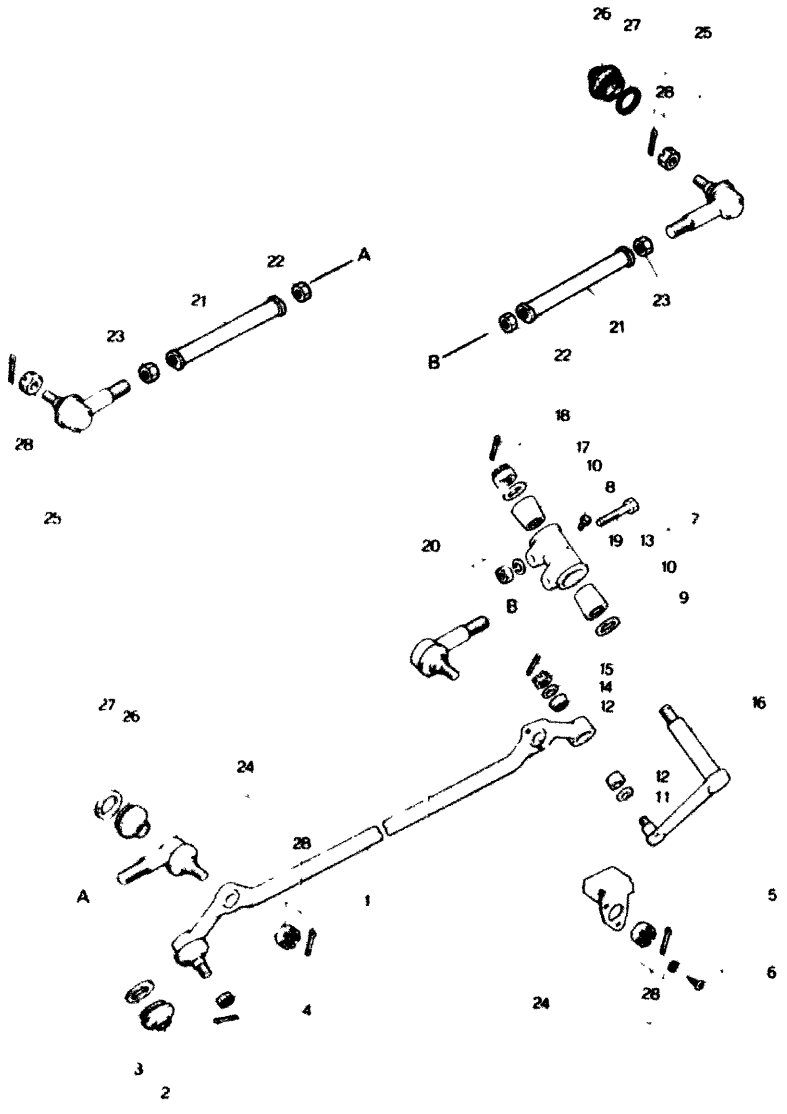

32 STEERING SYSTEM (ROD)

No.	Part Number	Description
16	2541 32 351 A	Arm, Idler
17	0208 32 360 A	Seal, Dust
18	99924 1400	Nut
	99221 3025	Pin, Split
19	0603 32 355	Bolt, Idler
20	99921 1000	Nut, Idler
	99971 1000	Washer, Spring
21	0603 32 365 B	Rod, Tie
22	99922 1600	Nut
23	99944 1600	Nut
24	3874 99 322	Socket Set
25	3874 99 324	Socket Set
26	1823 32 279	Seal, Dust
27	1823 32 289	Ring, Dust Seal
28	99924 1200	Nut
	99221 3020	Pin, Split

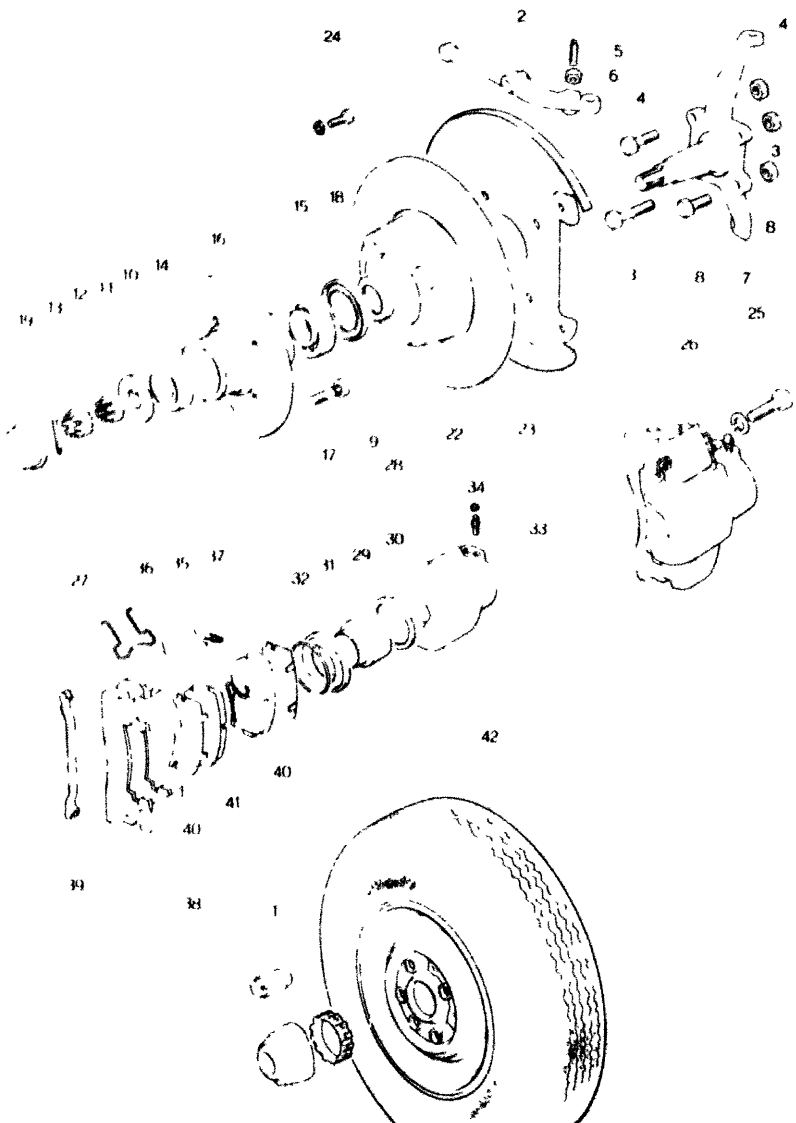

No.	Part Number	Description
1	1854 26 161B	Nut, Hub
2	3874 32 301	Arm (R), Knuckle
	3874 32 311	Arm (L), Knuckle
3	99750 11260	Bolt, Steering Knuckle
	99942 1200	Nut, Self Lock
4	99750 11270	Bolt, Steering Knuckle
	99942 1200	Nut, Self Lock
5	99885 1040	Bolt, Stopper
6	99922 1000	Nut, Stopper
7	0223 33 021B	Knuckle (R), Steering
	0223 33 031B	Knuckle (L), Steering
8	99811 1030	Bolt, Steering Knuckle
	99942 1000	Nut, Self Lock
9	0110 33 041	Spacer, Steering Knuckl
10	99977 1845	Washer, Front Wheel
11	0662 33 042	Nut, Front Wheel
12	0662 33 049	Cover, Set
13	99221 4030	Pin, Split-Front Wheel
14	99603 0204	Bearing, Front Wheel Ou

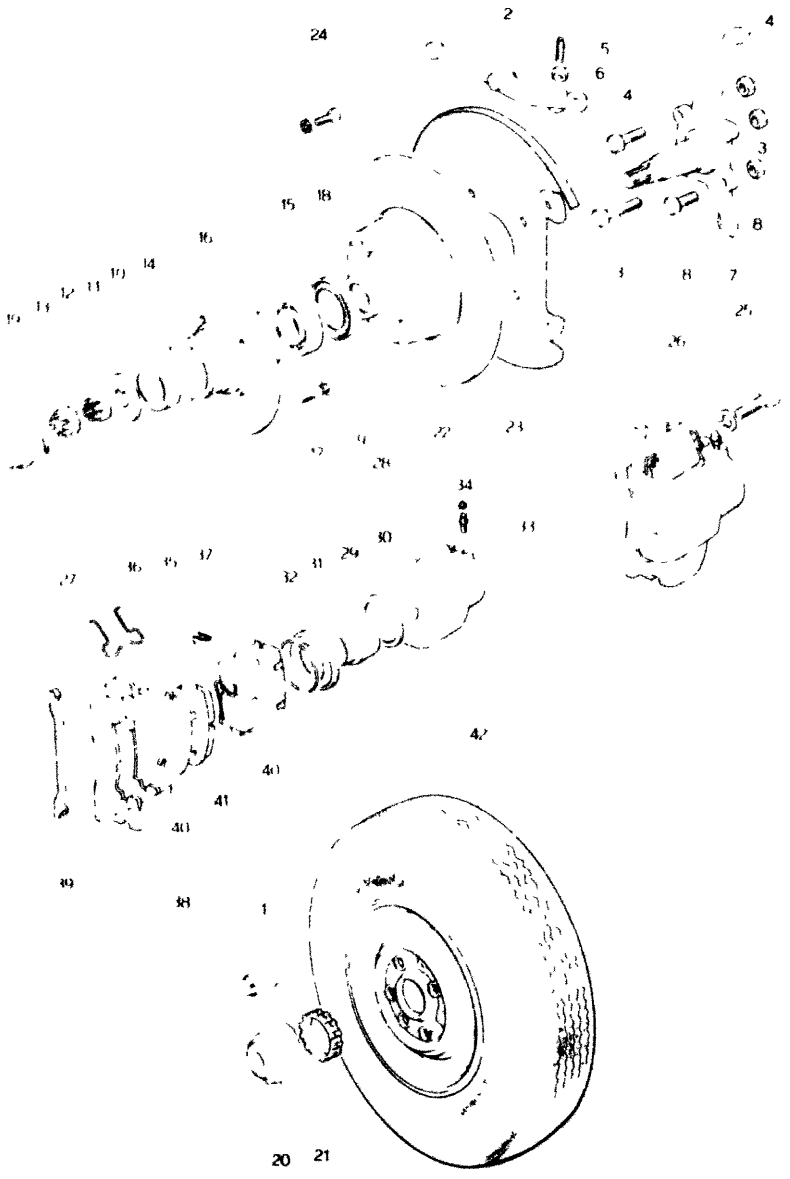

No.	Part Number	Description
15	99603 0206	Bearing, Front Wheel Inner
16	1854 33 061A	Hub Front Wheel
17	1854 33 062A	Bolt, Hub
18	3900 33 065	Oil Seal Front Wheel
19	1854 33 071	Cap Hub
20	1854 33 191	Emblem Center Cap
21	1854 33 192	Rubber Set
22	1854 33 251	Plate Disc
23	1854 33 260	Adapter (R Mounting
	1854 33 270	Adapter L Mounting
24	0221 33 698	Bolt Disc Plate
	99971 1000	Washer Spring
25	0305 33 699	Bolt Disc Brake
	99971 1200	Washer Spring
26	3874 33 980	Brake (R Disc
	3874 33 990	Brake L) Disc
27	3874 33 280	Support, Mounting
28	3874 33 610	Caliper (R) Fig No 29 34 inc

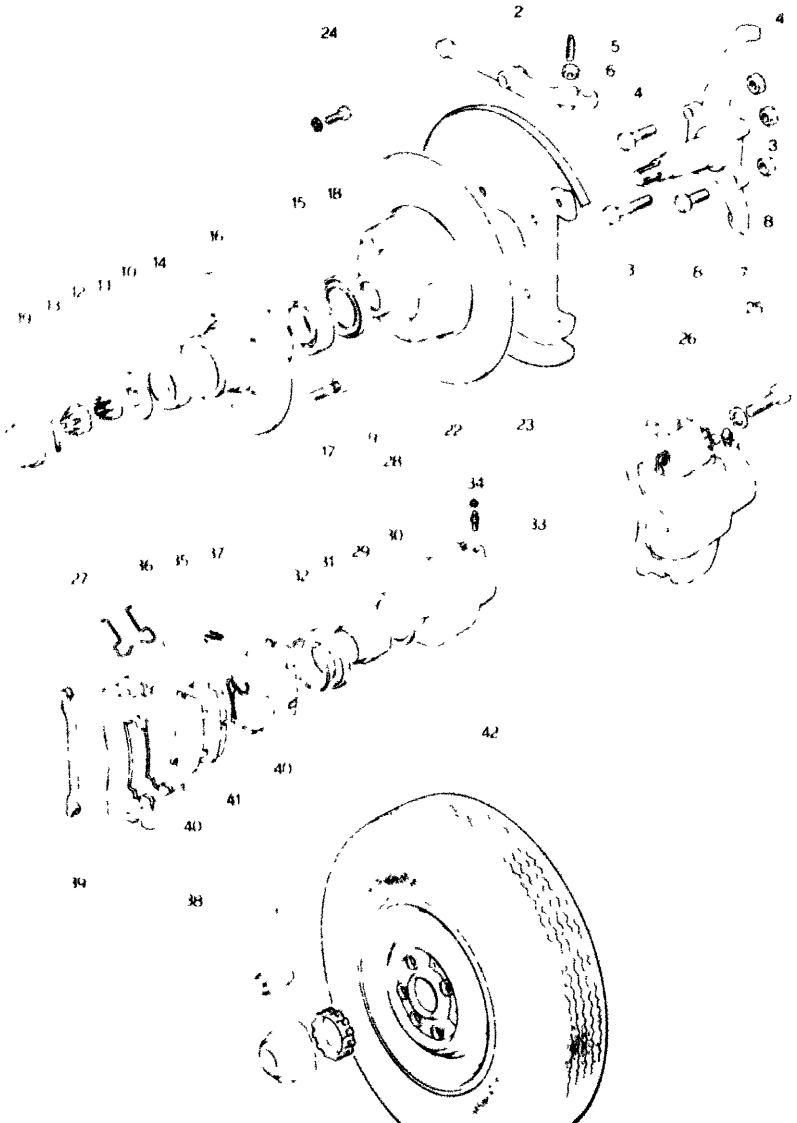

No.	Part Number	Description
	3874 33 710	Caliper (L) (Fig No 29
29	2981 33 651	Piston
30	2981 33 671	Seal, Piston
31	2981 33 681 A	Boot
32	0305 33 685 A	Ring Boot
33	0233 33 691	Screw, Bleeder
34	0600 33 693	Cap
35	0305 33 695	Plug (R Stopper
	0305 33 695	Plug (L), Stopper
36	0305 33 696	Spring, Anti Rattle
37	0305 33 698 A	Pin
38	0841 49 230 A	Pad Set (Fig No 39
39	0305 33 235	Clip, Anti Rattle Pad
40	0305 33 626 A	Shim
41	0296 33 636	Spring (R), Pad
	0296 33 646	Spring (L), Pad
42	9962 03 7314	Tire, 7.35 14 6PR
	9963 60 4130	Valve, Air-TR 413
	9965 05 5540	Wheel, Disc-5 1/2 J x 1

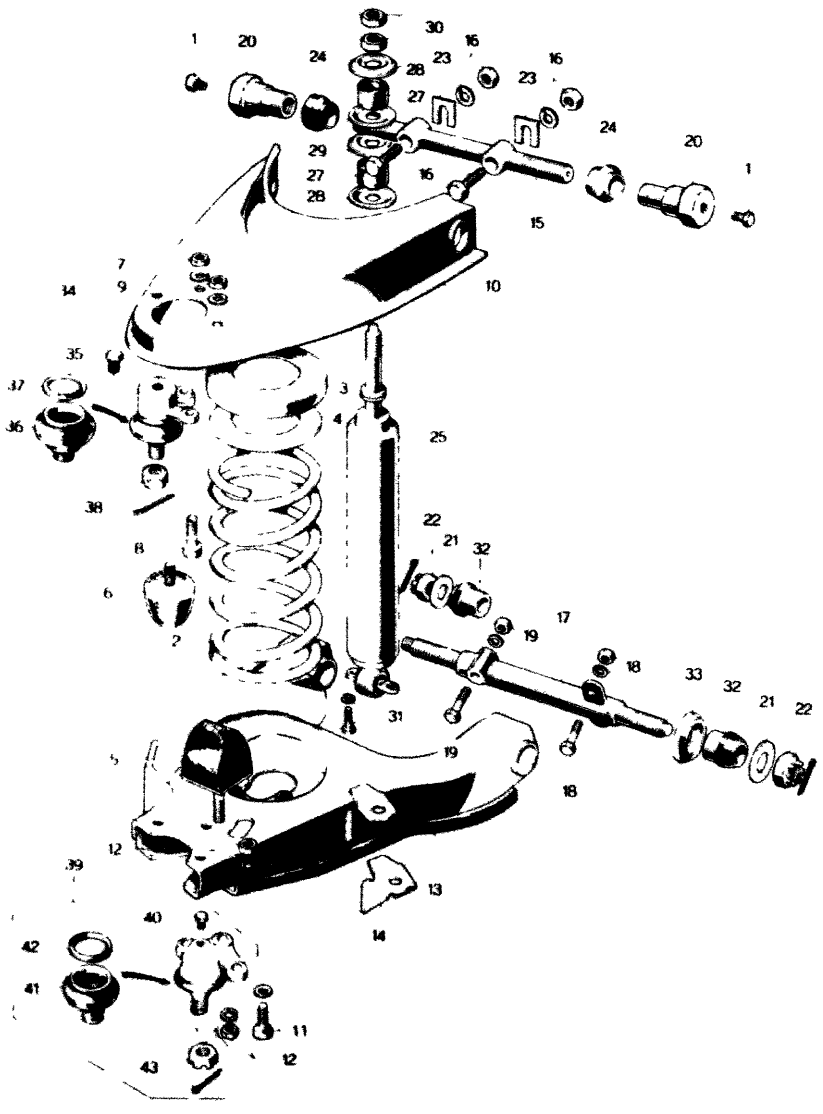

No.	Part Number	Description
1	0208 32 278	Plug, Hex-Head
2	3874 34 011	Spring, Coil
4	3874 34 013	Plate, Adjusting
5	0603 34 110C	Stopper, Bumper
6	0603 34 130B	Stopper, Rebound
7	99928 0800	Nut Rebound Stopper
	99971 0800	Washer, Spring
8	99750 10825	Bolt, Upper Ball Joint
9	99928 0800	Nut
	99971 0800	Washer, Spring
10	3874 34 211	Arm (R), Upper
	3874 34 261	Arm (L), Upper
11	0603 34 305	Bolt, Lower Ball Joint
12	0603 34 307	Nut, Lower Ball Joint & Bu
	99958 1022	Washer, Plain-Lower Ball
	99971 1000	Washer, Spring
13	3874 34 310	Arm (R), Lower

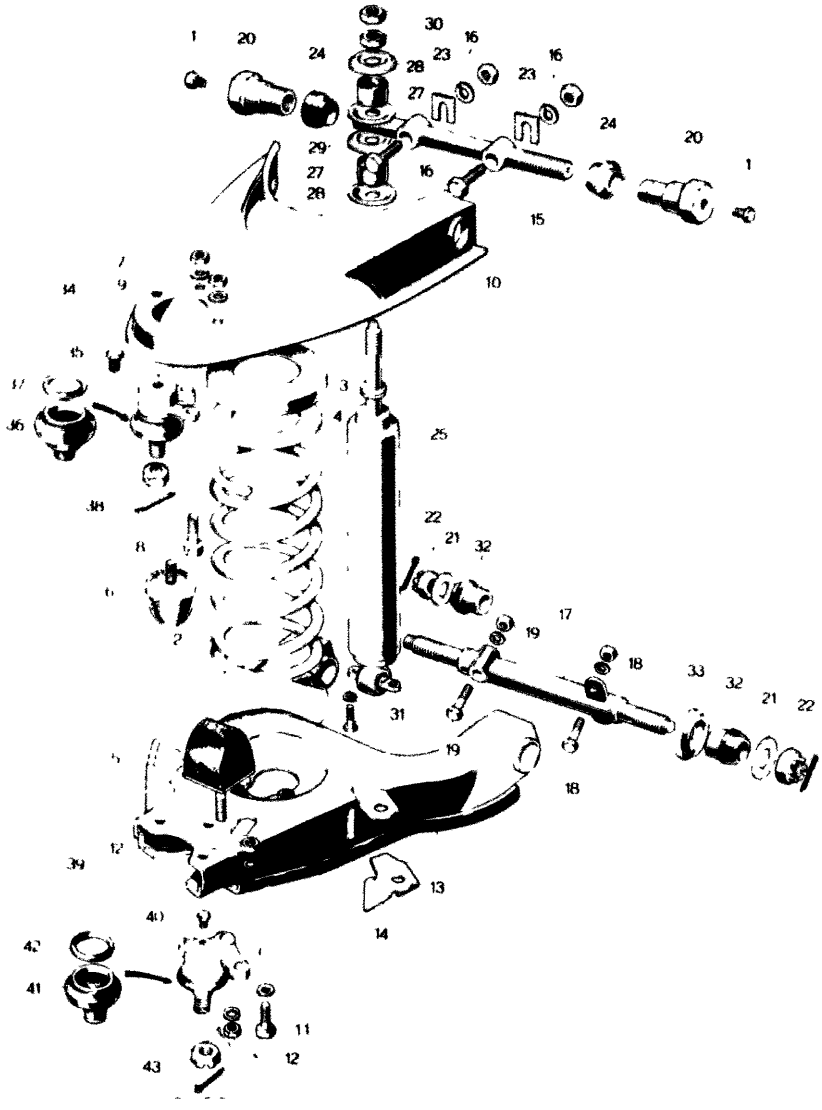

No.	Part Number	Description
	3874 34 360	Arm (L), Lower
14	3874 34 160	Bracket
15	0223 34 411	Shaft Upper Arm
16	0603 34 416	Bolt, Upper Arm Shaft
	99921 1200	Nut
	99971 1200	Washer, Spring
17	3874 34 431	Spindle, Lower Arm
18	99781 1240	Bolt, Lower Spindle
	99921 1200	Nut
	99971 1200	Washer, Spring
19	99781 1250	Bolt, Lower Spindle
	99921 1200	Nut
	99971 1200	Washer Spring
20	0662 34 471A	Bush, Thread-Upper Arm Shaf
21	0193 34 662	Washer, Lower Arm Spindle
22	99924 1400	Nut, Lower Arm Spindle
	99221 3025	Pin, Split

FRONT SUSPENSION (SPRING)

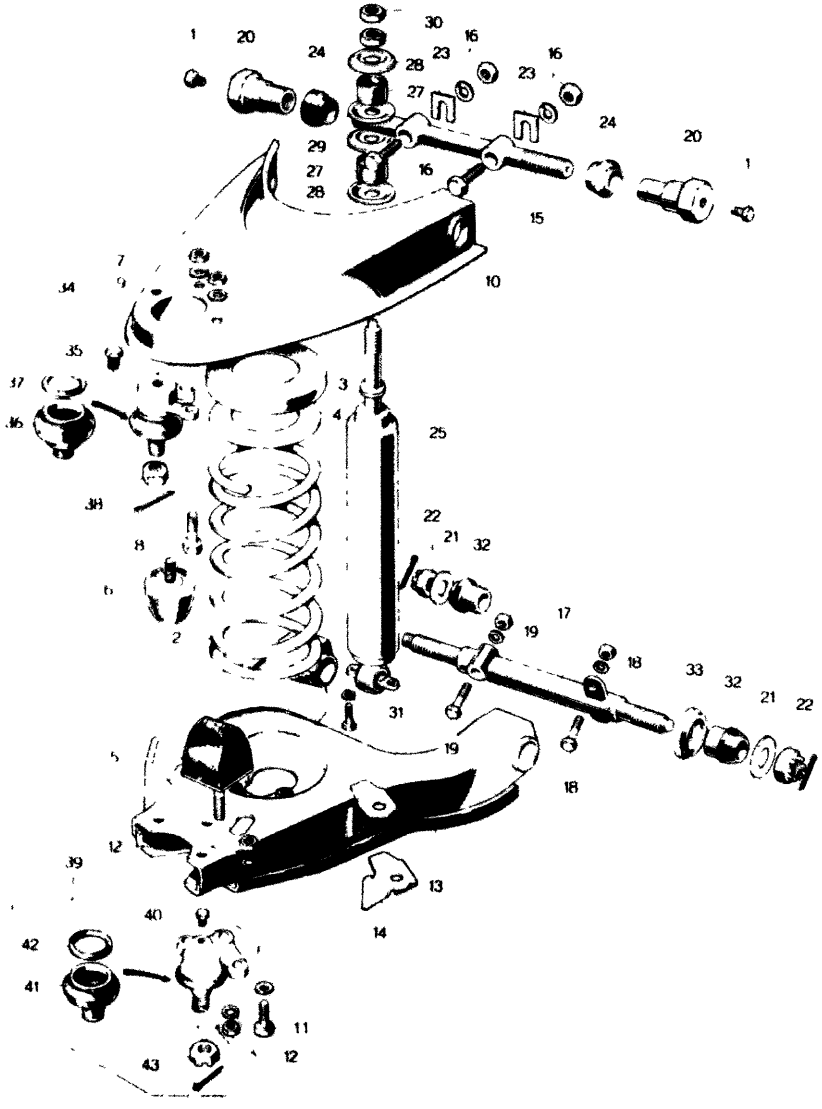

No.	Part Number	Description
23	0187 34 665	Shim Adjust (No 1
	0187 34 666	Shim (No 2
	0187 34 667	Shim No 3)
	0187 34 668	Shim Adjust No 4)
24	0633 34 673	Seal Dust-Upper Arm S
25	3874 34 700	Damper Front
~~26~~	~~0603 34 780~~	~~Bush, Rubber~~
27	0187 34 797	Bush, Rubber
28	0187 34 798	Retainer
29	0187 34 799	Washer Center
30	99921 1000	Nut
	99922 1000	Nut
31	99801 0822	Bolt, Front Damper Bush
	99971 0800	Washer, Spring
32	0193 34 820	Bush Rubber-Lower Spri
33	0193 34 940	Stopper Side-Lower Spri
34	3874 99 354	Joint Set Upper Ball

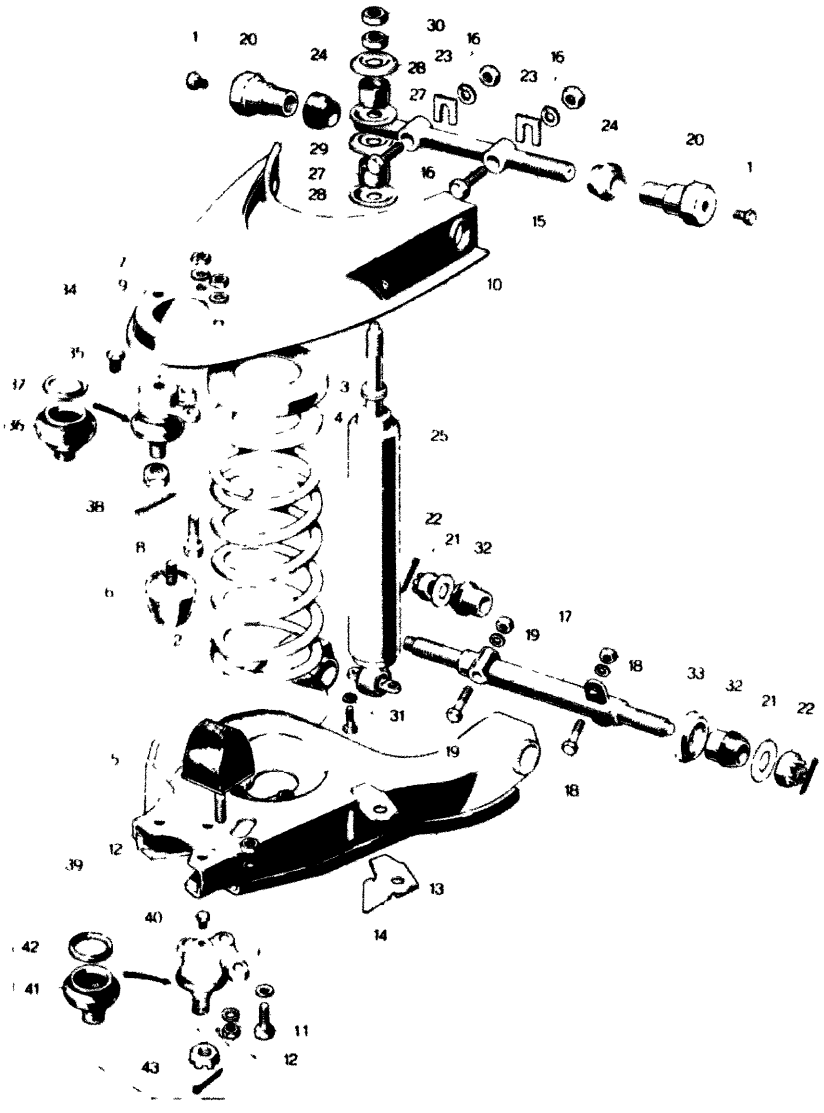

No.	Part Number	Description
35	0208 32 278	Plug
36	0187 32 279A	Seal Dust
37	0187 32 289	Ring Set, Dust Seal
38	99924 1200	Nut
	99221 3020	Pin Split
39	3874 99 356	Joint Set Lower Ball
40	0208 32 278	Plug
41	0603 34 515	Seal Dust
42	0187 34 536	Ring Set, Dust Seal
43	99923 1400	Nut
	99221 3025	Pin Split

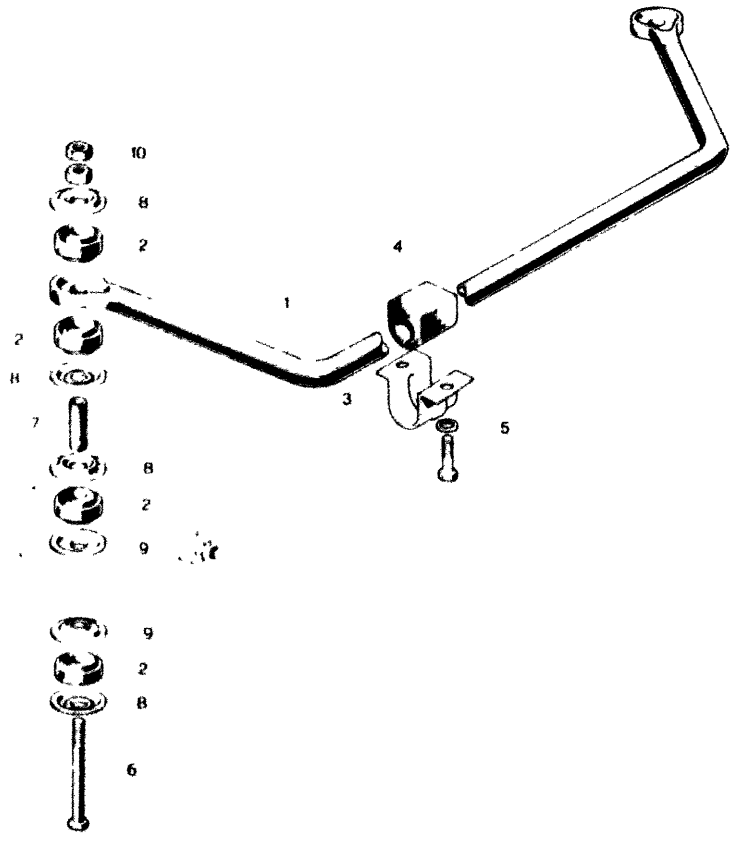

No.	Part Number	Descript
1	1854 34 151	Bar, Stabilizer
2	0603 34 153	Bush, Rubber
3	0603 34 155	Plate, Stabilizer
4	0603 34 156	Rubber, Stabilizer
5	99794 0830	Bolt, Plate
	99971 0800	Washer, Spring
6	0603 34 157A	Bolt, Stabilizer
7	0603 34 158	Spacer
8	0187 34 776	Retainer
~~9~~	~~0187 34 777~~	~~Washer, Centering~~
10	99921 1000	Nut
	99922 1000	Nut

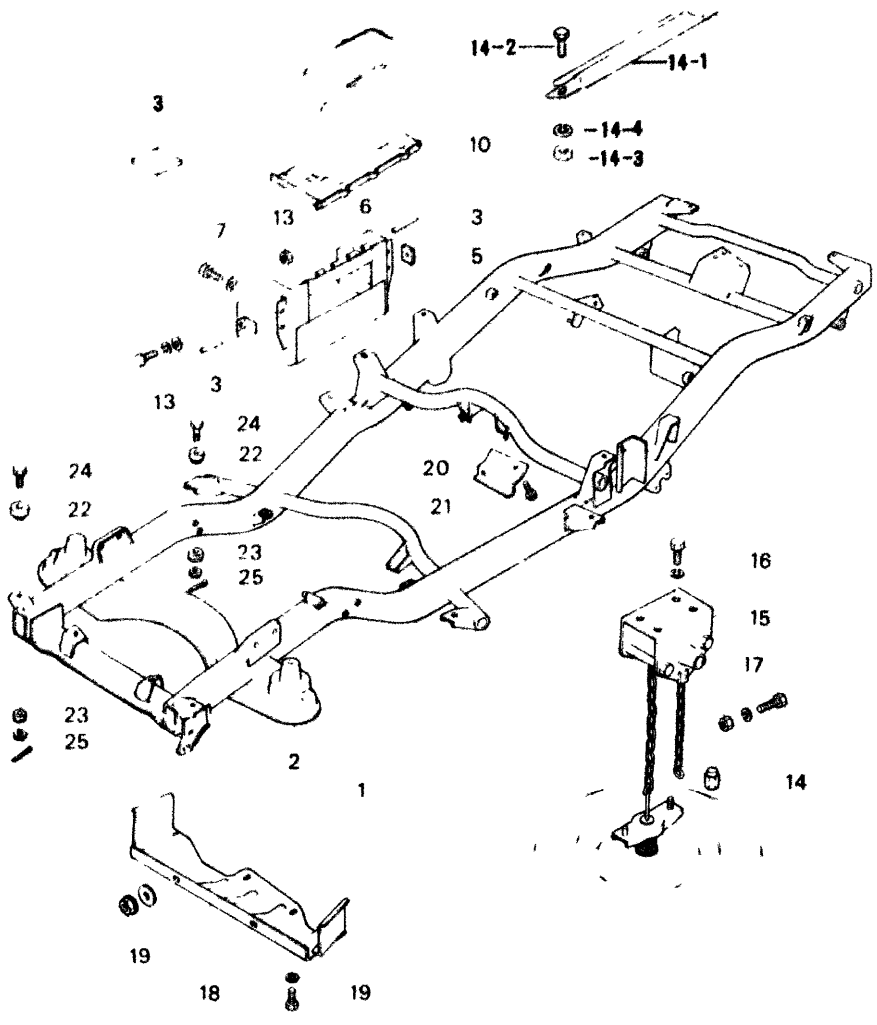

No.	Part Number	Description
1	3790 38 010A	Frame, Main
2	3790 38 200	Member, Cross
3	1859 38 551	Stopper, Battery
~~4~~	~~1854 38 555A~~	~~Spring~~
5	1854 38 558	Rubber
6	3790 38 560	Carrier, Battery
7	99784 1020	Bolt, Battery Carrier
	99951 1022	Washer, Plain
~~8~~	~~1854 38 570C~~	~~Cover, Front Battery~~
~~9~~	~~1854 38 580B~~	~~Cover, Upper Battery~~
10	3790 38 590	Tray, Battery
~~11~~	~~1854 38 600~~	~~Lock, Battery Carrier~~
~~12~~	~~99940 0803~~	~~Nut, Lock~~
13	99806 0610	Bolt, Battery Carrier
	99952 0600	Washer, Plain
	99971 0600	Washer, Spring
	99911 0600	Nut
14	1854 26 161B	Nut, Hub-Tire Carrier
14-1	3790 38 581	Clamp, Battery Carrier
14-2	0559 66 526C	Set Bolt
14-3	99906 0600	Nut
14-4	99952 0618	Washer

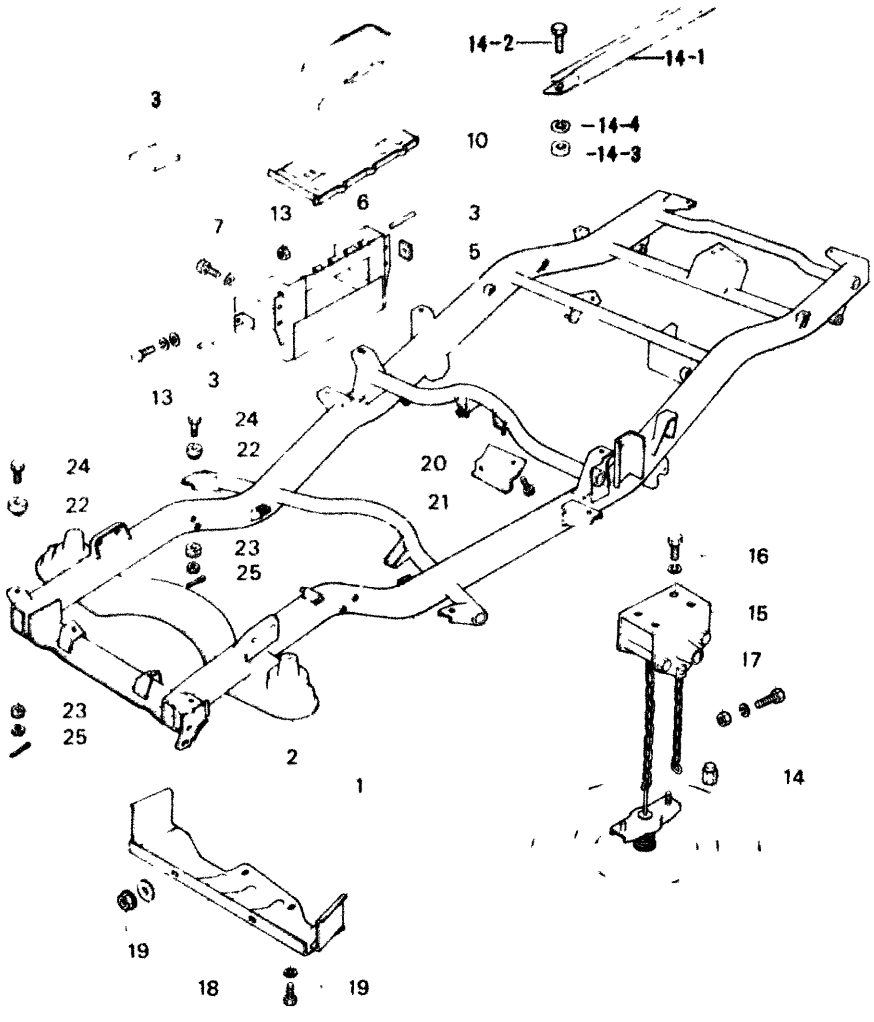

No.	Part Number	Description
15	1854 38 610B	Carrier Tire
	1854 38 650A	Plate, Anchor
	0193 69 770A	Bracket, Hanger
	0600 69 784	Spring Return
	0727 69 785	Spring Release
16	99801 0816	Bolt, Tire Carrier
	99971 0800	Washer, Spring
17	99806 0630	Bolt Tire Carrier
	99906 0600	Nut
	99971 0600	Washer, Spring
18	1854 38 810	Protector, Oil Pan
19	99786 0816	Bolt, Protector
	99952 0800	Washer, Plain
	99971 0800	Washer, Spring
	99940 0800	Nut
20	1854 38 851A	Insulator
21	99796 0612	Bolt, Insulator
22	0603 53 950A	Rubber, Mounting-Upper
23	0603 53 970	Rubber, Mounting-Lower

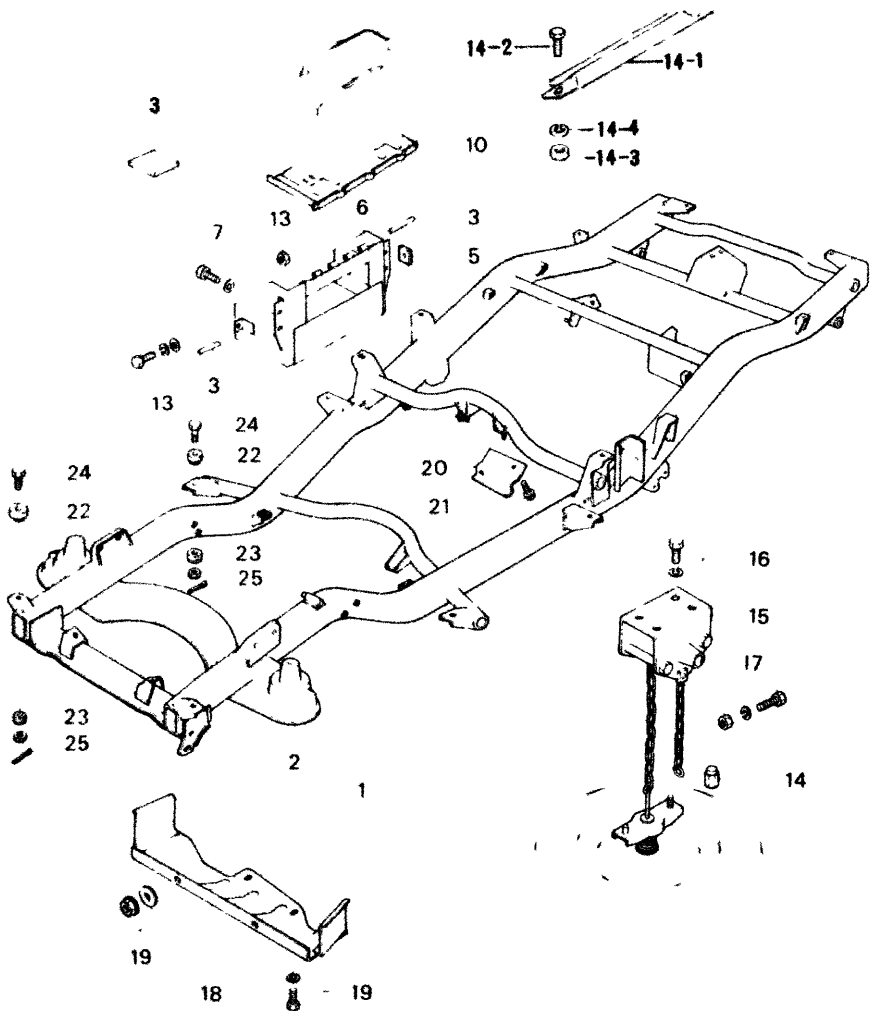

No.	Part Number	Description
24	0603 53 984A	Bolt Mount Set
25	99903 0800	Nut Mount Set
	99951 1030	Washer, Plain
	99221 2015	Pin, Split

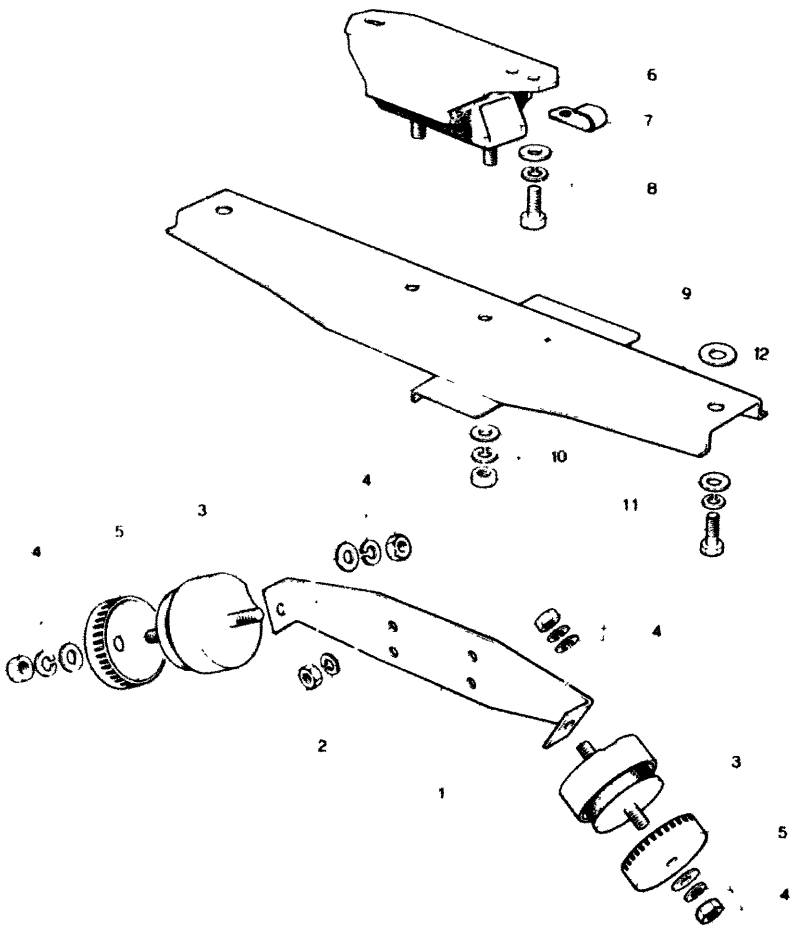

No.	Part Number	Description
1	1854 39 020A	Bracket Engine
2	99921 1000	Nut Engine Bracket
	99971 1000	Washer, Spring
3	1668 39 040C	Rubber Engine Mounting
•	1668 39 040D	**Rubber, Engine Mountir**
4	99921 1000	Nut Engine Mounting R
	99951 1030	Washer Plain
	99971 1000	Washer Spring
	0884 39 387	Washer
5	1668 39 045A	Casing Stopper
•	1668 39 045B	**Casing, Stopper**
6	1011 39 340A	Rubber, Mounting
7	99276 1208	Clip Mounting Rubber
8	99801 0820	Bolt Mounting Rubber
	99952 0800	Washer Plain
	99971 0800	Washer, Spring
9	1854 39 390B	Member, Mounting-T mis
10	99921 1000	Nut, Mounting Member
	99951 1030	Washer Plain
	99971 1000	Washer, Spring
11	99811 1030	Bolt, Mounting Member
	99951 1030	Washer, Plain

39 ENGINE & T/MISSION SU

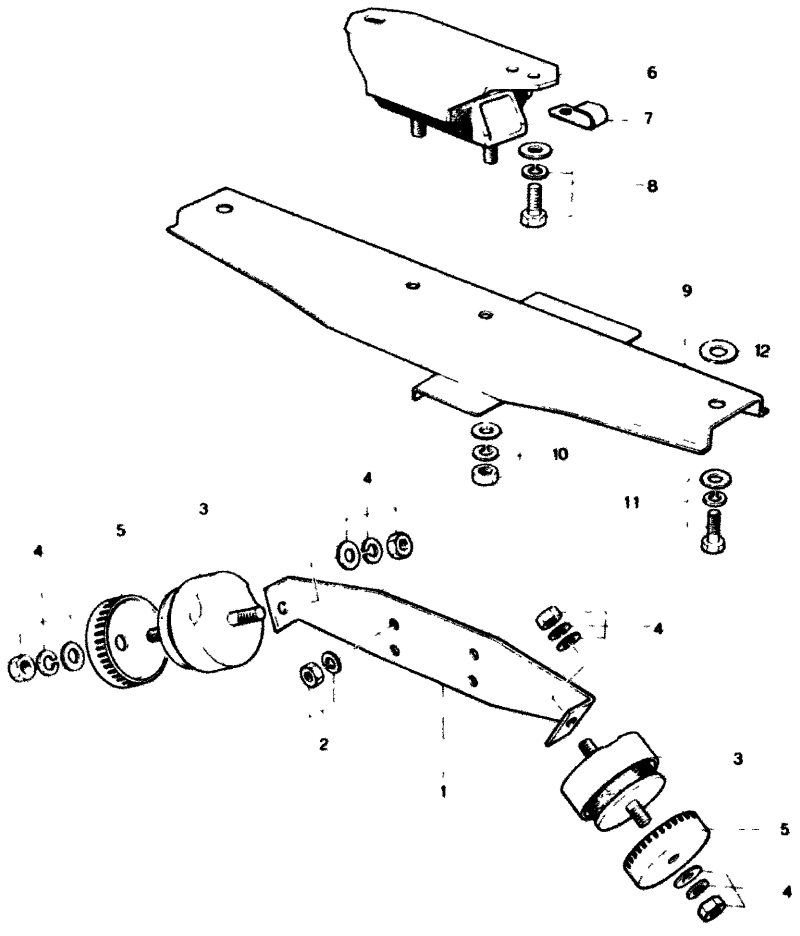

No.	Part Number	Description
	99971 1000	Washer, Spring
12	99952 1442	Washer, Plain

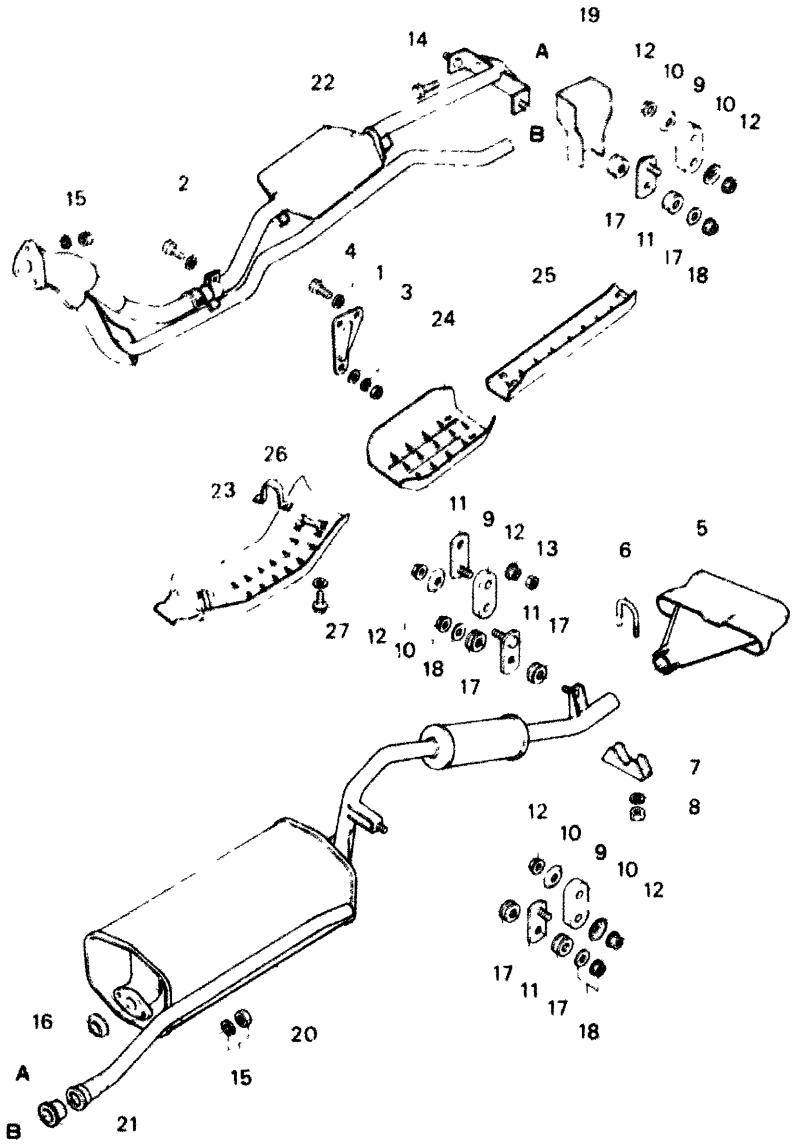

No.	Part Number	Description
1	1854 40 081	Bracket Pre-Silencer
2	99801 0830	Bolt Bracket Pre-Sil
	99951 0822	Washer Plain
	99971 0800	Washer Spring
3	99901 0800	Nut Bracket
	99951 0822	Washer Plain
4	99801 0816	Bolt Bracket
	99971 0800	Washer Spring
5	3900 40 090	Diffuser, Main Silencer
6	1854 40 096A	Bolt "U"-Diffuser
7	1854 40 097A	Clamp 'U' Bolt
8	99901 0800	Nut, 'U" Bolt
	99971 0800	Washer Spring
9	3900 40 160	Hanger, Silencer
10	0820 40 166	Washer, Silencer Hanger
11	1114 40 170	Plate Silencer Hanger
12	99940 0800	Nut, Silencer Hanger
13	99901 0800	Nut, Plate
14	99801 1045	Bolt, Pre-Silencer
15	2158 40 355	Nut, Silencer

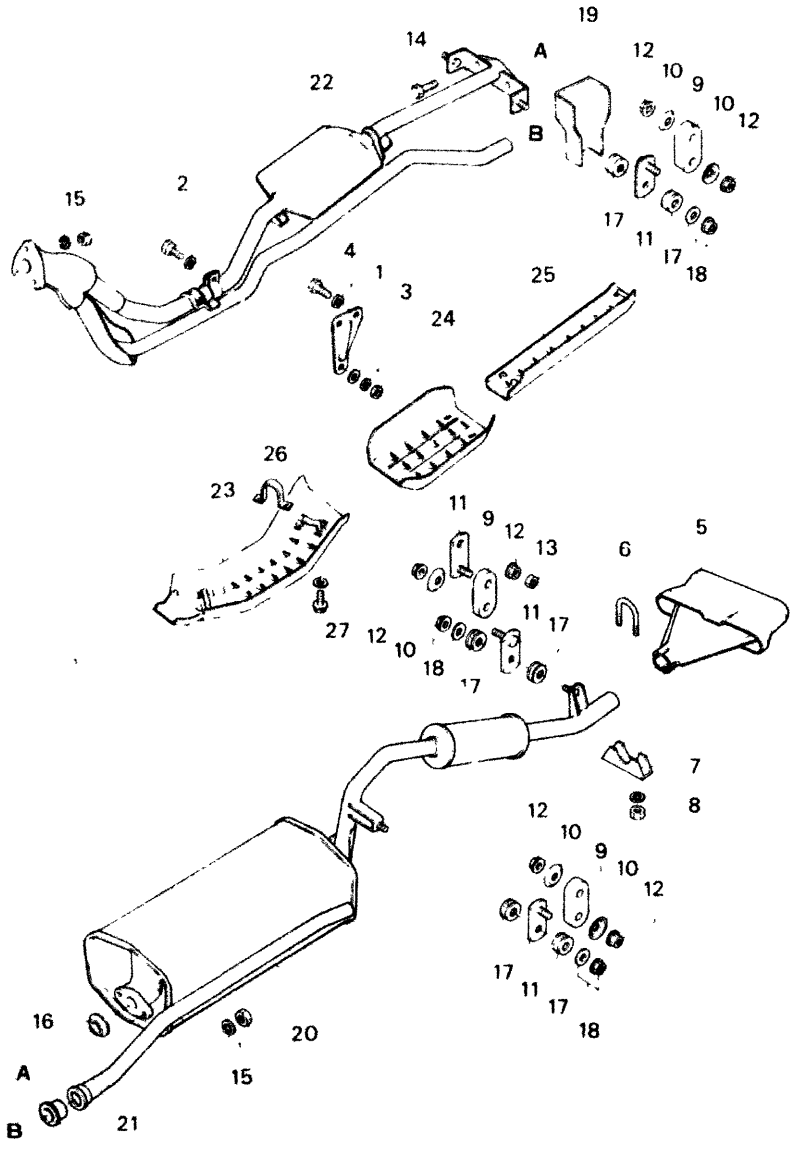

		99971 1000	Washer Spring
16	1757 40 356	Gasket EX Pipe
17	0824 40 401	Insulator Silencer Hanger Pla
18	99949 0800	Nut Silencer Hanger
		99951 0822	Washer Plain
19	1854 40 405	Insulator
•	**1854 40 405A**	**Insulator**
20	3900 40 500B	Silencer, Main
21	2090 40 508A	Joint, Rubber - Silencer
22	**3790 40 600A**	Silencer, Pre-
23	1854 40 810C	Protector No 1
24	1854 40 821A	Protector No 2
25	**3790 40 830**	Protector No 3
26	1114 40 850B	Band Protector
27	99796 0612	Bolt Protector
		99952 0618	Washer Plain

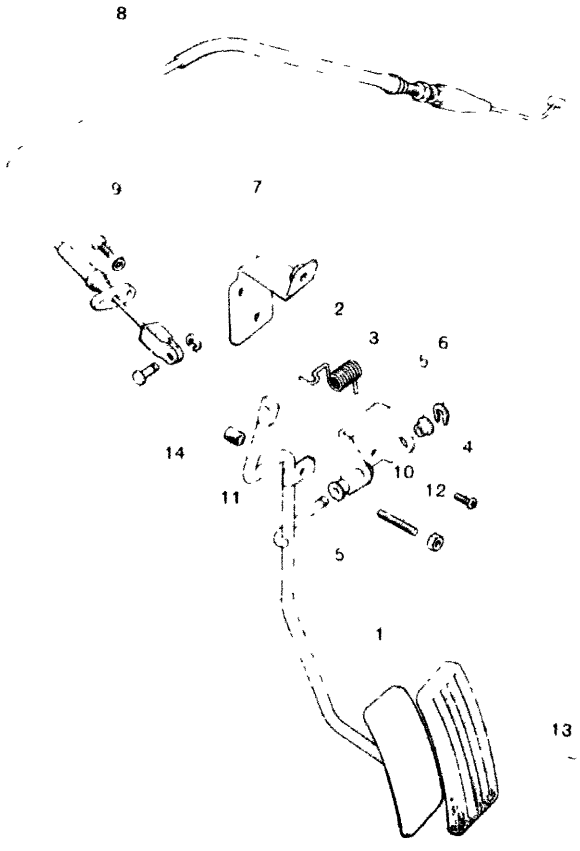

No.	Part Number	Description
1	1854 41 610B	Pedal, Accel
2	2158 41 619	Spring
3	0305 41 641	Retainer Accel Rod
4	99786 0616	Screw, Tapping-Retainer
5	0259 41 644	Bush
6	99575 0600	Ring, Retaining
7	1856 41 650	Retainer, Accel Rod Aut
8	1854 41 660C	Cable, Accel
9	99786 0620	Screw Tapping-Accel Ca
	99952 0618	Washer Plain
10	0118 41 681	Stop, Pedal
11	0118 41 682	Rubber, Stopper
12	99940 0600	Nut, Stopper
13	3792 41 711A	Pad Pedal
14	99230 0511	Pin, Joint Cable & Pedal
	99575 0300	Ring, Snap

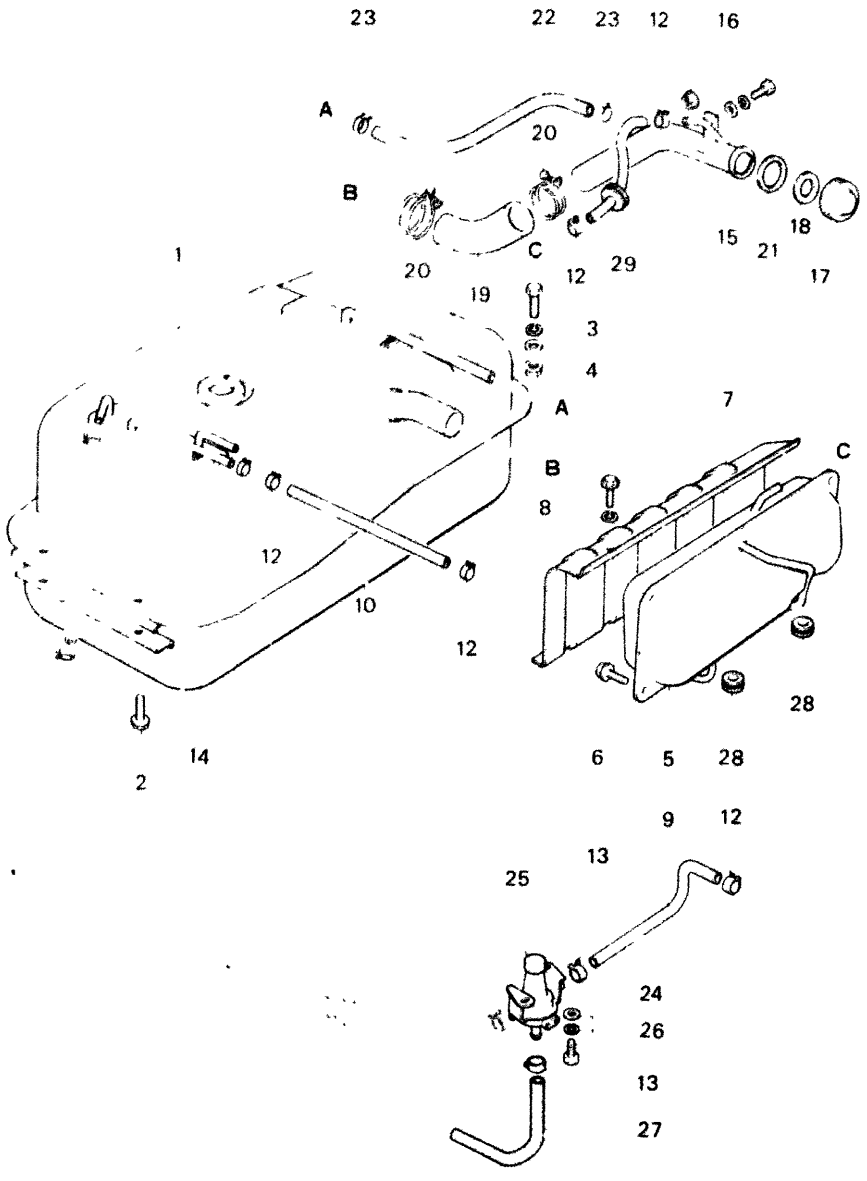

No.	Part Number	Description
1	3787 42 310A	Tank Fuel
2	99786 0820	Bolt Fuel Tank-Front
3	99601 0820	Bolt Fuel Tank-Rear
	99952 0800	Washer Plain
	99971 0800	Washer Spring
4	99940 0802	Nut Fuel Tank-Rear
5	1854 42 330	Tank, Condense
6	99786 0612	Bolt Condense Tank
7	1854 42 338A	Protector Condense Tank
8	99786 0616	Bolt, Protector
	99971 0600	Washer, Spring
9	1854 42 339A	Hose Condense Tank
10	99348 06340	Hose Condense Tank Fuel
11	99336 06030	Hose Condense Tank Filler Pipe
	99340 60300	Hose Condense Tank Filler Pipe
	99348 06200	Hose Condense Tank Filler (Fed. Manual)
12	99283 1000	Clip, Hose-Tank Side
13	99283 1100	Clip, Hose-Check Valve
14	1854 42 342A	Seat, Fuel Tank
15	3787 42 350	Pipe, Filler

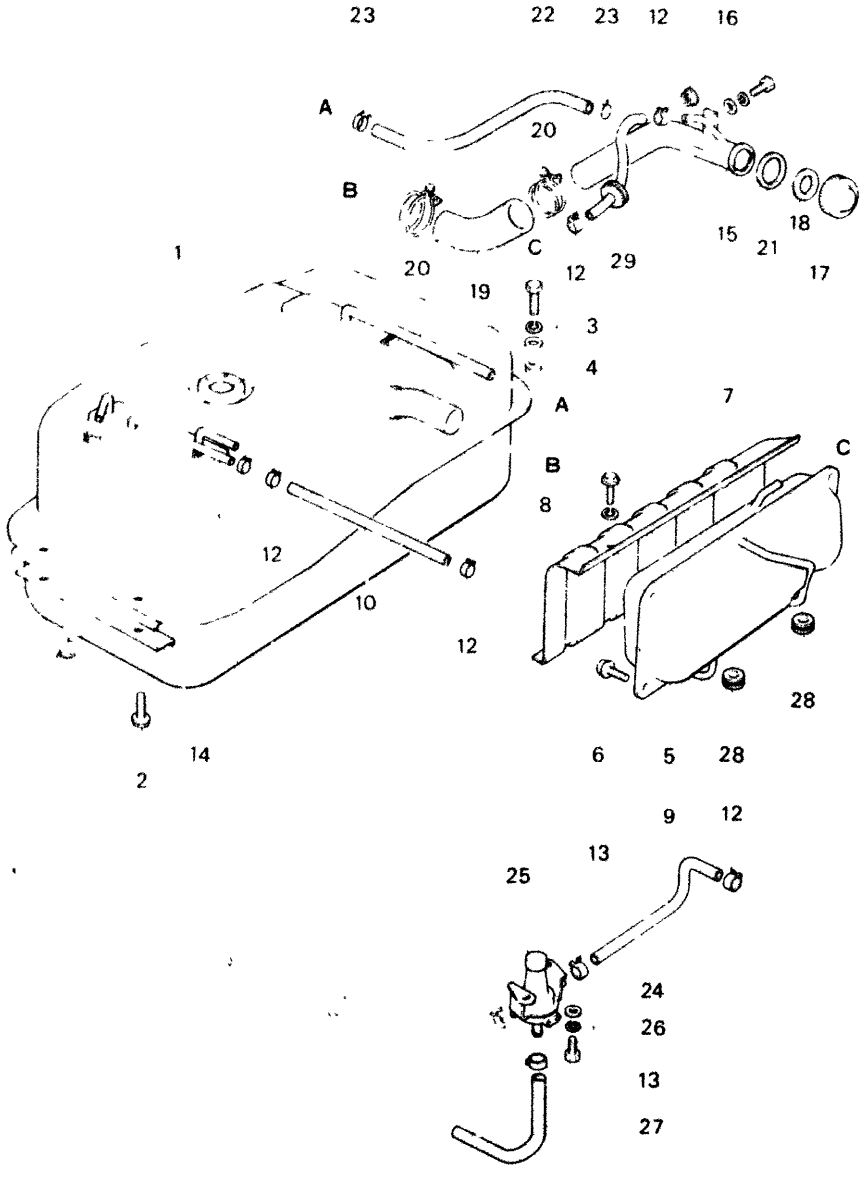

No.	Part Number	Description
16	99801 0816	Bolt Filler Pipe
	99952 0800	Washer Plain
	99971 0800	Washer Spring
	99940 0800	Nut
17	1823 42 430	Cap Filler
18	0136 42 434	Gasket
19	3870 42 441	Hose, Filler
20	99282 5800	Clamp Hose-Filler Hose
21	0136 42 449	Supporter Filler Pipe
22	3900 42 451	Hose Filler Pipe Fuel Tar
23	99282 2201	Clamp, Hose-Filler Hose
24	3648 42 910	Valve, Check
25	1854 42 717	Cap Check Valve
26	99797 0512	Bolt, Check Valve
	99952 0500	Washer, Plain
	99971 0500	Washer, Spring

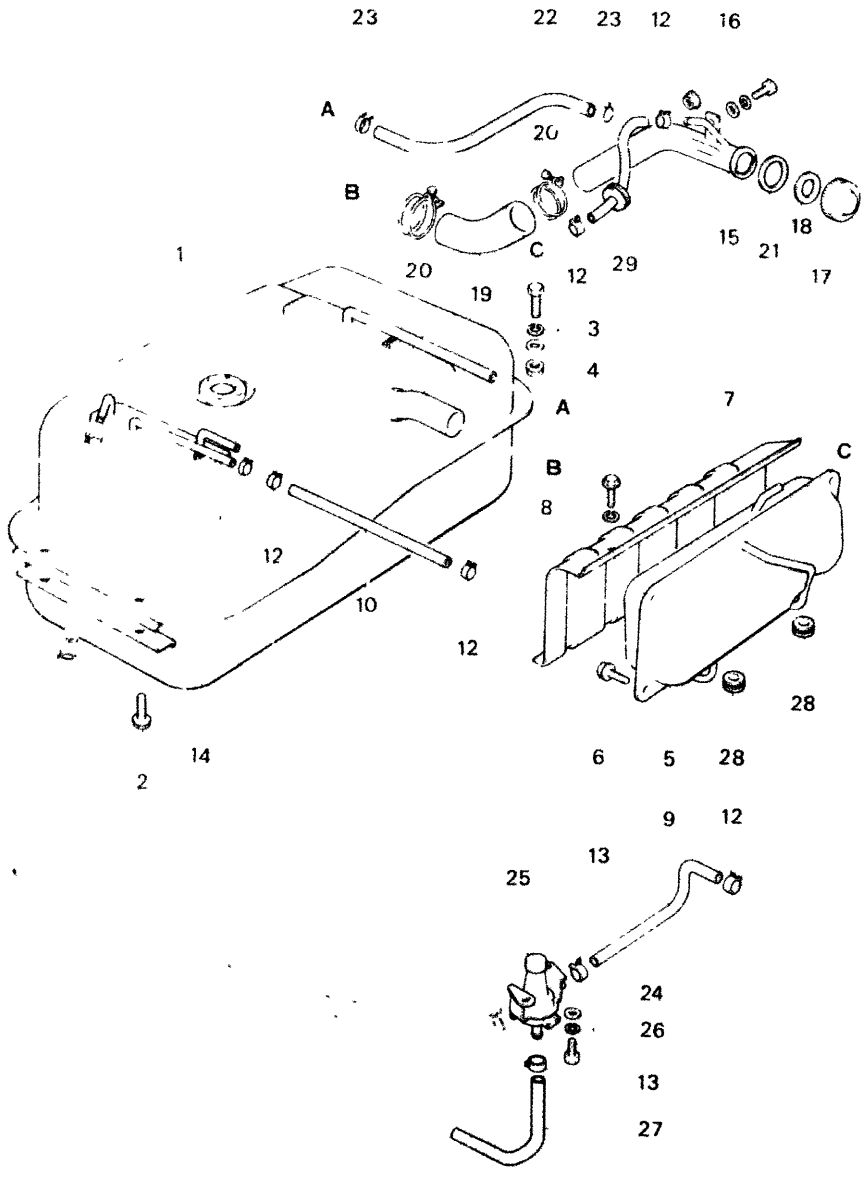

No.	Part Number	Description
27	99348 0628	Hose Check Valve Flo
28	99681 1001	Protector Condense Ta (Fed. Manual)
29	99681 1501	Protector Hose (Fed. Manual)

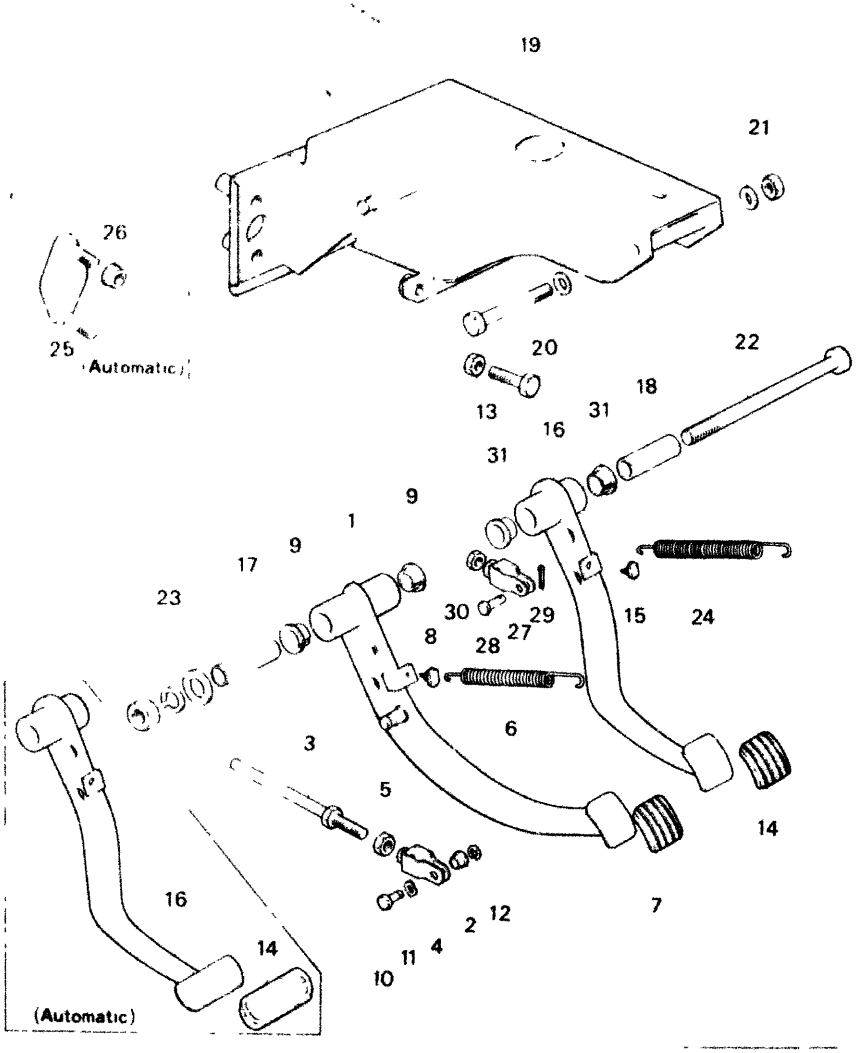

No.	Part Number	Description
1	1854 41 030A	Pedal Clutch
2	0727 41 023	Bush Push Rod Fork Clut
3	0824 41 131	Rod Push Clutch
4	1872 41 140	Fork, Push Rod
5	1872 41 142	Nut Push Rod
6	0180 41 308	Spring Clutch Pedal
7	3792 43 028	Pad Pedal Clutch
8	0187 43 029	Stopper Pedal
9	1015 46 085	Bush, Pedal
10	0223 46 683	Pin
11	99972 0800	Washer Wave
12	99575 0600	Ring, Retaining
13	99795 1032	Bolt, Pedal Stopper
	99922 1000	Nut
14	3792 43 028	Pad, Pedal-Brake (Manu
	0225 43 028A	Pad, Pedal-Brake (Autor
15	0187 43 029	Stopper Pedal-Brake Pe
16	1854 43 030B	Pedal, Brake (Manual)
	1856 43 030A	Pedal, Brake (Automatic)
17	0866 43 061	Pipe (Manual)

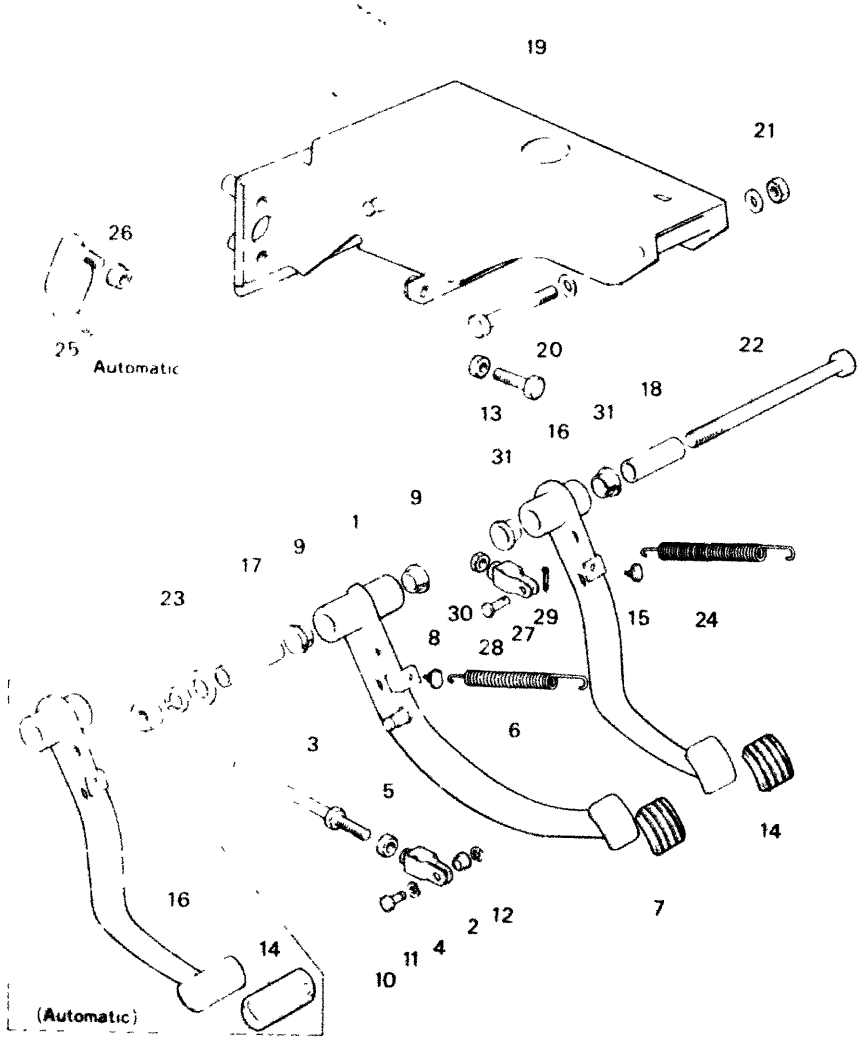

No.	Part Number	Description
18	0866 43 062	Pipe
19	3790 43 070	Bracket Master Cylinder
20	99801 0890	Bolt Bracket
	99952 0822	Washer Plain
21	99940 0800	Nut Bracket
	99952 0822	Washer Plain
22	99813 10180	Bolt Pedal Manual
	99813 10140	Bolt Pedal (Automatic
	99952 1000	Washer Plain
23	99921 1000	Nut, Pedal
	99952 1000	Washer Plain
	99971 1000	Washer, Spring
24	0603 43 081	Spring Brake Pedal
25	1015 43 090	Plate Bracket Automatic
26	99940 0800	Nut Plate
27	1854 43 140	Fork, Brake
28	99231 0822	Pin Joint-Fork
29	99221 2020	Pin, Split
30	99922 0800	Nut Fork
31	1015 46 085	Bush Brake Pedal

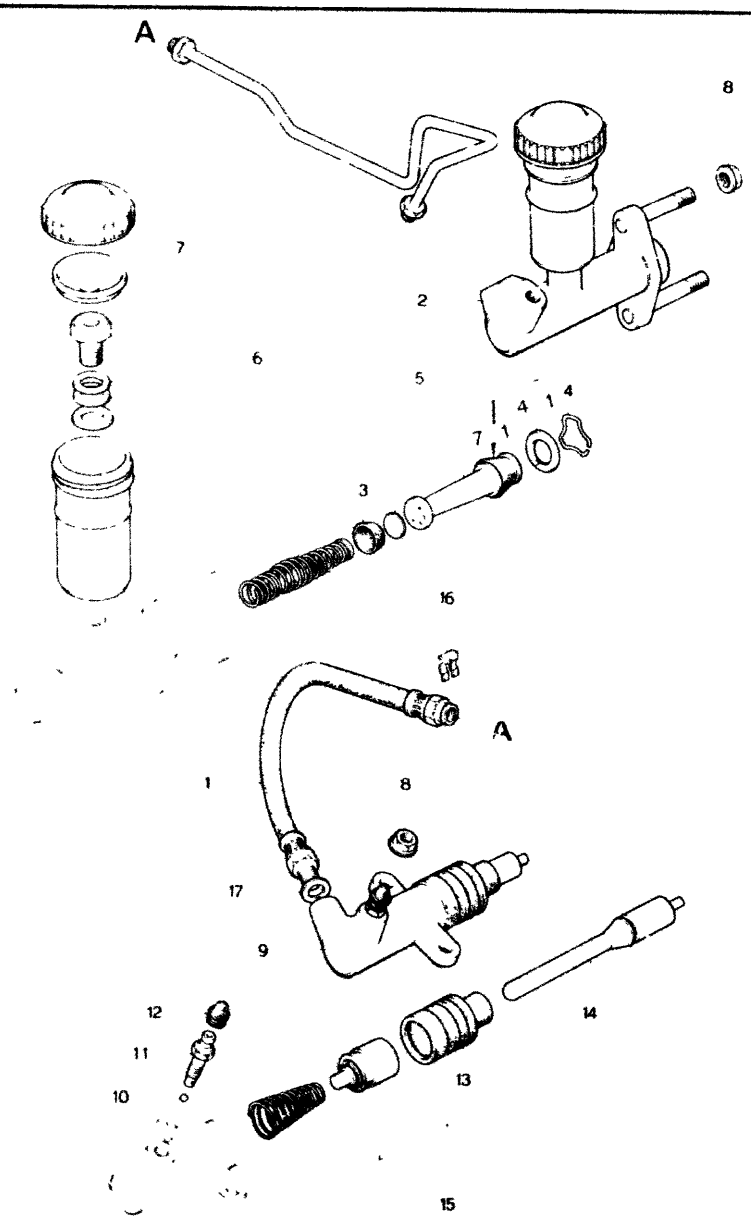

CLUTCH RELEASE (MANUAL)

No	Part Number	Description
1	0118 41 380A	Hose Flexible
2	1011 41 400A	Cylinder Clutch Master
3	0839 41 461	Cup Primary
4	0111 43 432	Wire, Piston Stop
4-1	0111 43 433	Washer
5	1052 89 411A	Repair Kit
6	0391 89 435	Tank Set Reserve
7	0317 89 436A	Cup Set Reserve Ta
7-1	0305 41 451	Cup, secondary
8	99940 0800	Nut Cylinder
9	1881 41 920A	Cylinder Clutch Release
10	99611 1500	Ball, Steel
11	0259 33 691	Valve, Bleeder
12	0259 33 693	Cap, Bleeder
13	0603 41 331	Boot
14	1881 41 341	Rod, Push

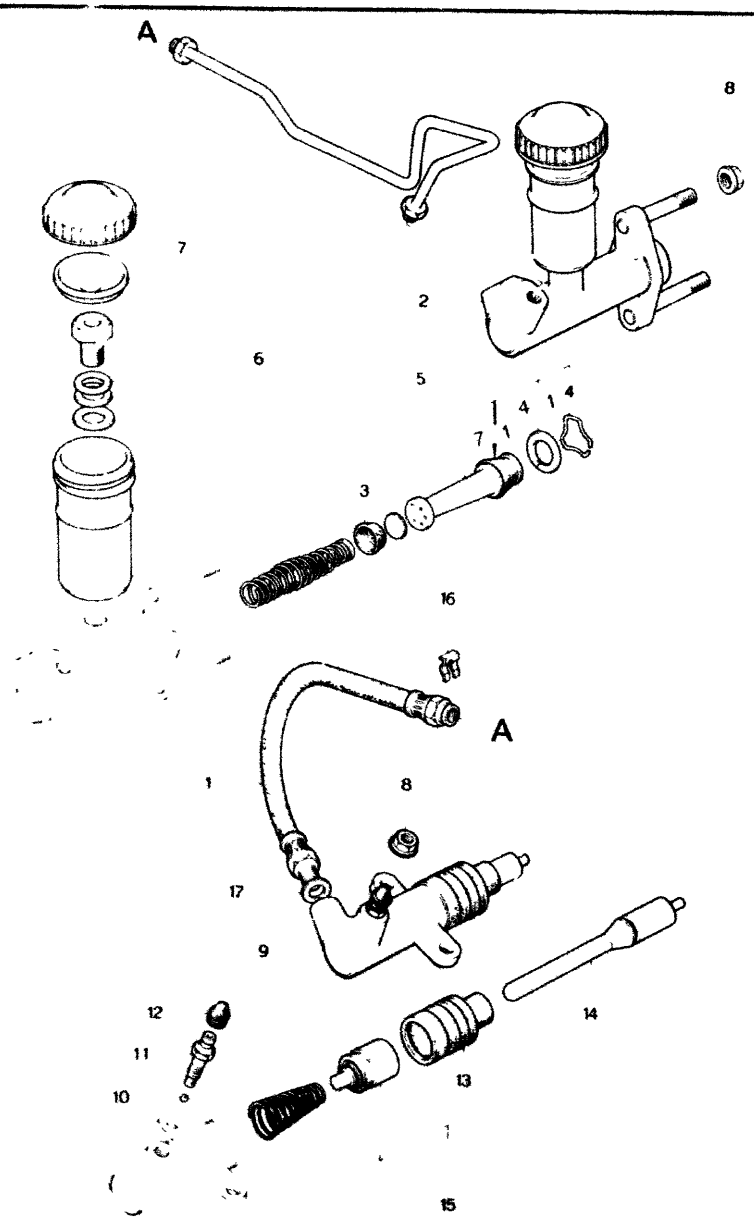

No.	Part Number	Description
15	1052 89 411 A	Repair Kit
16	0136 43 635	Clip, Flexible Hose
17	99564 1000	Packing, Flexible Hose

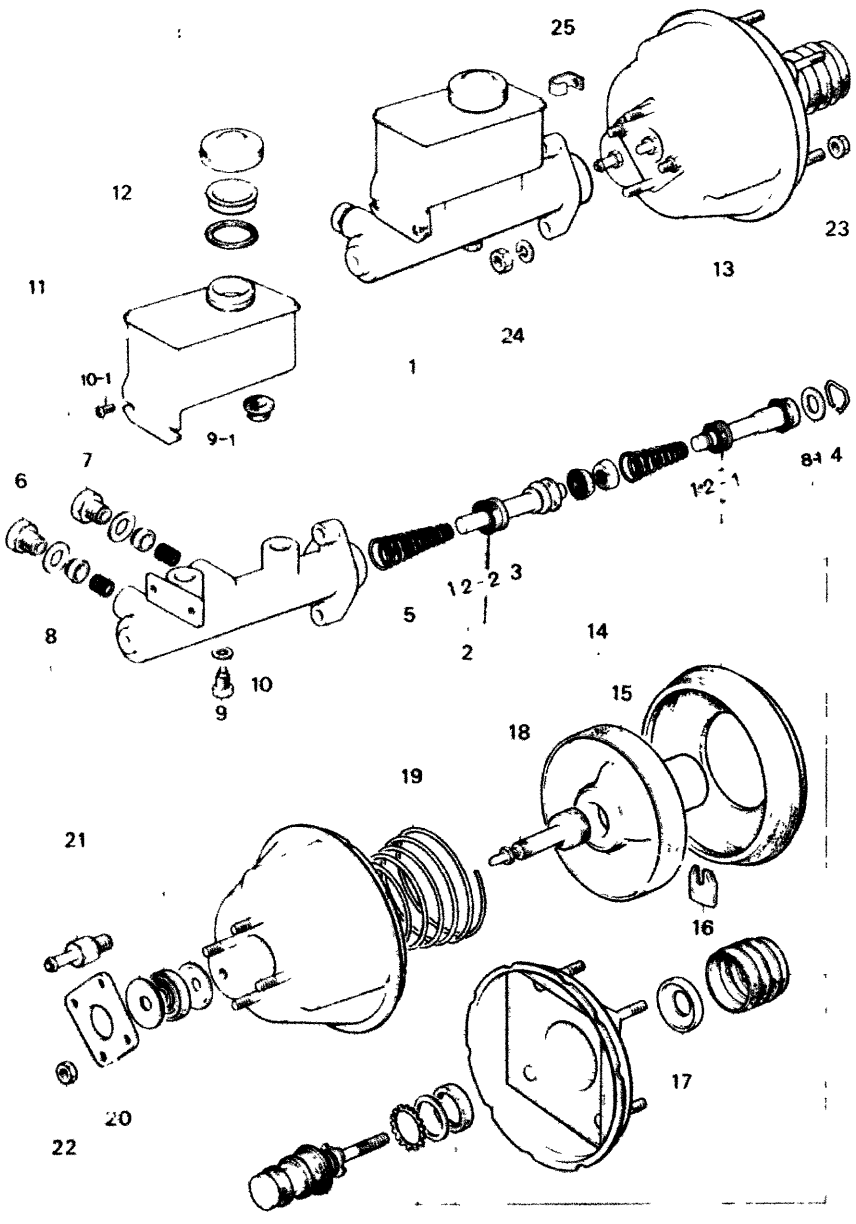

No.	Part Number	Description	
1	1854 43 400	Cylinder, Tandem Master	
2	1708 49 610	Parts Kit, Inner (Fig. No. 8 ~ 10 Included)	
3	1708 49 630	Piston, Floating (Fig. No.	
4	0305 49 638	Wire, Piston Stop	
5	1708 49 642	Spring, Floating	
6	0512 49 651	Bolt, Joint	
7	0512 49 652	Bolt, Joint	
8	0305 49 656	Gasket, Joint Bolt	
8-1	0305 49 666	Washer, Stop	
	0512 49 667	Washer, Stop	Selective
	0512 49 668	Washer, Stop	
9	0512 49 676	Bolt, Set (A)	
	0512 49 677	Bolt, Set (B)	Selective
	0512 49 678	Bolt, Set (C)	
9-1	0305 49 686B	Bush	
10	0512 49 696	Gasket, Set Bolt	
• 10-1	0391 49 692	Bolt, Tank Set	
11	0391 89 435	Tank Set	
12	0317 89 436A	Cap Set, Tank	
12-1	0305 49 626	Cup, Primary	

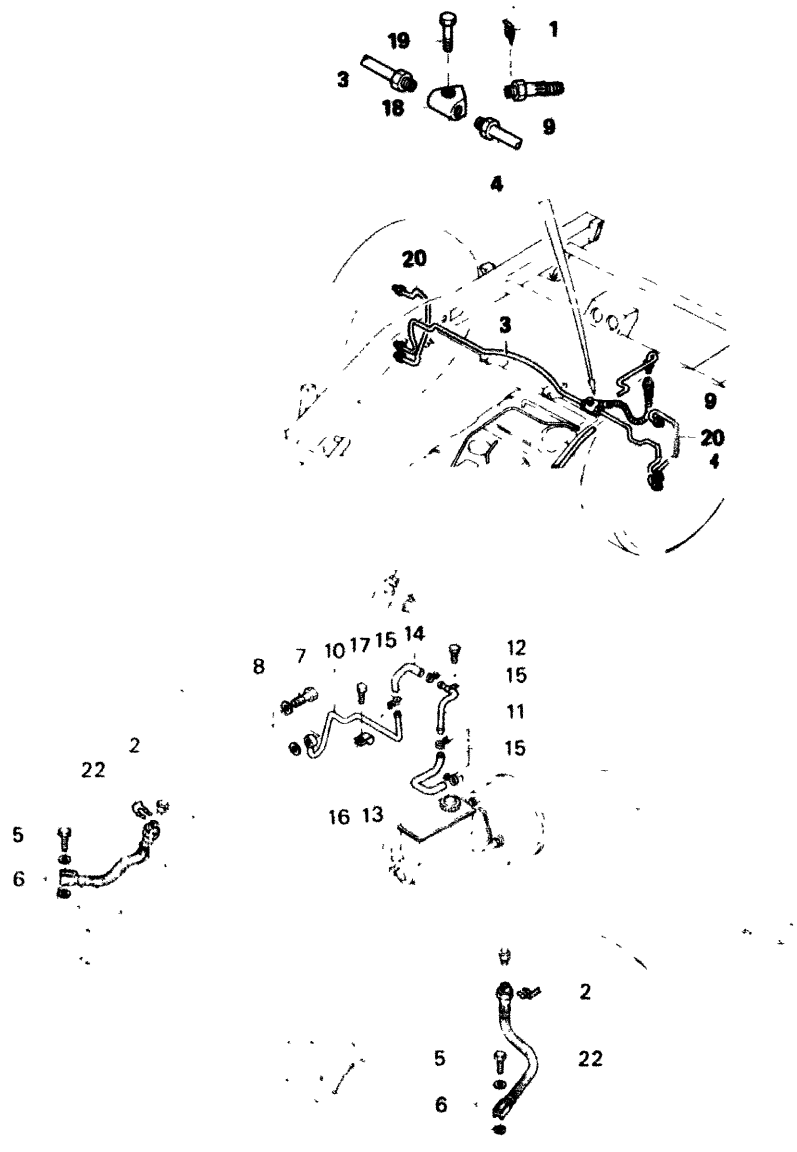

No.	Part Number	Description
1	0136 43 635	Clip Flexible Hose
2	0305 43 635	Clip, Flexible Hose
3	3790 43 650	Pipe Brake Oil (R)-Rea
4	3790 43 660	Pipe, Brake Oil (L)-Rea
5	1570 43 694A	Bolt Connector-Front F
6	99562 1000	Gasket
7	1570 43 694A	Bolt, Connector
8	99562 1200	Gasket, Connector Bolt
9	1854 43 810	Hose, Flexible Rear
10	1757 43 830A	Pipe, Vacuum
11	1854 43 830	Pipe Vacuum
12	99796 0610	Bolt, Vacuum Pipe
13	1854 43 836	Hose, Vacuum
14	1854 43 842	Hose, Vacuum
15	99282 1901	Band, Hose-Vacuum Hos
16	1757 43 848	Holder, Pipe
17	99796 0812	Bolt, Pipe Holder
18	0118 43 853	Joint, Pipe-Rear
19	99796 0625	Bolt, Joint
20	3874 43 950	Pipe, Rear-Brake Oil

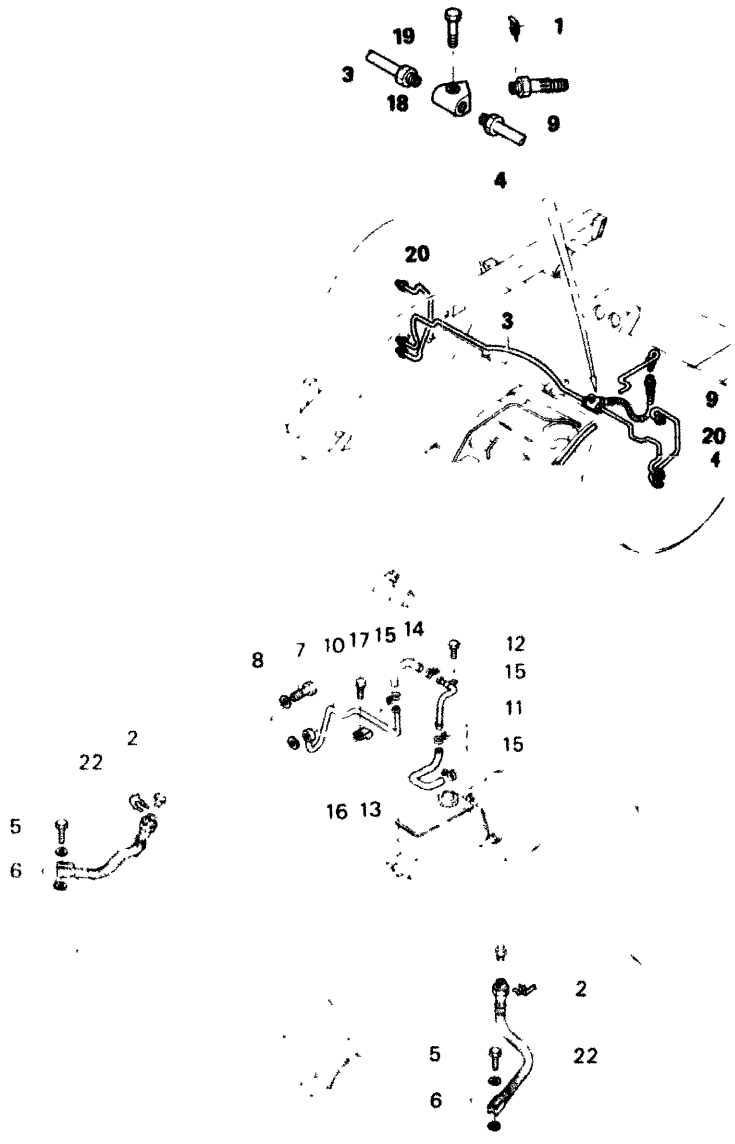

No.	Part Number	Description
22	1854 43 970	Hose Flexible
23	~~8187 45 221~~	~~Joint, Pipe-Rear~~
24	~~99000 0025~~	~~Bolt, Pipe Joint~~
	~~99040 0600~~	~~Nut~~

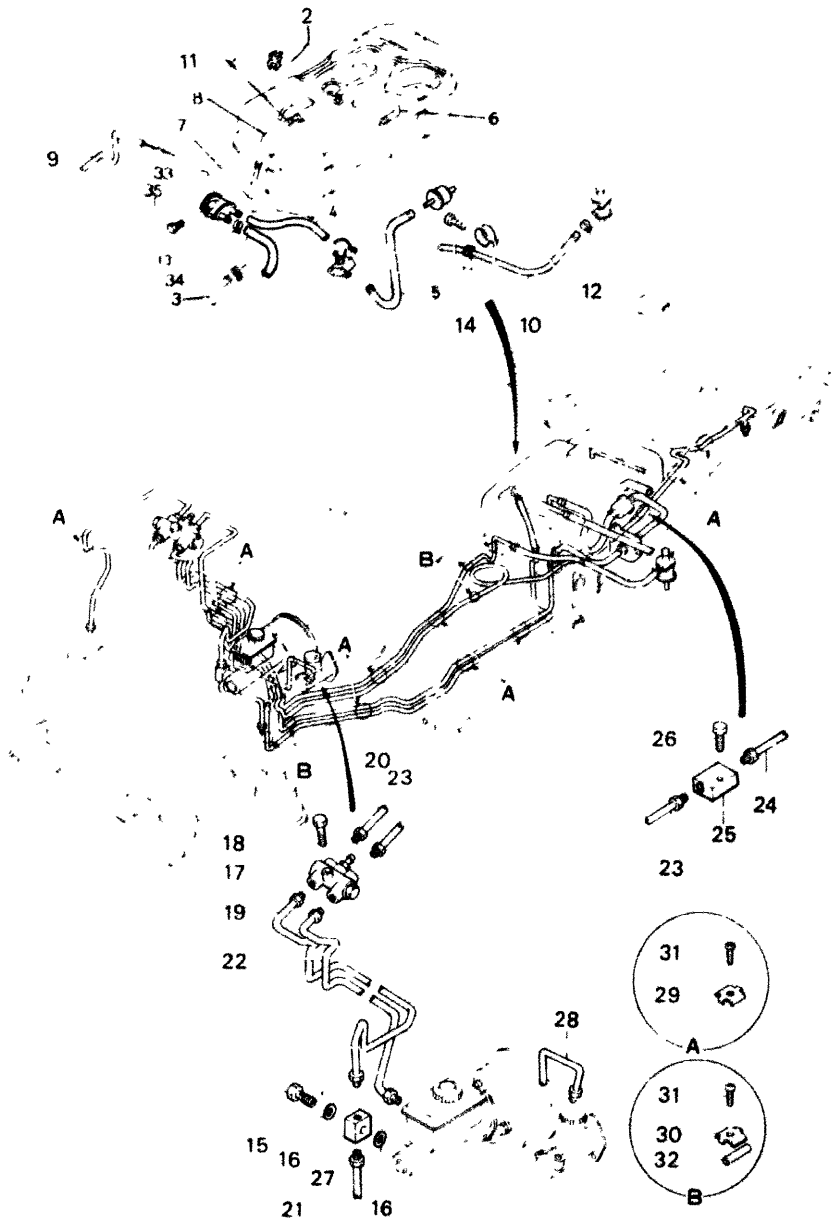

No.	Part Number	Description
2	0707 43 390	Clip
3	3790 45 061	Pipe Fuel Main
4	99348 0826	Hose Fuel Main Main Pipe Fuel
5	99348 0832	Hose Fuel Main Fuel Pump
6	99348 0826	Hose Fuel Main Fuel F
7	1854 45 631B	Pipe Fuel Return
8	99348 06290	Hose Fuel Return Return Pipe
9	3790 45 731	Pipe Evaporation
10	99348 06570	Hose Evaporation Evaporation Pi
11	99283 1000	Clip Hose
12	99283 1100	Clip Hose
13	99283 1200	Clip Hose
14	99686 1400	Protector Hose
15	0118 43 505A	Bolt Connector
16	99562 1000	Gasket, Connector Bolt
17	1011 43 890A	Indicator Brake Fail
18	99786 0635	Bolt Indicator
19	1854 45 210	Pipe Front Main Brake
20	3790 45 280	Pipe Front Brake R

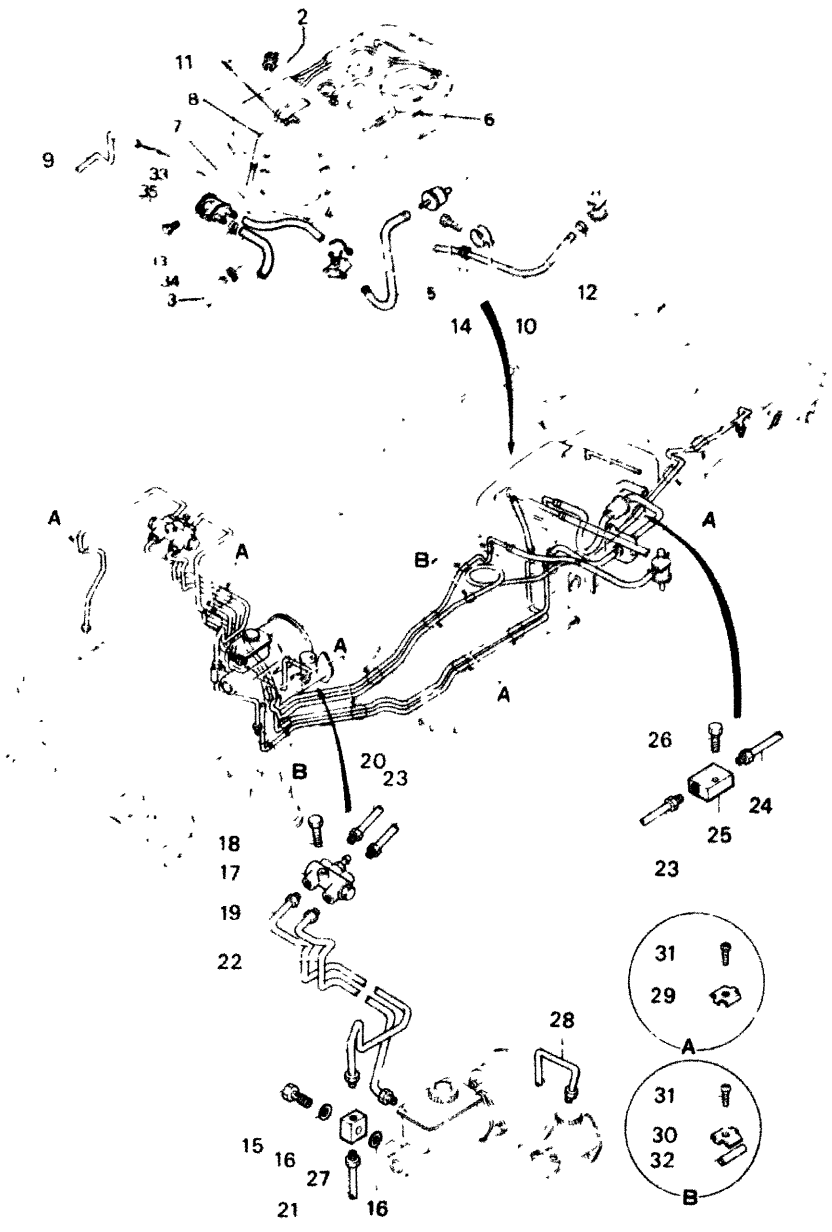

No.	Part Number	Description
21	3790 45 320	Pipe Front Brake L
22	1854 45 340	Pipe Rear Main Brake
23	3790 45 350	Pipe Rear Brake No 1
24	3790 45 360	Pipe, Rear Brake No 2
25	0571 45 451	Joint Pipe
26	99786 0630	Bolt Pipe Joint
27	0866 45 452	Joint Pipe
28	1854 45 550A	Pipe Clutch Manual
29	0866 45 903A	Clip, Pipe
30	1304 45 903	Clip, Pipe
31	99786 0612	Screw
32	1854 45 995	Protector
33	3919 45 170	Valve, Fuel Cut
34	99348 0816	Hose
35	99860 0516	Screw, Tapping

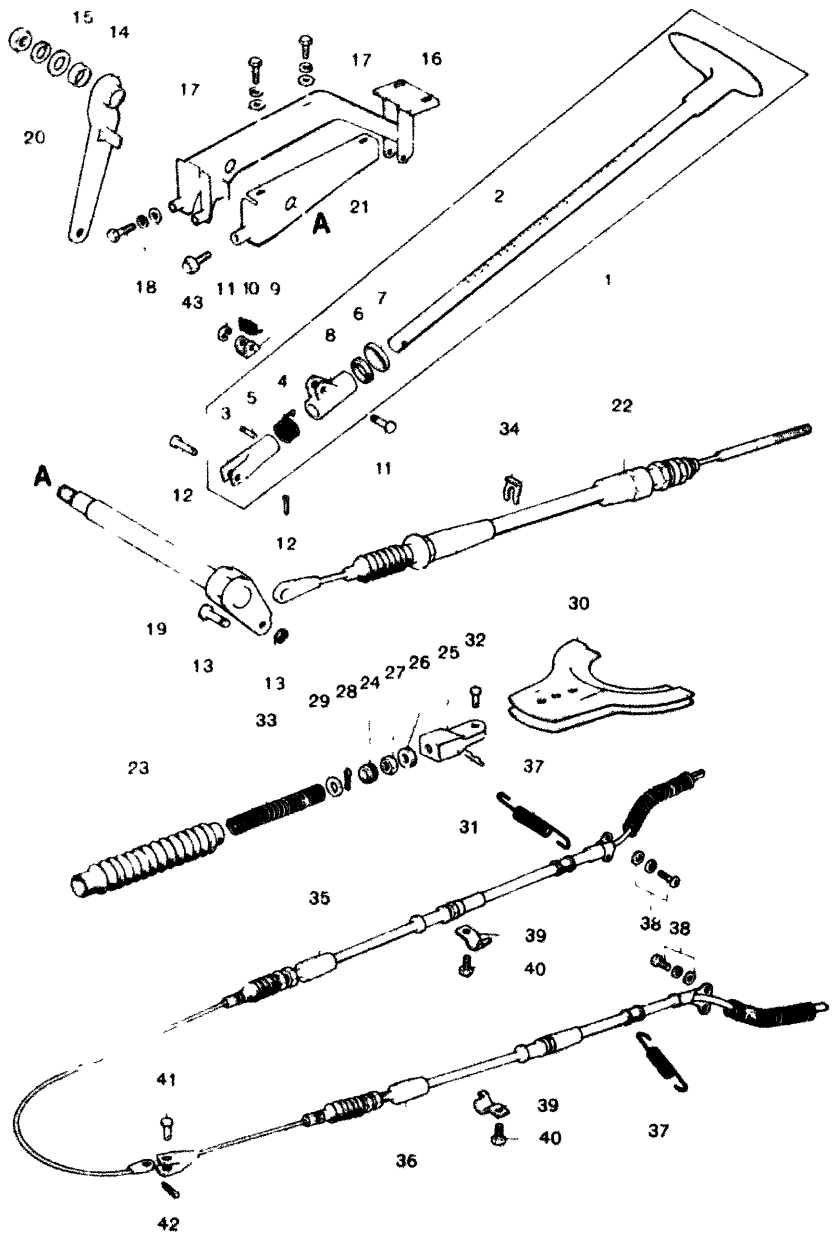

No.	Part Number	Description
15	2541 44 063	Spacer
16	1854 44 080	Bracket, Parking Brake
17	99830 0612B	Screw, Bracket
	99953 0600	Washer, Plain
	99971 0600	Washer, Spring
18	99785 0645	Screw, Bracket
	99951 0618	Washer, Plain
	99971 0600	Washer, Spring
19	1845 44 090	Lever, Spindle
20	99922 1000	Nut, Spindle Lever
	99952 1000	Washer, Plain
	99971 1000	Washer, Spring
21	1845 44 110	Bracket, Parking Brake
22	3874 44 150	Cable, Front
23	0603 44 158A	Boot
24	0603 44 167	Ring, Guide
25	0603 44 261	Joint, Fork
26	0603 44 262	Nut, Adjust
27	99906 0600	Nut

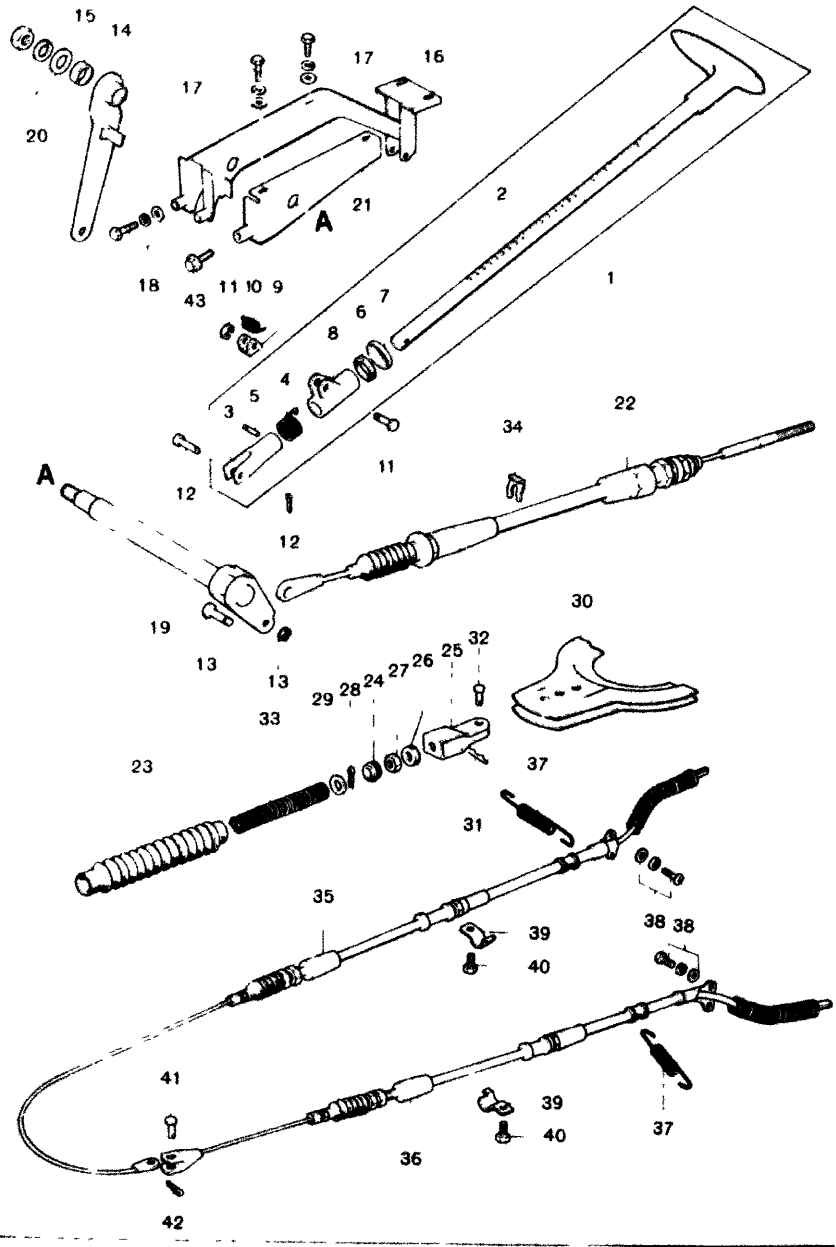

No.	Part Number	Description
28	99221 1610	Pin Split
29	99203 2000	Washer Plain
30	0603 44 270	Plate, Equalizer
31	99231 0822	Pin, Joint-Equalizer Pla
32	0603 44 272	Pin
33	0603 44 357	Spring, Joint Fork
34	0118 44 375	Clip, Cable
35	3790 44 410	Cable (R), Rear
36	3870 44 420	Cable (L), Rear
37	0578 44 431	Spring, Cable
38	99833 0510	Screw, Setting Plate
	99952 0500	Washer, Plain
	99971 0500	Washer, Spring
39	0866 44 439	Clip, Rear Cable
40	99786 0616	Screw, Tapping-Clip
41	99231 0620	Pin, Joint Rear Cable
42	99221 1610	Pin, Split-Joint Pin
43	99786 0845	Screw, Tapping-Parking Bra

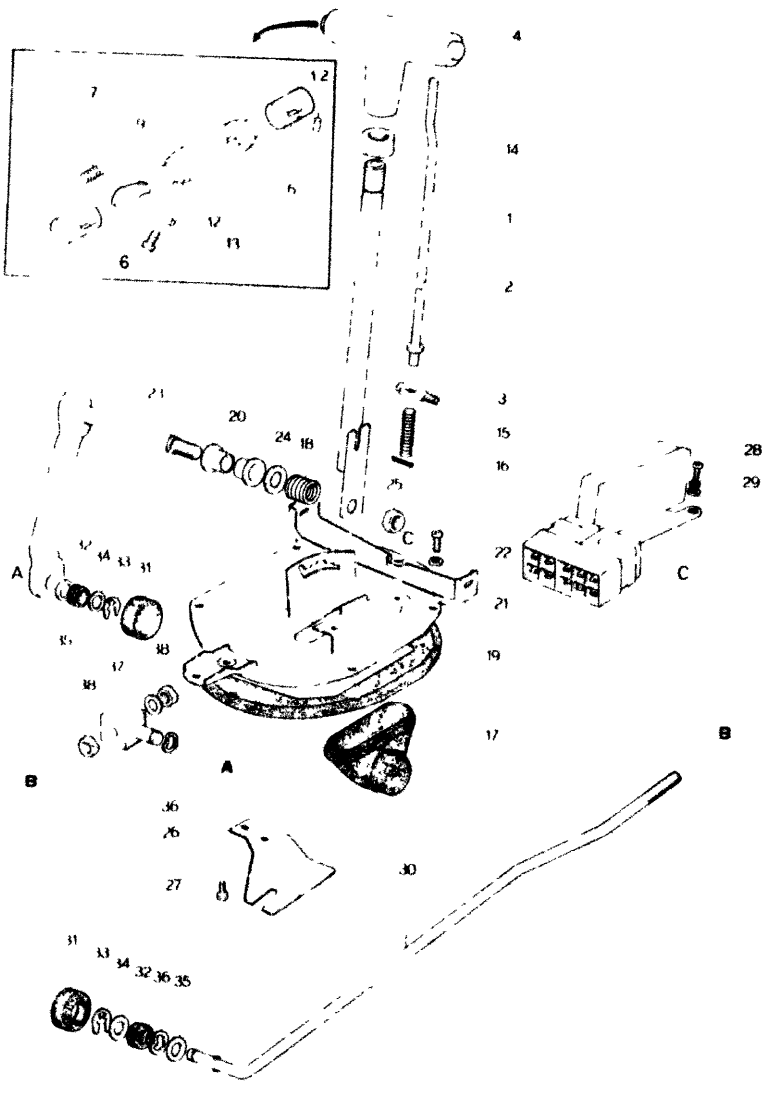

No.	Part Number	Description
1	1015 46 010B	Lever, Selecter
2	1244 46 021	Rod
3	1840 46 022	Pin, Guide
4	3598 46 030A	Knob, Change Lever
~~5~~	~~2375 46 051A~~	~~Knob~~
6	1244 46 032	Button
7	1244 46 038	Spring
~~8~~	~~2375 46 064~~	~~Supporter~~
9	1244 46 055	Lever
~~10~~	~~2375 46 056A~~	~~Plug~~
~~11~~	~~0368 46 057A~~	~~Cap~~
12	1244 46 035	Pipe
13	99868 0416	Screw
14	2375 46 061	Nut
15	2375 46 062	Spring
16	99221 2020	Pin, Split
17	1015 46 081	Boot
18	1015 46 082	Spring

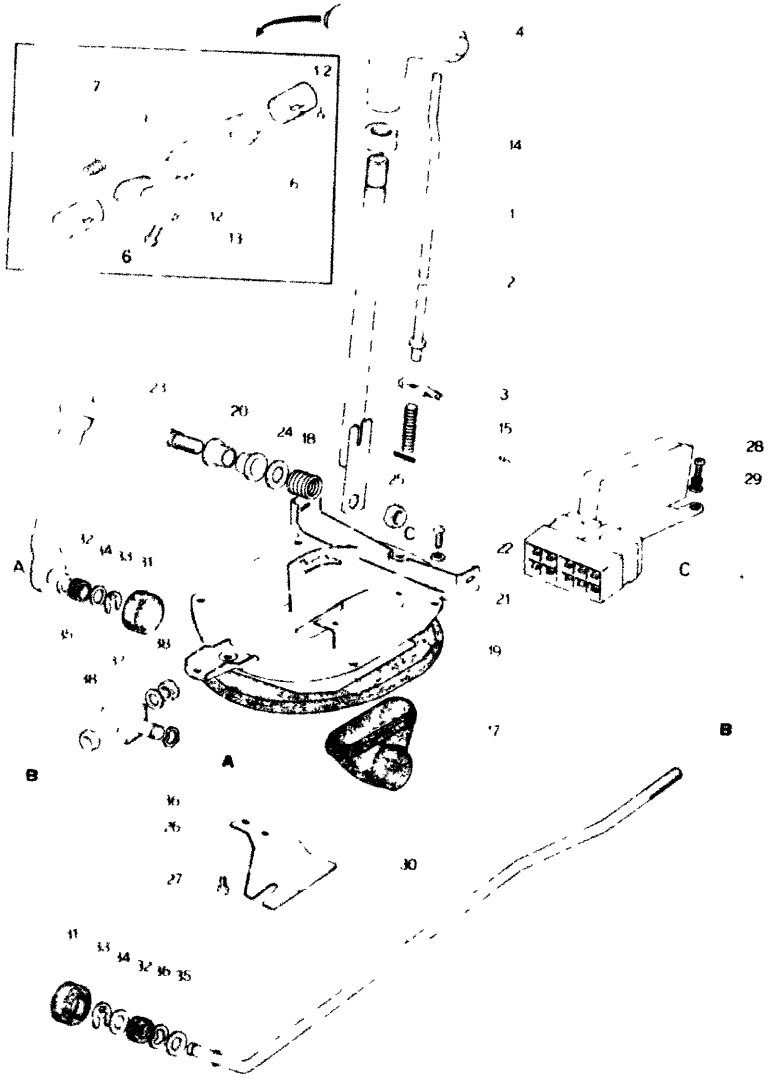

No.	Part Number	Description
19	1015 46 083A	Rubber, Seal
20	1015 46 085	Bush, Lever
21	1856 46 110	Bracket, Selector Lever
22	99865 0516	Screw, Lever Bracket
23	1015 46 150A	Lever
24	99953 1400	Washer, Plain
25	99940 1000	Nut, Lever
26	1856 46 201	Insulator, Heat
27	99796 1016	Bolt, Heat Insulator
28	1015 66 520A	Switch, Inhibitor
•	1015 66 520B	Switch, Inhibitor
29	99763 0610	Screw, Inhibitor Switch
30	1856 46 571	Rod
31	1015 46 648	Cover, Dust
32	1015 46 684	Bush
33	99575 0600	Ring, Retaining
34	99952 0816	Washer, Plain
35	99953 0800	Washer, Plain
36	99972 0800	Washer, Wave
37	1015 46 691	Joint, "T"
38	99902 0800	Nut, "T" Joint
	99971 0800	Washer, Spring

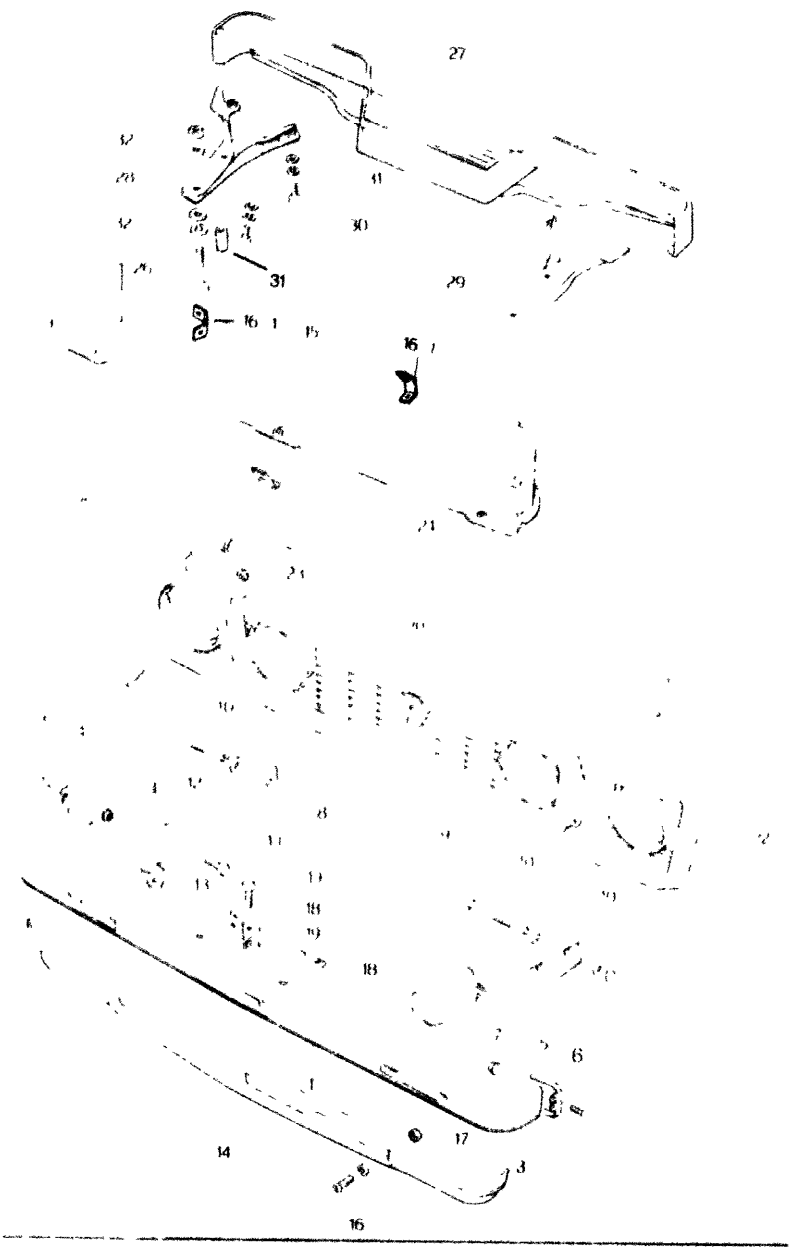

No.	Part Number	Description
1	1854 50 031	Bumper (C Front
2	1854 50 060	Bumper (R Front
3	1854 50 070	Bumper (L) Front
4	1854 50 062	Extension R
5	1854 50 072	Extension L
6	0223 50 275	Screw Extension
7	99940 0602	Nut Extension
8	1854 50 110A	Stay (R) Bumper
9	1854 50 120A	Stay L Bumper
10	99811 1245	Bolt Stay - Body
	99951 1226	Washer Plain
	99971 1200	Washer Spring
11	99786 0825	Bolt, Stay - Bumper
	99952 1030	Washer Plain
12	0223 50 275	Screw, Bumper
13	99940 0602	Nut, Bumper
14	1854 50 091	Panel, Front Skirt
15	1854 50 130A	Intake, Air
16	99834 0512	Screw, Skirt Panel & Air
16-1	1854 50 165	Bracket, Air Intake

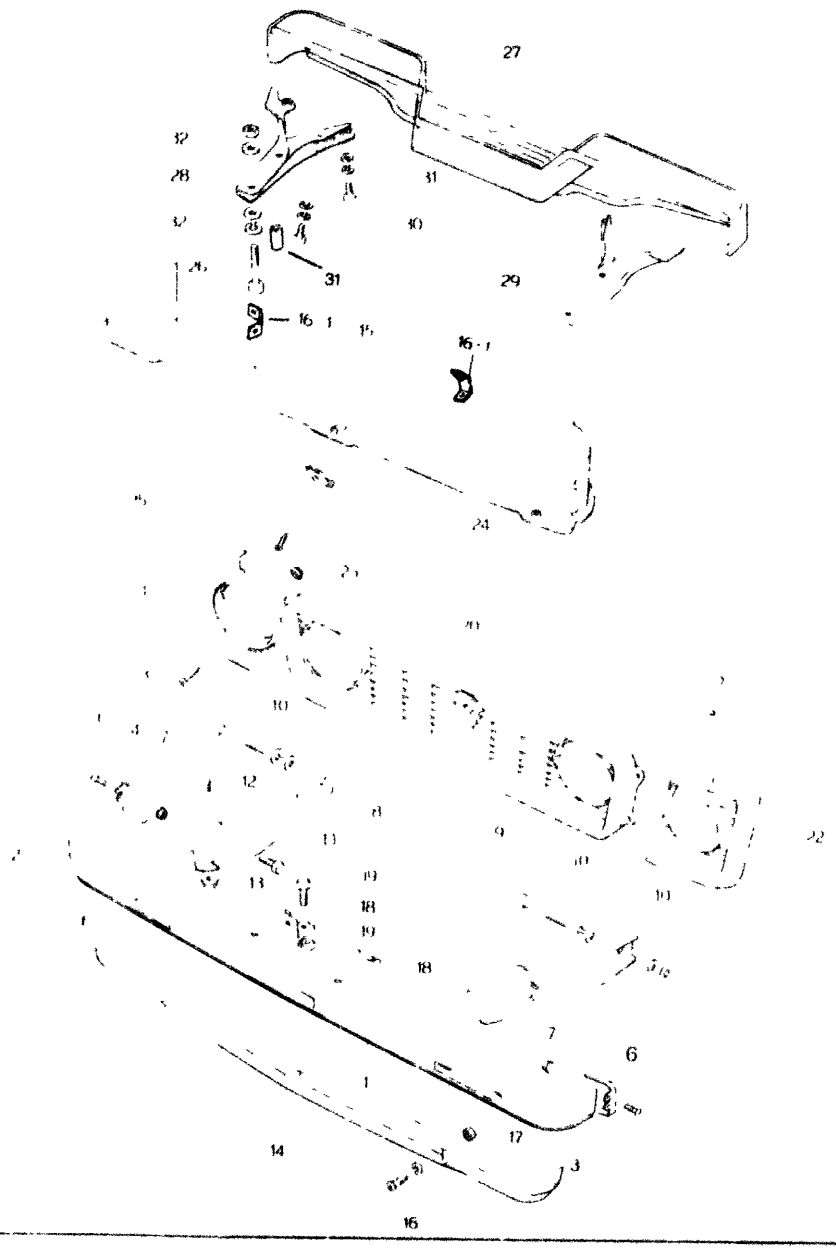

No.	Part Number	Description
	99951 0618	Washer Plain
17	99940 0502	Nut Skirt Panel & Air Intake
18	1823 50 098	Holder Number Plate
19	99806 0616	Bolt Number Plate Holder
	99940 0602	Nut
20	1854 50 511	Grille Radiator
21	1854 50 521	Bezel (R) Head Lamp BLK
22	1854 50 531	Bezel (L) Head Lamp BLK
23	99769 0425B	Screw Grille & Bezel
	99910 0403	Grommet, Screw
24	1854 50 551	Garnish, Upper
25	99769 0416	Screw Garnish
	99896 0400	Nut Spring
26	1854 78 615	Bolt Rear Bumper
	1823 78 620B	Bumper, Rear
28	1854 78 640A	Stay (R), Rear Bumper
29	1854 78 650A	Stay (L) Rear Bumper
30	99781 1025	Bolt
	99951 1022	Washer Plain
	99971 1000	Washer Spring
31	1855 78 616	Spacer

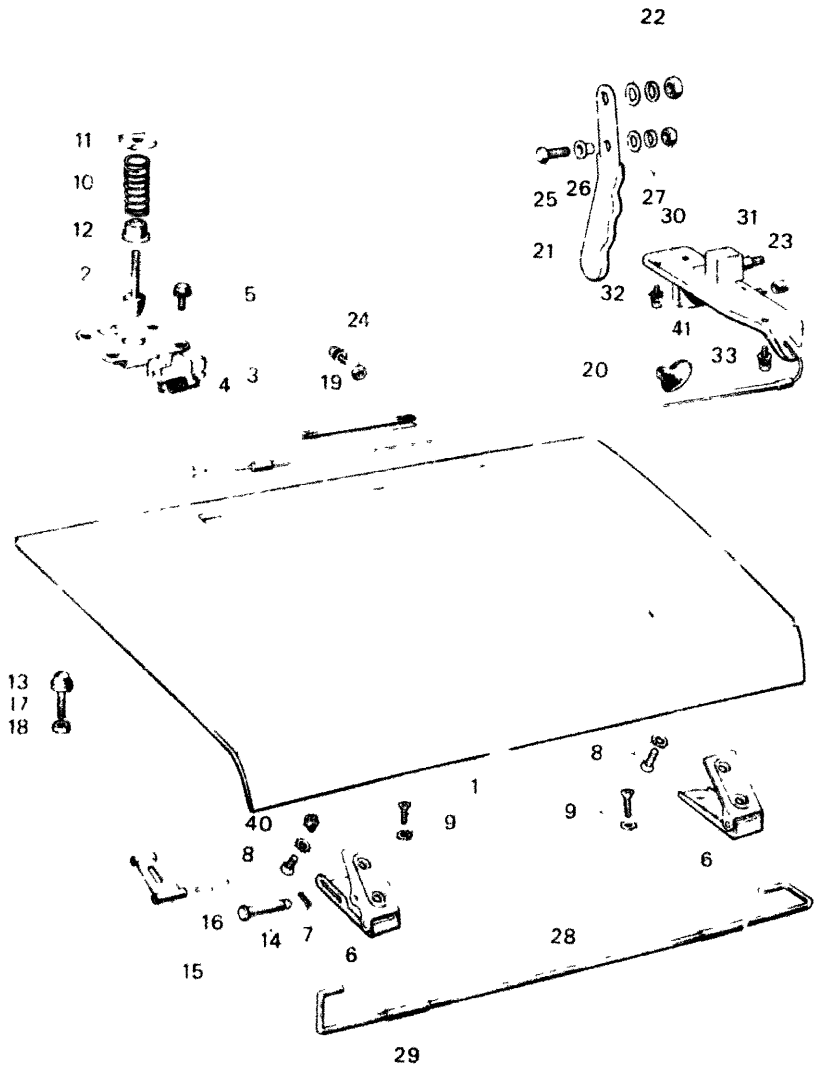

No.	Part Number	Description
1	3790 52 010	Bonnet
2	0187 52 141	Hook Bonnet
3	0503 52 160B	Lock Bonnet
4	0305 52 331	Spring Return - Lock
5	99796 0616	Bolt, Bonnet Lock
	99953 0600	Washer, Plain
	99971 0600	Washer Spring
6	0603 52 210B	Hinge R Bonnet
	0603 52 260A	Hinge L Bonnet
7	99221 1610	Pin, Split - Bonnet Hinge
8	99831 0820	Screw Hinge Upper
	99975 0800	Washer Toothed
9	99837 0825	Screw Hinge Lower
	99975 0800	Washer Toothed
10	0603 52 142	Spring, Lift
11	0603 52 143	Nut, Lock
12	0187 52 144	Seat, Lower - Spring

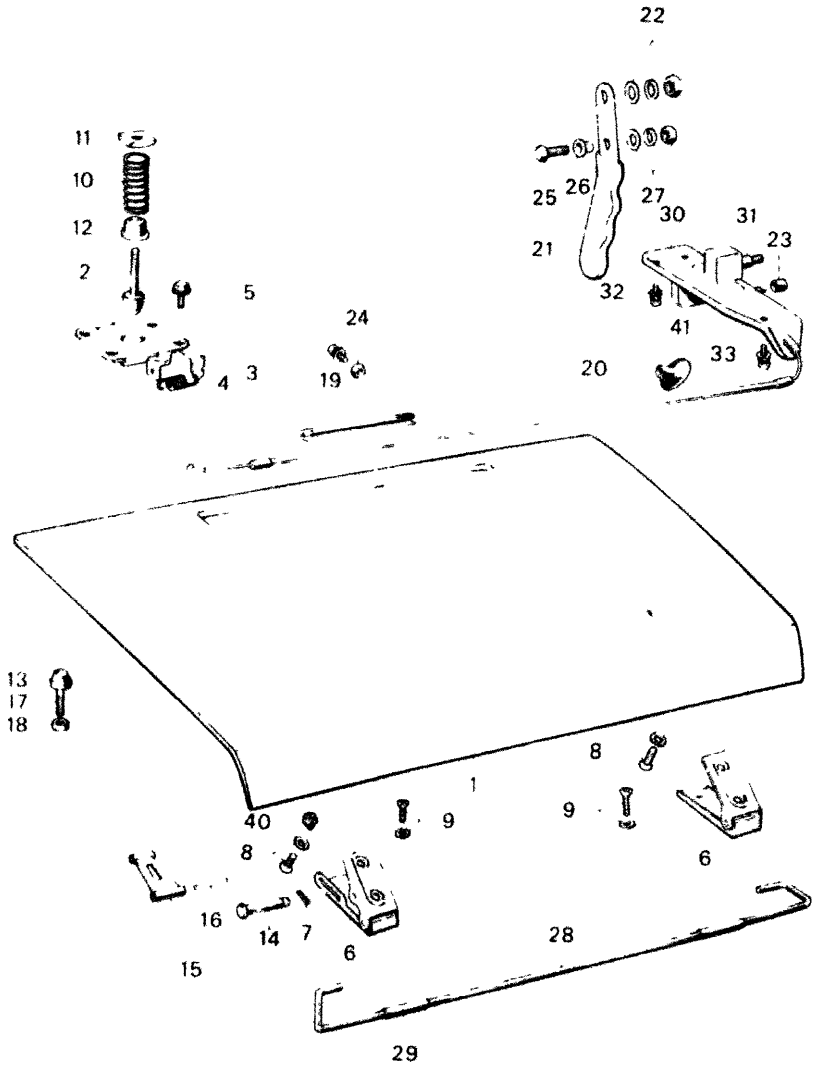

No	Part Number	Description
13	0603 52 451A	Rubber, Cushion - Bonnet
14	0603 52 214	Pin No 2. Stop
15	0603 52 230	Plate. Stop
16	0603 52 232A	Pin No 1 Stop
17	99831 0830	Screw Cushion Rubber
18	99902 0800	Nut Cushion Rubber
19	0603 52 472	Rubber, Seal - Bonnet
20	0603 52 510	Wire, Release - Bonnet
21	0208 52 520	Handle, Release Wire
22	99906 0600	Nut Release Handle
	99952 0600	Washer Plain
	99972 0800	Washer Wave
23	0187 52 523	Rubber Stopper - Release Han
24	99797 0516	Bolt, Release Wire
	99952 0500	Washer, Plain
	99971 0500	Washer, Spring
	99906 0500	Nut
25	0187 52 531	Bolt, Release Wire Handle

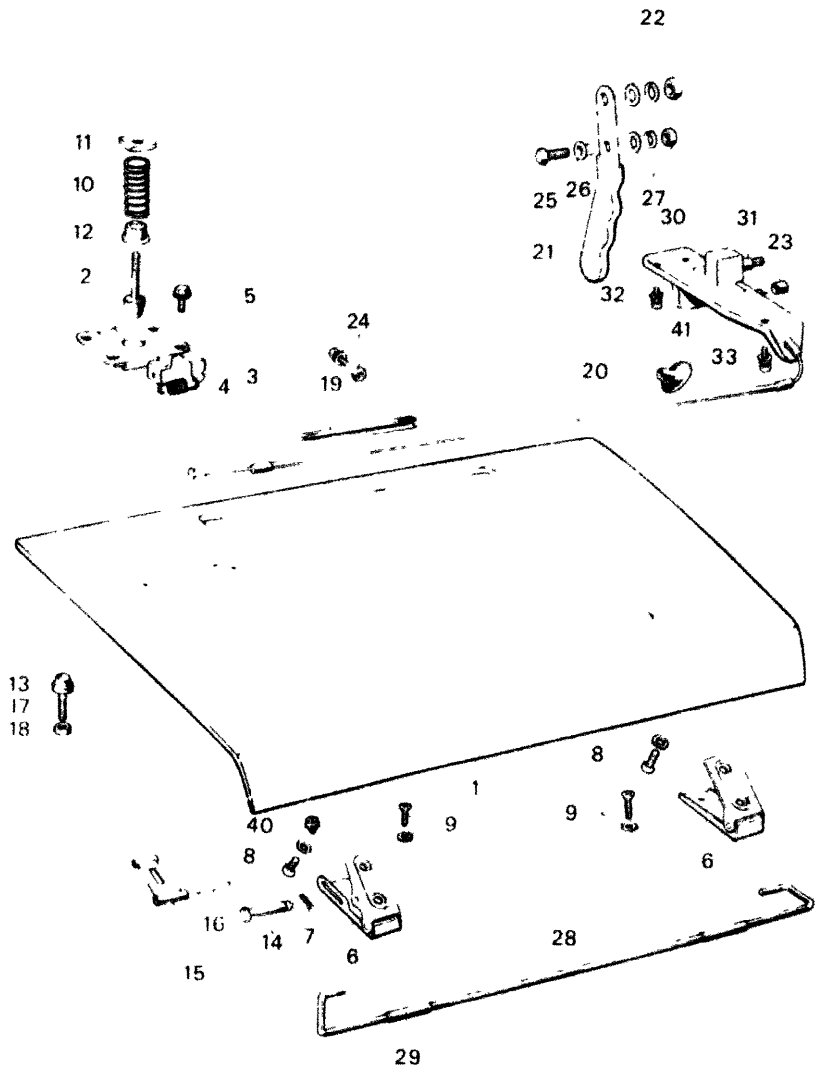

No.	Part Number	Description
26	0187 52 532	Spacer Release Wire S
27	99906 0600	Nut Release Wire Handl
	99952 0600	Washer Plain
	99971 0600	Washer Spring
28	0603 52 351A	Bar Torsion
29	0603 52 353	Support Torsion Bar
30	2677 52 540A	Bracket Release Handle
31	0603 52 543	Pin Handle Set
32	99834 0512	Screw Release Handle B
	99975 0500	Washer Toothed
33	99830 0512	Screw Release Handle B
	99953 0500	Washer Plain
	99971 0500	Washer Spring
~~34~~	~~1854 52 611~~	~~Rubber Seal~~
~~35~~	~~1854 52 612~~	~~Plate "A" Rubber Set~~
~~36~~	~~1854 52 613C~~	~~Plate "B" Rubber Set~~
~~37~~	~~1854 52 614B~~	~~Plate "C" Rubber Set~~
~~38~~	~~1854 52 615C~~	~~Rubber No. 2 Seal~~

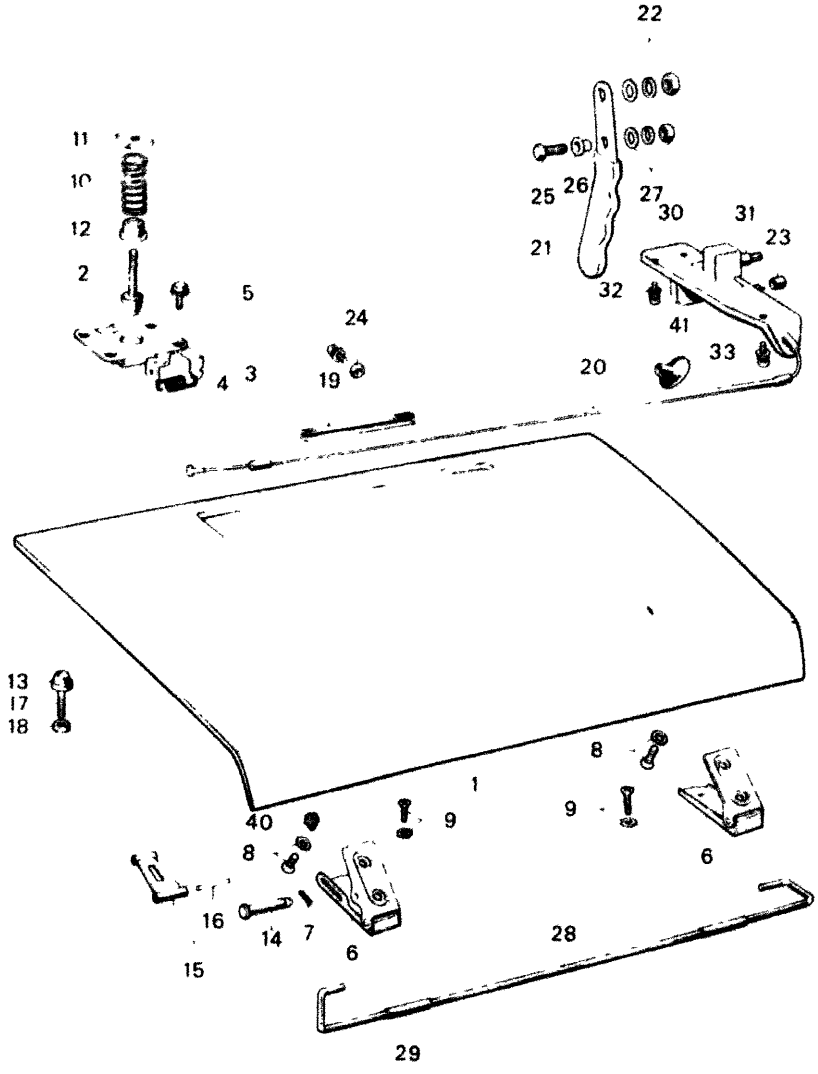

52 BONNET

No.	Part Number	Description
39	99865 0510	Screw, Tapping
40	0118 58 931	Rubber, Stop-Bonnet Hinge
41	~~2677 52 505~~	~~Protector, Bonnet Release Wire (F~~
	0118 70 531	Protector, Bonnet Release Wire
~~42~~	~~6866 52 398A~~	~~Pad, Bonnet (1800 cc)~~

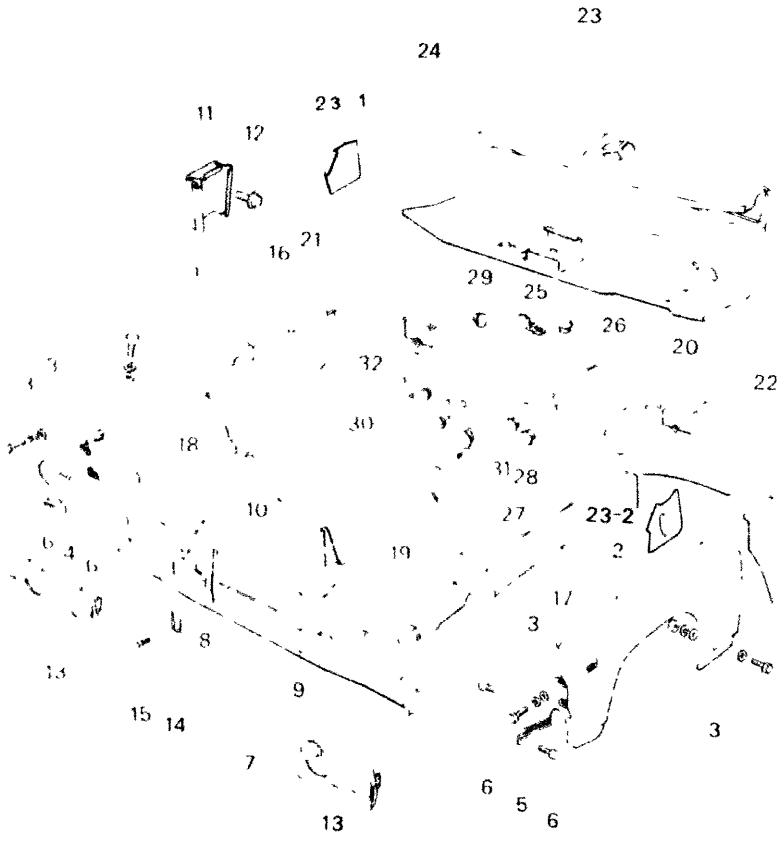

No.	Part Number	Description
1	1854 51 020B	Panel (R), Fender
2	1854 51 520B	Panel (L), Fender
3	99806 0614	Bolt, Fender Panel
	99953 0600	Washer, Plain
	99971 0600	Washer, Spring
	99940 0602	Nut
~~4~~	~~1823 51 060~~	~~Plate (R), Junction~~
~~5~~	~~1823 51 560~~	~~Plate (L), Junction~~
~~6~~	~~99786 0610~~	~~Bolt, Junction~~
7	3790 53 030	Panel, Shroud-Radiator
8	1854 53 050A	Member (R), Radiator
9	1854 54 050A	Member (L), Radiator
10	1854 53 036	Member No. 2, Cross
11	0483 53 241	Bracket, Reserve Tank
12	99796 0612	Bolt, Reserve Tank Bracket
13	1854 53 070	Bracker, Head Lamp
14	1854 53 091B	Member, Grille Set
15	99796 0612	Bolt, Grille Set Member
16	3790 53 110	Panel (R), Tire Apron-Front
17	3790 54 110	Panel (L), Tire Apron-Front

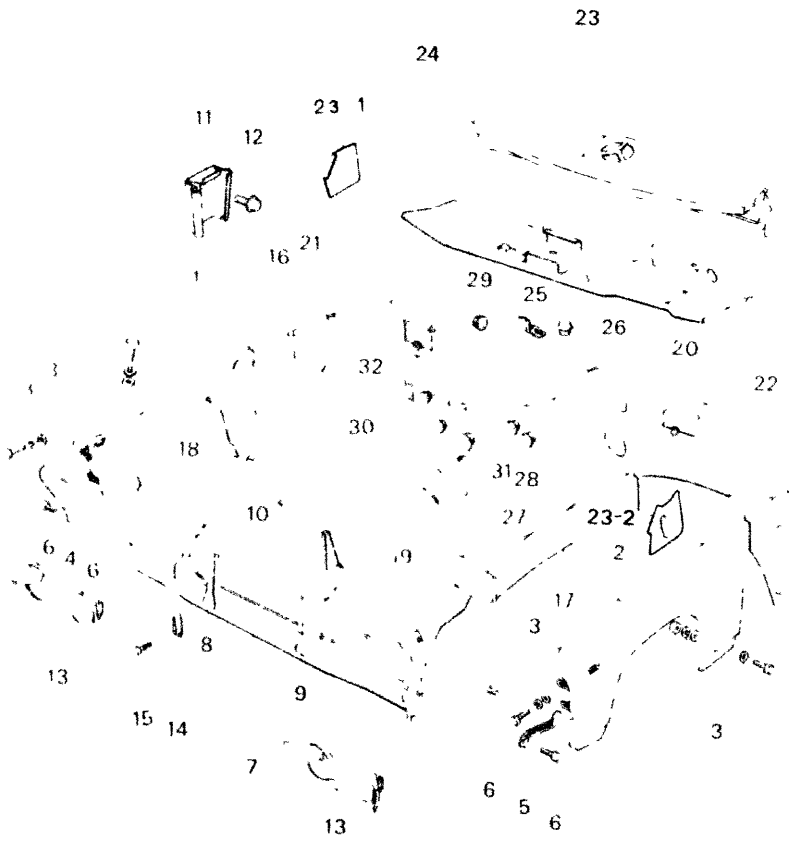

3-D2

No.	Part Number	Description
18	1854 53 160B	Panel (R), Shroud
19	1854 54 160C	Panel (L), Shroud
20	1854 53 200	Panel, Dash-Lower
21	2541 53 220A	Panel (R), Cowl Side
22	3792 54 220	Panel (L), Cowl Side
23	1854 53 230C	Panel, Instrument
•	1854 53 230D	Panel, Instrument
23-1	1854 53 181	Bracket, Dash panel (R)
23-2	1854 54 181	Bracket, Dash panel (L)
24	3790 53 380	Panel, Dash-Upper
25	1823 53 410A	Bracket, Tuner Set
26	0187 53 134	Rubber, Dust Seal
27	99336 08038	Pipe, Drain
28	0208 56 615	Plug, Drain (W/O Heater)
29	0613 63 105A	Cover, Service Hole
30	0187 53 134	Rubber, Dust Seal
31	1708 61 031	Plug, Hole
32	1004 72 873	Grommet

(W/O C

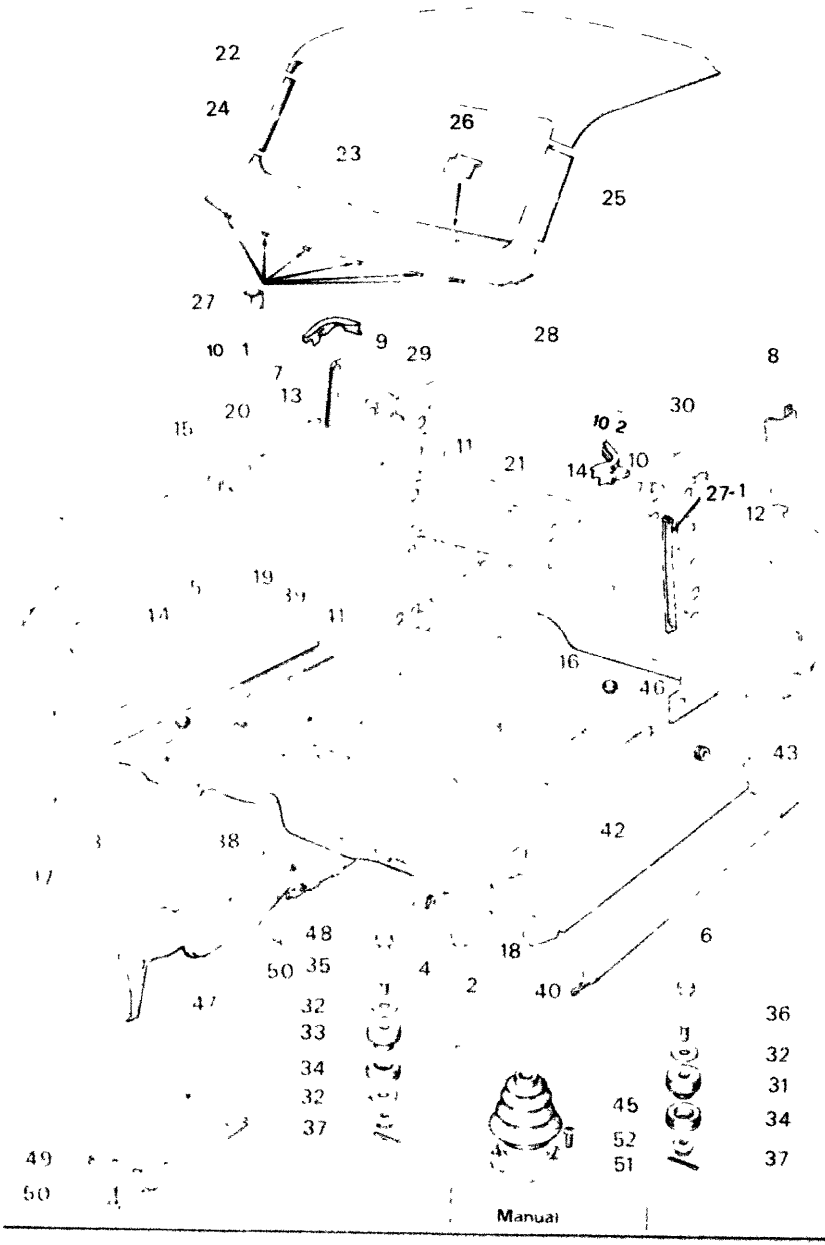

Manual

No.	Part Number	Description
1	3792 53 510	Pillar (R), Front-Lower
2	3792 54 510	Pillar (L), Front-Lower
3	0603 53 520A	Pillar (R), Front-Inside
4	0603 54 520A	Pillar (L), Front-Inside
5	0603 53 531	Pillar (R), Side Sill-Outer
6	0603 54 531	Pillar (L), Side Sill-Outer
7	3792 53 551C	Pillar (R), Rear-Outer
8	3792 54 551C	Pillar (L), Rear-Outer
9	0603 53 552	Plate (R), Rear Pillar Corner
10	0603 54 552	Plate (L), Rear Pillar Corner
10-1	3790 53 591	Junction, Rear Corner (R)
10-2	3790 54 590	Junction, Rear Corner (L)
11	2540 53 560A	Pillar (R), Rear-Front Side
12	2540 54 560A	Pillar (L), Rear-Front Side
13	3792 53 571	Member (R), Roof Side
14	3792 54 571	Member (L), Roof Side
15	3792 53 572	Rail (R), Rain
16	3792 54 572	Rail (L), Rain
17	0603 53 573	Plate (R), Cowl Set
18	0603 54 573	Plate (L), Cowl Set

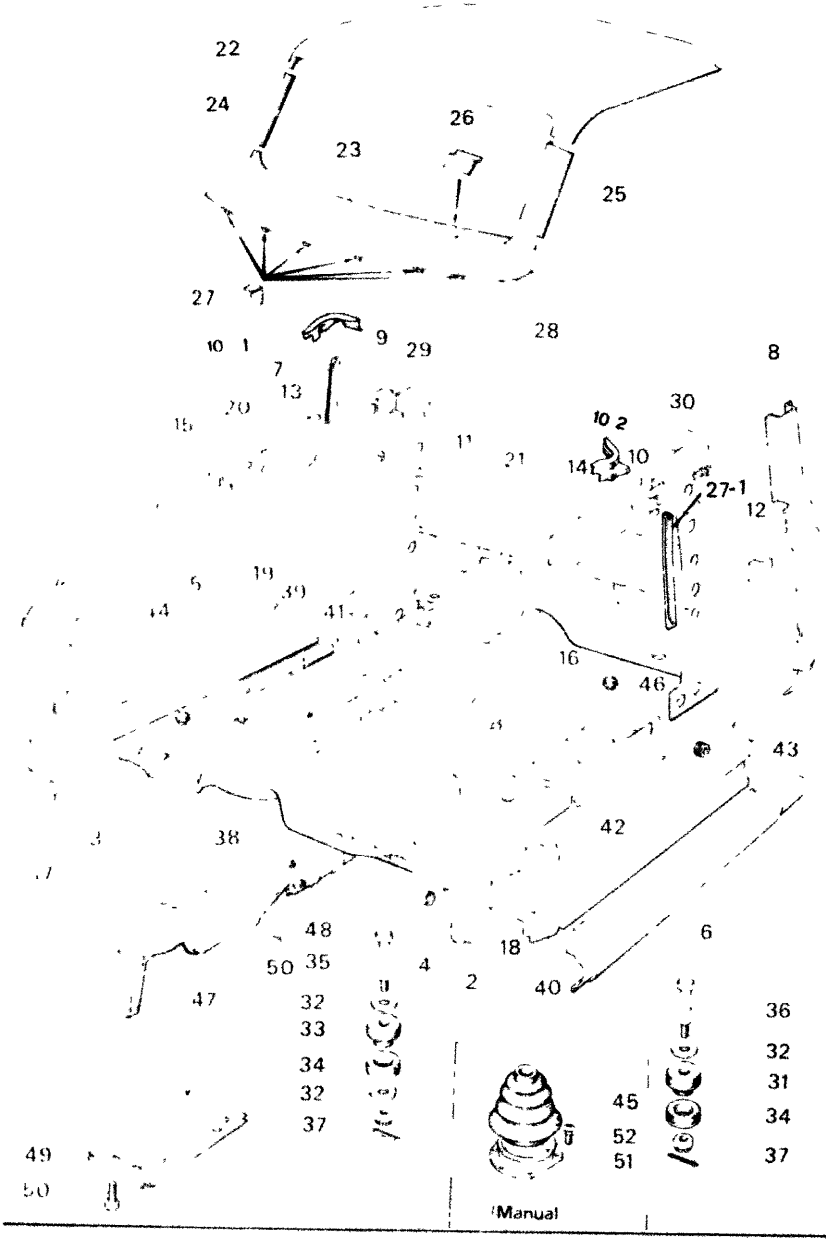

No.	Part Number	Description
19	3792 53 600	Member, Roof Cross
20	0603 53 611	Plate (R), Junction
21	0603 54 611	Plate (L), Junction
22	3792 53 681A	Panel, Roof
23	2651 53 682A	Panel, Cowl
24	0603 53 683A	Pillar (R), Front
25	0603 53 684A	Pillar (L), Front
26	0578 53 685	Stopper, Cowl Panel
27	0221 53 916	Clip
27-1	3792 53 581	Rain, Rail (R)
	3792 54 581	Rain, Rail (L)
28	3790 53 700	Plate, Back
●	3790 53 700A	Plate, Back
29	3790 53 710A	Pillar (R), Rear Inner
30	3792 54 710A	Pillar (L), Rear Inner
31	0603 53 950A	Rubber, Mounting Lower
32	99951 1030	Washer, Plain-Mounting Rubb
33	0603 53 950A	Rubber No. 3, Mounting Upp
34	0603 53 970	Rubber, Mounting Lower
35	0603 53 984A	Bolt, Mounting

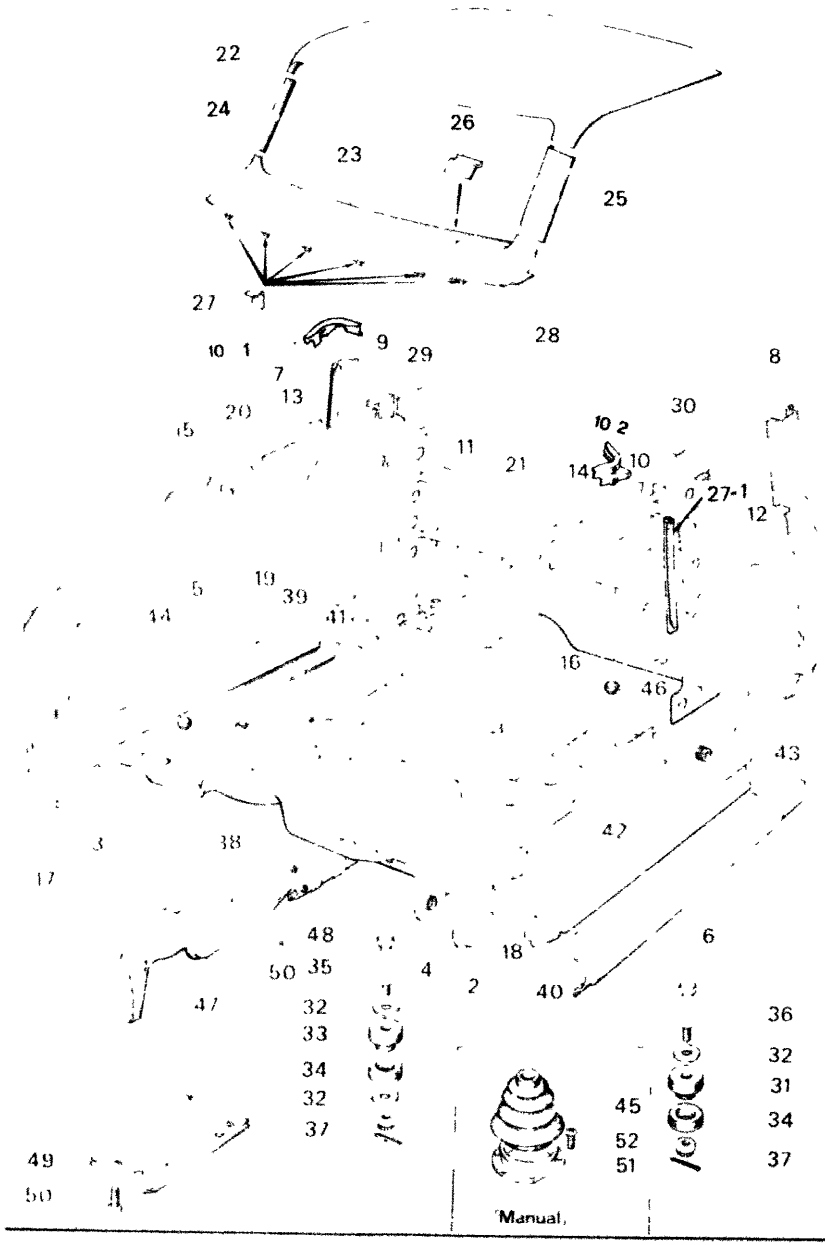

No.	Part Number	Description
36	0603 53 984A	Bolt Mounting
37	99903 0800	Nut, Grooved
	99221 2015	Pin, Split
38	3790 56 010	Board, Floor
•	3790 56 010A	Board, Floor
39	3875 56 031	Panel (R), Side Sill-Inner
•	3875 56 031A	Panel (R), Side Sill-Inner
40	3875 56 531	Panel (R), Side Sill-Inner
•	3875 56 531A	Panel (R), Side Sill-Inner
41	3792 56 200	Bracket (R), Seat
42	3792 56 700	Bracket (L), Seat
43	0111 41 692	Protector, Cord
44	0118 56 241	Plug, Drain
45	0247 56 274A	Boot, Change Lever (Manu
46	0208 56 615	Plug, Drain
47	1854 56 811	Insulator, Heat
48	1854 56 840C	Insulator No. 2, Heat
49	1854 56 851A	Insulator No. 3, Heat
50	99796 0610	Bolt, Heat Insulator
	99796 0612	Bolt, Heat Insulator
	99952 0618	Washer, Plain

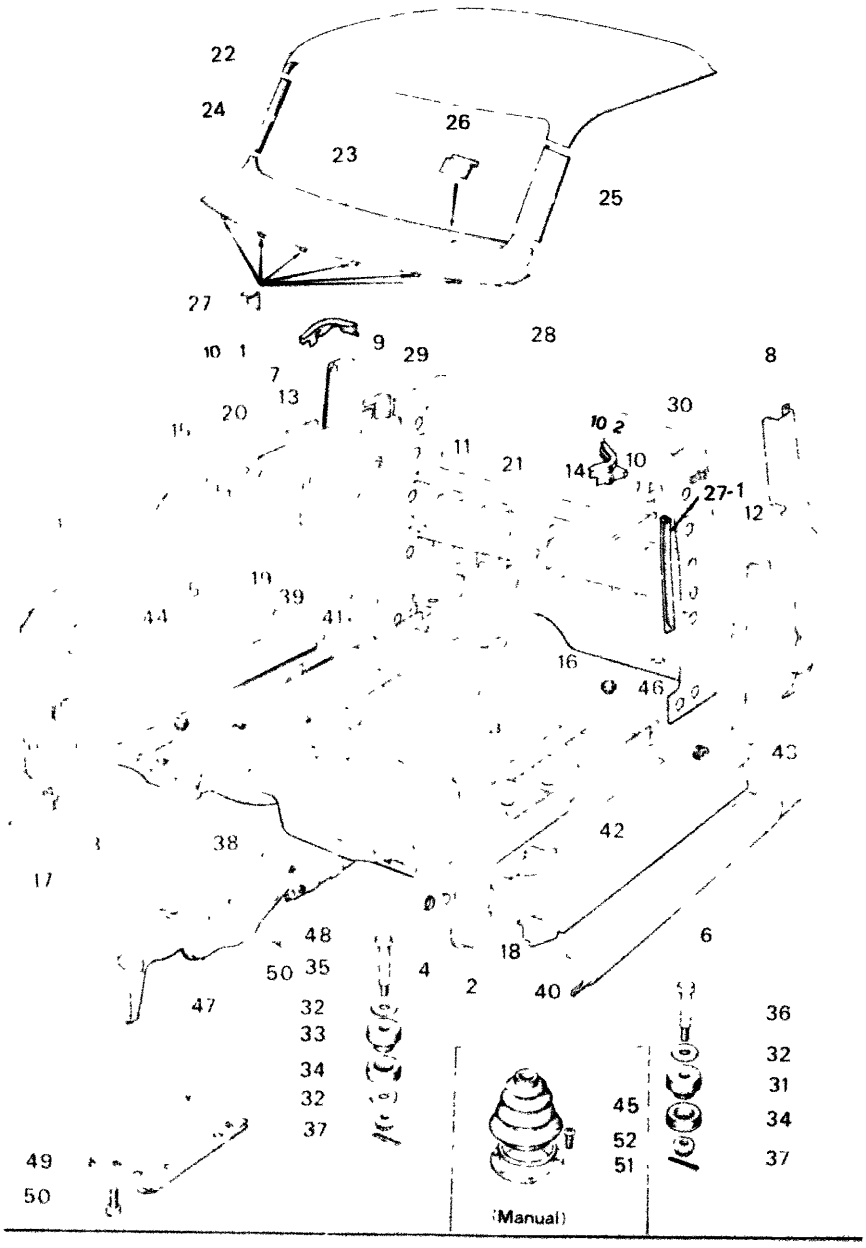

No.	Part Number	Description	
51	1002 64 491	Seat, Boot	(Manual
52	99865 0512	Screw, Boot Seat	

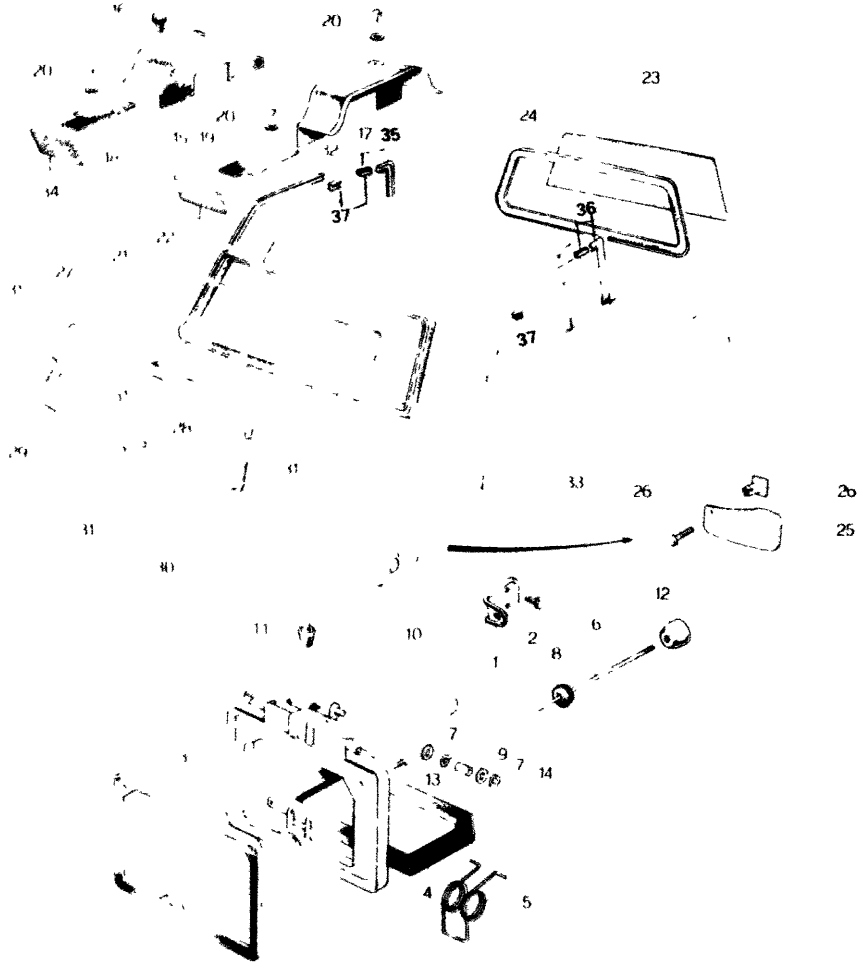

No.	Part Number	Descriptio
1	1854 54 234	Holder, Rod (R), Side
2	99830 0612	Bolt, Rod Holder
3	0603 53 431D	Gasket, Ventilator
4	0603 53 432A	Rubber, Seal
5	0603 53 433A	Spring, Ventilator
6	0603 53 434B	Rod (R), Ventilator
	0617 54 434	Rod (L), Ventilator
•	0603 53 434B	Rod (L), Ventilator
7	0603 53 435	Washer, Rod
8	0603 53 436	Grommet, Rod
9	0603 53 438	Bush, Ventilator Rod
10	0603 53 440B	Ventilator
11	0208 70 713	Rubber, Stopper-Ventila
12	0118 70 722A	Knob, Ventilator Rod
13	99833 0512	Screw, Ventilator
14	99576 0400	Ring, Stop-Rod
15	2677 53 811A	Cover (R), Dust
16	99786 0512	Screw, Dust Cover
17	0603 53 811B	Cover (L), Dust
18	0603 53 821	Cover No. 2 (R), Dust

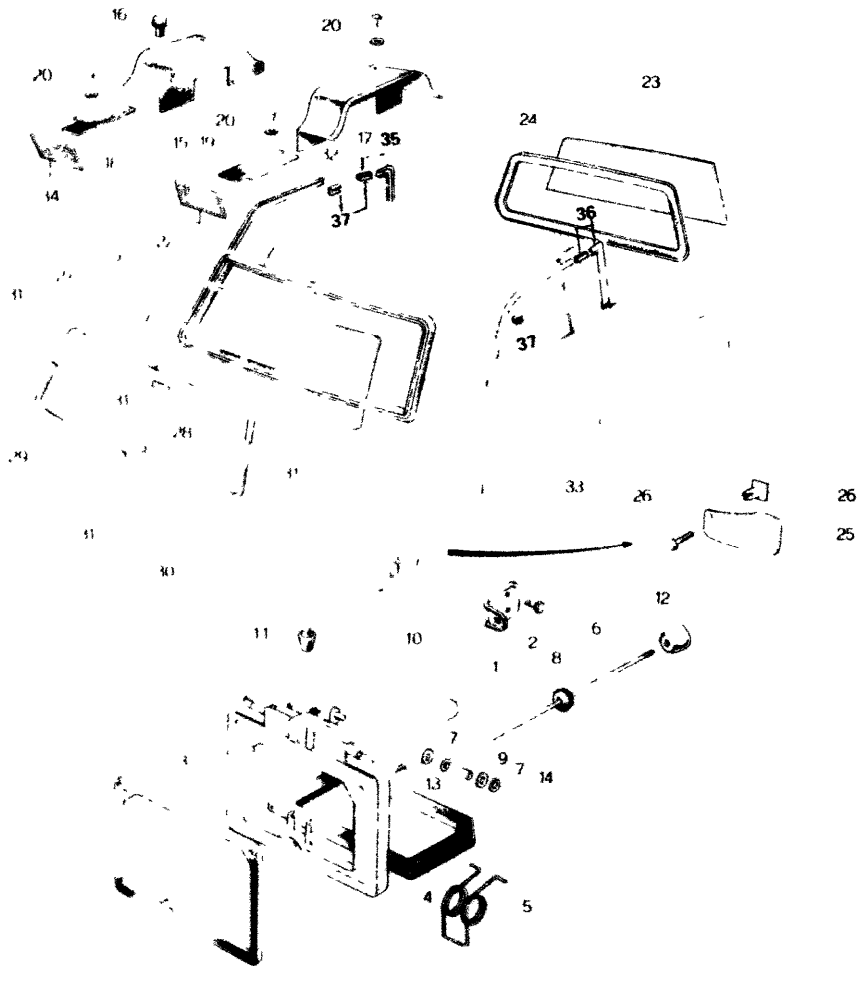

No.	Part Number	Description	
19	2677 54 [illegible]	Cover No. 2 (L), Dust	
20	0193 53 462	Fastener, Dust Cover	
	99953 0600	Washer, Plain	
21	1823 53 901	Glass, Front Window (Blue Pane)	Select
•	1823 53 901A	Glass, Front Window (Blue Pane)	
	2651 53 901A	Glass, Front Window (Transparent)	
•	2651 53 901B	Glass, Front Window (Transparent)	
22	0603 53 902	Weatherstrip, Front Window (W/O Mould)	
	2541 53 902	Weatherstrip, Front Window (With Mould)	
23	3760 53 941	Glass, Back Window (Blue Pane)	
•	3760 53 941A	Glass, Back Window	
	3764 53 941	Glass, Back Window (Transparent)	
•	3764 53 941A	Glass, Back Window (Transparent)	
24	3792 53 912	Weatherstrip, Back Window	
25	1854 53 891A	Flap, Front	
26	99769 0616B	Bolt, Front Flap	
	99910 0601	Grommet, Screw	
27	2541 53 991	Mould (R), Upper-Front Win	
28	2541 54 991	Mould (L), Upper-Front Win	

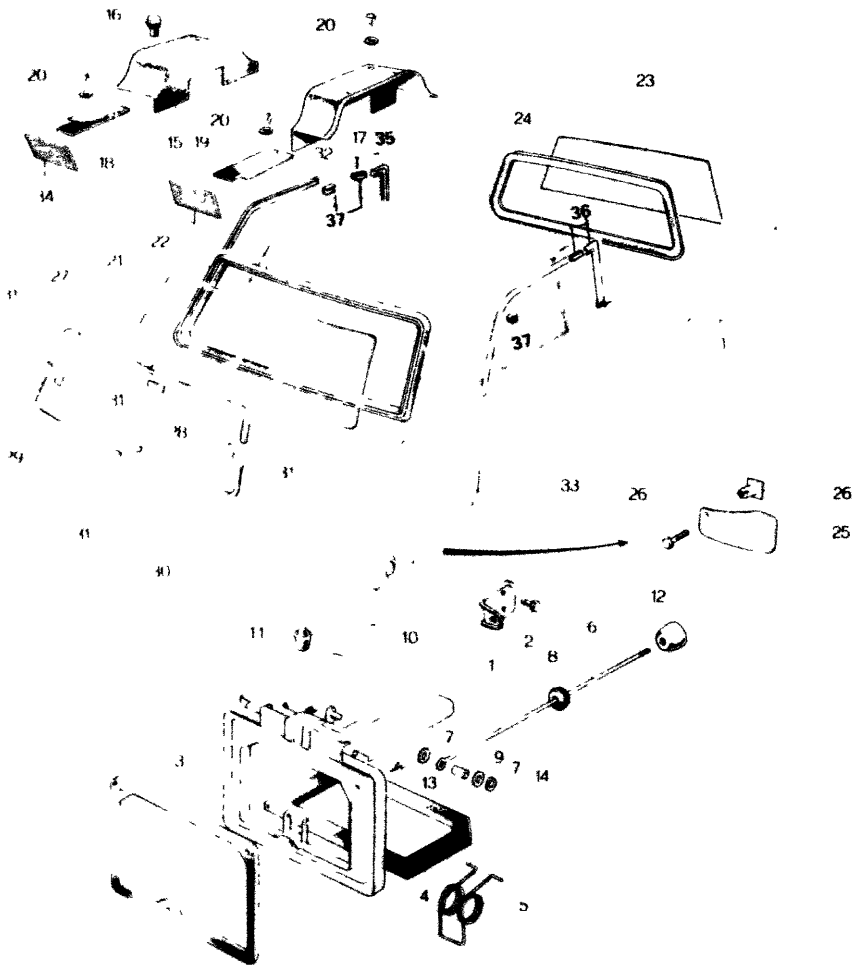

No.	Part Number	Description
29	2541 53 992	Mould (R), Lower-Front W
30	2541 54 992	Mould (L), Lower-Front W
31	0735 70 425A	Junction, Front Window M
32	3792 99 731	Mould Set (R), Drip Front
33	3792 99 736	Mould Set (L), Drip Front
34	0208 58 925	Screen, Side Seal
35	3792 99 732	Mould Set (R), Drip Rear
36	3792 99 737	Mould Set (L), Drip Rear
37	0223 70 827	Clip, Drip Moulding

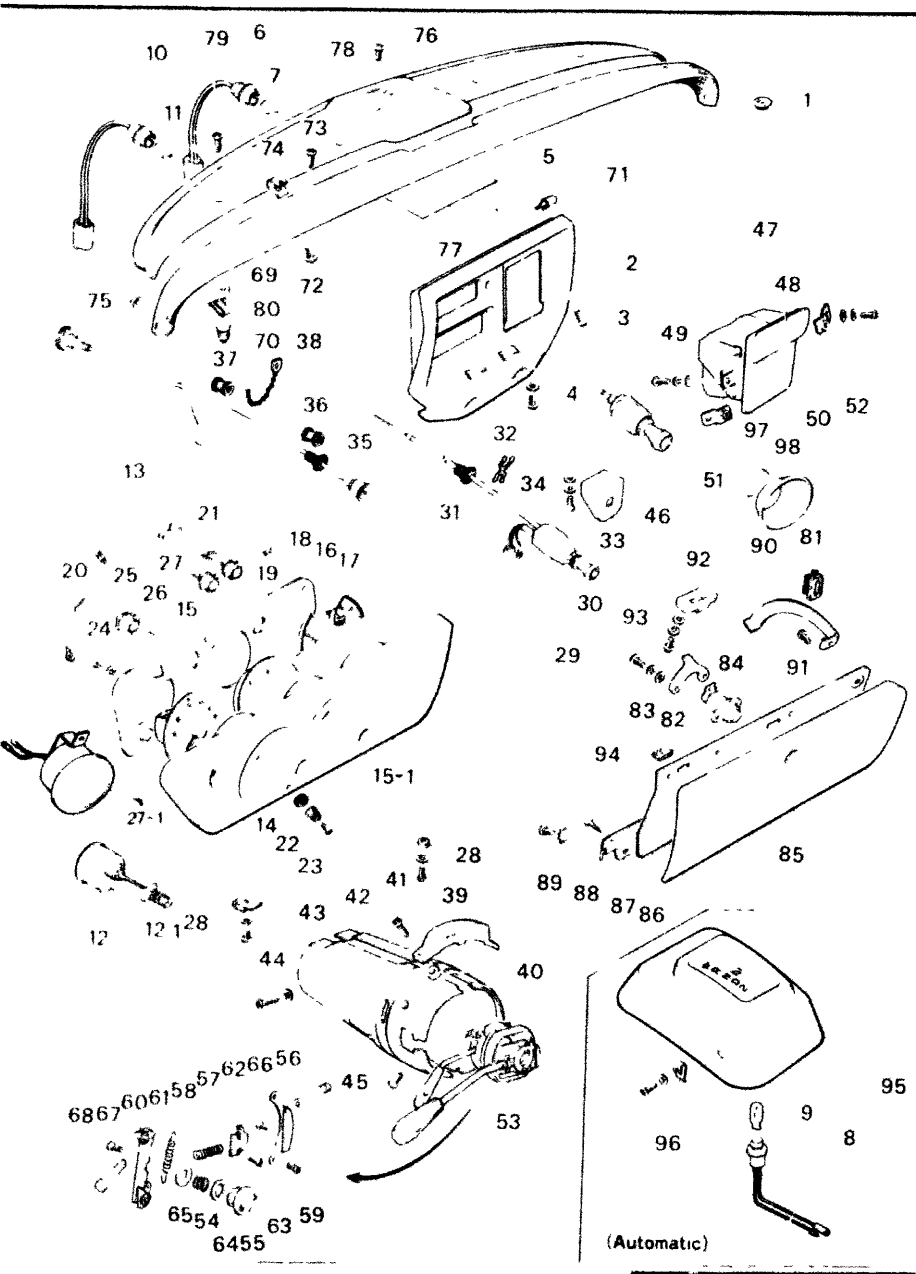

No.	Part Number	Description
1	0613 53 105A	Cover Service Hole
2	1854 55 220	Panel Center
3	99862 0516B	Screw Center Panel
4	99860 0512	Screw Center Panel
	99952 0500	Washer, Plain
5	99896 0500	Nut Spring
6	1011 55 240	Bulb & Socket
7	99701 1030	Bulb
8	1840 55 240	Bulb & Socket Indicator
9	99701 6030	Bulb
10	1011 55 280	Lamp
11	99701 6030	Bulb
12	1854 55 490	Resistor
12-1	1011 60 241A	Knob Resistor
13	3787 55 430	Meter Set (Manual)
	3790 55 430	Meter Set (Automatic)

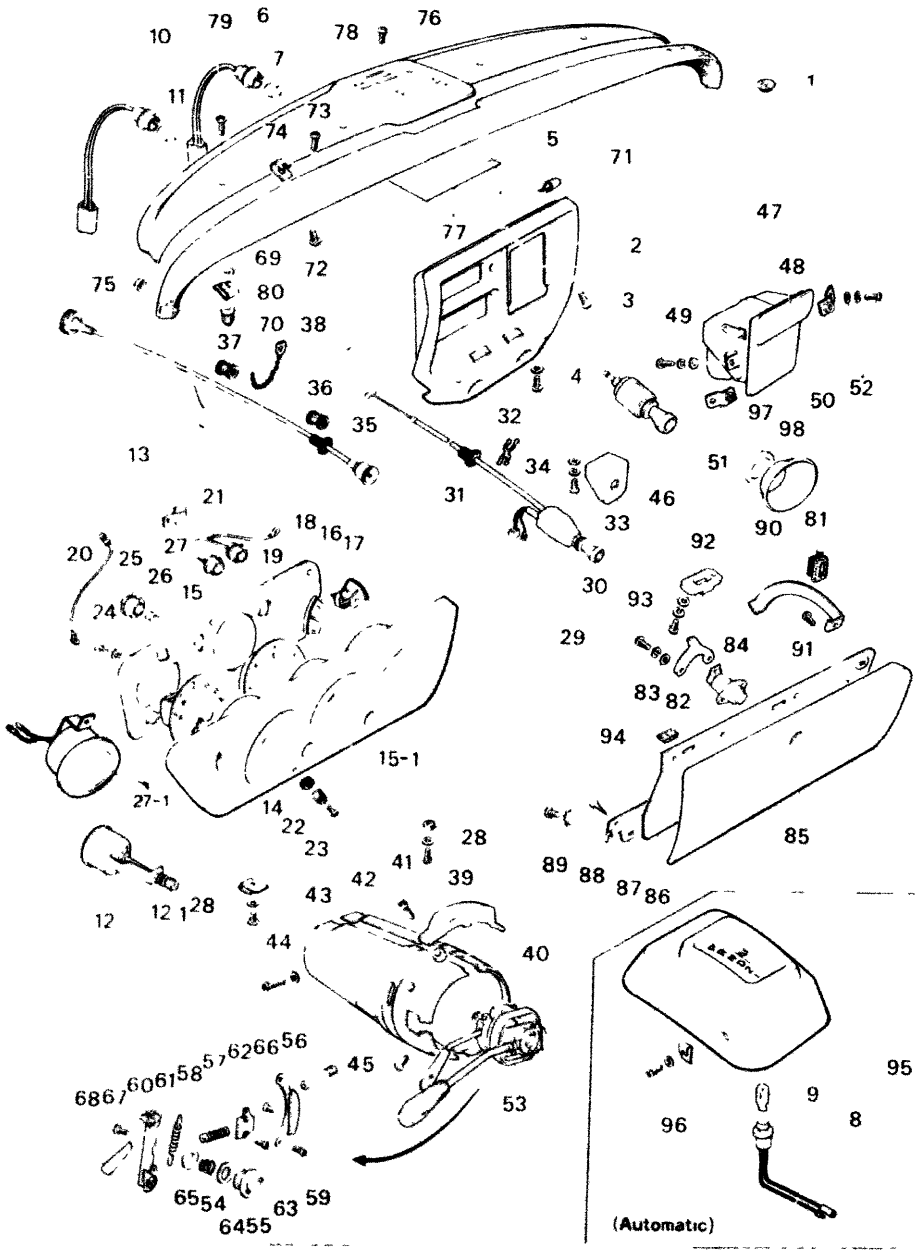

55~70 DASHBOARD

No.	Part Number	Description
14	0326 75 011	Grommet
15	3790 75 021	Speedometer
15-1	3775 75 010A	Hood Meter
16	0483 75 022	Meter Fuel
17	0317 75 023	Meter Temp
18	3900 75 025A	Plate Bottom
19	3787 75 026	Tachometer (Manual)
	3790 75 026	Tachometer (Automatic)
20	3900 75 030A	Cord
21	0492 75 060	Harness Wiring
22	0824 75 149	Knob Trip Meter
23	0824 75 150	Screw Knob
24	0710 75 436	Screw Tapping
25	0259 55 261	Socket
26	99701 6030	Bulb
27	3900 75 035	Clip
27-1	1568 75 029	Buzzer (Manual)
28	99864 0520B	Screw Meter
	99952 0500B	Washer Plain
	0820 56 905	Washer Spring

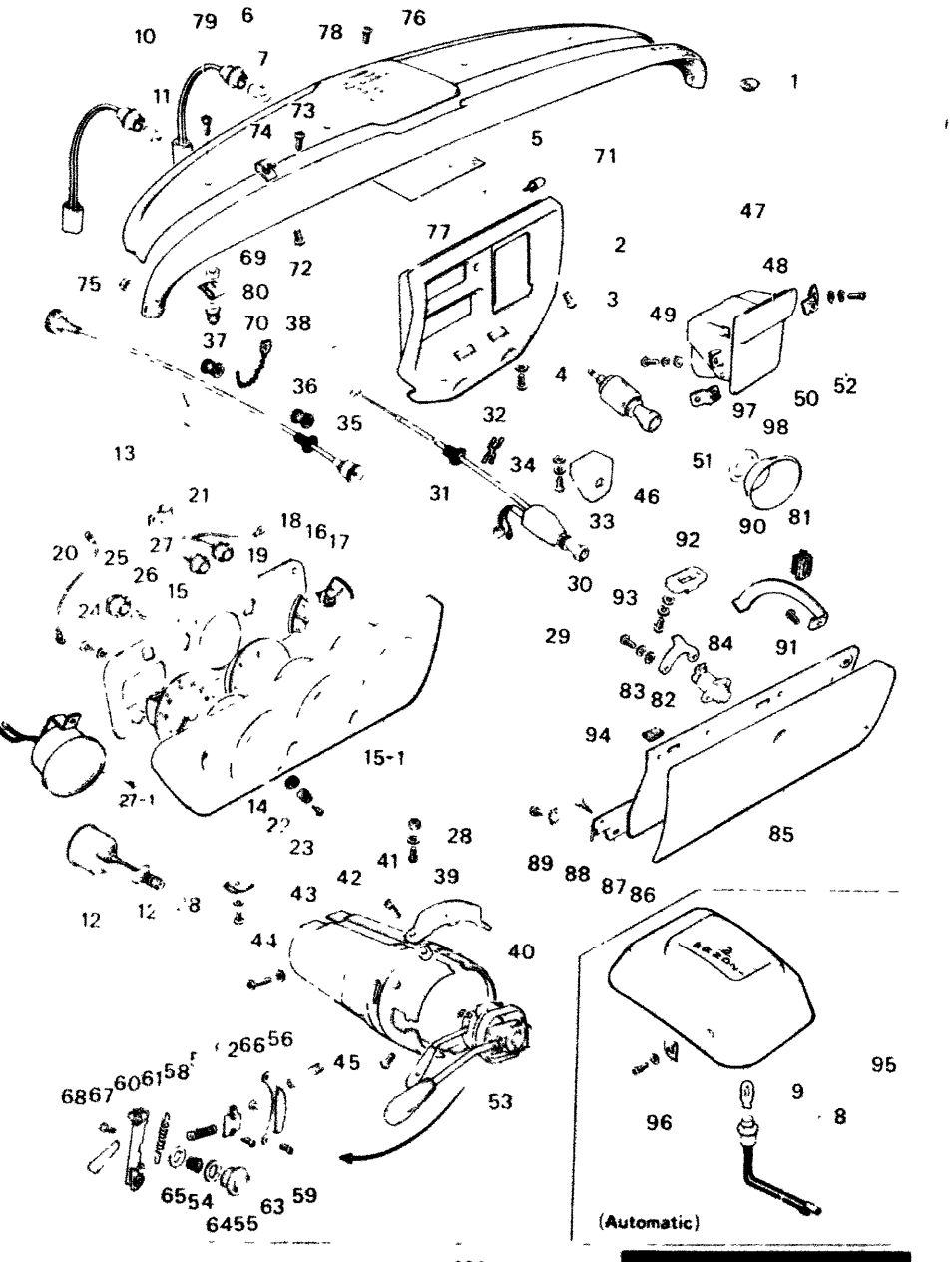

No.	Part Number	Description
	99896 0500	Nut Spring
29	3787 60 050	Wire Choke
30	3597 60 053	Knob Choke Wire
31	0259 52 301	Grommet Choke Wire
32	99288 0808	Clip Choke Wire
33	1854 55 161	Bracket Choke Wire
34	99830 0510	Screw Bracket
35	1011 60 070A	Cable Speedometer
36	99682 0801	Grommet Speedometer
37	99686 0800	Grommet Speedometer
38	99709 0108	Band Speedometer Cabl
39	1907 60 311	Plate Name-Column Cov
~~40~~	~~1611 60 312~~	~~Spacer Name Plate~~
41	99832 0414B	Screw Name Plate
42	1854 60 331A	Cover (R Column BLK
43	1854 60 341A	Cover (L Column BLK
44	99833 0412B	Screw Column Cover
	99971 0400B	Washer Spring

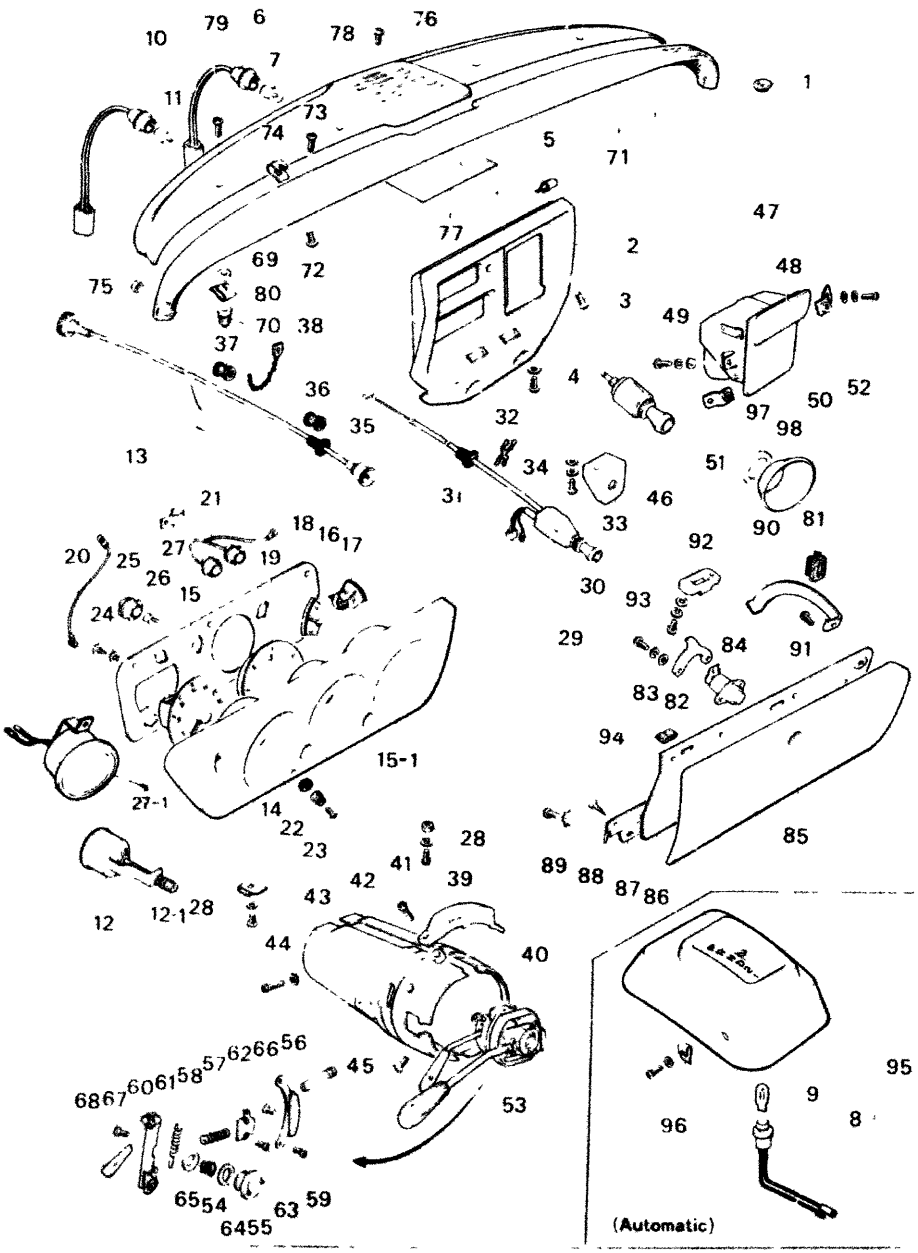

55~70 DASHBOARD

No.	Part Number	Description
45	99832 0412B	Screw Column Cover
46	0866 60 720A00	Lighter, Cigar (BLK
47	1854 64 620A	Tray Ash
48	1854 64 640A	Case Inner
49	99830 0508	Screw Ash Tray
50	1854 64 650	Bracket Ash Tray
51	1854 64 660	Bracket Ash Tray
52	99830 0508	Screw Bracket
53	3790 66 120	Switch Combination
54	0317 60 252	Spring Cancel Cam
55	0317 60 253	Cam, Cancel
56	1634 60 254	Bracket, Fixing
57	0317 60 255	Ball Steel
58	0317 60 256	Spring Arm Set
59	0317 60 257	Screw Bracket
60	0317 60 258	Arm
61	0317 60 259	Spring Ratchet

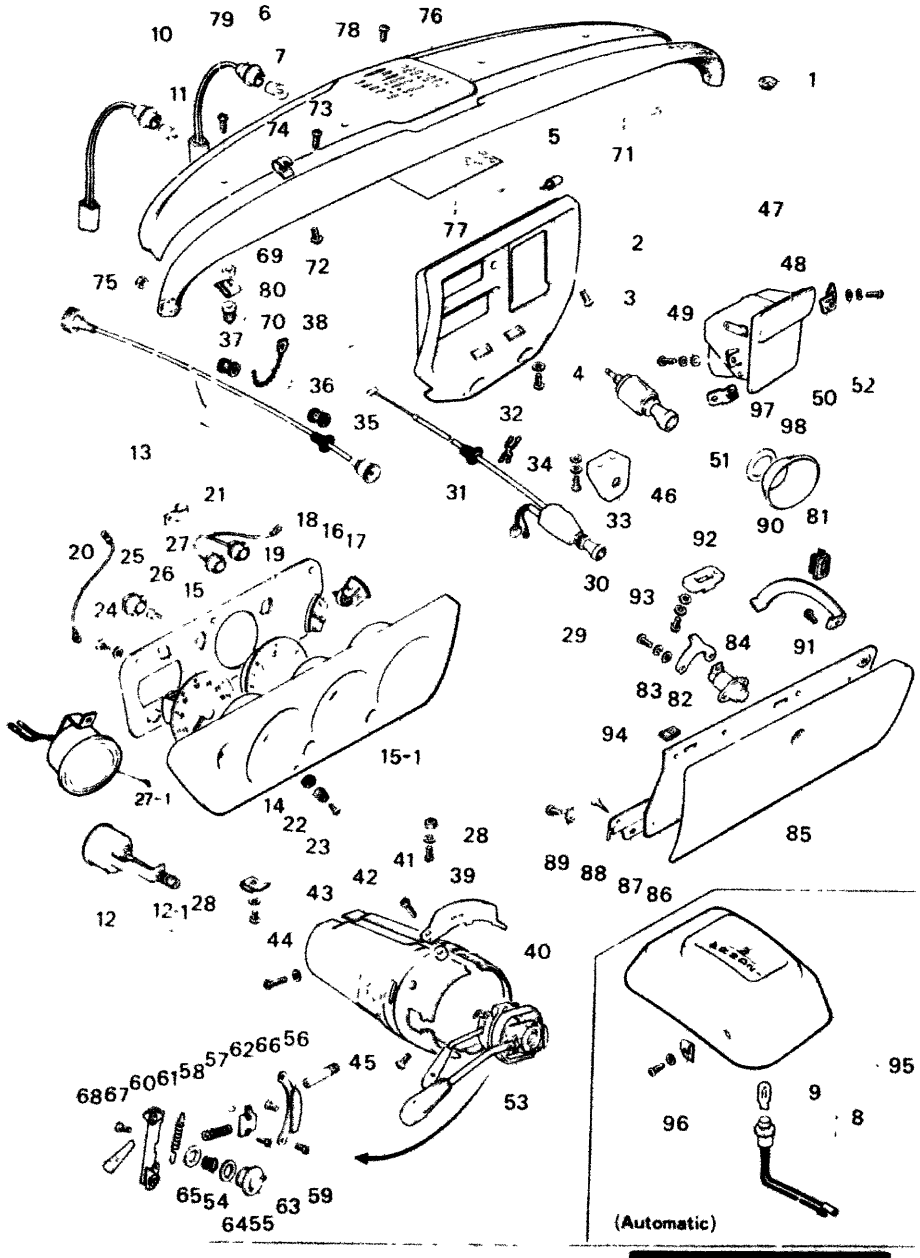

No.	Part Number	Description
62	0317 60 261	Plate, Set
63	0317 60 262	Screw Set Plate
64	0866 60 263	Washer "A"
65	0866 60 264	Washer "B"
66	0317 60 266	Screw
67	0866 60 267	Screw, Light Switch
68	3790 66 121	Knob, Light Switch
69	0317 68 013A	Spacer, Garnish
70	0317 68 018	Cap, Crush Pad & Garni
71	1854 68 020	Pad, Crush (BLK)
72	99862 0516B	Screw, Crush Pad
73	99864 0512	Screw, Crush Pad
74	99896 0500	Nut, Spring-Crush Pad
75	99940 0502	Nut, Crush Pad
76	1854 68 091	Garnish
77	0866 68 095	Cover, Cloth
78	99863 0510B	Screw, Garnish
79	99863 0520	Screw, Garnish
80	99896 0500	Nut, Spring-Garnish

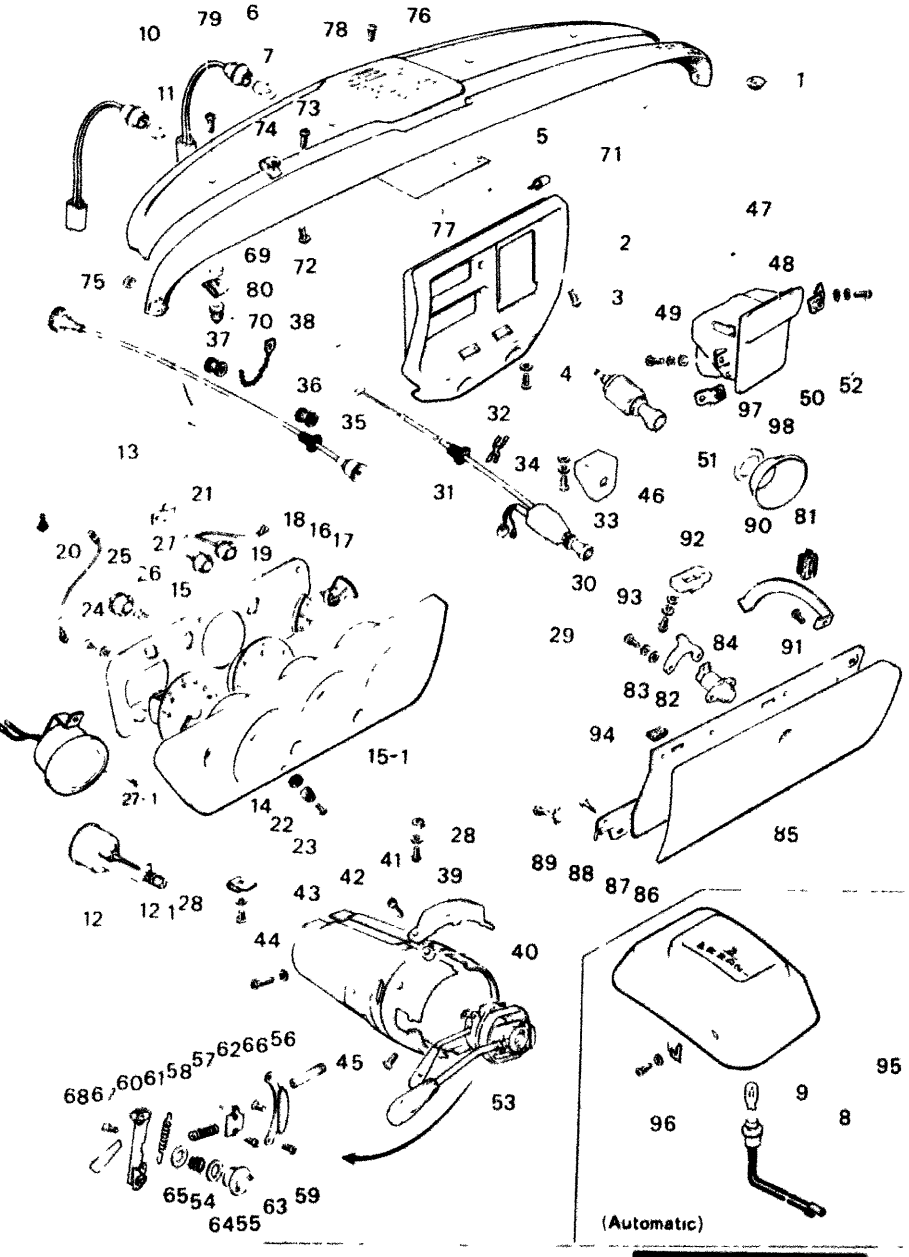

55~70 DASHBOARD

No.	Part Number	Description
81	0603 53 305	Guide, Glove Box
82	2280 55 182	Guide Glove Box
83	99833 0416	Screw, Guide
	99952 0400	Washer, Plain
	99971 0400	Washer, Spring
84	0274 55 200	Lock Glove Box
85	1879 70 220A	Lid, Outer-Glove Box
86	2370 70 231A	Lid, Inner-Glove Box
87	1854 70 240	Hinge Glove Box
88	99862 0410B	Screw Glove Box Lid & Hinge
89	99834 0410B	Screw Hinge - Body
	99973 0400	Washer, Toothed
90	2370 70 261	Stopper, Glove Box Lid
91	99832 0408B	Screw Stopper
92	0317 70 262A	Striker Glove Box Lid
93	99838 0516B	Screw Striker
	99952 0500B	Washer, Plain
	99971 0500B	Washer, Spring
94	0317 70 269	Cushion, Glove Box Lid
95	1856 68 860	Indicator (Automatic

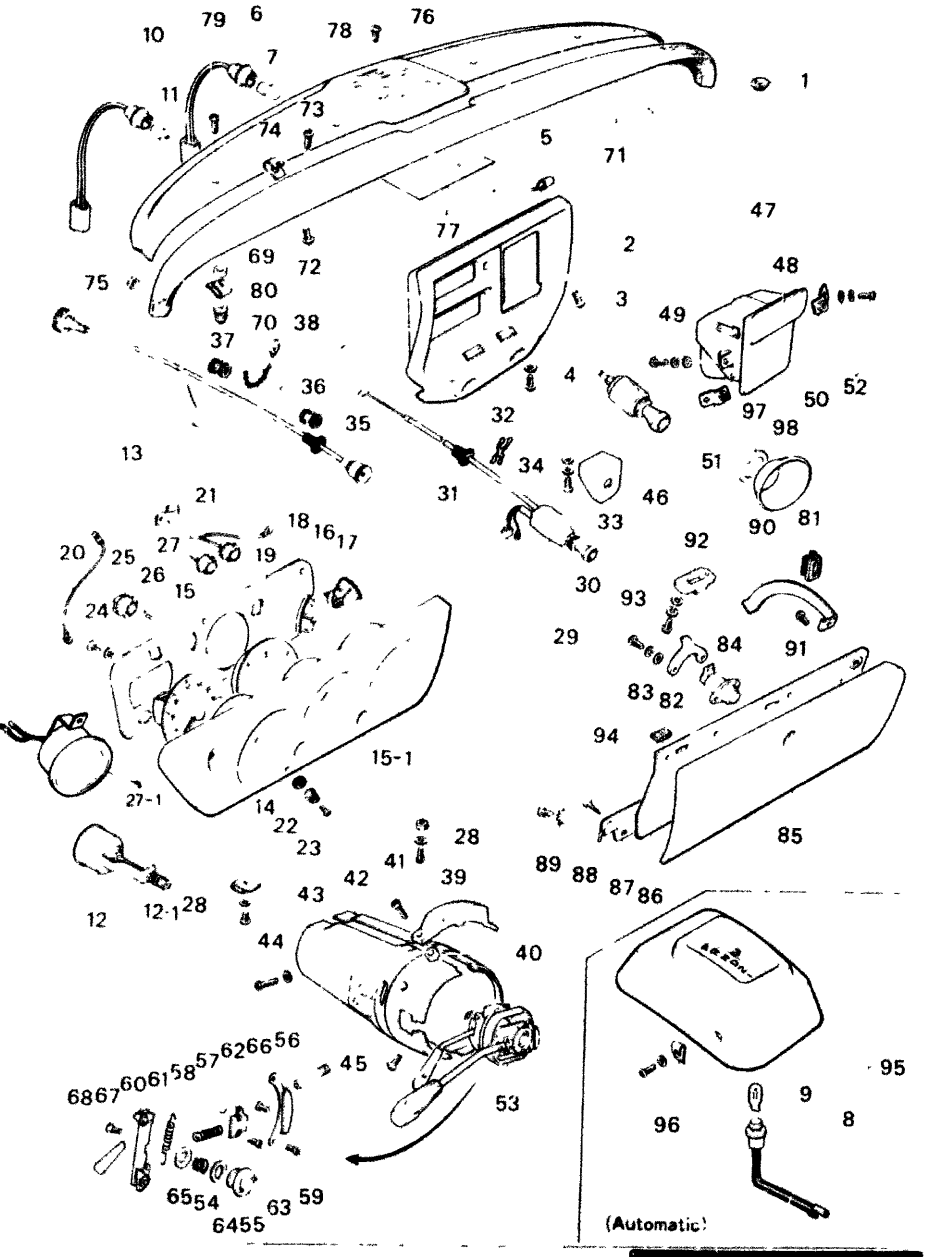

No.	Part Number	Description
96	99862 0516B	Screw Indicator
	99967 0500B	Washer
	99096 0500B	Nut Spring
97	0305 60 715	Insulator
98	0317 60 721	Protector

Autom

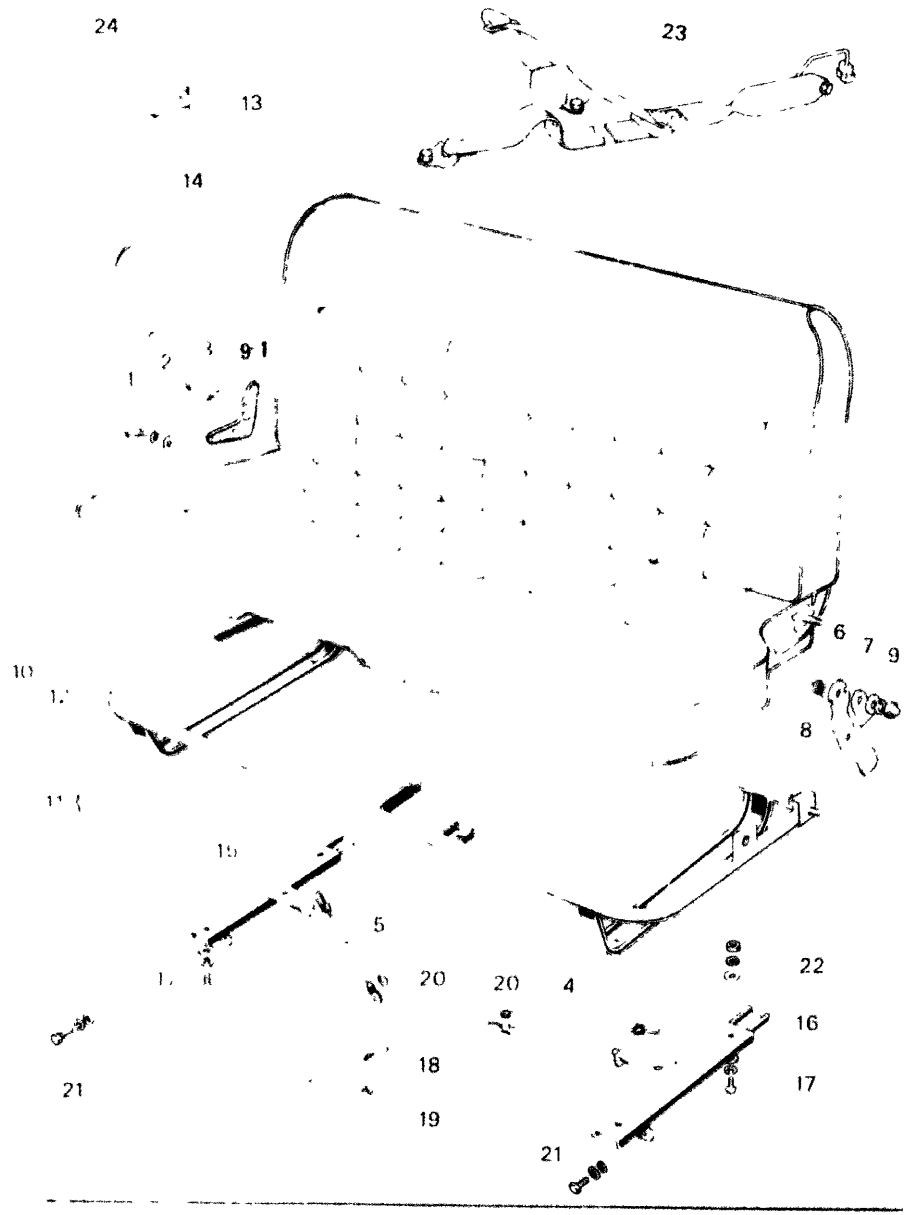

No.	Part Number	Description
		When ordering the following Seat & Trim, Add colour code nos. given below after part:
		· 03 (BLK) · 22 (BEIG) · 52 (
1	0603 57 102	Pin, Hinge
2	99951 0822	Washer, Plain
	99952 1030	Washer, Plain
3	0603 57 109	Rubber, Stop
•	3875 57 126	Plate, Set
4	0603 57 111	Wire No. 1, Adjuster
5	0603 57 112	Wire No. 2, Adjuster
6	2541 57 121	Plate, Lock
•	3874 57 121	Plate, Lock
7	~~2541 57 122~~	~~Plate, Stopper~~
•	3874 57 122	Plate, Stopper
8	2541 57 123	Spring (R), Return
•	3874 57 123	Spring (R), Return
	2541 57 124	Spring (L), Return
•	3874 57 124	Spring (L), Lock
9	99945 0600	Nut, Cap
•	99576 0600	Ring, Retaining
	99952 0816	Washer, Plain

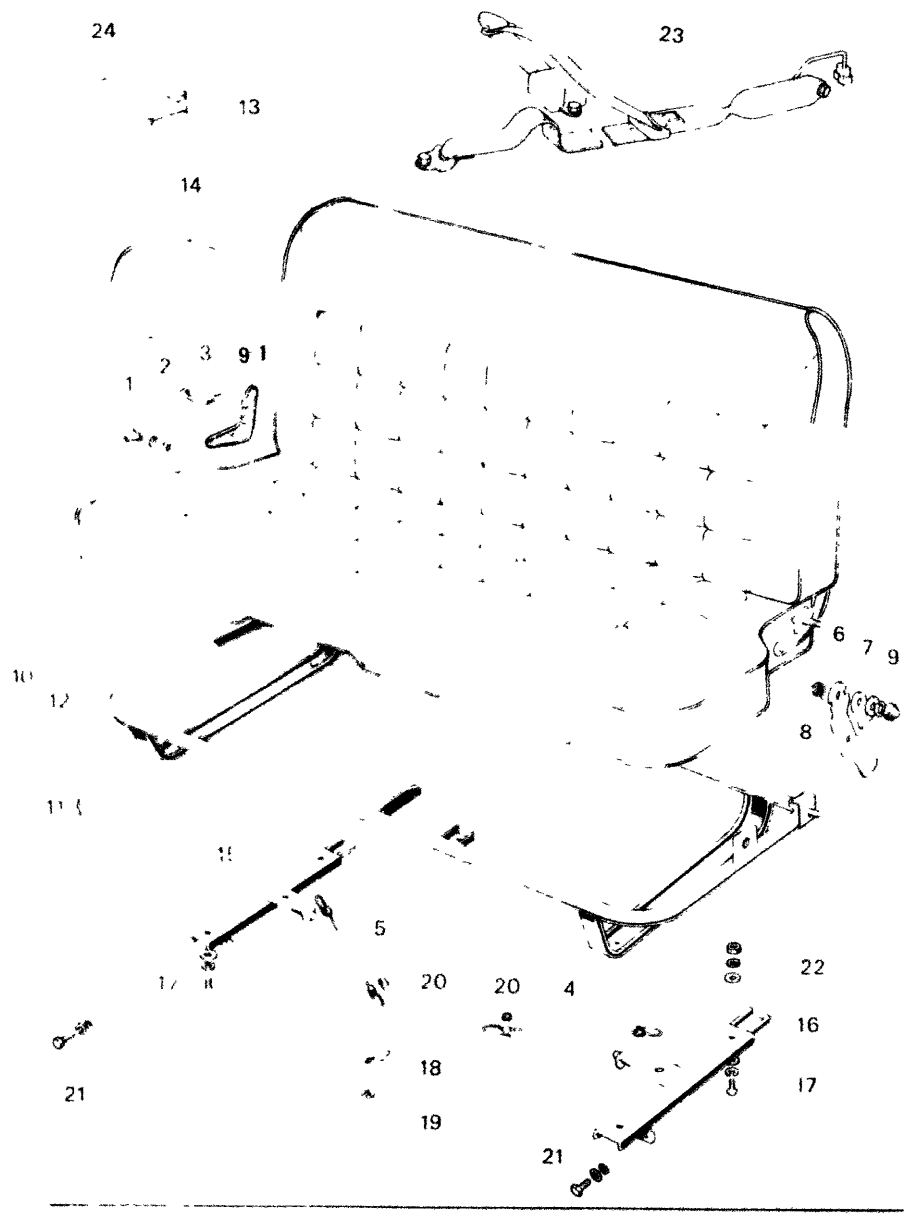

57 SEAT

No.	Part Number	Description
	99971 0600	Washer, Spring
•	3874 57 125	Shaft, Hinge
9-1	3875 57 101	Cover, Seat Hinge (R)
	3875 57 102	Cover, Seat Hinge (L)
10	3875 57 200	©Cushion
•	3875 57 200A	©Cushion
11	3875 57 220	© Trim
12	3874 57 400	Frame
•	3874 57 400A	Frame
13	3875 57 300	©Seat Back
•	3875 57 300A	©Seat Back
14	3875 57 320	© Trim, Seat Back
15	3874 57 650	Slide (R)
16	3874 57 680	Slide (L)
17	99801 0816	Bolt, Slide
	99952 0800	Washer, Plain
	99971 0800	Washer, Spring
18	0662 88 024	Lever, Adjuster

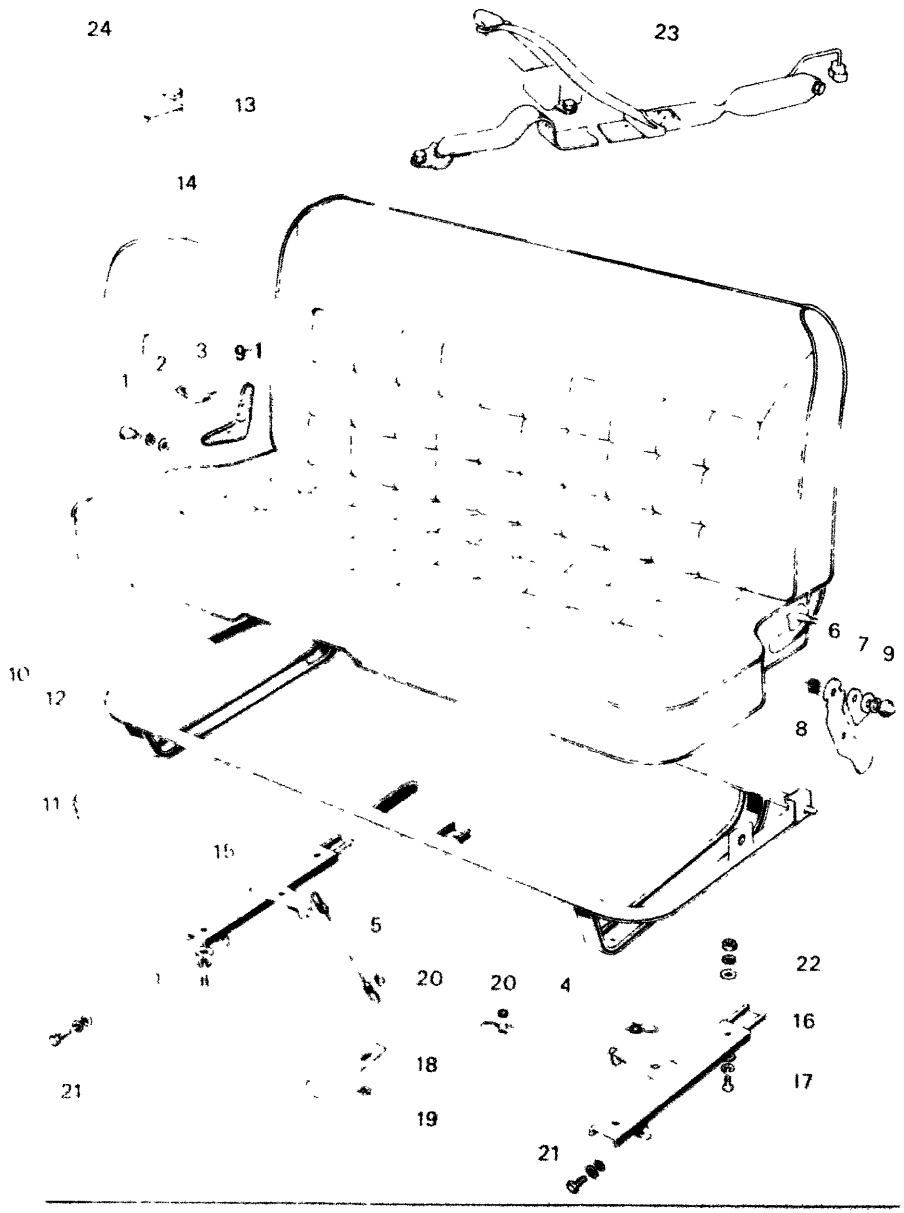

No	Part Number	Description
19	99576 0700	Ring, Retaining-Adjuster Lev
20	0738 57 109	Clip, Adjuster Wire
21	99796 0820	Bolt, Seat
	99952 0800	Washer, Plain (Recipro)
22	99901 0800	Nut, Seat
	99971 0800	Washer, Spring
23	3916 57 900A-00	Belt, Seat (R) TAKATA MA
	3770 57 900A-00	Belt, Seat (R) NSK MAKE
•	3770 57 900B-00	Belt, Seat (R) NSK MAKE
	3916 57 920A-00	Belt, Seat (L) TAKATA MA
	3770 57 920A-00	Belt, Seat (L) NSK MAKE
•	3770 57 920B-00	Belt, Seat (L) NSK MAKE
24	3794 57 991	Holder

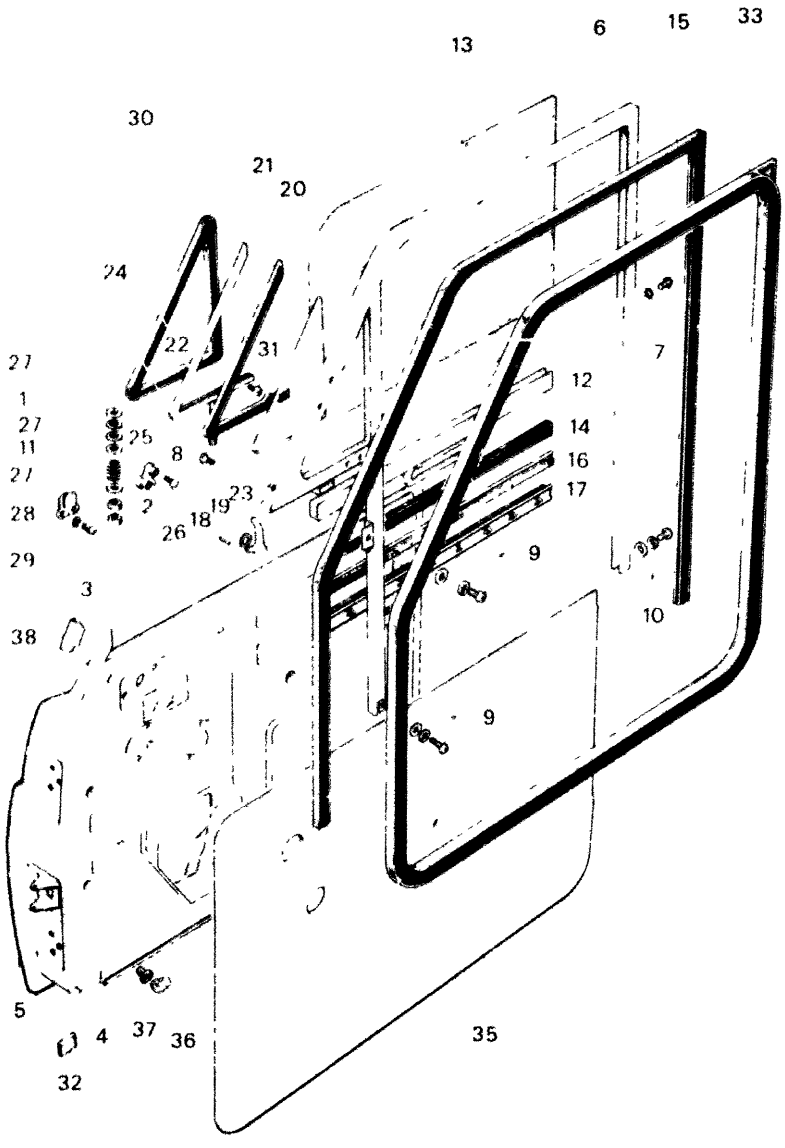

FRONT SI

No.	Part Number	Description
1	0820 52 403	Washer
2	99906 0600	Nut
3	99907 0600	Nut
4	3790 58 010	Body (R), Door (Fig. N
	3790 59 010	Body (L), Door (Fig. N
5	1819 58 020	Panel (R), Outer
	3790 59 020	Panel (L), Outer
6	0603 58 110A	Frame (R), Sash
	0603 59 110A	Frame (L), Sash
7	99834 0506	Screw, Sash Frame
	99974 0500	Washer, Toothed
8	99831 0612	Screw, Ventilator
9	99833 0612	Screw, Sash Frame
	99951 0618	Washer, Plain
	99971 0600	Washer, Spring
10	99834 0612	Screw, Sash Frame Lowe
	99952 0618	Washer, Plain
	99974 0600	Washer, Toothed
11	0115 58 171	Spring, Ventilator
12	0603 58 210	Holder, Door Glass

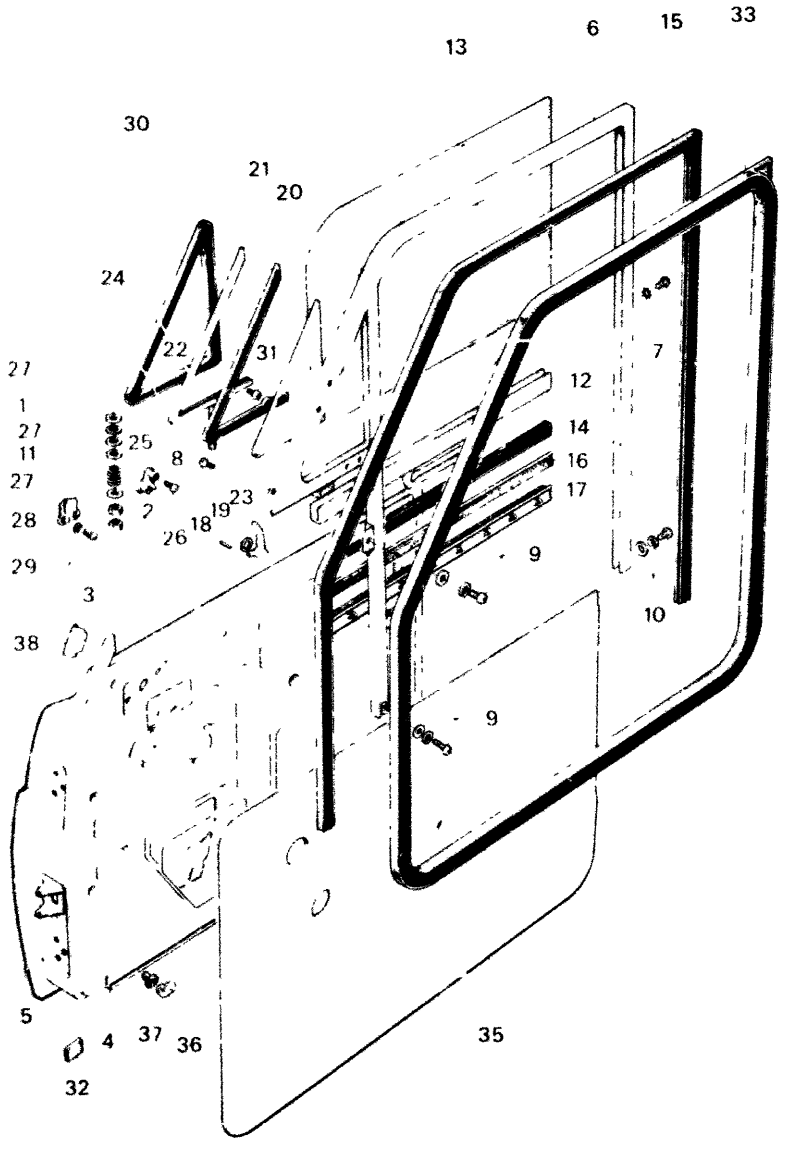

No.	Part Number	Description
13	0588 58 221B	Glass, Door (Transparent)
•	0588 58 221C	Glass, Door (Transparent)
	1823 58 221A	Glass, Door (Blue Pane)
•	1823 58 221B	Glass, Door (Blue Pane)
14	0588 58 231	Rubber, Holding-Door Glass
15	0588 58 241	Run Channel, Glass
16	0603 58 280A	Weatherstrip, Outer
17	0603 58 290A	Weatherstrip, Inner
	0603 58 410C	Ventilator (R). Door (Transp
•	0603 58 410D	Ventilator (R), Door (Transp
	1823 58 410	Ventilator (R), Door (Blue P
•	1823 58 410A	Ventilator (R), Door (Blue P
	0603 59 410C	Ventilator (L), Door (Transp
•	0603 59 410D	Ventilator (L), Door (Transp
	1823 59 410	Ventilator (L), Door (Blue P
•	1823 59 410A	Ventialtor (L), Door (Blue P
18	0115 58 214	Pin, Spring
19	99972 1000	Washer, Wave
20	0603 58 411B	Glass, Ventilator (Transpa

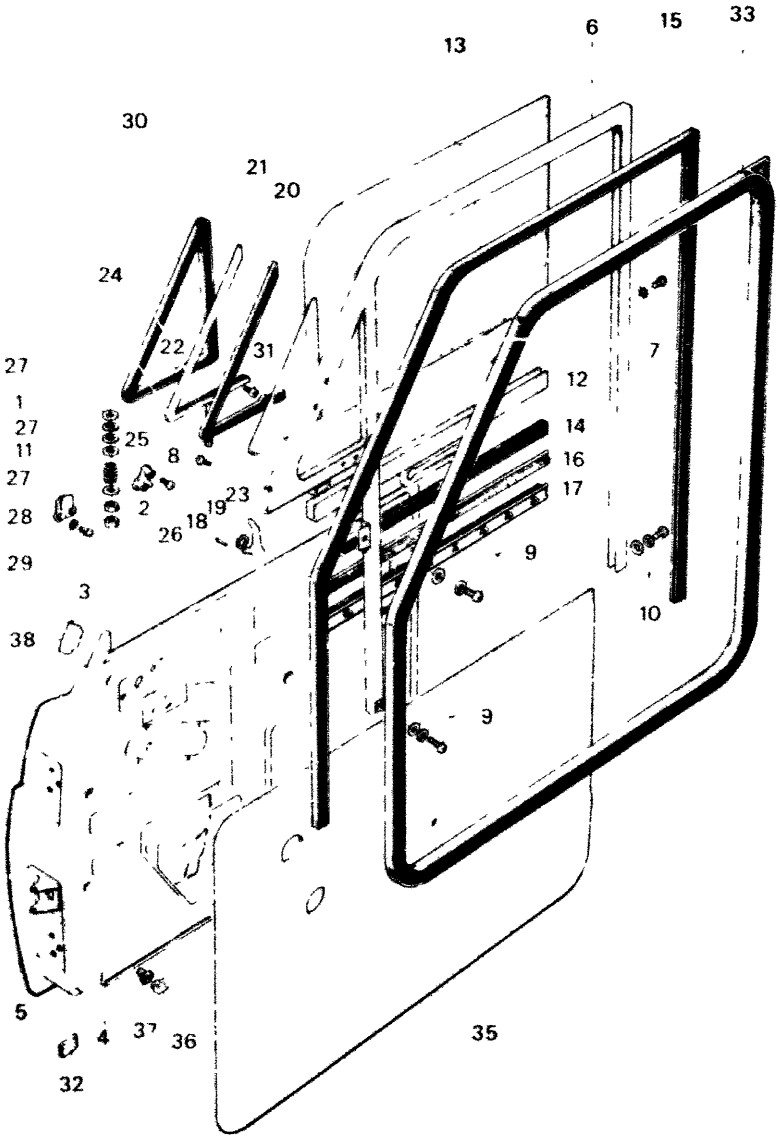

FRONT SI

No.	Part Number	Descriptio
•	0603 58 411C	Glass, Ventilator (Tr
	1823 58 411	Glass, Ventilator (Bl
•	1823 58 411A	Glass, Ventilator (Bl
21	0603 58 412A	Rubber (R), Holding
	0603 59 412A	Rubber (L), Holding
22	0603 58 420B	Sash (R), Ventilator
	0603 59 420B	Sash (L), Ventilator
23	0183 58 451	Handle (R), Ventilat
	0183 59 451	Handle (L), Ventilat
24	0603 58 460A	Sash (R), Ventilator
	0603 59 460A	Sash (L), Ventilator
25	0603 58 430A	Hinge (R), Ventilator
	0603 59 430A	Hinge (L), Ventilator
26	99772 0410	Screw, Ventilator Hinge
27	0187 58 471	Washer
28	0193 58 481	Plate, Lock
29	99833 0408	Screw, Lock Plate
	99971 0400	Washer, Spring
30	0603 58 491C	Rubber (R), Sash-Ventil

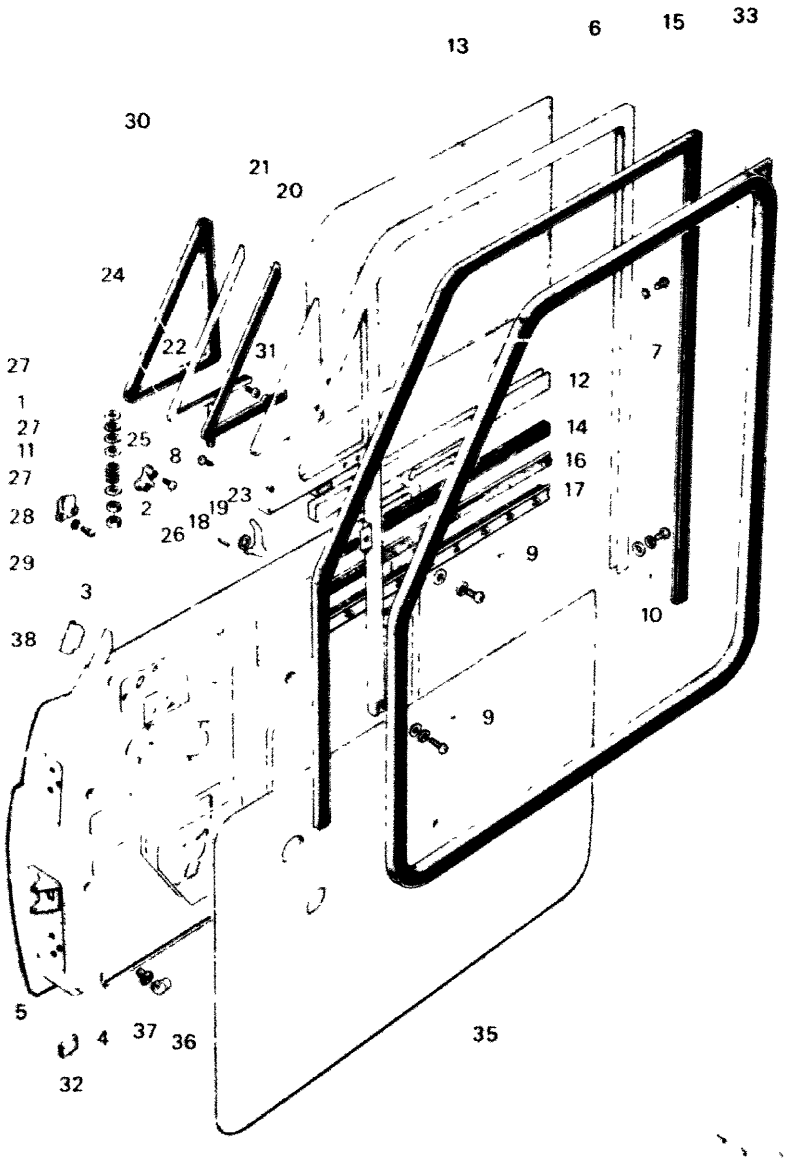

No.	Part Number	Description
	0603 59 491C	Rubber (L), Sash-Ventilator
31	99772 0514	Screw, Ventilator
32	0208 58 497	Cushion
33	3874 58 901	Weatherstrip (R)
•	3874 58 901A	Weatherstrip (R)
	3874 59 901	Weatherstrip (L)
•	3874 59 901A	Weatherstrip (L)
~~34~~	~~0603 58 904~~	~~Pad, Weatherstrip (Rotary)~~
35	3790 58 910 03	Trim (R), Door (BLK)
	3790 58 910 22	Trim (R), Door (BEIG)
	3790 58 910 52	Trim (R), Door (BLU)
	3790 59 910 03	Trim (L), Door (BLK)
	3790 59 910 22	Trim (L), Door (BEIG)
	3790 59 910 52	Trim (L), Door (BLU)
36	0208 58 921	Fastener, Door Trim
37	0187 58 922	Rubber, Seal-Fastener
38	1854 58 951A	Pad (R), Door Body
	1854 59 951A	Pad (L), Door Body

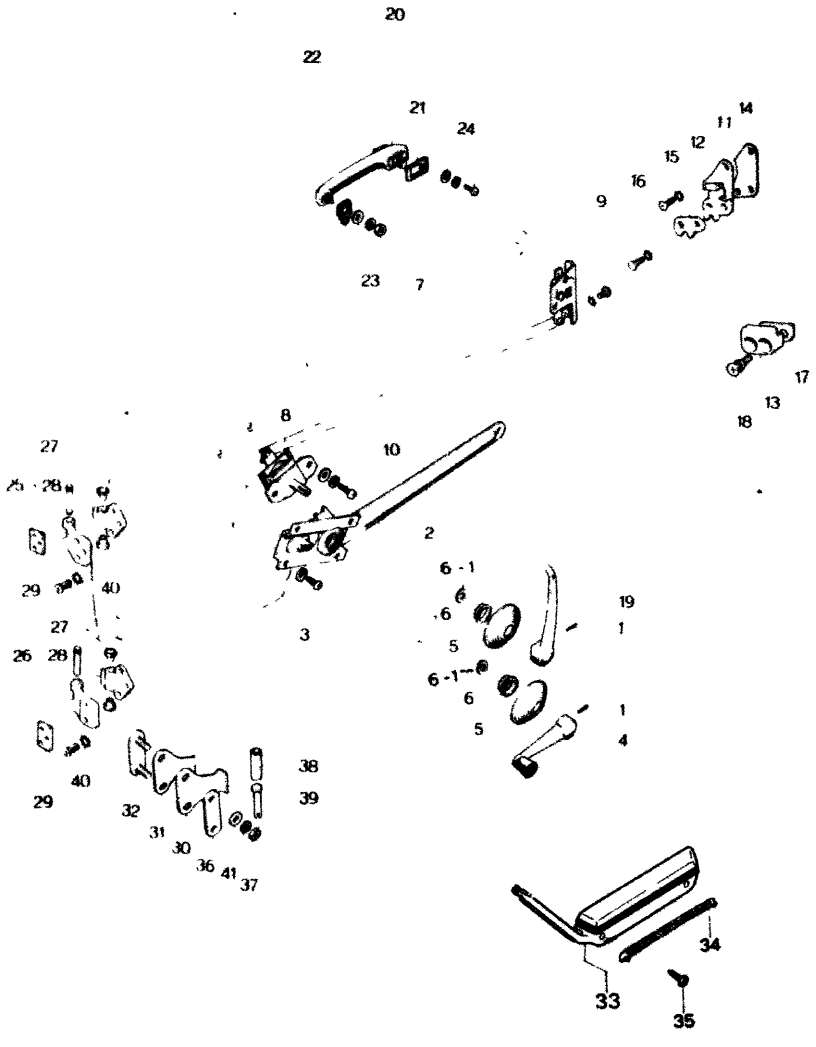

FRONT S

No.	Part Number	Description
1	0100 58 272A	Pin, Tapered
2	0603 58 300A	Regulator (R) Window
	0603 59 300A	Regulator (L) Window
3	99833 0612	Screw Regulator
	99971 0600	Washer Spring
4	0118 58 370A 01	Handle (R) Regulator
	0118 59 370A 01	Handle (L) Regulator
5	0118 58 391 01	Escutcheon Regulator H
●	0118 58 391A01	**Escutcheon, Regulator Ha**
● 6	0118 58 392	Crown Escutcheon
6-1	0259 58 305B	**Gasket, Regulator Handle**
7	2651 58 500B	Lock (R Door
	2651 59 500B	Lock (L Door
8	2651 58 600	Lock, Inner
9	99832 0612	Screw, Door Lock
	99974 0600	Washer Toothed
10	99833 0616	Screw Inner Lock
	99952 0600	Washer, Plain
	99971 0600	Washer, Spring
11	0259 58 570	Striker (R), Door Lock

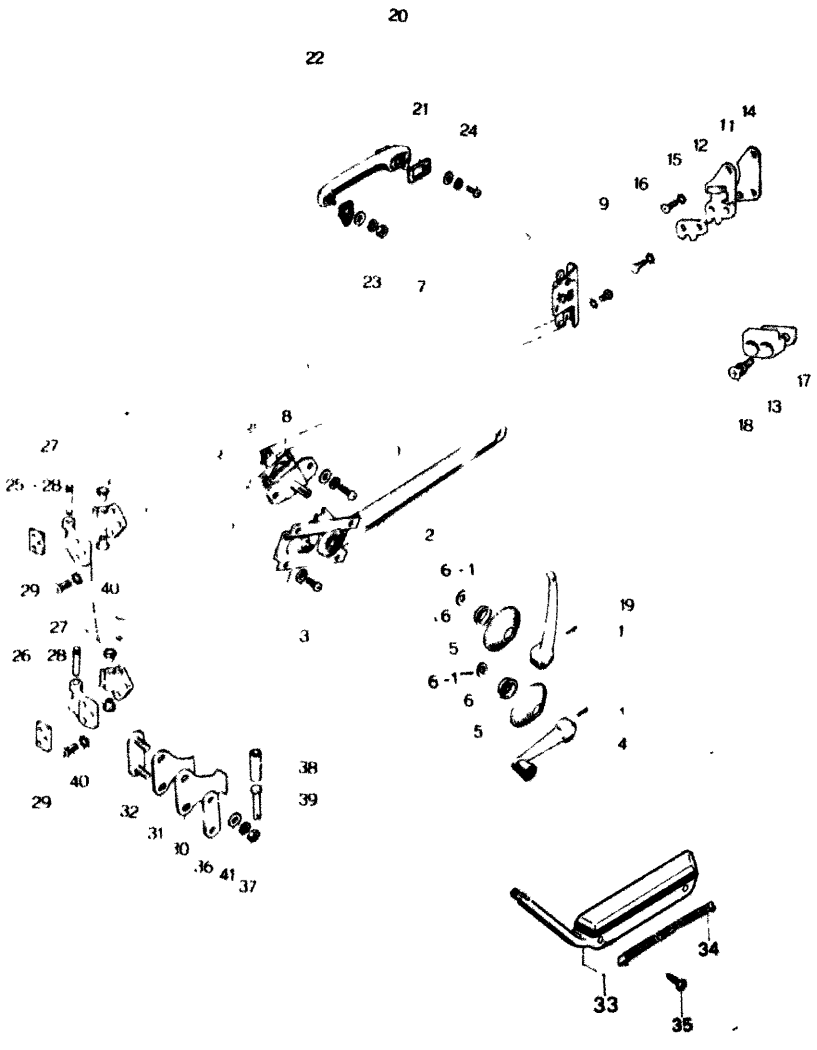

No.	Part Number	Description
	0259 59 570	Striker (L), Door Lock
12	0259 58 581	Rack (R), Door Striker
	0259 59 581	Rack (L), Door Striker
13	2350 58 582	Block, Antiburst
14	0187 58 592A	Seat, Striker
15	99761 0620	Screw, Door Striker
	99974 0600	Washer, Toothed
	99975 0600	Washer, Toothed
16	99761 0630	Screw, Door Striker
	99974 0600	Washer Toothed
	99975 0600	Washer, Toothed
17	2350 58 593	Shim, Antiburst Block
18	99761 0630	Screw Antiburst Block
	99974 0600	Washer, Toothed
19	0115 58 651B	Handle (R), Inner
	0115 59 651B	Handle (L), Inner
20	2651 58 670	Handle, Outer
21	0603 58 674	Seat No 1
22	0603 58 675	Seat No 2
23	99906 0600	Nut, Outer Handle

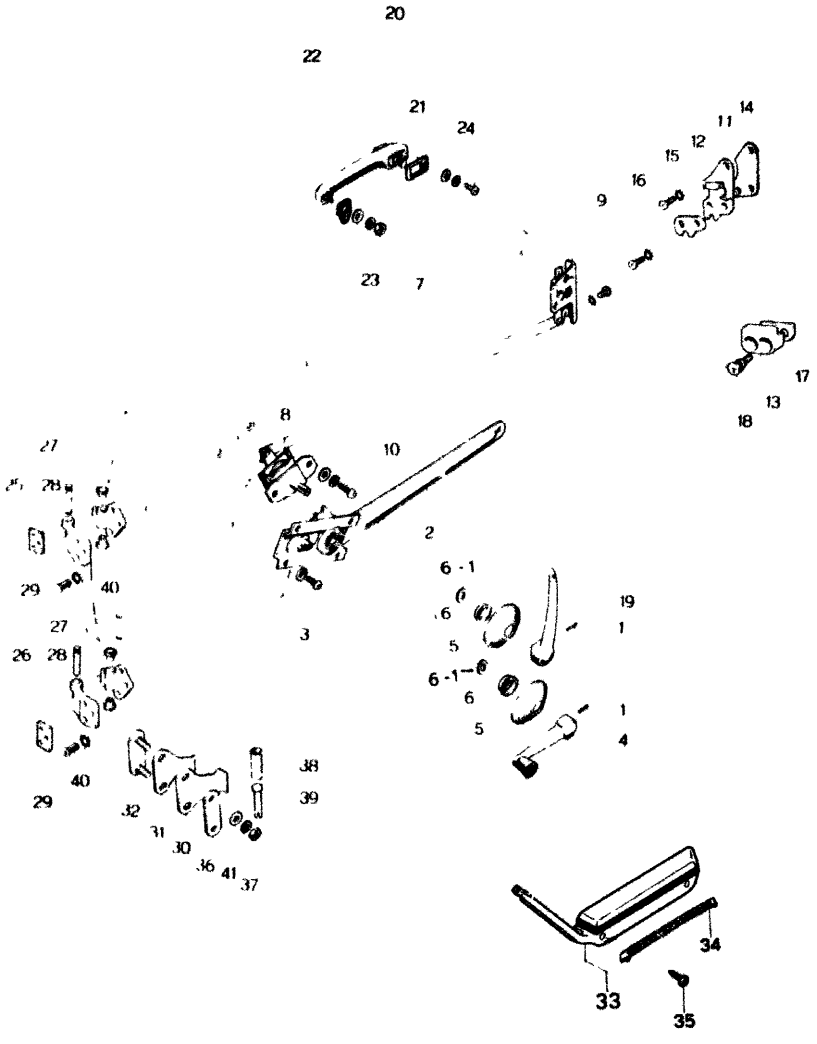

No.	Part Number	Description
	99952 0600	Washer, Plain
	99971 0600	Washer, Spring
24	99833 0612	Screw, Outer Handle
	99952 0600	Washer, Plain
	99971 0600	Washer, Spring
25	0588 58 710	Hinge "A", Upper
26	0588 58 760	Hinge "B", Lower
27	0223 58 721	Bush
28	0187 58 731	Pin, Hinge
29	0603 58 741A	Spacer
30	0603 58 811	Spring, Check-Door
31	0603 58 812	Spring, Check Sub-Door
32	0603 58 820A	Plate, Set-Door Checker
33	3875 69 370-00	Rest (R), Arm (BLK)
•	3875 69 370-20	Rest (R), Arm (BEIG)
	3875 69 370-50	Rest (R), Arm (BLU)
	3875 69 390-00	Rest,(L), Arm (BLK)
•	3875 69 390-20	Rest (L), Arm (BEIG)
	3875 59 390-50	Rest (L), Arm (BLU)
34	3875 69 373-00	Cover (BLK)
•	3875 69 373-20	Cover (BEIG)
	3875 69 373-50	Cover (BLU)
35	99830 0620	Screw, Arm Rest

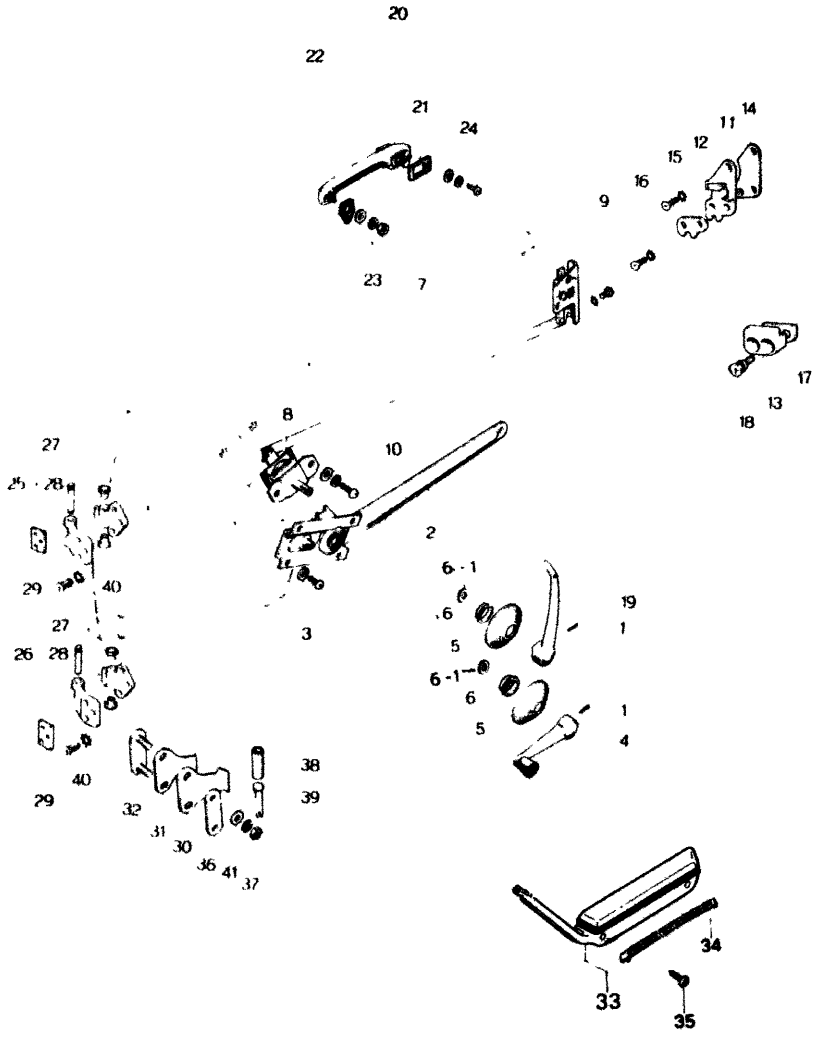

No.	Part Number	Description	
	99952 0500	Washer, Plain	
36	0603 58 823A	Washer, Door Checker	
37	99906 0600	Nut, Door Checker	
	99971 0600	Washer, Spring	
38	0317 58 831A	Roller, Door Checker	
39	0317 58 832	Pin, Door Checker	
40	99761 0825	Screw, Door Hinge	
	99975 0800	Washer, Toothed	
41	0208 72 821	Washer No 1, Adjuster	Selec
	0208 72 822	Washer No 2, Adjuster	

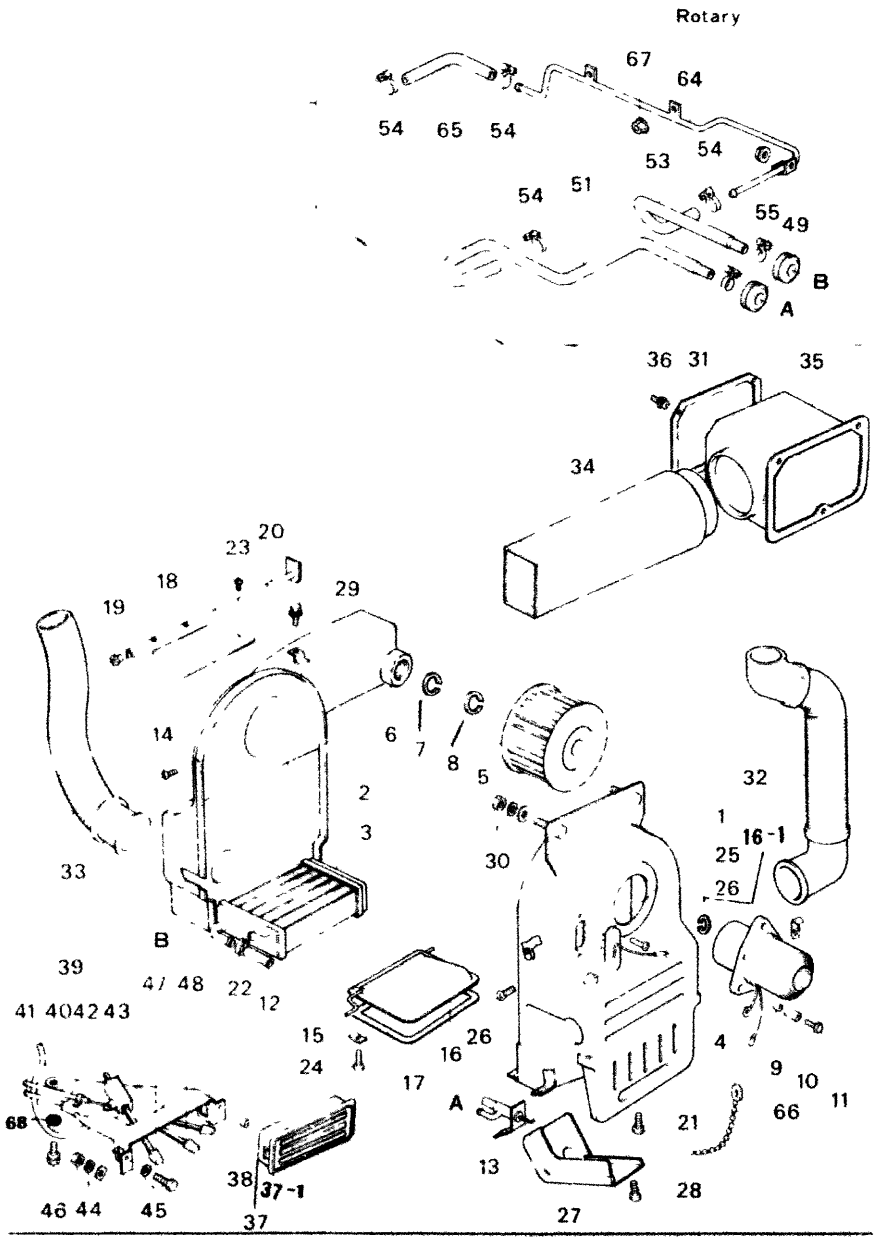

No.	Part Number	Description
	1854 61 080D	Heater Set
	1854 61 080E	Heater Set
•	3792 61 140B	Heater Unit (Fig. No. 1,~
•	3792 61 140C	Heater Unit (Fig. No. 1,~
1	2677 76 121B	Case
2	2677 76 122A	Plate
3	2677 76 123	Core
4	3792 76 124A	Motor
5	3792 76 456	Fan
6	0866 76 472A	Nut
7	0866 76 475	Washer, Plain
8	0866 76 476	Washer, Plain
9	2677 76 129	Bush
10	2677 76 130	Ring, Rubber
11	3792 76 131	Screw, Set
12	2677 76 133	Hose, Water
13	2677 76 134A	Valve, Water
~~14~~	~~0269 76 135~~	~~Screw~~
15	2677 76 135	Spring
16	2677 76 136B	Valve, Air
16-1	0866 76 474	Washer, Plain

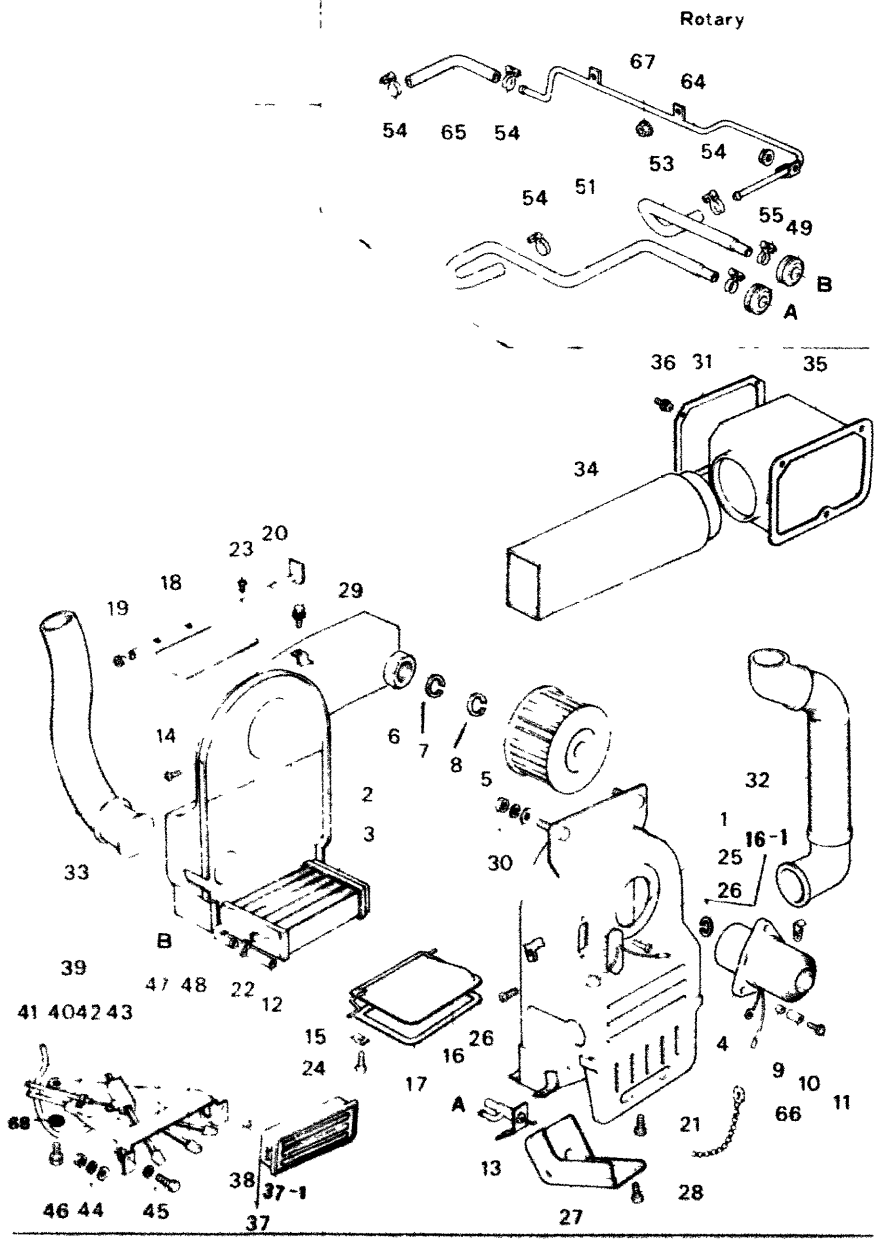

No.	Part Number	Description
17	2677 76 143	Gasket
18	2677 76 145	Valve Air
19	2677 76 146	Bush
20	2677 76 147 A	Shaft
21	99833 0412	Screw
	99971 0400	Washer Spring
22	99282 2200	Band Hose
23	99833 0306	Screw
24	99833 0410	Screw
25	3792 76 150	Resistance
26	99833 0510	Screw
27	2677 61 145A	Cover
28	99833 0412	Screw
29	99796 0812	Bolt Heater Unit & Bod
30	99940 0800	Nut Heater Unit
31	3874 61 155	Packing
32	2677 61 240A	Hose (R Defroster

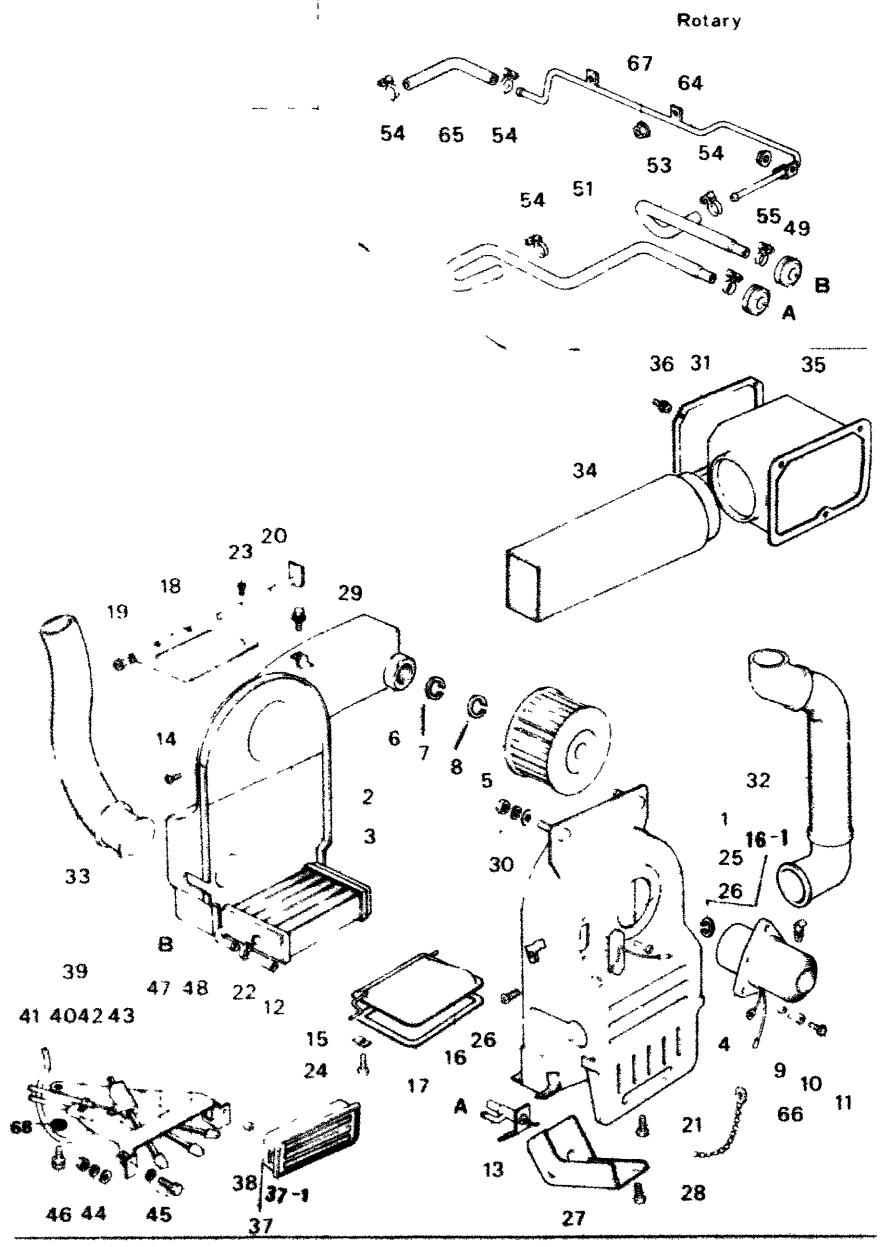

No.	Part Number	Description
33	2677 61 260A	Hose Defroster
34	2677 61 250A	Duct Air
•	2677 61 250B	Duct, Air
35	2541 61 573A	Junction Air Duct
36	99740 0512	Screw, Air Duct Junc
37	1823 61 170C00	Panel, Assy, Decoratio (Fig. No. 37-1, 38, ir
37-1	1823 61 180C	Panel, Decolation
38	99701 1030	Bulb, Illumination
39	1854 61 190C	Control Heater
40	1854 76 446	Cable
41	1823 76 447A	Cable
42	1854 76 448A	Cable
43	1823 76 554	Switch, Heater
~~44~~	~~99006 0500~~	~~Nut, Heater Control~~
	~~99952 0500~~	~~Washer, Plain~~
	~~99971 0500~~	~~Washer, Spring~~
45	99797 0510	Bolt, Heater Control
	99952 0500	Washer, Plain
	99971 0500	Washer, Spring

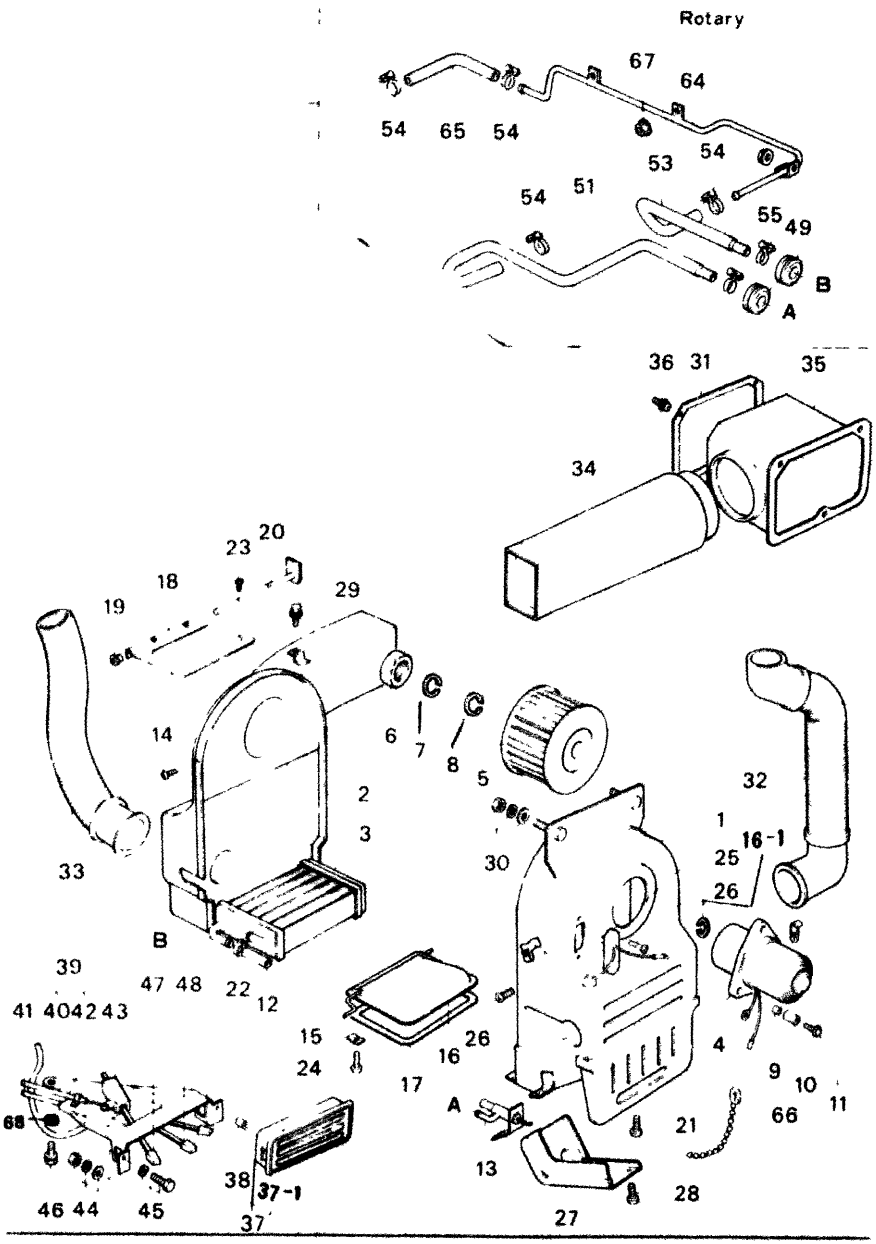

No.	Part Number	Description
46	99786 0520	Bolt, Heater Control
47	1823 76 442	Knob No 1
48	1823 76 443	Knob No 2
49	0233 61 479	Grommet
~~50~~	~~2844 61 211C~~	~~Hose No 1 Water (1600cc)~~
	~~1820 61 211B~~	~~Hose No 1, Water (1800cc)~~
51	1854 61 211	Hose No 1 Water
~~52~~	~~2844 61 215D~~	~~Hose No 2 Water (1600cc)~~
	~~1820 61 215B~~	~~Hose No 2, Water (1800cc)~~
53	1854 61 212	Hose No 2 Water
54	99282 2600	Band Hose
55	99282 2200	Band, Hose
~~56~~	~~0305 13 170A~~	~~Connector, Hose (Fig No 17 m~~
~~57~~	~~99922 2000~~	~~Nut~~
~~58~~	~~99504 2000~~	~~Gasket, Connector~~
~~59~~	~~1820 61 125~~	~~Clip~~ (1800cc)
~~60~~	~~1823 61 126~~	~~Clip~~
~~61~~	~~1304 61 241~~	~~Clip (1600cc)~~
~~62~~	~~99704 0620~~	~~Bolt~~ (1600cc)
	~~99071 0600~~	~~Washer, Spring~~

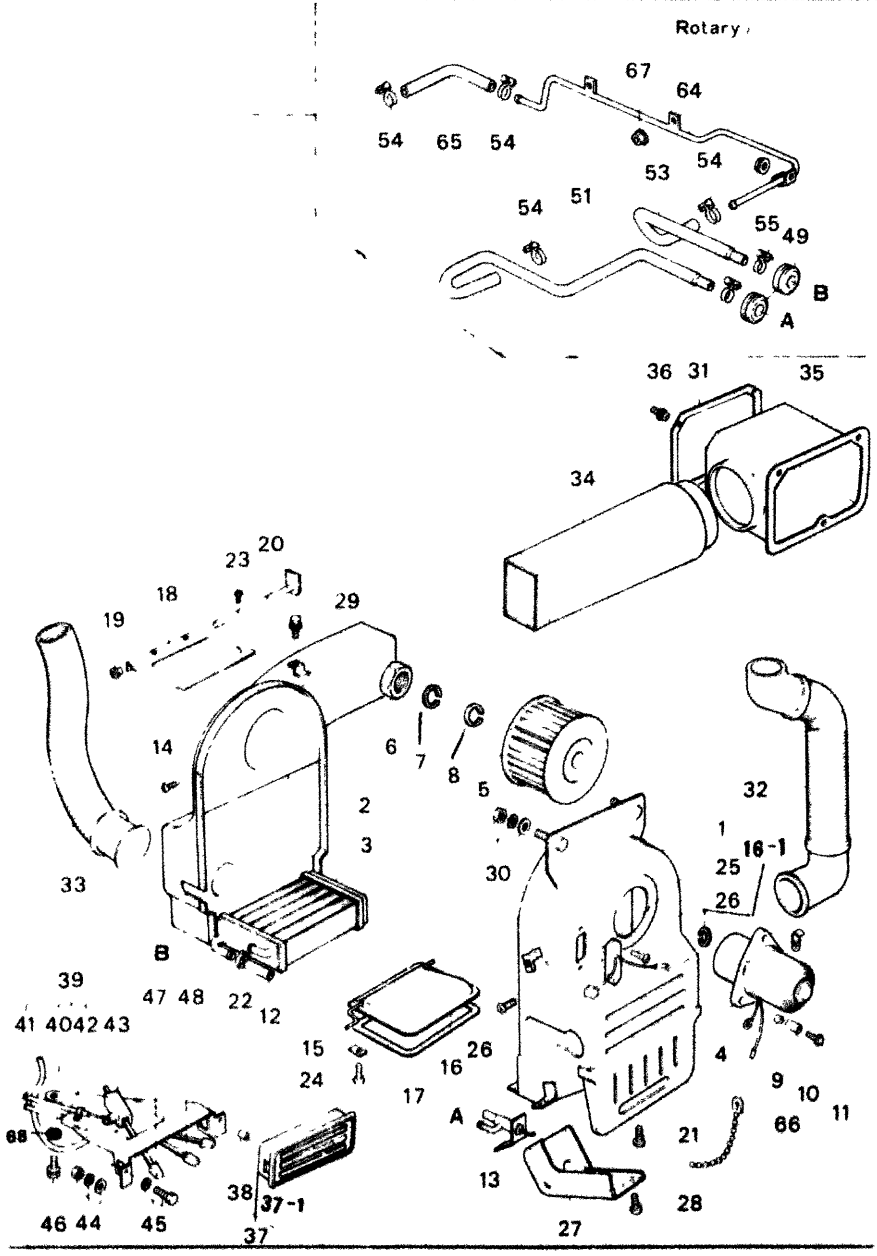

No	Part Number	Description
~~63~~	~~99788 0812~~	~~Bolt, Clip (1600cc)~~
64	1854 61 220A	Pipe, Water
65	0824 61 183B	Hose, Water
66	99288 1608	Band
67	99940 0602	Nut
68	0193 65 627	Washer

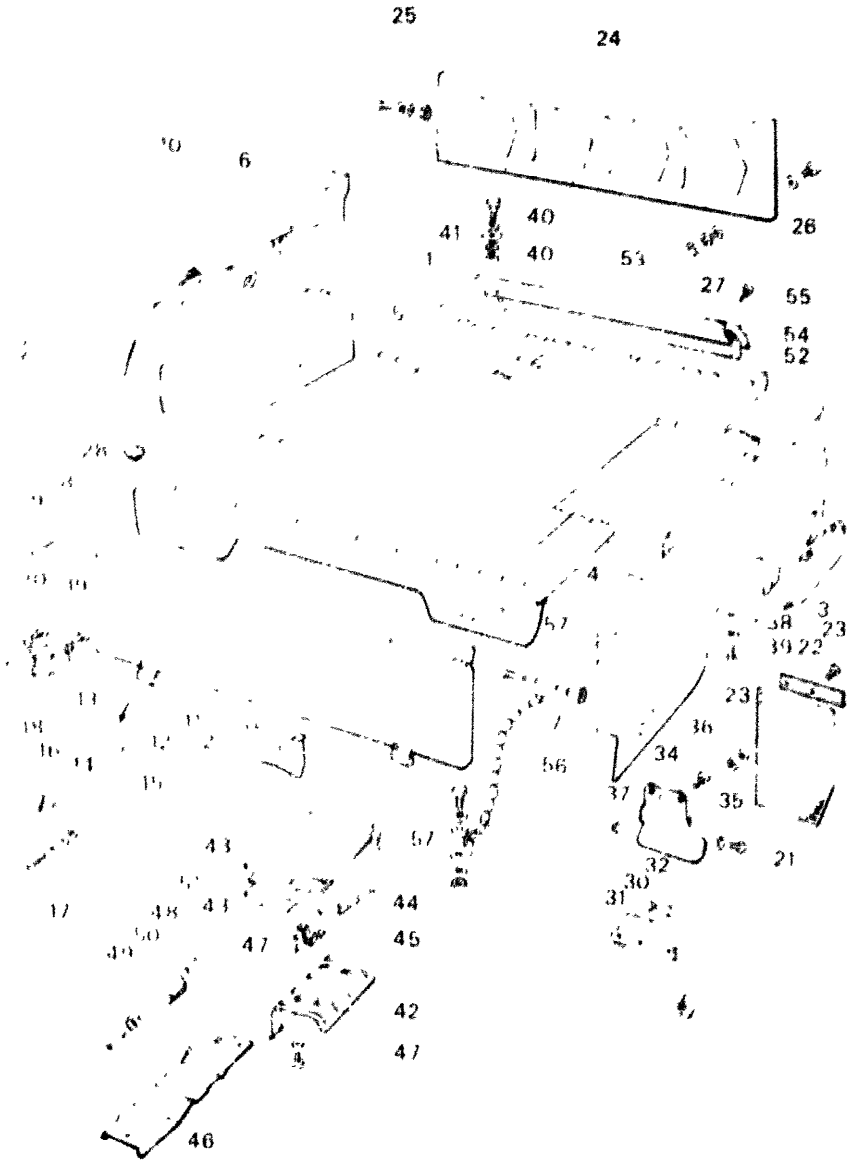

No.	Part Number	Description
	3790 65 010	Box
1	3790 65 020	Board Floor (Fig. No
2	2651 65 140A	Bracket Number Pla
3	3790 65 500	Cover Service
● 3-1	1854 65 531A	Rubber, Service Cove
4	1854 65 201A	House R Tire
5	1854 65 210A	House L Tire
6	1854 65 310	Bracket Condence T
7	3790 65 430	Plate (R) Side
8	1823 65 437A	Protector
9	99864 0408	Screw Tapping-Prote
10	3790 65 460	Plate L Side
11	0603 65 490C	Door, Rear (Fig. No. 12, ~ 16, inc
12	0183 65 551	Hinge

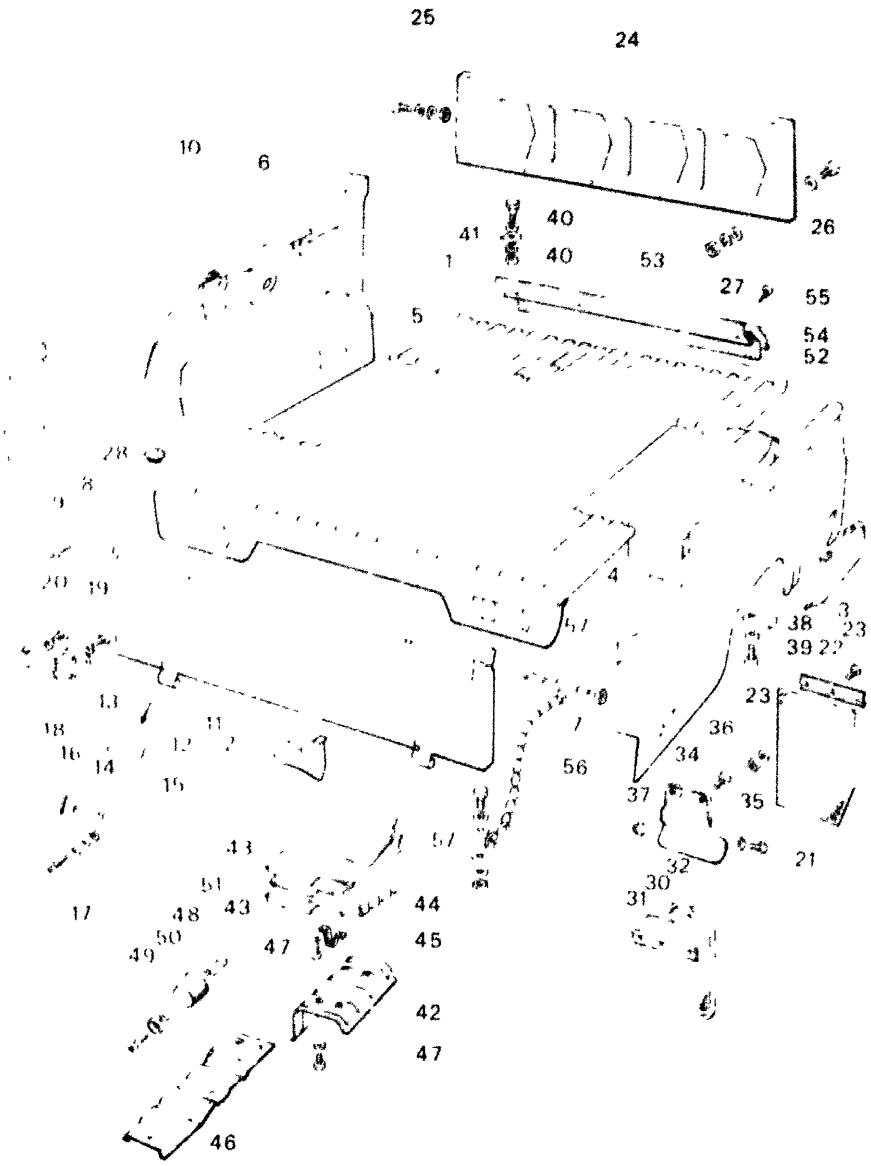

No.	Part Number	Description
13	99251 0818	Rivet
14	0183 65 552	Hinge, Box Rear Door
	83 65 553	Pin Hinge
16	0024 65 554	Washer Hinge
	99221 3020	Pin Split
17	99833 0820	Screw Door Hinge
	99901 0800	Nut
	99952 0800	Washer Plain
	99971 0800	Washer Spring
18	0603 65 560A	Shutter Door
19	99834 0820	Screw Shutter
	99971 0800	Washer Spring
20	99834 0835	Screw Shutter
	99971 0800	Washer Spring
21	1854 65 855B	Flap
22	1854 65 856	Washer
23	99833 0618	Screw Flap
	99906 0600	Nut
	99953 0600	Washer Plain
24	1823 65 900	Plate Front

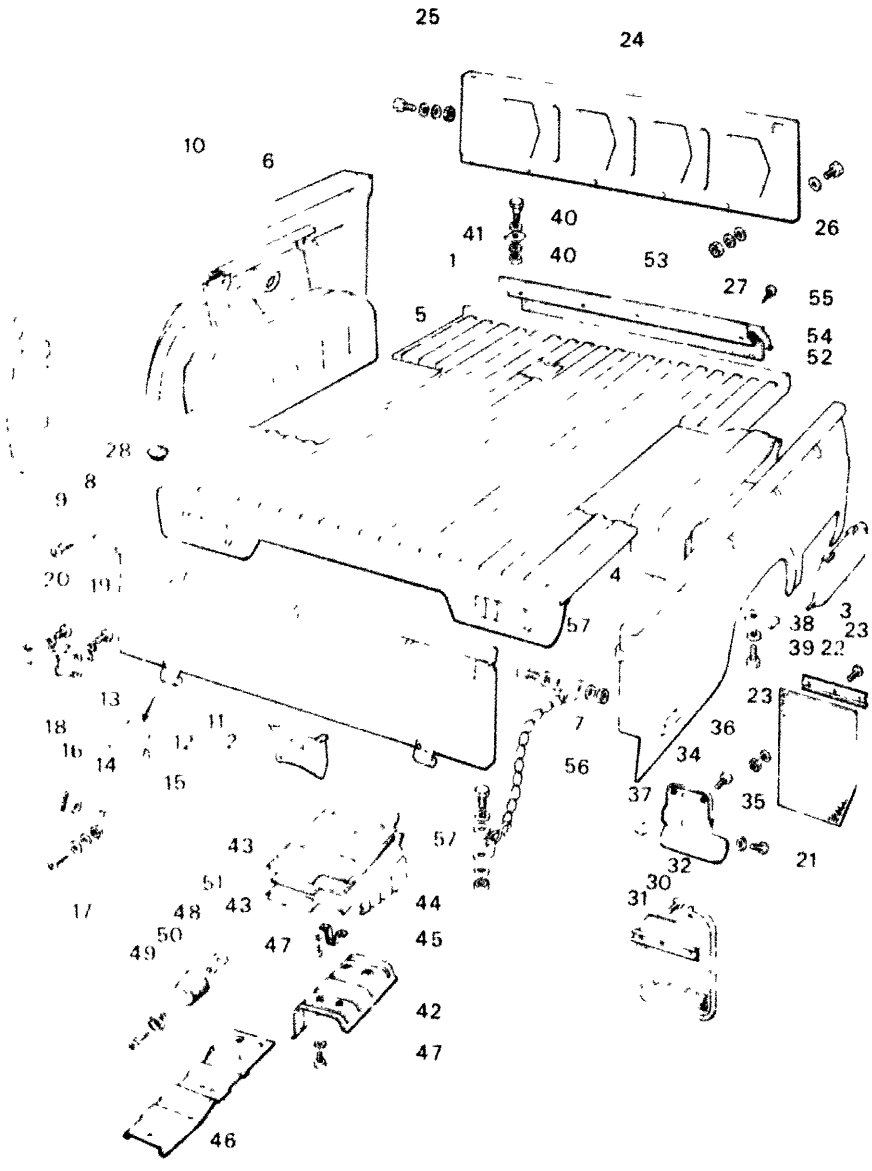

No.	Part Number	Description
25	99795 0820	Bolt, Front Plate
	99906 0800	Nut
	99952 0800	Washer, Plain
	99971 0800	Washer Spring
26	99795 0816	Bolt, Front Plate
	99952 0800	Washer Plain
27	99906 0800	Nut
	99952 0800	Washer, Plain
	99971 0800	Washer Spring
~~28~~	~~0222 66 971~~	~~Rubber, Seal (Rotar~~
~~29~~	~~0603 65 851~~	~~Flap, Mud Guard (Recip~~
30	1854 65 851B	Flap (R), Mud Guard
	1854 65 951B	Flap (L), Mud Guard
31	1854 65 853	Washer, Flap Set
32	99796 0616	Screw, Flap
~~33~~	~~99906 0600~~	~~Nut~~
	~~99953 0600~~	~~Washer, Plain~~ (Recipro

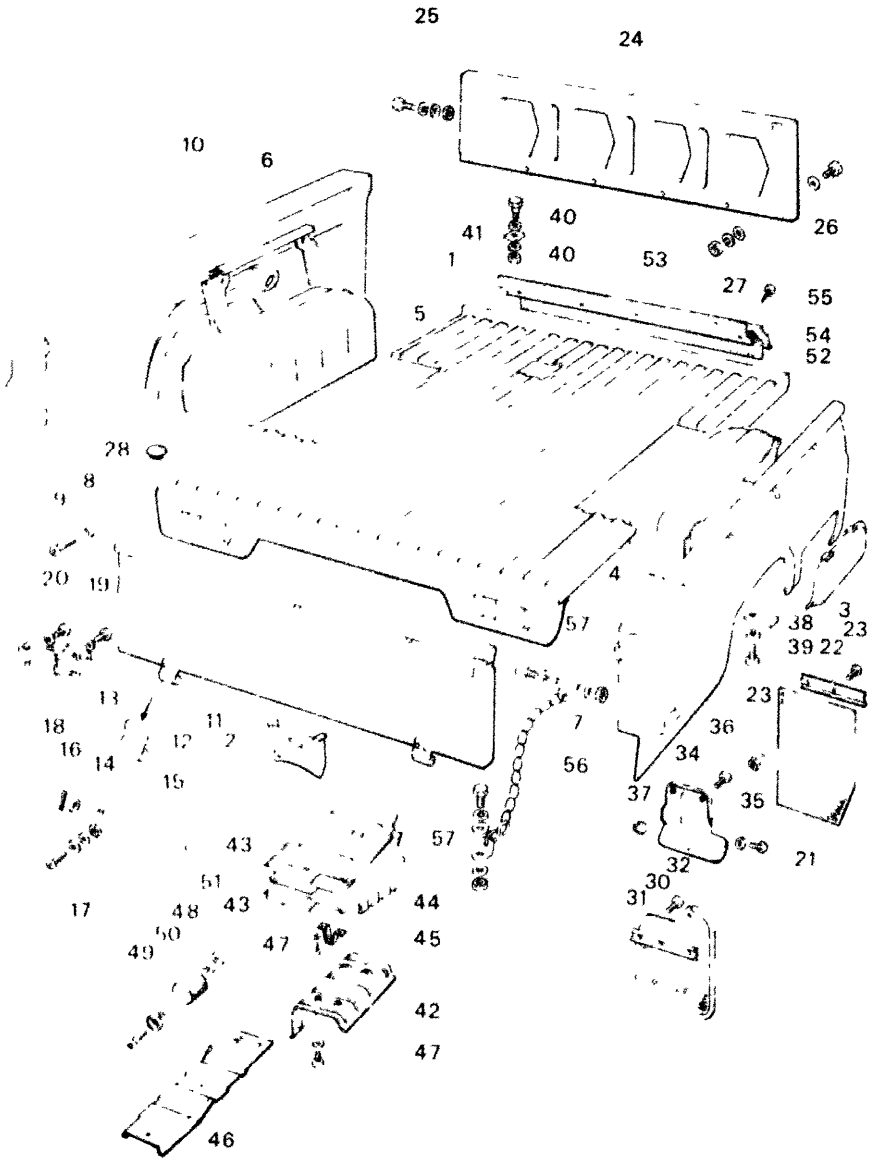

No.	Part Number	Description
	~~99940 0600~~	~~Nut~~
34	1854 65 870	Bracket (R) Flap
	1854 65 970	Bracket (L) Flap
35	99769 0616B	Bolt, Bracket
	99952 0618B	Washer, Plain
36	99796 0616	Bolt, Bracket
37	99910 0601	Grommet Screw
38	3874 65 014	Shim, Box Set
39	997501 1235	Bolt Box Set
	99940 1200	Nut
40	997501 1235	Bolt Box Set
	99940 1200	Nut
41	3874 65 014	Shim Box Set
42	1854 65 711A	Insulator Lower
43	1854 65 721	Insulator No 1-Upper
44	1854 65 722	Insulator No 2-Upper
45	1354 65 730	Bracket, Insulator

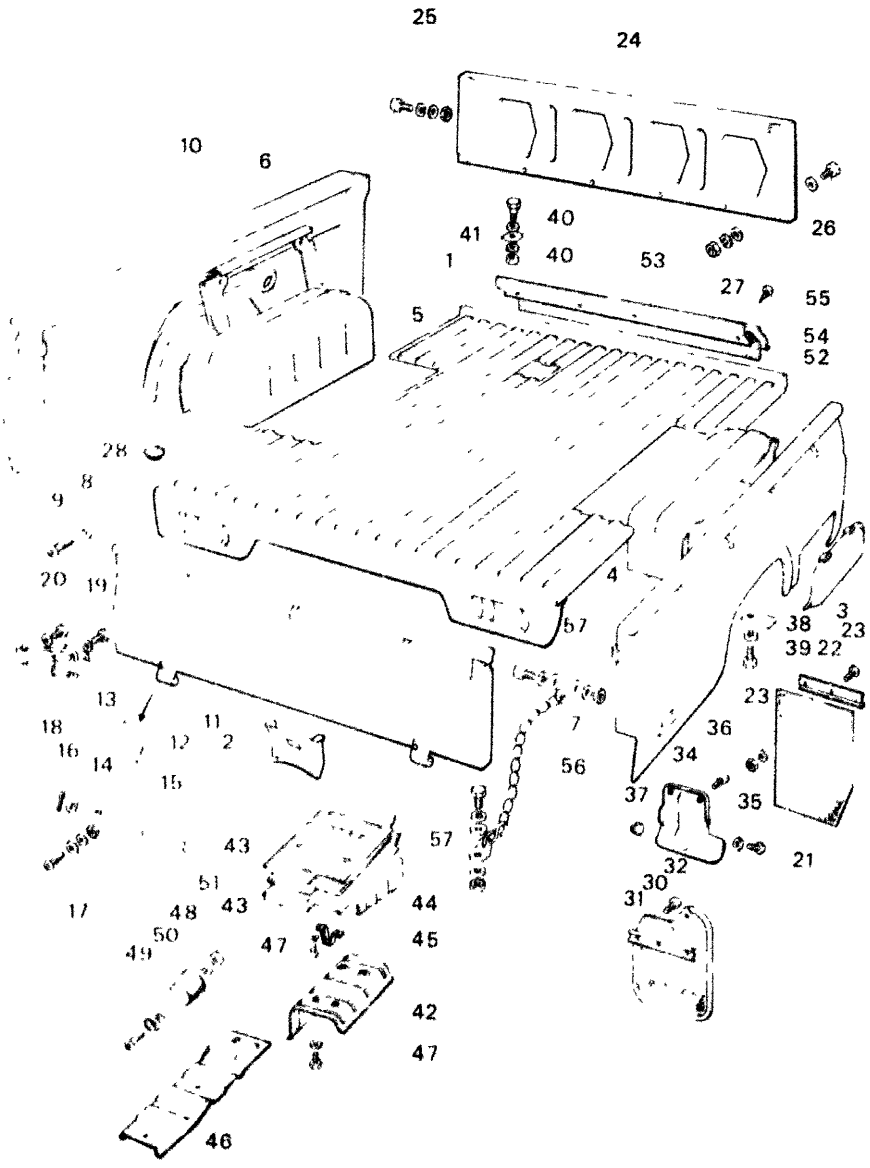

No.	Part Number	Description
46	1854 65 741	Insulator No 3
47	99796 0616	Bolt, Insulator
	99952 0618	Washer, Plain
	99952 1030	Washer Plain
	0111 40 358	Insulator
48	0559 65 055	Rubber Stop-Door
49	99834 0830	Screw Stop Rubber
	0014 65 734	Seat Screw
50	0727 65 052A	Spacer Door Stop Rubl
51	99901 0800	Nut, Door Stop Rubber
	99971 0800	Washer, Spring
52	3790 65 751	Rubber Seal
53	3790 65 752	Plate, Seal No 1
~~54~~	~~1854 65 753~~	~~Plate, Seal No. 2~~
55	99864 0512	Screw, Tapping
56	1823 65 810C	Chain
57	99811 1025	Bolt
	99921 1000	Nut
	99951 1030	Washer Plain
	99952 1000	Washer, Plain
	99971 1000	Washer, Spring

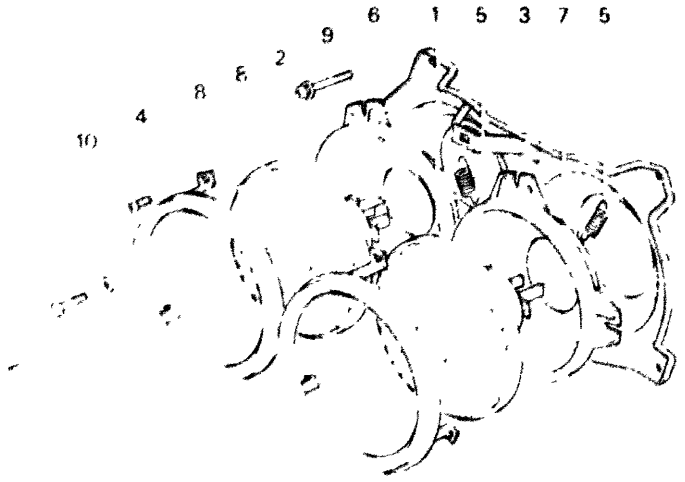

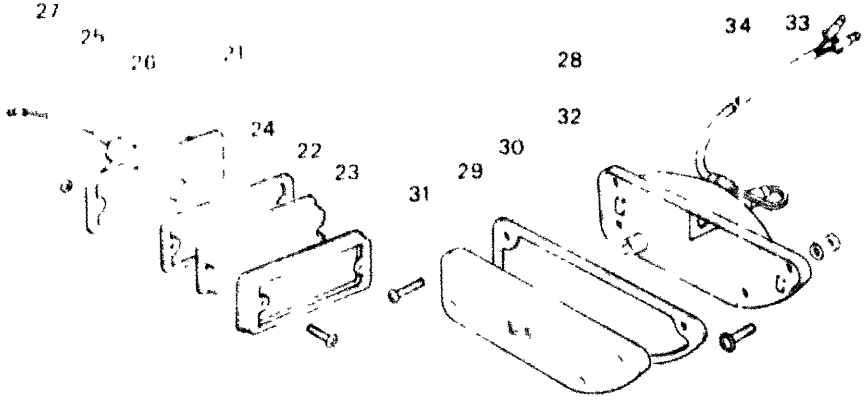

No.	Part Number	Description
1	0183 66 021	Beam Sealed 12V 37
2	2801 66 022	Beam Sealed 12V 37 5 50
3	1854 66 031	Housing R
	1854 66 041	Housing L
4	0275 87 007	Screw
5	2850 87 012	Spring
6	0727 87 012	Holder R Lamp
	0727 87 022	Holder L Lamp
7	0727 87 013	Holder R Lamp
	0727 87 023	Holder L Lamp
8	0727 87 014	Holder Lamp Front
9	0727 87 016	Screw Adjust
10	99786 0616B	Screw
	99953 0600	Washer Plain
	99971 0600	Washer Spring
	2885 99 661	Lamp (R) Head
	2885 99 666	Lamp (L) Head
11	0183 66 021	Beam Sealed 12V 37 5
12	2801 66 022	Beam Sealed 12V 37 5

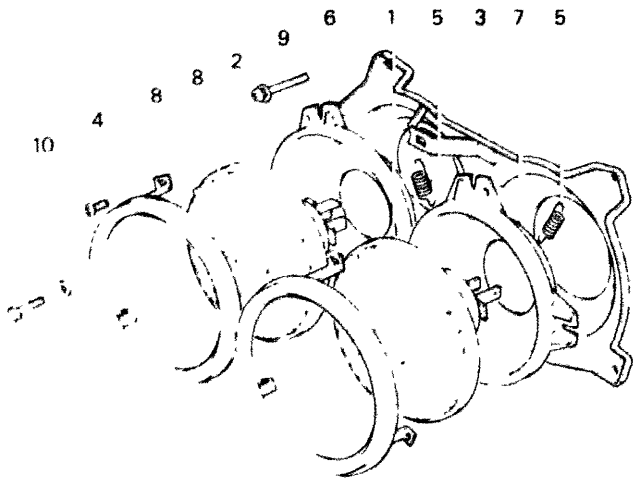

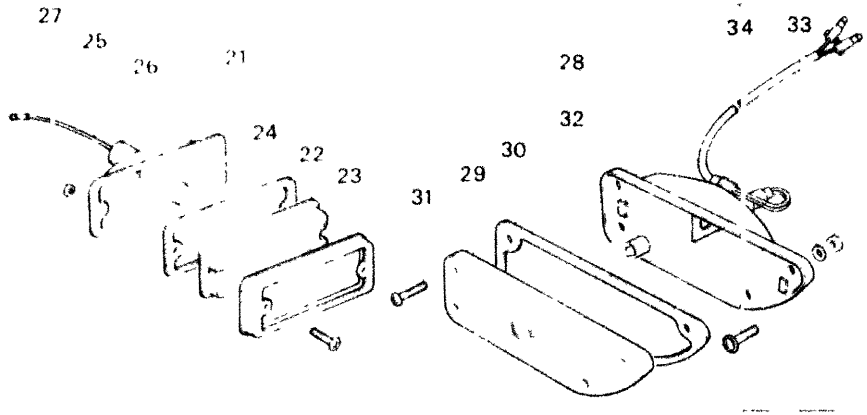

No.	Part Number	Description
~~13~~	~~2651 66 024~~	~~Ring, Retaining~~
~~14~~	~~2651 66 025~~	~~Ring No. 1 (R), Mounting~~
	~~2651 66 055~~	~~Ring No. 1 (L), Mounting~~
~~15~~	~~2651 66 026~~	~~Ring No 2 (R), Mounting~~
	~~2651 66 056~~	~~Ring No 2 (L) Mounting~~
~~16~~	~~2651 66 031~~	~~Screw, Adjust~~
~~17~~	~~2651 66 032~~	~~Spring~~
~~18~~	~~0223 66 025A~~	~~Screw~~
~~19~~	~~0223 66 070~~	~~Cord, Head Lamp~~
~~20~~	~~99033 0512~~	~~Screw~~
	~~99052 0500~~	~~Washer, Plain~~
	~~99071 0600~~	~~Washer, Spring~~
21	2244 89 663	Lamp (R) Side Marker
	2244 89 668	Lamp (L) Side Marker
22	2244 87 191	Globe
23	2244 87 192	Rim
24	2244 87 194	Rubber (R) Seal
	2244 87 195	Rubber (L) Seal
25	2244 87 196	Cord

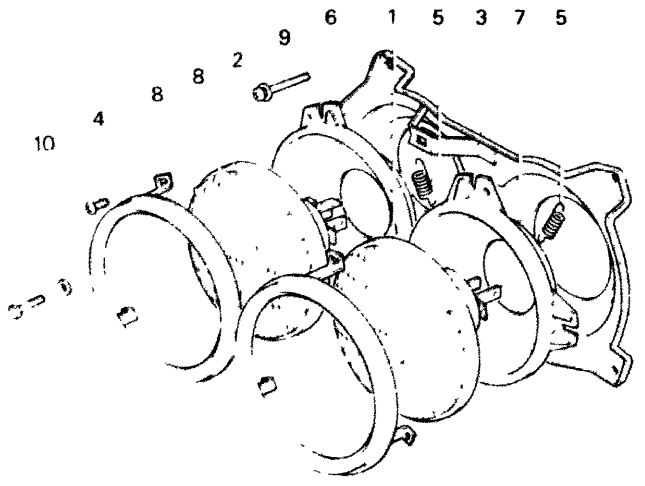

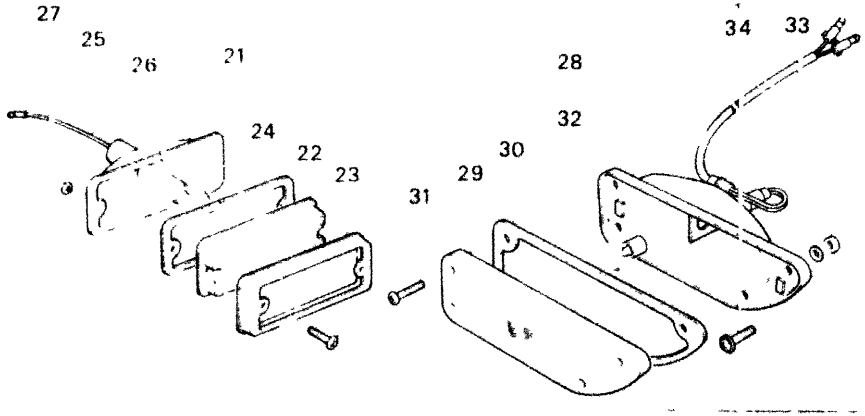

No.	Part Number	Description
26	99701 2080	Bulb
27	99773 0420	Screw Side Marker
	99906 0400	Nut
28	1854 89 662	Lamp R Front Turn Sig
	1854 89 667	Lamp L Front Turn Sig
29	2244 66 091	Lens R
	2244 66 111	Lens L
30	0259 66 094 A	Rubber R Seal
	0259 66 114	Rubber L Seal
31	0259 66 095	Screw Lamp Globe
32	99701 4278	Bulb

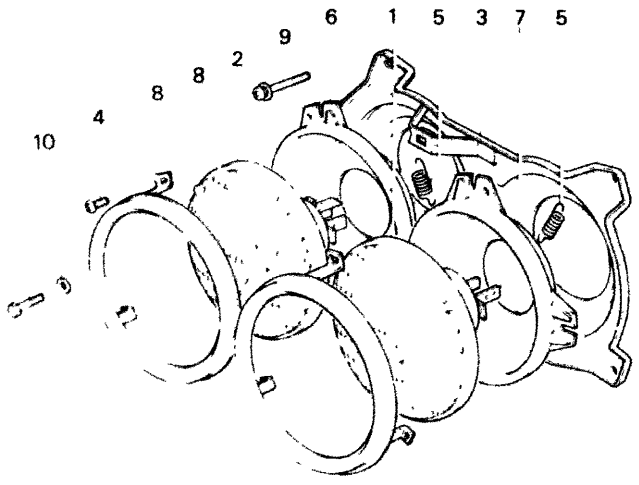

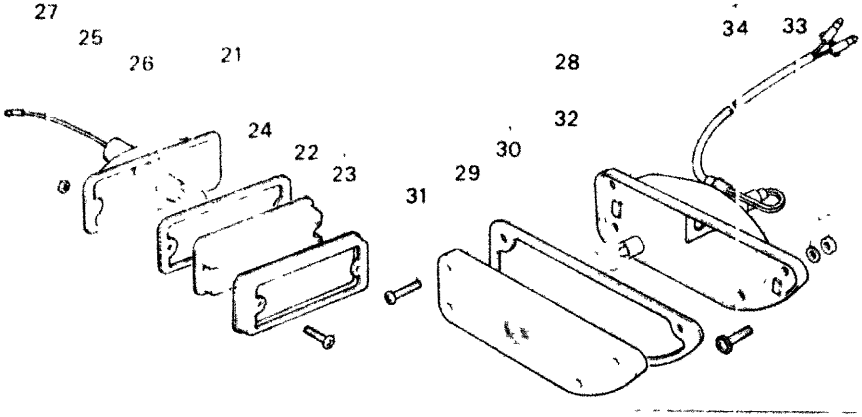

No.	Part Number	Description
33	99906 0500	Nut, Front Turn Signal Lamp
	99952 0500	Washer, Spring
~~34~~	~~99740 0512~~	~~Screw, Front Turn Signal La~~

LAMPS (REAR SIDE)

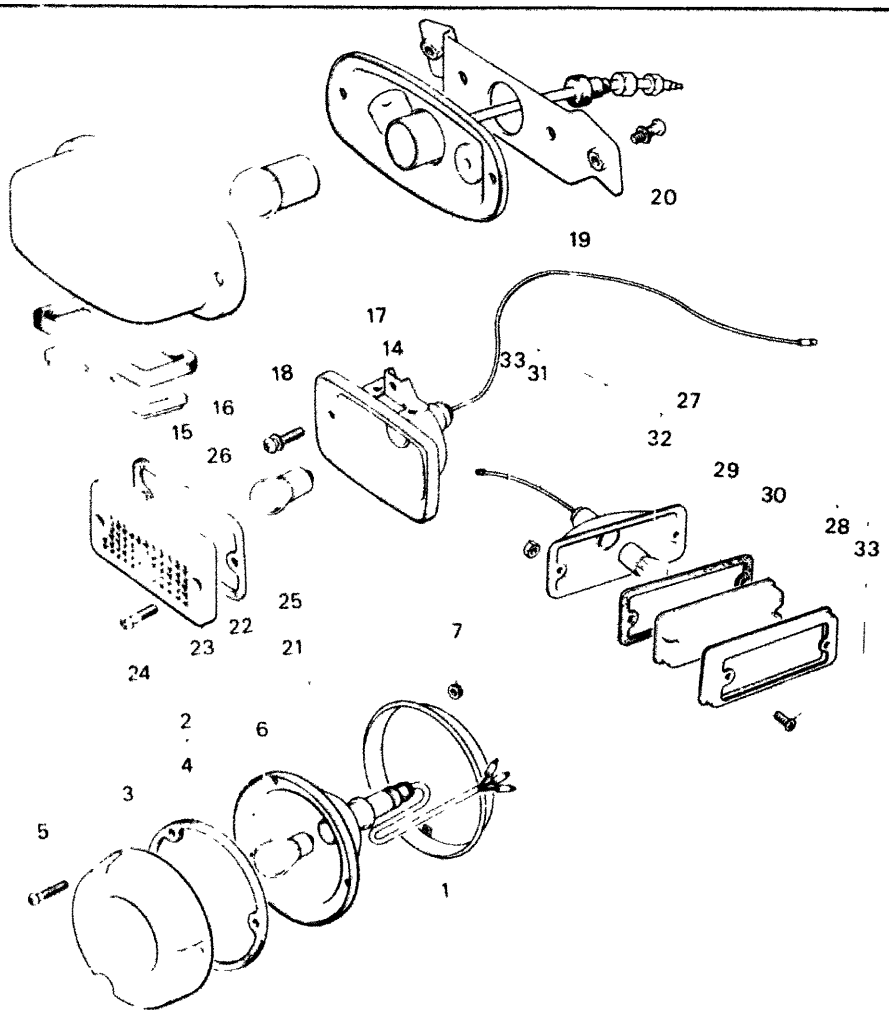

No.	Part Number	Description
1	2627 66 201A	Ring, Rear Combination Lam
2	1854 89 664	Lamp, Rear Combination
3	0738 87 061	Lens
4	0738 87 063	Gasket
5	0710 87 126	Screw
6	99701 4278	Bulb
7	99940 0500	Nut
~~8~~	~~3906 89 664~~	~~Lamp, Rear Combination~~
~~9~~	~~99773 0410~~	~~Screw~~
~~10~~	~~1823 66 212~~	~~Gasket~~
~~11~~	~~1823 66 213~~	~~Lens~~
~~12~~	~~99701 4237~~	~~Bulb~~
~~13~~	~~99940 0502~~	~~Nut~~
14	3900 89 665	Lamp, Licence
15	0136 66 091A	Lens
16	0136 66 092	Gasket
17	99701 2080	Bulb

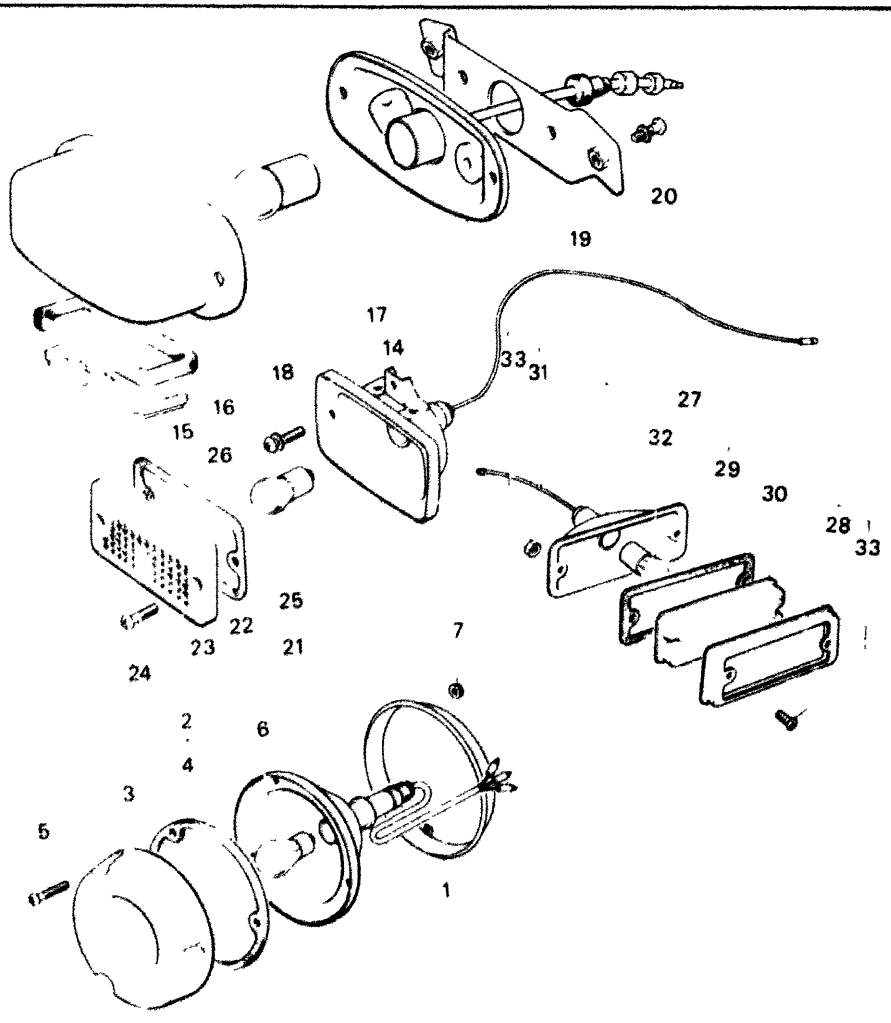

66 87 LAMPS (REAR SIDE

No.	Part Number	Description
18	0136 66 094A	Cover
19	2651 66 220A	Holder Licence Lamp
20	99833 0620	Screw Holder
	99971 0600	Washer Spring
	99906 0600	Nut
21	1823 66 330 A	Lamp, Back Up
22	0710 87 102	Gasket
23	0710 87 103	Lens
24	0710 87 104	Screw
25	99700 8120	Bulb
26	99797 0512	Bolt Back Up Lamp
	99952 0516	Washer, Plain
27	2244 89 673	Lamp (R), Side Marker
	2244 89 676	Lamp (L), Side Marker
28	2244 87 192	Rim
29	2244 87 194	Rubber (R), Seal
	2244 87 195	Rubber (L), Seal

LAMPS (REAR SIDE)

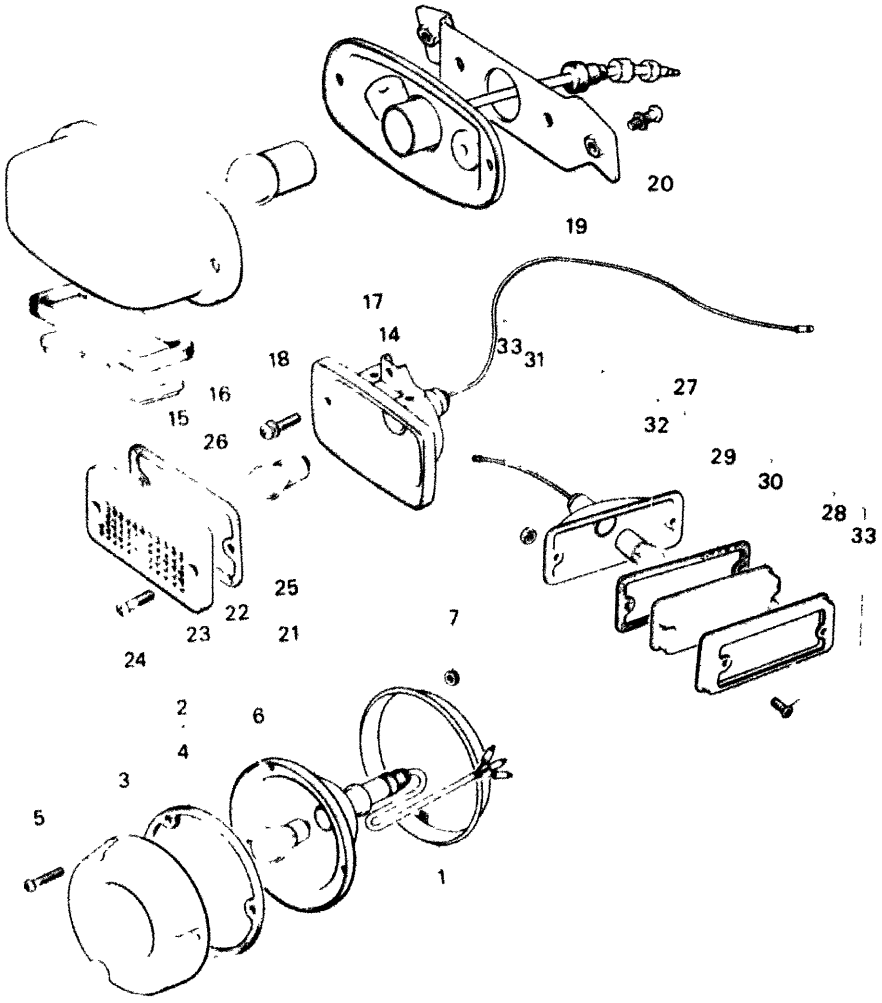

No.	Part Number	Description
30	2244 87 201	Globe
31	2244 87 206	Cord
32	99701 2080	Bulb
33	99773 0420	Screw
	99906 0400	Nut

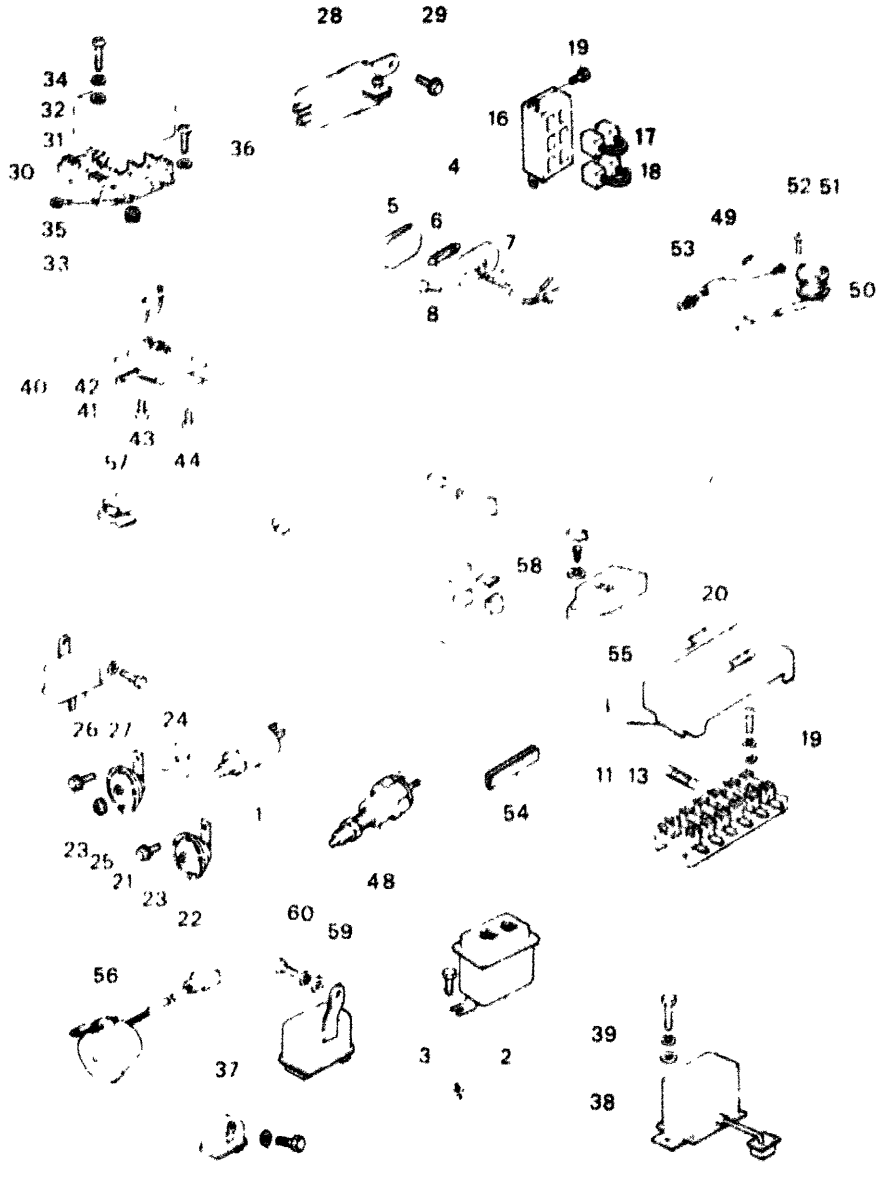

37-1

No.	Part Number	Description
1	2691 18 660	Switch Kick Down .Au
2	1540 60 930	Relay Turn Signal
3	99796 0610	Bolt Turn Signal Relay
4	0702 66 290	Lamp Interior
5	0243 66 152	Globe
6	99701 5050	Bulb
7	1854 66 295	Cord
8	99863 0412	Screw Interior Lamp
9	1881 66 840	Unit. Flasher Hazard
10	99796 0610	Bolt. Unit
11	3790 66 730	Block Fuse
12	3770 66 732	Cover (Receptr
	3770 66 732	Cover (Rotary)

66 67 ELECTRIC EQUIPMENT (BODY) (SWITCH & RELAY)

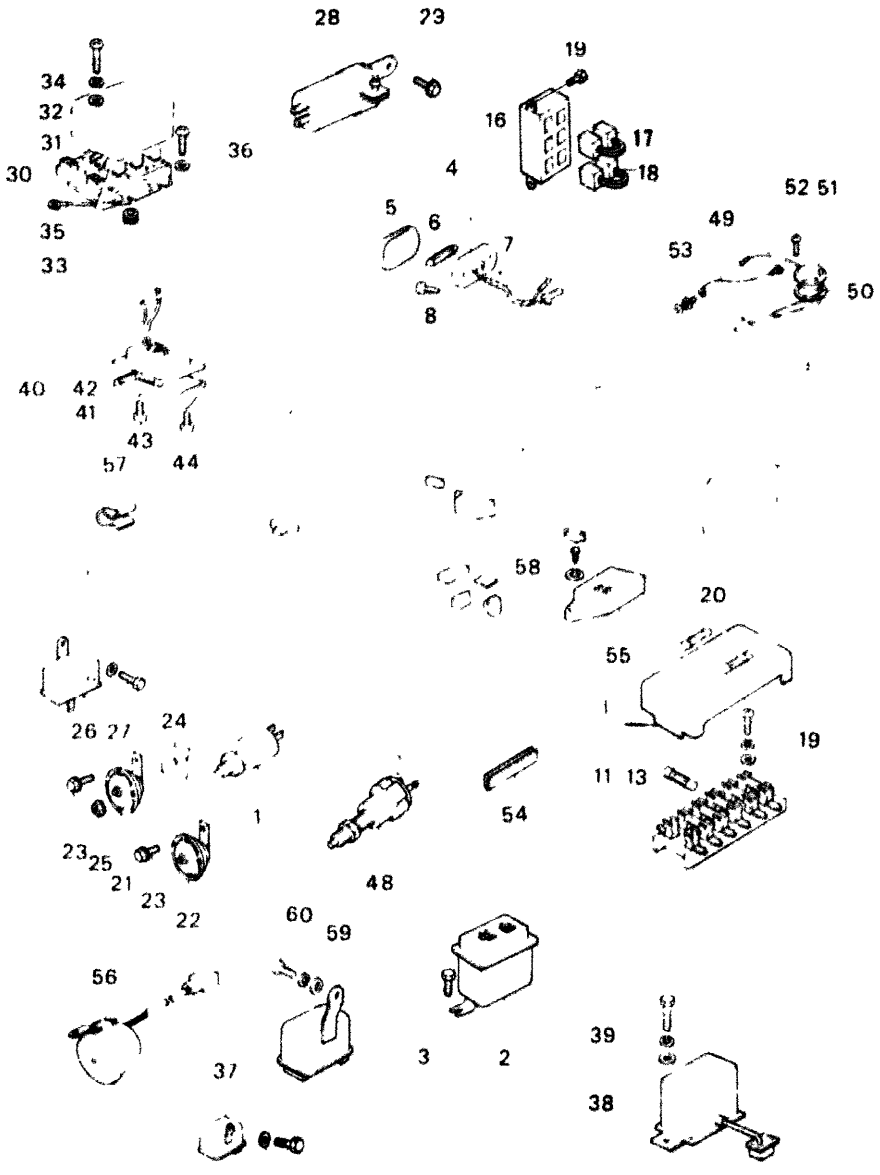

66 67 ELECTRIC EQUIPMEN (SWITCH & RELAY)

No	Part Number	Description
13	99706 0115	Fuse 15A
	99706 0110	Fuse 10A
~~14~~	~~3792 66 740~~	~~Bracket, Fuse Box~~
		~~(Recipro)~~
~~15~~	~~99830 0512~~	~~Screw, Bracket~~
16	8531 66 760	Block, Fuse
17	3776 67 099	Link, Fusible
18	3775 67 099	Link, Fusible
19	99797 0516B	Bolt
	99952 0500	Washer Plain
20	1011 66 130	Spare Fuse Set
21	1720 66 790B	Horn, Electric-Low Tone
●	1720 66 790C	Horn, Electric-Low Tone
22	1720 66 780B	Horn Electric-High Tone
●	1720 66 780C	Horn, Electric-High Tone
23	99786 0816	Bolt Electric Horn

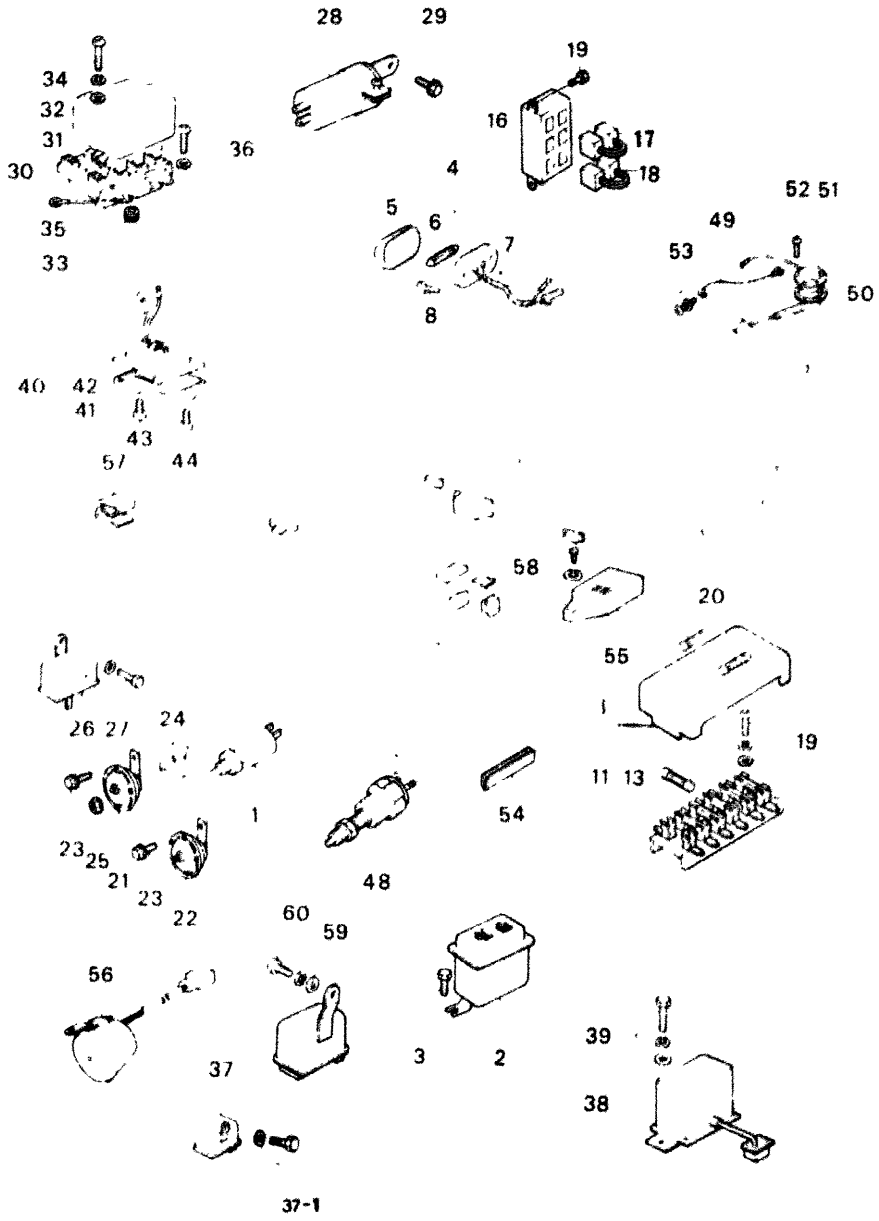

No.	Part Number	Description
~~24~~	~~3986 66 771~~	~~Bracket, Horn~~
~~25~~	~~99940 0800~~	~~Nut, Electric Horn~~
26	1524 66 810	Relay Horn
27	99785 0612	Bolt
	99952 0600	Washer Plain
28	3919 66 830	Unit Flasher
29	99940 0601	Nut, Flasher Unit
	99953 0600	Washer, Plain
~~30~~	~~1757 67 560~~	~~Unit, Central Control~~
~~31~~	~~1757 67 562~~	~~Unit, Flasher~~
~~32~~	~~1757 67 566~~	~~Cover~~
~~33~~	~~0866 67 717~~	~~Bush~~
~~34~~	~~0866 67 718~~	~~Screw~~
	~~99952 0600B~~	~~Washer, Plain~~
	~~99971 0600B~~	~~Washer, Spring~~
~~35~~	~~0866 67 719~~	~~Relay~~
36	99786 0630	Screw, Central Control U
	99952 0600	Washer, Plain
37	0839 67 880	Relay, Ignition
37-1	99786 0616	Screw
	99953 0600	Washer, Plain

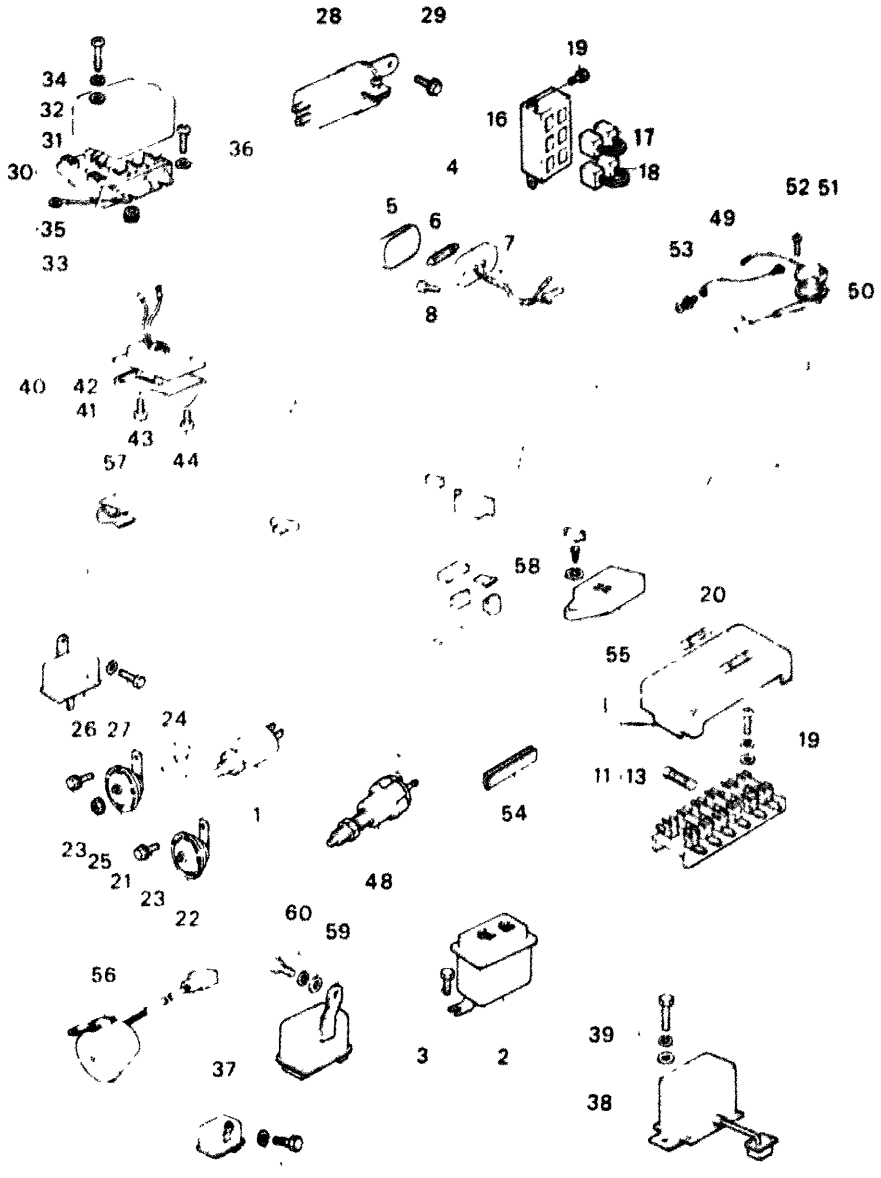

37-1

No.	Part Number	Description
~~38~~	~~0620 66 670A~~	~~Relay, Wiper~~
		(Recipro
~~39~~	~~00706 0610~~	~~Bolt, Wiper Relay~~
40	1650 66 620	Lamp Warning
41	1650 66 621	Lens
42	99701 5050	Bulb
43	99863 0310B	Screw
44	99865 0412	Screw
~~45~~	~~3776 67 000~~	~~Link, Fusible~~
~~46~~	~~3776 67 755~~	~~Clip, Link~~
~~47~~	~~00830 0510~~	~~Screw, Clip (Recipro~~
	~~99832 0520~~	~~Screw, Clip~~
	~~00874 0800~~	~~Washer (Rotary)~~
	~~00875 0500~~	~~Washer~~
49	0233 66 790	Switch Stop
~~49~~	~~0180 66 795~~	~~Cord, Earth (Recipro~~
• 50	3874 60 962	Gasket (Nippon Denso Make)
•	8531 60 962	Gasket (Yusin Make)
•	8531 60 962A	Gasket (Yusin Make)
51	1854 67 180A	Gauge, Fuel Tank
•	1854 67 180B	Gauge, Fuel Tank

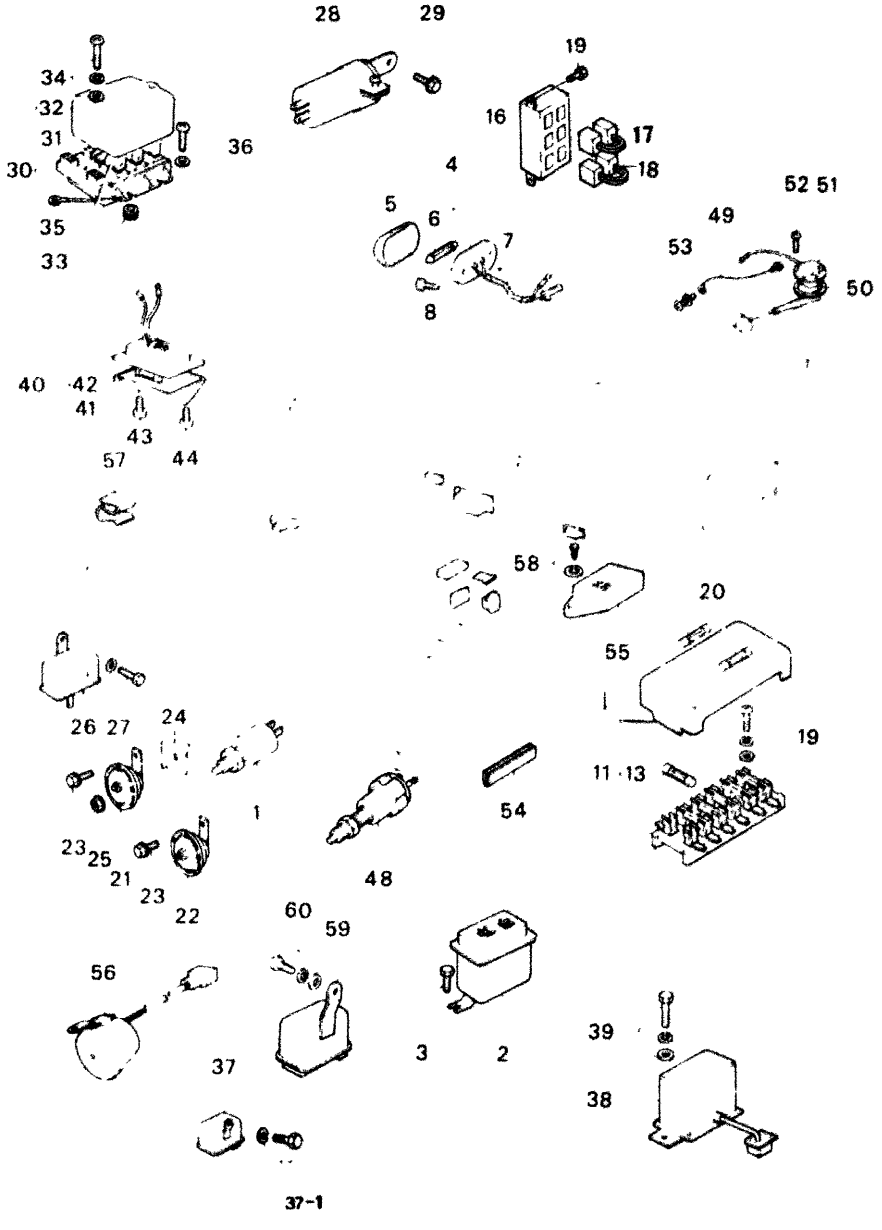

No.	Part Number	Description
52	99833 0408	Screw Gauge
~~53~~	~~99833 0508~~	~~Screw~~ (Recipro)
	~~99833 0410~~	~~Screw~~
~~54~~	~~1011 42 001~~	~~Protector~~
55	3564 67 700	Timer
56	0735 67 730A	Buzzer
57	1011 67 923	Clip
58	99786 0616	Screw
	99953 0600	Washer Plain
59	1016 67 620	Relay Fast Idle
60	99796 0610	Bolt Relay

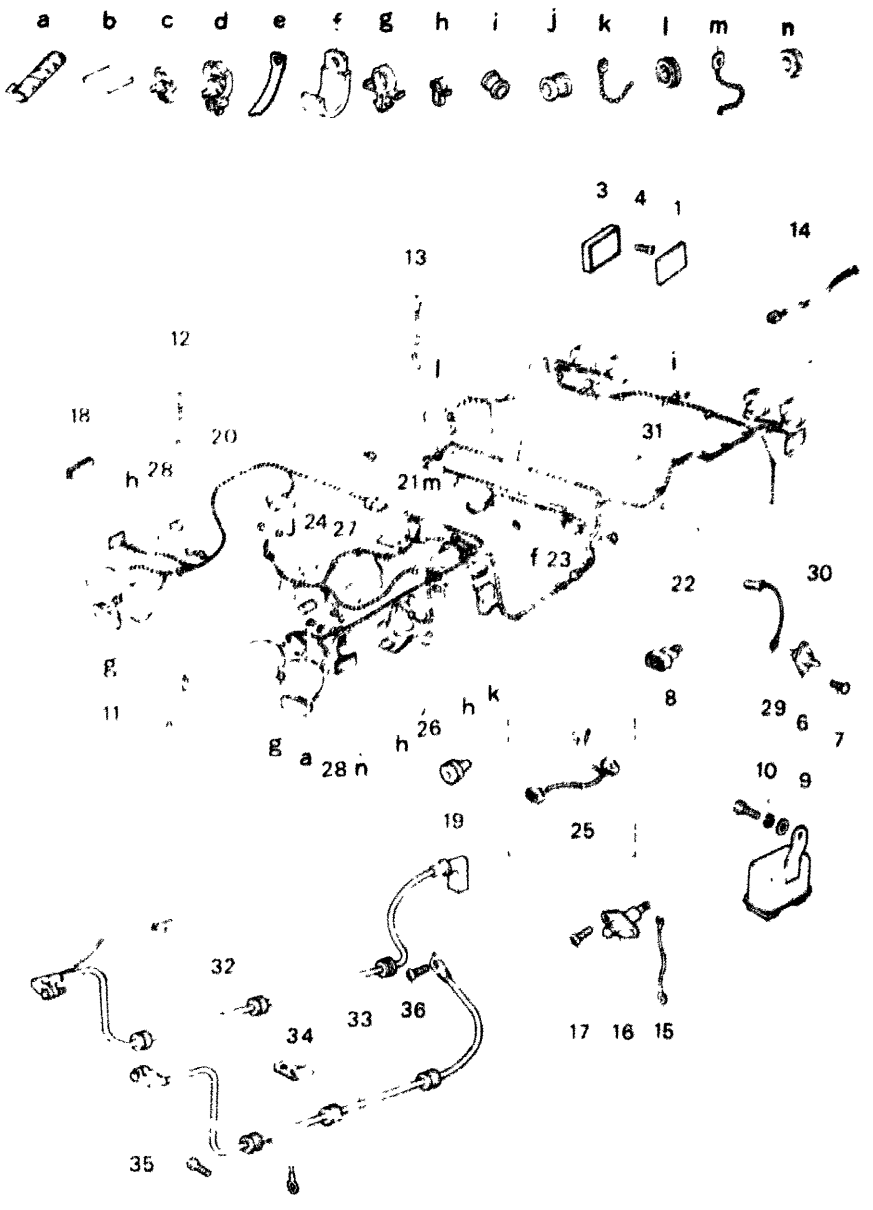

No.	Part Number	Description
1	0419 51 571A	Reflector, Reflex
2	0627 66 651	Reflector, Reflex (Rear
3	2627 66 601	Base Relex Reflector
4	99865 0412	Screw Reflex Reflector
5	99940 0600	Nut Reflex Reflector
6	0305 60 690	Switch Door
7	99864 0512	Screw, Door Switch
8	1220 67 985 8715 67 985	Connector Short (Federal) Connector, Short (Feder
9	1220 67 740 3648 67 740	Relay 3P 2E Relay (3P)
10	99797 0616	Bolt Relay
	99952 0600	Washer Plain
	99971 0600	Washer Spring
11	0553 67 143A	Cord Earth
12	0710 66 868A	Cord Earth
13	0603 66 723	Cord Earth
• 15	0188 66 731A	Cord
16	0820 66 950	Switch
17	99865 0408	Screw Switch
18	1907 67 151	Protector

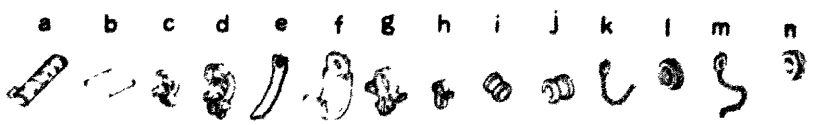

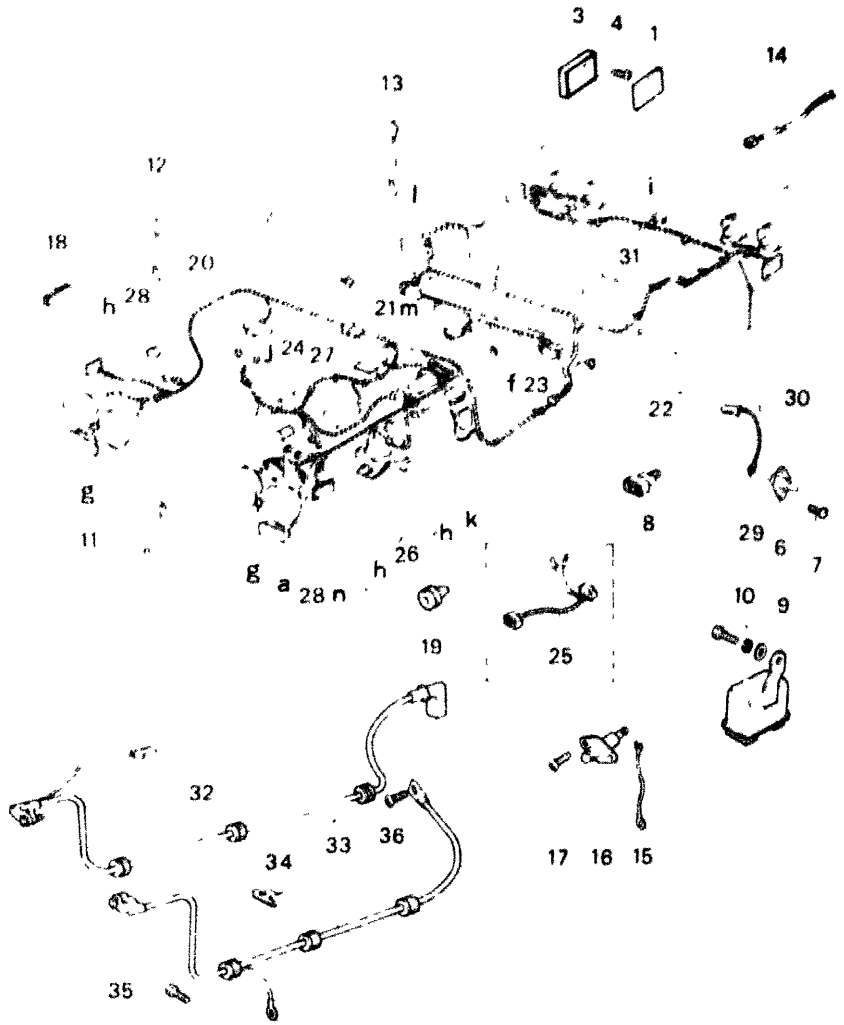

No.	Part Number	Description
~~19~~	~~3806 67 182~~	~~Protector (Receptor~~
20	3790 67 010B	Harness Frt Wire
~~21~~	~~3775 67 020~~	~~Harness (Frt. L.r. Wire~~
22	3790 67 030A	Harness Rr Wire
23	3790 67 040A	Harness Emission Wire
24	3790 67 060A	Harness Engine Wire
25	3791 67 070	Harness Wire-Inhibitor Auto
~~26~~	~~3775 67 080~~	~~Harness, Wire-Ig. Coil (Rotor~~
~~27~~	~~1011 67 090~~	~~Harness, Wire-Transmission (M~~
~~28~~	~~1854 67 130~~	~~Harness, Wire-Head Lamp~~
29	0316 67 135	Cord, Door Switch
~~30~~	~~0801 67 187~~	~~Tape~~
31	3906 67 240	Cord Warning Lamp
~~32~~	~~3844 67 100D~~	~~Cable, Battery Positive (Rec~~

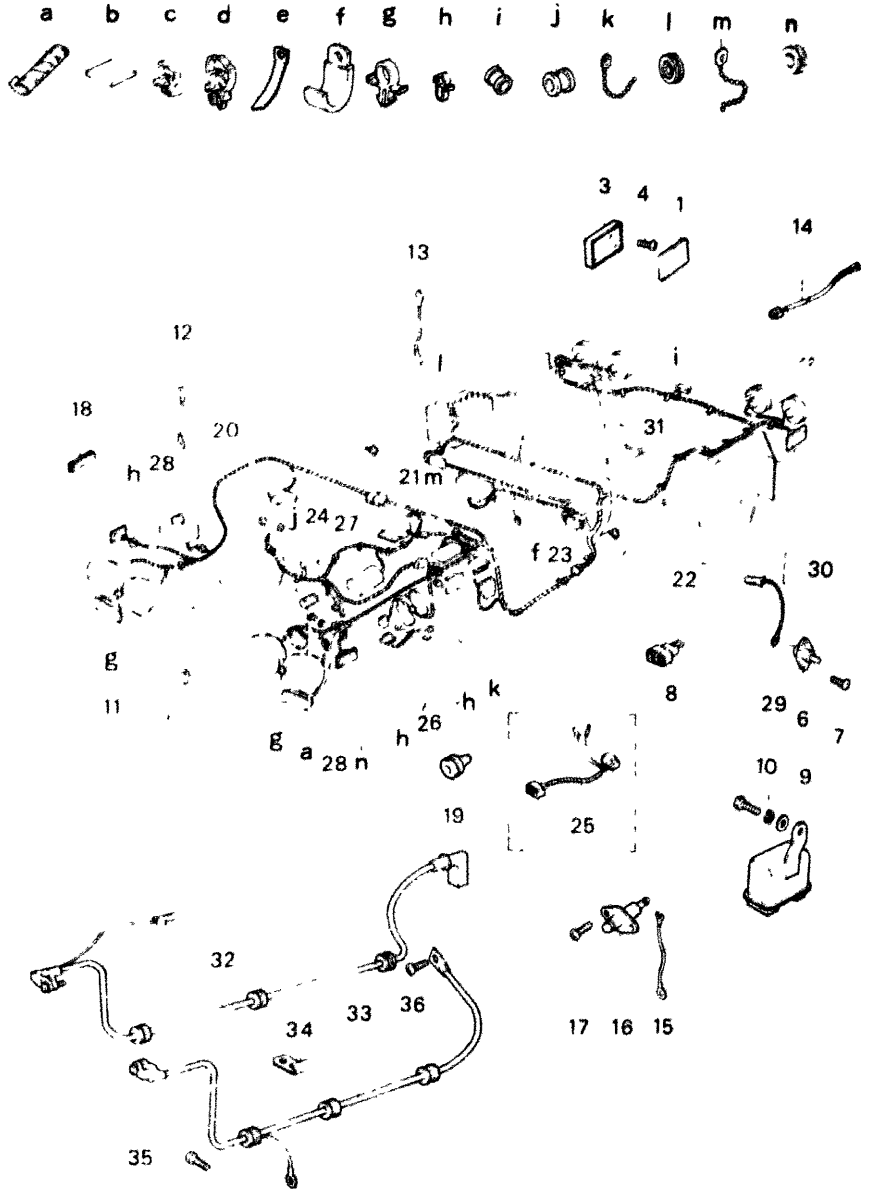

No.	Part Number	Description
	379067 100A	Cable, Battery Positive
33	379067 110	Wire Earth-Battery
	0223 66 722	Wire Earth-Battery
~~34~~	~~2944 67 901A~~	~~Clip~~
35	99811 0816	Bolt, Earth Wire (Rec
	99952 0800	Washer, Plain
	99971 0800	Washer, Spring
36	99811 0816	Screw Earth Wire (Rot
	99786 0812	Bolt, Earth Wire (Rec
	99952 0800	Washer, Plain
~~a~~	~~0823 10 111~~	~~Supporter, Engine Wire Harnes~~
	~~0305 67 994~~	~~Supporter, Engine Wire Harnes~~
b	0208 66 949	Pad Protector
c	1011 67 911	Clip, Wire Harness
d	1011 67 912	Clip Wire Harness
e	0305 67 994	Supporter, Wire Harness
f	1011 67 923	Clip, Wire Harness
g	99279 0803	Clip, Wire Harness
h	99279 1105	Clip, Wire Harness
i	99884 1000	Protector Cord

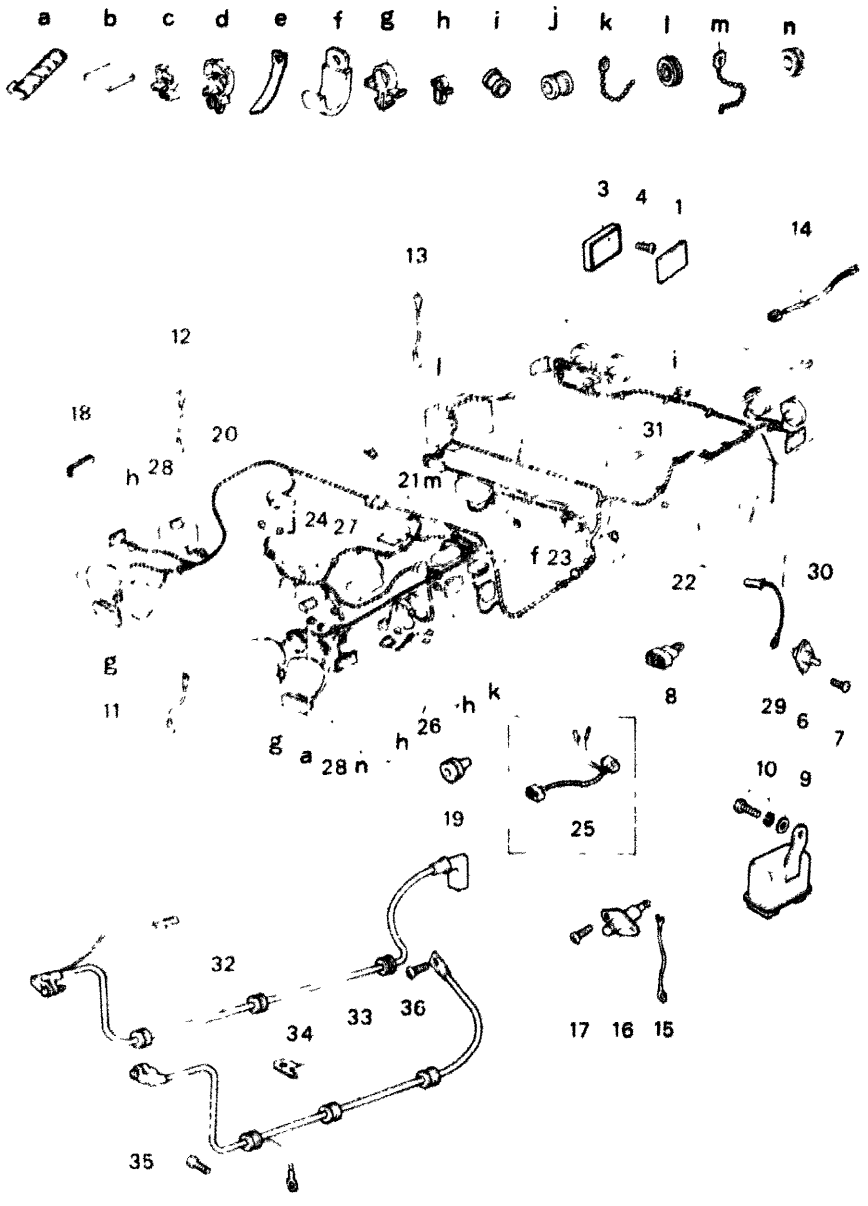

No.	Part Number	Description
j	99682 2001	Protector, Cord
k	99709 3140	Band
l	99686 2000	Protector
m	99709 3250	Band



No.	Part Number	Description
1	0118 13 431	Washer Rubber
3	99794 0616	Bolt Wiper
	99953 0600	Washer Plain
	99971 0600	Washer Spring
4	2158 66 366D	Arm Wiper
4-1	8532 76 641	Cover, Wiper Arm
5	1823 67 350A	Motor & Link
•	1823 67 350B	Motor & Link
6	0212 66 371	Cap Rubber
• 7	0223 66 371	Nut
8	0212 66 372	Nut Decoration
9	1823 67 351	Bush
10	1823 67 352	Bush
11	1823 67 370A	Motor Wiper
12	1823 67 380	Frame
13	1823 67 390	Link, Wiper
14	1823 76 602	Box, Gear
15	0259 87 101A	Plate Holder
16	0259 87 103	Gasket
17	2158 87 104	Plate, End



66 87 WINDSHIELD WIPER

No.	Part Number	Description
18	0259 87 105	Screw
19	0259 87 106	Brush
20	99806 0510	Bolt
21	0257 87 107	Screw
22	0259 87 107	Ball
23	0257 87 108	Nut
24	99971 0500	Washer
25	0259 87 108A	Rotor
26	0259 87 109A	Starter
27	2158 87 112B	Wire Harness
28	0259 87 119	Nut
29	0259 87 120	Screw
30	0259 87 134	Nut
31	0702 87 135	Washer, Wave
32	0702 87 138	Ring Retaining
33	0738 87 803	Felt
34	0738 87 804	Washer
35	0305 87 906	Washer, Cap
36	1823 67 330	Blade, Wiper
37	1823 76 631	Rubber, Wiper Blade

SCREEN WASHER

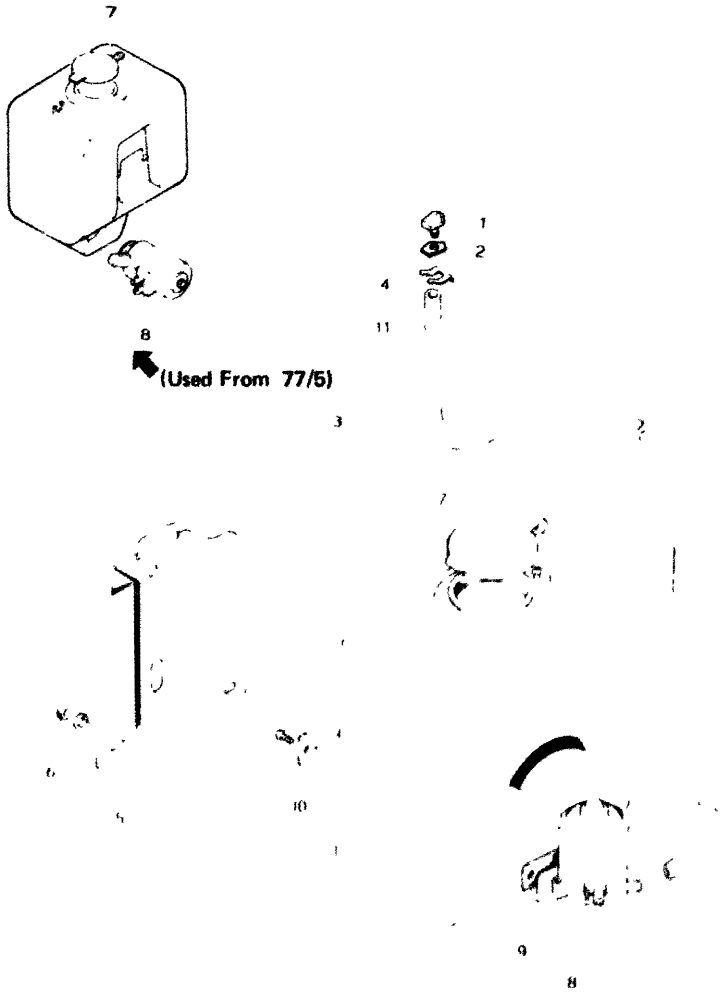

No.	Part Number	Description
1	1011 67 510	Nozzle Washer
2	1011 67 511A	Gasket
3	0317 67 480	Tank
•	0317 67 480A	Tank
4	1011 67 515	Clip
•	1011 67 515A	Clip
5	0866 67 521	Bracket
6	99786 0612	Bolt Bracket
7	0727 87 992	Cap
•	1391 76 673	Cap
8	0305 87 993	Pump
•	8532 76 672	Pump
• 9	0727 87 994	Gasket
• 10	0727 87 995	Plate
11	99335 04185	Pipe

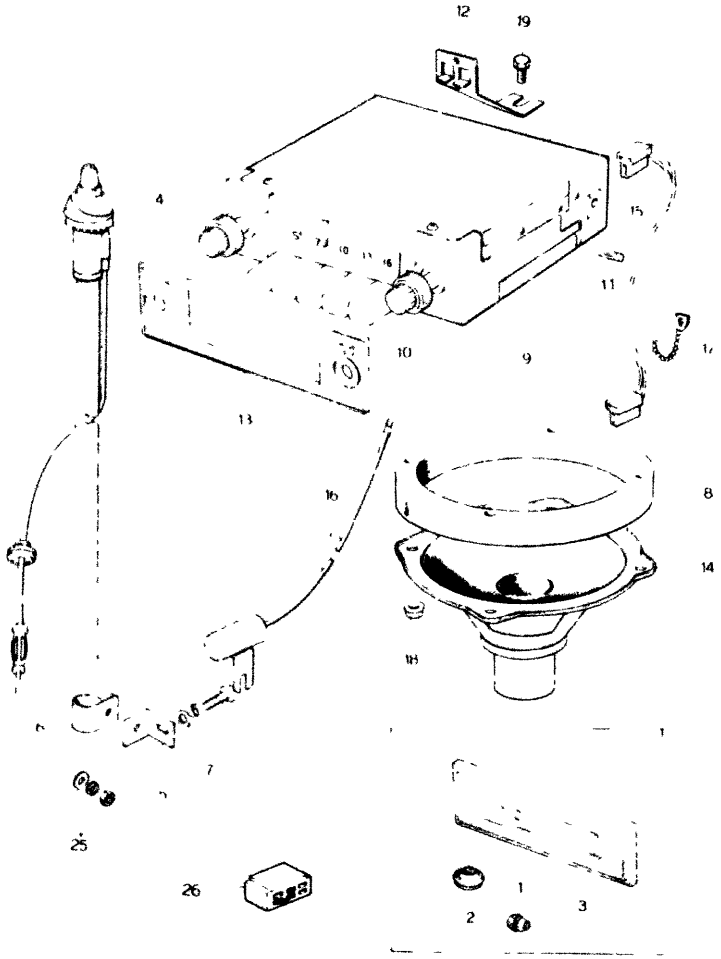

Without Auto Radio

No.	Part Number	Description
1	0118 56 242B	Plug Hole
2	0222 66 911	Cover Antenna
3	0398 68 875	Ornament
	1854 66 870	Auto Radio ,AM
	1857 66 870	Auto Radio AM FM
4	0617 66 534	Antenna
5	0617 66 535	Bracket No 1 Antenn
6	0617 66 536	Bracket No 2 Antenn
7	99833 0512	Screw Bracket
	99952 0516	Washer Plain
	99971 0500	Washer Spring
8	0317 66 862	Partition Loud Speake
9	~~1823 66 900A~~	~~Tuner (AM)~~
	~~1821 66 900~~	~~Tuner (SW)~~ ~~(Recipro~~
	~~1822 66 900~~	~~Tuner (FM)~~

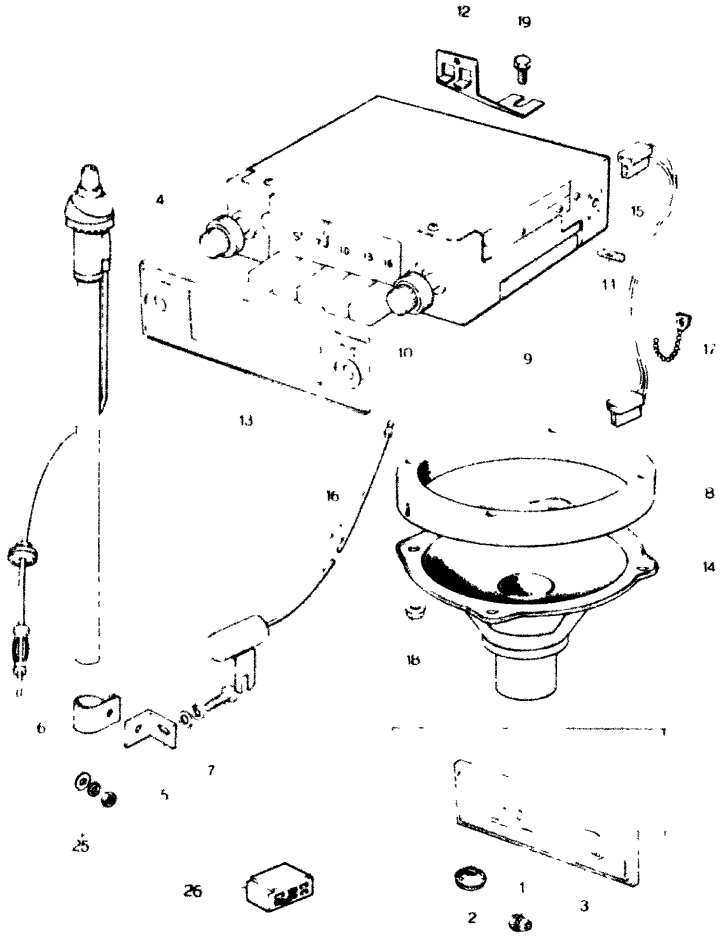

Without Auto Radio

66 AUTO RADIO

No.	Part Number	Description
	1854 66 900	Tuner AM)
	1857 66 900	Tuner (AM FM
• 10	~~0305 87 084~~	~~Knob~~
• 11	~~0398 66 965~~	~~Fuse~~
12	1854 66 903	Bracket Tuner
13	1854 66 905	Panel Decoration
14	0866 66 960	Speaker Loud
15	0866 66 965	Cord Loud Speaker
16	0820 66 992	Condenser
17	99709 0108	Band
18	99940 0500	Nut
19	99786 0510	Bolt Bracket

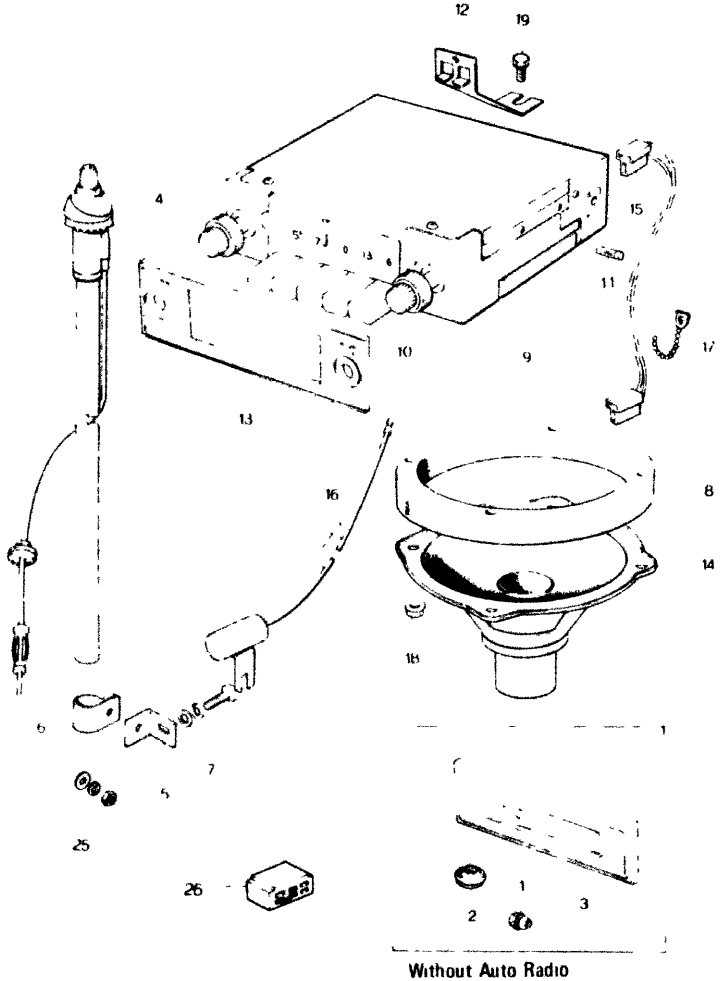

Without Auto Radio

No.	Part Number	Description
	~~99971 0600~~	~~Washer, Spring (Rec~~
	~~20 1820 66 873~~	~~Cord, Condenser (AM~~
	~~21 1820 66 871~~	~~Wire, Earth~~
	~~22 1820 66 872~~	~~Tab, Earth~~
	~~23 99796 0612~~	~~Bolt~~
	~~99953 0600~~	~~Washer, Plain~~
	~~99971 0600~~	~~Washer, Spring~~
	~~24 99940 0600~~	~~Nut~~
	~~25 99940 0500~~	Nut, Clip (Rotary)
	~~99906 0500~~	~~Nut~~
	~~99957 0500~~	~~Washer, Plain (Re~~
	~~99971 0500~~	~~Washer, Spring~~
26	1010 66 980	Cord, Short

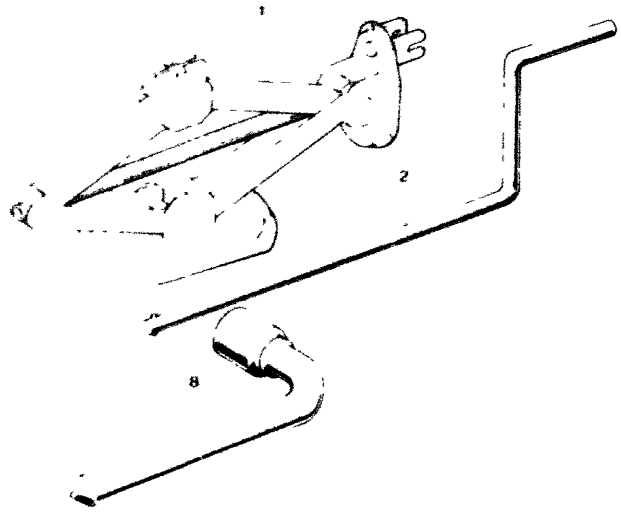

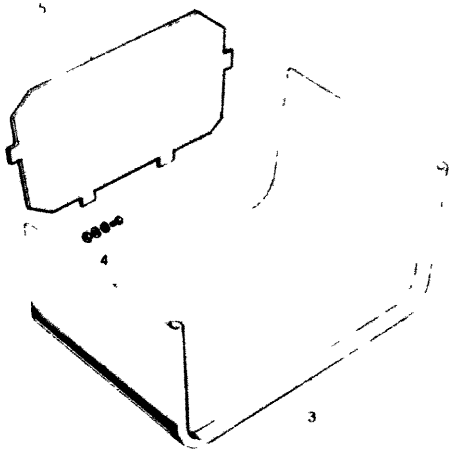

No.	Part Number	Description
1	1854 37 790A	Jack, Pantograph
2	0603 68 240	Lever, Jack Crank
3	3792 68 610B	Shelf Parcel
4	99834 0512	Screw Parcel Shelf
	99971 0500	Washer, Spring
	99952 0500	Washer Plain
	99906 0500	Nut
5	3792 68 615	Plate End Parcel Shelf
	~~1819 68 660~~	~~Tools (Recipro)~~
	~~1854 68 660~~	~~Tools (Rotary)~~
~~6~~	~~0866 68 680~~	~~Wrench, Monkey (Recip~~
	~~0110 68 050A~~	~~Wrench, Monkey (Rota~~
~~7~~	~~0672 68 060A~~	~~Spanner Set~~
8	0810 68 070A	Wrench Hub Nut
~~9~~	~~0187 68 110A~~	~~Screw Driver Set~~
~~10~~	~~2677 68 110~~	~~Screw Driver Set~~
~~11~~	~~0672 68 120A~~	~~Screw Driver Set~~
~~12~~	~~0118 68 180A~~	~~Plier~~
~~13~~	~~1819 68 670~~	~~Bag, Tool (Recipro)~~

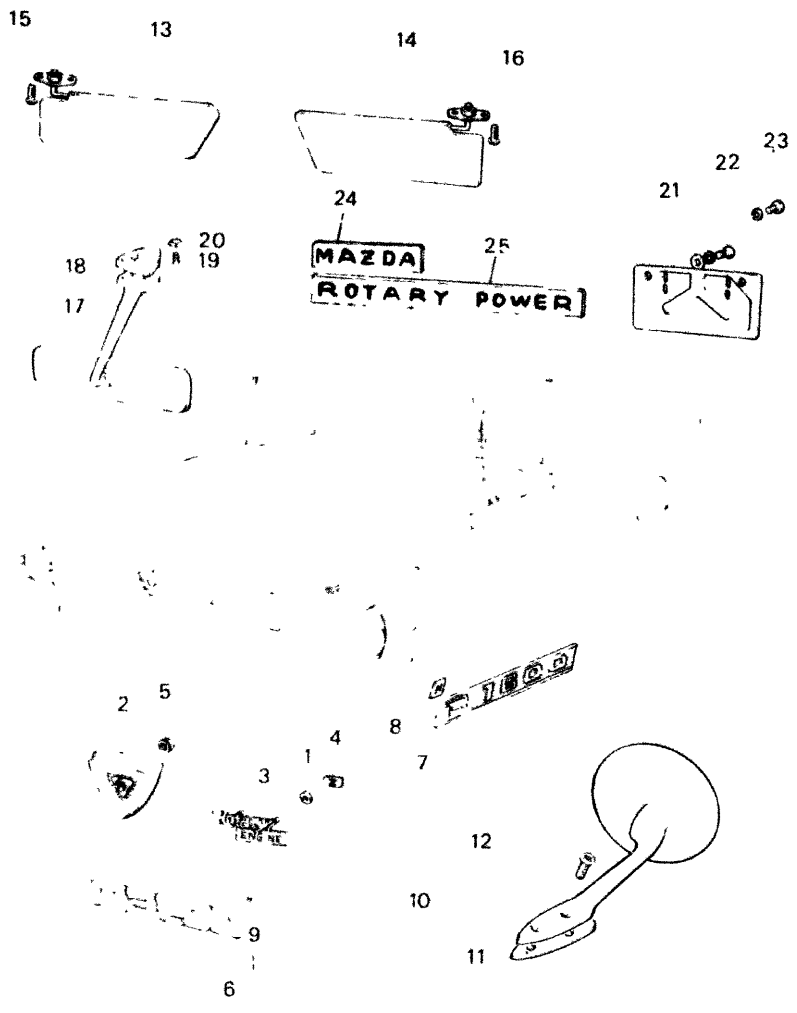

No.	Part Number	Description
1	0730 69 057A	Gasket
2	1128 69 071A 02	Emblem, Front (SILV M)
3	1881 69 076	Mark, Rotary Engine
4	99578 3000	Nut, Speed
5	99940 0500	Nut, Front Emblem
~~6~~	~~0587 69 604~~	~~Ornament, Front~~
~~7~~	~~2677 69 053A~~	~~Name Side (1800 cc)~~
	~~2844 69 053A~~	~~Name, Side (1600 cc)~~
~~8~~	~~99579 3000~~	~~Nut, Speed-Side Name~~
~~9~~	~~0187 69 049A~~	~~Nut, Speed~~
10	2850 69 090	Mirror Rear View
11	2850 69 101	Gasket
12	99772 0516	Screw
13	1823 69 150B 31	Sun Visor (R) (BEIG)
14	1823 69 170B 31	Sun Visor (L) (BEIG)
15	99764 0416	Screw, Tapping-Sun Visor
16	99764 0416	Screw, Tapping-Sun Visor
17	0222 69 190A	Mirror, Interior

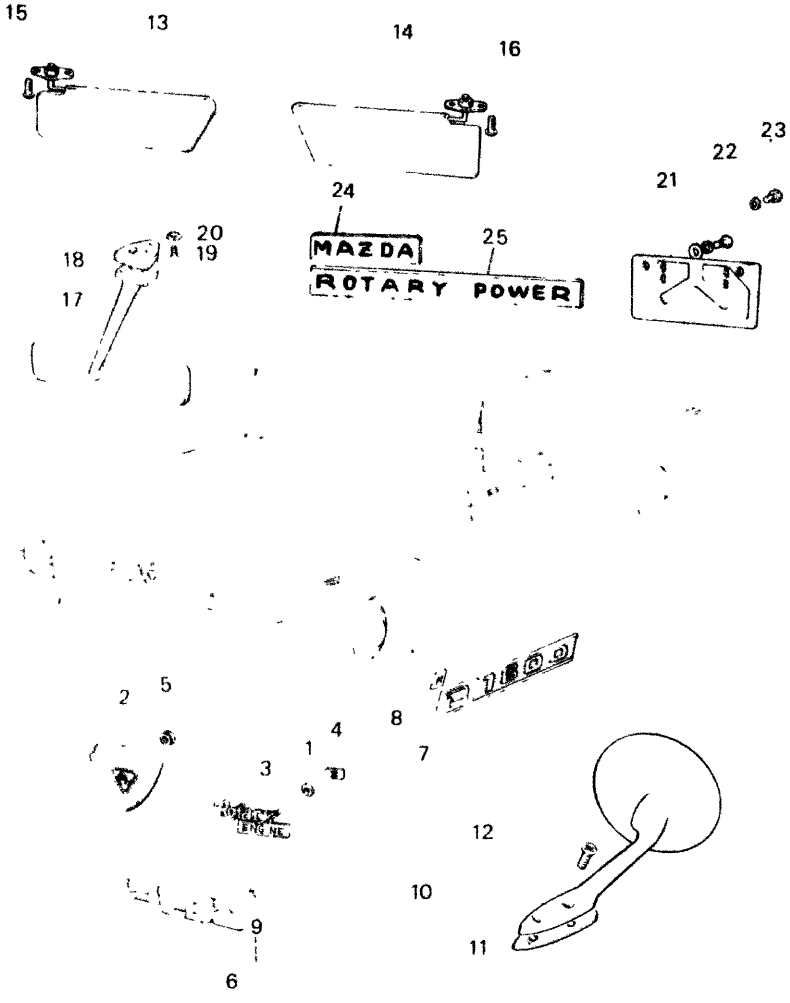

69 ATTACHMENT

No.	Part Number	Description
• 18	0223 69 181	Base, Interior Mirror
19	99831 0416	Screw, Interior Mirror
20	99975 0400	Washer
21	2651 69 810	Holder Number Plate
22	99806 0616	Bolt, Number Plate Holder
	99971 0600	Washer, Spring
23	99806 0612	Bolt Number Plate Holder
	99971 0600	Washer, Spring
24	1854 69 088	Label, MAZDA
25	1854 69 087A-00	Label, ROTARY POWER (W
	1854 69 087A-02	Label, ROTARY POWER (

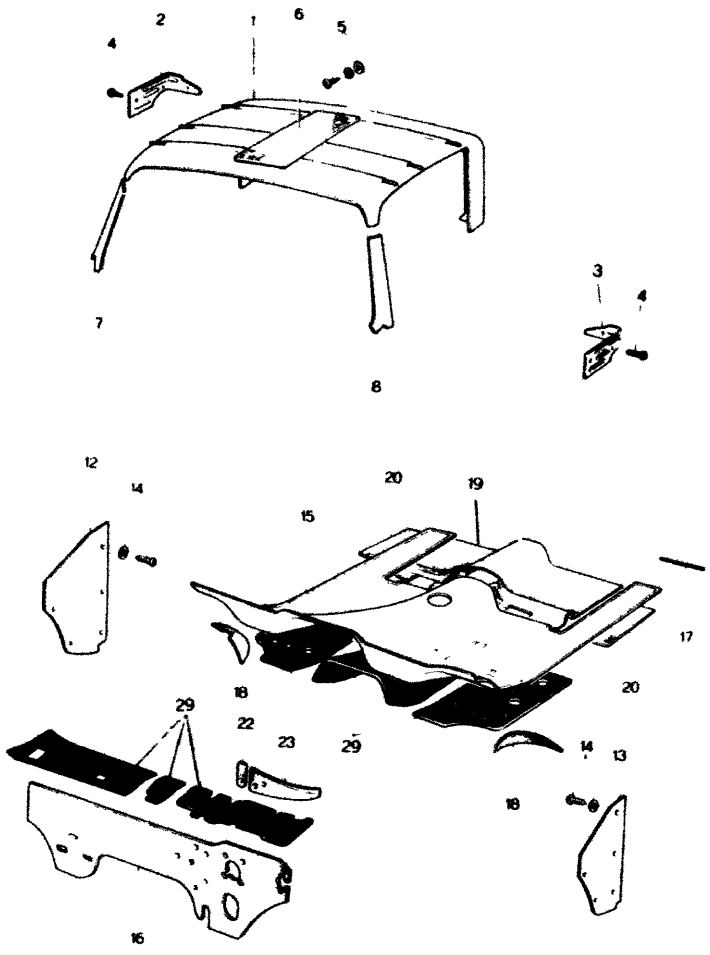

No.	Part Number	Description
1	3874 69 310 31	Ceiling, Top (BEIG)
2	3790 69 321	Plate (R), Fixing
3	3790 69 322	Plate (L), Fixing
4	99862 0410	Screw, Tapping-Fixing P
5	99863 0512	Screw Tapping
	99952 0500	Washer Plain
	99971 0500	Washer, Spring
6	0603 69 323A	Cushion, Listing
7	1854 69 411	Trim (R) Pillar
8	1854 69 412	Trim (L Pillar
~~9~~	~~1854 69 461B~~	~~Trim (R), Rear Pillar~~
~~10~~	~~1854 69 471B~~	~~Trim (L) Rear Pillar~~
~~11~~	~~99867 0516B~~	~~Screw~~
	~~99967 0500B~~	~~Washer~~
12	3792 69 511A06	Trim (R), Cowl Side (BL
13	3792 69 521B06	Trim (L), Cowl Side (BL
14	99862 0416B	Screw, Tapping
	99968 0400B	Washer

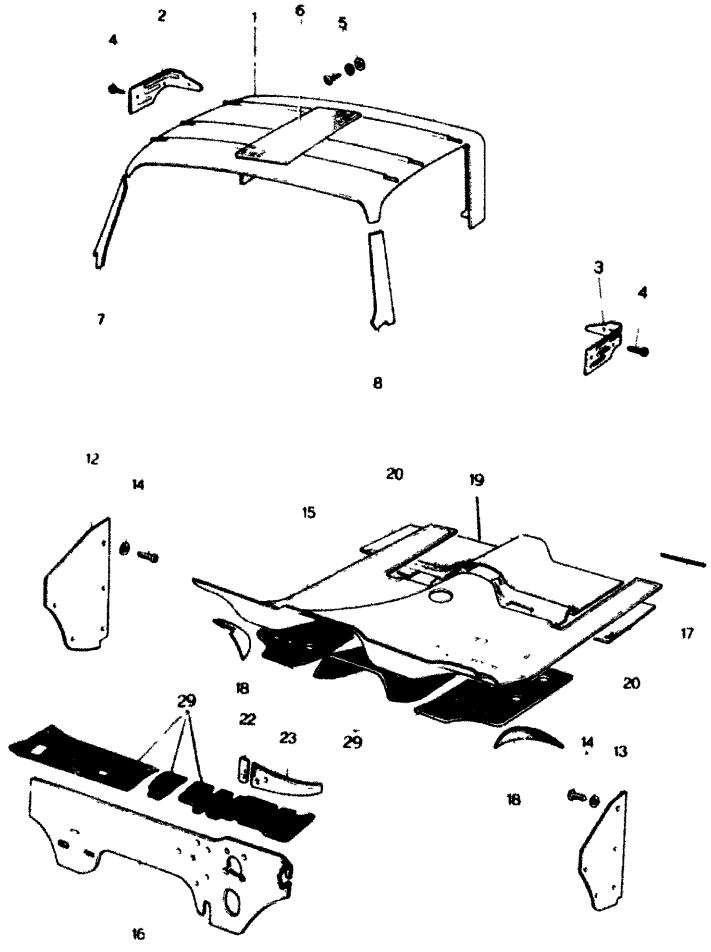

69 TOP CEILING & MAT

No.	Part Number	Description
	When ordering the following Mat., add colour code nos given below after parts nu -00 (BLK) -20 (BRN) -50 (BLU)	
15	1854 69 611 A C	Mat, Floor (Manual)
	1856 69 611 A C	Mat, Floor (Automatic)
16	1854 69 660 B	Insulation
~~17~~	~~0727 69 662~~	~~Wire, No 2~~
18	1854 69 683	Pad, Tire House
19	1854 69 684 B	Pad, Seat Lower
20	1854 69 685	Pad, Floor-Seat Side
	or	
22	1854 69 688	Pad, Dashboard No 3
23	1854 69 689 A	Pad, Dashboard No 4
~~24~~	~~1854 69 691 B~~	~~Pad, Seat Lower Rear~~
~~25~~	~~1854 69 692 D~~	~~Pad, Back Plate~~
~~26~~	~~0603 69 637 C~~	~~Pad, Floor Side~~
~~27~~	~~2495 69 681 A~~	~~Pad, Floor Center~~ (Recipro)
~~28~~	~~0107 69 091~~	~~Rubber~~
29	0208 76 071	Silencer (A 30 cm square sheet)

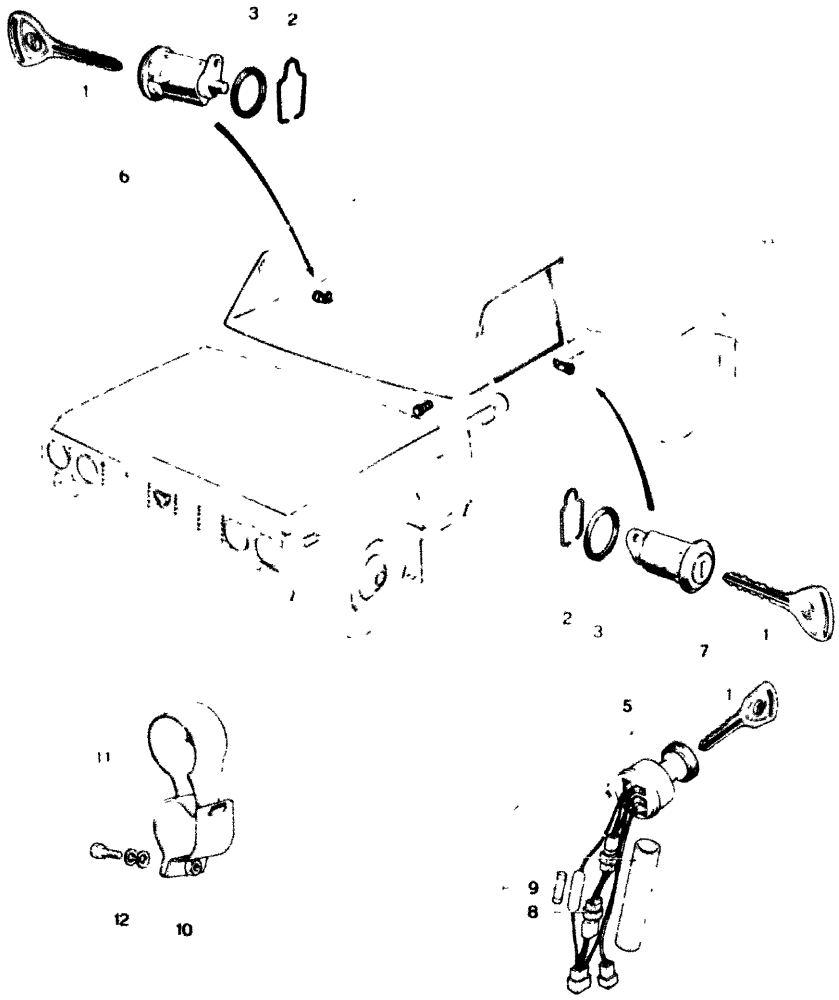

No.	Part Number	Description
	3775 09 010B	Key Set
● 1	2119 58 668	Key
2	0223 58 961	Fastener, Key Cylinde
3	0223 58 962	Gasket, Door Key Cy
~~4~~	~~3917 75 980~~	~~Key Sub Set, Ignition Swit~~
5	3775 75 980	Key Sub Set Ignition Swit
6	1819 75 910	Key Sub Set R) Do
7	1819 75 920	Key Sub Set L) Do
8	1175 66 710	Link Fusible
●	1175 66 710A	**Link, Fusible**
9	99706 0110	Fuse (10A)
10	0370 60 425A	Bracket Ignition Switch
11	0370 60 500B	Bracket, Ignition Switch
12	99[illegible]3 0620	Bolt, Bracket
	99952 0600	Washer, Plain
	99971 0600	Washer, Spring
●	2119 74 158	Key Blank (5000 – 6099

PARTS NUMBER	PARTS COMP. LIST PAGE	FIG. NO.	FICHE INDEX
3775 09 010B	262		3-H13
3775 10 100	002	001	1-C1
0839 10 105	002	002	1-C1
1757 10 111	002	006	1-C1
1757 10 120	002	003	1-C1
1757 10 171A	002	007	1-C1
1757 10 171A	007	085	1-H1
1757 10 172	006	008	1-C1
1757 10 172	007	085	1-H1
0813 10 173	002	009	1-C1
0813 10 173	006	085	1-I1
8527 10 174	006	010	1-C1
8527 10 174	006	085	1-I1
3646 10 200	002	011	1-C1
0820 10 203	003	027	1-D1
0839 10 203	002	012	1-C1
2329 10 204	002	013	1-C1
0839 10 205	002	014	1-C1
0839 10 205	003	028	1-D1
1757 10 206A	002	015	1-C1
1757 10 207	002	016	1-C1
1757 10 208	003	028	1-D1
0324 10 250	003	024	1-D1
0453 10 250	003	024	1-D1
0324 10 252	003	025	1-D1
1029 10 300	004	037	1-E1
1757 10 300	004	040	1-E1
1757 10 304	003	029	1-D1
0366 10 320A	003	030	1-D1
1757 10 351	004	041	1-E1
3565 10 410A	007	076	1-H1
2329 10 417	007	077	1-H1
1757 10 451	004	043	1-E1
1757 10 452	004	043	1-E1
0839 10 455	004	044	1-E1
0839 10 455	008	085	1-I1
2306 10 461	032	040	1-E4
3648 10 500	010	001	1-J1
0820 10 502B	010	002	1-J1
0820 10 502B	010	005	1-J1
0839 10 504	010	003	1-J1
3648 10 550	010	004	1-J1
0813 10 555	008	085	1-I1
0813 10 555	010	008	1-J1
1668 10 556	010	006	1-J1
1757 10 600B	004	045	1-E1
0820 10 605	004	046	1-E1
1757 10 609	004	047	1-E1
0820 10 631B	004	048	1-E1
8527 10 641	005	060	1-F1
8527 10 641	008	085	1-I1
1757 10 711	008	085	1-I1
3565 10 730A	007	080	1-H1
3565 10 830	006	069	1-G1
1757 10 845	006	070	1-G1
3565 10 860B	006	071	1-G1
1757 10 862	006	074	1-G1
3565 10 865B	006	072	1-G1
0820 10 872A	158	025	2-H9
1011 11 111	013	051	1-M1
1202 11 300A	010	009	1-J1
1202 11 302	010	010	1-J1
1757 11 304	010	011	1-J1
1056 11 307A	010	009	1-J1
0820 11 317	010	012	1-J1
1202 11 321	010	013	1-J1
1202 11 323	010	014	1-J1
0820 11 341	008	085	1-I1
0820 11 341	010	015	1-J1
1202 11 343	008	085	1-I1
1202 11 343	010	016	1-J1
1011 11 351	011	017	1-K1
1011 11 353A	011	018	1-K1
1011 11 361	011	019	1-K1
1011 11 363A	011	020	1-K1
3648 11 400	011	021	1-K1
8501 11 400	011	021	1-K1
1881 11 403	011	022	1-K1
1881 11 404	011	023	1-K1
0813 11 405	011	024	1-K1
0839 11 411A	011	026	1-K1
0839 11 412	011	027	1-K1
1011 11 501	011	029	1-K1
0839 11 502	011	051	1-K1
1011 11 504	012	032	1-L1
0813 11 505B	012	033	1-L1
0839 11 506	011	031	1-K1
1011 11 507	012	034	1-L1
0839 11 508	012	031	1-L1
0839 11 509	012	031	1-L1

PARTS NUMBER	PARTS COMP. LIST PAGE	FIG. NO.	FICHE INDEX
1757 11 511	012	035	1-L1
1854 11 511	012	035	1-L1
0839 11 531	012	037	1-L1
0839 11 551A	012	038	1-L1
3790 11 600	012	039	1-L1
0820 11 611B	012	040	1-L1
1854 11 700	012	042	1-L1
0800 11 702	012	043	1-L1
0820 11 703	012	045	1-L1
0810 11 711	013	046	1-M1
0820 11 712	013	047	1-M1
1029 11 750	013	048	1-M1
3565 13 1000	015	001	1-C2
1010 13 104	032	041	1-E4
8712 13 104	032	042	1-E4
1757 13 111A	008	085	1-I1
1757 13 111A	013	009	1-C2
3787 13 200	024	001	1-C3
3789 13 200	024	001	1-C3
1757 13 201A	027	005	1-F3
8527 13 203	027	006	1-F3
8712 13 220A	027	006	1-F3
1757 13 221A	008	085	1-I1
1757 13 221A	027	006	1-F3
8712 13 231A	027	009	1-F3
3597 13 240	018	001	1-E2
3597 13 240A	018	001	1-E2
8735 13 240	018	009	1-E2
8735 13 240A	018	009	1-E2
3648 13 270	035	034	1-G4
3648 13 290	018	006	1-E2
8501 13 2900	018	002	1-E2
3648 13 300B	020	001	1-F2
1617 13 300A	020	007	1-F2
3648 13 310A	020	008	1-F2
3565 13 330A	015	011	1-C2
2850 13 331	076	001	1-C9
1757 13 341A	015	013	1-C2
1757 13 351A	020	002	1-F2
0223 13 363	034	001	1-F4
1757 13 371B	015	014	1-C2
3565 13 380B	016	022	1-D2
3565 13 390	016	023	1-D2
1854 13 400A	034	002	1-F4
1854 13 400B	034	002	1-F4
0866 13 402B	034	003	1-F4
0118 13 431	245	001	3-C11
1757 13 445	034	005	1-F4
8503 13 446A	034	007	1-F4
1570 13 447	034	008	1-F4
8527 13 447	034	009	1-F4
1883 13 448	034	010	1-F4
1757 13 449	034	012	1-F4
8527 13 449	035	033	1-G4
8527 13 459	035	033	1-G4
0222 13 470B	035	019	1-G4
0381 13 481	035	020	1-G4
1757 13 510B	022	001	1-G2
1881 13 515A	022	002	1-G2
1757 13 527B	022	004	1-G2
8712 13 531	022	005	1-G2
0839 13 614	016	019	1-D2
1757 13 710A	030	001	1-C4
1757 13 714	030	004	1-C4
1757 13 715	030	007	1-C4
0136 13 717A	024	002	1-C3
1757 13 717	030	008	1-C4
3565 13 718	030	009	1-C4
8712 13 720	030	010	1-C4
3565 13 724	008	085	1-I1
3790 13 724	030	012	1-C4
3648 13 725	031	065	1-D4
2329 13 726	030	013	1-C4
3790 13 730	030	014	1-C4
8501 13 740	030	015	1-C4
2090 13 742B	016	017	1-D2
1757 13 744	030	017	1-C4
2090 13 746	031	018	1-D4
1757 13 750	031	019	1-D4
8715 13 750	031	019	1-D4
8712 13 752	031	022	1-D4
1757 13 753C	031	023	1-D4
8735 13 754	031	024	1-D4
8712 13 757	031	026	1-D4
3648 13 759	031	021	1-D4
3790 13 759A	031	021	1-D4
8735 13 772B	031	050	1-D4
1757 13 780	035	022	1-G4
3565 13 785	035	024	1-G4
1757 13 786B	035	025	1-G4

PARTS NUMBER	PARTS COMP. LIST PAGE	FIG. NO.	FICHE INDEX
0114 13 768A	024	003	1-C3
3565 13 768A	035	026	1-G4
1757 13 790	035	028	1-G4
1757 13 790A	035	028	1-G4
1854 13 794A	035	029	1-G4
3565 13 795	035	030	1-G4
3567 13 800A	016	016	1-D2
3597 13 865	016	007	1-E2
2329 13 870	016	018	1-D2
2329 13 882	016	019	1-D2
1757 13 889B	008	085	1-I1
1757 13 889B	016	020	1-D2
1757 13 891	008	085	1-I1
1757 13 891	016	021	1-D2
8501 14 100	037	008	1-C5
8501 14 110	037	014	1-C5
1757 14 112	037	009	1-C5
0810 14 113	037	010	1-C5
0839 14 115	004	049	1-E1
0839 14 117	037	011	1-C5
8501 14 118	037	012	1-C5
0839 14 119B	037	013	1-C5
0839 14 141A	038	016	1-D5
0839 14 142	038	017	1-D5
0866 14 160E	038	018	1-D5
0810 14 171	038	019	1-D5
3648 14 250	038	021	1-D5
0839 14 274A	004	050	1-E1
0839 14 274	004	051	1-E1
1757 14 600	038	028	1-D5
1757 14 611	039	038	1-E5
0820 14 620A	039	040	1-E5
0813 14 625	039	041	1-E5
0820 14 625A	039	042	1-E5
0813 14 641	039	043	1-E5
1757 14 651	039	044	1-E5
1757 14 652	040	046	1-F5
1757 14 653	040	048	1-F5
3565 14 660A	040	049	1-F5
3565 14 662A	044	034	1-E6
3565 14 670A	040	050	1-F5
1854 14 700	042	002	1-C6
0813 14 716	042	007	1-C6
0865 14 720	042	008	1-C6
1570 14 730A	042	009	1-C6

PARTS NUMBER	PARTS COMP. LIST PAGE	FIG. NO.	FICHE INDEX
1757 14 740	042	010	1-C6
1758 14 740	042	010	1-C6
0839 14 745	042	011	1-C6
1757 14 810	042	003	1-C6
1757 14 821	042	004	1-C6
1757 14 822	042	005	1-C6
1757 14 823	042	006	1-C6
8527 15 010	043	018	1-D6
8527 15 010A	043	018	1-D6
8553 15 010B	043	018	1-D6
2090 15 104	043	019	1-D6
1757 15 105A	008	085	1-I1
1757 15 105A	044	035	1-E6
1757 15 106	008	085	1-I1
1757 15 106	044	036	1-E6
1757 15 114	043	020	1-D6
1757 15 118	043	021	1-D6
1757 15 120	043	022	1-D6
3648 15 130	043	026	1-D6
3648 15 130A	043	028	1-D6
3648 15 130B	043	028	1-D6
1757 15 132	043	023	1-D6
1757 15 151B	044	038	1-E6
1757 15 152A	043	024	1-D6
1757 15 152B	043	024	1-D6
0839 15 171A	043	025	1-D6
8553 15 171	043	025	1-D6
8519 15 172	043	026	1-D6
1757 15 173	043	027	1-D6
3648 15 200	044	042	1-E6
0766 15 205	045	047	1-F6
1202 15 210	045	045	1-F6
1907 15 211	044	040	1-E6
1907 15 211A	044	040	1-E6
3648 15 250	044	041	1-E6
1854 15 310D	045	046	1-F6
1856 15 310E	045	046	1-F6
1715 15 312	042	001	1-C6
1854 15 312	045	049	1-F6
3565 15 350B	045	052	1-F6
1854 15 351C	046	055	1-G6
3505 15 370	045	053	1-F6
3900 15 411	046	056	1-G6
3900 15 421	046	057	1-G6
1854 15 511	046	061	1-G6

PARTS NUMBER	PARTS COMP. LIST PAGE	FIG. NO.	FICHE INDEX
1854 15 521	046	002	1-G6
0603 16 102B	046	001	1-H6
0603 16 103	046	005	1-H6
0222 16 105	046	006	1-H6
0813 16 11C	048	003	1-H6
1861 16 210B	046	004	1-H6
0860 16 214A	046	007	1-H6
0222 16 222	046	01C	1-H6
0895 16 410	046	008	1-H6
0839 16 43C	046	009	1-H6
0895 16 460B	045	011	1-H6
0820 16 510	046	012	1-H6
0820 16 515	049	013	1-I6
0454 16 52C	047	014	1-I6
0839 17 111	051	001	1-C7
0839 17 111	055	040	1-E7
0107 17 161	051	002	1-C7
3778 17 200A	051	003	1-C7
1853 17 201	055	001	1-F7
0810 17 204	055	005	1-F7
0810 17 205	055	006	1-F7
3648 17 261	055	007	1-F7
0317 17 265	055	009	1-F7
3778 17 231	055	010	1-F7
1853 17 241	055	011	1-F7
0187 17 243	055	008	1-F7
1853 17 243	055	012	1-F7
0105 17 244A	055	013	1-F7
1853 17 244	055	014	1-F7
0862 17 245A	055	015	1-F7
1853 17 245	055	016	1-F7
3778 17 251	055	019	1-F7
1853 17 261A	056	020	1-G7
1853 17 262	056	021	1-G7
1853 17 264	055	017	1-F7
1853 17 265	055	018	1-F7
3778 17 271	056	022	1-G7
0884 17 274	056	023	1-G7
0884 17 275A	056	024	1-G7
3648 17 275	056	025	1-G7
0839 17 276	056	026	1-G7
0839 17 277	056	026	1-G7
0839 17 276	056	026	1-G7
3648 17 281B	057	051	1-H7
3648 17 281C	057	051	1-H7

PARTS NUMBER	PARTS COMP. LIST PAGE	FIG. NO.	FICHE INDEX
0839 17 287	056	027	1-G7
0839 17 288	056	027	1-G7
0821 17 297	056	028	1-G7
0862 17 301A	056	029	1-G7
0821 17 302	056	030	1-G7
3648 17 302	056	030	1-G7
0821 17 303	056	031	1-G7
0884 17 304	056	032	1-G7
0839 17 305	056	033	1-G7
0839 17 305A	056	033	1-G7
3648 17 308	056	035	1-G7
3648 17 310	057	057	1-H7
0118 17 313	060	001	1-J7
0118 17 313	061	030	1-K7
0821 17 313	057	038	1-H7
0884 17 315	057	039	1-H7
0884 17 316A	057	040	1-H7
0884 17 317A	057	040	1-H7
0884 17 318A	057	040	1-H7
4059 17 323	057	042	1-H7
0884 17 325B	057	044	1-H7
0305 17 327	057	046	1-H7
0305 17 328	057	040	1-H7
3778 17 330B	051	014	1-C7
0398 17 333	051	015	1-C7
0437 17 335	052	016	1-D7
0437 17 335	081	035	1-G9
0862 17 341	057	047	1-H7
1281 17 341	091	001	1-H10
0114 17 351	060	003	1-J7
0862 17 351	052	018	1-D7
0862 17 351	080	001	1-F9
0187 17 352	052	019	1-D7
0187 17 352	080	002	1-F9
0111 17 354	052	020	1-D7
0111 17 354	080	C03	1-F9
1281 17 371	052	022	1-D7
0862 17 375	052	023	1-D7
0862 17 375	053	040	1-E7
0810 17 381A	052	025	1-D7
0810 17 385	052	026	1-D7
0810 17 385	053	040	1-E7
3778 17 393	052	029	1-D7
3778 17 393	053	040	1-E7
1853 17 402A	060	004	1-J7

PARTS NUMBER	PARTS COMP. LIST PAGE	FIG. NO.	FICHE INDEX
1855 17 404	060	005	1-J7
5778 17 405	060	006	1-J7
3648 17 410	060	007	1-J7
0103 17 411	060	008	1-J7
0498 17 411A	060	009	1-J7
3648 17 414	062	046	1-L7
3648 17 415	062	047	1-L7
3648 17 416	062	048	1-L7
0498 17 421B	060	010	1-J7
0498 17 422	060	011	1-J7
3648 17 431	060	012	1-J7
3648 17 432	060	013	1-J7
0821 17 433	060	014	1-J7
0821 17 441	060	015	1-J7
0259 17 441	060	016	1-J7
3790 17 441	052	030	1-D7
3790 17 441	060	005	1-F9
0802 17 442	052	031	1-D7
0802 17 442	060	006	1-F9
5778 17 450A	061	020	1-K7
0803 17 461	061	021	1-K7
0398 17 462A	061	022	1-K7
3648 17 463	061	023	1-K7
3648 17 463A	061	023	1-K7
3648 17 464	061	024	1-K7
3648 17 465	061	025	1-K7
0498 17 470	061	027	1-K7
0647 17 473	061	030	1-K7
0303 17 474	053	040	1-E7
0303 17 474	062	043	1-L7
0802 17 475	061	032	1-K7
0271 17 475	053	040	1-E7
0271 17 475	061	033	1-K7
0303 17 482	062	044	1-L7
0824 17 483	061	034	1-K7
0103 17 491	061	035	1-K7
0821 17 503A	062	041	1-L7
3794 17 510	061	037	1-K7
1274 17 520	061	038	1-K7
0884 17 530	053	040	1-E7
0802 17 531A	053	035	1-E7
0802 17 535	053	036	1-E7
0802 17 535	053	040	1-E7
0802 17 540B	053	038	1-E7
3648 17 551A	062	039	1-L7
0221 17 552	062	040	1-L7
3648 17 611	057	049	1-H7
0884 17 612	057	050	1-H7
3648 17 621	058	056	1-I7
3648 17 622A	058	057	1-I7
3648 17 626	058	058	1-I7
3648 17 629	057	052	1-H7
0884 17 633A	058	053	1-I7
0884 17 634A	058	055	1-I7
0884 17 635A	058	053	1-I7
0884 17 636A	058	053	1-I7
0862 17 641	058	055	1-I7
0862 17 642	058	055	1-I7
0862 17 643	058	055	1-I7
0862 17 644	058	055	1-I7
0862 17 660A	051	005	1-C7
1562 18 100A	064	001	1-C8
1672 18 100A	064	002	1-C8
0578 18 101	065	016	1-D8
0845 18 101	065	016	1-D8
3648 18 101	065	017	1-D8
0823 18 107	064	003	1-C8
3790 18 110A	064	004	1-C8
3648 18 111	064	005	1-C8
0820 18 114	064	010	1-C8
3790 18 115	064	006	1-C8
1854 18 120	064	007	1-C8
1757 18 130A	064	011	1-C8
1757 18 140B	064	012	1-C8
1757 18 150D	064	009	1-C8
1854 18 160	064	008	1-C8
1757 18 170A	064	013	1-C8
1757 18 180A	064	014	1-C8
3648 18 190	064	015	1-C8
3790 18 200	065	020	1-D8
0107 18 210A	065	021	1-D8
0810 18 276	040	051	1-F5
0810 18 277	040	051	1-F5
1011 18 300	069	001	1-G8
1757 18 311	070	020	1-H8
1881 18 361A	070	023	1-H8
0222 18 375	070	026	1-H8
0222 18 376	070	026	1-H8
0222 18 377	070	026	1-H8
1672 18 381A	070	027	1-H8

PARTS NUMBER	PARTS COMP. LIST PAGE	FIG. NO.	FICHE INDEX
0453 18 391	066	039	1-E8
1757 18 400C	072	001	1-I8
1757 18 400D	072	001	1-I8
1758 18 400C	072	001	1-I8
1758 18 401A	074	026	1-K8
1757 18 510A	003	032	1-D1
1881 18 51[illegible]	003	032	1-D1
0504 18 520B	074	025	1-K8
8715 18 520	074	025	1-K8
3745 18 600	066	041	1-E8
2691 18 660	234	001	3-C10
3648 18 8[illegible]0	066	042	1-E8
3648 18 860	074	029	1-K8
3648 18 861A	074	030	1-K8
3597 18 862	018	003	1-E2
3597 18 862	018	010	1-E2
1881 18 880A	074	032	1-K8
1259 18 890	066	044	1-E8
8716 18 940B	067	047	1-F8
8735 18 940A	067	047	1-F8
8736 18 940A	067	047	1-F8
1758 19 026	076	002	1-C9
0842 19 025	076	004	1-C9
1908 19 027	076	006	1-C9
0454 19 028A	076	007	1-C9
1758 19 028	076	009	1-C9
1015 19 031	095	001	1-K10
1758 19 036A	076	019	1-L10
1758 19 035	076	020	1-L10
3649 19 064	076	003	1-C9
3649 19 090A	078	044	1-E9
8501 19 100	076	012	1-C9
1758 19 211B	076	013	1-C9
1758 19 215	076	014	1-C9
0338 19 216	076	015	1-C9
1758 19 220	076	016	1-C9
0338 19 225	076	017	1-C9
1758 19 240	076	018	1-C9
0338 19 245A	077	019	1-D9
0338 19 256	077	020	1-D9
0338 19 257	077	021	1-D9
0338 19 258	077	022	1-D9
1181 19 310B	080	010	1-F9
0338 19 331A	080	011	1-F9
0338 19 336	080	013	1-F9
0338 19 337	080	014	1-F9
0338 19 338	080	015	1-F9
1758 19 341	080	018	1-F9
0378 19 344	080	016	1-F9
0338 19 360	085	001	1-C1
0338 19 360A	085	001	1-C1
0338 19 361	081	019	1-G9
0338 19 363	081	020	1-G9
0842 19 381	081	021	1-G9
0338 19 384	081	022	1-G9
0842 19 385	081	023	1-G9
1758 19 386	081	024	1-G9
0338 19 388A	081	025	1-G9
0338 19 389	081	026	1-G9
1758 19 391A	081	027	1-G9
1758 19 392A	081	028	1-G9
0842 19 394	081	029	1-G9
1758 19 394A	081	030	1-G9
0338 19 395	081	031	1-G9
0338 19 397	081	032	1-G9
0338 19 397	092	025	1-I1
1758 19 397	081	033	1-G9
1181 19 431B	095	003	1-K1
1758 19 440A	095	005	1-K1
1758 19 443	095	006	1-K1
0338 19 449	095	007	1-K1
1758 19 450	095	008	1-K1
1758 19 460	085	002	1-C1
0338 19 470	085	003	1-C1
0338 19 475	085	004	1-C1
0338 19 475	086	016	1-D1
0338 19 475	088	047	1-F1
0338 19 476	085	005	1-C1
0338 19 476	086	017	1-D1
0338 19 476	088	047	1-F1
0338 19 480	085	006	1-C1
0338 19 480	086	018	1-D1
0338 19 486	085	007	1-C1
0338 19 486	086	019	1-D1
0338 19 486	088	047	1-F1
0338 19 487	085	008	1-C1
0338 19 487	086	020	1-D1
0338 19 487	088	047	1-F1
0338 19 488	085	009	1-C1
0338 19 488	086	021	1-D1

PARTS NUMBER	PARTS COMP. LIST PAGE	FIG. NO.	FICHE INDEX
0338 19 485	088	047	1-F10
0338 19 498	085	010	1-C10
0338 19 498	086	022	1-D10
0338 19 498	088	047	1-F10
0338 19 499	085	011	1-C10
0338 19 499	086	023	1-D10
0338 19 499	088	047	1-F10
0338 19 500	085	012	1-C10
0338 19 500	086	024	1-D10
0338 19 500	088	047	1-F10
0338 19 500A	085	012	1-C10
0338 19 500A	086	024	1-D10
0338 19 500A	088		1-F10
1758 19 503	085	013	1-C10
1758 19 504	085	013	1-C10
1758 19 505	085	013	1-C10
1758 19 506	085	013	1-C10
1758 19 507	085	013	1-C10
1758 19 508	085	013	1-C10
0338 19 509	085	014	1-C10
0338 19 509	086	025	1-D10
0338 19 509	088	047	1-F10
1758 19 510	086	015	1-D10
1758 19 511	086	026	1-D10
0578 19 515	086	027	1-D10
0338 19 530	086	028	1-D10
0338 19 531	086	029	1-D10
0338 19 533	086	030	1-D10
0338 19 534	086	031	1-D10
0338 19 540	087	032	1-E10
0338 19 550	087	033	1-E10
0338 19 560	087	034	1-E10
0338 19 565	087	035	1-E10
0338 19 566	087	036	1-E10
0338 19 567	087	037	1-E10
0338 19 570	087	038	1-E10
0338 19 580	091	004	1-H10
0338 19 581	091	005	1-H10
0338 19 590	091	006	1-H10
0338 19 591	091	007	1-H10
0338 19 593	091	008	1-H10
0338 19 594	091	009	1-H10
0338 19 595	091	010	1-H10
0338 19 596	091	011	1-H10
0338 19 598	087	039	1-E10

PARTS NUMBER	PARTS COMP. LIST PAGE	FIG. NO.	FICHE INDEX
0338 19 601	091	012	1-H10
0338 19 603	091	013	1-H10
0338 19 604	091	014	1-H10
0338 19 605	091	015	1-H10
0338 19 606	091	016	1-H10
0338 19 607	091	017	1-H10
0338 19 608	092	018	1-I10
0338 19 609	092	019	1-I10
0338 19 610	092	020	1-I10
0338 19 610A	092	020	1-I10
1758 19 613	092	021	1-I10
1758 19 614	092	021	1-I10
1758 19 615	092	021	1-I10
1758 19 616	092	021	1-I10
1758 19 617	092	021	1-I10
1758 19 618	092	021	1-I10
0338 19 619	092	022	1-I10
0338 19 621	087	040	1-E10
0338 19 621	089	047	1-G10
0338 19 622	087	041	1-E10
0338 19 622	092	023	1-I10
0338 19 623	087	042	1-E10
0338 19 624	087	043	1-E10
0338 19 631	087	044	1-E10
0338 19 632	087	044	1-E10
0338 19 633	087	044	1-E10
0338 19 634	087	044	1-E10
0338 19 635	087	044	1-E10
0338 19 636	087	044	1-E10
0338 19 638	088	045	1-F10
0338 19 638	089	047	1-G10
0338 19 639	088	046	1-F10
0338 19 641	088	047	1-F10
0338 19 642	088	047	1-F10
0338 19 643	088	047	1-F10
0338 19 644	088	047	1-F10
0338 19 645	088	047	1-F10
0338 19 646	088	047	1-F10
0338 19 647	088	047	1-F10
0842 19 650	092	024	1-I10
0338 19 651	092	026	1-I10
0338 19 655	09	027	1-I10
0338 19 656		028	1-I10
0436 19 656		045	1-F10
0436 19 656	89		1-G10

PARTS NUMBER	PARTS COMP. LIST PAGE	FIG. NO.	FICHE INDEX
0842 19 660	092	029	1-I10
0338 19 661	092	030	1-I10
0338 19 663	092	031	1-I10
0338 19 664	093	032	1-J10
0842 19 665	093	033	1-J10
0338 19 666	093	034	1-J10
0338 19 667	093	035	1-J10
0338 19 670A	093	036	1-J10
0338 19 675	093	037	1-J10
0338 19 676	077	023	1-D9
0338 19 701A	095	009	1-K10
0338 19 702A	095	010	1-K10
0338 19 703	095	011	1-K10
0338 19 704	095	012	1-K10
0338 19 706	095	013	1-K10
1840 19 710	081	034	1-G9
0338 19 731	095	015	1-K10
0338 19 732	095	016	1-K10
0338 19 733C	095	017	1-K10
0338 19 734A	096	018	1-L10
0338 19 735	081	036	1-G9
0338 19 737	082	037	1-H9
0338 19 738	082	037	1-H9
3649 19 739	082	038	1-H9
0338 19 768	082	039	1-H9
1758 19 815	082	040	1-H9
1675 19 821	082	044	1-H9
0338 19 822	082	045	1-H9
1758 19 823	082	046	1-H9
0338 19 825	082	047	1-H9
0338 19 826	082	047	1-H9
0338 19 827	082	047	1-H9
0338 19 828	082	047	1-H9
0338 19 829	082	047	1-H9
0338 19 831	082	041	1-H9
0338 19 832	082	042	1-H9
0338 19 833	082	043	1-H9
1758 19 835	082	048	1-H9
1758 19 836	083	049	1-I9
0338 19 837	083	050	1-I9
1856 19 870A	083	051	1-I9
1758 19 880	083	052	1-I9
0338 19 904A	077	026	1-D9
0808 19 910	077	027	1-D9
0842 19 915A	077	028	1-D9

PARTS NUMBER	PARTS COMP. LIST PAGE	FIG. NO.	FICHE INDEX
1053 19 920B	077	030	1-D9
1053 19 930B	077	031	1-D9
1015 19 934C	077	032	1-D9
1098 19 939	077	035	1-D9
1015 19 945A	077	033	1-D9
2579 19 969	077	054	1-D9
0397 22 200	088	047	1-F10
0881 22 297	058	059	1-I7
0866 23 025	007	085	1-H1
0866 23 025	008	085	1-I1
1757 23 040A	007	085	1-H1
1757 23 040B	007	085	1-H1
3648 23 050A	003	026	1-D1
3648 23 070	006	075	1-G1
8712 23 075	005	061	1-F1
1757 23 103	013	050	1-M1
1011 23 151A	013	052	1-M1
8735 23 180	013	053	1-M1
3790 23 200	007	085	1-H1
3791 23 200	007	085	1-H1
8503 23 318	024	004	1-C3
8712 23 319	027	064	1-F3
3787 23 323	027	064	1-F3
3648 23 324	024	006	1-C3
3565 23 325	024	007	1-C3
3565 23 326	024	008	1-C3
3565 23 327	024	009	1-C3
3787 23 331	024	010	1-C3
3565 23 332	024	011	1-C3
3648 23 337	027	064	1-F3
3565 23 349	024	012	1-C3
8527 23 350	024	013	1-C3
3787 23 353	024	014	1-C3
3565 23 354	024	015	1-C3
0187 23 356	024	016	1-C3
0291 23 366	024	017	1-C3
3648 23 370	024	018	1-C3
8501 23 374	024	019	1-C3
3648 23 375	025	020	1-D3
8712 23 380	025	021	1-D3
8504 23 390	025	022	1-D3
8712 23 393	025	023	1-D3
3565 23 394	025	024	1-D3
1208 23 395	025	025	1-D3
8503 23 401	025	027	1-D3

PARTS NUMBER	PARTS COMP. LIST PAGE	FIG. NO.	FICHE INDEX
3787 23 409	025	028	1-D3
3787 23 410	025	029	1-D3
3789 23 410	025	029	1-D3
1029 23 411	025	030	1-D3
8712 23 420	025	031	1-D3
8712 23 422	025	032	1-D3
3565 23 423	025	033	1-D3
3620 23 424	025	034	1-D3
3565 23 426	025	035	1-D3
3565 23 427	025	036	1-D3
3565 23 428	025	037	1-D3
8716 23 430	027	063	1-F3
1757 23 433	027	064	1-F3
8501 23 440	025	038	1-D3
3565 23 446	026	039	1-E3
3787 23 446	026	039	1-E3
1757 23 450	026	040	1-E3
1757 23 455	026	041	1-E3
3565 23 460	026	042	1-E3
3787 23 460	026	042	1-E3
3787 23 461	026	043	1-E3
3565 23 462	026	044	1-E3
3565 23 464	026	045	1-E3
1757 23 470	026	046	1-E3
3900 23 471	026	047	1-E3
1029 23 480	026	048	1-E3
1757 23 481	026	049	1-E3
3565 23 490	026	050	1-E3
8501 23 491	026	051	1-E3
3565 23 495	026	052	1-E3
3565 23 496	026	053	1-E3
3787 23 500	026	054	1-E3
3565 23 501	026	055	1-E3
1757 23 507	026	056	1-E3
3565 23 508	027	057	1-F3
3787 23 510	027	058	1-F3
8527 23 519	027	064	1-F3
3787 23 520	027	059	1-F3
3788 23 522	026	069	1-G3
3787 23 540	028	069	1-G3
3565 23 549	027	061	1-F3
3565 23 652	027	062	1-F3
1757 23 672	020	003	1-F2
3648 23 673	020	004	1-F2
1757 23 680	020	005	1-F2
3648 23 693A	020	006	1-F2
1757 23 713	030	002	1-C4
1757 23 725	031	020	1-D4
0839 23 801	038	065	1-D5
0813 23 802B	038	022	1-D5
0813 23 803	038	023	1-D5
0820 23 832B	038	029	1-D5
0730 23 837	039	034	1-E5
0730 23 839	039	035	1-E5
8501 23 882	037	014	1-C5
1757 24 302	065	022	1-D8
3648 24 303	065	023	1-D8
3648 24 304	066	036	1-E8
3648 24 305	066	036	1-E8
8735 24 308	065	024	1-D8
1757 24 310	065	025	1-D8
8735 24 313	065	026	1-D8
1757 24 314	065	027	1-D8
1757 24 317	065	028	1-D8
8735 24 319	065	029	1-D8
1757 24 322	066	030	1-E8
3648 24 323	066	036	1-E8
8735 24 330	066	032	1-E8
1757 24 334	066	033	1-E8
3648 24 340	066	034	1-E8
3775 24 350	066	035	1-E8
3790 24 351	066	036	1-E8
8650 24 351	066	036	1-E8
1011 24 501	069	002	1-G8
0820 24 503	069	008	1-G8
1011 24 510	069	013	1-G8
0208 24 514	069	010	1-G8
0866 24 526	069	011	1-G8
1011 24 527	069	003	1-G8
0866 24 530	069	004	1-G8
0866 24 533	069	005	1-G8
1011 24 533	069	014	1-G8
1011 24 534	069	015	1-G8
0866 24 535	069	006	1-G8
0866 24 540A	069	007	1-G8
1011 24 541	069	016	1-G8
0866 24 550	069	009	1-G8
1011 24 560	069	012	1-G8
1011 24 563	069	017	1-G8
8028 24 581	069	018	1-G8

PARTS NUMBER	PARTS COMP. LIST PAGE	FIG. NO.	FICHE INDEX
0866 24 704	072	002	1-I8
1758 24 705	072	003	1-I8
3648 24 705	072	003	1-I8
1758 24 706	073	021	1-J8
1757 24 709	072	004	1-I8
3648 24 709	072	004	1-I8
1757 24 710B	072	005	1-I8
1757 24 710C	072	005	1-I8
1758 24 710A	072	005	1-I8
0426 24 712	072	006	1-I8
0426 24 715A	072	007	1-I8
0806 24 716	072	008	1-I8
0845 24 720	072	009	1-I8
0426 24 725	072	010	1-I8
0426 24 726	072	011	1-I8
1758 24 726	072	011	1-I8
0222 24 730	072	008	1-I8
1757 24 730A	072	012	1-I8
1758 24 730B	072	012	1-I8
0426 24 731	072	013	1-I8
1758 24 731A	072	013	1-I8
1758 24 736	073	020	1-J8
0222 24 740	072	009	1-I8
0222 24 741	073	014	1-J8
1758 24 750	073	015	1-J8
0222 24 753	073	017	1-J8
0426 24 753	073	018	1-J8
0426 24 754	073	019	1-J8
1757 24 760	073	020	1-J8
2677 25 015	098	002	2-C1
2677 25 071	098	005	2-C1
2677 25 072	098	005	2-C1
2677 25 073	098	005	2-C1
2677 25 074	098	005	2-C1
2677 25 075	098	005	2-C1
2677 25 076	098	005	2-C1
2677 25 077	098	005	2-C1
3790 25 100	098		2-C1
0578 25 150	098	003	2-C1
0290 25 151	098	006	2-C1
3790 25 210	098	007	2-C1
2677 25 220	098	008	2-C1
1856 25 300A	099	009	2-D1
1856 25 314	099	014	2-D1
3790 26 010	101	001	2-E1

PARTS NUMBER	PARTS COMP. LIST PAGE	FIG. NO.	FICHE INDEX
0259 26 051	101	003	2-E1
0419 26 060	101	004	2-E1
1854 26 111A	101	010	2-E1
1854 26 113A	101	012	2-E1
1854 26 115A	101	010	2-E1
0604 26 125B	102	013	2-F1
0604 26 129	102	014	2-F1
0603 26 131A	102	015	2-F1
0603 26 152	102	017	2-F1
0603 26 153	102	018	2-F1
0603 26 154	102	019	2-F1
0603 26 155	102	020	2-F1
0603 26 156	102	017	2-F1
0603 26 157	102	021	2-F1
1854 26 161B	106	032	2-I1
1854 26 161B	124	001	2-C4
1854 26 161B	135	014	2-C6
0603 26 165	102	022	2-F1
0603 26 166	102	022	2-F1
0603 26 167	102	022	2-F1
0603 26 168	102	022	2-F1
0603 26 251A	104	001	2-G1
0603 26 281B	104	003	2-G1
0589 26 287A	104	004	2-G1
0603 26 288	104	005	2-G1
0603 26 291B	104	005	2-G1
0589 26 297A	104	004	2-G1
0603 26 301	104	006	2-G1
1823 26 310B	104	007	2-G1
1823 26 312B	104	008	2-G1
0603 26 341	104	009	2-G1
0223 26 345A	104	010	2-G1
0223 26 391	104	011	2-G1
0604 26 465	105	013	2-H1
3874 26 510	105	012	2-H1
1854 26 570A	107	034	2-J1
0647 26 610A	104	012	2-G1
0208 26 671	105	014	2-H1
0647 26 710A	105	012	2-H1
0603 26 800A	105	024	2-H1
0603 26 810A	105	024	2-H1
0603 26 821A	106	026	2-I1
0604 26 832	105	025	2-H1
0118 26 834	106	027	2-I1
0603 26 898	106	029	2-I1

PARTS NUMBER	PARTS COMP. LIST PAGE	FIG. NO.	FICHE INDEX
0012 27 012	109	001	2-C2
0604 27 015	109	002	2-C2
3790 27 100	109		2-C2
3790 27 110	109	003	2-C2
0579 27 120A	109	004	2-C2
0578 27 130A	109	005	2-C2
0603 27 141	109	006	2-C2
0604 27 142	109	007	2-C2
0578 27 1500	109	008	2-C2
0305 27 171	109	010	2-C2
3874 27 231	110	011	2-D2
0603 27 251	110	014	2-D2
0578 27 252	110	015	2-D2
0578 27 253	110	015	2-D2
0578 27 254	110	015	2-D2
0603 27 255	110	016	2-D2
0578 27 261	110	017	2-D2
0114 27 262	110	018	2-D2
0603 27 263	110	019	2-D2
0110 27 301	111	020	2-E2
0578 27 302	111	021	2-E2
0114 27 303	111	023	2-E2
0223 27 401A	111	024	2-E2
0223 27 402A	111	024	2-E2
0223 27 403A	111	024	2-E2
0223 27 404A	111	024	2-E2
0223 27 405A	111	024	2-E2
0223 27 406A	111	024	2-E2
0223 27 407A	111	024	2-E2
0223 27 408A	111	024	2-E2
0223 27 409A	111	024	2-E2
0223 27 411A	111	024	2-E2
0223 27 412A	111	024	2-E2
0223 27 413A	111	024	2-E2
0223 27 414A	111	024	2-E2
0223 27 415A	111	024	2-E2
3874 28 010A	113	001	2-F2
3874 28 011	113	001	2-F2
3874 28 012	113	001	2-F2
3874 28 013	113	001	2-F2
3874 28 014	113	001	2-F2
3874 28 015	113	001	2-F2
3874 28 016	113	001	2-F2
0603 28 110	113	002	2-F2
0603 28 114	113	005	2-F2

PARTS NUMBER	PARTS COMP. LIST PAGE	FIG. NO.	FICHE INDEX
0603 28 140	113	007	2-F2
0603 28 142	113	008	2-F2
0603 28 151	114	011	2-G2
0603 28 152	114	012	2-G2
0603 28 161	114	013	2-G2
0603 28 171	114	011	2-G2
0603 28 320	114	015	2-G2
3874 28 330	113	006	2-F2
3874 28 350	113	010	2-F2
3874 28 700	114	016	2-G2
3874 28 981	114	021	2-G2
1854 32 018	116	002	2-C3
1175 32 030	116	003	2-C3
1175 32 041	116	004	2-C3
1175 32 042	116	005	2-C3
1175 32 043	116	006	2-C3
1175 32 044	116	007	2-C3
1854 32 049	116	008	2-C3
1854 32 050A	116	014	2-C3
0208 32 059	117	016	2-D3
0259 32 071	117	017	2-D3
1854 32 080	117	018	2-D3
1854 32 110	117	018	2-D3
0603 32 122	117	019	2-D3
0603 32 122	117	020	2-D3
1854 32 130	117	021	2-D3
1854 32 141	117	022	2-D3
1854 32 151	117	023	2-D3
1854 32 154	117	024	2-D3
1854 32 155	117	024	2-D3
1854 32 156	117	024	2-D3
1854 32 157	117	024	2-D3
1854 32 158	117	024	2-D3
1854 32 159	117	024	2-D3
1854 32 161	117	025	2-D3
1854 32 163	117	026	2-D3
0180 32 165A	117	027	2-D3
0180 32 171A	117	028	2-D3
0180 32 172A	118	028	2-E3
0180 32 173A	118	028	2-E3
0180 32 174A	118	028	2-E3
0183 32 182	118	030	2-E3
0180 32 184	118	031	2-E3
0603 32 186	118	030	2-E3
0208 32 188	118	038	2-E3

PARTS NUMBER	PARTS COMP. LIST PAGE	FIG. NO.	FICHE INDEX
0820 32 190	118	033	2-E3
3874 32 226	118	039	2-E3
3790 32 250	121	001	2-G3
1854 32 267	121	005	2-G3
0208 32 276	121	006	2-G3
0208 32 276	120	001	2-C5
0208 32 278	131	035	2-F5
0208 32 278	131	040	2-F5
0167 32 279A	131	036	2-F5
1823 32 279	121	002	2-G3
1823 32 279	122	020	2-H3
0167 32 289	131	037	2-F5
1823 32 289	121	003	2-G3
1823 32 289	122	027	2-H3
3874 32 301	124	002	2-C4
3874 32 311	124	002	2-C4
2541 32 320	121	007	2-G3
0208 32 324B	121	009	2-G3
0208 32 326	121	010	2-G3
0208 32 326A	121	011	2-G3
0208 32 329	121	012	2-G3
0208 32 331A	121	013	2-G3
0208 32 340A	121	014	2-G3
2541 32 351A	122	016	2-H3
0603 32 355	122	019	2-H3
0208 32 360A	122	017	2-H3
0603 32 365B	122	021	2-H3
1757 32 411A	119	041	2-F3
1757 32 411B	119	041	2-F3
1854 32 421	119	043	2-F3
1795 32 600	119	047	2-F3
1727 32 611	119	040	2-F3
1854 32 886	116	015	2-C3
1854 32 900	116	001	2-C3
0223 33 001B	124	007	2-C4
0223 33 003B	124	007	2-C4
0110 33 041	124	005	2-C4
0602 33 042	124	017	2-C4
0602 33 049	124	016	2-C4
1854 33 001A	125	016	2-D4
1854 33 002A	125	017	2-D4
3900 33 003	125	018	2-D4
1854 33 071	125	019	2-D4
1854 33 191	107	036	2-J1
1854 33 191	125	020	2-D4

PARTS NUMBER	PARTS COMP. LIST PAGE	FIG. NO.	FICHE INDEX
1854 33 192	107	037	2-J1
1854 33 192	125	021	2-D4
0305 33 235	126	039	2-E4
1854 33 251	125	022	2-D4
1854 33 260	125	023	2-D4
1854 33 270	125	063	2-D4
3874 33 280	125	027	2-D4
0304 33 352A	105	021	2-H1
3874 33 610	125	028	2-D4
0305 33 626A	126	040	2-E4
0296 33 636	126	041	2-E4
0296 33 640	126	041	2-E4
2981 33 651	126	029	2-E4
0167 33 671A	105	014	2-H1
2981 33 671	126	030	2-E4
1312 33 673	105	015	2-H1
0003 33 681A	105	016	2-H1
2981 33 681A	126	031	2-E4
0305 33 685A	126	032	2-E4
0233 33 691	126	033	2-E4
0259 33 691	105	017	2-H1
0259 33 691	154	011	2-E4
0259 33 693	105	018	2-H1
0259 33 693	154	012	2-E4
0600 33 693	126	034	2-E4
0305 33 695	126	035	2-E4
0305 33 695	126	035	2-E4
0305 33 696	126	036	2-E4
0221 33 696	125	024	2-D4
0305 33 698A	126	037	2-E4
0305 33 699	125	025	2-D4
3874 33 710	126	038	2-E4
3874 33 980	125	026	2-D4
3874 33 990	125	026	2-D4
3874 34 011	128	002	2-C5
3874 34 013	128	004	2-C5
0603 34 110C	128	005	2-C5
0603 34 130B	128	006	2-C5
1854 34 151	133	001	2-G5
0603 34 153	114	017	2-G2
0603 34 153	133	002	2-G5
0603 34 155	133	003	2-G5
0603 34 156	133	004	2-G5
0603 34 157A	133	006	2-G5
0603 34 158	133	007	2-G5

3874 34 510	128	013	2-C5
3874 34 360	129	013	2-D5
0223 34 411	129	013	2-D5
0603 34 410	129	010	2-D5
3874 34 431	129	017	2-D5
0602 34 471A	129	020	2-D5
0603 34 510	131	041	2-F5
0187 34 550	131	042	2-F5
0193 34 000	129	021	2-D5
0187 34 660	130	023	2-E5
0187 34 000	130	023	2-E5
0187 34 007	130	023	2-E5
0187 34 660	130	023	2-E5
0033 34 075	130	024	2-E5
3874 34 700	130	025	2-E5
0187 34 770	114	018	2-G2
0187 34 770	133	008	2-G5
0187 34 777	114	019	2-G2
0187 34 747	130	027	2-E5
0187 34 795	130	028	2-E5
0187 34 799	130	029	2-E5
0193 34 820	130	032	2-E5
0193 34 940	130	033	2-E5
1854 37 790A	204	001	3-C13
3790 38 010A	135	001	2-C6
3790 38 200	135	002	2-C6
1859 38 551	135	003	2-C6
1854 38 558	135	005	2-C6
3790 38 560	135	006	2-C6
3790 38 581	135	014	2-C6
3790 38 590	135	010	2-C6
1854 38 610B	136	015	2-D6
1854 38 650A	136	015	2-D6
1854 38 810	136	016	2-D6
1854 38 851A	136	020	2-D6
1854 39 020A	139	001	2-F6
1668 39 040C	139	003	2-F6
1668 39 040D	139	003	2-F6
1668 39 045A	139	005	2-F6
1668 39 045B	139	005	2-F6
1854 40 096A	142	006	2-C
1854 40 097A	142	007	2-C
3900 40 160	142	009	2-C
0820 40 160	142	010	2-C
1114 40 170	142	011	2-C
2158 40 355	016	019	1-D
2158 40 355	142	015	2-C
1757 40 356	143	016	2-D
0111 40 358	223	047	3-C
0824 40 401	143	017	2-D
1854 40 40_	143	019	2-D
1854 40 405A	143	019	2-D
3900 40 500B	143	020	2-D
2090 40 508A	143	021	2-D
3790 40 600A	143	022	2-D
1854 40 810C	143	023	2-D
1854 40 821A	143	024	2-D
3790 40 830	143	025	2-D
1114 40 850B	143	026	2-D
0727 41 023	151	002	2-C
1854 41 030A	151	001	2-C
0824 41 131	151	003	2-C
1872 41 140	151	004	2-C
1872 41 142	151	005	2-C
0160 41 308	151	006	2-C
0603 41 331	154	013	2-E
1881 41 341	154	014	2-E
0118 41 380A	154	001	2-E
1011 41 400A	154	002	2-E
0305 41 451	154	007	2-E
0839 41 461	154	003	2-E
1854 41 610B	145	001	2-E
2158 41 619	145	002	2-E
0305 41 641	145	003	2-E
0259 41 644	145	005	2-E
1850 41 650	145	007	2-E
1854 41 660C	145	008	2-E
0118 41 681	145	010	2-E
0118 41 682	145	011	2-E
0111 41 692	186	043	3-G

PARTS NUMBER	PARTS COMP. LIST PAGE	FIG. NO.	FICHE INDEX
3796 41 711A	145	013	2-E7
1861 41 920A	154	009	2-E9
3787 42 310A	147	001	2-C8
1854 42 330	147	005	2-C8
1854 42 338A	147	007	2-C8
1854 42 339A	147	009	2-C8
1854 42 342A	147	014	2-C8
3787 42 350	147	015	2-C8
1823 42 430	146	017	2-D8
0136 42 434	146	018	2-D8
3870 42 441	146	019	2-D8
0136 42 447	146	021	2-D8
3900 42 451	146	022	2-D8
1854 42 717	146	025	2-D8
3648 42 910	146	024	2-D8
0225 43 028A	151	014	2-C9
3792 43 065	151	007	2-C9
3792 43 025	151	014	2-C9
0187 43 027	151	008	2-C9
0187 43 029	151	015	2-C9
1854 43 030B	151	016	2-C9
1850 43 030A	151	016	2-C9
0866 43 061	151	017	2-C9
0800 43 062	152	016	2-D9
3790 43 070	152	019	2-D9
0603 43 081	152	024	2-D9
1015 43 090	152	025	2-D9
1854 43 140	152	027	2-D9
0707 43 590	165	002	2-E10
1854 43 600	157	001	2-G9
0111 43 432	154	004	2-E9
0111 43 433	154	004	2-E9
0118 43 505A	165	015	2-E10
0150 43 630	155	016	2-F9
0136 43 650	160	001	2-C10
0305 43 650	160	002	2-C10
3790 43 650	160	003	2-C10
3790 43 660	160	004	2-C10
1570 43 694A	160	005	2-C10
1570 43 694A	160	007	2-C10
1854 43 800	158	013	2-H9
1854 43 810	160	009	2-C10
1757 43 830A	160	010	2-C10
1854 43 830	160	011	2-C10
1854 43 836	160	013	2-C10
1854 43 842	160	014	2-C10
1757 43 848	160	016	2-C10
0118 43 853	160	018	2-C10
1011 43 890A	163	017	2-E10
3874 43 950	160	020	2-C10
1654 43 970	161	022	2-D10
1845 44 010	166	001	2-G10
1845 44 020	166	002	2-G10
2781 44 041	166	003	2-G10
2781 44 042	166	004	2-G10
0114 44 043	166	005	2-G10
0183 44 045	166	006	2-G10
0114 44 046	166	007	2-G10
0114 44 051	166	008	2-G10
0114 44 052	166	009	2-G10
0114 44 053	166	010	2-G10
0114 44 056	166	012	2-G10
1845 44 060	166	014	2-G10
2541 44 063	167	015	2-H10
1854 44 080	167	016	2-H10
1845 44 090	167	019	2-H10
1845 44 110	167	021	2-H10
3874 44 150	167	022	2-H10
0603 44 158A	167	023	2-H10
0603 44 167	167	024	2-H10
0603 44 261	167	025	2-H10
0603 44 262	167	026	2-H10
0603 44 270	168	030	2-I10
0603 44 272	168	032	2-I10
0603 44 357	168	033	2-I10
0118 44 375	168	034	2-I10
3790 44 410	168	035	2-I10
3870 44 420	168	036	2-I10
0578 44 431	168	037	2-I10
0866 44 439	168	039	2-I10
3790 45 061	163	003	2-E10
3919 45 170	164	033	2-F10
1854 45 210	163	019	2-E10
3790 45 280	163	020	2-E10
3790 45 320	164	021	2-F10
1854 45 340	164	022	2-F10
3790 45 350	164	023	2-F10
3790 45 360	164	024	2-F10
0571 45 451	164	025	2-F10
0866 45 452	164	027	2-F10

PARTS NUMBER	PARTS COMP. LIST PAGE	FIG. NO.	FICHE INDEX
1854 45 550A	104	028	2-F10
1854 45 631B	103	007	2-E10
3790 45 731	103	009	2-E10
0866 45 903A	078	037	1-E9
0866 45 903A	104	029	2-F10
1304 45 903	104	030	2-F10
1854 45 995	104	032	2-F10
1015 46 010B	170	001	2-C11
1244 46 021	170	002	2-C11
1840 46 022	170	003	2-C11
3598 46 030M	170	004	2-C11
1244 46 032	170	006	2-C11
1244 46 035	170	012	2-C11
1244 46 038	170	007	2-C11
1244 46 055	170	009	2-C11
2375 46 061	170	014	2-C11
2375 46 062	170	015	2-C11
1015 46 067	170	017	2-C11
1015 46 068	170	018	2-C11
1015 46 068M	171	019	2-D11
1015 46 069	151	009	2-C9
1015 46 069	152	031	2-D9
1015 46 069	171	020	2-D11
1856 46 110	171	021	2-D11
1015 46 150A	171	023	2-D11
1856 46 201	171	026	2-D11
1856 46 571	171	030	2-D11
1015 46 648	171	031	2-D11
0223 46 683	151	010	2-C9
1015 46 684	171	032	2-D11
1015 46 691	171	037	2-D11
0841 49 250M	126	038	2-E4
1708 49 610	157	002	2-G9
0305 49 622	153	012	2-H9
0305 49 626	157	012	2-G9
1708 49 630	157	003	2-G9
0305 49 638	157	004	2-G9
1708 49 642	157	005	2-G9
0512 49 651	157	006	2-G9
0512 49 652	157	007	2-G9
0305 49 656	157	008	2-G9
0305 49 666	157	008	2-G9
0512 49 667	157	008	2-G9
0512 49 668	157	008	2-G9
0512 49 676	157	009	2-G9
0512 49 677	157	009	2-G9
0512 49 678	157	009	2-G9
0305 49 686B	157	009	2-G9
0391 49 692	157	010	2-G9
0512 49 696	157	010	2-G9
1854 49 720	158	014	2-H9
0824 49 745	158	015	2-H9
2046 49 746	158	016	2-H9
2046 49 747	158	017	2-H9
0870 49 770	158	018	2-H9
0824 49 781	158	019	2-H9
0824 49 782	158	020	2-H9
0870 49 785	158	021	2-H9
1854 50 051	173	001	3-C1
1854 50 060	173	002	3-C1
1854 50 062	173	004	3-C1
1854 50 070	173	005	3-C1
1854 50 072	173	005	3-C1
1854 50 091	173	014	3-C1
1823 50 098	174	018	3-D1
1854 50 110A	173	008	3-C1
1854 50 120A	173	009	3-C1
1854 50 130A	173	015	3-C1
1854 50 165	173	016	3-C1
0223 50 275	173	006	3-C1
0223 50 275	173	012	3-C1
1854 50 511	174	020	3-D1
1854 50 521	174	021	3-D1
1854 50 531	174	022	3-D1
1854 50 551	174	024	3-D1
1854 51 020B	181	001	3-C2
1854 51 520B	181	002	3-C2
0419 51 571A	240	001	3-H10
3790 52 010	176	001	3-E1
0187 52 141	176	002	3-E1
0603 52 142	176	010	3-E1
0603 52 143	176	011	3-E1
0187 52 144	176	012	3-E1
0603 52 160B	176	003	3-E1
0603 52 210B	176	006	3-E1
0603 52 214	177	014	3-F1
0603 52 230	177	015	3-F1
0603 52 232A	177	016	3-F1
0603 52 260A	176	006	3-E1
0259 52 301	194	031	3-E4

PARTS NUMBER	PARTS COMP. LIST PAGE	FIG. NO.	FICHE INDEX
0305 52 331	176	004	3-E1
0603 52 351A	178	028	3-G1
0603 52 353	178	029	3-G1
0820 52 403	205	001	3-C6
0603 52 451A	177	013	3-F1
0603 52 472	177	019	3-F1
0603 52 510	177	020	3-F1
0208 52 520	177	021	3-F1
0187 52 523	177	023	3-F1
0187 52 531	177	025	3-F1
0187 52 536	176	026	3-G1
2677 52 540A	176	030	3-G1
0603 52 543	176	031	3-G1
3790 53 030	181	007	3-C2
1854 53 030	181	010	3-C2
1854 53 050A	181	006	3-C2
1854 53 070	181	013	3-C2
1854 53 091B	181	014	3-C2
0613 53 103	192	001	3-C4
3790 53 110	181	016	3-C2
0187 53 134	182	026	3-D2
0187 53 134	182	030	3-D2
1854 53 180B	182	018	3-D2
1854 53 181	182	023	3-D2
1854 53 200	182	020	3-D2
2541 53 220A	182	021	3-D2
1854 53 230C	182	023	3-D2
1854 53 230D	182	023	3-D2
0483 53 241	181	011	3-C2
0603 53 305	197	081	3-H4
3790 53 360	182	024	3-D2
1823 53 410A	182	025	3-D2
0603 53 431D	189	003	3-C3
0603 53 434A	189	004	3-C3
0603 53 435A	189	005	3-C3
0603 53 434B	189	006	3-C3
0603 53 434B	189	006	3-C3
0603 53 435	189	007	3-C3
0603 53 436	189	008	3-C3
0603 53 438	189	009	3-C3
0603 53 440B	189	010	3-C3
0193 53 462	190	020	3-D3
3792 53 510	184	001	3-E2
0603 53 520A	184	003	3-E2
0603 53 531	184	005	3-E2
3792 53 551C	184	007	3-E2
0603 53 552	184	009	3-E2
2540 53 560A	184	011	3-E2
3792 53 571	184	013	3-E2
3792 53 572	184	015	3-E2
0603 53 573	184	017	3-E2
3792 53 581	185	027	3-F2
3790 53 591	184	010	3-E2
3792 53 600	185	019	3-F2
0603 53 611	185	020	3-F2
3792 53 681A	185	022	3-F2
2651 53 682A	185	023	3-F2
0603 53 683A	185	024	3-F2
0603 53 684A	185	025	3-F2
0576 53 685	185	026	3-F2
3790 53 700	185	028	3-F2
3790 53 700A	185	028	3-F2
3790 53 710A	185	029	3-F2
0603 53 811B	189	017	3-C3
2677 53 811A	189	015	3-C3
0603 53 821	189	018	3-C3
1854 53 891A	190	025	3-D3
1823 53 901	190	021	3-D3
1823 53 901A	190	021	3-D3
2651 53 901A	190	021	3-D3
2651 53 901B	190	021	3-D3
0603 53 902	190	022	3-D3
2541 53 902	190	022	3-D3
3792 53 912	190	024	3-D3
0221 53 916	185	027	3-F2
3760 53 941	190	023	3-D3
3760 53 941A	190	023	3-D3
3764 53 941	190	023	3-D3
3764 53 941A	190	023	3-D3
0603 53 950A	136	022	2-D6
0603 53 950A	185	031	3-F2
0603 53 950A	185	033	3-F2
0603 53 970	136	023	2-D6
0603 53 970	185	034	3-F2
0603 53 984A	137	024	2-E6
0603 53 984A	185	035	3-F2
0603 53 984A	186	036	3-G2
2541 53 991	190	027	3-D3
2541 53 992	190-1	029	3-E3
1854 54 050A	181	009	3-C2

PARTS NUMBER	PARTS COMP. LIST PAGE	FIG. NO.	FICHE INDEX
3790 54 110	181	017	3-C2
1854 54 160C	182	019	3-D2
1854 54 161	182	023	3-D2
3792 54 220	182	022	3-D2
1854 54 234	189	001	3-C3
0617 54 434	189	006	3-C3
3792 54 510	184	002	3-E2
0603 54 520A	184	004	3-E2
0603 54 531	184	006	3-E2
3792 54 551C	184	008	3-E2
0603 54 552	184	010	3-E2
2540 54 560A	184	012	3-E2
3792 54 571	184	014	3-E2
3792 54 572	184	016	3-E2
0603 54 573	184	018	3-E2
3792 54 581	185	027	3-F2
3790 54 590	184	010	3-E2
0603 54 611	185	021	3-F2
3796 54 710A	185	030	3-F2
2677 54 821	190	019	3-D3
2541 54 991	190	028	3-D3
2541 54 992	190- 1	030	3-E3
1854 55 161	194	033	3-E4
2280 55 186	197	002	3-H4
0274 55 200	197	004	3-H4
1854 55 220	192	002	3-C4
1011 55 240	192	006	3-C4
1840 55 240	192	008	3-C4
0259 55 261	193	025	3-D4
1011 55 280	192	010	3-C4
3787 55 430	192	013	3-C4
3790 55 430	192	015	3-C4
1854 55 490	192	012	3-C4
3790 56 010	186	038	3-G2
3790 56 010A	186	038	3-G2
3875 56 031	186	039	3-G2
3875 56 031A	186	039	3-G2
3792 56 200	186	041	3-G2
0118 56 241	186	044	3-G2
0118 56 242B	250	001	3-C12
0247 56 274A	186	045	3-G2
3875 56 331	186	040	3-G2
3875 56 331A	186	040	3-G2
0208 56 615	182	028	3-D2
0208 56 615	186	046	3-G2

PARTS NUMBER	PARTS COMP. LIST PAGE	FIG. NO.	FICHE INDEX
3792 56 700	186	042	3-G2
1854 56 811	186	047	3-G2
1854 56 840C	186	048	3-G2
1854 56 851A	186	049	3-G2
0820 56 905	046	009	1-G6
0820 56 905	193	028	3-D4
3875 57 101	201	009	3-D5
0603 57 102	200	001	3-C5
3875 57 102	201	009	3-D5
0603 57 109	200	005	3-C5
0738 57 109	201- 1	020	3-E5
0603 57 111	200	004	3-C5
0603 57 112	200	005	3-C5
2541 57 121	200	006	3-C5
3874 57 121	200	006	3-C5
3874 57 122	200	007	3-C5
2541 57 123	200	008	3-C5
3874 57 123	200	008	3-C5
2541 57 124	200	008	3-C5
3874 57 124	200	008	3-C5
3874 57 125	201	009	3-D5
3875 57 126	200	005	3-C5
3875 57 200	201	010	3-D5
3875 57 200A	201	010	3-D5
3875 57 220	201	011	3-D5
3875 57 300	201	013	3-D5
3875 57 300A	201	013	3-D5
3875 57 320	201	014	3-D5
3874 57 400	201	012	3-D5
3874 57 400A	201	012	3-D5
3874 57 650	201	015	3-D5
3874 57 680	201	016	3-D5
3770 57 900A00	201- 1	023	3-E5
3770 57 900B00	201- 1	023	3-E5
3916 57 900A00	201- 1	023	3-E5
3770 57 920A00	201- 1	023	3-E5
3770 57 920B00	201- 1	023	3-E5
3916 57 920A00	201- 1	023	3-E5
3794 57 991	201- 1	024	3-E5
3790 58 010	203	004	3-C6
1819 58 020	203	005	3-C6
0603 58 110A	203	006	3-C6
0115 58 171	203	011	3-C6
0603 58 210	203	012	3-C6
0115 58 214	204	018	3-D6

PARTS NUMBER	PARTS COMP. LIST PAGE	FIG. NO.	FICHE INDEX
0566 58 221B	204	013	3-D6
0588 58 221C	204	013	3-D6
1823 58 221A	204	013	3-D6
1823 58 221B	204	013	3-D6
0588 58 231	204	014	3-D6
0588 58 241	204	015	3-D6
0100 58 276A	206	001	3-G6
0603 58 280A	204	016	3-D6
0603 58 290A	204	017	3-D6
0603 58 300A	206	002	3-G6
0259 58 305B	208	006	3-G6
0118 58 370A01	208	004	3-G6
0118 58 391 01	206	005	3-G6
0118 58 391A01	208	005	3-G6
0118 58 396	208	006	3-G6
0603 58 410C	204	017	3-D6
0603 58 410D	204	017	3-D6
1823 58 410	204	017	3-D6
1823 58 410A	204	017	3-D6
0603 58 411B	204	020	3-D6
0603 58 411C	205	020	3-E6
1823 58 411	205	020	3-E6
1823 58 411A	205	020	3-E6
0603 58 412A	205	021	3-E6
0603 58 420B	205	022	3-E6
0603 58 430A	205	025	3-E6
0183 58 451	205	023	3-E6
0603 58 460A	205	024	3-E6
0187 58 471	205	027	3-E6
0193 58 481	205	028	3-E6
0603 58 491C	205	030	3-E6
0208 58 497	206	032	3-F6
2651 58 500B	208	007	3-G6
0259 58 570	208	011	3-G6
0259 58 581	209	012	3-H6
2350 58 582	209	013	3-H6
0187 58 592A	209	014	3-H6
2350 58 593	209	017	3-H6
2651 58 600	208	008	3-G6
0115 58 651B	209	019	3-H6
2119 58 668	262	001	3-H13
2651 58 670	209	020	3-H6
0603 58 674	209	021	3-H6
0603 58 675	209	022	3-H6
0588 58 710	210	025	3-I6
0223 58 721	210	027	3-I6
0187 58 731	210	028	3-I6
0603 58 741A	210	029	3-I6
0588 58 760	210	026	3-I6
0603 58 811	210	030	3-I6
0603 58 812	210	031	3-I6
0603 58 820A	210	032	3-I6
0603 58 825A	211	036	3-J6
0317 58 851A	211	038	3-J6
0317 58 832	211	039	3-J6
3874 58 901	206	033	3-F6
3874 58 901A	206	033	3-F6
3790 58 910 03	206	035	3-F6
3790 58 910 22	206	035	3-F6
3790 58 910 52	206	035	3-F6
0208 58 921	206	036	3-F6
0187 58 922	206	037	3-F6
0208 58 925	190-1	034	3-E5
0118 58 931	179	040	3-H1
1854 58 951A	206	038	3-F6
0223 58 961	262	002	3-H13
0223 58 962	262	003	3-H13
3790 59 010	203	004	3-C6
3790 59 020	203	005	3-C6
0603 59 110A	203	006	3-C6
0603 59 300A	208	002	3-G6
0118 59 370A01	208	004	3-G6
3875 59 390 50	210	033	3-I6
0603 59 410C	204	017	3-D6
0603 59 410D	204	017	3-D6
1823 59 410	204	017	3-D6
1823 59 410A	204	017	3-D6
0603 59 412A	205	021	3-E6
0603 59 420B	205	022	3-E6
0603 59 430A	205	025	3-E6
0183 59 451	205	023	3-E6
0603 59 460A	205	024	3-E6
0603 59 491C	206	030	3-F6
2651 59 500B	208	007	3-G6
0259 59 570	209	011	3-H6
0259 59 581	209	012	3-H6
0115 59 651B	209	019	3-H6
3874 59 901	206	033	3-F6
3874 59 901A	206	033	3-F6
3790 59 910 03	206	035	3-F6

PARTS NUMBER	PARTS COMP. LIST PAGE	FIG. NO.	FICHE INDEX
3790 59 910 22	206	035	3-F6
3790 59 910 52	206	035	3-F6
1854 59 951A	206	038	3-F6
3787 60 050	194	029	3-E4
3597 60 053	194	030	3-E4
1011 60 070A	194	035	3-E4
1011 60 241A	192	012	3-C4
0317 60 252	195	054	3-F4
0317 60 253	195	055	3-F4
1634 60 254	195	056	3-F4
0317 60 255	195	057	3-F4
0317 60 256	195	058	3-F4
0317 60 257	195	059	3-F4
0317 60 258	195	060	3-F4
0317 60 259	195	061	3-F4
0317 60 261	196	062	3-G4
0317 60 262	196	063	3-G4
0866 60 263	196	064	3-G4
0866 60 264	196	065	3-G4
0317 60 266	196	066	3-G4
0866 60 267	196	067	3-G4
1907 60 311	194	039	3-E4
1854 60 331A	194	042	3-E4
1854 60 341A	194	043	3-E4
0370 60 425A	262	010	3-H13
0370 60 500B	262	011	3-H13
0305 60 690	240	006	3-H10
0305 60 715	198	097	3-I4
0866 60 720A00	195	046	3-F4
0317 60 721	198	098	3-I4
1540 60 930	234	002	3-C10
3874 60 962	237	050	3-F10
8531 60 962	237	050	3-F10
8531 60 962A	237	050	3-F10
1708 61 031	182	031	3-D2
0864 61 061A	046	064	1-G6
1854 61 080D	213		3-C7
1854 61 080E	213		3-C7
3792 61 140B	213		3-C7
3792 61 140C	213		3-C7
2677 61 145A	214	027	3-D7
3874 61 155	214	031	3-D7
1823 61 170C00	215	037	3-E7
1823 61 180C	215	037	3-E7
0824 61 183B	217	065	3-G7
1854 61 190C	215	059	3-E7
1854 61 211	216	051	3-F7
1854 61 212	216	053	3-F7
1854 61 220A	217	064	3-G7
2677 61 240A	214	032	3-D7
2677 61 250A	215	034	3-E7
2677 61 250B	215	034	3-E7
2677 61 260A	215	033	3-E7
0233 61 479	216	049	3-F7
2541 61 573A	215	035	3-E7
0613 63 105A	182	029	3-D2
1002 64 491	187	051	3-H2
1854 64 620A	195	047	3-F4
1854 64 640A	195	048	3-F4
1854 64 650	195	050	3-F4
1854 64 660	195	051	3-F4
3790 65 010	219		3-C8
3874 65 014	222	038	3-F8
3874 65 014	222	041	3-F8
3790 65 020	219	001	3-C8
0727 65 052A	223	050	3-G8
0559 65 055	223	048	3-G8
2651 65 140A	219	002	3-C8
1854 65 201A	219	004	3-C8
1854 65 210A	219	005	3-C8
1854 65 310	219	006	3-C8
3790 65 430	219	007	3-C8
1823 65 437A	219	008	3-C8
3790 65 460	219	010	3-C8
0603 65 490C	219	011	3-C8
3790 65 500	219	003	3-C8
1854 65 531A	219	003	3-C8
0183 65 551	219	012	3-C8
0183 65 552	220	014	3-D8
0183 65 553	220	015	3-D8
0024 65 554	220	016	3-D8
0603 65 560A	220	018	3-D8
0193 65 627	217	068	3-G7
1854 65 711A	222	042	3-F8
1854 65 721	222	043	3-F8
1854 65 722	222	044	3-F8
1854 65 730	222	045	3-F8
0014 65 734	223	049	3-G8
1854 65 741	223	046	3-G8
3790 65 751	223	052	3-G8

PARTS NUMBER	PARTS COMP. LIST PAGE	FIG. NO.	FICHE INDEX
3790 65 752	223	053	3-G8
1823 65 810C	223	056	3-G8
1854 65 851B	221	030	3-E8
1854 65 853	221	031	3-E8
1854 65 855B	220	021	3-D8
1854 65 856	220	022	3-D8
1854 65 870	222	034	3-F8
1823 65 900	220	024	3-D8
1854 65 951B	221	030	3-E8
1854 65 970	222	034	3-F8
0183 66 021	225	001	3-C9
2801 66 022	225	002	3-C9
1854 66 031	225	003	3-C9
1854 66 041	225	003	3-C9
0136 66 091A	230	015	3-G9
2244 66 091	227	029	3-E9
0136 66 092	230	016	3-G9
0136 66 094A	231	018	3-H9
0259 66 094A	227	030	3-E9
0259 66 095	227	031	3-E9
2244 66 111	227	029	3-E9
0259 66 114	227	030	3-E9
3790 66 120	195	053	3-F4
3790 66 121	196	068	3-G4
1011 66 130	255	020	3-D10
0243 66 152	234	005	3-C10
2627 66 201A	230	001	3-G9
2651 66 220A	231	019	3-H9
0702 66 290	234	004	3-C10
1854 66 295	234	007	3-C10
1823 66 330A	231	021	3-H9
2158 66 3660	245	004	3-C11
0212 66 371	245	006	3-C11
0223 66 371	245	007	3-C11
0212 66 372	245	008	3-C11
1015 66 520A	171	028	2-D11
1015 66 520B	171	028	2-D11
0559 66 526C	135	014	2-C6
0617 66 534	250	004	3-C12
0617 66 535	250	005	3-C12
0617 66 536	250	006	3-C12
2627 66 601	240	003	3-H10
1650 66 620	237	040	3-F10
1650 66 621	237	041	3-F10
1175 66 710	262	008	3-H13

PARTS NUMBER	PARTS COMP. LIST PAGE	FIG. NO.	FICHE INDEX
1175 66 710A	262	008	3-H13
0223 66 722	242	053	3-J10
0603 66 723	240	013	3-H10
3790 66 730	234	011	3-C10
0188 66 731A	240	015	3-H10
8531 66 760	235	016	3-D10
1720 66 780B	235	022	3-D10
1720 66 780C	235	022	3-D10
0233 66 790	237	048	3-F10
1720 66 790B	235	021	3-D10
1720 66 790C	235	021	3-D10
1524 66 810	236	026	3-E10
3919 66 830	236	028	3-E10
0317 66 862	250	008	3-C12
0710 66 868A	240	012	3-H10
1854 66 870	250	003	3-C12
1857 66 870	250	003	3-C12
1854 66 900	251	009	3-D12
1857 66 900	251	009	3-D12
1854 66 903	251	012	3-D12
1854 66 905	251	013	3-D12
0222 66 911	250	002	3-C12
0208 66 949	242	036	3-J10
0820 66 950	240	016	3-H10
0866 66 960	251	014	3-D12
0866 66 965	251	015	3-D12
1010 66 980	252	026	3-E12
0820 66 992	251	016	3-D12
3790 67 010B	241	020	3-I10
3790 67 030A	241	022	3-I10
3790 67 040A	241	023	3-I10
3790 67 060A	241	024	3-I10
3791 67 070	241	025	3-I10
3775 67 099	235	018	3-D10
3776 67 099	235	017	3-D10
3790 67 100A	242	032	3-J10
3790 67 110	242	033	3-J10
0316 67 135	241	029	3-I10
0553 67 143A	240	011	3-H10
1907 67 151	240	018	3-H10
1854 67 180A	237	051	3-F10
1854 67 180B	237	051	3-F10
3906 67 240	241	031	3-I10
1823 67 330	246	036	3-D11
1823 67 350A	245	005	3-C11

PARTS NUMBER	PARTS COMP. LIST PAGE	FIG. NO.	FICHE INDEX
1823 67 350B	245	005	3-C11
1823 67 351	245	009	3-C11
1823 67 352	245	010	3-C11
1823 67 370A	245	011	3-C11
1823 67 380	245	01c	3-C11
1823 67 390	245	013	3-C11
0317 67 480	248	003	3-E11
0317 67 480A	248	005	3-E11
1011 67 510	246	001	3-E11
1011 67 511A	246	002	3-E11
1011 67 515	248	004	3-E11
1011 67 515A	248	004	3-E11
0860 67 521	245	005	3-E11
1016 67 620	018	006	1-E2
1016 67 620	236	059	3-G10
3564 67 700	238	055	3-G10
0735 67 730A	236	056	3-G10
1220 67 740	240	009	3-H10
3648 67 740	240	009	3-H10
0839 67 880	236	037	3-E10
1011 67 911	066	045	1-E8
1011 67 911	242	036	3-J10
1011 67 912	242	036	3-J10
1011 67 923	236	057	3-G10
1011 67 923	242	036	3-J10
1220 67 980	240	008	3-H10
8715 67 980	240	008	3-H10
0305 67 994	242	036	3-J10
0317 68 015A	196	069	3-G4
0317 68 015	196	070	3-G4
1854 68 020	196	071	3-G4
0810 68 070A	254	008	3-C13
1854 68 091	196	076	3-G4
0860 68 095	196	077	3-G4
0603 68 240	254	002	3-C13
3792 68 610B	254	003	3-C13
3792 68 615	254	005	3-C13
1856 68 860	197	095	3-H4
0398 68 875	250	003	3-C12
0730 69 057A	256	001	3-D13
1128 69 071A02	256	002	3-D13
1881 69 076	256	005	3-D13
1854 69 087A00	257	025	3-E13
1854 69 087A02	257	025	3-E13
1854 69 088	257	024	3-E13
2850 69 090	256	010	3-D13
2850 69 101	256	011	3-D13
1823 69 150B31	256	013	3-D13
1823 69 170B31	256	014	3-D13
0223 69 181	257	018	3-E13
0222 69 190A	256	017	3-D13
3674 69 310 31	259	001	3-F13
3790 69 321	259	002	3-F13
3790 69 322	259	003	3-F13
0603 69 323A	259	006	3-F13
3875 69 370 00	210	033	3-I6
3875 69 370 20	210	033	3-I6
3875 69 370 50	210	033	3-I6
3875 69 373 00	210	034	3-I6
3875 69 373 20	210	034	3-I6
3875 69 373 50	210	034	3-I6
3875 69 390 00	210	033	3-I6
3875 69 390 20	210	033	3-I6
1854 69 411	259	007	3-F13
1854 69 412	259	008	3-F13
3792 69 511A06	259	012	3-F13
3792 69 521B06	259	013	3-F13
1854 69 611A	260	015	3-G13
1856 69 611A	260	015	3-G13
1854 69 660B	260	016	3-G13
1854 69 683	260	018	3-G13
1854 69 684B	260	019	3-G13
1854 69 685	260	020	3-G13
1854 69 686	260	022	3-G13
1854 69 689A	260	023	3-G13
0193 69 770A	136	015	2-D6
0600 69 784	136	015	2-D6
0727 69 785	136	015	2-D6
2651 69 810	257	021	3-E13
1879 70 220A	197	085	3-H4
2370 70 231A	197	086	3-H4
1854 70 240	197	087	3-H4
2370 70 261	197	090	3-H4
0317 70 262A	197	092	3-H4
0317 70 269	197	094	3-H4
0735 70 425A	190- 1	031	3-E3
0118 70 531	179	041	3-H1
0208 70 713	189	011	3-C3
0118 70 722A	189	012	3-C3
0223 70 827	190- 1	037	3-E3

PARTS NUMBER	PARTS COMP. LIST PAGE	FIG. NO.	FICHE INDEX
0208 72 821	211	041	3-J6
0208 72 3xx	211	041	3-J6
1004 72 873	162	032	3-D2
2119 74 15x	202	012	3-H13
3775 75 01xA	193	015	3-D4
0320 75 011	193	014	3-D4
3790 75 021	193	015	3-D4
0463 75 022	193	016	3-D4
0317 75 023	193	017	3-D4
3900 75 023A	193	018	3-D4
3787 75 020	193	019	3-D4
3790 75 x25	193	019	3-D4
1508 75 029	193	027	3-D4
3900 75 03xA	193	020	3-D4
3900 75 03x	193	027	3-D4
0496 75 060	193	021	3-D4
0824 75 14x	193	022	3-D4
0824 75 150	193	023	3-D4
0710 75 x30	193	024	3-D4
1819 75 91x	202	006	3-H13
1819 75 92x	202	007	3-H13
3775 75 x0x	202	005	3-H13
208 76 071	200	029	3-G13
2677 76 121x	213	001	3-C7
2677 76 122A	213	002	3-C7
2677 76 123	213	003	3-C7
3792 76 124x	213	004	3-C7
2677 76 129	213	009	3-C7
2677 76 13x	213	010	3-C7
3792 76 131	213	011	3-C7
2677 76 133	213	012	3-C7
2677 76 134A	213	013	3-C7
2677 76 135	213	015	3-C7
2677 76 136x	213	016	3-C7
2677 76 143	214	017	3-D7
2677 76 14x	214	018	3-D7
2677 76 140	214	019	3-D7
2677 76 147A	214	020	3-D7
3792 76 15x	214	025	3-D7
1823 76 442	216	047	3-F7
1823 76 443	216	048	3-F7
1854 76 440	215	040	3-E7
1823 76 447A	215	041	3-E7
1854 76 448A	215	042	3-E7
3792 76 456	215	005	3-C7

PARTS NUMBER	PARTS COMP. LIST PAGE	FIG. NO.	FICHE INDEX
0866 76 472A	213	000	3-C7
0866 76 474	213	016	3-C7
0866 76 475	213	007	3-C7
0866 76 476	213	008	3-C7
1823 76 554	215	043	3-E7
1823 76 602	245	014	3-C11
1823 76 631	240	037	3-D11
8532 76 641	245	004	3-C11
8532 76 672	248	008	3-E11
1391 76 673	248	007	3-E11
8527 77 739	000	064	1-G1
1854 78 615	174	026	3-D1
1855 78 616	174	051	3-D1
1823 76 620B	174	027	3-D1
1854 78 640	174	028	3-D1
1854 76 550	174	029	3-D1
0273 87 007	225	004	3-C9
0727 87 012	225	000	3-C9
2650 87 012	225	005	3-C9
0727 87 013	225	007	3-C9
0727 87 014	225	008	3-C9
0727 87 016	225	009	3-C9
0727 87 022	225	006	3-C9
0727 87 025	225	007	3-C9
0738 87 061	230	003	3-G9
0738 87 063	230	004	3-G9
0259 87 101A	245	015	3-C11
0710 87 102	231	022	3-H9
0259 87 103	245	010	3-C11
0710 87 103	231	023	3-H9
0710 87 104	231	024	3-H9
2158 87 104	245	017	3-C11
0259 87 105	246	018	3-D11
0259 87 106	246	019	3-D11
0257 87 107	246	021	3-D11
0259 87 107	246	022	3-D11
0257 87 108	246	023	3-D11
0259 87 108A	246	025	3-D11
0259 87 109A	246	026	3-D11
2158 87 112B	246	027	3-D11
0259 87 119	246	028	3-D11
0259 87 120	246	029	3-D11
0710 87 126	230	005	3-G9
0259 87 154	246	030	3-D11
0702 87 135	246	031	3-D11

PARTS NUMBER	PARTS COMP. LIST PAGE	FIG. NO.	FICHE INDEX
0702 87 158	246	032	3-D11
2244 87 191	226	022	3-D9
2244 87 192	226	023	3-D9
2244 87 192	231	029	3-H9
2244 87 194	226	024	3-D9
2244 87 194	231	029	3-H9
2244 87 195	226	024	3-D9
2244 87 195	231	029	3-H9
2244 87 196	226	025	3-D9
2244 87 201	232	030	3-I9
2244 87 206	232	031	3-I9
0738 87 803	240	033	3-D11
0738 87 804	240	034	3-D11
0305 87 906	240	035	3-D11
0727 87 992	248	007	3-E11
0305 87 993	240	008	3-E11
0727 87 994	248	009	3-E11
0727 87 995	248	010	3-E11
0002 88 024	201	0 8	3-D5
3776 89 175	053	040	1-E7
0706 89 251	098	004	2-C1
1052 89 411A	154	005	2-E9
1052 89 411A	155	015	2-F9
0391 89 435	154	006	2-E9
0391 89 435	157	011	2-G9
0317 89 436A	154	007	2-E9
0317 89 436A	157	012	2-G9
1854 89 602	227	028	3-E9
2244 89 663	226	021	3-D9
1854 89 664	230	002	3-G9
3900 89 665	230	014	3-G9
1854 89 667	227	028	3-E9
2244 89 668	226	021	3-D9
2244 89 675	231	027	3-H9
2244 89 676	231	027	3-H9
3565 99 100C	007	085	1-H1
0305 99 178	066	042	1-L7
3874 99 322	122	024	2-H3
3874 99 324	122	025	2-H3
3874 99 354	130	034	2-E5
3874 99 355	131	039	2-F5
3792 99 731	190- 1	032	3-E3
3792 99 732	190- 1	035	3-E3
3792 99 736	190- 1	033	3-E3
3792 99 737	190- 1	036	3-E3

PARTS NUMBER	PARTS COMP. LIST PAGE	FIG. NO.	FICHE INDEX
9079 60 820	030	006	1-C4
9085 71 0135	051	012	1-C7
9909 60 5008	198	096	3-I4
9920 32 000	168	029	2-I10
9922 11 212	039	046	1-E5
9922 11 610	168	028	2-I10
9922 11 610	168	042	2-I10
9922 11 610	176	007	3-E1
9922 12 012	116	015	2-C5
9922 12 015	137	025	2-E6
9922 12 015	186	037	3-G2
9922 12 015B	166	012	2-G10
9922 12 020	152	029	2-D9
9922 12 020	176	016	2-C11
9922 13 020	121	004	2-G3
9922 13 020	121	015	2-G3
9922 13 020	122	028	2-H3
9922 13 020	131	038	2-F5
9922 13 020	220	016	3-D8
9922 13 025	122	018	2-H3
9922 13 025	129	022	2-D5
9922 13 025	131	043	2-F5
9922 14 030	124	013	2-C4
9922 20 216	052	052	1-D7
9922 20 216	080	007	1-F9
9922 20 610	012	044	1-L1
9922 20 610	013	049	1-M1
9923 00 511	145	014	2-E7
9923 00 523B	166	011	2-G10
9923 00 615	166	013	2-G10
9923 10 620	168	041	2-I10
9923 10 822	152	028	2-D9
9923 10 822	168	031	2-I10
9923 31 225	051	006	1-C7
9923 60 571	012	036	1-L1
9924 61 232	051	007	1-C7
9925 10 818	220	013	3-D8
9925 44 014	101	011	2-E1
9927 60 506	052	028	1-D7
9927 61 006	078	036	1-E9
9927 61 008	118	035	2-E3
9927 61 208	139	007	2-F6
9927 62 008	070	028	1-H8
9927 90 803	242	036	3-J10
9927 91 105	242	036	3-J10

PARTS NUMBER	PARTS COMP. LIST PAGE	FIG. NO.	FICHE INDEX
9928 21 700	078	039	1-E9
9928 21 901	160	015	2-C10
9928 22 200	214	022	3-D7
9928 22 200	216	055	3-F7
9928 22 201	148	023	2-D8
9928 22 600	046	005	1-G6
9928 22 600	216	054	3-F7
9928 24 309	030	010	1-C4
9928 24 900	040	003	1-G6
9928 25 800	146	020	2-D8
9928 31 000	054	015	1-F4
9928 31 000	147	012	2-C8
9928 31 000	165	011	2-E10
9928 31 100	034	016	1-F4
9928 31 100	147	013	2-C8
9928 31 100	165	012	2-E10
9928 31 200	054	017	1-F4
9928 31 400	165	013	2-E10
9928 31 500	045	054	1-F6
9928 80 808	194	032	3-E4
9928 80 8050	022	007	1-G2
9928 81 005	217	000	3-G7
9930 52 000	007	078	1-H1
9930 65 000	002	017	1-C1
9930 65 000	005	035	1-D1
9930 70 000	005	052	1-F1
9930 71 000	013	002	1-C2
9933 50 4100	248	011	3-E11
9933 80 8030	147	011	2-C8
9933 80 8050	162	027	3-D2
9934 00 4130	016	011	1-E2
9934 00 4200	032	035	1-E4
9934 00 4200	034	036	1-E4
9934 00 4270	018	004	1-E2
9934 00 4270	018	012	1-E2
9934 00 6230	032	034	1-E4
9934 00 8300	147	011	2-C8
9934 80 6100	035	035	1-G4
9934 80 6200	147	011	2-C8
9934 80 628	149	027	2-E8
9934 80 6290	163	008	2-E10
9934 80 6540	147	010	2-C8
9934 80 6570	165	010	2-E10
9934 80 6930	034	014	1-F4
9934 80 816	164	034	2-F10

PARTS NUMBER	PARTS COMP. LIST PAGE	FIG. NO.	FICHE INDEX
9934 80 826	163	004	2-E1
9934 80 826	163	006	2-E1
9934 80 832	163	005	2-E1
9934 80 8930	034	013	1-F4
9938 10 600	078	040	1-E9
9938 10 800	078	041	1-E9
9938 11 400	042	014	1-C6
9938 41 200	005	053	1-F1
9938 41 200F	043	016	1-D6
9950 24 000	051	013	1-C7
9950 24 000	101	008	2-E1
9950 31 000F	003	051	1-D1
9950 33 000	015	003	1-C2
9951 01 000	007	079	1-H1
9951 11 000	015	004	1-C2
9951 11 400	005	062	1-F1
9951 11 600	007	063	1-H1
9954 10 1101	011	025	1-K1
9954 10 1201	095	004	1-K1
9954 10 1601	008	065	1-I1
9954 10 1601	038	027	1-D5
9954 10 1601	083	053	1-I9
9954 10 2211	052	033	1-D7
9954 10 2211	060	008	1-F9
9954 10 2401	008	065	1-I1
9954 10 350	008	065	1-I1
9954 10 350	066	037	1-E8
9954 12 401	015	010	1-C4
9956 21 000	160	006	2-C1
9956 21 000	163	016	2-E1
9956 21 200	160	008	2-C1
9956 21 400	006	065	1-D1
9956 21 400	053	040	1-E7
9956 21 400	060	017	1-J7
9956 21 600	003	054	1-D1
9956 21 600	005	054	1-F1
9956 21 600	042	015	1-C6
9956 22 800	012	041	1-L1
9956 40 600	003	035	1-D1
9956 40 800	053	040	1-E7
9956 40 800	05.	043	1-H7
9956 41 000	007	079	1-H1
9956 41 000	015	005	1-C2
9956 41 000	053	040	1-E7
9956 41 000	060	018	1-J7

PARTS NUMBER	PARTS COMP. LIST PAGE	FIG. NO.	FICHE INDEX
9956 41 000	078	042	1-E9
9956 41 000	155	017	2-F9
9956 41 200	078	043	1-E9
9956 41 400	002	004	1-C1
9956 41 600	007	084	1-H1
9956 41 600	035	023	1-G4
9956 41 600	043	017	1-D6
9956 41 600	074	033	1-K8
9956 41 800	053	040	1-E7
9957 32 200	057	041	1-H7
9957 32 300	057	043	1-H7
9957 32 300	091	002	1-H10
9957 33 500	053	003	1-F7
9957 41 300	002	049	1-L7
9957 43 000	044	030	1-E6
9957 45 200	099	010	2-D1
9957 50 300	145	014	2-E7
9957 50 300	166	011	2-G10
9957 50 400	166	013	2-G10
9957 50 600	108	028	2-I1
9957 50 600	143	006	2-E7
9957 50 600	151	012	2-C9
9957 50 600	171	033	2-D11
9957 60 400	189	014	3-C3
9957 60 600	200	009	3-C5
9957 60 700	201- 1	019	3-E5
9957 60 800	040	047	1-F5
9957 83 300	256	004	3-D13
9958 36 8355	118	032	2-E3
9958 61 0207	052	034	1-D7
9958 61 0207	080	009	1-F9
9960 30 204	124	014	2-C4
9960 30 208	125	015	2-D4
9960 30 2080	102	016	2-F1
9960 65 3070	055	004	1-F7
9960 66 2050	099	011	2-D1
9960 66 3050	050	054	1-G7
9960 66 3440	050	036	1-G7
9960 67 2030	044	031	1-E6
9961 11 500	058	054	1-I7
9961 11 500	091	003	1-H10
9961 11 500	105	019	2-H1
9961 11 500	154	010	2-E9
9961 11 750	080	012	1-F9
9961 12 000	011	028	1-K1
9961 12 000	080	017	1-F9
9961 12 500	060	019	1-J7
9961 12 750	095	014	1-K10
9962 03 7314	106	030	2-I1
9962 03 7314	126	042	2-E4
9963 60 4130	106	030	2-I1
9963 60 4130	126	042	2-E4
9965 05 5540	106	030	2-I1
9965 05 5540	126	042	2-E4
9965 53 0010	106	031	2-I1
9965 53 0020	106	031	2-I1
9965 53 0030	106	031	2-I1
9965 53 0040	106	031	2-I1
9965 53 0050	106	031	2-I1
9965 53 0060	106	031	2-I1
9968 11 001	149	028	2-E8
9968 11 501	149	029	2-E8
9968 11 503	034	018	1-F4
9968 20 601	194	036	3-E4
9968 22 001	243	036	3-K10
9968 41 000	242	036	3-J10
9968 60 800	194	037	3-E4
9968 61 400	163	014	2-E10
9968 62 000	243	036	3-K10
9970 08 120	231	025	3-H4
9970 11 030	192	007	3-C4
9970 11 030	215	038	3-E7
9970 12 080	227	026	3-E4
9970 12 080	230	017	3-G4
9970 12 080	232	032	3-I4
9970 14 278	227	036	3-E9
9970 14 278	230	006	3-G4
9970 15 050	234	006	3-C10
9970 15 050	237	042	3-F10
9970 16 030	192	009	3-C4
9970 16 030	192	011	3-C4
9970 16 030	193	026	3-C4
9970 60 110	235	013	3-D10
9970 60 110	262	009	3-H13
9970 60 115	235	013	3-D10
9970 90 108	007	082	1-H1
9970 90 108	022	006	1-G2
9970 90 108	074	031	1-K8
9970 90 108	078	044	1-E9
9970 96 108	194	038	3-E4

9974 00 512	215	036	3-E7
9975 01 0825	166	006	2-C5
9975 01 1020	099	018	2-D1
9975 01 1235	222	039	3-F8
9975 01 1435	222	040	3-F8
9975 01 1620	124	003	2-C4
9975 01 1670	124	004	2-C4
9975 32 1022	110	012	2-D2
9975 36 1022	110	012	2-D2
9975 37 0115	046	010	1-H6
9976 10 020	209	015	3-H6
9976 10 030	209	016	3-H6
9976 10 030	209	018	3-H6
9976 10 825	211	040	3-J8
9976 30 010	171	029	2-D11
9976 40 410	250	015	3-D13
9976 40 410	250	016	3-D13
9976 90 410	174	025	3-D1
9976 90 425B	174	025	3-D1
9976 90 610B	190	020	3-D3
9976 90 610B	222	035	3-F8
9977 20 410	205	020	3-E6
9977 20 514	200	031	3-F6
9977 20 515	256	012	3-D13
9977 30 420	227	027	3-E9
9977 30 420	232	035	3-I9
9978 10 820	057	045	1-H7
9978 10 822	116	034	2-E3
9978 11 025	174	030	3-D1
9978 11 240	129	018	2-D5
9978 11 250	129	019	2-D5
9978 41 010	076	005	1-C9
9978 41 020	135	007	2-C6
9978 50 512	230	027	3-E10
9978 50 645	167	016	2-H10
9978 60 510	251	019	3-D12
9978 60 512	189	016	3-C3
9978 60 520	216	046	3-F7
9978 60 612	022	005	1-G2
9978 60 612	035	021	1-G4

9978 60 616	015	015	1-C2
9978 60 616	034	011	1-F4
9978 60 616	145	004	2-E7
9978 60 616	147	008	2-C8
9978 60 616	168	040	2-I1
9978 60 616	236	037	3-E1
9978 60 616	238	038	3-J1
9978 60 616B	225	010	3-C9
9978 60 620	119	044	2-F5
9978 60 620	145	009	2-E7
9978 60 630	164	026	2-F1
9978 60 630	236	030	3-E1
9978 60 635	163	018	2-E1
9978 60 816	020	010	1-F2
9978 60 816	045	051	1-F6
9978 60 816	136	019	2-D6
9978 60 816	235	025	3-D1
9978 60 820	147	002	2-C6
9978 60 825	173	011	3-C1
9978 60 845	168	043	2-I1
9978 60 850	065	019	1-D8
9978 90 820F	101	002	2-E1
9979 40 616	245	003	3-C1
9979 40 825B	119	045	2-F5
9979 40 830	133	005	2-G5
9979 50 816	221	026	3-E8
9979 50 820	221	025	3-E8
9979 51 032	151	013	2-C9
9979 60 608	053	037	1-E7
9979 60 610	004	038	1-E1
9979 60 610	031	027	1-D4
9979 60 610	031	031	1-D4
9979 60 610	034	006	1-F4
9979 60 610	074	027	1-K8
9979 60 610	076	008	1-C9
9979 60 610	076	010	1-C9
9979 60 610	077	029	1-D9
9979 60 610	083	054	1-I9
9979 60 610	160	012	2-C10
9979 60 610	186	050	3-G2

PARTS NUMBER	PARTS COMP. LIST PAGE	FIG. NO.	FICHE INDEX
9979 60 610	234	003	3-C10
9979 60 610	236	060	3-G10
9979 60 612	052	021	1-D7
9979 60 612	061	031	1-K7
9979 60 614	080	004	1-F9
9979 60 614	130	021	2-D6
9979 60 614	143	027	2-D7
9979 60 614	161	012	3-C2
9979 60 614	181	015	3-C2
9979 60 614	186	050	3-G2
9979 60 616	037	015	1-C5
9979 60 616	039	039	1-E5
9979 60 616	176	005	3-E1
9979 60 616	221	032	3-E8
9979 60 616	222	036	3-F8
9979 60 616	225	047	3-G8
9979 60 620	044	039	1-E6
9979 60 620	045	045	1-F6
9979 60 620	052	024	1-D7
9979 60 620	076	038	1-E9
9979 60 625	160	019	2-C10
9979 60 630	013	012	1-C2
9979 60 630	016	024	1-D2
9979 60 630	016	003	1-E2
9979 60 640	051	028	1-D4
9979 60 640	051	032	1-D4
9979 60 640	042	013	1-C6
9979 60 640	046	060	1-G6
9979 60 650	160	017	2-C10
9979 60 650	214	029	3-D7
9979 60 650	030	005	1-C4
9979 60 650	004	042	1-E1
9979 60 650	061	026	1-K7
9979 60 650	070	011	1-C9
9979 60 660	044	032	1-E6
9979 60 660	070	025	1-H8
9979 60 660	201- 1	021	3-E5
9979 60 662	061	026	1-K7
9979 60 665	070	024	1-H8
9979 60 852	061	029	1-K7
9979 61 010	171	027	2-D11
9979 61 035	049	016	1-I6
9979 61 035	077	024	1-D9
9979 61 045	049	015	1-I6
9979 61 045	077	024	1-D9
9979 61 050	077	024	1-D9
9979 61 090	049	017	1-I6
9979 68 112	111	022	2-E2
9979 70 510	215	045	3-E7
9979 70 512	148	026	2-D8
9979 70 512	231	026	3-H9
9979 70 516	177	024	3-F1
9979 70 516B	235	019	3-D10
9979 70 610	240	010	3-H10
9980 01 0115	070	021	1-H8
9980 10 8108	119	044	2-F5
9980 10 816	136	016	2-D6
9980 10 816	142	004	2-C7
9980 10 816	148	016	2-D8
9980 10 816	201	017	3-D5
9980 10 820	006	073	1-G1
9980 10 820	010	007	1-J1
9980 10 820	139	008	2-F6
9980 10 820	147	003	2-C8
9980 10 822	130	031	2-E5
9980 10 825	011	050	1-K1
9980 10 830	142	002	2-C7
9980 10 840	005	057	1-F1
9980 10 865	005	058	1-F1
9980 10 875	005	059	1-F1
9980 10 890	152	020	2-D9
9980 11 032	073	022	1-J8
9980 11 045	142	014	2-C7
9980 11 075	073	023	1-J8
9980 50 8100	030	003	1-C4
9980 51 0120	073	023	1-J8
9980 60 510	246	040	3-D11
9980 60 610	135	013	2-C6
9980 60 612	053	039	1-E7
9980 60 612	257	043	3-E15
9980 60 614	045	044	1-F6
9980 60 614	181	003	3-C2
9980 60 616	006	068	1-G1
9980 60 616	038	040	1-D5
9980 60 616	042	012	1-C6
9980 60 616	174	019	3-D1
9980 60 616	257	022	3-E13
9980 60 620	262	012	3-H13
9980 60 630	136	017	2-D6
9981 11 010	004	039	1-E1

PARTS NUMBER	PARTS COMP. LIST PAGE	FIG. NO.	FICHE INDEX
9966 30 512	259	005	3-F13
9986 30 520	196	079	3-G4
9986 40 408	219	009	3-C6
9986 40 512	196	073	3-G4
9986 40 512	223	055	3-G8
9986 40 520B	193	028	3-D4
9986 50 408	240	017	3-H10
9986 50 412	237	044	3-F10
9986 50 412	240	004	3-H10
9986 50 510	007	046	1-F8
9986 50 510	179	039	3-H1
9986 50 512	187	052	3-H2
9986 50 516	046	058	1-G6
9986 50 516	171	022	2-D11
9986 80 416	170	013	2-C11
9988 51 [illegible]	124	005	2-C4
9989 60 [illegible]	174	025	3-D1
9989 60 500	192	005	3-C4
9989 60 500	194	028	3-E4
9989 60 500	196	074	3-G4
9989 60 500	196	080	3-G4
9990 10 800	027	067	1-F3
9990 10 800	038	026	1-D5
9990 10 800	044	055	1-K6
9990 10 800	044	057	1-E6
9990 10 800	073	024	1-J8
9990 10 800	101	009	2-E1
9990 10 800	142	003	2-C7
9990 10 800	142	006	2-C7
9990 10 800	142	013	2-C7
9990 10 800	201- 1	022	3-E5
9990 10 800	220	017	3-D8
9990 10 800	223	051	3-G8
9990 20 800	171	038	2-D11
9990 20 800	177	018	3-F1
9990 30 800	137	025	2-E6
9990 30 800	186	037	3-G2
9990 60 400	227	027	3-E9
9990 60 400	252	035	3-I9
9990 60 500	065	018	1-D8
9990 60 500	069	019	1-G8
9990 60 500	177	024	3-F1
9990 60 500	228	033	3-F9
9990 60 500	254	004	3-C13
9990 60 600	052	027	1-D7

PARTS NUMBER	PARTS COMP. LIST PAGE	FIG. NO.	FICHE INDEX
9990 60 600	135	014	2-C6
9990 60 600	136	017	2-D6
9990 60 600	167	027	2-H10
9990 60 600	177	022	3-F1
9990 60 600	178	027	3-G1
9990 60 600	203	002	3-C6
9990 60 600	209	023	3-H6
9990 60 600	211	037	3-J6
9990 60 600	220	043	3-D8
9990 60 600	231	020	3-H9
9990 60 800	158	022	2-H9
9990 60 800	221	025	3-E8
9990 60 800	221	027	3-E8
9990 70 600	039	057	1-E5
9990 70 600	203	003	3-C6
9991 00 403	174	043	3-D1
9991 00 601	190	026	3-D3
9991 00 601	222	037	3-F8
9991 10 600	135	013	2-C6
9992 11 000	114	020	2-G2
9992 11 000	118	037	2-E3
9992 11 000	122	020	2-H3
9992 11 000	130	030	2-E5
9992 11 000	133	010	2-G5
9992 11 000	139	002	2-F6
9992 11 000	139	004	2-F6
9992 11 000	139	010	2-F6
9992 11 000	152	023	2-D9
9992 11 000	223	057	3-G8
9992 11 200	129	016	2-D5
9992 11 200	129	018	2-D5
9992 11 200	129	019	2-D5
9992 11 400	113	003	2-F2
9992 11 400	113	009	2-F2
9992 12 000	118	040	2-E3
9992 20 600	152	030	2-D9
9992 21 000	114	020	2-G2
9992 21 000	118	029	2-E3
9992 21 000	124	006	2-C4
9992 21 000	130	030	2-E5
9992 21 000	133	010	2-G5
9992 21 000	151	013	2-C9
9992 21 000	167	020	2-H10
9992 21 200	037	007	1-C5
9992 21 400	095	002	1-K10

PARTS NUMBER	PARTS COMP. LIST PAGE	FIG. NO.	FICHE INDEX
9992 21 600	122	022	2-H3
9992 21 800	099	012	2-D1
9992 31 400	131	043	2-F5
9992 41 200	121	004	2-G3
9992 41 200	121	015	2-G3
9992 41 200	122	028	2-H3
9992 41 200	131	038	2-F5
9992 41 400	122	018	2-H3
9992 41 400	129	042	2-D5
9992 80 800	128	007	2-C5
9992 80 800	128	009	2-C5
9992 81 200	114	014	2-G2
9994 00 500	230	007	3-G9
9994 00 500	251	016	3-D12
9994 00 500	250	005	3-D13
9994 00 502	174	017	3-D1
9994 00 502	190	075	3-G4
9994 00 600	016	025	1-D2
9994 00 600	054	004	1-F4
9994 00 600	045	050	1-F6
9994 00 600	067	048	1-F8
9994 00 600	105	023	2-H1
9994 00 600	145	012	2-E7
9994 00 601	050	011	1-C4
9994 00 601	236	029	3-E10
9994 00 602	074	026	1-K8
9994 00 602	173	007	3-C1
9994 00 602	173	013	3-C1
9994 00 602	174	019	3-D1
9994 00 602	181	003	3-C2
9994 00 602	217	007	3-G7
9994 00 603	066	038	1-E6
9994 00 800	016	026	1-D2
9994 00 800	136	019	2-D6
9994 00 800	142	012	2-C7
9994 00 800	148	016	2-D8
9994 00 800	152	021	2-D9
9994 00 800	152	026	2-D9
9994 00 800	154	008	2-E9
9994 00 800	158	025	2-H9
9994 00 800	214	030	3-D7
9994 00 801	015	008	1-C2
9994 00 801	158	024	2-H9
9994 00 802	020	009	1-F2
9994 00 802	147	004	2-C8

PARTS NUMBER	PARTS COMP. LIST PAGE	FIG. NO.	FICHE INDEX
9994 01 000	171	025	2-D11
9994 01 001	049	016	1-I6
9994 01 001	052	017	1-D7
9994 01 001	070	022	1-H8
9994 01 001	077	025	1-D9
9994 01 001	099	015	2-D1
9994 01 200	222	039	3-F8
9994 01 200	222	040	3-F8
9994 10 801	020	011	1-F2
9994 21 000	104	006	2-G1
9994 21 000	124	008	2-C4
9994 21 200	124	003	2-C4
9994 21 200	124	004	2-C4
9994 41 600	122	023	2-H5
9994 50 600	200	009	3-C5
9994 81 200	116	013	2-C3
9994 90 800	145	018	2-D7
9995 10 618	167	018	2-H10
9995 10 618	174	016	3-D1
9995 10 618	203	009	3-C6
9995 10 816	044	032	1-E6
9995 10 822	119	045	2-F3
9995 10 822	142	002	2-C7
9995 10 822	142	003	2-C7
9995 10 822	143	018	2-D7
9995 10 822	200	006	3-C5
9995 11 022	118	037	2-E3
9995 11 022	135	007	2-C6
9995 11 022	174	030	3-D1
9995 11 030	137	043	2-E6
9995 11 030	139	004	2-F6
9995 11 030	139	010	2-F6
9995 11 030	139	011	2-F6
9995 11 030	185	032	3-F2
9995 11 030	223	057	3-G8
9995 11 030B	119	046	2-F3
9995 11 226	173	010	3-C1
9995 20 400	197	083	3-H4
9995 20 412	062	050	1-L7
9995 20 500	065	018	1-D8
9995 20 500	070	019	1-H8
9995 20 500	148	026	2-D8
9995 20 500	168	038	2-I10
9995 20 500	177	024	3-F1
9995 20 500	192	004	3-C4

PARTS NUMBER	PARTS COMP. LIST PAGE	FIG. NO.	FICHE INDEX
9995 20 500	211	035	3-J6
9995 20 500	215	045	3-E7
9995 20 500	226	033	3-F9
9995 20 500	235	019	3-D10
9995 20 500	254	004	3-C13
9995 20 500	259	005	3-F13
9995 20 500B	193	028	3-D4
9995 20 500B	197	093	3-H4
9995 20 516	231	026	3-H9
9995 20 516	250	007	3-C12
9995 20 600	015	015	1-C2
9995 20 600	034	004	1-F4
9995 20 600	034	011	1-F4
9995 20 600	045	044	1-F6
9995 20 600	135	013	2-C6
9995 20 600	177	022	3-F1
9995 20 600	178	027	3-G1
9995 20 600	206	010	3-G6
9995 20 600	210	023	3-J6
9995 20 600	210	024	3-J6
9995 20 600	236	027	3-E10
9995 20 600	236	036	3-E10
9995 20 600	240	010	3-H10
9995 20 600	262	012	3-H13
9995 20 618	119	042	2-F3
9995 20 618	135	014	2-C6
9995 20 618	143	027	2-D7
9995 20 618	145	009	2-E7
9995 20 618	180	050	3-G2
9995 20 618	203	010	3-C6
9995 20 618	223	047	3-G8
9995 20 618B	222	035	3-F8
9995 20 800	005	057	1-F1
9995 20 800	005	058	1-F1
9995 20 800	005	059	1-F1
9995 20 800	006	073	1-G1
9995 20 800	030	003	1-C4
9995 20 800	045	051	1-F6
9995 20 800	057	045	1-H7
9995 20 800	073	024	1-J8
9995 20 800	136	019	2-D6
9995 20 800	139	008	2-F6
9995 20 800	147	003	2-C8
9995 20 800	148	016	2-D8
9995 20 800	201	017	3-D5

PARTS NUMBER	PARTS COMP. LIST PAGE	FIG. NO.	FICH INDE
9995 20 800	201- 1	021	3-E5
9995 20 800	220	017	3-D8
9995 20 800	221	025	3-E8
9995 20 800	221	026	3-E8
9995 20 800	221	027	3-E8
9995 20 816	171	034	2-D1
9995 20 816	200	009	3-C5
9995 20 822	020	010	1-F2
9995 20 822	070	025	1-H8
9995 20 822	152	020	2-D9
9995 20 822	152	021	2-D9
9995 20 878	046	060	1-G6
9995 21 000	152	022	2-D9
9995 21 000	152	023	2-D9
9995 21 000	167	020	2-H1
9995 21 000	223	057	3-G8
9995 21 030	173	011	3-C1
9995 21 030	200	002	3-C5
9995 21 030	223	047	3-G8
9995 21 442	140	012	2-G6
9995 30 300	116	012	2-C3
9995 30 400	039	045	1-E5
9995 30 500	178	033	3-G1
9995 30 600	167	017	2-H1
9995 30 600	176	005	3-E1
9995 30 600	181	003	3-C2
9995 30 600	190	020	3-D3
9995 30 600	220	023	3-D8
9995 30 600	225	010	3-C9
9995 30 600	236	029	3-E10
9995 30 600	236	037	3-E10
9995 30 600	238	056	3-G10
9995 30 600	245	003	3-C11
9995 30 800	038	026	1-D5
9995 30 800	044	033	1-E6
9995 30 600	171	035	2-D11
9995 31 000	048	002	1-H6
9995 31 000	073	023	1-J8
9995 31 400	171	024	2-D11
9995 81 018	110	013	2-D2
9995 81 022	128	012	2-C5
9996 33 310	062	045	1-L7
9996 33 330	062	045	1-L7
9996 36 910	055	002	1-F7
9996 36 930	055	002	1-F7

PARTS NUMBER	PARTS COMP. LIST PAGE	FIG. NO.	FICHE INDEX
9996 70 500B	198	096	3-I4
9996 80 400B	159	014	3-F13
9997 10 300	116	012	2-C3
9997 10 400	059	032	1-E5
9997 10 400	105	022	2-H1
9997 10 400	197	083	3-H4
9997 10 400	205	029	3-E6
9997 10 400	214	021	3-D7
9997 10 400B	194	044	3-E4
9997 10 500	065	018	1-D8
9997 10 500	070	019	1-H8
9997 10 500	146	026	2-D8
9997 10 500	58	038	2-I10
9997 10 500	177	024	3-F1
9997 10 500	176	033	3-G1
9997 10 500	215	045	3-E7
9997 10 500	246	024	3-D11
9997 10 500	250	007	3-C12
9997 10 500	254	004	3-C13
9997 10 500	259	005	3-F13
9997 10 500B	197	083	3-H4
9997 10 600	000	008	1-C1
9997 10 600	038	026	1-D5
9997 10 600	059	037	1-E5
9997 10 600	042	012	1-C6
9997 10 600	045	044	1-F6
9997 10 600	052	027	1-D7
9997 10 600	053	039	1-E7
9997 10 600	000	040	1-E8
9997 10 600	121	006	2-G3
9997 10 600	135	013	2-C6
9997 10 600	136	017	2-D6
9997 10 600	147	008	2-C8
9997 10 600	167	017	2-H10
9997 10 600	167	016	2-H10
9997 10 600	176	005	3-E1
9997 10 600	178	027	3-G1
9997 10 600	181	003	3-C2
9997 10 600	201	009	3-D5
9997 10 600	203	009	3-C6
9997 10 600	208	003	3-G6
9997 10 600	208	010	3-G6
9997 10 600	210	023	3-I6
9997 10 600	210	024	3-I6
9997 10 600	211	037	3-J6

PARTS NUMBER	PARTS COMP. LIST PAGE	FIG. NO.	FICHE INDEX
9997 10 600	225	010	3-C9
9997 10 600	231	020	3-H9
9997 10 600	240	010	3-H10
9997 10 600	245	003	3-C11
9997 10 600	257	022	3-E13
9997 10 600	257	023	3-E13
9997 10 600	262	012	3-H13
9997 10 601	060	001	1-J7
9997 10 601	061	036	1-K7
9997 10 800	005	057	1-F1
9997 10 800	005	058	1-F1
9997 10 800	005	059	1-F1
9997 10 800	006	075	1-G1
9997 10 800	010	007	1-J1
9997 10 800	011	030	1-K1
9997 10 800	027	067	1-F3
9997 10 800	030	003	1-C4
9997 10 800	038	026	1-D5
9997 10 800	044	033	1-E6
9997 10 800	044	057	1-E6
9997 10 800	048	009	1-H6
9997 10 800	048	010	1-H6
9997 10 800	073	024	1-J8
9997 10 800	101	009	2-E1
9997 10 800	107	035	2-J1
9997 10 800	116	015	2-C3
9997 10 800	118	034	2-E3
9997 10 800	119	044	2-F3
9997 10 800	119	045	2-F3
9997 10 800	128	007	2-C5
9997 10 800	128	009	2-C5
9997 10 800	130	031	2-E5
9997 10 800	133	005	2-G5
9997 10 800	136	016	2-D6
9997 10 800	136	019	2-D6
9997 10 800	139	008	2-F6
9997 10 800	142	002	2-C7
9997 10 800	142	004	2-C7
9997 10 800	142	008	2-C7
9997 10 800	147	003	2-C8
9997 10 800	148	016	2-D8
9997 10 800	158	022	2-H9
9997 10 800	171	038	2-D11
9997 10 800	201	017	3-D5
9997 10 800	201- 1	022	3-E5

PARTS NUMBER	PARTS COMP. LIST PAGE	FIG. NO.	FICHE INDEX
9997 10 800	220	017	3-D8
9997 10 800	220	019	3-D8
9997 10 800	220	020	3-D8
9997 10 800	221	025	3-E8
9997 10 800	221	027	3-E8
9997 10 800	223	051	3-G8
9997 11 000	004	039	1-E1
9997 11 000	006	070	1-G1
9997 11 000	048	002	1-H6
9997 11 000	073	025	1-J8
9997 11 000	099	018	2-D1
9997 11 000	113	004	2-F2
9997 11 000	118	037	2-E3
9997 11 000	122	020	2-H3
9997 11 000	125	024	2-D4
9997 11 000	128	012	2-C5
9997 11 000	139	002	2-F6
9997 11 000	139	004	2-F6
9997 11 000	139	010	2-F6
9997 11 000	140	011	2-G6
9997 11 000	143	015	2-D7
9997 11 000	152	023	2-D9
9997 11 000	167	020	2-H10
9997 11 000	174	050	3-B1
9997 11 000	223	057	3-G8
9997 11 200	109	009	2-C2
9997 11 200	114	014	2-G2
9997 11 200	125	025	2-D4
9997 11 200	129	016	2-D5
9997 11 200	129	018	2-D5
9997 11 200	129	019	2-D5
9997 11 200	173	010	3-C1
9997 11 400	095	002	1-K10
9997 11 400	113	003	2-F2
9997 11 400	113	009	2-F2
9997 11 800	099	013	2-D1
9997 12 000	116	040	2-E3
9997 20 800	151	011	2-C9
9997 20 800	171	036	2-D11
9997 20 800	177	022	3-F1
9997 21 000	204	019	3-D6
9997 30 400	197	089	3-H4
9997 40 500	203	007	3-C6
9997 40 600	205	010	3-C6
9997 40 600	208	009	3-G6

PARTS NUMBER	PARTS COMP. LIST PAGE	FIG. NO.	FICH INDE
9997 40 600	209	015	3-H6
9997 40 600	209	016	3-H6
9997 40 600	209	018	3-H6
9997 50 400	257	020	3-E1
9997 50 500	178	032	3-G1
9997 50 600	209	015	3-H6
9997 50 600	209	016	3-H6
9997 50 800	176	008	3-E1
9997 50 800	176	009	3-E1
9997 50 800	211	040	3-J6
9997 71 845	124	010	2-C4
9997 91 200	037	007	1-C5