Mazda RX-2

(Capella Rotary)

616

(Capella 1600)

Workshop Manual

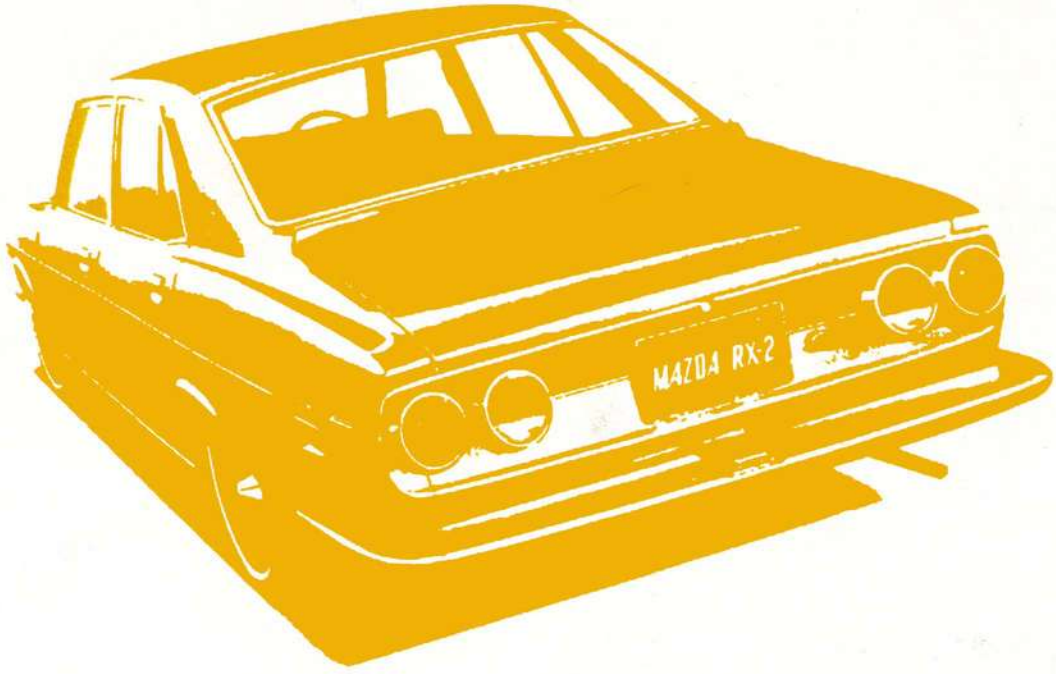

780

mazda

WORKSHOP MANUAL

MAZDA RX-2
(CAPELLA ROTARY)

SEDAN
COUPÉ

NOTE :
"Capella Rotary" is the nickname of the "MAZDA RX-2", which is used in some markets.

SECTION INDEX	
Name	Section
Engine	1
Lubricating System	2
Cooling System	3
Fuel System	4
Electrical System	5
Clutch	6
Transmission	7
Propeller Shaft	8
Rear Axle	9
Steering	10
Brake	11
Wheels & Tires	12
Suspension	13
Body	14
Technical Data	T

TOYO KOGYO CO., LTD.
HIROSHIMA, JAPAN

NOVEMBER, 1970

ENGINE

1–A. REMOVING THE ENGINE ..... 1 : 4
1–B. DISASSEMBLING THE ENGINE ..... 1 : 6
1–C. ENGINE INSPECTION AND REPAIR ..... 1 : 10
1–C–1. Front Housing ..... 1 : 10
1–C–2. Intermediate Housing ..... 1 : 12
1–C–3. Rear Housing ..... 1 : 12
1–C–4. Rotor Housing ..... 1 : 13
1–C–5. Rotor ..... 1 : 14
1–C–6. Seal ..... 1 : 18
1–C–7. Eccentric Shaft ..... 1 : 21
1–D. ENGINE ASSEMBLY ..... 1 : 22
1–D–1. Installing the Oil Seal ..... 1 : 22
1–D–2. Installing the Seal ..... 1 : 22
1–D–3. Installing the Rear Rotor ..... 1 : 23
1–D–4. Installing the Rear Rotor Housing ..... 1 : 23
1–D–5. Installing the Eccentric Shaft.... 1 : 24
1–D–6. Installing the Seal..... 1 : 25
1–D–7. Installing the Intermediate Housing ..... 1 : 25
1–D–8. Installing the Front Rotor and Housing ..... 1 : 25
1–D–9. Installing the Front Housing .... 1 : 25
1–D–10. Tightening the Tension Bolts.... 1 : 25
1–D–11. Installing the Clutch Assembly .. 1 : 26
1–D–12. Adjustment of Eccentric Shaft End Play ..... 1 : 26
1–D–13. Installing the Front Cover ..... 1 : 27
1–D–14. Installing the Metering Dump.... 1 : 28
1–D–15. Installing the Oil Strainer and Oil Pan ..... 1 : 28
1–D–16. Installing the Oil Filter..... 1 : 28
1–D–17. Installing the Water Pump ..... 1 : 28
1–D–18. Installing the Distributor ..... 1 : 29
1–D–19. Installing the Alternator ..... 1 : 29
1–D–20. Installing the Manifold and Carburettor ..... 1 : 30
1–E. ENGINE INSTALLATION ..... 1 : 30

LICENSE NSU-WANKEL

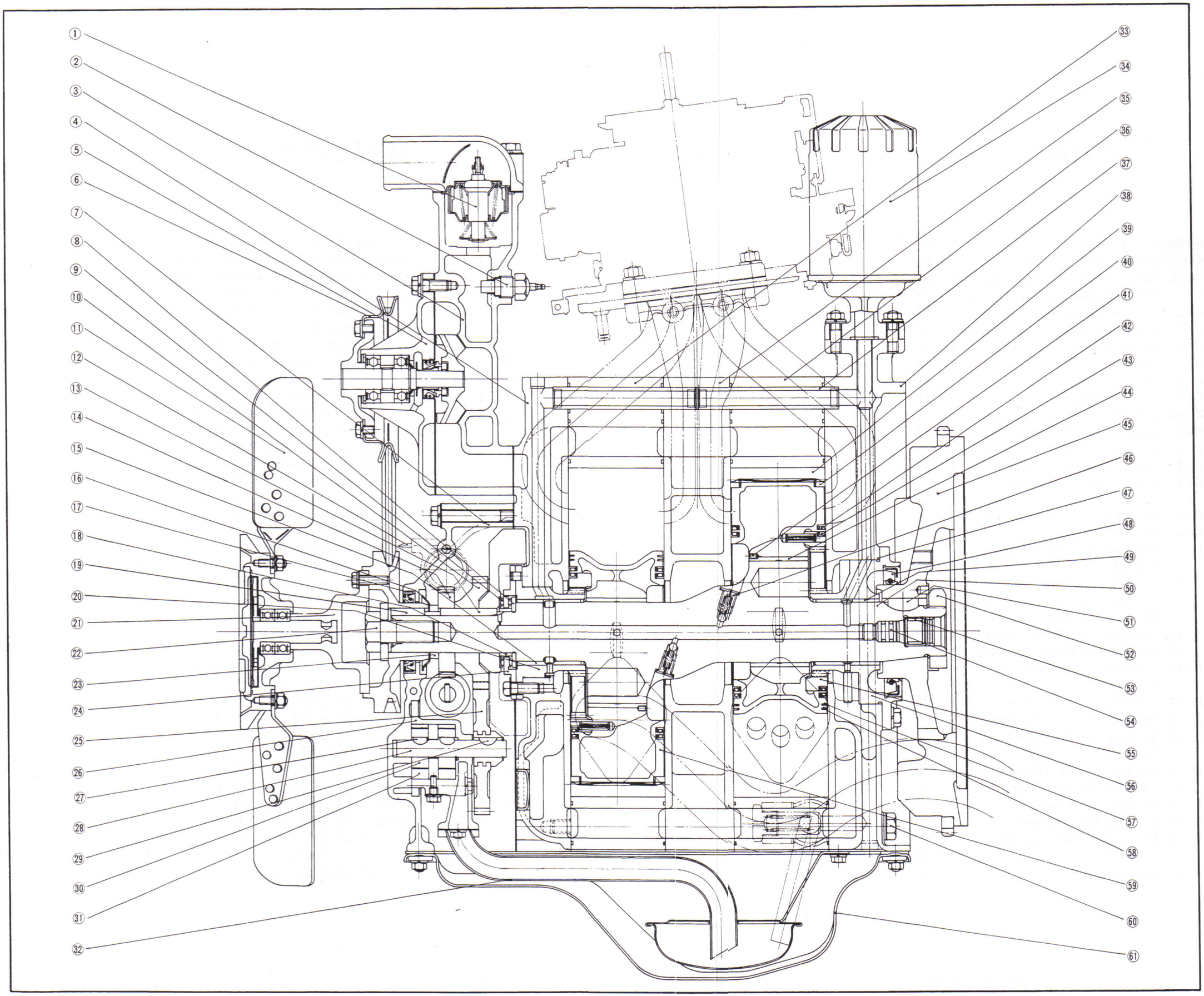

Fig. 1–1 Engine (1)

1. Thermostat
2. Heat Gauge Unit
3. Water Pump Casing Ass'y
4. Front Housing Ass'y
5. Pump Cover Ass'y
6. Water Pump Pulley
7. Front Cover Ass'y
8. Thrust Plate
9. Needle Bearing
10. Oil Pump Drive Gear
11. Cooling Fan
12. Indicator Pin
13. Key
14. Distributor Drive Gear
15. Main Bearing
16. Oil Baffle Plate
17. Oil Seal
18. Spacer
19. Key
20. Stationary Gear (front)
21. Fan Drive Ass'y
22. Bolt
23. Spacer
24. Thrust Bearing Housing
25. Oil Pump Drive Gear
26. Oil Pump Body
27. Key
28. Oil Pump Shaft
29. Key
30. Oil Pump Inner Rotor
31. Oil Pump Outer Rotor
32. Oil Strainer
33. Front Rotor Housing
34. Oil Filter
35. Intermediate Housing
36. Rear Rotor Housing
37. Tubular Dowel
38. Rear Housing
39. Apex Seal
40. Corner Seal
41. Set Screw
42. Oil Seal (outer)
43. Oil Seal (inner)
44. Rotor Bearing
45. Flywheel
46. Oil Jet Plug
47. "O" Ring
48. Oil Seal
49. Main Bearing
50. Eccentric Shaft
51. Key
52. Nut
53. Needle Bearing
54. Blind Plug
55. Internal Gear
56. Stationary Gear (rear)
57. Side Seal Inner
58. Side Seal Outer
59. Rotor Ass'y
60. Tension Bolt
61. Oil Pan

1 : 1

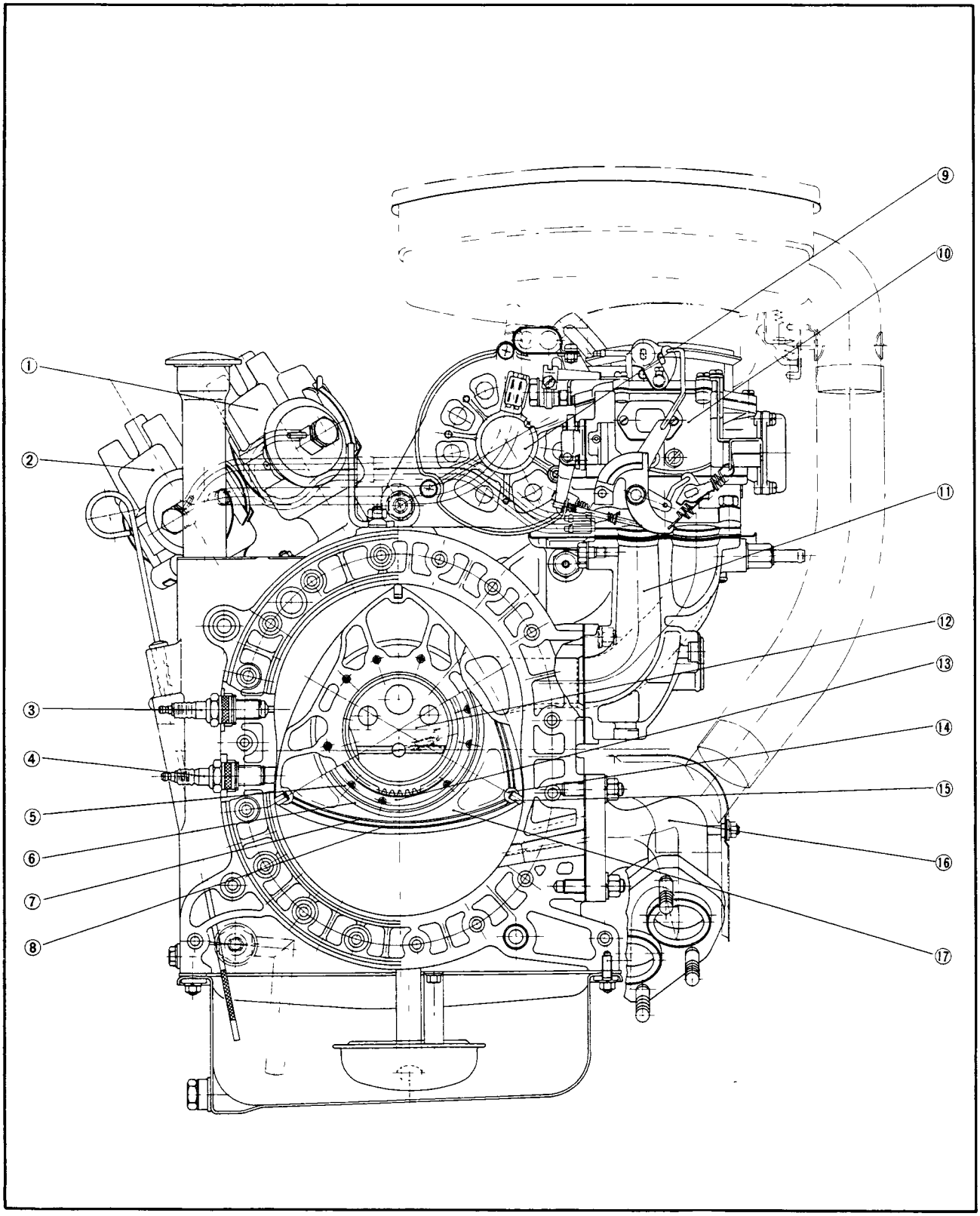

Fig. 1–2 Engine (2)

1. Trailing Distributor
2. Leading Distributor
3. Trailing Spark Plug
4. Leading Spark Plug
5. Inner Oil Seal
6. Outer Oil Seal
7. Inner Side Seal
8. Outer Side Seal
9. Alternator
10. Carburettor
11. Inlet Manifold
12. Eccentric Shaft
13. Internal Gear
14. Corner Seal
15. Apex Seal
16. Exhaust Manifold
17. Rotor

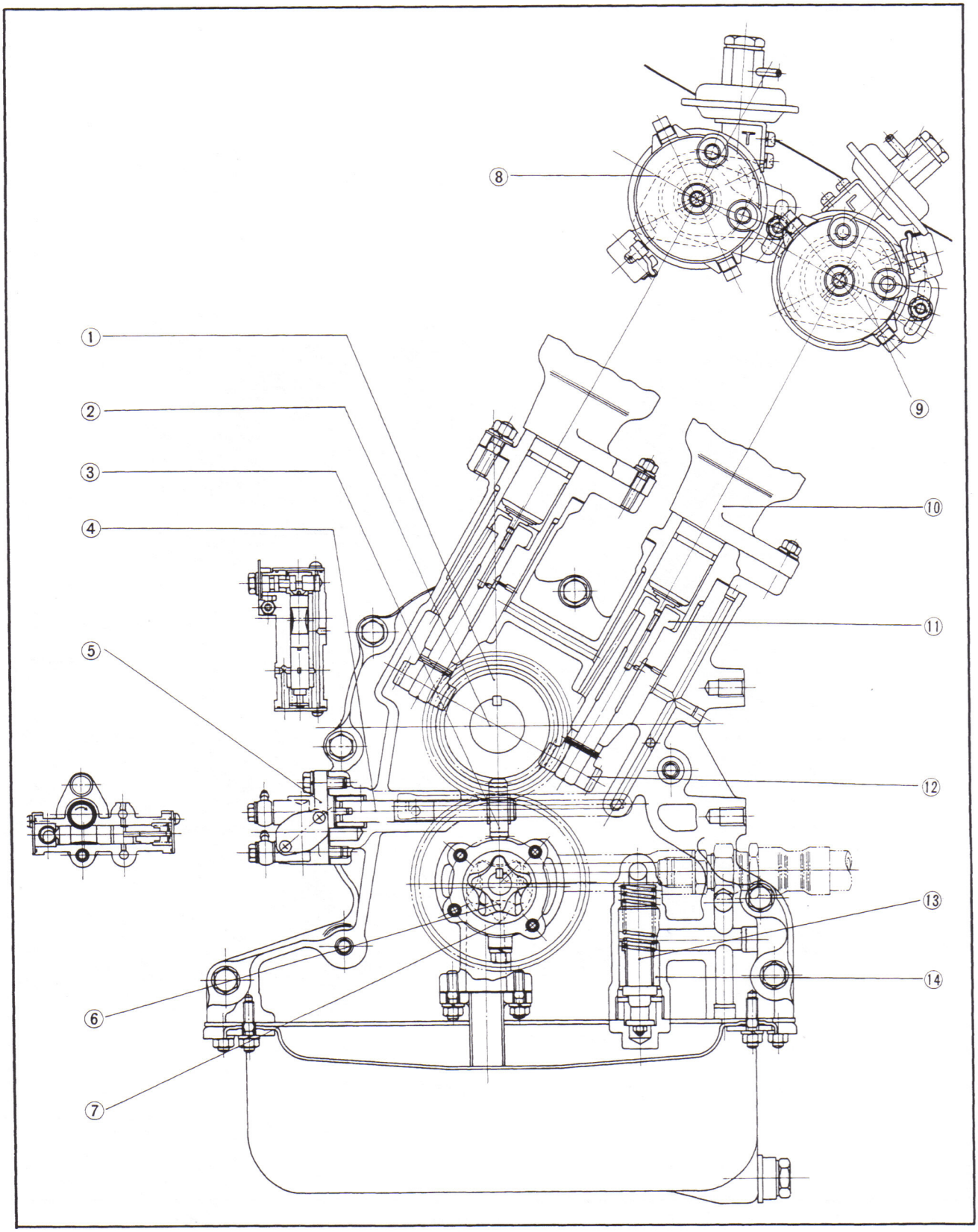

Fig. 1–3 Engine (3)

1. Distributor Drive Gear
2. Eccentric Shaft
3. Metering Pump Drive Gear
4. Metering Pump Drive Shaft
5. Metering Pump Ass'y
6. Oil Pump Inner Rotor
7. Oil Pump Outer Rotor
8. Trailing Distributor
9. Leading Distributor
10. Distributor Socket
11. Distributor Drive Shaft
12. Distributor Driven Gear
13. Pellet
14. Slide Valve

ENGINE

RX-2 is mounted with a 2-rotor type rotary piston engine of Toyo Kogyo's unique design. Its single chamber capacity is 573 cc (35.0 cu. in) and the compression ratio is 9.4 : 1. The performance is shown in Fig. 1-4.

The main component parts of the rotary piston engine are entirely different from those of the conventional reciprocating engine. The rotor which corresponds to the piston of the reciprocating engine makes a rotary motion due to the explosion pressure occurring in the chamber formed by the rotor housing and the side housing which correspond to the cylinder of the reciprocating engine. This rotary motion of the rotor is converted into the rotary motion of the eccentric shaft and is then produced as output through the flywheel.

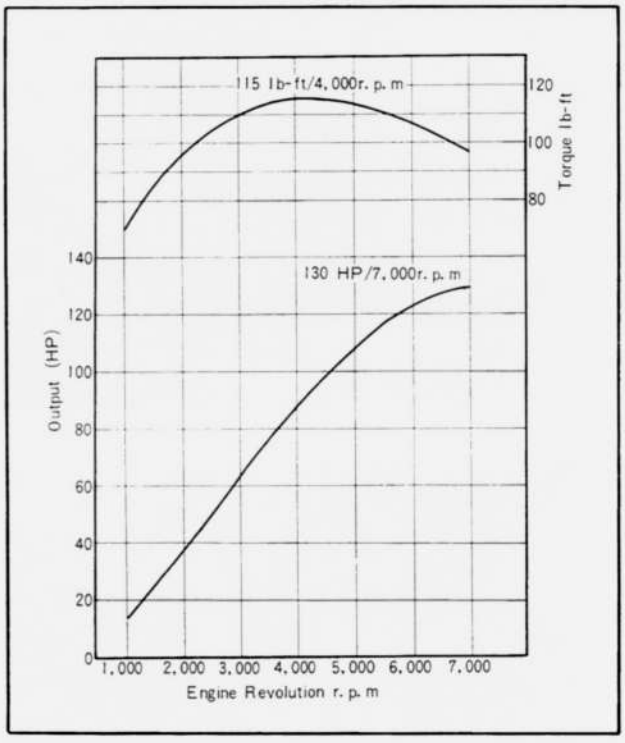

Fig. 1–4 Engine performane curve

1–A. REMOVING THE ENGINE

To remove the engine for overhauling, proceed as descreibed in the following :

1. Remove the bonnet.
2. Protect the fender with a cover.
3. Drain the cooling water.
4. Drain the engine lubricating oil.
5. Remove the air-cleaner.
6. Remove the fuel pipe from the carburettor.
7. Disconnect the accelerator cable and the choke cable from the carburettor.
8. Disconnect the wiring from the starting motor.
9. Disconnect the wiring from the alternator and the water temperature gauge unit.
10. Disconnect the high-tension cables from the distributors and the spark plugs.
11. Disconnect the wire of the oil pressure switch.
12. Remove the water hoses from the engine.
13. Remove the heater hose from the engine.

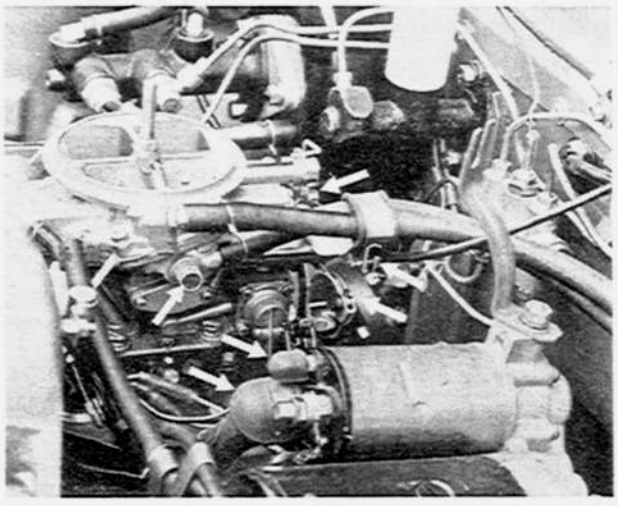

Fig. 1–5 Disconecting pipes and cables

14. Remove the oil hoses from the front cover and rear housing of the engine, and remove the oil hose clip on the engine mounting bracket.
15. Remove the radiator upper shroud.
16. Remove the alternator.

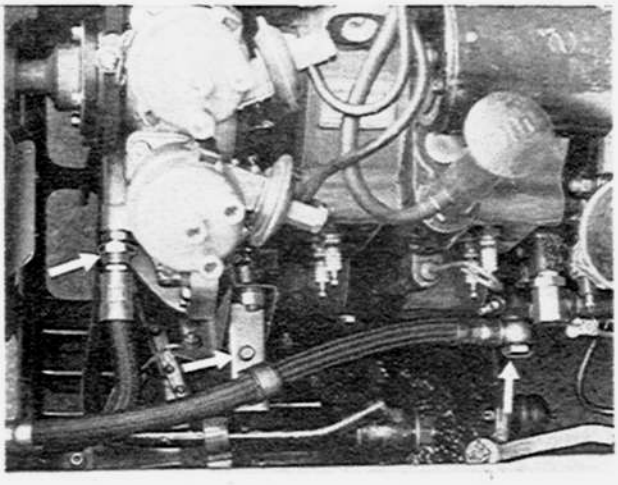

Fig. 1–6 Removing oil hoses

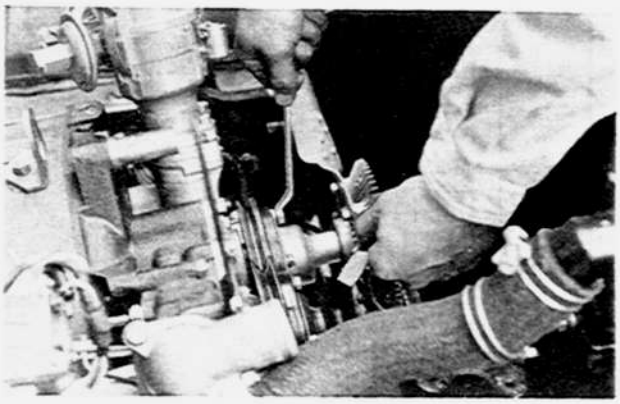

Fig. 1–7 Removing cooling fan

17. Remove the cooling fan from the eccentric shaft pulley.
18. Remove the starting motor.
19. Remove the clutch release cylinder and place it on the frame.

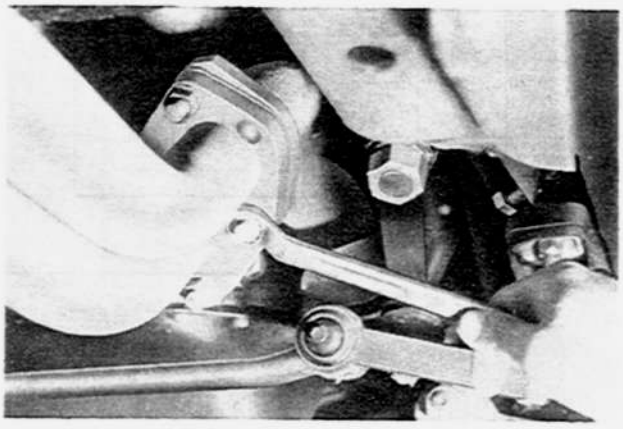

Fig. 1–8 Disconnecting exhaust pipe

20. Disconnect the exhaust pipe from the manifold.
21. Remove the bolts securing the clutch housing to the rear housing of the engine.
22. Remove the hot air duct from the exhaust manifold.
23. Support the transmission with a suitable jack.

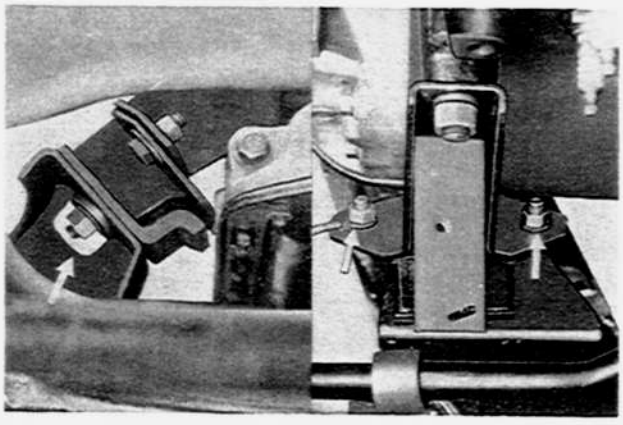

Fig. 1–9 Loosening mounting bolts

24. Remove the bolts from each engine mounting. For easy disconnection, it is recommendable to remove the two small bolts on left-hand side and a large nut on right-hand side as shown in Fig. 1–9.



Fig. 1–10 Removing engine from vehicle

25. Install a suitable lifting sling on the engine hanger bracket of the front rotor housing. Attach the sling to a hoist or other lifting device and take up all slack.
26. Pull the engine forward until it clears the clutch shaft. Then, lift the engine from the vehicle.
27. Disconnect the connecting rod of the oil metering pump at the carburettor side.
28. Remove the intake manifold, with carburettor and exhaust manifold.
29. Remove the engine bracket.
30. Mount the engine on the **engine stand** (49 0107 680A, 49 0813 005 and 49 0820 006).

1–B. DISASSEMBLING THE ENGINE

Engine overhaul should be done in the following order after dismounting the engine from the vehicle:

1. Remove the water pump pulley.
2. Remove the water pump.
3. Remove the distributors from the front cover.
4. Remove the spark plugs.
5. Remove the oil filter from the rear housing.

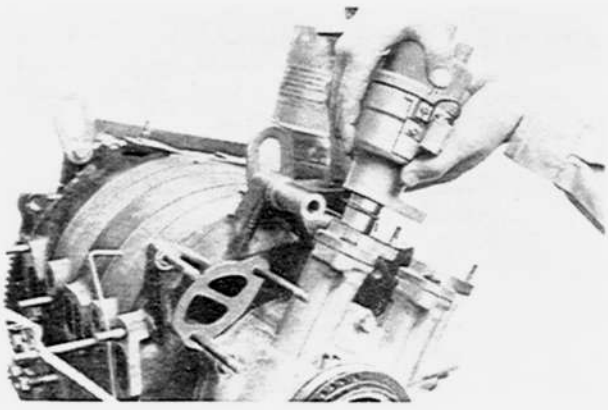

Fig. 1–11 Removing distributor

6. Attach the **ring gear brake** (49 0820 060) to the flywheel. Remove the eccentric shaft pulley with key.
7. Remove the clutch assembly and clutch disk.
8. Straighten the tab of the lockwasher and remove the flywheel nut using the **flywheel box wrench** (49 0820 035).

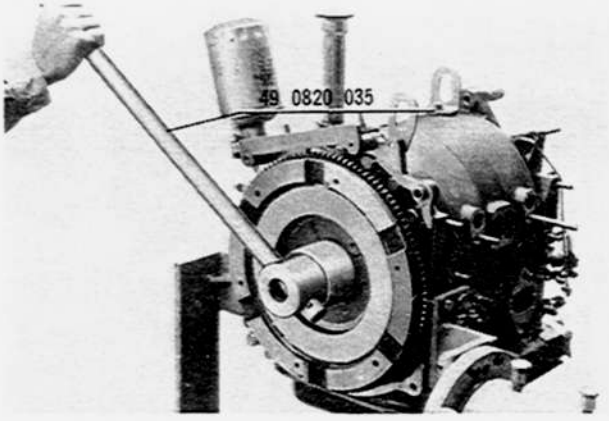

Fig. 1–12 Loosening flywheel nut

9. Remove the flywheel by using the **flywheel puller** (49 0823 300), turning the handle and lightly hitting the head of the puller.

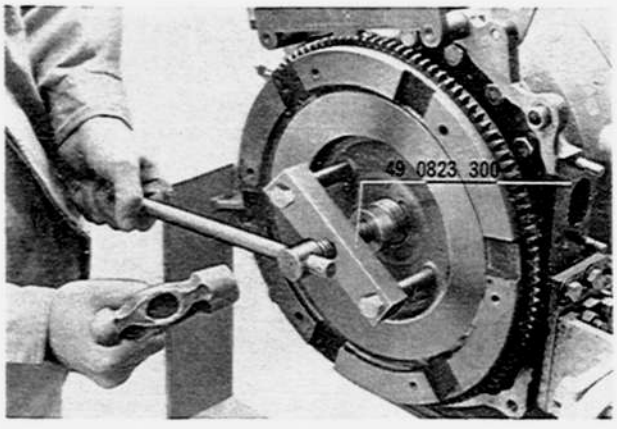

Fig. 1–13 Removing flywheel

10. Remove the oil pan.
11. Remove the oil strainer.

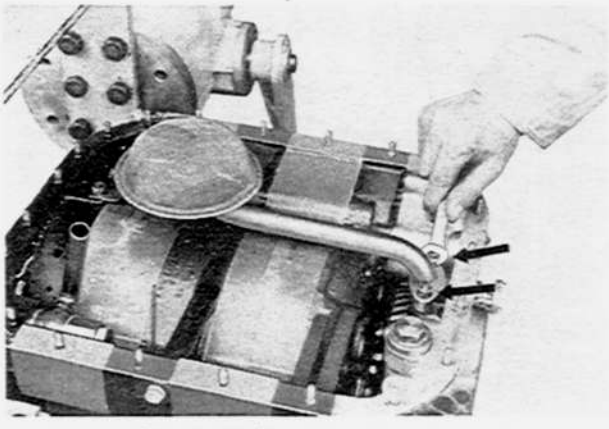

Fig. 1–14 Removing oil strainer

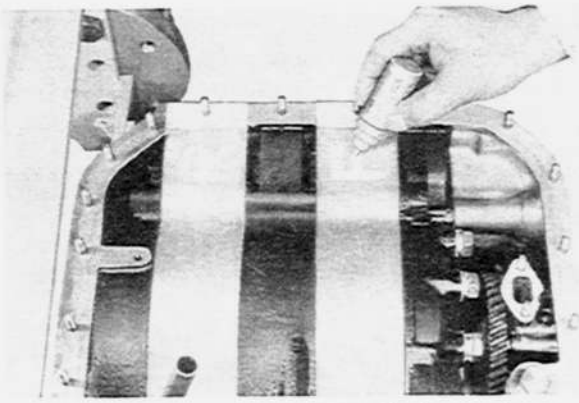

Fig. 1–15 Applying identification marks

Note: Apply identification marks on the front and rear rotor housings, which are common parts, so that they are fitted as they were, when reassembling the engine.

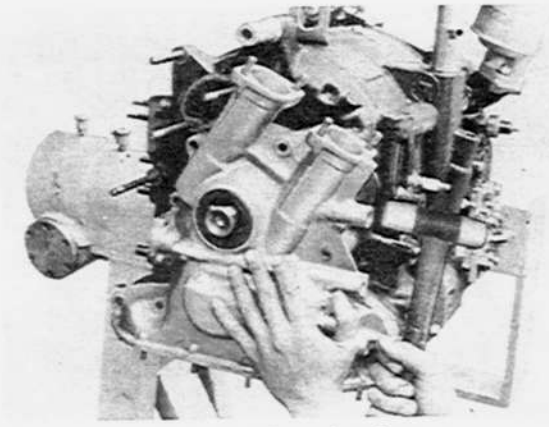

Fig. 1–16 Removing front cover

12. Remove the oil metering pump from the front cover.
13. Loosen the bolts attaching front cover and remove the cover.

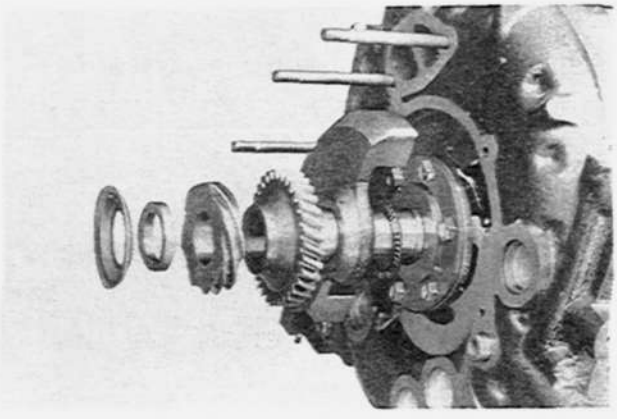

Fig. 1–17

14. Remove the spacer, distributor drive gear, oil pump drive gear, balance weight, thrust plate, and needle bearing in that order from the eccentric shaft.
15. Straighten the lockwashers of needle bearing housing tightened by six bolts and loosen the bolts. Remove the needle bearing housing, needle bearing and thrust washer.

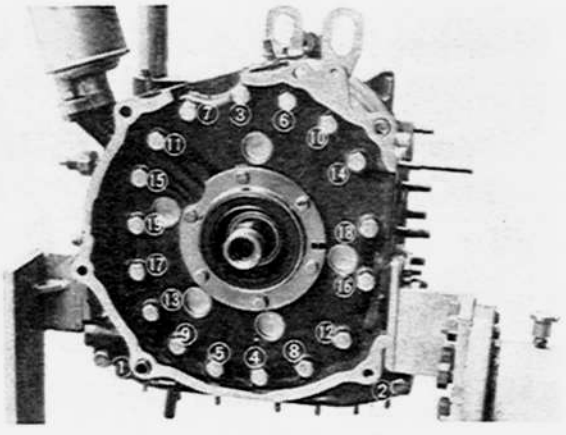

Fig. 1–18 Loosening order

16. Loosen the tension bolts in the order as shown in Fig. 1–18.

17. Remove the front housing.
18. Remove the corner seals with springs and the side seals with springs and place them in the **seal case** (49 0813 250) following the marks which are made at the nearest portion of each seal on the rotor side face.
These marks are made in order to prevent each seal from changing its original position when reassembling.
19. Remove the sealing rubbers and the "O" rings from between the front housing and the rotor housing.



Fig. 1–19 Removing front housing

20. Hold the rotor housing down by hand to prevent it from moving up, then pull the tubular dowels by using the **dowel puller** (49 0813 215).

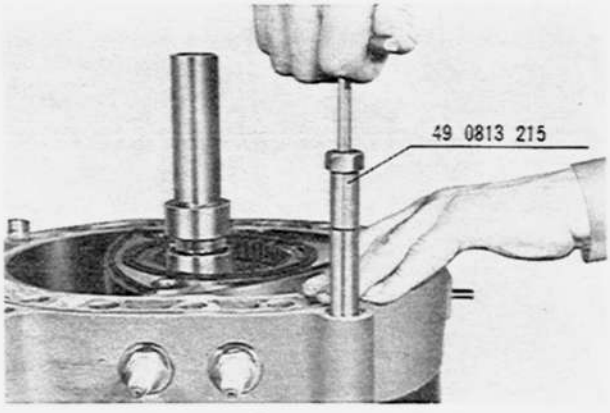

Fig. 1–20 Pulling tubular dowels

21. Install the **rotor clamp** (49 0813 230) by allowing the front rotor housing to move up to the required level so as not to damage the apex seals, then remove the front rotor housing.

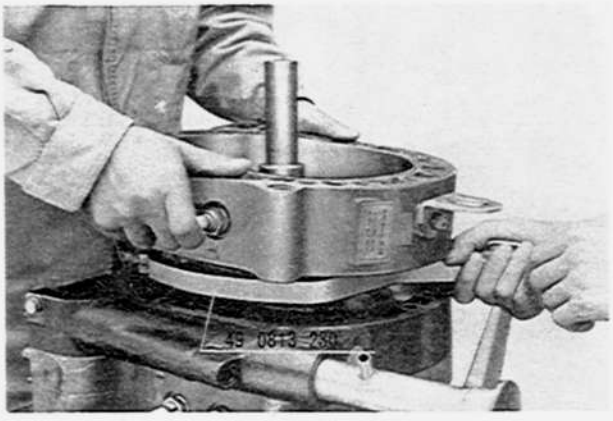

Fig. 1–21 Removing rotor housing

Note: The rotors are marked as shown in Fig. 1–22. "F" on the internal gear side indicates the front rotor, while "R" indicates the rear rotor. When assembling, be careful to these marks.

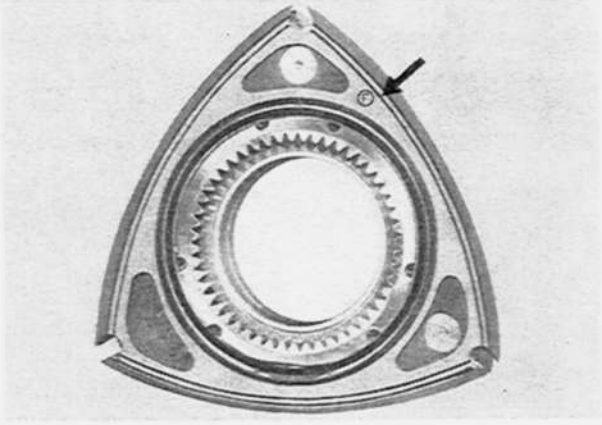

Fig. 1–22 Identification mark of rotor

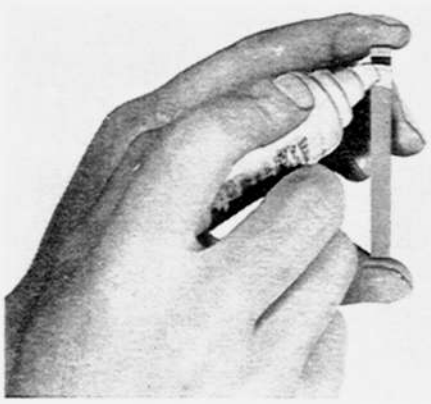

Fig. 1–23 Putting identification mark

22. Remove the apex seals and springs after removing the rotor clamp. When removing the apex seal, put an identification mark on the bottom of the apex seal so that, when reassembling the engine, the apex seal can be incorporated to the correct location and in the correct direction. Never put a mark with a punch, notch or the like.

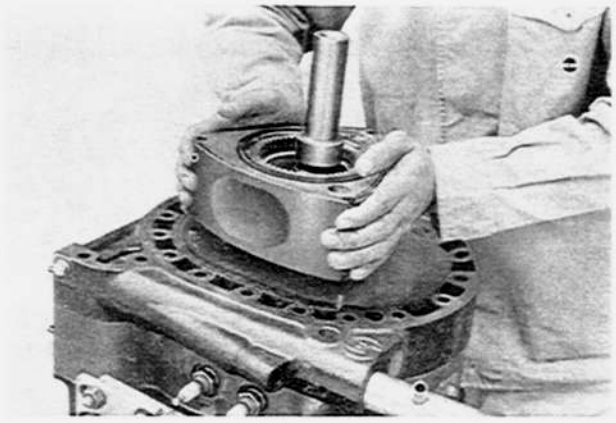

Fig. 1–24 Removing rotor

23. Remove the rotor from the eccentric shaft and place it upside down on a clean cloth or rubber.

Note: If some seals drop, be careful not to change the original position of each seal on the reverse side of the rotor.

24. Remove the seals on the rear side of the rotor.

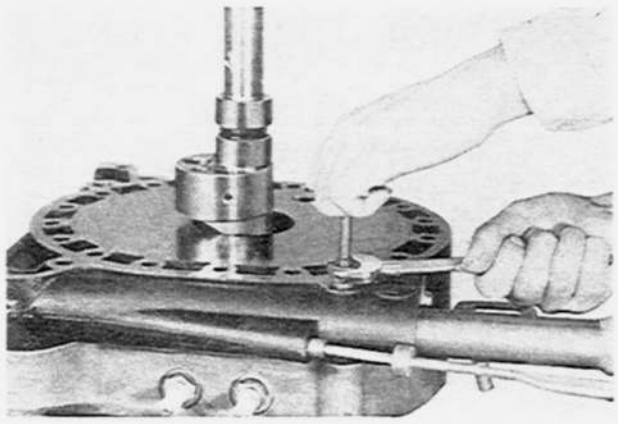

Fig. 1–25 Removing tubular dowels

25. Extract the tubular dowels from the intermediate housing with the **dowel puller** (49 0813 215).

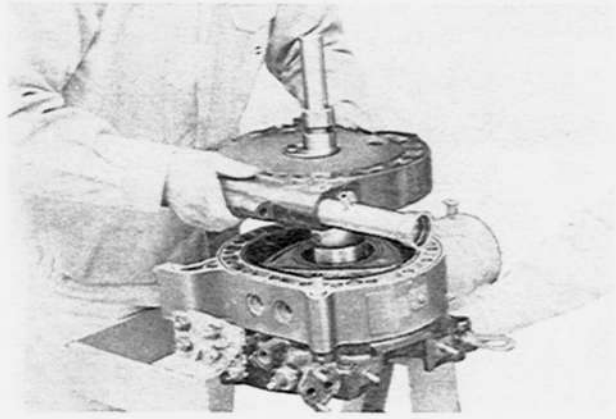

Fig. 1–26 Removing intermediate housing

26. Remove the intermediate housing. Due to the eccentricity of the shaft at the journal portion, the intermediate housing must be removed by sliding it beyond the journal portion of the front rotor while holding the intermediate housing up and at the same time pushing up the eccentric shaft.
27. Remove the eccentric shaft.
28. Repeat the above procedure to remove the rear rotor housing and the rear rotor assembly.

1–C. ENGINE INSPECTION AND REPAIR

1–C–1. Front Housing

a. Inspection of front housing assembly

1. Check for traces of gas or water leakage.
2. Check for wear and damage on the surfaces contacting each seal.
3. Check for wear, cracks or broken teeth on the stationary gear.
4. Check for wear, scratching, flaking, and other damages to the main bearing.

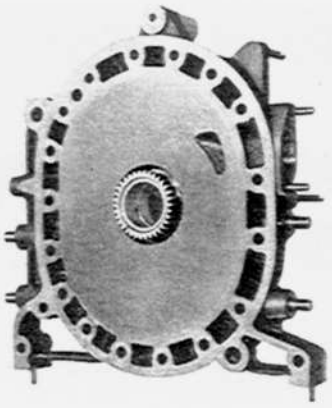

Fig. 1–27 Front housing

b. Cleaning the front housing

It is recommended that the following steps are taken to remove carbon and sealing agent from the front housing.

1. Carbon Deposits

Use an extra-fine emery paper. When a carbon scraper is to be used, be careful not to damage the matching surfaces of the housing.

2. Sealing Agent

Use a cloth or a brush soaked in a solution of ketone or thinner.

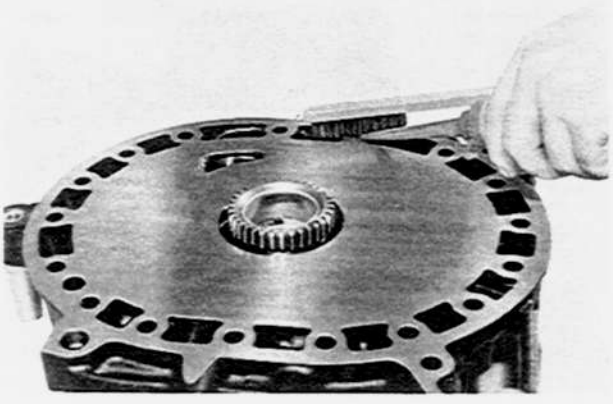

Fig. 1–28 Cleaning front housing

c. Inspection of front housing for distortion

Place a straight edge on the housing surface as shown in Fig. 1–29 and measure the clearance between both with a feeler gauge.

The housing must be replaced if the distortion is found to be more than 0.04 mm (0.002 in).

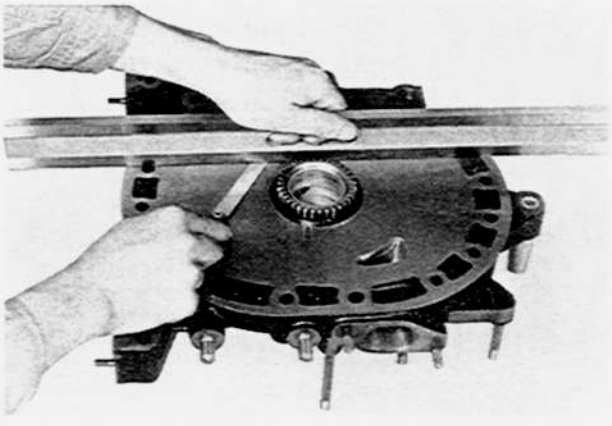

Fig. 1–29 Checking front housing distortion

d. Inspection of front housing for wear

Wear of the matching surfaces of the front housing and rotor should be measured with a dial indicator. The front housing must be replaced if the wear exceeds 0.1 mm (0.004 in).

There is a tendency of increased wear at both ends of the minor axis of the front housing. The effective depth of this wear is small.

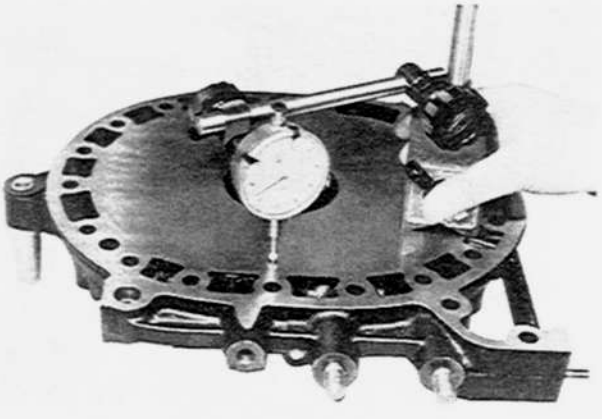

Fig. 1–30 Checking front housing wear

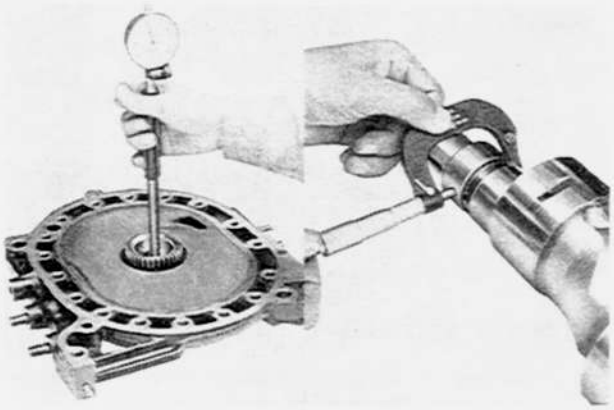

Fig. 1–31 Checking oil clearance

e. Checking the main bearing clearance

The main bearing clearance is measured by checking the inner diameter of the main bearing and the outer diameter of the journal section of the eccentric shaft. The standard main bearing clearance is 0.04 ~ 0.07 mm (0.0016 ~ 0.0028 in), and the bearing must be replaced if the clearance becomes more than 0.10 mm (0.0039 in).

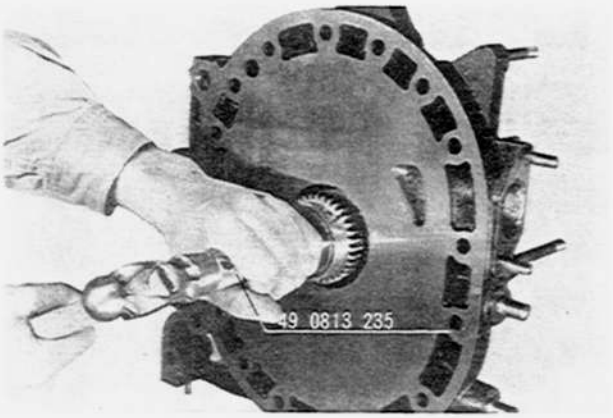

Fig. 1–32 Removing stationary gear

f. Removing and assembling the stationary gear and main bearing

When this work is required, proceed in the following steps.

1. Remove the bolts securing the stationary gear to the housing.
2. Press out the stationary gear with the **main bearing puller and installer** (49 0813 235).



Fig. 1–33 Removing lock pin

3. Mount the stationary gear on a vise. Remove the bearing lock pin by using the **lock pin remover** (49 0820 260).

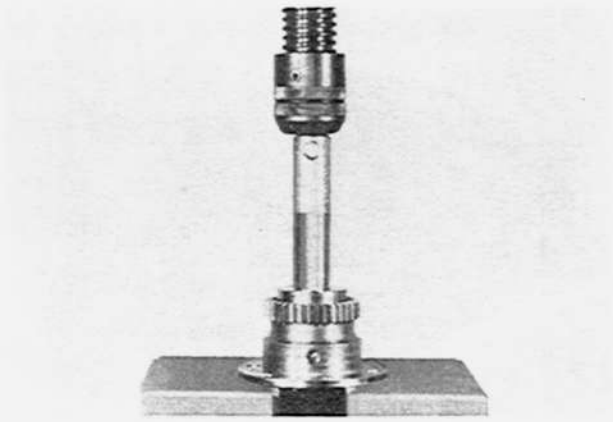

Fig. 1–34 Removing main bearing

4. Remove the adapter from the **main bearing puller and installer** (49 0813 235) and use it to extract the main bearing as shown in Fig. 1–34.

5. Attach the adapter on the main bearing puller and installer and use it to press the bearing into the gear until the adaper touched the gear flange. Be sure to match the oil holes of bearing and gear, as shown in Fig. 1–35.
6. Insert the lock pin to prevent the bearing from turning.

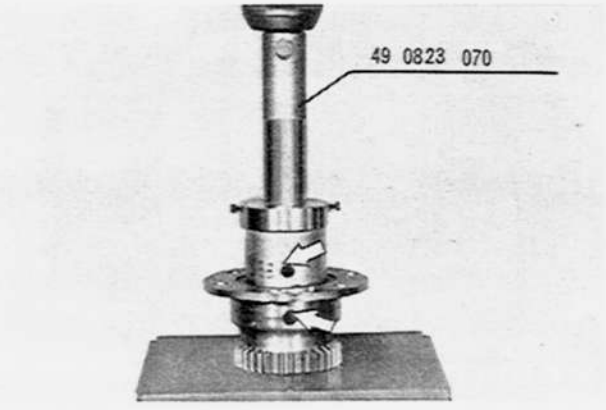

Fig. 1–35 Installing main bearing

7. Press in the staitionary gear to the housing with **main bearing puller and installer** (49 0813 235), aligning the slot of the stationary gear flange and the dowel pin, as shown in Fig. 1–36.
8. Tighten the bolts attaching stationary gear.

Note: When replacing the stationary gear, refer to par 1–C–5, h.

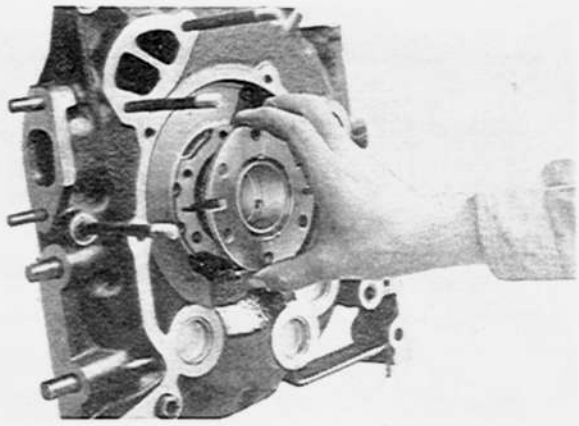

Fig. 1–36 Installing stationary gear

1–C–2. Intermediate Housing

Inspection for distortion or wear of the intermediate housing should be carried out in the same way as described for the front housing. Refer to par. 1–C–1.

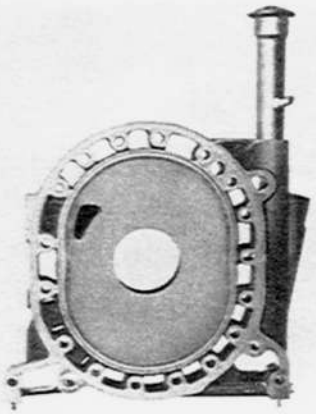

Fig. 1–37 Intermediate housing

1–C–3. Rear Housing

Inspection of the rear housing is carried out according to Par. 1–C–1, but the following point must be inspected as well.

a. Checking the oil seal

Check for wear and damage. If trace of oil leakage is found, replace the oil seal.

b. Replacing the stationary gear

1. Remove the bolts attaching the stationary gear to the rear housing.
2. Using the **main bearing puller and installer** (49 0813 235), extract the stationary gear.

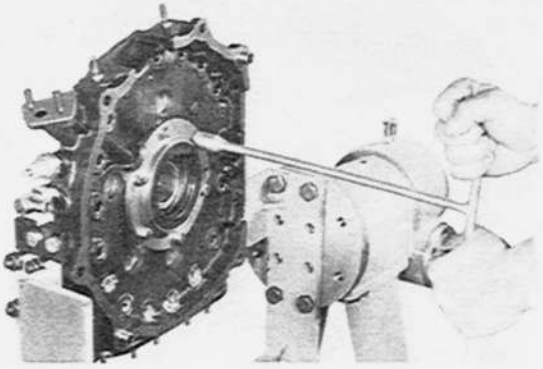

Fig. 1–38 Removing stationary gear

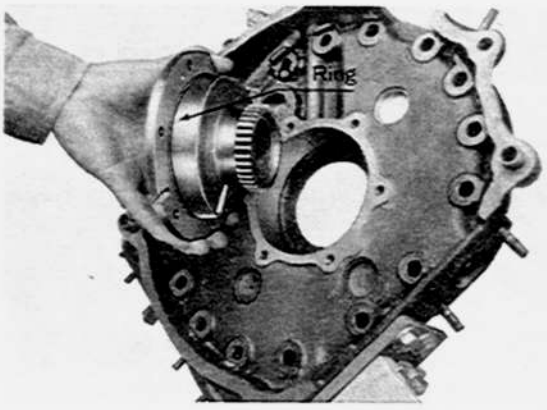

Fig. 1–39 Installing stationary gear

3. Put a thin film of grease on the "O" ring and place it in the groove of the stationary gear.
4. Apply sealing agent to the stationary gear flange.
5. Install the stationary gear on the rear housing while being careful not to damage the "O" ring and to match the slot of the stationary gear flange to the dowel pin of the rear housing.
6; Tighten the bolts attaching the stationary gear.

Note: Replace the "O" ring with new one whenever removing or replacing the stationary gear.

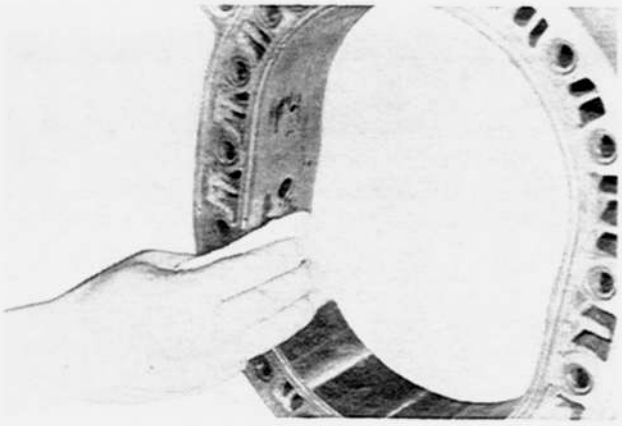

Fig. 1–40 Cleaning rotor housing

1–C–4. Rotor Housing

a. Checking the rotor housing

1. Check for exfoliation, damage or cracks on the chromium-plated surface. If any of these conditions is found, replace the rotor housing.
2. Check for traces of gas or water leakage along the inner margin of each side face of the rotor housing.

b. Cleaning the rotor housing

1. Remove the sealing agent by wiping with a cloth or brush soaked in a solution of ketone or thinner.
2. Remove carbon from the inner surface of the rotor housing by wiping with cloth. Soak the cloth in a solution of ketone or thinner when it is difficult to remove.
3. Remove deposits and rust from the cooling water passages.

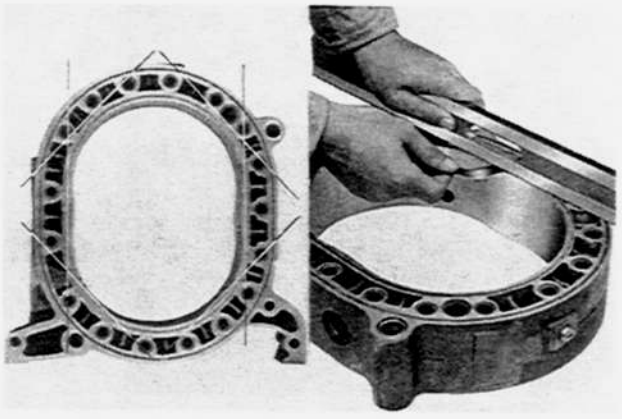

Fig. 1–41 Inspection rotor housing distortion

c. Inspection of rotor housing distortion

Measure the distortion of the rotor housing surface at the position shown in Fig. 1–41, by using a straight edge and a feeler gauge. Replace the part with a new one if the distortion is found to be more than 0.04 mm (0.002 in).

Note: This operation should be done at any time when overhauling the engine.

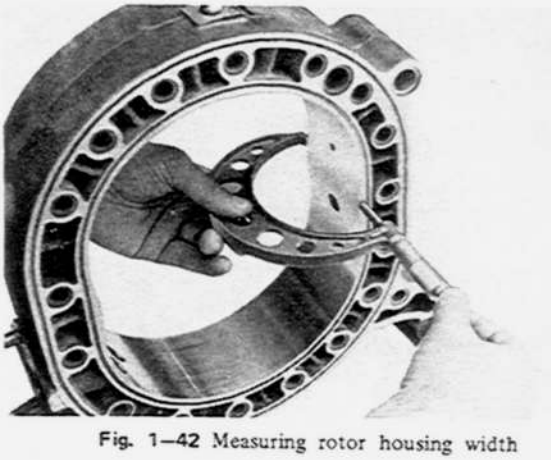

Fig. 1–42 Measuring rotor housing width

d. Measuring the rotor housing width

Measure the width of the rotor housing at points close to the trochoid surface by using a micrometer. Measurements must be taken at least 8 points. If the difference between the maximum value and the minimum value exceeds 0.08 mm (0.0031 in), the rotor housing must be replaced with a new one, as there is a possibility of gas or water leakage. The standard width of the rotor is $70 \begin{smallmatrix}+0\\-0.02\end{smallmatrix}$ mm ($2.7559 \begin{smallmatrix}+0\\-0.0008\end{smallmatrix}$ in).

Note: This operation should be done when the trouble, such as overheating etc., has been occurred on engine.

1–C–5. Rotor

a. Inspection of combustion condition and gas leakage

1. The combustion condition can, to a certain extent, be judged as in the case of reciprocating engines by the color and quantity of carbon on the rotor. Combustion can be said to be good if the color of carbon is brown. Generally carbon on the leading side seen from the direction of rotation is brown, while the trailing side shows black color. It should be noted that this color varies according to operating conditions just before the engine is dismantled.
2. Gas leakage can be judged by checking the color of the rotor side surface for blow-by traces originating from the side seals and corner seals.

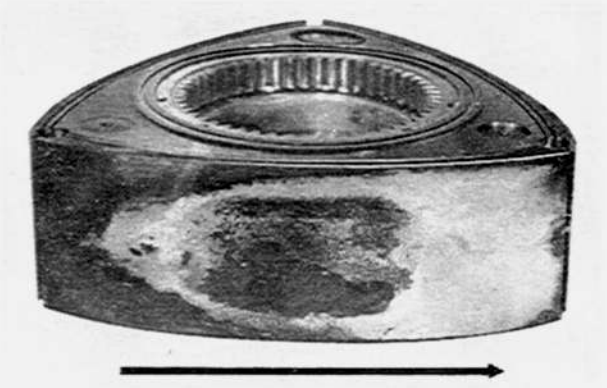

Fig. 1–43 Combustion condition

b. Oil seal inspection

1. Check for wear and damage of the oil seal lip contacted with the sliding surface of the side or intermediate housing. If the contact width is more than 0.8 mm (0.031 in), the oil seal should be replaced with new one.
2. Check the oil seal protrusion shown in Fig. 1–44. It should be more than 0.5 mm (0.02 in).

Note: Replace the "O" ring when overhauling the engine.

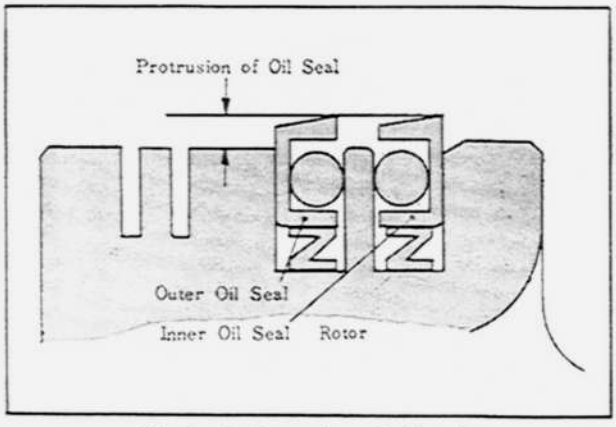

Fig. 1–44 Protrusion of oil seal

c. Removing the oil seal

1. Remove the oil seal by inserting the **oil seal remover** (49 0813 225) or a screw-driver in the slots of the rotor and prying it off.

Note: (1) Do not exert strong pressure at only one place to prevent deformation of the oil seal.
(2) Be careful not to damage the lip of the oil seal. Use a certain protectior shown in Fig. 1–53.

2. Install the oil seal, referring to Par. 1–D–1.

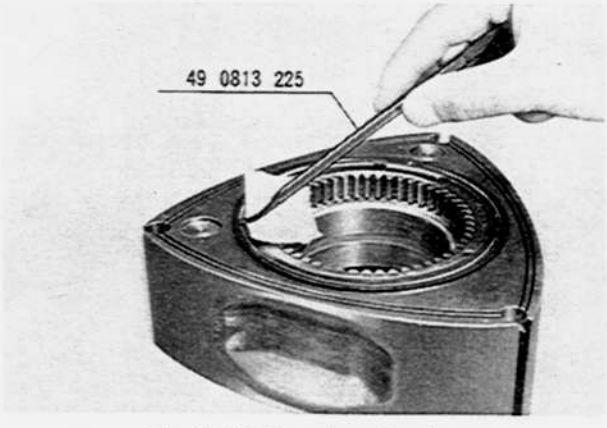

Fig. 1–45 Removing oil seals

d. Cleaning the rotor

Remove the carbon on the rotor by using a carbon remover or emery paper. Carbon in the grooves must be removed with a carbon remover taking care not to damage the grooves. Wash the rotor in cleaning solution and dry by blowing with compressed air.

e. Rotor inspection

Check the rotor for wear and damage. Check the internal gear for cracks, worn or chipped teeth.

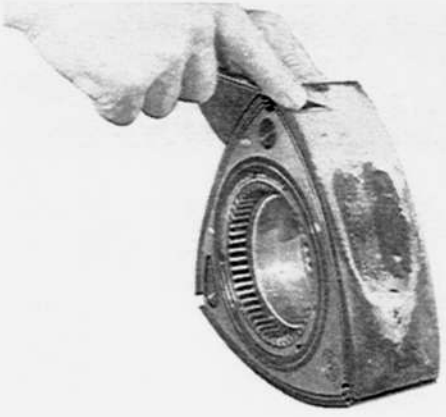

Fig. 1–46 Cleaning rotor

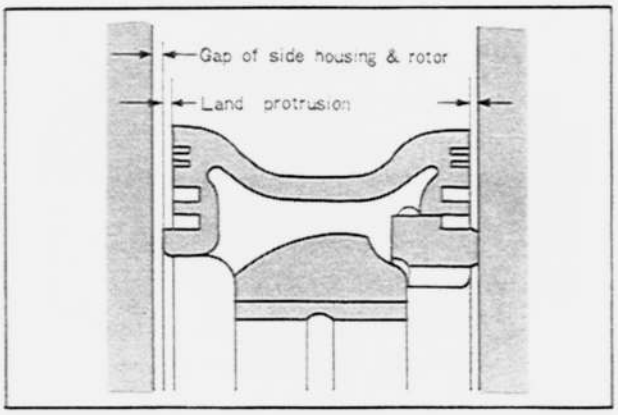

Fig. 1–47

f. Inspecting the gap between side housing and rotor
The clearance can be measured by taking the width of the rotor housing and the width of the rotor. The standard clearance is 0.13 ~ 0.17 mm (0.0051 ~ 0.0067 in). If it is more than 0.17 mm (0.0067 in) replace the rotor and gear assembly. If the clearance is less than specification, there is a possiblity that the internal gear locked with 6 double pins is loose.

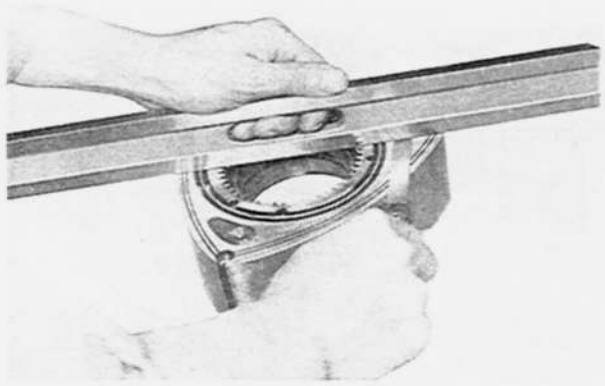

Fig. 1–48 Inspection land protrusion

g. Inspecting the land protrusion
Check the land protrusion of the rotor by placing a straight edge over the land and measuring the clearance between the rotor face and straight edge with a feeler gauge. It should be 0.10 ~ 0.15 mm (0.004 ~ 0.006 in). If it is less than specification, there is a possibility of the rotor touching the side housing at places other than the land, causing wear of damage.

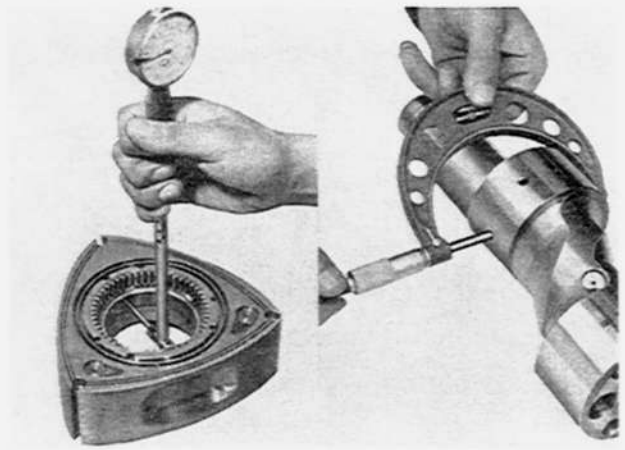

Fig. 1–49 Inspecting bearing clearance

h. Inspecting the rotor bearing
Check for wear, flaking or scratches on the bearing. If any of these conditions is found, replace the bearing. The bearing clearance can be measured by taking the inner diameter of the rotor bearing and the outer diameter of the eccentric shaft journal. The standard clearance is 0.05 ~ 0.09 mm (0.0020 ~ 0.0035 in). Replace the bearing if it is more than 0.10 mm (0.0039 in).

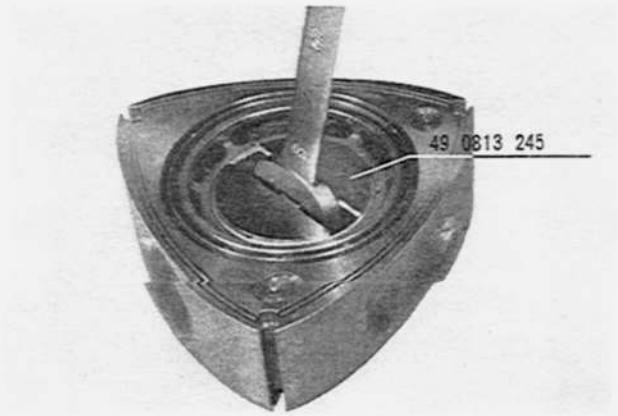

Fig. 1–50 Fitting expander

i. Replacing the rotor bearing
1. Insert the **expander** (49 0813 245) into the bearing to prevent the deformation of the rotor bearing when drilling a hole.

2. Drill a hole of 3.5 mm (0.14 in) diameter and about 7 mm (0.28 in) depth in the locking screw which holds the bearing on the rotor. And then, remove the expander.



Fig. 1–51 Drilling hole

3. Place the rotor on the support so as to face the internal gear upward. Using the **rotor bearing puller and installer** (49 0813 240) without its adapter ring, press out the bearing, being careful not to damage the internal gear.
4. If the bore in the rotor is damaged while removing the bearing, finish the bore with emery paper and blow with compressed air.

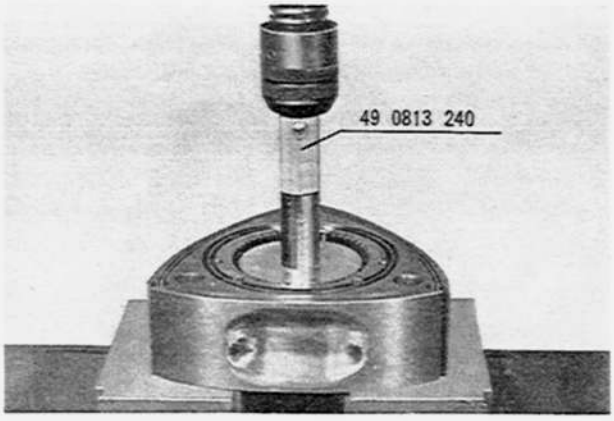

Fig. 1–52 Removing rotor bearing

5. Place the rotor on the support so as to face the internal gear upward. Press fit a new bearing using the **rotor bearing puller and installer** (49 0813 240) with its adapter removed screws until the oil hole of the bearing matches the oil hole on the apex side of the rotor, and the bearing and the boss become flush.

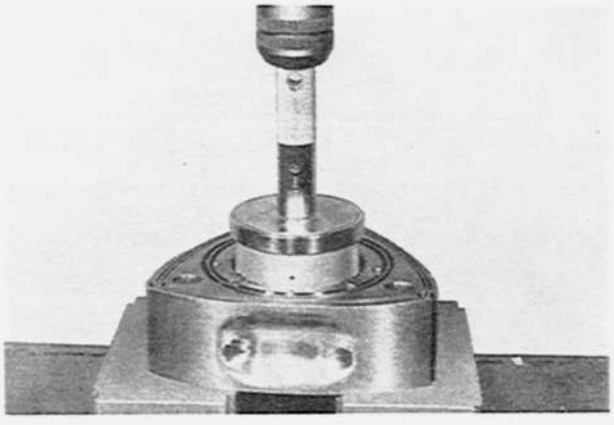

Fig. 1–53 Installing rotor bearing

6. Insert the **expander** (49 0813 254) into the bearing, and then drill a hole of 3.5 mm (0.14 in) diameter and about 7 mm (0.28 in) depth at approximately 7 mm (0.28 in) to the left or right from the original location of the locking screw hole. It must be made to the same direction from each original hole. The center of the hole must be 0.5 mm (0.02 in) from the rotor bore.
7. Thread the hole with an M4, P=0.70 mm tap.

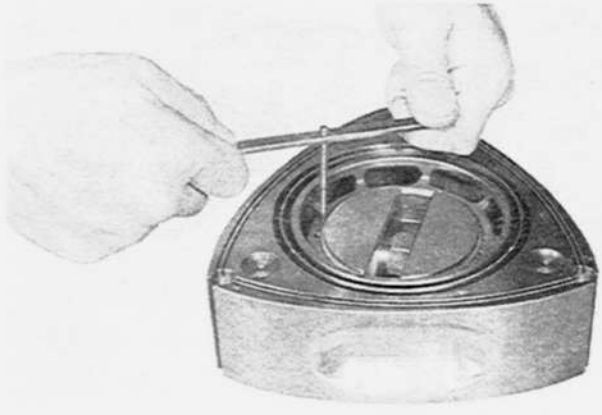

Fig. 1–54 Making thread



Fig. 1–55 Staking locking screws

8. Tighten the locking screws and stake them into positions with a punch to prevent them from working out.
9. Wash the rotor thoroughly and blow with compressed air.

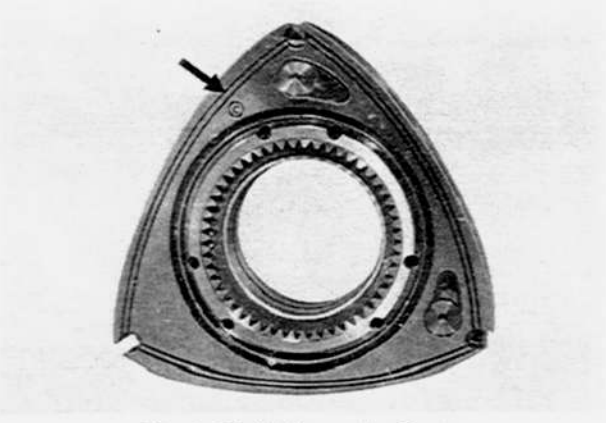

Fig. 1–56 Weight mark of rotor

j. Replacing the rotor

When replacing the rotor, note the following points.

1. Weight of rotor

Rotors are classified into 5 categories according to weight and marked a, b, c, d and e on the internal gear side.

In order to balance the front and rear rotors, the following combinations are adopted in the factory:

Combination of Markings
a–a, b
b–a, b, c
c–b, c, d
d–c, d, e
e–d, e

Note: If it is necessary to replace a rotor, use a rotor marked with "c" in any case.

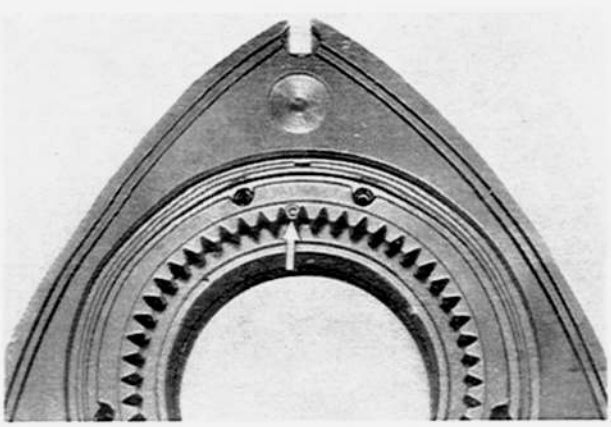

Fig. 1–57 Mark of internal gear

2. Internal and stationary gear backlash

The internal gears and stationary gears are classified into 3 categories, which are shown by embossing markings, A, no mark and C.

In order to obtain a proper backlash between the internal gear and the stationary gear, the identically marked gears are incorporated in the factory.

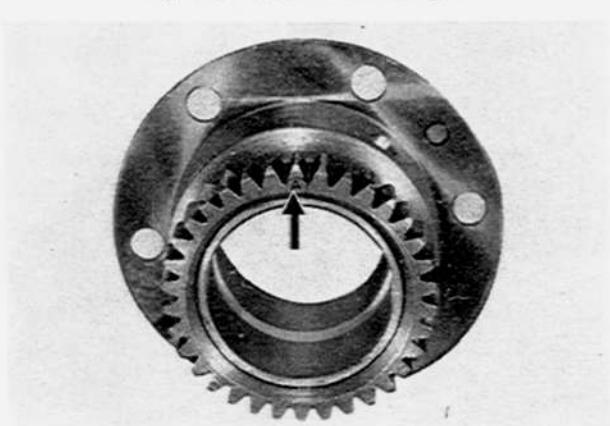

Fig. 1–58 Mark of stationary gear

Note: When replacing a stationary gear at dealer, use a unmarked stationary gear in any case.

1–C–6. Seal and spring

a. Cleaning the seal and spring

1. Apex seal

Use a carbon remover to remove the carbon from both sides while being careful not to damage the apex seal. Wash with cleaning solution.

Note: A special carbon material is used for the apex seal. This is weaker and easier to damage than metal. Therefore, take extra care. Never use emery paper as it will damage the apex seal.

2. Corner seal and side seal

Clean with carbon remover and wash. Never use emery paper.

3. Seal spring

Remove carbon with the carbon remover and wash in cleaning solution.

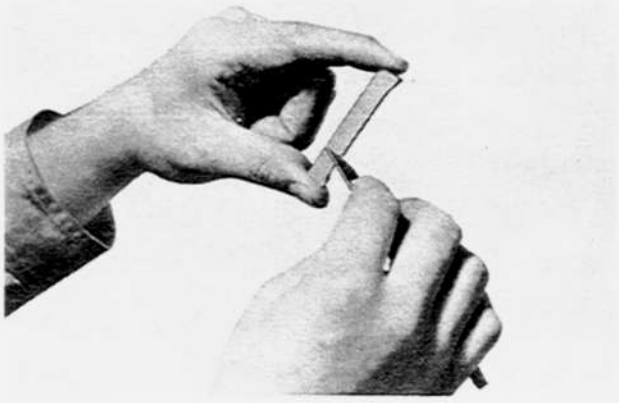

Fig. 1–59 Cleaning apex seal

b. Inspecting the apex seal

Check apex seal for wear, damage or cracks and replace if any of these conditions is found.

Measure the height of the apex seal with a micrometer. Replace if the height is less than 8.0 mm (0.315 in).

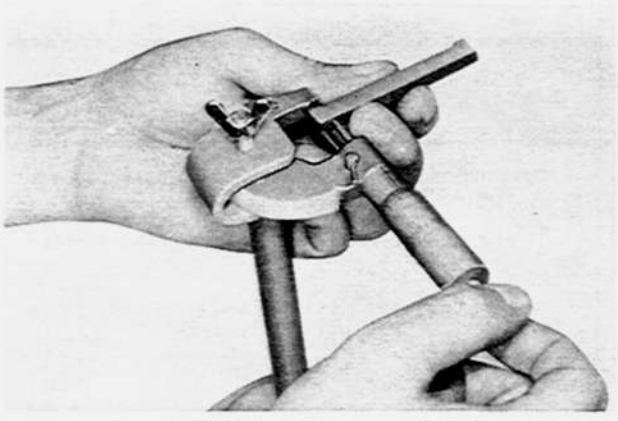

Fig. 1–60 Measuring apex seal height

c. Inspecting the gap between apex seal and groove

To measure the gap between apex seal and groove, place the apex seal in its respective rotor groove and use a feeler gauge to measure the gap. As shown in Fig. 1–61, the apex seal tends to wear unevenly and for this reason the feeler gauge should be inserted fully into the bottom of the groove. The standard value of this gap is 0.036 ~ 0.072 mm (0.0014 ~ 0.0028 in) and the apex seal must be replaced if the gap is more than 0.1 mm (0.0039 in).

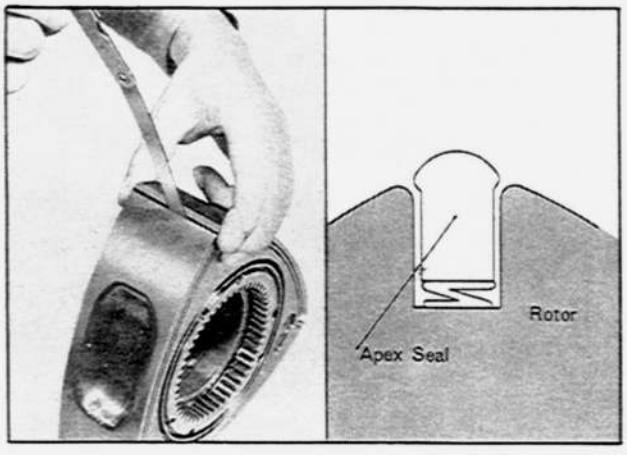

Fig. 1–61 Checking gap of apex seal and gloove

d. Inspecting the gap between apex seal and side housing

Measure the length of the apex seal with a micrometer. Compare this measurement with the minimum value of the rotor housing width (Refer to Par. 1–C–4) to calculate the gap between the apex seal and side housing. The normal value of this gap is 0.01 ~ 0.05 mm (0.0004 ~ 0.0020 in), and the apex seal must be replaced if it is more than 0.15 mm (0.0059 in).

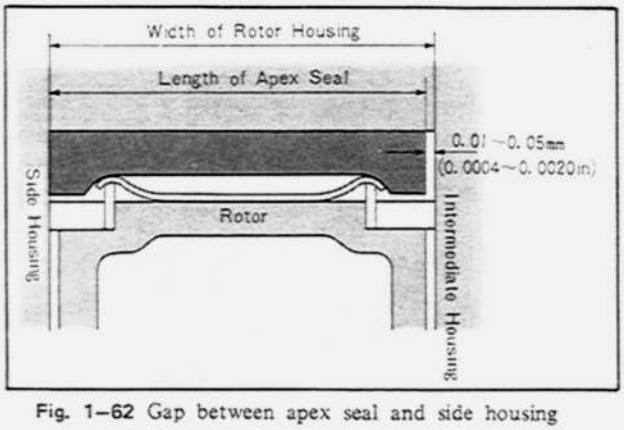

Fig. 1–62 Gap between apex seal and side housing



Fig. 1–63 Checking side seal gap

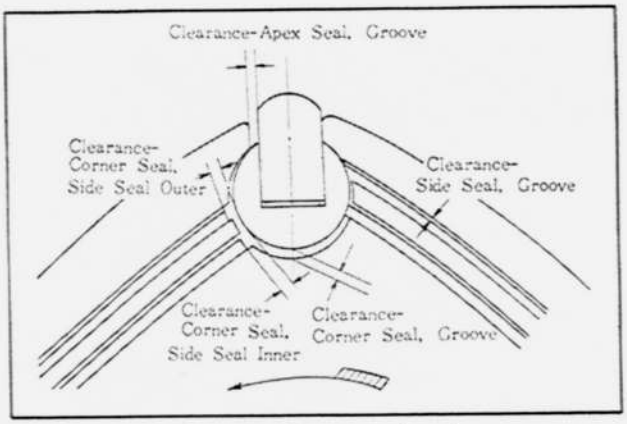

Fig. 1–64 Clearance of seals

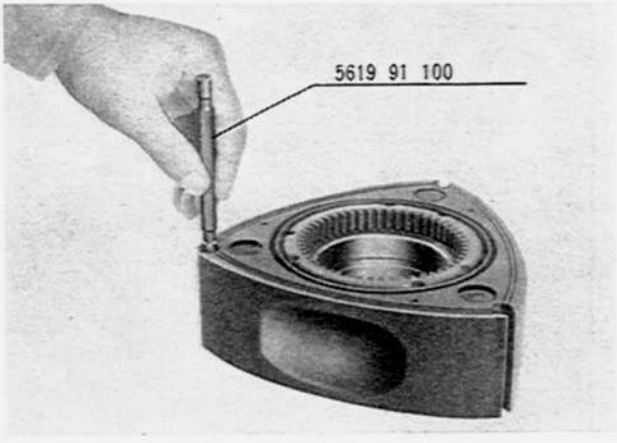

Fig. 1–65 Checking gap of corner seal and groove

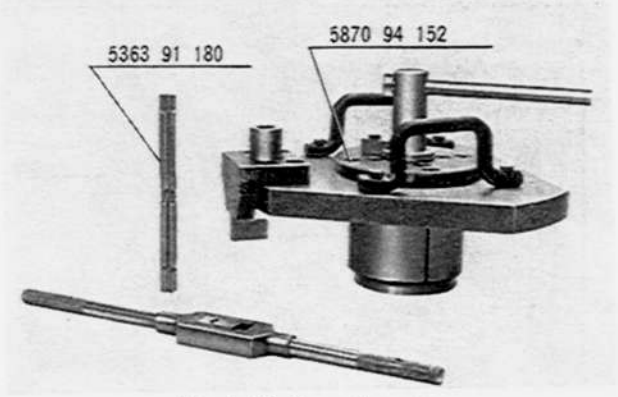

Fig. 1–66 Jig and reamer

e. Inspecting the gap between side seal and groove
Measure the gap with a feeler gauge. The standard clearnace is 0.04 ~ 0.07 mm (0.0016 ~ 0.0028 in), and the side seal must be replaced if it exceeds 0.1 mm (0.0039 in).

f. Inspecting the gap between corner seal and groove
The standard gap is 0.020 ~ 0.048 mm (0.0008 ~ 0.0019 in) and the limit is 0.08 mm (0.0031 in).
This gap enlargement shows uneven wear of the corner seal bore, which occurs when the enginei is operated with dust entering through a clogged element, damaged air cleaner or any other cause. When the wear is permitted to increase, the engine power will be reduced and the engine will become hard to start.
The extent of wear of the corner seal bore is determined by the **bar limit gauge** (5619 91 100) and classified into three conditions:
(1) Neither end of the gauge does not go into the bore. This means that the gap conforms to the specifications.
(2) While the go-end of the gauge goes into the bore, the not-go-end does not. This means the gap is more than stnadard dimension and less than the limit.
In this case, replace the corner seal with a 0.03 mm (0.0012 in) oversize one, leaving the rotor side as it is.
(3) If the both ends of the gauge go into the bore, it means that the gap exceeds the limit of 0.08 mm (0.0031 in). Rework the corner seal bore with the **jig** (5870 94 1520) and **reamer** (5363 91 180) to 11.2 $^{+\ 0.008}_{+\ 0.003}$ mm (0.4410 $^{+\ 0.0003}_{+\ 0.0001}$ in) diameter following the procedure in Par. 1–C–6, g, and fit a 0.2 mm (0.0079 in) oversize corner seal.

Note: (1) As the corner seal bore generally shows a heavy wear in the direction of the rotation, the side arcs on the gauge are partially cut off. Be sure to take measurement in the direction of the maximum wear of the bore.
(2) If the limit gauge is not availabe, a feeler gauge narrowed at the forward portion can be used for measuring the gap. According to a measurement thus obtained, the same corrective step as in the case of the limit gauge is applicable.
(3) The dimension of the outer diameter of the limit gauge is as follows:

Go-end	11.0 $^{+\ 0.019}_{+\ 0.021}$ mm	(0.4331 $^{+\ 0.0007}_{+\ 0.0008}$ in)
Not-go-end	11.0 $^{+\ 0.044}_{+\ 0.046}$ mm	(0.4331 $^{+\ 0.0017}_{+\ 0.0018}$ in)

g. Reboring corner seal groove
1. Remove carbon, rust and other deposits from the rotor surface especially the apex seal groove, being careful not to damage.
2. Install the **jig** (5870 94 152) the rotor and tighten the collect bar being careful not to damage the rotor bearing and apex seal groove.
3. Ream a hole with the **reamer** (5363 91 180) by hand applying sufficient engine oil as the coolant.

When feeding the reamer, it must be turned by about 20 rotations or over before the reaming work is accomplished completely.
4. Remove the reamer and jig from the rotor being careful not to damage the rotor.
Repeat the same manner as above to make other holes of the rotor.
5. Thoroughly clean the rotor, and check and comfirm by visual inspection how the reaming hole of the corner seal is drilled through and if there is any damage to the rotor.
6. Fit a 200μ oversize corner seal of which surface is hard-chromium-plated. Check and comfirm whether the gap between corner seal and groove is under specification.

Note: (1) When installing or removing the jig, be careful not to hit the rotor.
(2) If the reaming is carried out without applying oil, it will be difficult to obtain a proper surface roughness no matter how many time the reaming may be repeated.
(3) Avoid the two stage reaming, that is, with drawing the reamer halfway during the reaming work and then resuming the reaming, because chips may affect the surface roughness.
(4) Before starting the reaming work, it must be comfirmed that the reamer diameter is under specifications, because the reamer might be worn less than the limit if it was used many time.

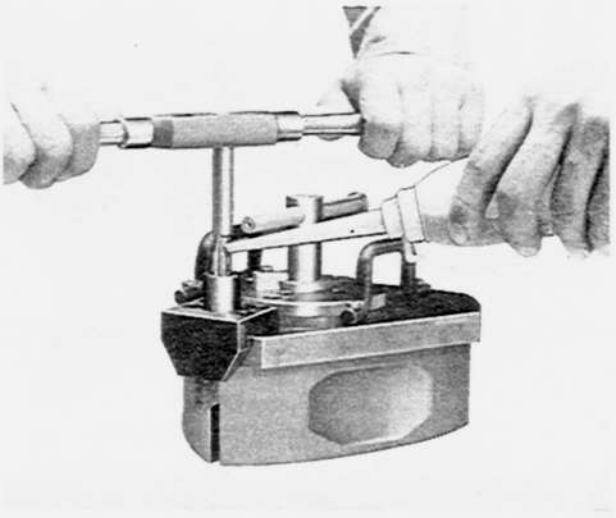

Fig. 1–67 Reboring corner seal groove

Reamer diameter	11.203 ~ 11.208 mm (0.4411 ~ 0.4413 in)
Rebored corner seal hole diameter	11.200 ~ 11.225 mm (0.4410 ~ 0.4419 in)
Oversize corner seal diameter	11.170 ~ 11.180 mm (0.4398 ~ 0.4402 in)

h. Inspecting the gap between side seal and corner seal

Check the gap with the side seal and corner seal installed on the rotor. Insert a feeler gauge between the rear of the side seal (against the turning direction of rotor) and the corner seal. When this clearance is too large, gas-sealing performance becomes poor.
The side seal must be replaced if the gap between the side seal and the corner seal exceeds 0.4 mm (0.016 in).
When a side seal is replaced, adjust the gap between side seal and corner seal by grinding the opposite end of the side seal to the rotor rotating direction along the round shape of corner seal with a fine file so that gap may be 0.05 ~ 0.15 mm (0.002 ~ 0.006 in).

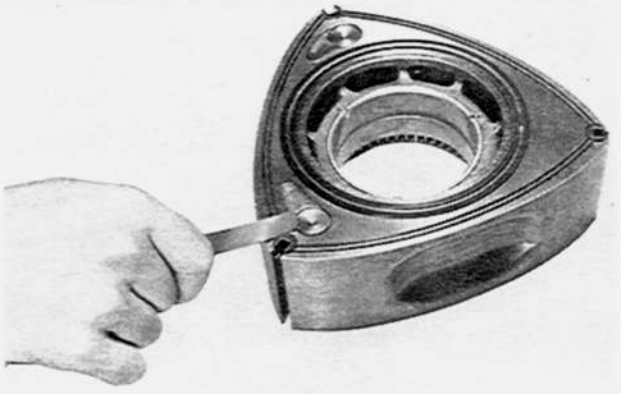

Fig. 1–68 Checking gap of corner seal and side seal

Note: Be sure to use the right one when installing a new side seal as there are four different types, namely, the front inner, front outer, rear inner, and rear outer seal.

i. Inspecting the seal spring

Check for wear or damage of the seal spring, especially the contacted portions with rotor or seal.

Note: When the corner seal, corner seal spring, side seal and side seal spring are installed onto the rotor, check the protrusion of each seal, referring to Par. 1–D–2.

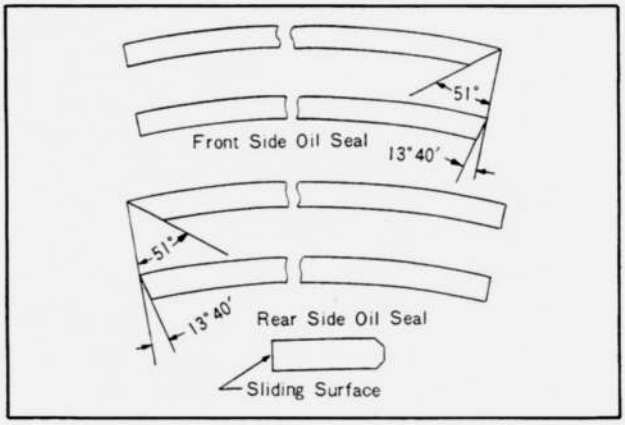

Fig. 1–69 Shape of side seal

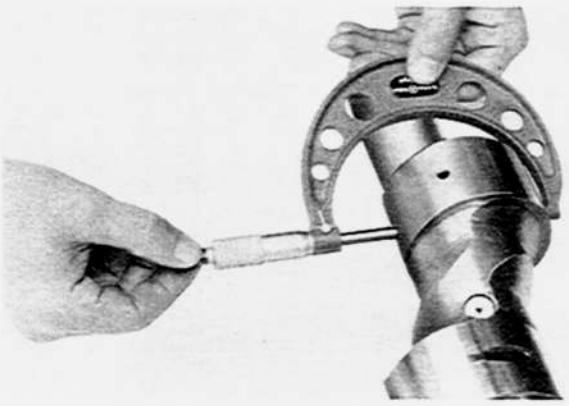

Fig. 1–70 Measuring journal diameter

1–C–7. Eccentric Shaft

a. Inspecting the eccentric shaft

Wash the shaft in a cleaning solution and blow the oil passage with compressed air. Check for cracks, scratches, wear or blockage of oil passages.

Measure the diameter of all journals of the eccentric shaft with a micrometer. Replace the shaft if the wear is excessive. The standard diameter of the main journal is $43\ ^{+0}_{-0.015}$ mm ($1.6929\ ^{+0}_{-0.0006}$ in), while that of the rotor journal is $74\ ^{-0.015}_{-0.030}$ mm ($2.9134\ ^{-0.0006}_{-0.0012}$ in).

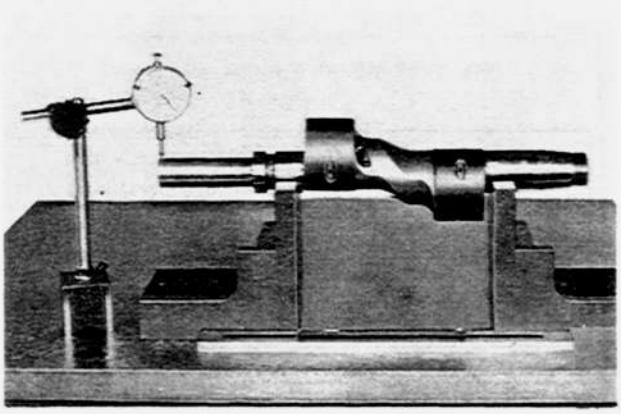

Fig. 1–71 Checking eccentric shaft run-out

b. Checking the eccentric shaft run-out

Mount the eccentric shaft on the "V" blocks. Turn the shaft slowly and measure the deflection at the front and rear with a dial gauge. If the deflection is more than 0.02 mm (0.0008 in), replace the shaft with a new one.

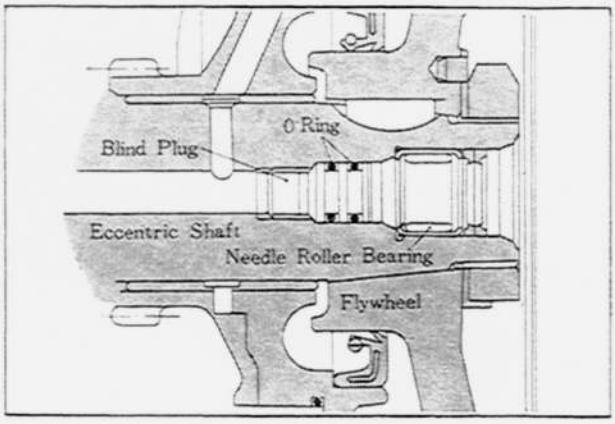

Fig. 1–72 Blind plug

c. Inspecting the blind plug

An oil passage is provided inside of the eccentric shaft. The rear end is sealed with a blind plug for a pressure of 5 kg/cm² (71 lb/in²). Therefore, it is important to check for oil leakage or loose plug. If oil leakage is found, remove the blind plug with a hexagonal Allen key and replace the "O" ring.

d. Inspecting the needle roller bearing

Check for wear or damage to the needle roller bearing at the rear end of the eccentric shaft. Then insert the pilot part of the main drive shaft and check for smooth operation and proper clearance.

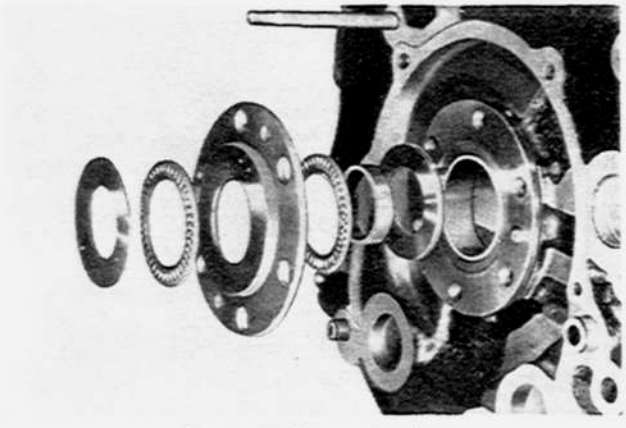

Fig. 1–73 Thrust bearings

e. Inspecting the thrust bearings

The end thrust of the eccentruc shaft is taken bythe thrust bearings. Check the thrust bearing for wear or damage. Also inspect the bearing housing and thrust plate for wear.

1–D. ENGINE ASSEMBLY

The procedures for assembling the engine when the engine is to be completely overhauled are as follows:

1–D–1. Installing the Oil Seal

1. Place the rotor on a rubber pad or cloth to protect it from damage.
2. Fit the outer and inner oil seal springs in their respective grooves of the rotor so that the spring gap is located opposite each other as shown in Fig. 1–74.
3. Insert a new "O" ring in each oil seal.

Note: When replacing the oil seal, confirm smooth movement by placing the oil seal on the rotor groove before installing the "O" ring.

4. Apply the sufficient engine oil to the oil seal and groove.
5. Install the oil seal to the rotor groove pushing the head face of the oil seal with fingers slowly, carefully not to deform the oil seal as shown in Fig.1–75.

Note:
(1) When fitting the oil seal, comfirm the head face of the oil seal so as not to mistake the head face (taper) for the bottom face (flat).
(2) Install the oil seals on the both side of the rotor.



Fig. 1–74 Position of spring gap



Fig. 1–75 Installing oil seal

1–D–2. Installing the Seal

1. Place the rear rotor on a rubber pad or cloth so as to face the internal gear side upward.
2. Confirming the identification marks of the apex seal, place each apex seal on the rotor groove without the spring.
3. Install the corner seal springs and corner seals, and apply the engine oil.

Note: The top surface of the corner seal must be 1.3 ~ 1.5 mm (0.05 ~ 0.06 in) higher than the rotor surface. It must also move freely, when pressed by finger.

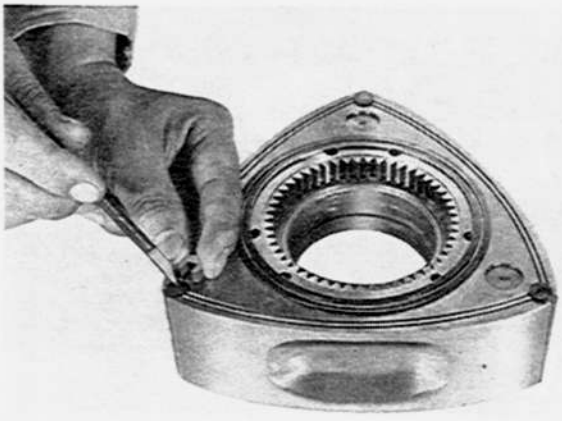

Fig. 1–76 Fitting corner seal

4. Fit the side seal springs to the rotor so as to face both ends of the side seal upward, and apply the engine oil.
5. Fit the side seals to their respective grooves.

Note: The side seal must protrude approx. 1.0 mm (0.04 in) from the rotor surface. Also check free movement by pressing manually.

6. Apply oil to the internal gear and seals of the rotor.
7. Install the **rotor clamp** (49 0813 230).

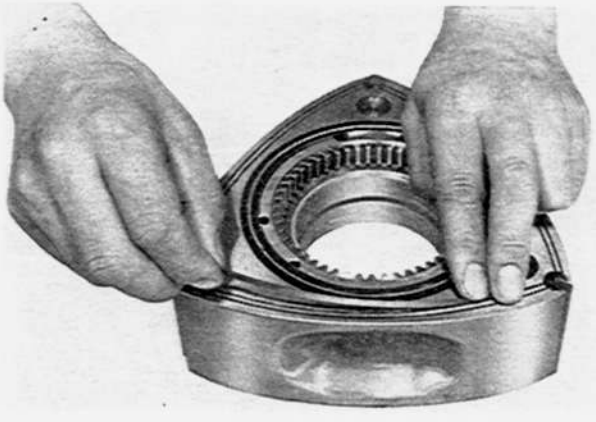

Fig. 1–77 Fitting side seal

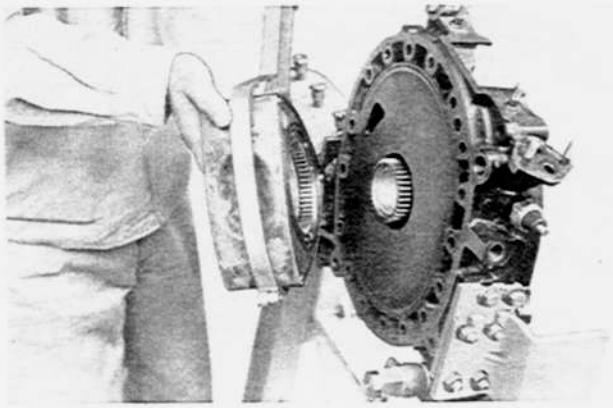

Fig. 1–78 Installing rear rotor assembly

1–D–3. Installing the rear rotor

1. Mount the rear housing on the **engine stand** (49 0107 680A, 49 0813 005 and 49 0820 006), so that the rotor friction surface of the housing faces vertically.
2. Place the rotor on the rear housing taking care not to drop the seals, and turn the rear housing with rotor so as to be the sliding surface of the rear housing with rotor so as to be the sliding surface of the rear housing upward.

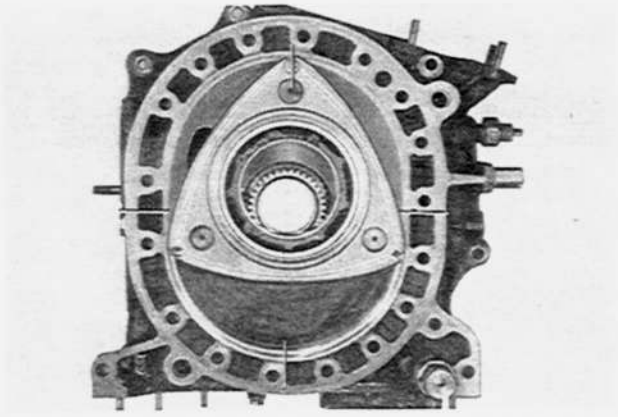

Fig. 1–79 Location of rotor apex

3. Mesh the internal gear and stationary gear so that one of the rotor apexes is set to any one of the four places shown in Fig. 1–79.

Note: In this case, be careful not to drop the corner seal into the parts.

4. Remove the rotor clamp and apex seals.

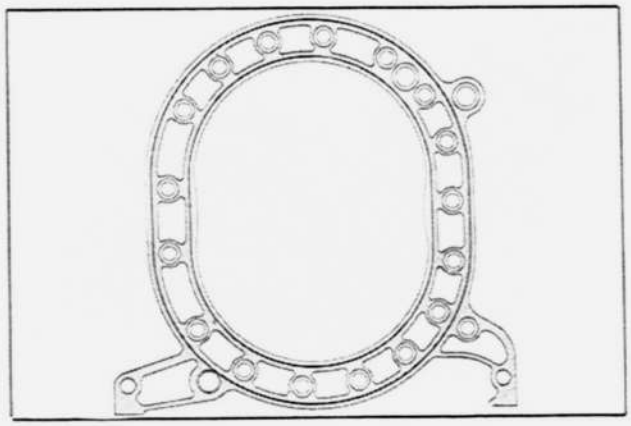

Fig. 1–80 Applying sealing agent

1–D–4. Installing the rear rotor housing

1. Apply sealing agent to the rear side of the rear rotor housing, as shown in Fig. 1–80. Be careful not to let the sealing agent penetrate into the cooling water or oil circuits.

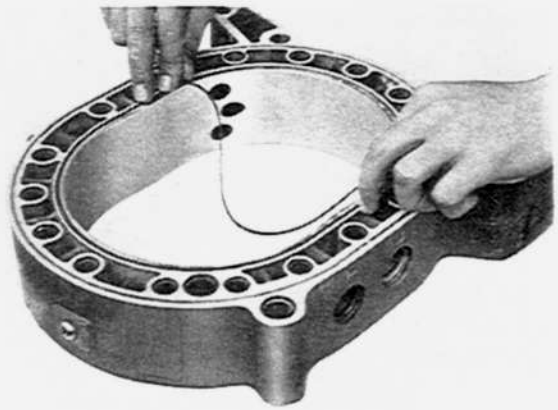

Fig. 1–81 Fitting sealing rubber

2. Place the new "O" rings and sealing rubbers on the rear rotor housing.

Note: When installing the "O" rings and sealing rubbers on the rear rotor housing, slightly apply rubber grease to "O" rings and sealing rubbers to prinent them from coming off.

3. Reverse the rotor housing while taking care not to let the sealing rubbers and "O" rings drop out of the grooves, and mount it on the rear housing.

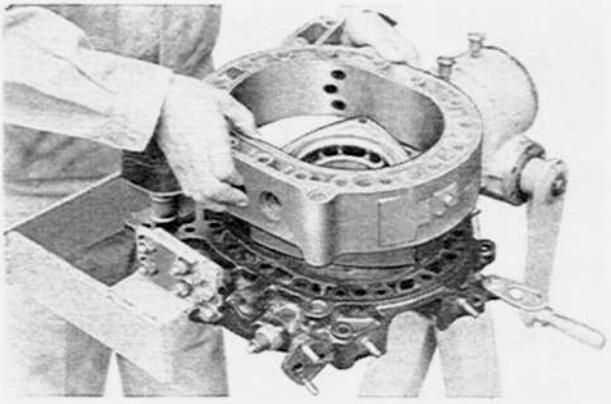

Fig. 1–82 Installing rear rotor housing

4. Insert the tubular dowels through the rear rotor housing holes to rear housing hole, after supplying a few drops of lubricant to the tubular dowels.

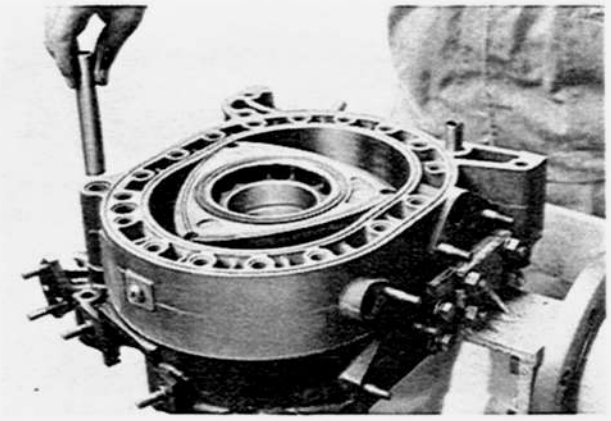

Fig. 1–83 Installing tubular dowels

1–D–5. Installing the eccentric shaft

1. Lubricate the journal sections.
2. Insert the eccentric shaft while being careful not to damage rotor bearing and main bearing.

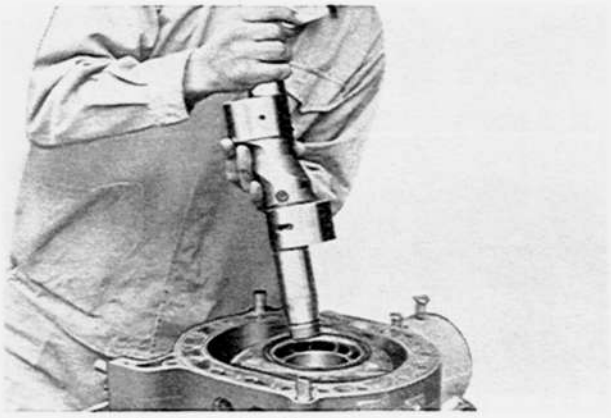

Fig. 1–84 Installing eccentric shaft

1–D–6. Installing the seals

1. Fit each apex seal to the rotor groove confirming the position and direction.
2. Install the each apex seal spring to the reverse side of the apex seal as shown in Fig. 1–85.
3. Fit the corner seals and side seals to their respective positions on the rotor. (Refer to step 3 and 4 in par 1–D–2.).
4. Apply some oil to the seals on the rotor and friction surface of the rear side housing.

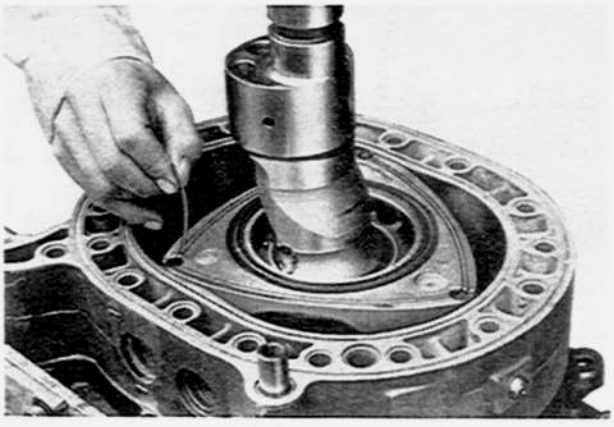

Fig. 1–85 Fitting apex seal spring

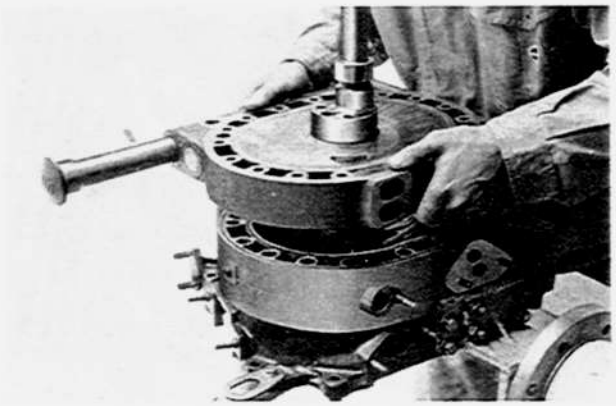

Fig. 1–86 Installing intermeidate housing

1–D–7. Installing the Intermediate Housing

1. Apply sealing agent on the mating surface of the rear rotor housing.
2. Fit the new sealing rubbers and "O" rings on the rear rotor housing.
3. Make sure that the rotor housing is free from foreign matter.
4. While holding the rear end of the eccentric shaft up as high as it's rear journal portion does not exceed the rear rotor bearing, install the intermediate housing through the eccentric shaft.

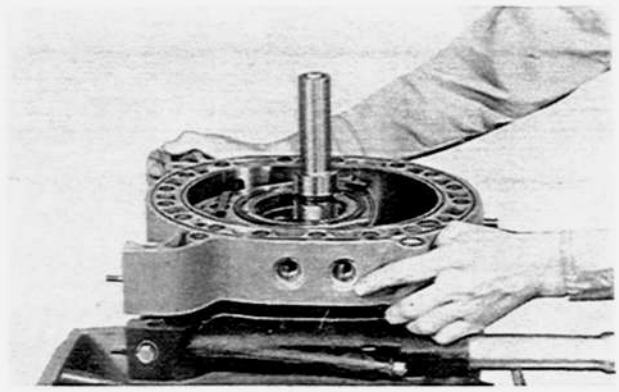

Fig. 1–87 Installing front rotor housing

1–D–8. Installing the Front Rotor and Housing

Refer to Par. 1–D–2, 3, 4 and 6, and assemble the front rotor and front rotor housing.

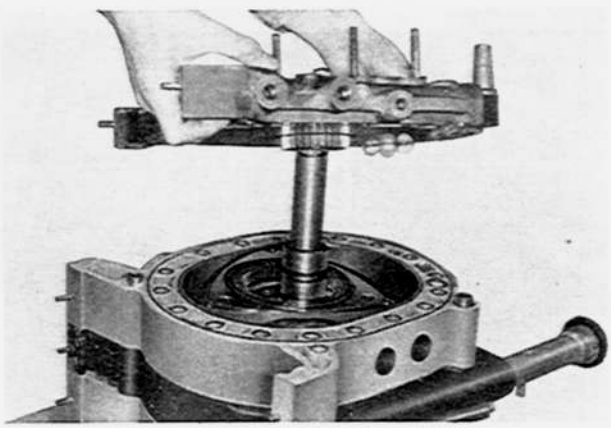

Fig. 1–88 Installing front housing

1–D–9. Installing the Front Housing

1. Apply sufficient engine oil to the stationary gear and the main bearing.
2. Install the front housing over the eccentric shaft. If necessary, turn the rotor slightly to engage the teeth of the front housing stationary gear and the front rotor internal gear.

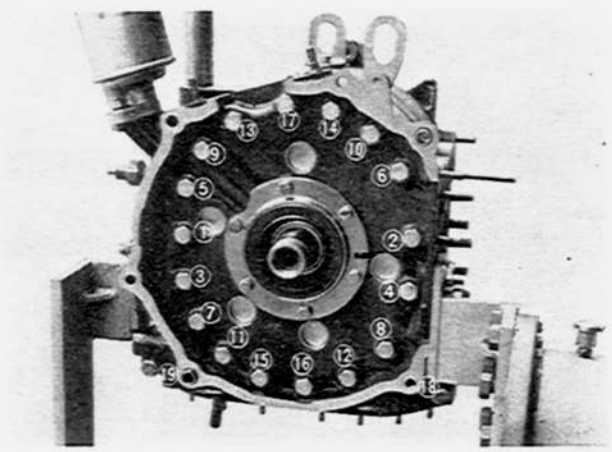

Fig. 1–89 Tightening order

1–D–10. Tightening the Tension Bolts

1. Fit the tension bolts.
2. Tighten the bolts gradually in the order shown in Fig. 1–89. The specified tightening torque is 2.5 m-kg (18 ft-lb).

Note: Attach the pulley bolt to the front end of the eccentric shaft and turn by means of a wrench to confirm smooth rotation.

1–D–11. Installing the Clutch Assembly

1. Apply grease to the oil seal of the rear housing.
2. Mount the flywheel to the rear end of the eccentric shaft through the key.
3. Apply sealing agent to the both faces of lock washer, apply the locking agent on the thread of the eccentric shaft and place the lock washer in position and install the lock nut.
4. Hold the flywheel with the **ring gear brake** (49 0820 060) and tighten the lock nut to a torque of 45 m-kg (320 ft-lb).
5. Bend the tab of the lock washer.

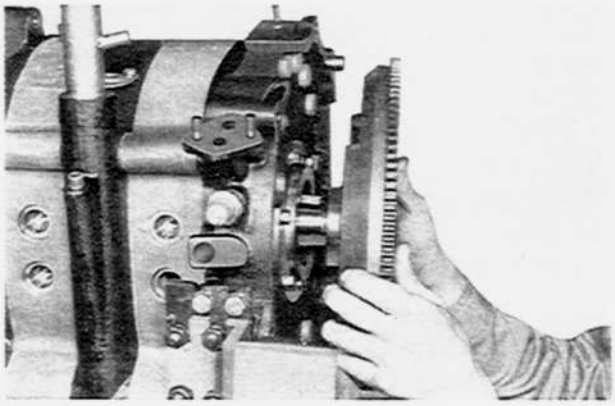

Fig. 1–90 Installing flywheel

6. Holding the clutch disk at the mounting position on the flywheel insert the **clutch disk centering tool** (49 0813 310) through the spline of the clutch disk into the needle bearing at the rear end of the eccentric shaft.
7. Mount the clutch cover and match the "O" mark on the clutch cover with the reamed hole of the flywheel and fit the securing bolts.
8. Tighten the bolts to a torque of 2.0 m-kg (15 ft-lb).

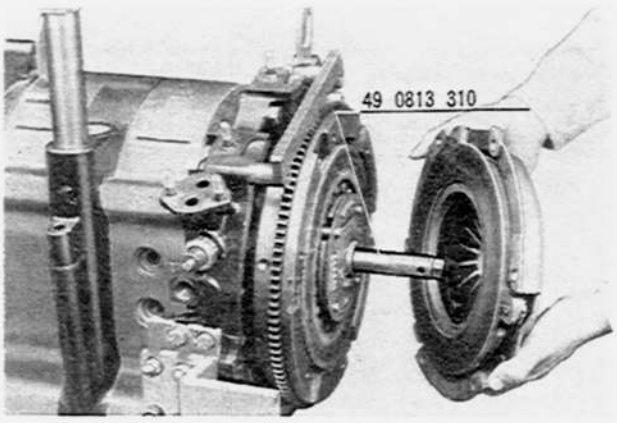

Fig. 1–91 Installing clutch assembly

1–D–12. Adjustment of Eccentric Shaft End Play

1. Turn the engine so as to place the front side of engine upward.
2. Fit the thrust plate, spacer and needle bearing on the eccentric shaft, and then apply sufficient engine oil to them.
3. Install the bearing housing on the front housing, and tighten the bolts and bend the tabs of the lock washers.

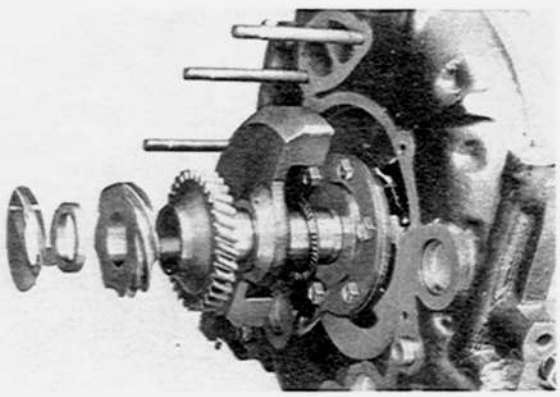

Fig. 1–92

4. Applying engine oil, install the needle bearing, thrust washer, balance weight, oil pump drive gear, distributor drive gear, key, spacer and beffle plate in that order on the eccentric shaft

Note: Before installing the thrust washer and balance weight, be sure that two needle bearing are in order along the center of the eccentric shaft.

5. Install the eccentric shaft pulley with key without front cover and tighten the bolt to 7.0 m-kg (50 ft-lb) holding the flywheel with the **ring gear brake** (49 0820 060).
6. Turn the engine assembly so as to place the eccentric shaft horizontally, and fit a dial indicator so that a feeler touches on the pulley.

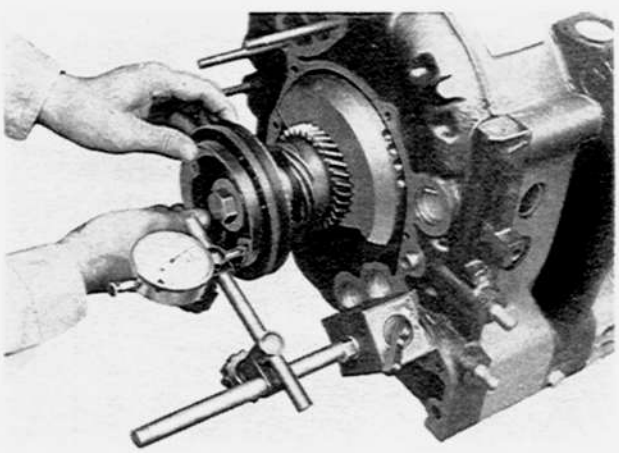

Fig. 1–93 Checking end play

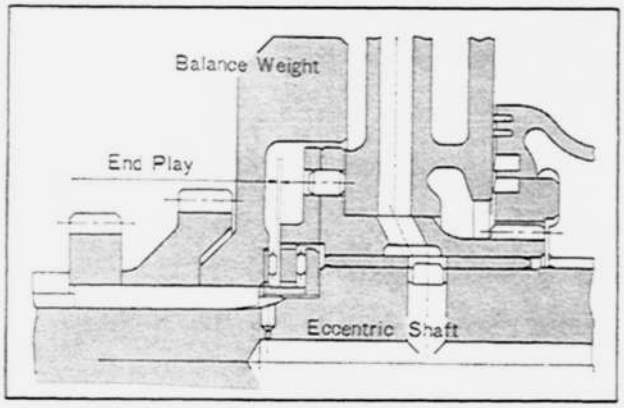

Fig. 1–94 End play of eccentric shaft

7. Move the pulley fore and aft, and read the scale of dial indicator. The measured value should be 0.04 ~ 0.07 mm (0.0016 ~ 0.0018 in). If it is not within the limit, adjust it by mean of grinding the spacer using the emery paper on the flat place, or by replacing the spacer. The following three kinds of spacer are available. Comfirm the end play again. If the measurement is within standard, remove the eccentric shaft pulley and key, and take a next step to fit the front cover.

Mark	Thickness
N	9.00 ± 0.01 mm (0.3543 ± 0.0004 in)
M	9.04 ± 0.01 mm (0.3559 ± 0.0004 in)
L	9.08 ± 0.01 mm (0.3574 ± 0.0004 in)

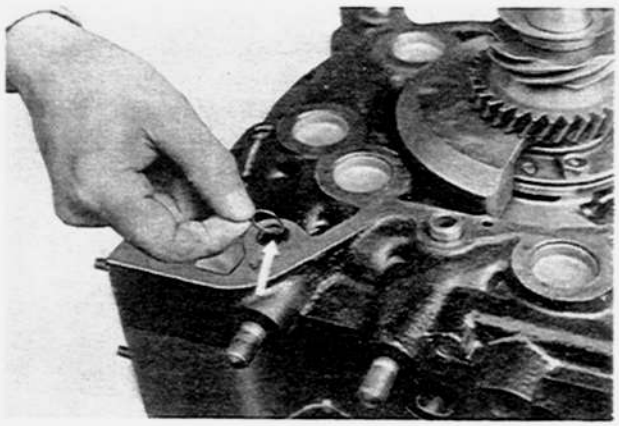

Fig. 1–95 Fitting "O" ring

1–D–13. Installing the Front Cover and Eccentric Shaft Pulley

1. Place the "O" ring on the oil passage of the front housing.
2. Apply grease to the oil seal of the front cover.

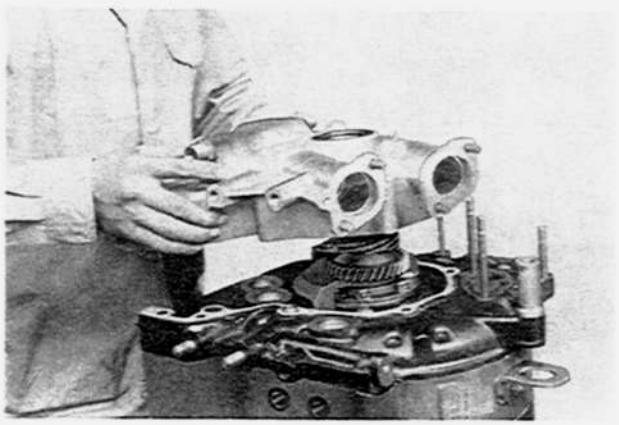

Fig. 1–96 Installing front cover

3. Place the gasket on the front housing and install the front cover.
4. Tighten the volts mounting front cover to a torque of 2.0 m-kg (15 ft-lb).

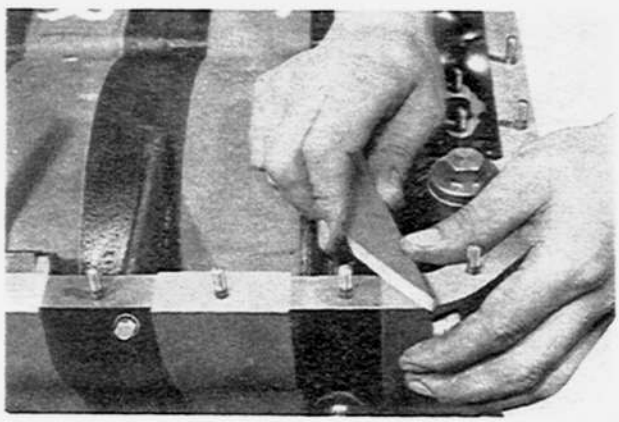

Fig. 1–97 Cutting excess gasket

5. Install the eccentric shaft pulley aligning the key grooves of the eccentric shaft and pulley.
6. Tighten nut mounting the eccentric shaft pulley to a torque of 7.0 m-kg (50 ft-lb).
7. Cut off surplus front cover gasket along mounting surface of the oil pan.

1–D–14. Installing the Metering Pump
Install the metering pump on the front cover.

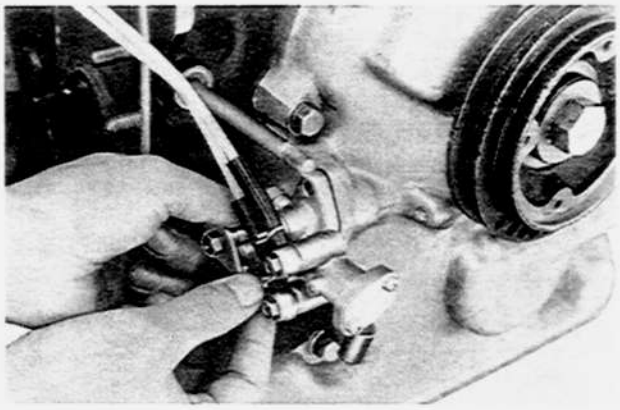

Fig. 1–98 Installing metering pump

1–D–15. Installing the Oil Strainer and Oil Pan
1. Place the gasket on the oil pump and install the oil strainer.
2. Fix the oil strainer stay with a bolt to the rear housing.
3. Apply sealing agnet to the matching surface of the oil pan and each housing.
4. Install the oil pan with a gasket.
5. Install the nuts through the stiffeners.
6. Tighten the nuts diagonally until a torque of 0.6 m-kg (4.5 ft-lb) is attained.

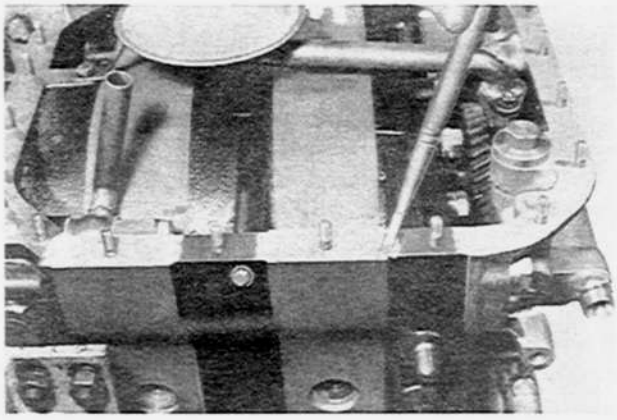

Fig. 1–99 Applying sealing agent

1–D–16. Installing the Oil Filter
Place the two "O" rings on the oil filter and install the unit to the rear housing.

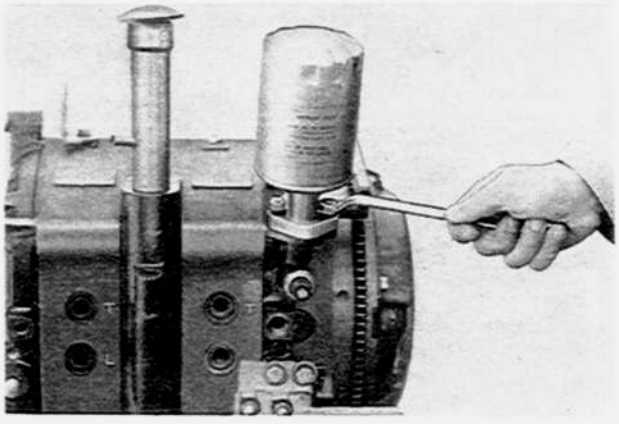

Fig. 1–100 Installing oil filter

1–D–17. Installing the Distributors
1. Turn the engine and stop when the white mark on the pulley matches the needle on the front housing.

Note: In case of the rotary engine, each rotor makes a 1/3 rotation as against one rotation of the eccentric shaft. That is, one combustion is obtained while the rotor makes a 1/3 rotation. Therefore, when the mark and the needle are aligned the front rotor is always located at T.D.C. in the compression stroke.

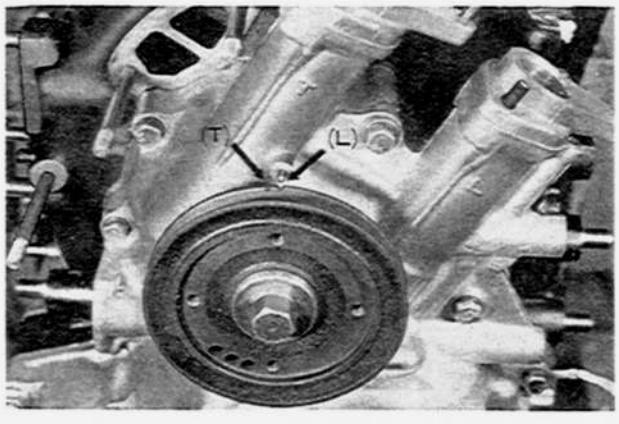

Fig. 1–101 Aligning for top dead center

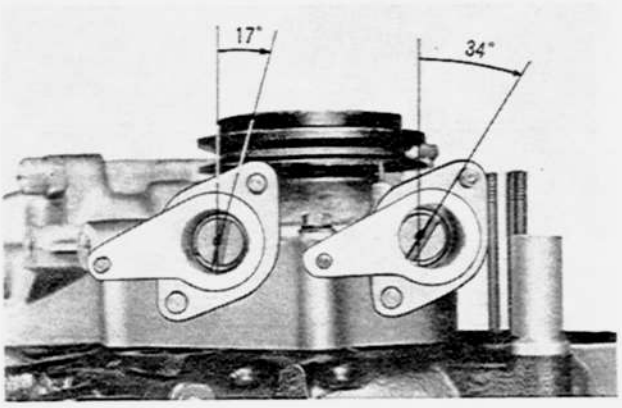

Fig. 1–102 Position of distributor socket

2. Install the trailing distributor socket through the gasket so that the groove on the drive shaft is at an incliation of about 34° to the right against the longitudinal axis of engine.
3. Install the leading side distributor socket through the gasket to the front housing so that the groove on the upper side of the drive shaft points about 17° to the right against the longitudinal axis of the engine, as shown in Fig. 1–102.

Note: The woodruff area at the upper part of the drive shaft varies with the left and right grooves, but this does not affect ignition timing even if it is 180° opposite.

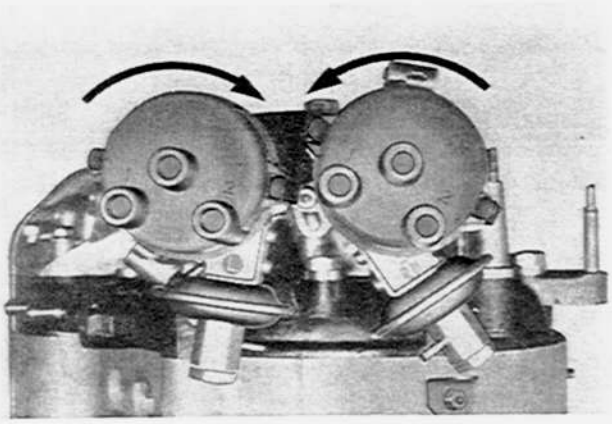

Fig. 1–103 Adjusting ignition timing

4. Install each distributor on the socket so that the key of the distributor shaft matches the slot at the upper side of distributor drive shaft.

Note: The marks of the distributor and front cover, T and L, must be matched.

5. Turn the distributors as shown in Fig.1–103, until the contact point starts to open, Then tighten the lockplate.

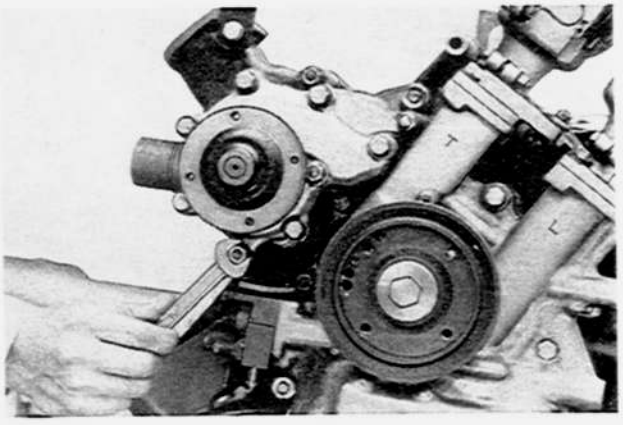

Fig. 1–104 Installing water pump

1–D–18. Installing the Water Pump

1. Place the gasket on the front housing and install the water pump. Tighten the nuts.
2. Install the water pump pulley.

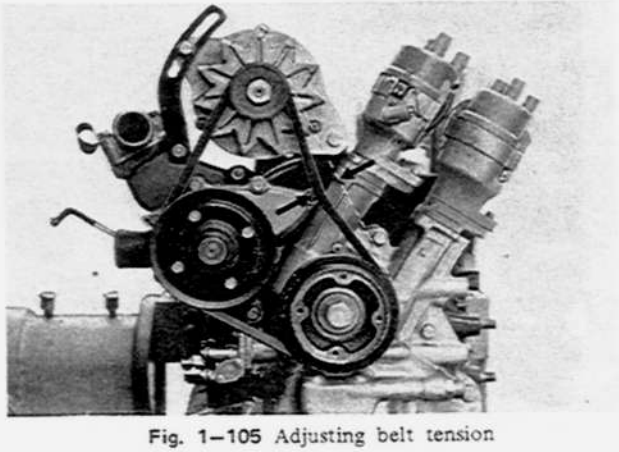

Fig. 1–105 Adjusting belt tension

1–D–19. Installing the Alternator

1. Fix the alternator on the mounting bracket with bolt and nut.
2. Fit the V belt on the pulleys.
3. Attach the upper end of the alternator flange to the strap.
4. Adjust the belt tension so that the slack of the belt may be 15 ~ 17 mm (0.59 ~ 0.67 in) at the center point between alternator and eccentric shaft pulleys pushing the belt by about 10 kg (22 lb). For a new belt, it should be 11 ~ 13 mm (0.43 ~ 0.51 lb).
5. Tighten the bolts and nuts.

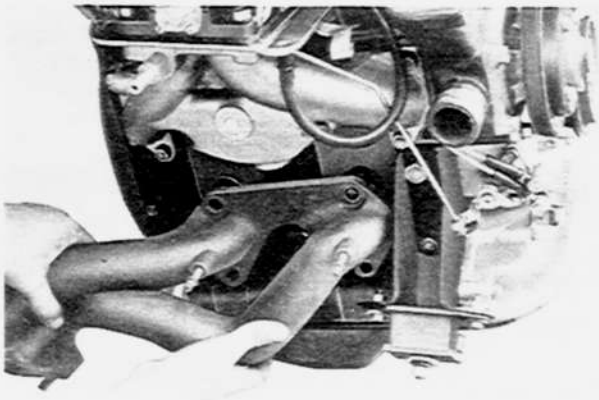

Fig. 106 Installing manifold

1–D–20. Installing the Manifold and Carburettor

1. Remove the engine from the engine stand.
2. Install the inlet manifold, exhaust manifold and carburettor with their gaskets.
3. Connect the carburettor and metering pump link.
4. Install the metering oil tube, and the distributor vacuum control tube.

1–E. ENGINE INSTALLATION

The engine is installed by reversing the removing procedures.

SPECIAL TOOLS

49 0107 680A	Engine stand
49 0813 005	Engine hanger
49 0820 006	Attachment, engine hanger
49 0813 215	Dowel puller
49 0813 240	Rotor bearing puller and installer
49 0813 245	Expander, rotor bearing
49 0813 225	Oil seal remover
49 0813 230	Rotor clamp
49 0813 250	Seal case
49 0813 235	Main bearing puller and installer
49 0820 260	Lock pin remover[
49 0820 060	Ring gear brake
49 0820 035	Box wrench, flywheel
49 0823 300	Flywheel puller
49 0813 310	Clutch disk centering tool
5619 91 100	Bar limit gauge, corner seal gloove
5870 94 152	Jig, corner seal gloove
5363 91 180	Reamer, corner seal gloove

LUBRICATING SYSTEM

2–A. LUBRICATING CIRCUIT ..... 2 : 1
2–B. OIL PRESSURE RELIEF VALVE ..... 2 : 1
2–C. OIL PRESSURE SWITCH ..... 2 : 2
2–D. INSPECTING THE OIL PRESSURE ..... 2 : 2
2–E. OIL PUMP ..... 2 : 2
2–E–1. Oil Pump Inspection ..... 2 : 2
2–E–2. Assembling the Oil Pump ..... 2 : 3
2–E–3. Replacing the Oil Pump Gears .. 2 : 3
2–F. OIL FILTER ..... 2 : 3
2–G. OIL THERMO VALVE ..... 2 : 3
2–G–1. Inspecting the Oil Thermo-Valve ..... 2 : 4
2–H. METERING OIL PUMP ..... 2 : 4
2–H–1. Inspecting the Metering Oil Pump ..... 2 : 4
2–H–2. Adjusting the Metering Oil Pump ..... 2 : 4

LUBRICATING SYSTEM

A two-rotor type pump supplies oil by forced circulation. The pump installed inside the front cover is driven by gears on the eccentric shaft.

A full-flow oil filter is provided on the rear housing of the engine. The metering oil pump delivers an adequate amount of oil into the float chamber of carburettor to lubricate seals.

An oil cooler is fixed beneath the radiator. When the oil temperature rises, a thermo-valve functions to cool the oil in the cooler.

2–A. LUBRICATING CIRCUIT

1. The oil enters the oil pump through an oil strainer and is discharged to the oil filter through the oil passage of the housing.
2. When the oil temperature exceeds 71°C (160°F), the thermo-valve in the front cover starts functioning to discharge the oil to the oil cooler from the oil pump.
3. The cooled oil passed through a hose from cooler is mixed with the uncooled oil passed through the passage of the housing, before the oil filter.
4. The filtered oil is discharged to the front main bearing through the tubular dowel and to the rear main bearing through the passage of the rear housing.
5. After lubricating the front and rear main bearings, the oil passes through the oil holes of the bearings and enters the oil passage provided in the eccentric shaft.
6. Stationary gears, internal gears and thrust bearings are lubricated with the oil discharged through the clearance between the main bearing and the shaft.
7. The oil circulating through the eccentric shaft passage lubricates the rotor bearings.
8. The eccentric shaft is equipped with two oil plug jets which are faced to front and rear rotor inner holes. The oil in the passage of the eccentric shaft is injected through the plug jets into the rotors and cools the rotors.
9. Oil passing through the tubular dowel is sent to the distributor and the metering oil pump.
10. From the metering oil pump the lubricant is discharged to the carburettor and is supplied into the combustion chambers together with the air-fuel mixture to lubricate the apex seal, corner seal, side seal and the housing.

2–B. PRESSURE REGULATOR

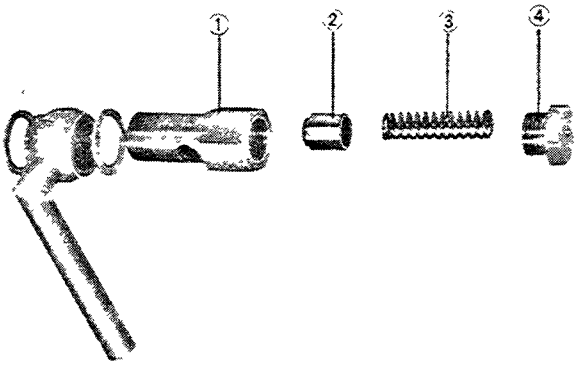

Fig. 2–1

1. Regulator body
2. Control plunger
3. Control spring
4. Plug

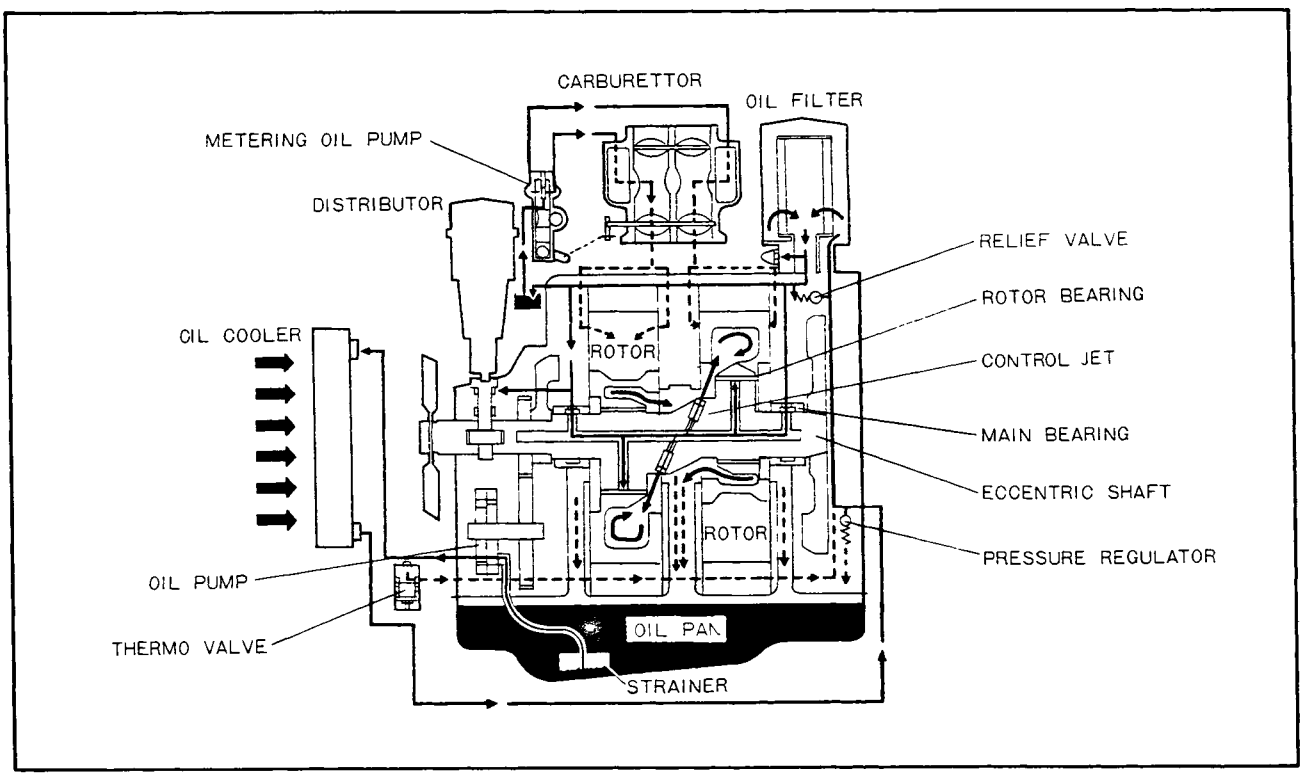

Fig. 2–2 Lubricating circuit

2–B. OIL PRESSURE RELIEF VALVE

The oil pressure regulator valve is installed in the rear housing. The regulator valve opens when the number of engine revolutions increases and the oil pressure in the lubricating system rises. Then the oil pressure is relieved and excess oil is returned to the oil sump. By this function of the regulator valve, the oil pressure can be maintained at a maximum of 5.0 kg/cm² (71.1 lb/in²).

2–C. OIL PRESSURE SWITCH

The oil pressure switch is provided on the left side of the rear housing. This switch is connected to the warning lamp on the instrument panel. The normal pressure is 2.5 kg/cm² (35.6 lb/in²) during engine idling. If the oil pressure drops below 0.3 kg/cm² (4.3 lb/in²), the warning lamp lights up to indicate some troubles in the lubricating system. When the lamp comes on, immediate checks should be made.

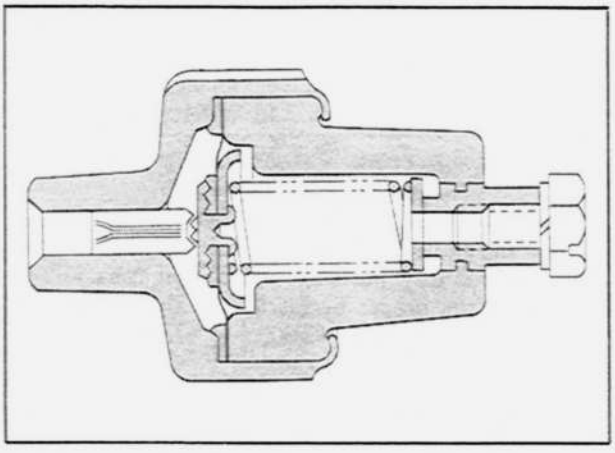

Fig. 2–3 Oil pressure switch

2–D. INSPECTING THE OIL PRESSURE

The oil pressure should be checked as follows:

1. Operate the engine until it is warmed up to the normal operating temperature.
2. Remove the oil pressure switch and connect an oil pressure gauge instead.
3. Operate the engine at 3,000 rpm and read the oil pressure gauge. The oil pressure should be 5.0 kg/cm² (71.1 lb/in²).

If the oil pressure is found extremely low, check the following points:

1) Make sure whether the oil level is between F and L on the dipstick gauge or not.
2) See if the oil filter is clogged. If clogged, replace the oil filter cartridge refer to 2–F.
3) Inspect the oil pump for defects, refer to 2–E.
4) Inspect the oil pressure relief valve and check plunger wear. If found defective, replace the valve. The specifications of the spring are in the following table.

Free Length	46.4 mm (1.827 in)
Set Length	35.3 mm (1.390 in)
Set Load	7.1 kg (15.6 lb.)

2–E. OIL PUMP

The components of the trochoid rotor type oil pump are shown in Fig. 2–5.

The feeding capacity of the oil pump is 16 ~ 20 liters (34 ~ 42 U.S. pint, 28 ~ 35 Imp. pint) per minute at 6,000 rpm.

2–E–1. Oil Pump Inspection

For checking, proceed as follows:

1. Use a feeler gauge to check the clearance between the outer rotor and the inner rotor as shown in Fig. 2–4. The standard clearnace should be 0.01 ~ 0.09 mm (0.0004 ~ 0.0035 in).

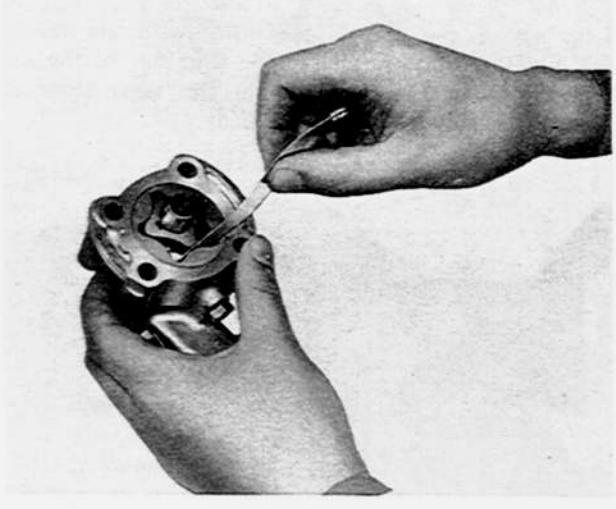

Fig. 2–4 Checking gap of rotors

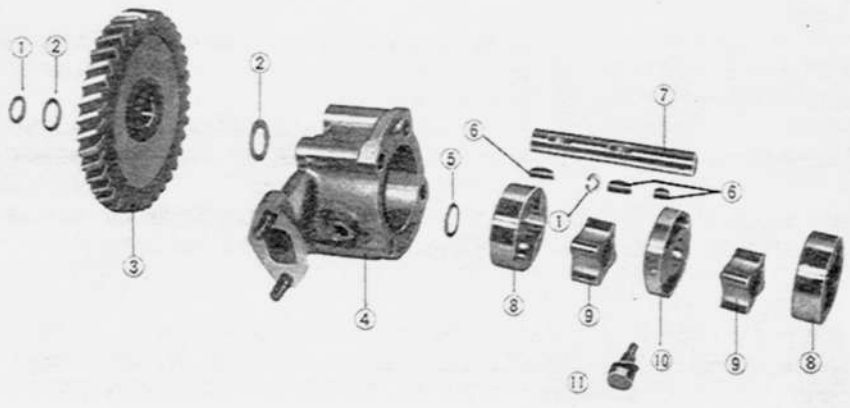

Fig. 2–5 Oil pump assembly

1. Snap ring
2. Adjusting washer
3. Oil pump driven gear
4. Oil pump body
5. Thrust washer
6. Woodruff key
7. Oil pump shaft
8. Outer rotor
9. Inner rotor
10. Intermediate plate
11. Set bolt & washer

2. Measure the clearance between the outer rotor and the pump body with the feeler gauge. The specified clearance is 0.20 ~ 0.25 mm (0.008 ~ 0.010 in).
3. Inspect the end float of the rotor with the feeler gauge as shown in Fig. 2–6. If the end float is too large, make corrections by scraping the pump body. The standard value of the end float is 0.10 ~ 0.20 mm (0.0014 ~ 0.008 in).

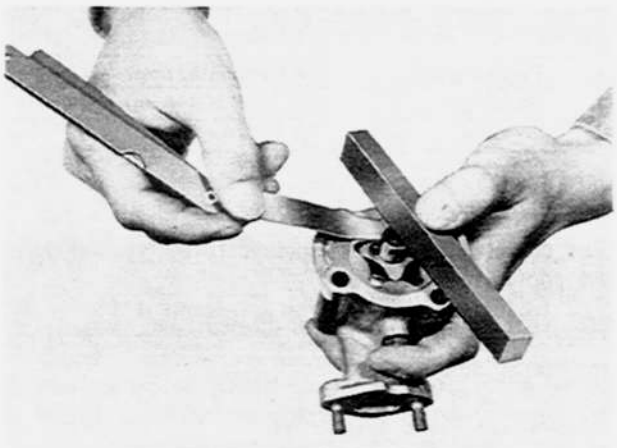

Fig. 2–6 Checking end float of rotors

2–E–2. Assembling the Oil Pump

1. Attach the stop ring and the key to the oil pump drive shaft.
2. Attach the inner rotor to the shaft by matching the key groove of the inner rotor with the key.
3. Fix the thrust washer to the stop ring of the shaft as shown in Fig. 2–7. Mount the inner rotor and shaft assembly to the pump body.

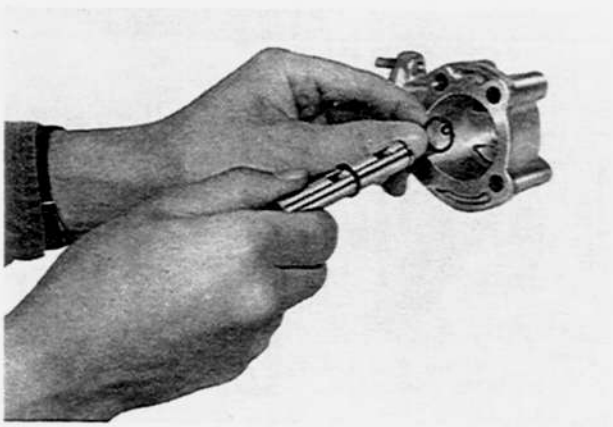

Fig. 2–7 Assembling oil pump

4. Apply oil to the outer rotor. Attach the outer rotor to the body with the chamfered side facing the driven gear.
5. Attach the intermediate plate to the body. Tighten the screw.
6. Fix the key to the key groove of the shaft.
7. Mount the inner rotor on the shaft with matching the key groove.
8. Mount the outer rotor
9. Mount the oil pump assembly on the front cover and fix it with the bolts. Rotate the drive shaft by hand to see whether it rotates smoothly.
10. Mount the thrust washer and driven gear on the shaft (insert the key).
11. Insert an available shims between the driven gear and the stop ring so that the clearance between the oil pump body and the driven gear is 0.1 ~ 0.2 mm (0.004 ~ 0.008 in). The following three kinds of shims are available : 0.1 mm (0.004 in), 0.3 mm (0.012 in), 0.6 mm (0.024 in).
12. Then fix the stop ring.

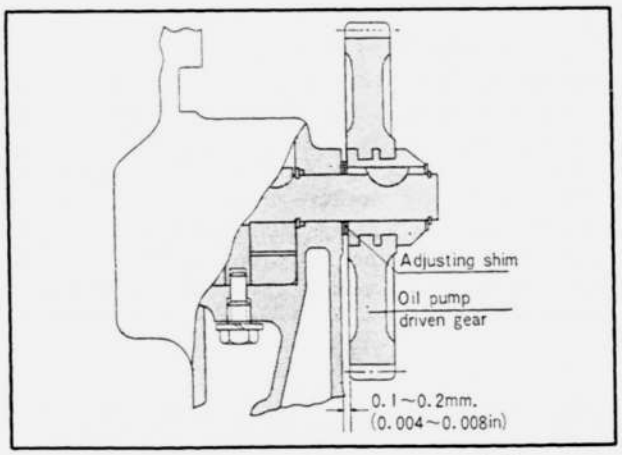

Fig. 2–8 Clearance of drive gear and body

2–E–3. Replacing the Oil Pump Gears

If the oil pump drive gear or the driven gear should be replaced, they must be replaced in pairs in order to obtain the proper backlash. The standard backlash is 0.08 ~ 0.12 mm (0.003 ~ 0.005 in).

2–F. OIL FILTER

The oil filter is of the cartridge type. The element is sealed in its container as a unit.
The oil filter is equipped with a relief valve. When the filter-flow resistance exceeds 0.8 ~ 1.2 kg/cm² (11.4 ~ 17.1 lb/in²) on account of clogging and contamination of the element, the relief valve is opened by the oil pressure.
The oil is then discharged directly to the engine without passing through the oil filter. The oil filter element should be replaced in intervals of 12,000 km (8,000 miles).

1. Use the oil filter wrench to replace the oil filter cartridge.
2. Apply a small quantity of oil to the rubber packing of the new filter cartridge and fix the cartridge to the filter bracket.
3. Tighten the cartridge a farther 2/3 of a turn by hand after the oil seal contacts with the seal surface but absolutely no more.
4. Start the engine and check if the oil leaks from the joints.

2–G. OIL THERMO–VALVE

The oil thermo-valve is provided in the front cover and consists of a pellet, a sliding valve and a return

spring. The oil sent from the oil pump to the thermo-valve takes two courses thereafter depend upon oil temperature, one leading to the oil cooler, and the other bypassing the oil cooler and leading direct to the oil filter by way of the housing. The passage leading to the oil cooler is always opened. The passage leading to the housing is also fully opened when the oil temperature is low, and most oil takes this passage and proceeds direct to the oil filter via the housing as there is resistance in the oil cooler. When the oil temperature rises to over 71°C (160°F), the pellet starts functioning, and when the oil temperature reaches 78°C (172°F), the passage leading to the housing gets completely closed. During the condition of the temperature between 71° ~ 78°C (160° ~ 172°F), a part of oil is sent directly to the oil filter via housing and the rest is cooled in the cooler before being sent to the oil filter. After exceeding 78°C (172°F), as the oil passage to the housing is closed, all oil is sent to the oil filter through the cooler.

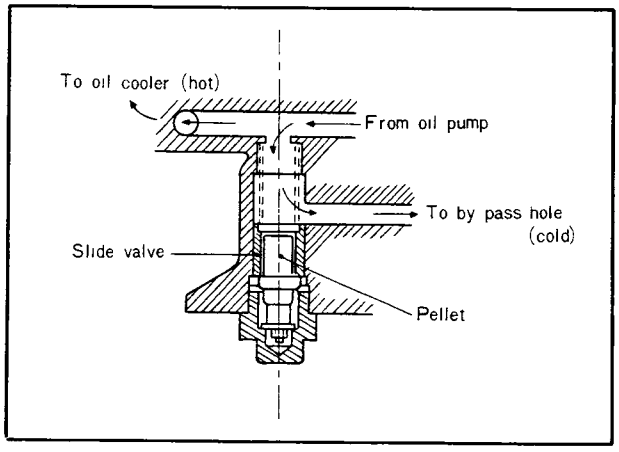

Fig. 2–9 Oil thermo-valve

2–G–1. Inspecting the Oil Thermo-Valve

1. Inspect the sliding surface of the slide valve to see whether there is any damage.
2. Inspect the return spring for any damage or deterioration. If the deterioration is serious, replace the spring. The free length of the spring should be 43.8 mm (1.724 in).
3. Inspect the pellet by inserting it in water together with a thermometer. Stir the water and gradually heat it. Check whether the pellet begins to function at 71°C (160°F) and lifts by 6 mm (0.236 in) at 78°C (172°F).

2–H. METERING OIL PUMP

The plunger type metering oil pump is provided to send a proper amount of oil to the carburettor. The oil enters the combustion chamber together with the air fuel mixture. Thus the sliding faces of seals and housing are lubricated.

The supplied amount of oil is controlled by the engine revolutions and the load, in the following way: The control lever of the pump is interlocked with the throttle lever of the carburettor and moves the control pin. The control pin is cam-shaped shaft and is in contact with the cam-shaped tip of the plunger, and so the stroke of the plunger is controled with the opening angle of the throttle valve. When the opening of the throttle valve is small, the stroke of the plunger is only a little. Thus the stroke of the differential plunger which is turned and pushed together with the plunger is small to keep the oil discharge small.

When the opening of the throttle valve becomes large, the stroke of plunger becomes larger to increase the stroke of the differential plunger. Thus the supplied amount of oil becomes larger.

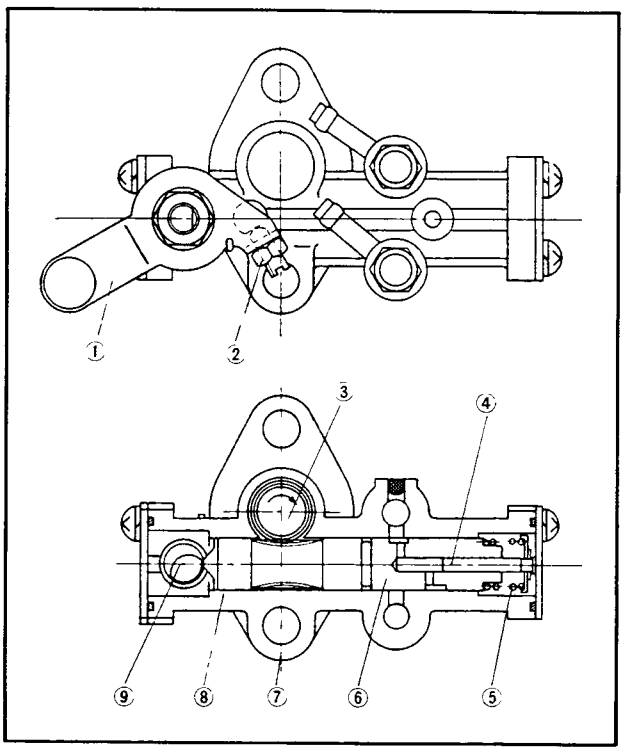

Fig. 2–10 Metering oil pump

1. Control lever
2. Adjust screw
3. Driving worm
4. Sub-plunger
5. Plunger spring
6. Differential plunger
7. Pump body
8. Plunger
9. Control pin

2–H–1. Inspecting the Metering Oil Pump

The amount of oil discharge from the oil metering pump should be inspected as follows:

Disconnect the oil tubes, which are connected with the carburettor, at the carburettor side.

Disconnect the connecting rod of the oil metering pump at the carburettor side. Set the engine so as to revolve at 2,000 rpm. Check the amount of oil discharged from the oil tube of the oil metering pump and if it is 6.5 ±1 cc/10 min, discharge of oil is normal. Otherwise, adjust the oil metering pump.

2–H–2. Adjusting the Metering Oil Pump

For adjustment of the oil metering pump, the amount of oil discharge will be increased by turning the adjust screw clockwise and be decreased by turning it counterclockwise.

COOLING SYSTEM

3–A. COOLANT CIRCULATION ..... 3 : 1
3–B. GENUINE LONG LIFE COOLANT ..... 3 : 1
3–C. FLUSHING THE COOLING SYSTEM ..... 3 : 2
3–D. RADIATOR ..... 3 : 2
3–D–1. Pressure Cap ..... 3 : 2
3–E. COOLING FAN ..... 3 : 2
3–E–1. Checking the Fan Revolution ..... 3 : 2
3–F. THERMOSTAT ..... 3 : 2
3–G. WATER PUMP ..... 3 : 3
3–G–1. Disassembling the Water Pump ..... 3 : 3
3–G–2 Assembling the Water Pump ..... 3 : 4

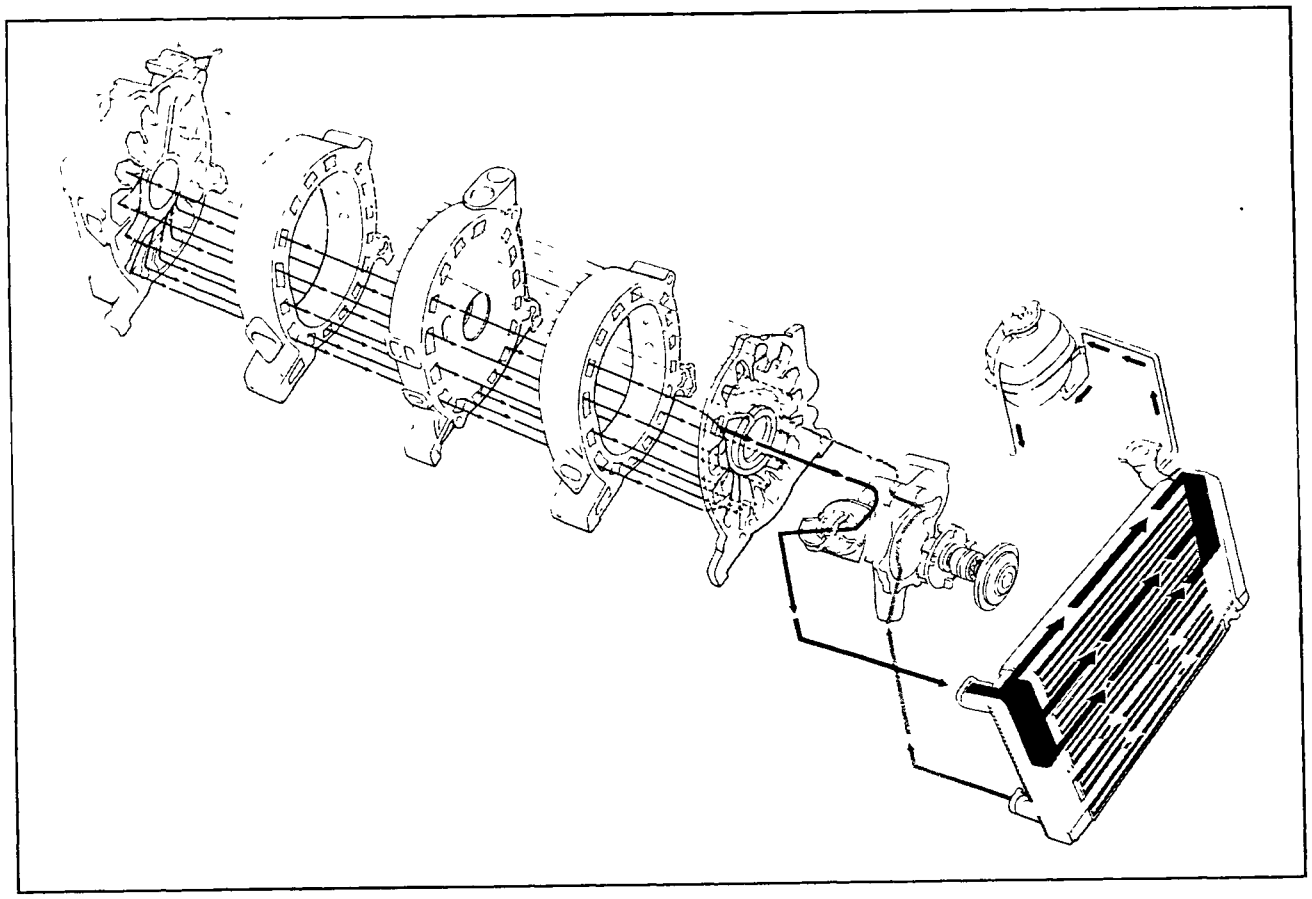

Fig. 3–1 Cooling circuit

COOLING SYSTEM

The completely sealed cooling system consists of a radiator with a sealed filler cap, an expansion chamber (sub-tank) with a pressure cap, centrifugal water pump a thermostat and a four-vane fan.
The radiator and the expansion chamber are connected by hose. When the engine is heated sufficiently, the coolant in the radiator flows out and is led into the expansion chamber through the hose. The coolant is then returned to the radiator by negative pressure which builds up in the cooling system when the engine cools down. The coolant should be changed every two years or every 48,000 km (30,000 miles).

3–A. COOLANT CIRCULATION

The water pump is driven by the eccentric shaft pulley over a V-belt and discharges the cooling water to the front housing. The water circulates from the front housing through the water passage provided in each housing and flows to the rear housing. From the rear housing, the water is returned to the front housing. At low engine temperature, the thermostat is closed to keep the water from entering the radiator. The water is then recirculated directly to the water pump and discharged to each housing. As the thermostat opens when the engine is warmed up, the water flows into the radiator. The cooled water flows from the radiator to the water pump through the connecting hose and cools the engine by circulation.

3–B. GENUINE LONG LIFE COOLANT

The genuine long life coolant is used in the cooling system of RX-2.
The genuine long life coolant was developed for the aluminum engine of RX-2. Antifreeze solution and anti-corrosive solution are included in this coolant.
The table below shows the mixing rate of water and genuine long life coolant. Follow the table when changing the coolant.

Freezing Point	Mixture Ratio %		Specific Gravity of Mixture at 20°C(68°F)
	Coolant	Water	
−20°C(−4°F)	35	65	1.051
−45°C(−49°F)	55	45	1.078

Note: If the genuine long life coolant is not available, add genuine antifreeze solution or anticorrosive according to the season.

Freezing point (Centigrade)	mixture percentage (Volume)		Specifix gravity of mixture at 20°C(68°F)
	Antifreeze solution	water	
−6.3	15	85	1.022
−9.3	20	80	1.029
−12.6	25	75	1.037
−16.2	30	70	1.044
−20.5	35	65	1.051
−25.2	40	60	1.058
−31.2	45	55	1.066
−37.6	50	50	1.073
−45.2	55	45	1.080

3–C. FLUSHING THE COOLING SYSTEM

When the genuine long life coolant is in use, the coolant should be changed every two years ro every 48, 000 km (30,000 miles). At the time of the coolant change, the cooling system should be cleaned as follows:

1. Open the drain cocks to drain the coolant.
2. Close the cocks. Fill with the clean soft water (demineralized water).
3. Operate the engine for about one hour.
4. Drain the water.
5. Fill in a mixture of water and genuine long life coolant.

Note: In case the accumulation of rust and other deposits are excessive, a detergent can be used. In this case the instructions of the detergent maker should be followed.

3–D. RADIATOR

The radiator is of the corrugated fin type with a sealed filler cap. A pressure cap is fixed to the expansion chamber.

Carefully inspect the radiator for water leakage. Any minor leakage must be completely eliminated by soldering or other means. A clogged radiator badly influences the cooling effect and should be cleaned with the compressed air.

3–D–1. Pressure Cap

The pressure cap is provided on the expansion chamber. The expansion chamber and the radiator are connected by hose. When the cooling water is pressurized, the boiling point rises and this prevents overheating and minimizes the loss of water. When the pressure in the cooling system exceeds 0.9 kg/cm² (12.8 lb/in²), the cap opens. When the coolant temperature falls, the vacuum release valve open at 0.1 kg/cm² (1.4 lb/in²) to prevent vacuum build up in the cooling system.

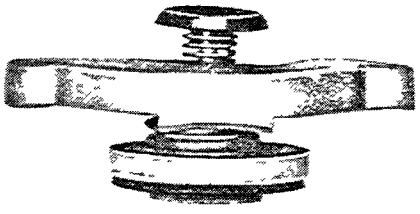

Fig. 3–2 Pressure cap

3–E. COOLING FAN

Torque limit type fan drive has been adopted to drive the cooling fan, with a view to reducing the loss of the horsepower at a high speed under full load and preventing noises due to the fan, and also this drive is so designed using silicon oil as the medium for transmitting the torque that even if that the fan the engine revolution increases, the revolution of the the fan does not exceed a certain limit.

3–E–1. Checking the Fan Revolution

In case troubles, such as oil leakage etc., should take place on the fan drive, the fan revolution decreases. If the engine is apt to overheat, check the revolution of the fan in the following manners.

1) Stick scotch tape on the fan drive shaft and fan as per Fig. 3–3.

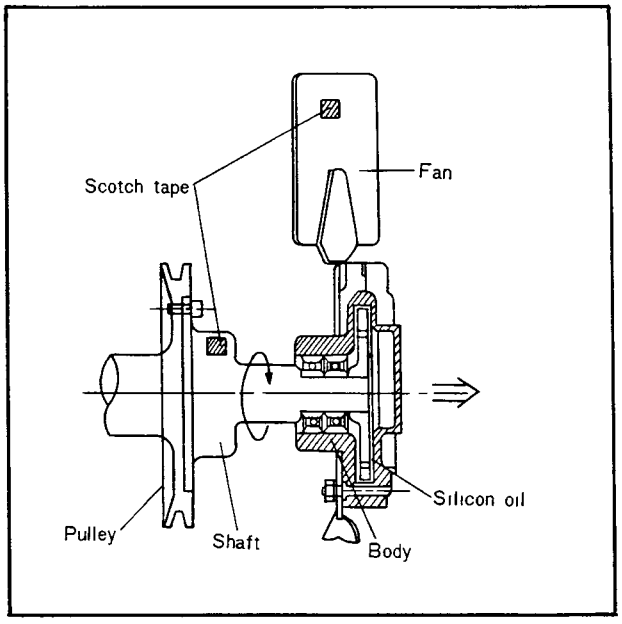

Fig. 3–3 Fan drive assembly

2) Keep the engine revolution at 2,000 rpm by using a photo electrical revolution counter.

3) Facing the revolution counter to the fan and read the revolution of the fan, and if it is less than the prescribed one, replace the fan drive ass'y and if it is more than the prescribed one, carry out the following check.

4) After warming-up the engine for 5 minites at more than 3,000 r p m , keep the engine at 5,000 r p m by using a tacho dwell tester, and check if the revolution of the engine at that time is within the prescribed one.

Prescribed Revolution	
Shaft	Fan
2,000 rpm.	1,500 ~ 1,800 rpm.
5,000 rpm.	Loss than 2,400 rpm.

3–F. THERMOSTAT

Thermostat is for adjusting the temperature of the cooling water circulation in the engine body.

The thermostat begins to open at 82°C (180°F) and fully opens at 95°C (203°F). The lift at this moment is 8 mm (0.31 in).

For inspection of the thermostat, place the thermostat together with a thermometer in water. Stir the water

while gradually heating. Measure the temperature under which the thermostat begins to open and the lift. If the measured value differs excessively from the standard value, install a new thermostat.
It is of wax type and bottom bypass type which is superior in the cooling efficiency. The bypass hole is provided at the lower part of the thermostat, as shown in Fig. 3–4, through which a large volume of cooling water flows when the thermostat is completely closed so that localized rise in temperature can be prevented.

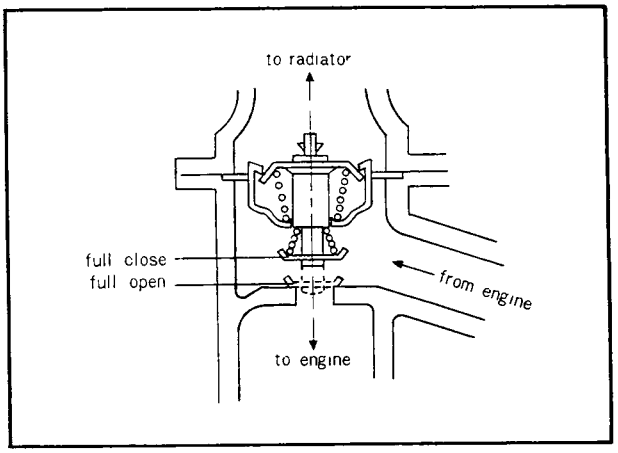

Fig. 3–4 Thermostat

On the other hand, when the thermostat is completely opened, the bypass hole is closed by the thermostat valve and all the quantity of cooling water is circulated into the radiator, which will enable the radiator to work effectively. However, in case the thermostat is taken off, the volume of cooling water flowing through the bypass hole is large due to a larger bypass hole and water circulating into the radiator will decrease by half which will result in the rise of the temperature of the cooling water. Accordingly, be sure not to take off the thermostat nor to use any other make instead of this type.

3–G. WATER PUMP

The water pump is of the centrifugal impeller type. The shaft is supported in the pump body by two bearings.
The impeller is fitted on the rear end of the pump shaft. The seal is made of stainless steel, carbon and rubber to prevent water leakage. Inspect the water pump for water leakage, check the end play and looseness of bearings. Move the impeller blades by hand. If the play is excessive, the bearing must be worn. If water leaks from the pump body opening, the seal is defective. Then it is necessary to overhaul the pump and inspect the seal and seat surfaces. If the seal is defective, it should be replaced.

3–G–1. Disassembling the Water Pump

1. Remove the bolts that attach the cover to the pump body, and separate the water pump assembly.
2. Remove the pulley boss with the **water pump puller** No. 1 (49 0813 145A), press the shaft slowly to extract the pulley boss from the shaft. And then remove the retaining ring with a suitable plier.

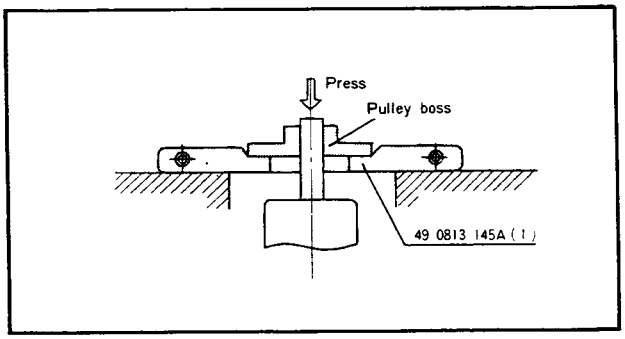

Fig. 3–5 Removing pulley boss

3. Support the front side of the water pump cover with the **water pump puller** No. 2 (49 0813 145A) and apply pressure to the rear end of the shaft to press the shaft and remove the impeller, and then push the bear-

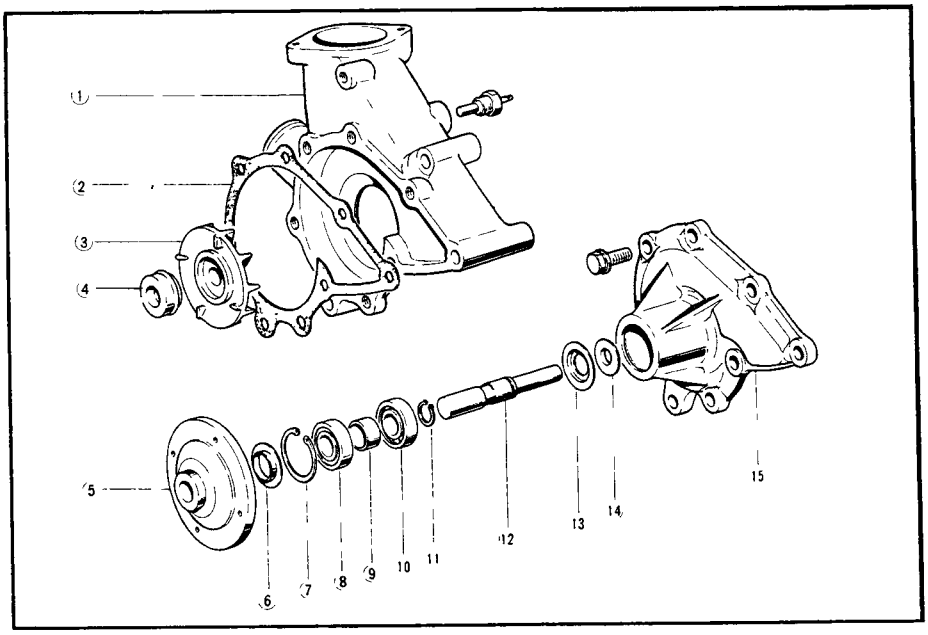

1. Pump casing
2. Packing
3. Impeller
4. Water seal cpt.
5. Pulley boss
6. Dust seal plate
7. Retaining ring
8. Ball bearing
9. Spacer
10. Ball bearing
11. Stop ring
12. Shaft
13. Dust seal plate
14. Baffle plate
15. Pump cover

Fig. 3–6 Water pump assembly

ing assembly with shaft out through front of the cover.
4. Remove the water seal complete.
5. Remove the bearings and spacer from the shaft with a suitable puller.

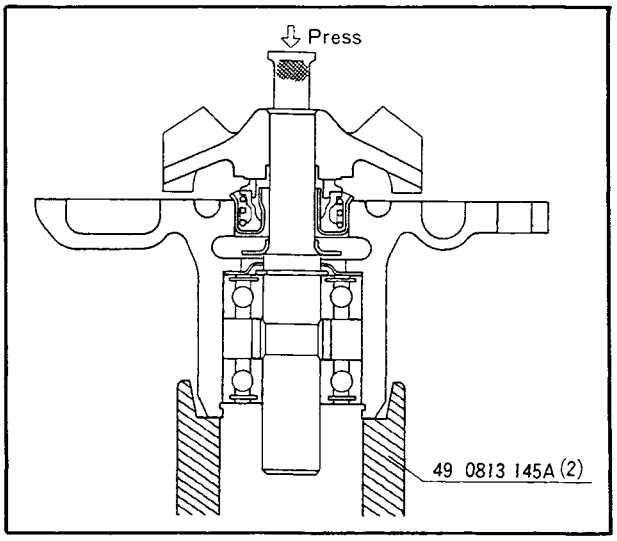

Fig. 3–7 Removing impeller

3–G–2. Assembling the Water Pump

When assembling the water pump, refer to Fig. 3–6 and proceed as follows:
1. Fit the stop ring into the groove of the shaft.
2. Place the dust seal plate on the stop ring and drive the baffle plate onto the tapper of the shaft.
3. Pressfit the bearing with the sealed side rearward.
4. Press the shaft and bearing into the cover using a suitable tool.
5. Insert the spacer into the shaft and approximately fill 1/3 the space between the two bearings with grease.
6. Pressfit the bearing with sealed side forward until the retaining ring can be inserted.
7. Install the snap ring into the groove of the cover to retain the bearings in position.
8. After fitting the dust seal plate to the pulley boss press the pulley boss onto the shaft until the boss comes in contact with the bearing.
9. Install the water seal complete into the cover.
10. Press the impeller assembly onto the shaft until it is flush with the end of the shaft.
11. Install the cover and gasket to the body.

SPECIAL TOOL

49 0813 145A	Water pump puller

FUEL SYSTEM

4–A. CARBURETTOR ..... 4 : 1
- 4–A–1. Carburettor Function ..... 4 : 1
- 4–A–2. Disassembling the Carburettor .... 4 : 3
- 4–A–3. Carburettor Inspection ..... 4 : 4
- 4–A–4. Assembling the Carburettor ..... 4 : 4
- 4–A–5. Carburettor Adjustment ..... 4 : 4

4–B. FUEL PUMP ..... 4 : 5
- 4–B–1. Fuel Pump Test ..... 4 : 5
- 4–B–2. Disassembling the Fuel Pump..... 4 : 5
- 4–B–3. Fuel Pump Inspection ..... 4 : 6
- 4–B–4. Assembling and Adjusting the Pump ..... 4 : 6

4–C. FUEL FILTER ..... 4 : 6

4–D. AIR CLEANER ..... 4 : 7

FUEL SYSTEM

The fuel system consists of the fuel tank, the fuel lines, fuel filter, fuel pump, the carburettor and the air cleaner.

The capacity of the fuel tank is 65.5 liters (17.3 U.S. gallons, 14.5 Imp. gallons). The operating fuel is regular gasoline.

4–A. CARBURETTOR

RX–2 is equipped with a 2–stage 4–barrel Zenith Stromberg carburettor. This carburettor comprises two sets each of primary barrels (for normal use) and a secondary barrels (for high output). In addition, a float circuit and a transfer system for the primary and secondary stages are attached. The primary barrel is equipped with a choke circuit, a low speed circuit, an auxiliary slow circuit and an accelerating circuit.

4–A–1. Carburettor Function

a. Fuel return circuit

This system incorporates a bimetal type fuel return valve to prevent percolation. When the fuel temperature reaches 55°C (131°F), the valve begins to open to return the fuel to the fuel tank.

b. Float circuit

The float chamber is equipped with a float and a needle valve to keep the fuel level constant under all operating conditions. Especially, as a needle valve material the special rubber is adopted more to prevent the fuel overflowing.

An oil level gauge is provided in the float chamber for easy inspection of the fuel level.

The ventilation system of the float chamber is of the inner circulation type.

Thus the fuel consumption is not influenced even if

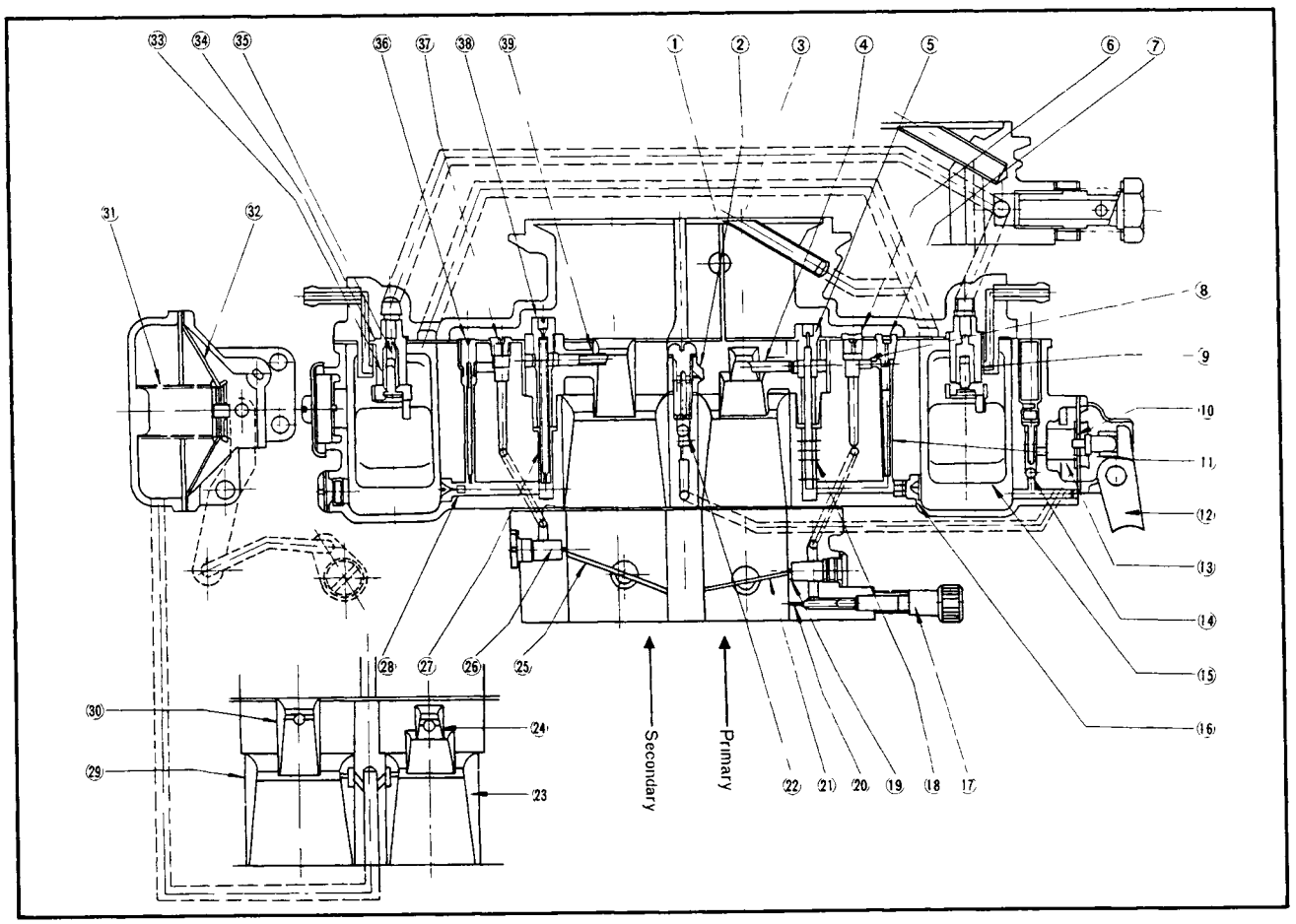

Fig. 4–1 Carburettor

1. Choke valve
2. Pump nozzle
3. Air vent pipe
4. Primary main nozzle
5. Primary main air bleed
6. No. 2 slow air bleed
7. No. 1 slow air bleed
8. Slow economizer
9. Needle valve
10. Accelerating diaphragm
11. Slow jet
12. Pump lever
13. Return spring
14. Inlet check valve
15. Float
16. Primary main jet
17. Idle adjust screw
18. Primary emultion tube
19. Bypass hole
20. Idle hole
21. Primary throttle valve
22. Outlet check valve
23. Primary large venturi
24. Primary small venturi
25. Secondary throttle valve
26. Bypass hole
27. Secondary emulsion tube
28. Secondary main jet
29. Secondary large venturi
30. Secondary small venturi
31. Diaphragm spring
32. Diaphragm
33. Valve spring
34. Valve seat
35. Needle valve
36. Secondary slow jet
37. Secondary slow air bleed
38. Secondary main air bleed
39. Secondary main nozzle

the air cleaner is clogged to a certain extent.

C. Low speed circuit

During idling and early part-throttle operation, the fuel is measured in the low speed circuit.
The fuel passes through the slow jet fitted in a branch passage of the main jet.
Then the fuel is mixed with air from the No. 1 slow air bleed and metered by the slow econonizer. And again it is mixed with air from the No. 2 slow air bleed.
The air-fuel mixture then flows through the low speed passage and is ejected from the idle hole or the bypass hole.

d. Auxiliary slow circuit

This circuit has been installed to privent misfiring and knocking which are liable to occur at low load and high revolution due to lean mixture.
This is of the structure that a diaphragm responsive to the negative pressure of the secondary side is provided halfway on the circuit with its valve designed to open at a certain extent of the negative pressure, allowing the fuel led from the secondary step system to pass and proceed to the auxiliary slow jet and then finally the fuel is ejected through the auxiliary slow port to the primary venturi

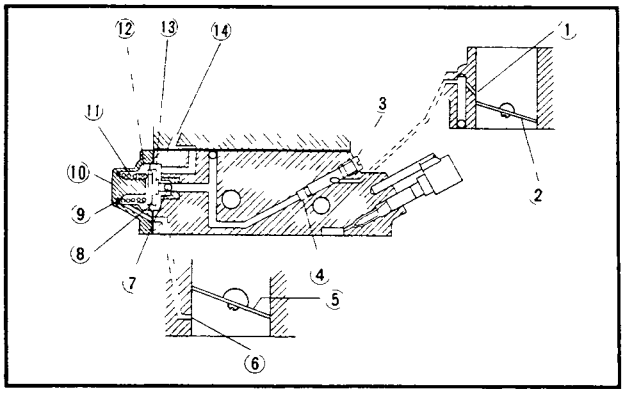

Fig. 4–2 Auxiliary slow circuit

1. Auxiliary slow hole
2. Primary throttle valve
3. Plug
4. Auxiliary slow jet
5. Secondary throttle valve
6. Vacuum hole
7. Ball valve
8. Diaphragm
9. Shim
10. Cover
11. Diaphragm spring
12. Vacuum chamber
13. Fuel chamber
14. From step circuit

e. Primary height speed circuit

During operation at part-throttle or full-throttle, the fuel is supplied through the high speed circuit. The fuel in the float chamber flows through the main jet, is mixed in the emulsion tube with the air from the main air bleed, and is sprayed through the main nozzle to the venturi.

f. Accelerating circuit

The accelerating circuit measures and supplies fuel for the rapid acceleration and smooth engine operation when the throttle valve is opened at lower speed. The accelerating pump is connected to the primary throttle valve by a link. When the primary throttle valve is closed, the diaphragm of the accelerating pump is pushed forward by a return spring. Then the fuel in the float chamber is sucked up into the accelerating pump diaphragm chamber through the inlet check valve.
When the primary throttle valve is opened, the diaphragm is pushed backward, the inlet check valve is closed, and the outlet check valve is opened. Then, the fuel in the accelerating pump is sprayed through the pump nozzle to the venturi.

g. Choke circuit

For easy starting and warming-up, the mixture ratio of air and fuel is controlled by the choke valve. The choke valve is an offset spring loaded type and prevents excessive choking.
When the choke valve is fully closed, the throttle valve is automatically opened to 15° by the choke connecting rod so as to obtain the most suitable mixture for starting-up of the engine.

h. Step circuit

The step circuit corresponds to the low speed circuit of the primary barrel and improves the connection between the primary and secondary barrels.
The fuel-flow in the secondary slow jet is mixed with air from the secondary slow air bleed, passes through the secondary low speed passage, and is ejected through a bore located near the fully-closed position of the secondary throttle valve.

i. Secondary high speed circuit

The secondary high speed circuit corresponds to the primary high speed circuit.
The secondary throttle valve is constructed so as to react to negative pressure in the venturi.
The vacuum jets are provided in the venturi sections of the primary and secondary stages. The average negative pressure of both jets acts in the diaphragm chamber and moves the diaphragm. The diaphragm and the secondary throttle valve are connected by a link to open the throttle valve according to the negative pressure.
However, the secondary throttle valve cannot be opened until the primary throttle valve is opened to 50° since the liable range of the secondary throttle valve

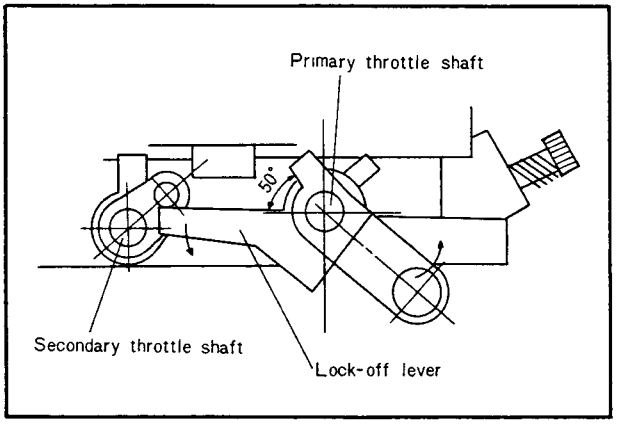

Fig. 4–3 Lock-off system

to open or close is controled with a connection between the lock-off lever installed on the primary shaft and the stopper on the secondary shaft.
When the opening of the primary throttle valve exceeds 50°, the secondary throttle valve opens in proportion to the negative pressure. Then the fuel from the main jet is mixed with air from the main air bleed and sprayed from the main nozzle into the venturi.

4–A–2. Disassembling the Carburettor

The carburettor should be disassembled in the following way :

1. Remove the choke connecting rod from the choke lever.
2. Remove the screws which are fixing the air horn to the main body and remove the throttle wire bracket.
3. Remove the bolt tightening the air cleaner to the carburettor and remove the air horn from the main body.

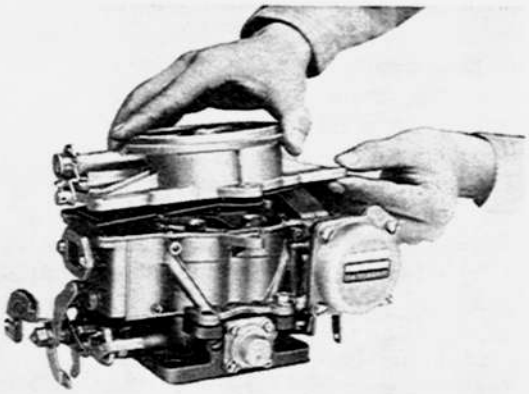

Fig. 4–4 Removing of air horn

4. Take out the float pin and remove the float.
5. Remove the needle valve assembly.

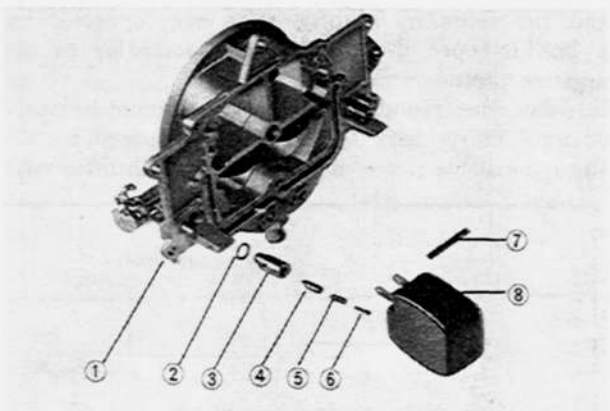

Fig. 4–5 Needle valve assembly

1. Air horn	4. Needle valve	7. Float pin
2. Shim	5. Spring	8. Float
3. Valve seat	6. Retainer	

6. Remove the screw fixing the choke valve to the shaft, and dismantle choke valve and shaft from the air horn.
7. Disconnect the vacuum control rod from the secondary throttle lever by removing a clip.
8. Remove the connecting rod of accelerating pump from the accelerator pump arm by removing a clip.
9. Remove the screws which are fixing the throttle body to the main body, and disconnect the throttle body from the main body.
10. Remove the cover and take out the accelerating pump diaphragm and the return spring.
Remove the inlet check ball by removing the plug.
11. Remove the accelerator nozzle and the outlet check ball.
12. Remove the slow jets of the primary and secondary stages and all air bleed connections from the main body.
13. Remove the main jets by removing the plugs from the main body.

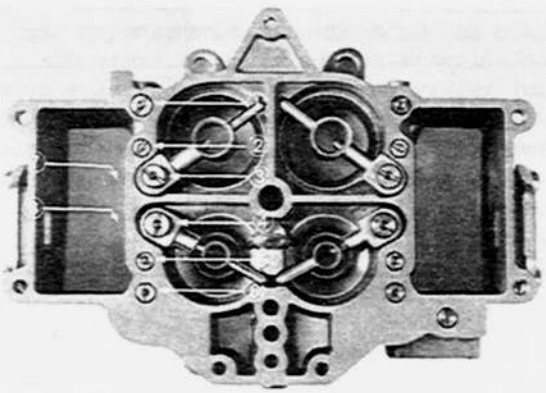

Fig. 4–6 Removing jets and air bleeds

1. Secondary slow air bleed	5. Primary slow jet
2. Secondary slow jet	6. Primary slow air bleed
3. Secondary main air bleed	7. Secondary main jet
4. Primary main air bleed	8. Primary main jet

14. Remove the screws fixing the sub-slow diaphragm cover and take out the diaphragm, return spring and adjust shim. Remove the sub-slow jet by removing the plug.
15. Remove the cover and take out diaphragm and the return spring.

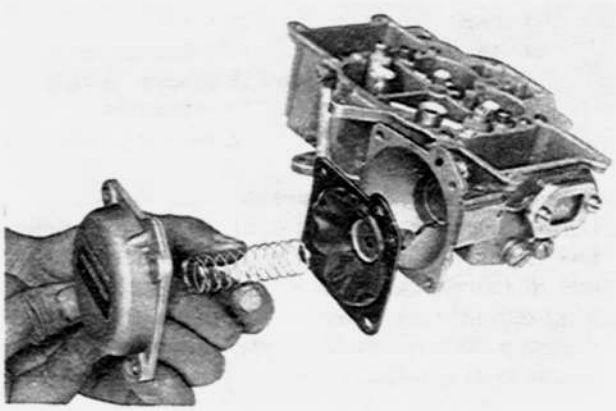

Fig. 4–7 Removing of diaphragm

16. Tap the venturi from the bottom for dismantling.
17. Remove the lever by removing the fixing nut of the primary throttle lever on the shaft.

Remove the throttle valve and the shaft by removing screws fixing the throttle valve.
18. Remove the set screws of the secondary throttle valve and dismantle the secondary throttle valve and the shaft.

Note: Do not dismantle venturi, throttle valve and shaft, and the choke valve and shaft, except when they have to be veplaced on account of wear or damage.

4–A–3. Carburettor Inspection

After disassembly, inspect the carburettor as follows:
1. Wash all parts in clean detergent and dry with compressed air. All passages of the carburettor must be blown very carefully.
2. Inspect the air horn and the main body for cracks and damages, also inspect the choke shaft for wear.
3. Inspect the throttle valve for wear.
4. Inspect all jets for clogging. If clogged, wash the jets in detergent. Do not use the wire.
5. Inspect the float needle and seat for wear.
6. Inspect the pump diaphragm and the auxiliary slow diaphragm. If damaged, replace them.
7. Inspect the valves of the pump to see whether they function under all operating conditions.
8. Check the diaphragm of secondary control for damage.
9. Inspect the idle adjusting needle for burrs and ridges.
10. When assembling, only new gaskets should be used.

4–A–4. Assembling the Carburettor

The carburettor can be assembled by reversing the disassembling procedure. The following points should be kept in mind:
1. The parts of the primary barrel are similar in shape to those of the secondary barrel. Do not interchange any parts.
2. When mounting the valve, be careful to eliminate the clearance between the throttle valve and the throttle chamber wall.

4–A–5. Carburettor Adjustment

a. Float level adjustment

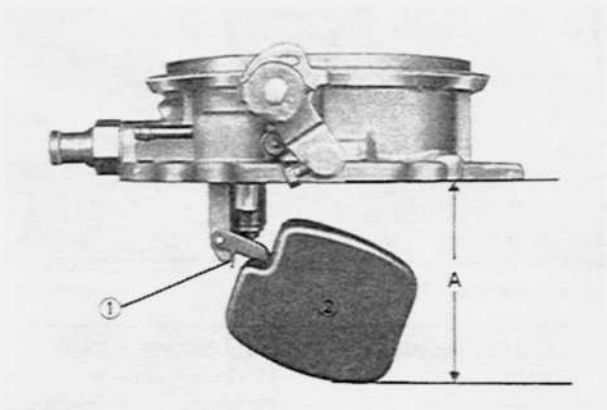

Fig. 4–8 Float level adjustment
1. Float seat lip 2. Float

Adjust the maximum fuel quantity coming in through the needle valve by bending the float seat lip so that the distance (A) between the lowest part of the float and the lower face of the air horn is 55 ~ 56 mm (2.1 ~ 2.2 in), as shown in Fig. 4–8.
Then adjust the fuel level by means of the washer at the fuel inlet, so that the distance (B) between the upper face of the float and the lower face of the air horn is 46 ~ 47 mm (1.8 ~ 1.9 in), as shown in Fig. 4–9. Under this condition, fuel level is kept at the center of the bowl cover.

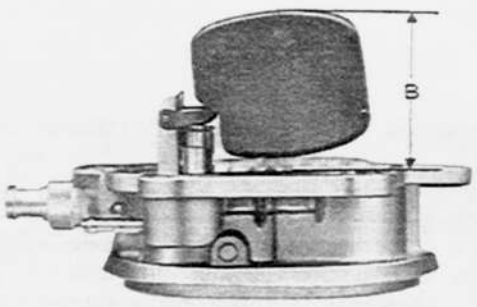

Fig. 4–9 Float level adjustment

b. Fast idling adjustment

When the choke valve is fully closed, the throttle valve opens to 15° by action of the connecting rod and provides easy starting–up. At this moment, the clearance between the throttle valve and the throttle chamber wall is 1.12 mm (0.045 in).
Adjust by bending the connecting rod until the proper clearance is obtained.

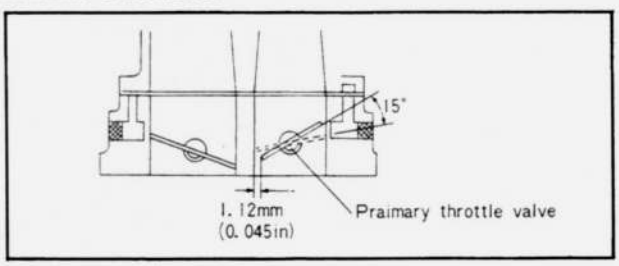

Fig. 4–10

The choke lever is provided with two holes for hanging the choke valve return spring. The return spring is normally hung in the upper hole, but in the cold districts it is hung in the lower hole to improve the engine startability.

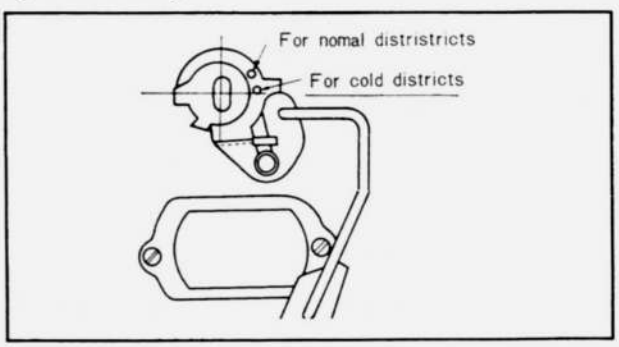

Fig. 4–11

c. Idling adjustment

Adjust the idling speed with the engine sufficiently warmed up and the choke valve fully opened.

1. Set the idling to the regular speed with the throttle adjusting screw.
2. Adjust the idle adjust screw until the smooth idling is obtained. When the idle adjusting screw is screwed in, the mixture of the fuel and air becomes lean. When the screw is loosened, the mixture becomes rich.
3. Adjust the idling so that the engine revolution will be 700 r p m in the above manner of (1) and (2).
4. Screw in the idle adjust screw from the position adjusted as above until the engine stalls. In this case, if it is less than $^3/_4$ turn, unscrew the idle adjust screw to the position previously settled, if it is more than $^3/_4$ turn, unscrew the idle adjust screw by $^3/_4$ turn from the position where the engine stalls.

Note: (1) To measure the engine revolution, be sure to use a revolution counter intended for general servicing instead of the tachometer equipped on the vehicle.
(2) Set the idle adjust screw lightly to avoid damaging the needle.

4–B. FUEL PUMP

4–B–1. Fuel Pump Test

If the fuel pump does not supply the proper amount of fuel to the carburettor, the following tests should be made prior to disassembly of the pump.

a. Pressure test

Connect the fuel pressure tester to the discharge port of the pump to test the fuel pressure. Feeding pressure should be 0.2 to 0.3 kg/cm² (2.8 to 4.3 lb/in²). If it is out of specifications, adjust it by means of the adjust screw. If still defective, disassemble the pump for inspection.

b. Volume test

Conduct a volume test of the fuel pump. The fuel pump should supply more than 900 cc (0.23 U.S. gallon, 0.20 Imp. gallon) of fuel per minute. If defective, disassemble the pump for inspection.

4–B–2. Disassembling the Fuel Pump

Observe the following procedure to disassemble the fuel pump:

1. Provide the matching marks on the air chamber, valve chamber and base so that the locations of the

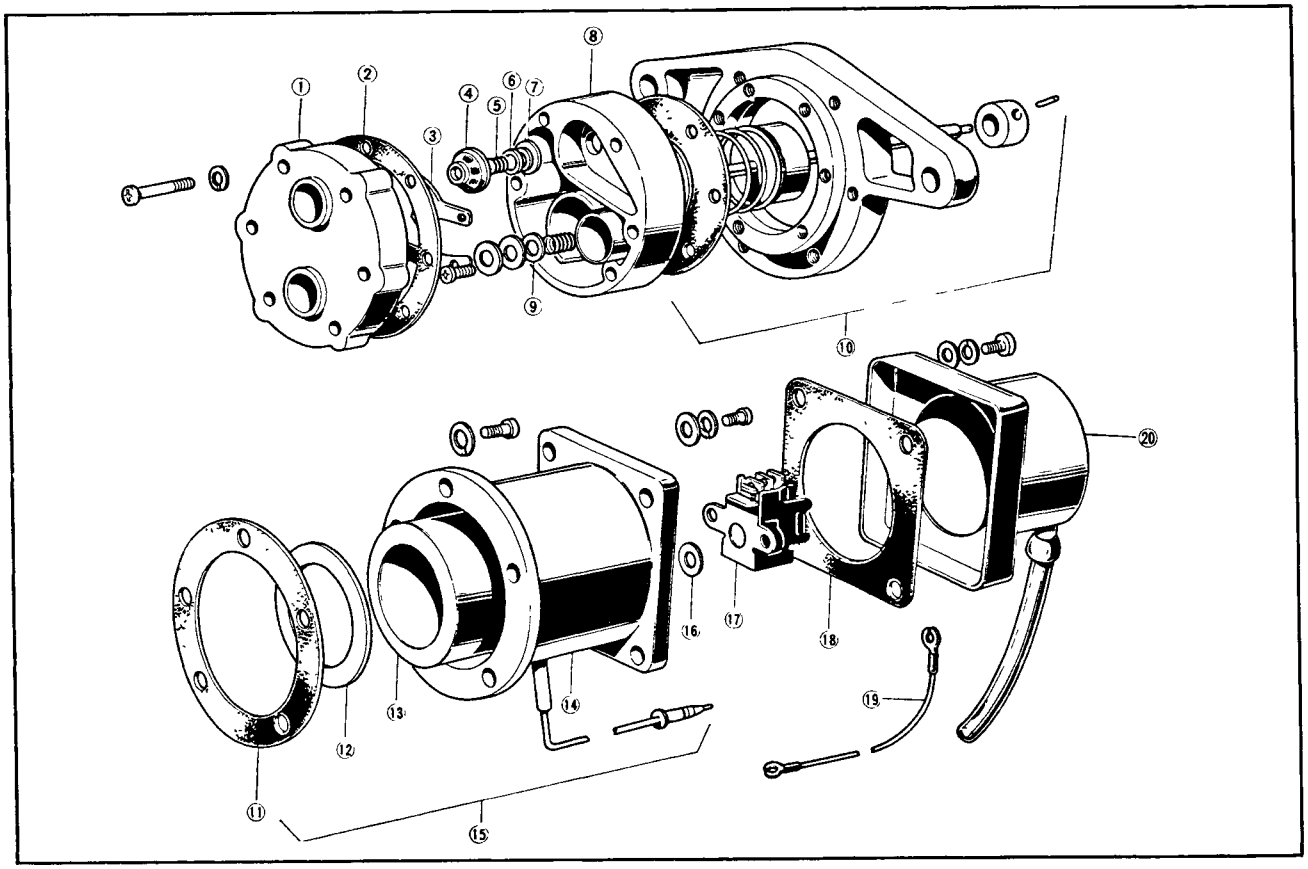

Fig. 4–12 Fuel pump assembly

1. Air chamber
2. Gasket
3. Valve retainer
4. Valve seat holder
5. Valve spring
6. Outlet valve
7. Valve seat
8. Valve chamber
9. Inlet valve
10. Diaphragm ass'y
11. Adjusting plate
12. Plate
13. Coil ass'y
14. Body
15. Body ass'y
16. Adjusting washer
17. Switch ass'y
18. Gasket
19. Earth wire
20. Cover

inlet and outlet valves are marked for assembling.
2. Remove the set screws of air chamber and valve chamber from the base. Remove the air chamber, gasket and valve chamber.
3. Attach the valve retainer and remove the screw. Remove the retainer and the valve assembly from the valve chamber.
4. Remove the cover by removing the screws which hold the cover to the body.
5. Disconnect the wiring from the switch assembly.
6. Remove the screws and dismantle the switch assembly from the body.
7. Remove the screws which are fixing the body to the base, and dismantle the body from the base.

4–B–3. Fuel Pump Inspection

1. Inspect the air chamber, valve chamber and base for cracks and damages.
2. Inspect the diaphragm for damage and deterioration.
3. Inspect the inlet and outlet valves. If they do not function normally, replace them.
4. Inspect the points of the switch assembly for wear, burning, fusing, etc. Clean the points with a file or oil stone if defects are not serious. If serious, replace the points.

4–B–4. Assembling and Adjusting the Pump

To assemble the fuel pump, reverse the procedure for disassembling and observe the following points.

a. Inspecting the diaphragm shaft stroke

After the body is attached to the base, place a dial indicator on the diaphragm shaft as illustrated.
Push in the diaphragm by hand and read the graduation of the dial indicator. The reading should be 2.8 ~ 3.0 mm (0.11 ~ 0.12 in). When the stroke is above 3.0 mm (0.12 in), remove the adjusting plate which is located between the body and the base.
When the stroke is below 0.28 mm (0.11 in), insert additional adjusting plate.
Three kinds of adjusting plate are available:
0.1 mm (0.004 in), 0.25 mm (0.010 in), 0.5 mm (0.020 in).

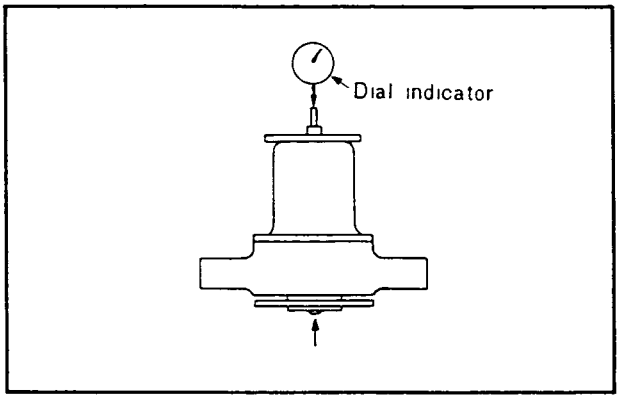

Fig. 4–13 Checking of diaphragm shaft stroke

b. Inspecting the switch point

After the switch assembly is attached to the body, place the dial indicator on the diaphragm shaft as illustrated.
Move the diaphragm shaft by hand and see whether the point of the switch assembly opens and closes at a distance of 0.5 ~ 1.0 mm (0.020 ~ 0.039 in) from the end of each stroke of the shaft.

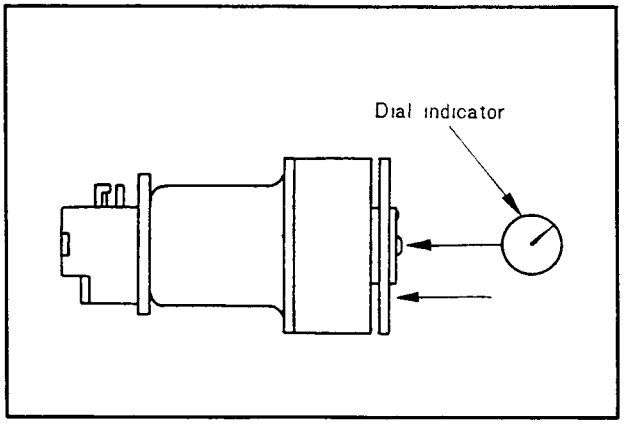

Fig. 4–14 Checking of switch

If defective, adjust in either of the following two ways of whitch the methoed (1) is for a big adjustment and the methoed (2) is for a small one.
1. Adjustment with washers
If the point opens too early or closes too late, decrease the number of washers at the tip of the shaft. If it opens too late and closes too early, increase the number of washers. There are two types of adjusting washers : 0.25 and 0.6 mm (0.010 and 0.024 in).
2. Adjustment with stoppers
If the point opens too early, bend the upper stopper upward. If too late, bend the stopper downward. If the closing action of the point is too late, bend the lower stopper upward. If too early, bend it downward. Actually, when the point opens early, the closing position becomes late. When the opening position is late, it must close early. Then it is necessary to adjust the upper and lower stoppers simultaneously. The point gap is 1.0 mm (0.039 in) when the points are opened.

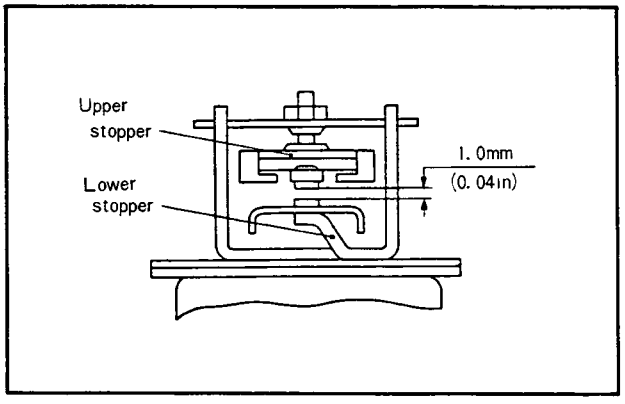

Fig. 4–15 Point gap

4–C. FUEL FILTER

The fuel filter is of the cartridge type with an integrated element and housing.

The fuel filter cartridge is held by the clamp which is attached to the lower side of the service hole cover of the luggage compartment.
Both ends of the cartridge are connected by rubber pipes.
The cartridge should be replaced at intervals of 18,000 km (12,000 miles).



Fig. 4–16 Fuel filter

4–D. AIR CLEANER

The air cleaner is of the paper element suction type. The air cleaner element should be cleaned every 3,000 km (2,000 miles) and replaced every 36,000 km (24,000 miles). Under sub-standard road conditions, the cleaner element should be cleaned every 1,5000 km (1,000 miles) and replaced every 18,000 km (12,000 miles).
On the air cleaner, the intake of fresh air and hot air are automatically switched over by means of the thermo-valve and control diaphragm installed in the air cleaner.
The control diaphragm is installed at the bottom of the fresh air duct. When the ambient temperature drops below 40°C (104°F), the control diaphragm operates the air shutters, by utilizing the engine negative pressure avilable through the thermo-valve.
This diaphragm starts functioning at negative pressure exceeds −100 mm-Hg and reaches the maximum stroke of 8 mm when the negative pressure exceeds −200 mm-Hg. Under such a condition, the fresh air shutter is perfectly closed, while the hot air shutter linked to the fresh air is fully opened.
When the ambient temperature exceeds 40°C (104°F), the engine negative pressure working on the control diaphragm is cut by the thermo-valve, whereby the fresh air shutter is fully opened and the hot air shutter is completely closed.
Check the thermo-valve every six months as to whether it functions normally at ambient temperature over 40°C (104°F).

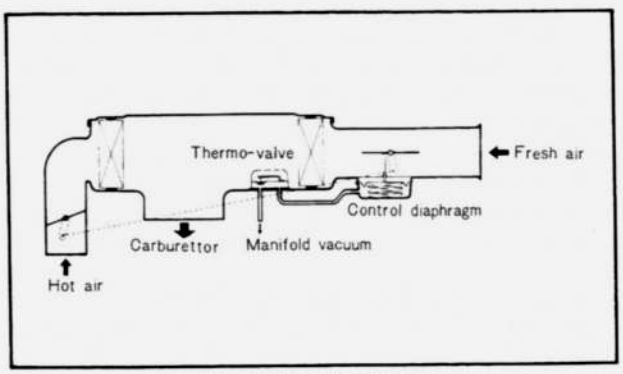

Fig. 4–17 Air cleaner

ELECTRICAL SYSTEM

5–A. BATTERY ..... 5 : 1
5–A–1. Checking the Battery ..... 5 : 1
5–A–2. Charging the Battery ..... 5 : 1
5–B. SPARK PLUG ..... 5 : 1
5–B–1. Checking the Spark Plug ..... 5 : 1
5–C. IGNITION COIL ..... 5 : 2
5–D. DISTRIBUTOR ..... 5 : 2
5–D–1. Adjusting the Point Gap ..... 5 : 2
5–D–2. Adjusting the Ignition Timing ..... 5 : 2
5–D–3. Testing the Distributor ..... 5 : 2
5–D–4. Disassembling the Distributor ..... 5 : 4
5–D–5. Distributor Inspection ..... 5 : 4
5–D–6. Assembling the Distributor ..... 5 : 4
5–E. ALTERNATOR ..... 5 : 4
5–E–1. Service Precautions ..... 5 : 4
5–E–2. Checking the Charging System on Car ..... 5 : 4
5–E–3. Disassembling the Alternator ..... 5 : 4
5–E–4. Alternator Inspection ..... 5 : 5
5–E–5. Assembling the Alternator ..... 5 : 6
5–F. REGULATOR ..... 5 : 6
5–F–1. Checking the Constant Voltage Relay ..... 5 : 6
5–F–2. Adjusting the Regulator ..... 5 : 6
5–G. STARTING MOTOR ..... 5 : 7
5–G–1. Checking the Starting Circuit ..... 5 : 7
5–G–2. Testing the Starting Motor ..... 5 : 7
5–G–3. Disassembling the Starting Motor ..... 5 : 7
5–G–4. Starting Motor Inspection ..... 5 : 8
5–G–5. Magnetic Switch Test ..... 5 : 9
5–G–6. Assembling the Starting Motor ..... 5 : 10
5–H. LIGHTING SYSTEM ..... 5 : 10
5–H–1. Headlight Aim ..... 5 : 10
5–H–2. Replacing the Bulbs ..... 5 : 10
5–I. INSTRUMENT PANEL ..... 5 : 11
5–I–1. Fuel Gauge ..... 5 : 11
5–I–2. Water Thermometer ..... 5 : 11

ELECTRICAL SYSTEM

5–A. BATTERY

RX–2 is equipped with a 12 volts battery consisting of six cells. Its capacity is 60 ampere hours of 20 hour rating.
The battery is located at the front right side of the engine compartment.

5–A–1. Checking the Battery

As the battery has many important functions to engine start, ignition and lighting, check the following points periodically and always keep the battery in perfect conditon.
1. Check the electrolyte level in each cell of the battery, and add distilled water to maintain the solution 10 ~ 20 mm (0.4 ~ 0.8 in) above the plates.
Do not overfill.
2. Check the specific gravity of the electrolyte with a hydrometer, as shown in Fig. 5–1. If the reading is 1.26 or more, it indicates that the battery is fully

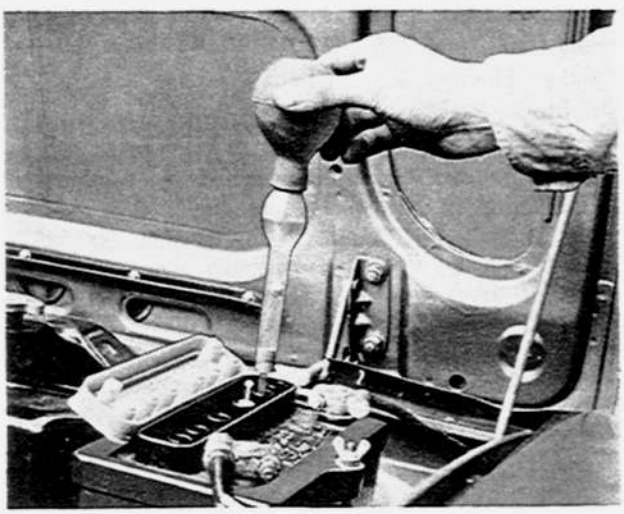

Fig. 5–1 Checking the specific gravity

charged. If the reading is below 1.20, the battery requires recharging.
3. Check the tightness of the terminals to ensure good electrical connections. Clean the terminals and coat the terminals with grease.
4. Inspect for corroded or frayed battery cables.

5–A–2. Charging the Battery

a. Constant current charge

1. If the exterior of the battery is dirty with sulphuric acid or dust and dirt, wash these off with clean water and dry thoroughly before charging the battery.
2. Check the electrolyte level and add distilled water if necessary.

Note: If addition of distilled water is neglected, the plates and seperators will become exposed to air, causing a sulphation to occur on the plates.
Do not add dilute sulphuric acid unless the electrolyte has overflown or leaked out.

3. Connect the battery to the charger ensuring that the polarities are correct.
4. To charge, apply an electric current of approximately 5A until the specific gravity of the electrolyte reaches 1.25 ~ 1.27.

b. Fast charge

As a fast charge causes both the temperature and the level of the electrolyte to rise suddenly, it does not have a favorable effect on the battery. Therefore, this should not be performed unless in the case of an emergency.
When a fast charge is being applied with the battery mounted on the vehicle, ensure that the cables are removed from the battery terminals before the charge is applied. If this is neglected, it could cause a damage to the diodes on the alternator.
The battery should be kept by the use of cooling water to prevent the temperature of the electrolyte from exceeding 45°C (113°F), otherwise the charging should be discontinued temporarily when the temperature rises above this point.

5–B. SPARK PLUG

The two spark plug system is adopted on RX–2 for increasing the combution efficiency. There are three kinds of heat range for genuine spark plugs as follows, so that they can be used under the driving area or running condition.

MANUFACTURE	HOT TYPE	STANDARD	COLD TYPE
NGK	B–6EJ	B–7EJ	B–8EJ
Denso	W20 EG2	W22 EG2	W25 EG2

As these spark plugs are designed specially for RX–2, do not replace these with any of other types of spark plug.

5–B–1. Checking the Spark Plug

Check the spark plugs for burned and eroded electrode, black deposits, fouling, and cracked porcelain. Clean the spark plugs with a spark plug cleaner or a wire brush if they are foul.
Replace the badly burned or eroded spark plugs.
Measure the electrode gap of each spark plug with a wire gauge. If it is improper, adjust the gap to the specified valve 0.8 ~ 0.9 mm (0.031 ~ 0.035 in) by bending the outer electrode.

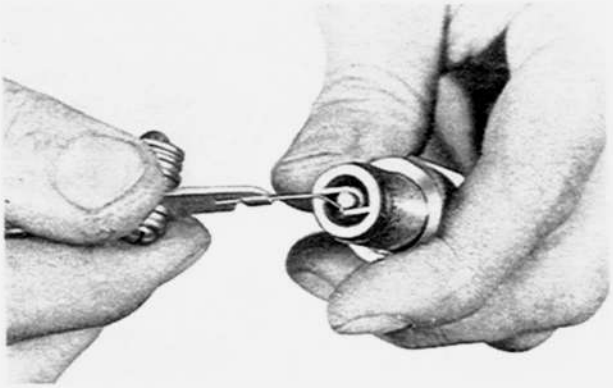

Fig. 5–2 Adjusting spark plug gap

5–C. IGNITION COIL

Two types of ignition coil are equipped.
One is the leading ignition coil with external resistance which improves ignition performance and startability of the engine, and another is ordinary type, the trailing ignition coil.
When the ignition key is turned on to actuate the starter, the "S" and "R" terminals of the key switch are closed with the "B" terminal of the key switch and the "Ig" terminal is opened. In this case, current leads to the "S" terminal of the relay and magnetizes the relay coil. Thus, the "H" and "B" terminals of the relay are closed. Then, the primary current leads from the "R" terminal to the trailing ignition coil via the relay. And also, the primary current for leading one is led from the "R" terminal direct to the leading ignition coil by passing the external resistor.
When the ignition key is returned to the "Ig" position after starting the engine, only "Ig" terminal is closed with "B" terminal of the key switch. Therefore, the function of the relay is stopped and the primary current flows from the "Ig" terminal to the trailing ignition coil. And also, the current for leading one flows from the "Ig" terminal to the leading ignition coil by way of the external resistor.

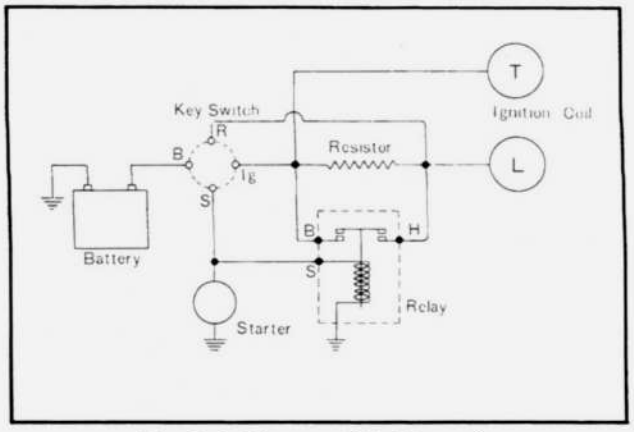

Fig. 5–3 Diagrum of ignition coil

5–D. DISTRIBUTOR

RX–2 is equipped with two distributors, one for the spark plugs on the leading side and one for those on the trailing side.
Each distributor consists of distributing mechanism, contact breaker mechanism, and ignition timing advance control of centrifugal and vacuum.

5–D–1. Adjusting the Point Gap

Adjust the point gap of each distributor as follows:
1. Check the contact points alignment. If necessary, bend the stationary contact bracket so as to obtain contact in the center of the contact points.
2. Crank and stop the engine when the rubbing block on the contact arm just rests on the highest point of the cam.
3. Insert a feeler gauge of 0.45 mm (0.016 in) between the contact points, loosen the two set screws and move the stationary contact point until the correct gap is obtained.

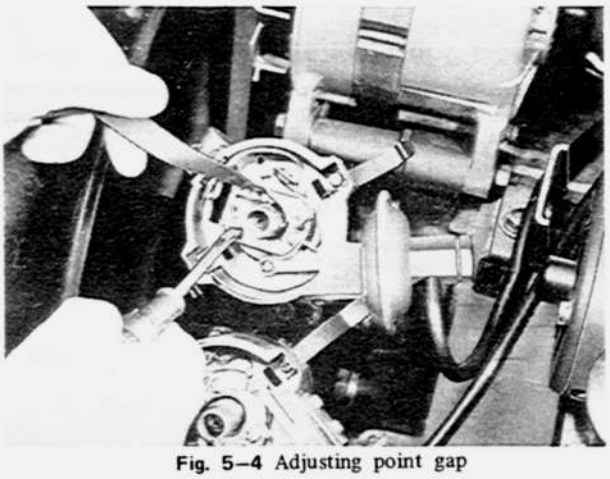

Fig. 5–4 Adjusting point gap

4. Tighten the set screws and recheck the point gap.

5–D–2. Adjusting the Ignition Timing

To obtain maximum engine performance, the distributor must be correctly positioned on the engine to give the proper ignition timing. If a timing light is available, use it to adjust the ignition timing, as follows :
1. Connect the timing light to the high tension cord for trailing side or leading side of front rotor. Start the engine and set the idle to 700 rpm.
2. Observe the position of the timing mark.
3. Loosen the distributor lock nuts and rotate each distributor housing so that each timing mark on the eccentric shaft pulley aligns with needle on the front cover.
4. Tighten the distributor lock nuts and recheck the timing.

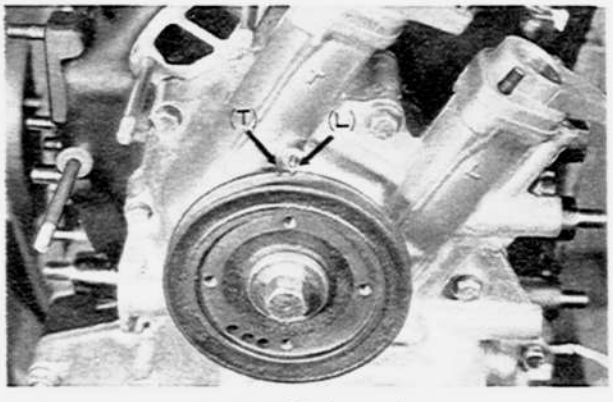

Fig. 5–5 Timing marks

5–D–3. Testing the Distributor

a. Dwell angle test

The dwell angle also called cam angle is degrees of rotation through which the contact points remain closed.
To test the dwell angle, use a distributor tester following the instructions of the manufacturer. If the dwell reading is within 55 and 61 degrees, it is correct. If the reading is not within the specifications,

it indicates the following troubles.
1. Incorrect point gap
2. Worn cam
3. Worn rubbing block
4. Distorted contact arm

b. Advance Test

To test the ignition advancing characteristic of the distributor, use a distributor tester.
The advancing characteristic of each distributor should be within the range shown in Fig. 5–6 and 5–7.

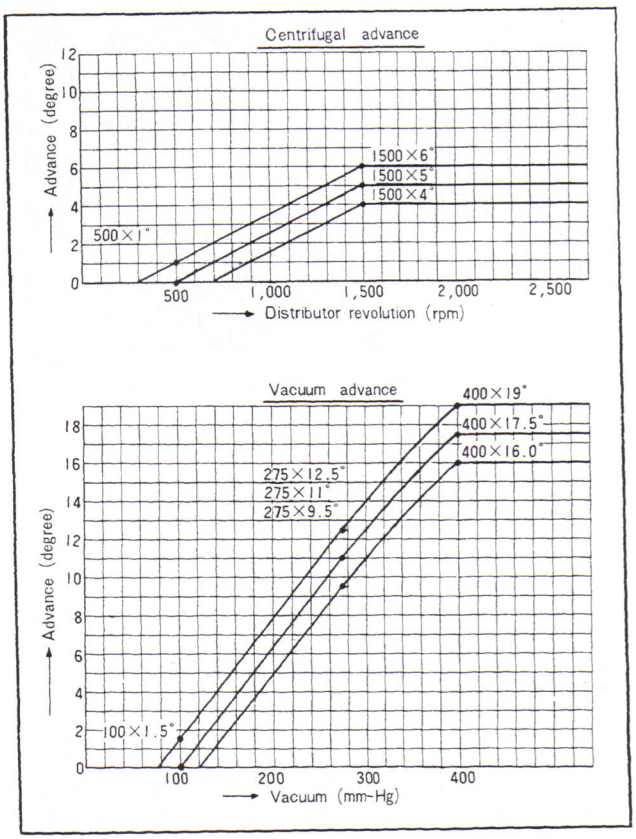

Fig. 5–6 Advancing characteristic (trailing side)

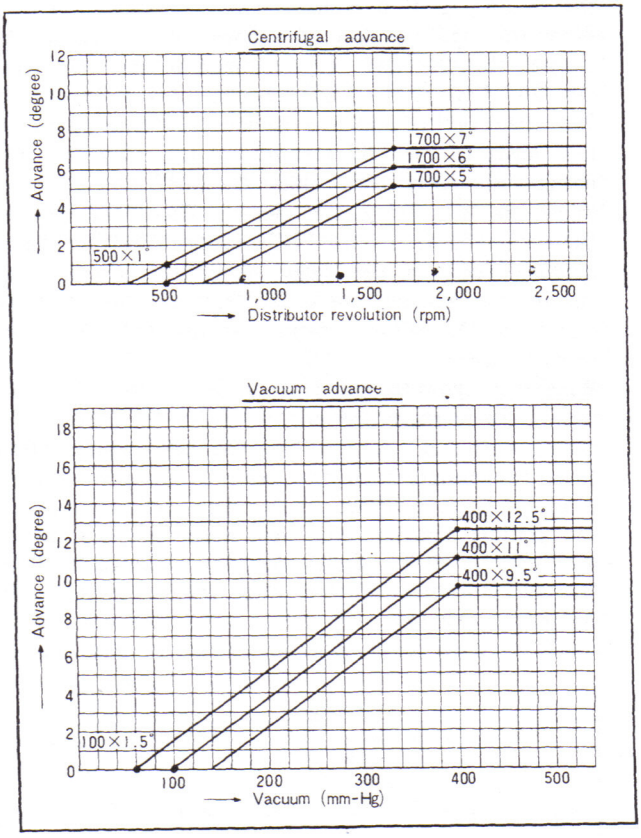

Fig. 5–7 Advancing characteristic (leading side)

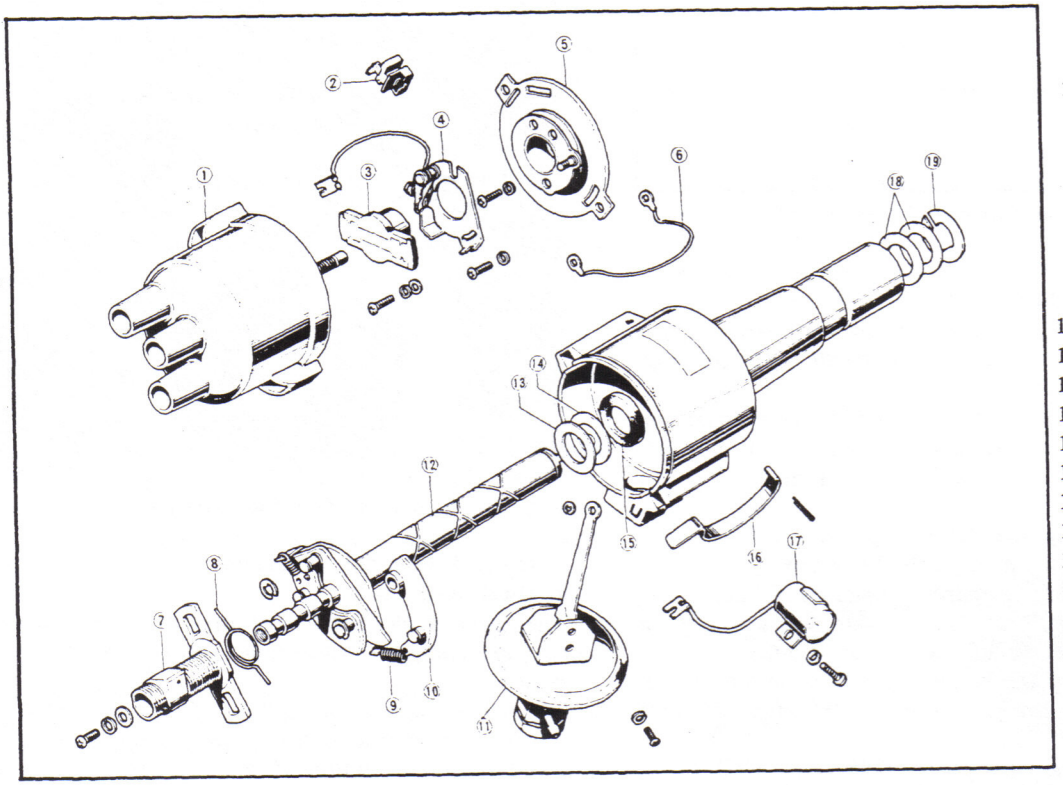

1. Cap
2. Terminal
3. Rotor
4. Arm support ass'y
5. Breaker base ass'y
6. Earth wire
7. Cam
8. Hair pin spring
9. Governor spring
10. Governor weight
11. Diaphragm ass'y
12. Shaft
13. Washer
14. Washer
15. Oil seal
16. Clamp
17. Condenser
18. Washer
19. Lock washer

Fig. 5–8 Distributor assembly

5–D–4. Disassembling the Distributor

1. Loosen the cap retaining clips and lift off the cap.
2. Remove the rotor.
3. Remove the screws that attach the vacuum control unit from the distributor housing and remove the clip holding the breaker base link. Remove the vacuum control unit.
4. Loosen the primary terminal nut and disconnect the lead. Remove the contact point assembly from the breaker base after removing the set screws.
5. Remove the primary terminal stud and insulator.
6. Remove the condenser.
7. Remove the screws that attach the breaker base and cap retaining clips to the housing. Remove the breaker base and retaining clips.
8. Take off the felt and remove the cam set screw, then remove the cam.
9. Remove the distributor drive shaft retaining clip and washers. Remove the shaft in upward direction through the top of the distributor housing.
10. The governor can be removed by removing the governor spring and clip.

5–D–5. Distributor Inspection

a. Inspection of distributor cap

Inspect the distributor cap for cracks, carbon runners and signs of arcing. Replace the cap if any of these are found.

Clean the high tension terminals.

b. Inspecting the rotor

Inspect the rotor for cracks or evidence of excessive burning at the end of the metal strip.

c. Inspecting the contact points

Inspect the points for wear, burning, transferred metal and pitting. If the points are affected only slightly, clean with stiff metal brush or oil stone. In case of severe damage, replace the points.

d. Checking the contact arm spring tension

For inspection, hook a spring scale on the contact arm and pull straight at a right angle to the contact arm. Read the tension when the contact points start to separate. If the reading is 0.5 kg (1.1 lb) or less, replace the movable contact arm.

e. Checking the condenser

If the condenser is leaky, it will cause a weak spark

5–D–6. Assembling the Distributor

Assemble the distributor in the reverse order of disassembling.

or burned contact points check the capacity of the condenser with a condenser tester.

The capacity is 0.27 ±10% microfarads. In the absence of a tester, check by substituting a new condenser.

5–E. ALTERNATOR

5–E–1. Service Precautions

When servicing the charging system, observe the following precaution. If not followed, the result will be in serious damage of the system.

1. Do not short across or ground any of the terminals on the alternator.
2. Never operate the alternator with on an open circuit (with the field terminal connected and the armature terminal disconnected).
3. When installing a battery, always make sure that the negative post of the battery is attached securely to the ground strap.
4. Never reverse battery leads, not even for an instant, as reverse polarity current flow will damage the diodes in the alternator.
5. When charging the battery with a fast charger, disconnect the positive cable at the battery.

5–E–2. Checking the Charging System on Car

If the electrical system is not charging properly, it is advisable to determine whether the trouble is in the alternator or regulator prior to removing the alternator.

1. Disconnect the wire from "B" terminal of the alternator and connect the ammeter with the negative lead of the ammeter to the wire and the positive lead to the "B" terminal, as shown in Fig. 5–9
2. Connect the positive lead of the voltmeter to the "B" terminal of the alternator and ground the negative lead of the voltmeter.
3. Switch the headlight on.
4. Start the engine and take the reading of the ammeter and voltmeter, holding the engine speed of 2,000 rpm (alternator speed: 4,000 rpm).

If the ammeter shows less than 32 ampares, the trouble is in the alternator and if the voltagemeter shows without the specifications it is in the regulator.

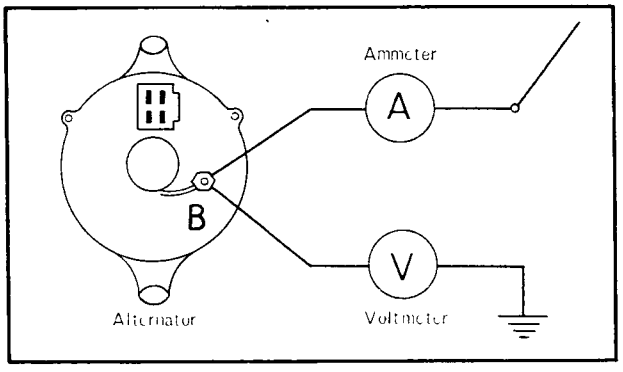

Fig. 5–9 Checking alternator

5–E–3. Disassembling the Alternator

1. Remove the nut attaching the radio noise suppression condenser and remove the condenser.
2. Remove the nut attaching the pulley to the shaft and remove the pulley, fan and spacer.
3. Remove the through bolts.
4. Separate the front housing assembly by prying apart with a screwdriver at the slots of the front housing.
5. Remove the rotor from the front housing.
6. Remove the front bearing retainer attaching screw and remove the retainer. Support the front housing close to the bearing boss, and press out the old bearing from the housing, only if the bearing is defective.

7. Unsolder the diode leads and stator coil leads.
8. Remove the stator from the rear housing.
9. Remove the screws that attach the brush holder to the housing and remove the brush and holder, insulator and terminal.
10. Remove the screw attaching the heat sink and the two terminal screws, and remove the diodes and heat sink assemblies from the rear housing.

5–E–4. Alternator Inspection

a. Checking of stator coil

Check the stator coil for both open and grounded circuits with a tester.

To check for open, connect the prods to each of the two leads, as shown in Fig. 5–10. If there is no flow of current, the coil is open circuit and must be repaired or replaced.

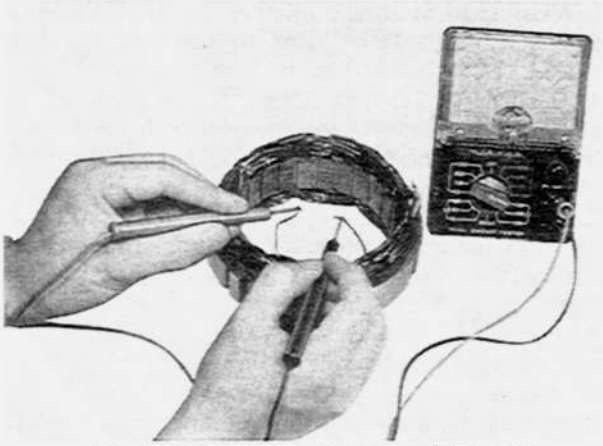

Fig. 5–10 Checking of stator coil for open

To check for ground, connect one prod to the core and the other to each lead wire, as shown in Fig. 5–11. If a ground is present the current will flow and the stator coil must be repaired or replaced.

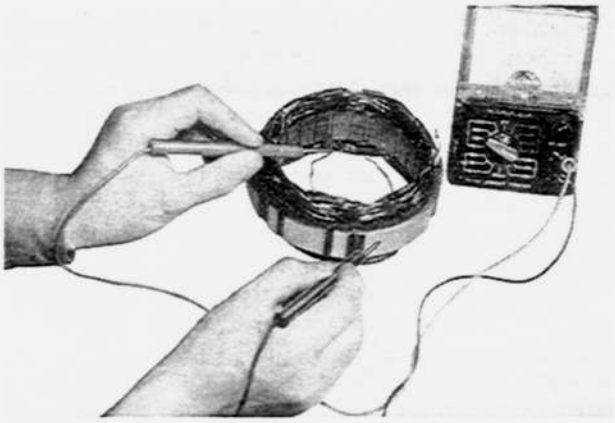

Fig. 5–11 Checking of stator coil for ground

b. Checking the rotor

To check for open circuit place both prods of a tester on the slip rings, as shown in Fig. 5–12.

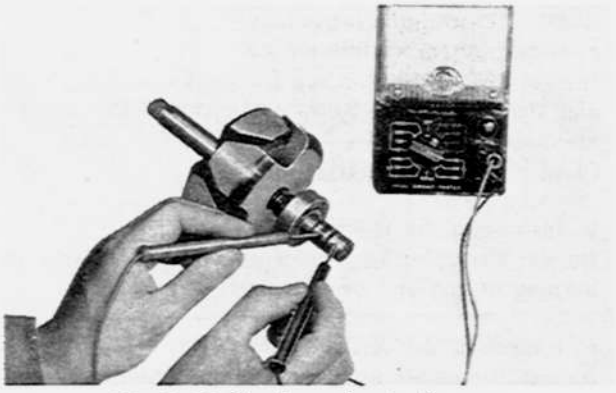

Fig. 5–12 Checking of rotor for open

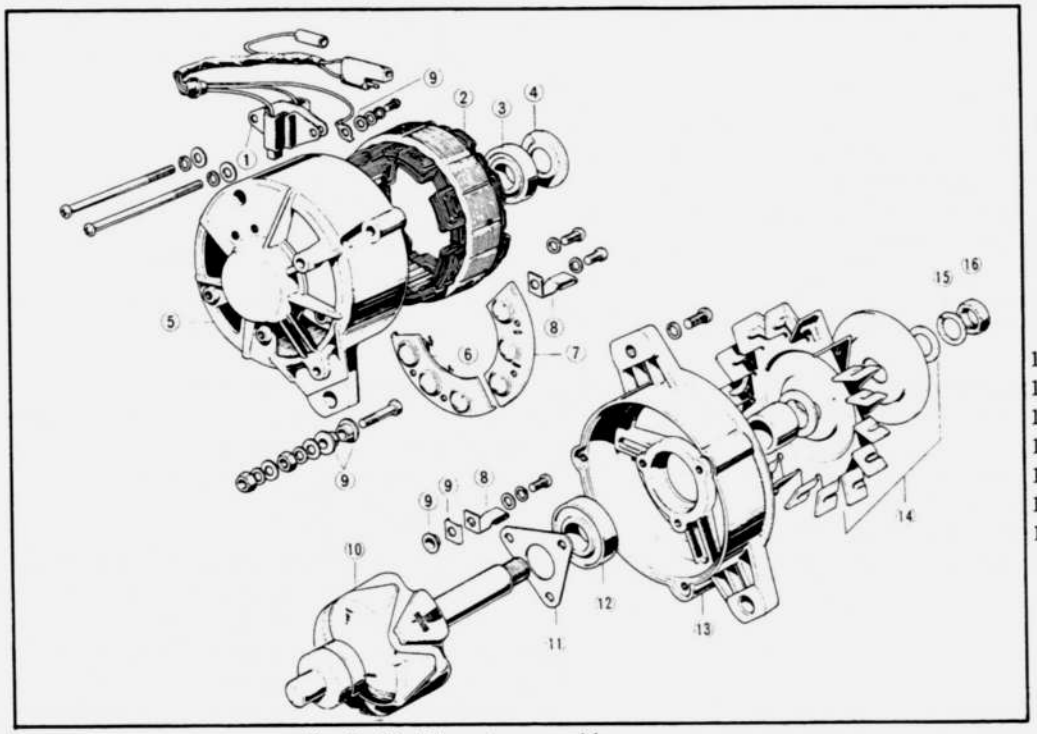

1. Brush holder
2. Stator
3. Ball bearing (rear)
4. Seal washer
5. Rear bracket
6. Heat sink cpt. ⊖
7. Heat sink cpt. ⊕
8. Clamp
9. Insulator
10. Rotor
11. Bearing press plate
12. Ball bearing (front)
13. Front bracket
14. Pulley ass'y
15. Spring washer
16. Nut

Fig. 5–13 Alternator assembly

If the reading is 5 to 6 ohms, there is no trouble in the rotor.
To check for ground, connect one prod to the slip ring and other prod to the core. If the current flows the rotor must be repaired or replaced.

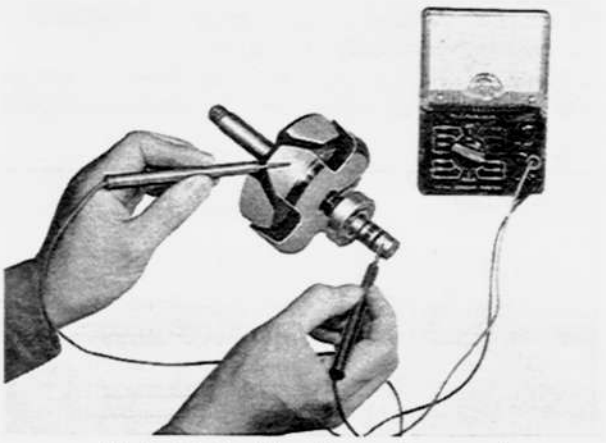

Fig. 5–14 Checking of rotor for ground

c. Checking the diodes
Diodes for use in the alternator are avialable in two different types, the positive diode which allows current to flow from the lead wire to the case but not from the case to the lead wire and the negative diode which has the opposite properties.
To check, read the resistance between the lead wire and case with a tester. Then reverse the tester leads and note the reading.
If both readings are very low or high, the diode is defective. A good diode will give one low reading and one high reading.

Note: The diode and heat sink are serviced as an assembly only.

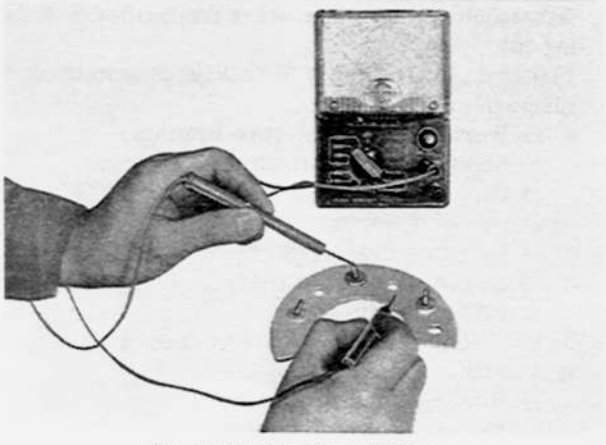

Fig. 5–15 Checking of diode

d. Checking the brushes
The brush should be replaced when one third of its original length is worn. The wear limit line is marked on each brush surface for warning.
The standard tension of the brush spring is 350 gr (12.5 oz). If the tension is too low or if excessive corrosion exists, the spring must be replaced.

e. Checking the bearings
There is no need of lubricating as the bearing is prelubricated. In a long spell of use, when the bearing is worn or damaged, replace it with a new one.

5–E–5. Assembling the Alternator
Assemble the alternator in the reverse order of disassembling, noting the following point.
1. When installing the rotor assembly to the rear housing and stator assembly, hold the brushes in position by inserting a piece of stiff wire into the hole of the brush through the rear housing as shown in Fig. 5–16.

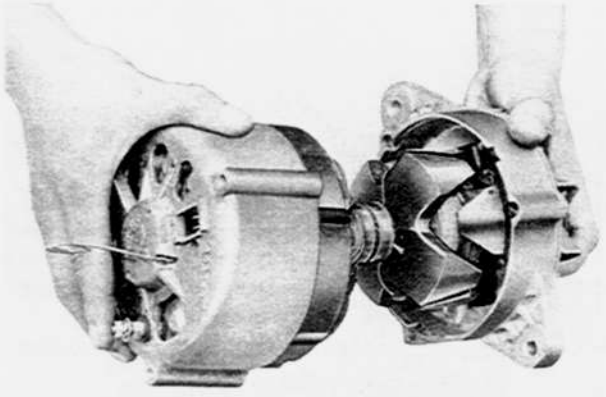

Fig. 5–16 Installing of rotor assembly

5–F. REGULATOR

5–F–1. Checking the Constant Voltage Relay
To check, use an almost fully charged battery and connect a voltmeter between the (A) and (E) terminals of the regulator, as shown in Fig. 5–17.
Then, hold the alternator revolution to 4,000 rpm (engine revolution 2,000 rpm) and take a reading of the voltmeter. If the reading is from 13.5 ~ 14.5 volts, it is in proper order. If it is not within the specifications, the voltage relay must be adjusted, as instructed in Par. 5–F–2.

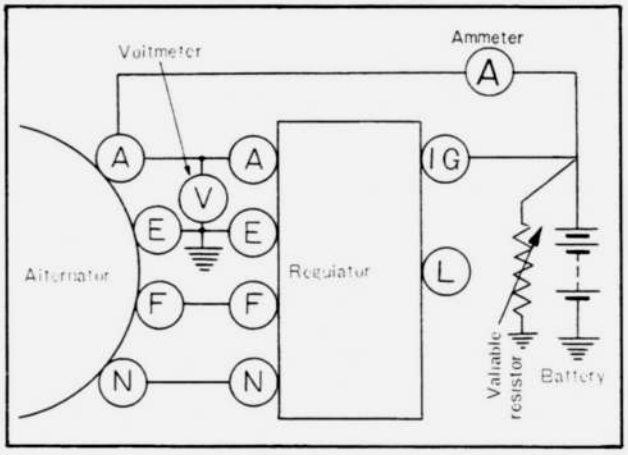

Fig. 5–17 Checking of constant voltage relay

5–F–2. Adjusting the Regulator
First, check the air gap, back gap and point gap with a wire gauge.

If they are not within the specifications, adjust by bending the stationary contact bracket. After correct gaps are obtained, adjust the voltage setting. Bend the upper plate down to decrease the voltage setting, up to increase the voltage setting.
In case of the pilot lamp relay, if the voltage when the lamp lights up is adjusted to the specification, the voltage when the lamp goes out may be within the specification.

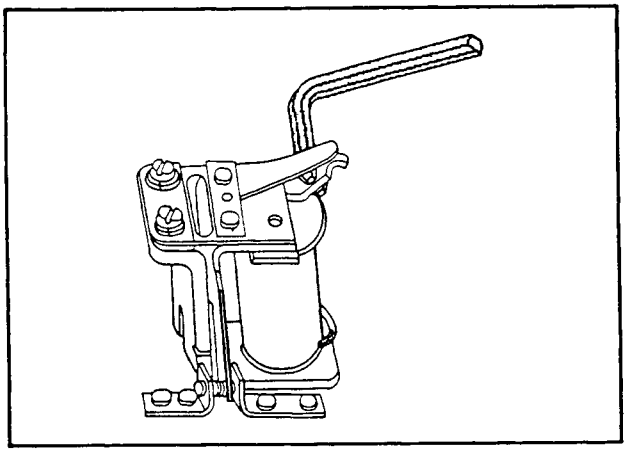

Fig. 5–18 Adjusting of regulator

Constant voltage relay

Adjustment	Standard specification
Air gap	0.7 ~ 1.1 mm (0.028 ~ 0.043 in)
Point gap	0.3 ~ 0.4 mm (0.012 ~ 0.016 in)
Back gap	0.7 ~ 1.1 mm (0.028 ~ 0.043 in)
Voltage	14 ± 0.5 V (Alternator 4,000 rpm)

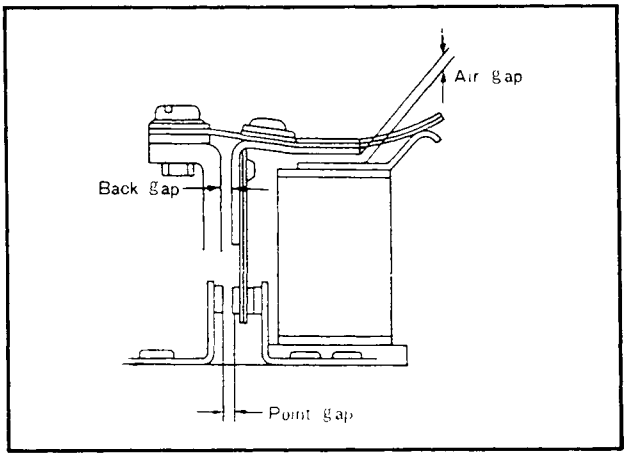

Fig. 5–19 Regulator gap

5–G. STARTING MOTOR

5–F–1. Checking the Starting Circuit

When the starting motor fails to operate or does not satisfactorily operate, check the following points before removing the starting motor:
1. Weak battery
2. Corroded or loose battery terminal
3. Loose starting motor terminal
4. Broken or loose wires of the starting circuit
5. Faulty ignition switch

5–G–2. Testing the Starting Motor

a. Free running test

1. Place the starting motor in a vise equipped with soft jaws and connect a fully-charged 12 volts battery to the starting motor.
2. Connect an ammeter between the (B) terminal of the starting motor and the battery.
3. Operate the starting motor and take a reading. The current draw should be 70 amperes minimum at 3,600 rpm or more.

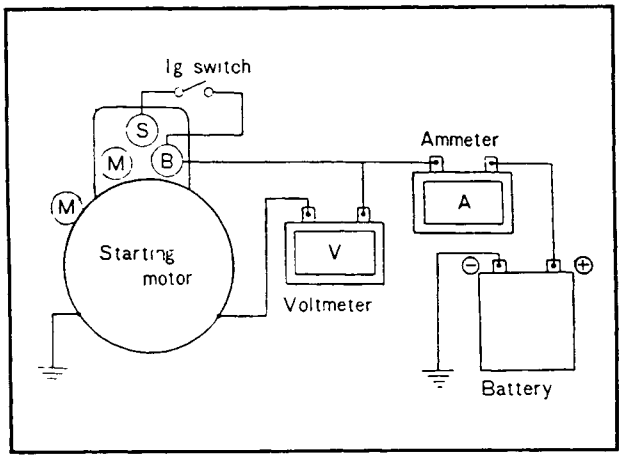

Fig. 5–20

b. Lock resistance test

1. Install the starting motor on a test bench.
2. Test the lock resistance of the starting motor, following the instructions of the test equipment manufacturer.
3. With applied battery voltage adjusted to 6.0 volts, the current flow should be 60 amperes and the torque should be 2.7 m-kg (19.5 ft-lb).

If the starting motor does not perform to the above test requirements repair it referring to the following list.
1) Starter rotates slowly with a large current at free running.
   a) Worn, dirty or defective bearings
   b) Short circuit of armature
   c) Grounded armature and field coil
2) Starter does not rotate with a large current.
   a) Defective field circuit
   b) Defective armature circuit
   c) Burnt commutator
3) Low torque and low current flow. Low free running speed.
   a) Breakage of field circuit
   b) Excessive internal resistance
4) Low torque. High free running speed.
   a) Short circuit of field coil

5–G–3. Disassembling the Starter motor

1. Disconnect the field strap from the terminal on the magnetic switch.
2. Remove the magnetic switch attaching screws and remove the magnetic switch, spring and washers from the driving housing.

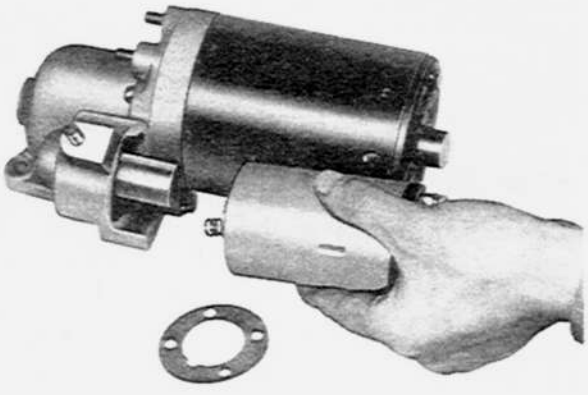

Fig. 5–21 Removing of magnetic switch

3. Remove the planger from the driving lever.
4. Remove the through bolts and remove the rear bracket.

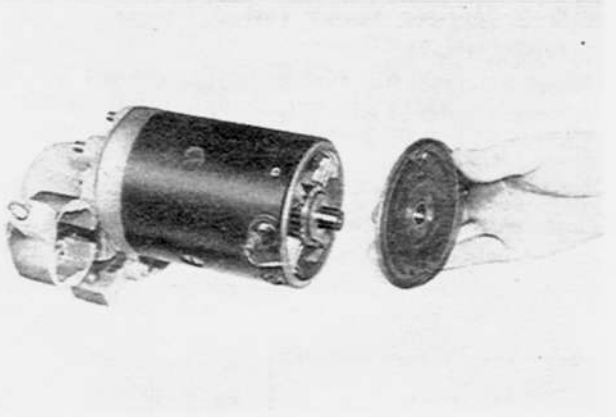

Fig. 5–22 Removing of rear bracket

5. Remove the insulator and washer from the end of the armature shaft.
6. Loosening the screws attaching field coil, separate the field coil assembly from the center bracket.

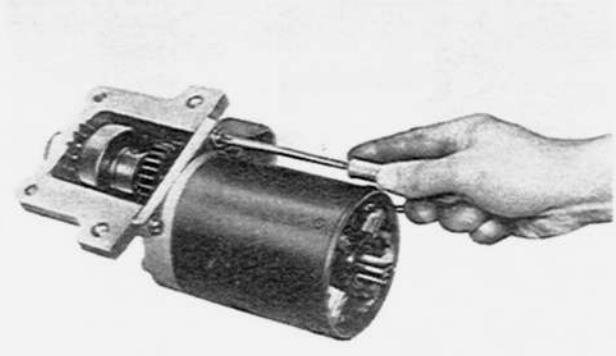

Fig. 5–23 Removing the field coil

7. Remove the armature from the center bracket and remove the thrust washer.
8. Separate the front bracket and the center bracket.
9. Remove the driving lever, spring and spring seat.
10. Remove the over running clutch assembly from the front bracket.

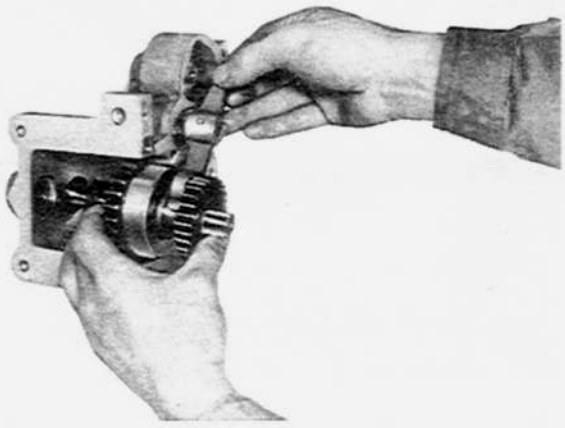

Fig. 5–24 Removing of driving lever

5–G–4. Starting Motor Inspection

a. Checking the armature

Check the armature for both grounding and short circuit. To check for grounding, touch one prod of a tester to each segment and the other prod to the core or shaft. If there is current flow, the coil of the corresponding segment is grounded.

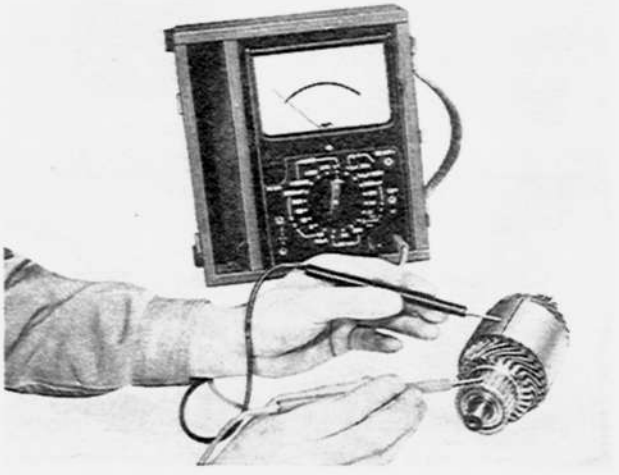

Fig. 5–25 Checking of armature

To check for short circuit, use a growler tester. Place the armature against the core of the tester, and hold a steel strip on the armature. Then, rotate the armature slowly by hand. In case of short in the coil, the steel strip will become magnetized and vibrate.

b. Checking the commutator

If the commutator is dirty, discolored or worn, clean it with emery paper and wash with clean solvent. After cleaning, undercut the mica between the segments to the depth of 0.5 ~ 0.8 mm (0.020 ~ 0.031 in). Refer Fig. 5–26.

c. Checking the field coil

To test the field coil for ground with a tester, place one prod on the yoke or pole core and the other prod to the field terminal. In case of grounding, there will be current flow and the field coil must be repaired or replaced. Refer Fig. 5–27.

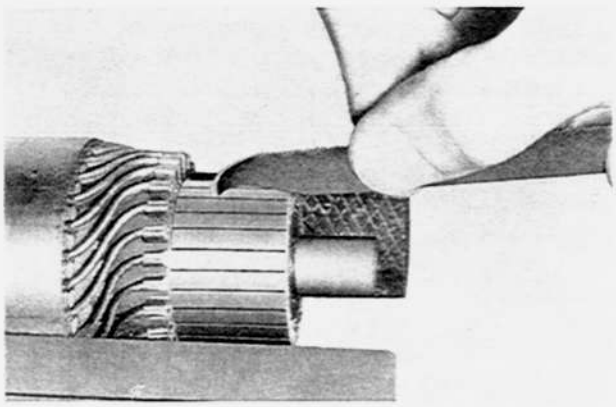

Fig. 5–26 Under cut



Fig. 5–27 Checking of field coil

d. Checking the brush holder

Check the brush holder for ground. Touch one prod of a tester to the brush holder and the other prod to the frame. Current flow indicates grounding. In that case replace the holder.

e. Checking the brushes and brush springs

Check the brushes and replace if they are worn down more than one third of their original length. Otherwise, reduced spring tension will lead to an increase in the brush-commutator contact resistance. This lowers the torque and causes burnt commutator surface. The spring tension is 1,130g (40.0 oz). If the tension is too low, replace the springs.

f. Checking the bush

Check the clearance between the armature shaft and the bush. If it exceeds 0.2 mm (0.08 in), replace the bush.

5–G–5. Magnetic Switch Test

a. Pull-in coil test

Apply the specified voltage (12V) between the (S) terminal and (MT) terminal. If the magnetic switch is forcefully attacted, the pull-in coil is in good condition.

b. Holding coil test

Ground the (MT) terminal to the magnetic switch body with a lead and impose the specified voltage (8V) to terminal (S) to pull in the plunger. If the plunger

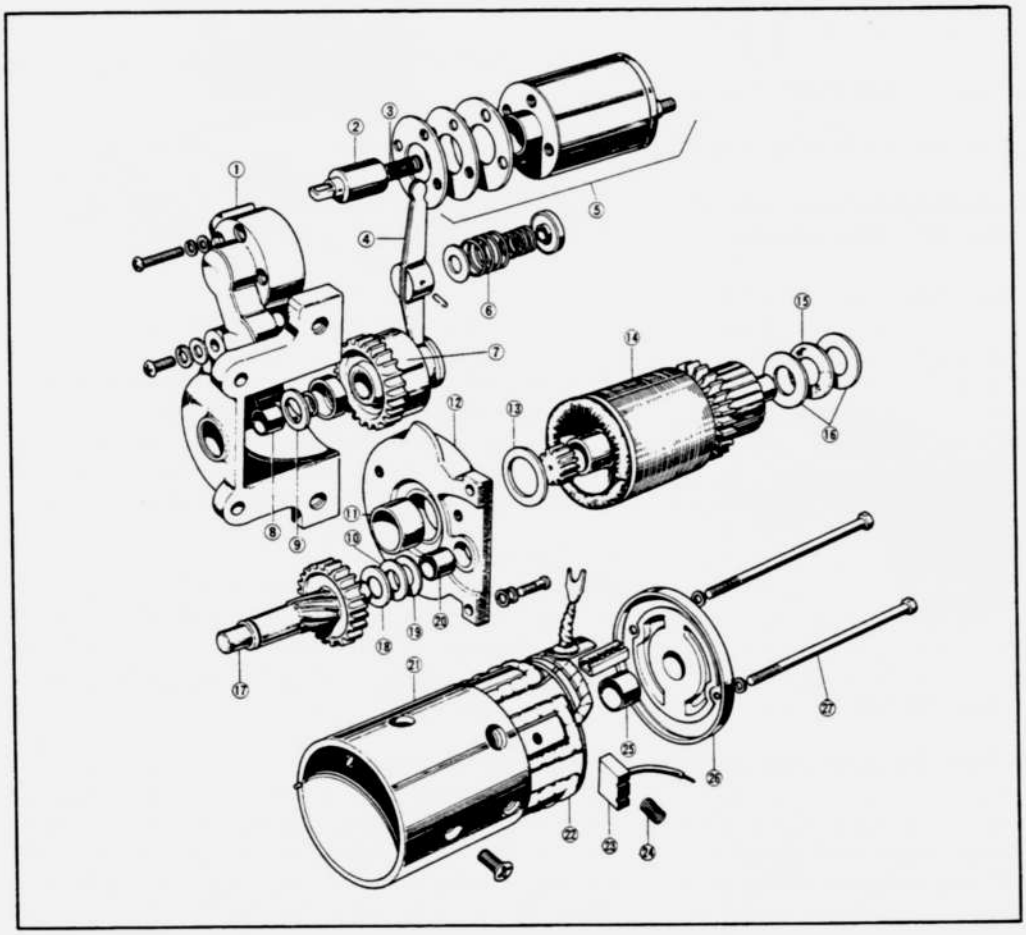

Fig. 5–28
Starting motor assembly

1. Front bracket
2. Plunger
3. Spring
4. Driving lever
5. Magnet switch ass'y
6. Driving lever spring
7. Over running clutch
8. Metal
9. Washer
10. Washer
11. Metal
12. Center bracket
13. Washer
14. Armature
15. Insulator
16. Washer
17. Pinion shaft
18. Washer
19. Washer
20. Metal
21. Yoke
22. Field coil
23. Brush
24. Brush spring
25. Metal
26. Rear bracket
27. Bolt

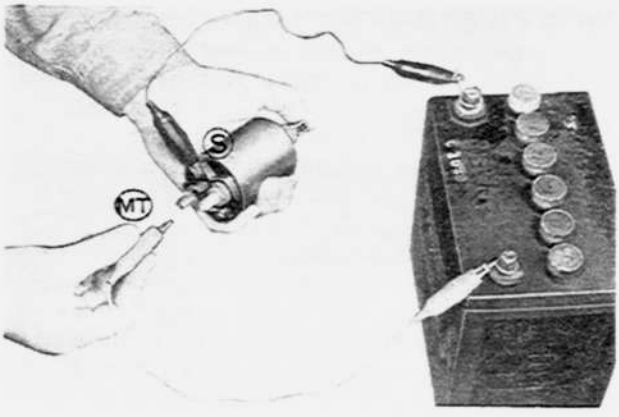

Fig. 5–29 Pull-in coil test

remains attracted after disconnecting the lead from the (MT) terminal, the coil functions properly.

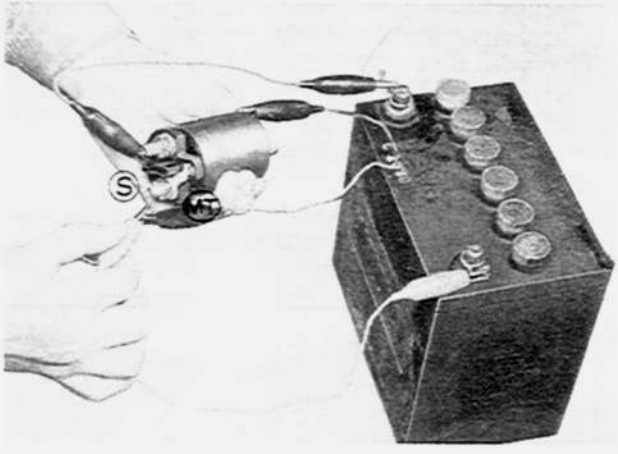

Fig. 5–30 Holding coil test

c. Return test

Push in the plunger by hand and apply the specified voltage (12V) between the (MT) terminal and the magnetic switch body. If the plunger is not attracted, there is no trouble.

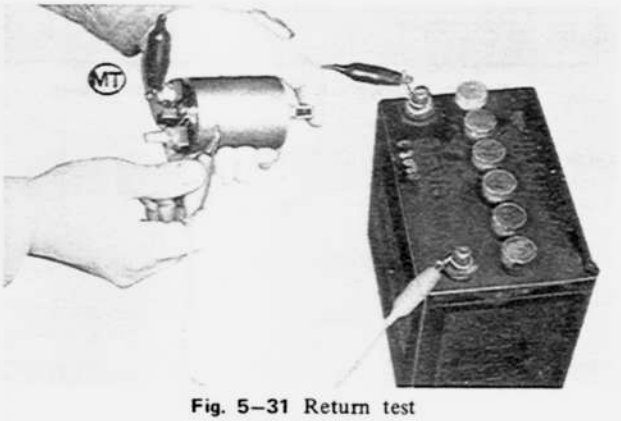

Fig. 5–31 Return test

5–G–6. Assembling the Starting Motor

To assemble the starting motor, reverse the procedure of Par. 5–G–3, noting the following points.

1. Adjust the armature shaft end play to 0.1 ~ 0.4 mm (0.004 0.015 in) with a thrust washer on the rear end of the shaft and pinion shaft end play to 0.1 ~ 0.3 mm (0.004 ~ 0.012 in) with a washer the end of the shaft.
2. When the magnetic switch is closed, the clearance between the pinion and stop collar should be 0.3 ~ 1.5 mm (0.012 ~ 0.06 in).

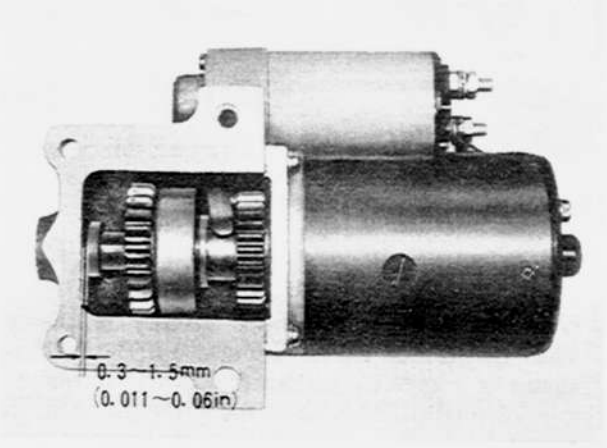

Fig. 5–32 Gap of pinion and stop collar

5–H. LIGHTING SYSTEM

The wiring of the lighting systems is shown in the wiring diagrams. The wires in the various circuits are of different colors to aid when checking individual circuits.

5–H–1. Headlight Aim

Before adjusting the headlights, make sure that the tires are inflated uniformly to recommended pressure and the vehicle is on the level ground without load. To adjust the headlights, remove the head lamp frames and turn the three spring-loaded screws of the sealed beam unit the headlights are aimed properly. When the high beam is aimed 1.0 m (39.37 in) straight ahead, the center of the high intensity should be 12.9 mm (0.51 in) lower than the horizontal lamp center line, as shown in Fig. 5–33.

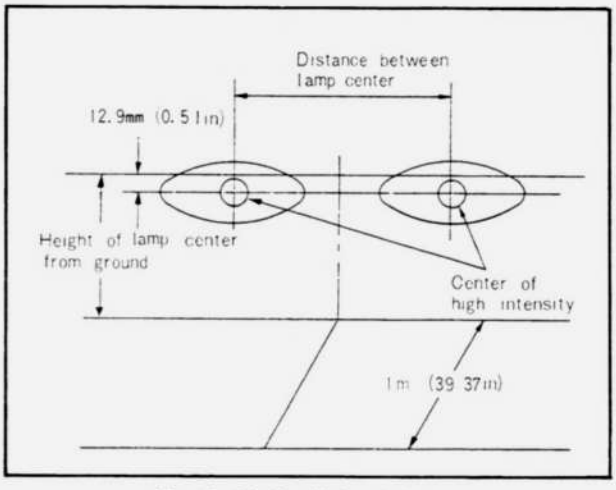

Fig. 5–33 Headlight aiming

5–H–2. Replacing the Bulbs

When replacing bulbs, conform to the following table.

Head lamp	50W/40W
Front turn signal & side lamp	21W/5W
Side turn signal lamp	3.4W
Fog lamp	25W
Step lamp	6W
Glove compartment lamp	5W
Turn signal lamp (rear)	21W
Stop, tail & reverse lamp	21W/5W/10W
Licence lamp	10W

5–I. INSTRUMENT PANEL

5–I–1. Fuel Gauge

RX–2 is equipped with an electric fuel gauge. The fuel gauge indicates the fuel quantity in the tank when the ignition switch is turned on. The fuel gauge circuit is composed of the fuel meter, mounted on the instrument panel, and the fuel tank unit, connected by a single wire through the ignition switch. Should the meter fail to register, check and repair the fuel meter circuit as follows:

1) Fuel gauge does not register with ignition "ON".
   a) Defective panel unit
   b) Faulty contact in "Ig" terminal of meter gauge
   c) Wiring to tank grounded
   d) Meter gauge improperly grounded

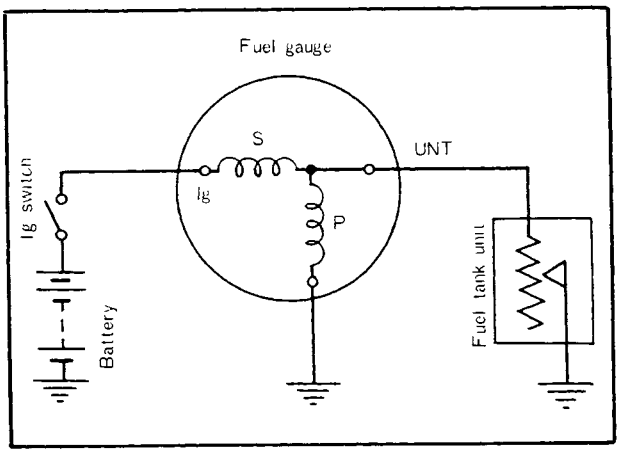

Fig. 5–34 Diagram of the fuel gauge

2) Fuel gauge shows "F" under all conditions.
   a) Open circuit in tank unit and meter gauge
   b) Break in wiring between tank unit and panel
3) Fuel gauge shows "E" under all conditions.
   a) Loose or faulty contact of terminals
   b) Short circuit in tank unit or meter gauge
   c) Break in P coil and S coil of meter gauge

5–I–2. Water Thermometer

The cooling water thermometer is operated electrically like the fuel gauge. The circuit consists of the water thermometer on the instrument panel and the sending unit installed on the thermostat case. When the water thermometer registers improperly, check on the following points and refer to the wiring diagram for repair.

1) Pointer does not move when ignition switch is turned on.
   a) Defective panel unit
   b) Faulty contact in "Ig" terminal
2) Pointer shows "H" under all conditions.
   a) Open circuit in sending unit
   b) Break in wiring between both units
   c) Loose or faulty contact in terminals
3) Pointer shows "C" under all conditions.
   a) Defective panel unit
   b) Short circuit in sending unit
   c) Panel unit improperly grounded

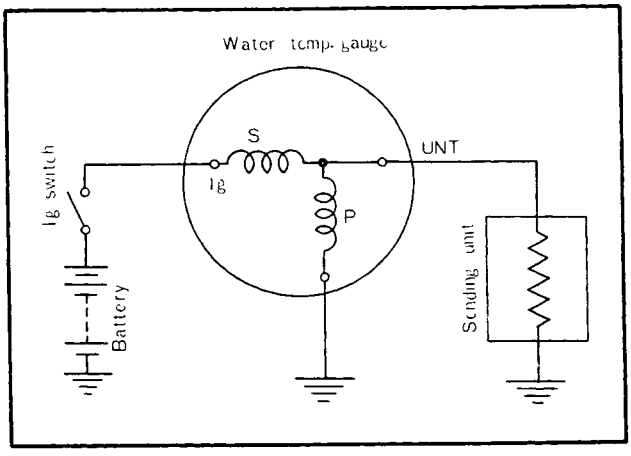

Fig. 5–35 Diagram of the water temp. gauge

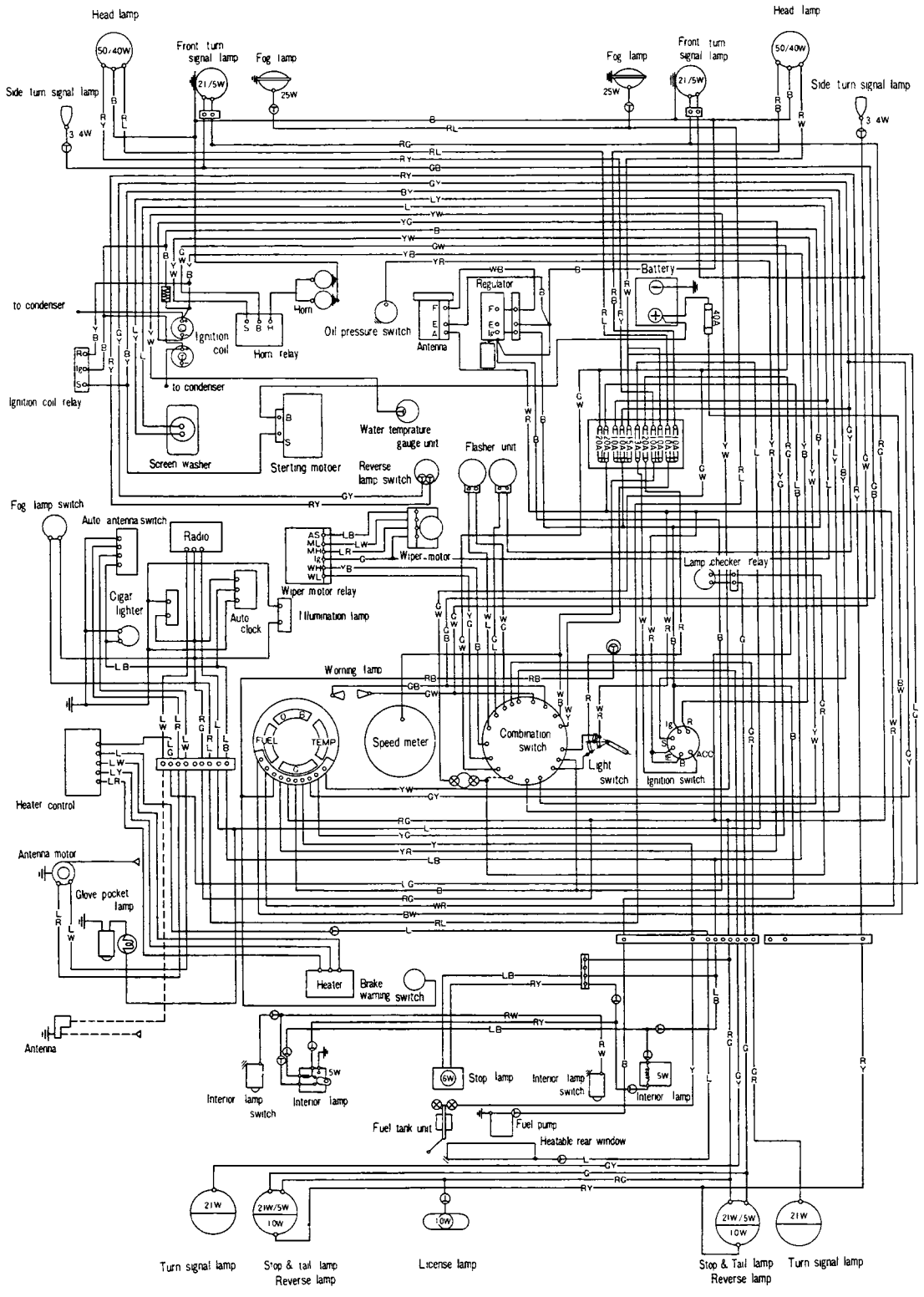

Wiring colour code

R : Red
G : Green
B : Black
L : Blue
Y : Yellow
W : White

Example:

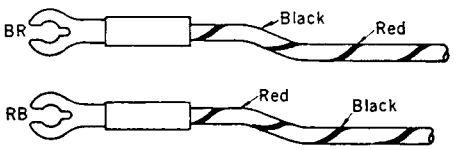

Fig. 5–36 Wiring diagram (all models except coupe super deluxe)

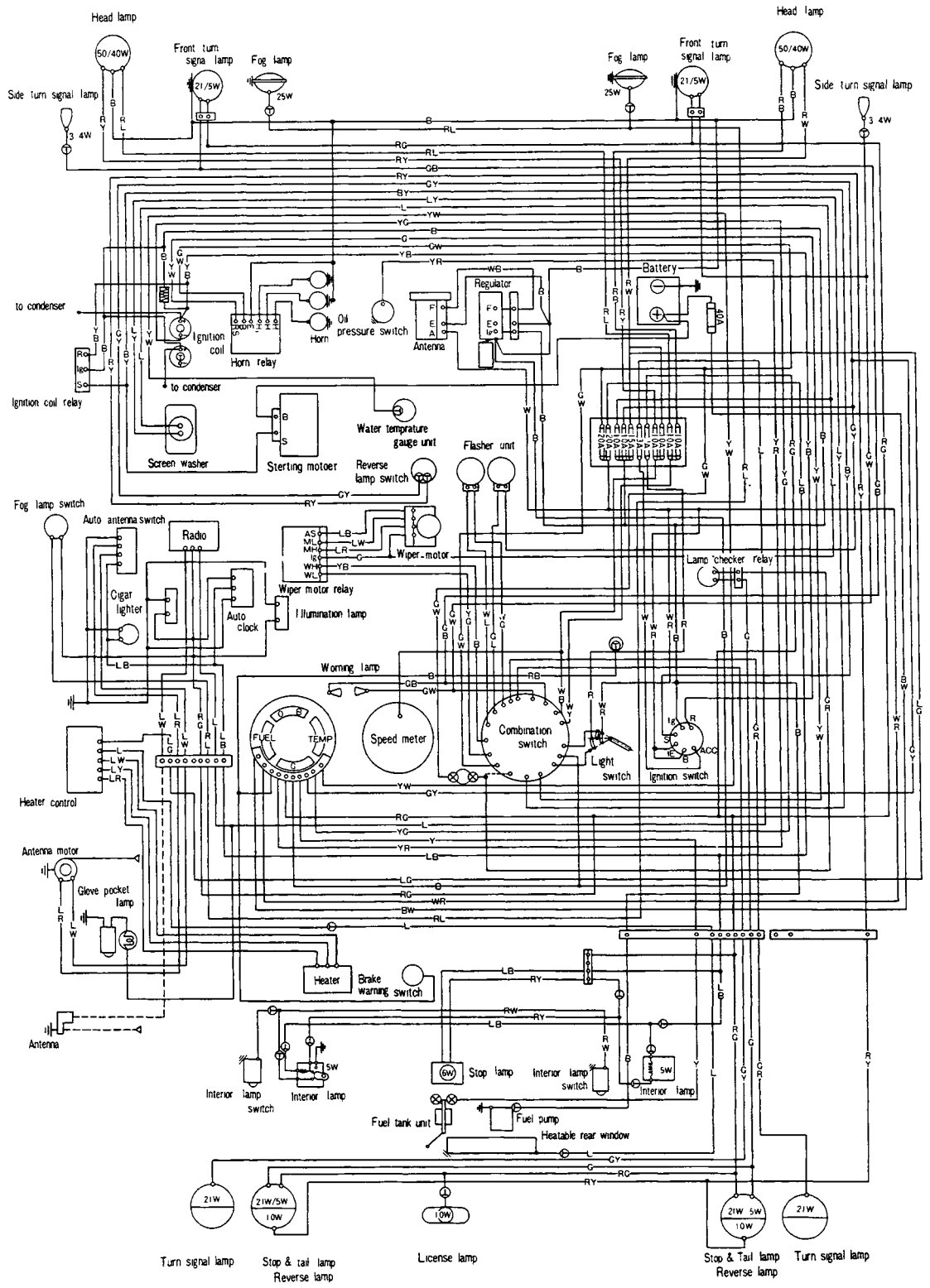

Wiring colour code

R : Red
G : Green
B : Black
L : Blue
Y : Yellow
W : White

Example:

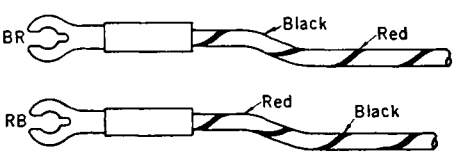

Fig. 5–37 Wiring diagram (coupe super deluxe)

CLUTCH

6–A. CLUTCH PEDAL ADJUSTMENT..... 6 : 1
6–B. RELEASE FORK ADJUSTMENT..... 6 : 1
6–C. CLUTCH REMOVAL..... 6 : 1
6–D. CLUTCH INSPECTION..... 6 : 1
6–D–1. Checking the Release Bearing..... 6 : 1
6–D–2. Checking the Pressure Plate Assembly..... 6 : 1
6–D–3. Checking the Clutch Disk..... 6 : 1
6–D–4. Flywheel Inspection..... 6 : 2
6–D–5. Ring Gear Replacement..... 6 : 2
6–D–6. Inspecting the Needle Roller Bearing and Oil Seal..... 6 : 2
6–E. CLUTCH ASSEMBLY..... 6 : 2
6–F. CLUTCH MASTER CYLINDER..... 6 : 2
6–F–1. Removing the Clutch Master Cylinder..... 6 : 2
6–F–2. Disassembling the Clutch Master Cylinder..... 6 : 3
6–F–3. Checking the Clutch Master Cylinder..... 6 : 3
6–F–4. Assembling the Clutch Master Cylinder..... 6 : 3
6–F–5. Installing the Clutch Master Cylinder..... 6 : 3
6–G. CLUTCH RELEASE CYLINDER..... 6 : 3
6–G–1. Removing the Clutch Release Cylinder..... 6 : 3
6–G–2. Checking the Clutch Release Cylinder..... 6 : 3
6–G–3. Assembling the Clutch Release Cylinder..... 6 : 3
6–G–4. Installing the Clutch Release Cylinder..... 6 : 4
6–H. AIR BLEEDING..... 6 : 4

CLUTCH

The clutch is of the single dry disk type. The clutch assembly consists of the clutch disk assembly, clutch cover and pressure plate assembly, and clutch release mechanism.
The clutch operating mechanism is a hydraulic type.

6–A. CLUTCH PEDAL ADJUSTMENT

The free travel of the clutch pedal should be between 20 to 30 mm (0.8 to 1.2 in). To adjust the free travel, loosen the lock nut and turn the push rod until proper adjustment is made.

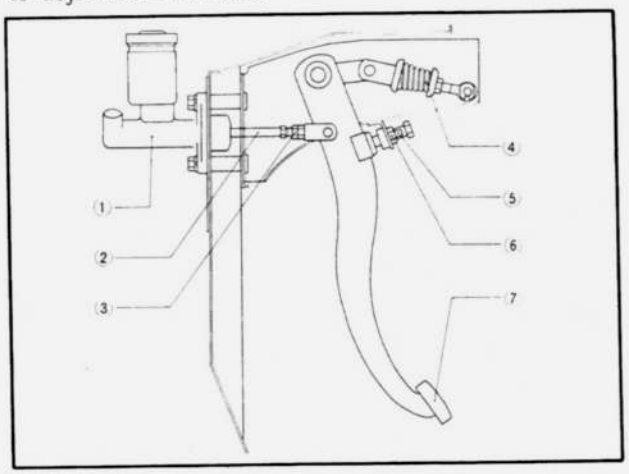

Fig. 6–1 Clutch pedal adjustment

1. Master cylinder
2. Push rod
3. Lock nut
4. Return spring
5. Stopper bolt
6. Lock nut
7. Clutch pedal

6–B. RELEASE FORK ADJUSTMENT

There should always be a safe clearance of 1.5 mm (0.06 in) between the release bearing and the diaphragm spring. This clearance is essential to disengage the release bearing and to prevent unnecessary wear and possible slippage. This clearance is obtained when the free play of the release fork is adjusted to 3.0 mm (0.12 in).
To adjust remove the return spring, loosen the lock nut, and turn the adjusting nut until the correct play is obtained.
After adjusting, securely tighten the lock nut and hook the return spring.

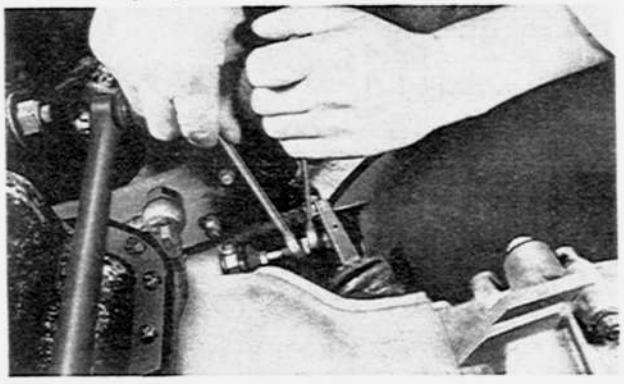

Fig. 6–2

6–C. CLUTCH REMOVAL

To remove the clutch from the vehicle, proceed as follows:
1. Remove the transmission as detailed in Par. 7–A.
2. Install the **ring gear brake** (49 0820 060).
3. Loosen the bolts holding the clutch cover assembly to the flywheel and remove the clutch cover assembly and the clutch disk.
4. Loosen the nut that attaches the flywheel to the eccentric shaft. Remove the flywheel.
5. Remove the return spring for the clutch release bearing and slide off the release bearing.
6. Pull the release fork outward until the retaining spring of the fork releases itself from the pivot pin. Remove the fork from the clutch housing.

6–D. CLUTCH INSPECTION

6–D–1. Checking the Release Bearing

Check the release bearing by turning the bearing race by hand. Replace it if any abnormal noise or roughness is felt when turning.
Examine the front cover of the transmission carefully to be certain there are no burrs on the outer surface of the front cover which pilots the release bearing. Check the release fork for crack or bend.

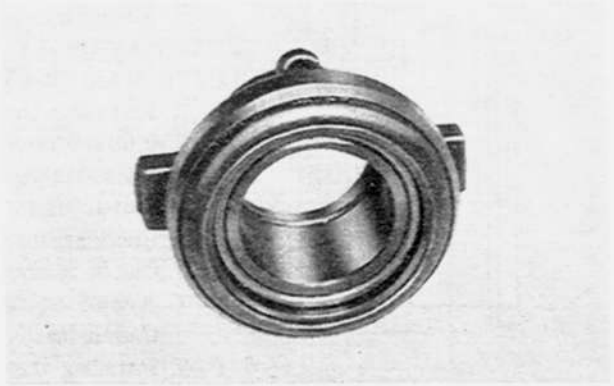

Fig. 6–3 Release bearing

Note: The release bearing is packed with lubricant which is intended to last the whole life time of the bearing. Therefore, the bearing must not be washed in gasoline or any other solvent.

6–D–2. Checking the Pressure Plate Assembly

Check the contact surfaces of the pressure plate with the clutch facing for wear, damage or warpage.
If it is slight, correct it by lapping with compound or by turning a lathe. But if severe, replace with a new one.
Check the diaphragm spring and cover and if any wear or damage is found, replace the pressure plate assembly.

6–D–3. Checking the Clutch Disk

Inspect the clutch disk for warpage with a dial indicator or a feeler gauge, as shown in Fig. 6–4.
If it is more than 1.0 mm (0.0394 in), replace with a new one.



Fig. 6–4 Checking clutch disk

Replace excessive worn facing as it will cause slippage, or scores the pressure plate and flywheel due to the projected heads of rivets.
If oil is evident on the facing, clean or replace the facing and eliminate the cause of oil leakage.
Make certain that the clutch disk slides easily on the main drive shaft without any excessive play.
If the play exceeds 0.3 mm (0.012 in), replace the clutch disk or the main drive shaft.

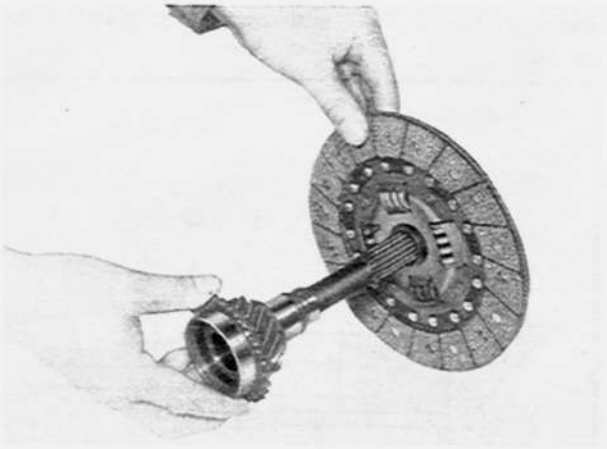

Fig. 6–5 Checking spline fit of clutch disk

6–D–4. Flywheel Inspection

Inspect the contact surface of the flywheel with the clutch facing for burnt surface, scored surface of rivet grooves.
If it is slight, it can be reconditioned by grinding in a lathe. If the damage is deep, the flywheel should be replaced.
Check the ring gear teeth and replace if the ring gear teeth are broken, cracked or seriously burred.

6–D–5. Ring Gear Replacement

1. Heat the old ring gear and remove it from the flywheel.
2. Heat the new ring gear evenly 250 to 300°C (480 to 570°F).
3. Place the ring gear on the cold flywheel, making sure that the chamfer on the teeth is faced to the engine.
4. Allow the ring gear to cool slowly to shrink it onto the flywheel.

6–D–6. Inspecting the Needle Roller Bearing and Oil Seal

Check the needle roller bearing and oil seal at the rear end of the eccentric shaft. Then insert the pilot part of the main drive shaft and check for smooth operation and proper clearance. If the bearing is loosen or runs rough, it should be replaced.
Check for wear and damage of the oil seal lip. If traces of oil leakage are found, replace the oil seal.

6–E. CLUTCH ASSEMBLY

1. Install the flywheel onto the rear end of the eccentric shaft through the key. Place the lockwasher in its place and install the lock nut.
2. Use a **ring gear brake** (49 0820 060) and tighten the lock nut to 45 m-kg (320 ft-lb).
3. Bend the lockwasher to prevent loosening.
4. Hold the clutch disk and pressure plate assembly in mounting position. Then, insert a **clutch disk centering tool** (49 0813 310) through the spline of the disk and into the pilot bearing. If a tool is not available, use a spare main drive shaft.
5. Match the "O" mark on the pressure plate with the reamer hole of the flywheel and fit the securing bolts.

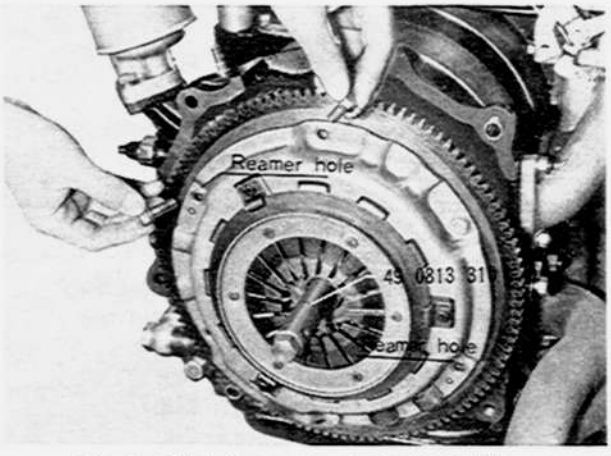

Fig. 6–6 Installing pressure plate assembly

6. Tighten the bolts to 2.0 m-kg (15 ft-lb).
7. Remove the centering tool and ring gear brake.
8. Apply grease to the pivot pin and drive the release fork inward so that the retaining spring of the fork fits to the pivot pin. Install the release bearing and hook the return spring. After installing, check to ensure that the release bearing slides smoothly back and forth on the retainer when operating the release fork.
9. Install the transmission. Care should be taken in order not to bend the clutch disk by allowing the transmission to hang.

6–F. CLUTCH MASTER CYLINDER

6–F–1. Removing the Clutch Master Cylinder

If it becomes necessary to remove the clutch master cylinder for repair or overhaul, proceed as follows:

1. Disconnect the fluid pipe at the clutch master cylinder outlet.
2. Remove the nuts that attach the clutch master cylinder to the dash panel.
3. Pull the clutch master cylinder straight out and away from the dash panel.

6–F–2. Disassembling the Clutch Master Cylinder

The disassembling procedures of the master cylinder after removing are as follows:
1. Clean the outside of the clutch master cylinder thoroughly and drain the brake fluid.
2. Remove the resevoir tank from the cylinder.
3. Remove the dust boot from the cylinder.
4. Remove the piston stop wire with a screwdriver and remove the stop washer.
5. Remove the piston, piston cup and return spring from the cylinder.

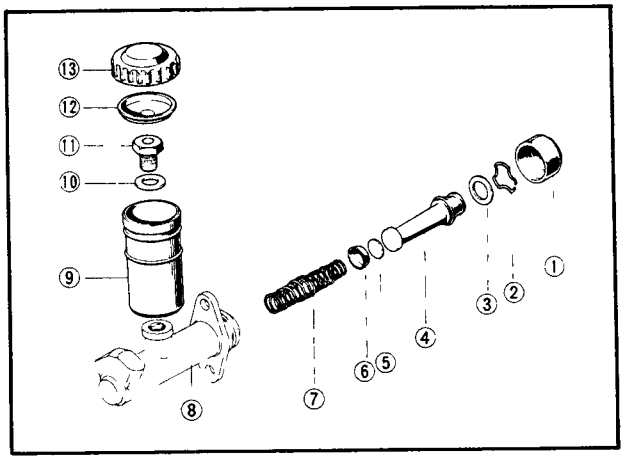

Fig. 6–7 Clutch master cylinder

1. Boot
2. Stop wire
3. Stop washer
4. Piston & 2nd.cup
5. Spacer
6. Primary cup
7. Piston spring
8. Cylinder body
9. Reserve tank
10. Washer
11. Plug
12. Baffle
13. Cap

6–F–3. Checking the Clutch Master Cylinder

1. Wash the parts in clean alcohol or brake fluid. Never use gasoline or kerosene.
2. Check the piston cup and replace if they are damaged, worn, softened or swelled.
3. Examine the cylinder bore and piston for wear, roughness or scoring.
4. Check the clearance between the cylinder bore and the piston. If it is more than 0.15 mm (0.006 in), replace the cylinder or piston.
5. Ensure that the compensating port on the cylinder is open.

6–F–4. Assembling the Clutch Master Cylinder

1. Dip the piston and cups in clean brake fluid.
2. Install the reservoir tank.
3. Insert the return spring into the cylinder.
4. Install the primary piston cup so that the flat side of the cup faces the piston.
5. Fit the secondary cup onto the piston and install them in the cylinder.
6. Install the stop washer and stop wire.
7. Fill reservoir half with brake fluid and operate the piston with a screwdriver until the fluid is ejected at the outlet.
8. Install the dust boot to the cylinder.

6–F–5. Installing the Clutch Master Cylinder

1. Install the clutch master cylinder assembly onto the dash panel and tighten the nuts.
2. Connect the fluid pipe to the cylinder.
3. Fill with brake fluid and bleed the clutch hydraulic system.

6–G. CLUTCH RELEASE CYLINDER

6–G–1. Removing the Clutch Release Cylinder

1. Disconnect the flexible pipe at the clutch release cylinder.
2. Unhook the release fork return spring.
3. Remove the bolts attaching the cylinder to the clutch housing. Remove the release cylinder.

6–G–2. Checking the Clutch Release Cylinder

Refer to Par. 6–F–3 and inspect the clutch release cylinder.

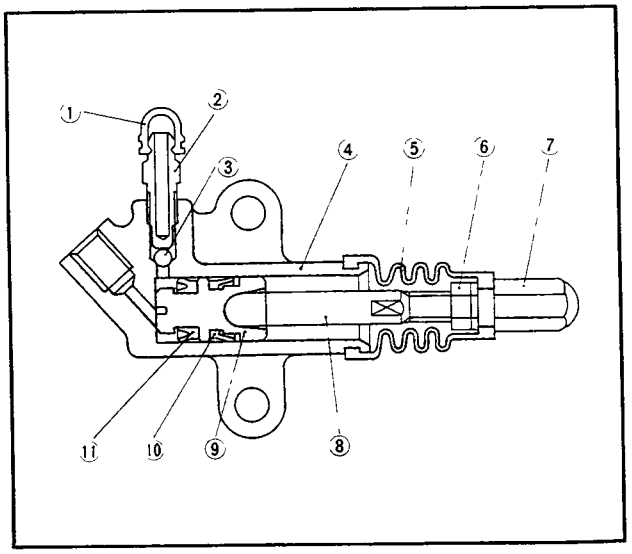

Fig. 6–8 Clutch release cylinder

1. Cap
2. Bleeder valve
3. Steel ball
4. Cylinder body
5. Boot
6. Lock nut
7. Adjust screw
8. Release rod
9. Piston
10. Secondary cup
11. Primary cup

6–G–3. Assembling the Clutch Release Cylinder

1. Fit the cups to the piston and install them in the cylinder.
2. Install the dust boot on the end of the cylinder.
3. Install the steel ball and bleeder into the bleeder hole.
4. Install the clutch release rod.

6–G–4. Installing the Clutch Release Cylinder

1. Install the clutch release cylinder assembly to the clutch housing with two bolts.
2. Connect the flexible pipe.
3. Fill the reservoir of the master cylinder with brake fluid and bleed the system, as described in Par. 6–H.
4. Adjust the free play of the release fork, as described in Par. 6–B.
5. Hook the return spring.

6–H. AIR BLEEDING

The clutch hydraulic system must be bled whenever a fluid line has been disconnected or air enters the system. To bleed the clutch system, remove the rubber cap from the bleeder valve and attach the bleeder tube and fixture of the bleeder screw. Place the end of the tube in a glass jar and submerge in brake pedal and allow it to return slowly. Continue this pumping action and watch the flow of fluid in the jar. When air bubbles cease to appear, close the bleeder valve. During bleeding the reservoir of the master cylinder must be kept filled with fluid at least 3/4 of its capacity. After the bleeding operation, remove the tube, fit the cap on the bleeder valve, fill the reservoir and fit the filler cap.

SPECIAL TOOLS

49 0820 060	Ring gear brake
49 0813 310	Clutch disk centering tool

TRANSMISSION

7–A. TRANSMISSION REMOVAL ..... 7 : 3
7–B. DISASSEMBLING THE TRANSMISSION ..... 7 : 3
7–C. TRANSMISSION INSPECTION ..... 7 : 4
7–C–1. Inspection of Transmission Case ..... 7 : 4
7–C–2. Checking the Bearings ..... 7 : 4
7–C–3. Checking the Gears ..... 7 : 4
7–C–4. Checking the Synchronizer Mechanism ..... 7 : 4
7–C–5. Checking Run-Out of Main Shaft ..... 7 : 5
7–D. ASSEMBLING THE TRANSMISSION ..... 7 : 5
7–D–1. Assembling the transmission ..... 7 : 5
7–D–2. Assembling the Extension ..... 7 : 6
7–D–3. Installing the Extension Assembly ..... 7 : 6
7–D–4. Installing the Clutch Housing ..... 7 : 7
7–E. INSTALLING THE TRANSMISSION ..... 7 : 7

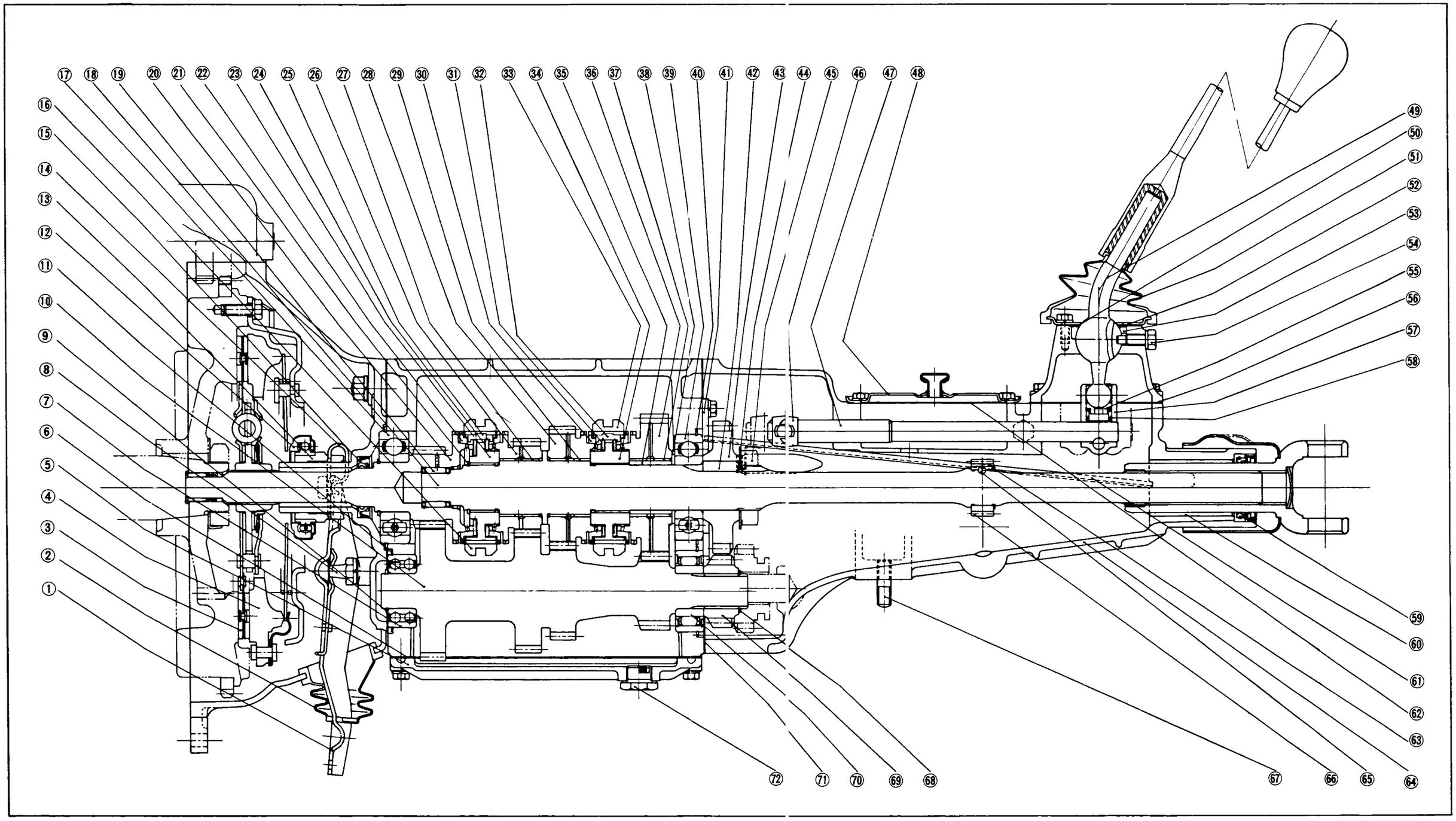

Fig. 7–1 Clutch and Transmission

1. Release Fork
2. Dust Boot
3. Clutch Disk Assembly
4. Pressure Plate Assembly
5. Under Cover
6. Gasket
7. Ball Bearing
8. Pirot Pin
9. Snap Ring
10. Counter Shaft Gear
11. Adjust Shim
12. Clutch Bearing
13. Clutch Release Collar
14. Collar Spring
15. Oil Seal
16. Clutch Hub Sleeve
17. Ball Bearing
18. Main Shaft
19. Needle Bearing
20. Main Drive Gear
21. Snap Ring
22. Sinchronizer Ring
23. 3-4 Clutch Hub
24. Sinchronizer Spring
25. Sinchronizer Key
26. Sinchronizer Ring
27. Bush
28. Second Gear
29. Bush
30. Sinchronizer Ring
31. Sinchronizer Spring
32. Sinchronizer Key
33. Clutch Hub Sleeve
34. 1-2 Clutch Hub
35. Gear Sleeve
36. Low Gear
3 . Bush
3 . Thrust Washer
3 . Ball Bearing
4 . Adjust Shim
4 . Bearing Stopper
4 . Key
4 . Reverse
4 . Washer
4 . Lock Nut
4 . Control Lever
4 . Control Rod
4 . Blind Cover
49. Change Lever
50. Shim
51. Dust Boot
52. Cover Plate
53. Bush
54. Set Screw
55. Spring Seat
56. Gasket
57. Control Rod Gate
58. Spring
59. Oil Seal
60. Bush
61. Oil Pass
62. Gasket
63. Snap Ring
64. Extension Housing
65. Steel Ball
66. Speed Drive Gear
67. Stud
68. Snap Ring
69. Counter Reverse Gear
70. Needle Bearing
71. Gasket
72. Magnet Plug

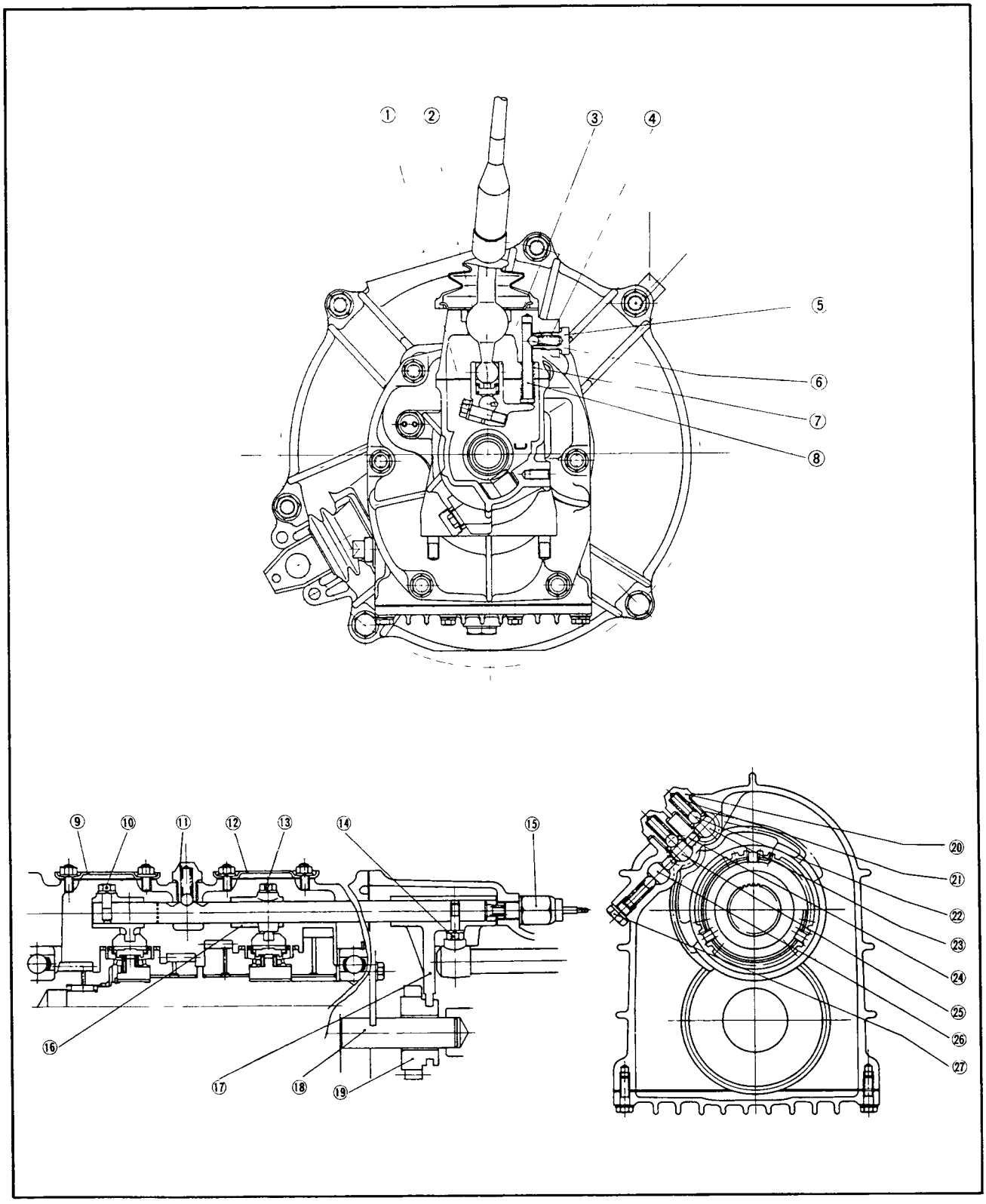

Fig. 7–2 Transmission

1. Reamer Bolt
2. Key
3. Control Lever End
4. Spring
5. Spring Cap
6. Steel Ball
7. Spring
8. Select Lock Spindle
9. Blind Cover
10. Set Screw (3rd top)
11. Spring Cap
12. Blind Cover
13. Set Screw (Low & 2nd)
14. Set Screw (reverse)
15. Reverse Lamp Switch
16. Shift Fork (Low & 2nd)
17. Shift Fork (reverse)
18. Reverse Idle Gear Shaft
19. Reverse Idle Gear
20. Spring Cap
21. Spring
22. Steel Ball
23. Shift Rod (Low & 2nd)
24. Inter Lock Pin
25. Shift Rod (3rd & top)
26. Shift Rod (reverse)
27. Spring Set Plug

TRANSMISSION

RX–2 is equipped with a four-speed manual transmission of the synchromesh type with helical gears to provide silent operation. Gear shifting is of the direct control floor-shift type.

The transmission gear ratio is as follows:

Gear	Gear Ratio
First	3.683
Second	2.263
Third	1.397
Top	1.000
Reverse	3.692

7–A. REMOVING THE TRANSMISSION

When removing only the transmission from the vehicle, proceed as follows:

1. Disconnect the earth wire of the battery.
2. Remove the console assembly and dust boot of the gear shift lever. Loosen the attaching bolts on the cover plate and remove the dust boots, cover plate and bush together with the shift lever from the transmission housing.
3. Disconnect the wirings of the starting motor and the reverse lamp switch and then remove the starting motor.
4. Remove the drain plug and drain the transmission oil. Clean the drain plug and reinstall after draining.
5. Disconnect the speedometer cable from the speedometer driven gear.
6. Remove the release fork return spring. Loosen the nuts and remove the clutch release cylinder with the push rod from the clutch housing.
7. Disconnect the exhaust pipe from the exhaust manifold by loosening the nuts.
8. Disconnect the propeller shaft from the transmission.
9. Support the transmission with a jack and a block of wood and remove the nuts holding the supporter on to the side frame member.
10. Remove the bolts holding the transmission on to the clutch housing.
11. Move the transmission toward the rear so as to remove the main drive shaft from the clutch disk. Lower the jack and remove the transmission from the vehicle.

7–B. DISASSEMBLING THE TRANSMISSION

1. Remove the release bearing, spring and fork.
2. Loosen the bolts attaching the clutch housing to the case and remove the clutch.
3. Remove the change control case from the extension housing.
4; Remove the spring seat and spring from the control lever end.
5. Loosen the nuts attaching the extension housing to the transmission case. Slide the extension housing off through the main shaft, laying down the control lever end to the left as far as it will go.
6. After removing the reamer volt and the friction piece, remove the control lever and the control lever end.
7. Remove the speedometer driven gear from the extension housing by loosening the set screw.

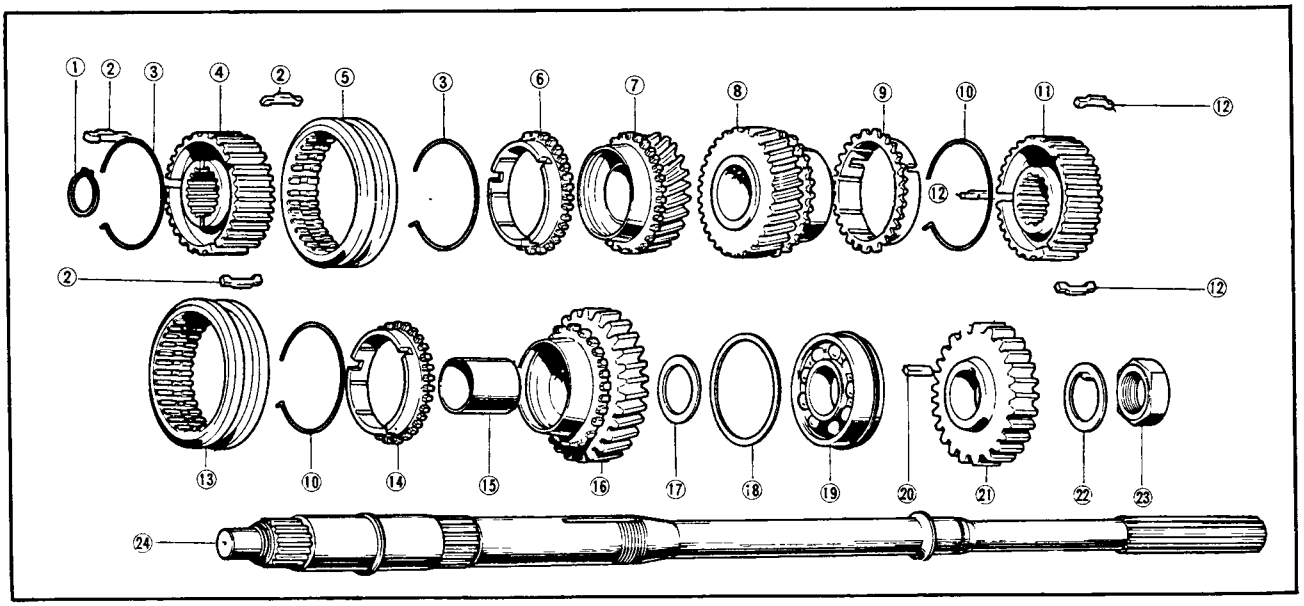

Fig. 7–3 Main shaft assembly

1. Snap ring
2. Key
3. Spring
4. Clutch hub (Low & 2nd)
5. Clutch hub sleeve (Low & 2nd)
6. Synchronizer ring (3rd)
7. Third gear
8. Second gear
9. Synchronizer ring (2nd)
10. Spring
11. Clutch hub (3rd & Top)
12. Key
13. Clutch hub sleeve (3rd & Top)
14. Synchronizer ring (low)
15. Low gear sleeve
16. Low gear
17. Thrust washer
18. Adjust shim
19. Ball bearing
20. Key
21. Reverse gear
22. Lock washer
23. Lock nut
24. Main shaft

8. Remove the under cover and two blind covers.
9. Remove the shift fork rod locking balls and springs, and remove the interlock pins. Loosen the shift fork nuts and remove the shift forks with reverse idle gear from the case.
10. After removing the snap ring on the rear side of the speedometer drive gear, slide the speedometer drive gear off from the main shaft and remove the steel ball.
11. Mount the main shaft assembly on the **main shaft holder** (49 0259 440) as shown in Fig. 7–4 and loosen the reverse gear lock nut, and remove lock nut, lock washer, reverse gear and key.

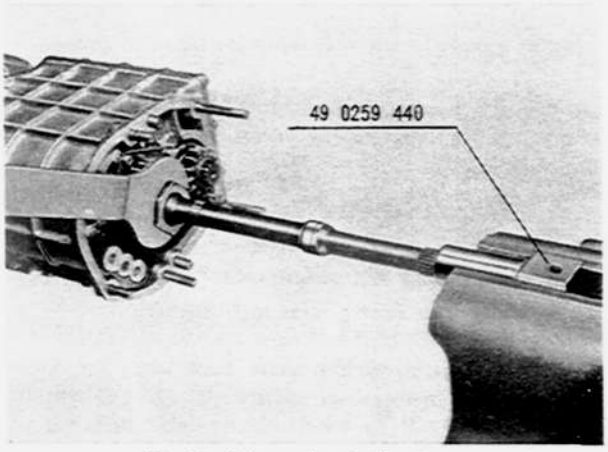

Fig. 7–4 Loosening lock nut

12. Remove the snap ring on the counter shaft gear, and remove the counter reverse gear.
13. Remove the bearing stopper, and then remove the reverse idle gear shaft.
14. Remove the ball bearing on the main shaft and needle bearing on the counter shaft from the rear side of the case using the **bearing puller set** (49 0839 425).
15. Remove the snap rings from the ball bearings of the front side of the case. Remove the ball bearings from the main drive gear and counter shaft gear using the bearing puller

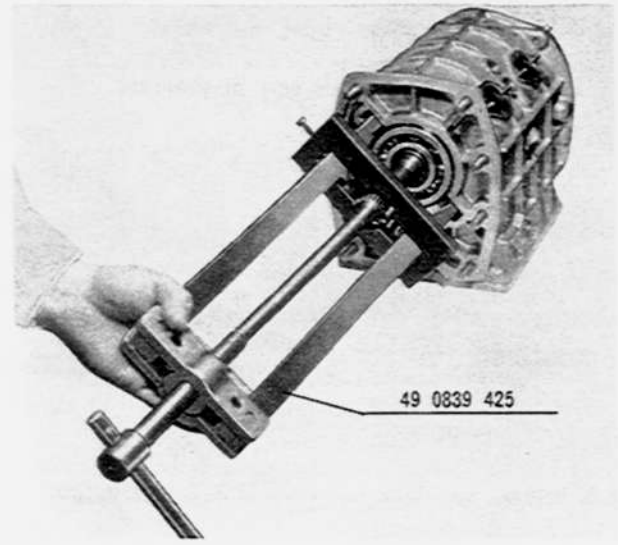

Fig. 7–5 Removing ball bearing

16. Take out counter shaft gear, main drive gear and main shaft assembly from the case.
17. Remove the thrust washer, low gear and sleeve assembly, synchronizer ring, low and second clutch hub assembly, synchronizer ring and the second gear in that order.
18. Remove the snap ring on the front end of the main shaft. Remove the third and top clutch hub assembly, synchronizer ring and third gear.

7–C. INSPECTING THE TRANSMISSION

7–C–1. Inspecting the Transmission Case

Clean the transmission case thoroughly with a suitable solvent, and dry with compressed air. Inspect the case for cracks or any damage.

7–C–2. Checking the Bearings

Inspect each bearing for roughness and excessive wear. They can be determined by slowly turning the outer race by fingers. If excessive wear or roughness is found, replace with new bearing as it will cause the noises.

7–C–3. Checking the Gears

Inspect the teeth of each gear. If excessively worn, broken or chipped, replace with new gears. Excessive wear of the gears causes increase of backlash, which results in producing noises or may cause the gear to work off while running.

7–C–4. Checking the Synchronizer Mechanism

1. To check the contact between the inner surface of the synchronizer ring and the cone surface of the gear, apply a thin coat of Prussian Blue on the cone surface of the gear and fit the ring to it.

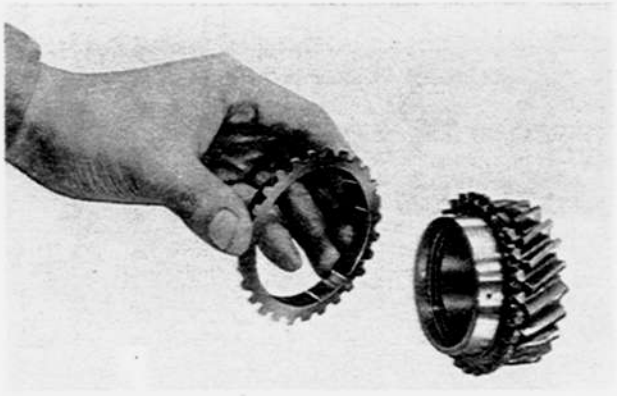

Fig. 7–6 Inspecting synchronizer ring

The contact should be even and uniform over the contacting surface. If the contact is one-sided or spotty, this must be corrected. If the amount of correction is small, this may be done by lapping the surfaces lightly together with compound. If the defects are excessive, replace the synchronizer ring or the gear.
2. Even when the synchronizer ring seats well on the gear cone, if the ring is worn to the extent of no oil grooves remaining on its inside, synchronization can not be obtained.

It is necessary, then, to check the extent of wear of the corn or ring. For this, uniformly fit the ring to the gear corn, and measure clearance (A) between the side faces of the ring teeth and gear teeth with a feeler gauge. The standard clearance is 1.6 mm (0.06 in). If the clearance is less than 0.8 mm (0.031 in), it is an indication of excessive wear of the corn or the internal surface of the ring. In such cases, check the corn and ring and replace the defective part with a new one.

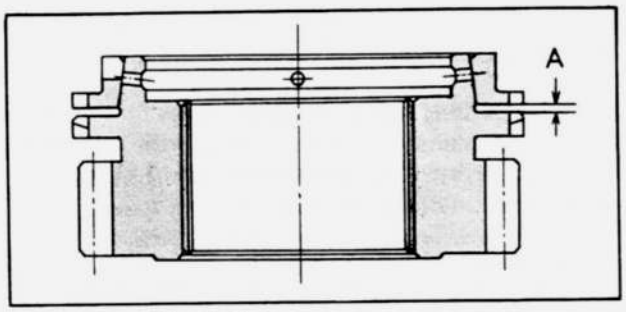

Fig. 7–7

3. Check the synchronizer key, the inner surface of the clutch sleeve, and the key groove on the clutch hub for wear. If wear is excessive, it will cause difficulties in maintaining the neutral position of the clutch sleeve or will cause inferior functioning of the synchronizer ring and make shifting difficult.
4. Check the key spring tension. Decrease tension or damaged key springs will result in uneven pressure against the three keys and will cause improper functioning of the keys and inferior synchronization.

5–C–5. Checking the Run-Out of Main Shaft

Check the run-out on the main shaft and if the deflection is excessive, correct it by using a press. The standard reading on the dial indicator for run-out should be less than 0.03 mm (0.0012 in).

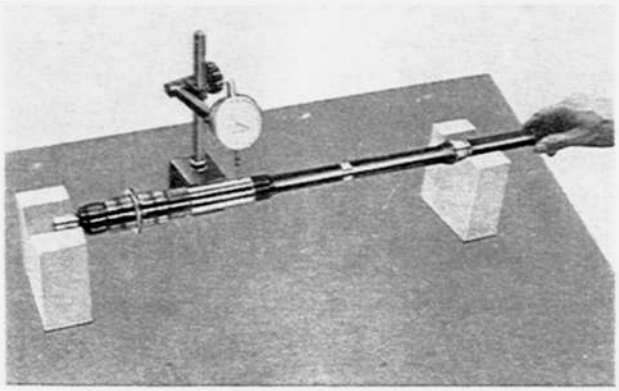

Fig. 7–8 Checking run-out of main shaft

7–D. ASSEMBLING THE TRANSMISSION

7–D–1. Assembling the Transmission Case

1. Assemble the low-and-second clutch hub and sleeve, and third-and-top clutch hub and sleeve.
2. Install the second gear, synchronizer ring, low-and-second clutch hub assembly, synchronizer ring, low gear sleeve, low gear and thrust washer, in that order, onto the main shaft from the rear side.
3. Install the third gear, synchronizer ring and third-and-top clutch hub assembly onto the front side of the main shaft, and fit the snap ring on the groove.
4. Install the needle roller bearing and synchronizer ring to the main drive shaft.
5. Place the main drive gear assembly and main shaft assembly into the transmission case temporarily without ball bearings.

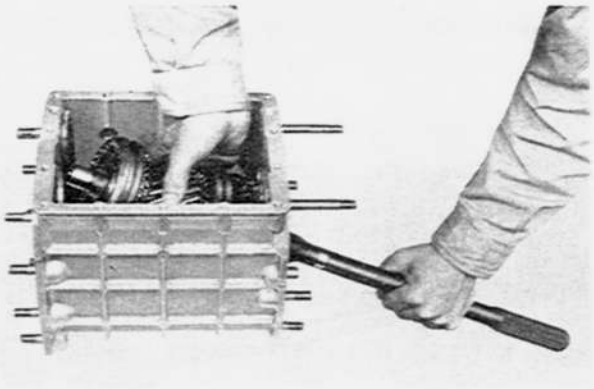

Fig. 7–9 Placing main shaft assembly

6. Put the low-and-second shaft fork and third-and-top one on the respective groove of the clutch sleeve.

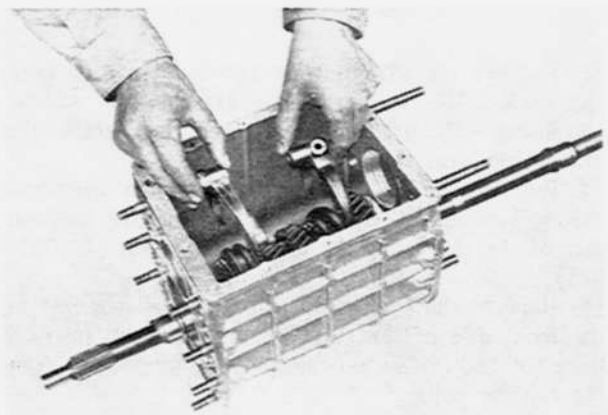

Fig. 7–10 Fitting shaft forks

7. Place the counter shaft gear in the case.

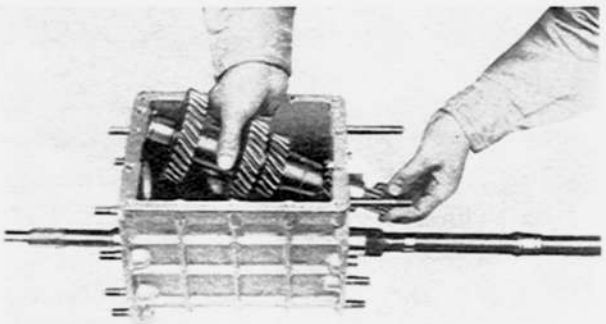

Fig. 7–11 Placing counter shaft gear

8. Install the needle roller bearing of the counter shaft to the rear side, and install the roller bearing of the counter shaft with proper size of adjust shim to the front side and fit the snap ring.
9. Install the roller bearings with proper size of shims to the main drive shaft and main shaft, and fit the snap ring on the main drive shaft.

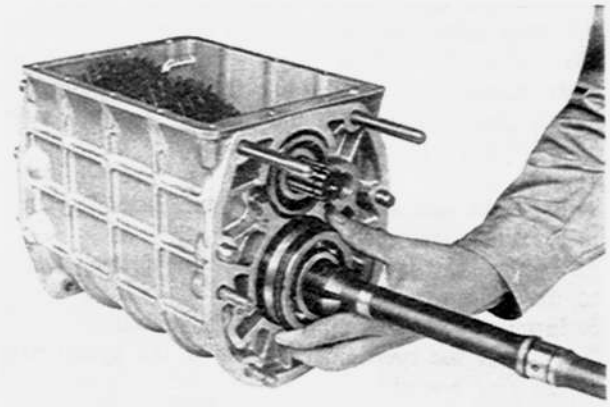

Fig. 7–12 Installing ball bearing

10. Install the reverse gear and snap ring to the counter shaft.
11. Fit the bearing stopper and reverse idle gear shaft to the case. Tighten the bolts of the bearing stopper to 1.0 m-kg (7 ft-lb).
12. Install the reverse gear with key onto the main shaft. Install the lock washer and lock nut, and tighten the lock nut to 23 m-kg (170 ft-lb) while holding the rear end of the main shaft with **main shaft holder** (49 0259 440). Then bent the lock washer.
13. Install the low-and-second shift rod into the case and set the low-and-second shift fork, which has been placed on the groove of the clutch hub temporarily, with the set screw.
14. Place the shift rod on the neutral position and insert the inter lock pin.
15. Install the third-and-top shift rod and set shift fork with set screw. Insert the inter lock pin.

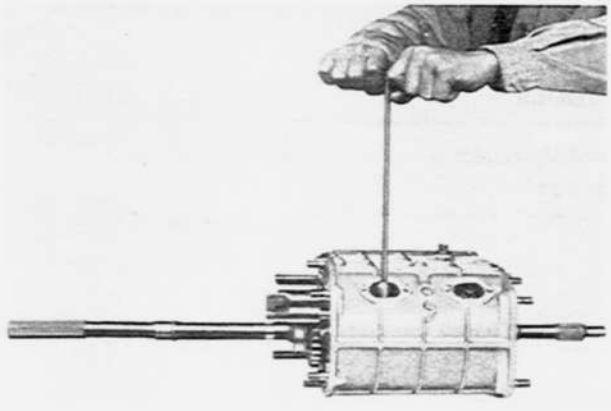

Fig. 7–13 Securing shift fork

16. Install the reverse shift rod with the reverse idle gear.
17. Put the shift locking ball and spring to the groove of each shift rod and install the spring caps.
18. Install the under cover and two blind covers.
19. Install the speedometer drive gear with locking ball onto the main shaft and secure it with a snap ring.

7–D–2. Assembling the Extension

1. Install the oil seal to the rear side of the extension by using suitable tool.
2. Insert the control rod, install the control lever end with key and tighten the reamer bolts.

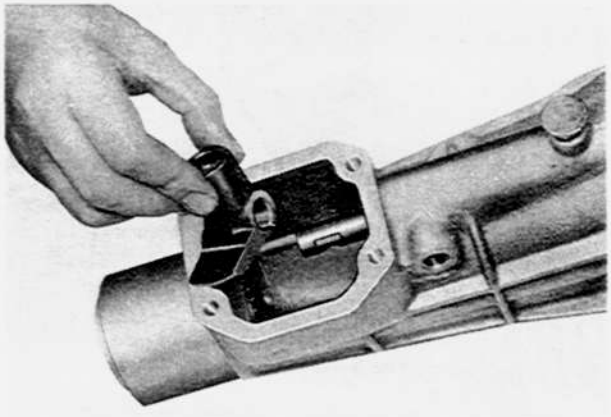

Fig. 7–14 Installing control lever end

3. Fit the friction piece and the spring to the extension and install the spring cap.

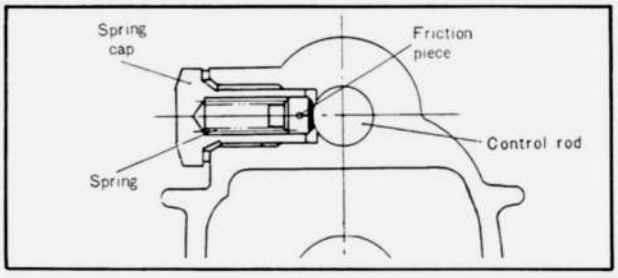

Fig. 7–15 Friction piece of control rod

4. Install the reverse lamp switch.
5. Install the speedometer driven gear assembly and secure with the lock plate.

7–D–3. Installing the Extension Assembly

1. Place the gasket on the rear side of the transmission case and install the extension assembly to the

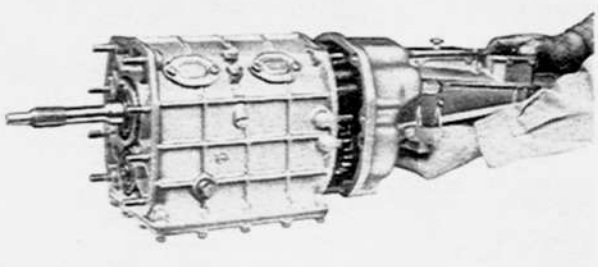

Fig. 7–16 Installing extension

transmission case, laying down the control lever end to the left as far as it will go. Tighten the nuts and confirm that the control rod operates properly.
2. Insert the select lock spindle and return spring. Install the locking ball and the spring in alignment with the spindle groove and fit the spring cap. Install the set screw to the control case.

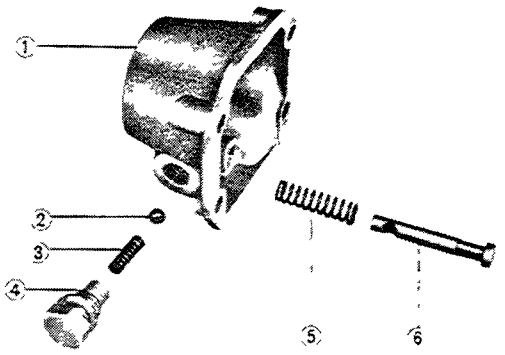

Fig. 7–17 Control case

1. Control case
2. Locking ball
3. Spring
4. Spring cap
5. Spring
6. Select lock spindle

3. Insert the spring and seat into the control lever end and install the control case assembly to the extension together with the gasket.

7–D–4. Installing the Clutch Housing

1. Place the gasket on the front surface of the transmission case. Install the clutch housing, being careful not to damage the oil seal.
2. Install the release bearing, spring and fork.

7–E. INSTALLING THE TRANSMISSION

1. Shift the trnasmission into top gear. Support the transmission with a jack and a block of wood and move it under the vehicle.
2. Lower the rear end of the trnasmission and align the centers of the main drive shaft and the clutch disk by raising the jack.
3. Move the trnasmission forward until the spline on the main drive shaft contacts the spline on the clutch disk. Align the splines properly by turning the **main shaft holder** (49 0259 440) and after aligning the knock pin, mount the transmission to the engine body.
Tighten the bolts. Secure the earth wire with bolt.
4. Raise the jack and install the transmission supporter to the side frame member. Tighten the nuts.
5. Remove the jack and connect the propeller shaft to the transmission.
6. Install the exhaust pipe to the manifold.
7. Connect the speedometer cable to the speedometer driven gear assembly.
8. Install the release cylinder to the clutch housing and the return spring. If necessary, adjust the free play on the release fork. (See Par. 6–B)
9. Move the lever end from top gear to neutral. Align the groove on the spherical surface of the shift lever with the set screw on the control case and insert the tip of the shift lever into the control lever end. Then, fit the bush into the control case. Install the cover plate with the packing and tighten the bolts. The operation of the shift lever may be adjusted by inserting adjust shims on the 3 bolts between the cover plate and the packing. The standard force of the shift lever at the knob is 2.0 ~ 4.0 kg (4.4 ~ 8.8 lb). Install the dust boots to the case. After installing the starting motor, connect the wirings of the starting motor and reverse lamp switch.
10. Supply the transmission with the proper amount of transmission oil though the dipstick gauge inlet. The following transmission oils are available:
SAE EP 80 Below −18°C (0°F)
SAE EP 90 Above −18°C (0°F)
11. Connect the earth wire to the battery.

SPECIAL TOOLS

49 0259 440	Main shaft holder
49 0839 425	Bearing puller set

PROPELLER SHAFT

8–A. REMOVING OF PROPELLER SHAFT ..... 8 : 1
8–B. CHECKING OF PROPELLER SHAFT ..... 8 : 1
8–C. DISASSEMBLING OF UNIVERSAL JOINT ..... 8 : 1
8–D. CHECKING OF UNIVERSAL JOINT ..... 8 : 1
8–E. ASSEMBLING OF UNIVERSAL JOINT ..... 8 : 2
8–F. INSTALLING OF PROPELLER SHAFT ..... 8 : 2

PROPELLER SHAFT

The propeller shaft assembly consists of the tubular piece of steel, universal joints and yokes.
The rear end of the propeller shaft is attached to the companion flange of the rear axle through the universal joint and the front end is attached to the main shaft of the transmission by means of the splined sliding yoke, which permits fore and aft movement of the propeller shaft when the rear axle moves up and down.
The universal joints are lubricated for life, so do not require lubricating.

8–A. REMOVING OF PROPELLER SHAFT

1. Remove the bolts attaching the rear end of the propeller shaft to the companion flange of the rear axle.

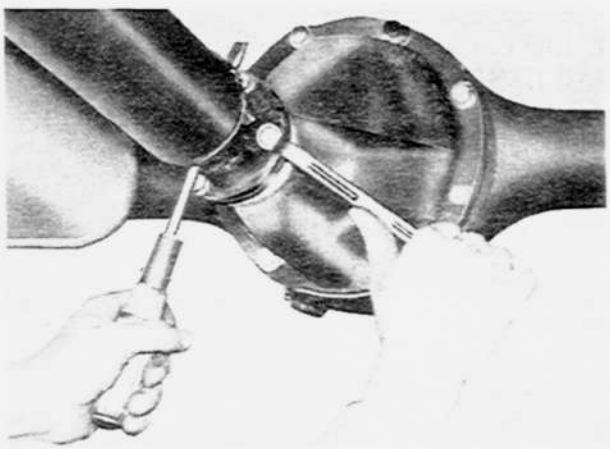

Fig. 8–1 Disconnecting of propeller shaft

2. Pull the propeller shaft rearward and disconnect it from the transmission extension.

8–B. CHECKING OF PROPELLER SHAFT

1. Check the run-out of the propeller shaft by supporting both ends of the propeller shaft on the V blocks and applying a dial indicator. The permissible run-out is under 0.4 mm (0.016 in).

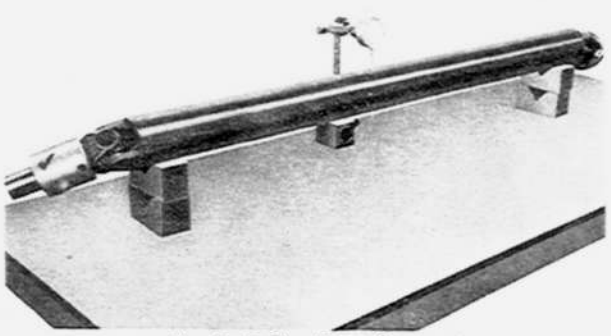

Fig. 8–2 Checking of run-out

2. Check the propeller shaft for dynamic unbalance. If it is more than 20 cm-kg (17.4 in-lb) at 4,000 rpm, correct or replace it. Excessive unbalance of the propeller shaft causes vibration and noise.

8–C. DISASSEMBLING OF UNIVERSAL JOINT

1. Remove the snap rings retaining the bearing cups in the yoke.
2. Using a hammer and drift, drive in one of the bearing cups and remove the opposite bearing cup from the yoke.

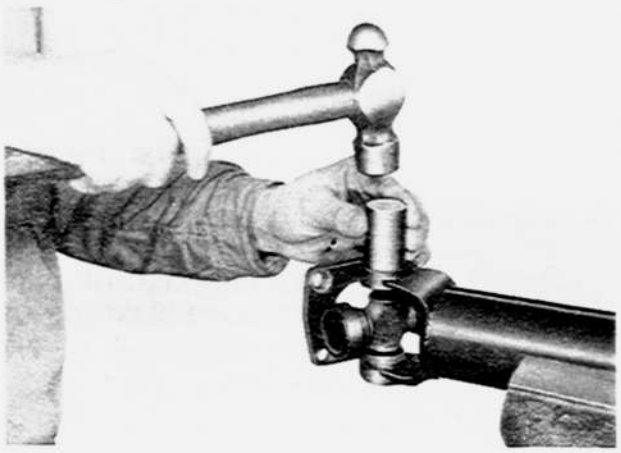

Fig. 8–3 Removing of bearing cup

3. Remove the remaining bearing cup by pressing the spider.
4. Remove the spider from the yoke.

If the **universal joint replacer** (49 0259 460) is available, use it to disassemble the universal joint, as follows:

1. Remove the snap rings.
2. Position the **universal joint replacer** (49 0259 460) on the yoke and screw in the center bolt until the bearing cup comes out of the yoke.

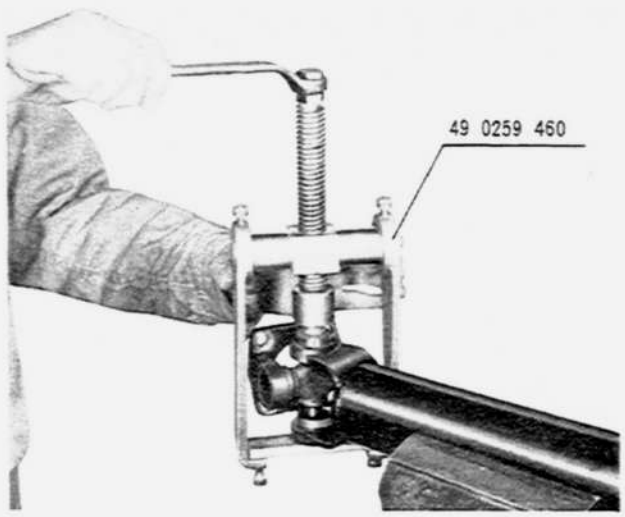

Fig. 8–4 Universal joint replacer

3. Remove the replacer and remove the bearing cup.
4. Remove the other bearing cups in the same manner.

8–D. CHECKING OF UNIVERSAL JOINT

1. Examine the bearing surfaces of the spider. They should be smooth and free from pits.
2. Measure the diameter of the spider. If the wear of the spider exceeds 0.1 mm (0.0394 in), replace with a new one. The standard diameter is 14.72 mm (0.5795 in).

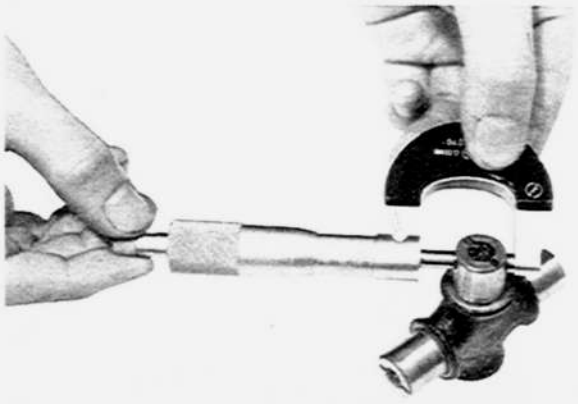

Fig. 8–5 Measuring of spider diameter

3. Check the needle rollers in the bearing cups for wear or any damage. The rollers should have a uniformly good appearance and roll freely inside the bearing cup.



Fig. 8–6 Universal joint

1. Roller bearing
2. Spider
3. Oil seal
4. Yoke
5. Propeller shaft
6. Snap ring

8–E. ASSEMBLING OF UNIVERSAL JOINT

1. Smear the wall of the bearing cup with grease to retain the needle rollers in place.
2. Assemble the needle rollers in the bearing cup and fill them with grease.
3. Fit the oil seal in place.
4. Place the spider in the yoke. Position the needle roller bearing assembly into the yoke.
5. Using the replacer together with the adopter and plate, press-fit the bearing assembly into the yoke while guiding the spider into the bearing until the snap ring can be installed.

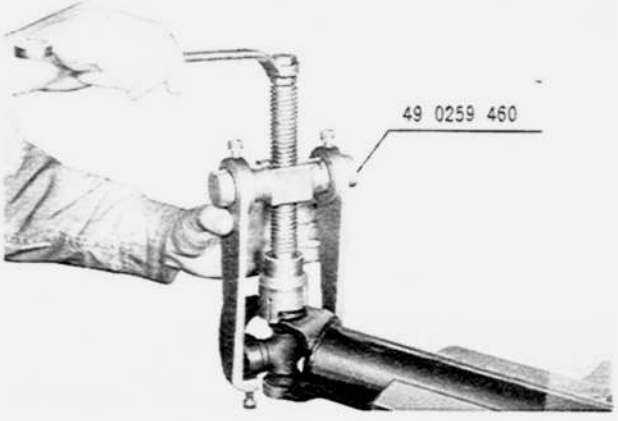

Fig. 8–7 Installing of bearing cup

6. Install the snap ring.
7. Press-fit the remaining bearing assembly into the yoke as instructed above.
8. Install the snap ring to hold the bearing cups in the yoke. In this case select the properly sized snap rings so that the universal joint is placed in the center of the yoke and to minimize the end play of the cups.

The snap rings are available in the following thickness.

1.22 mm (0.048 in)	1.28 mm (0.050 in)	1.34 mm (0.053 in)
1.24 mm (0.049 in)	1.30 mm (0.051 in)	1.36 mm (0.054 in)
1.26 mm (0.050 in)	1.32 mm (0.052 in)	1.38 mm (0.054 in)

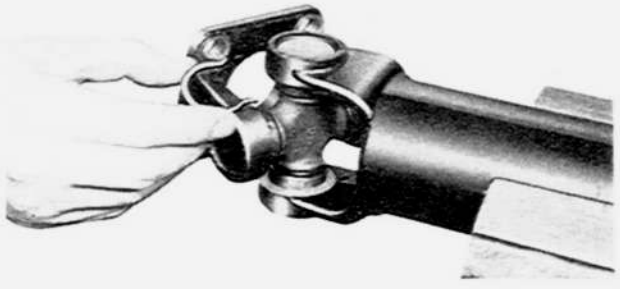

Fig. 8–8 Installing of snap ring

8–F. INSTALLING OF PROPELLER SHAFT

Installing the propeller shaft in the reverse order of removing.

SPECIAL TOOL

49 0259 460	Universal joint replacer

REAR AXLE

9–A. REAR AXLE SHAFT ..... 9 : 1
9–A–1. Removing of Rear Axle Shaft ..... 9 : 1
9–A–2. Replacing of Axle Shaft Bearing ..... 9 : 1
9–A–3. Installing of Rear Axle Shaft ..... 9 : 1
9–B. REAR AXLE REMOVAL ..... 9 : 2
9–C. REAR AXLE DISASSEMBLY ..... 9 : 2
9–C–1. Removing of Differential ..... 9 : 2
9–C–2. Disassembling of Differential ..... 9 : 3
9–C–3. Removing of Drive Pinion ..... 9 : 3
9–C–4. Removing of Pinion Bearing Outer Race ..... 9 : 3
9–D. REAR AXLE INSPECTION ..... 9 : 3
9–D–1. Checking of Drive Pinion and Ring Gear ..... 9 : 3
9–D–2. Checking of Differential Gears ..... 9 : 4
9–D–3. Checking of Bearings ..... 9 : 4
9–D–4. Checking of Oil Seal ..... 9 : 4
9–D–5. Checking of Companion Flange ..... 9 : 4
9–E. REAR AXLE ASSEMBLY ..... 9 : 4
9–E–1. Adjusting of Drive Pinion ..... 9 : 4
9–E–2. Adjusting of Pinion Bearing Preload ..... 9 : 6
9–E–3. Assembling of Differential ..... 9 : 6
9–E–4. Installing of Differential ..... 9 : 7
9–E–5. Adjusting of Backlash ..... 9 : 7
9–F. REAR AXLE INSTALLATION ..... 9 : 8

REAR AXLE

MAZDA 616 is equipped with a semi-floating type rear axle with a hypoid ring gear and pinion set. The final reduction ratio is 3.700.

9–A. REAR AXLE SHAFT

9–A–1. Removing of Rear Axle Shaft

1. Remove the rear wheel and brake drum.
2. Remove the brake shoe assembly, as detailed in Par. 11–E.
3. Remove the nuts holding the brake backing plate and bearing retainer to the axle housing.
4. Extract the axle shaft assembly using the **puller** (49 0223 630A and 49 0259 631).



Fig. 9–1 Removing of rear axle shaft

9–A–2. Replacing of Axle Shaft Bearing

1. Remove the rear axle shaft assembly as described in Par. 9–A–1.
2. Using the **bearing remover set** (49 0259 745), support the spacer and press the axle shaft out of the collar and bearing, as shown in Fig. 9–2.

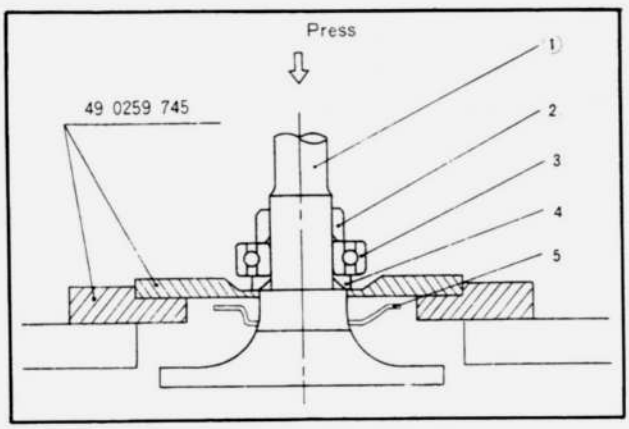

Fig. 9–2 Removing of bearing

1. Rear axle shaft
2. Collar
4. Spacer
5. Retainer
6. Bearing

Note: In case the pressure necessary to press out the axle shaft exceeds 10 tons (22,000 lb) or if the bearing remover set is not available, grind off the part of bearing retaining collar and cut it with the use of a chisel, as shown in Fig. 9–3, taking care not to damage the axle shaft.

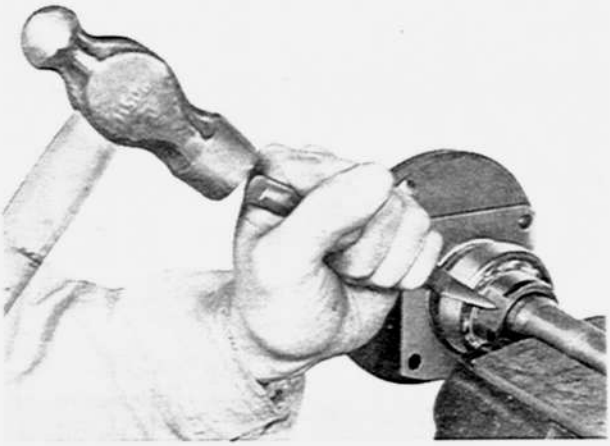

Fig. 9–3 Cutting of bearing collar

3. Remove the bearing retainer from the axle shaft.
4. Clean all parts and check the condition of the collar, spacer, axle shaft and the oil seal located in the axle shaft housing.
5. Install the bearing retainer and spacer onto the axle shaft.
6. Position the bearing on the axle shaft with the sealed side toward the axle shaft flange, and press it on until the spacer comes in contact with the shoulder of the shaft.
7. Press the bearing retaining collar onto the axle shaft using the **bearing replacer** (49 0259 745) until it is firm contact with the bearing inner race.

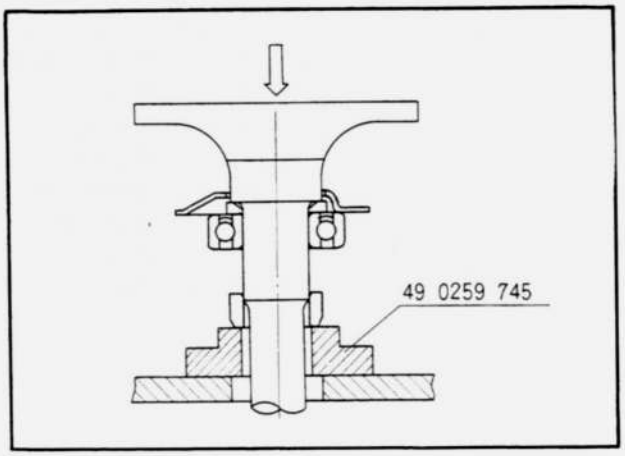

Fig. 9–4 Installing of bearing collar

Note: If the bearing retaining collar is press-fitted with less than 3 tons (6,600 lb), replace the collar with a new one.

9–A–3. Installing of Rear Axle Shaft

1. Apply grease to the oil seal located in the axle housing.
2. Check the rear axle shaft end play as follows:
Install the backing plate temporarily and measure the depth of the bearing seat in the axle housing, using a depth gauge as shown in Fig. 9–5.

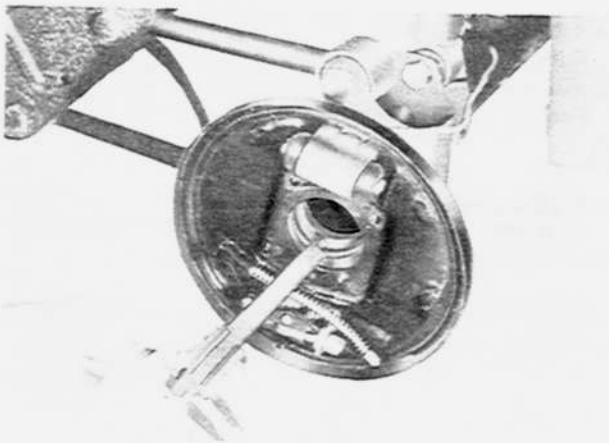

Fig. 9–5 Measuring of depth

Then, measure the width of bearing outer race. The difference between the two measurements indicates the required thickness of the shims.
The maximum permissible end play is **0.1 mm (0.004 in)**. Shims are available in thickness of 0.1 mm and 0.4 mm (0.004 in and 0.016 in).

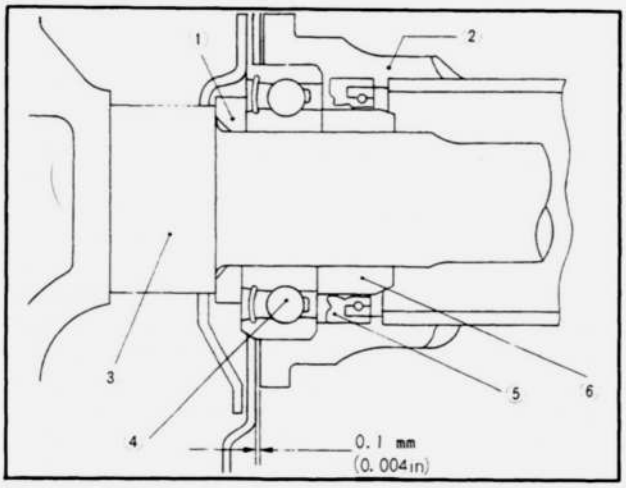

Fig. 9–6 Clearance of backing plate and housing

1. Spacer
2. Axle casing
3. Axle shaft
4. Bearing
5. Oil seal
6. Collar

3. Install the rear axle shaft assembly and shims through the brake backing plate to the rear axle housing so as to fit the splines of the differential side gear and the end of the axle shaft.
Tighten the nuts.
4. Install the brake shoe assembly.
5. Install the brake drum and the wheel.

9–B. REAR AXLE REMOVAL

1. Jack up the vehicle until the rear wheels are clear of the ground.
2. Drain the oil by removing the drain plug. Reinstall the drain plug after draining.
3. Remove the rear axle shafts, referring to Par. 9–A–1.
4. Disconnect the propeller shaft at the companion flange of the rear axle.
5. Remove the nuts supporting the rear axle to the rear axle housing and remove the rear axle.

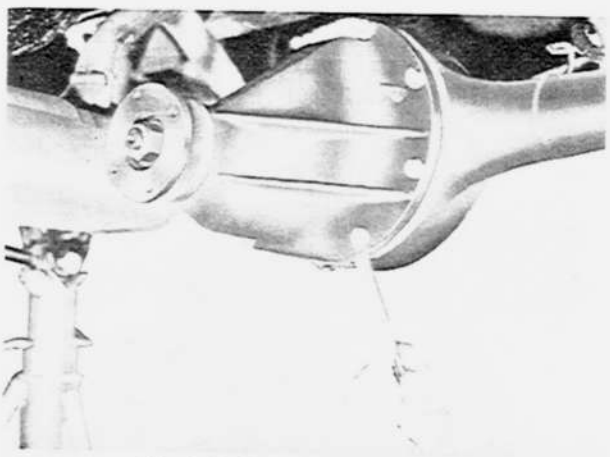

Fig. 9–7 Removing of rear axle

9–C. REAR AXLE DISASSEMBLY

9–C–1. Removing of Differential

1. Mount the rear axle on the **stand** (49 0164 550D and 49 0223 561).
2. Apply identification punch marks on the carrier, differential bearing cap, and adjuster for reassembly purpose.

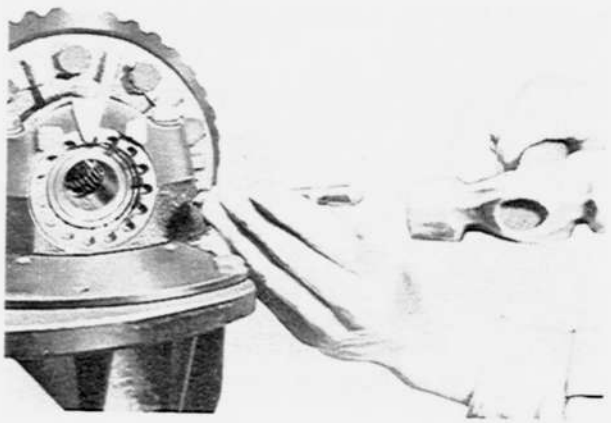

Fig. 9–8 Applying of identification marks

3. Remove the adjuster lock plates.

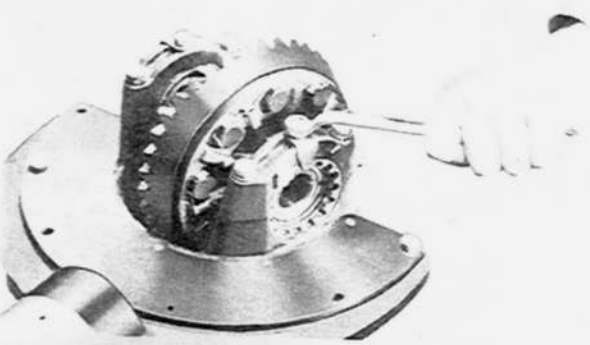

Fig. 9–9 Removing of lock plate

4. Loosen the bearing cap attaching nuts and back off the adjuster slightly with the **spanner** (49 0259 720) to relieve differential bearing preload.
5. Remove the differential assembly together with the bearing outer races. Make certain that each bearing outer race remains with its respective bearing.

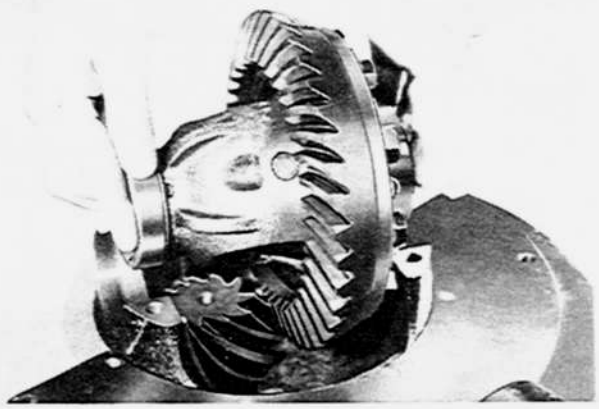

Fig. 9–10 Removing of differential assembly

9–C–2. Disassembling of Differential

1. Using a suitable puller, remove the differential bearings from the differential gear case.
2. Remove the bolts and lockwashers that attach the ring gear to the gear case. Remove the ring gear.

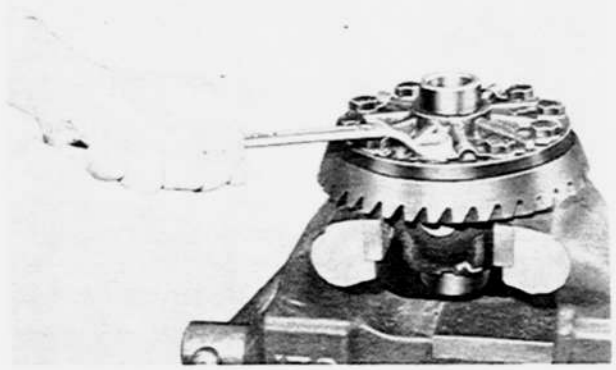

Fig. 9–11 Removing of ring gear

3. From the back side of the ring gear flange, drive the pinion shaft lock pin out of the gear case with a suitable drift, as shown in Fig. 9–12.

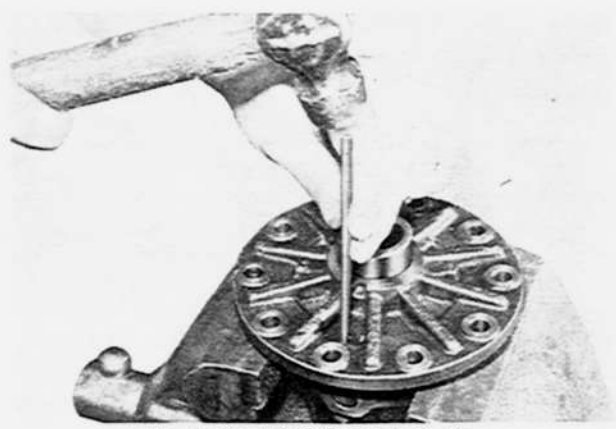

Fig. 9–12 Removing of lock pin

4. Remove the pinion shaft.
5. Rotate the differential pinion gears 90 degrees and remove each pinion gear and thrust washer.
6. Remove the differential side gears and thrust washers.

9–C–3. Removing of Drive Pinion

1. Hold the companion flange with the **holder** (49 0259 710) and remove the drive pinion nut.

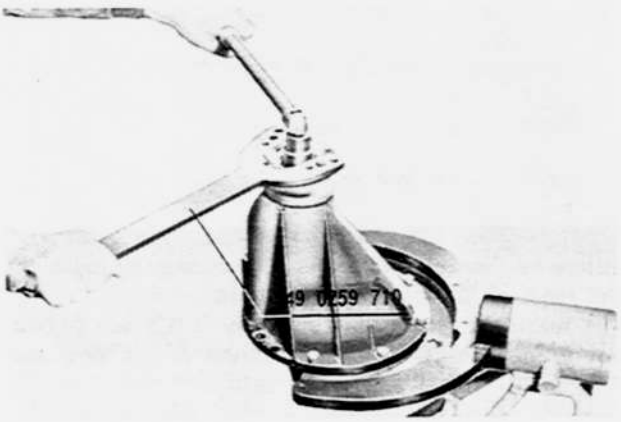

Fig. 9–13 Removing of drive pinion nut

2. Remove the companion flange.
3. Remove the drive pinion and rear bearing from the carrier. If necessary, tap the pinion out with a plastic hammer, while being careful to guide the pinion with hand to avoid damage.
4. Remove the oil seal and the front bearing.

9–C–4. Removing of Pinion Bearing Outer Race

The pinion bearing outer races can be removed from the carrier by using a drift in slots provided for this purpose.

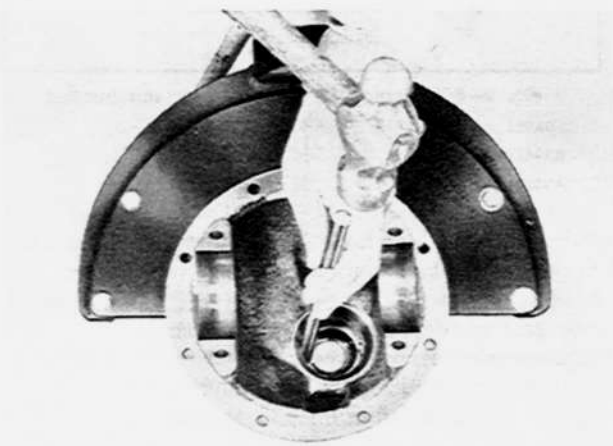

Fig. 9–14 Removing of pinion bearing outer race

9–D. REAR AXLE INSPECTION

9–D–1. Checking of Drive Pinion and Ring Gear

Check the drive pinion for damaged or excessively worn teeth, damaged bearing journals and splines. Inspect the ring gear for worn or chipped teeth. If any of above conditions is found, replace both

drive pinion and ring gear as they are available only in set.

9–D–2. Checking of Differential Gears

Inspect the differential side gears and pinion gears for cracks, chipped teeth or any damage. Replace the side gears, pinion gears or thrust washers if necessary. Check the clearance between the pinion gear and shaft. If excessive clearance is found due to wear, replace with new parts.

Check the spline fit of the side gear and rear axle shaft. If it is **0.3 mm (0.012 in) or more,** replace the side gear or rear axle shaft.

9–D–3. Checking of Bearings

Inspect the differential bearings and pinion bearings for wear, flaking or any damage. If inspection reveals that either bearing cones or outer race are unfit for further service, replace the bearing.

9–D–4. Checking of Oil Seal

Check the oil seal for wear or damage. If there is any possibility of oil leakage, replace the oil seal.

9–D–5. Checking of Companion Flange

Check the companion flange for cracks, worn splines, or rough oil seal contacting surface. Repair or replace the companion flange if necessary.

9–E. REAR AXLE ASSEMBLY

9–E–1. Adjusting of Drive Pinion

The drive pinion should be correctly positioned in relation to the ring gear by the use of spacer which is placed between the drive pinion and the outer race of the pinion rear bearing.

The standard distance between the top of the drive pinion and the center of the ring gear **(mounting distance)** is **90 ± 0.025 mm.**

To adjust the drive pinion position, use the **special gauge** (49 0727 570 and 49 0305 555) and proceed as follows:

1. Install the dial indicator to the gauge body. Place the gauge body on the surface plate as shown in Fig. 9–15 and lock the dial indicator by the screw to that the needle is pointing toward 1 to 3 mm.
Then, set the reading to "Zero" by turning the outer ring of the indicator.

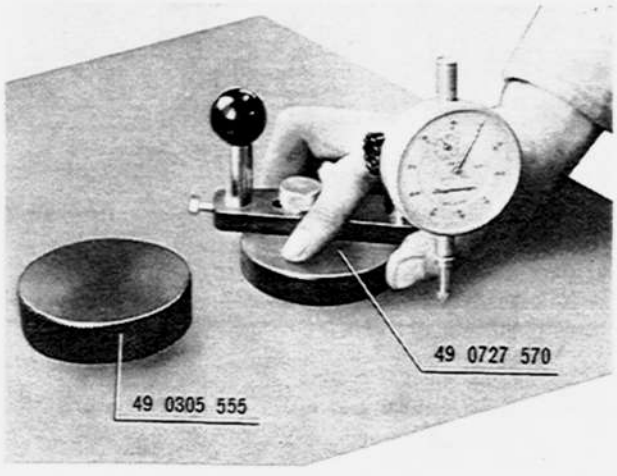

Fig. 9–15 Pinion adjusting gauge

2. Make certain that the differential bearing support bores are free of dirt and burrs.
3. Install the pinion and bearing model together with a spacer into the carrier.

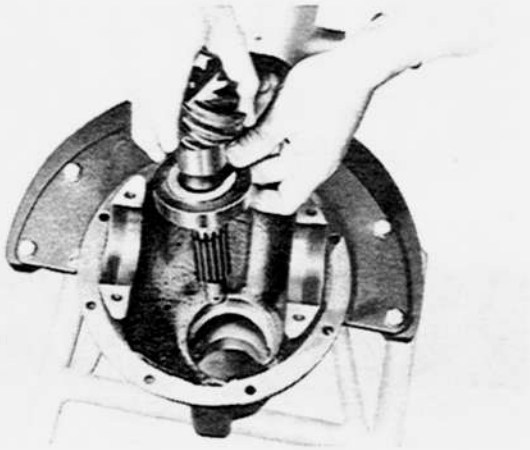

Fig. 9–16 Installing of pinion and bearing model

4. Place the gauge block on the pinion, carefully place the gauge body as adjusted according to Step 1, on the gauge block so that the feeler of the indicator comes in contact with the lowest portion of the differential bearing support bore.

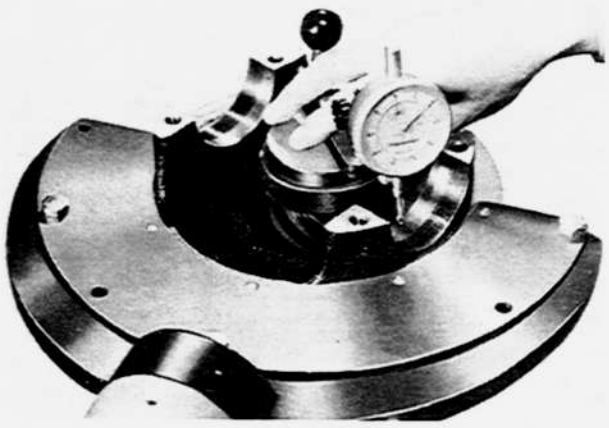

Fig. 9–17 Measuring of pinion height

5. Record the number of hundredths dial indicator moves in a "+" (plus) or "–" (minus) direction from zero. Remove the gauge body and dial indicator from the carrier and check zero setting on the surface plate to make sure this setting was not disturbed by handling.
6. In order to compensate for all of the machining variables, the pinion has a plus or minus reading recorded in hundredth millimeters on the rear face of the pinion.
(a) If the pinion is marked "+" (plus), subtract the amount specified on the pinion.
(b) If the pinion is marked "–" (minus), add the amount specified on the pinion.

7. Place the bearing model and the rear pinion bearing on the surface plate and compare their heights as shown in Fig. 9–18.
(a) If the bearing is higher than the model, subtract the amount equivalent to the difference.
(b) If the bearing lower than the model, add the amount equivalent to the difference.

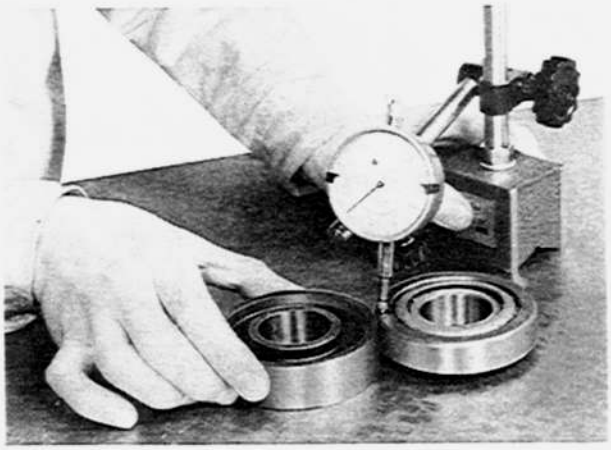

Fig. 9–18 Measuring of bearing height

8. Finally select the correct pinion spacer to be used during pinion assembly by adding or subtracting the amount determined in Step 5, 6 and 7 from the thickness of the spacer used in Step 3.
The spacers are available in the following thickness:

Identification mark	Thickness
08	3.08 mm (0.1213 in)
11	3.11 mm (0.1224 in)
14	3.14 mm (0.1236 in)
17	3.17 mm (0.1248 in)
20	3.20 mm (0.1260 in)
23	3.23 mm (0.1271 in)
26	3.26 mm (0.1283 in)
29	3.29 mm (0.1295 in)
32	3.32 mm (0.1307 in)
35	3.35 mm (0.1319 in)
38	3.38 mm (0.1331 in)
41	3.41 mm (0.1343 in)
44	3.44 mm (0.1354 in)
47	3.47 mm (0.1366 in)

9. Position the correct spacer on the pinion and install the rear pinion bearing.

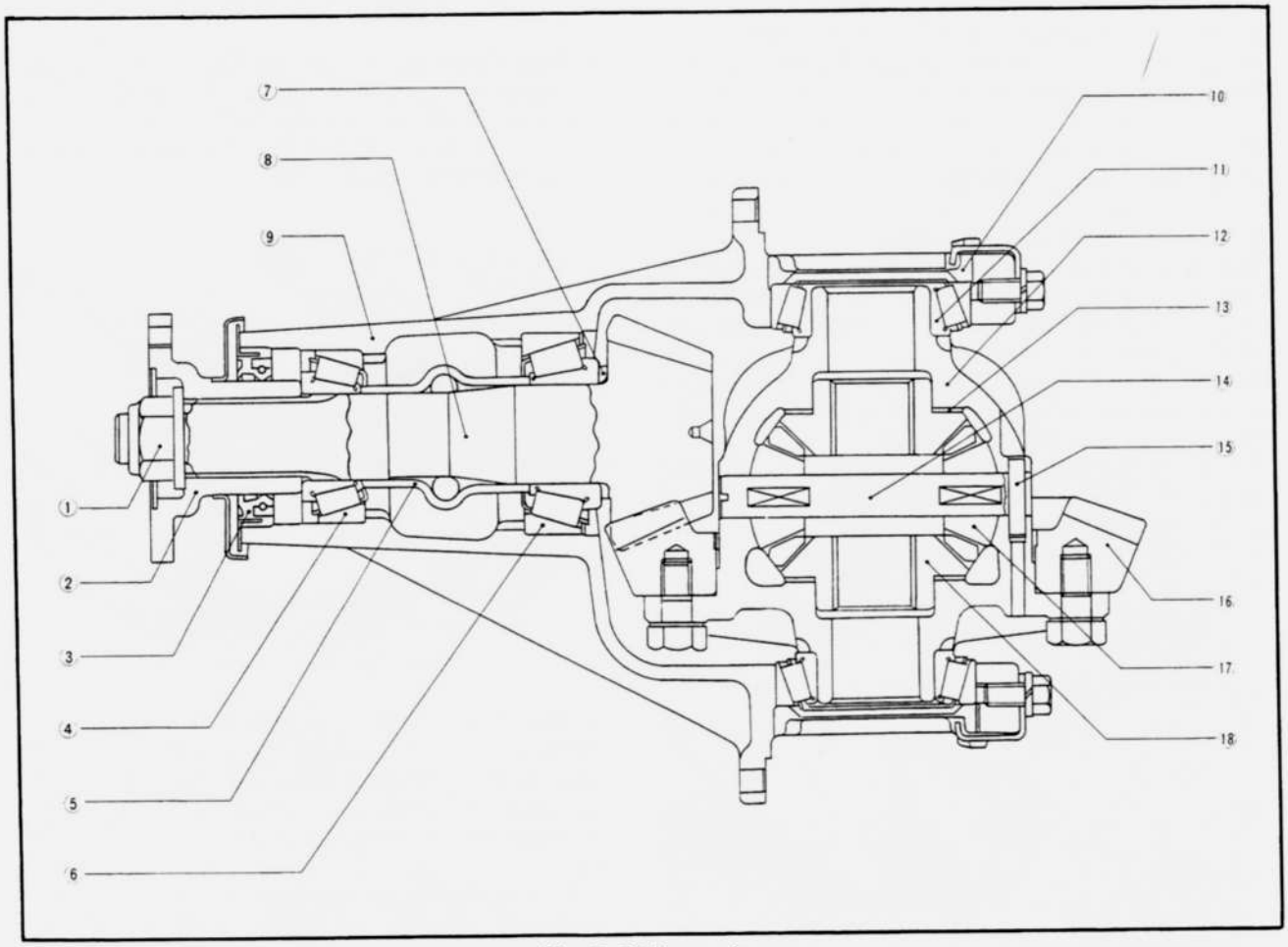

Fig. 9–19 Rear axle

1. Nut
2. Companion flange
3. Oil seal
4. Front pinion bearing
5. Collapsible spacer
6. Rear pinion bearing
7. Spacer
8. Drive pinion
9. Carrier
10. Adjuster
11. Differential bearing
12. Differential gear case
13. Thrust washer
14. Pinion shaft
15. Lock pin
16. Ring gear
17. Pinion gear
18. Side gear

9–E–2. Adjusting of Pinion Bearing Preload

1. Position the pinion assembly in the carrier and install the collapsible spacer as shown in Fig. 9–20.

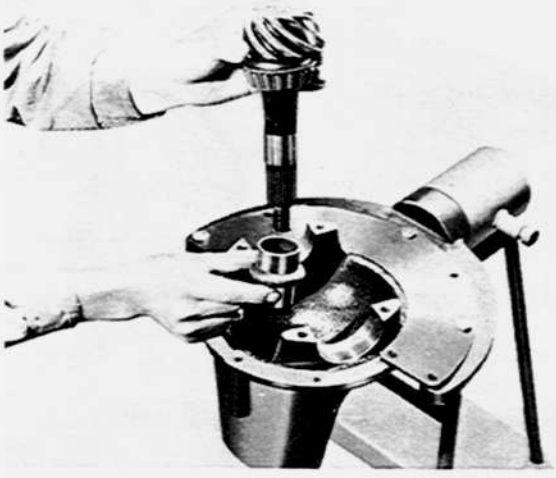

Fig. 9–20 Installing of collapsible spacer

2. Place the front pinion bearing in position on the pinion. Hold the pinion fully forward and drive the pinion bearing over the pinion until seated.
3. Apply grease to the lip of the pinion oil seal and install the pinion oil seal into the carrier.
4. Install the companion flange on the pinion by tapping with a soft hammer.
5. Install the pinion washer and nut. Before tightening the nut (When the pinion preload is Zero), check the drag by the oil seal by using a torque wrench.
6. Tighten the pinion nut to **13 m-kg (94 ft-lb)** and check the preload as shown in Fig. 9–21.

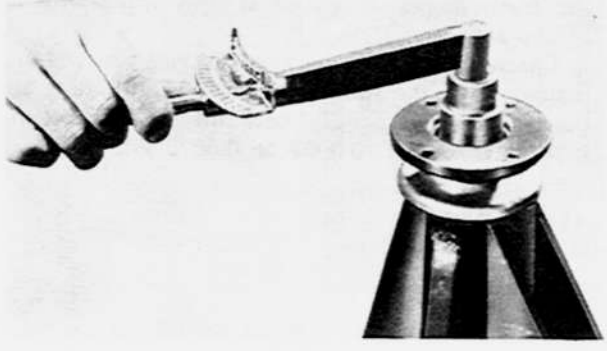

Fig. 9–21 Checking of preload

Note: After preload has been checked, final tightening should be done very cautiously.
The pinion nut should be further tightened only a little at a time and preload should be checked after each slight amount of tightening. Exceeding preload specifications will compress the collapsible spacer too far and requires its replacement.

7. While observing the proceeding caution, carefully set the preload drag at **9 to 14 cm-kg (7.8 to 12.2 in-lb)** plus the oil seal drag determined in Step 5.

9–E–3. Assembling of Differential

1. Install the thrust washer on each differential side gear and install these in the gear case.

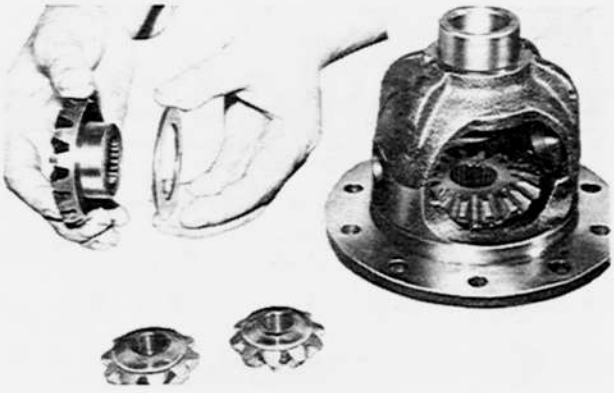

Fig. 9–22 Installing of thrust washer

2. Through the opening of the gear case, insert each of two pinion gears exactly 180 degrees opposite each other.
3. Rotate the gears 90 degrees so that the pinion shaft holes of the case come into alignment with the holes in the pinion gears.

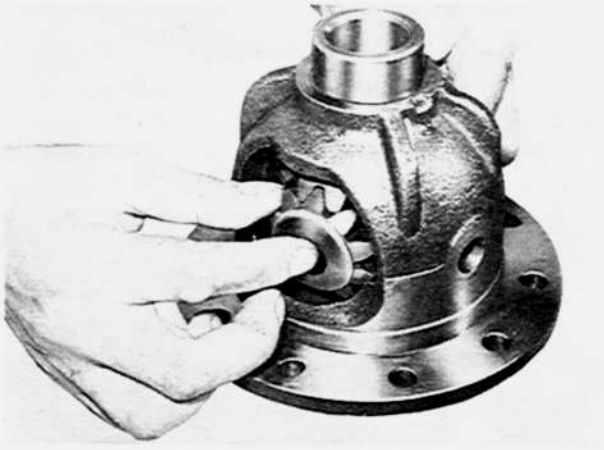

Fig. 9–23 Installing of pinion gears

4. Insert the pinion shaft through the case and pinion gears.
5. Check the backlash of the side gear and pinion gear.

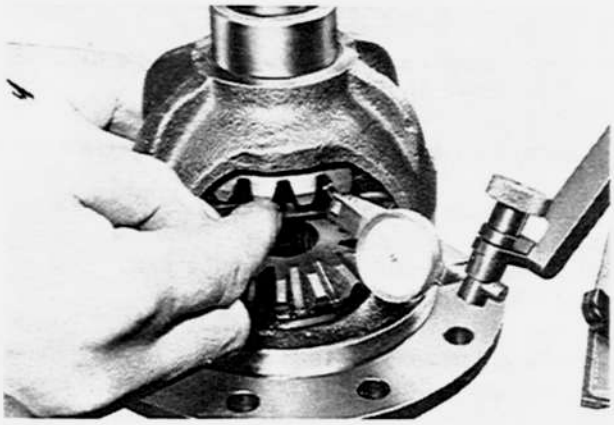

Fig. 9–24 Checking of backlash

The backlash should be 0 to 0.1 mm (0 to 0.004 in). If it is **more than 0.2 mm (0.008 in)**, adjust with the side gear thrust washers.
The following thrust washers are available:

Identification mark	Thickness
0	2.0 mm (0.0787 in)
1	2.1 mm (0.0827 in)
2	2.2 mm (0.0866 in)

6. Install the lock pin to secure the pinion shaft, and in order to prevent the lock pin from working out, stake into position with a punch.

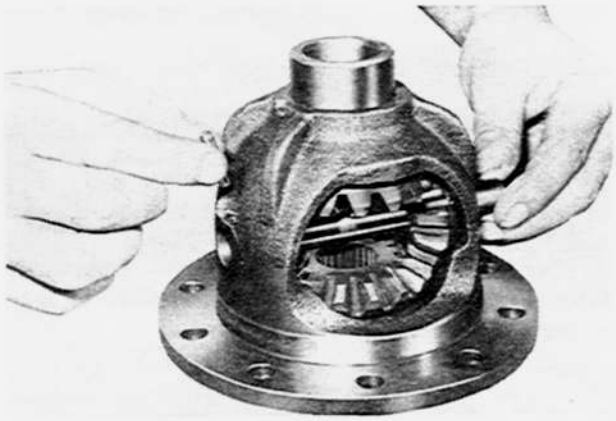

Fig. 9–25 Installing of lock pin

7. Install the ring gear to the case and tighten the bolts to a torque of **5.0 m-kg (35 ft-lb).**

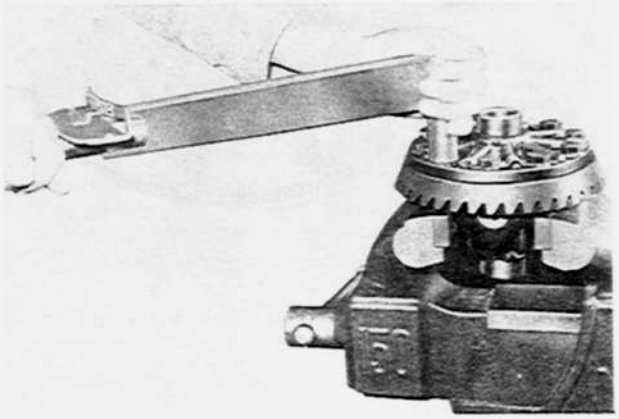

Fig. 9–26 Installing of ring gear

Note: As there are two kinds of bolts, use those which fit the holes of the gear case flange.

8. Bend the tabs of the lock plates to prevent loosening.
9. Install each differential bearing to the hubs of the gear case.
10. Install the differential bearing outer races to its respective bearing.

9–E–4. Installing of Differential

1. Place the differential gear assembly in the carrier, **marking ensure that the marks for backlash adjustment on the face of the pinion and ring gear teeth are aligned each other.**

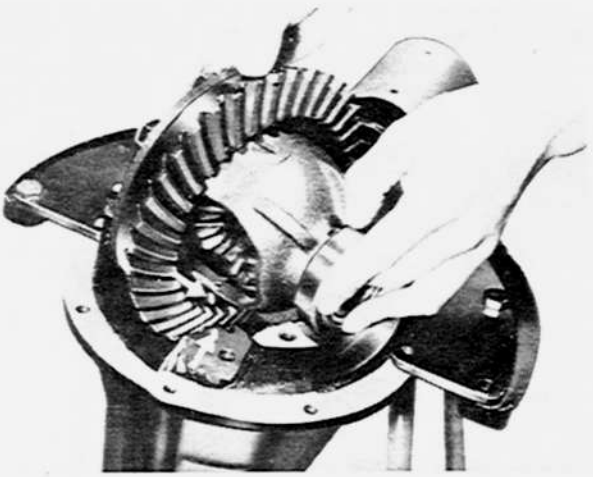

Fig. 9–27 Installing of differential assembly

2. As there are two types of a adjusters, right-hand threaded and left-hand threaded, note the identification marks on the adjusters and install each to its respective side.
3. Install the differential bearing caps making sure that the identification marks on the caps correspond with those on the carrier and install the attaching bolts.
4. Turn the adjusters with the **spanner** (49 0259 720) until the bearings are properly positioned in their respective outer races and the end play is eliminated with some backlash existing between the ring gear and drive pinion.
5. Slightly tighten one of the bearing cap bolts on each side and adjust the backlash, as instructed in the following paragraph.

9–E–5. Adjusting of Backlash

1. Secure a dial indicator to the carrier flange so that the feeler comes in contact at right angles with one of the ring gear teeth.
2. Check the backlash between the ring gear and drive pinion. With the **spanner** (49 0259 720), turn both bearing adjusters equally until the backlash becomes **0.17 to 0.19 mm (0.0067 to 0.0075 in).**

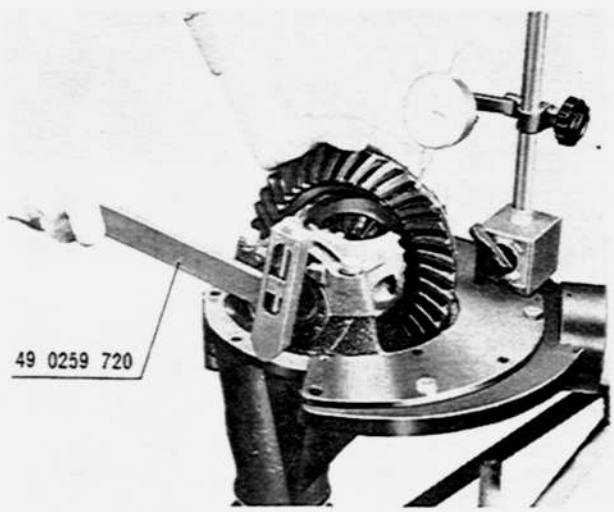

Fig. 9–28 Adjusting of backlash

3. The preload on the differential bearings is obtained by tightening the adjusters. Tighten the adjusters until the distance between both pilot sections on the bearing caps becomes **185.5 mm (7.306 in)**, as shown in Fig. 9–29.

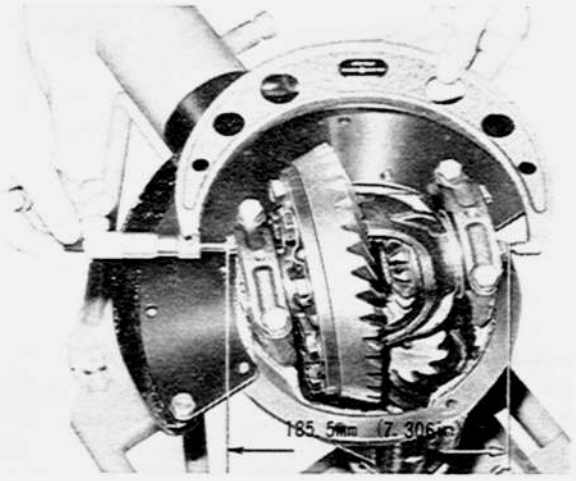

Fig. 9–29 Adjusting of preload

Note: When adjusting the preload, care must be taken not to affect the backlash of the drive pinion and ring gear.

4. Tighten the bearing cap bolts to a torque of **4.0 m–kg (30 ft–lb)**.
5. Install the adjuster lock plates on the bearing caps to prevent the adjuster from loosening.

6. Check the tooth contact of the ring gear and pinion by applying a thin coat of red lead on both sides of about six or eight of ring gear teeth and rotating the ring gear few times to and fro.
If the pinion position and backlash have been correctly set, the contact pattern should be as shown in Fig. 9–30.

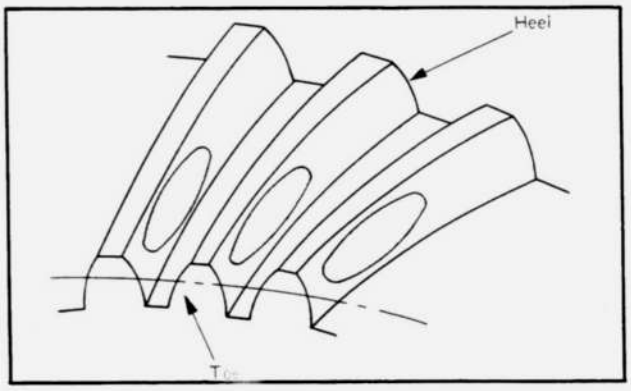

Fig. 9–30 Correct tooth contact

9–F. REAR AXLE INSTALLATION

1. Install the rear axle to the rear axle housing and attaching nuts.
2. Attach the propeller shaft to the companion flange of the rear axle.
3. Install the rear axle shafts and adjust the end play, as instructed in Par. 9–A–5.
4. Refill with the oil up to the level hole.

SPECIAL TOOLS

49 0223 630A	Rear axle shaft puller
49 0259 631	Attachment (for puller)
49 0259 745	Bearing remover set
49 0164 550D	Rear axle stand
49 0223 561	Attachment (for stand)
49 0259 720	Backlash adjusting spanner
49 0259 710	Companion flange holding tool
49 0727 570	Pinion adjusting gauge
49 0305 555	Gauge block and bearing model

STEERING

10–A. CHECKING OF STEERING WHEEL PLAY ..... 10 : 1
10–B. STEERING GEAR REMOVAL ..... 10 : 1
10–B–1. Removing of Steering Gear (Separate type) ..... 10 : 1
10–B–2. Removing of Steering Gear (Nonseparate type) ..... 10 : 2
10–C. STEERING GEAR DISASSEMBLY ..... 10 : 2
10–D. STEERING GEAR INSPECTION ..... 10 : 2
10–E. STEERING GEAR ASSEMBLY ..... 10 : 2
10–F. STEERING GEAR ADJUSTMENT ..... 10 : 3
10–F–1. Adjusting of Worm Bearing Preload ..... 10 : 3
10–F–2. Adjusting of Sector Gear and Ball Nut Backlash ..... 10 : 4
10–G. STEERING GEAR INSTALLATION ..... 10 : 4
10–H. STEERING LINKAGE ..... 10 : 4
10–H–1. Checking of Ball Joint ..... 10 : 4
10–H–2. Replacing of Idler Arm ..... 10 : 4
10–H–3. Replacing of Pitman Arm ..... 10 : 4
10–H–4. Replacing of Tie Rod ..... 10 : 5
10–H–5. Greasing of Idler Arm ..... 10 : 5
10–I. FRONT WHEEL ALIGNMENT ..... 10 : 6
10–I–1. Inspection before Checking Front Wheel Alignment ..... 10 : 6
10–I–2. Toe-in ..... 10 : 6
10–I–3. Camber, Caster and king pin Inclination ..... 10 : 6
10–I–4. Adjusting of Steering Angle ..... 10 : 6

STEERING

The steering system consists of the steering gear, steering column, steering wheel and steering linkage.
The steering gear is of a recirculating ball nut type and the steering gear ratio 17.0 to 19.0 : 1. Therefore, this steering gear provides easy steering.

10–A. CHECKING OF STEERING WHEEL PLAY

The standard free play at the outer circumference of the steering wheel is 5 to 20 mm (0.2 to 0.8 in). To check the free play of the steering wheel, place the front wheel straight ahead and turn the steering wheel slowly. The value of the free play is taken when the front wheel begins to move.
If excessive play is found, the following points should be carefully checked, because this could cause steering instability in driving.

1. Fit of the ball joints of the center link and those of the tie rods
2. Looseness of the idler arm bushes
3. Looseness of the wheel bearings
4. Backlash between the sector gear and ball nut

10–B. STEERING GEAR REMOVAL

10–B–1. Removing of Steering Gear (Separate type)

1. Loosen the worm shaft attaching bolt.

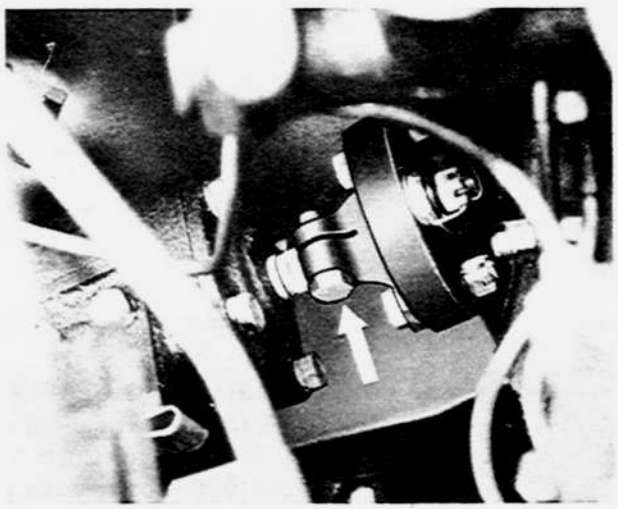

Fig. 10–1 Removing of worm shaft attaching bolt

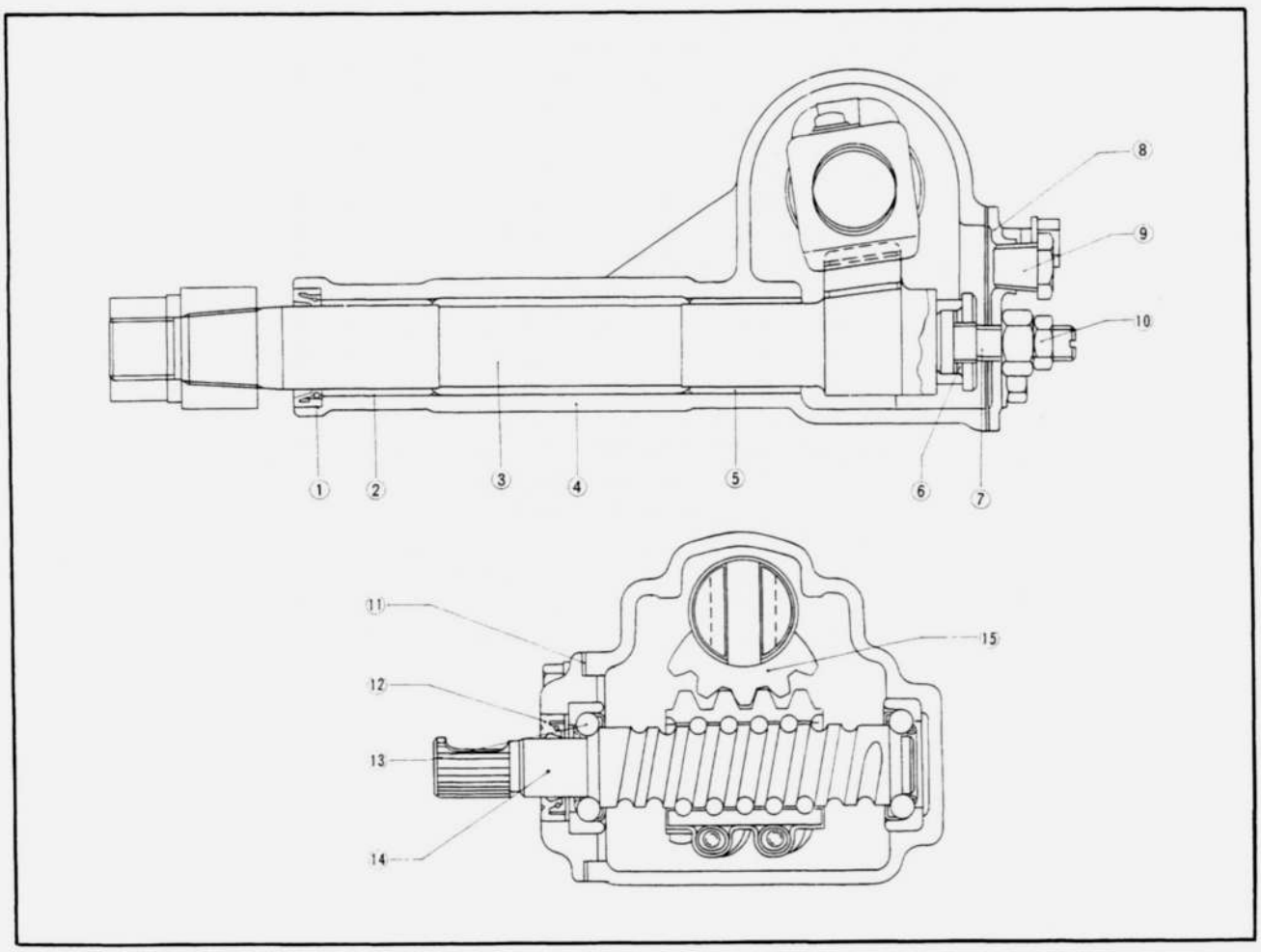

Fig. 10–2 Steering gear

1. Oil seal
2. Bush
3. Sector shaft
4. Housing
5. Bush
6. shim
7. Adjusting screw
8. Side cover
9. Plug
10. Lock nut
11. Shim
12. Oil seal
13. Bearing
14. Warm and ball nut assembly
15. Sector gear

2. Jack up the vehicle and remove the front wheel.
3. Disconnect the center link from the pitman arm by using the **puller** (49 0118 850C).



Fig. 10–3 Disconnecting of center link

4. Remove the bolts and nuts holding the steering gear housing to the frame.

Note: Confirm the position of the shim for convenience when readjusting the column shaft alignment.

10–B–2. Removing of Steering Gear (Nonseparate type)
1. Remove the horn cap attaching screws and remove the horn cap.
2. Scribe a line mark on the steering wheel and column shaft.
3. Remove the steering wheel nut, and then remove the steering wheel and the horn lever assembly.
4. Remove the column cover.
5. Remove the combination switch assembly from the column jacket.
6. Remove the steering column support bracket.
7. Jack up the vehicle and remove the front wheel.
8. Disconnect the center link from the pitman arm by using the **puller** (49 0118 850C).
9. Remove the bolts and nuts holding the steering gear housing to the frame.

Note: Confirm the position of the shim for convenience when readjusting the column shaft alignment.

10–C. STEERING GEAR DISASSEMBLY

Before disassembling, thoroughly clean the outside surface of the steering gear houding.
1. Drain oil by removing the filler plug.
2. Hold the steering housing in a vise.
3. Loosen the nut holding the pitman arm and remove the pitman arm with the **puller** (49 0223 695), as shown in Fig. 10–4.
4. Remove the sector shaft adjusting screw lock nut.
5. Remove the side cover attaching bolts, and remove the side cover and gasket by turning the adjusting screw clockwise through the cover.
6. Remove the adjusting screw and shims from the slot at the end of the sector shaft.
7. Carefully remove the sector shaft from the gear housing so as not to damage the bushes and oil seal.

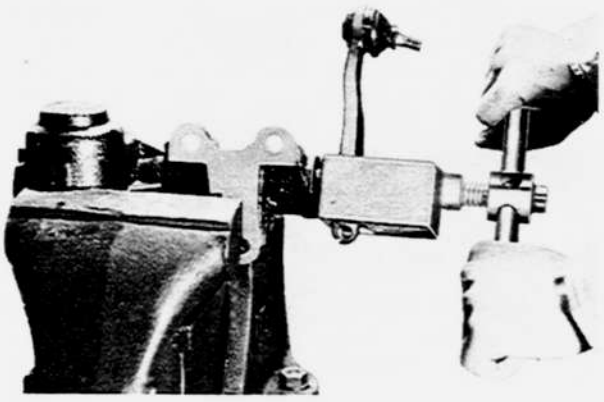

Fig. 10–4 Removing of pitman arm

8. Remove the end cover together with the shims by removing the attaching bolts.
9. Remove the worm shaft and ball nut assembly through the bottom of the gear housing. The worm shaft and ball nut are serviced as an assembly only.

10–D. STEERING GEAR INSPECTION

1. Check operation of the ball nut assembly on the worm shaft. If the ball nut does not travel smoothly and freely on the worm shaft and there is roughness, the ball nut and worm shaft assembly should be replaced.

Note: The worm shaft and ball nut are serviced as an assembly only.

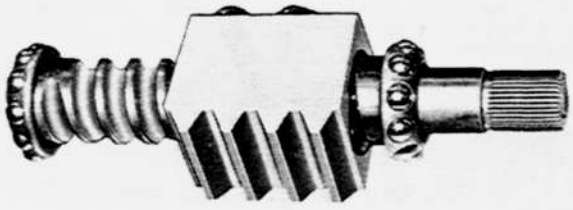

Fig. 10–5 Worm and ball nut assembly

2. Check the worm bearings and cups for wear or any damage. If defective, replace with new ones.
3. Check fit of the sector shaft in the bushes of the housing. If the bushes are worm, replace with new ones.
4. Check the oil seal for wear, flaw or any damage. If there is any possibility of oil leakage, replace the oil seal.

10–E. STEERING GEAR ASSEMBLY

1. Insert the worm shaft and ball nut assembly into the gear housing.
2. Install the end cover with the preload adjusting shims, and adjust the worm bearings preload to **1.0 to 4.0 cm-kg (0.9 to 3.5 in-lb)**, by following the

procedure explained in Par. 10–F–1.

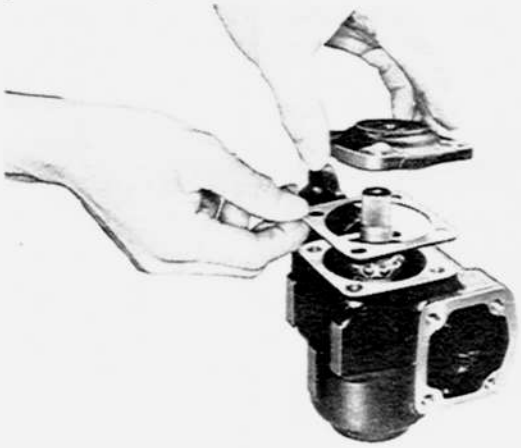

Fig. 10–6 Installing of end cover and shim

3. Install the adjusting screw into the slot at the end of the sector shaft. Check the end clearance with a feeler gauge, and adjust this clearance to be **0.02 to 0.08 mm (0.0008 to 0.0031 in)** by inserting appropriate shims. The shims are available in the following four thicknesses.

1.95 mm (0.077 in)	2.05 mm (0.081 in)
2.00 mm (0.079 in)	2.10 mm (0.083 in)

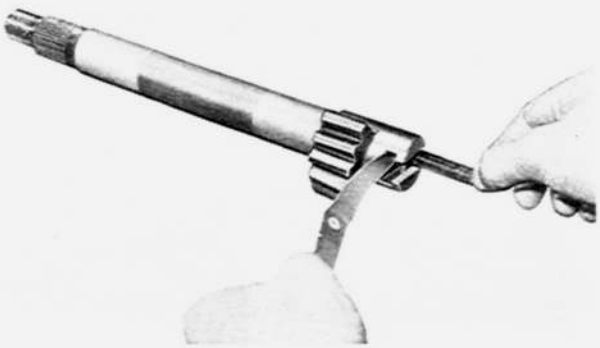

Fig. 10–7 Checking of end clearance

4. Turn the worm shaft and place the rack in the center position of the worm in the gear housing. Insert the sector shaft and adjusting screw into the gear housing, being careful not to damage the bushes and oil seal, and ensuring that the center of the sector gear is aligned with the center of the rack, as shown in Fig. 10–8.

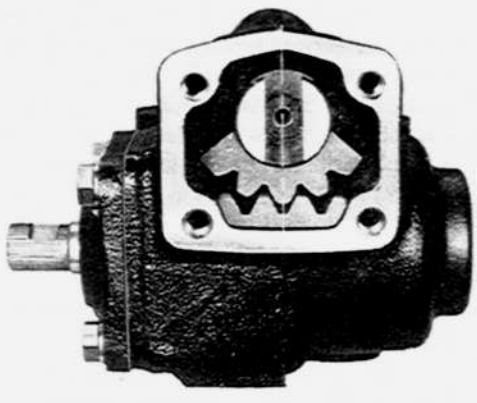

Fig. 10–8 Position of sector gear and rack

5. Install the side cover and the gasket onto the adjusting screw, turning the adjusting screw counterclockwise until it is screwed into proper position.

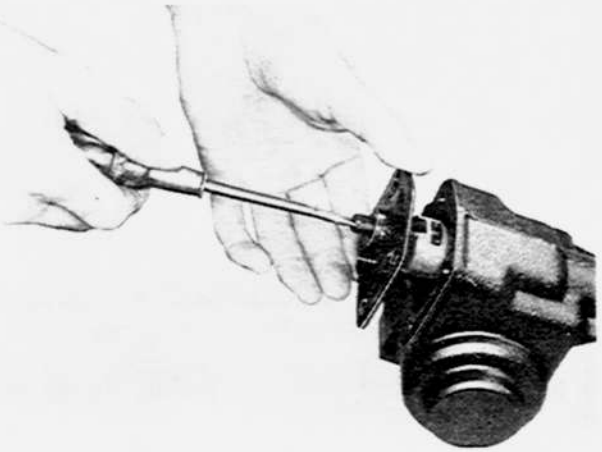

Fig. 10–9 Installing of side cover

6. Install the side cover attaching bolts and tighten the bolts.
7. Adjust the backlash between the sector gear and rack by applying the procedure explained in Par. 10–F–2. After adjusting, tighten the adjusting screw lock nut securely.
8. Install the pitman arm onto the sector shaft, **aligning the identification marks** and tighten the nut. The tightening torque is **15.0 m-kg (110 ft-lb)**.

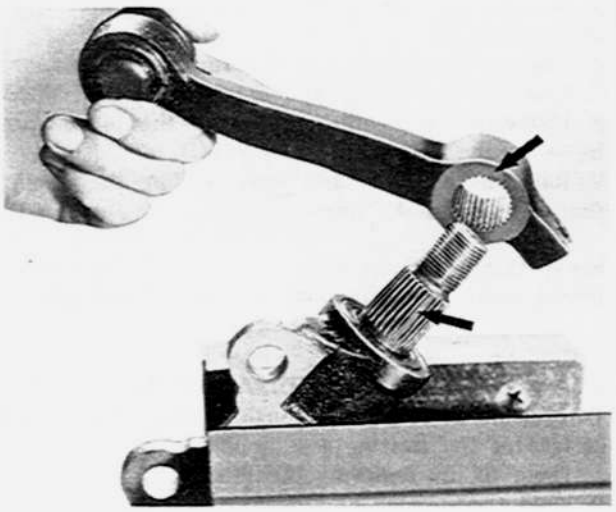

Fig. 10–10 Installing of pitman arm

10–F. STEERING GEAR ADJUSTMENT

10–F–1. Adjusting of Worm Bearing Preload

To adjust the worm bearing preload, remove the steering gear from the vehicle. With a torque wrench, rotate the worm shaft and check the rotating torque. The rotating torque (preload) should be between **6.0 to 8.0 cm-kg (5.2 to 6.9 in-lb)**.

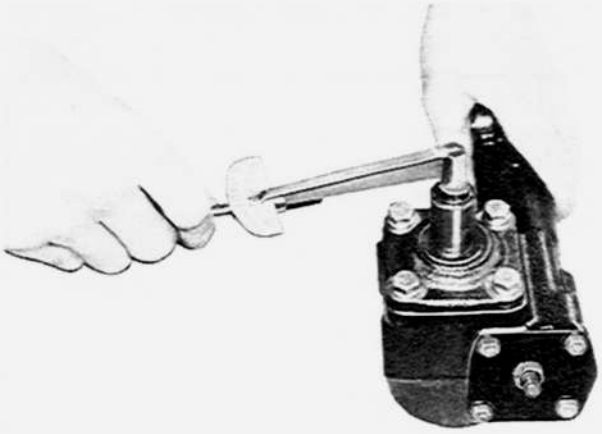

Fig. 10–11 Checking of preload

If the reading is not within limits, adjust the preload as follows:
1. Remove the end cover attaching bolts and the end cover together with the shims.
2. If the preload is **less than 6.0 cm-kg (5.2 in-lb),** reduce the shim, and add the shim if the preload is **more than 8.0 cm-kg (6.9 in-lb).**
The following shims are available:

0.050 mm (0.002 in)	0.100 mm (0.004 in)
0.075 mm (0.003 in)	0.200 mm (0.008 in)

3. Install the end cover and recheck the worm bearing preload.

Note: The preload before installing the sector shaft should be between **1.0 to 4.0 cm-kg (0.9 to 3.5 in-lb).**

10–F–2. Adjusting of Sector Gear and Ball Nut Backlash

The sector shaft adjusting screw, installed in the side cover, raises or lowers the sector shaft to provide proper mesh between the tapered teeth of the sector gear and the rack of the ball nut. This adjustment can be accurately made only after proper worm bearing preload has been established.
Adjust the backlash as follows:
1. Turn the worm shaft gently and stop it at the center position.
2. Loosen the lock nut of the adjusting screw and screw in or out the adjusting screw until the correct adjustment is obtained. The standard backlash is **0 to 0.1 mm (0 to 0.0039 in).** This is equivalent to a movement of about 3 degrees of the worm shaft.
3. After adjusting, tighten the adjusting screw lock nut securely.
4. Rotate the worm shaft and check to ensure that the sector shaft turns 40° smoothly to the right and left.



Fig. 10–12 Adjusting of backlash

10–G. STEERING GEAR INSTALLATION

To install the steering gear assembly, reverse the procedure in Par. 10–B. After installing, fill oil up to the level hole.

10–H. STEERING LINKAGE

10–H–1. Checking of Ball Joint

1. Check the dust seal for wear, flaw or any damage. If the dust seal is defective, this will allow entry of water and dust, resulting in ball joint wear.
Replace the dust seal if found defective.
2. The end play of the ball stud is preadjusted at the factory to be from **0 to 0.20 mm (0 to 0.008 in).** If it exceeds **0.5 mm (0.02 in),** replace the ball joint in its assembled form.

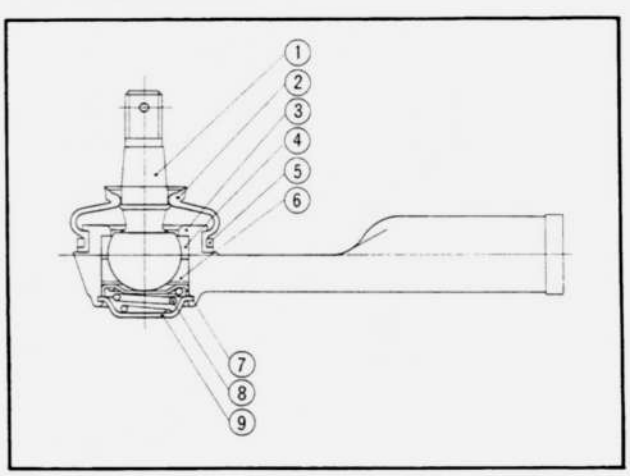

Fig. 10–13 Ball joint

1. Ball stud
2. Dust seal
3. Socket
4. Ball seat
5. Set ring
6. Ball seat
7. Spring seat
8. Spring
9. Cap

10–H–2. Replacing of Idler Arm

After disconnecting the center link from the idler arm, the idler arm can be removed by removing the nut attaching the idler arm to the bracket.
Excessively worn bushes must be replaced. Install the idler arm to the bracket and center link, and tighten the nut to **5.0 m-kg (40 ft-lb).**

10–H–3. Replacing of Pitman Arm

After the center link is removed, the pitman arm can be removed from the sector shaft by removing the nut and by using the **puller** (49 0223 695).

Install the pitman arm onto the sector shaft, aligning the marks of the pitman arm and the sector shaft and tighten the nut. The tightening torque is **15 m-kg (110 ft-lb)**.

10–H–4. Replacing of Tie Rod

The tie rod can be removed from the center link and knuckle arm by removing the ball joint nut and using the **ball joint puller** (49 0118 850C). Install the tie rod to the center link and steering knuckle.

Note: Whenever the tie rods or ball joints are replaced, the toe-in must be reset.

10–H–5. Greasing of Idler Arm

The idler arm requires lubrication only once in two years or every 48,000 km (30,000 miles). Therefore, no greasing is necessary within this period.
When lubricating, remove the plug and temporarily install the grease nipple. Loosen the nut that holds the idler arm to the bracket, and then, feed "Lithium Grease" until new grease appears from the brim of the bush. After greasing, tighten the nut to **5.0 m-kg (40 ft-lb)**. Remove the grease nipple and reinstall the plug.

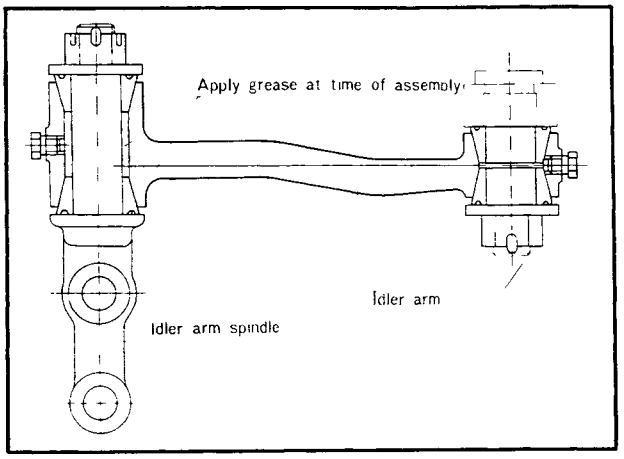

Fig. 10–14 Idler arm

Note: The ball joints for the steering linkage are filled with lithium grease and are completely sealed which require no lubrication service.

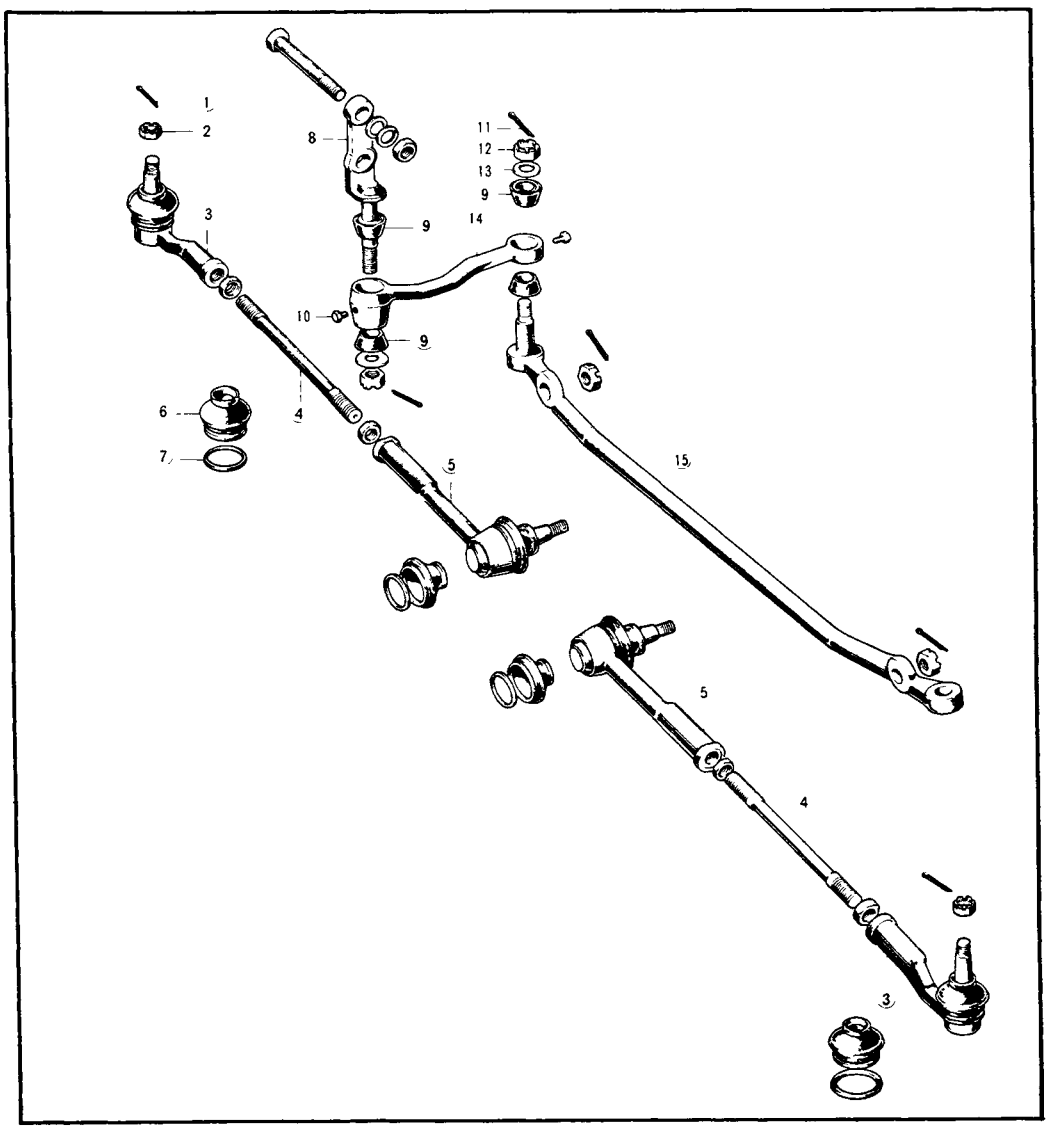

Fig. 10–15

Steering linkage

1. Split pin
2. Nut
3. Ball joint
4. Tie rod
5. Ball joint
6. Dust seal
7. Set ring
8. Spindle
9. Bush
10. Plug
11. Split pin
12. Nut
13. Washer
14. Idler arm
15. Center link

10–I. FRONT WHEEL ALIGNMENT

10–I–1. Inspection before Checking Front Wheel Alignment

Proper alignment of the front wheels must be maintained in order to ensure steering stability and satisfactory tire life. Before checking or correcting the front wheel alignment, the following points which will affect steering should be inspected.

1. Check the tire inflation and bring to recommended pressure.
2. Inspect the front wheel bearing adjustment and correct if necessary.
3. Inspect the wheel and tire run-out and balance.
4. Inspect the ball joints of the front suspension and steering linkage for any excessive looseness.
5. The vehicle must be on level ground and have no luggage or passenger load.

10–I–2. Toe-in

Toe-in is the difference in the distance between the front wheels, measured at the front and at the rear of the tires, the standard toe-in is **–4 to 2 mm (–0.16 to 0.08 in).**

Check and adjust the toe-in as follows:

1. Raise the front end of the vehicle until the wheels clear the ground.
2. Turning the wheels by hand, mark a line in the center of each tire tread by using a scribing block.
3. Measure the distance between the marked lines at the front and rear of the wheels. Both measurements must be taken at equal distances from the ground.

If the distance between the wheels at the rear is greater than that at the front by **–4 to 2 mm (–0.16 to 0.08 in),** it is correct.

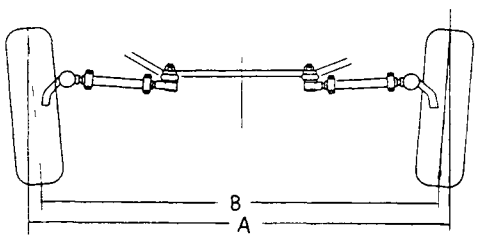

A–B=– 4 ~ 2 mm (–0. 16~0. 08 in)

Fig. 10–16 Toe–in

If it is found to be incorrect, adjust the toe-in by loosening the lock nuts and turning the tie rods. The tie rods are threaded with right and left hand threads to provide equal adjustment at both wheels.

10–I–3. Camber, Caster and King Pin Inclination

The camber, caster, and king pin inclination are not adjustable.

These are set properly in production, and will not be altered in normal driving unless the vehicle is involved in a serious collision.

Whenever camber caster or king pin inclination is moved out of its specified angle, check all parts of front suspension and body alignment.

If necessary, replace or repair.

10–I–4. Adjusting of Steering Angle

Adjust the steering angle with the adjusting bolts fitted onto the pitman arm and the side frame, so that the front wheels turn **43° inward** and **31° outward.**

SPECIAL TOOLS

49 0118 850C	Ball joint puller
49 0223 695	Pitman arm puller

BRAKES

11–A. BRAKE PEDAL ADJUSTMENT ..... 11 : 1
11–A–1. Adjusting of Pedal Height ..... 11 : 1
11–A–2. Adjusting of Free Play ..... 11 : 1
11–B. BRAKE MASTER CYLINDER ..... 11 : 1
11–B–1. Removing of Brake Master Cylinder.. 11 : 1
11–B–2. Disassembling of Brake Master Cylinder ..... 11 : 1
11–B–3. Checking of Brake Master Cylinder .... 11 : 2
11–B–4. Assembling of Brake Master Cylinder.. 11 : 3
11–B–5. Installing of Brake Master Cylinder ... 11 : 3
11–C. POWER BRAKE UNIT ..... 11 : 3
11–C–1. Checking of Power Brake Unit on Vehicle ..... 11 : 3
11–C–2. Removing of Power Brake Unit ..... 11 : 3
11–C–3. Disassembling of Power Brake Unit ... 11 : 4
11–C–4. Checking of Power Brake Unit ..... 11 : 5
11–C–5. Assembling of Power Brake Unit ..... 11 : 5
11–C–6. Installing of Power Brake Unit ..... 11 : 5
11–D. FRONT BRAKE ..... 11 : 5
11–D–1. Replacing of Disk Brake Shoe ..... 11 : 5
11–D–2. Removing and Disassembling of Caliper ..... 11 : 6
11–D–3. Checking of Caliper ..... 11 : 7
11–D–4. Assembling and Installing of Caliper ..... 11 : 7
11–D–5. Removing of Brake Disk ..... 11 : 7
11–D–6. Inspecting of Brake Disk ..... 11 : 7
11–D–7. Installing of Brake Disk ..... 11 : 8
11–E. REAR BRAKE ..... 11 : 8
11–E–1. Removing of Rear Brake Shoes ..... 11 : 8
11–E–2. Inspection of Rear Brake ..... 11 : 8
11–E–3. Installing of Rear Brake Shoes ..... 11 : 8
11–E–4. Adjusting of Rear Brake ..... 11 : 9
11–F. WHEEL CYLINDER ..... 11 : 9
11–F–1. Removing of Wheel Cylinder ..... 11 : 9
11–F–2. Disassembling of Wheel Cylinder ..... 11 : 9
11–F–3. Checking of Wheel Cylinder ..... 11 : 9
11–F–4. Assembling of Wheel Cylinder ..... 11 : 9
11–F–5. Installing of Wheel Cylinder ..... 11 : 9
11–G. AIR BLEEDING ..... 11 : 9
11–G–1. Bleeding of Master Cylinder and Front Wheel Cylinder ..... 11 : 9
11–G–2. Bleeding of Rear Wheel Cylinder ..... 11 : 10
11–H. PARKING BRAKE ..... 11 : 10
11–H–1. Adjusting of Parking Brake ..... 11 : 10

11

BRAKES

MAZDA 616 is equipped with a tandem master cylinder and a power brake unit. The tandem master cylinder is so constructed that the front and rear brakes are independently actuated by oil pressure originated from the independent system, and that in the event of failure of one of the brakes, effective braking remains on two wheels, thus raising safety.
The power brake unit is a combined vacuum and hydraulic unit which utilizes intake manifold vacuum and atmospheric pressure to provide power-assisted application of vehicle brakes.
The front brake unit are of the disk brake type which assure you of still more safety.
The rear brake are of drum type with leading and trailing shoes.
The parking brake is operated by means of a brake lever and influences both rear wheels mechanically.

11–A. BRAKE PEDAL ADJUSTMENT

11–A–1. Adjusting of Pedal Height

The standard fitting position of the brake pedal is about 20 mm (0.8 in) from the toe board (insulator) as shown in Fig. 11–2. This adjustment is made by loosening the lock nut and turning the stop lamp switch. After adjusting, tighten the lock nut.

11–A–2. Adjusting of Free Play

There should always be 5 to 15 mm (0.2 to 0.6 in) free pedal travel before the compensating port is clogged by the piston cup in the master cylinder.
To adjust the free play, loosen the lock nut and turn the master cylinder push rod connected to the brake pedal. After proper adjustment is obtained, tighten the lock nut.

11–B. BRAKE MASTER CYLINDER

11–B–1. Removing of Brake Master Cylinder

If it becomes necessary to remove the master cylinder for repair or overhaul, proceed as follows:
1. Disconnect the fluid pipes at the brake master cylinder outlets.
2. Loosen the nuts that attach the brake master cylinder to the power brake unit.
3. Pull the master cylinder straight out and away from the power brake unit.

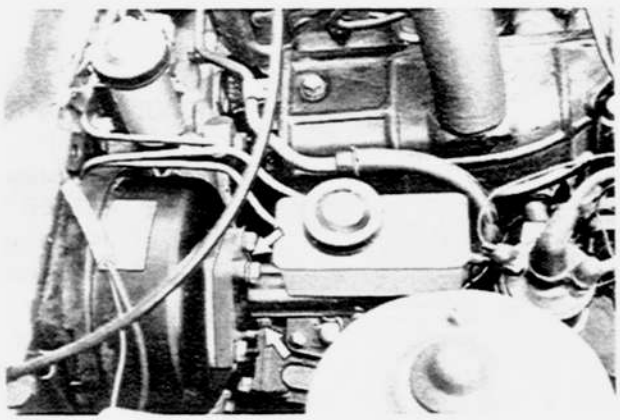

Fig. 11–1 Removing of Brake Master Cylinder

11–B–2. Disassembling of Brake Master Cylinder

1. Clean the outside of the master cylinder thoroughly and drain the brake fluid.
2. Remove the reservoir from the cylinder.
3. Remove the dust boot from the cylinder.
4. Using a suitable plier, remove the snap ring and remove the stop washer.
5. Remove the primary piston, spacer, piston cups, spring seat and return spring from the cylinder.

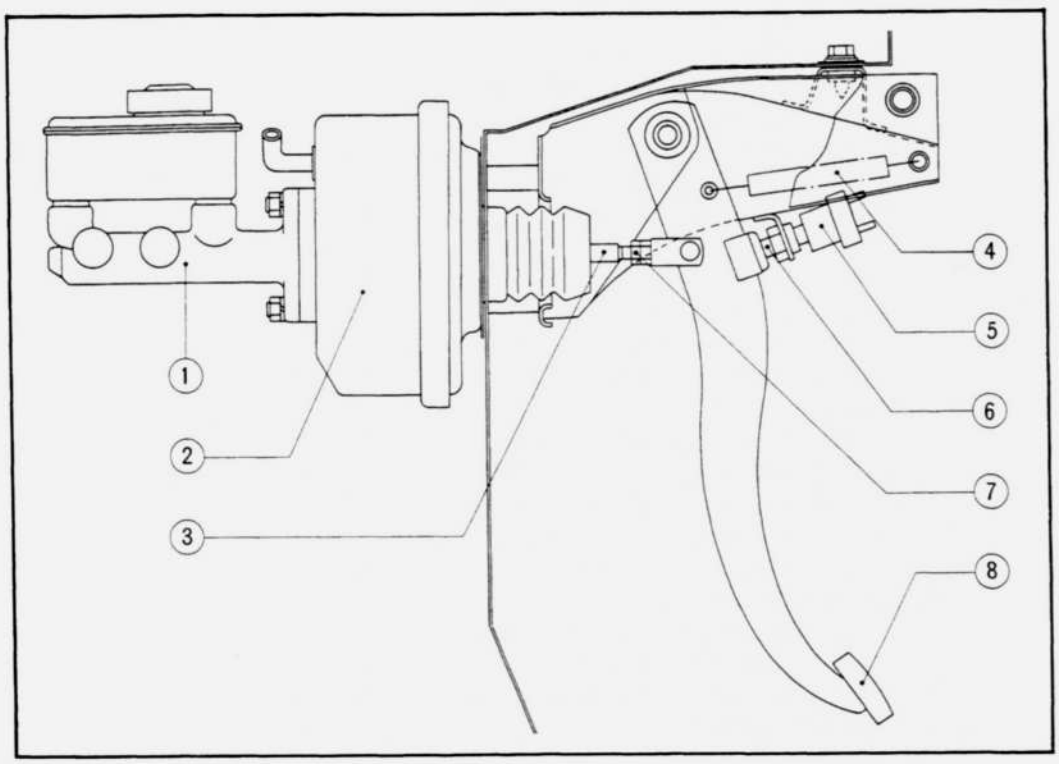

Fig. 11–2

Brake pedal

1. Master cylinder
2. Power brake unit
3. Push rod
4. Return spring
5. Stop switch
6. Lock nut
7. Lock nut
8. Brake pedal

6. Loosen the secondary piston stop bolt.
7. Pushing in the secondary piston with a screwdriver, remove the stop bolt and insert the guide pin in its place. Then, gradually take out the screwdriver and remove the secondary piston, spacer, piston cup, secondary cup, spring seat and return spring.
If necessary, blow out with compressed air from the outlet hole.

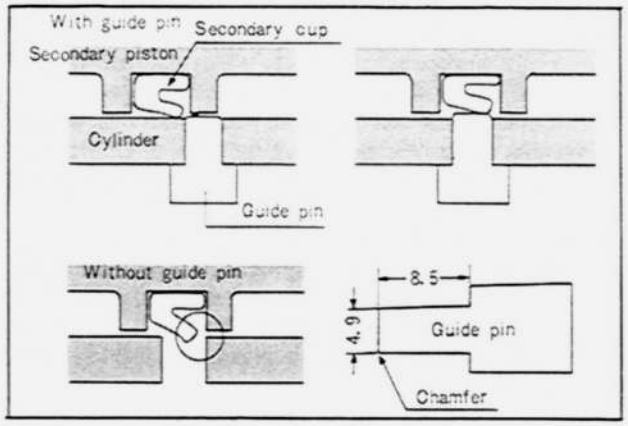

Fig. 11–3 Guide pin

8. Remove the fluid pipe fittings from the cylinder, and then remove the check valve and spring.

11–B–3. Checking of Brake Master Cylinder
1. Wash the parts in clean alcohole or brake fluid. **Never use gasoline or kerosene.**
2. Check the piston cups and replace if they are damaged, worn, softened, or swelled.
3. Examine the cylinder bore and piston for wear, roughness or scoring.
4. Check the clearance the cylinder bore and the piston. If it is **more than 0.15 mm (0.006 in),** replace the cylinder or piston.

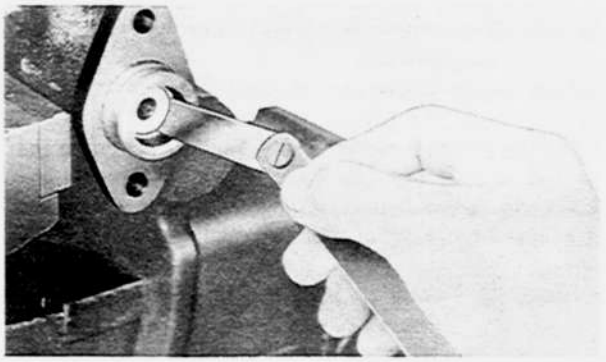

Fig. 11–4 Checking of piston clearance

5. Ensure that the compensating ports on the cylinder are open.

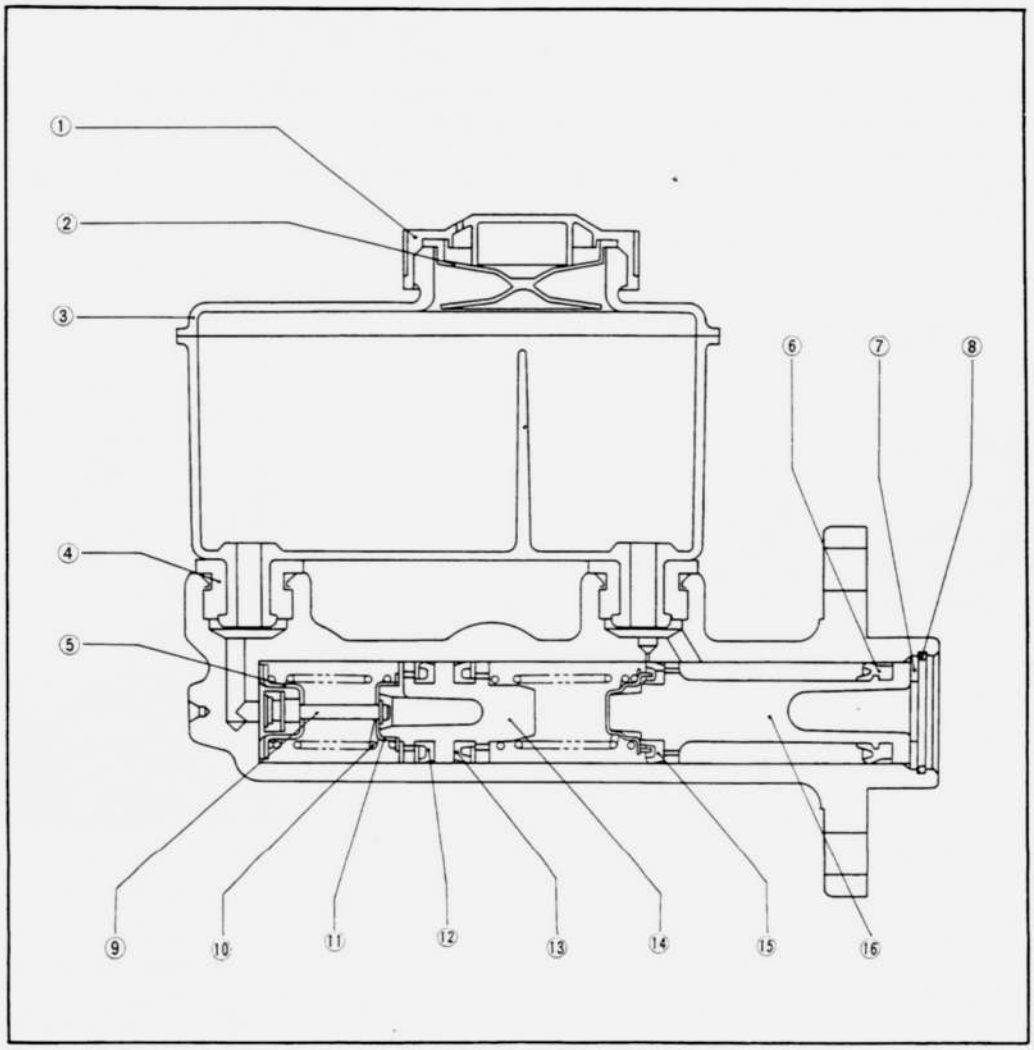

Fig. 11–5

Brake master cylinder

1. Cap
2. Oil baffle
3. Reservoir
4. Elbow joint bush
5. Valve stopper
6. Primary cup
7. Washer
8. Stop wire
9. Valve rod
10. Spring
11. Spring seat
12. Secondary cup
13. Secondary cup
14. Secondary piston
15. Primary cup
16. Primary piston

11–B–4. Assembling of Brake Master Cylinder

1. Dip the pistons and the cups in clean brake fluid.
2. Fit the check valve on the spring and place them in the outlet hole. Install the pipe fitting to the outlet hole.
3. Insert the return spring of large coil diameter into the cylinder.
4. Fit the secondary cup and primary cup onto the secondary piston so that the flat side of the cup goes toward the piston.
5. Fit the guide pin into the stop bolt hole and insert the secondary piston assembly together with the spring seat into the cylinder.
6. Push the secondary piston as far as it will go, remove the guide pin and install the stop bolt.
7. Fit the primary cup onto the primary piston so that the flat side of the cup goes toward the piston.
8. Fit the secondary cup onto the primary piston, with the edge side of the cup facing the secondary piston.
9. Insert the return spring of small coil diameter and the primary piston assembly with the spring seat.
10. Install the stop washer and snap ring.

Note: Make sure that the piston cups do not cover the compensating ports.

11. Install the reservoir.
12. Install the dust boot to the cylinder.

11–B–5. Installing of Brake Master Cylinder

To install the master cylinder, carry out the removing operation in the reverse order. After installing, bleed the brake system, referring to Par. 11–G–1.

11–C. POWER BRAKE UNIT

11–C–1. Checking of Power Brake Unit on Vehicle

1. Road test the brakes by making a brake application at about 30 km (20 miles) to determine if the vehicle stops evenly and quickly. If pedal has a spongy feel when applying brakes, air may be present in hydraulic system. Bleed the system as described in Par. 11–G–1.
2. With the engine stopped and transmission in neutral, apply brakes several times to deplete all vacuum reserve in power brake unit. Depress brake pedal, hold light-foot pressure on the pedal and start the engine. If vacuum system is operating, pedal will tend to fall away under foot pressure and less pressure will be required to hold pedal in applied position.
If no action is felt, vacuum system is not functioning.
3. Stop the engine. Again deplete all vacuum reverse in system. Depress the brake pedal and hold foot pressure on the pedal. If pedal gradually falls away under foot pressure, hydraulic system is leaking internally or externally.
4. Start the engine with brakes off and transmission in neutral. Run the engine to medium speed and turn off ignition switch. Immediately close throttle.
This build up vacuum. Wait no less 90 seconds, then try brake action. If not vacuum-assisted for two or more applications, vacuum check valve is faulty or there is a leak in vacuum system.

11–C–2. Removing of Power Brake Unit

1. Disconnect the fluid pipes at the brake master cylinder outlets.
2. Disconnect the vacuum hose at the power brake unit.

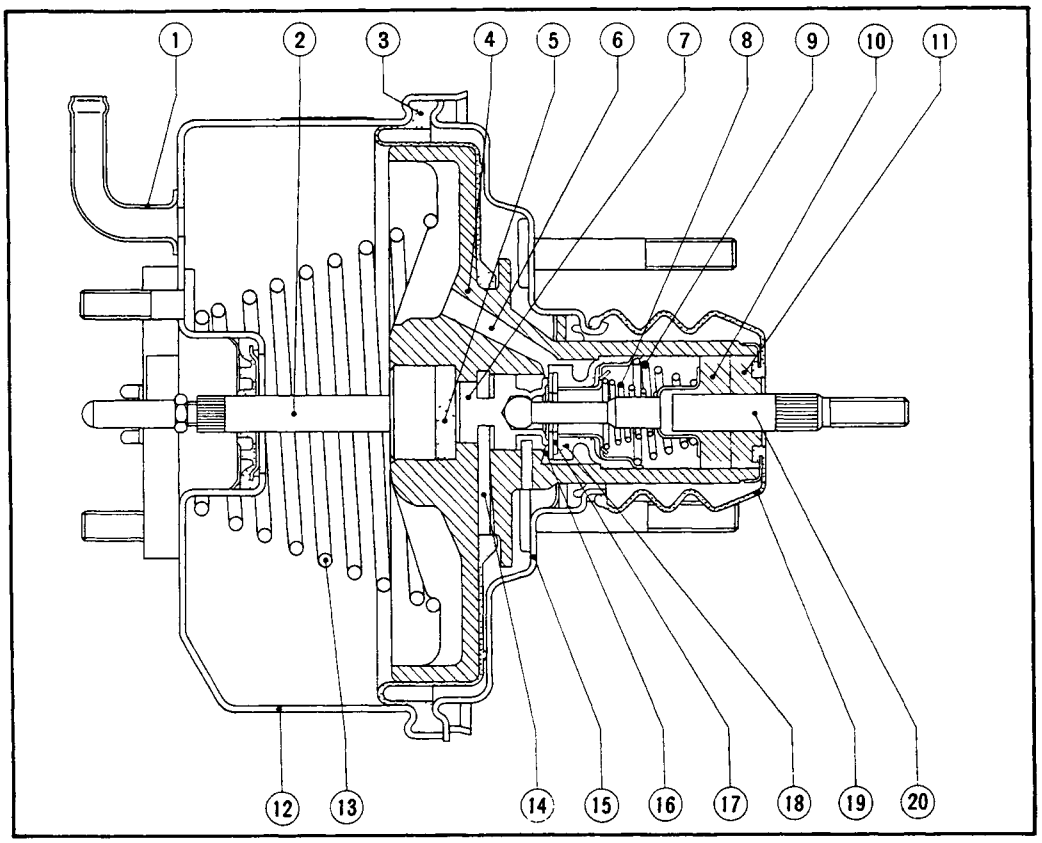

Fig. 11–6

Power brake unit

1. Check valve
2. Push rod
3. Diaphragm
4. Power piston
5. Reaction disk
6. Vacuum passage
7. Air valve plunger
8. Spring
9. Spring
10. Silencer
11. Silencer filter
12. Front shell
13. Return spring
14. Key
15. Rear shell
16. Atmospheric port
17. Air valve piston
18. Floating control valve
19. Boot
20. Valve rod and plunger

3. Disconnect the push rod from the brake pedal by removing the split pin at the fork end.
4. Loosen the nuts that attach the power brake unit to the dash panel.
5. Remove the power brake unit and master cylinder assembly from the dash panel, being careful not to allow brake fluid to drip on exterior paint.

11–C–3. Disassembling of Power Brake Unit

1. Remove the master cylinder and the check valve from the power brake unit.
2. Place the power brake unit in a vise with push rod up. Clamp the unit firmly on the flange.
3. Scribe a mark on the bottom center of the front and rear shells to facilitate reassembly.
4. Remove the boot.

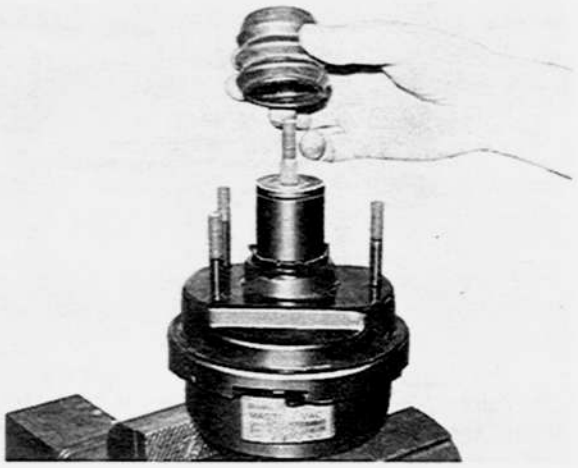

Fig. 11–7 Removing of boot

5. Attach the **wrench** (49 6500 090) to the studs of the rear shell as shown in Fig. 11–8. Rotate the rear shell clockwise to unlocked position.
Loosen the rear shell carefully as it is spring-loaded.

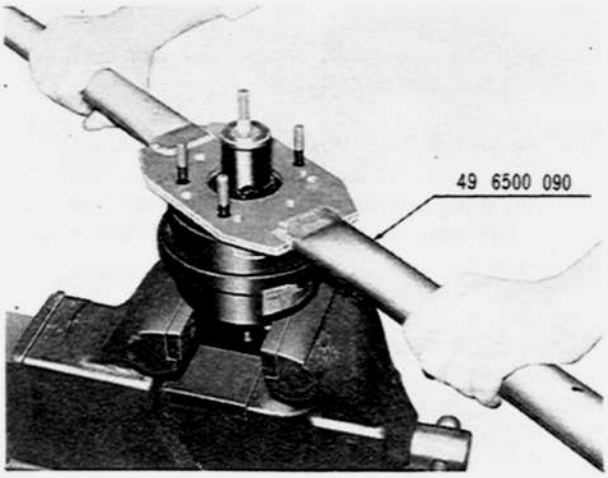

Fig. 11–8 Removing of rear shell

6. Lift the rear shell and plate and valve body, valve rod and plunger assembly from the unit. Then, remove the return spring.
7. Remove the plate, valve body, valve rod and plunger assembly from the rear shell.

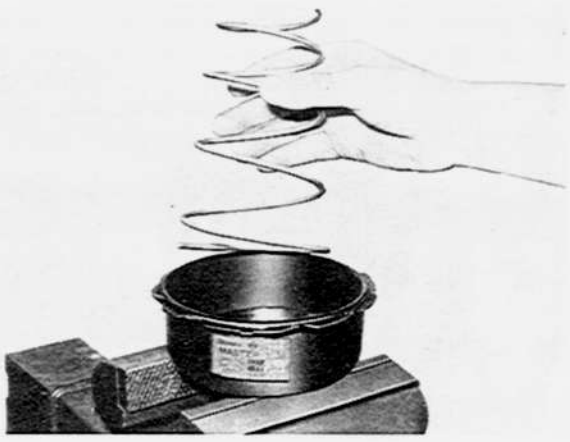

Fig. 11–9 Removing of return spring

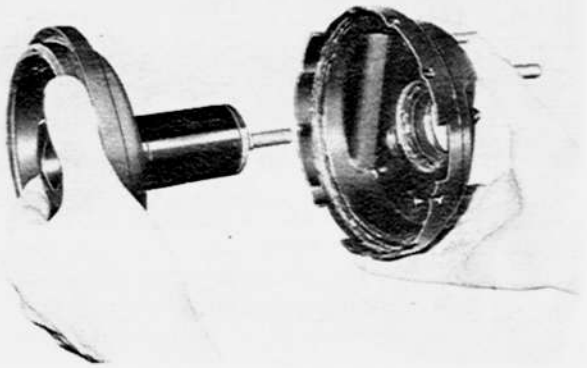

Fig. 11–10 Removing of plate and valve body assembly

Note: Do not remove the rear seal from the rear shell unless seal is defective and the new seal is available. To remove the rear seal, support the rear shell and drive out the rear seal with a punch or a screwdriver.

8. Remove the diaphragm from the plate and valve body.



Fig. 11–11 Removing of diaphragm

9. Remove the air silencer with the air filter from the plate and valve body, being careful not to chip plastic.
10. Press in on the valve rod to remove the valve retainer key. Remove the valve rod and plunger assembly.

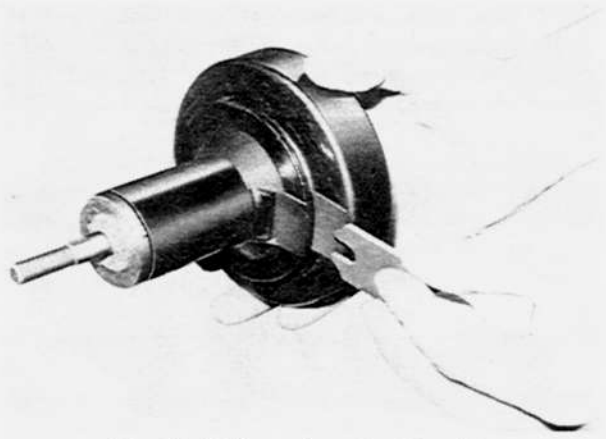

Fig. 11–12 Removing of retainer key

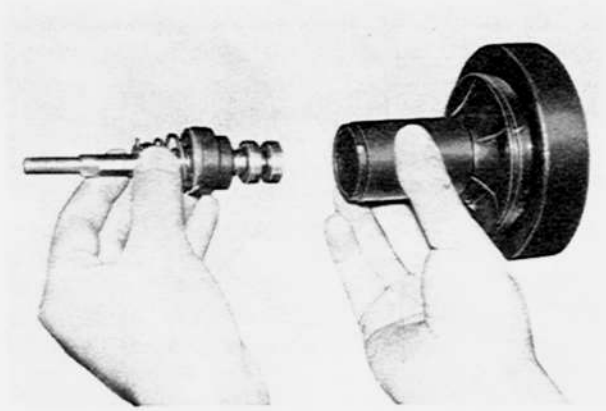

Fig. 11–13 Removing of valve rod and plunger

Note: The valve rod and plunger are serviced as an assembly only.

11. Press the reaction disk out of the valve body.
12. Remove the push rod.
13. Remove the front seal from the front shell if necessary.

11–C–4. Checking of Power Brake Unit

1. Inspect the all rubber parts. Wipe free of fluid and carefully inspect each rubber part for cuts, nicks or other damage.
2. Check the plate and valve body for cracks, distortion, chipping and damaged seats.
3. Inspect the reaction disk for deterioration of rubber.
4. Check the valve rod and plunger for all seats to be smooth and free of nicks and dents. Replace with a new one if defective.
5. Inspect the front and rear shells for scratches, scores, pits, dents or other damage.
6. Check the diaphragm for cuts or other damage.

11–C–5. Assembling of Power Brake Unit

1. Apply the power brake lubricant to the inner surface of tube section of the plate and valve body and to the surfaces of the valve rod and plunger.
2. Insert the valve rod and plunger assembly into the tube section of the plate and valve body.
3. Press down on the valve rod and align the groove in the valve plunger with the slot of the valve body. Insert the retainer key.
4. Install the diaphragm on the plate and valve body making certain the diaphragm is seated in the groove.
5. Assemble the air filter and the air silencer over the rod and position in the valve body.
6. Apply the power brake lubricant liberally to the entire surface of the reaction disk and install the reaction disk into the plate and valve body.
7. Coat the outer bead of the diaphragm with the power brake lubricant where it bears against the outer rim of the front and rear shell to aid in assembly.
8. Apply the power brake lubricant to the seal in the rear shell and carefully guide tube end of the plate and valve body, through the seal in the rear shell.
9. Install the plate and valve body into the front shell.

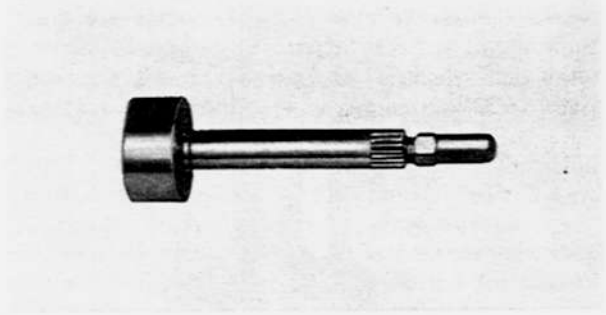

Fig. 11–14 Push rod

10. Apply power brake lubricant to the push rod and install the push rod through the front of the plate and valve body.
11. Install the return spring.
12. Install the rear shell assembly by using the **wrench** (49 6500 090) to rotate the front shell counter-clockwise until scribe marks align.

Note: Press the front shell down firmly, maintaining a pressure until the shell flanges are fully locked.

13. Install the boot down against the rear shell.
14. Install the master cylinder.

11–C–6. Installing of Power Brake Unit

Install the power brake unit in the reverse order of removing. After installing the unit, bleed the hydraulic system according to the procedure described in Par. 11–G–1.

11–D. FRONT BRAKE

11–D–1. Replacing of Disk Brake Shoe

The lining should be inspected whenever the wheels are removed for any reason (tire rotation, etc.).
The shoe and lining should be replaced, if the thickness of the shoe and lining is **8.0 mm (0.315 in) or less** due to wear. To replace the disk brake shoes, proceed as follows:

1. Jack up the vehicle and remove the front wheel.
2. Remove the fastening clips and remove the stop plates.

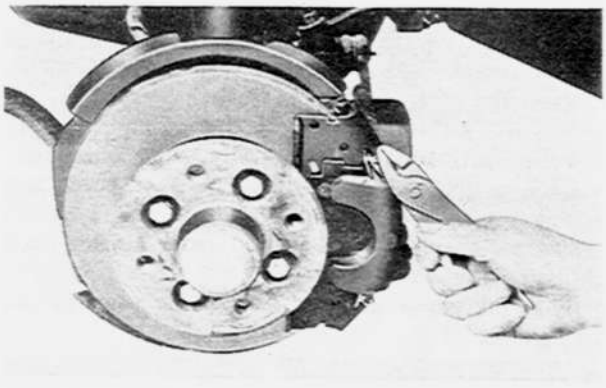

Fig. 11–15 Removing of fastening clips

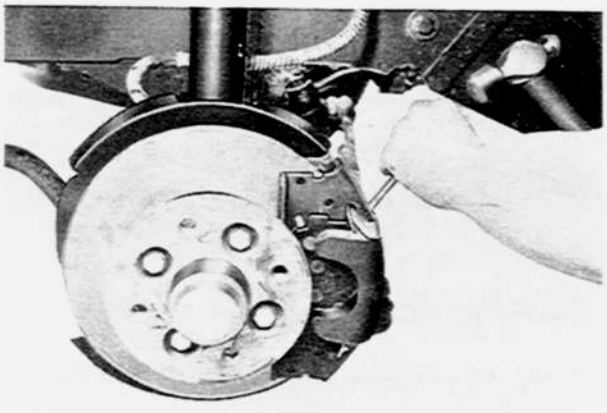

Fig. 11–16 Removing of stop plates

3. Remove the caliper and anti-rattle spring.

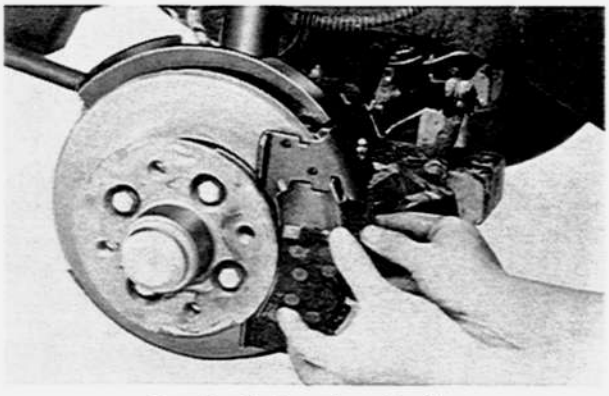

Fig. 11–17 Removing of caliper

4. Remove the shoes.

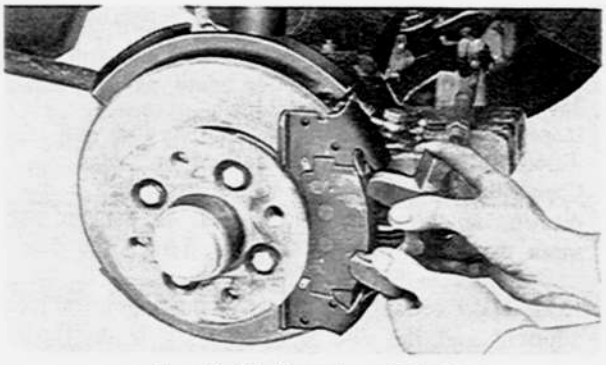

Fig. 11–18 Removing of shoes

5. Attach a vinyl pipe to the bleeder screw and submerge other end of the pipe into glass jar containing brake fluid.
6. Open the bleeder valve and press the piston into the cylinder with the **expanding tool** (49 0221 600B).

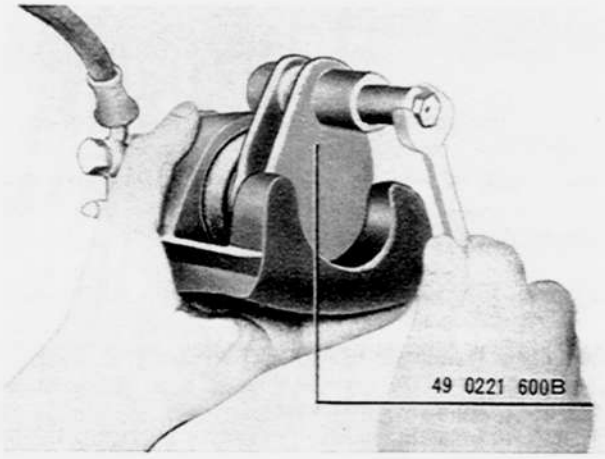

Fig. 11–19 Pressing of piston

7. Tighten the bleeder screw and remove the vinyl pipe and the tool.
8. Install the new brake shoes.
9. Refit the anti-rattle spring, caliper, stoppers and fastening clips.
10. Install the wheel and tighten the bolts to **9.0 m-kg (70 ft-lb)**.

11–D–2. Removing and Disassembling of Caliper

1. Raise the vehicle and remove the wheel.
2. Disconnect the brake fluid pipe from the caliper. Plug the end of the fluid pipe to prevent entrance of dirt and loss of fluid.
3. Remove the caliper from the brake disk, referring to Par. 11–D–1.
4. Clean the outside of the caliper and remove the boot.
5. Place a wood in the caliper pit in order to avoid damage, gradually blow compressed air from the fluid pipe hole and remove the piston.

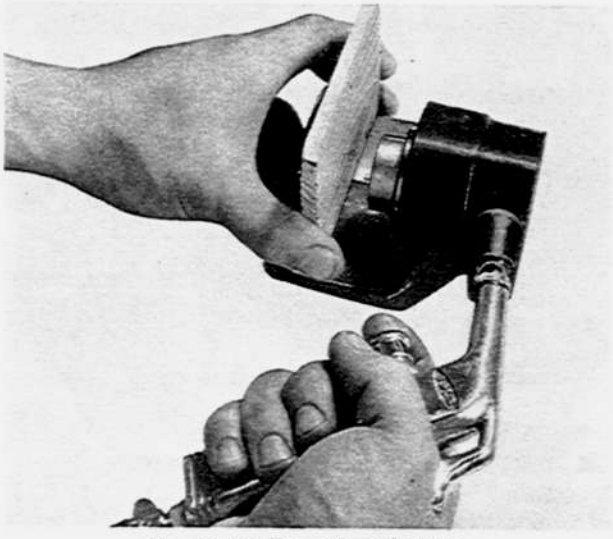

Fig. 11–20 Removing of piston

6. Remove the piston seal from the cylinder.

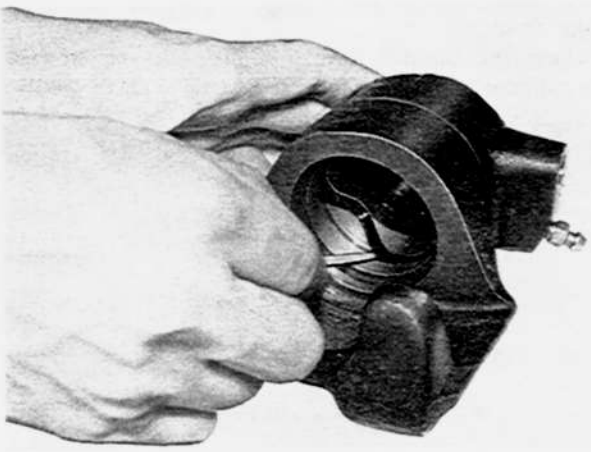

Fig. 11–21 Removing of piston seal

11–D–3. Checking of Caliper

1. Before checking, wash all parts in clean alcohol or brake fluid. **Never use gasoline or kerosene.** Blow out the fluid passages in the caliper with compressed air.
2. Check the cylinder bore and piston for scoring, scratches or rust. If any of these conditions is found, replace with new piston or caliper.
Minor damage can be eliminated by means of polishing with crocus cloth.
3. The piston seal and dust boot should be replaced with new ones every time repair work is carried out on the brake caliper.

11–D–4. Assembling and Installing of Caliper

1. Apply clean brake fluid to the cylinder bore and piston.
2. Install the piston seal.
3. Install the piston carefully into the cylinder bore.



Fig. 11–22 Installing of piston

4. Fit the boot to the caliper.
5. Install the caliper in the reverse order of removing.
6. After installing, bleed the brake lines, referring to Par. 11–G–1.

11–D–5. Removing of Brake Disk

Before removing the brake disk, check the lateral run-out of the brake disk, as detailed in Par 11–D–6.
1. Raise the vehicle and remove the wheel.
2. Remove the bolts attaching the caliper assembly and remove the caliper assembly from the brake disk.
3. Remove the grease cap, split pin, set cover and bearing adjusting nut.
4. Remove the thrust washer and outer bearing from the wheel hub.
5. Slide the wheel hub and brake disk assembly off the spindle.

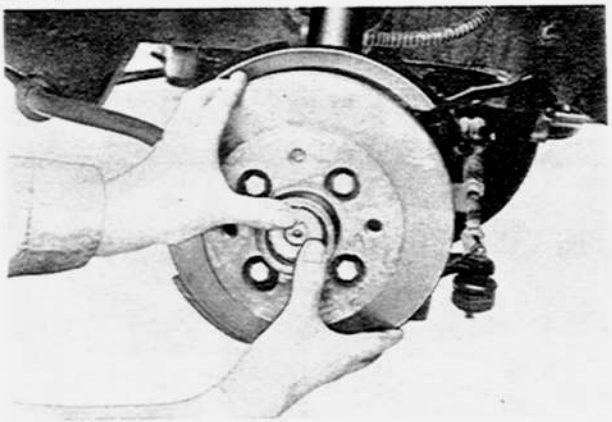

Fig. 11–23 Removing of hub and disk assembly

6. Place the wheel hub and brake disk assembly in the vise equipped with soft jaws.
7. Mark the position of brake disk and wheel hub.

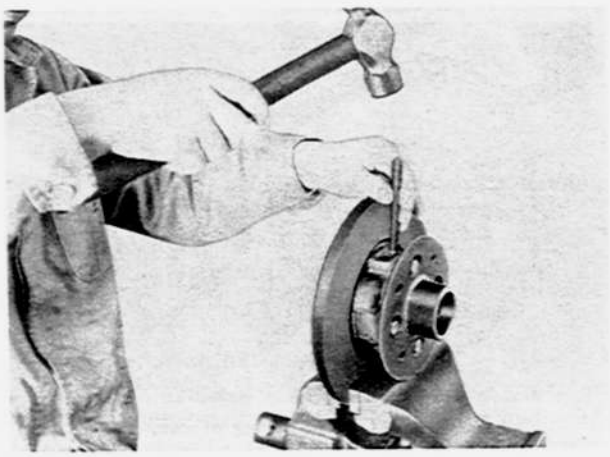

Fig. 11–24 Applying of identification marks

8. Remove the attaching bolts and separate the brake disk from the wheel hub. **Do not** drive it off.

11–D–6. Inspecting of Brake Disk

Inspect the friction surfaces of the disk and recondition if they are scored, scrached or rusted.
Check the lateral run-out of the disk with a dial indicator, as shown in Fig. 11–25. If the run-out is **more than 0.06 mm (0.0024 in),** reface the disk.

Note: Make certain that the wheel bearings are correctly adjusted and the disk is fitted securely on the hub, before checking the run-out of the disk.

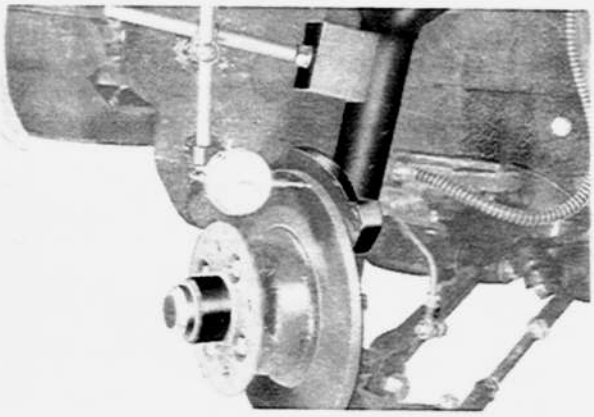

Fig. 11–25 Checking of disk run-out

When refacing the disk, remove only so much material as is necessary to clean up the disk.
The thickness of the disk after refacing must not be **less than 11 mm (0.4331 in)**.

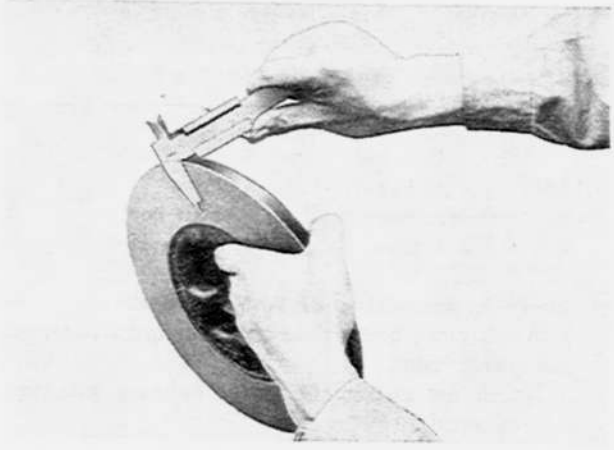

Fig. 11–26 Checking of disk thickness

11–D–7. Installing of Brake Disk

Carry out the removing operation in the reverse order. After installing, adjust the bearing preload, as instructed in Par. 12–F–4.

11–E. REAR BRAKE

11–E–1. Removing of Rear Brake Shoes

1. Raise the vehicle and remove the wheel.
2. Remove the drum attaching bolts and fit them into the tapped holes and screw them in evenly to force the drum away from the axle shaft flange.
3. Remove the brake shoe return springs.
4. Remove the brake shoe retaining spring and guide pin by compressing the retaining spring and turning the guide pin 90 degrees.
5. Remove the brake shoes.
6. Disengage the parking brake cable from the operating lever on the brake shoe.

11–E–2. Inspection of Rear Brake

a. Inspection of brake drum

Inspect the brake drum and recondition if it is rough or scored. Check the out of roundness with a dial indicator. If it is **0.15 mm (0.0059 in) or more**, reface the drum. When refacing the drum, remove only so much material as is necessary to obtain a smooth surface on the drum. Do not reface **more than 1.0 mm (0.0394 in)**. The standard inner diameter of the drum is 200 mm (7.8741 in).

b. Inspection of brake linings

1. Inspect the brake linings and replace with new parts if the linings are badly burned or worn.
2. Examine the lining contact pattern. For inspection, chalk the entire inner surface of the brake drum and slide the lining along the chalked surface. The lining should show a uniform contact across the entire width, extending from toe to heel.
Shoes having sufficient lining but lack of contact should be ground properly.
3. If oil or grease is evident on the lining, wash off oil or grease in a suitable solvent.
Then, correct the cause of leakage. However, if the lining is saturated with oil or grease, replace it.

c. Inspection of wheel cylinders

Examine whether the exterior of the wheel cylinder boots is wet with brake fluid. Excessive amounts of fluid at this point indicates leakage past the piston cups. Therefore, the wheel cylinder must be overhauled.

d. Inspection of brake lines

Inspect all brake lines for leakage with the foot brake applied. Check all brake pipes, hoses and connections for signs of chafing, deterioration or other damage.

11–E–3. Installing of Rear Brake Shoes

1. Lubricate the adjusting screw threads, mating surfaces of the shoes and backing plate edges with a small amount of grease.
2. Install the eye of the parking brake cable onto the parking brake operating lever installed to the rear side shoe.
3. Installing the operating strut between the slots of the shoes, engage the brake shoes with the slots in the adjusting screw and the wheel cylinder piston.
4. Hold the brake shoes to the backing plate with the retaining springs and pins.

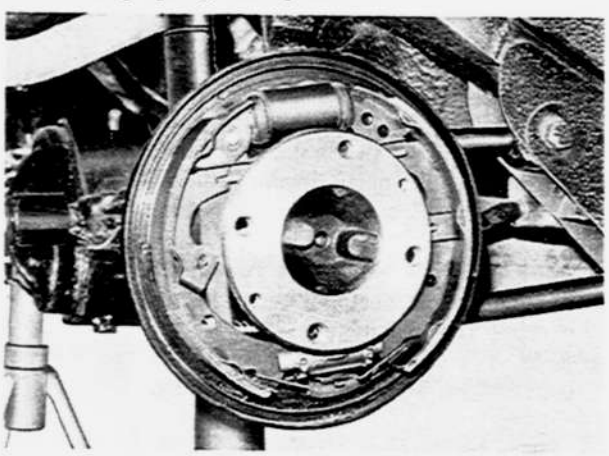

Fig. 11–27 Rear brake

5. Install the shoe return springs.
6. Sand the linings lightly to remove any trace of dirt or grease.
7. Install the brake drum to the axle shaft flange and tighten the attaching bolts.
8. Apply the brake pedal several times and adjust the brake, as instructed in Par. 11–E–4.
9. Install the wheel.

11–E–4. Adjusting of Rear Brake

1. Jack up the vehicle until the wheels are free to turn.
2. Remove the adjusting hole covers from the backing plate.
3. Be sure the parking brake lever is fully released.
4. Insert a screwdriver into the star wheel of the adjuster and turn the star wheel toward the arrow direction marked on the brake backing plate until the wheel is locked. Then, back off the star wheel 5 notches. Which will obtain a brake shoe clearance is 0.1 mm (0.004 in).

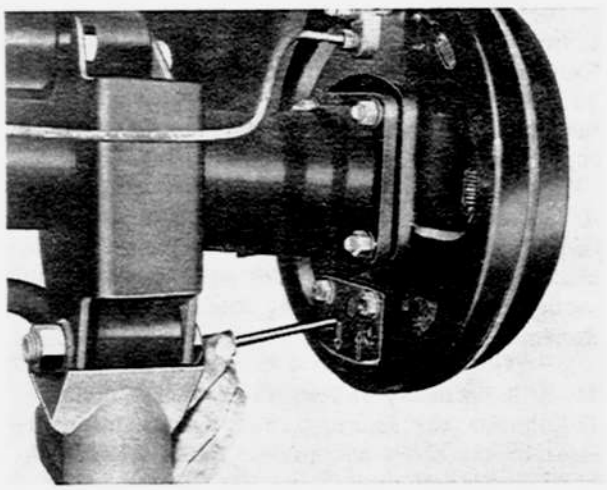

Fig. 11–28 Adjusting of rear brake

5. Repeat the above adjustment on each wheel. The adjustments must be equal at all wheels.
6. Install the adjusting hole covers in the backing plate.

11–F. WHEEL CYLINDER

11–F–1. Removing of Wheel Cylinder

1. Remove the brake shoes, as described in Par. 11–E–1.
2. Disconnect the brake fluid pipe at the wheel cylinder. Plug the end of the brake fluid pipe.
3. Remove the nuts attaching the wheel cylinder to the backing plate. Remove the wheel cylinder.

11–F–2. Disassembling of Wheel Cylinder

1. Remove the dust boots and pistons from the both ends of the cylinder.
2. Press in the piston cup and force out the piston cups, filling blocks and return spring.

11–F–3. Checking of Wheel Cylinder

1. Wash all parts in clean alcohol or brake fluid. **Never use gasoline or kerosene.**
2. Examine the cylinder bore and pistons for wear, roughness or scoring.
3. Check the clearance between the cylinder and piston. If it is **more than 0.15 mm (0.006 in)**, replace with new parts.
4. Inspect the piston cups for wear, softening, swelling and other damage. If any of these conditions exists, replace the cups.

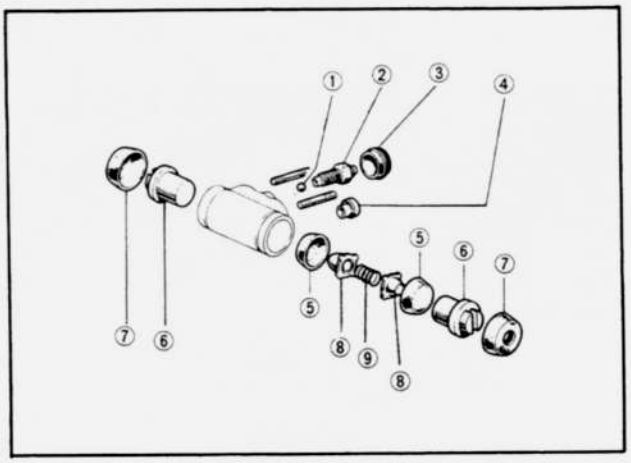

Fig. 11–29 Wheel cylinder

1. Valve	5. Piston cup
2. Bleeder	6. Piston
3. Cap	7. Dust boot
4. Seat	8. Filling block

11–F–4. Assembling of Wheel Cylinder

1. Apply clean brake fluid to the cylinder bore, pistons and piston cups.
2. Install the piston cup in the cylinder with the flat side outward.
3. Install the filling block, return spring, filling block, piston cup and pistons in sequence.
4. Install the dust boots.

11–F–5. Installing of Wheel Cylinder

1. Install the wheel cylinder to the backing plate and connect the fluid pipe.
2. Install the brake shoes and the drum, as described in Par. 11–E–3.
3. Bleed the brake lines as detailed in Par. 11–G–2.

11–G. AIR BLEEDING

Whenever the wheel cylinder or master cylinder is overhauled, or air enters the system, air bleeding must be carried out. The correct sequence of bleeding is to bleed master cylinder first and either front or rear wheel cylinder second.

Note: During bleeding operation, the reservoir of the master cylinder must be kept at least 3/4 full of the brake fluid.

11–G–1. Bleeding of Master Cylinder and Front Wheel Cylinder

1. Remove the bleeder valve cap and connect a vinyl pipe to the bleeder valve. Submerge the other end

of the pipe in the brake fluid in a glass jar.
2. Open the bleeder valve. Depress the brake pedal a full stroke and allow it to return slowly.
Continue this pumping action until air bubbles cease to appear in the jar.

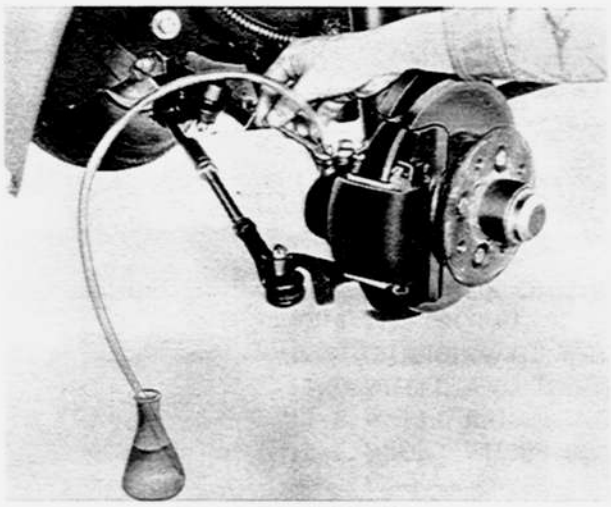

Fig. 11–30 Air bleeding

3. When bleeding operation is completed, close the bleeder valve, remove the vinyl pipe and fit the cap to the bleeder valve.

11–G–2. Bleeding of Rear Wheel Cylinder

1. Depress the brake pedal several times quickly. And then, with the brake pedal depressed, open the bleeder valve to expel the air. Close the valve before releasing the pedal.
2. Repeat above operation until the brake fluid is expelled in a solid stream, without any air bubbles.

11–H. PARKING BRAKE

11–H–1. Adjusting of Parking Brake

The service brakes must be properly adjusted before adjusting the parking brake.
Adjust the length of the front cable with the adjusting nut on the rear end of the front cable so that the brake is locked when the parking brake lever is pulled 2 or 3 notches. After adjustment, apply the parking brake several times, then release and make sure that the rear wheels rotate freely without dragging.

SPECIAL TOOLS

49 6500 090	Wrench
49 0221 600B	Expanding tool

WHEELS AND TIRES

12–A. INFLATION OF TIRES ..... 12 : 3
12–B. TIRE ROTATION ..... 12 : 3
12–C. CHANGING OF WHEELS ..... 12 : 3
12–D. WHEEL AND TIRE RUN-OUT ..... 12 : 3
12–E. WHEEL BALANCING ..... 12 : 3
12–F. FRONT WHEEL BEARING ..... 12 : 3
12–F–1. Checking of Front Wheel Bearing ..... 12 : 3
12–F–2. Removing of Front Wheel Bearing ..... 12 : 4
12–F–3. Installing of Front Wheel Bearing ..... 12 : 4
12–F–4. Adjusting of Front Wheel Bearing ..... 12 : 4
12–G. REAR WHEEL BEARING ..... 12 : 4

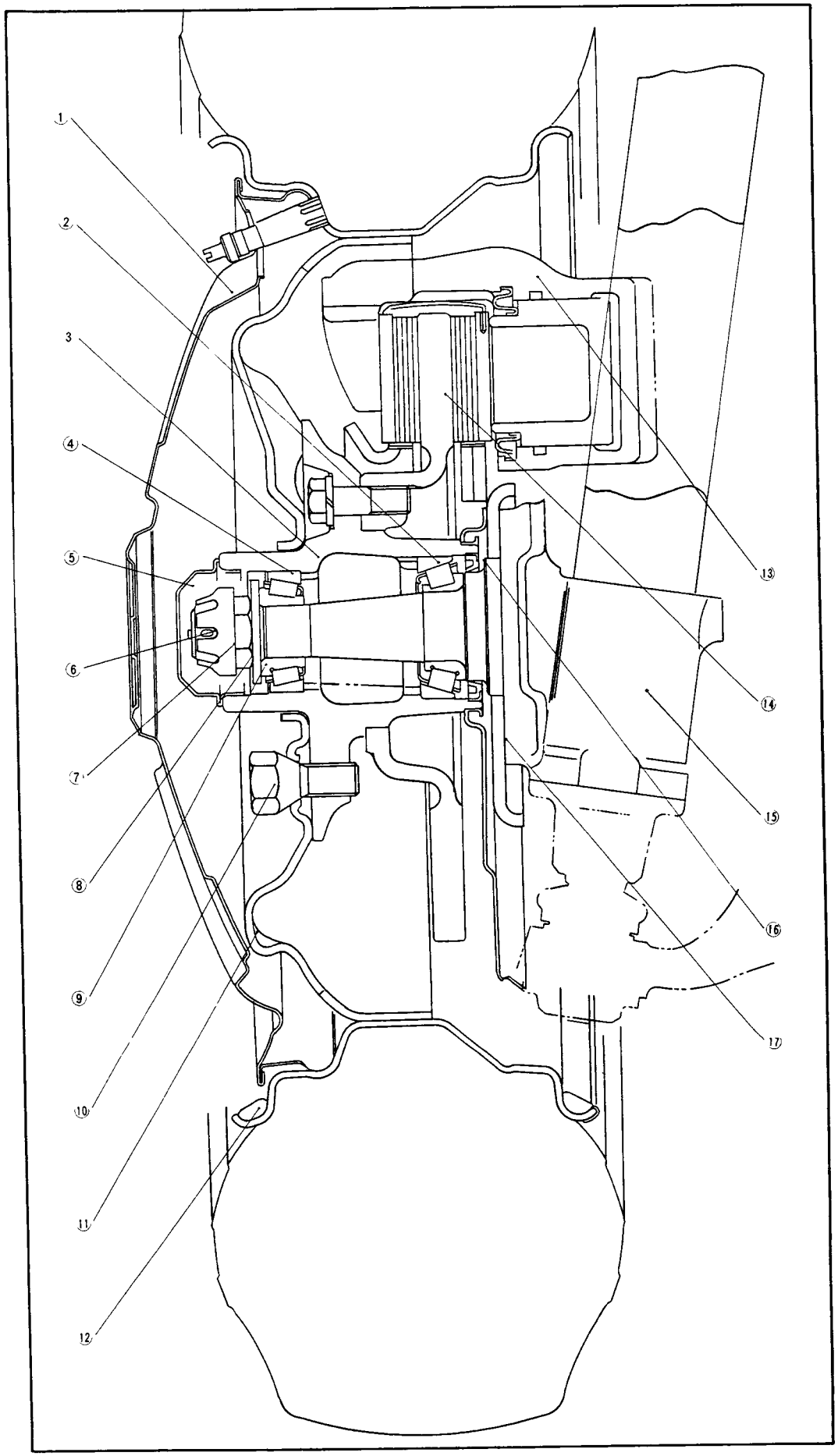

Fig. 12–1

Front wheel

1. Wheel cap
2. Bearing (inner)
3. Wheel hub
4. Bearing (outer)
5. Hub cap
6. Split pin
7. Set cover
8. Nut
9. Washer
10. Wheel bolt
11. Disk wheel
12. Balance weight
13. Caliper
14. Disk plate
15. Front damper
16. Oil seal
17. Mounting adapter

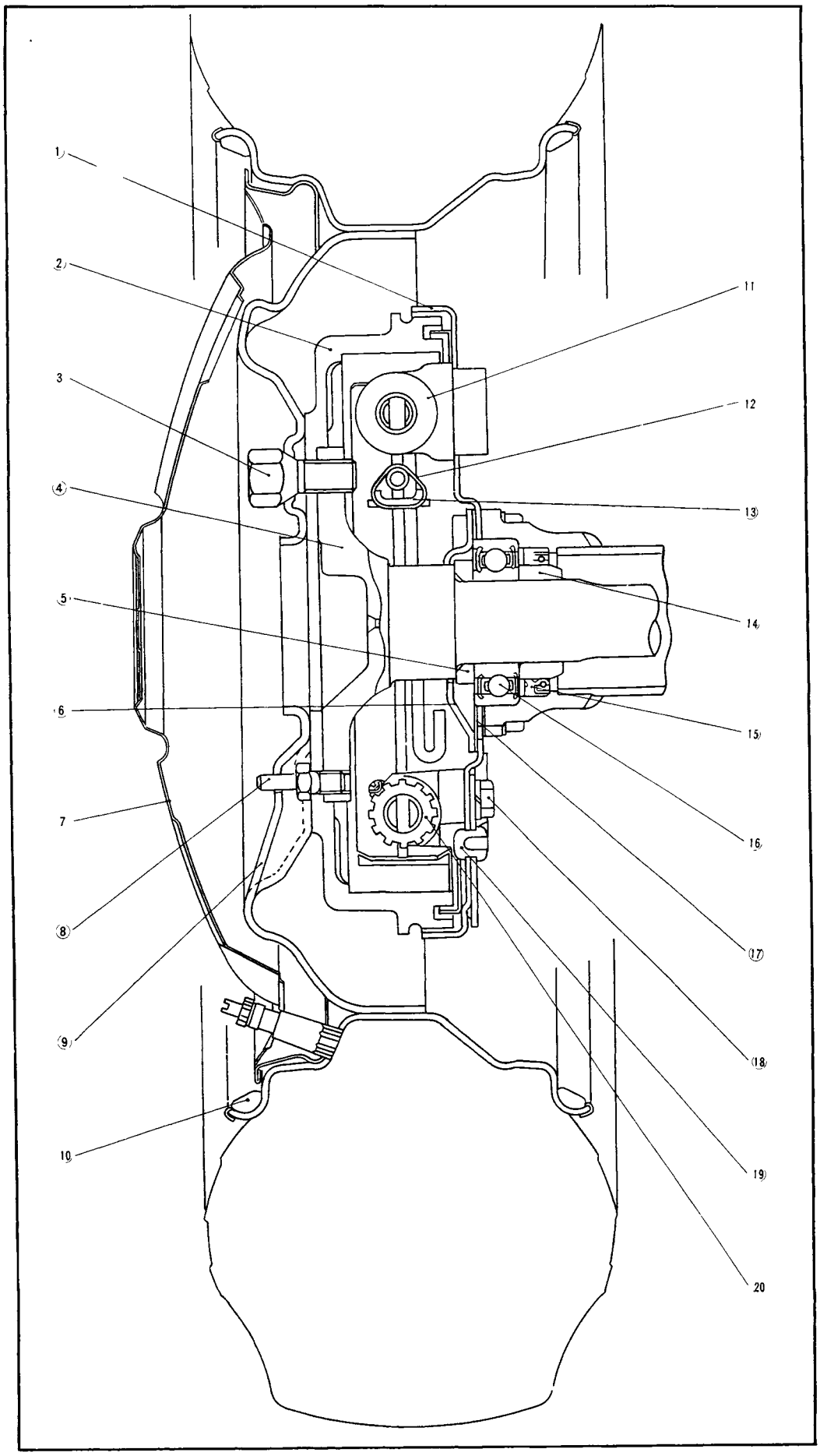

Fig. 12–2

Rear wheel

1. Backing plate
2. Brake drum
3. Wheel bolt
4. Rear axle shaft
5. Bearing spacer
6. Bearing retainer
7. Wheel cap
8. Bolt
9. Disk wheel
10. Balance weight
11. Wheel cylinder
12. Holder
13. Operation strut
14. Bearing collar
15. Oil seal
16. Bearing
17. Adjusting shim
18. Bolt
19. Cover
20. Adjuster

WHEELS AND TIRES

12–A. INFLATION OF TIRES

Maintenance of correct inflation pressure is one of the most important elements of tire care.
Excessive inflation pressure will cause:
1. Hard rides
2. Damage to tire carcass
3. Poor traction
4. Premature tread wear in center of tire

Low inflation pressure will cause:
1. Hard steering
2. Rapid and uneven wear on the edges of tire tread
3. Increased cord fatigue or broken tire cords
4. High tire temperature
5. Blow outs

Check the inflation pressure with a reliable gauge when the tires are cold.
The standard pressure is as follows:

	Less than 100 km/h (60 mile/h)	More than 100 km/h (60 mile/h)
Front	1.5 kg/cm^2 (21 lb/in^2)	1.7 kg/cm^2 (24 lb/in^2)
Rear	1.5 kg/cm^2 (21 lb/in^2)	1.7 kg/cm^2 (24 lb/in^2)

After checking or inflating the pressure, place the valve cap back on and tighten by hand. It helps to maintain the air pressure in the tires in case of any valve leak and keeps dust and water out of the valve.

12–B. TIRE ROTATION

To equalize wear and make a set of tires last longer, it is recommended that the tires be rotated, as shown in Fig. 12–3, every 6,000 km (4,000 miles).
When rotating the tires, check for signs of abnormal wear and bulging and any stone, nail, glass, etc. should be removed.

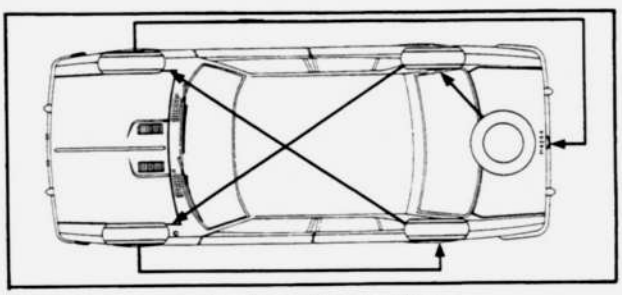

Fig. 12–3 Tire rotation

12–C. CHANGING OF WHEELS

1. Remove the wheel cap and loosen the wheel attaching bolts. All bolts are right handed screws which are loosened by turning counter-clockwise.
2. Jack up the vehicle until the wheel clears the ground.
3. Remove the wheel attaching bolts and change the wheel.
4. Install the wheel attaching bolts and alternately tighten the diametrically opposite bolts until the wheel closely touches the hub flange.
5. Lower the vehicle and firmly tighten the bolts to a torque of **9.5 m-kg (70 ft-lb)**.
6. Refit the wheel cap.

12–D. WHEEL AND TIRE RUN-OUT

Wheel and tire should be measured for both radial and lateral run-out. The radial run-out is the difference between the high and low points on the tread of tire; while the lateral run-out is the wobble of the wheel.
To measure the radial run-out, apply a dial indicator against the center rib of the tire tread and rotate the wheel slowly. This measurement should not exceed 2.0 mm (0.08 in).
To measure the lateral run-out, position a dial indicator against the side of the tire. The reading of the indicator should be within 2.5 mm (0.10 in).

12–E. WHEEL BALANCING

The allowable unbalance is 360 cm-gr (5.0 in-oz), which is less than 20 gr (0.7 oz) at the rim.
Excessive wheel unbalance causes shimmy at high speed. If unbalance exceeds 360 cm-gr (5.0 in-oz) or when a tire is disassembled for repair, the tire and wheel assembly should be statically and dynamically balanced with a wheel balancer in accordance with the manufacturer's instructions.

12–F. FRONT WHEEL BEARING

12–F–1. Checking of Front Wheel Bearing

To check the front wheel bearings, raise the vehicle with a jack until the wheels clear the ground.
Grip the tire and shake it sideways. If considerable play is noticed, this indicates that the bearings are rough.



Fig. 12–4 Checking of front wheel bearing

When disassembled, check the wheel bearings for pits, brinell marks or any damage. If any of above conditions exists, replace with new bearings.

12–F–2. Removing of Front Wheel Bearing

1. Raise the vehicle until the front wheels are free of the ground.
2. Remove the wheel cap and wheel.
3. Remove the bolts attaching the caliper assembly and remove the caliper assembly from the brake disk.
4. Remove the grease cap, split pin and bearing adjusting nut.
5. Remove the thrust washer and outer bearing from the hub.
6. Slide the hub and brake disk assembly off the spindle.
7. Remove the oil seal and inner bearing from the wheel hub.
8. Drive out the bearing outer races, using a brass drift in the slots provided for this purpose.

12–F–3. Installing of Front Wheel Bearing

Install the wheel bearings in the reverse order of removing, with care taken on the following points:
1. Clean the bearings thoroughly and repack them with lithium grease. **Do not** overpack.
2. Fill the hub cavity with lithium grease.
3. Adjust the bearing preload as instructed in the following paragraph.

12–F–4. Adjusting of Front Wheel Bearing

The wheel bearing preload is adjusted by the adjusting nut. Adjusting procedure is as follows:
1. Check the bearing preload by hooking a spring scale in the wheel bolt hole on the hub.

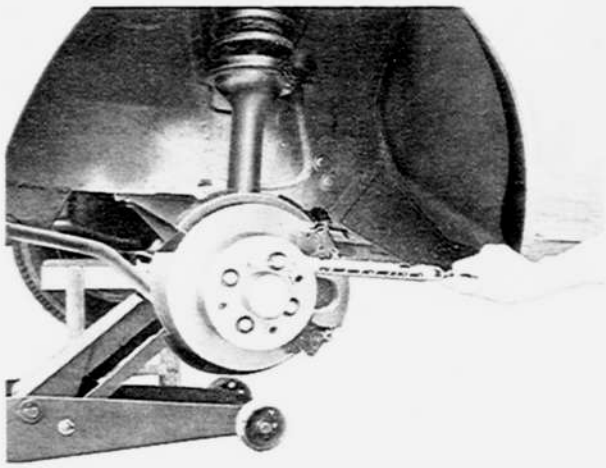

Fig. 12–5 Checking of bearing preload

2. Pull the spring scale squarely and take a reading on the scale when the hub starts to turn. This reading should be **0.4 to 0.9 kg (0.9 to 2.0 lb)**.
3. Tighten the adjusting nut until the correct reading is obtained.
4. Fit the set cover onto the adjusting nut and align the slots of the set cover with the hole of the spindle. Install the split pin.

12–G. REAR WHEEL BEARING

Servicing the rear wheel bearings is explained in Par. 9–A.

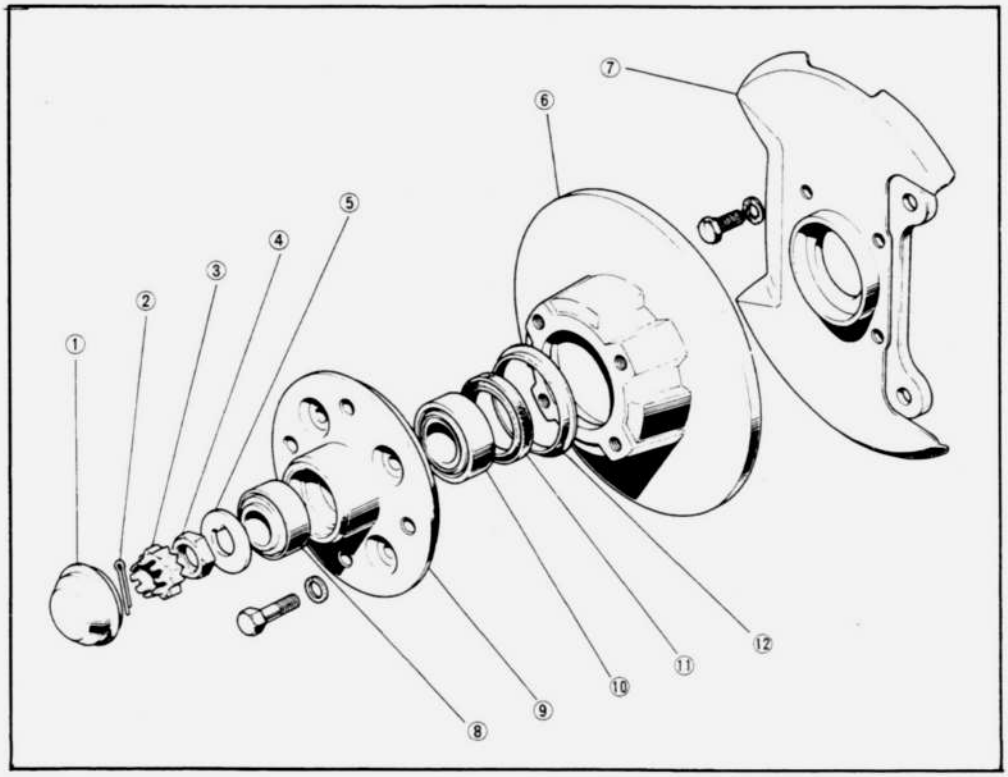

Fig. 12–6

Front wheel hub assembly

1. Grease cap
2. Split pin
3. Set cover
4. Adjusting nut
5. Washer
6. Disk plate
7. Dust plate
8. Outer bearing
9. Wheel hub
10. Inner bearing
11. Oil seal
12. Dust cover

SUSPENSION

13–A. FRONT SHOCK ABSORBER ..... 13 : 3
13–A–1. Removing of Front Shcok Absorber ..... 13 : 3
13–A–2. Disassembling of Front Shock Absorber ..... 13 : 4
13–A–3. Checking of Front Shock Absorber ..... 13 : 4
13–A–4. Assembling of Front Shock Absorber ..... 13 : 5
13–A–5. Installing of Front Shock Absorber ..... 13 : 7
13–B. SUSPENSION ARM ASSEMBLY ..... 13 : 7
13–B–1. Removing of Suspension Arm Assembly ..... 13 : 7
13–B–2. Checking of Suspension Arm ..... 13 : 7
13–B–3. Installing of Suspension Arm ..... 13 : 7
13–C. BALL JOINT ..... 13 : 7
13–C–1. Checking of Ball Joint ..... 13 : 7
13–C–2. Replacing of Ball Joint ..... 13 : 7
13–D. REAR SUSPENSION ..... 13 : 8
13–D–1. Removing of Rear Shock Absorber ..... 13 : 8
13–D–2. Disassembling of Rear Shock Absorber ..... 13 : 8
13–D–3. Checking of Rear Shock Absorber ..... 13 : 8
13–D–4. Assembling of Rear Shock Absorber ..... 13 : 9
13–D–5. Installing of Rear Shock Absorber ..... 13 : 9
13–E. FOUR LINKS ..... 13 : 9
13–E–1. Removing of Upper and Lower Links ..... 13 : 9
13–E–2. Checking of Upper and Lower Links ..... 13 : 9
13–E–3. Installing of Upper and lower Links ..... 13 : 9
13–F. LATERAL ROD ..... 13 : 10
13–F–1. Removing of Lateral Rod ..... 13 : 10
13–F–2. Checking of Lateral Rod ..... 13 : 10
13–F–3. Installing of Lateral Rod ..... 13 : 10

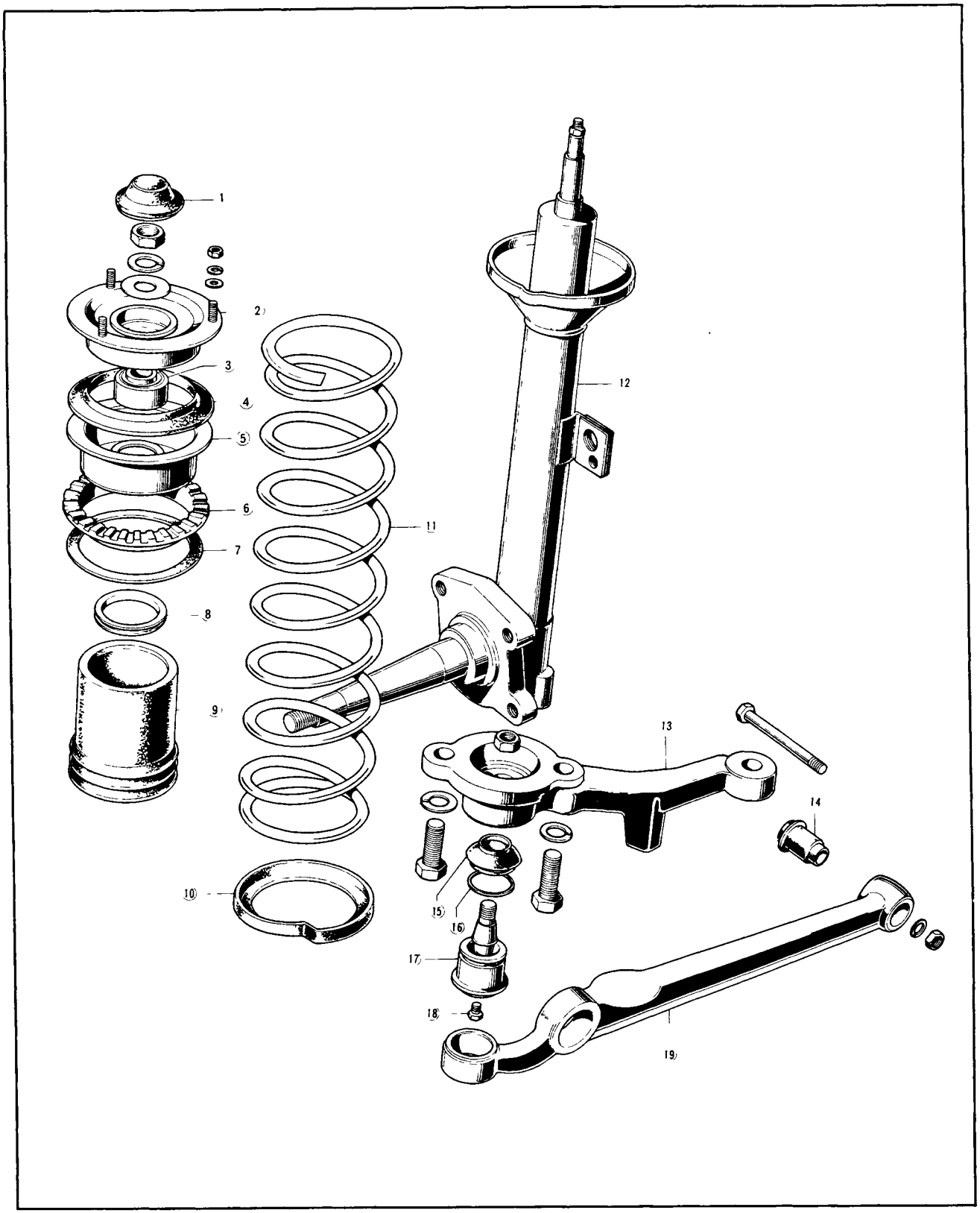

Fig. 13–1 Front suspension

1. Cap
2. Mounting rubber
3. Bearing
4. Seal
5. Spring seat upper
6. Rubber seat upper
7. Adjusting plate
8. Dust seal ring
9. Boot
10. Rubber seat lower
11. Coil spring
12. Front shock absorber assembly
13. Knuckle arm
14. Rubber bush
15. Dust seal
16. Set ring
17. Ball joint
18. Plug
19. Arm

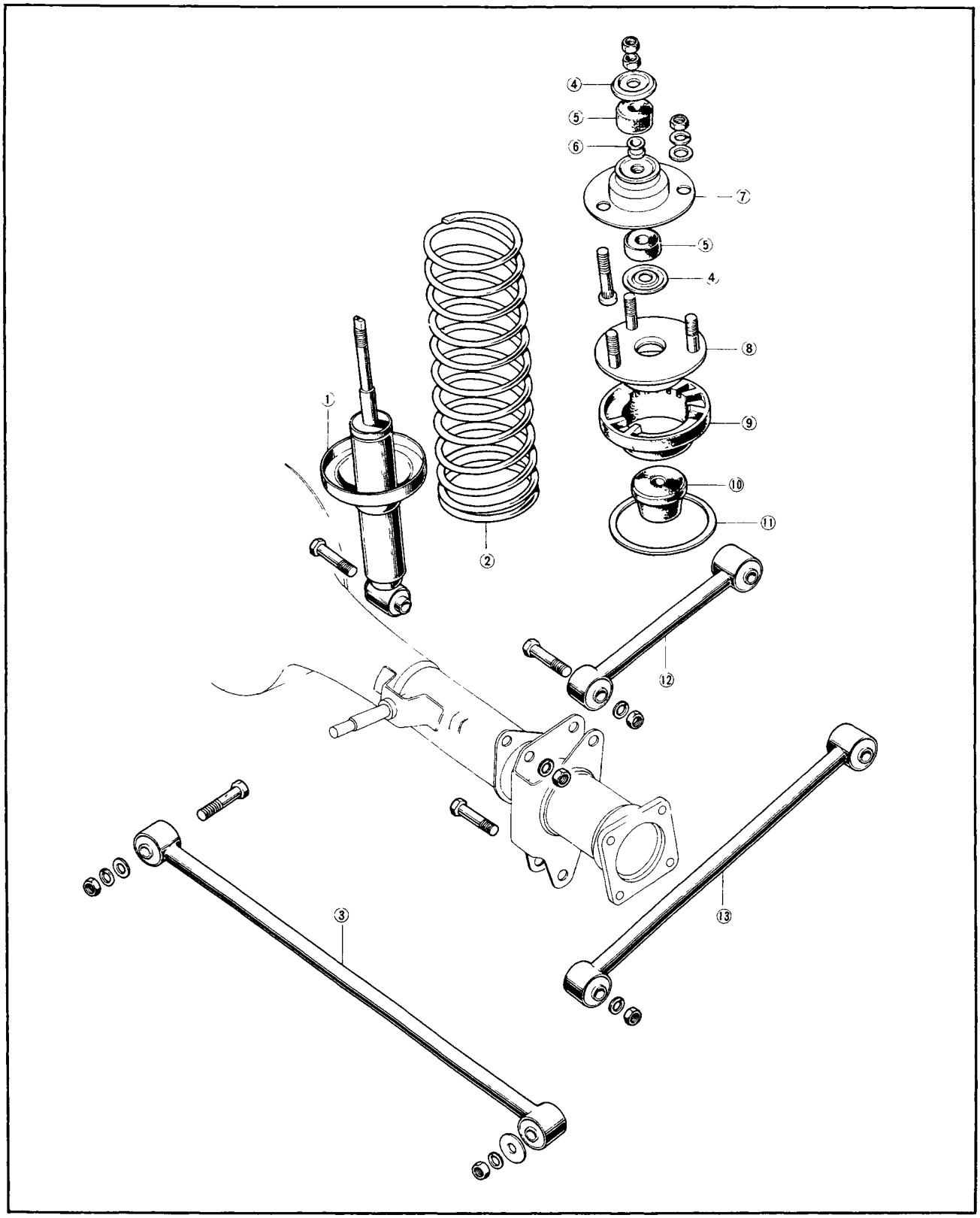

Fig. 13–2 Rear suspension

1. Rear shock absorber assembly
2. Coil spring
3. Lateral rod
4. Retainer
5. Rubber bush
6. Gromet
7. Set plate
8. Spring seat upper
9. Rubber seat
10. Bound stopper
11. Adjusting shim
12. Upper link
13. Lower link

SUSPENSION

The front suspension is of double action shock absorbers integrally made with each steering knuckle, coil springs, suspension arms and stabilizer bar.
This front suspension does not require lubrication, except the lower ball joints which are provided with plugs to attach grease fittings when required.
The toe-in can be adjusted, but the camber, caster and king pin inclination are set during production, and can not be altered.
The rear suspension is of a four-links lateral rod, coil springs and De Carbon type shock absorbers.

13–A. FRONT SHOCK ABSORBER

13–A–1. Removing of Front Shock Absorber

1. Jack up the vehicle until the front wheels are clear of the ground and remove the front wheel.
2. Remove the three nuts attaching the mounting rubber to the front fender apron.

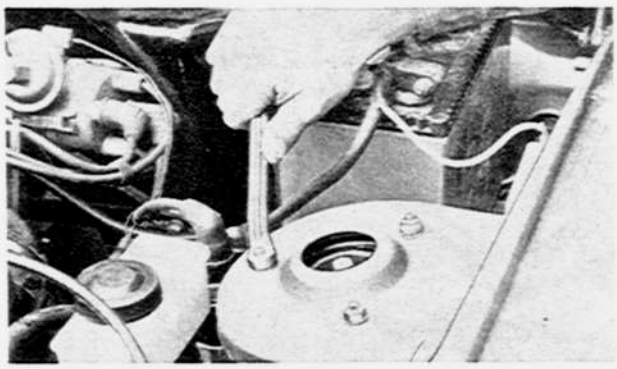

Fig. 13–3 Removing of three nuts

3. Disconnect the brake pipe from the reservoir tube. Plug the end of the brake pipe to prevent leakage of the fluid.
4. Remove the bolts attaching the caliper to the dust cover and remove the caliper.
5. Remove the hub grease cap, split pin, set cover and bearing adjusting nut from the steering knuckle spindle.
6. Remove the wheel hub and brake disk assembly from the steering knuckle spindle.
7. Remove the two bolts attaching the front shock absorber to the steering knuckle arm.

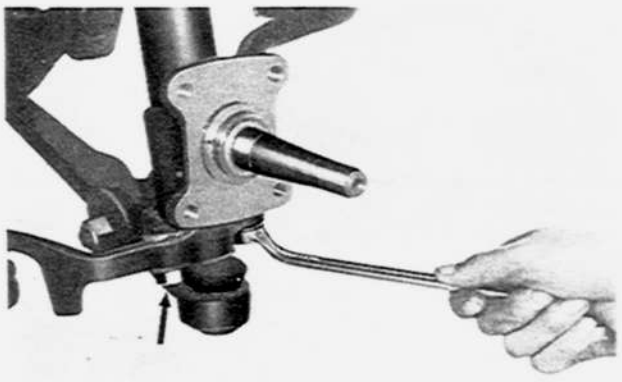

Fig. 13–4 Removing of two bolts

8. Remove the shock absorber.



Fig. 13–5 Removing of shock absorber

9. Hold the shock absorber in a vise.
10. Using the **coil spring holder** (49 0223 640A and 49 0223 641), compress the coil spring.
11. Hold the upper end of the piston rod with a spanner and then remove the lock nut.

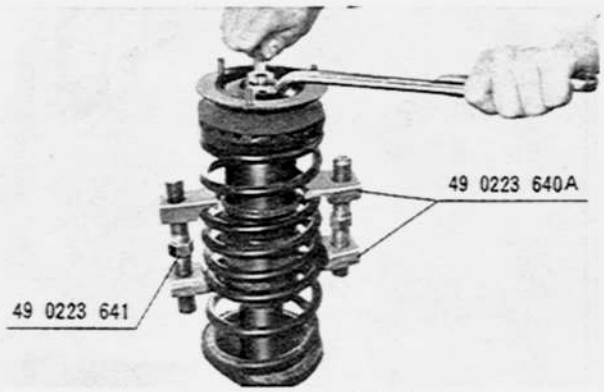

Fig. 13–6 Removing of lock nut

12. Remove the mounting rubber, bearing, rubber seal, spring seat upper, rubber seat upper, adjusting plate, seal ring, dust boot, coil spring and lower seat in that order.

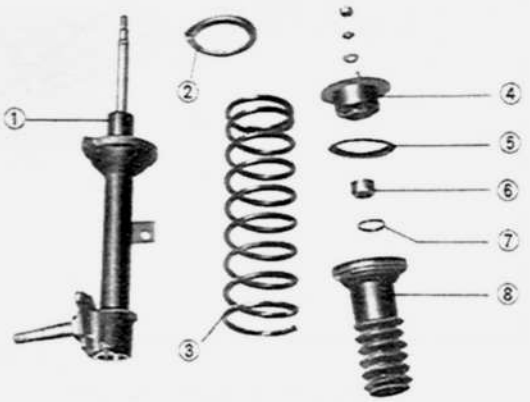

Fig. 13–7 Front shock absorber

1. Shock absorber
2. Rubber seat lower
3. Coil spring
4. Mounting rubber
5. Rubber seal
6. Bearing
7. Dust seal ring
8. Spring seat upper, rubber seat upper, adjusting plate and boot

13–A–2. Disassembling of Front Shock Absorber

1. Using the **cap nut wrench** (49 0259 700), remove the cap nut and seal from the reservoir tube.

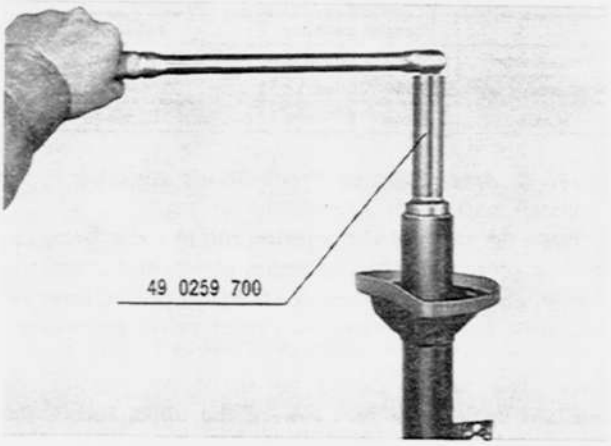

Fig. 13–8 Removing of cap nut

2. Remove the "O" ring installed on the piston rod guide with a suitable tool.

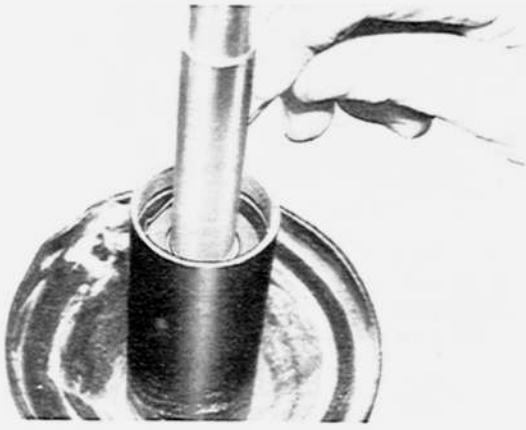

Fig. 13–9 Removing of "O" ring

3. Pull out the piston rod assembly from the pressure tube.
4. Remove the piston rod guide, back up ring, stopper and stopper guide from the piston rod.
5. Hold the upper end of the piston rod in a vise, being careful to protect it with aluminum plates, and remove the piston nut.

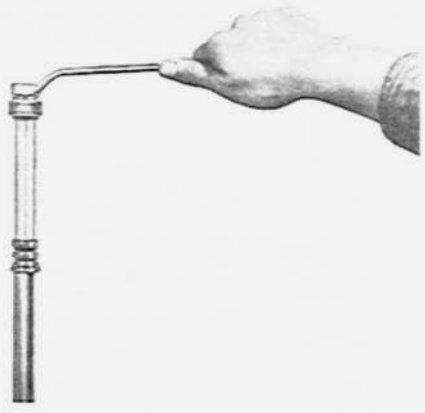

Fig. 13–10 Removing of piston nut

6. Remove the washer, centering valve, relief valves, piston, check valves, check valve springs and the washer from the piston rod in that order.
7. Remove the piston ring from the piston.

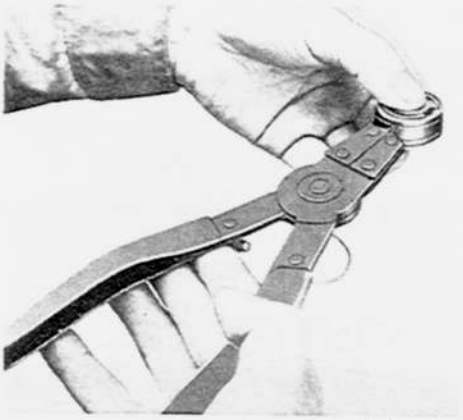

Fig. 13–11 Removing of piston ring

8. Remove the pressure tube from the reservior tube.
9. Remove the base valve assembly from the pressure tube.
10. Remove the bolt and nut of the base valve assembly, and remove the valve seat, relief valves, base valve casing and relief valves.

13–A–3. Checking of Front Shock Absorber

1. To test the shock absorber, hold the shock absorber in an upright position and work the piston rod up and down in its full length of travel, four or five times. If a strong resistance is felt due to hydraulic pressure, the shock absorber is functioning properly. If no resistance is felt or there is a sudden free movement in travel, the shock absorber should be repaired.
If excessive amount of fluid is evident on the exterior of the shock absorber, the shock absorber should be repaired.
2. Check the coil spring for signs of fatigue, cracks or any damage.
3. Check the mounting rubber for weakness at the rubber cushion, roughness or damage at the bearing, and damage of the bolts.
4. Check the reservior tube for fluid leak or deformation and check the steering knuckle for crack.
5. Check the piston rod for wear. The piston rod

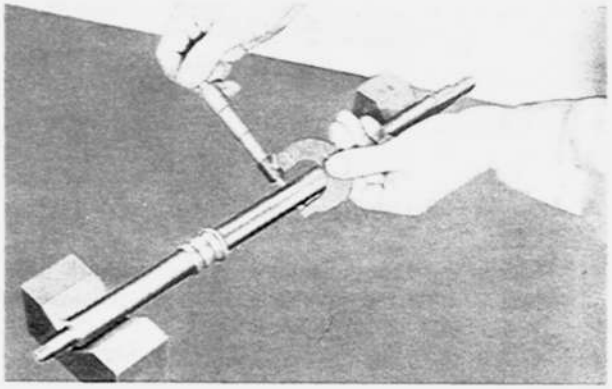

Fig. 13–12 Checking of piston rod diameter

diameter should be **more than 19.94 mm (0.785 in).** The standard diameter is 20.0 mm (0.788 in).
6. Check the run-out of the piston rod by supporting both ends of the piston rod on V blocks and applying a dial indicator. The permissible run-out is **under 0.1 mm (0.004 in).**

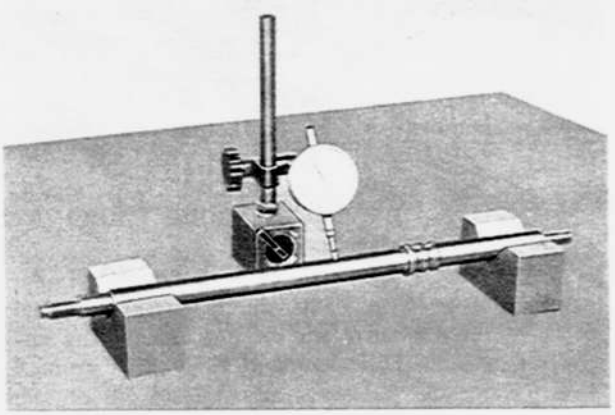

Fig. 13–13 Checking of run-out

7. Check the contact surface of the piston with the check valve and the relief valve for wear or damage. If excessive wear or damages are found, replace with a new one.
8. Check the piston ring for wear or damage.
9. Check the relief valve and the check valve for wear, damages and flatness.

	Thickness x number	Flatness
Relief valve	0.20 mm (0.008 in) x 5	Less than 0.02 mm (0.0008 in)
Centering valve	0.10 mm (0.004 in) x 1	
Check valve	0.25 mm (0.010 in) x 1	Less than 0.02 mm (0.0008 in)

10. Check the check valve spring for signs of fatigue or damages.
11. Check the run-out of the pressure tube.
The permissible run-out is **under 0.2 mm (0.008 in).**

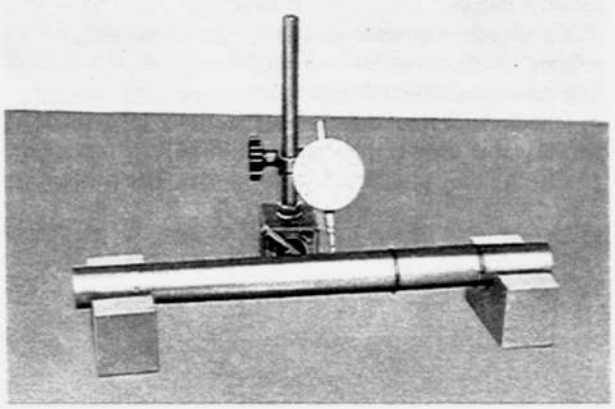

Fig. 13–14 Checking of run-out

12. Check the inner diameter of the pressure tube.
The inner diameter of the tube should be **less than 30.07 mm (1.184 in).**
13. Check the cap nut and seal for damaged threads, and check the lip of the oil seal for wear or damages. If necessary, replace with a new one.
14. Check the rod guide for wear or damage.
15. Check the base valve casing, tension valve compression valve and washer for wear or damages.

	Thickness x number	Flatness
Tension valve	0.10 mm (0.004 in) x 4	
Compression valve	0.20 mm (0.008 in) x 5	
Washer	0.50 mm (0.020 in) x 1	Less than 0.02 mm (0.0008 in)

13–A–4. Assembling of Front Shock Absorber

1. Install the piston ring to the piston.
2. Place the top end of the piston rod in a vise, being careful to protect it with aluminum plates, and install the washer, check valve spring, check valve, piston, three relief valves, centering valve, two relief valves and washer.

Note: The piston should be fitted by making the constant orifice side face toward the upper end of the piston rod.

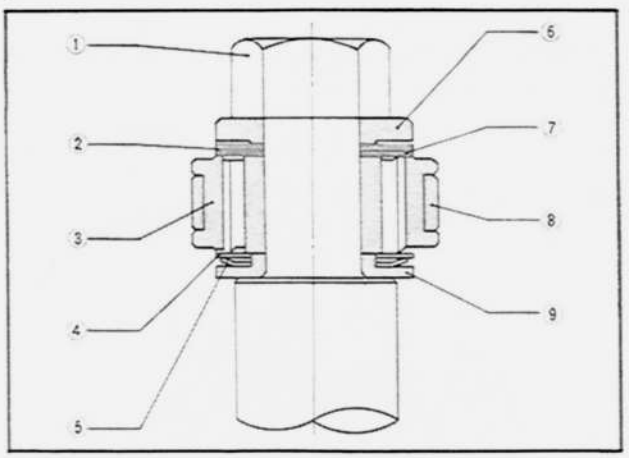

Fig. 13–15 Piston assembly

1. Nut
2. Relief valve
3. Piston
4. Check valve
5. Check valve spring
6. Washer
7. Centering valve
8. Piston ring
9. Washer

3. Tighten the piston nut to **1.5 m-kg (10.0 ft-lb),** ensuring that the check valve and check valve spring are properly positione.

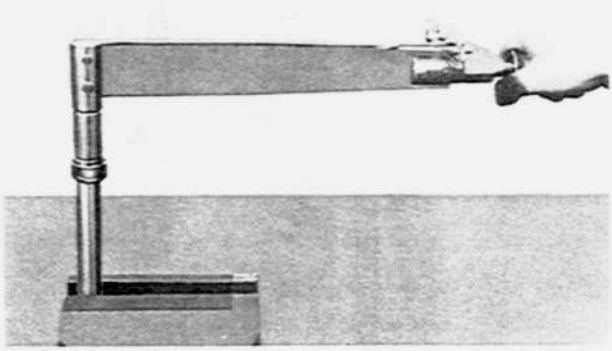

Fig. 13–16 Tightening of piston nut

4. Punch two positions of the threads between the piston nut and the piston rod with a punch to prevent loosening of the piston nut as shown in Fig. 13–17.



Fig. 13–17 Applying of punch

5. Fit the four tension valves onto the bolt and install it into the base valve casing.
6. Fit the five compression valves, washer and nut to the base valve casing and tighten the nut to **0.15 m-kg (1.0 ft-lb)**.

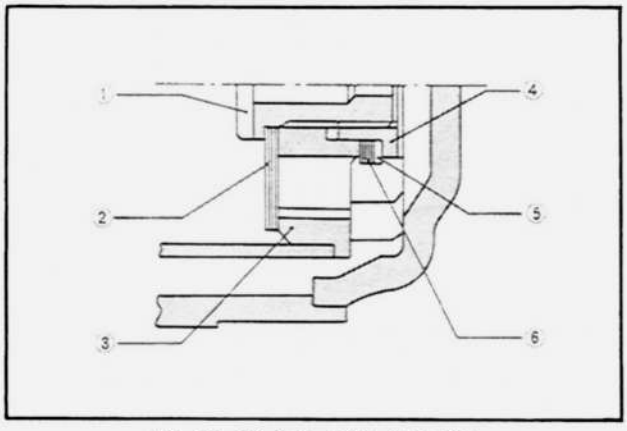

Fig. 13–18 Base valve assembly

1. Bolt
2. Relief valve
3. Base valve casing
4. Nut
5. Valve seat
6. Relief valve

7. After tightening the nut, punch the center of the bolt with a punch.
8. Install the stopper guide, stopper, back up ring and the piston rod guide into the pressure tube.
9. Install the two oil stop rings onto the bottom side of the pressure tube, as shown in Fig. 13–19.
10. Insert the piston rod assembly into the pressure tube from the bottom side and install the base valve assembly into the bottom of the pressure tube.

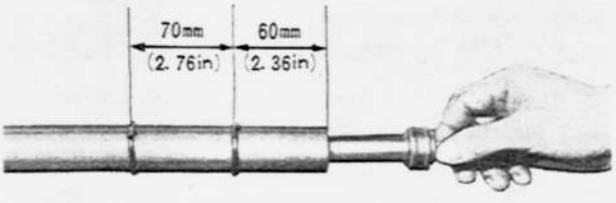

Fig. 13–19 Installing of oil stop rings

11. Insert the pressure tube assembly into the reservior tube.
12. Fill the reservior tube with shock absorber fluid. The capacity of fluid should be exactly **245 cc (0.52 U.S. pint, 0.43 Imp. pint)**.

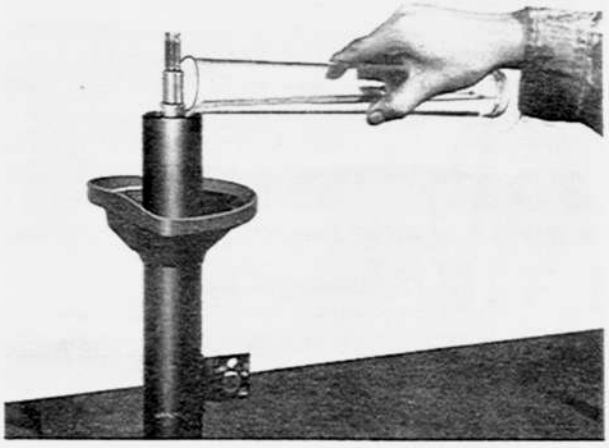

Fig. 13–20 Filling of shock absorber fluid

13. Apply grease to the lip of the oil seal. Install the "O" ring and insert the cap nut slowly onto the piston rod.
14. Tighten the cap nut temporarily, ensuring that the piston rod is extended to its maximum length, with the **hook wrench** (49 0259 702).

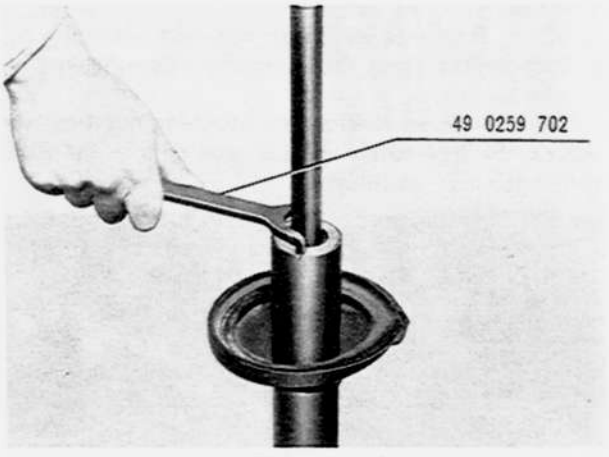

Fig. 13–21 Tightening of cap nut

Tighten the cap nut to a torque of **5.5 m-kg (40 ft-**

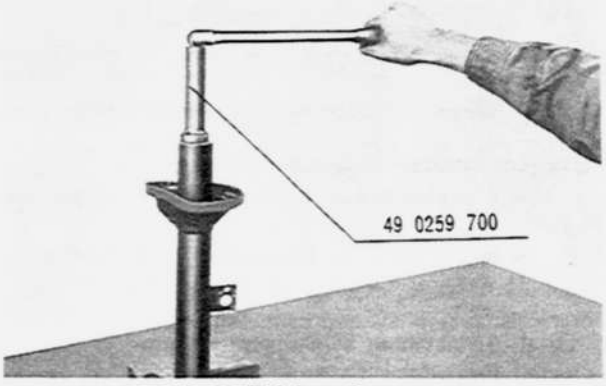

Fig. 13–22 Tighting of cap nut

lb), with the **cap nut wrench** (49 0259 700), after the piston is lowered.

Note: The cap nut is tightened in this condition to raise the air pressure remaining within the reservoir tube.

13–A–5. Installing of Front Shock Absorber

Install the front shock absorber in the reverse order of removing, noting the following points.

1. Adjust the vehicle height by using the proper combination of the coil spring and adjusting plate.

The coil springs are available in three sizes according to the strength of the springs.

Coil spring identification	
Mark	Load required to reduce coil spring length from 352 mm (13.86 in) to 194 mm (7.64 in)
1 dot	281 ~ 289 kg (619 ~ 637 lb)
2 dots	289 ~ 296 kg (637 ~ 653 lb)
3 dots	296 ~ 304 kg (653 ~ 670 lb)

If possible, use springs with the same identification mark on both sides.

2. When installing, use vegetable grease for the interior of the rubber bushes.

13–B. SUSPENSION ARM ASSEMBLY

13–B–1. Removing of Suspension Arm Assembly

1. Remove the front shock absorber, referring to Par. 13–A–1.
2. Remove the suspension arm attaching nut from the rod on the front cross member, and remove the front suspension arm assembly.

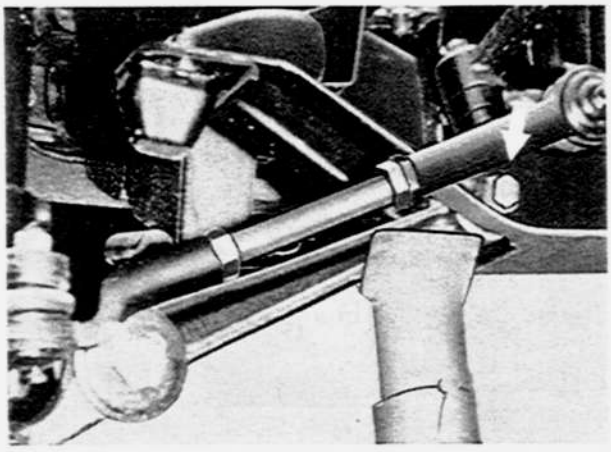

Fig. 13–23 Removing of suspension arm

13–B–2. Checking of Suspension Arm

1. Check the lower arm and knuckle arm for any crack or damage.
2. Check the rubber bushes for weakness, wear or damage. If necessary, replace with new ones.

13–B–3. Installing of Suspension Arm

Install the suspension arm, referring to Par. 13–B–1 and 13–A–1.

13–C. BALL JOINT

The ball joints for the suspension arm are made **maintenance free for 48,000 km (30,000 miles)** and therefore, require no greasing during this period.

When greaseing becomes necessary, supply **Molybdenum Disulfide Lithium Grease** to the ball joints, proceeding as follows:

1. Remove the plug from the ball joint and temporarily install the grease nipple.
2. Feed **Molybdenum Disulfide Lithium Grease** through the nipple until the grease begins to flow freely from the dust seal or the dust seal begins to ballon.
3. Remove the grease nipple and reinstall the plug.

Note: Never use multipurpose grease or chassis grease. If improper grease is used, this will deteriorate the durability of the mechanism.

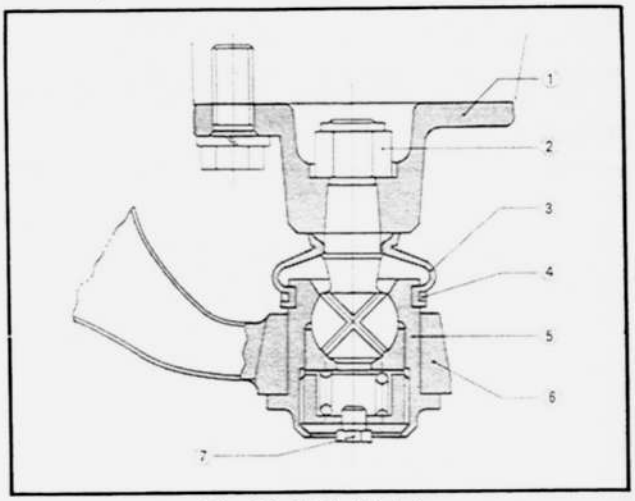

Fig. 13–24 Ball joint

1. Knuckle arm
2. Nut
3. Dust seal
4. Set ring
5. Ball joint assembly
6. Arm
7. Plug

13–C–1. Checking of Ball Joint

1. Check the dust seal for wear, flaw or any damage. If the dust seal is defective, this will allow entry of water and dirt, resulting in ball joint wear.
2. Check the revolving torque of the ball stud. To check, hook the spring scale in the hole of the knuckle arm for connecting the tie rod and pull the spring scale until the ball stud starts to turn. The reading of the spring scale should be **6 to 11 kg (13.2 to 22.3 lb).** If it is less than 6 kg (13.2 lb), replace the ball joint in its assembled form.

13–C–2. Replacing of Ball Joint

If it becomes necessary to replace the ball joint, proceed as follows:

1. Remove the suspension arm assembly as described in Par. 13–B–1.
2. Remove the ball joint nut and remove the ball joint and suspension arm from the knuckle arm.
3. Remove the set ring and the dust boot from the ball joint.
4. Using the **ball joint remover and installer** (49 0259 860), press the ball joint out of the suspension arm.

Note: Before pressing out the ball joint, clean the ball joint and suspension arm so as not to damage the mounting bore of the suspension arm.

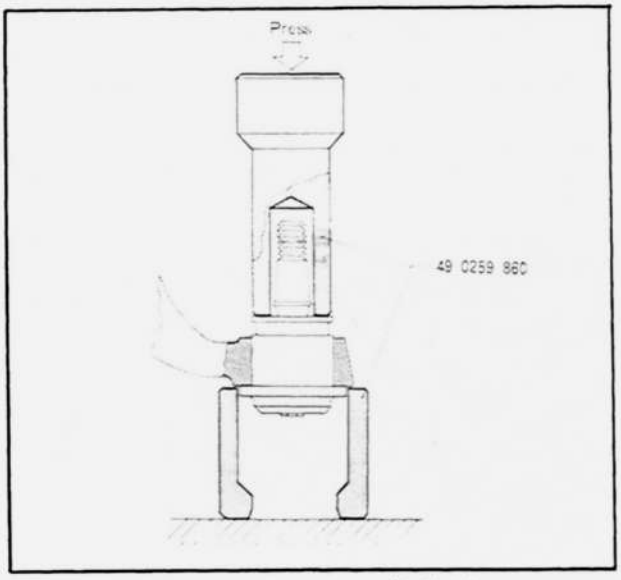

Fig. 13–25 Removing of ball joint

5. Clean the mounting bore of the suspension arm and apply kerosene.
6. Press fit the ball joint to the suspension arm with the **ball joint remover and installer** (49 0259 860).

Note: If the pressure necessary to press in the ball joint is less than 1,500 kg (3,300 lb), the suspension arm should be replaced.

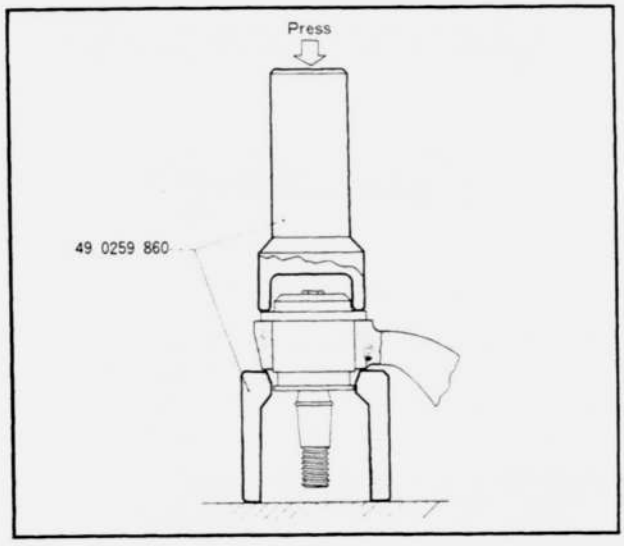

Fig. 13–26 Installing of ball joint

7. Install the ball joint and suspension arm to the knuckle arm and tighten the nut to **6.5 m-kg (50 ft-lb).**

13–D. REAR SUSPENSION

13–D–1. Removing of Rear Shock Absorber

1. Remove the nuts attaching the upper end of the shock absorber from the luggage compartment.
2. Remove the nut from the lower end of the shock absorber.
3. Place the jack under the rear axle housing and raise the vehicle.
Then, place a stand under the frame side rail.
4. Gradually lower the jack under the rear axle housing and remove the rear shock absorber.

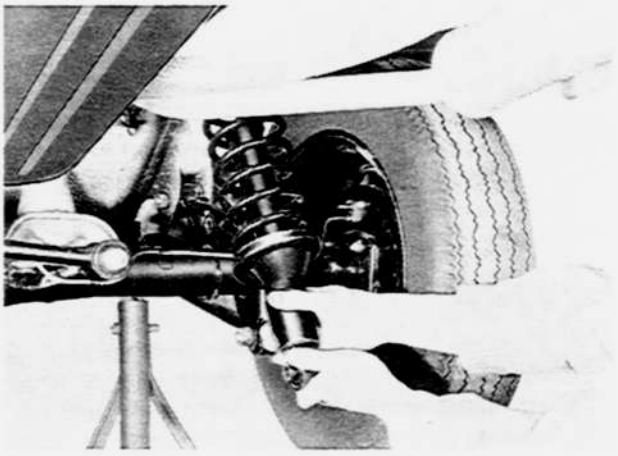

Fig. 13–27 Removing of rear shock absorber

13–D–2. Disassembling of Rear Shock Absorber

1. Apply the identification mark on the rear shock absorber before it is disassembled.
2. Hold the shock absorber in a vise.
3. Using the **coil spring holder** (49 0223 640A and 49 0223 641), compress the coil spring.
4. Remove the lock nuts.

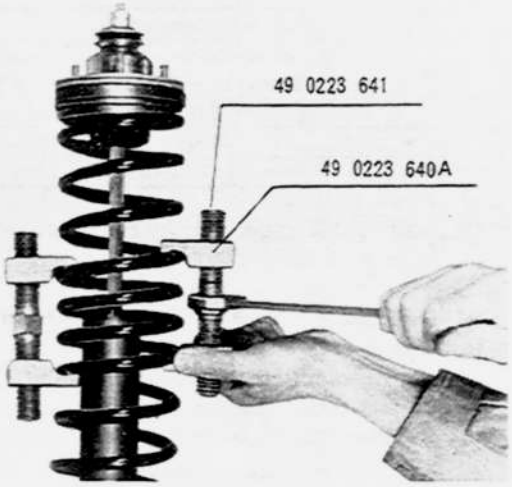

Fig. 13–28 Compressing of coil spring

13–D–3. Checking of Rear Shock Absorber

1. If excessive amount of oil is evident on the exterior of the shock absorber, the shock absorber should be replaced with a new one.

Note: The rear shock absorber should not be disassembled as it contains a high compression gas.
If it is found to be defective, replace it as an assembly.

2. Check the coil spring for signs of fatigue, cracks or any damage.

3. Check the rubber seat, rubber bush for weakness at the rubber cushion.
4. Check the set plate, spring seat for crack, wear and damage. If necessary, replace with a new one.

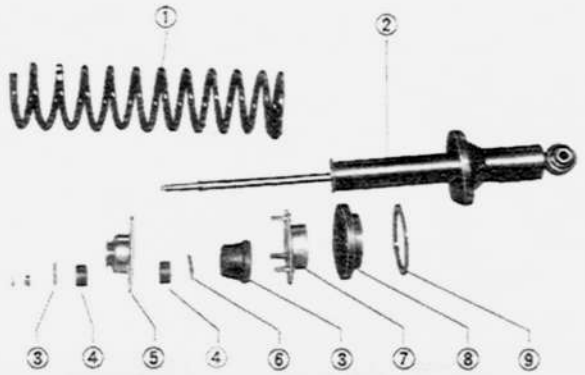

Fig. 13–29 Rear shock absorber assembly

1. Coil spring
2. Rear shock absorber
3. Retainer
4. Rubber bush
5. Set plate
6. Rubber stopper
7. Spring seat upper
8. Rubber seat
9. Adjusting shim

13–D–4. Assembling of Rear Shock Absorber

Assemble the rear shock absorber in the reverse order of disassembling, noting the following point.
1. Adjust the vehicle height by using the proper combination of the coil spring and adjusting plate.
The coil springs are available in three sizes according to the strength of the springs.

Coil spring identification	
Mark	Load required to reduce coil spring length from 371 mm (14.61 in) to 247 mm (9.72 in)
1 dot	263.4 ~ 271 kg (581 ~ 597 lb)
2 dots	271 ~ 279 kg (597 ~ 561 lb)
3 dots	279 ~ 286.6 kg (615 ~ 632 lb)

If possible, use springs with the same identification mark on both sides.

13–D–5. Installing of Rear Shock Absorber

Install the rear shock absorber in the reverse order of removing, noting the following points.
1. The rear shock absorber should be installed by making the protector face toward the front of the vehicle.



Fig. 13–30 Lower of rear shock absorber

2. Tighten the rear shock absorber attaching nut and bolt to a torque **11 m-kg (80 ft-lb).**

13–E. FOUR LINKS

13–E–1. Removing of Upper and Lower Link

1. Remove the lower link attaching bolts and nuts and remove the lower link.
2. Remove the upper link attaching bolt and nuts and remove the upper link.

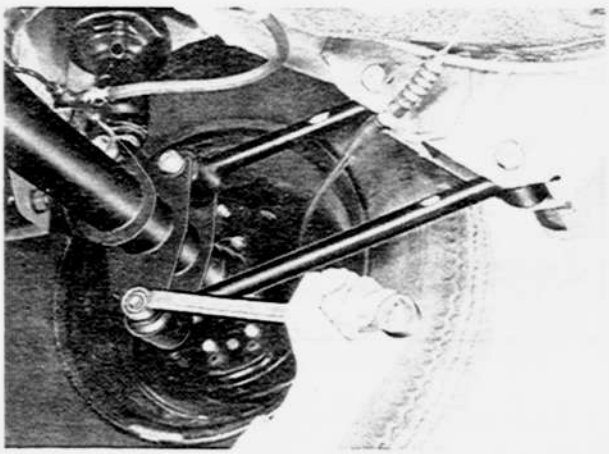

Fig. 13–31 Four links

13–E–2. Checking of Upper and Lower Links

1. Check the links for crack or damage.
2. Check the rubber bushes for weakness.

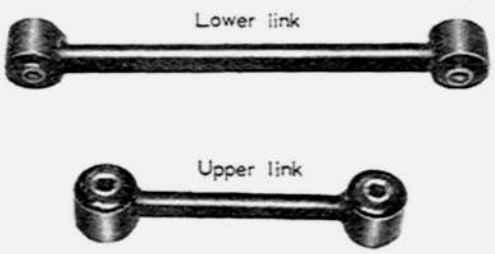

Fig. 13–32 Upper and lower links

13–E–3. Installing of Upper and Lower Link

Install the upper and lower link in the reverse order of removing, noting the following points.
1. When installing the upper and lower link on body

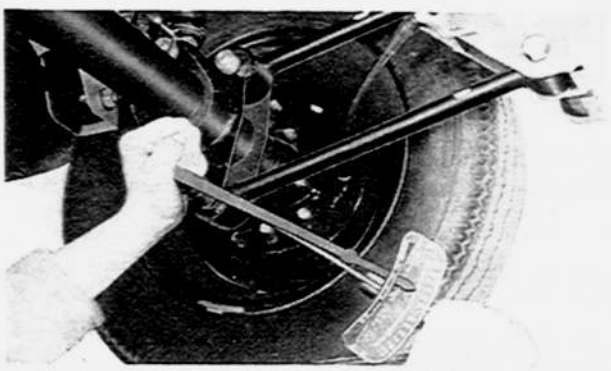

Fig. 13–33 Tightening of links

and rear axle housing the **white mark** should be placed at the front of the vehicle.
2. When installing the upper and lower links, the torque should be **11 m-kg (80 ft-lb)** in unloaded condition. If they are tightened in rebounding condition, the height of the vehicle will get higher or durability of the rubber bushes will deteriorate.

13–F. LATERAL ROD

13–F–1. Removing of Lateral Rod
1. Remove the lateral rod attaching nuts to the rear axle housing.
2. Remove the lateral rod attaching nut and bolt to the body and remove the lateral rod.

13–F–2. Checking of Lateral Rod
Referring to Par. 13–E–2, check the lateral rod.

13–F–3. Installing of Lateral Rod
Install the lateral rod in the reverse order of removing, noting the following point.
1. When installing the lateral rod, the torque should be **11 m-kg (80 ft-lb)** in unloaded condition. If they are tightened in rebounding condition, the height of the vehicle will get higher or durability of the rubber bushes will deteriorate.

SPECIAL TOOLS

49 0223 640A	Coil spring holder
49 0223 641	Screw (For coil spring holder)
49 0259 700	Cap nut wrench
49 0259 702	Hook wrench
49 0259 860	Ball joint remover and installer

BODY

14–A. WINDSHIELD GLASS ..... 14 : 1
14–A–1. Removing of Windshield Glass ..... 14 : 1
14–A–2. Installing of Windshield Glass ..... 14 : 2
14–B. REAR WINDOW ..... 14 : 4
14–C. FRONT DOOR ..... 14 : 5
14–C–1. Disassembling of Front Door ..... 14 : 5
14–C–2. Assembling of Front Door ..... 14 : 5
14–C–3. Adjusting of Front Door ..... 14 : 6
14–D. REAR DOOR ..... 14 : 6
14–D–1. Disassembling of Rear Door ..... 14 : 6
14–D–2. Assembling of Rear Door ..... 14 : 6
14–E. TOP CEILING ..... 14 : 7
14–E–1. Removing of Top Ceiling ..... 14 : 7
14–E–2. Installing of Top Ceiling ..... 14 : 7
14–F. REAR SIDE WINDOW (COUPÉ) ..... 14 : 7
14–F–1. Removing of Rear Side Window ..... 14 : 7
14–F–2. Installing of Rear Side Window ..... 14 : 8

14

14–A. WINDSHIELD GLASS

Windshield glass of the type which is bonded on is installed: the wind shield glass is bonded to the body in order to reduce the noise level of the wind blowing against the windshield glass during driving, obtain tight sealing, enhance the body strength and increase the safety at the time of crash.

Fig. 14–1 shows the structure.
The windshield glass is bonded to the body with a sealant, and the dam prevents the sealant from being forced towards the interior of the vehicle when the window glass is being installed.
The windshield glass is positioned to the body with 3 to 4 spacers, and the mould is fitted into the clips attached to the body.

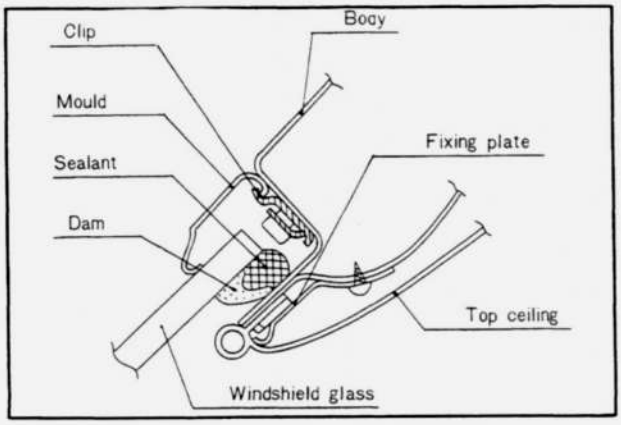

Fig. 14–1 Structure of windshield

Use the following **window tool set** (49 0305 870) as shown in Fig. 14–2 to remove and install the windshield glass.

14–A–1. Removing of Windshield Glass

1. Remove the interior mirror and also the right and left front pillar trims from the interior of the vehicle.
2. Remove the wiper arms.
3. Using the **mould remover** (49 0305 871), remove the mould in the manner shown in Fig. 14–3.
4. Remove the clips.

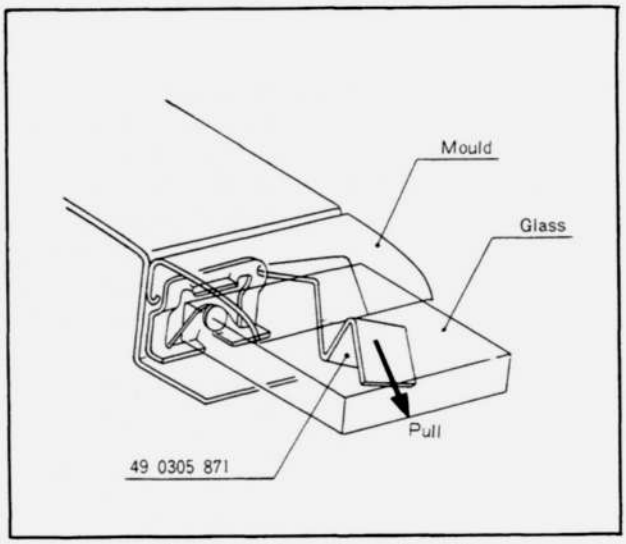

Fig. 14–3 Removing of mould

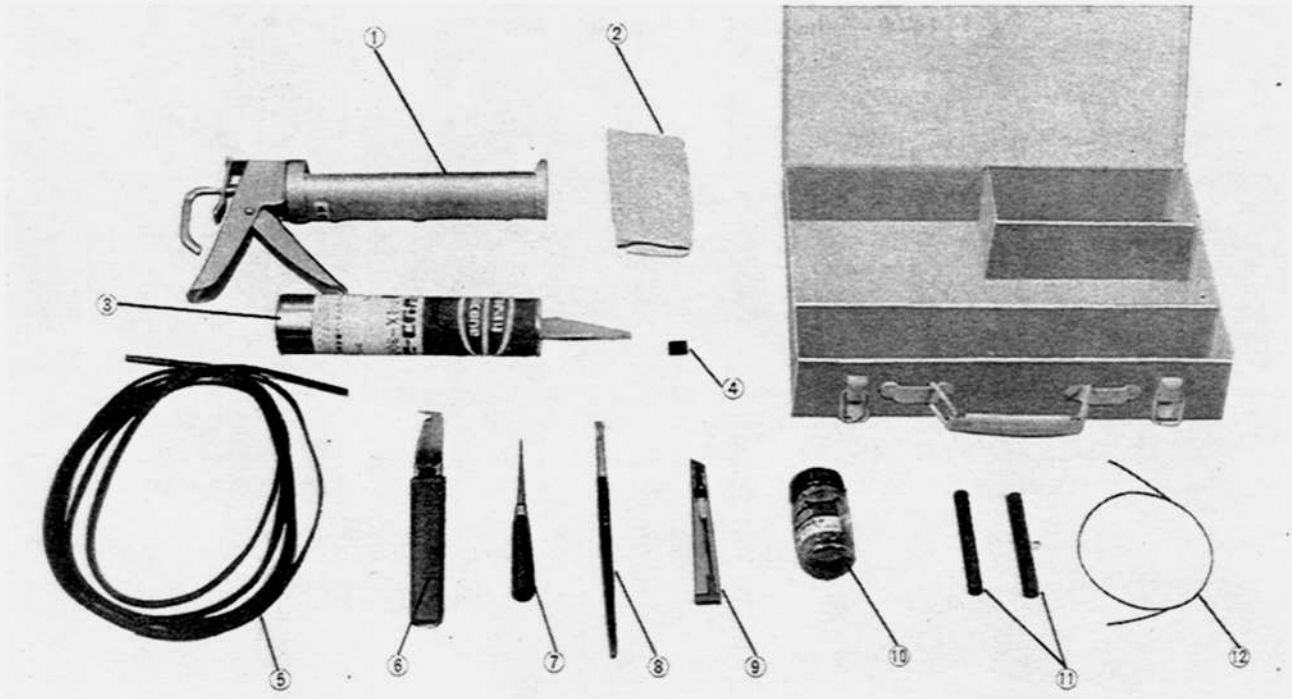

Fig. 14–2 Window tool set

1. Sealant gun (49 0305 872)
2. Guaze
3. Sealant (Part No. 0305 77 739)
4. Spacer
5. Dam
6. Mould remover (49 0305 871)
7. Needle (eyeleteer)
8. Brush
9. Cutting knife
10. Primer (Part No. 0305 77 738)
11. Bar
12. Piano wire (0.5 mm diameter)

5. Pierce the windlow sealant with a needle (eyeleteer). Pass a piano wire of approximately 500 mm (20 in) long, through the hole, and wrap each end of the wire around a small bar.



Fig. 14–4 Piercing of piano wire

6. Cut the sealant off along the entire circumference of the glass by two persons (one inside the vehicle and the other outside it) each pulling one of the bars as if they were using a saw.

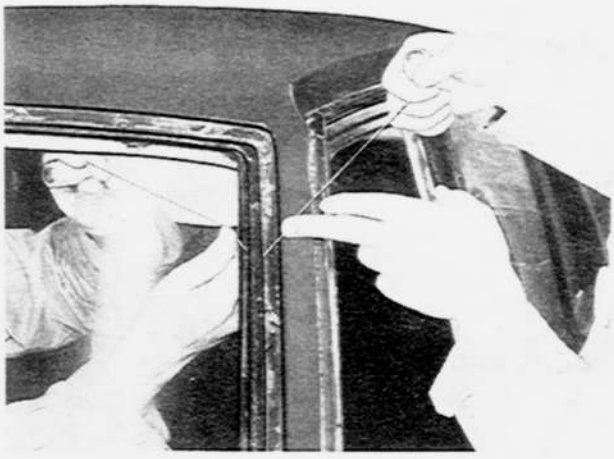

Fig. 14–5 Cutting of sealant

Note:
(a) When cutting the sealant with a piano wire, cut it along the border between the window glass and the sealant.
(b) The piano wire is liable to snap if only a certain section is constantly used and becomes hot.
Therefore, when cutting the sealant ensure that the piano wire is kept cool (it should be cooled slowly) or the section of the wire being used is constantly rotated.
(c) When cutting the sealant off, pay special attention so that the top ceiling, painted surfaces, etc. are not damaged.

7. Remove the window glass from the body. The removal of the window glass shown in Fig. 14–6 should be performed by two persons.

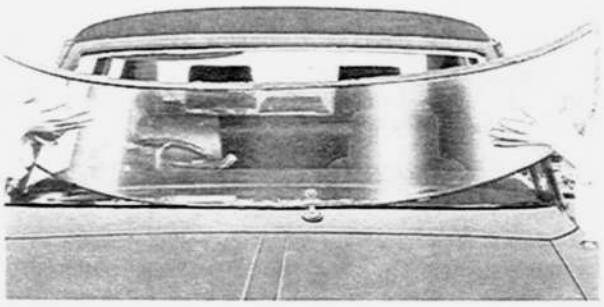

Fig. 14–6 Removing of windshield glass

14–A–2. Installing of Windshield Glass
1. Using a cutting knife, cut the sealant off smoothly so that approximately 1 to 2 mm (0.04 to 0.08 in) of sealant remains along the entire circumference of the windshield framework.



Fig. 14–7 Cutting of sealant

If the thickness of sealant left along the circumference of the window framework is too small, first, clean with a solvent to remove any grease.
Then, apply primer with a brush and leave it to dry for 20 to 30 minutes.
Then, apply sealant until a thickness of 1 to 2 mm (0.04 to 0.08 in) is obtained.

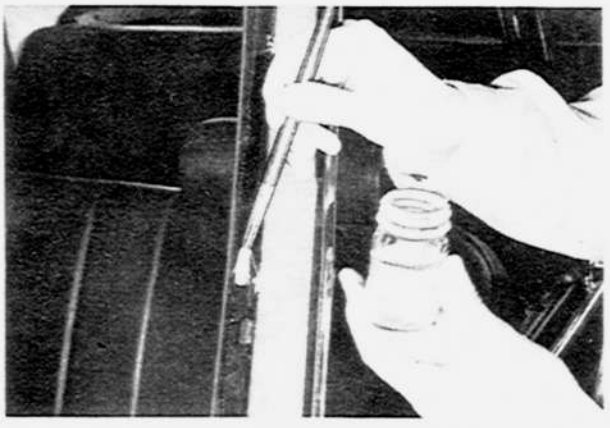

Fig. 14–8 Applying of primer

2. Using a solvent, wipe the entire edges of the window glass to a width of approximately 50 mm (2.0 in) from the edge and also the entire circumference of the body on which the glass is to be bonded to remove any grease.
Then, bond the dam with bonding agent parallel to the edge of the window glass at a position 7 mm (0.028 in) away from it. Bond the dam in the direction shown in Fig. 14–9.

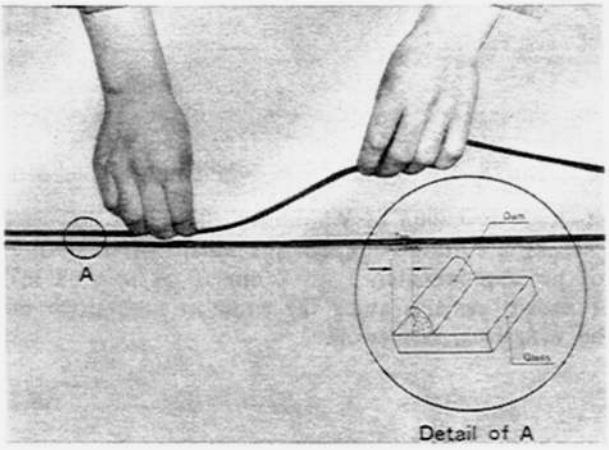

Fig. 14–9 Bonding of dam

Note: Securely bond the dam so that it is straight and will not come apart.

3. Apply primer on the entire circumferences of the bonding areas of the window glass and the body with gauze (for the former) and a brush (for the latter), and leave them to dry for 20 to 30 minutes. (See Fig. 14–8)

Note:
(a) Apply as thin a sealant coating as possible to the window glass.

(b) Don't allow any dust, water, oil, etc. to get on the coating surface and also don't touch the coating with hand.

(c) If the window glass which was removed is to be reused, remove the sealant adhering to the glass to some extent with a cutting knife.
Then, remove the remaining sealant with a cleaning solvent and wipe it clean with gauze.

4. Bond each spacer to the body with bonding agent. Fig. 14–10 shows the directions and positions of each spacer.
There are two kinds of spacer, indentified by color as shown below.

Part No.	Name of Part	Color
0305 70 448	Spacer	Gray
0305 70 447A	Spacer	Black

Although a spacer is bonded on both the right and the left hand sides of the windshield glass in Fig. 14–10, a spacer on only one side of the glass should be sufficient.

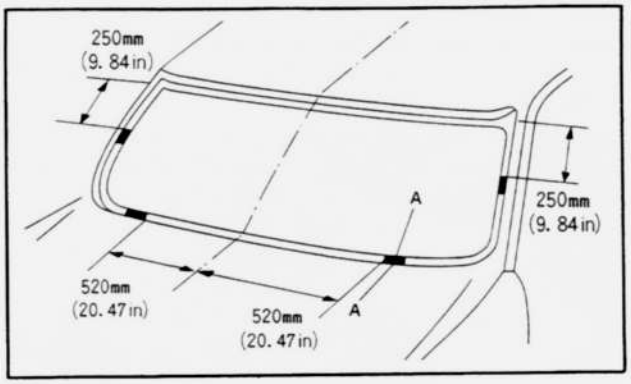

Fig. 14–10 Positions of spacers

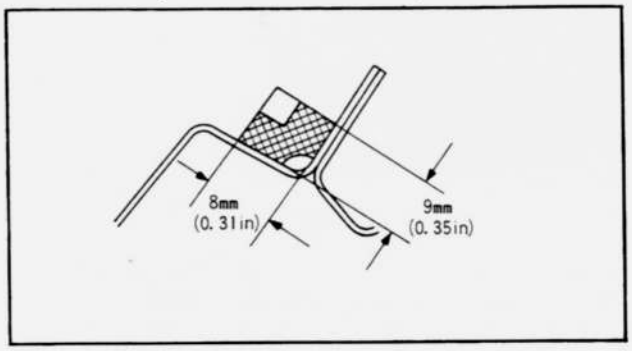

Fig. 14–11 A–A section of Fig. 14–10

5. Insert each clip to the clip insertion portion in the manner shown in Fig. 14–12.
If any clip happens to be loose after it has been inserted, replace with a new clip.

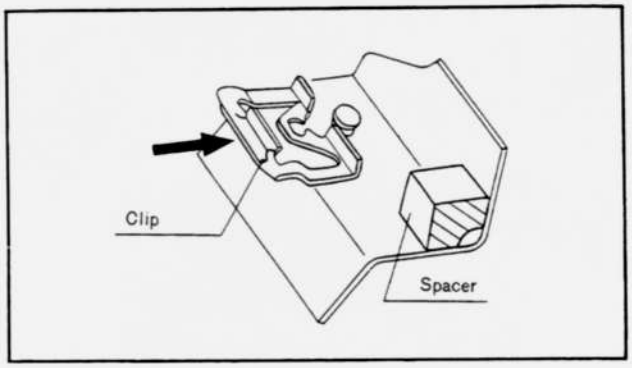

Fig. 14–12 Inserting of clip

6. After the primer is dry, apply the sealant so that

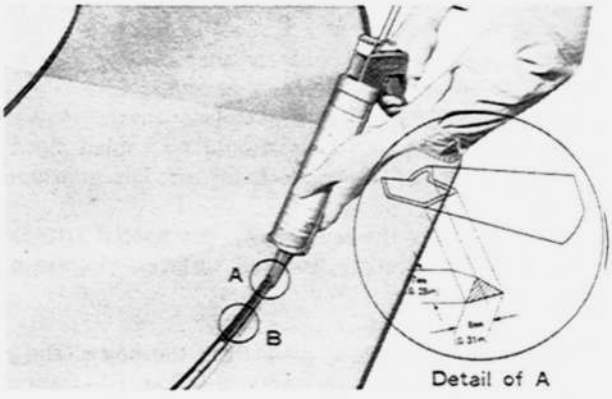

Fig. 14–13 Applying of sealant

it is 8 mm (0.31 in) high along the entire circumference of the window glass with the **sealant gun** (49 0305 872) fitted with a sealant cartridge (see Fig. 14–13). If the sealant comes apart from the painted surface on the body side, use the remainder of the sealant for rectification.

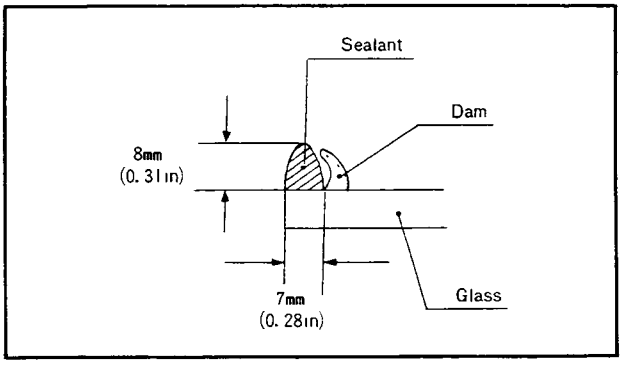

Fig. 14–14 Detail B of Fig. 14–13

Note:
(a) Shape the nozzle of the sealant cartridge with a cutting knife as shown in Fig. 14–13.
Then, break the film of the sealant with a piece of wire and it is ready for application.
(b) If the application is unsatisfactory, rectify it with a wooden spatula.
(c) If any sealant adheres to your hand, it should be removed immediately.

7. Install the window glass to the body. Adjust the step between the window glass and the body to be 5.8 mm (0.23 in).

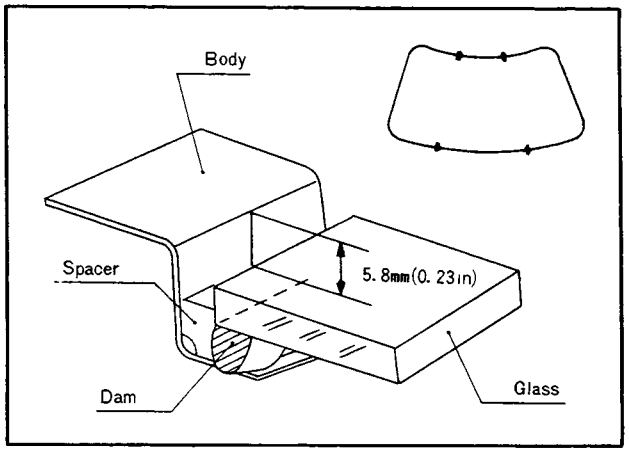

Fig. 14–15 Adjusting of step

Note:
(a) After placing the window glass on the inner side of the spacer, push the glass with the hand and check the step at the four positions shown in Fig. 14–15.
(b) If possible, do not apply any force to the window glass until the sealant has hardened.

Time required for the sealant to harden after it is applied
Summer (20°C, 68°F)..... 5 hours
Winter (5°C, 41°F).....24 hours

8. If any sealant has been forced out or is found to be lacking, rectify such portions with a wooden spatula.
9. After checking to ensure that there are no water leakages, install the mould, interior mirror, front pillar trim, etc.

Precautions:
1. If any water leakage is found after the sealant has hardened, use repairing agent.
2. Keep the door windows open until the sealant has hardened to some extent.
If the door windows are kept tightly closed, the interior atmospheric pressure would suddenly change when the doors are opened and closed.
This could cause vacant spaces to develop in the unhardened sealant and deteriorate the air-tightness and bonding properties of the sealant.
3. The time required before the vehicle can be driven after the sealant has been applied is approximately 5 hours in summer (20°C, 68°F) or 24 hours in winter (5°C, 41°F) if the sealant is left in open weather for drying.
4. If the vehicle is to be repainted, remove all the sealant from the body and then after baking the paint on, apply the sealant so that it is 10 mm (0.4 in) high.
Never apply air setting paint to the surface on which the sealant is to be applied, because the air setting painting method would have problems in weatherproofness and its bonding properties between the paint layer and the sheet metal and between the paint layer and the primer.

14–B. REAR WINDOW

The removal and installation of the rear window glass can be made in the same way as those of the windshield glass.
But care should be taken to the following points:
1. In the case of a vehicle equipped with a rear window with printed hot lines, perform the work of disconnection and connection of the relevant wiring.
2. The step between the rear window glass and the body should be adjusted to be 7.8 mm (0.31 in).

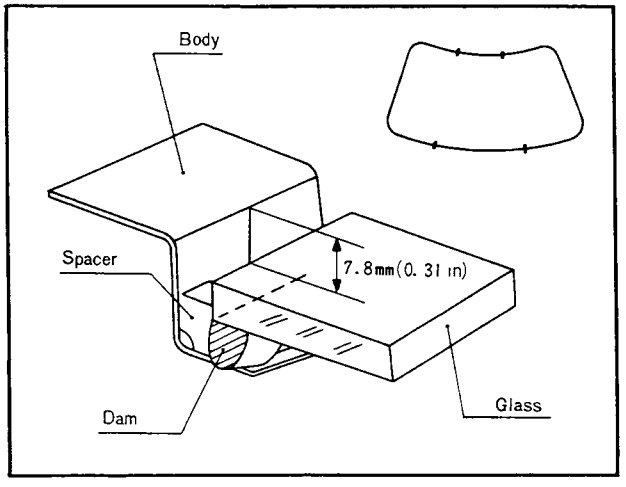

Fig. 14–16 Adjusting of step

3. The directions and positions of each spacer to be bonded are shown in Fig. 14–17.

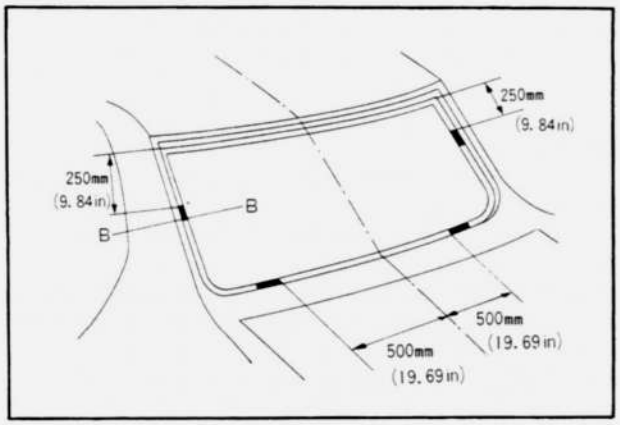

Fig. 14–17 Positions of spacers

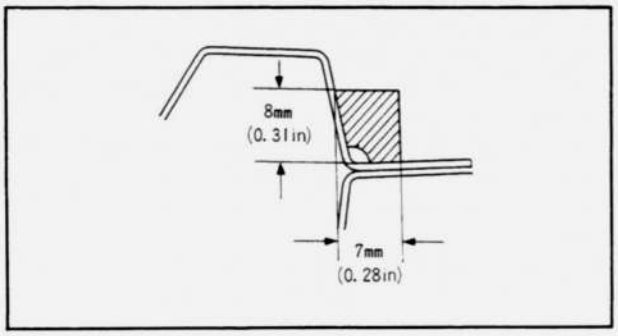

Fig. 14–18 B–B section of Fig. 14–17

14–C. FRONT DOOR

14–C–1. Disassembling of Front Door

1. Remove the inner lock knob.
2. Remove the arm rest.
3. Remove the inner handle cover.
4. Remove the pad of the regulator handle and remove the regulator handle and escutcheon by loosening the attaching bolt.

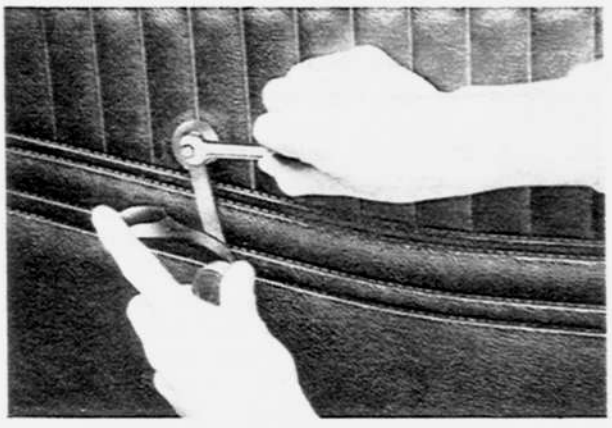

Fig. 14–19 Removing of regulator handle

5. Remove the door trim board.
6. Remove the inside screens (vinyl), which are installed to prevent water leakages.
7. Remove the outer weatherstrip from the door body.
8. Remove the door window glass. With the window glass lowered to half-opened position, it can be easily taken out.

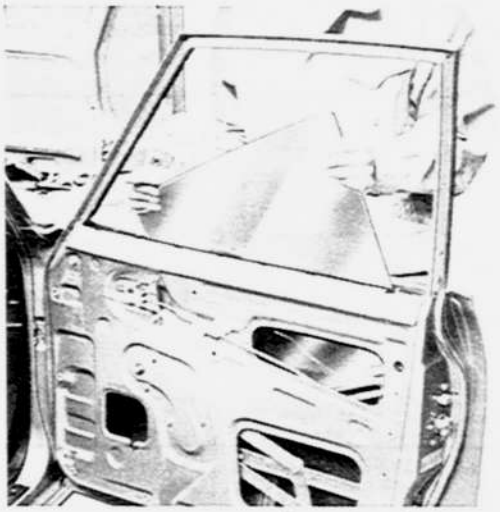

Fig. 14–20 Removing of glass

9. Remove the outer handle.
10. Pull out the set spring and remove the key cylinder

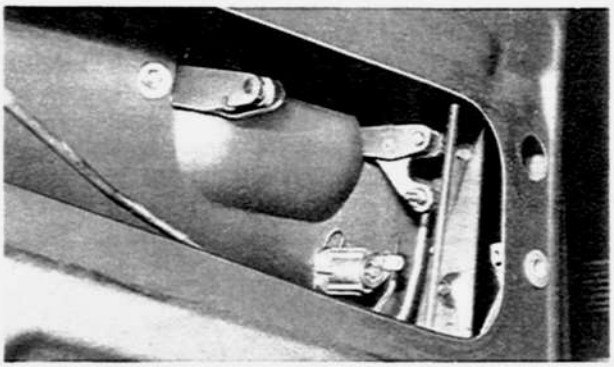

Fig. 14–21 Removing of key cylinder

11. Remove the door lock complete.
12. Remove the window regulator.

14–C–2. Assembling of Front Door

1. Install the outer handle.
2. Install the key cylinder and fit the set spring to the key cylinder.
3. Install the door lock complete.

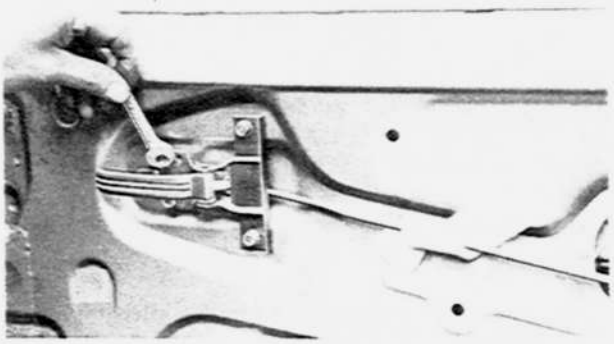

Fig. 14–22 Installing of door lock complete

4. Connect the actuating rod after adjusting the free play of the outer handle by the nylon bush to be within **1.5 to 3.0 mm (0.06 to 0.12 in)**.
5. Install the glass guides and tighten them with bolts.
6. Install the door run channel in the door sash.
7. Install the window regulator and temporarily tighten it.

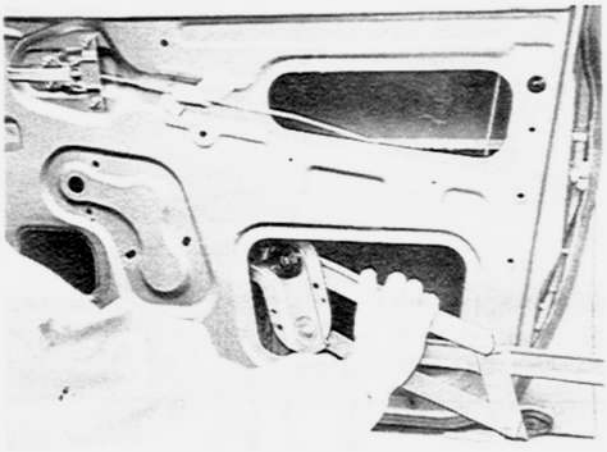

Fig. 14–23 Installing of window regulator

8. Install the door window glass, and securely tighten the window regulator while adjusting the alignment between the window glass and the door sash.
9. To prevent water leakage, apply a solid sealing agent on the heads of the bolts attaching the window regulator.
10. Paste the inside screens.
11. Install the outer weatherstrip to the door body.
12. Install the door trim board and inner lock knob.
13. Install the inner handle cover.
14. Install the regulator handle.
15. Install the arm rest.

14–C–3. Adjusting of Front Door

The doors are adjustable at the hinge mountings on the door and the body. The door striker is also adjustable. These adjustments are adequate to obtain proper door alignment and adjustment. The hinge attaching holes on the door pillars are larger than the bolts, permitting adjustment in either direction.

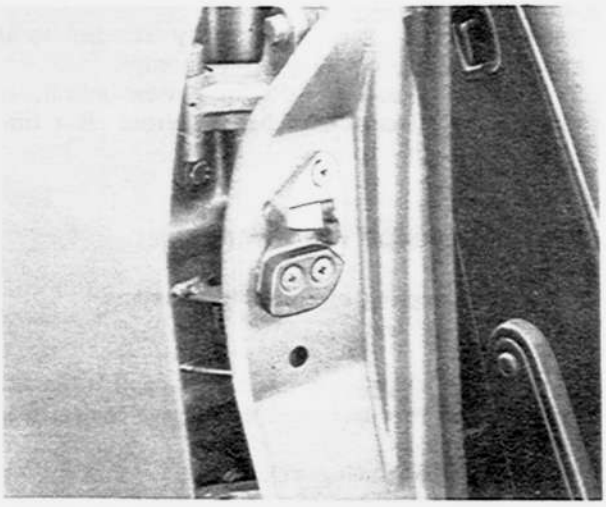

Fig. 14–24 Door striker

14–D. REAR DOOR

14–D–1. Disassembling of Rear Door

1. Remove the inner lock knob.
2. Remove the arm rest.
3. Remove the inner handle cover.
4. Remove the pad of the regulator handle and remove the regulator handle and escutcheon by loosening the attaching bolt.
5. Remove the door trim board.
6. Remove the inside screens (vinyl), which are install to prevent water leakages.
7. Remove the outer weatherstrip from the door body.
8. Remove the center sash, and slide off the quarter window glass with the weatherstrip.

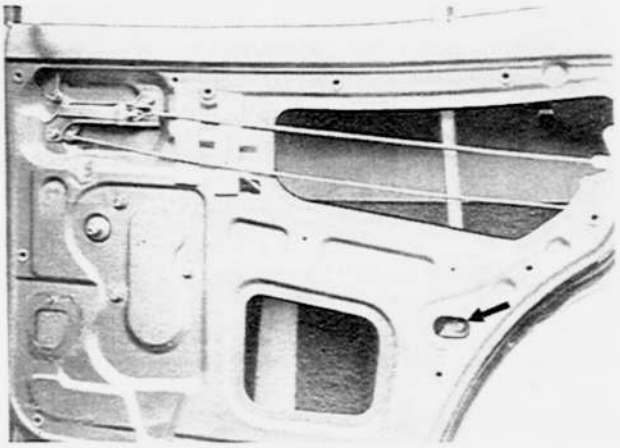

Fig. 14–25 Removing of center sash

9. Remove the door window glass. With the window glass lowered to half-opened position, it can be easily taken out.

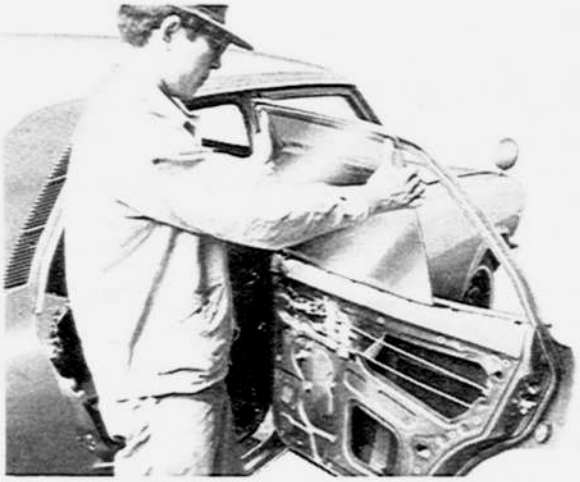

Fig. 14–26 Removing of glass

10. Remove the outer handle.
11. Remove the door lock complete.
12. Remove the window regulator.

14–D–2. Assembling of Rear Door

1. Install the outer handle.
2. Install the door lock complete.
3. Connect the actuating rod after adjusting the free

play of the outer handle by the nylon bush to be within **1.5 to 3.0 mm (0.06 to 0.12 in).**

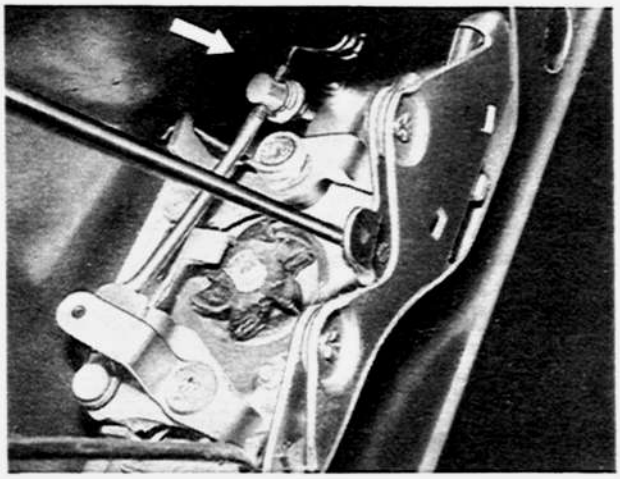

Fig. 14–27 Connecting of actuating rod

4. Install the window regulator.
5. Install the door window glass.
6. Install the center sash and temporarily tighten it.
7. Install the glass run channel.
8. Install the quarter window.
9. Securely tighten the center sash while adjusting the alignment between the window glass and the door sash.
10. Install the outer weatherstrip.
11. Paste the inside screens.
12. To prevent water leakage, apply a solid sealing agent on the heads of the bolts attaching the window regulator.
13. Install the door trim board and inner lock knob.
14. Install the regulator handle.
15. Install the arm rest.

14–E. TOP CEILING

14–E–1. Removing of Top Ceiling

1. Remove the rear view mirror, sun visors, interior lamps, assist handles, etc.
2. Remove the front pillar trims and rear package tray trim.
3. Strip off the seaming welts from the body flange.
4. Strip off the front and rear polythylene plates from the inserting point of the body.
5. remove the listing wire and top ceiling.

14–E–2. Installing of Top Ceiling

1. Affix the head linings (top insulations) onto the body ceiling with adhesive cement.
2. Heat up the top ceiling to a temperature of 30°C to 50°C (86° F to 122° F).
3. Insert both ends of each of the listing wires to their proper positions in successive order beginning from the rear as shown in Fig. 14–28.
When doing so, be careful that the wires do not swing down.
4. Insert the front and rear polyethylene plates of the top ceiling to the inserting point of the body.



Fig. 14–28 Installing of listing wire

Note: When inserting the top ceiling, if the guide made of plastic plate is used, you can insert it without touching the weaving point.

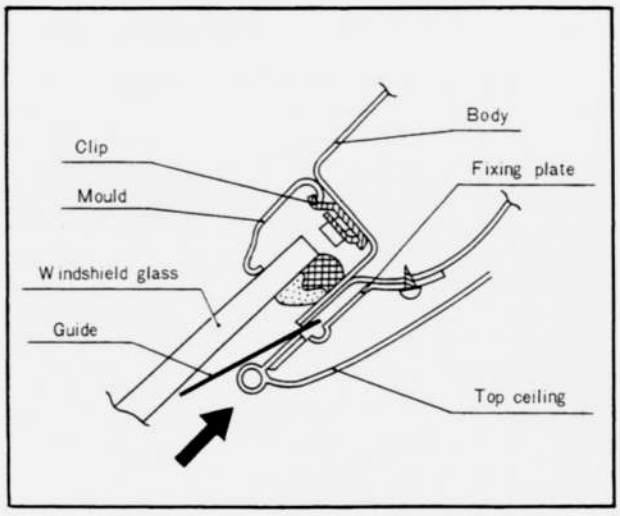

Fig. 14–29 Inserting of top ceiling

5. Apply neoprene adhesive cement to the outside of the body flange.
6. After one or two minutes, pull the top ceiling from both side to avoid any slackening and glue both side onto the body flange.
7. After the top ceiling is properly attached to the body flange, clip off all protruding edges.
8. Install the seaming welts, rear view mirror, sun visors, interior lamps, assist handles, front pillar trims, rear package tray trim, etc.

14–F. REAR SIDE WINDOW (COUPÉ)

14–F–1. Removing of Rear Side Window

1. Remove the seat.

Note: When removing the seat back, pull it out after removing the two nuts from the luggage compartment.

2. Remove the seaming welt covers.
3. Remove the package tray trim upper as shown in Fig. 14–30.

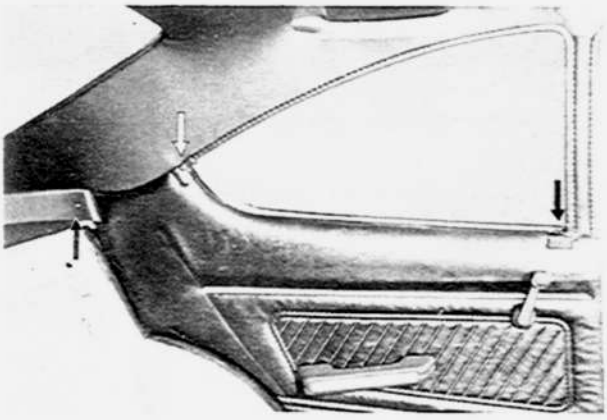

Fig. 14–30 Removing of seaming welt cover

4. Remove the pad of the regulator handle and remove the regulator handle and escutcheon by loosening the attaching bolt.
5. Remove the arm rest.
6. Remove the door trim board.
7. Remove the inside screens (vinyl), which are installed to prevent water leakages.
8. Remove the glass guide.

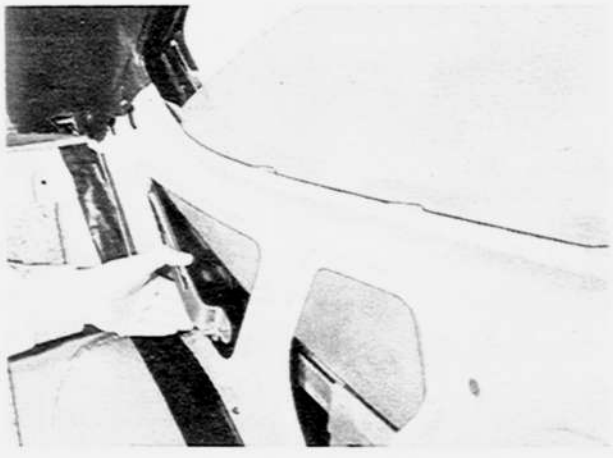

Fig. 14–31 Removing of glass guide

9. Remove the window glass. With the window glass lowered to half-opened position, it can be easily taken out.



Fig. 14–32 Removing of window glass

10. Remove the regulator.

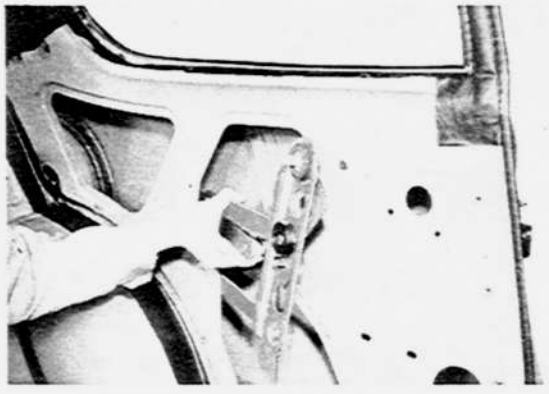

Fig. 14–33 Removing of regulator

11. Remove the outer weatherstrip.

14–F–2. Installing of Rear Side Window

Carry out the removing operations in the reverse order.

SPECIAL TOOLS

49 0305 871	Mould remover
49 0305 872	Sealant gun
49 0305 870	Window tool set (included above two tools)

TECHNICAL DATA

ENGINE (General Data)

Type	Rotary piston engine, in line 2 rotors, water cooled
Displacement	573 cc×2 rotors (35.0 cu. in×2 rotors)
Compression ratio	9.4 : 1
Compression pressure	6.7 kg/cm² at 220 rpm (95 lb/in² at 220 rpm)
Max. Brake horsepower	130 HP/7,000 rpm (SAE)
Max. Torque	115 ft-lb/4,000 rpm (SAE)
Port timing :	
Intake opens	Primary : 32° A. T. D. C. Sacondary : 32° A. T. D. C.
Intake closes	Primary : 40° A. B. D. C. Secondary : 40° A. B. D. C.
Exhaust opens	80° B. B. D. C.
Exhaust closes	48° A. T. D. C.

ENGINE

Front and rear housing :	
Limit of distortion	0.04 mm (0.002 in)
Limit of wear	0.10 mm (0.004 in)
Rotor housing :	
Width	$70\ ^{+0}_{-0.02}$ mm ($2.7559^{+0}_{-0.0008}$ in)
Limit of distortion	0.04 mm (0.002 in)
Intermediate housing :	
Limit of distortion	0.04 mm (0.002 in)
Limit of wear	0.10 mm (0.004 in)
Width	50±0.1 mm (1.9685±0.0039 in)
Rotor :	
Standerd weight (with internal gear and bearing)	4.570 kg (10.08 lb)
Inside diameter	$80\ ^{+0.018}_{-0}$ mm ($3.1497^{+0.0007}_{-0}$ in)
Clearance of side housing and rotor	0.13～017 mm (0.0051～0.0067 in)
Protrusion of land	0.10～0.15 mm (0.004～0.006 in)
Permissible protrusion of land	Max. 0.2 mm (0.008 in) Min. 0.085 mm (0.003 in)
Width of apex seal gloove	6±0.009 mm (0.2362±0.0004 in)
Diameter of corner seal cave	$11^{+0.018}_{-0}$ mm ($0.4331^{+0.0007}_{-0}$ in)
Depth of corner seal cave	$7.9^{+0}_{-0.2}$ mm ($0.3110^{+0}_{-0.0079}$ in)
Width of side seal groove	$1.0^{+0.039}_{+0.014}$ mm ($0.0394^{+0.0015}_{+0.0006}$ in)
Depth of side seal groove	$4.4^{+0}_{-0.2}$ mm ($0.1732^{+0}_{-0.0079}$ in)
Width of oil seal groove	$3.5^{+0.06}_{+0.03}$ mm ($0.1378^{+0.0024}_{+0.0012}$ in)
Depth of oil seal groove	6.4±0.1mm (0.2520±0.0039 in)
Apex seal :	
Length	$69.97^{+0}_{-0.02}$ mm ($2.7548\ in^{+0}_{-0.0008}$ in)
Width	$6^{-0.045}_{-0.063}$ mm ($0.2362^{-0.0018}_{-0.0025}$ in)
Height	$10^{+0}_{-0.1}$ mm ($0.3937^{+0}_{-0.0039}$ in)
Limit of height	8.0 mm (0.3150 in)
Clearance of apex seal and side housing :	
Standard	0.01～0.05 mm (0.0004～0.0020 in)
Limit	0.15 mm (0.0059 in)
Clearance of apex seal and rotor groove :	
Standard	0.036～0.072 mm (0.0014～0.0028 in)
Limit	0.10 mm (0.0039 in)
Apex seal spring :	
Free height	5.8 mm (0.228 in)
Set height	2.0 mm (0.079 in)
Set load	2.6±0.2 kg (5.7±0.4 lb)
Spring constant	0.64 kg/mm (35.8 lb/in)
Corner seal :	
Outside diameter	$11^{-0.020}_{-0.030}$ mm ($0.4331^{-0.0008}_{-0.0012}$ in)
Width	$7^{+0}_{-0.2}$ mm ($0.2756^{+0}_{-0.0079}$ in)
Clearance of corner seal and rotor groove :	
Standard	0.020～0.048 mm (0.0008～0.0019 in)
Limit	0.08 mm (0.0031 in)
Corner seal spring :	
Free height	2.7 mm (0.106 in)
Set height	1.0 mm (0.039 in)
Set load	1.3±0.3 kg (2.9±0.7 lb)
Spring constant	0.76 kg/mm (42.6 lb/in)
Side seal :	
Thickness	$1.0^{-0.014}_{-0.039}$ mm ($0.0394^{-0.0006}_{-0.0015}$ in)
Width	$3.5^{+0}_{-0.1}$ mm ($0.1378^{+0}_{-0.0039}$ in)
Clearance of side seal and rotor groove :	
Standard	0.04～0.07 mm (0.0016～0.0028 in)
Limit	0.10 mm (0.0039 in)
Clearance of side seal and corner seal :	
Standard	0.05～0.15 mm (0.002～ 0.006 in)
Limit	0.40 mm (0.016 in)
Side seal spring :	
Free height	2.0 mm (0.079 in)
Set height	1.0 mm (0.039 in)
Set load	3.6±0.3 kg (7.9±0.7 lb)
Spring constant	3.6 kg/mm (201.6 lb/in)
Oil seal :	
Thickness	$5.5^{+0.2}_{-0}$ mm ($0.2165^{+0.0079}_{-0}$ in)

Width	$3.37^{+0.05}_{-0.10}$ mm ($0.1327^{+0.0020}_{-0.0039}$ in)
Outside diameter of outer oil seal	$126^{-0.04}_{-0.10}$ mm ($4.9607^{-0.0016}_{-0.0039}$ in)
Outside diameter of inner oil seal	$116^{-0.03}_{-0.09}$ mm ($4.5670^{-0.0012}_{-0.0035}$ in)
Contact width of oil seal lip :	
Standard	0.2 mm (0.008 in)
Limit	0.8 mm (0.031 in)
Oil seal spring :	
Free height	Inner side : 2.6 mm (0.102 in)
	Outer side : 2.5 mm (0.098 in)
Set height	1.0 mm (0.039 in)
Set load	12^{+3}_{-0} kg ($26.5^{+6.6}_{-0}$ lb)
Spring constant	Inner side : 7.5 kg/mm (420.0 lb/in)
	Outer side : 8.3 kg/mm (464.8 lb/in)
Mian bearing :	
Inner diameter	$43^{+0.055}_{+0.040}$ mm ($1.6929^{+0.0022}_{+0.0016}$ in)
Main bearing clearance :	
Standard	0.04～0.07 mm (0.0016～0.0028 in)
Limit	0.10 mm (0.0039 in)
Rotor bearing :	
Inner diameter	$74^{+0.060}_{+0.035}$ mm ($2.9134^{+0.0024}_{+0.0014}$ in)
Rotor bearing clearance :	
Standard	0.05～0.09 mm (0.0020～0.0035 in)
Limit	0.10 mm (0.0039 in)
Eccentric shaft :	
Eccentricity of rotor journal	$15^{+0}_{-0.03}$ mm ($0.5906^{+0}_{-0.0012}$ in)
Main journal diameter	$43^{+0}_{-0.015}$ mm ($1.6929^{+0}_{-0.0006}$ in)
Rotor journal diameter	$74^{-0.015}_{-0.030}$ mm ($2.9134^{-0.0006}_{-0.0012}$ in)
Permissible run-out	Less than 0.02 mm (Less than 0.0008 in)
End play :	
Standard	0.04～0.07 mm (0.0016～0.0028 in)
Limit	0.09 mm (0.0035 in)
Internal gear :	
Number of teeth	51
Backlash of internal gear and stationary gear	0.06～0.08 mm (0.0024～0.0031in)
Stationary gear :	
Number of teeth	34
Inner diameter	$48^{+0.016}_{-0}$ mm ($1.8898^{+0.0006}_{-0}$ in)

LUBRICATING SYSTEM

Oil pump :	
Feeding capacity	16～20 liter/min (34～42 U.S. pint/min, 28～35 Imp. pint/min) at 6,000 rpm
Clearance of outer rotor and body	0.20～0.25mm (0.008～0.010 in)
Clearance of outer rotor and inner rotor	0.01～0.09 mm (0.0004～0.0035 in)
Rotor end float	0.10～0.20 mm (0.0039～0.0079 in)
Backlash of oil pump drive gear and driven gear	0.08～0.12 mm (0.0031～0.0047 in)
Oil pressure :	
Normal	5.0 kg/cm² (71.1 lb/in²) at 3,000 rpm
	2.5 kg/cm² (35.6 lb/in²) at 700 rpm
Warning lamp lights	0.3 kg/cm² (4.3 lb/in²)
Pressure regulater control spring:	
Free length	46.4 mm (1.827 in)
Set length	35.3 mm (1.390 in)
Set load	7.1 kg (15.6 lb)
Relief valve opens :	
Regulated pressure	1.0±0.2 kg/cm² (14.2±2.8lb/in²)
Oil thermo-valve :	
Starts to close	71°C (160°F)
Closes completely	78°C (172°F)
Lift	6 mm (0.236 in) at 78°C 172°F)
	17 mm (0.669 in) at 140°C 284°F)
Oil thermo-valve return spring :	
Free length	43.8±0.5 mm (1.724±0.020 in)
Initial load	4 kg (8.8 lb)
Spring constant	0.432 kg/mm (24.2 lb/in)
Oil cooler :	
Core area	1.9 m² (20.5 ft²)
Capacity	0.3 liter (0.6 U.S. pint, 0.5 Imp. pint)
Oil metering pump feeding capacity :	
Idling position of lever	6.5 ± 1 cc/10 min at 2000 rpm
Full opening position of lever	17.0±1.5cc/10 min at 2000 rpm
Oil capacity :	
Oil pan	4.5 liters (9.5 U.S. pints, 7.9 Imp. pints)
Full capacity	5.5 liters (11.6 U.S. pints, 9.7 Imp. pints)

COOLING SYSTEM

Water pump :	
Type	Centrifugal
Feeding capacity	110～120 liter (233～ 254 U.S. pint, 194～211 Imp. pint)/min
Fan :	
Standard revolution	1,600～1,950 rpm at 2,000 rpm of engine
Fan diameter	370 mm (14.57 in)
Number of blades	4
Water pump pulley ratio	1.035 : 1
Thermostat :	
Starts to open	82°C (180°F)

Fully opens	95°C (203°F)
Lift	More than 8 mm (0.31 in) at 95°C (203°F)
Radiator :	
Type	Corrugated fin
Core area	6.8 m² (73.2 ft²)
Relief valve pressure	0.9±0.1 kg/cm² (12.8±1.4 lb/in²)
Cooling capacity :	
With heater	8.0 liters (16.9 U.S. pints, 14.1 Imp. pints)
Without heater	7.0 liters (14.8 U.S. pints, 12.3 Imp. pints)

FUEL SYSTEM

Fuel tank capacity	65.5 liters (17.3 U.S. gallons, 14.5 Imp. gallons)
Fuel filter	Paper element, cartridge type
Fuel pump :	
Type	Electrical
Rated terminal voltage	12V
Min. operating voltage	Less than 10V
Feeding pressure	0.20~0.30 kg/cm² (2.8~4.3 lb/m²)
Feeding capacity	More than 900 cc (0.23 U.S. gallon, 0.20 Imp. gallon)/min.
Current on full discharing	Less than 1.5 A
Point gap	1.0 mm (0.039 in)
Carburettor :	
Type	Down-draft, Zenith Stronberg
Venturi diameter	Primary : 20×13×6.5 mm (0.787×0.512×0.256 in)
	Secondary : 28×10 mm (1.102×0.394 in)
Main jet	Primary : #90
	Secondary : #155
Main air bleed	Primary : #80
	Secondary : #160
Slow jet	Primary : #50
	Secondary : #130
Slow air bleed	Primary : #70 & #210
	Secondary : #60 & #100
Vacuum jet	Primary : #180
	Secondary : #80
Pump nozzle	0.7 mm (0.028 in)

ELECTRICAL SYSTEM

Battery :	
Voltage	12V (NS50Z)
Capacity	60AH (20 hours rate)
Terminal ground	Negative
Specific gravity	Fully charged : 1.26
	Recharge at : 1.20
Distributor (T & L) :	
Contact point gap	0.45±0.05 mm (0.018±0.002 in)
Point pressure	0.575±0.075 kg (1.27±0.17 lb)
Condenser capacity	0.27±0.027μF
Centrifugal advance :	
Trailing	Start : 0° at 500 rpm of dis.
	Max. : 5° at 1500 rpm of dis.
Leading	Start : 0° at 500 rpm of dis.
	Max. : 6° at 1700 rpm of dis.
Vacuum advance :	
Trailing	Start : 0° at 100 mmHg
	Max. : 17.5° at 400 mmHg
Leading	Start : 0° at 100 mmHg
	Max. : 11° at 400 mmHg
Dwell angle	58°±3°
Firing order	1—2
Ignition timing	Trailing : 5° A.T.D.C.
	Leading : 0°
Marking location	Eccentric shaft pulley
Spark plug type and gap :	
Hot type	NGK B-6EJ 0.8~0.9 mm (0.031~0.035 in)
	Denso W20EG2 0.8~0.9 mm (0.031~0.035 in)
Standard type	NGK B-7EJ 0.8~0.9 mm (0.031~0.035 in)
	Denso W22EG2 0.8~0.9 mm (0.031~0.035 in)
Cold type	NGK B-8EJ 0.8~0.9 mm (0.031~0.035 in)
	Denso W25EG2 0.8~0.9 mm (0.031~0.035 in)
Starting motor :	
Capacity	1.0 KW
Free running test	Voltage : 12V
	Current : Less than 70A at 3,600 rpm or more
Lock test	Voltage : 6.0V
	Current : 60A or less
	Torque : 2.7m-kg (19.5 ft-lb)
Brush spring tension	1.13 kg (40.0 oz)
Magnet switch operating voltage	9.0V
Alternator :	
Ground polarity	Negative
Reted output	12V 40A
Number of pole	8
No load test	Voltage : 14V at 1,050 rpm or less
	Current : 0A
Load test	Voltage : 14V at 2,500 rpm or less
	Current : 32A
Brush spring pressure	350gr (12.5 oz)
Slip ring diameter	33 mm±0.2 (1.299±0.008 in)
Ratio of alternator and eccentric shaft	2 : 1
Regulator :	
Constant voltage relay	Air gap : 0.7~1.1 mm (0.028~0.043 in)
	Point gap : 0.3~0.4 mm (0.012~0.016 in)
	Back gap : 0.7~1.1 mm (0.028~0.043 in)
Regulated voltage, without load	14±0.5V
Bulbs :	
Head lamp	50W/40W
Front turn signal & side lamp	21W/5W
Side turn signal lamp	3.4W
Fog lamp	25W
Interior lamp	5W
Step lamp	6W
Glove compartment lamp	5W
Turn signal lamp (rear)	21W
Stop, tail & reverse lamp	21W/5W/10W
Licence lamp	10W

CLUTCH

Type	Single dry plate
Spring	Diaphragm spring
Pressure plate :	
Inner diameter	150 mm (5.91 in)
Outer diameter	215 mm (8.47 in)
Clutch disk :	
Inner diameter	154 mm (6.06 in)
Outer diameter	215 mm (8.47 in)
Clutch disk friction assembly thickness	8.5±0.3 mm (0.335±0.012 in)
Clearance between push rod and clutch release fork	3.0 mm (0.12 in)
Pedal free travel	20~30 mm (0.8~1.2 in)
Master cylinder bore	15.87 mm (0.6248 in)
Release cylinder bore	17.46 mm (0.6874 in)

TRANSMISSION

Type	Four-forward speed and one reverse speed, with synchronizing for all forward and selective for reverse
Shift lever location	Floor
Gear ratio :	
First	3.683
Second	2.263
Third	1.397
Top	1.000
Reverse	3.692
Lubricant	Above −18°C (0°F) : EP. SAE 90 Below −18°C (0°F) : EP. SAE 80
Oil capacity	2.5 liters (5.3 U.S. pints, 4.4 Imp pints)
Backlash of gears .	
Main drive & counter gear	0.03~0.10 mm (0.001~0.004 in)
First gear	0.10~0.20 mm (0.004~0.008 in)
Second gear	0.05~0.15 mm (0.002~0.006 in)
Third gear	0.05~0.15 mm (0.002~0.006 in)
Reverse gear	0.10~0.20 mm (0.004~0.008 in)

PROPELLER SHAFT

Length :	
Front	502 mm (19.76 in)
Rear	719 mm (28.31 in)
Permissible unbalance :	
Front joint	20 cm-gr (0.28 in-oz) at 4,000 rpm
Center joint	12.5 cm-gr (0.17 in-oz) at 4,000 rpm
Rear joint	20 cm-gr (0.28 in-oz) at 4,000 rpm
Permissifie run-out	0.4 mm (0.016 in)
Outer diameter	50.8 mm (2.00 in)

REAR AXLE

Type	Semi-floating, hypoid gears
Reduction ratio	3.7
Number of teeth	37 : 10
Lubricant	Above −18°C (0°F) : HP. SAE 90 Below −18°C (0°F) : HP. SAE 80
Oil capacity	1.2 liters (2.5 U.S. pints, 2.1 Imp. pints)
Free play of axle shaft	0~0.1 mm (0~0.004 in)
Permissible deflection of ring gear	0.1 mm (0.0039 in or less)
Mounting distance	90±0.025 mm (3.5434±0.0010 in)
Drive pinion bearing preload	9~14 cm-kg (7.8~12.2 in-lb)
Backlash between ring gear and drive pinion	0.17~0.19 mm (0.0067~0.0075 in)
Backlash between side gear and pinion	0.1 mm (0.004 in or less)

BRAKES

Master cylinder :	
Type	Tandem master cylinder
Bore	22.22 mm (7/8 in)
Permissible clearance of piston and bore	0.15 mm (0.0059 in)
Pedal free travel	5~15 mm (0.2~0.6 in)
Power brake unit :	
Type	Bendix type disk brake
Power cylinder diametor	152.4 mm (6.0001 in)
Power cylinder stroke	35mm (1 38 in)
Front brake :	
Type	Bendix type disk brake
Number of shoe per wheel	2
Shoe material	F50
Dimension of lining and shoe (width × thickness × length)	46×14×97 mm (1.81×0.55×3.82 in)
Minimum allowable thickness of lining and shoe	8mm (0.315 in)
Brake disk outer diameter	230 mm (9.055 in)
Permissible brake disk run-out	0.15 mm (0.0059 in)
Rear brake :	
Type	Drum type with reading and trailing
Drum inner diameter	200 mm (7.8741 in)
Lining material	D-852
Lining dimension (width × thickness × length)	32×4×199 mm (1.26×0.16×7.83 in)
Wheel cylinder bore	19.05 mm (3/4 in)
Parking brake :	
Type	Mechanical internal expansion
Operates at	Rear wheels

STEERING

Type	Recerculating ball nut (Variable ratio gear)
Reduction ratio	17~19 . 1
Free play of steering wheel	10~30 mm (0.4~1.2 in)
Max. steering angle :	
Inner wheel	43°
Outer wheel	31°
Lubricant	EP. SAE 90
Oil capacity	250 cc (0.5 U.S. pint, 0.4 Imp. pint)
Backlash of rack and sector gear	0
Worm bearing preload	1.0~4.0 cm-kg (0.9~3.5 in-lb)
End clearance of sector shaft	0.02~0.08 mm (0.001~0.003 in)

Steering geometry :	
King pin inclination	9°15′
Camber	−0°15′
Caster	1°03′
Toe in	−4∼2 mm(−0.16∼0.08 in)
Trail	5 mm (0.2 in)

FRONT SUSPENSION

Type	Strut
Spring constant	1.85±0.129 kg/mm (103.5±7.2 lb/in)
Spring pressure :	When the spring length is compressed to 194 mm(7.638 in)
1 dot	281∼289 kg (619∼637 lb)
2dots	289∼296 kg (637∼653 lb)
3dots	296∼304 kg (653∼670 lb)
Wire diameter	11.5 mm (0.45 in)
Outer coil diameter	121.5 mm (4.78 in)
Free length	352 mm (13.86 in)
Fitting length	194 mm (7.64 in)
Shock absorber	Hydraulic double action
Piston rod :	
Diameter	20 mm (0.787 in)
Permissible run-out	0.05 mm (0.002 in)
Piston assembly :	
Relief valve thickness	0.2±0.015 mm (0.0079±0.0006 in)
Center ring valve thickness	0.1±0.008 (0.0039±0.00031 in)
	0.15±0.01 mm (0.0059±0.0004 in)
Check valve thickness	0.25 mm (0.0098 in)
Flatness	Less than 0.05 mm (0.002 in)
Pressure tube :	
Inner diameter	30 mm (1.181 in)
Botton valve :	
Tention valve thickness	0.1±0.008 mm (0.0039±0.00031 in)
	0.15±0.01 mm (0.0059±0.0004 in)
Compression valve thickness	0.2±0.015 mm (0.0079±0.0006 in)

REAR SUSPENSION

Type	4 links & lateral rod
Spring constant :	2.22±0.16 kg/mm (124.2±9.2 lb/in)
Coil spring :	
Wire diameter	10.8 mm (0.43 in)
Outer coil diameter	100.8 mm (3.97 in)
Free length	371 mm (14.61 in)
Fitting length	247 mm (9.73 in)
Spring Pressure :	When the spring length is cormpressed to 247 mm (9.7 in)
1dot	263.4∼271 kg (581∼597 lb)
2dots	271∼279 kg (597∼615 lb)
3dots	279∼286.6 kg (615∼632 lb)
Shock absorber	De carbon

WHEELS AND TIRES

Wheel type :	
Front	4-J x 13 WDC
Rear	4-J x 13 WDC
Tire :	
Front	155 SR 13 or 155 HR 13
Rear	155 SR 13 or 155 HR 13
Tube :	
Front	155 SR 13 or 155 HR 13
Rear	155 SR 13 or 155 HR 13
Air pressure :	
Front	1.5 kg/cm² (21.3 lb/in²) less than 100 km/h (60 mile/h)
	1.7 kg/cm² (24.2 lb/in²) more than 100 km/h (60 mile/h)
Rear	1.5 kg/cm² (21.3 lb/in²) less than 100 km/h (60 mile/h)
	1.7 kg/cm² (24.2 lb/in²) more than 100 km/h (60 mile/h)
Permissible unbalance	0.20 cm-kg (0.0278 in-oz)
Permissible deviation of disk wheel	Under 1.3 mm (0.0512 in)

WEIGHTS AND DIMENSIONS

Overall length	4,150 mm (163.39 in)
Overall width	1,580 mm (62.21 in)
Overall hight	1,420 mm (55.91 in)
Wheel base	2,470 mm (97.25 in)
Tread :	
Front	1,285 mm (50.59 in)
Rear	1,280 mm (50.39 in)
Minimum turning radius	4,700 mm (185.04 in)
Road clearance	160 mm (6.30 in)
Overhang :	
Front	645 mm (25.39 in)
Rear	980 mm (38.58 in)
Seating capacity	5
Car weight (no load)	955 kg (2105.4 lb)

TIGHTENING TORQUE LIST

	m-kg	ft-lb
Engine :		
Tension bolt	2.5	18
Flywheel	45.0	350
Eccentric shaft plley	7.0	50
Spark plug	2.0	14
Oilpan	0.6	4.5
6 mm bolt & nut	1.0	7
8 mm bolt & nut	2.0	15
10mm bolt & nut	4.0	30
Clutch .		
Pressure plate	2.0	15
Master cylnder reserver	2.5	20
Transmission		
Main shaft lock nut	23.0	170
Shift fork lock bolt	1.0	10
Trans mission case .		
8 mm bolt	2.5	20
10mm bolt	3.5	25
Propeller shaft .		
Yoke attaching bolt	3.0	20
Rear axle :		
Companion flange	15.0	110
Ring gear	6.0	45
Bearing cap	4.0	30
Drain plug	2.0	15
Steering :		
Tie rod ball joint	3.0	20
Tie rod lock nut	7.5	55
Steering gear housing	5.0	40
Pitman arm	15.0	110
Idler arm	5.0	40
Steering joint	1.5	10
Brake :		
Caliper bracket	5.5	40
Frant backing plate	4.0	30
Front hub attaching bolt	5.0	40
Rear backing plate	2.5	20
Master cylinder joint bolt	6.5	50
Master cylinder set bolt	0.2	1 0
Wheel :		
wheel bolt	9.5	70
Suspension :		
Suspension arm	8.0	60
Arm ball joint	6.5	50
Stabilizer	9.0	65
Front damper cap nut	5.5	40
Front damper piston	1.5	10
Front damper base valve	0.15	1.0
Rear suspension link	11.0	80
Standard bolts :		
6 mm p=1.0	0.8	5
8 mm p=1.25	2.0	15
10mm p=1.25	4.0	30
12mm p=1.5	7.0	50
14mm p=1.5	9.0	65

WORKSHOP MANUAL

MAZDA 616 (CAPELLA 1600)

SEDAN
COUPÉ

SECTION INDEX	
Name	Section
Engine	1
Lubricating System	2
Cooling System	3
Fuel System	4
Electrical System	5
Clutch	6
Transmission (Floor Shift)	7
Transmission (Column Shift)	7A
Technical Data	T

NOTE :
"Capella 1600" is the nickname of the "MAZDA 616", which is used in some markets.

TOYO KOGYO CO., LTD.
HIROSHIMA, JAPAN

OCTOBER, 1970

ENGINE

1–A. CHECKING COMPRESSION PRESSURE ..... 1 : 4
1–B. ENGINE REMOVAL ..... 1 : 4
1–C. ENGINE DISASSEMBLY ..... 1 : 4
1–D. ENGINE INSPECTION AND REPAIR ..... 1 : 7
1–D–1. Inspection of Cylinder Head ..... 1 : 7
1–D–2. Inspection of Valve Spring ..... 1 : 7
1–D–3. Inspection of Valve ..... 1 : 7
1–D–4. Checking of Valve Stem and Guide Clearance ..... 1 : 7
1–D–5. Replacing of Valve Guide ..... 1 : 7
1–D–6. Refacing of Valve ..... 1 : 8
1–D–7. Inspection and Refacing of Valve Seat ..... 1 : 8
1–D–8. Valve Seat Cutter ..... 1 : 8
1–D–9. Checking of Contact between Valve and Valve Seat ..... 1 : 9
1–D–10. Inspection of Valve Seat Sinking ..... 1 : 9
1–D–11. Inspection of Rocker Arm and Shaft ..... 1 : 9
1–D–12. Replacing of Rocker Arm Bush ..... 1 : 9
1–D–13. Inspection of Cylinder Block ..... 1 : 9
1–D–14. Inspection of Cylinder Bore ..... 1 : 10
1–D–15. Inspection of Piston ..... 1 : 10
1–D–16. Checking of Piston Clearance ..... 1 : 10
1–D–17. Inspection of Piston Ring Groove ..... 1 : 11
1–D–18. Checking of Piston Ring End Gap ..... 1 : 11
1–D–19. Checking of Piston Pin Fit ..... 1 : 11
1–D–20. Replacing of Small End Bush ..... 1 : 11
1–D–21. Connecting Rod Bearing ..... 1 : 12
1–D–22. Checking of Connecting Rod Bearing Clearance ..... 1 : 12
1–D–23. Checking of Connecting Rod Side Play ..... 1 : 12
1–D–24. Checking of Connecting Rod Alignment ..... 1 : 12
1–D–25. Weight of Connecting Rod ..... 1 : 12
1–D–26. Checking of Main Journal and Crankpin ..... 1 : 13
1–D–27. Checking of Crankshaft Run-Out ..... 1 : 13
1–D–28. Main Bearing ..... 1 : 13
1–D–29. Checking of Main Bearing Clearance ..... 1 : 13
1–D–30. Checking of Crankshaft End Play ..... 1 : 14
1–D–31. Camshaft Inspection ..... 1 : 14
1–D–32. Checking of Camshaft Run-Out ..... 1 : 14
1–D–33. Camshaft Bearing ..... 1 : 14
1–D–34. Checking of Camshaft Bearing Clearance ..... 1 : 14
1–D–35. Checking of Camshaft End Play ..... 1 : 15
1–D–36. Checking Timing Chain, Oi. Pump Drive Chain and Sprockets ..... 1 : 15
1–D–37. Checking of Chain Tensioner and Chain Vibration Damper ..... 1 : 15
1–E. ENGINE ASSEMBLY ..... 1 : 15
1–F. ENGINE INSTALLATION ..... 1 : 23

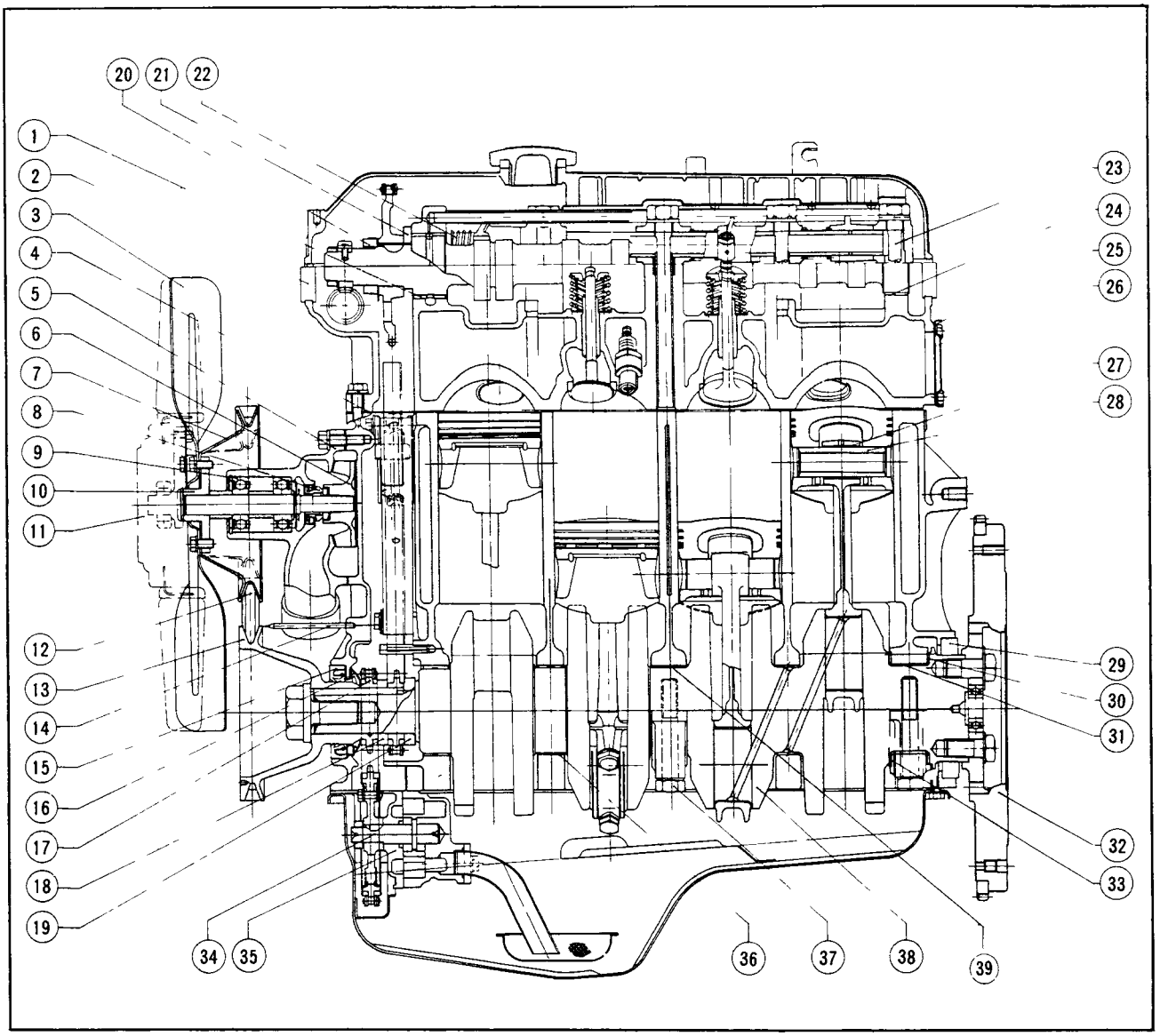

Fig. 1–1 Engine (1)

1. Camshaft bearing front
2. Oil seal
3. Cooling fan
4. Cylinder head gasket
5. Water pump
6. Impeller
7. Water pump pulley
8. Water seal
9. Bearing
10. Pulley boss
11. Fan drive
12. V belt
13. Crankshaft pulley
14. Top indicator pin
15. Oil seal
16. Oil deflector
17. Crankshaft sprocket
18. Spacer
19. Spacer
20. Lock nut
21. Thrust plate
22. Spring
23. Cylinder head bolt
24. Camshaft bearing rear
25. Blind cover
26. Gasket
27. Small end bush
28. Piston pin
29. Oil seal
30. Thrust bearing upper
31. Main bearing
32. Flywheel
33. Thrust bearing lower
34. Oil pump shaft
35. Oil pump cover
36. Main bearing
37. Main bearing cap bolt
38. Crankshaft
39. Main bearing

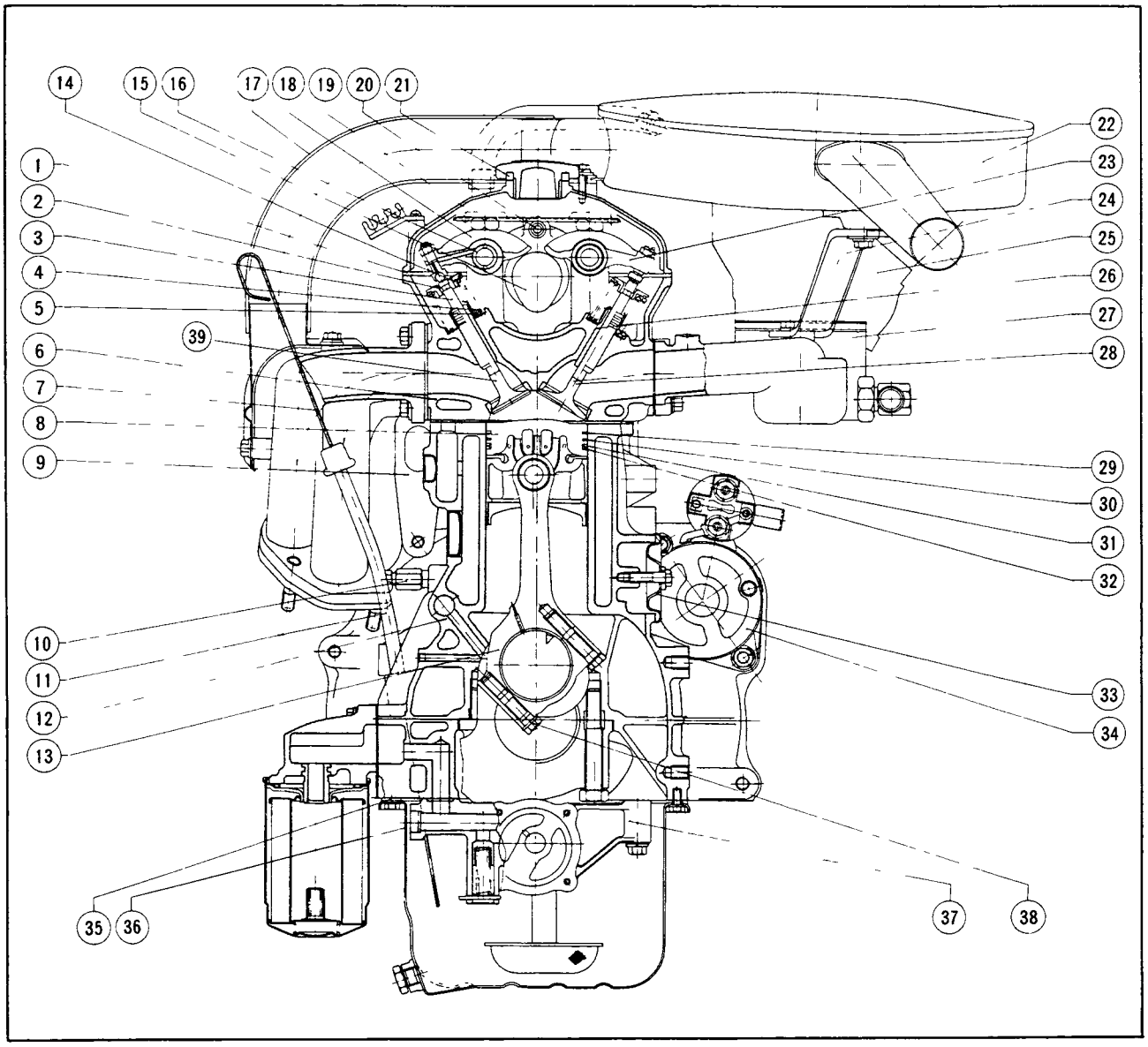

Fig. 1–2 Engine (2)

1. Rocker arm cover gasket
2. Exhaust taper sleeve
3. Exhaust valve
4. Valve spring outer
5. Valve spring inner
6. Cylinder head
7. Oil level gauge
8. Piston
9. Engine hanger
10. Water drain cock
11. Level gauge guide pipe
12. Cylinder block
13. Connecting rod
14. Spring seat upper
15. Camshaft
16. Exhaust rocker shaft
17. Hot air duct
18. Rocker arm
19. Rocker arm cover
20. Oil distribution pipe
21. Gasket
22. Air cleaner
23. Inlet taper sleeve
24. Air cleaner supporter
25. Carburetor
26. Inlet valve guide
27. Inlet manifold
28. Inlet valve
29. Piston ring top
30. Piston ring second
31. Piston ring oil
32. Expander
33. Crankcase cover
34. Starting motor
35. Gasket
36. Oil pan
37. Oil pump body
38. Connecting rod cap bolt
39. Exhaust valve

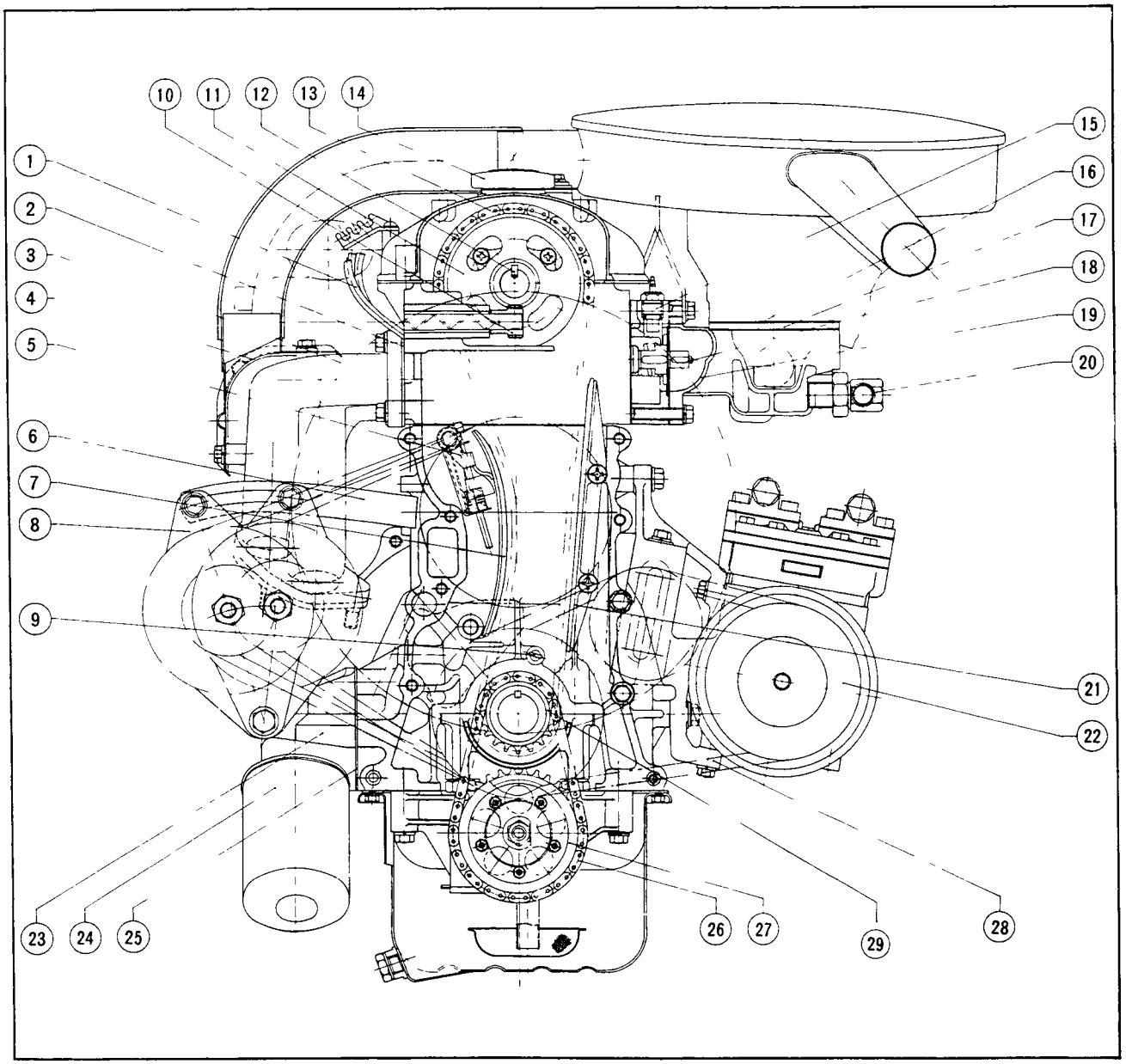

Fig. 1–3 Engine (3)

1. Hightension cord
2. Gasket
3. Exhaust manifold
4. Insulator
5. Chain tensioner
6. Alternator strap
7. Slipper blade
8. Alternator
9. Oil jet
10. Distributor driven gear
11. Cam sprocket wheel
12. Distributor drive gear
13. Timing chain
14. Oil filler cap
15. Water temperature unit
16. Gasket
17. Insulator
18. Thermostat
19. Thermostat casing cover
20. Hose connector
21. Vibration damper
22. Cooler compressor
23. Alternator bracket
24. Oil filter
25. Gasket
26. Oil pump drive chain
27. Oil pump sprocket
28. Bracket
29. Rubber ring

ENGINE

MAZDA 616 is mounted with a 1,586 cc (96.8 cu-in) in-line water cooled, over head camshaft four cylinder engine. Its bore and stroke is 78 x 83 mm and the compression ratio is 8.6 : 1.

1–A. CHECKING COMPRESSION PRESSURE

To check the compression pressure, proceed as follows:

1. Warm up the engine to the normal operating temperature.
2. Remove all spark plugs.
3. Set the throttle valve to the wide open position.
4. Place a compression gauge in the spark plug hole.
5. Crank the engine with the starting motor until the pressure reaches a maximum value.
6. Test the remaining cylinders in the same manner.
7. The normal compression pressure is **11.9 kg/cm² (169.2 lb/in²)** at the engine speed of 310 rpm.

If low or uneven values are obtained, test the compression pressure again after pouring a small quantity of oil into each cylinder. If the pressure is low, both with and without oil, this is a symptom of leaking valves. If the pressure is higher when the oil has been added, it is probable that the piston rings or cylinder bores are worn.

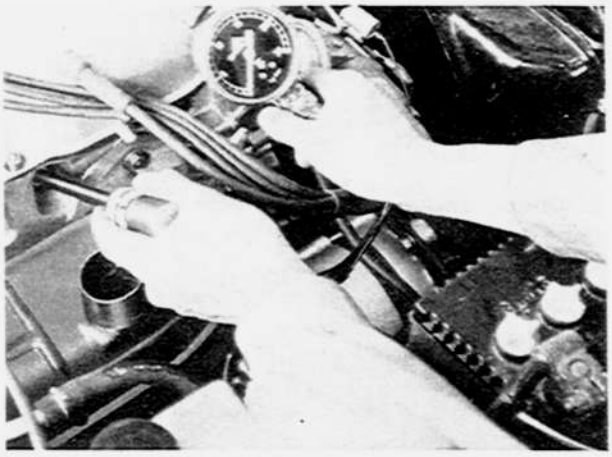

Fig. 1–4 Checking of compression pressure

1–B. ENGINE REMOVAL

The procedures for removing the engine from the vehicle for overhauling are as follows:

1. Remove the bonnet.
2. Loosen the under cover attaching bolts and remove the under cover.
3. Drain the cooling water by opening the drain cocks at the lower of the radiator and the right rear of the cylinder block.
4. Drain the engine oil.
5. Disconnect the earth wire at the battery to avoid the possibility of a short circuit.
6. Disconnect the wires to the engine. (Distributor, starting motor, alternator, oil pressure switch, water temperature gauge unit, carburetor solenoid and engine earth wire)
7. Remove the insulator at the exhaust manifold.
8. Loosen the nuts attaching the exhaust manifold to the cylinder head.
9. Remove the air cleaner.
10. Disconnect the choke control wire at the carburetor.
11. Disconnect the accelerator wire at the carburetor.
12. Disconnect the vacuum pipe for the power brake unit from the intake manifold.
13. Disconnect the fuel hose at the carburetor.
14. Remove the each water hose at the intake manifold.
15. Remove the water hose for the expansion tank at the radiator.
16. Remove the radiator hose at the upper and lower of the radiator.
17. Loosen the radiator cowling attaching bolts.
18. Loosen the radiator attaching bolts and then remove the radiator.

Note: The radiator cowling should be removed after the radiator has been removed.

19. Support the transmission with a suitable jack.
20. Remove the starting motor.
21. Remove the clutch cover plate and stays.
22. Remove the bolts and nuts supporting the transmission to the engine.
23. Install a suitable lifting sling on the engine hanger brackets. Attach the sling to a hoist or other lifting device and take up all slack.
24. Remove the bolts and nuts from each engine mount.
25. Pull the engine forward until it clears the clutch shaft. Then lift the engine from the vehicle.



Fig. 1–5 Removing of engine

26. Remove the engine mounting brackets from the cylinder block and mount the engine on to the **engine stand** (49 0107 680A and 49 0305 005) or wood blocks.

1–C. ENGINE DISASSEMBLY

Engine overhaul should be done in the following order after removing the engine from the vehicle. If the engine repair stand is not available, take care so as to sufficiently protect the engine and its parts against damage.

1–C–1. Removing of Distributor

1. Disconnect the hightension cords from each spark plug.
2. Pull off the vacuum control tube from the distributor.
3. Loosen the distributor locking nut and remove the distributor from the cylinder head.

1–C–2. Removing of Alternator and Bracket

1. Loosen the alternator strap attaching bolts.
2. Loosen the alternator mounting bolt and nut, and then remove the alternator and the "V" belt.
3. Loosen the nuts and bolt attaching the alternator bracket to the block.
4. Remove the alternator bracket.

1–C–3. Removing of Oil Filter

1. Remove the oil filter cartridge with a wrench, referring to Par. 2–F–1.
2. Loosen the bolts and remove the filter cover and gasket.

1–C–4. Removing of Cooling Fan and Pulley

1. Loosen the bolts that attach the cooling fan and pulley to the water pump boss.
2. Remove the fan and pulley.

1–C–5. Removing of Water Pump

1. Loosen the bolts and nuts attaching the water pump to the timing chain cover.
2. Remove the alternator strap.
3. Remove the water pump and gasket.

1–C–6. Removing of Thermostat

1. Loosen the bolts and nuts that attach the thermostat cover to the cylinder head.
2. Remove the thermostat cover, gasket and engine hanger bracket.
3. Remove the thermostat.

1–C–7. Removing of Intake Manifold and Carburetor

1. Loosen the bolts holding the inlet manifold to the cylinder head.
2. Remove the intake manifold and carburetor assembly and gasket.

1–C–8. Removing of Cylinder Head and Camshaft

1. Remove the attaching nuts and remove the rocker arm cover and gasket.
2. Remove two semicircular oil seals.
3. Remove the lock nut and washer and slide the distributor drive gear off the camshaft.
4. Install the **ring gear brake** (49 0221 030A) to the flywheel.
5. With the **spanner** (49 0164 631A) loosen the lock nut for the camshaft sprocket.
6. Remove the bolt that attach the cylinder head and the timing chain cover.
7. Loosen the cylinder head bolts in the reverse order of tightening.
8. Remove the rocker arm assembly.
9. Pull the camshaft rearward and remove the camshaft from the camshaft sprocket.
Remove the camshaft sprocket.
10. Remove the camshaft bearing halves from the cylinder head.
11. Remove the cylinder head and gasket.

Note: When removing only the camshaft or the cylinder head, the timing chain should be lifted upward to prevent the slipper blade of the chain tensioner from flying out and causing a difficulty in adjusting the timing chain.

1–C–9. Removing of Valve and Valve Spring

1. Remove the carbon inside the combustion chamber.
2. Use the **valve spring lifter** (49 0636 100) as shown in Fig. 1–6 and compress the valve springs.

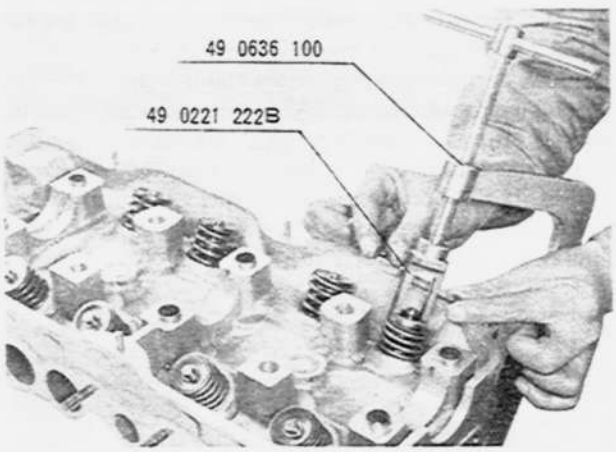

Fig. 1–6 Removing of valve

3. Remove the taper sleeve, upper spring seat, valve springs, lower spring seat and spacer.
4. Remove the valve.

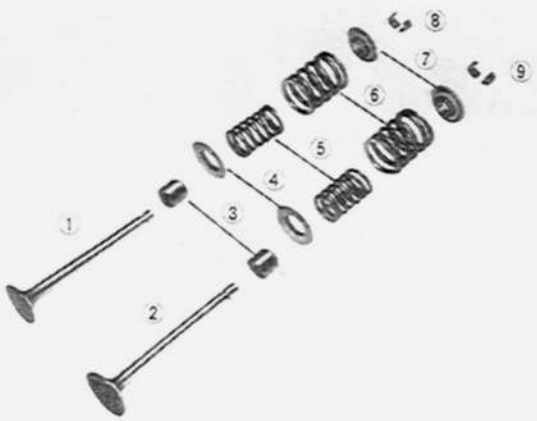

Fig. 1–7 Valve assembly

1. Exhaust valve
2. Intake valve
3. Valve seats
4. Spring lower seats
5. Inner springs
6. Outer springs
7. Spring upper seats
8. Tapper sleeves (EX)
9. Tapper sleeves (IN)

Note: Place the taper sleeves, upper spring seats, valve springs, lower spring seats and valves in order in a suitable case for reassembling.

1–C–10. Removing of Crankshaft Pulley

1. Install the **ring gear brake** (49 0221 030A) to the flywheel.
2. Loosen the pulley bolt and pull the pulley off the front end of the crankshaft.

1–C–11. Removing of Clutch Assembly

1. Install the **ring gear brake** (49 0221 030A).
2. Loosen the bolts holding the clutch cover to the flywheel and remove the clutch cover and pressure plate assembly and clutch disk.
3. Loosen the bolts attaching the flywheel to the rear end of the crankshaft.

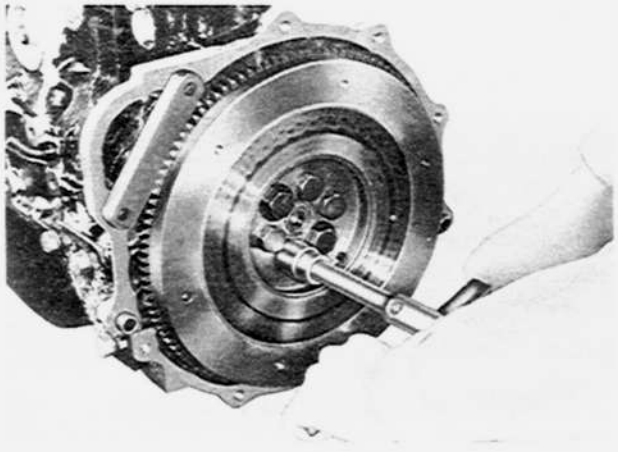

Fig. 1–8 Removing of flywheel

4. Remove the ring gear brake and flywheel.

1–C–12. Removing of Oil Pan

1. Rotate the cylinder block upside down position.
2. Loosen the nuts and bolts that attach the oil pan to the cylinder block.
3. Remove the oil pan and gasket.

1–C–13. Removing of Timing Chain Cover

1. Loosen the bolts and nuts that attach the timing chain cover to the cylinder block.
2. Remove the chain cover and gaskets.
3. Remove the oil deflector from the crankshaft.

1–C–14. Removing of Chain Tensioner and Chain Vibration Damper

1. Remove the bolt attaching the chain tensioner to the block and remove the tensioner.
2. Remove the slipper blade to the block and remove the slipper blade.
3. Remove the screws that attach the chain vibration damper to the block. Remove the chain vibration damper.

1–C–15. Removing of Chain and Sprockets

1. Remove the lock nut and washer for the oil pump sprocket.
2. Pull off the oil pump sprocket and crankshaft sprocket together with the oil pump drive chain.
3. Remove the spacer from the crankshaft.
4. Remove the crankshaft sprocket and timing chain.
5. Remove the key and spacer from the crankshaft.

1–C–16. Removing of Oil Pump and Strainer

1. Remove the nuts attaching the oil strainer to the oil pump and remove the oil strainer and "O" ring.
2. Loosen the bolts and remove the oil pump, "O" ring and adjusting washers from the cylinder block.

1–C–17. Removing of Piston and Connecting Rod

1. Remove the bolts from each connecting rod and remove the bearing caps.
2. Push the piston and connecting rod assembly out of the cylinder block with the handle end of a hammer until the piston rings are free from the cylinder bore. Remove the piston and connecting rod assembly from the top of the block.
3. To separate the piston and connecting rod, remove the clips and remove the piston pin with the **piston pin remover and installer** (49 0223 061). If tightly, heat the piston by a piston heater.



Fig. 1–9 Removing of piston pin

1–C–18. Removing of Crankshaft

1. Loosen the bolts that attach the main bearing cap to the cylinder block.
2. Use the **main bearing cap puller** (49 0221 270A) and remove the rear main bearing cap and thrust washers.

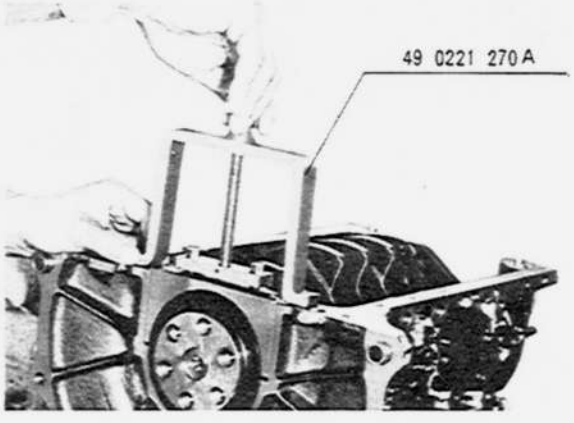

Fig. 1–10 Removing of rear main bearing

3. Remove the remaining bearing caps.
4. Take out the oil seal from the rear end of the crankshaft.
5. Remove the crankshaft from the cylinder block.

1–D. ENGINE INSPECTION AND REPAIR

1–D–1. Inspection of Cylinder Head

Remove all carbon in the combustion chamber and exhaust port. Be sure that the water passages are open. Inspect all tapped openings. Repair or replace any damaged therads or broken studs.

Check for cylinder head distortion by placing a straight edge on the cylinder head surface.

Measure the clearance between the straight edge and the cylinder head surface with a feeler gauge as shown in Fig. 1–11. If distortion **exceeds 0.15 mm (0.006 in)**, grind with a surface grinder.

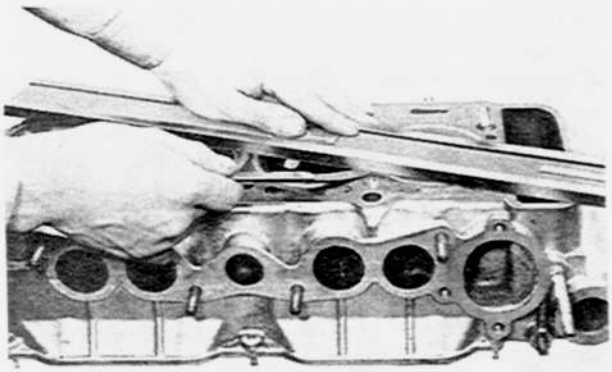

Fig. 1–11 Inspecting of cylinder head

1–D–2. Inspection of Valve Spring

Examine the springs for corrosion or acid etchings. If it is severe, replace with new ones.

Check the free length, spring pressure and squareness of the spring. Replace with new spring if the length is decreased **more than 3 %** of the standard dimension, or if the spring fitting pressure is reduced **more than 15 %** of the standard dimension, or the out of squareness is more than 3 mm per 100 mm (0.03 in per 4.0 in).

The specifications of the valve springs are :

	Inner spring	Outer spring
Free length	36.8 mm (1.449 in)	37.3 mm (1.469 in)
Fitting length	32.5 mm (1.280 in)	34.0 mm (1.339 in)
Fitting pressure	9.5 kg (20.9 lb)	14.3 kg (31.5 lb)

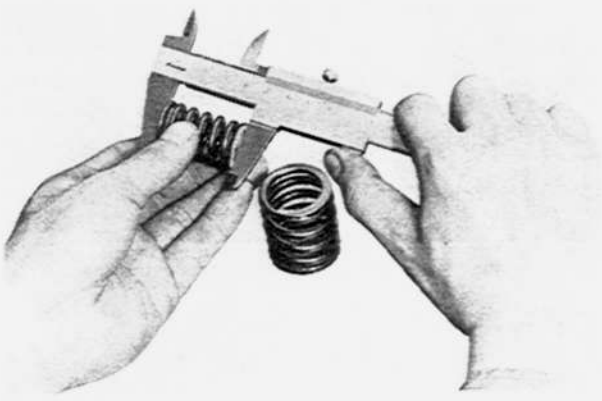

Fig. 1–12 Checking of free length

1–D–3. Inspection of Valve

Remove all carbon from the valves. Visually inspect all valves for warpage, cracks or excessive burning and replace if any of these conditions is found.

Replace any worn, pitted or corroded valves that can not be cleaned or refaced.

Measure the diameter of the valve stem at two or three places along the length of the stem with a micrometer. Replace if the wear of the valve stem is **more than 0.05 mm (0.0020 in).**

The standard diameter is 8.0 mm (0.3150 in).

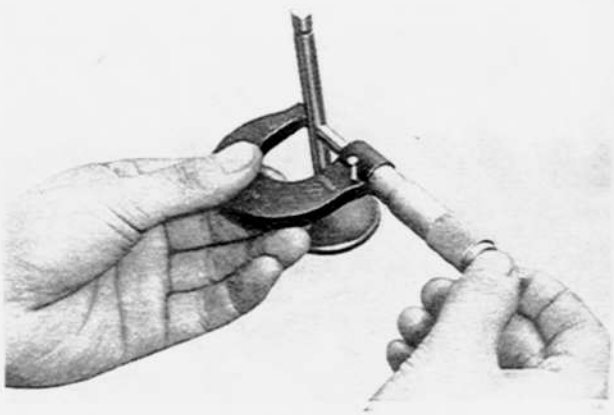

Fig. 1–13 Measuring of valve stem diameter

1–D–4. Checking of Valve Stem and Guide Clearance

The clearance between the valve stem and guide should be, under the condition of the guide being fitted with the cylinder head, **0.018 to 0.053 mm (0.0007 to 0.0021 in) on the inlet side** and **0.018 to 0.058 mm (0.0007 to 0.0023 in) on the exhaust side.** To check this clearance, place the valve in each guide. Check the clearance with a suitably mounted dial indicator, or feel the clearance by moving the valve stem back and forth. If this check shows excessive clearance, it will be necessary to replace the valve guide and valve.

1–D–5. Replacing of Valve Guide

1. Press out the old valve guide with the **valve guide remover** (49 0221 251A).

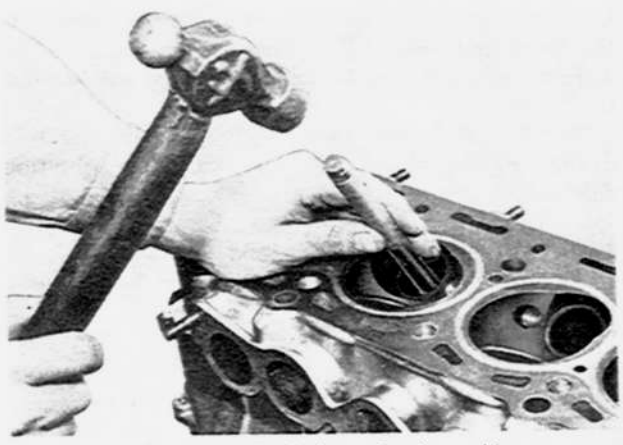

Fig. 1–14 Replacing of valve guide

2. Press in the new guide squarely with the same tool until the ring on the guide touches the cylinder head.

Note: Intake and exhaust valve guides are different as shown in Fig. 1–15.

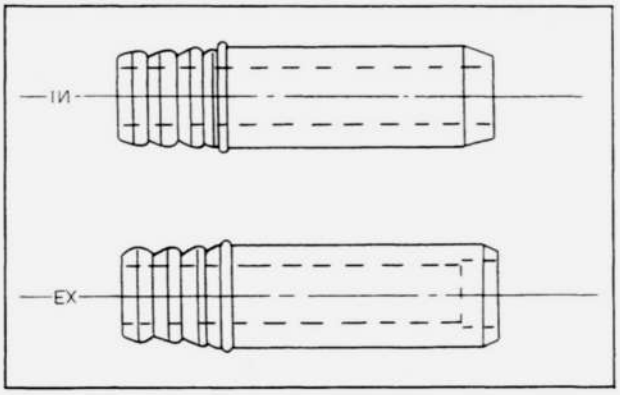

Fig. 1–15 Valve guides

3. Install the new valve seal onto the valve guide with the **valve seal installer** (49 0223 160A).

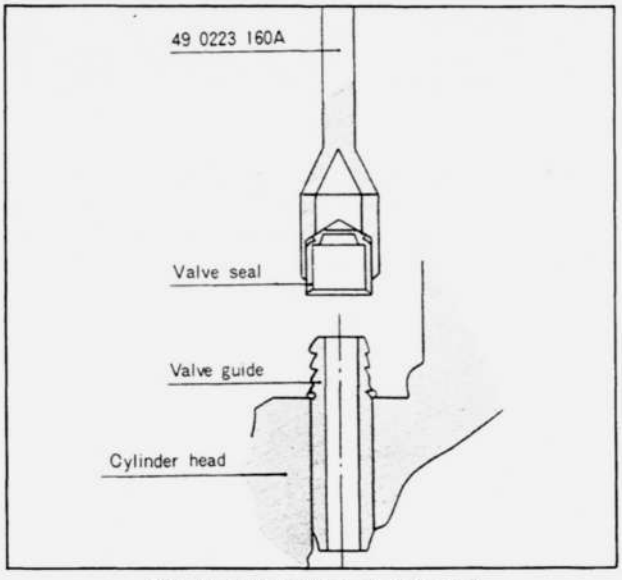

Fig. 1–16 Installing of valve seal

1–D–6. Refacing of Valve

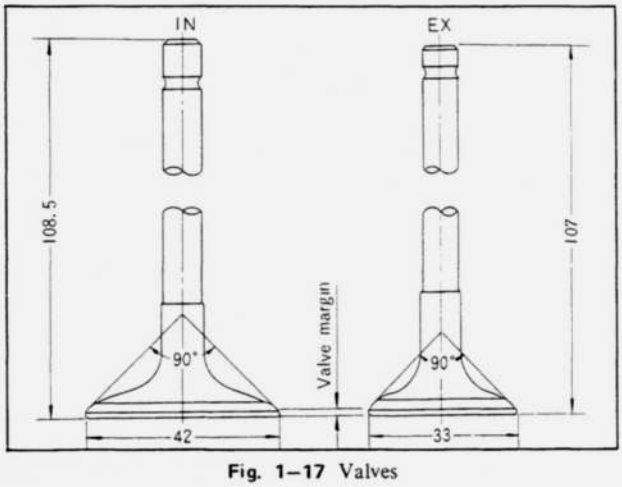

Fig. 1–17 Valves

Reface the valves with a valve refacer, following the instructions of the valve refacer manufacturer. The **intake and exhaust valve face has** a **90 degree** angle. Take off only the minimum of metal required to clean the valve faces.

Note: If the outer edge of the valve (valve margin) becomes **less than 1.0 mm (0.040 in)** from excessive grinding, the valve must be replaced.

1–D–7. Inspection and Refacing of Valve Seat

Inspect the valve seats for cracks, burrs, ridges or improper angle and width. When necessary to reface the valve seat, use a valve seat grinder or a valve seat cutter and grind to a **90 degree angle. Do not** grind any more than is necessary to clean up the valve seat. When using the seat cutter, refer to next paragraph.

Note:
(a) If the valve guides are to be replaced, this must be done before refacing the valve seat.
(b) The valve seat ring is shrinkage-fitted in the cylinder head. However, the seat ring cannot be replaced in view of maintaining strength.

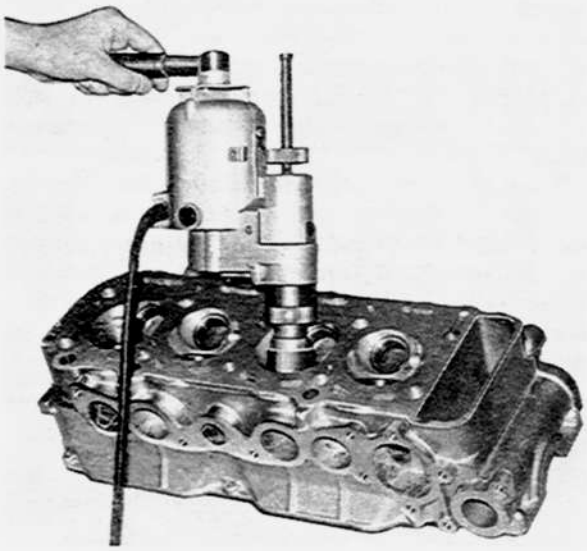

Fig. 1–18 Valve seat grinder

1–D–8. Valve Seat Cutter

The following cutters are available for refacing valve seats.

1. Valve seat cutter pilot	49 2765 034
2. Valve seat cutter pilot	49 2728 033
3. 90° cutter (for inlet seat)	49 2801 011
4. 30° cutter (for inlet port)	49 2801 013
5. 150° cutter (for inlet spot facing)	49 2821 012
6. 90° cutter (for exhaust seat)	49 2952 011
7. 30° cutter (for exhaust port)	49 2541 013
8. 150° cutter (for exhaust spot facing)	49 2765 012

When refacing the valve seat with any one of these cutters, fit the cutter on the taper of the pilot and insert the pilot into the valve guide hole. Then, turn the handle and cut off to correct the valve seat.

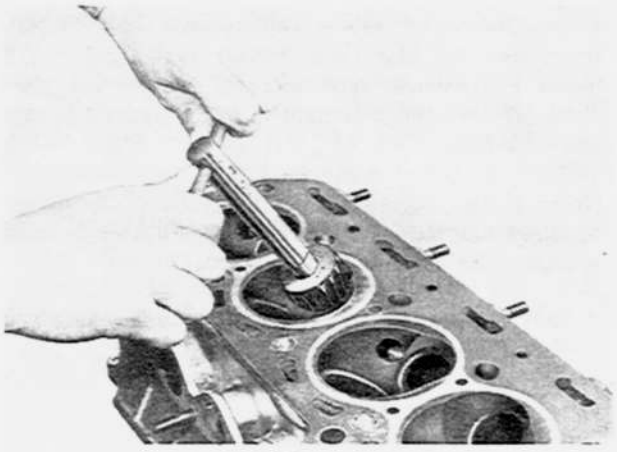

Fig. 1–19 Valve seat cutter

1–D–9. Checking of Contact between Valve and Valve Seat

After the valve or valve seat is ground, check the contact between the valve and valve seat as follows:
1. Apply a thin coat of "Prussian Blue" on the valve face and insert the valve into the valve seat.
2. Move the valve up and down with hand pressure, rotating the valve.
3. Remove the valve and observe the transfer of "Prussian Blue" to the valve seat.
An even transfer indicates accurate valve and valve seat refacing. If uneven, the valve must be lapped into the valve seat, using a suitable lapping compound.
4. Check the valve seat width with a steel scale placed across the face of the valve seat. The **valve seat width is 2.1 mm (0.083 in) for the intake** valve seat and **1.4 mm (0.055 in) for the exhaust** valve seat. If the valve seat width is too wide, it can be reduced from inside with the 30° seat cutter and from outside with the 150° seat cutter.

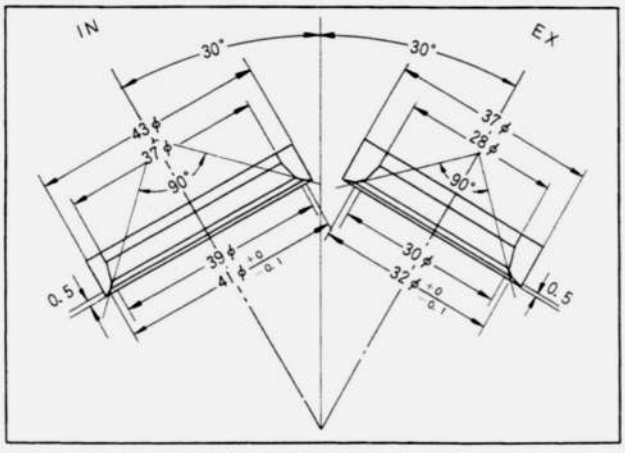

Fig. 1–20 Valve seat

1–D–10. Inspection of Valve Seat Sinking

When the valve and the valve seat have been refaced several times or they must be cut deeply for adequate reconditioning, the position of the valve sinks below the standard position. Accordingly, the spring pressure under the fitting condition falls. Check the sinking of the valve seat by using a vernier calipers as shown in Fig. 1–21.
If the **sinking exceeds 0.5 mm (0.020 in)**, washers of sufficient thickness to compensate the sinking must be placed under the springs so as to maintain the specified spring pressure. If the sinking is **more than 1.5 mm (0.059 in)**, replace the valve or cylinder head.

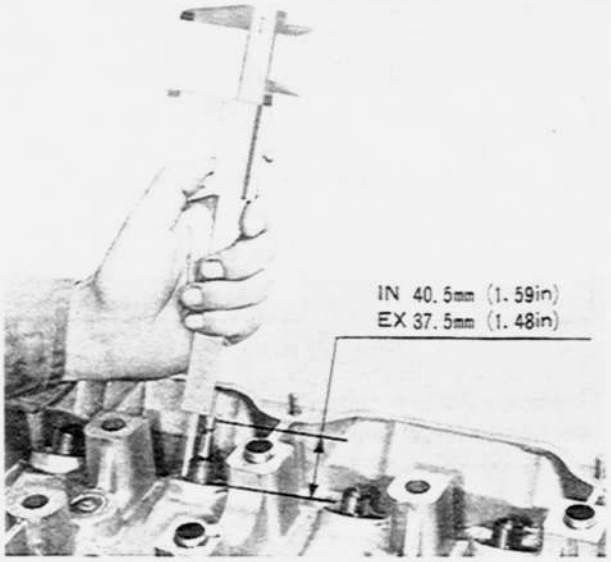

Fig. 1–21 Checking of valve seat sinking

1–D–11. Inspection of Rocker Arm and Shaft

The standard clearance between the rocker arm bush and shaft is 0.020 to 0.074 mm (0.0008 to 0.0029 in). Inspect the clearance and if it is **more than 0.10 mm (0.0039 in)**, replace the bush or shaft.

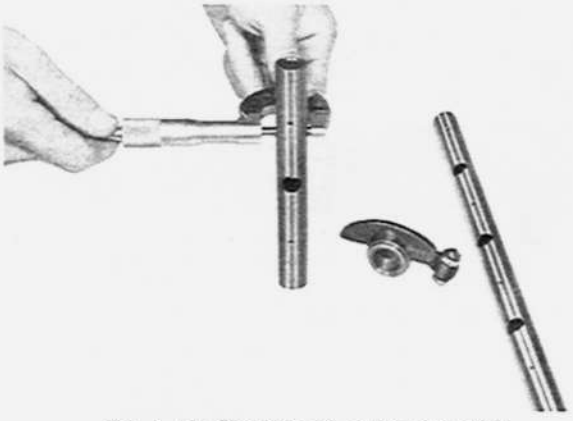

Fig. 1–22 Checking of rocker arm shaft

1–D–12. Replacing of Rocker Arm Bush

1. Using a suitable mandrel, press the bush out of the rocker arm.
2. Press fit the bush with the same tool used to remove, being sure **to align the oil holes** of the rocker arm and bush.
3. Ream up the bush to the correct fit.

1–D–13. Inspection of Cylinder Block

Clean the cylinder block with a suitable solvent. Special care must be taken when cleaning the oil passages, coolant passages and cylinder walls to remove

all sludge, dirt and carbon deposit. After cleaning, use compressed air to dry the block thoroughly. Examine the cylinder block for crack and any damage. Examine all machined surfaces of the block for burrs and scores. Check for the cylinder block distortion in the same way, as described in Par. 1–D–1.

1–D–14. Inspection of Cylinder Bore

Check the cylinder bores for wear, scratching and waveness. Measure the diameter of the cylinder bore by using a cylinder gauge as shown in Fig. 1–23.

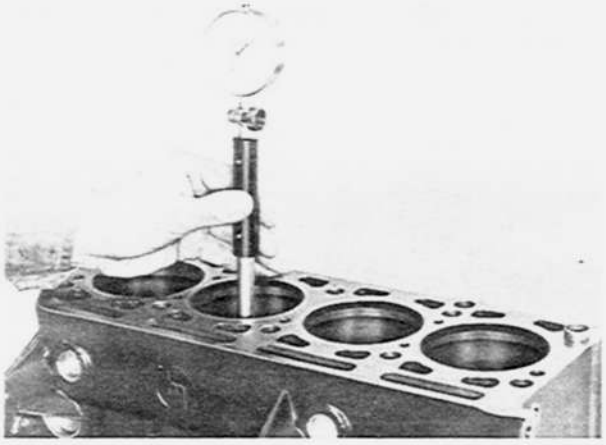

Fig. 1–23 Checking of cylinder bore (1)

This measurement should be taken in the X-X direction and the Y-Y direction at each of the 3 places, upper, middle and lower, of one cylinder, as shown in Fig. 1–24. The difference between the minimum and maximum values out of the 6 measured values is regarded as the amount of wear. If the wear of cylinder bore is **0.15 mm (0.0059 in) or more,** it should be honed or rebored. Honing and reboring should be made to correspond to piston and rings oversize and to the recommended piston clearance of **0.057 to 0.072 mm (0.0022 to 0.0028 in).**

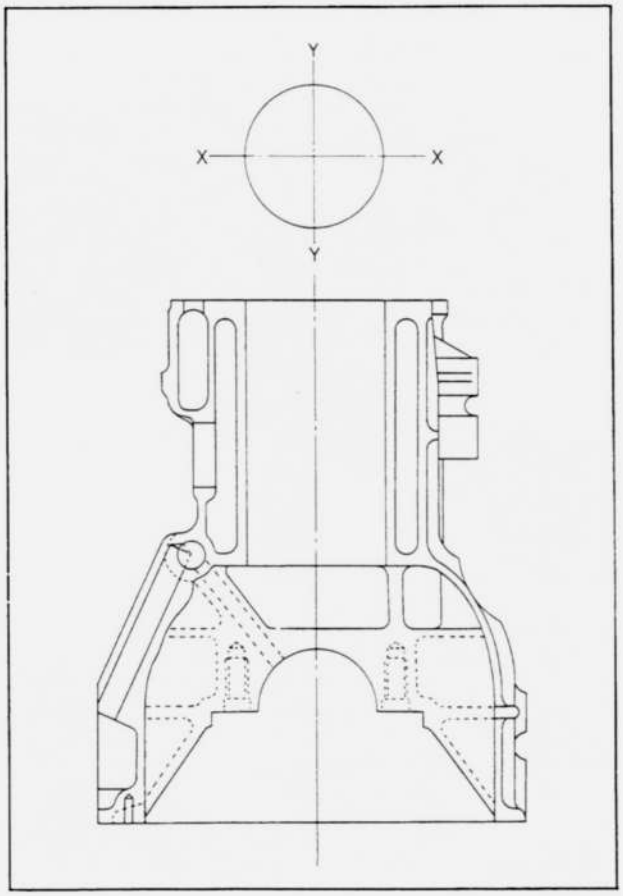

Fig. 1–24 Checking of cylinder bore (2)

Note:
(a) If any one of the cylinder bores requires reboring, the remaining ones also require reboring.
(b) Reboring must not go beyond 1.0 mm (0.0394 in).

The following oversizes of pistons and rings are available :

0.25 mm (0.0098 in)	0.75 mm (0.0295 in)
0.50 mm (0.0197 in)	1.00 mm (0.0394 in)

1–D–15. Inspection of Piston

Carefully inspect the piston and replace if it is severely scratched or burned.
Measure the diameter of the piston by means of a micrometer. The standard diameter is as shown in Fig. 1–25. If the wear is severe, replace the piston.

Note: This measurement should be carried out without the piston pin fitted.

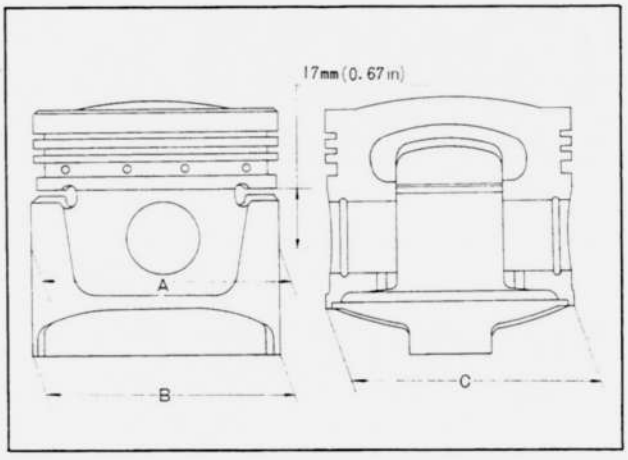

Fig. 1–25 Piston
A: 77.945 ± 0.01 mm (3.0687 ± 0.0004 in)
B: 78.0 ± 0.01 mm (3.0709 ± 0.0004 in)
C: 77.69 ± 0.01 mm (3.0587 ± 0.0004 in)

1–D–16. Checking of Piston Clearance

Check the clearance between each piston and cylinder by measuring the diameter of the piston and cylinder bore. Refer to Par. 1–D–14 for the bore measurement procedure. Measure the piston diameter **at 90 degrees to the pin bore axis and 17 mm (0.67 in) below the ring groove.**
The standard clearance is **0.057 to 0.072 mm (0.0022 to 0.0028 in).**
If the clearance exceeds **0.15 mm (0.0059 in),** rebore the cylinders and use the oversize piston referring to Par. 1–D–14.

Marked	Cylinder	Piston
A	$78\ ^{+0.019}_{+0.013}$ mm (3.0709 $^{+0.0007}_{+0.0005}$ in)	$77.945\ ^{+0.010}_{+0.004}$ mm (3.0687 $^{+0.0004}_{+0.0002}$ in)
Unmarked	$78\ ^{+0.013}_{+0.006}$ mm (3.0709 $^{+0.0005}_{+0.0002}$ in)	77.945 ± 0.004 mm (3.0687 ± 0.0002 in)
C	$78\ ^{+0.006}_{-0}$ mm (3.0709 $^{+0.0002}_{-0}$ in)	$77.945\ ^{-0.004}_{-0.010}$ mm (3.0687 $^{-0.0002}_{-0.0004}$ in)

The standard pistons and cylinders are graded into 3 classes respectively according to the diameter of the piston and cylinder bore, and each of them is stamped with A or C, or unmarked as shown in Fig. 1–26.

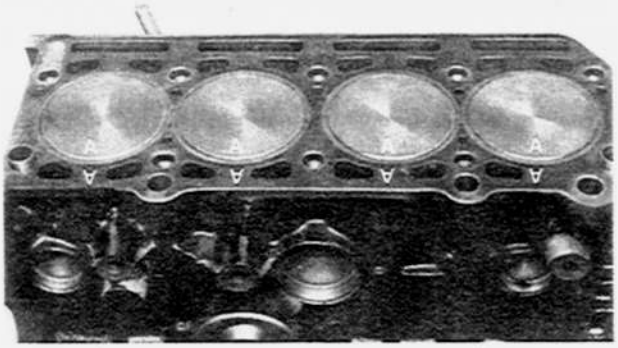

Fig. 1–26 Matching of piston and cylinder

The standard clearance is obtained by combining the piston and the cylinder which have the same marks.

1–D–17. Inspection of Piston Ring Groove

Remove the carbon from the piston ring grooves by using a ring groove cleaner or a shape square edge of broken ring piece. With a feeler gauge, check the side clearance of the piston rings as shown in Fig. 1–27. If it is improper, replace the piston rings.



Fig. 1–27 Piston ring groove inspection

The standard clearances are as follows:

	Side clearance
Top ring	0.035 ~ 0.070 mm (0.0014 ~ 0.0028 in)
Second ring	0.030 ~ 0.064 mm (0.0012 ~ 0.0025 in)
Oil ring	0.030 ~ 0.064 mm (0.0012 ~ 0.0025 in)

1–D–18. Checking of Piston Ring End Gap

Place the piston ring in the cylinder bore below the ring travel, using a piston head to push the ring in squarely. Check the piston ring end gap with a feeler gauge as shown in Fig. 1–28.
The end gap should be **0.20 to 0.40 mm (0.008 to 0.016 in)**.

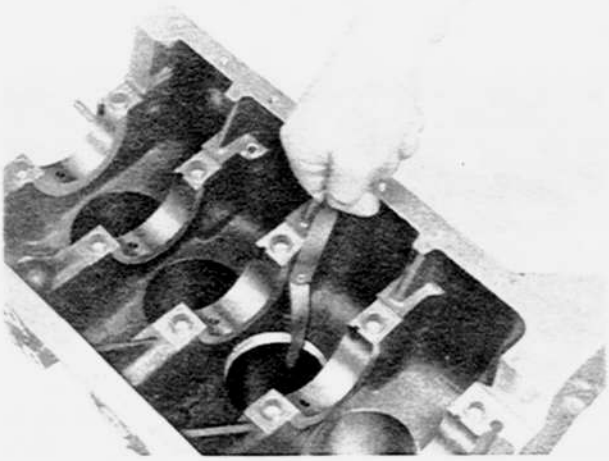

Fig. 1–28 Checking of end gap

1–D–19. Checking of Piston Pin Fit

Check the fit of the piston pin and the connecting rod small end bush to be **0.01 to 0.03 mm (0.0004 to 0.0012 in)**. Replace the piston pin and bush if they are worn heavily.

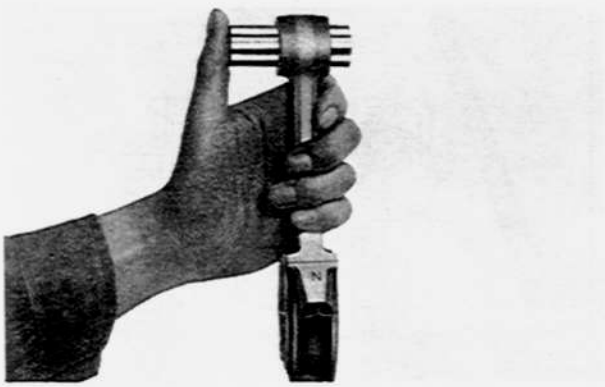

Fig. 1–29 Checking of piston pin fit

1–D–20. Replacing of Small End Bush

1. Press out the old bush with a suitable mandrel.
2. Press fit the new bush, being sure to **align the oil holes** of the bush and connecting rod.
3. Finish the inner surface of the bush with a reamer or a pin hole grinder.

Note: The fit is correct when the piston pin slides through the bush with some pressure but without any noticeable looseness.

1–D–21. Connecting Rod Bearing

The connecting rod bearings are of aluminum-lined and of the interchangeable type. When properly installed, the bearings provide proper clearance without filling, scraping or shimming.

Each bearing consists of two halves and should be replaced as a set.

The connecting rod bearing sets are available in the standard size and undersize of **0.25, 0.50 and 0.75 mm (0.0098, 0.0197 and 0.0295 in).**

Inspect the bearing carefully and replace if it is worn, scored or flaked.

1–D–22. Checking of Connecting Rod Bearing Clearance

The connecting rod bearing clearance should be **0.027 to 0.077 mm (0.0011 to 0.0030 in).**

Check the bearing clearance by using a "Plastigage" as follows:

1. Clean the surfaces of the bearing and crankpin.
2. Place the "Plastigage" on the crankpin.
3. Install the bearing cap and tighten the bolts to the specified torque of **4.5 m-kg (30 ft-lb).**
4. Remove the bearing cap and measure the width of the "Plastigage", using the scale printed on the envelope.

If the clearance is excessive, replace the connecting rod bearings by undersizes and grind the crankpins so as to obtain specified bearing clearance.

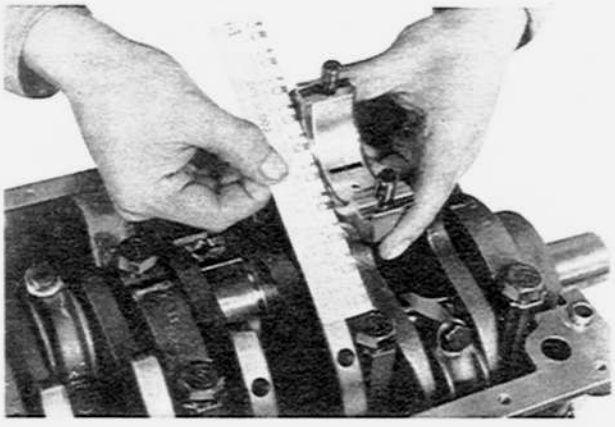

Fig. 1–30 Checking of bearing clearance

1–D–23. Checking of Connecting Rod Side Play

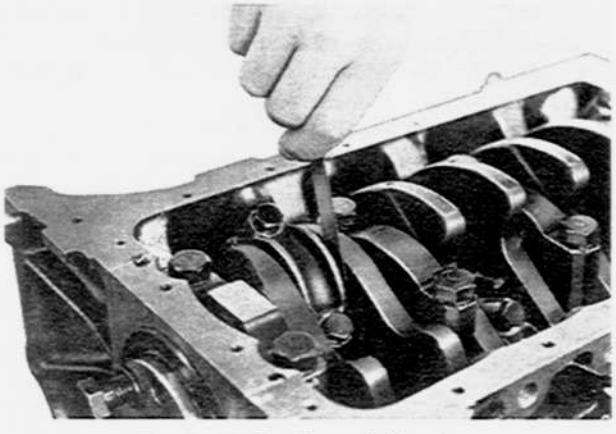

Fig. 1–31 Checking of side play

Check the connecting rod side play with a feeler gauge as shown in Fig. 1–31. The side play should be **0.11 to 0.21 mm (0.0043 to 0.0083 in).**

1–D–24. Checking of Connecting Rod Alignment

Check the connecting rod for bend or twist by using a suitable alignment fixture. Follow the instructions of the fixture manufacturer. If the bend or twist exceeds specifications, the connecting rod must be straightened or replaced.

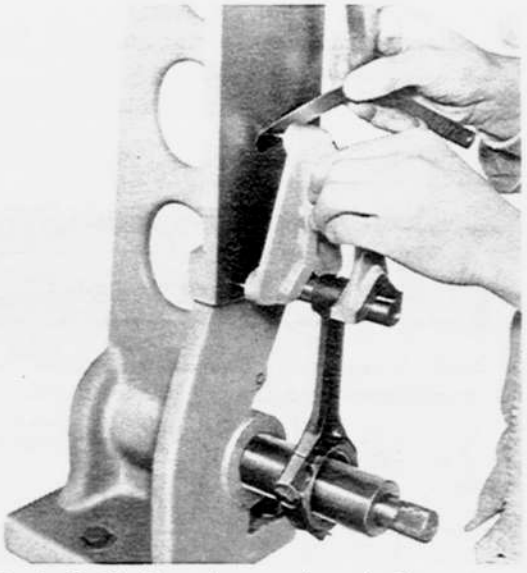

Fig. 1–32 Checking of connecting rod alignment

1–D–25. Weight of Connecting Rod

The weight of four connecting rods in the engine should balance within 5 gr (0.18 oz).

In order to effect this, the connecting rods are classified into following groups and inscribed the mark on each connecting rod.



Fig. 1–33 Mark of connecting rod weight

Code No.	Minimum weight	Maximum weight
C	675 gr (23.81 oz)	680 gr (23.98 oz)
D	680 gr (23.98 oz)	685 gr (24.16 oz)
E	685 gr (24.16 oz)	690 gr (24.34 oz)
F	690 gr (24.34 oz)	695 gr (24.51 oz)
G	695 gr (24.51 oz)	700 gr (24.69 oz)
H	700 gr (24.69 oz)	705 gr (24.87 oz)
I	705 gr (24.87 oz)	710 gr (25.04 oz)
J	710 gr (25.04 oz)	715 gr (25.22 oz)
K	715 gr (25.22 oz)	720 gr (25.39 oz)
L	720 gr (25.39 oz)	725 gr (25.57 oz)
M	725 gr (25.57 oz)	730 gr (25.75 oz)
N	730 gr (25.75 oz)	735 gr (25.92 oz)
O	735 gr (25.92 oz)	740 gr (26.10 oz)

1–D–26. Checking of Main Journal and Crankpin

Clean the crankshaft thoroughly with a suitable solvent and blow out the oil passages with compressed air.

Inspect the crankshaft for cracks, scratches and the oil passages for clog.

Measure the diameter of each main journal and crankpin with a micrometer. If the wear is **more than 0.05 mm (0.0020 in)**, the crankshaft should be ground to the undersize of **0.25, 0.50 and 0.75 mm (0.0098, 0.0197 and 0.0295 in).**

The standard diameter of the crankpins and main journals is shown in the following table.

Crankpin		$53\ ^{-0.045}_{-0.060}$ mm ($2.0866\ ^{-0.0018}_{-0.0024}$ in)
Main journal	Green	$63\ ^{-0.052}_{-0.060}$ mm ($2.4804\ ^{-0.0020}_{-0.0024}$ in)
	Brown	$63\ ^{-0.045}_{-0.052}$ mm ($2.4804\ ^{-0.0018}_{-0.0020}$ in)

1–D–27. Checking of Crankshaft Run-Out

To check alignment, mount the crankshaft on the V blocks and apply a dial indicator. Slowly rotate the crankshaft and note the reading on the dial indicator.

The maximum allowable run-out is **0.03 mm (0.0012 in)**. If the run-out exceeds 0.03 mm (0.0012 in), correct with a press.

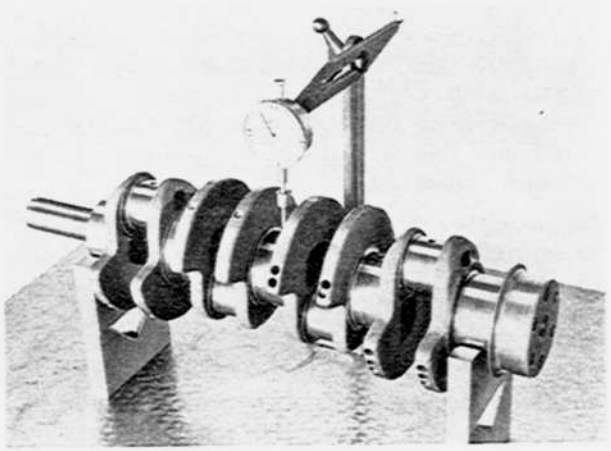

Fig. 1–34 Checking of crankshaft run-out

1–D–28. Main Bearing

The main bearings are of aluminum-lined and interchangeable type. They are classified 3 types according to the shape as shown in Fig. 1–35.

When correctly installed, it is provided proper clearance without filing, scraping or shimming.

Each bearing consists of two halves and should be replaced as a set.

The main bearings are available in the standard size and undersize of **0.25, 0.50 and 0.75 mm (0.0098, 0.0197 and 0.0295 in)**.

The standard main bearings are graded into three classes according to the thickness and each of them is painted with green, brown and yellow. Refer to Par. 1–D–29 when replacing the main bearings.

Inspect the bearings carefully for wear, scoring, flaking or any damage. If any of these conditions exists, replace with new bearings.

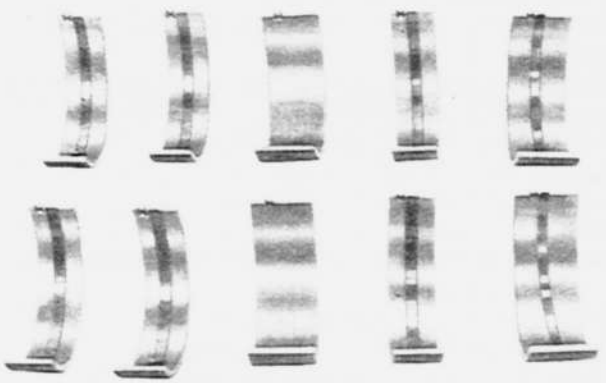

Fig. 1–35 Main bearings

1–D–29. Checking of Main Bearing Clearance

Check the main bearing clearance by using "Plastigage" in the same manner for the connecting rod bearing clearance.

Note the following differences.

1. The standard main bearing clearance is **0.031 to 0.061 mm (0.0012 to 0.0024 in).**
2. The tightening torque of the bearing cap nuts is **8.5 m-kg (60 ft-lb).**

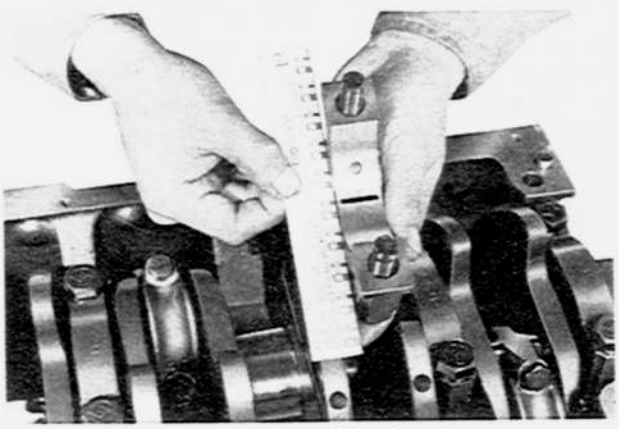

Fig. 1–36 Checking of bearing clearance

Note: The standard main bearing, main journal and bearing housing are classified into two or three grades respectively by the sizes of the diameter and the standard bearing clearance is obtained by combining the main bearing, main journal and bearing housing in accordance with the following chart.

Bearing housing (Cylinder block)	Main journal (Crankshaft)	Main bearing	Clearance
Brown	Green	Green	0.032 ~ 0.059 mm (0.0013 ~ 0.0023 in)
	Brown	Yellow	0.035 ~ 0.061 mm (0.0014 ~ 0.0024 in)
Green	Green	Brown	0.031 ~ 0.059 mm (0.0012 ~ 0.0023 in)
	Brown	Green	0.034 ~ 0.061 mm (0.0013 ~ 0.0024 in)

1–D–30. Checking of Crankshaft End Play

The end thrust of the crankshaft is taken by the thrust washers at the rear of the crankshaft.

The standard end play of the crankshaft is **0.08 to 0.242 mm (0.0031 to 0.0095 in).**

Check the end play with a dial indicator or a feeler gauge as shown in Fig. 1–37.

Correct, if the end play exceeds **0.3 mm (0.012 in).**

The end play can be adjusted by the thrust washers. The thrust washers are available in the oversize of **0.25, 0.50 and 0.75 mm (0.0098, 0.0197 and 0.0295 in).**



Fig. 1–37 Checking of end play

1–D–31. Camshaft Inspection

Check to see that the cam faces and journals are smooth and are not scored or worn.

Measure the cam height with a micrometer and if a wear exceeding **0.2 mm (0.0079 in)** is found, replace the camshaft.

The standard cam height is 44.715 mm (1.7605 in) on inlet and 44.682 mm (1.7592 in) on exhaust.

Measure the diameter of the camshaft journals. If a wear of **more than 0.05 mm (0.0020 in)** is found, grind the journals to an undersize of **0.25, 0.50 and 0.75 mm (0.0098, 0.0197 and 0.0295 in).**

The standard diameters of the camshaft journals are in the following table.

Front	$45\ ^{-0.040}_{-0.055}$ mm	$(1.7717\ ^{-0.0016}_{-0.0022}$ in)
Center	$45\ ^{-0.050}_{-0.065}$ mm	$(1.7717\ ^{-0.0020}_{-0.0026}$ in)
Rear	$45\ ^{-0.040}_{-0.055}$ mm	$(1.7717\ ^{-0.0016}_{-0.0022}$ in)

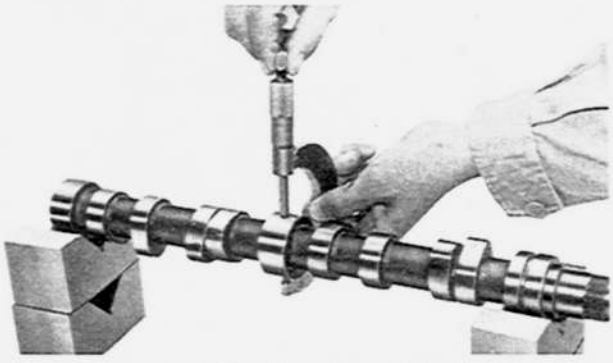

Fig. 1–38 Checking of camshaft journal

1–D–32. Checking of Camshaft Run-Out

To check the run-out, mount the camshaft on the V blocks or center holding device and use a dial indicator, as shown in Fig. 1–39.

Rotate the camshaft with hand and determine the reading on the indicator.

If run-out exceeds **0.03 mm (0.0012 in),** straighten the camshaft with a press or replace with a new one.

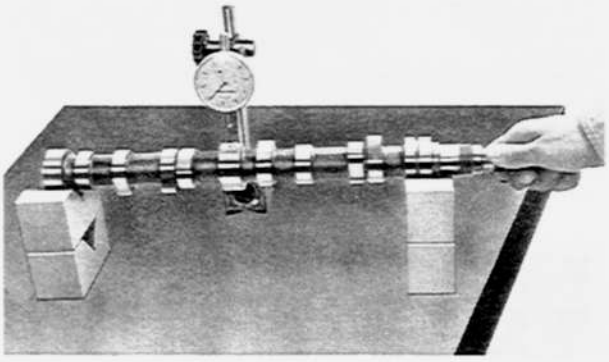

Fig. 1–39 Checking of camshaft run-out

1–D–33. Camshaft Bearing

The camshaft bearings are of babbitt-lined and interchangeable types. They are classified into 2 types as shown in Fig. 1–40.

When correctly installed, it is provided proper clearance without filing, scraping or shimming. Each bearing consists of two halves and should be replaced as a set.

The camshaft bearings are available in the standard size and undersize of **0.25, 0.50 and 0.75 mm (0.0098, 0.0197 and 0.0295 in).**

Inspect the bearings carefully for wear, scoring, flaking or any damage. If any of these conditions exists, replace with new bearings.

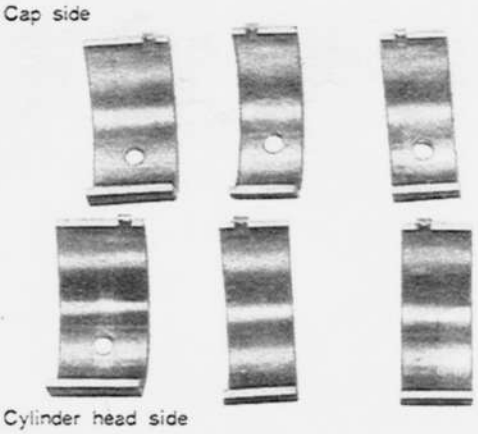

Fig. 1–40 Camshaft bearings

1–D–34. Checking of Camshaft Bearing Clearance

Check the camshaft bearing clearance by using a "Plastigage" in the same manner for the connecting rod bearing clearance.

Note the following differences:

1. The standard camshaft bearing clearances are as follows.

Front	0.019 ~ 0.069 mm (0.0007 ~ 0.0027 in)
Center	0.029 ~ 0.079 mm (0.0011 ~ 0.0031 in)
Rear	0.019 ~ 0.069 mm (0.0007 ~ 0.0027 in)

2. The tightening torque of the bolts is **8 m-kg (60 ft-lb).**

1–D–35. Checking of Camshaft End Play

The end play of the camshaft is determined by the clearance between the sprocket surface and the thrust plate surface.
Measure this clearance with a feeler gauge as shown in Fig. 1–41.
The end play of the camshaft should be **0.02 to 0.18 mm (0.0008 to 0.0071 in).** If the end play is excessive, replace with a new thrust plate.

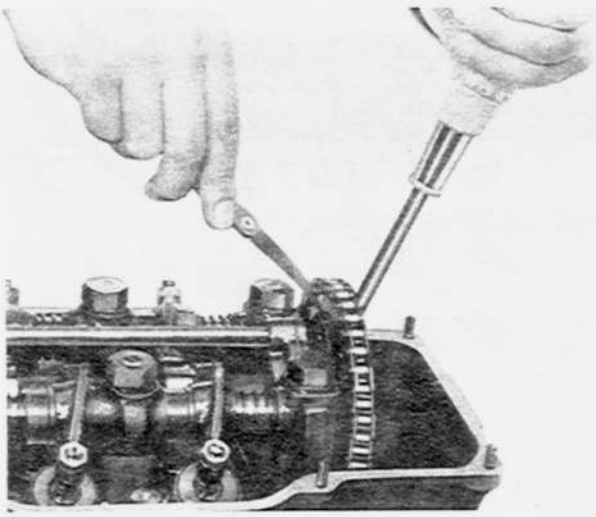

Fig. 1–41 Checking of camshaft end play

1–D–36. Checking of Timing Chain, Oil Pump Drive Chain and Sprockets

Check each chain for broken links. Check the sprockets for cracks and worn or damaged teeth. If any defects are found, replace with new parts.



Fig. 1–42. Sprocket

1–D–37. Checking of Chain Tensioner and Chain Vibration Damper

Check the chain tensioner and chain vibration damper for wear or any damage. Replace with new parts if necessary.

1–E. ENGINE ASSEMBLY

The procedures for assembling the engine when the engine is to be completely overhauled are as follows:

1–E–1. Assembling of Piston and Connecting Rod

1. Install the piston pin clip in the groove on one side of the piston.
2. Place the connecting rod in the piston and align the hole of the connecting rod with the hole of the piston.
3. Insert the piston pin with the **piston pin installer** (49 0223 061) until the piston pin clip can be fitted. Preheat the piston if tightly.
4. Fit the piston pin clip in the groove.

Note: Care must be taken during the installation that relative positions of the oil hole on the connecting rod big end and the "F" mark on the piston are in accordance with Fig. 1–43.

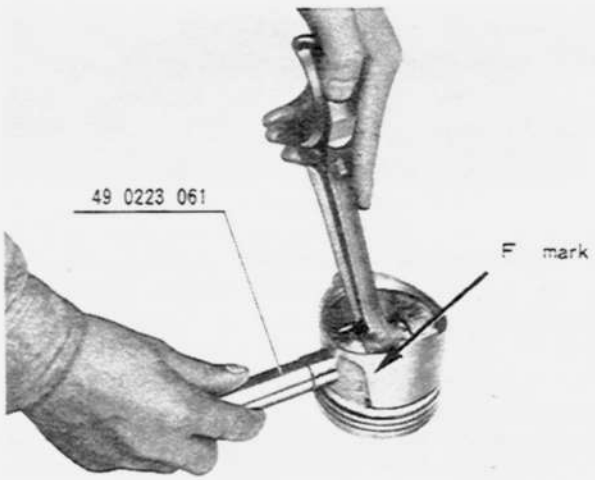

Fig. 1–43 Inserting of piston pin

1–E–2. Installing of Piston Ring

1. Fit the expander in the bottom ring groove and install the oil ring on it with a installer as shown in Fig. 1–44.
2. Install the second ring and then the top ring.



Fig 1–44 Installing of piston ring

Note:
(a) Be sure to install the rings with the inscription mark "R" upward as the faces of the top and second

rings are tapered as shown in Fig. 1–45.
(b) Do not expand the rings more than necessary to install, also be careful not to burr the piston with the end of the rings.

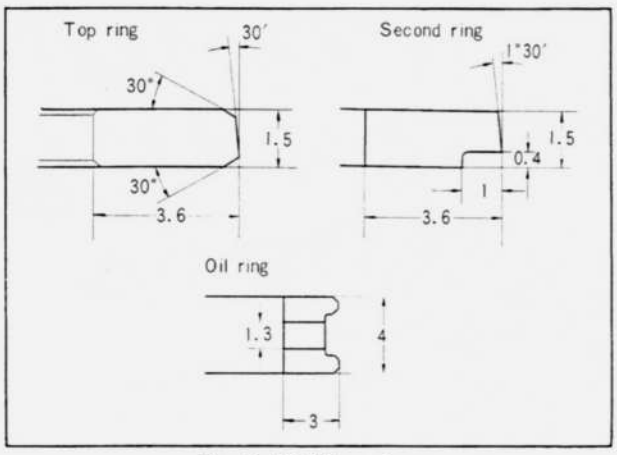

Fig. 1–45 Piston rings

1–E–3. Installing of Piston and Connecting Rod Assembly

1. Place the piston rings at **about 120 apart so that the gap is not located on the thrust side and the piston pin side.**
2. Lubricate the entire assembly with engine oil.
3. Using the suitable piston installer, insert the piston and connecting rod assembly from the top of the cylinder block by tapping the piston lightly with a plastic hammer.



Fig. 1–46 Installing of piston assembly

Note: Insert the piston to the cylinder so that "F" mark on the piston is directed to the front of the engine.

4. Rotate the cylinder block upside down.
5. Fit the connecting rod bearing halves into their respective locations.

1–E–4. Installing of Crankshaft

1. Clean the contact surfaces of the cylinder block, main bearings and crankshaft.
2. Fit the five sets of main bearings properly to the cylinder block and the bearing caps respectively.

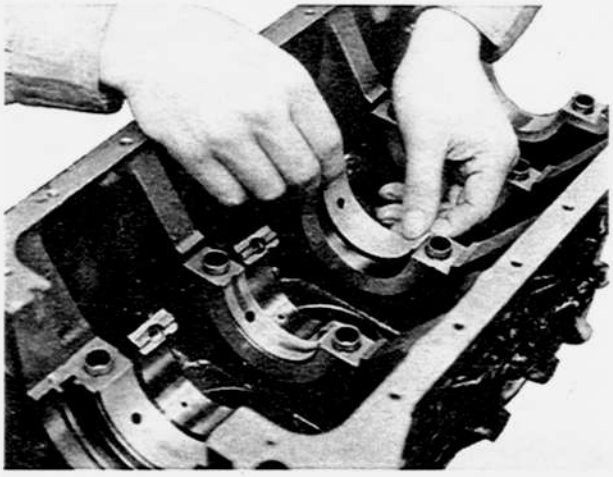

Fig. 1–47 Installing of main bearing

Note: When it is necessary to replace the main bearings with new ones, refer to Par. 1–D–29.

3. Fit the half of the thrust washers to the cylinder block with **oil grooved surface facing the crankshaft thrust side.**

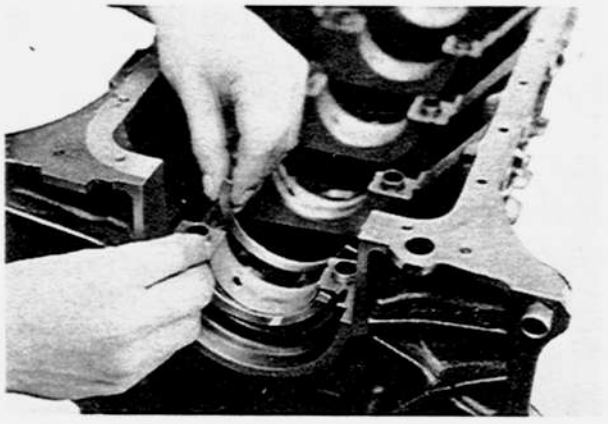

Fig. 1–48 Fitting of thrust washers

4. Lubricate the main bearing surfaces with engine oil.
5. Place the crankshaft in the cylinder block, being careful not to drop the thrust washers.

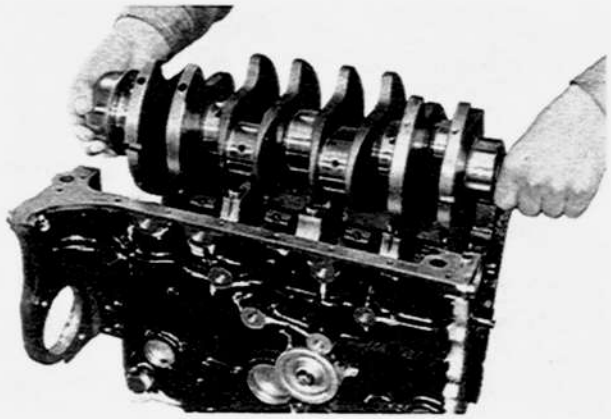

Fig. 1–49 Installing of crankshaft

6. Fit the oil seal to the rear end of the crankshaft after applying grease to the seal lip.
7. Fit the rod-shaped oil seals (side seals) into the grooves on both sides of the rear main bearing cap.

Note: The side seals should be placed as shown in Fig. 1–50.

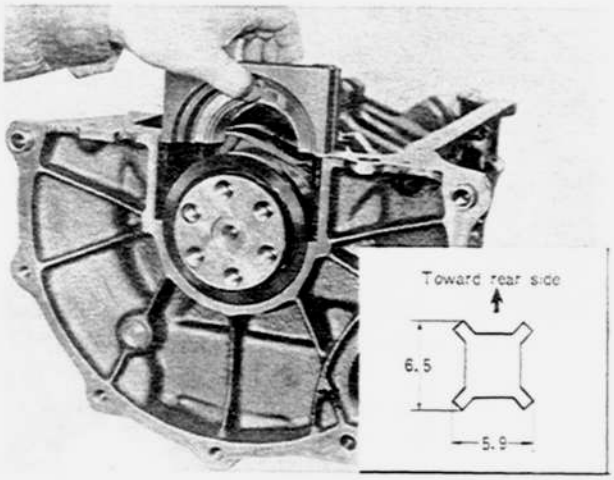

Fig. 1–50 Installing of main bearing cap

Fit the half of the thrust washers to the rear main bearing cap with the grooves toward the crankshaft thrust side.
9. Install the main bearing caps.
10. Tighten the bolts to **8.5 m-kg (60 ft-lb)**.

Note: The main bearing caps are marked with a number which shows the order of their arrangement.

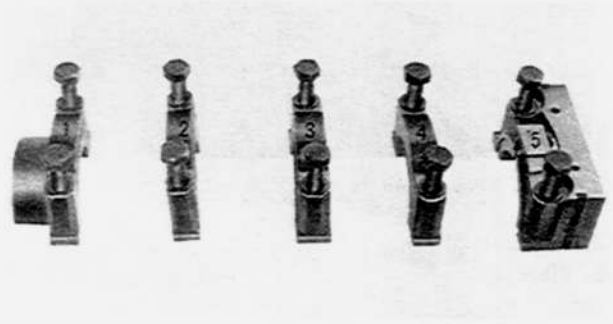

Fig. 1–51 Main bearing caps

1–E–5. Checking of Main Bearing Clearance and End Play

Refer to Par. 1–D–29 and 1–D–30.

1–E–6. Installing of Connecting Rod Bearing Cap

1. Install the connecting rod bearing halves into their respective caps with the tang fitting in the slot provided.
2. Lubricate the connecting rod bearing surfaces with engine oil.
3. Install the caps to the connecting rods, ensuring that the identification numbers are matched.
4. Tighten the bolts to **4.5 m-kg (30 ft-lb)**.

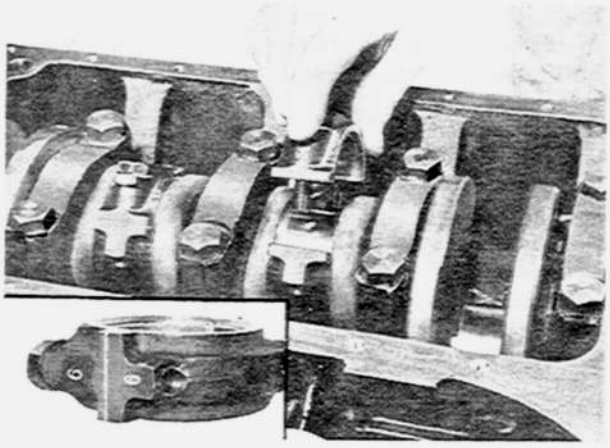

Fig. 1–52 Installing of connecting rod cap

5. After tightening, turn the crankshaft and make sure that the rotation is light and smooth.

1–E–7. Checking of Connecting Rod Bearing Clearance and Side Play

Refer to Par. 1–D–22 and 1–D–23.

1–E–8. Installing of Oil Pump and Strainer

1. Place the adjusting shims on the cylinder block.

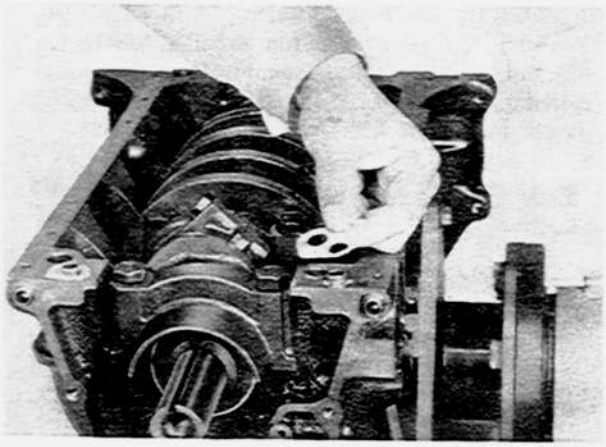

Fig. 1–53 Placing of adjusting shim

2. Fit the "O" ring to the outlet hole on the oil pump and install the oil pump to the block, aligning the dowel pins.

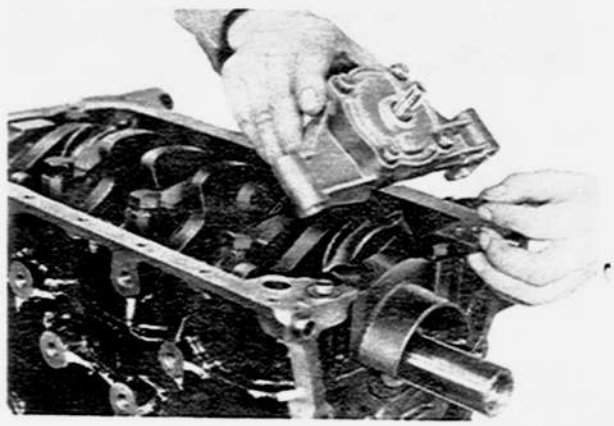

Fig. 1–54 Fitting of "O" ring

3. Tighten the attaching bolts.
4. Place the "O" ring on the oil pump and install the oil strainer to the oil pump. Tighten the nuts.

1–E–9. Installing of Timing Chain and Sprockets

1. Fit the spacer onto the crankshft.
2. Place the timing chain on the crankshaft sprocket and camshaft sprocket with the tally marks aligned as shown in Fig. 1–55.

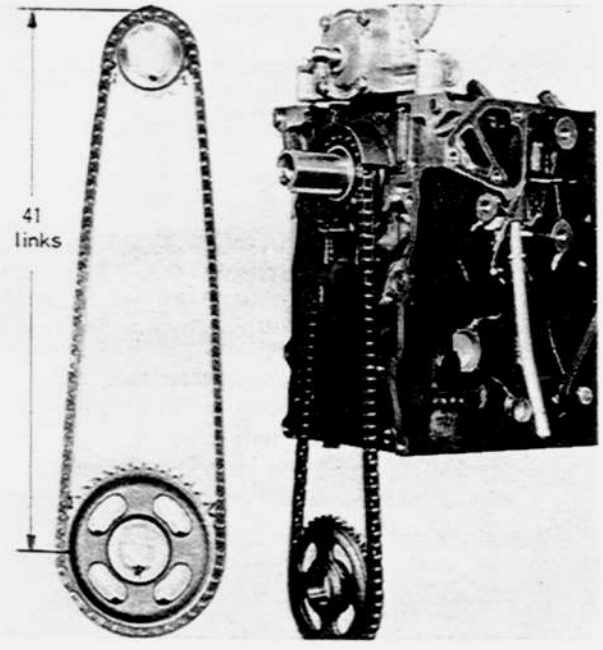

Fig. 1–55 Installing of timing chain

3. Being careful not to change the relation of timing chain, camshaft sprocket and crankshaft sprocket, fit the crankshaft sprocket onto the crankshaft.
4. Align the keyways of the crankshaft and sprocket and install the key.
5. Fit the spacer onto the crankshaft.

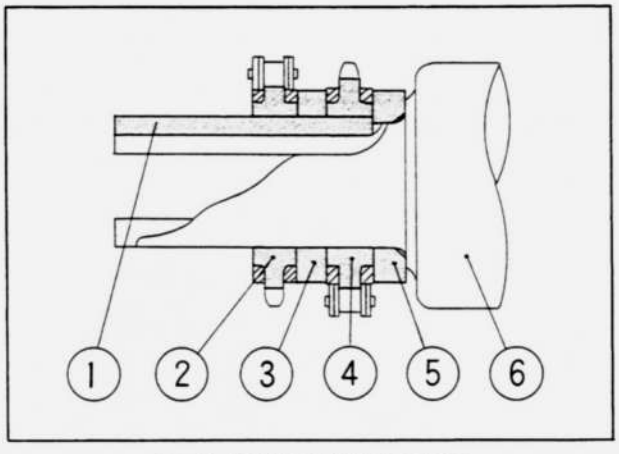

Fig. 1–56 Crankshaft sprockets

1. Key
2. Oil pump sprocket
3. Spacer
4. Timing sprocket
5. Spacer
6. Crankshaft

6. Install the chain tensioner, slipper blade and chain vibration damper in positions.

1–E–10. Installing of Oil Pump Drive Chain and Sprockets

1. Fit the key on the oil pump shaft.
2. Fit the oil pump drive chain to the crankshaft sprocket and oil pump sprocket and install them to the crankshaft and oil pump shaft, aligning the key.
3. Tighten the oil pump nut and check the slack of the oil pump chain by pressing with a finger as shown in Fig. 1–57.

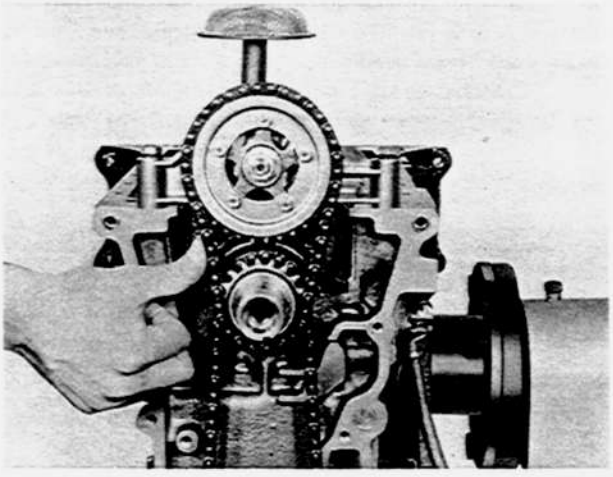

Fig. 1–57 Checking of oil pump drive chain

The slack should be within **4.0 mm (0.16 in)**
If it exceeds **4.0 mm (0.16 in)**, remove the oil pump and add the shims between the cylinder block and oil pump.
The thickness of the shim is 0.15 mm (0.006 in).
4. After adjusting, torque the oil pump nut **3.5 m-kg (25 ft-lb)** and bend the tab of the lockwasher.

1–E–11. Installing of Timing Chain Cover

1. Install the oil baffle plate to the crankshaft with the edge turned outward.

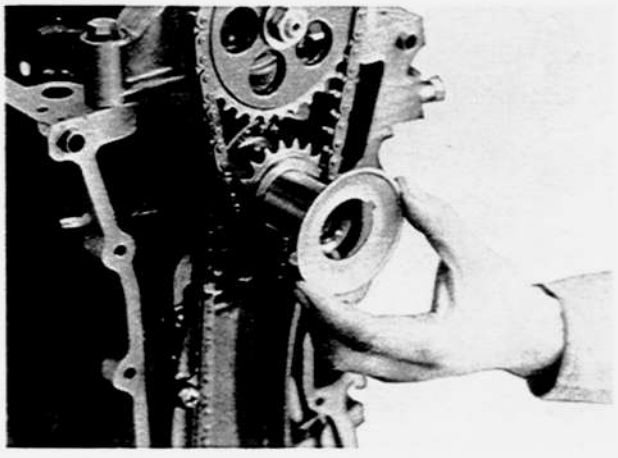

Fig. 1–58 Installing of Timing Chain Cover

2. Fit the oil deflector and the oil seal into the timing chain cover. Then, apply grease to the oil seal lip.
3. Place the gaskets on the cylinder block and install the chain cover, aligning the dowel pins.
Tighten the bolts and nuts.

Note: Cut off the excess gaskets along the mounting surfaces of the oil pan and cylinder head.

1–E–12. Installing of Oil Pan

1. Before installing the oil pan, make a final internal inspection.
2. Apply a thin coat of gasket paste on the cylinder block.
3. Place a new gasket on the cylinder block.
4. Install the oil pan and tighten the bolts and nuts little by little in trun until the torque becomes **0.7 m-kg (5.0 ft-lb) evenly.**

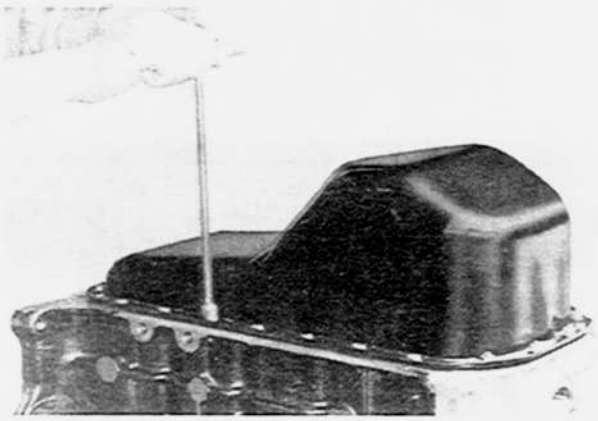

Fig. 1–59 Installing of oil pan

1–E–13. Installing of Clutch Assembly

Install the clutch assembly, as described in Par. 6–E.

1–E–14. Installing of Crankshaft Pulley

1. Lock the flywheel with the **ring gear brake** (49 0221 030A).
2. Install the crankshaft pulley to the crankshaft so that the key groove of the pulley aligns with the key on the crankshaft.

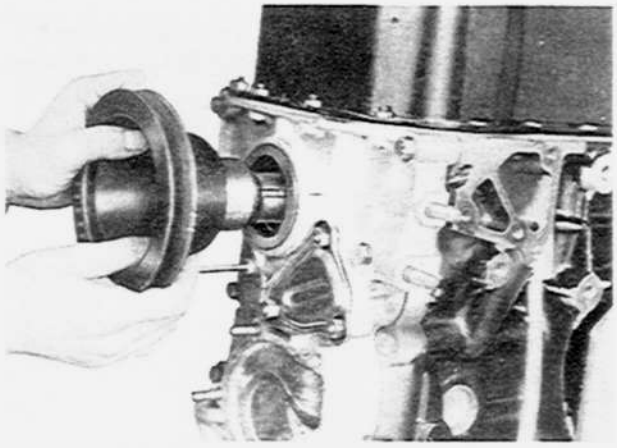

Fig. 1–60 Installing of crankshaft pulley

3. Tighten the pulley bolts to **14.5 m-kg (105 ft-lb).**

1–E–15. Installing of Cylinder Head

1. Hold the camshaft sprocket and chain securely with a hand and rotate the cylinder block upside down.
2. Place the sprocket and the chain on the tops of the slipper blade and the vibration damper.

Note: Ensure that the tally marks of both the camshaft sprocket and the chain are engaged properly.

3. Place a new gasket on the cylinder block.
4. Position the cylinder head on the cylinder block, aligning the dowels.

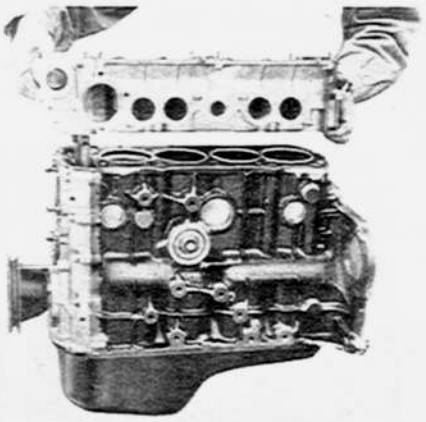

Fig. 1–61 Installing of cylinder head

1–E–16. Installing of Camshaft

1. Fit the three sets of the camshaft bearings properly to the cylinder head and the bearing caps respectively.

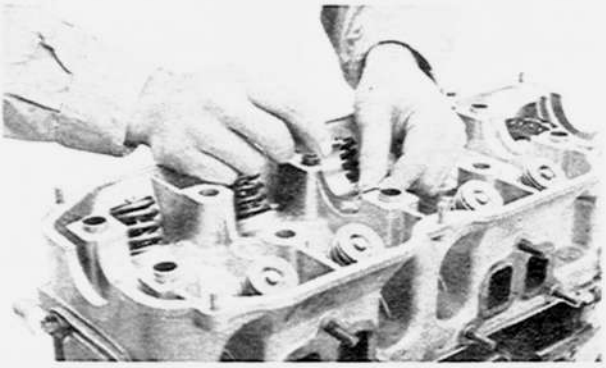

Fig. 1–62 Installing of camshaft bearing

2. Lubricate the bearing surfaces with engine oil.
3. Install the camshaft to the sprocket, aligning the key and fit the camshaft journals onto the respective bearings.

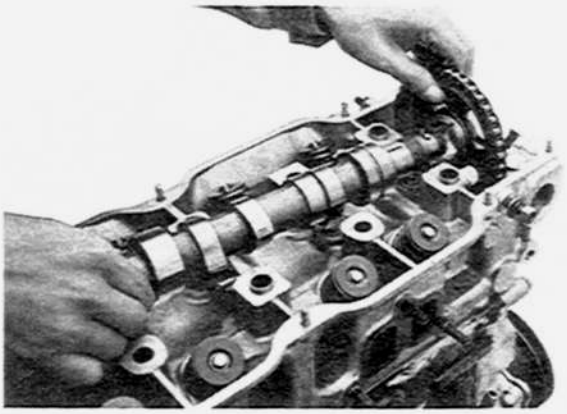

Fig. 1–63 Installing of camshaft

Note: The valve timing is as shown in Fig. 1–64.

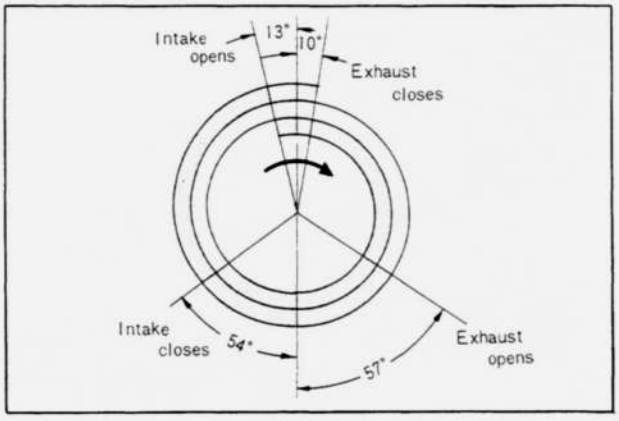

Fig. 1–64 Valve timing

1–E–17. Assembling of Rocker Arm

Assemble the rocker arms in the formation shown in Fig. 1–65.

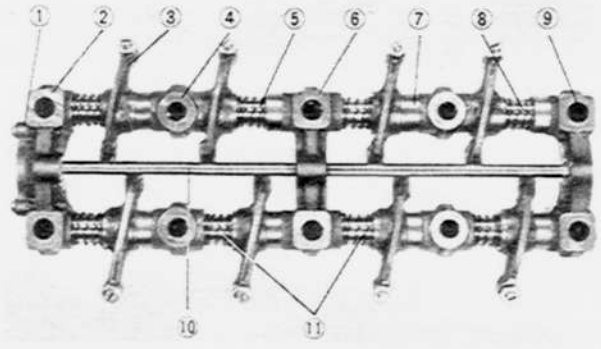

Fig. 1–65 Rocker arm assembly

1. Thrust plate
2. Front bearing cap
3. Rocker arm
4. Supporter
5. Rocker arm shaft (EX)
6. Center bearing cap
7. Spacer
8. Spring
9. Rear bearing cap
10. Oil pipe
11. Rocker arm shaft (IN)

Care must be taken on the following points:

1. The rocker arms, spacers and rocker arm shaft supporters are respectively interchangeable for the intake and the exhaust.
2. The rocker arm shafts for the intake and the exhaust are not interchangeable. Two shafts are installed on the intake side and one on the exhaust side. The two shafts for the intake side are interchangeable.

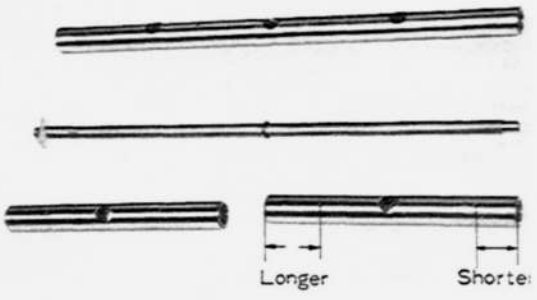

Fig. 1–66 Rocker arm shafts and oil pipe

3. When installing the rocker arm shafts on the intake side, the ends with the longer distance between the oil hole and the tip are turned towards inside each other.
4. The center bearing cap is installed with the oil hole facing toward the intake side.
5. The oil pipe is installed with the oil ejection hole facing the camshaft. In order to avoid vibration of the pipe after it has installed, the "O" ring fitted on the pipe is pressed into the hole for the pipe on the center bearing cap.

1–E–18. Installing of Rocker Arm Assembly

1. Face the flat surface on the ball on each of the rocker arms downward.

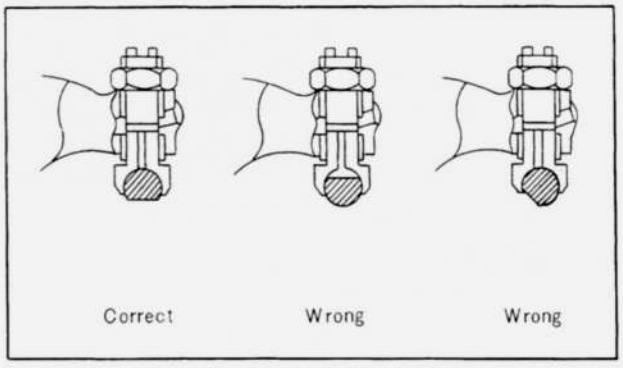

Fig. 1–67 Tappet ball

2. Aligning the dowels, position the rocker arm assembly on the cylinder head.

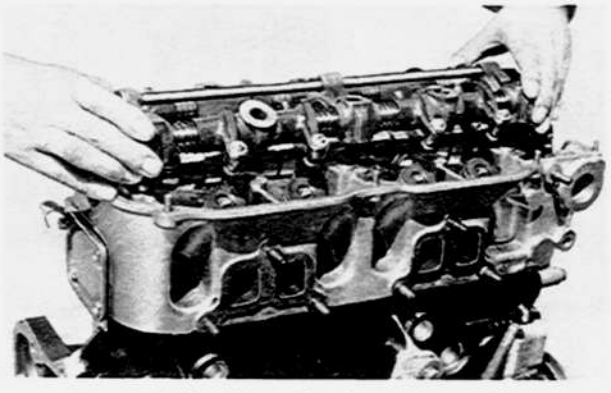

Fig. 1–68 Installing of rocker arm assembly

3. Tighten the cylinder bolts temporarily.

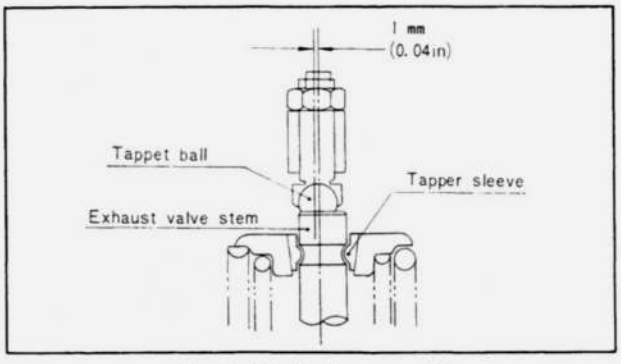

Fig. 1–69 Rocker arm offset

4. Move the rocker arm supporters and **offset** each of the **exhaust side rocker arms 1 mm (0.04 in)** from the valve stem center.
This offsetting will rotate the exhaust valves and thus prevent carbon deposits and uneven wear on the valve seats.
5. Tighten the cylinder head bolts evenly to **8.0 m-kg (60 ft-lb) in the sequence shown in Fig. 1–70.**

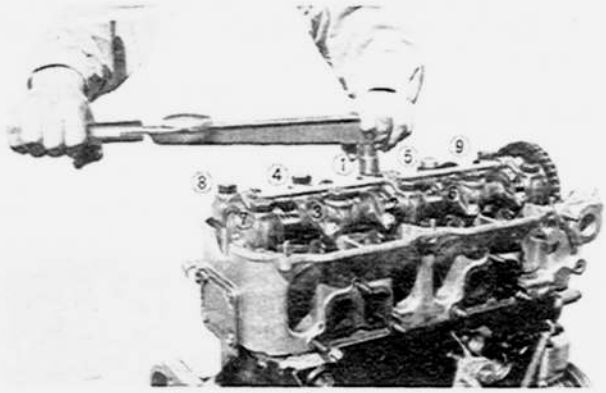

Fig. 1–70 Tightening order

6. Tighten the bolt attaching the cylinder head and the timing chain cover.

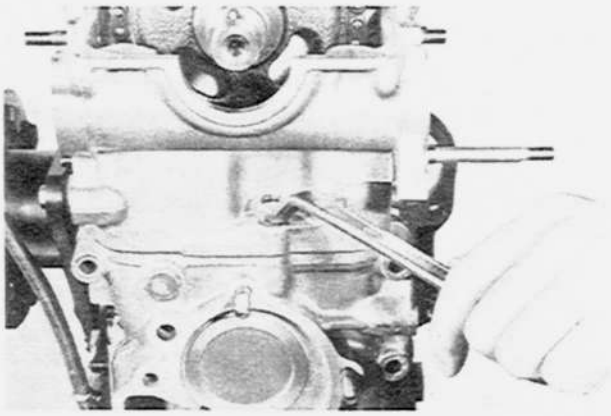

Fig. 1–71 Tightening of attaching bolt

7. Lock the flywheel with the **ring gear brake** (49 0221 030A) and tighten the camshaft sprocket lock nuts to **8.0 m-kg (60 ft-lb)** with the **spanner** (49 0164 631A). Bend the tab of the lock washer.

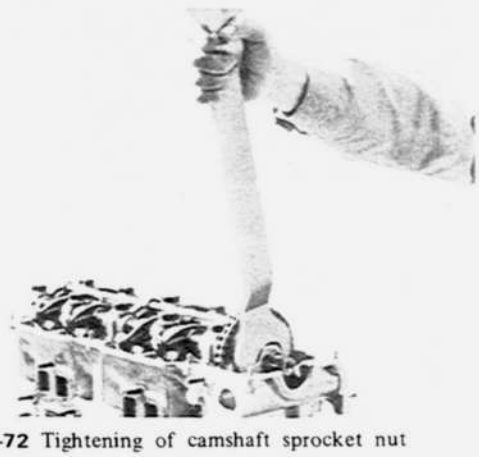

Fig. 1–72 Tightening of camshaft sprocket nut

8. Align the key groove with the pin and install the distributor drive gear to the camshaft.

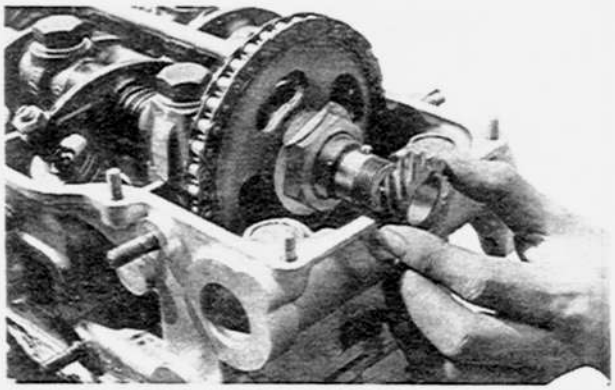

Fig. 1–73 Installing of distributor drive gear

9. Tighten the lock nut to **8.0 m-kg (60 ft-lb)** and bend the tab of the lock washer.

1–E–19. Checking of Camshaft Bearing Clearance and End Play

Refer to Par. 1–D–34 and 1–D–35.

1–E–20. Adjusting of Timing Chain

Using a screw driver through the opening of the cylinder head, turn the slide pin of the chain tensioner counter-clockwise and release the adjusting arm.
The timing chain now has the proper tension and no further manual adjustment is required.

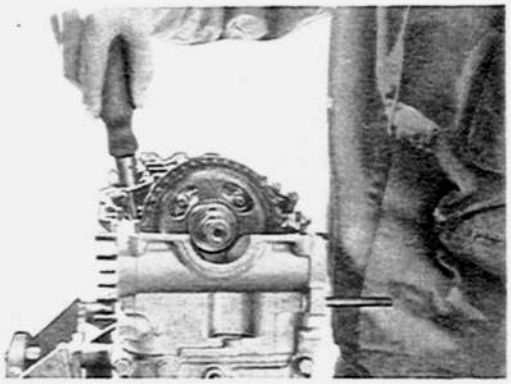

Fig. 1–74 Adjusting of timing of chain

1–E–21. Installing of Water Pump

1. Position the gasket on the timing chain cover and install the water pump.



Fig. 1–75 Installing of water pump

2. Install the alternator strap.
3. Tighten the attaching bolts and nuts.

1–E–22. Installing of Thermostat

1. Install the thermostat casing and gasket to the cylinder head.
2. Insert the thermostat into thermostat casing.

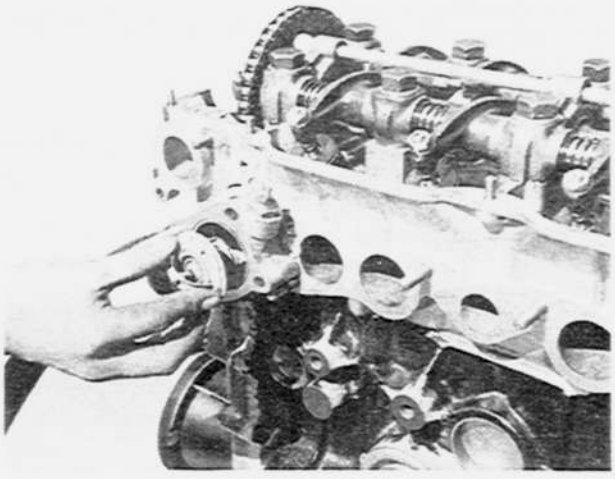

Fig. 1–76 Inserting of thermostat

3. Install the thermostat cover and gasket.
4. Install the engine hanger.
5. Tighten the attaching bolts and nuts.

1–E–23. Installing of Intake Manifold and Carburetor

1. Place the gasket on the cylinder head.
2. Install the intake manifold and carburetor assembly to the cylinder head and tighten the attaching nuts.

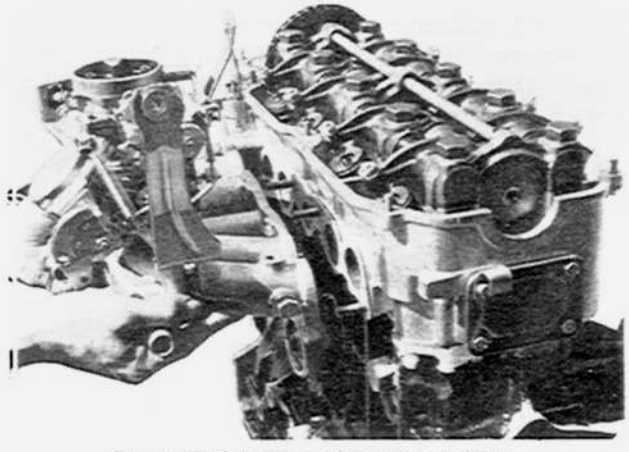

Fig. 1–77 Installing of intake manifold

1–E–24. Installing of Distributor

1. Rotate the crankshaft in the direction of revolution until the **No. 1 piston is at 8 degrees before top of the compression stroke.** The first mark on the edge of the crankshaft pulley should be in line with the needle on the timing chain cover, as shown in Fig. 1–78.
2. Align the tally marks on the distributor housing and the drive gear as shown in Fig. 1–79.



Fig. 1–78 Aligning of crankshaft pulley

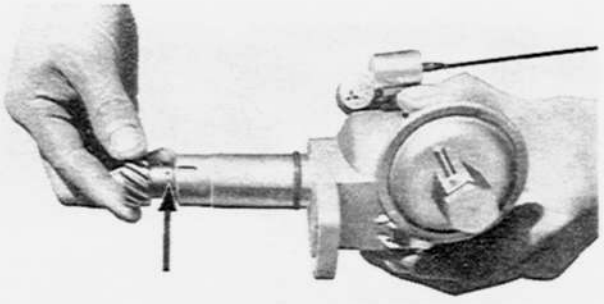

Fig. 1–79 Aligning of tally marks

3. Insert the distributor to the cylinder head and engage the gears.

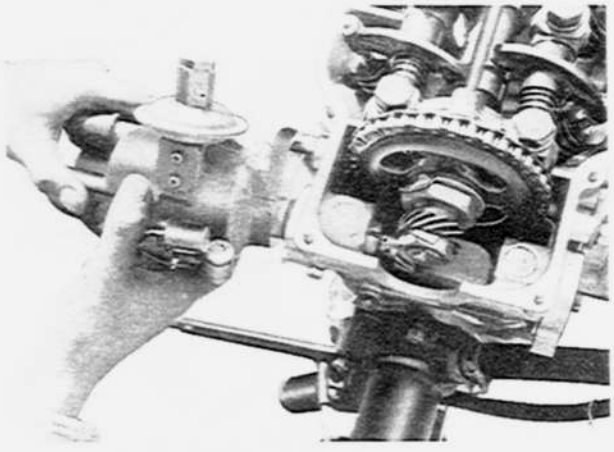

Fig. 1–80 Inserting of distributor

4. Tighten the distributor locking nut.

1–E–25. Installing of Oil Filter

1. Place the gasket on the block and install the oil filter cover. Tighten the bolts.
2. Apply oil onto the oil seal on the new filter cartridge.
3. Install the cartridge onto the cover and screw in until it just touches the cover.
4. Tighten the cartridge a further 2/3 of a turn but absolutely no more.

1–E–26. Installing of Cooling Fan

Install the pulley and fan onto the pulley boss of the water pump and tighten the attaching bolts.

1–E–27. Installing of Alternator Bracket and Alternator

1. Install the alternator bracket to the cylinder block.
2. Install the alternator to the bracket with bolts.

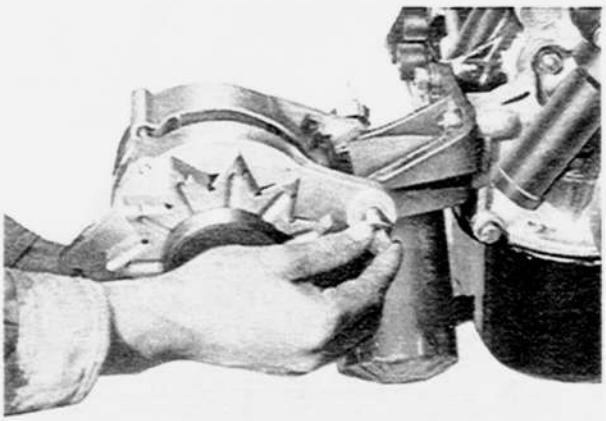

Fig. 1–81 Installing of alternator

3. Attach the upper end of the alternator flange to the strap.
4. Fit the "V" belt.
5. Using a lever, pull the alternator away from the engine until the proper tension is obtained.

Correct adjustment will permit the belt to flex 12 to 14 mm (0.47 to 0.55 in) by pressing with a finger in the middle between the pulleys. For a new belt, it should be 9 to 11 mm (0.35 to 0.43 in).

6. Tighten the bolts.

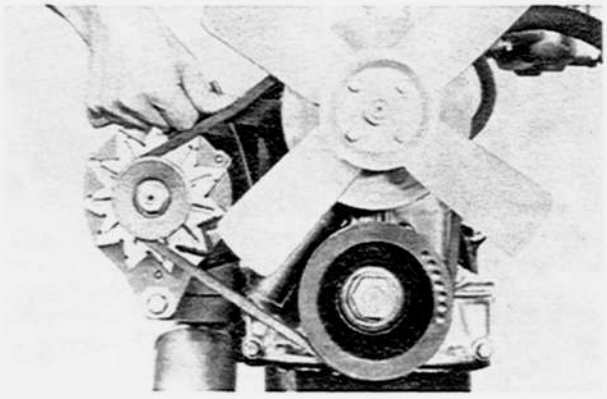

Fig. 1–82 Adjusting of tension

1–E–28. Adjusting of Valve Clearance

Adjust the valve clearance to be **0.3 mm (0.012 in) for both the intake and exhaust** when the piston is at top dead center of the compression stroke.

To adjust valve clearance, loosen the lock nut and insert a feeler gauge between the rocker arm and vlave stem, and then, turn the adjusting screw until the proper clearance is obtained.

After adjustment, tighten the lock nut securely and recheck clearance.

Note:

(a) Before inserting the feeler gauge, engine that the flat surface of the ball on the rocker arm is facing dawnward.

(b) When adjusting the valve clearance **at the camshaft side, the clearance should be 0.25 mm (0.010 in)**

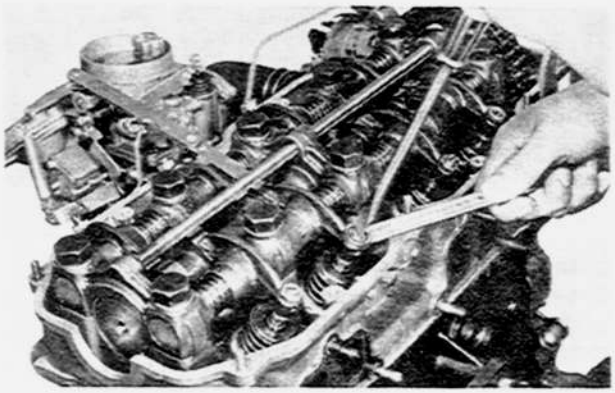

Fig. 1–83 Adjusting of valve clearance

(c) Whenever the engine is overhauled, the valve clearance must be readjusted after warming up the engine and retightening the cylinder head bolts to the specified torque.

1–E–29. Installing of Rocker Arm Cover

1. Fit two semicircular oil seals, with the "OUT" mark facing outwards, to the front and rear of the cylinder head.

2. Place a new gasket on the cylinder head.
3. Install the rocker arm cover and tighten the attaching nuts.

1–F. ENGINE INSTALLATION

Carry out the removing operations in the reverse order.

SPECIAL TOOLS

49 0107 680A	Engine stand	49 0223 160A	Valve seal installer
49 0305 005	Hanger (for engine stand)	49 2765 034	Valve seat cutter pilot
49 0164 631A	Spanner	49 2728 033	Valve seat cutter pilot
49 0636 100	Valve spring lifter	49 2801 011	90° Cutter (for IN seat)
49 0221 222A	Pivot (for valve spring lifter)	49 2801 013	30° Cutter (for IN port)
49 0221 030A	Ring gear brake	49 2821 012	150° Cutter (for IN spot facing)
49 0223 061	Piston pin remover and installer	49 2952 011	90° Cutter (for EX seat)
49 0221 270A	Main bearing cap puller	49 2541 013	30° Cutter (for EX port)
49 0221 251A	Valve guide remover	49 2765 012	150° Cutter (for EX spot facing)

LUBRICATING SYSTEM

2–A. LUBRICATING CIRCUIT ..... 2 : 1
2–B. OIL PRESSURE RELIEF VALVE ..... 2 : 1
2–C. OIL PRESSURE SWITCH ..... 2 : 1
2–D. CHECKING OF OIL PRESSURE ..... 2 : 1
2–E. OIL PUMP ..... 2 : 2
2–E–1. Checking of Oil Pump ..... 2 : 2
2–F. OIL FILTER ..... 2 : 3
2–F–1. Replacing of Oil Filter ..... 2 : 3

LUBRICATING SYSTEM

Oil is circulated under pressure by a rotor type pump. The pump is mounted on the cylinder block inside the oil pan and driven by the chain via the crankshaft. A full flow type oil filter is mounted on the right front of the cylinder block.
The oil capacity is 3.9 liters (8.2 U.S. paints, 6.7 Imp. paints).

2–A. LUBRICATING CIRCUIT

1. The oil pump which is driven by the chain, draws up oil from the oil pan through the strainer and sends it to the oil filter.
2. Oil that has been filtered through the oil filter is forced to the main oil gallery and then to the main bearings.
3. The passages in the crankshaft direct the oil from the main bearings to the connecting rod bearings.
4. The cylinder walls, piston pins and bushes are lubricated with oil squirted out of the oil holes on the large end of the connecting rods.
5. The crankshaft and camshaft sprockets are lubricated by oil which is supplied through a passage from the main oil gallery to the oil jet.
6. Oil from the main gallery reaching the oil control plug on the front right side of the cylinder head is forced up to the front camshaft bearing and the exhaust side rocker arm shaft.
7. Oil from the oil passage turning point of the front camshaft bearing is forced to the intake side rocker arm shaft, lubricates each of the rocker arm bushes and then passes on the center camshaft bearing. Also, the oil lubricates the valve stem and other valve train surfaces.
8. Oil from the front camshaft bearing is forced to the oil pipe and ejected from the jets on the oil pipe to lubricate the cam surfaces, and then oil passing through the oil pipe is forced to the rear camshaft bearing.

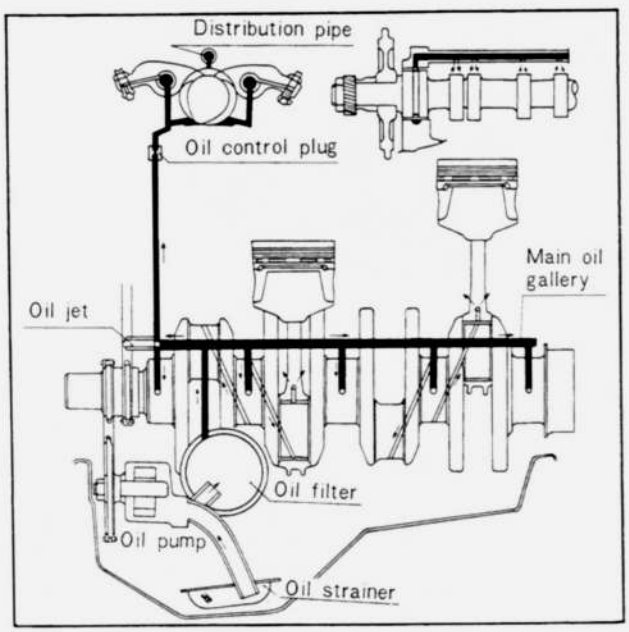

Fig. 2–1 Lubricating circuit

9. The distributor drive shaft is lubricated with oil splashed on the lubricating-hole for the drive shaft by operation of the timing chain and the rocker arms.
10. After lubricating the various parts, oil drops directly back to the oil pan from the front side of the cylinder head.

2–B. OIL PRESSURE RELIEF VALVE

The oil pressure relief valve is provided into the oil pump body.
When the engine revolution becomes high and excessive oil pressure develops in the system, the relief valve opens to relieve the pressure and to return the excess oil to the oil pan. Thus, the oil pressure maintains within the maximum pressure of 4.5 kg/cm^2 (64 lb/in^2).

2–C. OIL PRESSURE SWITCH

The oil pressure switch fitted to the filter body is connected to the oil pressure warning lamp with the wiring.
Safe minimum pressure is 0.3 kg/cm^2 (4.3 lb/in^2) at idle. If the oil pressure drops below 0.3 kg/cm^2 (4.3 lb/in^2), the warning lamp lights up to indicate some troubles in the lubricating system.
Therefore, when the warning lamp goes on, immediate check should be made

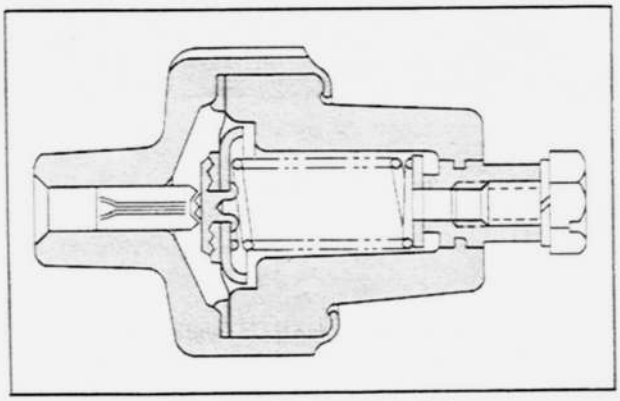

Fig. 2–2 Oil pressure switch

2–D. CHECKING OF OIL PRESSURE

1. Remove the oil pressure switch and connect the **oil pressure gauge** (49 0187 280) instead.

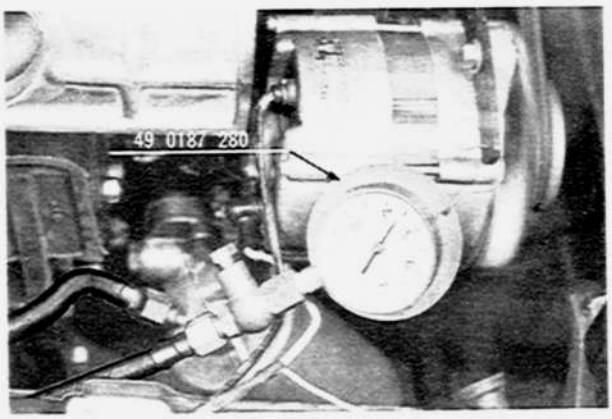

Fig. 2–3 Checking of oil pressure.

2. Warm up the engine to the normal operating temperature.
3. Run the engine **at 3,000 rpm** and take a reading the gauge.
If the reading of the gauge is **3.5 to 4.5 kg/cm² (50 to 64 lb/in²)**, the oil pressure is normal.
Should there be a noticeable drop in pressure, check the following points.
1) Ensure that the oil level is between the "F" and "L" of the dipstick gauge.
2) Check the oil filter for clog. If it exists. replace the filter cartridge, referring to Par. 2–F–1.
3) Check the oil pump, as described in Par. 2–E–1.
4) Check the relief valve for worn plunger and fatigued spring. The free length of the spring is 46.4 mm (1.83 in).

2–E. OIL PUMP

The oil pump is of a rotor type based on the trochoid curve and consists of the parts as shown in Fig. 2–6. The feeding capacity is 13.0 liters/min. (3.4 U.S. gallons/min., 2.9 Imp. gallons/min.) at 2,000 rpm of engine revolution.

2–E–1. Checking of Oil Pump

1. Check the clearance between the lobes of the rotors with a feeler gauge as shown in Fig. 2–4.
If the clearance is **more than 0.25 mm (0.010 in)**, replace both rotors.

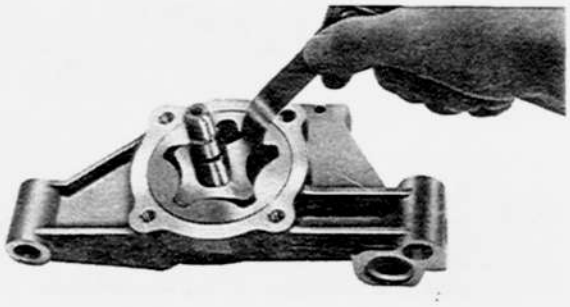

Fig. 2–4 Checking of clearance between rotors

2. Check the clearance between the outer rotor and pump body with a feeler gauge. This clearance should be **0.14 to 0.25 mm (0.006 to 0.010 in)**.

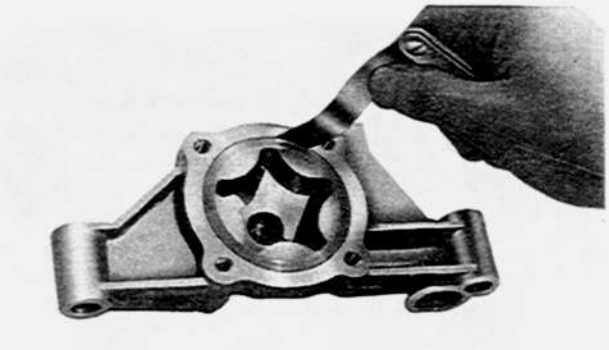

Fig. 2–5 Checking of rotor and body clearance

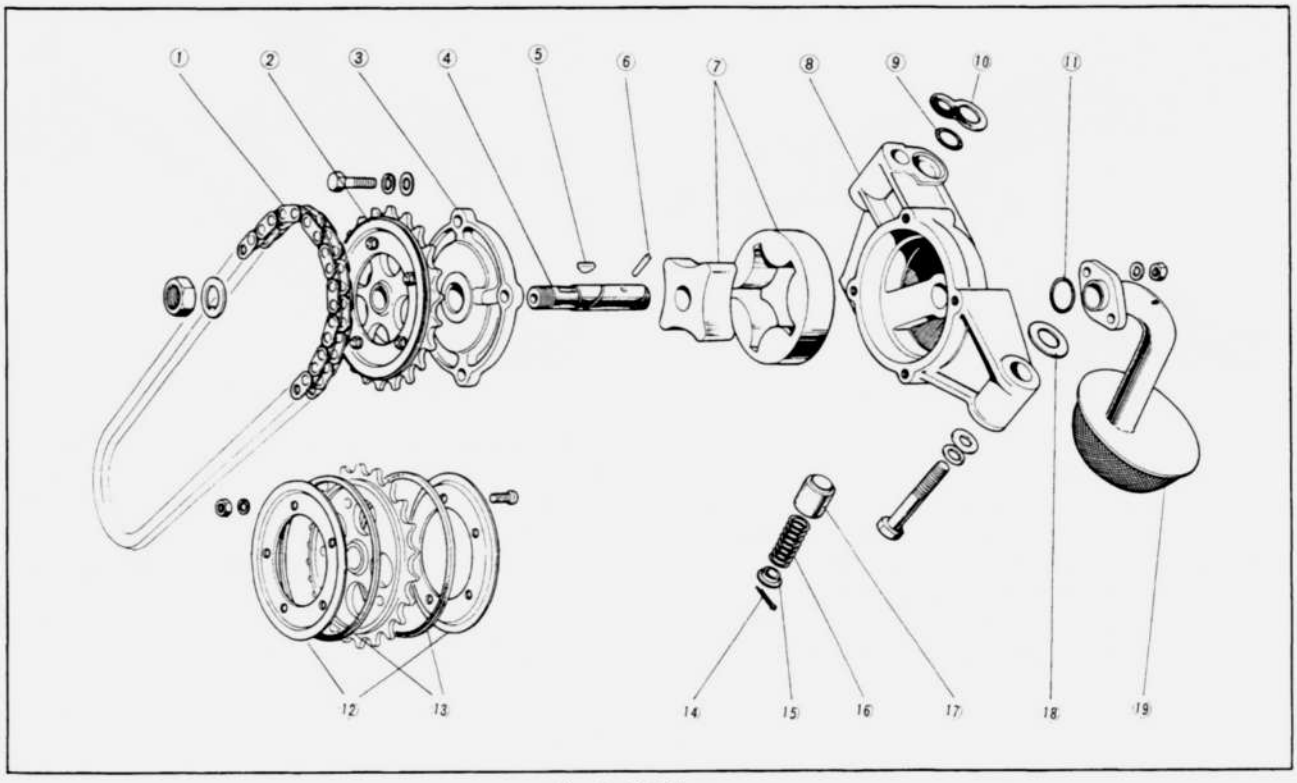

Fig. 2–6 Oil pump

1. Drive chain
2. Sprocket assembly
3. Cover
4. Shaft
5. Woodruff key
6. Grooved pin
7. Rotor assembly
8. Body
9. "O" ring
10. Adjusting shim
11. "O" ring
12. Rubber guide
13. Rubber ring
14. Split pin
15. Spring seat
16. Spring
17. Plunger
18. Adjusting shim
19. Oil strainer

3. Check the end of the rotors. Place a straight edge across the pump body and measure the clearance between the rotor and the straight edge with a feeler gauge as shown in Fig. 2–7.



Fig. 2–7 Checking of rotor end float

Then, place a straight edge across the pump cover and measure the clearance between the straight edge and the cover.
If the end float is **0.15 mm (0.006 in)** or more, correct the pump cover by grinding.
The standard end float is 0.04 to 0.10 mm (0.002 to 0.004 in).

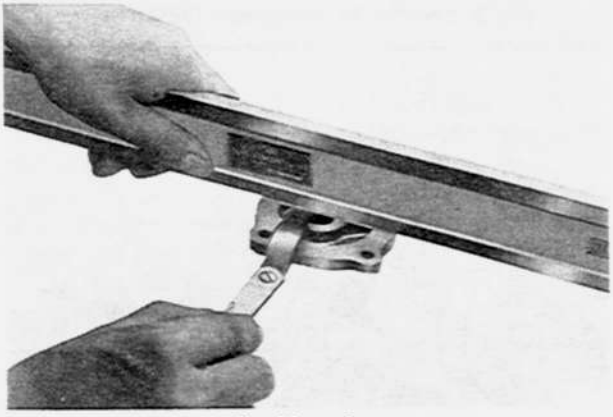

Fig. 2–8 Checking of pump cover

2–F. OIL FILTER

The oil filter is of a cartridge type. The element of the filter is sealed in the container as a unit. The oil filter is provided with a relief valve.
If the oil filter clogs due to impurities in oil and the filtering resistance reaches 0.8 to 1.2 kg/cm² (11 to 18 lb/in²), the oil can not pass through the element. However, the oil pushes the relief valve open and unfiltered oil is supplied to the engine. The element should be replaced **every 12,000 km (8,000 miles).**

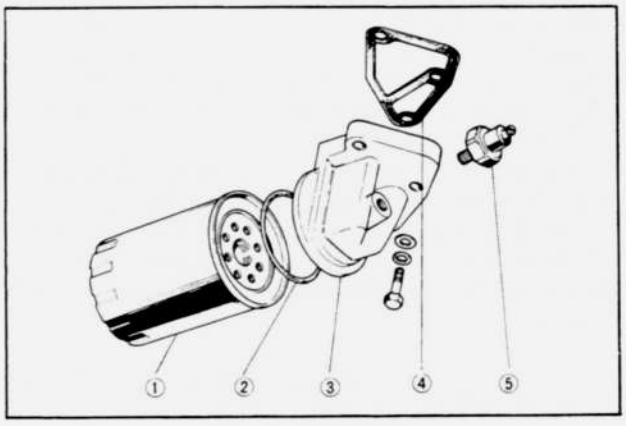

Fig. 2–9 Oil filter
1. Cartridge
2. Oil seal
3. Cover
4. Gasket
5. Oil pressure switch

2–F–1. Replacing of Oil Filter

1. Remove the oil filter cartridge with a wrench as shown in Fig. 2–10.

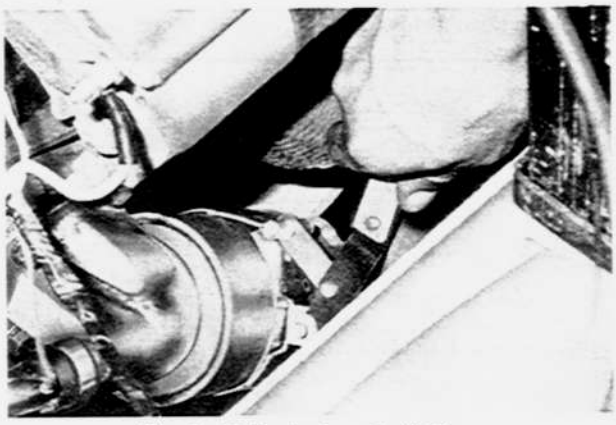

Fig. 2–10 Replacing of oil filter

2. **Apply oil onto the oil seal** on a new filter cartridge.
3. Install the cartridge onto the cover and screwin until it just touches the cover.
4. Tighten the cartridge **a further 2/3 of a turn but absolutely no more.**
5. Start the engine and check that the joints are not leaking. Top up with oil if necessary.

SPECIAL TOOL

49 0187 280	Oil pressure gauge

COOLING SYSTEM

3–A. COOLANT CIRCUIT ..... 3 : 1
3–B. MAZDA GENUINE LONG LIFE COOLANT ..... 3 : 1
3–C. CLEANING OF COOLING SYSTEM ..... 3 : 1
3–D. RADIATOR ..... 3 : 1
3–D–1. Expansion Tank Pressure Cap ..... 3 : 2
3–E. THERMOSTAT ..... 3 : 2
3–F. WATER PUMP ..... 3 : 2
3–F–1. Checking of Water Pump ..... 3 : 2
3–F–2. Disassembling of Water Pump ..... 3 : 3
3–F–3. Assembling of Water Pump ..... 3 : 3

COOLING SYSTEM

The completely sealed cooling system consists of a corrugated fin type radiator with sealed filler cap, expansion tank with pressure cap, centrifugal water pump, wax pellet type thermostat, and a four-blade fan.
The radiator and the expansion tank are connected by hose. When engine is overheated, the coolant in the radiator flows out and led into the expansion tank through the hose. The coolant is then returned to the radiator by negative pressure which builds up in the cooling system when the engine cools down. The coolant should be changed every two years or every 48,000 km (32,000 miles).

3–A. COOLANT CIRCUIT

The water pump, which is driven by a belt from the crankshaft, delivers the coolant from the radiator through the inlet pipe to the water jackets on the cylinder block and the cylinder head.
When the engine is cold, the themostat is closed and the coolant in the water jacket does not circulate back into the radiator but is delivered back to the inlet pipe after passing theough the hot spot on the inlet manifold to preheat the air and fuel mixture. As the coolant circulates only between the water jackets and the inlet pipe, this enables the engine to warm up quickly.
Once the engine is warmed up, this opens the thermostat and the coolant is then circulated through the hot spot only to the inlet pipe but also to the radiator through the thermostat. The coolant in the radiator is cooled by the fan and the air stream caused by the travel of the vehicle and is then circulated to the water jackets.

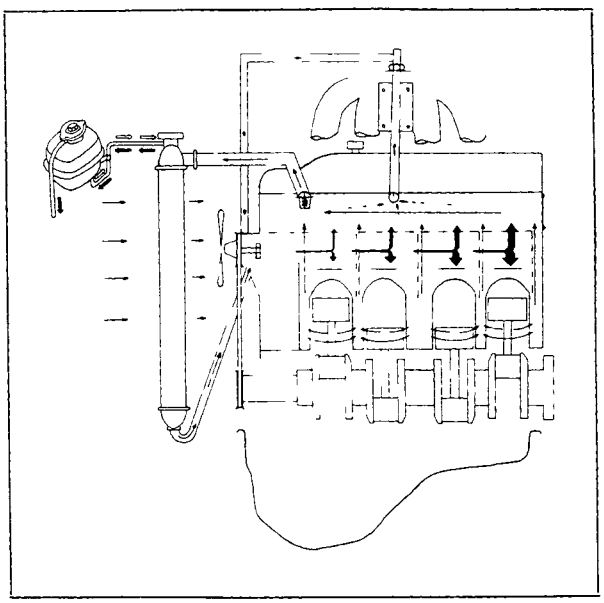

Fig. 3–1 Coolant circuit

3–B. MAZDA GENUINE LONG LIFE COOLANT

MAZDA genuine long life coolant is used in the cooling system of the MAZDA 616. The MAZDA genuine long life coolant was developed for the aluminum engine of MAZDA vehicles. Antifreeze solution and anticorrosive solution are included in this coolant.
The table below shows the mixing rate of water and MAZDA genuine long life coolant.

Freezing point	Mixture ratio %		Specific gravity of mixture at 20°C (68°F)
	Coolant	Water	
– 20°C (–4°F)	35	65	1.051
– 45°C (–49°F)	55	45	1.078

Note:
(a) Always use soft water (demineralized water) in the cooling system.
(b) If the MAZDA genuine long life coolant is not available, add MAZDA genuine antifreeze solution or anticorrosive according to the season.
The percentage of the MAZDA genuine antifreeze solution required to protect the cooling system is shown in the following table.

Freezing point (Centigrade)	Mixture percentage (Volume)		Specific gravity of mixture at 20°C (68°F)
	Antifreeze solution	Water	
– 6.3	15	85	1.022
– 9.3	20	80	1.029
–12.6	25	75	1.037
–16.2	30	70	1.044
–20.5	35	65	1.051
–25.2	40	60	1.058
–31.2	45	55	1.066
–37.6	50	50	1.073
–45.2	55	45	1.080

3–C. CLEANING OF COOLING SYSTEM

The cooling system should be flushed every 48,000 km (32,000 miles) or every two years.
The flushing procedures are as follows:
1. Open the drain cocks and drain the coolant.
2. Close the drain cocks and supply clean soft water (demineralized water).

Note: If necessary, use cleaning solution to loosen the rust and scale, according to the instructions given by the maker of the cleaning solution.

3. Run the engine for about one hour keeping the normal operating temperature.
4. Drain the coolant completely and flush clean water through the cooling system in the direction opposite to the normal coolant flow. This action causes the water to get behind the corrosive deposits and force them out.
5. Fill with a mixture of MAZDA genuine long life coolant and soft water (demineralized water).

3–D. RADIATOR

The radiator is of a coorrugated fin type with a sealed filler cap.
The capacity of the radiator is 2.6 liters (0.7 U.S. gallons, 0.6 Imp. gallons).
Examine the radiator carefully for leakage. If any leakage should be discovered, however small it may

be, repair completely by soldering, etc.
Clean the exterior of the radiator core by blowing out with compressed air.

3–D–1. Expansion Tank Pressure Cap

The pressure cap is provided on the expansion tank. The expansion tank and the radiator are connected by the hose.
The pressure in the cooling system increases the boiling point of the coolant and prevents overheating and reduces overflow losses.
When the pressure in the cooling system exceeds 0.9 kg/cm² (12.8 lb/in²), the pressure valve opens.
A vacuum release valve is employed to prevent undesirable build-up when the system cools down.



Fig. 3–2 Expansion tank pressure cap

Note: To remove the radiator cap when the coolant temperature is high or boiling, depress the push button on the expansion tank cap to release the pressure and then remove the radiator cap.

3–E. THERMOSTAT

The thermostat is of a wax pellet type with the jiggle pin. The cooling system is designed to provide adequate cooling. However, the thermostat is necessary to provide quick warming up and to prevent over cooling.
To test the thermostat, place it in water with a thermometer and heat up the water gradually and check the temperature when the thermostat starts to open and when it opens fully. And also measure the lift height when the thermostat is fully opened.
If the reading shows a large difference from the standard specification, replace with a new thermostat.
The specification of the thermostat is shown in the following table.

Starts to open	82°C (180°F)
Fully opens	95°C (203°F)
Valve lift height	8mm (0.32 in)

3–F. WATER PUMP

The water pump employs a centrifugal impeller. In the pump body, the shaft is supported with two bearings. The impeller is fitted to the rear end of the shaft. The seal assembly made of carbon and rubber prevents water leakage.

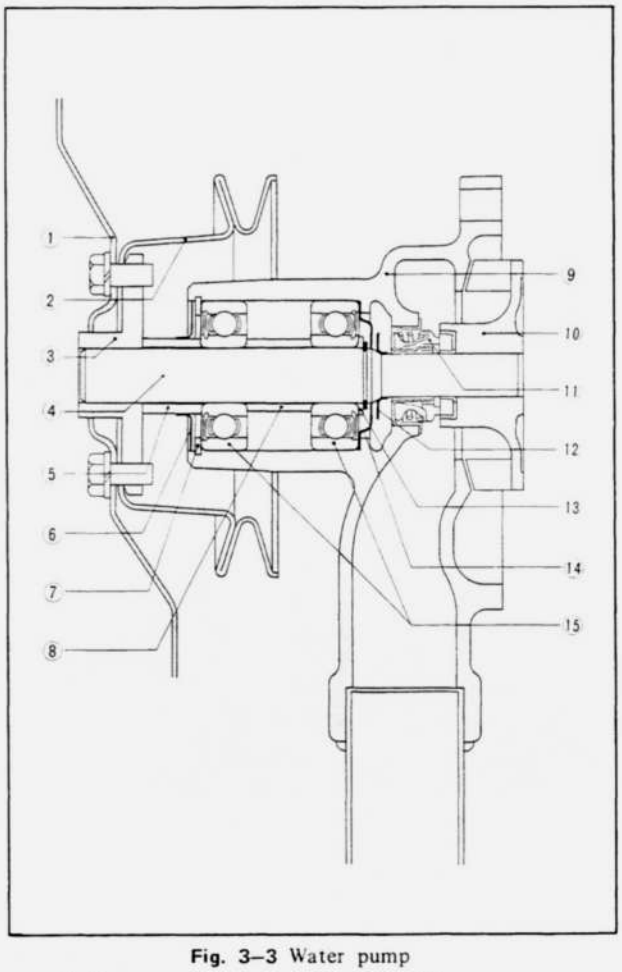

Fig. 3–3 Water pump

1. Fan
2. Pulley
3. Pulley boss
4. Shaft
5. Spacer
6. Dust seal plate
7. Snap ring
8. Spacer
9. Body
10. Impeller
11. Seal assembly
12. Baffle plate
13. Washer
14. Dust seal plate
15. Bearing

3–F–1. Checking of Water Pump

Check the water pump for leaks and excessive end play or looseness of the shaft and bearings. If there is evidence of excessive play when the fan blades are manually moved up and down, it shows that the bearings are rough.



Fig. 3–4 Bearing and shaft assembly

If water leaks from the hole located on the pump body, it indicates defective seal necessitating overhaul of the pump and check of the seal and seat surfaces. If defective, replace it.

3–F–2. Disassembling of Water Pump

1. Remove the impeller from the shaft with a suitable puller.
2. Using the **puller** (49 0187 270), remove the pulley boss from the shaft.

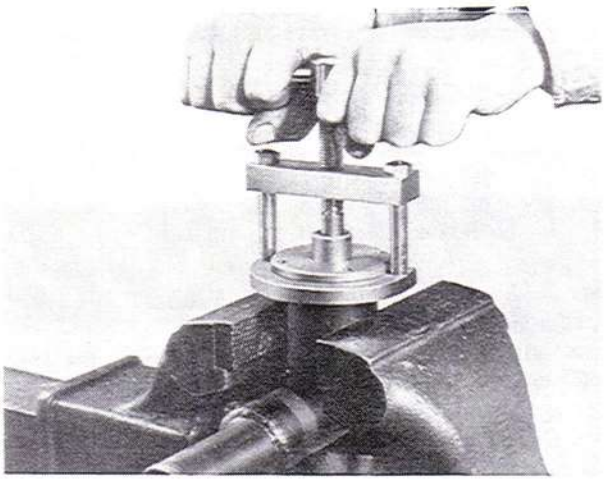

Fig. 3–5 Removing of pulley boss

3. Remove the spacer and dust seal plate assembly.
4. Remove the snap ring with a suitable plier.
5. Support the pump body and apply pressure to the rear end of the shaft to press the shaft, spacer and bearings assembly out through the front of the pump.
6. Remove the seal assembly from the body.
7. Remove the bearings and spacer from the shaft with a suitable puller.

3–F–3. Assembling of Water Pump

1. Install the stop ring into the groove on the shaft.
2. Place the dust seal plate on the shaft.
3. Drive the baffle plate onto the taper of the shaft.
4. Install the shaft into the body.
5. Install the washer and press in the bearing with the sealed side rearward.
6. Place the spacer on the bearing and fill grease.
7. Install the bearing with the sealed side forward until the snap ring can be installed.
8. Install the snap ring.

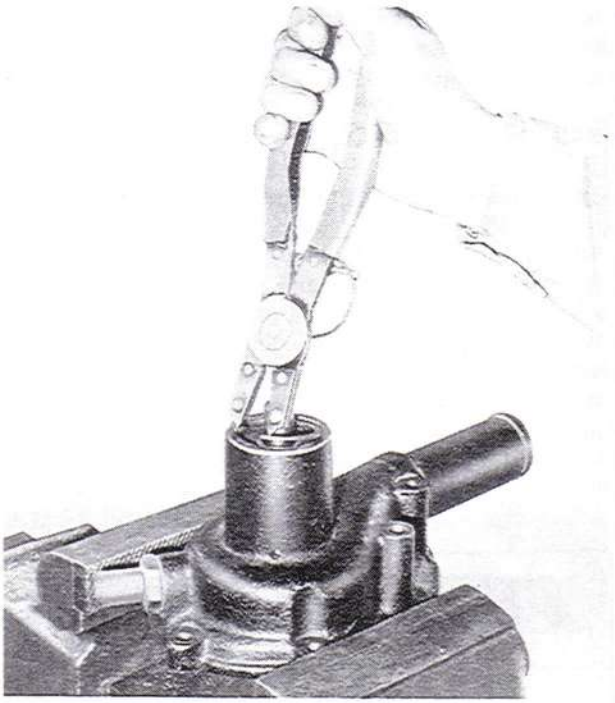

Fig. 3–6 Installing of snap ring

9. Position the spacer and dust seal plate on the bearing and press the pulley boss onto the shaft until it is flush with the front end of the shaft.
10. Install the seal assembly into the body.

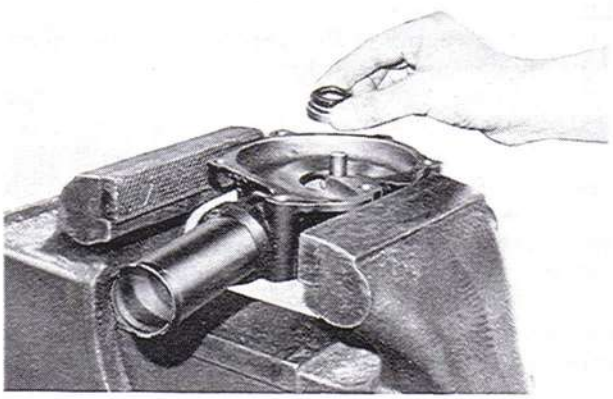

Fig. 3–7 Installing of seal assembly

11. Press the impeller onto the shaft until it is flush with the end of the shaft.

SPECIAL TOOL

49 0187 270	Water pump boss puller

FUEL SYSTEM

4–A. CARBURETOR ..... 4 : 1
4–A–1. Disassembling of Carburetor ..... 4 : 1
4–A–2. Carburetor Inspection ..... 4 : 2
4–A–3. Assembling of Carburetor ..... 4 : 2
4–A–4. Carburetor Adjustment ..... 4 : 2
4–B. FUEL PUMP ..... 4 : 3
4–B–1. Testing of Fuel Pump ..... 4 : 3
4–B–2. Disassembling of Fuel Pump ..... 4 : 3
4–B–3. Fuel Pump Inspection ..... 4 : 4
4–C. FUEL FILTER ..... 4 : 5
4–D. FUEL LINE ..... 4 : 5
4–E. FUEL TANK ..... 4 : 5
4–F. AIR CLEANER ..... 4 : 5

FUEL SYSTEM

The fuel system consists of the fuel tank, fuel line, fuel filter, fuel pump, carburetor and air cleaner. The fuel tank capacity is 50 liters (13.2 U.S. gallons, 11.0 Imp. gallons).

4–A. CARBURETOR

MAZDA 616 is equipped with two barrel, Stromberg carburetor, model Nikki 215282-231.

4–A–1. Disassembling of Carburetor

The procedures for disassembling the carburetor after removing from the engine are as follows:

1. Remove the throttle return spring.
2. Remove the split pin and washer from the pump connecting and separate the rod from the lever. Remove the spring and washer from the rod.

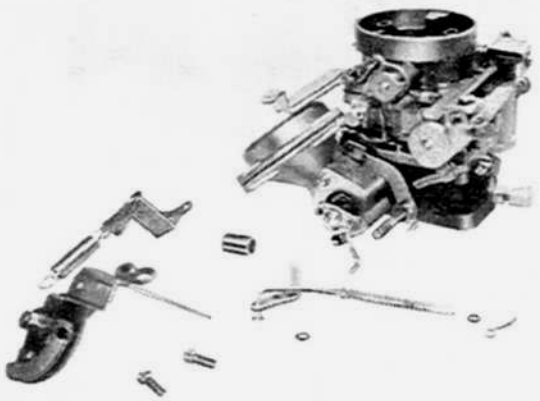

Fig. 4–1 Removing of connecting rod

3. Remove the pump lever retainer and remove the pump lever from the air horn and pump piston rod.
4. Disconnect the choke rod from the lever.
5. Remove the screws that attach the air horn and brackets to the main body. Remove the brackets and lift the air horn straight up and away from the main body.

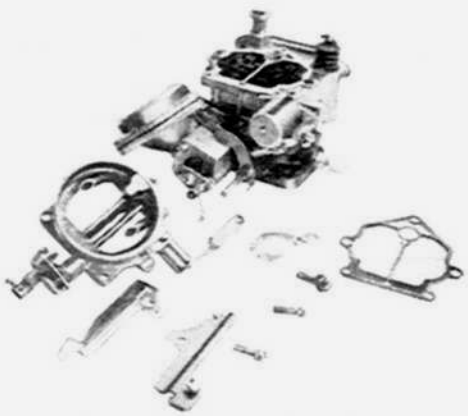

Fig. 4–2 Removing of air horn

6. Remove the pump piston assembly.
7. Invert the main body and remove the bolts that attach the throttle body to the main body. One of them is underside of the main body. Separate the throttle body and main body.

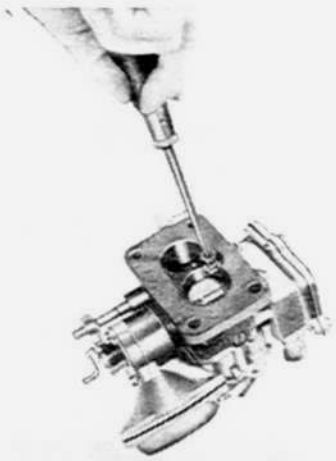

Fig. 4–3 Separating of main body

8. Remove the bowl cover attaching screws and remove the bowl cover and rubber gasket.
9. Invert the main body and remove the collar and float from the float pin. Remove the needle valve assembly.
10. Remove the fuel inlet fitting, noting the number of copper seat gaskets.

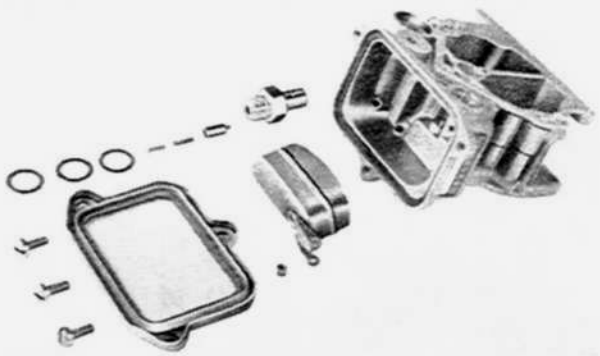

Fig. 4–4 Removing of float

11. Remove the solenoid assembly.
12. Remove the main air bleeds, slow air bleeds and slow jets.

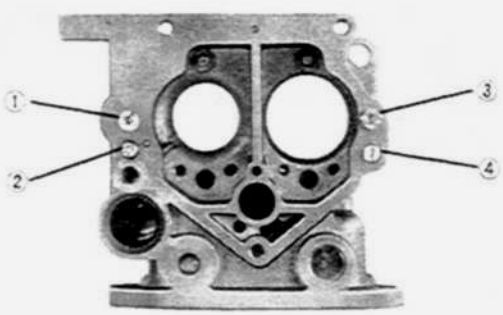

Fig. 4–5 Jets and bleeds

1. Slow air bleed
2. Slow jet
3. Step air bleed
4. Step jet

13. Remove the main jets after removing the plugs from the main body.

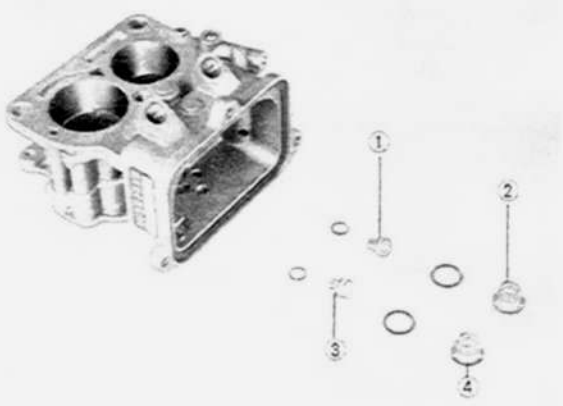

Fig. 4–6 Main jets
1. Primary main jet
2. Plug
3. Secondary main jet
4. Plug

14. Remove the power valve with the **screwdriver** (49 0118 870A)

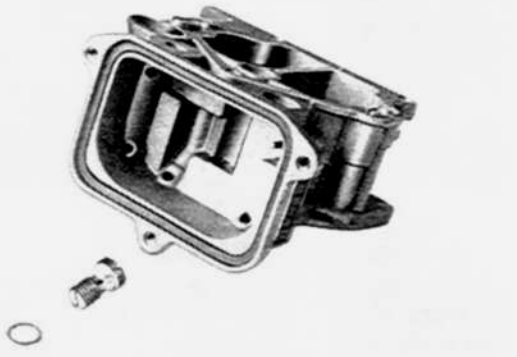

Fig. 4–7 Removing of power valve

15. Remove the idle adjusting needle and spring from the throttle body.

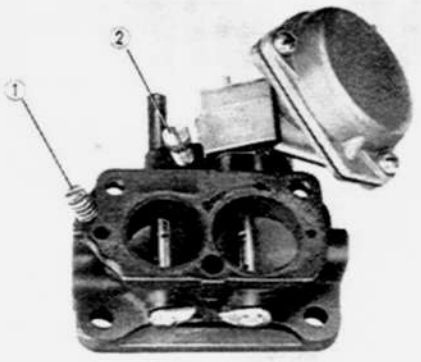

Fig. 4–8 Removing of idle adjusting needle
1. Idle adjusting screw
2. Throttle adjusting screw

16. Remove the split pin and washer from the throttle lever connecting link and separate the link from the primary throttle shaft arm.
17. Remove the diaphragm cover attaching screws and remove the cover and return spring.
18. Remove the throttle return lever and dust cover from the diaphragm body. Remove the clip, disconnect the diaphragm rod and remove the diaphragm and rod assembly.

Note: Do not remove the primary throttle valve and shaft, secondary valve and shaft, venturis unless they are defective.

4–A–2. Carburetor Inspection

1. Thoroughly clean all parts in clean solvent and dry with compressed air. Especially, blow out all passages of the carburetor carefully.
2. Inspect the air horn and the main body for cracks and breakage.
3. Inspect the choke shaft and the throttle shaft for wear. Worn throttle shaft allows air to enter into the cylinder and the mixture at low speed becomes lean.
4. Examine all jets and air bleeds for clog. If it exists, clean in solvent and blow with compressed air. **Never use wire.**
5. Inspect the pump plunger cup. Replace the plunger if it is worn or damaged.
6. Inspect the valves for accelerating pump if they operate properly.
7. Check the float needle and seat for wear.
8. Check the float for damage.
9. Inspect the idle adjusting needle for burrs or ridges.
10. Check the diaphragm for damage.
11. Check the solenoid for fuel cut-off valve and replace if it does not work properly.
12. Discard the old gaskets and use new gaskets when reassembling.

4–A–3. Assembling of Carburetor

Assemble the carburetor in the reverse order of disassembling, noting the following points.
1. Make sure that all parts are in good condition and clean.
2. Both the primary and secondary barrels have their respective parts which are of the same shape. Therefore, when assembling particular care should be taken so as not to mistake one for the other.
3. When installing the throttle valve or choke valve, take care so as to eliminate the gap between the valve and wall.

4–A–4. Carburetor Adjustment

a. Idle adjustment

Idle adjustment should be attempted after making certain that the engine ignition and compression are in good order.
1. Connect an accurate tachometer to the engine.
2. Warm up the engine sufficiently and make sure the choke valve is wide open.
3. Adjust the throttle adjusting screw to set the idle speed to **600 rpm.**
4. Adjust the idle adjusting screw to obtain highest tachometer reading.
5. After highest reading is obtained by the idle adjusting screw, readjust the throttle adjusting screw as

required to obtain **20 rpm** faster than the specified idle. Next turn the idle adjusting screw in (lean) as required to reduce the engine speed **20 rpm.**

Note: This method of adjusting idle mixture should be used to keep hydrocarbon and carbon monoxide emissions to a minimum.

b. Adjusting of accelerator pump lever

At the end of the accelerator pump lever, there are two holes for the connecting rod, which provide two changes in the pump injection amount.
The injection amount per piston stroke is 0.6 cc when the pump connecting rod is fitted to "A" hole and 0.8 cc, to "B" hole.
Select and use these holes in consideration of the atmospheric temperature and the engine condition.

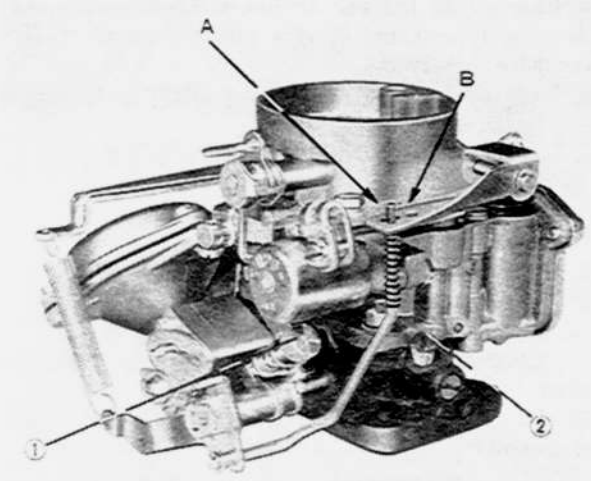

Fig. 4–9 Pump adjustment
1. Throttle adjusting screw 2. Idle adjusting screw

c. Adjusting of float level

The float level can be readily checked through the transparent bowl cover.
To adjust the float level, remove the carburetor. Then, remove the bowl cover and invert the carburetor. Bend the float seat lip so that the distance between the top of the float chamber and the float becomes **6 mm (0.236 in).**

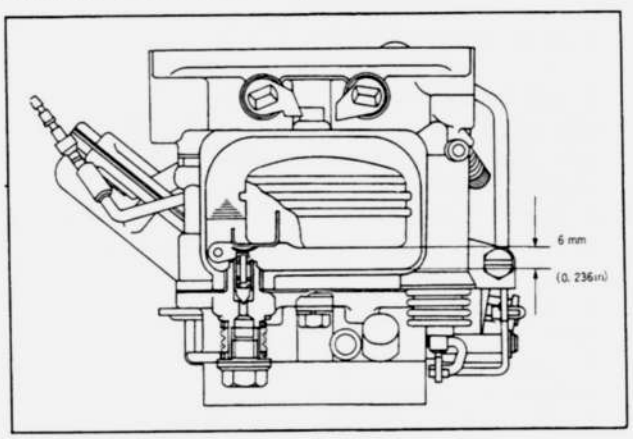

Fig. 4–10 Float level adjustment

d. Adjusting of choke connecting rod

When the choke valve is completely closed, the primary throttle valve automatically opens to 18 degrees for easy starting by a choke connecting rod.
At this time, the clearance between throttle valve and wall is **1.29 mm (0.0508 in)**, as shown in Fig. 4–11.
To adjust, bend the choke connecting rod until the correct clearance is obtained.

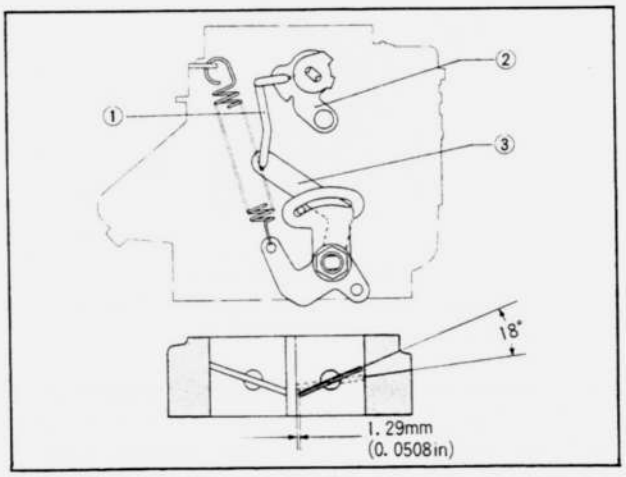

Fig. 4–11 Choke connecting rod adjustment
1. Choke connecting rod 3. Choke connecting lever
2. Choke lever

4–B. FUEL PUMP

4–B–1. Testing of Fuel Pump

If the fuel pump fails to supply fuel properly to the carburetor, the following tests should be made before removing the fuel pump from the vehicle.

a. Pressure test

Test the fuel pressure of the pump, as follows:
1. Connect the gauge to the discharge port of the fuel pump.
2. Switch the ignition on. (**Do not** start the engine).
3. If the reading of the gauge is **0.20 to 0.25 kg/cm^2 (2.8 to 3.6 lb/in^2)**, the fuel pump is in proper order.

b. Volume test

The fuel pump should supply 1,000 cc (0.26 U.S. gallon, 0.22 Imp. gallon) of fuel in 1 minute.

4–B–2. Disassembling of Fuel Pump

1. Apply the identification marks on the air chamber, valve chamber and diaphragm assembly so that the inlet and outlet valve are properly located when the pump is reassembled.
2. Loosen the screws attaching the air chamber and valve chamber to the diaphragm assembly.
Remove the air chamber, gasket and valve chamber.
3. Loosen the attaching screw of the valve retainers and remove the retainer and valves from the valve chamber.
4. Remove the cover by loosening the screws.
5. Disconnect the wiring from the switch.

6. Remove the switch from the body by loosening the screws.
7. Remove the body from the diaphragm assembly by loosening the screws.

4–B–3. Fuel Pump Inspection

a. Checking of diaphragm shaft stroke

After installing the body on the diaphragm assembly,, depress the diaphragm with a finger and check the diaphragm shaft stroke at the end of the shaft. The specified stroke is **2.8 to 3.0 mm (0.11 to 0.12 in).** If the stroke exceeds the standard, thin the adjusting plate between the diaphragm assembly and the body. If it is less than the standard, increase the thickness of the adjusting plate. **0.1, 0.25 and 0.5 mm (0.004, 0.010 and 0.020 in)** adjusting plates are available.

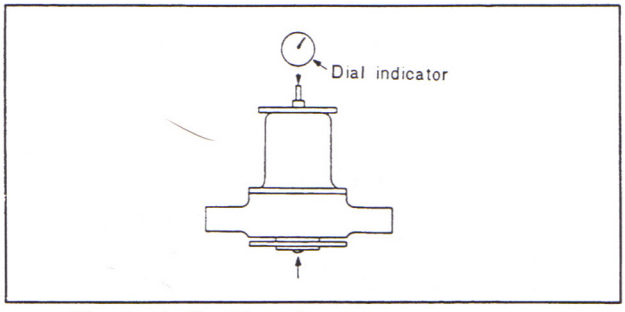

Fig. 4–12 Checking of diaphragm shaft stroke

b. Checking of switch for make and break

After fitting switch to the body, contact the dial indicator with the diaphragm shaft and check when the point opens and closs by depressing and releasing the diaphragm. The specified switching position is **0.5 to 1.0 mm (0.02 to 0.04 in)** from each stroke end. When the switch position deviates from the specified, adjust it according to any of the following methods.

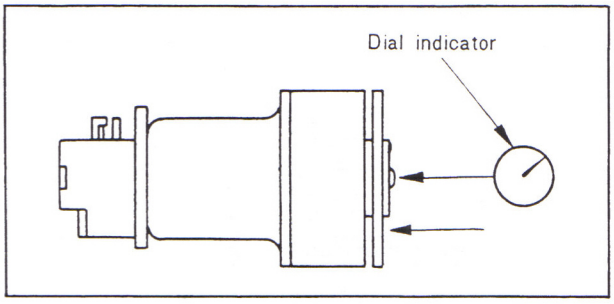

Fig. 4–13 Checking of switch

If the points opens too early and closes too late, decrease the thickness of the adjusting washer located between the diaphragm shaft and the lever, if it opens too late and closes too early, increase it.
0.25 and 0.6 mm (0.010 and 0.024 in) adjusting washers are available.
If the point opens earlier than the standard, bend the upper stopper upward if the point opens too late, bend

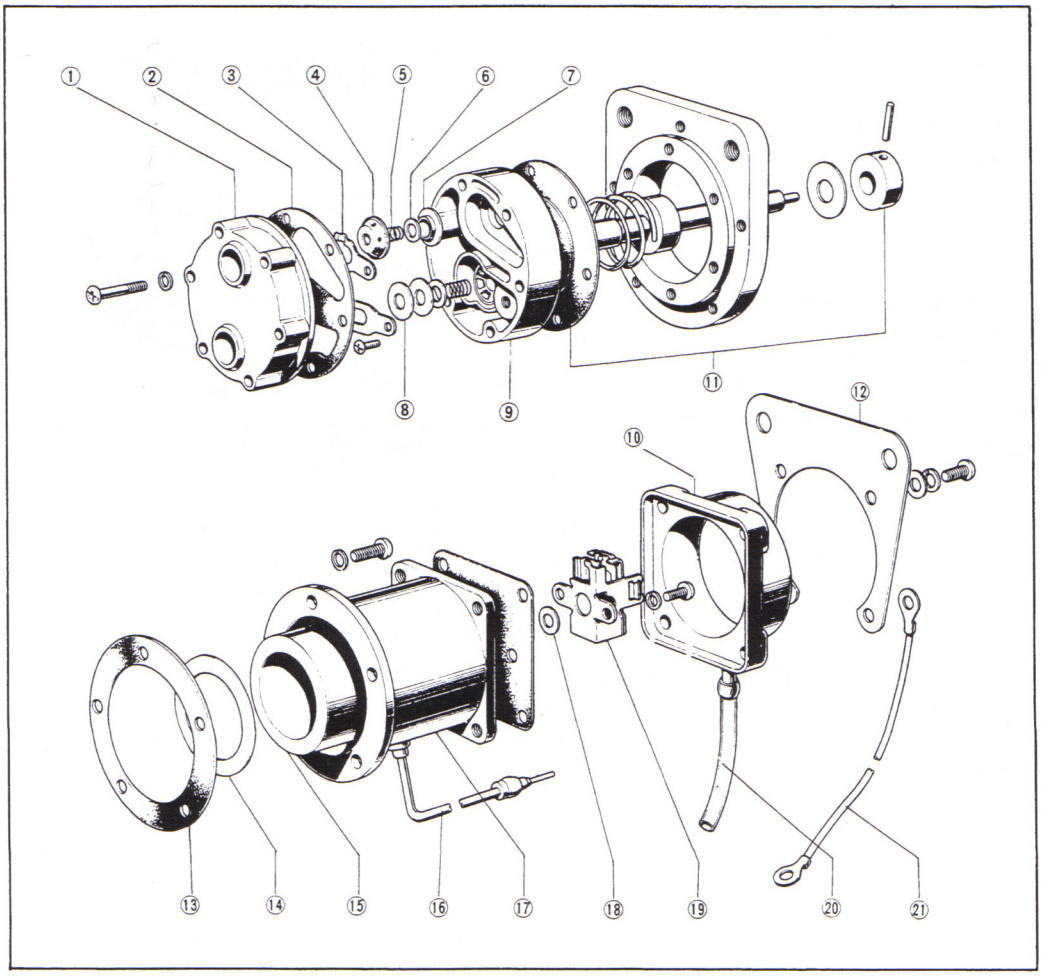

Fig. 4–14

Fuel pump assembly

1. Air chamber
2. Gasket
3. Valve retainer
4. Valve holder
5. Spring
6. Valve
7. Valve seat
8. Valve seat holder
9. Valve chamber
10. Cover
11. Diaphragm assembly
12. Bracket
13. Adjusting plate
14. Magnetic permeable plate
15. Coil
16. Lead wire
17. Body
18. Adjusting washer
19. Switch
20. Air bent pipe
21. Earth wire

it downward. If the point closes later than the standard, bend the lower stopper upward; if the point closes too early, bend it downward.
Therefore, adjustment by stoppers actually requires to bend both upper and lower stoppers simultaneously, because when the point open too early, it closes too late and when the point closes too late, it opens too early. The point gap should be **1.0 mm (0.04 in)** when the point opens.

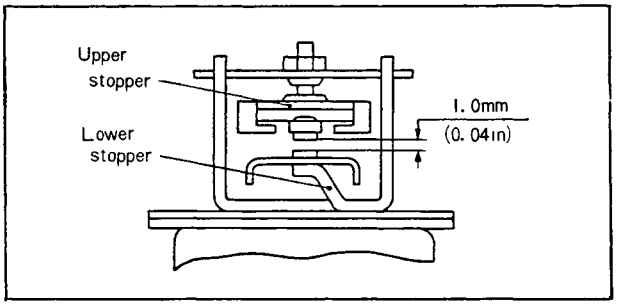

Fig. 4–15 Adjusting of point

4–C. FUEL FILTER

The fuel filter is of a cartridge type, and the element is made integrally with the case.
The fuel filter cartridge should be replaced every **18,000 km (12,000 miles).**
To replace the fuel filter cartridge, open the trunk lid and remove the service hole cover from the luggage compartment floor.
The cartridge is fitted to the underside of the service hole cover.
Disconnect the fuel pipes from the cartridge and change the cartridge. Reconnect the fuel pipes. Start the engine and check for leaks.

4–D. FUEL LINE

Inspect the fuel lines for leaks and tighten the fuel line connections to prevent leakage.
It is important to keep the fuel system clean and free from water. If an excessive amount of dirt or water is found, drain the fuel tank and blow out the fuel lines with compressed air.

4–E. FUEL TANK

The capacity of the tank is **50 liters (13.2 U.S. gallons, 11.0 Imp. gallons).**
The fuel gauge unit is mounted into the top of the fuel tank. The air vent pipe is provided on the fuel tank. A restriction in the air vent pipe will cause difficulty in filling the fuel tank.

4–F. AIR CLEANER

The air cleaner is of the dry type and the air cleaner element is made of the none-woven fabrics.
The air cleaner element should be cleaned **every 3,000 km (2,000 miles).** Under dusty or sandy conditions, the element should be cleaned frequently. The air cleaner element should be changed with a new one **every 36,000 km (24,000 miles).** To clean the element, unscrew the wing nut and remove the air cleaner cover. Take out the element and blow out the dust from the element with a low compressed air. Reinstall the element and cover.

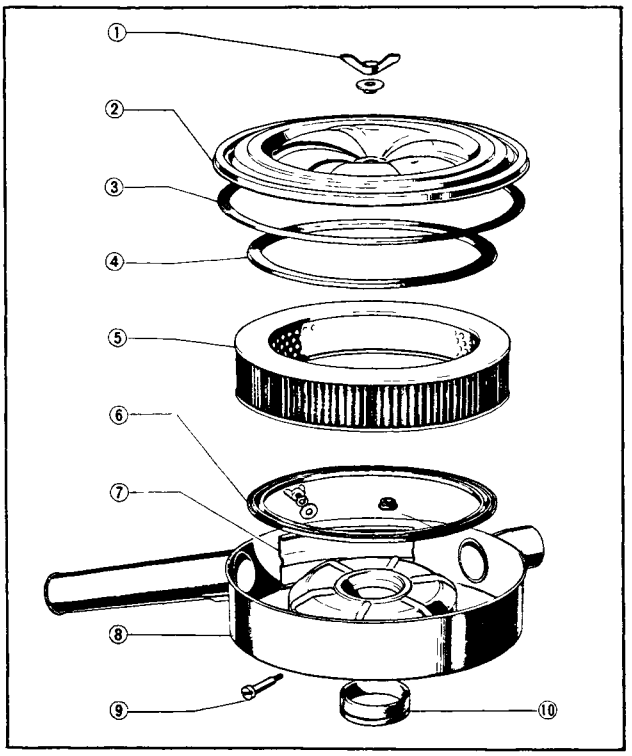

Fig. 4–16 Air cleaner

1. Wing nut
2. Cover
3. Packing
4. Packing
5. Element
6. Packing
7. Shutter
8. Body
9. Clamp bolt
10. Packing

SPECIAL TOOL

49 0118 870A[1]	Screwdriver

ELECTRICAL SYSTEM

5–A. BATTERY ..... 5 : 1
5–A–1. Checking of Battery ..... 5 : 1
5–A–2. Charging of Battery ..... 5 : 1
5–B. SPARK PLUG ..... 5 : 1
5–C. DISTRIBUTOR ..... 5 : 1
5–C–1. Adjusting of Point Gap ..... 5 : 1
5–C–2. Adjusting of Ignition Timing ..... 5 : 2
5–C–3. Testing of Distributor ..... 5 : 2
5–C–4. Disassembling of Distributor ..... 5 : 2
5–C–5. Distributor Inspection ..... 5 : 3
5–C–6. Assembling of Distributor ..... 5 : 3
5–D. ALTERNATOR ..... 5 : 4
5–D–1. Precautions on Service ..... 5 : 4
5–D–2. Checking of Charging System on Car ..... 5 : 4
5–D–3. Disassembling of Alternator ..... 5 : 5
5–D–4. Alternator Inspection ..... 5 : 5
5–D–5. Assembling of Alternator ..... 5 : 6
5–E. REGULATOR ..... 5 : 6
5–E–1. Checking of Constant Voltage Relay ..... 5 : 6
5–E–2. Checking of Pilot Lamp Relay ..... 5 : 6
5–E–3. Adjusting of Regulator ..... 5 : 6
5–F. STARTING MOTOR ..... 5 : 7
5–F–1. Checking of Starting Circuit ..... 5 : 7
5–F–2. Testing of Starting Motor ..... 5 : 7
5–F–3. Disassembling of Starting Motor ..... 5 : 7
5–F–4. Starting Motor Inspection ..... 5 : 8
5–F–5. Magnetic Switch Test ..... 5 : 9
5–F–6. Assembling of Starting Motor ..... 5 : 10
5–G. LIGHTING SYSTEM ..... 5 : 10
5–G–1. Headlight Aiming ..... 5 : 10
5–G–2. Replacing of Bulbs ..... 5 : 10
5–H. INSTRUMENT PANEL ..... 5 : 10
5–H–1. Fuel Gauge ..... 5 : 10
5–H–2. Water Temperature Gauge ..... 5 : 11

5

ELECTRICAL SYSTEM

The major electrical systems are the starting system, ignition system, charging system, lighting system and the electrical instrument.
Service information for these systems are included in this section.

5–A. BATTERY

MAZDA 616 is equipped with a 12-volt battery consisting of six cells. Its capacity is 60 ampere hours of 20 hour rating. The battery is located at the right side of the engine compartment.

5–A–1. Checking of Battery

As the battery has many important functions, check the following points periodically and always keep the battery in perfect condition.
1. Check the electrolyte level in each cell of the battery, add distilled water to maintain the solution 10 to 20 mm (0.4 to 0.8 in) above the plate. **Do not** overfill.
2. Check the specific gravity of the electroyte with a hydrometer, as shown in Fig. 5–1. If the reading is 1.26 or more, it indicates that the battery is fully charged. If the reading is **below 1.20,** the battery **requires recharging.**

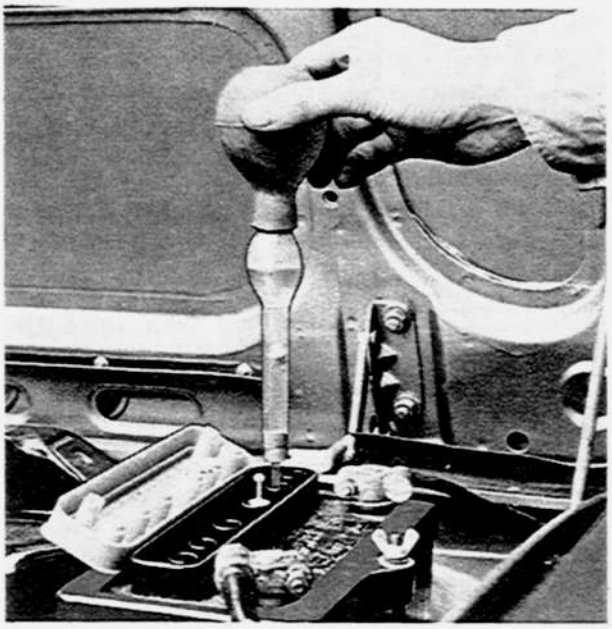

Fig. 5–1 Checking of specific gravity

3. Check tightness of the terminals to ensure good electrical connections. Clean the terminals and coat the terminals with grease.
4. Inspect for corroded or frayed battery cables.

5–A–2. Charging of Battery

a. Constant-current charge

1. If the exterior of the battery is dirty with sulphuric acid or dust and dirt, wash this off with clean water and dry thoroughly before charging the battery.
2. Check the electrolyte level and add distilled water if necessary.

Note: If addition of distilled water is neglected, the plates and separators will become exposed to air, causing a sulphation to occur on the plates. Do not add dilute sulphuric acid unless the electrolyte has overflowed or leaked out.

3. Connect the battery to a charger, ensuring that the polarities are correct.
4. To charge, apply an electric current of approximately 5 amperes until the specific gravity of the electrolyte reaches 1.25 ~ 1.27.

b. Fast charge

As a fast charge causes both the temperature and the level of the electrolyte to rise suddenly, it does not have a favorable effect on the battery.
Therefore, this should not be performed unless in the case of an emergency.
To charge with a fast charger, follow the instructions of the manufacturer.

Note: Ensure that the cables are disconnected from the battery terminals before charge is applied.
If this is neglected, it could cause a damage to the diodes on the alternator.

5–B. SPARK PLUG

The standard spark plug is **NGK BP-6ES or NIPPON DENSO W20EP.**
Check the spark plugs for burned and eroded electrode, black deposits, fouling, and cracked porcelain.
Clean the spark plugs with a spark plug cleaner or wire brush if they are fouled. Replace the badly burned or eroded spark plug.
Measure the electrode gap of each spark plug with a wire gauge. If it is improper, adjust the gap to the specified **0.8 mm (0.032 in)** by bending the outer electrode.

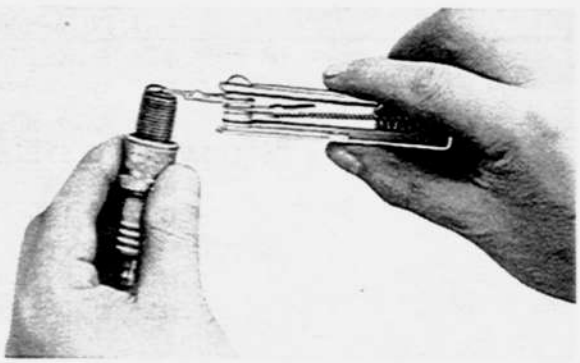

Fig. 5–2 Checking of spark plug gap

5–C. DISTRIBUTOR

5–C–1. Adjusting of Point Gap

Adjust the point gap on the distributor as follows:
1. Check the contact point alignment. If necessary,

bend the stationary contact bracket so as to obtain contact in the center of the contact points.
2. Crank the engine and stop when the rubbing block on the contact arm just rests on the highest point of the cam.
3. Insert a feeler gauge of **0.5 mm (0.020 in)** between the contact points, loosen the set screw and turn the adjusting screw until the correct gap in obtained.
4. Tighten the set screw and recheck the point gap.

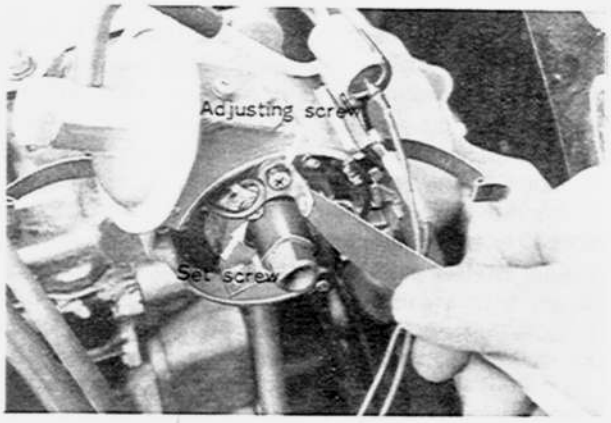

Fig. 5–3 Adjusting of point gap

5–C–2. Adjusting of Ignition Timing

To obtain maximum engine performance, the distributor must be correctly positioned on the engine to give the proper ignition timing (8 degrees before top dead center). If a timing light is available, use it to adjust the ignition timing, as follows:
1. Connect the timing light to the No. 1 spark plug. Start the engine and set the idle to 600 rpm.
2. Using the timing light, observe the position of the timing mark.
3. Loosen the distributor lock nut and rotate the distributor housing so that the timing mark on the crankshaft pulley aligns with the needle on the timing chain cover.
4. Tighten the distributor lock nut and recheck the timing.

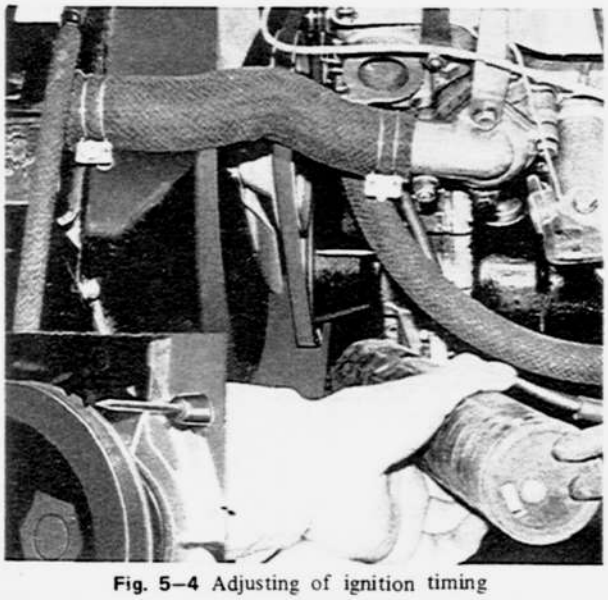

Fig. 5–4 Adjusting of ignition timing

5–C–3. Testing of Distributor

a. Dwell angle test

Dwell angle also called cam angle is degrees of rotation through which the contact points remian closed. To test dwell angle, use a distributor tester following the instructions of the manufacturer. If the dwell reading is within **49 and 55 degrees**, it is correct.
If the reading is not within the specifications, it indicates the following troubles.
1. Incorrect point gap
2. Worn cam
3. Worn rubbing block
4. Distorted contact arm

b. Advance test

To test the ignition advancing characteristic of the distributor, use a distributor tester. The advancing characteristic of the contact breaker should be within the range shown in Fig. 5–5.

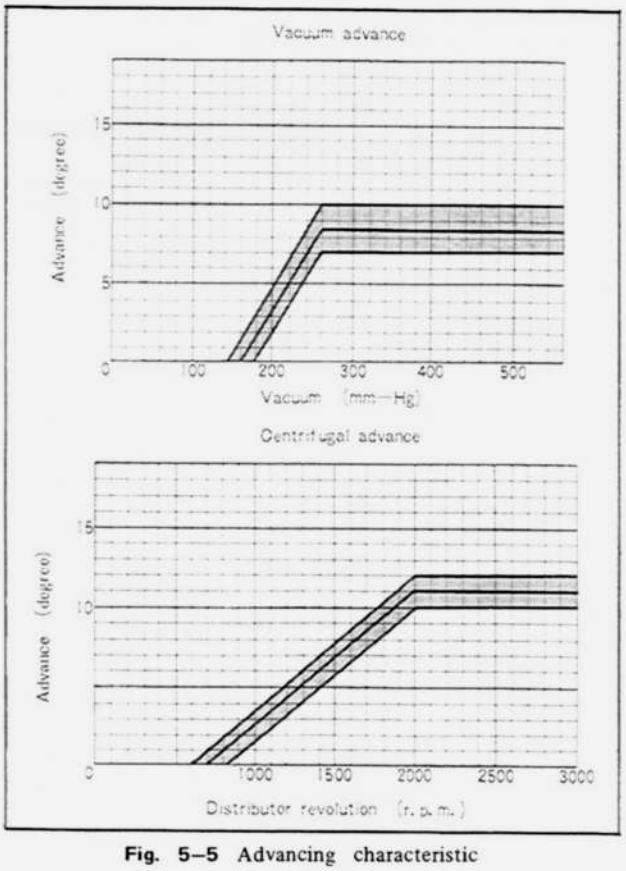

Fig. 5–5 Advancing characteristic

5–C–4. Disassembling of Distributor

1. Unfasten the cap retaining clips and lift off the cap.
2. Remove the rotor.
3. Loosen the primary terminal screw and disconnect the condenser lead and primary lead.
4. Remove the condensers.
5. Remove the screws that attach the cam lubricating felt assembly and the contact point assembly to the breaker base and remove the cam lubricating felt assembly and point assembly.

6. Remove the screws that attach the vacuum control unit to the distributor housing and remove the clip holding the link to the breaker base.
Remove the vacuum control unit.
7. Remove the screws attaching the earth wire and breaker base to the housing. Remove the earth wire and breaker base.
8. Remove the cam attaching screw and remove the cam.
9. Drive the lock pin out of the gear with a suitable drift, and remove the gear and washers.
10. Push the shaft up and remove through the top of the housing.
11. The governor can be removed by removing the governor spring and clip.

5–C–5. Distributor Inspection

a. Inspection of distributor cap
Inspect the distributor cap for cracks, carbon runners and evidence of arcing. If any of these conditions exists, the cap should be replaced. Clean any corroded high tension terminals.

b. Inspection of rotor
Inspect the rotor for cracks or evidence of excessive burning at the end of the metal strip.
If any of these conditions exist, the rotor should be replaced.

c. Inspection of contact point
Inspect the points for wear, burning, transferred metal and pitting. If they are slight, the points can be cleaned with a stiff bristled brush or oil stone. If they are severe, replace with new ones.

d. Checking of contact arm spring tension
For inspection, hook a spring scale on the contact arm and pull in a straight line at a right angle to the contact arm. Take a reading when the contact point start to separate. If the reading is 0.5 kg (1.1 lb) or less, replace the movable contact arm.

e. Checking of condenser
If the condenser is leaky, it will cause a weak spark or burned contact points. Check the capacity of the condenser with a condenser tester. The capacity is **0.20 to 0.24 microfarads.** In the absence of a tester check by substituting a new condenser.

5–C–6. Assembling of Distributor
Assemble the distributor in the reverse order of disassembling.

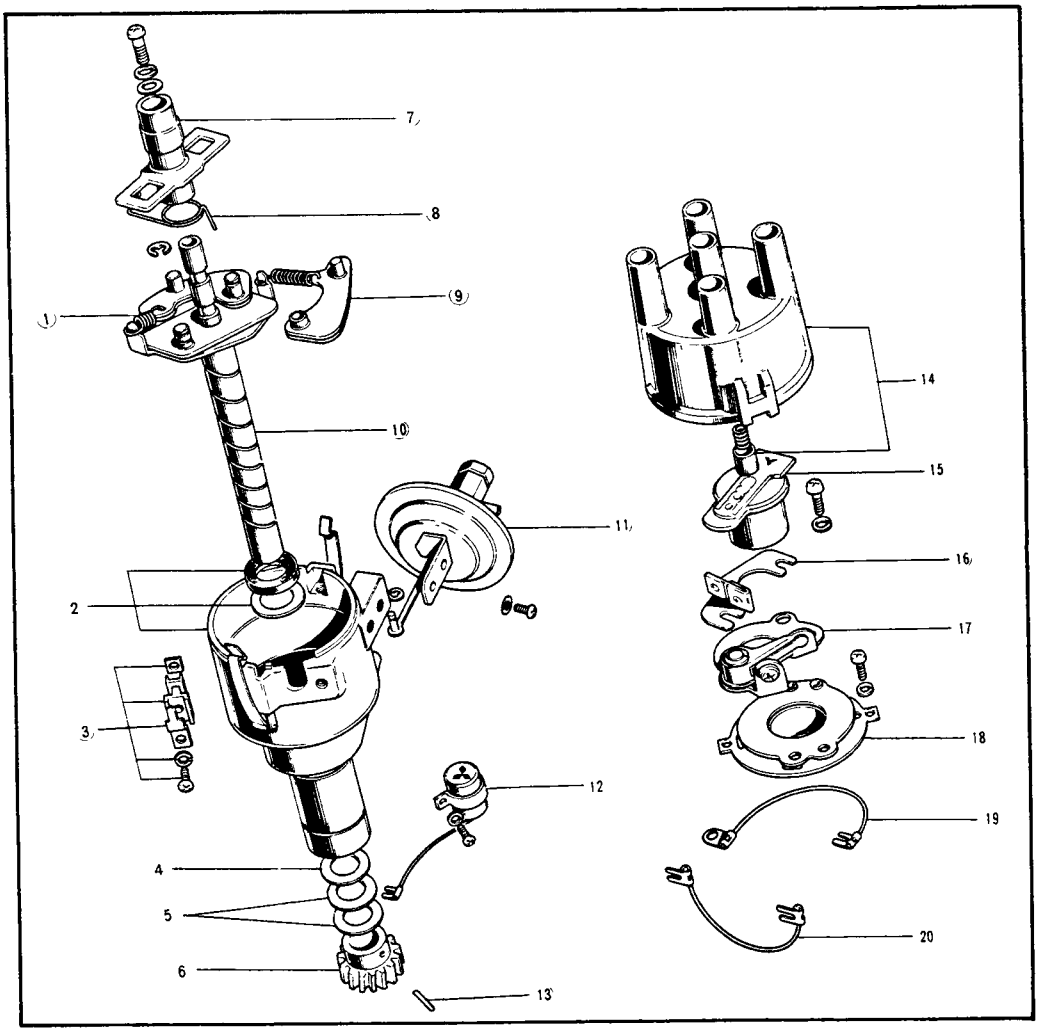

Fig. 5–6
Distributor assembly

1. Spring
2. Housing assembly
3. Terminal assembly
4. Washer
5. Washer
6. Drive gear
7. Cam assembly
8. Spring
9. Governor
10. Shaft
11. Vacuum control unit
12. Condenser
13. Lock pin
14. Cap assembly
15. Rotor
16. Felt assembly
17. Point assembly
18. Breaker base
19. Earth wire
20. Lead wire

5–D. ALTERNATOR

5–D–1. Precautions on Service

When servicing the charging system, observe the following precautions. If not followed, the result will be in serious damage of the system.

1. **Do not short across** or **ground** any of the terminals on the alternator.
2. **Never operate** the alternator on an **open circuit** (with the field terminal connected and the armature terminal disconnected).
3. When installing a battery, always make sure that the negative post of the battery is attached to the ground strap securely.
4. **Never reverse battery leads,** even for an instant as the reverse polarity current flow will damage the diodes in the alternator.
5. When charging the battery **with a fast charger, disconnect the positive cable** at the battery.

5–D–2. Checking of Charging System on Car

If the electrical system is not charging properly, it is advisable to determine whether the trouble is in the alternator or regulator prior to removing the alternator.

1. Disconnect the wire from "B" terminal of the alternator and connect the ammeter with the negative lead of the ammeter to the wire and the positive lead to the "B" terminal, as shown in Fig. 5–7.
2. Connect the positive lead of the voltmeter to the "B" terminal of the alternator and ground the negative lead of the voltmeter.
3. Switch the headlight on.
4. Start the engine and take the readings of the ammeter and voltmeter, holding the engine speed of 1,800 rpm (alternator speed : 4,000 rpm).

If the ammeter shows 32 ampares or less, the trouble is in the alternator and if the voltmeter shows without the specifications it is in the regulator.

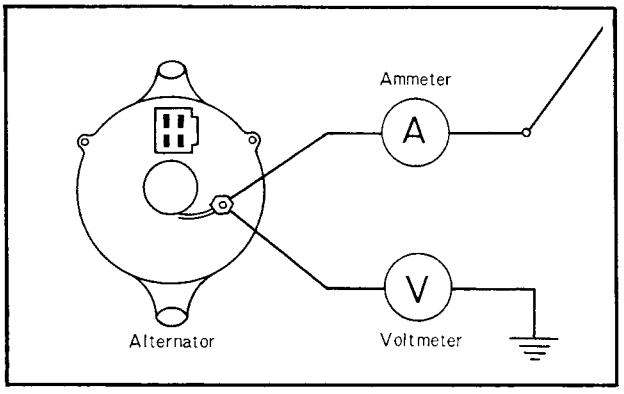

Fig. 5–7 Checking of charging system

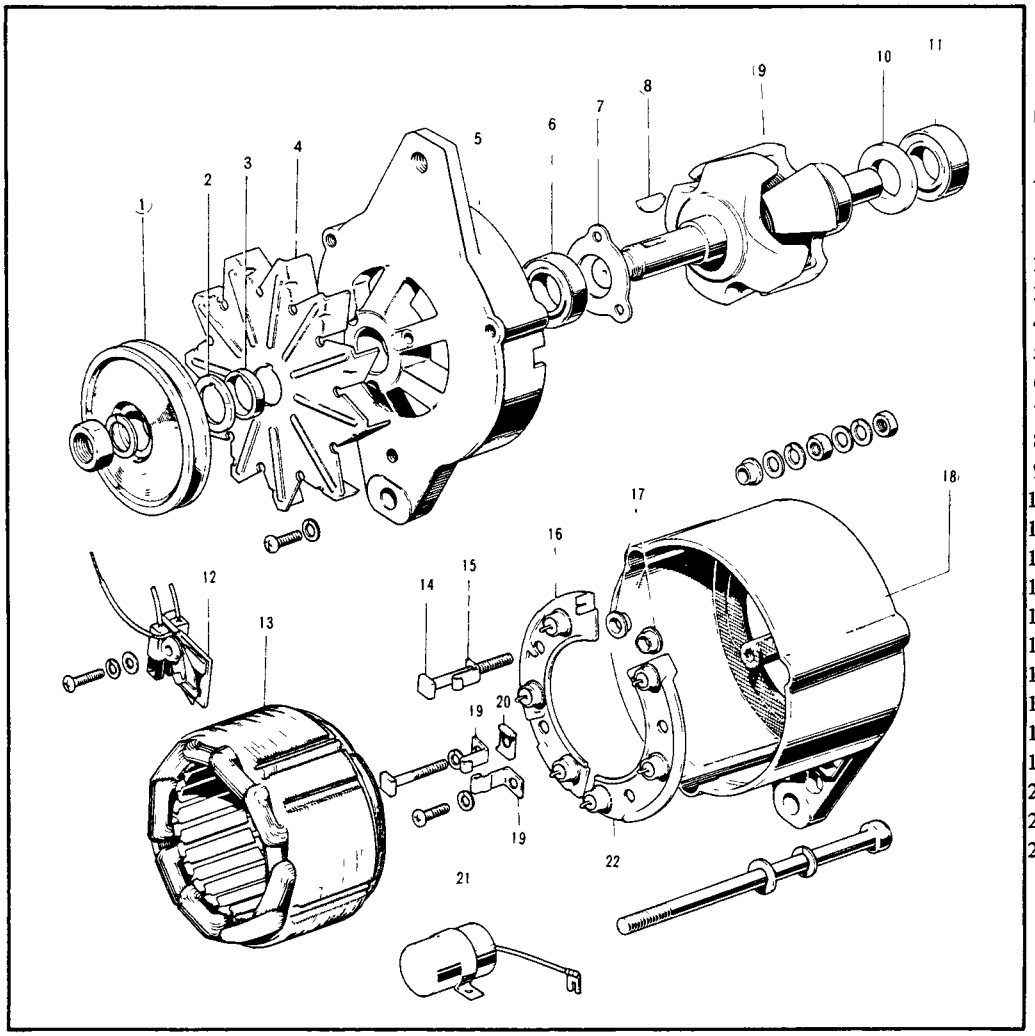

Fig. 5–8

Alternator

1. Pulley
2. Spacer
3. Bush
4. Fan
5. Front housing
6. Bearing
7. Bearing cover
8. Key
9. Rotor
10. Washer
11. Bearing
12. Brush
13. Stator
14. Bolt
15. Clamp
16. Heat sink cpt. ⊕
17. Insulation plate
18. Rear housing
19. Clamp
20. Insulation
21. Condenser
22. Heat sink cpt. ⊖

5–D–3. Disassembling of Alternator

1. Remove the nut attaching the radio noise suppression condenser and remove the condenser.
2. Remove the nut attaching the pulley to the shaft and remove the pulley, fan and spacer.
3. Remove the through bolts.
4. Separate the front housing assembly by prying apart with a screwdriver at the slots of the front housing.
5. Remove the rotor from the front housing.
6. Remove the front bearing retainer attaching screw and remove the retainer. Support the front housing close to the bearing boss, and press out the old bearing from the housing, only if the bearing is defective.
7. Unsolder the diode leads and stator coil leads.
8. Remove the stator from the rear housing.
9. Remove the screws that attach the brush holder to the housing and remove the brush and holder, insulator and terminal.
10. Remove the heat sink attaching screw and the two terminal screws and remove the diodes and heat sink assemblies from the rear housing.

5–D–4. Alternator Inspection

a. Checking of stator coil

Check the stator coil for both open and grounded circuits with a tester.

To check for open, connect the prods to each of the two leads, as shown in Fig. 5–9. If there is no flow of current, the coil is open circuit and must be repaired or replaced.

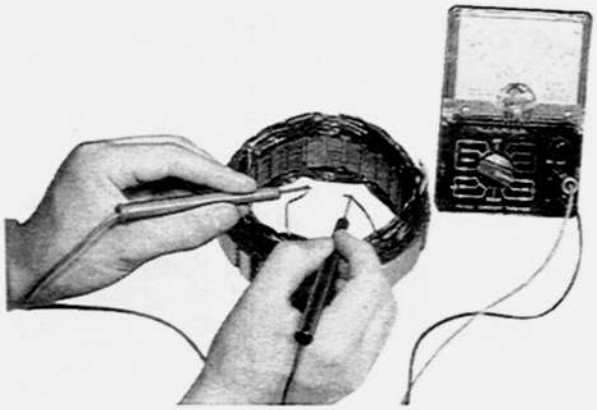

Fig. 5–9 Checking of stator coil for open

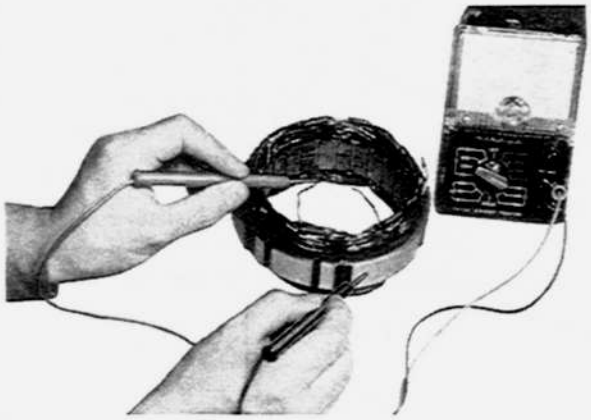

Fig. 5–10 Checking of stator coil for ground

To check for ground, connect one prod to the core and the other to each lead wire, as shown in Fig. 5–10. If a ground is present the current will flow and the stator coil must be repaired or replaced.

b. Checking of roter

To check for open circuit, place both prods of a tester on the slip rings, as shown in Fig. 5–11.

If the reading is 5 to 6 Ω, there is no trouble in the rotor.

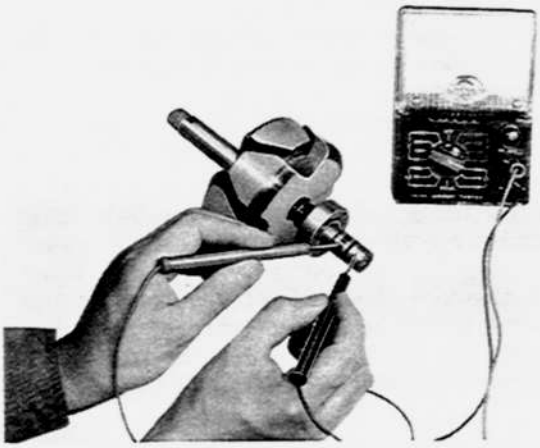

Fig. 5–11 Checking of rotor for open

To check for ground, connect one prod to the slip ring and other prod to the core. If the current flows, the rotor mast be repaired or replaced.

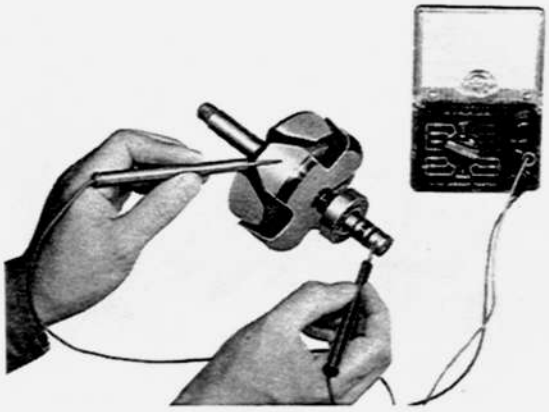

Fig. 5–12 Checking of rotor for ground

c. Checking of diodes

Diodes for use in the alternator are avilable in two different types, the positive diode which allows current to flow from the lead wire to the case but not from the case to the lead wire and the negative diode which has the opposite properties.

To check, read the resistance between the lead wire and case with a tester. Then reverse the tester leads and note the reading.

If both readings are very low or high, the diode is defective. A good diode will give one low reading and one high reading.

Note: The diode and heat sink are serviced as an assembly only.

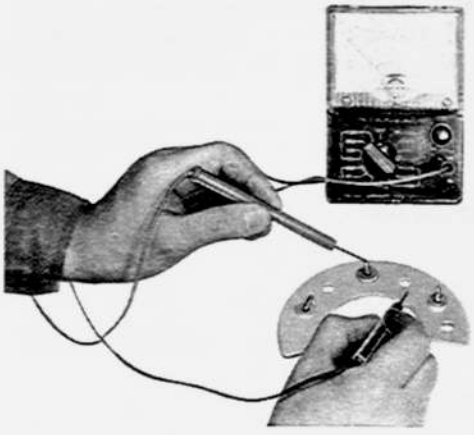

Fig. 5–13 Checking of diode

d. Checking of brushes

The brush should be replaced when one third of its original length is worn. The wear limit line is marked on each bursh surface for warning.

The standard tension of the brush spring is 350 gr (12.5 oz). If the tension is too low or if excessive corrosion exists, the spring must be replaced.

e. Checking of bearings

There is no need of lubricating as the bearing is prelubricated. In a long spell of use, when the bearing is worn or damaged, replace it with a new one.

5–D–5. Assembling of Alternator

Assemble the alternator in the reverse order of disassembling, noting the following point.

1. When installing the rotor assembly to the rear housing and stator assembly, hold the brushes in position by inserting a piece of stiff wire into the hole of the brush through the rear housing as shown in Fig. 5–14.

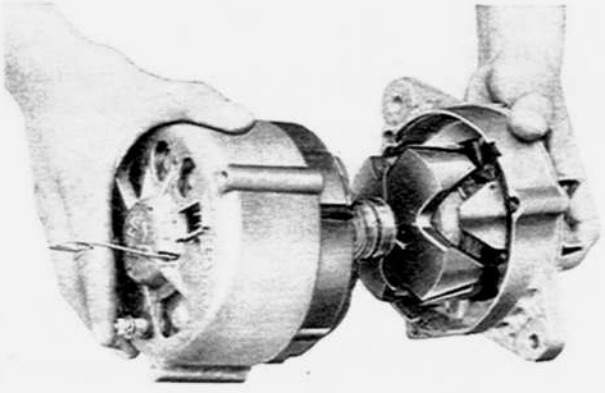

Fig. 5–14 Installing of rotor assembly

5–E. REGULATOR

5–E–1. Checking of Constant Voltage Relay

To check, use an almost fully charged battery and connect a voltmeter between the (A) and (E) terminals of the regulator, as shown in Fig. 5–15.

Then, hold the alternator revolution to 4,000 rpm (engine revolution 1,800 rpm) and take a reading of the voltmeter. If the reading is from 14 to 15 volts, it is in proper order. If it is not within the specifications, the voltage relay must be adjusted, as instructed in Par. 5–E–3.

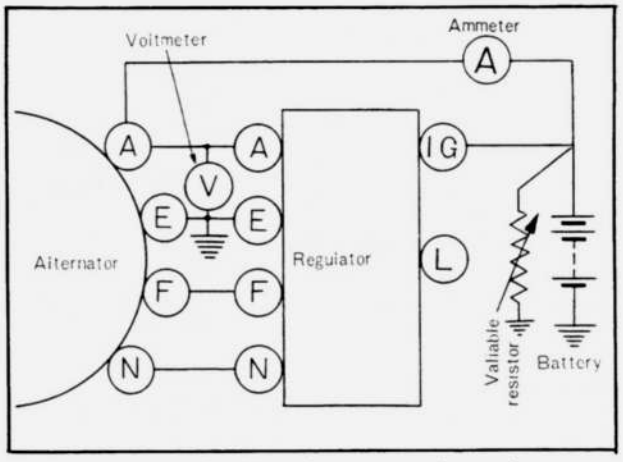

Fig. 5–15 Checking of constant voltage relay

5–E–2. Checking of Pilot Lamp Relay

Make a circuit, as shown in Fig. 5–16, using a voltmeter and variable resistor, and light up the pilot lamp. Then, slide the knob of the variable resistor so that the voltage gradually increases.

Read the voltage between the (N) and (E) terminal when the lamp goes out. If this voltage in 4.2 to 5.2 volts, it is normal.

Next, slide the knob to gradually reduce the voltage and the lamp will light again. If the reading is 0.5 to 3.0 volts at this time, it is proper.

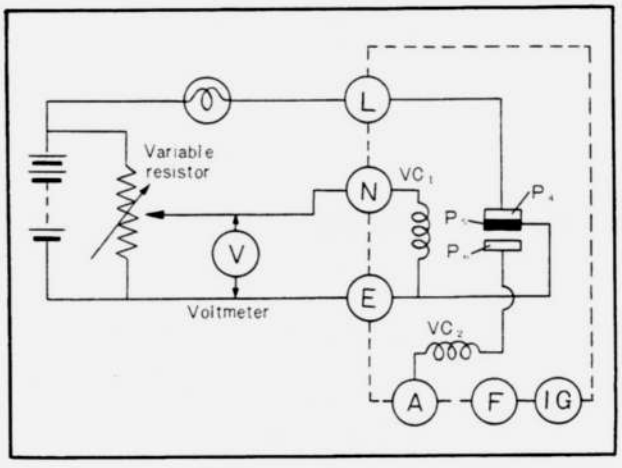

Fig. 5–16 Checking of pilot lamp relay

5–E–3. Adjusting of Regulator

First, check the air gap, back gap and point gap with a wire gauge. If they are not within the specifications, adjust by bending the stationary contact bracket. After correct gaps are obtained, adjust the voltage setting. Bend the upper plate down to decrease the voltage setting, up to increase the voltage setting.

In case of the pilot lamp relay, if the voltage when the lamp lights up is adjusted to the specification, the voltage when the lamp goes out may be within the specification.

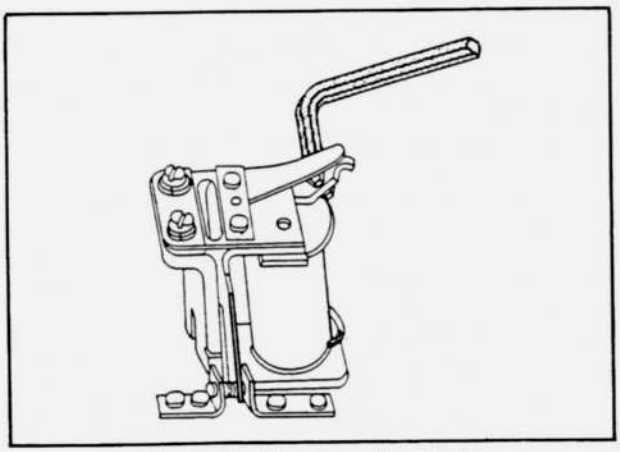

Fig. 5–17 Adjusting of regulator

Constant voltage relay

Air gap	0.7 ~ 1.1 mm (0.028 0.043 in)
Point gap	0.3 ~ 0.4 mm (0.012 ~ 0.016 in)
Back gap	0.7 ~ 1.1 mm (0.028 ~ 0.043 in)

Pilot lamp relay

Air gap	0.9 ~ 1.2 mm (0.035 ~ 0.047 in)
Point gap	0.7 ~ 1.1 mm (0.028 ~ 0.043 in)
Back gap	0.7 ~ 1.1 mm (0.028 ~ 0.043 in)

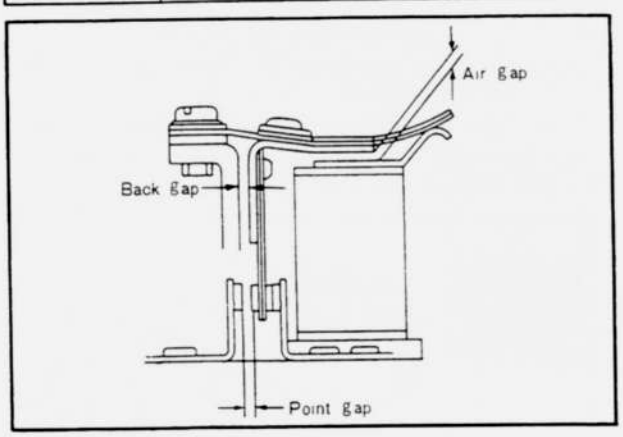

Fig. 5–18 Checking of gap

5–F. STARTING MOTOR

5–F–1. Checking of Starting Circuit

When the starting motor fails to operate or does not satisfactorily operate, check the following points before removing the starting motor:

1. Weak battery
2. Corroded or loose battery terminal
3. Loose starting motor terminal
4. Broken or loose wires of the starting circuit
5. Faulty ignition switch

5–F–2. Testing of Starting Motor

a. Free running test

1. Place the starting motor in a vise equipped with soft jaws and connect a fully-charged 12 volt battery to the starting motor.
2. Connect an ammeter between the (B) terminal of the starting motor and the battery.
3. Operate the starting motor and take a reading. The current draw should be 60 amperes minimum at 6,000 rpm.

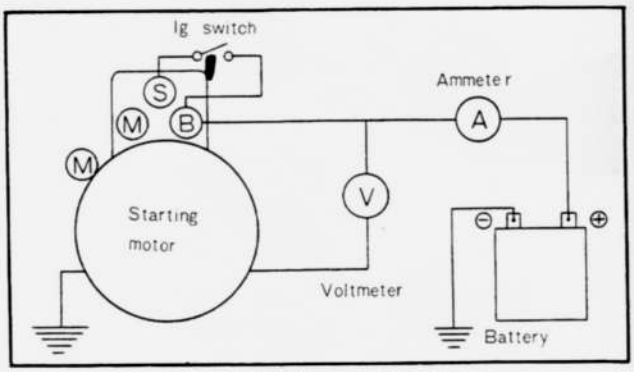

Fig. 5–19 Free running test

b. Lock resistance test

1. Install the starting motor on a test bench.
2. Test the lock resistance of the starting motor, following the instructions of the test equipment manufacturer.
3. With applied battery boltage adjusted to 7.5 volts, the current flow should be 560 amperes and the torque should be 1.3 m-kg (9.4 ft-lb).

If the starting motor dose not perform to the above test requirements, repair it referring to the following list.

1) Starter rotates slowly with a large current at free running.
   a) Worn, dirty or defective bearings
   b) Short circuit of armature
   c) Grounded armature and field coil
2) Starter does not rotate with a large current.
   a) Defective field circuit
   b) Defective armature circuit
   c) Burnt commutator
3) Low torque and low current flow. Low free running speed.
   a) Breakage of field circuit
   b) Excessive internal resistance
4) Low torque. High free running speed.
   a) Short circuit of field coil

5–F–3. Disassembling of Starting Motor

1. Disconnect the field strap from the terminal on the magnetic switch.
2. Remove the magnetic switch attaching screws and

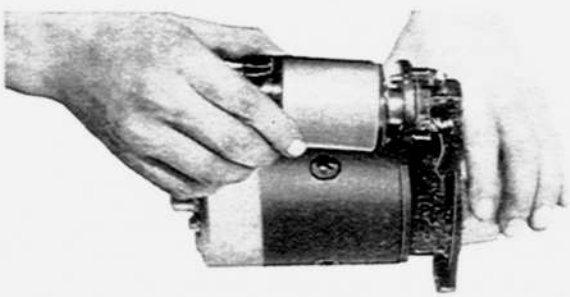

Fig. 5–20 Removing of magnetic switch

remove the magnetic switch, spring and washers from the driving housing.
3. Remove the plunger from the driving lever.

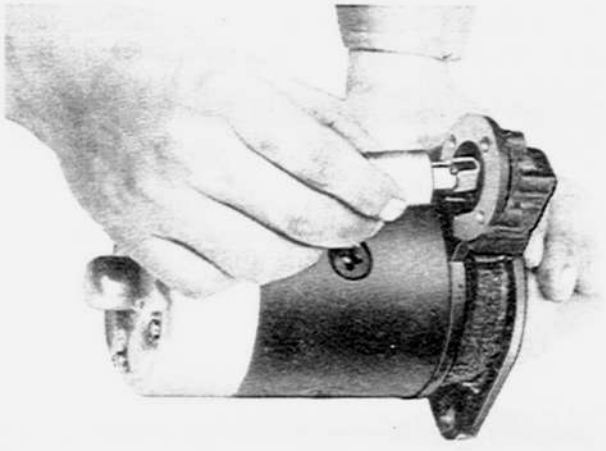

Fig. 5–21 Removing of plunger

4. Remove the through bolts and screws, and remove the rear cover, insulator and washers.

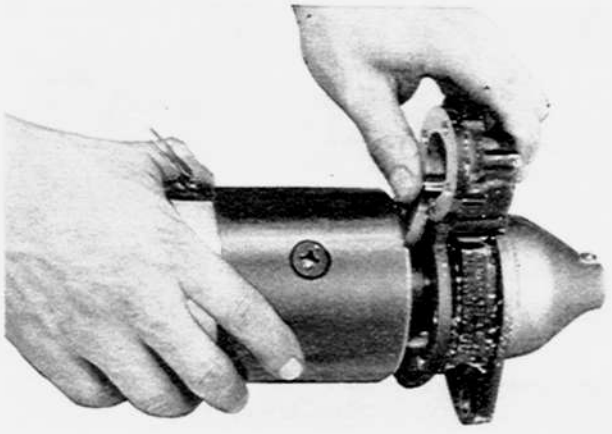

Fig. 5–22 Removing of rear cover

5. Separate the yoke assembly from the driving housing.

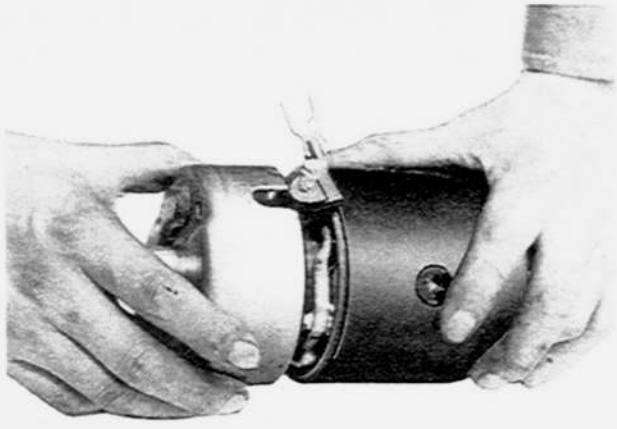

Fig. 5–23 Separating of yoke and housing

6. Remove the rubber packing, springs and spring seat.

7. Remove the armature and over-running clutch assembly from the driving housing.

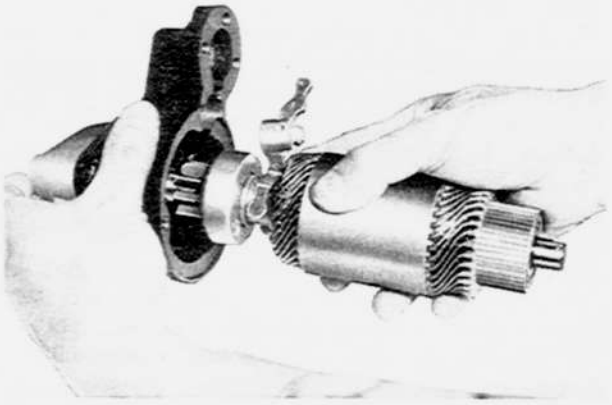

Fig. 5–24 Removing of armature assembly

8. Remove the driving lever.
9. Remove the pinion stop collar by driving the collar with a suitable drift and slide the pinion and over running clutch off the armature shaft.

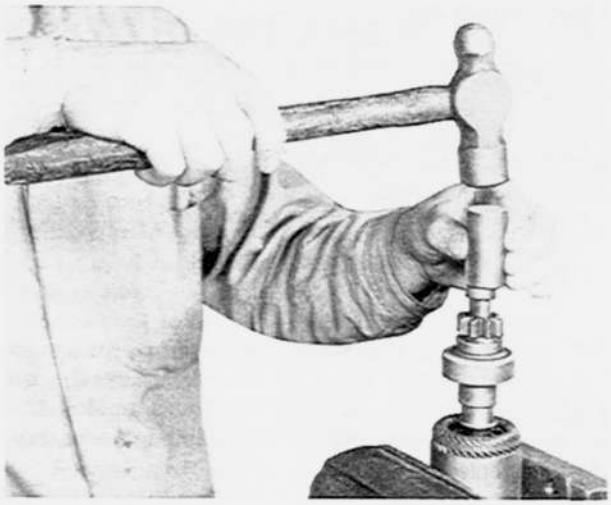

Fig. 5–25 Removing of collar

5–F–4. Starting Motor Inspection

a. Checking of armature

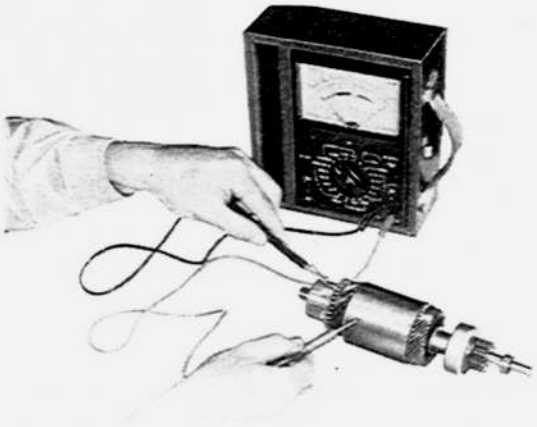

Fig. 5–26 Checking of armature

Check the armature for both ground and short-circuit.
To check for ground, touch one prod of a tester to each segment and the other prod to the core or shaft. If the current flows, the coil connected to the segment is grounded.
To check for short-circuit, use a growler tester. Place the armature against the core of the tester, and hold a steel strip on the armature.
Then, rotate the armature slowly by hand. In case of short in the coil, the steel strip will become magnetized and vibrate.

b. Checking of commutator
Check the commutator. If it is dirty, discolored or worn, clean it with sand paper and wash with clean solvent. After cleaning, **undercut** the mica between the segments to a depth of **0.5 to 0.8 mm (0.020 to (0.031 in)**.

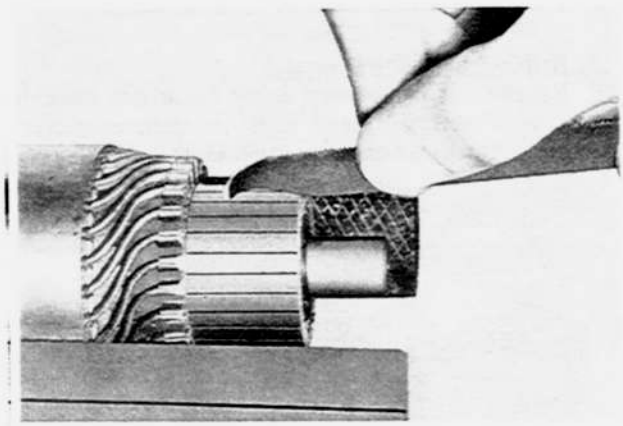

Fig. 5–27 Undercutting

c. Checking of field coil
To test the field coil for ground with a tester, place one prod on the yoke or pole core and the other prod to the field terminal. If it is grounded, the current will flow, and the field coil must be repaired or replaced.

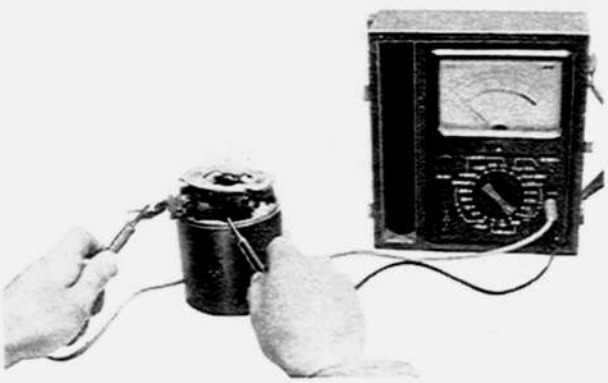

Fig. 5–28 Checking of field coil for ground

d. Checking of brush holder
Check the brush holder for ground. Touch one prod of a tester to the brush holder and the other prod to the yoke. If it is grounded, the current flows, and the brush holder must be replaced.

e. Checking of brushes and brush springs
Check the brushes and replace if they are worn more than one third of their original length. Otherwise, the brush spring tension will be reduced, leading to an increase in the brush-commutator contact resistance. This will lower the torque and cause the burned surfaces of the commutator.
The spring tension is 1.0 to 1.3 kg (2.2 to 2.9 lb). If the tension is too low, replace with a new one.

f. Checking of bushes
Check the clearance between the armature shaft and bush If it exceeds 0.2 mm (0.008 in), replace the bush.

5–F–5. Magnetic Switch Test

a. Pull-in coil test
Apply the specified voltage (12 V) between the (S) terminal and (MT) terminal. If the magnetic switch is forcefully attracted, the pull-in coil is in good condition.

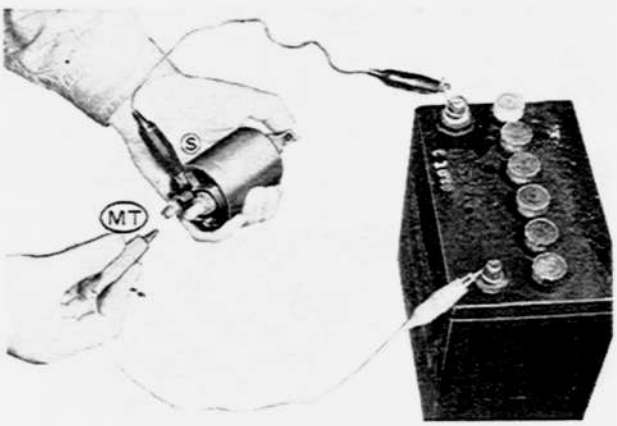

Fig. 5–29 Pull-in coil test

b. Holding coil test
Ground the (MT) terminal to the magnetic switch body with lead and impose the specified voltage (8 V) upon the (S) terminal to pull in the plunger.
If the plunger remains attracted after disconnecting the lead at the (MT) terminal, there is no trouble with the holding coil.

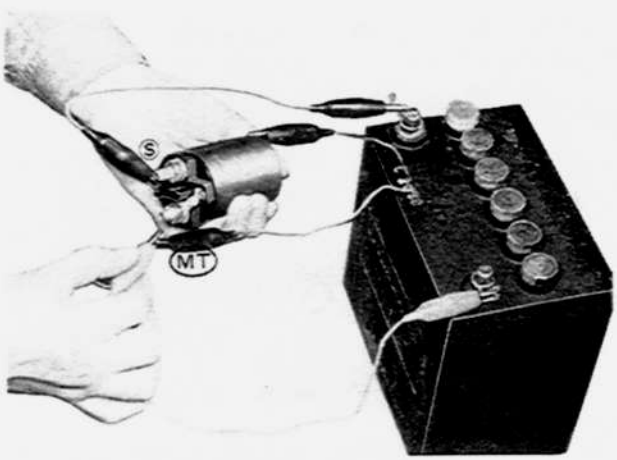

Fig. 5–30 Holding coil test

c. Return test

Push in the plunger with hand and apply the specified voltage (12 V) between the (MT) terminal and the magnetic switch body. If the plunger is not attracted, there is no trouble.

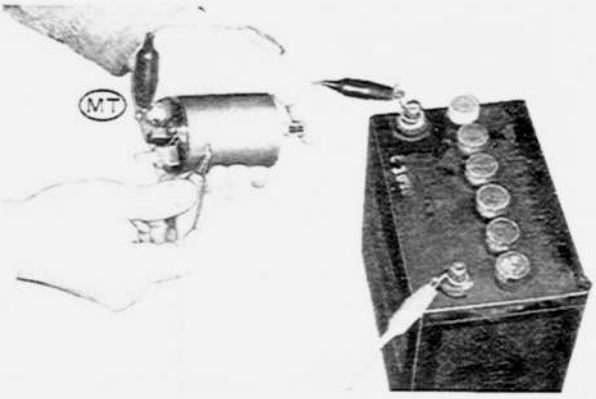

Fig. 5–31 Return test

5–F–6. Assembling of Starting Motor

To assemble the starting motor, reverse the procedure of Par. 5–F–3, noting the following points.

1. Adjust the armature shaft end play to 0.2 to 0.5 mm (0.008 to 0.02 in) with a thrust washer on the rear end of the shaft after tightening the through bolts.
2. When the magnetic switch is engaged, the clearance between the pinion and stop collar should be 0.5 to 2.0 mm (0.02 to 0.08 in). This clearance can be adjusted by inserting the adjusting washer between the magnetic switch body and drive housing.

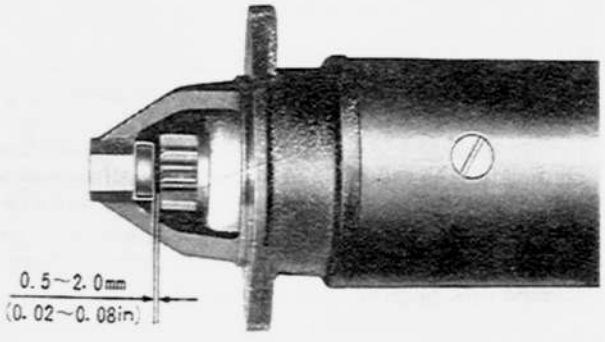

Fig. 5–32 Adjusting of clearance

5–G. LIGHTING SYSTEM

The wiring of the lighting system is shown in the wiring diagrams. The wires in the various circuits are of different colors to aid when checking individual circuits.

5–G–1. Headlight Aiming

Before adjusting the headlights, make sure that the tires are inflated uniformly to recommended pressure and the vehicle is on level ground without load.

To adjust the headlights, turn the three spring-loaded screws of the sealed beam unit until the headlights are properly aimed.

When the high beam is aimed 1.0 m (39.37 in) straight ahead, the center of the high intensity should be 12.9 mm (0.51 in) lower than the horizontal lamp center line, as shown in Fig. 5–33.

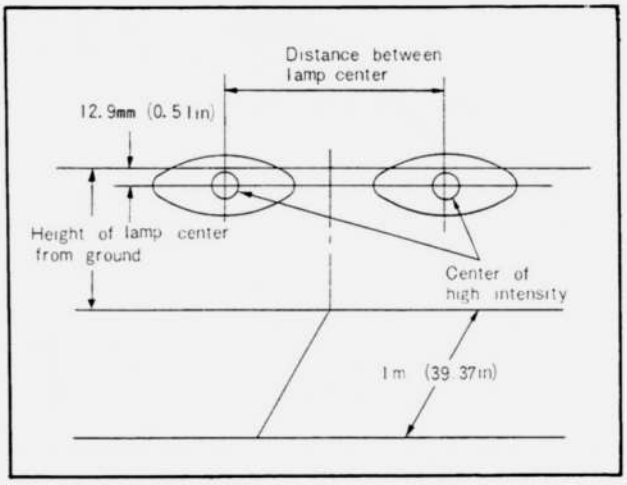

Fig. 5–33 Headlight aiming

5–G–2. Replacing of Bulbs

When replacing the bulb, conform to the following table.

Headlamp	50 W / 40 W or 45 W/ 40 W
Fog lamp	25 W
Side and front turn signal lamp	5 W / 21 W
Side turn signal lamp	3 W
Tail and stop lamp	5 W / 21 W
Rear turn signal lamp	21 W
Reverse lamp	10 W
License plate lamp	10 W
Interior lamp	5 W
Step lamp	6 W
Glove compartment lamp	5 W
Instrument panel:	
Illumination lamp	3 W
Warning lamp	3 W

5–H. INSTRUMENT PANEL

5–H–1. Fuel Gauge

The fuel gauge indicates the quantity of gasoline in the tank only when the ignition switch is turned on. The fuel gauge circuit is composed of the fuel gauge, mounted on the instrument panel, and the fuel tank unit, connected by a single wire through the ignition switch. Should the gauge fail to register, check and repair the fuel gauge circuit, referring to the following list.

1) Fuel gauge does not register with ignition "ON".
   a) Defective panel unit
   b) Faulty contact in IG terminal of panel unit
   c) Wiring to tank grounded
   d) Panel unit improperly grounded
2) Fuel gauge shows "F" under all conditions.
   a) Open circuit in tank unit
   b) Break in wiring between tank unit and panel unit

3) Fuel gauge shows "E" under all conditions.
   a) Short circuit in tank unit or panel unit
   b) Break in P coil and S coil of panel unit
   c) Loose or poor contact of terminals

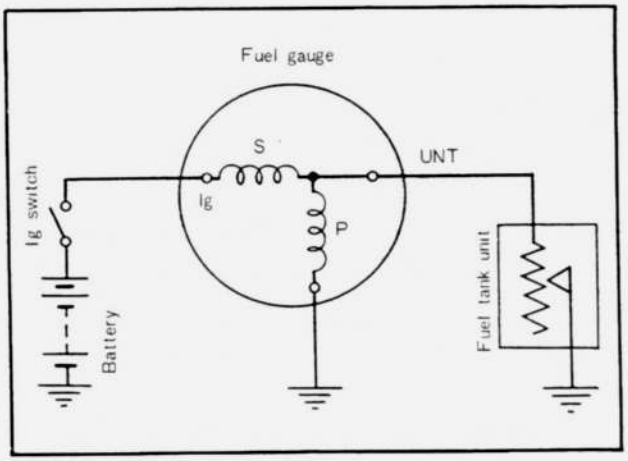

Fig. 5–34 Diagram of fuel gauge

If the **checker** (49 0187 050C) is available, use it according to the following procedure to confirm whether the trouble lies in the panel unit or in the tank unit.
1. Disconnect the wiring (yellow) of the tank unit and connect it to the positive lead of the checker. Ground the negative lead of the checker.
2. Set the checker knob in the "F" position of the resister type.
3. Turn on the ignition switch and check whether the fuel gauge at the instrument panel points to "F"
Proceed with the inspection by setting the checker knob in the "½" and "E" positions in turn to observe accuracy of the fuel gauge indication.
If the fuel gauge points to "F" "½" and "E" accurately, the trouble lies in the tank unit while if the fuel gauges indication is inaccurate, the trouble lies in the panel unit.

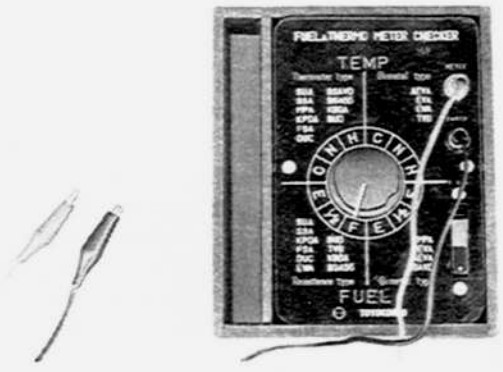

Fig. 5–35 Checker

5–H–2. Water Temperature Gauge

The water temperature gauge electrically operated like the fuel gauge, consists of the water temperature gauge in the instrument panel and sending unit installed on the thermostat case.
When the water temperature gauge rigisters improperly, check the following points by referring to wiring diagram and repair.
1) Pointer does not more when ignition switch turned on.
   a) Defective panel unit
   b) Fauly contact in IG terminal
2) Pointer shows "H" under all conditions.
   a) Open circuit in sending unit
   b) Break in wiring between both units
   c) Loose or faulty contact in terminals
3) Pointer shows "C" under all conditions.
   a) Defective panel unit
   b) Short circuit in sending unit
   c) Panel unit improperly grounded

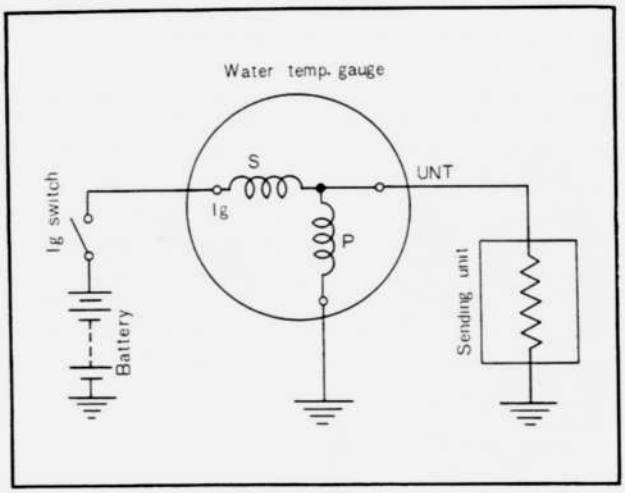

Fig. 5–36 Diagram of water temp. gauge

If the **checker** (49 0187 050C) is available, use it according to the following procedure to confirm whether the trouble lies in the panel unit or in the sending unit.
1. Disconnect the wiring (yellow) of the sending unit and connect it to the positive lead of the checker. Ground the negative lead of the checker.
2. Set the checker knob in the "C" position of the thermistor type.
3. Turn on the ignition switch and check whether the water temperature gauge at the instrument panel points to "C". Proceed with the inspection by setting the checker knob in the "N" and "H" positions in turn to observe accuracy of the water temperature gauge indication. If the water temperature gauge points to "C", "N" and "H" accurately, the trouble lies in the sending unit while it the water temperature gauges indication is inaccurate, the trouble lies in the panel unit.

SPECIAL TOOL

49 0187 050C	Fuel & thermometer checker

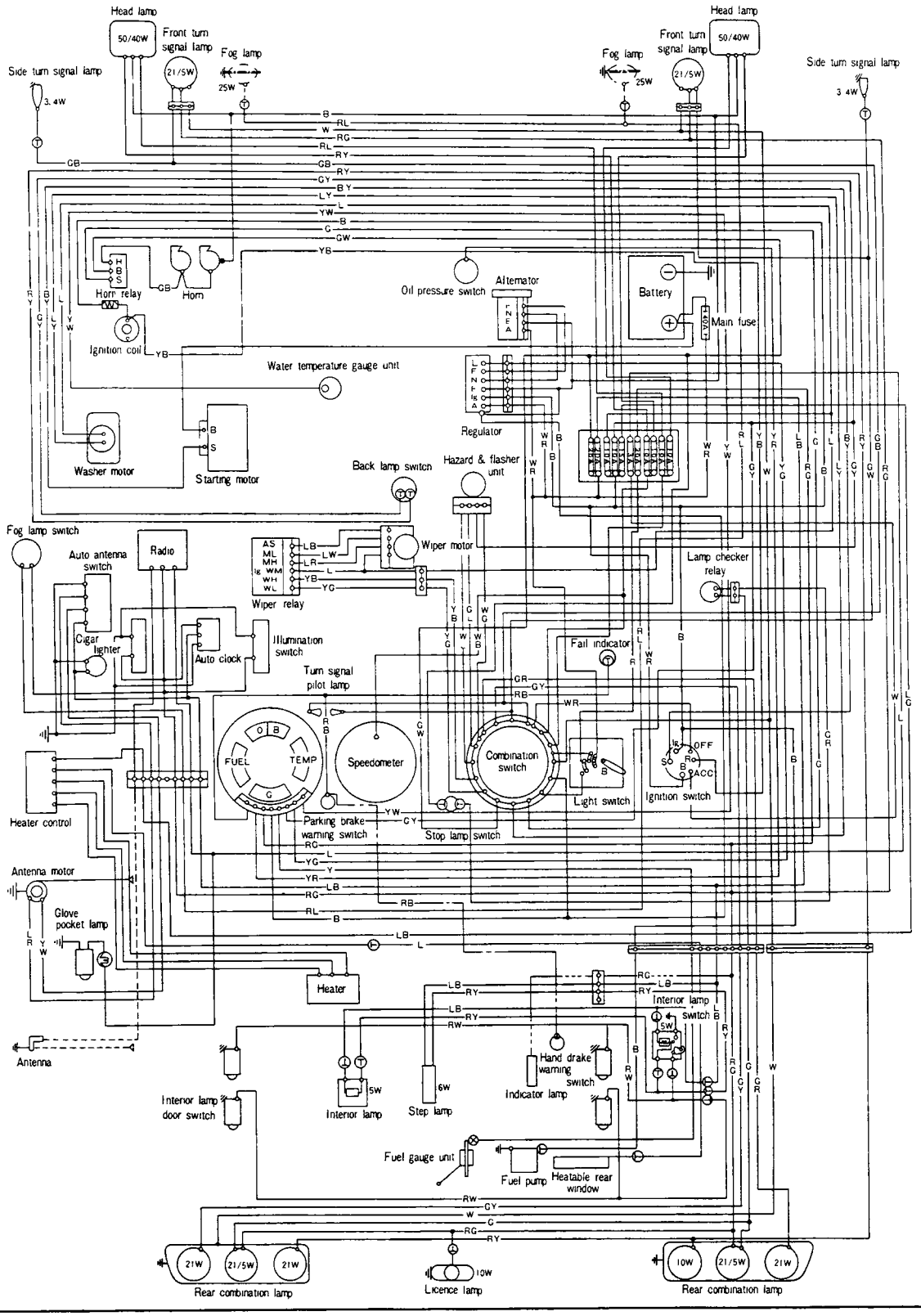

Wiring colour code

R : Red
G : Green
B : Black
L : Blue
Y : Yellow
W : White

Example

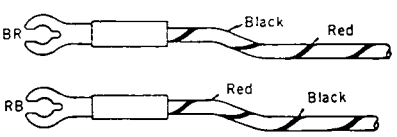

Fig. 5–37 Wiring diagram (right hand drive)

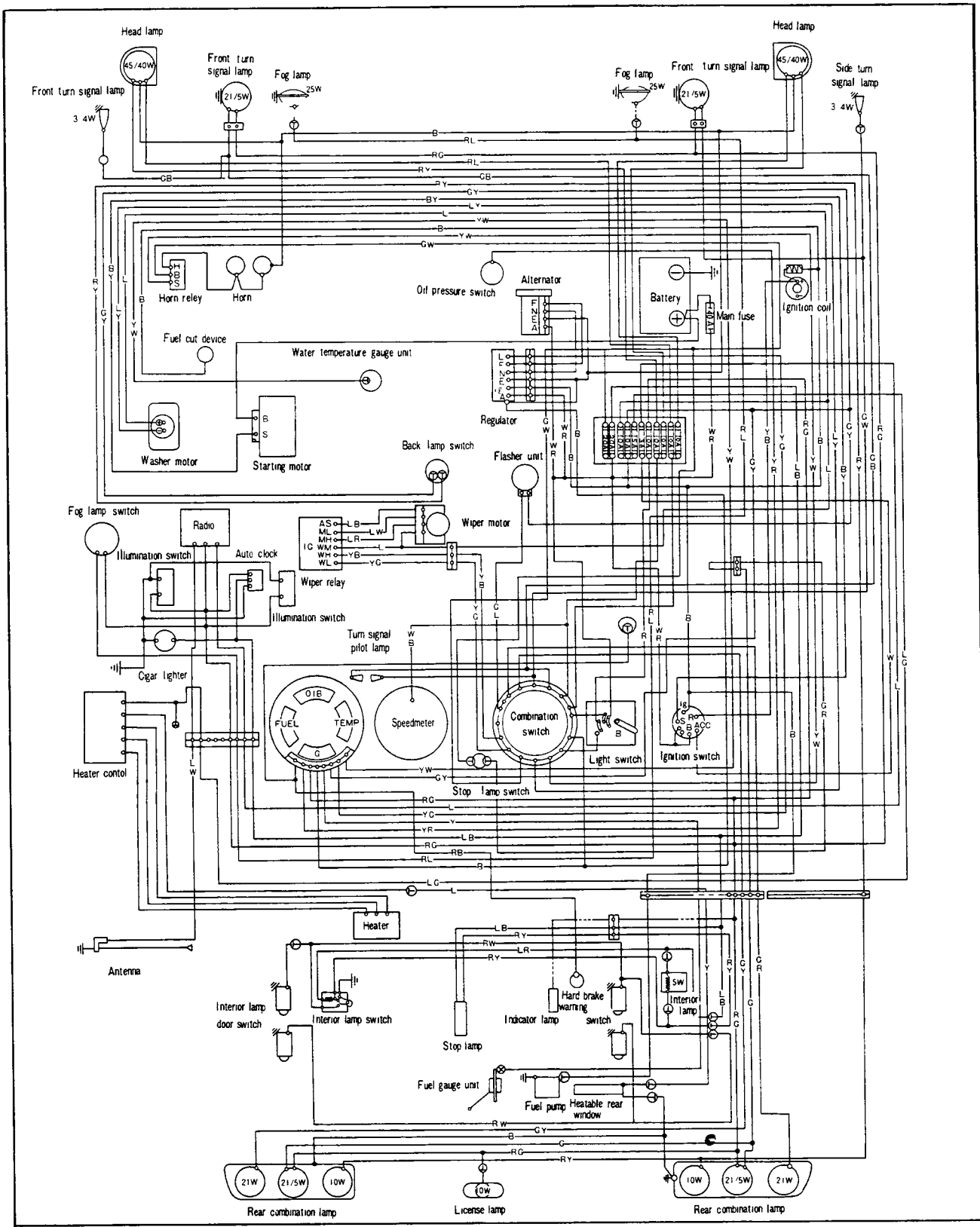

Wiring colour code

R : Red
G : Green
B : Black
L : Blue
Y : Yellow
W : White

Example

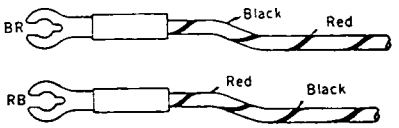

5–38 Wiring diagram (left hand drive)

CLUTCH

6–A. CLUTCH PEDAL ADJUSTMENT ..... 6 : 1
6–B. RELEASE FORK ADJUSTMENT ..... 6 : 1
6–C. CLUTCH REMOVAL ..... 6 : 1
6–D. CLUTCH INSPECTION ..... 6 : 1
6–D–1. Checking of Release Bearing and Fork ..... 6 : 1
6–D–2. Checking of Pressure Plate and Cover Assembly ..... 6 : 1
6–D–3. Checking of Clutch Disk ..... 6 : 2
6–D–4. Flywheel Inspection ..... 6 : 2
6–D–5. Ring Gear Replacement ..... 6 : 2
6–D–6. Checking of Pilot Bearing ..... 6 : 2
6–E. CLUTCH ASSEMBLY ..... 6 : 2
6–F. CLUTCH MASTER CYLINDER ..... 6 : 3
6–F–1. Removing of Clutch Master Cylinder ..... 6 : 3
6–F–2. Disassembling of Clutch Master Cylinder ..... 6 : 3
6–F–3. Checking of Clutch Master Cylinder ..... 6 : 3
6–F–4. Assembling of Clutch Master Cylinder ..... 6 : 3
6–F–5. Installing of Clutch Master Cylinder ..... 6 : 4
6–G. CLUTCH RELEASE CYLINDER ..... 6 : 4
6–G–1. Removing of Clutch Release Cylinder ..... 6 : 4
6–G–2. Checking of Clutch Release Cylinder ..... 6 : 4
6–G–3. Assembling of Clutch Release Cylinder ..... 6 : 4
6–G–4. Installing of Clutch Release Cylinder ..... 6 : 4
6–H. AIR BLEEDING ..... 6 : 4

CLUTCH

The clutch is of the single dry disk type. The clutch assembly consists of the clutch disk assembly, clutch cover and pressure plate assembly, and clutch release mechanism.
The clutch operating mechanism is a hydraulic type.

6–A. CLUTCH PEDAL ADJUSTMENT

The free travel of the clutch pedal should be between **20 to 30 mm (0.8 to 1.2 in).** To adjust the free travel, loosen the lock nut and turn the push rod until proper adjustment is made.

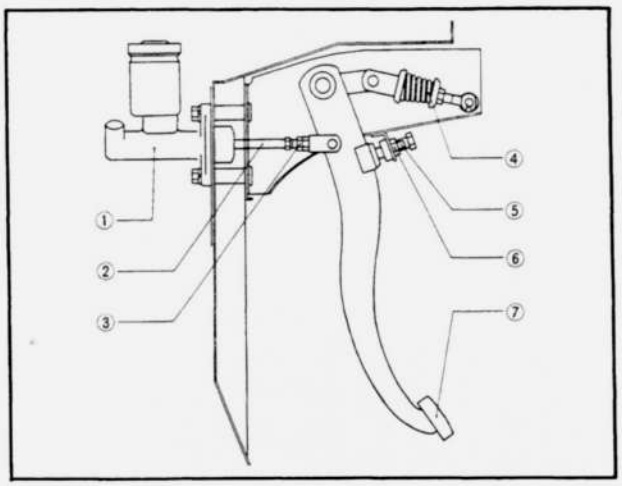

Fig. 6–1 Clutch pedal

1. Clutch master cylinder
2. Rod
3. Lock nut
4. Return spring
5. Stopper bolt
6. Lock nut
7. Pedal

6–B. RELEASE FORK ADJUSTMENT

There should always be a safe clearance of 1.5 mm (0.06 in) between the release bearing and the diaphragm spring. This clearance is essential to disengage the release bearing and to prevent unnecessary wear and possible slippage. This clearance is obtained when the free play of the release fork is adjusted to **3.0 mm (0.12 in).**

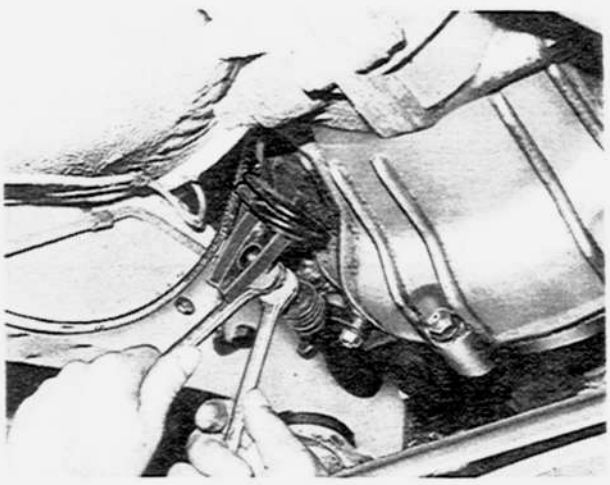

Fig. 6–2 Adjusting of release fork

To adjust remove the return spring, loosen the lock nut, and turn the adjusting nut until the correct play is obtained.
After adjusting, securely tighten the lock nut and hook the return spring.

6–C. CLUTCH REMOVAL

To remove the clutch from the vehicle, proceed as follows:
1. Remove the transmission as detailed in Par. 7–A.
2. Install the **ring gear brake** (49 0221 030A).
3. Loosen the bolts holding the clutch cover assembly to the flywheel and remove the clutch cover assembly and the clutch disk.
4. Loosen the bolts that attach the flywheel to the crankshaft. Remove the flywheel.
5. Remove the return spring for the clutch release bearing and slide off the release bearing.
6. Pull the release fork outward until the retaining spring of the fork releases itself from the pivot pin. Remove the fork from the clutch housing.

6–D. CLUTCH INSPECTION

6–D–1. Checking of Release Bearing and Fork

Note: The release bearing is packed with lubricant which is intended to last the whole life time of the bearing. Therefore, the bearing must not be washed in gasoline or any other solvent.

Check the release bearing by turning the bearing race by hand. Replace if the bearing feels rough or seems noisy when turning.
Examine the front cover of the transmission carefully to be certain there are no burrs on the outer surface of the front cover which pilots the release bearing. Check the release fork for crack or bend.



Fig. 6–3 Release bearing

6–D–2. Checking of Pressure Plate and Cover Assembly

Check the contact surfaces of the pressure plate with the clutch facing for wear, damage or warpage.
If it is slight, correct it by lapping with compound or by turning a lathe. But if severe, replace with a new one.

Check the diaphragm spring and cover and if any wear or damage is found, replace the pressure plate and cover assembly.

6–D–3. Checking of Clutch Disk

Inspect the clutch disk for warpage with a dial indicator or a feeler gauge, as shown in Fig. 6–4.
If it is **more than 1.0 mm (0.0394 in)**, replace with a new one.



Fig. 6–4 Checking of clutch disk

Replace excessive worn facing as it will cause slippage, or scores the pressure plate and flywheel due to the projected heads of rivets.
If oil is evident on the facing, clean or replace the facing and eliminate the cause of oil leakage.
Make certain that the clutch disk slides easily on the main drive shaft without any excessive play.
If the play exceeds 0.3 mm (0.012 in), replace the clutch disk or the main drive shaft.

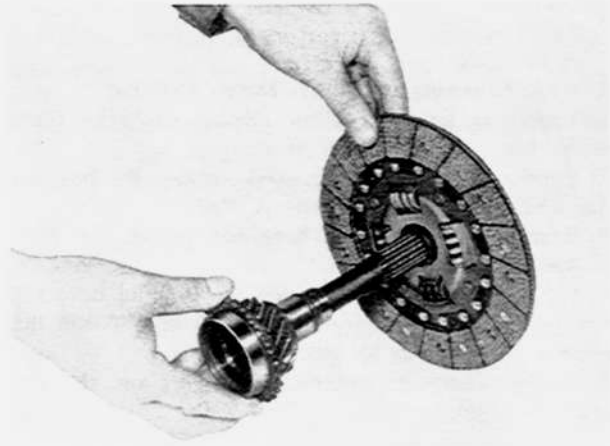

Fig. 6–5 Checking of disk spline

6–D–4. Flywheel Inspection

Inspect the contact surface of the flywheel with the clutch facing for burnt surface, scored surface or rivet grooves.
If it is slight, it can be reconditioned by grinding in a lathe. If the damage is deep, the flywheel should be replaced.
Check the ring gear teeth and replace if the ring gear teeth are broken, cracked or seriously burred.

6–D–5. Ring Gear Replacement

1. Heat the old ring gear and remove it from the flywheel.
2. Heat the new ring gear **evenly 250 to 300°C (480 to 570°F).**
3. Place the ring gear on the cold flywheel, making sure that the **chamfer on the teeth is faced to the engine.**
4. Allow the ring gear to cool slowly to shrink it onto the flywheel.

6–D–6. Checking of Pilot Bearing

Check the transmission main drive shaft pilot bearing which is pressed into the center of the flywheel.
If the bearing is loose or rough, it should be replaced.

6–E. CLUTCH ASSEMBLY

1. Install the flywheel onto the rear end of the crankshaft with six bolts. When doing so, **align the "O" marked hole** on the flywheel with the reamer hole on the crankshaft and install the **reamer bolt** in the "O" marked hole.

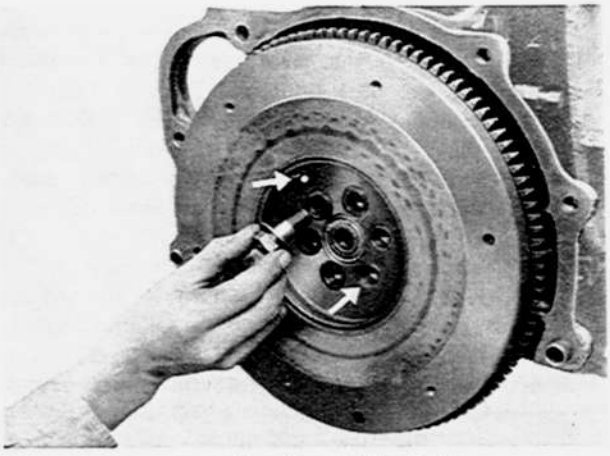

Fig. 6–6 Installing of flywheel

2. Use the **ring gear brake** (49 0221 030A) and tighten the bolts to **16.0 m-kg (120 ft-lb).**
3. Hold the clutch disk in its mounting position with the **clutch disk centering tool** (49 0223 391).
If the tool is not available, use a spare main drive shaft.

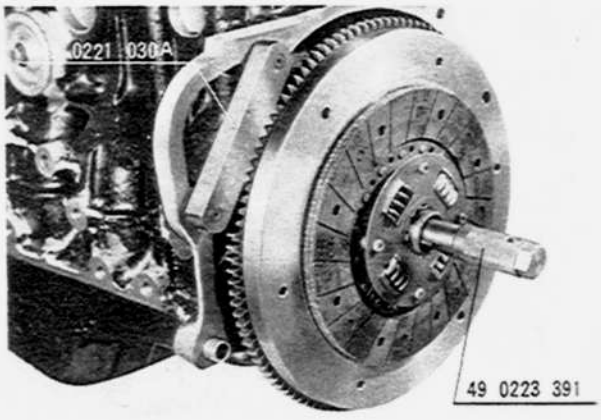

Fig. 6–7 Installing of clutch disk

4. Install the clutch cover and pressure plate assembly, **aligning the "O" marks** of the clutch cover and flywheel and install the attaching bolts.
Use the reamer bolts in the "O" marked holes. Tighten the bolts to **2.0 m-kg (15 ft-lb)**.

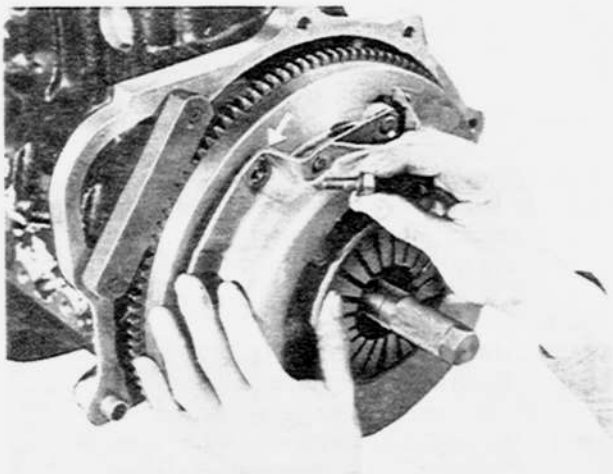

Fig. 6–8 Installing of clutch cover

5. Remove the disk centering tool and ring gear brake.
6. Apply grease to the pivot pin. Insert the release fork through the dust boot and press it inward so that the retaining spring of the release fork fits to the pivot pin.
7. Install the release bearing and the return spring.
8. Install the transmission.

6–F. CLUTCH MASTER CYLINDER

6–F–1. Removing of Clutch Master Cylinder

If it becomes necessary to remove the master cylinder for repair or overhaul, proceed as follows:
1. Disconnect the fluid pipe at the master cylinder outlet.
2. Loosen the nuts that attach the master cylinder to the dash panel.
3. Pull the master cylinder straight out and away from the dash panel.

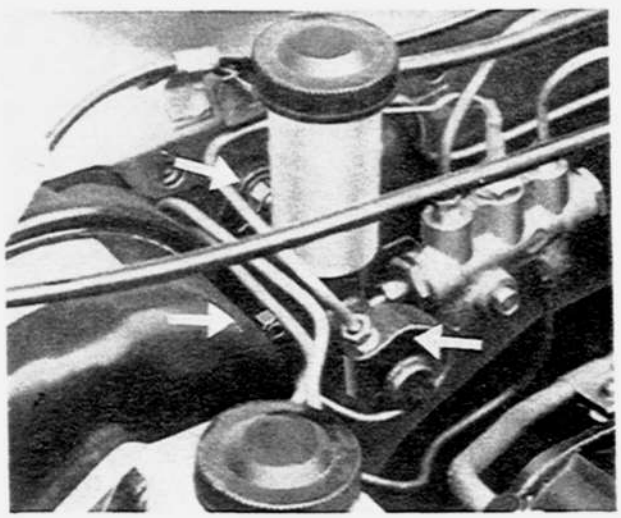

Fig. 6–9 Removing of master cylinder

6–F–2. Disassembling of Clutch Master Cylinder

The procedures for disassembling the master cylinder after removing the master cylinder are as follows:
1. Clean the outside of the master cylinder thoroughly and drain the brake fluid.
2. Remove the dust boot from the cylinder.
3. Remove the piston stop wire with a screwdriver and remove the stop washer.
4. Remove the piston assembly, primary cup and return spring from the cylinder.
5. Remove the reservoir from the cylinder.

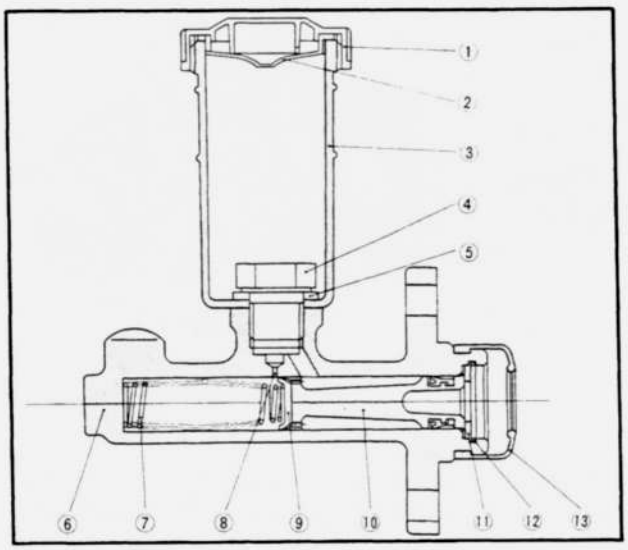

Fig. 6–10 Clutch master cylinder

1. Cap
2. Baffle
3. Reservoir
4. Bolt
5. Washer
6. Cylinder
7. Return spring
8. Compensating port
9. Primary cup
10. Piston assembly
11. Stop washer
12. Stop wire
13. Boot

6–F–3. Checking of Clutch Master Cylinder

1. Wash the parts in clean alcohol or brake fluid. **Never** use gasoline or kerosene.
2. Check the piston cups and replace if they are damaged, worn, softened, or swelled.
3. Examine the cylinder bore and piston for wear, roughness or scoring.
4. Check the clearance between the cylinder bore and the piston. If it is **more than 0.15 mm (0.006 in)**, replace the cylinder or piston.
5. Ensure that the compensating port on the cylinder is open.

6–F–4. Assembling of Clutch Master Cylinder

1. Before assembling, dip the piston and cups in clean brake fluid.
2. Install the reservoir.
3. Insert the return spring into the cylinder.
4. Install the primary cup so that the flat side of the cup goes toward the piston.
5. Fit the secondary cup onto the piston and install them into the cylinder.
6. Install the stop washer and stop wire.
7. Fill with brake fluid and operate the piston with a

screwdriver until the fluid is ejected at the outlet.
8. Install the rubber boot to the cylinder.

6–F–5. Installing of Clutch Master Cylinder
1. Install the clutch master cylinder assembly onto the dash panel and tighten the nuts.
2. Connect the fluid pipe to the cylinder.
3. Fill with brake fluid.
4. Bleed the clutch hydraulic system, as described in Par. 6–H.

6–G. CLUTCH RELEASE CYLINDER

6–G–1. Removing of Clutch Release Cylinder
1. Disconnect the fluid pipe at the clutch release cylinder.
2. Unhook the release fork return spring.
3. Loosen the nuts attaching the cylinder to the clutch housing. Remove the release cylinder.

6–G–2. Checking of Clutch Release Cylinder
Refer to Par. 6–F–3 and inspect the clutch release cylinder.

6–G–3. Assembling of Clutch Release Cylinder
1. Fit the cups to the piston and install them into the cylinder.
2. Install the rubber boot on the end of the cylinder.
3. Install the valve (steel ball) and bleeder screw into the bleeder hole. Fit the cap.
4. Install the clutch release rod.

6–G–4. Installing of Clutch Release Cylinder
1. Install the clutch release cylinder assembly to the clutch housing with two nuts.
2. Connect the fluid pipe.
3. Fill the reservoir of the master cylinder with brake fluid and bleed the system, as described in Par. 6–H.
4. Adjust the free play of the release fork, as instructed in Par. 6–B.
5. Hook the return spring.

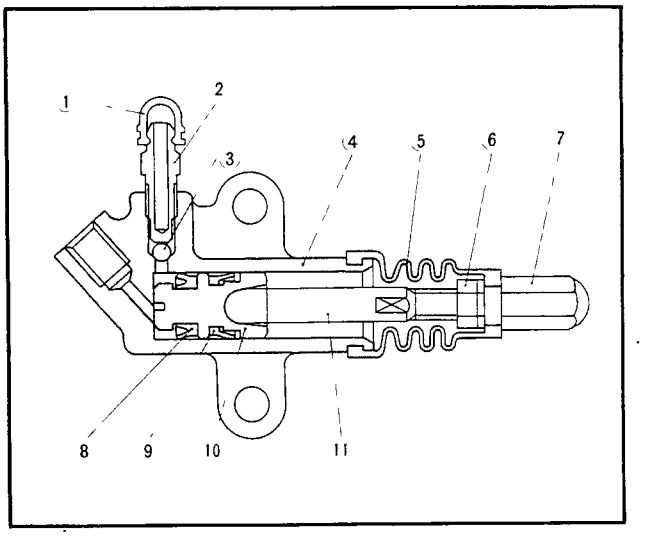

Fig. 6–11 Clutch release cylinder.

1. Cap
2. Bleeder
3. Valve
4. Cylinder
5. Boot
6. Lock nut
7. Adjusting nut
8. Primary cup
9. Secondary cup
10. Piston
11. Push rod

6–H. AIR BLEEDING

The clutch hydraulic system must be bleed whenever a fluid line has been disconnected or air enters the system. To bleed the clutch system, remove the rubber cap from the bleeder screw and attach the bleeder tube and fixture of the bleeder screw.
Place the end of the tube in the glass jar and submerge in brake fluid. Open the bleeder valve.
Depress the clutch pedal and allow it to return slowly. Continue this pumping action and watch the flow of fluid in the jar. When air bubbles cease to appear, close the bleeder valve. During bleeding the reservoir of the master cylinder must be kept at least 3/4 full of the brake fluid. After the bleeding operation, remove the tube, fit the cap to the bleeder valve, fill the reservoir and fit the cap.

SPECIAL TOOLS

49 0221 030A	Ring gear brake
49 0223 391	Clutch disk centering tool

TRANSMISSION

7–A. TRANSMISSION REMOVAL..... 7 : 3
7–B. DISASSEMBLING THE TRANSMISSION..... 7 : 3
7–C. TRANSMISSION INSPECTION..... 7 : 4
7–C–1. Inspection of Transmission Case..... 7 : 4
7–C–2. Checking the Bearings..... 7 : 4
7–C–3. Checking the Gears..... 7 : 4
7–C–4. Checking the Synchronizer Mechanism..... 7 : 4
7–C–5. Checking Run-Out of Main Shaft..... 7 : 5
7–D. ASSEMBLING THE TRANSMISSION..... 7 : 5
7–D–1. Assembling the transmission..... 7 : 5
7–D–2. Assembling the Extension..... 7 : 6
7–D–3. Installing the Extension Assembly..... 7 : 6
7–D–4. Installing the Clutch Housing..... 7 : 7
7–E. INSTALLING THE TRANSMISSION..... 7 : 7

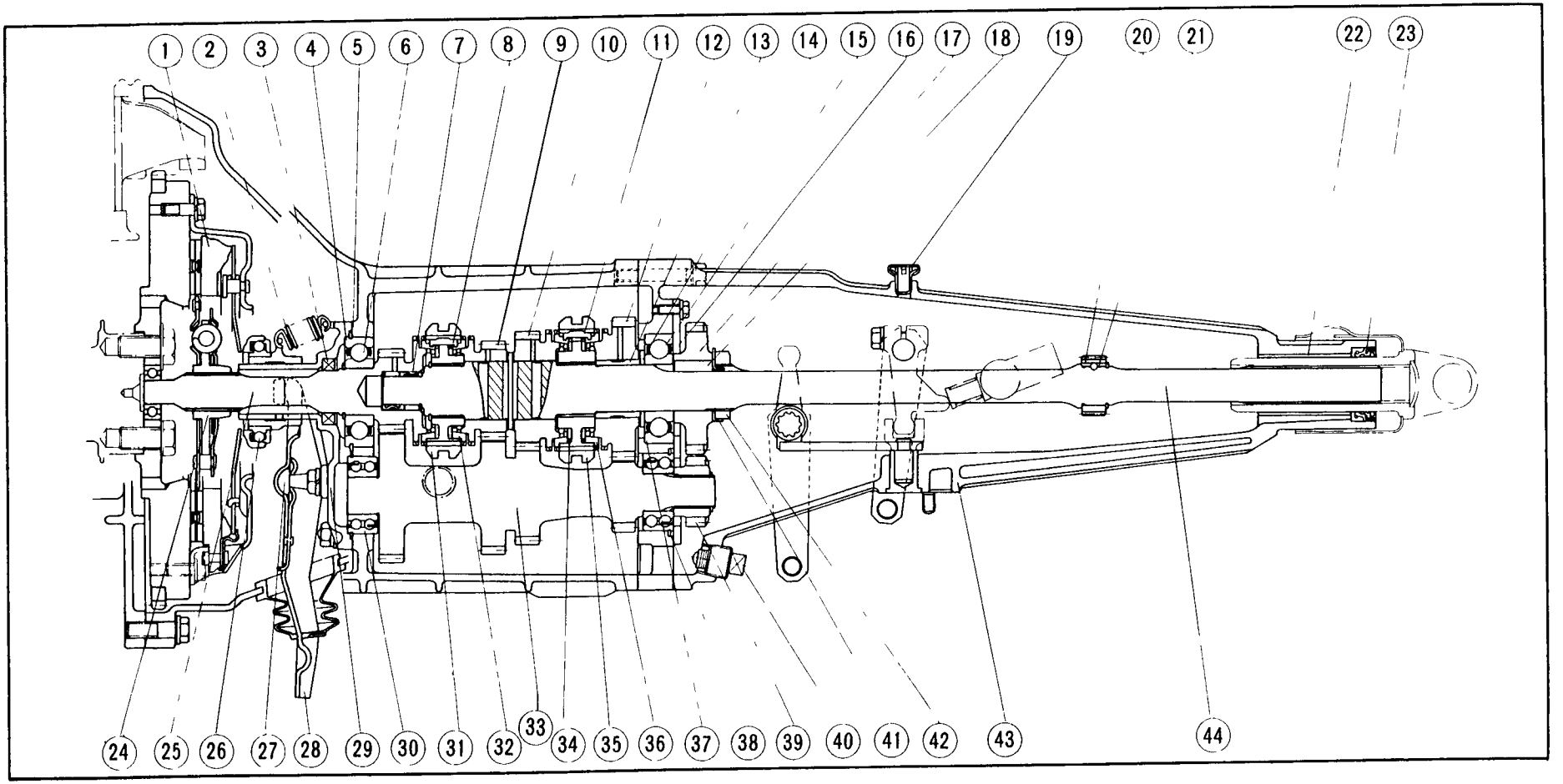

Fig. 7–1 Clutch and transmission (Column Shift)

1. Clutch cover assembly
2. Return spring
3. Oil seal
4. Adjusting shim
5. Packing
6. Ball bearing
7. Needle bearing
8. Key spring
9. Third gear
10. Second gear
11. Synchronizer key
12. Low gear
13. Gear sleeve
14. Spacer
15. Ball bearing
16. Bearing cover
17. Reverse gear
18. Key
19. Bleeder cap
20. Speedometer drive gear
21. Steel ball
22. Bush
23. Oil seal
24. Clutch disk
25. Main drive gear
26. Release bearing
27. Pivot pin
28. Release fork
29. Front cover
30. Ball bearing
31. Clutch hub sleeve
32. Synchronizer ring
33. Counter shaft gear
34. Key spring
35. Clutch hub sleeve
36. Synchronizer ring
37. Adjusting shim
38. Adjusting shim
39. Counter reverse gear
40. Drain plug
41. Lock washer
42. Lock nut
43. Extension housing
44. Main shaft

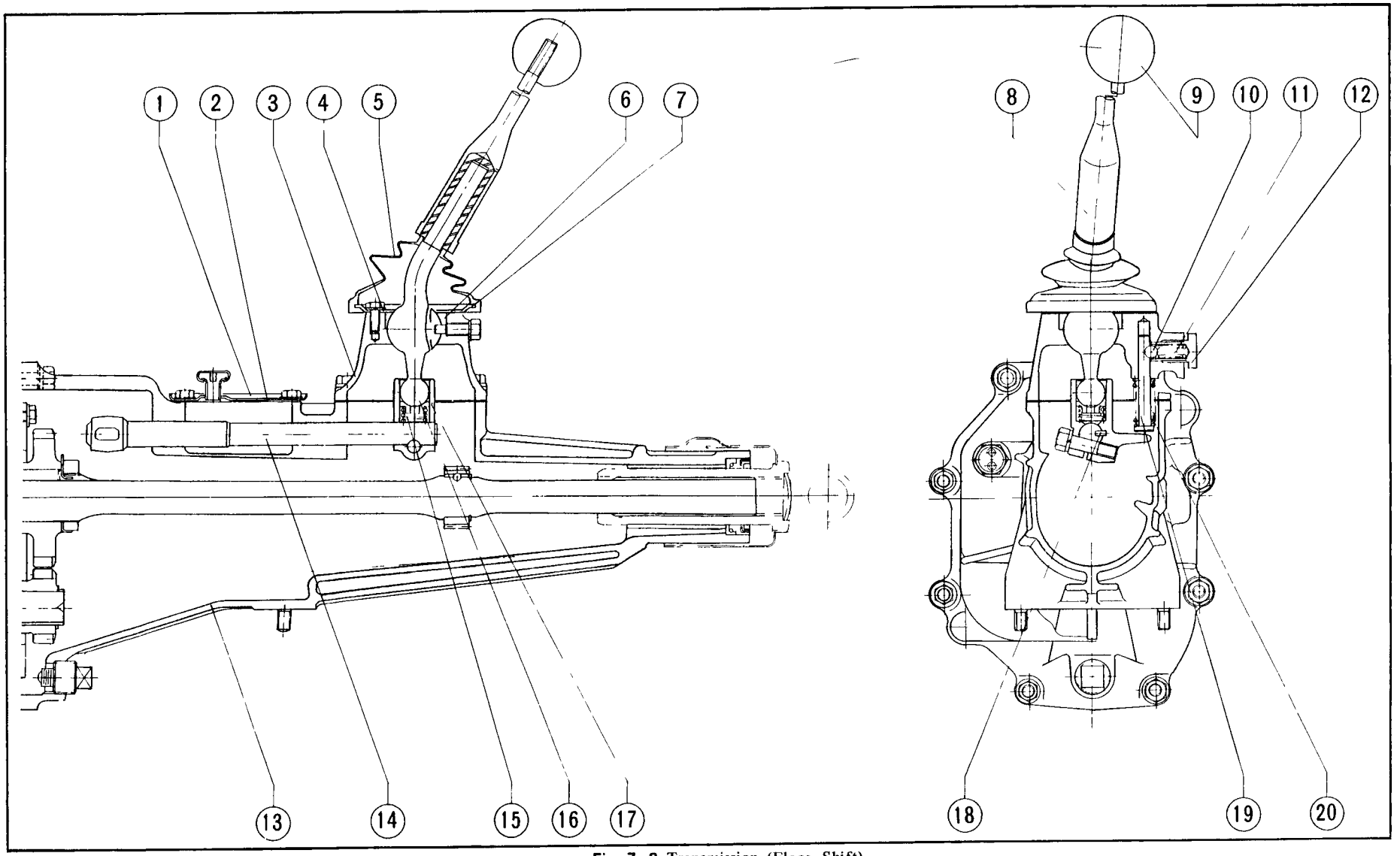

Fig. 7–2 Transmission (Floor Shift)

1. Blind cover
2. Gasket
3. Shift control case
4. Adjusting shim
5. Dust cover
6. Bush
7. Cover plate
8. Gear shift lever
9. Knob
10. Steel ball
11. Spring
12. Spring cap
13. Extension housing
14. Control lever rod
15. Spring
16. spring seat
17. Control lever end
18. Key
19. Select lock spindle
20. Return spring

TRANSMISSION

MAZDA 616 is equipped with a four speed manual transmission which is of the synchromesh type on the low, second, third and top gears and of the selective sliding mesh type on the reverse gear.
The transmission gear ratio is as follows:

	Gear ratio
First	3.403
Second	2.005
Third	1.373
Top	1.000
Reverse	3.665

In this section, servicing the transmission with floor shift is explained and servicing the transmission with column shift is explained in Section 7A.

7–A. TRANSMISSION REMOVAL

When removing only the transmission from the vehicle, take the following procedures.
1. Drain the lubricant from the transmission.
2. Disconnect the earth wire of the battery.
3. Remove the front console box.
4. Remove the boots for the gearshift lever.
5. Remove the bolts attaching the cover plate to the gearshift lever retainer. Remove the cover plate and gasket.
6. Remove the gearshift lever set bolt.
7. Pull the gearshift lever, shim and bush straight up and away from the gearshift lever retainer.

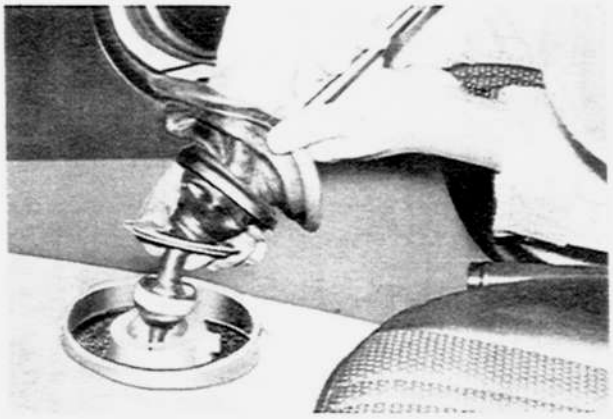

Fig. 7–3 Removing of gearshift lever

8. Disconnect the wires of the starting motor and the reverse lamp switch.
9. Remove the propeller shaft from the rear axle and the transmission.
10. Disconnect the speedometer cable from the extension housing.
11. Remove the bolts attach the exhaust pipe to the bracket on the transmission case.
12. Remove the nuts and disconnect the rear end of the exhaust manifold from the pre-silencer pipe.
13. Unhook the clutch release fork return spring and remove the clutch release cylinder from the clutch housing.
14. Remove the starting motor.
15. Remove the nuts and bolts holding the transmission to the rear end plate of the cylinder block.
16. Place a jack under the engine, protecting the engine oil pan with a block of wood.
17. Remove the nuts holding the transmission support to the cross member.
18. Remove the nuts holding the cross member to the frame side rails and remove the cross member.

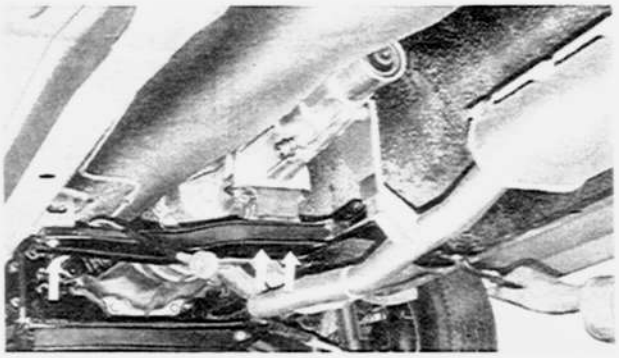

Fig. 7–4 Removing of cross member

19. Lower the jack, slide the transmission rearward until the main drive shaft clears the clutch disk, and remove the transmission from under the vehicle.

7–B. TRANSMISSION DISASSEMBLY

The procedures for disassembling the transmission after removing the transmission from the vehicle are as follows:
1. Remove the clutch release bearing return spring and slide off the bearing.
2. Remove the clutch release fork.
3. Remove the bolts attaching the front cover to the transmission case and remove the front cover, shim and gasket.

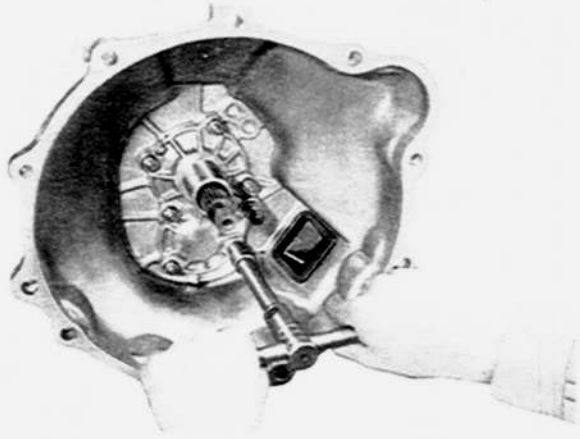

Fig. 7–5 Removing of front cover

4. Remove the snap rings on the main drive shaft and counter shaft.
5. Remove the gearshift lever retainer and gasket from the extension housing.
6. Remove the spring cap bolt and remove the spring and steel ball, slect lock spindle and spring from the gearshift lever retainer.

7. Remove the nuts that attach the extension housing to the transmission case. Slide the extension housing off the main shaft, with control lever end laid down to the left as far as it will go.

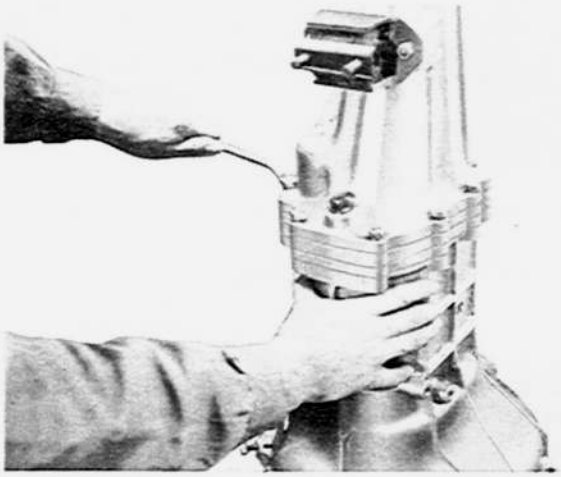

Fig. 7–6 Removing of extension housing

8. Remove the spring seat and the spring from the control lever end.
9. Remove the spring cap bolt and remove the spring and friction piece from the extension housing.
10. Remove the bolt attaching the control rod end to the control rod and remove the control rod and rod end from the extension housing.
11. Remove the speedometer driven gear from the extension housing by loosening the set screw.
12. Remove the reverse lamp switch.
13. Remove the snap ring that secures the speedometer drive gear to the main shaft. Slide the speedometer drive gear off the main shaft and remove the lock ball.
14. Tap the front end of the main drive shaft and counter shaft in turn with the plastic hammer and remove the bearing housing (intermediate plate) assembly from the transmission case.

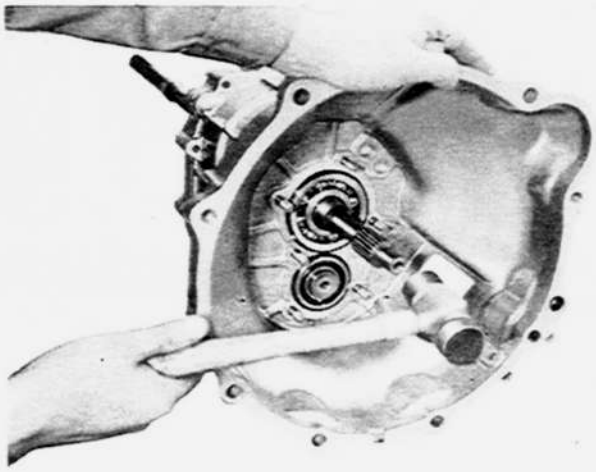

Fig. 7–7 Removing of bearing assembly

15. Remove the main drive shaft and needle bearing from the main shaft.
16. Remove the three bolts and remove the springs and the shift locking balls.

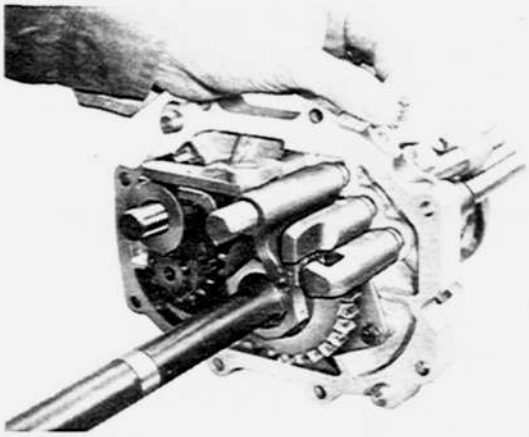

Fig. 7–8 Removing of shift locking ball

17. Remove the shift lever attaching nut and remove the reverse shift rod together with the reverse idle gear and shift lever from the bearing housing.

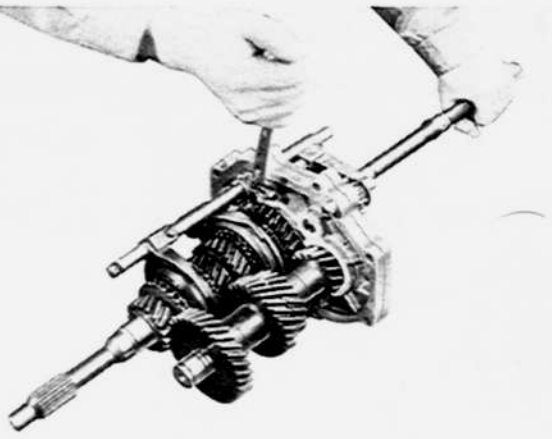

Fig. 7–9 Removing of shift lever

18. Remove each set screw attaching the shift fork to the rod. Push each of the shift rods rearward through the fork and bearing housing and remove the shift rods and forks.

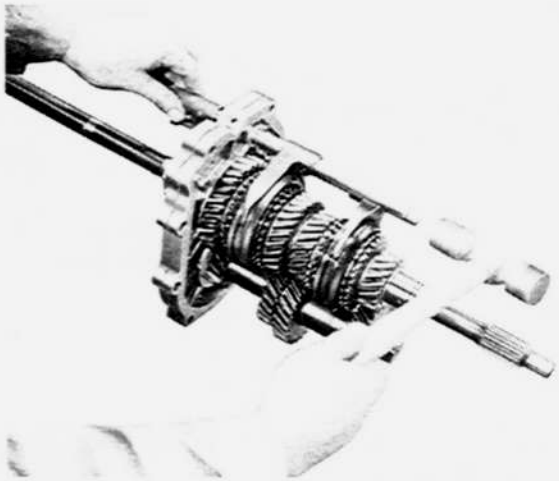

Fig. 7–10 Removing of shift fork and rod

19. Remove the reverse shift rod locking ball and spring, and the interlock pins from the bearing housing.

20. Straighten the tub of the lockwasher, hold the main shaft with the **holder** (49 0259 440) as shown in Fig. 7–11 and loosen the lock nut by using the **spanner** (49 0164 631). Remove the reverse gear from the main shaft.

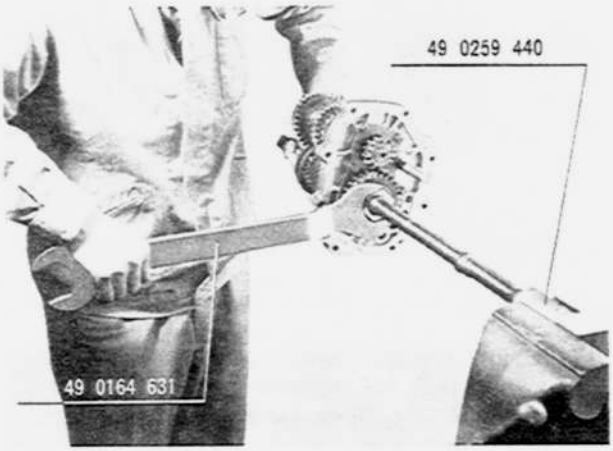

Fig. 7–11 Loosening of lock nut

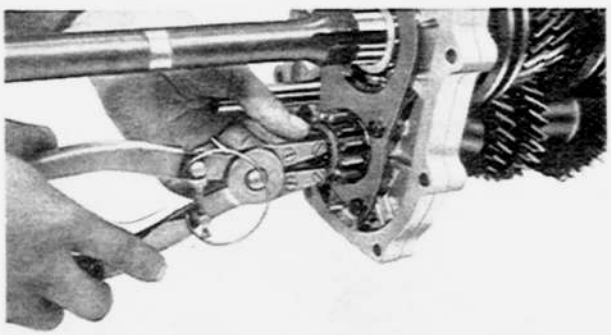

Fig. 7–12 Removing of snap ring

21. Remove the snap ring from the rear of the counter shaft and slide off the counter reverse gear as shown in Fig. 7–12.
22. Remove the bearing cover from the bearing housing.
23. With the plastic hammer, tap the rear end of the main shaft and counter shaft in turn, being careful not to damage the shafts, and remove these shafts from the bearing housing.

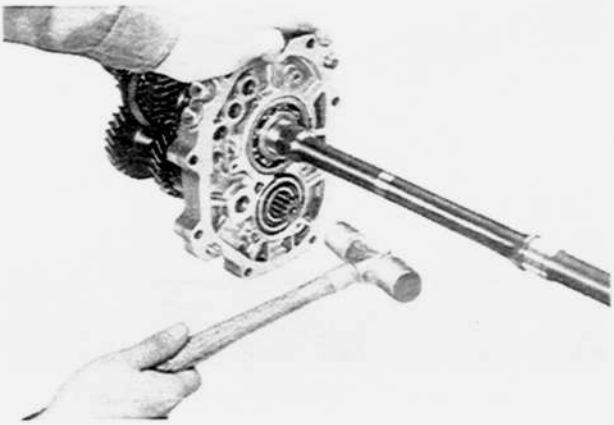

Fig. 7–13 Removing of counter shaft

24. Remove the bearings from the bearing housing and transmission case.
25. Using the snap ring pliers, remove the snap ring from the front of the main shaft.
26. Slide the third-and-top clutch hub and sleeve assembly, synchronizer ring and third gear off the main shaft.
27. Remove the thrust washer, low gear and sleeve, synchronizer ring, first-and-second clutch hub and sleeve assembly, synchronizer ring, and second gear from the rear of the main shaft in sequence.

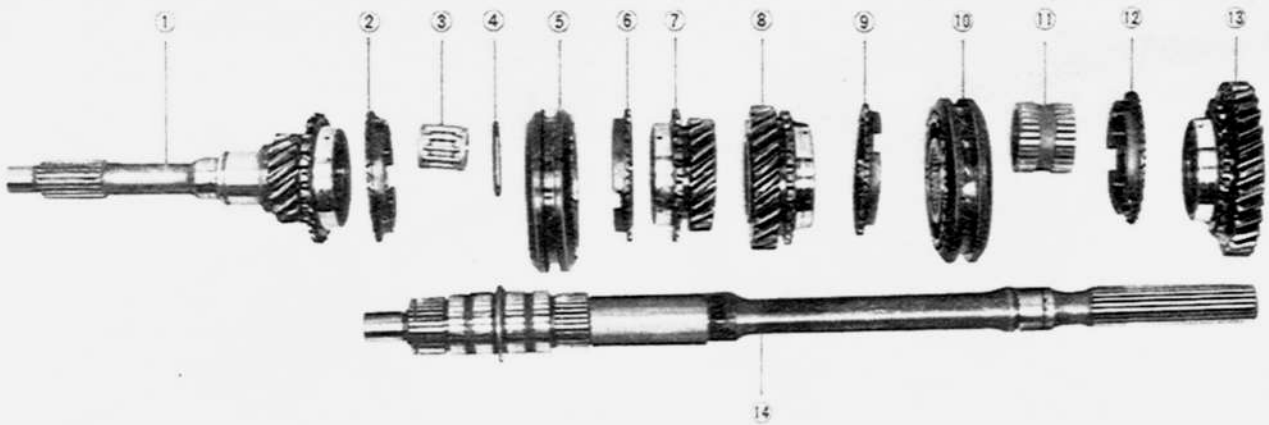

Fig. 7–14 Main shaft assembly

1. Main drive shaft
2. Synchronizer ring
3. Needle bearing
4. Snap ring
5. Clutch hub and sleeve (top and 3rd)
6. Synchronizer ring
7. Third gear
8. Second gear
9. Synchronizer ring
10. Clutch hub and sleeve (low and 2nd)
11. Sleeve
12. Synchronizer ring
13. Low gear
14. Main shaft

7–C. TRANSMISSION INSPECTION

7–C–1. Checking of Transmission Case and Bearing Housing

Clean the transmission case and bearing housing thoroughly, using a suitable solvent, and dry with compressed air. Inspect the case and bearing housing for cracks and the machined mating surfaces for burrs, nicks or any damages.

Note: As the bearing housing is machined under the condition of being fitted with the transmission case, the center of bearing housing and transmission case are completely matched. Therefore, the bearing housing only should not be replaced.

7–C–2. Checking of Bearings

Inspect each bearing for roughness. This can be determined by slowly turning the outer race by hand.

7–C–3. Checking of Gears

Inspect the teeth of each gear. If excessively worn, broken or chipped, replace with new gear. Excessive wear of the gears causes increase of backlash, which results in producing noises or may cause the gear to work off while running.

7–C–4. Checking of Synchronizer Mechanism

1. Inspect the gear teeth on the synchronizer ring. If there is evidence of chipping or excessively worn teeth, replace with new parts.
2. Inspect the synchronizer ring for wear. To check the wear of the synchronizer ring, fit the synchronizer ring evenly to the gear cone and measure the clearance between the side faces of the synchronizer ring and the gear with a feeler gauge, as shown in Fig. 7–15. If it is less than **0.8 mm (0.032 in)**, replace the synchronizer ring or gear. The standard clearance is 1.5 mm (0.060 in).



Fig. 7–15 Checking of synchronizer ring

3. Inspect the contact between the inner surface of the synchronizer ring and the cone surface of the gear. To inspect, apply a thin coat of "Prussian Blue" on the cone surface of the gear and fit it into the ring. If the contact pattern is poor, correct this by applying the compound and lapping the surfaces together.

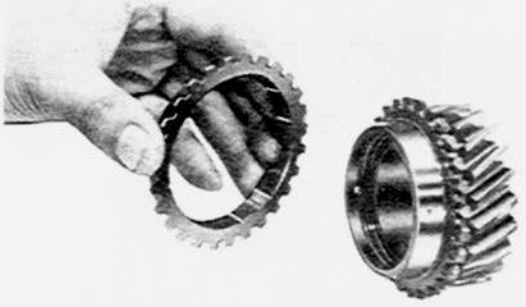

Fig. 7–16 Checking of synchronizer ring

4. See if the clutch sleeve slides easily on the clutch hub.
5. Check the synchronizer key, the inner surface of the clutch sleeve, and the key groove on the clutch hub for wear.
6. Check the synchronizer key spring for tension.

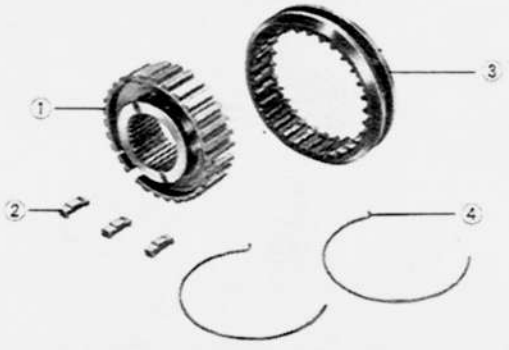

Fig. 7–17 Clutch hub and sleeve assembly
1. Clutch hub
2. Key
3. Clutch sleeve
4. Spring

7–C–5. Checking of Main Shaft Run–Out

Inspect the main shaft for run-out by applying a dial indicator to several places along the shaft.

The standard reading of the indicator for run-out should be **less than 0.03 mm (0.0012 in)**. If the run-out exceeds 0.03 mm (0.0012 in), correct with a press or replace with a new one.

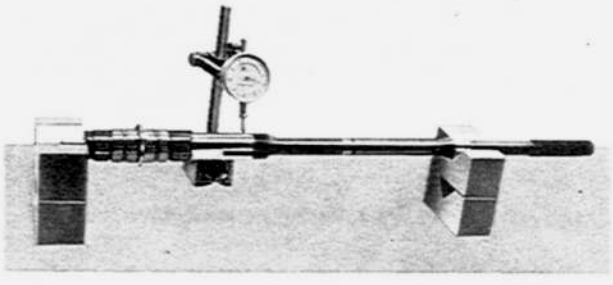

Fig. 7–18 Checking of run-out

7–D. TRANSMISSION ASSEMBLY

1. Install the third gear and synchronizer ring onto the front section of the main shaft.
2. Assemble the third-and-top clutch hub and sleeve, and install it to the main shaft.



Fig. 7–19 Assembling of clutch hub and sleeve

3. Fit the snap ring on the main shaft.



Fig. 7–20 Installing of snap ring

4. Assemble the low-and-second clutch hub and sleeve.
5. Install the second gear, synchronizer ring, low-and-second clutch hub and sleeve, synchronizer ring, low gear with sleeve, and thrust washer in this sequence to the rear section of the main shaft.
6. Install the main drive shaft and the needle roller bearing to the main shaft.

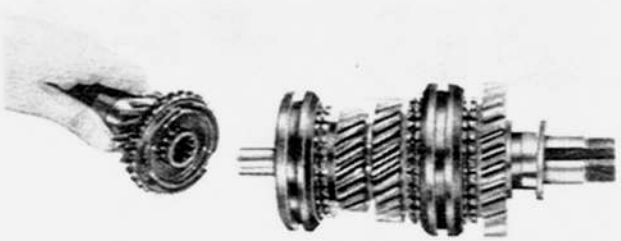

Fig. 7–21 Installing of main drive shaft

7. Press fit the ball bearing for the counter shaft to the bearing housing.
8. Install the counter shaft to the ball bearing of the bearing housing by using a press.
9. Position the main shaft assembly in the bearing housing, and install the ball bearing while tapping the outer race of the bearing with the plastic hammer.

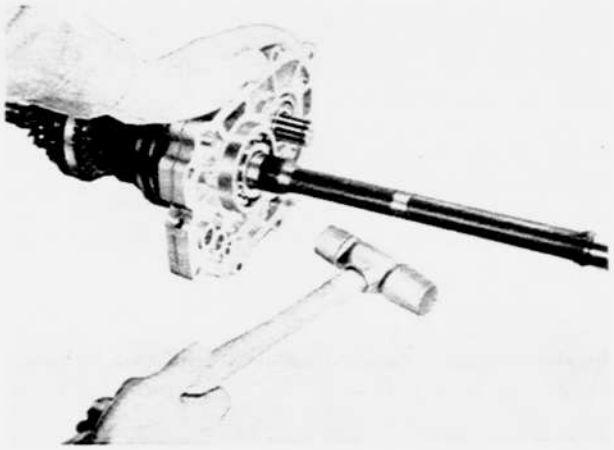

Fig. 7–22 Installing of bearing housing

10. Install the bearing cover to the bearing housing.
11. Install the reverse gear with the key onto the main shaft and tighten the lock nut by using the **holder** (49 0259 440) and **spanner** (49 0164 631).
Bend the tab of the lock washer.

Note: When installing the main shaft reverse gear and the counter shaft reverse gear, both gears should be fitted so that the chamfer on the teeth is faced rearward.

12. Install the counter shaft reverse gear and secure it with the snap ring.
13. Insert the locking ball and spring into the (A) of the bearing housing as shown in Fig. 7–23.

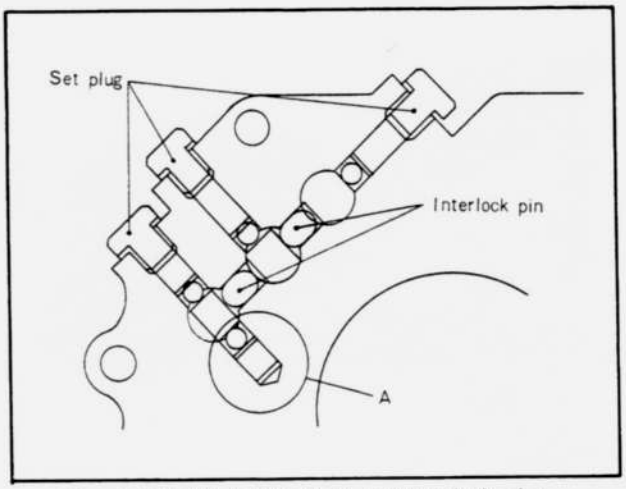

Fig. 7–23 Shift locking balls and interlock pins

14. Push down the ball with a suitable screwdriver.
15. Install the reverse shift fork rod and shift lever with the reverse idle gear at the same time.
16. Install the shift forks to their respective clutch sleeve.
17. Using the **shift fork rod guide** (49 0187 441A)

and **interlock pin installer** (49 0187 451A), insert the interlock pin, as shown in Fig. 7–24.

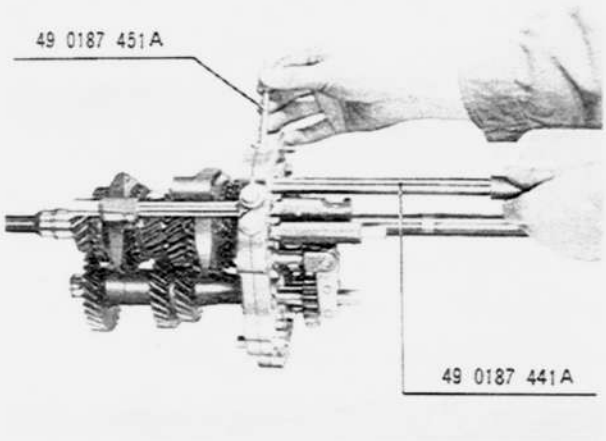

Fig. 7–24 Installing of interlock pin

18. Remove the tools and install the low-and-second shift rod through the holes of the bearing housing and fork.
19. With the same tools that were used in step 17, and install the interlock pin.
20. Remove the tools and install the third-and-top shift rod.
21. Align the lock bolt holes of the shift fork and rod. Install the lock bolt.
22. Install the shift locking balls and springs into their respective positions and install the plugs.
23. Apply a thin coat of sealing agent on both contact surfaces of the bearing housing.
24. Install the bearing housing assembly to the transmission case.

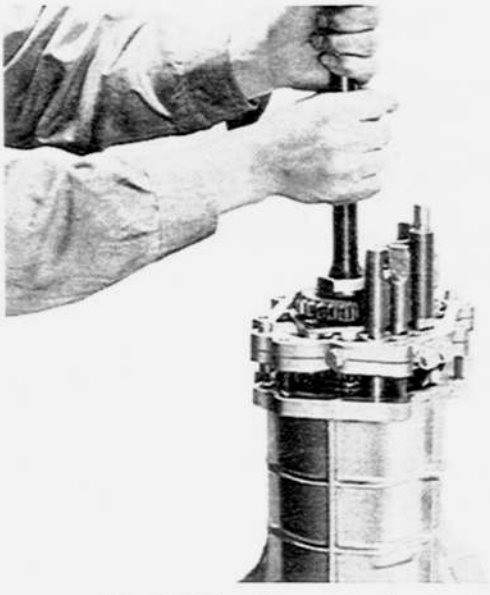

Fig. 7–25 Installing of bearing housing

25. Install the speedometer drive gear with the steel ball onto the main shaft and secure it with the snap ring as shown in Fig. 7–26.
26. Install the ball bearings for the main drive shaft



Fig. 7–26 Installing of speedometer drive gear

and counter shaft with the **installer** (49 0180 321) and secure it with the snap rings.

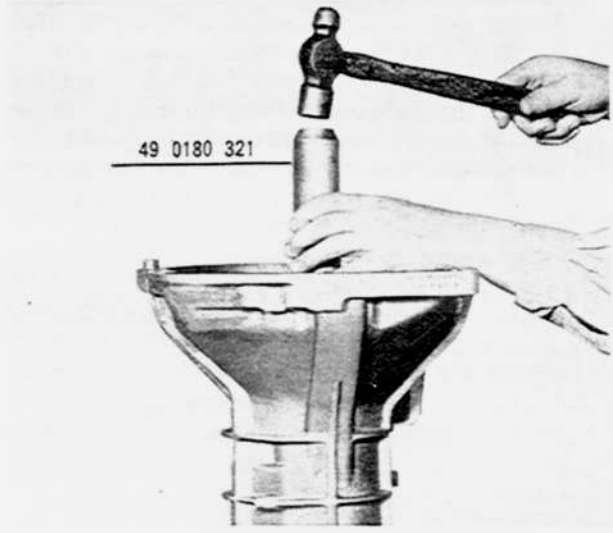

Fig. 7–27 Installing of bearings

Note: When installing the ball bearing, the main drive shaft may slide slightly toward the extension housing, causing difficulty in fitting the snap ring.
Softly peen the rear end of the main shaft with the copper hammer until the main drive shaft rests in a suitable position.

27. Install the speedometer driven gear assembly to the extension housing and fix with the screw.

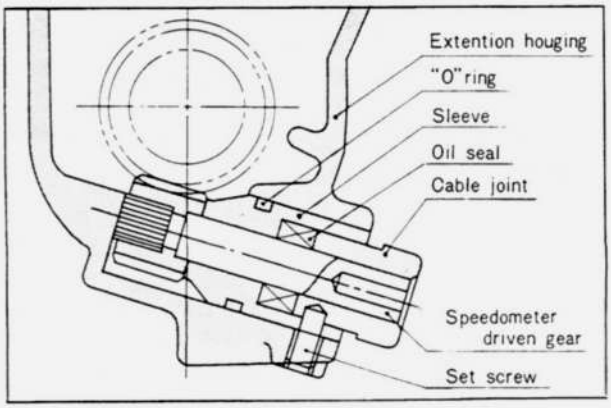

Fig. 7–28 Speedometer driven gear

28. Insert the control rod through the holes from the front side of the extension.
29. Align the key, and insert the control rod end to the control rod. Install the bolt.



Fig. 7–29 Inserting of control rod end

30. Install the spring and friction piece to the extension housing and install the spring cap bolt.
31. Install the extension housing to the bearing housing with the control rod end laid down to the left as far as it will go. Tighten the attaching nuts.
Check to ensure that the control rod operates properly.
32. Insert the slect lock spindle and spring from the inside of the gearshift lever retainer.
33. Install the steel ball and spring in alignment with spindle groove and install the spring cap bolt.
34. Insert the spring and spring seat into the control rod end.

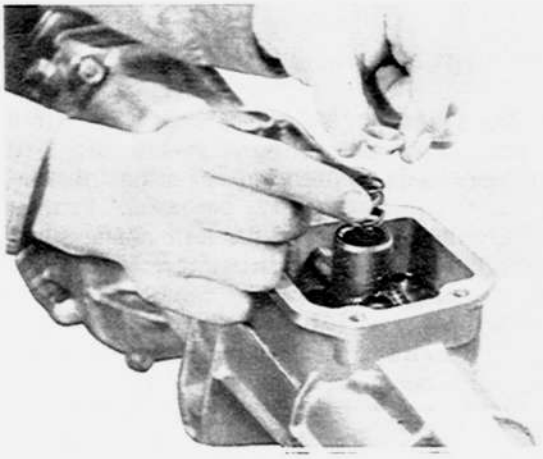

Fig. 7–30 Inserting of spring and spring seat

35. Install the gearshift lever retainer and gasket to the extension housing.

36. Apply grease to the lip of the oil seal inside the front cover and install the front cover to the transmission case.

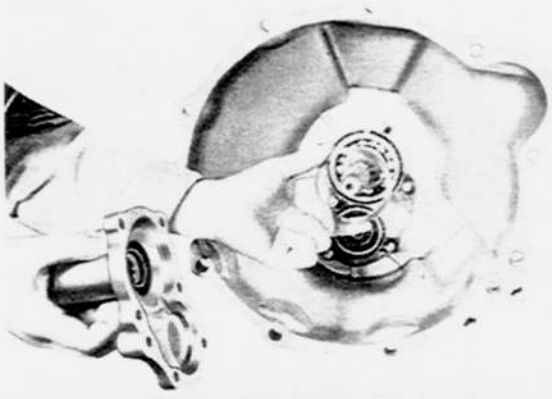

Fig. 7–31 Installing of front cover

Note: When the front cover is installed, the clearance between the bearing outer race and the front cover should be **less than 0.15 mm (0.006 in).**
This clearance can be adjusted by inserting the adjusting shim of 0.15 mm (0.006 in) or 0.30 mm (0.012 in).

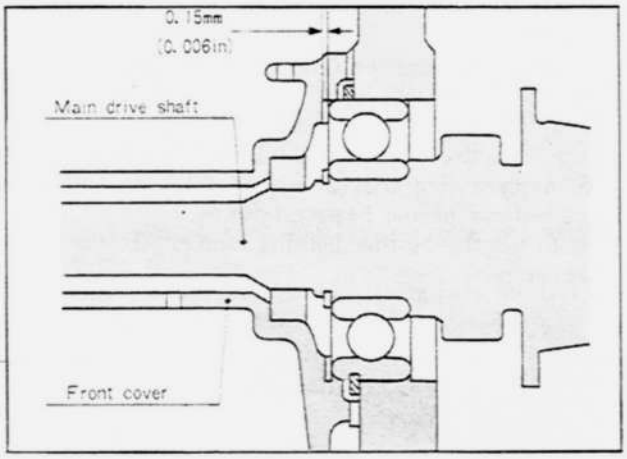

Fig. 7–32 Adjusting of bearing end play

37. Install the release bearing, return spring and the release fork.

7–E. INSTALLING OF TRANSMISSION

Carry out the removing operations in the reverse order.

Note: Use the tool (49 0259 440) to align the splines of the main drive shaft and clutch disk.

SPECIAL TOOLS

49 0259 440	Main shaft holder
49 0164 631	Spanner (for reverse gear lock nut)
49 0187 441A	Shift fork rod guide
49 0187 451A	Interlock pin installer
49 0180 321	Bearing installer

TRANSMISSION
(Column Shift)

7A–A. TRANSMISSION REMOVAL ..... 7A : 1
7A–B. TRANSMISSION DISASSEMBLY ..... 7A : 1
7A–C. TRANSMISSION INSPECTION ..... 7A : 2
- 7A–C–1. Checking of Transmission Case and Bearing Housing ..... 7A : 2
- 7A–C–2. Checking of Bearings ..... 7A : 2
- 7A–C–3. Checking of Gears ..... 7A : 2
- 7A–C–4. Checking of Synchronizer Mechanism ..... 7A : 2
- 7A–C–5. Checking of Main Shaft Run-Out ..... 7A : 3

7A–D. TRANSMISSION ASSEMBLY ..... 7A : 3
7A–E. INSTALLING OF TRANSMISSION ..... 7A : 6
7A–F. CHANGE LEVER ADJUSTMENT ..... 7A : 6
- 7A–F–1. Adjusting of Sleeve ..... 7A : 6

TRANSMISSION

7A–A. TRANSMISSION REMOVAL

When removing only the transmission from the vehicle, take the following procedures:

1. Drain the lubricant from the transmission.
2. Disconnect the earth wire of the battery.
3. Disconnect the wires of the starting motor and the reverse lamp switch.
4. Remove the propeller shaft from the rear axle and the transmission.
5. Disconnect the speedometer cable from the extension housing.
6. Disconnect the changing rods and remove the counter lever bracket from the transmission.
7. Remove the bolts attaching the exhaust pipe to the bracket on the transmission case.
8. Remove the nuts and disconnect the rear end of the exhaust manifold from the pre-silencer pipe.
9. Unhook the clutch release fork return spring and remove the clutch release cylinder from the clutch housing.
10. Remove the starting motor.
11. Remove the nuts and bolts holding the transmission to the rear end plate of the cylinder block.
12. Place a jack under the engine, protecting the engine oil pan with a block of wood.
13. Remove the nuts holding the transmission support to the cross member.
14. Remove the nuts holding the cross member to the frame side rails and remove the cross member.
15. Lower the jack, slide the transmission rearward until the main drive shaft clears the clutch disk, and remove the transmission from under the vehicle.

7A–B. TRANSMISSION DISASSEMBLY

The procedures for disassembling the transmission after removing the transmission from the vehicle are as follows:

1. Remove the clutch release bearing return spring and slide off the bearing.
2. Remove the clutch release fork.
3. Remove the bolts attaching the front cover to the transmission case and remove the front cover, shim and gasket.

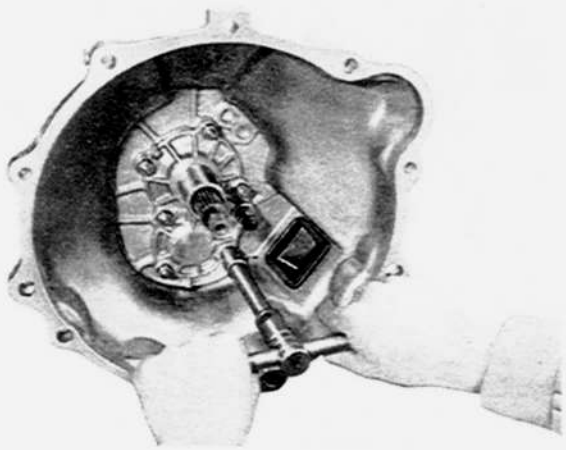

Fig. 7A–1 Removing of front cover

4. Remove the snap rings on the main drive shaft and counter shaft.
5. Remove the nuts attaching the extension housing to the transmission case. Slide the extension housing off the main shaft, with outer shift lever laid down to the left as far as it will go.

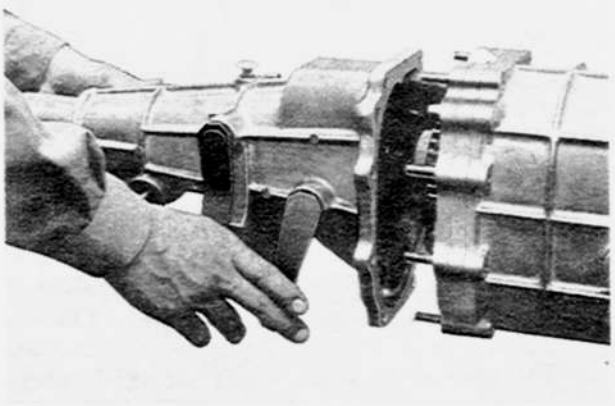

Fig. 7A–2 Removing of extension housing

6. Remove the speedometer driven gear from the extension housing by loosening the set screw.
7. Remove the reverse lamp switch.
8. Remove the snap ring that secures the speedometer drive gear to the main shaft. Slide the speedometer drive gear off the main shaft and remove the lock ball.
9. Tap the front end of the main drive shaft and counter shaft in turn with the plastic hammer and remove the bearing housing (intermediate plate) assembly from the transmission case.

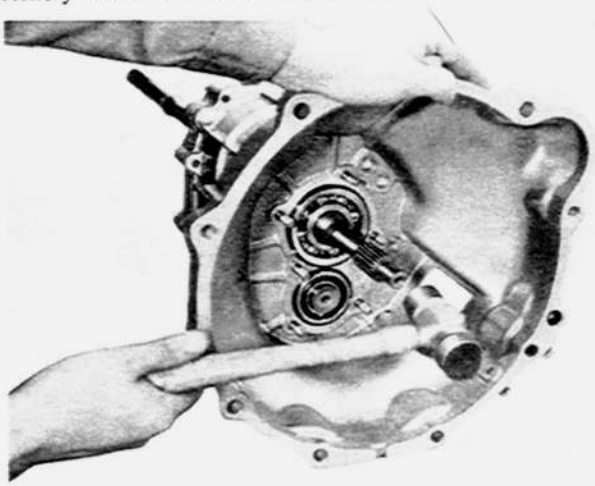

Fig. 7A–3 Removing of bearing assembly

10. Remove the main drive shaft and needle bearing from the main shaft.
11. Remove the three bolts and remove the springs and the shift locking balls.
12. Remove the shift lever attaching nut and remove the reverse shift rod together with the reverse idle gear and shift lever from the bearing housing.
13. Remove each set screw attaching the shift fork to the rod. Push each of the shift rods rearward through the fork and bearing housing and remove

the shift rods and forks.
14. Remove the reverse shift rod locking ball and spring, and the interlock pins from the bearing housing.
15. Straighten the tub of the lockwasher, hold the main shaft with the **holder** (49 0259 440) as shown in Fig. 7–4 and loosen the lock nut by using the **spanner** (49 0164 631). Remove the reverse gear from the main shaft.

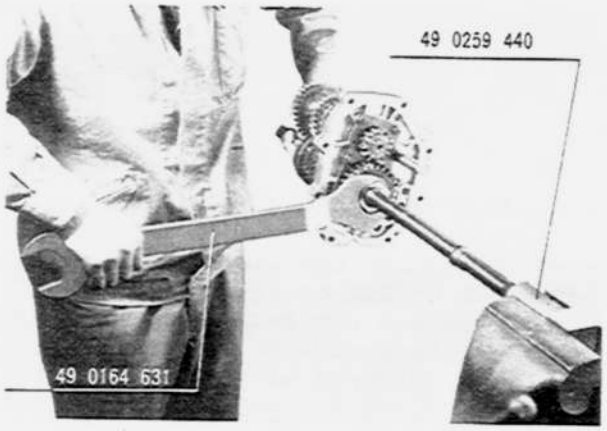

Fig. 7A–4 Loosening of lock nut

16. Remove the snap ring from the rear of the counter shaft and slide off the counter reverse gear as shown in Fig. 7A–5.

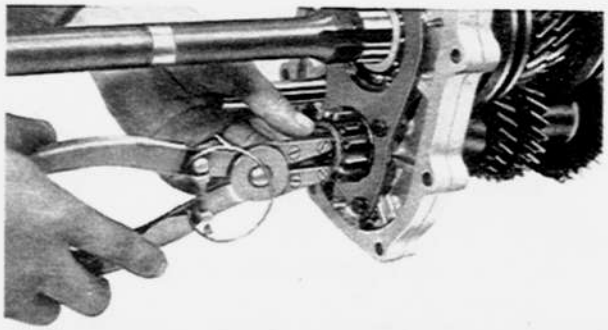

Fig. 7A–5 Removing of snap ring

17. Remove the bearing cover from the bearing housing.
18. With the plastic hammer, tap the rear end of the main shaft and counter shaft in turn, being careful not to damage the shafts, and remove these shafts from the bearing housing.

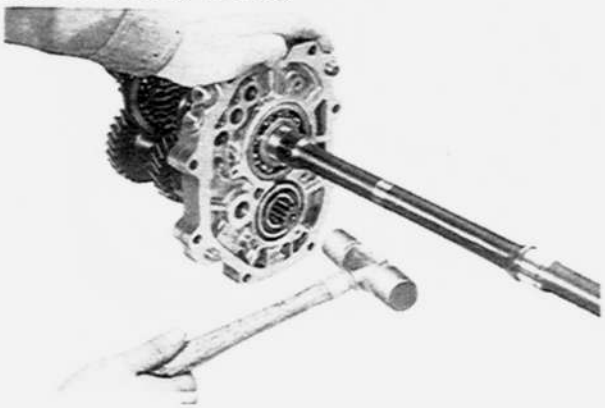

Fig. 7A–6 Removing of counter shaft

19. Remove the bearings from the bearing housing and transmission case.
20. Using the snap ring pliers, remove the snap ring from the front of the main shaft.
21. Slide the third-and-top clutch hub and sleeve assembly, synchronizer ring and third gear off the main shaft.
22. Remove the thrust washer, low gear and sleeve, synchronizer ring, first-and-second clutch hub and sleeve assembly, synchronizer ring, and second gear from the rear of the main shaft in this sequence.

7A–C. TRANSMISSION INSPECTION

7A–C–1. Checking of Transmission Case and Bearing Housing

Clean the transmission case and bearing housing thoroughly, using a suitable solvent, and dry with compressed air. Inspect the case and bearing housing for cracks and the machined mating surfaces for burrs, nicks or any damages.

Note: As the bearing housing is machined under the condition of being fitted with the transmission case, the center of bearing housing and transmission case are completely matched. Therefore, the bearing housing only should not be replaced.

7A–C–2. Checking of Bearings

Inspect each bearing for roughness. This can be determined by slowly turning the outer race by hand.

7A–C–3. Checking of Gears

Inspect the teeth of each gear. If excessively worn, broken or chipped, replace with new gear. Excessive wear of the gears causes increase of backlash, which results in producing noises or may cause the gear to work off while running.

7A–C–4. Checking of Synchronizer Mechanism

1. Inspect the gear teeth on the synchronizer ring. If there is evidence of chipping or excessively worn teeth, replace with new parts.

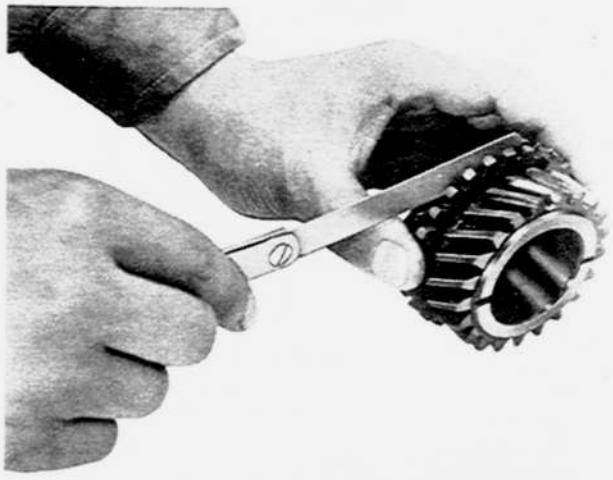

Fig. 7A–7 Checking of synchronizer ring

2. Inspect the synchronizer ring for wear. To check the wear of the synchronizer ring, fit the synchronizer ring evenly to the gear cone and measure the clearance between the side faces of the synchronizer ring and the gear with a feeler gauge, as shown in Fig. 7A–7. If it is less than **0.8 mm (0.032 in)**, replace the synchronizer ring or gear. The standard clearance is 1.5 mm (0.060 in).
3. Inspect the contact between the inner surface of the synchronizer ring and the cone surface of the gear. To inspect, apply a thin coat of "Prussian Blue" on the cone surface of the gear and fit it into the ring. If the contact pattern is poor, correct this by applying the compound and lapping the surfaces together.

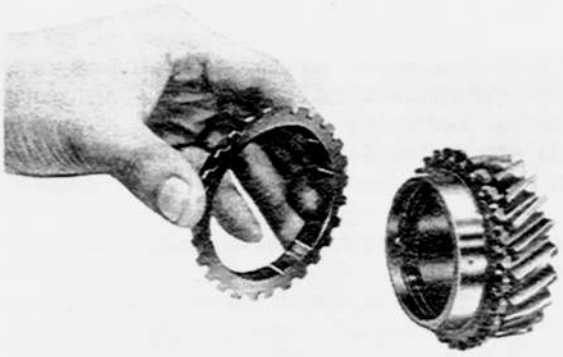

Fig. 7A–8 Checking of synchronizer ring

4. See if the clutch sleeve slides easily on the clutch hub.
5. Check the synchronizer key, the inner surface of the clutch sleeve, and the key groove on the clutch hub for wear.
6. Check the synchronizer key spring for tension.

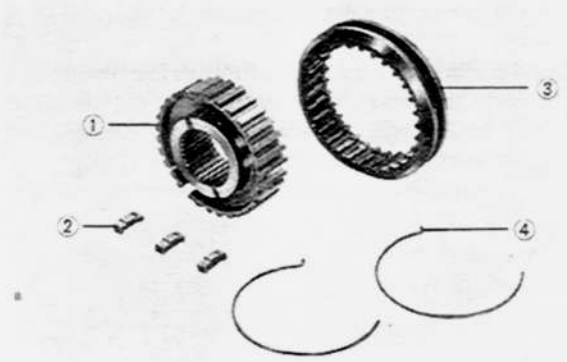

Fig. 7A–9 Clutch hub and sleeve assembly

1. Clutch hub
2. Key
3. Clutch sleeve
4. Spring

7A–C–5. Checking of Main Shaft Run-Out

Inspect the main shaft for run-out by applying a dial indicator to several places along the shaft.
The standard reading of the indicator for run-out should be **less than 0.03 mm (0.0012 in)**. If the run-out exceeds 0.03 mm (0.0012 in), correct with a press or replace with a new one.

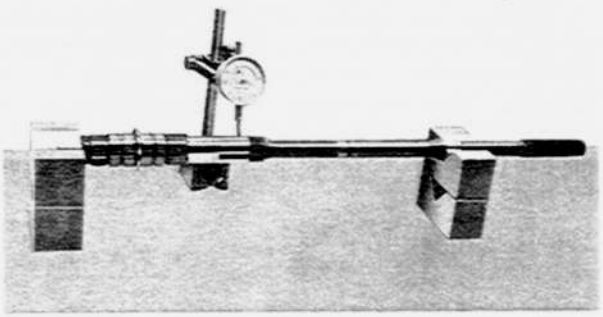

Fig. 7A–10 Checking of run-out

7A–D. TRANSMISSION ASSEMBLY

1. Apply grease to the oil seal for the outer select lever, and install the outer select lever and inner select lever to the extension housing.
2. Install the outer shift lever and inner shift lever to the extension housing.

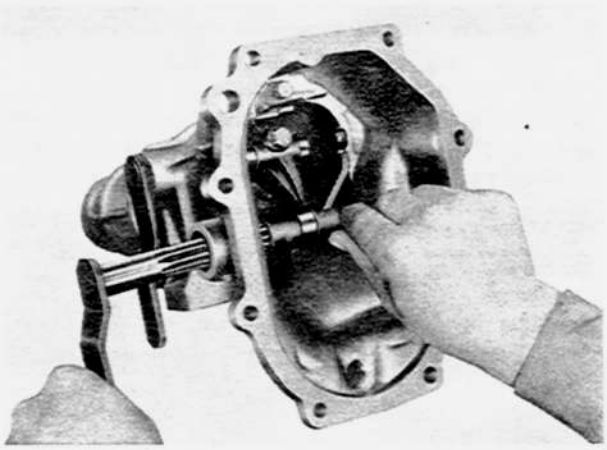

Fig. 7A–11 Installing of shift lever

3. Install the speedometer driven gear assembly to the extension housing and fix with the screw.
4. Install the third gear and synchronizer ring onto the front section of the main shaft.
5. Assemble the third-and-top clutch hub and sleeve, and install it to the main shaft.

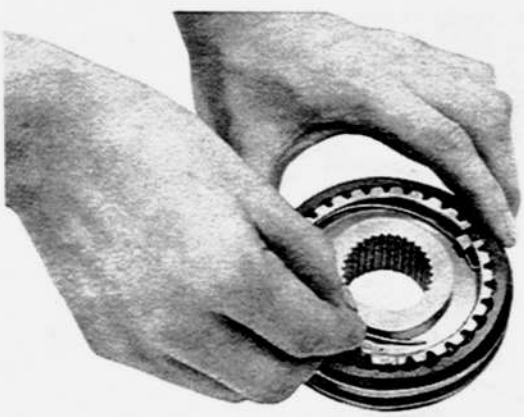

Fig. 7A–12 Assembling of clutch hub and sleeve

6. Fit the snap ring on the main shaft.



Fig. 7A–13 Installing of snap ring

7. Assemble the low-and-second clutch hub and sleeve.
8. Install the second gear, synchronizer ring, low-and-second clutch hub and sleeve, synchronizer ring, low gear with sleeve, and thrust washer in this sequence to the rear section of the main shaft.
9. Install the main drive shaft and the needle roller bearing to the main shaft.

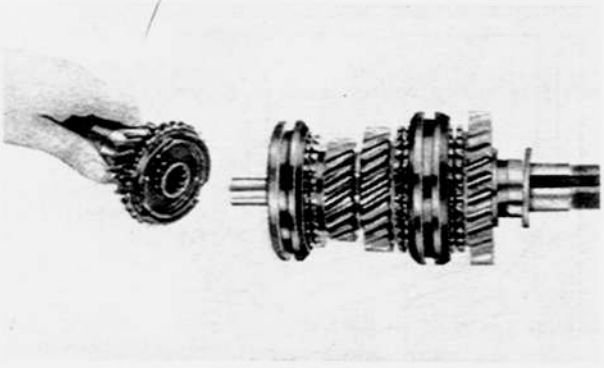

Fig. 7A–14 Installing of main drive shaft

10. Press fit the ball bearing for the counter shaft to the bearing housing.
11. Install the counter shaft to the ball bearing of the bearing housing by using a press.
12. Position the main shaft assembly in the bearing housing, and install the ball bearing while tapping the outer race of the bearing with the plastic hammer.

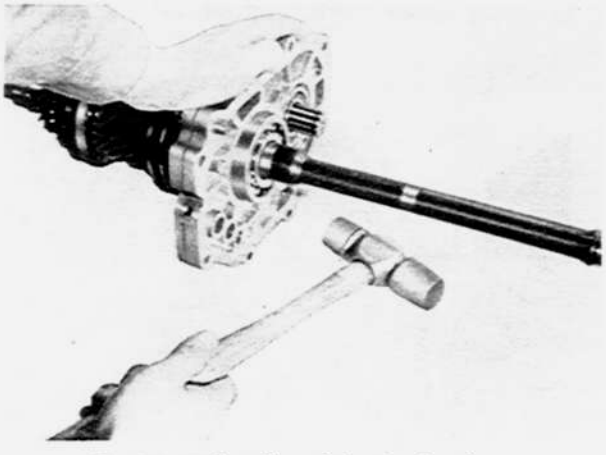

Fig. 7A–15 Installing of bearing housing

13. Install the bearing cover to the bearing housing.
14. Install the reverse gear with the key onto the main shaft and tighten the lock nut by using the **holder** (49 0259 440) and **spanner** (49 0164 631). Bend the tab of the lock washer.

Note: When installing the main shaft reverse gear and the counter shaft reverse gear, both gears should be fitted so that the chamfer on the teeth is faced rearward.

15. Install the counter shaft reverse gear and secure it with the snap ring.
16. Insert the locking ball and spring into the (A) of the bearing housing as shown in Fig. 7A–16.

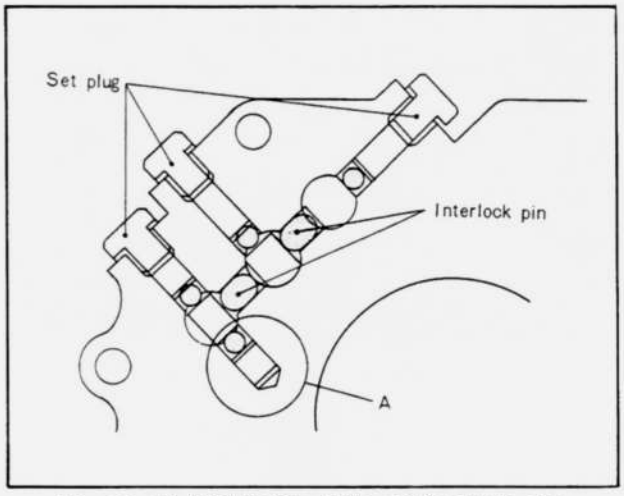

Fig. 7A–16 Shift locking balls and interlock pins

17. Push down the ball with a suitable screwdriver.
18. Install the reverse shift fork rod and shift lever with the reverse idle gear at the same time.
19. Install the shift forks to their respective clutch sleeve.
20. Using the **shift fork rod guide** (49 0187 441A) and **interlock pin installer** (49 0187 451A), insert the interlock pin, as shown in Fig. 7A–17.

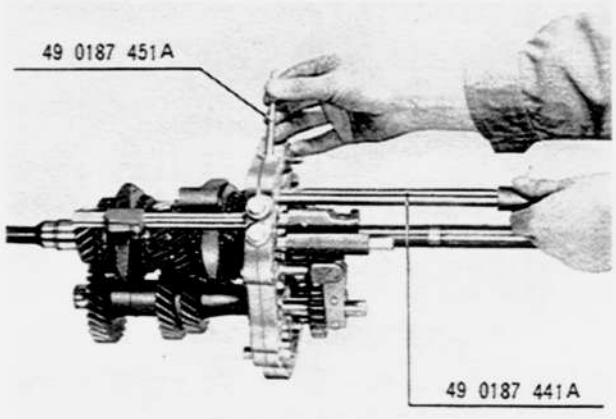

Fig. 7A–17 Installing of interlock pin

21. Remove the tools and install the low-and-second shift rod through the holes of the bearing housing and fork.

22. With the same tools that were used in step 20, install the interlock pin.
23. Remove the tools and install the third-and-top shift rod.
24. Align the lock bolt holes of the shift fork and rod. Install the lock bolt.
25. Install the shift locking balls and springs into their respective positions and install the plugs.
26. Apply a thin coat of sealing agent on both contact surfaces of the bearing housing.
27. Install the bearing housing assembly to the transmission case.



Fig. 7A–18 Installing of bearing housing

28. Install the speedometer drive gear with the steel ball onto the main shaft and secure it with the snap ring as shown in Fig. 7A–19.



Fig. 7A–19 Installing of speedometer drive gear

29. Install the ball bearings for the main drive shaft and counter shaft with the **installer** (49 0180 321) and secure it with the snap rings.

Note: When installing the ball bearing, the main drive shaft may slide slightly toward the extension housing, causing difficulty in fitting the snap ring.
Softly peen the rear end of the main shaft with the copper hammer until the main drive shaft rests in a suitable position.

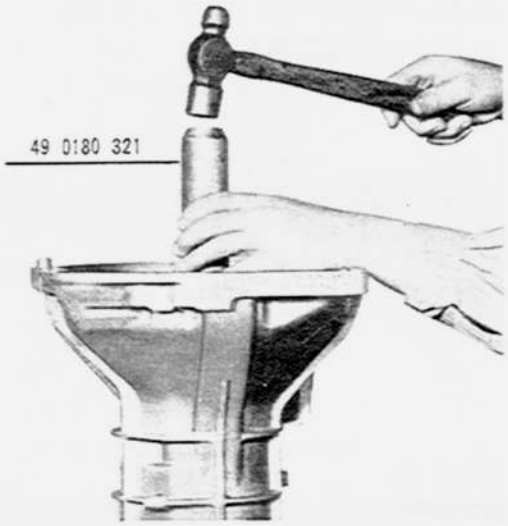

Fig. 7A–20 Installing of bearings

30. Install the speedometer driven gear assembly to the extension housing and fix with the screw.

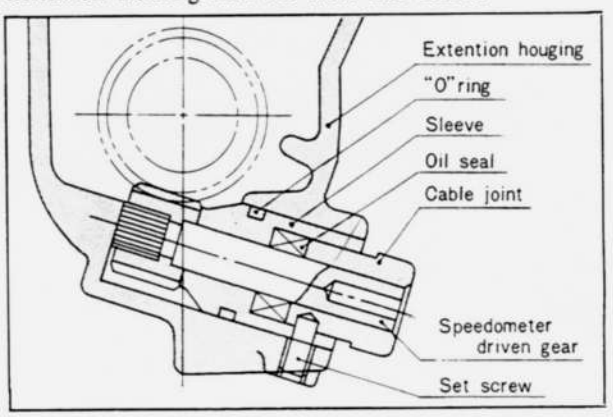

Fig. 7A–21 Speedometer driven gear

31. Install the extension housing to the bearing housing with the outer shift lever laid down to the left as far as it will go. Tighten the attaching nuts.
Check to ensure that the outer shift lever operates properly.
32. Apply grease to the lip of the oil seal inside

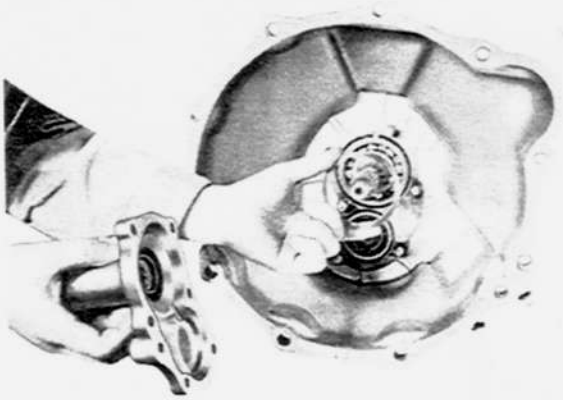

Fig. 7A–22 Installing of front cover

the front cover and install the front cover to the transmission case.

Note: When the front cover is installed, the clearance between the bearing outer race and the front cover should be **less than 0.15 mm (0.006 in)**.
This clearance can be adjusted by inserting the adjusting shim of 0.15 mm (0.006 in) or 0.30 mm (0.012 in).

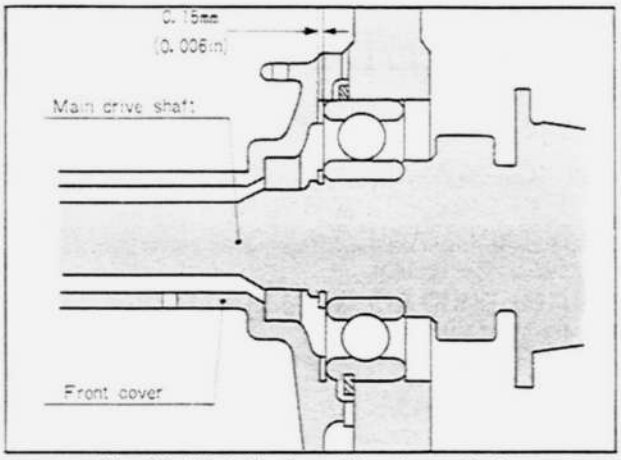

Fig. 7A–23 Adjusting of bearing end play

33. Install the release bearing, return spring and the release fork.

7A–E. INSTALLING OF TRANSMISSION

Carry out the removing operations in the reverse order.

Note: Use the tool (49 0259 440) to align the splines of the main drive shaft and clutch disk.

7A–F. CHANGE LEVER ADJUSTMENT

1. The standard position of the change lever in neutral should be at angle of 8 degrees forward (toward the window glass) from the horizontal plane through the control rod. To obtain this position, adjust the length of the front shift rod by loosening the lock nut and turning the front shift rod so that the tip of the change lever rests approximately 40 mm (1.6 in) from the horizontal plane.
2. When in neutral, adjust the length of the front selection rod by loosening the lock nut and turning the rod so that the distance between the steering wheel and the change lever becomes 85 mm (3.35 in) as shown in Fig. 7A–24.

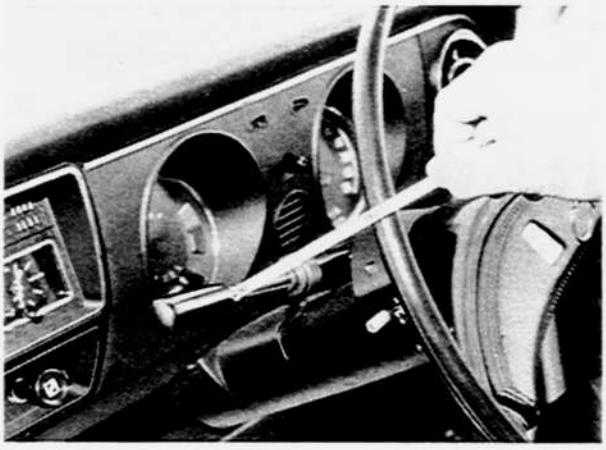

Fig. 7A–24 Change lever adjustment

3. After the above adjustment, shift the change lever into each position to make sure that it can be shifted smoothly and securely. If it does not shift smoothly and securely, adjust the front selection and shift rods again. Tighten the lock nuts of each rod after final adjustment.

7A–F–1. Adjusting of Sleeve

The standard torque, when the ball stud begins to move, is 1 to 3 cm-kg (0.9 to 2.7 in-lb).
To adjust, remove the split pin and turn the end screw until the correct adjustment is obrained. Fix the end screw with the split pin.

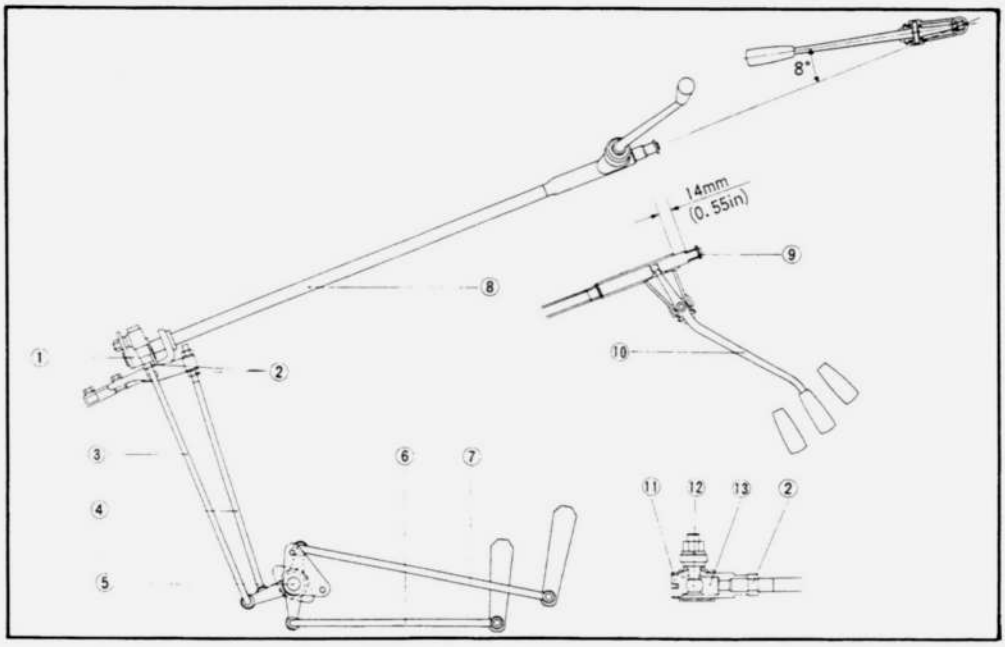

Fig. 7A–25

Change mechanism

1. Lower bracket assembly
2. Lock nut
3. Front shift rod
4. Front selection rod
5. Counter lever
6. Rear shift rod
7. Rear selection rod
8. Control rod
9. Adjusting washer
10. Change lever
11. End screw
12. Ball stud
13. Ball seat

SPECIAL TOOLS

49 0259 440	Main shaft holder
49 0164 631	Spanner (for reverse gear lock nut)
49 0187 441A	Shift fork rod guide
49 0187 451A	Interlock pin installer
49 0180 321	Bearing installer

TECHNICAL DATA

T

Engine (General Data)

Type	Four cylinder four stroke engine in line, water cooled, overhead camshaft
Bore	78 mm (3.07 in)
Stroke	83 mm (3.27 in)
Piston displacement	1,586 cc (96.8 cu-in)
Compression ratio	8.6 : 1
Compression pressure	11.9 kg/cm^2 (169 lb/in^2) at 310 rpm
Brake horsepower :	
SAE	104 HP at 6,000 rpm
Maximum torque :	
SAE	106 lb-ft at 3,500 rpm
Weight	138 kg (304 lb)
Length x Width x Height	0.711 x 0.684 x 0.640 m (28 x 27 x 25 in)

Engine

Cylinder head :	
Material	Aluminum alloy
Combustion chamber	50.0 cc (3.1 cu-in)
Permissible distortion	0.15 mm (0.006 in)
Valve clearance (Warm engine)	Inlet : 0.30 mm (0.012 in) Exhaust : 0.30 mm (0.012 in)
Valve seat ring :	
Outer diameter	Inlet : $43^{+0.12}_{+0.10}$ mm ($1.6929^{+0.0047}_{+0.0039}$ in) Exhaust : $37^{+0.12}_{+0.10}$ mm ($1.4567^{+0.0047}_{+0.0039}$ in)
Shrink fit in cylinder head	0.075 ~ 0.120 mm (0.0030 ~ 0.0047 in)
Valve seat :	
Valve seat angle	90°
Valve seat width	Inlet : 2.1 mm (0.083 in) Exhaust : 1.4 mm (0.055 in)
Valve guide :	
Length	50.5 mm (1.988 in)
Outer diameter	$14^{+0.044}_{+0.033}$ mm ($0.5512^{+0.0017}_{+0.0013}$ in)
Inner diameter	$8^{+0.083}_{+0.063}$ mm ($0.3150^{+0.0033}_{+0.0025}$ in)
Valve stem to guide clearance	Inlet : 0.018 ~ 0.053 mm (0.0007 ~ 0.0021 in) Exhaust : 0.018 ~ 0.058 mm (0.0007 ~ 0.0023 in)
Valve–Intake :	
Overall length	108.5 mm (4.272 in)
Head diameter	42 ± 0.1 mm (1.6536 ± 0.0039 in)
Angle of seat	90°
Stem diameter	$8^{+0.045}_{+0.030}$ mm ($0.3150^{+0.0018}_{+0.0012}$ in)
Valve margin thickness	1.5 ± 0.2 mm (0.0591 ± 0.0079 in)
Valve–Exhaust :	
Overall length	107.0 mm (4.213 in)
Head diameter	33 ± 0.1 mm (1.2992 ± 0.0039 in)
Angle of seat	90°
Stem diameter	$8^{+0.045}_{+0.025}$ mm ($0.3150^{+0.0018}_{+0.0010}$ in)
Valve margin thickness	1.5 ± 0.2 mm (0.0591 ± 0.0079 in)
Valve spring–Outer :	
Wire diameter	4.3 mm (0.169 in)
Outer coil diameter	32.9 mm (1.295 in)
Free length	37.3 mm (1.469 in)
Fitting length	34.0 mm (1.339 in)
Fitting load	14.3 kg (31.5 lb)
Valve spring–Inner :	
Wire diameter	3.0 mm (0.118 in)
Outer coil diameter	23.1 mm (0.909 in)
Free length	36.8 mm (1.449 in)
Fitting length	32.5 mm (1.280 in)
Fitting load	9.5 kg (20.9 lb)
Rocker arm :	
Bore in rocker arm	$22^{+0.021}_{-0}$ mm ($0.8662^{+0.0008}_{-0}$ in)
Rocker arm bush :	
Outer diameter	$22^{+0.049}_{+0.028}$ mm ($0.8662^{+0.0019}_{+0.0011}$ in)
Inner diameter	$19^{+0.033}_{-0}$ mm ($0.7480^{+0.0013}_{-0}$ in)
Rocker arm shaft-Intake:	
Outer diameter	$19^{-0.020}_{-0.041}$ mm ($0.7480^{-0.0008}_{-0.0016}$ in)
Length	154 mm (6.10 in)
Rocker arm shaft-Exhaust :	
Outer diameter	$19^{-0.020}_{-0.041}$ mm ($0.7480^{-0.0008}_{-0.0016}$ in)
Length	332 mm (13.07 in)
Rocker arm shaft and bush clearance	0.020 ~ 0.074 mm (0.0008 ~ 0.0029 in)
Camshaft :	
Journal diameter	Front : $45^{-0.040}_{-0.055}$ mm ($1.7717^{-0.0016}_{-0.0022}$ in) Center : $45^{-0.050}_{-0.065}$ mm ($1.7717^{-0.0020}_{-0.0026}$ in) Rear : $45^{-0.040}_{-0.055}$ mm ($1.7717^{-0.0016}_{-0.0022}$ in)
Basic circle of cam	38 ± 0.05 mm (1.4961 ± 0.0020 in)
Cam elevation	Inlet : 44.715 mm (1.7605 in) Exhaust : 44.682 mm (1.7592 in)
Camshaft end play	0.02 ~ 0.18 mm (0.0008 ~ 0.0071 in)

Permissible run-out of camshaft	0.03 mm (0.0012 in)
Camshaft bearing :	
Material	Babbitt
Bearing clearance	0.019 ~ 0.069 mm (0.0007 ~ 0.0027 in)
Undersize bearing available	0.25 mm (0.0098 in) 0.50 mm (0.0197 in) 0.75 mm (0.0295 in)
Camshaft drive :	Chain and sprockets
Number of chain links	100
Number of sprocket teeth	Camshaft sprocket : 38 Crankshaft sprocket : 19
Valve timing :	
Intake opens	13° before top dead center
Intake closes	54° after bottom dead center
Exhaust opens	57° before botton dead center
Exhaust closes	10° after top dead center
Connecting rod :	
Length (Center to center)	144 ± 0.05 mm (5.6694 ± 0.0020 in)
Permissible weight difference between connecting rods	5 gr (0.18 oz)
Permissible distortion	0.02 mm per 50 mm (0.002 in per 5 in)
End play	0.11 ~ 0.21 mm (0.0043 ~ 0.0083 in)
Small end bush :	
Inner diameter	$22^{+0.014}_{+0.003}$ mm ($0.8662^{+0.0006}_{+0.0001}$ in)
Outer diameter	$25^{+0.056}_{+0.035}$ mm ($0.9843^{+0.0022}_{+0.0014}$ in)
Bore in connecting rod	$25^{+0.021}_{-0.012}$ mm ($0.9843^{+0.0008}_{-0.0005}$ in)
Piston pin and bush clearance	0.01 ~ 0.03 mm (0.0004 ~ 0.0012 in)
Connecting rod bearing :	
Material	Aluminum
Bearing clearance	0.027 ~ 0.077 mm (0.0011 ~ 0.0030 in)
Available undersize bearing	0.25, 0.50, 0.75 mm (0.0098, 0.0197, 0.0295 in)
Piston :	
Type	Conical elliptic, slit skirt
Material	Aluminum alloy
Diameter (At 90 degrees to the pin bore axis and 17 mm (0.67 in) below the ring groove)	Mark A : $77.945^{+0.010}_{+0.004}$ mm ($3.0687^{+0.0004}_{+0.0002}$ in) No mark : 77.945 ± 0.004 mm (3.0687 ± 0.0002 in) Mark C : $77.945^{-0.004}_{-0.010}$ mm ($3.0687^{-0.0002}_{-0.0004}$ in)
Piston pin hole bore	$22^{-0.002}_{-0.012}$ mm ($0.8662^{-0.0001}_{-0.0005}$ in)
Ring groove width	Top : $1.5^{+0.040}_{+0.025}$ mm ($0.0591^{+0.0016}_{+0.0010}$ in) Second : $1.5^{+0.034}_{+0.020}$ mm ($0.0591^{+0.0013}_{+0.0008}$ in) Oil : $4.0^{+0.034}_{+0.020}$ mm ($0.1575^{+0.0013}_{+0.0008}$ in)
Ring groove depth	3.85 mm (0.1516 in)
Piston and cylinder clearance	0.057 ~ 0.072 mm (0.0022 ~ 0.0028 in)
Oversize piston available	0.25 mm (0.0098 in) 0.50 mm (0.0197 in) 0.75 mm (0.0295 in) 1.00 mm (0.0394 in)
Piston ring :	
Width	Top : $1.5^{-0.01}_{-0.03}$ mm ($0.0591^{-0.0004}_{-0.0012}$ in) Second : $1.5^{-0.01}_{-0.03}$ mm ($0.0591^{-0.0004}_{-0.0012}$ in) Oil : $4.0^{-0.01}_{-0.03}$ mm ($0.1575^{-0.0004}_{-0.0012}$ in)
Thickness	Top : 3.6 ± 0.1 mm (0.1417 ± 0.0039 in) Second : 3.6 ± 0.1 mm (0.1417 ± 0.0039 in) Oil : 3.0 ± 0.1 mm (0.1181 ± 0.0039 in)
Side clearance	Top : 0.035 ~ 0.070 mm (0.0014 ~ 0.0028 in) Second : 0.030 ~ 0.064 mm (0.0012 ~ 0.0025 in) Oil : 0.030 ~ 0.064 mm (0.0012 ~ 0.0025 in)
End gap	0.2 ~ 0.4 mm (0.008 ~ 0.016 in)
Piston pin :	
Diameter	$22^{-0.007}_{-0.016}$ mm ($0.8662^{-0.0003}_{-0.0006}$ in)
Length	64.5 ± 0.05 mm (2.5394 ± 0.0020 in)
Clearance between piston and pin	− 0.005 ~ 0.014 mm (− 0.0002 ~ 0.0006 in)
Crankshaft :	
Main journal diameter	Green : 62.940 ~ 62.948 mm (2.4780 ~ 2.4783 in) Brown : 62.948 ~ 62.955 mm (2.4783 ~ 2.4786 in)
Crankpin diameter	$53^{-0.045}_{-0.060}$ mm ($2.0866^{-0.0018}_{-0.0024}$ in)
Crankshaft end play	0.080 ~ 0.242 mm (0.0031 ~ 0.0095 in)
Permissible run-out of crankshaft	0.03 mm (0.0012 in)
Main bearing :	
Material	Aluminum
Bearing clearance :	
1. Bearing housing : Brown Main journal : Green Bearing : Green	0.032 ~ 0.059 mm (0.0013 ~ 0.0023 in)

2. Bearng housing : Brown Main journal : Brown Bearing : Yellow	0.035 ~ 0.061 mm (0.0014 ~ 0.0024 in)
3. Bearing housing : Green Main journal : Green Bearing : Brown	0.031 ~ 0.059 mm (0.0012 ~ 0.0023 in)
4. Bearing housing : Green Main journal : Brown Bearing : Green	0.034 ~ 0.061 mm (0.0013 ~ 0.0024 in)
Available undersize bearing	0.25, 0.50, 0.75 mm (0.0098, 0.0197, 0.295 in)
Cylinder block :	
Material	Special cast iron
Bore	Mark A : $78^{+0.019}_{+0.013}$ mm ($3.0709^{+0.0007}_{+0.0005}$ in) No mark : $78^{+0.013}_{+0.006}$ mm ($3.0709^{+0.0005}_{+0.0002}$ in) Mark C : $78^{+0.006}_{-0}$ mm ($3.0709^{+0.0002}_{-0}$ in)
Boring size	0.25, 0.50, 0.75, 1.00 mm (0.0098, 0.0197, 0.0295, 0.0394 in)

Lubricating system

Oil pump :	Rotor
Type	13 liter/min (3.4 U.S. gal/min, 2.9 Imp. gal/min) at 2,000 rpm (Engine revolution)
Feeding capacity	Chain via crankshaft
Oil pump driven by	46
Number of chain links	33
Number of sprocket teeth	0.14 ~ 0.25 mm (0.006 ~ 0.010 in)
Outer rotor and body clearance	0.04 ~ 0.10 mm (0.002 ~ 0.004 in)
Rotor end float	
Oil pressure :	3.5 ~ 4.5 kg/cm^2
Normal	(50 ~ 64 lb/in^2) at 3,000 rpm (Engine revolution)
	Below 0.3 kg/cm^2
Warning lamp lights	(4.3 lb/in^2)
Oil filter :	Full flow
Type	0.8 ~ 1.0 kg/cm^2
Relief valve opens	(11.4 ~ 14.2 lb/in^2)
Lubricant :	SAE 40
30°C or over (85°F or over)	SAE 30
15°C ~ 30°C (60°F ~ 85°F)	SAE 20
0°C ~ 15°C (32°F ~ 60°F)	SAE 20W–20
−10°C ~ 15°C (15°F ~ 60°F)	SAE 20W–40
−10°C ~ 40°C (15°F ~ 100°F)	SAE 10W
−18°C ~ 0°C (0°F ~ 32°F)	SAE 10W–30
−18°C ~ 30°C (0°F ~ 85°F)	SAE 5W–20
Below −18°C (Below 0°F)	3.6 liters (7.6 U.S. pints, 6.3 Imp. pints)
Oil capacity	

Cooling system

Water pump :	
Type	Centrifugal
Feeding capacity	45 liter/min (11.9 U.S. gal/min, 9.9 Imp. gal/min) at 2,000 rpm
Pump driven by	"V" belt
Angle of "V"	35°
Fan :	
Fan diameter	330 mm (13.0 in)
Number of blades	4
Ratio of crankshaft and fan	1 : 0.9
Thermostat :	
Type	Wax pellet
Starts to open	82°C (180°F)
Fully opens	95°C (203°F)
Lift	8 mm (0.315 in)
Radiator :	
Type	Corrugated fin
Core area	4.2 m^2 (45.2 ft^2)
Cooling capacity :	
With heater	7.0 liters (14.8 U.S. pints, 12.3 Imp. pints)
Without heater	6.5 liters (13.7 U.S. pints, 11.4 Imp. pints)

Fuel system

Fuel tank capacity	50 liters (13.2 U. S. gallons, 11.0 Imp. gallons)
Fuel pump :	
Type	Electrical
Fuel pressure	0.20 ~ 0.25 kg/cm^2) (2.8 ~ 3.6 lb/in^2)
Fuel feeding capacity	1,000 cc/min (2.1 U.S. pints, 1.8 Imp. pints)
Fuel filter :	
Type	Paper element
Carburetor :	
Type	Stromberg
Throat diameter	Primary : 28 mm (1.1024 in) Secondary : 32mm (1.2599 in)
Venturi diameter	Primary : 23 x 14 x 8 mm (0.9055 x 0.5512 x 0.3150 in) Secondary : 28 x 14 x 7 mm (1.1024 x 0.5512 x 0.2756 in)
Main nozzle	Primary : 2.1 mm (0.0828 in) Secondary : 2.5 mm (0.0984 in)
Main jet	Primary . 1.06 mm (0.0417 in) Secondary : 1.60 mm (0.0630 in)
Main air bleed	Primary : 0.5 mm (0.0197 in) Secondary : 0.7 mm (0.0276 in)
Slow jet	Primary : 0.46 mm (0.0181 in) Secondary : 0.8 mm (0.0315 in)
Slow air bleed	Primary : 1.4 x 1.6 mm (0.0551 x 0.0630 in) Secondary : 1.3 mm (0.0512 in)
Power jet	0.7 mm (0.0276 in)
Acceleration pump diameter	14.0 mm (0.5512 in)
Acceleration pump capacity	0.6 cc 0.8 cc
Idle speed	600 rpm

Electrical system

Battery :	
Type	NS50Z
Voltage	12 volt
Capacity	60 amp. hr (20 hour rate)
Terminal ground	Negative
Specific gravity	Fully charged : 1.26 Recharge at : 1.20
Generator :	
Type	Alternator
Ground polarity	Negative
Rotation (Viewed from front)	Right
No load test	Voltage : 14 volt Current : 0 amp. Revolution : 1,050 rpm or less
Load test	Voltage : 14 volt Current : 32 amp. Revolution : 2,500rpm or less
Brush	2
Brush spring tension	360 gr (0.8 lb)
Pulley ratio	1 · 2.2
Regulator :	
Constant voltage relay	Air gap : 0.7 ~ 1.1 mm (0.028 ~ 0.043 in) Point gap : 0.3 ~ 0.4 mm (0.012 ~ 0.016 in) Back gap : 0.7 ~ 1.1 mm (0.028 ~ 0.043 in)
Regulated voltage (No load)	14 ± 0.5 volt (Altemator speed 4,000 rpm)
Pilot lamp relay	Air gap : 0.9 ~ 1.2 mm (0.035 ~ 0.047 in) Point gap : 0.7 ~ 1.1 mm (0.028 ~ 0.043 in) Back gap : 0.7 ~ 1.1 mm (0.028 ~ 0.043 in)
Pilot lamp lights on	3.5 volt or less
Pilot lamp lights out	3.7 ~ 5.7 volt
Starting motor :	
Capacity	0.8 kw
Brush	4
Brush spring tension	1.2 kg (2.6 lb)
Lock test	Voltage : 7.5 volt Current : 560 amp. or less Torque : 1.3 m-kg (9.4 ft-lb) or more
Free running test	Voltage : 11.5 volt Current : 60 amp. or less Speed : 6,000 rpm or more
Control switch	Solenoid
Voltage required to close solenoid contacts	9.0 volt or less
Distributor :	
Driven by	Camshaft
Contact point gap	0.5 mm (0.020 in)
Contact point pressure	500 ~ 650 gr (1.1 ~ 1.4 lb)
Cam angle	49 ~ 55°
Centrifugal advance	Starts : 0° at 600 rpm Maximum : 11° at 2,000 rpm
Vacuum advance	Starts : 0° at 160 mm-Hg Maximum : 8.5° at 260 mm-Hg
Condenser capacity	0.20 ~ 0.24 μF
Firing order	1-3-4-2
Ignition timing	8° before top dead center
Mark location	Crankshaft pulley
Spark plug:	
Type	NGK BP-6ES or NIPPONDENSO W20 EP
Thread	14 mm
Spark plug gap	0.8 mm (0.032 in)
Bulbs :	
Head lamp	50W/40W or 45W/40W
Side and front turn signal lamp	5W/21W
Rear combination lamp	Turn signal lamp : 21W Stop and tail lamp : 21/5W Reverse lamp : 10W
Licence lamp	10W
Side marker lamp	3.4W
Interior lamp	5W
Instrument panel	Illumination lamp : 3W Oil pressure warning lamp: 3W High beam pilot lamp : 3W Turn signal pilot lamp : 3W

Clutch

Type	Single dry plate
Spring	Diaphragm spring
Pressure plate :	
Inner diameter	126 mm (4.96 in)
Outer diameter	203 mm (7.99 in)
Facing :	
Inner diameter	130 mm (5.12 in)
Outer diameter	200 mm (7.87 in)
Thickness (Single plate)	3.5 mm (0.138 in)
Permissible lateral run-out of clutch disk	1.0 mm (0.039 in)
Release fork free play	3.0 mm (0.12 in)
Pedal free travel	20 ~ 30 mm (0.8 ~ 1.2 in)
Master cylinder bore	15.87 mm (5/8 in)
Release cylinder bore	17.46 mm (11/16 in)
Permissible clearance of piston and cylinder bore	0.15 mm (0.0059 in)

Transmission

Type	Four-forward speed and one reverse speed, with synchro-mesh for all forward and sliding mesh for reverse
Shift lever location	Floor or steering column
Gear ratio :	
First	3.403
Second	2.005
Third	1.373
Top	1.000
Reverse	3.665
Lubricant	
Above − 18° C (0° F)	EP. SAE 90
Below − 18° C (0° F)	EP. SAE 80
Oil capacity	1.4 liters (3.0 U.S. pints, 2.5 Imp. pints)

Propeller shaft

Length	1,116 mm (43.94 in)
Outer diameter	75.0 mm (2.953 in)
Permissible run-out	0.4 mm (0.016 in)
Permissible unbalance	15 cm-gr (0.21 in-oz) at 4,000 rpm
Spider diameter	14.72 mm (0.5795 in)

T

Rear axle

Type	Semi-floating, hypoid gears
Reduction ratio	3.700
Number of teeth	37 : 10
Lubricant :	
Above −18° C (0° F)	HP. SAE 90
Below − 18° C (0° F)	HP. SAE 80
Oil capacity	1.2 liters (2.5 U.S. pints 2.1 Imp. pints)
Free play of axle shaft	0 ~ 0.1 mm (0 ~ 0.004 in)
Permissible deflection of ring gear	0.1 mm or less (0.0039 in or less)
Mounting distance	90 ± 0.025 mm (3.5434 ± 0.0010 in)
Drive pinion bearing preload	9 ~ 14 cm-kg (7.8 ~ 12.2 in-lb)
Backlash between ring gear and drive pinion	0.17 ~ 0.19 mm (0.0067 ~ 0.0075 in)
Backlash between side gear and pinion	0.1 mm or less (0.004 in or less)

Steering

Type	Recirculating ball nut
Reduction ratio	17 ~ 19 : 1
Free play of steering wheel	10 ~ 30 mm (0.4 ~ 1.2 in)
Maximum steering angle :	
Inner wheel	43°
Outer wheel	31°
Lubricant	EP. SAE 90
Oil capacity	250 cc (0.5 U.S. pint 0.4 Imp. pint)
Backlash between rack and sector gear	0
Worm bearing preload	1.0 ~ 4.0 cm-kg (0.9 ~ 3.5 in-lb)
End clearance of sector shaft	0.02 ~ 0.08 mm (0.001 ~ 0.003 in)
Steering geometry − Sedan :	
King pin inclination	9° 14′
Camber	− 0° 14′
Caster	0° 47′
Toe-in	− 4 ~ 2 mm (−0.16 ~ 0.08 in)
Caster trail	3 mm (0.12 in)
Steering geometry − Coupé :	
King pin inclination	9° 15′
Camber	− 0° 15′
Caster	1° 03′
Toe-in	− 4 ~ 2 mm (−0.16 ~ 0.08 in)
Caster trail	5 mm (0.20 mm)

Brakes

Pedal free travel	5 ~ 15 mm (0.2 ~ 0.6 in)
Master cylinder :	
Type	Tandem master cylinder
Bore	22.22 mm (7/8 in)
Permissible clearance of piston and bore	0.15 mm (0.0059 in)
Power brake unit :	
Type	Bendix
Power cylinder diameter	152.4 mm (6.0001 in)
Power cylinder stroke	35 mm (1.38 in)
Front brake :	
Type	Bendix type disk brake
Brake disk outer diameter	230 mm (9.055 in)
Thickness of brake disk	12 mm (0.4724 in)
Maximum allowable lateral run-out of brake disk	0.06 mm (0.0024 in)
Lining material	F 50
Thickness of lining and shoe	14 mm (0.551 in)
Minimum allowable thickness of lining and shoe	8 mm (0.315 in)
Rear brake :	
Type	Drum type with leading and trailing
Drum diameter	200 mm (7.8741 in)
Lining material	D−852
Wheel cylinder bore	19.05 mm (3/4 in)
Parking brake :	
Type	Mechanical internal expansion
Operates at	Rear wheels

Wheels and tires

Wheel type :	
Front	4J x 13WDC
Rear	4J x 13WDC
Tire :	
Front	6.15S13−4PR or 155SR 13
Rear	6.15S13−4PR or 155SR 13
Tube :	
Front	6.15−13 or 155SR 13
Rear	6.15−13 or 155SR 13
Inflation pressure :	
Less than 100 km/h (60 mile/h)	1.5 kg/cm^2 (21 lb/in^2)
More than 100 km/h (60 mile/h)	1.7 kg/cm^2 (24 lb/in^2)

Front suspension

Type	Strut
Spring constant	1.85 ± 0.129 kg/mm (103.5 ± 7.2 lb/in)
Spring pressure−When spring is compressed to 194 mm (7.64 in) :	
1 dot	281 ~ 289 kg (619 ~ 637 lb)
2 dots	289 ~ 296 kg (637 ~ 653 lb)
3 dots	296 ~ 304 kg (653 ~ 670 lb)
Wire diameter	11.5 mm (0.45 in)
Coil diameter	121.5 mm (4.78 in)
Free length	352 mm (13.86 in)
Shock absorber	Hydraulic double action

Rear suspension

Type	4 link and lateral rod
Spring constant	2.22 ± 0.16 kg/mm (124.2 ± 9.2 lb/in)
Spring pressure−When spring is compressed to 247 mm (9.72 in) :	
1 dot	263.4 ~ 271 kg (581 ~ 597 lb)
2 dots	271 ~ 279 kg (597 ~ 615 lb)
3 dots	279 ~ 286.6 kg (615 ~ 632 lb)
Wire diameter	10.8 mm (0.43 in)
Coil outer diameter	100.8 mm (3.97 in)
Free length	371 mm (14.61 in)
Shock absorber	De carbon

Weights and dimensions (Sedan)

Overall length	4,150 mm (163 in)

Overall width	1,580 mm (62 in)
Overall height	1,420 mm (56 in)
Wheel base	2,470 mm (97 in)
Tread :	
Front	1,285 mm (51 in)
Rear	1,280 mm (50 in)
Minimum turning radious	4,700 mm (15 ft 5 in)
Road clearance	160 mm (6 in)
Overhang :	
Front	645 mm (25 in)
Rear	980 mm (39 in)
Car weight (no load)	915 kg (2,015 lb)
Car weight (with load)	1,190 kg (2,625 lb)

Weights and dimensions (Coupé)

Overall length	4,150 mm (163 in)
Overall width	1,580 mm (62 in)
Overall height	1,395 mm (55 in)
Wheel base	2,470 mm (97 in)
Tread :	
Front	1,285 mm (51 in)
Rear	1,280 mm (50 in)
Minimum turning radious	4,700 mm (15 ft 5 in)
Road clearance	160 mm (6 in)
Overhang :	
Front	645 mm (25 in)
Rear	980 mm (39 in)
Car weight (no load)	910 kg (2,010 lb)
Car weight (with load)	1,185 kg (2,612 lb)

TIGHTENING TORQUE LIST

	m-kg	ft-lb
Engine :		
Main bearing cap	8.5	60
Connecting rod cap	4.5	30
Cylinder head	8.0	60
Oil pump sprocket	3.5	25
Crankshaft pulley	14.5	105
Camshaft sprocket	7.5	55
Distributor drive gear	7.5	55
Clutch :		
Flywheel	16.0	120
Clutch cover	2.0	15
Master cylinder reservoir	2.5	20
Transmission :		
Shift fork locking bolt	1.0	10
Transmission case :		
8 mm bolt	2.5	20
10 mm bolt	3.5	25
Propeller shaft :		
Yoke attaching bolt	3.0	20
Rear axle :		
Companion flange	15.0	110
Ring gear	5.0	40
Bearing cap	4.0	30
Drain plug	2.0	15
Steering :		
Tie rod ball joint	3.0	20
Tie rod lock nut	7.5	55

	m-kg	ft-lb
Steering gear housing	5.0	40
Pitman arm	15.0	110
Idler arm	5.0	40
Steering joint	1.5	10
Brake :		
Caliper bracket	5.5	40
Front backing plate	4.0	30
Front hub attaching bolt	5.0	40
Rear backing plate	2.5	20
Master cylinder joint bolt	6.5	50
Master cylinder set bolt	0.2	1.0
Wheel :		
Wheel bolt	9.5	70
Suspension :		
Suspension arm	8.0	60
Arm ball joint	6.5	50
Stabilizer	9.0	65
Front damper cap nut	5.5	40
Front damper piston	1.5	10
Front damper base valve	0.15	1.0
Rear suspension link	11.0	80
Standard bolts :		
6 mm P=1.0	0.8	5
8 mm P=1.25	2.0	15
10 mm P=1.25	4.0	30
12 mm P=1.5	7.0	50
14 mm P=1.5	9.0	65

© 1970 Mazda Motor Corporation
Printed in Australia
03-0780

