MAZDA

RX-2
ROTARY ENGINE
SERVICE MANUAL

Listed below are the names and addresses of the United States Distributors and the States under their jurisdiction:

MAZDA MOTORS OF AMERICA, INC.
3040 E. Ana Street
Compton, California 90221
(213) 537-2332

California	Nevada	Arizona	New Mexico	Colorado

MAZDA MOTORS OF AMERICA
Eastern Branch Office
60 New England Avenue
Piscataway, New Jersey 08854
(201) 752-5800

Connecticut	Massachusetts	Pennsylvania	Washington, D. C.
Delaware	New Hampshire	Rhode Island	West Virginia
Maine	New Jersey	Vermont	
Maryland	New York	Virginia	

MAZDA MOTORS OF AMERICA
Midwestern Branch Office
1600 Busse Road
Elk Grove Village, Illinois 60007
(312) 593-8090

Illinois	Kentucky	Nebraska	Tennessee
Indiana	Michigan	North Dakota	Wisconsin
Iowa	Minnesota	Ohio	
Kansas	Missouri	South Dakota	

MAZDA MOTORS OF AMERICA (NW), INC.
120 Andover Park East
Seattle, Washington 98188
(206) 248 0110

Washington	Oregon	Idaho	Utah	Wyoming

MAZDA MOTORS OF FLORIDA, INC.
7401 Phillips Highway
Jacksonville, Florida 32216
(904) 737 2404

Florida	Georgia	Alabama	North Carolina	South Carolina

MAZDA MOTORS OF TEXAS, INC.
8000 Harwin Drive
Houston, Texas
(713) 785 6440

Texas	Louisiana	Oklahoma	Arkansas	Mississippi

WORKSHOP MANUAL

MAZDA RX-2
(CAPELLA ROTARY)

SEDAN
COUPÉ

NOTE :
"Capella Rotary" is the nickname of the "MAZDA RX-2", which is used in some markets.

SECTION INDEX	
Name	Section
Engine	1
Lubricating System	2
Cooling System	3
Fuel System	4
Electrical System	5
Clutch	6
Transmission (Floor Shift)	7
Transmission (Automatic)	7A
Propeller Shaft	8
Rear Axle	9
Steering	10
Brake	11
Wheels & Tires	12
Suspension	13
Body	14
Technical Data	T

ENGINE

1–A. REMOVING THE ENGINE ..... 1 : 4
1–B. DISASSEMBLING THE ENGINE ..... 1 : 6
1–C. ENGINE INSPECTION AND REPAIR ..... 1 : 10
1–C–1. Front Housing ..... 1 : 10
1–C–2. Intermediate Housing ..... 1 : 12
1–C–3. Rear Housing ..... 1 : 12
1–C–4. Rotor Housing ..... 1 : 13
1–C–5. Rotor ..... 1 : 14
1–C–6. Seal ..... 1 : 18
1–C–7. Eccentric Shaft ..... 1 : 21
1–D. ENGINE ASSEMBLY ..... 1 : 22
1–D–1. Installing the Oil Seal ..... 1 : 22
1–D–2. Installing the Seal ..... 1 : 22
1–D–3. Installing the Rear Rotor ..... 1 : 23
1–D–4. Installing the Rear Rotor Housing ..... 1 : 23
1–D–5. Installing the Eccentric Shaft.... 1 : 24
1–D–6. Installing the Seal..... 1 : 25
1–D–7. Installing the Intermediate Housing ..... 1 : 25
1–D–8. Installing the Front Rotor and Housing ..... 1 : 25
1–D–9. Installing the Front Housing .... 1 : 25
1–D–10. Tightening the Tension Bolts.... 1 : 25
1–D–11. Installing the Clutch Assembly.. 1 : 26
1–D–12. Adjustment of Eccentric Shaft End Play ..... 1 : 26
1–D–13. Installing the Front Cover ..... 1 : 27
1–D–14. Installing the Metering Dump.... 1 : 28
1–D–15. Installing the Oil Strainer and Oil Pan ..... 1 : 28
1–D–16. Installing the Oil Filter..... 1 : 28
1–D–17. Installing the Water Pump ..... 1 : 28
1–D–18. Installing the Distributor ..... 1 : 29
1–D–19. Installing the Alternator ..... 1 : 29
1–D–20. Installing the Manifold and Carburettor ..... 1 : 30
1–E. ENGINE INSTALLATION ..... 1 : 30

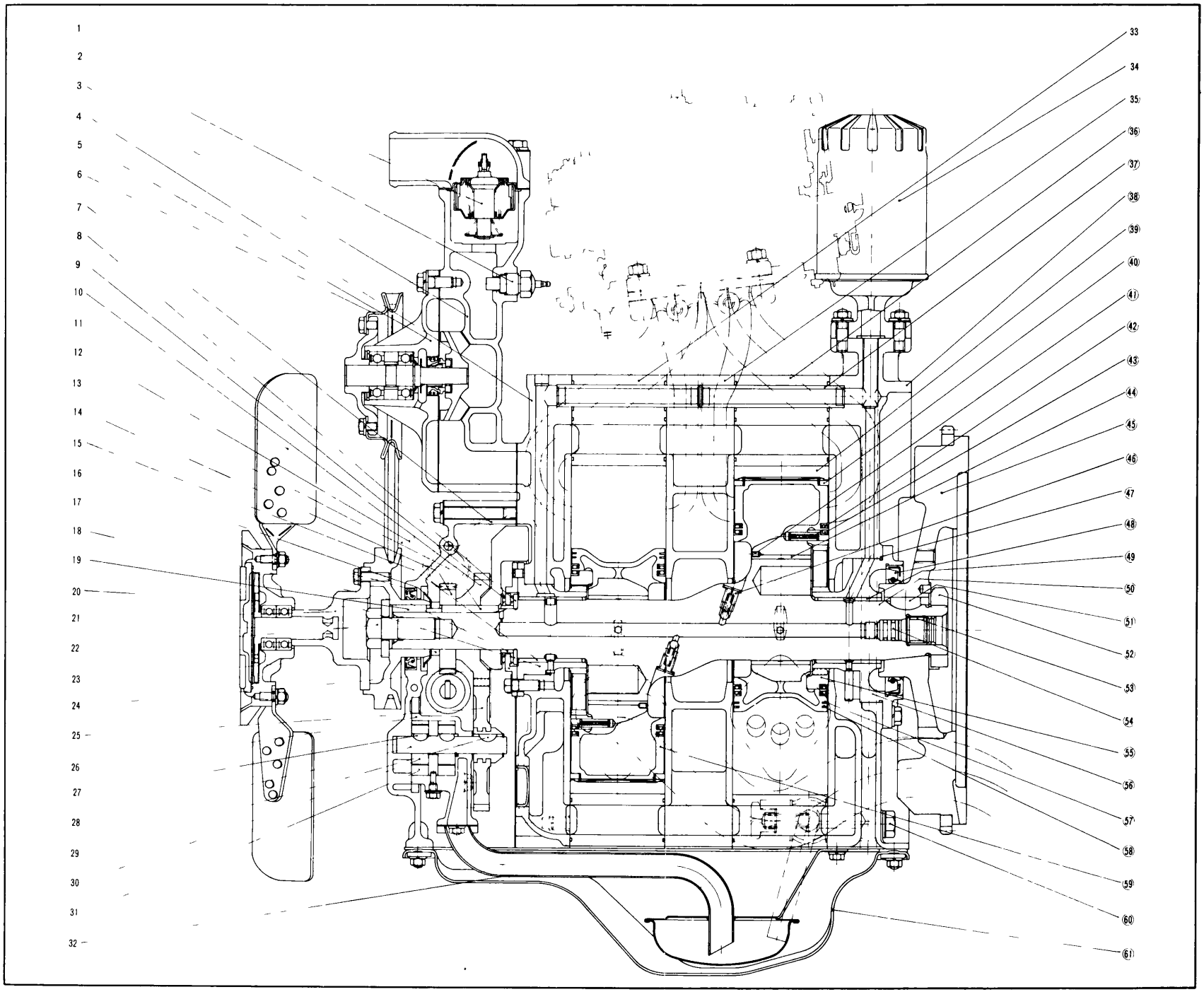

Fig. 1–1 Engine (1)

1 Thermostat
2. Heat Gauge Unit
3 Water Pump Casing Ass'y
4 Front Housing Ass'y
5. Pump Cover Ass'y
6. Water Pump Pulley
7. Front Cover Ass'y
8. Thrust Plate
9 Needle Bearing
10. Oil Pump Drive Gear
11. Cooling Fan
12. Indicator Pin
13. Key
14. Distributor Drive Gear
15. Main Bearing
16 Oil Baffle Plate
17. Oil Seal
18. Spacer
19 Key
20. Stationary Gear (front)
21. Fan Drive Ass'y
22 Bolt
23. Spacer
24. Thrust Bearing Housing
25 Oil Pump Drive Gear
26 Oil Pump Body
27. Key
28. Oil Pump Shaft
29 Key
30 Oil Pump Inner Rotor
31. Oil Pump Outer Rotor
32. Oil Strainer
33 Front Rotor Housing
34. Oil Filter
35 Intermediate Housing
36. Rear Rotor Housing
37 Tubular Dowel
38. Rear Housing
39. Apex Seal
40. Corner Seal
41 Set Screw
42 Oil Seal (outer)
43 Oil Seal (inner)
44. Rotor Bearing
45. Flywheel
46. Oil Jet Plug
47 "O" Ring
48. Oil Seal
49 Main Bearing
50. Eccentric Shaft
51. Key
52. Nut
53. Needle Bearing
54 Blind Plug
55. Internal Gear
56 Stationary Gear (rear)
57. Side Seal Inner
58 Side Seal Outer
59 Rotor Ass'y
60. Tension Bolt
61. Oil Pan

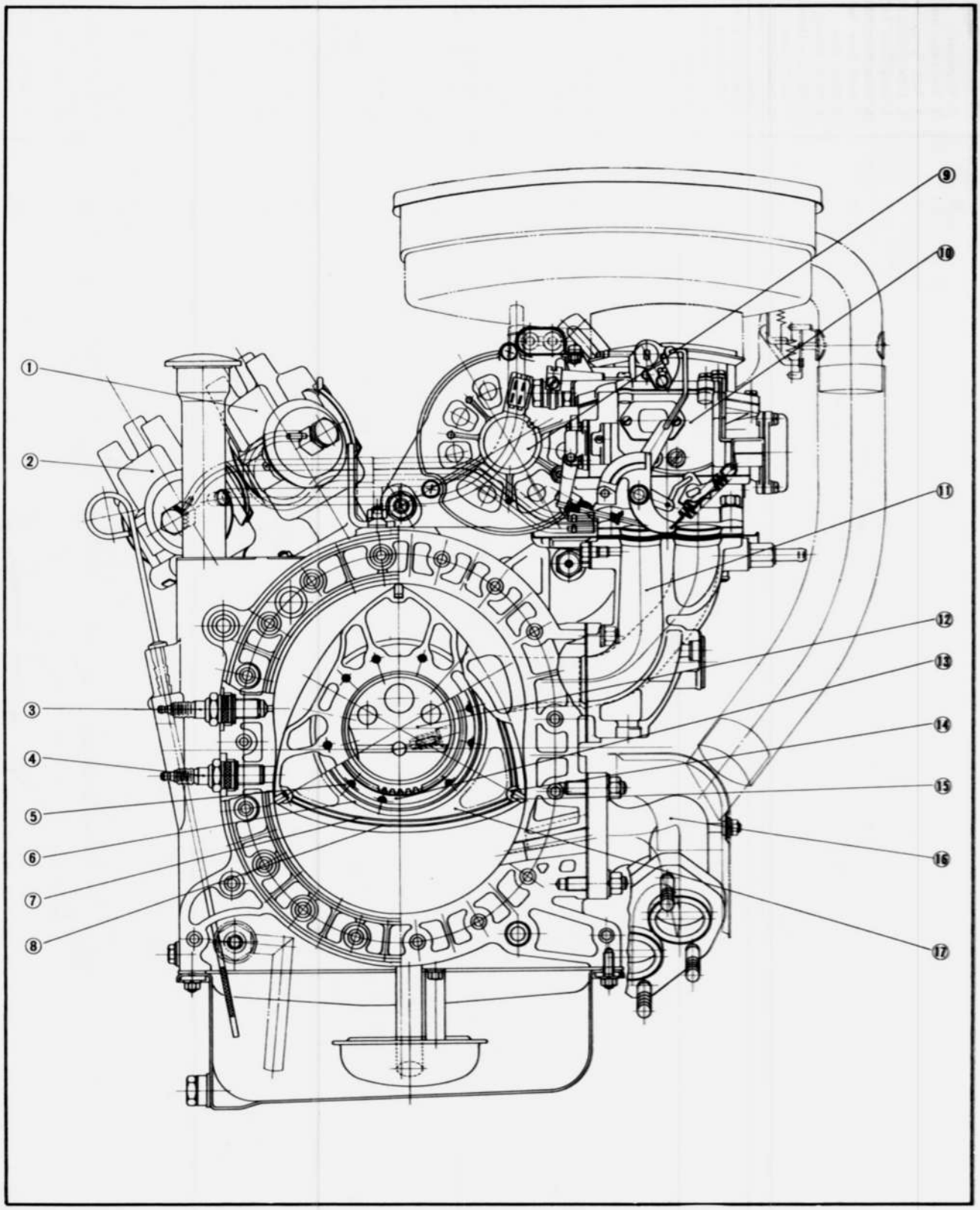

Fig. 1–2 Engine (2)

1. Trailing Distributor
2. Leading Distributor
3. Trailing Spark Plug
4. Leading Spark Plug
5. Inner Oil Seal
6. Outer Oil Seal
7. Inner Side Seal
8. Outer Side Seal
9. Alternator
10. Carburettor
11. Inlet Manifold
12. Eccentric Shaft
13. Internal Gear
14. Corner Seal
15. Apex Seal
16. Exhaust Manifold
17. Rotor

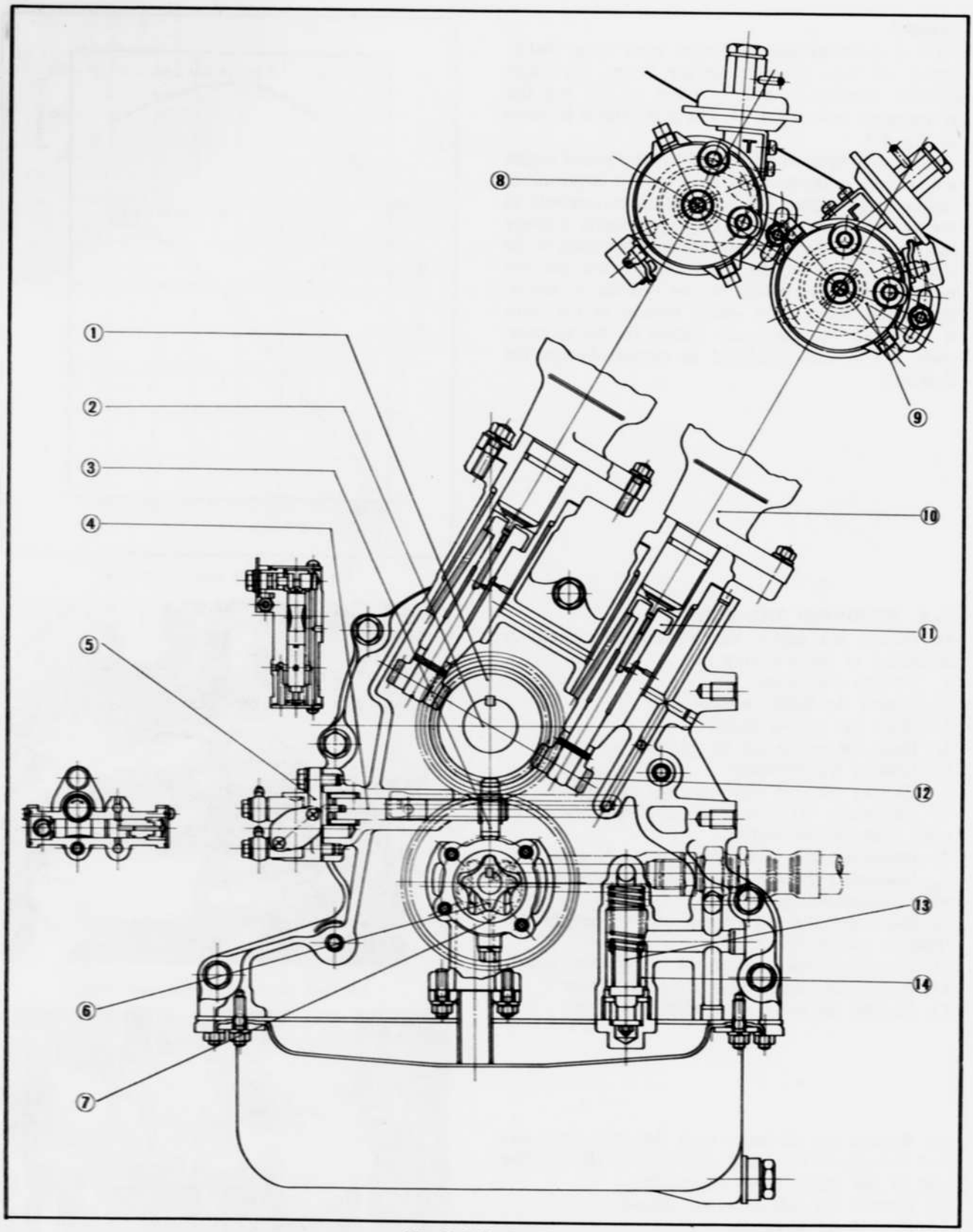

Fig. 1–3 Engine (3)

1. Distributor Drive Gear
2. Eccentric Shaft
3. Metering Pump Drive Gear
4. Metering Pump Drive Shaft
5. Metering Pump Ass'y
6. Oil Pump Inner Rotor
7. Oil Pump Outer Rotor
8. Trailing Distributor
9. Leading Distributor
10. Distributor Socket
11. Distributor Drive Shaft
12. Distributor Driven Gear
13. Pellet
14. Slide Valve

ENGINE

RX-2 is mounted with a 2-rotor type rotary piston engine of Toyo Kogyo's unique design. Its single chamber capacity is 573 cc (35.0 cu. in) and the compression ratio is 9.4 : 1. The performance is shown in Fig. 1-4.

The main component parts of the rotary piston engine are entirely different from those of the conventional reciprocating engine. The rotor which corresponds to the piston of the reciprocating engine makes a rotary motion due to the explosion pressure occurring in the chamber formed by the rotor housing and the side housing which correspond to the cylinder of the reciprocating engine. This rotary motion of the rotor is converted into the rotary motion of the eccentric shaft and is then produced as output through the flywheel.

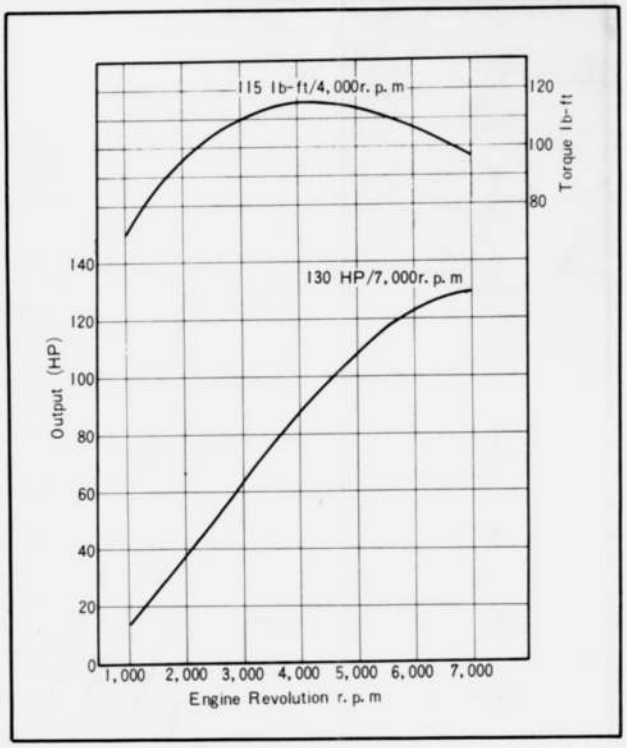

Fig. 1–4 Engine performane curve

1–A. REMOVING THE ENGINE

To remove the engine for overhauling, proceed as descreibed in the following :

1. Remove the bonnet.
2. Protect the fender with a cover.
3. Drain the cooling water.
4. Drain the engine lubricating oil.
5. Remove the air-cleaner.
6. Remove the fuel pipe from the carburettor.
7. Disconnect the accelerator cable and the choke cable from the carburettor.
8. Disconnect the wiring from the starting motor.
9. Disconnect the wiring from the alternator and the water temperature gauge unit.
10. Disconnect the high-tension cables from the distributors and the spark plugs.
11. Disconnect the wire of the oil pressure switch.
12. Remove the water hoses from the engine.
13. Remove the heater hose from the engine.

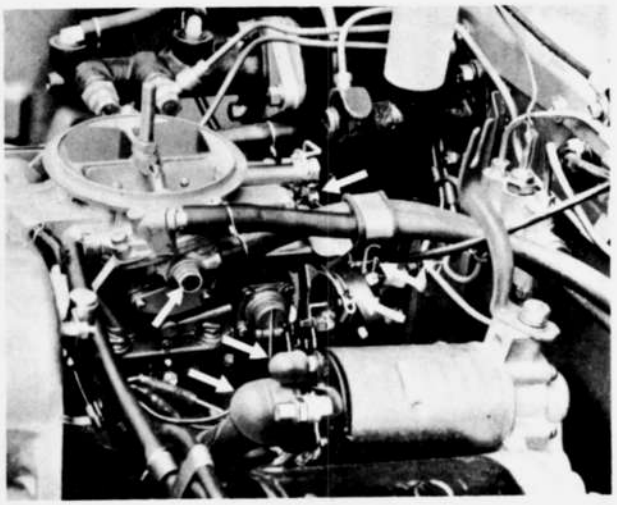

Fig. 1–5 Disconecting pipes and cables

14. Remove the oil hoses from the front cover and rear housing of the engine, and remove the oil hose clip on the engine mounting bracket.
15. Remove the radiator upper shroud.
16. Remove the alternator.

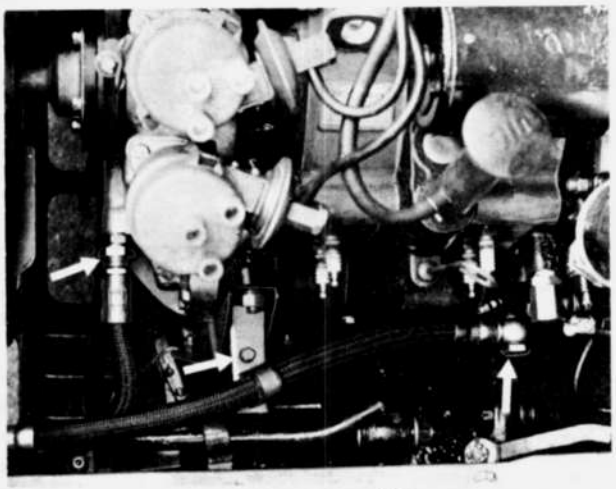

Fig. 1–6 Removing oil hoses

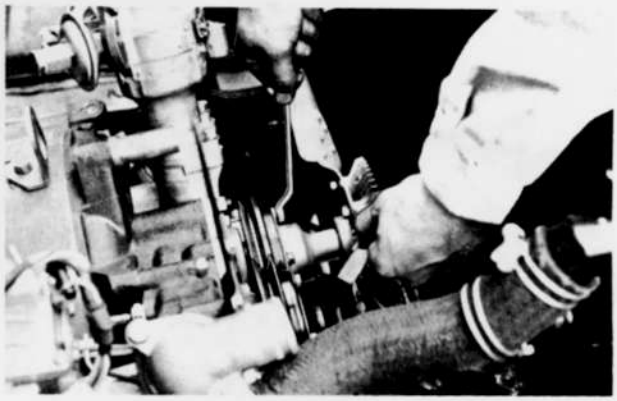

Fig. 1–7 Removing cooling fan

17. Remove the cooling fan from the eccentric shaft pulley.
18. Remove the starting motor.
19. Remove the clutch release cylinder and place it on the frame.

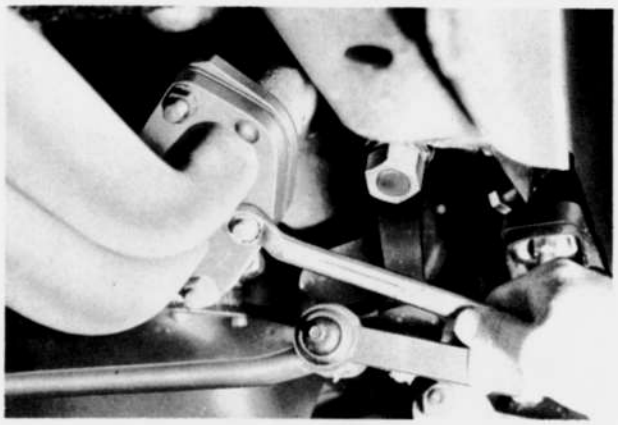

Fig. 1–8 Disconnecting exhaust pipe

20. Disconnect the exhaust pipe from the manifold.
21. Remove the bolts securing the clutch housing to the rear housing of the engine.
22. Remove the hot air duct from the exhaust manifold.
23. Support the transmission with a suitable jack.

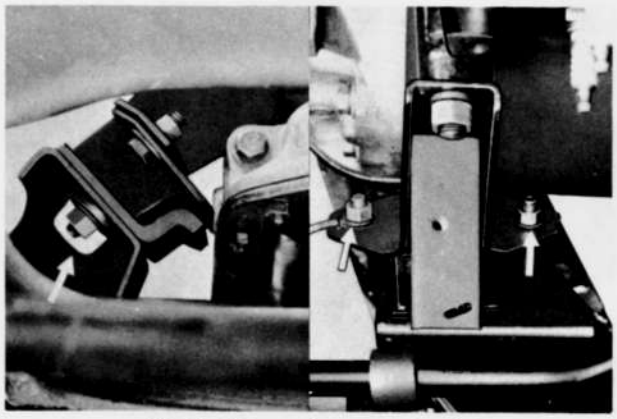

Fig. 1–9 Loosening mounting bolts

24. Remove the bolts from each engine mounting. For easy disconnection, it is recommendable to remove the two small bolts on left-hand side and a large nut on right-hand side as shown in Fig. 1–9.



Fig. 1–10 Removing engine from vehicle

25. Install a suitable lifting sling on the engine hanger bracket of the front rotor housing. Attach the sling to a hoist or other lifting device and take up all slack.
26. Pull the engine forward until it clears the clutch shaft. Then, lift the engine from the vehicle.
27. Disconnect the connecting rod of the oil metering pump at the carburettor side.
28. Remove the intake manifold, with carburettor and exhaust manifold.
29. Remove the engine bracket.
30. Mount the engine on the **engine stand** (49 0107 680A, 49 0813 005 and 49 0820 006).

1–B. DISASSEMBLING THE ENGINE

Engine overhaul should be done in the following order after dismounting the engine from the vehicle:

1. Remove the water pump pulley.
2. Remove the water pump.
3. Remove the distributors from the front cover.
4. Remove the spark plugs.
5. Remove the oil filter from the rear housing.

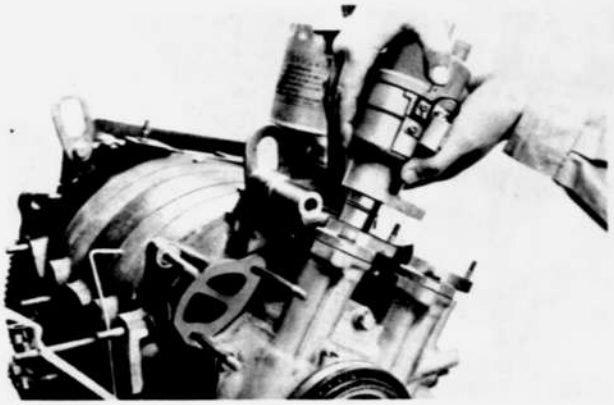

Fig. 1–11 Removing distributor

6. Attach the **ring gear brake** (49 0820 060) to the flywheel. Remove the eccentric shaft pulley with key.
7. Remove the clutch assembly and clutch disk.
8. Straighten the tab of the lockwasher and remove the flywheel nut using the **flywheel box wrench** (49 0820 035).

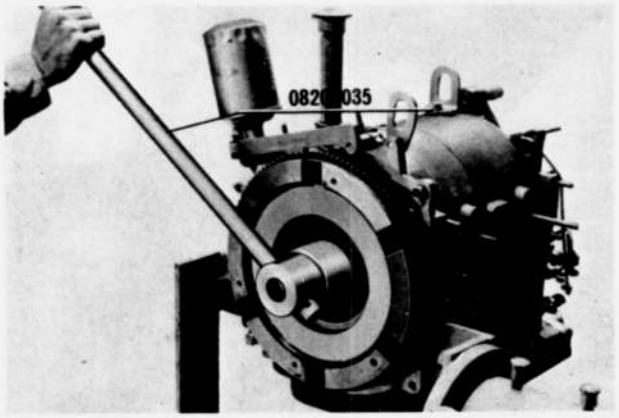

Fig. 1–12 Loosening flywheel nut

9. Remove the flywheel by using the **flywheel puller** (49 0823 300), turning the handle and lightly hitting the head of the puller.

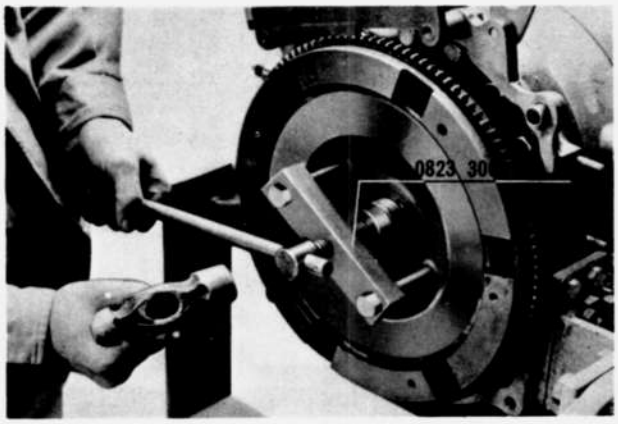

Fig. 1–13 Removing flywheel

10. Remove the oil pan.
11. Remove the oil strainer.

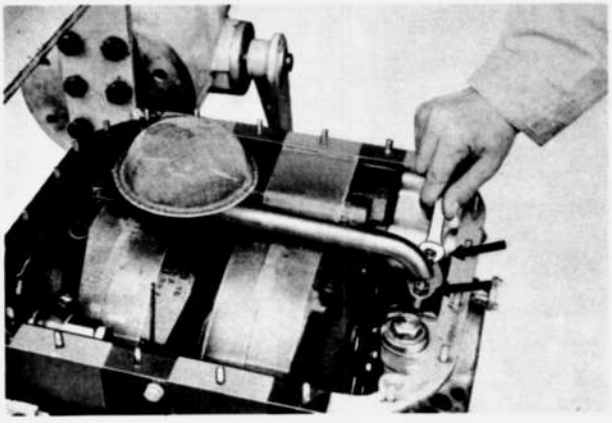

Fig. 1–14 Removing oil strainer

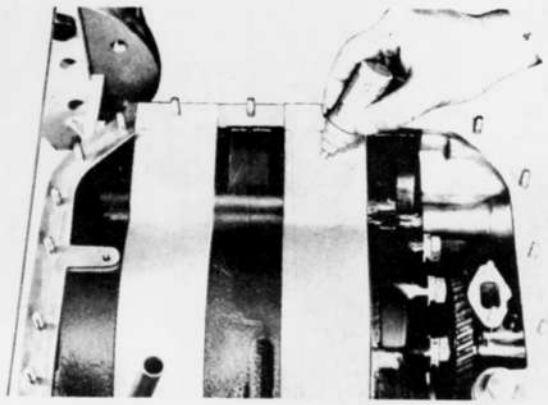

Fig. 1–15 Applying identification marks

Note: Apply identification marks on the front and rear rotor housings, which are common parts, so that they are fitted as they were, when reassembling the engine.

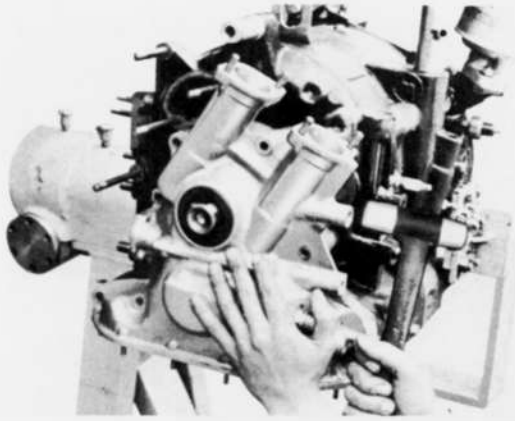

Fig. 1–16 Removing front cover

12. Remove the oil metering pump from the front cover.
13. Loosen the bolts attaching front cover and remove the cover.

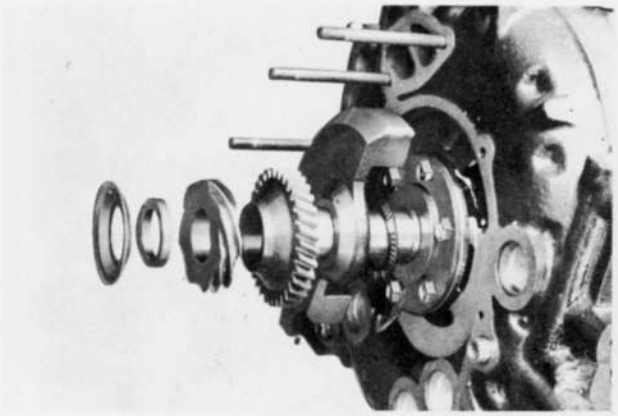

Fig. 1–17

14. Remove the spacer, distributor drive gear, oil pump drive gear, balance weight, thrust plate, and needle bearing in that order from the eccentric shaft.
15. Straighten the lockwashers of needle bearing housing tightened by six bolts and loosen the bolts. Remove the needle bearing housing, needle bearing and thrust washer.



Fig. 1–18 Loosening order

16. Loosen the tension bolts in the order as shown in Fig. 1–18.

17. Remove the front housing.
18. Remove the corner seals with springs and the side seals with springs and place them in the **seal case** (49 0813 250) following the marks which are made at the nearest portion of each seal on the rotor side face.
These marks are made in order to prevent each seal from changing its original position when reassembling.
19. Remove the sealing rubbers and the "O" rings from between the front housing and the rotor housing.



Fig. 1–19 Removing front housing

20. Hold the rotor housing down by hand to prevent it from moving up, then pull the tubular dowels by using the **dowel puller** (49 0813 215).

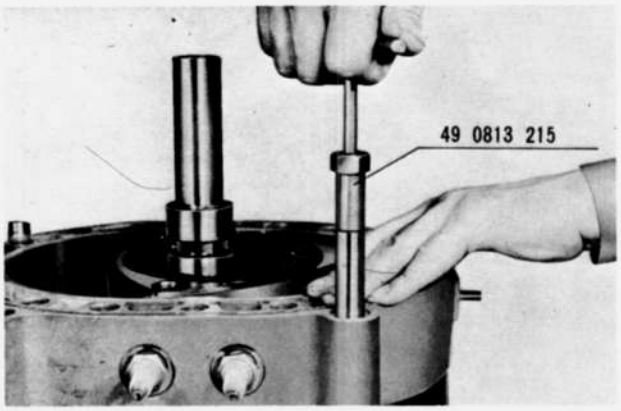

Fig. 1–20 Pulling tubular dowels

21. Install the **rotor clamp** (49 0813 230) by allowing the front rotor housing to move up to the required level so as not to damage the apex seals, then remove the front rotor housing.

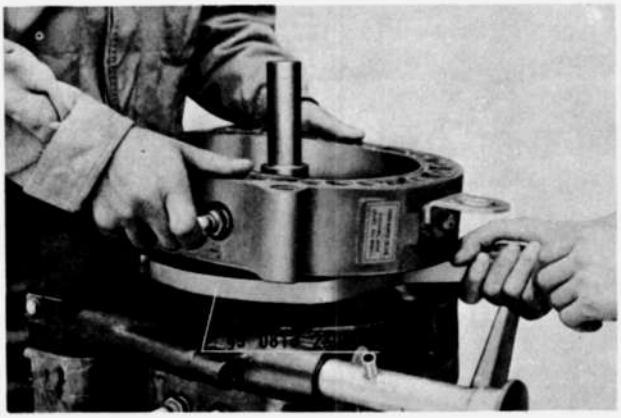

Fig. 1–21 Removing rotor housing

Note: The rotors are marked as shown in Fig. 1–22. "F" on the internal gear side indicates the front rotor, while "R" indicates the rear rotor. When assembling, be careful to these marks.

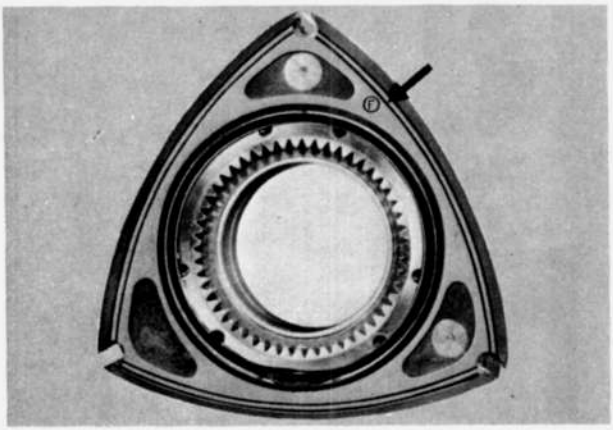

Fig. 1–22 Identification mark of rotor

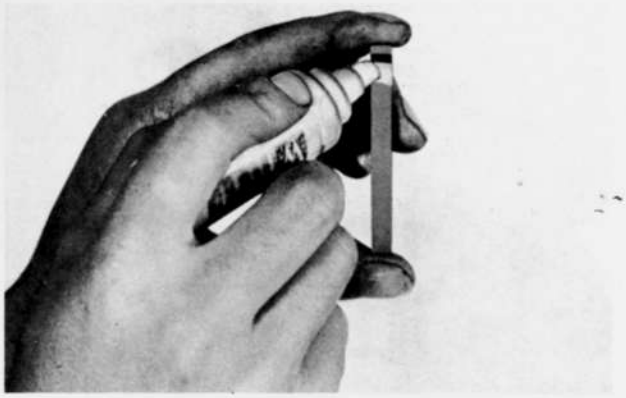

Fig. 1–23 Putting identification mark

22. Remove the apex seals and springs after removing the rotor clamp. When removing the apex seal, put an identification mark on the bottom of the apex seal so that, when reassembling the engine, the apex seal can be incorporated to the correct location and in the correct direction. Never put a mark with a punch, notch or the like.



Fig. 1–24 Removing rotor

23. Remove the rotor from the eccentric shaft and place it upside down on a clean cloth or rubber.

Note: If some seals drop, be careful not to change the original position of each seal on the reverse side of the rotor.

24. Remove the seals on the rear side of the rotor.

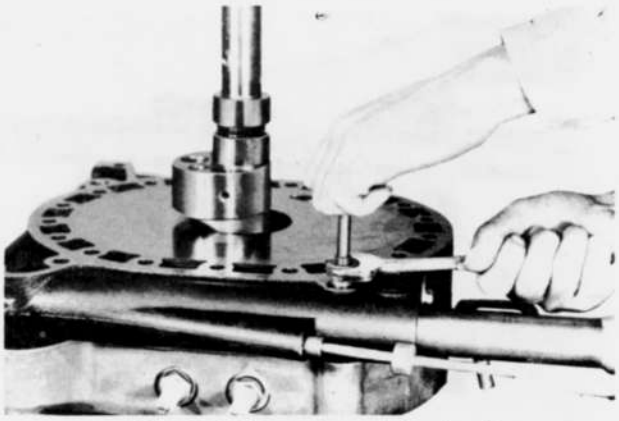

Fig. 1–25 Removing tubular dowels

25. Extract the tubular dowels from the intermediate housing with the **dowel puller** (49 0813 215).

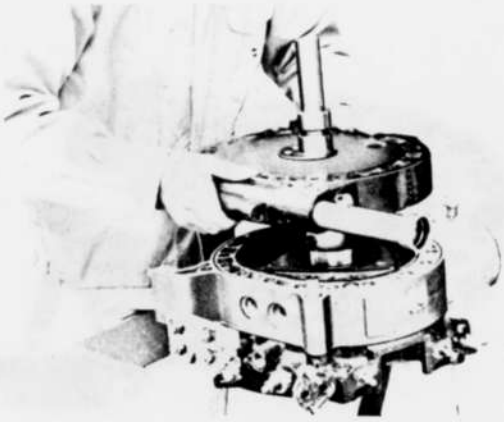

Fig. 1–26 Removing intermediate housing

26. Remove the intermediate housing. Due to the eccentricity of the shaft at the journal portion, the intermediate housing must be removed by sliding it beyond the journal portion of the front rotor while holding the intermediate housing up and at the same time pushing up the eccentric shaft.
27. Remove the eccentric shaft.
28. Repeat the above procedure to remove the rear rotor housing and the rear rotor assembly.

1–C. ENGINE INSPECTION AND REPAIR

1–C–1. Front Housing

a. Inspection of front housing assembly

1. Check for traces of gas or water leakage.
2. Check for wear and damage on the surfaces contacting each seal.
3. Check for wear, cracks or broken teeth on the stationary gear.
4. Check for wear, scratching, flaking, and other damages to the main bearing.

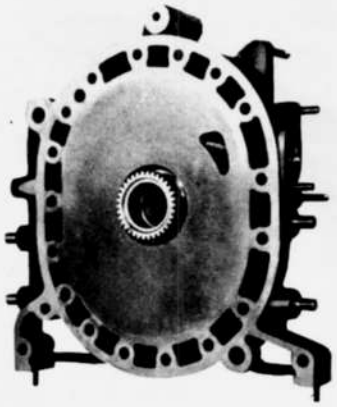

Fig. 1–27 Front housing

b. Cleaning the front housing

It is recommended that the following steps are taken to remove carbon and sealing agent from the front housing.

1. Carbon Deposits

Use an extra-fine emery paper. When a carbon scraper is to be used, be careful not to damage the matching surfaces of the housing.

2. Sealing Agent

Use a cloth or a brush soaked in a solution of ketone or thinner.

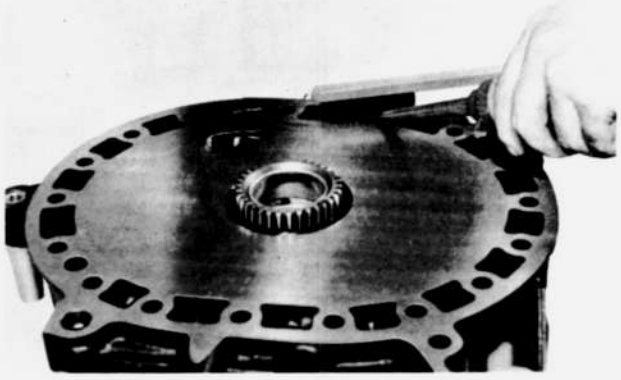

Fig. 1–28 Cleaning front housing

c. Inspection of front housing for distortion

Place a straight edge on the housing surface as shown in Fig. 1–29 and measure the clearance between both with a feeler gauge.

The housing must be replaced if the distortion is found to be more than 0.04 mm (0.002 in).

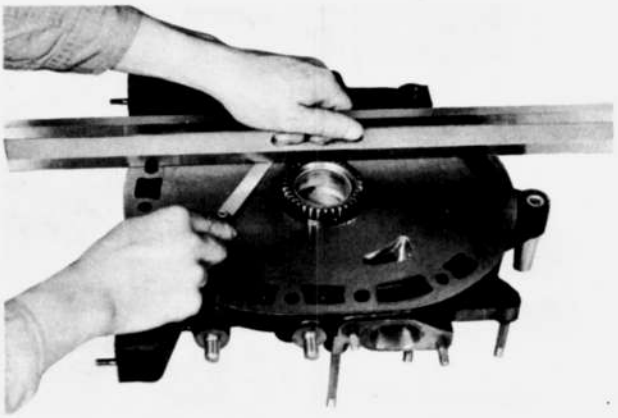

Fig. 1–29 Checking front housing distortion

d. Inspection of front housing for wear

Wear of the matching surfaces of the front housing and rotor should be measured with a dial indicator. The front housing must be replaced if the wear exceeds 0.1 mm (0.004 in).

There is a tendency of increased wear at both ends of the minor axis of the front housing. The effective depth of this wear is small.

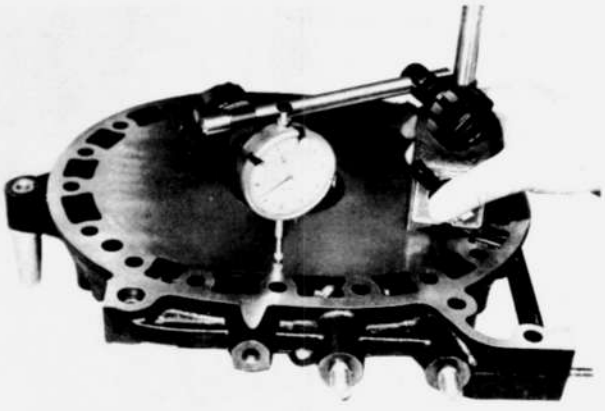

Fig. 1–30 Checking front housing wear

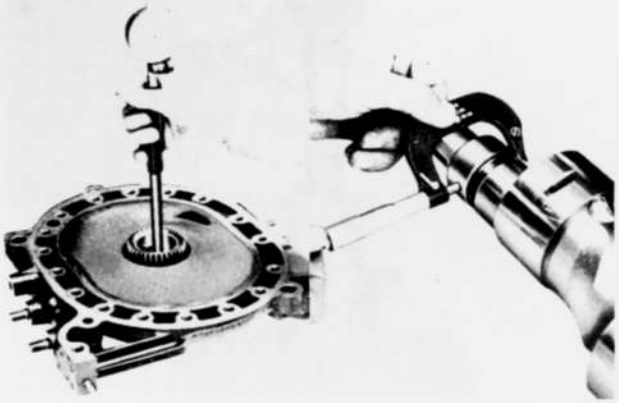

Fig. 1–31 Checking oil clearance

e. Checking the main bearing clearance

The main bearing clearance is measured by checking the inner diameter of the main bearing and the outer diameter of the journal section of the eccentric shaft. The standard main bearing clearance is 0.04 ~ 0.07 mm (0.0016 ~ 0.0028 in), and the bearing must be replaced if the clearance becomes more than 0.10 mm (0.0039 in).

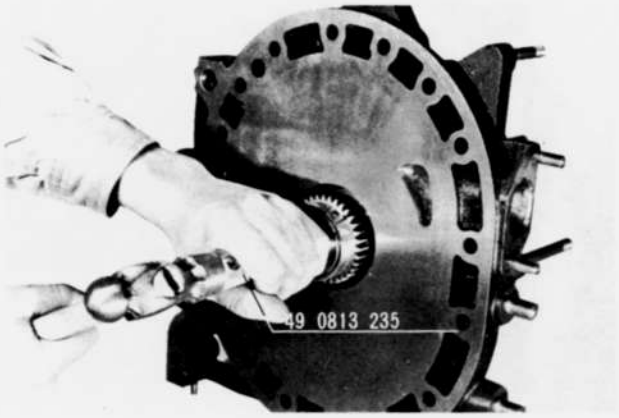

Fig. 1–32 Removing stationary gear

f. Removing and assembling the stationary gear and main bearing

When this work is required, proceed in the following steps.

1. Remove the bolts securing the stationary gear to the housing.
2. Press out the stationary gear with the **main bearing puller and installer** (49 0813 235).



Fig. 1–33 Removing lock pin

3. Mount the stationary gear on a vise. Remove the bearing lock pin by using the **lock pin remover** (49 0820 260).

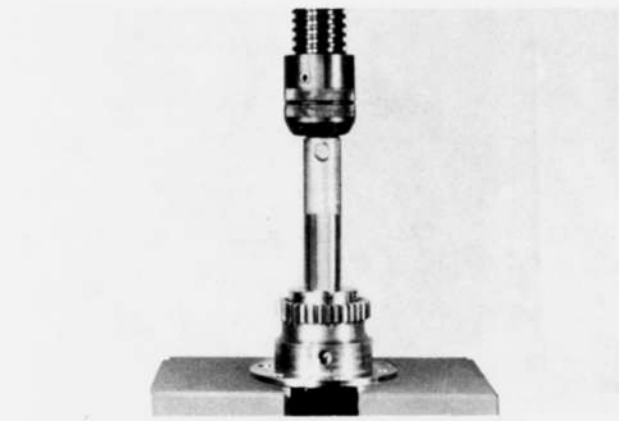

Fig. 1–34 Removing main bearing

4. Remove the adapter from the **main bearing puller and installer** (49 0813 235) and use it to extract the main bearing as shown in Fig. 1–34.

5. Attach the adapter on the main bearing puller and installer and use it to press the bearing into the gear until the adaper touched the gear flange. Be sure to match the oil holes of bearing and gear, as shown in Fig. 1–35.
6. Insert the lock pin to prevent the bearing from turning.

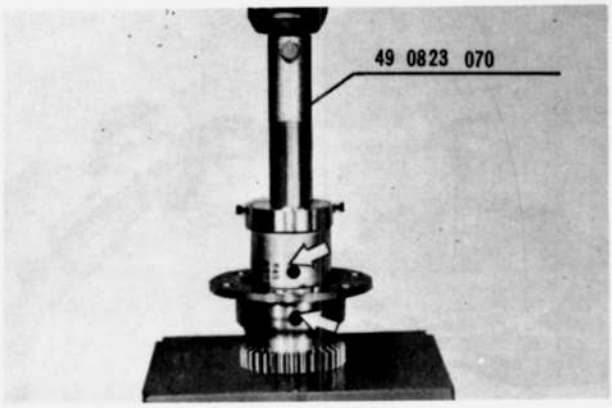

Fig. 1–35 Installing main bearing

7. Press in the staitionary gear to the housing with **main bearing puller and installer** (49 0813 235), aligning the slot of the stationary gear flange and the dowel pin, as shown in Fig. 1–36.
8. Tighten the bolts attaching stationary gear.

Note: When replacing the stationary gear, refer to par 1–C–5, h.

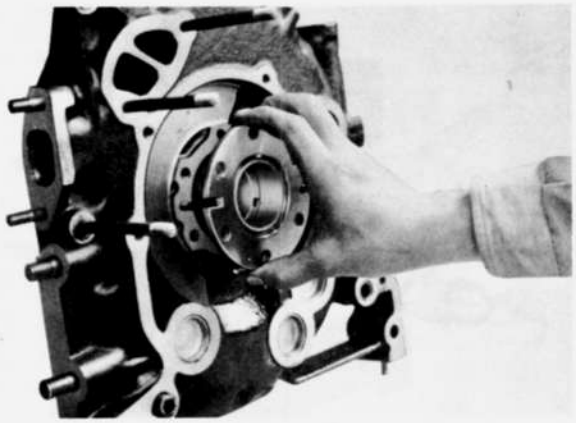

Fig. 1–36 Installing stationary gear

1–C–2. Intermediate Housing

Inspection for distortion or wear of the intermediate housing should be carried out in the same way as described for the front housing. Refer to par. 1–C–1.

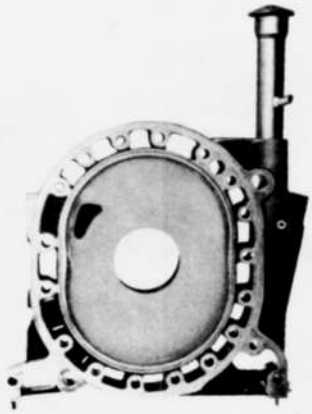

Fig. 1–37 Intermediate housing

1–C–3. Rear Housing

Inspection of the rear housing is carried out according to Par. 1–C–1, but the following point must be inspected as well.

a. Checking the oil seal

Check for wear and damage. If trace of oil leakage is found, replace the oil seal.

b. Replacing the stationary gear

1. Remove the bolts attaching the stationary gear to the rear housing.
2. Using the **main bearing puller and installer** (49 0813 235), extract the stationary gear.

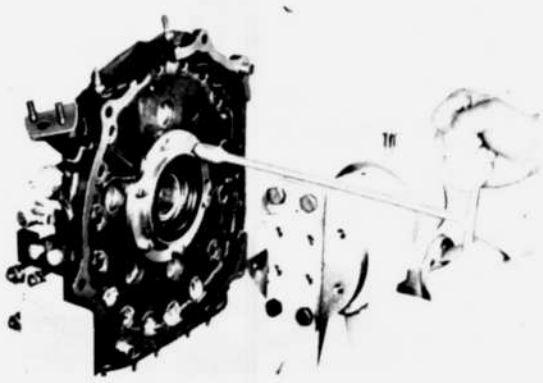

Fig. 1–38 Removing stationary gear

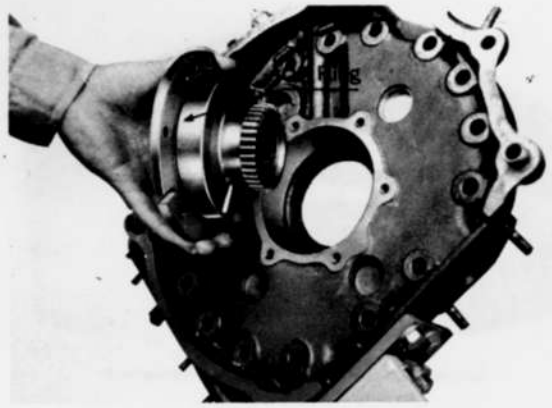

Fig. 1–39 Installing stationary gear

3. Put a thin film of grease on the "O" ring and place it in the groove of the stationary gear.
4. Apply sealing agent to the stationary gear flange.
5. Install the stationary gear on the rear housing while being careful not to damage the "O" ring and to match the slot of the stationary gear flange to the dowel pin of the rear housing.
6; Tighten the bolts attaching the stationary gear.

Note: Replace the "O" ring with new one whenever removing or replacing the stationary gear.

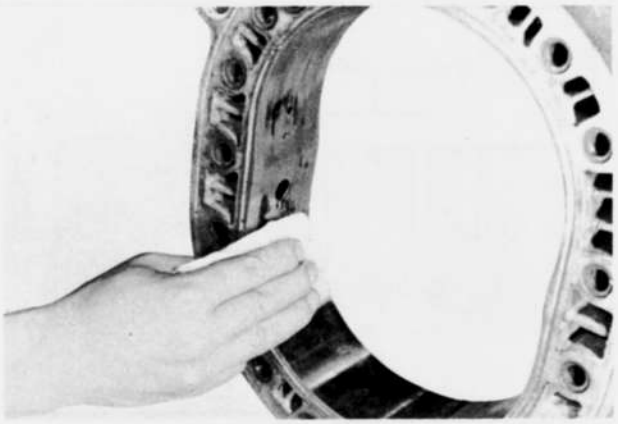

Fig. 1–40 Cleaning rotor housing

1–C–4. Rotor Housing

a. Checking the rotor housing

1. Check for exfoliation, damage or cracks on the chromium-plated surface. If any of these conditions is found, replace the rotor housing.
2. Check for traces of gas or water leakage along the inner margin of each side face of the rotor housing.

b. Cleaning the rotor housing

1. Remove the sealing agent by wiping with a cloth or brush soaked in a solution of ketone or thinner.
2. Remove carbon from the inner surface of the rotor housing by wiping with cloth. Soak the cloth in a solution of ketone or thinner when it is difficult to remove.
3. Remove deposits and rust from the cooling water passages.

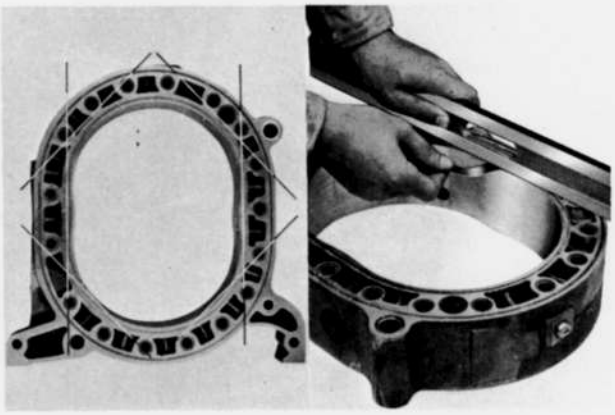

Fig. 1–41 Inspection rotor housing distortion

c. Inspection of rotor housing distortion

Measure the distortion of the rotor housing surface at the position shown in Fig. 1–41, by using a straight edge and a feeler gauge. Replace the part with a new one if the distortion is found to be more than 0.04 mm (0.002 in).

Note: This operation should be done at any time when overhauling the engine.

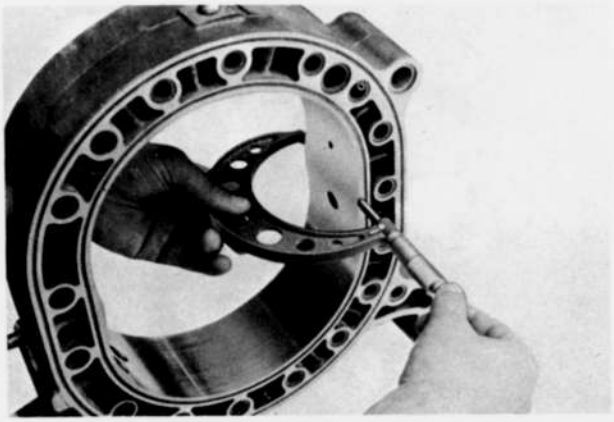

Fig. 1–42 Measuring rotor housing width

d. Measuring the rotor housing width

Measure the width of the rotor housing at points close to the trochoid surface by using a micrometer. Measurements must be taken at least 8 points. If the difference between the maximum value and the minimum value exceeds 0.08 mm (0.0031 in), the rotor housing must be replaced with a new one, as there is a possibility of gas or water leakage. The standard width of the rotor is $70\ ^{+\ 0}_{-\ 0.02}$ mm ($2.7559\ ^{+\ 0}_{-\ 0.0008}$ in).

Note: This operation should be done when the trouble, such as overheating etc., has been occurred on engine.

1–C–5. Rotor

a. Inspection of combustion condition and gas leakage

1. The combustion condition can, to a certain extent, be judged as in the case of reciprocating engines by the color and quantity of carbon on the rotor. Combustion can be said to be good if the color of carbon is brown. Generally carbon on the leading side seen from the direction of rotation is brown, while the trailing side shows black color. It should be noted that this color varies according to operating conditions just before the engine is dismantled.
2. Gas leakage can be judged by checking the color of the rotor side surface for blow-by traces originating from the side seals and corner seals.

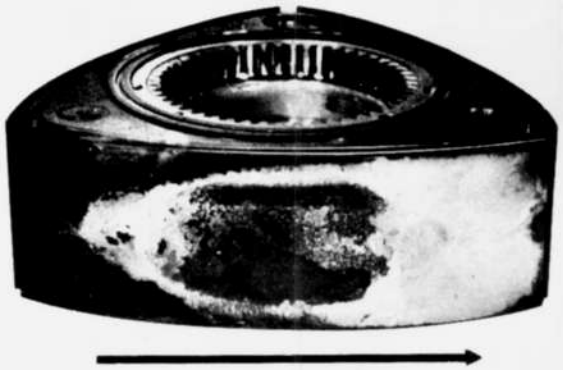

Fig. 1–43 Combustion condition

b. Oil seal inspection

1. Check for wear and damage of the oil seal lip contacted with the sliding surface of the side or intermediate housing. If the contact width is more than 0.8 mm (0.031 in), the oil seal should be replaced with new one.
2. Check the oil seal protrusion shown in Fig. 1–44. It should be more than 0.5 mm (0.02 in).

Note: Replace the "O" ring when overhauling the engine.

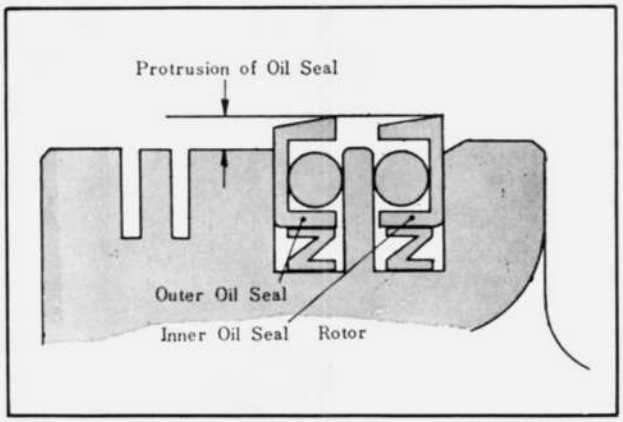

Fig. 1–44 Protrusion of oil seal

c. Removing the oil seal

1. Remove the oil seal by inserting the **oil seal remover** (49 0813 225) or a screw-driver in the slots of the rotor and prying it off.

Note: (1) Do not exert strong pressure at only one place to prevent deformation of the oil seal.
(2) Be careful not to damage the lip of the oil seal. Use a certain protectior shown in Fig. 1–53.

2. Install the oil seal, referring to Par. 1–D–1.



Fig. 1–45 Removing oil seals

d. Cleaning the rotor

Remove the carbon on the rotor by using a carbon remover or emery paper. Carbon in the grooves must be removed with a carbon remover taking care not to damage the grooves. Wash the rotor in cleaning solution and dry by blowing with compressed air.

e. Rotor inspection

Check the rotor for wear and damage. Check the internal gear for cracks, worn or chipped teeth.



Fig. 1–46 Cleaning rotor

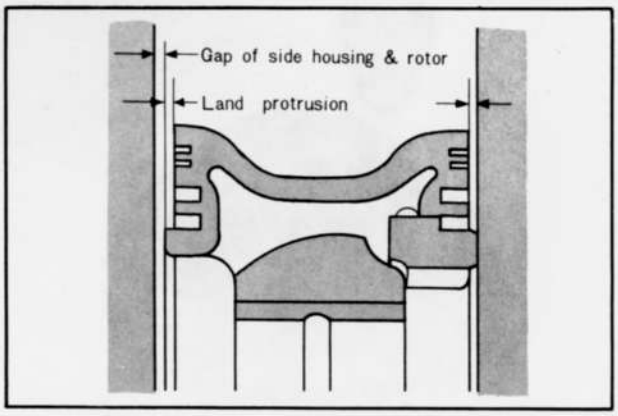

Fig. 1–47

f. Inspecting the gap between side housing and rotor
The clearance can be measured by taking the width of the rotor housing and the width of the rotor. The standard clearance is 0.13 ~ 0.17 mm (0.0051 ~ 0.0067 in). If it is more than 0.17 mm (0.0067 in) replace the rotor and gear assembly. If the clearance is less than specification, there is a possiblity that the internal gear locked with 6 double pins is loose.



Fig. 1–48 Inspection land protrusion

g. Inspecting the land protrusion
Check the land protrusion of the rotor by placing a straight edge over the land and measuring the clearance between the rotor face and straight edge with a feeler gauge. It should be 0.10 ~ 0.15 mm (0.004 ~ 0.006 in). If it is less than specification, there is a possibility of the rotor touching the side housing at places other than the land, causing wear of damage.

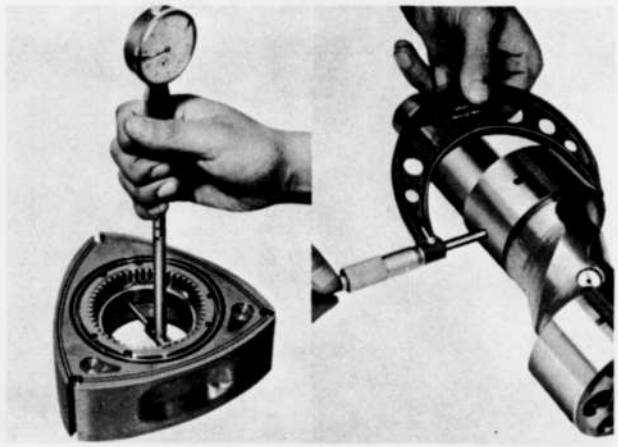

Fig. 1–49 Inspecting bearing clearance

h. Inspecting the rotor bearing
Check for wear, flaking or scratches on the bearing. If any of these conditions is found, replace the bearing. The bearing clearance can be measured by taking the inner diameter of the rotor bearing and the outer diameter of the eccentric shaft journal. The standard clearance is 0.05 ~ 0.09 mm (0.0020 ~ 0.0035 in). Replace the bearing if it is more than 0.10 mm (0.0039 in).



Fig. 1–50 Fitting expander

i. Replacing the rotor bearing
1. Insert the **expander** (49 0813 245) into the bearing to prevent the deformation of the rotor bearing when drilling a hole.

2. Drill a hole of 3.5 mm (0.14 in) diameter and about 7 mm (0.28 in) depth in the locking screw which holds the bearing on the rotor. And then, remove the expander.



Fig. 1–51 Drilling hole

3. Place the rotor on the support so as to face the internal gear upward. Using the **rotor bearing puller and installer** (49 0813 240) without its adapter ring, press out the bearing, being careful not to damage the internal gear.
4. If the bore in the rotor is damaged while removing the bearing, finish the bore with emery paper and blow with compressed air.

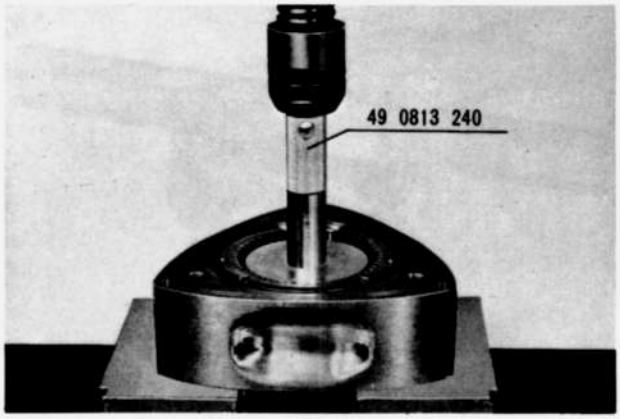

Fig. 1–52 Removing rotor bearing

5. Place the rotor on the support so as to face the internal gear upward. Press fit a new bearing using the **rotor bearing puller and installer** (49 0813 240) with its adapter removed screws until the oil hole of the bearing matches the oil hole on the apex side of the rotor, and the bearing and the boss become flush.

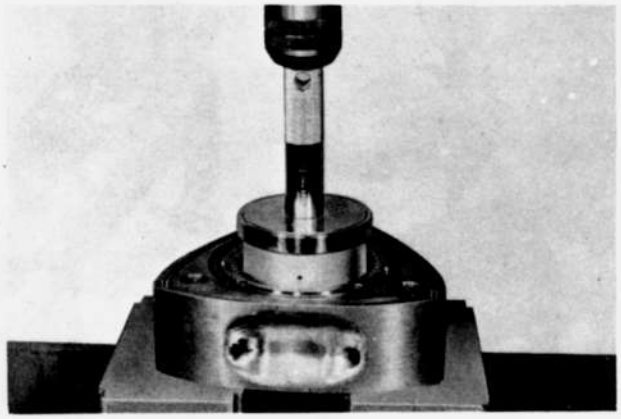

Fig. 1–53 Installing rotor bearing

6. Insert the **expander** (49 0813 254) into the bearing, and then drill a hole of 3.5 mm (0.14 in) diameter and about 7 mm (0.28 in) depth at approximately 7 mm (0.28 in) to the left or right from the original location of the locking screw hole. It must be made to the same direction from each original hole. The center of the hole must be 0.5 mm (0.02 in) from the rotor bore.
7. Thread the hole with an M4, P=0.70 mm tap.



Fig. 1–54 Making thread



Fig. 1–55 Staking locking screws

8. Tighten the locking screws and stake them into positions with a punch to prevent them from working out.
9. Wash the rotor thoroughly and blow with compressed air.

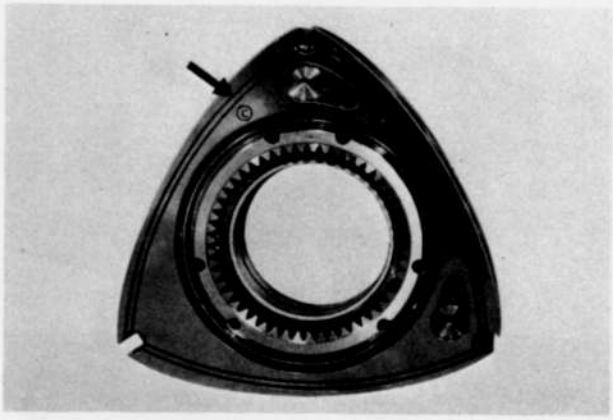

Fig. 1–56 Weight mark of rotor

j. Replacing the rotor

When replacing the rotor, note the following points.

1. Weight of rotor

Rotors are classified into 5 categories according to weight and marked a, b, c, d and e on the internal gear side.

In order to balance the front and rear rotors, the following combinations are adopted in the factory:

Combination of Markings
a–a, b
b–a, b, c
c–b, c, d
d–c, d, e
e–d, e

Note: If it is necessary to replace a rotor, use a rotor marked with "c" in any case.

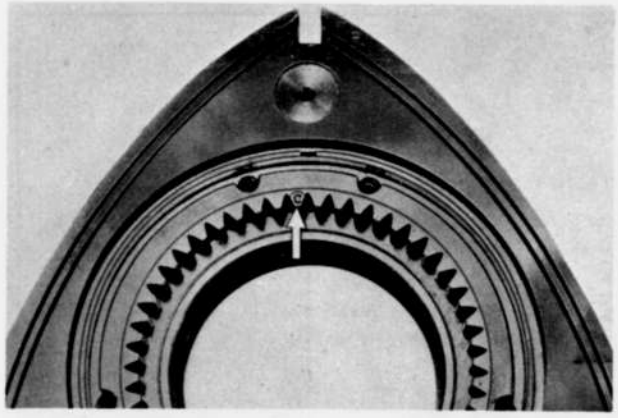

Fig. 1–57 Mark of internal gear

2. Internal and stationary gear backlash

The internal gears and stationary gears are classified into 3 categories, which are shown by embossing markings, A, no mark and C.

In order to obtain a proper backlash between the internal gear and the stationary gear, the identically marked gears are incorporated in the factory.

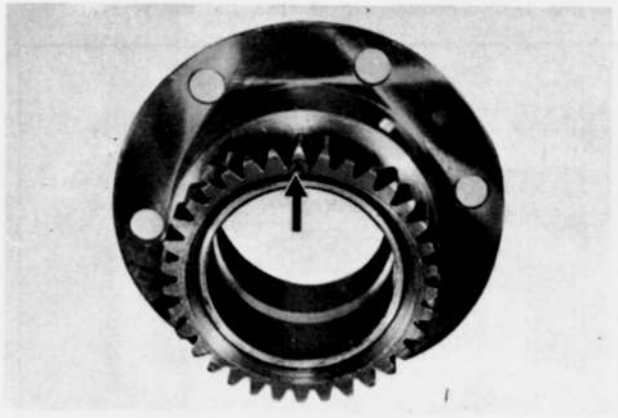

Fig. 1–58 Mark of stationary gear

Note: When replacing a stationary gear at dealer, use a unmarked stationary gear in any case.

1–C–6. Seal and spring

a. Cleaning the seal and spring

1. Apex seal

Use a carbon remover to remove the carbon from both sides while being careful not to damage the apex seal. Wash with cleaning solution.

Note: A special carbon material is used for the apex seal. This is weaker and easier to damage than metal. Therefore, take extra care. Never use emery paper as it will damage the apex seal.

2. Corner seal and side seal

Clean with carbon remover and wash. Never use emery paper.

3. Seal spring

Remove carbon with the carbon remover and wash in cleaning solution.



Fig. 1–59 Cleaning apex seal

b. Inspecting the apex seal

Check apex seal for wear, damage or cracks and replace if any of these conditions is found.

Measure the height of the apex seal with a micrometer. Replace if the height is less than 8.0 mm (0.315 in).

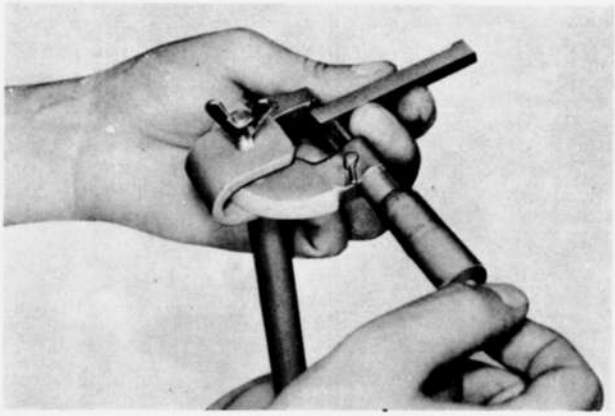

Fig. 1–60 Measuring apex seal height

c. Inspecting the gap between apex seal and groove

To measure the gap between apex seal and groove, place the apex seal in its respective rotor groove and use a feeler gauge to measure the gap. As shown in Fig. 1–61, the apex seal tends to wear unevenly and for this reason the feeler gauge should be inserted fully into the bottom of the groove. The standard value of this gap is 0.036 ~ 0.072 mm (0.0014 ~ 0.0028 in) and the apex seal must be replaced if the gap is more than 0.1 mm (0.0039 in).

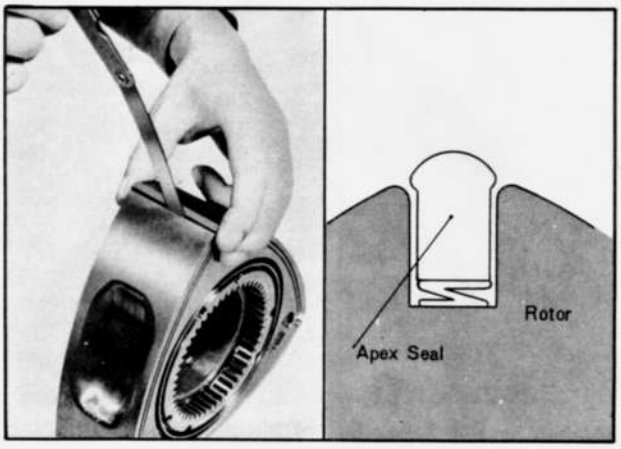

Fig. 1–61 Checking gap of apex seal and gloove

d. Inspecting the gap between apex seal and side housing

Measure the length of the apex seal with a micrometer. Compare this measurement with the minimum value of the rotor housing width (Refer to Par. 1–C–4) to calculate the gap between the apex seal and side housing. The normal value of this gap is 0.01 ~ 0.05 mm (0.0004 ~ 0.0020 in), and the apex seal must be replaced if it is more than 0.15 mm (0.0059 in).

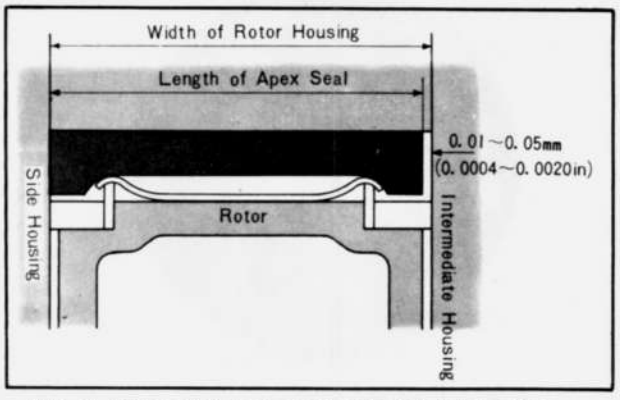

Fig. 1–62 Gap between apex seal and side housing



Fig. 1–63 Checking side seal gap

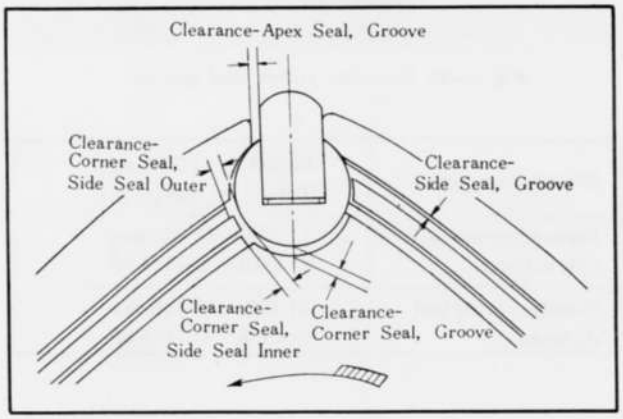

Fig. 1–64 Clearance of seals

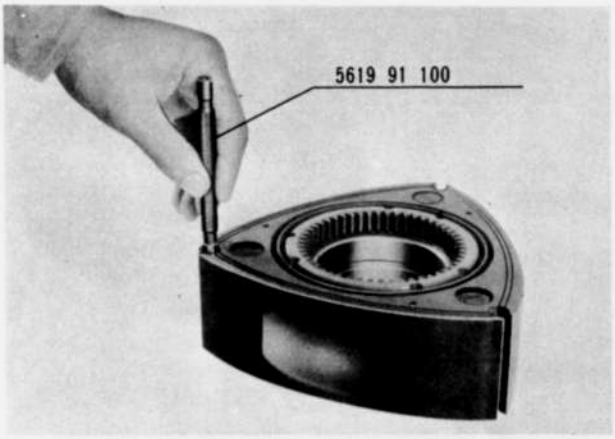

Fig. 1–65 Checking gap of corner seal and groove

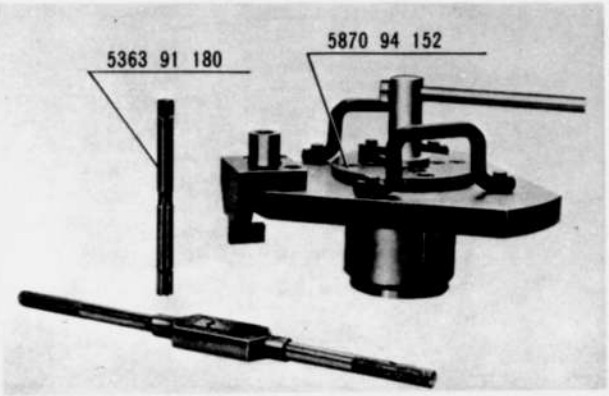

Fig. 1–66 Jig and reamer

e. Inspecting the gap between side seal and groove

Measure the gap with a feeler gauge. The standard clearnace is 0.04 ~ 0.07 mm (0.0016 ~ 0.0028 in), and the side seal must be replaced if it exceeds 0.1 mm (0.0039 in).

f. Inspecting the gap between corner seal and groove

The standard gap is 0.020 ~ 0.048 mm (0.0008 ~ 0.0019 in) and the limit is 0.08 mm (0.0031 in).

This gap enlargement shows uneven wear of the corner seal bore, which occurs when the enginei is operated with dust entering through a clogged element, damaged air cleaner or any other cause. When the wear is permitted to increase, the engine power will be reduced and the engine will become hard to start. The extent of wear of the corner seal bore is determined by the **bar limit gauge** (5619 91 100) and classified into three conditions:

(1) Neither end of the gauge does not go into the bore. This means that the gap conforms to the specifications.

(2) While the go-end of the gauge goes into the bore, the not-go-end does not. This means the gap is more than stnadard dimension and less than the limit.

In this case, replace the corner seal with a 0.03 mm (0.0012 in) oversize one, leaving the rotor side as it is.

(3) If the both ends of the gauge go into the bore, it means that the gap exceeds the limit of 0.08 mm (0.0031 in). Rework the corner seal bore with the **jig** (5870 94 1520) and **reamer** (5363 91 180) to 11.2 $^{+\ 0.008}_{+\ 0.003}$ mm (0.4410 $^{+\ 0.0003}_{+\ 0.0001}$ in) diameter following the procedure in Par. 1–C–6, g, and fit a 0.2 mm (0.0079 in) oversize corner seal.

Note: (1) As the corner seal bore generally shows a heavy wear in the direction of the rotation, the side arcs on the gauge are partially cut off. Be sure to take measurement in the direction of the maximum wear of the bore.

(2) If the limit gauge is not availabe, a feeler gauge narrowed at the forward portion can be used for measuring the gap. According to a measurement thus obtained, the same corrective step as in the case of the limit gauge is applicable.

(3) The dimension of the outer diameter of the limit gauge is as follows:

Go-end	$11.0\ ^{+\ 0.019}_{+\ 0.021}$ mm	(0.4331 $^{+\ 0.0007}_{+\ 0.0008}$ in)
Not-go-end	$11.0\ ^{+\ 0.044}_{+\ 0.046}$ mm	(0.4331 $^{+\ 0.0017}_{+\ 0.0018}$ in)

g. Reboring corner seal groove

1. Remove carbon, rust and other deposits from the rotor surface especially the apex seal groove, being careful not to damage.
2. Install the **jig** (5870 94 152) the rotor and tighten the collect bar being careful not to damage the rotor bearing and apex seal groove.
3. Ream a hole with the **reamer** (5363 91 180) by hand applying sufficient engine oil as the coolant.

When feeding the reamer, it must be turned by about 20 rotations or over before the reaming work is accomplished completely.
4. Remove the reamer and jig from the rotor being careful not to damage the rotor.
Repeat the same manner as above to make other holes of the rotor.
5. Thoroughly clean the rotor, and check and comfirm by visual inspection how the reaming hole of the corner seal is drilled through and if there is any damage to the rotor.
6. Fit a 200μ oversize corner seal of which surface is hard-chromium-plated. Check and comfirm whether the gap between corner seal and groove is under specification.

Note: (1) When installing or removing the jig, be careful not to hit the rotor.
(2) If the reaming is carried out without applying oil, it will be difficult to obtain a proper surface roughness no matter how many time the reaming may be repeated.
(3) Avoid the two stage reaming, that is, with drawing the reamer halfway during the reaming work and then resuming the reaming, because chips may affect the surface roughness.
(4) Before starting the reaming work, it must be comfirmed that the reamer diameter is under specifications, because the reamer might be worn less than the limit if it was used many time.

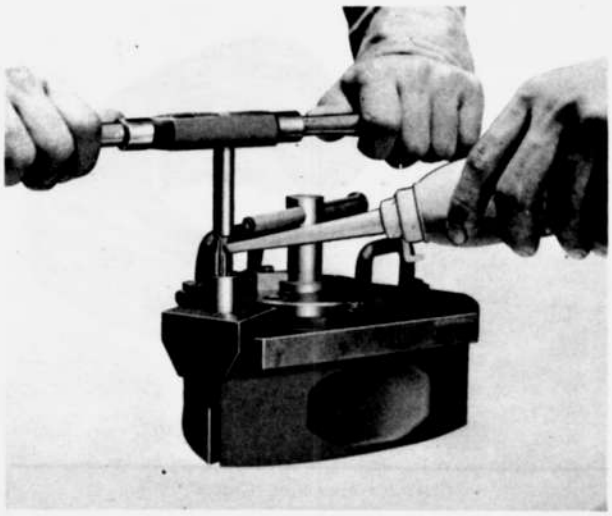

Fig. 1–67 Reboring corner seal groove

Reamer diameter	11.203 ~ 11.208 mm (0.4411 ~ 0.4413 in)
Rebored corner seal hole diameter	11.200 ~ 11.225 mm (0.4410 ~ 0.4419 in)
Oversize corner seal diameter	11.170 ~ 11.180 mm (0.4398 ~ 0.4402 in)

h. Inspecting the gap between side seal and corner seal

Check the gap with the side seal and corner seal installed on the rotor. Insert a feeler gauge between the rear of the side seal (against the turning direction of rotor) and the corner seal. When this clearance is too large, gas-sealing performance becomes poor.
The side seal must be replaced if the gap between the side seal and the corner seal exceeds 0.4 mm (0.016 in).
When a side seal is replaced, adjust the gap between side seal and corner seal by grinding the opposite end of the side seal to the rotor rotating direction along the round shape of corner seal with a fine file so that gap may be 0.05 ~ 0.15 mm (0.002 ~ 0.006 in).

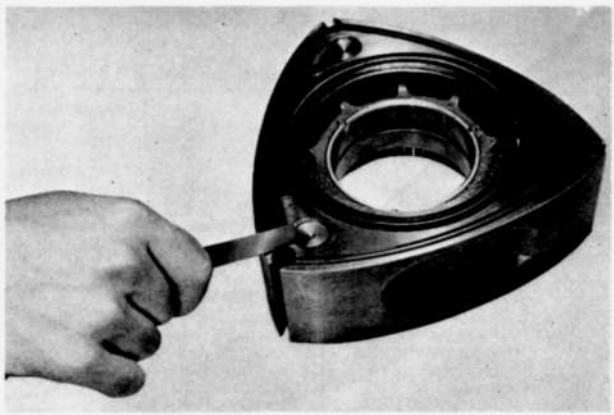

Fig. 1–68 Checking gap of corner seal and side seal

Note: Be sure to use the right one when installing a new side seal as there are four different types, namely, the front inner, front outer, rear inner, and rear outer seal.

i. Inspecting the seal spring

Check for wear or damage of the seal spring, especially the contacted portions with rotor or seal.

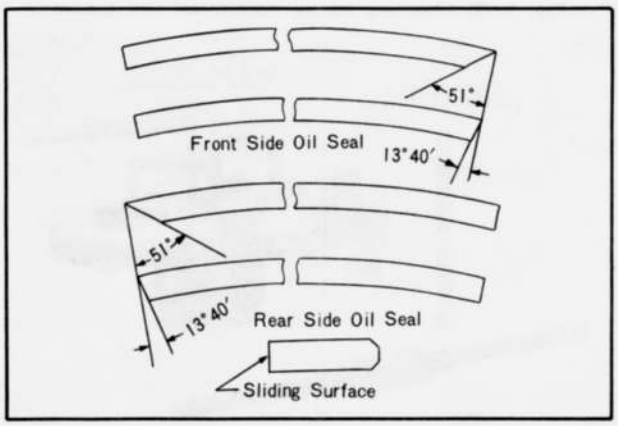

Fig. 1–69 Shape of side seal

Note: When the corner seal, corner seal spring, side seal and side seal spring are installed onto the rotor, check the protrusion of each seal, referring to Par. 1–D–2.

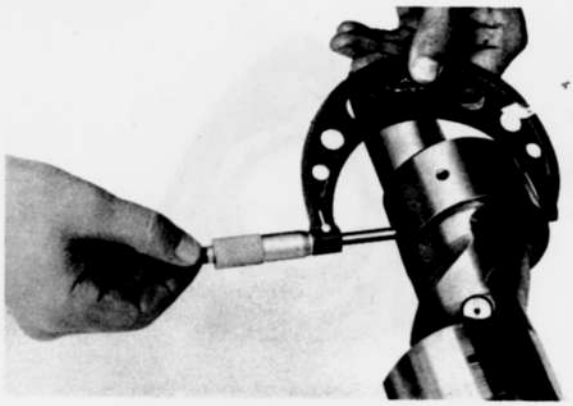

Fig. 1–70 Measuring journal diameter

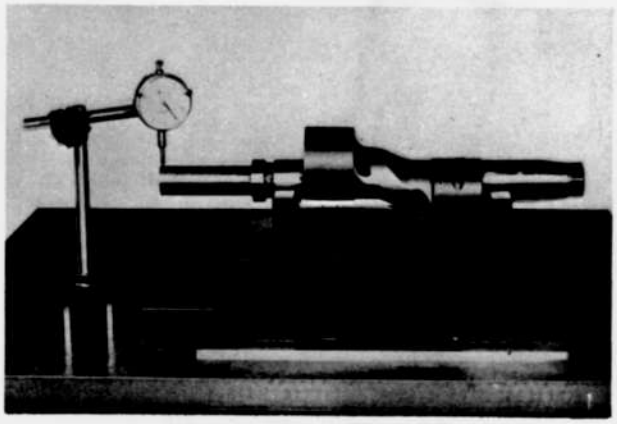

Fig. 1–71 Checking eccentric shaft run-out

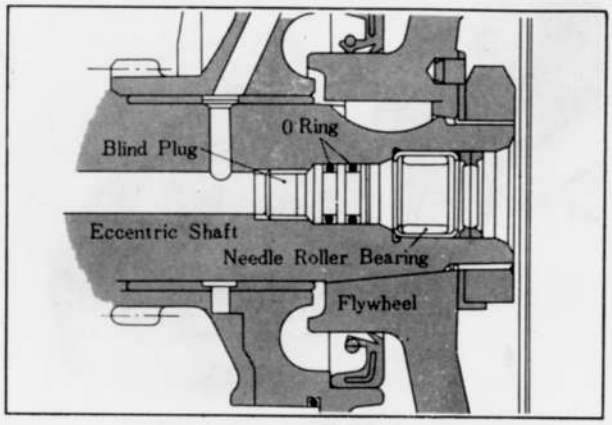

Fig. 1–72 Blind plug

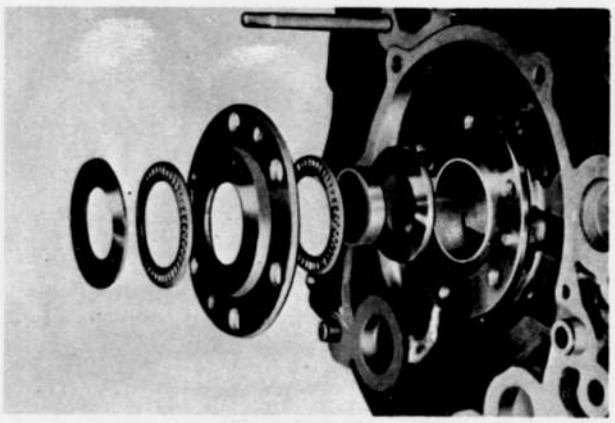

Fig. 1–73 Thrust bearings

1–C–7. Eccentric Shaft

a. Inspecting the eccentric shaft

Wash the shaft in a cleaning solution and blow the oil passage with compressed air. Check for cracks, scratches, wear or blockage of oil passages.

Measure the diameter of all journals of the eccentric shaft with a micrometer. Replace the shaft if the wear is excessive. The standard diameter of the main journal is $43\ ^{+0}_{-0.015}$ mm ($1.6929\ ^{+0}_{-0.0006}$ in), while that of the rotor journal is $74\ ^{-0.015}_{-0.030}$ mm ($2.9134\ ^{-0.0006}_{-0.0012}$ in).

b. Checking the eccentric shaft run-out

Mount the eccentric shaft on the "V" blocks. Turn the shaft slowly and measure the deflection at the front and rear with a dial gauge. If the deflection is more than 0.02 mm (0.0008 in), replace the shaft with a new one.

c. Inspecting the blind plug

An oil passage is provided inside of the eccentric shaft. The rear end is sealed with a blind plug for a pressure of 5 kg/cm² (71 lb/in²). Therefore, it is important to check for oil leakage or loose plug. If oil leakage is found, remove the blind plug with a hexagonal Allen key and replace the "O" ring.

d. Inspecting the needle roller bearing

Check for wear or damage to the needle roller bearing at the rear end of the eccentric shaft. Then insert the pilot part of the main drive shaft and check for smooth operation and proper clearance.

e. Inspecting the thrust bearings

The end thrust of the eccentruc shaft is taken bythe thrust bearings. Check the thrust bearing for wear or damage. Also inspect the bearing housing and thrust plate for wear.

1–D. ENGINE ASSEMBLY

The procedures for assembling the engine when the engine is to be completely overhauled are as follows:

1–D–1. Installing the Oil Seal

1. Place the rotor on a rubber pad or cloth to protect it from damage.
2. Fit the outer and inner oil seal springs in their respective grooves of the rotor so that the spring gap is located opposite each other as shown in Fig. 1–74.
3. Insert a new "O" ring in each oil seal.

Note: When replacing the oil seal, confirm smooth movement by placing the oil seal on the rotor groove before installing the "O" ring.

4. Apply the sufficient engine oil to the oil seal and groove.
5. Install the oil seal to the rotor groove pushing the head face of the oil seal with fingers slowly, carefully not to deform the oil seal as shown in Fig.1–75.

Note:
(1) When fitting the oil seal, comfirm the head face of the oil seal so as not to mistake the head face (taper) for the bottom face (flat).
(2) Install the oil seals on the both side of the rotor.



Fig. 1–74 Position of spring gap



Fig. 1–75 Installing oil seal

1–D–2. Installing the Seal

1. Place the rear rotor on a rubber pad or cloth so as to face the internal gear side upward.
2. Confirming the identification marks of the apex seal, place each apex seal on the rotor groove without the spring.
3. Install the corner seal springs and corner seals, and apply the engine oil.

Note: The top surface of the corner seal must be 1.3 ~ 1.5 mm (0.05 ~ 0.06 in) higher than the rotor surface. It must also move freely, when pressed by finger.



Fig. 1–76 Fitting corner seal

4. Fit the side seal springs to the rotor so as to face both ends of the side seal upward, and apply the engine oil.
5. Fit the side seals to their respective grooves.

Note: The side seal must protrude approx. 1.0 mm (0.04 in) from the rotor surface. Also check free movement by pressing manually.

6. Apply oil to the internal gear and seals of the rotor.
7. Install the **rotor clamp** (49 0813 230).



Fig. 1–77 Fitting side seal

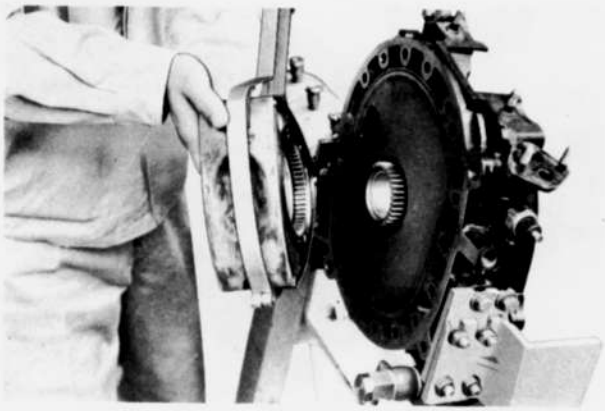

Fig. 1–78 Installing rear rotor assembly

1–D–3. Installing the rear rotor

1. Mount the rear housing on the **engine stand** (49 0107 680A, 49 0813 005 and 49 0820 006), so that the rotor friction surface of the housing faces vertically.
2. Place the rotor on the rear housing taking care not to drop the seals, and turn the rear housing with rotor so as to be the sliding surface of the rear housing with rotor so as to be the sliding surface of the rear housing upward.

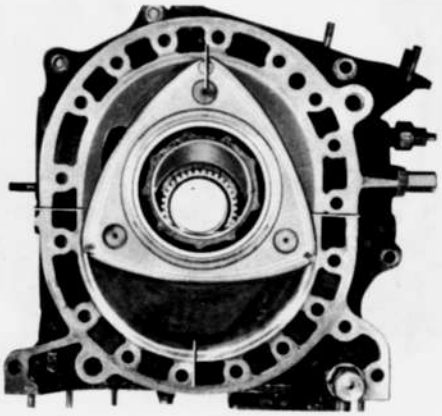

Fig. 1–79 Location of rotor apex

3. Mesh the internal gear and stationary gear so that one of the rotor apexes is set to any one of the four places shown in Fig. 1–79.

Note: In this case, be careful not to drop the corner seal into the parts.

4. Remove the rotor clamp and apex seals.

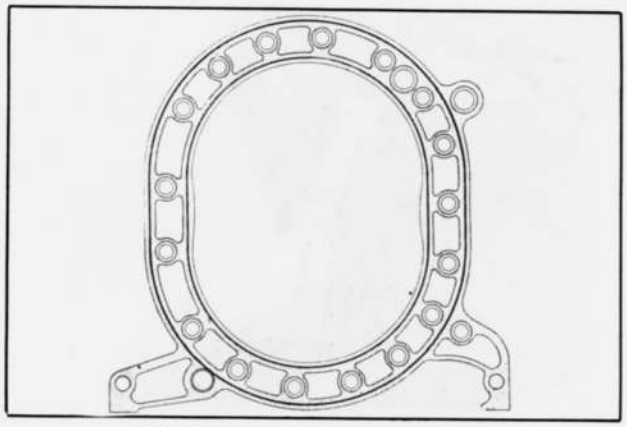

Fig. 1–80 Applying sealing agent

1–D–4. Installing the rear rotor housing

1. Apply sealing agent to the rear side of the rear rotor housing, as shown in Fig. 1–80. Be careful not to let the sealing agent penetrate into the cooling water or oil circuits.

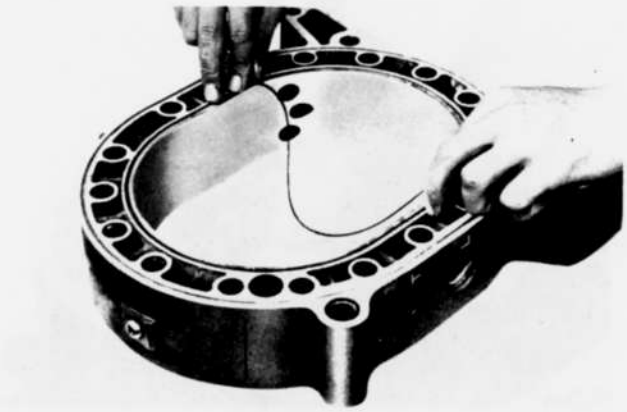

Fig. 1–81 Fitting sealing rubber

2. Place the new "O" rings and sealing rubbers on the rear rotor housing.

Note: When installing the "O" rings and sealing rubbers on the rear rotor housing, slightly apply rubber grease to "O" rings and sealing rubbers to prinent them from coming off.

3. Reverse the rotor housing while taking care not to let the sealing rubbers and "O" rings drop out of the grooves, and mount it on the rear housing.

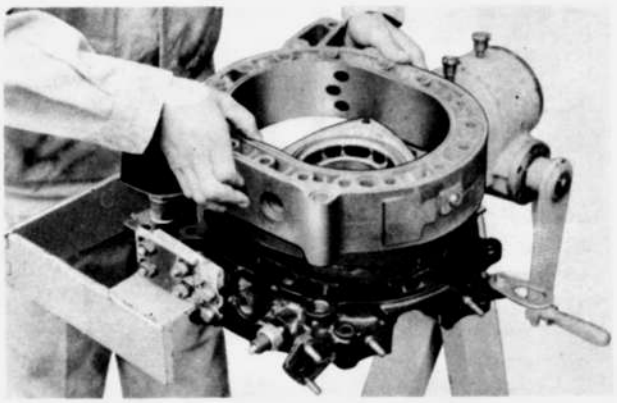

Fig. 1–82 Installing rear rotor housing

4. Insert the tubular dowels through the rear rotor housing holes to rear housing hole, after supplying a few drops of lubricant to the tubular dowels.

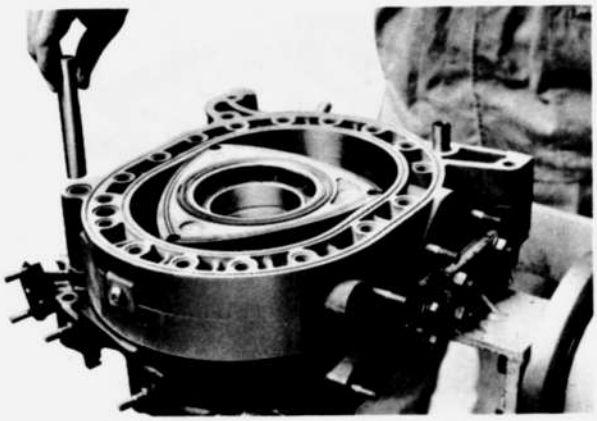

Fig. 1–83 Installing tubular dowels

1–D–5. Installing the eccentric shaft

1. Lubricate the journal sections.
2. Insert the eccentric shaft while being careful not to damage rotor bearing and main bearing.

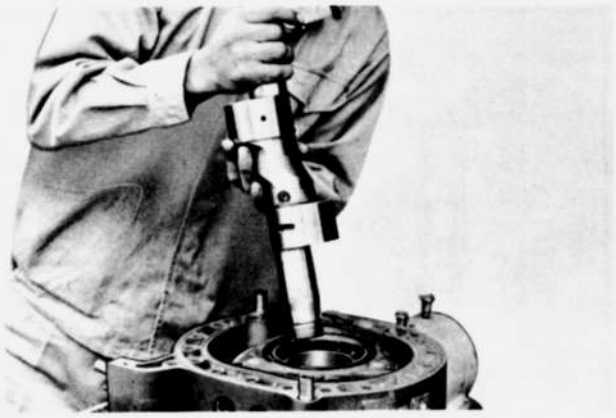

Fig. 1–84 Installing eccentric shaft

1–D–6. Installing the seals

1. Fit each apex seal to the rotor groove confirming the position and direction.
2. Install the each apex seal spring to the reverse side of the apex seal as shown in Fig. 1–85.
3. Fit the corner seals and side seals to their respective positions on the rotor. (Refer to step 3 and 4 in par 1–D–2.).
4. Apply some oil to the seals on the rotor and friction surface of the rear side housing.



Fig. 1–85 Fitting apex seal spring

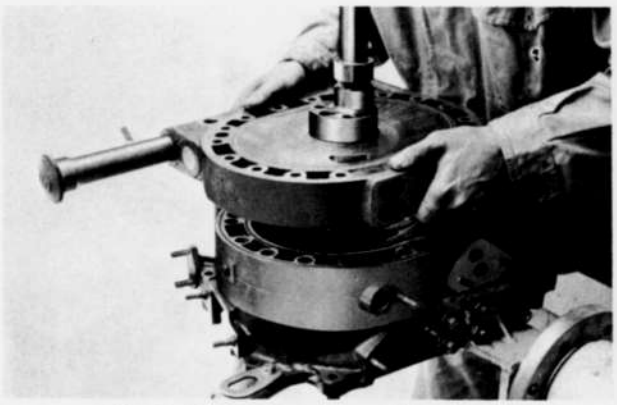

Fig. 1–86 Installing intermeidate housing

1–D–7. Installing the Intermediate Housing

1. Apply sealing agent on the mating surface of the rear rotor housing.
2. Fit the new sealing rubbers and "O" rings on the rear rotor housing.
3. Make sure that the rotor housing is free from foreign matter.
4. While holding the rear end of the eccentric shaft up as high as it's rear journal portion does not exceed the rear rotor bearing, install the intermediate housing through the eccentric shaft.

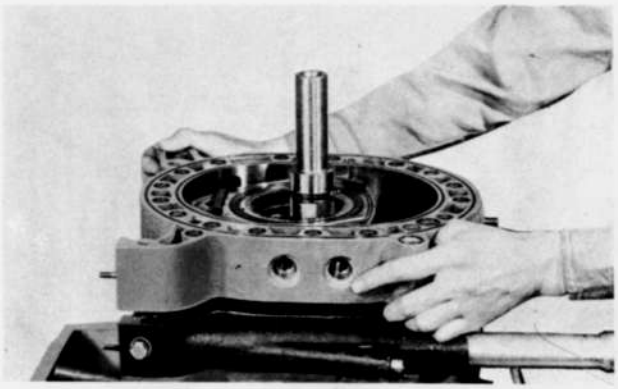

Fig. 1–87 Installing front rotor housing

1–D–8. Installing the Front Rotor and Housing

Refer to Par. 1–D–2, 3, 4 and 6, and assemble the front rotor and front rotor housing.

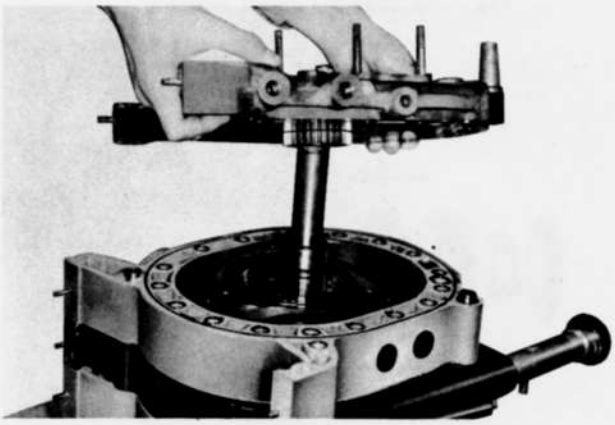

Fig. 1–88 Installing front housing

1–D–9. Installing the Front Housing

1. Apply sufficient engine oil to the stationary gear and the main bearing.
2. Install the front housing over the eccentric shaft. If necessary, turn the rotor slightly to engage the teeth of the front housing stationary gear and the front rotor internal gear.

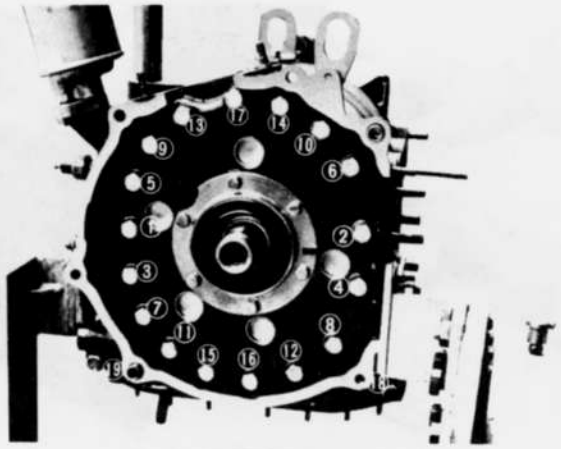

Fig. 1–89 Tightening order

1–D–10. Tightening the Tension Bolts

1. Fit the tension bolts.
2. Tighten the bolts gradually in the order shown in Fig. 1–89. The specified tightening torque is 2.5 m-kg (18 ft-lb).

Note: Attach the pulley bolt to the front end of the eccentric shaft and turn by means of a wrench to confirm smooth rotation.

1–D–11. Installing the Clutch Assembly

1. Apply grease to the oil seal of the rear housing.
2. Mount the flywheel to the rear end of the eccentric shaft through the key.
3. Apply sealing agent to the both faces of lock washer, apply the locking agent on the thread of the eccentric shaft and place the lock washer in position and install the lock nut.
4. Hold the flywheel with the **ring gear brake** (49 0820 060) and tighten the lock nut to a torque of 45 m-kg (320 ft-lb).
5. Bend the tab of the lock washer.

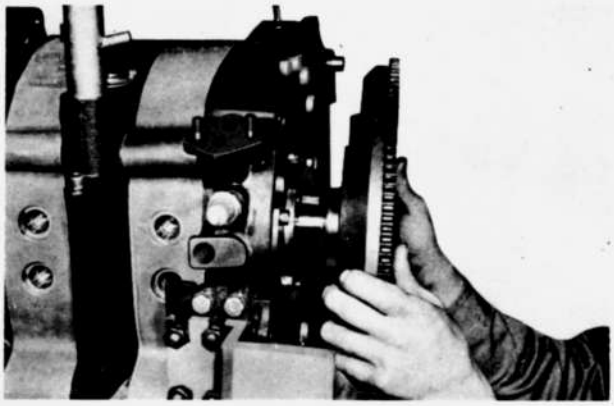

Fig. 1–90 Installing flywheel

6. Holding the clutch disk at the mounting position on the flywheel insert the **clutch disk centering tool** (49 0813 310) through the spline of the clutch disk into the needle bearing at the rear end of the eccentric shaft.
7. Mount the clutch cover and match the "O" mark on the clutch cover with the reamed hole of the flywheel and fit the securing bolts.
8. Tighten the bolts to a torque of 2.0 m-kg (15 ft-lb).

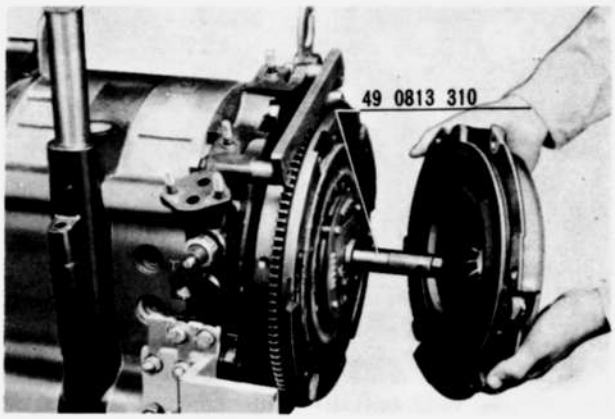

Fig. 1–91 Installing clutch assembly

1–D–12. Adjustment of Eccentric Shaft End Play

1. Turn the engine so as to place the front side of engine upward.
2. Fit the thrust plate, spacer and needle bearing on the eccentric shaft, and then apply sufficient engine oil to them.
3. Install the bearing housing on the front housing, and tighten the bolts and bend the tabs of the lock washers.

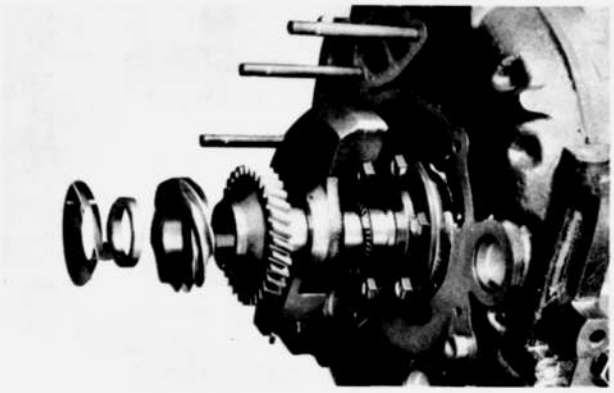

Fig. 1–92

4. Applying engine oil, install the needle bearing, thrust washer, balance weight, oil pump drive gear, distributor drive gear, key, spacer and beffle plate in that order on the eccentric shaft

Note: Before installing the thrust washer and balance weight, be sure that two needle bearing are in order along the center of the eccentric shaft.

5. Install the eccentric shaft pulley with key without front cover and tighten the bolt to 7.0 m-kg (50 ft-lb) holding the flywheel with the **ring gear brake** (49 0820 060).
6. Turn the engine assembly so as to place the eccentric shaft horizontally, and fit a dial indicator so that a feeler touches on the pulley.

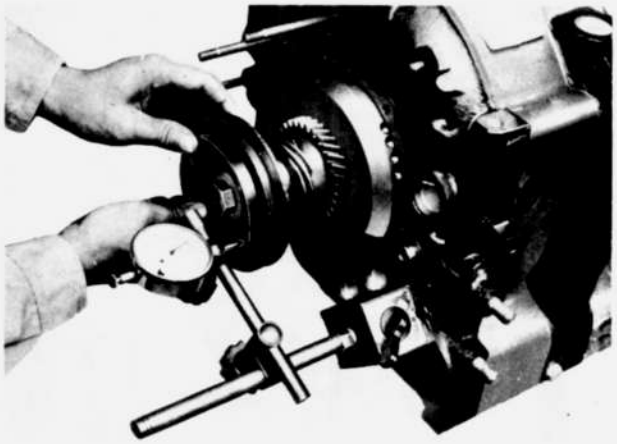

Fig. 1–93 Checking end play

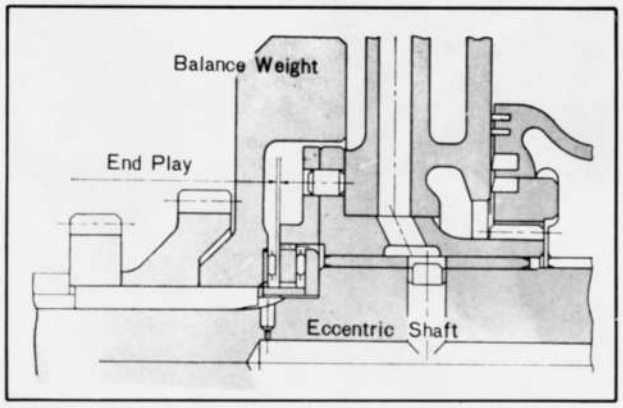

Fig. 1–94 End play of eccentric shaft

7. Move the pulley fore and aft, and read the scale of dial indicator. The measured value should be 0.04 ~ 0.07 mm (0.0016 ~ 0.0018 in). If it is not within the limit, adjust it by mean of grinding the spacer using the emery paper on the flat place, or by replacing the spacer. The following three kinds of spacer are available. Comfirm the end play again. If the measurement is within standard, remove the eccentric shaft pulley and key, and take a next step to fit the front cover.

Mark	Thickness
N	9.00 ± 0.01 mm (0.3543 ± 0.0004 in)
M	9.04 ± 0.01 mm (0.3559 ± 0.0004 in)
L	9.08 ± 0.01 mm (0.3574 ± 0.0004 in)

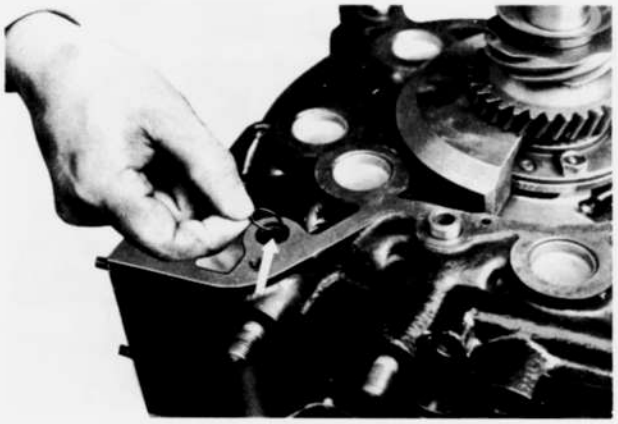

Fig. 1–95 Fitting "O" ring

1–D–13. Installing the Front Cover and Eccentric Shaft Pulley

1. Place the "O" ring on the oil passage of the front housing.
2. Apply grease to the oil seal of the front cover.

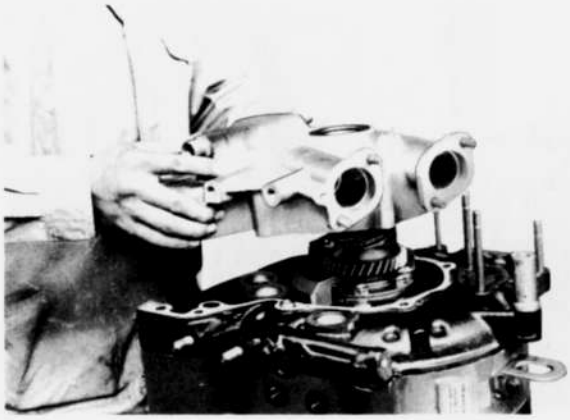

Fig. 1–96 Installing front cover

3. Place the gasket on the front housing and install the front cover.
4. Tighten the volts mounting front cover to a torque of 2.0 m-kg (15 ft-lb).

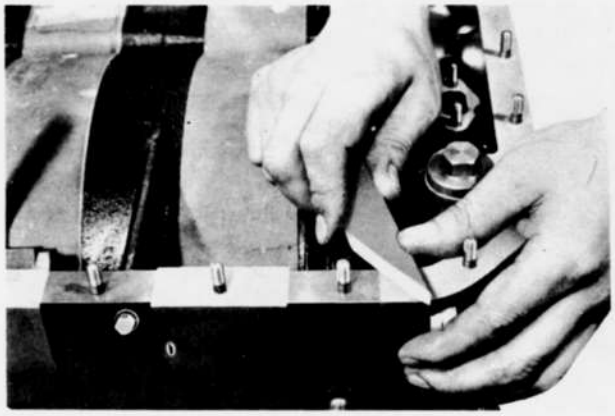

Fig. 1–97 Cutting excess gasket

5. Install the eccentric shaft pulley aligning the key grooves of the eccentric shaft and pulley.
6. Tighten nut mounting the eccentric shaft pulley to a torque of 7.0 m-kg (50 ft-lb).
7. Cut off surplus front cover gasket along mounting surface of the oil pan.

1–D–14. Installing the Metering Pump

Install the metering pump on the front cover.

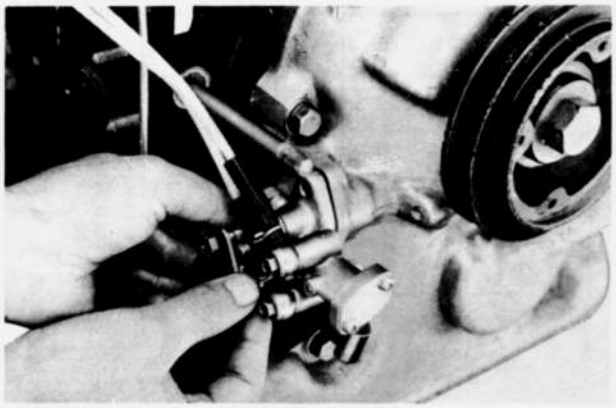

Fig. 1–98 Installing metering pump

1–D–15. Installing the Oil Strainer and Oil Pan

1. Place the gasket on the oil pump and install the oil strainer.
2. Fix the oil strainer stay with a bolt to the rear housing.
3. Apply sealing agnet to the matching surface of the oil pan and each housing.
4. Install the oil pan with a gasket.
5. Install the nuts through the stiffeners.
6. Tighten the nuts diagonally until a torque of 0.6 m-kg (4.5 ft-lb) is attained.

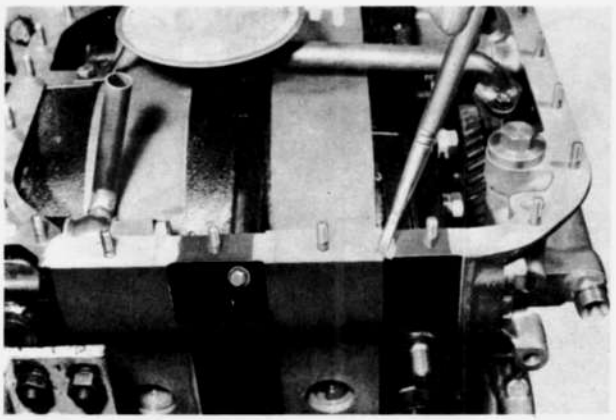

Fig. 1–99 Applying sealing agent

1–D–16. Installing the Oil Filter

Place the two "O" rings on the oil filter and install the unit to the rear housing.

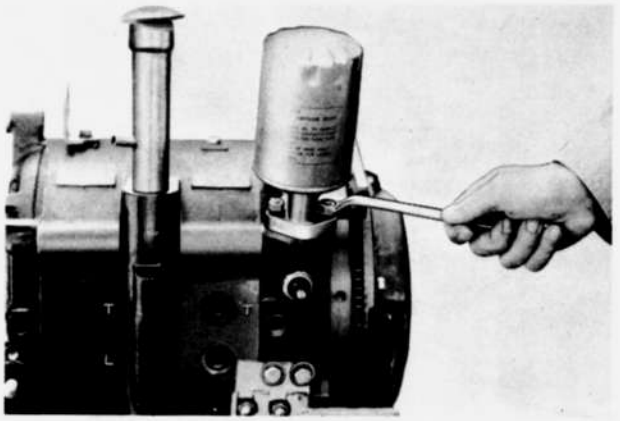

Fig. 1–100 Installing oil filter

1–D–17. Installing the Distributors

1. Turn the engine and stop when the white mark on the pulley matches the needle on the front housing.

Note: In case of the rotary engine, each rotor makes a 1/3 rotation as against one rotation of the eccentric shaft. That is, one combustion is obtained while the rotor makes a 1/3 rotation. Therefore, when the mark and the needle are aligned the front rotor is always located at T.D.C. in the compression stroke.



Fig. 1–101 Aligning for top dead center

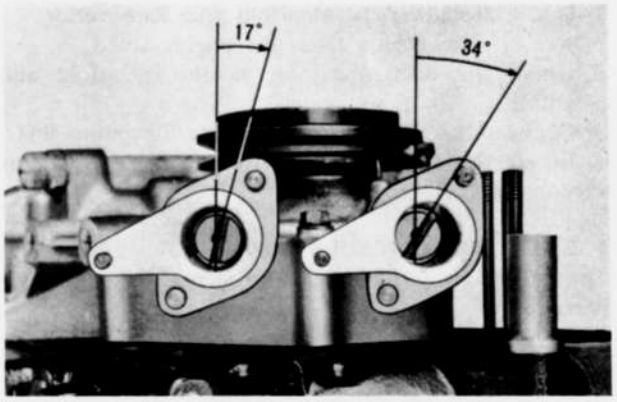

Fig. 1–102 Position of distributor socket

2. Install the trailing distributor socket through the gasket so that the groove on the drive shaft is at an incliation of about 34° to the right against the longitudinal axis of engine.
3. Install the leading side distributor socket through the gasket to the front housing so that the groove on the upper side of the drive shaft points about 17° to the right against the longitudinal axis of the engine, as shown in Fig. 1–102.

Note: The woodruff area at the upper part of the drive shaft varies with the left and right grooves, but this does not affect ignition timing even if it is 180° opposite.

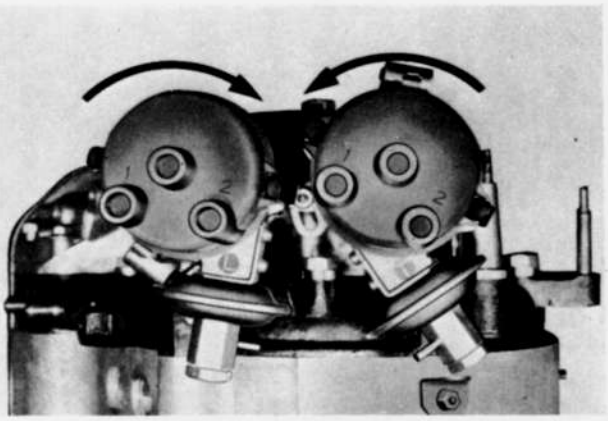

Fig. 1–103 Adjusting ignition timing

4. Install each distributor on the socket so that the key of the distributor shaft matches the slot at the upper side of distributor drive shaft.

Note: The marks of the distributor and front cover, T and L, must be matched.

5. Turn the distributors as shown in Fig.1–103, until the contact point starts to open, Then tighten the lockplate.

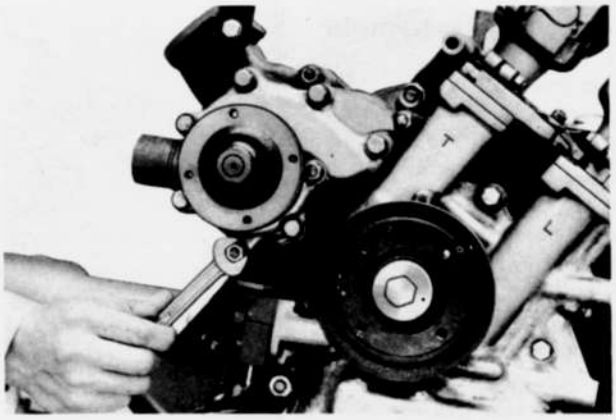

Fig. 1–104 Installing water pump

1–D–18. Installing the Water Pump

1. Place the gasket on the front housing and install the water pump. Tighten the nuts.
2. Install the water pump pulley.

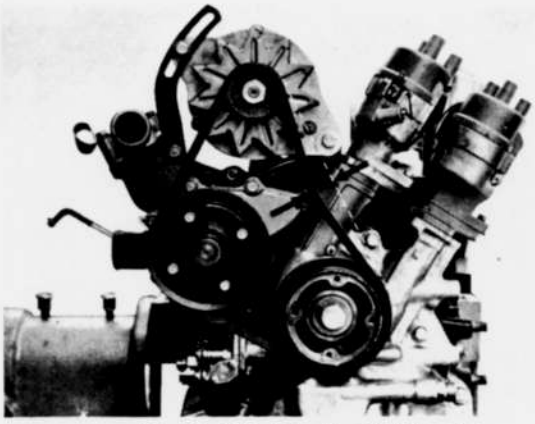

Fig. 1–105 Adjusting belt tension

1–D–19. Installing the Alternator

1. Fix the alternator on the mounting bracket with bolt and nut.
2. Fit the V belt on the pulleys.
3. Attach the upper end of the alternator flange to the strap.
4. Adjust the belt tension so that the slack of the belt may be 15 ~ 17 mm (0.59 ~ 0.67 in) at the center point between alternator and eccentric shaft pulleys pushing the belt by about 10 kg (22 lb). For a new belt, it should be 11 ~ 13 mm (0.43 ~ 0.51 lb).
5. Tighten the bolts and nuts.

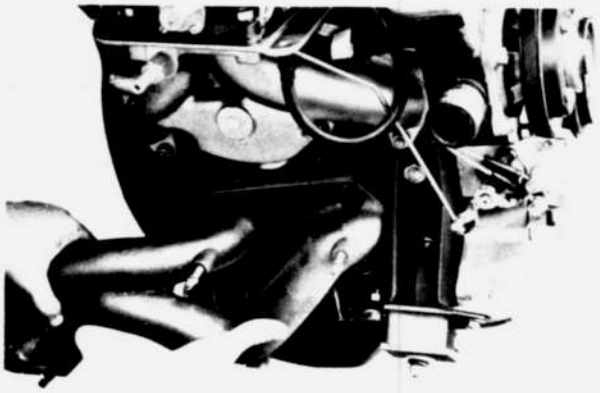

Fig. 106 Installing manifold

1–D–20. Installing the Manifold and Carburettor

1. Remove the engine from the engine stand.
2. Install the inlet manifold, exhaust manifold and carburettor with their gaskets.
3. Connect the carburettor and metering pump link.
4. Install the metering oil tube, and the distributor vacuum control tube.

1–E. ENGINE INSTALLATION

The engine is installed by reversing the removing procedures.

SPECIAL TOOLS

49 0107 680A	Engine stand
49 0813 005	Engine hanger
49 0820 006	Attachment, engine hanger
49 0813 215	Dowel puller
49 0813 240	Rotor bearing puller and installer
49 0813 245	Expander, rotor bearing
49 0813 225	Oil seal remover
49 0813 230	Rotor clamp
49 0813 250	Seal case
49 0813 235	Main bearing puller and installer
49 0820 260	Lock pin remover[
49 0820 060	Ring gear brake
49 0820 035	Box wrench, flywheel
49 0823 300	Flywheel puller
49 0813 310	Clutch disk centering tool
5619 91 100	Bar limit gauge, corner seal gloove
5870 94 152	Jig, corner seal gloove
5363 91 180	Reamer, corner seal gloove

MAZDA RX-2

1971

AIR POLLUTION CONTROL SYSTEMS

AIR POLLUTION CONTROL SYSTEMS

1 A–A. EXHAUST EMISSION CONTROL SYSTEM ..... 1A : 2
1A–A–1. Air Injection System ..... 1A . 2
a. Air pump ..... 1A : 2
b. Check valve ..... 1A : 2
c. Air injection nozzles ..... 1A : 2
d. Air control valve ..... 1A : 2
e. Thermal reactor ..... 1A : 3
1A–A–2. Ignition and Air Flow Control System .. 1A : 4
a. Thermosensor ..... 1A : 4
b. Vacuum switch ..... 1A : 4
c. Control box and thermodetector ..... 1A : 4
1A–A–3. Deceleration Control System ..... 1A : 5
a. Anti-afterburn valve ..... 1A : 5
b. Coasting valve ..... 1A : 6
c. Throttle positioner ..... 1A : 7
d. Air supply valve and time lag relay .. 1A : 7
1A–B. VENTILATION SYSTEM ..... 1A : 8
1A–B–1. Ventilation Valve ..... 1A : 8
1A–B–2. Oil Separator ..... 1A : 9
1A–C. EVAPORATIVE EMISSION CONTROL SYSTEM ... 1A : 9
1A–C–1. Canister ..... 1A : 9
1A–C–2. Condense Tank ..... 1A : 10
1A–C–3. Check Valve ..... 1A : 10
1A–D. MAINTENANCE SCHEDULE ..... 1A : 11
1A–E. MAINTENANCE PROCEDURE ..... 1A : 12
1A–E–1. Air Pump ..... 1A : 12
1A–E–2. Check Valve ..... 1A : 12
1A–E–3. Air Injection Nozzle ..... 1A : 12
1A–E–4. Thermal Reactor ..... 1A : 13
1A–E–5. Air Control Valve ..... 1A : 13
1A–E–6. Thermosensor ..... 1A : 13
1A–E–7. Vacuum Switch ..... 1A : 14
1A–E–8. Control Box ..... 1A : 14
1A–E–9. Thermodetector ..... 1A : 15
1A–E–10. Anti-afterburn Valve ..... 1A : 15
1A–E–11. Coasting Valve ..... 1A : 15
1A–E–12. Throttle Positioner ..... 1A : 16
1A–E–13. Air Supply Valve ..... 1A : 16
1A–E–14. Time Lag Relay ..... 1A : 17
1A–E–15. Ventilation Valve ..... 1A : 17
1A–E–16. Canister ..... 1A : 17
1A–F. ENGINE TUNE–UP ..... 1A : 17
1A–F–1. Checking of Battery ..... 1A : 17
1A–F–2. Checking of Engine Oil ..... 1A : 17
1A–F–3. Checking of Coolant ..... 1A : 17
1A–F–4. Checking of Alternator "V"-belt ..... 1A : 18
1A–F–5. Adjusting of Air Pump "V"-belt ..... 1A : 18
1A–F–6. Checking of Air Cleaner ..... 1A : 18
1A–F–7. Adjusting of Carburettor ..... 1A : 18
1A–F–8. Checking of Distributor ..... 1A : 19
1A–F–9. Spark Plug ..... 1A : 20
1A–G. TROUBLE SHOOTING ..... 1A : 21
TECHNICAL DATA ..... 1A : 22

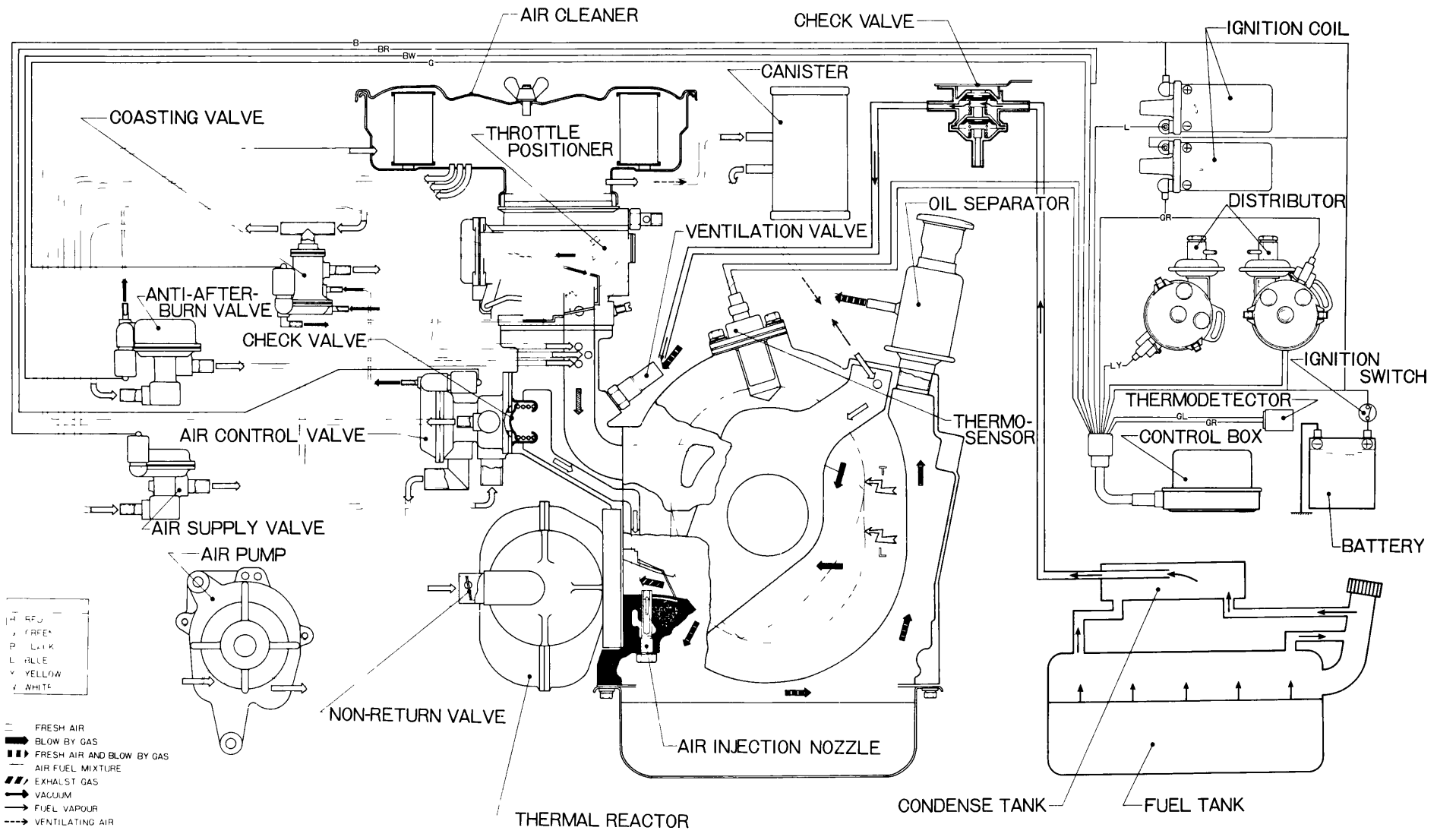

Fig. 1A–1 Air pollution control systems

AIR POLLUTION CONTROL SYSTEMS

The MAZDA RX–2 is equipped with an exhaust emission control system, a ventilation system and an evaporative emission control system.

1A–A. EXHAUST EMISSION CONTROL SYSTEM

The exhaust emission control system, consisting of an air injection system, an ignition and air flow control system and a deceleration control system, reduces air polluting hydrocarbon and carbon monoxide contained in the exhaust gas of the operating engine.

1A–A–1. Air Injection System

The air injection system, consisting of an air pump, a check valve, and an air injection nozzle, an air control valve and a thermal reactor injects into the exhaust port secondary air necessary for oxidation of hydrocarbon and carbon monoxide contained in the exhaust gas.

a. Air pump

The air pump is a vane type driven by the "V"-belt mounted on the eccentric shaft pulley. It provides to the air injection system secondary air required for re-igniting the exhaust gas.

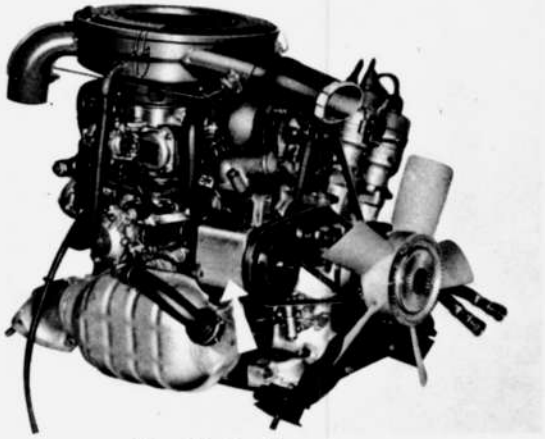

Fig. 1A–2 Air pump

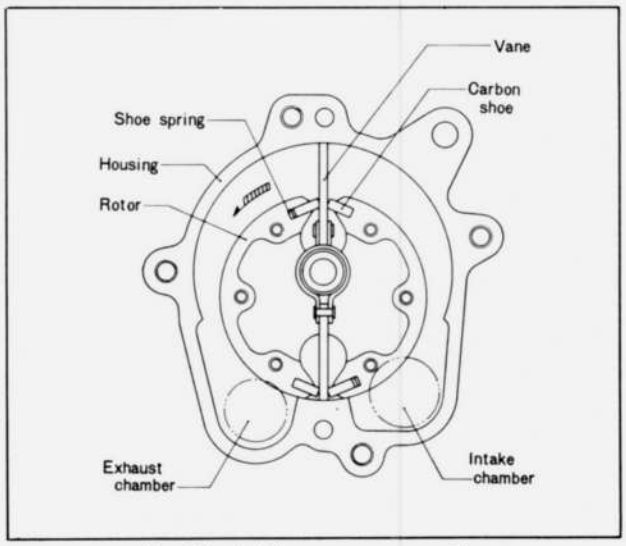

Fig. 1A–3 Air pump cross section

b. Check valve

The check valve opens and closes according to the pressure difference between secondary air and exhaust gas to prevent exhaust gas from backflowing into the air injection system and scorching the air pump, hoses, etc. When the pressure of secondary air in the air injection system exceeds the exhaust gas pressure, the secondary air opens the check valve and flows through the air injection nozzle into the exhaust port. When the secondary air pressure drops lower than the exhaust gas pressure due to failure of the air pump "V"-belt, breaking of the secondary air hose, etc., the check valve closes to prevent the backflow of the exhaust gas into the air injection system.

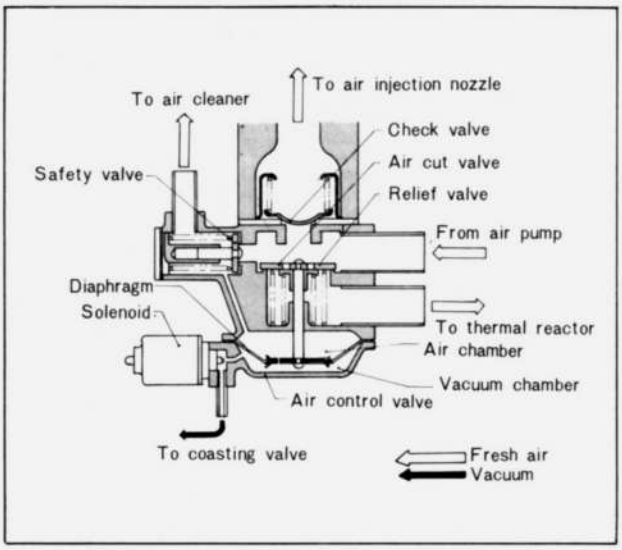

Fig. 1A–4. Check valve cross section

c. Air injection nozzles

The air injection nozzles are attached to each of the front and rear rotor housings. The secondary air channeled via the air pump and the check valve is injected through the nozzle into the exhaust port adjacent to the thermal reactor.

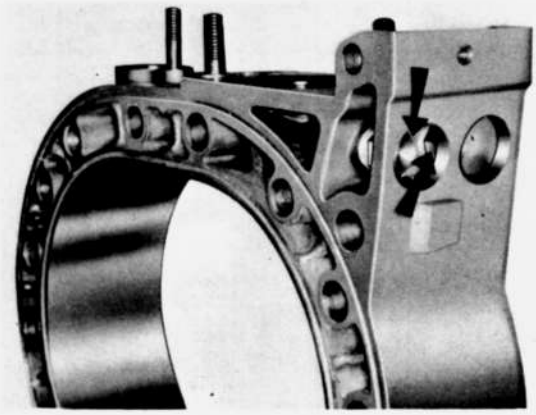

Fig. 1A–5 Air injection nozzles

d. Air control valve

The air control valve contains three valves: the air cut valve and the relief valve which control the amount of secondary air and thermal reactor cooling air to suit the engine operating condition, and the

safety valve that controls the amount of secondary air alone.

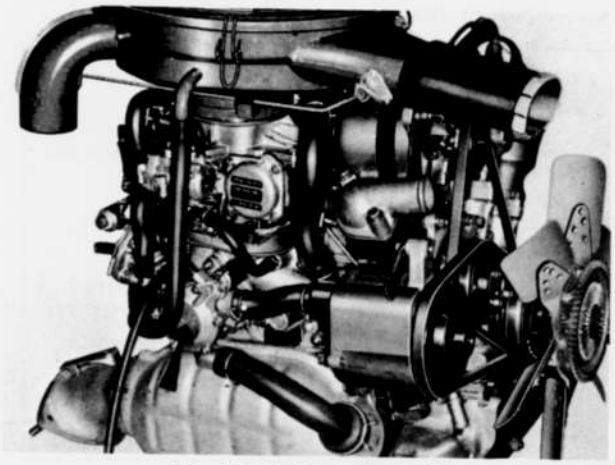

Fig. 1A–6 Air control valve

The air cut valve opens and closes according to the difference of pressure between the vacuum and air chambers. This valve, which is connected to the diaphragm, is closed during normal operation by the intake manifold vacuum. When the engine speed exceeds 4,000 ± 200 rpm, the control box actuates the solenoid to close the vacuum way. This equalizes the pressures in the two chambers, the spring force causes the valve to open and the air in the air injection system is channeled to the thermal reactor to cool it before being emitted to the atmosphere. At the same time, the air cut valve closes the secondary air passage to cut secondary air supply into the exhaust port.

In case the car is decelerated when running at the engine speed below 4,000 ± 200 rpm, the coasting valve of the deceleration control system operates to turn the vacuum in the vacuum chamber of the air control valve to atmospheric pressure. This equalizes the pressures in the vacuum and air chambers and causes the spring to open the air cut valve so that the air in the air injection system will go through the thermal reactor to cool it before being expelled to the atmosphere. At the same time the air cut valve closes the secondary air passage to cut fresh air supply.

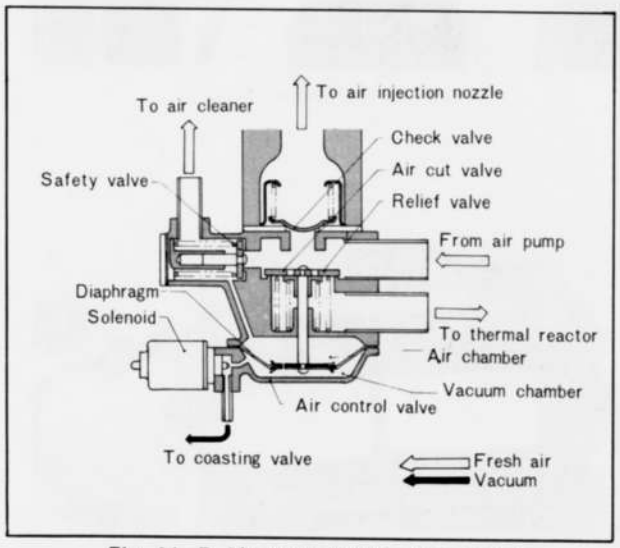

Fig. 1A–7 Air control valve cross section

The relief valve opens and closes in accordance with air pressure in the air injection system and the force of the return spring. When the air pressure in the air injection system exceeds 0.11 ~ 0.14 kg/cm² (1.3 ~ 2.0 lb/in²), it opens the relief valve against the return spring force and proceeds to the thermal reactor to cool it before being expelled to the atmosphere, thus controlling the secondary air volume.

When the air pressure decreases, the spring closes the valve.

The safety valve, like the relief valve, controls air pressure in the air injection system and adjusts the volume of secondary air.

If air in the air injection system should be trapped due to a malfunction, the safety valve relieves the trapped air to the air cleaner, thus preventing damages to the elements of the air injection system.

e. Thermal reactor

The thermal reactor is mounted just outside the exhaust port. It oxidizes the unburned exhaust gas expelled from the engine, to reduce the noxious components such as hydrocarbon and carbon monoxide.

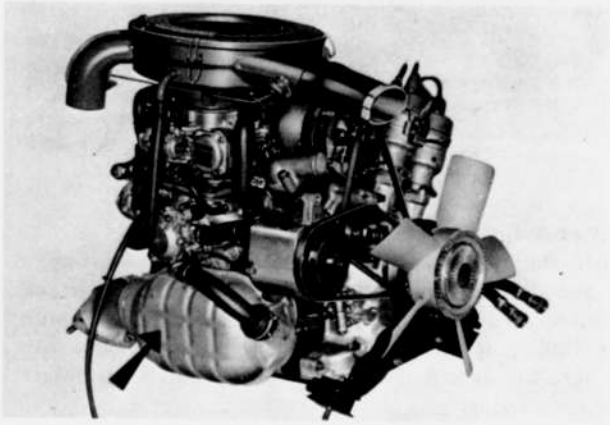

Fig. 1A–8 Thermal reactor

When the engine speed is more than 4,000 rpm or during deceleration, the air control valve feeds fresh air from the air pump to the thermal reactor to maintain the temperature necessary for oxidation of exhaust gas.

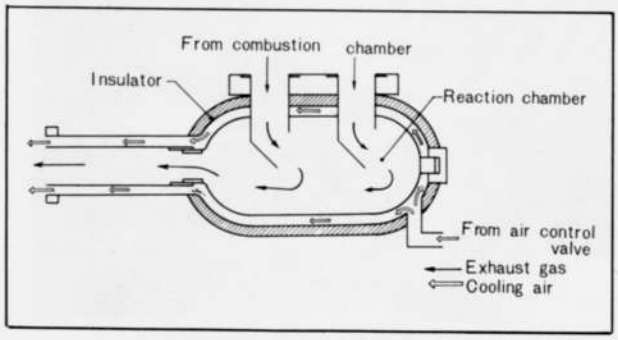

Fig. 1A–9 Thermal reactor cooling air circuit

The non-return valve which prevents backflow of exhaust gas from the reactor is attached at the air inlet of the reactor.

1A–A–2. Ignition and Air Flow Control System

The ignition and air flow control system consists of a thermosensor, a thermodetector, a vacuum switch, and a control box. This system ignites and cuts the trailing spark plug to suit engine temperature and engine speed in order to enhance the reactivity of the thermal reactor when the engine is cold. It has an additional function of regulating the air control valve of the air injection system.

a. Thermosensor

The thermosensor, which is attached in the cooling water passage of the engine, detects engine temperature and sends a signal to the control box, thereby causing ignition and cutting of the trailing spark plug.



Fig. 1A–10 Thermosensor

b. Vacuum switch

When the engine is cold and the throttle valve is open to near the idle position or near the full-open position, the vacuum switch signals the control box to ignite the trailing spark plug so as to maintain good driveability, to prevent spark plug fouling and to facilitate engine starting.

The vacuum switch is connected to the diaphragm rod of the vacuum advancer for the leading plug distributor. Its changeover is effected by the intake manifold vacuum.

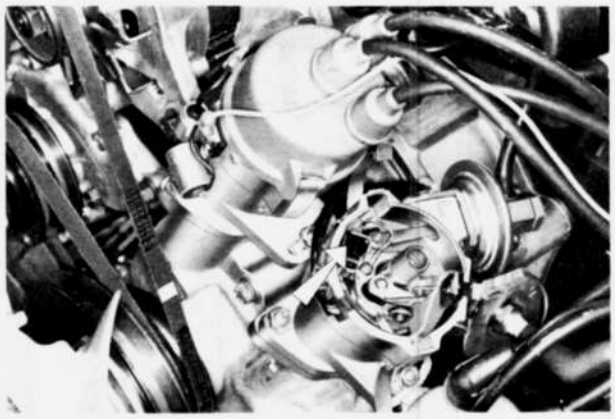

Fig. 1A–11 Vacuum switch

The vacuum sensing hole of the vacuum switch is located just above the carburettor throttle valve when it is opened to the idling position. (Fig. 1A–12)

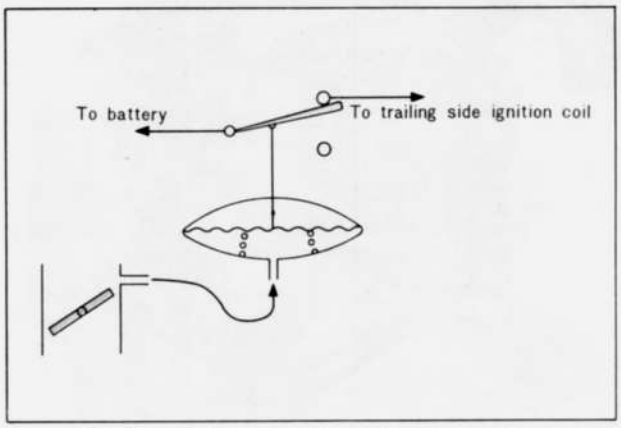

Fig. 1A–12 Throttle valve and vacuum switch

Therefore, when the throttle valve is at the idling or fully opened position, the vacuum sensing hole is subjected to a pressure close to the atmospheric pressure. Thus when starting or accelerating the engine, the switch connected to the vacuum advancer is energized to signal the control box so that the trailing spark plug will be ignited.

c. Control box and thermodetector

The control box is common to the ignition and air flow control system and the deceleration control sys-

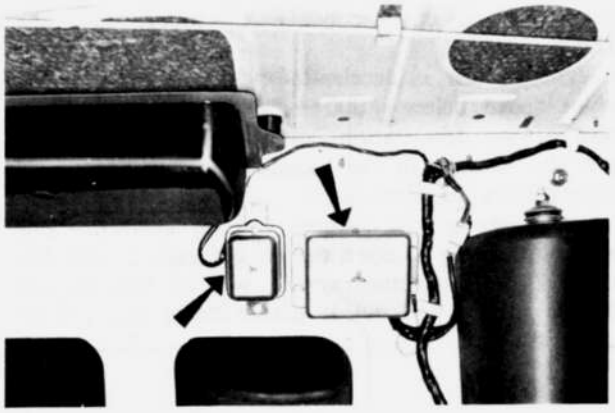

Fig. 1A–13 Control box



Fig. 1A–14 Thermodetector

tem. It ignites and cuts the trailing spark plug in accordance with the engine speed, the state of warming up and the engine load, controls secondary air and prevents afterburn during deceleration according to engine speed.

The control box receives several signals; pulses of the leading spark plug ignition coil which indicate engine revolutions, signals from the thermosensor detecting the condition of warming up, and signals from the vacuum switch which indicate engine load.

The thermodetector is a circuit in the control box and prevents the thermosensor from being influenced by ambient temperature.

1A–A–3. Deceleration Control System

The deceleration control system consists of an anti-afterburn valve, a coasting valve, a throttle positioner, an air supply valve, a time lag relay, and the control box which is common to the ignition and air flow control system. It prevents afterburn during deceleration and gear shifting and immediately after the engine is switched off.

a. Anti-afterburn valve

The anti-afterburn valve prevents afterburn by injecting air into the intake manifold during deceleration and gear shifting and immediately after the engine is switched off.

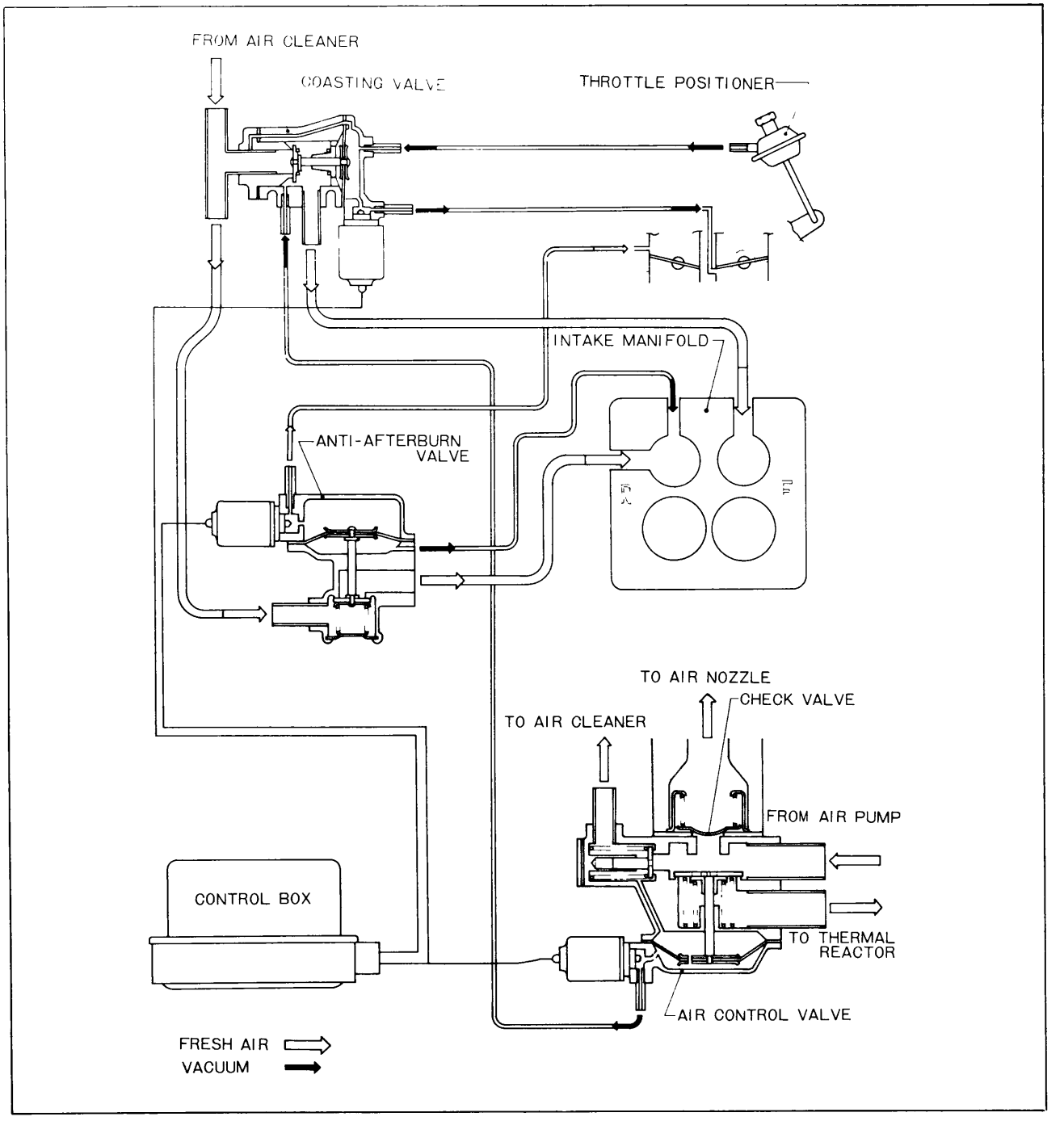

Fig. 1A–15 Deceleration control system

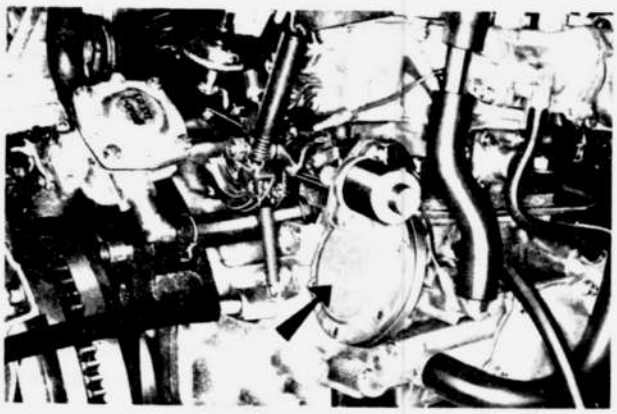

Fig. 1A–16 Anti-afterburn valve

The anti-afterburn valve operates by pressure difference between the air and vacuum chambers, and the spring force.
The intake manifold vacuum rises during deceleration and gear shifting, and the pressure difference between the two chambers opens the valve connected to the diaphragm, so that fresh air from the air cleaner is led into the intake manifold to correct overrich mixture, thus preventing afterburn.
During normal running condition, the solenoid shuts the atmospheric pressure sensing line leading to the air chamber. When the engine speed exceeds 4,000 ± 200 rpm, the control box commands the solenoid to open the sensing line and, due to the resulting pressure difference between the air and vacuum chambers, the valve connecting to the diaphragm is opened, thus leading fresh air from the air cleaner into the intake manifold so as to prevent afterburn during deceleration at high engine speeds.
In addition, when the engine is switched off the solenoid opens the sensing line, and, due to the resulting pressure difference between the air and vacuum chambers, the valve connected to the diaphragm is opened, and fresh air is lead from the air cleaner into the intake manifold to prevent afterburn after the engine is switched off.

The metering orifice in the diaphragm connects the air and vacuum chambers to control the duration of valve opening. When the pressures between the two chambers are equal, the valve is kept closed by the spring force, and when the pressure difference exceeds 100 mm-Hg, the valve is opened to lead fresh air from air cleaner into the intake manifold.
When the metering orifice equalizes pressure difference, the valve is closed to shut off air.

b. Coasting valve

The coasting valve, connected to the intake manifold, supplies fresh air from the air cleaner into the intake manifold to correct overrich mixture during deceleration. As a result, when the coasting valve opens, the intake manifold vacuum connected to the vacuum chamber of the air control valve is turned to the atmospheric pressure in order to cut secondary air supply during deceleration.

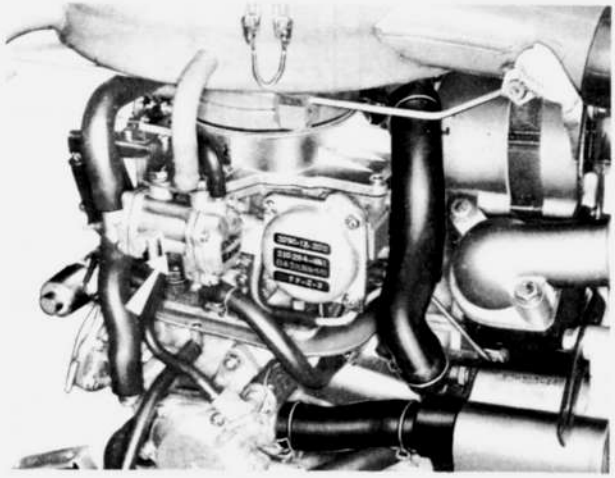

Fig. 1A–18 Coasting valve

The rise of intake manifold vacuum during deceleration and gear shifting causes the valve to open, and air from the air cleaner is supplied into the intake manifold preventing afterburn.

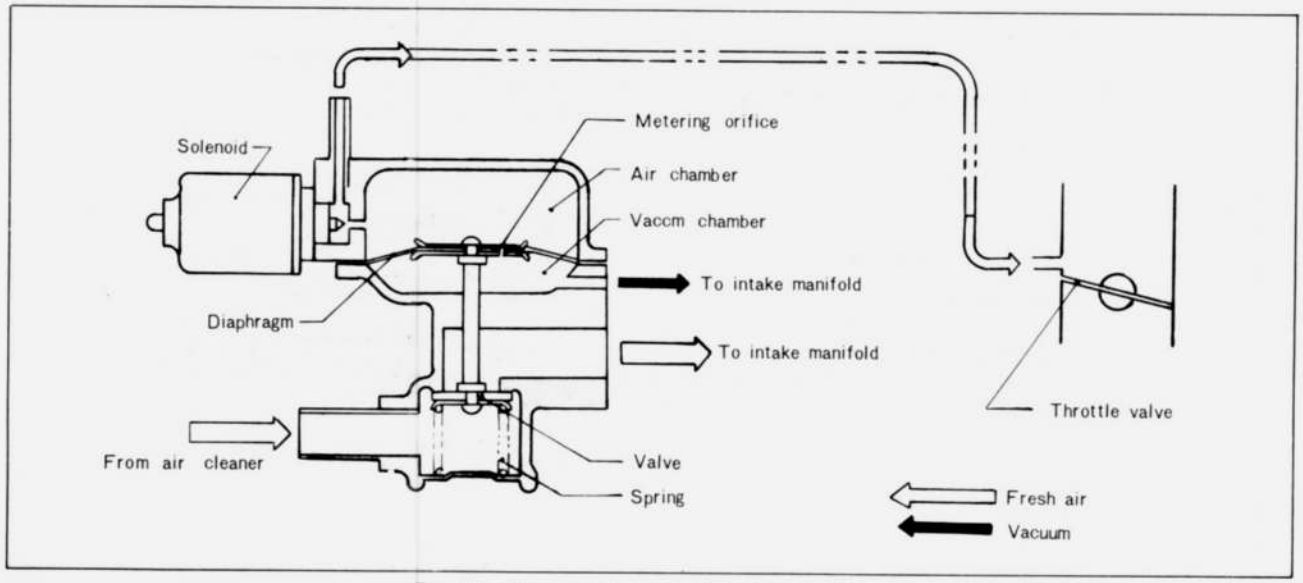

Fig. 1A–17 Anti-afterburn valve cross section

When the engine speed exceeds 1,200 ± 50 rpm, the control box commands the solenoid to open the intake manifold vacuum sensing line leading to the vacuum chamber, the pressures in the vacuum and air chamber are equalized and air from the air cleaner overcomes the spring force and flows into the intake manifold. In addition, when the coasting valve opens, the atmospheric pressure from the air cleaner is led into the vacuum chamber of the air control valve and pressures in the vacuum and air chambers of the air control valve are equalized allowing the spring force to operate the air cut valve.

c. Throttle positioner

The throttle positioner, which is connected to the carburettor throttle valve, holds the throttle valve at a certain opening angle during deceleration correcting overrich mixture to prevent afterburn.



Fig. 1A–19 Throttle positioner

The diaphragm of the throttle positioner is connected via the vacuum sensing line to the vacuum chamber of the coasting valve.

As the intake manifold vacuum coming to the vacuum chamber of the coasting valve is allowed to act against the throttle positioner diaphragm, the throttle valve linked to the diaphragm is held at a certain opening angle. When the engine speed decreases to 1,250 ± 50 rpm during deceleration, the control box commands the solenoid attached on the coasting valve to close the vacuum sensing line, preventing the intake manifold vacuum from acting against the throttle positioner diaphragm and returning the throttle valve to the idling position.

d. Air supply valve and time lag relay

The air supply valve and the time lag relay have the functions of preventing afterburn when the engine is switched off and filling the engine with fresh air.

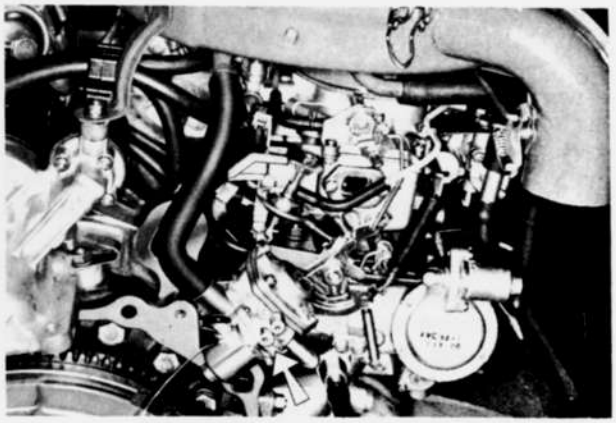

Fig. 1A–21 Air supply valve

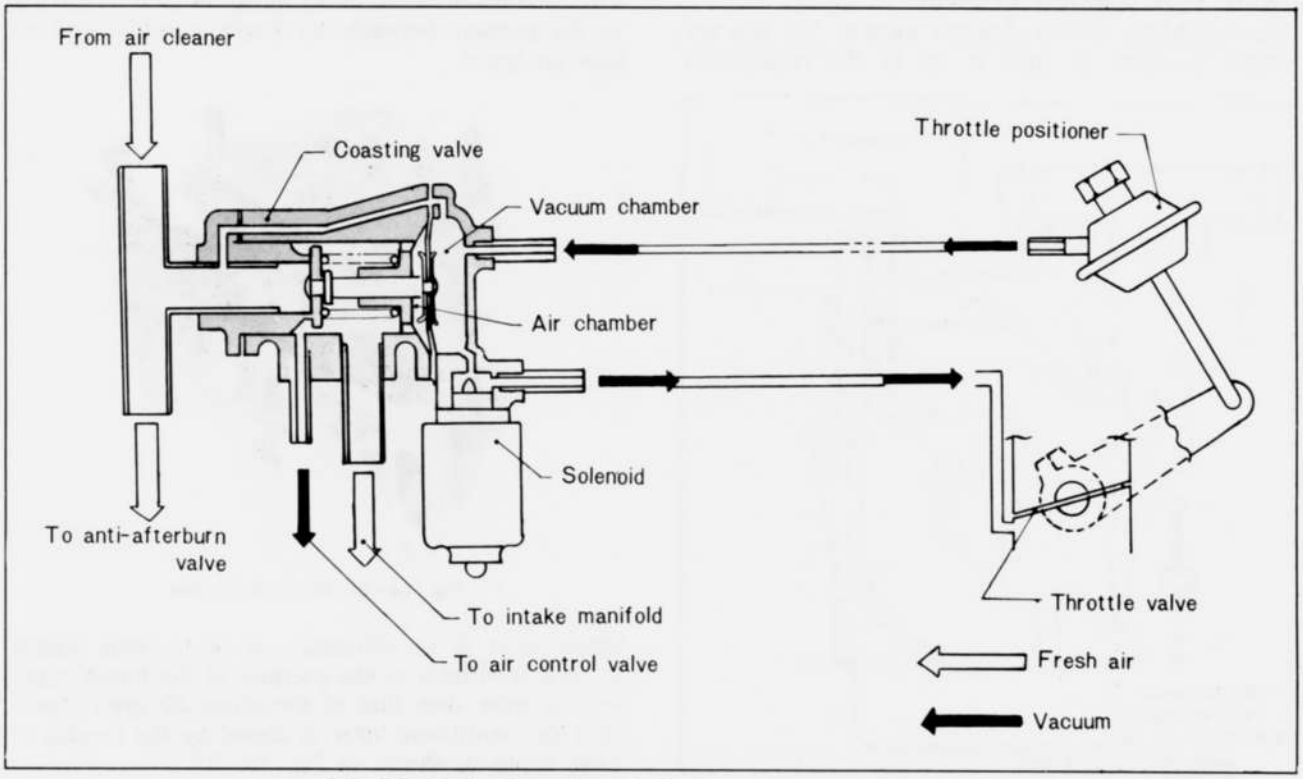

Fig. 1A–20 Coasting valve and throttle positioner cross section

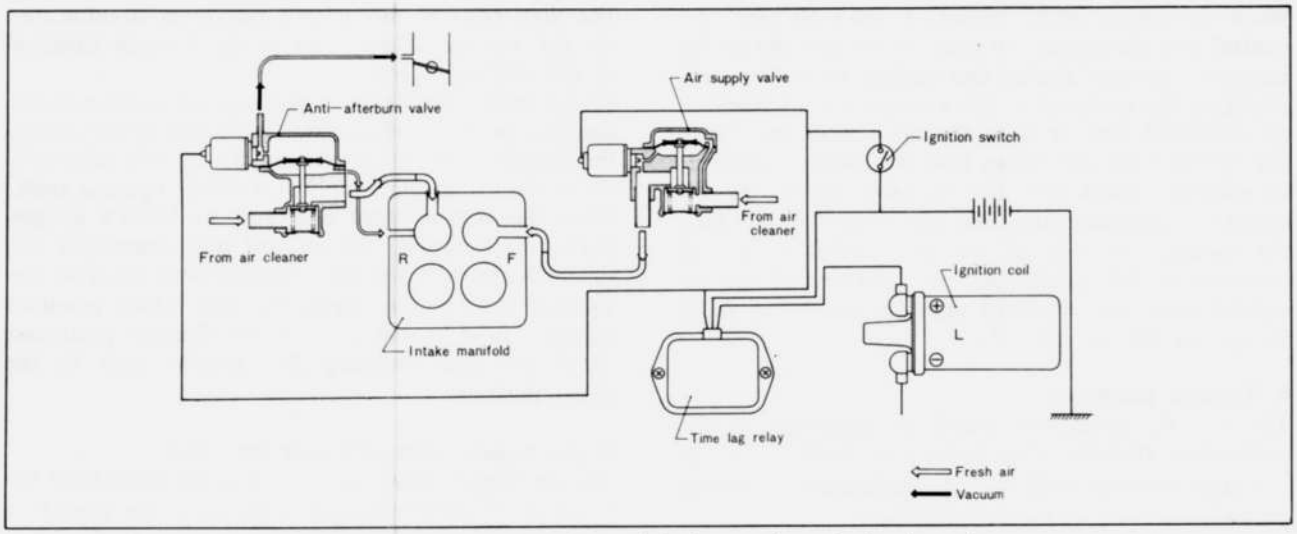

Fig. 1A–22 Air supply valve, anti-afterburn valve and time lag relay

The solenoid of the air supply valve keeps closing the intake manifold vacuum way while the ignition switch is "ON". When the engine is switched off, the solenoid opens the vacuum way and the resulting difference between the vacuum and air chambers causes the valve leading to the diaphragm to open so that fresh air from the air cleaner is supplied into the intake manifold.

For a short time after engine switch off the time lag relay ignites the leading spark plug to burn the unburned components of the charge in conjunction with the air supply valve and the anti-afterburn valve, then fills the engine with clean air.

1A–B. VENTILATION SYSTEM

The ventilation system channels blow-by gas into the intake manifold to burn it up in the combustion chamber and helps to control air pollution caused by engine blow-by gas.

This system consists mainly of a ventilation valve, an oil separator and hoses necessary to connect these components.

The air and blow-by gases flow in the ventilation system as shown in Fig. 1A–23.

Ventilating air from the air cleaner enters the engine air space. The ventilating air with blow-by gas enters through the oil separator into the ventilation valve which regulates the amount of air flow to meet the change of operating conditions and then is directed to the engine.

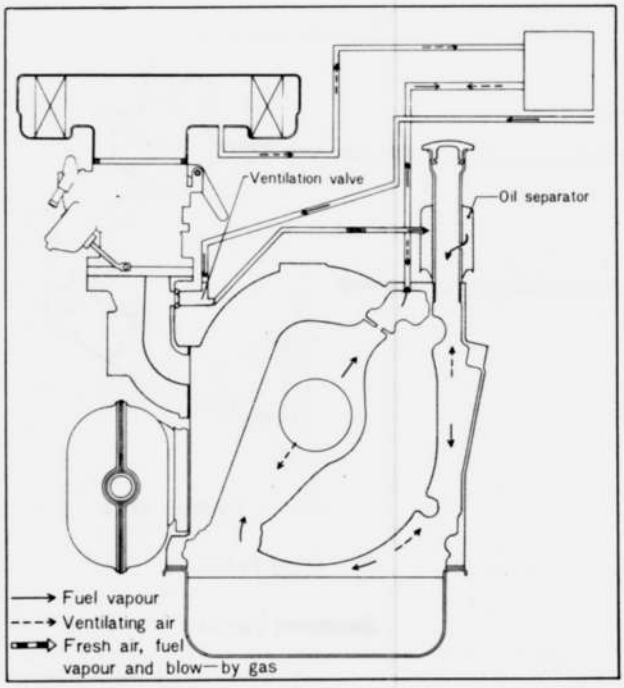

Fig. 1A–23 Ventilation system

1A–B–1. Ventilation Valve

The ventilation valve is operated by the difference of the pressure between the intake manifold and engine air space.

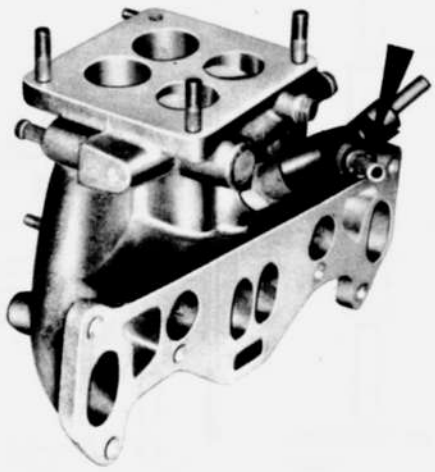

Fig. 1A–24 Ventilation valve

When there is no difference of the pressure (engine at stall condition) or the pressure of the intake manifold is more than that of the engine air space (backfire) the ventilation valve is closed by the tension of valve spring as shown in Fig. 1A–25.

If there is large difference (at engine idle or decele-

ration), the high vacuum of the intake manifold overcomes the tension of the valve spring, and the valve is pulled towards intake manifold side by the manifold vacuum as shown in Fig. 1A–26. Therefore, the air passes through the restricted passage in the valve.

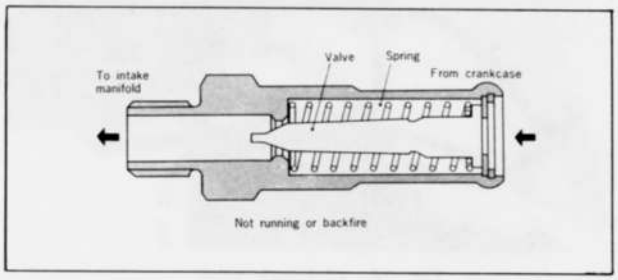

Fig. 1A–25 Ventilation valve operation

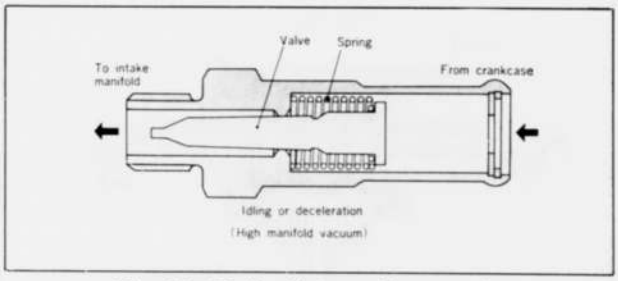

Fig. 1A–26 Ventilation valve operation

When the difference is small (at normal operation), the valve is balanced by the tension of valve spring and intake manifold vacuum. This increases the flow of blow-by gas.

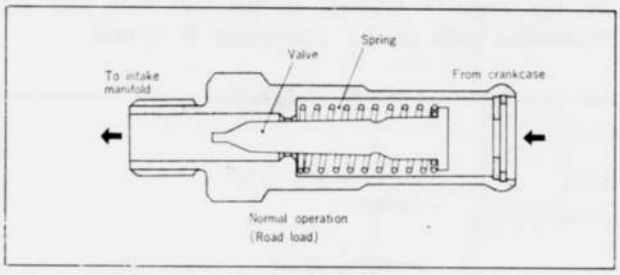

Fig. 1A–27 Ventilation valve operation

1A–B–2. Oil Separator

The oil separator is integrated with the oil filler pipe and prevents the engine oil from entering the combustion chamber.

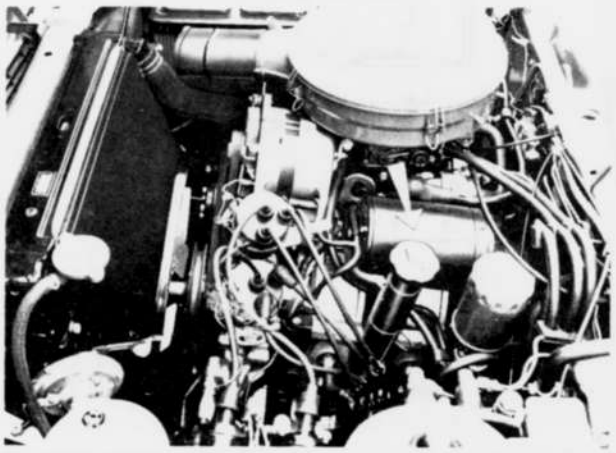

Fig. 1A–28 Oil separator

1A–C. EVAPORATIVE EMISSION CONTROL SYSTEM

This system prevents emission of fuel vapor generated by the ambient temperature around the fuel tank when the car is running or standing.

The fuel vapor rising from the surface of fuel in the fuel tank due to the ambient temperature is channeled into the condense tank and then fed back to the fuel tank when the engine is not running. Any fuel vapor that has not condensed in the condense tank is led into the air space of the engine where such vapor condenses for the most part and the remaining vapor goes to the canister and is trapped there.

The fuel vapor rising from the fuel tank when the engine is running is directly channeled to the ventilation valve from which it is sucked into the intake manifold to be burned up in the combustion chamber.

When running, the fuel trapped in the canister is vaporized by fresh air from the air cleaner and the engine temperature, and goes to the oil separato and ventilation valve through which it is sucked into the intake manifold together with fresh air and blow-by gas to be burned up in the combustion chamber.

1A–C–1. Canister

While the car is stationary, some of the fuel vapo generated in the fuel tank does not condense in the condense tank and, when channeled into the engine air space without being fed back to the fuel tank still cannot be trapped in the air space. Such vapo is absorbed by the canister.

While the engine is running, the fuel vapor trapped in the canister is released into the intake manifold together with fresh air from the air cleaner and burned up in the engine. The canister is always being purged by fresh air during engine operation.



Fig. 1A–29 Canister

1A–C–2. Condense Tank

The condense tank condenses the fuel vapor coming from the fuel tank and returns it to the fuel tank.

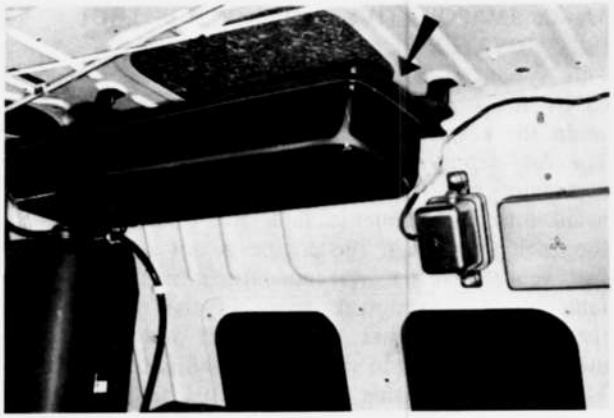

Fig. 1A–30 Condense tank

1A–C–3 Check Valve

The check valve located between the condense tank and the oil separator in the air space works appropriately when the conditions mentioned below take place, relating to the completely sealed ventilation type fuel system.

1. If the fuel system is normal, the flows of vapor and ventilation during engine operation are as shown in Fig. 1A–34.
2. If the connecting pipe from the condense tank to the oil separator is clogged, frozen, or ventilation valve does not work at all and as the result, fuel supply to the engine is cut off. Therefore, when the ventilation of fuel system is clogged, a valve is opened by the negative pressure in the fuel tank and the ventilation path to the atmosphere is opened.

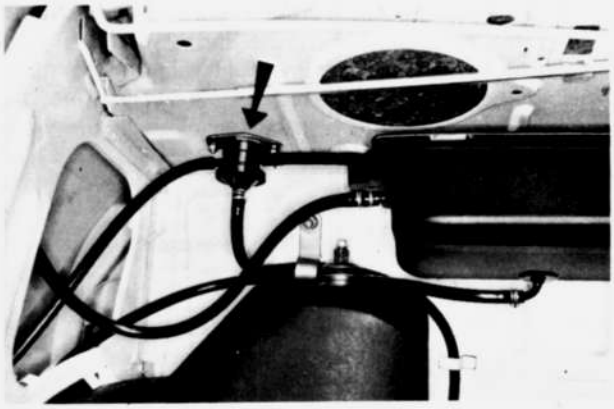

Fig. 1A–32 Check valve

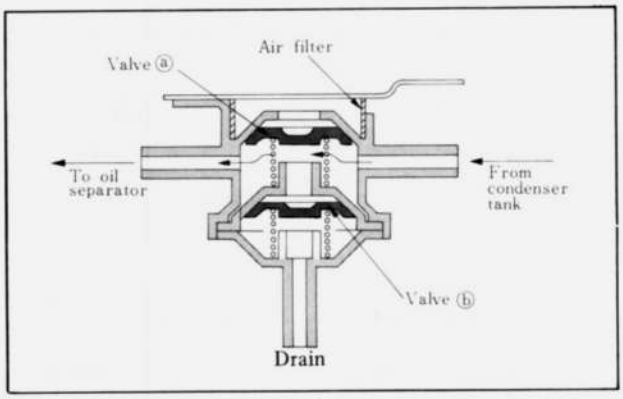

Fig. 1A–33 Check valve operation

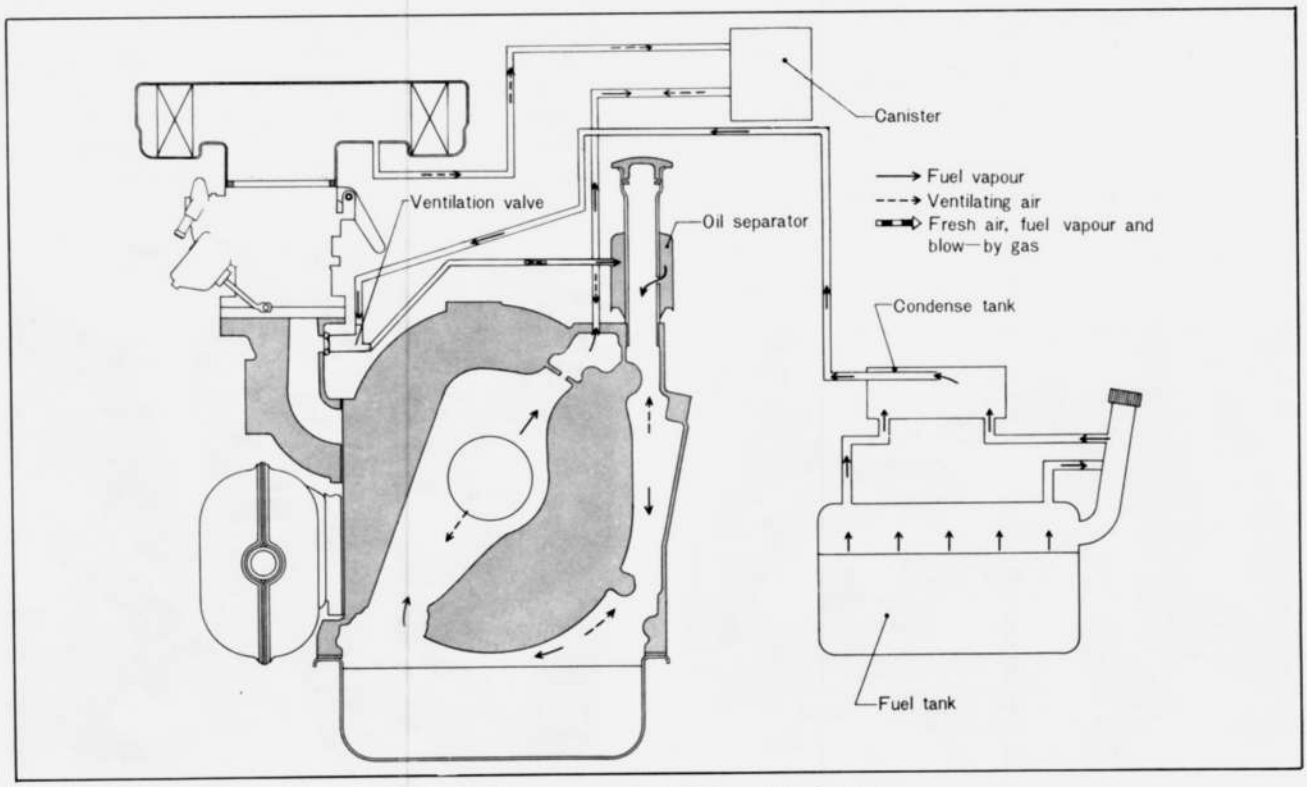

Fig. 1A–31 Evaporative emission control system

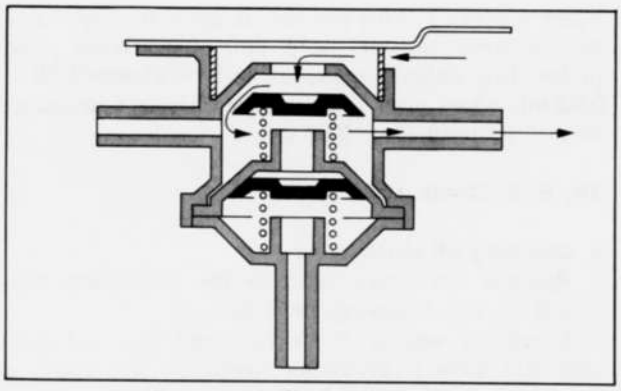

Fig. 1A–34 Check valve operation

3. When the fuel in the fuel tank is expanded due to intense heat, the pressure in fuel tank will rise. The ventilation valve mounted on the intake manifold which regulates the ventilation is not able to adjust the increased pressure due to its structure, and therefore, if such a condition occurs, the pressure in the fuel tank would rise continuously.
In order to prevent the increase of pressure in the fuel tank, the check valve is opened to release the pressure to the atmosphere.

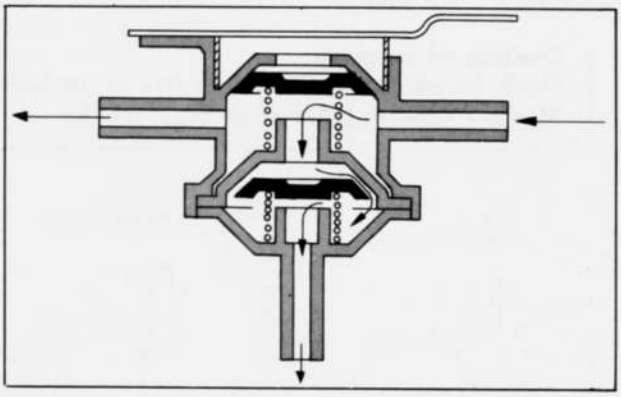

Fig. 1A–35 Check valve operation

1A–D. MAINTENANCE SCHEDULE

Maintenance schedules are shown in the following table.

No.	Maintenance operation	Intervals (Miles)
1.	Check and adjust distributor point gap (dwell angle)	4,000
2.	Inspect, clean, adjust and test spark plug — replace if necessary	4,000
3.	Check and adjust ignition timing	4,000
4.	Check and adjust carburettor	4,000
5.	Check air pump "V"–belt tension — adjust if necessary	4,000
6.	Check air hoses and vacuum sensing tubes for deterioration and leakage — correct or replace if required	12,000
7.	Check air pump for proper operation — replace as required	12,000
8.	Check check valve for proper operation — replace as required	12,000
9.	Check air control valve for proper operation — replace as required	12,000
10.	Check coasting valve for proper operation — replace as required	12,000
11.	Check throttle positioner for proper operation — adjust if necessary	12,000
12.	Check anti-afterburn valve for proper operation — replace as required	12,000
13.	Check air supply valve for proper operation — replace as required	12,000
14.	Check time lag relay for proper operation — replace as required	12,000
15.	Check thermosensor and thermodetector for proper operation — replace as required	12,000
16.	Check vacuum switch for proper operation — replace as required	12,000
17.	Check control box for proper operation — correct or replace as required	12,000
18.	Check ventilation hoses of ventilation system for leakage and deterioration — replace as required	12,000
19.	Check ventilation valve for proper operation — replace as required	12,000
20.	Check fuel hose of evaporative emission control system for leakage and deterioration — correct or replace as required	12,000
21.	Check canister for proper operation — replace as required	12,000
22.	Check thermal reactor for proper operation — replace as required	12,000

1A–E. MAINTENANCE PROCEDURE

This section explains the procedures for checking, adjusting and replacing the parts of the RX-2 air pollution control systems.

1A–E–1. Air Pump

a. Checking of air pump

1. Check to see that air hoses are free of air leaks.
2. Attach a pressure gauge as in Fig. 1A–36.

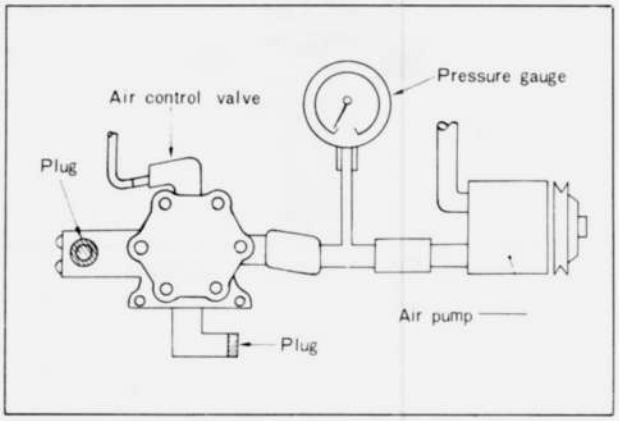

Fig. 1A–36 Checking of air pump

3. Run the engine at idle speed. If the pressure gauge reading is **0.033 ~ 0.046 kg/cm² (0.47 ~ 0.65 lb/in²)**, the air pump is normal.

b. Removing of air pump

1. Remove the air cleaner.
2. Remove the "V"-belt of the air pump.
3. Remove the air hoses from the air pump.
4. Loosen the air pump bolts and remove the air pump.

c. Installing of air pump

Mount the air pump in the reverse sequence, and adjust the tension of the "V"-belt in the procedure described below.

d. Adjusting of air pump "V"-belt

Pull the air pump away from the engine until the "V"-belt assumes proper tension. A proper lever should be used in adjusting.

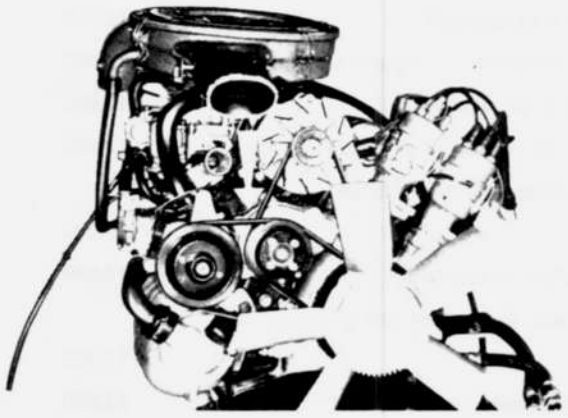

Fig. 1A–37 Checking of belt deflection

When a 10 kg (22 lb) pressure is given to a spot midway between the air pump pulley and water pump pulley, belt deflection should be **9 ~ 11 mm(0.35 ~ 0.43 in)**; when new, the belt should have a deflection **of 7 ~ 9 mm(0.28 ~ 0.35 in)**.

1A–E–2. Check Valve

a. Checking of check valve

1. Remove the check valve in the procedures mentioned in the following item b.
2. Check the seating of the valve and seat, and make sure that there is no spring creep; the free length of the spring is **31 mm (1.22 in)**.



Fig. 1A–38 Check valve

1. Valve seat
2. Spring
3. Valve

b. Removing of check valve

1. Remove the air cleaner.
2. Remove the air hoses leading to the air control valve. Loosen the nuts and remove the air control valve.
3. Remove the check valve seat.
4. Remove the valve and spring.

c. Installing of check valve

Install the check valve in the reverse sequence.

1A–E–3. Air Injection Nozzle

a. Removing of air injection nozzle

1. Drain the engine oil.
2. Remove the engine under cover.
3. Remove the oil pan.
4. Remove the air injection nozzle from the rotor housing.



Fig. 1A–39 Air injection nozzle

b. Installing of air injection nozzle

Install the air injection nozzle in the reverse sequence.

1A–E–4. Thermal Reactor

a. Checking of thermal reactor

1. Check to see that the thermal reactor is not damaged or cracked.
2. Remove the air hose leading to the air control valve and check to see that the non-return valve works smoothly.

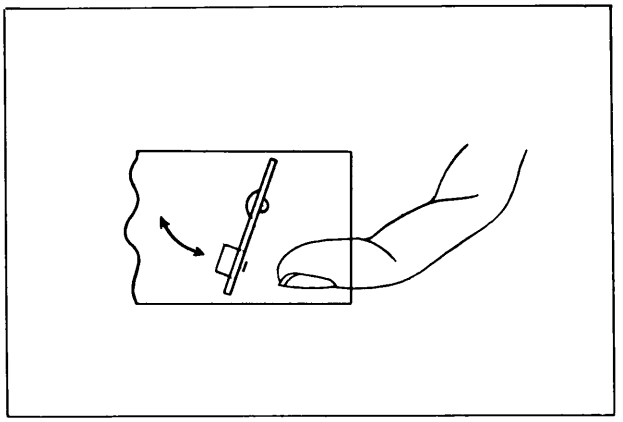

Fig. 1A–40 Checking of non-return valve

3. Start the engine and keep it running at idle speed.
4. Check to see that each part of the air injection system works properly.
5. Make sure that most exhaust gas is not released from the cooling air injection pipe for the thermal reactor.

b. Removing of thermal reactor

1. Remove the air cleaner.
2. Remove the air pump.
3. Remove the carburettor and intake manifold assembly.
4. Remove the heat insulator.
5. Loosen the nuts and remove the thermal reactor. The lower nut must be loosened with a **special tool** (49 2113 001).

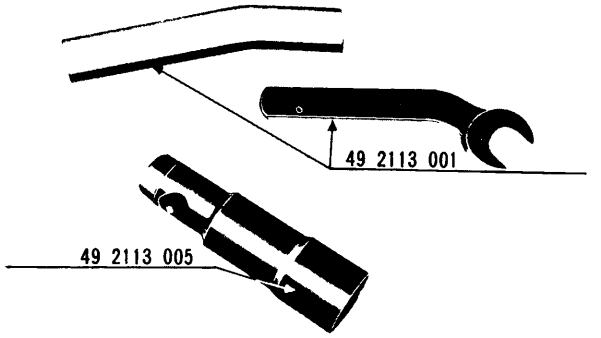

Fig. 1A–41 Special tools

c. Installing of thermal reactor

Install the thermal reactor in the reverse sequence.

1A–E–5. Air Control Valve

a. Checking of air control valve

1. Turn off the ignition switch and check the operation of the solenoid. If the clicking sound is audible, the solenoid is normal. If direct connector of the solenoid terminal to the battery produces no operation sound, the solenoid is defective.
2. Attach the pressure gauge as in Fig. 1A–42.

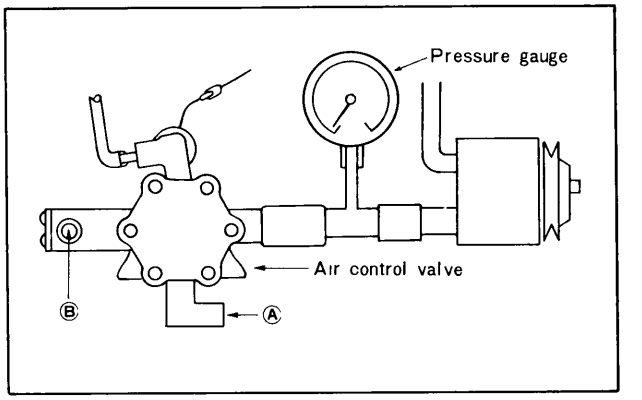

Fig. 1A–42 Checking of air control valve

3. Remove the air hoses from outlets Ⓐ and Ⓑ .
4. Start the engine and keep it running at idle speed. Check to see that the pressure gauge reads 0.033 ~ 0.046 kg/cm² (0.47 ~ 0.65 lb/in²) and that there is no air leak from outlets Ⓐ and Ⓑ of the air control valve.
5. Make sure that the pressure gauge reads **0.11~0.14 kg/cm² (1.3 ~ 2.0 lb/in²)** when the engine speed is **3,000 rpm** and that there is air leak from outlets Ⓐ and Ⓑ.
6. Remove the solenoid terminal. Make sure that the pressure gauge reads **0 ~ 0.025 kg/cm² (0 ~ 0.36 lb/in²)** and that air flows from outlet Ⓐ of the air control valve and air **does not** flow from outlet Ⓑ

b. Removing of air control valve

1. Remove the air cleaner.
2. Remove the wiring to the solenoid.
3. Remove the air hoses from the air control valve.
4. Loosen the nuts and remove the air control valve.

c. Installing of air control valve

Install the air control valve in the reverse sequence.

1A–E–6. Thermosensor

a. Checking of thermosensor

1. Make sure that there is no boot breakage or wax

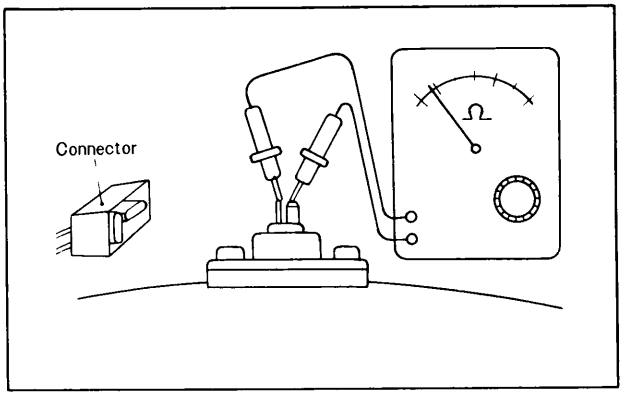

Fig. 1A–43 Checking of thermosensor

leak.
2. Connect the ohm meter as in Fig. 1A–43, and check the resistance. Reading of **under 200 kΩ** indicates that the thermosensor is normal.

b. Removing of thermosensor
1. Remove the air cleaner.
2. Remove the starting motor.
3. Remove the thermosensor connector.
4. Remove the boot.
5. Loosen the nuts and remove the thermosensor.

c. Installing of thermosensor
Install the thermosensor in the reverse sequence.

1A–E–7. Vacuum Switch

a. Checking of vacuum switch
1. Remove the cap of the leading spark plug distributor.
2. Remove the vacuum sensing tube from the vacuum advancer of the leading spark plug distributor, then attach the vacuum gauge in its place as in Fig. 1A–44.

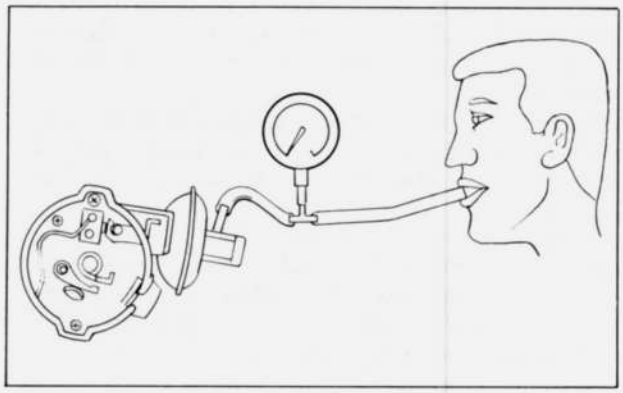

Fig. 1A–44 Checking of vacuum switch

3. Hold the mouth on the vacuum gauge and suck in reading the vacuum gauge. Make sure by the switching sound that the vacuum switch changes over from **"ON" to "OFF"** when the vacuum gauge reading is under approximately **180 mm–Hg,** and it changes over from **"OFF" to "ON"** when the vacuum is reduced until the vacuum gauge reads **120 ± 30 mm–Hg.**
4. Mount the cap of the leading spark plug distributor and connect the vacuum sensing tube to the vacuum advancer.
5. Remove the thermosensor connector.
6. Connect the timing light to the high tension cord of the trailing spark plug distributor. Run the engine at idle speed and check to see that the timing light goes off (the vacuum switch "OFF") when the engine speed is raised to **1,900 ± 300 rpm ~ 4,000 ± 200 rpm.**

1A–E–8. Control Box

a. Checking of control box
1. Remove the thermosensor connector and check the following points:
1) Connect the timing light to the high tension cord of the trailing spark plug distributor.

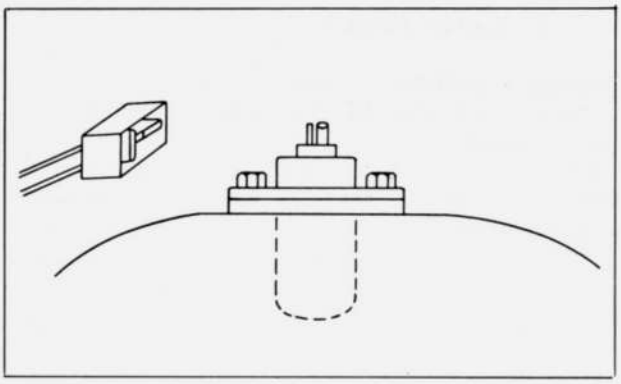

Fig. 1A–45 Removing of thermosensor connector

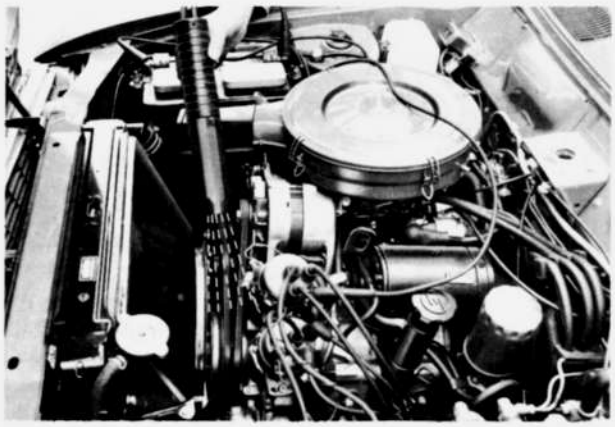

Fig. 1A–46 Checking of control box (1)

Check to see that the timing light does not go on when the engine speed is between **1,900 ± 300 rpm ~ 4,000 ± 200 rpm,** and goes on when the engine speed is raised to **more than 4,200 rpm.**
2) Connect an ammeter to the air control valve solenoid and the anti-afterburn valve solenoid.
Check to see that the current flows to each solenoid when the engine speed is between **800 ~ 4,000 ± 200 rpm** and there is no current flow to either solenoid when the engine speed is above **4,200rpm.**

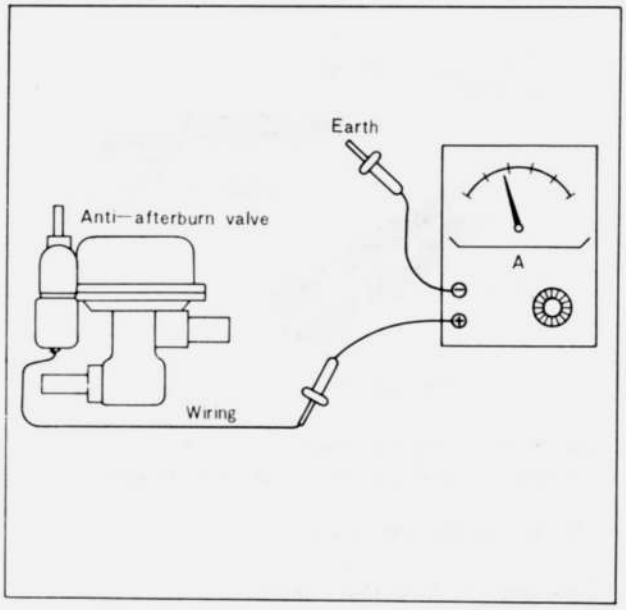

Fig. 1A–47 Checking of control box (2)

2. With the thermosensor connector terminal short-circuited as in Fig. 1A–48, check the following points :

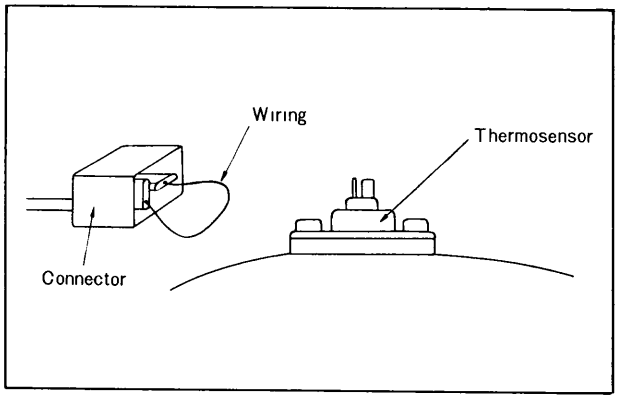

Fig. 1A–48 Connector short-circuit

1) Connect the timing light to the high tension cord of the trailing spark plug distributor and check to see that the timing light goes on when the engine speed is between **1,900 ± 300 rpm and 4,000 ± 200 rpm.**

3. Connect the thermosensor connector to the thermosensor and check the following points:
1) Connect an ammeter to the coasting valve solenoid and check to see that there is no current flow to the ammeter when idling, current flows above **1,250 ~ 1,550** rpm;
When the engine speed is gradually lowered, the current flow stops at **1,300 ~ 1,100 rpm.**

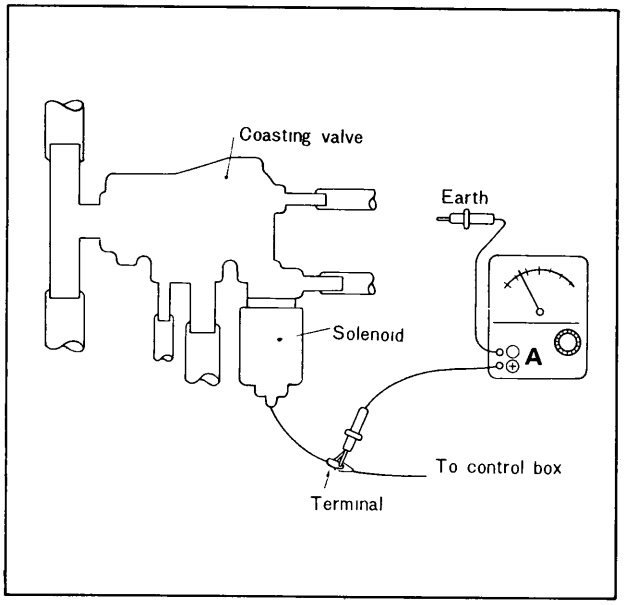

Fig. 1A–49 Checking of control box (3)

b. Removing of control box
1. Remove the control box connector.
2. Loosen the control box nuts and remove the control box.

c. Installing of control box
Install the control box in the reverse sequence.

1A–E–9. Thermodetector

a. Checking of thermodetector
Check the resistance, using an ohm meter. If the resistance is **lower than 200 kΩ**, the thermodetector is satisfactory.

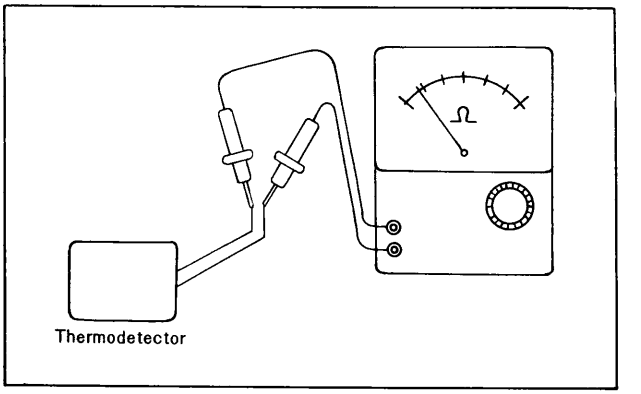

Fig. 1A–50 Checking of thermodetector

1A–E–10. Anti-afterburn Valve

a. Checking of anti-afterburn valve
1. Remove the air suction hose.
2. Run the engine at idle speed.
3. Hold the hand over the opening of the air suction hose for the anti-afterburn valve. If strong vacuum is felt, the anti-afterburn valve should be replaced.
4. Run the engine at 3,500 ~ 3,800 rpm and make sure that, when the throttle valve is fully closed suddenly, air is sucked in for **0.2 ~ 1.0 sec.** through the air suction hose of the anti-afterburn valve.
5. Run the engine at idle speed.
6. Remove the lead wire leading to the solenoid of the anti-afterburn valve.
Make sure that air continues to be sucked in through the air suction hose while the lead wire disconnected.

b. Removing of anti-afterburn valve
1. Remove the air cleaner
2. Remove the air hoses from the anti-afterburn valve.
3. Loosen the mounting nuts and remove the anti-afterburn valve.

c. Installing of anti-afterburn valve
Install the anti-afterburn valve in the reverse sequence.

1A–E–11. Coasting Valve

a. Checking of coasting valve
1. Attach the vacuum gauge as in Fig. 1A–51.
2. Start and warm up the engine.
Make sure that the vacuum gauge reads more than 400 mm-Hg when the engine speed is 800 rpm.
3. Raise the engine speed to about **2,500 rpm.** Make sure that, when the throttle valve is fully closed suddenly, the vacuum gauge reads **0 ~ 30 mm-Hg** and, when the engine speed is lowered to **1,300 ~ 1,100 rpm**, the reading rises to **more than 400 mm-Hg.**

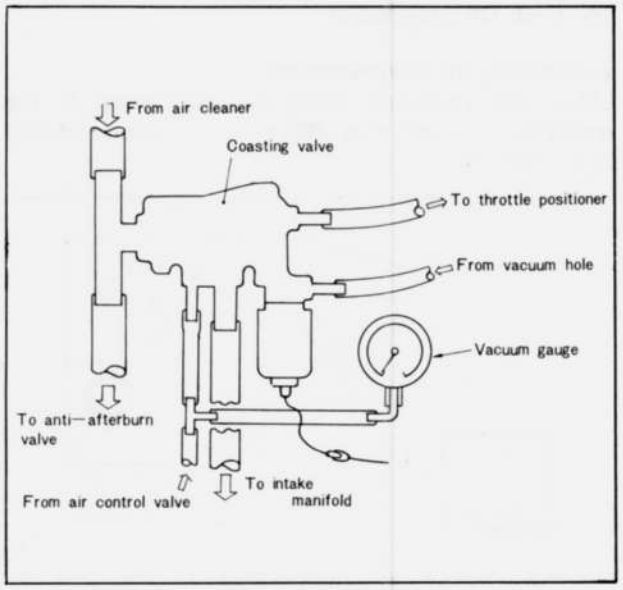

Fig. 1A–51 Checking of coasting valve

When vacuum gauge readings are excessive, check the following points:

1) Check the current from the control box to the coasting valve solenoid by reference to the procedure mentioned in 1A–E–9.
2) Make sure that the solenoid operates properly.
3) Make sure that the throttle positioner is in proper adjustment. Refer to the adjusting procedure mentioned in 1A–E–12.
4) Make sure that there is no clogging in the vacuum relief passage connecting the vacuum chamber and the air inlet pipe in the coasting valve.
5) Make sure that idling fuel flow is proper. (Proper flow: 1.8 ~ 2.1 1/H or 0.47 ~ 0.54 U.S. gallon /H).

b. Removing of coasting valve

1. Remove the air cleaner
2. Remove the coasting valve from the air hoses and the vacuum sensing tubes.
3. Loosen the mounting bolts and remove the coasting valve.

c. Installing of coasting valve

Install the coasting valve in the reverse sequence.

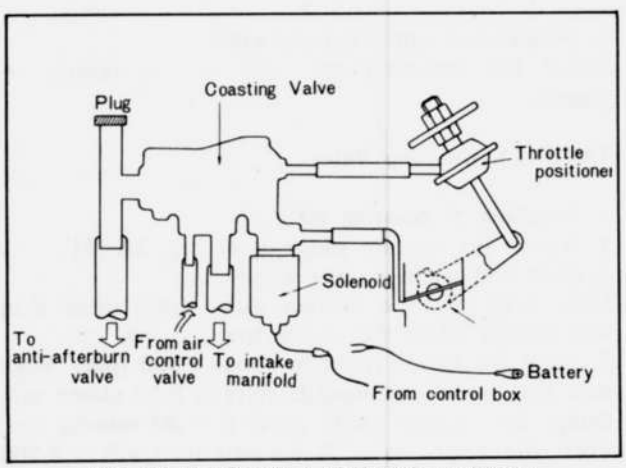

Fig. 1A–52 Checking of throttle positioner

1A–E–12. Throttle Positioner

a. Checking of throttle positioner

1. Remove the air hose leading to the air cleaner from the coasting valve air inlet, and plug the air inlet as in Fig. 1A–52.
2. Start the engine and run the engine at 2,000 rpm.
3. Disconnect the wiring leading to the coasting valve solenoid and connect in its place the wiring from the positive terminal of the battery. When the accelerator pedal is released suddenly, the engine speed will be stays 950 ± 50 rpm. If the engine speed does not become stable at that value, adjust the throttle positioner in the procedure mentioned below.

b. Adjusting of throttle positioner

1. Disconnect the wiring leading to the coasting valve solenoid and connect in its place the wiring from the positive terminal of the battery.
2. When the accelerator pedal is released from 2,000 rpm, adjust the adjusting nut in or out so that the engine speed will be 950 ± 50 rpm.
3. Tighten the lock nut.
4. Check again to see that, when the battery wiring is disconnected, from the solenoid, the engine speed decreases to 800 rpm and when it is connected, the engine speed rises to 950 ± 50 rpm.

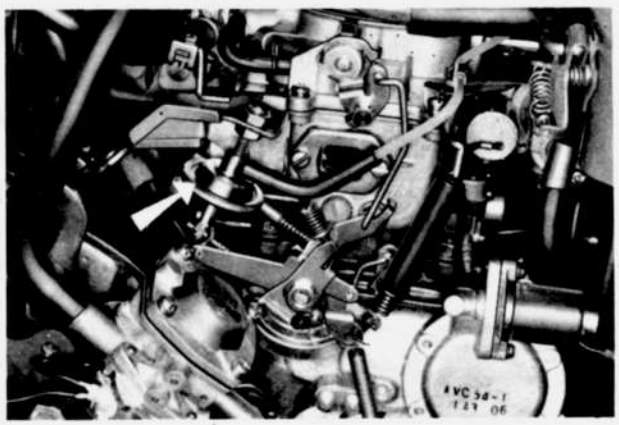

Fig. 1A–53 Throttle positioner

1A–E–13. Air Supply Valve

a. Checking of air supply valve

1. Remove the air hose from the air suction pipe of the air supply valve.
2. Start the engine and keep it running at idle speed. When the air suction pipe of the air supply valve is closed with the hand, reduction of idle speed must be **under 30 rpm** Make sure that, when the wiring to the air supply valve solenoid is disconnected, a large amount of air is supplied into the intake manifold.

b. Removing of air supply valve

1. Remove the air cleaner and air duct.
2. Disconnect the air hose, vacuum sensing tube and lead wire.
3. Loosen the mounting nuts and remove the air supply valve.

c. Installing of air supply valve
Install the air supply valve in the reverse sequence.

1A–E–14. Time Lag Relay

a. Checking of time lag relay
1. Connect an ammeter to the positive side of the ignition coil for the leading spark plug.
2. Start the engine and keep it running at idle speed. When the current continues to flow for **0.7 ~ 1.0 sec.** after turning off the engine switch, the time lag relay is satisfactory.

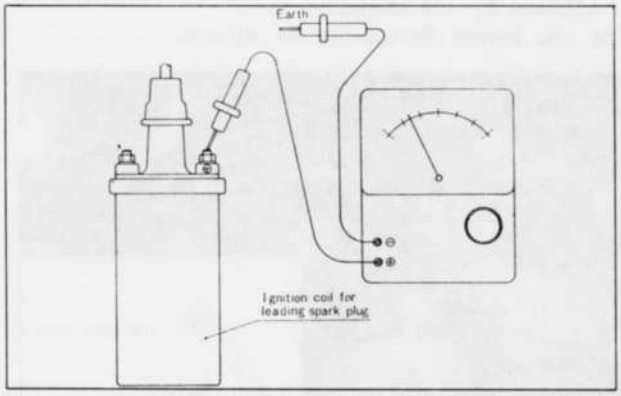

Fig. 1A–54 Checking of time lag relay

1A–E–15. Ventilation Valve

a. Checking of ventilation valve
1. Check to see that the air cleaner element is not clogged.
2. Install a vacuum gauge as in Fig. 1A–55.
3. Start the engine. When the engine speed is raised to 2,500 ~ 3,000 rpm, the vacuum reading must be under **60 mm–Hg.**

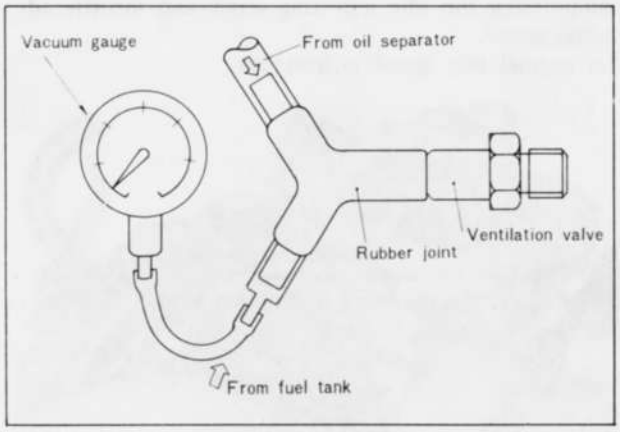

Fig. 1A–55 Checking of ventilation valve

1A–E–16. Canister

a. Checking of canister
1. Check to see that the air cleaner element is not clogged.
2. Attach a vacuum gauge as in Fig. 1A–55. Check to see that when the engine speed is raised to 2,500 ~ 3,000 rpm, the vacuum gauge reads under **60 mm –Hg.**

1A–F. ENGINE TUNE-UP

1A–F–1. Checking of Battery
Referring to Par. 5–A–1, check the battery.

1A–F–2. Checking of Engine Oil
1. Check the engine oil. If it is short of normal level, replenish engine oil to bring the level up somewhere between the "F" and "L" marks. The engine oil should be replaced normally **every 6,000 km (4,000 miles),** and the oil filter should be replaced **every 12,000 km (8,000 miles).**

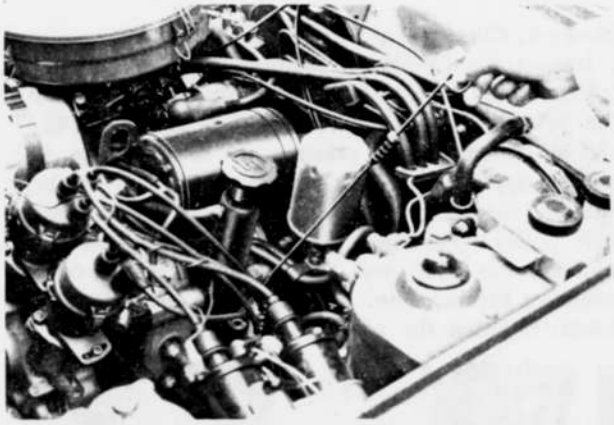

Fig. 1A–56 Checking of engine oil

2. Check the oil for deterioration. Check if the coolant or fuel is present in the oil. If necessary, replace with proper grade engine oil.

Temperature	MS Grade
Below–18°C (Below 0°F)	SAE 5W-20 or 5W-30
–18°C ~ 30°C (0°F ~ 85°F)	SAE 10W-30
–18°C ~ 40°C (0°F ~ 100°F)	SAE 10W-40
–10°C ~ 40°C (15°F ~ 100°F)	SAE 20W-40 or 20W-50

1A–F–3. Checking of Coolant
1. Check the cooling system for leaks, weak hoses, and loose hose clamps. If necessary, replenish with MAZDA genuine long life coolant. The coolant should be replaced normally **every 48,000 km (32,000 miles).**

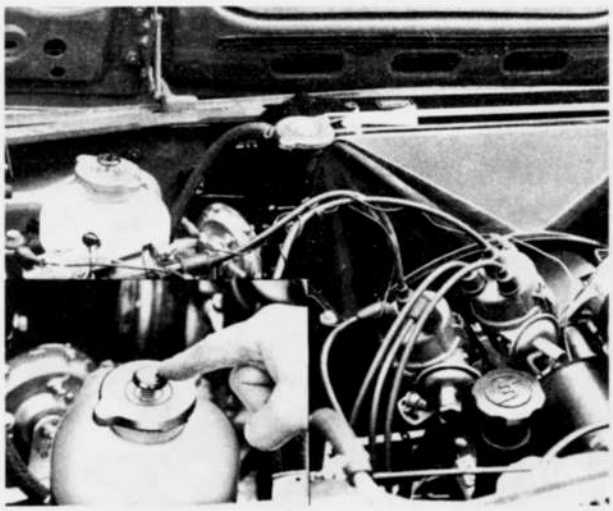

Fig. 1A–57 Checking of coolant

Note:
1. The coolant level should be checked, as much as possible, when it is cold. When checking it while hot, it is advisable to do so by, first of all, releasing the pressure from the expansion chamber by pushing the button on the top of the expansion chamber and then removing the cap of the expansion chamber, the set spring of the radiator and the radiator cap in this order.
2. The appropriate coolant level is to have the radiator full and expansion chamber about **1/3 full. Do not** over fill.

1A–F–4. Checking of Alternator "V"-belt
1. Inspect the "V"-belt condition.
2. Check and adjust if necessary for correct tension. The belt deflection should be **11 ~ 13 mm (0.43 ~ 0.51 in) when thumb pressure of about 10 kg (22** ft-lb) is applied onto the middle position of the belt between the water pump pulley and the eccentric shaft pulley. To adjust the belt tension, loosen the adjusting bar bolt, and adjust the alternator on its mounting bracket until the tension of the belt is sufficient. Tighten the adjusting bar bolt.

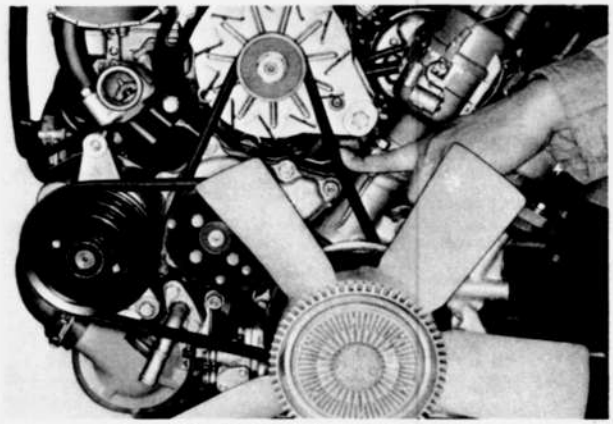

Fig. 1A–58 Checking of deflection

1A–F–5. Adjusting of Air Pump "V"-belt
Referring to Par. 1A–E–1, adjust the "V"-belt tension.

1A–F–6. Checking of Air Cleaner
1. The air cleaner element should be cleaned with compressed air at low pressure **every 3,000 km (2,000 miles).** Under dusty or sandy conditions the element should be cleaned **every 1,500 km (1,000 miles)** and replaced **every 18,000 km (12,000 miles).**
2. Replace the element if damaged or excessively dirty. The element should be replace normally **every 30,000 km (20,000 miles).**



Fig. 1A–59 Replacing of element

1A–F–7. Adjusting of Carburettor

a. Idle limiter
Idle limiter regulates the fuel flow at low speeds and is adjusted by the manufacture.
The idle limiter should not be adjusted.

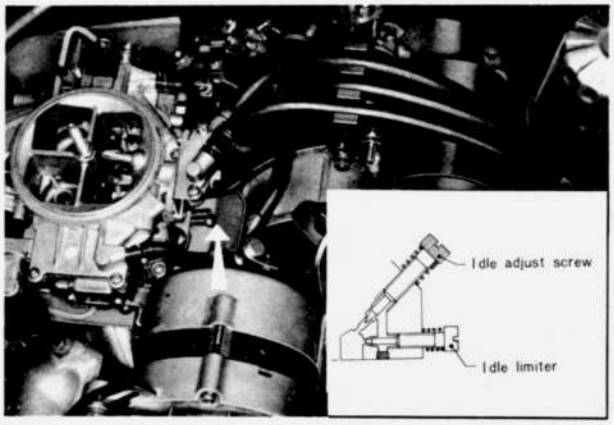

Fig. 1A–60 Idle limiter

b. Adjusting of idle speed
1. Fully warm up the engine.
2. Make sure that the return of the secondary throttole valve is proper.
3. Adjust the carbon monoxide concentration to **0 ~ 3.0 percentages** and the idle speed to 800 rpm by manipulating the idle adjusting screw and throttle adjusting screw.
The normal idle speed is **800 rpm.**

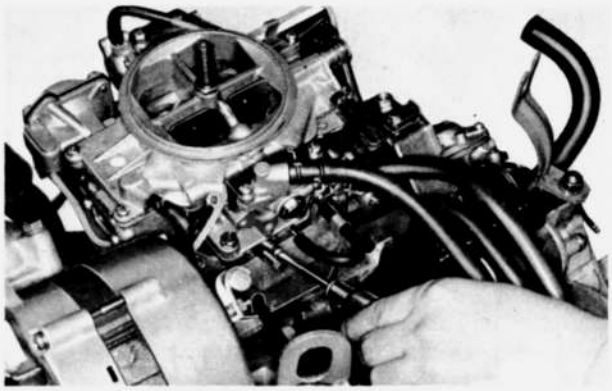

Fig. 1A–61 Adjusting of idle speed

c. Fast idle adjustment
When the carburettor is in choked position, the primary throttle valve is opened **15 degrees.**
When the choke valve is fully closed, the clearnace between the primary throttle valve and bore is **1.12 mm (0.0441 in).**
Measure the clearance using a suitable wire gauge,

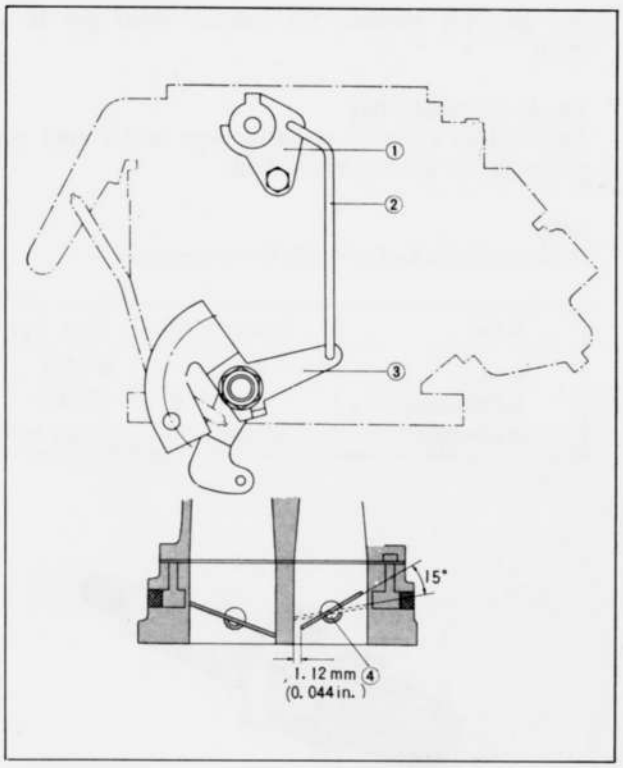

Fig. 1A–62 Fast idle adjustment
1. Choke lever
2. Fast idle lever
3. Choke connecting lever
4. Primary throttle valve

and if necessary, adjust it by bending the fast idle lever.
Check the choke valve for smooth movement.

d. Adjusting of choke valve return spring
Select and adjust the setting position of choke spring according to the atmospheric temperature and the engine condition. The setting positions are as shown in Fig. 1A–63.

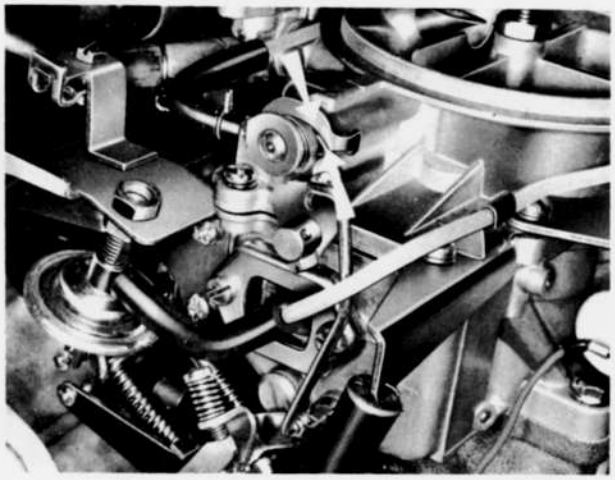

Fig. 1A–63 Adjusting of return spring

1A–F–8. Checking of Distributor

a. Adjusting of ignition timing
Adjust the ignition timing as follows:
1. Connect a timing light to the high tension cord for leading spark plug of front rotor housing.
2. Start the engine, and run it at idle speed of 800 rpm.
3. Aim the timing light at the timing indicator pin on the front cover.
4. Loosen the distributor locking nuts and rotate the leading side distributor body until the timing mark on the eccentric shaft pulley aligns with the timing indicator pin on the front cover.
5. Tighten the locking nuts and recheck the timing.
6. Adjust the trailing side distributor in the same way as above.

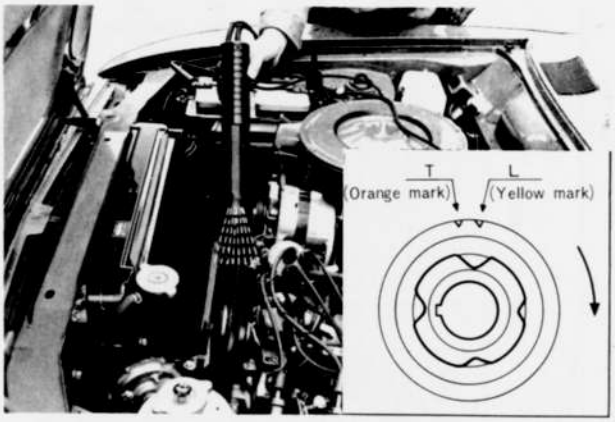

Fig. 1A–64 Adjusting of ignition timing

b. Advance test
To test the ignition advancing characteristic of the

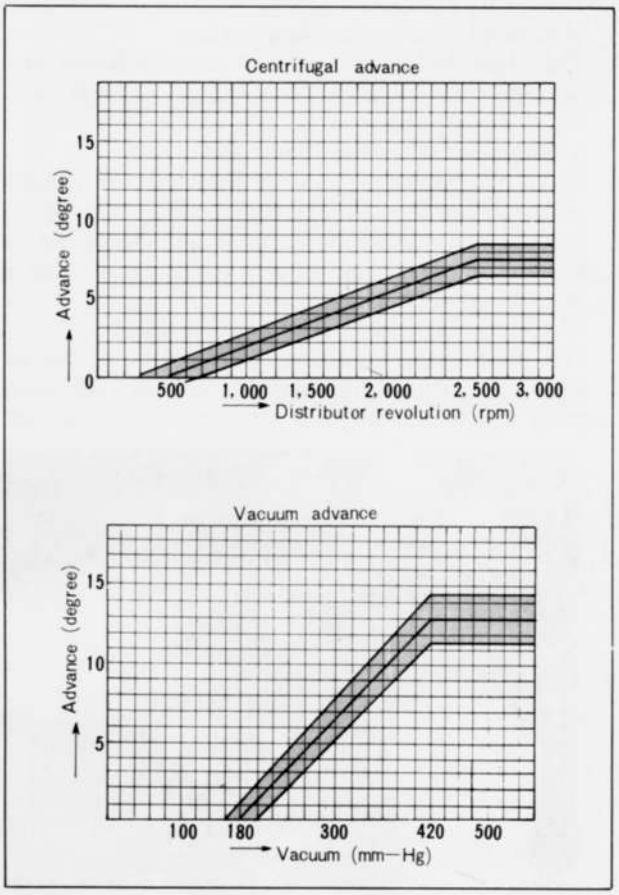

Fig. 1A–65 Advancing characteristic (Trailing side)

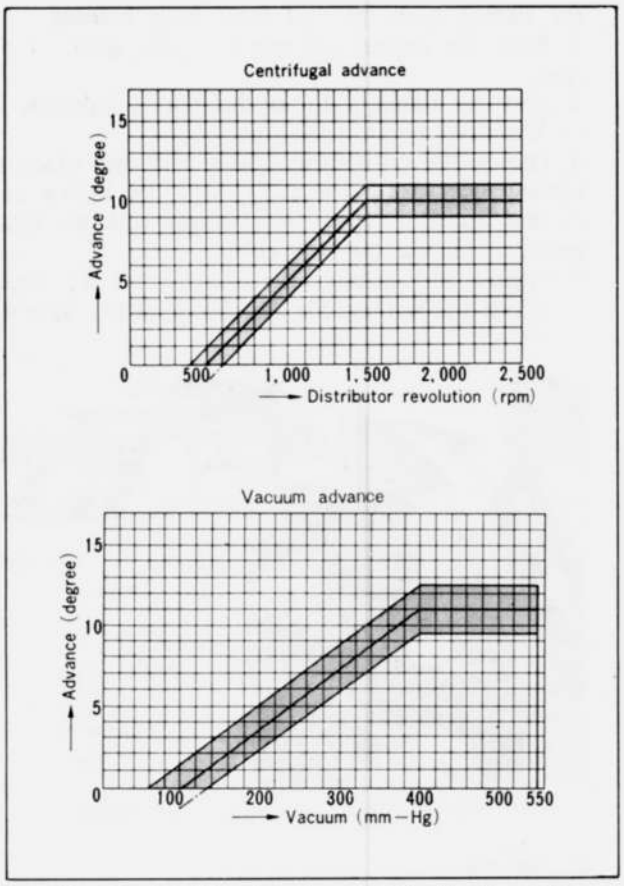

Fig. 1A–66 Advancing characteristic (Leading side)

distributor, use a distributor tester.
The advancing characteristic of each distributor should be **within the range** shown in Fig. 1A–65 and 1A–66.

c. Checking of contact point gap
Check and adjust the contact point gap. To check the point gap, rotate the distributor drive shaft until the contact arm rubbing block is at the top of the cam. Check the point gap with a feeler gauge. The gap should be **0.45 mm (0.018 in).**
Check the cam dwell angle with a tester.
The dwell angle should be **55° to 61°**. If the dwell angle was below the specified amount, the contact point gap is too large. If the dwell angle was above the specified amount, the contact point gap is too small.

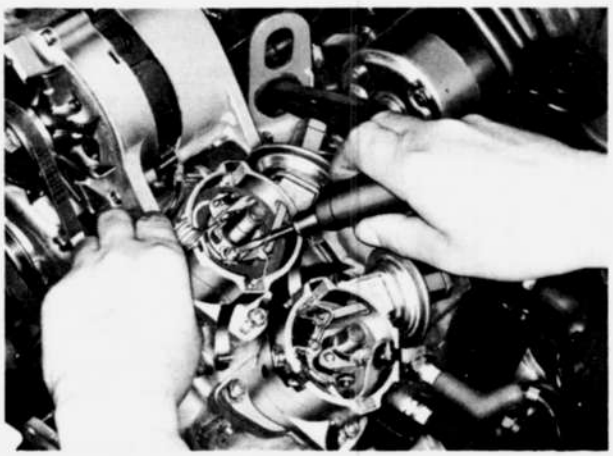

Fig. 1A–67 Adjusting of point gap

1A–F–9. Spark Plug
Spark plugs are of a standard type and a cold type as shown in the following table.

Note:
Do not use spark plug which is not specified.

Maker	Standard type	Cold type
NGK	B-7EM	B-8EM
NIPPONDENSO	W22EA	W25EA
CHAMPION	N-80B .033"	N-78B .033"



Fig. 1A–68 Spark plug

a. Checking of Spark Plug
1. Inspect each plug individually for badly worn electrodes, glazed, broken or blistered porcelain, and replace the plug as necessary.
2. Clean the spark plugs throughly using a sand blast cleaner.
3. Adjust the spark plug gap by bending the ground electrode to obtain the gap **0.9 mm (0.033 in)** with a wire gauge.

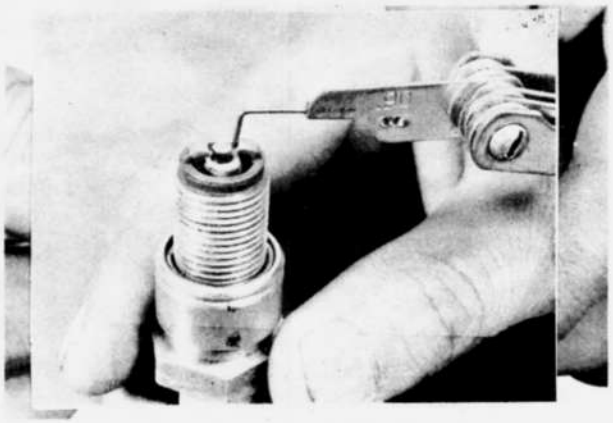

Fig. 1A–69 Adjusting of electrode gap

4. Inspect each spark plug for make, and heat range. All spark plugs must be of the same maker and number or heat range. If spark plugs show burning white or rapid electrode wear, replace with a **cold range type** spark plugs.

1A–G. TROUBLE SHOOTING

The possible faults and their remedies are listed in the following table.
When the symptoms of troubles are detected, proper care must be taken immediatly before proceeding to the next probable cause.

Symptoms and probable causes	Remedies
1. Noisy air pump	
1) Disconnected or leaky air hose	Connect or replace
2) "V" – belt improperly adjusted	Adjust
3) Loose pump attaching bolts	Tighten
4) Defective air pump	Replace
2. Rough engine idling or hard starting	
1) Fouled or improperly adjusted spark plugs	Clean, adjust or replace
2) Burned or improperly adjusted distributor contact point	Adjust or replace
3) Defective ignition coil	Replace
4) Improper ignition timing adjustment	Adjust
5) Improper carburettor adjustment	
a) Idle speed	Adjust
b) Float level	Adjust
c) Incorrect fast idle	Adjust
6) Improper return of secondary throttle valve	Correct
7) Air leak into intake manifold from each connection or hose	Connect or replace
8) Excessive air leak into intake manifold from each valve	
a) Defective anti-afterburn valve	Replace
b) Defective air supply valve	Replace
c) Improper operation of coasting valve	Check item "9)"
9) Improper operation of coasting valve	
a) Improper throttle positioner adjustment	Adjust
b) Defective control box	Replace
c) Defective coasting valve	Replace
10) Improper operation of air control valve	
a) Defective control box	Replace
b) Defective air control valve	Replace
11) Improper operation of ventilation valve	Replace
12) Hot and cold air intake system stuck in "Heat-on" position	Adjust
3. Afterburn in the exhaust system	Adjust
1) Improper carburettor adjustment	Clean, adjust or replace
2) Fouled or improperly adjusted spark plugs	Clean, adjust or replace
3) Improper operation of anti-afterburn valve	Replace
4) Improper operation of coasting valve	Check item "2–9)"
5) Improper operation of air supply valve	Replace
6) Improper operation of time lag relay	Replace
7) Improper throttle positioner adjustment	Adjust
4. Poor acceleration and car knocking	
1) Fouled or improperly adjusted spark plugs	Clean, adjust or replace
2) Improper ignition timing adjustment	Adjust
3) Improper carburettor adjustment	Adjust
4) Excessive air leak into intake manifold from each connection, hose or valve	Check item "2–7)"
5) Improper operation of trailing side spark plug	Replace
a) Defective thermosensor	Replace
b) Defective vacuum switch	Replace
c) Defective control box	Replace
5. Much hydrocarbon and carbon monoxide in exhaust gas	
1) Improper carburettor adjustment	Adjust
a) Low idle speed	
b) Lean air-fuel mixture	
2) Fouled or improperly adjusted spark plugs	Clean, adjust or replace
3) Improper ignition timing adjustment	Adjust
4) Improper operation of ignition control system	Check item "4–5)"
5) Improper operation of air injection system	

Symptoms and probable causes	Remedies
a) Leaky or disconnected hoses	Connect or replace
b) Bend or clogged hoses	Repair or replace
c) Improper air pump "V" – belt tension	Adjust
d) Defective air pump	Replace
e) Defective check valve	Replace
f) Defective air control valve	Check item "2–10)"
g) Excessive air leak into intake manifold from each connection, hose or valve	Check item "2–7)"
h) Defective ventilation valve	Replace
i) Defective thermal reactor	Replace

TECHNICAL DATA

Carburettor	
Type	Zenith stromberg
Idle speed	800 rpm
Idle fuel flow	1.8 ~ 2.1 *l*/H (0.47 ~ 0.54 U.S. gallon/H)
CO concentration	0 ~ 3.0 %
Throat diameter :	
Primary	28 mm (1.1024 in)
Secondary	34 mm (1.3386 in)
Venturi diameter :	
Primary	20 x 13 x 6.5 mm (0.7874 x 0.5118 x 0.2559 in)
Secondary	28 x 10 mm (1.1024 x 0.3937 in)
Main jet :	
Primary	# 90
Secondary	#155
Main air bleed :	
Primary	#880
Secondary	#150
Slow jet :	
Primary	# 50
Secondary	#130
Slow air bleed :	
Primary No. 1	# 70
No. 2	#190
Secondary No. 1	# 60
No. 2	# 60
Auxiliary slow jet	# 80
Vacuum port diameter :	
Primary	1.8 mm (0.0708 in)
Secondary	0.6 mm (0.0236 in)
Acceleration pump nozzle	0.6 mm (0.0236 in)
Idle limiter hole diameter	1.8 mm (0.0708 in)

Distributor	
Dwell angle	58 ± 3°
Contact point gap	0.45 ± 0.05 mm (0.018 ± 0.002 in)
Contact point pressure	500 ~ 650 gr (1.1 ~ 1.4 lb)
Condenser capacity	0.27 ± 0.027 μF
Centrifugal advance:	
Leading	Starts: 0 ± 1° at 500 rpm
	Maximum: 10 ± 1° at 1,500 rpm
Trailing	Starts: 0 ± 1° at 500 rpm
	Maximum: 7.5 ± 1° at 2,500 rpm
Vacuum advance:	
Leading	Starts: 0 ± 1.5° at 100 mm-Hg
	Maximum: 11 ± 1.5° at 400 mm-Hg
Trailing	Starts: 0 ± 1.5° at 180 mm-Hg
	Maximum: 13 ± 1.5° at 420 mm-Hg
Ignition timing:	
Leading	0°
Trailing	10° after top dead center
Vacuum switch	Equipped
Spark plug	
Type	
Standard	NGK B–7EJ
	NIPPONDENSO W22EG2
	CHAMPION N–80B
Cold	NGK B–8EJ .033"
	NIPPONDENSO W25EJ2
	CHAMPION N–78B .033"
Tread	14 mm
Electrode gap	0.9 mm (0.033 in)

SPECIAL TOOLS

49 2113 001	Thermal reactor nut remover
49 2113 005	Ventilation valve box wrench

MAZDA RX-2

1972

AIR POLLUTION CONTROL SYSTEMS

AIR POLLUTION CONTROL SYSTEMS

1A–A. EXHAUST EMISSION CONTROL SYSTEM ..... 1A : 7
1A–A–1. Air Injection System ..... 1A : 7
a. Air pump ..... 1A : 7
b. Check valve ..... 1A : 7
c. Air injection nozzles .... 1A : 7
d. Air control valve ..... 1A : 7
e. Thermal reactor ..... 1A : 8
1A–A–2. Ignition and Air Flow Control System ..... 1A : 9
a. No. 1 thermosensor ..... 1A : 9
b. No. 2 thermosensor ..... 1A : 9
c. Vacuum switch ..... 1A : 9
d. No. 1 control box and thermodetector ..... 1A : 9
e. No. 2 control box and choke switch ..... 1A : 10
1A–A–3. Deceleration Control System ..... 1A : 11
a. Anti-afterburn valve .... 1A : 11
b. Coasting valve ..... 1A : 11
c. Idle switch ..... 1A : 12
d. Air supply valve ..... 1A : 12
1A–B. VENTILATION SYSTEM ..... 1A : 13
1A–B–1. Ventilation Valve ..... 1A : 13
1A–C. EVAPORATIVE EMISSION CONTROL SYSTEM ..... 1A : 14
1A–C–1. Charcoal Filter ..... 1A : 15
1A–C–2. Condense Tank ..... 1A : 15
1A–D. MAINTENANCE SCHEDULE ..... 1A : 16
1A–E. MAINTENANCE PROCEDURE ..... 1A : 17
1A–E–1. Air Pump ..... 1A : 17
1A–E–2. Check Valve ..... 1A : 17
1A–E–3. Air Injection Nozzle ..... 1A : 17
1A–E–4. Thermal Reactor ..... 1A : 18
1A–E–5. Air Control Valve ..... 1A : 18
1A–E–6. No. 1 Thermosensor ..... 1A : 18
1A–E–7. No. 2 Thermosensor .... 1A : 19
1A–E–8. Thermodetector ..... 1A : 19
1A–E–9. Vacuum Switch ..... 1A : 19
1A–E–10. No. 1 Control Box ..... 1A : 19
1A–E–11. No. 2 Control Box and Leading Ignition Retard System ..... 1A : 20
1A–E–12. Anti-afterburn Valve ..... 1A : 21
1A–E–13. Coasting Valve ..... 1A : 22
1A–E–14. Idle Switch ..... 1A : 22
1A–E–15. Choke Switch ..... 1A : 23
1A–E–16. Air Supply Valve ..... 1A : 23
1A–E–17. Ventilation Valve ..... 1A : 23
1A–E–18. Charcoal Filter ..... 1A : 23
1A–E–19. Distributor ..... 1A : 24
1A–E–20. Spark Plug ..... 1A : 25
1A–E–21. Ignition Coil ..... 1A : 26
1A–E–22. Carburetor ..... 1A : 26
1A–F. EXHAUST EMISSION TEST PROCEDURE ..... 1A : 27
1A–F–1. Test Mode ..... 1A : 27
1A–F–2. Test Procedure ..... 1A : 28
1A–F–3. Factors of Driving Operation Which Affect Emission ..... 1A : 30
1A–F–4. Other Elements Which Affect Emission ..... 1A : 30
1A–G. TROUBLE SHOOTING ..... 1A : 31
1A–G–1. Synptoms, Causes and Remedies ..... 1A : 31
1A–G–2. Detects, Conditions of Trouble and Causes of Defects Related to Each System ..... 1A : 34
TECHNICAL DATA ..... 1A : 38

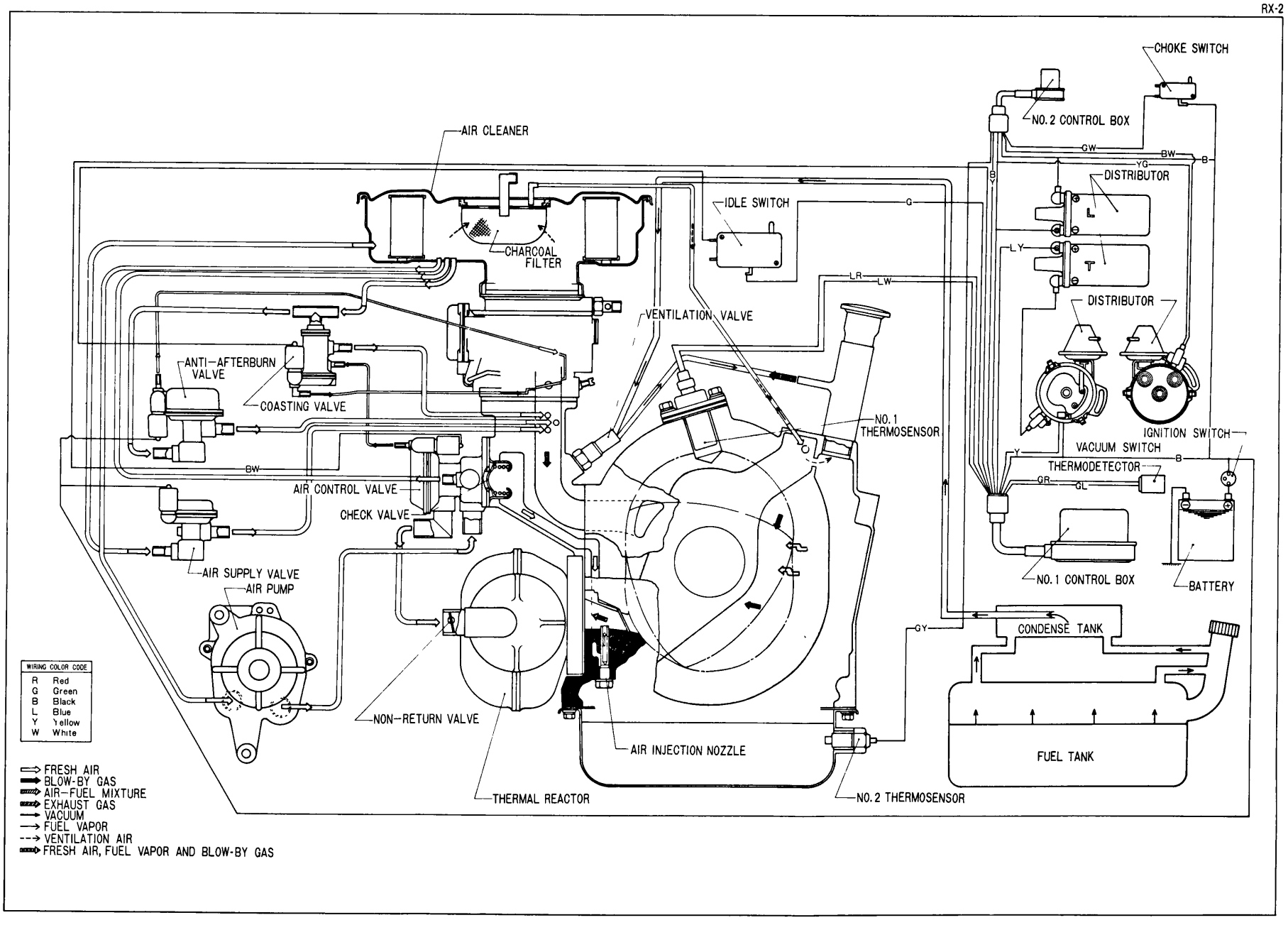

Fig. 1A-1 Air pollution control

RX-2

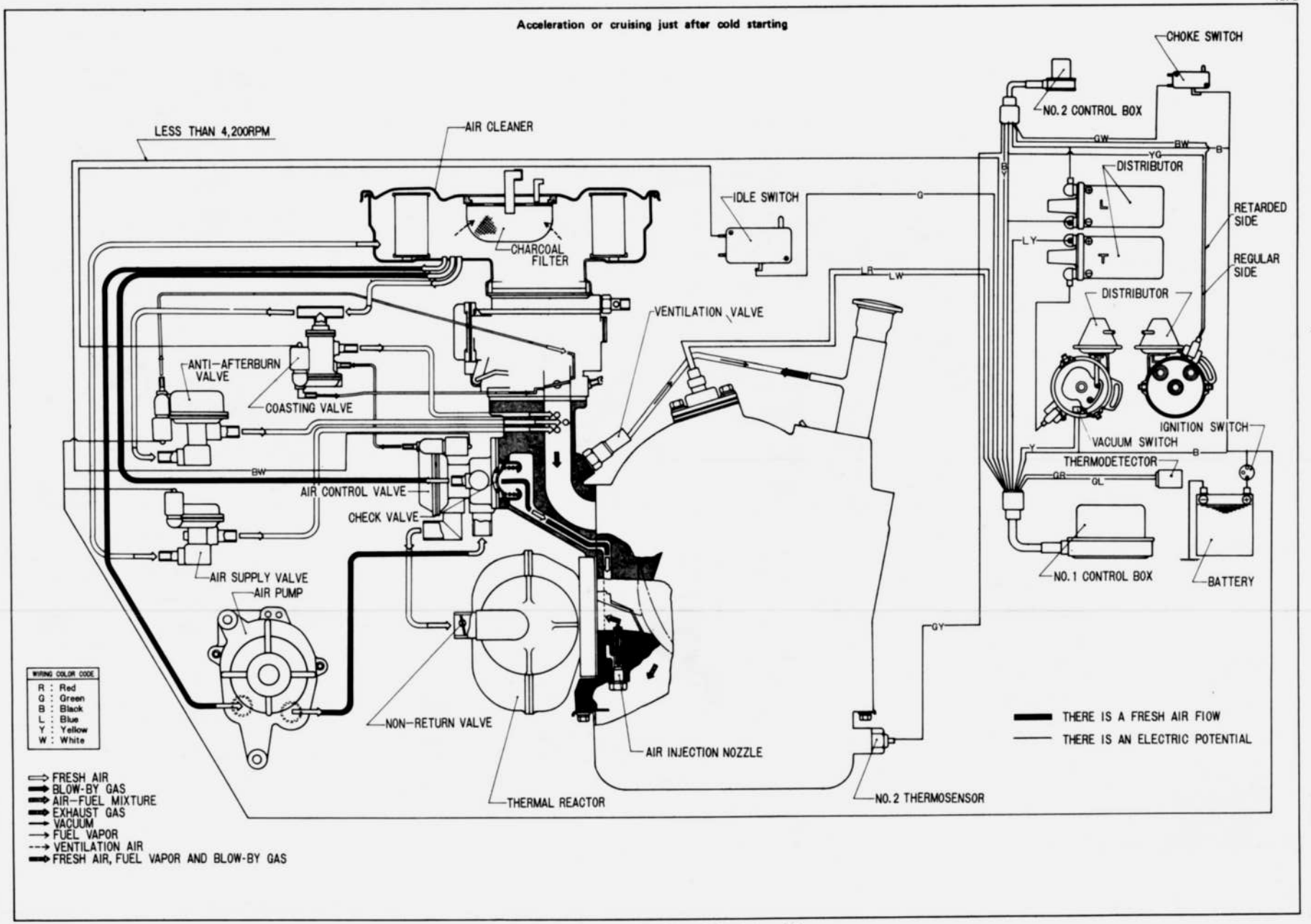

Fig. 1A-2 Condition of air flow and electric potential

RX-2

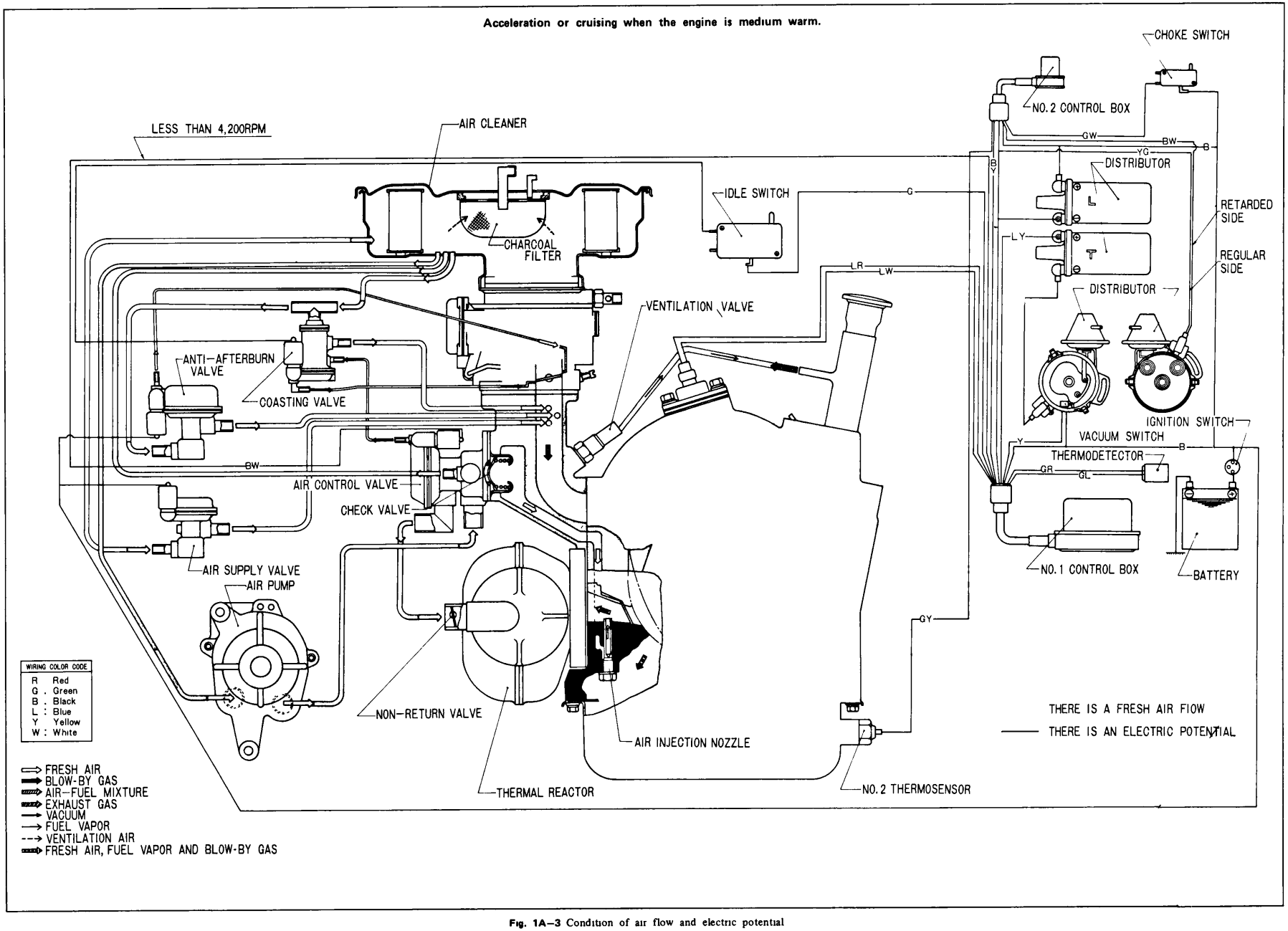

Fig. 1A-3 Condition of air flow and electric potential

RX-2

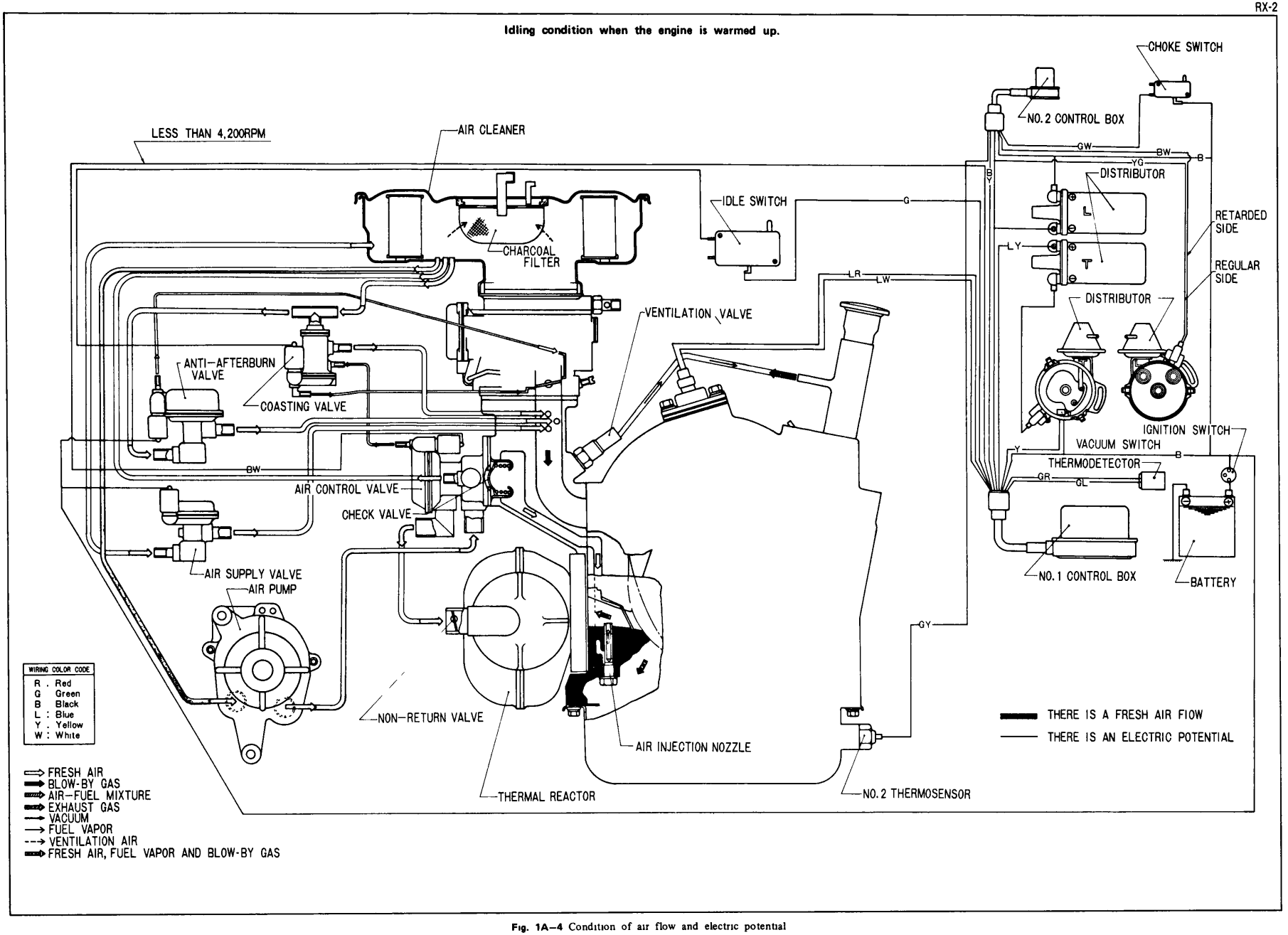

Fig. 1A-4 Condition of air flow and electric potential

RX-2

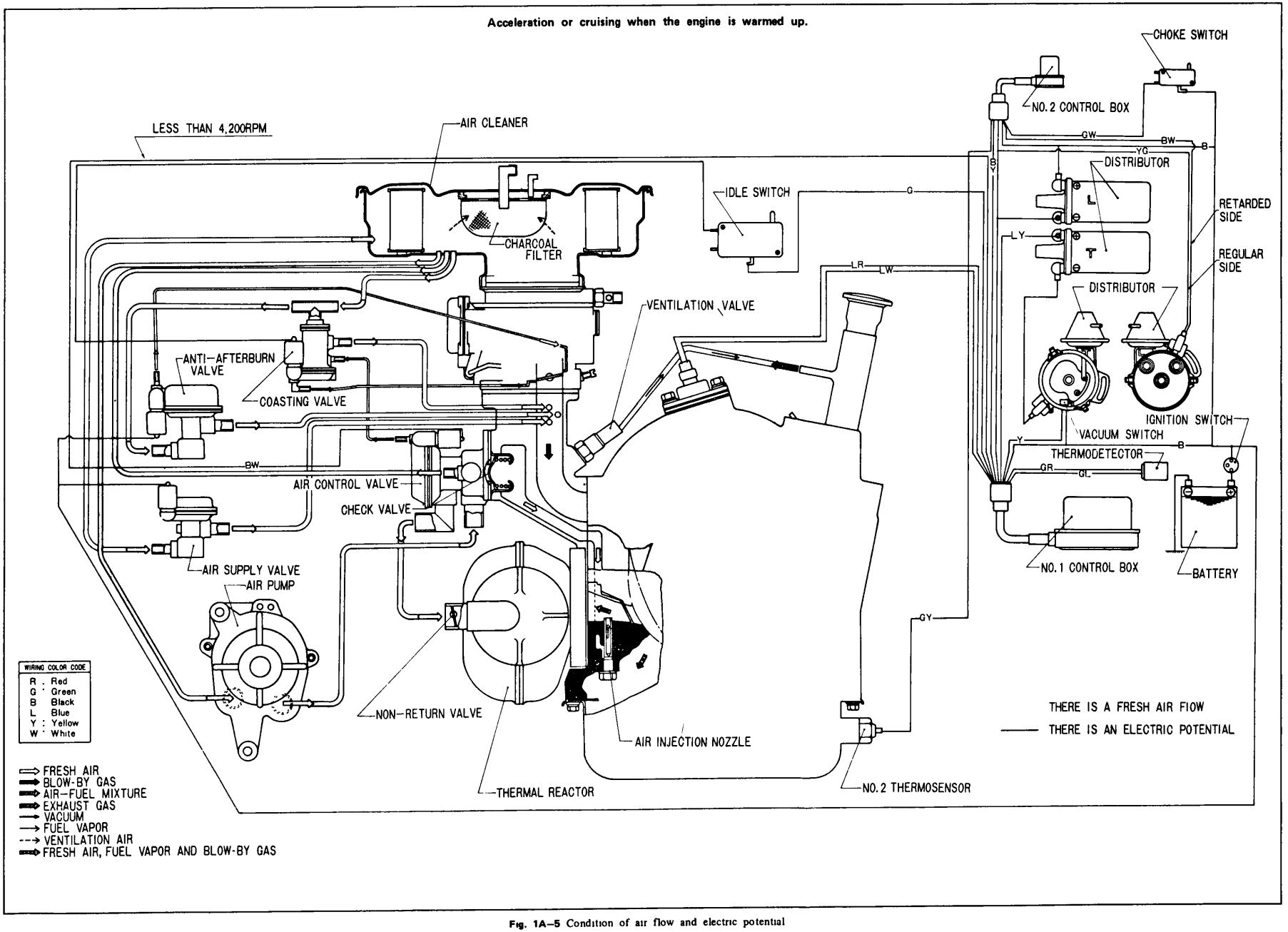

Fig. 1A–5 Condition of air flow and electric potential

RX-2

Deceleration when the engine is warmed up.

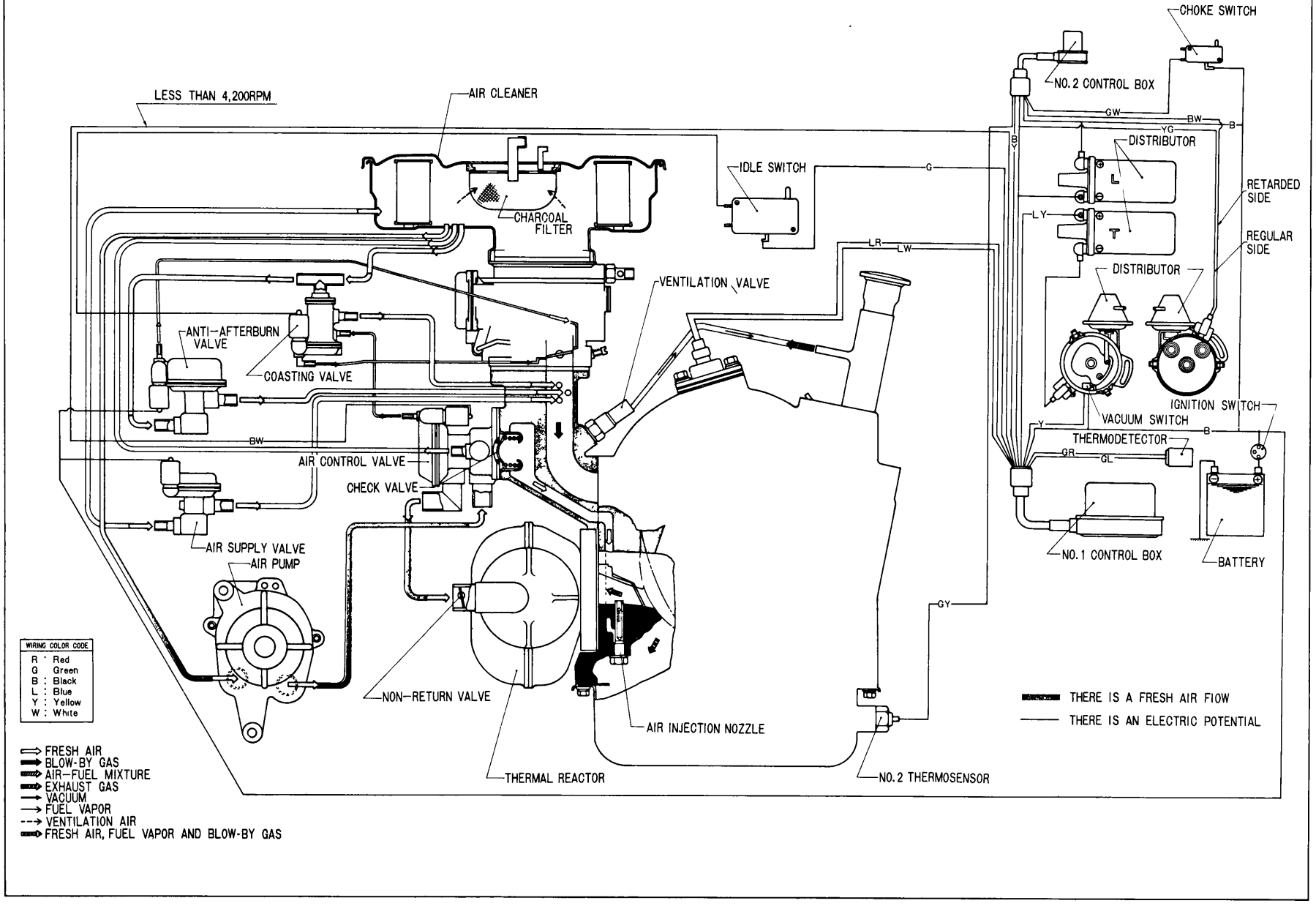

Fig. 1A–6 Condition of air flow and electric potential

AIR POLLUTION CONTROL SYSTEMS

The MAZDA RX-2 is equipped with an exhaust emission control system, a ventilation system and an evaporative emission control system.

1A–A. EXHAUST EMISSION CONTROL SYSTEM

The exhaust emission control system, consisting of an air injection system, an ignition and air flow control system and a deceleration control system, reduces air polluting hydrocarbon and carbon monoxide contained in the exhaust gas of the operating engine.

1A–A–1. Air Injection System

The air injection system, consisting of an air pump, a check valve, and an air injection nozzle, an air control valve and a thermal reactor injects into the exhaust port secondary air necessary for oxidation of hydrocarbon and carbon monoxide contained in the exhaust gas.

a. Air pump

The air pump is a vane type driven by the "V"-belt mounted on the eccentric shaft pulley. It provides to the air injection system secondary air required for re-igniting the exhaust gas.



Fig. 1A–7 Air pump

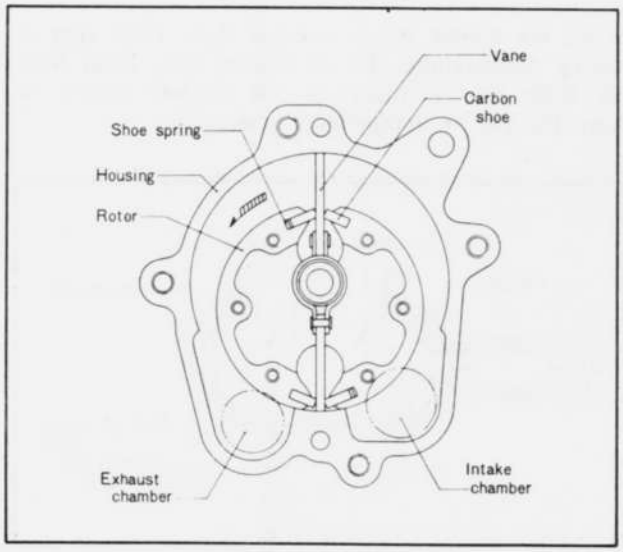

Fig. 1A–8 Air pump cross section

b. Check valve

The check valve opens and closes according to the pressure difference between secondary air and exhaust gas to prevent exhaust gas from backflowing into the air injection system and scorching the air pump, hoses, etc. When the pressure of secondary air in the air injection system exceeds the exhaust gas pressure, the secondary air opens the check valve and flows through the air injection nozzle into the exhaust port. When the secondary air pressure drops lower than the exhaust gas pressure due to failure of the air pump "V"-belt, breaking of the secondary air hose, etc., the check valve closes to prevent the backflow of the exhaust gas into the air injection system.

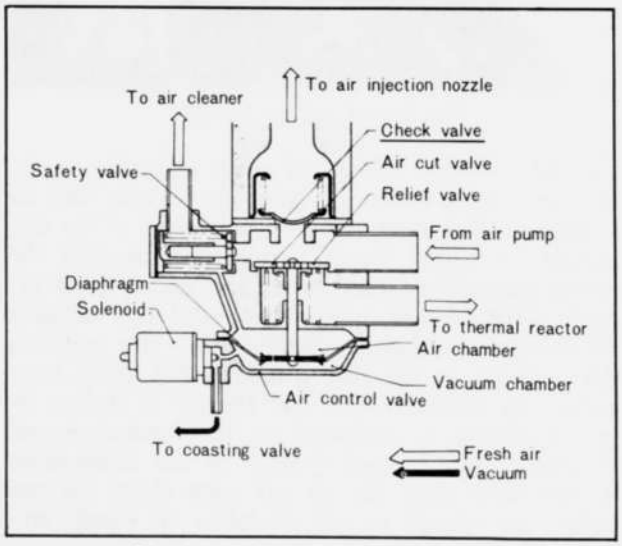

Fig. 1A–9 Check valve cross section

c. Air injection nozzles

The air injection nozzles are attached to each of the front and rear rotor housings. The secondary air channeled via the air pump and the check valve is injected through the nozzle into the exhaust port adjacent to the thermal reactor.

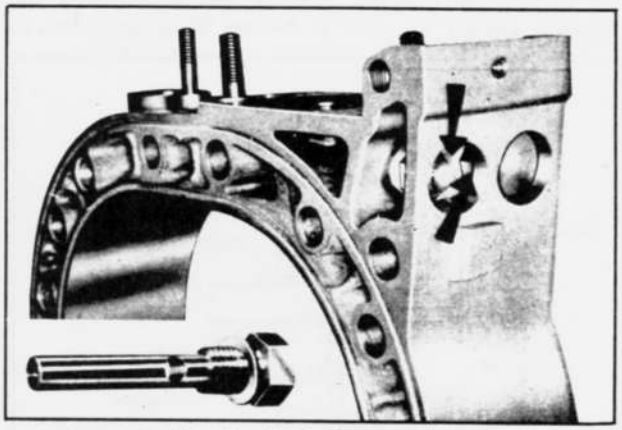

Fig. 1A–10 Air injection nozzles

d. Air control valve

The air control valve contains three valves: the air cut valve and the relief valve which control the amount of secondary air and thermal reactor cooling air to suit the engine operating condition, and the

safety valve that controls the amount of secondary air alone.

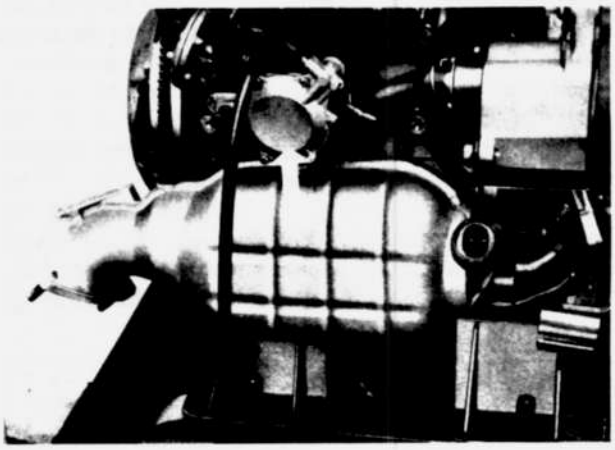

Fig. 1A–11 Air control valve

The air cut valve opens and closes according to the difference of pressure between the vacuum and air chambers. This valve, which is connected to the diaphragm, is closed during normal operation by the intake manifold vacuum. When the engine speed exceeds 4,000 ± 200 rpm, the control box actuates the solenoid to close the vacuum way. This equalizes the pressures in the two chambers, the spring force causes the valve to open and the air in the air injection system is channeled to the thermal reactor to cool it before being emitted to the atmosphere. At the same time, the air cut valve closes the secondary air passage to cut secondary air supply into the exhaust port.

In case the car is decelerated when running at the engine speed below 4,000 ± 200 rpm, the coasting valve of the deceleration control system operates to turn the vacuum in the vacuum chamber of the air control valve to atmospheric pressure. This equalizes the pressures in the vacuum and air chambers and causes the spring to open the air cut valve so that the air in the air injection system will go through the thermal reactor to cool it before being expelled to the atmosphere. At the same time the air cut valve closes the secondary air passage to cut fresh air supply.

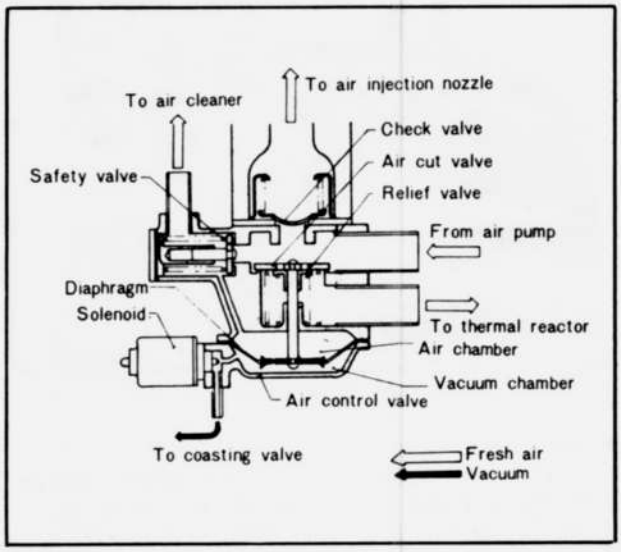

Fig. 1A–12 Air control valve cross section

The relief valve opens and closes in accordance with air pressure in the air injection system and the force of the return spring. When the air pressure in the air injection system exceeds 0.14 ~ 0.2 kg/cm² (2.0 ~ 2.8 lb/in²), it opens the relief valve against the return spring force and proceeds to the thermal reactor to cool it before being expelled to the atmosphere, thus controlling the secondary air volume.

When the air pressure decreases, the spring closes the valve.

The safety valve, like the relief valve, controls air pressure in the air injection system and adjusts the volume of secondary air.

If air in the air injection system should be trapped due to a malfunction, the safety valve relieves the trapped air to the air cleaner, thus preventing damages to the elements of the air injection system.

e. Thermal reactor

The thermal reactor is mounted just outside the exhaust port. It oxidizes the unburned exhaust gas expelled from the engine, to reduce the noxious components such as hydrocarbon and carbon monoxide.

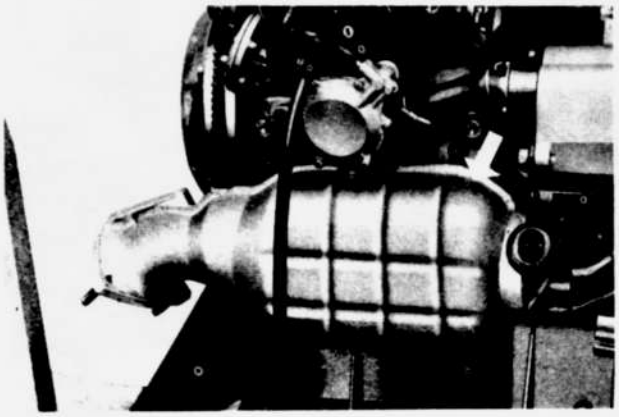

Fig. 1A–13 Thermal reactor

When the engine speed is more than 4,000 rpm or during deceleration, the air control valve feeds fresh air from the air pump to the thermal reactor to keep the reactor temperature reasonably.

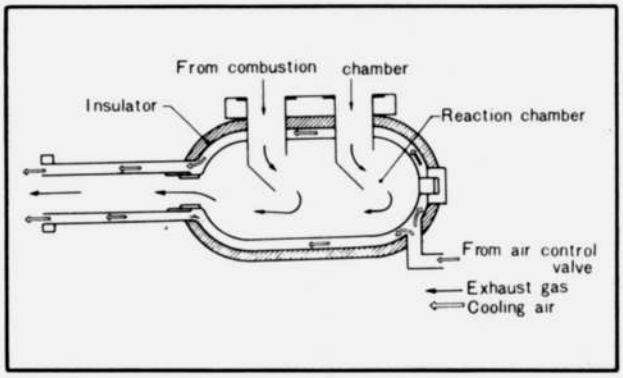

Fig. 1A–14 Thermal reactor cooling air circuit

The non-return valve which prevents backflow of exhaust gas from the reactor is attached at the air inlet of the reactor.

1A–A–2. Ignition and Air Flow Control System

The ignition and air flow control system consists of two thermosensors, a thermodetector, a vacuum switch, choke switch and two control boxes. This system ignites and cuts the trailing spark plug to suit engine temperature and engine speed in order to enhance the reactivity of the thermal reactor when the engine is cold. It has an additional function of regulating the air control valve of the air injection system.

a. No. 1 thermosensor

The No. 1 thermosensor, which is placed in the cooling water passage, detects the water temperature and sends the signal to the positive side of the trailing coil through the No. 1 control box. And this is th source of signal for operating the trailing ignition.

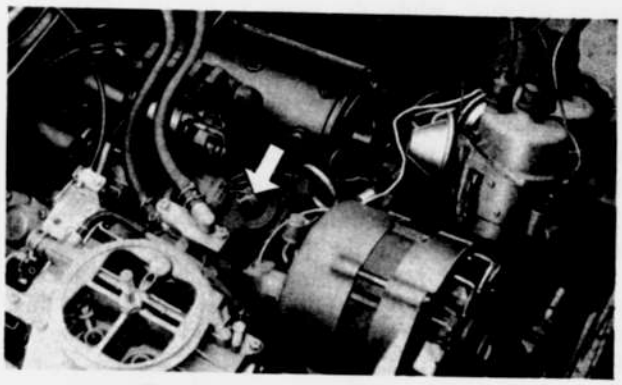

Fig. 1A–15 No. 1 thermosensor

b. No. 2 thermosensor

The No. 2 thermosensor which is placed in the oil pan detects the oil temperature and sends the signal to the No. 2 control box. And it is a power input for retarding the leading ignition timing by 10 degrees when the engine is cold.

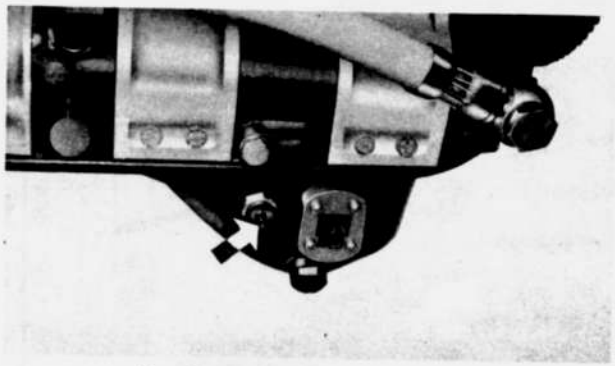

Fig. 1A–16 No. 2 thermosensor

c. Vacuum switch

When the engine is cold and the throttle valve is open to near the idle position or near the full-open position, the vacuum switch signals the No. 1 control box to ignite the trailing spark plug so as to maintain good driveability, to prevent spark plug fouling and to facilitate engine starting.

The vacuum switch is connected to the diaphragm rod of the vacuum advancer for the trailing plug distributor. Its changeover is effected by the intake manifold vacuum.

The vacuum sensing hole of the vacuum switch is located just above the carburetor throttle valve when it is opened to the idling position. (Fig. 1A–18)

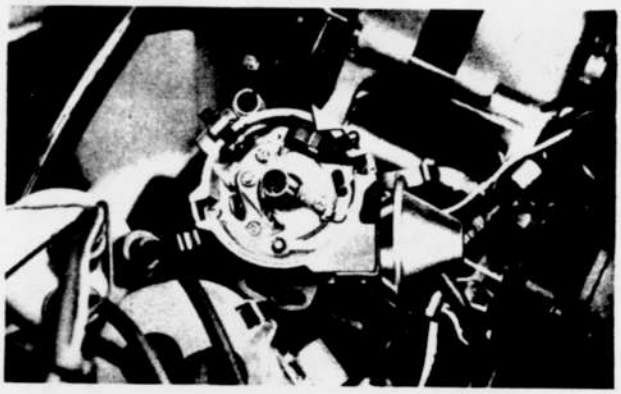

Fig. 1A–17 Vacuum switch

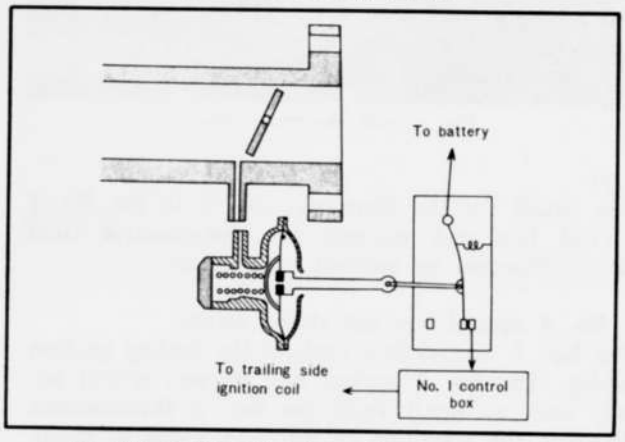

Fig. 1A–18 Throttle valve and vacuum switch

Therefore, when the throttle valve is at the idling or fully opened position, the vacuum sensing hole is subjected to a pressure close to the atmospheric pressure. Thus when starting or accelerating the engine, the switch connected to the vacuum advancer is energized to signal the No. 1 control box so that the trailing spark plug will be ignited.

d. No. 1 control box and thermodetector

The control box is common to the ignition and air flow control system and the deceleration control system. It ignites and cuts the trailing spark plug in accordance with the engine speed, the state of warming up and the engine load, controls secondary air and prevents afterburn during deceleration according to engine speed.

The No. 1 control box receives several signals ; pulses of the leading spark plug ignition coil which indicate engine revolutions, signals from the No. 1 thermosensor detecting the condition of warming up and signals from the vacuum switch which indicate engine

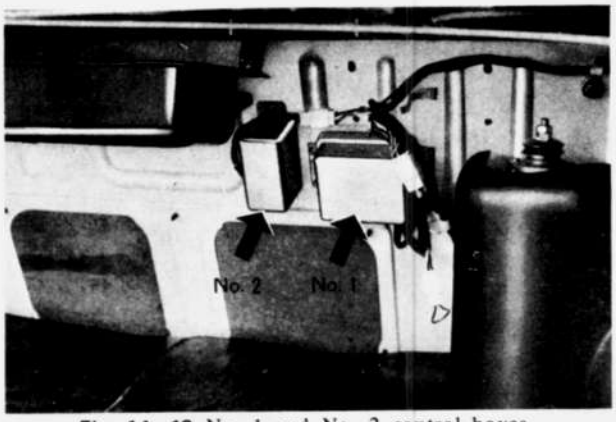

Fig. 1A–19 No. 1 and No. 2 control boxes

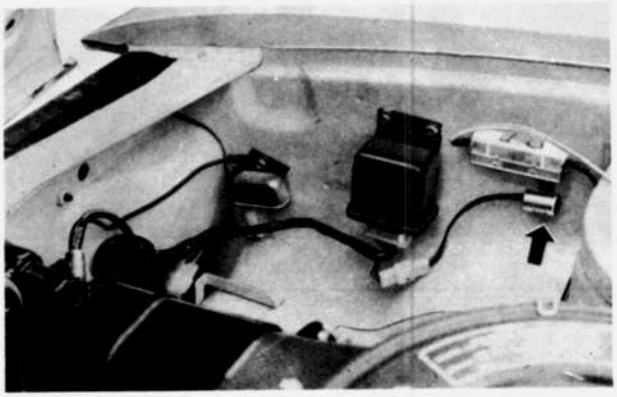

Fig. 1A–20 Thermodetector

load.
The circuit for the thermodetector is in the No. 1 control box and prevents the thermosensor from being influenced by ambient temperature.

e. No. 2 control box and choke switch
The No. 2 control box controls the leading ignition timing. The No. 2 control box receives several signals such as signal from the No. 2 thermosensor detecting the condition of warm-up, signal of choke switch which is pulled, signal from the No. 1 control box. And No. 2 control box operates so as to conduct or disconduct between leading side ignition coil and retarded contact point.

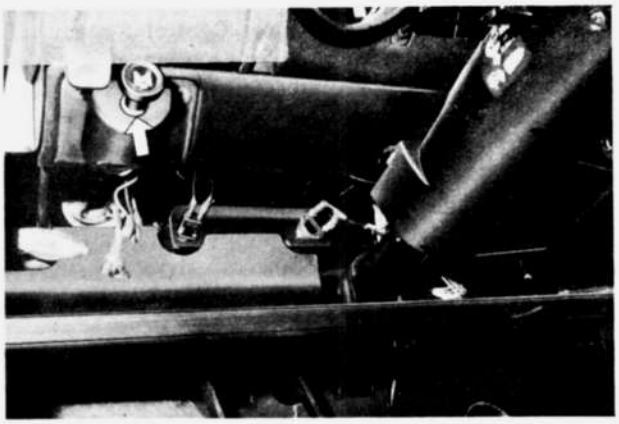

Fig. 1A–21 Choke switch

That system has two contact points inside the leading side distributor, and one of them is for the normal advance, while the other is for the retarded advance and the phase angle is 10 degrees. And as the retarded side contact point is not provided with the vacuum advance system.

1A–A–3. Deceleration Control System
The deceleration control system consists of an anti-afterburn valve, a coasting valve, an idle switch, an air supply valve, and the No. 1 control box which is common to the ignition and air flow control system. It prevents afterburn during deceleration and gear shifting and immediately after the engine is switched off.

a. Anti-afterburn valve
The anti-afterburn valve prevents afterburn by supplying air into the intake manifold during deceleration and gear shifting and immediately after the engine is switched off.
The anti-afterburn valve operates by pressure dif-

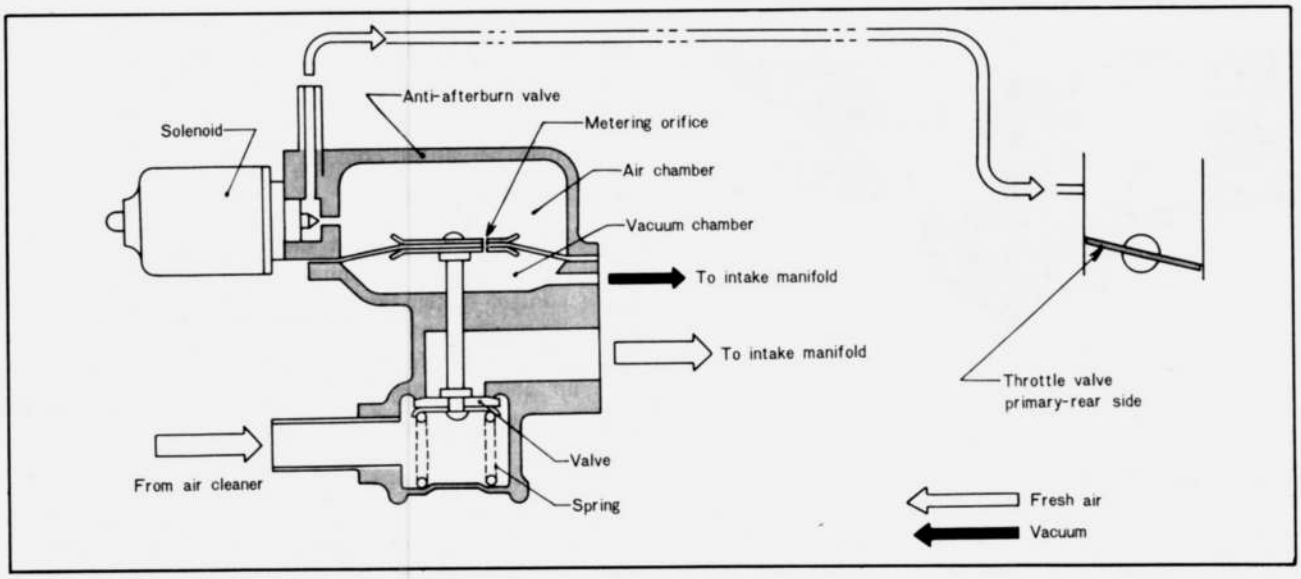

Fig. 1A–22 Anti-afterburn valve cross section

ference between the air and vacuum chambers, and the spring force. The operating time in this case is 0.7 sec. when the pressure difference is 400 mm-Hg. The intake manifold vacuum rises during deceleration and gear shifting, and the pressure difference between the two chambers opens the valve connected to the diaphragm, so that fresh air from the air cleaner is led into the intake manifold to correct overrich mixture, thus preventing afterburn.

During normal running condition, the solenoid shuts the atmospheric pressure sensing line leading to the air chamber.

When the engine is switched off the solenoid opens the sensing line, and, due to the resulting pressure

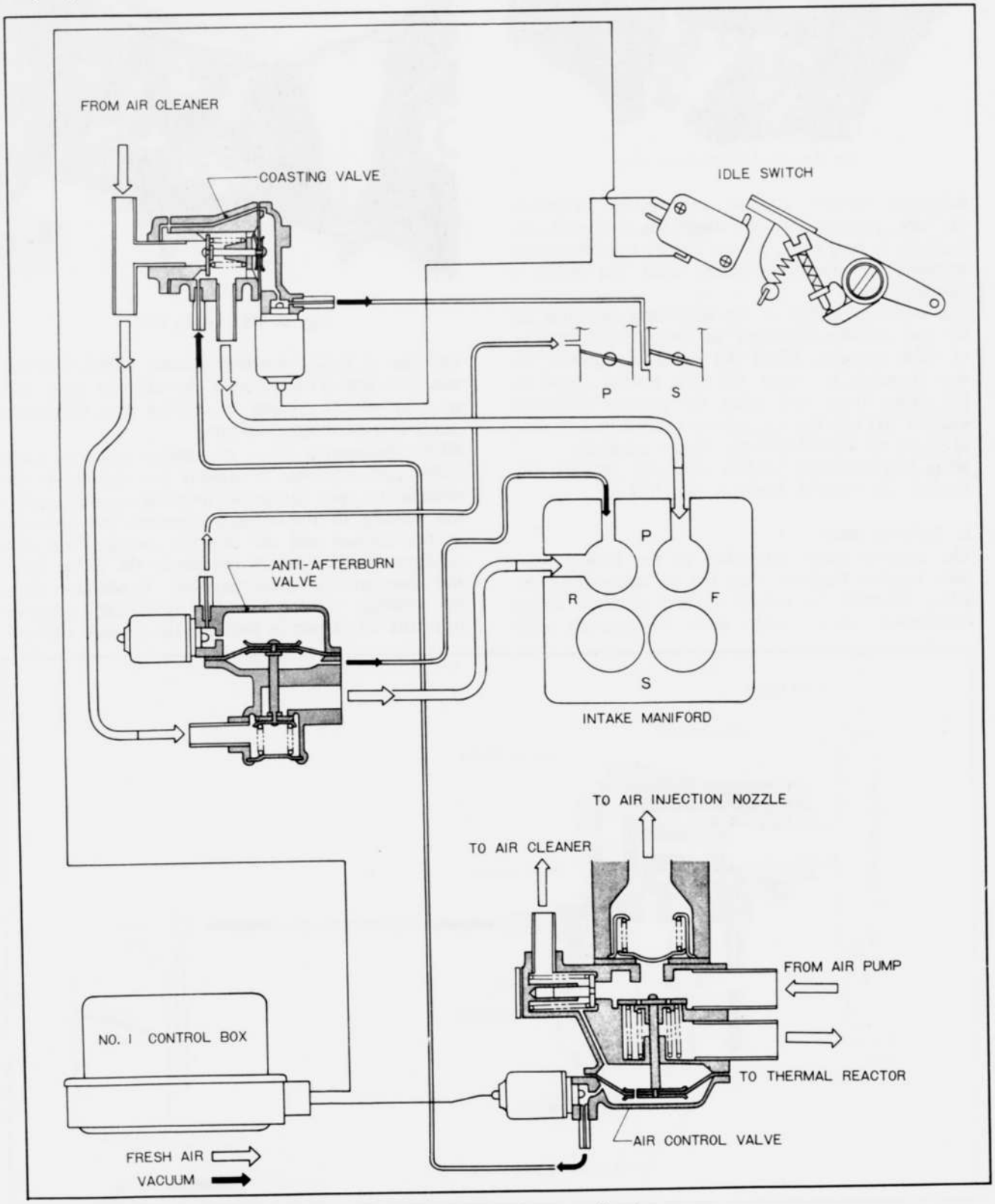

Fig. 1A–23 Deceleration control system

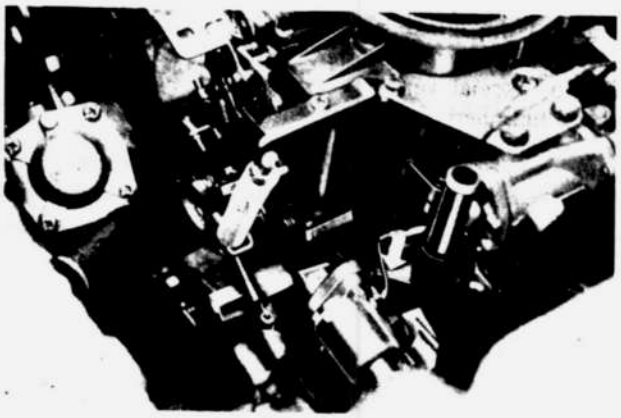

Fig. 1A–24 Anti-afterburn valve

difference between the air and vacuum chambers, the valve connected to the diaphragm is opened, and fresh air is lead from the air cleaner into the intake manifold to prevent afterburn after the engine is switched off.

The metering orifice in the diaphragm connects the air and vacuum chambers to control the duration of valve opening. When the pressures between the two chambers are equal, the valve is kept closed by the spring force, and when the pressure difference exceeds 100 mm-Hg, the valve is opened to lead fresh air from air cleaner into the intake manifold.

When the metering orifice equalizes pressure difference, the valve is closed to shut off air.

b. Coasting valve

The coasting valve, connected to the intake manifold, supplies fresh air from the air cleaner into the intake manifold to correct overrich mixture during deceleration. As a result, when the coasting valve opens, the intake manifold vacuum connected to the vacuum chamber of the air control valve is turned to the atmospheric pressure in order to cut secondary air supply during deceleration.

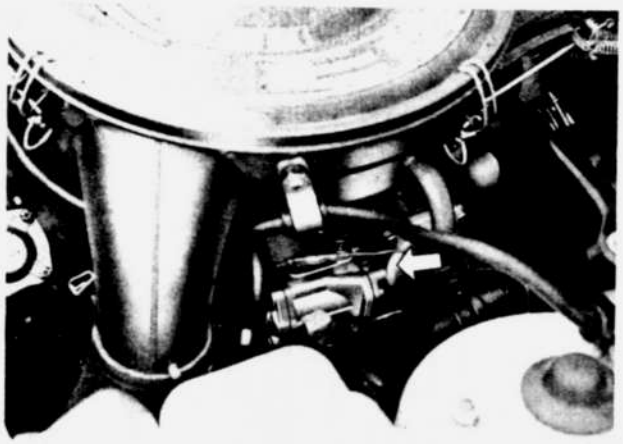

Fig. 1A–25 Coasting valve

The rise of intake manifold vacuum during deceleration and gear shifting causes the valve to open, and air from the air cleaner is supplied into the intake manifold preventing afterburn.

While deceleration when the engine speed is above 1,200 rpm, the No. 1 control box commands the solenoid to open the intake manifold vacuum sensing line leading to the vacuum chamber, the pressures in the vacuum and air chamber are equalized and air from the air cleaner overcomes the spring force and flows into the intake manifold. In addition, when the coasting valve opens, the atmospheric pressure from the air cleaner is led into the vacuum chamber

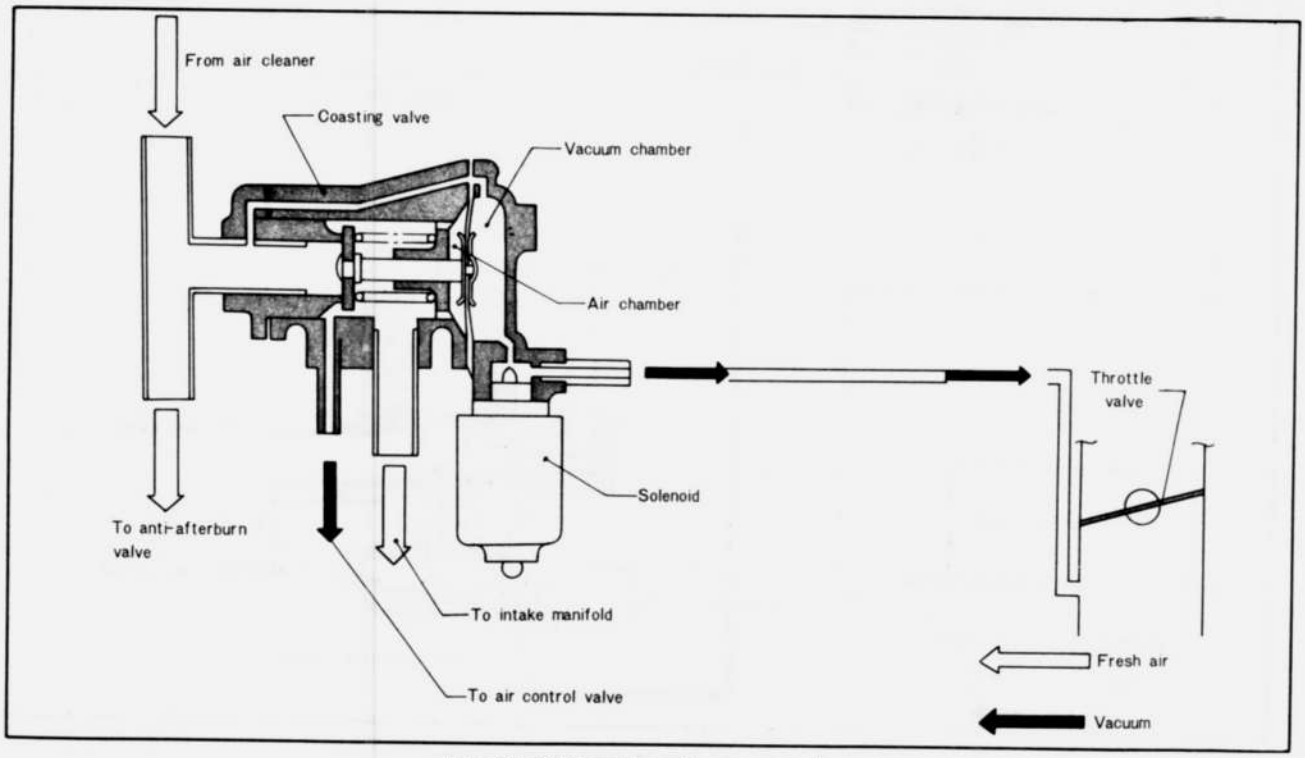

Fig. 1A–26 Coasting valve cross section

of the air control valve and pressures in the vacuum and air chambers of the air control valve are equalized allowing the spring force to operate the air cut valve.

c. Idle switch

The idle switch is connected in line between the No. 1 control box and the coasting valve solenoid, and the current from the No. 1 control box flows to the idle switch (switched on when decelerating the engine) and into the coasting valve solenoid.

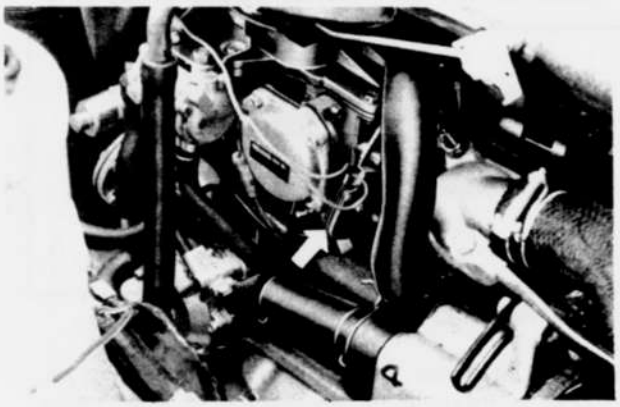

Fig. 1A–27 Idle switch

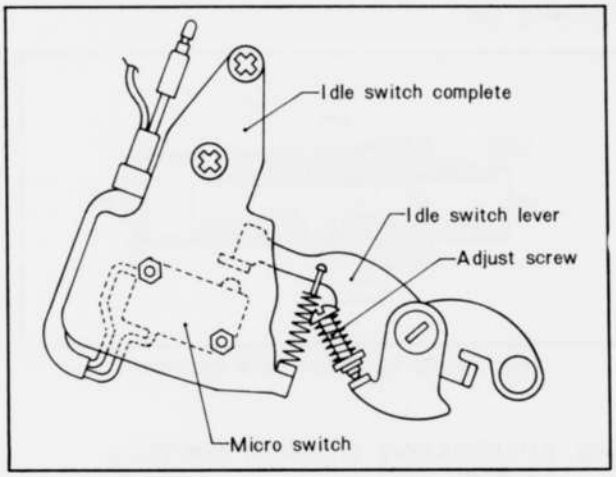

Fig. 1A–28 Idle switch

Therefore, the coasting valve operates while decelerating at the engine speed of more than 1,200 ± 50 rpm. The idle switch detects the decelerating condition of the car.

d. Air supply valve

The air supply valve has the functions of preventing afterburn when the engine is switched off and filling the engine with fresh air.

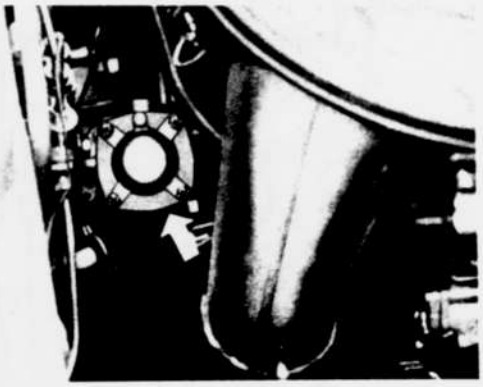

Fig. 1A–29 Air supply valve

The solenoid of the air supply valve keeps closing the intake manifold vacuum way while the ignition switch is on. When the engine is switched off, the solenoid opens the vacuum way and the resulting difference pressure between the vacuum and air chambers causes the valve leading to the diaphragm to open so that fresh air from the air cleaner is supplied into the intake manifold.

1A–B. VENTILATION SYSTEM

The ventilation system channels blow-by gas into the intake manifold to burn it up in the combustion chamber and helps to control air pollution caused by engine blow-by gas.

This system consists mainly of a ventilation valve and hose necessary to connect the ventilation valve. The air and blow-by gases flow in the ventilation system as shown in Fig. 1A–31.

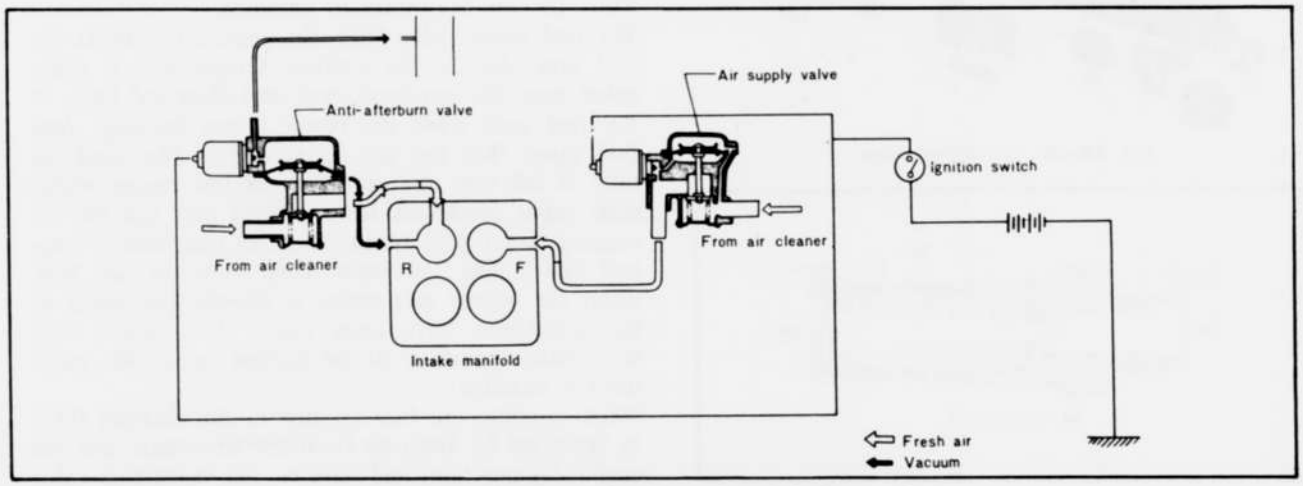

Fig. 1A–30 Air supply valve and anti-afterburn valve

Ventilating air from the air cleaner enters the engine air space. The ventilating air with blow-by gas enters into the ventilation valve which regulates the amount of air flow to meet the change of operating conditions and then is directed to the engine.

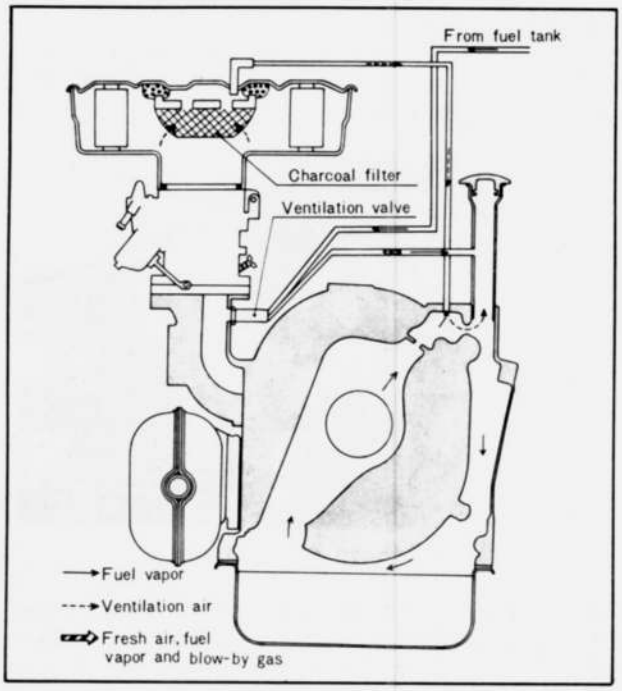

Fig. 1A–31 Ventilation system

1A–B–1. Ventilation Valve

The ventilation valve is operated by the difference of the pressure between the intake manifold and engine air space.

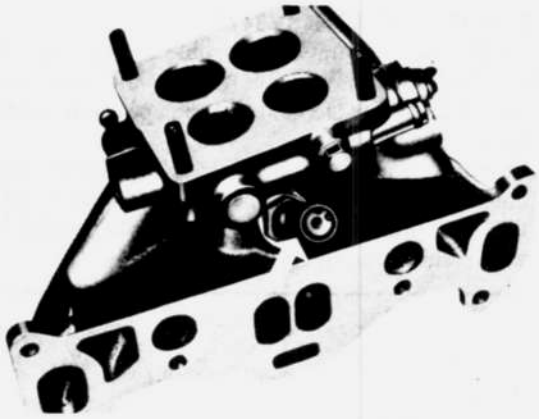

Fig. 1A–32 Ventilation valve

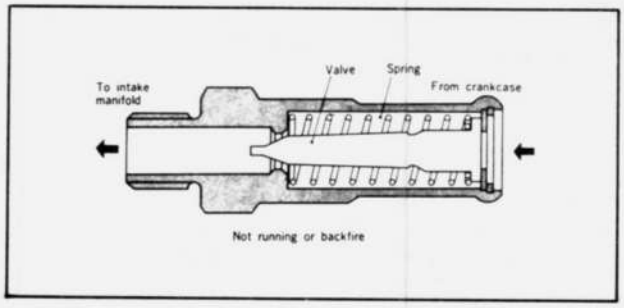

Fig. 1A–33 Ventilation valve operation

When there is no difference of the pressure (engine at stall condition) or the pressure of the intake manifold is more than that of the engine air space (backfire) the ventilation valve is closed by the tension of valve spring as shown in Fig. 1A–33.

If there is large difference (at engine idle or deceleration), the high vacuum of the intake manifold overcomes the tension of the valve spring, and the valve is pulled towards intake manifold side by the manifold vacuum as shown in Fig. 1A–34. Therefore, the air passes through the restricted passage in the valve.

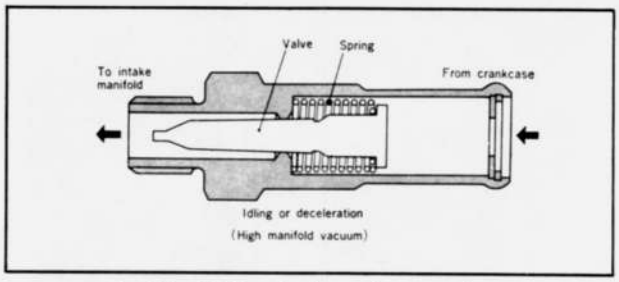

Fig. 1A–34 Ventilation valve operation

When the difference is small (at normal operation), the valve is balanced by the tension of valve spring and intake manifold vacuum. This increases the flow of blow-by gas.

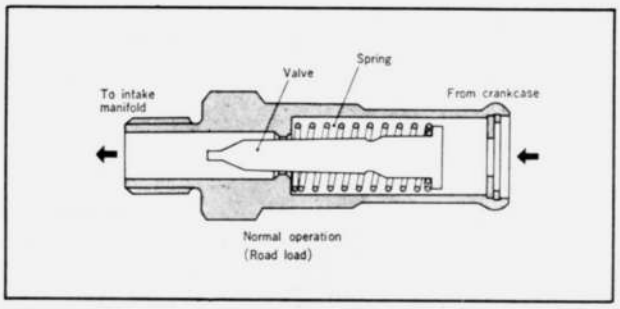

Fig. 1A–35 Ventilation valve operation

1A–C. EVAPORATIVE EMISSION CONTROL SYSTEM

This system prevents emission of fuel vapor generated by the ambient temperature around the fuel tank when the car is running or standing.

The fuel vapor rising from the surface of fuel in the fuel tank due to the ambient temperature is channeled into the condense tank and then fed back to the fuel tank when the engine is not running. Any fuel vapor that has not condensed in the condense tank is led into the air space of the engine where such vapor condenses for the most part and the remaining vapor goes to the charcoal filter and is trapped there. The fuel vapor rising from the fuel tank when the engine is running is directly channeled to the ventilation valve from which it is sucked into the intake manifold to be burned up in the combustion chamber.

When running, the fuel trapped in the charcoal filter is vaporized by fresh air from the air cleaner and the engine temperature, and goes to the ventilation valve which it is sucked into the intake manifold together

with fresh air and blow-by gas to be burned up in the combustion chamber.

1A–C–1. Charcoal Filter

While the car is stationary, some of the fuel vapor generated in the fuel tank does not condense in the condense tank and, when channeled into the engine air space without being fed back to the fuel tank, still cannot be trapped in the air space. Such vapor is absorbed by the charcoal filter.

While the engine is running, the fuel vapor trapped in the charcoal filter is released into the intake manifold together with fresh air from the air cleaner and burned up in the engine. The canister is always being purged by fresh air during engine operation.



Fig. 1A–36 Charcoal filter

1A–C–2. Condense Tank

The condense tank condenses the fuel vapor coming from the fuel tank and returns it to the fuel tank.

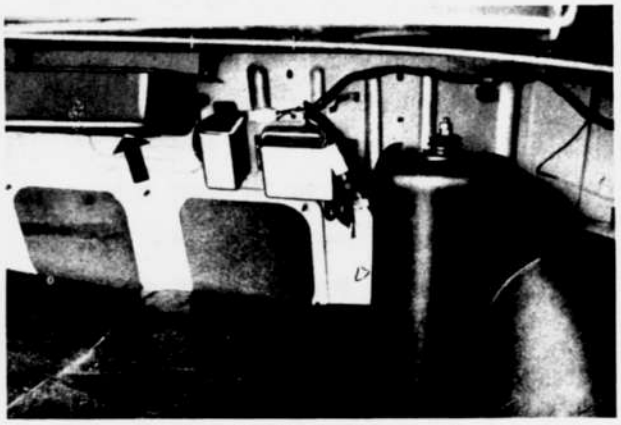

Fig. 1A–37 Condense tank

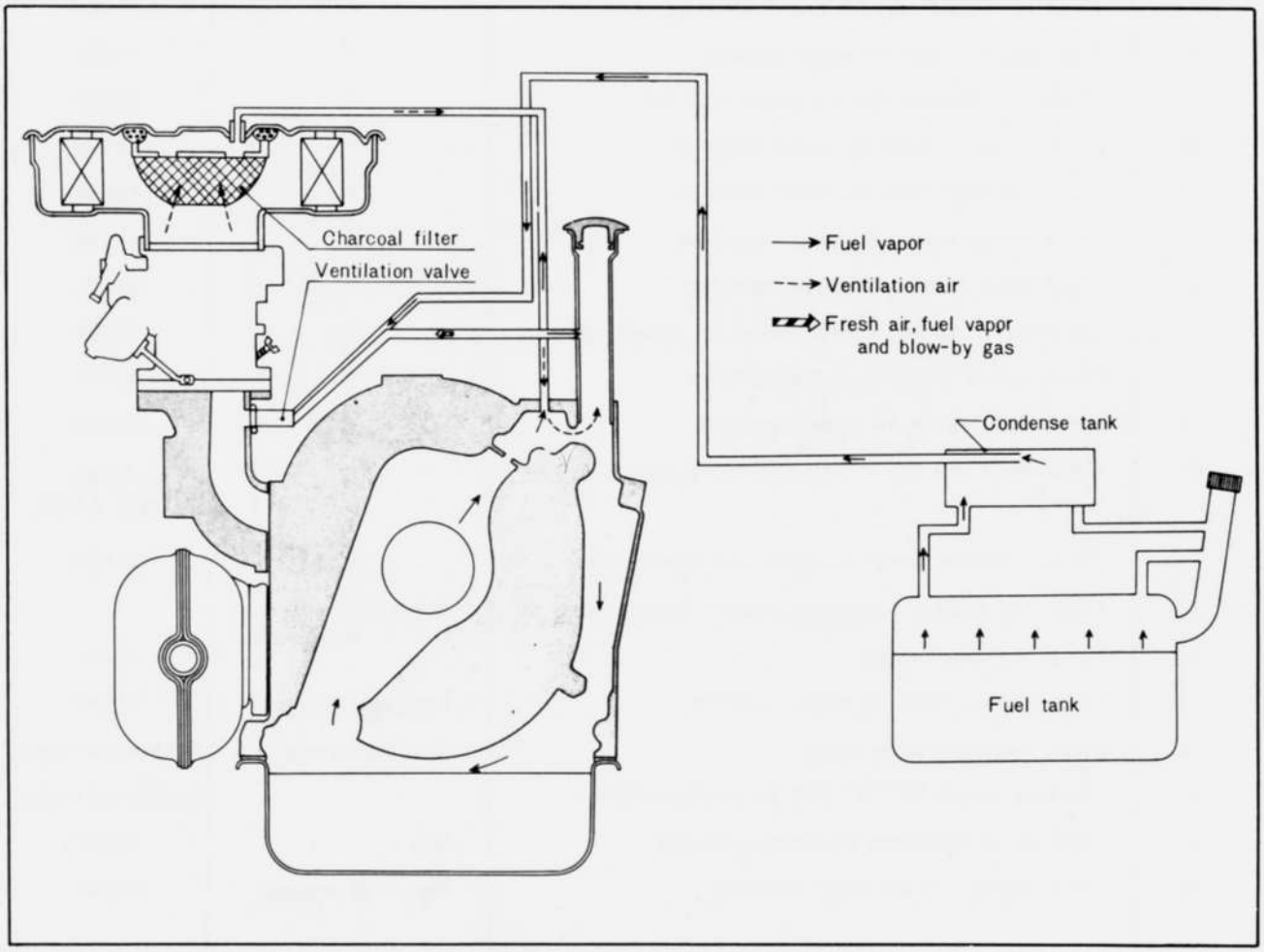

Fig. 1A–38 Evaporative emission control system

1A–D. MAINTENANCE SCHEDULE

Maintenance schedules are shown in the following table.

No.	Maintenance operations	Remedies	Intervals (Miles)
1.	Check and adjust distributor point gap or dwell angle and point surface	Replace if necessary	4,000
2.	Inspect, clean, adjust and test spark plug	〃	4,000
3.	Check initial ignition timing	Adjust if necessary	4,000
4.	Check idle revolution	〃	4,000
5.	Check idle mixture and float level	〃	4,000
6.	Check idle switch for proper operation	Replace as required	4,000
7.	Check air pump V-belt tension	Adjust if necessary	4,000
8.	Check air hoses and vacuum sensing tubes for deterioration and leakage	Connect or replace if necessary	12,000
9.	Check air pump for proper operation	Replace as required	12,000
10.	Check check valve for proper operation	〃	12,000
11.	Check air control valve for proper operation	〃	12,000
12.	Check coasting valve for proper operation	〃	12,000
13.	Check anti-afterburn valve for proper operation	〃	12,000
14.	Check air supply valve for proper operation	〃	12,000
15.	Check ventilation valve for proper operation	〃	12,000
16.	Check thermal reactor for proper operation	〃	12,000
17.	Check thermodetector for proper operation	〃	12,000
18.	Check No. 1 and No. 2 thermosensors for proper operation	〃	12,000
19.	Check vacuum switch for proper operation	〃	12,000
20.	Check choke switch for proper operation	〃	12,000
21.	Check No. 1 and No. 2 control boxes for proper operation	〃	At 4,000 Every 1,2000
22.	Check ventilation hoses for leakage and deterioration	〃	12,000
23.	Check fuel hoses of evaporative emission control system for leakage and deterioration	Correct or replace as required	12,000
24.	Check charcoal filter for proper operation	Replace as required	12,000
25.	Check accelerator pump stroke	Adjust if necessary	Summer and winter
26.	Check air cleaner "S"-"W" lever for proper position		Summer and winter
27.	Check choke mechanism for proper operation	Adjust	12,000
28.	Check ignition coil for proper operation	Replace as required	12,000

1A–E. MAINTENANCE PROCEDURE

This section explains the procedures for checking, adjusting and replacing the parts of the RX-2 air pollution control systems.

1A–E–1. Air Pump

a. Checking of air pump

1. Check to see that air hoses are free of air leaks.
2. Attach a pressure gauge as in Fig. 1A–39.

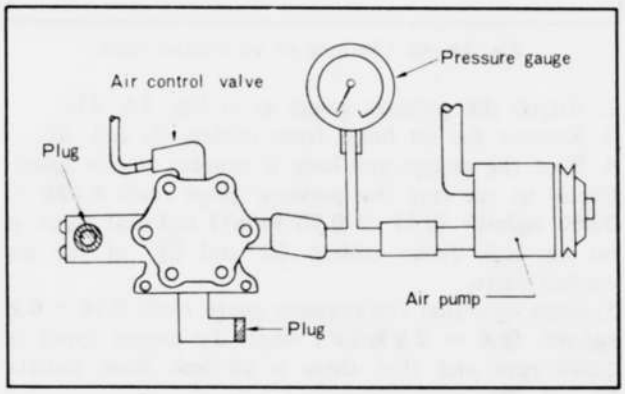

Fig. 1A–39 Checking of air pump

3. Run the engine at idle speed. If the pressure gauge reading is **0.026 ~ 0.053 kg/cm² (0.37 ~ 0.75 lb/in²)**, the air pump is normal.

b. Removing of air pump

1. Remove the air cleaner.
2. Remove the "V"-belt of the air pump.
3. Remove the air hoses from the air pump.
4. Loosen the air pump bolts and remove the air pump.

c. Installing of air pump

Mount the air pump in the reverse sequence, and adjust the tension of the "V"-belt in the procedure described below.

d. Adjusting of air pump "V"-belt

Pull the air pump away from the engine until the "V"-belt assumes proper tension. A proper lever should be used in adjusting.



Fig. 1A–40 Checking of belt deflection

When a 10 kg (22 lb) pressure is given to a spot midway between the air pump pulley and water pump pulley, belt deflection should be **9 ~ 11 mm (0.35 ~ 0.43 in)**; when new, the belt should have a deflection of **7 ~ 9 mm (0.280 ~ 0.350 in)**.

1A–E–2. Check Valve

a. Checking of check valve

1. Remove the check valve in the procedures mentioned in the following item b.
2. Check the seating of the valve and seat, and make sure that there is no spring creep; the free length of the spring is **31 mm (1.22 in)** and the fitting length of spring is **18 mm (0.682 in)**.



Fig. 1A–41 Check valve

1. Valve seat
2. Valve
3. Spring

b. Removing of check valve

1. Remove the air cleaner.
2. Remove the air hoses leading to the air control valve. Loosen the nuts and remove the air control valve.
3. Remove the check valve seat.
4. Remove the valve and spring.

c. Installing of check valve

Install the check valve in the reverse sequence.

1A–E–3. Air Injection Nozzle

a. Removing of air injection nozzle

1. Drain the engine oil.
2. Remove the engine under cover.
3. Remove the oil pan.
4. Remove the air injection nozzle from the rotor housing.

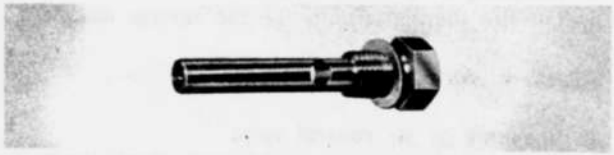

Fig. 1A–42 Air injection nozzle

b. Installing of air injection nozzle

Install the air injection nozzle in the reverse sequence.

1A–E–4. Thermal Reactor

a. Checking of thermal reactor

1. Check to see that the thermal reactor is not damaged or cracked.
2. Remove the air hose leading to the air control valve and check to see that the non-return valve works smoothly.

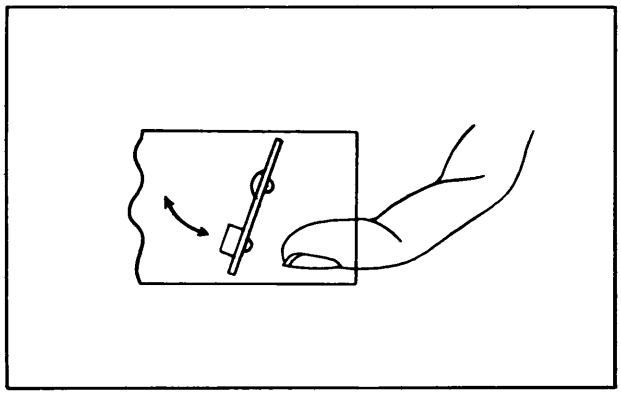

Fig. 1A–43 Checking of non-return valve

3. Start the engine and keep it running at idle speed.
4. Check to see that each part of the air injection system works properly.
5. Make sure that most exhaust gas is not released from the cooling air injection pipe for the thermal reactor.

b. Removing of thermal reactor

1. Remove the air cleaner.
2. Remove the air pump.
3. Remove the carburetor and intake manifold assembly.
4. Remove the heat insulator.
5. Loosen the nuts and remove the thermal reactor. The lower nut must be loosened with the **nut remover** (49 2113 001).



Fig. 1A–44 Nut remover

c. Installing of thermal reactor

Install the thermal reactor in the reverse sequence.

1A–E–5. Air Control Valve

a. Checking of air control valve

1. Turn off the ignition switch and check the operation of the solenoid. If the clicking sound is audible, the solenoid is normal. If direct connector of the solenoid terminal to the battery produces no operation sound, the solenoid is defective.

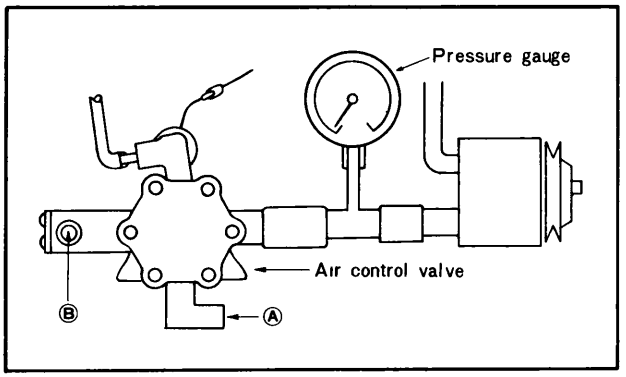

Fig. 1A–45 Checking of air control valve

2. Attach the pressure gauge as in Fig. 1A–45.
3. Remove the air hoses from outlets Ⓐ and Ⓑ.
4. Start the engine and keep it running at idle speed. Check to see that the pressure gauge reads **0.026 ~ 0.053 kg/cm² (0.37 ~ 0.75 lb/in²)** and that there is no air leak from outlets Ⓐ and Ⓑ of the air control valve.
5. Make sure that the pressure guage reads **0.14 ~ 0.2 kg/cm² (2.0 ~ 2.8 lb/in²)** when the engine speed is **3,500 rpm** and that there is air leak from outlets Ⓐ and Ⓑ.
6. Remove the solenoid terminal. Make sure that the pressure gauge reads **0 ~ 0.053 kg/cm² (0 ~ 0.75 lb/in²)** and that air flows from outlet Ⓐ of the air control valve and air **does not** flow from outlet Ⓑ.
7. Simply checking of air control valve (check every valve incorporated)

7–1. When the relief valve or the air cut valve in faulty, the air sent from the air pump during idling flows into the forced air-cooling pipe.

7–2. When the safety valve is faulty, the air sent from the air pump flows into the air cleaner at idle.

b. Removing of air control valve

1. Remove the air cleaner.
2. Remove the wiring to the solenoid.
3. Remove the air hoses from the air control valve.
4. Loosen the nuts and remove the air control valve.

c. Installing of air control valve

Install the air control valve in the reverse sequence.

1A–E–6. No. 1 Thermosensor

a. Checking of No. 1 thermosensor

1. Make sure that there is no boot breakage or wax leak.
2. Connect the ohm meter as in Fig. 1A–46, and check the resistance. The readings as shown below indicate that the No. 1 thermosensor is normal:

Over 7 kΩ–before warm-up the engine (when ambient and water temperatures are under 30°C (86°F)).
Under 2.3 kΩ–after warm-up the engine (when temperature is over 70°C (156°F)).

b. Removing of No. 1 thermosensor

1. Remove the air cleaner.
2. Remove the starting motor.

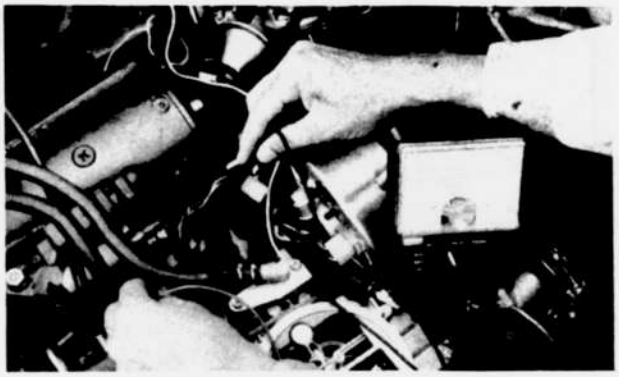

Fig. 1A–46 Checking of No. 1 thermosensor

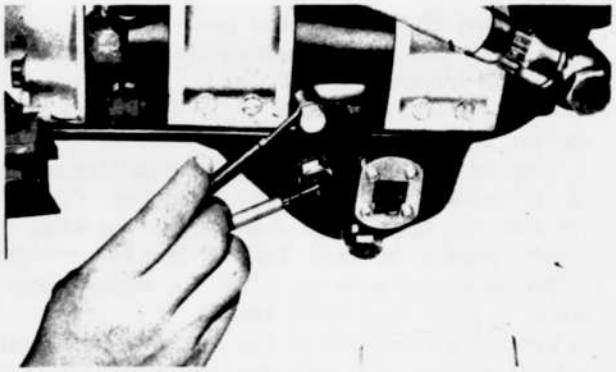

Fig. 1A–47 Checking of No. 2 thermosensor

3. Remove the No. 1 thermosensor connector.
4. Remove the boot.
5. Loosen the nuts and remove the No. 1 thermosensor.

c. Installing of No. 1 thermosensor

Install the No. 1 thermosensor in the reverse sequence.

1A–E–7. No. 2 thermosensor

a. Checking of No. 2 thermosensor

1. Make sure that there is no terminal breakage.
2. Connect the ohm meter as in Fig. 1A–47, and check the resistance. The readings as shown below indicate that the No. 2 thermosensor is normal;

Over 5 kΩ–before warm-up (when ambient and water temperatures are under 30°C (86°F)).
Under 2 kΩ–after warm-up (when water temperature is over 70°C (158°F)).

b. Removing of No. 2 thermosensor

1. Drain the engine oil.
2. Remove the No. 2 thermosensor connector.
3. Loosen and remove the No. 2 thermosensor.

1A–E–8. Thermodetector

a. Checking of thermodetector

Connect the ohm meter as shown in Fig. 1A–48, and check the resistance. The following ohm meter readings indicate that the thermodector is normal.

Ambient temperature	Resistance
−20°C (−4°F)	10 kΩ ± 5%
0°C (32°F)	3 kΩ ± 5%
20°C (68°F)	1.2 kΩ ± 5%
40°C (105°F)	0.5 kΩ ± 5%

1A–E–9. Vacuum Switch

a. Checking of vacuum switch

1. Remove the cap of the leading spark plug distributor.
2. Remove the vacuum sensing tube from the vacuum advancer of the trailing spark plug distributor, then attach the vacuum gauge in its place as in Fig. 1A–49.
3. Hold the mouth on the vacuum gague and suck reading the vacuum gauge. Make sure by the switching

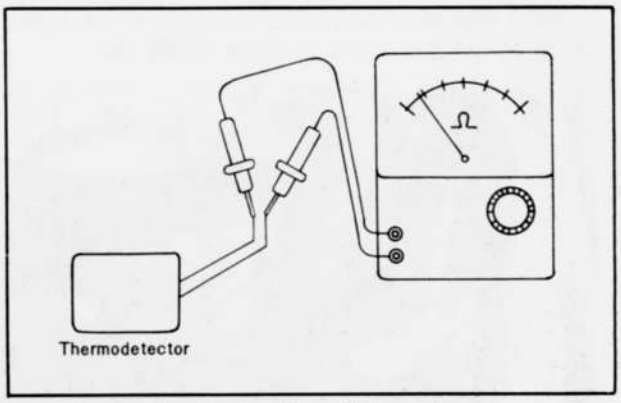

Fig. 1A–48 Checking of thermodetector

sound that the vacuum switch changes over from **"ON" to "OFF"** when the vacuum gauge reading is under approximately **180 mm-Hg,** and it changes over from **"OFF" to "ON"** when the vacuum is reduced until the vacuum gauge reads **120 ± 30 mm-Hg.**

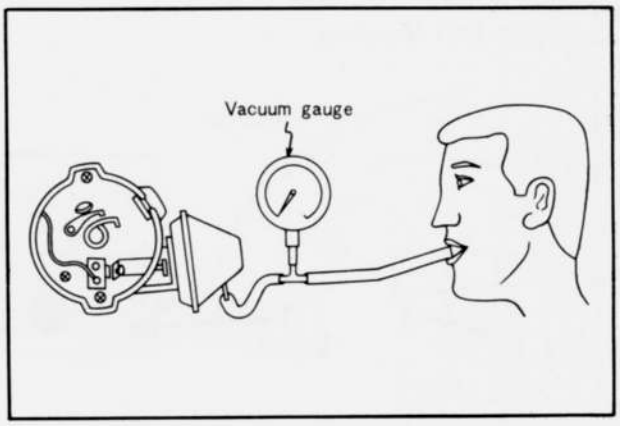

Fig. 1A–49 Checking of vacuum switch

4. Mount the cap of the trailing spark plug distributor and connect the vacuum sensing tube to the vacuum advancer.
5. Remove the No. 1 thermosensor connector.
6. Connect the timing light to the high tension cord of the trailing spark plug distributor. Run the engine at idle speed and check to see that the timing light goes off (the vacuum switch "OFF") when the engine speed is raised to **1,900 ± 300 rpm ~ 4,000 ± 200 rpm.**

1A–E–10. No. 1 Control Box

a. Checking of No. 1 control box

1. Remove the No. 1 thermosensor connector and check the following points:

1) Warm-up the engine (up to 70°C (158°F) of the coolant temperature).

2) Connect the timing light to the high tension cord of the trailing side spark plug distributor. Check to see that the timing light does not go on when the engine speed is between **1,900 ± 300 rpm ~ 4,000 ± 200 rpm,** and goes on when the engine speed is raised to more than **4,200 rpm.**

3) Connect an ammeter to the air control valve solenoid. Check to see that the current flows to the solenoid when the engine speed is between **900 ~ 4,000 ± 200 rpm,** and there is no flow to the solenoid when the engine speed is above **4,200 rpm.**

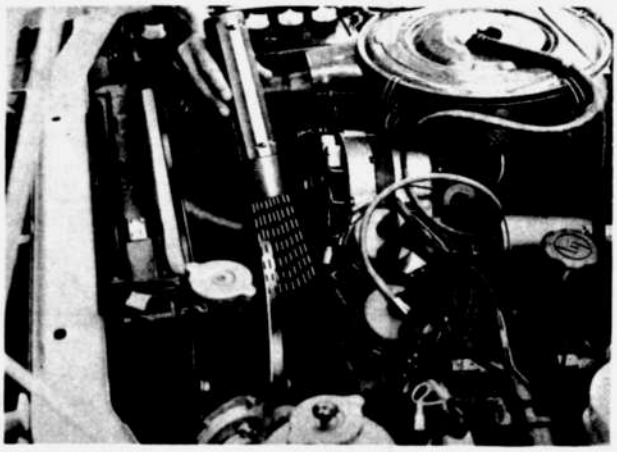

Fig. 1A–50 Checking of No. 1 control box (1)

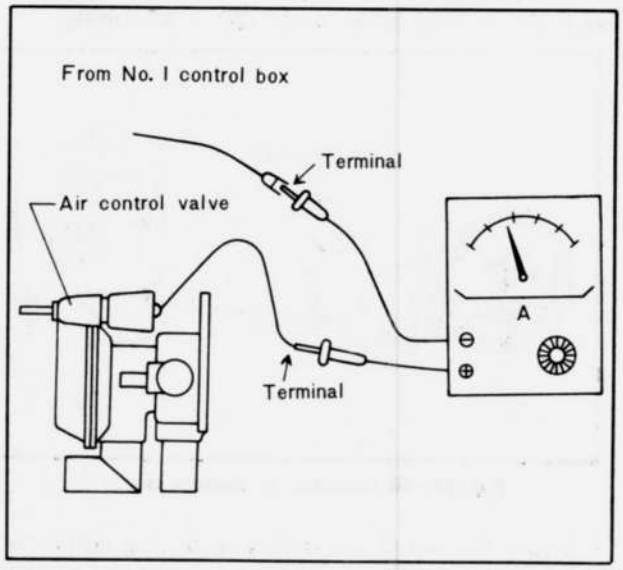

Fig. 1A–51 Checking of No. 1 control box (2)

2. With the No. 1 thermosensor connector terminal short-circuited as in Fig. 1A–52, check the following points:

1) Connect the timing light to the high tension cord of the trailing spark plug distributor and check to see that the timing light goes on when the engine speed is between **1,900 ± 300 rpm and 4,000 ± 200 rpm.**

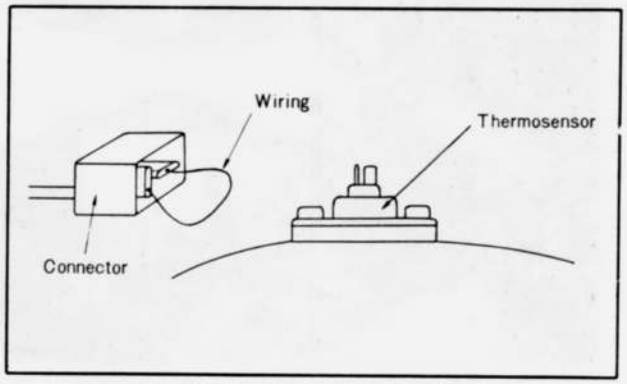

Fig. 1A–52 Connector short-circuit

3. Connect the No. 1 thermosensor connector to the No. 1 thermosensor and check the following points:

1) Connect an ammeter to the coasting valve solenoid and check to see that there is no current flow to the ammeter when idling, current flows above **1,250 ~ 1,550 rpm.**

When the engine speed is gradually lowered, the current flow stops at **1,300 ~ 1,100 rpm.**

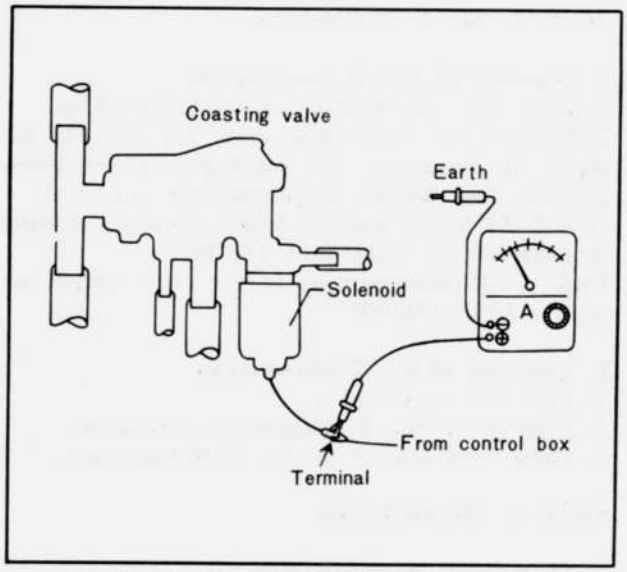

Fig. 1A–53 Checking of No. 1 control box (3)

b. Removing of No. 1 control box

1. Remove the No. 1 control box connector.
2. Loosen the No. 1 control box nuts and remove the control box.

c. Installing of No. 1 control box

Install the No. 1 control box in the reverse sequence.

1A–E–11. No. 2 Control Box and Leading Ignition Retard System

a. Checking of No. 2 control box and leading ignition retard system

1. Remove the No. 1 and No. 2 thermosensor connectors.
2. Remove the trailing side vacuum switch connector.
3. Connect the timing light to the high tension cord of the leading spark plug of the front rotor housing.

4. Start the engine and run it at no load **2,000 ~ 2,500 rpm.**
5. Pull the choke switch about **5 ~ 10 mm (0.2 ~ 0.4 in)** in order to actuate the choke switch. In this case, if the engine speed goes down about **200 ~ 300 rpm,** the choke switch is normal.

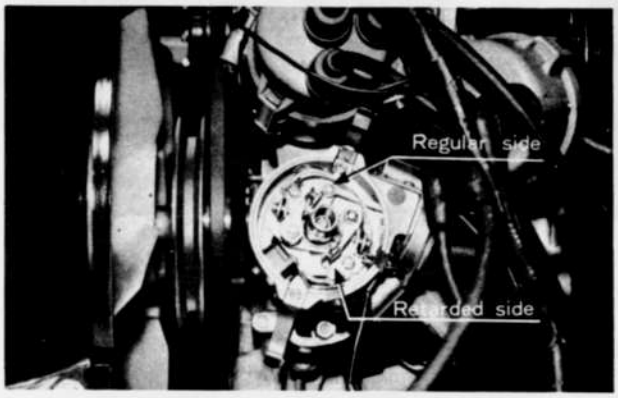

Fig. 1A–54 Checking of retard system (1)

6. Disconnect the leading side distributor connector at minus (–) terminal so as to conduct electricity only by a wire (a black and white one) of the retarding side.

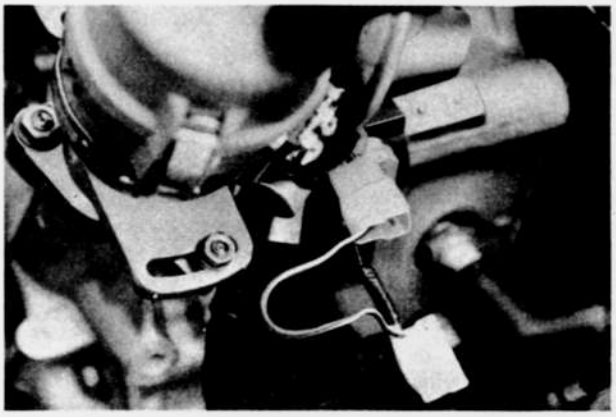

Fig. 1A–55 Checking of retard system (2)

7. Start the engine and run it at the idling speed of 900 rpm.
8. Aim the timing light at the timing indicator pin on the front cover.
If the timing mark on the eccentric shaft pulley aligns with the timing indicator pin on the front cover, the leading ignition retard system is satisfactory. (10 deg. A.T.D.C.)

Note :

1. When checking the No. 1 and No. 2 control boxes, be attentive to the following points:
1) The wiring from the control box to each valve solenoid and idle switch should not be earthed or connected faultily.
2) When removing or installing the control box, the ignition switch should be put off so as to prevent the burning of the transistor, diode, etc. in the control box, otherwise it would have to be replaced.

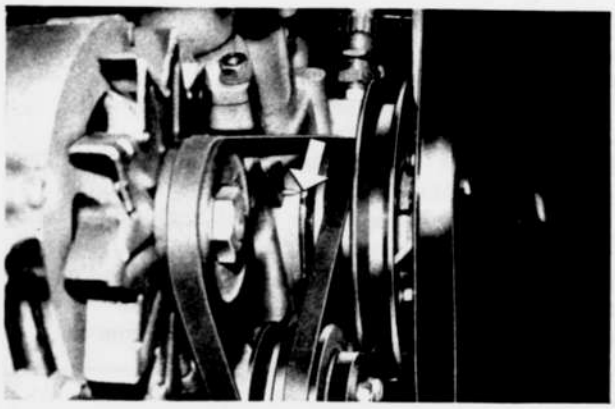

Fig. 1A–56 Checking of retard system (3)

1A–E–12. Anti-afterburn Valve

a. Checking of anti-afterburn valve
1. Remove the air suction hose.
2. Run the engine at idle speed.
3. Hold the hand over the opening of the air suction hose for the anti-afterburn valve. If strong vacuum is felt, the anti-afterburn valve should be replaced.
4. Run the engine at 3,500 ~ 3,800 rpm and make sure that, when the throttle valve is fully closed suddenly, air is sucked in for **0.4 ~ 1.0 sec.** through the air suction hose of the anti-afterburn valve.
5. Run the engine at idle speed.
6. Remove the lead wire leading to the solenoid of the anti-afterburn valve.
Make sure that air continues to be sucked in through the air suction hose while the lead wire disconnected.

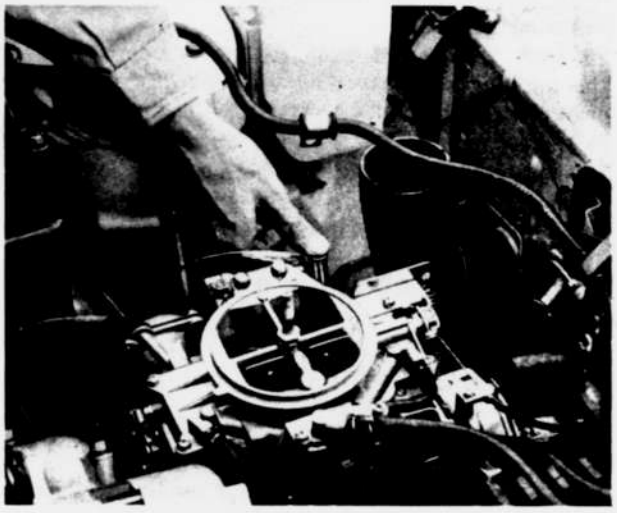

Fig. 1A–57 Checking of anti-afterburn valve

b. Removing of anti-afterburn valve
1. Remove the air cleaner.
2. Remove the air hoses from the anti-afterburn valve.
3. Loosen the mounting nuts and remove the anti-afterburn valve.

c. Installing of anti-afterburn valve
Install the anti-afterburn valve in the reverse sequence.

1A–E–13. Coasting Valve

a. Checking of coasting valve

1. Attach the vacuum gauge as in Fig. 1A–58.
2. Start and warm up the engine.

Make sure that the vacuum gauge reads more than 400 mm-Hg when the engine speed is 900 rpm.

3. Raise the engine speed to about **2,500 rpm**. Make sure that, when the throttle valve is fully closed suddenly, the vacuum gauge reads **0 ~ 30 mm-Hg** and, when the engine speed is lowered to **1,300 ~ 1,100 rpm**, the reading rises to **more than 400 mm-Hg**.

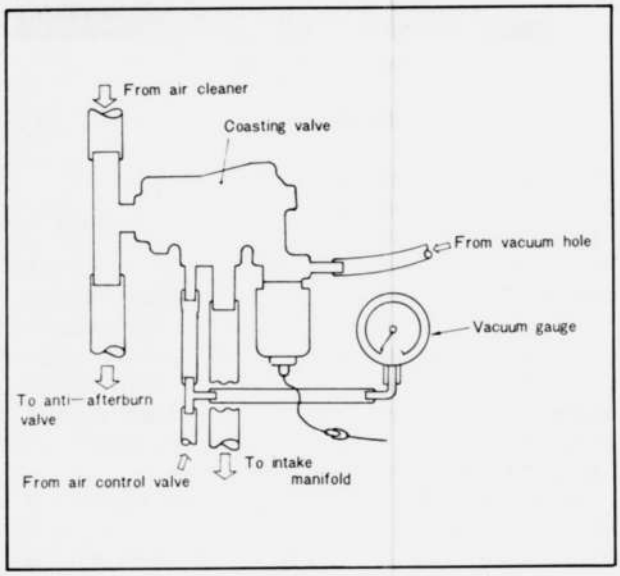

Fig. 1A–58 Checking of coasting valve

When vacuum gauge readings are excessive, check the following points :

1) Check the current from the No. 1 control box to the coasting valve solenoid by referring to the procedure mentioned in 1A–E–10.
2) Make sure that the solenoid operates properly.
3) Make sure that there is no clogging in the vacuum relief passage connecting the vacuum chamber and the air inlet pipe in the coasting valve.
4) Make sure that idling fuel flow is proper. (Proper flow: **2.0 ~ 2.3 L/H** or **0.52 ~ 0.6 U.S. gallon/H).**

b. Removing of coasting valve

1. Remove the air cleaner.
2. Remove the air hoses and the vacuum sensing tubes from the coasting valve.
3. Loosen the mounting bolts and remove the coasting valve.

1A–E–14. Idle Switch

a. Checking of idle switch

1. Remove the idle switch terminal.
2. If there is conduction when an external force is not applied to the switch knob (when the primary throttle valve opens at idling opening angle) and if there is no conduction when an external force is applied, the idle switch is normal.

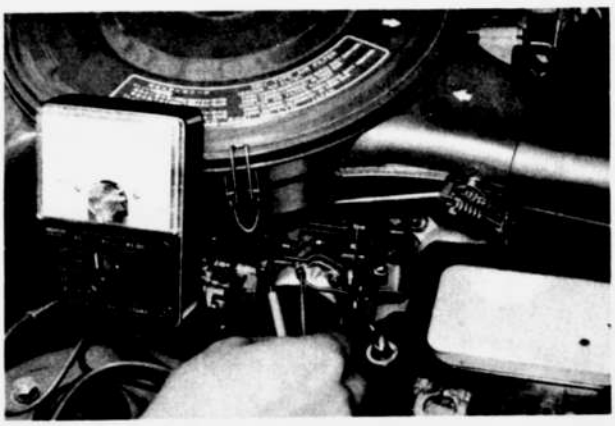

Fig. 1A–59 Checking of idle switch

b. Removing of idle switch

1. Remove the air cleaner and relevant hoses.
2. Remove the coasting valve and carburetor.
3. Loosen the screws and remove the idle switch.

c. Adjusting of idle switch

1. Install the idle switch in the reverse sequence.
2. Warm up the engine until the water temperature rises about 70°C (159°F).
3. Make sure that the idle fuel flow and the idle speed are within the normal range.
4. Adjust the engine speed to 1,075 ~ 1,100 rpm by turning the throttle adjusting screw.
5. Turn the adjust screw of the idle switch until idle switch changes from "OFF" to "ON".
6. Slowly return the adjust screw of the idle switch and stop just where the switch changes from "ON" to "OFF".
7. Make sure that the idle switch turns on above 1,000 rpm when the throttle adjust screw is returned.
8. Set the engine speed to 900 rpm by turning the throttle adjust screw.
9. Make sure that the engine speed is 900 rpm by carrying out no load running two or three times.

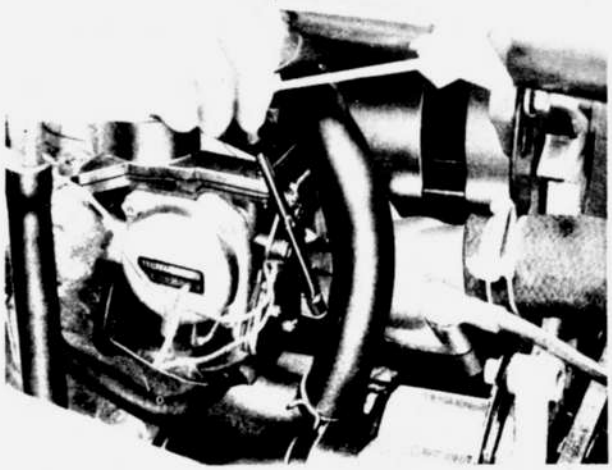

Fig. 1A–60 Adjusting of idle switch

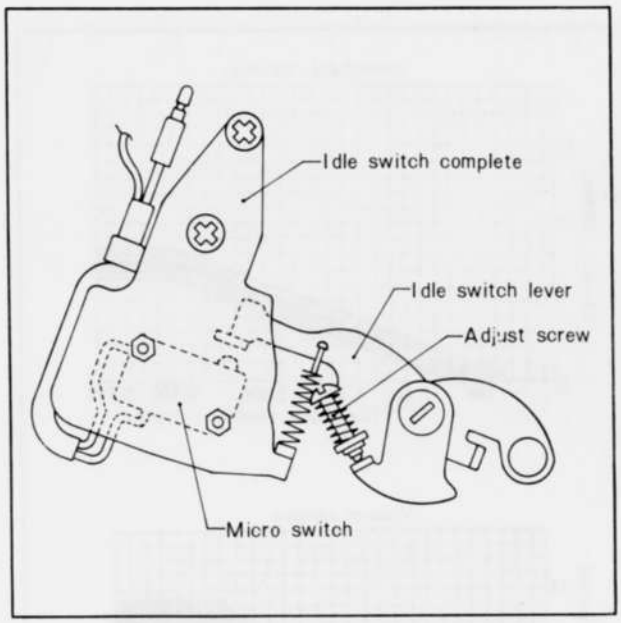

Fig. 1A–61 Idle switch

1A–E–15. Choke Switch

a. Checking of choke switch

1. Remove the choke switch terminal.
2. If the two terminals of the switch are disconducted by pulling the choke control knob about 10 mm (0.4 in) and conducted by returning the knob, the choke switch is normal.

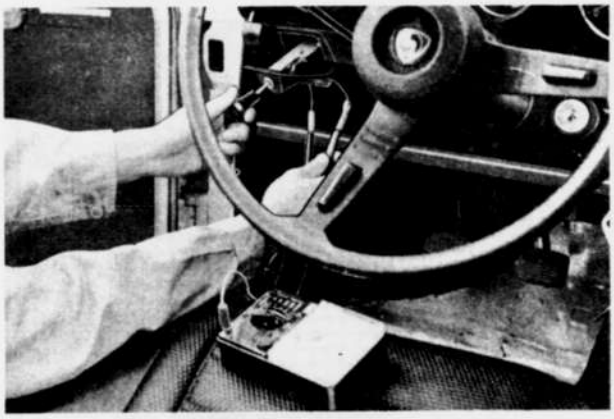

Fig. 1A–62 Checking of choke switch

1A–E–16. Air Supply Valve

a. Checking of air supply valve

1. Remove the air hose from the air suction pipe of the air supply valve.
2. Start the engine and keep it running at idle speed. When the air suction pipe of the air supply valve is closed with the hand, reduction of idle speed must be **under 30 rpm**. Make sure that, when the wiring to the air supply valve solenoid is disconnected, a large amount of air is supplied into the intake manifold.

b. Removing of air supply valve

1. Remove the air cleaner and air duct.
2. Disconnect the air hose, vacuum sensing tube and lead wire.
3. Loosen the mounting nuts and remove the air supply valve.

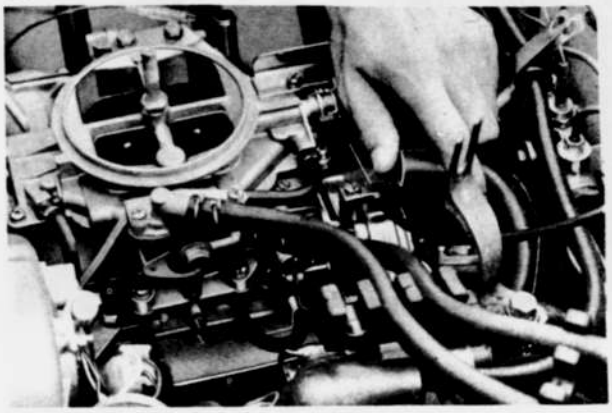

Fig. 1A–63 Checking of air supply valve

c. Installing of air supply valve

Install the air supply valve in the reverse sequence.

1A–E–17. Ventilation Valve

a. Checking of ventilation valve

1. Check to see that the air cleaner element is not clogged.
2. Install a vacuum gauge as in Fig. 1A–64.
3. Start the engine. When the engine speed is raised to 2,500 ~ 3,000 rpm, the vacuum reading must be under **60 mm-Hg.**

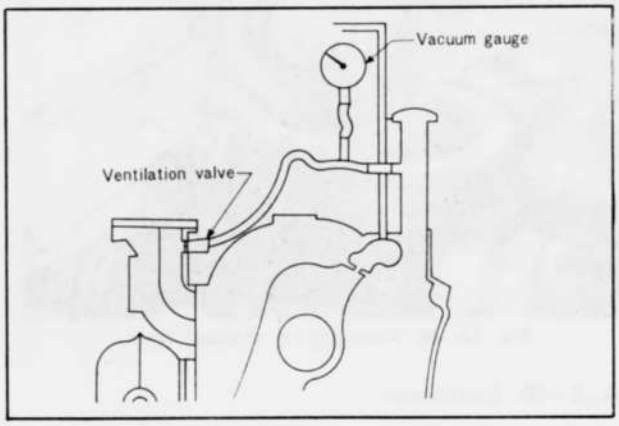

Fig. 1A–64 Checking of ventilation valve

b. Removing of ventilation valve

1. Remove the fuel return valve.
2. Remove the distributor vacuum tubes.
3. Remove the ventilation hose at the ventilation valve.
4. Loosen and remove the ventilation valve with the **ventilation valve wrench** (49 2113 005).

1A–E–18. Charcoal Filter

a. Checking of charcoal filter

1. Check to see that the air cleaner element is not clogged.

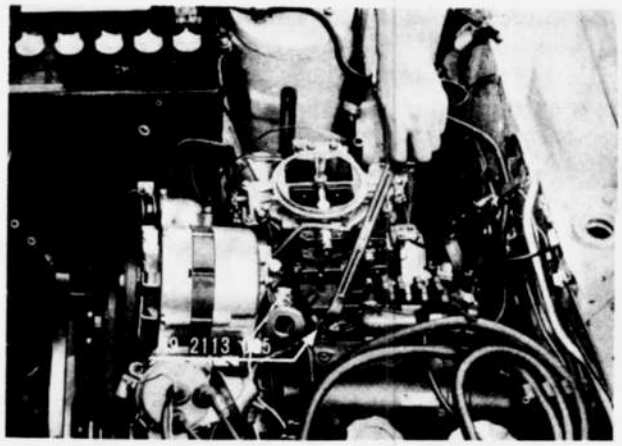

Fig. 1A–65 Removing of ventilation valve

2. Visually check the adhering condition of oil. When the whole surface is damp with oil, measure the ventilation resistance.
3. Attach a vacuum gauge as in Fig. 1A–64. Check to see that when the engine speed is raised to 2,500 ~ 3,000 rpm, the vacuum gauge reads under **60 mm -Hg.**

b. Removing of charcoal filter
1. Remove the air cleaner cover.
2. Loosen and remove the charcoal filter.



Fig. 1A–66 Removing of charcoal filter

1A–E–19. Distributor

a. Adjusting of ignition timing
Adjust the ignition timing as follows:
1. Connect a timing light to the high tension cord for leading spark plug of front rotor housing.
2. Start the engine, and run it at idle speed of 900 rpm.
3. Aim the timing light at the timing indicator pin on the front cover.
4. Loosen the distributor locking nuts and rotate the leading side distributor body until the timing mark on the eccentric shaft pulley aligns with the timing indicator pin on the front cover.
5. Tighten the locking nuts and recheck the timing.
6. Adjust the trailing side distributor in the same way as above.

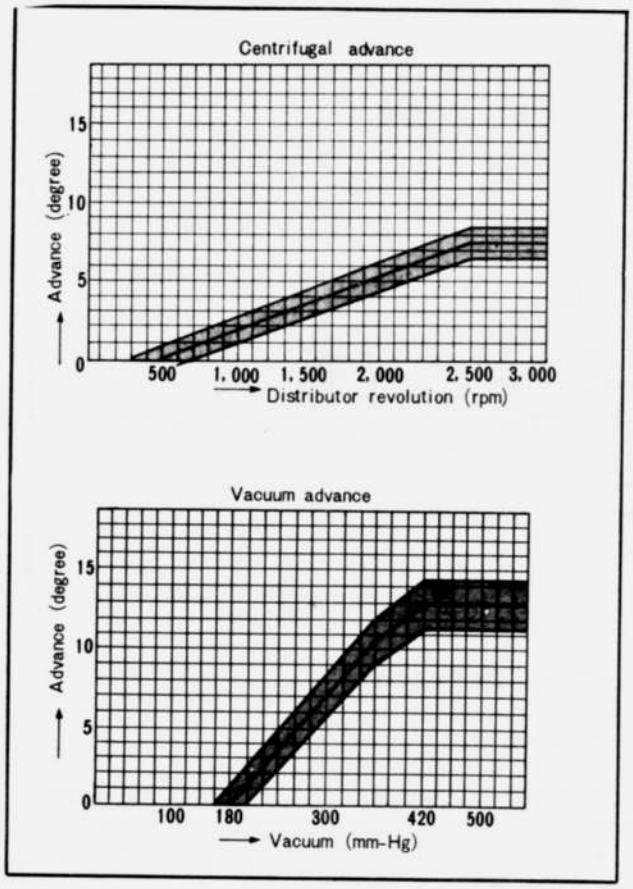

Fig. 1A–67 Advancing characteristic (Trailing side)

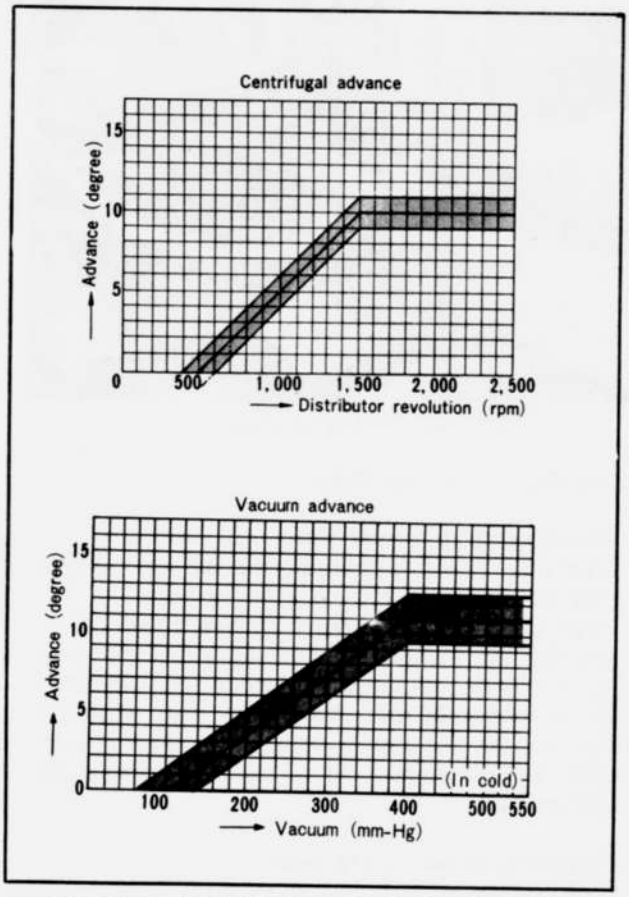

Fig. 1A–68 Advancing characteristic (Leading side)

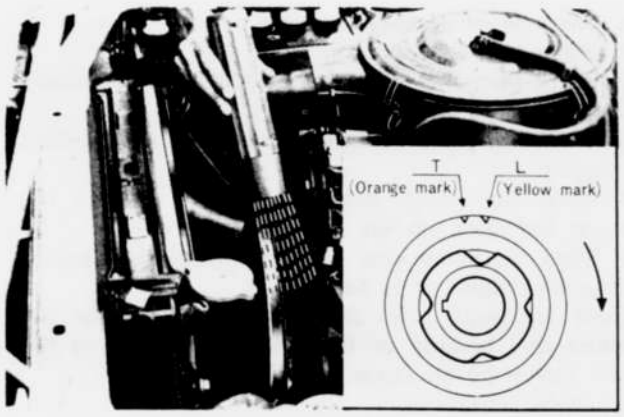

Fig. 1A–69 Adjusting of ignition timing

b. Advance test

To test the ignition advancing characteristic of the distributor, use a distributor tester.

The advnacing characteristic of each distributor should be **within the range** shown in Fig. 1A–67 and 1A–68.

c. Checking of contact point gap

Check and adjust the contact point gap. To check the point gap, rotate the distributor drive shaft until the contact arm rubbing block is at the top of the cam. Check the point gap with a feeler gauge. The gap should be **0.45 mm (0.018 in).**

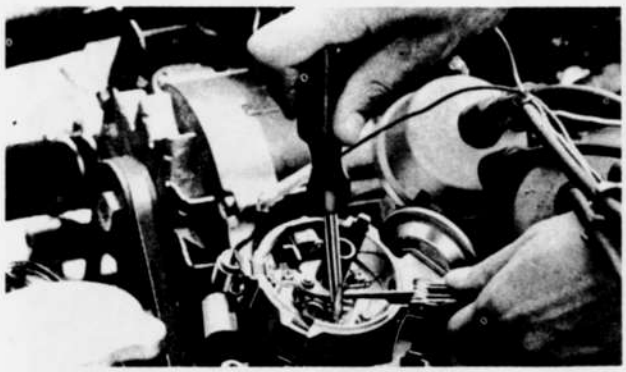

Fig. 1A–70 Adjusting of point gap

Check the cam dwell angle with a tester.

The dwell angle should be **55° to 61°**. If the dwell angle was below the specified amount, the contact point gap is too large. If the dwell angle was above the specified amount, the contact point gap is too small.

1A–E–20. Spark Plug

Spark plugs are of a standard type, and a cold type, as shown in the following table.

Standard Type

Maker	Brand	Electrode gap
NGK	B–7EM	0.8 ~ 0.9 mm (0.031 ~ 0.035 in)
NIPPONDENSO	W22EA	0.8 ~ 0.9 mm (0.031 ~ 0.035 in)
CHAMPION	N–80B .033"	0.8 ~ 0.9 mm (0.031 ~ 0.035 in)

Cold Type

Maker	Brand	Standard electrode gap
NGK	B–8EM	0.8 ~ 0.9 mm (0.031 ~ 0.035 in)
NIPPONDENSO	W25EA	0.8 ~ 0.9 mm (0.031~ 0.035 in)
CHAMPION	N–78B .033"	0.8 ~ 0.9 mm (0.031 ~ 0.035 in)

a. Checking of spark plug

1. Inspect each plug individually for badly worn electrodes, glazed, broken or blistered porcelain, and replace the plug as necessary.
2. Clean the spark plugs throughly using a sand blast cleaner.
3. Measure the electrode gap with a wire gauge. If the gap exceeds 1.1 mm (0.043 in) replace the spark plug.
4. Inspect each spark plug for make, and heat range. All spark plugs must be of the same maker and number or heat range. If spark plugs shown burning white or rapid electrode wear, replace with a **cold range type** spark plugs. Do not use spark plug which is not specified.

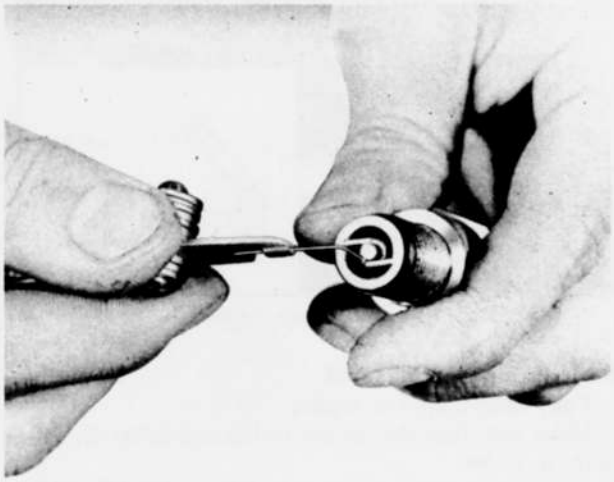

Fig. 1A–71 Adjusting of electrode gap



Fig. 1A–72 Adjusting of electrode gap

1A–E–21. Ignition Coil

a. Checking of ignition coil

1. Check the oil leaking out of the ignition coil and replace it when much oil leak is found.
2. Disconnect each wiring from the positive and negative terminals of the ignition coil.
3. Measure the primary coil resistance and check the disconnection of the primary coil.

Trailing side coil (Internal resistance type)
HP5 – 10F 3.09Ω
Leading side coil (External resistance type)
HP5 – 13J 1.35Ω
Incidentally, the above parts are common to RX-2 and R-100 Coupé.

1A–E–22. Carburetor

a. Idle limiter

Idle limiter regulates the fuel flow at low speeds and is adjusted by the manufacture.
The idle limiter should not be adjusted.

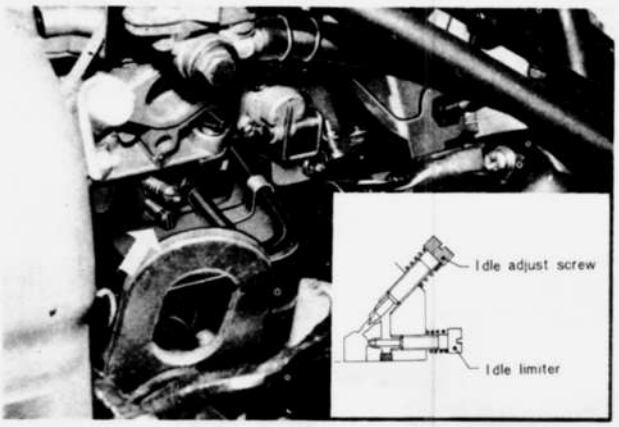

Fig. 1A–73 Idle limiter

b. Adjusting of idle speed

1. Fully warm up the engine.
2. Make sure that the return of the secondary throttle valve is proper.
3. Adjust the idle fuel flow to **2.0 ~ 2.3 L/H (0.52 ~ 0.6 U.S. gallon/H)** and the idle speed to 900 rpm by manipulating the idle adjusting screw and throttle adjusting screw.

The normal idle speed is **900 rpm**.

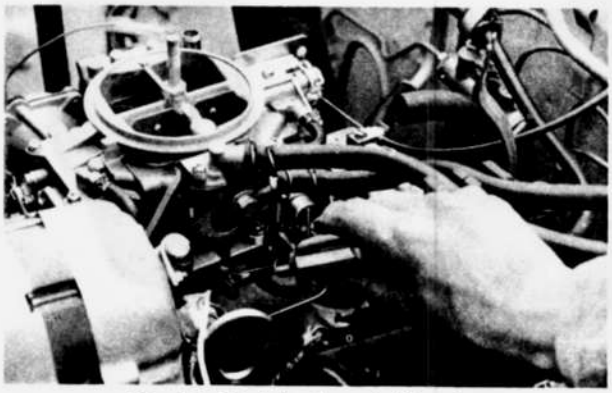

Fig. 1A–74 Adjusting of idle mixture

c. Checking of accelerator pump

1. Remove the air cleaner.
2. Check the pump for discharge by moving the primary throttle valve.
3. Check the pump for lever's movement and nozzle's clogging.
4. When the pump nozzle is clogged, remove the pump and clean up the nozzle.
5. When the pump lever does not operate or operates sluggishly, adjust it as follows:

There are many cases that the pump operation becomes dull because of the increased friction of the part shown by an arrow.
Emergency measures :
1) Finish the sliding face with sand paper.
2) Supply oil to the sliding face.

d. Checking of secondary throttle valve for faulty opening

1. Remove the air cleaner.
2. Check the secondary throttle valve operation while raising the engine speed from 900 rpm up to around 5,000 rpm (No load running) by fully depressing the accelerator pedal.
3. If the secondary throttle valve opens smoothly and almost fully opens, the opening of the secondary throttle valve is normal.
4. When the valve does not operate at all or smoothly, clean up the secondary throttle valve bearing.

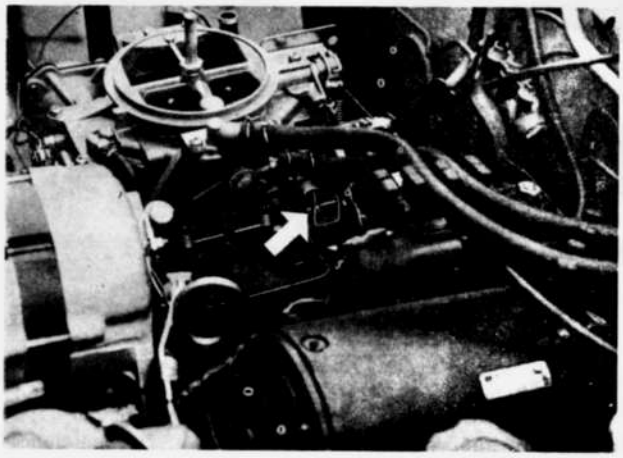

Fig. 1A–75 Checking of accelerator pump (1)

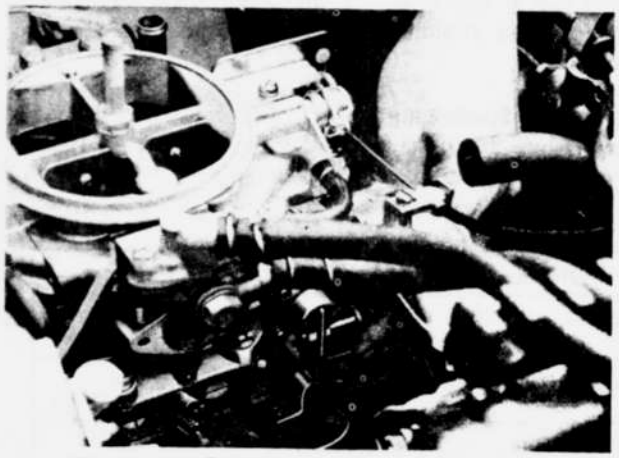

Fig. 1A–76 Checking of accelerator pump (2)

e. Checking of secondary throttle valve for faulty closing

1. Remove the air cleaner.
2. Set the engine speed to 900 rpm.
3. Make sure whether the idle speed is the normal 900 rpm when slowly returning the accelerator pedal just after fully depressing the pedal so as to raise the engine speed from the idling speed of 900 rpm up to about 4,000 rpm (no load running). If the idling speed is normal, the closing condition of the valve is satisfactory.
4. When the idling speed exceeds 970 rpm, depress the primary throttle valve with adequate force. And, in case the engine speed returns to the normal speed the above excess is due to the faulty returning of the primary throttle valve.
5. If the engine speed does not recover the normal speed and is kept at high revolution, depress the accelerator pedal once or twice. In case the engine speed returns to the normal speed, this trouble is due to the faulty closing of the secondary throttle valve.
6. Clean up the secondary throttle valve bearing of the throttle body.

Note :

Be attentive not to misunderstand that this trouble is due to the faulty closing of the coasting valve.

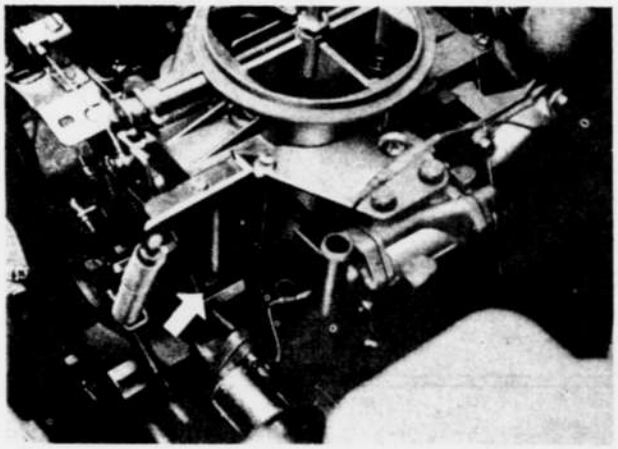

Fig. 1A–77 Checking of secondary throttle valve (1)

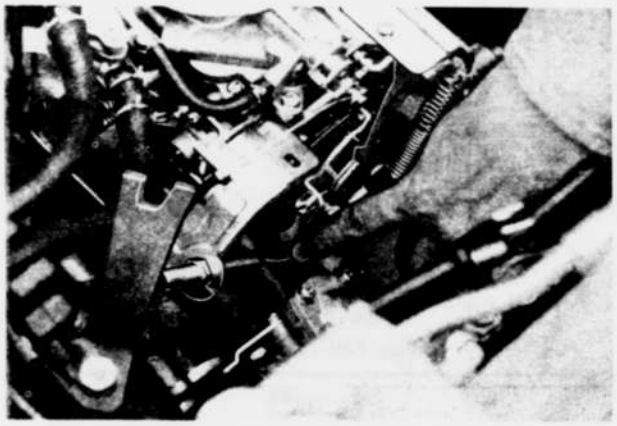

Fig. 1A–78 Checking of secondary throttle valve (2)

f. Fast idle adjustment

When the choke valve is in choked position, the primary throttle valve is opened **15.5 ~ 18.5 degrees.** When the choke valve is fully closed, the clearance between the primary throttle valve and bore is **1.17 ~ 1.56 mm (0.0461 ~ 0.0616 in)**.

Measure the clearance using a suitable wire gauge, and if necessary, adjust it by bending the starting adjust lever.

When the choke valve is closed 20 degrees, the throttle valve is opened more than 8 degrees and when the choke valve is fully opened, the opening of the throttle valve is under 2 degrees.

Check the choke valve for smooth movement.

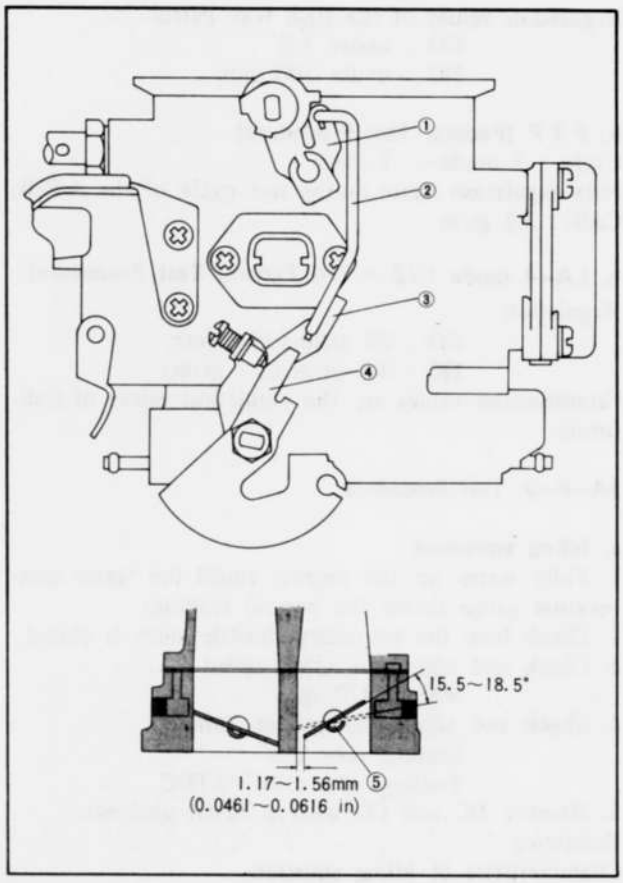

Fig. 1A–79 Fast idle adjustment

1. Choke valve lever
2. Starting connecting rod
3. Starting throttle lever
4. Starting adjust lever
5. Primary throttle valve

1A–F–. EXHAUST EMISSION TEST PROCEDURE

1A–F–1. Test Mode

a. Idling emissions

Regarding emissions during idling, CO and HC are regulated, but there is no regulation on NOx at present.

(Reference)

Regulation values of the High Way Patrol
CO : under 3 %
HC : under 300 ppm

b. F T P (Federal Test Procedure)
Cycle : 7 mode– 7 cycle
NOx regulation value during hot cycle of the A R B, Calif. ; 3.2 gr/m

c. LA–4 mode ('72 ~ '74 Federal Test Procedure)
Regulation
CO : 39 gr/m (39 gr/m)
HC : 3.4 gr/m (3.2 gr/m)
Parenthesized values are the regulation values of California.

1A–F–2. Test Procedure

a. Idling emissions
1. Fully warm up the engine. (until the water temperature gauge shows the normal reading)
2. Check how the secondary throttle valve is closed.
3. Check and adjust the idling speed.
900 ~ 970 rpm
4. Check and adjust the ignition timing.
Leading side : 0°
Trailing side : 10° ATDC
5. Measure HC and CO with a NDIR analyzer.
Reference
Characteristics of idling emission
As the idling emissions are closely related with the idle fuel flow, care should be taken when adjusting the idle fuel flow. For reference, the relation between the number of unturnings of the screw and the fuel flow is shown in the following graphs by the mean value of the fuel flow.

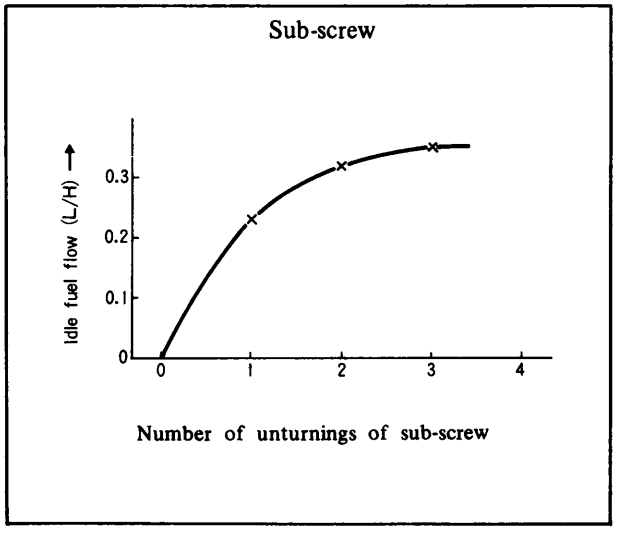

Fig. 1A–80

b. F T P
Instructions for 7–mode driving
(Cold start)
1. To start the engine, pull the choke out to the full manual travel.
2. As soon as the engine has been started, adjust the idling speed to about 1,800 ~ 2,000 rpm by means of the choke.

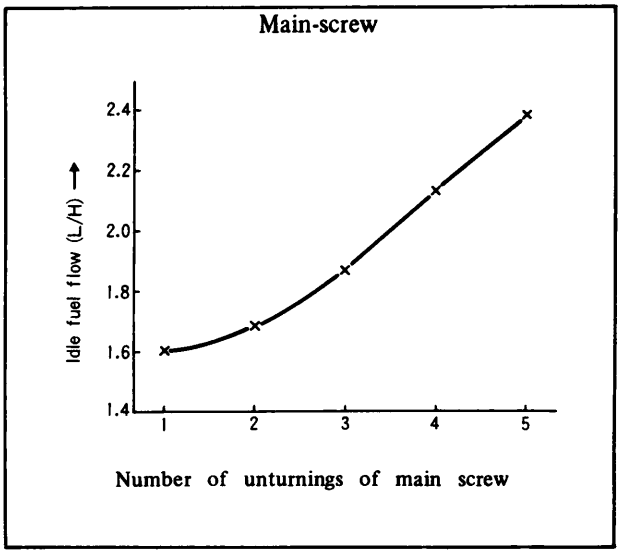

Fig. 1A–81

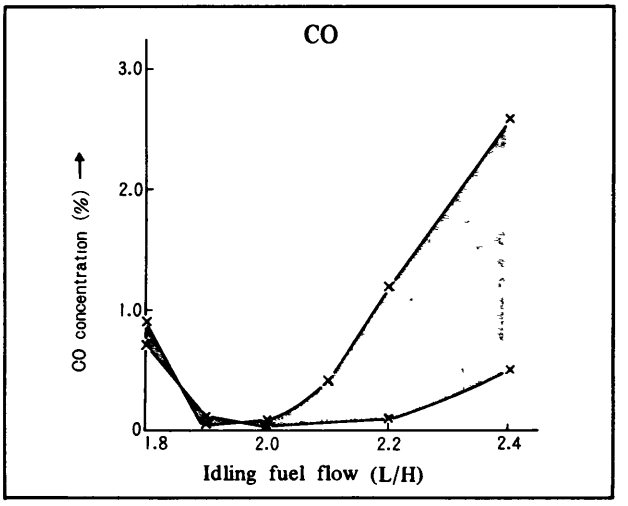

Fig. 1A–82

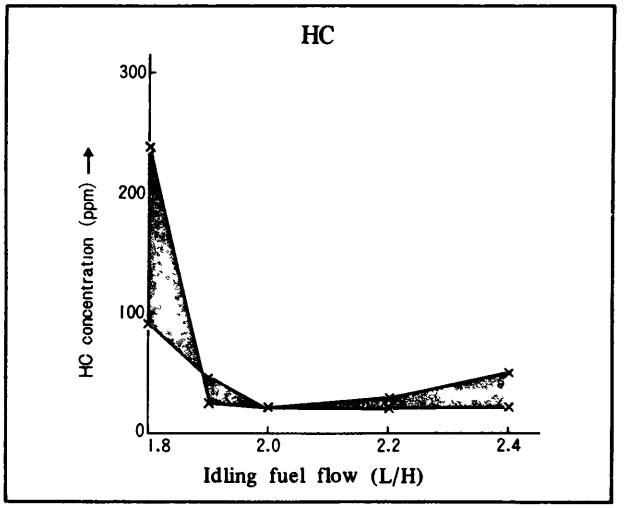

Fig. 1A–83

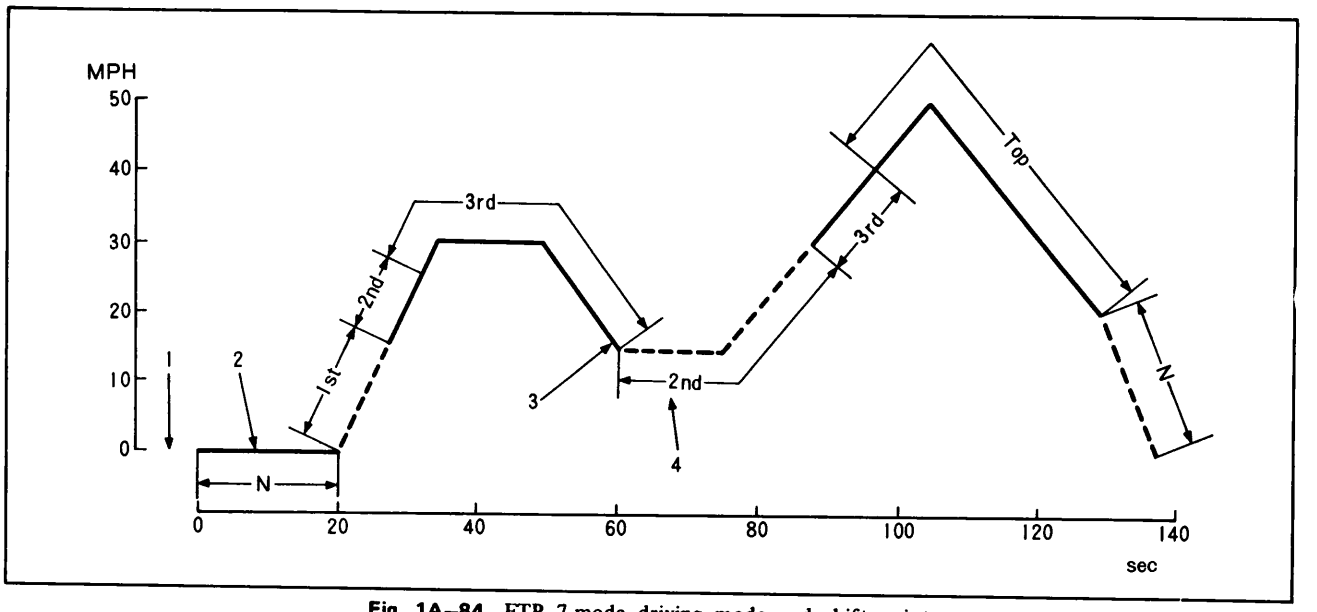

Fig. 1A–84 FTP 7-mode driving mode and shift points

3. Choke should be set at the position as described above at least for the first 80 seconds.
4. Use second gear for 15 M/H cruising and 15 ~ 30 acceleration.

Note 1)

Flywheel	Actual H.P. (50 M/H)
1971 2,500 lb	9.4
1972 2,750 lb	9.9

Note 2)

Chassis dynamometer load used ; Type CLAYTON
The indicated horse power is the value which is corrected according to the CLAYTON type load calibration curve mentioned in the Federal Resister.

Note 3)

In the case of hot cycle test, it is necessary to warm up the reactor by more than three cycles.

c. LA–4 mode

1. Engine starting and choke operation.
   1) Pull out the choke button to its full stroke.
   2) Start the engine with the clutch disengaged.
   3) Push back the choke button smoothly to its fast idle position, immediately after engine starts.
   4) Fast idle speed is set at 1,800 ~ 2,000 rpm.
   5) Push back the choke button completely during the deceleration between 181 and 187 seconds from the engine start.
   6) The above process is shown schematically as follow. (Fig. 1A–85)

2. **The shift patterns**

Acceleration modes	
15 m.p.h.	1st to 2nd gear
25 m.p.h.	2nd to 3rd gear
40 m.p.h.	3rd to 4th gear
Deceleration modes	
15 m.p.h.	Clutch disengaged

3. **Equivalent inertia weight**
   2,750 lbs.

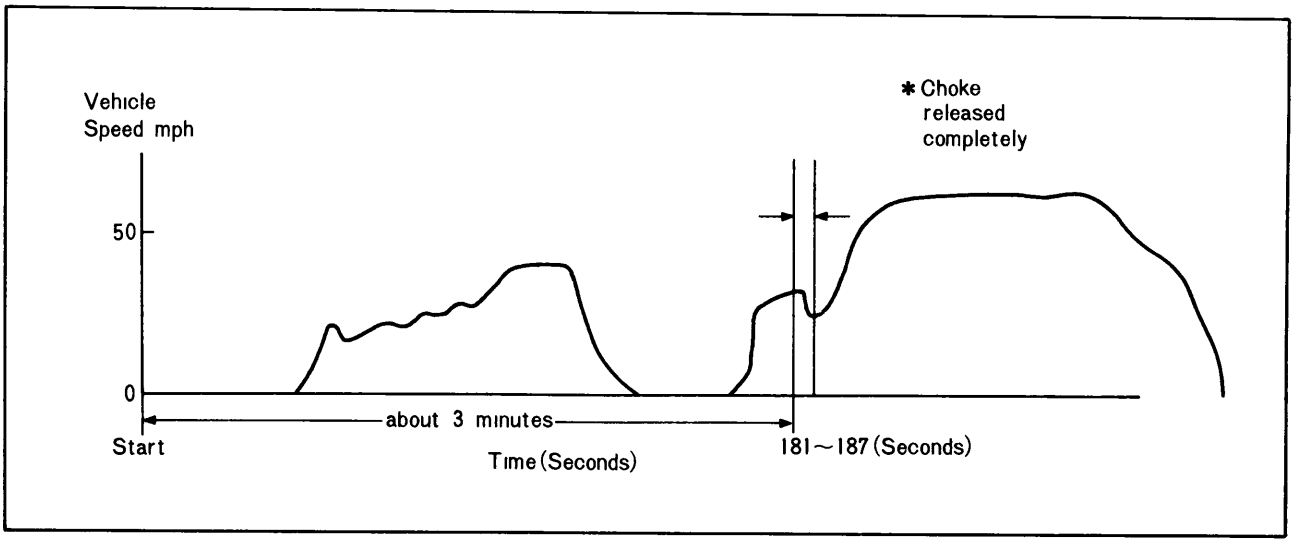

Fig. 1A–85 LA-4 driving mode

4. Signal input for tachometer should be taken from ignition coil for leading plugs.
5. Idling speed 900 ~ 970 rpm
6. Ignition timing
   Trailing plugs 10 deg. ATDC
   Leading plugs 0 deg.

1A–F–3. Factors of Driving Operation Which Affect Emissions

a. Choke operation
The choke should be operated properly and quickly. Over choke ; There is a possibility of engine stall, which increase the emissions.
Over revolution; There is a possibility of engine damage.

b. Changing operation
It should be done as smoothly and quickly as possible.

c. Deceleration
When the car speed is under 15 M/H, it is better to make clutch disengaged.

1A–F–4. Other Elements Which Affect Emissions

1. Improper – excessive chassis dynamometer load
2. Too inferior response of driving aid
3. Others ; Keep the tire pressure of the rear wheels under 45 psi (pound per square inch) so as to prevent tire damage.

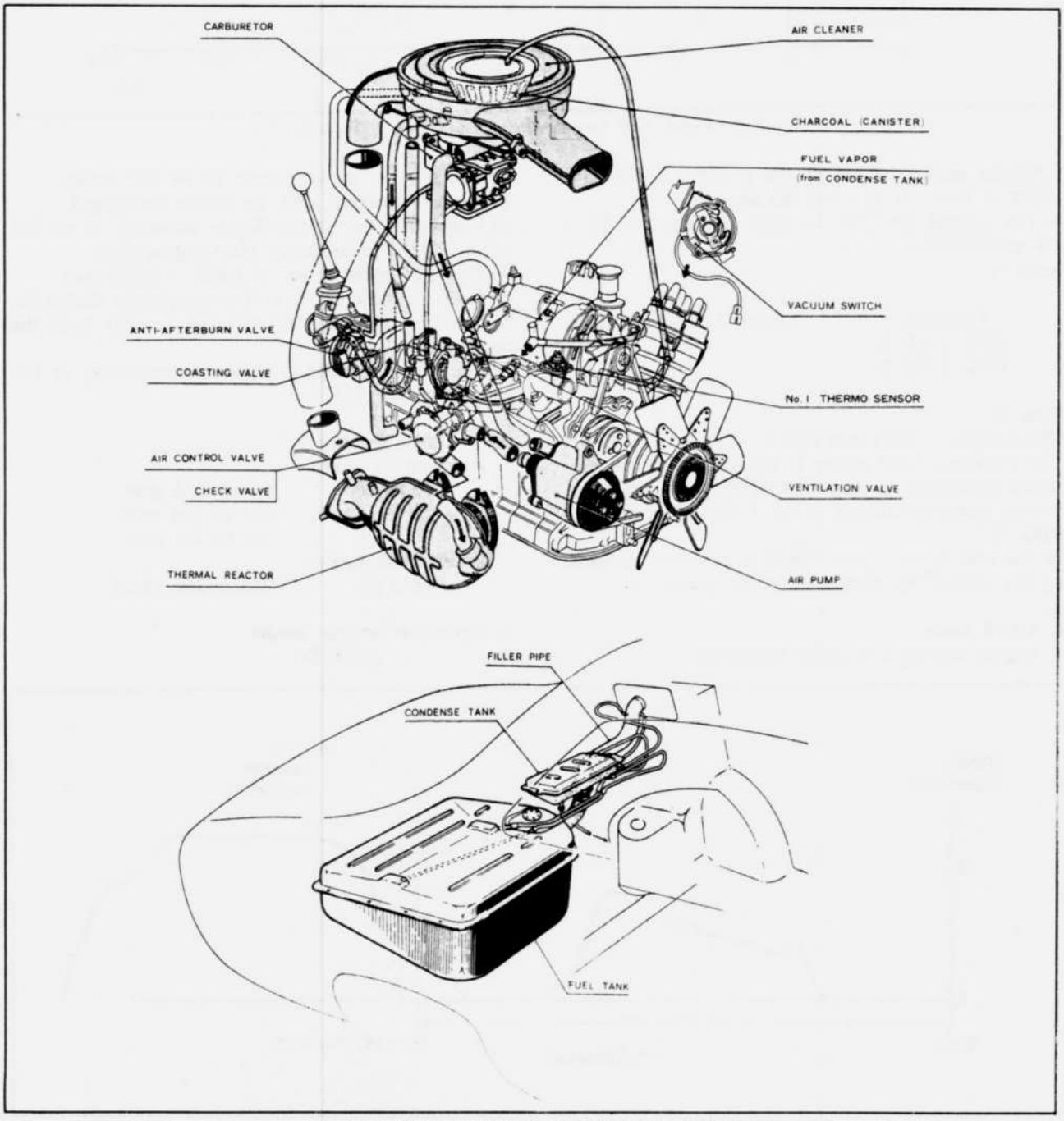

Fig. 1A–86 Construction of air pollution control system

1A–G. TROUBLE SHOOTING

1A–G–1. Symptoms, Causes and Remedies

The possible faults and their remedies are listed in the following table.
When the symptoms of troubles are detected, proper care must be taken immediately before proceeding to the next probable cause.

Symptoms and probable causes	Remedies
1. Poor acceleration	
* The engine does not fully respond to the depression of the accelerator pedal.	
* The accelerative force is poor.	
* The climbing capacity is insufficient.	
* The max. speed can not be obtained.	
1) Improper ignition timings for leading and trailing plugs.	See 1A–E–20 Adjust
2) Improper opening of carburetor secondary throttle valve	See 1A–E–23 Clean
3) Fouling and excessive gap of spark plugs (Fouling by lead or carbon)	See 1A–E–21 Clean or replace
4) Burned or improperly adjusted distributor contact point	See 1A–E–20 Replace if necessary
5) Lack of fuel supply at high speed running	See 4–B Replace if necessary
2. Rough engine idling and hard starting	
* The idling speed can not be lowered.	
* Too much engine vibration at idling	
* The engine starting is too hard.	
* The engine stalls immediately even if it starts.	
1) Air leak from each hose	Replace if necessary
2) Clogging of carburetor jets	Clean
3) Improper seating of carburetor secondary throttle valve	See 1A–E–23 Clean
4) Fouled spark plug	See 1A–E–21 Clean or replace
5) Burned or improperly adjusted distributor contact point	See 1A–E–20 Clean or replace
6) Improper ignition timings of leading and trailing plugs.	See 1A–E–20 Adjust
7) Defective ventilation valve	See 1A–E–18 Replace if necessary
8) Internal disconnection of leading and trailing ignition coils	See 1A–E–22 Replace
9) Air leak from air intake system	Repair or replace if necessary
10) Defective coasting valve	See 1A–E–13 Replace if necessary
11) Defective anti-afterburn valve	See 1A–E–12 Replace if necessary
12) Defective air supply valve	See 1A–E–17 Replace if necessary
13) Low compression pressure	Repair
14) Leading side ignition retards constatnly	See 1A–E–11 Check and replace
3. Noisy air pump	
* The noise is generated by the air pump when the engine is idling.	
* The noise is generated by the air pump when the engine is racing.	
1) Improperly adjusted "V"-belt	See 1A–E–1 Adjust
2) Defective air pump	See 1A–E–1 Replace
3) Disconnected or leaky air hose	Connect and replace
4) Insufficient tightening of pump attaching bolts	See 1A–E–1 Adjust
4. Improper fuel connection between slow and main zones (Flat spot)	
* Shock is felt when depressing the accelerator pedal to accelerate from the low speed cruising condition.	
* Shock is felt when depressing the accelerator pedal after turning left at low speed.	
1) Improper injection of carburetor accelerator pump	See 1A–E–23 Adjust
2) Leading side ignition retards constantly	See 1A–E–11 Replace
3) Clogging of carburetor jets	Clean
4) Fouled leading spark plug	See 1A–E–21
5) Excessively low carburetor fuel level	Adjust
6) Continuously opened anti-afterburn valve or air supply valve or coasting valve	See 1A–E–12, 1A–E–13, 1A–E–17 Replace

Symptoms and probable causes	Remedies
5. Improper fuel connection between primary and secondary zones * Shock is caused when accelerating from running at around 3,000 rpm by depressing the accelerator pedal. * Shock is caused when promptly accelerating from the middle speed or the decelerating condition.	
1) Clogging of carburetor jets	Clean
2) Excessively low carburetor fuel level	Adjust
3) Serious clogging of air cleaner element	Clean or replace
4) Continuously opened anti-afterburn valve, air supply valve and coasting valve	See 1A–E–12, 1A–E–13, 1A–E–17 Replace
6. Large car knocking during cruising * It is impossible to cruise constantly in any gear. * Shock is sometimes caused during running in top gear.	
Note) These phenomena are more or less inevitable. Therefore, unless the car knocking is excessive, it can be regarded to be normal.	
1) Clogging of carburetor jets or excessively low fuel level	Clean or adjust
2) Trailing side ignition does not occur	Check and replace if necessary
3) Air leak from each hose	Repair and replace if necessary
4) Air leak from each valve	Replace if necessary
5) Fouled spark plug	Clean and replace
6) Improper distributor vacuum advance (no advance)	Repair and replace parts
7. Abnormally large engine knocking	
1) Improper ignition timings of leading and trailing sides (excessive advance)	See 1A–E–20 Adjust
2) Excessive distributor vacuum advance	See 1A–E–20 Adjust
3) Excessive distributor centrifugal advance	See 1A–E–20 Adjust
4) Too poor fuel	Clean
5) Insufficient heat range and extreme gap erosion of spark plug	Adjust and replace
8. Pre-ignition or spit back * Large noise comes from the engine compartment at high speed running, e.g. on the free way, and the engine horse-power falls.	
Note) If the car is run continuously under the condition mentioned above, the insulator of the spark plug is broken and bites into the rotor, causing the vehicle to be inoperable.	
Pre-ignition / Spit back 1) Excessive spark plug gap for trailing side 2) Excessive advance of trailing side ignition 3) Excessive advance of leading side ignition 4) Insufficient heat range of spark plug 5) Insufficient metering oil 6) Sticky apex seal 7) Improper alignment of high tension cords	
9. Large car bucking or deceleration vibration * Within the range where the coasting valve should operate (when decelerating from 1,400 rpm or over) large car bucking occurs.	
Note) Even if the car bucking happens to occur within the range of engine speed less than 1,400 rpm where the coasting valve does not operate, it may be regarded as normal.	
1) Improper operation of coasting valve	See 1A–E–13 Replace
2) Defective No. 1 control box	See 1A–E–10 Replace
3) Improper idle fuel flow or idle speed	See 1A–E–23 Adjust
4) Air leak from each hose	Repair and replace if necessary
5) Air leak from each valve	Repair and replace if necessary
6) Defective idle switch	See 1A–E–14 Replace
7) Fouled spark plug	Clean and replace

Symptoms and probable causes	Remedies
10. Afterburning * Extremely annoying afterburning occurs during deceleration. * Afterburning occurs when turning off the ignition switch.	
1) Air supply valve not opening properly	See 1A-E-17 Replace
2) Anti-afterburn valve not opening properly	See 1A-E-12 Replace
3) Coasting valve not opening properly	See 1A-E-13 Replace
4) Rich idle mixture	See 1A-E-23 Adjust
5) Gas leak from exhaust system	Repair and replace parts
6) Too low idle revolution	See 1A-E-23 Adjust
11. Over flow from carburetor	
1) Dust biting into needle valve	Clean
2) Improper sealing of needle valve	Clean and replace parts
3) Improper movement of float	Adjust and replace parts
4) Large fuel pressure of electric fuel pump	Replace if necessary
12. The engine brake does not work even if the accelerator pedal is released. * Even if the accelerator pedal is released when running, the engine brake does not work, which causes the overrunning and makes the driver uneasy.	
1) Improper returning of carburetor primary throttle valve	See 1A-E-23 Clean
2) Improper returning of carburetor secondary throttle valve	See 1A-E-23 Clean
13. The air jets out from the tail pipe for the forced air cooling during idling.	
1) Improper operation of air control valve	See 1A-E-5 Replace
2) Electric current not flowing from the No. 1 control box to air control valve (through throttle opener switch)	See 1A-E-10 Replace
14. The leading side ignition is retarded when idling.	
1) Defective No. 1 thermosensor	See 1A-E-6 Replace
2) Defective No. 2 thermosensor	See 1A-E-7 Replace
3) Defective No. 1 control box	See 1A-E-10 Replace
4) Defective No. 2 control box	See 1A-E-11 Replace
5) Defective vacuum switch	See 1A-E-9 Replace
6) Defective choke switch	See 1A-E-16 Replace
15. Factors which adversely affect overall emissions under proper procedure (Ex. In case of bag sampling)	
1) Improper operation of air control valve (Air cut valve, Relief valve and Safety valve)	See 1A-E-5 Replace
2) Defective No. 1 control box or No. 2 control box	See 1A-E-10, 11 Replace
3) Trailing side spark plug is not controlled (when the water and oil temperatures are low.)	See 1A-E-9, 10 Replace
4) Leading side ignition timing not retarded (when the water and oil temperatures are low.)	See 1A-E-11 Replace
5) Improper ignition timings of leading and trailing plugs.	See 1A-E-20 Adjust
6) Improper idling mixture	See 1A-E-23 Adjust
7) Improper engine idling speed (Proper idling speed is 900 rpm.)	See 1A-E-23 Adjust
8) Defective carburetor (improper fuel level, jet, etc.)	See 1A-E-23 Adjust
9) Improper operation of coasting valve	See 1A-E-13 Replace
10) Improper operation of anti-afterburning valve	See 1A-E-12 Replace
11) Fouled spark plug	See 1A-E-21 Clean and replace
12) Breakage of reactor	See 1A-E-4 Replace
13) Air leak from secondary air passage	Repair and replace
14) Air leak from each sensing tube to intake manifold	Repair and replace
16. Factors which adversely affect idling emissions	
1) Improper idling speed or mixture	See 1A-E-23 Adjust
2) Defective spark plug	See 1A-E-21 Clean and replace
3) Improper ignition timings of leading and trailing sides	See 1A-E-20 Adjust
4) Defective distributor contact point	See 1A-E-20 Clean and replace
5) Deteriorated air pump	

Symptoms and Probable causes	Remedies
6) Improper operation of air control valve	See 1A–E–5 Replace
7) Defective No. 1 control box	See 1A–E–10 Replace
8) Air leak from each valve into intake manifold	Repair and replace
9) Breakage of reactor	
17. Factors which adversely affect deceleration emissions	
1) Improper idling speed and fuel flow	See 1A–E–23 Adjust
2) Improper operation of anti-afterburn valve	See 1A–E–12 Replace
3) Air supply valve opens faultly.	See 1A–E–17 Replace
4) Improper operation of coasting valve	See 1A–E–13 Replace
5) Improper operation of air control valve (Air cut valve, Relief valve and Safety valve)	See 1A–E–5 Replace
6) Defective idling switch	See 1A–E–14 Replace
7) Breakage of reactor	See 1A–E–4 Replace
18. Factors which adversely affect acceleration emissions	
1) Improper air pump flow	See 1A–E–1. Replace
2) Defective air control valve (Air cut valve, Relief valve and Safety valve)	See 1A–E–5 Replace
3) Trailing side spark plug also ignited (when the water and oil temperatures are low)	See 1A–E–10 Replace
4) Leading side ignition not retarded	See 1A–E–11 Replace
5) Defective No. 1 thermosensor	See 1A–E–6 Replace
6) Defective No. 2 thermosensor	See 1A–E–7 Replace
7) Defective thermodetector	See 1A–E–8 Replace
8) Defective carburetor (improper fuel level and other)	See 1A–E–23 Adjust
9) Defective No. 1 control box	See 1A–E–10 Replace
10) Defective No. 2 control box	See 1A–E–11 Replace
11) Defective distributor vacuum switch	See 1A–E–9 Replace
12) Defective reactor	See 1A–E–4 Replace
13) Defective spark plug	See 1A–E–21 Replace

1A–G–2. Detects, Conditions of Trouble and Causes of Defects Related to Each System

Air control valve

Possible troubles	Corresponded item
1. Number of revolutions during idling decreases	B, D
2. Emission during idling becomes unfavorable	B, C, D
3. Emission during acceleration becomes unfavorable.	B
4. Emission during cruising becomes unfavorable.	B
5. Emission during deceleration becomes unfavourable	B
6. Damage is liable to occur on reactor	A
7. Rough engine idling	B, D
Conditions of trouble of system	**Corresponded item**
A. Remains constantly open (air inject)	a, b
B. Remains constantly closed (air cut)	a, b
C. Excessive air leakage from valve	b
D. Safety valve remains constantly open	b
Probable causes	
a. Defective No. 1 control box	
b. Defective air control valve	

No. 1 thermosensor

Possible troubles	Corresponded item
1. Exhaust emission becomes abnormally unfavourable.	A
2. Possibility of the reactor being damaged is great.	B
3. Penalty in fuel economy	B
4. Power drop	B

Conditions of trouble of system	Corresponded item
A. Trailing ignition does not cut off in driving ranges other than "idling, deceleration or wide open throttle" at normal temperature cold start (4 plugs).	a, b, c
B. Trailing ignition remains constantly off in driving ranges other than "idling, deceleration, or wide open throttle" when the engine is warm (2 plugs).	a, b
Probable causes	
a. Defective No. 1 control box	
b. Defective No. 1 thermosensor	
c. Defective vacuum switch	

No. 2 Thermosensor

Possible troubles	Corresponded item
1. Exhaust emission becomes abnormally unfavourable.	A
Conditions of trouble of device	Corresponded item
A. Leading ignition does not retard when the choke is operated in driving ranges other than "idling, deceleration, under 180 mm-Hg" at normal temperature cold start.	a
Probable cause	
a. Defective No. 2 thermosensor	

Thermodetector

Possible trouble	Corresponded item
1. Trailing ignition does not cut off at noraml temperature cold condition and 4 plugs are in operation	A, B,
Conditions of trouble of system	Corresponded item
A. Disconnection of connector B. Broken connection of wires inside thermodector	a
Probable cause	
a. Defective thermodetector	

Vacuum switch

Possible troubles	Corresponded item
1. Exhaust emission becomes abnormally unfavourable.	B
2. Penalty of power	A
3. Driveability deteriorates	A
4. Possibility of reactor being damaged is great.	A
Conditions of trouble of system	Corresponded item
A. Leading ignition only operate in all driving ranges until the No. 1 thermosensor commences operation with the vacuum switch turned on.	b
B. Both trailing and leading ignition operate in all driving ranges even engine is cold or No. 1 thermosensor is disconnected with vacuum switch turned off.	a
Probable causes	
a. Damaged diaphragm of switch or damaged vacuum tube	
b. Diaphragm rod of switch interferes with surrounding parts	

No. 1 control box

Possible troubles	Corresponded item
1. Exhaust emission becomes abnormally unfavorable	A, C, D, E
2. Power drop	B, C
3. Driveability shows abnormally deterionation	D, E
Conditions of trouble of system	Corresponded item
A. Trailing ignition does not cut off when engine is cold. (4 plugs in all ranges)	a, b, d
B. Trailing ignition remains constantly off.	d
C. Leading ignition does not retard when engine is cold.	c, e, f
D. Coasting valve or air-control valve operate improperly.	a
Probable causes	
a. Defective No. 1 control box	
b. Defective No. 1 thermosensor	
c. Defective choke switch	
d. Defective vacuum switch	

e. Defective No. 2 control box f. Defective No. 2 thermosensor	

No. 2 control box

Possible troubles	Corresponded item
1. Exhaust emission becomes abnormally unfavourable	A
Conditions of trouble of device	**Corresponded item**
A. Leading ignition does not retard when choke is operated in during ranges over than "Idling, deceleration, or wide open throttle at cold start. Note 1) Cold start means to start the engine temperature and oil temperature at 20 ~ 30°C (68 ~ 86°F). Note 2) "Idling, deceleration or wide open throttle" means driving in idling, driving in deceleration or driving in acceleration.	a, b, c,

Probable causes
a. Defective No. 2 control box b. Defective No. 2 thermosensor c. Defective choke switch

Anti-afterburn valve

Possible troubles	Corresponded item
1. Abnormal afterburn occurs during deceleration	A, C
2. Abnormal afterburn occurs during key-off.	A, C
3. Regular car knock (surging) becomes excessive.	B, C
4. Flat spot occurs when vehicle speed is slightly accelerated from low speed or deceleration.	B, C
5. Hard engine starting	B
6. Rough engine idling	B, C
7. Abnormal amounts of idle HC and CO	B, C
8. Flat spot occurs during driving	B, C
Conditions of trouble of system	**Corresponded item**
A. Remains constantly closed	a
B. Remains constantly open	a
C. Excessive air leakage from valve	a

Possible cause
a. Defective anti-afterburn valve

Coasting valve

Possible troubles	Corresponded item
1. Rough engine idling	A
2. Hard engine starting	A
3. Abnormal amounts of idle HC and CO	A, C
4. Abnormal afterburn occurs	B
5. Flat spot occurs during driving	A, C
6. Regular car knock (surging) becomes excessive.	A, C
7. Flat spot occurs when vehicle speed is slightly accelerated from low speed or deceleration.	B
8. Idle speed becomes higher.ing idling becomes higher.	A, C
Conditions of trouble of system	**Corresponded item**
A. Remains constantly open or there is delay in closing.	a, b, c
B. Remains constantly closed or there is delay in opening.	a, b, c
C. Excessive air leakage from valve or hose	c

Probable causes
a. Defective idle switch b. Defective No. 1 control box c. Defective coasting valve

Idle switch

Possible troubles	Corresponded item
1. Exhaust emission becomes abnormally unfavourable.	B
2. Driveability deteriorates	A
3. Abnormal afterburn occurs	B
4. Car bucking becomes abnormally excessive	B

Conditions of trouble of system	Corresponded item
A. Coasting valve remains constantly open at acceleration and normal speed running.	b, c
B. Coasting valve does not open during deceleration.	a, b, c, d
Probable causes	
a. Defective No. 1 control box b. Defective coasting valve solenoid c. Defective idle switch d. Improper return of the carburetor primary throttle valve	

Choke switch

Possible troubles	Corresponded item
1. Driveability shows abnormal deterioration when the engine is cold.	B
2. Exhaust emission becomes abnormally unfavourable	A
Conditions of trouble of device	Corresponded item
A. Leading ignition does not retard when the choke switch is off and the engine is cold.	a, b
B. Leading ignition remains constantly retarded when the choke is completely pushed back while engine is cold.	a, b
Probable causes	
a. Defective No. 2 control box b. Defective choke switch	

Air supply valve

Possible troubles	Corresponded item
1. Abnormal afterburn occurs during key-off.	A
2. Regular car knock (surging) becomes excessive.	B, C
3. Hard engine starting	B
4. Rough engine idling	B, C
5. Abnormal amounts of idle HC and CO	B, C
6. Flat spot occurs during driving.	B, C
Conditions of trouble of system	Corresponded item
A. Remains constantly closed	a
B. Remains constantly open	a
C. Excessive air leakage from valve	a
Probable cause	
a. Defective air supply valve	

Ventilation valve

Possible troubles	Corresponded item
1. Misfiring frequently occurs during idling and fluctuations in number of revolutions increase.	B
2. Number of revolutions at idling decreases	A
3. Dilution of engine oil with gasoline increases	B
4. Defective purging occurs in charcoal filter.	A
Conditions of trouble of system	Corresponded item
A. Remains constantly closed	a
B. Remains constantly open	a
Probable cause	
a. Defective ventilation valve	

TECHNICAL DATA

Carburetor	
Type	Zenith stromberg
Idle speed	900 ~ 970 rpm
Idle fuel flow	2.0 ~ 2.3 L/H (0.52 ~ 0.6 U.S. gallons/H)
CO concentration	0 ~ 3.0 %
Throat diameter:	
Primary	28 mm (1.102 in)
Secondary	34 mm (1.339 in)
Venturi diameter	
Primary	20 x 13 x 6.5 mm (0.787 x 0.512 x 0.256 in)
Secondary	28 x 10 mm (1.102 x 0.394 in)
Main jet:	
Primary	#92
Secondary	#150
Main air bleed:	
Primary	#80
Secondary	#150
Slow jet:	
Primary	#50
Secondary	#130
Slow air bleed:	
Primary No. 1	#70
No. 2	#190
Secondary No 1	#60
No. 2	#60
Auxiliary slow jet	#70
Vacuum port diameter	
Primary	1.8 mm (0.0708 in)
Secondary	0.6 mm (0.0236 in)
Accelerator pump nozzle	0.6 mm (0.0236 in)
Idle limiter hole diameter	2.1 mm (0.0827 in)

Distributor	
Dwell angle	58 ± 3°
Contact point gap	0.45 ± 0.05 mm (0.018 ± 0.002 in)
Contact point pressure	500 ~ 650 gr (1.1 ~ 1.4 lb)
Condenser capacity	0.27 ± 0.027 μF
Centrifugal advance:	
Leading	Starts : 0 ± 1° at 500 rpm Maximum : 10 ± 1° at 1,500 rpm
Trailing	Starts : 0 ± 1° at 500 rpm Maximum : 7.5° ± 1° at 2,500 rpm
Vacuum advance:	
Leading	Starts : 0 ± 1.5° at 100 mm-Hg Maximum : 11° ± 1.5° at 180 mm-Hg
Trailing	Starts : 0 ± 1.5° at 180 mm-Hg Maximum : 13° ± 15° at 420 mm-Hg
Ignition timing:	
Leading	0°
Trailing	10° ATDC
Vacuum switch	Equipped in the trailing side distributor
Two contact points	Equipped in the leading side distributor

Spark plug		
Type		
Standard	NGK	B-7EM
	NIPPONDENSO	W22EA
	CHAMPION	N-80B .033"
Cold	NGK	B-8EM
	NIPPONDENSO	W25EA
	CHAMPION	N-78B .033"
Thread	14 mm	
Electrode gap	0.8 ~ 0.9 mm (0.031 ~ 0.035 in)	

SPECIAL TOOLS

49 2113 001	Thermal reactor nut remover
49 2113 005	Ventilation valve wrench

LUBRICATING SYSTEM

2–A. LUBRICATING CIRCUIT ..... 2 : 1
2–B. OIL PRESSURE RELIEF VALVE ..... 2 : 1
2–C. OIL PRESSURE SWITCH ..... 2 : 2
2–D. INSPECTING THE OIL PRESSURE ..... 2 : 2
2–E. OIL PUMP ..... 2 : 2
2–E–1. Oil Pump Inspection ..... 2 : 2
2–E–2. Assembling the Oil Pump ..... 2 : 3
2–E–3. Replacing the Oil Pump Gears .. 2 : 3
2–F. OIL FILTER ..... 2 : 3
2–G. OIL THERMO VALVE ..... 2 : 3
2–G–1. Inspecting the Oil Thermo-Valve ..... 2 : 4
2–H. METERING OIL PUMP ..... 2 : 4
2–H–1. Inspecting the Metering Oil Pump ..... 2 : 4
2–H–2. Adjusting the Metering Oil Pump ..... 2 : 4

LUBRICATING SYSTEM

A two-rotor type pump supplies oil by forced circulation. The pump installed inside the front cover is driven by gears on the eccentric shaft.

A full-flow oil filter is provided on the rear housing of the engine. The metering oil pump delivers an adequate amount of oil into the float chamber of carburettor to lubricate seals.

An oil cooler is fixed beneath the radiator. When the oil temperature rises, a thermo-valve functions to cool the oil in the cooler.

2–A. LUBRICATING CIRCUIT

1. The oil enters the oil pump through an oil strainer and is discharged to the oil filter through the oil passage of the housing.
2. When the oil temperature exceeds 71°C (160°F), the thermo-valve in the front cover starts functioning to discharge the oil to the oil cooler from the oil pump.
3. The cooled oil passed through a hose from cooler is mixed with the uncooled oil passed through the passage of the housing, before the oil filter.
4. The filtered oil is discharged to the front main bearing through the tubular dowel and to the rear main bearing through the passage of the rear housing.
5. After lubricating the front and rear main bearings, the oil passes through the oil holes of the bearings and enters the oil passage provided in the eccentric shaft.
6. Stationary gears, internal gears and thrust bearings are lubricated with the oil discharged through the clearance between the main bearing and the shaft.
7. The oil circulating through the eccentric shaft passage lubricates the rotor bearings.
8. The eccentric shaft is equipped with two oil plug jets which are faced to front and rear rotor inner holes. The oil in the passage of the eccentric shaft is injected through the plug jets into the rotors and cools the rotors.
9. Oil passing through the tubular dowel is sent to the distributor and the metering oil pump.
10. From the metering oil pump the lubricant is discharged to the carburettor and is supplied into the combustion chambers together with the air-fuel mixture to lubricate the apex seal, corner seal, side seal and the housing.

2–B. PRESSURE REGULATOR

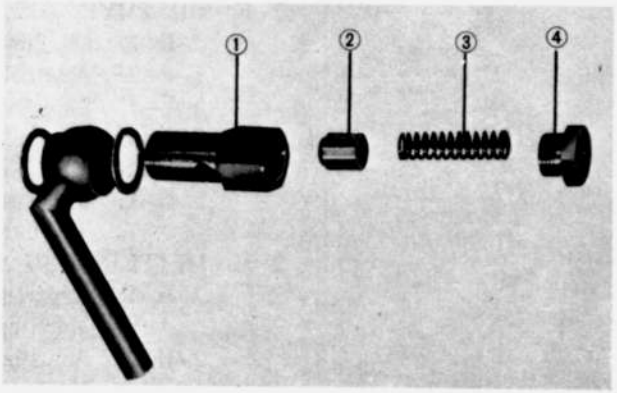

Fig. 2–1

1. Regulator body
2. Control plunger
3. Control spring
4. Plug

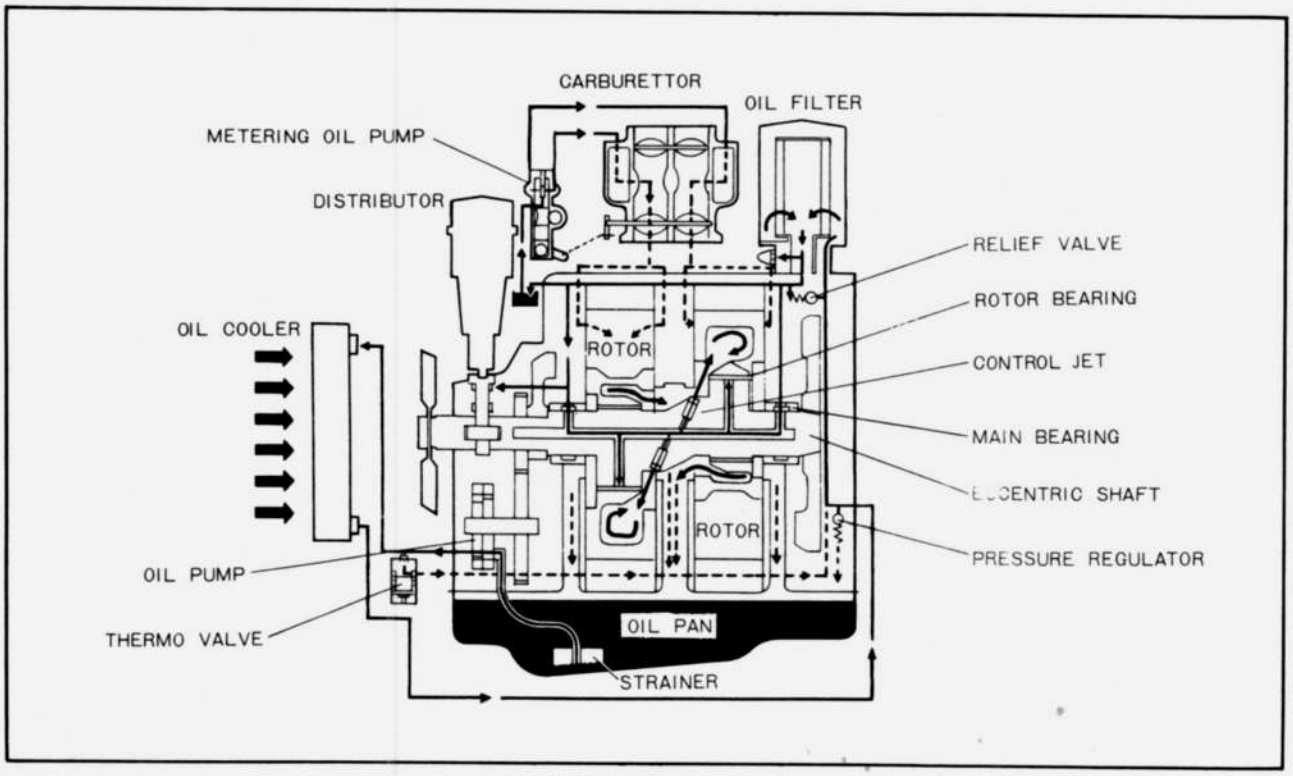

Fig. 2–2 Lubricating circuit

2–B. OIL PRESSURE RELIEF VALVE

The oil pressure regulator valve is installed in the rear housing. The regulator valve opens when the number of engine revolutions increases and the oil pressure in the lubricating system rises. Then the oil pressure is relieved and excess oil is returned to the oil sump. By this function of the regulator valve, the oil pressure can be maintained at a maximum of 5.0 kg/cm² (71.1 lb/in²).

2–C. OIL PRESSURE SWITCH

The oil pressure switch is provided on the left side of the rear housing. This switch is connected to the warning lamp on the instrument panel. The normal pressure is 2.5 kg/cm² (35.6 lb/in²) during engine idling. If the oil pressure drops below 0.3 kg/cm² (4.3 lb/in²), the warning lamp lights up to indicate some troubles in the lubricating system. When the lamp comes on, immediate checks should be made.

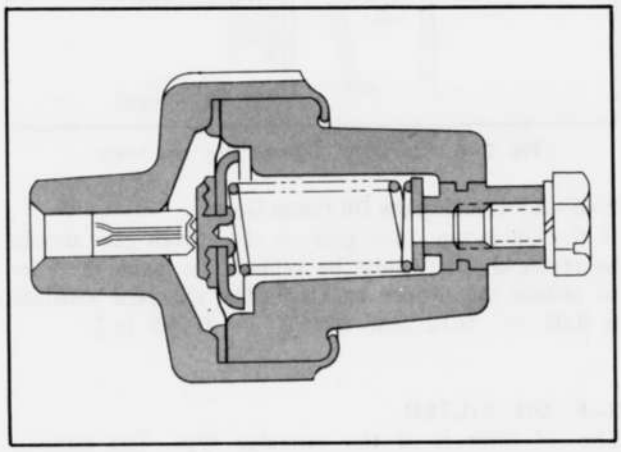

Fig. 2–3 Oil pressure switch

2–D. INSPECTING THE OIL PRESSURE

The oil pressure should be checked as follows:

1. Operate the engine until it is warmed up to the normal operating temperature.
2. Remove the oil pressure switch and connect an oil pressure gauge instead.
3. Operate the engine at 3,000 rpm and read the oil pressure gauge. The oil pressure should be 5.0 kg/cm² (71.1 lb/in²).

If the oil pressure is found extremely low, check the following points:

1) Make sure whether the oil level is between F and L on the dipstick gauge or not.
2) See if the oil filter is clogged. If clogged, replace the oil filter cartridge refer to 2–F.
3) Inspect the oil pump for defects, refer to 2–E.
4) Inspect the oil pressure relief valve and check plunger wear. If found defective, replace the valve. The specifications of the spring are in the following table.

Free Length	46.4 mm (1.827 in)
Set Length	35.3 mm (1.390 in)
Set Load	7.1 kg (15.6 lb.)

2–E. OIL PUMP

The components of the trochoid rotor type oil pump are shown in Fig. 2–5.

The feeding capacity of the oil pump is 16 ~ 20 liters (34 ~ 42 U.S. pint, 28 ~ 35 Imp. pint) per minute at 6,000 rpm.

2–E–1. Oil Pump Inspection

For checking, proceed as follows:

1. Use a feeler gauge to check the clearance between the outer rotor and the inner rotor as shown in Fig. 2–4. The standard clearnace should be 0.01 ~ 0.09 mm (0.0004 ~ 0.0035 in).

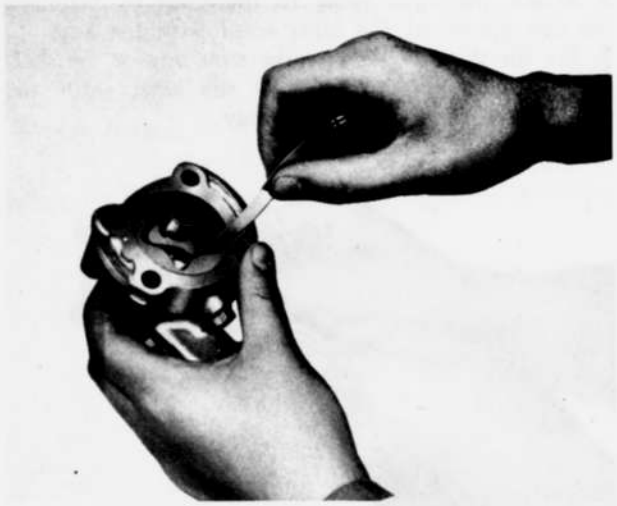

Fig. 2–4 Checking gap of rotors

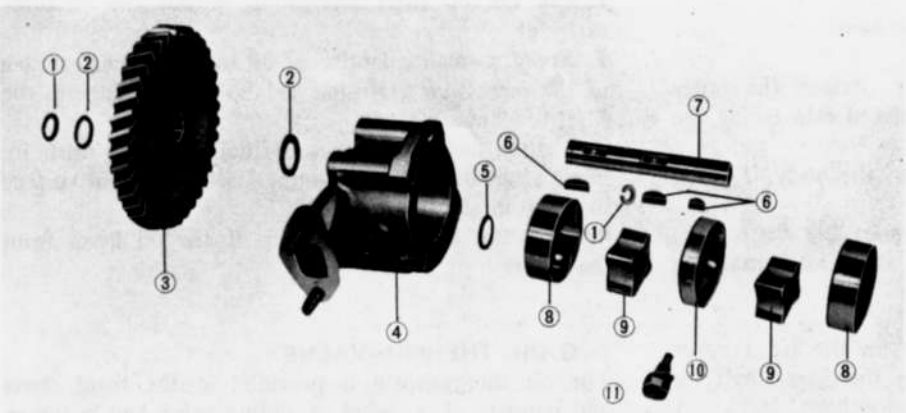

Fig. 2–5 Oil pump assembly

1. Snap ring
2. Adjusting washer
3. Oil pump driven gear
4. Oil pump body
5. Thrust washer
6. Woodruff key
7. Oil pump shaft
8. Outer rotor
9. Inner rotor
10. Intermediate plate
11. Set bolt & washer

2. Measure the clearance between the outer rotor and the pump body with the feeler gauge. The specified clearance is 0.20 ~ 0.25 mm (0.008 ~ 0.010 in).
3. Inspect the end float of the rotor with the feeler gauge as shown in Fig. 2–6. If the end float is too large, make corrections by scraping the pump body. The standard value of the end float is 0.10 ~ 0.20 mm (0.0014 ~ 0.008 in).



Fig. 2–6 Checking end float of rotors

2–E–2. Assembling the Oil Pump

1. Attach the stop ring and the key to the oil pump drive shaft.
2. Attach the inner rotor to the shaft by matching the key groove of the inner rotor with the key.
3. Fix the thrust washer to the stop ring of the shaft as shown in Fig. 2–7. Mount the inner rotor and shaft assembly to the pump body.



Fig. 2–7 Assembling oil pump

4. Apply oil to the outer rotor. Attach the outer rotor to the body with the chamfered side facing the driven gear.
5. Attach the intermediate plate to the body. Tighten the screw.
6. Fix the key to the key groove of the shaft.
7. Mount the inner rotor on the shaft with matching the key groove.
8. Mount the outer rotor
9. Mount the oil pump assembly on the front cover and fix it with the bolts. Rotate the drive shaft by hand to see whether it rotates smoothly.
10. Mount the thrust washer and driven gear on the shaft (insert the key).
11. Insert an available shims between the driven gear and the stop ring so that the clearance between the oil pump body and the driven gear is 0.1 ~ 0.2 mm (0.004 ~ 0.008 in). The following three kinds of shims are available : 0.1 mm (0.004 in), 0.3 mm (0.012 in), 0.6 mm (0.024 in).
12. Then fix the stop ring.

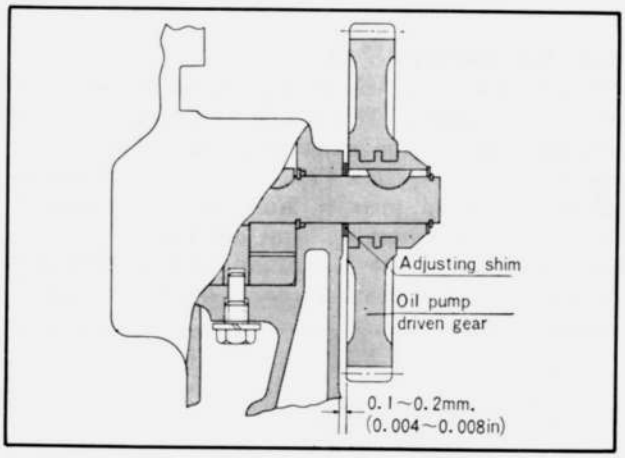

Fig. 2–8 Clearance of drive gear and body

2–E–3. Replacing the Oil Pump Gears

If the oil pump drive gear or the driven gear should be replaced, they must be replaced in pairs in order to obtain the proper backlash. The standard backlash is 0.08 ~ 0.12 mm (0.003 ~ 0.005 in).

2–F. OIL FILTER

The oil filter is of the cartridge type. The element is sealed in its container as a unit.
The oil filter is equipped with a relief valve. When the filter-flow resistance exceeds 0.8 ~ 1.2 kg/cm² (11.4 ~ 17.1 lb/in²) on account of clogging and contamination of the element, the relief valve is opened by the oil pressure.
The oil is then discharged directly to the engine without passing through the oil filter. The oil filter element should be replaced in intervals of 12,000 km (8,000 miles).

1. Use the oil filter wrench to replace the oil filter cartridge.
2. Apply a small quantity of oil to the rubber packing of the new filter cartridge and fix the cartridge to the filter bracket.
3. Tighten the cartridge a farther 2/3 of a turn by hand after the oil seal contacts with the seal surface but absolutely no more.
4. Start the engine and check if the oil leaks from the joints.

2–G. OIL THERMO–VALVE

The oil thermo-valve is provided in the front cover and consists of a pellet, a sliding valve and a return

spring. The oil sent from the oil pump to the thermo-valve takes two courses thereafter depend upon oil temperature, one leading to the oil cooler, and the other bypassing the oil cooler and leading direct to the oil filter by way of the housing. The passage leading to the oil cooler is always opened. The passage leading to the housing is also fully opened when the oil temperature is low, and most oil takes this passage and proceeds direct to the oil filter via the housing as there is resistance in the oil cooler. When the oil temperature rises to over 71°C (160°F), the pellet starts functioning, and when the oil temperature reaches 78°C (172°F), the passage leading to the housing gets completely closed. During the condition of the temperature between 71° ~ 78°C (160° ~ 172°F), a part of oil is sent directly to the oil filter via housing and the rest is cooled in the cooler before being sent to the oil filter. After exceeding 78°C (172°F), as the oil passage to the housing is closed, all oil is sent to the oil filter through the cooler.

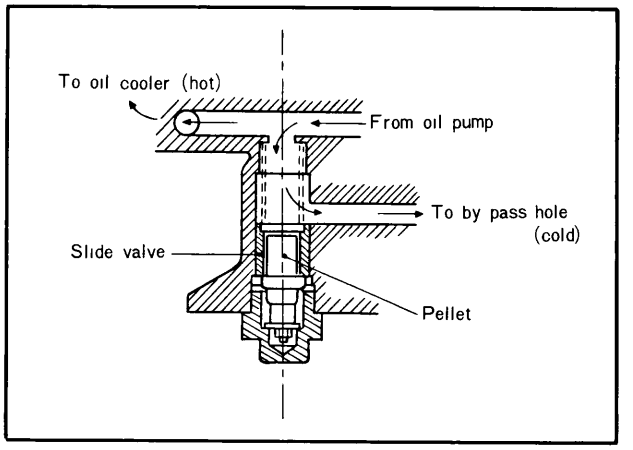

Fig. 2–9 Oil thermo-valve

2–G–1. Inspecting the Oil Thermo-Valve

1. Inspect the sliding surface of the slide valve to see whether there is any damage.
2. Inspect the return spring for any damage or deterioration. If the deterioration is serious, replace the spring. The free length of the spring should be 43.8 mm (1.724 in).
3. Inspect the pellet by inserting it in water together with a thermometer. Stir the water and gradually heat it. Check whether the pellet begins to function at 71°C (160°F) and lifts by 6 mm (0.236 in) at 78°C (172°F).

2–H. METERING OIL PUMP

The plunger type metering oil pump is provided to send a proper amount of oil to the carburettor. The oil enters the combustion chamber together with the air fuel mixture. Thus the sliding faces of seals and housing are lubricated.

The supplied amount of oil is controlled by the engine revolutions and the load, in the following way: The control lever of the pump is interlocked with the throttle lever of the carburettor and moves the control pin. The control pin is cam-shaped shaft and is in contact with the cam-shaped tip of the plunger, and so the stroke of the plunger is controled with the opening angle of the throttle valve. When the opening of the throttle valve is small, the stroke of the plunger is only a little. Thus the stroke of the differential plunger which is turned and pushed together with the plunger is small to keep the oil discharge small.

When the opening of the throttle valve becomes large, the stroke of plunger becomes larger to increase the stroke of the differential plunger. Thus the supplied amount of oil becomes larger.

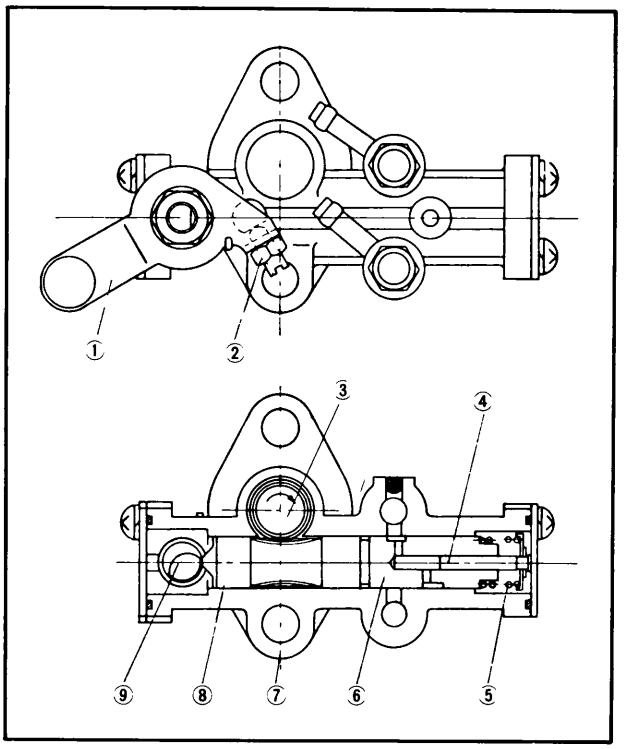

Fig. 2–10 Metering oil pump

1. Control lever
2. Adjust screw
3. Driving worm
4. Sub-plunger
5. Plunger spring
6. Differential plunger
7. Pump body
8. Plunger
9. Control pin

2–H–1. Inspecting the Metering Oil Pump

The amount of oil discharge from the oil metering pump should be inspected as follows:

Disconnect the oil tubes, which are connected with the carburettor, at the carburettor side.

Disconnect the connecting rod of the oil metering pump at the carburettor side. Set the engine so as to revolve at 2,000 rpm. Check the amount of oil discharged from the oil tube of the oil metering pump and if it is 6.5 ±1 cc/10 min, discharge of oil is normal. Otherwise, adjust the oil metering pump.

2–H–2. Adjusting the Metering Oil Pump

For adjustment of the oil metering pump, the amount of oil discharge will be increased by turning the adjust screw clockwise and be decreased by turning it counterclockwise.

COOLING SYSTEM

3–A. COOLANT CIRCULATION ..... 3 : 1
3–B. GENUINE
LONG LIFE COOLANT ..... 3 : 1
3–C. FLUSHING THE
COOLING SYSTEM ..... 3 : 2
3–D. RADIATOR ..... 3 : 2
3–D–1. Pressure Cap ..... 3 : 2
3–E. COOLING FAN ..... 3 : 2
3–E–1. Checking the Fan Revolution ..... 3 : 2
3–F. THERMOSTAT ..... 3 : 2
3–G. WATER PUMP ..... 3 : 3
3–G–1. Disassembling the
Water Pump ..... 3 : 3
3–G–2 Assembling the
Water Pump ..... 3 : 4

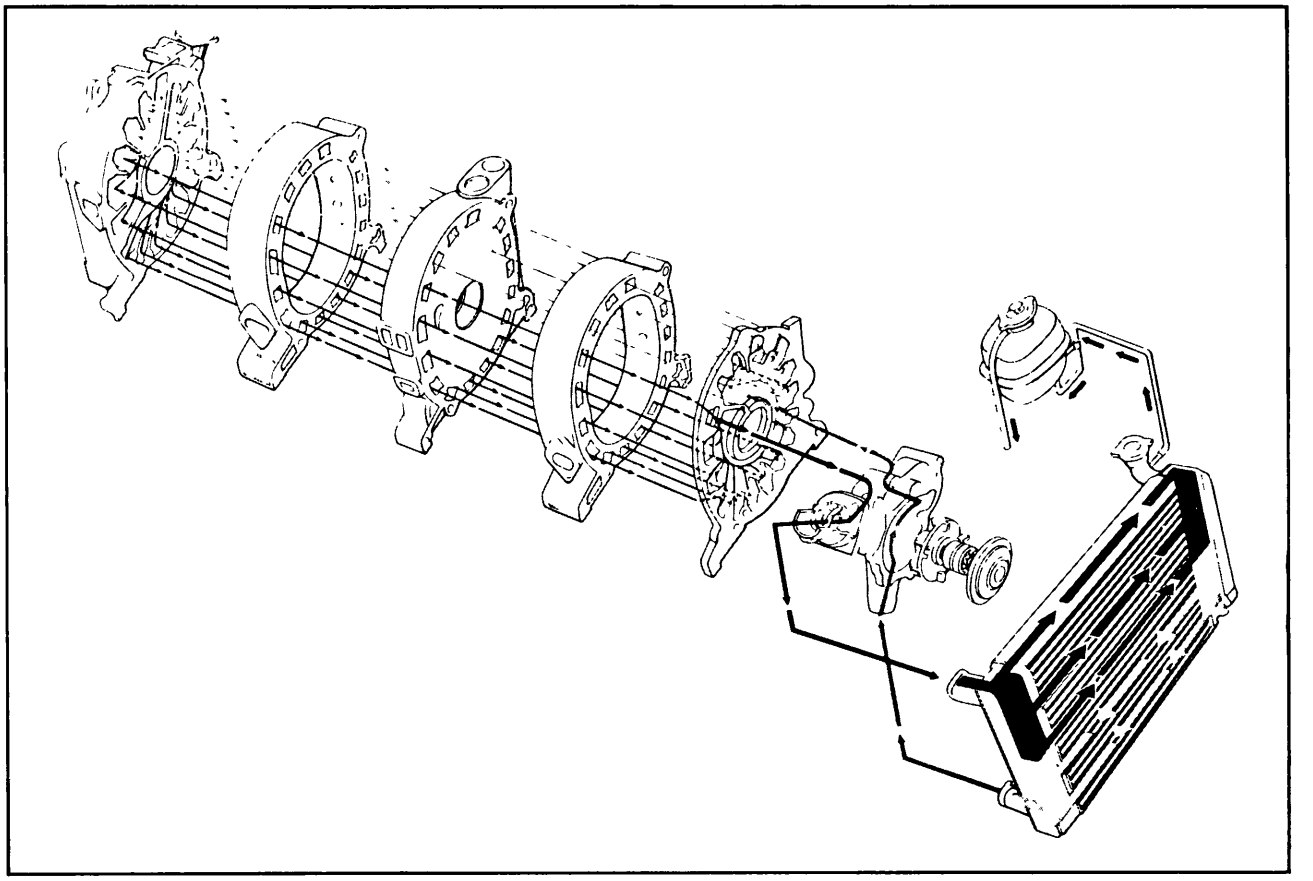

Fig. 3–1 Cooling circuit

COOLING SYSTEM

The completely sealed cooling system consists of a radiator with a sealed filler cap, an expansion chamber (sub-tank) with a pressure cap, centrifugal water pump a thermostat and a four-vane fan.
The radiator and the expansion chamber are connected by hose. When the engine is heated sufficiently, the coolant in the radiator flows out and is led into the expansion chamber through the hose. The coolant is then returned to the radiator by negative pressure which builds up in the cooling system when the engine cools down. The coolant should be changed every two years or every 48,000 km (30,000 miles).

3–A. COOLANT CIRCULATION

The water pump is driven by the eccentric shaft pulley over a V-belt and discharges the cooling water to the front housing. The water circulates from the front housing through the water passage provided in each housing and flows to the rear housing. From the rear housing, the water is returned to the front housing. At low engine temperature, the thermostat is closed to keep the water from entering the radiator. The water is then recirculated directly to the water pump and discharged to each housing. As the thermostat opens when the engine is warmed up, the water flows into the radiator. The cooled water flows from the radiator to the water pump through the connecting hose and cools the engine by circulation.

3–B. GENUINE LONG LIFE COOLANT

The genuine long life coolant is used in the cooling system of RX-2.
The genuine long life coolant was developed for the aluminum engine of RX-2. Antifreeze solution and anti-corrosive solution are included in this coolant.
The table below shows the mixing rate of water and genuine long life coolant. Follow the table when changing the coolant.

Freezing Point	Mixture Ratio %		Specific Gravity of Mixture at 20°C(68°F)
	Coolant	Water	
−20°C(−4°F)	35	65	1.051
−45°C(−49°F)	55	45	1.078

Note: If the genuine long life coolant is not available, add genuine antifreeze solution or anticorrosive according to the season.

Freezing point (Centigrade)	mixture percentage (Volume)		Specifix gravity of mixture at 20°C(68°F)
	Antifreeze solution	water	
−6.3	15	85	1.022
−9.3	20	80	1.029
−12.6	25	75	1.037
−16.2	30	70	1.044
−20.5	35	65	1.051
−25.2	40	60	1.058
−31.2	45	55	1.066
−37.6	50	50	1.073
−45.2	55	45	1.080

3–C. FLUSHING THE COOLING SYSTEM

When the genuine long life coolant is in use, the coolant should be changed every two years ro every 48, 000 km (30,000 miles). At the time of the coolant change, the cooling system should be cleaned as follows:

1. Open the drain cocks to drain the coolant.
2. Close the cocks. Fill with the clean soft water (demineralized water).
3. Operate the engine for about one hour.
4. Drain the water.
5. Fill in a mixture of water and genuine long life coolant.

Note: In case the accumulation of rust and other deposits are excessive, a detergent can be used. In this case the instructions of the detergent maker should be followed.

3–D. RADIATOR

The radiator is of the corrugated fin type with a sealed filler cap. A pressure cap is fixed to the expansion chamber.

Carefully inspect the radiator for water leakage. Any minor leakage must be completely eliminated by soldering or other means. A clogged radiator badly influences the cooling effect and should be cleaned with the compressed air.

3–D–1. Pressure Cap

The pressure cap is provided on the expansion chamber. The expansion chamber and the radiator are connected by hose. When the cooling water is pressurized, the boiling point rises and this prevents overheating and minimizes the loss of water. When the pressure in the cooling system exceeds 0.9 kg/cm² (12.8 lb/in²), the cap opens. When the coolant temperature falls, the vacuum release valve open at 0.1 kg/cm² (1.4 lb/in²) to prevent vacuum build up in the cooling system.

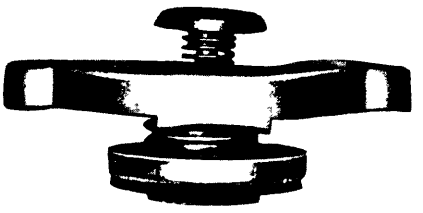

Fig. 3–2 Pressure cap

3–E. COOLING FAN

Torque limit type fan drive has been adopted to drive the cooling fan, with a view to reducing the loss of the horsepower at a high speed under full load and preventing noises due to the fan, and also this drive is so designed using silicon oil as the medium for transmitting the torque that even if that the fan the engine revolution increases, the revolution of the the fan does not exceed a certain limit.

3–E–1. Checking the Fan Revolution

In case troubles, such as oil leakage etc., should take place on the fan drive, the fan revolution decreases. If the engine is apt to overheat, check the revolution of the fan in the following manners.

1) Stick scotch tape on the fan drive shaft and fan as per Fig. 3–3.

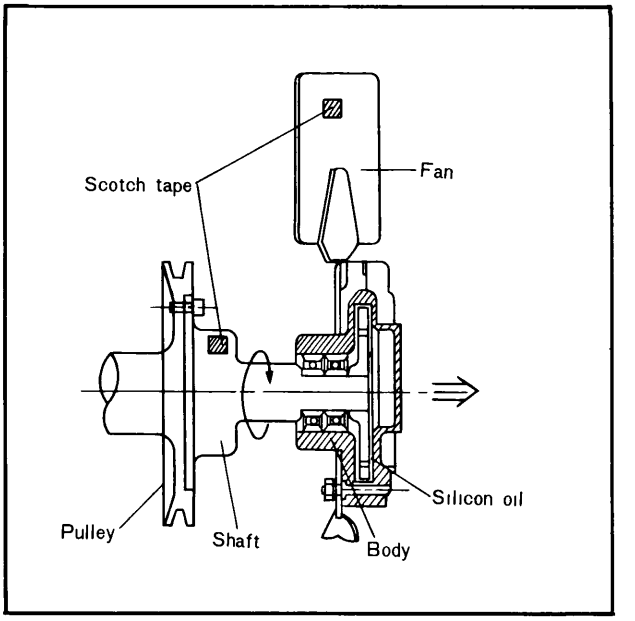

Fig. 3–3 Fan drive assembly

2) Keep the engine revolution at 2,000 rpm by using a photo electrical revolution counter.

3) Facing the revolution counter to the fan and read the revolution of the fan, and if it is less than the prescribed one, replace the fan drive ass'y and if it is more than the prescribed one, carry out the following check.

4) After warming-up the engine for 5 minites at more than 3,000 r p m , keep the engine at 5,000 r p m by using a tacho dwell tester, and check if the revolution of the engine at that time is within the prescribed one.

Prescribed Revolution	
Shaft	Fan
2,000 rpm.	1,500 ~ 1,800 rpm.
5,000 rpm.	Loss than 2,400 rpm.

3–F. THERMOSTAT

Thermostat is for adjusting the temperature of the cooling water circulation in the engine body.

The thermostat begins to open at 82°C (180°F) and fully opens at 95°C (203°F). The lift at this moment is 8 mm (0.31 in).

For inspection of the thermostat, place the thermostat together with a thermometer in water. Stir the water

while gradually heating. Measure the temperature under which the thermostat begins to open and the lift. If the measured value differs excessively from the standard value, install a new thermostat.
It is of wax type and bottom bypass type which is superior in the cooling efficiency. The bypass hole is provided at the lower part of the thermostat, as shown in Fig. 3–4, through which a large volume of cooling water flows when the thermostat is completely closed so that localized rise in temperature can be prevented.

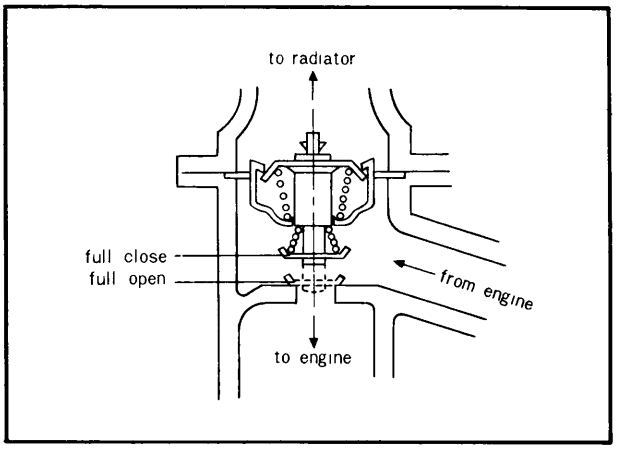

Fig. 3–4 Thermostat

On the other hand, when the thermostat is completely opened, the bypass hole is closed by the thermostat valve and all the quantity of cooling water is circulated into the radiator, which will enable the radiator to work effectively. However, in case the thermostat is taken off, the volume of cooling water flowing through the bypass hole is large due to a larger bypass hole and water circulating into the radiator will decrease by half which will result in the rise of the temperature of the cooling water. Accordingly, be sure not to take off the thermostat nor to use any other make instead of this type.

3–G. WATER PUMP

The water pump is of the centrifugal impeller type. The shaft is supported in the pump body by two bearings.
The impeller is fitted on the rear end of the pump shaft. The seal is made of stainless steel, carbon and rubber to prevent water leakage. Inspect the water pump for water leakage, check the end play and looseness of bearings. Move the impeller blades by hand. If the play is excessive, the bearing must be worn. If water leaks from the pump body opening, the seal is defective. Then it is necessary to overhaul the pump and inspect the seal and seat surfaces. If the seal is defective, it should be replaced.

3–G–1. Disassembling the Water Pump

1. Remove the bolts that attach the cover to the pump body, and separate the water pump assembly.
2. Remove the pulley boss with the **water pump puller** No. 1 (49 0813 145A), press the shaft slowly to extract the pulley boss from the shaft. And then remove the retaining ring with a suitable plier.

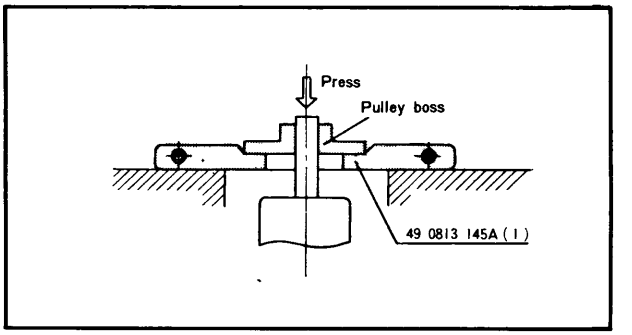

Fig. 3–5 Removing pulley boss

3. Support the front side of the water pump cover with the **water pump puller** No. 2 (49 0813 145A) and apply pressure to the rear end of the shaft to press the shaft and remove the impeller, and then push the bear-

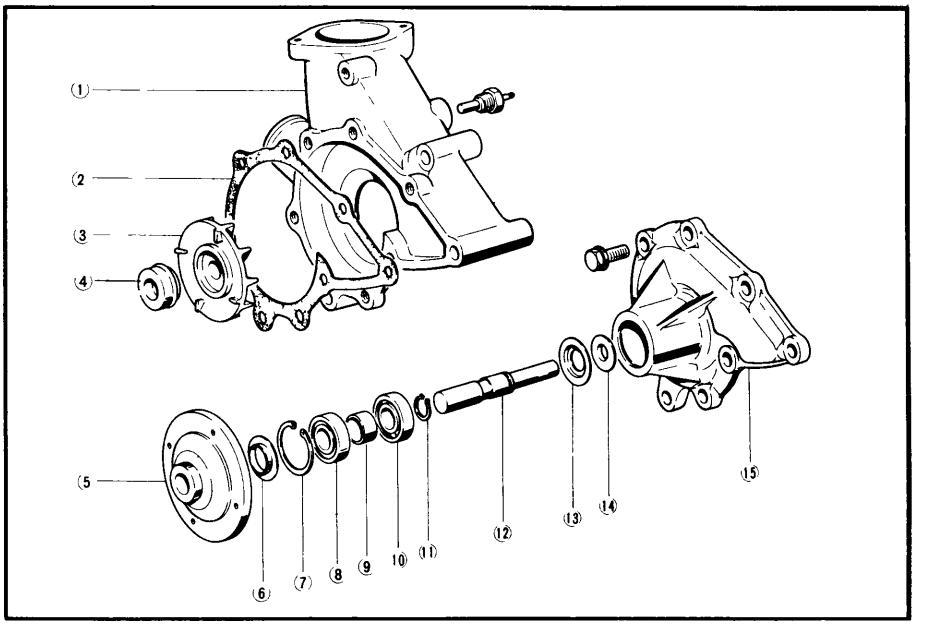

1. Pump casing
2. Packing
3. Impeller
4. Water seal cpt.
5. Pulley boss
6. Dust seal plate
7. Retaining ring
8. Ball bearing
9. Spacer
10. Ball bearing
11. Stop ring
12. Shaft
13. Dust seal plate
14. Baffle plate
15. Pump cover

Fig. 3–6 Water pump assembly

ing assembly with shaft out through front of the cover.
4. Remove the water seal complete.
5. Remove the bearings and spacer from the shaft with a suitable puller.

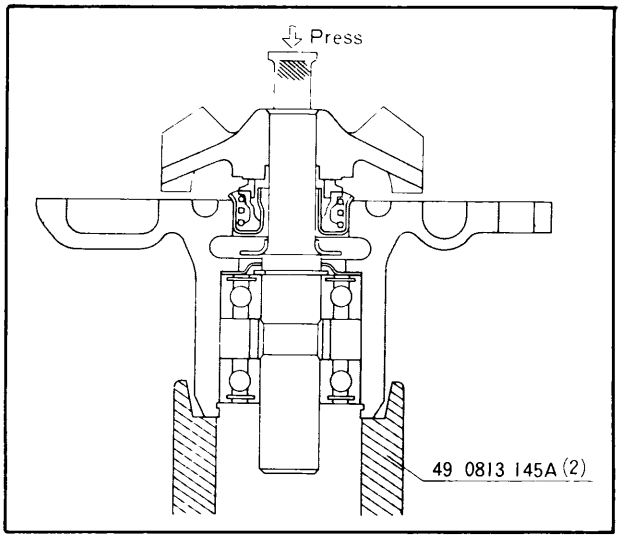

Fig. 3–7 Removing impeller

3–G–2. Assembling the Water Pump

When assembling the water pump, refer to Fig. 3-6 and proceed as follows
1. Fit the stop ring into the groove of the shaft.
2. Place the dust seal plate on the stop ring and drive the baffle plate onto the tapper of the shaft.
3. Pressfit the bearing with the sealed side rearward.
4. Press the shaft and bearing into the cover using a suitable tool.
5. Insert the spacer into the shaft and approximately fill 1/3 the space between the two bearings with grease.
6. Pressfit the bearing with sealed side forward until the retaining ring can be inserted.
7. Install the snap ring into the groove of the cover to retain the bearings in position.
8. After fitting the dust seal plate to the pulley boss press the pulley boss onto the shaft until the boss comes in contact with the bearing.
9. Install the water seal complete into the cover.
10. Press the impeller assembly onto the shaft until it is flush with the end of the shaft.
11. Install the cover and gasket to the body.

SPECIAL TOOL

49 0813 145A	Water pump puller

FUEL SYSTEM

4–A. CARBURETTOR ..... 4 : 1
4–A–1. Carburettor Function ..... 4 : 1
4–A–2. Disassembling the Carburettor .... 4 : 3
4–A–3. Carburettor Inspection ..... 4 : 4
4–A–4. Assembling the Carburettor ..... 4 : 4
4–A–5. Carburettor Adjustment ..... 4 : 4
4–B. FUEL PUMP ..... 4 : 5
4–B–1. Fuel Pump Test ..... 4 : 5
4–B–2. Disassembling the Fuel Pump..... 4 : 5
4–B–3. Fuel Pump Inspection ..... 4 : 6
4–B–4. Assembling and Adjusting the Pump ..... 4 : 6
4–C. FUEL FILTER ..... 4 : 6
4–D. AIR CLEANER ..... 4 : 7

FUEL SYSTEM

The fuel system consists of the fuel tank, the fuel lines, fuel filter, fuel pump, the carburettor and the air cleaner.

The capacity of the fuel tank is 65.5 liters (17.3 U.S. gallons, 14.5 Imp. gallons). The operating fuel is regular gasoline.

4–A. CARBURETTOR

RX–2 is equipped with a 2–stage 4–barrel Zenith Stromberg carburettor. This carburettor comprises two sets each of primary barrels (for normal use) and a secondary barrels (for high output). In addition, a float circuit and a transfer system for the primary and secondary stages are attached. The primary barrel is equipped with a choke circuit, a low speed circuit, an auxiliary slow circuit and an accelerating circuit.

4–A–1. Carburettor Function

a. Fuel return circuit

This system incorporates a bimetal type fuel return valve to prevent percolation. When the fuel temperature reaches 55°C (131°F), the valve begins to open to return the fuel to the fuel tank.

b. Float circuit

The float chamber is equipped with a float and a needle valve to keep the fuel level constant under all operating conditions. Especially, as a needle valve material the special rubber is adopted more to prevent the fuel overflowing.

An oil level gauge is provided in the float chamber for easy inspection of the fuel level.

The ventilation system of the float chamber is of the inner circulation type

Thus the fuel consumption is not influenced even if

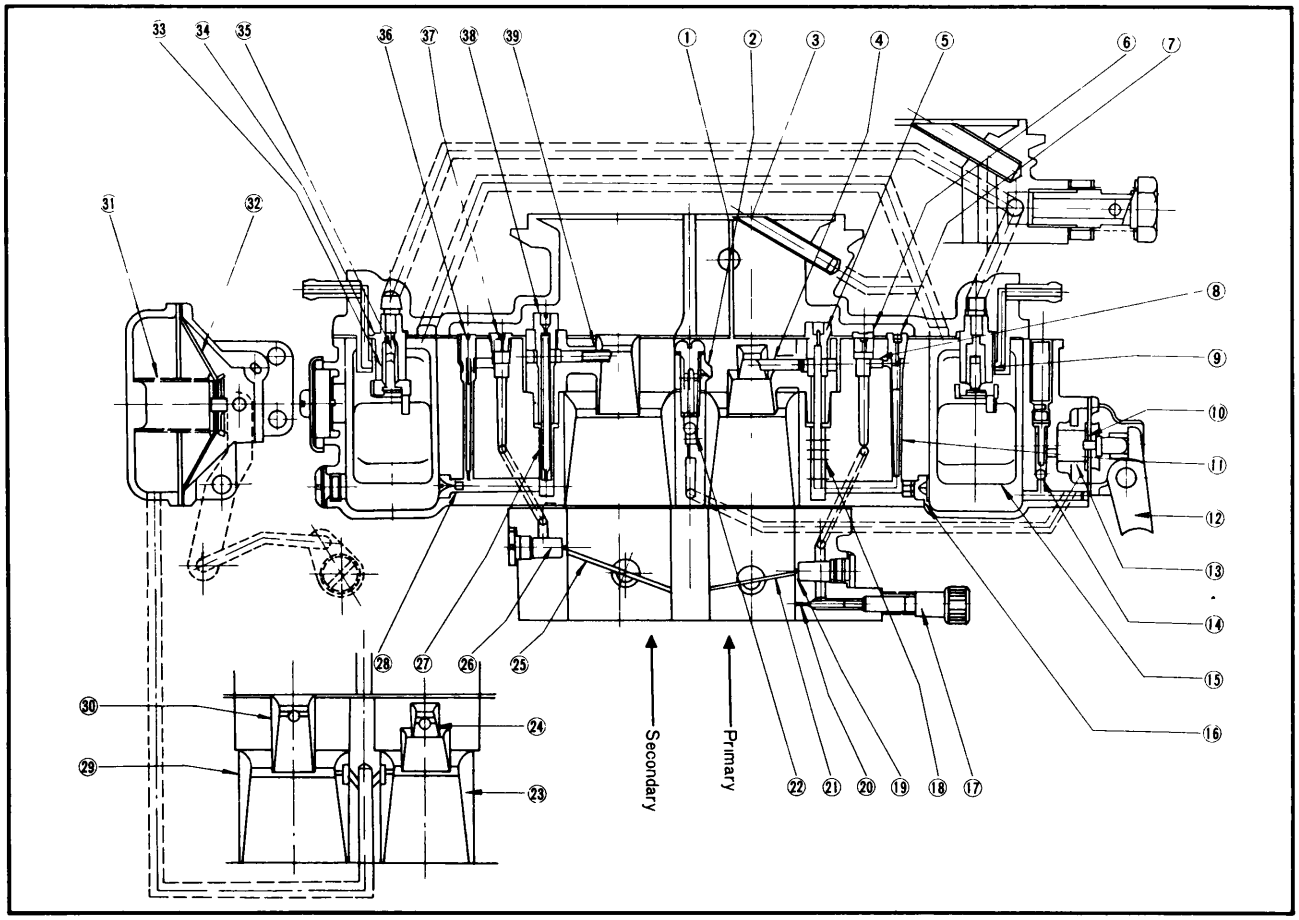

Fig. 4–1 Carburettor

1. Choke valve
2. Pump nozzle
3. Air vent pipe
4. Primary main nozzle
5. Primary main air bleed
6. No. 2 slow air bleed
7. No. 1 slow air bleed
8. Slow economizer
9. Needle valve
10. Accelerating diaphragm
11. Slow jet
12. Pump lever
13. Return spring
14. Inlet check valve
15. Float
16. Primary main jet
17. Idle adjust screw
18. Primary emultion tube
19. Bypass hole
20. Idle hole
21. Primary throttle valve
22. Outlet check valve
23. Primary large venturi
24. Primary small venturi
25. Secondary throttle valve
26. Bypass hole
27. Secondary emulsion tube
28. Secondary main jet
29. Secondary large venturi
30. Secondary small venturi
31. Diaphragm spring
32. Diaphragm
33. Valve spring
34. Valve seat
35. Needle valve
36. Secondary slow jet
37. Secondary slow air bleed
38. Secondary main air bleed
39. Secondary main nozzle

the air cleaner is clogged to a certain extent.

C. Low speed circuit

During idling and early part-throttle operation, the fuel is measured in the low speed circuit.
The fuel passes through the slow jet fitted in a branch passage of the main jet.
Then the fuel is mixed with air from the No. 1 slow air bleed and metered by the slow econonizer. And again it is mixed with air from the No. 2 slow air bleed.
The air-fuel mixture then flows through the low speed passage and is ejected from the idle hole or the bypass hole.

d. Auxiliary slow circuit

This circuit has been installed to privent misfiring and knocking which are liable to occur at low load and high revolution due to lean mixture.
This is of the structure that a diaphragm responsive to the negative pressure of the secondary side is provided halfway on the circuit with its valve designed to open at a certain extent of the negative pressure, allowing the fuel led from the secondary step system to pass and proceed to the auxiliary slow jet and then finally the fuel is ejected through the auxiliary slow port to the primary venturi

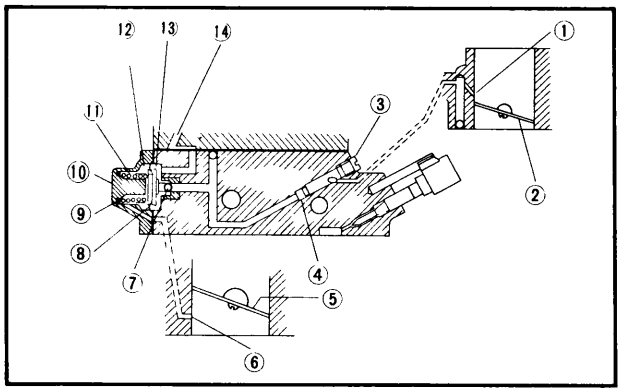

Fig. 4–2 Auxiliary slow circuit

1. Auxiliary slow hole
2. Primary throttle valve
3. Plug
4. Auxiliary slow jet
5. Secondary throttle valve
6. Vacuum hole
7. Ball valve
8. Diaphragm
9. Shim
10. Cover
11. Diaphragm spring
12. Vacuum chamber
13. Fuel chamber
14. From step circuit

e. Primary height speed circuit

During operation at part-throttle or full-throttle, the fuel is supplied through the high speed circuit. The fuel in the float chamber flows through the main jet, is mixed in the emulsion tube with the air from the main air bleed, and is sprayed through the main nozzle to the venturi.

f. Accelerating circuit

The accelerating circuit measures and supplies fuel for the rapid acceleration and smooth engine operation when the throttle valve is opened at lower speed. The accelerating pump is connected to the primary throttle valve by a link. When the primary throttle valve is closed, the diaphragm of the accelerating pump is pushed forward by a return spring. Then the fuel in the float chamber is sucked up into the accelerating pump diaphragm chamber through the inlet check valve.
When the primary throttle valve is opened, the diaphragm is pushed backward, the inlet check valve is closed, and the outlet check valve is opened. Then, the fuel in the accelerating pump is sprayed through the pump nozzle to the venturi.

g. Choke circuit

For easy starting and warming-up, the mixture ratio of air and fuel is controlled by the choke valve. The choke valve is an offset spring loaded type and prevents excessive choking.
When the choke valve is fully closed, the throttle valve is automatically opened to 15° by the choke connecting rod so as to obtain the most suitable mixture for starting-up of the engine.

h. Step circuit

The step circuit corresponds to the low speed circuit of the primary barrel and improves the connection between the primary and secondary barrels.
The fuel-flow in the secondary slow jet is mixed with air from the secondary slow air bleed, passes through the secondary low speed passage, and is ejected through a bore located near the fully-closed position of the secondary throttle valve.

i. Secondary high speed circuit

The secondary high speed circuit corresponds to the primary high speed circuit.
The secondary throttle valve is constructed so as to react to negative pressure in the venturi.
The vacuum jets are provided in the venturi sections of the primary and secondary stages. The average negative pressure of both jets acts in the diaphragm chamber and moves the diaphragm. The diaphragm and the secondary throttle valve are connected by a link to open the throttle valve according to the negative pressure.
However, the secondary throttle valve cannot be opened until the primary throttle valve is opened to 50° since the liable range of the secondary throttle valve

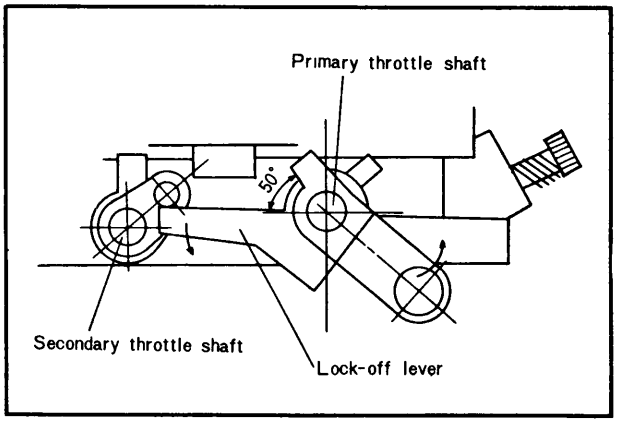

Fig. 4–3 Lock-off system

to open or close is controled with a connection between the lock-off lever installed on the primary shaft and the stopper on the secondary shaft.
When the opening of the primary throttle valve exceeds 50°, the secondary throttle valve opens in proportion to the negative pressure. Then the fuel from the main jet is mixed with air from the main air bleed and sprayed from the main nozzle into the venturi.

4–A–2. Disassembling the Carburettor

The carburettor should be disassembled in the following way :

1. Remove the choke connecting rod from the choke lever.
2. Remove the screws which are fixing the air horn to the main body and remove the throttle wire bracket.
3. Remove the bolt tightening the air cleaner to the carburettor and remove the air horn from the main body.

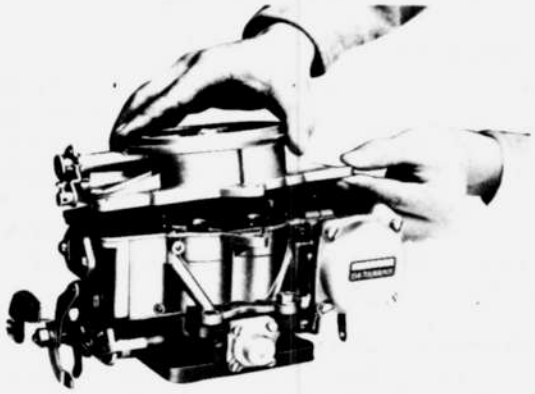

Fig. 4–4 Removing of air horn

4. Take out the float pin and remove the float.
5. Remove the needle valve assembly.

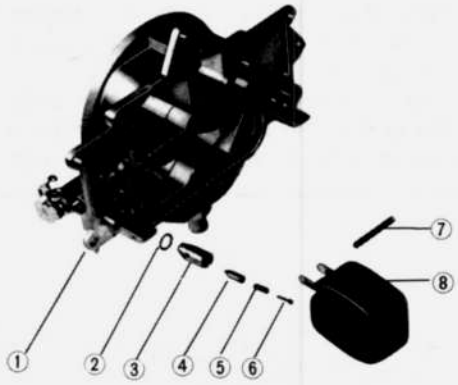

Fig. 4–5 Needle valve assembly

1. Air horn	4. Needle valve	7. Float pin
2. Shim	5. Spring	8. Float
3. Valve seat	6. Retainer	

6. Remove the screw fixing the choke valve to the shaft, and dismantle choke valve and shaft from the air horn.
7. Disconnect the vacuum control rod from the secondary throttle lever by removing a clip.
8. Remove the connecting rod of accelerating pump from the accelerator pump arm by removing a clip.
9. Remove the screws which are fixing the throttle body to the main body, and disconnect the throttle body from the main body.
10. Remove the cover and take out the accelerating pump diaphragm and the return spring.
Remove the inlet check ball by removing the plug.
11. Remove the accelerator nozzle and the outlet check ball.
12. Remove the slow jets of the primary and secondary stages and all air bleed connections from the main body.
13. Remove the main jets by removing the plugs from the main body.

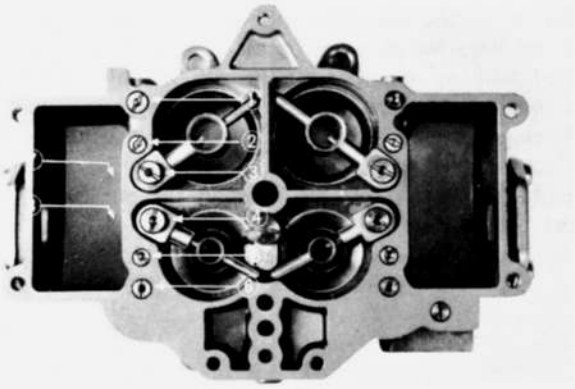

Fig. 4–6 Removing jets and air bleeds

1. Secondary slow air bleed	5. Primary slow jet
2. Secondary slow jet	6. Primary slow air bleed
3. Secondary main air bleed	7. Secondary main jet
4. Primary main air bleed	8. Primary main jet

14. Remove the screws fixing the sub-slow diaphragm cover and take out the diaphragm, return spring and adjust shim. Remove the sub-slow jet by removing the plug.
15. Remove the cover and take out diaphragm and the return spring.

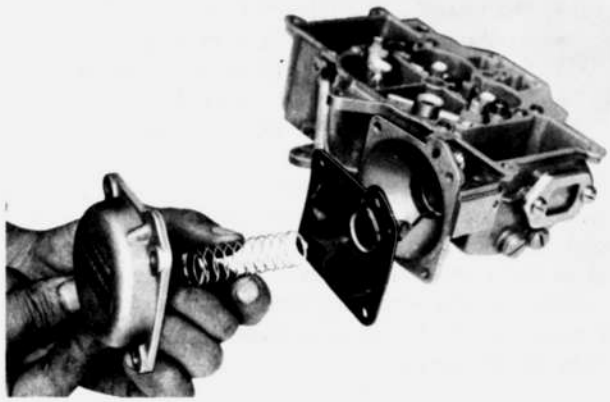

Fig. 4–7 Removing of diaphragm

16. Tap the venturi from the bottom for dismantling.
17. Remove the lever by removing the fixing nut of the primary throttle lever on the shaft.

Remove the throttle valve and the shaft by removing screws fixing the throttle valve.
18. Remove the set screws of the secondary throttle valve and dismantle the secondary throttle valve and the shaft.

Note: Do not dismantle venturi, throttle valve and shaft, and the choke valve and shaft, except when they have to be veplaced on account of wear or damage.

4–A–3. Carburettor Inspection

After disassembly, inspect the carburettor as follows:
1. Wash all parts in clean detergent and dry with compressed air. All passages of the carburettor must be blown very carefully.
2. Inspect the air horn and the main body for cracks and damages, also inspect the choke shaft for wear.
3. Inspect the throttle valve for wear.
4. Inspect all jets for clogging. If clogged, wash the jets in detergent. Do not use the wire.
5. Inspect the float needle and seat for wear.
6. Inspect the pump diaphragm and the auxiliary slow diaphragm. If damaged, replace them.
7. Inspect the valves of the pump to see whether they function under all operating conditions.
8. Check the diaphragm of secondary control for damage.
9. Inspect the idle adjusting needle for burrs and ridges.
10. When assembling, only new gaskets should be used.

4–A–4. Assembling the Carburettor

The carburettor can be assembled by reversing the disassembling procedure. The following points should be kept in mind:
1. The parts of the primary barrel are similar in shape to those of the secondary barrel. Do not interchange any parts.
2. When mounting the valve, be careful to eliminate the clearance between the throttle valve and the throttle chamber wall.

4–A–5. Carburettor Adjustment

a. Float level adjustment

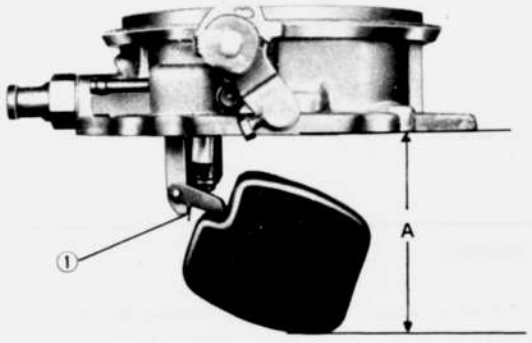

Fig. 4–8 Float level adjustment
1. Float seat lip 2. Float

Adjust the maximum fuel quantity coming in through the needle valve by bending the float seat lip so that the distance (A) between the lowest part of the float and the lower face of the air horn is 55 ~ 56 mm (2.1 ~ 2.2 in), as shown in Fig. 4–8.
Then adjust the fuel level by means of the washer at the fuel inlet, so that the distance (B) between the upper face of the float and the lower face of the air horn is 46 ~ 47 mm (1.8 ~ 1.9 in), as shown in Fig. 4–9. Under this condition, fuel level is kept at the center of the bowl cover.

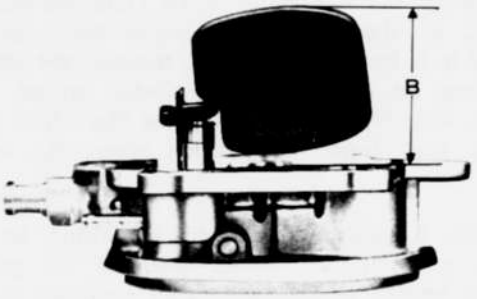

Fig. 4–9 Float level adjustment

b. Fast idling adjustment

When the choke valve is fully closed, the throttle valve opens to 15° by action of the connecting rod and provides easy starting–up. At this moment, the clearance between the throttle valve and the throttle chamber wall is 1.12 mm (0.045 in).
Adjust by bending the connecting rod until the proper clearance is obtained.

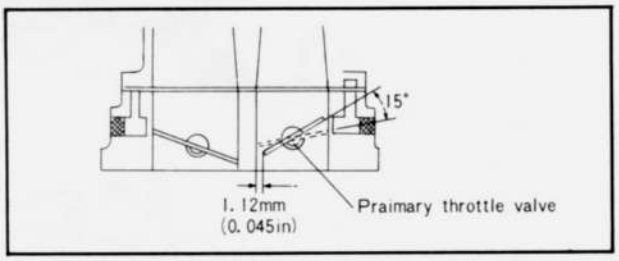

Fig. 4–10

The choke lever is provided with two holes for hanging the choke valve return spring. The return spring is normally hung in the upper hole, but in the cold districts it is hung in the lower hole to improve the engine startability.

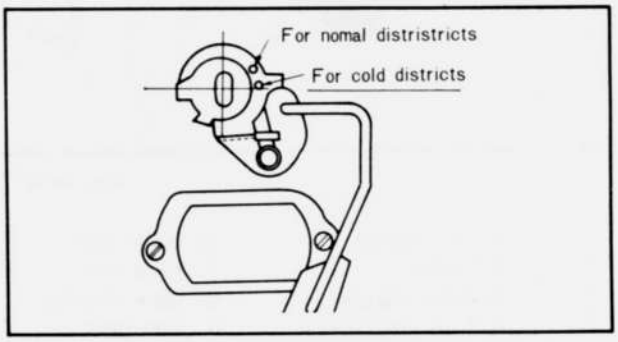

Fig. 4–11

c. Idling adjustment

Adjust the idling speed with the engine sufficiently warmed up and the choke valve fully opened.

1. Set the idling to the regular speed with the throttle adjusting screw.
2. Adjust the idle adjust screw until the smooth idling is obtained. When the idle adjusting screw is screwed in, the mixture of the fuel and air becomes lean. When the screw is loosened, the mixture becomes rich.
3. Adjust the idling so that the engine revolution will be 700 r p m in the above manner of (1) and (2).
4. Screw in the idle adjust screw from the position adjusted as above until the engine stalls. In this case, if it is less than $^3/_4$ turn, unscrew the idle adjust screw to the position previously settled, if it is more than $^3/_4$ turn, unscrew the idle adjust screw by $^3/_4$ turn from the position where the engine stalls.

Note: (1) To measure the engine revolution, be sure to use a revolution counter intended for general servicing instead of the tachometer equipped on the vehicle.
(2) Set the idle adjust screw lightly to avoid damaging the needle.

4–B. FUEL PUMP

4–B–1. Fuel Pump Test

If the fuel pump does not supply the proper amount of fuel to the carburettor, the following tests should be made prior to disassembly of the pump.

a. Pressure test

Connect the fuel pressure tester to the discharge port of the pump to test the fuel pressure. Feeding pressure should be 0.2 to 0.3 kg/cm² (2.8 to 4.3 lb/in²). If it is out of specifications, adjust it by means of the adjust screw. If still defective, disassemble the pump for inspection.

b. Volume test

Conduct a volume test of the fuel pump. The fuel pump should supply more than 900 cc (0.23 U.S. gallon, 0.20 Imp. gallon) of fuel per minute. If defective, disassemble the pump for inspection.

4–B–2. Disassembling the Fuel Pump

Observe the following procedure to disassemble the fuel pump:

1. Provide the matching marks on the air chamber, valve chamber and base so that the locations of the

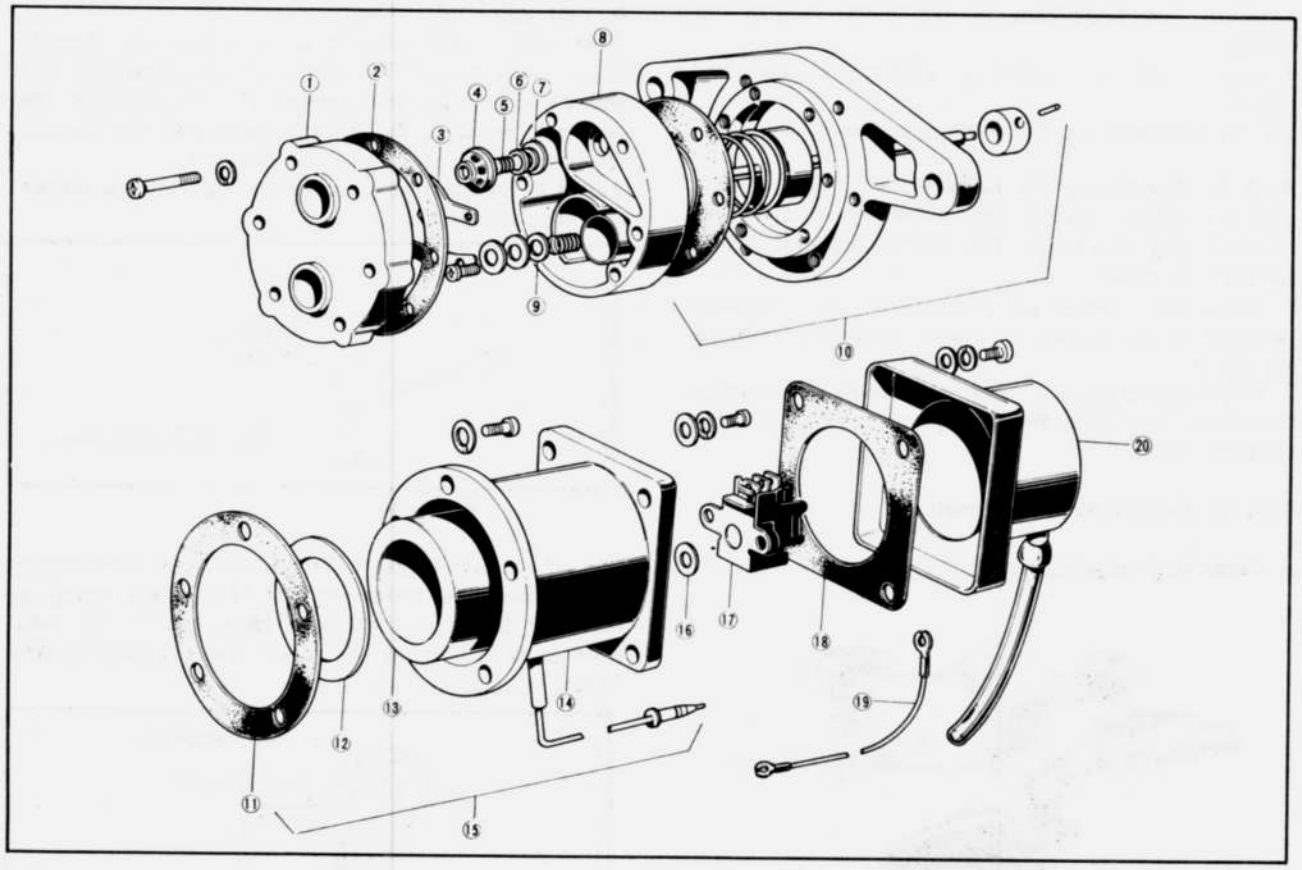

Fig. 4–12 Fuel pump assembly

1. Air chamber
2. Gasket
3. Valve retainer
4. Valve seat holder
5. Valve spring
6. Outlet valve
7. Valve seat
8. Valve chamber
9. Inlet valve
10. Diaphragm ass'y
11. Adjusting plate
12. Plate
13. Coil ass'y
14. Body
15. Body ass'y
16. Adjusting washer
17. Switch ass'y
18. Gasket
19. Earth wire
20. Cover

inlet and outlet valves are marked for assembling.
2. Remove the set screws of air chamber and valve chamber from the base. Remove the air chamber, gasket and valve chamber.
3. Attach the valve retainer and remove the screw. Remove the retainer and the valve assembly from the valve chamber.
4. Remove the cover by removing the screws which hold the cover to the body.
5. Disconnect the wiring from the switch assembly.
6. Remove the screws and dismantle the switch assembly from the body.
7. Remove the screws which are fixing the body to the base, and dismantle the body from the base.

4–B–3. Fuel Pump Inspection

1. Inspect the air chamber, valve chamber and base for cracks and damages.
2. Inspect the diaphragm for damage and deterioration.
3. Inspect the inlet and outlet valves. If they do not function normally, replace them.
4. Inspect the points of the switch assembly for wear, burning, fusing, etc. Clean the points with a file or oil stone if defects are not serious. If serious, replace the points.

4–B–4. Assembling and Adjusting the Pump

To assemble the fuel pump, reverse the procedure for disassembling and observe the following points.

a. Inspecting the diaphragm shaft stroke

After the body is attached to the base, place a dial indicator on the diaphragm shaft as illustrated.
Push in the diaphragm by hand and read the graduation of the dial indicator. The reading should be 2.8 ~ 3.0 mm (0.11 ~ 0.12 in). When the stroke is above 3.0 mm (0.12 in), remove the adjusting plate which is located between the body and the base.
When the stroke is below 0.28 mm (0.11 in), insert additional adjusting plate.
Three kinds of adjusting plate are available:
0.1 mm (0.004 in), 0.25 mm (0.010 in), 0.5 mm (0.020 in).

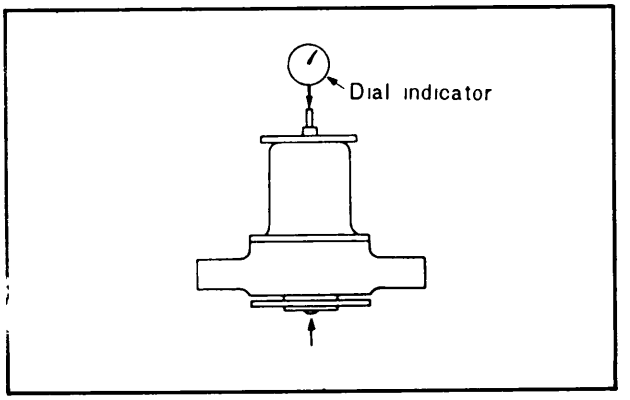

Fig. 4–13 Checking of diaphragm shaft stroke

b. Inspecting the switch point

After the switch assembly is attached to the body, place the dial indicator on the diaphragm shaft as illustrated.
Move the diaphragm shaft by hand and see whether the point of the switch assembly opens and closes at a distance of 0.5 ~ 1.0 mm (0.020 ~ 0.039 in) from the end of each stroke of the shaft.

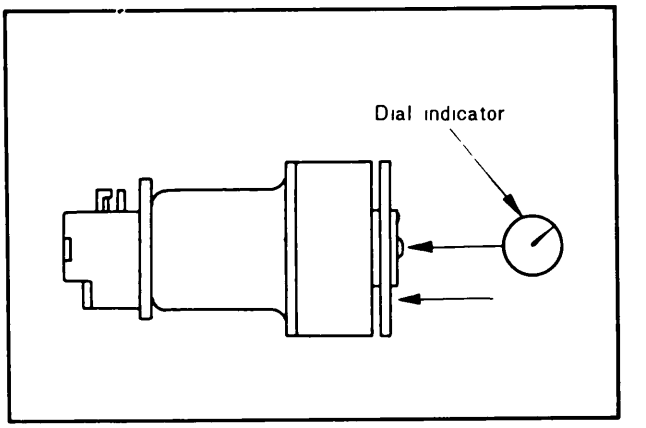

Fig. 4–14 Checking of switch

If defective, adjust in either of the following two ways of whitch the methoed (1) is for a big adjustment and the methoed (2) is for a small one.
1. Adjustment with washers
If the point opens too early or closes too late, decrease the number of washers at the tip of the shaft. If it opens too late and closes too early, increase the number of washers. There are two types of adjusting washers : 0.25 and 0.6 mm (0.010 and 0.024 in).
2. Adjustment with stoppers
If the point opens too early, bend the upper stopper upward. If too late, bend the stopper downward. If the closing action of the point is too late, bend the lower stopper upward. If too early, bend it downward. Actually, when the point opens early, the closing position becomes late. When the opening position is late, it must close early. Then it is necessary to adjust the upper and lower stoppers simultaneously. The point gap is 1.0 mm (0.039 in) when the points are opened.

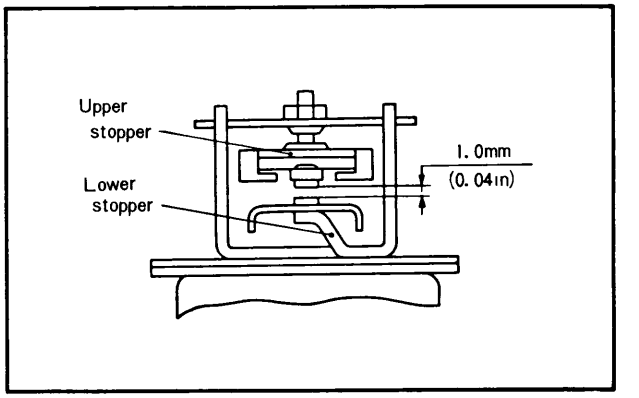

Fig. 4–15 Point gap

4–C. FUEL FILTER

The fuel filter is of the cartridge type with an integrated element and housing.

The fuel filter cartridge is held by the clamp which is attached to the lower side of the service hole cover of the luggage compartment.
Both ends of the cartridge are connected by rubber pipes.
The cartridge should be replaced at intervals of 18,000 km (12,000 miles).



Fig. 4–16 Fuel filter

4–D. AIR CLEANER

The air cleaner is of the paper element suction type. The air cleaner element should be cleaned every 3,000 km (2,000 miles) and replaced every 36,000 km (24,000 miles). Under sub-standard road conditions, the cleaner element should be cleaned every 1,5000 km (1,000 miles) and replaced every 18,000 km (12,000 miles).
On the air cleaner, the intake of fresh air and hot air are automatically switched over by means of the thermo-valve and control diaphragm installed in the air cleaner.
The control diaphragm is installed at the bottom of the fresh air duct. When the ambient temperature drops below 40°C (104°F), the control diaphragm operates the air shutters, by utilizing the engine negative pressure avilable through the thermo-valve.
This diaphragm starts functioning at negative pressure exceeds −100 mm-Hg and reaches the maximum stroke of 8 mm when the negative pressure exceeds −200 mm-Hg. Under such a condition, the fresh air shutter is perfectly closed, while the hot air shutter linked to the fresh air is fully opened.
When the ambient temperature exceeds 40°C (104°F), the engine negative pressure working on the control diaphragm is cut by the thermo-valve, whereby the fresh air shutter is fully opened and the hot air shutter is completely closed.
Check the thermo-valve every six months as to whether it functions normally at ambient temperature over 40°C (104°F).

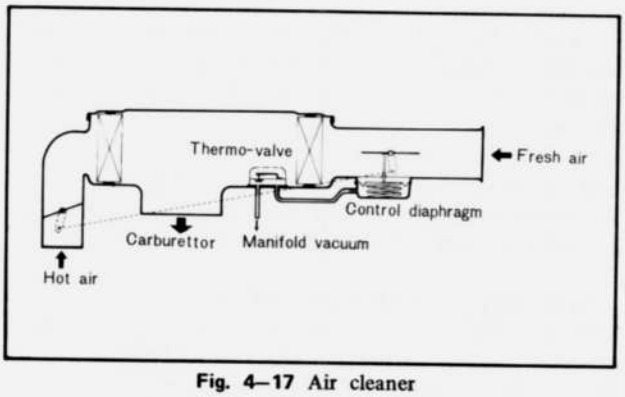

Fig. 4–17 Air cleaner

ELECTRICAL SYSTEM

5–A. BATTERY ..... 5 : 1
5–A–1. Checking the Battery ..... 5 : 1
5–A–2. Charging the Battery ..... 5 : 1
5–B. SPARK PLUG ..... 5 : 1
5–B–1. Checking the Spark Plug ..... 5 : 1
5–C. IGNITION COIL ..... 5 : 2
5–D. DISTRIBUTOR ..... 5 : 2
5–D–1. Adjusting the Point Gap ..... 5 : 2
5–D–2. Adjusting the Ignition Timing ..... 5 : 2
5–D–3. Testing the Distributor ..... 5 : 2
5–D–4. Disassembling the Distributor ..... 5 : 4
5–D–5. Distributor Inspection ..... 5 : 4
5–D–6. Assembling the Distributor ..... 5 : 4
5–E. ALTERNATOR ..... 5 : 4
5–E–1. Service Precautions ..... 5 : 4
5–E–2. Checking the Charging System on Car ..... 5 : 4
5–E–3. Disassembling the Alternator ..... 5 : 4
5–E–4. Alternator Inspection ..... 5 : 5
5–E–5. Assembling the Alternator ..... 5 : 6
5–F. REGULATOR ..... 5 : 6
5–F–1. Checking the Constant Voltage Relay ..... 5 : 6
5–F–2. Adjusting the Regulator ..... 5 : 6
5–G. STARTING MOTOR ..... 5 : 7
5–G–1. Checking the Starting Circuit ..... 5 : 7
5–G–2. Testing the Starting Motor ..... 5 : 7
5–G–3. Disassembling the Starting Motor ..... 5 : 7
5–G–4. Starting Motor Inspection ..... 5 : 8
5–G–5. Magnetic Switch Test ..... 5 : 9
5–G–6. Assembling the Starting Motor ..... 5 : 10
5–H. LIGHTING SYSTEM ..... 5 : 10
5–H–1. Headlight Aim ..... 5 : 10
5–H–2. Replacing the Bulbs ..... 5 : 10
5–I. INSTRUMENT PANEL ..... 5 : 11
5–I–1. Fuel Gauge ..... 5 : 11
5–I–2. Water Thermometer ..... 5 : 11

ELECTRICAL SYSTEM

5–A. BATTERY

RX–2 is equipped with a 12 volts battery consisting of six cells. Its capacity is 60 ampere hours of 20 hour rating.
The battery is located at the front right side of the engine compartment.

5–A–1. Checking the Battery

As the battery has many important functions to engine start, ignition and lighting, check the following points periodically and always keep the battery in perfect conditon.
1. Check the electrolyte level in each cell of the battery, and add distilled water to maintain the solution 10 ~ 20 mm (0.4 ~ 0.8 in) above the plates.
Do not overfill.
2. Check the specific gravity of the electrolyte with a hydrometer, as shown in Fig. 5–1. If the reading is 1.26 or more, it indicates that the battery is fully

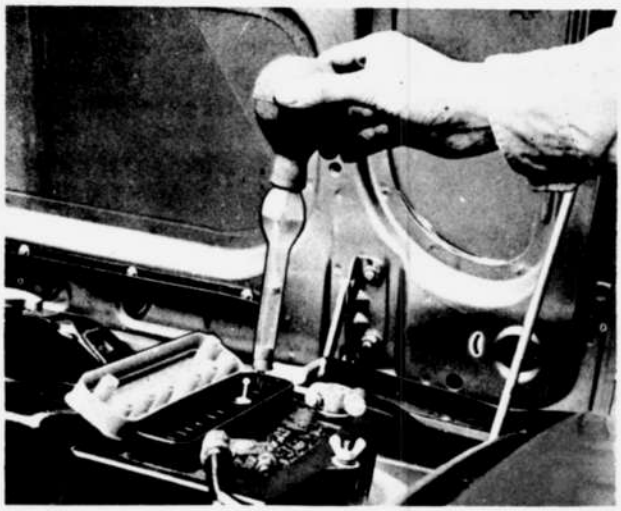

Fig. 5–1 Checking the specific gravity

charged. If the reading is below 1.20, the battery requires recharging.
3. Check the tightness of the terminals to ensure good electrical connections. Clean the terminals and coat the terminals with grease.
4. Inspect for corroded or frayed battery cables.

5–A–2. Charging the Battery

a. Constant current charge

1. If the exterior of the battery is dirty with sulphuric acid or dust and dirt, wash these off with clean water and dry thoroughly before charging the battery.
2. Check the electrolyte level and add distilled water if necessary.

Note: If addition of distilled water is neglected, the plates and seperators will become exposed to air, causing a sulphation to occur on the plates.
Do not add dilute sulphuric acid unless the electrolyte has overflown or leaked out.

3. Connect the battery to the charger ensuring that the polarities are correct.
4. To charge, apply an electric current of approximately 5A until the specific gravity of the electrolyte reaches 1.25 ~ 1.27.

b. Fast charge

As a fast charge causes both the temperature and the level of the electrolyte to rise suddenly, it does not have a favorable effect on the battery. Therefore, this should not be performed unless in the case of an emergency.
When a fast charge is being applied with the battery mounted on the vehicle, ensure that the cables are removed from the battery terminals before the charge is applied. If this is neglected, it could cause a damage to the diodes on the alternator.
The battery should be kept by the use of cooling water to prevent the temperature of the electrolyte from exceeding 45°C (113°F), otherwise the charging should be discontinued temporarily when the temperature rises above this point.

5–B. SPARK PLUG

The two spark plug system is adopted on RX–2 for increasing the combution efficiency. There are three kinds of heat range for genuine spark plugs as follows, so that they can be used under the driving area or running condition.

MANUFACTURE	HOT TYPE	STANDARD	COLD TYPE
NGK	B–6EJ	B–7EJ	B–8EJ
Denso	W20 EG2	W22 EG2	W25 EG2

As these spark plugs are designed specially for RX–2, do not replace these with any of other types of spark plug.

5–B–1. Checking the Spark Plug

Check the spark plugs for burned and eroded electrode, black deposits, fouling, and cracked porcelain. Clean the spark plugs with a spark plug cleaner or a wire brush if they are foul.
Replace the badly burned or eroded spark plugs.
Measure the electrode gap of each spark plug with a wire gauge. If it is improper, adjust the gap to the specified valve 0.8 ~ 0.9 mm (0.031 ~ 0.035 in) by bending the outer electrode.



Fig. 5–2 Adjusting spark plug gap

5–C. IGNITION COIL

Two types of ignition coil are equipped.
One is the leading ignition coil with external resistance which improves ignition performance and startability of the engine, and another is ordinary type, the trailing ignition coil.
When the ignition key is turned on to actuate the starter, the "S" and "R" terminals of the key switch are closed with the "B" terminal of the key switch and the "Ig" terminal is opened. In this case, current leads to the "S" terminal of the relay and magnetizes the relay coil. Thus, the "H" and "B" terminals of the relay are closed. Then, the primary current leads from the "R" terminal to the trailing ignition coil via the relay. And also, the primary current for leading one is led from the "R" terminal direct to the leading ignition coil by passing the external resistor.
When the ignition key is returned to the "Ig" position after starting the engine, only "Ig" terminal is closed with "B" terminal of the key switch. Therefore, the function of the relay is stopped and the primary current flows from the "Ig" terminal to the trailing ignition coil. And also, the current for leading one flows from the "Ig" terminal to the leading ignition coil by way of the external resistor.

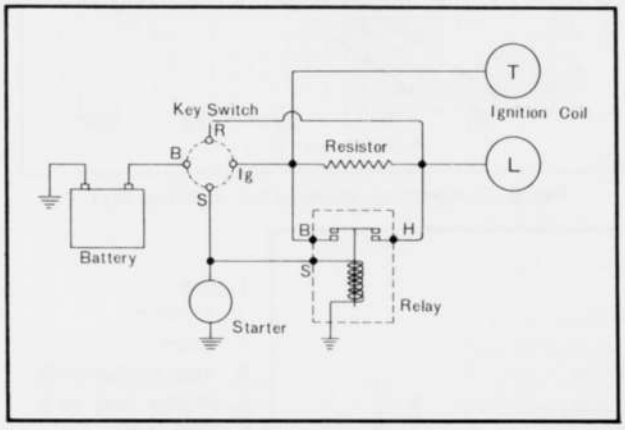

Fig. 5–3 Diagrum of ignition coil

5–D. DISTRIBUTOR

RX–2 is equipped with two distributors, one for the spark plugs on the leading side and one for those on the trailing side.
Each distributor consists of distributing mechanism, contact breaker mechanism, and ignition timing advance control of centrifugal and vacuum.

5–D–1. Adjusting the Point Gap

Adjust the point gap of each distributor as follows:
1. Check the contact points alignment. If necessary, bend the stationary contact bracket so as to obtain contact in the center of the contact points.
2. Crank and stop the engine when the rubbing block on the contact arm just rests on the highest point of the cam.
3. Insert a feeler gauge of 0.45 mm (0.016 in) between the contact points, loosen the two set screws and move the stationary contact point until the correct gap is obtained.

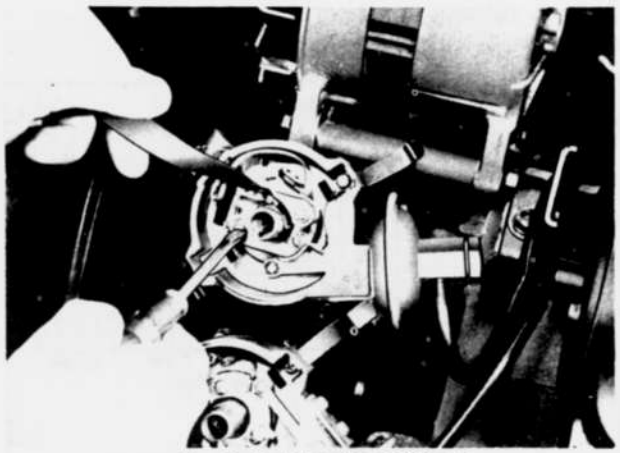

Fig. 5–4 Adjusting point gap

4. Tighten the set screws and recheck the point gap.

5–D–2. Adjusting the Ignition Timing

To obtain maximum engine performance, the distributor must be correctly positioned on the engine to give the proper ignition timing. If a timing light is available, use it to adjust the ignition timing, as follows :
1. Connect the timing light to the high tension cord for trailing side or leading side of front rotor. Start the engine and set the idle to 700 rpm.
2. Observe the position of the timing mark.
3. Loosen the distributor lock nuts and rotate each distributor housing so that each timing mark on the eccentric shaft pulley aligns with needle on the front cover.
4. Tighten the distributor lock nuts and recheck the timing.

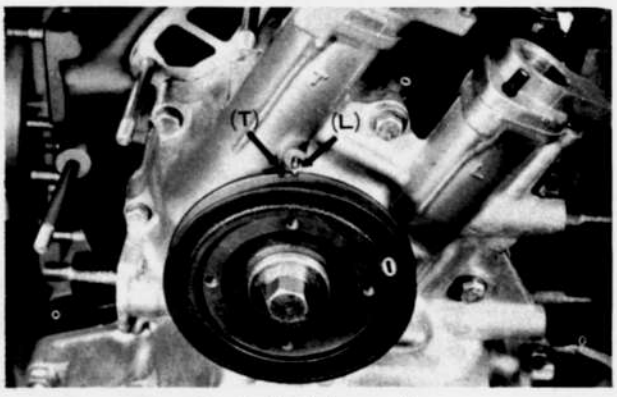

Fig. 5–5 Timing marks

5–D–3. Testing the Distributor

a. Dwell angle test

The dwell angle also called cam angle is degrees of rotation through which the contact points remain closed.
To test the dwell angle, use a distributor tester following the instructions of the manufacturer. If the dwell reading is within 55 and 61 degrees, it is correct. If the reading is not within the specifications,

it indicates the following troubles.
1. Incorrect point gap
2. Worn cam
3. Worn rubbing block
4. Distorted contact arm

b. Advance Test

To test the ignition advancing characteristic of the distributor, use a distributor tester.
The advancing characteristic of each distributor should be within the range shown in Fig. 5–6 and 5–7.

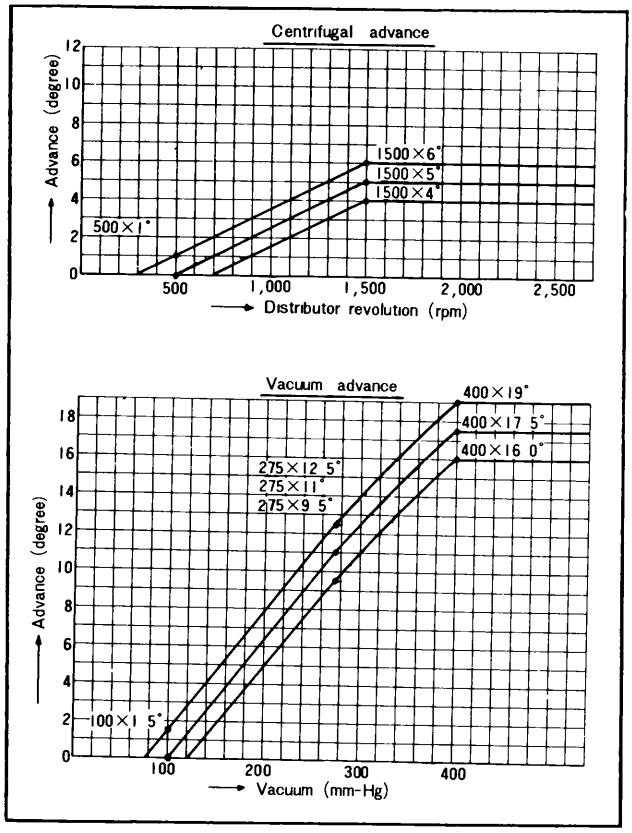

Fig. 5–6 Advancing characteristic (trailing side)

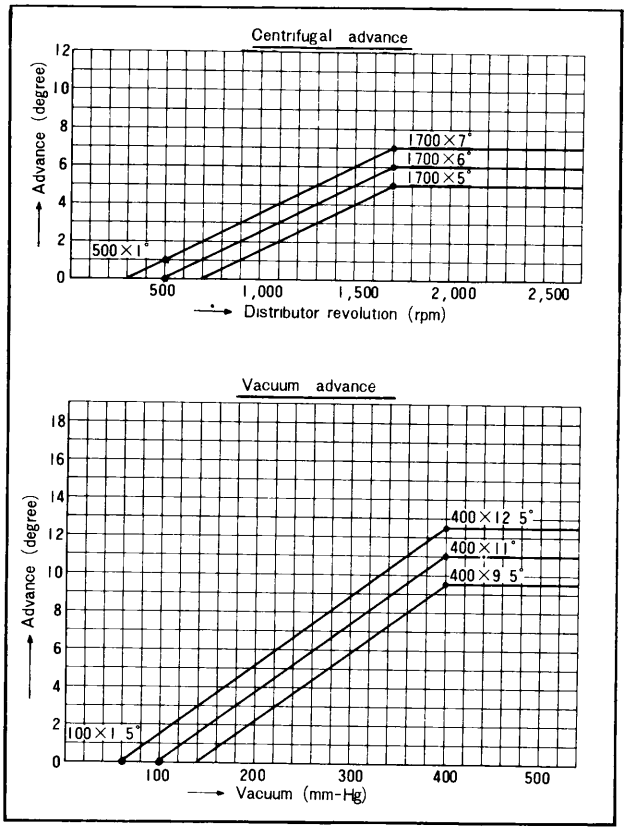

Fig. 5–7 Advancing characteristic (leading side)

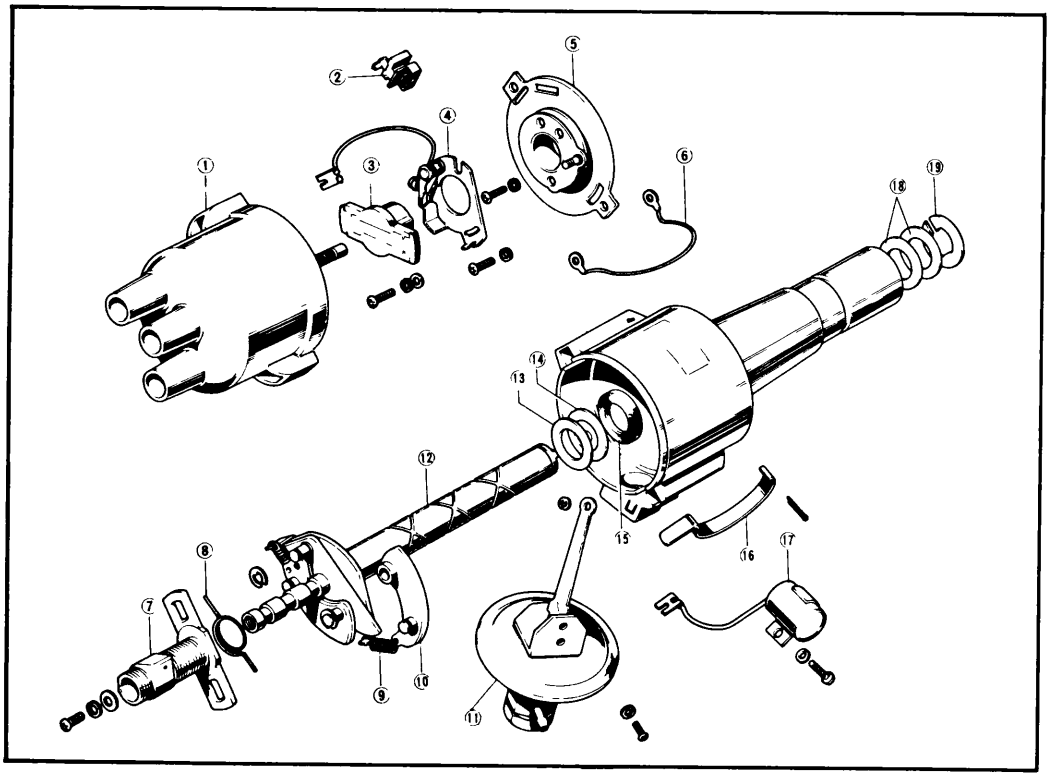

1. Cap
2. Terminal
3. Rotor
4. Arm support ass'y
5. Breaker base ass'y
6. Earth wire
7. Cam
8. Hair pin spring
9. Governor spring
10. Governor weight
11. Diaphragm ass'y
12. Shaft
13. Washer
14. Washer
15. Oil seal
16. Clamp
17. Condenser
18. Washer
19. Lock washer

Fig. 5–8 Distributor assembly

5–D–4. Disassembling the Distributor

1. Loosen the cap retaining clips and lift off the cap.
2. Remove the rotor.
3. Remove the screws that attach the vacuum control unit from the distributor housing and remove the clip holding the breaker base link. Remove the vacuum control unit.
4. Loosen the primary terminal nut and disconnect the lead. Remove the contact point assembly from the breaker base after removing the set screws.
5. Remove the primary terminal stud and insulator.
6. Remove the condenser.
7. Remove the screws that attach the breaker base and cap retaining clips to the housing. Remove the breaker base and retaining clips.
8. Take off the felt and remove the cam set screw, then remove the cam.
9. Remove the distributor drive shaft retaining clip and washers. Remove the shaft in upward direction through the top of the distributor housing.
10. The governor can be removed by removing the governor spring and clip.

5–D–5. Distributor Inspection

a. Inspection of distributor cap

Inspect the distributor cap for cracks, carbon runners and signs of arcing. Replace the cap if any of these are found.

Clean the high tension terminals.

b. Inspecting the rotor

Inspect the rotor for cracks or evidence of excessive burning at the end of the metal strip.

c. Inspecting the contact points

Inspect the points for wear, burning, transferred metal and pitting. If the points are affected only slightly, clean with stiff metal brush or oil stone. In case of severe damage, replace the points.

d. Checking the contact arm spring tension

For inspection, hook a spring scale on the contact arm and pull straight at a right angle to the contact arm. Read the tension when the contact points start to separate. If the reading is 0.5 kg (1.1 lb) or less, replace the movable contact arm.

e. Checking the condenser

If the condenser is leaky, it will cause a weak spark or burned contact points check the capacity of the condenser with a condenser tester.

The capacity is 0.27 ±10% microfarads. In the absence of a tester, check by substituting a new condenser.

5–D–6. Assembling the Distributor

Assemble the distributor in the reverse order of disassembling.

5–E. ALTERNATOR

5–E–1. Service Precautions

When servicing the charging system, observe the following precaution. If not followed, the result will be in serious damage of the system.

1. Do not short across or ground any of the terminals on the alternator.
2. Never operate the alternator with on an open circuit (with the field terminal connected and the armature terminal disconnected).
3. When installing a battery, always make sure that the negative post of the battery is attached securely to the ground strap.
4. Never reverse battery leads, not even for an instant, as reverse polarity current flow will damage the diodes in the alternator.
5. When charging the battery with a fast charger, disconnect the positive cable at the battery.

5–E–2. Checking the Charging System on Car

If the electrical system is not charging properly, it is advisable to determine whether the trouble is in the alternator or regulator prior to removing the alternator.

1. Disconnect the wire from "B" terminal of the alternator and connect the ammeter with the negative lead of the ammeter to the wire and the positive lead to the "B" terminal, as shown in Fig. 5–9
2. Connect the positive lead of the voltmeter to the "B" terminal of the alternator and ground the negative lead of the voltmeter.
3. Switch the headlight on.
4. Start the engine and take the reading of the ammeter and voltmeter, holding the engine speed of 2,000 rpm (alternator speed: 4,000 rpm).

If the ammeter shows less than 32 ampares, the trouble is in the alternator and if the voltagemeter shows without the specifications it is in the regulator.

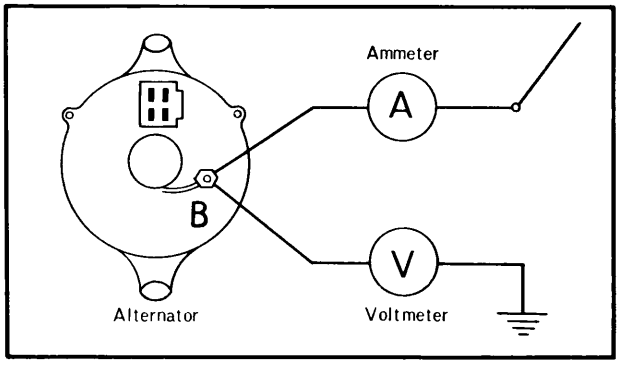

Fig. 5–9 Checking alternator

5–E–3. Disassembling the Alternator

1. Remove the nut attaching the radio noise suppression condenser and remove the condenser.
2. Remove the nut attaching the pulley to the shaft and remove the pulley, fan and spacer.
3. Remove the through bolts.
4. Separate the front housing assembly by prying apart with a screwdriver at the slots of the front housing.
5. Remove the rotor from the front housing.
6. Remove the front bearing retainer attaching screw and remove the retainer. Support the front housing close to the bearing boss, and press out the old bearing from the housing, only if the bearing is defective.

7. Unsolder the diode leads and stator coil leads.
8. Remove the stator from the rear housing.
9. Remove the screws that attach the brush holder to the housing and remove the brush and holder, insulator and terminal.
10. Remove the screw attaching the heat sink and the two terminal screws, and remove the diodes and heat sink assemblies from the rear housing.

5–E–4. Alternator Inspection

a. Checking of stator coil

Check the stator coil for both open and grounded circuits with a tester.

To check for open, connect the prods to each of the two leads, as shown in Fig. 5–10. If there is no flow of current, the coil is open circuit and must be repaired or replaced.

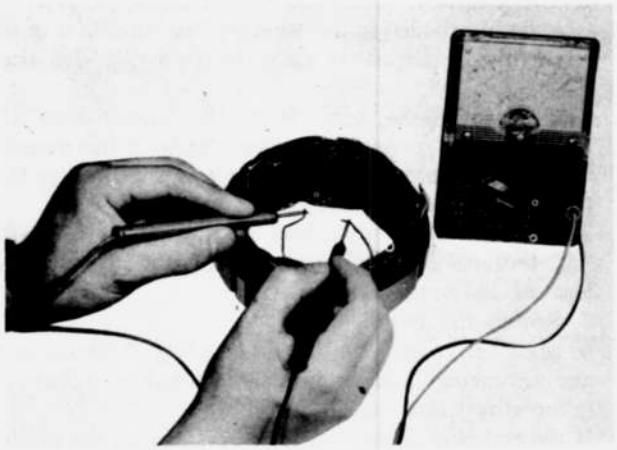

Fig. 5–10 Checking of stator coil for open

To check for ground, connect one prod to the core and the other to each lead wire, as shown in Fig. 5–11. If a ground is present the current will flow and the stator coil must be repaired or replaced.

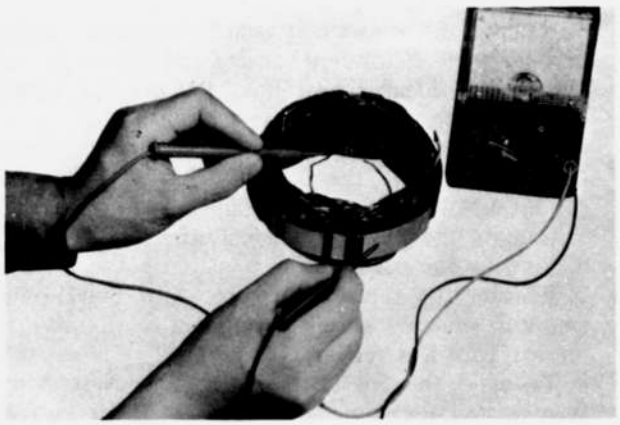

Fig. 5–11 Checking of stator coil for ground

b. Checking the rotor

To check for open circuit place both prods of a tester on the slip rings, as shown in Fig. 5–12.

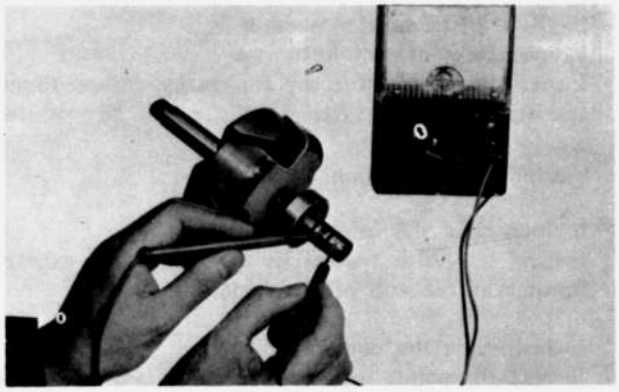

Fig. 5–12 Checking of rotor for open

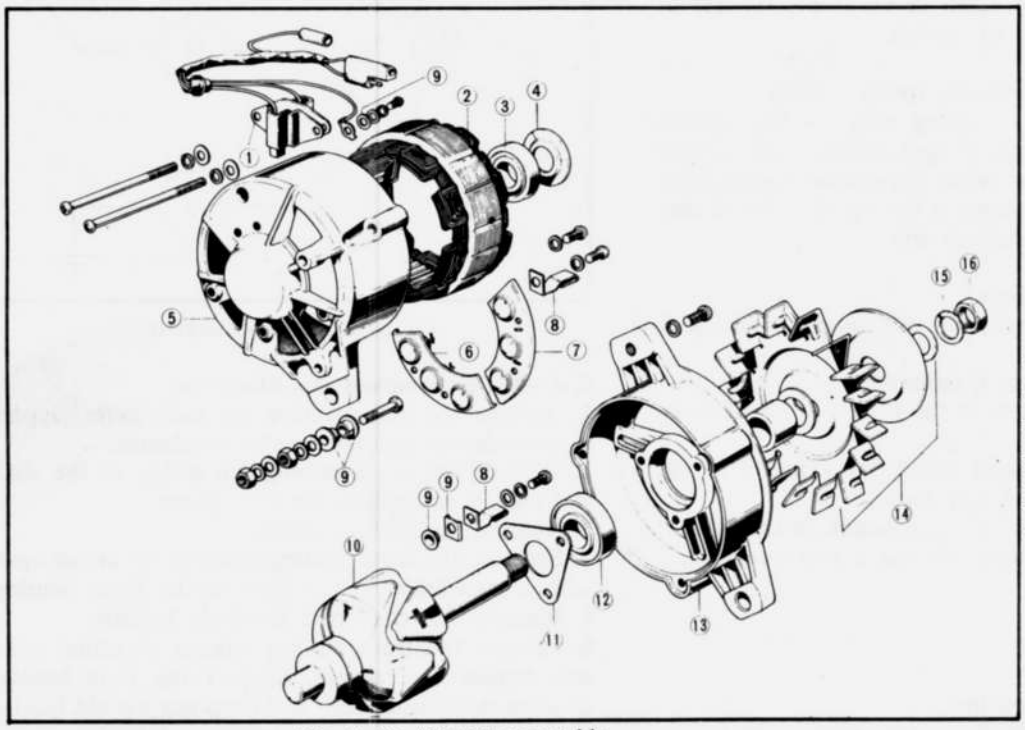

1. Brush holder
2. Stator
3. Ball bearing (rear)
4. Seal washer
5. Rear bracket
6. Heat sink cpt. ⊖
7. Heat sink cpt. ⊕
8. Clamp
9. Insulator
10. Rotor
11. Bearing press plate
12. Ball bearing (front)
13. Front bracket
14. Pulley ass'y
15. Spring washer
16. Nut

Fig. 5–13 Alternator assembly

If the reading is 5 to 6 ohms, there is no trouble in the rotor.
To check for ground, connect one prod to the slip ring and other prod to the core. If the current flows the rotor must be repaired or replaced.

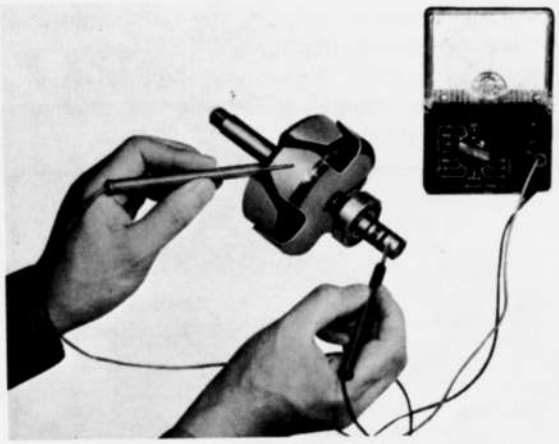

Fig. 5–14 Checking of rotor for ground

c. Checking the diodes
Diodes for use in the alternator are avialable in two different types, the positive diode which allows current to flow from the lead wire to the case but not from the case to the lead wire and the negative diode which has the opposite properties.
To check, read the resistance between the lead wire and case with a tester. Then reverse the tester leads and note the reading.
If both readings are very low or high, the diode is defective. A good diode will give one low reading and one high reading.

Note: The diode and heat sink are serviced as an assembly only.

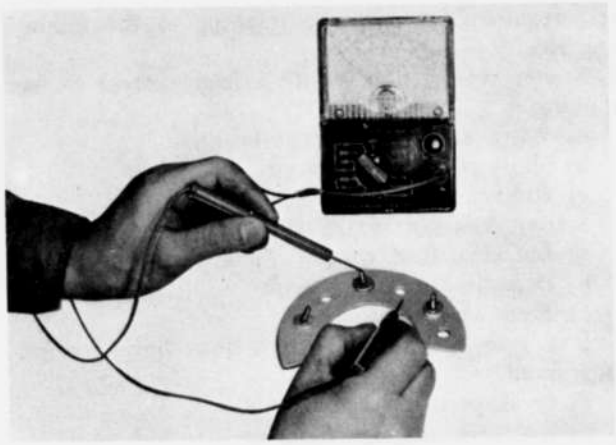

Fig. 5–15 Checking of diode

d. Checking the brushes
The brush should be replaced when one third of its original length is worn. The wear limit line is marked on each brush surface for warning.
The standard tension of the brush spring is 350 gr (12.5 oz). If the tension is too low or if excessive corrosion exists, the spring must be replaced.

e. Checking the bearings
There is no need of lubricating as the bearing is prelubricated. In a long spell of use, when the bearing is worn or damaged, replace it with a new one.

5–E–5. Assembling the Alternator
Assemble the alternator in the reverse order of disassembling, noting the following point.
1. When installing the rotor assembly to the rear housing and stator assembly, hold the brushes in position by inserting a piece of stiff wire into the hole of the brush through the rear housing as shown in Fig. 5–16.

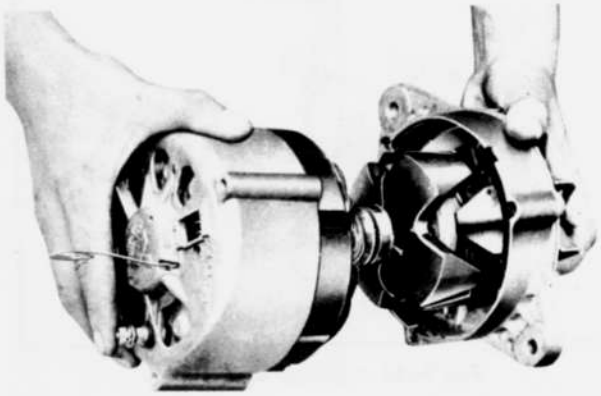

Fig. 5–16 Installing of rotor assembly

5–F. REGULATOR

5–F–1. Checking the Constant Voltage Relay
To check, use an almost fully charged battery and connect a voltmeter between the (A) and (E) terminals of the regulator, as shown in Fig. 5–17.
Then, hold the alternator revolution to 4,000 rpm (engine revolution 2,000 rpm) and take a reading of the voltmeter. If the reading is from 13.5 ~ 14.5 volts, it is in proper order. If it is not within the specifications, the voltage relay must be adjusted, as instructed in Par. 5–F–2.

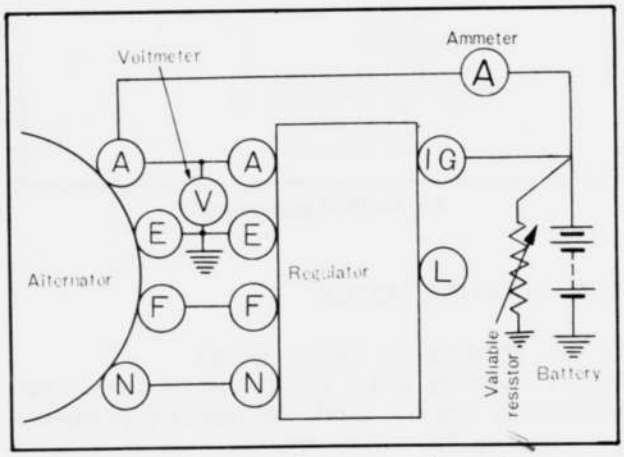

Fig. 5–17 Checking of constant voltage relay

5–F–2. Adjusting the Regulator
First, check the air gap, back gap and point gap with a wire gauge.

If they are not within the specifications, adjust by bending the stationary contact bracket. After correct gaps are obtained, adjust the voltage setting. Bend the upper plate down to decrease the voltage setting, up to increase the voltage setting.
In case of the pilot lamp relay, if the voltage when the lamp lights up is adjusted to the specification, the voltage when the lamp goes out may be within the specification.

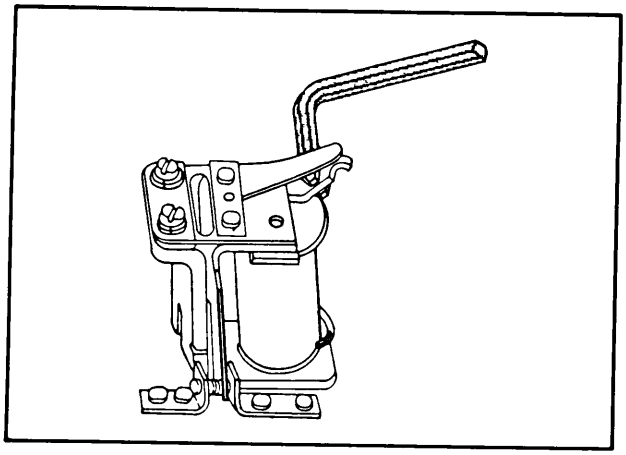

Fig. 5–18 Adjusting of regulator

Constant voltage relay

Adjustment	Standard specification
Air gap	0.7 ~ 1.1 mm (0.028 ~ 0.043 in)
Point gap	0.3 ~ 0.4 mm (0.012 ~ 0.016 in)
Back gap	0.7 ~ 1.1 mm (0.028 ~ 0.043 in)
Voltage	14 ± 0.5 V (Alternator 4,000 rpm)

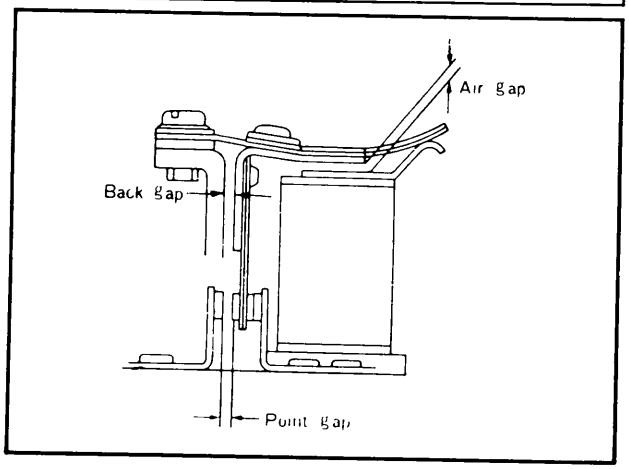

Fig. 5–19 Regulator gap

5–G. STARTING MOTOR

5–F–1. Checking the Starting Circuit

When the starting motor fails to operate or does not satisfactorily operate, check the following points before removing the starting motor:
1. Weak battery
2. Corroded or loose battery terminal
3. Loose starting motor terminal
4. Broken or loose wires of the starting circuit
5. Faulty ignition switch

5–G–2. Testing the Starting Motor

a. Free running test

1. Place the starting motor in a vise equipped with soft jaws and connect a fully-charged 12 volts battery to the starting motor.
2. Connect an ammeter between the (B) terminal of the starting motor and the battery.
3. Operate the starting motor and take a reading. The current draw should be 70 amperes minimum at 3,600 rpm or more.

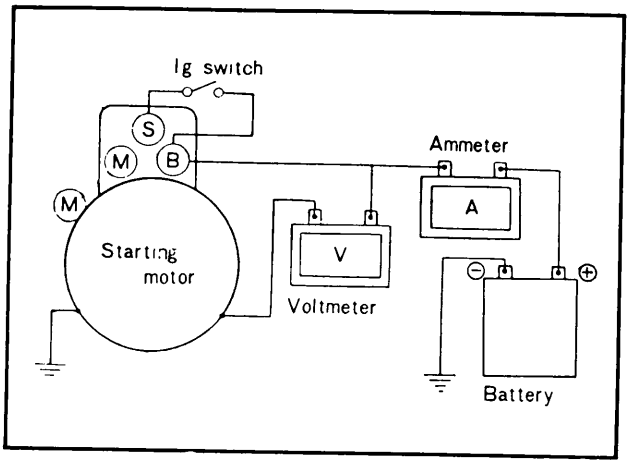

Fig. 5–20

b. Lock resistance test

1. Install the starting motor on a test bench.
2. Test the lock resistance of the starting motor, following the instructions of the test equipment manufacturer.
3. With applied battery voltage adjusted to 6.0 volts, the current flow should be 60 amperes and the torque should be 2.7 m-kg (19.5 ft-lb).

If the starting motor does not perform to the above test requirements repair it referring to the following list.
1) Starter rotates slowly with a large current at free running.
   a) Worn, dirty or defective bearings
   b) Short circuit of armature
   c) Grounded armature and field coil
2) Starter does not rotate with a large current.
   a) Defective field circuit
   b) Defective armature circuit
   c) Burnt commutator
3) Low torque and low current flow. Low free running speed.
   a) Breakage of field circuit
   b) Excessive internal resistance
4) Low torque. High free running speed.
   a) Short circuit of field coil

5–G–3. Disassembling the Starter motor

1. Disconnect the field strap from the terminal on the magnetic switch.
2. Remove the magnetic switch attaching screws and remove the magnetic switch, spring and washers from the driving housing.

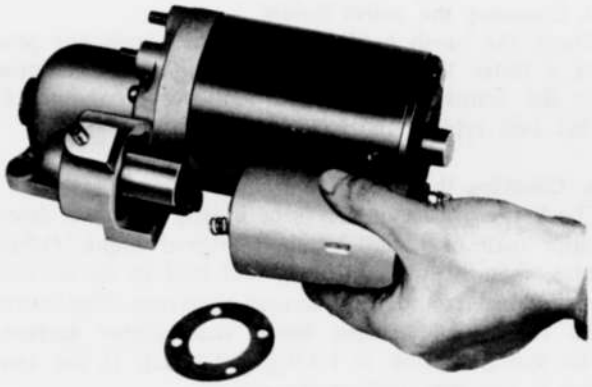

Fig. 5–21 Removing of magnetic switch

3. Remove the planger from the driving lever.
4. Remove the through bolts and remove the rear bracket.

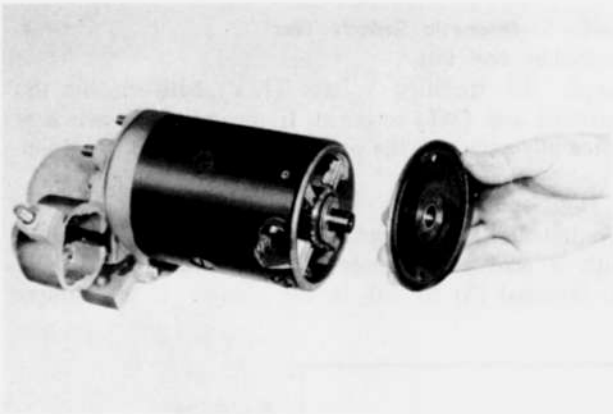

Fig. 5–22 Removing of rear bracket

5. Remove the insulator and washer from the end of the armature shaft.
6. Loosening the screws attaching field coil, separate the field coil assembly from the center bracket.



Fig. 5–23 Removing the field coil

7. Remove the armature from the center bracket and remove the thrust washer.
8. Separate the front bracket and the center bracket.
9. Remove the driving lever, spring and spring seat.
10. Remove the over running clutch assembly from the front bracket.



Fig. 5–24 Removing of driving lever

5–G–4. Starting Motor Inspection

a. Checking the armature

Check the armature for both grounding and short circuit. To check for grounding, touch one prod of a tester to each segment and the other prod to the core or shaft. If there is current flow, the coil of the corresponding segment is grounded.



Fig. 5–25 Checking of armature

To check for short circuit, use a growler tester. Place the armature against the core of the tester, and hold a steel strip on the armature. Then, rotate the armature slowly by hand. In case of short in the coil, the steel strip will become magnetized and vibrate.

b. Checking the commutator

If the commutator is dirty, discolored or worn, clean it with emery paper and wash with clean solvent. After cleaning, undercut the mica between the segments to the depth of 0.5 ~ 0.8 mm (0.020 ~ 0.031 in). Refer Fig. 5–26.

c. Checking the field coil

To test the field coil for ground with a tester, place one prod on the yoke or pole core and the other prod to the field terminal. In case of grounding, there will be current flow and the field coil must be repaired or replaced. Refer Fig. 5–27.

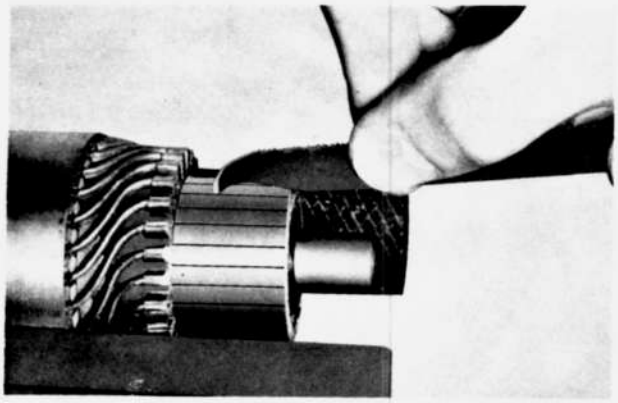

Fig. 5–26 Under cut

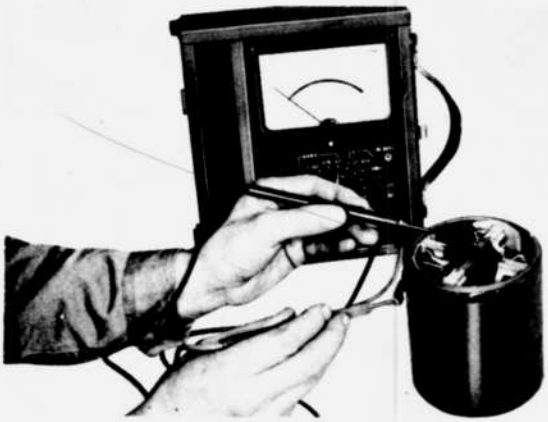

Fig. 5–27 Checking of field coil

d. Checking the brush holder

Check the brush holder for ground. Touch one prod of a tester to the brush holder and the other prod to the frame. Current flow indicates grounding. In that case replace the holder.

e. Checking the brushes and brush springs

Check the brushes and replace if they are worn down more than one third of their original length. Otherwise, reduced spring tension will lead to an increase in the brush-commutator contact resistance. This lowers the torque and causes burnt commutator surface. The spring tension is 1,130g (40.0 oz). If the tension is too low, replace the springs.

f. Checking the bush

Check the clearance between the armature shaft and the bush. If it exceeds 0.2 mm (0.08 in), replace the bush.

5–G–5. Magnetic Switch Test

a. Pull-in coil test

Apply the specified voltage (12V) between the (S) terminal and (MT) terminal. If the magnetic switch is forcefully attacted, the pull-in coil is in good condition.

b. Holding coil test

Ground the (MT) terminal to the magnetic switch body with a lead and impose the specified voltage (8V) to terminal (S) to pull in the plunger. If the plunger

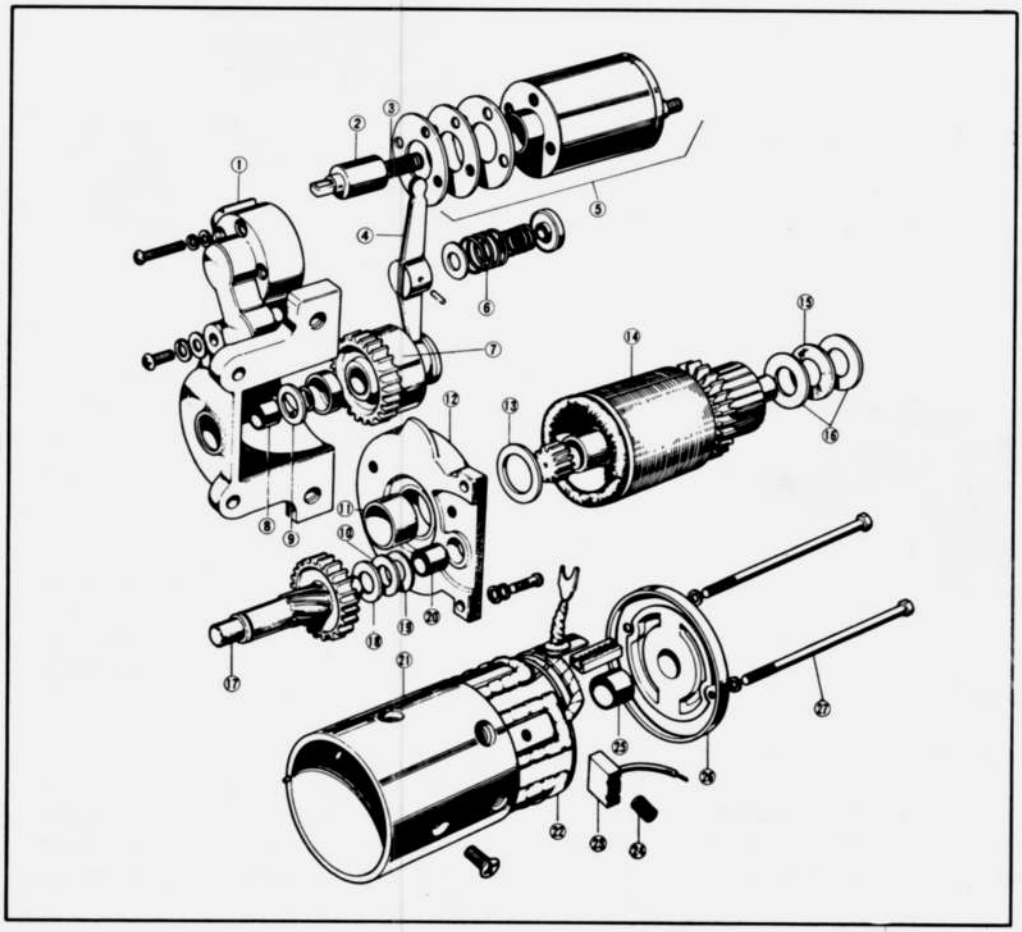

Fig. 5–28
Starting motor assembly

1. Front bracket
2. Plunger
3. Spring
4. Driving lever
5. Magnet switch ass'y
6. Driving lever spring
7. Over running clutch
8. Metal
9. Washer
10. Washer
11. Metal
12. Center bracket
13. Washer
14. Armature
15. Insulator
16. Washer
17. Pinion shaft
18. Washer
19. Washer
20. Metal
21. Yoke
22. Field coil
23. Brush
24. Brush spring
25. Metal
26. Rear bracket
27. Bolt

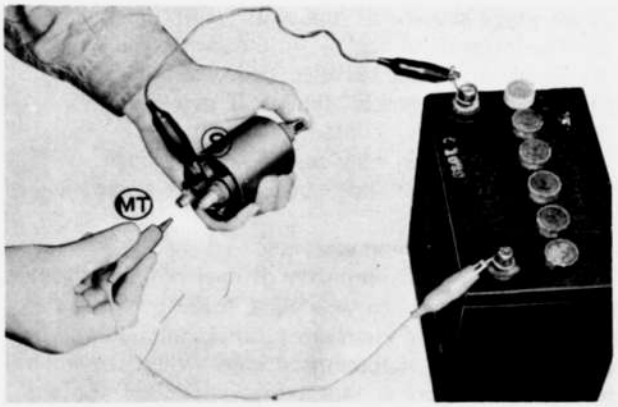

Fig. 5–29 Pull-in coil test

remains attracted after disconnecting the lead from the (MT) terminal, the coil functions properly.

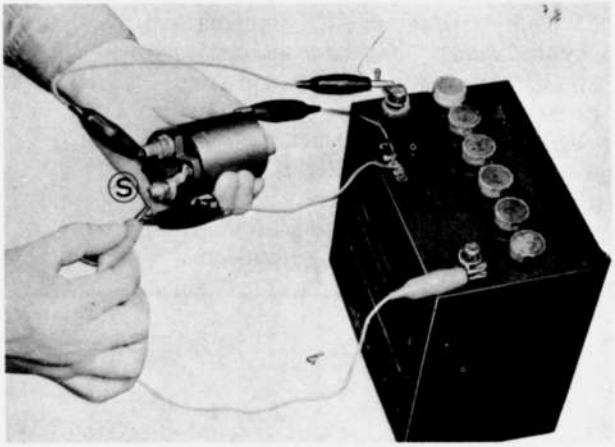

Fig. 5–30 Holding coil test

c. Return test

Push in the plunger by hand and apply the specified voltage (12V) between the (MT) terminal and the magnetic switch body. If the plunger is not attracted, there is no trouble.

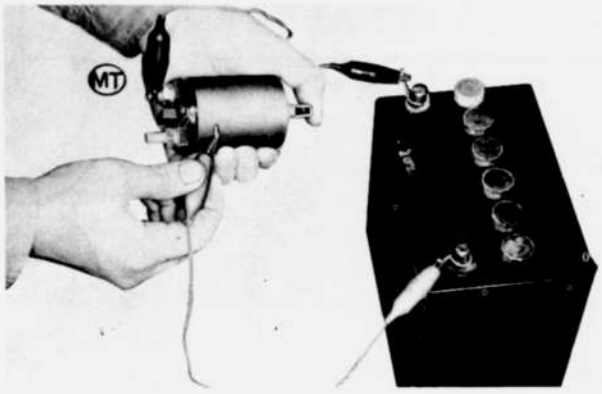

Fig. 5–31 Return test

5–G–6. Assembling the Starting Motor

To assemble the starting motor, reverse the procedure of Par. 5–G–3, noting the following points.

1. Adjust the armature shaft end play to 0.1 ~ 0.4 mm (0.004 0.015 in) with a thrust washer on the rear end of the shaft and pinion shaft end play to 0.1 ~ 0.3 mm (0.004 ~ 0.012 in) with a washer the end of the shaft.
2. When the magnetic switch is closed, the clearance between the pinion and stop collar should be 0.3 ~ 1.5 mm (0.012 ~ 0.06 in).

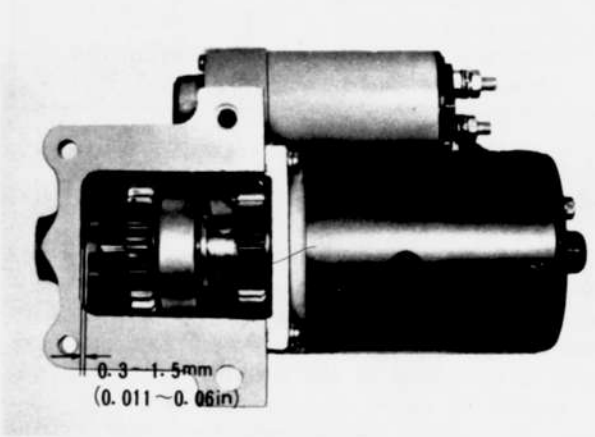

Fig. 5–32 Gap of pinion and stop collar

5–H. LIGHTING SYSTEM

The wiring of the lighting systems is shown in the wiring diagrams. The wires in the various circuits are of different colors to aid when checking individual circuits.

5–H–1. Headlight Aim

Before adjusting the headlights, make sure that the tires are inflated uniformly to recommended pressure and the vehicle is on the level ground without load. To adjust the headlights, remove the head lamp frames and turn the three spring-loaded screws of the sealed beam unit the headlights are aimed properly. When the high beam is aimed 1.0 m (39.37 in) straight ahead, the center of the high intensity should be 12.9 mm (0.51 in) lower than the horizontal lamp center line, as shown in Fig. 5–33.

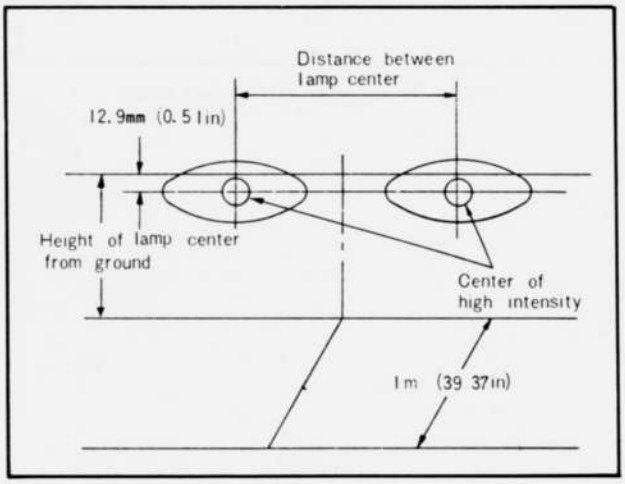

Fig. 5–33 Headlight aiming

5–H–2. Replacing the Bulbs

When replacing bulbs, conform to the following table.

Head lamp	50W/40W
Front turn signal & side lamp	21W/5W
Side turn signal lamp	3.4W
Fog lamp	25W
Step lamp	6W
Glove compartment lamp	5W
Turn signal lamp (rear)	21W
Stop, tail & reverse lamp	21W/5W/10W
Licence lamp	10W

5–I. INSTRUMENT PANEL

5–I–1. Fuel Gauge

RX–2 is equipped with an electric fuel gauge. The fuel gauge indicates the fuel quantity in the tank when the ignition switch is turned on. The fuel gauge circuit is composed of the fuel meter, mounted on the instrument panel, and the fuel tank unit, connected by a single wire through the ignition switch. Should the meter fail to register, check and repair the fuel meter circuit as follows:

1) Fuel gauge does not register with ignition "ON".
   a) Defective panel unit
   b) Faulty contact in "Ig" terminal of meter gauge
   c) Wiring to tank grounded
   d) Meter gauge improperly grounded
2) Fuel gauge shows "F" under all conditions.
   a) Open circuit in tank unit and meter gauge
   b) Break in wiring between tank unit and panel
3) Fuel gauge shows "E" under all conditions.
   a) Loose or faulty contact of terminals
   b) Short circuit in tank unit or meter gauge
   c) Break in P coil and S coil of meter gauge

5–I–2. Water Thermometer

The cooling water thermometer is operated electrically like the fuel gauge. The circuit consists of the water thermometer on the instrument panel and the sending unit installed on the thermostat case. When the water thermometer registers improperly, check on the following points and refer to the wiring diagram for repair.

1) Pointer does not move when ignition switch is turned on.
   a) Defective panel unit
   b) Faulty contact in "Ig" terminal
2) Pointer shows "H" under all conditions.
   a) Open circuit in sending unit
   b) Break in wiring between both units
   c) Loose or faulty contact in terminals
3) Pointer shows "C" under all conditions.
   a) Defective panel unit
   b) Short circuit in sending unit
   c) Panel unit improperly grounded

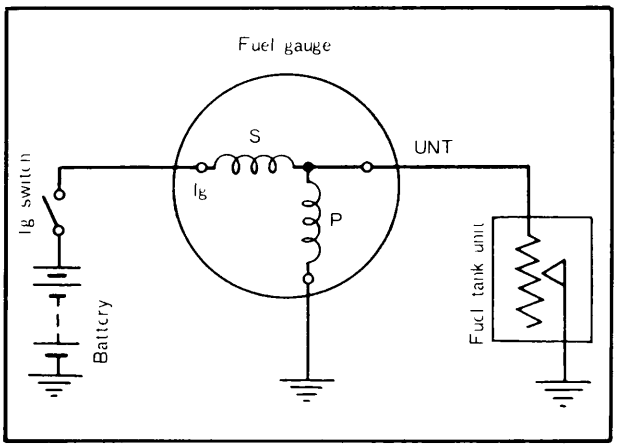

Fig. 5–34 Diagram of the fuel gauge

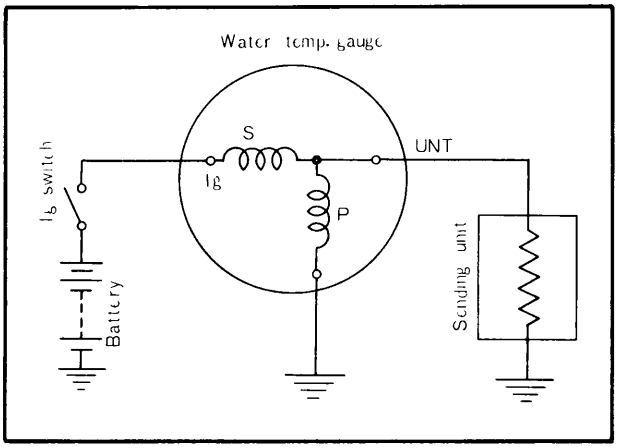

Fig. 5–35 Diagram of the water temp. gauge

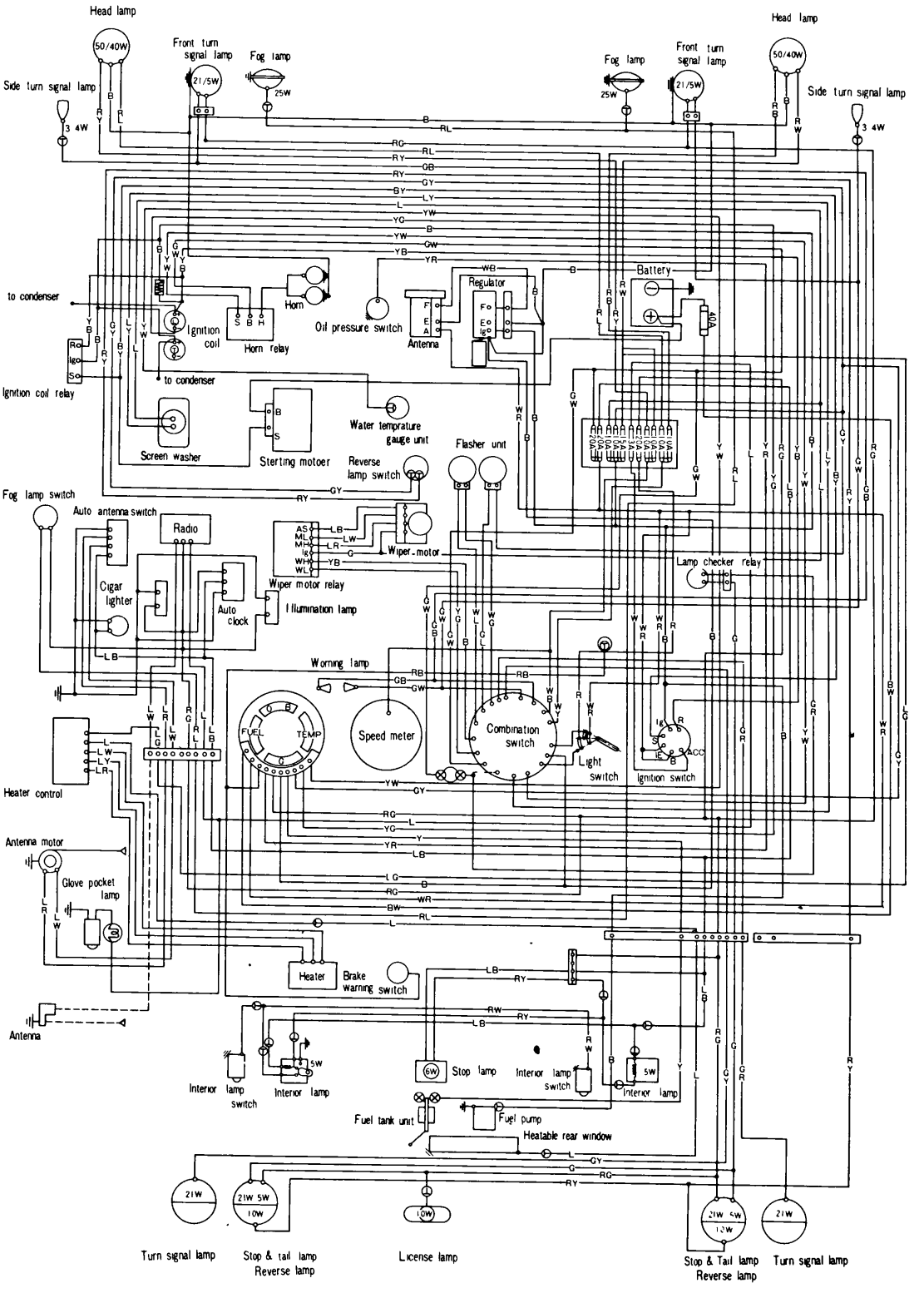

Wiring colour code

- R : Red
- G : Green
- B : Black
- L : Blue
- Y : Yellow
- W : White

Example:

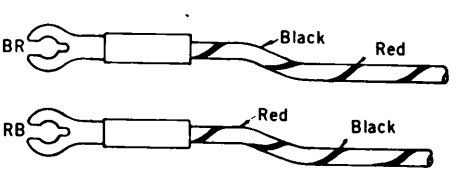

Fig. 5–36 Wiring diagram (all models except coupe super deluxe)

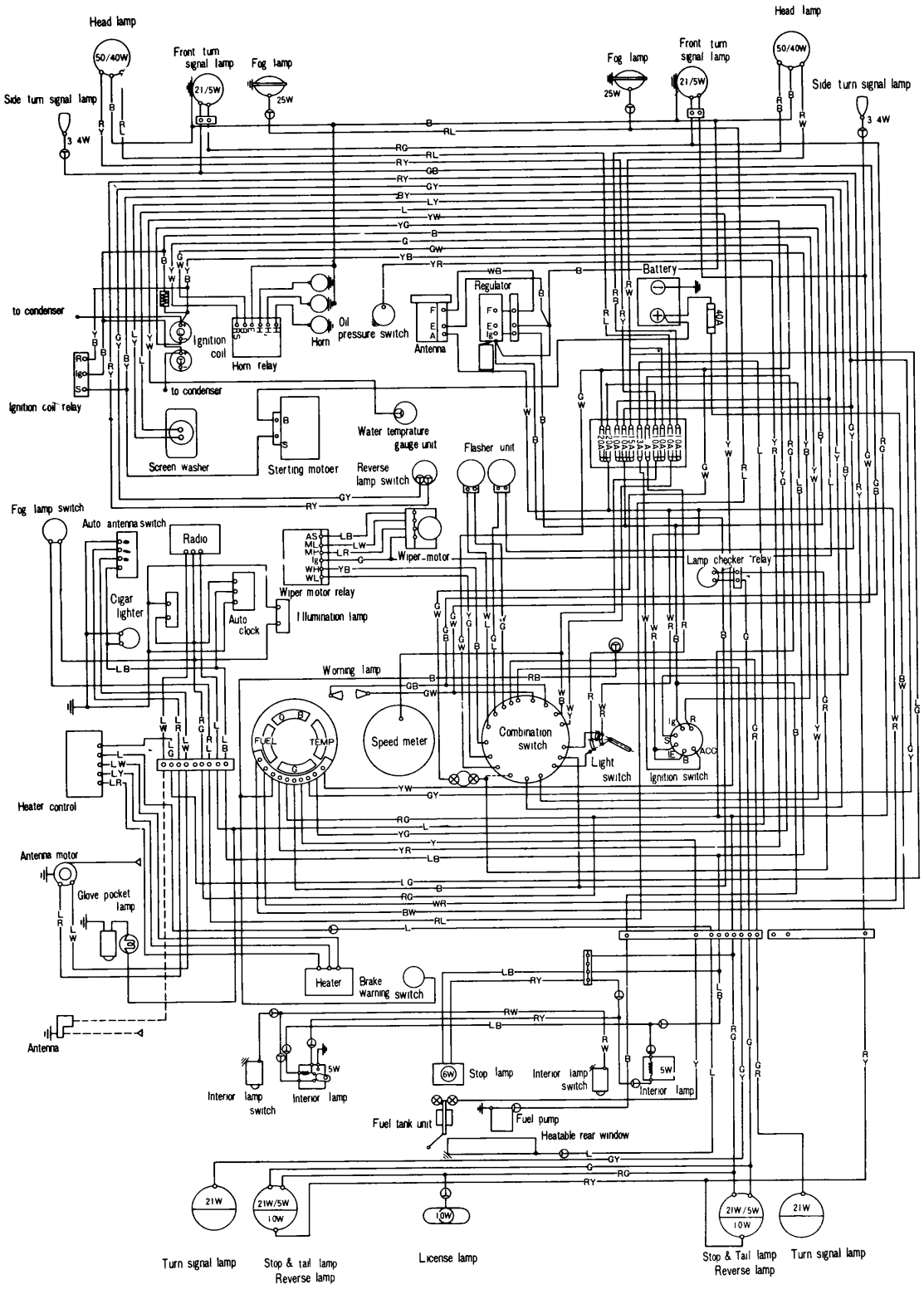

Wiring colour code

R : Red
G : Green
B : Black
L : Blue
Y : Yellow
W : White

Example:

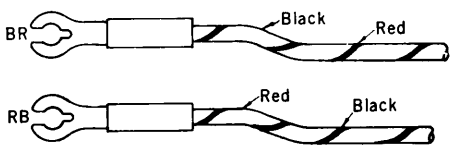

Fig. 5–37 Wiring diagram (coupe super deluxe)

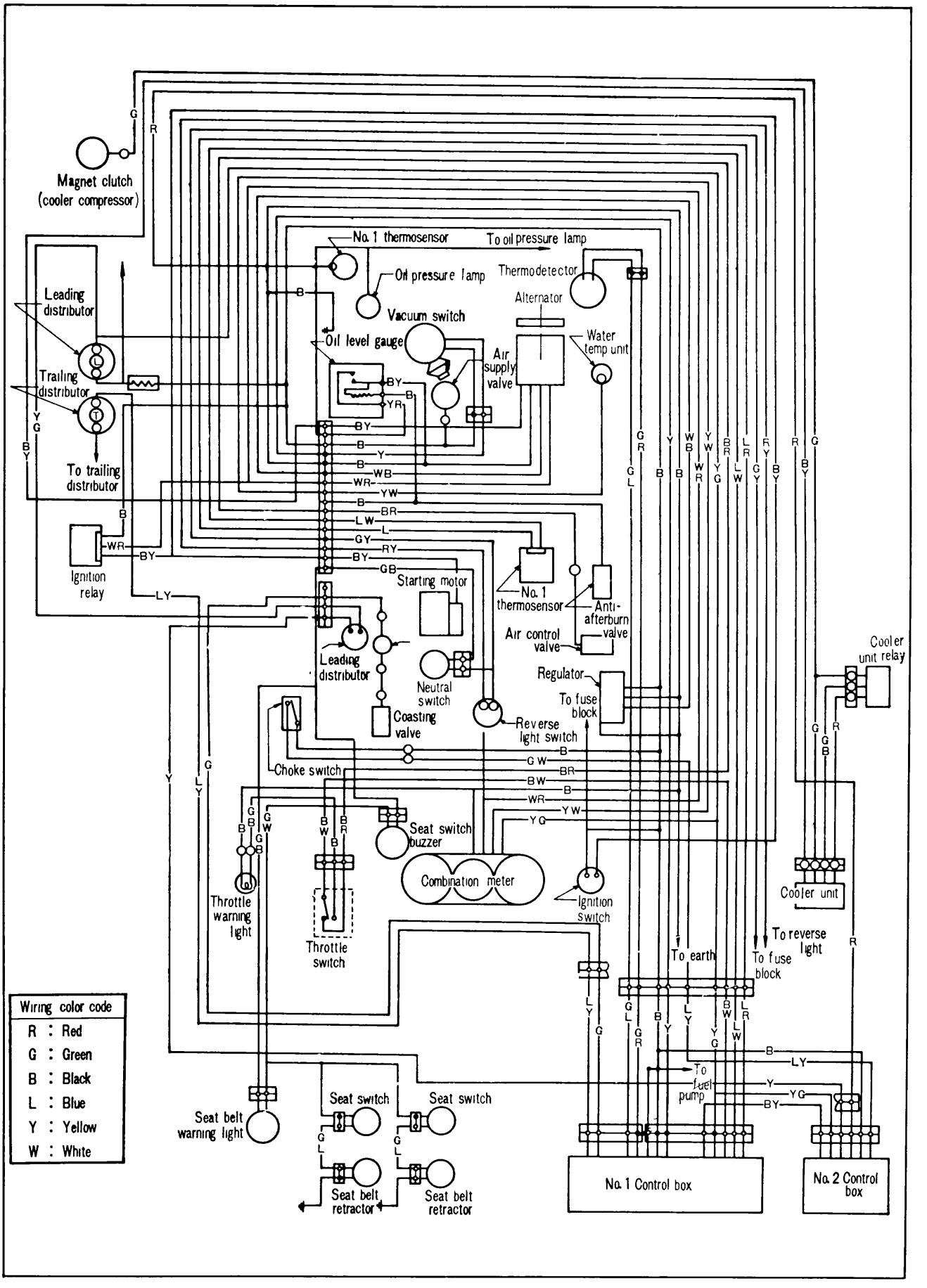

Fig. 1A–87 Wiring diagram

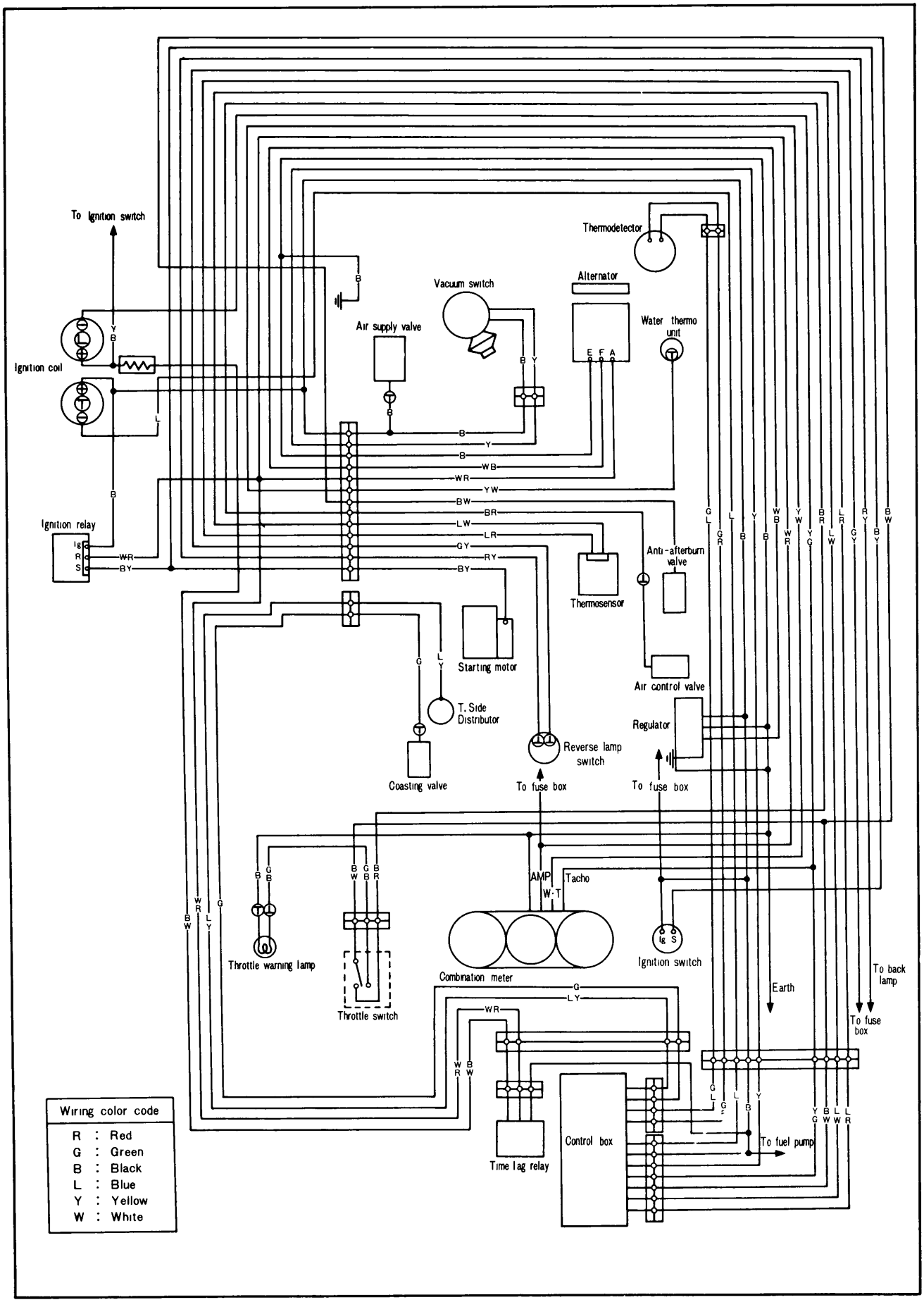

Fig. 1A–70 Wiring diagram

CLUTCH

6–A. CLUTCH PEDAL ADJUSTMENT..... 6 : 1
6–B. RELEASE FORK ADJUSTMENT..... 6 : 1
6–C. CLUTCH REMOVAL..... 6 : 1
6–D. CLUTCH INSPECTION..... 6 : 1
6–D–1. Checking the Release Bearing..... 6 : 1
6–D–2. Checking the Pressure Plate Assembly..... 6 : 1
6–D–3. Checking the Clutch Disk..... 6 : 1
6–D–4. Flywheel Inspection..... 6 : 2
6–D–5. Ring Gear Replacement..... 6 : 2
6–D–6. Inspecting the Needle Roller Bearing and Oil Seal..... 6 : 2
6–E. CLUTCH ASSEMBLY..... 6 : 2
6–F. CLUTCH MASTER CYLINDER..... 6 : 2
6–F–1. Removing the Clutch Master Cylinder..... 6 : 2
6–F–2. Disassembling the Clutch Master Cylinder..... 6 : 3
6–F–3. Checking the Clutch Master Cylinder..... 6 : 3
6–F–4. Assembling the Clutch Master Cylinder..... 6 : 3
6–F–5. Installing the Clutch Master Cylinder..... 6 : 3
6–G. CLUTCH RELEASE CYLINDER..... 6 : 3
6–G–1. Removing the Clutch Release Cylinder..... 6 : 3
6–G–2. Checking the Clutch Release Cylinder..... 6 : 3
6–G–3. Assembling the Clutch Release Cylinder..... 6 : 3
6–G–4. Installing the Clutch Release Cylinder..... 6 : 4
6–H. AIR BLEEDING..... 6 : 4

CLUTCH

The clutch is of the single dry disk type. The clutch assembly consists of the clutch disk assembly, clutch cover and pressure plate assembly, and clutch release mechanism.

The clutch operating mechanism is a hydraulic type.

6–A. CLUTCH PEDAL ADJUSTMENT

The free travel of the clutch pedal should be between 20 to 30 mm (0.8 to 1.2 in). To adjust the free travel, loosen the lock nut and turn the push rod until proper adjustment is made.

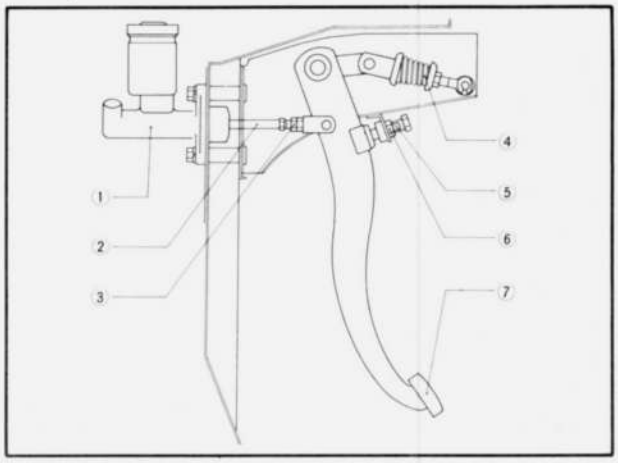

Fig. 6–1 Clutch pedal adjustment

1. Master cylinder
2. Push rod
3. Lock nut
4. Return spring
5. Stopper bolt
6. Lock nut
7. Clutch pedal

6–B. RELEASE FORK ADJUSTMENT

There should always be a safe clearance of 1.5 mm (0.06 in) between the release bearing and the diaphragm spring. This clearance is essential to disengage the release bearing and to prevent unnecessary wear and possible slippage. This clearance is obtained when the free play of the release fork is adjusted to 3.0 mm (0.12 in).

To adjust remove the return spring, loosen the lock nut, and turn the adjusting nut until the correct play is obtained.

After adjusting, securely tighten the lock nut and hook the return spring.

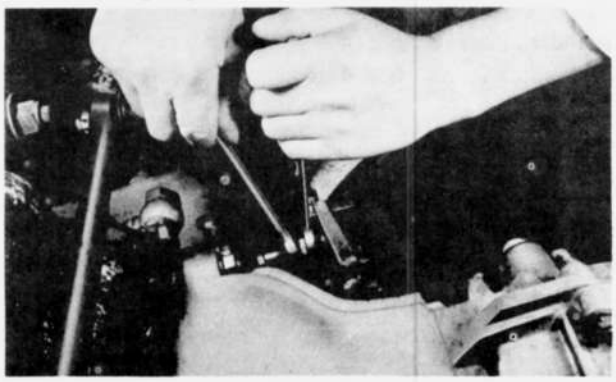

Fig. 6–2

6–C. CLUTCH REMOVAL

To remove the clutch from the vehicle, proceed as follows:

1. Remove the transmission as detailed in Par. 7–A.
2. Install the **ring gear brake** (49 0820 060).
3. Loosen the bolts holding the clutch cover assembly to the flywheel and remove the clutch cover assembly and the clutch disk.
4. Loosen the nut that attaches the flywheel to the eccentric shaft. Remove the flywheel.
5. Remove the return spring for the clutch release bearing and slide off the release bearing.
6. Pull the release fork outward until the retaining spring of the fork releases itself from the pivot pin. Remove the fork from the clutch housing.

6–D. CLUTCH INSPECTION

6–D–1. Checking the Release Bearing

Check the release bearing by turning the bearing race by hand. Replace it if any abnormal noise or roughness is felt when turning.

Examine the front cover of the transmission carefully to be certain there are no burrs on the outer surface of the front cover which pilots the release bearing. Check the release fork for crack or bend.



Fig. 6–3 Release bearing

Note: The release bearing is packed with lubricant which is intended to last the whole life time of the bearing. Therefore, the bearing must not be washed in gasoline or any other solvent.

6–D–2. Checking the Pressure Plate Assembly

Check the contact surfaces of the pressure plate with the clutch facing for wear, damage or warpage.

If it is slight, correct it by lapping with compound or by turning a lathe. But if severe, replace with a new one.

Check the diaphragm spring and cover and if any wear or damage is found, replace the pressure plate assembly.

6–D–3. Checking the Clutch Disk

Inspect the clutch disk for warpage with a dial indicator or a feeler gauge, as shown in Fig. 6–4.

If it is more than 1.0 mm (0.0394 in), replace with a new one.



Fig. 6–4 Checking clutch disk

Replace excessive worn facing as it will cause slippage, or scores the pressure plate and flywheel due to the projected heads of rivets.
If oil is evident on the facing, clean or replace the facing and eliminate the cause of oil leakage.
Make certain that the clutch disk slides easily on the main drive shaft without any excessive play.
If the play exceeds 0.3 mm (0.012 in), replace the clutch disk or the main drive shaft.

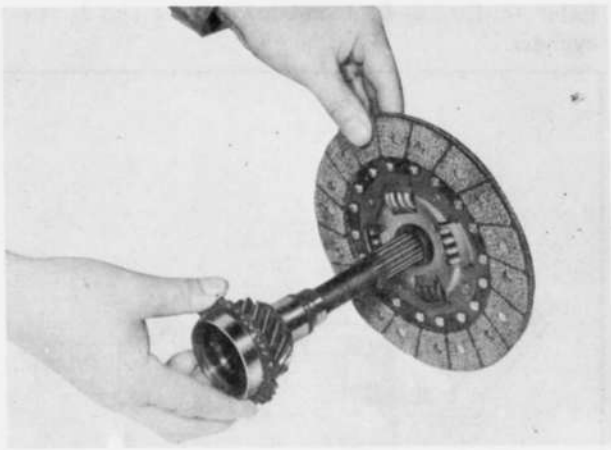

Fig. 6–5 Checking spline fit of clutch disk

6–D–4. Flywheel Inspection

Inspect the contact surface of the flywheel with the clutch facing for burnt surface, scored surface of rivet grooves.
If it is slight, it can be reconditioned by grinding in a lathe. If the damage is deep, the flywheel should be replaced.
Check the ring gear teeth and replace if the ring gear teeth are broken, cracked or seriously burred.

6–D–5. Ring Gear Replacement

1. Heat the old ring gear and remove it from the flywheel.
2. Heat the new ring gear evenly 250 to 300°C (480 to 570°F).
3. Place the ring gear on the cold flywheel, making sure that the chamfer on the teeth is faced to the engine.
4. Allow the ring gear to cool slowly to shrink it onto the flywheel.

6–D–6. Inspecting the Needle Roller Bearing and Oil Seal

Check the needle roller bearing and oil seal at the rear end of the eccentric shaft. Then insert the pilot part of the main drive shaft and check for smooth operation and proper clearance. If the bearing is loosen or runs rough, it should be replaced.
Check for wear and damage of the oil seal lip. If traces of oil leakage are found, replace the oil seal.

6–E. CLUTCH ASSEMBLY

1. Install the flywheel onto the rear end of the eccentric shaft through the key. Place the lockwasher in its place and install the lock nut.
2. Use a **ring gear brake** (49 0820 060) and tighten the lock nut to 45 m-kg (320 ft-lb).
3. Bend the lockwasher to prevent loosening.
4. Hold the clutch disk and pressure plate assembly in mounting position. Then, insert a **clutch disk centering tool** (49 0813 310) through the spline of the disk and into the pilot bearing. If a tool is not available, use a spare main drive shaft.
5. Match the "O" mark on the pressure plate with the reamer hole of the flywheel and fit the securing bolts.

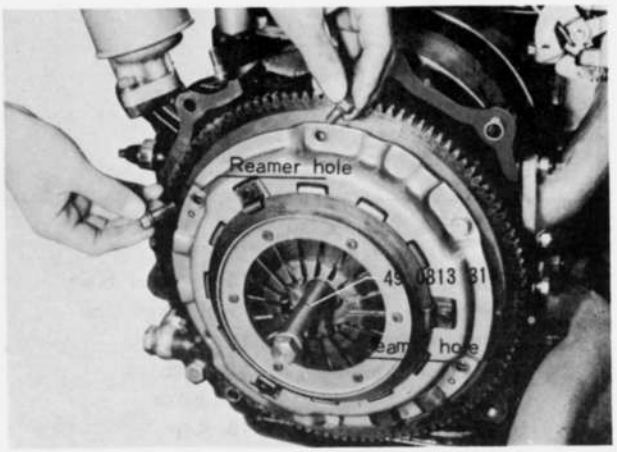

Fig. 6–6 Installing pressure plate assembly

6. Tighten the bolts to 2.0 m-kg (15 ft-lb).
7. Remove the centering tool and ring gear brake.
8. Apply grease to the pivot pin and drive the release fork inward so that the retaining spring of the fork fits to the pivot pin. Install the release bearing and hook the return spring. After installing, check to ensure that the release bearing slides smoothly back and forth on the retainer when operating the release fork.
9. Install the transmission. Care should be taken in order not to bend the clutch disk by allowing the transmission to hang.

6–F. CLUTCH MASTER CYLINDER

6–F–1. Removing the Clutch Master Cylinder

If it becomes necessary to remove the clutch master cylinder for repair or overhaul, proceed as follows:

1. Disconnect the fluid pipe at the clutch master cylinder outlet.
2. Remove the nuts that attach the clutch master cylinder to the dash panel.
3. Pull the clutch master cylinder straight out and away from the dash panel.

6–F–2. Disassembling the Clutch Master Cylinder

The disassembling procedures of the master cylinder after removing are as follows:
1. Clean the outside of the clutch master cylinder thoroughly and drain the brake fluid.
2. Remove the resevoir tank from the cylinder.
3. Remove the dust boot from the cylinder.
4. Remove the piston stop wire with a screwdriver and remove the stop washer.
5. Remove the piston, piston cup and return spring from the cylinder.

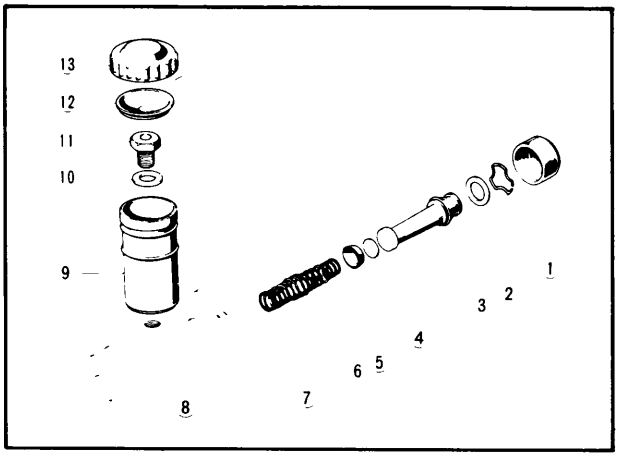

Fig. 6–7 Clutch master cylinder

1. Boot
2. Stop wire
3. Stop washer
4. Piston & 2nd.cup
5. Spacer
6. Primary cup
7. Piston spring
8. Cylinder body
9. Reserve tank
10. Washer
11. Plug
12. Baffle
13. Cap

6–F–3. Checking the Clutch Master Cylinder

1. Wash the parts in clean alcohol or brake fluid. Never use gasoline or kerosene.
2. Check the piston cup and replace if they are damaged, worn, softened or swelled.
3. Examine the cylinder bore and piston for wear, roughness or scoring.
4. Check the clearance between the cylinder bore and the piston. If it is more than 0.15 mm (0.006 in), replace the cylinder or piston.
5. Ensure that the compensating port on the cylinder is open.

6–F–4. Assembling the Clutch Master Cylinder

1. Dip the piston and cups in clean brake fluid.
2. Install the reservoir tank.
3. Insert the return spring into the cylinder.
4. Install the primary piston cup so that the flat side of the cup faces the piston.
5. Fit the secondary cup onto the piston and install them in the cylinder.
6. Install the stop washer and stop wire.
7. Fill reservoir half with brake fluid and operate the piston with a screwdriver until the fluid is ejected at the outlet.
8. Install the dust boot to the cylinder.

6–F–5. Installing the Clutch Master Cylinder

1. Install the clutch master cylinder assembly onto the dash panel and tighten the nuts.
2. Connect the fluid pipe to the cylinder.
3. Fill with brake fluid and bleed the clutch hydraulic system.

6–G. CLUTCH RELEASE CYLINDER

6–G–1. Removing the Clutch Release Cylinder

1. Disconnect the flexible pipe at the clutch release cylinder.
2. Unhook the release fork return spring.
3. Remove the bolts attaching the cylinder to the clutch housing. Remove the release cylinder.

6–G–2. Checking the Clutch Release Cylinder

Refer to Par. 6–F–3 and inspect the clutch release cylinder.

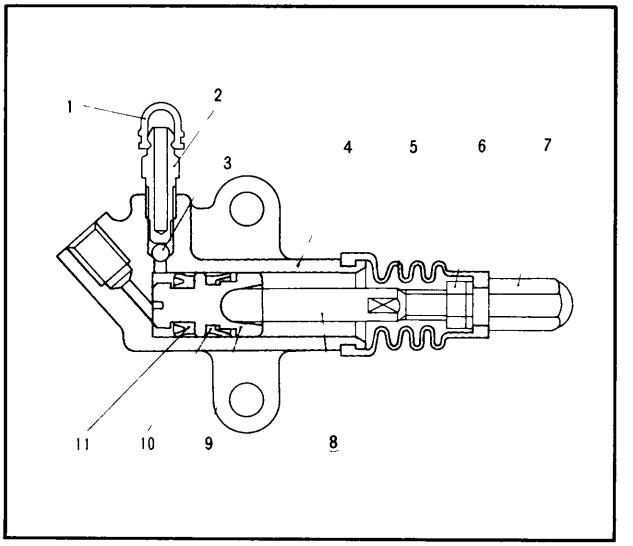

Fig. 6–8 Clutch release cylinder

1. Cap
2. Bleeder valve
3. Steel ball
4. Cylinder body
5. Boot
6. Lock nut
7. Adjust screw
8. Release rod
9. Piston
10. Secondary cup
11. Primary cup

6–G–3. Assembling the Clutch Release Cylinder

1. Fit the cups to the piston and install them in the cylinder.
2. Install the dust boot on the end of the cylinder.
3. Install the steel ball and bleeder into the bleeder hole.
4. Install the clutch release rod.

6–G–4. Installing the Clutch Release Cylinder

1. Install the clutch release cylinder assembly to the clutch housing with two bolts.
2. Connect the flexible pipe.
3. Fill the reservoir of the master cylinder with brake fluid and bleed the system, as described in Par. 6–H.
4. Adjust the free play of the release fork, as described in Par. 6–B.
5. Hook the return spring.

6–H. AIR BLEEDING

The clutch hydraulic system must be bled whenever a fluid line has been disconnected or air enters the system. To bleed the clutch system, remove the rubber cap from the bleeder valve and attach the bleeder tube and fixture of the bleeder screw. Place the end of the tube in a glass jar and submerge in brake pedal and allow it to return slowly. Continue this pumping action and watch the flow of fluid in the jar. When air bubbles cease to appear, close the bleeder valve. During bleeding the reservoir of the master cylinder must be kept filled with fluid at least 3/4 of its capacity. After the bleeding operation, remove the tube, fit the cap on the bleeder valve, fill the reservoir and fit the filler cap.

SPECIAL TOOLS

49 0820 060	Ring gear brake
49 0813 310	Clutch disk centering tool

TRANSMISSION

7–A. TRANSMISSION REMOVAL ..... 7 : 3
7–B. DISASSEMBLING THE TRANSMISSION ..... 7 : 3
7–C. TRANSMISSION INSPECTION ..... 7 : 4
7–C–1. Inspection of Transmission Case ..... 7 : 4
7–C–2. Checking the Bearings ..... 7 : 4
7–C–3. Checking the Gears ..... 7 : 4
7–C–4. Checking the Synchronizer Mechanism ..... 7 : 4
7–C–5. Checking Run-Out of Main Shaft ..... 7 : 5
7–D. ASSEMBLING THE TRANSMISSION ..... 7 : 5
7–D–1. Assembling the transmission ..... 7 : 5
7–D–2. Assembling the Extension ..... 7 : 6
7–D–3. Installing the Extension Assembly ..... 7 : 6
7–D–4. Installing the Clutch Housing ..... 7 : 7
7–E. INSTALLING THE TRANSMISSION ..... 7 : 7

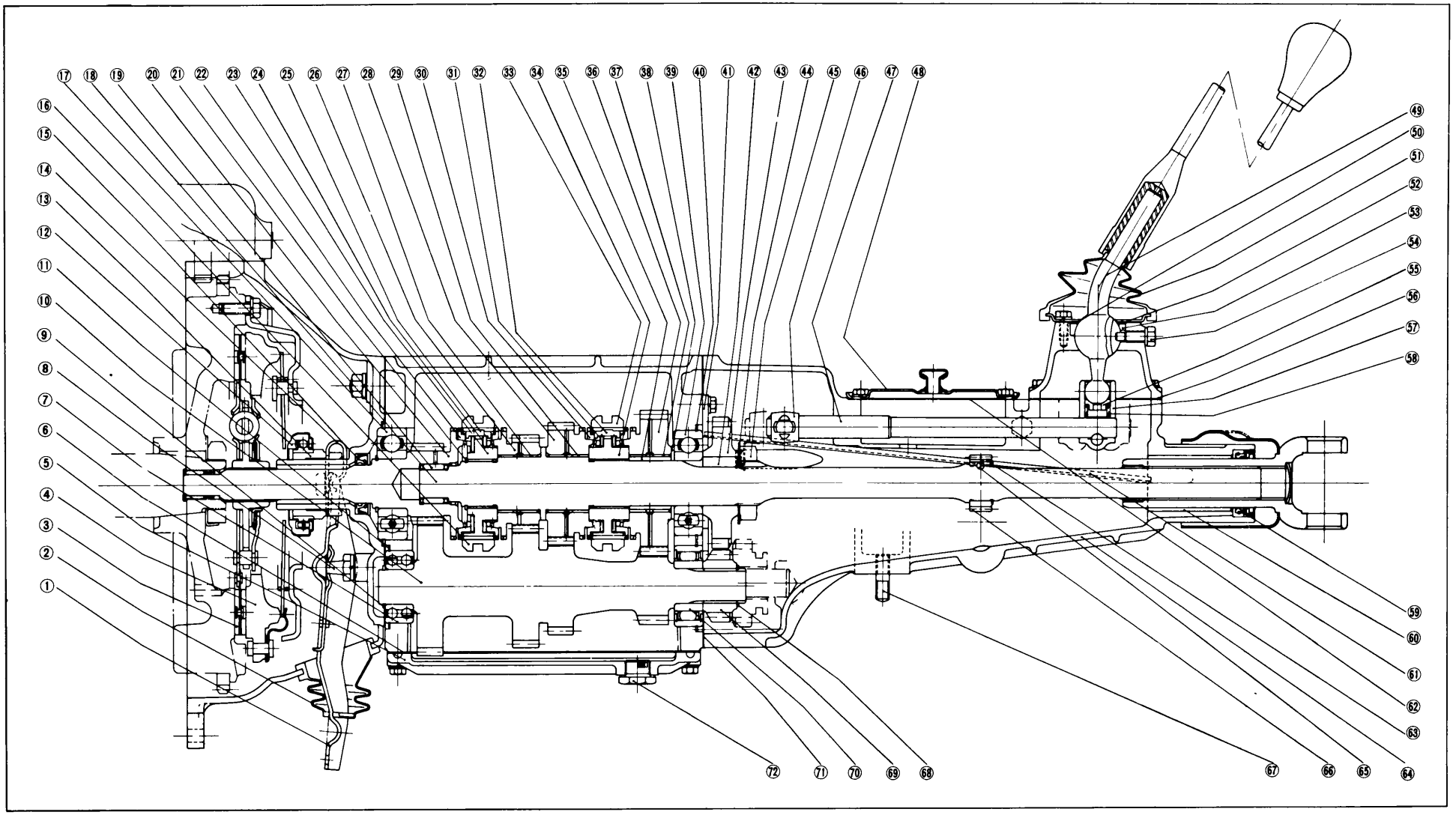

Fig. 7–1 Clutch and Transmission

1. Release Fork
2. Dust Boot
3. Clutch Disk Assembly
4. Pressure Plate Assembly
5. Under Cover
6. Gasket
7 Ball Bearing
8. Pivot Pin
9. Snap Ring
10. Counter Shaft Gear
11. Adjust Shim
12. Clutch Bearing
13. Clutch Release Collar
14. Collar Spring
15 Oil Seal
16 Clutch Hub Sleeve
17. Ball Bearing
18 Main Shaft
19. Needle Bearing
20. Main Drive Gear
21 Snap Ring
22 Sinchronizer Ring
23. 3-4 Clutch Hub
24 Sinchronizer Spring
25 Sinchronizer Key
26. Sinchronizer Ring
27. Bush
28. Second Gear
29 Bush
30. Sinchronizer Ring
31 Sinchronizer Spring
32 Sinchronizer Key
33 Clutch Hub Sleeve
34. 1-2 Clutch Hub
35. Gear Sleeve
36 Low Gear
37 Bush
38 Thrust Washer
39. Ball Bearing
40. Adjust Shim
41 Bearing Stopper
42 Key
43 Reverse
44 Washer
45 Lock Nut
46 Control Lever
47. Control Rod
48 Blind Cover
49 Change Lever
50. Shim
51 Dust Boot
52 Cover Plate
53 Bush
54 Set Screw
55 Spring Seat
56 Gasket
57 Control Rod Gate
58 Spring
59 Oil Seal
60. Bush
61. Oil Pass
62 Gasket
63. Snap Ring
64. Extension Housing
65. Steel Ball
66. Speed Drive Gear
67 Stud
68 Snap Ring
69 Counter Reverse Gear
70. Needle Bearing
71 Gasket
72 Magnet Plug

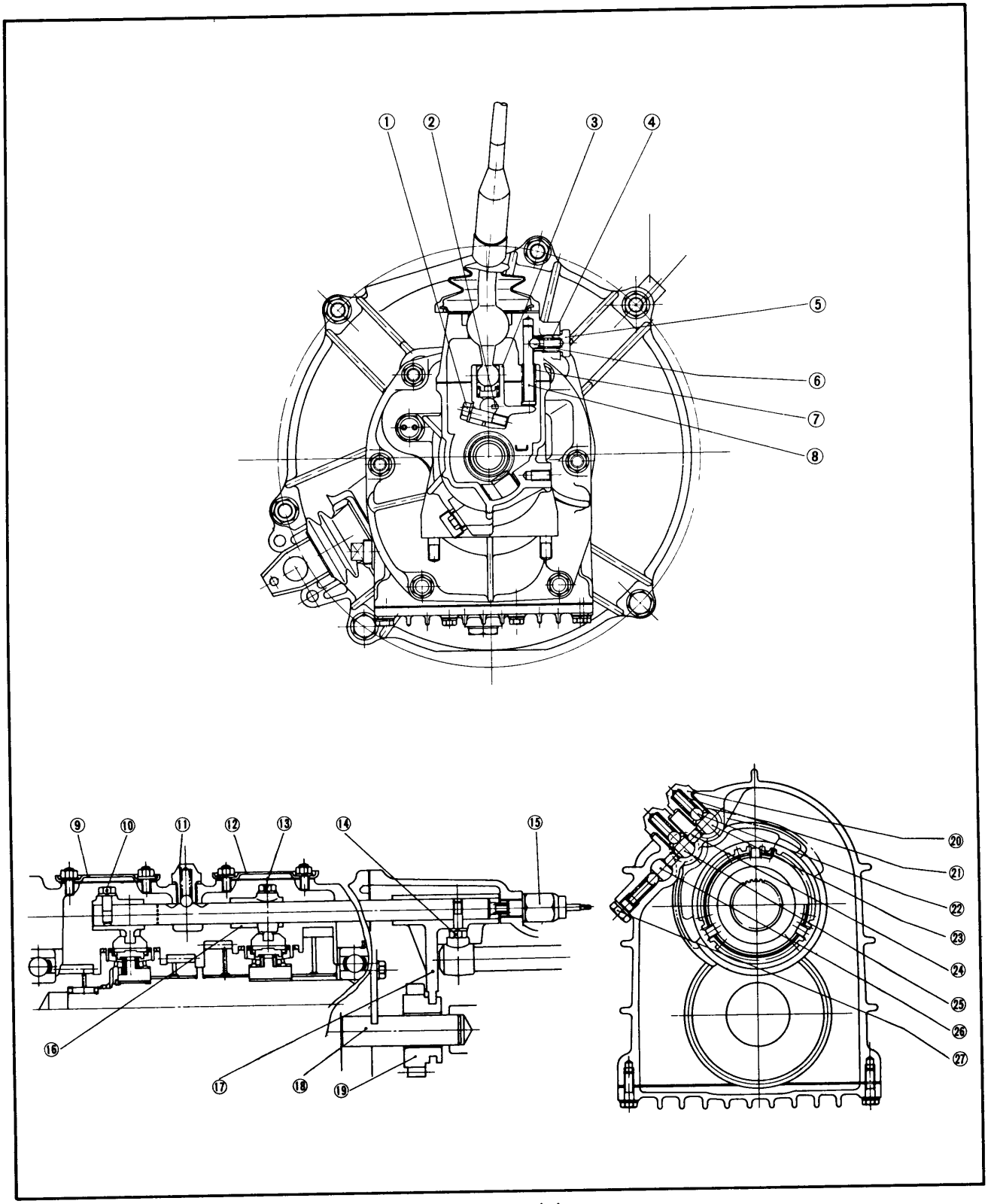

Fig. 7–2 Transmission

1. Reamer Bolt
2. Key
3. Control Lever End
4. Spring
5. Spring Cap
6. Steel Ball
7. Spring
8. Select Lock Spindle
9. Blind Cover
10. Set Screw (3rd top)
11. Spring Cap
12. Blind Cover
13. Set Screw (Low & 2nd)
14. Set Screw (reverse)
15. Reverse Lamp Switch
16. Shift Fork (Low & 2nd)
17. Shift Fork (reverse)
18. Reverse Idle Gear Shaft
19. Reverse Idle Gear
20. Spring Cap
21. Spring
22. Steel Ball
23. Shift Rod (Low & 2nd)
24. Inter Lock Pin
25. Shift Rod (3rd & top)
26. Shift Rod (reverse)
27. Spring Set Plug

TRANSMISSION

RX–2 is equipped with a four-speed manual transmission of the synchromesh type with helical gears to provide silent operation. Gear shifting is of the direct control floor-shift type.

The transmission gear ratio is as follows:

Gear	Gear Ratio
First	3.683
Second	2.263
Third	1.397
Top	1.000
Reverse	3.692

7–A. REMOVING THE TRANSMISSION

When removing only the transmission from the vehicle, proceed as follows:

1. Disconnect the earth wire of the battery.
2. Remove the console assembly and dust boot of the gear shift lever. Loosen the attaching bolts on the cover plate and remove the dust boots, cover plate and bush together with the shift lever from the transmission housing.
3. Disconnect the wirings of the starting motor and the reverse lamp switch and then remove the starting motor.
4. Remove the drain plug and drain the transmission oil. Clean the drain plug and reinstall after draining.
5. Disconnect the speedometer cable from the speedometer driven gear.
6. Remove the release fork return spring. Loosen the nuts and remove the clutch release cylinder with the push rod from the clutch housing.
7. Disconnect the exhaust pipe from the exhaust manifold by loosening the nuts.
8. Disconnect the propeller shaft from the transmission.
9. Support the transmission with a jack and a block of wood and remove the nuts holding the supporter on to the side frame member.
10. Remove the bolts holding the transmission on to the clutch housing.
11. Move the transmission toward the rear so as to remove the main drive shaft from the clutch disk. Lower the jack and remove the transmission from the vehicle.

7–B. DISASSEMBLING THE TRANSMISSION

1. Remove the release bearing, spring and fork.
2. Loosen the bolts attaching the clutch housing to the case and remove the clutch.
3. Remove the change control case from the extension housing.
4; Remove the spring seat and spring from the control lever end.
5. Loosen the nuts attaching the extension housing to the transmission case. Slide the extension housing off through the main shaft, laying down the control lever end to the left as far as it will go.
6. After removing the reamer volt and the friction piece, remove the control lever and the control lever end.
7. Remove the speedometer driven gear from the extension housing by loosening the set screw.

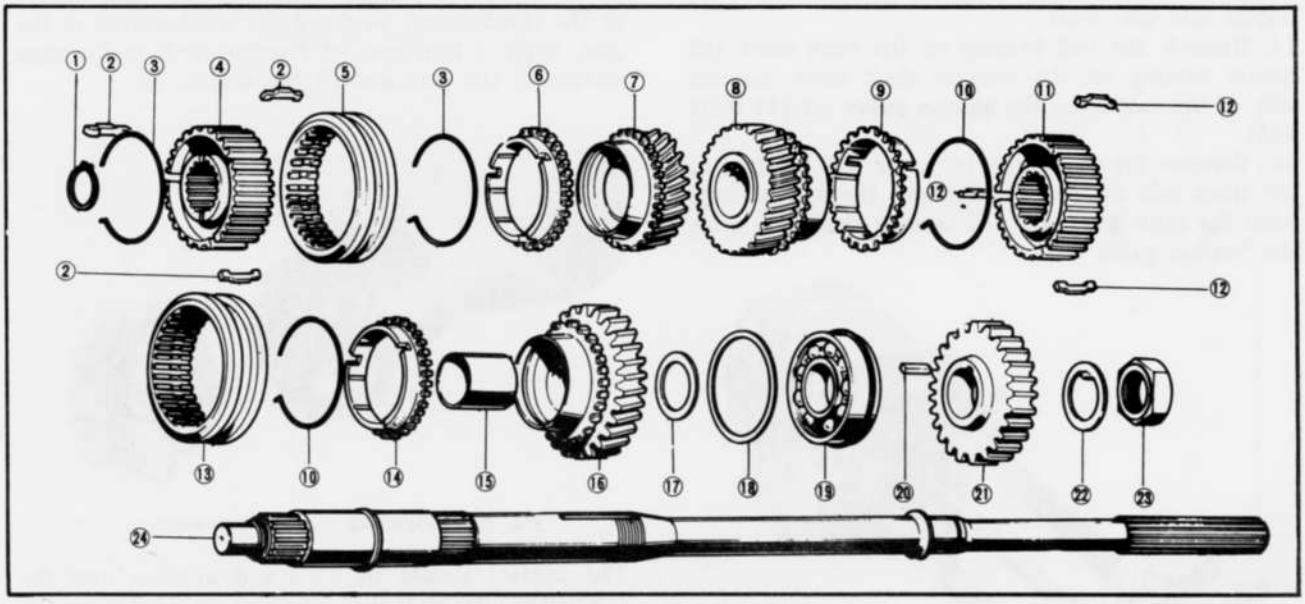

Fig. 7–3 Main shaft assembly

1. Snap ring
2. Key
3. Spring
4. Clutch hub (Low & 2nd)
5. Clutch hub sleeve (Low & 2nd)
6. Synchronizer ring (3rd)
7. Third gear
8. Second gear
9. Synchronizer ring (2nd)
10. Spring
11. Clutch hub (3rd & Top)
12. Key
13. Clutch hub sleeve (3rd & Top)
14. Synchronizer ring (low)
15. Low gear sleeve
16. Low gear
17. Thrust washer
18. Adjust shim
19. Ball bearing
20. Key
21. Reverse gear
22. Lock washer
23. Lock nut
24. Main shaft

8. Remove the under cover and two blind covers.
9. Remove the shift fork rod locking balls and springs, and remove the interlock pins. Loosen the shift fork nuts and remove the shift forks with reverse idle gear from the case.
10. After removing the snap ring on the rear side of the speedometer drive gear, slide the speedometer drive gear off from the main shaft and remove the steel ball.
11. Mount the main shaft assembly on the **main shaft holder** (49 0259 440) as shown in Fig. 7–4 and loosen the reverse gear lock nut, and remove lock nut, lock washer, reverse gear and key.

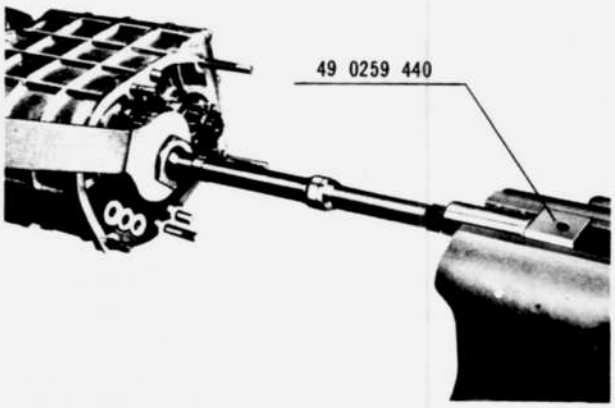

Fig. 7–4 Loosening lock nut

12. Remove the snap ring on the counter shaft gear, and remove the counter reverse gear.
13. Remove the bearing stopper, and then remove the reverse idle gear shaft.
14. Remove the ball bearing on the main shaft and needle bearing on the counter shaft from the rear side of the case using the **bearing puller set** (49 0839 425).
15. Remove the snap rings from the ball bearings of the front side of the case. Remove the ball bearings from the main drive gear and counter shaft gear using the bearing puller

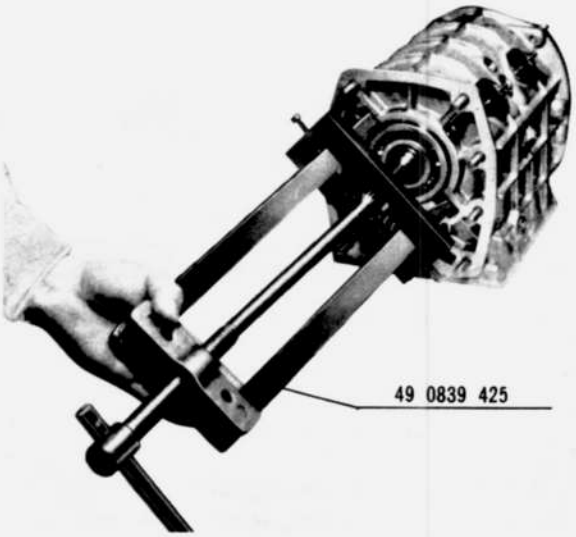

Fig. 7–5 Removing ball bearing

16. Take out counter shaft gear, main drive gear and main shaft assembly from the case.
17. Remove the thrust washer, low gear and sleeve assembly, synchronizer ring, low and second clutch hub assembly, synchronizer ring and the second gear in that order.
18. Remove the snap ring on the front end of the main shaft. Remove the third and top clutch hub assembly, synchronizer ring and third gear.

7–C. INSPECTING THE TRANSMISSION

7–C–1. Inspecting the Transmission Case

Clean the transmission case thoroughly with a suitable solvent, and dry with compressed air. Inspect the case for cracks or any damage.

7–C–2. Checking the Bearings

Inspect each bearing for roughness and excessive wear. They can be determined by slowly turning the outer race by fingers. If excessive wear or roughness is found, replace with new bearing as it will cause the noises.

7–C–3. Checking the Gears

Inspect the teeth of each gear. If excessively worn, broken or chipped, replace with new gears. Excessive wear of the gears causes increase of backlash, which results in producing noises or may cause the gear to work off while running.

7–C–4. Checking the Synchronizer Mechanism

1. To check the contact between the inner surface of the synchronizer ring and the cone surface of the gear, apply a thin coat of Prussian Blue on the cone surface of the gear and fit the ring to it.

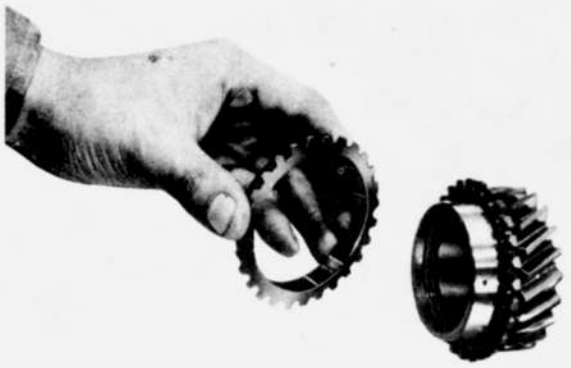

Fig. 7–6 Inspecting synchronizer ring

The contact should be even and uniform over the contacting surface. If the contact is one-sided or spotty, this must be corrected. If the amount of correction is small, this may be done by lapping the surfaces lightly together with compound. If the defects are excessive, replace the synchronizer ring or the gear.
2. Even when the synchronizer ring seats well on the gear cone, if the ring is worn to the extent of no oil grooves remaining on its inside, synchronization can not be obtained.

It is necessary, then, to check the extent of wear of the corn or ring. For this, uniformly fit the ring to the gear corn, and measure clearance (A) between the side faces of the ring teeth and gear teeth with a feeler gauge. The standard clearance is 1.6 mm (0.06 in). If the clearance is less than 0.8 mm (0.031 in), it is an indication of excessive wear of the corn or the internal surface of the ring. In such cases, check the corn and ring and replace the defective part with a new one.

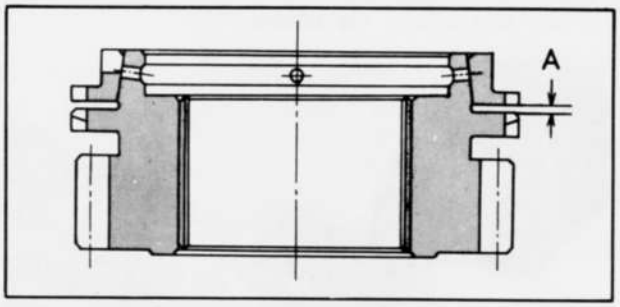

Fig. 7–7

3. Check the synchronizer key, the inner surface of the clutch sleeve, and the key groove on the clutch hub for wear. If wear is excessive, it will cause difficulties in maintaining the neutral position of the clutch sleeve or will cause inferior functioning of the synchronizer ring and make shifting difficult.
4. Check the key spring tension. Decrease tension or damaged key springs will result in uneven pressure against the three keys and will cause improper functioning of the keys and inferior synchronization.

5–C–5. Checking the Run-Out of Main Shaft

Check the run-out on the main shaft and if the deflection is excessive, correct it by using a press. The standard reading on the dial indicator for run-out should be less than 0.03 mm (0.0012 in).

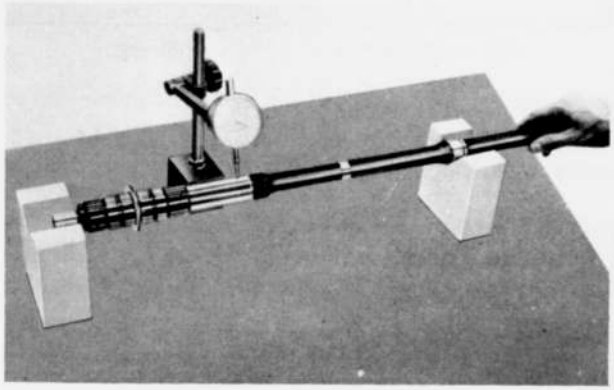

Fig. 7–8 Checking run-out of main shaft

7–D. ASSEMBLING THE TRANSMISSION

7–D–1. Assembling the Transmission Case

1. Assemble the low-and-second clutch hub and sleeve, and third-and-top clutch hub and sleeve.
2. Install the second gear, synchronizer ring, low-and-second clutch hub assembly, synchronizer ring, low gear sleeve, low gear and thrust washer, in that order, onto the main shaft from the rear side.
3. Install the third gear, synchronizer ring and third-and-top clutch hub assembly onto the front side of the main shaft, and fit the snap ring on the groove.
4. Install the needle roller bearing and synchronizer ring to the main drive shaft.
5. Place the main drive gear assembly and main shaft assembly into the transmission case temporarily without ball bearings.

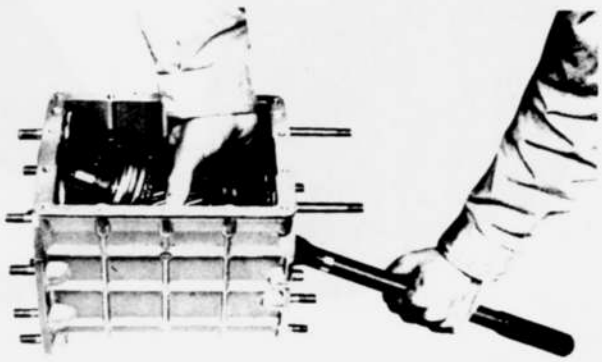

Fig. 7–9 Placing main shaft assembly

6. Put the low-and-second shaft fork and third-and-top one on the respective groove of the clutch sleeve.

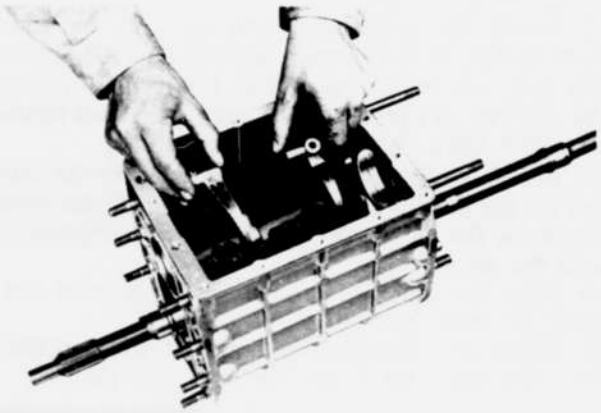

Fig. 7–10 Fitting shaft forks

7. Place the counter shaft gear in the case.

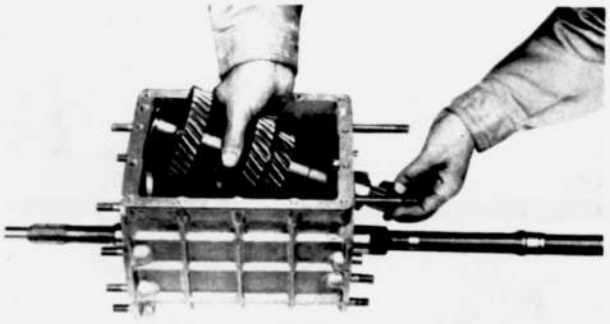

Fig. 7–11 Placing counter shaft gear

8. Install the needle roller bearing of the counter shaft to the rear side, and install the roller bearing of the counter shaft with proper size of adjust shim to the front side and fit the snap ring.
9. Install the roller bearings with proper size of shims to the main drive shaft and main shaft, and fit the snap ring on the main drive shaft.

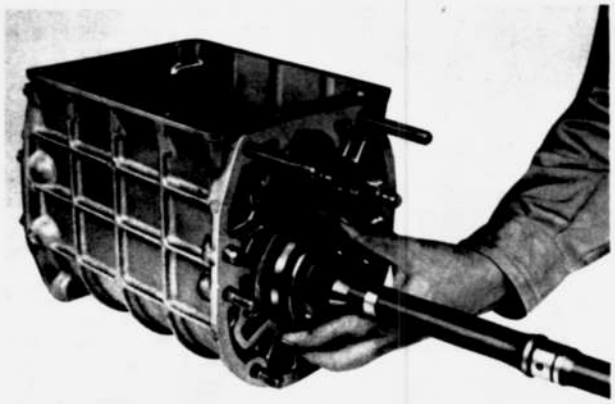

Fig. 7–12 Installing ball bearing

10. Install the reverse gear and snap ring to the counter shaft.
11. Fit the bearing stopper and reverse idle gear shaft to the case. Tighten the bolts of the bearing stopper to 1.0 m-kg (7 ft-lb).
12. Install the reverse gear with key onto the main shaft. Install the lock washer and lock nut, and tighten the lock nut to 23 m-kg (170 ft-lb) while holding the rear end of the main shaft with **main shaft holder** (49 0259 440). Then bent the lock washer.
13. Install the low-and-second shift rod into the case and set the low-and-second shift fork, which has been placed on the groove of the clutch hub temporarily, with the set screw.
14. Place the shift rod on the neutral position and insert the inter lock pin.
15. Install the third-and-top shift rod and set shift fork with set screw. Insert the inter lock pin.

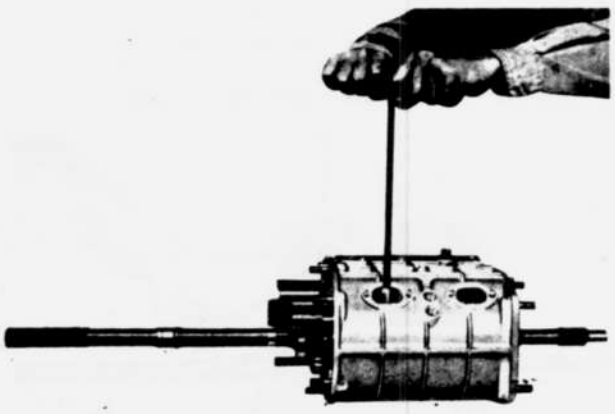

Fig. 7–13 Securing shift fork

16. Install the reverse shift rod with the reverse idle gear.
17. Put the shift locking ball and spring to the groove of each shift rod and install the spring caps.
18. Install the under cover and two blind covers.
19. Install the speedometer drive gear with locking ball onto the main shaft and secure it with a snap ring.

7–D–2. Assembling the Extension

1. Install the oil seal to the rear side of the extension by using suitable tool.
2. Insert the control rod, install the control lever end with key and tighten the reamer bolts.

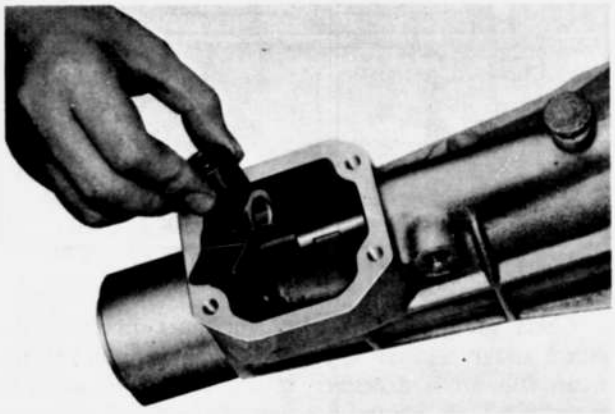

Fig. 7–14 Installing control lever end

3. Fit the friction piece and the spring to the extension and install the spring cap.

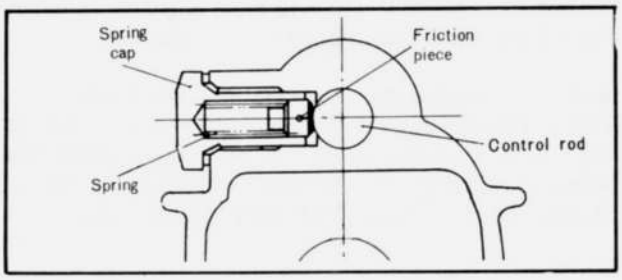

Fig. 7–15 Friction piece of control rod

4. Install the reverse lamp switch.
5. Install the speedometer driven gear assembly and secure with the lock plate.

7–D–3. Installing the Extension Assembly

1. Place the gasket on the rear side of the transmission case and install the extension assembly to the

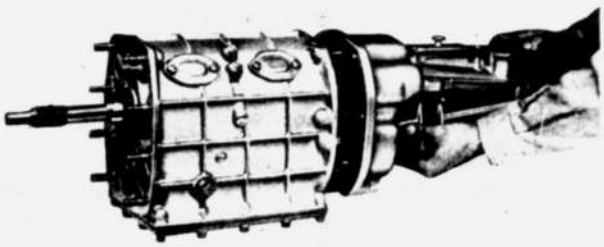

Fig. 7–16 Installing extension

transmission case, laying down the control lever end to the left as far as it will go. Tighten the nuts and confirm that the control rod operates properly.
2. Insert the select lock spindle and return spring. Install the locking ball and the spring in alignment with the spindle groove and fit the spring cap. Install the set screw to the control case.

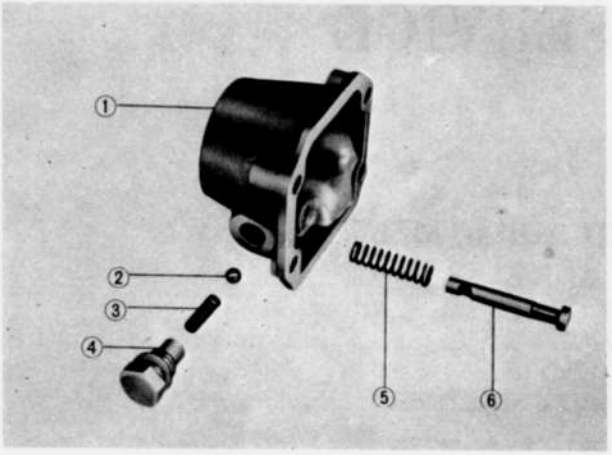

Fig. 7–17 Control case

1. Control case
2. Locking ball
3. Spring
4. Spring cap
5. Spring
6. Select lock spindle

3. Insert the spring and seat into the control lever end and install the control case assembly to the extension together with the gasket.

7–D–4. Installing the Clutch Housing

1. Place the gasket on the front surface of the transmission case. Install the clutch housing, being careful not to damage the oil seal.
2. Install the release bearing, spring and fork.

7–E. INSTALLING THE TRANSMISSION

1. Shift the trnasmission into top gear. Support the transmission with a jack and a block of wood and move it under the vehicle.
2. Lower the rear end of the trnasmission and align the centers of the main drive shaft and the clutch disk by raising the jack.
3. Move the trnasmission forward until the spline on the main drive shaft contacts the spline on the clutch disk. Align the splines properly by turning the **main shaft holder** (49 0259 440) and after aligning the knock pin, mount the transmission to the engine body.
Tighten the bolts. Secure the earth wire with bolt.
4. Raise the jack and install the transmission supporter to the side frame member. Tighten the nuts.
5. Remove the jack and connect the propeller shaft to the transmission.
6. Install the exhaust pipe to the manifold.
7. Connect the speedometer cable to the speedometer driven gear assembly.
8. Install the release cylinder to the clutch housing and the return spring. If necessary, adjust the free play on the release fork. (See Par. 6–B)
9. Move the lever end from top gear to neutral. Align the groove on the spherical surface of the shift lever with the set screw on the control case and insert the tip of the shift lever into the control lever end. Then, fit the bush into the control case. Install the cover plate with the packing and tighten the bolts. The operation of the shift lever may be adjusted by inserting adjust shims on the 3 bolts between the cover plate and the packing. The standard force of the shift lever at the knob is 2.0 ~ 4.0 kg (4.4 ~ 8.8 lb). Install the dust boots to the case. After installing the starting motor, connect the wirings of the starting motor and reverse lamp switch.
10. Supply the transmission with the proper amount of transmission oil though the dipstick gauge inlet. The following transmission oils are available:
SAE EP 80 Below −18°C (0°F)
SAE EP 90 Above −18°C (0°F)
11. Connect the earth wire to the battery.

SPECIAL TOOLS

49 0259 440	Main shaft holder
49 0839 425	Bearing puller set

AUTOMATIC TRANSMISSION

MODEL 3N71B (JATCO)

HOW TO SERVICE

Page

1. TROUBLE DIAGNOSIS AND ADJUSTMENT 45
   1-A. ITEMS TO CHECK AND ADJUST 45
      1-A-1. TORQUE CONVERTER OIL 45
      1-A-2. ENGINE IDLING SPEED 46
      1-A-3. KICK-DOWN SWITCH AND DOWNSHIFT SOLENOID 46
      1-A-4. MANUAL LINKAGE 46
      1-A-5. INHIBITOR SWITCH 46
   1-B. DIAGNOSTIC TEST ITEMS 47
      1-B-1. STALL TEST 47
      1-B-2. ROAD TEST 48
      1-B-3. OIL PRESSURE TEST 50
   1-C. TROUBLE DIAGNOSIS CHART 52
      1-C-1. ITEM TO CHECK 52
      1-C-2. TROUBLE DIAGNOSIS CHART 52
2. REMOVAL OF TRANSMISSION 54
3. DISASSEMBLY OF TRANSMISSION COMPLETE 55
4. OVERHAUL OF MAIN COMPONENT 56
   4-A. TORQUE CONVERTER 56
   4-B. FRONT CLUTCH ASSEMBLY 56
   4-C. REAR CLUTCH ASSEMBLY 57
   4-D. LOW & REVERSE BRAKE ASSEMBLY 58
   4-E. BAND SERVO 59
   4-F. GOVERNOR VALVE ASSEMBLY 60
   4-G. OIL PUMP 61
   4-H. CONTROL VALVE ASSEMBLY 62
   4-I. BEARING AND BEARING RACE 63
   4-J. OTHER COMPONENT PARTS 63
5. REASSEMBLY OF TRANSMISSION 64
6. INSTALLATION AND ADJUSTMENT OF TRANSMISSION 66

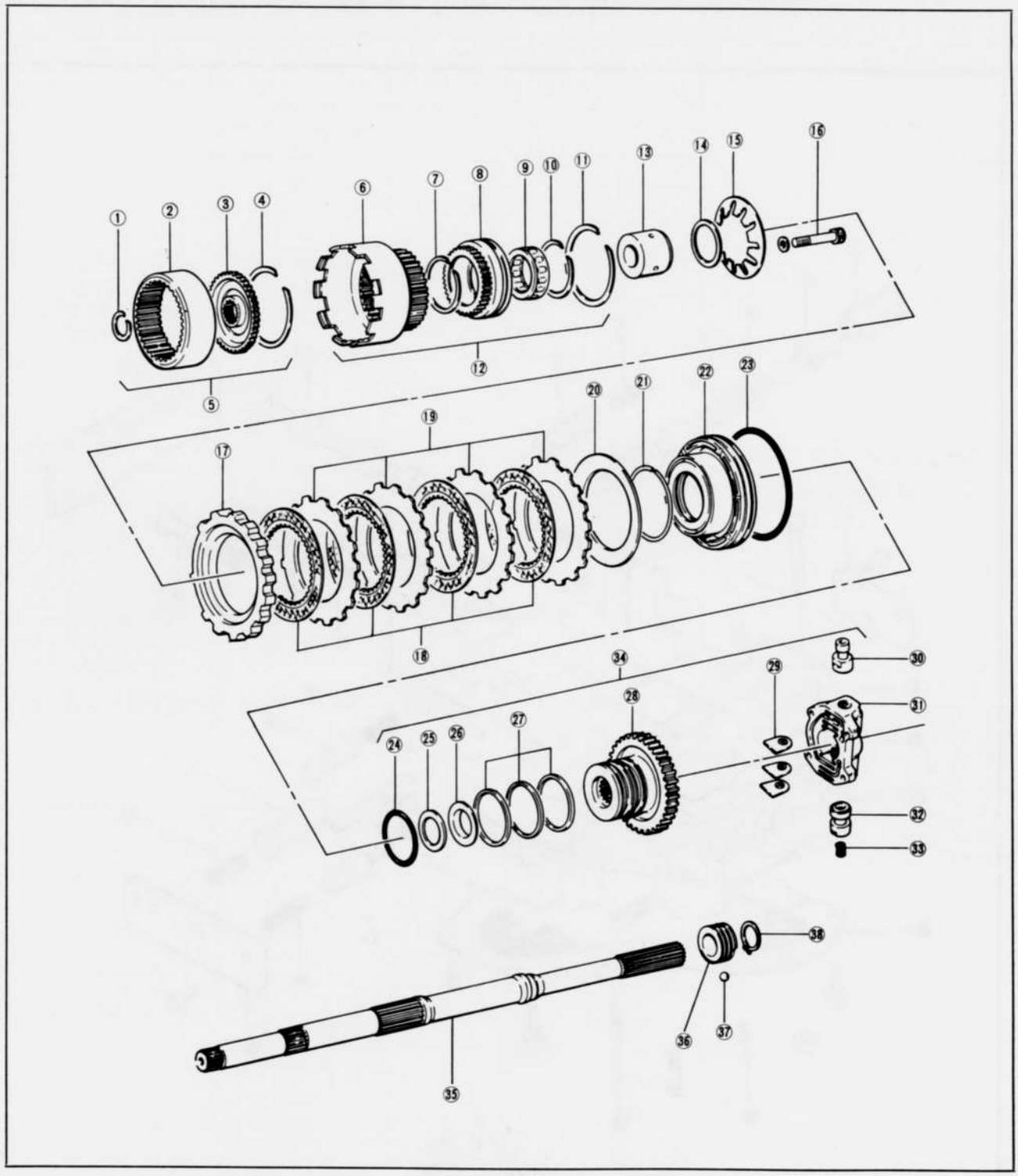

Fig. 1-3 Automatic transmission component (3)

1. Snap ring
2. Flange
3. Drive flange
4. Snap ring
5. Drive flange assembly
6. Drum
7. Snap ring
8. Outer race
9. One-way clutch
10. Snap ring
11. Snap ring
12. Connecting drum assembly
13. Inner race
14. Snap ring
15. Piston return spring
16. Bolt
17. Retaining plate
18. Friction plate
19. Steel plate
20. Dished plate
21. Spring ring
22. Low & reverse brake piston
23. Piston seal
24. Seal ring
25. Needle bearing
26. Bearing race
27. Seal ring
28. Oil distributor
29. Retainer plate
30. Secondary governor valve
31. Governor valve body
32. Primary governor valve
33. Governor valve spring
34. Oil distributor assembly
35. Output shaft
36. Speedometer drive gear
37. Steel ball
38. Snap ring

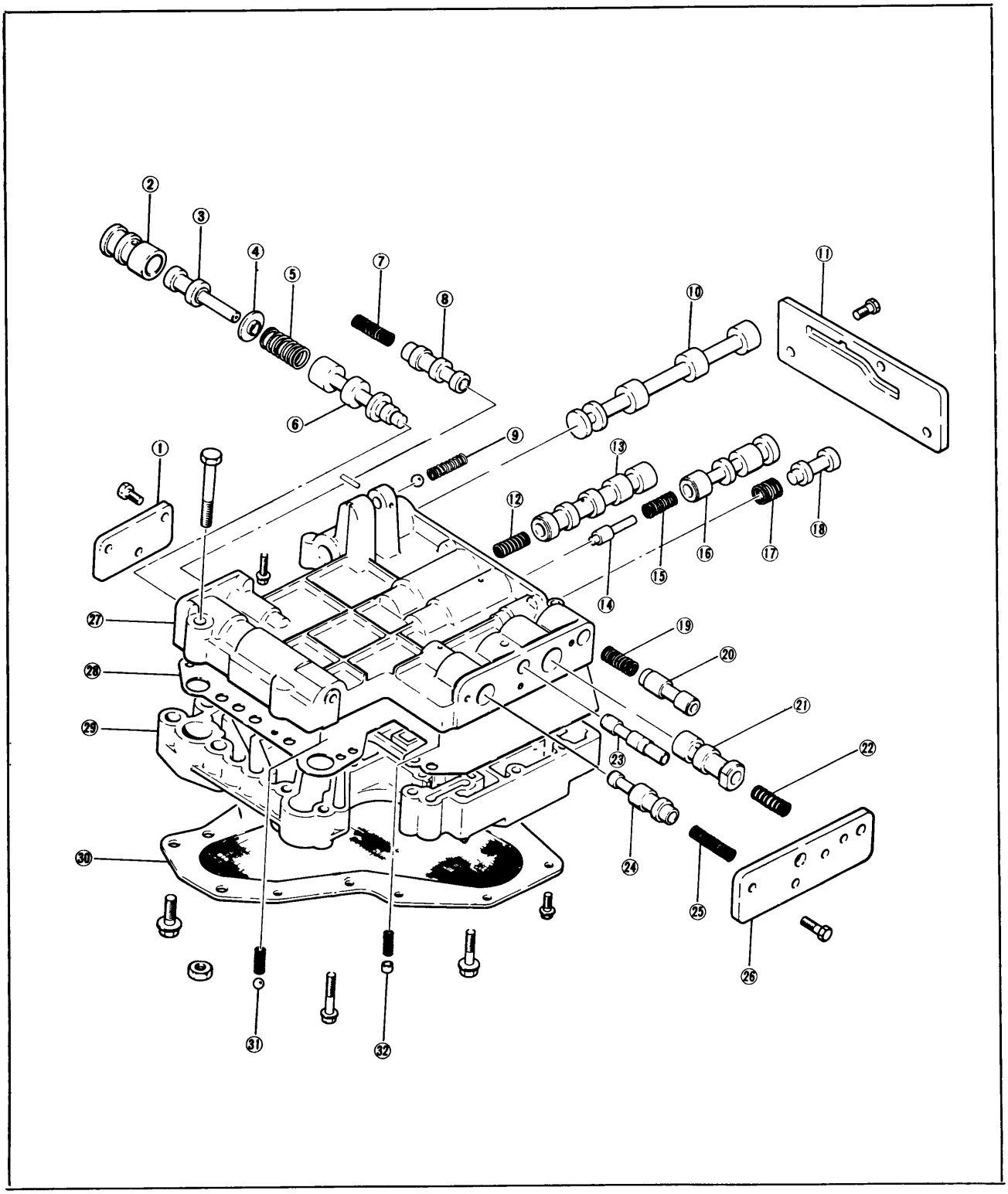

Fig. 1-4 Automatic transmission component (4)

1. Side plate "D"
2. Plug sleeve
3. Pressure regulator plug
4. Spring seat
5. Pressure regulator spring
6. Pressure regulator valve
7. Second lock spring
8. Second lock valve
9. Manual plate spring and ball
10. Manual valve
11. Side plate "A"
12. 1st-2nd shift spring
13. 1st-2nd shift valve
14. 2nd-3rd shift plug
15. 2nd-3rd shift spring
16. 2nd-3rd shift valve
17. Pressure modifier spring
18. Pressure modifier valve
19. Solenoid downshift spring
20. Solenoid downshift valve
21. Throttle back-up valve
22. Throttle back-up spring
23. Vacuum throttle valve
24. 2-3 timing valve
25. 2-3 timing spring
26. Side plate "B"
27. Control valve body
28. Separator plate
29. Lower valve body
30. Oil strainer
31. Relief ball and spring
32. Orifice check valve and spring

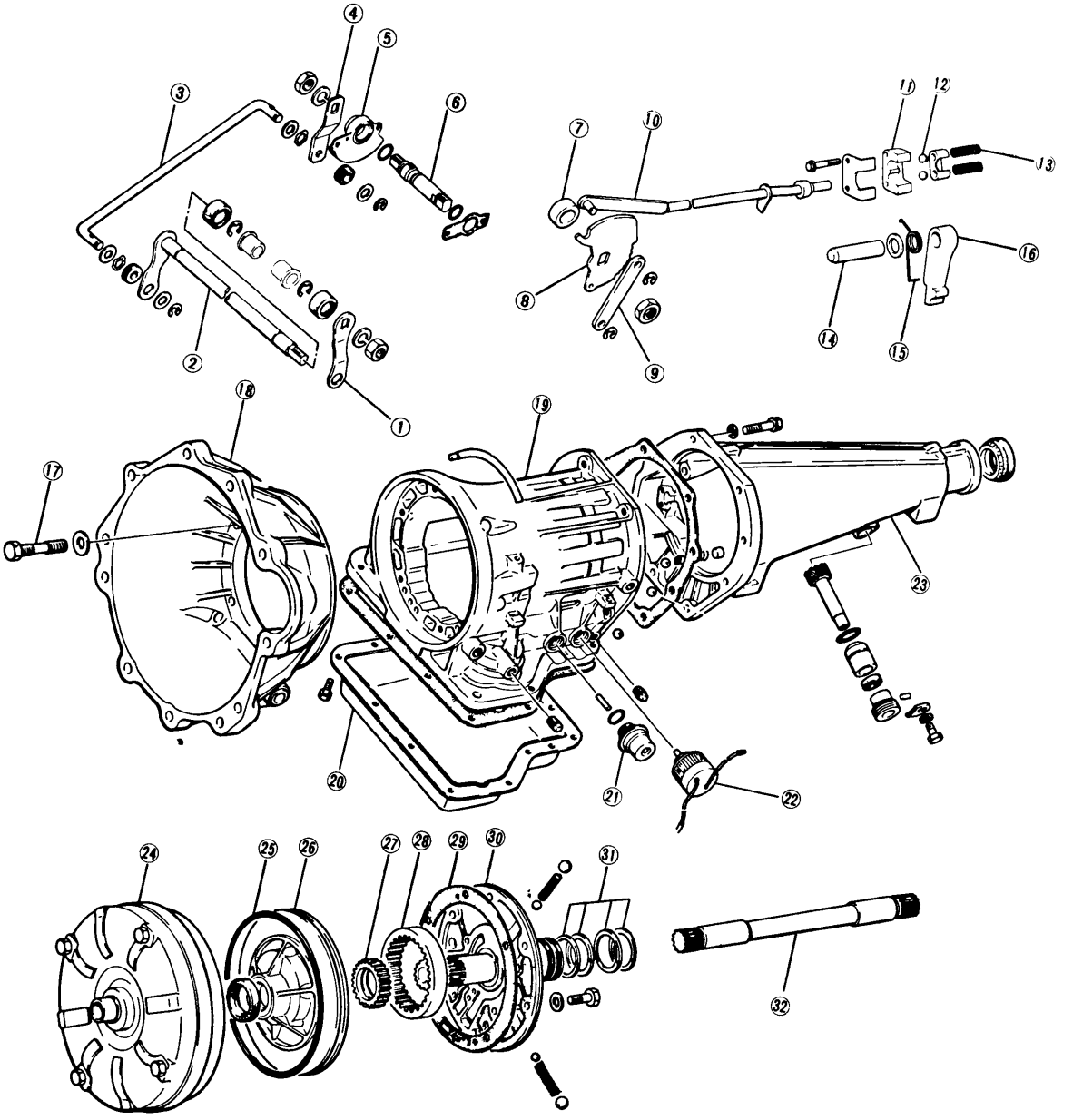

Fig. 1-1 Automatic transmission component (1)

1. Lever
2. Counter shaft assembly
3. Rod
4. Select lever
5. Inhibitor switch
6. Manual shaft
7. Manual washer
8. Manual plate assembly
9. Parking lever
10. Parking rod assembly
11. Actuator support
12. Steel ball
13. Parking ball spring
14. Parking pawl shaft
15. Pawl return spring
16. Parking pawl
17. Bolt
18. Torque converter housing
19. Transmission case
20. Oil pan
21. Vacuum diaphragm
22. Downshift solenoid
23. Extension housing assembly
24. Torque converter
25. Seal ring
26. Pump housing assembly
27. Inner gear
28. Outer gear
29. Gasket
30. Pump cover assembly
31. Seal ring
32. Input shaft

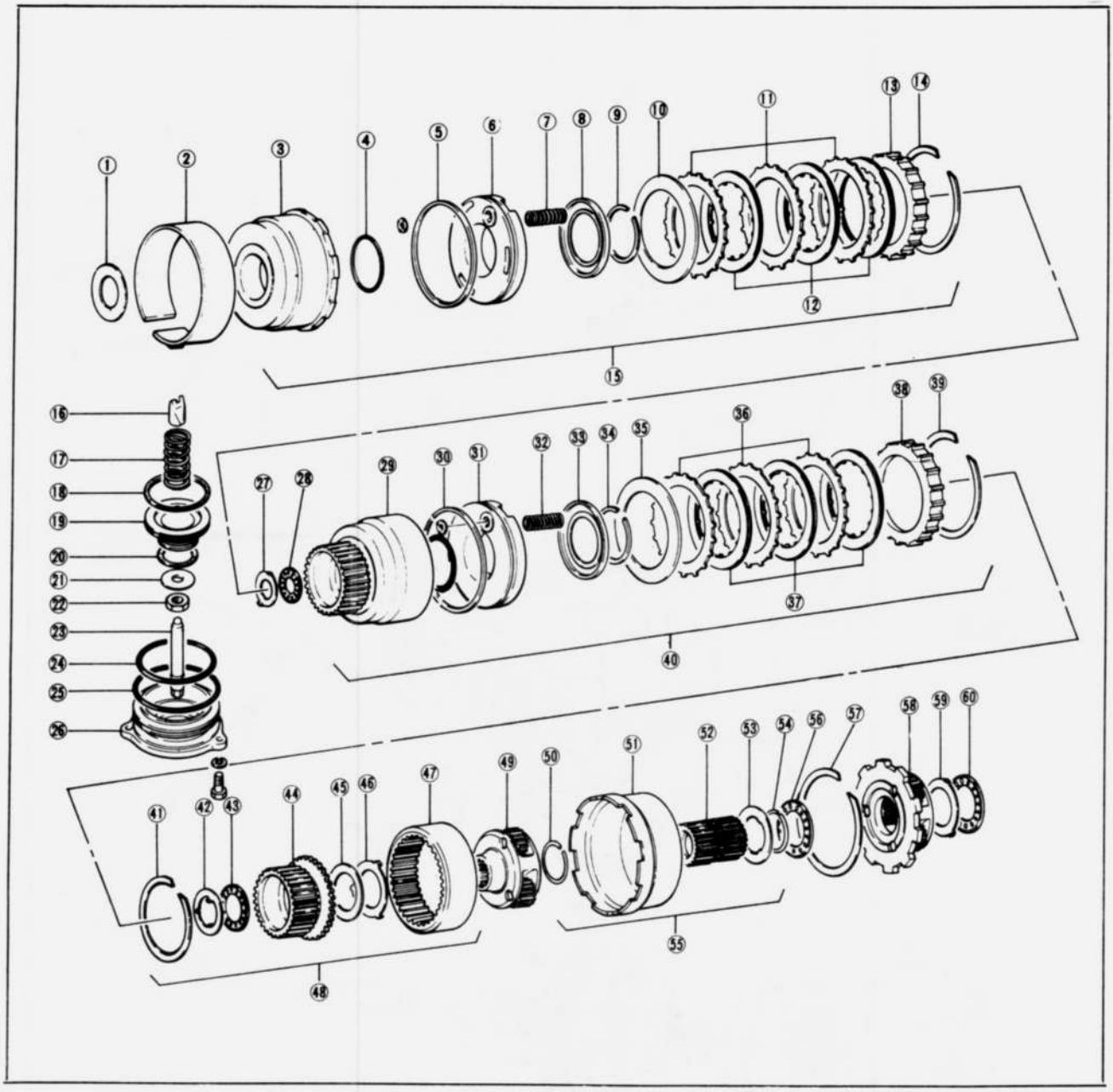

Fig. 1-2 Autonatic transmission component (2)

1. Adjusting washer
2. Brake band
3. Front clutch drum assembly
4. Seal ring
5. Seal ring
6. Front clutch piston
7. Return spring
8. Spring retainer
9. Snap ring
10. Dished plate
11. Outer plate
12. Inner plate
13. Retaining plate
14. Snap ring
15. Front clutch assembly
16. Band strut
17. Piston return spring
18. Piston seal
19. Servo piston
20. Piston seal
21. Washer
22. Band adjust nut
23. Piston stem
24. Seal ring
25. Seal ring
26. servo retainer
27. Bearing race
28. Needle bearing
29. Rear clutch drum
30. Seal ring
31. Rear clutch piston
32. Return spring
33. Spring retainer
34. Snap ring
35. Dished plate
36. Outer plate
37. Inner plate
38. Retaining plate
39. Snap ring
40. Rear clutch assembly
41. Snap ring
42. Bearing race
43. Needle bearing
44. Rear clutch hub
45. Needle bearing
46. Bearing race
47. Internal gear
48. Rear clutch hub assembly
49. Front planet carrier assembly
50. Snap ring
51. Connecting shell
52. Sun gear
53. Bearing race
54. Snap ring
55. Shell & sun gear assembly
56. Needle bearing
57. Snap ring
58. Rear planet carrier assembly
59. Bearing race
60. Needle bearing

1. TROUBLE DIAGNOSIS AND ADJUSTMENT

In trouble-shooting an automatic transmission it is necessary first of all to correctly define a faulty phenomenon, and then make efficient and orderly check to determine possible causes so that a proper remedy can be effected.

To grasp a faulty phenomenon, check whether the automatic transmission functions normally in all aspects under all conditions including starting, running and stopping. Find out a corresponding trouble from among the troubles in the TROUBLE DIAGNOSIS CHART, and check "Items to Check" in the sequence as indicated.

In diagnosing according to the TROUDLE DIAGNOSIS CHART, make sure to first check and adjust the following items (described in 1-A):

(1)—oil level, (2)—idling speed, (3)—down-shift solenoid and kickdown switch, (4)—manual linkage and (5)—inhibitor switch

It is meaningless to proceed to check other items without checking the above items carefully.

In the case of the automatic transmission particularly, there are a great number of troubles which can be solved by inspecting and regulating the above items with the transmission mounted on the vehicle. So do not remove or disassemble the transmission without checking such items first.

Also there are some troubles which require further detailed diagnostic tests including stall test, road test and hydraulic pressure test before removing the transmission from the vehicle. Such tests are described in 1-B.

If a trouble should prove not correctable by inspection, adjustments and repairs made according to TROUBLE DIAGNOSIS CHART with the transmission installed, that is, if removal and overhauling are indicated by diagnosis, only then, the transmission should be removed and overhauled in the procedure mentioned later.

1-A. ITEMS TO CHECK AND ADJUST

1-A-1. TORQUE CONVERTER OIL

a. Oil level check

Put the vehicle on a level surface and move the manual shift lever through all driving ranges applying brake with the engine idling condition. Then place the lever in "N" or "P". Insert the dipstick fully and take it out quickly before splashing oil adheres to the gauge, and then observe the level on the cold side of the dipstick when the engine is cold or on the hot side when the engine is hot. Be sure to check on the dipstick in either case with the engine idling. The oil level must be somewhere between L and F marks and never be outside the limits.

The engine is said to be cold when the oil temperature is on the order of 40°C (104°F) which is reached by approximately two minutes of idling at 1,200 rpm after engine is started, and it is said to be hot when the oil temperature is on the order of 80°C (176°F) which is attained by running the vehicle for about 8 km (5 miles) after engine is started.

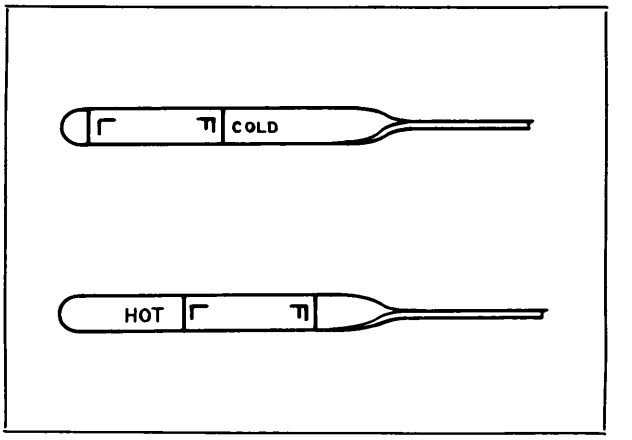

Fig. 2-1 Dipstick gauge

Note: 1. The recommended oil is Genuine Automatic Transmission Fluid Dexron or Automatic Transmission Fluid Dexron of any make. Do not mix with other type of automatic transmission fluid than mentioned above.

2. Periodic oil change is not necessary, but the oil level must be checked at least every 6,000 km (4,000 miles).

3. The total amount of oil is 5.5 liters (11.6 u. s. pints, 9.7 Imp. pints, 5.8 u. s. quarts) and the difference between the amounts shown by L and F marks on the dipstick is about 0.4 liter (0.9 u. s. pint, 0.7 Imp. pint, 0.4 u. s. quart).

b. Oil leakage check

When the oil level is lower than specified, add it and at the same time check carefully for possible leaks and repair any if found.

Note: 1. Torque converter oil is of a red-wine color and is distinguishable from engine oil.

2. In checking for possible leak from the transmission breather pipe, jack up one of the rear wheels and run the engine to simulate the running condition. When the oil level is over the "F" limit, the oil never fails to spurt out from the breather pipe. When water is contained in it, the oil sometimes spurts out even when the oil level is within the specified range.

c. Oil condition check

In checking the condition of oil by the oil sticking on the dipstick, note that, if the oil appears like varnish, it might cause control values to stick, and if it is black, it shows that linings of clutch or brake band have been scorched. In case such oil deterioration is found severe, it sometimes indicates that overhaul should be made without conducting tests listed in TROUBLE DIAGNOSIS CHART. If it is difficult to readily determine whether or not to make such tests, oil should be drained for confirmation.

1-A-2. ENGINE IDLING SPEED

The engine idling speed should be properly adjusted to the specified revolution by using a tachometer for servicing rather than the one installed on the vehicle. If the engine idling speed is too low, the engine cannot revolve smoothly and when it is too high, shifts from "N" or "P" to other ranges will be harsh with increased shock or creep. Adjust the engine idling to the following revolution range specified for each model, but the engine idling speed for the vehicle with air conditioner should be adjusted 50 rpm higher than those mentioned below.

Model	Engine idling revolution	Required range
RX-2 (Capella Rotary)	750 ~ 800	"N"
RX-3	700 ~ 750	"N"
1300	600 ~ 650	"N"
808 (1300)	600 ~ 650	"N"
616 (Capella 1600)	650 ~ 700	"N"
616 fos U. S. A.	750 ~ 800	"D"
808 (1600)	750 ~ 800	"D"
618	700 ~ 750	"D"

1-A-3. KICK-DOWN SWITCH AND DOWN-SHIFT SOLENOID

Position the ignition switch at the first stage after making sure that the accelerator pedal goes through the entire stroke properly. Depress the accelerator pedal as far as it goes. As the throttle nears the wide-open position, the contact point of the kick-down switch is closed with a light click from the solenoid.

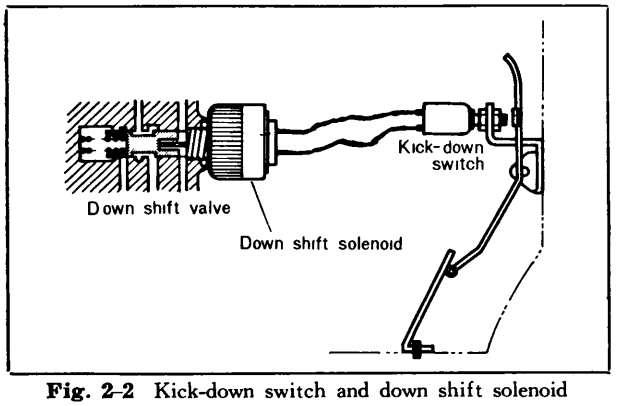

Fig. 2-2 Kick-down switch and down shift solenoid

The kick-down switch must begin to operate in between 7/8—15/16 of the entire pedal travel or full throttle. If not, adjust the kick-down switch. If the solenoid should not make any clicking sound it indicates some abnormality, so check with a tester must be made.

Note: When the solenoid is removed for replacing, some one liter of fluid leaks out. So a receptacle should be made ready to catch it.

1-A-4. MANUAL LINKAGE

The adjustment of linkage is equally important as "Inspection of oil level" for the automatic transmission. Therefore, great care should be exercised because defective adjustment will result in the breakdown of the transmission.

Pull the manual lever toward you and turn it so far as "P" to "1" range, where clicks will be felt by hand. This is the detent of manual valve in the body, and indicates the correct position of the lever. Inspect whether the pointer of selector dial corresponds to this point, and also whether the lever comes in alignment with the stepping of position plate when it is released.

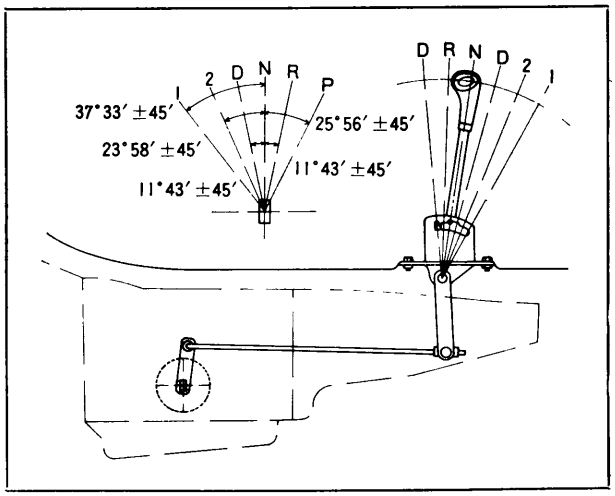

Fig. 2-3 Manual linkage

When the position of the manual lever is found incorrect, disconnect the T joint on the lower rod, and place in "N" the range select lever on the transmission (where the slot of the manual shaft is positioned vertically). Adjust the position of the manual lever by turning the T joint so as to position the manual lever in "N". Finally make sure that the lever travels to "P" and "1" ranges correctly. Check at the same time to see that the linkage has no looseness.

Note: An aditional counter lever is used only on the 616 (Capella 1600) model.

1-A-5. INHIBITOR SWITCH

The inhibitor switch permits the reverse lamp to light up only when "R" range is selected and the starter motor to revolve only when the lever is in "N" or "P" position, so that when "D", "2" or "1" is selected, the reverse lamp does not light up and the starter motor cannot revolve.

If any abnormality is found in any range, check and adjust the manual linkage; if the manual linkage is found normal, then check the inhibitor switch.

Engage the manual lever in each range and check with a tester to see that the wires protruding from the inhibitor switch are alive. The black and white stranded wire is connected to the starter motor, and the green (or red) and yellow one is connected to the

reverse lamp. Check also the extent through which the electrical connection is made for "R", "N" and "P". Move the range select lever to both sides from the center position of each range ("R", "P" and "N"), and it is normal if the electricity is on while the lever is within an angle of about 3° on the both side from each lever set line. However, if anything wrong is revealed as a result of the conductivity check of the inhibitor switch, make adjustments in the following procedures.

Remove the nut that holds the range select lever and two bolts holding the inhibitor switch body, then remove the screw under the switch body. Correctly position the manual shaft in "N" by adjusting the range select lever. (The proper "N" position is where the slot of the manual shaft is positioned vertically and the detent works to position the shaft correctly with a click sound.)

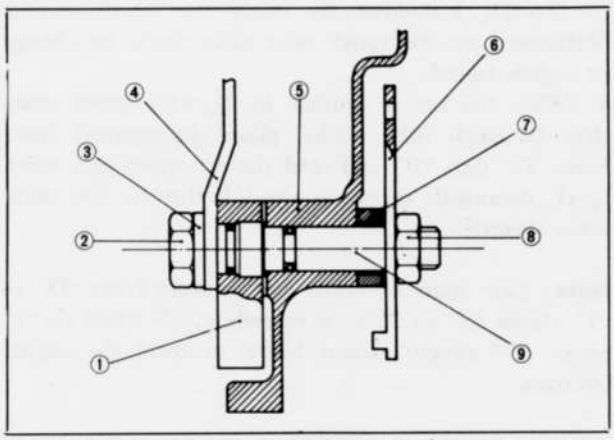

Fig. 2-4 Inhibitor switch

1. Inhibitor switch
2. Nut
3. Washer
4. Range select lever
5. Transmission case
6. Manual plate
7. Spacer
8. Nut
9. Manual shaft

Move the switch slightly aside so that the screw hole will be aligned with the pin hole of the internal rotor combined with the manual shaft and check their alignment by inserting a 1.5 mm (0.059 in) diameter pin into the holes. If the alignment is made correct, fasten the switch body with the bolts, pull out the pin and tighten up the screw again into the hole, and fasten the select lever as before. Check over again the continuity with the tester. If the malfunction still remains, replace the inhibitor switch.

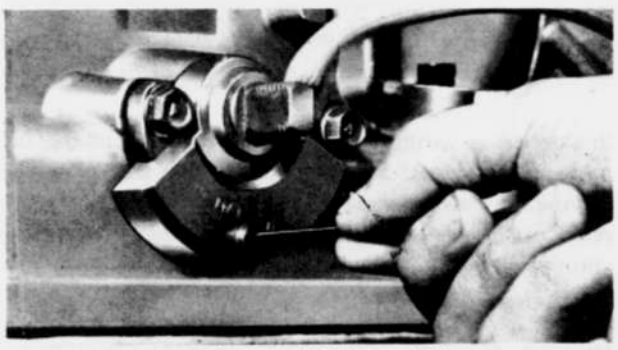

Fig. 2-5 Adjusting inhibitor switch

1-B. DIAGNOSTIC TEST ITEMS

Make sure that all the inspection items described in 1-A are normal before starting the diagnostic tests—stall test, road test and oil pressure test.

1-B-1. STALL TEST

The purpose of this test is to check the transmission and engine for trouble by measuring the maximum numbers of the engine revolutions while the vehicle is held in a stalled condition and the carburetor is in full throttle operation with the manual lever in ranges "D", "2", "1" and "R" respectively and by comparing the measured results with the standard values.

The specified stall revolution for each model is in the following table.

Model	Stall revolution (rpm)	
	Before breaking in	After breaking in
RX-2 (Capella Rotary)	2,100~2,350	2,150~2,400
RX-3	2,000~2,250	2,050~2,300
1300	1,700~1,950	1,750~2,000
808 (1300)	1,650~1,900	1,700~1,950
616 (Capella 1600)	1,900~2,150	1,950~2,200
616 for U.S.A.	1,800~2,050	1,850~2,100
808 (1600)	1,900~2,150	1,950~2,200
618	1,700~1,950	1,750~2,000

Stall test procedure:

1. Check the levels of engine coolant, engine oil and torque converter oil. Warm up the engine at about 1,200 rpm for several minutes with the manual lever in "P" in order to heat the torque converter oil to a suitable temperature of 60°~100°C (140°~212°F).
2. Mount the engine tachometer at a location that allows good visibility from the driver's seat and put a mark on specified revolutions on the meter.
3. Secure the front and rear wheels completely with chocks and apply the hand brake. Be sure to depress the brake pedal firmly with the left foot before depressing down the accelerator pedal.
4. Place the manual lever in "D" Range.
5. Gradually step on the accelerator pedal to the wide-open position. As soon as the engine speed becomes constant, read the engine speed and release the accelerator pedal.
6. Place the manual lever in "N" or "P" and run the engine at about 1,200 rpm for more than one minute to cool down the torque converter oil and coolant.
7. Proceed to do the stall test for "2", "1" and "R" in the same manner as for "D".

Note: The stall test operation as specified in the item (5) should be made within five seconds. If it takes too long, the oil deteriorates and the clutches, brake and band are adversely affected. Sufficient cooling time should be given between each test for the four ranges "D", "2", "1" and "R".

Judgement:

By comparing the measured stall speed and the specified one, troubles can be surmised as follows:

1. Standard stall revolution

Both transmission control elements and engine performance are normal, and the one-way clutch of the torque converter is not slipping though whether or not there is sticking is unknown.

* In the road test, if the maximum speed cannot be attained and the torque converter oil is found to be at unusually high temperature, the one-way clutch of the torque converter is diagnosed to be sticking.

2. High stall revolution more than standard revolution

If the engine revolution in stall condition is higher than the standard values, it indicates that one or more clutches in the transmission are slipping and, therefore, no further test is required. For the following abnormalities, the respective causes are presumed.

- High rpm in all ranges.....Line pressure is low or all clutches, brake and band are slipping.
- High rpm in "D", "2" and "1" (normal in "R")... ...The rear clucth is slipping.
- High rpm in "D" (normal in "2", "1" and "R")... ...The one-way clutch is slipping.
- High rpm in "R" (normal in "D", "2" and "1")... ...The front clutch or the low and reverse brake is slipping.

* In the road test, if there is no engine braking in "1" range, the low and reverse brake is slipping, and if there is engine braking in "1" range, the front clutch is slipping.

- High rpm in "2" (normal in "D", "1" and "R")... ...The band is slipping.

3. Low stall revolution less than standard

The one-way clutch of the torque converter is slipping, or the engine performance is poor.

* In the road test, if poor acceleration is noted at various speeds, indicates poor engine performance or incorrect engine adjustment. In case the starting acceleration is poor while acceleration at high speeds is normal, the one-way clutch of the torque converter is slipping.

1-B-2. ROAD TEST

An accurate knowledge of the automatic transmission is prerequisite to its exact diagnosis by a road test.

The purpose of road test is to make a comprehensive check of the transmission under varying running conditions to detect and analyze troubles and to clear up the cause of troubles.

a. Shift Point Check

Check to see that the up-shift and down-shift occur within the range specified in the shift point table below, following the checking procedures.

Shift point check procedure:

1. Make sure that the tyre air pressure is in the standard range and preheat the converter oil to appropriate temperature about 60°~100°C (140~212°F) in engine idling condition.
2. Place the manual lever in "D" range and accelerate in wide open throttle (kick-down switch energized), and read the car speed at the instant of $D_1 \rightarrow D_2$ and $D_2 \rightarrow D_3$ upshifts with speedometer which is installed on this car.
3. Drive the car with the manual lever in "D". When it is running at a constant speed in D_3, depress the accelerator pedal to the full (the kickdown switch energized) and make sure that $D_3 \rightarrow D_2$ shift occurs. Continue this check at higher speeds until a critical speed from which that down-shift does not occur any more is reached. Proceed to check the critical speed for $D_2 \rightarrow D_1$ kick-down by using the same method. Shift-down can be noted by a shift shock or change in engine sound.
4. When the car is runing in D_3 at a speed more than 60 km/h (45 mile/h), place the manual lever from "D" into "1", and read the car speed just when $I_2 \rightarrow I_1$ downshift occurs at the full throttle and minimum throttle.

Note: Care must be taken not to shift from "D" to "1" (from "2" to "1") in exceeding the speed in "2" range ("1" range) shown below to avoid the engine overrun.

Model	Engine Max. speed (rpm)	"1" Range Km/h (Mile/h)	"2" Range Km/h (Mile/h)
RX-2 (Capella Rotary)	6,500	70 (45)	120 (75)
RX-3	6,500	70 (45)	120 (75)
1300	6,000	60 (35)	100 (60)
808 (1300)	6,000	60 (35)	100 (60)
616 (Capella 1600)	5,500	60 (35)	100 (60)
616 for U.S.A.	5,500	55 (35)	95 (60)
808 (1600)	5,500	55 (35)	95 (60)
618	5,500	55 (35)	95 (60)

5. Connect a vacuum gauge into the socket in the intake manifold and set it so that it is visible while driving. Place the manual lever in "D" and accelerate with accelerator pressure controlled so that the vacuum gauge will show 200 mm-kg, and read car speed at the instant of $D_1 \rightarrow D_2$ and $D_2 \rightarrow D_3$ upshifts.

Note: 1. In reading car speeds at shifting, accelera-

tion and decleration around shift points must be made gently except for (2) above.
2. Checks of (2), (3) and (4) above should indicate general condition of shift point except in very rare instances. Item (5) should be carried out only when the condition in partial throttle must be known.

Car Speed at Gear Shift

Throttle Condition	Gear Shift	Model and Shift Speeds km/h (mile/h)			
		RX-2 (Capella Rotary)	RX-3	1300	808 (1300)
Kick-down (0~50 mm-Hg)	$D_1 \rightarrow D_2$	54~ 74 (33~46)	54~ 72 (33~46)	(27~38)	44~ 60 (27~38)
	$D_2 \rightarrow D_3$	95~114 (59~77)	95~123 (59~77)	(47~64)	76~101 (47~63)
	$D_3 \rightarrow D_2$	81~105 (50~65)	83~107 (51~67)	(42~55)	67~ 87 (42~54)
	$D_2 \rightarrow D_1$	36~ 53 (22~33)	36~ 54 (21~34)	(18~32)	30~ 44 (18~28)
Half throttle (200 mm-Hg)	$D_1 \rightarrow D_2$	13~ 29 (8~20)	13~ 28 (8~18)	(7~15)	11~ 24 (7~15)
	$D_2 \rightarrow D_3$	29~ 63 (18~40)	29~ 62 (18~39)	(14~33)	22~ 52 (14~33)
Full throttle (0~50 mm-Hg)	$I_2 \rightarrow I_1$	41~ 54 (26~34)	42~ 55 (26~35)	(21~38)	34~ 45 (21~38)
Minimum throttle (Over 450 mm-Hg)	$I_2 \rightarrow I_1$	41~ 54 (26~34)	42~ 55 (26~35)	(21~38)	34~ 45 (21~38)

Throttle Condition	Gear Shift	Model and Shift Speeds km/h (mile/h)			
		616 (Capella 1600)	616 for U.S.A.	808 (1600)	618
Kick-down (0~50 mm-Hg)	$D_1 \rightarrow D_2$	48~ 65 (31~41)	(28~38)	44~ 60 (27~38)	(28~41)
	$D_2 \rightarrow D_3$	84~110 (52~70)	(48~65)	76~101 (47~63)	(51~68)
	$D_3 \rightarrow D_2$	75~ 96 (40~66)	(34~55)	67~ 87 (42~54)	(44~57)
	$D_2 \rightarrow D_1$	33~ 48 (21~30)	(18~28)	30~ 44 (18~28)	(19~29)
Half throttle (200 mm-Hg)	$D_1 \rightarrow D_2$	12~ 26 (8~17)	(7~15)	11~ 24 (7~15)	(7~17)
	$D_2 \rightarrow D_3$	25~ 56 (16~35)	(14~33)	22~ 52 (14~33)	(14~36)
Full throttle (0~50 mm-Hg)	$I_2 \rightarrow I_1$	38~ 50 (24~31)	(22~30)	34~ 45 (21~38)	(22~30)
Minimum throttle (Over 450 mm-Hg)	$I_2 \rightarrow I_1$	38~ 50 (24~31)	(22~30)	34~ 45 (21~38)	(22~30)

Note: The shift speeds in the above table include the permissible allowance of a speedometer on the car. Therefore check the shift speed with the speedometer on the car.

b. Other Checks In Driving

1. Check each range for faulty performance or shifting. Check to see, for instance, that:
(1) Firm locking is effected when "P" is selected.
(2) Reversing is effected when "R" is selected.
(3) Completely neutral condition is attained by selecting "N".
(4) $D_1 \leftrightarrow D_2 \leftrightarrow D_3$ shifts take place in "D" range.
(5) Kick-down takes place.
(6) When "1" is selected from "D", there occur $D_3 \rightarrow 1_2 \rightarrow 1_1$ or $D_3 \rightarrow 1_1$ shifts with engine braking effected in 1_2 and 1_1.
(7) The transmission does not shift up in "I" range.
(8) In "2" range, the transmission is fixed to 2nd speed.
2. Check to see that shifting is smooth without conspicuous shock and there is no marked creep. (Slight creep in each range is normal).
3. Check to see that shifts are effected promptly without drag.
4. Check for abnormal gear noise, clutch, band squeal, poor acceleration or oil leak.

1-B-3. OIL PRESSURE TEST

When there is slippage in the gear train or when shifts do not feel proper, line pressure and governor pressure must be checked.
The following chart shows standard line pressures (before cut back), which are applied to the all models.

Manual Range	Line Pressure kg/cm² (lb/in²)	
	Engine Idling	Stall
"R"	3.5~ 6.0(50~ 85) *4.0~ 7.0(57~100)	14.0~16.0(200~227) *15.5~19.0(220~270)
"D"	3.0~ 4.0(43~ 57)	9.5~11.0(135~156)
"2"	8.0~12.0(114~170)	10.0~12.0(142~170)
"1"	3.0~ 4.0(43~ 57)	9.5~11.0(135~156)

Note: The line pressure at reverse range will be changed to these figures marked * in near future.

a. Line Pressure Test

Place the transmission in "D", "2", "1" and "R", and check respective line pressure at engine idling and stall conditions. Compare the results with specified pressures to trace the cause of trouble.

Line pressure test procedures:

1. Warm up the engine to bring the converter oil to operating temperature 60°~100°C (140°~212°F).
2. Line pressure for "R" range is taken out at an inspection hole at the left front of the transmission case, and for "D", "2" and "1" ranges the inspection hole is at the right rear. Connect a pressure gage to the inspection hole and put it where it is visible from the driver's seat.



Fig. 2-6 Oil pressure test
A. For line pressure in "R" range
B. For governor pressure
C. For line pressure in forward ranges

3. Firmly chock the front and rear wheels and apply the hand brake as in the stall test.
4. With the manual lever put in the range to be checked, run the engine at engine idling condition and read the pressure gauge.
5. With the brake pedal depressed fully, press the accelerator pedal gradually to the wide open position. While checking whether the pressure rises smoothly, read the pressure gauge at the stall condition. The test time from starting accelerator depression to its release must not exceed 5 seconds.
6. Measure line pressure for each of other ranges in the same manner. Be sure to interpose more than one minute cooling time at 1,200 rpm with the manual lever placed in "P" or "N".
7. After aboves, check whether the cut-back function to release the shock at gear shifting is operative properly. The cut-back function can be judged nomal if the line pressure drops suddenly when the car is accelerated gradually and reaches to the certain running speed.

Diagnosis from measurements:

1. When line pressure at idling is low in all of "R", "D", "2" and "1", possible causes include a fault in the pressure supply system, e.g. increased side clearance in the oil pump, reduced pump output because of bolts left untightened, oil leak from pump, valve body or transmission case, and sticking of regulator valve or vacuum throttle valve.
2. In case line pressure at idling is low in one range only, there probably are pressure leaks in some devices or oil passages for the relevant range.
3. In case line pressure at idling is high in all ranges, possible cause is throttle pressure rise due to leak from vacuum tube or vacuum diaphragm, or regulator valve sticking.
4. When pressure does not rise at stall condition, the vacuum rod possibly may not be installed.
5. When pressure side is not smooth or pressure at stall condition does not come within the specified range, possible cause is sticking of vacuum throttle valve, pressure regulator valve or pressure regulator plug.

b. Governor pressure test

Governor pressure has only to be measured when shift point is different from the specified.

Connect a pressure gauge in the inspection hole on the left rear of transmission case, and put it where it is visible during driving. Read governor pressure when the car is going at required speeds for each model. If the result is out of the specified range shown in the following table, disassemble and check the governor valve.

Governor Pressure (1)

Model	Driving Speed		Out-put Shaft Speed	Standard Govener Pressure	
	km/h	mile/h	rpm	kg/cm²	lb/in²
RX-2 (Capella Rotary)	30		1,020 ~ 1,120	0.9 ~ 1.5	13 ~ 21
	55		1,880 ~ 2,010	1.6 ~ 2.2	23 ~ 28
	85		2,900 ~ 3,070	3.0 ~ 3.9	43 ~ 55
		20	1,080 ~ 1,180	0.9 ~ 1.3	13 ~ 18
		35	1,920 ~ 2,050	1.6 ~ 2.2	23 ~ 28
		55	3,010 ~ 3,180	3.2 ~ 4.1	45 ~ 59
RX-3	30		1,000 ~ 1,110	0.8 ~ 1.2	11 ~ 17
	60		2,010 ~ 2,150	1.7 ~ 2.3	24 ~ 33
	90		3,010 ~ 3,180	3.2 ~ 4.1	45 ~ 59
		20	1,070 ~ 1,180	0.9 ~ 1.3	13 ~ 18
		35	1,890 ~ 2,030	1.6 ~ 2.2	23 ~ 28
		55	2,950 ~ 3,150	3.2 ~ 4.0	45 ~ 57
1300		15	890 ~ 1,010	0.8 ~ 1.2	11 ~ 17
		35	2,110 ~ 2,270	2.1 ~ 2.8	30 ~ 40
		50	3,010 ~ 3,200	3.6 ~ 4.6	51 ~ 65
808 (1300)	25		920 ~ 1,040	0.8 ~ 1.2	11 ~ 17
	50		1,880 ~ 2,030	1.8 ~ 2.4	26 ~ 34
	80		3,010 ~ 3,200	3.7 ~ 4.7	53 ~ 67
616 (Capella 1600)	30		1,020 ~ 1,120	0.9 ~ 1.3	13 ~ 18
	55		1,880 ~ 2,610	1.8 ~ 2.4	26 ~ 34
	85		2,900 ~ 3,070	3.5 ~ 4.4	50 ~ 62
		20	1,080 ~ 1,180	1.0 ~ 1.4	14 ~ 20
		35	1,920 ~ 2,050	1.8 ~ 2.4	26 ~ 34
		55	3,010 ~ 3,180	3.8 ~ 4.6	54 ~ 65
616 for U.S.A.		15	880 ~ 980	0.8 ~ 1.2	11 ~ 17
		35	2,080 ~ 2,230	2.1 ~ 2.7	30 ~ 38
		50	2,970 ~ 3,140	3.6 ~ 4.6	51 ~ 65
808 (1600)		15	900 ~ 1,000	0.9 ~ 1.3	13 ~ 18
		30	1,810 ~ 1,960	1.7 ~ 2.3	24 ~ 33
		50	3,030 ~ 3,220	3.8 ~ 4.7	54 ~ 67
618		20	1,140 ~ 1,260	1.0 ~ 1.4	14 ~ 20
		35	2,010 ~ 2,180	2.0 ~ 2.6	29 ~ 36
		50	2,890 ~ 3,050	3.5 ~ 4.3	50 ~ 61

Governor Pressure (2)

Governor Type	Break Point	at 1,000 r.p.m	at 2,000 r.p.m	at 3,000 r.p.m
35	400~600 r.p.m	0.9~1.3kg/cm² (13~18lb/in²)	1.8~2.4kg/cm² (26~34lb/in²)	3.4~4.2kg/cm² (48~60lb/in²)
38	400~600 r.p.m	0.9~1.3kg/cm² (13~18lb/in²)	1.6~2.2kg/cm² (23~28lb/in²)	3.0~3.8kg/cm² (43~54lb/in²)

Note: The two types of governor are avairable depending on the models. 35 type is for 1300, 808 series, 616 (Capella 1600) series and 618. The other 38 type is applied exclsively to the models mounded the rotary engine, RX-2 (Capella Rotary) and RX-3. When indicated by output shaft revolutions, the oil pressure characteristics of each governor are shown in the above table Governov Pressure (2).

1-C. TROUBLE DIAGNOSIS CHART

1-C-1. ITEMS TO CHECK

(1) Inspection with automatic transmission on the car.

A. Oil level
B. Range select linkage
C. Inhibitor switch and wiring
D. Vacuum diaphragm and piping
E. Downshift solenoid, kick-down switch and wiring
F. Enging idling speed
G. Oil pressure
H. Engine stall speed
I. Rear lubrication
J. Manual control valve
K. Governor valve
L. Band servo
M. Transmission air check
N. Oil drain check
O. Ignition switch and starter motor
P. Engine adjustment and brake inspection

(2) Inspection after inspecting automatic transmission on the car.

a. Rear clutch
b. Front clutch
c. Band brake
d. Low & reverse brake
e. Oil pump
f. Leak from hydraulic passages
g. One-way clutch in torque converter
h. One-way clutch in power train
i. Front clutch check ball
j. Parking linkage
k. Planetary gear

1-C-2. TROUBLE DIAGNOSIS CHART

(The numerals show the sequence of inspection for detecting trouble.)

Trouble	A	B	C	D	E	F	G	H	I	J	K	L	M	N	O	P	a	b	c	d	e	f	g	h	i	j	k
Engine won't start in "N" and "P" ranges		2	3												1												
Engine starts in other ranges than "N" and "P" ranges		1	2																								
Excessive shock on "N"→"D" range shift				2		1	3			4							⑤										
Car won't move in "D" range (but moves in "2", "1" and "R" ranges)		1					2			3														④			
No drive, excessive slip or very poor acceleration in "D", "2" or "1" range (Driver in "R" range)	1	2					4			5			6	3		7	⑧	⑩				⑨					
No drive, excessive slip or very poor acceleration in "R" range (but Drives in "D", "2" and "1" ranges)	1	2					3			5			6	4			⑨	⑧		⑦		⑩			⑪		
Car won't move in any range	1	2					3			5			6	4							⑦	⑧				⑨	
Tendency to slip when starting	1	2		6			3			5			7	4							⑧	⑨					
Car moves in "N" range		1								3				2			④										
Maximum speed too low and poor acceleration	1	2					4	5		7		6		3		8	⑪	⑫	⑨	⑩	⑬						
Car braked when "R" range is selected												3	2	1			④		⑤							⑥	
Excessive creep						1																					
No creep at all	1	2				3				5				4			⑧	⑨			⑥	⑦					
No $D_1 \rightarrow D_2$ change		1		2	3					5	6	8	7	4					⑨			⑩					
No $D_2 \rightarrow D_3$ change		1		2	3					5	6	8	7	4				⑨				⑩			⑪		
$D_1 \rightarrow D_2$ and $D_2 \rightarrow D_3$ shift-points too high				1	2		3			5	6			4								⑦					
$D_1 \rightarrow D_3$ change without through D_2										2	4		3	1				⑤				⑥					

Trouble	A	B	C	D	E	F	G	H	I	J	K	L	M	N	O	P	a	b	c	d	e	f	g	h	i	j	k
Excessive shock on $D_1 \rightarrow D_2$ change				1				2		4		5		3					⑥								
Excessive shock on $D_2 \rightarrow D_3$ change				1	2		3			3		5	4					⑥									
Practically no shift shock or excessive slip on $D_1 \rightarrow D_2$ change	1	2		3			4			6		8	7	5					⑨			⑩					
Practically no shock; or excessive slip; or engine runaway on $D_2 \rightarrow D_3$ change	1	2		3			4			6		8	7	5				⑨				⑩			⑪		
Car braked on $D_1 \rightarrow D_2$ change										2				1				④		③				⑤			
Car braked on $D_2 \rightarrow D_3$ change										3		2		1					④								
No $D_3 \rightarrow D_2$ change				1						3	4	6	5	2				⑦	⑧			⑨					
No $D_2 \rightarrow D_1$ or $D_3 \rightarrow D_1$ change				1						3	4	6	5	2					⑦					⑧			
Shift shock felt when accelerator is released and deceleration occurs		1		2	3		4			5	6											⑦					
$D_3 \rightarrow D_2$ and $D_2 \rightarrow D_1$ shift-points too high		1		2	3		4			5	6											⑦					
No kick-down on accelerator depression in D_3 (within kick-down speed limits)				2	1					4	5			3					⑥			⑦					
Abnormal rise of engine speed on accelerator depression in D_3 (above kick-down upper limit)		1		2			3			5	6		7	4				⑧				⑨				
Engine runaway or slip on $D_3 \rightarrow D_2$ change				1			2			4		6	5	3				⑦	⑧			⑨			⑩		
No $D_3 \rightarrow 2$ change on "D"→"2" range shift		1					2			4		5		3					⑥			⑦					
$2 \rightarrow 1$, $2 \rightarrow D$, or $2 \rightarrow D_3$ change in "2" range		1					2			3																	
No shift shock or engine runaway on "1"→"2" range shift	1	2		3		4		1		6			7	5					⑨		⑩						
No $D_3 \rightarrow 1_2$ change on "D"→"1" range shift		1					2			4	5	7	6	3				⑧	⑨			⑩					
No engine braking in "1" range		1					2			4			5	3						⑥		⑦					
$1 \rightarrow 2$ or D_2 change, or 2 or $D_2 \rightarrow D_3$ change in "1" range		1								2												③					
No $1_2 \rightarrow 1_1$ change on "D"→"1" range shift	1	2								4	5	6	7	3						⑧		⑨					
Excessive shift shock on $1_2 \rightarrow 1_1$ change in "1" range				1				2		4				3						⑤							
Car moves in "P" range, and parking gear not removed when "P" range is disengaged.		1																								②	
Transmission overheats	1						3	4	2	6		8	7	5				⑨	⑩	⑪	⑫	⑬	⑭				⑮
Oil spurting up or white exhaust during running	1			3			5	6	2	7			8	4				⑨	⑩	⑪	⑫	⑬	⑭				⑮
Offensive smell from oil charging pipe	1													2			③	④	⑤	⑥	⑦	⑧	⑨				⑩
Transmission noisy in "P" and "N" ranges	1						2														③						
Transmission noisy in "D", "2", "1" and "R" ranges	1						2										③				④			⑤			⑥

2. REMOVAL OF TRANSMISSION

When dismounting the automatic transmission from a vehicle, pay attention to the following point.
Before dismounting the transmission, rigidly inspect it by aid of the "Trouble-Diagnosis Chart", and dismount it only when considered to be necessary. The transmission should be removed in the following sequence:

1. Remove the battery earth.
2. Jack up the vehicle and support it with safety stands.
3. Remove the heat insulator. Remove the bolt for the exhaust pipe bracket on the right side of the converter housing. Loosen and remove the bolts for the exhaust pipe joint on the rear of the pre-silencer, and disconnect the pipe.
4. Loosen and remove the four bolts for the propeller shaft, and pull it out from the extension housing. Apply a plug to prevent oil leak.
5. Disconnect the speedometer cable from the extension housing.
6. Remove the control rod.
7. Remove the vacuum hose from the vacuum diaphragm. Also disconnect the wire connections of downshift solenoid and inhibitor switch, and remove the wires from the clip.
8. Disconnect the feed pipe and return pipe for cooling on the left side of the transmission.

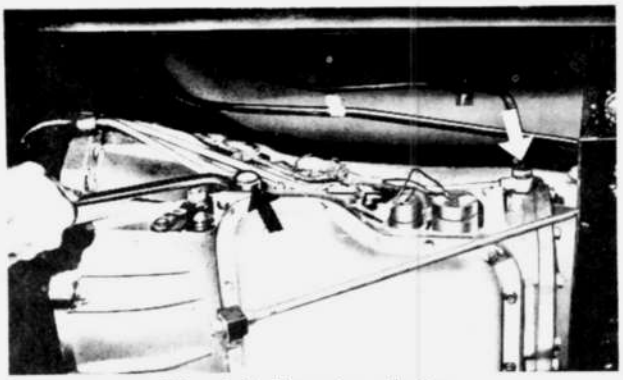

Fig. 2-7 Removing oil pipes

9. Remove the undercover (or service cover) on the converter housing.

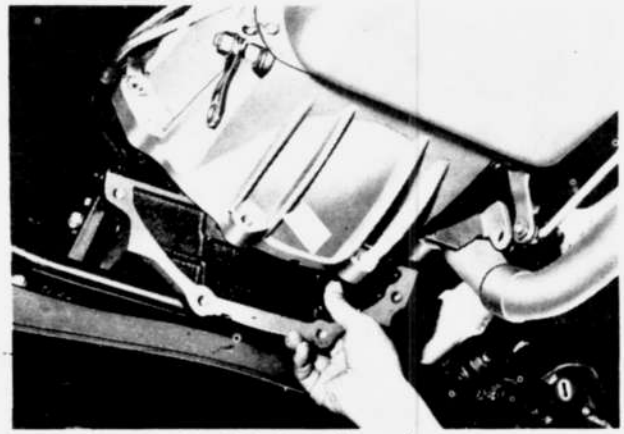

Fig. 2-8 Removing under cover

10. Fix the ring gear with the **ring gear brake** (49 0877 060 for rotary engine model, 49 0378 060 for reciprocating one), then loosen and remove four bolts that attach the torque converter to the drive plate by using the **special wrench** (49 0877 435). At the same time, make aligning mark across torque converter and drive plate.

Note : In the case of rotary engine models, it is advisable to loosen the bolts attaching the torque converter to drive plate through the hole for starting motor location.

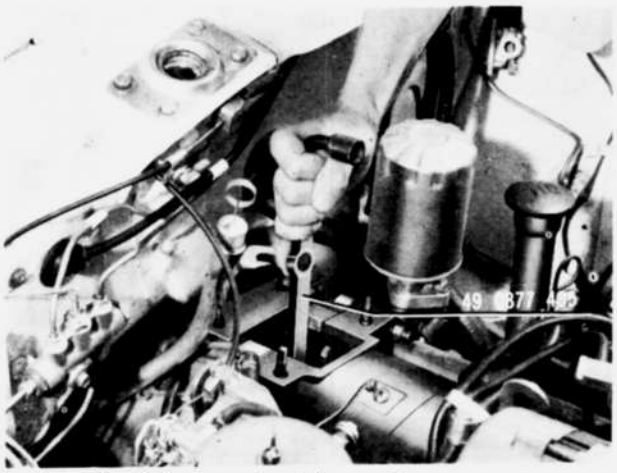

Fig. 2-9 Loosening bolts on the converter

11. With the transmission supported with the transmission holder, remove the tightening nuts of the transmission member and take out the member.
12. Lower the transmission holder, widen the clearance between the transmission and the floor and remove the starter motor. Then loosen and remove the bolts that connect the engine and the top of the torque converter housing to disconnect the transmission and engine.

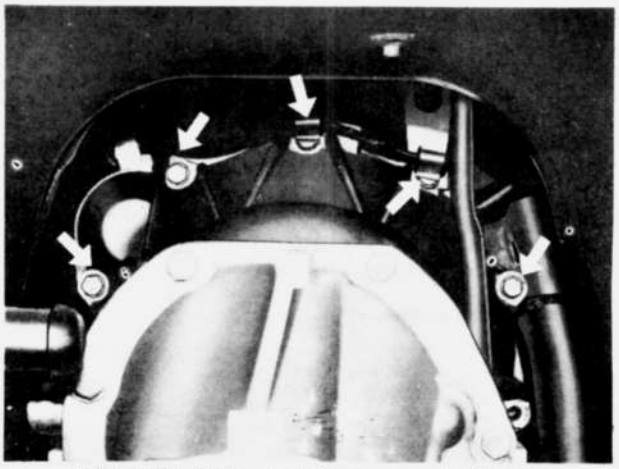

Fig. 2-10 Bolts on engine & converter housing

13. Return the transmission to the level position. While slowly plying a screw driver or something between the converter and the drive plate, pull out the transmission rearward with the converter attached to it. Then lower the holder and dismount the transmission.

3. DISASSEMBLY OF TRANSMISSION COMPLETE

Attention must be paid to the following matter in disassembling the transmission:

(1) Clean the outside of the transmission thoroughly before overhauling. In case of that, see that the steam does not enter the transmission and the gasoline is not used in using rubber parts.

(2) Disassembly should be made in a clean workshop, preferably in a dust-proof workshop.

Disassembly Procedure

1. Remove the torque converter from the housing taking care not to have the converter oil spill.
Then tilt the transmission housing and drain the oil in the oil pan through the end of the extension housing into a vessel.
2. Loosen the bolt for the oil gauge tube and remove it together with the "O" ring.
3. Remove the snap rings of the rod that connects the range select lever and the countershaft, and take out the rod, if equipped.
4. Loosen and remove the bolts that attach the converter housing and the transmission case, and remove the converter housing.

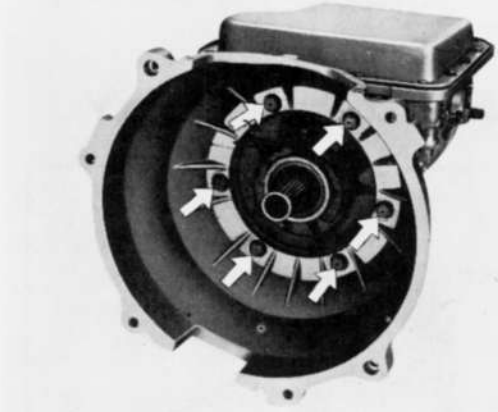

Fig. 2-11 Bolts on converter housing and case

5. Loosen and remove out the oil pan bolts and take out the oil pan.
6. Turn the downshift solenoid and the vacuum diaphragm unit by hand and remove them together with "O" rings. Take care not to forget taking out the vacuum diaphragm rod.

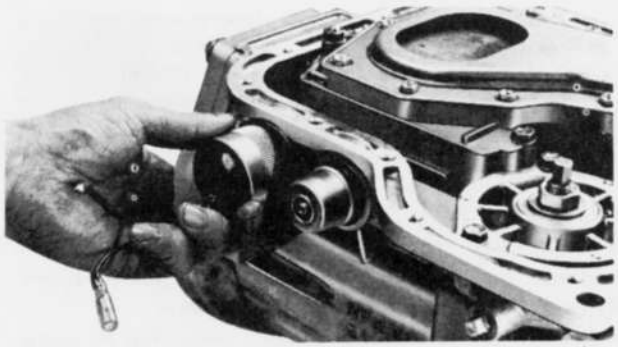

Fig. 2-12 Removing downstift solenoid

7. Remove the control valve assembly by loosening out seven attaching bolts.

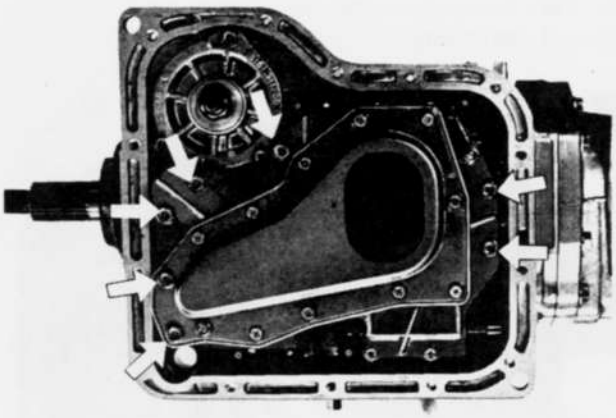

Fig. 2-13 Control box setting bolts

8. Pull out the input shaft.
9. Loosen lock nut on piston stem. Then tighten piston stem in order to prevent to fall front clutch drum down when oil pump is withdrawn.
10. Pull out the oil pump with the oil **Oil pump remover** (49 8000 011) as shown in Fig. 2-14.

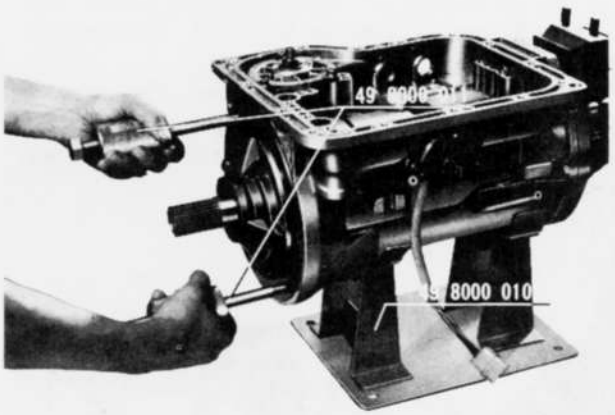

Fig. 2-14 Removing oil pump

11. Loosen the piston stem and take out the band strut.
12. Remove the following as one set: band, front clutch assembly, rear clutch assembly, front planet carrier assembly with sun gear.

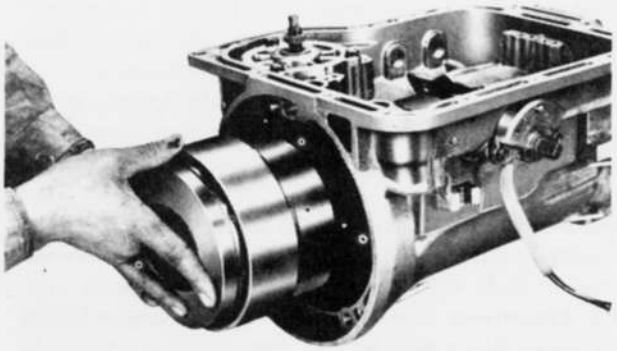

Fig. 2-15 Removing clutch ass'y

13. Take out the rear planet carrier by removing the snap ring which fastens the rear planet carrier to the connecting drum.
14. Take out the output shaft snap ring and the internal drive flange.

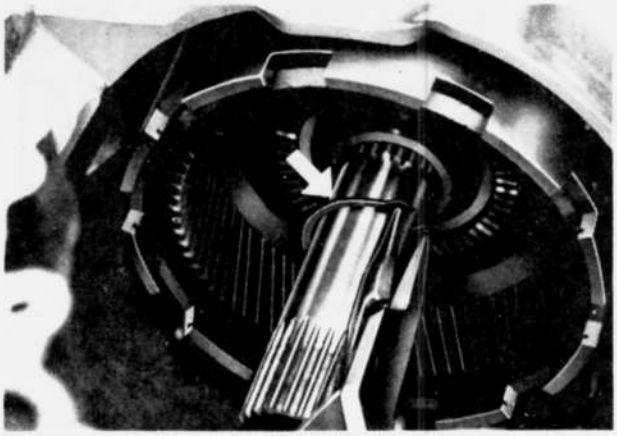

Fig. 2-16 Removing snap ring

15. Turn left the connecting drum as far as it goes and make sure it is firmly locked. Then turn it right and remove together with the one-way clutch.
16. Loosen and remove the eight bolts that attach the extension housing and the transmission case, and pull out the extension housing rearward taking care so that the washer does not fall down. Then remove the parking pawl, spring and washer.
17. Pull out the output shaft rearward. Then remove the oil distributor together with governor and take out the needle bearing remaining on the transmission case side.

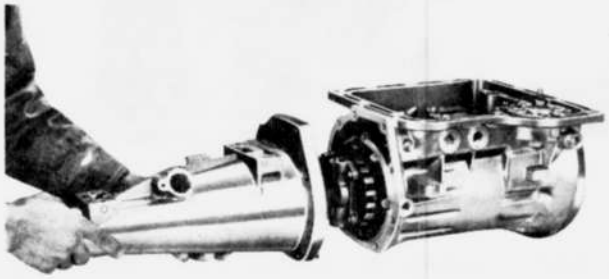

Fig. 2-17 Removing extension housing

18. Remove the snap ring from each end of the parking brake lever, then remove the parking brake lever and the parking brake rod. Loosen and remove the manual shaft nut and remove the manual plate and the spacer, and pull out the manual shaft.
19. Remove the range select lever by loosening the attaching nut, and take out the inhibitor switch by turning out the attaching bolts.

The above operations complete the disassembly of the principal transmission parts excepting the low-reverse brake which still remain on the transmission case. The low-reverse brake can of course be removed from the transmission case but the disassembling operations of it are described in the next section dealing with overhaul of principal components.

4. OVERHAUL OF MAIN COMPORNENTS

The specifications of component parts for each model may be different due to the differene of the engine capacity.
However they have common procedures of overhauling. The principal components each include a large number of similar parts finished to high precision. So all related parts of each component should be placed apart from others to avoid confusion. Overhaul should be made in the following sequence. (Bearings and bearing races must be checked with respect to parts to which they are mounted.)

4-A. TORQUE CONVERTER

1. The torque converter is welded all along the circumference and so cannot be disassembled.

To inspect

2. Check for external damages, oil leak, distortions, dents, etc., and replace if necessary.

Note : If the converter oil is found markedly degerated or fouled, thoroughly rinse the inside of the converter with approximately 0.5 liter (1.0 u.s. pint, 0.5 u.s. quart, 0.9 Imp. pint) of cleaning solvent (none-lead gasoline or kerosene) and make it drain for half an hour with the rear side of the converter facing down. Then fill it with converter oil and stir it well and drain it again in the same procedure.

4-B. FRONT CLUTCH ASSEMBLY

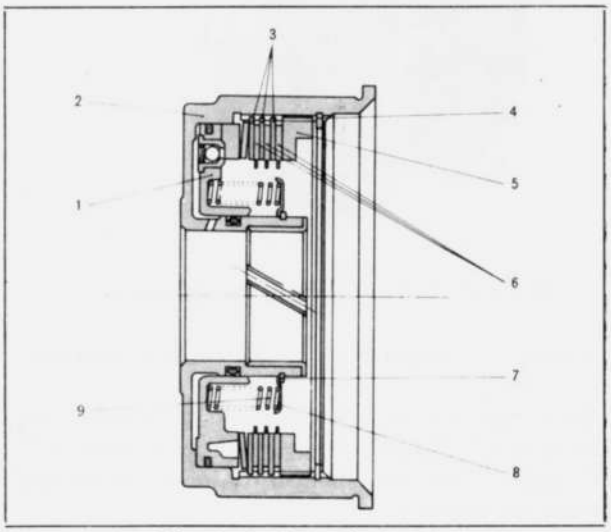

Fig. 2-18 Front clutch ass'y

1. Piston
2. Front clutch drum
3. Outer plate
4. Snap ring
5. Retaining ptate
6. Inner plate
7. Snap ring
8. Spring retainer
9. Coil spring

To Remove

1. Remove the snap ring with a screw driver or something, then take out the retaining plate, Inner plates, outer plate plates and dished plate.
2. Remove the coil spring retainer snap ring by using the **clutch spring compressor** (49 8000 030).

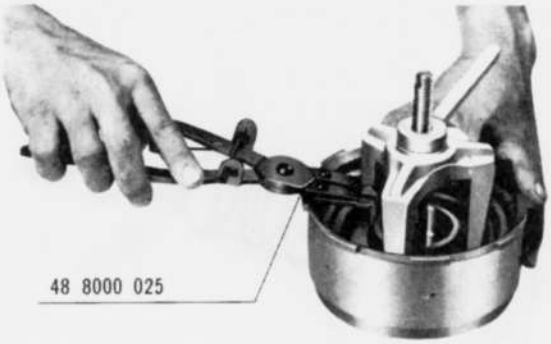

Fig. 2-19 Removing snap ring

3. Remove the coil spring retainer and 10 coil springs.
4. Remove the piston by blowing compressed air into the oil hole as shown in Fig. 2-20.

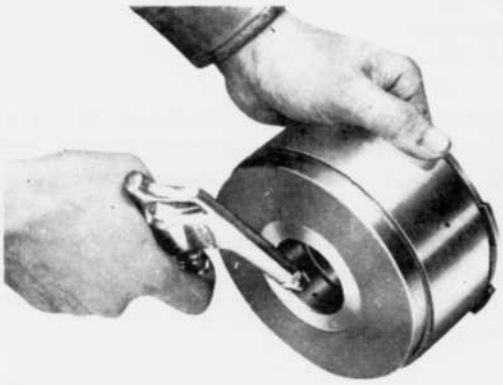

Fig. 2-20 Blowing out piston

To Inspect

5. Check the inner plates for worn or damaged facings.
6. Check to see that the coil spring retainer is not deformed.
7. Check to see that the coil spring has not lost tension.
8. Check to see that the seal around the piston and the "O" ring inside the clutch drum are not damaged.
9. If defective parts are found, replace them with new ones.

To Reassemble

10. All parts are smeared with converter oil and reassembled in the reverse sequence of the disassembly.



Fig. 2-21 Measuring clearance

11. Measure the clearance between the snap ring and retaining plate with a thickness gauge after reassembly and selectively use a retaining plate to provide the standard clearance 1.0~1.5 mm (0.039~0.059 in).

Note: To adjust above clearance, the retaining plate comes in the following six thicknesses.
10.6 mm (0.417 in), 10.8 mm (0.425 in),
11.0 mm (0.433 in), 11.2 mm (0.441 in),
11.4 mm (0.449 in), 11.6 mm (0.457 in)

12. Install the front clutch assembly to the oil pump. Blow compressed air into the oil hole as shown in Fig. 2-22 and check the clutch operation.

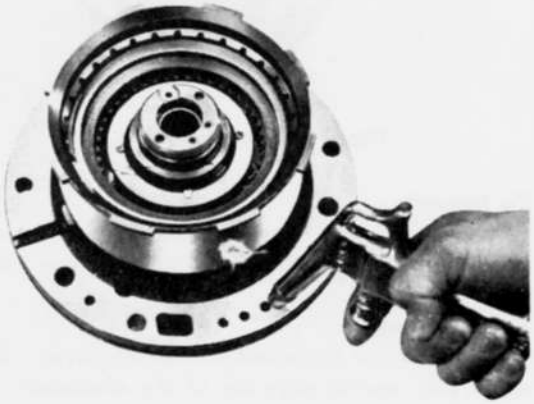

Fig. 2-22 Testing front Clutch

4-C. REAR CLUTCH ASSEMBLY

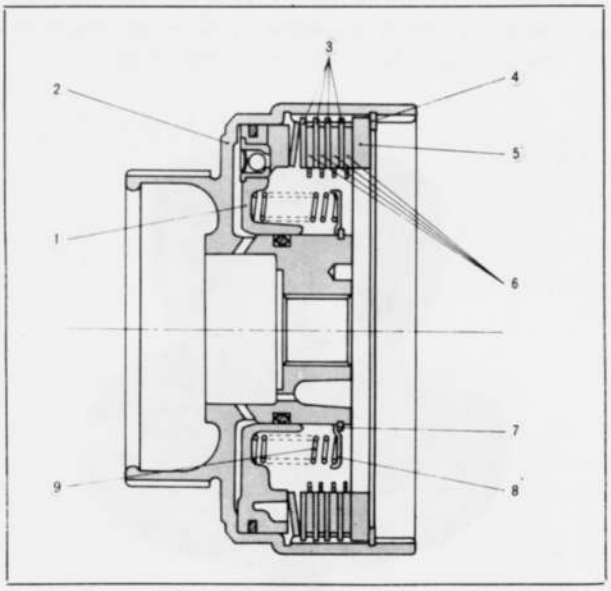

Fig. 2-23 Rear clutch ass'y

1. Piston
2. Rear clutch drum
3. Outer plate
4. Snap ring
5. Retaining plate
6. Inner plate
7. Snap ring
8. Spring retainer
9. Coil spring

To Remove

1. Remove the snap ring, retaining plate, outer plates, inner plates and dished plate in the same procedure as for the front clutch assembly.

2. Remove the coil spring retainer snap ring by the use of the clutch spring compressor. Then remove the coil spring retainer and 10 coil springs.
3. Remove the piston by blowing compressed air into the oil hole.



Fig. 2-24 Blowing out piston

To Inspect

4. Make the same inspection as for the front clutch assembly and replace any defective parts with new ones.

To Reassemble

5. All parts are reassembled with converter oil smeared in the reverse sequence of the disassembly, as in the case of the front clutch.
6. After reassembly, check to see that the clearance between the snap ring and retaining plate is within the standard range of 1.0~1.5 mm (0.039~0.059 in).
7. Install the rear clutch assembly to the oil pump and check the clutch operation by blowing compressed air into the oil hole as shown in Fig. 2-25.



Fig. 2-25 Rear clutch testing hole

4-D. LOW AND REVERSE BRAKE ASSEMBLY

To Remove

1. Remove the snap ring of the low and reserve brake. Remove the retaining plate, friction plates, pressure plates and dished plate.

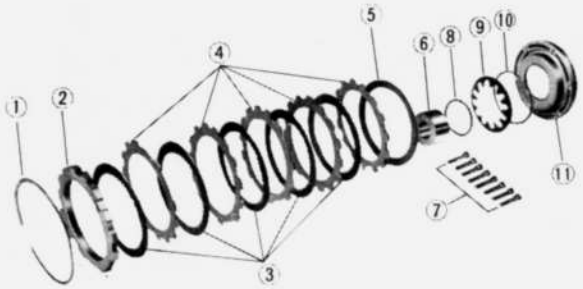

Fig. 2-26 Low & reverse brake

1. Snap sing
2. Retaining plate
3. Friction plate
4. Steel plate
5. Dished plate
6. Inner race
7. Bolt
8. Snap ring
5. Piston return spring
10. Spring ring
11. Piston

2. The inner race of the one-way clutch is tightened with 8 bolts from the rear of the case. Loosen and remove all the bolts using the **hex-head extension** (49 8000 040), then remove the inner race, snap ring, piston return spring and ring.
3. Remove the piston by blowing compressed air into the low and reverse brake oil hole located at the rear of the transmission case.

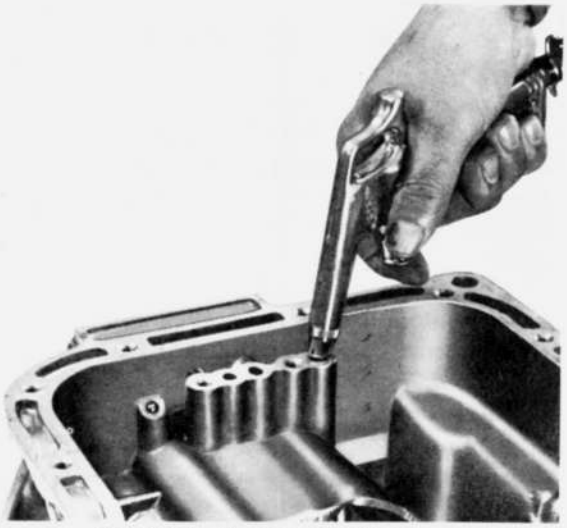

Fig. 2-27 Blowing out piston

To Inspect

4. Check the friction plate for worn or damaged facing.
5. Check to see that the piston return spring has not lost tension.
6. Check to see that there is no deformation on the snap ring (stopper) for piston return spring, attached on the one-way clutch inner race.
7. Check to see that the seal rubber on the inside and outside of the piston are not damaged.
8. If any defective part is found, replace with new one.

To Reassemble

9. Lubricate the piston with converter oil and install it into the transmission case.

10. Install on the piston the return spring support ring, return spring, snap ring and one-way clutch inner race in this order. Then tighten the inner race, from rear of the case, with eight bolts by using the **hex-head exension** (49 8000 040) to a specified torque of 1.5~2.0 m-kg (11~15 ft-lb).

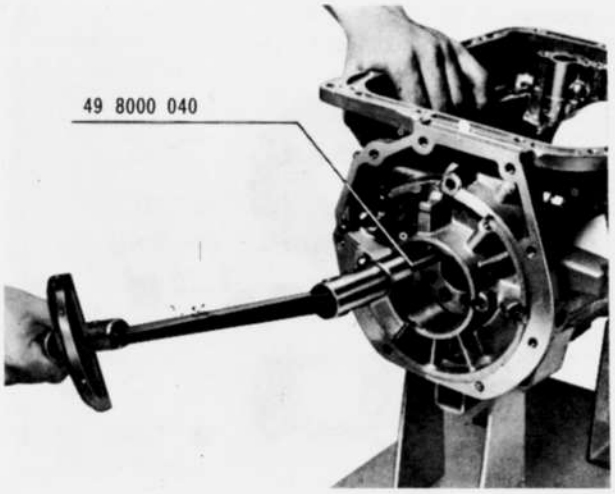

Fig. 2-28 Tightening inner race

11. Reassemble the dished plate, steel plates, friction plates and retaining plate in the reverse order, smearing each with converter oil. Then fit the snap ring.
12. After reassembly, measure the clearance between the snap ring and retaining plate and select the retaining plate to provide a standard clearance of 0.8~1.05 mm (0.032~0.042 in).

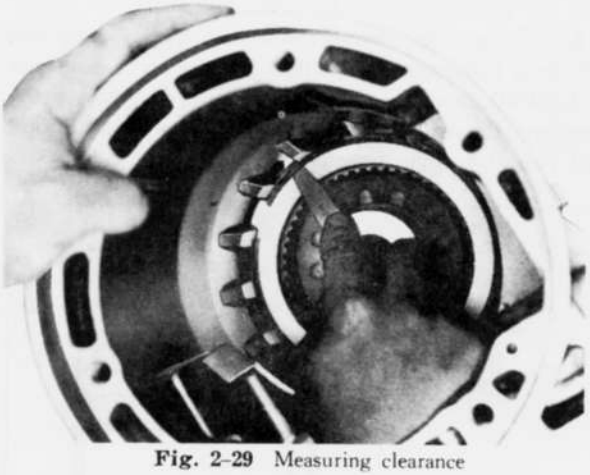

Fig. 2-29 Measuring clearance

Note: To adjust above clearance the retaining plate is available in the following six thicknesses.
1300, 808 (1300):

15.8 mm (0.622 in),	16.0 mm (0.630 in),
16.2 mm (0.638 in),	16.4 mm (0.646 in),
16.6 mm (0.654 in),	16.8 mm (0.662 in)

The models except above:

11.8 mm (0.465 in),	12.0 mm (0.472 in),
12.2 mm (0.480 in),	12.4 mm (0.488 in),
12.6 mm (0.496 in),	12.8 mm (0.504 in)

13. Check the operation of the low and reverse brake by blowing air into the oil hole as shown in Fig. 2-27.

4-E. BAND SERVO

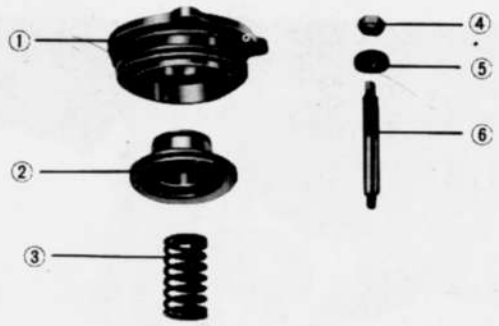

Fig. 2-30 Band servo

1. Retainer
2. Piston
3. Return spring
4. Adjust nut
5. Washer
6. piston stem

To Remove

1. Loosen and remove three bolts that attach the band servo retainer to the transmission case, and remove the band servo retainer together with the servo piston. Take out the return spring. If the servo retainer is difficult to disconnect from the case, it can be readily removed by blowing air into the oil hole on the piston release side.
2. Blow compressed air into the oil hole on the apply side of the servo piston to remove the piston from the retainer.



Fig. 2-31 Blowing out piston

To Inspect

3. Check to see that two "O" rings on the servo retainer and the seal rubber on the servo piston are not damaged.
4. Check to see that there are no damages on the servo retainer, piston, piston stem and the portion of transmission case where those parts are fitted.
5. Check the return spring for decline or deformation.
6. Check the brake band lining for wear or damages.

To Reassemble

7. Apply converter oil on all parts and reinstall them in the reverse order of disassembly.

8. Blow compressed air into the oil hole on the servo piston apply side to make sure that the piston operates properly, as in Fig. 2-32.

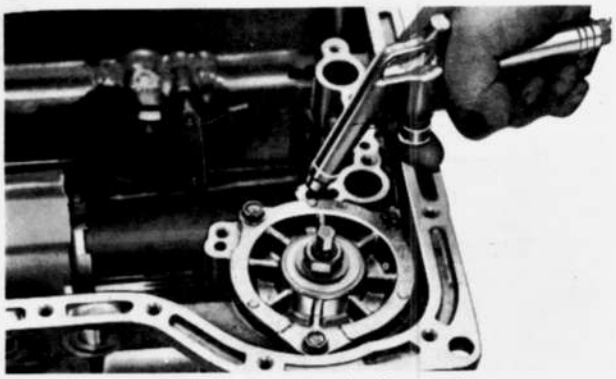

Fig. 2-32 Checking band servo (1)

9. Back off the three attaching bolts slightly and uniformly, and apply compressed air into the oil hole on the servo piston release side, as in Fig. 2-33. If the retainer rises by the extent of bolt backing off, the piston operation on release is normal. Tightening torque of the servo retainer is 0.35~0.45 m-kg (2.5~3.2 ft-lb).

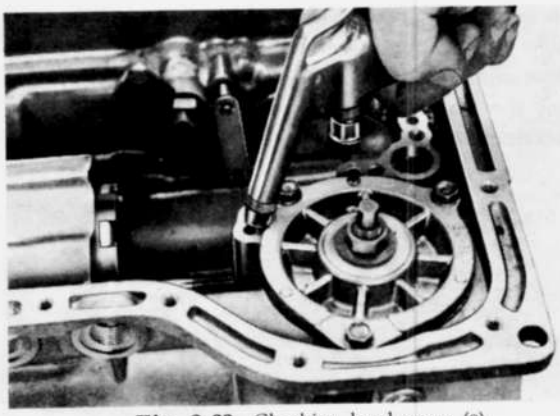

Fig. 2-33 Checking band servo (2)

4-F. GOVERNOR VALVE ASSEMBLY

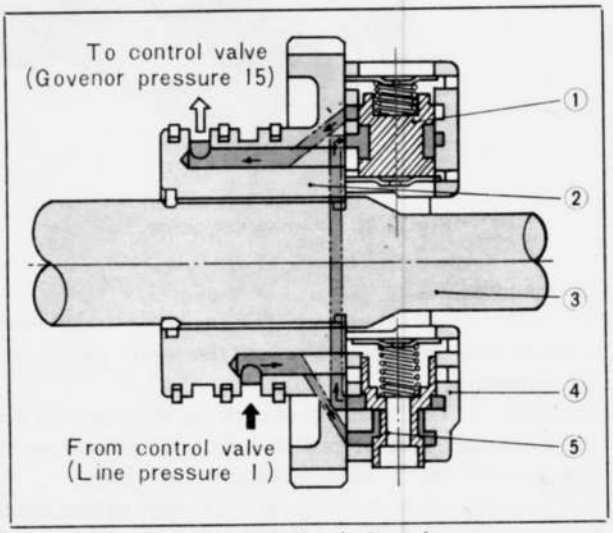

Fig. 2-34 Cross-sectional view of governor

1. Primary valve
2. Oil distributor
3. Output shaft
4. Governor valve body
5. Secondary valve

To Remove

1. Loosen and remove four bolts that attach the governor. Remove the governor from the oil distributor.
2. Remove the secondary governor retainer plate. Then remove the spring and secondary governor valve from the body.
3. Remove the primary governor valve in the same procedure as for the secondary, if primary governor is to be disassembled for any purpose.

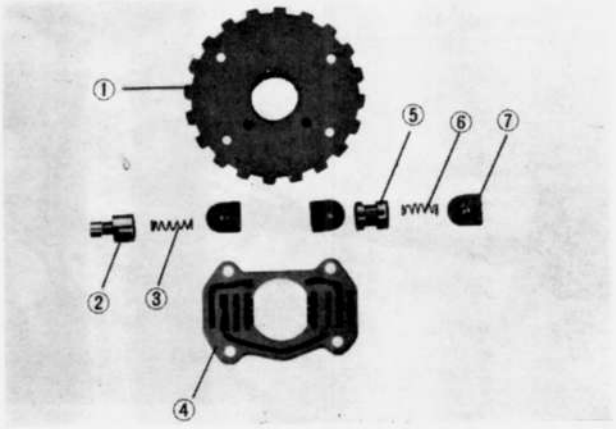

Fig. 2-35 Governor valve

1. Oil distributor
2. Secondary valve
3. Spring
4. Valve body
5. Primary valve
6. Spring
7. Retainer plate

To Inspect

4. Check the valve and the body to see that there is nothing that may cause valve sticking or catching.
5. Check to see that the spring has not lost tension and the retainer plates are not deformed.
6. Check the side clearance between the sealing and gloove as shown in Fig. 2-36. The standard clearance is 0.04~0.16 mm (0.002~0.006 in). When disassembling the seal ring, squeeze it up so that its joint will rise above the groove, and disconnect the joint.

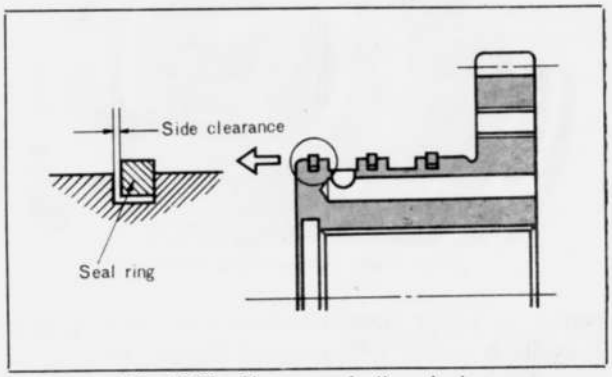

Fig. 2-36 Clearance of oil seal ring

To Reassemble

7. Lubricate all parts with converter oil and reinstall them in the reverse order of disassembly so as not to confuse primary with secondary. After reassembly, make sure that the governor spring is straight and there is no catch in the governer-valve movement.
8. Tighten the governor to the oil distributor with four bolts to a standard torque of 0.35~0.45 m-kg (2.5~3.2 ft-lb).

9. To determine if secondary governor is in good condition, blow air under light pressure into line pressure hole in Fig. 2-34 to listen for noise like a model plane.

4-G. OIL PUMP ASSEMBLY

To Remove

1. Disconnect the pump cover from the pump housing by loosening five bolts that attach them.
2. Take out the inner gear and the outer gear from the pump housing. At the same time, put a sign indicating the installing side with quick-dry ink or something and not with a punch, to avoid erroneous assembly.

To Inspect

3. Check to see that tooth faces of the inner and outer gears are not damaged or worn.
4. Check the side play of the inner (or outer) gear by using a straight edge and thickness gauge as in Fig. 2-37. The standard valve is 0.02~0.04 mm (0.001~0.002 in). If the clearance exceeds 0.08 mm (0.003 in), replace the gears with those selected from the three kinds. Make sure that the inner and outer gears are replaced as a set.

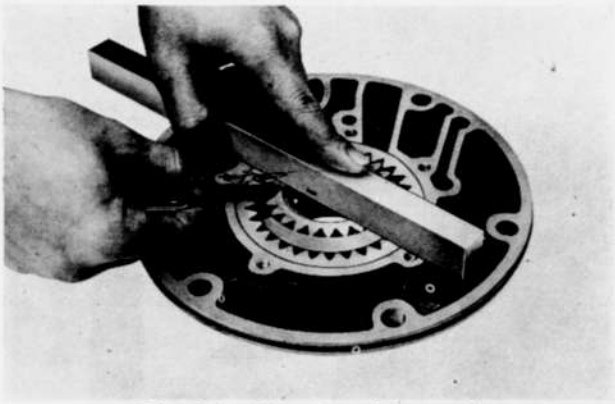

Fig. 2-37 Measuring clearance (1)

5. Check the clearance between the outer gear teeth and crescent. The standard valve is 0.14~0.21 mm (0.006~0.008 in). If the clearance exceeds 0.25 mm (0.010 in), replace the gears.

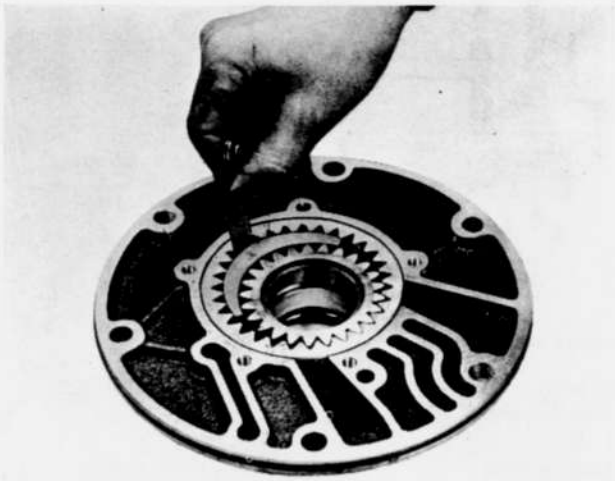

Fig. 2-38 Measuring clearance (2)

6. Check the clearance between the outer gear and the housing. The standard valve is 0.05~0.20 mm (0.002~0.008 in). If the clearance exceeds 0.25 mm (0.010 in , replace the gears as a set.

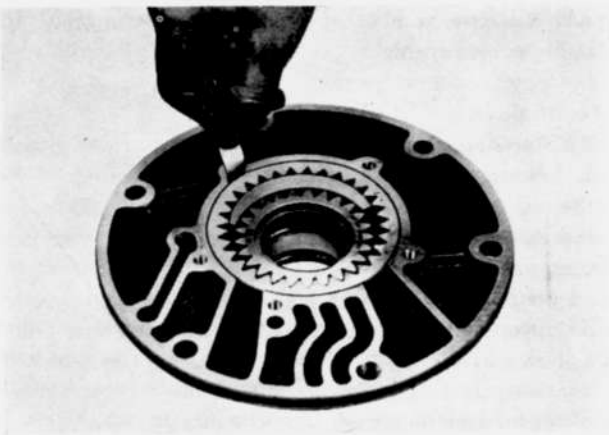

Fig. 2-39 Measuring clearance (3)

7. Check to see that the seal rubber attached on the pump housing periphery is not damaged.
8. Check to see that the oil seal lip is not damaged and the spring has not lost tension.
9. Check to see that the seal rings of oil feed grooves for the front and rear clutches are not damaged or lost tension. Measure the side clearance of the seal ring. The standard valve is 0.04~0.16 mm (0.002 ~0.006 in). When replacing seal ring refer to part 4-F, 16.
10. Check to see that the pump housing and the cover are not damaged.
11. If any defective part is found, replace with new one.

To Reassemble

12. Fix the pump housing to the torque converter and fit the inner gear and outer gear in the pump housing as were installed in original. Then fit the pump cover as shown in Fig. 2-40 and tighten it temporarily with five bolts.



Fig. 2-40 Assembling oil pump

13. After removing the pump assembly from the torque converter, tighten the bolts finally with specified torque 0.6~0.8 m-kg (4.3~5.8 ft-lb).

4-H. CONTROL VALVE ASSEMBLY

The control valves are composed of the most accurate of the automatic transmission parts and so particular care must be paid in disassembly and reassembly. Also, since a number of similar parts are used, they must be arranged in the order of disassembly to facilitate reassembly.

To Remove

1. Loosen and remove the bolts and nut, that attach the oil strainer, and remove the oil strainer. In loosening the 8-mm bolt, a box wrench should be used as much as possible although a screw driver can be used.
2. Disconnect the lower valve body, separate plate and upper valve body by removing the attaching bolts as shown in Fig. 2-41. When taking out the separate plate, be careful not to lose the orifice check valves and springs in the lower valve body.
3. Take out the manual valve.
4. Remove the side plate "A", then take out the 1-2 shift valve with spring, the 2-3 shift valve with sping the 2-3 shift plug and the pressure modifier valve with spring.

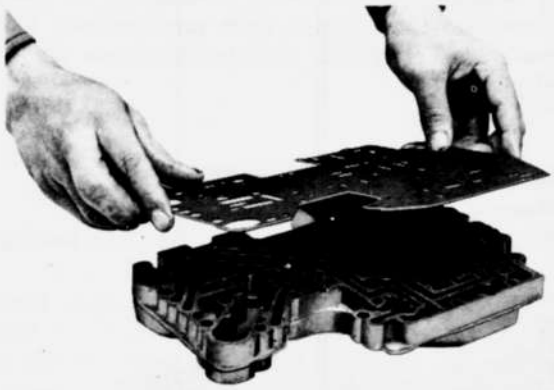

Fig. 2-41 Removing separate plate

5. Remove the side plate "B", then take out the solenoid downshift valve with spring, the throttle back-up valve with spring, the vacuum throttle valve and the 2-3 timing valve with spring.
6. Remove the side plate "D", then take out the pressure regulator plug sleeve, pressure regulator plug, spring seat, spring, pressure regurator valve and second lock valve with spring.

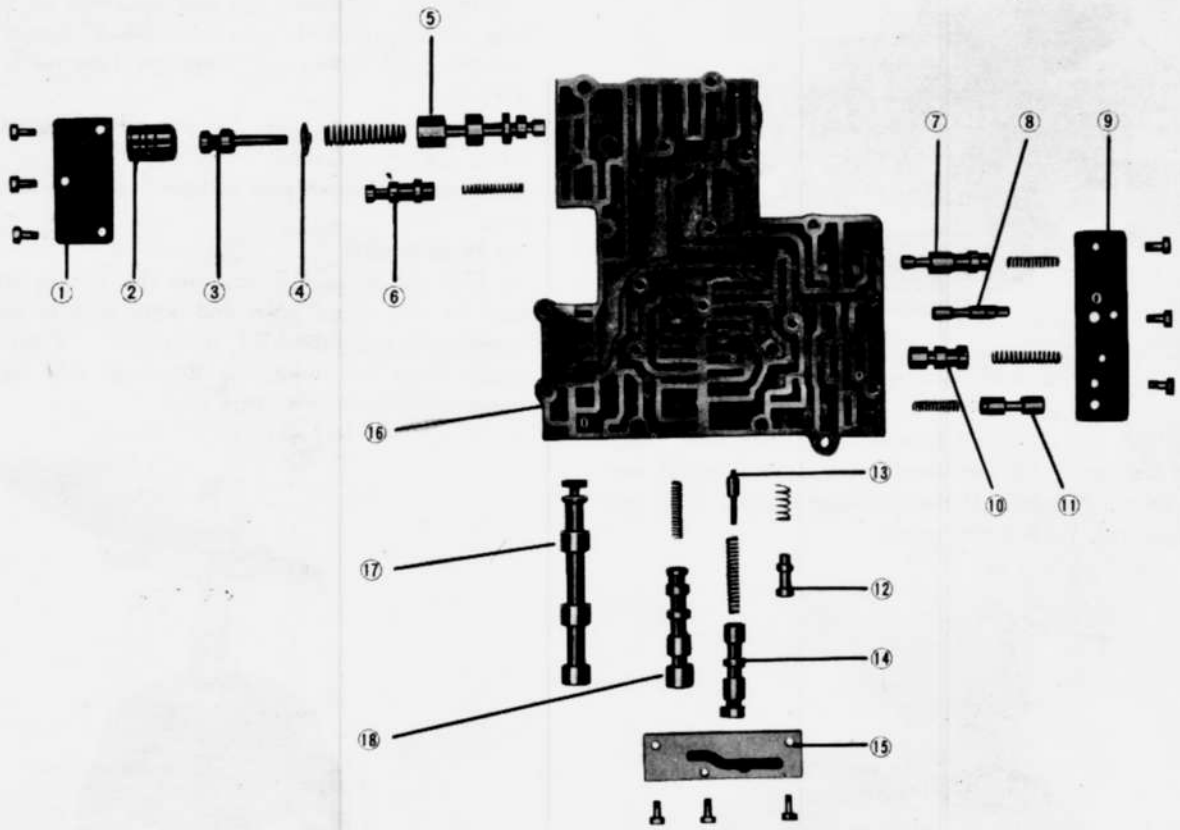

Fig. 2-42 Component parts of control valve

1. Side plate "D"
2. Plug sleeve
3. Regulator pressure plug
4. Spring seat
5. Regulator pressure valve
6. Second lock valve
7. 2-3 timing valve
8. Vacuum throttle valve
9. Side plate "B"
10. Throttle back-up valve
11. Down shift valve
12. Modifier valve
13. 2-3 shift plug
14. 2-3 shift valve
15. Side plate "A"
16. Upper valve body
17. Manual valve
18. 1-2 shift valve

To Inspect

7. Check each valve for anything that might cause sticking.
8. Check to see that valve springs and check valve springs have not lost tension.
9. Check to see that the oil strainer is not damaged.
10. Check for possible abnormal oil passage developing on the separate plate.
11. Check for possible damages or other abnormalities in the oil passages of valve body.
12. If any defective part is found, replace with new one.

To Reassemble

13. Reassemble in the reverse order to disassembly paying special attention to the following points:

(1) Install small valves and springs by referring to the components parts of control valve Fig. 2–42.
(2) Lubricate all valves and springs with converter oil before installing.
(3) If there is any valve that is difficult to insert, do not force it in but give it a light, straight push.
(4) Make sure that the followings are strictly tightened to 0.25~0.35 m-kg (1.8~2.5 ft-lb):
Side plate to valve body
Lower valve body to upper valve body
Oil strainer to lower valve body

4–I. BEARING AND BEARING RACE

Check each bearing and bearing race after cleaning carefully. Also check to see that the mating parts of each bearing and bearing race are not damaged. If any defective part is found, replace it.

4–J. OTHER COMPONENT PARTS

Check to see by sight that the following parts are not damaged. Disassembly, if indicated, should be made in the procedure below.

a. Front planet carrier assembly, rear planet carrier assembly, input shaft and output shaft.

The planetary carrier cannot be divided into its individual components.

If any part or component is defective, replace the carrier as a unit.

Check the clearance between pinion washer and planetary carrier with a feeler.

The standard clearance is 0.20~0.70 mm (0.008~0.027 in).

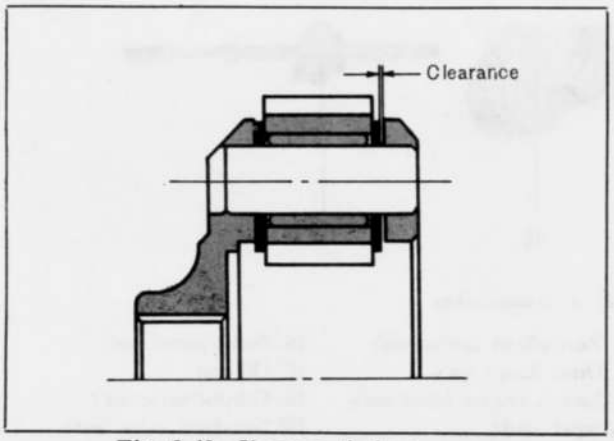

Fig. 2–43 Clearance of planetary gear

If the clearance exceeds 0.80 mm (0.032 in), replace with new one.

b. Shell and sun gear assembly

Remove the snap rings and draw out the sun gear from the connecting shell.

c. Internal drive flange assembly

Remove the snap ring and disconnect the flange from the internal gear.

d. Connecting drum assembly

The operation of the one-way clutch can be checked by assuring that the connecting drum assembly (or outer race) turns clockwise and not counter-clockwise, before removing the connecting drum assembly from the case. See part 3 "DISASSEMBLY OF TRANSMISSION COMPLETE"—15.

Draw out the one-way clutch by removing the snap ring from each end. Remove the outer race snap ring and draw out the outer race rearward from the drum.

After disassembly, check to see that the one-way clutch is not damaged. Check at the same time whether there is any damage on the contacting surface of the outer race or inner race.



Fig. 2–44 One-way clutch

When installing the one-way clutch, make sure that it is fitted with the arrow mark "→" on the front of vehicle.



Fig. 2–45 Mark on the One-way clutch

e. Manual control system and parking lock system

Removal and disassembly of these parts are omitted.

5. REASSEMBLY OF TRANSMISSION

Reassembling the major component parts on the transmission case are described below.
Install them in the procedure reverse to that of part 3 "DISASSEMBLY OF TRANSMISSION" and make sure to lubricate each with converter oil before installation. All gaskets must be replaced with new ones. As to various component parts, refer to part 4 "OVERHAUL OF MAIN COMPONENT".

1. Install the low and reverse brake assembly on the transmission case. (See 4-D)
2. Turn clockwise and push in the connecting drum assembly, engaging it with the friction plates.
3. Maunt the needle bearing and bearing race for the front face of the oil distributor assembly on the transmission case side. Then install the oil distributor assembly with governor to the case, taking care not to damage the seal rings.
4. Install the output shaft.
5. Mount the needle bearings on the front and rear faces of the internal drive flange, fit the flange on the output shaft and lock it with the snap ring.
6. Mount the bearing race on the rear face of the rear planet carrier and the needle bearing on its front face. Fit the rear planet carrier into the internal drive flange, and lock the carrier by placing the snap ring on the connecting drum.
7. Push in the manual shaft into the case and tighten the spacer and manual plate with the nut. Then mount the parking lever and parking rod.
8. Install the band servo on the case. (See 4-E)
9. Install the spacer, return spring and parking pawl on the shaft. Fit the rear end of the parking rod between the two steel balls in the supporter, then install the extension housing onto the case. Tighten the balts to a specified torque of 2.0~2.5 m-kg (15~18 ft-lb).

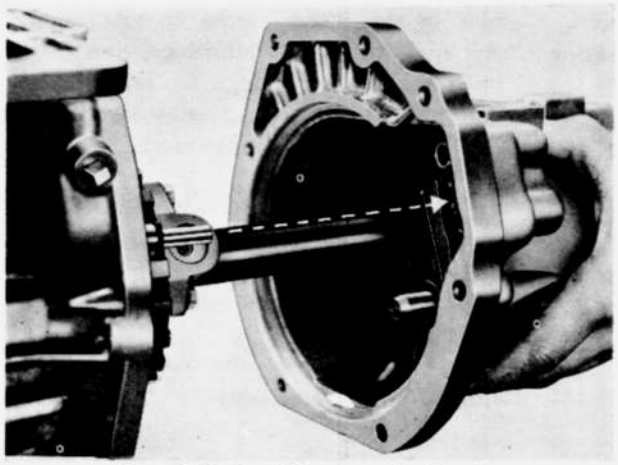

Fig. 2-46 Installing extension housing

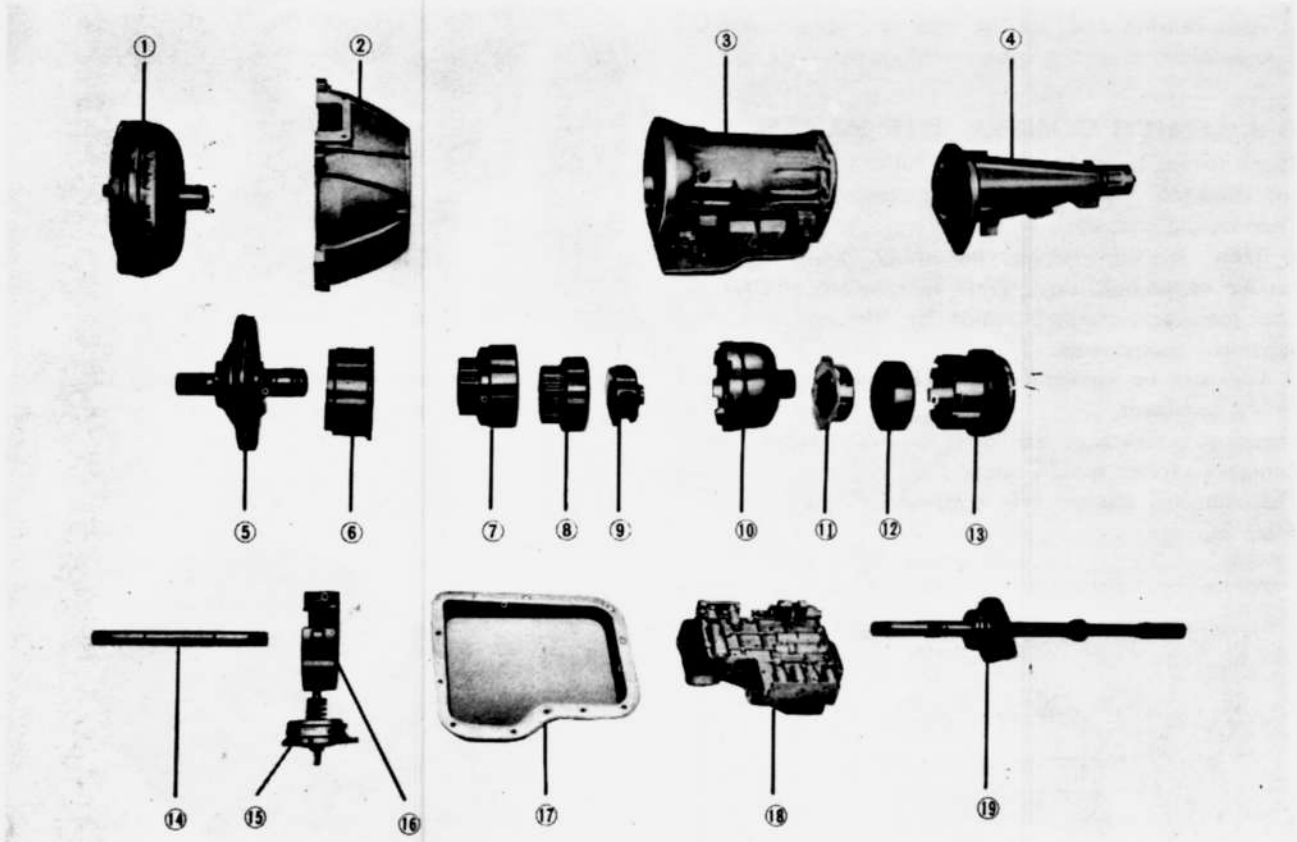

Fig. 2-47 Main components of Transmission

1. Torque converter
2. Converter housing
3. Case
4. Extension housing
5. Oil pump ass'y
6. Front clutch ass'y
7. Rear clutch ass'y
8. Rear clutch hub ass'y
9. Rear planet carrier ass'y
10. Shell & sun gear ass'y
11. Rear planet carrier ass'y
12. Drive flange ass'y
13. Low & reverse brake ass'y
14. Input shaft
15. Brake band
16. Servo piston ass'y
17. Oil pan
18. Control valve ass'y
19. Governor valve ass'y and out put shaft

10. Mount the needle bearing on the rear face of the rear clutch hub and the bearing race on the front face of the front planet carrier. Assemble the rear clutch hub and the planet carrier, and install its assembly on the sun gear and connecting shell.
11. Put the above assembly with the rear clutch hub side facing upward. Mount the needle bearing on the front face of the rear clutch hub and the bearing race on the rear face of the rear clutch assembly, and install the rear clutch assembly downward on the rear clutch hub. In doing so, turn it a little so that the teeth of the clutch plates may come into engagement with the clutch hub spline.
12. Install the front clutch assembly into the rear one as in the case of the rear clutch assembly.

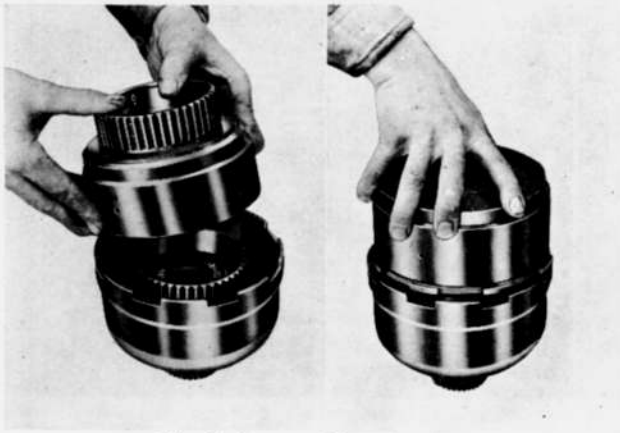

Fig. 2-48 assembling clutches

13. Install the assembly including the connecting shell and the front clutch into the transmission case.
14. Temporarily mount the brake band on the front clutch drum and fit the strut.
15. Set the front clutch thrust washer, which adjusts the end play of the front clutch drum, on the rear face of the oil pump cover assembly, and also set the bearing race, which adjusts the total end play, on the rear end of the oil pump cover. Apply some amount of vaseline to prevent bearing race falling.
Install the oil pump assembly with packing to the transmission case. Then tighten the converter housing onto the transmission case with five bolts to 4.0 ~5.0 m-kg (29~36 ft-lb) torque. Insert the input shaft.

Note : Above two end plays should be checked after the oil pump is properly installed and adjusted following 16 and 17.

16. Push the front clutch drum back and forth and insert a thickness gauge in the clearance between the front clutch drum and connecting shell in order to measure the end play between the rear face of the oil pump cover and the front face of the front clutch drum. Select a thrust washer from the following seven washers to adjust the clearance to specified 0.5 ~0.8 mm (0.020~0.032 in).

1.50 mm (0.059 in),	1.70 mm (0.057 in),
1.90 mm (0.075 in),	2.10 mm (0.083 in),
2.30 mm (0.091 in),	2.50 mm (0.038 in),
2.70 mm (0.106 in)	

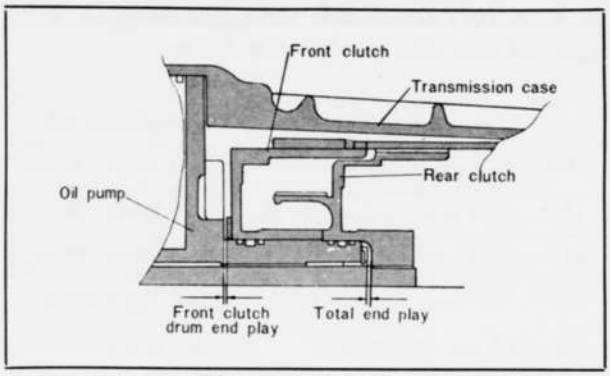

Fig. 2-49 End plays

17. In measuring the total end play, apply the dial gauge on the tip of the input shaft and move the connecting shell fore and aft, and read the needle vibration. The standard clearance is 0.25~0.50 mm (0.010~0.020 in). Adjust end play by selecting a proper race in the followings.

1.20 mm (0.047 in),	1.40 mm (0.055 in),
1.60 mm (0.063 in),	1.80 mm (0.071 in),
2.00 mm (0.079 in),	2.20 mm (0.087 in),

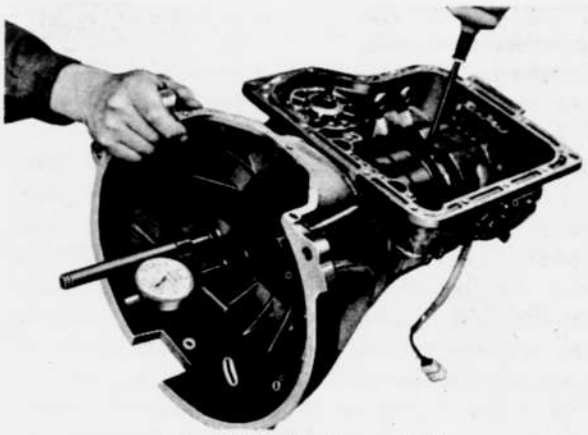

Fig. 2-50 Checking end play

18. Tighten the stem of the servo piston to a torque of 1.2~1.5 m-kg (8.6~11.0 ft-lb). Then loosen it by two turns and lock with the lock nut to a tightening torque of 3.0~4.0 m-kg (22~29 ft-lb).
19. Install the control valve assembly onto the transmission case with seven bolts to a specified tightening torque of 0.55~0.75 m-kg (4.0~5.4 ft-lb).
20. If the valve body, transmission case or rod were replaced, measure the distance "L" in the condition of

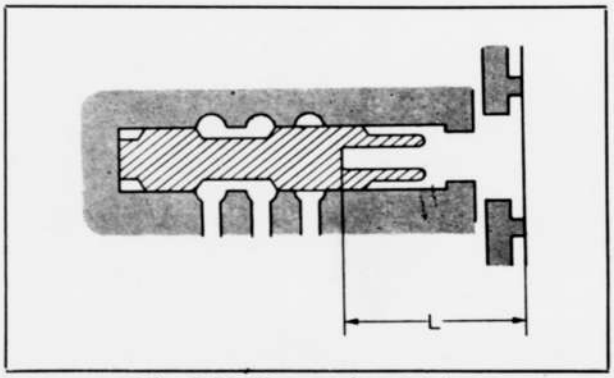

Fig. 2-51 Vacuum throttle valve

the valve fully compressed and select adequate diaphragm rod according to the table below.

Measurement "L"	Diaphragm rod
Under 27.2 mm (1.073 in)	29.0 mm (1.140 in)
27.2 ~ 27.7 mm (1.073~1.093 in)	29.5 mm (1.160 in)
27.7 ~ 28.2 mm (1.093~1.112 in)	30.0 mm (1.180 in)
28.2 ~ 28.7 mm (1.112~1.132 in)	30.5 mm (1.200 in)
Over 28.7 mm (1.132 in)	31.0 mm (1.220 in)

21. Install the oil pan together with the packing to a tightening torque of 0.35~0.45 m-kg (2.5~3.2 ft-lb).

6. INSTALLATION AND ADJUSTMENT OF TRANSMISSON

1. Before installing the transmission, measure the runout of the torque converter drive plate with a dial gauge. The runout must be within 0.3 mm (0.012 in). In case the runout exceeds 0.5 mm (0.020 in), replace the drive plate.
2. Installation procedure for the transmission is reverse to the removing procedure, referring to "REMOVAL OF TRANSMISSION" in Part 2. In tightening the torque converter and the drive plate, temporarily tighten four bolts first, then lock the drive plate with the ring gear brake. And tighten the four bolts to a specified torque of 4~5 m-kg (29~36 ft-lb). In case of confirming the tightening torque accurately, it is recomendable to proceed as follows: Install a torque wrench to the hole in the center of the **special wrench** (49 0378 435), and tighten the bolt until the reading on the torpue wrench comes to the value to be obtained by the undermentioned formula.

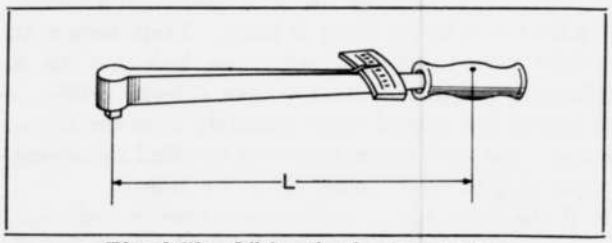

Fig. 2-52 "L" length of torque wrench

"L" indicates the effective length of the torque wrench. In the case of the torque wrench expressed in the m-kg unit, measure the "L" in terms of cm, and substitute the value (for example, 30 in case of 30 cm) into formula (1). In the case of the ft-lb torque wrench, on the other hand, measure the "L" in the inch unit, and substitute the value into formula (2). The prescribed tightening torque will thus be obtained.

$$\frac{5\,L}{10+L} \cdot \text{m-kg} \quad \cdots\cdots(1)$$

$$\frac{35\,L}{4+L} \cdot \text{ft-lb} \quad \cdots\cdots(2)$$

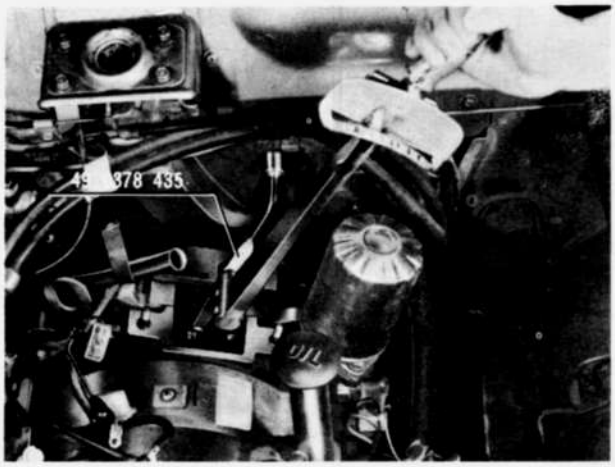

Fig. 2-53 Measuring tightening torque

3. When the installation is finished, rotate the crankshaft and check to see that there is no interference in the transmission. Then make the following check:
(1) Fill converter oil. The converter, when empty, can hold 5.5 liters (11.6 u.s. pints, 9.7 Imp. pints, 5.7 u.s. quarts). (1-A-1)
(2) Check and regulate the manual linkage. (1-A-4)
(3) Check and regulate the inhibitor switch. (1-A-5)
(4) Check and regulate the engine idling. (1-A-2)
Apply the band brake. With the engine idling, place the manual lever in "N", "D", "2", "1" and "R", and check to see that there is a slight shock of the transmission.
(5) Confirm the operation of the kickdown switch and downshaft solenoid. (1-A-3)
(6) Check the oil level again.
4. When checking and regulating are over, conduct stall test, road test and hydraulic test referring to diagnostic test items (1-B) in order to make sure that the transmission works normally.

REAR AXLE

9–A. REAR AXLE SHAFT ..... 9 : 1
9–A–1. Removing of Rear Axle Shaft ..... 9 : 1
9–A–2. Replacing of Axle Shaft Bearing ..... 9 : 1
9–A–3. Installing of Rear Axle Shaft ..... 9 : 1
9–B. REAR AXLE REMOVAL ..... 9 : 2
9–C. REAR AXLE DISASSEMBLY ..... 9 : 2
9–C–1. Removing of Differential ..... 9 : 2
9–C–2. Disassembling of Differential ..... 9 : 3
9–C–3. Removing of Drive Pinion ..... 9 : 3
9–C–4. Removing of Pinion Bearing Outer Race. ..... 9 : 3
9–D. REAR AXLE INSPECTION ..... 9 : 3
9–D–1. Checking of Drive Pinion and Ring Gear ..... 9 : 3
9–D–2. Checking of Differential Gears ..... 9 : 4
9–D–3. Checking of Bearings ..... 9 : 4
9–D–4. Checking of Oil Seal ..... 9 : 4
9–D–5. Checking of Companion Flange ..... 9 : 4
9–E. REAR AXLE ASSEMBLY ..... 9 : 4
9–E–1. Adjusting of Drive Pinion ..... 9 : 4
9–E–2. Adjusting of Pinion Bearing Preload ..... 9 : 6
9–E–3. Assembling of Differential ..... 9 : 6
9–E–4. Installing of Differential ..... 9 : 7
9–E–5. Adjusting of Backlash ..... 9 : 7
9–F. REAR AXLE INSTALLATION ..... 9 : 8

REAR AXLE

MAZDA RX2 is equipped with a semi-floating type rear axle with a hypoid ring gear and pinion set. The final reduction ratio is 3.700.

9–A. REAR AXLE SHAFT

9–A–1. Removing of Rear Axle Shaft

1. Remove the rear wheel and brake drum.
2. Remove the brake shoe assembly, as detailed in Par. 11–E.
3. Remove the nuts holding the brake backing plate and bearing retainer to the axle housing.
4. Extract the axle shaft assembly using the **puller** (49 0223 630A and 49 0259 631).

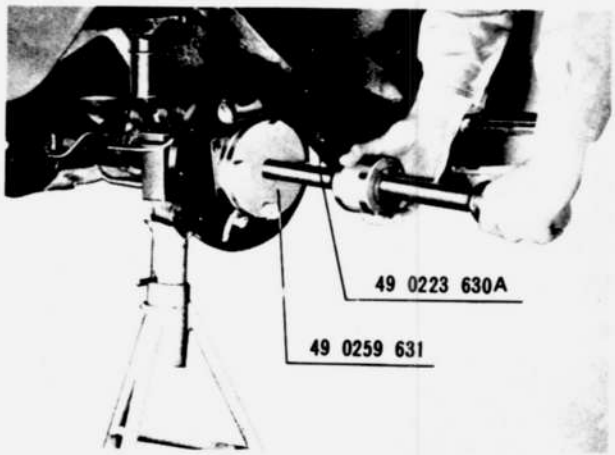

Fig. 9–1 Removing of rear axle shaft

9–A–2. Replacing of Axle Shaft Bearing

1. Remove the rear axle shaft assembly as described in Par. 9–A–1.
2. Using the **bearing remover set** (49 0259 745), support the spacer and press the axle shaft out of the collar and bearing, as shown in Fig. 9–2.

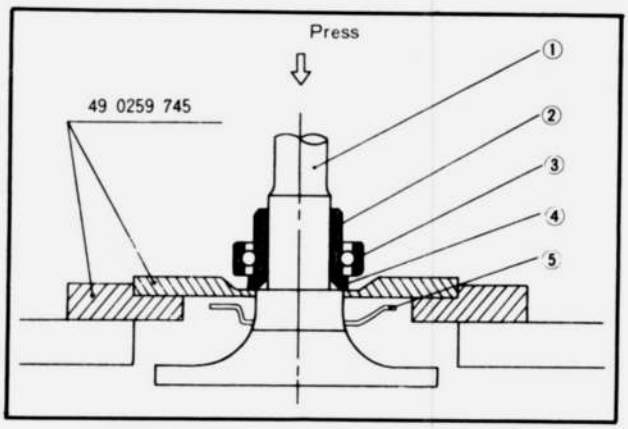

Fig. 9–2 Removing of bearing

1. Rear axle shaft
2. Collar
4. Spacer
5. Retainer
6. Bearing

Note: In case the pressure necessary to press out the axle shaft exceeds 10 tons (22,000 lb) or if the bearing remover set is not available, grind off the part of bearing retaining collar and cut it with the use of a chisel, as shown in Fig. 9–3, taking care not to damage the axle shaft.



Fig. 9–3 Cutting of bearing collar

3. Remove the bearing retainer from the axle shaft.
4. Clean all parts and check the condition of the collar, spacer, axle shaft and the oil seal located in the axle shaft housing.
5. Install the bearing retainer and spacer onto the axle shaft.
6. Position the bearing on the axle shaft with the sealed side toward the axle shaft flange, and press it on until the spacer comes in contact with the shoulder of the shaft.
7. Press the bearing retaining collar onto the axle shaft using the **bearing replacer** (49 0259 745) until it is firm contact with the bearing inner race.

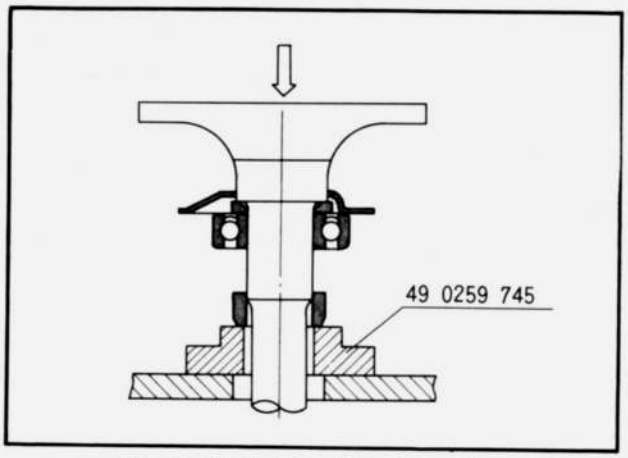

Fig. 9–4 Installing of bearing collar

Note: If the bearing retaining collar is press-fitted with less than 3 tons (6,600 lb), replace the collar with a new one.

9–A–3. Installing of Rear Axle Shaft

1. Apply grease to the oil seal located in the axle housing.
2. Check the rear axle shaft end play as follows: Install the backing plate temporarily and measure the depth of the bearing seat in the axle housing, using a depth gauge as shown in Fig. 9–5.

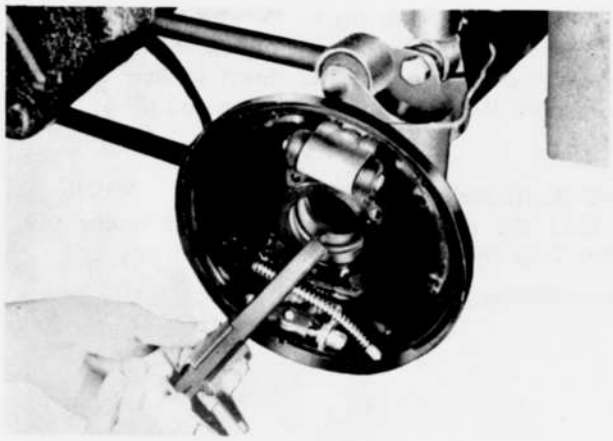

Fig. 9–5 Measuring of depth

Then, measure the width of bearing outer race. The difference between the two measurements indicates the required thickness of the shims.
The maximum permissible end play is **0.1 mm (0.004 in)**. Shims are available in thickness of 0.1 mm and 0.4 mm (0.004 in and 0.016 in).

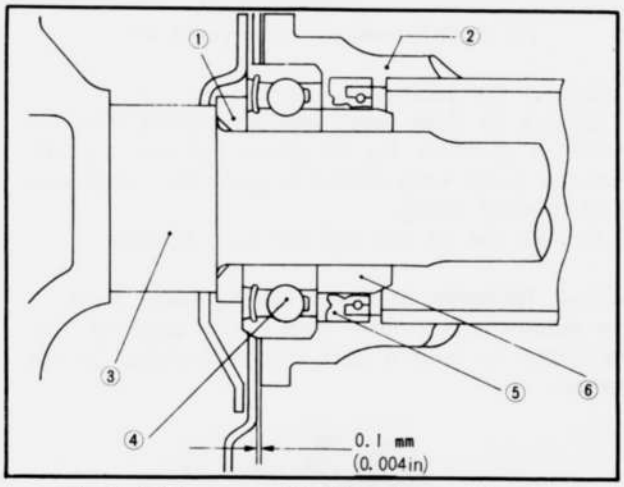

Fig. 9–6 Clearance of backing plate and housing

1. Spacer
2. Axle casing
3. Axle shaft
4. Bearing
5. Oil seal
6. Collar

3. Install the rear axle shaft assembly and shims through the brake backing plate to the rear axle housing so as to fit the splines of the differential side gear and the end of the axle shaft.
Tighten the nuts.
4. Install the brake shoe assembly.
5. Install the brake drum and the wheel.

9–B. REAR AXLE REMOVAL

1. Jack up the vehicle until the rear wheels are clear of the ground.
2. Drain the oil by removing the drain plug. Reinstall the drain plug after draining.
3. Remove the rear axle shafts, referring to Par. 9–A–1.
4. Disconnect the propeller shaft at the companion flange of the rear axle.
5. Remove the nuts supporting the rear axle to the rear axle housing and remove the rear axle.



Fig. 9–7 Removing of rear axle

9–C. REAR AXLE DISASSEMBLY

9–C–1. Removing of Differential

1. Mount the rear axle on the **stand** (49 0164 550D and 49 0223 561).
2. Apply identification punch marks on the carrier, differential bearing cap, and adjuster for reassembly purpose.

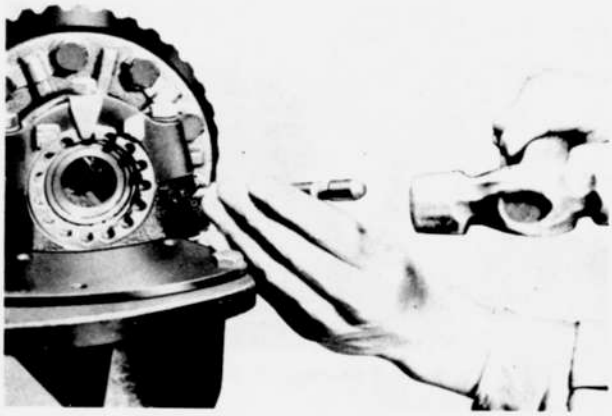

Fig. 9–8 Applying of identification marks

3. Remove the adjuster lock plates.

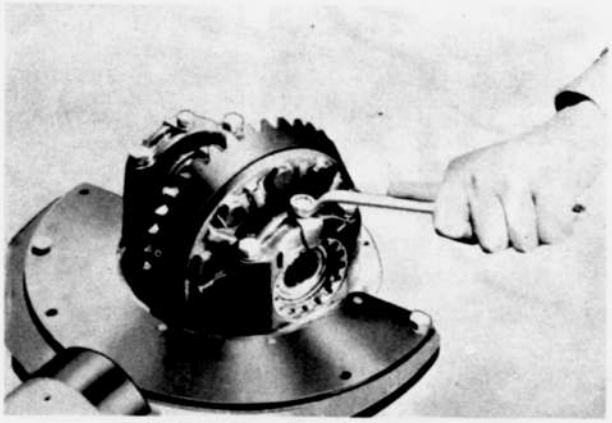

Fig. 9–9 Removing of lock plate

4. Loosen the bearing cap attaching nuts and back off the adjuster slightly with the **spanner** (49 0259 720) to relieve differential bearing preload.
5. Remove the differential assembly together with the bearing outer races. Make certain that each bearing outer race remains with its respective bearing.



Fig. 9–10 Removing of differential assembly

9–C–2. Disassembling of Differential

1. Using a suitable puller, remove the differential bearings from the differential gear case.
2. Remove the bolts and lockwashers that attach the ring gear to the gear case. Remove the ring gear.

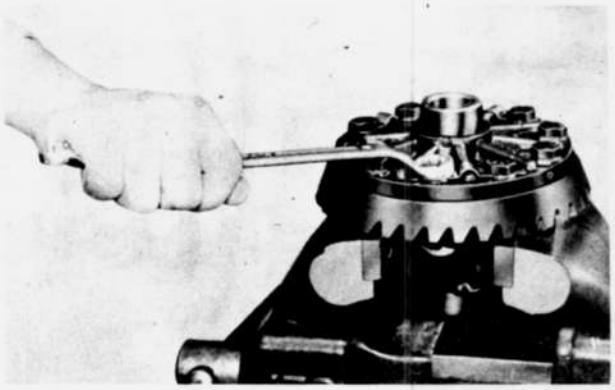

Fig. 9–11 Removing of ring gear

3. From the back side of the ring gear flange, drive the pinion shaft lock pin out of the gear case with a suitable drift, as shown in Fig. 9–12.

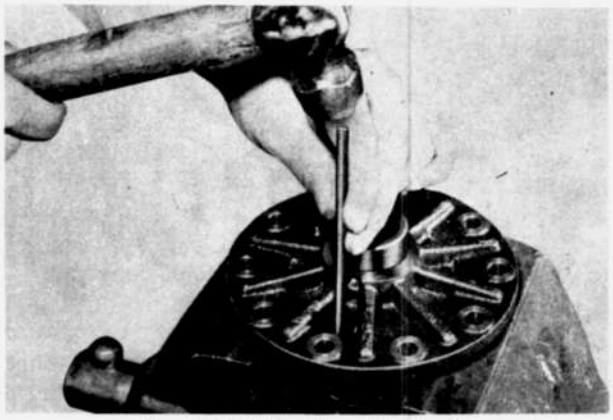

Fig. 9–12 Removing of lock pin

4. Remove the pinion shaft.
5. Rotate the differential pinion gears 90 degrees and remove each pinion gear and thrust washer.
6. Remove the differential side gears and thrust washers.

9–C–3. Removing of Drive Pinion

1. Hold the companion flange with the **holder** (49 0259 710) and remove the drive pinion nut.

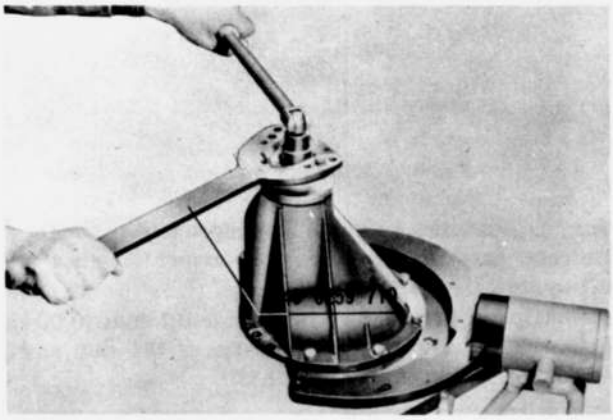

Fig. 9–13 Removing of drive pinion nut

2. Remove the companion flange.
3. Remove the drive pinion and rear bearing from the carrier. If necessary, tap the pinion out with a plastic hammer, while being careful to guide the pinion with hand to avoid damage.
4. Remove the oil seal and the front bearing.

9–C–4. Removing of Pinion Bearing Outer Race

The pinion bearing outer races can be removed from the carrier by using a drift in slots provided for this purpose.

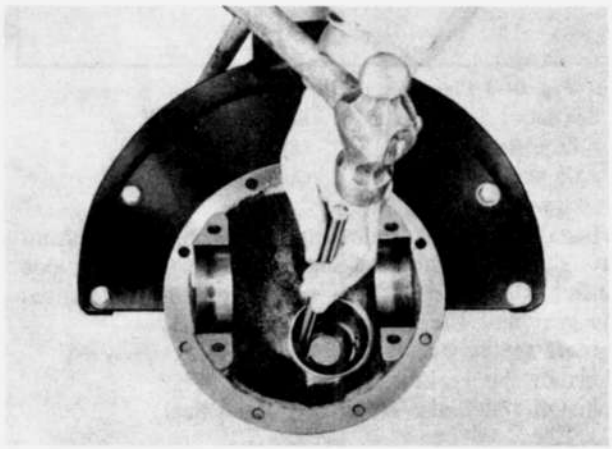

Fig. 9–14 Removing of pinion bearing outer race

9–D. REAR AXLE INSPECTION

9–D–1. Checking of Drive Pinion and Ring Gear

Check the drive pinion for damaged or excessively worn teeth, damaged bearing journals and splines. Inspect the ring gear for worn or chipped teeth. If any of above conditions is found, replace both

drive pinion and ring gear as they are available only in set.

9–D–2. Checking of Differential Gears

Inspect the differential side gears and pinion gears for cracks, chipped teeth or any damage. Replace the side gears, pinion gears or thrust washers if necessary. Check the clearance between the pinion gear and shaft. If excessive clearance is found due to wear, replace with new parts.

Check the spline fit of the side gear and rear axle shaft. If it is **0.3 mm (0.012 in) or more,** replace the side gear or rear axle shaft.

9–D–3. Checking of Bearings

Inspect the differential bearings and pinion bearings for wear, flaking or any damage. If inspection reveals that either bearing cones or outer race are unfit for further service, replace the bearing.

9–D–4. Checking of Oil Seal

Check the oil seal for wear or damage. If there is any possibility of oil leakage, replace the oil seal.

9–D–5. Checking of Companion Flange

Check the companion flange for cracks, worn splines, or rough oil seal contacting surface. Repair or replace the companion flange if necessary.

9–E. REAR AXLE ASSEMBLY

9–E–1. Adjusting of Drive Pinion

The drive pinion should be correctly positioned in relation to the ring gear by the use of spacer which is placed between the drive pinion and the outer race of the pinion rear bearing.

The standard distance between the top of the drive pinion and the center of the ring gear **(mounting distance)** is **90 ± 0.025 mm.**

To adjust the drive pinion position, use the **special gauge** (49 0727 570 and 49 0305 555) and proceed as follows:

1. Install the dial indicator to the gauge body. Place the gauge body on the surface plate as shown in Fig. 9–15 and lock the dial indicator by the screw to that the needle is pointing toward 1 to 3 mm.
Then, set the reading to "Zero" by turning the outer ring of the indicator.

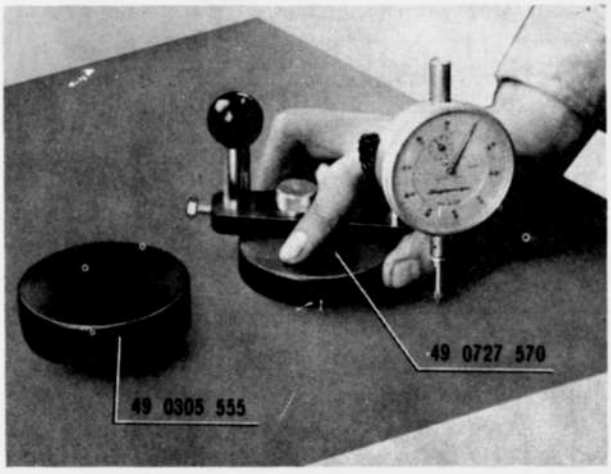

Fig. 9–15 Pinion adjusting gauge

2. Make certain that the differential bearing support bores are free of dirt and burrs.
3. Install the pinion and bearing model together with a spacer into the carrier.

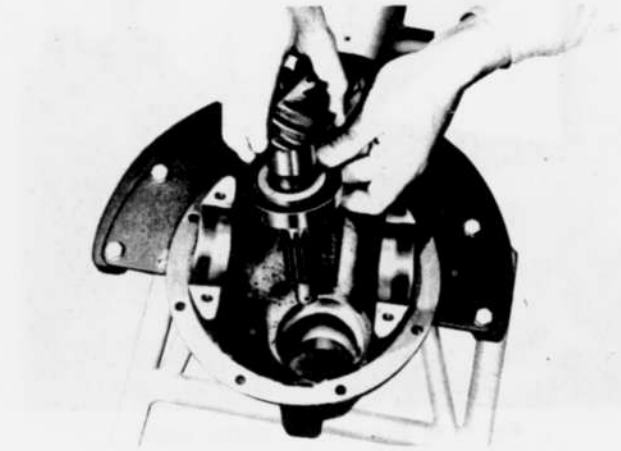

Fig. 9–16 Installing of pinion and bearing model

4. Place the gauge block on the pinion, carefully place the gauge body as adjusted according to Step 1, on the gauge block so that the feeler of the indicator comes in contact with the lowest portion of the differential bearing support bore.

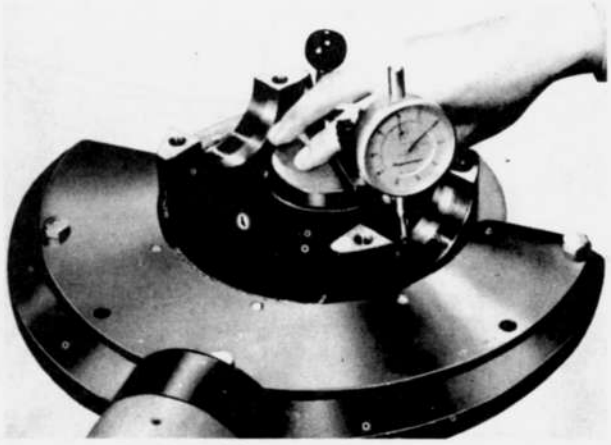

Fig. 9–17 Measuring of pinion height

5. Record the number of hundredths dial indicator moves in a "+" (plus) or "–" (minus) direction from zero. Remove the gauge body and dial indicator from the carrier and check zero setting on the surface plate to make sure this setting was not disturbed by handling.
6. In order to compensate for all of the machining variables, the pinion has a plus or minus reading recorded in hundredth millimeters on the rear face of the pinion.
(a) If the pinion is marked "+" (plus), subtract the amount specified on the pinion.
(b) If the pinion is marked "–" (minus), add the amount specified on the pinion.

7. Place the bearing model and the rear pinion bearing on the surface plate and compare their heights as shown in Fig. 9–18.
(a) If the bearing is higher than the model, subtract the amount equivalent to the difference.
(b) If the bearing lower than the model, add the amount equivalent to the difference.



Fig. 9–18 Measuring of bearing height

8. Finally select the correct pinion spacer to be used during pinion assembly by adding or subtracting the amount determined in Step 5, 6 and 7 from the thickness of the spacer used in Step 3.
The spacers are available in the following thickness:

Identification mark	Thickness
08	3.08 mm (0.1213 in)
11	3.11 mm (0.1224 in)
14	3.14 mm (0.1236 in)
17	3.17 mm (0.1248 in)
20	3.20 mm (0.1260 in)
23	3.23 mm (0.1271 in)
26	3.26 mm (0.1283 in)
29	3.29 mm (0.1295 in)
32	3.32 mm (0.1307 in)
35	3.35 mm (0.1319 in)
38	3.38 mm (0.1331 in)
41	3.41 mm (0.1343 in)
44	3.44 mm (0.1354 in)
47	3.47 mm (0.1366 in)

9. Position the correct spacer on the pinion and install the rear pinion bearing.

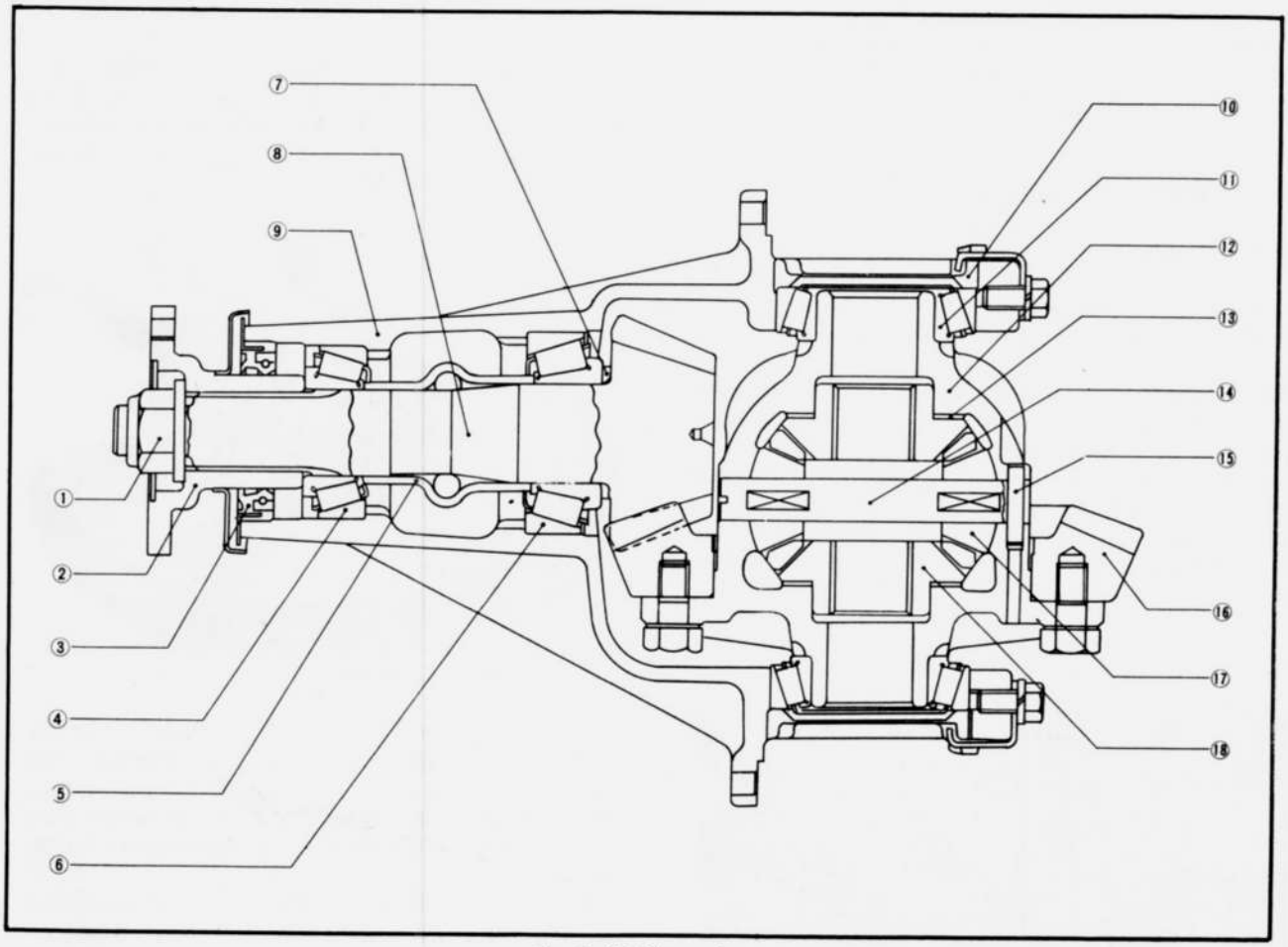

Fig. 9–19 Rear axle

1. Nut
2. Companion flange
3. Oil seal
4. Front pinion bearing
5. Collapsible spacer
6. Rear pinion bearing
7. Spacer
8. Drive pinion
9. Carrier
10. Adjuster
11. Differential bearing
12. Differential gear case
13. Thrust washer
14. Pinion shaft
15. Lock pin
16. Ring gear
17. Pinion gear
18. Side gear

9–E–2. Adjusting of Pinion Bearing Preload

1. Position the pinion assembly in the carrier and install the collapsible spacer as shown in Fig. 9–20.

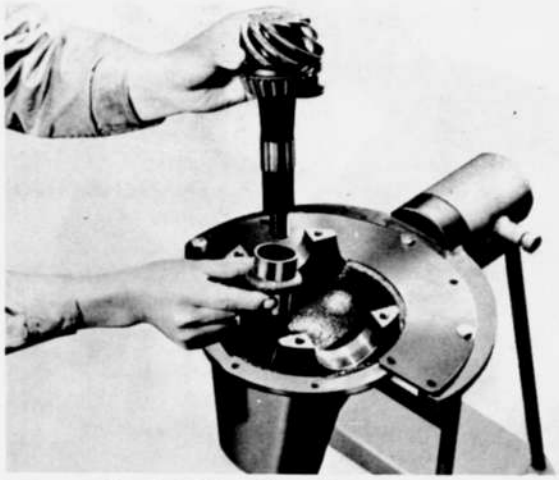

Fig. 9–20 Installing of collapsible spacer

2. Place the front pinion bearing in position on the pinion. Hold the pinion fully forward and drive the pinion bearing over the pinion until seated.
3. Apply grease to the lip of the pinion oil seal and install the pinion oil seal into the carrier.
4. Install the companion flange on the pinion by tapping with a soft hammer.
5. Install the pinion washer and nut. Before tightening the nut (When the pinion preload is Zero), check the drag by the oil seal by using a torque wrench.
6. Tighten the pinion nut to **13 m-kg (94 ft-lb)** and check the preload as shown in Fig. 9–21.

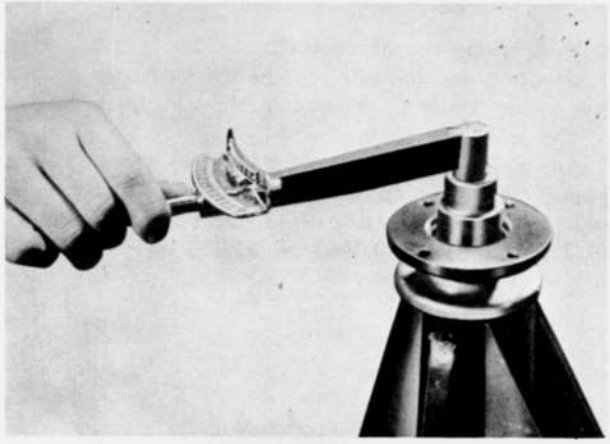

Fig. 9–21 Checking of preload

Note: After preload has been checked, final tightening should be done very cautiously.
The pinion nut should be further tightened only a little at a time and preload should be checked after each slight amount of tightening. Exceeding preload specifications will compress the collapsible spacer too far and requires its replacement.

7. While observing the proceeding caution, carefully set the preload drag at **9 to 14 cm-kg (7.8 to 12.2 in-lb)** plus the oil seal drag determined in Step 5.

9–E–3. Assembling of Differential

1. Install the thrust washer on each differential side gear and install these in the gear case.



Fig. 9–22 Installing of thrust washer

2. Through the opening of the gear case, insert each of two pinion gears exactly 180 degrees opposite each other.
3. Rotate the gears 90 degrees so that the pinion shaft holes of the case come into alignment with the holes in the pinion gears.



Fig. 9–23 Installing of pinion gears

4. Insert the pinion shaft through the case and pinion gears.
5. Check the backlash of the side gear and pinion gear.

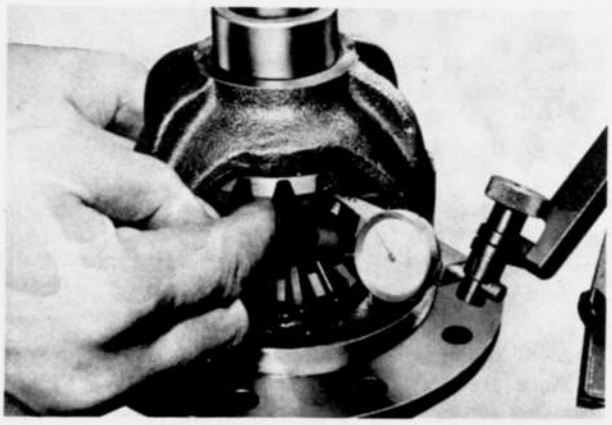

Fig. 9–24 Checking of backlash

The backlash should be 0 to 0.1 mm (0 to 0.004 in). If it is **more than 0.2 mm (0.008 in)**, adjust with the side gear thrust washers.
The following thrust washers are available:

Identification mark	Thickness
0	2.0 mm (0.0787 in)
1	2.1 mm (0.0827 in)
2	2.2 mm (0.0866 in)

6. Install the lock pin to secure the pinion shaft, and in order to prevent the lock pin from working out, stake into position with a punch.



Fig. 9–25 Installing of lock pin

7. Install the ring gear to the case and tighten the bolts to a torque of **5.0 m-kg (35 ft-lb).**

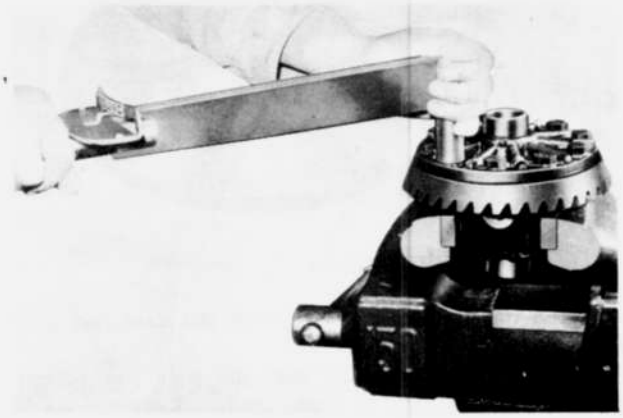

Fig. 9–26 Installing of ring gear

Note: As there are two kinds of bolts, use those which fit the holes of the gear case flange.

8. Bend the tabs of the lock plates to prevent loosening.
9. Install each differential bearing to the hubs of the gear case.
10. Install the differential bearing outer races to its respective bearing.

9–E–4. Installing of Differential

1. Place the differential gear assembly in the carrier, **marking ensure that the marks for backlash adjustment on the face of the pinion and ring gear teeth are aligned each other.**

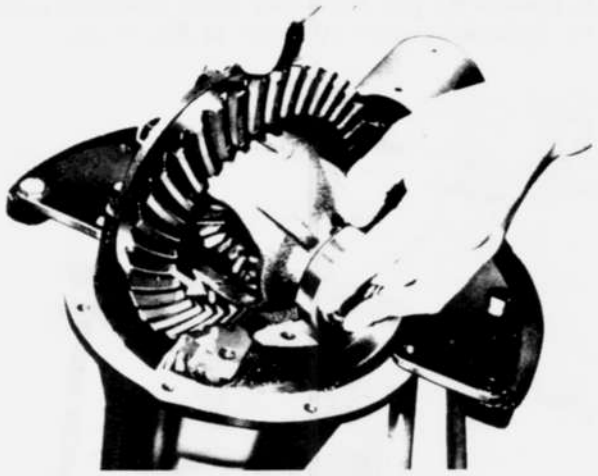

Fig. 9–27 Installing of differential assembly

2. As there are two types of a adjusters, right-hand threaded and left-hand threaded, note the identification marks on the adjusters and install each to its respective side.
3. Install the differential bearing caps making sure that the identification marks on the caps correspond with those on the carrier and install the attaching bolts.
4. Turn the adjusters with the **spanner** (49 0259 720) until the bearings are properly positioned in their respective outer races and the end play is eliminated with some backlash existing between the ring gear and drive pinion.
5. Slightly tighten one of the bearing cap bolts on each side and adjust the backlash, as instructed in the following paragraph.

9–E–5. Adjusting of Backlash

1. Secure a dial indicator to the carrier flange so that the feeler comes in contact at right angles with one of the ring gear teeth.
2. Check the backlash between the ring gear and drive pinion. With the **spanner** (49 0259 720), turn both bearing adjusters equally until the backlash becomes **0.17 to 0.19 mm (0.0067 to 0.0075 in).**

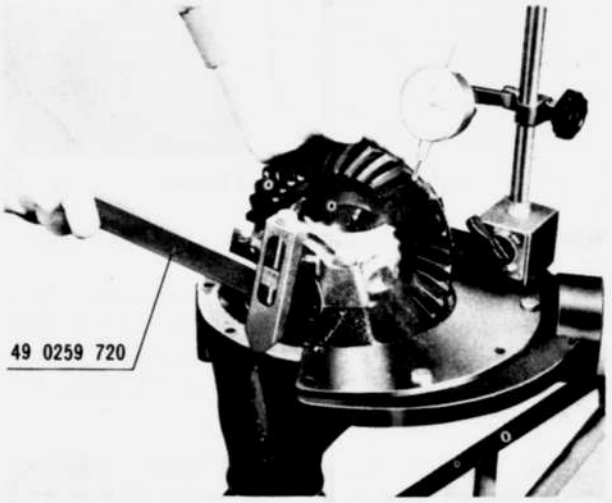

Fig. 9–28 Adjusting of backlash

3. The preload on the differential bearings is obtained by tightening the adjusters. Tighten the adjusters until the distance between both pilot sections on the bearing caps becomes **185.5 mm (7.306 in)**, as shown in Fig. 9–29.

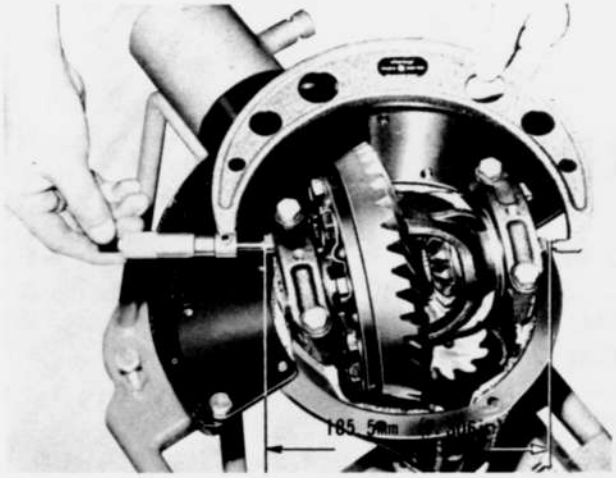

Fig. 9–29 Adjusting of preload

Note: When adjusting the preload, care must be taken not to affect the backlash of the drive pinion and ring gear.

4. Tighten the bearing cap bolts to a torque of **4.0 m–kg (30 ft–lb).**
5. Install the adjuster lock plates on the bearing caps to prevent the adjuster from loosening.

6. Check the tooth contact of the ring gear and pinion by applying a thin coat of red lead on both sides of about six or eight of ring gear teeth and rotating the ring gear few times to and fro.
If the pinion position and backlash have been correctly set, the contact pattern should be as shown in Fig. 9–30.

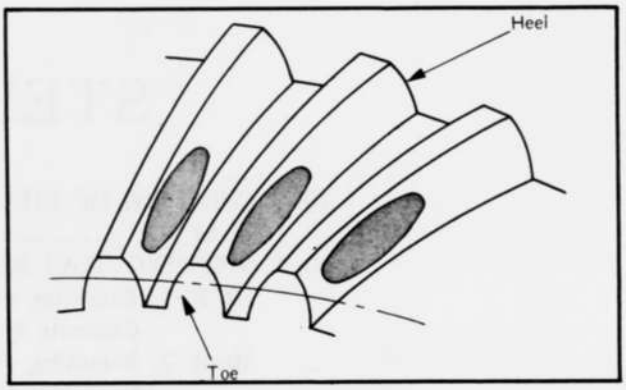

Fig. 9–30 Correct tooth contact

9–F. REAR AXLE INSTALLATION

1. Install the rear axle to the rear axle housing and attaching nuts.
2. Attach the propeller shaft to the companion flange of the rear axle.
3. Install the rear axle shafts and adjust the end play, as instructed in Par. 9–A–5.
4. Refill with the oil up to the level hole.

SPECIAL TOOLS

49 0223 630A	Rear axle shaft puller
49 0259 631	Attachment (for puller)
49 0259 745	Bearing remover set
49 0164 550D	Rear axle stand
49 0223 561	Attachment (for stand)
49 0259 720	Backlash adjusting spanner
49 0259 710	Companion flange holding tool
49 0727 570	Pinion adjusting gauge
49 0305 555	Gauge block and bearing model

STEERING

10–A. CHECKING OF STEERING WHEEL PLAY ..... 10 : 1
10–B. STEERING GEAR REMOVAL ..... 10 : 1
10–B–1. Removing of Steering Gear (Separate type) ..... 10 : 1
10–B–2. Removing of Steering Gear (Nonseparate type) ..... 10 : 2
10–C. STEERING GEAR DISASSEMBLY ..... 10 : 2
10–D. STEERING GEAR INSPECTION ..... 10 : 2
10–E. STEERING GEAR ASSEMBLY ..... 10 : 2
10–F. STEERING GEAR ADJUSTMENT ..... 10 : 3
10–F–1. Adjusting of Worm Bearing Preload ..... 10 : 3
10–F–2. Adjusting of Sector Gear and Ball Nut Backlash ..... 10 : 4
10–G. STEERING GEAR INSTALLATION ..... 10 : 4
10–H. STEERING LINKAGE ..... 10 : 4
10–H–1. Checking of Ball Joint ..... 10 : 4
10–H–2. Replacing of Idler Arm ..... 10 : 4
10–H–3. Replacing of Pitman Arm ..... 10 : 4
10–H–4. Replacing of Tie Rod ..... 10 : 5
10–H–5. Greasing of Idler Arm ..... 10 : 5
10–I. FRONT WHEEL ALIGNMENT ..... 10 : 6
10–I–1. Inspection before Checking Front Wheel Alignment ..... 10 : 6
10–I–2. Toe-in ..... 10 : 6
10–I–3. Camber, Caster and king pin Inclination ..... 10 : 6
10–I–4. Adjusting of Steering Angle ..... 10 : 6

STEERING

The steering system consists of the steering gear, steering column, steering wheel and steering linkage.
The steering gear is of a recirculating ball nut type and the steering gear ratio 17.0 to 19.0 : 1. Therefore, this steering gear provides easy steering.

10–A. CHECKING OF STEERING WHEEL PLAY

The standard free play at the outer circumference of the steering wheel is 5 to 20 mm (0.2 to 0.8 in). To check the free play of the steering wheel, place the front wheel straight ahead and turn the steering wheel slowly. The value of the free play is taken when the front wheel begins to move.
If excessive play is found, the following points should be carefully checked, because this could cause steering instability in driving.
1. Fit of the ball joints of the center link and those of the tie rods
2. Looseness of the idler arm bushes
3. Looseness of the wheel bearings
4. Backlash between the sector gear and ball nut

10–B. STEERING GEAR REMOVAL

10–B–1. Removing of Steering Gear (Separate type)

1. Loosen the worm shaft attaching bolt.

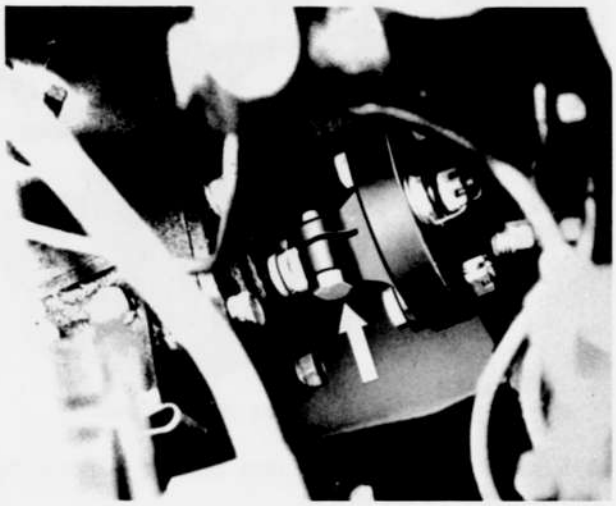

Fig. 10–1 Removing of worm shaft attaching bolt

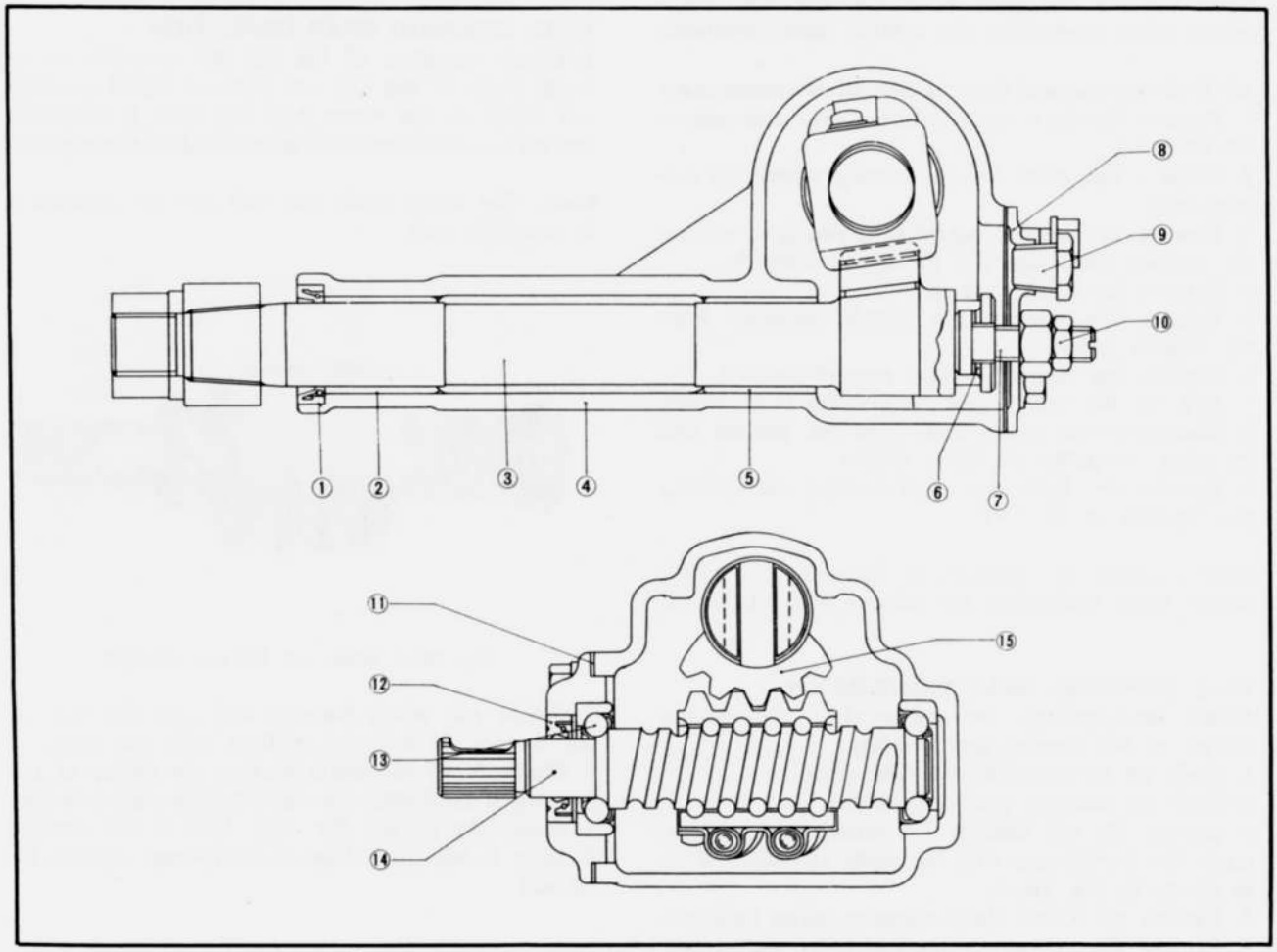

Fig. 10–2 Steering gear

1. Oil seal
2. Bush
3. Sector shaft
4. Housing
5. Bush
6. shim
7. Adjusting screw
8. Side cover
9. Plug
10. Lock nut
11. Shim
12. Oil seal
13. Bearing
14. Warm and ball nut assembly
15. Sector gear

2. Jack up the vehicle and remove the front wheel.
3. Disconnect the center link from the pitman arm by using the **puller** (49 0118 850C).



Fig. 10–3 Disconnecting of center link

4. Remove the bolts and nuts holding the steering gear housing to the frame.

Note: Confirm the position of the shim for convenience when readjusting the column shaft alignment.

10–B–2. Removing of Steering Gear (Nonseparate type)
1. Remove the horn cap attaching screws and remove the horn cap.
2. Scribe a line mark on the steering wheel and column shaft.
3. Remove the steering wheel nut, and then remove the steering wheel and the horn lever assembly.
4. Remove the column cover.
5. Remove the combination switch assembly from the column jacket.
6. Remove the steering column support bracket.
7. Jack up the vehicle and remove the front wheel.
8. Disconnect the center link from the pitman arm by using the **puller** (49 0118 850C).
9. Remove the bolts and nuts holding the steering gear housing to the frame.

Note: Confirm the position of the shim for convenience when readjusting the column shaft alignment.

10–C. STEERING GEAR DISASSEMBLY

Before disassembling, thoroughly clean the outside surface of the steering gear houding.
1. Drain oil by removing the filler plug.
2. Hold the steering housing in a vise.
3. Loosen the nut holding the pitman arm and remove the pitman arm with the **puller** (49 0223 695), as shown in Fig. 10–4.
4. Remove the sector shaft adjusting screw lock nut.
5. Remove the side cover attaching bolts, and remove the side cover and gasket by turning the adjusting screw clockwise through the cover.
6. Remove the adjusting screw and shims from the slot at the end of the sector shaft.
7. Carefully remove the sector shaft from the gear housing so as not to damage the bushes and oil seal.

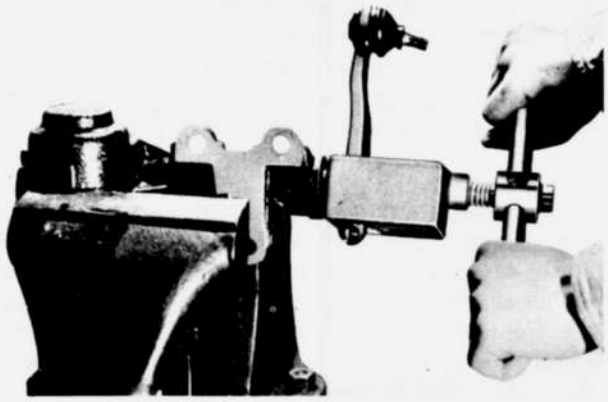

Fig. 10–4 Removing of pitman arm

8. Remove the end cover together with the shims by removing the attaching bolts.
9. Remove the worm shaft and ball nut assembly through the bottom of the gear housing. The worm shaft and ball nut are serviced as an assembly only.

10–D. STEERING GEAR INSPECTION

1. Check operation of the ball nut assembly on the worm shaft. If the ball nut does not travel smoothly and freely on the worm shaft and there is roughness, the ball nut and worm shaft assembly should be replaced.

Note: The worm shaft and ball nut are serviced as an assembly only.

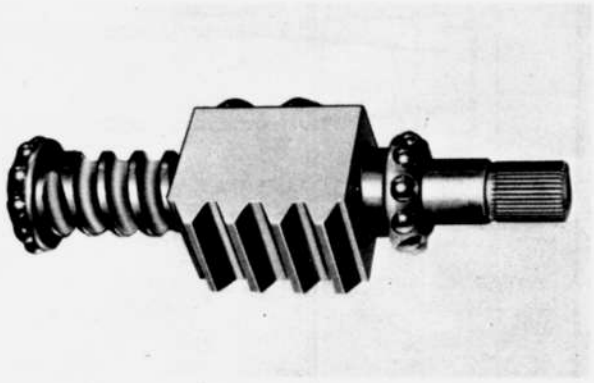

Fig. 10–5 Worm and ball nut assembly

2. Check the worm bearings and cups for wear or any damage. If defective, replace with new ones.
3. Check fit of the sector shaft in the bushes of the housing. If the bushes are worn, replace with new ones.
4. Check the oil seal for wear, flaw or any damage. If there is any possibility of oil leakage, replace the oil seal.

10–E. STEERING GEAR ASSEMBLY

1. Insert the worm shaft and ball nut assembly into the gear housing.
2. Install the end cover with the preload adjusting shims, and adjust the worm bearings preload to **1.0 to 4.0 cm-kg (0.9 to 3.5 in-lb)**, by following the

procedure explained in Par. 10–F–1.

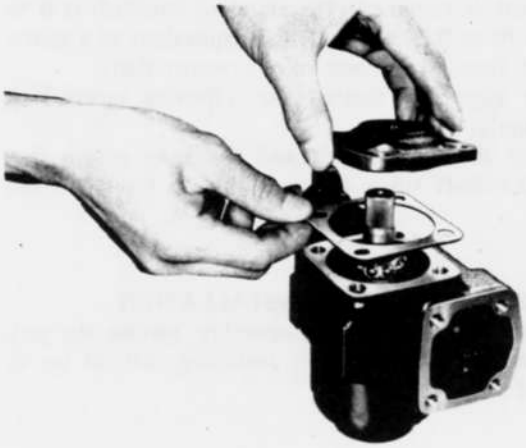

Fig. 10–6 Installing of end cover and shim

3. Install the adjusting screw into the slot at the end of the sector shaft. Check the end clearance with a feeler gauge, and adjust this clearance to be **0.02 to 0.08 mm (0.0008 to 0.0031 in)** by inserting appropriate shims. The shims are available in the following four thicknesses.

1.95 mm (0.077 in)	2.05 mm (0.081 in)
2.00 mm (0.079 in)	2.10 mm (0.083 in)

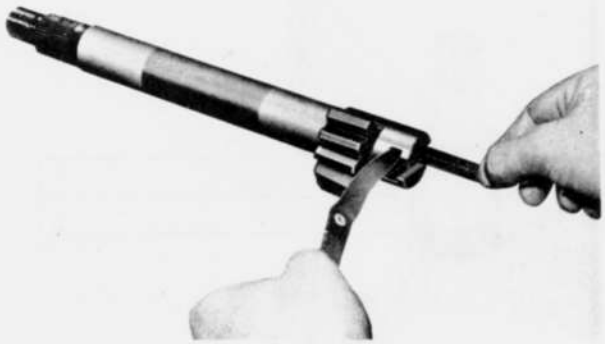

Fig. 10–7 Checking of end clearance

4. Turn the worm shaft and place the rack in the center position of the worm in the gear housing. Insert the sector shaft and adjusting screw into the gear housing, being careful not to damage the bushes and oil seal, and ensuring that the center of the sector gear is aligned with the center of the rack, as shown in Fig. 10–8.

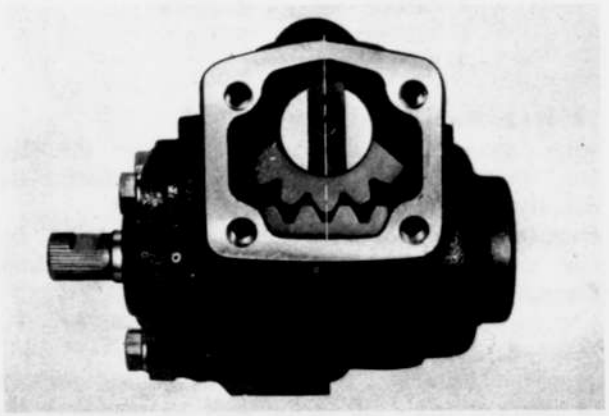

Fig. 10–8 Position of sector gear and rack

5. Install the side cover and the gasket onto the adjusting screw, turning the adjusting screw counterclockwise until it is screwed into proper position.

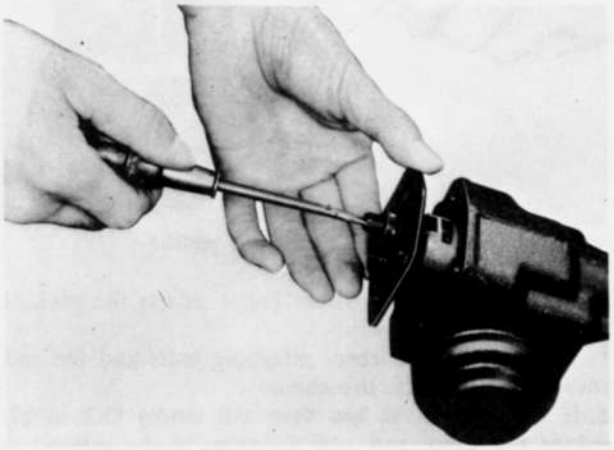

Fig. 10–9 Installing of side cover

6. Install the side cover attaching bolts and tighten the bolts.
7. Adjust the backlash between the sector gear and rack by applying the procedure explained in Par. 10–F–2. After adjusting, tighten the adjusting screw lock nut securely.
8. Install the pitman arm onto the sector shaft, **aligning the identification marks** and tighten the nut. The tightening torque is **15.0 m-kg (110 ft-lb).**

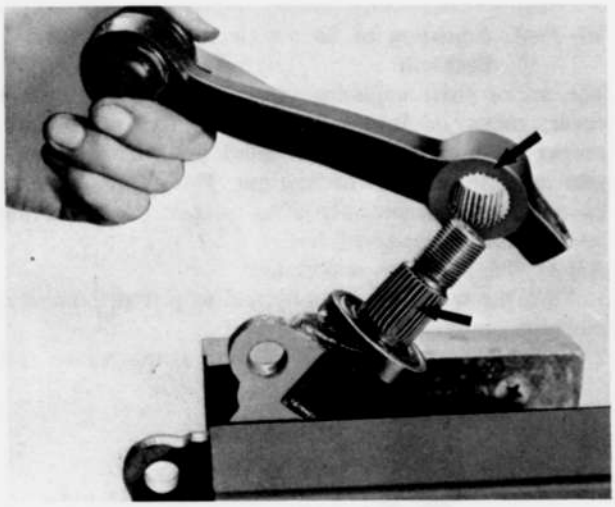

Fig. 10–10 Installing of pitman arm

10–F. STEERING GEAR ADJUSTMENT

10–F–1. Adjusting of Worm Bearing Preload

To adjust the worm bearing preload, remove the steering gear from the vehicle. With a torque wrench, rotate the worm shaft and check the rotating torque. The rotating torque (preload) should be between **6.0 to 8.0 cm-kg (5.2 to 6.9 in-lb).**

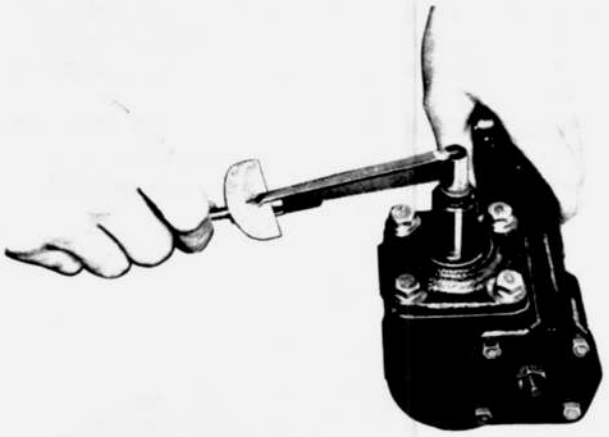

Fig. 10–11 Checking of preload

If the reading is not within limits, adjust the preload as follows:
1. Remove the end cover attaching bolts and the end cover together with the shims.
2. If the preload is **less than 6.0 cm-kg (5.2 in-lb),** reduce the shim, and add the shim if the preload is **more than 8.0 cm-kg (6.9 in-lb).**
The following shims are available:

0.050 mm (0.002 in)	0.100 mm (0.004 in)
0.075 mm (0.003 in)	0.200 mm (0.008 in)

3. Install the end cover and recheck the worm bearing preload.

Note: The preload before installing the sector shaft should be between **1.0 to 4.0 cm-kg (0.9 to 3.5 in-lb).**

10–F–2. Adjusting of Sector Gear and Ball Nut Backlash

The sector shaft adjusting screw, installed in the side cover, raises or lowers the sector shaft to provide proper mesh between the tapered teeth of the sector gear and the rack of the ball nut. This adjustment can be accurately made only after proper worm bearing preload has been established.
Adjust the backlash as follows:
1. Turn the worm shaft gently and stop it at the center position.
2. Loosen the lock nut of the adjusting screw and screw in or out the adjusting screw until the correct adjustment is obtained. The standard backlash is **0 to 0.1 mm (0 to 0.0039 in).** This is equivalent to a movement of about 3 degrees of the worm shaft.
3. After adjusting, tighten the adjusting screw lock nut securely.
4. Rotate the worm shaft and check to ensure that the sector shaft turns 40° smoothly to the right and left.

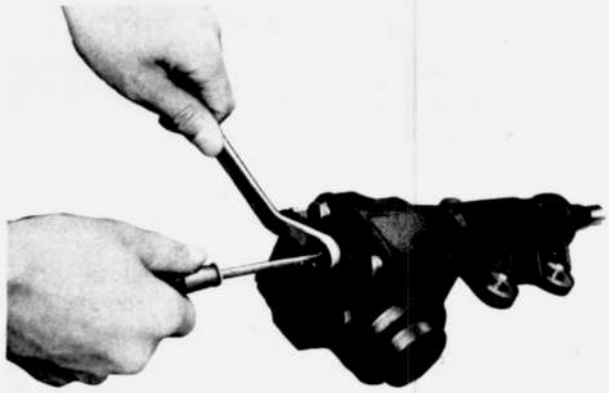

Fig. 10–12 Adjusting of backlash

10–G. STEERING GEAR INSTALLATION

To install the steering gear assembly, reverse the procedure in Par. 10–B. After installing, fill oil up to the level hole.

10–H. STEERING LINKAGE

10–H–1. Checking of Ball Joint

1. Check the dust seal for wear, flaw or any damage. If the dust seal is defective, this will allow entry of water and dust, resulting in ball joint wear.
Replace the dust seal if found defective.
2. The end play of the ball stud is preadjusted at the factory to be from **0 to 0.20 mm (0 to 0.008 in).** If it exceeds **0.5 mm (0.02 in),** replace the ball joint in its assembled form.

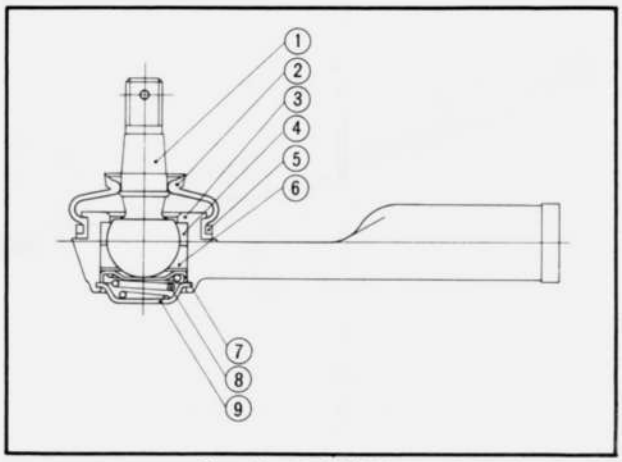

Fig. 10–13 Ball joint

1. Ball stud
2. Dust seal
3. Socket
4. Ball seat
5. Set ring
6. Ball seat
7. Spring seat
8. Spring
9. Cap

10–H–2. Replacing of Idler Arm

After disconnecting the center link from the idler arm, the idler arm can be removed by removing the nut attaching the idler arm to the bracket.
Excessively worn bushes must be replaced. Install the idler arm to the bracket and center link, and tighten the nut to **5.0 m-kg (40 ft-lb).**

10–H–3. Replacing of Pitman Arm

After the center link is removed, the pitman arm can be removed from the sector shaft by removing the nut and by using the **puller** (49 0223 695).

Install the pitman arm onto the sector shaft, aligning the marks of the pitman arm and the sector shaft and tighten the nut. The tightening torque is **15 m-kg (110 ft-lb)**.

10–H–4. Replacing of Tie Rod

The tie rod can be removed from the center link and knuckle arm by removing the ball joint nut and using the **ball joint puller** (49 0118 850C). Install the tie rod to the center link and steering knuckle.

Note: Whenever the tie rods or ball joints are replaced, the toe-in must be reset.

10–H–5. Greasing of Idler Arm

The idler arm requires lubrication only once in two years or every 48,000 km (30,000 miles). Therefore, no greasing is necessary within this period.
When lubricating, remove the plug and temporarily install the grease nipple. Loosen the nut that holds the idler arm to the bracket, and then, feed "Lithium Grease" until new grease appears from the brim of the bush. After greasing, tighten the nut to **5.0 m-kg (40 ft-lb)**. Remove the grease nipple and reinstall the plug.

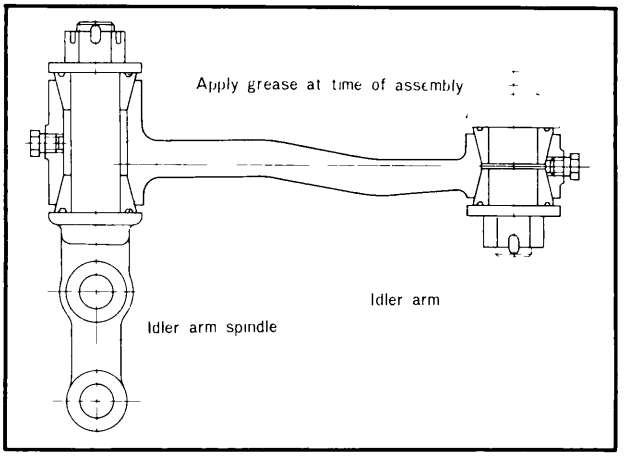

Fig. 10–14 Idler arm

Note: The ball joints for the steering linkage are filled with lithium grease and are completely sealed which require no lubrication service.

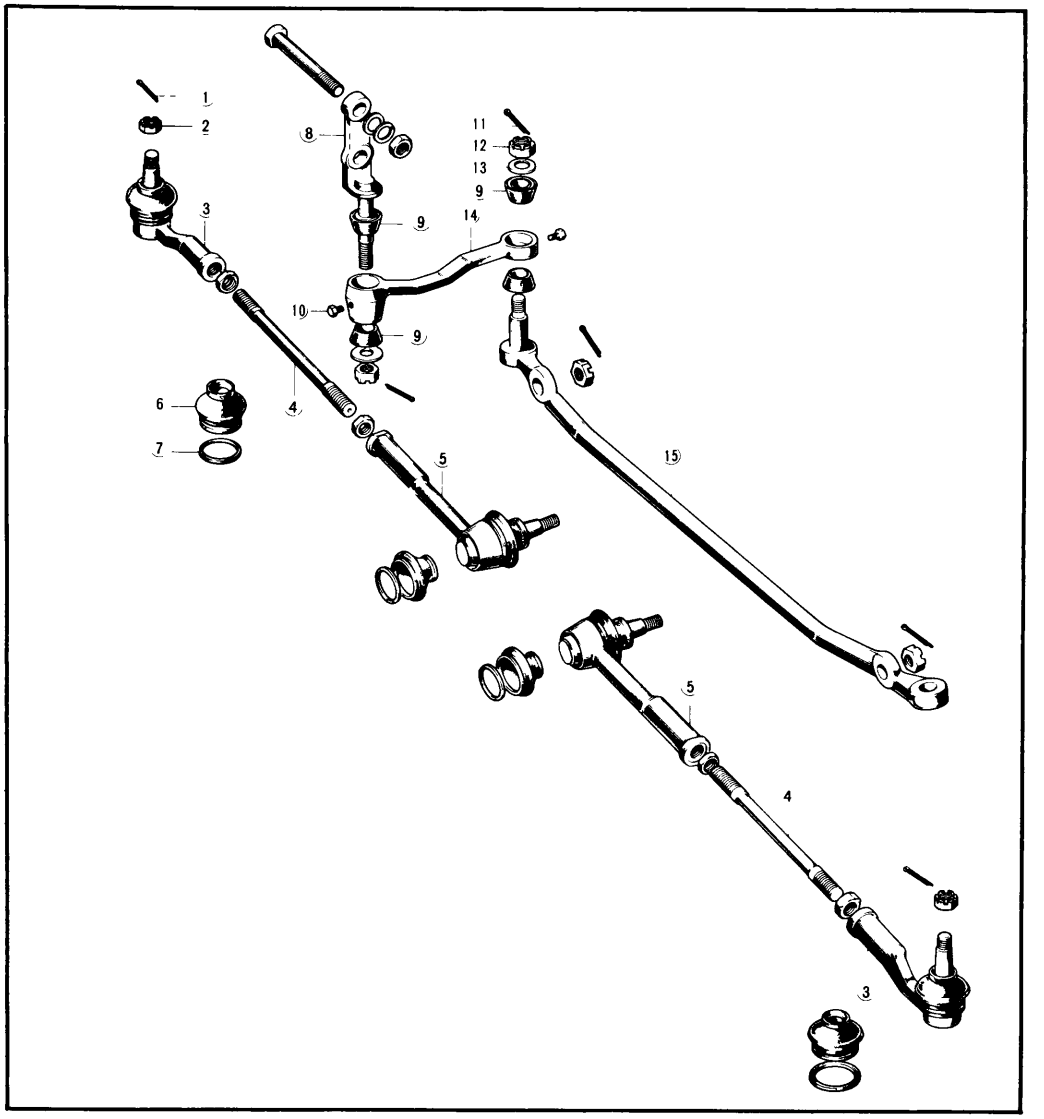

Fig. 10–15

Steering linkage

1. Split pin
2. Nut
3. Ball joint
4. Tie rod
5. Ball joint
6. Dust seal
7. Set ring
8. Spindle
9. Bush
10. Plug
11. Split pin
12. Nut
13. Washer
14. Idler arm
15. Center link

10–I. FRONT WHEEL ALIGNMENT

10–I–1. Inspection before Checking Front Wheel Alignment

Proper alignment of the front wheels must be maintained in order to ensure steering stability and satisfactory tire life. Before checking or correcting the front wheel alignment, the following points which will affect steering should be inspected.

1. Check the tire inflation and bring to recommended pressure.
2. Inspect the front wheel bearing adjustment and correct if necessary.
3. Inspect the wheel and tire run-out and balance.
4. Inspect the ball joints of the front suspension and steering linkage for any excessive looseness.
5. The vehicle must be on level ground and have no luggage or passenger load.

10–I–2. Toe-in

Toe-in is the difference in the distance between the front wheels, measured at the front and at the rear of the tires, the standard toe-in is **–4 to 2 mm (–0.16 to 0.08 in).**

Check and adjust the toe-in as follows:

1. Raise the front end of the vehicle until the wheels clear the ground.
2. Turning the wheels by hand, mark a line in the center of each tire tread by using a scribing block.
3. Measure the distance between the marked lines at the front and rear of the wheels. Both measurements must be taken at equal distances from the ground.

If the distance between the wheels at the rear is greater than that at the front by **–4 to 2 mm (–0.16 to 0.08 in),** it is correct.

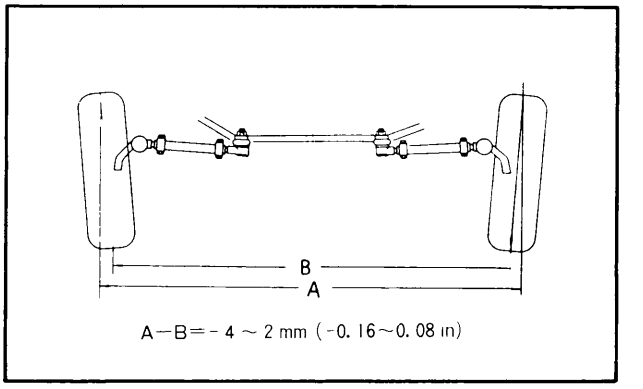

Fig. 10–16 Toe–in

If it is found to be incorrect, adjust the toe-in by loosening the lock nuts and turning the tie rods. The tie rods are threaded with right and left hand threads to provide equal adjustment at both wheels.

10–I–3. Camber, Caster and King Pin Inclination

The camber, caster, and king pin inclination are not adjustable.

These are set properly in production, and will not be altered in normal driving unless the vehicle is involved in a serious collision.

Whenever camber caster or king pin inclination is moved out of its specified angle, check all parts of front suspension and body alignment.

If necessary, replace or repair.

10–I–4. Adjusting of Steering Angle

Adjust the steering angle with the adjusting bolts fitted onto the pitman arm and the side frame, so that the front wheels turn **43° inward** and **31° outward.**

SPECIAL TOOLS

49 0118 850C	Ball joint puller
49 0223 695	Pitman arm puller

BRAKES

11–A. BRAKE PEDAL ADJUSTMENT ..... 11 : 1
11–A–1. Adjusting of Pedal Height ..... 11 : 1
11–A–2. Adjusting of Free Play ..... 11 : 1
11–B. BRAKE MASTER CYLINDER ..... 11 : 1
11–B–1. Removing of Brake Master Cylinder.. 11 : 1
11–B–2. Disassembling of Brake Master Cylinder ..... 11 : 1
11–B–3. Checking of Brake Master Cylinder .... 11 : 2
11–B–4. Assembling of Brake Master Cylinder.. 11 : 3
11–B–5. Installing of Brake Master Cylinder ... 11 : 3
11–C. POWER BRAKE UNIT ..... 11 : 3
11–C–1. Checking of Power Brake Unit on Vehicle ..... 11 : 3
11–C–2. Removing of Power Brake Unit ..... 11 : 3
11–C–3. Disassembling of Power Brake Unit ... 11 : 4
11–C–4. Checking of Power Brake Unit ..... 11 : 5
11–C–5. Assembling of Power Brake Unit ..... 11 : 5
11–C–6. Installing of Power Brake Unit ..... 11 : 5
11–D. FRONT BRAKE ..... 11 : 5
11–D–1. Replacing of Disk Brake Shoe ..... 11 : 5
11–D–2. Removing and Disassembling of Caliper ..... 11 : 6
11–D–3. Checking of Caliper ..... 11 : 7
11–D–4. Assembling and Installing of Caliper ..... 11 : 7
11–D–5. Removing of Brake Disk ..... 11 : 7
11–D–6. Inspecting of Brake Disk ..... 11 : 7
11–D–7. Installing of Brake Disk ..... 11 : 8
11–E. REAR BRAKE ..... 11 : 8
11–E–1. Removing of Rear Brake Shoes ..... 11 : 8
11–E–2. Inspection of Rear Brake ..... 11 : 8
11–E–3. Installing of Rear Brake Shoes ..... 11 : 8
11–E–4. Adjusting of Rear Brake ..... 11 : 9
11–F. WHEEL CYLINDER ..... 11 : 9
11–F–1. Removing of Wheel Cylinder ..... 11 : 9
11–F–2. Disassembling of Wheel Cylinder ..... 11 : 9
11–F–3. Checking of Wheel Cylinder ..... 11 : 9
11–F–4. Assembling of Wheel Cylinder ..... 11 : 9
11–F–5. Installing of Wheel Cylinder ..... 11 : 9
11–G. AIR BLEEDING ..... 11 : 9
11–G–1. Bleeding of Master Cylinder and Front Wheel Cylinder ..... 11 : 9
11–G–2. Bleeding of Rear Wheel Cylinder ..... 11 : 10
11–H. PARKING BRAKE ..... 11 : 10
11–H–1. Adjusting of Parking Brake ..... 11 : 10

BRAKES

MAZDA RX2 is equipped with a tandem master cylinder and a power brake unit. The tandem master cylinder is so constructed that the front and rear brakes are independently actuated by oil pressure originated from the independent system, and that in the event of failure of one of the brakes, effective braking remains on two wheels, thus raising safety.
The power brake unit is a combined vacuum and hydraulic unit which utilizes intake manifold vacuum and atmospheric pressure to provide power-assisted application of vehicle brakes.
The front brake unit are of the disk brake type which assure you of still more safety.
The rear brake are of drum type with leading and trailing shoes.
The parking brake is operated by means of a brake lever and influences both rear wheels mechanically.

11–A. BRAKE PEDAL ADJUSTMENT

11–A–1. Adjusting of Pedal Height

The standard fitting position of the brake pedal is about 20 mm (0.8 in) from the toe board (insulator) as shown in Fig. 11–2. This adjustment is made by loosening the lock nut and turning the stop lamp switch. After adjusting, tighten the lock nut.

11–A–2. Adjusting of Free Play

There should always be 5 to 15 mm (0.2 to 0.6 in) free pedal travel before the compensating port is clogged by the piston cup in the master cylinder.
To adjust the free play, loosen the lock nut and turn the master cylinder push rod connected to the brake pedal. After proper adjustment is obtained, tighten the lock nut.

11–B. BRAKE MASTER CYLINDER

11–B–1. Removing of Brake Master Cylinder

If it becomes necessary to remove the master cylinder for repair or overhaul, proceed as follows:
1. Disconnect the fluid pipes at the brake master cylinder outlets.
2. Loosen the nuts that attach the brake master cylinder to the power brake unit.
3. Pull the master cylinder straight out and away from the power brake unit.

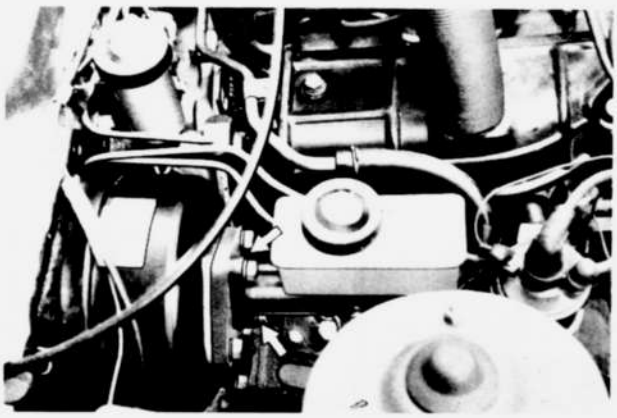

Fig. 11–1 Removing of Brake Master Cylinder

11–B–2. Disassembling of Brake Master Cylinder

1. Clean the outside of the master cylinder thoroughly and drain the brake fluid.
2. Remove the reservoir from the cylinder.
3. Remove the dust boot from the cylinder.
4. Using a suitable plier, remove the snap ring and remove the stop washer.
5. Remove the primary piston, spacer, piston cups, spring seat and return spring from the cylinder.

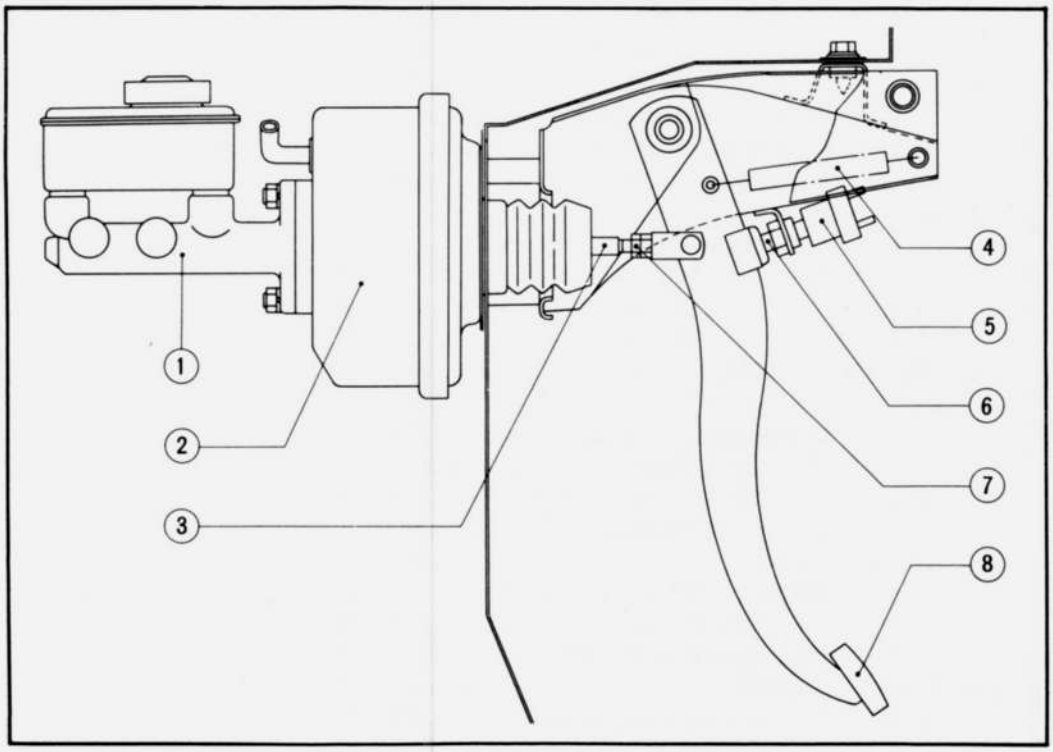

Fig. 11–2

Brake pedal

1. Master cylinder
2. Power brake unit
3. Push rod
4. Return spring
5. Stop switch
6. Lock nut
7. Lock nut
8. Brake pedal

6. Loosen the secondary piston stop bolt.
7. Pushing in the secondary piston with a screwdriver, remove the stop bolt and insert the guide pin in its place. Then, gradually take out the screwdriver and remove the secondary piston, spacer, piston cup, secondary cup, spring seat and return spring.
If necessary, blow out with compressed air from the outlet hole.

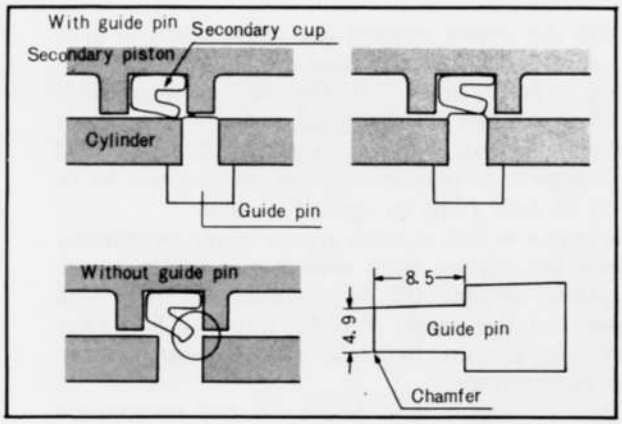

Fig. 11–3 Guide pin

8. Remove the fluid pipe fittings from the cylinder, and then remove the check valve and spring.

11–B–3. Checking of Brake Master Cylinder

1. Wash the parts in clean alcohole or brake fluid. **Never use gasoline or kerosene.**
2. Check the piston cups and replace if they are damaged, worn, softened, or swelled.
3. Examine the cylinder bore and piston for wear, roughness or scoring.
4. Check the clearance the cylinder bore and the piston. If it is **more than 0.15 mm (0.006 in),** replace the cylinder or piston.



Fig. 11–4 Checking of piston clearance

5. Ensure that the compensating ports on the cylinder are open.

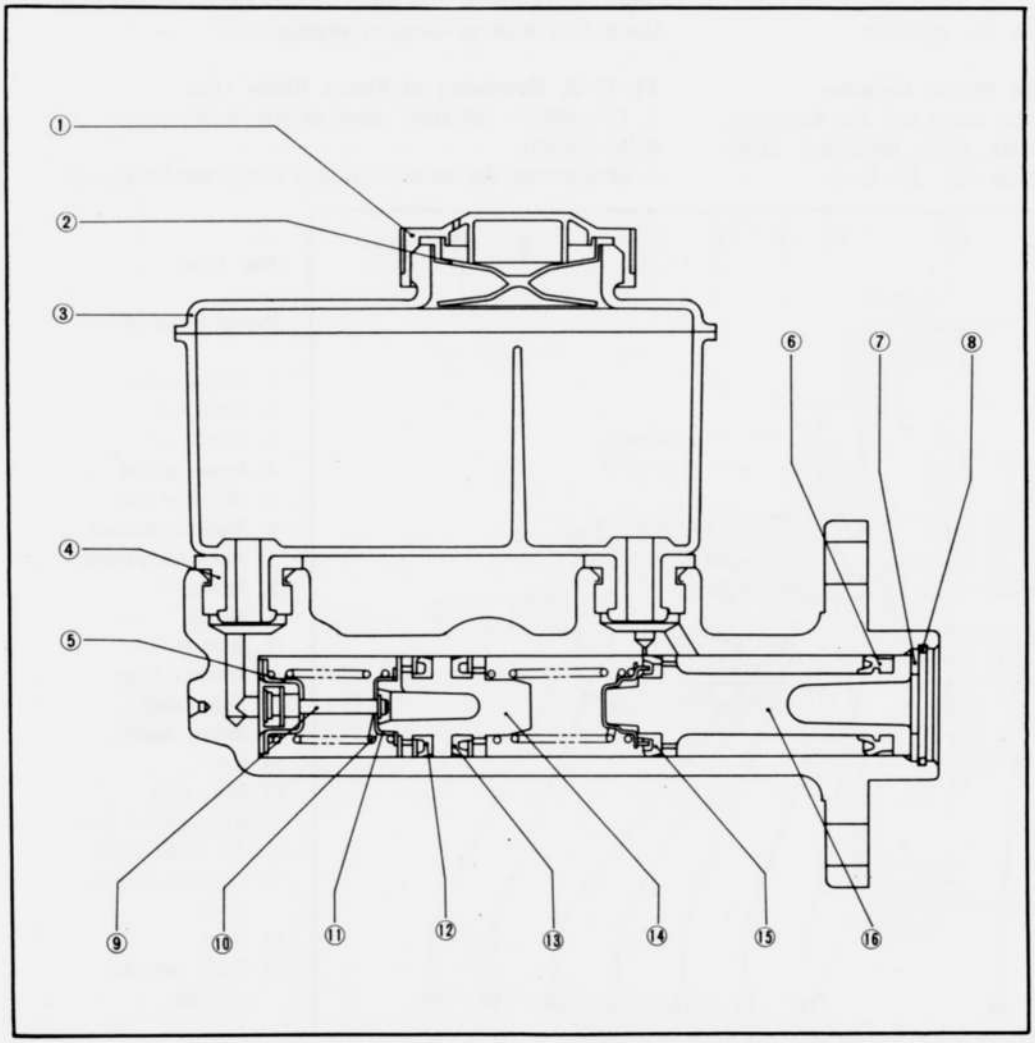

Fig. 11–5

Brake master cylinder

1. Cap
2. Oil baffle
3. Reservoir
4. Elbow joint bush
5. Valve stopper
6. Primary cup
7. Washer
8. Stop wire
9. Valve rod
10. Spring
11. Spring seat
12. Secondary cup
13. Secondary cup
14. Secondary piston
15. Primary cup
16. Primary piston

11–B–4. Assembling of Brake Master Cylinder

1. Dip the pistons and the cups in clean brake fluid.
2. Fit the check valve on the spring and place them in the outlet hole. Install the pipe fitting to the outlet hole.
3. Insert the return spring of large coil diameter into the cylinder.
4. Fit the secondary cup and primary cup onto the secondary piston so that the flat side of the cup goes toward the piston.
5. Fit the guide pin into the stop bolt hole and insert the secondary piston assembly together with the spring seat into the cylinder.
6. Push the secondary piston as far as it will go, remove the guide pin and install the stop bolt.
7. Fit the primary cup onto the primary piston so that the flat side of the cup goes toward the piston.
8. Fit the secondary cup onto the primary piston, with the edge side of the cup facing the secondary piston.
9. Insert the return spring of small coil diameter and the primary piston assembly with the spring seat.
10. Install the stop washer and snap ring.

Note: Make sure that the piston cups do not cover the compensating ports.

11. Install the reservoir.
12. Install the dust boot to the cylinder.

11–B–5. Installing of Brake Master Cylinder

To install the master cylinder, carry out the removing operation in the reverse order. After installing, bleed the brake system, referring to Par. 11–G–1.

11–C. POWER BRAKE UNIT

11–C–1. Checking of Power Brake Unit on Vehicle

1. Road test the brakes by making a brake application at about 30 km (20 miles) to determine if the vehicle stops evenly and quickly. If pedal has a spongy feel when applying brakes, air may be present in hydraulic system. Bleed the system as described in Par. 11–G–1.
2. With the engine stopped and transmission in neutral, apply brakes several times to deplete all vacuum reserve in power brake unit. Depress brake pedal, hold light-foot pressure on the pedal and start the engine. If vacuum system is operating, pedal will tend to fall away under foot pressure and less pressure will be required to hold pedal in applied position.
If no action is felt, vacuum system is not functioning.
3. Stop the engine. Again deplete all vacuum reverse in system. Depress the brake pedal and hold foot pressure on the pedal. If pedal gradually falls away under foot pressure, hydraulic system is leaking internally or externally.
4. Start the engine with brakes off and transmission in neutral. Run the engine to medium speed and turn off ignition switch. Immediately close throttle.
This build up vacuum. Wait no less 90 seconds, then try brake action. If not vacuum-assisted for two or more applications, vacuum check valve is faulty or there is a leak in vacuum system.

11–C–2. Removing of Power Brake Unit

1. Disconnect the fluid pipes at the brake master cylinder outlets.
2. Disconnect the vacuum hose at the power brake unit.

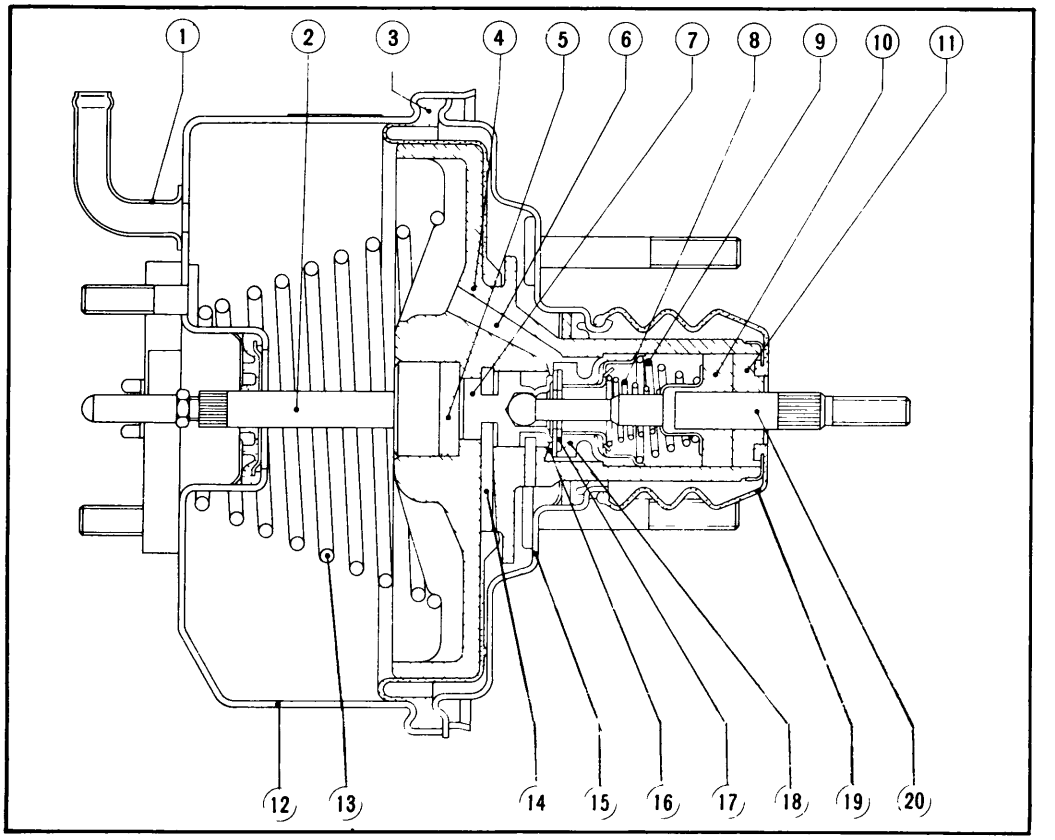

Fig. 11–6

Power brake unit

1. Check valve
2. Push rod
3. Diaphragm
4. Power piston
5. Reaction disk
6. Vacuum passage
7. Air valve plunger
8. Spring
9. Spring
10. Silencer
11. Silencer filter
12. Front shell
13. Return spring
14. Key
15. Rear shell
16. Atmospheric port
17. Air valve piston
18. Floating control valve
19. Boot
20. Valve rod and plunger

3. Disconnect the push rod from the brake pedal by removing the split pin at the fork end.
4. Loosen the nuts that attach the power brake unit to the dash panel.
5. Remove the power brake unit and master cylinder assembly from the dash panel, being careful not to allow brake fluid to drip on exterior paint.

11–C–3. Disassembling of Power Brake Unit

1. Remove the master cylinder and the check valve from the power brake unit.
2. Place the power brake unit in a vise with push rod up. Clamp the unit firmly on the flange.
3. Scribe a mark on the bottom center of the front and rear shells to facilitate reassembly.
4. Remove the boot.

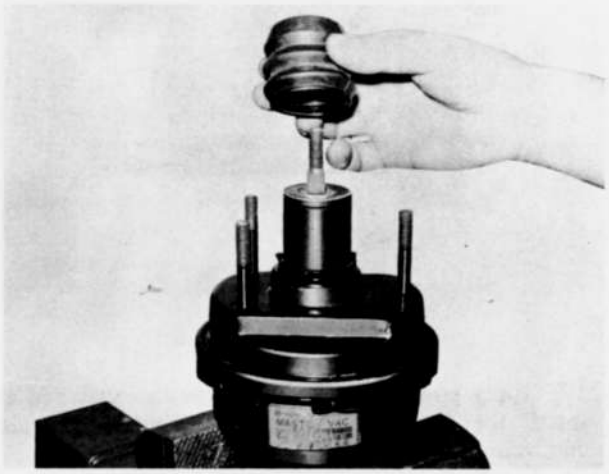

Fig. 11–7 Removing of boot

5. Attach the **wrench** (49 6500 090) to the studs of the rear shell as shown in Fig. 11–8. Rotate the rear shell clockwise to unlocked position.
Loosen the rear shell carefully as it is spring-loaded.

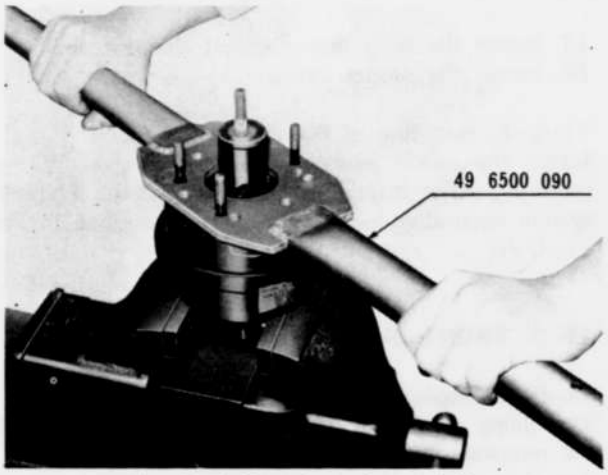

Fig. 11–8 Removing of rear shell

6. Lift the rear shell and plate and valve body, valve rod and plunger assembly from the unit. Then, remove the return spring.
7. Remove the plate, valve body, valve rod and plunger assembly from the rear shell.



Fig. 11–9 Removing of return spring



Fig. 11–10 Removing of plate and valve body assembly

Note: Do not remove the rear seal from the rear shell unless seal is defective and the new seal is available. To remove the rear seal, support the rear shell and drive out the rear seal with a punch or a screwdriver.

8. Remove the diaphragm from the plate and valve body.



Fig. 11–11 Removing of diaphragm

9. Remove the air silencer with the air filter from the plate and valve body, being careful not to chip plastic.
10. Press in on the valve rod to remove the valve retainer key. Remove the valve rod and plunger assembly.



Fig. 11–12 Removing of retainer key



Fig. 11–13 Removing of valve rod and plunger

Note: The valve rod and plunger are serviced as an assembly only.

11. Press the reaction disk out of the valve body.
12. Remove the push rod.
13. Remove the front seal from the front shell if necessary.

11–C–4. Checking of Power Brake Unit

1. Inspect the all rubber parts. Wipe free of fluid and carefully inspect each rubber part for cuts, nicks or other damage.
2. Check the plate and valve body for cracks, distortion, chipping and damaged seats.
3. Inspect the reaction disk for deterioration of rubber.
4. Check the valve rod and plunger for all seats to be smooth and free of nicks and dents. Replace with a new one if defective.
5. Inspect the front and rear shells for scratches, scores, pits, dents or other damage.
6. Check the diaphragm for cuts or other damage.

11–C–5. Assembling of Power Brake Unit

1. Apply the power brake lubricant to the inner surface of tube section of the plate and valve body and to the surfaces of the valve rod and plunger.
2. Insert the valve rod and plunger assembly into the tube section of the plate and valve body.
3. Press down on the valve rod and align the groove in the valve plunger with the slot of the valve body. Insert the retainer key.
4. Install the diaphragm on the plate and valve body making certain the diaphragm is seated in the groove.
5. Assemble the air filter and the air silencer over the rod and position in the valve body.
6. Apply the power brake lubricant liberally to the entire surface of the reaction disk and install the reaction disk into the plate and valve body.
7. Coat the outer bead of the diaphragm with the power brake lubricant where it bears against the outer rim of the front and rear shell to aid in assembly.
8. Apply the power brake lubricant to the seal in the rear shell and carefully guide tube end of the plate and valve body, through the seal in the rear shell.
9. Install the plate and valve body into the front shell.

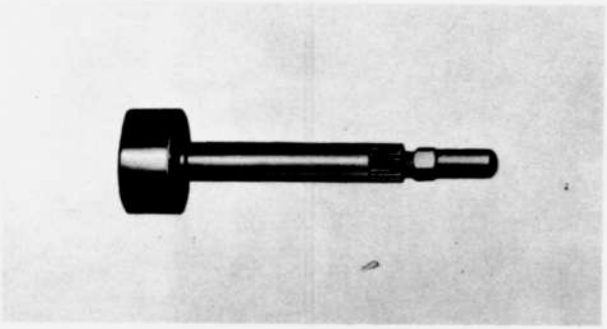

Fig. 11–14 Push rod

10. Apply power brake lubricant to the push rod and install the push rod through the front of the plate and valve body.
11. Install the return spring.
12. Install the rear shell assembly by using the **wrench** (49 6500 090) to rotate the front shell counter-clockwise until scribe marks align.

Note: Press the front shell down firmly, maintaining a pressure until the shell flanges are fully locked.

13. Install the boot down against the rear shell.
14. Install the master cylinder.

11–C–6. Installing of Power Brake Unit

Install the power brake unit in the reverse order of removing. After installing the unit, bleed the hydraulic system according to the procedure described in Par. 11–G–1.

11–D. FRONT BRAKE

11–D–1. Replacing of Disk Brake Shoe

The lining should be inspected whenever the wheels are removed for any reason (tire rotation, etc.).
The shoe and lining should be replaced, if the thickness of the shoe and lining is **8.0 mm (0.315 in) or less** due to wear. To replace the disk brake shoes, proceed as follows:

1. Jack up the vehicle and remove the front wheel.
2. Remove the fastening clips and remove the stop plates.

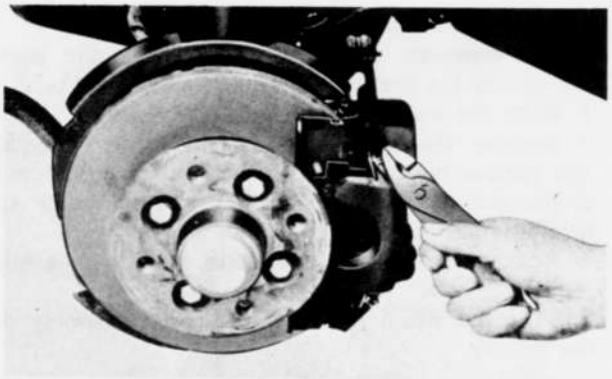

Fig. 11–15 Removing of fastening clips

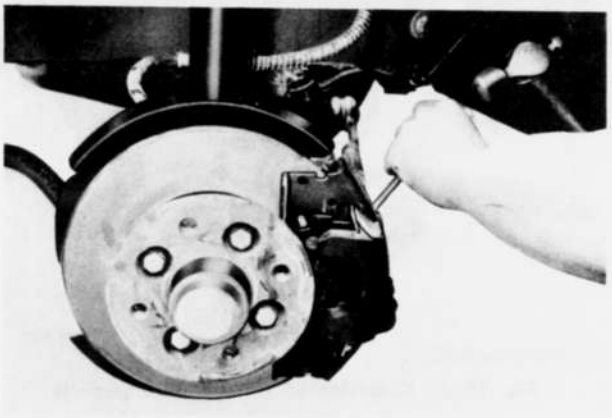

Fig. 11–16 Removing of stop plates

3. Remove the caliper and anti-rattle spring.

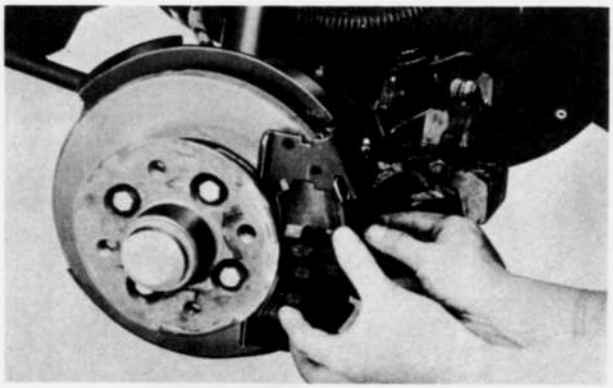

Fig. 11–17 Removing of caliper

4. Remove the shoes.

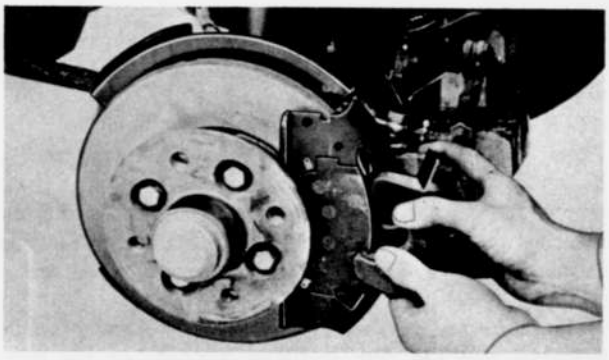

Fig. 11–18 Removing of shoes

5. Attach a vinyl pipe to the bleeder screw and submerge other end of the pipe into glass jar containing brake fluid.
6. Open the bleeder valve and press the piston into the cylinder with the **expanding tool** (49 0221 600B).



Fig. 11–19 Pressing of piston

7. Tighten the bleeder screw and remove the vinyl pipe and the tool.
8. Install the new brake shoes.
9. Refit the anti-rattle spring, caliper, stoppers and fastening clips.
10. Install the wheel and tighten the bolts to **9.0 m-kg (70 ft-lb)**.

11–D–2. Removing and Disassembling of Caliper

1. Raise the vehicle and remove the wheel.
2. Disconnect the brake fluid pipe from the caliper. Plug the end of the fluid pipe to prevent entrance of dirt and loss of fluid.
3. Remove the caliper from the brake disk, referring to Par. 11–D–1.
4. Clean the outside of the caliper and remove the boot.
5. Place a wood in the caliper pit in order to avoid damage, gradually blow compressed air from the fluid pipe hole and remove the piston.



Fig. 11–20 Removing of piston

6. Remove the piston seal from the cylinder.

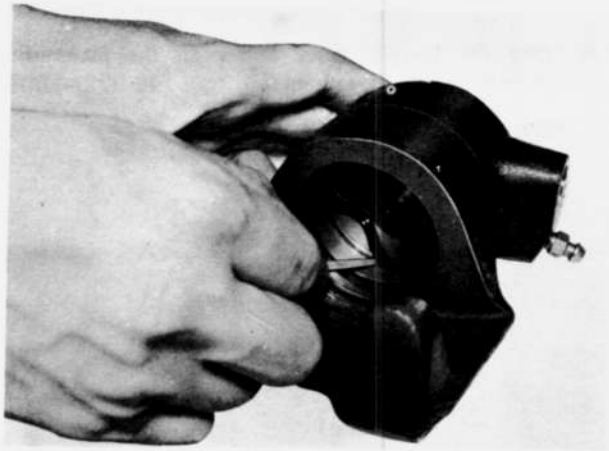

Fig. 11–21 Removing of piston seal

11–D–3. Checking of Caliper

1. Before checking, wash all parts in clean alcohol or brake fluid. **Never use gasoline or kerosene.** Blow out the fluid passages in the caliper with compressed air.
2. Check the cylinder bore and piston for scoring, scratches or rust. If any of these conditions is found, replace with new piston or caliper.
Minor damage can be eliminated by means of polishing with crocus cloth.
3. The piston seal and dust boot should be replaced with new ones every time repair work is carried out on the brake caliper.

11–D–4. Assembling and Installing of Caliper

1. Apply clean brake fluid to the cylinder bore and piston.
2. Install the piston seal.
3. Install the piston carefully into the cylinder bore.

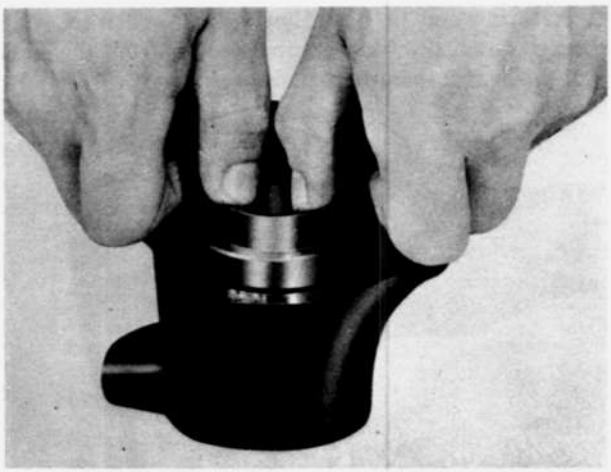

Fig. 11–22 Installing of piston

4. Fit the boot to the caliper.
5. Install the caliper in the reverse order of removing.
6. After installing, bleed the brake lines, referring to Par. 11–G–1.

11–D–5. Removing of Brake Disk

Before removing the brake disk, check the lateral run-out of the brake disk, as detailed in Par 11–D–6.
1. Raise the vehicle and remove the wheel.
2. Remove the bolts attaching the caliper assembly and remove the caliper assembly from the brake disk.
3. Remove the grease cap, split pin, set cover and bearing adjusting nut.
4. Remove the thrust washer and outer bearing from the wheel hub.
5. Slide the wheel hub and brake disk assembly off the spindle.

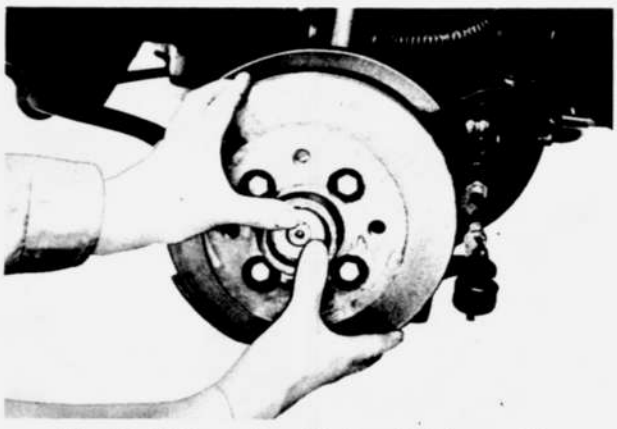

Fig. 11–23 Removing of hub and disk assembly

6. Place the wheel hub and brake disk assembly in the vise equipped with soft jaws.
7. Mark the position of brake disk and wheel hub.

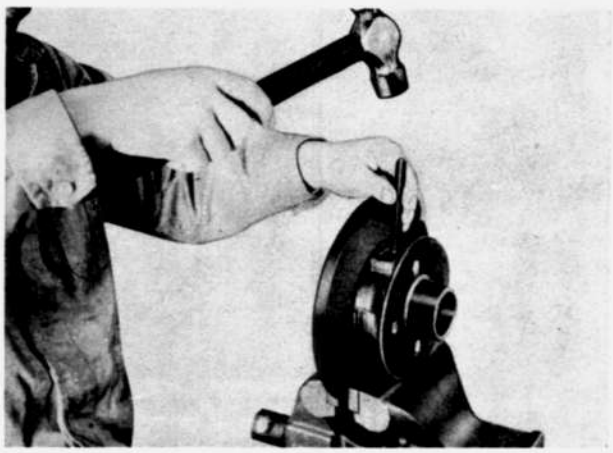

Fig. 11–24 Applying of identification marks

8. Remove the attaching bolts and separate the brake disk from the wheel hub. **Do not** drive it off.

11–D–6. Inspecting of Brake Disk

Inspect the friction surfaces of the disk and recondition if they are scored, scrached or rusted.
Check the lateral run-out of the disk with a dial indicator, as shown in Fig. 11–25. If the run-out is **more than 0.06 mm (0.0024 in),** reface the disk.

Note: Make certain that the wheel bearings are correctly adjusted and the disk is fitted securely on the hub, before checking the run-out of the disk.

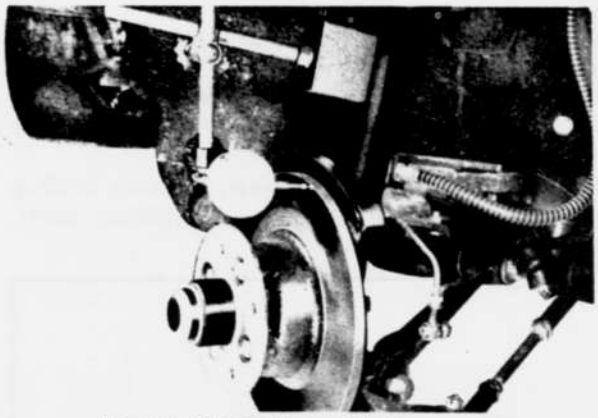

Fig. 11–25 Checking of disk run-out

When refacing the disk, remove only so much material as is necessary to clean up the disk.
The thickness of the disk after refacing must not be **less than 11 mm (0.4331 in).**

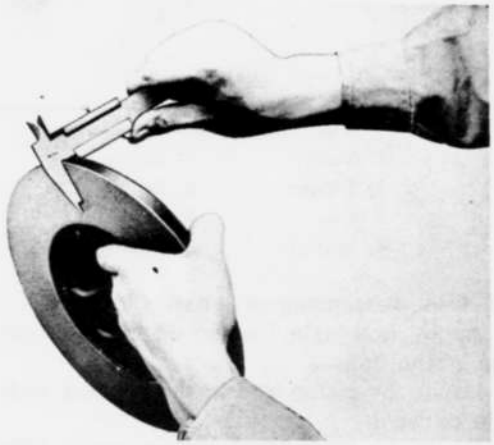

Fig. 11–26 Checking of disk thickness

11–D–7. Installing of Brake Disk

Carry out the removing operation in the reverse order. After installing, adjust the bearing preload, as instructed in Par. 12–F–4.

11–E. REAR BRAKE

11–E–1. Removing of Rear Brake Shoes

1. Raise the vehicle and remove the wheel.
2. Remove the drum attaching bolts and fit them into the tapped holes and screw them in evenly to force the drum away from the axle shaft flange.
3. Remove the brake shoe return springs.
4. Remove the brake shoe retaining spring and guide pin by compressing the retaining spring and turning the guide pin 90 degrees.
5. Remove the brake shoes.
6. Disengage the parking brake cable from the operating lever on the brake shoe.

11–E–2. Inspection of Rear Brake

a. Inspection of brake drum

Inspect the brake drum and recondition if it is rough or scored. Check the out of roundness with a dial indicator. If it is **0.15 mm (0.0059 in) or more**, reface the drum. When refacing the drum, remove only so much material as is necessary to obtain a smooth surface on the drum. Do not reface **more than 1.0 mm (0.0394 in)**. The standard inner diameter of the drum is 200 mm (7.8741 in).

b. Inspection of brake linings

1. Inspect the brake linings and replace with new parts if the linings are badly burned or worn.
2. Examine the lining contact pattern. For inspection, chalk the entire inner surface of the brake drum and slide the lining along the chalked surface. The lining should show a uniform contact across the entire width, extending from toe to heel.
Shoes having sufficient lining but lack of contact should be ground properly.
3. If oil or grease is evident on the lining, wash off oil or grease in a suitable solvent.
Then, correct the cause of leakage. However, if the lining is saturated with oil or grease, replace it.

c. Inspection of wheel cylinders

Examine whether the exterior of the wheel cylinder boots is wet with brake fluid. Excessive amounts of fluid at this point indicates leakage past the piston cups. Therefore, the wheel cylinder must be overhauled.

d. Inspection of brake lines

Inspect all brake lines for leakage with the foot brake applied. Check all brake pipes, hoses and connections for signs of chafing, deterioration or other damage.

11–E–3. Installing of Rear Brake Shoes

1. Lubricate the adjusting screw threads, mating surfaces of the shoes and backing plate edges with a small amount of grease.
2. Install the eye of the parking brake cable onto the parking brake operating lever installed to the rear side shoe.
3. Installing the operating strut between the slots of the shoes, engage the brake shoes with the slots in the adjusting screw and the wheel cylinder piston.
4. Hold the brake shoes to the backing plate with the retaining springs and pins.

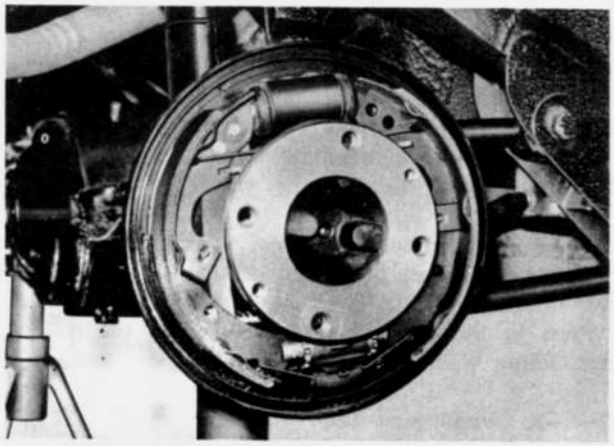

Fig. 11–27 Rear brake

5. Install the shoe return springs.
6. Sand the linings lightly to remove any trace of dirt or grease.
7. Install the brake drum to the axle shaft flange and tighten the attaching bolts.
8. Apply the brake pedal several times and adjust the brake, as instructed in Par. 11–E–4.
9. Install the wheel.

11–E–4. Adjusting of Rear Brake

1. Jack up the vehicle until the wheels are free to turn.
2. Remove the adjusting hole covers from the backing plate.
3. Be sure the parking brake lever is fully released.
4. Insert a screwdriver into the star wheel of the adjuster and turn the star wheel toward the arrow direction marked on the brake backing plate until the wheel is locked. Then, back off the star wheel 5 notches. Which will obtain a brake shoe clearance is 0.1 mm (0.004 in).

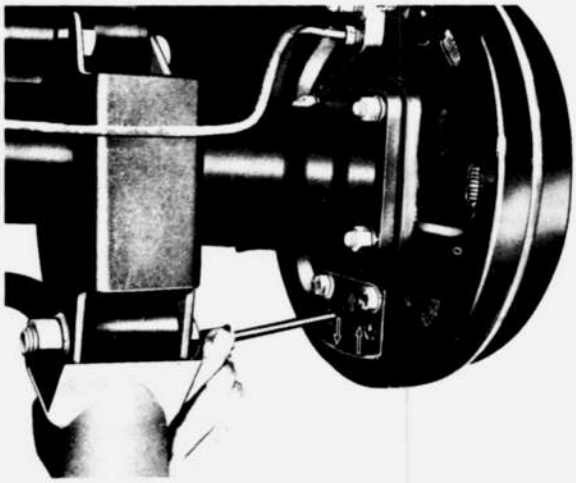

Fig. 11–28 Adjusting of rear brake

5. Repeat the above adjustment on each wheel. The adjustments must be equal at all wheels.
6. Install the adjusting hole covers in the backing plate.

11–F. WHEEL CYLINDER

11–F–1. Removing of Wheel Cylinder

1. Remove the brake shoes, as described in Par. 11–E–1.
2. Disconnect the brake fluid pipe at the wheel cylinder. Plug the end of the brake fluid pipe.
3. Remove the nuts attaching the wheel cylinder to the backing plate. Remove the wheel cylinder.

11–F–2. Disassembling of Wheel Cylinder

1. Remove the dust boots and pistons from the both ends of the cylinder.
2. Press in the piston cup and force out the piston cups, filling blocks and return spring.

11–F–3. Checking of Wheel Cylinder

1. Wash all parts in clean alcohol or brake fluid. **Never use gasoline or kerosene.**
2. Examine the cylinder bore and pistons for wear, roughness or scoring.
3. Check the clearance between the cylinder and piston. If it is **more than 0.15 mm (0.006 in)**, replace with new parts.
4. Inspect the piston cups for wear, softening, swelling and other damage. If any of these conditions exists, replace the cups.

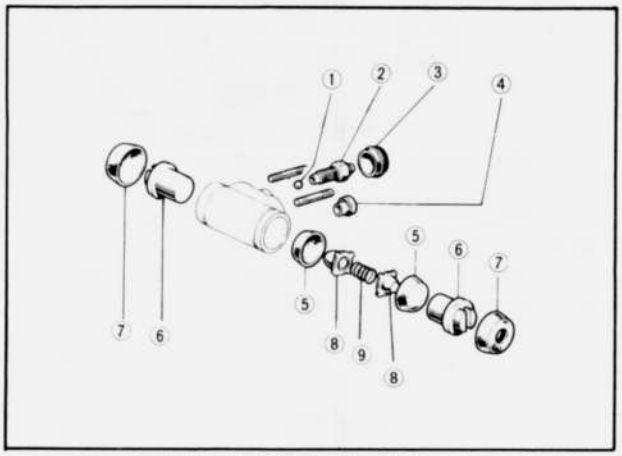

Fig. 11–29 Wheel cylinder

1. Valve	5. Piston cup
2. Bleeder	6. Piston
3. Cap	7. Dust boot
4. Seat	8. Filling block

11–F–4. Assembling of Wheel Cylinder

1. Apply clean brake fluid to the cylinder bore, pistons and piston cups.
2. Install the piston cup in the cylinder with the flat side outward.
3. Install the filling block, return spring, filling block, piston cup and pistons in sequence.
4. Install the dust boots.

11–F–5. Installing of Wheel Cylinder

1. Install the wheel cylinder to the backing plate and connect the fluid pipe.
2. Install the brake shoes and the drum, as described in Par. 11–E–3.
3. Bleed the brake lines as detailed in Par. 11–G–2.

11–G. AIR BLEEDING

Whenever the wheel cylinder or master cylinder is overhauled, or air enters the system, air bleeding must be carried out. The correct sequence of bleeding is to bleed master cylinder first and either front or rear wheel cylinder second.

Note: During bleeding operation, the reservoir of the master cylinder must be kept at least 3/4 full of the brake fluid.

11–G–1. Bleeding of Master Cylinder and Front Wheel Cylinder

1. Remove the bleeder valve cap and connect a vinyl pipe to the bleeder valve. Submerge the other end

of the pipe in the brake fluid in a glass jar.
2. Open the bleeder valve. Depress the brake pedal a full stroke and allow it to return slowly.
Continue this pumping action until air bubbles cease to appear in the jar.

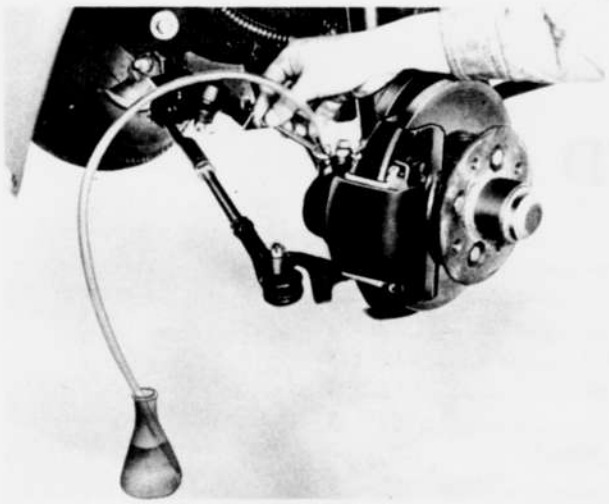

Fig. 11–30 Air bleeding

3. When bleeding operation is completed, close the bleeder valve, remove the vinyl pipe and fit the cap to the bleeder valve.

11–G–2. Bleeding of Rear Wheel Cylinder

1. Depress the brake pedal several times quickly.
And then, with the brake pedal depressed, open the bleeder valve to expel the air. Close the valve before releasing the pedal.
2. Repeat above operation until the brake fluid is expelled in a solid stream, without any air bubbles.

11–H. PARKING BRAKE

11–H–1. Adjusting of Parking Brake

The service brakes must be properly adjusted before adjusting the parking brake.
Adjust the length of the front cable with the adjusting nut on the rear end of the front cable so that the brake is locked when the parking brake lever is pulled 2 or 3 notches. After adjustment, apply the parking brake several times, then release and make sure that the rear wheels rotate freely without dragging.

SPECIAL TOOLS

49 6500 090	Wrench
49 0221 600B	Expanding tool

WHEELS AND TIRES

12–A. INFLATION OF TIRES ..... 12 : 3
12–B. TIRE ROTATION ..... 12 : 3
12–C. CHANGING OF WHEELS ..... 12 : 3
12–D. WHEEL AND TIRE RUN-OUT ..... 12 : 3
12–E. WHEEL BALANCING ..... 12 : 3
12–F. FRONT WHEEL BEARING ..... 12 : 3
12–F–1. Checking of Front Wheel Bearing ..... 12 : 3
12–F–2. Removing of Front Wheel Bearing ..... 12 : 4
12–F–3. Installing of Front Wheel Bearing ..... 12 : 4
12–F–4. Adjusting of Front Wheel Bearing ..... 12 : 4
12–G. GEAR WHEEL BEARING ..... 12 : 4

WHEELS AND TIRES

12–A. INFLATION OF TIRES

Maintenance of correct inflation pressure is one of the most important elements of tire care.
Excessive inflation pressure will cause:
1. Hard rides
2. Damage to tire carcass
3. Poor traction
4. Premature tread wear in center of tire

Low inflation pressure will cause:
1. Hard steering
2. Rapid and uneven wear on the edges of tire tread
3. Increased cord fatigue or broken tire cords
4. High tire temperature
5. Blow outs

Check the inflation pressure with a reliable gauge when the tires are cold.
The standard pressure is as follows:

Up to 2 persons		Full load	
Front	Rear	Front	Rear
20 psi	20 psi	20 psi	26 psi

After checking or inflating the pressure, place the valve cap back on and tighten by hand. It helps to maintain the air pressure in the tires in case of any valve leak and keeps dust and water out of the valve.

12–B. TIRE ROTATION

To equalize wear and make a set of tires last longer, it is recommended that the tires be rotated, as shown in Fig. 12–3, every 6,000 km (4,000 miles).
When rotating the tires, check for signs of abnormal wear and bulging and any stone, nail, glass, etc. should be removed.

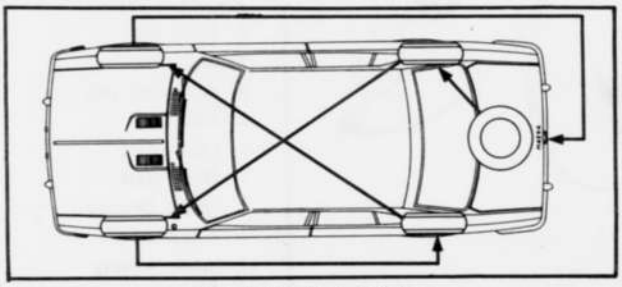

Fig. 12–3 Tire rotation

12–C. CHANGING OF WHEELS

1. Remove the wheel cap and loosen the wheel attaching bolts. All bolts are right handed screws which are loosened by turning counter-clockwise.
2. Jack up the vehicle until the wheel clears the ground.
3. Remove the wheel attaching bolts and change the wheel.
4. Install the wheel attaching bolts and alternately tighten the diametrically opposite bolts until the wheel closely touches the hub flange.
5. Lower the vehicle and firmly tighten the bolts to a torque of **9.5 m-kg (70 ft-lb)**.
6. Refit the wheel cap.

12–D. WHEEL AND TIRE RUN-OUT

Wheel and tire should be measured for both radial and lateral run-out. The radial run-out is the difference between the high and low points on the tread of tire; while the lateral run-out is the wobble of the wheel.
To measure the radial run-out, apply a dial indicator against the center rib of the tire tread and rotate the wheel slowly. This measurement should not exceed 2.0 mm (0.08 in).
To measure the lateral run-out, position a dial indicator against the side of the tire. The reading of the indicator should be within 2.5 mm (0.10 in).

12–E. WHEEL BALANCING

The allowable unbalance is 360 cm-gr (5.0 in-oz), which is less than 20 gr (0.7 oz) at the rim.
Excessive wheel unbalance causes shimmy at high speed. If unbalance exceeds 360 cm-gr (5.0 in-oz) or when a tire is disassembled for repair, the tire and wheel assembly should be statically and dynamically balanced with a wheel balancer in accordance with the manufacturer's instructions.

12–F. FRONT WHEEL BEARING

12–F–1. Checking of Front Wheel Bearing

To check the front wheel bearings, raise the vehicle with a jack until the wheels clear the ground.
Grip the tire and shake it sideways. If considerable play is noticed, this indicates that the bearings are rough.



Fig. 12–4 Checking of front wheel bearing

When disassembled, check the wheel bearings for pits, brinell marks or any damage. If any of above conditions exists, replace with new bearings.

12–F–2. Removing of Front Wheel Bearing

1. Raise the vehicle until the front wheels are free of the ground.
2. Remove the wheel cap and wheel.
3. Remove the bolts attaching the caliper assembly and remove the caliper assembly from the brake disk.
4. Remove the grease cap, split pin and bearing adjusting nut.
5. Remove the thrust washer and outer bearing from the hub.
6. Slide the hub and brake disk assembly off the spindle.
7. Remove the oil seal and inner bearing from the wheel hub.
8. Drive out the bearing outer races, using a brass drift in the slots provided for this purpose.

12–F–3. Installing of Front Wheel Bearing

Install the wheel bearings in the reverse order of removing, with care taken on the following points:
1. Clean the bearings thoroughly and repack them with lithium grease. **Do not** overpack.
2. Fill the hub cavity with lithium grease.
3. Adjust the bearing preload as instructed in the following paragraph.

12–F–4. Adjusting of Front Wheel Bearing

The wheel bearing preload is adjusted by the adjusting nut. Adjusting procedure is as follows:
1. Check the bearing preload by hooking a spring scale in the wheel bolt hole on the hub.

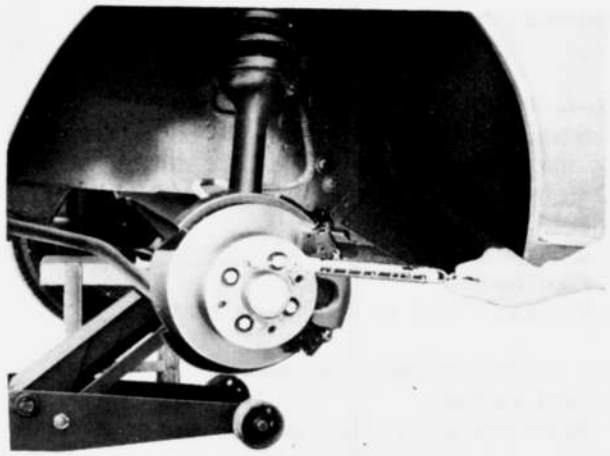

Fig. 12–5 Checking of bearing preload

2. Pull the spring scale squarely and take a reading on the scale when the hub starts to turn. This reading should be **0.4 to 0.9 kg (0.9 to 2.0 lb)**.
3. Tighten the adjusting nut until the correct reading is obtained.
4. Fit the set cover onto the adjusting nut and align the slots of the set cover with the hole of the spindle. Install the split pin.

12–G. REAR WHEEL BEARING

Servicing the rear wheel bearings is explained in Par. 9–A.

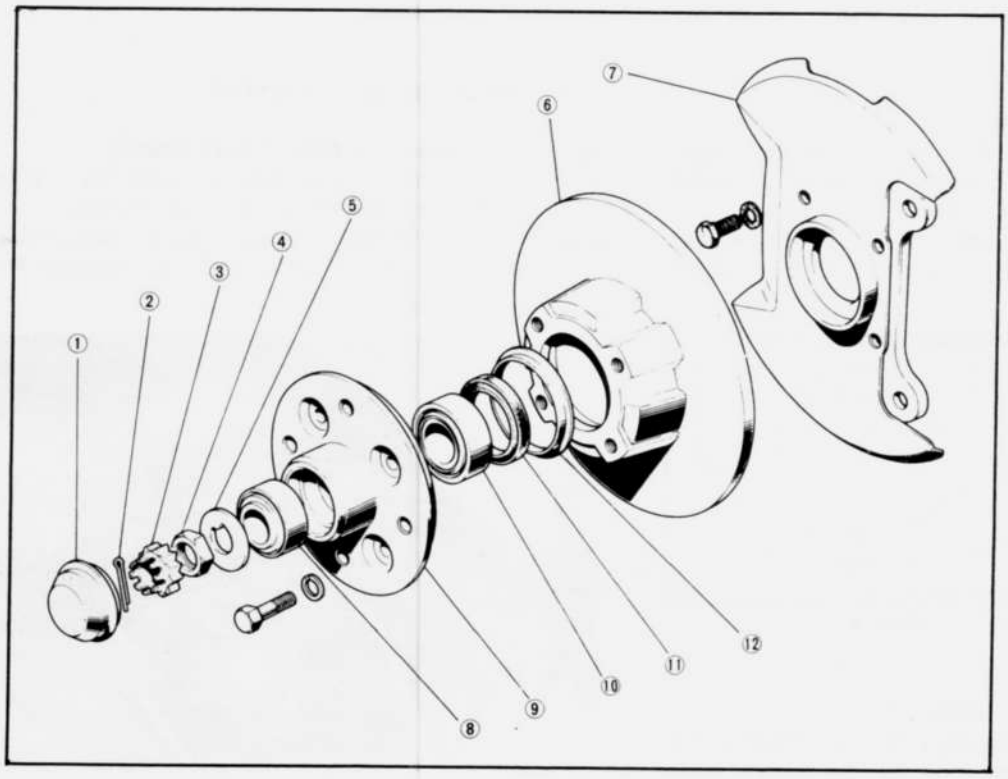

Fig. 12–6

Front wheel hub assembly

1. Grease cap
2. Split pin
3. Set cover
4. Adjusting nut
5. Washer
6. Disk plate
7. Dust plate
8. Outer bearing
9. Wheel hub
10. Inner bearing
11. Oil seal
12. Dust cover

SUSPENSION

13–A. FRONT SHOCK ABSORBER ..... 13 : 3
13–A–1. Removing of Front Shcok Absorber ..... 13 : 3
13–A–2. Disassembling of Front Shock Absorber ..... 13 : 4
13–A–3. Checking of Front Shock Absorber ..... 13 : 4
13–A–4. Assembling of Front Shock Absorber ..... 13 : 5
13–A–5. Installing of Front Shock Absorber ..... 13 : 7
13–B. SUSPENSION ARM ASSEMBLY ..... 13 : 7
13–B–1. Removing of Suspension Arm Assembly ..... 13 : 7
13–B–2. Checking of Suspension Arm ..... 13 : 7
13–B–3. Installing of Suspension Arm ..... 13 : 7
13–C. BALL JOINT ..... 13 : 7
13–C–1. Checking of Ball Joint ..... 13 : 7
13–C–2. Replacing of Ball Joint ..... 13 : 7
13–D. REAR SUSPENSION ..... 13 : 8
13–D–1. Removing of Rear Shock Absorber ..... 13 : 8
13–D–2. Disassembling of Rear Shock Absorber ..... 13 : 8
13–D–3. Checking of Rear Shock Absorber ..... 13 : 8
13–D–4. Assembling of Rear Shock Absorber ..... 13 : 9
13–D–5. Installing of Rear Shock Absorber ..... 13 : 9
13–E. FOUR LINKS ..... 13 : 9
13–E–1. Removing of Upper and Lower Links ..... 13 : 9
13–E–2. Checking of Upper and Lower Links ..... 13 : 9
13–E–3. Installing of Upper and lower Links ..... 13 : 9
13–F. LATERAL ROD ..... 13 : 10
13–F–1. Removing of Lateral Rod ..... 13 : 10
13–F–2. Checking of Lateral Rod ..... 13 : 10
13–F–3. Installing of Lateral Rod ..... 13 : 10

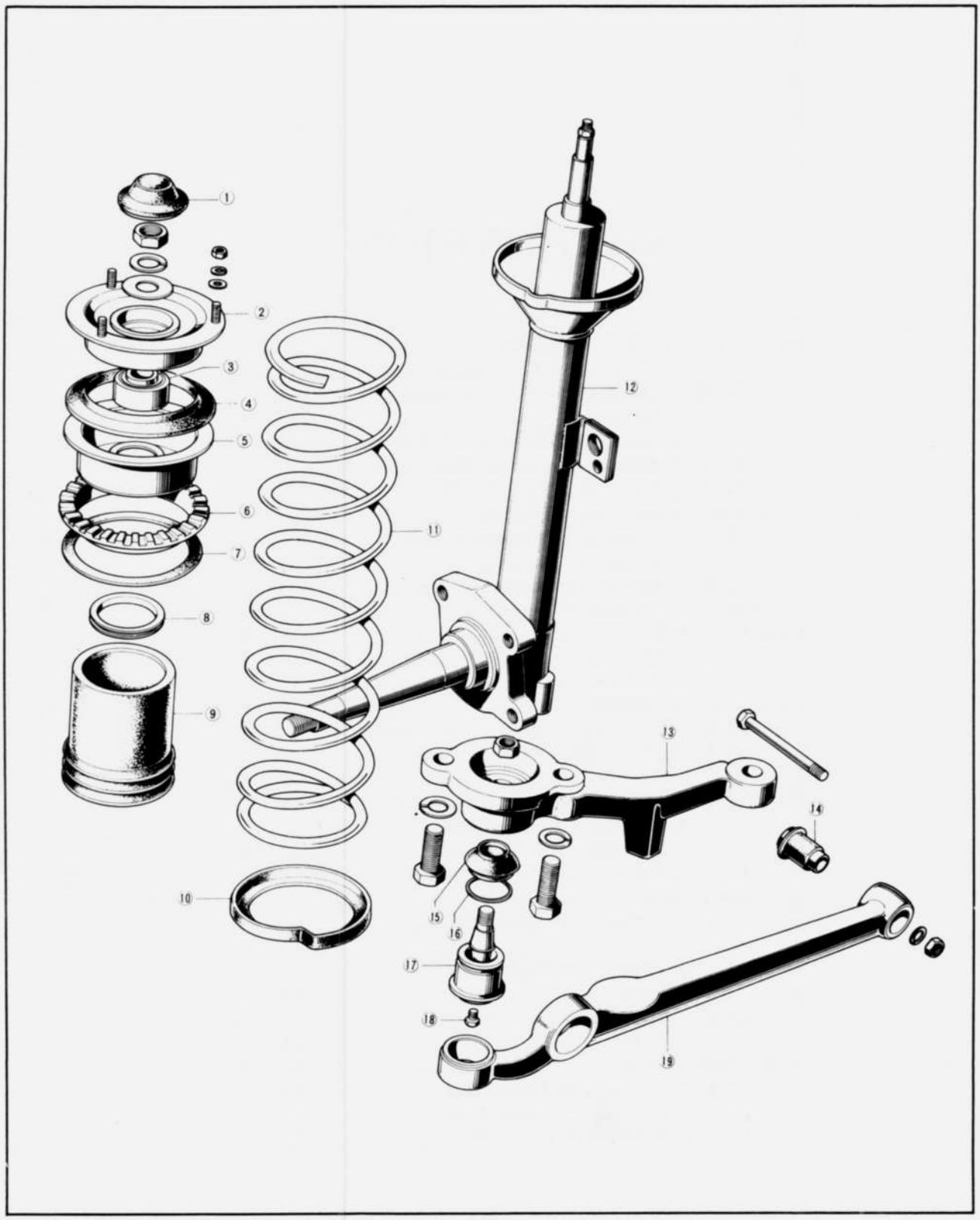

Fig. 13–1 Front suspension

1. Cap
2. Mounting rubber
3. Bearing
4. Seal
5. Spring seat upper
6. Rubber seat upper
7. Adjusting plate
8. Dust seal ring
9. Boot
10. Rubber seat lower
11. Coil spring
12. Front shock absorber assembly
13. Knuckle arm
14. Rubber bush
15. Dust seal
16. Set ring
17. Ball joint
18. Plug
19. Arm

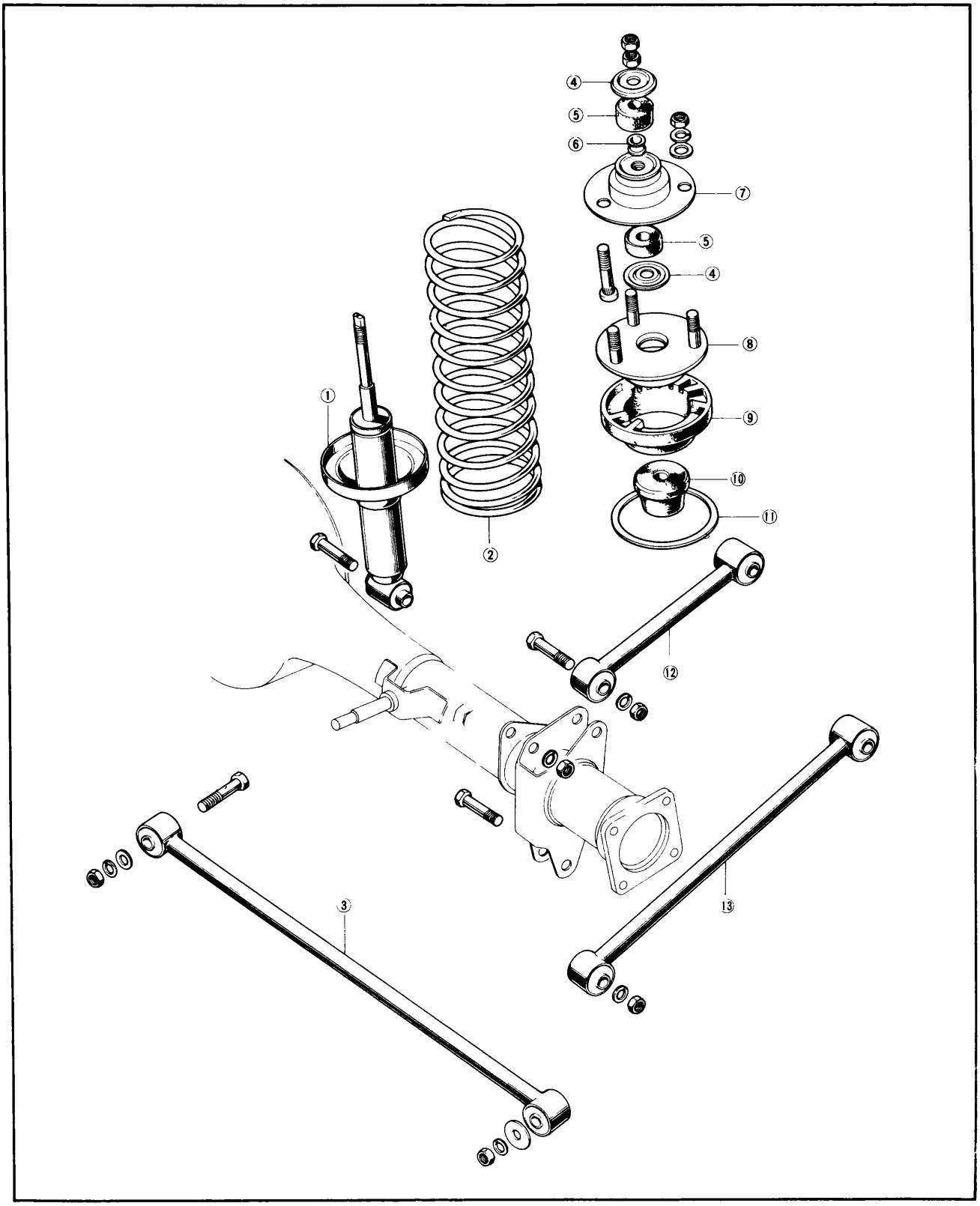

Fig. 13–2 Rear suspension

1. Rear shock absorber assembly
2. Coil spring
3. Lateral rod
4. Retainer
5. Rubber bush
6. Gromet
7. Set plate
8. Spring seat upper
9. Rubber seat
10. Bound stopper
11. Adjusting shim
12. Upper link
13. Lower link

SUSPENSION

The front suspension is of double action shock absorbers integrally made with each steering knuckle, coil springs, suspension arms and stabilizer bar.
This front suspension does not require lubrication, except the lower ball joints which are provided with plugs to attach grease fittings when required.
The toe-in can be adjusted, but the camber, caster and king pin inclination are set during production, and can not be altered.
The rear suspension is of a four-links lateral rod, coil springs and De Carbon type shock absorbers.

13–A. FRONT SHOCK ABSORBER

13–A–1. Removing of Front Shock Absorber

1. Jack up the vehicle until the front wheels are clear of the ground and remove the front wheel.
2. Remove the three nuts attaching the mounting rubber to the front fender apron.



Fig. 13–3 Removing of three nuts

3. Disconnect the brake pipe from the reservoir tube. Plug the end of the brake pipe to prevent leakage of the fluid.
4. Remove the bolts attaching the caliper to the dust cover and remove the caliper.
5. Remove the hub grease cap, split pin, set cover and bearing adjusting nut from the steering knuckle spindle.
6. Remove the wheel hub and brake disk assembly from the steering knuckle spindle.
7. Remove the two bolts attaching the front shock absorber to the steering knuckle arm.

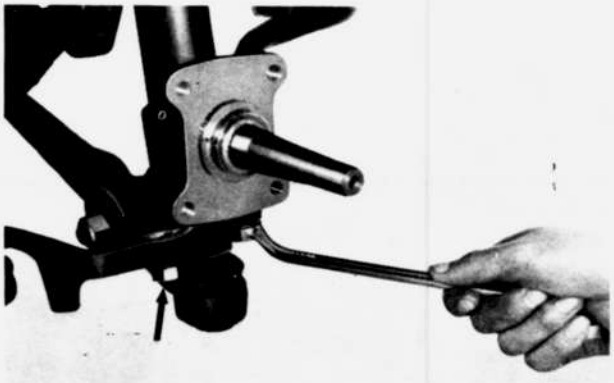

Fig. 13–4 Removing of two bolts

8. Remove the shock absorber.



Fig. 13–5 Removing of shock absorber

9. Hold the shock absorber in a vise.
10. Using the **coil spring holder** (49 0223 640A and 49 0223 641), compress the coil spring.
11. Hold the upper end of the piston rod with a spanner and then remove the lock nut.

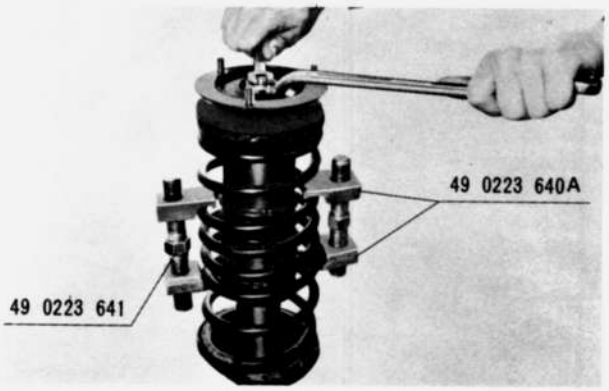

Fig. 13–6 Removing of lock nut

12. Remove the mounting rubber, bearing, rubber seal, spring seat upper, rubber seat upper, adjusting plate, seal ring, dust boot, coil spring and lower seat in that order.

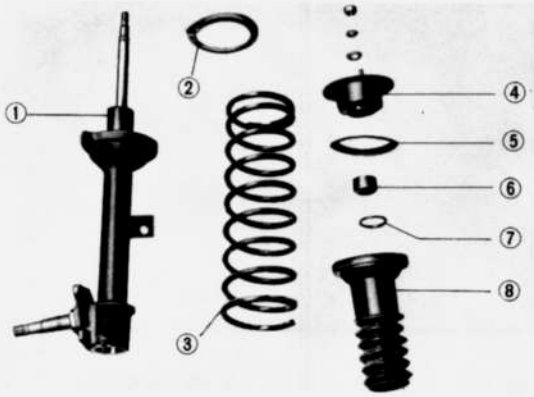

Fig. 13–7 Front shock absorber

1. Shock absorber
2. Rubber seat lower
3. Coil spring
4. Mounting rubber
5. Rubber seal
6. Bearing
7. Dust seal ring
8. Spring seat upper, rubber seat upper, adjusting plate and boot

13–A–2. Disassembling of Front Shock Absorber

1. Using the **cap nut wrench** (49 0259 700), remove the cap nut and seal from the reservoir tube.

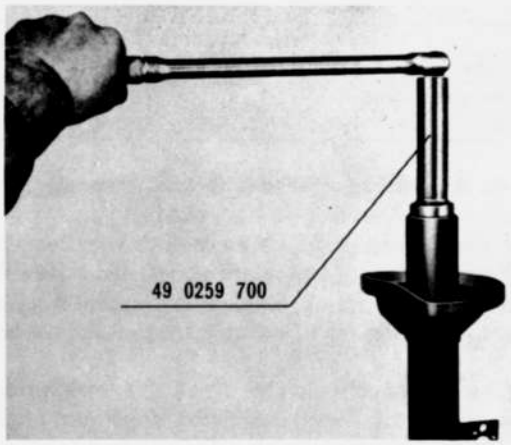

Fig. 13–8 Removing of cap nut

2. Remove the "O" ring installed on the piston rod guide with a suitable tool.

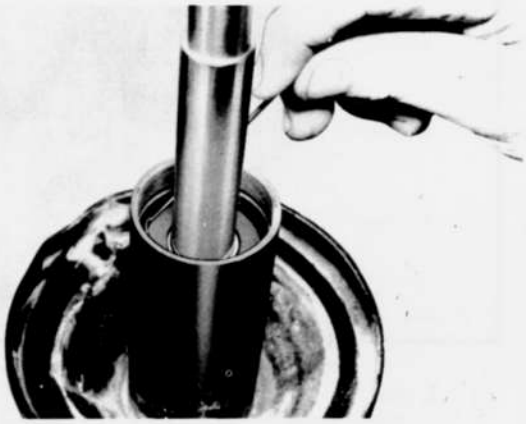

Fig. 13–9 Removing of "O" ring

3. Pull out the piston rod assembly from the pressure tube.
4. Remove the piston rod guide, back up ring, stopper and stopper guide from the piston rod.
5. Hold the upper end of the piston rod in a vise, being careful to protect it with aluminum plates, and remove the piston nut.

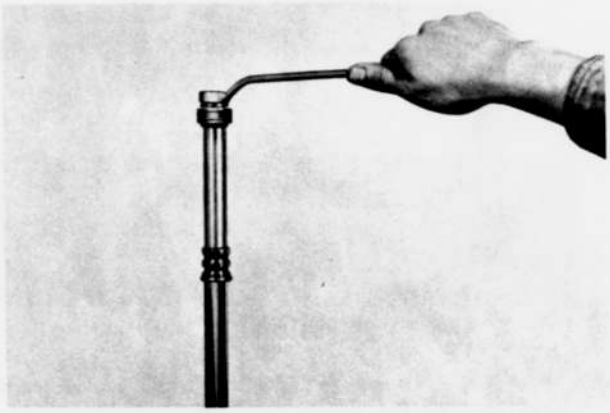

Fig. 13–10 Removing of piston nut

6. Remove the washer, centering valve, relief valves, piston, check valves, check valve springs and the washer from the piston rod in that order.
7. Remove the piston ring from the piston.



Fig. 13–11 Removing of piston ring

8. Remove the pressure tube from the reservior tube.
9. Remove the base valve assembly from the pressure tube.
10. Remove the bolt and nut of the base valve assembly, and remove the valve seat, relief valves, base valve casing and relief valves.

13–A–3. Checking of Front Shock Absorber

1. To test the shock absorber, hold the shock absorber in an upright position and work the piston rod up and down in its full length of travel, four or five times. If a strong resistance is felt due to hydraulic pressure, the shock absorber is functioning properly. If no resistance is felt or there is a sudden free movement in travel, the shock absorber should be repaired.

If excessive amount of fluid is evident on the exterior of the shock absorber, the shock absorber should be repaired.

2. Check the coil spring for signs of fatigue, cracks or any damage.
3. Check the mounting rubber for weakness at the rubber cushion, roughness or damage at the bearing, and damage of the bolts.
4. Check the reservior tube for fluid leak or deformation and check the steering knuckle for crack.
5. Check the piston rod for wear. The piston rod

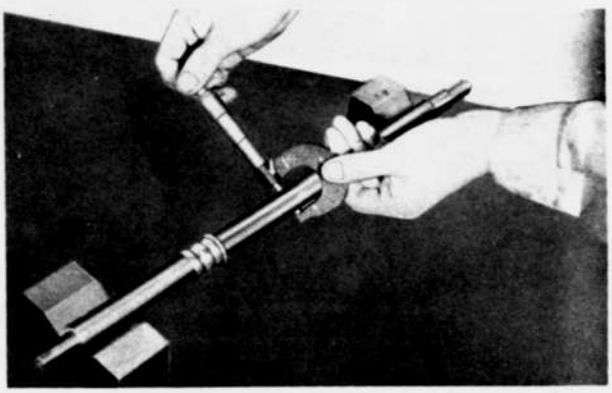

Fig. 13–12 Checking of piston rod diameter

diameter should be **more than 19.94 mm (0.785 in).** The standard diameter is 20.0 mm (0.788 in).
6. Check the run-out of the piston rod by supporting both ends of the piston rod on V blocks and applying a dial indicator. The permissible run-out is **under 0.1 mm (0.004 in).**

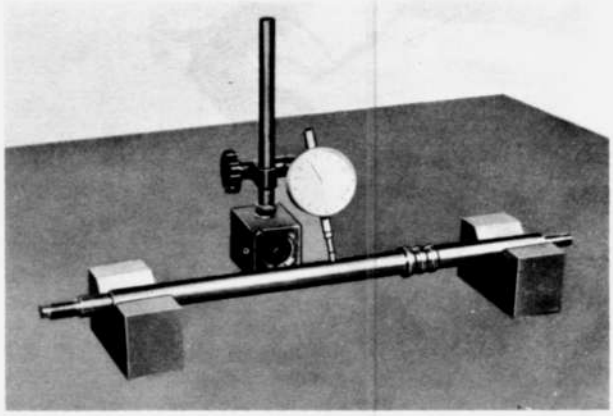

Fig. 13–13 Checking of run-out

7. Check the contact surface of the piston with the check valve and the relief valve for wear or damage. If excessive wear or damages are found, replace with a new one.
8. Check the piston ring for wear or damage.
9. Check the relief valve and the check valve for wear, damages and flatness.

	Thickness x number	Flatness
Relief valve	0.20 mm (0.008 in) x 5	Less than 0.02 mm (0.0008 in)
Centering valve	0.10 mm (0.004 in) x 1	
Check valve	0.25 mm (0.010 in) x 1	Less than 0.02 mm (0.0008 in)

10. Check the check valve spring for signs of fatigue or damages.
11. Check the run-out of the pressure tube.
The permissible run-out is **under 0.2 mm (0.008 in).**

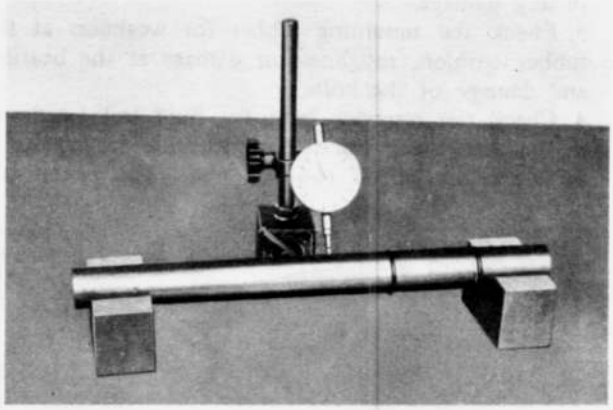

Fig. 13–14 Checking of run-out

12. Check the inner diameter of the pressure tube.
The inner diameter of the tube should be **less than 30.07 mm (1.184 in).**
13. Check the cap nut and seal for damaged threads, and check the lip of the oil seal for wear or damages. If necessary, replace with a new one.
14. Check the rod guide for wear or damage.
15. Check the base valve casing, tension valve compression valve and washer for wear or damages.

	Thickness x number	Flatness
Tension valve	0.10 mm (0.004 in) x 4	
Compression valve	0.20 mm (0.008 in) x 5	
Washer	0.50 mm (0.020 in) x 1	Less than 0.02 mm (0.0008 in)

13–A–4. Assembling of Front Shock Absorber

1. Install the piston ring to the piston.
2. Place the top end of the piston rod in a vise, being careful to protect it with aluminum plates, and install the washer, check valve spring, check valve, piston, three relief valves, centering valve, two relief valves and washer.

Note: The piston should be fitted by making the constant orifice side face toward the upper end of the piston rod.

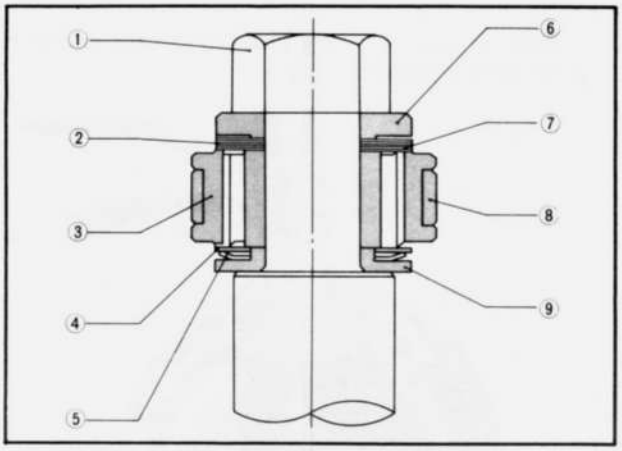

Fig. 13–15 Piston assembly

1. Nut
2. Relief valve
3. Piston
4. Check valve
5. Check valve spring
6. Washer
7. Centering valve
8. Piston ring
9. Washer

3. Tighten the piston nut to **1.5 m-kg (10.0 ft-lb),** ensuring that the check valve and check valve spring are properly positione.

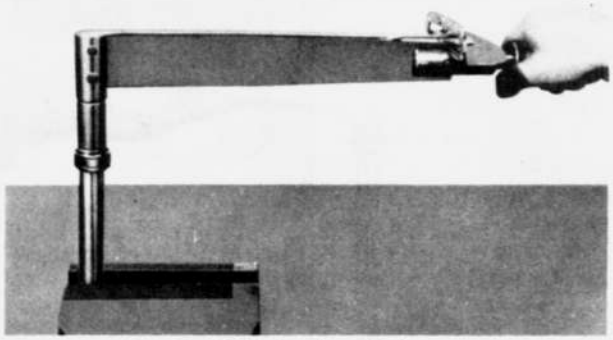

Fig. 13–16 Tightening of piston nut

4. Punch two positions of the threads between the piston nut and the piston rod with a punch to prevent loosening of the piston nut as shown in Fig. 13–17.



Fig. 13–17 Applying of punch

5. Fit the four tension valves onto the bolt and install it into the base valve casing.
6. Fit the five compression valves, washer and nut to the base valve casing and tighten the nut to **0.15 m-kg (1.0 ft-lb)**.

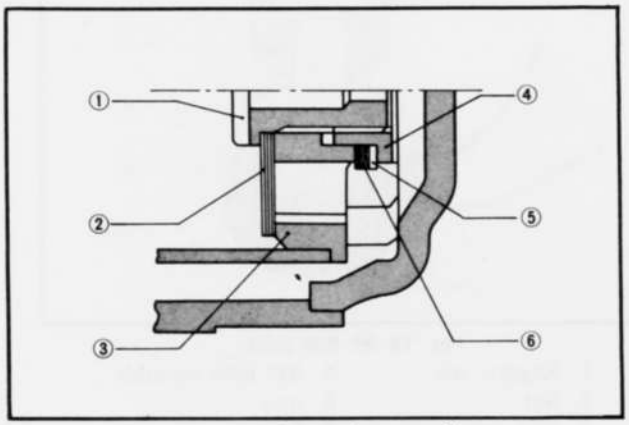

Fig. 13–18 Base valve assembly

1. Bolt
2. Relief valve
3. Base valve casing
4. Nut
5. Valve seat
6. Relief valve

7. After tightening the nut, punch the center of the bolt with a punch.
8. Install the stopper guide, stopper, back up ring and the piston rod guide into the pressure tube.
9. Install the two oil stop rings onto the bottom side of the pressure tube, as shown in Fig. 13–19.
10. Insert the piston rod assembly into the pressure tube from the bottom side and install the base valve assembly into the bottom of the pressure tube.

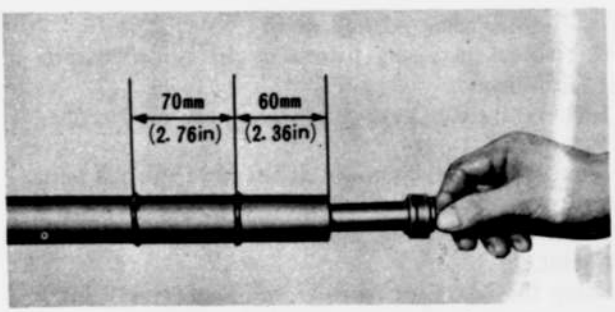

Fig. 13–19 Installing of oil stop rings

11. Insert the pressure tube assembly into the reservior tube.
12. Fill the reservior tube with shock absorber fluid. The capacity of fluid should be exactly **245 cc (0.52 U.S. pint, 0.43 Imp. pint)**.

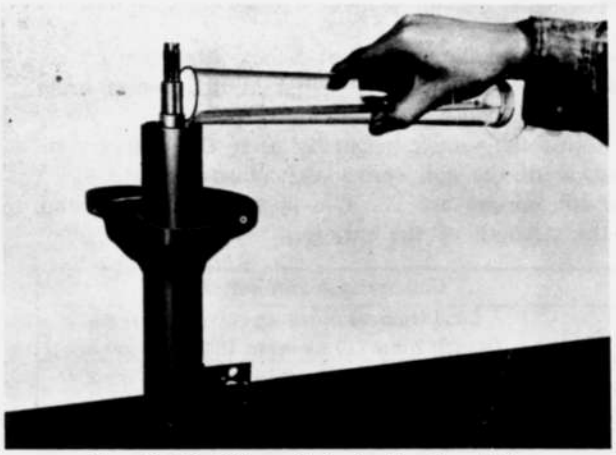

Fig. 13–20 Filling of shock absorber fluid

13. Apply grease to the lip of the oil seal. Install the "O" ring and insert the cap nut slowly onto the piston rod.
14. Tighten the cap nut temporarily, ensuring that the piston rod is extended to its maximum length, with the **hook wrench** (49 0259 702).

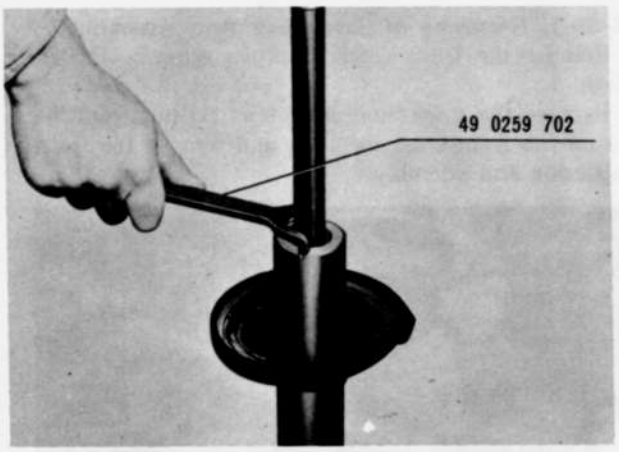

Fig. 13–21 Tightening of cap nut

Tighten the cap nut to a torque of **5.5 m-kg (40 ft-**

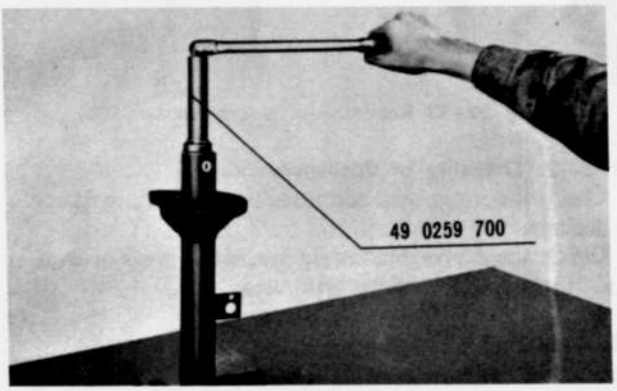

Fig. 13–22 Tighting of cap nut

lb), with the **cap nut wrench** (49 0259 700), after the piston is lowered.

Note: The cap nut is tightened in this condition to raise the air pressure remaining within the reservoir tube.

13–A–5. Installing of Front Shock Absorber

Install the front shock absorber in the reverse order of removing, noting the following points.

1. Adjust the vehicle height by using the proper combination of the coil spring and adjusting plate.

The coil springs are available in three sizes according to the strength of the springs.

Coil spring identification	
Mark	Load required to reduce coil spring length from 352 mm (13.86 in) to 194 mm (7.64 in)
1 dot	281 ~ 289 kg (619 ~ 637 lb)
2 dots	289 ~ 296 kg (637 ~ 653 lb)
3 dots	296 ~ 304 kg (653 ~ 670 lb)

If possible, use springs with the same identification mark on both sides.

2. When installing, use vegetable grease for the interior of the rubber bushes.

13–B. SUSPENSION ARM ASSEMBLY

13–B–1. Removing of Suspension Arm Assembly

1. Remove the front shock absorber, referring to Par. 13–A–1.
2. Remove the suspension arm attaching nut from the rod on the front cross member, and remove the front suspension arm assembly.

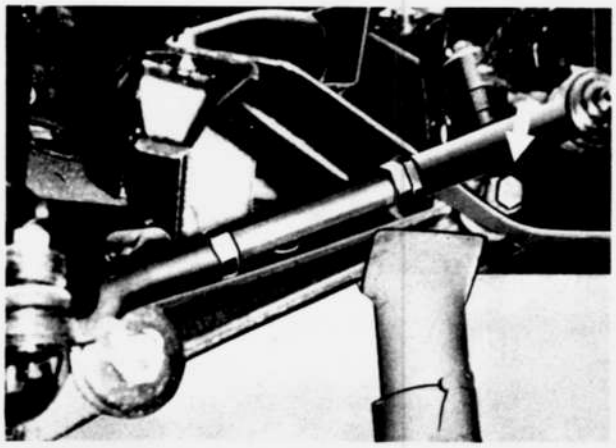

Fig. 13–23 Removing of suspension arm

13–B–2. Checking of Suspension Arm

1. Check the lower arm and knuckle arm for any crack or damage.
2. Check the rubber bushes for weakness, wear or damage. If necessary, replace with new ones.

13–B–3. Installing of Suspension Arm

Install the suspension arm, referring to Par. 13–B–1 and 13–A–1.

13–C. BALL JOINT

The ball joints for the suspension arm are made **maintenance free for 48,000 km (30,000 miles)** and therefore, require no greasing during this period.

When greaseing becomes necessary, supply **Molybdenum Disulfide Lithium Grease** to the ball joints, proceeding as follows:

1. Remove the plug from the ball joint and temporarily install the grease nipple.
2. Feed **Molybdenum Disulfide Lithium Grease** through the nipple until the grease begins to flow freely from the dust seal or the dust seal begins to ballon.
3. Remove the grease nipple and reinstall the plug.

Note: Never use multipurpose grease or chassis grease. If improper grease is used, this will deteriorate the durability of the mechanism.

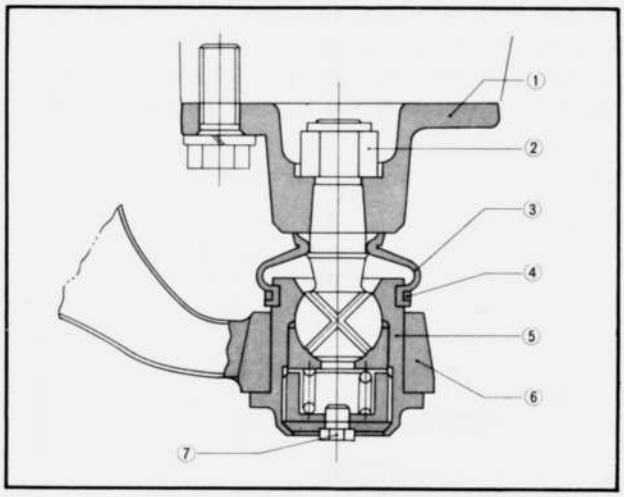

Fig. 13–24 Ball joint

1. Knuckle arm
2. Nut
3. Dust seal
4. Set ring
5. Ball joint assembly
6. Arm
7. Plug

13–C–1. Checking of Ball Joint

1. Check the dust seal for wear, flaw or any damage. If the dust seal is defective, this will allow entry of water and dirt, resulting in ball joint wear.
2. Check the revolving torque of the ball stud. To check, hook the spring scale in the hole of the knuckle arm for connecting the tie rod and pull the spring scale until the ball stud starts to turn. The reading of the spring scale should be **6 to 11 kg (13.2 to 22.3 lb)**. If it is less than 6 kg (13.2 lb), replace the ball joint in its assembled form.

13–C–2. Replacing of Ball Joint

If it becomes necessary to replace the ball joint, proceed as follows:

1. Remove the suspension arm assembly as described in Par. 13–B–1.
2. Remove the ball joint nut and remove the ball joint and suspension arm from the knuckle arm.
3. Remove the set ring and the dust boot from the ball joint.
4. Using the **ball joint remover and installer** (49 0259 860), press the ball joint out of the suspension arm.

Note: Before pressing out the ball joint, clean the ball joint and suspension arm so as not to damage the mounting bore of the suspension arm.

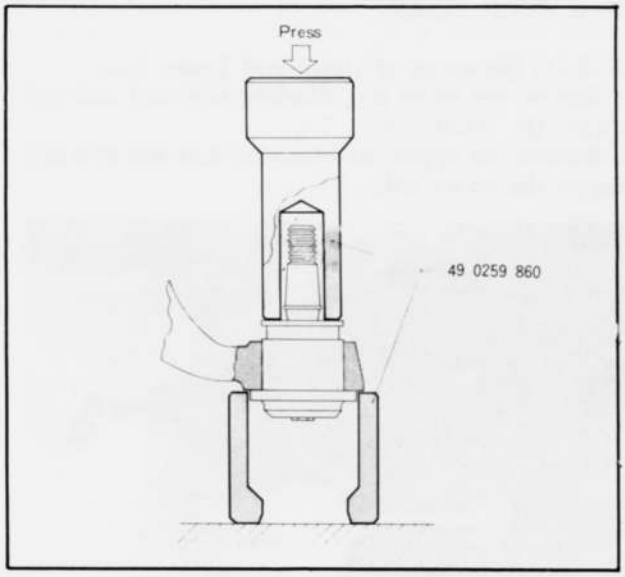

Fig. 13–25 Removing of ball joint

5. Clean the mounting bore of the suspension arm and apply kerosene.
6. Press fit the ball joint to the suspension arm with the **ball joint remover and installer** (49 0259 860).

Note: If the pressure necessary to press in the ball joint is less than 1,500 kg (3,300 lb), the suspension arm should be replaced.

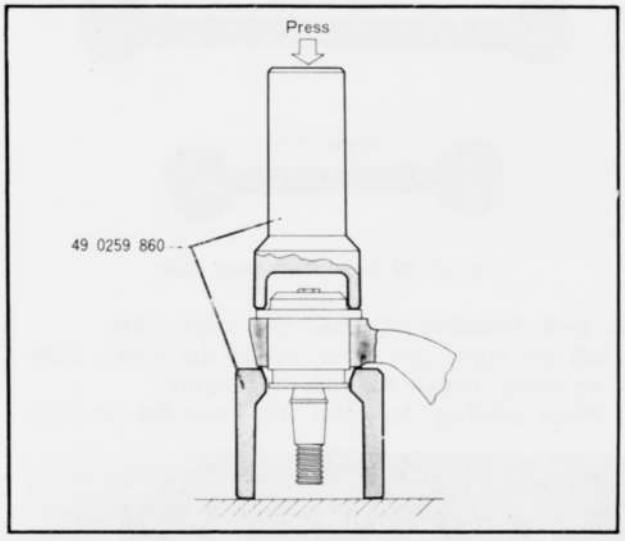

Fig. 13–26 Installing of ball joint

7. Install the ball joint and suspension arm to the knuckle arm and tighten the nut to **6.5 m-kg (50 ft-lb).**

13–D. REAR SUSPENSION

13–D–1. Removing of Rear Shock Absorber

1. Remove the nuts attaching the upper end of the shock absorber from the luggage compartment.
2. Remove the nut from the lower end of the shock absorber.
3. Place the jack under the rear axle housing and raise the vehicle.
Then, place a stand under the frame side rail.
4. Gradually lower the jack under the rear axle housing and remove the rear shock absorber.

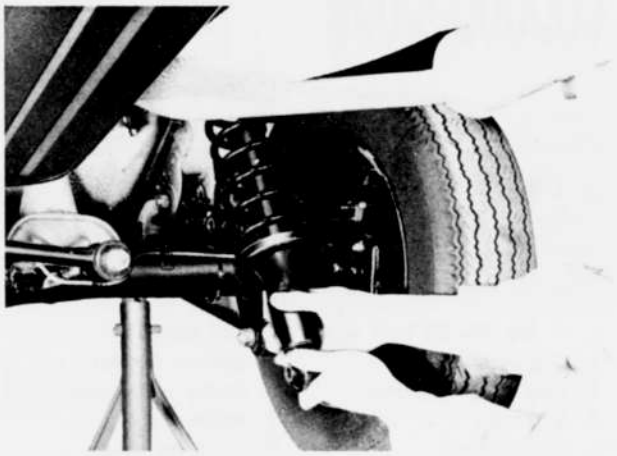

Fig. 13–27 Removing of rear shock absorber

13–D–2. Disassembling of Rear Shock Absorber

1. Apply the identification mark on the rear shock absorber before it is disassembled.
2. Hold the shock absorber in a vise.
3. Using the **coil spring holder** (49 0223 640A and 49 0223 641), compress the coil spring.
4. Remove the lock nuts.

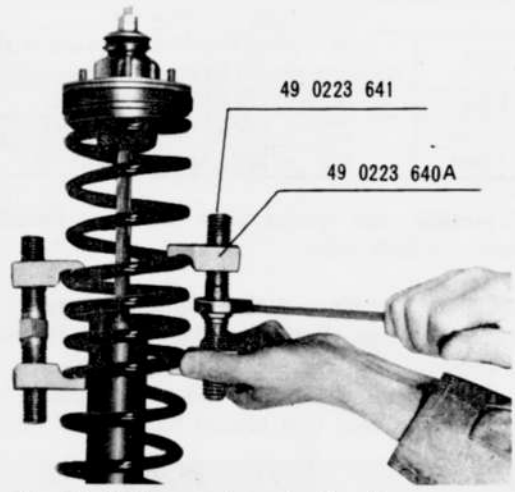

Fig. 13–28 Compressing of coil spring

13–D–3. Checking of Rear Shock Absorber

1. If excessive amount of oil is evident on the exterior of the shock absorber, the shock absorber should be replaced with a new one.

Note: The rear shock absorber should not be disassembled as it contains a high compression gas.
If it is found to be defective, replace it as an assembly.

2. Check the coil spring for signs of fatigue, cracks or any damage.

3. Check the rubber seat, rubber bush for weakness at the rubber cushion.
4. Check the set plate, spring seat for crack, wear and damage. If necessary, replace with a new one.

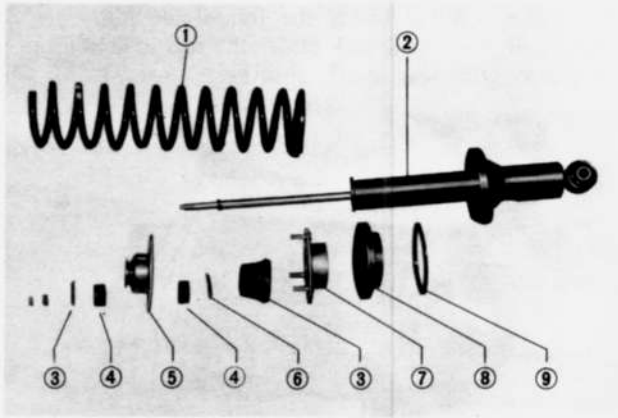

Fig. 13–29 Rear shock absorber assembly

1. Coil spring
2. Rear shock absorber
3. Retainer
4. Rubber bush
5. Set plate
6. Rubber stopper
7. Spring seat upper
8. Rubber seat
9. Adjusting shim

13–D–4. Assembling of Rear Shock Absorber

Assemble the rear shock absorber in the reverse order of disassembling, noting the following point.
1. Adjust the vehicle height by using the proper combination of the coil spring and adjusting plate.
The coil springs are available in three sizes according to the strength of the springs.

Coil spring identification	
Mark	Load required to reduce coil spring length from 371 mm (14.61 in) to 247 mm (9.72 in)
1 dot	263.4 ~ 271 kg (581 ~ 597 lb)
2 dots	271 ~ 279 kg (597 ~ 561 lb)
3 dots	279 ~ 286.6 kg (615 ~ 632 lb)

If possible, use springs with the same identification mark on both sides.

13–D–5. Installing of Rear Shock Absorber

Install the rear shock absorber in the reverse order of removing, noting the following points.
1. The rear shock absorber should be installed by making the protector face toward the front of the vehicle.

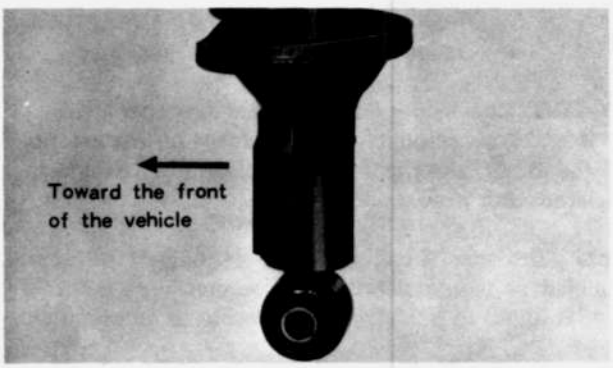

Fig. 13–30 Lower of rear shock absorber

2. Tighten the rear shock absorber attaching nut and bolt to a torque **11 m-kg (80 ft-lb).**

13–E. FOUR LINKS

13–E–1. Removing of Upper and Lower Link

1. Remove the lower link attaching bolts and nuts and remove the lower link.
2. Remove the upper link attaching bolt and nuts and remove the upper link.

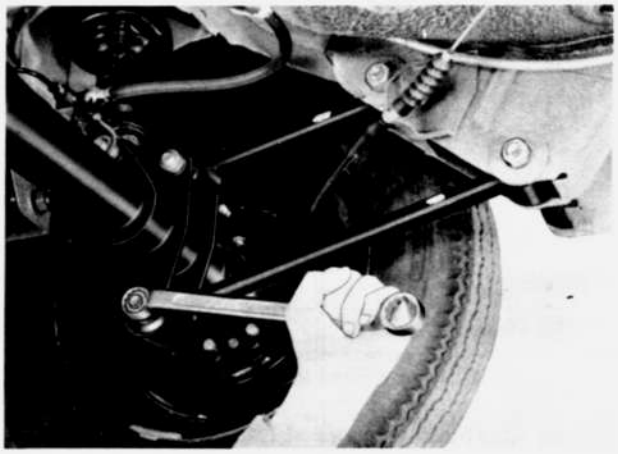

Fig. 13–31 Four links

13–E–2. Checking of Upper and Lower Links

1. Check the links for crack or damage.
2. Check the rubber bushes for weakness.

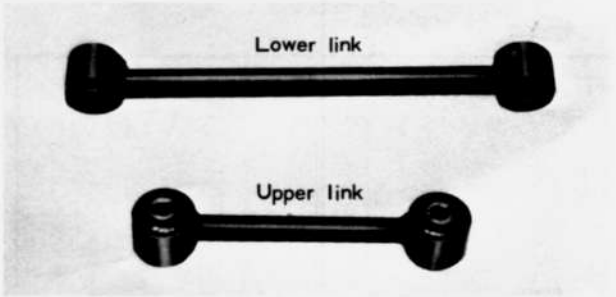

Fig. 13–32 Upper and lower links

13–E–3. Installing of Upper and Lower Link

Install the upper and lower link in the reverse order of removing, noting the following points.
1. When installing the upper and lower link on body

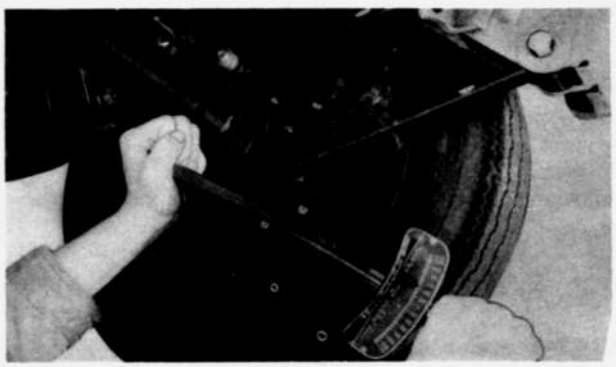

Fig. 13–33 Tightening of links

and rear axle housing the **white mark** should be placed at the front of the vehicle.
2. When installing the upper and lower links, the torque should be **11 m-kg (80 ft-lb)** in unloaded condition. If they are tightened in rebounding condition, the height of the vehicle will get higher or durability of the rubber bushes will deteriorate.

13–F. LATERAL ROD

13–F–1. Removing of Lateral Rod

1. Remove the lateral rod attaching nuts to the rear axle housing.
2. Remove the lateral rod attaching nut and bolt to the body and remove the lateral rod.

13–F–2. Checking of Lateral Rod

Referring to Par. 13–E–2, check the lateral rod.

13–F–3. Installing of Lateral Rod

Install the lateral rod in the reverse order of removing, noting the following point.
1. When installing the lateral rod, the torque should be **11 m-kg (80 ft-lb)** in unloaded condition. If they are tightened in rebounding condition, the height of the vehicle will get higher or durability of the rubber bushes will deteriorate.

SPECIAL TOOLS

49 0223 640A	Coil spring holder
49 0223 641	Screw (For coil spring holder)
49 0259 700	Cap nut wrench
49 0259 702	Hook wrench
49 0259 860	Ball joint remover and installer

BODY

14–A. WINDSHIELD GLASS ..... 14 : 1
14–A–1. Removing of Windshield Glass ..... 14 : 1
14–A–2. Installing of Windshield Glass ..... 14 : 2
14–B. REAR WINDOW ..... 14 : 4
14–C. FRONT DOOR ..... 14 : 5
14–C–1. Disassembling of Front Door ..... 14 : 5
14–C–2. Assembling of Front Door ..... 14 : 5
14–C–3. Adjusting of Front Door ..... 14 : 6
14–D. REAR DOOR ..... 14 : 6
14–D–1. Disassembling of Rear Door ..... 14 : 6
14–D–2. Assembling of Rear Door ..... 14 : 6
14–E. TOP CEILING ..... 14 : 7
14–E–1. Removing of Top Ceiling ..... 14 : 7
14–E–2. Installing of Top Ceiling ..... 14 : 7
14–F. REAR SIDE WINDOW (COUPÉ) ..... 14 : 7
14–F–1. Removing of Rear Side Window ..... 14 : 7
14–F–2. Installing of Rear Side Window ..... 14 : 8

14–A. WINDSHIELD GLASS

Windshield glass of the type which is bonded on is installed: the wind shield glass is bonded to the body in order to reduce the noise level of the wind blowing against the windshield glass during driving, obtain tight sealing, enhance the body strength and increase the safety at the time of crash.

Fig. 14–1 shows the structure.
The windshield glass is bonded to the body with a sealant, and the dam prevents the sealant from being forced towards the interior of the vehicle when the window glass is being installed.
The windshield glass is positioned to the body with 3 to 4 spacers, and the mould is fitted into the clips attached to the body.

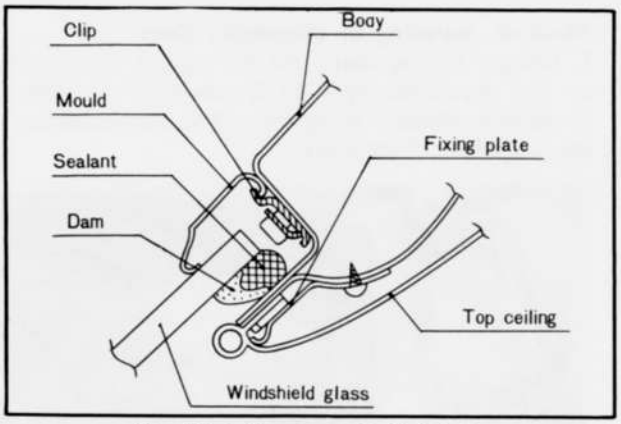

Fig. 14–1 Structure of windshield

Use the following **window tool set** (49 0305 870) as shown in Fig. 14–2 to remove and install the windshield glass.

14–A–1. Removing of Windshield Glass

1. Remove the interior mirror and also the right and left front pillar trims from the interior of the vehicle.
2. Remove the wiper arms.
3. Using the **mould remover** (49 0305 871), remove the mould in the manner shown in Fig. 14–3.
4. Remove the clips.

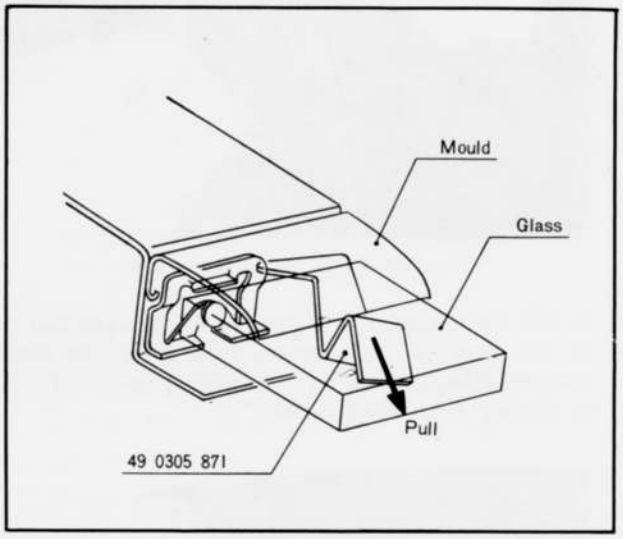

Fig. 14–3 Removing of mould

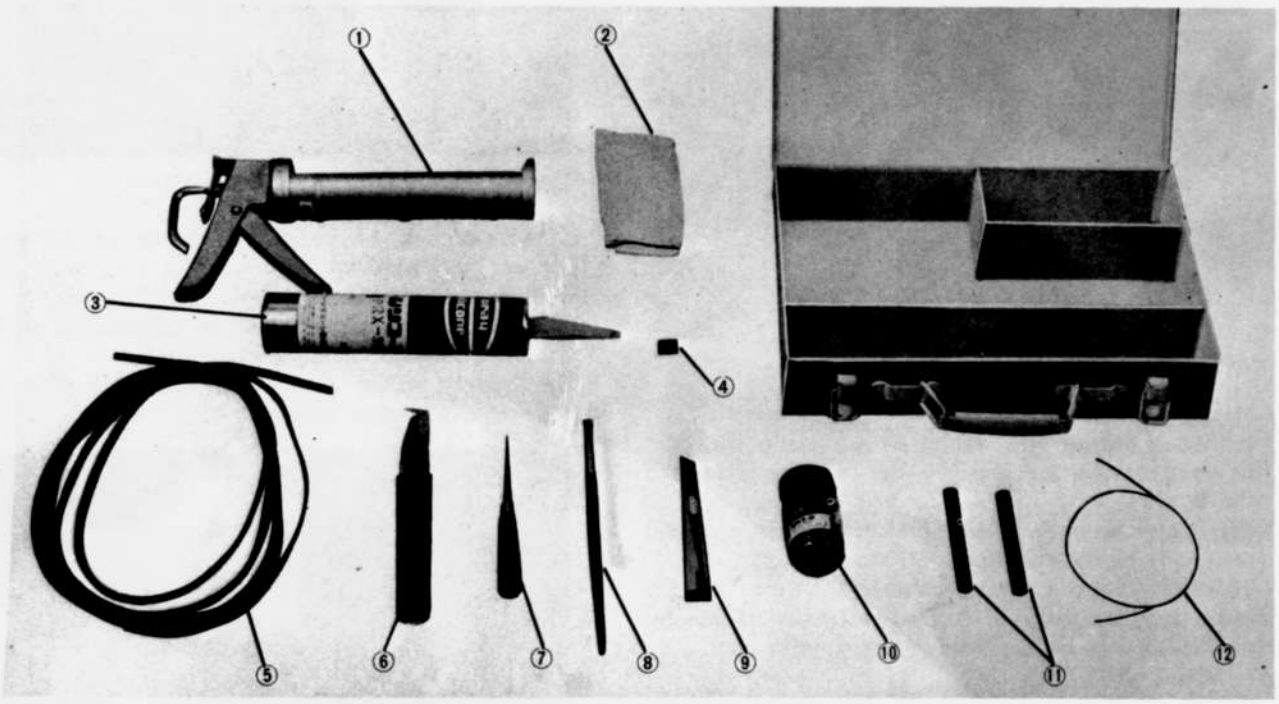

Fig. 14–2 Window tool set

1. Sealant gun (49 0305 872)
2. Guaze
3. Sealant (Part No. 0305 77 739)
4. Spacer
5. Dam
6. Mould remover (49 0305 871)
7. Needle (eyeleteer)
8. Brush
9. Cutting knife
10. Primer (Part No. 0305 77 738)
11. Bar
12. Piano wire (0.5 mm diameter)

5. Pierce the windlow sealant with a needle (eyeleteer). Pass a piano wire of approximately 500 mm (20 in) long, through the hole, and wrap each end of the wire around a small bar.

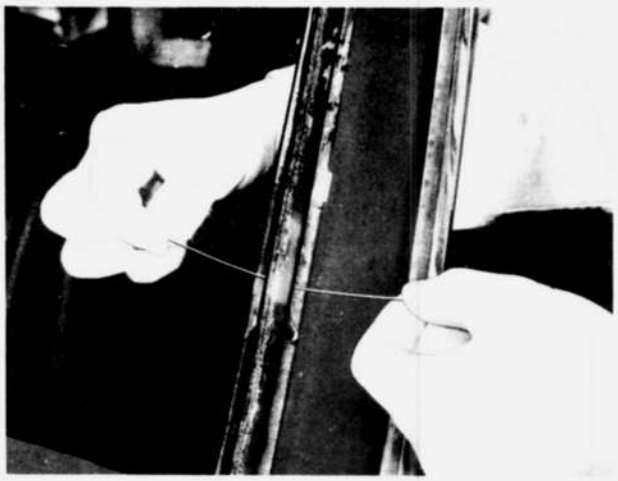

Fig. 14–4 Piercing of piano wire

6. Cut the sealant off along the entire circumference of the glass by two persons (one inside the vehicle and the other outside it) each pulling one of the bars as if they were using a saw.

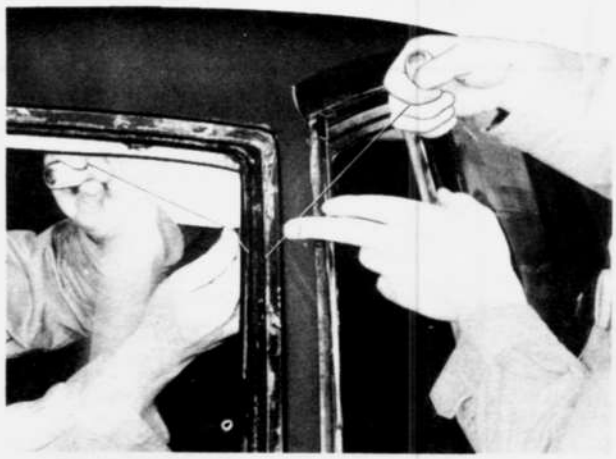

Fig. 14–5 Cutting of sealant

Note:
(a) When cutting the sealant with a piano wire, cut it along the border between the window glass and the sealant.
(b) The piano wire is liable to snap if only a certain section is constantly used and becomes hot.
Therefore, when cutting the sealant ensure that the piano wire is kept cool (it should be cooled slowly) or the section of the wire being used is constantly rotated.
(c) When cutting the sealant off, pay special attention so that the top ceiling, painted surfaces, etc. are not damaged.

7. Remove the window glass from the body. The removal of the window glass shown in Fig. 14–6 should be performed by two persons.

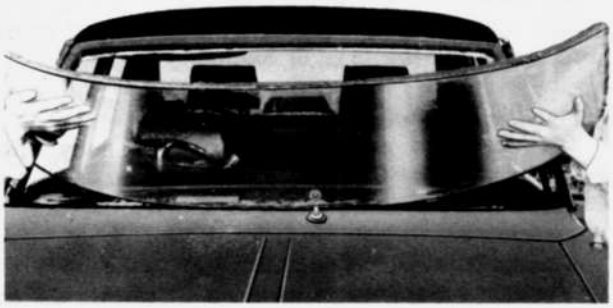

Fig. 14–6 Removing of windshield glass

14–A–2. Installing of Windshield Glass
1. Using a cutting knife, cut the sealant off smoothly so that approximately 1 to 2 mm (0.04 to 0.08 in) of sealant remains along the entire circumference of the windshield framework.



Fig. 14–7 Cutting of sealant

If the thickness of sealant left along the circumference of the window framework is too small, first, clean with a solvent to remove any grease.
Then, apply primer with a brush and leave it to dry for 20 to 30 minutes.
Then, apply sealant until a thickness of 1 to 2 mm (0.04 to 0.08 in) is obtained.



Fig. 14–8 Applying of primer

2. Using a solvent, wipe the entire edges of the window glass to a width of approximately 50 mm (2.0 in) from the edge and also the entire circumference of the body on which the glass is to be bonded to remove any grease.
Then, bond the dam with bonding agent parallel to the edge of the window glass at a position 7 mm (0.028 in) away from it. Bond the dam in the direction shown in Fig. 14–9.

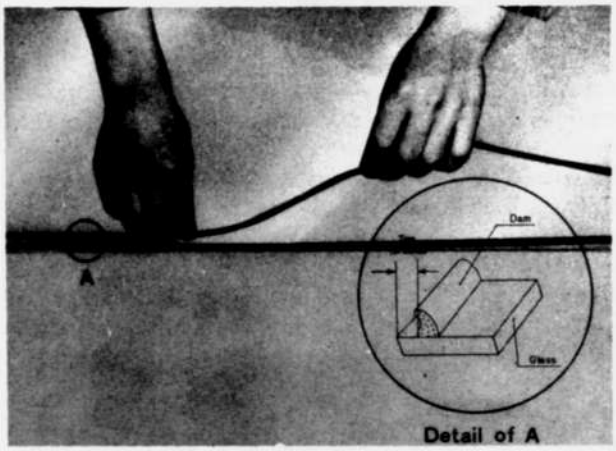

Fig. 14–9 Bonding of dam

Note: Securely bond the dam so that it is straight and will not come apart.

3. Apply primer on the entire circumferences of the bonding areas of the window glass and the body with gauze (for the former) and a brush (for the latter), and leave them to dry for 20 to 30 minutes. (See Fig. 14–8)

Note:
(a) Apply as thin a sealant coating as possible to the window glass.

(b) Don't allow any dust, water, oil, etc. to get on the coating surface and also don't touch the coating with hand.

(c) If the window glass which was removed is to be reused, remove the sealant adhering to the glass to some extent with a cutting knife.
Then, remove the remaining sealant with a cleaning solvent and wipe it clean with gauze.

4. Bond each spacer to the body with bonding agent. Fig. 14–10 shows the directions and positions of each spacer.
There are two kinds of spacer, indentified by color as shown below.

Part No.	Name of Part	Color
0305 70 448	Spacer	Gray
0305 70 447A	Spacer	Black

Although a spacer is bonded on both the right and the left hand sides of the windshield glass in Fig. 14–10, a spacer on only one side of the glass should be sufficient.

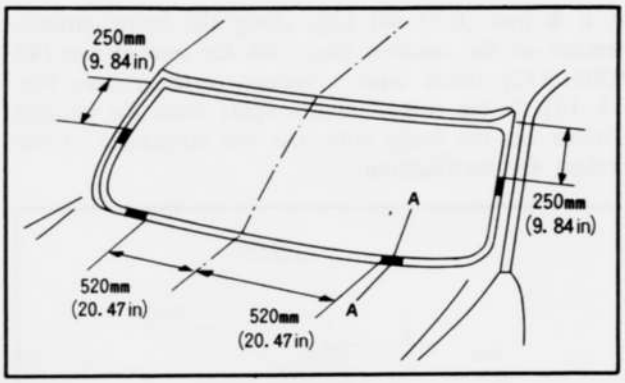

Fig. 14–10 Positions of spacers

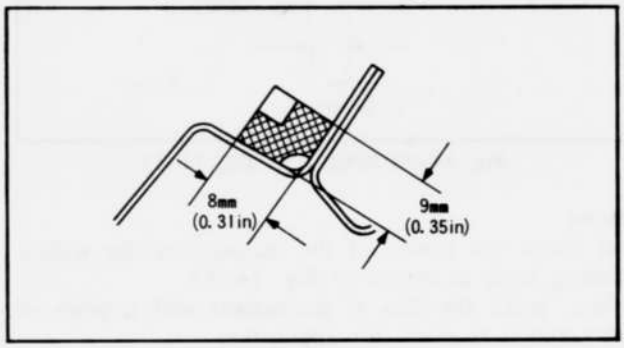

Fig. 14–11 A–A section of Fig. 14–10

5. Insert each clip to the clip insertion portion in the manner shown in Fig. 14–12.
If any clip happens to be loose after it has been inserted, replace with a new clip.

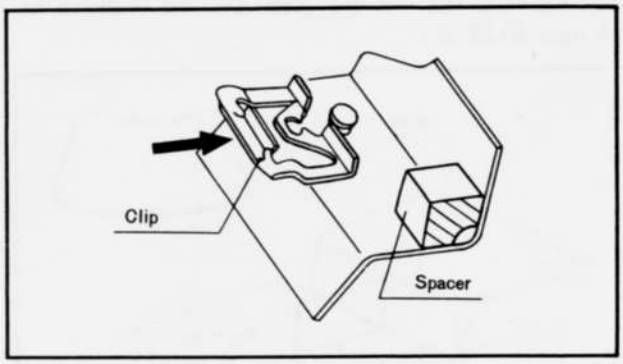

Fig. 14–12 Inserting of clip

6. After the primer is dry, apply the sealant so that

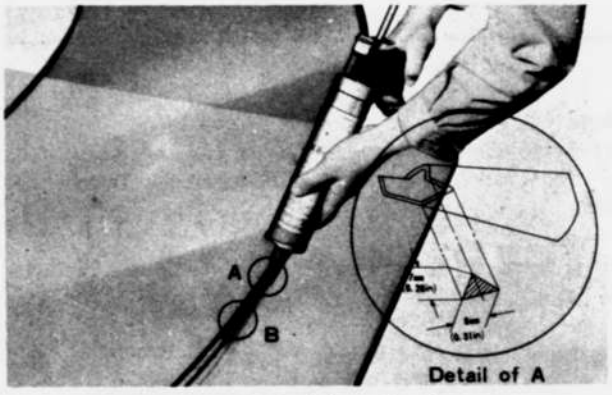

Fig. 14–13 Applying of sealant

it is 8 mm (0.31 in) high along the entire circumference of the window glass with the **sealant gun** (49 0305 872) fitted with a sealant cartridge (see Fig. 14–13). If the sealant comes apart from the painted surface on the body side, use the remainder of the sealant for rectification.

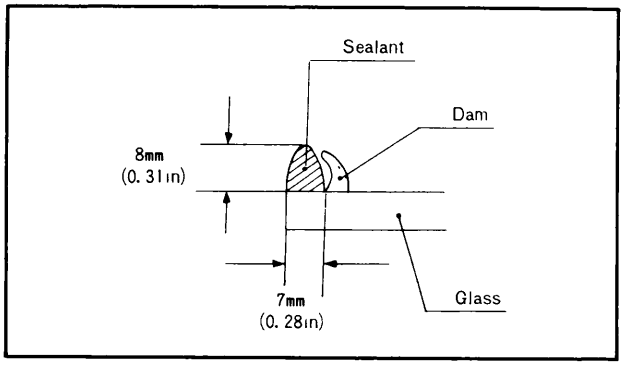

Fig. 14–14 Detail B of Fig. 14–13

Note:
(a) Shape the nozzle of the sealant cartridge with a cutting knife as shown in Fig. 14–13.
Then, break the film of the sealant with a piece of wire and it is ready for application.
(b) If the application is unsatisfactory, rectify it with a wooden spatula.
(c) If any sealant adheres to your hand, it should be removed immediately.

7. Install the window glass to the body. Adjust the step between the window glass and the body to be 5.8 mm (0.23 in).

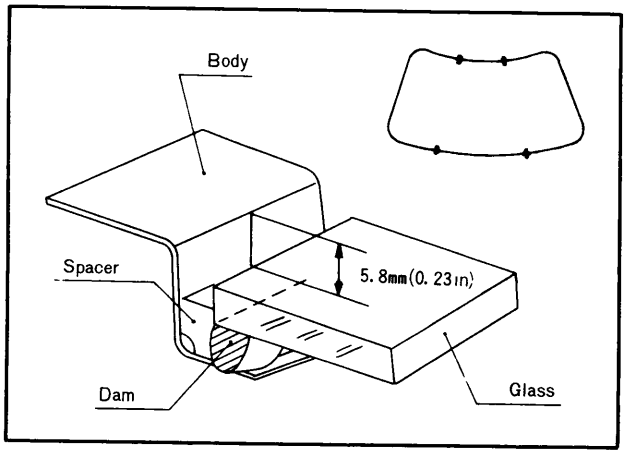

Fig. 14–15 Adjusting of step

Note:
(a) After placing the window glass on the inner side of the spacer, push the glass with the hand and check the step at the four positions shown in Fig. 14–15.
(b) If possible, do not apply any force to the window glass until the sealant has hardened.

Time required for the sealant to harden after it is applied
Summer (20°C, 68°F)..... 5 hours
Winter (5°C, 41°F).....24 hours

8. If any sealant has been forced out or is found to be lacking, rectify such portions with a wooden spatula.
9. After checking to ensure that there are no water leakages, install the mould, interior mirror, front pillar trim, etc.

Precautions:
1. If any water leakage is found after the sealant has hardened, use repairing agent.
2. Keep the door windows open until the sealant has hardened to some extent.
If the door windows are kept tightly closed, the interior atmospheric pressure would suddenly change when the doors are opened and closed.
This could cause vacant spaces to develop in the unhardened sealant and deteriorate the air-tightness and bonding properties of the sealant.
3. The time required before the vehicle can be driven after the sealant has been applied is approximately 5 hours in summer (20°C, 68°F) or 24 hours in winter (5°C, 41°F) if the sealant is left in open weather for drying.
4. If the vehicle is to be repainted, remove all the sealant from the body and then after baking the paint on, apply the sealant so that it is 10 mm (0.4 in) high.
Never apply air setting paint to the surface on which the sealant is to be applied, because the air setting painting method would have problems in weather-proofness and its bonding properties between the paint layer and the sheet metal and between the paint layer and the primer.

14–B. REAR WINDOW

The removal and installation of the rear window glass can be made in the same way as those of the windshield glass.
But care should be taken to the following points:
1. In the case of a vehicle equipped with a rear window with printed hot lines, perform the work of disconnection and connection of the relevant wiring.
2. The step between the rear window glass and the body should be adjusted to be 7.8 mm (0.31 in).

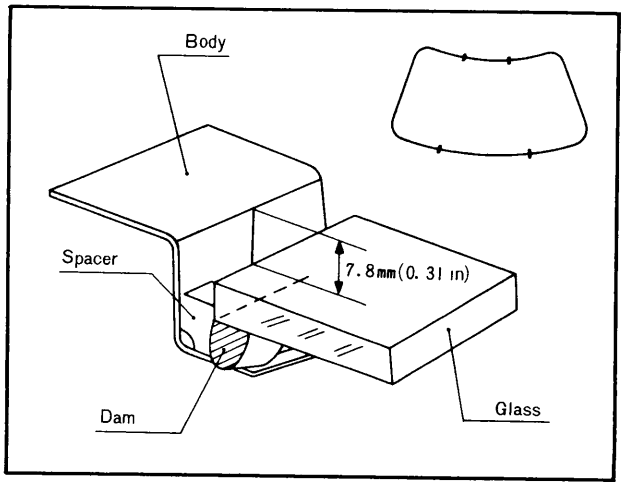

Fig. 14–16 Adjusting of step

3. The directions and positions of each spacer to be bonded are shown in Fig. 14–17.

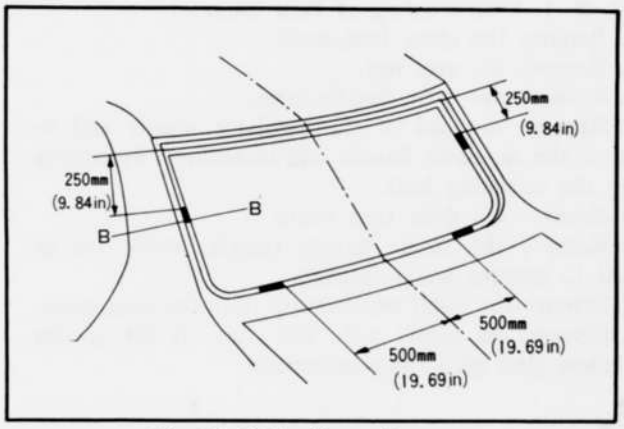

Fig. 14–17 Positions of spacers

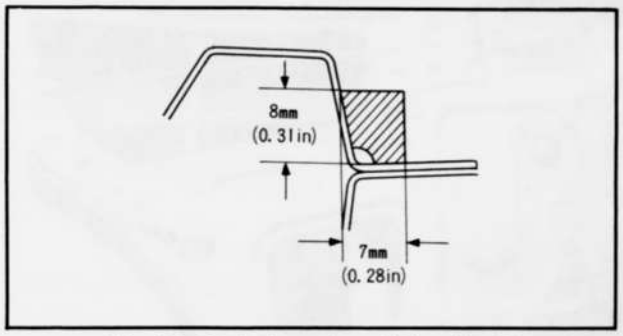

Fig. 14–18 B–B section of Fig. 14–17

14–C. FRONT DOOR

14–C–1. Disassembling of Front Door

1. Remove the inner lock knob.
2. Remove the arm rest.
3. Remove the inner handle cover.
4. Remove the pad of the regulator handle and remove the regulator handle and escutcheon by loosening the attaching bolt.

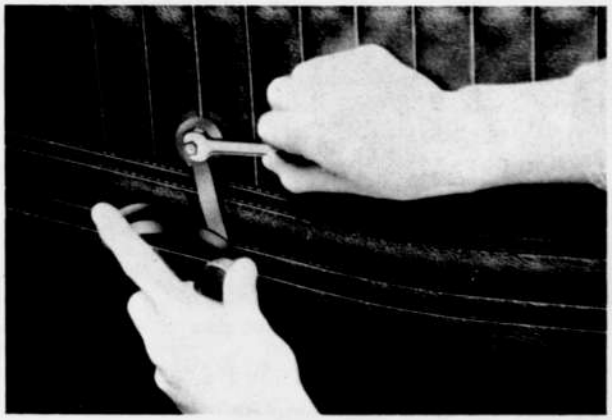

Fig. 14–19 Removing of regulator handle

5. Remove the door trim board.
6. Remove the inside screens (vinyl), which are installed to prevent water leakages.
7. Remove the outer weatherstrip from the door body.
8. Remove the door window glass. With the window glass lowered to half-opened position, it can be easily taken out.

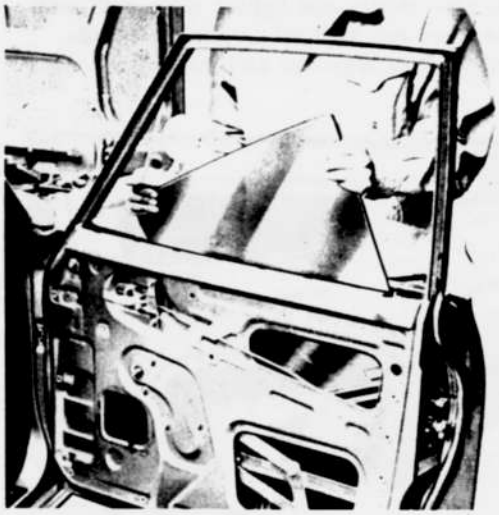

Fig. 14–20 Removing of glass

9. Remove the outer handle.
10. Pull out the set spring and remove the key cylinder

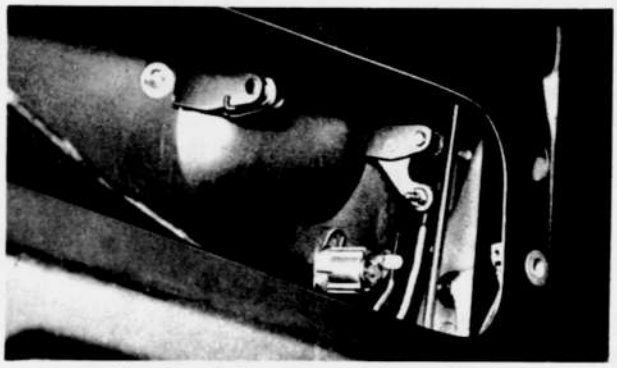

Fig. 14–21 Removing of key cylinder

11. Remove the door lock complete.
12. Remove the window regulator.

14–C–2. Assembling of Front Door

1. Install the outer handle.
2. Install the key cylinder and fit the set spring to the key cylinder.
3. Install the door lock complete.

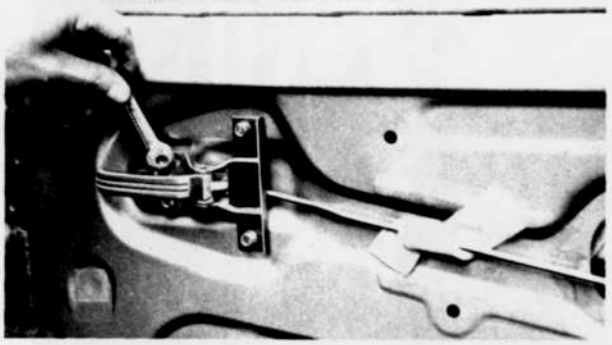

Fig. 14–22 Installing of door lock complete

4. Connect the actuating rod after adjusting the free play of the outer handle by the nylon bush to be within **1.5 to 3.0 mm (0.06 to 0.12 in)**.
5. Install the glass guides and tighten them with bolts.
6. Install the door run channel in the door sash.
7. Install the window regulator and temporarily tighten it.

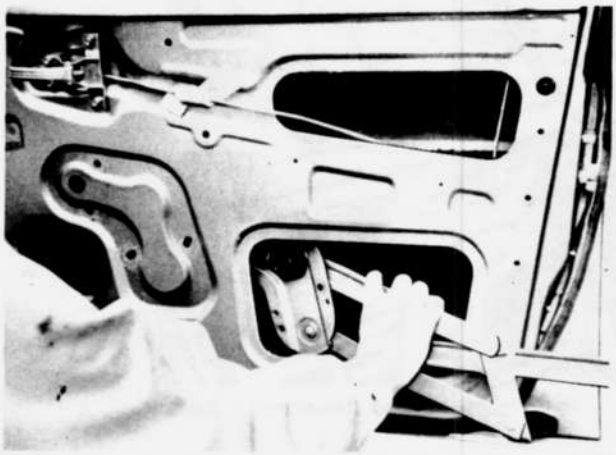

Fig. 14–23 Installing of window regulator

8. Install the door window glass, and securely tighten the window regulator while adjusting the alignment between the window glass and the door sash.
9. To prevent water leakage, apply a solid sealing agent on the heads of the bolts attaching the window regulator.
10. Paste the inside screens.
11. Install the outer weatherstrip to the door body.
12. Install the door trim board and inner lock knob.
13. Install the inner handle cover.
14. Install the regulator handle.
15. Install the arm rest.

14–C–3. Adjusting of Front Door

The doors are adjustable at the hinge mountings on the door and the body. The door striker is also adjustable. These adjustments are adequate to obtain proper door alignment and adjustment. The hinge attaching holes on the door pillars are larger than the bolts, permitting adjustment in either direction.

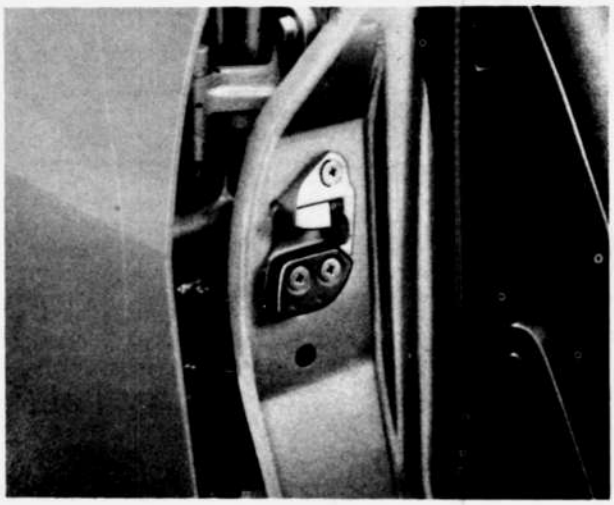

Fig. 14–24 Door striker

14–D. REAR DOOR

14–D–1. Disassembling of Rear Door

1. Remove the inner lock knob.
2. Remove the arm rest.
3. Remove the inner handle cover.
4. Remove the pad of the regulator handle and remove the regulator handle and escutcheon by loosening the attaching bolt.
5. Remove the door trim board.
6. Remove the inside screens (vinyl), which are install to prevent water leakages.
7. Remove the outer weatherstrip from the door body.
8. Remove the center sash, and slide off the quarter window glass with the weatherstrip.

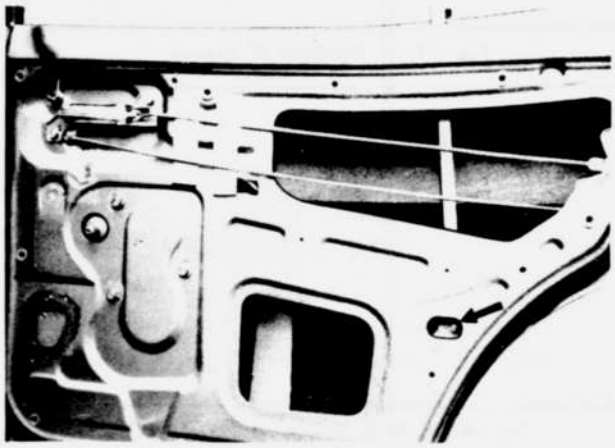

Fig. 14–25 Removing of center sash

9. Remove the door window glass. With the window glass lowered to half-opened position, it can be easily taken out.

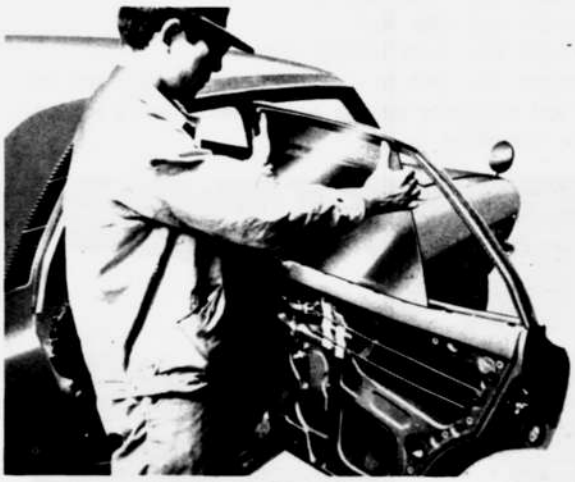

Fig. 14–26 Removing of glass

10. Remove the outer handle.
11. Remove the door lock complete.
12. Remove the window regulator.

14–D–2. Assembling of Rear Door

1. Install the outer handle.
2. Install the door lock complete.
3. Connect the actuating rod after adjusting the free

play of the outer handle by the nylon bush to be within **1.5 to 3.0 mm (0.06 to 0.12 in).**

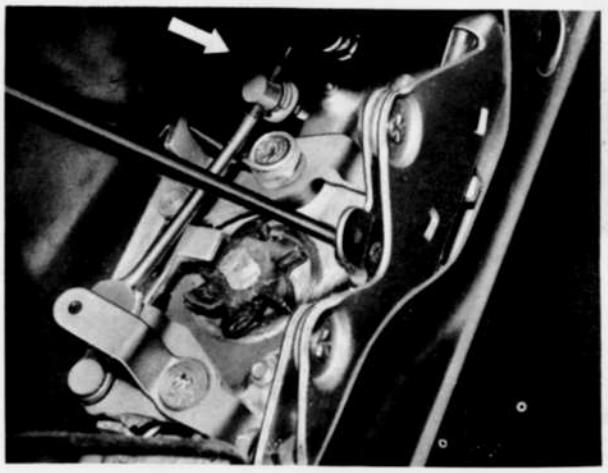

Fig. 14–27 Connecting of actuating rod

4. Install the window regulator.
5. Install the door window glass.
6. Install the center sash and temporarily tighten it.
7. Install the glass run channel.
8. Install the quarter window.
9. Securely tighten the center sash while adjusting the alignment between the window glass and the door sash.
10. Install the outer weatherstrip.
11. Paste the inside screens.
12. To prevent water leakage, apply a solid sealing agent on the heads of the bolts attaching the window regulator.
13. Install the door trim board and inner lock knob.
14. Install the regulator handle.
15. Install the arm rest.

14–E. TOP CEILING

14–E–1. Removing of Top Ceiling

1. Remove the rear view mirror, sun visors, interior lamps, assist handles, etc.
2. Remove the front pillar trims and rear package tray trim.
3. Strip off the seaming welts from the body flange.
4. Strip off the front and rear polythylene plates from the inserting point of the body.
5. remove the listing wire and top ceiling.

14–E–2. Installing of Top Ceiling

1. Affix the head linings (top insulations) onto the body ceiling with adhesive cement.
2. Heat up the top ceiling to a temperature of 30°C to 50°C (86° F to 122° F).
3. Insert both ends of each of the listing wires to their proper positions in successive order beginning from the rear as shown in Fig. 14–28.
When doing so, be careful that the wires do not swing down.
4. Insert the front and rear polyethylene plates of the top ceiling to the inserting point of the body.



Fig. 14–28 Installing of listing wire

Note: When inserting the top ceiling, if the guide made of plastic plate is used, you can insert it without touching the weaving point.

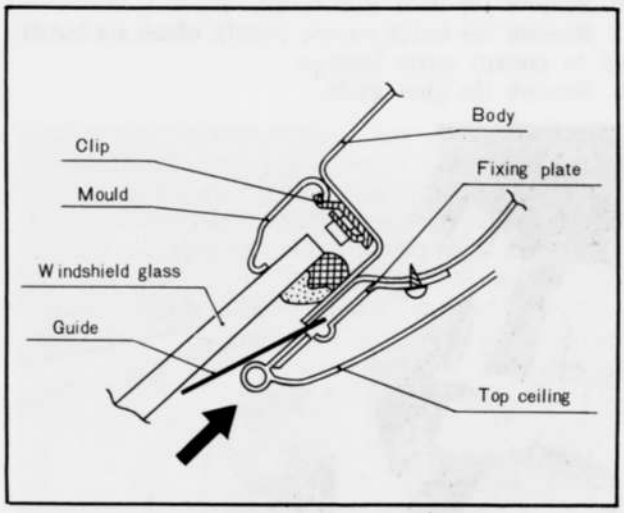

Fig. 14–29 Inserting of top ceiling

5. Apply neoprene adhesive cement to the outside of the body flange.
6. After one or two minutes, pull the top ceiling from both side to avoid any slackening and glue both side onto the body flange.
7. After the top ceiling is properly attached to the body flange, clip off all protruding edges.
8. Install the seaming welts, rear view mirror, sun visors, interior lamps, assist handles, front pillar trims, rear package tray trim, etc.

14–F. REAR SIDE WINDOW (COUPÉ)

14–F–1. Removing of Rear Side Window

1. Remove the seat.

Note: When removing the seat back, pull it out after removing the two nuts from the luggage compartment.

2. Remove the seaming welt covers.
3. Remove the package tray trim upper as shown in Fig. 14–30.

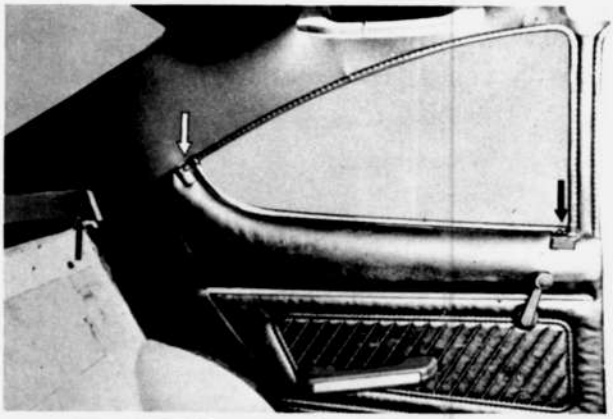

Fig. 14–30 Removing of seaming welt cover

4. Remove the pad of the regulator handle and remove the regulator handle and escutcheon by loosening the attaching bolt.
5. Remove the arm rest.
6. Remove the door trim board.
7. Remove the inside screens (vinyl), which are installed to prevent water leakages.
8. Remove the glass guide.

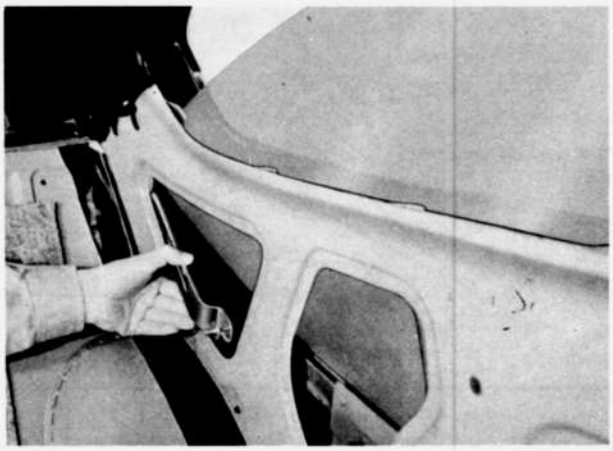

Fig. 14–31 Removing of glass guide

9. Remove the window glass. With the window glass lowered to half-opened position, it can be easily taken out.



Fig. 14–32 Removing of window glass

10. Remove the regulator.

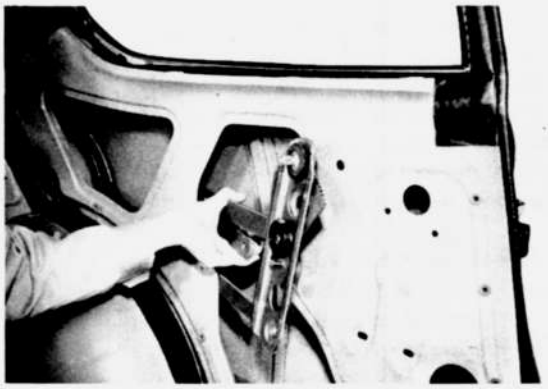

Fig. 14–33 Removing of regulator

11. Remove the outer weatherstrip.

14–F–2. Installing of Rear Side Window

Carry out the removing operations in the reverse order.

SPECIAL TOOLS

49 0305 871	Mould remover
49 0305 872	Sealant gun
49 0305 870	Window tool set (included above two tools)

BODY CHECKING DIMENSION

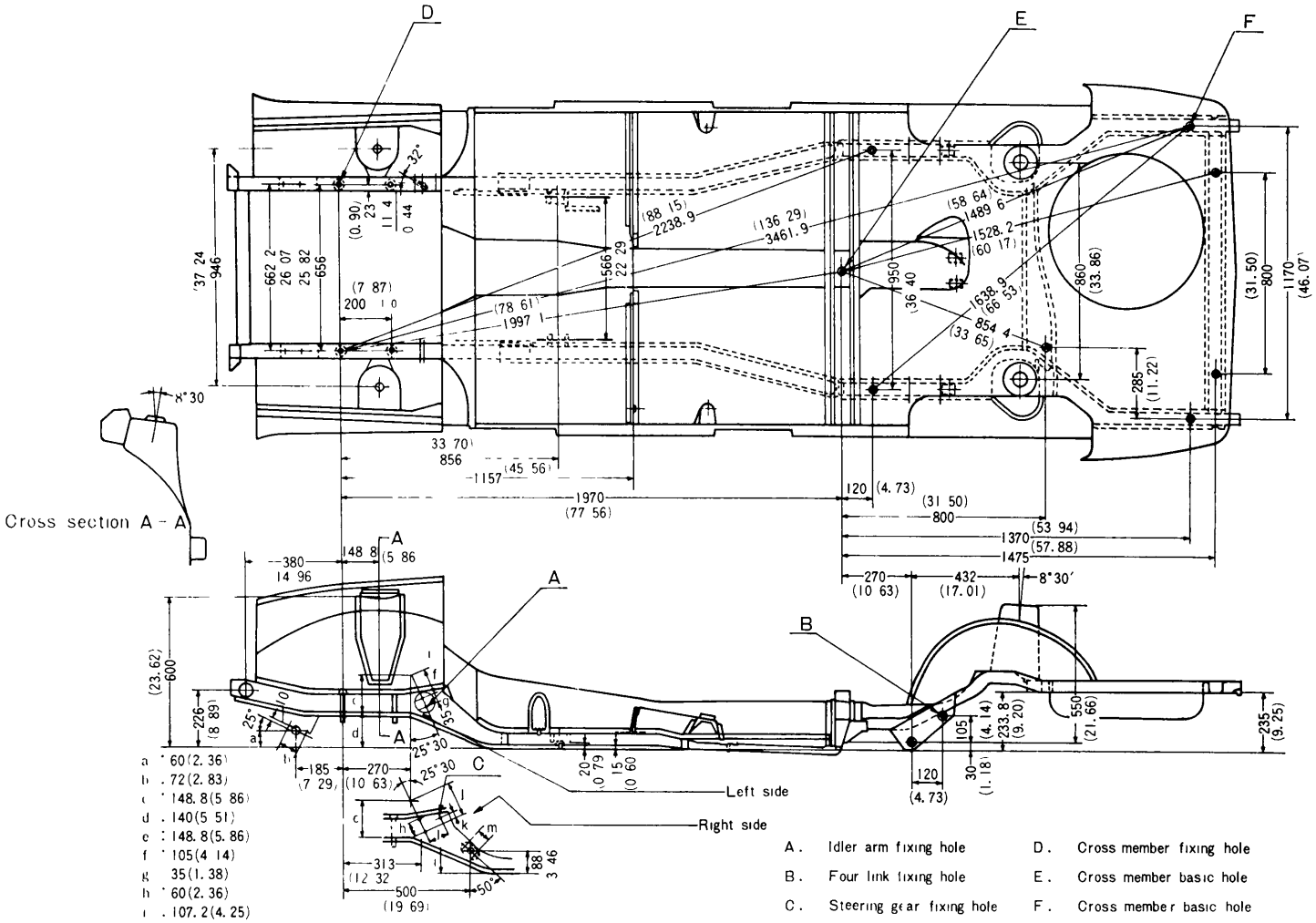
D
E
F
Cross section A - A
A
B
C
Left side
Right side
8°30′
(23.62)
600
226
(8.89)
380
14.96
148.8
(5.86)
185
(7.29)
270
(10.63)
313
(12.32)
500
(19.69)
1970
(77.56)
1157
(45.56)
856
33.70
120
(4.73)
(31.50)
800
1370
(53.94)
(57.88)
1475
432
(17.01)
(31.50)
800
1170
(46.07)
285
(11.22)
105
(4.14)
233.8
(9.20)
550
(21.66)
235
(9.25)
30
(1.18)
88
3.46
50°
25°30
a : 60(2.36)
b : 72(2.83)
c : 148.8(5.86)
d : 140(5.51)
e : 148.8(5.86)
f : 105(4.14)
g : 35(1.38)
h : 60(2.36)
i : 107.2(4.25)
j : 138(5.44)
k : 25(0.98)
l : 75(2.95)
m : 50(1.97)
( ) shows inch
A. Idler arm fixing hole
B. Four link fixing hole
C. Steering gear fixing hole
D. Cross member fixing hole
E. Cross member basic hole
F. Cross member basic hole

TECHNICAL DATA

ENGINE (General Data)	
Type	Rotary piston engine, in line 2 rotors, water cooled
Displacement	573 cc×2 rotors (35.0 cu. in×2 rotors)
Compression ratio	9.4 : 1
Compression pressure	6.7 kg/cm² at 220 rpm (95 lb/in² at 220 rpm)
Max. Brake horsepower	130 HP/7,000 rpm (SAE)
Max. Torque	115 ft-lb/4,000 rpm (SAE)
Port timing :	
Intake opens	Primary : 32° A. T. D. C. Sacondary : 32° A. T. D. C.
Intake closes	Primary : 40° A. B. D. C. Secondary : 40° A. B. D. C.
Exhaust opens	80° B. B. D. C.
Exhaust closes	48° A. T. D. C.

ENGINE	
Front and rear housing :	
Limit of distortion	0.04 mm (0.002 in)
Limit of wear	0.10 mm (0.004 in)
Rotor housing :	
Width	$70\ ^{+0}_{-0.02}$ mm ($2.7559\ ^{+0}_{-0.0008}$ in)
Limit of distortion	0.04 mm (0.002 in)
Intermediate housing :	
Limit of distortion	0.04 mm (0.002 in)
Limit of wear	0.10 mm (0.004 in)
Width	50±0.1 mm (1.9685±0.0039 in)
Rotor :	
Standerd weight (with internal gear and bearing)	4.570 kg (10.08 lb)
Inside diameter	$80\ ^{+0.018}_{-0}$ mm ($3.1497\ ^{+0.0007}_{-0}$ in)
Clearance of side housing and rotor	0.13～017 mm (0.0051～0.0067 in)
Protrusion of land	0.10～0.15 mm (0.004～0.006 in)
Permissible protrusion of land	Max. 0.2 mm (0.008 in) Min. 0.085 mm (0.003 in)
Width of apex seal gloove	6±0.009 mm (0.2362±0.0004 in)
Diameter of corner seal cave	$11\ ^{+0.018}_{-0}$ mm ($0.4331\ ^{+0.0007}_{-0}$ in)
Depth of corner seal cave	$7.9\ ^{+0}_{-0.2}$ mm ($0.3110\ ^{+0}_{-0.0079}$ in)
Width of side seal groove	$1.0\ ^{+0.039}_{+0.014}$ mm ($0.0394\ ^{+0.0015}_{+0.0006}$ in)
Depth of side seal groove	$4.4\ ^{+0}_{-0.2}$ mm ($0.1732\ ^{+0}_{-0.0079}$ in)
Width of oil seal groove	$3.5\ ^{+0.06}_{+0.03}$ mm ($0.1378\ ^{+0.0024}_{+0.0012}$ in)
Depth of oil seal groove	6.4±0.1mm (0.2520±0.0039 in)
Apex seal :	
Length	$69.97\ ^{+0}_{-0.02}$ mm ($2.7548\ \text{in}\ ^{+0}_{-0.0008}$ in)
Width	$6\ ^{-0.045}_{-0.063}$ mm ($0.2362\ ^{-0.0018}_{-0.0025}$ in)
Height	$10\ ^{+0}_{-0.1}$ mm ($0.3937\ ^{+0}_{-0.0039}$ in)
Limit of height	8.0 mm (0.3150 in)
Clearance of apex seal and side housing :	
Standard	0.01～0.05 mm (0.0004～0.0020 in)
Limit	0.15 mm (0.0059 in)
Clearance of apex seal and rotor groove :	
Standard	0.036～0.072 mm (0.0014～0.0028 in)
Limit	0.10 mm (0.0039 in)
Apex seal spring :	
Free height	5.8 mm (0.228 in)
Set height	2.0 mm (0.079 in)
Set load	2.6±0.2 kg (5.7±0.4 lb)
Spring constant	0.64 kg/mm (35.8 lb/in)
Corner seal :	
Outside diameter	$11\ ^{-0.020}_{-0.030}$ mm ($0.4331\ ^{-0.0008}_{-0.0012}$ in)
Width	$7\ ^{+0}_{-0.2}$ mm ($0.2756\ ^{+0}_{-0.0079}$ in)
Clearance of corner seal and rotor groove :	
Standard	0.020～0.048 mm (0.0008～0.0019 in)
Limit	0.08 mm (0.0031 in)
Corner seal spring :	
Free height	2.7 mm (0.106 in)
Set height	1.0 mm (0.039 in)
Set load	1.3±0.3 kg (2.9±0.7 lb)
Spring constant	0.76 kg/mm (42.6 lb/in)
Side seal :	
Thickness	$1.0\ ^{-0.014}_{-0.039}$ mm ($0.0394\ ^{-0.0006}_{-0.0015}$ in)
Width	$3.5\ ^{+0}_{-0.1}$ mm ($0.1378\ ^{+0}_{-0.0039}$ in)
Clearance of side seal and rotor groove :	
Standard	0.04～0.07 mm (0.0016～0.0028 in)
Limit	0.10 mm (0.0039 in)
Clearance of side seal and corner seal :	
Standard	0.05～0.15 mm (0.002～ 0.006 in)
Limit	0.40 mm (0.016 in)
Side seal spring :	
Free height	2.0 mm (0.079 in)
Set height	1.0 mm (0.039 in)
Set load	3.6±0.3 kg (7.9±0.7 lb)
Spring constant	3.6 kg/mm (201.6 lb/in)
Oil seal :	
Thickness	$5.5\ ^{+0.2}_{-0}$ mm ($0.2165\ ^{+0.0079}_{-0}$ in)

Width	$3.37^{+0.05}_{-0.10}$ mm ($0.1327^{+0.0020}_{-0.0039}$ in)
Outside diameter of outer oil seal	$126^{-0.04}_{-0.10}$ mm ($4.9607^{-0.0016}_{-0.0039}$ in)
Outside diameter of inner oil seal	$116^{-0.03}_{-0.09}$ mm ($4.5670^{-0.0012}_{-0.0035}$ in)
Contact width of oil seal lip :	
Standard	0.2 mm (0.008 in)
Limit	0.8 mm (0.031 in)
Oil seal spring :	
Free height	Inner side : 2.6 mm (0.102 in)
	Outer side : 2.5 mm (0.098 in)
Set height	1.0 mm (0.039 in)
Set load	12^{+3}_{-0} kg ($26.5^{+6.6}_{-0}$ lb)
Spring constant	Inner side : 7.5 kg/mm (420.0 lb/in)
	Outer side : 8.3 kg/mm (464.8 lb/in)
Mian bearing :	
Inner diameter	$43^{+0.055}_{+0.040}$ mm ($1.6929^{+0.0022}_{+0.0016}$ in)
Main bearing clearance :	
Standard	0.04~0.07 mm (0.0016~0.0028 in)
Limit	0.10 mm (0.0039 in)
Rotor bearing :	
Inner diameter	$74^{+0.060}_{+0.035}$ mm ($2.9134^{+0.0024}_{+0.0014}$ in)
Rotor bearing clearance :	
Standard	0.05~0.09 mm (0.0020~0.0035 in)
Limit	0.10 mm (0.0039 in)
Eccentric shaft :	
Eccentricity of rotor journal	$15^{+0}_{-0.03}$ mm ($0.5906^{+0}_{-0.0012}$ in)
Main journal diameter	$43^{+0}_{-0.015}$ mm ($1.6929^{+0}_{-0.0006}$ in)
Rotor journal diameter	$74^{-0.015}_{-0.030}$ mm ($2.9134^{-0.0006}_{-0.0012}$ in)
Permissible run-out	Less than 0.02 mm (Less than 0.0008 in)
End play :	
Standard	0.04~0.07 mm (0.0016~0.0028 in)
Limit	0.09 mm (0.0035 in)
Internal gear :	
Number of teeth	51
Backlash of internal gear and stationary gear	0.06~0.08 mm (0.0024~0.0031in)
Stationary gear :	
Number of teeth	34
Inner diameter	$48^{+0.016}_{-0}$ mm ($1.8898^{+0.0006}_{-0}$ in)

LUBRICATING SYSTEM

Oil pump	
Feeding capacity	16~20 liter/min (34~42 U.S. pint/min, 28~35 Imp. pint/min) at 6,000 rpm
Clearance of outer rotor and body	0.20~0.25mm (0.008~0.010 in)
Clearance of outer rotor and inner rotor	0.01~0.09 mm (0.0004~0.0035 in)
Rotor end float	0.10~0.20 mm (0.0039~0.0079 in)
Backlash of oil pump drive gear and driven gear	0.08~0.12 mm (0.0031~0.0047 in)
Oil pressure :	
Normal	5.0 kg/cm² (71.1 lb/in²) at 3,000 rpm
	2.5 kg/cm² (35.6 lb/in²) at 700 rpm
Warning lamp lights	0.3 kg/cm² (4.3 lb/in²)
Pressure regulater control spring:	
Free length	46.4 mm (1.827 in)
Set length	35.3 mm (1.390 in)
Set load	7.1 kg (15.6 lb)
Relief valve opens :	
Regulated pressure	1.0±0.2 kg/cm² (14.2±2.8lb/in²)
Oil thermo-valve :	
Starts to close	71°C (160°F)
Closes completely	78°C (172°F)
Lift	6 mm (0.236 in) at 78°C 172°F)
	17 mm (0.669 in) at 140°C 284°F)
Oil thermo-valve return spring :	
Free length	43.8±0.5 mm (1.724±0.020 in)
Initial load	4 kg (8.8 lb)
Spring constant	0.432 kg/mm (24.2 lb/in)
Oil cooler :	
Core area	1.9 m² (20.5 ft²)
Capacity	0.3 liter (0.6 U.S. pint, 0.5 Imp. pint)
Oil metering pump feeding capacity :	
Idling position of lever	6.5 ± 1 cc/10 min at 2000 rpm
Full opening position of lever	17.0±1.5cc/10 min at 2000 rpm
Oil capacity :	
Oil pan	4.5 liters (9.5 U.S. pints, 7.9 Imp. pints)
Full capacity	5.5 liters (11.6 U.S. pints, 9.7 Imp. pints)

COOLING SYSTEM

Water pump :	
Type	Centrifugal
Feeding capacity	110~120 liter (233~ 254 U.S. pint, 194~211 Imp. pint)/min
Fan :	
Standard revolution	1,600~1,950 rpm at 2,000 rpm of engine
Fan diameter	370 mm (14.57 in)
Number of blades	4
Water pump pulley ratio	1.035 : 1
Thermostat :	
Starts to open	82°C (180°F)

Fully opens	95°C (203°F)
Lift	More than 8 mm (0.31 in) at 95°C (203°F)
Radiator :	
Type	Corrugated fin
Core area	6.8 m² (73.2 ft²)
Relief valve pressure	0.9±0.1 kg/cm² (12.8±1.4 lb/in²)
Cooling capacity :	
With heater	8.0 liters (16.9 U.S. pints, 14.1 Imp. pints)
Without heater	7.0 liters (14.8 U.S. pints, 12.3 Imp. pints)

FUEL SYSTEM

Fuel tank capacity	65.5 liters (17.3 U.S. gallons, 14.5 Imp. gallons)
Fuel filter	Paper element, cartridge type
Fuel pump :	
Type	Electrical
Rated terminal voltage	12V
Min. operating voltage	Less than 10V
Feeding pressure	0.20~0.30 kg/cm² (2.8~4.3 lb/m²)
Feeding capacity	More than 900 cc (0.23 U.S. gallon, 0.20 Imp. gallon)/min.
Current on full discharing	Less than 1.5 A
Point gap	1.0 mm (0.039 in)
Carburettor :	
Type	Down-draft, Zenith Stronberg
Venturi diameter	Primary : 20×13×6.5 mm (0.787×0.512×0.256 in)
	Secondary : 28×10 mm (1.102×0.394 in)
Main jet	Primary : #90
	Secondary : #155
Main air bleed	Primary : #80
	Secondary : #160
Slow jet	Primary : #50
	Secondary : #130
Slow air bleed	Primary : #70 & #210
	Secondary : #60 & #100
Vacuum jet	Primary : #180
	Secondary : #80
Pump nozzle	0.7 mm (0.028 in)

ELECTRICAL SYSTEM

Battery :	
Voltage	12V (NS50Z)
Capacity	60AH (20 hours rate)
Terminal ground	Negative
Specific gravity	Fully charged : 1.26
	Recharge at : 1.20
Distributor (T & L) :	
Contact point gap	0.45±0.05 mm (0.018±0.002 in)
Point pressure	0.575±0.075 kg (1.27±0.17 lb)
Condenser capacity	0.27±0.027μF
Centrifugal advance :	
Trailing	Start : 0° at 500 rpm of dis.
	Max. : 5° at 1500 rpm of dis.
Leading	Start : 0° at 500 rpm of dis.
	Max. : 6° at 1700 rpm of dis.
Vacuum advance :	
Trailing	Start : 0° at 100 mmHg
	Max. : 17.5° at 400 mmHg
Leading	Start : 0° at 100 mmHg
	Max. : 11° at 400 mmHg
Dwell angle	58°±3°
Firing order	1—2
Ignition timing	Trailing : 5° A. T. D. C.
	Leading : 0°
Marking location	Eccentric shaft pulley
Spark plug type and gap :	
Hot type	NGK B-6EJ 0.8~0.9 mm (0.031~0.035 in)
	Denso W20EG2 0.8~0.9 mm (0.031~0.035 in)
Standard type	NGK B-7EJ 0.8~0.9 mm (0.031~0.035 in)
	Denso W22EG2 0.8~0.9 mm (0.031~0.035 in)
Cold type	NGK B-8EJ 0.8~0.9 mm (0.031~0.035 in)
	Denso W25EG2 0.8~0.9 mm (0.031~0.035 in)
Starting motor :	
Capacity	1.0 KW
Free running test	Voltage : 12V
	Current : Less than 70A at 3,600 rpm or more
Lock test	Voltage : 6.0V
	Current : 60A or less
	Torque : 2.7m-kg (19.5 ft-lb)
Brush spring tension	1.13 kg (40.0 oz)
Magnet switch operating voltage	9.0V
Alternator :	
Ground polarity	Negative
Reted output	12V 40A
Number of pole	8
No load test	Voltage : 14V at 1,050 rpm or less
	Current : 0A
Load test	Voltage : 14V at 2,500 rpm or less
	Current : 32A
Brush spring pressure	350gr (12.5 oz)
Slip ring diameter	33 mm±0.2 (1.299±0.008 in)
Ratio of alternator and eccentric shaft	2 : 1
Regulator :	
Constant voltage relay	Air gap : 0.7~1.1 mm (0.028~0.043 in)
	Point gap : 0.3~0.4 mm (0.012~0.016 in)
	Back gap : 0.7~1.1 mm (0.028~0.043 in)
Regulated voltage, without load	14±0.5V
Bulbs :	
Head lamp	50W/40W
Front turn signal & side lamp	21W/5W
Side turn signal lamp	3 4W
Fog lamp	25W
Interior lamp	5W
Step lamp	6W
Glove compartment lamp	5W
Turn signal lamp (rear)	21W
Stop, tail & reverse lamp	21W/5W/10W
Licence lamp	10W

CLUTCH

Type	Single dry plate
Spring	Diaphragm spring
Pressure plate :	
Inner diameter	150 mm (5.91 in)
Outer diameter	215 mm (8.47 in)
Clutch disk :	
Inner diameter	154 mm (6.06 in)
Outer diameter	215 mm (8.47 in)
Clutch disk friction assembly thickness	8.5±0.3 mm (0.335±0.012 in)
Clearance between push rod and clutch release fork	3.0 mm (0.12 in)
Pedal free travel	20~30 mm (0.8~1.2 in)
Master cylinder bore	15.87 mm (0.6248 in)
Release cylinder bore	17.46 mm (0.6874 in)

TRANSMISSION

Tipe	Four-forward speed and one reverse speed, with synchronizing for all forward and selective for reverse
Shift lever location	Floor
Gear ratio :	
First	3.683
Second	2.263
Third	1.397
Top	1.000
Reverse	3.692
Lubricant	Above −18°C (0°F) : EP. SAE 90 Below −18°C (0°F) : EP. SAE 80
Oil capacity	2.5 liters (5.3 U.S. pints, 4.4 Imp. pints)
Backlash of gears :	
Main drive & counter gear	0.03~0.10 mm (0.001~0.004 in)
First gear	0.10~0.20 mm (0.004~0.008 in)
Second gear	0.05~0.15 mm (0.002~0.006 in)
Third gear	0.05~0.15 mm (0.002~0.006 in)
Reverse gear	0.10~0.20 mm (0.004~0.008 in)

PROPELLER SHAFT

Length :	
Front	502 mm (19.76 in)
Rear	719 mm (28.31 in)
Permissible unbalance :	
Front joint	20 cm-gr (0.28 in-oz) at 4,000 rpm
Center joint	12.5 cm-gr (0.17 in-oz) at 4,000 rpm
Rear joint	20 cm-gr (0.28 in-oz) at 4,000 rpm
Permissifie run-out	0.4 mm (0.016 in)
Outer diameter	50.8 mm (2.00 in)

REAR AXLE

Type	Semi-fioating, hypoid gears
Reduction ratio	3.7
Number of teeth	37 : 10
Lubricant	Above −18°C (0°F) : HP. SAE 90 Below −18°C (0°F) : HP. SAE 80
Oil capacity	1.2 liters (2.5 U.S. pints, 2.1 Imp. pints)
Free play of axle shaft	0~0.1 mm (0~0.004 in)
Permissible deflection of ring gear	0.1 mm (0.0039 in or less)
Mounting distance	90±0.025 mm (3.5434±0.0010 in)
Drive pinion bearing preload	9~14 cm-kg (7.8~12.2 in-lb)
Backlash between ring gear and drive pinion	0.17~0.19 mm (0.0067~0.0075 in)
Backlash between side gear and pinion	0.1 mm (0.004 in or less)

BRAKES

Master cylinder :	
Type	Tandem master cylinder
Bore	22.22 mm (7/8 in)
Permissible clearance of piston and bore	0.15 mm (0.0059 in)
Pedal free travel	5~15 mm (0.2~0.6 in)
Power brake unit :	
Type	Bendix type disk brake
Power cylinder diametor	152.4 mm (6.0001 in)
Power cylinder stroke	35mm (1.38 in)
Front brake :	
Type	Bendix type disk brake
Number of shoe per wheel	2
Shoe material	F50
Dimension of lining and shoe (width × thickness × length)	46×14×97 mm (1.81×0.55×3.82 in)
Minimum allowable thickness of lining and shoe	8mm (0.315 in)
Brake disk outer diameter	230 mm (9.055 in)
Permissible brake disk run-out	0.15 mm (0.0059 in)
Rear brake :	
Type	Drum type with reading and trailing
Drum inner diameter	200 mm (7.8741 in)
Lining material	D-852
Lining dimension (width × thickness × length)	32×4×199 mm (1.26×0.16×7.83 in)
Wheel cylinder bore	19.05 mm (3/4 in)
Parking brake :	
Type	Mechanical internal expansion
Operates at	Rear wheels

STEERING

Type	Recerculating ball nut (Variable ratio gear)
Reduction ratio	17~19 : 1
Free play of steering wheel	10~30 mm (0.4~1.2 in)
Max. steering angle :	
Inner wheel	43°
Outer wheel	31°
Lubricant	EP. SAE 90
Oil capacity	250 cc (0.5 U.S. pint, 0.4 Imp. pint)
Backlash of rack and sector gear	0
Worm bearing preload	1.0~4.0 cm-kg (0.9~3.5 in-lb)
End clearance of sector shaft	0.02~0.08 mm (0.001~0.003 in)

Steering geometry :	
King pin inclination	9°15′
Camber	−0°15′
Caster	1°03′
Toe in	−4∼2 mm(−0.16∼0.08 in)
Trail	5 mm (0.2 in)

FRONT SUSPENSION

Type	Strut
Spring constant	1.85±0.129 kg/mm (103.5±7.2 lb/in)
Spring pressure :	When the spring length is compressed to 194 mm(7.638 in)
1 dot	281∼289 kg (619∼637 lb)
2dots	289∼296 kg (637∼653 lb)
3dots	296∼304 kg (653∼670 lb)
Wire diameter	11.5 mm (0.45 in)
Outer coil diameter	121.5 mm (4.78 in)
Free length	352 mm (13.86 in)
Fitting length	194 mm (7.64 in)
Shock absorber	Hydraulic double action
Piston rod :	
Diameter	20 mm (0.787 in)
Permissible run-out	0.05 mm (0.002 in)
Piston assembly :	
Relief valve thickness	0.2±0.015 mm (0.0079±0.0006 in)
Center ring valve thickness	0.1±0.008 (0.0039±0.00031 in)
	0.15±0.01 mm (0.0059±0.0004 in)
Check valve thickness	0.25 mm (0.0098 in)
Flatness	Less than 0.05 mm (0.002 in)
Pressure tube :	
Inner diameter	30 mm (1.181 in)
Botton valve :	
Tention valve thickness	0.1±0.008 mm (0.0039±0.00031 in)
	0.15±0.01 mm (0.0059±0.0004 in)
Compression valve thickness	0.2±0.015 mm (0.0079±0.0006 in)

REAR SUSPENSION

Type	4 links & lateral rod
Spring constant :	2.22±0.16 kg/mm (124.2±9.2 lb/in)
Coil spring :	
Wire diameter	10.8 mm (0.43 in)
Outer coil diameter	100.8 mm (3.97 in)
Free length	371 mm (14.61 in)
Fitting length	247 mm (9.73 in)
Spring Pressure :	When the spring length is compressed to 247 mm (9.7 in)
1dot	263.4∼271 kg (581∼597 lb)
2dots	271∼279 kg (597∼615 lb)
3dots	279∼286.6 kg (615∼632 lb)
Shock absorber	De carbon

WHEELS AND TIRES

Wheel type :	
Front	4-J×13 WDC
Rear	4-J×13 WDC
Tire :	
Front	155 SR 13 or 155 HR 13
Rear	155 SR 13 or 155 HR 13
Tube :	
Front	155 SR 13 or 155 HR 13
Rear	155 SR 13 or 155 HR 13
Air pressure :	
Front	1.5 kg/cm² (21.3 lb/in²) less than 100 km/h (60 mile/h)
	1.7 kg/cm² (24.2 lb/in²) more than 100 km/h (60 mile/h)
Rear	1.5 kg/cm² (21.3 lb/in²) less than 100 km/h (60 mile/h)
	1.7 kg/cm² (24.2 lb/in²) more than 100 km/h (60 mile/h)
Permissible unbalance	0.20 cm-kg (0.0278 in-oz)
Permissible deviation of disk wheel	Under 1.3 mm (0.0512 in)

WEIGHTS AND DIMENSIONS

Overall length	4,150 mm (163.39 in)
Overall width	1,580 mm (62.21 in)
Overall hight	1,420 mm (55.91 in)
Wheel base	2,470 mm (97.25 in)
Tread :	
Front	1,285 mm (50.59 in)
Rear	1,280 mm (50.39 in)
Minimum turning radius	4,700 mm (185.04 in)
Road clearance	160 mm (6.30 in)
Overhang :	
Front	645 mm (25.39 in)
Rear	980 mm (38.58 in)
Seating capacity	5
Car weight (no load)	955 kg (2105.4 lb)

TIGHTENING TORQUE LIST

	m-kg	ft-lb
Engine :		
Tension bolt	2.5	18
Flywheel	45.0	350
Eccentric shaft plley	7.0	50
Spark plug	2.0	14
Oilpan	0.6	4.5
6 mm bolt & nut	1.0	7
8 mm bolt & nut	2.0	15
10mm bolt & nut	4.0	30
Clutch :		
Pressure plate	2.0	15
Master cyliuder reserver	2.5	20
Transmission :		
Main shaft lock nut	23.0	170
Shift fork lock bolt	1.0	10
Trans mission case :		
8 mm bolt	2.5	20
10mm bolt	3.5	25
Propeller shaft :		
Yoke attaching bolt	3.0	20
Rear axle :		
Companion flange	15.0	110
Ring gear	6.0	45
Bearing cap	4.0	30
Drain plug	2.0	15
Steering :		
Tie rod ball joint	3.0	20
Tie rod lock nut	7.5	55
Steering gear housing	5.0	40
Pitman arm	15.0	110
Idler arm	5.0	40
Steering joint	1.5	10
Brake :		
Caliper bracket	5.5	40
Frant backing plate	4.0	30
Front hub attaching bolt	5.0	40
Rear backing plate	2.5	20
Master cylinder joint bolt	6.5	50
Master cylinder set bolt	0.2	1.0
Wheel :		
wheel bolt	9.5	70
Suspension :		
Suspension arm	8.0	60
Arm ball joint	6.5	50
Stabilizer	9.0	65
Front damper cap nut	5.5	40
Front damper piston	1.5	10
Front damper base valve	0.15	1.0
Rear suspension link	11.0	80
Standard bolts :		
6 mm p=1.0	0.8	5
8 mm p=1.25	2.0	15
10mm p=1.25	4.0	30
12mm p=1.5	7.0	50
14mm p=1.5	9.0	65