MAZDA RX-2
COUPE & SEDAN
PARTS CATALOG



Issued by

TOYO KOGYO CO.,LTD.

July, 1970

HOW TO USE THIS PARTS CATALOG

This parts catalog is complied for the following models.
Model:MAZDA RX-2 Coupe & MAZDA RX-2 Sedan

Model No.	Model /Type	Description
2065	S122A-S	MAZDA RX-2 Sedan Super DX., Floor Shift Manual T/mission, For France (L. H. D.)
2066	S122A-S	MAZDA RX-2 Sedan Super DX., Floor Shift Manual T/mission, General Export Model (L. H. D.)
2067	S122A-S	MAZDA RX-2 Sedan Super DX., Floor Shift Manual T/mission, Arctic Spec. Model (L. H. D.)
2069	S122A-CA	MAZDA RX-2 Coupe DX., Floor Shift Manual T/mission, General Export Model (L. H. D.)
2071	S122A-CA	MAZDA RX-2 Coupe DX., Floor Shift Manual T/mission, Arctic Spec. Model (L. H. D.)
2072	S122A-SCA	MAZDA RX-2 Coupe Super DX., Floor Shift Manual T/mission, General Export Model (L. H. D.)
2073	S122A-SCA	MAZDA RX-2 Coupe Super DX., Floor Shift Manual T/mission, Arctic Spec. Model (L. H. D.)
2075	S122A-CA	MAZDA RX-2 Coupe DX., Floor Shift Manual T/mission, For France (L. H. D.)
2080	S122A-SCA	MAZDA RX-2 Coupe Super DX., Floor Shift Manual T/mission, For France (L. H. D.)
2321	S122A-S	MAZDA RX-2 Sedan Super DX., Floor Shift Manual T/mission, General Export Model (R. H. D.)
2323	S122A-CA	MAZDA RX-2 Coupe DX., Floor Shift Manual T/mission, General Export Model (R. H. D.)
2324	S122A-SCA	MAZDA RX-2 Coupe Super DX., Floor Shift Manual T/mission, General Export Model (R. H. D.)
2874	S122A-A	MAZDA RX-2 Sedan DX., Floor Shift Manual T/mission, General Export Model (R. H. D.)
2875	S122A-S	MAZDA RX-2 Sedan Super DX., Floor Shift Manual T/mission, For England (R. H. D.)
2877	S122A-CA	MAZDA RX-2 Coupe DX., Floor Shift Manual T/mission, For England (R. H. D.)
2878	S122A-SCA	MAZDA RX-2 Coupe Super DX., Floor Shift Manual T/mission, For England (R. H. D.)

(I) Layout

This parts catalog consists of index of groups, illustrations composition lists and index of part numbers.

Pages listing parts, with no designation of applying models signify that the parts listed therein are used in common for all models, and whenever the page lists parts for specific models, this is shown by giving the applying models on the page.

(II) How to locate parts

1) When part number is not known.

A. Refer to index groups and locate the group to which the part belongs.

⇩

B. Open to group illustration page and locate part wanted.

⇩

C. See the number given for the part in the illustration and find corresponding number in the parts composition lists.

⇩

D. Then, you will find name and part number of the part on the right side of this number.

2) When part number is known but shape and name of part is unknown.

A. See index given at back of the parts catalog and find pages where illustration, part number and figure number is listed.

⇩

B. Open to page indicated and locate the part number in the parts composition list, and after this locate the part in the illustration by referring to figure number given at front of the part number.

⇩

C. The corresponding figure number in the illustration is for the part required.

On part Number

A. Exclusive parts

Example :

0840	10	100	A
Indication of Vehicle Model	Indication of Group	Indication of inherent number	Indication of Modification

B. Standardized parts (General parts)

Example :

Or 90 99	801	0612	C
Indication of Standardized part	Indication of Category	Indication of Size	Indication of Material

C. Standardized parts (Tires, Tubes, Disc Wheels, etc.)

Example :

99	62	08	7016
Indication of Standardized part	Indication of Category	Indication of Type	Indication of Size

3) On Quantity

The quantity given in parts composition list shows number of parts used per vehicle and does not indicate selling unit.

4) Other Precautions

☆ Mark— Parts marked thus are not available as replacement parts, therefore, when these parts are required, order in the form of assemblies (or sets) including these parts or in the form of parts interchangeable with these parts.

5) Abbreviations

(R)	Right	EX.	Exhaust
(L)	Left	IN.	Inlet
(C)	Center	T/Mission	Transmission
(Frt.)	Front	Ⓐ	Austrian Approval Mark
(Rr.)	Rear	(E2)	ECE (Economic Commission for Europe) Approval Mark
Cpt.	Complete	(BS)	British Approval Mark
Ass'y	Assembly	©	Parts with Different Colours (Indicate Colour when Ordering)
Std.	Standard	10	Indication of Group
O. S.	Over Size		
U. S.	Under Size		

(Ⅲ) On Groups

1) The figure enclosed by a triangle at the top of each page (Example 10) indicates group number.

2) Group numbers are determined according to structure and function of parts.

3) The group number given in index of groups coincide with the numerals (Example 10) of the illustration and parts composition pages.

(Ⅳ) Explanation on Parts Composition Lists

1) Indication of composition of assembly.

A. The largeness of the letters used for part names are given in three sizes.

(a) The largest letters show the largest composition of parts. Therefore, the parts printed in the largest letters always include parts printed offset to the right, and also printed in medium-size letters.

(b) The parts printed in medium-size letters always include parts printed in the smallest letters and offset to the right.

(c) The parts printed in smallest letters and offset to the right are always included in the parts printed in medium-sized letters or largest size letters that are located above.

(d) The parts printed in smallest letters and not offset to the right signify that these parts do not form any part of any assembly or sub assembly.

B. Indication of parts composition by spacing out between lines. In the case of an assembly or sub-assembly consisting of more than 2 parts, the space between the parts forming the assembly or sub-assembly and the other parts is widened, to clearly indicate the parts forming the assembly or sub-assembly.

(a)	0839 41 920	CLUTCH RELEASE CYLINDER Ass'y	1
(b) — 1	0259 33 691	Bleeder Vave	1
(c)	0603 41 320	CLUTCH PISTON	1
(d) — 2	0603 41 322B	Piston Cap	1
(e) — 3	0191 41 331	Boot	1
(f) — 4	0613 41 308	Return Spring	3

(a) ····· Includes (b) to (c)(e)
(c) ····· Includes (d)
(f) ····· Is not included in any ass'y nor sub ass'y

(V) Precautions to be taken when placing orders for parts

1) Always specify part number, name of part and quantity required.

2) Be sure to list the parts in order of part number, when filling in order sheet.

3) As processing of orders received by us is done by electronic computers, importance is attached to the part number. Therefore, in case the part number and name of the part do not coincide with each other, the part will be sent to you in accordance with part number.

(VI) Replacement pages and purport

Page replacements are supplied in monthly frequency as a rule, listing parts modified or newly added, and sequence number, month and year date will be printed in lower corner of each replacement page.
Therefore it is essential that care be taken to check on these dates to confirm if the parts listed conform to the car imported, before ordering.

1) Explanation on designation given in remarks column

a Car No. ····· Chassis no.of car that modification and numerals becomes effective from.

b 70/1 ····· 70 designates year of modification and numerals
1 ~ 12 shows month of year.
Date in brackets (70/5) show date effected for C.K.D (Complete knock Down) models.

c. ○ Mark ····· Indicates that modified part and former part are interchangeable.

d ※ Mark ····· Indicates that former part has superseded by new part and is no longer available.

e. × ····· Indicates that modified part and old part are not interchangeable.

f. Mark ····· Indicates that new part interchangeable with old part but that old part in not interchangeable as a replacement for cars utilizing the new part.

2) ● Mark ····· This dot at front of figure number shows parts modified in each replacement page.

Group No.	Description	Fig. Page	Part No.
	Engine Parts		
10	Rotor Housing (Front)	1	2~4
10	Rotor Housing (Rear)	5	6~8
10.11	Rotor (Front)	9	10~11
10.11	Rotor (Rear)	12	13~14
13	IN. & EX. System	15	16~17
23	Carburettor	18	19~24
23	Air Cleaner	25	26
14	Oil Pump	27	28~30
23	Metering Oil Pump	31	32~33
14.15	Cooling System	34	35~37
15	Water Pump	38	39~40
16.41	Clutch Control System	41	42~43
17	T/mission (Case)	44	45~46
17	T/mission (Gear)	47	48~50
17	T/mission (Gear Control)	51	52~53
18	Electric Equipment (Engine No. 1)	54	55~56
18	Electric Equipment (Engine No. 2)	57	58~60
24	Distributor (Trailing Side)	61	62~63
24	Distributor (Leading Side)	64	65~66
24	Alternator	67	68~69

INDEX.

Group No.	Description	Fig. Page	Part No.
24	Starter	70	71~73
24	Starter (Arctic Spec. Model)	74	75~76
	Chassis Parts		
25	Propeller Shaft	77	78
26	Rear Axle	79	80~81
26	Rear Brake	82	83~85
27	Driving	86	87~88
28	Rear Suspension	89	90~91
32	Steering System (Wheel & Gear) (With Energy Absorbing Shaft)	92	93~97
32	Steering System (Wheel & Gear) (With coupling Joint, Without Energy Absorbing Shaft)	98	99~103
32	Steering System (Wheel & Gear)	104	105~108
32	Steering System (Rod, R.H.D.)	109	110~111
32	Steering System (Rod, L.H.D.)	112	113~114
33	Front Axle	115	116~118
34	Front Suspension (Spring)	119	120~121
34	Front Damper	122	123~124
34	Front Suspension (Cross Member)	125	126
39	Engine & T/mission Support	127	128
40	Exhaust System	129	130~131
42	Fuel Tank	132	133~135

Group No.	Description	Fig. Page	Part No.
13.45	Fuel Piping	136	137~138
23	Fuel Pump	139	140~141
41	Accelerator Control System	142	143
41.43	Clutch & Brake System	144	145~147
41.49	Clutch Master Cyl. & Tandem Master Cylinder (R.H.D.)	148	149~151
41.49	Clutch Master Cyl. & Tandem Master Cylinder (L.H.D.)	152	153~155
49	Master Vac	156	157
44	Parking Brake System	158	159~160
43.45	Piping (Clutch & Brake, R.H.D.)	161	162
43.45	Piping (Clutch & Brake, L.H.D.)	163	164~165
	Body Parts		
50	Bumper & Grille	166	167~168
52	Bonnet Lock	169	170~171
52	Trunk Lid Lock	172	173
51~70	Body Panels (Front)	174	175~177
52~70	Body Panels (Side, All Coupe Models)	178	179~182
52~70	Body Panels (Side, All Sedan Models)	183	184~186
53.56	Package Tray & Floor Board	187	188~191
55.60	Dashboard (Meter & Switch, R.H.D.)	192	193~195
55.60	Dashboard (Meter & Switch, L.H.D.)	196	197~200
55.75	Meter Set.	201	202

INDEX.

Group No.	Description	Fig. Page	Part No.
57	Seat (Coupe Model)	203	204~208
57	Seat (With Assistance Lever, R.H.D., Coupe Model)	209	210~214
57	Seat (With Assistance Lever, L.H.D., Coupe Model)	215	216~221
57	Seat (All Sedan Models)	222	223~228
58.59	Front Side Door (Glass)	229	230~233
58.59	Front Side Door (Lock)	234	235~238
61.76	Car Heater (R.H.D.)	239	240~241
61.76	Car Heater (L.H.D.)	242	243~245
61.76	Blower & Control	246	247~250
61~79	Car Cooler (R.H.D.)	251	252~259
61~78	Car Cooler (L.H.D.)	260	261~267
61.76	Control & Cooling unit	268	269~272
66.87	Lamps (Front Side)	273	274~276
66.87	Lamps (Rear Side)	277	278~280
66.87	Electric Equipment (Body)	281	282~286
67.87	Windshield Wiper (R.H.D.)	287	288~289
67.87	Windshield Wiper (L.H.D.)	290	291~293
67.87	Screen Washer	294	295
66	Auto Radio	296	297~298
66	Stereo Radio	299	300~301
55~70	Crush Pad & Glove Box	302	303~305
68	Console Box	306	307~308

Group No.	Description	Fig. Page	Part No.
68	Service Tools	309	310~311
69	Attachment	312	313~317
69	Trim & Top Ceiling	318	319~321
68.69	Trim & Floor Mat	322	323~324
70.71	Ventilator	325	326~328
70.71	Window Glass & Moulding (All Coupe Models)	329	330~332
70.71	Window Glass & Moulding (All Sedan Models)	333	334~336
70.71	Rear Side Window (All Coupe Models)	337	338~341
72.73	Rear Side Door (Glass, All Sedan Models)	342	343~345
72.73	Rear Side Door (Lock, All Sedan Models)	346	347~349
09	Key Set	350	351~352
	INDEX.		353~388

ALPHABETICAL INDEX

Description	Page

ENGINE

Bolt, Tension - Rotor Housing	7
Bracket, Mounting - Engine	128
Cap, Limiter - Carburettor	16,24
Cap, Oil Filler - Rotor	7
Carburettor	16,19~24
Cleaner, Air	17,26
Cover, Dust - Rotor Housing	7
Cover, Front - Rotor	3
Diaphragm, Control - Air Cleaner	26
Duct, Hot Air	16
Element, Air Cleaner	26
Gear, Stationary - Rotor	10,13
Hanger, Engine - Rotor Housing	4,8
Hose, Hot Air	16
Hose, Ventilation	8
Housing, Intermediate	7
Housing, Front - Rotor	2
Housing, Rear - Rotor	6
Housing (Frt.) - Rotor	2
Manifold, Exhaust	17
Manifold, Inlet	16
Pan, Oil	7
Pellet, Rotor Housing	3
Pin, Top Indicator - Rotor	3
Pipe, Control - Air Cleaner	26
Pipe, Drain - Carburettor	17
Pipe, Oil Filler - Rotor	7
Plate, Oil Baffle - Rotor	11
Pulley, Dynamo Drive	11
Rotor	10,13,
Rubber, Mounting - Engine	121,128
Seal, Apex - Rotor	10,13
Seal, Corner - Rotor	13
Seal, Side Inner - Rotor	10,13
Seal, Side Outer - Rotor	10,13
Shaft, Eccentric - Rotor	14
Spring, Apex Seal - Rotor	10,13
Spring, Corner Seal	13
Spring, Side Seal - Rotor	10,13

Description	Page
Tray, Carburettor	16
Tube, Boost - Air Cleaner	17
Valve, Slide - Rotor	3
Weight, Balance - Rotor	11
Wheel, Fly	14

EXHAUST SYSTEM

Silencer, Main	130
Silencer, Pre-	130

LUBRICATION

Body, Oil Pump	28
Control Way - Pressure Regulator	30
Filter, Oil	29
Gear, Driven - Oil Pump	30
Gear, Driven - Oil Pump	28
Gear Set, Oil Pump	28
Plate, Middle - Oil Pump	28
Plunger, Control - Pressure Regulator	29
Plunger, Differential - Oil Pump	32
Pump, Metering Oil	30,32,33
Regulator, Pressure - Oil Pump	29
Rod, Connecting - Oil Pump	30
Rotor Set, Oil Pump	28
Shaft, Driven Gear - Oil Pump	30
Shaft, Oil Pump	28
Spring, Control - Pressure Regulator	29
Strainer, Oil	29
Tube, Metering Oil	30

COOLING

Boss, Pulley - Water Pump	39
Casing, Water Pump	39
Cooler, Oil	36
Cover, Thermostat	40
Cover, Water Pump	39
Drive, Fan	35
Fan, Cooling	35
Gauge Unit, Heat - Water Pump	39
Hose, Water - Thermostat	36
Hose, Water - Radiator	36

ALPHABETICAL INDEX

Description	Page
Impeller, Water Pump	39
Pulley, Water Pump	35
Pump, Water	35,39
Radiator	35
Seal, Water-Water Pump	39
Shroud, Radiator	36
Tank, Reserve-Radiator	36
Thermostat	40
CLUTCH	
Bolt, Reamer-Clutch Control	42
Collar, Release-Clutch	42
Cover, Dust-Clutch	42
Cover, Clutch	42
Cylinder, Release-Clutch	43
Cylinder, Master-Clutch	146,149,153
Disc, Clutch	43
Fork, Release-Clutch Control	43
Housing, Clutch	42
Pedal, Clutch	145
Pin, Pivot-Clutch Control	42
Pipe, Clutch	162,165
Pipe, Flexible	43
Piston, Clutch	43
Rod, Release-Clutch	43
TRANSMISSION	
Bearing, Needle Roller-Transmission	48
Bolt, Reamer-Transmission	53
Boot, Dust-Transmission	53
Case, Change Control	52
Case, Transmission	45
Cover, Under-Transmission	46
Fork, Shift-Reverse	52
Fork, Shift-Transmission	52
Gate, Control Rod-Transmission	52
Gear, Reverse Idle	50
Gear, Countershaft	49
Gear, Low-Transmission	49
Gear, Main Drive-Transmission	48
Gear, Reverse	49
Gear, Second-Transmission	48

Description	Page
Gear, Speedometer Drive	50,45
Gear, Third-Transmission	48
Housing, Extension-Transmission	45
Hub, Clutch	48
Joint, Speedometer	45
Knob, Change Lever	53
Lever, Change	53
Lever, Control-Transmission	52
Member, Mounting	128
Pass, Oil-Transmission	46
Piece, Friction	53
Pin, Interlock-Transmission	52
Plate, Cover	53
Plug, Magnet-Transmission	46
Ring, Synchronizer	48
Rod, Shift-Transmission	52
Shaft, Main-Transmission	48
Shaft, Reverse Idle Gear	50
Sleeve, Clutch Hub	48
Sleeve, Speedometer	45
Spindle, Select Lock	53
Switch, Reverse Lamp	46
PROPELLER SHAFT & DRIVING	
Carrier, Differential	87
Case, Differential Gear	87
Driving & Differential	87
Flange, Companion	87
Gear Set, Final	88
Joint, Universal	78
Pinion, Differential	87
Shaft, Differential Pinion	87
Shaft, Propeller	78
Support, Center Bearing-P/Shaft	78
Yoke, Propeller Shaft	78
Yoke, Sliding	78
Yoke, Universal Joint	78
FRONT & REAR AXLE	
Adapter, Center Cap-Rear Axle	85
Adapter, Mounting-Disc Brake	116
Block, Anchor-Brake	83

ALPHABETICAL INDEX

Description	Page
Bolt, Hub	84,117
Brake, Disc	116
Breather-Rear Axle Casing	80
Cap, Center-Rear Axle	85,117
Cap, Wheel	85,116
Casing, Rear Axle	80
Cover, Brake Drum	83
Cylinder, Wheel	84
Drum, Brake	83
Hub, Wheel	116
Pad, Disc Brake	117
Plate, Disc	116
Plug, Magnet Drain-Rear Axle Casing	80
Plug, Oil Level	80
Ring, Wheel	85,117
Shaft, Rear Axle	80
Shoe, Brake	83
Strut, Operation-Brake	84
SUSPENSION	
Arm, Front Suspension	120
Arm, Knuckle	120
Damper, Front	121,123
Damper, Rear	90
Joint, Ball	120
Link, Lower	90
Link, Upper	90
Member, Cross	126
Rod, Lateral	90
Seat, Spring	90
Spring, Coil	90,120
Stabilizer	126
Stopper, Bound	81,126
Valve, Base-Front Damper	124
Valve, Check	162,164
STEERING	
Arm, Idler	113
Arm, Pitman	96,102,107
Cap, Horn	94, 99,105
Column, Steering	100
Cover, Column	195,199

Description	Page
Gear, Steering	94,100,106
Idler	110
Joint, Steering	97,103
Link, Center	110,113
Link, Steering	113
Nut, Worm Ball	95,100,106
Rod, Tie	111,113
Set, Socket	110,113
Shaft, Energy Absorbing	94
Shaft, Sector	95,101,106
Shaft, Steering	100
Wheel, Steering	93, 99,105
ACCELERATION CONTROLS	
Arm, Accelerator Pedal	143
Pedal, Accelerator	143
Wire, Accelerator	143
Wire, Choke	194,198
FOOT BRAKE	
Bracket, Master Cylinder	145
Cylinder, Tandem Master	146,150,154
Hose, Flexible	162,164
Master Vac (Power Brake)	147,157
Pedal, Brake	145
Pipe, Brake	162,164
Tank, Reserve-Brake	146
HAND BRAKE	
Boot, Parking Brake	159
Lever, Parking Brake	159
Wire, Parking Brake	159
FUEL SYSTEM	
Cap, Filler	134
Filter, Fuel	138
Gauge, Fuel Tank	135
Lid, Filler	133
Pipe, Fuel	137
Pipe, Fuel Return	138
Pump, Fuel	137,140
Tank, Fuel	133
ELECTRICAL EQUIPMENT	
Alternator	58, 68, 69

ALPHABETICAL INDEX

Description	Page
Antenna, Magnet-Radio	298
Antenna, Motor-Radio	298
Arm, Wiper	288, 291
Battery, N50Z	59
Belt, "V"-Fan	58
Blade, Wiper	288, 291
Block, Fuse	283
Block, Main Fuse	283
Bracket, Alternator	3, 58
Cable, Positive-Battery	59
Clamp, Battery	59
Clock, Auto	193, 197
Coil, Ignition	55
Condenser, Ignition Coil	286
Cord, High Tension	55
Distributor, Leading	56, 65, 66
Distributor, Trailing	56, 62, 63
Gear, Drive-Distributor Socket	56
Harness, Wire	285
Horn, Electric	283, 284
Insert, Distributor	56
Lamp, Licence	280
Lamp, Front Turn Signal	275
Lamp, Head	274
Lamp, Interior	282
Lamp No. 1, Rear Combination	278
Lamp No. 2, Rear Combination	279
Lamp, Side Turn Signal	276
Lamp, Step	282
Lighter, Cigarette	194, 199
Motor & Link, Wiper	288, 291
Mould, Drip	331, 335
Plug, Spark	56
Regulator	58
Radio, Auto	297
Radio, Stereo	300
Relay, Ignition Coil	286
Relay, Lamp Checker	286
Relay, Wiper	286
Set, Meter	193, 197, 202
Shaft, Drive-Distributor Socket	56, 11
Socket, Distributor	56
Starter	58, 71
Strap, Alternator	58
Switch, Antenna	194, 199
Switch, Combination	194, 199
Switch, Door	286
Switch, Fog Lamp	194, 199
Switch, Glove Box	303
Switch, Ignition	352
Switch, Parking Lamp	160
Switch, Stop-Brake	147
Tray, Battery	59
Trim, Door	232, 344
Tube, Vacuum Control	56
Unit, Flasher	285
Unit, Hazard Flasher	285
Washer, Screen	295
Wire, Earth-Battery	60
Wire, Panel	194, 198

BODY & FITTINGS

Back, Rear Seat	208, 213, 220, 227
Bar, Front Bumper	167
Block, Anti-Burst-Door	236 348
Body, Front Door	230
Body, Rear Door	343
Bonnet	175
Bumper, Rear	167
Channel, Glass Run	231, 343
Checker, Door	238
Cover, Under	126
Cushion, Rear Seat	208, 213, 220, 227
Fender, Rear	181, 185
Fender, Front	175
Frame, Front (Rr)	188
Frame, Front Side	176
Frame, Rear Side	189
Frame, Side	179, 184
Garnish, Rear Side	280
Glass, Back Window	330, 334

ALPHABETICAL INDEX

Description	Page
Glass, Front Door	231
Glass, Quarter Window	343
Glass, Rear Door	343
Glass, Side Window	338
Guard, Bumper	168
Grille, Air Flow	316
Grille, Front	168
Guide, Glass	339
Handle, Inner	236
Handle, Outer-Door	236,347
Handle, Regulator	236,338,347
Hinge, Bonnet	170
Hinge, Door	237,348
Hinge, Trunk Lid	173
Holder, Number Plate	167
Knuckle, Reclining (R)	205,210,216,224
Knuckle, Reclining (L)	207,212,219,226
Lever, Assistance	212,217
Lid, Trunk	73,179,184
Lock, Bonnet	170
Lock, Door	235,347
Lock, Trunk Lid	173
Member, Cross	188,189
Mould, Back Window	330,334
Mould, Beltline	233,341,345
Mould, Bonnet	171
Mould, Front Glass	332,336
Mould, Front	332,336
Mould, Step	331,335
Panel, Instrument	176
Pan, Rear Floor	188
Panel, Cowl Side	180,184
Panel, Cowl Lower	175
Panel, Shroud	176
Panel, Dash	176
Panel, Dash	175
Panel, Rear Deck	181,186
Panel, Rear End	182,186
Panel, Roof	181,186
Panel, Side Sill Inner	190
Panel, Side Sill Outer	181,185
Panel, Wheel Apron	175,176
Panel, Wheel House	189
Pan, Front Floor	188
Plate, Scarf	331,335
Reflector, Reflex-Rear Side	280
Regulator, Window	236,338,347
Rest, Arm-Door	233,340,345
Rest, Arm-Seat	227
Restraint, Head (R)	205,211,217,224
Restraint, Head (L)	207,213,219,226
Ring, Head Lamp	168
Seat, Front (R)	204,210,216,223
Seat, Front (L)	206,211,218,225
Skirt, Front	176
Spring, Balance-Trunk Lid	173
Spring, Door Checker	348
Stay, Front Bumper	167
Stay, Rear Bumper	167
Striker, Door	236,348
Striker, Trunk Lid	173
Tray, Ash-Seat	205,211,217,224
Tray, Package	188
Trim, Front Pillar	320
Ventilator, First	326
Weatherstrip, Front Door	231,232
Weatherstrip, Rear Door	344
Weatherstrip, Side Window	339,340
Weatherstrip, Trunk Lid	173
Welt, Seaming	233,339,345
Wire, Release-Bonnet	170

ACCESSORIES & OPTIONAL PARTS

Description	Page
Belt, "V"-Cooler	253,262
Belt, Front Safety	221
Belt, Rear Safety	221
Blower, Heater	240,244,247,258,267
Box, Console	307
Box, Console-Cooler	257,266
Box, Glove	305
Bracket, Compressor	252,261

ALPHABETICAL INDEX

Description	Page
Cable, Speedometer	194, 198
Compressor	255, 264
Condenser, Cooler	254, 262
Conditioner, Air	252, 261
Control, Cooler	256, 265, 269
Control, Heater	241, 244, 249
Cooler, Car	252, 261
Core, Heater	240, 243
Drive, Fan	252, 261
Emblem	313
Finisher	316
Handle, Assist	316
Hose, Defroster	241, 245, 258, 267
Hose, Water-Heater	241, 244
Hose, Ventilation-Heater, Cooler	241, 245, 258, 267
Jack	310
Key Set, Filler Lid	351
Key Set, Front Door	351
Key Set, Glove Box	351
Key Set	351
Key Set, Trunk Lid	351
Lamp, Glove Box	303
Lock, Steering	195, 200, 352
Mat, Floor	323
Nozzle, Defroster	232, 245
Pad, Crush	303
Panel, Decoration	328
Pulley, Idle-Cooler	252, 261
Relay, Cooler	255, 264
Set, Heater	240, 243
Switch, Cooler	257, 266
Switch, Idle-Cooler	255, 264
Switch, Thermo-Cooler	256, 265
Tank, Liquid-Cooler	254, 263
Tank, Vacuum-Cooler	257, 266
Tray, Ash-Cooler	257, 266
Tray, Ash-Front	304
Trim, Center Pillar	320
Unit, Cooling-Cooler	256, 266, 270

10 ROTOR HOUSING (FRONT)

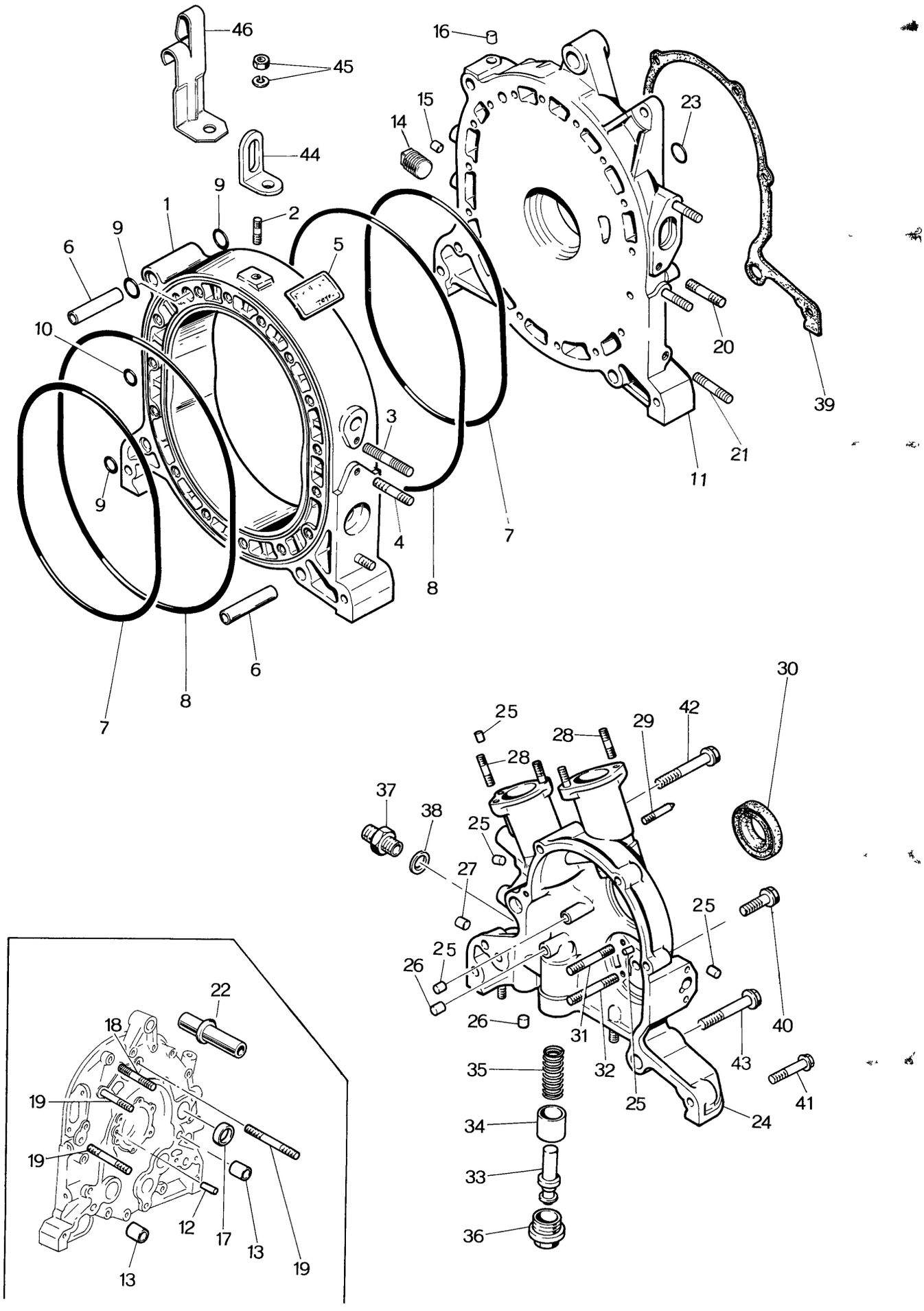

ROTOR HOUSING (FRONT)

No.	Part Number	Description	Q'ty	Remarks
1	0840 10 100A	ROTOR HOUSING Ass'y (Frt.)	1	
●	0840 10 100D	ROTOR HOUSING Ass'y (Frt.)	1	Car No. 70619 7/4 ~ ×
2	99851 0814	Stud, Engine Hanger	1	
3	99851 0870	Stud, Inlet Manifold	1	
4	99851 1028	Stud, Exhaust Manifold	2	Car No. 70619 7/4 ~ Discarded
●	2329 10 105	Stud, Exhaust Manifold	2	Car No. 70619 7/4 ~ Added Anew
5	0813 10 405	License Mark	1	
6	0039 10 111B	Tubular Dowel	2	
7	0810 10 171	Sealing Rubber, Inner	2	
8	0813 10 172	Sealing Rubber, Outer	2	
9	0813 10 173	"O" Ring, Tubular Dowel	4	
10	0813 10 174	"O" Ring, Tension Bolt	36	
●	0820 23 040	Ringset (Fig. No. 7~10 included)	1	Set
11	2123 10 200	FRONT HOUSING Ass'y	1	Order Under 2113 23 020B
●	2080 23 020A	FRONT HOUSING Ass'y	1	Car No. 52931 7/1 ~ O
●	2123 10 200D	FRONT HOUSING Ass'y	1	Car No. 61926 7/1 ~ O
●	2123 10 200F	FRONT HOUSING Ass'y	1	Car No. 69368 7/4 ~ O
	2113 10 200B	FRONT HOUSING Ass'y	1	Order Under 2113 23 020B
●	2329 23 020A	FRONT HOUSING Ass'y (Arctic Spec. Model)	1	Car No. 52931 7/1 ~ O
●	2113 10 200F	FRONT HOUSING Ass'y (Arctic Spec. Model)	1	Car No. 61926 7/1 ~ O
●	2113 10 200H	FRONT HOUSING Ass'y (Arctic Spec. Model)	1	Car No. 69368 7/4 ~ O
12	2113 10 203	Knock Pin, Gear	1	
●	0839 10 203	Knock Pin, Gear	1	Car No. 61926 7/1 ~ O
13	0813 10 204	Tubular Dowel	2	
14	2113 10 206	Blind Plug	1	
		Cars With Powerful Type Car Heater		
15	99307 0800	Blind Plug	1	
16	99307 1200	Blind Plug	3	
17	99306 3000	Blind Plug, Water	4	
18	99852 0850	Stud, Water Pump	1	
19	99852 0878	Stud, Water Pump	3	
20	99852 0822	Stud, Inlet Manifold	2	
21	99859 1220	Stud, Mounting	4	

10 ROTOR HOUSING (FRONT)

No.	Part Number	Description	Q'ty	Remarks
22	0839 18 311B	Alternator Bracket	1	
23	0813 10 174	"O" Ring	1	
24	0820 10 600G	FRONT COVER Ass'y	1	
●	0839 10 600	FRONT COVER Ass'y	1	Car No. 52893 ~ ×
25	99307 0600	Blind Plug	5	
26	99307 1200	Blind Plug	2	
27	99307 1400	Blind Plug	1	
28	99851 0818	Stud, Distributor	4	
29	0820 10 631A	Top Indicator Pin	1	
30	0813 10 605	Oil Seal	1	
31	99851 0645	Stud	2	
32	99852 0645	Stud	2	
33	0813 10 611	Pellet	1	
34	0813 10 612	Slide Valve	1	
●	0850 14 115	Planger	1	Car No. 52893 ~ ×
35	0813 10 613	Return Spring	1	
●	0850 14 273	Return Spring	1	Car No. 52893 ~ ×
36	0820 10 614	Plug, Pellet	1	
●	0221 14 117	Plug, Pellet	1	Car No. 52893 ~ ×
37	99384 1200	Union Joint	1	
38	99562 1600	Packing	1	
39	0820 10 641C	Gasket, Front Cover	1	
●	0839 10 641	Gasket, Front Cover	1	Car No. 52893 ~ ×
40	908016 8 35	Set Bolt, Front Cover	3	
●	908016 8 40	Set Bolt, Front Cover	4	Car No. 52893 ~ ×
41	908016 8 45	Set Bolt, Front Cover	2	
42	908016 8 65	Set Bolt Front Cover	1	Car No. 24890 ~ Discarded
	99801 0865	Bolt	1	Car No. 24890 ~ Added Anew
	99971 0800	Spring Washer	1	
	99952 0800	Plain Washer	1	
43	908016 8 75	Set Bolt, Front Cover	2	Car No. 24890 ~ Discarded
	99801 0875	Bolt	2	Car No. 24890 ~ Added Anew
	99971 0800	Spring Washer	2	
	99952 0800	Plain Washer	2	

No.	Part Number	Description	Q'ty	Remarks
44	0820 10 861	Engine Hanger	1	
●	2869 10 860	Engine Hanger	1	Car No. 70217 7/4 ~ ○
45	99901 0800	Nut, Hanger	1	
	99971 0800	Spring Washer	1	
● 46	0839 10 872A	Clip	1	Car No. 70217 7/4 ~ Discarded
●	2091 10 872	Clip, Arctic Spec Model	1	Car No. 33885 7/10 ~ Added Anew
●	0839 99 100A	Gasket Set, Engine	1	
● Ⓝ	2329 10 864	Protector Engine Hanger	1	Car No. 70217 7/14 Added Anew

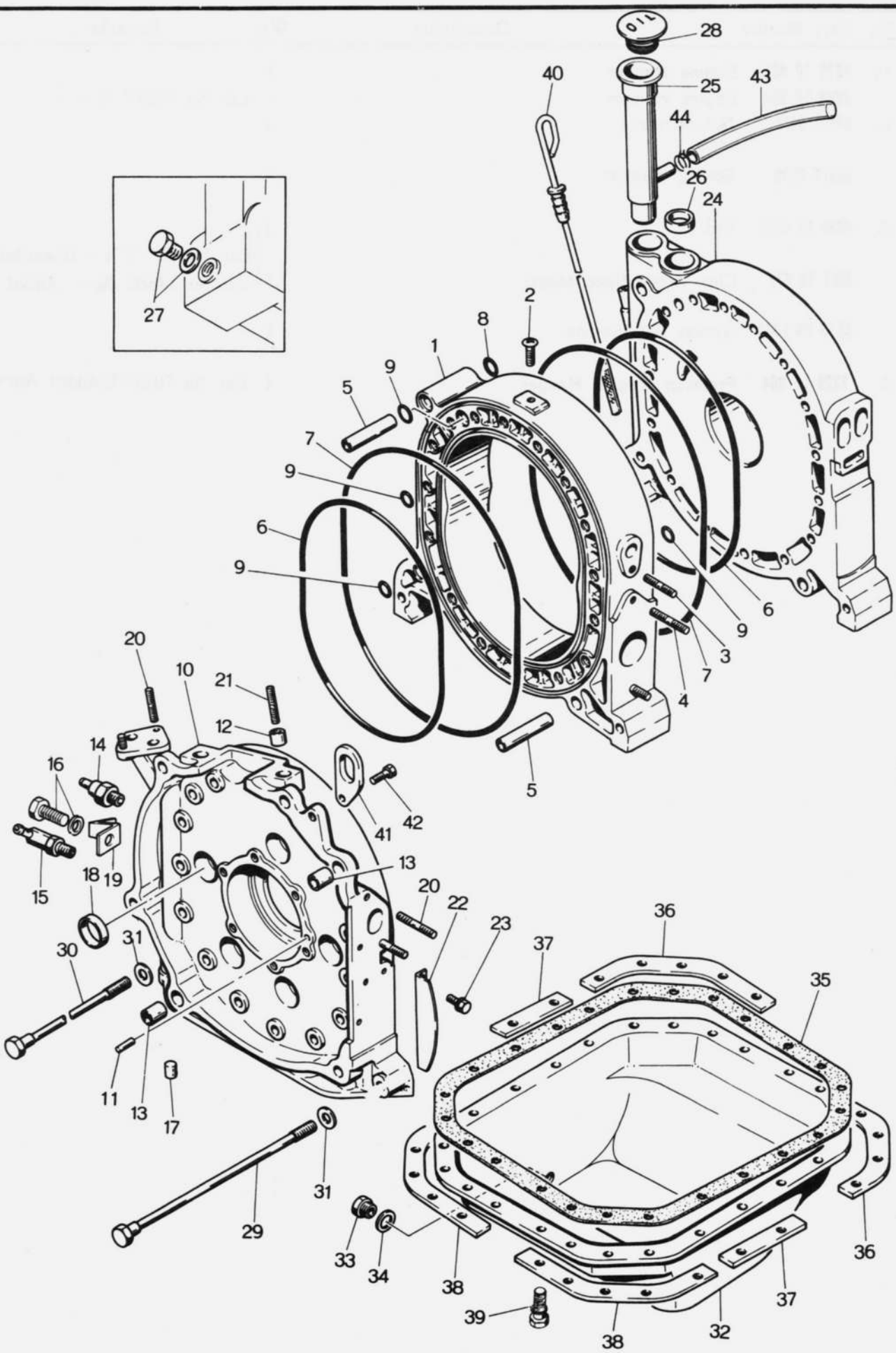
28
40
25
43
44
26
24
27
2
8
1
9
5
7
9
6
9
6
9
3
7
4
5
20
10
21
12
14
16
15
18
19
41
42
13
20
22
23
30
31
11
13
17
29
31
33
34
38
39
38
32
37
36
35
37
36

No.	Part Number	Description	Q'ty	Remarks
1	0840 10 150A	ROTOR HOUSING Ass'y (Rr.)	1	
●	0840 10 150D	ROTOR HOUSING Ass'y (Rr.)	1	Car No. 70619 7/4 ~ ×
2	99833 0810	Screw	1	
3	99851 0830	Stud, Inlet Manifold	1	
4	99851 1028	Stud, Exhaust Manifold	2	Car No. 70618 7/4 ~Discarded
●	0839 10 105	Stud, Exhaust Manifold	1	Car No. 70619 7/4 ~Added Anew
●	0839 10 106	Stud, Exhaust Manifold	1	Car No. 70619 7/4 ~Added Anew
5	0839 10 111B	Tubular Dowel	2	
6	0810 10 171	Sealing Rubber, Inner	2	
7	0813 10 172	Sealing Rubber, Outer	2	
8	0813 10 173	"O" Ring, Tubular Dowel	4	
9	0813 10 174	"O" Ring, Tension Bolt	36	Car No. 70619 7/4 Discarded
●	0820 23 040	"O" Ring Set (Fig. No. 6~9 included)	1	
10	2080 10 300	REAR HOUSING Ass'y	1	Order Under 2113 23 030B
●	2080 23 030B	REAR HOUSING Ass'y	1	Car No. 52931 7/1 ~ ○
●	2080 10 300C	REAR HOUSING Ass'y	1	Car No. 61926 7/1 ~ ○
●	2080 10 300D	REAR HOUSING Ass'y	1	Car No. 61323 7/2 ~ △
●	2080 10 300E	REAR HOUSING Ass'y	1	Car No. 69368 7/4 ~ ○
	2123 10 300	REAR HOUSING Ass'y	1	Order Under 2113 23 030B
●	2080 23 030B	REAR HOUSING Ass'y Arctic Spec. Model	1	Car No. 52931 7/1 ~ ○
●	2080 23 030C	REAR HOUSING Ass'y	1	Car No. 61926 7/1 ~ ○
11	0820 10 203	Knock Pin, Gear	1	
12	99234 12 08	Tubular Pin, Starter	2	
13	0221 10 309	Tubular Pin	2	
14	0813 18 501	Oil Pressure Switch	1	
15	0839 10 320	Hose Joint	1	
16	99811 1010	Bolt	1	
	99971 1000	Spring Washer	1	
17	99307 1200	Blind Plug	1	
18	99306 3000	Blind Plug, Water	5	
19	0839 61 235A	Clip	1	
20	99852 0822	Stud	4	
21	99852 0830	Stud, Starter	2	

10 ROTOR HOUSING (REAR)

No.	Part Number	Description	Q'ty	Remarks
22	0820 10 305	Dust Cover	1	
23	908062 6 10	Set Bolt, Dust Cover	2	Car No. 24890 ~ Discarded
	99806 0610	Bolt	2	Car No. 24890 ~ Added Anew
	99971 0600	Spring Washer	2	
24	2080 10 400	INTERMEDIATE HOUSING Ass'y	1	
●	2080 10 400B	INTERMEDIATE HOUSING Ass'y	1	Car No. 55065 ~ ○
●	2080 10 400C	INTERMEDIATE HOUSING Ass'y	1	Car No. 69368 ~ ○
25	0820 10 410B	Oil Filler Pipe	1	
26	99305 2800	Expansion Plug	1	
27	99510 1000	Plug	1	
	99564 1000	Packing	1	
28	0243 10 250B	Oil Filler Cap	1	
29	0839 10 451A	Tension Bolt	18	
●30	0839 10 452A	Tension Bolt	1	
●	0839 10 452B	Tension Bolt	1	Car No. 55065 ~ ×
31	0823 10 455	Plain Washer	19	
32	0839 10 700A	OIL PAN Ass'y	1	
●	2090 10 700B	OIL PAN Ass'y	1	Car No. ~ ○
33	99511 1400	Drain Plug	1	
34	99562 1400	Packing	1	
35	0839 10 711	Gasket	1	
36	0839 10 721	Stiffener	2	
37	0839 10 722	Stiffener	2	
38	0839 10 723	Stiffener	2	

No.	Part Number	Description	Q'ty	Remarks
39	908062 6 16	Set Bolt, Oil Pan	22	
40	0839 10 830	Oil Level Gauge	1	
41	0820 10 862A	Engine Hanger	1	
●	2090 10 862A	Engine Hanger	1	Car No. 72017 7/3 ～ ○
42	908012 8 18	Set Bolt, Engine Hanger	7	
43	0839 10 871	Ventilation Hose	1	
44	0222 13 493	Clip	2	

ROTOR (FRONT)

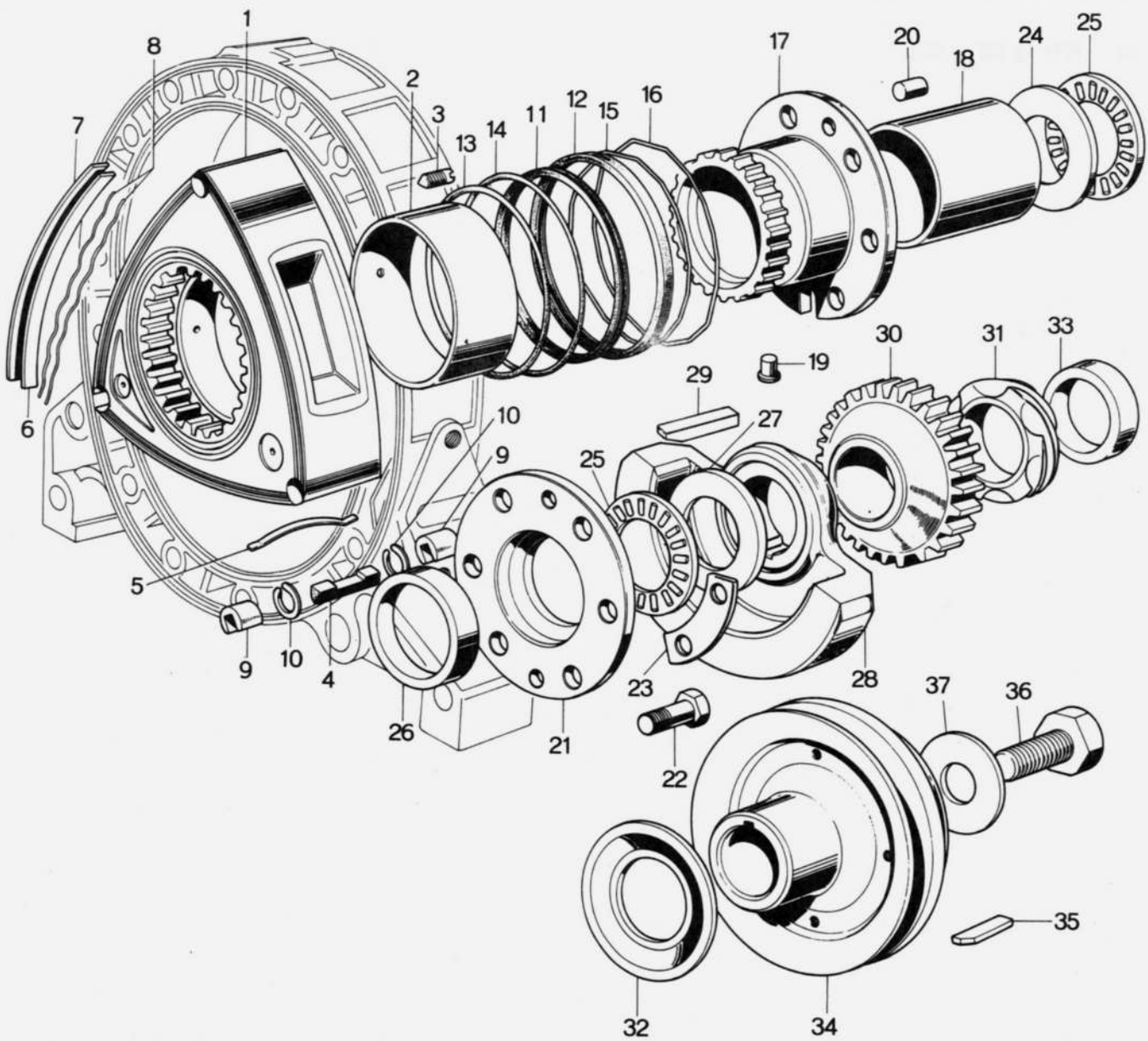
1
8
2
3
7
13
14
11
12
15
16
17
20
18
24
25
6
19
30
31
33
29
27
10
9
25
5
9
10
4
26
21
23
28
37
36
22
35
32
34

No.	Part Number	Description	Q'ty	Remarks	
● 1	~~0839 23 102~~	~~ROTOR Ass'y (Frt.) "B"~~			☆
	0839 23 103	ROTOR Ass'y (Frt.) "C"	1		
●	0839 23 103A	ROTOR Ass'y (Frt.) "C"	1	Car No. 54507 ~ ○	
●	~~0839 23 104~~	~~ROTOR Ass'y (Frt.) "D"~~			☆
● 2	0839 11 111B	Rotor Bearing	1		
3	99885 0406	Screw	3		
4	0839 11 301B	Apex Seal	3		
5	0839 11 304	Apex Seal Spring	3		
6	2125 23 151	Side Seal Outer (Frt.)	3		
●	2125 23 154	Side Seal Outer (Rear)	3		
7	2125 23 152	Side Seal Inner (Frt.)	3		
●	2125 23 155	Side Seal Inner (Rear)	3		
8	0820 11 317	Side Seal Spring	12		
9	0820 11 321B	Corner Seal	6		
	0820 23 175A	Corner Seal (O.S. 0.2)	6		
	0820 23 176	Corner Seal (O.S. 0.03)	6		
●	0820 23 176A	Corner Seal (O.S. 0.03)	6	Car No. 61926 ~ ○	
10	0839 11 323	Corner Seal Spring	6		
11	0820 11 331	Oil Seal, Inner	2	Order Under 0820 23 180	
12	0820 11 333	Oil Seal, Outer	2		
13	0820 11 341	"O" Ring, Inner	2		
14	0820 11 343	"O" Ring, Outer	2		
15	0820 11 351	Spring, Oil Seal Inner	2		
●	0839 11 351	Spring, Oil Seal Inner	2	Car No. 61926 ~ ○	
16	0820 11 353	Spring, Oil Seal Outer	2		
●	0839 11 353	Spring, Oil Seal Outer	2	Car No. 61926 ~ ○	
● Ⓝ	0820 23 180	Oil Seal Set (Fig. 11 & 12 included)	2		
17	0820 10 500A	STATIONARY GEAR Ass'y (Frt.)	1		
●	0839 10 500	STATIONARY GEAR Ass'y (Frt.)	1	Car No. 52931 ~ ×	
●	0839 10 500A	STATIONARY GEAR Ass'y (Frt.)	1	Car No. 59943 ~ ○	
●	0839 10 500B	STATIONARY GEAR Ass'y (Frt.)	1	Car No. 61926 ~ ×	
18	0813 10 502A	Main Bearing	1		
●	~~0820 10 502A~~	~~Main Bearing~~	~~1~~	~~Car No. 59943 ~ ×~~	
●	0820 10 502B	Main Bearing	1	Car No. 61926 ~ ×	

10 11 ROTOR (FRONT)

No.	Part Number	Description	Q'ty	Remarks
● 19	0813 10 503	Lock Pin	1	Car No. 59943 ⅞ ~ Discarded
20	0820 10 504	Knock Pin	1	
21	0820 11 501A	Thrust Bearing	1	
●	0839 11 501	Thrust Bearing	1	Car No. 52893 ⅞ ~ ×
22	99801 0822	Bolt, Stationary Gear	6	
23	0813 11 503	Lock Washer	3	
24	0839 11 504B	Thrust Plate	1	
25	0813 11 505B	Needle Bearing	2	
26	0820 11 502	Spacer (L = 9.02)		
●	0839 11 502	Spacer (L = 9.02)		Car No. 52893 ⅞ ~ ×
	0820 11 506	Spacer (L = 9.08)		
●	0839 11 506	Spacer (L = 9.08)	1	Car No. 52893 ⅞ ~ ×
	0820 11 508	Spacer (L = 9.04)		
●	0839 11 508	Spacer (L = 9.04)		Car No. 52893 ⅞ ~ ×
	0820 11 509	Spacer (L = 9.00)		
●	0839 11 509	Spacer (L = 9.00)		Car No. 52893 ⅞ ~ ×
27	0820 11 507	Thrust Washer	1	
28	0839 11 511B	Balance Weight	1	
●	0839 11 511C	Balance Weight	1	Car No. 52893 ⅞ ~ ×
●	0839 11 511D	Balance Weight	1	Car No. 55065 ⅞ ~ ×
29	0820 11 512A	Key	1	
30	0820 11 521B	Drive Gear, Oil Pump	1	
●	0839 11 551	Sprocket Oil Pump	1	Car No. 52893 ⅞ ~ ×
31	0839 11 531	Drive Gear, Distributor	1	
32	0813 11 541	Oil Baffle Plate	1	
33	0820 11 542	Spacer	1	
34	0839 11 601B	Pulley	1	
35	99236 0525	Key, Pulley	1	
36	997533 1640	Bolt, Pulley	1	
37	2329 11 613	Washer	1	

Selective use

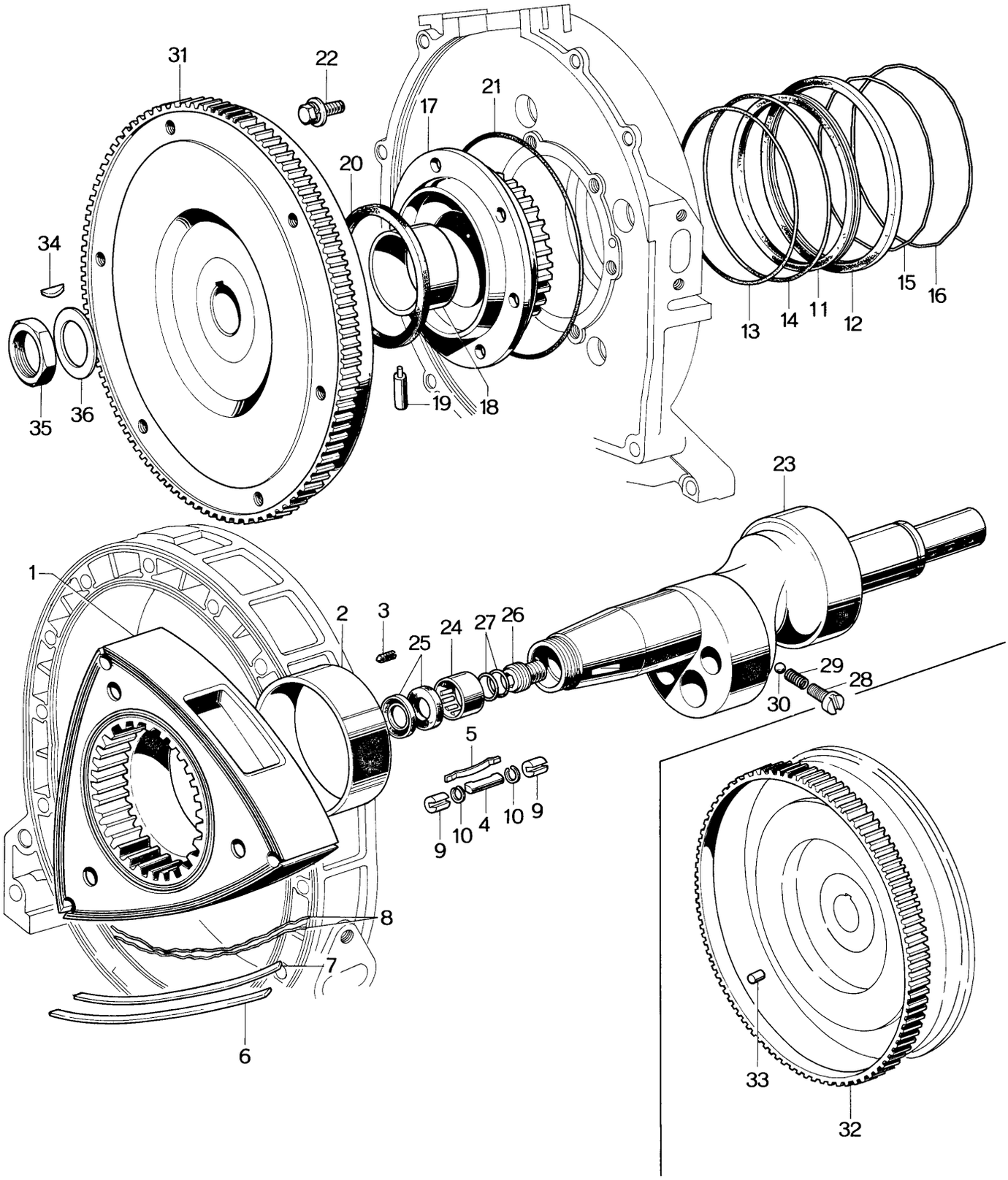
31
22
21
17
20
34
35
36
19
18
13
14
11
12
15
16
23
1
2
3
25
24
27
26
29
28
30
5
9
10
4
10
9
8
7
6
33
32

	No.	Part Number	Description	Q'ty	Remarks	
●	1	~~0839 23 112~~	~~ROTOR Ass'y (Rr.) "B"~~			☆
		0839 23 113	ROTOR Ass'y (Rr.) "C"	1		
●		0839 23 113A	ROTOR Ass'y (Rr.) "C"	1	Car No. 54507 ~ ○	
●		~~0839 23 114~~	~~ROTOR Ass'y (Rr.) "D"~~			☆
●	2	0839 11 111B	Rotor Bearing	1		
	3	99855 0406	Screw	3		
	4	0839 11 301B	Apex Seal	3		
	5	0839 11 304	Apex Seal Spring	3		
	6	2125 23 154	Side Seal Outer (Rr.)	3		
●		2125 23 151	Side Seal Outer (Frt.)	3		
	7	2125 23 155	Side Seal Inner (Rr.)	3		
●		2125 23 152	Side Seal Inner (Frt.)	3		
	8	0820 11 317	Side Seal Spring	12		
	9	0820 11 321B	Corner Seal	6		
		0820 23 175A	Corner Seal (O.S. 0.2)	6		
		0820 23 176	Corner Seal (O.S. 0.03)	6		
●		0820 23 176A	Corner Seal (O.S. 0.03)	6	Car No. 61926 ~ ○	
	10	0839 11 323	Corner Seal Spring	6		
	11	0820 11 331	Oil Seal, Inner	2		
	12	0820 11 333	Oil Seal, Outer	2		
	13	0820 11 341	"O" Ring, Inner	2		
	14	0820 11 343	"O" Ring, Outer	2		
	15	0820 11 351	Spring, Oil Seal Inner	2		
	16	0820 11 353	Spring, Oil Seal Outer	2		
●	Ⓝ	0820 23 180	Oil Seal Set (Fig. No. 11 & 12 included)	2		
	17	0820 10 550	STATIONARY GEAR Ass'y (Rr.)	1		
●		0820 10 550A	STATIONARY GEAR Ass'y (Rr.)	1	Car No. 59894 ~ ○	
●		0820 10 550B	STATIONARY GEAR Ass'y (Rr.)	1	Car No. 66431 ~ ○	
	18	0813 10 502A	Main Bearing	1		
●		~~0820 10 502A~~	~~Main Bearing~~	~~1~~	~~Car No. 59894 ~ ×~~	
●		0820 10 502B	Main Bearing	1	Car No. 66431 ~ ×	

10 11 ROTOR (REAR)

No.	Part Number	Description	Q'ty	Remarks
19	0813 10 554	Lock Pin	1	Car No. 66430 7/2 ~ Discarded
20	0820 10 556A	Oil Seal	1	
21	0813 10 555	"O" Ring	1	
22	908012 8 18	Set Bolt, Stationary Gear	6	
23	0839 11 400H	ECCENTRIC SHAFT Ass'y	1	
●	0839 11 400I	ECCENTRIC SHAFT Ass'y	1	Car No. 55065 7/1 ~ ×
24	0810 11 403	Needle Bearing	1	
25	0810 11 404	Oil Seal	2	
26	0813 11 405	Blind Plug	1	
27	99541 01101	"O" Ring	2	
28	0839 11 411A	Oil Jet Plug	2	
29	0839 11 412	Spring	2	
30	99611 2000	Steel Ball	2	
31	0839 11 700A	FLY WHEEL	1	
●	0839 11 700B	FLY WHEEL	1	Car No. 55065 7/1 ~ ×
32	0600 11 502	Ring Gear	1	
33	0820 11 703	Pin	1	
34	0820 11 705	Key, Fly Wheel	1	
35	0810 11 711	Nut, Fly Wheel	1	
36	0820 11 712	Lock Washer	1	

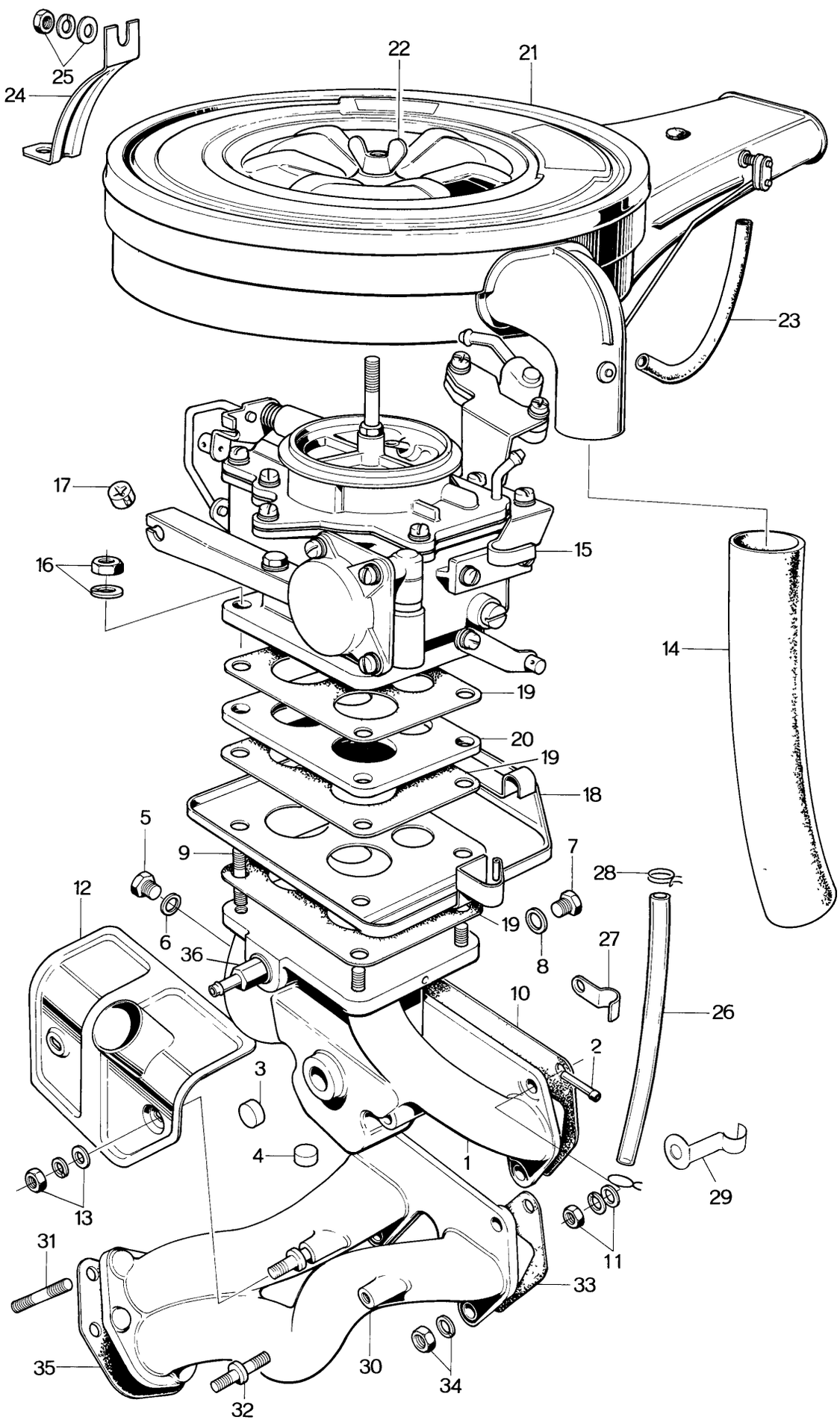
22
21
25
24
23
17
15
16
14
19
20
19
18
5
9
7
28
12
6
19
8
27
36
10
26
2
3
4
1
29
13
11
31
33
35
30
34
32

No.	Part Number	Description	Q'ty	Remarks
1	0839 13 100B	INLET MANIFOLD Ass'y	1	
●	0839 13 100D	INLET MANIFOLD Ass'y	1	Car No. 70619 7/4 ~ ○
2	0813 13 102A	Joint Plug	1	
3	99307 1400	Blind Plug	1	
4	99307 1800	Blind Plug	1	
5	99510 0800	Blind Plug	2	
6	99564 0800	Packing	2	
7	99511 1000	Blind Plug	1	
8	99564 1000	Packing	1	
9	99851 0826	Stud, Carburettor	4	
10	0839 13 111	Gasket, Inlet Manifold	1	
●	0839 13 111A	Gasket, Inlet Manifold	1	Car No. 70619 7/4 ~ ×
11	99901 0800	Nut, Manifold	6	
	99952 0800	Plain Washer	6	
	99971 0800	Spring Washer	6	
12	0839 13 330A	Hot Air Duct	1	
●	0839 13 330B	Hot Air Duct	1	Car No. 70619 7/4 ~ ×
13	99906 0600	Nut, Hot Air Duct	2	
	99953 0600	Plain Washer	2	
	99971 0600	Spring Washer	2	
14	0839 13 341A	Hot Air Hose	1	
●	0839 13 341B	Hot Air Hose	1	Car No. 70619 7/4 ~ ○
15	0839 13 210B	Carburettor (R. H. D.)	1	
	0839 13 210E	Carburettor (R. H. D.)	1	Car No. 25947 7/9 ~ ○
	0839 13 210F	Carburettor (R. H. D.)	1	Car No. 36206 7/4 ~ ○
●	0839 13 210G	Carburettor (R. H. D.)	1	Car No. 70619 7/11 ~ ○
●	0839 13 210H	Carburettor (R. H. D.)	1	Car No. 74696 7/4 ~ ○
	2080 13 200	Carburettor (L. H. D.)	1	
	2080 13 200C	Carburettor (L. H. D.)	1	Car No. 25947 7/9 ~ ○
	2080 13 200D	Carburettor (L. H. D.)	1	Car No. 36206 7/11 ~ ○
●	2080 13 200E	Carburettor (L. H. D.)	1	Car No. 70619 7/4 ~ ○
●	2080 13 200F	Carburettor (L. H. D.)	1	Car No. 74696 7/4 ~ ○
16	99901 0800	Nut, Carburettor	4	
	99971 0800	Spring Washer	4	
17	0820 13 205	Limiter Cap	1	
18	0839 13 230A	Carburettor Tray	1	
	0839 13 230B	Carburettor Tray	1	Car No. 24191 7/9 ~ ×
●	0839 13 230C	Carburettor Tray	1	Car No. 70619 7/4 ~ △

No.	Part Number	Description	Q'ty	Remarks
19	0823 13 221	Gasket, Carburettor	3	
●	0823 13 221A	Gasket, Carburettor	3	Car No. 70619 7/4 ~ ○
20	0823 13 222	Insulator, Carburettor	1	
●	0823 13 222A	Insulator, Carburettor	1	Car No. 70619 7/4 ~ ○
21	0839 13 300G	Air Cleaner	1	
●	0839 13 300H	Air Cleaner	1	Car No. 64229 7/3 ~ ○
22	99941 0801	Wing Nut, Air Cleaner	1	
	99952 0800	Plain Washer	1	
23	0839 13 307	Boost Tube, Air Cleaner	1	
24	0839 13 311A	Supporter, Air Cleaner	1	
25	99901 0800	Nut, Air Cleaner Supporter	2	
	99952 0816	Plain Washer	2	
	99971 0800	Spring Washer	2	
26	0820 13 235	Drain Pipe, Carburettor	1	
27	99295 1508	Clip, Drain Pipe	1	
28	0710 45 191	Clip, Drain Pipe	1	Car No. 52931 7/1 ~ Discarded
29	0820 13 237	Clip	1	
30	0839 13 600C	EXHAUST MANIFOLD	1	
●	0839 13 600I	EXHAUST MANIFOLD	1	Car No. 70619 7/4 ~ ○
31	99851 1032	Stud, Exhaust Pipe	2	
●	0823 13 603	Stud, Exhaust Pipe	2	Car No. 70619 7/4 ~ ○
32	0180 13 459	Stud, Hot Air Duct	2	
33	0839 13 611B	Gasket, Exhaust Manifold	2	
●	0839 13 611D	Gasket, Exhaust Manifold	2	Car No. 70619 7/4 ~ ○
34	0813 13 613	Nut, Exhaust Manifold	4	
●	0839 13 613	Nut, Exhaust Manifold	4	Car No. 70619 7/4 ~ ○
	99971 1000	Spring Washer	4	
●	0839 13 614	Washer, Plain	4	Car No. 70619 7/4 ~ Added Anew
35	0839 13 621	Gasket, Exhaust Manifold	1	
36	0222 13 130B	Connector, Without Car Heater	1	

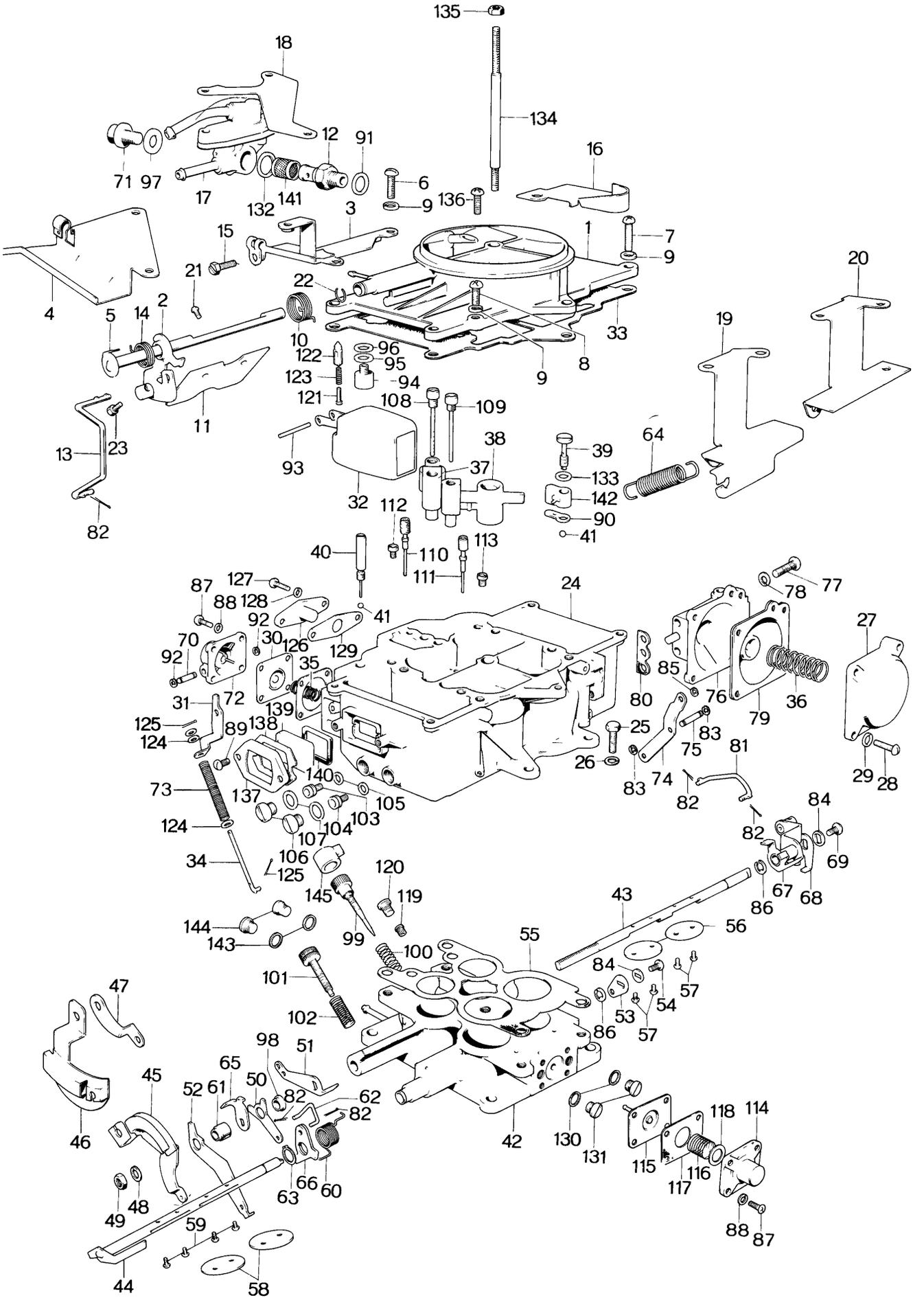
135
18
134
12
91
16
71 97
6
17
132 141
9 136
3
15
1
7
9
4
21
22
20
5 14 2
10
33
19
122
96
95
123
94
9
8
121
108
109
11
13
23
93
38
39
64
37
133
142
32
112
90
82
40
110
41
113
111
87
127
88 128
24
77
78
92
41
27
70
30
126
129
85
92
35
80
76
36
31
72
139
79
125
89
138
25
83
124
75
81
26
83
74
29 28
73
140
82
137
105
84
124
103
104
82
107
69
34
106
67
68
125
86
120
145
119
144
43
56
143
99
55
100
84
101
57
53
54
47
102
86
57
98
51
65
45
52 61
50
82
62
82
46
42
130
131
118
114
115
116
117
49
48
66
60
63
88
87
59
44
58

No.	Part Number	Description	Q'ty	Remarks
	0839 13 210B	CARBURETTOR (Nikki Make) (R. H. D.)	1	
	0839 13 210E	CARBURETTOR (Nikki Make) (R. H. D.)	1	Car No. 25947 ⁷⁰/₉ ~ ○
	0839 13 210F	CARBURETTOR (Nikki Make) (R. H. D.)	1	Car No. 36206 ⁷⁰/₁₁ ~ ○
	2080 13 200	CARBURETTOR (Nikki Make) (L. H. D.)	1	
	2080 13 200C	CARBURETTOR (Nikki Make) (L. H. D.)	1	Car No. 25947 ⁷⁰/₉ ~ ○
	2080 13 200D	CARBURETTOR (Nikki Make) (L. H. D.)	1	Car No. 36206 ⁷⁰/₁₁ ~ ○
1	0839 23 301	Air Horn	1	
2	0839 23 302	Lever, Choke Valve	1	
3	0839 23 303	Holder, Choke Wire (R. H. D.)	1	
	0839 23 303A	Holder, Choke Wire (R. H. D.)	1	Car No. 40001 ⁷⁰/₁₂ ~ ×
4'	2080 23 303	Holder, Choke Wire (L.H.D.)	1	
5	0823 23 304	Shaft, Choke Lever	1	
6	0183 13 776	Screw, Air Horn	2	
●	0839 13 419	Screw, Air Horn	2	Car No. 71284 ⁷¹/₄ ~ ○
7	0193 23 333A	Screw, Air Horn	7	
●	0839 23 386	Screw, Air Horn	8	Car No. 71284 ⁷¹/₄ ~ ○
8	0193 23 325A	Screw, Air Horn	3	Car No. 64265 ⁷¹/₃ ~ Discarded
9	0193 23 334	Spring Washer	8	
10	0839 23 305	Spring, Choke Lever	1	
11	0823 23 306	Valve, Choke	1	
12	0823 23 307B	Connector	1	
13	0839 23 308	Connecting Rod, Starting (R. H. D.)	1	
●	2080 23 308	Connecting Rod, Starting (L. H. D.)	1	Car No. 56448 ⁷¹/₂ ~ Added Anew
14	0839 23 309	Spring, Choke Valve	1	
●15	0839 23 311	Bolt, Choke Wire Set	1	Order Under 0829 23 303 ☆
16	0839 23 312	Clip	1	
17	0839 23 314	Fuel Return Valve	1	
	0839 23 314A	Fuel Return Valve	1	Car No. 40001 ⁷⁰/₁₂ ~ ×
● 18	0839 23 315	Bracket	1	Order Under 0839 23 314 ☆
19	0839 23 318	Throttle Wire Bracket (R. H. D.)	1	
	0839 23 318A	Throttle Wire Bracket (R. H. D.)	1	Car No. 25947 ⁷⁰/₉ ~ ○
20	2080 23 318	Throttle Wire Bracket (L. H. D.)	1	
	2080 23 318A	Throttle Wire Bracket (L. H. D.)	1	Car No. 25947 ⁷⁰/₉ ~ ○
21	0107 13 768A	Screw, Choke Valve	2	
22	0107 13 813	Ring, Choke Lever	1	
23	0222 23 273B	Bolt, Choke Wire	1	
24	0839 23 321	Body	1	
	0839 23 321A	Body	1	Car No. 36026 ⁷⁰/₁₁ ~ ×
●	0839 23 321B	Body	1	Car No. 71284 ⁷¹/₄ ~ ×

No.	Part Number	Description	Q'ty	Remarks
25	0839 23 484	Bolt, Body	4	
●	0839 23 484A	Bolt, Body	4	Car No. 71284 7/4 ~ O
26	0193 23 379	Spring Washer, Body	4	
27	0823 23 322	Cover, Diaphragm	1	
28	0107 13 776A	Screw, Cover	4	
●	0839 23 384	Screw, Cover	4	Car No. 71284 7/4 ~ O
29	0193 23 334	Spring Washer	4	
30	0823 23 323	Diaphragm, Accelerator Pump	1	
31	0839 23 325	Arm, Accelerator Pump	1	
32	0823 23 326A	Float	2	
●	0823 23 326B	Float	2	Car No. 55864 7/2 ~ O
33	0839 23 327	Gasket, Body	1	
34	0839 23 332	Rod, Pump Connecting	1	
35	0823 23 333	Spring, Accelerator Pump	1	
36	0839 23 334	Spring, Diaphragm	1	
37	0823 23 335	Small Venturi (P)	2	
38	0839 23 336	Small Venturi (S)	2	
39	0823 23 337	Bolt, Pump Jet	1	
40	0823 23 338	Plug, Check Ball	1	
41	0107 13 781	Pump Valve	2	
42	0839 23 341	Flange	1	
	0839 23 341A	Flange	1	Car No. 36206 7/11 ~ Added Anew
43	0839 23 342	Throttle Shaft (P)	1	
44	0823 23 343	Throttle Shaft (S)	1	
	0839 23 343	Throttle Shaft (S)	1	Car No. 36206 7/11 ~ Added Anew
45	0839 23 344	Throttle Lever (R. H. D.)	1	
	0839 23 344A	Throttle Lever (R. H. D.)	1	Car No. 25947 7/8 ~ O
46	2080 23 344	Throttle Lever (L. H. D.)	1	
	2080 23 344A	Throttle Lever (L. H. D.)	1	Car No. 25947 7/8 ~ O
47	2080 23 383	Throttle Return Lever (L.H.D.)	1	
48	0193 23 367	Spring Washer	1	
49	0222 23 261	Nut	1	
50	0823 23 345A	Lever, Throttle Valve Lock	1	

No.	Part Number	Description	Q'ty	Remarks
51	0839 23 346	Arm, Throttle Valve Adjust	1	
52	0839 23 347	Starting Lever (R. H. D.)	1	
●	2080 23 347	Starting Lever (L. H. D.)	1	Car No. 56448 7/2 ~ Added Anew
● 53	0839 23 348	Arm, Throttle Shaft (S)	1	
54	0603 23 388A	Screw	1	
55	0839 23 349	Gasket, Flange	1	
56	0823 23 351	Throttle Valve (P)	2	
57	0107 13 737A	Screw, Valve	4	
58	0823 23 352	Throttle Valve (S)	2	
	0839 23 352	Throttle Valve (S)	2	Car No. 36206 7/11 ~ Added Anew
● 59	~~0222 23 395A~~	~~Screw, Valve~~	~~4~~	
60	0823 23 353	Spring, Throttle Shaft	1	
61	0824 23 354	Collar, Throttle Lever (R. H. D.)	1	
●	2080 23 354	Collar, Throttle Lever (L. H. D.)	1	Car No.56448 7/2 ~ Added Anew
62	0823 23 355	Link, Throttle Lever	1	
63	0823 23 356	Ring, Throttle Return (S)	1	
64	0839 23 357	Spring, Throttle Return	1	
	0839 23 357A	Spring, Throttle Return	1	Car No. 25947 7/3 ~ O
65	0823 23 358	Arm, Throttle Shaft	1	
●	2080 23 358	Arm, Throttle Shaft	1	Car No. 56448 7/2 ~ Added Anew
66	0823 23 359	Lever, Throttle Return (S)	1	
67	0839 23 361	Lever, Metering Pump	1	
68	0839 23 362	Arm, Metering Pump	1	
69	0603 23 388A	Screw	1	
70	0823 23 364	Pin, Pump Lever	1	
71	0823 23 365B	Bolt, Union	1	
72	0823 23 366	Cover, Accelerator Pump Diaphragm	1	
— 73	0839 23 367	Spring, Damper	1	
74	0823 23 368	Lever Diaphragm	1	
75	0823 23 369	Pin, Diaphragm	1	
76	0823 23 371A	Diaphragm Chamber	2	
●	0823 23 371B	Diaphragm Chamber	2	Car No. 71284 7/4 ~ ×

No.	Part Number	Description	Q'ty	Remarks
77	0183 13 776	Screw, Diaphragm Chamber	2	
78	0193 23 334	Spring Washer	2	
79	0823 23 372	Diaphragm	1	
80	0823 23 373	Gasket	1	
●	0823 23 373A	Gasket	1	Car No. 71284 7/4 ~ ×
81	0823 23 374	Connecting Rod	1	
82	0193 23 369	Pin	5	
83	0823 23 375	Stop Ring	2	
84	0823 23 381	Washer, Throttle Lever	2	
85	0823 23 382	Stop Ring	1	
● Ⓝ	2080 23 383	Collar, Throttle Lever (L. H. D.)	1	Car No. 56448 7/2 ~ Added Anew
● 86	0823 23 384	Stop Ring	1	Car No. 64264 7/3 ~ Discarded
●	0839 23 385	Stop Ring	1	
● Ⓝ	2080 23 385	Ring, Starter Lever (L. H. D.)	1	Car No. 56448 7/2 ~ Added Anew
87	0823 23 388	Screw	8	
88	0600 23 367	Spring Washer	8	
89	0823 23 389	Screw	4	
●	0823 23 389A	Screw	4	Car No. 71284 7/4 ~ ○
90	0823 23 391	Gasket, Pump Jet	1	
91	0823 23 394	Gasket, Fuel Connector	1	
92	0823 23 395	Stop Ring	2	
93	0823 23 396	Float Pin	2	
94	0823 23 398B	Seat, Needle Valve	2	
95	0823 23 399	Gasket, Needle Valve	2	
96	0107 13 795	Gasket	2	
97	0823 23 402A	Gasket, Fuel Connector	1	
98	0823 23 404	Collar, Shaft	1	
99	0839 23 405	Screw, Idle Adjust	1	
100	0222 23 366	Spring, Idle Adjust	1	
101	0222 23 365B	Screw, Throttle Adjust	1	
102	0164 13 398	Spring, Throttle Adjust	1	
●	2080 23 387	Spring, Throttle Adjust (L. H. D.)	1	Car No. 56448 7/2 ~ Added Anew

No.	Part Number	Description	Q'ty	Remarks
103	0839 23 421	Main Jet (P)	2	
104	0839 23 422	Main Jet (S)	2	
105	0193 23 383	Gasket, Main Jet	4	
106	0603 23 354	Plug	4	
107	0107 13 654	Gasket	4	
108	0839 23 423	Main Air Bleed (P)	2	
109	0839 23 424	Main Air Bleed (S)	2	
110	0839 23 425	Slow Jet	2	
111	0839 23 426	Step Jet	2	
	0839 23 426A	Step Jet	2	Car No. 36206 $^{7}/_{11}$ ~ Added Anew
112	0222 23 351	Slow Air Bleed	2	
113	0823 23 428	Step Air Bleed	2	
114	0839 23 431	Cover, Sub Slow	1	
115	0839 23 432	Diaphragm, Sub Slow	1	
116	0839 23 433	Spring, Sub Slow	1	
117	0839 23 435	Gasket, Diaphragm	1	
118	0839 23 406	Washer, Sub Slow	1	
119	0839 23 438	Sub Slow Jet	1	
	0839 23 438A	Sub Slow Jet	1	Car No. 36206 $^{7}/_{11}$ ~ Added Anew
120	2756 13 657F	Blind Plug	1	
121	0823 23 461	Retainer, Spring	2	
122	0823 23 462A	Needle Valve	2	
123	0107 13 633	Spring	2	
124	0823 23 472	Retainer, Spring	4	
125	3193 23 369	Pin	2	
● 126	0839 23 475	Cover	1	Car No. 64264 $^{7}/_{3}$ ~Discarded
127	0823 23 388	Screw, Cover	2	
●	0823 23 388A	Screw, Cover	2	Car No. 71284 $^{7}/_{4}$ ~ ○
● 128	0193 23 334	Spring Washer	2	Car No. 64264 $^{7}/_{3}$ ~Discarded

No.	Part Number	Description	Q'ty	Remarks
●129	0839 23 476	Gasket, Cover	1	Car No. 64264 7/3 ~ Discarded
●130	0823 23 478	Gasket	2	Car No. 64264 7/3 ~ Discarded
●131	0107 13 668	Plug	2	
132	0823 23 481A	Gasket, Fuel Connector	1	
133	0107 13 658	Gasket, Pump Jet	1	
134	0839 23 485	Bolt, Cleaner Set	1	
135	99907 0800	Nut, Cleaner Set	1	
136	0600 23 398A	Screw, Air Horn	1	
137	0652 23 351	Cover, Level Gauge	2	
138	0652 23 352	Gasket	2	
139	0652 23 353	Glass, Level Gauge	2	
140	0652 23 354	Gasket	2	
141	0839 23 401	Filter	1	
142	0839 23 328	Accelerator Nozzle	1	
●143	0839 23 483	Gasket	2	Car No. 64264 7/3 ~ Discarded
●144	0193 23 376A	Plug	2	
● Ⓝ	2080 23 436	Shim (L. H. D.)	1	Car No. 64264 7/2 ~Added Anew
Ⓝ	0839 23 387	Screw	1	Car No. 71284 7/4 ~ Added Anew
145	0820 13 205	Limiter Cap	1	
	0305 23 312A	Throttle Return Spring Cover	1	Car No. 25947 7/5 ~ Added Anew

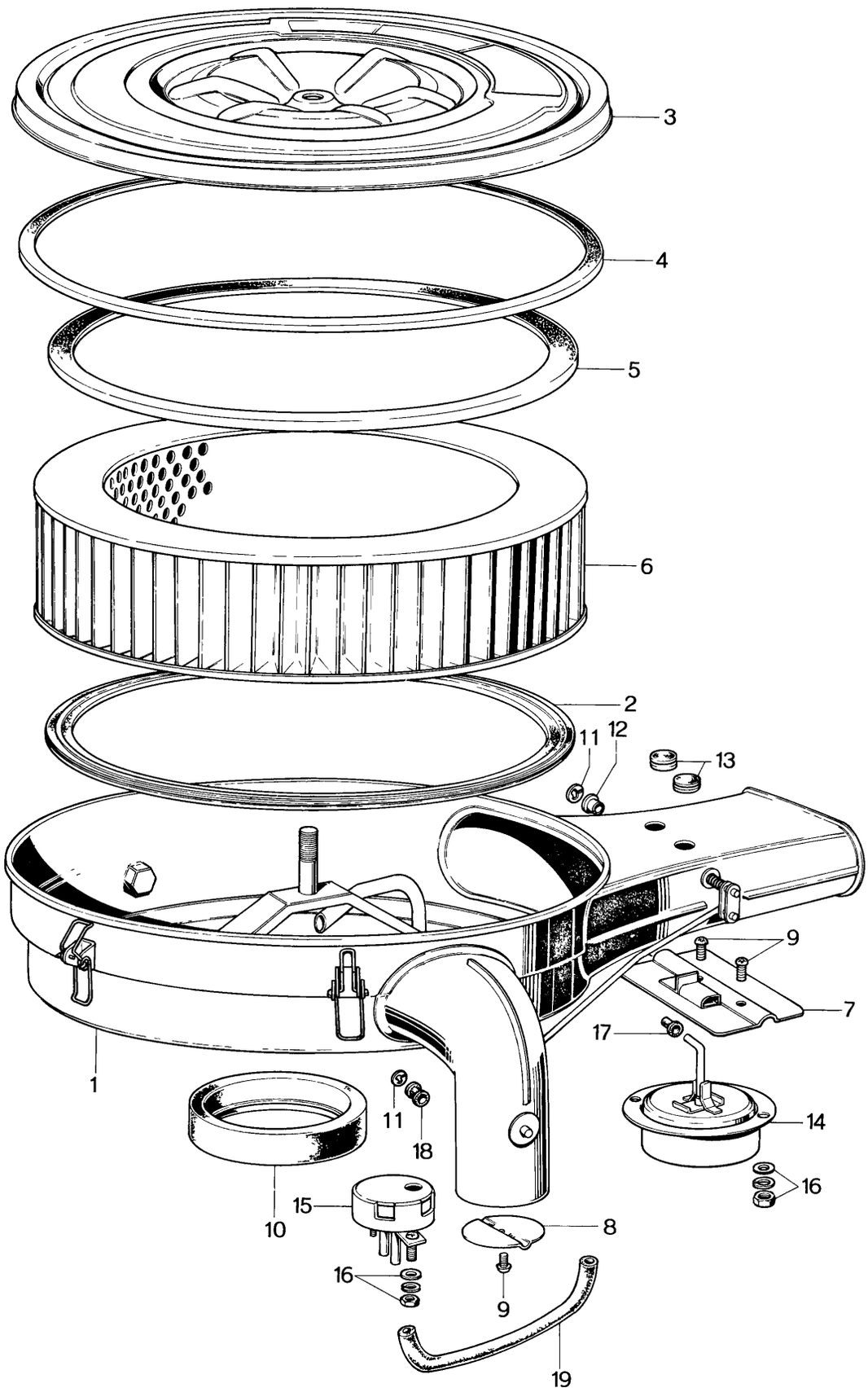
3
4
5
6
2
11
12
13
9
7
17
1
11
18
14
16
15
10
8
16
9
19

No.	Part Number	Description	Q'ty	Remarks
	0839 13 300G	AIR CLEANER	1	
●	0839 13 300H	AIR CLEANER	1	Car No. 64229 7/3 ~ ○
1	0839 23 671C	BODY Ass'y	1	
2	2113 23 675	Packing, Element	1	
3	0839 23 673A	COVER Ass'y	1	
4	2113 23 674	Packing, Cover	1	
5	2113 23 675	Packing, Element	1	
	0820 23 687	Packing, Element	1	Car No. 36206 7/11 ~ ×
●	0839 23 675	Packing, Element	1	Car No. 52327 7/1 ~ ○
6	0839 23 672	Element	1	
7	0839 23 676A	Shutter	1	
8	0839 23 677	Shutter "B"	1	
9	0839 23 678	Screw, Shutter	3	
	0839 23 683	Plain Washer	4	
10	0839 23 679	Seal Rubber	1	
11	0839 23 684	Stop Ring	2	
12	0839 23 686	Bush "A"	2	
13	0839 23 685	Blind Plug	2	
14	0839 23 692	Diaphragm Control	1	
15	0839 23 693	Thermo Valve	1	
16	99906 0400	Nut, Thermo Valve, Diaphragm Control	4	
	99952 0400	Plain Washer	4	
	99971 0400	Spring Washer	4	
17	0839 23 687	Bush "B"	1	
18	0839 23 688	Bush "C"	1	Car No. 36206 7/11 ~ Quantity
	0839 23 689	Bush "D"	2	Car No. 36206 7/11 ~ Quantity
19	0839 23 696	Control Pipe	1	

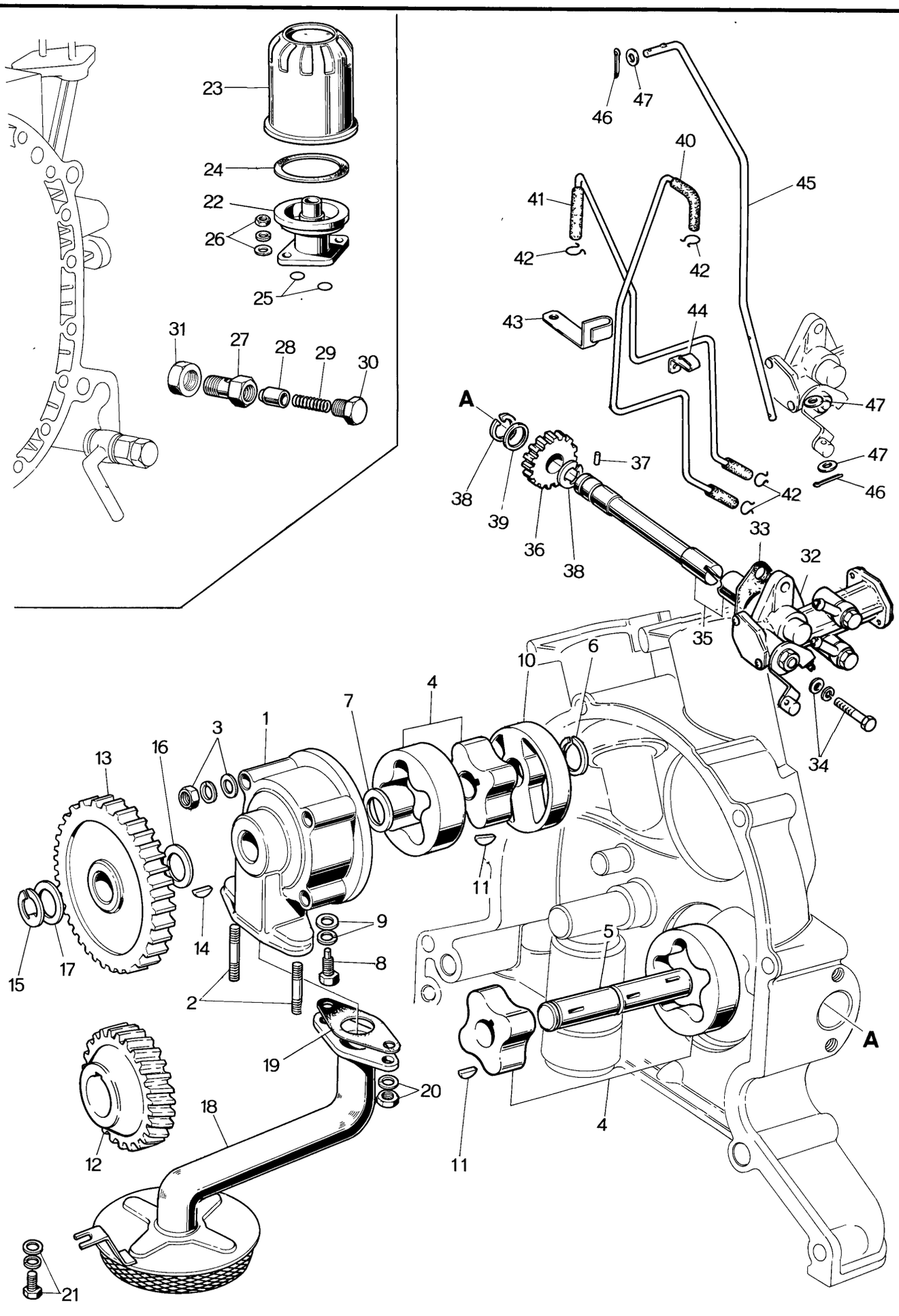
23
24
22
26
25
31
27
28
29
30
46
47
40
45
41
42
42
43
44
47
A
37
47
38
39
36
38
42
46
33
32
35
10
6
4
7
1
3
16
13
34
11
9
14
8
15
17
2
5
A
19
20
18
4
12
11
21

No.	Part Number	Description	Q'ty	Remarks
1	0820 14 100C	OIL PUMP BODY Ass'y	1	
2	99852 0614	Stud	2	
3	99906 0600	Nut, Oil Pump	4	
	99953 0600	Plain Washer	4	
	99971 0600	Spring Washer	4	
4	0820 23 882	Oil Pump Rotor Set	2	
5	0820 14 112C	Shaft, Oil Pump	1	
6	0810 14 113	Snap Ring	1	
7	0810 14 114	Thrust Washer	1	
8	0820 14 117A	Lock Bolt, Oil Pump	1	
9	99953 0600	Plain Washer	1	
	99971 0600	Spring Washer	1	
10	0820 14 118	Middle Plate, Oil Pump	1	
11	0820 14 119	Key	2	
	0820 23 881	OIL PUMP GEAR SET	1	
12	0820 11 521B	Oil Pump Driven Gear	1	
13	0820 14 151C	Oil Pump Driven Gear	1	
14	0107 18 274	Key	1	
15	99573 1200	Snap Ring	1	
16	0810 14 204	Adjust Shim (t=0.3)	1	

OIL PUMP

No.	Part Number	Description		Q'ty	Remarks
17	0820 14 204	Adjust Shim (t=0.6)			
	0820 14 205	Adjust Shim (t=0.3)	Selective use	1	
	0820 14 206	Adjust Shim (t=0.1)			
● 18	0839 14 160B	Oil Strainer		1	
19	0810 14 171	Packing, Oil Strainer		1	
20	99906 0600	Nut, Oil Strainer		2	
	99971 0600	Spring Washer		2	
21	908066 6 10	Set Bolt, Oil Strainer		1	
	0820 14 300A	OIL FILTER Ass'y		1	
	0839 14 300	OIL FILTER Ass'y		1	Car No. 38158 $^{70}/_{11}$ ~ △
22	0820 23 801A	Cover		1	
	0839 23 801	Cover		1	Car No. 38158 $^{70}/_{11}$ ~ △
23	0813 23 802A	Cartridge		1	
24	0813 23 803	Packing		1	
25	99541 01601	"O" Ring, Oil Filter		2	
26	99901 0800	Nut, Oil Filter		2	
	99971 0800	Spring Washer		2	
	99953 0800	Plain Washer		2	
	0820 14 250A	PRESSURE REGULATOR Ass'y		1	
27	0820 14 251A	Body		1	
28	0221 14 115	Control Plunger		1	
29	0221 14 116	Control Spring		1	

No.	Part Number	Description	Q'ty	Remarks
30	0221 14 117	Control Way	1	
31	0820 14 252	Nut	1	
32	0823 14 600G	Metering Oil Pump	1	Car No. 24190 ~ Discarded
●	0839 14 600B	Metering Oil Pump	1	Car No. 24191 ~ Added Anew
33	0810 14 611	Packing, Oil Pump	1	
34	99806 0630	Bolt, Metering Oil Pump	1	
	99806 0618	Bolt	1	
	99953 0600	Plain Washer	2	
	99971 0600	Spring Washer	2	
35	0820 14 620	Driven Gear Shaft	1	
36	0820 14 625	Driven Gear	1	
37	0813 14 623	Pin	1	
38	99576 0800	Snap Ring	2	
39	0810 18 276	Adjust Shim (t=0.6)	Selective use	2
	0810 18 277	Adjust Shim (t=0.3)		
40	0839 14 630	Metering Oil Tube	1	
41	0839 14 640	Metering Oil Tube	1	
42	0813 14 641	Clip	4	
43	0839 14 643	Clip	1	
44	0820 14 647	Clip	1	
45	0839 14 651B	Connecting Rod	1	
●	0839 14 651C	Connecting Rod	1	Car No. 24191 ~ ×
46	99221 1212	Split Pin	2	
47	99953 0400	Plain Washer	3	

14 OIL PUMP
(USED FROM CAR NO. 52893 71/1~)

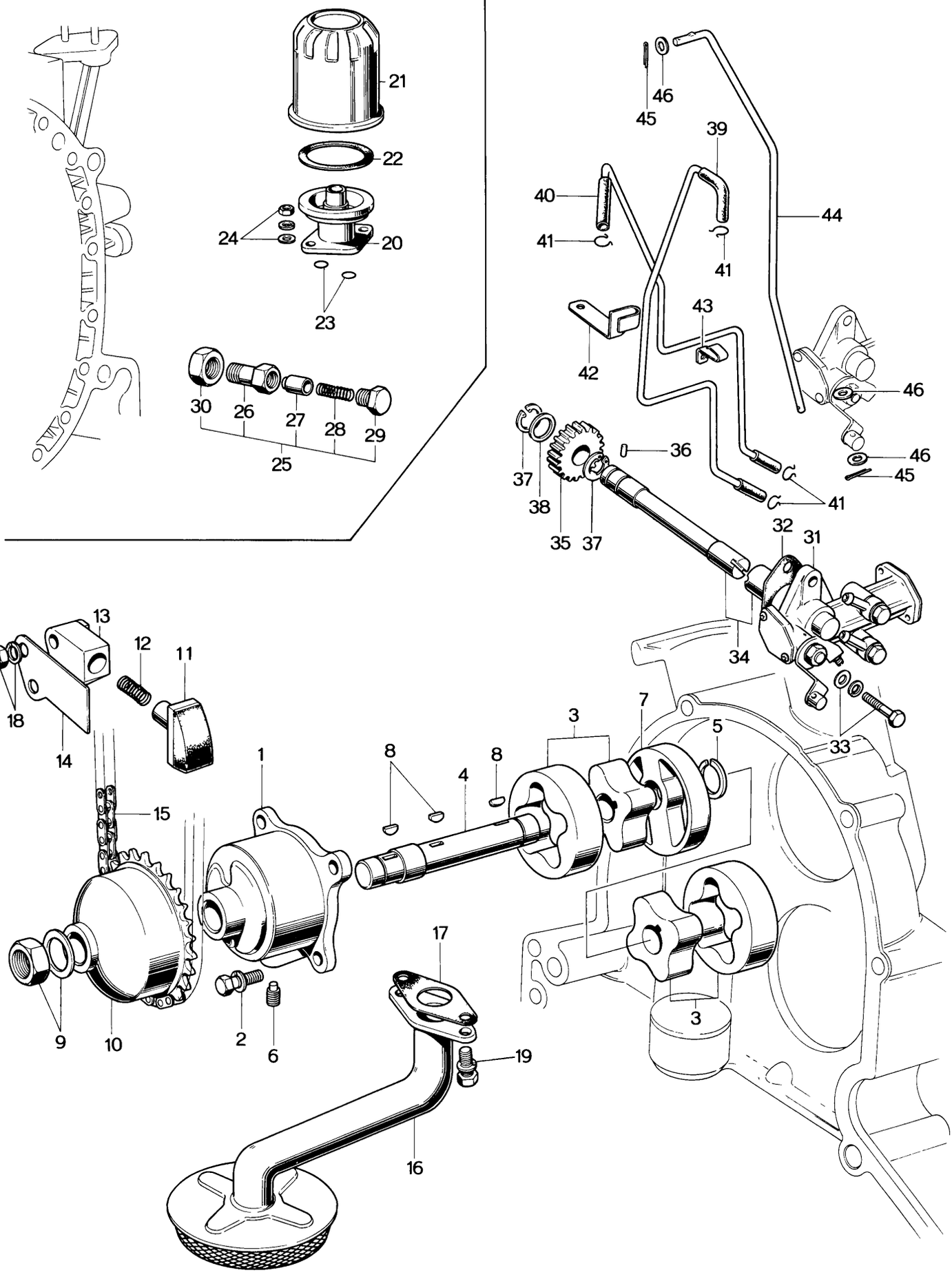

OIL PUMP

(USED FROM CAR NO. 52893 71/1 ~)

14

No.	Part Number	Description	Q'ty	Remarks
1	0839 14 101A	Body, Oil Pump	1	
2	908066 6 18	Bolt, Set-Oil Pump Body	4	
3	0820 23 882A	Rotor Set, Oil Pump	2	
4	0839 14 112A	Shaft, Oil Pump	1	
5	0810 14 113	Ring, Snap	1	
6	0839 14 117	Bolt, Lock-Oil Pump	1	
7	0820 14 118C	Plate, Middle Oil Pump	1	
8	0839 14 119	Key	1	
9	99922 1200	Nut	1	
	99979 1200	Washer, Tab	1	
10	0839 14 141	Gear, Drive-Oil Pump	1	
11	0823 14 130	Adjuster, Chain	1	
12	0823 14 131	Spring	1	
13	0839 14 132	Body	1	
14	0839 14 133	Plate, Giude	1	
15	0839 14 142	Chain	1	
16	0820 14 160C	Strainer, Oil	1	
17	0810 14 171	Gasket, Oil Strainer	1	
18	99906 0600	Nut, Chain Adjust	2	
	99971 0600	Washer, Spring	2	
19	908062 6 16	Bolt, Set - Oil Strainer	2	
	0839 14 300	FILTER, OIL	1	
20	0839 23 801	Cover	1	
21	0813 23 802A	Cartridge, Oil Filter	1	
22	0813 23 803	Gasket	1	

14 OIL PUMP

(USED FROM CAR NO. 52893 71/1 ~)

No.	Part Number	Description	Q'ty	Remarks
23	99541 01601	Ring, "O"-Oil	2	
24	99901 0800	Nut, Oil Filter	2	
	99971 0800	Washer, Spring	2	
	99953 0800	Washer, Plain	2	
25	0820 14 250B	REGULATOR Ass'y, PRESSURE	1	
26	0820 14 251B	Body, Pressure Regulator	1	
27	0221 14 115	Plunger, Pressure Control	1	
28	0221 14 116	Spring, Pressure Contol	1	
29	0221 14 117	Plug	1	
30	0820 14 252	Nut	1	
31	0839 14 600B	Pump Cpt.,Metering Oil	1	
32	0810 14 611	Gasket, Metering Oil Pump	1	
33	99806 0630	Bolt, Metering Oil Pump	1	
	99806 0618	Bolt	1	
	99971 0600	Washer, Spring	2	
	99953 0600	Washer, Plain	2	
34	0820 14 620	Shaft, Driven Gear	1	
35	0820 14 625	Gear, Driven	1	
36	0813 14-623	Pin	1	
37	99576 0800	Ring, Snap	2	
38	0810 18 276	Shim, (t=0.6)-Adjust	2	
	0810 18 277	Shim, (t=0.3)-Adjust	2	

No.	Part Number	Description	Q'ty	Remarks
39	0839 14 630	Tube, Metering Oil	1	
40	0839 14 640	Tube, Metering Oil	1	
41	0813 14 641	Clip	4	
42	0839 13 643	Clip	1	
43	0820 14 647	Clip	1	
44	0839 14 651C	Rod, Connecting	1	
45	99221 1212	Pin, Split	2	
46	99953 0400	Washer, Plain	3	

23 METERING OIL PUMP

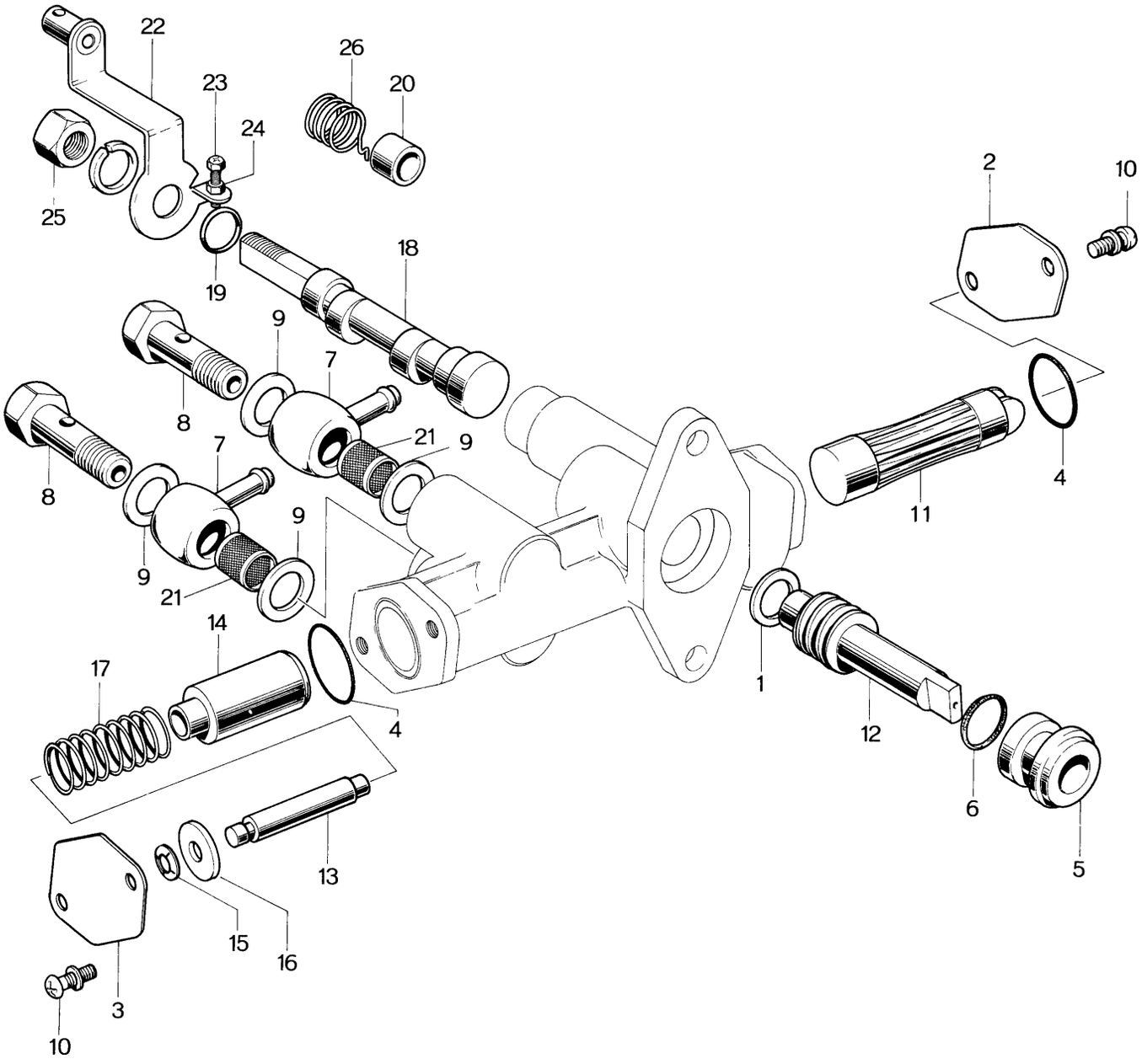

	No.	Part Number	Description	Q'ty	Remarks
		0823 14 600G	METERING OIL PUMP Ass'y	1	
		0839 14 600B	METERING OIL PUMP Ass'y	1	Car No. 24191 7/9 ~ ×
●		0839 14 600C	METERING OIL PUMP Ass'y	1	Car No. 66878 7/3 ~ ○
●		2090 14 600	METERING OIL PUMP Ass'y	1	Car No. 69299 7/3 ~ ○
	1	0820 23 832B	Thrust Washer	1	
	2	0820 23 833A	Plate	1	
●		0820 23 833B	Plate	1	Car No. 66878 7/3 ~ ×
	3	0820 23 834A	"O" Ring	1	
●		0820 23 834B	Sub Plunger	1	Car No. 66878 7/3 ~ ×
	4	0730 23 837	Sub Plunger	2	
	5	0820 23 835A	Worm Bearing	1	
	6	0730 23 839	"O" Ring	1	
	7	0820 23 836	Connector	2	
	8	0730 23 842	Connector Bolt	2	
	9	0730 23 843	Washer, Connector	4	
	10	908332 4 08	Set Screw, Plate	4	
	11	0730 23 845	Plunger	1	
	12	0730 23 846	Driving Worm	1	
	13	0823 23 837A	Sub Plunger	1	
		0820 23 837A	Sub Plunger	1	Car No. 24191 7/9 ~ ×
●		2090 23 837	Sub Plunger	1	Car No. 69299 7/3 ~ ○
	14	0823 23 838	Differential Plunger	1	
		0820 23 838	Differential Plunger	1	Car No. 24191 7/9 ~ ×
●		2090 23 838	Differential Plunger	1	Car No. 69299 7/3 ~ ○
	15	0730 23 848	Push Nut	1	
	16	0820 23 839A	Spring Plate	1	
	17	0820 23 840	Plunger Spring	1	
	18	0823 23 841	Control Pin	1	
		0839 23 841	Control Pin	1	Car No. 24191 7/9 ~ ×
●		2090 23 841	Control Pin	1	Car No. 69299 7/3 ~ ○
	19	0730 23 854	"V" Ring	1	
	20	0820 23 842	Cap	1	
	21	0820 23 843	Strainer	2	
	22	0820 23 844A	Control Lever	1	
●		2090 23 844	Control	1	Car No. 69299 7/3 ~ ○
	23	0820 23 845A	Adjust Screw	1	
	24	0820 23 847A	Nut, Adjust Screw	1	
	25	99907 0600	Nut, Control Lever	1	

23 METERING OIL PUMP

No.	Part Number	Description	Q'ty	Remarks
	99971 0600	Spring Washer	1	
26	0820 23 848A	Retun Spring	1	

COOLING SYSTEM

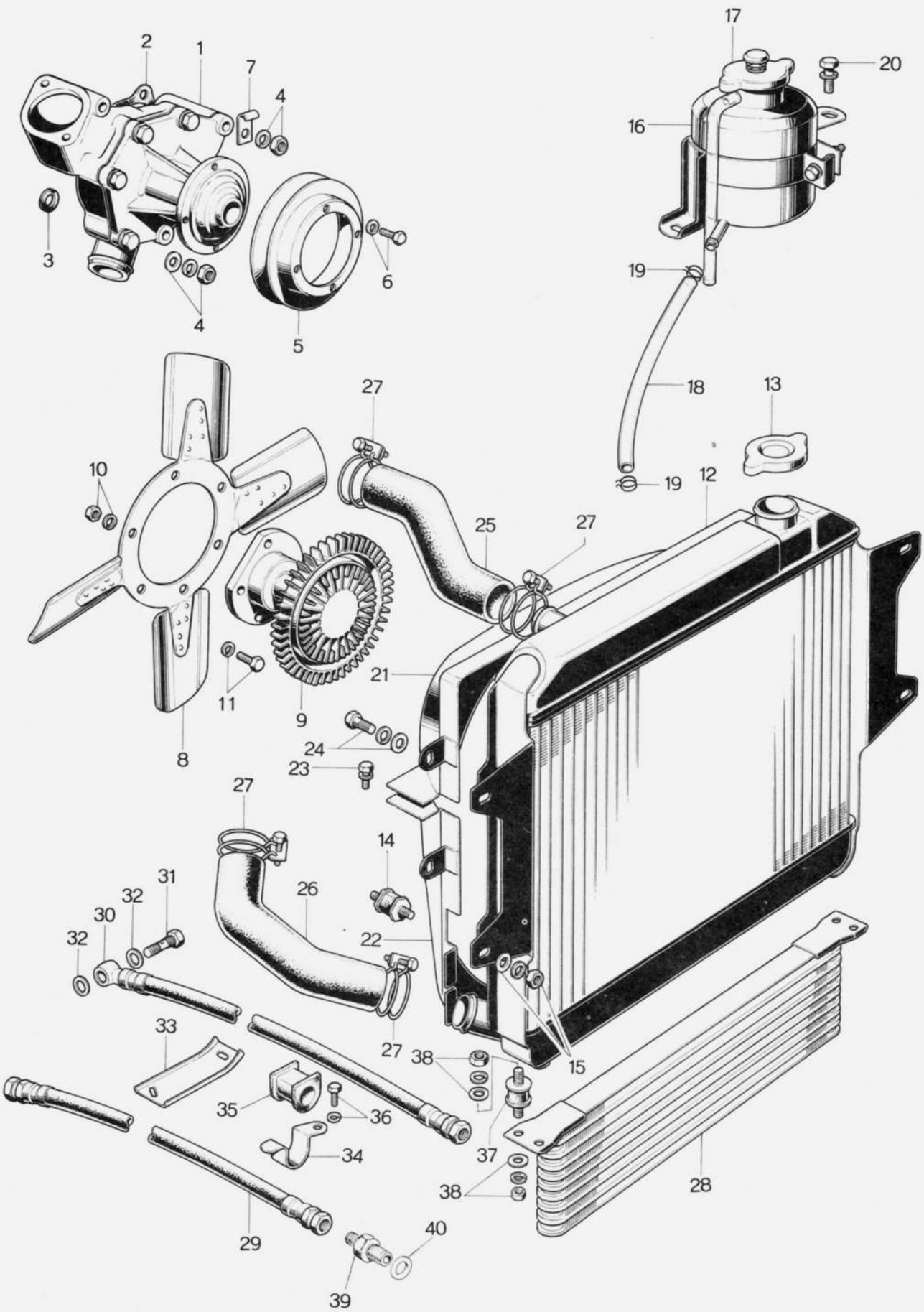

No.	Part Number	Description	Q'ty	Remarks
1	0839 15 010C	Water Pump Cpt.	1	
●	0839 15 010D	Water Pump Cpt.	1	Car No. 52893 $\frac{7}{1}$ ~ ×
2	0822 15 105	Packing, Water Pump	1	
3	0820 15 106	Packing, Water Pump	1	
4	99901 0800	Nut, Water Pump	4	
	99953 0800	Plain Washer	3	
	99971 0800	Spring Washer	4	
5	0820 15 151	Pulley, Water Pump	1	
6	908062 6 10	Set Bolt, Pulley	4	Car No. 29912 $\frac{7}{10}$ ~ Discarded
	99806 0610	Bolt	4	Car No. 29912 $\frac{7}{10}$ ~ Added Anew
	99971 0600	Spring Washer	4	
7	99295 1508	Clip	1	
	0839 15 250B	**FAN & FAN DRIVE Ass'y**	1	
8	2329 15 200A	Cooling Fan	1	
9	0839 15 210	Fan Drive	1	
● 10	99906 0600	Nut, Fan & Fan Drive	6	Car No. 55667 $\frac{7}{2}$ ~ Discarded
●	99971 0600	Spring Washer	6	
●	908062 612	Set Bolt	6	Car No. 55667 $\frac{7}{2}$ ~ Added Anew
11	908066 6 18	Set Bolt, Fan Drive	4	
12	0839 15 310D	**RADIATOR**	1	
● 13	0223 15 205	Cap	1	
● Ⓝ	0710 15 203	Drain Cock	1	From Car No. 1
● Ⓝ	0710 15 204	Gasket	1	
14	0820 15 312	Insulation Rubber	4	

No.	Part Number	Description	Q'ty	Remarks
15	99901 0800	Nut, Radiator	4	
	99951 0800	Plain Washer	4	
	99971 0800	Spring Washer	4	
16	0839 15 350	RESERVE TANK	1	
17	0222 15 255	Cap	1	
18	0839 15 351B	Water Hose, Reserve Tank	1	
19	99285 0800	Clip, Water Hose	2	
20	908016 8 12	Set Bolt, Reserve Tank	2	
21	0839 15 410A	Radiator Shroud Upper	1	
	0839 15 410B	Radiator Shroud Upper	1	Car No. 24890 ⁷⁰/₇₉ ~ ○
●	0839 15 410C	Radiator Shroud Upper	1	Car No. 52893 ⁷¹/₇₁ ~ ×
●	0839 15 410D	Radiator Shroud Upper	1	Car No. 69368 ⁷¹/₇₄ ~ ○
22	0839 15 420B	Radiator Shroud Lower	1	
	0839 15 420C	Radiator Shroud Lower	1	Car No. 24890 ⁷⁰/₇₉ ~ ○
●	0839 15 420D	Radiator Shroud Lower	1	Car No. 52893 ⁷¹/₇₁ ~ ×
●	0839 15 420E	Radiator Shroud Lower	1	Car No. 69368 ⁷¹/₇₄ ~ ○
23	908057 6 16	Set Bolt, Radiator Shroud	4	
24	908016 8 12	Set Bolt, Radiator Shroud	4	
25	0839 15 511A	Water Hose, Thermostat~Radiator	1	
26	0839 15 521A	Water Hose, Radiator~Water Pump	1	
27	99282 4900	Hose Band, Water Hose	4	
28	0839 14 700C	Oil Cooler	1	
	0839 14 700D	Oil Cooler	1	Car No. 26012 ⁷⁰/₇₉ ~ △
● 29	0839 14 720B	Oil Hose	1	
● 30	0839 14 730B	Oil Hose	1	
31	99381 1400	Connector Bolt, Oil Hose	1	
✳ 32	99562 1800	Packing	2	
33	0839 14 740	Bracket, Oil Hose (Arctic Spec Model excluded)	1	
34	0839 14 745	Clip, Oil Hose	1	
	2091 14 735	Clip, Oil Hose. Arctic Spec Model	1	Car No. 24890 ⁷⁰/₇₉ ~ Added Anew

No.	Part Number	Description	Q'ty	Remarks
35	0813 14 716	Protector, Oil Hose	1	
● 36	908062 6 10	Set Bolt, Clip (Arctic Spec Model excluded)	1	
37	0820 15 312	Insulation Rubber, Oil Cooler	4	
38	99901 0800	Nut, Oil Cooler	8	
●	99952 0800	Plain Washer	12	Car No. 26012 ~ Quantity
	99971 0800	Spring Washer	8	
39	99384 1200	Union Joint	2	
40	99564 1600	Packing	2	

WATER PUMP

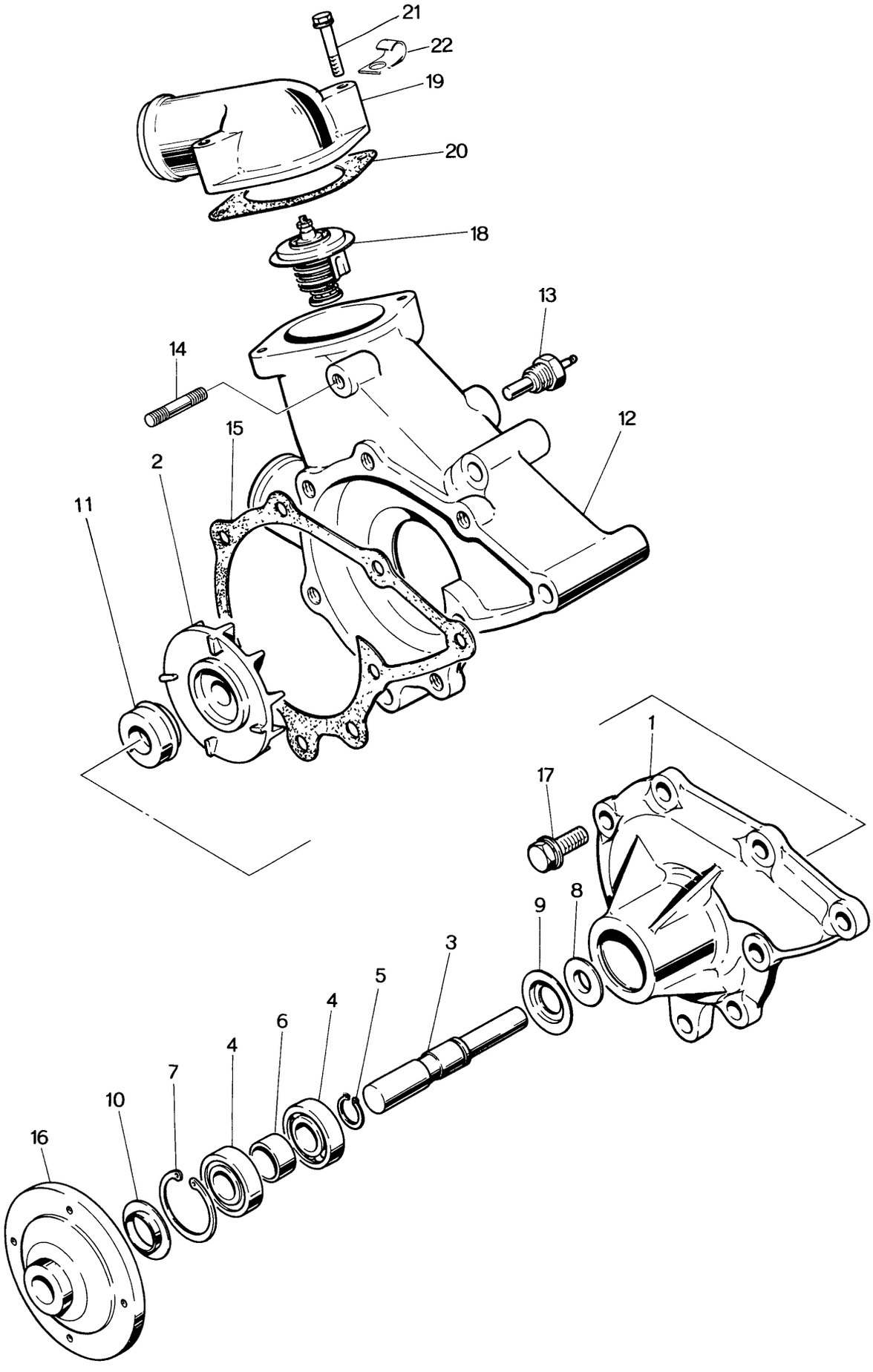

No.	Part Number	Description	Q'ty	Remarks
	0839 15 010C	**WATER PUMP Cpt.**	1	
	0820 15 130A	**WATER PUMP COVER Ass'y**	1	
1	0820 15 131A	Pump Cover	1	
2	0813 15 111	Impeller	1	
3	0820 15 112	Shaft	1	
4	0118 15 121	Ball Bearing	2	
5	0118 15 114	Stop Ring	1	
6	0820 15 115	Spacer	1	
7	99574 3500	Retaining Ring	1	
8	0813 15 117	Baffle Plate	1	
9	0118 15 118	Dust Seal Plate	1	
10	0810 15 119	Dust Seal Plate	1	
11	0820 15 120	Water Seal Cpt.	1	
12	0839 15 100C	**WATER PUMP CASING Ass'y**	1	
13	0259 18 510	Heat Gauge Unit	1	
14	0839 15 102	Stud	1	
15	0820 15 132A	Packing, Pump Cover	1	
16	0820 15 152	Pulley Boss	1	
17	908016 8 22	Set Bolt, Water Pump	5	

15 WATER PUMP

	No.	Part Number	Description	Q'ty	Remarks
	18	0823 15 171	Thermostat	1	
	19	0839 15 172	Cover, Thermostat	1	
	20	0813 15 173	Packing, Thermostat Cover	1	
●	21	908016 8 40	Set Bolt, Thermostat Cover	2	Car No. 24890 ⁷⁰⁄₁₀～ Discarded
●		99801 0840	Bolt	2	Car No. 24890 ⁷⁰⁄₁₀～ Added Anew
●		99971 0800	Spring Washer	2	
●		99952 0800	Plain Washer	2	
	22	99295 1008	Clip	2	
●		0820 99 150	WATER PUMP REPAIR KIT (Fig No. 2～5,7,9,10,11 included)	1	

CLUTCH CONTROL SYSTEM

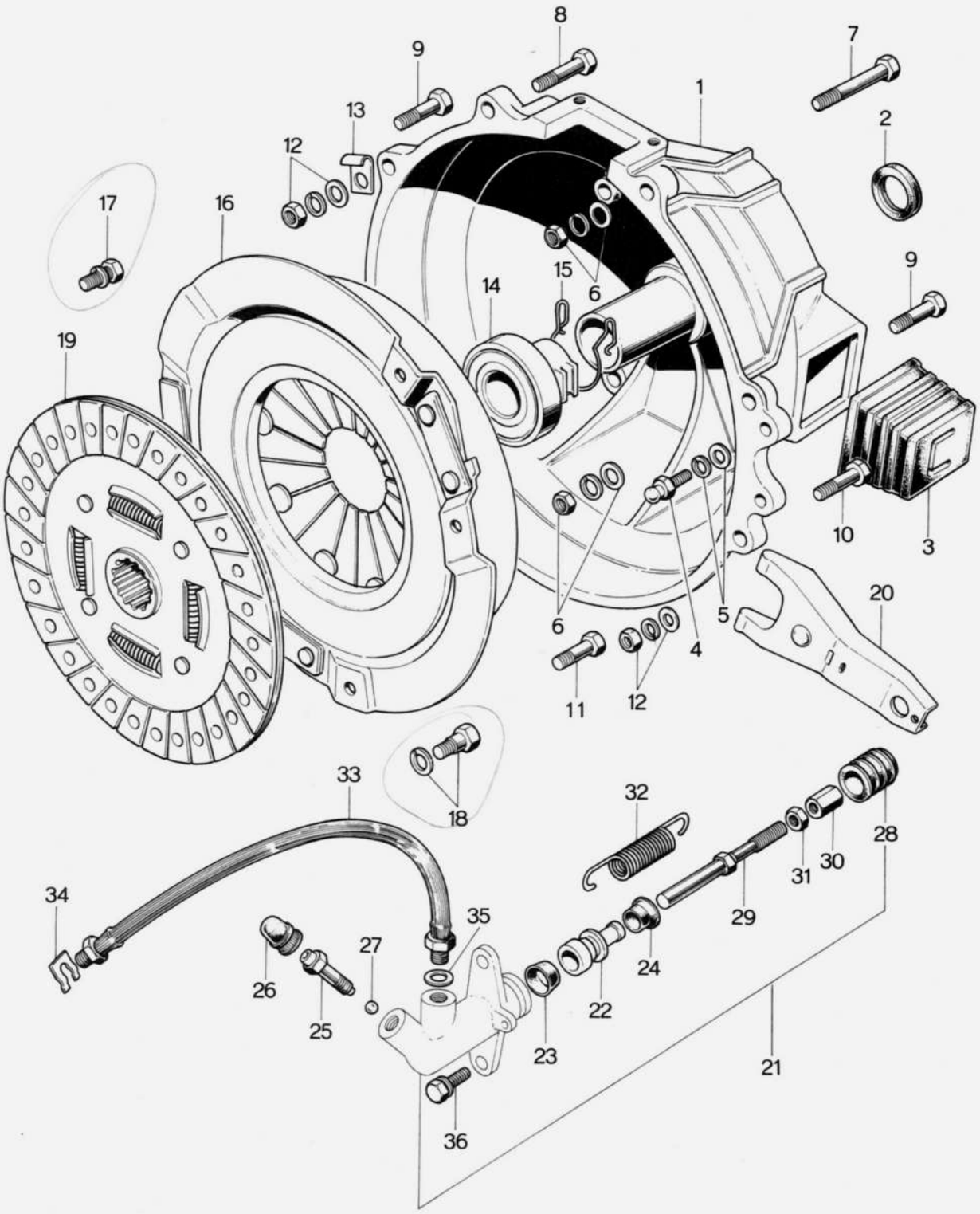

No.	Part Number	Description	Q'ty	Remarks
1	0839 16 210A	CLUTCH HOUSING Ass'y	1	
2	0603 16 103	Oil Seal	1	
3	0155 16 104	Dust Cover	1	
4	0603 16 102B	Pivot Pin	1	
5	99953 1000	Plain Washer	1	
	99971 1000	Spring Washer	1	
6	99921 1000	Nut, Clutch Housing + T/mission Case	8	
	99953 1000	Plain Washer	8	
	99971 1000	Spring Washer	8	
7	99811 1075	Bolt, Clutch Housing	1	
8	99811 1055	Bolt	1	
9	99811 1050	Bolt	2	
10	99811 1045	Bolt	1	
11	99811 1032	Bolt	1	
12	99921 1000	Nut	4	
	99953 1000	Plain Washer	5	
	99971 1000	Spring Washer	6	
13	99295 1510	Clip	1	
14	0820 16 510	Clutch Release Collar	1	
15	0820 16 515	Spring, Clutch Release Collar	1	
16	0839 16 410A	Clutch Cover	1	
●	0839 16 410B	Clutch Cover	1	Car No. 56452 7/2 ~ O
17	99811 0820	Bolt, Cluch Cover	4	
	99971 0800	Spring Washer, Clutch Cover	4	
18	0180 16 215	Reamer Bolt, Clutch Cover	2	
	99971 0800	Spring Washer	2	

No.	Part Number	Description	Q'ty	Remarks
19	0839 16 460D	Clutch Disc	1	
20	0305 16 520	Release Fork	1	
21	0839 41 920	CLUTCH RELEASE CYLINDER Ass'y	1	
22	0603 41 320	CLUTCH PISTON	1	
23	0603 41 322B	Piston Cup	1	
24	0603 41 323	Secondary Cup	1	
25	0259 33 691	Bleeder Valve	1	
26	0259 33 693	Cap	1	
27	99611 1500	Steel Ball	1	
28	0191 41 331	Boot	1	
29	0839 41 341	Clutch Release Rod	1	
30	0118 41 342	Adjust Screw	1	
31	99922 0800	Nut	1	
32	0613 41 308	Return Spring	1	
33	0118 41 380A	Flexible Pipe	1	
34	0136 43 635	Clip	1	
35	99564 1000	Packing	1	
36	908016 8 28	Set Bolt, Release Cylinder	2	

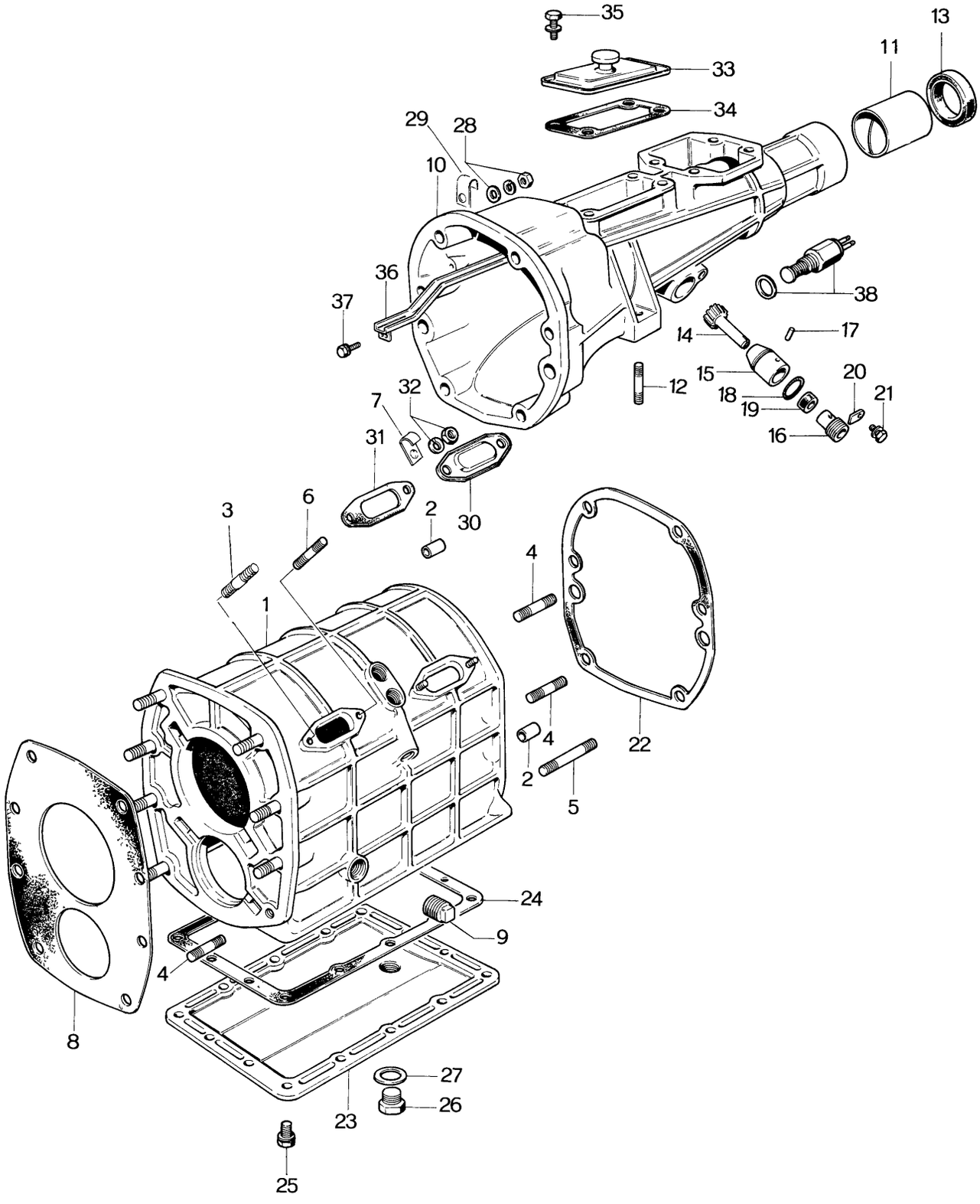
35
13
11
33
34
29
28
10
36
37
38
14
17
12
15
20
18
21
19
16
32
7
31
30
3
6
2
4
1
22
4
2
5
24
9
4
8
27
26
23
25

No.	Part Number	Description	Q'ty	Remarks
1	0839 17 100B	T / MISSION CASE Ass'y	1	
2	99233 1225	Knock Pin	2	
3	99852 0610	Stud	3	
4	99855 1025	Stud	12	
5	99855 1060	Stud	2	
6	0839 17 105	Stud	1	
7	99295 0606	Clip, Back up Lamp Cord	1	
8	0839 17 111	Gasket, Front	1	
9	99502 4000	Plug	1	
10	0839 17 330	EXTENSION HOUSING Ass'y	1	
11	0187 17 333	Bush	1	
12	99851 0814	Stud	2	
13	0317 17 335	Oil Seal	1	
14	0305 17 345	Driven Gear, Speedometer	1	
●	0620 17 345A	Driven Gear, Speedometer	1	Car No. 61926 7/3 ~ ×
15	0187 17 346B	Sleeve, Speedometer	1	
16	0187 17 351A	Joint, Speedometer	1	
17	0187 17 352	Dowel Pin	1	
18	99541 02101	"O" Ring	1	
19	99586 10207	Oil Seal	1	
20	0111 17 354	Lock Plate, Joint	1	

No.	Part Number	Description	Q'ty	Remarks
21	908062 6 14	Set Bolt, Lock Plate	1	
22	0839 17 361	Gasket, Extension Housing	1	
23	0839 17 371	Under Cover	1	
24	0839 17 375	Gasket, Under Cover	1	
'25	908066 6 22	Set Bolt, Under Cover	14	
26	0810 17 121	Magnet Plug	1	
27	99564 1800	Packing, Magnet Plug	1	
28	99921 1000	Nut, T / mission Case + Extension Housing	6	
	99953 1000	Plain Washer	5	
	99971 1000	Spring Washer	6	
29	99295 0610	Clip, Back up Lamp Cord	1	
30	0810 17 381	Blind Cover	2	
31	0810 17 385	Gasket, Blind Cover	2	
32	99906 0600	Nut, Blind Cover	5	
	99971 0600	Spring Washer	4	
33	0839 17 520	Blind Cover	1	
34	0839 17 524	Gasket, Blind Cover	1	
35	908062 6 10	Set Bolt, Blind Cover	4	
36	0839 17 540A	Oil Pass	1	
37	908062 6 10	Set Bolt, Oil Pass	1	
38	0221 18 505	Reverse Lamp Switch	1	

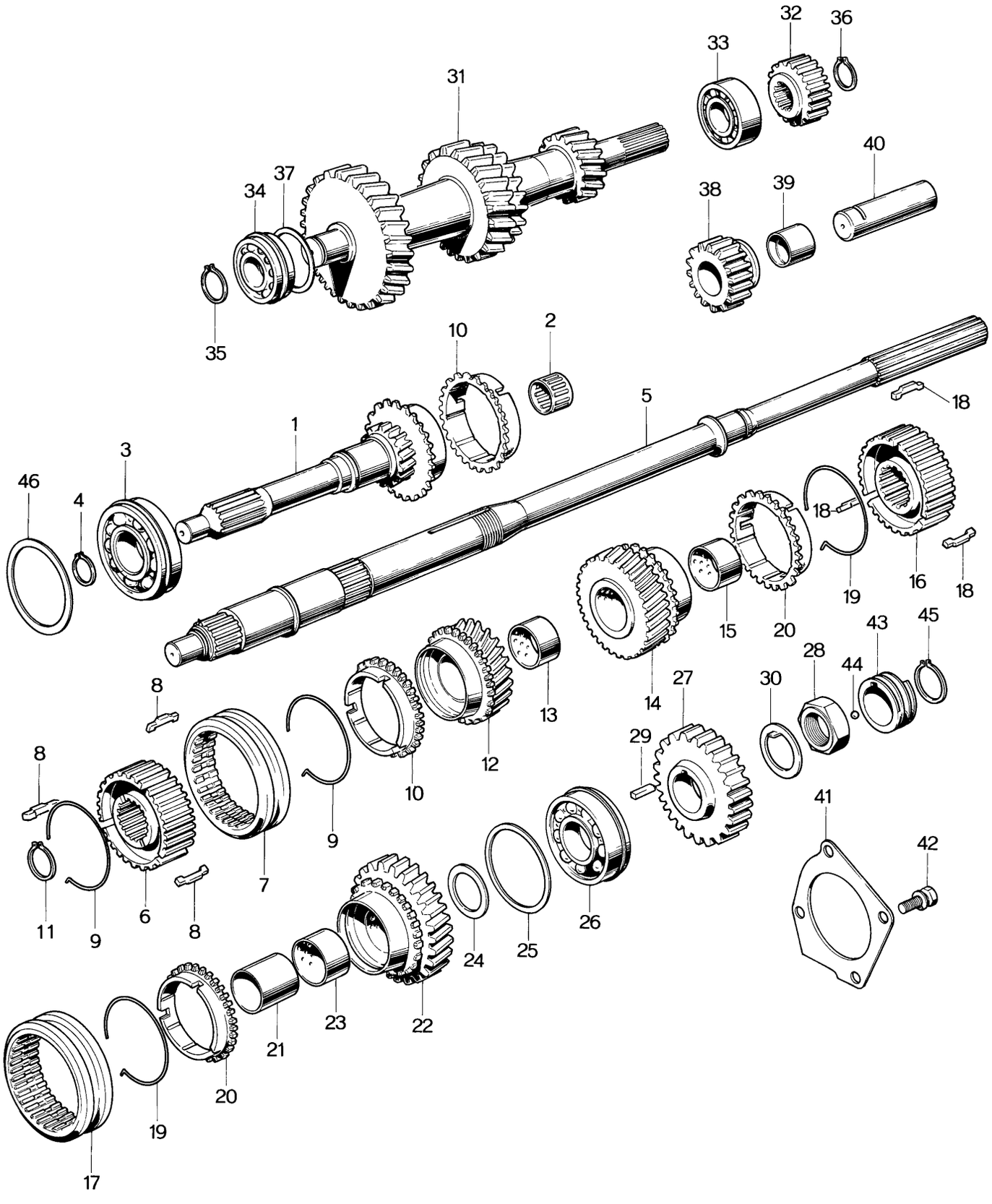
32
36
33
31
40
34
37
38
39
35
10
2
5
18
1
3
46
4
18
16
18
19
15
20
43
45
28
44
27
30
14
8
13
29
8
12
10
41
9
7
42
6
11
9
8
26
24
25
23
22
21
20
19
17

No.	Part Number	Description	Q'ty	Remarks
1	0839 17 201A	Main Drive Gear	1	
2	0810 17 205	Needle Roller Bearing	1	
3	99606 33070	Ball Bearing	1	
4	99573 3500	Snap Ring	1	
5	0839 17 221	Main Shaft	1	
6	0290 17 241	Clutch Hub (3.4)	1	
	0290 17 241A	Clutch Hub (3.4)	1	Car No. 30159 7/10 ~ O
7	0603 17 262	Clutch Hub Sleeve (3.4)	1	
8	0187 17 243	Key, Synchronizer	3	
9	0600 17 324	Spring, Synchronizer	2	
10	0813 17 245	Synchronizer Ring	2	
11	99573 3200	Snap Ring	1	
●	0317 17 225	Snap Ring	1	Car No. 56452 7/2 ~ O
12	0839 17 230	THIRD GEAR	1	
13	0839 17 232	Bush	1	
14	0839 17 250	SECOND GEAR	1	
15	0839 17 232	Bush	1	
16	0290 17 261	Clutch Hub (1.2)	1	
	0290 17 261A	Clutch Hub (1.2)	1	Car No. 30159 7/10 ~ O
17	0603 17 262	Clutch Hub Sleeve (1.2)	1	
18	0187 17 243	Key, Synchronizer	3	
19	0600 17 324	Spring, Synchronizer	2	
20	0813 17 245	Synchronizer Ring	2	

No.	Part Number	Description	Q'ty	Remarks
21	0839 17 275	Gear Sleeve	1	
22	0839 17 270	LOW GEAR	1	
23	0839 17 232	Bush	1	
24	0839 17 276	Thrust Washer		
	0839 17 277	Thrust Washer } Selective use	1	
	0839 17 278	Thrust Washer		
25	0839 17 287	Adjust Shim } Selective use	2	
	0839 17 288	Adjust Shim	1	
26	0810 17 204	Ball Bearing	1	
27	0839 17 281	Reverse Gear	1	
28	0839 17 284	Lock Nut	1	
29	0839 17 285	Key	1	
30	99978 3200	Lock Washer	1	
31	0839 17 301	Countershaft Gear	1	
32	0839 17 302	Reverse Gear, Counter	1	
33	0821 17 303	Needle Bearing	1	
34	0821 17 297	Ball Bearing	1	
35	0839 17 305	Snap Ring	1	
36	99573 2500	Snap Ring	1	
37	0305 17 327	Adjust Shim } Selective use	2	
	0305 17 328	Adjust Shim	1	

No.	Part Number	Description	Q'ty	Remarks
38	0839 17 310	REVERSE IDLE GEAR	1	
39	0813 17 312	Bush	1	
40	0839 17 313	Shaft, Reverse Idle Gear	1	
41	0839 17 321	Bearing Stopper	1	
42	907812 6 16	Set Bolt, Bearing Stopper	4	
43	0305 17 341	Drive Gear, Speedometer	1	
●	0620 17 341B	Drive Gear, Speedometer	1	Car No. 61926 7/3 ~ ×
44	99611 1500	Steel Ball	1	
45	99573 2500	Snap Ring	1	
46	99963 6910	Adjust Shim } Selective use	2	
	99963 6930	Adjust Shim } Selective use	1	

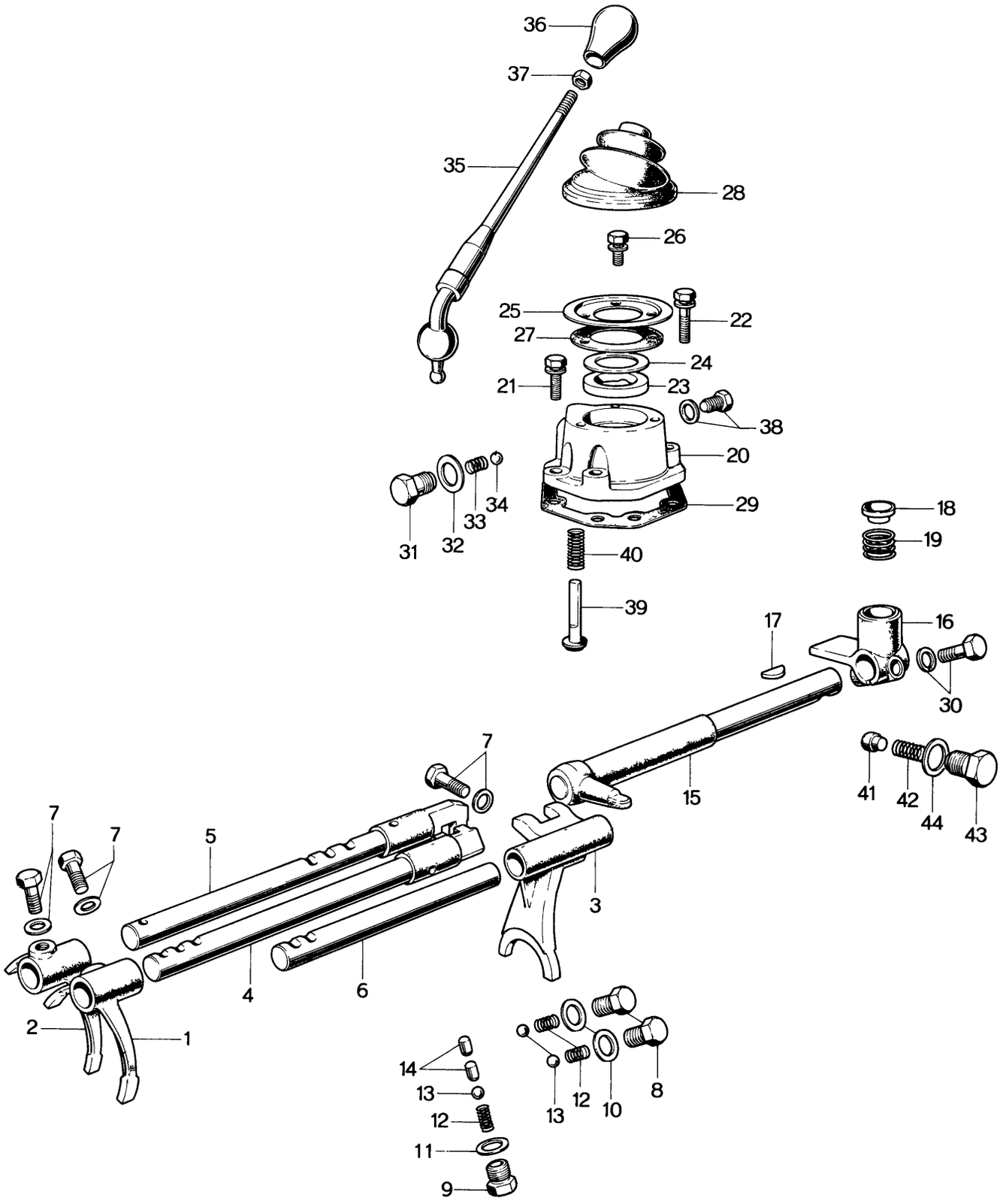
36
37
35
28
26
25
22
27
24
21
23
38
20
29
18
19
34
33
31
32
40
39
17
16
30
7
7
7
5
15
41
42
44
43
3
4
6
2
1
14
13
12
11
9
13
12
10
8

No.	Part Number	Description	Q'ty	Remarks
1	0810 17 402	Shift Fork (1.2)	1	
2	0810 17 404	Shift Fork (3.4)	1	
3	0839 17 406	Shift Fork, Reverse	1	
4	0839 17 410	Shift Rod (1.2)	1	
5	0839 17 420	Shift Rod (3.4)	1	
6	0839 17 431	Shift Rod Reverse	1	
7	0118 17 313	Set Screw, Shift Fork	3	
	99971 0600	Spring Washer	3	
8	0221 17 441	Spring Cap	2	
9	0259 17 441	Spring Cap	1	
10	99562 1400	Packing, Spring Cap	2	
11	99564 1000	Packing, Spring Cap	1	
12	0103 17 411	Spring	3	
13	99611 2500	Steel Ball	3	
14	0114 17 351	Interlock Pin	2	
15	0839 17 450	Control Lever	1	
16	0271 17 461A	Control Rod Gate	1	
17	0111 17 323	Key, Control Gate	1	
18	0221 17 462	Spring Seat	1	
19	0221 17 463	Spring	1	
20	0271 17 471	Change Control Case	1	
21	99801 0825	Bolt, Control Case	2	
	99971 0800	Spring Washer, Control Case	2	
	99953 0800	Plain Washer, Control Case	2	
22	99801 0835	Bolt, Control Case	2	
	99971 0800	Spring Washer, Control Case	2	
	99953 0800	Plain Washer, Control Case	2	
23	0221 17 472	Bush	1	
●	0303 17 481	Bush	1	Car No. 53308 ～×
24	99963 3310	Shim } Selective use	3	
	99963 3330	Shim } Selective use	1	

No.	Part Number	Description	Q'ty	Remarks
25	0221 17 473	Cover Plate	1	
26	908062 6 14	Set Bolt, Cover Plate	3	
27	0221 17 474	Gasket, Cover Plate	1	
28	0221 17 475A	Dust Boot	1	
29	0271 17 478	Gasket	1	
30	0187 17 492	Reamer Bolt	1	
	99971 0800	Spring Washer	1	
31	0191 17 491	Spring Cap	1	
32	99562 1400	Packing	1	
33	0103 17 411	Spring	1	
34	99611 2500	Steel Ball	1	
35	0271 17 510B	Change Lever (R. H. D.)	1	
	0839 17 510	Change Lever (R. H. D.)	1	Car No. 24191 7/8 ~ O
	2994 17 510A	Change Lever (L.H.D.)	1	
36	0329 17 520	Knob, Change Lever	1	
37	0824 17 524	Nut, Knob	1	
● 38	0221 17 541	Set Screw, Change Lever	1	Car No. 77442 7/4 ~ Discarded
●	99564 0800	Packing	1	
39	0221 17 551A	Select Lock Spindle	1	
40	0221 17 552	Spring	1	
41	2780 17 561	Friction Piece	1	
●	0303 17 561	Friction Piece	1	Car No. 77610 7/8 ~ O
42	0103 17 411	Spring	1	
43	99510 1000	Plug	1	
44	99562 1000	Packing	1	
● Ⓝ	0303 17 482	Washer Wave	1	Car No. 53308 7/2 ~ Added Anew
● Ⓝ	99963 3310	Shim	3	
● Ⓝ	99963 3330	Shim	1	

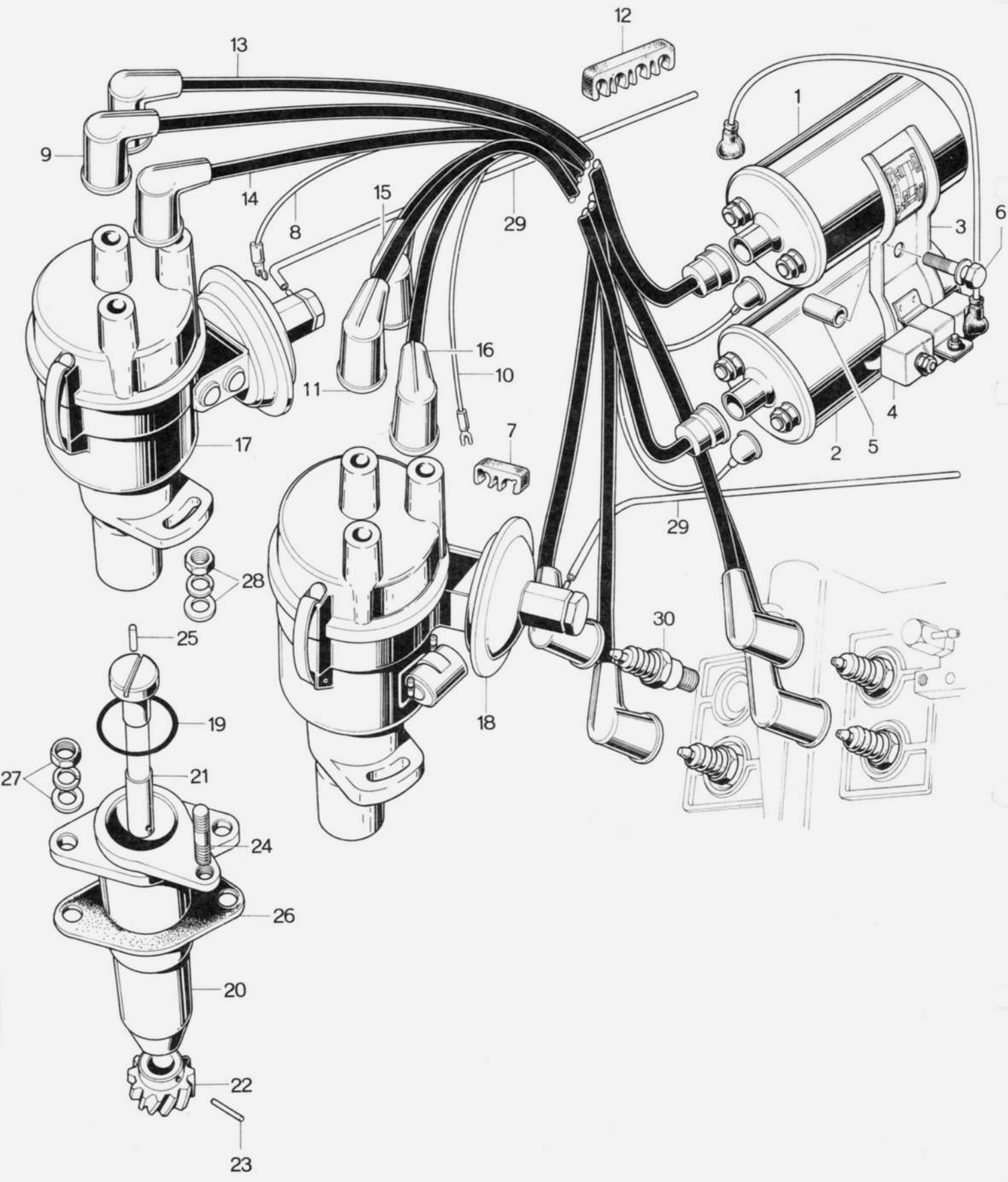
12
13
1
9
14
8
15
29
3
6
16
11
10
4
7
2
5
17
29
28
30
25
18
19
27
21
24
26
20
22
23

No.	Part Number	Description	Q'ty	Remarks
1	0813 18 100A	Ignition Coil (HP 5-10F) Trailing	1	
●	0820 18 100D	Ignition Coil-Trailing	1	Car No. 53308 7½ ~ ×
2	0839 18 100	Ignition Coil (HP 5-13E) Leading	1	
●	0823 18 100	Ignition Coil-Leading	1	Car No. 53308 7½ ~ ×
3	0839 18 190	BRACKET Ass'y, Ignition Coil	1	
●	0839 18 190A	BRACKET Ass'y, Ignition Coil	1	Car No. 53308 7½ ~ ×
4	0839 18 101	Resistor	1	
	99907 0500	Nut, Resistor	4	
	99971 0500	Spring Washer, Resistor	4	
	99952 0500	Plain Washer, Resistor	4	
5	0823 18 107	Pipe	1	
6	99801 0850	Bolt, Ignition Coil	1	
	99971 0800	Spring Washer	1	
	0839 18 110A	HIGH TENSION CORD Ass'y	1	
●	0820 18 110D	HIGH TENSION CORD Ass'y	1	Car No. 53308 7½ ~ ×
7	0820 18 111B	Supporter	1	
8	0839 18 115	Cord, Coil ~ Distributor	1	
9	0839 18 120	High Tension Cord, Coil ~ Distributor	1	
10	0839 18 155	Cord, Coil ~ Distributor	1	
11	0839 18 160	High Tension Cord, Coil ~ Distributor	1	
	0839 18 150	HIGH TENSION CORD Ass'y	1	
12	0820 18 114	Supporter	2	
13	0839 18 130	High Tension Cord (T - 1)	1	
14	0839 18 140	High Tension Cord (T - 2)	1	
15	0839 18 170	High Tension Cord (L - 1)	1	
16	0839 18 180	High Tendion Cord (L - 2)	1	

No.	Part Number	Description	Q'ty	Remarks
17	0839 18 200	Distributor, Trailing	1	
●	0839 18 200A	Distributor, Trailing	1	Car No. 53308 7/2 ~ ×
18	0839 18 700	Distributor, Leading	1	
19	0107 18 201	"O" Ring	2	
	0839 18 270A	DISTRIBUTOR SOCKET Ass'y	2	
●	0839 18 270B	DISTRIBUTOR SOCKET Ass'y	2	Car No. 69368 7/4 ~ ○
20	0820 18 271C	Socket	2	
●	0820 18 271D	Socket	2	Car No. 69368 7/4 ~ ○
21	0839 18 272	Drive Shaft	2	
22	0839 18 273A	Drive Gear	2	
23	0820 11 105	Spring Pin	2	
24	99851 0618	Stud	2	
25	0813 18 288	Insert	2	
26	0820 18 279A	Gasket, Distributor Socket	2	
27	99901 0800	Nut, Distributor Socket	4	
	99953 0800	Plain Washer	4	
	99971 0800	Spring Washer	4	
28	99906 0600	Nut, Distributor Socket	2	
	99952 0600	Plain Washer	2	
	99971 0600	Spring Washer	2	
29	0823 18 291	Vacuum Control Tube	2	
30	0839 18 600	Spark Plug { NGK-B-7EJ / DENSO-W-22EG 2 (Std.) }	4	
	0840 18 600	Spark Plug, High Speed Type { NGK-B-8EJ / DENSO-W25EG 2 }	4	
	0848 18 600	Spark Plug, Low Speed Type { NGK-B-6EJ / DENSO-W20EG 2 }	4	

ELECTRIC EQUIPMENT (ENGINE NO. 2)

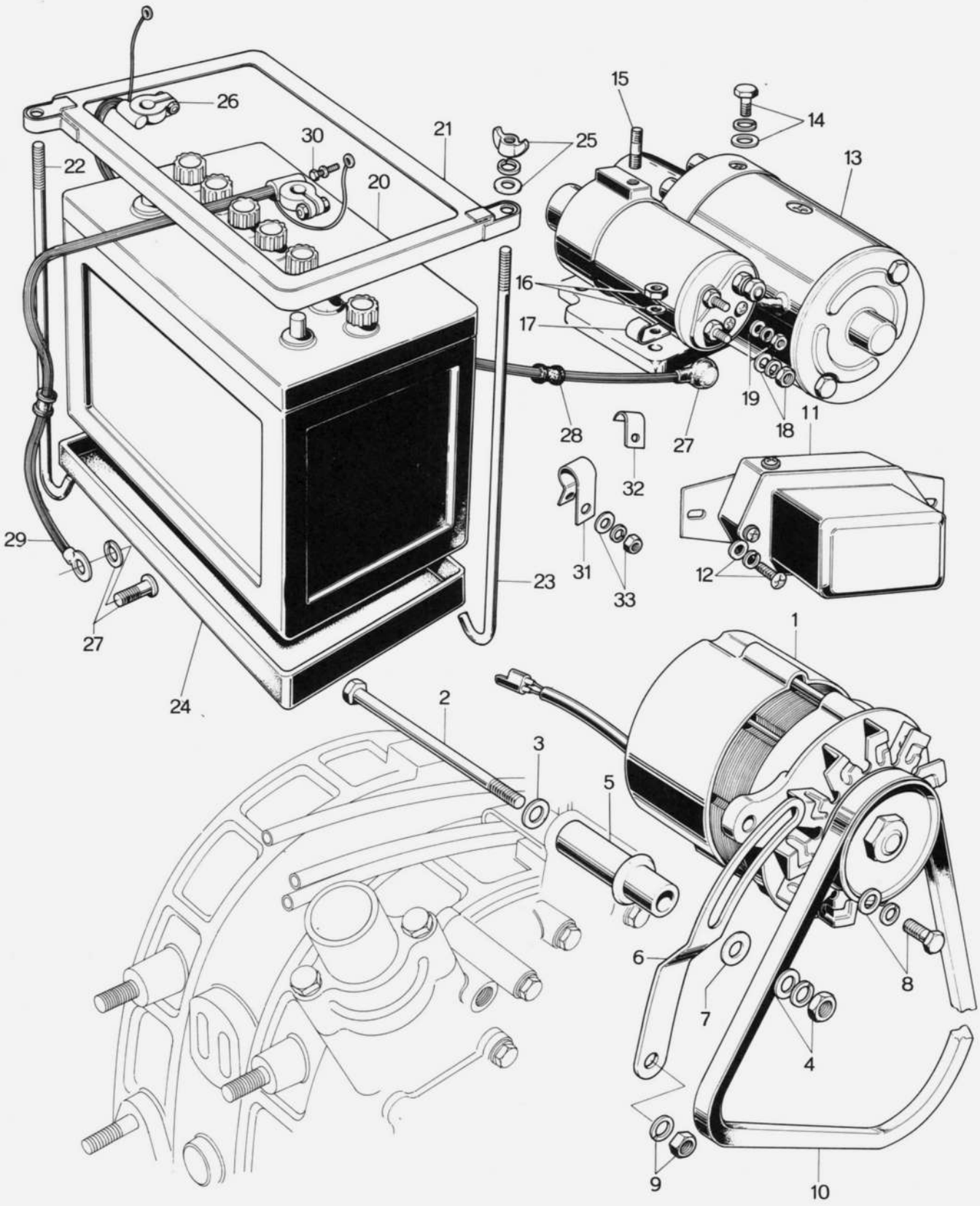

No.	Part Number	Description	Q'ty	Remarks
1	0839 18 300	Alternator (40A)	1	
● Ⓝ	2869 18 300	Alternator (50A) For Arctic Spec.	1	Car No. 6422 7/3 ~
2	99813 10125	Bolt, Alternator	1	
3	0823 10 455	Plain Washer	1	
4	99921 1000	Nut, Alternator	1	
	99952 1000	Plain Washer	2	
	99971 1000	Spring Washer	1	
5	0839 18 311B	Alternator Bracket	1	
6	0839 18 361	Alternator Strap	1	
7	0222 18 377	Shim, Alternator		
	0222 18 375	Shim, Alternator (t=0.3) } Selective use	1	
	0222 18 376	Shim, Alternator (t=0.5)		
8	99801 0822	Bolt, Alternator	1	
	99951 0818	Plain Washer	1	
	99971 0800	Spring Washer	1	
9	99907 0800	Nut, Strap	1	
	99971 0800	Spring Washer	1	
10	0820 18 381	"V" Belt	1	
11	0222 18 391	Regulator	1	
●	0222 18 391C	Regulator	1	Car No. 53807 7/1 ~ ○
12	99834 0616	Screw, Regulator	2	
	99953 0600	Plain Washer	2	
	99971 0600	Spring Washer	2	
13	2329 18 400	Starter	1	
●	0845 18 400	Starter	1	Car No. 55667 7/2 ~ ×
	0839 18 400A	Starter, Arctic Spec. Model	1	
●	0839 18 400B	Starter, Arctic Spec. Model	1	Car No. 55667 7/2 ~ ×
●	0839 18 400C	Starter Arctic Spec. Model	1	Car No. 77610 7/5 ~ △
14	99801 0828	Bolt, Starter	2	
	99953 0800	Plain Washer	2	
	99971 0800	Spring Washer	2	

No.	Part Number	Description	Q'ty	Remarks
15	99851 0814	Stud, Air Cleaner Supporter	1	
16	99901 0800	Nut, Starter	2	
	99971 0800	Spring Washer	2	
17	99295 2008	Clip, Harness use	1	
18	99901 0800	Nut, Starter	1	
	99952 0800	Plain Washer	1	
	99971 0800	Spring Washer	1	
● 19	99906 0500	Nut, Starter	1	Car No. 55667 7/2 ~ Quantity
	99952 0500	Plain Washer	2	
●	99971 0500	Spring Washer	1	Car No. 55667 7/2 ~ Quantity
	99806 0508	Screw, Starter, Arctic Spec. use	1	Car No. 55666 7/2 ~ Discarded
	99906 0500	Nut	1	
20	0504 18 520	Battery (N50Z)	1	
	2091 18 520	Battery (N50Z), Arctic Spec. Model	1	
●	2869 18 520	Battery (N70), Arctic Spec. Model	1	Car No. 61926 7/3 ~ ○
21	2826 53 290A	Battery Clamp	1	
●	2869 53 290	Battery Clamp	1	Car No. 61926 7/3 ~ ○
22	0223 54 225	Bolt, Clamp No. 1	1	
23	2826 53 299	Bolt, Clamp No. 2	1	
●	0614 70 445	Bolt, Clamp No. 2	1	Car No. 61926 7/3 ~ ○
24	2113 54 295	Battery Tray	1	
●	2981 54 222	Battery Tray	1	Car No. 61926 7/3 ~ ○
25	99941 0600	Wing Nut, Battery	2	
	99952 0618	Plain Washer	2	
	99971 0600	Spring Washer	2	
26	2324 67 100A	BATTERY POSITIVE CABLE	1	
	2324 67 100B	BATTERY POSITIVE CABLE	1	Car No. 33885 7/10 ~ ○
27	0114 66 905	Rubber Cap	1	
28	0136 66 715	Protector	3	

No.	Part Number	Description	Q'ty	Remarks
29	2828 67 111	Earth Wire, Battery	1	
30	908066 6 12	Set Bolt, Earth Wire	1	
31	0839 67 105	Clip, Battery Positive Cable	2	
32	99295 1508	Clip, Battery Positive Cable	1	
33	99906 0800	Nut, Clip	1	
	99952 0800	Plain Washer	1	
	99971 0800	Spring Washer	1	

24 DISTRIBUTOR (TRAILING SIDE)

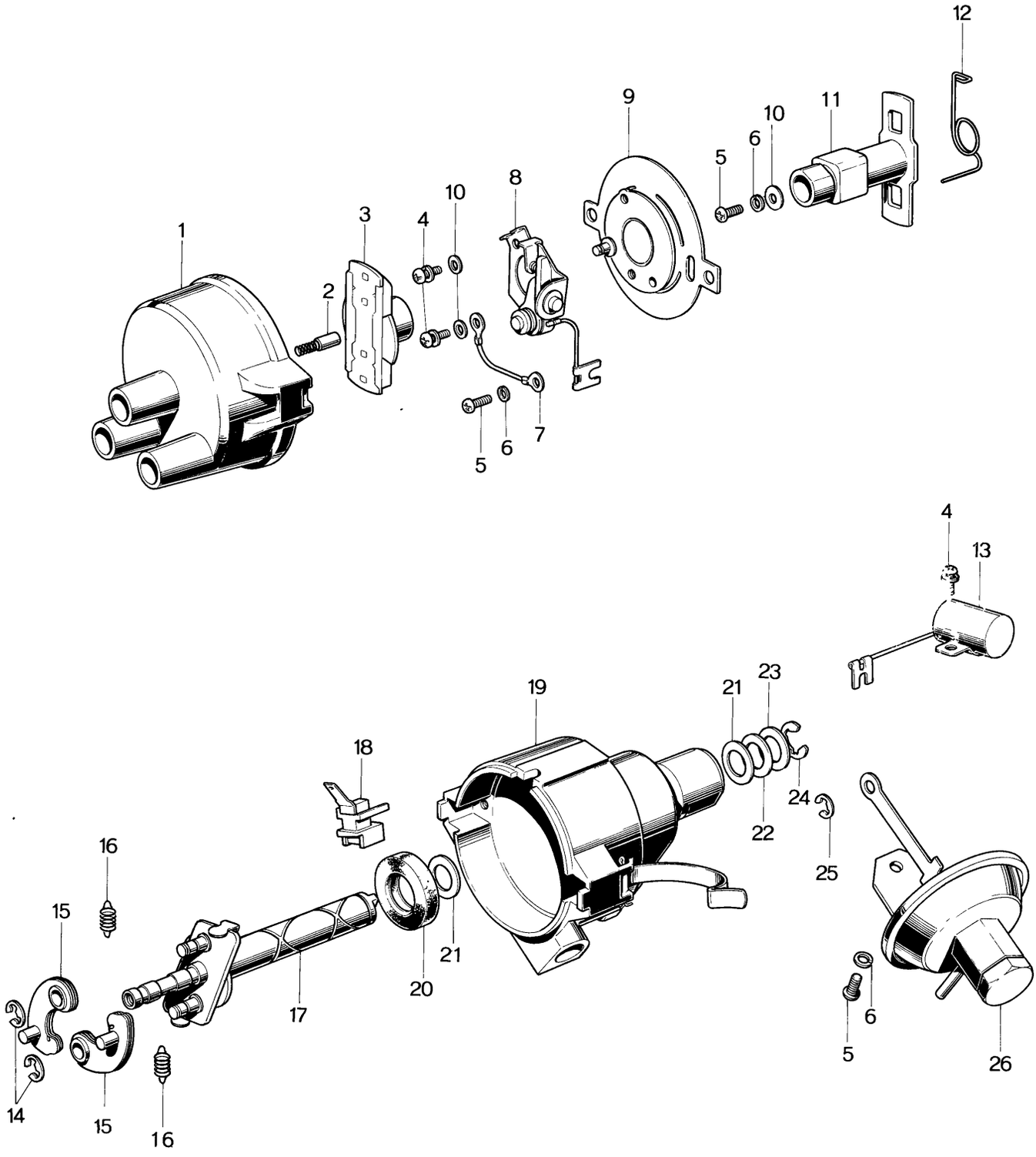

No.	Part Number	Description	Q'ty	Remarks
	0839 18 200	DISTRIBUTOR, (Trailing)	1	
●	0839 18 200A	DISTRIBUTOR, (Trailing)	1	Car No. 55667 7½ ~ ×
1	0820 24 301	CAP	1	
2	2545 23 496	Contact Carbon	1	
3	0813 24 303	Rotor	1	
4	0820 24 318	Set Screw	3	
5	0249 24 367	Screw (4 × 8)	5	
6	0107 18 208	Spring Washer (4)	5	
7	0107 18 212	Earth Wire	1	
8	0813 24 316	Arm Support	1	
9	0820 24 315	Breaker Base	1	
10	0107 18 227	Washer (4.2×9.5×0.8)	3	
11	0839 24 311	Cam	1	
12	2587 24 336	Hair Pin Spring	1	
13	0820 24 322	Condenser	1	
●	0839 24 334	Condenser	1	Car No. 55667 7½ ~ Added Anew
14	0107 18 231	Snap Ring	2	
15	2587 24 335	Governor Weight	2	
16	0813 24 308	Governor Spring	2	
17	0823 24 305	Shaft	1	
18	0820 24 319	Terminal	1	
19	0839 24 304	HOUSING Ass'y	1	
●	0839 24 304A	HOUSING Ass'y	1	Car No. 55667 7½ ~ ○
● 20	0107 18 216A	Oil Seal	1	Car No. 55666 7½ ~ Discarded

24 DISTRIBUTOR (TRAILING SIDE)

No.	Part Number	Description	Q'ty	Remarks
● 21	0107 18 226A	Washer (12.7×20×1)	1	Car No. 55667½ ~ Q'ty
22	0107 18 224	Washer (12.7×20×0.2)	1	
23	0107 18 225	Washer (12.7×20×0.1)	1	
24	0107 18 221A	Snap Ring	1	
25	0107 18 266	Snap Ring	1	
● 26	0820 24 324	Vacuum Control	1	

DISTRIBUTOR (LEADING SIDE)

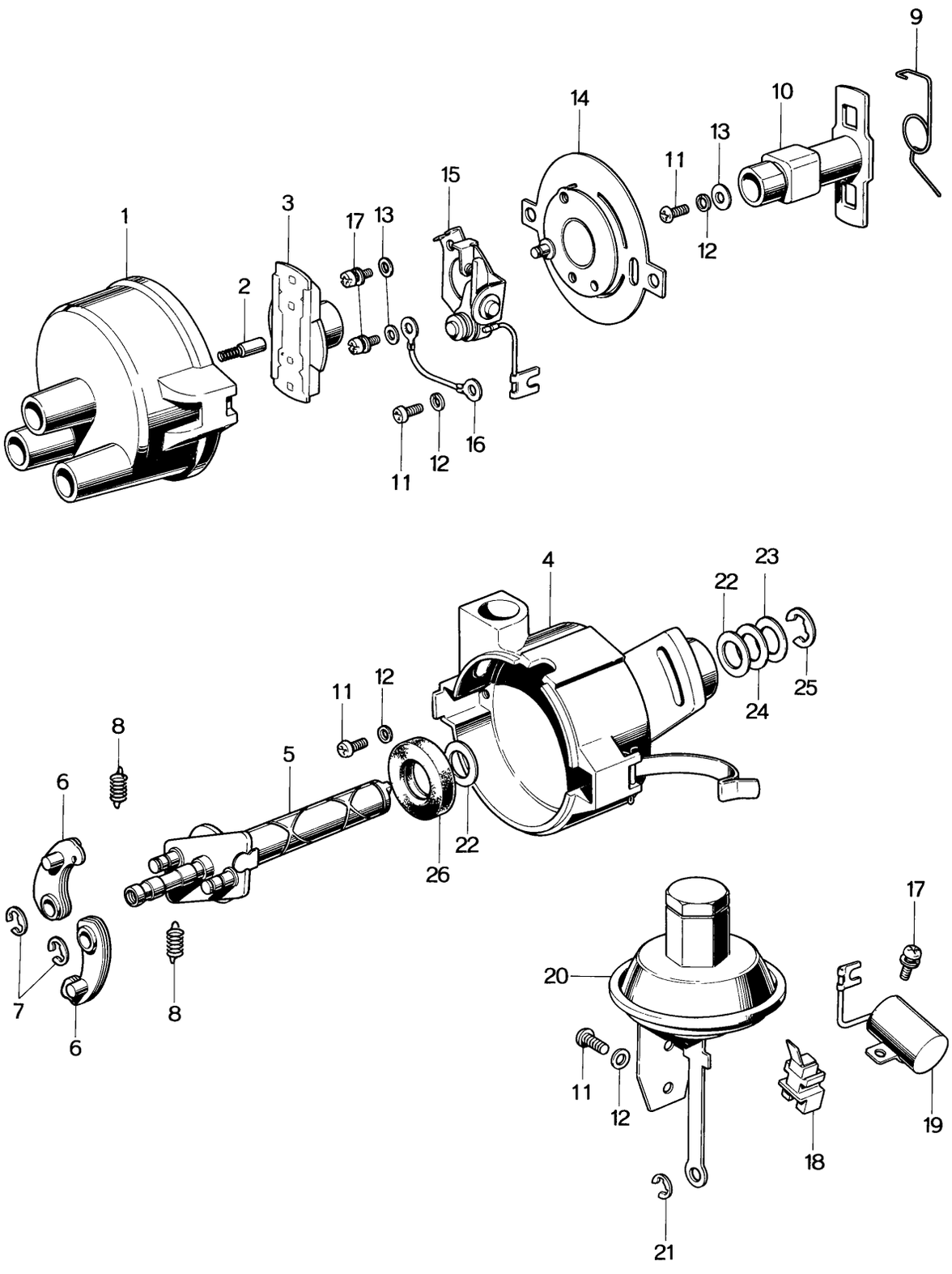

No.	Part Number	Description	Q'ty	Remarks
	0839 18 700	DISTRIBUTOR, LEADING	1	
1	0820 24 301	CAP	1	
2	2545 23 496	Contact Carbon	1	
3	0813 24 303	Rotor	1	
4	0839 24 404	Housing	1	
5	0820 24 405	Shaft	1	
6	0813 24 306	Governor Weight	2	
7	0107 18 231	Lock Washer	2	
8	0813 24 308	Governor Spring	1	
9	0813 24 309	Hair Pin Spring	1	
10	0839 24 411	Cam	1	
11	0249 24 367	Screw (4 × 8)	5	
12	0107 18 208	Spring Washer (4.1×7.6×1.0)	5	
13	0107 18 227	Washer (4.2×9.5×0.8)	3	
14	0820 24 315	Breaker Base	1	
15	0813 24 316	Arm Support	1	
16	0107 18 212	Earth Cord	1	
17	0820 24 318	Set Screw	3	
18	0820 24 319	Terminal	1	
19	0820 24 322	Condenser	1	
20	0820 24 423	Vacuum Control	1	
21	0107 18 266	Lock Washer	1	
22	0107 18 226A	Washer (12.7×20×1.0)	2	

24 DISTRIBUTOR (LEADING SIDE)

No.	Part Number	Description	Q'ty	Remarks
23	0107 18 225	Washer (12.7×20×0.1)	1	
24	0107 18 224	Washer (12.7×20×0.2)	1	
25	0107 18 221A	Lock Washer	1	
26	0107 18 216A	Oil Seal	1	

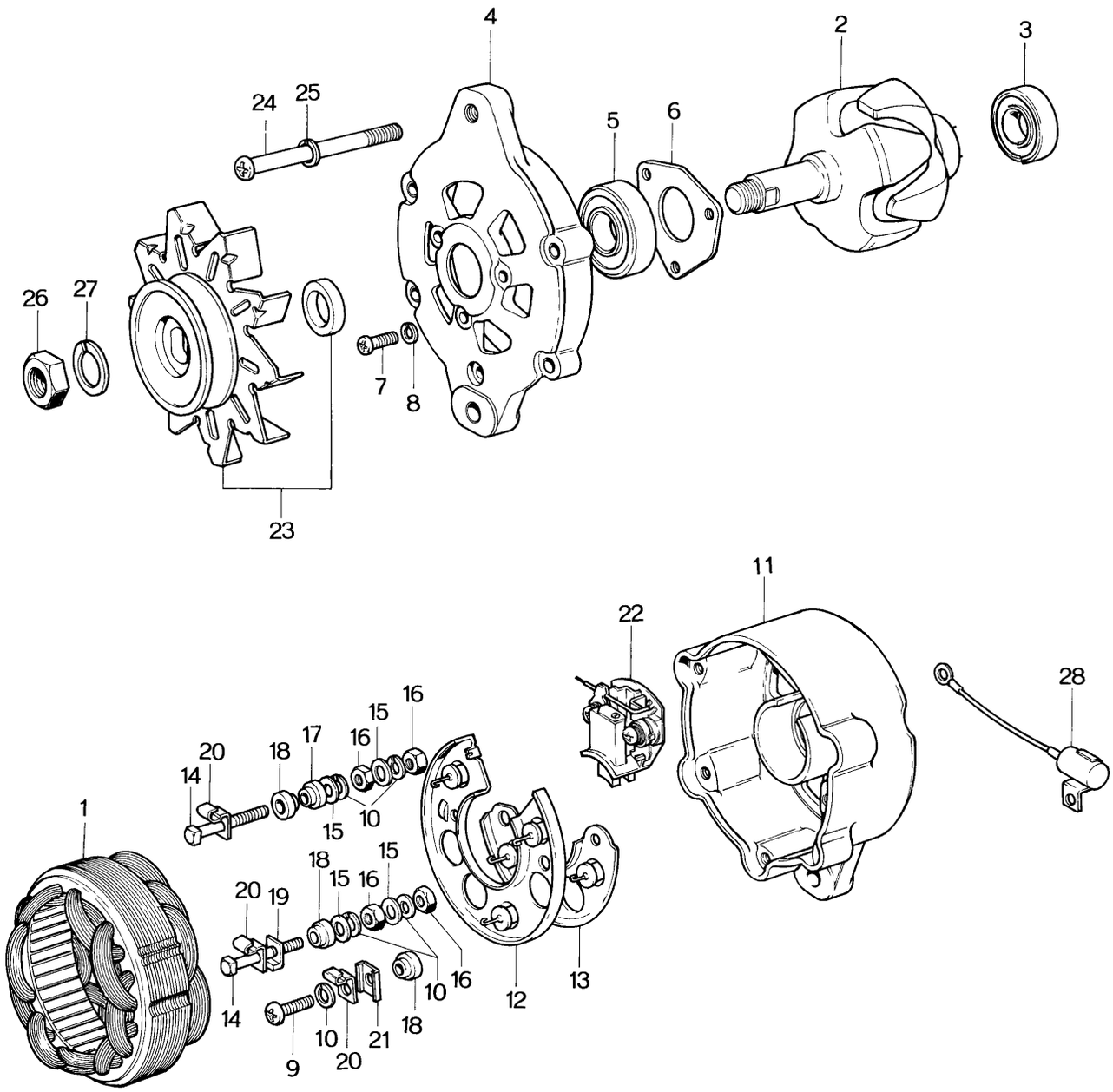
4
2
3
24
25
5
6
26
27
7
8
23
11
22
28
16
15
17
16
18
20
14
10
15
1
18
15
16
15
20
19
16
10
14
12
13
10
18
9
10
20
21

No.	Part Number	Description	Q'ty	Remarks
	0839 18 300	**ALTERNATOR**	1	
1	0290 24 501A	Stator	1	
2	0290 24 505A	Rotor	1	
3	0208 24 523	Ball Bearing	1	
	0290 24 510A	**FRONT BRACKET Ass'y**	1	
4	0290 24 511A	Front Bracket	1	
5	0290 24 524	Ball Bearing	1	
6	0290 24 515	Bearing Press Plate	1	
7	0636 24 568B	Screw (5 × 18)	3	
8	0200 23 531	Spring Washer (5.1 × 9.2 × 1.3t)	3	
	0290 24 520A	**REAR BRACKET Ass'y**	1	
9	0636 24 568B	Screw (5 × 18)	1	
10	0200 23 531	Spring Washer (5.1 × 9.2 × 1.3t)	5	
● 11	0290 24 521A	Rear Bracket	1	
● 12	0290 24 541A	Heat Sink Cpt. ⊕	1	
● 13	0290 24 542A	Heat Sink Cpt. ⊖	1	
14	0820 24 511	Square Bolt (5 × 36)	2	
15	0187 24 566	Washer (5.5 × 10 × 0.8t)	4	
16	0222 24 568	Nut (5 × 8 B × 4 H)	4	
17	0208 24 563A	Insulator Plate (5)	1	
18	0290 24 563	Insulator Plate (5)	3	

ALTERNATOR

No.	Part Number	Description	Q'ty	Remarks
19	0636 24 562A	"L" Type Insulation (5)	1	
20	0820 24 519	Clamp	3	
21	0290 24 513	"U" Type Insulation	1	
22	0290 24 556	Brush Holder	1	
23	0839 24 530	Pulley Ass'y	1	
24	0290 24 517	Screw (6 ×71)	3	
25	0107 18 424	Spring Washer (6.1×12.2×1.5t)	3	
26	0187 24 579A	Nut (12×22B×7 H)	1	
27	0187 24 577A	Spring Washer (12.2×21.5×3 t)	1	
28	0290 24 581	Condenser	1	

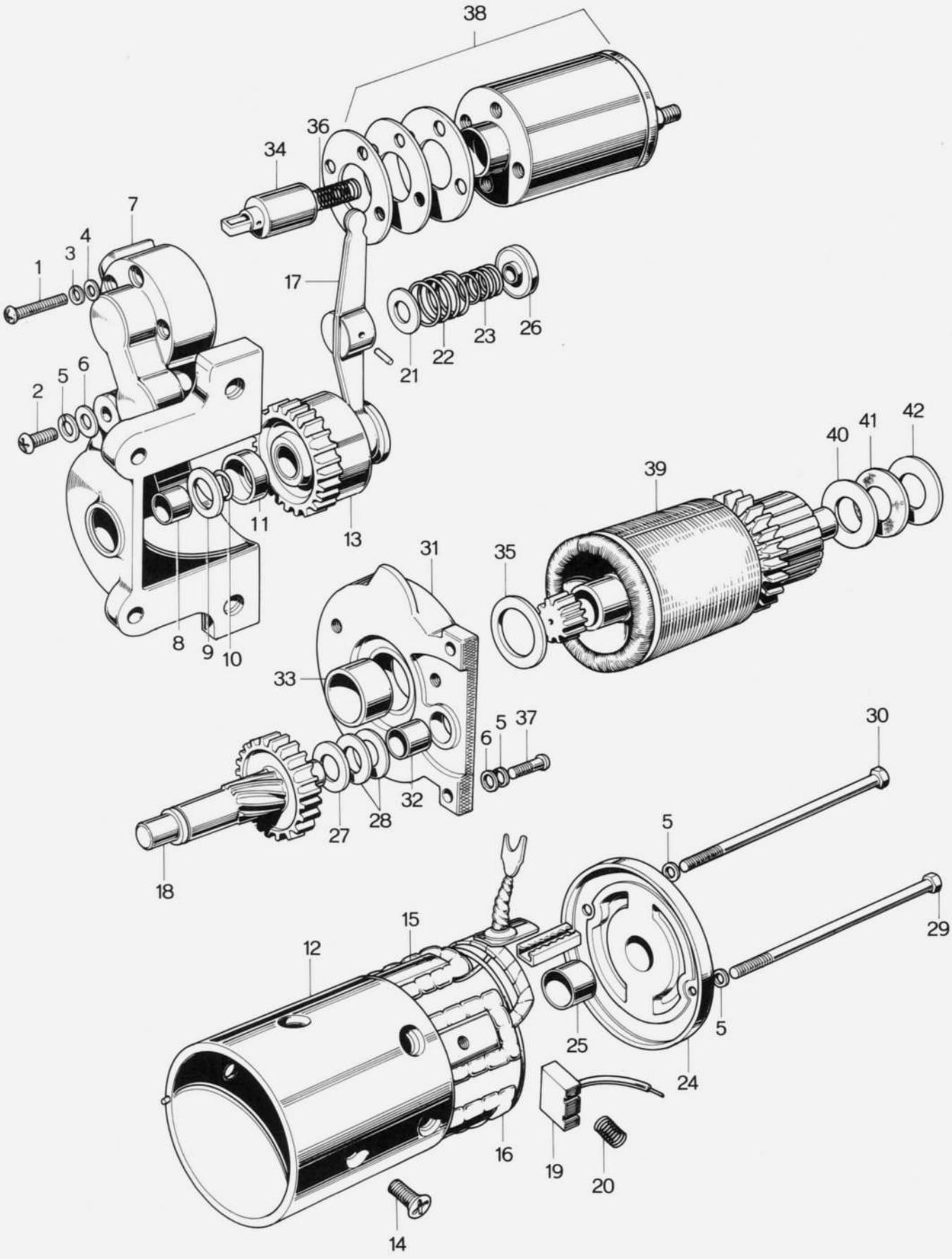
38
36
34
7
4
3
1
17
23
26
22
21
6
5
2
42
41
40
39
11
13
31
35
8
9
10
33
37
5
6
30
32
27
28
18
5
15
29
12
25
24
16
19
20
14

No.	Part Number	Description	Q'ty	Remarks
●	2329 18 400	**STARTER** (Mitsubishi Make)	1	Used Up to Car No. 55666 ⅞
1	0820 24 757	Small Screw (5×36)	4	
2	0820 24 759	Small Screw (6×22)	1	
3	0200 23 531	Spring Washer (5.1×92×13)	4	
4	0187 24 566	Washer (5.5×10×0.8)	4	
5	0200 23 519	Spring Washer (6.1×12.2×1.5)	5	
6	0813 24 726	Washer (6.5×13×1)	3	
7	0820 24 710B	**FRONT BRACKET**	1	
8	0249 24 731	Metal	1	
9	0820 24 714	Washer (14.4×26×1.6)	1	
10	0820 24 713	Ring	1	
11	0820 24 712	Pinion Stopper	1	
12	2329 24 701	Yoke	1	
13	0820 24 709	Over Running Clutch	1	
14	0813 24 704	Screw (8×15)	4	
15	0813 24 703	Pole Piece	4	
16	2329 24 702	Field Coil	1	
17	0820 24 716	Lever	1	
18	0820 24 721	Pinion Shaft	1	
19	0813 24 723A	Brush	4	
20	0813 24 724	Brush Spring	4	

No.	Part Number	Description	Q'ty	Remarks
21	0820 24 756	Washer	1	
22	0820 24 755	Lever Spring (B)	1	
23	0820 24 754	Lever Spring (A)	1	
24	0820 24 720	REAR BRACKET	1	
25	0249 24 731	Metal	1	
26	0820 24 717	Spring Seat (B)	1	
27	0820 24 747	Washer (14.4×26×0.8)	1	
28	0820 24 748	Washer (14.4×26×0.2)	2	
29	0603 23 617	Through Bolt (6×132)	1	
30	0107 18 423A	Through Bolt (6×150)	1	
31	0820 24 706A	CENTER BRACKET	1	
32	0249 24 731	Metal	1	
33	0820 24 707	Metal	1	
34	0820 24 751	Plunger	1	
35	0820 24 749	Washer (24.2×34×0.5)	2	
36	0820 24 752	Spring	1	
37	0820 24 759	Small Screw (6×22)	2	
38	2329 24 736	Switch	1	

No.	Part Number	Description	Q'ty	Remarks
39	0820 24 705	Armature	1	
40	0820 24 741	Washer	1	
41	0118 23 691	Insulation Washer	1	
42	0118 23 689	Washer	2	

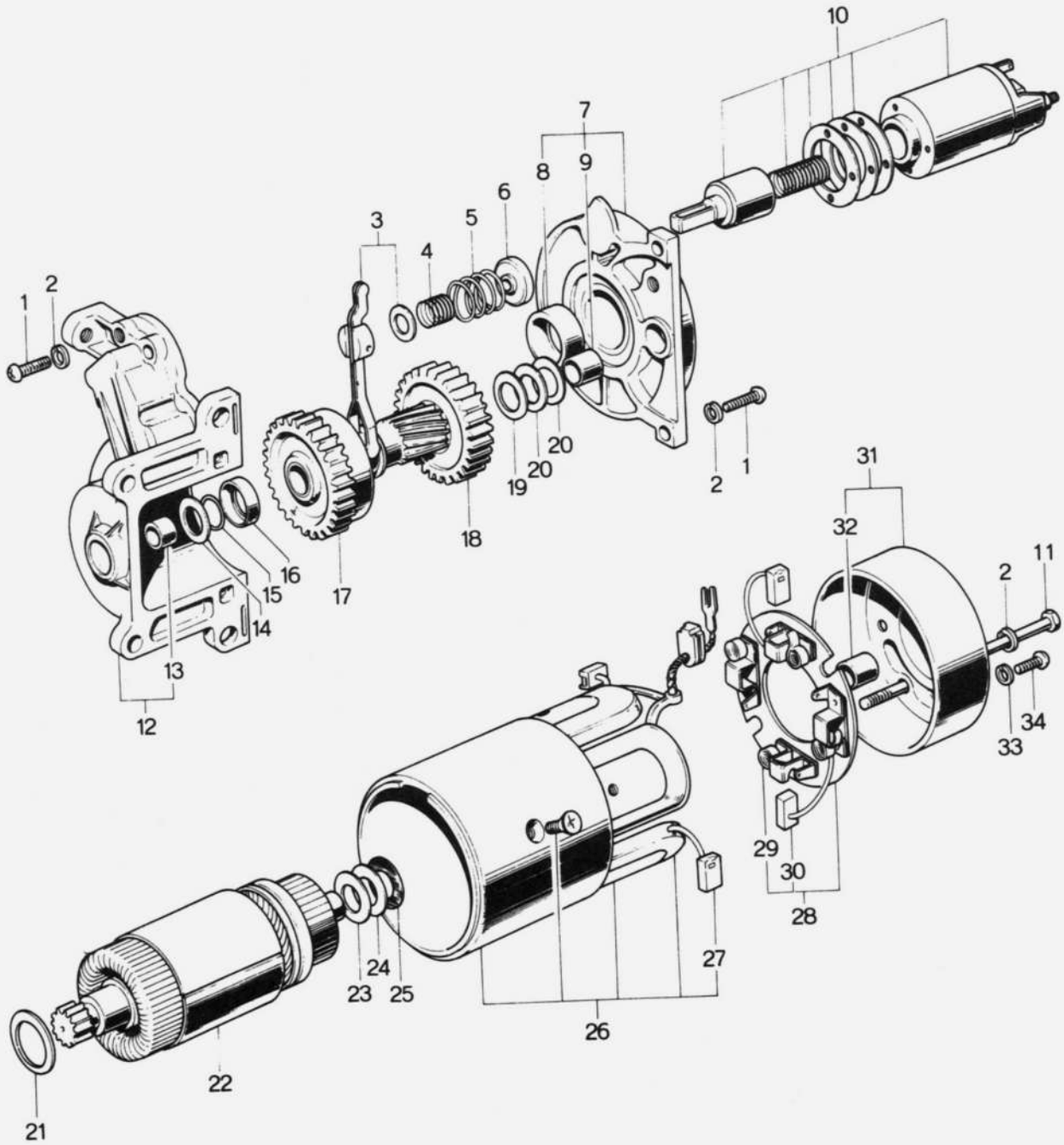
10
7
8
9
6
5
3
4
1
2
2
1
20
19
20
18
17
16
15
14
13
12
31
32
2
11
33
34
29
30
28
27
26
24
23
25
22
21

No.	Part Number	Description	Q'ty	Remarks
	0845 18 400	**STARTER**	1	Used from Car No. 55667
1	0164 23 664	Screw (6×25)	6	
2	0107 18 424	Washer, Spring (6.1×12.2×1.5)	8	
3	0845 24 716	Lever Ass'y	1	
4	0118 23 636	Lever, Spring	1	
5	0118 23 637	Lever, Spring	1	
6	0845 24 717	Holder Ass'y	1	
7	0845 24 706	Bracket Ass'y, Center	1	
8	0820 24 707	Bearing, Sleeve (C)	1	
9	0222 24 741	Bearing, Sleeve (R)	1	
10	0222 24 760A	Switch Ass'y	1	
11	0222 24 756	Bolt, (6×134)	2	
12	0845 24 710	**BRACKET Ass'y**, Front	1	
13	0222 24 741	Bearing, Sleeve (R)	1	
14	0820 24 714	Washer (4.4×26×1.6)	1	
15	0820 24 713	Ring	1	
16	0845 24 712	Stopper	1	
17	0845 24 709	Clutch, Over Running	1	
18	0845 24 721	Shaft Ass'y, Gear	1	
19	0820 24 747	Washer (14.4×26×0.8)	1	
20	0820 24 748	Washer (14.4×26×0.2)	2	

No.	Part Number	Description	Q'ty	Remarks
21	0845 24 749	Washer (24.5×34×1.6)	1	
22	0845 24 705	Armature	1	
23	0107 18 406B	Washer (14.5×30×1.2)	1	
24	0118 23 689	Washer (14.5×30×0.25)	2	
25	0118 23 691	Washer, Insulation (14.4×30×0.8)	1	
26	0845 24 701	YOKE Ass'y	1	
27	0222 24 753	Brush	2	
28	0222 24 750	HOLDER Ass'y, Brush	1	
29	0222 24 752A	Brush, Spring	4	
30	0222 24 753	Brush	2	
31	0845 24 720	BRACKET Ass'y, Rear	1	
32	0222 24 741	Bearing, Sleeve (R)	1	
33	0200 23 531	Washer, Spring (5.9×9.2×1.3)	2	
34	0222 24 517	Screw (5×10)	2	

STARTER (ARCTIC SPEC. MODEL)

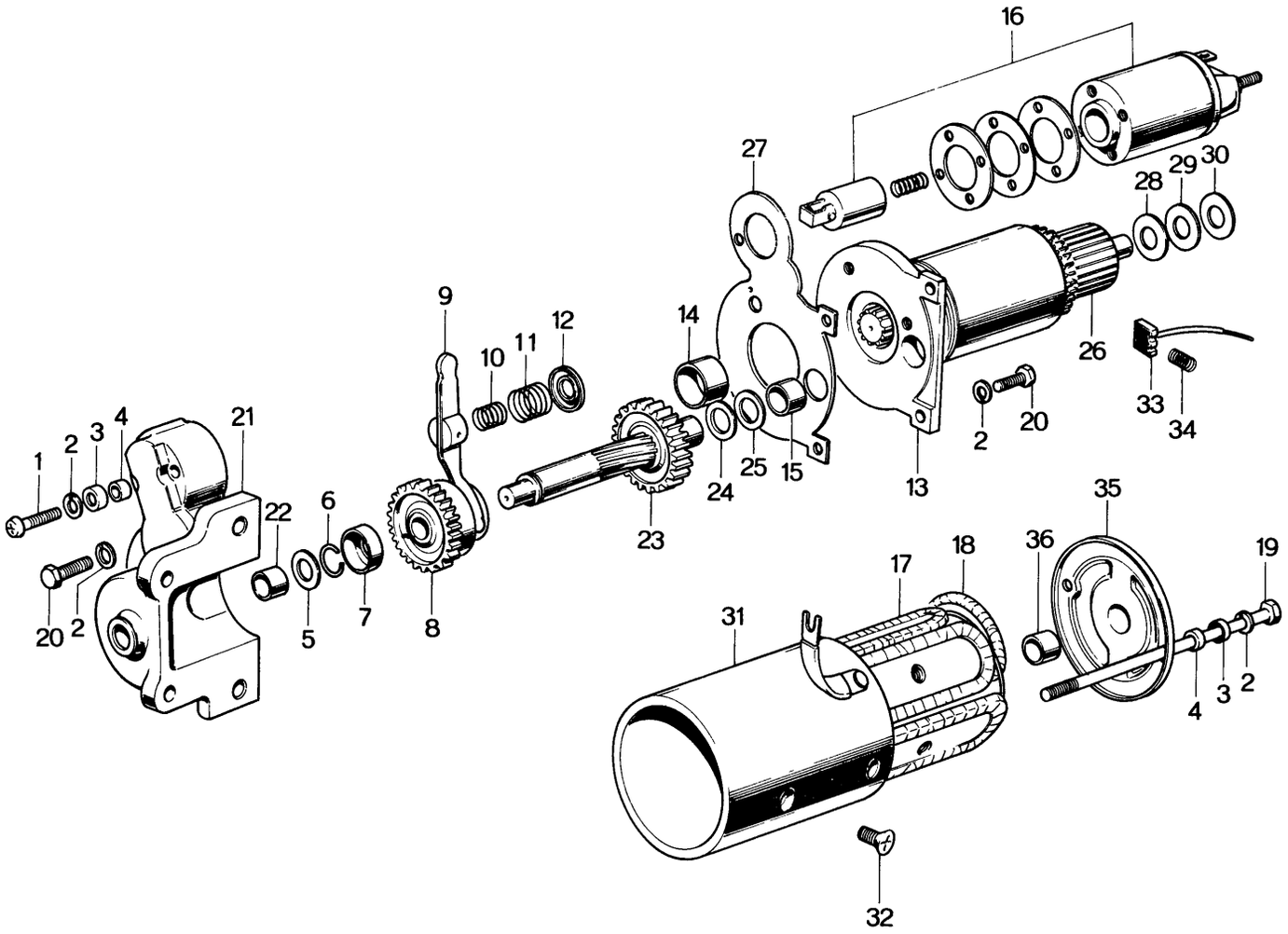

No.	Part Number	Description	Q'ty	Remarks
●	0839 18 400A	STARTER (Mitsubishi Make)	1	
●	0839 18 400B	STARTER (Mitsubishi Make)	1	Car No. 55667 ～○
●	0839 18 400C	STARTER (Mitsubishi Make)	1	Car No. 77610 7/8 ～△
1	0839 24 757	Screw (6×45)	2	
●	0839 24 758	Screw (6×45)	2	Car No. 55667 7/2 ～○
2	0200 23 519	Spring Washer (6.1×12.2×1.5)	8	
3	0839 24 761	Gasket Cover	4	
4	0839 24 762	Gasket	4	
5	0820 24 714	Washer (4.4×26×1.6)	1	
6	0820 24 713	Ring	1	
7	0820 24 712	Pinion Stopper	1	
8	0839 24 709	Over Running Clutch	1	
9	0839 24 716	Lever Ass'y	1	
10	0820 24 754	Lever Spring (A)	1	
11	0820 24 755	Lever Spring (B)	1	
12	0820 24 717	Spring Seat	1	
13	0839 24 706	CENTER BRACKET	1	
14	0839 24 715	Metal	1	
15	0249 24 731	Metal	1	
16	0839 24 736	Switch Ass'y	1	
●	0839 24 736A	Switch Ass'y	1	Car No. 55667 7/2 ～×
●	0839 24 736B	Switch Ass'y	1	Car No. 77610 7/8 ～×
17	0839 24 703	Pole Piece	4	
18	0839 24 702	Field Coil	1	
19	0600 23 617	Through Bolt (6×152)	2	
●	0839 24 764	Through Bolt (6×155)	2	Car No. 55667 7/2 ～○
20	0839 24 718	Bolt (6×22)	4	
●	0839 24 763	Bolt (6×20)	4	Car No. 55667 7/2 ～○

No.	Part Number	Description	Q'ty	Remarks
21	0839 24 710	FRONT BRACKET	1	
22	0249 24 731	Metal	1	
23	0839 24 721	Pinion Shaft	1	
24	0820 24 747	Washer (14.4×26×0.8)	1	
25	0820 24 748	Washer (14.4×26×0.2)	2	
26	0839 24 705	Armature	1	
27	0839 24 719	Water Proof Plate	1	
28	0118 23 689	Washer (14.5×30×0.25)	2	
29	0820 24 741	Washer (14.5×30×0.8)	1	
30	0118 23 691	Insulation Washer (14.4×30×0.8)	1	
31	0839 24 701	Yoke	1	
●	0839 24 701A	Yoke	1	Car No. 55667, 7½ ~ ×
●	0839 24 701B	Yoke	1	Car No. 77610 7⅘ ~ ○
32	0727 24 712	Screw (8×17)	4	
33	0839 24 723	Brush	4	
34	0839 24 724	Brush Spring	4	
35	0839 24 720	REAR BRACKET	1	
36	0839 24 722	Metal	1	

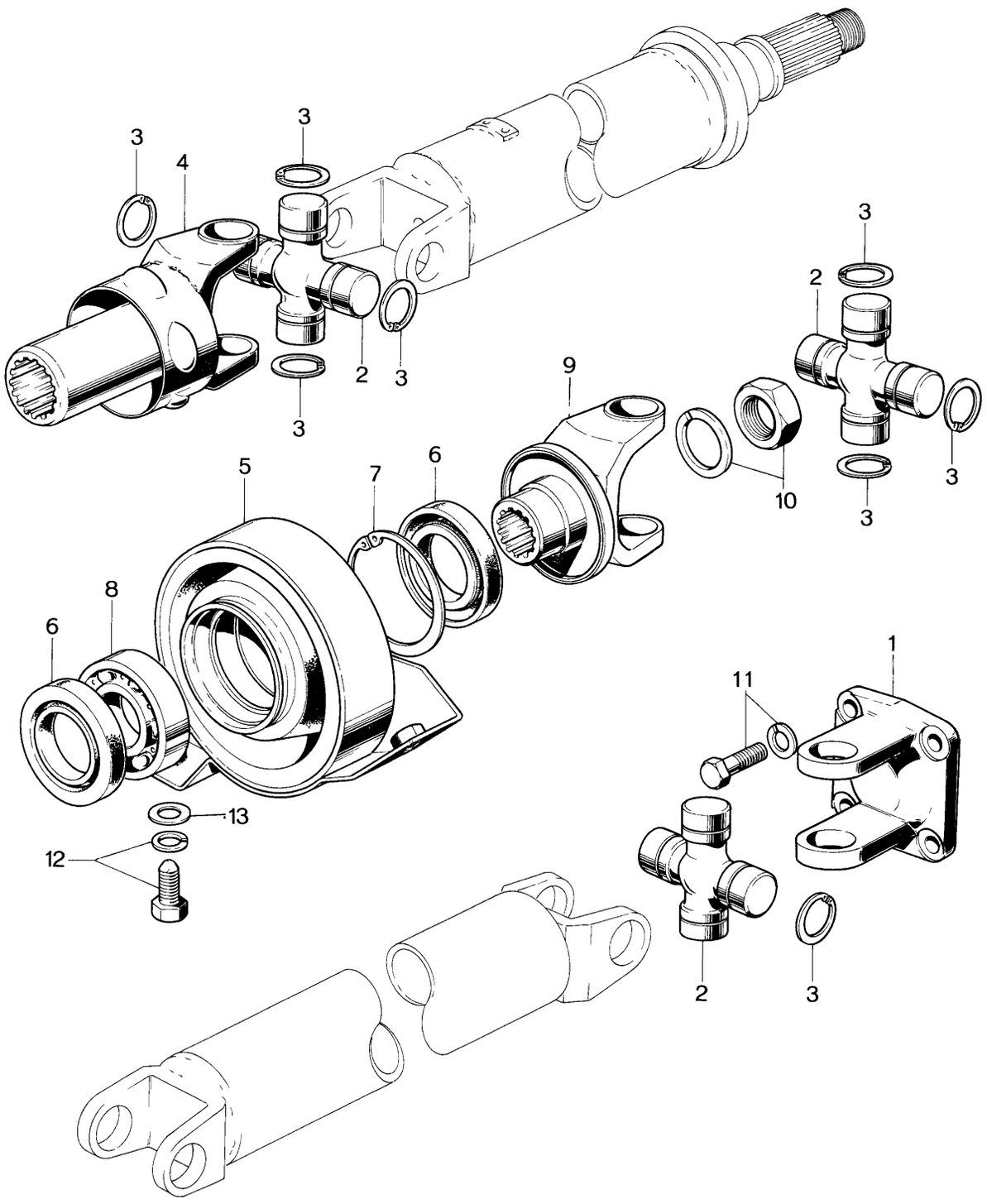
3
4
3
2
3
3
3
2
3
3
10
3
9
5
7
6
8
6
13
12
1
11
2
3

No.	Part Number	Description	Q'ty	Remarks
	0839 25 100C	**PROPELLER SHAFT Ass'y**	1	
1	0259 25 021B	Yoke, Universal Joint	1	
2	0259 25 060	Universal Joint	3	
3	0259 25 071A	Snap Ring (t=1.22)		
	0259 25 072A	Snap Ring (t=1.24)		
	0259 25 073A	Snap Ring (t=1.26)		
	0259 25 074A	Snap Ring (t=1.28)		
	0259 25 075A	Snap Ring (t=1.30) Selective use	12	
	0259 25 076A	Snap Ring (t=1.32)		
	0259 25 077A	Snap Ring (t=1.34)		
	0259 25 078A	Snap Ring (t=1.36)		
	0259 25 079A	Snap Ring (t=1.38)		
4	0324 25 130	Sliding Yoke Ass'y	1	
5	0839 25 300A	Center Bearing Support	1	
6	0290 25 151	Oil Seal	2	
● 7	99574 5200	Snap Ring	2	Car No. 53598 Quantity
8	99606 62050	Ball Bearing	1	
9	0223 25 220D	Yoke	1	
10	99922 1800	Nut	1	
	99971 1800	Spring Washer	1	
11	99752 30818	Bolt, Propeller Shaft	4	
	99971 0800	Spring Washer	4	
12	99804 1020	Bolt, Center Bearing Support	2	
	99804 1022	Bolt, Center Bearing Support	2	Car No. 30692 70/10 ~ O
	99971 1000	Spring Washer	2	
13	99952 1000	Adjust Washer	2	
	0063 58 221	Adjust Washer	2	Car No. 30692 70/10 ~ O

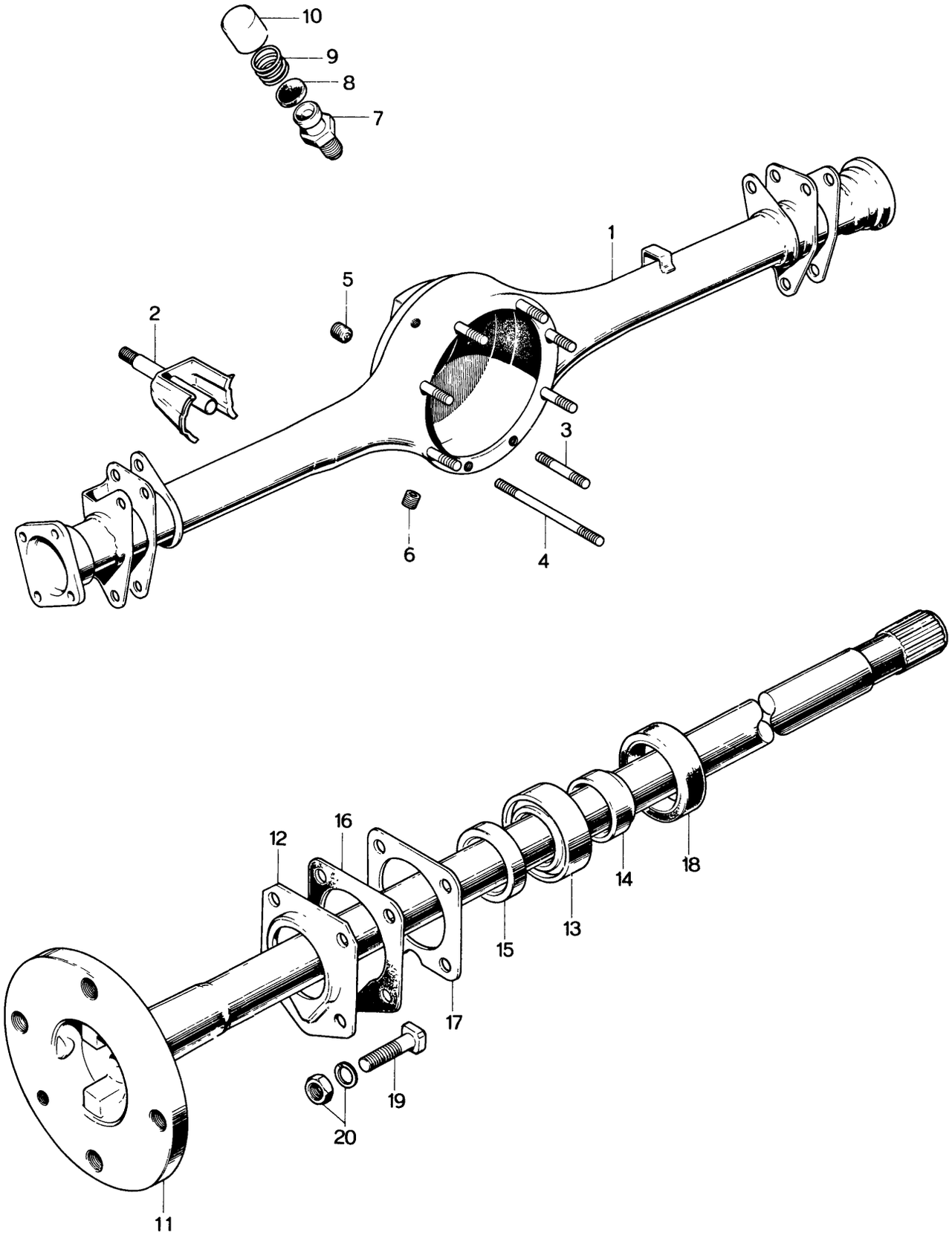
10
9
8
7
1
5
2
3
6
4
16
12
18
14
13
15
17
19
20
11

No.	Part Number	Description	Q'ty	Remarks
1	0839 26 010B	REAR AXLE CASING	1	
2	0305 26 080B	Bracket	1	
3	99852 0820	Stud	7	
4	99852 0880	Stud	1	
5	0259 26 041	Oil Level Plug	1	
6	0259 26 051	Magnet Drain Plug	1	
	0730 26 060	BREATHER Ass'y	1	
7	0730 26 062	Breather Body	1	
8	0259 26 064	Rubber, Breather Cap	1	
9	0730 26 065	Spring, Breather Cap	1	
10	0730 26 063	Breather Cap	1	
11	0839 26 111	Rear Axle	2	
12	0259 26 121	Bearing Retainer	2	
●	0317 26 121	Bearing Retainer	2	Car No. 52327 7/1 ~ ×
13	0317 26 151	Bearing	2	
●	0317 26 151A	Bearing	2	Car No. 52327 7/1 ~ △
14	0259 26 152	Bearing Collar	2	
15	0259 26 155	Bearing Spacer	2	
16	0259 26 129	Packing	2	
17	0259 26 141	Adjust Shim } Selective use	4	
	0259 26 142	Adjust Shim } Selective use		
18	0187 26 154	Oil Seal	2	

No.	Part Number	Description	Q'ty	Remarks
19	0259 26 132	Bolt	8	
20	99901 0800	Nut	8	
	99971 0800	Spring Washer	8	

26 REAR BRAKE

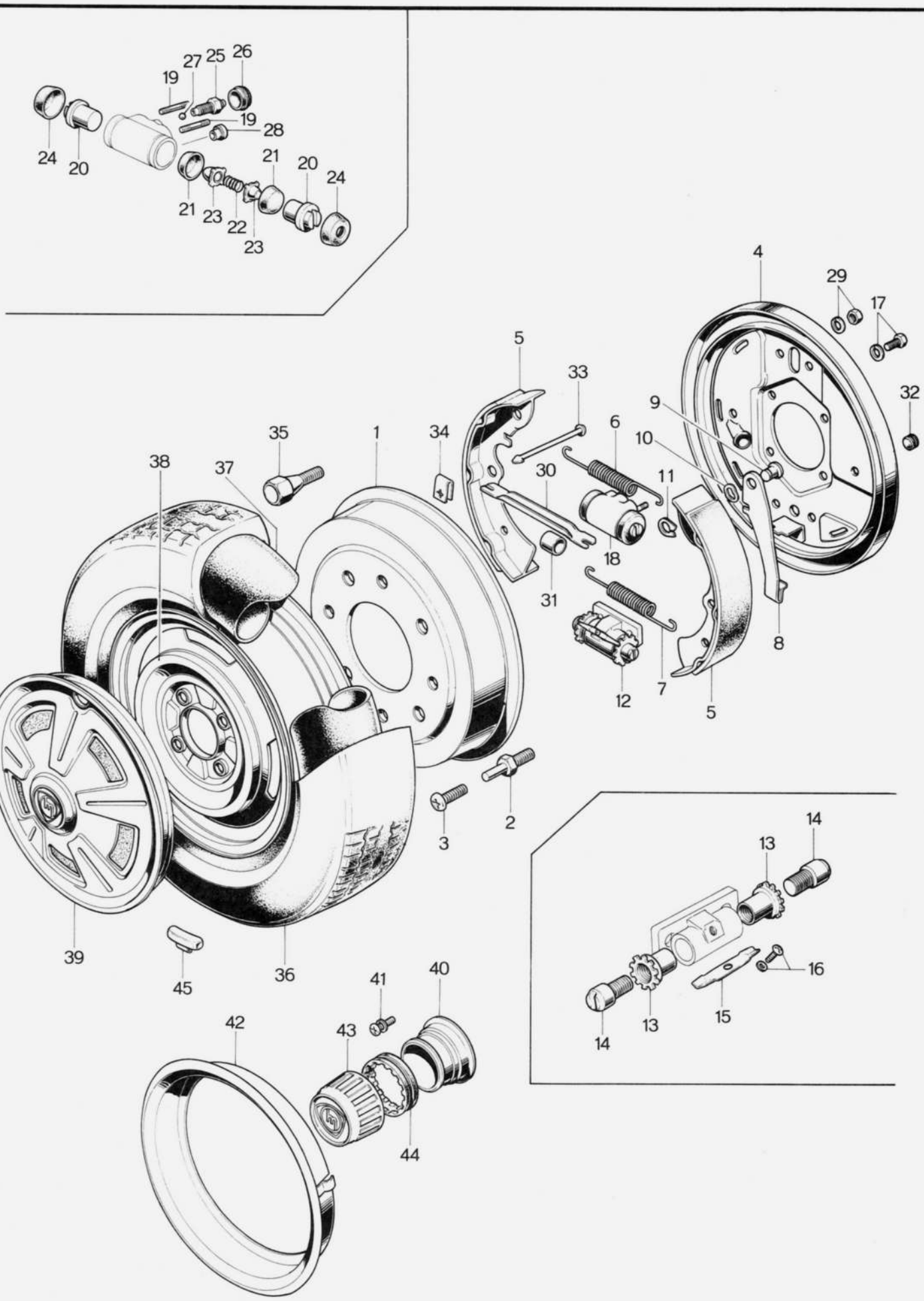

No.	Part Number	Description	Q'ty	Remarks
1	0305 26 251	Brake Drum	2	
2	0305 26 255	Bolt	4	
3	99833 0812	Screw, Center Cap use	4	
4	0305 26 280A	Brake Drum Cover (R)	1	
	0305 26 290A	Brake Drum Cover (L)	1	
5	0305 26 310A	Brake Shoe	4	
6	0187 26 341	Return Spring	2	
7	0118 26 342	Return Spring	4	
8	0305 26 800A	LEVER Ass'y (R)	1	
	0305 26 810A	LEVER Ass'y (L)	1	
9	0118 26 832	Pin	2	
10	0118 26 834	Wave Washer	2	
11	99575 0600	Retaining Ring	2	
12	0305 26 500	ANCHOR BLOCK Ass'y	2	
13	0710 26 461	Adjuster	4	
14	0305 26 465	Adjust Screw	4	
15	0710 26 352	Spring	2	
16	908332 4 08	Set Screw	2	

No.	Part Number	Description	Q'ty	Remarks
17	99801 0814	Bolt, Anchor Block	4	
	99971 0800	Spring Washer	4	
18	0813 26 610A	WHEEL CYLINDER Ass'y	2	
19	99852 0612	Stud	4	
20	0810 26 651	Piston	4	
21	0810 26 671	Piston Cup	4	
22	0221 26 672	Spring	2	
23	0221 26 673	Filling Block	4	
24	0613 33 681	Dust Cover	4	
25	0259 33 691	Bleeder Screw	2	
26	0259 33 693	Cap, Bleeder Screw	2	
27	99611 1500	Steel Ball	2	
28	0613 26 922	Tube Seat	2	
29	99906 0600	Nut, Wheel Cylinder	4	
	99971 0600	Spring Washer	4	
30	0187 26 821	Operation Strut (R)	1	
	0187 26 921	Operation Strut (L)	1	
31	0118 26 897	Holder	2	
32	0710 33 288	Plug, Back Plate	4	
33	0187 33 391	Guide Pin, Brake Shoe	4	
34	0110 26 345	Clip Spring	4	
35	0259 33 165	Hub Bolt	8	

No.	Part Number	Description	Q'ty	Remarks
	0820 33 165	Hub Bolt	8	
36	9962 12 6113	6.15S—13—4PR Low Profile Tire		
●	9962 02 6413	6.45S—13—4PR Low Profile Tire		Car No. 61926 7/3 ~ ×
	9962 11 6113	6.15S—13—4PR Low Profile Tire, White Ring		
●	9962 01 6413	6.45S—13—4PR Low Profile Tire, White Ring		Car No. 61926 7/3 ~ ×
	9962 02 1553	155SR—13 Radial Tire, White Ring	Selective use	Car No. 61925 7/3 ~ Discarded
	9962 04 1553	155SR—13 Radial Tire	2	
●	9962 01 1653	165SR—13 Radial Tire		Car No. 61926 7/3 ~ ×
	9962 07 1553	155HR—13 Radial Tire		Car No. 33038 7/3 ~ Added Anew
●	9962 03 1653	165HR—13 Radial Tire		Car No. 61926 7/3 ~ ×
37	9963 01 6113	6.15—13 Tube, Low Profile Tire	2	
●	9963 01 6413	6.45—13 Tube, Low Profile Tire	2	Car No. 61926 7/3 ~ ×
	9963 01 1553	155—13 Tube, Radial Tire	2	
●	9963 01 1653	165—13 Tube, Radial Tire	2	Car No. 61926 7/3 ~ ×
38	9965 11 4030	4—J × 13WDC Disc Wheel	2	
	9965 05 4530	4½—J × 13WDC Disc Wheel	2	Car No. 40001 70/12 ~ ○
	9965 12 4030	4—J × 13WDC Disc Wheel, Center Cap use	2	
	9965 06 4530	4½—J × 13WDC Disc Wheel, Center Cap use	2	Car No. 40001 70/12 ~ ○
39	0841 33 170E	Wheel Cap	2	
●	0841 33 170F	Wheel Cap	2	Car No. 32016 70/10 ~ ○
40	0820 26 570A	Adapter	2	
41	908332 8 12	Set Screw, Adapter	4	
42	0820 33 180A	Wheel Ring	2	
43	0820 33 191A	Center Cap	2	
44	0820 33 192A	Set Rubber	2	
45	99655 30010	Balancing Weight	Selective use	
●	99655 30015	Balancing Weight		Car No. 69368 7/4 ~ Added Anew
	99655 30020	Balancing Weight		
●	99655 30025	Balancing Weight		Car No. 69368 7/4 ~ Added Anew
	99655 30030	Balancing Weight		
●	99655 30035	Balancing Weight		Car No. 69368 7/4 ~ Added Anew
	99655 30040	Balancing Weight		
●	99655 30045	Balancing Weight		Car No. 69368 7/4 ~ Added Anew
	99655 30050	Balancing Weight		
	99655 30060	Balancing Weight		

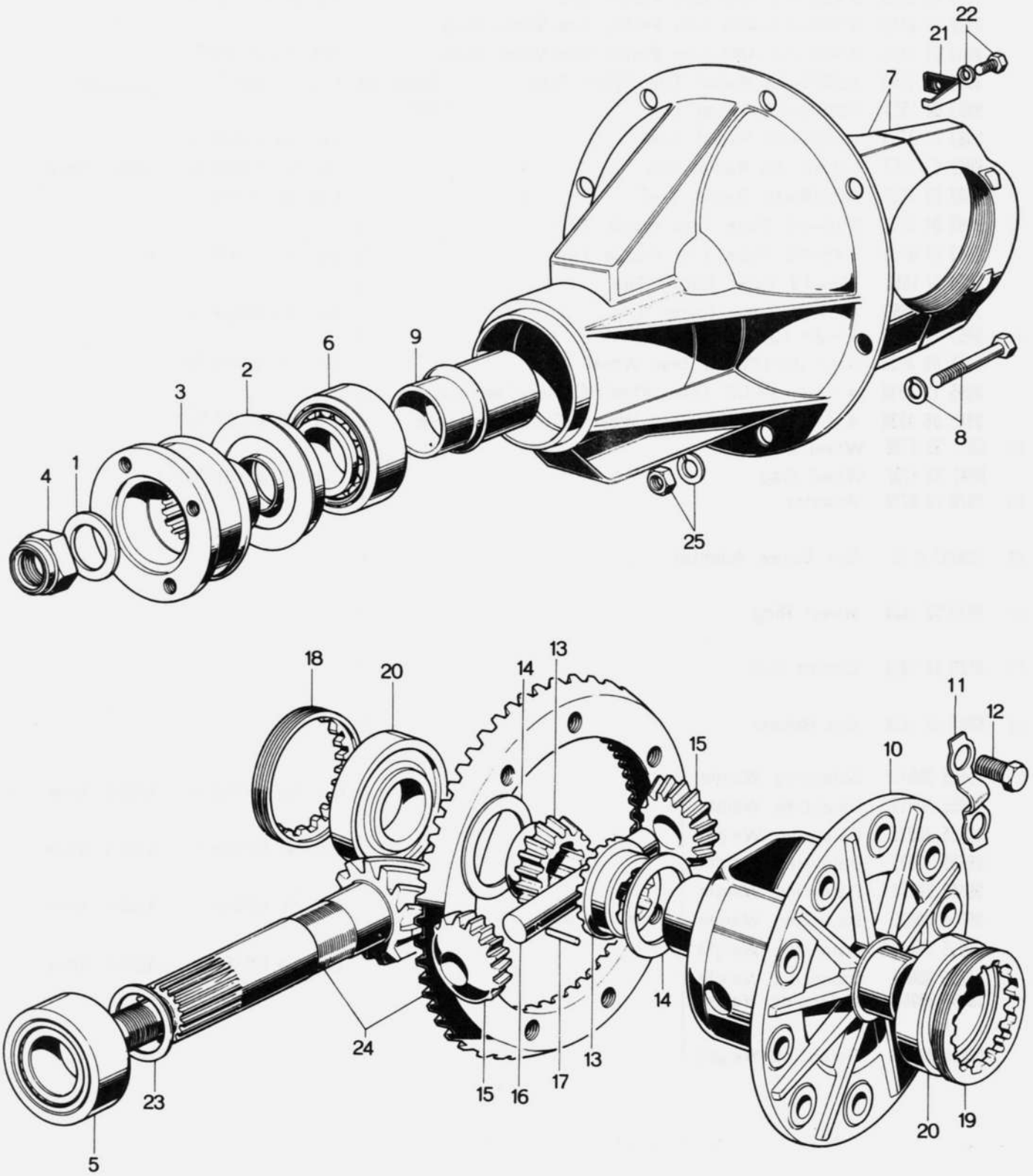
22
21
7
6
9
2
3
4
1
8
25
18
20
14
13
11
12
15
10
14
24
23
15
16
17
13
20
19
5

No.	Part Number	Description	Q'ty	Remarks
	2112 27 000	**DRIVING & DIFFERENTIAL**	1	
1	0223 27 012	Washer	1	
2	2112 27 018	Oil Seal	1	
3	0223 27 020B	Companion Flange Ass'y	1	
4	0223 27 030	Lock Nut	1	
5	0221 27 141	Bearing, Drive Pinion (Rr.)	1	
6	0755 27 141	Bearing, Drive Pinion (Frt.)	1	
7	0820 27 150A	**DIFFERENTIAL CARRIER Ass'y**	1	
8	99811 1050	Bolt	4	
	99971 1000	Spring Washer	4	
● 9	0305 27 171	Distance Piece	1	Car No. 69368 7/4 ~ Added Anew
10	0290 27 231	Differential Gear Case	1	
11	0221 27 245	Lock Washer	5	
12	99753 41022	Reamer Bolt } Selective use	10	
	99753 81022	Reamer Bolt } Selective use	10	
13	0820 27 251	Differential Side Gear	2	
14	0290 27 252	Washer (t=2.0)		
	0290 27 253	Washer (t=2.1) } Selective use	2	
	0290 27 254	Washer (t=2.2)		
15	0221 27 255	Differential Pinion	2	
16	0221 27 261	Shaft, Differential Pinion	1	

No.	Part Number	Description	Q'ty	Remarks
17	0114 27 262	Pin	1	
18	0290 27 301	Adjust Screw (R)	1	
19	0290 27 341	Adjust Screw (L)	1	
20	0221 27 305	Bearing	2	
21	0290 27 302	Lock Plate	2	
22	99811 0812	Bolt, Lock Plate	2	
	99971 0800	Spring Washer	2	
23	0223 27 401	Spacer (t=3.08)		
	0223 27 402	Spacer (t=3.11)		
	0223 27 403	Spacer (t=3.14)		
	0223 27 404	Spacer (t=3.17)		
	0223 27 405	Spacer (t=3.20)		
	0223 27 406	Spacer (t=3.23)		
	0223 27 407	Spacer (t=3.26)		
	0223 27 408	Spacer (t=3.29)	Selective use 1	
	0223 27 409	Spacer (t=3.32)		
	0223 27 411	Spacer (t=3.35)		
	0223 27 412	Spacer (t=3.38)		
	0223 27 413	Spacer (t=3.41)		
	0223 27 414	Spacer (t=3.44)		
	0223 27 415	Spacer (t=3.47)		
● 24	0820 27 950C	Final Gear Set (Ratio : 3.70)	1	
●	2080 27 110	Final Gear Set (Ratio : 3.90)	1	Car No. 61926 7/3 ~ ×
25	99901 0800	Nut, Differential	8	
	99971 0800	Spring Washer	8	

No.	Part Number	Description		Q'ty	Remarks
●	0223 27 112	Distance Piece	Selective use	1	Car No. 69367 7/3 ~ Discarded
●	0223 27 113	Distance Piece			
●	0223 27 114	Distance Piecr			
●	0223 27 115	Distance Piece			
●	0603 27 121	Adjust Shim	Selective use	3	
●	0603 27 122	Adjust Shim			
●	0603 27 123	Adjust Shim			

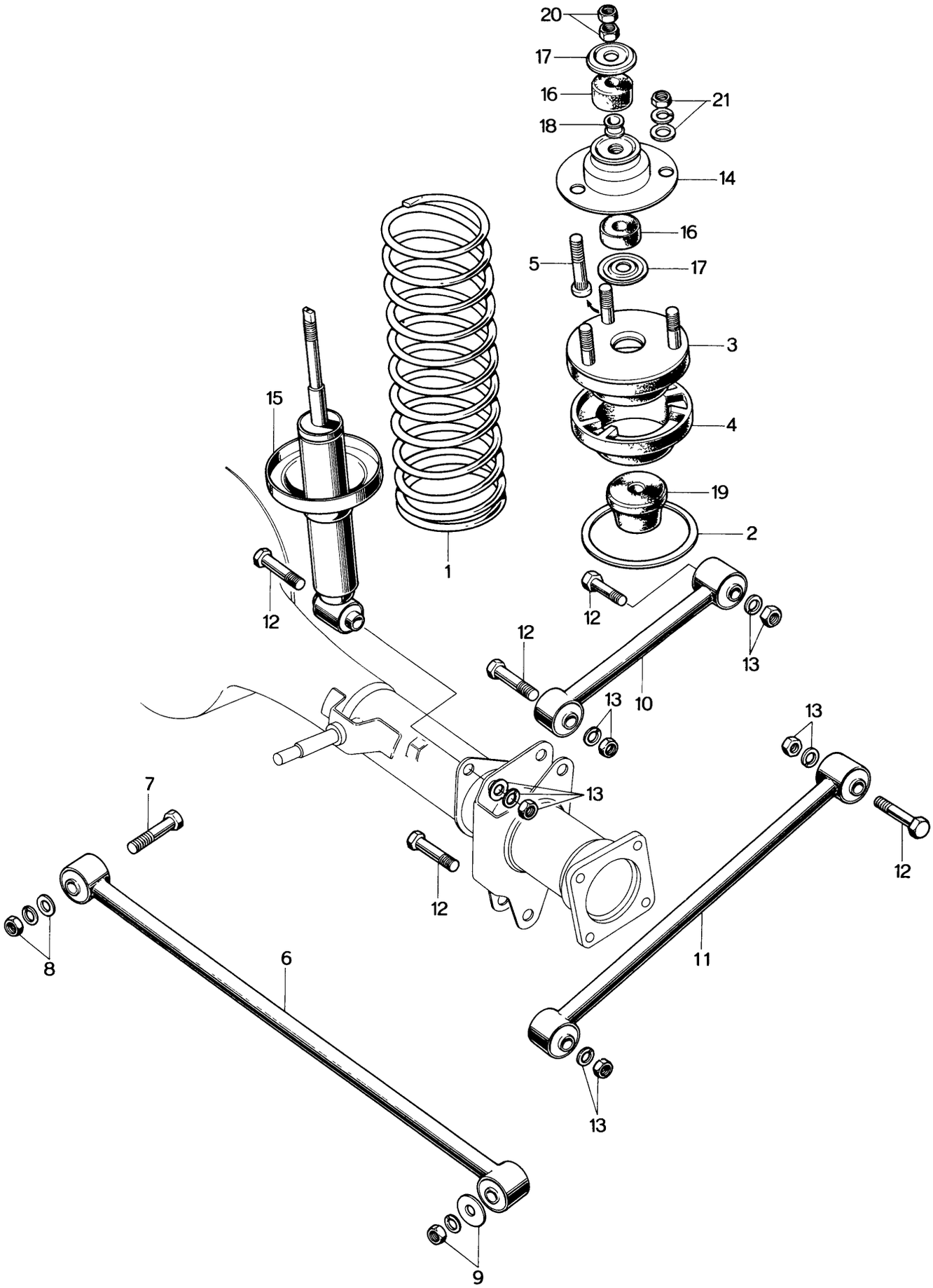
20
17
16
18
21
14
16
5
17
3
4
19
2
15
1
12
12
12
13
13
10
13
13
7
13
12
12
8
6
11
13
9

No.	Part Number	Description	Q'ty	Remarks
1	0839 28 011A	Coil Spring	2	
2	0824 28 012	Adjust Shim	2	
3	0305 28 040	SPRING SEAT UPPER	2	
●	0305 28 040A	SPRING SEAT UPPER	2	Car No. 61926 7/3 ~ △
4	0305 28 013A	Rubber Seat	2	
5	0824 28 464A	Bolt	6	
6	0305 28 150B	Lateral Rod Ass'y	1	
	0305 28 150C	Lateral Rod Ass'y	1	Car No. 29314 7/10 ~ ×
7	0305 28 111B	Bolt	1	
8	99921 1400	Nut, Lateral Rod	2	
	99971 1400	Spring Washer	2	
	99952 1426	Plain Washer	2	
9	0193 34 662	Washer, Lateral Rod	1	
	99921 1400	Nut	2	
	99971 1400	Spring Washer	2	
10	0305 28 200D	Upper Link Ass'y	2	
●	0305 28 200E	Upper Link Ass'y	2	Car No. 52327 7/1 ~ ○ ※
11	0305 28 300C	Lower Link Ass'y	2	
●	0305 28 300D	Lower Link Ass'y	2	Car No. 52327 7/1 ~ ○ ※
12	0305 28 111B	Bolt, Link	10	
13	99921 1400	Nut, Link	10	
	99971 1400	Spring Washer	10	
	99953 1400	Plain Washer	6	
14	0305 28 470	Set Plate	2	
15	0305 28 700C	Rear Damper	2	
●	0305 28 700D	Rear Damper	2	Car No. 45603 7/12 ~ ○
16	0223 28 775	Rubber Bush	4	

No.	Part Number	Description	Q'ty	Remarks
17	0223 28 776	Retainer	4	
18	0824 28 778A	Grommet	2	
19	0305 28 591A	Bound Stopper	2	
●	0305 28 591B	Bound Stopper	2	Car No. 61926 7/3 ~ △
20	99921 1000	Nut, Damper	2	
	99922 1000	Nut	2	
21	99901 0800	Nut, Set Plate	6	
	99952 0800	Plain Washer	6	
	99971 0800	Spring Washer	6	
● Ⓝ	0305 49 080	Rubber Bush, Rear Damper	2	From Car No. 1

STEERING SYSTEM (WHEEL & GEAR)
(WITH ENERGY ABSORBING SHAFT)

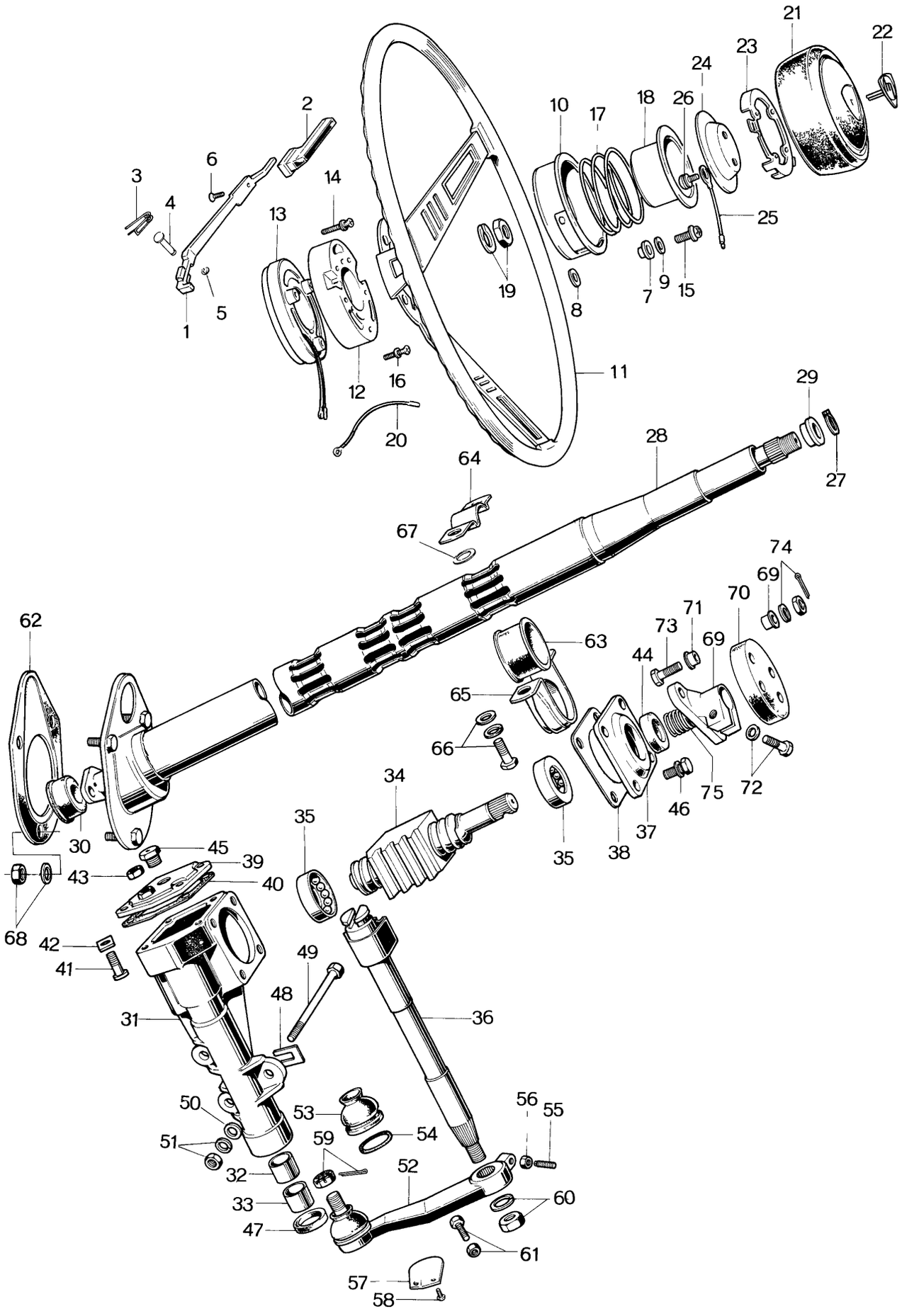

No.	Part Number	Description	Q'ty	Remarks
	0839 32 980C	STEERING WHEEL BOSS Ass'y With Triple Horn Lever	1	
	0841 32 980A	STEERING WHEEL BOSS Ass'y	1	
1	0839 32 011A	Horn Lever	3	
2	0839 32 012A	Lever End	3	
3	0824 32 013A	Return Spring	3	
4	0839 32 019	Shaft	3	Triple Horn Lever use
5	99576 0300	Snap Ring, Shaft	3	
6	99868 0412	Screw, Horn Lever	3	
7	0839 32 026	Insulator	3	
8	0839 32 027	Insulator	3	
9	0839 32 028	Washer	3	
10	0839 32 030C	Cap Retainer For cars with Triple Horn Lever	1	
	0841 32 030	Cap Retainer	1	
11	0839 32 040A	Steering Wheel For cars with Triple Horn Lever	1	
	0841 32 040	Steering Wheel	1	
12	0839 32 042A	Boss	1	
13	0839 32 820A	Terminal	1	
●	0839 32 0820B	Terminal (For Cars With Triple Horn Lever)	1	Car No. 69368 7/4 ~ ×
	0841 32 820	Terminal	1	
●	0841 32 0820A	Terminal	1	Car No. 69368 7/4 ~ ×
14	908314 6 14B	Set Screw, Boss	5	
15	908332 4 16	Set Screw	3	
16	99848 0312	Screw	3	
17	0839 32 014	Spring	1	
18	0839 32 015A	Contact Cap	1	
19	99922 1200	Nut, Steering Wheel	1	

STEERING SYSTEM (WHEEL & GEAR) (WITH ENERGY ABSORBING SHAFT)

No.	Part Number	Description	Q'ty	Remarks
	99971 1200	Spring Washer	1	
20	0839 32 055	Earth Cord For cars with Triple Horn Lever	1	
21	0839 32 800B	HORN CAP Ass'y	1	
	2080 32 800	HORN CAP Ass'y, Dull Finish	1	
22	0824 32 810	Emblem	1	
	2080 32 810	Emblem, Dull Finish	1	
23	0839 32 025B	Cap Retainer	1	
24	0839 32 029	Contact Plate	1	
25	0839 32 039	Cord	1	
26	908682 3 08	Set Screw	6	
27	0208 32 059	Stop Ring	1	
28	0303 32 100	Energy Absorbing Shaft, For General	1	
●	0303 32 100A	Energy Absorbing Shaft, For General	1	Car No. 39870 ’71~×
	2835 32 100	Energy Absorbing Shaft, For France & Finland	1	
●	2835 32 100A	Energy Absorbing Shaft, For France & Finland	1	Car No. 39870 ’71~×
29	0259 32 071	Bush, Shaft Support	1	
30	0305 32 089A	Centering Bush	1	
●	0820 32 089	Centering Bush	1	Car No. 39870 ’71~×
	0303 32 110	STEERING GEAR Ass'y (R.H.D.)	1	
	2113 32 110	STEERING GEAR Ass'y (L.H.D.)	1	
31	0303 32 120A	GEAR HOUSING Ass'y (R.H.D.)	1	

No.	Part Number	Description	Q'ty	Remarks
	2113 32 120	GEAR HOUSING Ass'y (L.H.D.)	1	
32	0180 32 122A	Bush	1	
33	0180 32 123A	Bush	1	
34	0305 32 130B	WORM BALL NUT (R.H.D.)	1	
	2113 32 130	WORM BALL NUT (L.H.D.)	1	
35	0259 32 182	Ball Bearing	2	
36	0305 32 141	Sector Shaft	1	
37	0820 32 151	End Cover	1	
38	0259 32 154	Shim, End Cover (t=0.05)	Selective use 1	
	0259 32 155	Shim (t=0.075)		
	0259 32 156	Shim (t=0.1)		
	0259 32 157	Shim (t=0.2)		
39	0259 32 160	Side Cover	1	
40	0259 32 163	Packing, Side Cover	1	
41	0180 32 165A	Adjust Screw	1	
42	0180 32 171A	Adjust Shim (t=1.95)	Selective use 1	
	0180 32 172A	Adjust Shim (t=2.00)		
	0180 32 173A	Adjust Shim (t=2.05)		
	0180 32 174A	Adjust Shim (t=2.10)		
43	99922 1000	Lock Nut	1	
44	0180 32 184	Oil Seal	1	
45	0820 32 190	Oil Plug	1	

STEERING SYSTEM (WHEEL & GEAR)
(WITH ENERGY ABSORBING SHAFT)

No.	Part Number	Description	Q'ty	Remarks
46	908012 8 16	Set Bolt, Cover	8	
47	99583 26388	Oil Seal	1	
48	0208 32 188	Adjust Shim, Gear Housing	1	
49	99781 1090	Bolt, Gear Housing	3	
50	0305 32 119	Plain Washer	3	
51	99942 1000	Nut, Gear Housing	3	
	99951 1022	Plain Washer	2	
52	2324 32 220	PITMAN ARM Ass'y (R.H.D.)	1	
	2835 32 220	PITMAN ARM Ass'y (L.H.D.)	1	
53	0259 32 279	Dust Seal	1	
54	0259 32 289	Set Ring	1	
55	0603 32 315	Bolt	1	
56	99922 1000	Lock Nut	1	
57	0820 32 227	Insulator	1	(R.H.D.)
58	908332 4 08	Set Screw, Insulator	2	(R.H.D.)
59	99924 1000	Nut	1	(R.H.D.)
	99221 2020	Split Pin	1	
60	99921 1800	Nut, Pitman Arm	1	
	99971 1800	Spring Washer	1	
61	0187 32 235	Bolt, Turning Radius Adjust	1	

No.	Part Number	Description	Q'ty	Remarks
	99922 1000	Lock Nut	1	
62	0326 32 411	Dust Cover	1	
63	2244 32 423	Fixing Rubber	1	
64	0305 32 425	Bracket, Upper	1	
65	0305 32 426	Bracket, Lower	1	
66	99799 0832	Bolt, Bracket	2	
	99952 0800	Plain Washer	2	
	99971 0800	Spring Washer	2	
67	0259 43 088	Spacer	2	
68	99901 0800	Nut, Shaft Jacket	3	
	99952 0800	Plain Washer	3	
●	0305 99 016	STEERING JOINT SET	1	
●	0187 32 850A	STEERING JOINT Ass'y	1	Car No. 39803 7/11 ~ ×
● 69	0305 32 059	Spider	1	Car No. 39802 7/11 ~ Discarded
● 70	0305 32 881	Coupling	1	
● 71	0305 32 882A	Stopper, Rubber	8	
● 72	907812 8 25	Set Bolt	1	
● 73	99802 0832	Bolt	2	
● 74	99904 0800	Nut	2	
●	99971 0800	Spring Washer	2	
●	99221 2015	Split Pin	2	
●	0187 32 886B	Clamp	1	Car No. 39803 7/11 ~ Added Anew
●	99781 0835	Bolt, Clamp	1	
●	99971 0800	Spring Washer	1	
●	99781 0825	Bolt, Steering Joint	1	
●	99971 0800	Spring Washer	1	
75	0305 32 860	Spring	1	
●	0187 32 860	Spring	1	Car No. 39803 7/11 ~ ×

STEERING SYSTEM (WHEEL & GEAR)

(WITH COUPLING JOINT, WITHOUT ENERGY ABSORBING SHAFT

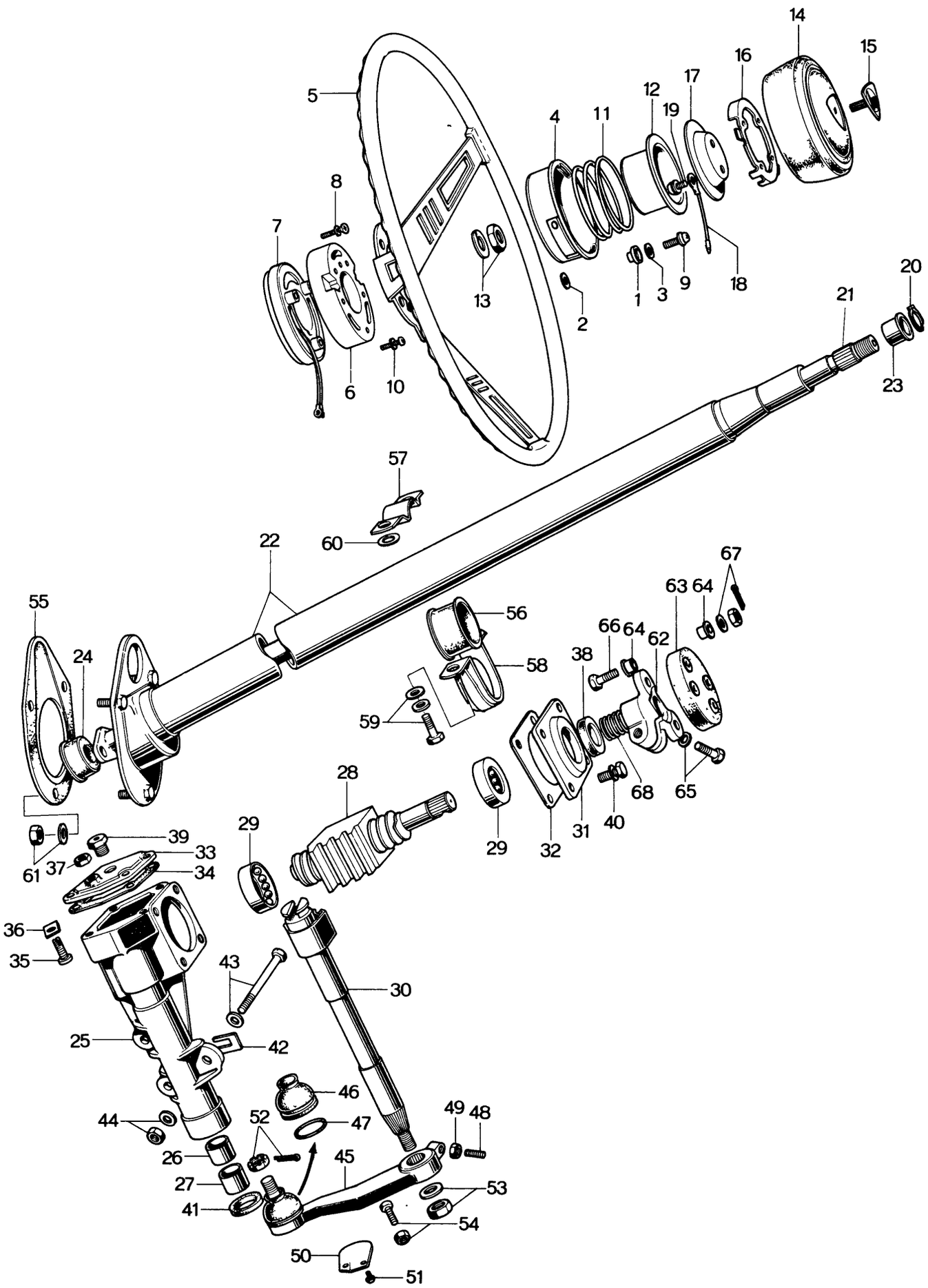

No.	Part Number	Description	Q'ty	Remarks
	0841 32 980A	STEERING WHEEL BOSS Ass'y	1	
1	0839 32 026	Insulator	3	
2	0839 32 027	Insulator	3	
3	0839 32 028	Washer	3	
4	0841 32 030	Cap Retainer	1	
5	0841 32 040	Steering Wheel	1	
6	0839 32 042A	Boss	1	
7	0841 32 820	Terminal	1	
●	0841 32 820A	Terminal	1	Car No. 69368 7/4 ~ ×
8	908314 6 14B	Set Screw, Boss	5	
9	908332 4 16	Set Screw	3	
10	99848 0312	Screw	3	
11	0839 32 014	Spring	1	
12	0839 32 015A	Contact Cap	1	
13	99922 1200	Nut, Steering Wheel	1	
	99971 1200	Spring Washer	1	
14	0839 32 800B	HORN CAP Ass'y	1	
	2080 32 800	HORN CAP Ass'y, Dull Finish	1	
15	0824 32 810	Emblem	1	
	2080 32 810	Emblem, Dull Finish	1	
16	0839 32 025B	Cap Retainer	1	
17	0839 32 029	Contact Plate	1	
18	0839 32 039	Cord	1	

STEERING SYSTEM (WHEEL & GEAR) (2069,2071)
(WITH COUPLING JOINT, WITHOUT ENERGY ABSORBING SHAFT)

No.	Part Number	Description	Q'ty	Remarks
19	908682 3 08	Set Screw	6	
20	0208 32 059	Stop Ring	1	
21	2831 32 051	Shaft Ass'y, Without Steering Lock Use	1	
	2862 32 050B	Shaft Ass'y, With Steering Lock Use	1	
●	2862 32 050C	Shaft Ass'y, With Steering Lock Use	1	Car No. 39870 ’70/11 ~ ×
22	2831 32 080	Shaft Ass'y, Without Steering Lock Use	1	
	2862 32 080	Shaft Ass'y, With Steering Lock Use	1	
23	0259 32 071	Bush, Shaft Support	1	
24	0305 32 089A	Centering Bush	1	
●	0820 32 089	Centering Bush	1	Car No. 39870 ’70/11 ~ ×
	~~0303 32 110~~	~~STEERING GEAR Ass'y (R.H.D.)~~	~~1~~	
	2113 32 110	STEERING GEAR Ass'y (L.H.D.)	1	
● 25	~~0303 32 120A~~	~~GEAR HOUSING Ass'y (R.H.D.)~~	~~1~~	
	2113 32 120	GEAR HOUSING Ass'y (L.H.D.)	1	
26	0180 32 122A	Bush	1	
27	0180 32 123A	Bush	1	
● 28	~~0305 32 130B~~	~~WORM BALL NUT (R.H.D.)~~	~~1~~	
	2113 32 130	WORM BALL NUT (L.H.D.)	1	
29	0259 32 182	Ball Bearing	2	

No.	Part Number	Description	Q'ty	Remarks
30	0305 32 141	Sector Shaft	1	
31	0820 32 151	End Cover	1	
32	0259 32 154	Shim, End Cover (t=0.05)		
	0259 32 155	Shim (t=0.075)	Selective use 1	
	0259 32 156	Shim (t=1.0)		
	0259 32 157	Shim (t=0.2)		
33	0259 32 160	Side Cover	1	
34	0259 32 163	Packing, Side Cover	1	
35	0180 32 165A	Adjust Screw	1	
36	0180 32 171A	Adjust Shim (t=1.95)		
	0180 32 172A	Adjust Shim (t=2.00)	Selective use 1	
	0180 32 173A	Adjust Shim (t=2.05)		
	0180 32 174A	Adjust Shim (t=2.10)		
37	99922 1000	Lock Nut	1	
38	0180 32 184	Oil Seal	1	
39	0820 32 190	Oil Plug	1	
40	908012 8 16	Set Bolt, Cover	8	
41	99583 26388	Oil Seal	1	
42	0208 32 188	Adjust Shim, Gear Housing	1	
43	99781 1090	Bolt, Gear Housing	3	
	0305 32 119	Plain Washer	3	
44	99942 1000	Nut, Gear Housing	3	
	99951 1022	Plain Washer	2	

STEERING SYSTEM (WHEEL & GEAR) (2069,2071)
(WITH COUPLING JOINT, WITHOUT ENERGY ABSORBING SHAFT)

No.	Part Number	Description	Q'ty	Remarks
45	~~2324 32 220~~	~~PITMAN ARM Ass'y (R.H.D.)~~		
	2835 32 220	PITMAN ARM Ass'y (L.H.D.)	1	
46	0259 32 279	Dust Seal	1	
47	0259 32 289	Set Ring	1	
48	0603 32 315	Bolt	1	
49	99922 1000	Lock Nut	1	
50	~~0826 32 227~~	~~Insulator~~	~~1~~	(R.H.D.)
51	~~808332 4 08~~	~~Set Screw, Insulator~~	~~2~~	(R.H.D.)
52	99924 1000	Nut	1	
	99221 2020	Split Pin	1	
53	99921 1800	Nut, Pitman Arm	1	
	99971 1800	Spring Washer	1	
54	0187 32 235	Bolt, Turning Radius Adjust	1	
	99922 1000	Lock Nut	1	
55	0326 32 411	Dust Cover	1	
56	2244 32 423	Fixing Rubber	1	
57	0305 32 425	Bracket, Upper	1	
58	0305 32 426	Bracket, Lower	1	
59	99799 0832	Bolt, Bracket	2	
	99952 0800	Plain Washer	2	
	99971 0800	Spring Washer	2	
60	0259 43 088	Spacer	2	
61	99901 0900	Nut, Shaft Jacket	3	
	99952 0800	Plain Washer	3	

STEERING SYSTEM (WHEEL & GEAR) (2069,2071)
(WITH COUPLING JOINT, WITHOUT ENERGY ABSORBING SHAFT)

32

No.	Part Number	Description	Q'ty	Remarks
●	0305	STEERING JOINT Ass'y	1	
●	0187 32 850A	STEERING JOINT Ass'y	1	Car No. 39863 70/11 ~ ×
● 62	0305 32 059	Spider	1	
● 63	0305 32 881	Caupling	1	
● 64	0305 32 882A	Stopper, Rubber	8	
● 65	907812 8 25	Set Bolt, Spider	1	
● 66	99802 0832	Bolt	2	Car No. 39802 70/11 ~ Discarded
● 67	99904 0800	Nut	2	
●	99971 0800	Spring Washer	2	
●	99221 2015	Split Pin	2	
●	0187 32 886B	Clamp	1	
●	99781 0835	Bolt, Clamp	1	
●	99971 0800	Spring Washer	1	
●	99781 0825	Bolt, Steering Joint	1	Car No. 39803 70/11 ~ Added Anew
●	99971 0800	Spring Washer	1	
68	0305 32 860	Spring	1	
●	0187 32 860	Spring	1	Car No. 39803 70/11 ~ ×

STEERING SYSTEM (WHEEL & GEAR)
2323 (AUSTRALIA EXCLUDED)

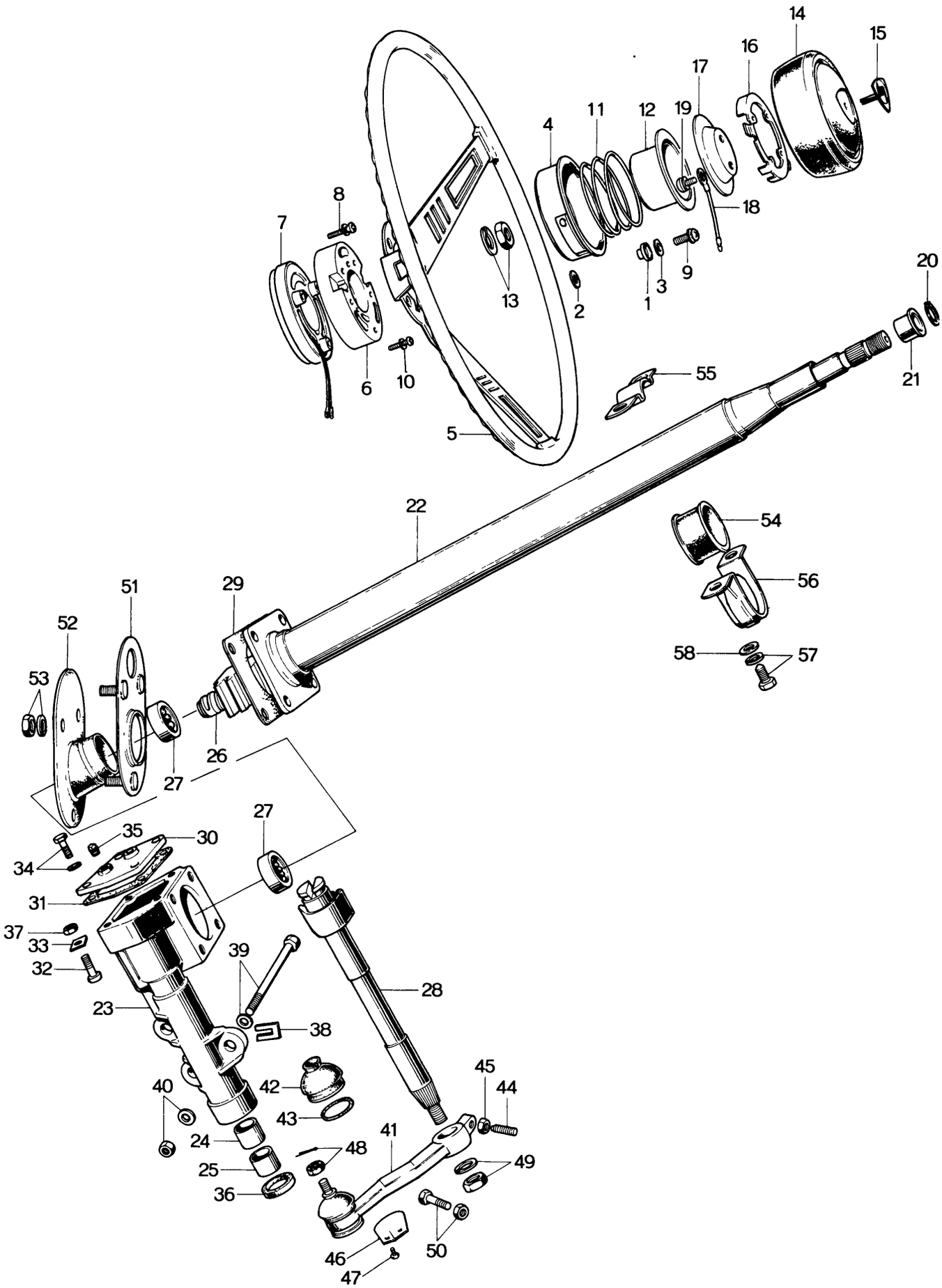

No.	Part Number	Description	Q'ty	Remarks
	0841 32 980A	STEERING WHEEL BOSS Ass'y	1	
1	0839 32 026	Insulator	3	
2	0839 32 027	Insulator	3	
3	0839 32 028	Washer	3	
4	0841 32 030	Cap Retainer	1	
5	0841 32 040	Steering Wheel	1	
6	0839 32 042A	Boss	1	
7	0841 32 820	Terminal	1	
●	0841 32 820A	Terminal	1	Car No. 69368 7/4 ~ ×
8	908314 6 14B	Set Screw, Boss	5	
9	908332 4 16	Set Screw	3	
10	99848 0312	Screw	3	
11	0839 32 014	Spring	1	
12	0839 32 015A	Contact Cap	1	
13	99922 1200	Nut	1	
	99971 1200	Spring Washer	1	
14	0839 32 800B	HORN CAP Ass'y	1	
15	0824 32 810	Emblem	1	
16	0839 32 025B	Cap Retainer	1	
17	0839 32 029	Contact Plate	1	
18	0839 32 039	Cord	1	
19	908682 3 08	Set Screw	6	

No.	Part Number	Description	Q'ty	Remarks
	0302 32 110	**STEERING GEAR Ass'y**	1	
20	0208 32 059	Stop Ring	1	
21	0259 32 071	Bush, Shaft Support	1	
22	0304 32 080	Shaft Jacket	1	
23	0303 32 120A	**GEAR HOUSING Ass'y**	1	
24	0180 32 122A	Bush	1	
25	0180 32 123A	Bush	1	
26	0304 32 130B	**WORM BALL NUT**	1	
27	0259 32 182	Ball Bearing	2	
28	0305 32 141	Sector Shaft	1	
29	0259 32 154	Shim, End Cover (t=0.05)	Selective use 1	
	0259 32 155	Shim (t=0.075)		
	0259 32 156	Shim (t=0.1)		
	0259 32 157	Shim (t=0.2)		
30	0259 32 160	Side Cover	1	
31	0259 32 163	Gasket, Side Cover	1	
32	0180 32 165A	Adjust Screw	1	
33	0180 32 171A	Adjust Shim (t=1.95)	Selective use 1	
	0180 32 172A	Adjust Shim (t=2.00)		

No.	Part Number	Description	Q'ty	Remarks
	0180 32 173A	Adjust Shim (t=2.05) } Selective use	1	
	0180 32 174A	Adjust Shim (t=2.10) }		
34	908012 8 16	Set Bolt, Cover	8	
35	99502 2000	Plug	1	
36	99583 26388	Oil Seal	1	
37	99922 1000	Lock Nut	1	
38	0208 32 188	Adjust Shim, Gear Housing	1	
39	99781 1090	Bolt, Gear Housing	3	
	0305 32 119	Plain Washer	3	
40	99942 1000	Nut	3	
	99951 1022	Plain Washer	2	
41	2324 32 220	**PITMAN ARM Ass'y**	1	
42	0259 32 279	Dust Seal	1	
43	0259 32 289	Set Ring	1	
44	0603 32 315	Bolt	1	
45	99922 1000	Lock Nut	1	
46	0820 32 227	Insulator	1	
47	908332 4 08	Set Screw	2	
48	99924 1000	Nut	1	
	99221 2020	Split Pin	1	

No.	Part Number	Description	Q'ty	Remarks
49	99921 1800	Nut, Pitman Arm	1	
	99971 1800	Spring Washer	1	
50	0187 32 235	Bolt, Turning Radius Adjust	1	
	99922 1000	Lock Nut	1	
51	0304 32 410	Set Plate	1	
52	0302 32 411	Dust Cover	1	
53	99901 0800	Nut, Set Plate	3	
	99952 0800	Plain Washer	3	
54	2244 32 423	Fixing Rubber	1	
55	0305 32 425	Bracket, Upper	1	
56	0305 32 426	Bracket, Lower	1	
57	99799 0832	Bolt, Bracket	2	
	99952 0800	Plain Washer	2	
	99971 0800	Spring Washer	2	
58	0259 43 088	Spacer	2	

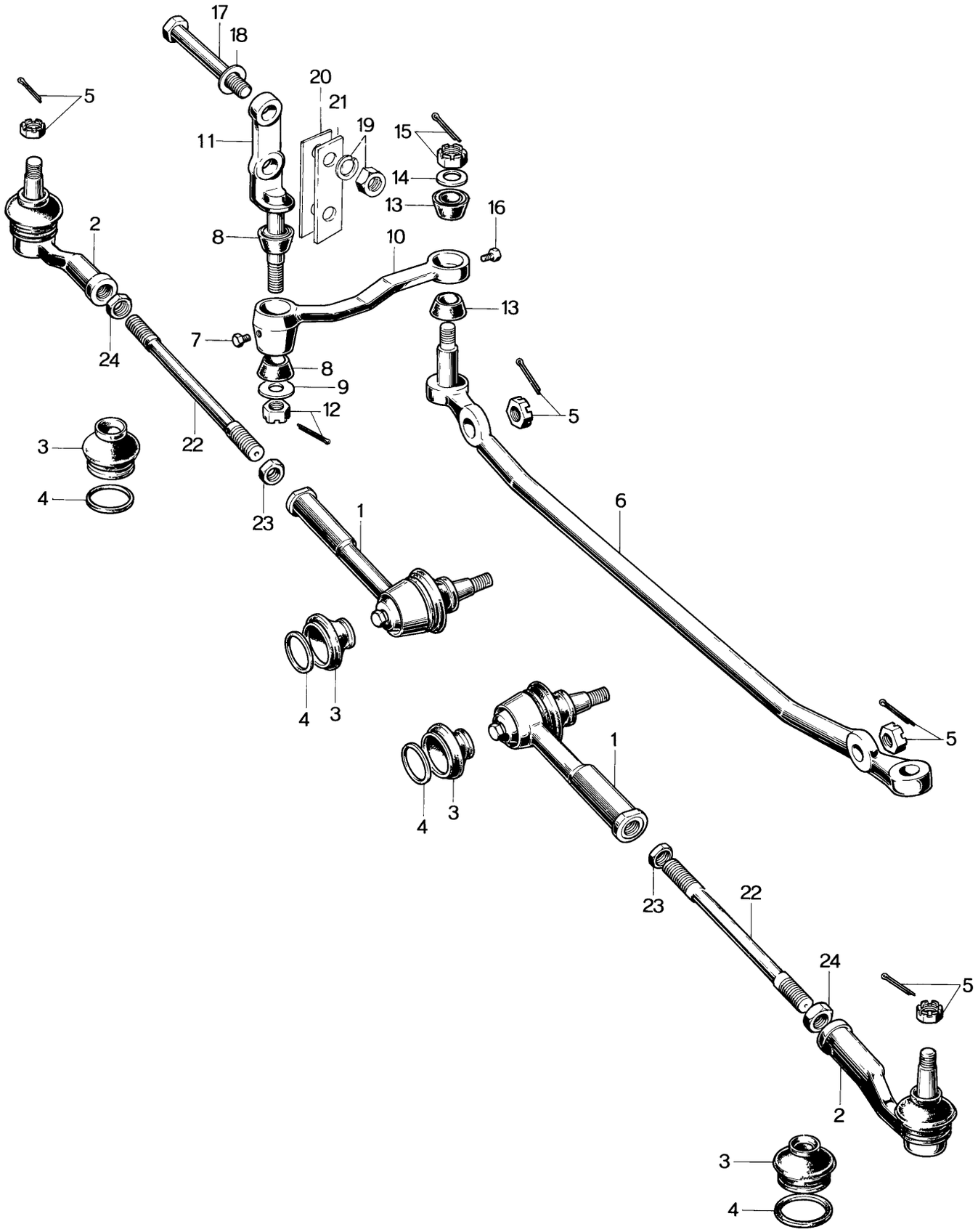
17
18
20
21
19
15
5
11
14
13
16
2
8
10
7
13
24
8
9
12
5
3
22
4
23
6
1
4
3
5
1
4
3
23
22
24
5
2
3
4

No.	Part Number	Description	Q'ty	Remarks
1	2370 99 322	SOCKET SET	2	
2	2370 99 324	SOCKET SET	2	
3	0259 32 279	Dust Seal	4	
4	0259 32 289	Set Ring	4	
5	99924 1000	Nut	4	
	99221 2020	Split Pin	4	
6	0305 32 250	Center Link	1	
	0305 32 320	IDLER Ass'y	1	
7	0208 32 278	Plug	1	
8	0259 32 329	Bush	2	
9	0259 32 341	Washer	1	
10	0305 32 351	Idler Arm	1	
11	0710 32 352	Spindle	1	
12	99924 1200	Nut	1	
	99221 3020	Split Pin		
13	0259 32 329	Bush	2	
14	0259 32 341	Washer	1	
15	99221 3020	Split Pin	1	
	99924 1200	Nut	1	
16	0208 32 278	Plug	1	
17	99781 1092	Bolt, Idler	2	

STEERING SYSTEM (ROD, R.H.D.)

No.	Part Number	Description	Q'ty	Remarks
18	0305 32 119	Plain Washer	2	
19	99921 1000	Nut, Idler	2	
	99971 1000	Spring Washer	2	
20	0305 32 321	Shim, Idler	1	
21	2080 32 358	Spacer, Idler	1	
22	0305 32 365	Tie Rod	2	
23	99922 1400	Nut	2	
24	99944 1400	Nut	2	

STEERING SYSTEM (ROD, L. H. D.)

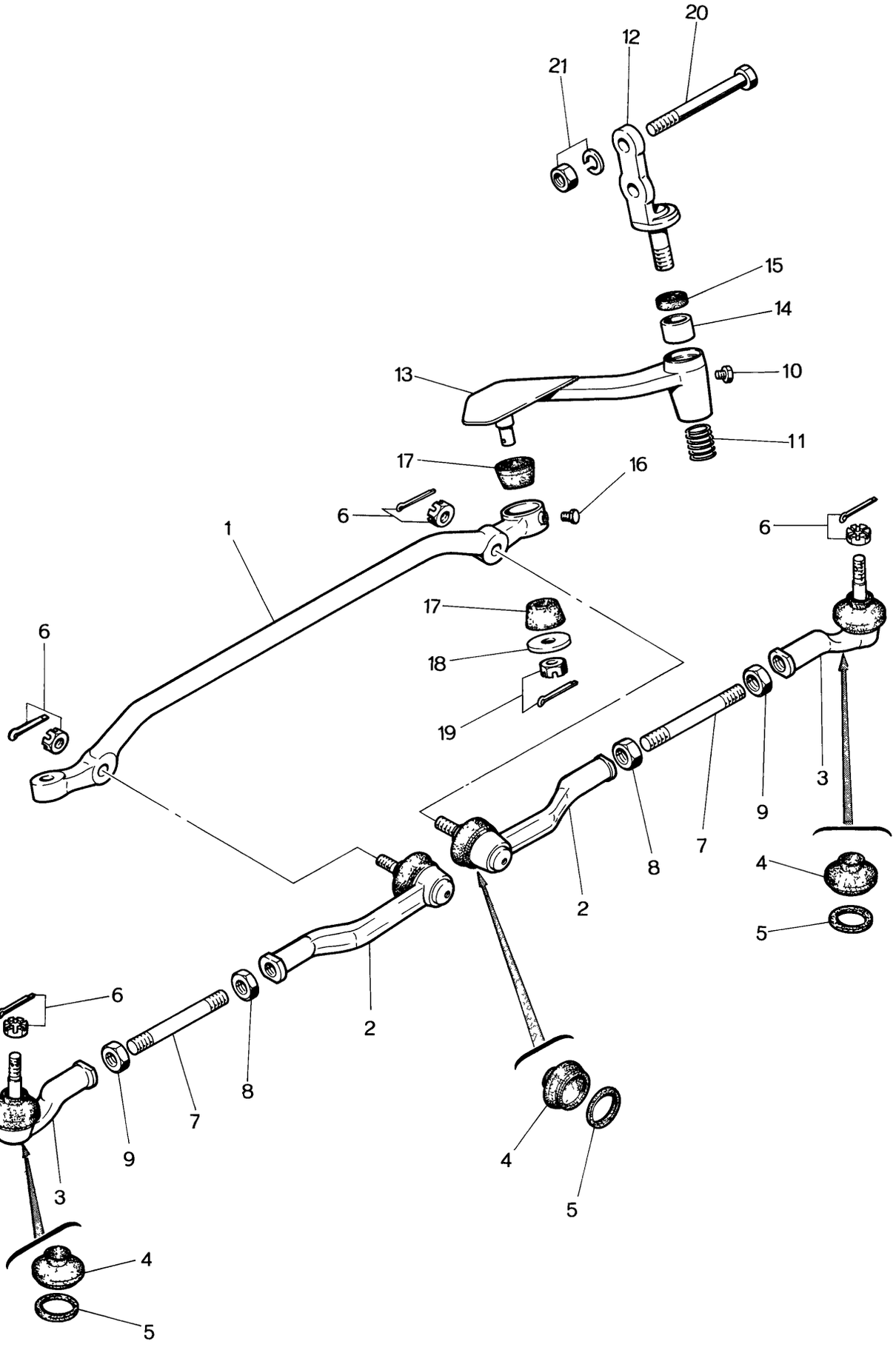

No.	Part Number	Description	Q'ty	Remarks
1	2080 32 261	Center Link	1	
2	2113 99 322	SOCKET Ass'y	2	
3	2370 99 324	SOCKET Ass'y	2	
4	0259 32 279	Dust Seal	4	
5	0259 32 289	Set Ring	4	
6	99924 1000	Nut, Socket	4	
	99221 2020	Split Pin	4	
7	2113 32 365	Tie Rod	2	
8	99922 1400	Lock Nut, Tie Rod	2	
9	99944 1400	Lock Nut, Tie Rod	2	
	2113 32 320B	STEERING LINK Ass'y	1	
●	2080 32 320	STEERING LINK Ass'y	1	Car No. 42470 $\frac{7}{1}$ ~ ×
10	0208 32 278	Plug	1	
11	0111 32 173	Spring	1	
12	2113 32 330	Spindle	1	
13	2113 32 350B	IDLER ARM Ass'y	1	
●	2113 32 350C	IDLER ARM Ass'y	1	Car No. 42470 $\frac{7}{4}$ ~ ○
14	2113 32 354	Bush	1	

STEERING SYSTEM (ROD, L.H.D.)

No.	Part Number	Description	Q'ty	Remarks
15	2113 32 356	Oil Seal	1	
16	0208 32 278	Plug, Idler	1	
17	2113 32 329	Tapered Bush	2	
18	0259 32 341	Washer	1	
19	99924 1200	Nut, Idler	1	
	99221 3020	Split Pin	1	
20	99781 1092	Bolt, Idler	2	
●	99781 1085	Bolt, Idler	2	Car No. 52931 7/2 ~ ×
21	99921 1000	Nut, Idler	2	
	99971 1000	Spring Washer	2	

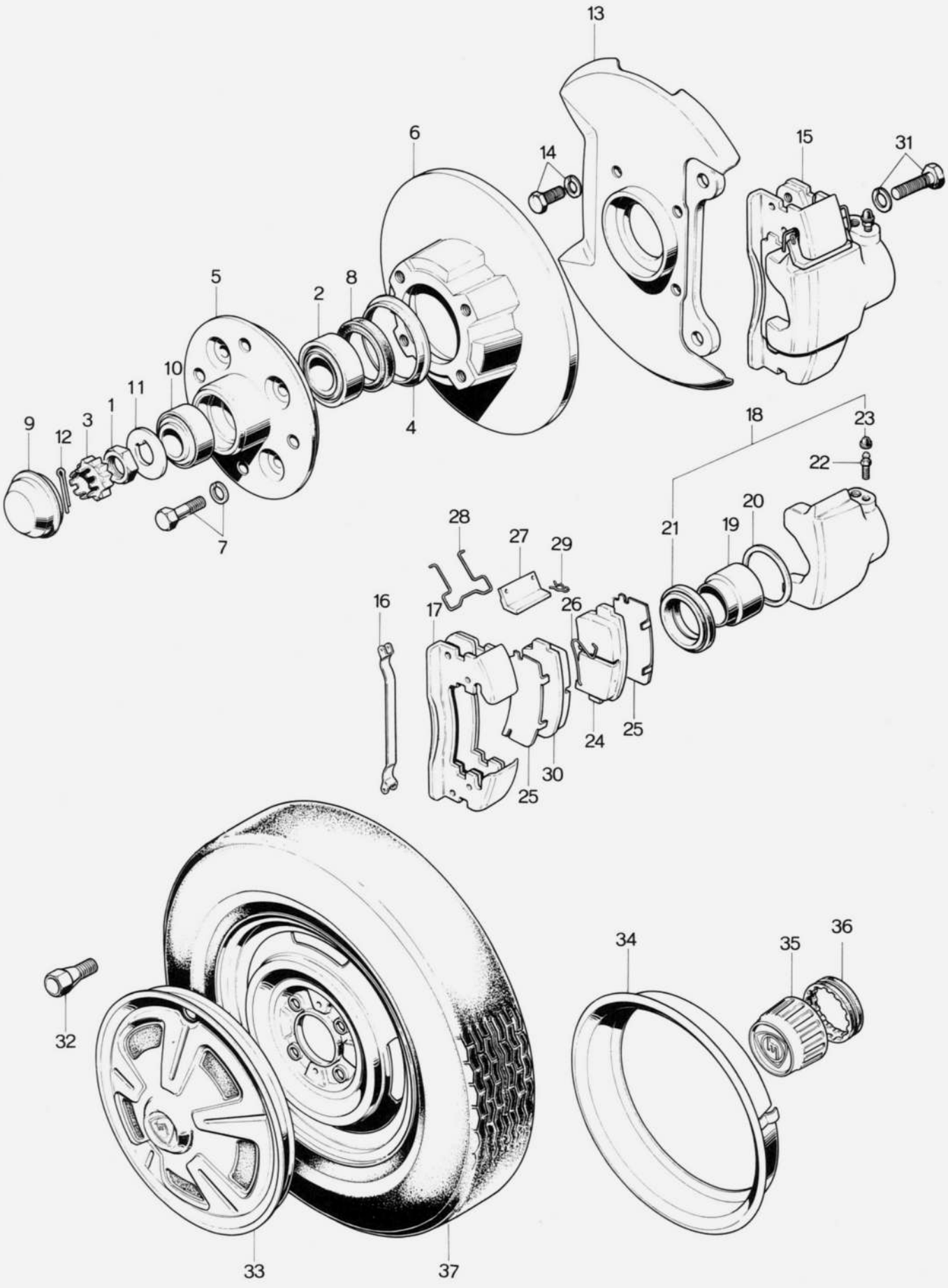
13
6
14
15
31
5
2
8
10
11
1
3
12
9
4
18
23
22
21
19
20
28
27
29
16
17
26
24
25
30
25
7
32
34
35
36
33
37

No.	Part Number	Description	Q'ty	Remarks
1	0662 33 042	Nut	2	
2	0259 33 047	Bearing, Inner	2	
3	0317 33 049	Set Cover	2	
4	0221 33 035	Dust Ring	2	
5	0329 33 061	Wheel Hub	2	
	0820 33 091A	Wheel Hub, Center Cap	2	
6	0305 33 251	Disc Plate	2	
7	0221 33 698	Bolt, Disc Plate	8	
	99971 1000	Spring Washer	8	
8	0187 33 065A	Oil Seal	2	
9	0259 33 071	Hub Cap	2	
10	0317 33 075	Bearing, Outer	2	
11	0317 33 043	Tab Washer	2	
12	99221 4030	Split Pin	2	
13	0305 33 260	Mounting Adapter Ass'y	2	
14	99811 1022	Bolt, Mounting Adapter	8	
	99971 1000	Spring Washer	8	
15	0305 33 980A	DISC BRAKE Ass'y (R)	1	
	0305 33 990A	DISC BRAKE Ass'y (L)	1	
16	0305 33 235	Anti-Rattle Pad Clip	4	
17	0305 33 280	Support, Mounting	2	

No.	Part Number	Description	Q'ty	Remarks
18	0305 33 610	BODY & PISTON Ass'y (R)	1	
	0305 33 710	BODY & PISTON Ass'y (L)	1	
19	2981 33 651	Piston	2	
20	2981 33 671	Piston Seal	2	
21	2981 33 681	Boot	2	
22	0233 33 691	Bleeder Screw	2	
23	0600 33 693	Cap	2	
24	0305 33 625	Pad Ass'y, Outer	2	
25	0305 33 626A	Shim	4	
26	0296 33 636	Pad Spring (R)	1	
	0296 33 646	Pad Spring (L)	1	
27	0305 33 695	Support Plug	4	
28	0305 33 696	Spring	4	
29	0305 33 698	Pin	8	
30	0305 33 725	Pad Ass'y, Inner	2	
● Ⓝ	0841 49 230	Pad Set (Fig. No. 16,24,25,26 & 30 included)	1	Set
● Ⓝ	0296 49 240	Seal Kit (Fig. No. 20 & 21 included)	1	Set
31	0305 33 699	Bolt, Disc Brake	4	
	99971 1200	Spring Washer	4	
32	0259 33 165	Wheel Set Bolt	8	
	0820 33 165	Wheel Set Bolt, Coupe Use	8	
33	0841 33 170E	Wheel Cap	2	
●	0841 33 170F	Wheel Cap	2	Car No. 32016 7/10 ~ ○
34	0820 33 180A	Wheel Ring, Coupe Use	2	
35	0820 33 191A	Center Cap, Coupe Use	2	

No.	Part Number	Description	Q'ty	Remarks
36	0820 33 192A	Set Rubber, Coupe Use	2	
37	9962 12 6113	6.15S—13—4PR Low Profile Tire		
●	9962 02 6413	6.45S—13—4PR Low Profile Tire		Car No. 61926 7/3 ~ ×
	9962 11 6113	6.15S—13—4PR Low Profile Tire, White Ring	2	
●	9962 01 6413	6.45S—13—4PR Low Profile Tire, White Ring		Car No. 61926 7/3 ~ ×
●	9962 02 1553	155SR—13Radial Tire, White Ring	Selective use	
	9962 04 1553	155SR—13Radial Tire		Car No. 61925 7/3 ~ Discarded
●	9962 01 1653	165SR—13Radial Tire		Car No. 61926 7/3 ~ ×
	9962 07 1553	155HR—13Radial Tire		Car No. 33038 70/10 ~ Added Anew
●	9962 03 1653	165HR—13Radial Tire		Car No. 61926 7/3 ~ ×
	9963 01 6113	6.15—13Tube, Low Profile Tire	2	
●	9963 01 6413	6.45—13Tube, Low Profile Tire	2	Car No. 61926 7/3 ~ ×
	9963 01 1553	155—13Tube, Radial Tire	2	
●	9963 01 1653	165—13Tube, Radial Tire	2	Car No. 61926 7/3 ~ ×
	9965 11 4030	4—J×13WDC Disc Wheel	2	
	9965 05 4530	4½—J×13WDC Disc Wheel	2	Car No. 40001 70/12 ~ ○
	9965 12 4030	4—J×13WDC Disc Wheel, Center Cap use	2	
	9965 06 4530	4½—J×13WDC Disc Wheel, Center Cap use	2	Car No. 40001 70/12 ~ ○

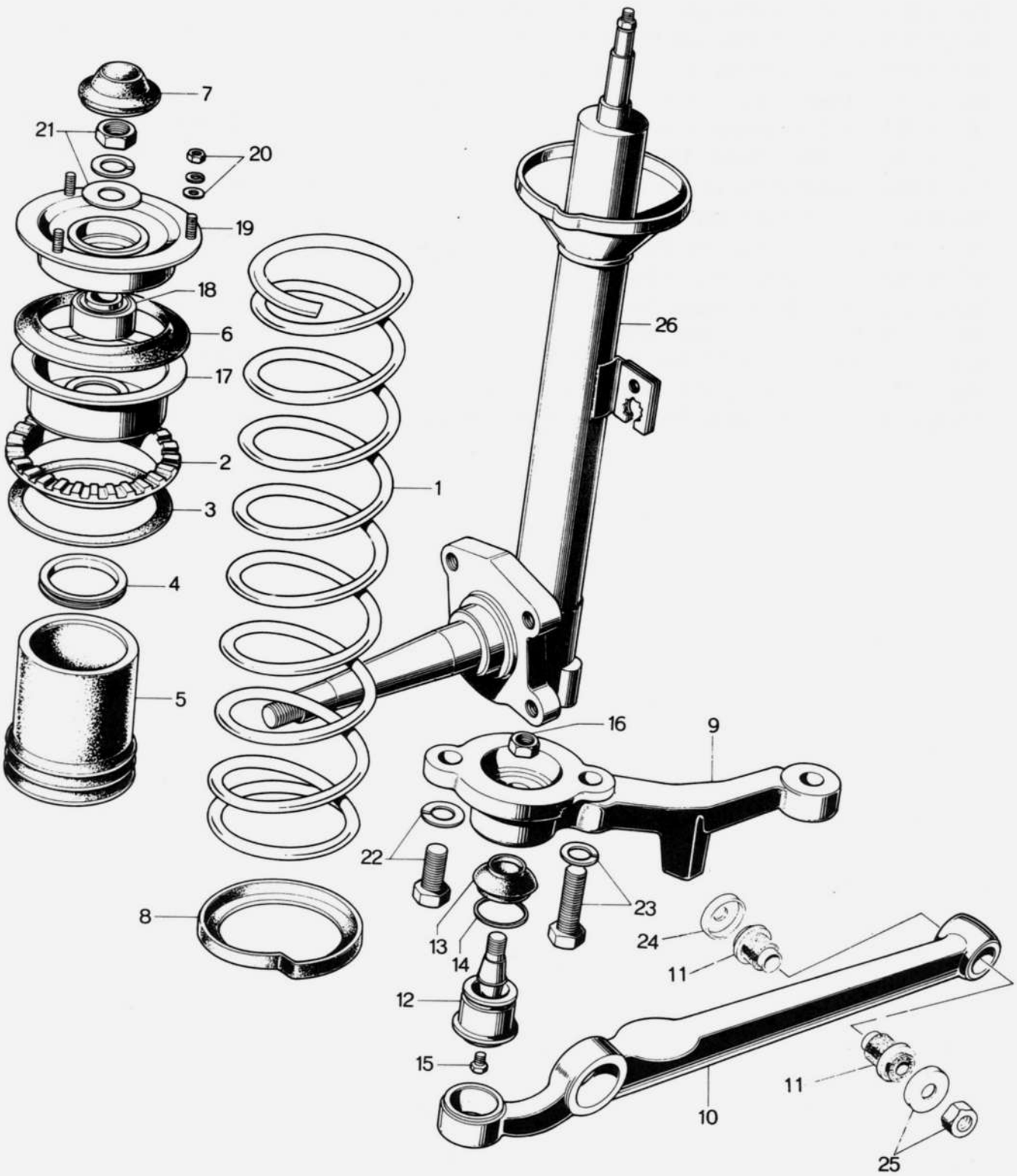
7
21
20
19
18
6
17
2
3
4
5
1
26
16
9
22
23
8
13
14
24
11
12
15
10
11
25

No.	Part Number	Description	Q'ty	Remarks
1	0839 34 011	Coil Spring	2	
2	0259 34 012	Rubber Seat, Upper	2	
3	0259 34 013	Adjust Plate (t=4.5)	2	
4	2158 34 014	Dust Seal Ring	2	
5	0259 34 015	Boot	2	
6	0259 34 016	Seal	2	
7	0259 34 019	Cap	2	
8	0259 34 021	Rubber Seat, Lower	2	
	0839 34 310	ARM Ass'y (R)	1	
	0839 34 320	ARM Ass'y (L)	1	
9	0305 32 301B	Knuckle Arm (R)	1	
	0305 32 311B	Knuckle Arm (L)	1	
10	0305 34 311	Arm	2	
11	0317 34 460	Rubber Bush	4	
12	0259 99 356	BALL JOINT Ass'y	2	
13	0187 32 279A	Dust Seal	2	
14	0259 32 289	Set Ring	2	
15	0208 32 278	Plug	2	
16	99942 1200	Self Lock Nut	2	

No.	Part Number	Description	Q'ty	Remarks
17	2158 34 340	Spring Seal, Upper	2	
18	2158 34 381	Bearing	1	
19	2158 34 390	Mounting Rubber	1	
20	99901 0800	Nut, Mounting Rubber	6	
	99952 0800	Plain Washer	6	
	99971 0800	Spring Washer	6	
21	99921 1400	Nut, Damper Upper Side	2	
	99951 1430	Plain Washer	2	
	99971 1400	Spring Washer	2	
22	99781 1225	Bolt, Socket	2	
	99971 1200	Spring Washer	2	
23	99781 1240	Bolt, Socket	2	
	99971 1200	Spring Washer	2	
24	0317 34 662	Washer No. I	2	
25	0317 34 663	Washer No.2	2	
	99947 1400	Nut	2	
26	0305 34 910D	Front Damper Ass'y	2	
●	0305 34 910E	Front Damper Ass'y	2	Car No. 52327 7/1 ~ ○
●	0305 34 910F	Front Damper Ass'y	2	Car No. 69368 7/4 ~ ○

34 FRONT DAMPER

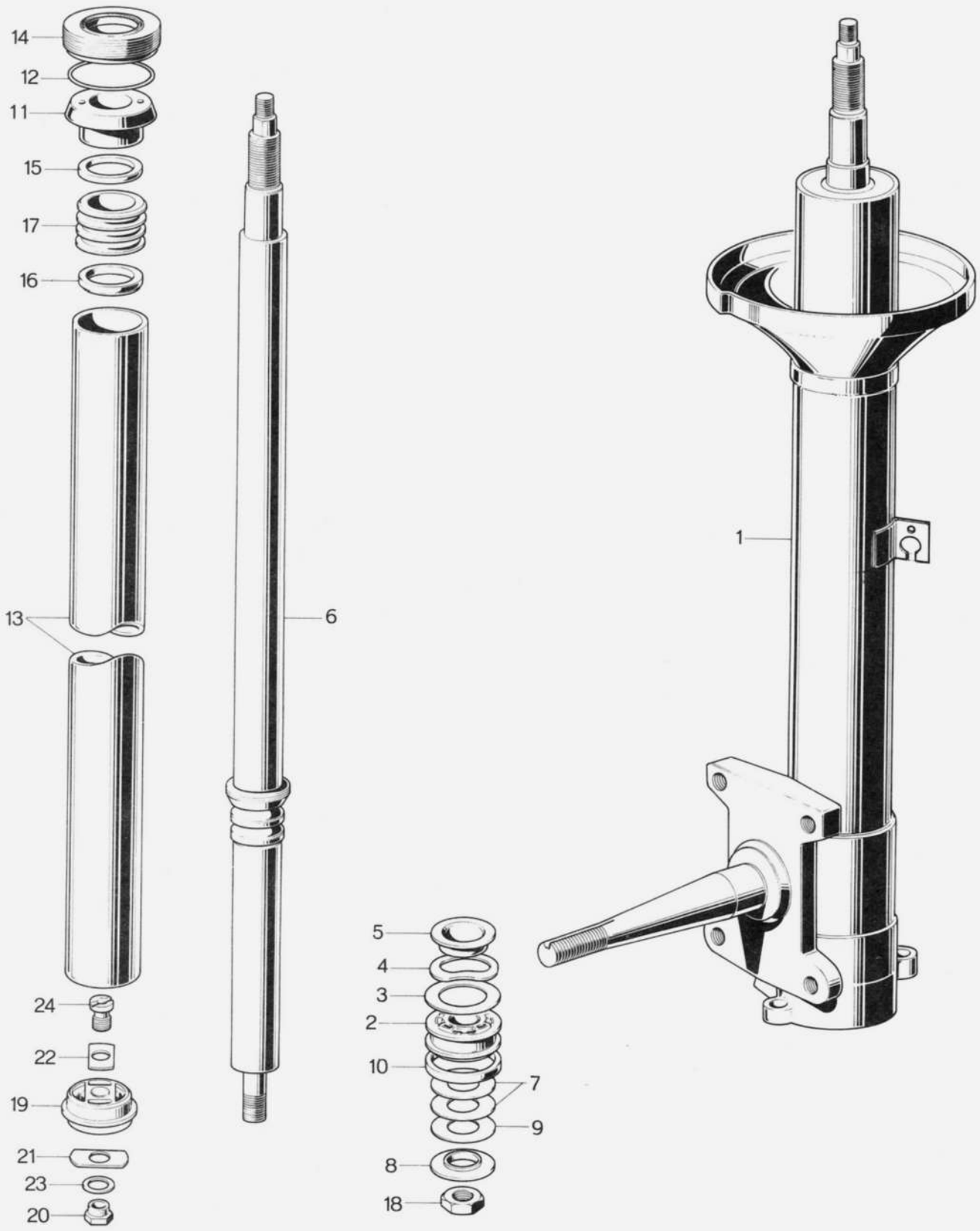

No.	Part Number	Description	Q'ty	Remarks
1	0305 34 910D	FRONT DAMPER	2	
●	0305 34 910E	FRONT DAMPER	2	Car No. 52327 ⁷⁄₁ ~ ○
●	0305 34 910G	FRONT DAMPER	2	Car No. 69368 ⁷⁄₄ ~ ○
2	0305 34 701	Piston	2	
3	0259 34 705	Check Valve	2	
4	0305 34 707	Check Valve Spring	2	
5	0259 34 708	Washer	2	
6	0305 34 710A	Piston Rod	2	
●	0839 34 710	Piston Rod	2	Car No. 52327 ⁷⁄₁ ~ ○
7	0259 34 712	Relief Valve	10	
8	0305 34 713	Washer	2	
9	0305 34 714	Valve	2	
10	0259 34 719A	Piston Ring	2	
11	0259 34 730	Piston Rod Guide	2	
12	0183 34 731	"O" Ring	2	
13	0305 34 732A	Pressure Tube	2	
14	0305 34 760A	OIL SEAL Ass'y	2	
	0259 34 735A	Oil Seal	2	
15	0259 34 767	Ring	2	
16	0259 34 768	Guide Stopper	2	
17	0259 34 769B	Stopper	2	
18	99921 1200	Nut	2	
	0305 34 709	Nut	2	Car No. 29912 ⁷⁰⁄₁₀ ~ ○

34 FRONT DAMPER

No.	Part Number	Description	Q'ty	Remarks
	0305 34 720	BASE VALVE Ass'y	2	
19	0305 34 721A	Casing	2	
20	0305 34 722A	Nut	2	
21	0305 34 723	Valve	10	
22	0305 34 724	Valve	8	
23	0305 34 726A	Washer	2	
24	0305 34 729A	Bolt	2	

FRONT SUSPENSION (CROSS MEMBER)

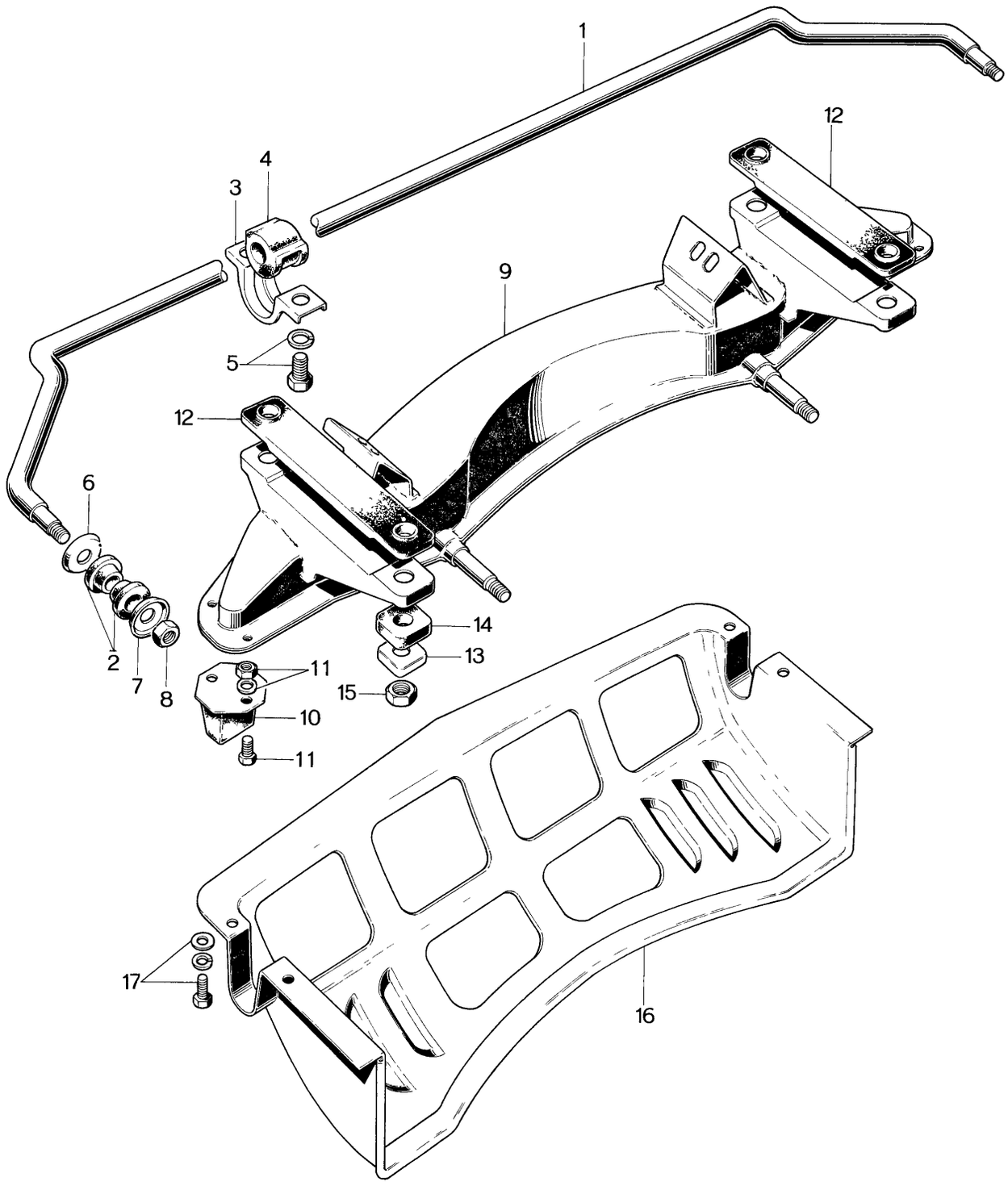

No.	Part Number	Description	Q'ty	Remarks
1	0305 34 151	Stabilizer	1	
●	0305 34 151A	Stabilizer	1	Car No. 61926 7/3 ~ △
2	0259 34 153	Rubber Bush, Stabilizer	4	
3	0259 34 155	Plate, Stabilizer Support	2	
4	0305 34 156	Rubber Bush	2	
5	99781 1020	Bolt, Stabilizer Support	1	
●	99781 1025	Bolt, Stabilizer Support	1	Car No. 53807 7/1 ~ ○
	99971 1000	Spring Washer	4	
6	0259 34 157	Washer, Stabilizer (Frt.)	2	
7	0259 34 158	Washer, Stabilizer (Rr.)	2	
8	99947 1400	Nut	2	
9	0839 34 800B	Cross Member, Front Suspension	1	
10	0259 34 110	Bound Stopper	2	
11	99806 0618	Bolt, Bound Stopper	4	
	99971 0600	Spring Washer	4	
	99906 0600	Nut	4	
12	0259 34 896	Cushion, Upper	2	
13	0259 34 897	Washer	4	
14	0259 34 898	Cushion, Lower	4	
15	99942 1000	Self Lock Nut	4	
16	0839 56 981	Under Cover	1	
●	0839 56 981A	Under Cover	1	Car No. 59502 7/2 ~ ○
17	908061 6 20	Set Bolt, Under Cover	4	

ENGINE & T/MISSION SUPPORT

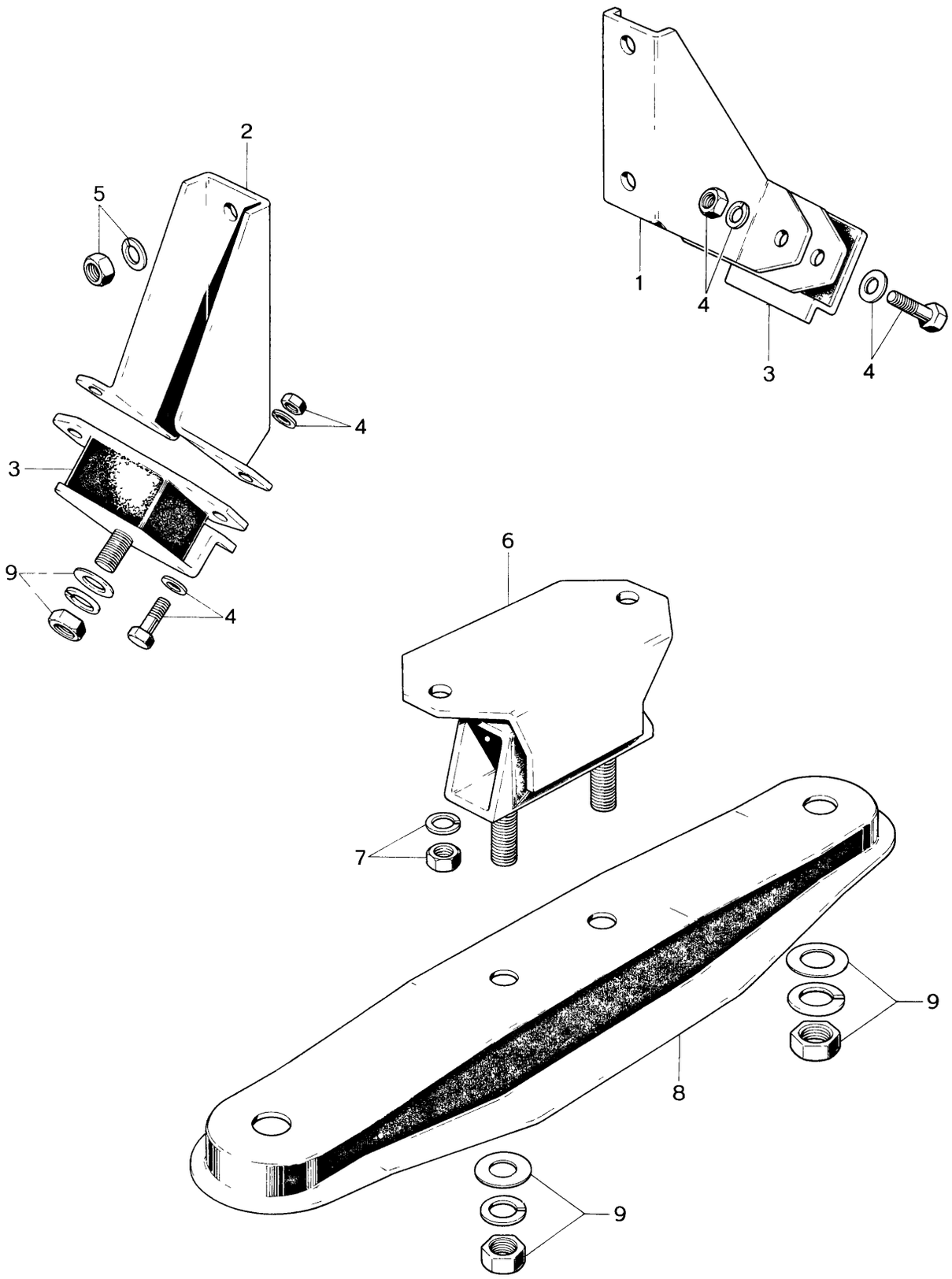

No.	Part Number	Description	Q'ty	Remarks
1	0820 39 021	Mounting Bracket (R)	1	
2	0820 39 031A	Mounting Bracket (L)	1	
3	0662 39 040	Mounting Rubber	2	
4	99801 0822	Bolt, Mounting	4	
	99951 0822	Plain Washer	4	
	99901 0800	Nut	4	
	99971 0800	Spring Washer	4	
5	99921 1200	Nut, Mounting	4	
	99971 1200	Spring Washer	4	
6	0259 39 340	Mounting Member, T/mission	1	
7	99901 0800	Nut, Mounting Member	2	
	99971 0800	Spring Washer	2	
8	0839 39 381	Mounting Member, T/mission	1	
9	99921 1000	Nut, Mounting Member	6	
	99951 1030	Plain Washer	6	
	99971 1000	Spring Washer	6	

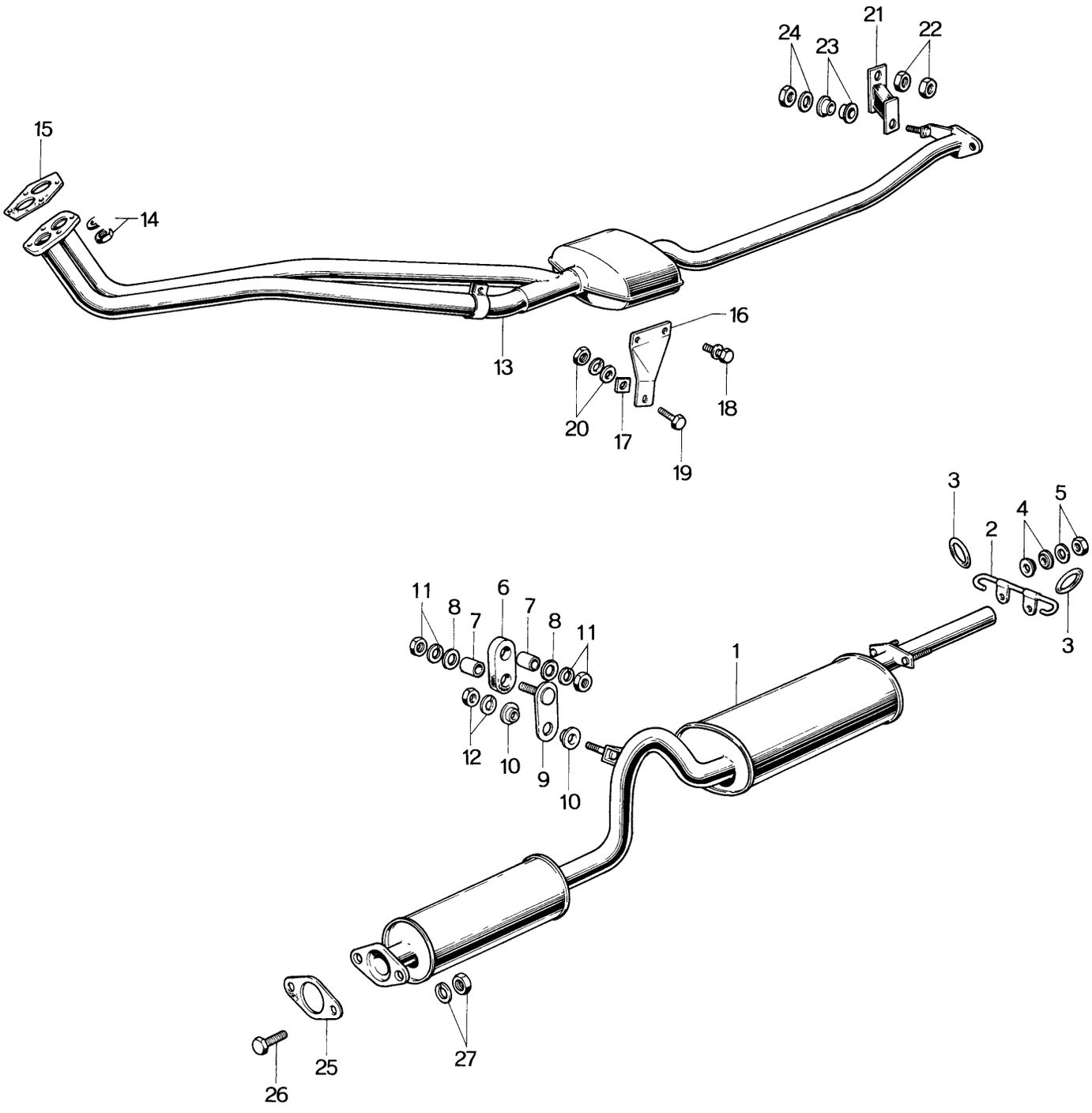
15
14
13
24
23
21
22
16
18
20
17
19
3
5
4
2
3
11
8
7
6
7
8
11
1
12
10
9
10
25
26
27

No.	Part Number	Description	Q'ty	Remarks
1	0839 40 100E	Main Silencer	1	
2	0839 40 060	Hook	1	
3	0305 40 061	Silencer Hanger	2	
4	0824 40 401	Insulator	4	
5	99949 0800	Nut, Hook	2	
	99952 0800	Plain Washer	2	
6	0820 40 161	Silencer Hanger	1	
7	0820 40 165	Pipe	2	
8	0820 40 166	Washer	2	
9	0820 40 170	Plate	1	
10	0824 40 401	Insulator	2	
11	99901 0800	Nut, Silencer Hanger	2	
	99971 0800	Spring Washer	2	
12	99949 0800	Nut, Plate	1	
	99971 0800	Spring Washer	1	
13	0839 40 300C	Pre-Silencer	1	
14	2158 40 355	Nut, Silencer	4	
	99971 1000	Spring Washer	4	
15	0839 13 621	Gasket	1	
16	0839 40 081A	Bracket	1	
17	0208 13 458	Clamp	1	
18	908012 8 20	Set Bolt, Bracket	2	
19	99801 0828	Bolt, Bracket	1	
20	99901 0800	Nut, Bracket	1	
	99951 0818	Plain Washer	1	
	99971 0800	Spring Washer	1	

No.	Part Number	Description	Q'ty	Remarks
21	0820 40 180	Silencer Hanger	1	
22	99901 0800	Nut, Silencer Hanger	1	
	99902 0800	Nut	1	
23	0824 40 401	Insulator	2	
24	99949 0800	Nut, Silencer Hanger	1	
	99952 0800	Plain Washer	1	
25	0810 40 356	Gasket, Flange	1	
26	99801 1045	Bolt, Flange	2	
27	2158 40 355	Nut, Flange	2	
	99971 1000	Spring Washer	2	

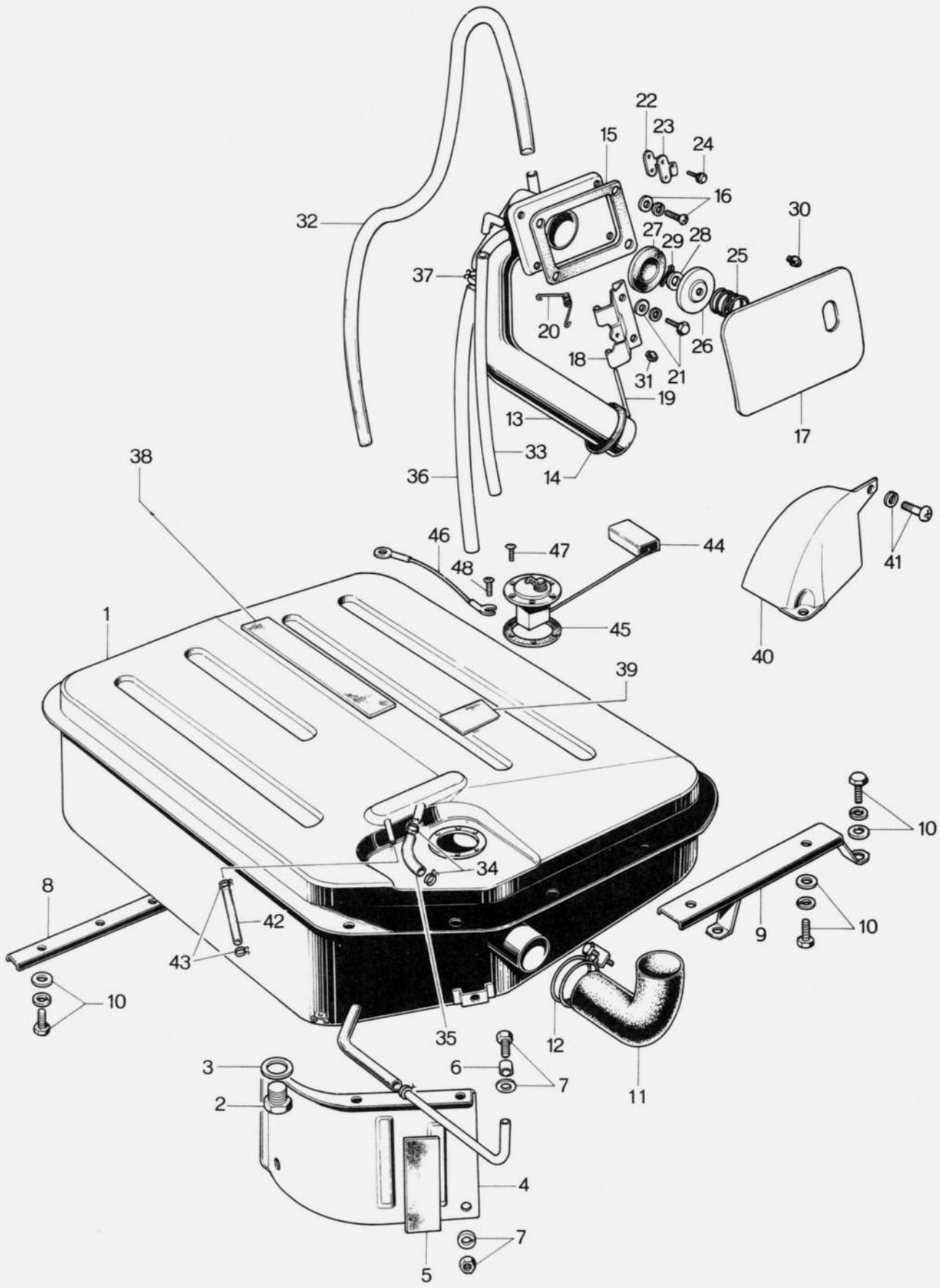
22
23
24
15
16
32
30
27
29
28
25
37
20
26
18
31
21
19
13
17
33
36
14
38
46
47
44
48
41
45
40
1
39
10
34
8
42
9
10
43
10
35
12
3
6
7
2
11
4
7
5

No.	Part Number	Description	Q'ty	Remarks
1	0839 42 310A	FUEL TANK Ass'y	1	
2	0114 42 046A	Drain Plug	1	
3	99560 1200	Packing	1	
4	0305 42 461	Protector, Fuel Tank	1	
5	0824 42 403	Pad	1	
6	0223 50 049	Spacer	1	
7	99806 0622	Bolt, Protector	2	
	99906 0600	Nut	2	
	99952 0618	Plain Washer	4	
8	0839 42 381	Washer "A"	1	
9	0305 42 390	Washer	1	
● 10	908046 6 25	Set Bolt, Washer+Fuel Tank	7	Car No. 69368 7/4 ~ Q'ty
11	0305 42 347B	Hose Joint	1	
12	99282 5500	Clamp	2	
13	0839 42 350A	Filler Pipe	1	
14	0305 42 348	Grommet, Filler Pipe	1	
15	0305 42 441	Packing	1	
16	908337 5 12	Set Screw, Filler Pipe	4	
17	0305 42 410	FILLER LID Ass'y	1	
18	0305 42 432	Hinge	1	
19	0305 42 433	Pin	1	

No.	Part Number	Description	Q'ty	Remarks
20	0259 42 455A	Check Spring	1	
21	908336 5 12	Set Screw, Filler Lid	2	
22	0223 42 375	Back Plate	1	
23	0223 42 376	Lock Plate	1	
24	908066 4 12	Set Screw, Lock Plate	2	
25	0259 42 425	Spring	1	
26	0223 42 426	Filler Cap	1	
27	0223 42 427	Gasket	1	
28	99952 0600	Plain Washer	1	Car No. 24191 ⅞ ~ Discarded
29	99221 1212	Split Pin	1	Car No. 24190 ⅞ ~ Discarded
	99575 0500	Snap Ring	1	Car No. 24191 ⅞ ~ Added Anew
30	0187 70 491	Stopper	1	
31	0259 42 459	Cushion Rubber	1	
32	0305 42 349	Vent Tube	1	
33	2694 42 397	Vent Tube	1	
34	2046 43 839	Clip	2	
35	0305 42 345A	Pipe	1	
36	99336 12029	Pipe	1	
37	99285 1200	Wire Clip	2	
38	0621 42 371	Pad	1	
39	0259 42 792	Pad	1	
40	0305 42 465	Protector	1	
41	99863 0510B	Screw, Protector	2	
	99952 0516B	Plain Washer	2	
42	99340 06020	Pipe	1	
43	0222 13 493	Clip	2	

No.	Part Number	Description	Q'ty	Remarks
44	0839 67 170	FUEL TANK GAUGE	1	
45	0243 66 773	Packing	1	
46	0275 67 175	Earth Cord, Fuel Tank Gauge	1	
47	99833 0408	Screw, Fuel Tank Gauge	5	
48	99833 0410	Screw, Earth Cord	1	

FUEL PIPING

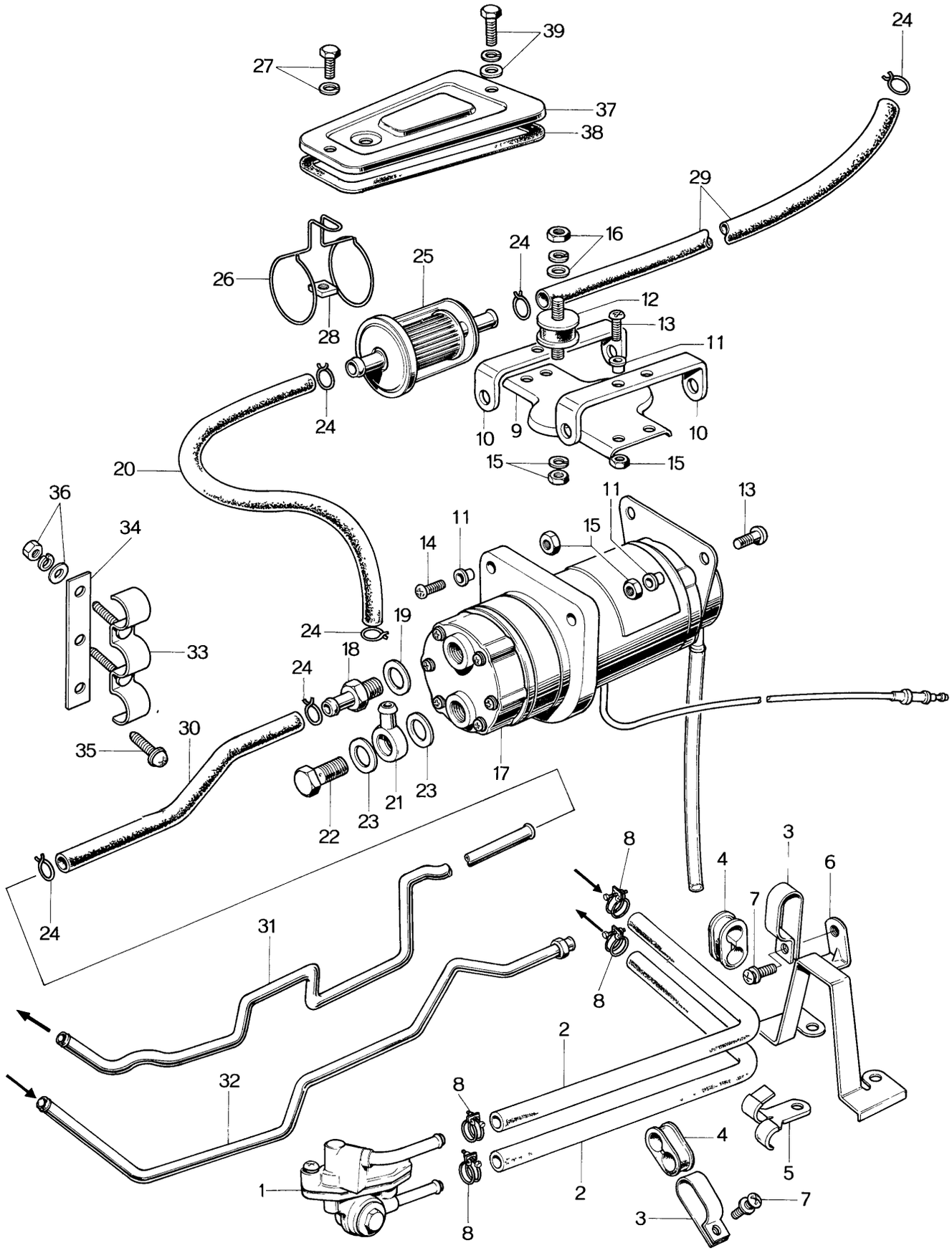
39
27
24
37
38
29
16
24
25
26
12
13
28
11
24
10
9
10
15
15
20
36
11
13
34
11
15
14
24
19
33
18
24
35
30
17
21
23
22
23
24
8
4
3
6
7
31
8
2
32
8
4
5
1
2
3
7
8

No.	Part Number	Description	Q'ty	Remarks
1	0839 23 314	Fuel Return Valve	1	
2	0839 13 440A	Fuel Pipe	2	Car No. 38158 ’70/11 ~ Discarded
	0839 13 442B	Main Fuel Pipe (R. H. D.)	1	Car No. 40001 ’70/12 ~ Added Anew
	2080 13 442	Main Fuel Pipe (L. H. D.)	1	Car No. 38158 ’70/11 ~ Added Anew
	2073 13 440	Main Fuel Pipe (L. H. D.) Arctic Spec Model	1	Car No. 38158 ’70/12 ~ Added Anew
	99340 06725	Fuel Pipe (R. H. D.)	1	Car No. 40001 ’70/11 ~ Added Anew
	99340 06660	Fuel Pipe (L. H. D. & Arctic Spec Model)	1	Car No. 38158 ’70/11 ~ Added Anew
3	0839 13 447	Clip, Fuel Pipe	2	Car No. 38158 ’70/11 ~ Discarded
●	0222 13 493	Clip (R. H. D.)	2	Car No. 40001 ’70/12 ~ Added Anew
	99295 0606	Clip (L. H. D.)	1	Car No. 38158 ’70/11 ~ Added Anew
4	0823 13 445A	Protector	2	
5	0839 13 448A	Clip, Fuel Pipe	1	
	0839 13 448B	Clip, Fuel Pipe	1	Car No. 38158 ’70/11 ~ ○
6	0839 13 450B	Bracket, Fuel Pipe Clip	1	Car No. 38158 ’70/11 ~ Discarded
7	908332 6 10	Set Screw, Clip	2	Car No. 38158 ’70/11 ~ Discarded
8	99282 1600	Clip, Fuel Pipe Return	4	Car No. 38158 ’70/11 ~ Discarded
	0187 66 991	Clip	2	Car No. 38158 ’70/11 ~ Added Anew
9	0305 13 361	Bracket, Fuel Pump	1	
10	0305 13 362	Supporter, Fuel Pump	2	
●	0305 13 362B	Supporter, Fuel Pump	2	Car No. 69881 ’74 (’75) ~ ○
11	0305 13 366	Washer	8	
12	0223 13 363	Insulation Rubber	2	
13	99833 0612	Screw, Fuel Pump	6	
14	99833 0616	Screw, Fuel Pump	2	
15	99906 0600	Nut, Fuel Pump	8	
	99971 0600	Spring Washer	2	
16	99906 0600	Nut, Insulation Rubber	2	
	99953 0600	Plain Washer	2	
	99971 0600	Spring Washer	2	
17	0839 13 400D	Fuel Pump	2	
●	0839 13 400E	Fuel Pump	1	Car No. 21039 ’78 ~ ○
● 18	0839 13 433	Connector	1	Car No. 52297 ’71 ~ Discarded
● 19	99564 1200	Packing	1	Car No. 52297 ’71 ~ Discarded
20	99340 06630	Fuel Pipe	1	
●	0305 45 021	Fuel Pipe	1	Car No. 52297 ’71 ~ ×
● 21	0034 42 633	Connector Fuel Pipe	1	Car No. 52297 ’71 ~ Added Anew
● 22	0034 13 373	Connector Bolt	2	Car No. 52297 ’71 ~ Quantity

13 45 FUEL PIPING

No.	Part Number	Description	Q'ty	Remarks
23	99562 1200	Packing	4	Car No. 52297 7/1 ~ Quantity
24	99282 1600	Hose Clamp	4	
25	0222 13 470A	Fuel Filter	1	
26	0222 13 481	Clamp	1	
27	99801 0814	Bolt, Fuel Filter	1	
	99971 0800	Spring Washer	1	
28	99911 0800	Square Nut, Fuel Filter	1	
29	99340 06300	Fuel Pipe	1	
30	99340 06112	Fuel Pipe	1	
●	0305 45 072	Fuel Pipe	1	Car No. 52297 7/1 ~ ×
31	0839 45 071B	Fuel Pipe (R. H. D.)	1	
	0839 45 071C	Fuel Pipe (R. H. D.)	1	Car No. 40001 7/12 ~ ○
●	0839 45 071D	Fuel Pipe (R. H. D.)	1	Car No. 52297 7/1 ~ ×
	2080 45 071	Fuel Pipe (L. H. D.)	1	
	2080 45 071A	Fuel Pipe (L. H. D.)	1	Car No. 33038 7/10 ~ ×
32	0829 45 610C	Fuel Pipe, Return (R. H. D.)	1	
	0839 45 610D	Fuel Pipe, Return (R. H. D.)	1	Car No. 40001 7/12 ~ ○
	2080 45 610	Fuel Pipe, Return (L. H. D.)	1	
	2080 45 610A	Fuel Pipe, Return (L. H. D.)	1	Car No. 33038 7/10 ~ ×
33	2677 45 910	Clip	1	
34	2850 45 921	Clip	1	
35	907810 6 16	Set Bolt, Clip	1	
36	99906 0400	Nut, Clip	1	
	99952 0400	Plain Washfr Washer	1	
	99971 0400	Spring Washer	1	
37	0305 56 231	Service Hole Corver Cover	1	
38	0305 56 232	Seal Rubber	1	
39	908062 6 12	Set Bolt, Service Hole Cover	2	

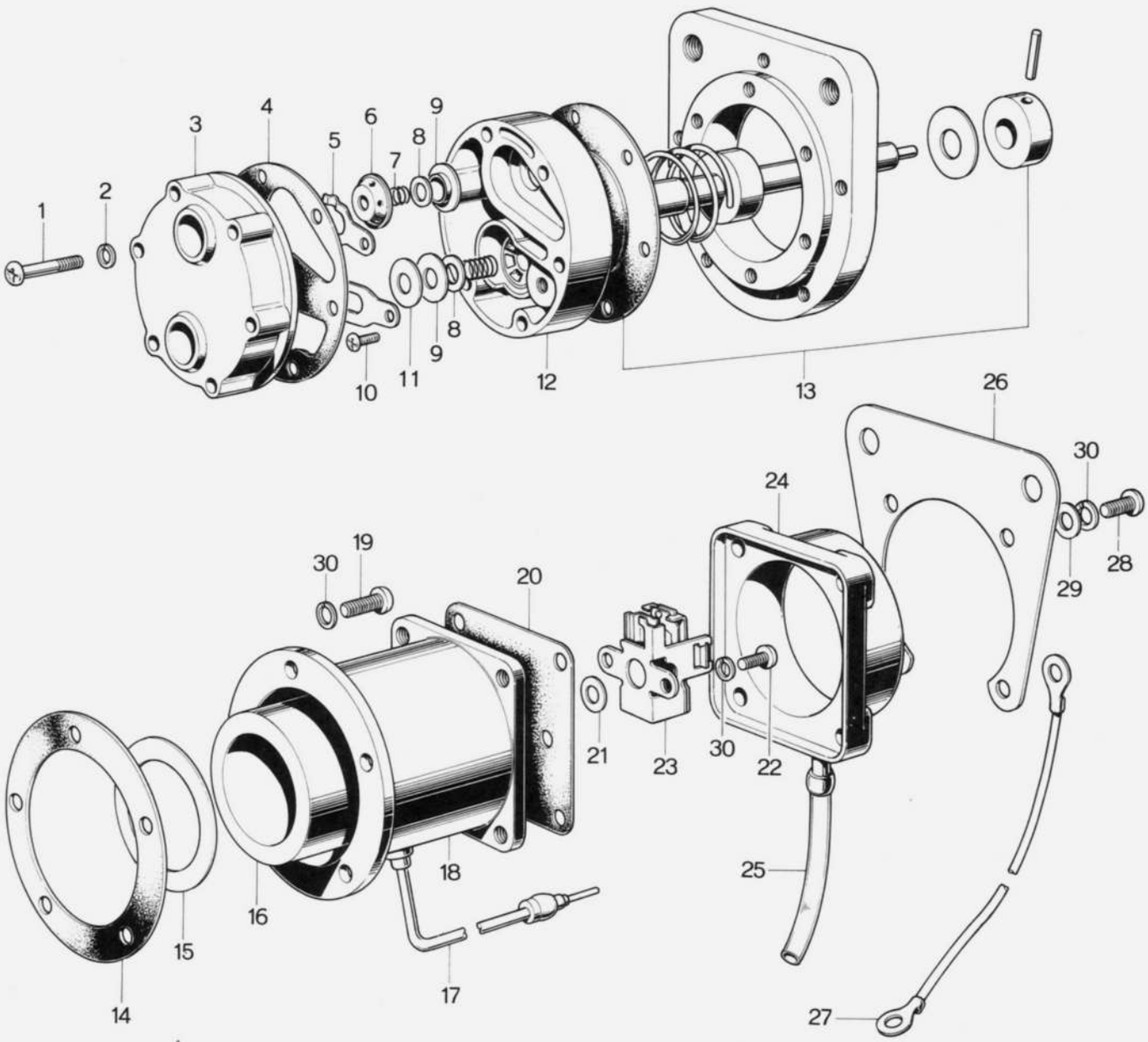
1
2
3
4
5
6
7
8
9
10
11
12
13
14
15
16
17
18
19
20
21
22
23
24
25
26
27
28
29
30

No.	Part. Number	Description	Q'ty	Remarks
	0839 13 400D	FUEL PUMP	1	
	0839 13 400E	FUEL PUMP	1	Car No. 21039 7/8 ~ O
●	0839 23 601	PUMP Ass'y	1	
1	0820 23 602	Screw	6	
2	0190 13 389	Spring Washer	6	
3	0221 23 215	Cover	1	
4	0820 23 603	Gasket	1	
5	0137 13 369B	Valve Retainer	2	
6	0839 23 618	Valve Holder	1	
7	0137 13 356A	Valve Spring	2	
8	0137 13 355A	Valve	2	
9	0137 13 357A	Valve Seat	2	
10	0820 23 604	Screw	2	
11	0137 13 361A	Valve Seat Holder	1	
12	0137 13 351B	Valve Chamber	1	
13	0839 23 611	Diaphragm Ass'y	1	
14	0221 23 229	Packing (t=0.5)	1	
	0221 23 231	Packing (t=0.25)	1	
	0221 23 232	Packing (t=0.1)	1	
	0820 23 615	BODY Ass'y	1	
15	0221 23 226	Magnetic Permeable Plate	1	
16	0221 23 225	Coil Ass'y	1	

No.	Part Number	Description	Q'ty	Remarks
17	0137 13 394A	Lead Wire	1	
18	0820 23 616	Body	1	
19	0820 23 621	Screw	5	
● 20	0222 23 631	Cover Packing	1	
21	0221 23 227	Adjusting Washer (t=0.25)	1	
	0221 23 228	Adjusting Washer (t=0.6)	1	
22	0820 23 625	Screw	2	
23	0222 23 630	Switch Ass'y	1	
	0222 23 630A	Switch Ass'y	1	Car No. 21643 ⁷⁰⁄₈ ~ ○
●	0222 23 630B	Switch Ass'y	1	Car No. 38813 ⁷⁰⁄₁₁ ~ ○
24	0221 23 233	Cover	1	
25	0839 23 628	Breather Pipe	1	
26	0839 23 629	Bracket	1	
27	0305 23 626A	Earth Wire	1	
28	0839 23 625	Screw	4	
29	0820 23 624	Washer	3	
30	0190 13 389	Spring Washer	11	

ACCELERATOR CONTROL SYSTEM

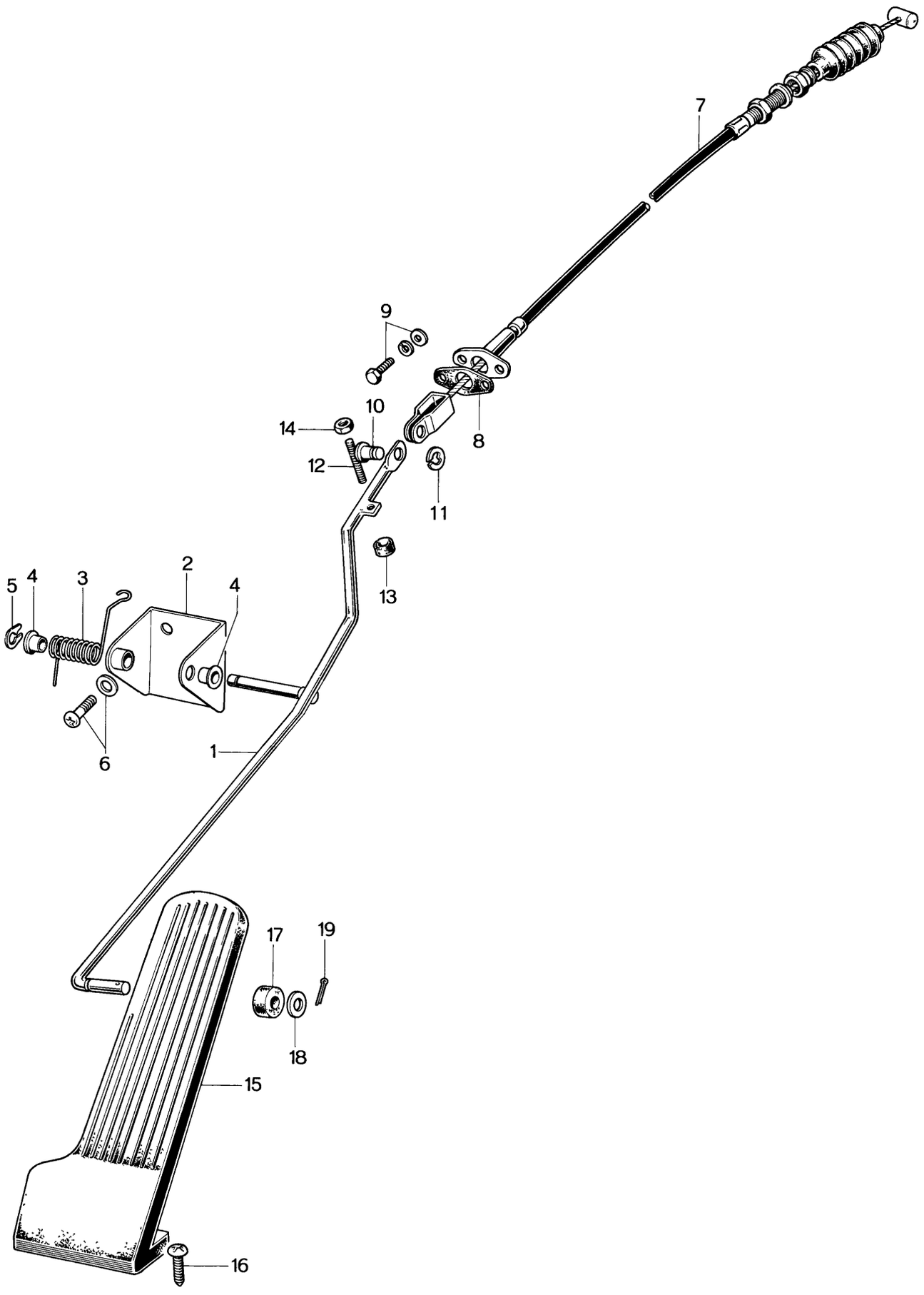

No.	Part Number	Description	Q'ty	Remarks
1	0305 41 610B	Accelerator Pedal Arm (R.H.D.)	1	
	2080 41 610	Accelerator Pedal Arm (L.H.D.)	1	
2	0305 41 641	Arm Bracket Ass'y	1	
3	0824 41 619	Return Spring	1	
4	0259 41 644	Bush	2	
5	99575 0600	"U" Stop Ring	1	
6	908332 6 16	Set Screw	2	
7	0839 41 660	Accelerator Wire (R.H.D.)	1	
	2080 41 660	Accelerator Wire (L.H.D.)	1	
8	0249 41 671	Rubber Seat, Accelerator Control Wire	1	
9	908067 6 20	Set Bolt	2	
10	99230 0511	Pin	1	
11	99575 0300	"U" Stop Ring	1	
12	0118 41 681	Stopper	1	
13	0118 41 682	Rubber	1	
14	99907 0600	Lock Nut	1	
15	0290 41 710	Accelerator Pedal Ass'y	1	
16	99743 0520	Screw, Accelerator Pedal (R.H.D.)	2	
	99833 0514	Screw, Accelerator Pedal (L.H.D.)	2	
17	0259 41 613	Pedal Roller	1	
18	99953 0800	Plain Washer, Roller	2	
19	99221 2012	Split Pin, Roller	1	

CLUTCH & BRAKE SYSTEM

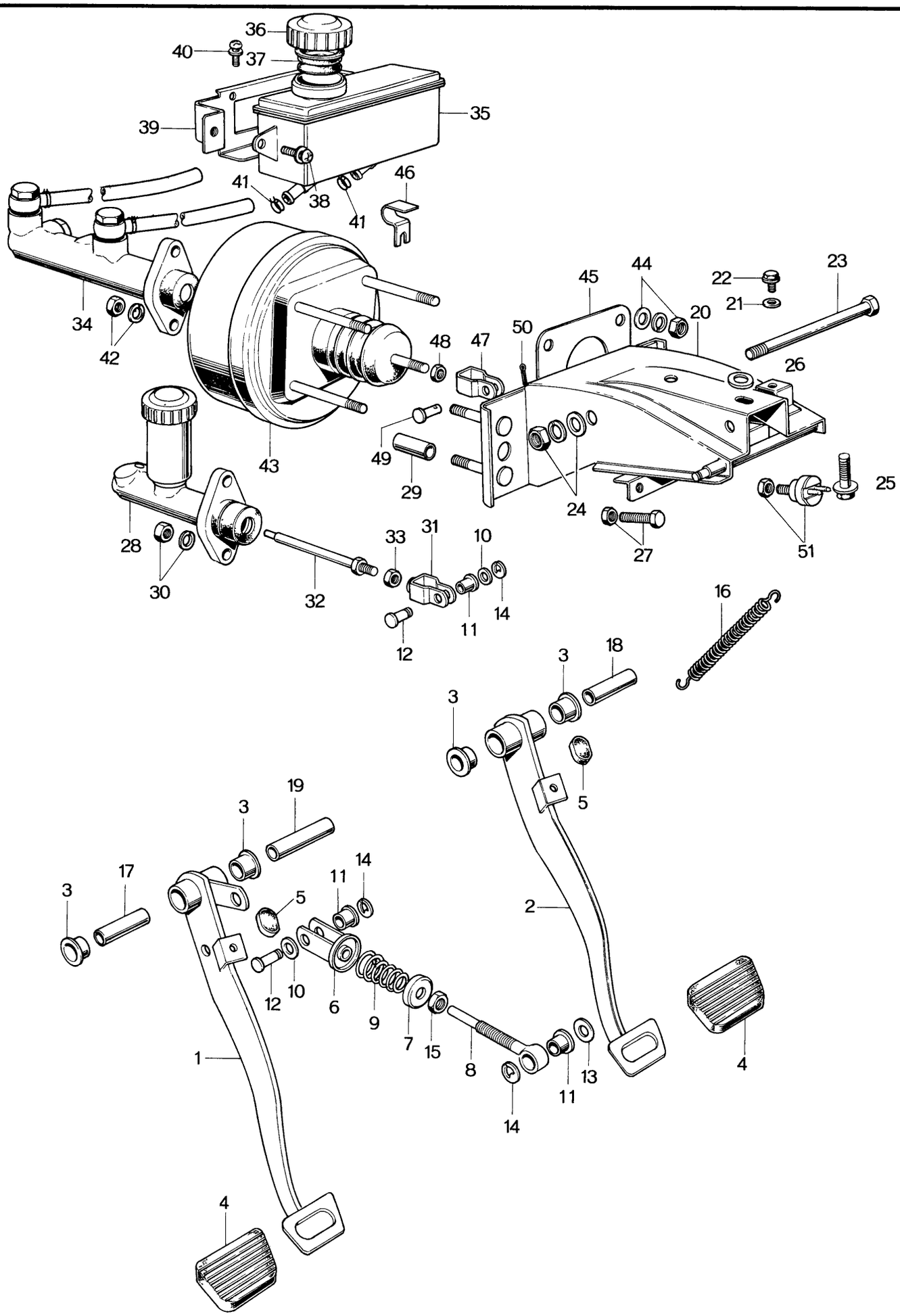

No.	Part Number	Description	Q'ty	Remarks
1	0305 41 030A	Clutch Pedal Ass'y (R.H.D.)	1	
	2835 41 030	Clutch Pedal Ass'y (L.H.D.)	1	
2	0305 43 030	Brake Pedal Ass'y (R.H.D.)	1	
	2835 43 030	Brake Pedal Ass'y (L.H.D.)	1	
3	0223 43 022	Bush	4	
4	0259 43 028	Pedal Pad	2	
5	0187 43 029	Stopper	2	
6	0824 41 040	Spring Seat	1	
7	0183 41 043	Spring Seat	1	
8	0824 41 051	Rod	1	
9	0183 41 081	Return Spring	1	
10	0824 41 084	Spacer	2	
11	0259 41 644	Bush	3	
12	0187 46 683	Pin	2	
13	99952 0816	Plain Washer	1	
14	99575 0600	Retaining Ring	3	
15	99901 0800	Nut, Rod	1	
16	0810 41 308	Return Spring	1	
17	0187 43 061	Pedal Pin	1	
18	2301 43 061	Pipe	1	
19	0223 43 064	Spacer	1	
20	0305 43 070B	Master Cylinder Bracket (R.H.D.)	1	
	2835 43 070	Master Cylinder Bracket (L. H. D.)	1	
●	2835 43 070A	Master Cylinder Bracket (L. H. D.)	1	Car No. 24191 ~ ○
21	0118 58 442	Seat	1	
22	908057 8 25	Set Bolt, Master Cylinder Bracket	1	
23	99813 12180	Bolt, Pedal	1	

CLUTCH & BRAKE SYSTEM

No.	Part Number	Description	Q'ty	Remarks
24	99921 1200	Nut, Pedal	1	
	99952 1200	Plain Washer	1	
	99971 1200	Spring Washer	1	
25	908017 8 16	Set Bolt, (R.H.D.) Master Cylinder Bracket	2	
	908016 8 20	Set Bolt, (L.H.D.) Master Cylinder Bracket	1	
26	0136 44 043	Spacer, (L.H.D.) Master Cylinder Bracket	1	
27	99795 1032	Bolt, Stopper	1	
	99922 1000	Nut, Stopper Bolt	1	
28	0305 41 400	Master Cylinder Ass'y, Clutch	1	
	2835 41 400	Master Cylinder Ass'y, Brake	1	
29	0259 43 065	Pipe	2	
●	0259 43 065	Pipe (L. H. D.)	1	Car No. 24191 ⅞ ~
30	99901 0800	Nut, Master Cylinder	2	
	99971 0800	Spring Washer	2	
31	0305 41 140	Fork End, Clutch	1	
32	0824 41 131	Push Rod	1	
33	99922 0800	Nut, Push Rod	1	
34	0839 43 990C	Tandem Master Cylinder Ass'y (R. H. D.)	1	
●	0839 43 990D	Tandem Master Cylinder Ass'y (R. H. D.)	1	Car No. 20451 ⅞ ~ ○
	2835 43 990	Tandem Master Cylinder Ass'y (L. H. D.)	1	
●	2835 43 990A	Tandem Master Cylinder Ass'y (L. H. D.)	1	Car No. 20451 ⅞ ~ ○
	0839 43 550	**RESERVE TANK Ass'y**	1	
35	0839 43 551	Reserve Tank	1	
36	0727 43 552	Cap	1	
37	0839 43 553	Baffle	1	

No.	Part Number	Description	Q'ty	Remarks
38	908336 5 16	Set Screw, Reserve Tank	2	
39	0839 43 570	Bracket, Reserve Tank	1	
40	908332 5 12	Set Screw, Bracket	2	
41	99285 0800	Clip, Pipe	2	Car No. 25947 ⅞ ~ Discarded
●	2835 49 685	Hose Clamp	2	Car No. 25947 ⅞ ~ Added Anew
42	99901 0800	Nut, Tandem Master Cylinder	2	
	99971 0800	Spring Washer	2	
43	0839 43 800A	Master Vac Ass'y (R.H.D.)	1	
	2835 43 800	Master Vac Ass'y (L.H.D.)	1	
44	99901 0800	Nut, Master Vac	4	
	99952 0816	Plain Washer	4	
	99971 0800	Spring Washer	4	
45	0305 43 093	Packing, Master Vac	1	
46	0839 43 849	Clip, (R.H.D.) Master Vac	1	
	2835 43 849	Clip, (L.H.D.)	1	
47	0305 43 140	Fork End	1	
48	99922 1000	Nut, Fork End	1	
49	99231 0818	Joint Pin, Fork End	1	
50	99221 2020	Split Pin	1	
51	0233 66 790	Stop Switch	1	

CLUTCH MASTER CYL. & TANDEM MASTER CYL. (R. H. D.)

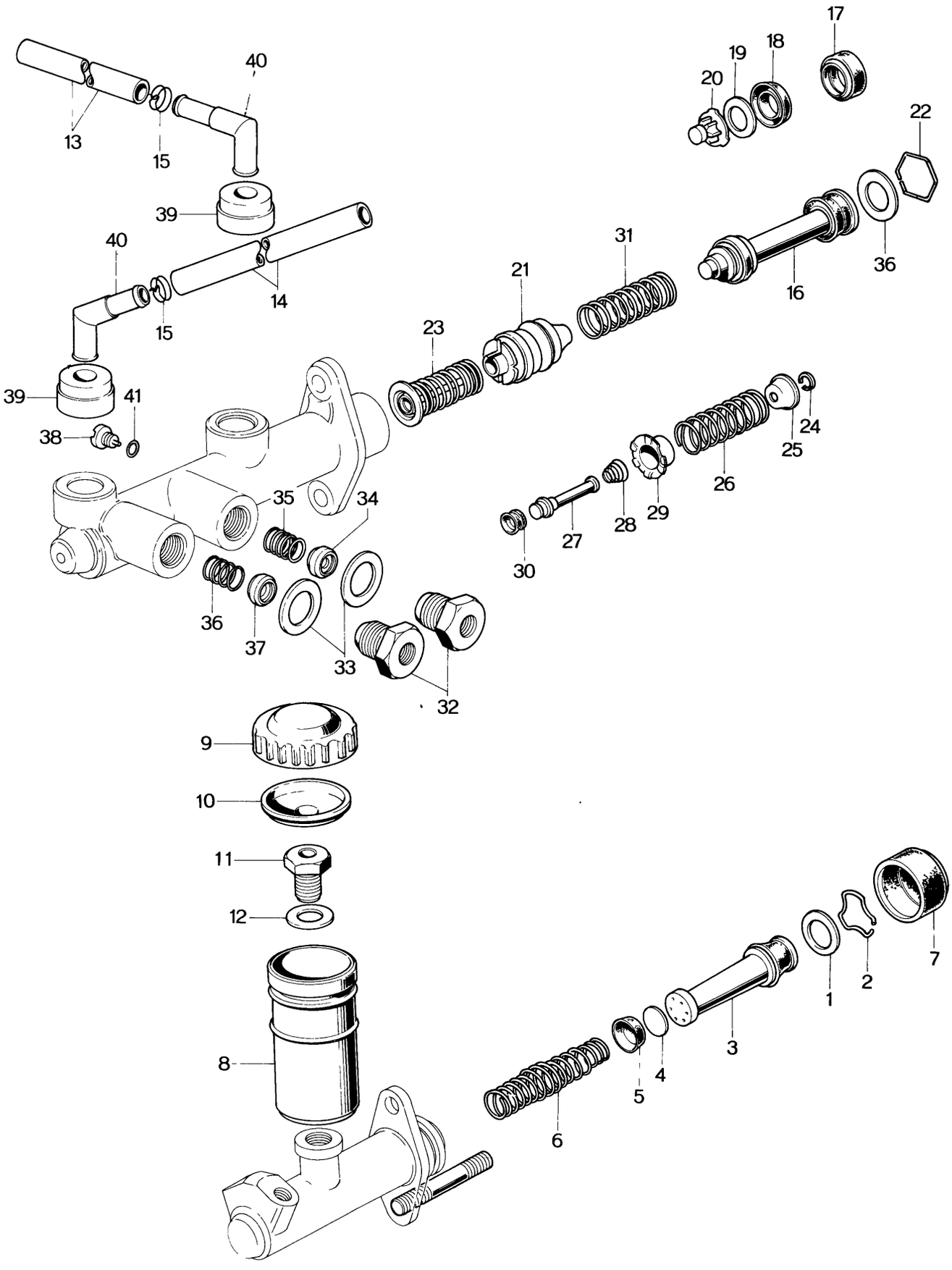

CLUTCH MASTER CYL. & TANDEM MASTER CYL. (R.H.D.)

No.	Part Number	Description	Q'ty	Remarks
	0305 41 400	CLUTCH MASTER CYLINDER Ass'y	1	
1	0111 43 433	Washer, Piston Stop	1	
2	0111 43 432	Wire, Piston Stop	1	
3	0305 41 440	PISTON Ass'y	1	
	0305 41 451	Secondary Cup	1	
4	0727 41 442	Spacer	1	
5	0305 41 461	Primary Cup	1	
6	0110 41 470	Piston Spring	1	
7	0111 43 511	Boot	1	
8	0317 43 551	Reserve Tank	1	
9	0727 43 552	Cap	1	
10	0727 43 553	Baffle	1	
	0839 43 553	Baffle	1	Car No. 24191 7/9 ~ ○
●	0839 43 553A	Baffle	1	Car No. 69368 7/4 ~ ○
11	0221 43 421	Plug	1	
●	0317 43 421	Plug	1	Car No. 55864 7/2 ~ ×
12	0221 43 431	Washer	1	
● Ⓝ	0317 43 428	Spring, Corn	2	Car No. 55864 7/2 ~ Added Anew
	0305 99 431	CLUTCH MASTER CYLINDER REPAIR KIT (Fig. No. 1~3,5~7 included)	1	

41 49 CLUTCH MASTER CYL. & TANDEM MASTER CYL. (R.H.D.)

No.	Part Number	Description	Q'ty	Remarks
	0839 43 990C	TANDEM MASTER CYLINDER	1	
	0839 43 990D	TANDEM MASTER CYLINDER	1	Car No. 20451 70/8 ~ ○
●	0839 43 990E	TANDEM MASTER CYLINDER	1	Car No. 76590 71/4 (71/5) ~ ○
● 13	0839 43 422B	Oil Pipe	1	
	0839 43 422B	Oil Pipe	2	Car No. 55864 70/12 ~ Q'ty
● 14	0839 43 423B	Oil Pipe	1	
	0839 43 423B	Oil Pipe	2	Car No. 55864 70/12 ~ Q'ty
15	99285 0800	Clip	2	Car No. 25947 70/9 ~ Discarded
	2835 49 685	Hose Clamp	2	Car No. 25947 70/9 ~ Added Anew
16	0305 49 620	PRIMARY PISTON Ass'y	1	
17	0305 49 625	Secondary Cup	1	
18	0305 49 626	Primary Cup	1	
19	0305 49 628	Spring Seat	1	
20	0305 49 629	Piston Cup Spacer	1	
21	0305 49 630B	FLOATING PISTON Ass'y	1	
	0305 49 626	Primary Cup	2	
22	0305 49 638	Piston Stop Wire	1	
23	0305 49 640E	FLOATING SPRING Ass'y	1	
	0305 49 640F	FLOATING SPRING Ass'y	1	Car No. 34307 70/11 ~ ○
●	0305 49 640H	FLOATING SPRING Ass'y	1	Car No. 76590 71/4 (71/5) ~ △
24	0305 49 623	Retaining Ring	1	
	0305 49 623A	Retaining Ring	1	Car No. 34307 70/11 ~ ×
25	0305 49 627C	Spring Seat, Floating Spring	1	
26	0305 49 642	Floating Piston Spring	1	
	0305 49 645C	Valve Rod	1	
27	0305 49 645D	Valve Rod	1	Car No. 34307 70/11 ~ ×
●	0305 49 645F	Valve Rod	1	Car No. 76590 71/4 (71/5) ~ ×

CLUTCH MASTER CYL. & TANDEM MASTER CYL. (R.H.D.)

41 49

No.	Part Number	Description	Q'ty	Remarks
28	0305 49 646	Tipping Valve Return Spring	1	
●	0305 49 646B	Tipping Valve Return Spring	1	Car No.75587 ⁷⁄₄ (⁷⁄₅) ~ ×
29	0305 49 647	Valve Stopper	1	
●	0305 49 647C	Valve Stopper	1	Car No.75587 ⁷⁄₄ (⁷⁄₅) ~ ×
30	0305 49 648	Tipping Valve	1	
31	0305 49 641	Primary Piston Spring	1	
32	0305 49 652	Joint Bolt	2	
33	0305 49 656	Joint Bolt Gasket	2	
34	0305 49 660	Check Valve Ass'y	1	
35	0305 49 665	Check Valve Spring	2	
36	0305 49 666	Piston Stop Washer	1	
37	0305 49 670	Outlet Valve Ass'y	1	
38	0305 49 676	Set Bolt	1	
39	0839 49 686A	Elbow Joint	2	
40	0839 49 699A	Elbow Joint	2	
41	99541 00603	"O" Ring	1	

0305 99 430 TANDEM MASTER CYLINDER REPAIR KIT 1
(Fig. No. 14,21,22,23,31,33,34,35,36,37 included)

41 49 CLUTCH MASTER CYL. & TANDEM MASTER CYL. (L. H. D.)

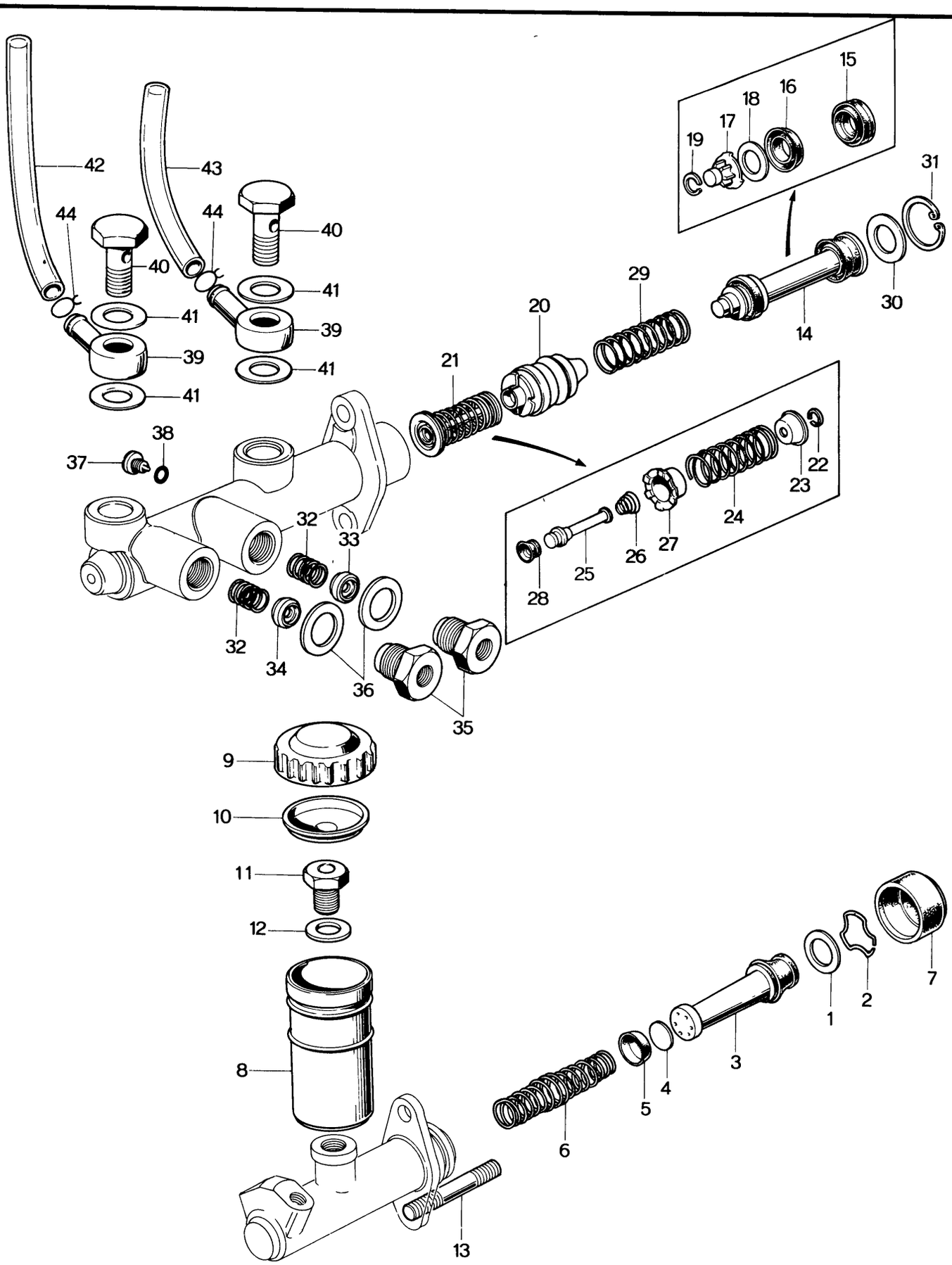

CLUTCH MASTER CYL. & TANDEM MASTER CYL. (L.H.D.)

41 49

No.	Part Number	Description	Q'ty	Remarks
	2835 41 400	**CLUTCH MASTER CYLINDER Ass'y**	1	
1	0111 43 433	Washer, Piston Stop	1	
2	0111 43 432	Wire, Piston Stop	1	
3	0305 41 440	**PISTON Ass'y**	1	
	0305 41 451	Secondary Cup	1	
4	0727 41 442	Spacer	1	
5	0305 41 461	Primary Cup	1	
6	0110 41 470	Piston Spring	1	
7	0111 43 511	Boot	1	
8	0317 43 551	Reserve Tank	1	
9	0727 43 552	Cap	1	
10	0727 43 553	Baffle	1	
●	0839 43 553	Baffle	1	Car No. 52327 ~ ○
●	0839 43 553A	Baffle	1	Car No. 69368 ~ ○
11	0221 43 421	Plug	1	
●	0317 43 421	Plug	1	Car No. 55864 ~ ×
12	0221 43 431	Washer	1	
● Ⓝ	0317 43 428	Spring, Corn	2	Car No. 55864 ~ Added Anew
13	99852 0848	Stud	1	
	0305 99 431	Clutch Master Cylinder Repair Kit	1	Fig.No.1~3,5~7 included

41 49 CLUTCH MASTER CYL. & TANDEM MASTER CYL. (L.H.D.)

No.	Part Number	Description	Q'ty	Remarks
	2835 43 990	TANDEM MASTER CYLINDER Ass'y	1	
	2835 43 990A	TANDEM MASTER CYLINDER Ass'y	1	Car No. 20451 ※～○
14	2046 49 620C	PRIMARY PISTON Ass'y	1	
15	2046 49 625A	Secondary Cup	1	
16	2046 49 626A	Primary Cup	1	
17	2046 49 627B	Spring Seat	1	
18	2046 49 629A	Piston Cup Spacer	1	
19	2046 49 622	Stop Ring	1	
20	2835 49 630A	FLOATING PISTON Ass'y	1	
	2046 49 635A	Primary Cup	2	☆
21	2835 49 640	FLOATING VALVE Ass'y	1	
22	2835 49 623	Stopper	1	
23	2835 49 628A	Spring Seat	1	
24	2835 49 642A	Floating Piston Spring	1	
25	2835 49 645A	Valve Rod	1	
26	2835 49 646A	Valve Spring	1	
27	2835 49 647A	Valve Case	1	
28	2835 49 648	Tipping Valve	1	

CLUTCH · MASTER CYL. & TANDEM MASTER CYL. (L.H.D.)

41 49

No.	Part Number	Description	Q'ty	Remarks
29	2835 49 641A	Primary Piston Spring	1	
30	2046 49 666	Piston Washer (1)	1	
	2046 49 667	Piston Washer (2)	1	
	2046 49 668	Piston Washer (3)	1	Selective use
	2046 49 669	Piston Washer (4)	1	
31	2046 49 638	Retaining Ring	1	
32	0233 49 665	Check Valve Spring	2	
33	0233 49 660	Check Valve	1	
34	0233 49 670	Check Valve	1	
35	2835 49 652	Joint Bolt	2	
36	0233 49 656	Gasket, Joint Bolt	2	
37	2046 49 676	Set Bolt	1	
38	2046 49 696	Gasket, Set Bolt	1	
39	2835 49 682	Union	2	
●	2835 49 682A	Union	2	Car No. 20668 ⅞ ~ ○
40	2835 49 686	Connector Bolt	2	
●	2835 49 686	Connector Bolt	2	Car No. 20668 ⅞ ~ ○
41	2835 49 687	Gasket	4	
42	0839 43 422A	Oil Pipe (ℓ = 135)	1	
●	0839 43 422B	Oil Pipe (ℓ = 135)	1	Car No. 20451 ⅞ ~ ○
43	2835 43 422	Oil Pipe (ℓ = 125)	1	
●	2835 43 422A	Oil Pipe (ℓ = 125)	1	Car No. 20451 ⅞ ~ ○
44	99285 0800	Clip	2	Car No. 30692 ⅞ ~ Discarded
	2835 49 685	Hose Clamp	2	Car No. 30692 ⅞ ~ Added Anew
●	2835 99 430	TANDEM MASTER CYLINDER REPAIR KIT (Fig. No. 14,20,21,29,30,31,32,33,34,36 included)	1	

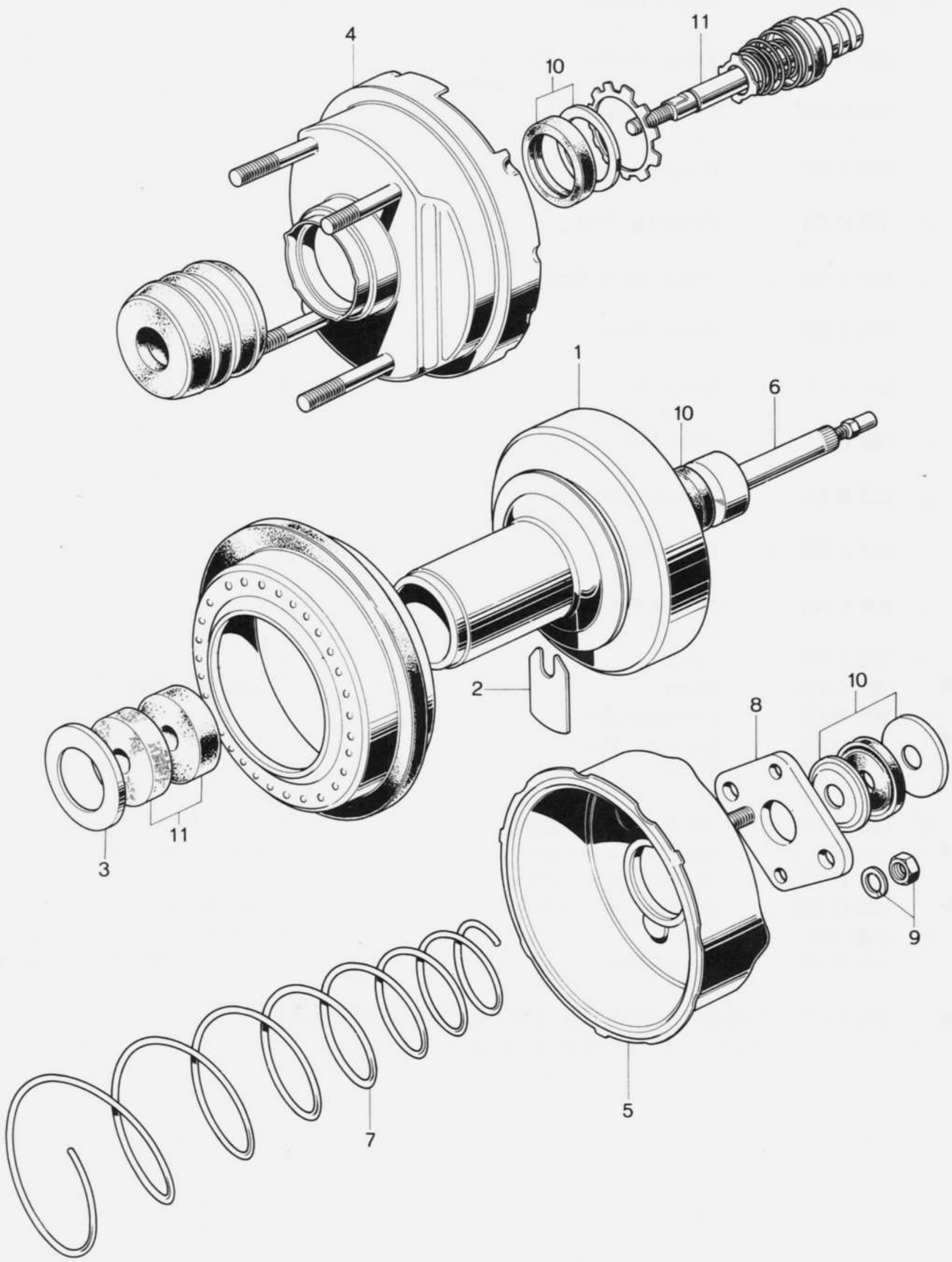
4
11
10
1
10
6
2
8
10
11
3
9
7
5

No.	Part Number	Description	Q'ty	Remarks
	0839 43 800A	MASTER VAC (R.H.D.)	1	
	2835 43 800	MASTER VAC (L.H.D.)	1	
1	0824 49 745	Diaphragm Plate	1	
2	2046 49 746	Key	1	
3	2046 49 747	Silencer Retainer	1	
4	0824 49 750	Rear Shell & Stud Ass'y	1	
5	0839 49 760	Front Shell & Stud Ass'y, (R.H.D.)	1	
	2835 49 760	Front Shell & Stud Ass'y, (L.H.D.)	1	
6	0824 49 770	Push Rod Ass'y	1	
7	0824 49 781	Spring	1	
8	0824 49 782	Flange	1	
9	2046 49 783	Spring Washer	1	
	2046 49 784	Nut	1	
● 10	0824 49 710A	Repair Kit "A"	1	Parts not listed here are supplied under these Kits
●	0824 49 720A	Repair Kit "B" ("A" Kit Included)	1	

PARKING BRAKE SYSTEM

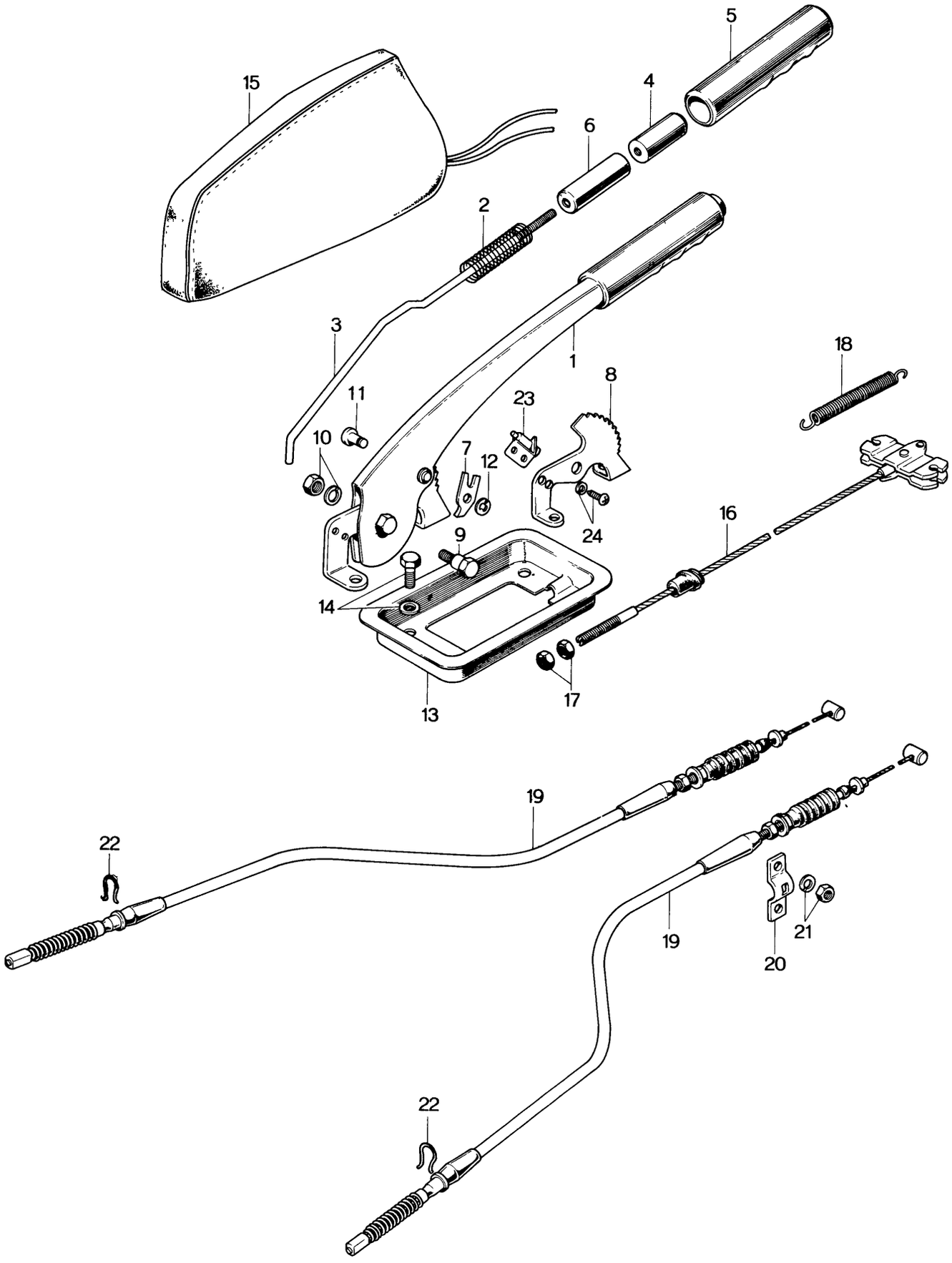

No.	Part Number	Description	Q'ty	Remarks
1	0302 44 010A	PARKING BRAKE LEVER Ass'y (Painted)	1	
	0303 44 010A	PARKING BRAKE LEVER Ass'y (Chrome Plated)	1	
2	0813 44 031	Spring	1	
3	0303 44 032	Release Rod	1	
4	0221 44 033	Release Button	1	
5	0813 44 034	Cap	1	
6	0813 44 035	Spacer	1	
7	0221 44 044	Ratchet	1	
8	0303 44 051A	Sector	1	
9	0303 44 053	Bolt	1	
10	99901 0800	Nut	1	
	99971 0800	Spring Washer	1	
11	99230 0815	Pin	1	
12	99575 0500	Snap Ring	1	
13	0302 44 132	Set Plate	1	
14	908062 6 16	Set Bolt, Set Plate	4	
15	0824 44 140	Boot	1	
16	0303 44 150A	Front Cable	1	
17	99947 0600	Nut, Front Cable	1	
18	0183 41 308	Return Spring	1	
19	0303 44 410C	Rear Cable	2	
●	0303 44 410D	Rear Cable	2	Car No. 39803 $^{7}/_{12}$～○
20	0303 44 439	Plate	2	
21	99906 0600	Nut, Plate	4	
	99971 0600	Spring Washer	4	

No.	Part Number	Description	Q'ty	Remarks
22	0305 44 471	Clip	2	
23	0820 66 840	Parking Lamp Switch	2	
24	908336 4 12	Set Screw, Parking Lamp Switch	2	

PIPING (CLUTCH & BRAKE R. H. D.)

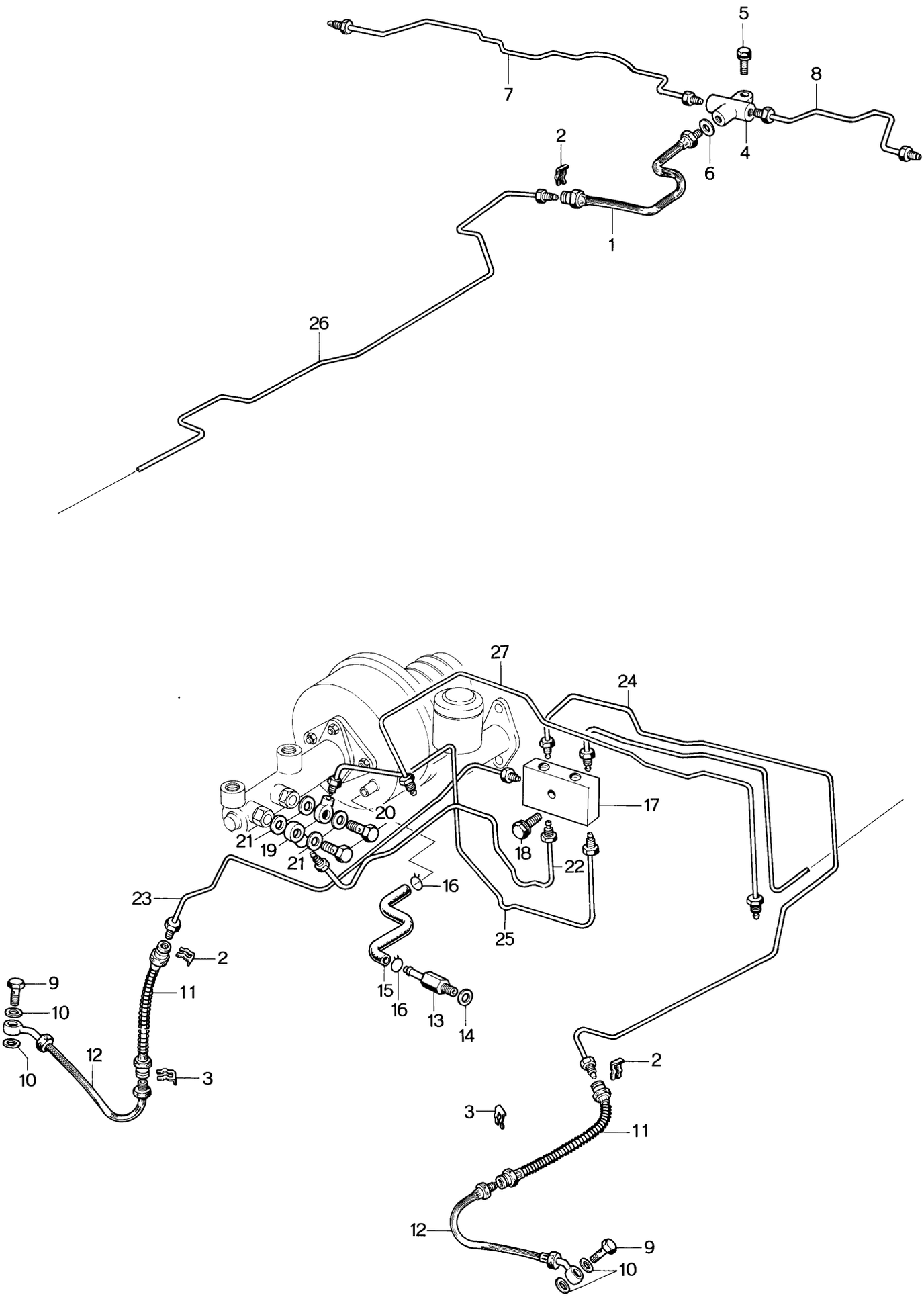

No.	Part. Number	Description	Q'ty	Remarks
1	0304 43 820	Flexible Hose	1	
2	0136 43 635	Clip	3	
3	0305 43 635	Clip	2	
4	0187 43 642	Pipe Joint	1	
5	908062 6 25	Set Bolt	1	
6	99562 1000	Packing	1	
7	0305 43 650A	Brake Pipe (Rr., R)	1	
8	0305 43 660A	Brake Pipe (Rr., L)	1	
9	0221 43 694	Connector Bolt	2	
10	99562 1000	Packing	4	
11	0305 43 810	Flexible Hose	2	
● 12	0305 43 820	Flexible Hose	2	Car No. 65341 7/3 ~ Discarded
●	0305 43 970	Flexible Hose Ass'y	2	Car No. 65342 7/3 ~ Added Anew
13	0839 43 770	Check Valve	1	
14	99562 1200	Packing	1	
15	0839 43 836	Vacuum Hose	1	
16	2046 43 839	Hose Clamp	2	
17	2828 45 461	Pipe Joint	1	
18	908062 6 35	Set Bolt	1	
19	0118 41 375	Pipe Connector	2	
20	0221 43 694	Connector Bolt	2	
21	99562 1000	Packing	4	
22	0305 45 260A	Main Brake Pipe (Frt.)	1	
23	0305 45 280A	Brake Pipe (Frt., R)	1	
24	0305 45 310A	Brake Pipe (Frt., L)	1	
25	0305 45 320A	Main Brake Pipe (Rr.)	1	
26	0839 45 330B	Brake Pipe Rear No. 2	1	
27	0305 45 510A	Clutch Pipe	1	

PIPING (CLUTCH & BRAKE L. H. D.)

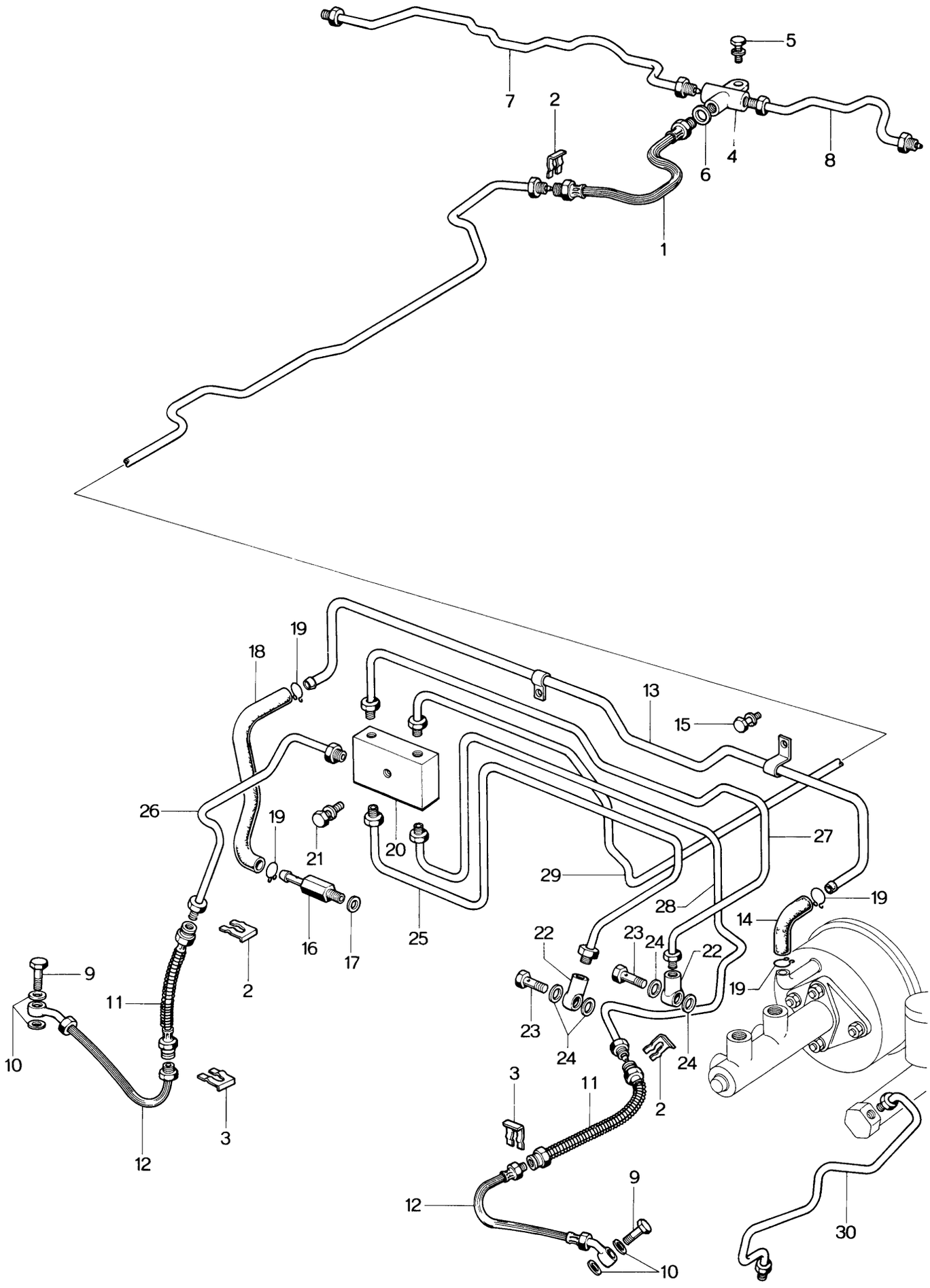

No.	Part Number	Description	Q'ty	Remarks
1	0304 43 820	Flexible Hose	1	
2	0136 43 635	Clip	3	
3	0305 43 635	Clip	2	
4	0187 43 642	Pipe Joint	1	
5	908062 6 25	Set Bolt	1	
6	99562 1000	Packing	1	
7	0305 43 650A	Brake Pipe (Rr., R)	1	
8	0305 43 660A	Brake Pipe (Rr., L)	1	
9	0221 43 694	Connector Bolt	2	
10	99562 1000	Packing	4	
11	0305 43 810	Flexible Hose	2	
● 12	0305 43 820	Flexible Hose	2	Car No. 65341 7/73 ~ Discarded
●	0305 43 970	Flexible Hose Ass'y	2	Car No. 65342 7/73 ~ Added Anew
13	2080 43 830	Vacuum Pipe Ass'y	1	
	2080 43 830A	Vacuum Pipe Ass'y	1	Car No. 25947 7/78 ~ ○
14	0305 43 842A	Vacuum Hose	1	
15	908062 6 16	Set Bolt	1	
16	0839 43 770	Check Valve	1	
17	99562 1200	Packing	1	
18	2080 43 836	Vacuum Hose	1	
	2080 43 836A	Vacuum Hose	1	Car No. 25947 7/78 ~ ○
19	2046 43 839	Hose Clamp	4	
20	2828 45 461	Pipe Joint	1	
21	908062 6 35	Set Bolt	1	
22	0118 41 375	Pipe Connector	2	
23	0221 43 694	Connector Bolt	2	
24	99562 1000	Packing	4	
25	2835 45 260	Main Brake Pipe (Frt.)	1	
	2835 45 260A	Main Brake Pipe (Frt.)	1	Car No. 33038 7/10 ~ ×
26	0305 45 280A	Brake Pipe (Frt., R)	1	

No.	Part Number	Description	Q'ty	Remarks
27	2835 45 310	Brake Pipe (Frt., L)	1	
28	2835 45 320	Brake Pipe (Rr.)	1	
	2835 45 320A	Brake Pipe (Rr.)	1	Car No. 33038 $^{70}/_{10}$ ~ ×
29	2835 45 330	Brake Pipe (Rr.) No. 2	1	
●	2835 45 330A	Brake Pipe (Rr.) No. 2	1	Car No. 52327 $^{70}/_{1}$ ~ ○
30	2080 45 510	Clutch Pipe	1	

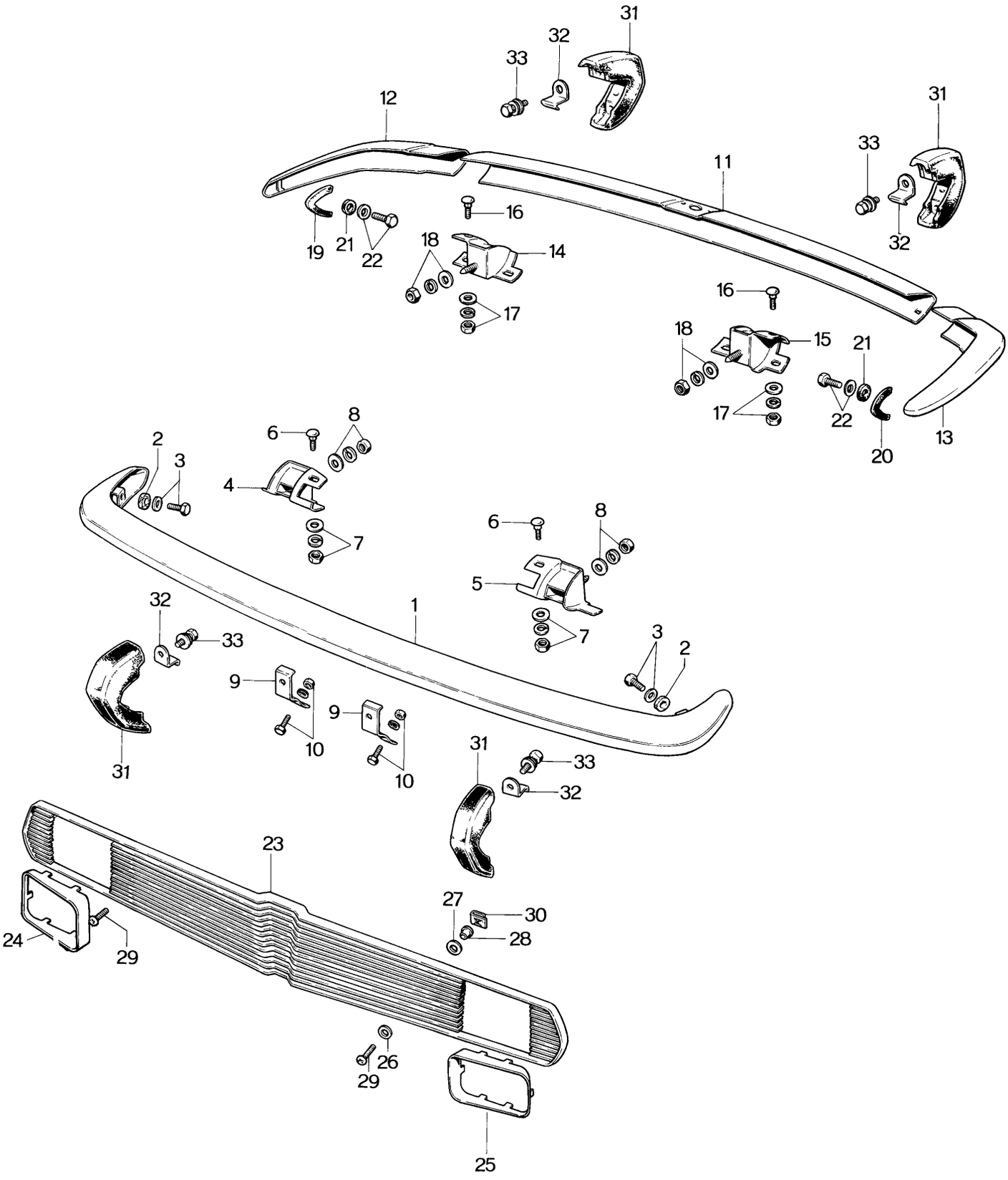
31
32
33
12
31
33
11
32
16
19
21
22
18
14
16
17
18
15
21
17
22
20
13
6
8
2
3
4
7
6
8
5
7
1
32
33
3
2
9
10
9
10
31
31
33
32
23
27
30
28
24
29
26
29
25

No.	Part Number	Description	Q'ty	Remarks
1	2826 50 110A	Front Bumper Bar Ass'y	1	
●	2826 50 110B	Front Bumper Bar Ass'y	1	Car No. 40001 7/12 ~ ×
2	0223 50 049	Spacer	2	
3	99805 0830	Bolt, Bumper	2	
	99951 0822	Plain Washer	2	
4	0305 50 160	Stay Ass'y, Front Bumper (R)	1	
●	0305 50 160A	Stay Ass'y, Front Bumper (R)	1	Car No. 40067 7/12 ~ ○
5	0305 50 170	Stay Ass'y, Front Bumper (L)	1	
●	0305 50 170A	Stay Ass'y, Front Bumper (L)	1	Car No. 40067 7/12 ~ ○
6	0223 50 275	Screw, Front Bumper	4	Car No. 40067 7/12 ~ Quantity
7	99906 0600	Nut, Front Bumper	4	Car No. 40067 7/12 ~ Quantity
	99951 0618	Plain Washer	4	Car No. 40067 7/12 ~ Quantity
	99971 0600	Spring Washer	4	Car No. 40067 7/12 ~ Quantity
8	99921 1000	Nut, Bumper Stay	2	
	99951 1022	Plain Washer	2	
	99971 1000	Spring Washer	2	
9	0305 50 180	Number Plate Holder	2	
10	99806 0612	Bolt, Number Plate Holder	2	
	99906 0600	Nut	2	
	99971 0600	Spring Washer	2	
11	0305 50 310A	Rear Bumper (C)	1	
●	0305 50 310B	Rear Bumper (C)	1	Car No. 40067 7/12 ~ ×
12	0305 50 320A	Rear Bumper (R)	1	
●	0305 50 320B	Rear Bumper (R)	1	Car No. 40067 7/12 ~ ○
13	0305 50 340A	Rear Bumper (L)	1	
●	0305 50 340B	Rear Bumper (L)	1	Car No. 40067 7/12 ~ ○
14	0305 50 360	Stay Ass'y, Front Bumper (R)	1	
●	0305 50 360A	Stay Ass'y, Rear Bumper (R)	1	Car No. 40067 7/12 ~ ○
15	0305 50 370	Stay Ass'y, Rear Bumper (L)	1	
●	0305 50 370A	Stay Ass'y, Rear Bumper (L)	1	Car No. 40067 7/12 ~ ○
● 16	0223 50 275	Screw, Rear Bumper	4	Car No. 40067 7/12 ~ Quantity
● 17	99906 0600	Nut, Rear Bumper	4	Car No. 40067 7/12 ~ Quantity
●	99951 0618	Plain Washer	4	Car No. 40067 7/12 ~ Quantity
●	99971 0600	Spring Washer	4	Car No. 40067 7/12 ~ Quantity

No.	Part Number	Description	Q'ty	Remarks	
18	99921 1000	Nut, Bumper Stay	2		
	99951 1022	Plain Washer	2		
	99971 1000	Spring Washer	2		
19	0305 50 381	Pad (R)	1		
20	0305 50 382	Pad (L)	1		
21	0305 50 398	Spacer	2		
22	99834 0616	Screw, Pad	2		
	99951 0618	Plain Washer	2		
● 23	0305 50 511B-04	Grille (Dark-Grey)	1		©
24	0305 50 521A	Lamp Ring (R)	1		
25	0305 50 531	Lamp Ring (L)	1		
26	0305 50 541	Washer	8		
27	0305 50 542	Cushion	8		
28	0305 50 543	Spacer	8		
29	99864 0420B	Screw	8		
30	99896 0400	Spring Nut	8		
● 31	0305 50 210-00	Bumper Guard No. 1 (R) (Blue)	2		©
●	0305 50 210A-00	Bumper Guard No. 1 (R) (Blue)	2	Car No. 28074 ~ ○	
●	0305 50 250-00	Bumper Guard No. 2 (L) (Blue)	2		©
●	0305 50 250A-00	Bumper Guard No. 2 (L) (Blue)	2	Car No. 28074 ~ ○	
32	0305 50 231	Clamp Plate, Bumper Guard	8		
33	908066 6 18	Set Bolt	8		

BONNET LOCK

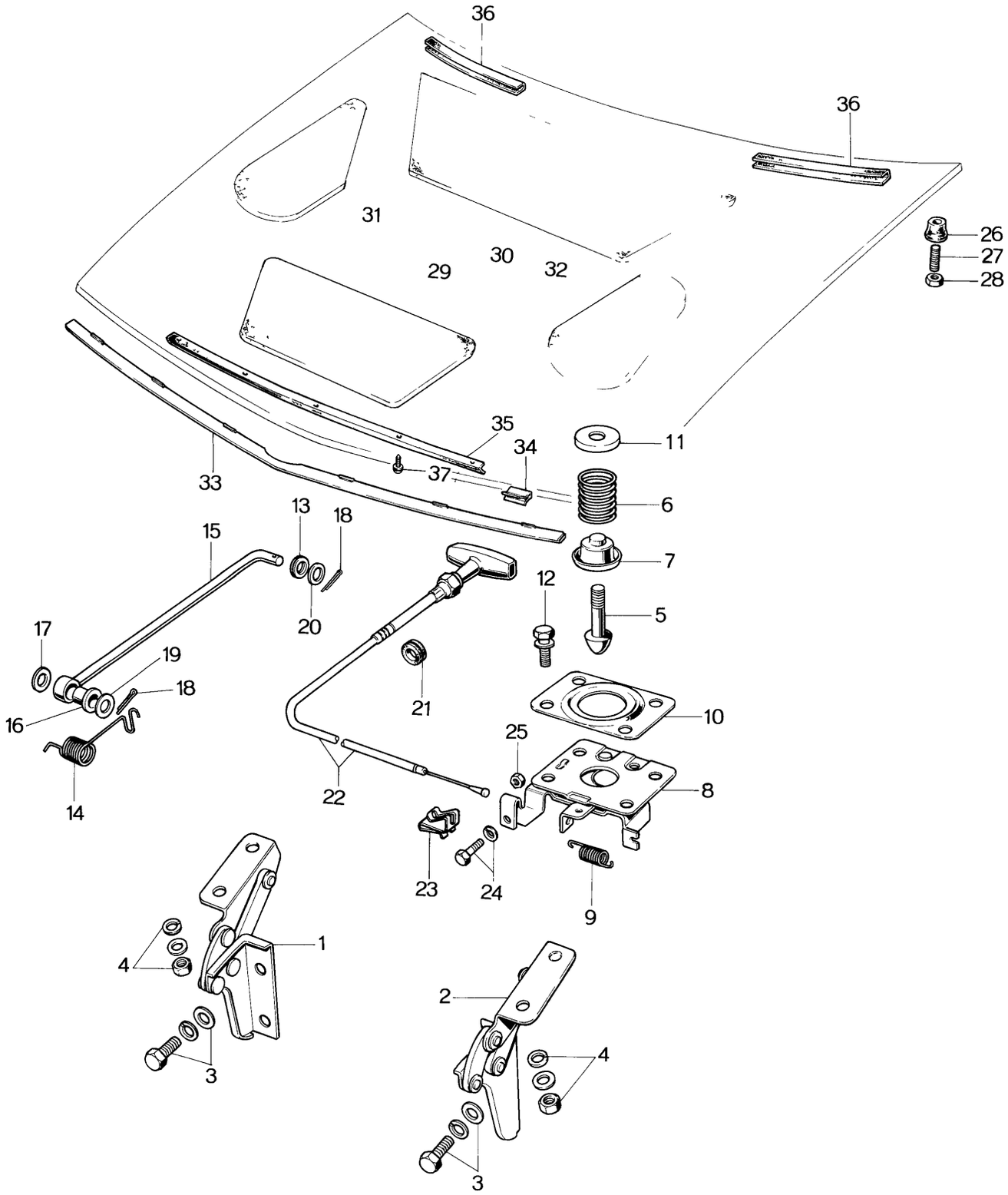
36
36
31
30
29
32
26
27
28
35
34
11
37
33
6
13
18
15
7
12
5
17
19
18
20
21
10
16
25
22
8
14
23
24
9
1
4
2
4
3
3

No.	Part Number	Description	Q'ty	Remarks
1	0305 52 210	Hinge Ass'y (R)	1	
2	0305 52 260	Hinge Ass'y (L)	1	
3	908017 8 16	Set Bolt, Hinge	4	
4	99906 0800	Nut	4	
	99952 0822	Plain Washer	4	
	99971 0800	Spring Washer	4	
5	0187 52 141	Hook, Bonnet	1	
6	0305 52 312A	Lift Spring	1	
●	0305 52 312B	Lift Spring	1	Car No. 52327 71/1 ~ ○
7	0305 52 320A	Spring Seat Lower	1	
●	0305 52 322A	Spring Seat Lower	1	Car No. 52327 71/1 ~ ○
8	0305 52 330	Lock Ass'y, Bonnet (R.H.D.)	1	
	2835 52 330	Lock Ass'y, Bonnet (L.H.D.)	1	
9	0187 52 145	Lock Return Spring	1	
10	0305 52 371A	Lock Guide Plate	1	
11	0305 52 313	Spring Seat Upper	1	
12	908067 6 16	Set Bolt, Lock	4	
13	0824 52 271	Roller	1	
14	0824 52 281	Spring	1	
	2835 52 381	Spring (L.H.D.)	1	Car No. 34307 70/11 ~ ×
15	0305 52 390	Stay Ass'y, Bonnet	1	
16	0223 58 721	Bush	1	
17	0136 65 752	Packing	1	
18	99221 2015	Split Pin	2	
19	99952 0800	Plain Washer	1	
20	99952 0822	Plain Washer	1	
21	0259 52 301	Grommet	1	
22	0305 52 410	Release Wire Ass'y (R.H.D.)	1	
	2835 52 410	Release Wire Ass'y (L.H.D.)	1	

BONNET LOCK

No.	Part Number	Description	Q'ty	Remarks
23	0223 52 302	Clamp, Release Wire (L.H.D.)	1	
24	908066 5 16	Set Bolt, Release Wire (R.H.D.)	1	
25	99906 0500	Nut (R.H.D.)	1	
26	0824 52 451	Cushion	2	
27	99831 0825	Screw, Cushion	2	
28	99902 0800	Nut	2	
29	0839 52 461	Insulator, Bonnet "A"	1	
30	0839 52 462	Insulator, Bonnet "B"	1	
31	0839 52 463	Insulator, Bonnet "C"	1	
32	0839 52 464	Insulator, Bonnet "D"	1	
33	0305 52 471	Bonnet Mould	1	
34	0305 52 472	Clip	6	
35	0305 52 481	Sealer	1	
36	0305 52 491	Bonnet Seal Rubber	2	
37	908641 4 10	Set Screw, Sealer	5	

TRUNK LID LOCK

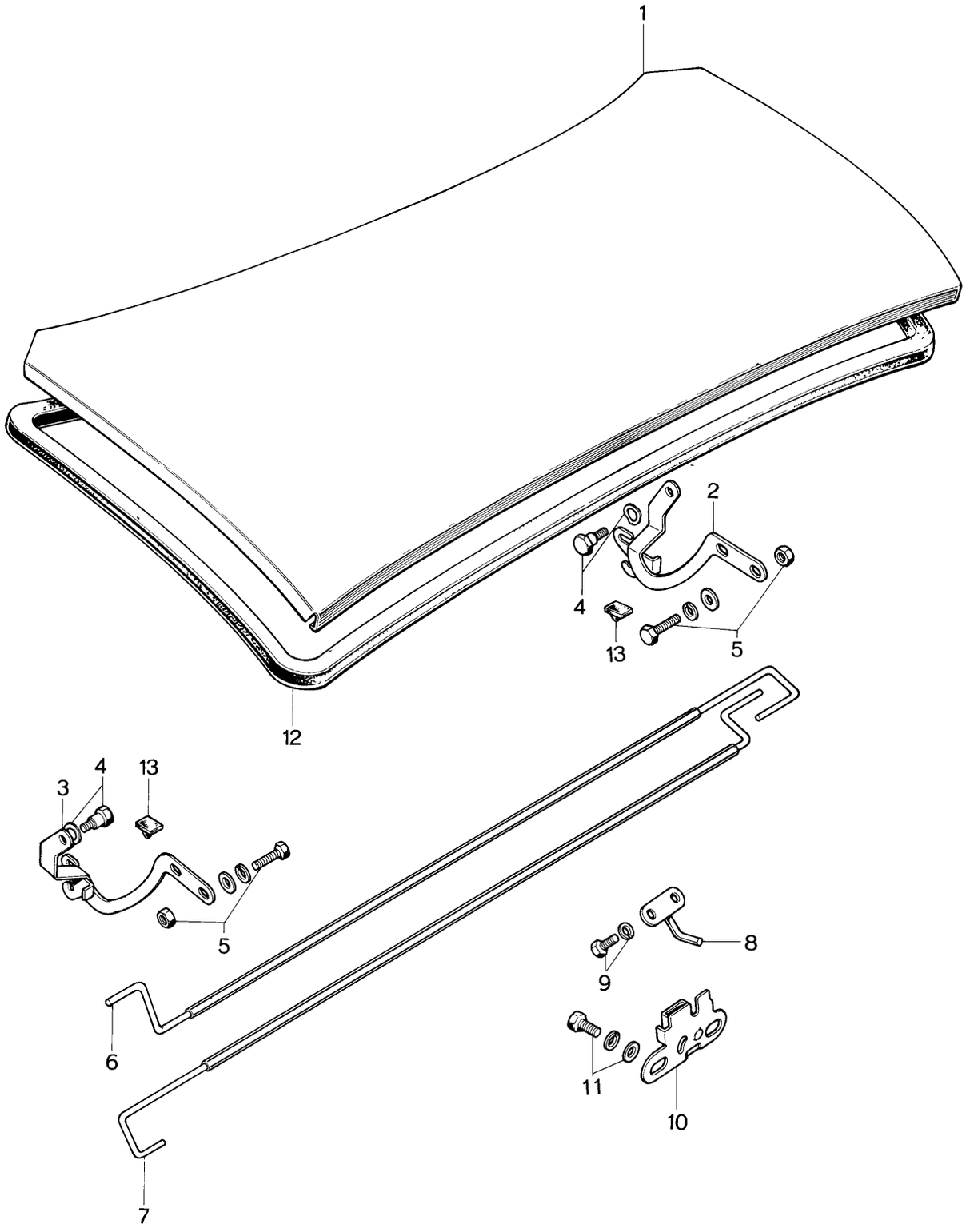

No.	Part Number	Description	Q'ty	Remarks
1	0305 52 510C	Trunk Lid Ass'y, Sedan use	1	
	0839 52 510D	Trunk Lid Ass'y, Coupe use	1	
2	0305 52 610A	Lid Hinge Ass'y (R), Sedan use	1	
	0839 52 610	Lid Hinge Ass'y (R), Coupe use	1	
3	0305 52 620A	Lid Hinge Ass'y (L), Sedan use	1	
	0839 52 620	Lid Hinge Ass'y (L), Coupe use	1	
4	0305 52 629	Hinge Bolt, Lid Hinge } Sedan use	2	
	99972 1000	Wave Washer } Sedan use	2	
	99906 0600	Nut	2	
	99952 0618	Plain Washer } Coupe use	2	
	99971 0600	Spring Washer } Coupe use	2	
5	908067 6 18	Set Bolt, Lid Hinge	4	
	99906 0600	Nut	4	
	99951 0618	Plain Washer	4	
6	0305 52 661	Balance Spring (R), Sedan use	1	
	0839 52 661A	Balance Spring (R), Coupe use	1	
7	0305 52 671	Balance Spring (L), Sedan use	1	
	0839 52 671A	Balance Spring (L), Coupe use	1	
8	0305 52 750	Striker Ass'y, Lid Lock	1	
9	908066 8 18	Set Bolt, Striker	2	
10	0305 52 850A	Trunk Lid Lock Ass'y	1	
11	908062 8 14	Set Bolt	2	
	99951 0818	Plain Washer	2	
12	0305 52 901	Weatherstrip, Sedan use	1	
	0839 52 901	Weatherstrip, Coupe use	1	
13	0305 52 628	Cushion Rubber	2	

BODY PANELS (FRONT)

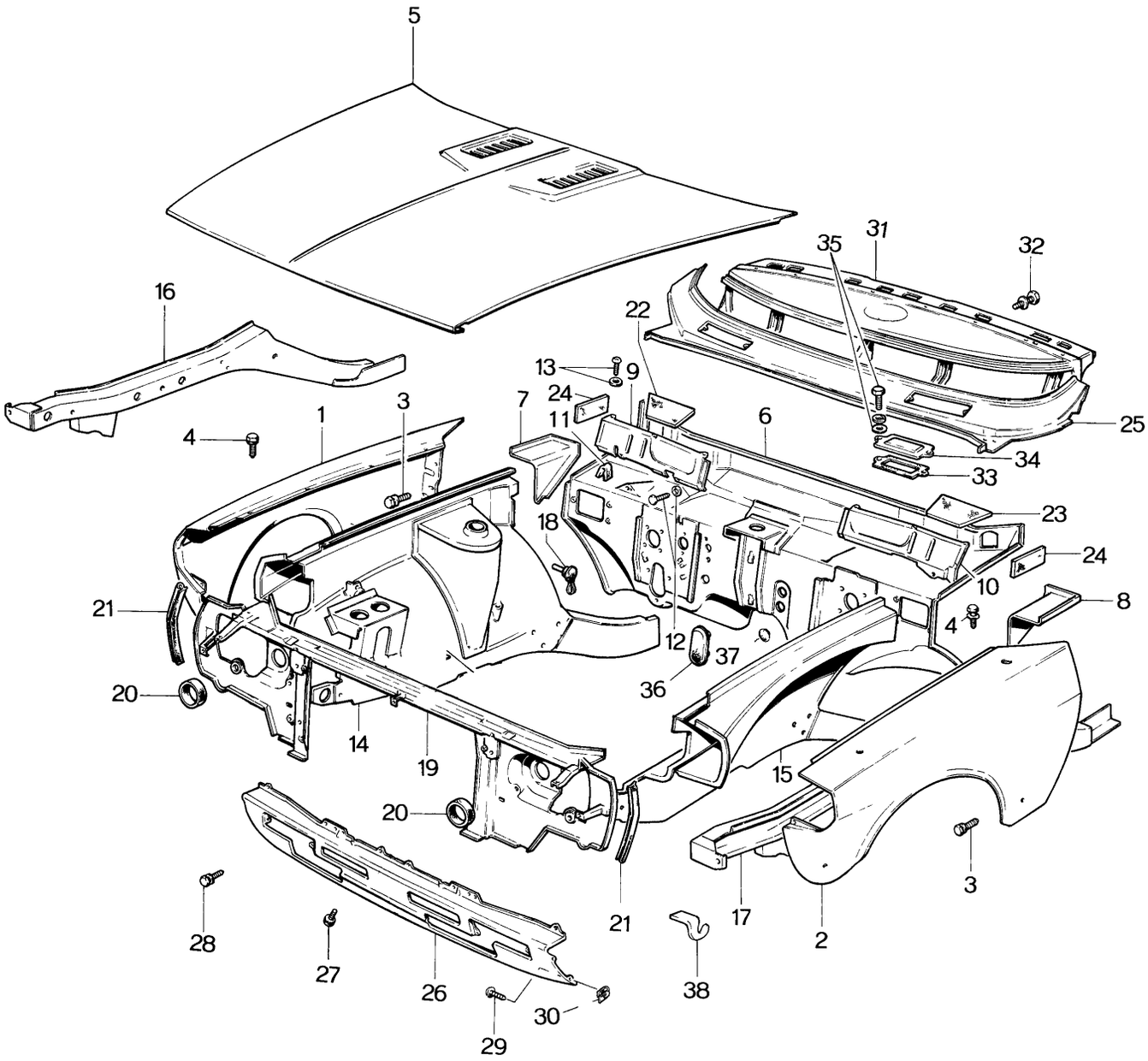

No.	Part Number	Description	Q'ty	Remarks	
1	2826 51 020	Front Fender (R)	1	Ouder Under No. 2825 51 020 (R)	☆
2	~~2080 51 120~~	~~Front Fender (L) (L. H. D.)~~	±	2836 51 120 (L)	☆
●	~~2835 51 120~~	~~Front Fender (L) (L. H. D.)~~	~~1~~	~~Car No. 21643~~ 70/8 ~ ○	☆
	~~2324 51 120~~	~~Front Fender (L) (R. H. D.)~~	~~1~~		☆
●	~~2835 51 120~~	~~Front Fender (L) (R. H. D.)~~	~~1~~	~~Car No. 53598~~ 71/1 ~ ○	☆
3	908057 6 20	Set Bolt, Fender	8		
4	908067 6 14	Set Bolt, Fender	10		
5	0839 52 110	Bonnet	1		
●	0305 52 110	Bonnet (R. H. D.)	1	Car No. 43803 70/12 ~ ○	
	2835 52 110	Bonnet (L. H. D.)	1	Car No. 34307 70/11 ~ ×	
6	0839 53 010H	Dash Panel Ass'y (R. H. D.)	1		
	0833 53 010	Dash Panel Ass'y (R. H. D.)	1	Car No. 27392 70/10 ~ ○	
●	0833 53 010A	Dash Panel Ass'y (R. H. D.)	1	Car No. 61926 71/3 ~ ○	
	2080 53 010A	Dash Panel Ass'y (L. H. D.)	1		
	2080 53 010E	Dash Panel Ass'y (L. H. D.)	1	Car No. 21039 70/8 ~ ○	
●	2080 53 010G	Dash Panel Ass'y (L. H. D.)	1	Car No. 61926 71/3 ~ ○	
7	0305 53 180	Corner Plate (R)	1		
8	0305 54 180	Corner Plate (L)	1		
9	0305 53 190B	Cowl Lower Panel (R) (R.H.D.) Sedan use	1		
	0839 53 190B	Cowl Lower Panel (R) (R.H.D.) Coupe use	1		
	2835 53 190	Cowl Lower Panel (R) (L.H.D.) Sedan use	1		
	2835 53 190A	Cowl Lower Panel (R) (L.H.D.) Sedan use	1	Car No. 21039 70/8 ~ ○	
	2835 53 190B	Cowl Lower Panel (R) (L.H.D.) Sedan use	1	Car No. 34307 70/11 ~ ○	
	2860 53 190A	Cowl Lower Panel (R) (R.H.D.) Coupe use Exclusive for Australia	1		
10	0305 54 190B	Cowl Lower Panel (L) (R.H.D.)	1		
	2835 54 190	Cowl Lower Panel (L) (L.H.D.)	1		
11	0305 53 195A	Packing (R) (R.H.D.)	1		
● 12	99799 0514	Bolt, Cowl Panel	14	(L. H. D.) Car No. 40657 70/12 ~ Quantity	
●			15	(R. H. D.) Car No. 40657 70/12 ~ Quantity	
	99952 0516	Plain Washer	8	(L. H. D.)	
			9	(R. H. D.)	
● 13	99833 0512	Screw, Cowl Panel	6	Car No. 40656 70/12 ~ Discarded	
	99952 0516	Plain Washer	6		
14	2080 53 210A	WHEEL APRON PANEL Ass'y (R) (L. H. D.)	1		
	2080 53 210B	WHEEL APRON PANEL Ass'y (R) (L. H. D.)	1	Car No. 38158 70/11 ~ ○	
●	2080 53 210C	WHEEL APRON PANEL Ass'y (R) (L. H. D.)	1	Car No. 59135 71/2 ~ ○	
●	2080 53 210D	WHEEL APRON PANEL Ass'y (R) (L. H. D.)	1	Car No. 61926 71/3 ~ ○	
	2321 53 210B	WHEEL APRON PANEL Ass'y (R) (R. H. D.)	1		
●	2321 53 210C	WHEEL APRON PANEL Ass'y (R) (R. H. D.)	1	Car No. 59135 71/2 ~ ○	
●	2321 53 210D	WHEEL APRON PANEL Ass'y (R) (R. H. D.)	1	Car No. 61926 71/3 ~ ○	
	2324 53 210E	WHEEL APRON PANEL Ass'y (R) (R. H. D.)	1	Triple Horn Use	
●	2324 53 210F	WHEEL APRON PANEL Ass'y (R) (R. H. D.)	1	Car No. 59135 71/2 ~ ○	
●	2324 53 210H	WHEEL APRON PANEL Ass'y (R) (R. H. D.)	1	Car No. 61926 71/3 ~ ○	

BODY PANELS (FRONT)

	No.	Part Number	Description	Q'ty	Remarks
	15	0839 54 210D	WHEEL APRON PANEL Ass'y (L) (R. H. D.)	1	
●		0839 54 210E	WHEEL APRON PANEL Ass'y (L) (R. H. D.)	1	Car No. 59135 7/2 ~ ○
		2080 54 210	WHEEL APRON PANEN Ass'y (L) (L. H. D.)	1	
		2080 54 210A	WHEEL APRON PANEL Ass'y (L) (L. H. D.)	1	Car No. 21039 7/8 ~ ○
		2080 54 210B	WHEEL APRON PANEL Ass'y (L) (L. H. D.)	1	Car No. 38158 7/11 ~ ×
●		2080 54 210C	WHEEL APRON PANEL Ass'y (L) (L. H. D.)	1	Car No. 59135 7/2 ~ ○
●	16	2324 56 040C	Front Side Frame (R) (R. H. D.)	1	
●		2080 56 040	Front Side Frame (R) (L. H. D.)	1	
	17	0839 56 540G	Front Side Frame (L) (R. H. D.)	1	
		2080 56 540	Front Side Frame (L) (L. H. D.)	1	
●		2080 56 540D	Front Side Frame (L) (L. H. D.)	1	Car No. 36206 7/11 ~ ○
	18	0259 58 931	Drain Valve	2	
	19	0305 53 700A	Shroud Panel Ass'y (R.H.D.)	1	
		2835 53 700	Shroud Panel Ass'y (L.H.D.)	1	
	20	0305 53 707A	Packing (R.H.D.)	2	
		2835 53 707	Packing (L.H.D.)	2	
	21	0305 53 708	Seal Rubber	2	
	22	0305 70 431	Insulator "A" (R)	1	
	23	0305 71 431	Insulator "A" (L)	1	
	24	0305 70 432	Insulator "B"	2	
	25	0305 53 970	Cowl Panel Ass'y (R.H.D.)	1	
		2835 53 970	Cowl Panel Ass'y (L.H.D.)	1	
	26	0305 70 020A	Front Skirt Ass'y	1	
		0305 70 020B	Front Skit Ass'y	1	Car No. 24191 7/9 ~ ○
	27	908066 5 12	Set Bolt, Front Skirt	2	
	28	908067 6 14	Set Bolt, Front Skirt	4	
	29	99860 0612	Screw, Front Skirt	4	
	30	99896 0600	Spring Nut	4	
	31	0839 70 100B	Instrument Panel Ass'y (R. H. D.)	1	
●		0839 70 100D	Instrument Panel Ass'y (R. H. D.)	1	Car No. 61926 7/3 ~ ○
		2080 70 100B	Instrument Panel Ass'y (L. H. D.)	1	
		2080 70 100C	Instrument Panel Ass'y (L. H. D.)	1	Car No. 27392 7/10 ~ ○
●		2080 70 100E	Instrument Panel Ass'y (L. H. D.)	1	Car No. 61926 7/3 ~ ○

No.	Part Number	Description	Q'ty	Remarks
32	908061 6 12	Set Bolt, Instrument Panel	2	
	0301 61 050	COVER Ass'y	1	
33	0301 61 051	Packing	1	
34	0301 61 052	Plate	1	
35	99799 0628	Bolt, Cover	2	Without Car Heater
	99952 0618	Plain Washer	2	
	99971 0600	Spring Washer	2	
36	0301 61 055	Grommet	1	
37	2304 15 321	Sealing Cap	2	
38	2851 56 921	Hook	1	Arctic Spec Model
●	2851 56 921A	Hook	1	Car No. 42150 7/12 ~ ○

BODY PANELS (SIDE, ALL COUPE MODELS)

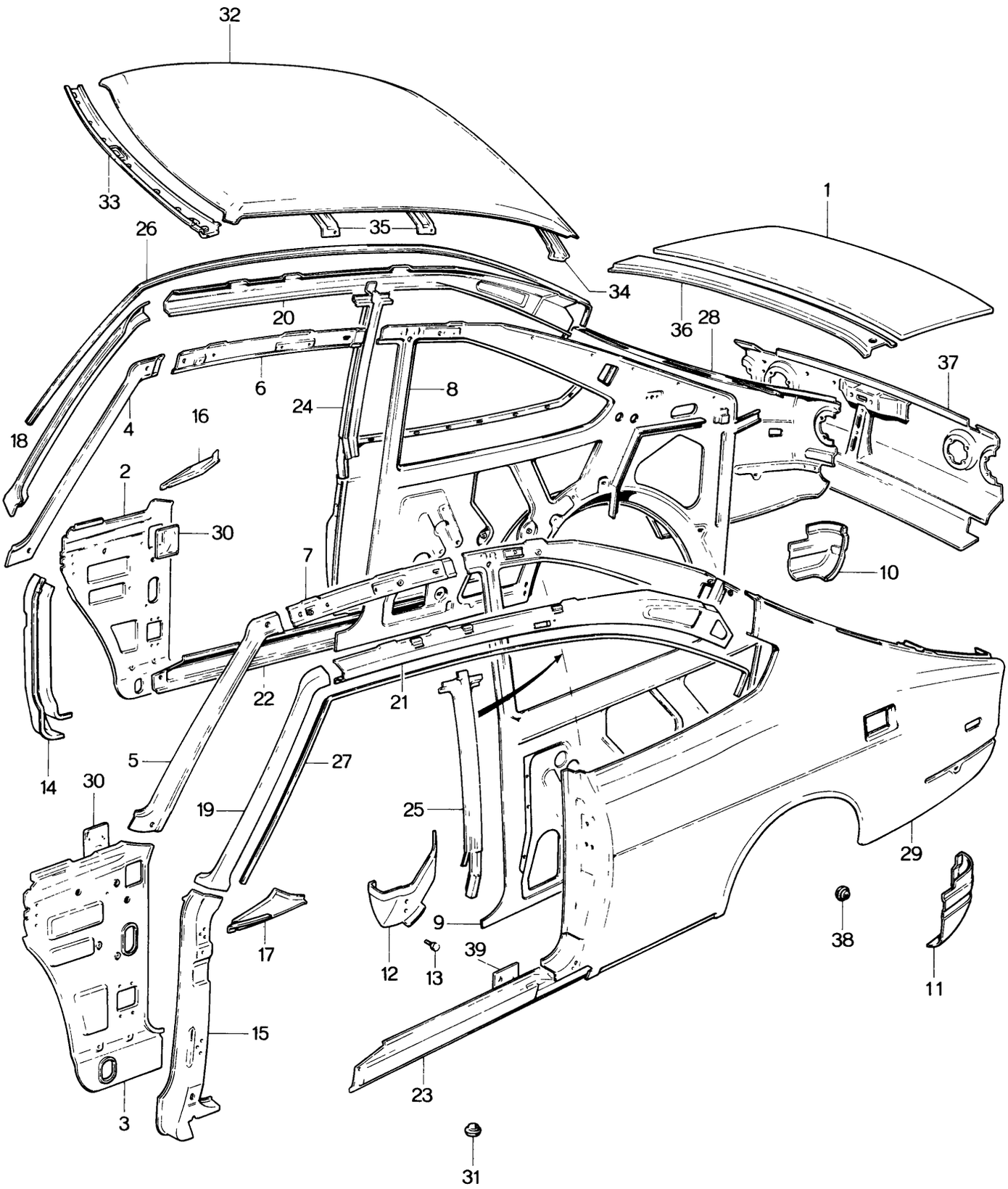

No.	Part Number	Description	Q'ty	Remarks
1	0839 52 510D	Trunk Lid Ass'y	1	
	2069 53 300	SIDE FRAME (R) (L.H.D.)	1	
		(2069)		
	2069 54 300	SIDE FRAME (L) (L.H.D.)	1	
	2071 53 300	SIDE FRAME (R) (L.H.D.)	1	
		(2071)		
	2071 54 300	SIDE FRAME (L) (L.H.D.)		
		For Arctic Spec Model		
	2072 53 300	SIDE FRAME (R) (L.H.D.)	1	
		(2072)		
	2072 54 300	SIDE FRAME (L) (L.H.D.)	1	
	2073 53 300	SIDE FRAME (R) (L.H.D.)	1	
●	2073 53 300A	SIDE FRAME (R) (L.H.D.)	1	Car No. 7/3 ~ △
	2073 54 300	SIDE FRAME (L) (L.H.D.)	1	
		(2073)		
●	2073 54 300A	SIDE FRAME (L) (L.H.D.)	1	Car No. 7/3 ~ △
		For Arctic		
	2080 53 300	SIDE FRAME (R) (L.H.D.)	1	
		(2075,2080)		
	2080 54 300	SIDE FRAME (L) (L.H.D.)	1	
		For France		
	2323 53 300A	SIDE FRAME (R) (R.H.D.)	1	
		(2323		
	2323 54 300A	SIDE FRAME (L) (R.H.D.)	1	
	2324 53 300B	SIDE FRAME (R) (R.H.D.)	1	Order Under 2323 53 300A ☆
		(2324)		
	2324 54 300B	SIDE FRAME (L) (R.H.D.)	1	Order Under 2323 54 300A ☆
	2877 53 300A	SIDE FRAME (R) (R.H.D.)	1	
		(2877)		
	2877 54 300A	SIDE FRAME (R) (R.H.D.)	1	
		For England		
	2878 53 300B	SIDE FRAME (R) (R.H.D.)	1	Order Under 2877 53 300A ☆
		(2878)		
	2878 54 300B	SIDE FRAME (L) (R.H.D.)	1	Order Under 2877 54 300A ☆
		For England		

BODY PANELS (SIDE, ALL COUPE MODELS)

No.	Part Number	Description	Q'ty	Remarks
2	0305 53 320A	Cowl Side Panel (R), (R.H.D.)	1	
	2080 53 320	Cowl Side Panel (R), (L.H.D.) Without Antenna Hole	1	
	2835 53 320	Cowl Side Panel (R), (L.H.D.) With Antenna Hole	1	
3	0305 54 320A	Cowl Side Panel (L), (R.H.D.)	1	
	2835 54 320	Cowl Side Panel (L), (L.H.D.)	1	
4	0839 53 330B	Front Pillar Inner (R)	1	
5	0839 54 330B	Front Pillar Inner (L)	1	
6	0839 53 340A	Roof Rail Inner (R)	1	
7	0839 54 340	Roof Rail Inner (L)	1	
8	0839 53 350F	Quarter Panel (R)	1	
●	0839 53 350H	Quarter Panel (R)	1	Car No. 40001 70/12 ~ ×
●	0833 53 350	Quarter Panel (R)	1	Car No. 55667 71/2 ~ △
	2080 53 350	Quarter Panel (R) For France	1	
●	2080 53 350B	Quarter Panel (R) For France	1	Car No. 40001 70/12 ~ ×
●	2080 53 350D	Quarter Panel (R) For France & Arctic Spec.	1	Car No. 55667 71/2 ~ △
9	0839 53 352	End Plate (R)	1	
10	0839 54 350F	Quarter Panel (L)	1	
	0839 54 350G	Quarter Panel (L)	1	Car No. 40001 70/12 ~ ×
●	0833 54 350	Quarter Panel (L)	1	Car No. 55667 71/2 ~ △
	2080 54 350	Quarter Panel (L) For France	1	
●	2080 54 350B	Quarter Panel (L) For France	1	Car No. 40001 70/12 ~ ×
●	2080 54 350C	Quarter Panel (L) For France & Arctic Spec	1	Car No. 55667 71/2 ~ △
11	0839 54 352	End Plate (L)	1	
●	0839 54 352A	End Plate (L)	1	Car No. 55667 71/2 ~ △
12	0305 54 370	End Plate	1	
●	0305 54 370A	End Plate	1	Car No. 55667 71/2 ~ △
13	908066 5 12	Set Bolt, End Plate	1	
14	0305 53 410A	Hinge Pillar Outer (R)	1	
	2835 53 410	Hinge Pillar Outer (R) Arctic Spec. Model With Side Defroster Duct hole	1	
15	0305 54 410B	Hinge Pillar Outer (L)	1	
	2835 54 410	Hinge Pillar Outer (L) Arctic Spec. Model With Side Defroster Duct hole	1	
16	0305 53 415	Cowl Bracket (R)	1	
17	0305 54 415	Cowl Bracket (L)	1	
18	0839 53 421A	Front Pillar Outer (R)	1	
19	0839 54 421A	Front Pillar Outer (L)	1	
20	0839 53 430	Roof Rail Outer (R)	1	

No.	Part Number	Description	Q'ty	Remarks
21	0839 54 430	Roof Rail Outer (L)	1	
22	0839 54 430	Side Sill Outer (R)	1	
●	0839 53 450A	Side Sill Outer (R)	1	Car No. 55667 7½~△
23	0839 54 450	Side Sill Outer (L)	1	
●	0839 54 450A	Side Sill Outer (L)	1	Car No. 55667 7½~△
24	0839 53 500	Center Pillar Outer (R)	1	
25	0839 54 500	Center Pillar Outer (L)	1	
26	0839 53 591	Rain Rail (R)	1	
27	0839 54 591	Rain Rail (L)	1	
28	2080 53 600	Rear Fender (R)	1	
●	2080 53 600A	Rear Fender (R) For France	1	Car No. 46142 7½~○
●	2080 53 600B	Rear Fender (R)	1	Car No. 55667 7½~△
	2323 53 600A	Rear Fender (R)	1	
	2323 53 600B	Rear Fender (R) R. H. D.	1	Car No. 43803 7½~○
●	2323 53 600C	Rear Fender (R) (England Excluded)	1	Car No. 46142 7½~△
●	~~2324 53 600C~~	~~Rear Fender (R)~~	⇟	
	2877 53 600A	Rear Fender (R)	1	
	2877 53 600B	Rear Fender (R) L. H. D.	1	Car No. 43803 7½~○
●	2877 53 600C	Rear Fender (R) (France Excluded) & England	1	Car No. 55667 7½~△
●	~~2878 53 600C~~	~~Rear Fender (R)~~	⇟	
29	2080 54 600	Rear Fender (L)	1	
●	2080 54 600A	Rear Fender (L) For France	1	Car No. 46142 7½~○
●	2080 54 600B	Rear Fender (L)	1	Car No. 55667 7½~△
	2323 54 600A	Rear Fender (L)	1	
	2323 54 600B	Rear Fender (L) R. H. D.	1	Car No. 43803 7½~○
●	2323 54 600C	Rear Fender (L) (England Excluded)	1	Car No. 55667 7½~△
●	~~2324 54 600C~~	~~Rear Fender (L)~~	⇟	
	2877 54 600A	Rear Fender (L)	1	
	2877 54 600B	Rear Fender (L) L. H. D. (France Excluded)	1	Car No. 43803 7½~○
●	2877 54 600C	Rear Fender (L) & England	1	Car No. 55667 7½~△
●	~~2878 54 600C~~	~~Rear Fender (L)~~	⇟	
●	Ⓝ 0839 53 658	Seat (Rear Fender)	1	Car No. 34307 7/11~Added Anew
30	0305 53 329	Seat	2	
31	0259 53 455	Drain Plug	4	
32	0839 53 901	Roof Panel	1	
33	0839 53 920	Front Header Ass'y	1	
34	0839 53 941	Rear Header	1	
	0839 53 941A	Rear Header	1	Car No. 40001 7½~○
35	0839 53 951	Roof Reinforcement	2	
36	0310 53 990	Rear Deck Panel	1	

BODY PANELS (SIDE, ALL COUPE MODELS)

No.	Part Number	Description	Q'ty	Remarks
37	~~2324 70 050C~~	~~Rear End Panel~~	~~1~~	
	2874 70 050A	Rear End Panel Without Rear Finisher hole	1	
38	0305 70 811	Hole Cover, Side Sill	6	

BODY PANELS (SIDE, ALL SEDAN MODELS)

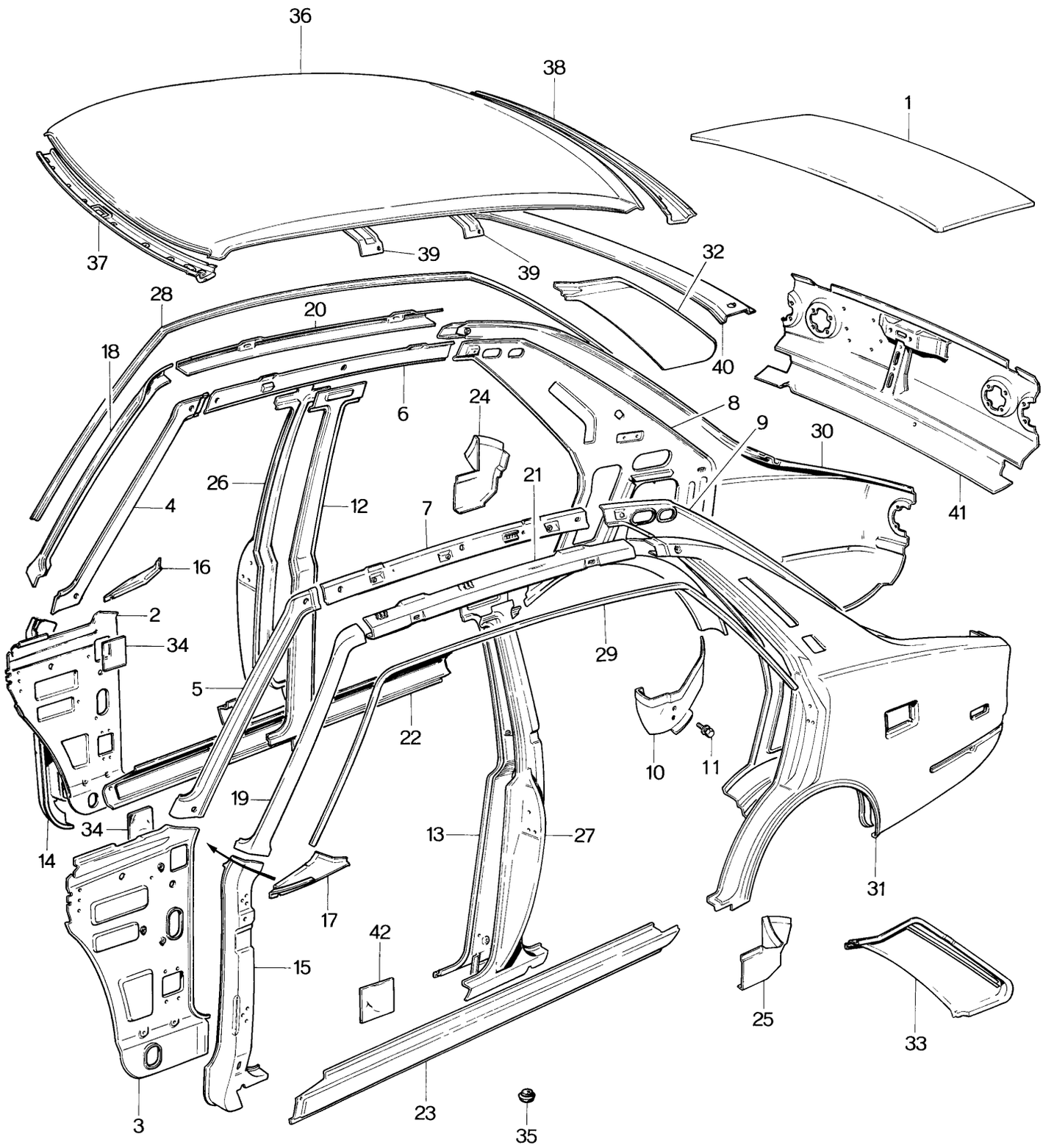

No.	Part Number	Description	Q'ty	Remarks
1	0305 52 510C	Trunk Lid Ass'y	1	
	2065 53 300	SIDE FRAME (R) — For France	1	L.H.D.
	2065 54 300	SIDE FRAME (L) — For France	1	L.H.D.
	2066 53 300	SIDE FRAME (R) — For General	1	L.H.D.
	2066 54 300	SIDE FRAME (L) — For General	1	L.H.D.
	2067 53 300	SIDE FRAME (R) — Arctic Spec. Model	1	L.H.D.
●	2067 53 300A	SIDE FRAME (R) — Arctic Spec. Model	1	L.H.D. Car No. 61926 7/3 ~ △
	2067 54 300	SIDE FRAME (L) — Arctic Spec. Model	1	L.H.D.
●	2067 54 300A	SIDE FRAME (L) — Arctic Spec. Model	1	L.H.D. Car No. 61926 7/3 ~ △
	2321 53 300	SIDE FRAME (R) — For Australia	1	L.H.D. Order Under 2874 53 300A ☆
	2321 54 300	SIDE FRAME (L) — For Australia	1	L.H.D. Order Under 2874 54 300A ☆
	2874 53 300	SIDE FRAME (R) — For Australia	1	R.H.D.
	2874 53 300A	SIDE FRAME (R) — For Australia	1	R.H.D. Car No. 24191 7/9 ~ ○
	2874 54 300	SIDE FRAME (L) — For Australia	1	R.H.D.
	2874 54 300A	SIDE FRAME (L) — For Australia	1	R.H.D. Car No. 24191 7/9 ~ ○
	2875 53 300	SIDE FRAME (R) — For General	1	R.H.D.
	2875 54 300	SIDE FRAME (L) — For General	1	R.H.D.
2	0305 53 320A	Cowl Side Panel (R) (R.H.D.)	1	
	2835 53 320	Cowl Side Panel (R) (L.H.D.)	1	
3	0305 54 320A	Cowl Side Panel (L) (R.H.D.)	1	
	2835 54 320	Cowl Side Panel (L) (L.H.D.)	1	
4	0305 53 330A	Front Pillar Inner (R)	1	
5	0305 54 330A	Front Pillar Inner (L)	1	
6	0305 53 340D	Roof Rail Inner (R)	1	
7	0305 54 340D	Roof Rail Inner (L)	1	
8	0305 53 350C	Rear Pillar Inner (R) (R. H. D.)	1	
●	0305 53 350D	Rear Pillar Inner (R) (R. H. D.)	1	Car No. 65342 7/3 ~ ○
	2835 53 350	Rear Pillar Inner (R) (L. H. D.)	1	
●	2835 53 350A	Rear Pillar Inner (R) (L. H. D.)	1	Car No. 40001 7/12 ~ ×
9	0305 54 350C	Rear Pillar Inner (L) (R. H. D.)	1	

BODY PANELS (SIDE, ALL SEDAN MODELS)

No.	Part Number	Description	Q'ty	Remarks
	2835 54 350	Rear Pillar Inner (L) (L.H.D.)	1	
10	0305 54 370	End Plate (L)	1	
11	908066 5 12	Set Bolt, End Plate	2	
12	0305 53 380C	Center Pillar Inner (R)	1	
13	0305 54 380C	Center Pillar Inner (L)	1	
14	0305 53 410A	Hinge Pillar Outer (R)	1	
	2835 53 410	Hinge Pillar Outer (R) With Side Defroster Duct hole	1	
15	0305 54 410B	Hinge Pillar Outer (L)	1	
	2835 54 410	Hinge Pillar Outer (L) With Side Defroster Duct hole	1	
16	0305 53 415	Cowl Bracket (R)	1	
17	0305 54 415	Cowl Bracket (L)	1	
18	0305 53 421A	Front Pillar Outer (R)	1	
19	0305 54 421A	Front Pillar Outer (L)	1	
20	0305 53 430B	Roof Rail Outer (R)	1	
21	0305 54 430B	Roof Rail Outer (L)	1	
22	0301 53 450	Side Sill Outer (R)	1	
●	0301 53 450A	Side Sill Outer (R)	1	Car No. 55667 7/2 ~ △
23	0301 53 450A	Side Sill Outer (L)	1	
●	0301 54 450B	Side Sill Outer (L)	1	Car No. 55667 7/2 ~ △
24	0305 53 452	Filler Plate (R)	1	
25	0305 54 452	Filler Plate (L)	1	
26	2826 53 500	Center Pillar Outer (R) For France & Australia	1	
	2862 53 500	Center Pillar Outer (R)	1	
27	2826 54 500	Center Pillar Outer (L) For France & Australia	1	
	2862 54 500	Center Pillar Outer (L)	1	
28	0305 53 591	Rain Rail (R)	1	
29	0305 54 591	Rain Rail (L)	1	
30	2065 53 600	Rear Fender (R) } For France	1	
●	2065 53 600A	Rear Fender (R) } For France	1	Car No. 46142 7/12 ~ ○
●	2065 53 600B	Rear Fender (R) } For France	1	Car No. 55667 7/2 ~ △

BODY PANELS (SIDE, ALL SEDAN MODELS) 52～70

	No.	Part Number		Description	Q'ty	Remarks
●		~~2321 53 600A~~	~~Rear Fender (R)~~	R. H. D. (England Excluded)	~~1~~	
		2874 53 600	Rear Fender (R)		1	
		2874 53 600A	Rear Fender (R)		1	Car No. 43803 70/12～○
●		2874 53 600B	Rear Fender (R)		1	Car No. 55667 71/2～△
		2875 53 600A	Rear Fender (R)	L. H. D. (France Excluded) & England	1	
		2875 53 600B	Rear Fender (R)		1	Car No. 43803 70/12～○
●		2375 53 600C	Rear Fender (R)		1	Car No. 55667 71/2～△
	31	2065 54 600	Rear Fendel (L)	For France	1	
●		2065 54 600A	Rear Fender (L)		1	Car No. 43803 70/12～△
●		2065 54 600B	Rear Fender (L)		1	Car No. 55667 71/2～△
●		~~2321 54 600A~~	~~Rear Fender (L)~~	R. H. D. (England Excluded)	~~1~~	
		2874 54 600	Rear Fender (L)		1	
		2874 54 600A	Rear Fender (L)		1	Car No. 43803 70/12～○
●		2874 54 600B	Rear Fender (L)		1	Car No. 55667 71/2～△
		2875 54 600A	Rear Fender (L)	L. H. D. (France Excluded) & England	1	
		2875 54 600B	Rear Fender (L)		1	Car No. 43803 70/12～○
●		2875 54 600C	Rear Fender (L)		1	Car No. 55667 71/2～△
	32	0305 53 670	Air Flow Chamber (R)		1	
	33	0305 54 670	Air Flow Chamber (L)		1	
	34	0305 53 329	Seat		2	
	35	0259 53 455	Drain Plug		6	
	36	0305 53 901	Roof Panel		1	
	37	0305 53 920	Front Header Ass'y		1	
	38	0305 53 941	Rear Header		1	
		0305 53 941A	Rear Header		1	Car No. 40001 70/12～○
	39	0305 53 951B	Roof Reinforcement		2	
	40	0305 53 990A	Rear Deck Panel		1	
	41	~~2824 70 050C~~	~~Rear End Panel With Rear Finisher hole~~		~~1~~	
		2874 70 050A	Rear End Panel Without Rear Finisher hole		1	
	42	0305 70 811	Hole Cover, Side Sill		6	

PACKAGE TRAY & FLOOR BOARD

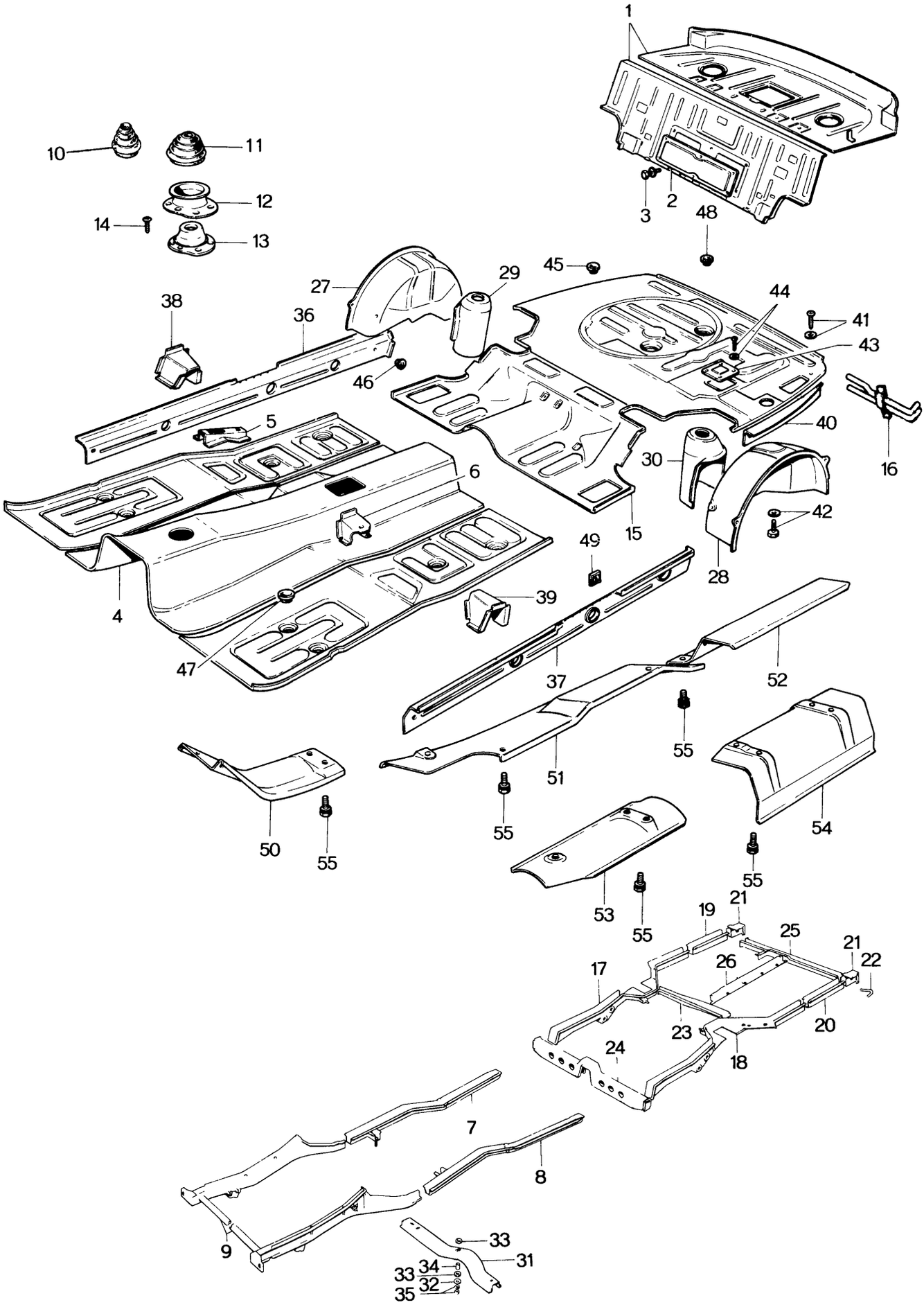

PACKAGE TRAY & FLOOR BOARD 53 56

No.	Part Number	Description	Q'ty	Remarks
1	0305 53 800B	Package Tray Ass'y, Sedan use	1	
	0839 53 800B	Package Tray Ass'y, Coupe use	1	
2	0305 53 861	Cover, Package Tray	1	
3	908061 5 10	Set Bolt, Cover	6	
4	0839 56 010	FRONT FLOOR PAN Ass'y (R.H.D.)	1	
	2080 56 010	FRONT FLOOR PAN Ass'y (L.H.D.)	1	
5	0839 56 180	Seat Bracket (R)	1	
●	0839 56 180A	Seat Bracket (R)	1	Car No. 52327 ~ ○
6	0305 56 681	Seat Bracket (L)	1	
7	0839 56 100	Front Frame Rear (R)	1	
8	0839 56 600A	Front Frame Rear (L)	1	
9	0305 56 160	Cross Member No. 1	1	
10	0247 56 274	Boot, Without Console Box	1	
11	0247 56 275	Boot, With Console Box	1	
12	0303 56 611	Seat	1	
13	0303 56 612	Insulator	1	
14	99864 0512	Tapping Screw, Insulator	6	
	0839 56 200F	REAR FLOOR PAN Ass'y (R. H. D.)	1	
	2080 56 200	REAR FLOOR PAN Ass'y (R. H. D.)	1	Car No. 24191 ~ ○
	2080 56 200A	REAR FLOOR PAN Ass'y (R. H. D.)	1	Car No. 38158 ~ ○
	2080 56 200B	REAR FLOOR PAN Ass'y (R. H. D.)	1	Car No. 40001 ~ ○
●	2080 56 200C	REAR FLOOR PAN Ass'y	1	Car No. 52327 ~ ○
●	2080 56 200D	REAR FLOOR PAN Ass'y	1	Car No. 55667 ~ △
	2080 56 200	REAR FLOOR PAN Ass'y (L. H. D.)	1	
	2080 56 200A	REAR FLOOR PAN Ass'y (L. H. D.)	1	Car No. 38158 ~ ○
	2080 56 200B	REAR FLOOR PAN Ass'y (L. H. D.)	1	Car No. 40001 ~ ○
●	2080 56 200C	REAR FLOOR PAN Ass'y (L. H. D.)	1	Car No. 52327 ~ ○
●	2080 56 200D	REAR FLOOR PAN Ass'y (L. H. D.)	1	Car No. 55667 ~ △

53 56 PACKAGE TRAY & FLOOR BOARD

No.	Part Number	Description	Q'ty	Remarks
15	0839 56 201B	Rear Floor Pan	1	
	0839 56 201C	Rear Floor Pan	1	Car No. 38158 ’76/11～△
	0839 56 201D	Rear Floor Pan	1	Car No. 40001 ’76/12～○
●	0339 56 201E	Rear Floor Pan	1	Car No. 52327 ’77/1～○
●	0839 56 201F	Rear Floor Pan	1	Car No. 69368 ’77/4～○
16	0839 56 630B	Tube Ass'y	1	
	0839 56 630C	Tube Ass'y	1	Car No. 24247 ’76/9～○
17	0839 56 250A	REAR SIDE FRAME (R)	1	
	0839 56 250B	REAR SIDE FRAMA (R)	1	Car No. 40001 ’76/12～○
18	0839 56 750B	REAR SIDE FRAME (L) Coupe use	1	
	0839 56 750C	REAR SIDE FRAME (L) Coupe use	1	Car No. 40001 ’76/12～○
	0303 56 750C	REAR SIDE FRAME (L) Sedan use	1	
	0303 56 750D	REAR SIDE FRAME (L) Sedan use	1	Car No. 40001 ’76/12～○
19	0305 56 321	Rear Frame No.3 (R)	1	
20	0305 56 820A	Rear Frame No.3 (L)	1	
21	0305 56 330A	Bumper Bracket	2	
22	0305 56 845	Hook	1	
23	0305 56 391	Cross Member No. 5	1	
●	0305 56 391A	Cross Member No. 5	1	Car No. 52327 ’77/1～○
24	0839 56 420	Cross Member No.3	1	
25	0839 56 460E	Cross Member No.4	1	
26	0839 56 340	Reinforcement	1	
●	0839 56 340A	Reinforcement	1	Car No. 52327 ’77/1～○
27	0839 56 350B	WHEEL HOUSE PANEL (R), Coupe use	1	
	0841 56 350B	WHEEL HOUSE PANEL (R), Sedan use	1	
28	0839 56 850	WHEEL HOUSE PANEL (L), Coupe use	1	
	0305 56 850B	WHEEL HOUSE PANEL (L), Sedan use	1	
29	0839 56 370A	Damper Bracket (R)	1	
	0305 56 370A	Damper Bracket (R)	1	Car No. 38158 ’76/11～○
30	0305 56 870A	Damper Bracket (L)	1	

PACKAGE TRAY & FLOOR BOARD 53 56

No.	Part Number	Description	Q'ty	Remarks
31	0839 56 121B	Center Bearing Support	1	
●	0839 56 121C	Center Bearing Support	1	Car No. 52327 7/1 ~ O
32	0839 56 127	Washer	2	
●	99952 1030	Washer	2	Car No. 52327 7/1 ~ O
33	0839 56 125	Rubber Bush	2	
34	0839 56 126A	Spacer	2	
35	99921 1000	Nut	2	
	99971 1000	Spring Washer	2	
36	0305 56 400	Side Sill Inner (R), Sedan use	1	
	0839 56 400	Side Sill Inner (R), Coupe use	1	
●	0839 56 400A	Side Sill Inner (R), Coupe use	1	Car No. 61926 7/3 ~ O
37	0305 56 900A	Side Sill Inner (L), Sedan use	1	
	0839 56 900	Side Sill Inner (L), Coupe use	1	
●	0839 56 900A	Side Sill Inner (L), Coupe use	1	Car No. 61926 7/3 ~ O
38	0305 56 411	Seat Bracket (R)	1	
39	0305 56 911	Seat Bracket (L)	1	
40	0305 56 961B	Protector	1	
41	99860 0516	Tapping Screw, Protector	2	
	99952 0500	Plain Washer	2	
	99952 0516	Plain Washer	2	Car No. 27392 7/10 ~ O
42	99797 0510	Bolt, Protector	3	
	99952 0500	Plain Washer	3	
	99952 0516	Plain Washer	3	Car No. 27392 7/10 ~ O
43	0305 56 991	Service Hole Cover	1	
44	908632 4 10	Set Screw, Service Hole Cover	4	
45	0118 56 241	Drain Plug	2	
46	0118 56 242B	Drain Plug	2	
47	0208 56 615	Drain Plug	10	
48	0810 56 639	Service Hole Cover	2	
49	0824 56 999	Check Valve, Side Sill	2	
50	0839 56 701	Insulator No. 1	1	
●	0839 56 701A	Insulator No. 1	1	Car No. 52327 7/1 ~ O
●	0839 56 701B	Insulator No. 1	1	Car No. 61926 7/3 ~ O
51	0839 56 702A	Insulator No. 2	1	

53 56 PACKAGE TRAY & FLOOR BOARD

No.	Part Number	Description	Q'ty	Remarks
52	0839 56 703	Insulator No.3	1	
53	0839 56 704	Insulator No.4	1	
54	0839 56 705	Insulator No. 5	1	
●	0839 56 705A	Insulator No. 5	1	Car No. 52327 7/1 ~ ×
●	0839 56 705B	Insulator No. 5	1	Car No. 61926 7/3 ~ ○
55	908047 6 14	Set Bolt, Insulator	19	

DASHBOARD (METER & SWITCH R. H. D.)

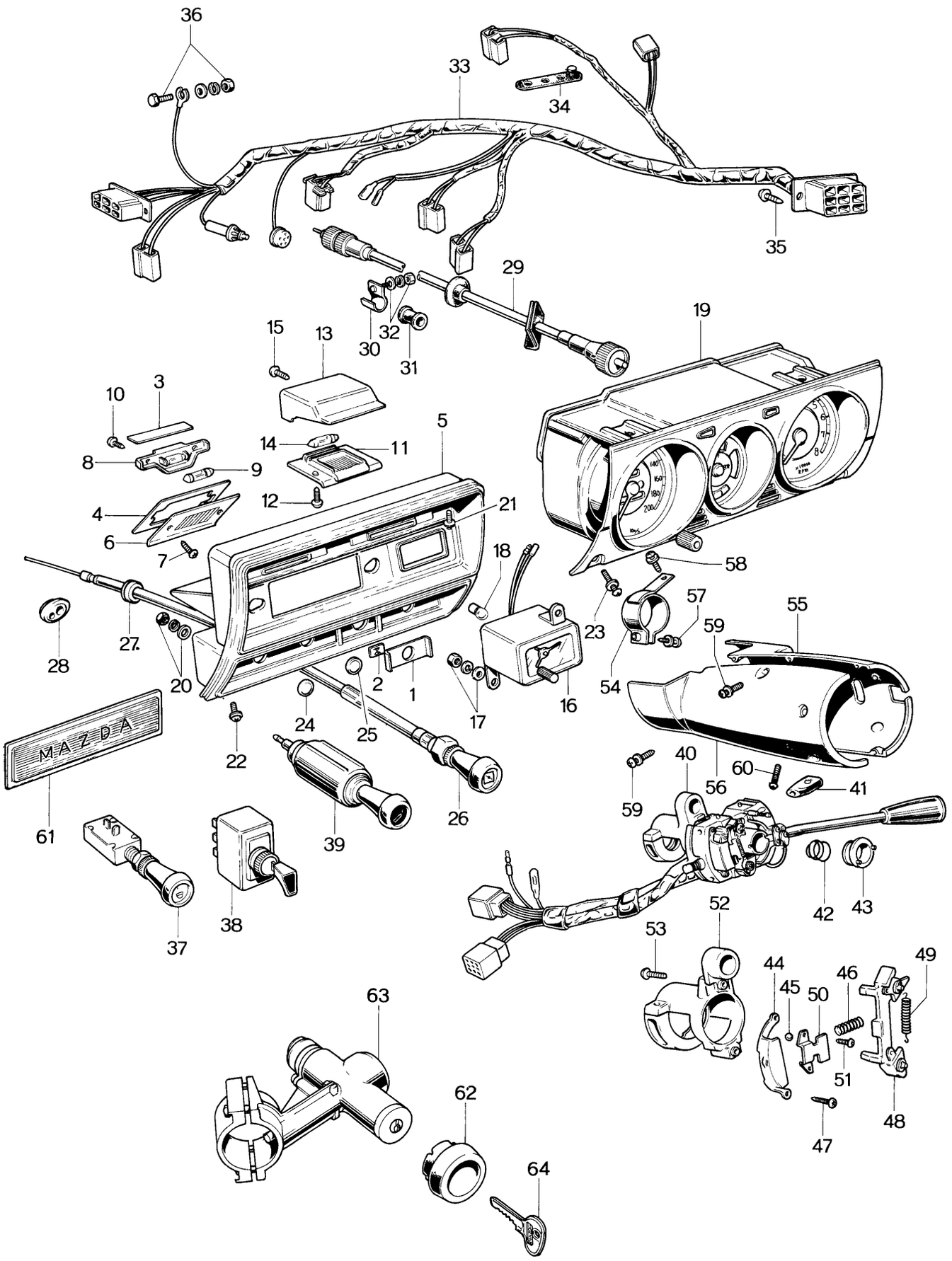

DASHBOARD (METER & SWITCH, R.H.D.) 55 60

No.	Part Number	Description	Q'ty	Remarks	
● 1	0305 55 325-00	Cover (Black)	1		©
2	99579 3000	Speed Nut, Cover	2		
3	0305 55 326	Plate	1		
4	0305 55 327	Plate	1		
5	0305 55 340B	Switch Panel, With Car Heater use	1		
	2835 55 340	Switch Panel, Without Car Heater use	1		
6	0305 55 350	Illumination Lens No. I	1		
7	99866 0410B	Screw, Illumination Lens No. I	2		
8	0305 55 360	Cover, Illumination Lens No. I	1		
9	99701 5030	Bulb	1		
10	908681 4 14	Set Screw, Illumination Cover	2		
11	0305 55 370	Illumination Lens No.2	1		
12	99866 0414B	Screw, Illumination Lens No.2	2		
13	0305 55 380	Cover, Illumination Lens No.2	1		
14	99701 5030	Bulb	1		
15	908681 4 14	Set Screw, Illumination Cover	1		
16	0305 55 700A	Auto Clock Ass'y	1		
17	99906 0500	Nut, Auto Clock	1		
	99952 0500	Plain Washer	1		
	99971 0500	Spring Washer	1		
18	99701 1030	Bulb, Auto Clock	1		
19	0839 55 430C	Meter Set, Km	1		
	2878 55 430A	Meter Set, Mile	1		
20	99906 0400	Nut, Meter Set	2		
	99952 0400	Plain Washer	2		
	99971 0400	Spring Washer	2		

55 60 DASHBOARD (METER & SWITCH, R.H.D.)

No.	Part Number	Description	Q'ty	Remarks	
21	908361 5 20B	Set Screw, Switch Panel	2		
22	908391 5 16B	Set Screw, Switch Panel	2		
23	908396 5 20B	Set Screw, Meter Set	4		
● 24	0259 55 951-00	Hole Cover, Fog Lamp Switch (Black)	1		©
● 25	0820 55 951-00	Hole Cover, Antenna Switch (Black)	1		©
26	0839 60 050	Choke Wire	1		
27	0305 60 052	Grommet	1		
●	0305 60 052A	Grommet	1	Car No. 61926 7/3 ~ ×	
28	0305 60 051	Grommet	1		
29	0839 60 070A	Speedometer Cable	1		
30	0305 60 080A	Clip Ass'y	1		
31	99686 0700	Protector	1		
32	99906 0500	Nut, Clip	1		
	99952 0500	Plain Washer	1		
	99971 0500	Spring Washer	1		
33	0305 60 130A	Panel Wire Ass'y	1		
34	0187 66 991	Rubber Clip	1		
35	908692 3 14	Set Screw	2		
36	99797 0510	Bolt, Earth	1		
	908066 5 10	Set Screw, Earth	1	Car No. 27392 70/10 ~ ○	
	99945 0500B	Nut	1		
	99971 0500	Spring Washer	1		
	99952 0516	Plain Washer	1		
37	0305 60 490	Fog Lamp Switch	1		
● 38	0305 60 540-00	Antenna Switch (Black)	1		©
39	0305 60 720	Cigar Lighter	1		
40	2324 60 250	COMBINATION SWITCH	1		

No.	Part Number	Description	Q'ty	Remarks	
41	0317 60 251	Knob	1		
42	0317 60 252	Spring	1		
43	0317 60 253	Cancel Cam	1		
44	0317 60 254	Fixing Bracket	1		
45	0317 60 255	Steel Ball	1		
46	0317 60 256	Spring	1		
47	0317 60 257	Screw	2		
48	0317 60 258	Arm	1		
49	0317 60 259	Spring	1		
50	0317 60 261	Set Plate	1		
51	0317 60 262	Screw	2		
52	0317 60 265	Band Holder	1		
	0324 60 265	Band Holder	1	Car No. 34307 $\frac{70}{11}$ ~ ○	
53	0317 60 266	Screw	2		
54	0305 60 320A	Support Ass'y	1		
● 55	0303 60 330B-00	Column Cover (R) (Black)	1		©
● 56	0303 60 340A-00	Column Cover (L) (Black)	1		©
57	908336 4 12	Set Screw, Support	1		
58	908336 4 08	Set Screw, Support	1		
59	908332 4 12B	Set Screw, Column Cover	3		
60	99832 0408B	Screw, Column Cover	4		
61	0301 66 905	Tuner Hole Cover	1		
62	2835 60 421	Set Ring	1		
63	2370 60 430	Steering Lock	1		
	2835 60 430	Steering Lock	1	Car No. 21791 $\frac{70}{8}$ ~ ○	
64	2370 60 439	Key, Steering Lock Included	1	Car No. 21790 $\frac{70}{8}$ ~ Discarded	
●	2301 60 439	Key, Steering Lock Included	1	Car No. 21791 $\frac{70}{8}$ ~ Added Anew	

DASHBOARD (METER & SWITCH L. H. D.)

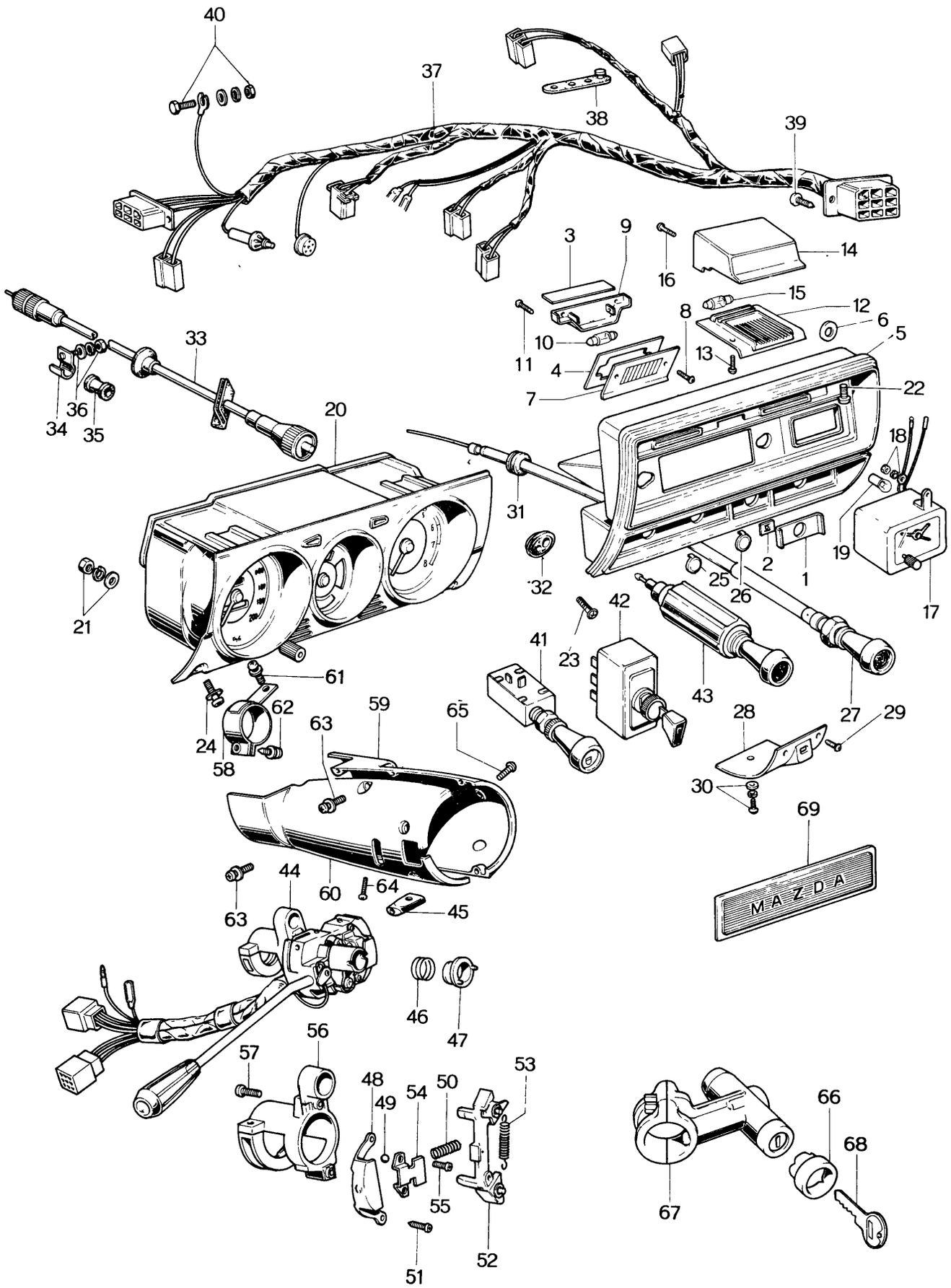

No.	Part Number	Description	Q'ty	Remarks
● 1	0305 55 325-00	Cover (Black)	1	©
2	99579 3000	Speed Nut, Cover	2	
3	0305 55 326	Plate	1	
4	0305 55 327	Plate	1	
5	0305 55 340B	Switch Panel With Car Heater use	1	
	2835 55 340	Switch Panel Without Car Heater use	1	
6	99952 0600	Plain Washer	1	
7	0305 55 350	Illumination Lens No. I	1	
8	99866 0410B	Screw, Illumination Lens No. I	2	
9	0305 55 360	Cover, Illumination Lens No. I	1	
10	99701 5030	Bulb	1	
11	908681 4 14	Set Screw, Illumination Cover	2	
12	0305 55 370	Illumination Lens No.2	1	
13	99866 0414B	Screw, Illumination Lens No.2	2	
14	0305 55 380	Cover, Illumination Lens No.2	1	
15	99701 5030	Bulb	1	
16	908681 4 14	Set Screw, Illumination Cover	1	
17	0305 55 700A	Auto Clock Ass'y	1	
18	99906 0500	Nut, Auto Clock	1	
	99952 0500	Plain Washer	1	
	99971 0500	Spring Washer	1	
19	99701 1030	Bulb, Auto Clock	1	
20	0839 55 430C	Meter Set (Km)	1	
	2073 55 430	Meter Set (Km) Arctic Spec. Model	1	
	2878 55 430A	Meter Set (Mile)	1	
21	99906 0400	Nut, Meter Set	2	

DASHBOARD (METER & SWITCH, L.H.D.)

No.	Part Number	Description	Q'ty	Remarks	
	99952 0400	Plain Washer	2		
	99971 0400	Spring Washer	2		
22	908361 5 20B	Set Screw, Switch Panel	2		
23	908391 5 16B	Set Screw, Switch Panel	2		
24	908396 5 20B	Set Screw, Meter Set	4		
● 25	0259 55 951-00	Hole Cover, Fog Lamp Switch (Black)	1		©
● 26	0820 55 951-00	Hole Cover, Antenna Switch (Black)	1		©
27	2080 60 050	Choke Wire	1		
	2080 60 050A	Choke Wire	1	Car No. 25947 7/9 ~ ○	
●	2080 60 050B	Choke Wire	1	Car No. 61926 7/3 ~ ×	
● 28	2835 60 045	Bracket	1		
29	99861 0512B	Screw, Bracket	2		
30	99799 0516	Screw, Bracket	1		
	99952 0516	Plain Washer	1		
	99971 0500	Spring Washer	1		
31	0305 60 052	Grommet	1		
●	0305 60 052A	Grommet	1	Car No. 61926 7/3 ~ ×	
32	0305 60 051	Grommet	1		
33	2080 60 070	Speedometer Cable	1	Car No. 52326 7/1 ~ Discarded	
34	0305 60 080A	Clip Ass'y	1		
35	99686 0700	Protector	1		
36	99906 0500	Nut, Clip	1		
	99952 0500	Plain Washer	1		
	99971 0500	Spring Washer	1		
37	0305 60 130A	Panel Wire Ass'y	1		
38	0187 66 991	Rubber Clip	1		
39	908692 314	Set Screw, Panel Wire	2		
40	99797 0510	Bolt, Earth	1		
	908066 5 10	Set Screw, Earth	1	Car No. 27392 7/10 ~ ○	
	99945 0500B	Nut	1		

No.	Part Number	Description	Q'ty	Remarks
	99971 0500	Spring Washer	1	
	99952 0516	Plain Washer	1	
41	0305 60 490	Fog Lamp Switch	1	
● 42	0305 60 540-00	Antenna Switch (Black)	1	©
43	0305 60 720	Cigar Lighter	1	
44	2835 60 250	COMBINATION SWITCH Without Hazard Switch For Austria & Italy	1	
	2072 60 250	COMBINATION SWITCH With Hazard Switch For General	1	
45	0317 60 251	Knob	1	
46	0317 60 252	Spring	1	
47	0317 60 253	Cancel Cam	1	
48	0317 60 254	Fixing Bracket	1	
49	0317 60 255	Steel Ball	1	
50	0317 60 256	Spring	1	
51	0317 60 257	Screw	2	
52	0317 60 258	Arm	1	
53	0317 60 259	Spring	1	
54	0317 60 261	Set Plate	1	
55	0317 60 262	Screw	2	
56	0324 60 265	Band Holder	1	
57	0317 60 266	Screw	2	
58	0305 60 320A	Support Ass'y	1	
● 59	2835 60 330-00	Column Cover (R) (Black), Without Hazard Switch Hole	1	©

DASHBOARD (METER & SWITCH, L.H.D.)

No.	Part Number	Description	Q'ty	Remarks	
●	2850 60 330-00	Column Cover (R)(Black) With Hazard Switch Hole	1		©
● 60	2835 60 340-00	Column Cover (L)(Black)	1		©
61	908332 4 12	Set Screw, Support	1		
62	908336 4 08	Set Screw, Support	1		
● 63	908332 4 12B	Set Screw, Column Cover	3	Car No. 52327 7/1 ~ Q'ty	
64	99832 04088	Screw, Column Cover	4		
● 65	99848 0320B	Screw	1	Car No. 52326 7/1 ~ Discarded	
66	2835 60 421	Set Ring	1		
67	2370 60 430	Steering Lock	1		
	2835 60 430	Steering Lock	1	Car No. 21791 7/8 ~ ○	
●	2835 60 430A	Steering Lock	1	Car No. 55667 7/2 ~ ○	
68	2370 60 439	Key, Steering Lock Included	1	Car No. 21790 7/8 ~ Discarded	
	2301 60 439	Key, Steering Lock Included	1	Car No. 21791 7/8 ~ Added Anew	
●	2835 60 439	Key, Steering Lock Included	1	Car No. 55667 7/2 ~ ○	
69	0301 66 905	Tuner Hole Cover	1		

METER SET

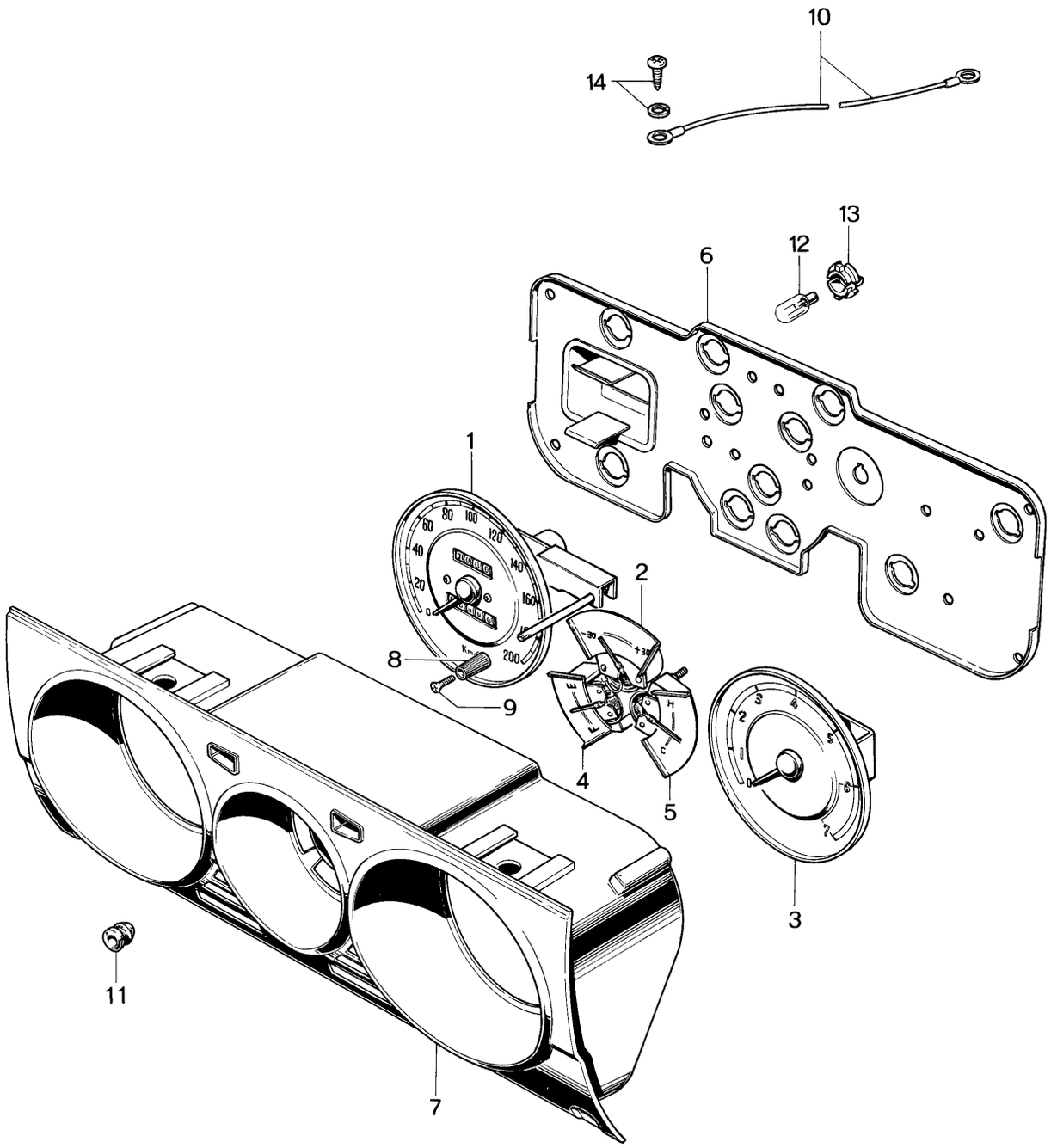

No.	Part Number	Description	Q'ty	Remarks
	0839 55 430C	METER SET (Km)	1	
	2073 55 430	METER SET (Km) Arctic Spec	1	
	2878 55 430A	METER SET (Mile)	1	
●	2878 55 430B	METER SET (Mile)	1	Car No. 27392 70/10 ~ O
	0839 75 090	COMBINATION METER (Km)	1	
	2073 75 090	COMBINATION METER (Km) Arctic Spec	1	
	2878 75 090	COMBINATION METER (Mile)	1	
●	2878 75 090A	COMBINATION METER (Mile)	1	Car No. 27392 70/10 ~ O
1	0839 75 101	Speedometer (Km)	1	
	2073 75 101	Speedometer (Km) Arctic Spec. Model	1	
	2878 75 101	Speedometer (Mile)	1	
●	2878 75 101A	Speedometer (Mile)	1	Car No. 27392 70/10 ~ O
2	0839 75 102	Ammeter	1	
3	0839 75 103	Tachometer	1	
4	0939 75 104	Fuel Meter	1	
5	0839 75 105	Thermometer	1	
6	0839 75 106	Bottom Plate	1	
7	0839 75 100	Meter Case	1	
8	0305 75 102	Knob	1	
9	0824 75 140	Screw	1	
10	0305 75 107	Earth Cord	1	
11	0305 75 108	Grommet	1	
12	99701 6030	Bulb	11	
13	0259 55 261	Socket	11	
14	0710 75 435	Spring Washer	5	
	0710 75 436	Tapping Screw	5	

SEAT (COUPE MODEL)

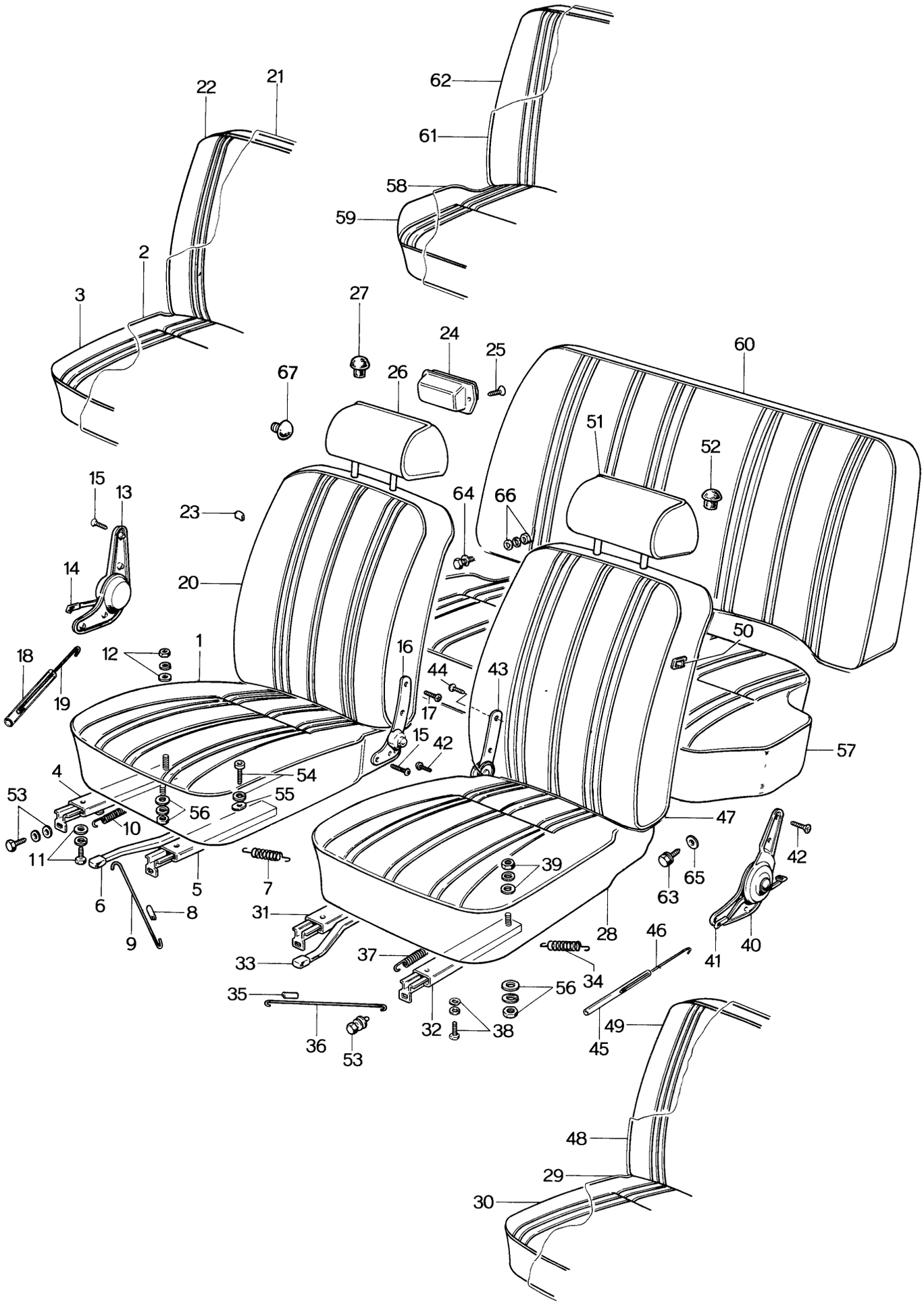

No.	Part Number	Description	Q'ty	Remarks	
●	0304 57 100A-00	FRONT SEAT (R) (R. H. D.) (Black)	1	With Head Restraint	©
●	0304 57 100A-09	FRONT SEAT (R) (R. H. D.) (Brown)	1		
●	2826 57 100-00	FRONT SEAT (R) (R. H. D.) (Black)	1	Without Head Restraint	©
●	2826 57 100-09	FRONT SEAT (R) (R. H. D.) (Brovn)	1		
●	2075 57 100	FRONT SEAT (R) (L. H. D.)	1	With Head Restraint	©
●	2075 57 100A-00	FRON SEAT (R) (L. H. D.) (Black)	1	Car No. 40657 7/12 ~ O	
●	2075 57 100A-09	FRONT SEAT(R) (L. H. D.) (Brown)	1		©
	2075 57 300	FRONT SEAT (R) (L. H. D.)	1	Without Head Restraint	
●	2075 57 300A-00	FRONT SEAT (R) (L. H. D.) (Black)	1	Car No. 40657 7/12 ~ O	©
●	2075 57 300A-09	FRONT SEAT (R) (L. H. D.) (Brown)	1		
	2843 57 100	FRONT SEAT (R)	1	Without Head Restraint	©
●	2843 57 100A-00	FRONT SEAT (R) (Black)	1	Car No. 40657 7/12 ~ O	
●	2843 57 100A-09	FRONT SEAT (R) (Brown)	1		
●	2857 57 100	FRONT SEAT (R) — Arctic Spec Model	1	With Head Restraint	
●	2838 57 100-00	FRONT SEAT (R) (Black) — Arctic Spec Model	1	Car No. 40657 7/12 ~ O	©
●	2838 57 100-09	FRONT SEAT (R) (Brown) — Arctic Spec Model	1		
● 1	0305 57 110-00	FRONT SEAT CUSHION (R) (Black)	1		©
●	0305 57 110-09	FRONT SEAT CUSHION (R) (Brown)	1		
●	2851 57 110-00	FRONT SEAT CUSHION (R) (Black)	1	Arctic Spec. Model	
●	2851 57 110-09	FRONT SEAT CUSHION (R) (Brown)	1		
2	0259 88 259	Top Cover	1		©
● 3	0305 88 010-00	Trim (R) (Black) — Arctic Spec. Model	1		
●	0305 88 010-09	Trim (R) (Brown) — Arctic Spec. Model	1		©
●	2851 88 010-00	Trim (R) (Black) — Arctic Spec. Model	1		
●	2851 88 010-09	Trim (R) (Brown) — Arctic Spec. Model	1		
4	0305 88 060	Adjuster No. 1 (R)	1		
5	0305 88 070	Adjuster No. 2 (L) (R.H.D.)	1		
	2080 88 070	Adjuster No. 2 (L) (L.H.D.)	1		
6	0259 88 273A	Knob, Adjuster	1		
7	0254 88 164	Lock Spring, Adjuster	2		
8	0259 88 025	Clip	2		
9	0305 88 062	Wire	1		
10	0259 88 123	Spring	1		
11	99801 0816	Bolt, Adjuster	2		
	99971 0800	Spring Washer	2		
	99952 0816	Plain Washer	2		
12	99901 0800	Nut, Adjuster	2		

SEAT (COUPE DX. MODEL)

No.	Part Number	Description	Q'ty	Remarks	
	99971 0800	Spring Washer	2		
	99952 0816	Plain Washer	2		
13	0305 57 130A	Knuckle (R) (R.H.D.)	1		
	2075 57 130	Knuckle (R) (L.H.D.) With Folding Foot Pedal	1		
14	0305 88 081	Knob, Knuckle	1		
15	2155 55 109	Screw, Knuckle & Hinge Plate	6		
16	0305 88 091	Hinge Plate (R)	1		
	0305 88 150	Hinge Plate (R)	1	Car No. 24191 ～ ×	
17	0259 57 109	Screw, Hinge Plate	2		
18	0839 88 173	Tube (L.H.D.)	1		
19	0839 88 174	Wire (L.H.D.)	1		
● 20	0304 57 120A-00	FRONT SEAT BACK (R) (Black)	1		©
●	0304 57 120A-09	FRONT SEAT BACK (R) (Brown)	1		
●	2851 57 120-00	FRONT SEAT BACK (R) (Black)	1	Arctic Spec. Model	©
●	2851 57 120-09	FRONT SEAT BACK (R) (Brown)	1		
21	0259 88 059	Top Cover	1		
● 22	0305 88 100A-00	Trim (R) (Black)	1		©
●	0305 88 100A-09	Trim (R) (Brown)	1		
●	2851 88 100-00	Trim (R) (Black)	1	Arctic Spec. Model	©
●	2851 88 100-09	Trim (R) (Brown)	1		
23	0305 88 009	Knob, Head Restraint	1		
24	0259 68 250	Ash Tray	1		
25	99864 0408	Tapping Screw, Ash Tray	1		
● 26	0305 57 140-00	Head Restraint (R) (Black)	1		©
●	0305 57 140-09	Head Restraint (R) (Brown)	1		
27	0257 57 109	Hole Cap, Cars Without Head Restraint	2		

No.	Part Number	Description	Q'ty	Remarks	
●	0310 57 150A-00	FRONT SEAT (L) (R. H. D.) (Black)	1	Without Head Restraint	©
●	0310 57 150A-09	FRONT SEAT (L) (R. H. D.) (Brown)	1		
●	0310 57 550A-00	FRONT SEAT (L) (R. H. D.) (Black)	1	With Head Restraint	
●	0310 57 550A-09	FRONT SEAT (L) (R. H. D.) (Brown)	1		
●	0304 57 150A-00	FRONT SEAT (L) (L. H. D.) (Black)	1	Without Head Restraint	
●	0304 57 150A-09	FRONT SEAT (L) (L. H. D.) (Brown)	1		
●	0304 57 550A-00	FRONT SEAT (L) (L. H. D.) (Black)	1	With Head Restraint	
●	0304 57 550A-09	FRONT SEAT (L) (L. H. D.) (Brown)	1		
●	2832 57 550-00	FRONT SEAT (L) (Black)	1	Without Head Restraint	
●	2832 57 550-09	FRONT SEAT (L) (Brown)	1		
●	2851 57 550-00	FRONT SEAT (L) (Black)	1	With Head Restraint	
●	2851 57 550-09	FRONT SEAT (L) (Brown)	1		
● 28	0305 57 160-00	FRONT SEAT CUSHION (L) (Black)	1		©
●	0305 57 160-09	FRONT SEAT CUSHION (L) (Brown)	1		
●	2851 57 160-00	FRONT SEAT CUSHION (L) (Black)	1	Arctic Spec. Model	©
●	2851 57 160-09	FRONT SEAT CUSHION (L) (Brown)	1		
29	0259 88 259	Top Cover	1		
● 30	0305 88 200-00	Trim (L) (Black)	1		©
●	0305 88 200-09	Trim (L) (Brown)	1		
●	2851 88 200-00	Trim (L) (Black)	1	Arctic Spec. Model	©
●	2851 88 200-09	Trim (L) (Brown)	1		
31	0305 88 250	Adjuster No.3 (R)	1		
32	0305 88 260	Adjuster No.4 (L)	1		
33	0259 88 373	Knob (L)	1		
34	0254 88 164	Lock Spring, Adjuster	2		
35	0259 88 025	Clip	2		
36	0305 88 062	Wire	1		
37	0259 88 123	Spring	1		
38	99801 0816	Bolt, Adjuster	2		
	99971 0800	Spring Washer	2		
	99952 0816	Plain Washer	2		
39	99901 0800	Nut, Adjuster	2		
	99971 0800	Spring Washer	2		

SEAT (COUPE DX. MODEL)

No.	Part Number	Description	Q'ty	Remarks
	99952 0816	Plain Washer	2	
40	0305 57 180A	Knuckle (L) (L.H.D.)	1	
	0310 57 180	Knuckle (L) (R.H.D.) With Folding Foot Pedal	1	
41	0305 88 081	Knob, Knuckle	1	
42	2155 57 109	Screw, Knuckle & Hinge Plate	6	
43	0305 88 092	Hinge Plate (L)	1	
	0305 88 160	Hinge Plate (L)	1	Car No. 24191 ～ ×
44	0259 88 109	Screw, Hinge Plate	2	
45	0839 88 173	Tube (R.H.D.)	1	
46	0839 88 174	Wire (R.H.D.)	1	
● 47	0304 57 170A-00	FRONT SEAT BACK (L) (Black)	1	
●	0304 57 170A-09	FRONT SEAT BACK (L) (Brown)	1	
●	2851 57 170-00	FRONT SEAT BACK (L) (Black)	1	Arctic Spec. Model
●	2851 57 170-09	FRONT SEAT BACK (L) (Brown)	1	
48	0259 88 059	Top Cover	1	
● 49	0305 88 280A-00	Trim (L) (Black)	1	
●	0305 88 280A-09	Trim (L) (Brown)	1	
●	2851 88 280-00	Trim (L) (Black)	1	Arctic Spec. Model
●	2851 88 280-09	Trim (L) (Brown)	1	
50	0305 88 009	Knob, Head Restraint	1	
● 51	0305 57 190-00	Head Restraint (L) (Black)	1	©
●	0305 57 190-09	Head Restraint (L) (Brown)	1	
52	0257 57 109	Hole Cap, Cars Without Head Restraint	2	
53	908046 8 25	Set Bolt, Front Seat	4	
54	99808 0825	Bolt, Front Seat	1	
	99971 0800	Spring Washer	1	

No.	Part Number	Description	Q'ty	Remarks	
55	0305 57 011	Washer	1		
56	99901 0800	Nut, Front Seat	3		
	99952 0822	Plain Washer	3		
	99951 0822	Plain Washer	3	Car No. 24191 ~ ○	
	99971 0800	Spring Washer	3		
● 57	0310 57 200A-00	REAR SEAT CUSHION (Black)	1		©
●	0310 57 200A-09	REAR SEAT CUSHION (Brown)	1		
●	2857 57 200-00	REAR SEAT CUSHION (Black)	1	Arctic Spec. Model	©
●	2857 57 200-09	REAR SEAT CUSHION (Brown)	1		
58	0305 88 415	Top Cover	1		
● 59	0310 88 370A-00	Trim (Black)	1		©
●	0310 88 370A-09	Trim (Brown)	1		
●	2857 88 370-00	Trim (Black)	1	Arctic Spec. Model	©
●	2857 88 370-09	Trim (Brown)	1		
● 60	0310 57 250A-00	REAR SEAT BACK (Black)	1		©
●	0310 57 250A-09	REAR SEAT BACK (Brown)	1		
●	2857 57 250-00	REAR SEAT BACK (Black)	1	Arctic Spec. Model	©
●	2857 57 250-09	REAR SEAT BACK (Brown)	1		
61	0305 88 416	Top Cover	1		
● 62	0310 88 420-00	Trim (Black)	1		©
●	0310 88 420-09	Trim (Brown)	1		
●	2857 88 420-00	Trim (Black)	1		©
●	2857 88 420-09	Trim (Brown)	1	Arctic Spec. Model	
63	908042 8 20	Set Bolt, Rear Seat	2		
64	908042 8 25	Set Bolt, Rear Seat	2		
65	0317 57 015	Washer, Rear Seat	4		
66	99901 0800	Nut, Rear Seat	2		
	99952 0822	Plain Washer	2		
	99951 0822	Plain Washer	2	Car No. 24191 ~ ○	
	99971 0800	Spring Washer	2		
67	99301 1100	Cap, Safety Belt Hole	6		

SEAT
(WITH ASSISTANCE LEVER, R. H. D. COUPE MODEL)

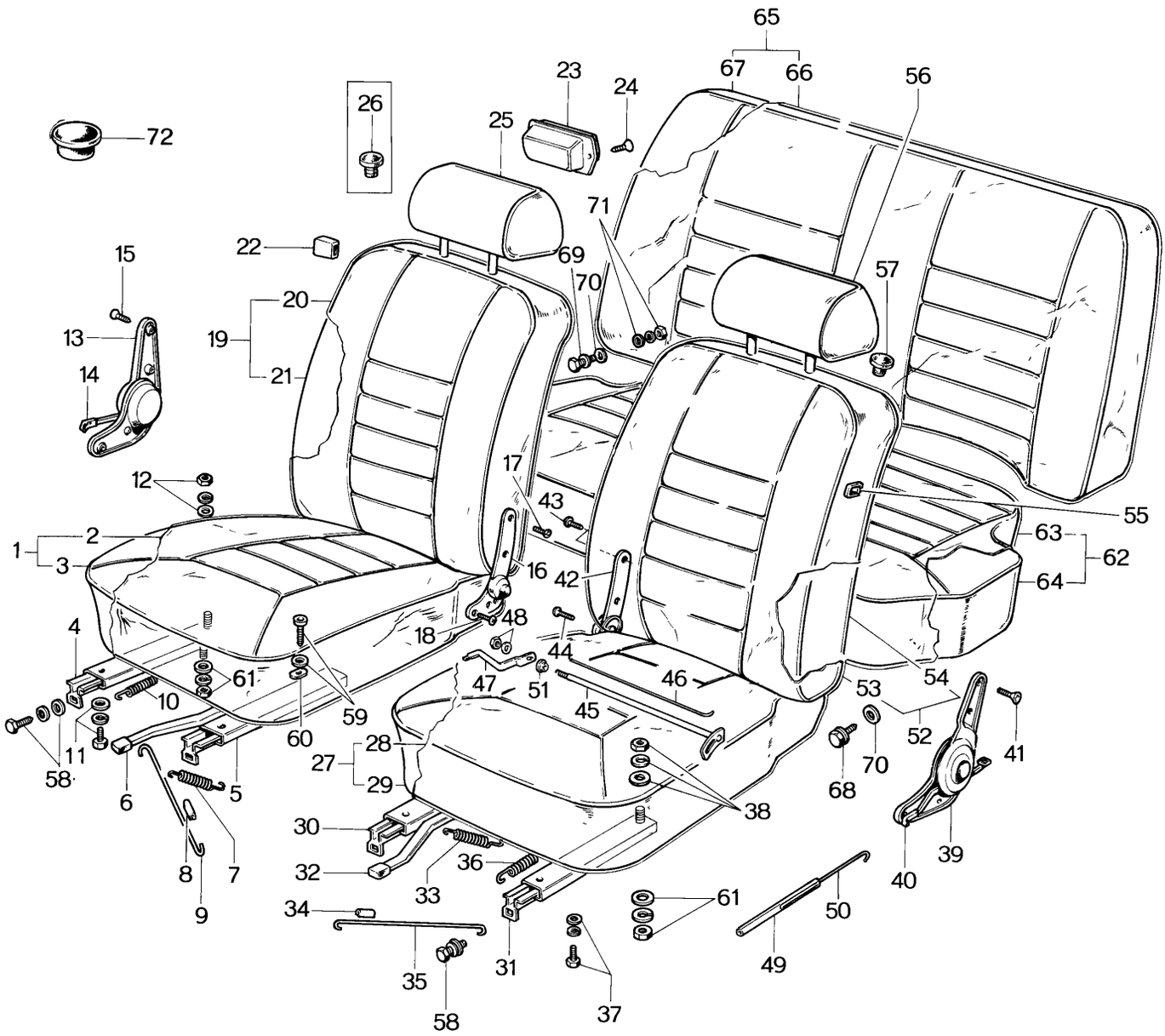

SEAT (WITH ASSISTANCE LEVER, R.H.D. COUPE SUPER-DX. MODEL)

No.	Part Number	Description	Q'ty	Remarks	
●	0839 57 100A-00	FRONT SEAT (R) (Black)	1	With Head Restraint	©
●	0839 57 100A-09	FRONT SEAT (R) (Brown)	1		
●	2324 57 100-00	FRONT SEAT (R) (Black)	1	Without Head Restraint	©
●	2324 57 100-09	FRONT SEAT (R) (Brown)	1		
● 1	0839 57 110-00	FRONT SEAT CUSHION (R) (Black)	1		
●	0839 57 110-09	FRONT SEAT CUSHION (R) (Brown)	1		©
2	0259 88 259	Top Cover			
● 3	0839 88 010-00	Trim (R) (Black)	1		
●	0839 88 010-09	Trim (R) (Brown)	1		©
4	0305 88 060	Adjuster No. 1 (R)	1		
5	0305 88 070	Adjuster No. 2 (L)	1		
6	0259 88 273A	Knob (R), Adjuster	1		
7	0254 88 164	Lock Spring, Adjuster	2		
8	0259 88 025	Clip	2		
9	0305 88 062	Wire	1		
10	0259 88 123	Spring	1		
11	99801 0816	Bolt, Adjuster	2		
	99952 0816	Plain Washer	2		
	99971 0800	Spring Washer	2		
12	99901 0800	Nut, Adjuster	2		
	99952 0816	Plain Washer	2		
	99971 0800	Spring Washer	2		
13	0839 57 130A	Knuckle (R)	1		
14	0305 88 081	Knob, Knuckle	1		
15	2155 57 109	Screw, Knuckle	4		
16	0305 88 091	Hinge Plate (R)	1		
	0305 88 150	Hinge Plate (R)	1	Car No. 24191 ～×	
17	0259 57 109	Screw, Hinge Plate	2		

57 SEAT (WITH ASSISTANCE LEVER, R.H.D. COUPE SUPER-DX. MODEL)

No.	Part Number	Description	Q'ty	Remarks	
18	0275 57 107	Screw, Hinge Plate	2		
● 19	0839 57 120A-00	FRONT SEAT BACK (R) (Black)	1		©
●	0839 57 120A-09	FRONT SEAT BACK (R) (Brown)	1		
20	0259 88 059	Top Cover	1		
● 21	0839 88 100A-00	Trim (R) (Black)	1		©
●	0839 88 100A-09	Trim (R) (Brown)	1		
22	0305 88 009	Knob, Head Restraint	1		
23	0259 68 250	Ash Tray	1		
24	99864 0408	Tapping Screw, Ash Tray	2		
● 25	0305 57 140-00	Head Restraint (R) (Black)	1		©
●	0305 57 140-09	Head Restraint (R) (Brown)	1		
26	0257 57 109	Hole Cap, Without Head Restraint	1		
●	0839 57 150A-00	FRONT SEAT (L) (Black)	1	With Head Restraint	©
●	0839 57 150A-09	FRONT SEAT (L) (Brown)	1		
●	2324 57 150-00	FRONT SEAT (L) (Black)	1	Without Head Restraint	©
●	2324 57 150-09	FRONT SEAT (L) (Brown)	1		
● 27	0839 57 160-00	FRONT SEAT CUSHION (L) (Black)	1		©
●	0839 57 160-09	FRONT SEAT CUSHION (L) (Brown)	1		
28	0259 88 259	Top Cover	1		
● 29	0839 88 200-00	Trim (L) (Black)	1		
●	0839 88 200-09	Trim (L) (Brown)	1		©
30	0839 88 250	Adjuster No. 3 (R)	1		
31	0305 88 260	Adjuster No. 4 (L)	1		
32	0259 88 373	Knob (L)	1		

No.	Part Number	Description	Q'ty	Remarks
33	0254 88 164	Lock Spring, Adjuster	1	
34	0259 88 025	Clip	2	
35	0305 88 062	Wire	1	
36	0259 88 123	Spring	1	
37	99801 0816	Bolt, Adjuster	2	
	99952 0816	Plain Washer	2	
	99971 0800	Spring Washer	2	
38	99901 0800	Nut, Adjuster	2	
	99952 0816	Plain Washer	2	
	99971 0800	Spring Washer	2	
39	0839 57 180A	Knuckle (L)	1	
40	0305 88 081	Knob, Knuckle	1	
41	2155 57 109	Screw, Knuckle	4	
42	0305 88 092	Hinge Plate (L)	1	
	0305 88 160	Hinge Plate (L)	1	Car No. 24191 ～ ×
43	0259 57 109	Screw, Hinge Plate	2	
44	0275 57 107	Screw, Hinge Plate	2	
45	0839 88 170	Conduct Plate	1	
46	0839 88 171	Torsion Bar	1	
47	0839 88 172	Assistance Lever	1	
48	99945 1000	Nut, Assistance Lever	1	
	99971 1000	Spring Washer	1	
49	0839 88 173	Tube	1	
50	0839 88 174	Wire	1	
51	0305 88 093	Bush	1	

57 SEAT (WITH ASSISTANCE LEVER, R.H.D. COUPE SUPER-DX. MODEL)

	No.	Part Number	Description	Q'ty	Remarks	
●	52	0839 57 170A-00	FRONT SEAT BACK (L) (Black)	1		©
●		0839 57 170A-09	FRONT SEAT BACK (L) (Brown)	1		
	53	0259 88 059	Top Cover	1		
●	54	0839 88 280A-00	Trim (L) (Black)	1		©
●		0839 88 280A-09	Trim (L) (Brown)			
	55	0305 88 009	Knob, Head Restraint	1		
●	56	0305 57 190-00	Head Restraint (Black)	1		©
●		0305 57 190-09	Head Restraint (Brown)	1		
	57	0257 57 109	Hole Cap, Without Head Restraint	2		
	58	908046 8 25	Set Bolt, Front Seat	4		
	59	99808 0825	Bolt, Front Seat	1		
		99971 0800	Spring Washer	1		
	60	0305 57 011	Washer	1		
	61	99901 0800	Nut, Front Seat	3		
		99952 0822	Plain Washer	3		
●		99951 0822	Plain Washer	3	Car No. 24191 ~ ○	
		99971 0800	Spring Washer	3		
●	62	0839 57 200A-00	REAR SEAT CUSHION (Black)	1		©
●		0839 57 200A-09	REAR SEAT CUSHION (Brown)	1		
	63	0305 88 415	Top Cover	1		
				1		
●	64	0839 88 370A-00	Trim (Black)	1		©
●		0839 88 370A-09	Trim (Brown)			
●	65	0839 57 250A-00	REAR SEAT BACK (Black)	1		©
●		0839 57 250A-09	REAR SEAT BACK (Brown)	1		
	66	0305 88 416	Top Cover	1		

No.	Part Number	Description	Q'ty	Remarks	
● 67	0839 88 420-00	Trim (Black)	1		©
●	0839 88 420-09	Trim (Brown)	1		
68	908042 8 20	Set Bolt, Rear Seat	2		
69	908042 8 25	Set Bolt, Rear Seat	2		
70	0317 57 015	Washer	4		
71	99901 0800	Nut, Rear Seat	2		
	99952 0822	Plain Washer	2		
	99951 0822	Plain Washer	2	Car No. 24191% ~ O	
	99971 0800	Spring Washer	2		
72	99301 1100	Cap, Safety Belt Hole	6		

SEAT (WITH ASSISTANCE LEVER, R.H.D. COUPE SUPER-DX. MODEL)

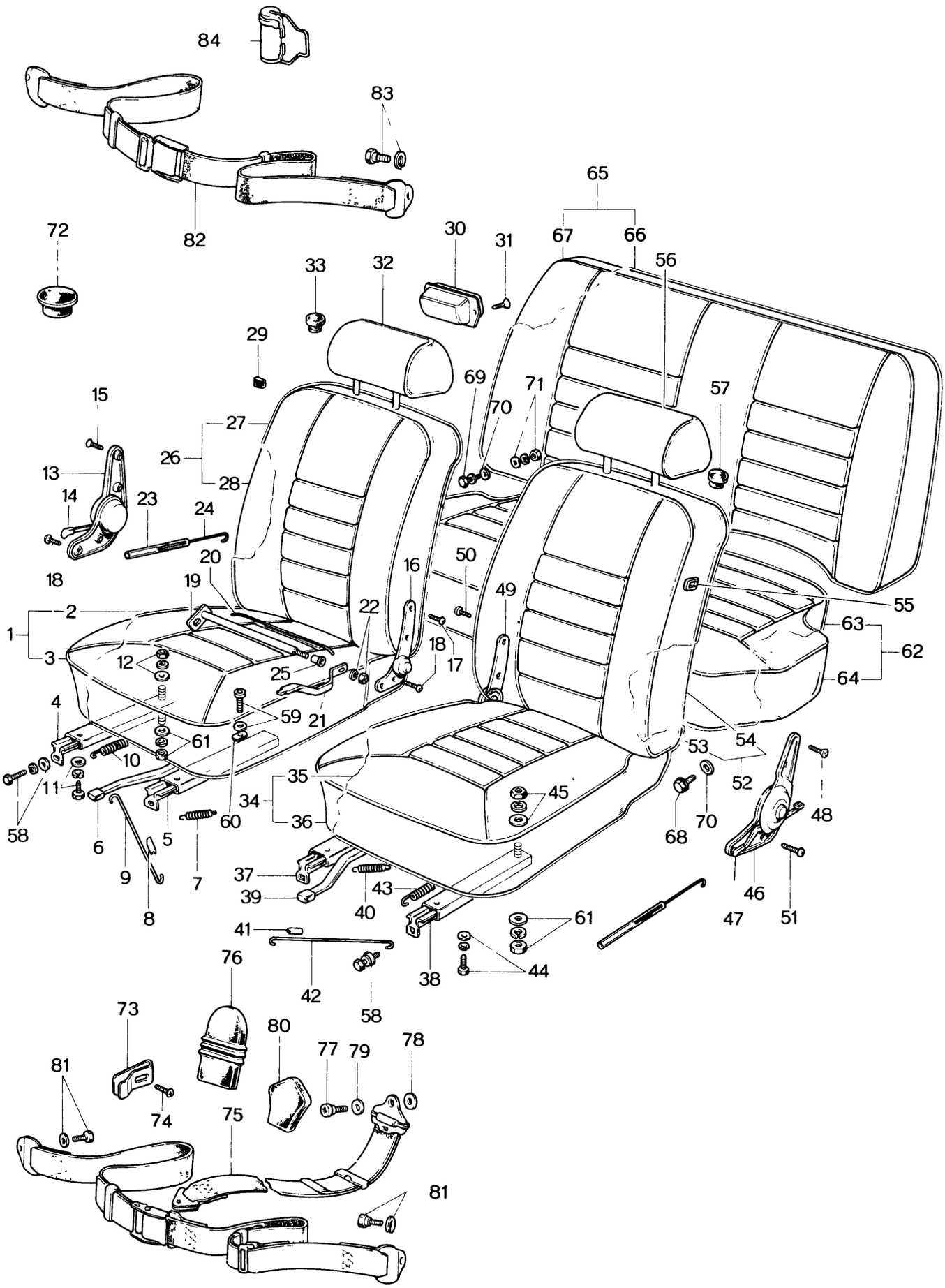

SEAT (WITH ASSISTANCE LEVER, L.H.D. COUPE SUPER-DX. MODEL)

	No.	Part Number	Description	Q'ty	Remarks
		2080 57 100	FRONT SEAT (R)	1	With Head Restraint
●		2080 57 100A-00	FRONT SEAT (R) (Black)	1	Car No. 40657 70/12 ~ ○
●		2080 57 100A-09	FRONT SEAT (R) (Brown)	1	
		2080 57 300	FRONT SEAT (R)	1	Without Head Restraint
●		2080 57 300A-00	FRONT SEAT (R) (Black)	1	Car No. 40657 70/12 ~ ○
●		2080 57 300A-09	FRONT SEAT (R) (Brown)	1	
		2091 57 100	FRONT SEAT (R)	1	With Head Restraint
●		2867 57 100-00	FRONT SEAT (R) (Black)	1	Car No. 40657 70/12 ~ ○
●		2867 57 100-09	FRONT SEAT (R) (Brown)	1	
		2073 57 100	FRONT SEAT (R)	1	Without Head Restraint
●		2073 57 100A-00	FRONT SEAT (R) (Black)	1	Car No. 40657 70/12 ~ ○
●		2073 57 100A-09	FRONT SEAT (R) (Brown)	1	
●	1	0839 57 110-00	FRONT SEAT CUSHION (R) (Black)	1	
●		0839 57 110-09	FRONT SEAT CUSHION (R) (Brown)	1	
●		2091 57 110-00	FRONT SEAT CUSHION (R) (Black)	1	Arctic Spec. Model
●		2091 57 110-09	FRONT SEAT CUSHION (R) (Brown)	1	
	2	0259 88 259	Top Cover	1	
●	3	0839 88 010-00	Trim (R) (Black)	1	
●		0839 88 010-09	Trim (R) (Brown)	1	
●		2091 88 010-00	Trim (R) (Black)	1	Arctic Spec. Model
●		2091 88 010-09	Trim (R) (Brown)	1	
	4	0305 88 060	Adjuster No. 1 (R)	1	
●	5	2080 88 070	Adjuster No. 2 (L)	1	
●		2080 88 070A	Adjuster No. 2 (L)	1	Car No. 40657 70/12 ~ ○
	6	0259 88 273A	Knob (R)	1	
	7	0254 88 164	Lock Spring, Adjuster	2	
	8	0259 88 025	Clip	2	
	9	0305 88 062	Wire	1	
	10	0259 88 123	Spring	1	
	11	99801 0816	Bolt, Adjuster	2	
		99952 0816	Plain Washer	2	
		99971 0800	Spring Washer	2	
	12	99901 0800	Nut, Adjuster	2	
		99952 0816	Plain Washer	2	
		99971 0800	Spring Washer	2	
	13	2080 57 130	Knuckle (R)	1	

57 SEAT (WITH ASSISTANCE LEVER, L.H.D. COUPE SUPER-DX. MODEL)

No.	Part Number	Description	Q'ty	Remarks	
14	0305 88 081	Knob, Knuckle	1		
15	2155 57 109	Screw, Knuckle	2		
16	0305 88 091	Hinge Plate (R)	1		
	0305 88 150	Hinge Plate (R)	1	Car No. 24191 ⅞ ~ ×	
17	0259 57 109	Screw, Hinge Plate	2		
18	0275 57 107	Screw, Knuckle & Hinge Plate	4		
19	2080 88 170	Conduct Plate	1		
20	2080 88 171	Torsion Bar	1		
21	2080 88 172	Assistance Lever	1		
22	99902 1000	Nut, Assistance Lever	1		
	99971 1000	Spring Washer	1		
23	0839 88 173	Tube	1		
24	0839 88 174	Wire	1		
25	0305 88 093	Bush	2		
● 26	0839 57 120A-00	FRONT SEAT BACK (R) (Black)	1		©
●	0839 57 120A-09	FRONT SEAT BACK (R) (Brown)	1		
●	2091 57 120-00	FRONT SEAT BACK (R) (Black)	1	Arctic Spec. Model	©
●	2091 57 120-09	FRONT SEAT BACK (R) (Brown)	1		
27	0259 88 059	Top Cover	1		
● 28	0839 88 100A-00	Trim (R) (Black)	1		©
●	0839 88 100A-09	Trim (R) (Brown)	1		
●	2091 88 100-00	Trim (R) (Black)	1	Arctic Spec. Model	©
●	2091 88 100-09	Trim (R) (Brown)	1		
29	0305 88 009	Knob, Head Restraint	1		
30	0259 68 250	Ash Tray	1		
31	99864 0408	Tapping Screw, Ash Tray	2		
● 32	0305 57 140-00	Head Restraint (R) (Black)	1		
●	0305 57 140-09	Head Restraint (R) (Brown)	1		©

No.	Part Number	Description	Q'ty	Remarks	
33	0257 57 109	Hole Cap, Cars Without Head Restraint	2		
●	2080 57 150-00	FRONT SEAT (L) (Black)	1	With Head Restraint	©
●	2080 57 150-09	FRONT SEAT (L) (Brown)	1		
●	2080 57 350-00	FRONT SEAT (L) (Black)	1	Without Head Restraint	©
●	2080 57 350-09	FRONT SEAT (L) (Brown)	1		
●	2091 57 150-00	FRONT SEAT (L) (Black)	1	With Head Restraint	©
●	2091 57 150-09	FRONT SEAT (L) (Brown)	1		
●	2073 57 150-00	FRONT SEAT (L) (Black) Arctic Spec Model	1	Without Head Restraint	©
●	2073 57 150-09	FRONT SEAT (L) (Brown)	1		
● 34	0839 57 160-00	FRONT SEAT CUSHION (L)	1		©
●	0839 57 160-09	FRONT SEAT CUSHION (L)	1		
●	2091 57 160-00	FRONT SEAT CUSHION (L)	1	Arctic Spec. Model	©
●	2091 57 160-09	FRONT SEAT CUSHION (L)	1		
35	0259 88 259	Top Cover	1		
● 36	0839 88 200-00	Trim (L) (Black)	1		©
●	0839 88 200-09	Trim (L) (Brown)	1		
●	2091 88 200-00	Trim (L) (Black)	1	Arctic Spec. Model	©
●	2091 88 200-09	Trim (L) (Brown)	1		
37	0305 88 250	Adjuster No.3 (R)	1		
38	0305 88 260	Adjuster No.4 (L)	1		
39	0259 88 373	Knob (L), Adjuster	1		
40	0254 88 164	Lock Spring, Adjuster	2		
41	0259 88 025	Clip	2		
42	0305 88 062	Wire	1		
43	0259 88 123	Spring	1		
44	99801 0816	Bolt, Adjuster	2		
	99952 0816	Plain Washer	2		
	99971 0800	Spring Washer	2		
45	99901 0800	Nut, Adjuster	2		

SEAT (WITH ASSISTANCE LEVER, L.H.D. COUPE SUPER-DX. MODEL)

No.	Part Number	Description	Q'ty	Remarks
	99952 0816	Plain Washer	2	
	99971 0800	Spring Washer	2	
46	2080 57 180	Knuckle (L)	1	
47	0305 88 081	Knob, Knuckle	1	
48	2155 57 109	Screw, Knuckle	2	
49	0305 88 092	Hinge Plate (L)	1	
	0305 88 160	Hinge Plate (L)	1	Car No. 24191 ～×
50	0259 57 109	Screw, Hinge Plate	2	
51	0275 57 107	Screw, Knuckle & Hinge Plate	4	
● 52	0839 57 170A-00	FRONT SEAT BACK (L) (Black)	1	
●	0839 57 170A-09	FRONT SEAT BACK (L) (Brown)	1	
●	2091 57 170-00	FRONT SEAT BACK (L) (Black)	1	Arctic Spec. Model
●	2091 57 170-09	FRONT SEAT BACK (L) (Brown)	1	
53	0259 88 059	Top Cover	1	
● 54	0839 88 280A-00	Trim (L) (Black)	1	
●	0839 88 280A-09	Trim (L) (Brown)	1	
●	2091 88 280-00	Trim (L) (Black)	1	
●	2091 88 280-09	Trim (L) (Brown)	1	
55	0305 88 009	Knob, Head Restraint	1	
● 56	0305 57 190-00	Head Restraint (L) (Black)	1	
●	0305 57 190-09	Head Restraint (L) (Brown)	1	
57	0257 57 109	Hole Cap, Cars Without Head Restraint	2	
58	908046 8 25	Set Bolt, Front Seat	4	
59	99808 0825	Bolt, Front Seat	1	
	99971 0800	Spring Washer	1	
60	0305 57 011	Washer	1	

SEAT (WITH ASSISTANCE LEVER, L.H.D. COUPE SUPER-DX. MODEL)

No.	Part Number	Description	Q'ty	Remarks	
61	99901 0800	Nut, Front Seat	3		
	99952 0822	Plain Washer	3		
	99951 0822	Plain Washer	3	Car No. 24191 ~ ○	
	99971 0800	Spring Washer	3		
● 62	0839 57 200A-00	REAR SEAT CUSHION (Black)	1		©
●	0839 57 200A-09	REAR SEAT CUSHION (Brown)	1		
●	2091 57 200-00	REAR SEAT CUSHION (Black)	1	Arctic Spec. Model	©
●	2091 57 200-09	REAR SEAT CUSHION (Brown)	1		
63	0305 88 415	Top Cover	1		
● 64	0839 88 370A-00	Trim (Black)	1		©
●	0839 88 370A-09	Trim (Brown)	1		
●	2091 88 370-00	Trim (Black)	1		©
●	2091 88 370-09	Trim (Brown)	1		
● 65	0839 57 250A-00	REAR SEAT BACK (Black)	1		©
●	0839 57 250A-09	REAR SEAT BACK (Brown)	1		
●	2091 57 250-00	REAR SEAT BACK (Black)	1	Arctic Spec. Model	©
●	2091 57 250-09	REAR SEAT BACK (Brown)	1		
66	0305 88 416	Top Cover	1		
● 67	0839 88 420-00	Trim (Black)	1		©
●	0839 88 420-09	Trim (Brown)	1		
●	2091 88 420-00	Trim (Black)	1	Arctic Spec. Model	©
●	2091 88 420-09	Trim (Brown)	1		
68	908042 8 20	Set Bolt, Rear Seat	2		
69	908042 8 25	Set Bolt, Rear Seat	2		
70	0310 57 015	Washer	4		
71	99901 0800	Nut, Rear Seat	2		
	99952 0822	Plain Washer	2		
	99951 0822	Plain Washer	2	Car No. 24191 ~ ○	
	99971 0800	Spring Washer	2		
72	99301 1100	Cap	6		

SEAT (WITH ASSISTANCE LEVER, L.H.D. COUPE SUPER-DX. MODEL)

No.	Part Number	Description	Q'ty	Remarks	
73	0305 57 909	Bolt Holder	2		
74	99836 0416	Screw, Bolt Holder	4		
● 75	0820 57 900A-00	FRONT SAFETY BELT(Black)	2		©
●	0820 57 900B-00	FRONT SAFETY BELT(Black)	2	Car No. 52327 ⁷⁰⁄₁₁ ~ ○	
76	0820 57 911	Mini Anchor Cover	4		
77	2981 57 976	Screw	2		
78	2981 57 978	Spacer	2		
79	0223 78 147	Washer	6		
80	0223 78 149	Cover	2		
81	99023 3524	Bolt	4		
	99201 3500	Spring Washer	4		
● 82	0223 78 200B-00	REAR SAFETY BELT (Black)	2		©
●	0223 78 200C-00	REAR SAFETY BELT (Black)	2	Car No. 52327 ⁷⁰⁄₁₁ ~ ○	
83	99023 3524	Bolt	4		
	99201 3500	Spring Washer	4		
84	0813 57 955A	Belt Roller	12		

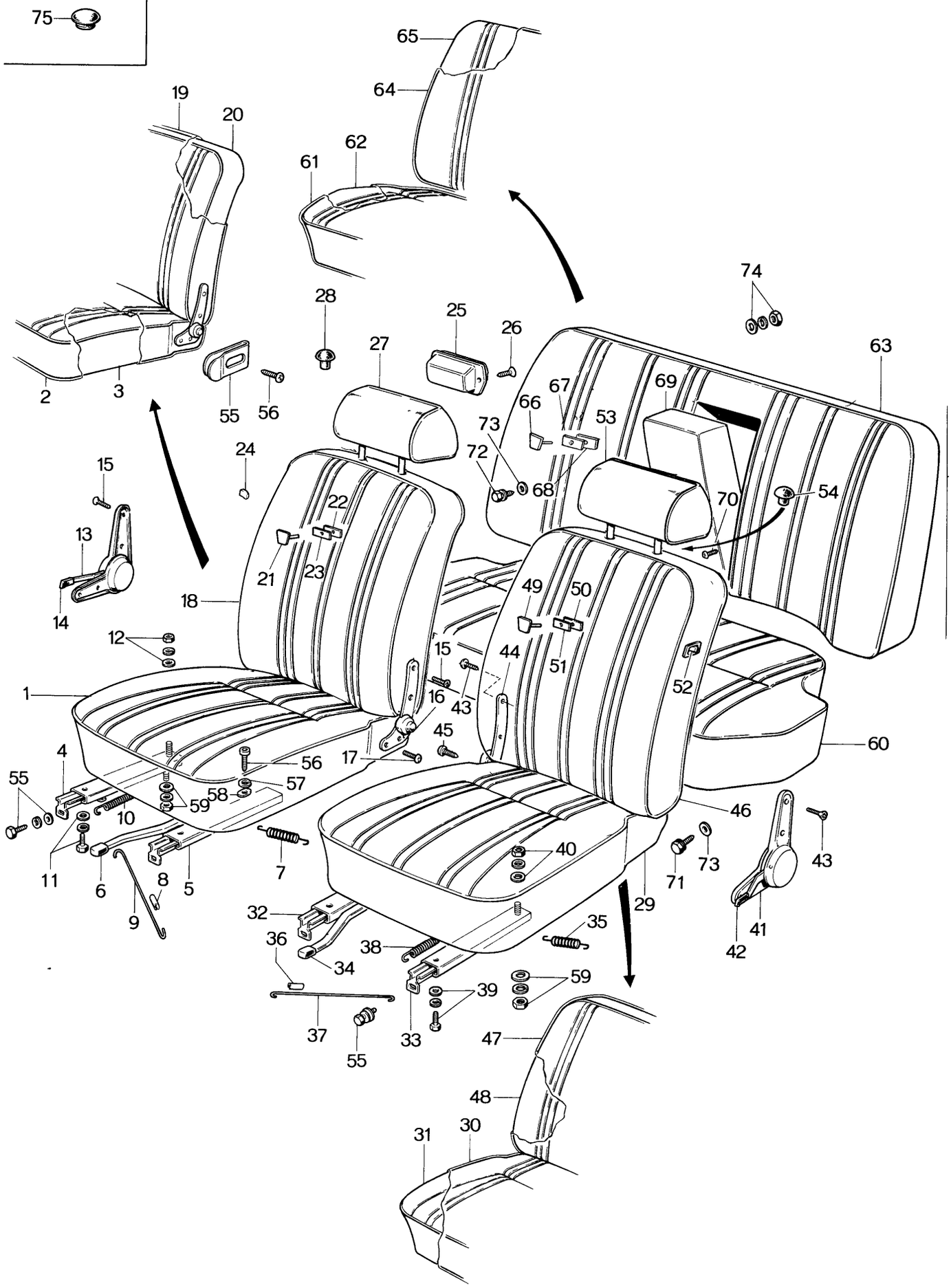
75
65
64
19
20
62
61
74
28
25
26
27
63
2
3
55
56
67
66
69
73
53
72
68
24
54
70
15
22
13
21
23
49
50
18
14
12
15
44
51
52
1
16
43
45
60
4
56
17
55
57
58
59
10
46
40
11
6
8
5
7
71
73
43
9
41
42
32
35
29
36
38
34
59
39
37
33
47
55
48
31
30

No.	Part Number	Description	Q'ty	Remarks
●	0304 57 100A-00	FRONT SEAT (R) (Black) — With Head Restraint	1	
●	0304 57 100A-09	FRONT SEAT (R) (Brown) — Without Garnish Button	1	
●	0305 57 100A-00	FRONT SEAT (R) (Black) — With Head Restraint	1	
●	0305 57 100A-09	FRONT SEAT (R) (Brown) — With Garnish Button	1	
●	2067 57 100-00	FRONT SEAT (R) (Black) — Without Head Restraint	1	Arctic Spec. Model
●	2067 57 100-09	FRONT SEAT (R) (Brown) — With Garnish Button	1	Arctic Spec. Model
●	2082 57 100-00	FRONT SEAT (R) (Black) — With Head Restraint	1	Arctic Spec. Model
●	2082 57 100-09	FRONT SEAT (R) (Brown) — With Garnish Button	1	Arctic Spec. Model
●	2321 57 100-00	FRONT SEAT (R) (Black) — Without Head Restraint	1	
●	2321 57 100-09	FRONT SEAT (R) (Brown) — With Garnish Button	1	
●	2826 57 100-00	FRONT SEAT (R) (Black) — Without Head Restraint	1	
●	2826 57 100-09	FRONT SEAT (R) (Brown) — Without Garnish Button	1	
● 1	0305 57 110-00	FRONT SEAT CUSHION (R) (Black)	1	
●	0305 57 110-09	FRONT SEAT CUSHION (R) (Brown)	1	
●	2851 57 110-00	FRONT SEAT CUSHION (R) (Black)	1	Arctic Spec. Model
●	2851 57 110-09	FRONT SEAT CUSHION (R) (Brown)	1	
2	0259 88 259	Top Cover	1	
● 3	0305 88 010-00	Trim (R) (Black)	1	
●	0305 88 010-09	Trim (R) (Brown)	1	
●	2851 88 010-00	Trim (R) (Black)	1	Arctic Spec. Model
●	2851 88 010-09	Trim (R) (Brown)	1	
4	0305 88 060	Adjuster No.1 (R)	1	
5	0305 88 070	Adjuster No.2 (L)	1	
6	0259 88 273A	Knob (R), Adjuster	1	
7	0254 88 164	Lock Spring	2	
8	0259 88 025	Clip	2	
9	0305 88 062	Wire	1	
10	0259 88 123	Spring	1	
11	99801 0816	Bolt, Adjuster	2	
	99971 0800	Spring Washer	2	
	99952 0816	Plain Washer	2	
12	99901 0800	Nut, Adjuster	2	
	99971 0800	Spring Washer	2	

SEAT (ALL SEDAN MODELS)

No.	Part Number	Description	Q'ty	Remarks	
	99952 0816	Plain Washer	2		
13	0305 57 130A	Knuckle (R)	1		
14	0305 88 081	Knob, Knuckle	1		
15	2155 57 109	Screw, Knuckle & Hinge Plate	6		
16	0305 88 150	Hinge Plate (R)	1		
17	0259 57 109	Screw, Hinge Plate	2		
● 18	0304 57 120A-00	FRONT SEAT BACK (R) (Black)	1	Without Garnish Button	©
●	0304 57 120A-09	FRONT SEAT BACK (R) (Brown)	1		
●	0305 57 120A-00	FRONT SEAT BACK (R) (Black)	1	With Garnish Button	©
●	0305 57 120A-09	FRONT SEAT BACK (R) (Brown)	1		
●	2082 57 120-00	FRONT SEAT BACK (R) (Black) Arctic Spec Model	1	With Garnish Button	©
●	2082 57 120-09	FRONT SEAT BACK (R) (Brown) Model	1		
19	0259 88 059	Top Cover	1		
● 20	0305 88 100A-00	Trim (R) (Black)	1		©
●	0305 88 100A-09	Trim (R) (Brown)	1		
●	2851 88 100-00	Trim (R) (Black) Arctic Spec. Model	1		©
●	2851 88 100-09	Trim (R) (Brown)	1		
21	0841 88 001	Garnish Button	1		
22	0841 88 002	Stopper, Garnish Button	1		
23	0317 88 082	Spacer, Garnish Button	1		
24	0305 88 009	Knob, Head Restraint	1		
25	0259 68 250	Ash Tray	1		
26	99864 0408	Tapping Screw, Ash Tray			
● 27	0305 57 140-00	Head Restraint (R) (Black)	1		©
●	0305 57 140-09	Head Restraint (R) (Brown)	1		
28	0257 57 109	Hole Cap, Cars Without Head Restraint	2		

No.	Part Number	Description	Q'ty	Remarks	
●	0304 57 150A-00	FRONT SEAT (L) (Black) Without Head Restraint	1		©
●	0304 57 150A-09	FRONT SEAT (L) (Brown) Without Garnish Button	1		
●	0304 57 550A-00	FRONT SEAT (L) (Black) With Head Restraint	1		©
●	0304 57 550A-09	FRONT SEAT (L) (Brown) Without Garnish Button	1		©
●	0305 57 150A-00	FRONT SEAT (L) (Black) With Head Restraint	1		
●	0305 57 150-09	FRONT SEAT (L) (Brown) With Garnish Button	1		©
●	2067 57 150-00	FRONT SEAT (L) (Black) Without Head Restraint	1		
●	2067 57 150-09	FRONT SEAT (L) (Brown) With Garnish Button	1	Arctic Spec. Model	©
●	2082 57 150-00	FRONT SEAT (L) (Black) With Head Restraint	1		©
●	2082 57 150-09	FRONT SEAT (L) (Brown) With Garnish Button	1		
●	2321 57 150-00	FRONT SEAT (L) (Black) Without Head Restraint	1		
●	2321 57 150-09	FRONT SEAT (L) (Brown) With Garnish Button	1		©
● 29	0305 57 160-00	FRONT SEAT CUSHION (L) (Black)	1		©
●	0305 57 160-09	FRONT SEAT CUSHION (L) (Brown)	1		
●	2851 57 160-00	FRONT SEAT CUSHION (L) (Black)	1	Arctic Spec. Model	
●	2851 57 160-09	FRONT SEAT CUSHION (L) (Brown)	1		
● 31	0305 88 200-00	Trim (L) (Black)	1		©
●	0305 88 200-09	Trim (L) (Brown)	1		
●	2851 88 200-00	Trim (L) (Black)	1	Arctic. Spec. Model	©
●	2851 88 200-09	Trim (L)(Brown)	1		
32	0305 88 250	Adjuster No.3 (R)	1		
33	0305 88 260	Adjuster No.4 (L)	1		
34	0259 88 373	Knob (L), Adjuster	1		
35	0254 88 164	Lock Spring	2		
36	0259 88 025	Clip	2		
37	0305 88 062	Wire	1		
38	0259 88 123	Spring	1		
39	99801 0816	Bolt, Adjuster	2		
	99971 0800	Spring Washer	2		
	99952 0816	Plain Washer	2		
40	99901 0800	Nut, Adjuster	2		
	99971 0800	Spring Washer	2		

SEAT (ALL SEDAN MODELS)

No.	Part Number	Description	Q'ty	Remarks	
	99952 0816	Plain Washer	2		
41	0305 57 180A	Knuckle (L)	1		
42	0305 88 081	Knob, Knuckle	1		
43	2155 57 109	Screw, Knuckle & Hinge Plate	6		
44	0305 57 160	Hinge Plate (L)	1		
45	0259 57 109	Screw, Hinge Plate	1		
● 46	0304 57 170A-00	FRONT SEAT BACK (L) (Black)	1	Without Garnish Button	©
●	0304 57 170A-09	FRONT SEAT BACK (L) (Brown)	1		
●	0305 57 170A-00	FRONT SEAT BACK (L) (Black)	1	With Garnish Button	©
●	0305 57 170A-09	FRONT SEAT BACK (L) (Brown)	1		
●	2082 57 170-00	FRONT SEAT BACK (L) (Black) Arctic Spec.	1	With Garnish Button	©
●	2082 57 170-09	FRONT SEAT BACK (L) (Brown) Model	1		
47	0259 88 059	Top Cover	1		
● 48	0305 88 280A-00	Trim (L) (Black)	1		©
●	0305 88 280A-09	Trim (L) (Brown)	1		
●	2851 88 280-00	Trim (L) (Black) Arctic Spec. Model	1		©
●	2851 88 280-09	Trim (L) (Brown)	1		
49	0841 88 001	Garnish Button	1		
50	0841 88 002	Stopper, Garnish Button	1		
51	0317 88 082	Spacer, Garnish Button	1		
52	0305 88 009	Knob, Head Restraint	1		
●	0305 57 190-00	Head Restraint (L) (Black)	1		©
●	0305 57 190-09	Head Restraint (L) (Brown)	1		
54	0257 57 109	Hole Cover, Cars Without Head Restraint	2		
55	908046 8 25	Set Bolt, Front Seat	4		
56	99808 0825	Bolt, Front Seat	1		

No.	Part Number	Description	Q'ty	Remarks	
57	99971 0800	Spring Washer	1		
58	0305 57 011	Washer	1		
59	99901 0800	Nut, Front Seat	3		
	99952 0822	Plain Washer	3		
	99971 0800	Spring Washer			
● 60	0305 57 200A-00	REAR SEAT CUSHION (Black)	1		©
●	0305 57 200A-09	REAR SEAT CUSHION (Brown)	1		
●	2851 57 200-00	REAR SEAT CUSHION (Black) Arctic Spec. Model	1		©
●	2851 57 200-09	REAR SEAT CUSHION (Brown)	1		
61	0305 88 415	Top Cover	1		
● 62	0305 88 370A-00	Trim (Black)	1		©
●	0305 88 370A-09	Trim (Brown)	1		
●	2851 88 370-00	Trim (Black) Arctic Spec. Model	1		©
●	2851 88 370-09	Trim (Brown)	1		
● 63	0304 57 250A-00	REAR SEAT BACK (Black) Without Arm Rest	1		©
●	0304 57 250A-09	REAR SEAT BACK (Brown) Without Garnish Button	1		
●	0305 57 250A-00	REAR SEAT BACK (Black) With Arm Rest	1		©
●	0305 57 250A-09	REAR SEAT BACK (Brown) With Garnish Button	1		
●	2082 57 250-00	REAR SEAT BACK (Black) With Arm Rest	1	Arctic Spec. Model	©
●	2082 57 250-09	REAR SEAT BACK (Brown) With Garnish Button	1		
64	0305 88 416	Top Cover	1		
● 65	0304 88 420A-00	Trim (Black)	1	Without Garnish Button	©
●	0304 88 420A-09	Trim (Brown)	1		
●	0305 88 420A-00	Trim (Black)	1	With Garnish Button	©
●	0305 88 420A-09	Trim (Brown)	1		
●	2082 88 420-00	Trim (Black)	1	With Garnish Button Arctic Spec. Model	©
●	2082 88 420-09	Trim (Brown)	1		
66	0841 88 001	Garnish Button	2		
67	0841 88 002	Stopper, Garnish Button	2		
68	0317 88 082	Spacer, Garnish Button	2		
● 69	0305 88 460-00	Arm Rest (Black)	1		©
●	0305 88 460-09	Arm Rest (Brown)	1		
●	2082 88 460-00	Arm Rest (Black) Arctic Spec. Model	1		©
●	2082 88 460-09	Arm Rest (Brown)	1		

SEAT (ALL SEDAN MODELS)

No.	Part Number	Description	Q'ty	Remarks
70	99744 0612	Screw, Arm Rest	2	
71	908042 8 20	Set Bolt, Rear Seat	2	
72	908042 8 25	Set Bolt, Rear Seat	2	
73	0317 57 015	Washer	4	
74	99901 0800	Nut, Rear Seat	3	
	99952 0822	Plain Washer	3	
	99971 0800	Spring Washer	3	
75	99301 1100	Cap, Safety Belt Hole	4	

FRONT SIDE DOOR (GLASS)

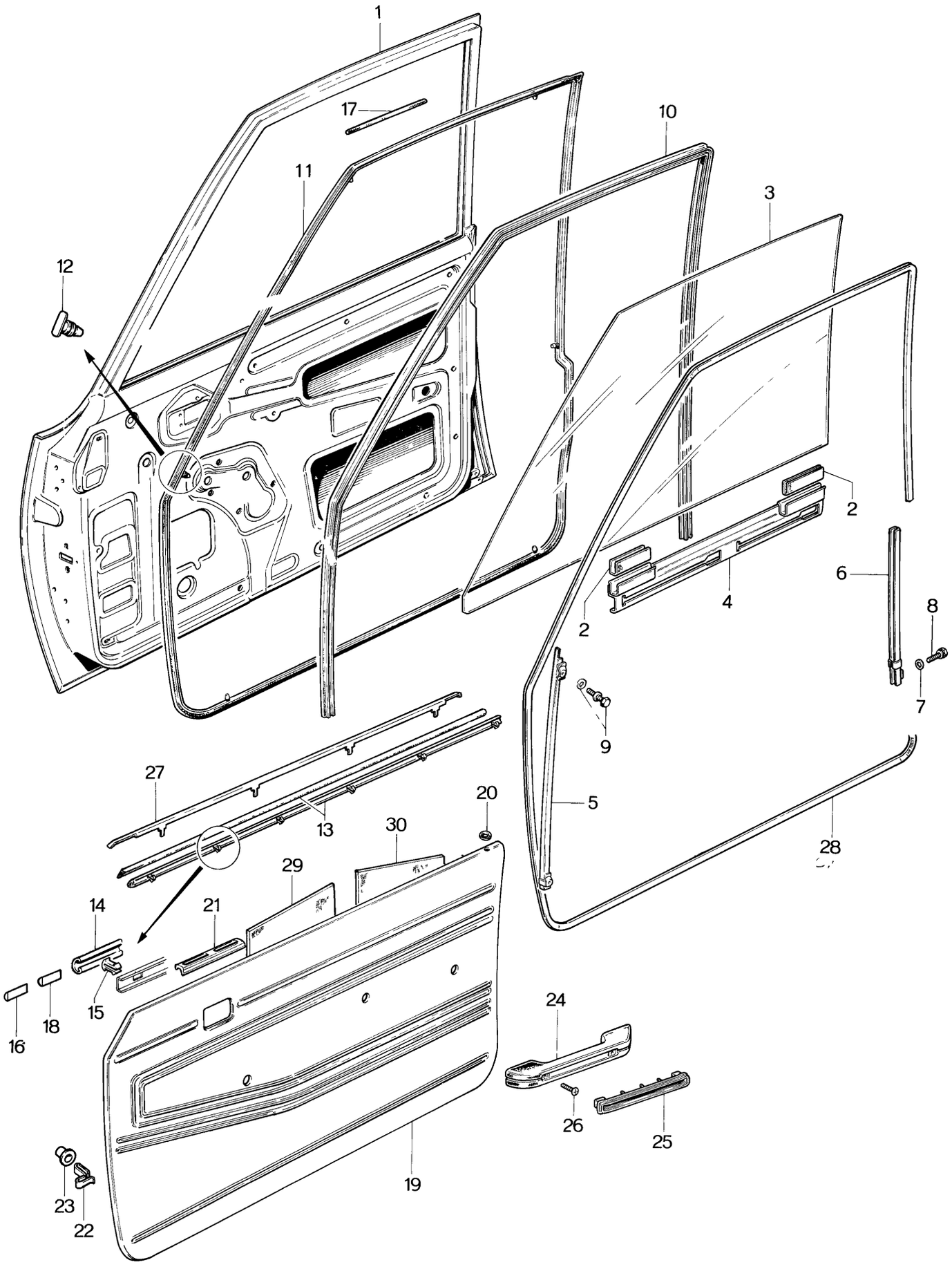

No.	Part Number	Description		Q'ty	Remarks
1	0305 58 010G	DOOR BODY Ass'y (R)	Sedan use	1	
	0305 59 010G	DOOR BODY Ass'y (L)		1	
	0839 58 010F	DOOR BODY Ass'y (R)	Coupe use	1	
	0839 58 010G	DOOR BODY Ass'y (R)		1	Car No. 33038 7/10 ~ O
	0839 59 010F	DOOR BODY Ass'y (L)		1	
	0839 59 010G	DOOR BODY Ass'y (L)		1	Car No. 33038 7/10 ~ O
	2835 58 010A	DOOR BODY Ass'y (R)	Sedan use With Defroster Hole Arctic Spec. Model	1	
	2835 58 010B	DOOR BODY Ass'y (R)		1	Car No. 24890 7/9 ~ O
	2835 59 010A	DOOR BODY Ass'y (L)		1	
	2835 59 010B	DOOR BODY Ass'y (L)		1	Car No. 24890 7/9 ~ O
	2080 58 010	DOOR BODY Ass'y (R)	Coupe use With Defroster Hole Arctic Spec. Model	1	
	2080 58 010A	DOOR BODY Ass'y (R)		1	Car No. 24890 7/9 ~ O
	2080 58 010B	DOOR BODY Ass'y (R)		1	Car No. 33038 7/10 ~ O
	2080 59 010	DOOR BODY Ass'y (L)		1	
	2080 59 010A	DOOR BODY Ass'y (L)		1	Car No. 24890 7/9 ~ O
	2080 59 010B	DOOR BODY Ass'y (L)		1	Car No. 33038 7/10 ~ O
	0305 58 020C	Outer Panel (R)	Sedan use	1	
	0305 59 020C	Outer Panel (L)		1	
	0839 58 020B	Outer Panel (R)	Coupe use	1	
	0839 59 020B	Outer Panel (L)		1	
	0305 58 601A	Sash (R)	Sedan use	1	
	0305 59 601A	Sash (L)		1	
	0839 58 601A	Sash (R)	Coupe use	1	
	0839 59 601A	Sash (L)		1	
2	0259 58 232	Rubber Strip		6	
	2292 58 232	Rubber Strip		6	Car No. 27392 7/10 ~ ×
3	0301 58 501	Door Glass (R)	Sedan use Transparent	1	
	0301 58 501A	Door Glass (R)		1	Car No. 27392 7/10 ~ ×
	0301 59 501	Door Glass (L)		1	
	0301 59 501A	Door Glass (L)		1	Car No. 27392 7/10 ~ ×
	0305 58 501	Door Glass (R)	Sedan use Blue Pane	1	
	0305 58 501A	Door Glass (R)		1	Car No. 27392 7/10 ~ ×
	0305 59 501	Door Glass (L)		1	
	0305 59 501A	Door Glass (L)		1	Car No. 27392 7/10 ~ ×
	0839 58 501	Door Glass (R)	Coupe use Blue Pane	1	
	0839 59 501	Door Glass (L)		1	
	2878 58 501	Door Glass (R)	Coupe use Transparent	1	

58 59 FRONT SIDE DOOR (GLASS)

No.	Part Number	Description	Q'ty	Remarks
	2878 59 501	Door Glass (L)	1	
4	0305 58 505	Lift Bracket (R)	1	
	0305 59 505	Lift Bracket (L)	1	
5	0305 58 603	Glass Guide "A" (R)	1	
●	0305 58 603A	Glass Guide "A" (R)	1	Car No. 57330 7½ ~ ×
	0305 59 603	Glass Guide "A" (L)	1	
●	0305 59 603A	Glass Guide "A" (L)	1	Car No. 57330 7½ ~ ×
6	0305 58 604	Glass Guide "B" (R)	1	
	0305 59 604	Glass Guide "B" (L)	1	
7	0727 70 943	Washer, Glass Guide	2	
8	908062 6 10	Set Bolt, Glass Guide	2	
9	908062 6 12	Set Bolt, Glass Guide	4	
	99951 0618	Plain Washer	4	
10	0305 58 605A	Glass Run Channel, Sedan use	2	
	0305 58 605C	Glass Run Channel, Sedan use	2	Car No. 27392 7/10 ~ ×
●	0305 58 605D	Glass Run Channel, "A" Sedan use	2	Car No. 57330 7½ ~ ×
	0839 58 605A	Glass Run Channel, Coupe use	2	
	0839 58 605B	Glass Run Channel, Coupe use	2	Car No. 27392 7/10 ~ ○
●	0839 58 605D	Glass Run Channel, "A" Coupe use	2	Car No. 57330 7½ ~ ×
●	0305 58 606	Glass Run Channel, "B" Sedan use	2	Car No. 57330 7½ ~ Added Anew
●	0839 58 606	Glass Run Channel, "B" Coupe use	2	Car No. 57330 7½ ~ Added Anew
11	0305 58 760C	WEATHERSTRIP Ass'y (R) } Sedan use	1	
	0305 59 760C	WEATHERSTRIP Ass'y (L) } Sedan use	1	
	0839 58 760B	WEATHERSTRIP Ass'y (R) } Coupe use	1	
	0839 59 760B	WEATHERSTRIP Ass'y (L) } Coupe use	1	
12	0305 58 762	Fastener	56	
13	0305 58 780D	WEATHERSTRIP Ass'y } Sedan use	2	
	0305 58 780F	WEATHERSTRIP Ass'y (R) Outer } Sedan use	1	Car No. 33038 7/10 ~ ○
	0305 59 780F	WEATHERSTRIP Ass'y (L) Outer } Sedan use	1	Car No. 33038 7/10 ~ ○
	0305 59 780D	WEATHERSTRIP Ass'y } Sedan use	2	
	0305 58 790	WEATHERSTRIP Ass'y (R) Inner } Sedan use	1	Car No. 33038 7/10 ~ ○
	0305 59 790	WEATHERSTRIP Ass'y (L) Inner } Sedan use	1	Car No. 33038 7/10 ~ ○
1	0839 58 780D	WEATHERSTRIP (R), Outer } Coupe use	1	
●	0839 58 780E	WEATHERSTRIP (R), Outer } Coupe use	1	Car No. 55667 7½ ~ △
	0839 59 780D	WEATHERSTRIP (L), Outer } Coupe use	1	
●	0839 59 780E	WEATHERSTRIP (L), Outer } Coupe use	1	Car No. 55667 7½ ~ △

No.	Part Number	Description		Q'ty	Remarks
	0839 58 790B	WEATHERSTRIP Ass'y (R), Inner	Coupe use	1	
●	0839 58 790C	WEATHERSTRIP Ass'y (R), Inner	Coupe use	1	Car No. 55667 ⁷⁄₂ ~△
	0839 59 790B	WEATHERSTRIP Ass'y (L), Inner	Coupe use	1	
●	0839 59 790C	WEATHERSTRIP Ass'y (L), Inner	Coupe use	1	Car No. 55667 ⁷⁄₂ ~△
14	0305 58 781B	Weatherstrip (R)	Sedan use	2	
	0305 59 781B	Weatherstrip (L)	Sedan use	2	
	0839 58 781B	Weatherstrip (R)	Coupe use	2	
	0839 59 781B	Weatherstrip (L)	Coupe use	2	
15	0839 58 783A	Fastener		36	
●	0839 58 783B	Fastener		36	Car No. 55667 ⁷⁄₂ ~△
16	0839 58 789	Spacer, Weatherstrip Outer, Coupe use		4	
	0839 58 789	Spacer, Weatherstrip Outer, Sedan use		4	Car No. 33038 ⁹⁄₁₀~ Added Anew
17	0305 58 768	Spacer, Weatherstrip		2	
18	0305 58 785	Adjuster, Weatherstrip		8	
●19	0305 58 810C-01	DOOR TRIM (R) (Black)	Sedan use	1	
●	0305 58 810C-04	DOOR TRIM (R) (Brown)	Sedan use	1	©
●	0305 59 810C-01	DOOR TRIM (L) (Black)	Sedan use	1	
●	0305 59 810C-04	DOOR TRIM (L) (Brown)	Sedan use	1	©
●	0839 58 810C-01	DOOR TRIM (R) (Black)	Coupe use	1	
●	0839 58 810C-04	DOOR TRIM (R) (Brown)	Coupe use	1	©
●	0839 59 810C-01	DOOR TRIM (L) (Black)	Coupe use	1	
●	0839 59 810C-04	DOOR TRIM (L) (Brown)	Coupe use	1	©
●	2851 58 810-01	DOOR TRIM (R) (Black)	Sedan use With Hole For Defroster Arctic Spec.Model	1	
●	2851 58 810-04	DOOR TRIM (R) (Brown)	Sedan use With Hole For Defroster Arctic Spec.Model	1	©
●	2851 59 810-01	DOOR TRIM (L) (Black)	Sedan use With Hole For Defroster Arctic Spec.Model	1	
●	2851 59 810-04	DOOR TRIM (L) (Brown)	Sedan use With Hole For Defroster Arctic Spec.Model	1	©
●	2858 58 810-01	DOOR TRIM (R) (Black)	Coupe use With Hole For Defroster Arctic. Model	1	©
●	2858 58 810-04	DOOR TRIM (R) (Brown)	Coupe use With Hole For Defroster Arctic. Model	1	
●	2858 59 810-01	DOOR TRIM (L) (Black)	Coupe use With Hole For Defroster Arctic. Model	1	©
●	2858 59 810-04	DOOR TRIM (L) (Brown)	Coupe use With Hole For Defroster Arctic. Model	1	
20	0223 58 692	Grommet		2	
21	2851 58 891	Defroster Nozzle, Arctic Spec. Model		2	

FRONT SIDE DOOR (GLASS)

No.	Part Number	Description	Q'ty	Remarks	
22	0208 58 921	Fastener	18		
23	0187 58 922	Fastener Seal Rubber	18		
24	0305 58 821A-01	Arm Rest (Black)	2		©
25	0305 58 822A-02	Garnish (Grey)	2		©
26	99833 0516	Screw, Arm Rest	4		
27	0305 58 831A	Beltline Mould (R) — Sedan use	1		
●	0305 58 831B	Beltline Mould (R) — Sedan use	1	Car No. 25947 ⁷⁰⁄₉ ~ ○	
	0305 59 831A	Beltline Mould (L) — Sedan use	1		
●	0305 59 831B	Beltline Mould (L) — Sedan use	1	Car No. 25947 ⁷⁰⁄₉ ~ ○	
	0839 58 831A	Beltline Mould (R) — Coupe use	1		
●	0839 58 831B	Beltline Mould (R) — Coupe use	1	Car No. 25947 ⁷⁰⁄₉ ~ ○	
	0839 59 831A	Beltline Mould (L) — Coupe use	1		
●	0839 59 831B	Beltline Mould (L) — Coupe use	1	Car No. 25947 ⁷⁰⁄₉ ~ ○	
● 28	0305 58 755A-00	Seaming Welt, Sedan use (Black)	2		©
●	0305 58 755B-00	Seaming Welt, Sedan use (Black)	2	Car No. 69368 ⁷¹⁄₄ ~ ○	
●	0839 58 755A-00	Seaming Welt, Coupe use (Black)	2		©
●	0839 58 755B-00	Seaming Welt, Coupe use (Black)	2	Car No. 69368 ⁷¹⁄₄ ~ ○	
29	0305 58 851A	Insulation, Sedan use	2		
	0305 72 851	Insulation, Coupe use	2		
30	0305 58 852	Insulation, Sedan use	2		
	0839 58 851	Insulation, Coupe use	2		

●

FRONT SIDE DOOR (LOCK)

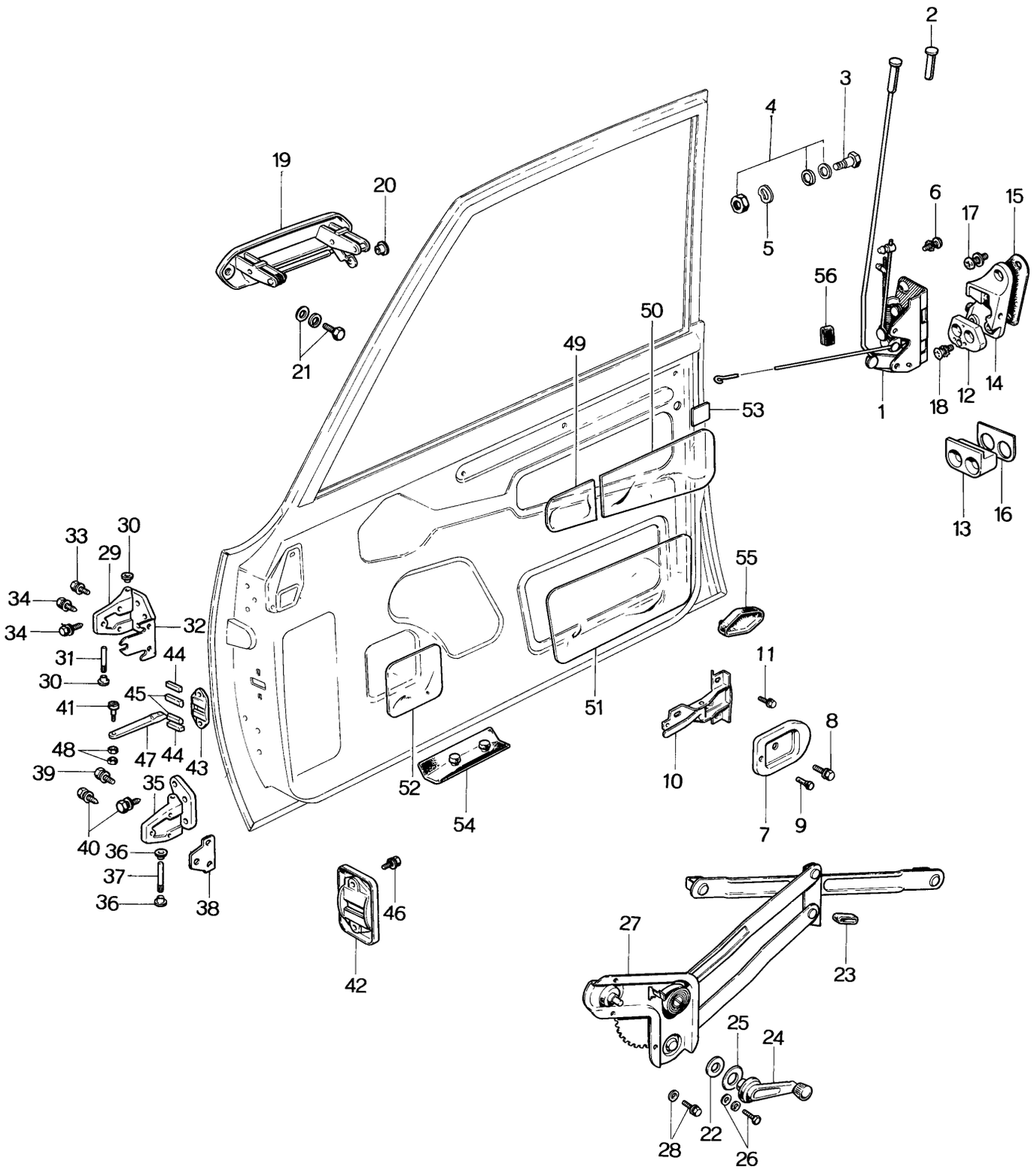

No.	Part Number	Description		Q'ty	Remarks
	0305 58 310C	DOOR LOCK Ass'y (R)		1	
●	0305 58 310D	DOOR LOCK Ass'y (R)	R. H. D. Sedan use (Australia Excluded)	1	Car No. 61926 7/3 ~ ○
	0305 59 310C	DOOR LOCK Ass'y (L)		1	
●	0305 59 310D	DOOR LOCK Ass'y (L)		1	Car No. 61926 7/3 ~ ○
	0839 58 310C	DOOR LOCK Ass'y (R)		1	
	0839 58 310D	DOOR LOCK Ass'y (R)		1	Car No. 33038 7/10 ~ ○
●	0839 58 310E	DOOR LOCK Ass'y (R)	R. H. D. Coupe use (Australia Excluded)	1	Car No. 61926 7/3 ~ ○
	0839 59 310C	DOOR LOCK Ass'y (L)		1	
	0839 59 310D	DOOR LOCK Ass'y (L)		1	Car No. 33038 7/10 ~ ○
●	0839 59 310E	DOOR LOCK Ass'y (L)		1	Car No. 61926 7/3 ~ ○
	2324 58 310	DOOR LOCK Ass'y (R)		1	
	2324 58 310A	DOOR LOCK Ass'y (R)		1	Car No. 33038 7/10 ~ ○
●	2324 58 310B	DOOR LOCK Ass'y (R)	L. H. D. Coupe use	1	Car No. 61926 7/3 ~ ○
	2080 59 310	DOOR LOCK Ass'y (L)		1	
●	2080 59 310B	DOOR LOCK Ass'y (L)		1	Car No. 61926 7/3 ~ ○
	2826 58 310	DOOR LOCK Ass'y (R)		1	
●	2826 58 310A	DOOR LOCK Ass'y (R)	L. H. D. Sedan use	1	Car No. 61926 7/3 ~ ○
	2835 59 310	DOOR LOCK Ass'y (L)		1	
●	2835 59 310A	DOOR LOCK Ass'y (L)		1	Car No. 61926 7/3 ~ ○
	2850 58 310	DOOR LOCK Ass'y (R)		1	
●	2850 58 310A	DOOR LOCK Ass'y (R)	Sedan use Arctic Spec. Model	1	Car No. 61926 7/3 ~ ○
	2850 59 310	DOOR LOCK Ass'y (L)		1	
●	2850 59 310A	DOOR LOCK Ass'y (L)		1	Car No. 61926 7/3 ~ ○
	2855 58 310	DOOR LOCK Ass'y (R)		1	
	2855 58 310A	DOOR LOCK Ass'y (R)		1	Car No. 33038 7/10 ~ ○
●	2855 58 310B	DOOR LOCK Ass'y (R)	Coupe use Arctic Spec. Model	1	Car No. 61926 7/3 ~ ○
	2855 59 310	DOOR LOCK Ass'y (L)		1	
	2855 59 310A	DOOR LOCK Ass'y (L)		1	Car No. 33038 7/10 ~ ○
●	2855 59 310B	DOOR LOCK Ass'y (L)		1	Car No. 61926 7/3 ~ ○
	2826 58 310	DOOR LOCK Ass'y (R)		1	
●	2826 58 310A	DOOR LOCK Ass'y (R)	For Australia Sedan use	1	Car No. 61926 7/3 ~ ○
	0305 59 310C	DOOR LOCK Ass'y (L)		1	
●	0305 59 310D	DOOR LOCK Ass'y (L)		1	Car No. 61926 7/3 ~ ○
	2324 58 310	DOOR LOCK Ass'y (R)		1	
●	2324 58 310A	DOOR LOCK Ass'y (R)		1	Car No. 33038 7/10 ~ ○
●	2324 58 310B	DOOR LOCK Ass'y (R)	For Australia Coupe use	1	Car No. 61926 7/3 ~ ○
	0839 59 310	DOOR LOCK Ass'y (L)		1	
●	0839 59 310D	DOOR LOCK Ass'y (L)		1	Car No. 33038 7/10 ~ ○
●	0839 59 310E	DOOR LOCK Ass'y (L)		1	Car No. 61926 7/3 ~ ○
2	0259 58 691-00	Knob (Black)		2	
3	0839 58 305	Stud, Door Lock	Coupe use	2	
4	99906 0500	Nut		2	Car No. 33038 7/10 ~ Discarded
	99952 0500	Plain Washer		2	
	99971 0500	Spring Washer		2	
5	99972 0800	Wave Washer		2	
6	908324 6 12	Set Screw, Door Lock		6	
● 7	0223 58 611B-00	Cover (Black)		2	
●	0223 58 611C-01	Cover (Black)		2	Car No. 24191 7/9 ~ ○
8	99832 0408B	Screw, Cover		2	
9	0259 58 612	Cushion Rubber		2	

58 59 FRONT SIDE DOOR (LOCK)

No.	Part Number	Description	Q'ty	Remarks
10	0223 58 660A	Inner Handle	2	
11	908066 5 10	Set Bolt, Inner Handle	8	
12	0305 58 361	Rack (R)	1	
	0305 59 361	Rack (L)	1	
13	2826 58 365	Anti-burst Block	2	
14	0259 58 570	Striker Ass'y (R)	1	
	0259 59 570	Striker Ass'y (L)	1	
15	0187 58 592A	Seat, Striker	2	
16	2350 58 593	Shim, Anti-burst Block	2	
17	907614 6 20	Set Screw, Striker	2	
18	907614 6 30	Set Screw, Striker & Anti-burst Block	4	
	2828 58 371A	Screw	4	
	99975 0600	Washer	4	
19	0305 58 410A	OUTER HANDLE (R)	1	
	0305 59 410A	OUTER HANDLE (L)	1	
20	0824 58 546	Bush	2	
●	0835 58 411	Bush	2	Car No. 42470 $^{70}/_{12}$～△
21	907976 5 08	Set Bolt, Outer Handle	4	
22	0259 58 305	Packing	2	
23	0259 58 306	Cushion	2	
● 24	0223 58 370B-01	Regulator Handle (Black)	2	©
● 25	0223 58 375A-00	Escutcheon (Black)	2	©
26	99806 0516	Bolt, Regulator Handle	2	
	99971 0500	Washer	2	
27	0305 58 560A	Window Regulator (R)	1	

No.	Part Number	Description	Q'ty	Remarks
	0305 59 560A	Window Regulator (L)	1	
	2850 58 560	Window Regulator (R) } Arctic Spec. Model	1	
	2850 59 560	Window Regulator (L) } Arctic Spec. Model	1	
28	908062 6 12	Set Bolt, Window Regulator	8	
	99951 0618	Plain Washer	8	
29	0317 58 700	UPPER HINGE Ass'y	2	
30	0223 58 721	Bush	4	
31	0187 58 731	Pin	2	
32	0317 58 736	Shim, Hinge	4	
33	907812 8 18	Set Bolt, Upper Hinge	4	
34	907832 8 25	Set Bolt, Upper Hinge	8	
35	0317 58 750	LOWER HINGE Ass'y (R)	1	
	0317 59 750	LOWER HINGE Ass'y (L)	1	
36	0223 58 721	Bush	4	
37	0187 58 731	Pin	2	
38	0317 58 785	Washer, Lower Hinge	2	
39	907812 8 18	Set Bolt, Lower Hinge	4	
40	907832 8 25	Set Bolt, Lower Hinge	8	

FRONT SIDE DOOR (LOCK)

No.	Part Number	Description	Q'ty	Remarks
41	0305 58 269	Bolt, Checker	2	
42	0305 58 270A	**CHECKER Ass'y**	2	
43	0305 58 272	Case	2	
44	0305 58 273	Rubber Spring	4	
45	0305 58 274	Slide Block	4	
46	908066 6 14	Set Bolt, Checker	4	
47	0305 58 281A	Lever, Checker	2	
48	99906 0600	Nut, Lever	2	
●	99947 0600	Self Lock Nut	2	Car No. 27392 70/10 ~ ○
●	99907 0600	Nut	2	Car No. 27392 70/10 ~ Discarded
49	0305 58 861	Screen "A"	2	
50	0305 58 862	Screen "B" (R) } Sedan use	1	
	0305 59 862	Screen "B" (L) } Sedan use	1	
	0839 58 862	Screen "B" (R) } Coupe use	1	
	0839 59 862	Screen "B" (L) } Coupe use	1	
51	0305 58 863	Screen "C" (R) } Sedan use	1	
	0305 59 863	Screen "C" (L) } Sedan use	1	
	0839 58 863	Screen "C", Coupe use	2	
52	0305 58 864	Screen "D"	1	
● 53	0245 72 926	Screen	1	Car No. 27392 70/10 ~ Discarded
54	0305 58 872	Drain Valve	4	
55	0305 58 874	Cushion	2	
56	0259 72 509	Pad	2	

CAR HEATER (R. H. D.)

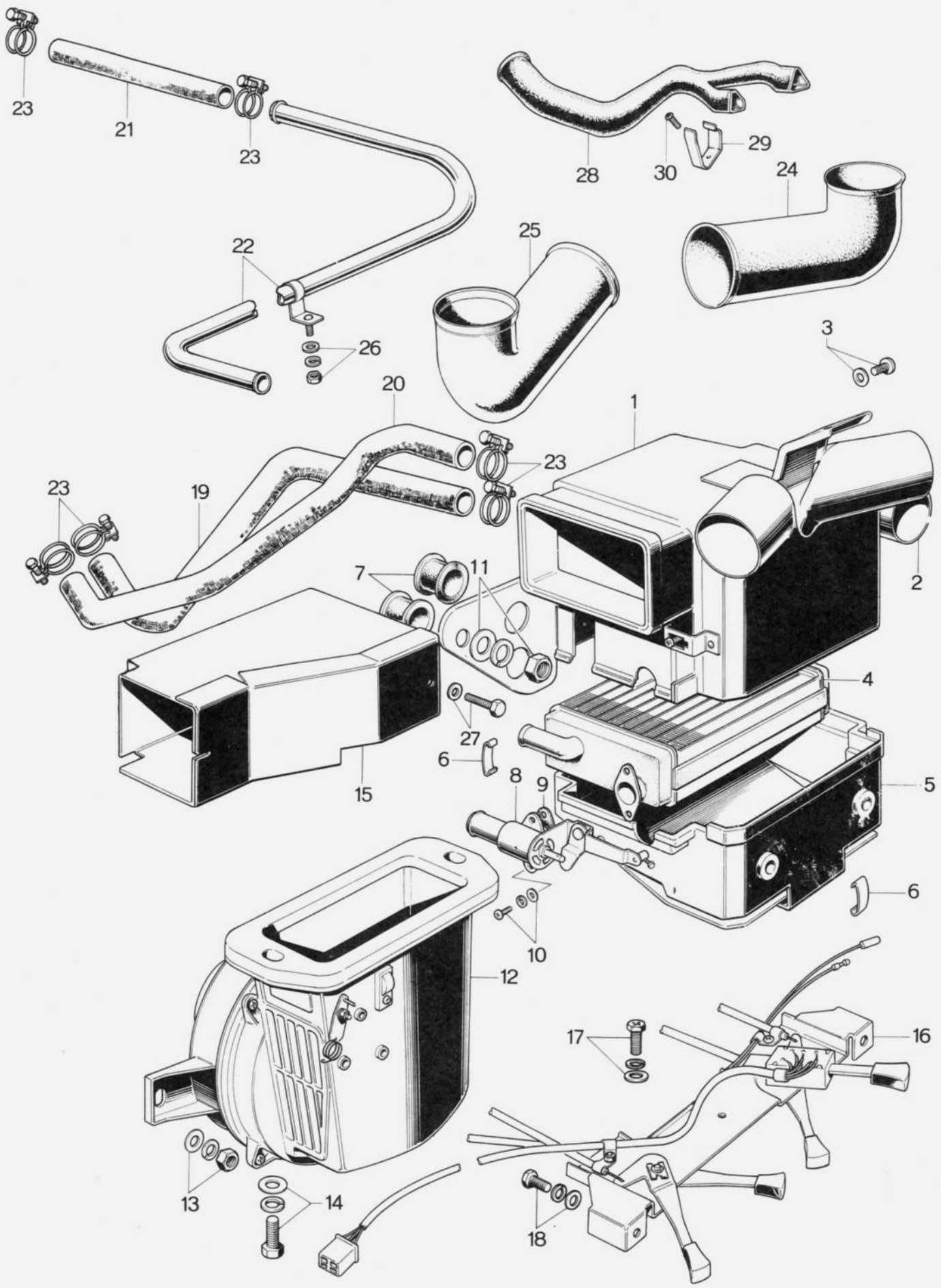

No.	Part Number	Description	Q'ty	Remarks
	0857 61 090	HEATER SET	1	
	0305 61 130A	CORE Ass'y	1	
	0305 61 130B	CORE Ass'y	1	Car No. 27392 ~ O
1	0305 76 081	Heater Case	1	
	0305 76 081A	Heater Case	1	Car No. 27392 ~ O
2	0305 76 082	Pipe	1	
3	99835 0412	Screw, Pipe	3	
	99863 0412	Screw, Pipe	3	Car No. 26650 ~ O
	99952 0400	Plain Washer	3	
4	0305 76 086	Heater Core	1	
	0305 76 086A	Heater Core	1	Car No. 27392 ~ O
5	0305 76 087	Duct	1	
	0305 76 087A	Duct	1	Car No. 27392 ~ O
6	0305 76 088	Clip	4	
7	0305 76 089	Grommet	2	Car No. 26650 ~ Q'ty
8	0305 76 083	Water Valve	1	
9	0305 76 084	Packing	1	
10	99835 0408	Screw	2	
	99952 0400	Plain Washer	2	
	99971 0400	Spring Washer	2	
11	99906 0600	Nut, Core	3	
	99952 0618	Plain Washer	3	
	99971 0600	Spring Washer	3	
12	0305 61 140C	Blower	1	
13	99906 0600	Nut, Blower	2	
	99952 0618	Plain Washer	2	
	99971 0600	Spring Washer	2	
14	99799 0630	Bolt, Blower	2	
●	99799 0635	Bolt, Blower	2	Car No. 52327 ~ O

CAR HEATER (R.H.D.)

No.	Part Number	Description	Q'ty	Remarks	
	99952 0618	Plain Washer	2		
	99971 0600	Spring Washer	2		
15	0305 61 150A	Duct	1		
	0305 61 150B	Duct	1	Car No. 24247 ~ ○	
16	0305 61 190A-00	Heater Control (Black)	1		©
	0305 61 190B-00	Heater Control (Black)	1	Car No. 27392 ~ ○	
17	99797 0510	Bolt, Heater Control	1		
	99952 0500	Plain Washer	1		
	99971 0500	Spring Washer	1		
18	99906 0500	Nut, Heater Control	2		
	99952 0500	Plain Washer	2		
	99971 0500	Spring Washer	2		
19	0839 61 211A	Water Hose No. 1	1		
	0839 61 211B	Water Hose No. 1	1	Car No. 27392 ~ ○	
20	0839 61 212A	Water Hose No. 2	1		
	0839 61 212B	Water Hose No. 2	1	Car No. 27392 ~ ○	
21	0839 61 213A	Water Hose No. 3	1		
22	0839 61 214A	Heater Pipe	1		
23	99282 2600	Hose Band	6		
24	0305 61 232	Defroster Hose (R)	1		
25	0305 61 233	Defroster Hose (L)	1		
26	99906 0500	Nut, Heater Pipe	1		
	99952 0516	Plain Washer	1		
	99971 0500	Spring Washer	1		
27	908687 4 16B	Set Screw, Duct	1		
28	0839 60 830A	Ventilation Hose	1		
29	0839 60 831	Clip, Ventilation Hose	1		
30	99864 0510	Screw, Clip	1		

CAR HEATER (L. H. D.)

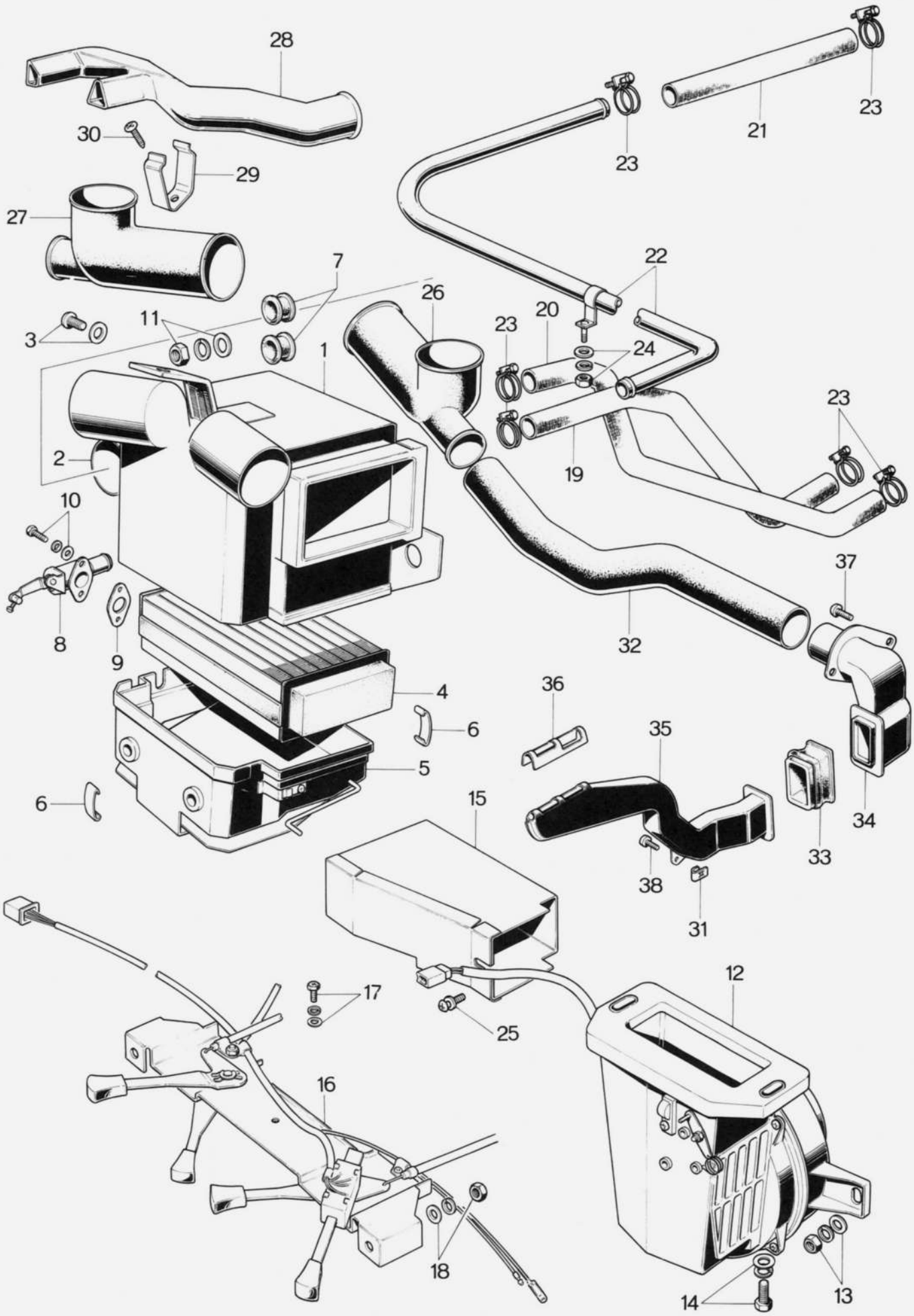

No.	Part Number	Description	Q'ty	Remarks
	2080 61 090	**HEATER SET**	1	
	2091 61 090	**HEATER SET,** Powerful Type	1	
	2835 61 130	**CORE Ass'y**	1	
	2851 61 130	**CORE Ass'y,** Powerful Type	1	
1	2835 76 081	Heater Case	1	
	2851 76 081	Heater Case, Powerful Type	1	
2	2835 76 082	Pipe	1	
3	99863 0412	Tapping Screw	3	
	99952 0400	Plain Washer	3	
4	0305 76 086A	Heater Core	1	
	2851 76 086	Heater Core, Powerful Type	1	
5	0305 76 087A	Duct	1	
	2851 76 087	Duct, Powerful Type	1	
6	0305 76 088	Clip	4	
7	0305 76 089	Grommet	2	
8	2835 76 083	Water Valve	1	
	2851 76 083	Water Valve, Powerful Type	1	
9	0305 76 084	Packing	1	
10	99835 0408	Screw	2	
	99952 0400	Plain Washer	2	
	99971 0400	Spring Washer	2	
11	99906 0600	Nut, Core	3	
	99952 0600	Plain Washer	3	

CAR HEATER (L.H.D.)

No.	Part Number	Description	Q'ty	Remarks	
	99971 0600	Spring Washer	3		
12	2835 61 140	Blower	1		
13	99906 0600	Nut, Blower	2		
	99952 0618	Plain Washer	2		
	99971 0600	Spring Washer	2		
14	99799 0630	Bolt, Blower	2		
●	99799 0635	Bolt, Blower	2	Car No. 52327 7/1 ~ ○	
	99952 0618	Plain Washer	2		
	99971 0600	Spring Washer	2		
15	2835 61 150	Duct	1		
	2851 61 150	Duct, Powerful Type	1		
● 16	2835 61 190-00	Heater Control (Black)	1		©
●	2835 61 190A-00	Heater Control (Black)	1	Car No. 21039 7/8 ~ ○	
17	99797 0510	Bolt, Heater Control	1		
	99952 0500	Plain Washer	1		
	99971 0500	Spring Washer	1		
18	99906 0500	Nut, Heater Control	2		
	99952 0500	Plain Washer	2		
	99971 0500	Spring Washer	2		
19	0839 61 211B	Water Hose No. 1	1		
20	0839 61 212B	Water Hose No. 2	1		
	2091 61 212	Water Hose No. 2 Powerful Type Heater	1		
21	0839 61 213A	Water Hose No. 3	1		
22	0839 61 214A	Heater Pipe	1		
23	99282 2600	Hose Band	6		
24	99906 0500	Nut, Heater Pipe	1		
	99952 0516	Plain Washer	1		
	99971 0500	Spring Washer	1		

No.	Part Number	Description		Q'ty	Remarks
25	908687 4 16B	Set Screw, Duct		2	
26	0305 61 233	Defroster Hose (R)		1	
	2851 61 232	Defroster Hose (R) Powerful Type		1	
27	2835 61 233	Defroster Hose (L)		1	
	2851 61 233	Defroster Hose (L) Powerful Type		1	
28	2846 60 830	Ventilation Hose		1	
	2858 60 830A	Ventilation Hose Powerful Type		1	
29	0839 60 831	Clip		1	
30	99864 0510	Screw Clip		1	
31	0820 56 905	Spring Nut		4	
	2851 61 241	Insolator (R)		1	Car No. 34307 70/11 ~ Added Anew
32	2851 61 242	Hose Side (R)		1	
	2851 61 243	Hose Side (L)		1	
33	2851 61 244	Tube, Defroster		2	
34	2851 61 245	Duct Side (R)		1	
	2851 61 245A	Duct Side (R)		1	Car No. 34307 70/11 ~ O
	2851 61 246	Duct Side (L)		1	
	2851 61 246A	Duct Side (L)	Powerful Type	1	Car No. 34307 70/11 ~ O
35	2851 61 247	Nozzle (R), Defroster Side		1	
	2851 61 247A	Nozzle (R), Defroster Side		1	Car No. 24247 70/9 ~ O
	2851 61 248	Nozzle (L), Defroster Side		1	
●	2851 61 248A	Nozzle (L), Defroster Side		1	Car No. 53807 71/1 ~ O
36	2851 61 249	Sealer		1	Car No. 24247 70/9 ~ Discarded
37	908636 5 16	Set Screw		4	Car No. 34307 70/11 ~ Q'ty
38	99836 0516	Screw		4	

BLOWER & CONTROL

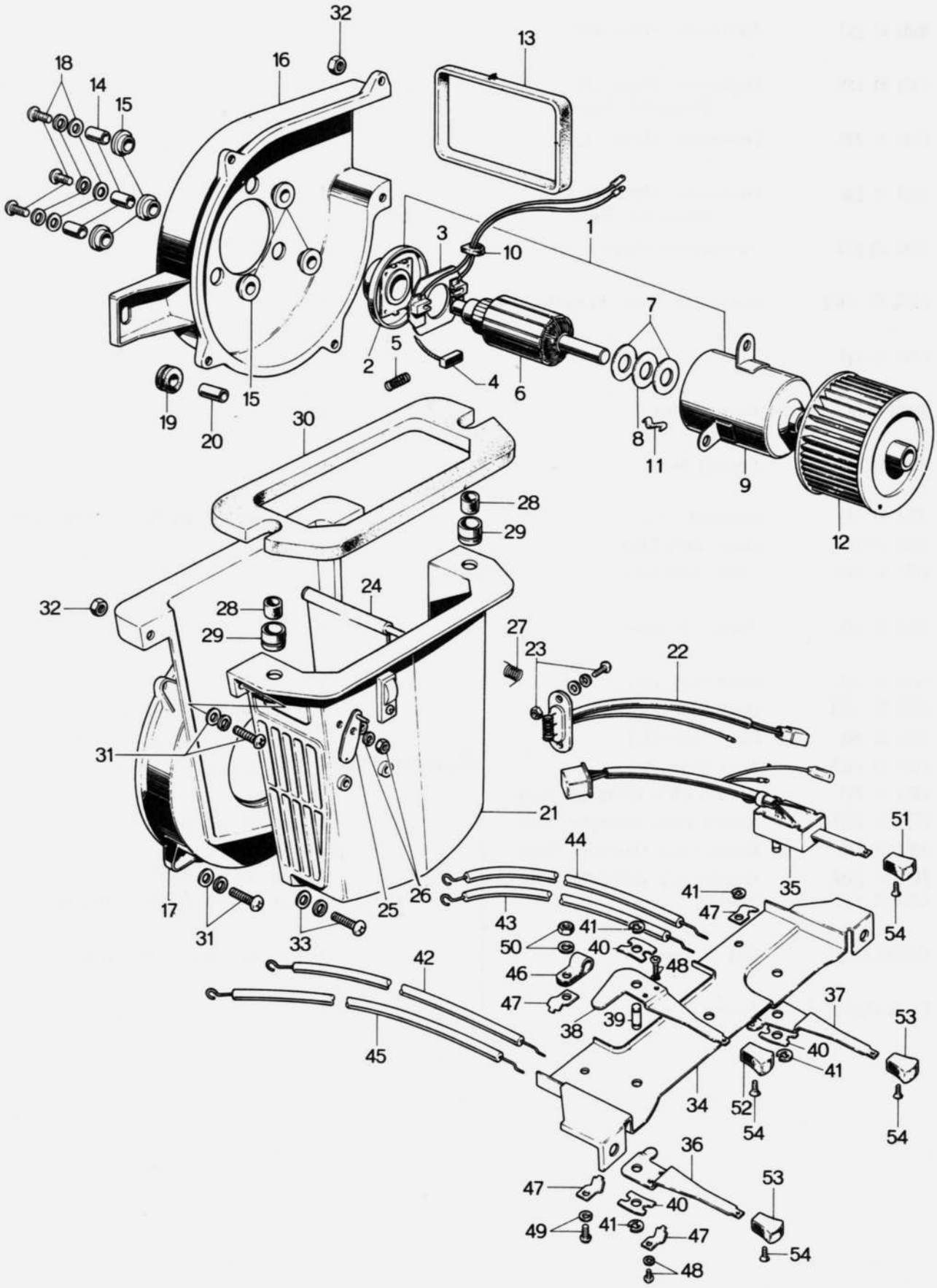

No.	Part Number	Description	Q'ty	Remarks
	0305 61 140B	BLOWER Ass'y (R.H.D.)	1	
●	0305 61 140C	BLOWER Ass'y (R.H.D.)	1	Car No. 24247 ~ ○
	2835 61 140	BLOWER Ass'y (L.H.D.)	1	
		Fig. No. 1 33 included		
1	0305 76 110	FAN MOTOR (R.H.D.)	1	
	2835 76 110	FAN MOTOR (L.H.D.)	1	
2	0305 76 141	Cover Ass'y	1	
3	0305 76 142	Brush Holder	1	
4	0305 76 143	Brush	2	
5	0305 76 144	Spring	2	
6	0305 76 145	Armature Ass'y (R.H.D.)	1	
	2835 76 145	Armature Ass'y (L.H.D.)	1	
7	0305 76 146	Thrust Washer	8	
8	0305 76 147	Bakelite Washer	2	
9	0305 76 149	Yoke Ass'y	1	
10	0305 76 150	Grommet	1	
11	0305 76 151	Lock Spring	2	
12	0305 76 116	Sirocco Fan (R.H.D.)	1	
	2835 76 116	Sirocco Fan (L.H.D.)	1	
13	0305 76 118	Lining No.2	1	
14	0305 76 123	Collar	3	
15	0305 76 124	Damper	6	
16	0305 76 125	Fan Case (R.H.D.)	1	
	2835 76 125	Fan Case (L.H.D.)	1	

BLOWER & CONTROL

No.	Part Number	Description	Q'ty	Remarks
17	0305 76 126	Fan Case (R.H.D.)	1	
	2835 76 126	Fan Case (L.H.D.)	1	
18	99835 0516	Screw	3	
	99952 0500	Plain Washer	3	
	99971 0500	Spring Washer	3	
19	0305 76 136	Grommet	2	
20	0305 76 138	Collar	2	
21	0305 76 127	Duct (R.H.D.)	1	
	2835 76 127	Duct (L.H.D.)	1	
22	0305 76 129	Resistor	1	
23	99835 0414	Screw, Resistor	2	
	99906 0400	Nut	2	
	99952 0400	Plain Washer	2	
	99971 0400	Spring Washer	2	
24	0305 76 131	Shutter (R.H.D.)	1	
	2835 76 131	Shutter (L.H.D.)	1	
25	0305 76 132	Lever (R.H.D.)	1	
	2835 76 132	Lever (L.H.D.)	1	
26	99906 0600	Nut, Shutter+Lever	1	
	99971 0600	Spring Washer	1	
27	0305 76 135	Spring (R.H.D.)	1	
	2835 76 135	Spring (L.H.D.)	1	
28	0305 76 137	Grommet	2	
29	0305 76 139	Collar	2	
30	0305 76 117	Lining No. I	1	
31	99835 0420	Screw	7	

No.	Part Number	Description	Q'ty	Remarks	
	99952 0400	Plain Washer	7		
	99971 0400	Spring Washer	7		
32	99906 0400	Nut	7		
33	99835 0416	Screw	1		
	99952 0400	Plain Washer	1		
	99971 0400	Spring Washer	1		
●	0305 61 190B-00	HEATER CONTROL Ass'y (R.H.D.) (Black)	1		©
●	2835 61 190-00	HEATER CONTROL Ass'y (L.H.D.) (Black)	1		©
●	2835 61 190A-00	HEATER CONTROL Ass'y (L.H.D.) (Black)	1	Car No. 21039 ⅞～○	
34	0305 76 155	Bracket	1		
	0305 76 155A	Bracket	1	Car No. 21039 ⅞～○	
35	0305 76 156	Switch	1		
	0305 76 156A	Switch	1	Car No. 21039 ⅞～○	
36	0305 76 157	Control Lever (R.H.D.)	1		
	2835 76 157	Control Lever (L.H.D.)	1		
37	0305 76 158	Control Lever	1		
38	0305 76 159	Control Lever	1		
39	0305 76 160	Pin	1		
40	0305 76 161	Spring	3		
41	0305 76 162	Snap Ring	3		
42	0305 76 163	Cable Wire (R.H.D.)	1		
	0305 76 163A	Cable Wire (R.H.D.)	1	Car No. 27392 ⅞～○	
	2835 76 163	Cable Wire (L.H.D.)	1		
43	0305 76 164	Cable Wire (R.H.D.)	1		
	2835 76 164	Cable Wire (L.H.D.)	1		
44	0305 76 165	Cable Wire	1		
45	0305 76 166	Cable Wire (R.H.D.)	1		
	2835 76 166	Cable Wire (L.H.D.)	1		

No.	Part Number	Description	Q'ty	Remarks	
46	0305 76 167	Clip	1		
47	0305 76 168	Clip	4		
48	99835 0512	Screw	2		
	99971 0500	Spring Washer	2		
49	99835 0516	Screw	1		
	99971 0500	Spring Washer	1		
50	99906 0500	Nut	1		
	99971 0500	Spring Washer	1		
51	0305 76 173	Knob	1		©
52	0305 76 174	Knob	1		©
53	0305 76 175	Knob	2		©
54	0305 76 176	Screw	4		

CAR COOLER (R. H. D.)

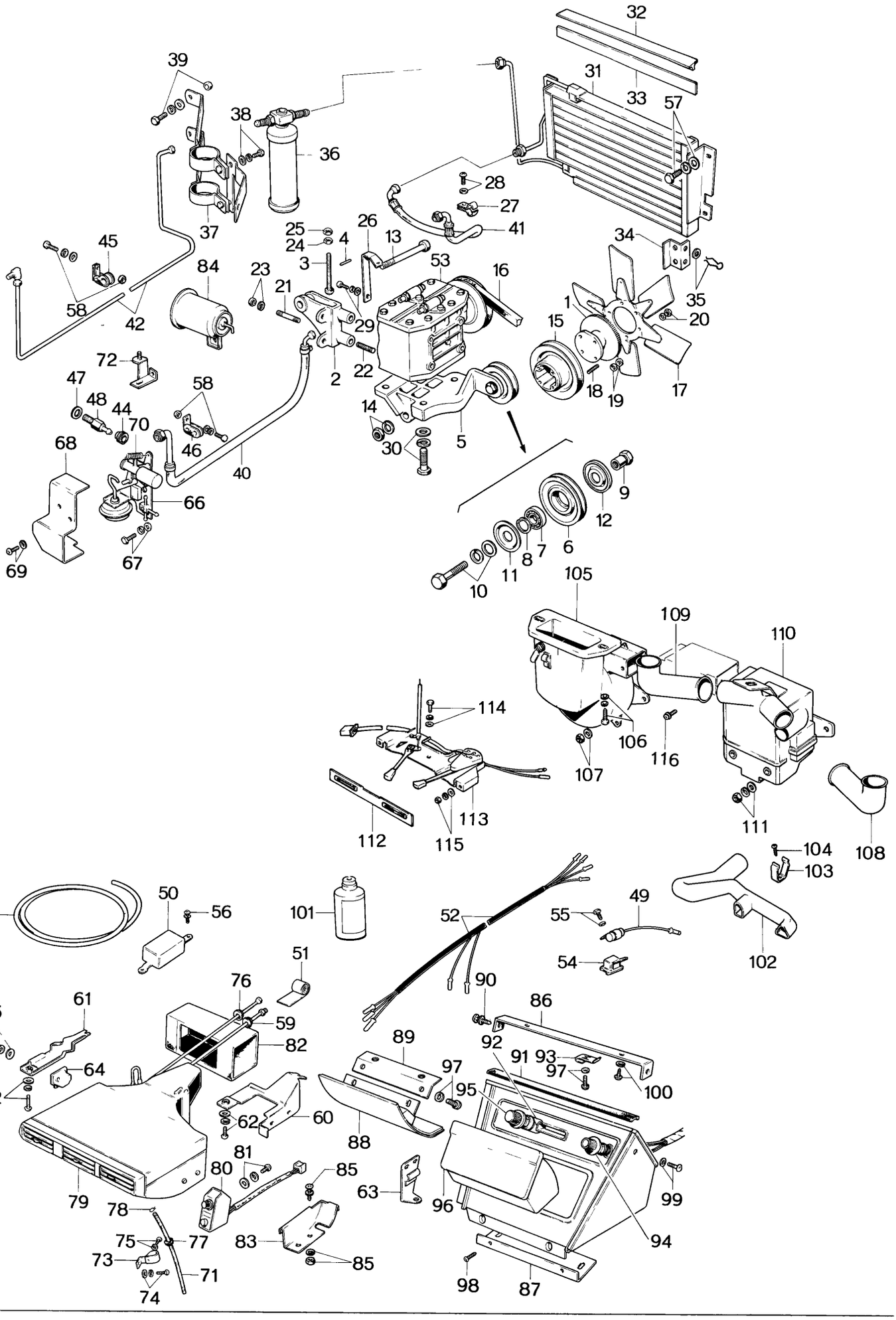

No.	Part Number	Description	Q'ty	Remarks
	0833 79 21UA	CAR COOLER SET, Without Car Heater & Console Box	1	
	0839 79 210A	CAR COOLER SET, Without Car Heater With Console Box	1	
	2324 61 710	AIR CONDITIONER, With Car Heater & Console Box	1	
	2874 61 710	AIR CONDITIONER, With Car Heater Without Console Box	1	
1	0823 15 210A	Fan Drive Ass'y	1	
●	2090 15 210	Fan Drive Ass'y	1	Car No. 52327 7/1 ~ ×
	0839 61 950A	COMPRESSOR BRACKET Ass'y No. 1	1	
●	0839 61 950B	COMPRESSOR BRACKET Ass'y No. 1	1	Car No. 52327 7/1 ~ ×
2	0839 61 951A	Bracket	1	
●	0839 61 951B	Bracket	1	Car No. 52327 7/1 ~ ×
3	0839 61 952	Adjust Bolt	1	
●	0839 61 952A	Adjust Bolt	1	Car No. 52327 7/1 ~ ×
4	0820 78 753B	Pin	1	Car No. 52326 7/1 ~ Discarded
●	0839 61 968	Spacer	1	Car No. 52327 7/1 ~ Added Anew
●	99856 1040	Stud	1	Car No. 52327 7/1 ~ Added Anew
5	0839 61 960A	COMPRESSOR BRACKET Ass'y No. 2 Fig. No. 6 12 Included	1	
●	0839 61 960B	COMPRESSOR BRACKET Ass'y No. 2	1	Car No. 52327 7/1 ~ ×
6	0839 61 970	IDLE PULLEY Ass'y	1	
●	0839 61 970A	IDLE PULLEY Ass'y	1	Car No. 52327 7/1 ~ ×
7	0208 78 736	Ball Bearing	1	
8	99574 4700	Snap Ring	1	
9	0839 61 963A	Bolt, Pulley	1	
●	0839 61 963B	Bolt, Pulley	1	Car No. 52327 7/1 ~ ×
●	0839 61 963C	Bolt, Pulley	1	Car No. 55667 7/2 ~ △
10	99806 1035	Bolt, Pulley	1	Car No. 52326 7/1 ~ Discarded
	99952 1000	Plain Washer	1	
	99971 1000	Spring Washer	1	
11	0839 61 964	Dust Seal	1	

CAR COOLER (R.H.D.)

No.	Part Number	Description	Q'ty	Remarks
12	0839 61 965	Dust Seal	1	
● Ⓝ	0839 61 967	Shaft-Adjust	1	Car No. 52327 ~ Added Anew
● Ⓝ	0839 61 968	Spacer	1	Car No. 52327 ~ Added Anew
13	0839 61 966	Bolt	1	
●	0839 61 966A	Bolt	1	Car No. 52327 ~ ×
14	99926 1400	Nut, Bracket No. 1 & Bracket No. 2	1	Car No. 52326 ~ Discarded
	99971 1400	Spring Washer	1	Car No. 52326 ~ Discarded
15	0839 61 975A	Pulley	1	
●	0839 61 975B	Pulley	1	Car No. 52327 ~ ○
●	0839 61 975C	Pulley	1	Car No. 55667 ~ △
16	0839 61 976	"V" Belt	1	
17	0839 61 980	Cooling Fan	1	
●	0842 15 200	Cooling Fan	1	Car No. 52327 ~ ×
18	99852 0645	Stud	4	
●	99852 0632	Stud	4	Car No. 52327 ~ ○
19	99906 0600	Nut	4	
	99971 0600	Spring Washer	4	
20	99906 0600	Nut, Cooling Fan	6	
	99971 0600	Spring Washer	6	
●	99951 0618	Plain Washer	6	Car No. 52327 ~ Added Anew
21	99859 1025	Stud	1	
22	99859 1055	Stud	2	
	99859 1050	Stud	2	Car No. 24191 ~ ○
● 23	99921 1000	Nut	4	Car No. 52327 ~ Quantity
●	99971 1000	Spring Washer	4	Car No. 52327 ~ Quantity
● 24	0820 78 756A	Adjust Screw	1	Car No. 52326 ~ Discarded
● 25	0820 78 757	Lock Nut	1	Car No. 52326 ~ Discarded
26	0839 61 771	Stay	1	Car No. 33038 ~ Discarded
27	0839 61 772	Clip	1	Car No. 33038 ~ Discarded
28	908346 4 10	Set Screw	1	Car No. 33038 ~ Discarded
29	99797 0812	Bolt, Stay	1	Car No. 33038 ~ Discarded
	99952 0800	Plain Washer	1	Car No. 33038 ~ Discarded
	99971 0800	Spring Washer	1	Car No. 33038 ~ Discarded

No.	Part Number	Description	Q'ty	Remarks
30	99806 0832	Bolt	4	
	99952 0800	Plain Washer	4	
	99971 0800	Spring Washer	4	
31	0839 61 790B	Condenser Ass'y	1	
32	0839 61 815	Seal Rubber	1	
33	0839 61 816	Sealer	1	
34	0839 61 817	Seal Rubber	2	
35	0193 53 462	Fastener	6	
	99953 0600	Plain Washer	6	
●	99801 0825	Bolt	2	Car No. 52327 7/1 ~ Added Anew
●	99971 0800	Washer-Spring	2	Car No. 52327 7/1 ~ Added Anew
	0839 61 800	LIQUID TANK Ass'y	1	
36	0305 61 801	Tank	1	
37	0839 61 802	Bracket	1	
38	99797 0616	Bolt	2	
	99952 0600	Spring Washer	2	
	99971 0600	Spring Washer	2	
39	99799 0620	Bolt	2	
	99906 0600	Nut	1	
	99952 0600	Plain Washer	2	
	99971 0600	Spring Washer	2	
40	0839 61 811	Flexible Hose No.3	1	
41	0839 61 812A	Flexible Hose No.4	1	
42	0303 61 813	Pipe	1	

CAR COOLER (R.H.D.)

No.	Part Number	Description	Q'ty	Remarks
43	0305 61 819	Vacuum Hose	1	
44	0305 61 824	Insulator	1	
45	0305 61 825	Clip No. I	1	
46	0305 61 826	Clip No.2	1	
47	0305 61 828	Packing	1	
48	0305 61 829	Check Valve	1	
49	0305 61 830	Condenser	1	
50	0305 61 850A	Idle Switch	1	
51	0305 61 901	Sealer	1	
52	0839 61 907A	Wire Harness	1	
●	0305 61 907A	Wire Harness	1	Car No. 61926 7/3 ~ ○
53	0839 61 910	Compressor Ass'y	1	
54	0235 79 380	Relay, Cooler	1	
55	908636 6 12	Set Screw	1	
56	908636 5 16	Set Screw, Idle Switch	2	
57	99797 0612	Bolt, Condenser	4	
	99952 0600	Plain Washer	4	
	99971 0600	Spring Washer	4	
58	99799 0512	Bolt, Clip No. I & No.2	2	
	99906 0500	Nut	2	
	99952 0500	Plain Washer	2	
	99971 0500	Spring Washer	2	
59	0305 61 821	Grommet "L"	1	
60	0305 61 851	Bracket (R)	1	
61	0305 61 852	Bracket (L)	1	
62	99797 0616	Bolt, Bracket	4	
	99799 0616	Bolt	2	

No.	Part Number	Description	Q'ty	Remarks
	99952 0600	Plain Washer	7	Car No. 24191 ~ Q'ty
	99971 0600	Spring Washer	7	Car No. 24191 ~ Q'ty
63	0305 61 853A	Stay	1	
64	0305 61 859	Thermo Switch	1	
65	99797 0408	Bolt, Thermo Switch	2	
	99952 0400	Plain Washer	2	
	99971 0400	Spring Washer	2	
66	0305 61 860	Control Ass'y	1	
67	99799 0512	Bolt, Control	3	
	99952 0500	Plain Washer	3	
	99971 0500	Spring Washer	3	
68	0305 61 862	Cover	1	
69	908386 5 10B	Set Screw	2	
70	0305 76 727	Spring	1	Car No. 21790 ~ Discarded
	0305 61 881	Spring	1	Car No. 21791 ~ Added Anew
71	0305 61 888	Drain Hose	1	
72	0305 61 889	Lever	1	
	0305 61 889A	Lever	1	Car No. 21791 ~ O
73	0305 61 890	Clip	1	
74	99860 0510	Tapping Screw, Clip	1	
	99952 0500	Plain Washer	1	
	99971 0500	Spring Washer	1	
75	908636 4 12	Set Screw	1	
76	0223 78 861	Grommet No. I	1	
77	0223 78 865	Grommet No.4	1	
78	0223 78 876	Clip	1	
79	0303 61 840	Cooling Unit, With Console Box	1	
	0305 61 840	Cooling Unit, Without Console Box	1	

CAR COOLER (R.H.D.)

No.	Part Number	Description		Q'ty	Remarks
80	0305 61 842	Cooler Switch		1	
81	99799 0408	Bolt	Without Console Box	2	
	99952 0400	Plain Washer		2	
	99971 0400	Spring Washer		2	
82	0305 61 854	Duct		1	
83	0305 61 855	Clip		1	
84	0305 61 856	Vacuum Tank		1	
●	0305 61 856A	Vacuum Tank		1	Car No. 64229 7/3 ~ ○
85	908347 4 16	Set Screw, Clip		1	
	99906 0400	Nut		1	
	99952 0412	Plain Washer		1	
86	0303 61 771A	Stay No. I		1	
87	0303 61 772	Stay No.2		1	
88	0303 61 773	Cover, Ash Tray		1	
89	0303 61 774	Stay No.3		1	
90	0303 61 775	Set Screw		2	
	0305 61 861	Diode		1	Car No. 24191 7/8 ~ Added Anew
	0305 61 871	Relay		1	
	0305 61 872	Wire Harness		1	
	99860 0608	Screw		1	
	0303 61 780A	**CONSOLE Ass'y**		1	
91	0303 76 702	Packing		1	
92	0303 76 703	Lamp & Switch		1	
93	0303 76 704	Speed Nut		2	
94	0305 76 704	Knob		1	
95	0303 76 705	Knob		1	
96	0820 68 180	Ash Tray		1	
97	908697 4 16	Set Screw		6	
98	99831 0412B	Screw		2	

No.	Part Number	Description	Q'ty	Remarks
99	908386 4 10	Set Screw	2	
100	908634 4 12	Set Screw	2	
101	0233 78 834	Freon	4	
102	0839 60 830A	Ventilation Hose	1	
103	0839 60 831	Clip, Ventilation Hose	1	
104	99864 0510	Screw, Clip	1	
105	0305 61 140C	Blower Ass'y	1	
106	99799 0630	Bolt, Blower	2	
	99952 0618	Plain Washer	2	
	99971 060C	Spring Washer	2	
107	99906 0600	Nut, Blower	2	
	99952 0600	Plain Washer	2	
108	0305 61 232	Defroster (R)	1	
109	0305 61 233	Defroster (L)	1	
110	2828 61 780	Duct Ass'y	1	
111	99906 0600	Nut, Duct	3	
	99952 0618	Plain Washer	3	
	99971 0600	Spring Washer	3	
112	2850 61 771	Ornament	1	
113	2828 61 790	Control Ass'y	1	
114	99797 0510	Bolt, Control	1	
	99952 0500	Plain Washer	1	
	99971 0500	Spring Washer	1	
115	99906 0500	Nut, Control	2	

No.	Part Number	Description	Q'ty	Remarks
	99952 0500	Plain Washer	2	
	99971 0500	Spring Washer	2	
116	908687 4 16B	Set Screw	2	

CAR COOLER (L. H. D.)

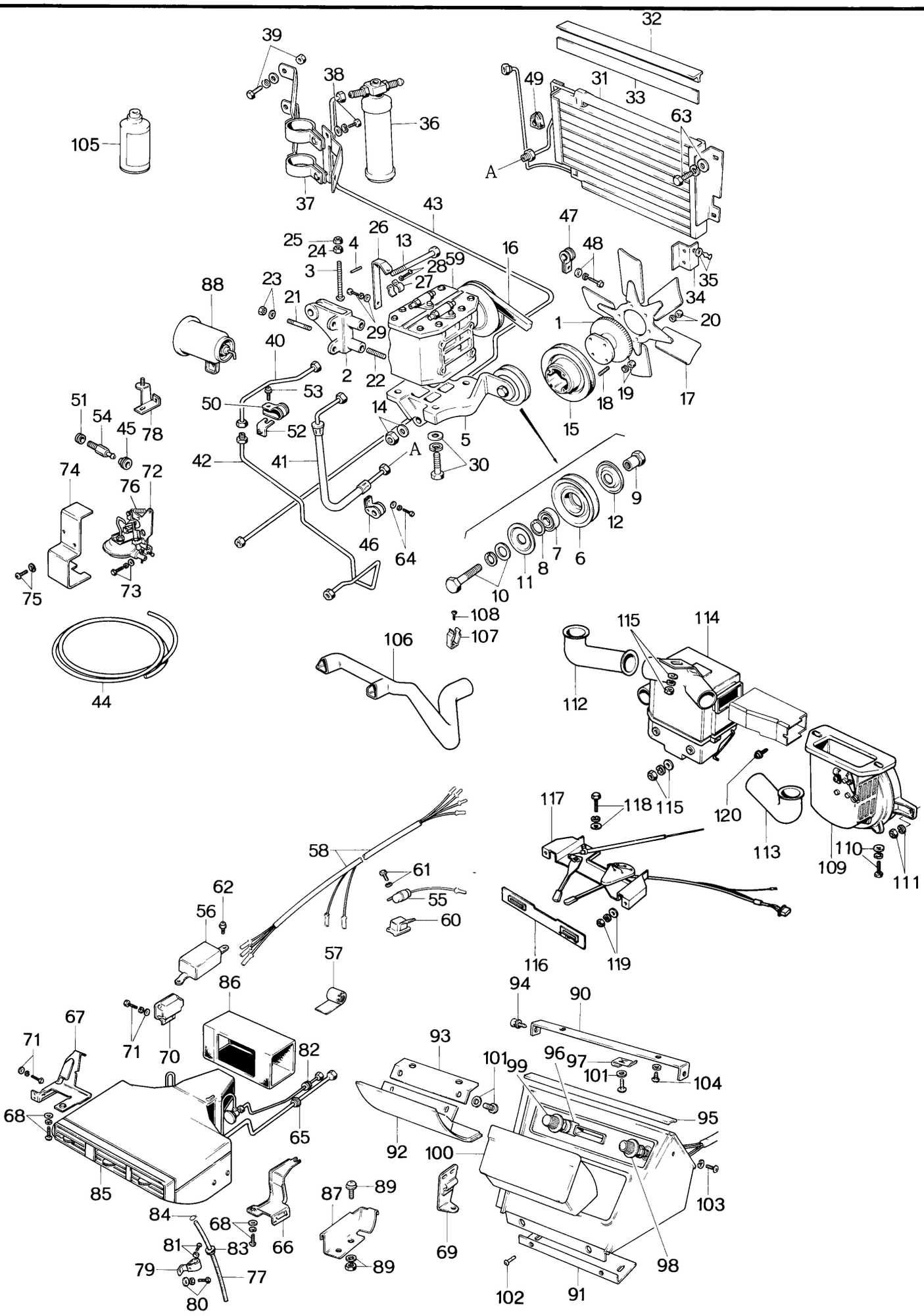

No.	Part Number	Description	Q'ty	Remarks
	2075 61 710A	AIR CONDITIONER, With Car Heater	1	
	2080 61 710A	CAR COOLER SET	1	
1	0823 15 210A	Fan Drive Ass'y	1	
●	2090 15 210	Fan Drive Ass'y	1	Car No. 52327 ～ ×
	0839 61 950A	COMPRESSOR BRACKET Ass'y No. 1	1	
●	0839 61 950B	COMPRESSOR BRACKET Ass'y No. 1	1	Car No. 52327 ～ ×
2	0839 61 951A	Bracket	1	
●	0839 61 951B	Bracket	1	Car No. 52327 ～ ×
3	0839 61 952	Adjust Bolt	1	
●	0839 61 952A	Adjust Bolt	1	Car No. 52327 ～ ×
4	0820 78 753B	Pin	1	
●	0839 61 968	Spacer	1	Car No. 52326 ～ Added Anew
●	99856 1040	Stud	1	Car No. 52326 ～ Added Anew
5	0839 61 960A	COMPRESSOR BRACKET Ass'y No. 2	1	
●	0839 61 960B	COMPRESSOR BRACKET Ass'y No. 2 Fig. No. 6～12 included	1	Car No. 52327 ～ ×
6	0839 61 970	IDLE PULLEY Ass'y	1	
●	0839 61 970A	IDLE PULLEY Ass'y	1	Car No. 52327 ～ ×
7	0208 78 736	Ball Bearing	1	
8	99574 4700	Snap Ring	1	
● Ⓝ	0839 61 967	Shaft-Adjust	1	Car No. 52327 ～ Added Anew
● Ⓝ	0839 61 968	Spacer	1	Car No. 52327 ～ Added Anew
9	0839 61 963A	Bolt, Pulley	1	
●	0839 61 963B	Bolt, Pulley	1	Car No. 52327 ～ ×
●	0839 61 963C	Bolt, Pulley	1	Car No. 52327 ～ △
● 10	99806 1035	Bolt, Pulley	1	Car No. 52326 ～ Discarded
●	99952 1000	Plain Washer	1	Car No. 52326 ～ Discarded
●	99971 .300	Spring Washer	1	Car No. 52326 ～ Discarded
11	0839 61 964	Dust Seal	1	
12	0839 61 965	Dust Seal	1	
13	0839 61 966	Bolt	1	
●	0839 61 966A	Bolt	1	Car No. 52327 ～ ×

CAR COOLER (L.H.D.)

No.	Part Number	Description	Q'ty	Remarks
● 14	99926 1400	Nut, Bracket No. 1 & No. 2	1	Car No. 52326 ~ Discarded
●	99971 1400	Spring Washer	1	Car No. 52326 ~ Discarded
15	0839 61 975A	Pulley	1	
●	0839 61 975B	Pulley	1	Car No. 52327 ~ ○
●	0839 61 975C	Pulley	1	Car No. 55667 ~ △
16	0839 61 976	"V" Belt	1	
17	0839 61 980	Cooling Fan	1	
●	0842 15 200	Cooling Fan	1	Car No. 52327 ~ ×
18	99852 0645	Stud	4	
●	99852 0635	Stud	4	Car No. 52327 ~ ×
19	99906 0600	Nut	4	
	99971 0600	Spring Washer	4	
20	99906 0600	Nut, Cooling Fan	6	
	99971 0600	Spring Washer	6	
●	99951 0618	Plain Washer	6	Car No. 52327 ~ Added Anew
21	99859 1025	Stud	1	
22	99859 1055	Stud	2	
● 23	99921 1000	Nut	4	Car No. 52327 ~ Quantity
	99971 1000	Spring Washer	4	Car No. 52327 ~ Quantity
● 24	0820 78 756A	Adjust Screw	1	Car No. 52326 ~ Discarded
● 25	0820 78 757	Lock Nut	1	Car No. 52326 ~ Discarded
26	0839 61 771	Stay	1	Car No. 33038 ~ Discarded
27	0839 61 772	Clip	1	Car No. 33038 ~ Discarded
28	908346 4 10	Set Screw	1	Car No. 33038 ~ Discarded
29	99797 0812	Bolt, Stay	1	Car No. 33038 ~ Discarded
	99952 0800	Plain Washer	1	Car No. 33038 ~ Discarded
	99971 0800	Spring Washer	1	Car No. 33038 ~ Discarded
30	99797 0835	Bolt	4	
	99952 0800	Plain Washer	3	
	99971 0800	Spring Washer	3	
31	0839 61 790B	Condenser	1	

No.	Part Number	Description	Q'ty	Remarks
32	0839 61 815	Seal Rubber	1	
33	0839 61 816	Sealer	1	
34	0839 61 817	Seal Rubber	2	
35	0193 53 462	Fastener	6	
	99953 0600	Plain Washer	6	
●	9980 10 825	Bolt	2	Car No. 52327 7/1 ~ Added Anew
●	99971 0800	Spring Washer	2	Car No. 52327 7/1 ~ Added Anew
	0839 61 800	**LIQUID TANK Ass'y**	1	
36	0305 61 801	Tank	1	
37	0839 61 802	Bracket	1	
38	99797 0616	Bolt	2	
	99952 0600	Plain Washer	2	
	99971 0600	Spring Washer	2	
39	99799 0620	Bolt	2	
	99906 0600	Nut	1	
	99952 0600	Plain Washer	2	
	99971 0600	Spring Washer	2	
40	2080 61 811	Flexible Hose	1	
	2080 61 811A	Flexible Hose	1	Car No. 40001 7/12 ~ ○
41	0839 61 812A	Flexible Hose	1	
42	2080 61 812	Pipe No. 1	1	
	2080 61 812A	Pipe No. 1	1	Car No. 33038 7/10 ~ ×
●	2080 61 812B	Pipe No. 1	1	Car No. 45686 7/12 ~ ○
43	2080 61 813	Pipe No. 2	1	
	2080 61 813A	Pipe No. 2	1	Car No. 33038 7/10 ~ ×
●	2080 61 813B	Pipe No. 2	1	Car No. 45686 7/12 ~ ○
44	0305 61 819	Vacuum Hose	1	
45	0305 61 824	Grommet	1	
46	0305 61 825	Clip No. 1	1	

No.	Part Number	Description	Q'ty	Remarks
47	2080 61 825	Clip	2	Car No. 33038 7/10~ Q'ty
48	99860 0512	Bolt, Clip	1	Car No. 33038 7/10~ Added Anew
	99952 0500	Plain Washer	1	Car No. 33038 7/10~ Added Anew
	99971 0500	Spring Washer	1	Car No. 33038 7/10~ Added Anew
49	0305 61 827	Protector	2	
50	2080 61 827	Clip	1	
	2080 61 827A	Clip	1	Car No. 40001 7/12~ ○
51	0305 61 828	Packing	1	
52	2080 61 828	Bracket	1	
53	908337 5 12	Set Bolt, Clip	1	
54	0305 61 829	Check Valve	1	
55	0305 61 830	Condenser	1	
56	0305 61 850A	Idle Switch	1	
57	0305 61 901	Sealer	1	
58	2846 61 907	Wire Harness	1	
●	2835 61 907	Wire Harness	1	Car No. 61926 7/13~ ○
59	0839 61 910	Compressor	1	
60	0235 79 380	Relay, Cooler	1	
61	908636 6 12	Set Screw	1	
62	908636 5 16	Set Screw, Idle Switch	2	
63	99797 0612	Bolt, Condenser	4	
	99952 0600	Plain Washer	4	
	99971 0600	Spring Washer	4	
64	99799 0512	Bolt, Clip No. 1 & No. 2	2	
	99906 0500	Nut	2	
	99952 0500	Plain Washer	2	
	99971 0500	Spring Washer	2	
65	0305 61 821	Grommet "L"	1	

No.	Part Number	Description	Q'ty	Remarks
66	2835 61 851	Bracket (R)	1	
67	2835 61 852	Bracket (L)	1	
68	99799 0616	Bolt, Bracket	6	
	99952 0600	Plain Washer	6	
	99971 0600	Spring Washer	6	
69	2835 61 853	Stay	1	
70	2835 61 859	Thermo Switch	1	
71	99797 0408	Bolt, Thermo Switch	2	
	99952 0400	Plain Washer	2	
	99971 0400	Spring Washer	2	
72	2835 61 860	Control	1	
73	99799 0512	Bolt, Control	3	
	99952 0500	Plain Washer	3	
	99971 0500	Spring Washer	3	
74	2835 61 862	Cover	1	
75	908386 5 10B	Set Screw	2	
76	2835 61 881	Spring	1	
77	0305 61 888	Drain Hose	1	
78	2835 61 889A	Lever	1	
79	0305 61 890	Clip	1	
80	99860 0510	Tapping Screw, Clip	2	Car No. 24191 ~ Q'ty
	99952 0500	Plain Washer	2	Car No. 24191 ~ Q'ty
	99971 0500	Spring Washer	2	Car No. 24191 ~ Q'ty
81	908636 4 12	Set Screw	1	
82	0223 78 861	Grommet No. 1	1	
83	0223 78 865	Grommet No. 4	1	

CAR COOLER (L.H.D.)

No.	Part Number	Description	Q'ty	Remarks
84	0223 78 876	Clip	1	
85	2840 61 840	Cooling Unit	1	
86	2835 61 854	Duct	1	
87	2835 61 855	Clip	1	
88	0305 61 856A	Vacuum Tank	1	
	2835 61 856	Vacuum Tank	1	Car No. 32016 70/10 ~ ○
●	0305 61 856A	Vacuum Tank	1	Car No. 64229 71/3 ~ ×
	99906 0400	Nut	1	
	99952 0412	Plain Washer	1	
90	0303 61 771A	Stay No. 1	1	
91	0303 61 772	Stay No. 2	1	
92	0303 61 773	Cover, Ash Tray	1	
93	0303 61 774	Stay No. 3	1	
94	0303 61 775	Set Screw	2	
Ⓝ	0305 61 861	Diode	1	Car No. 24191 79/9 ~ Added Anev
	0305 61 871	Relay	1	
	0305 61 872	Wire-Harness	1	
	0303 61 780A	CONSOLE Ass'y Fig. No. 95~104 included	1	
95	0303 76 702	Packing	1	
96	0303 76 703	Lamp & Switch	1	
97	0303 76 704	Speed Nut	2	
98	0305 76 704	Knob	1	
99	0303 76 705	Knob	1	
100	0820 68 180	Ash Tray	1	
101	908697 4 16	Set Screw	6	
102	99831 0412B	Screw	2	
103	908386 4 10	Set Screw	2	
104	908634 4 12	Tapping Screw	2	

No.	Part Number	Description	Q'ty	Remarks
105	0233 78 834	Freon	1	
106	2846 60 830	Ventilation Hose	1	
107	0839 61 831	Clip	1	
108	99864 0510	Screw	1	
109	2835 61 140	Blower	1	
110	99799 0630	Bolt, Blower	2	
	99952 0600	Plain Washer	2	
	99971 0600	Spring Washer	2	
111	99906 0600	Nut, Blower	2	
	99952 0618	Plain Washer	2	
112	0305 61 233	Defroster Hose	1	
113	2835 61 233	Defroster Hose	1	
114	2850 61 780	Duct	1	
115	99906 0600	Nut, Duct	3	
	99952 0618	Plain Washer	3	
	99971 0600	Spring Washer	3	
116	2850 61 771	Ornament	1	
117	2850 61 790	Control Ass'y	1	
118	99797 0510	Bolt	1	
	99952 0500	Plain Washer	1	
	99971 0500	Spring Washer	1	
119	99906 0500	Nut, Control	1	
	99952 0500	Plain Washer	1	
	99971 0500	Spring Washer	1	
120	908687 4 16B	Set Screw	1	

CONTROL & COOLING UNIT

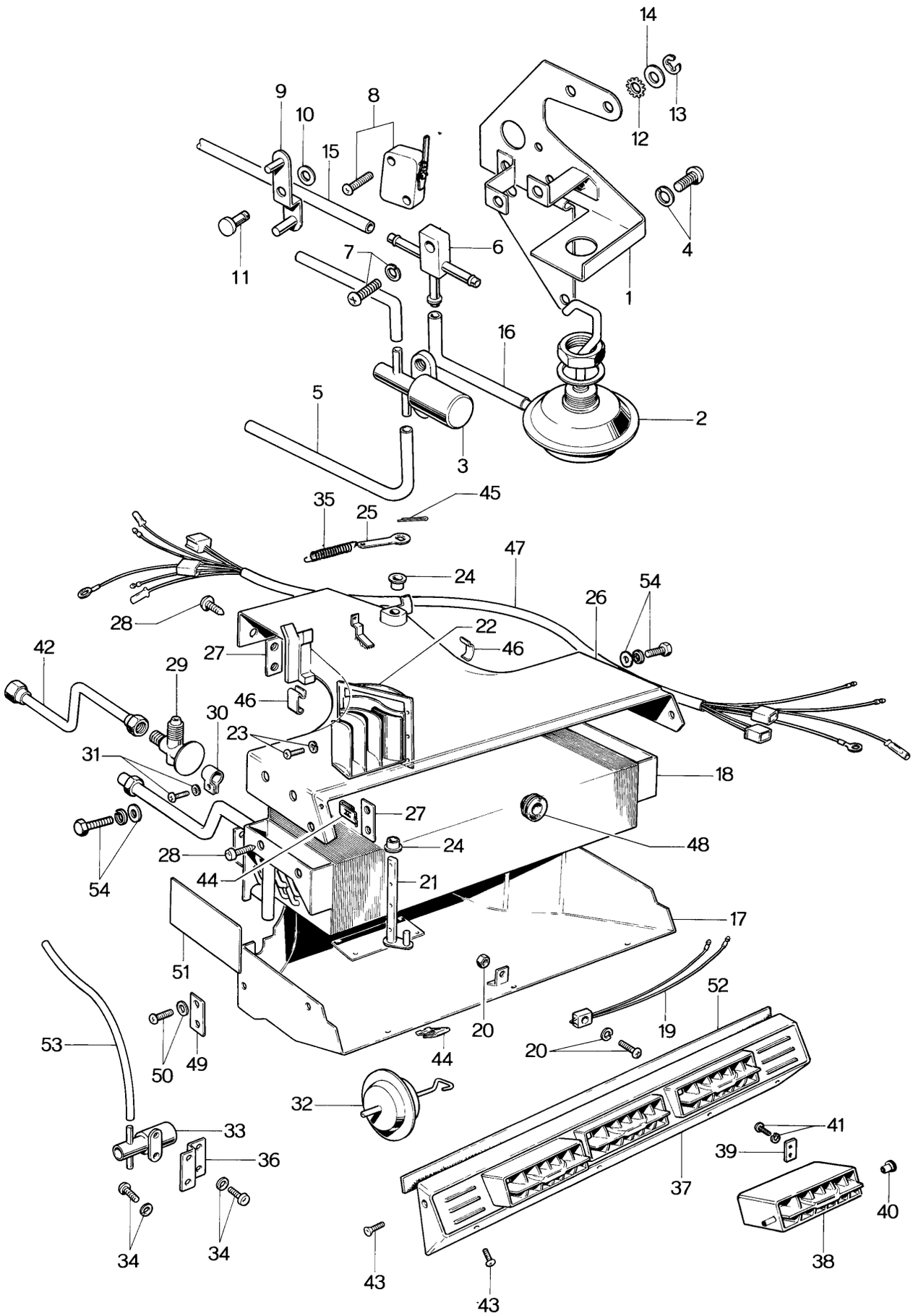

CONTROL & COOLING UNIT 61 76

No.	Part Number	Description	Q'ty	Remarks
	0305 61 860	CONTROL Ass'y (R.H.D.)	1	
	2835 61 860	CONTROL Ass'y (L.H.D.)	1	
1	0305 76 721	Bracket (R.H.D.)	1	
	2835 76 721	Bracket (L.H.D.)	1	
2	0305 76 722	Diaphragm	1	
3	0305 76 723	Vacuum Switch	1	
4	99864 0508	Tapping Screw	2	
	99971 0500	Spring Washer	2	
5	0305 76 724	Vacuum Hose	1	
6	0305 76 725	Three Way Joint	1	
7	99864 0412	Tapping Screw	1	
	99971 0400	Spring Washer	1	
8	0305 76 726	Switch (R.H.D.)	1	
	2835 76 726	Switch (L.H.D.)	1	
9	0305 76 728	Lever (R.H.D.)	1	
	2835 76 728	Lever (L.H.D.)	1	
10	0305 76 731	Washer	1	
11	0305 76 732	Pin	1	
12	0305 76 733	Spring	1	
13	0305 76 734	Snap Ring	1	
14	0305 76 735	Washer	1	
15	0305 76 729	Vacuum Hose	1	
16	0305 76 730	Vacuum Hose	1	

61 76 CONTROL & COOLING UNIT

No.	Part Number	Description	Q'ty	Remarks
	0303 61 840	COOLING UNIT (R.H.D.), With Console	1	
	0305 61 840	COOLING UNIT (L.H.D.)	1	
	2835 61 840	COOLING UNIT (R.H.D.)	1	
	2840 61 840	COOLING UNIT (L.H.D.), With Console	1	
17	0305 76 801	Case Lower (R.H.D.)	1	
	2835 76 801	Case Lower (L.H.D.)	1	
18	0305 76 802	Evaporator (R.H.D.)	1	
	2835 76 802	Evaporator (L.H.D.)	1	
19	0305 76 803	Sender	1	
20	99835 0414	Screw, Sender	1	
	99906 0400	Nut	1	
	99971 0400	Spring Washer	1	
21	0305 76 804	Shaft (R.H.D.)	1	
	2835 76 804	Shaft (L.H.D.)	1	
22	0305 76 805	Air Valve (R.H.D.)	1	
	2835 76 805	Air Valve (L.H.D.)	1	
23	99835 0308	Screw, Air Valve	3	
	99971 0300	Spring Washer	3	
24	0305 76 806	Bearing	2	
25	0305 76 807	Lever (R.H.D.)	1	
	2835 76 807	Lever (L.H.D.)	1	
26	0305 76 808	Case Upper (R.H.D.)	1	
	2835 76 808	Case Upper (L.H.D.)	1	
27	0305 76 809	Plate Nut	3	
28	99836 0410	Screw, Plate Nut	6	
29	0305 76 810	Valve	1	

No.	Part Number	Description	Q'ty	Remarks
30	0305 76 811	Clip	1	
31	99835 0516	Screw, Clip	1	
	99952 0500	Plain Washer	1	
32	0305 76 722	Diaphragm	1	
33	0305 76 723	Vacuum Switch	1	
34	99835 0508	Screw, Switch	4	
	99971 0500	Spring Washer	4	
35	0305 76 727	Spring	1	
36	0305 76 812	Bracket	1	
37	0303 76 813	Frame , With Console	1	
	0305 76 813	Frame	1	
38	0305 76 814	Grill Ass'y	3	
39	0305 76 815	Plate	6	
40	0305 76 816	Bush	6	
41	99835 0408	Screw, Plate	12	
	99971 0400	Spring Washer	12	
42	0305 76 817	Connector (R.H.D.)	1	
	2835 76 817	Connector (L.H.D.)	1	
43	99836 0410	Screw, Frame	5	
44	0305 76 818	Speed Nut	5	
45	0305 76 819	Pin	2	
46	0305 76 820	Clamp	4	
47	0305 76 821	Wire (R.H.D.)	1	
	2835 76 821	Wire (L.H.D.)	1	
48	0305 76 822	Grommet	1	
49	0305 76 823	Clip	2	

No.	Part Number	Description	Q'ty	Remarks
50	0305 76 825	Screw, Clip	2	
	0305 76 826	Washer	2	
51	0305 76 824	Tape	6	
52	0305 76 827	Packing	1	
53	0305 76 828	Vacuum Hose	1	
54	99799 0616	Screw	4	
	99952 0600	Plain Washer	4	
	99971 0600	Spring Washer	4	

LAMPS (FRONT SIDE)

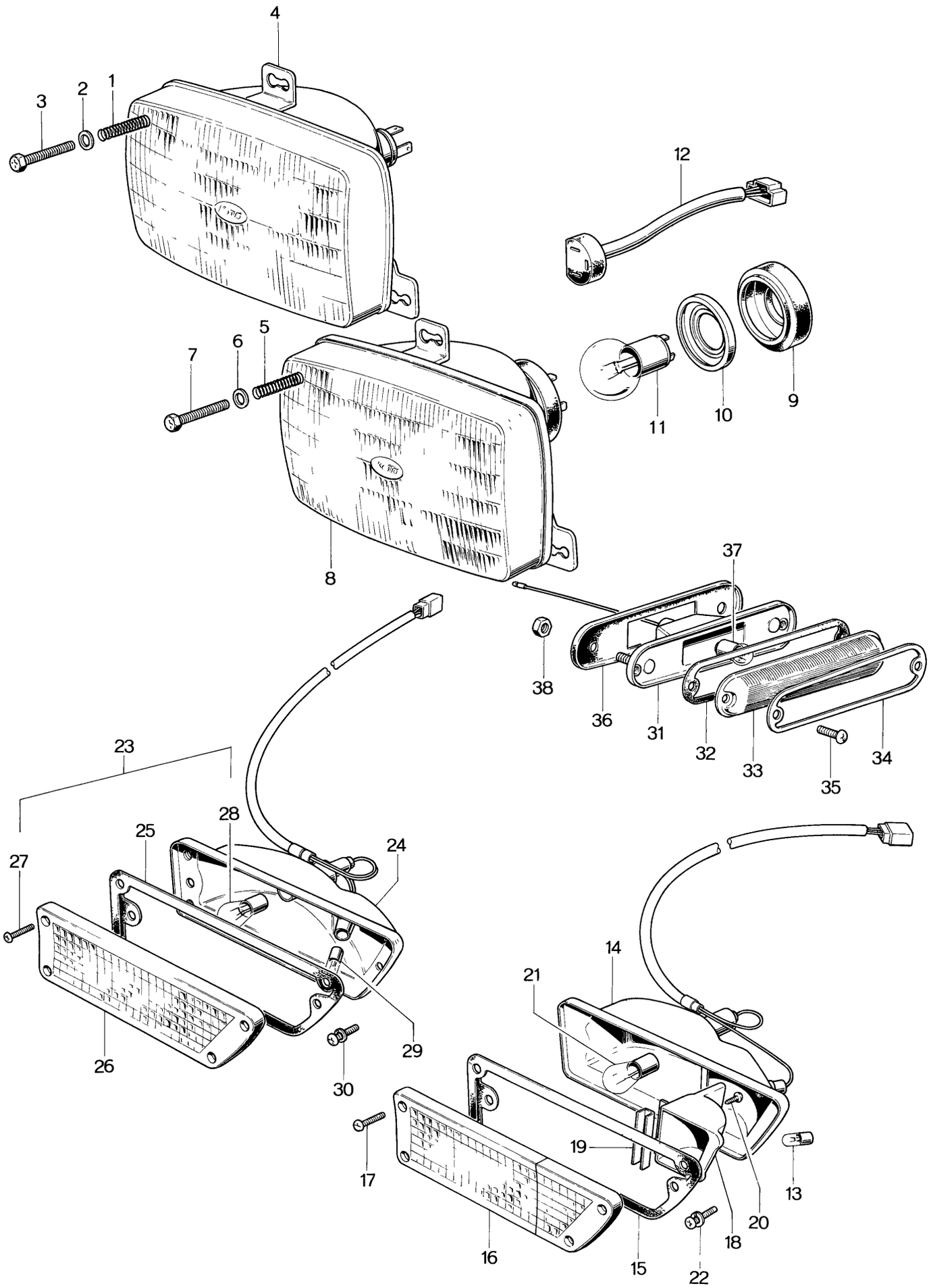

No.	Part Number	Description	Q'ty	Remarks
	0305 66 030	HEAD LAMP (R.H.D.)	2	Sealed Beam Type
	2836 66 030	HEAD LAMP (L.H.D.)	2	
1	0259 66 016	Spring	6	
2	0248 66 028	Holder	6	
3	0305 87 001	Adjust Screw	6	
4	0305 87 010	Head Lamp Unit (R.H.D.)	2	
	2836 87 010	Head Lamp Unit (L.H.D.)	2	
	2835 66 030	HEAD LAMP For France Bulb Amber	2	Semi-Sealed Beam Type
	2837 66 030	HEAD LAMP (L.H.D.) Bulb White	2	
	2837 66 030A	HEAD LAMP (L.H.D.) Bulb White	2	Car No. 24191 ~ ○
5	0259 66 016	Spring	6	
6	0248 66 028	Holder	6	
7	0305 87 001	Adjust Screw	6	
8	2835 87 010	Head Lamp Unit Bulb Amber	2	
	2837 87 010	Head Lamp Unit Bulb White	2	
9	2835 87 003	Cover	2	
10	2835 87 005	Bulb Holder	2	
11	2277 66 045	Bulb, Amber	2	
	2288 66 045	Bulb, White	2	
12	2835 67 160	Head Lamp Cord	2	

LAMPS (FRONT SIDE)

No.	Part Number	Description	Q'ty	Remarks
	2835 66 110	FRONT TURN SIGNAL LAMP (R) White & Amber Lens	1	
	2835 66 140	FRONT TURN SIGNAL LAMP (L) White & Amber Lens	1	
13	2835 87 001	Valve 4 W	2	
14	2835 87 002	Body (R)	1	
	2835 87 006	Body (L)	1	
15	0305 87 003	Packing (R)	1	
	0305 87 007	Packing (L)	1	
16	2835 87 004	Lens (R)	1	
	2835 87 008	Lens (L)	1	
17	0305 87 005	Screw	8	
18	2835 87 012	Case (R)	1	
	2835 87 014	Case (L)	1	
19	2835 87 011	Shade	2	
20	2835 87 013	Screw	2	
21	99701 3210	Bulb 21W	2	
22	907436 5 16	Set Screw, Front Turn Signal Lamp	4	

No.	Part Number	Description	Q'ty	Remarks
30	907436 5 16	Set Screw, Front Turn Signal Lamp	4	
●	0274 66 480A	SIDE TURN SIGNAL LAMP (R)	1	Order Under 2212 66 480 ☆
●	0274 66 490A	SIDE TURN SIGNAL LAMP (L)	1	Order Under 2212 66 490 ☆
	2212 66 480	SIDE TURN SIGNAL LAMP (R) With Ⓐ Mark, For Austria	1	
	2212 66 490	SIDE TURN SIGNAL LAMP (L) With Ⓐ Mark, For Austria	1	
31	0274 66 191A	Body	2	
	2212 66 191	Body, With Ⓐ Mark	2	
32	0274 87 192	Gasket	2	
33	0274 87 193	Lens	2	
34	0274 87 194	Rim	2	
35	0274 87 195	Screw	4	
36	0274 87 196	Seat Packing (R)	1	
	0274 87 206	Seat Packing (L)	1	
37	99701 1030	Bulb, 3 W	2	
38	99906 0400	Nut, Side Turn Signal Lamp	4	

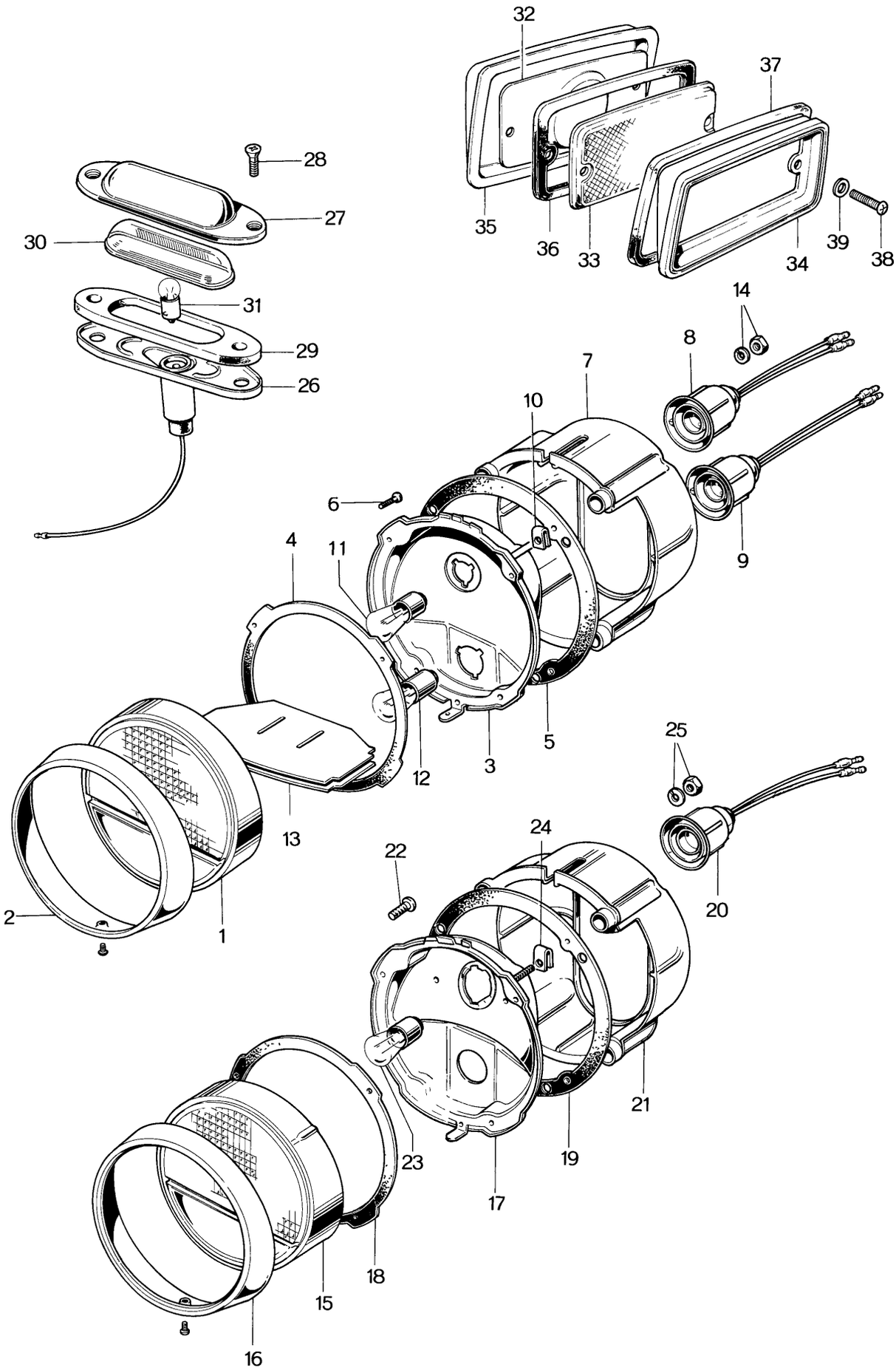
32
37
28
27
30
31
29
26
35
36
33
34
39
38
14
8
7
10
6
4
11
9
5
12
3
13
25
2
1
22
24
20
21
19
23
17
18
15
16

No.	Part Number	Description	Q'ty	Remarks
	2080 66 210	REAR COMBINATION LAMP No.1 R) Lens Tail & Stop Red, Reverse Amber (With (E) Mark & BS2516GRADE 1)	1	For France
	2325 66 130A	REAR COMBINATION LAMP No. 1 (R) Lens Tail & Stop Red, Reverse White (With (E2) Mark)	1	
	2878 66 210	REAR COMBINATION LAMP No. 1 (R) Lens Tail & Stop Red, Reverse White (With (E2) (A) Mark)	1	Car No. 34307 ~ ○
	2080 66 230	REAR COMBINATION LAMP No. 1 (L) Lens Tail & Stop Red, Reverse Amber (With (E) Mark & BS2516GRADE 1)	1	For France
	2325 66 150A	REAR COMBINATION LAMP No. 1 (L) Lens Tail & Stop Red, Reverse White (With (E2) Mark)	1	
	2878 66 230	REAR COMBINATION LAMP No. 1 (L) Lens Tail & Stop Red, Reverse White (With (E2) (A) Mark)	1	Car No. 34307 ~ ○
1	0820 66 131A	Globe, Red & White (R)	1	Car No. 34307 ~ Quantity
	0820 66 151	Globe, Red & White (L)	1	Car No. 34307 ~ Added Anew
	2080 87 001	Globe (R), Red & Amber } For France	1	
	2080 87 002	Globe (L), Red & Amber } For France	1	
2	2113 66 132	Brim (R)	1	
	2113 66 152	Brim (L)	1	
3	2325 66 133	Body, With (E2) Mark	2	
	2878 66 133	Body, With (E2) (A) Mark	2	Car No. 34307 ~ Added Anew
4	0820 66 174	Gasket	2	
5	0820 66 175	Gasket (R)	1	
	0820 66 195	Gasket (L)	1	
6	0820 66 136	Screw	8	
7	0820 66 137	Cover	2	
8	0820 66 138	Socket, Tail & Stop	2	
9	0820 66 159	Socket, Reverse	2	
10	0820 66 139	Earth Clip	2	
11	99701 4215	Bulb, Stop & Tail (E2) Mark & (E) Mark, BS 2516 GRADE 1 use	2	
12	2325 66 157	Bulb, Reverse (E2) Mark use	2	
	99701 8100	Bulb, Reverse (E) Mark & BS2516 GRADE 1 use	2	
13	0820 66 141	Shade	2	
14	99906 0500	Nut, Rear Combination Lamp No. 1	8	

No.	Part Number	Description	Q'ty	Remarks
	99952 0500	Plain Washer	8	
	2080 66 240	REAR COMBINATION LAMP No. 2 (R) Lens Amber & Red	1 1	
●	2080 66 250	REAR COMBINATION LAMP No. 2 (L) Lens Amber & Red	1	
15	2080 87 006	Lens (R), Amber & Red With	1	
	2080 87 007	Lens (L), Amber & Red With	1	
16	2113 66 132	Brim (R)	1	
	2113 66 152	Brim (L)	1	
17	2080 87 003	Body, With	1	
18	0820 66 174	Gasket	1	
19	0820 66 175	Gasket (R)	2	
	0820 66 195	Gasket (L)	1	
20	2080 87 005	Socket, With	1	
21	0820 66 137	Cover	2	
22	0820 66 136	Screw, Lamp Globe	8	
23	99701 3210	Bulb	2	
24	0820 66 139	Earth Clip	2	
25	99906 0500	Nut, Rear Combination Lamp No.2	8	
	99952 0500	Plain Washer	8	

No.	Part Number	Description	Q'ty	Remarks
	0305 66 370	LICENCE LAMP With Ⓐ Mark	1	
●	0305 66 370A	LICENCE LAMP	1	Car No. 36206 ⁷⁰⁄₁₁ ~ ○
26	0305 87 029	Body	1	
27	0305 87 031	Cover	1	
	2837 87 031	Cover, With Ⓐ Mark	1	
28	0305 87 032	Screw	2	
29	0275 87 123	Gasket	1	
30	0275 87 124	Lens	1	
31	99701 2100	Bulb, 12V / 10W	1	
	2830 66 670	REAR SIDE REFLEX REFLECTOR (R)	1	For Australia
	2828 66 920	REAR SIDE GARNISH (R)	1	R.H.D. (England & Australia Excluded)
	2830 66 690	REAR SIDE REFLEX REFLECTOR (L)	1	For Australia
	2828 66 940	REAR SIDE GARNISH (L)	1	R.H.D. (England & Australia Excluded)
32	0305 66 671	Body	2	
33	2244 87 201	Lens, Reflex Reflector (Australia)	2	
	2828 66 922	Lens (General)	2	
34	0305 66 673	Frame (R)	1	
	0305 66 693	Frame (L)	1	
35	0305 66 674	Bracket (R)	1	
	0305 66 694	Bracket (L)	1	
36	0305 66 675	Gasket	2	
37	0305 66 676	Gasket	2	
38	0305 66 677	Screw	4	
39	0305 66 678	Gasket	4	

ELECTRIC EQUIPMENT (BODY)

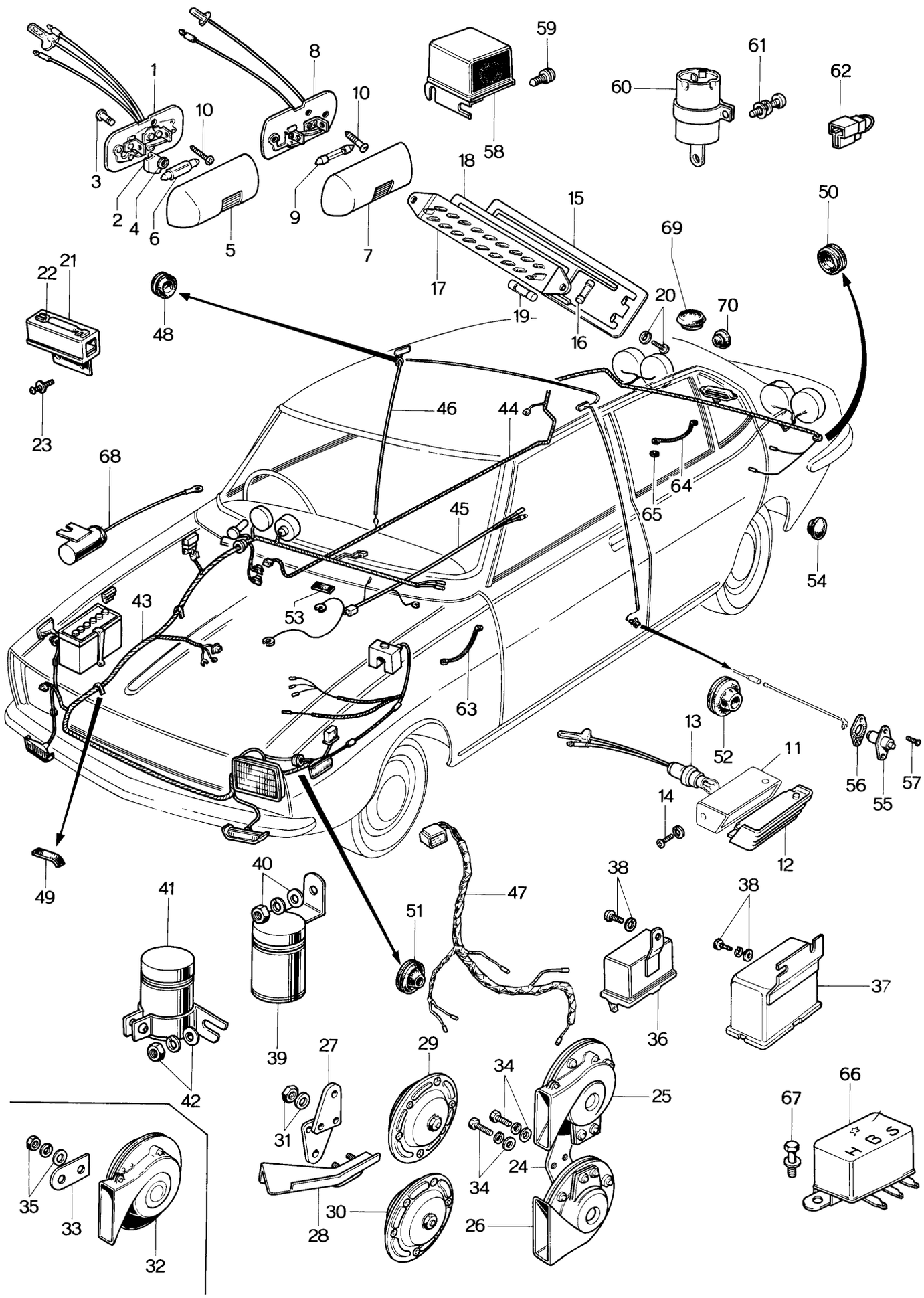

No.	Part Number	Description	Q'ty	Remarks
	0305 66 410	**ROOM LAMP Ass'y**	1	
1	0305 87 033	Base	1	
2	0305 87 034	Handle	1	
3	0305 87 035	Rivet, Handle	1	
4	0305 87 036	"E" Type Stop Ring	1	
5	0223 66 291	Lens	1	
6	99701 5050	Bulb, 5 W	1	
	0305 66 420	**ROOM LAMP Ass'y**	1	
7	0305 87 037	Lens	1	
8	0305 87 038	Base	1	
9	99701 5050	Bulb, 5 W	1	
10	99863 0416	Tapping Screw, Room Lamp	4	
	0305 66 570	**STEP LAMP**	1	
11	0305 66 571	Body	1	
12	0305 66 572	Lens	1	
13	0305 66 580	Bulb & Socket	1	
14	908686 4 12B	Set Screw, Step Lamp	2	

No.	Part Number	Description	Q'ty	Remarks
	0305 66 720	**FUSE BLOCK Ass'y**	1	
15	0305 66 721	Cover	1	©
16	2981 66 495	Fuse, 10A, Spare	1	
	0813 66 498	Fuse, 20A		
17	0305 66 730	**FUSE BLOCK**	1	
18	0305 87 081	Protector	1	
19	2981 66 495	Fuse, 10A	6	
	2981 66 496	Fuse, 15A	1	
	0813 66 498	Fuse, 20A	3	
	0296 87 485	Fuse, 3 A	1	
20	908332 5 16	Set Screw, Fuse Block	2	
21	0305 66 760B	MAIN FUSE BLOCK	1	
●	2852 66 760	MAIN FUSE BLOCK, Arctic Spec. Model	1	Car No. 61926⅞ ~Added Anew
22	0222 66 511A	Fuse, 40A	2	
●	2852 66 763	Fuse, 50A Arctic Spec. Model	2	Car No. 61926⅞ ~Added Anew
23	907436 6 16	Set Screw, Main Fuse Block	2	
~~24~~	~~0305 66 780A~~	~~ELECTRIC HORN Ass'y~~ Vortical Type	~~1~~	
	~~0305 66 781A~~	~~Bracket~~	~~1~~	

No.	Part Number	Description	Q'ty	Remarks
~~25~~	~~0305 66 790~~	~~Horn, High Tone~~ Vortical Type	~~1~~	
~~26~~	~~0305 66 800~~	~~Horn, Low Tone~~ Vortical Type	~~1~~	
	0839 66 790A	**ELECTRIC HORN Ass'y,** Flat Type	1	L.H.D. (Austria, Italy, France & Switzerland Excluded) R.H.D. (2324,2878 Excluded)
	2835 66 780A	**ELECTRIC HORN Ass'y,** Flat Type With (TRAR) Ⓐ Mark For Austria, Italy, France & Switzerland	1	
27	0839 66 791	Bracket No. I	2	
28	0839 66 792A	Bracket No.2	1	
29	0839 67 910	Horn, High Tone, Flat Type	1	
	2835 67 910	Horn, High Tone, Flat Type With (TRAR) Ⓐ Mark For Austria, Italy, France & Switzerland	1	
30	0839 67 920	Horn, Low Tone, Flat Type	1	
	2835 67 920	Horn, Low Tone, Flat Type With (TRAR) Ⓐ Mark For Austria, Italy, France & Switzerland	1	
31	99799 0820	Bolt	2	
	99971 0800	Spring Washer	2	
32	0839 67 900	**ELECTRIC HORN Ass'y,** Vortical Type Triple Horn use	1	2324,2878
33	0839 67 901	Bracket	1	2324,2878
34	99799 0820	Bolt, Horn	2	
	99952 0800	Plain Washer	1	
	99952 0822	Plain Washer	1	
	99971 0800	Spring Washer	2	
35	99906 0600	Nut, Horn	1	
	99952 0600	Plain Washer	1	

No.	Part Number	Description	Q'ty	Remarks
	99971 0600	Spring Washer	1	
36	0259 66 438	Horn Relay	1	
37	0839 66 810A	Horn Relay, Triple Horn use	1	
38	99799 0620	Bolt, Horn Relay	2 1	
	99952 0600	Plain Washer	2 1	
	99971 0600	Spring Washer	2	
39	0820 66 470A	Flasher Unit	1	
40	99906 0600	Nut, Flasher Unit	1	
	99952 0600	Plain Washer	1	
	99971 0600	Spring Washer	1	
41	0223 66 580	Hazard Flasher Unit	1	
42	99906 0600	Nut, Hazard Flasher Unit	1	
	99952 0600	Plain Washer	1	
	99971 0600	Spring Washer	1	
43	0839 67 010F	Wire Harness (Frt.)(R.H.D) With Triple Horn Cord	1	
●	0839 67 010H	Wire Harness (Frt.)(R.H.D.) With Triple Horn Cord	1	Car No. 55667 7/2 ~ ×
	0841 67 010F	Wire Harness (Frt.)(R.H.D.)	1	
●	0841 67 010H	Wire Harness (Frt.)(R.H.D.)	1	Car No. 55667 7/2 ~ ×
	2080 67 010	Wire Harness (Frt.)(L.H.D.)	1	
●	2080 67 010B	Wire Harness (Frt.) (L.H.D.)	1	Car No. 55667 7/2 ~ ×
44	0839 67 030B	Wire Harness (Rr.), Coupe use	1	
	0839 67 030C	Wire Harness (Rr.), Coupe use	1	Car No. 34307 7/11 ~ ×
	0841 67 030C	Wire Harness (Rr.), Sedan use	1	
●	0841 67 030D	Wire Harness (Rr.), All Models	1	Car No. 65342 7/3 ~ ×
45	0187 66 680A	Wire Harness, Back Up Lamp	1	
46	0305 67 080A	Wire Harness, Room Lamp (R.H.D.) Sedan use	1	
	0839 67 080A	Wire Harness, Room Lamp (R.H.D.) Coupe use	1	
	2835 67 080A	Wire Harness (L.H.D.), Room Lamp	1	
● 47	0305 67 090A	Wire Harness, Step Lamp	1	
●	0305 67 090B	Wire Harness, Step Lamp	1	Car No. 52931 7/1 ~ ○
48	0114 43 625	Protector, Room Lamp	2	
49	0208 66 949	Protector Pad	8	

No.	Part Number	Description	Q'ty	Remarks
50	99684 0600	Grommet	1	
51	99684 1000	Grommet	2	
● 52	99684 2000	Grommet	2	Car No. 38157 7/11 ~ Discarded
●	0208 66 949	PAD, Protector	1	Car No. 38158 7/11 ~ Added Anew
53	0305 67 994	Supporter	2	
54	0118 56 241	Drain Plug	1	
55	0209 66 820	Door Switch	2 4	Coupe use Sedan use
56	0209 66 821	Adjust Washer	2 4	Coupe use Sedan use
57	99864 0412	Screw, Door Switch	4 8	Coupe use Sedan use
58	0820 60 870A	Wiper Relay	1	
59	908066 6 16	Set Screw, Wiper Relay	2	
60	0296 67 860A	Lamp Checker Relay	1	
61	908066 6 16	Set Screw, Lamp Checker Relay	1	
62	0304 67 131	Coupler Used for case without Lamp Checker Relay	1	
63	0820 66 731	Earth Wire, Radio	1	
64	0813 66 732A	Earth Wire, Radio	1	
65	99951 0816	Plain Washer	1	
● 66	0275 67 910	Ignition Coil Relay	1	
●	0839 67 870	Ignition Coil Relay	1	Car No. 55667 7/2 ~ ○
67	908066 6 12	Set Bolt, Ignition Coil Relay	2	Car No. 55666 7/2 ~ Discarded
68	0839 66 995	Condenser, Ignition Coil	2	
●	0820 66 992	Condenser, Ignition Coil	1	Car No. 55667 7/2 ~ ○
69	0222 66 911	Hole Cover, Antenna	1	
70	0222 66 971	Hole Cover, Antenna Cord	1	

WINDSHIELD WIPER (R. H. D.)

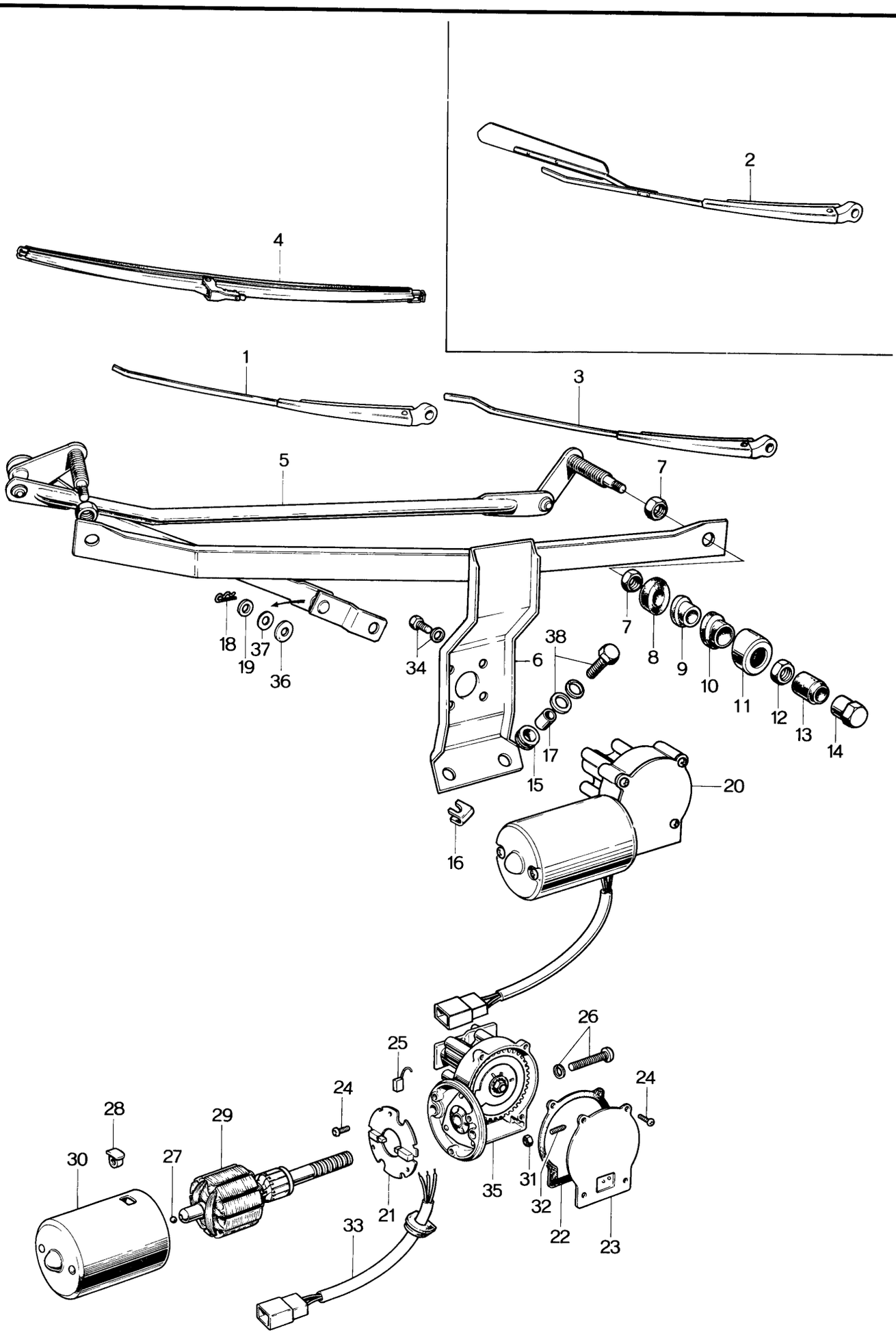

No.	Part Number	Description		Q'ty	Remarks
1	0305 67 321	Wiper Arm (R)	Selective use	1	
2	0839 67 321	Wiper Arm (R), With Fin		1	
3	0305 67 325	Wiper Arm (L)		1	
4	0305 67 330	Wiper Blade		2	
●	0305 67 330A	Wiper Blade		2	Car No. 61926 7/3 ~ ○
	0305 67 340B	**MOTOR AND LINK**		1	
5	0305 87 901	Link		1	
6	0305 87 902	Frame		1	
7	0259 87 134	Nut		4	
8	0305 87 903	Bush, Inner		2	
9	0305 87 904	Packing		2	
10	0305 87 905	Bush, Outer		2	
11	0305 87 906	Cap Washer		2	
12	0212 66 372	Nut		2	
13	0212 66 371	Cap		2	
14	0223 66 371	Nut		2	
15	0305 87 907	Grommet		2	
16	0305 87 908	Earth Plate		1	
17	0305 87 909	Collar		2	
18	0738 87 801	Pin		1	
19	0738 87 802	Washer		1	
20	0305 67 370	**MOTOR**		1	

67 87 WINDSHIELD WIPER (R.H.D.)

No.	Part Number	Description	Q'ty	Remarks
21	0259 87 101A	Plate, Brush Holder	1	
22	0259 87 103	Packing	1	
23	0259 87 104A	End Plate	1	
24	0259 87 105	Screw	7	
25	0259 87 106	Brush	3	
26	0257 87 107	Bolt	2	
	99971 0500	Spring Washer	2	
27	0259 87 107	Ball	2	
28	0257 87 108	Nut	2	
29	0259 87 108A	Rotor	1	
30	0259 87 109A	Yoke	1	
31	0259 87 119	Nut	1	
32	0259 87 120	Screw	1	
33	0305 87 921	Wire Harness	1	
34	99806 0510	Bolt	4	
	99971 0500	Spring Washer	2	
35	0305 87 951	Gear Box	1	
36	0738 87 803	Felt	1	
37	0738 87 804	Plain Washer	1	
38	99799 0625	Bolt, Link	2	
	99952 0618	Plain Washer	2	
●	2850 13 332	Plain Washer	2	Car No. 38158 7/11 ~ O
	99971 0600	Spring Washer	2	

WINDSHIELD WIPER (L. H. D.)

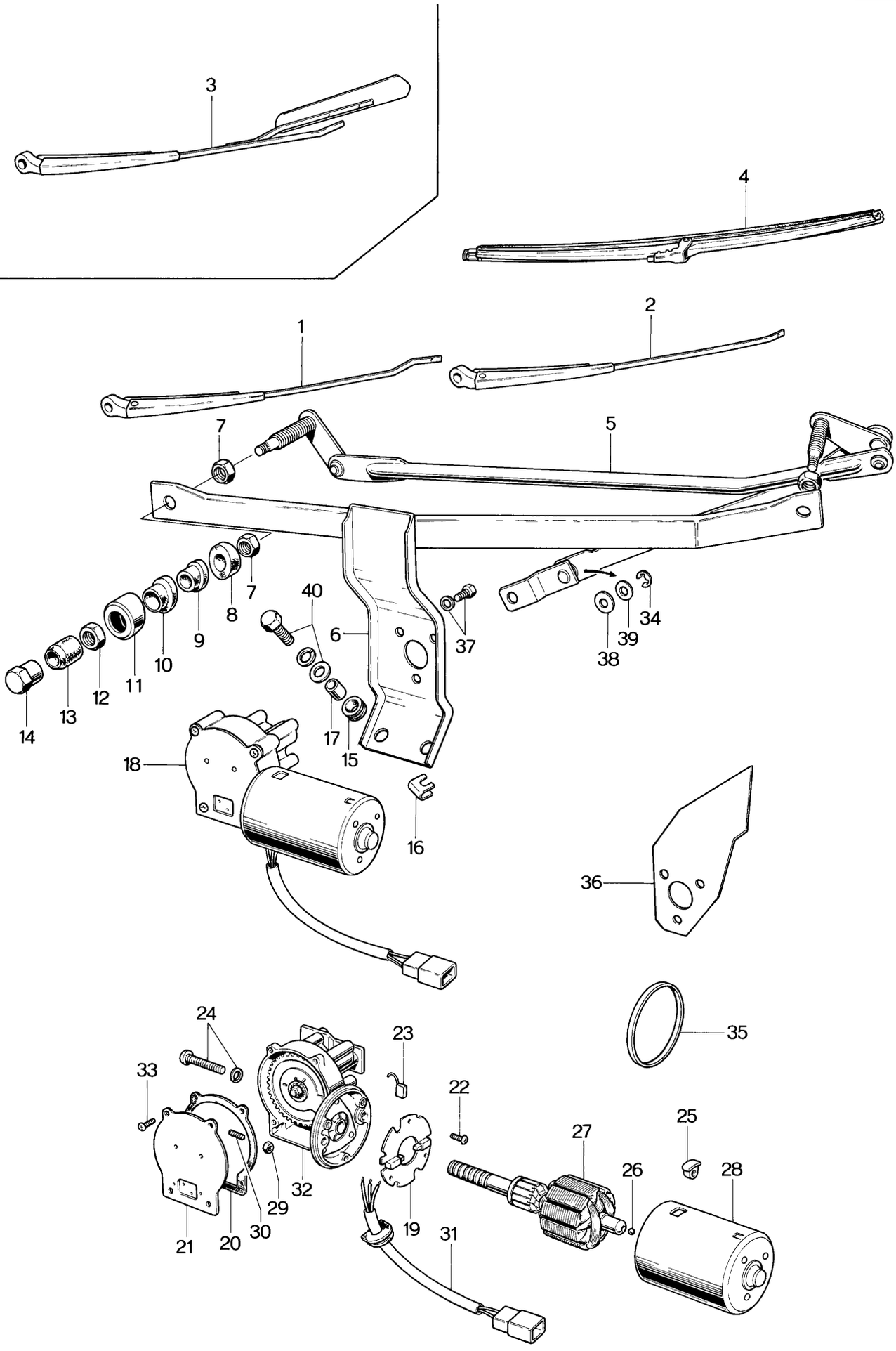

No.	Part Number	Description	Q'ty	Remarks
1	2835 67 321	Wiper Arm (R)	1	
2	2835 67 325	Wiper Arm (L) } Selective use	1	
3	2840 67 325	Wiper Arm (L), With Fin } Selective use	1	
4	0305 67 330	Wiper Blade	2	
●	2835 67 330	Wiper Blade	2	Car No. 61926 7/3 ~ ○
	0839 67 330	Wiper Blade, High Speed Type	2	
	2835 67 340	**MOTOR AND LINK**	1	
5	2835 87 901	Link	1	
6	2835 87 902	Frame	1	
7	0259 87 134	Nut	4	
8	0305 87 903	Bush, Inner	2	
9	0305 87 904	Packing	2	
10	0305 87 905	Bush, Outer	2	
11	0305 87 906	Cap Washer	2	
12	0212 66 372	Nut	2	
13	0212 66 371	Cap	2	
14	0223 66 371	Nut	2	
15	0305 87 907	Grommet	2	
16	0305 87 908	Earth Plate	1	
17	0305 87 909	Collar	2	
18	2835 67 370	**MOTOR**	1	

WINDSHIELD WIPER (L.H.D.)

No.	Part Number	Description	Q'ty	Remarks
19	0259 87 101A	Plate, Brush Holder	1	
20	2835 87 924	Packing	1	
21	2835 87 925	End Plate	1	
22	0259 87 105	Screw	3	
23	0259 87 106	Brush	3	
24	0257 87 107	Bolt	2	
	99971 0500	Spring Washer	2	
25	0257 87 108	Nut	2	
26	2835 87 928	Ball	2	
27	2835 87 923	Rotor	1	
28	2835 87 922	Yoke	1	
29	0259 87 119	Nut	1	
30	0259 87 120	Screw	1	
31	0305 87 921	Wire Harness	1	
32	2835 87 951	Gear Box	1	
33	2835 87 926	Screw	4	
34	2835 87 927	Retaining Ring	1	
35	0305 87 956	Band	1	
36	2835 87 957	Seal Cover	1	
37	99806 0510	Bolt	3	
	99971 0500	Washer	3	
38	0738 87 803	Felt	1	
39	0738 87 804	Plain Washer	1	
40	99799 0625	Bolt	2	

No.	Part Number	Description	Q'ty	Remarks
	99952 0618	Plain Washer	2	
	99971 0600	Spring Washer	2	

SCREEN WASHER

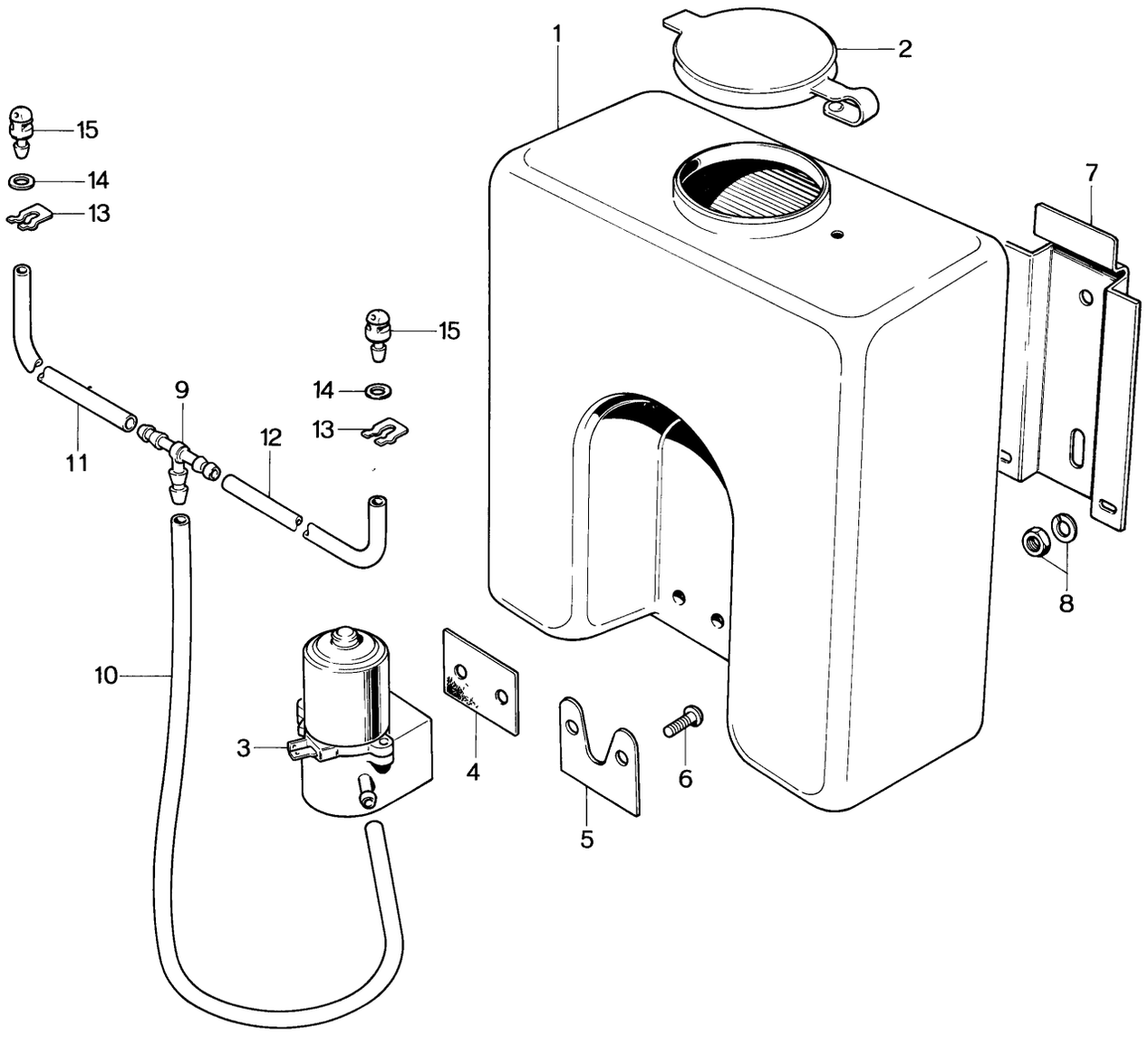

No.	Part Number	Description	Q'ty	Remarks
●	0301 79 370	**SCREEN WASHER SET**	1	
	0317 67 480	**TANK Ass'y**	1	
1	0317 67 511	Tank	1	
2	0727 87 992	Cap	1	
3	0305 87 993	Pump	1	
4	0727 87 994	Packing	1	
5	0727 87 995	Plate	1	
6	0727 87 996	Screw	2	
7	0317 67 521	Tank Bracket	1	
8	99906 0600	Nut, Bracket	2	
	99971 0600	Spring Washer	2	
	0305 67 500	**PIPE Ass'y**	1	
9	0813 66 879	Pipe Joint	1	
10	99335 04010	Pipe (ℓ =100)	1	
11	99335 04065	Pipe (ℓ =650)	1	
12	99335 04075	Pipe (ℓ =750)	1	
13	0118 41 669	Clip	2	
14	0259 66 905	Packing	2	
15	0275 67 510A	Nozzle	2	

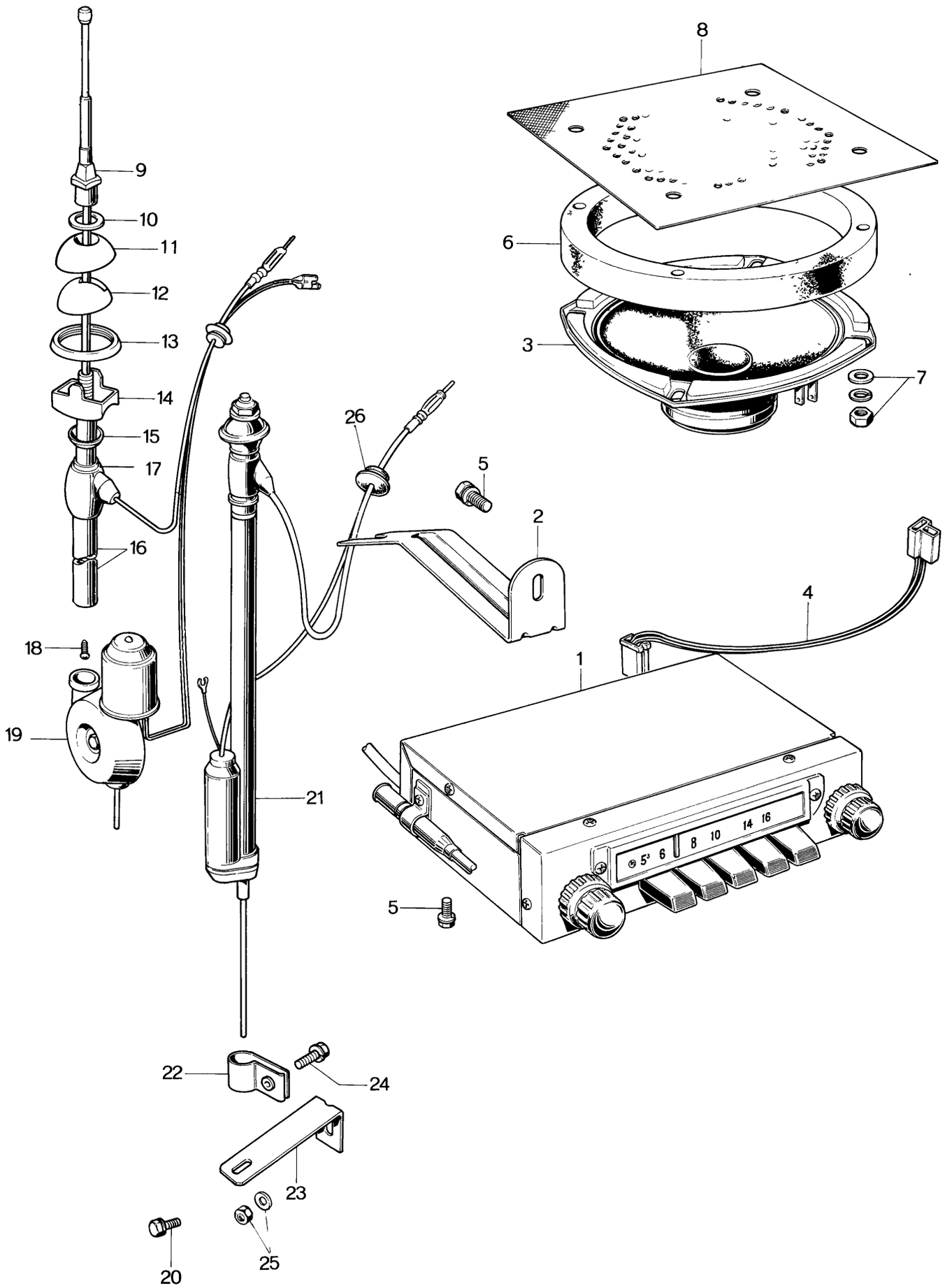
8
9
10
11
12
13
14
15
17
16
6
3
7
26
5
2
4
18
19
1
21
5
22
24
23
25
20

No.	Part Number	Description	Q'ty	Remarks
	0305 66 870	AUTO RADIO Ass'y, Medium Wave	1	
	2828 66 870	AUTO RADIO Ass'y, Medium Short Wave	1	
	2864 66 870	AUTO RADIO Ass'y, Medium Wave FM	1	
1	0305 66 900	Tuner, Medium Wave	1	
	2828 66 900	Tuner, Medium Short Wave	1	
	2864 66 900	Tuner, Medium Wave FM	1	
2	0305 66 871	Bracket, Tuner, Medium Wave use	1	
	2828 66 871	Bracket, Tuner, Medium Short Wave use	1	
	2864 66 871	Bracket, Tuner, Medium Wave use	1	
3	0305 66 960	Loud Speaker	1	
4	0305 66 872	Cord, Loud Speaker	1	
5	908067 5 12	Set Bolt, Bracket	2	
●	908067 5 10	Set Bolt, Bracket	2	Car No. 41414 $\frac{70}{12}$ ~ ○
6	0317 66 862	Partition	1	
7	99906 0400	Nut, Loud Speaker	2	
	99952 0400	Plain Washer	2	
	99971 0400	Spring Washer	2	
8	0305 66 966	Loud Speaker Net	1	
	0839 66 940	MOTOR ANTENNA	1	
●	0839 66 940A	MOTOR ANTENNA	1	Car No. 65342 $\frac{71}{3}$ ~ ×
9	0305 87 095	Cap Nut	1	
10	0305 87 096	Washer	1	
11	0839 87 001	Cover	1	
12	0223 91 533	Insulator	1	

No.	Part Number	Description	Q'ty	Remarks
13	0305 87 098	Packing	1	
14	0223 91 531	Gland Base	1	
15	0223 91 530	Base Washer	1	
16	0839 87 002	Pole	1	
17	0839 87 006	Feeder	1	
18	0223 91 529	Tapping Screw	2	
19	0305 87 107	Drum	1	
20	908067 5 10	Set Bolt, Motor Antenna	2	
21	0833 66 940	Magnet Antenna	1	
22	0259 66 539	Antenna Bracket No. I	1	
23	0833 66 941	Antenna Bracket No. 2	1	
24	908067 5 12	Set Bolt, Antenna Bracket	1	
25	99906 0500	Nut, Antenna Bracket	1	
	99952 0500	Plain Washer	1	
26	99683 0600	Protector	2	

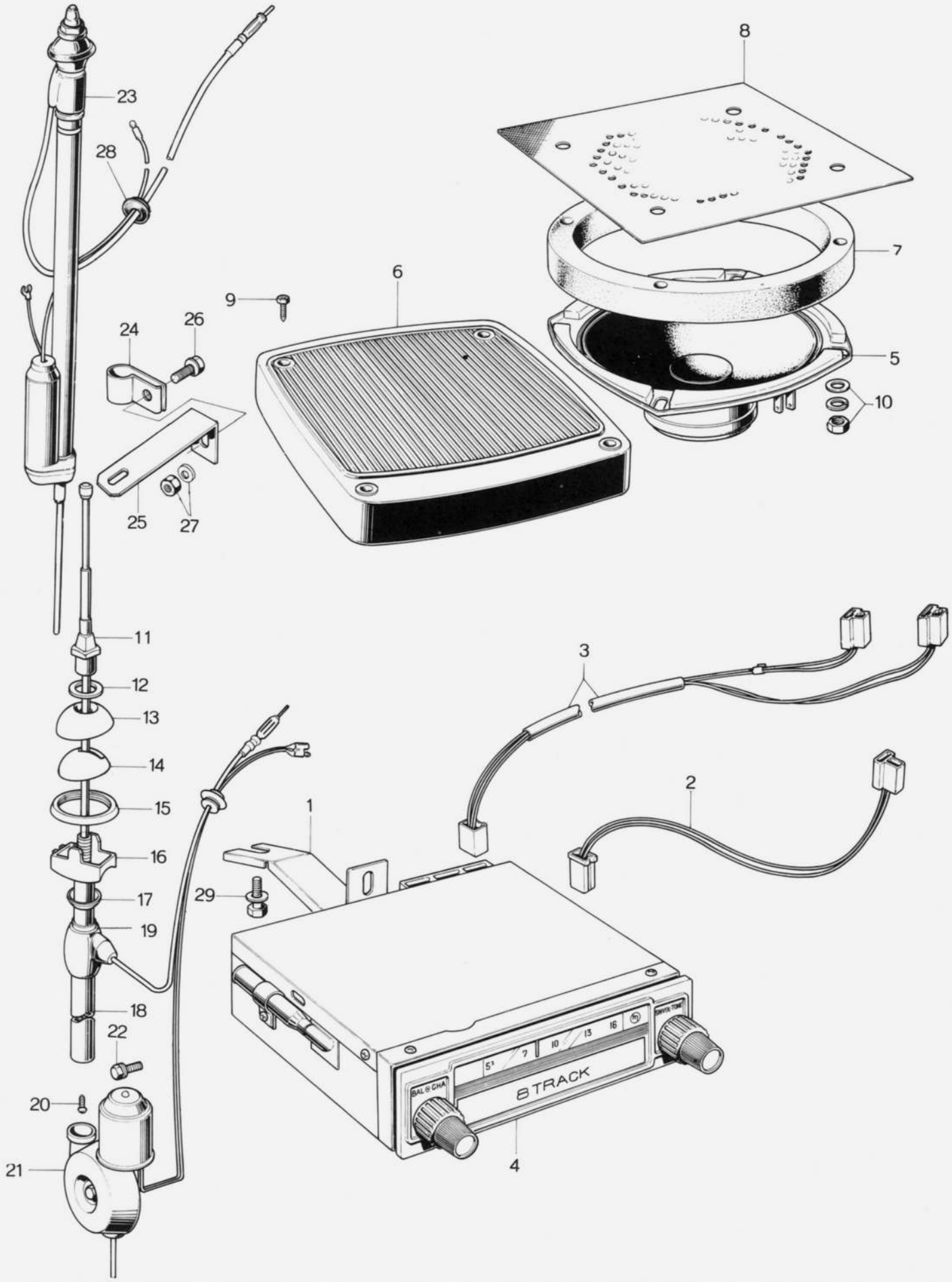
1
2
3
4
5
6
7
8
9
10
11
12
13
14
15
16
17
18
19
20
21
22
23
24
25
26
27
28
29
8 TRACK
BAL & CHA
TONE

No.	Part Number	Description	Q'ty	Remarks
	0303 66 870	**STEREO RADIO**	1	
1	0303 66 871	Tuner Bracket	1	
2	0305 66 872	Loud Speaker Cord	1	
3	0303 66 873A	Loud Speaker Cord No. 2	1	
4	0303 66 900	Tuner & Player	1	
5	0305 66 960	Loud Speaker	1	
6	0303 66 980	Loud Speaker, Stereo	2	
7	0317 66 862	Partition	1	
8	0305 66 966	Loud Speaker Net	1	
9	99863 0425B	Tapping Screw, Loud Speaker	8	
10	99906 0400	Nut, Loud Speaker	2	
	99952 0400	Plain Washer	2	
	99971 0400	Spring Washer	2	
	0839 66 940	**MOTOR ANTENNA**	1	
11	0305 87 095	Cap Nut	1	
12	0305 87 096	Washer	1	
13	0839 87 001	Cover	1	
14	0223 91 533	Insulator	1	
15	0305 87 098	Packing	1	
16	0223 91 531	Gland Base	1	
17	0223 91 530	Base Washer	1	
18	0839 87 002	Pole	1	

No.	Part Number	Description	Q'ty	Remarks
19	0839 87 006	Feeder	1	
20	0223 91 529	Tapping Screw	2	
21	0305 87 107	Drum	1	
22	908067 5 10	Set Bolt, Motor Antenna	2	
23	0833 66 940	Magnet Antenna	1	
●	0833 66 940A	Magnet Antenna	1	Car No. 65342 ⁷⁄₃ ~ ○
24	0259 66 539	Antenna Bracket No. I	1	
25	0833 66 941	Antenna Bracket No. 2	1	
26	908067 5 12	Set Bolt, Antenna Bracket	1	
27	99906 0500	Nut, Antenna Bracket	1	
	99952 0516	Plain Washer	1	
28	99683 0600	Protector	2	
29	908067 5 12	Set Bolt, Tuner Bracket	2	
●	908067 5 10	Set Bolt, Tuner Bracket	2	Car No. 41414 ⁷⁄₁₂ ~ ○

CRUSH PAD & GLOVE BOX

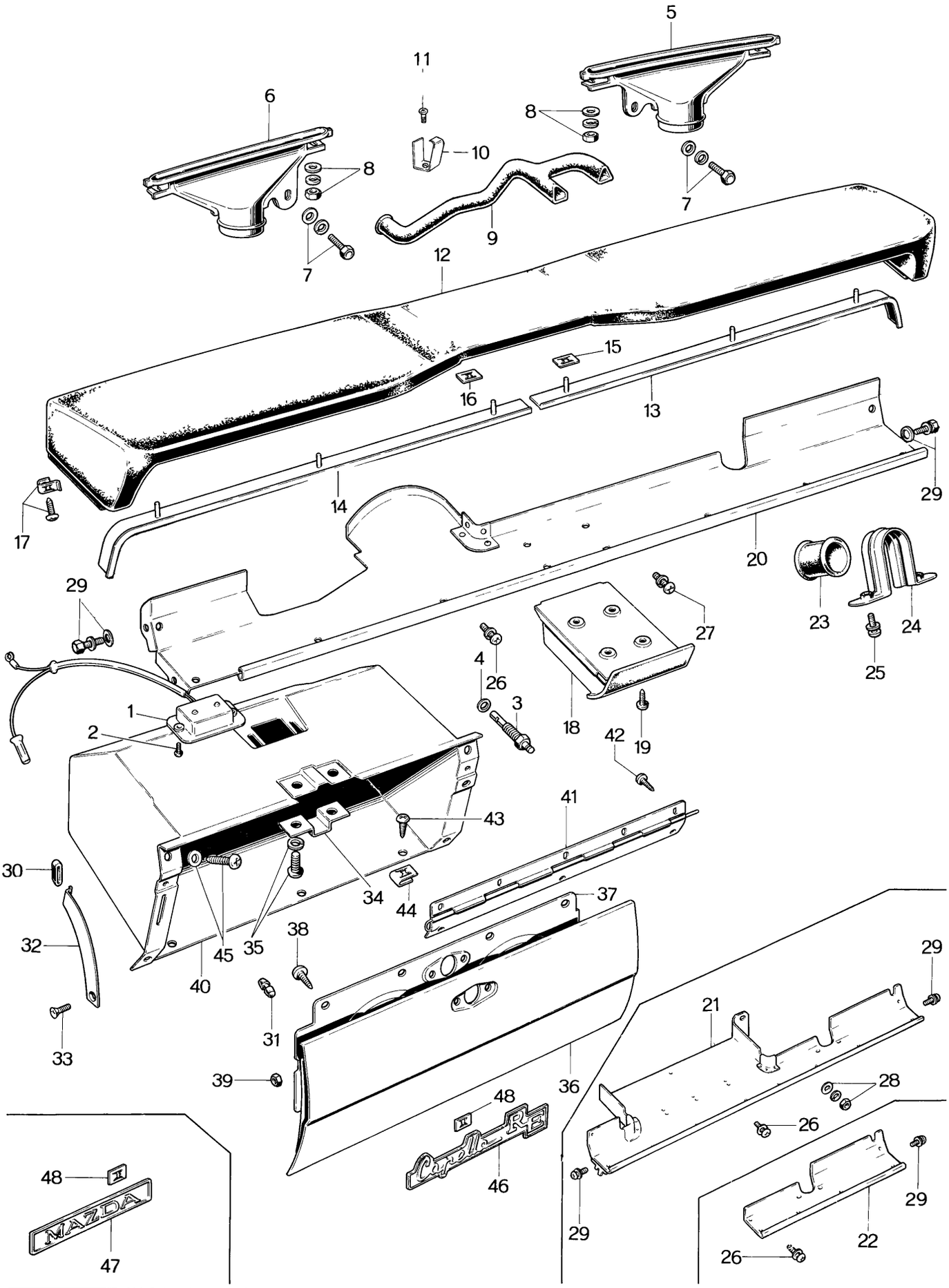

CRUSH PAD & GLOVE BOX 55~70

No.	Part Number	Description	Q'ty	Remarks
1	0305 55 890	Glove Box Lamp	1	
2	99869 0410B	Screw, Glove Box Lamp	2	
3	0305 60 690	Glove Box Switch	1	
4	99952 0800	Plain Washer	1	
5	0305 60 101	Defroster Nozzle (R)	1	
6	0305 60 102	Defroster Nozzle (L)	1	
7	99799 0516	Bolt, Defroster Nozzle	2	
	99952 0516	Plain Washer	2	
	99971 0500	Spring Washer	2	
8	99906 0500	Nut, Defroster Nozzle	4	
	99952 0516	Plain Washer	4	
	99971 0500	Spring Washer	4	
9	0839 60 830A	Ventilation Hose	1	
10	0839 60 831	Clip, Ventilation Hose	1	
11	99864 0510	Screw, Clip	1	
12	0305 68 020E-00	CRUSH PAD (Black)	1	©
13	0305 68 040A	Mould (R)	1	
14	0305 68 050A	Mould (L)	1	
15	99579 4000	Speed Nut	6	
16	99579 3000	Speed Nut, Crush Pad	8	
17	99862 0516B	Tapping Screw, Crush Pad	5	
	99896 0500	Spring Nut	5	

CRUSH PAD & GLOVE BOX

No.	Part Number	Description	Q'ty	Remarks
18	0305 68 180	ASH TRAY Ass'y	1	
	0305 68 180A	ASH TRAY Ass'y	1	Car No. 34307 ~△
●	0303 68 180	ASH TRAY Ass'y	1	Car No. 61926 ~×
	0305 68 200	Inner Case	1	Car No. 61926 ~ Discarded
19	908634 4 12	Set Screw, Ash Tray	4	
	908684 4 08	Set Screw, Ash Tray	4	Car No. 24191 ~○
	908334 5 08	Set Screw, Ash Tray	4	Car No. 34307 ~△
20	0305 69 810B	Parcel Shelf Ass'y (R.H.D.) With Car Heater	1	
	0305 69 810C	Parcel Shelf Ass'y (R.H.D.) With Car Heater	1	Car No. 31267 ~○
	2835 69 810	Parcel Shelf Ass'y (L.H.D.) With Car Heater	1	
	2835 69 810A	Parcel Shelf Ass'y (L.H.D.) With Car Heater	1	Car No. 30692 ~○
	2857 69 810	Parcel Shelf Ass'y (L.H.D.) Arctic Spec. Model With Powerful Type Car Heater	1	
	2857 69 810A	Parcel Shelf Ass'y (L.H.D.) Arctic Spec. Model With Powerful Type Car Heater	1	Car No. 30692 ~○
21	2826 69 810	Parcel Shelf Ass'y (R.H.D.) Without Car Heater	1	
	2826 69 810A	Parcel Shelf Ass'y (R.H.D.) Without Car Heater	1	Car No. 30839 ~×
	2845 69 810	Parcel Shelf Ass'y (L.H.D.) Without Car Heater	1	
	2845 69 810A	Parcel Shelf Ass'y (L.H.D.) Without Car Heater	1	Car No. 30839 ~×
22	2828 69 810	Parcel Shelf Ass'y (R.H.D.) With Car Cooler	1	
	2828 69 810A	Parcel Shelf Ass'y (R.H.D.) With Car Cooler	1	Car No. 30839 ~×
	2840 69 810	Parcel Shelf Ass'y (L.H.D.) With Car Cooler	1	
	2840 69 810A	Parcel Shelf Ass'y (L.H.D.) With Car Cooler	1	Car No. 30692 ~○
23	0305 69 825	Fixing Rubber	1	
24	0305 69 820A	Bracket, Parcel Shelf	1	
25	908337 5 12	Set Screw, Bracket	2	
26	908337 5 16	Set Screw, Parcel Shelf	1	Car No. 30692 ~ Discarded
27	908337 5 08B	Set Screw, Parcel Shelf With Car Heater & Cooler	2	
28	99906 0600	Nut, Parcel Shelf Without Car Heater	1	
	99906 0600B	Nut, Parcel Shelf Without Car Heater	1	Car No. 30692 ~×
	99952 0618	Plain Washer	1	
	99952 0618B	Plain Washer	1	Car No. 30692 ~×
	99971 0600	Spring Washer	1	
	99971 0600B	Spring Washer	1	Car No. 30692 ~×
29	99797 0525B	Bolt, Parcel Shelf	4	
	99952 0516B	Plain Washer	4	
	99971 0500B	Spring Washer	4	
30	0275 55 195	Cushion Rubber, Glove Box Lid	1	
31	0275 55 215	Cushion	2	
32	0305 70 201A	Stopper (R.H.D.)	1	

No.	Part Number	Description	Q'ty	Remarks	
	2835 70 201	Stopper (L.H.D.)	1		
33	99761 0416B	Screw, Stopper	1		
34	0305 70 202	Striker	1		
35	908331 4 16B	Set Screw, Striker	2		
36	0305 70 211B	Lid Outer (R.H.D.)	1		©
	2835 70 211	Lid Outer (L.H.D.)	1		©
37	0305 70 212	Lid Inner	1		
38	99861 0310B	Screw, Lid Inner	4		
39	99911 0400	Nut, Lid Inner	1		
40	0305 70 221B	Glove Box (R.H.D.)	1		©
	2835 70 221	Glove Box (L.H.D.)	1		
41	0305 70 230A	Hinge Ass'y	1		
42	99861 0410B	Screw, Hinge	5		
● 43	99861 0416B	Screw, Hinge	2	Car No. 21039 $^{70}/_{8}$ ~	Quantity
●	99866 0410B	Tapping Screw, Hinge	1	Car No. 21039 $^{70}/_{8}$ ~	Added Anew
●	99866 0412B	Tapping Screw, Hinge	3	Car No. 39803 $^{70}/_{11}$ ~	×
44	99896 0400	Spring Nut, Hinge	3		
45	99833 0514B	Screw, Glove Box	4		
	99952 0516B	Plain Washer	4		
46	0839 69 051A	Ornament, Glove Box	1		
47	2828 69 051	Ornament, Glove Box	1		
48	99579 3000	Speed Nut, Ornament	2		

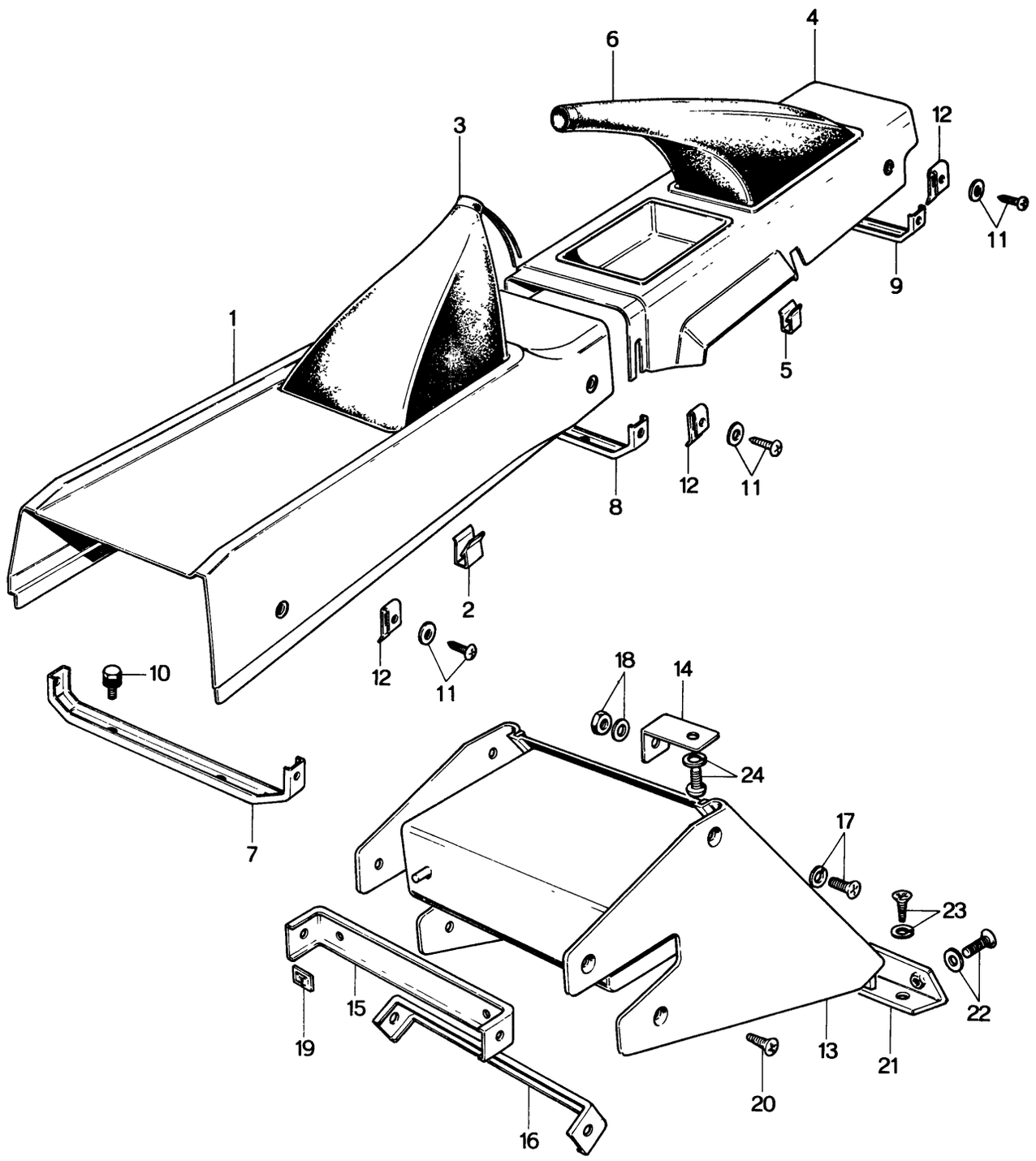
1
2
3
4
5
6
7
8
9
10
11
12
11
12
11
12
13
14
15
16
17
18
19
20
21
22
23
24

No.	Part Number	Description	Q'ty	Remarks
1	0841 68 860A	CONSOLE Ass'y (Frt.)	1	
●	2075 68 860	CONSOLE Ass'y (Frt.)	1	Car No. 55667 7/2 ~ ○
	2082 68 860	CONSOLE Ass'y (Frt.) Arctic Spec. Model	1	C
●	2082 68 860A	CONSOLE Ass'y (Frt.) Arctic Spec. Model	1	Car No. 55667 7/2 ~ ○
2	0303 68 862	Boot Clip	4	
3	0303 68 880A	Boot, Change Lever	1	
●	2855 68 880	Boot, Change Lever	1	Car No. 55667 7/2 ~ ○
4	0303 68 890A	CONSOLE Ass'y (Rr.)	1	
5	0303 68 862	Boot Clip	4	
6	0303 68 910A	Boot, Hand Brake Lever	1	
7	0839 68 851	Bracket No. 1	1	
8	0303 68 852	Bracket No. 2	1	
9	0303 68 853	Bracket No. 3	1	
10	908066 6 12	Set Bolt, Bracket	6	
11	908636 4 16B	Set Screw, Bracket	6	
12	99896 0400	Spring Nut, Bracket	6	
13	0839 68 930	CONSOLE Ass'y, Upper	1	
●	0839 68 930B	CONSOLE Ass'y, Upper	1	Car No. 61926 7/3 ~ ×
14	0839 68 936A	Bracket "A"	1	
15	0839 68 937	Bracket "B"	1	
16	0839 68 938	Bracket "C"	1	
17	908324 5 16B	Set Screw	2	
18	99906 0500	Nut	6	
	99952 0516	Plain Washer	2	

CONSOLE BOX

No.	Part Number	Description	Q'ty	Remarks
	99952 0500	Plain Washer	4	
	99971 0500	Spring Washer	6	
● 19	99579 3000	Speed Nut	2	Car No. 61926⅞ ~ Discarded
20	908324 5 16B	Set Screw	4	
21	0839 68 940A	Bracket	1	
●	0839 68 940B	Bracket	1	Car No. 21791⅞ ~ ×
22	99742 0420B	Set Screw	2	
	99967 0400B	Washer	2	
23	908697 4 16	Set Screw	2	
	907437 6 12B	Set Screw	2	
● Ⓝ	0820 68 180	Ash Tray	1	Car No. 61926⅞ ~ Added Anew
● Ⓝ	9083 46 416	Screw & Washer	2	Car No. 61926⅞ ~ Added Anew

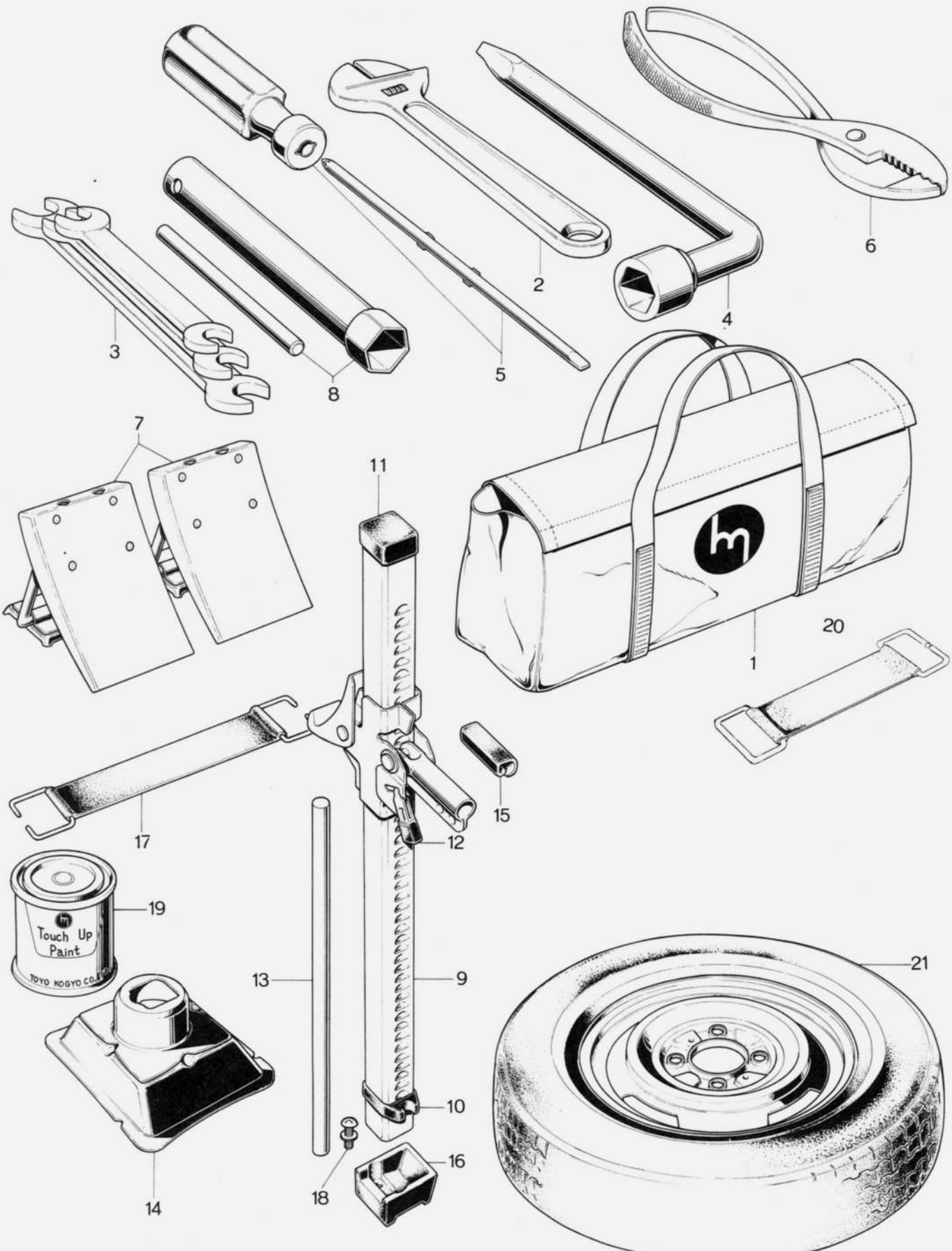
1
2
3
4
5
6
7
8
9
10
11
12
13
14
15
16
17
18
19
20
21
Touch Up Paint
TOYO KOGYO CO.

No.	Part Number	Description	Q'ty	Remarks
	0839 68 660	TOOL Ass'y	1	
1	0839 68 670	Tool Bag	1	
2	0110 68 050	Monkey Wrench (8 inch)	1	
3	0249 68 060	Spanner Set	1	
4	0810 68 070	Hub Nut Wrench	1	
5	0187 68 110	Driver Set	1	
6	0118 68 180	Plier (6 inch)	1	
7	0208 68 230	Wheel Stopper	2	
8	0839 68 720	Plug Wrench	1	
	0305 68 790	JACK BODY	1	
	0305 68 790A	PANTO GRAPH JACK	1	Car No. 40001 70/12 ~ ×
9	0305 68 800	Body	1	
	0305 68 800A	Jack, Panto Graph	1	Car No. 40001 70/12 ~ ×
10	0824 68 794	Handle Holder	1	Car No. 40001 70/12 ~ Discarded
11	0824 68 795	Cap	1	
12	0824 68 796	Lever Cap	1	
13	0305 68 803	Handle	1	
14	0305 68 810	Stand	1	
	0305 68 810A	Handle	1	Car No. 40001 70/12 ~ ×
● Ⓝ	0305 56 204	Seat Jack	1	Car No. 40001 70/12 ~ Added Anew
15	0223 56 942	Jack Holder (Frt.)	1	Car No. 40001 70/12 ~ Discarded
16	0824 56 944	Jack Holder (Rr.)	1	
17	0223 56 950	Jack Clamp	1	
18	908631 5 20	Set Screw, Jack Holder	2	
20	0839 56 970	Clamp	1	

No.	Part Number	Description	Q'ty	Remarks
21	9962 12 6113	6.15S—13—4PR Low Profile Tire		
●	9962 02 6413	6.45S—13—4PR Low Profile Tire		Car No. 61926 7/3 ~ ×
	9962 11 6113	6.15S—13—4PR Low Profile Tire, White Ring		
●	9962 01 6413	6.45S—13—4PR Low Profile Tire, White Ring		Car No. 61926 7/3 ~ ×
●	9962 02 1553	155SR—13 Radial Tire, White Ring		Car No. 61926 7/3 ~Discarded
	9962 04 1553	155SR—13 Radial Tire		Selective use
●	9962 01 1653	165SR—13 Radial Tire	2	Car No. 61926 7/3 ~ ×
	9962 07 1553	155HR—13 Radial Tire		Car No. 33038 7/3 ~Added Anew
●	9962 03 1653	165HR—13 Radial Tire		Car No. 61926 7/3 ~ ×
	9963 01 6113	6.15—13 Tube, Low Profile Tire		
●	9963 01 6413	6.45—13 Tube, Low Profile Tire	2	Car No. 61926 7/3 ~ ×
	9963 01 1553	155—13 Tube, Radial Tire		
●	9963 01 1653	165—13 Tube, Radial Tire		Car No. 61926 7/3 ~ ×
	9965 11 4030	4—JXWDC Disc Wheel	2	
●	9965 05 4530	4½—J × 13WDC, Disc Wheel	2	Car No. 40001 7/12 ~ ○
	9965 12 4030	4—J × 13WDC, Disc Wheel, Center Cap use	2	
●	9965 06 4530	4½—J × 13WDC, Wheel, Center Cap use	2	Car No. 40001 7/12 ~ ○

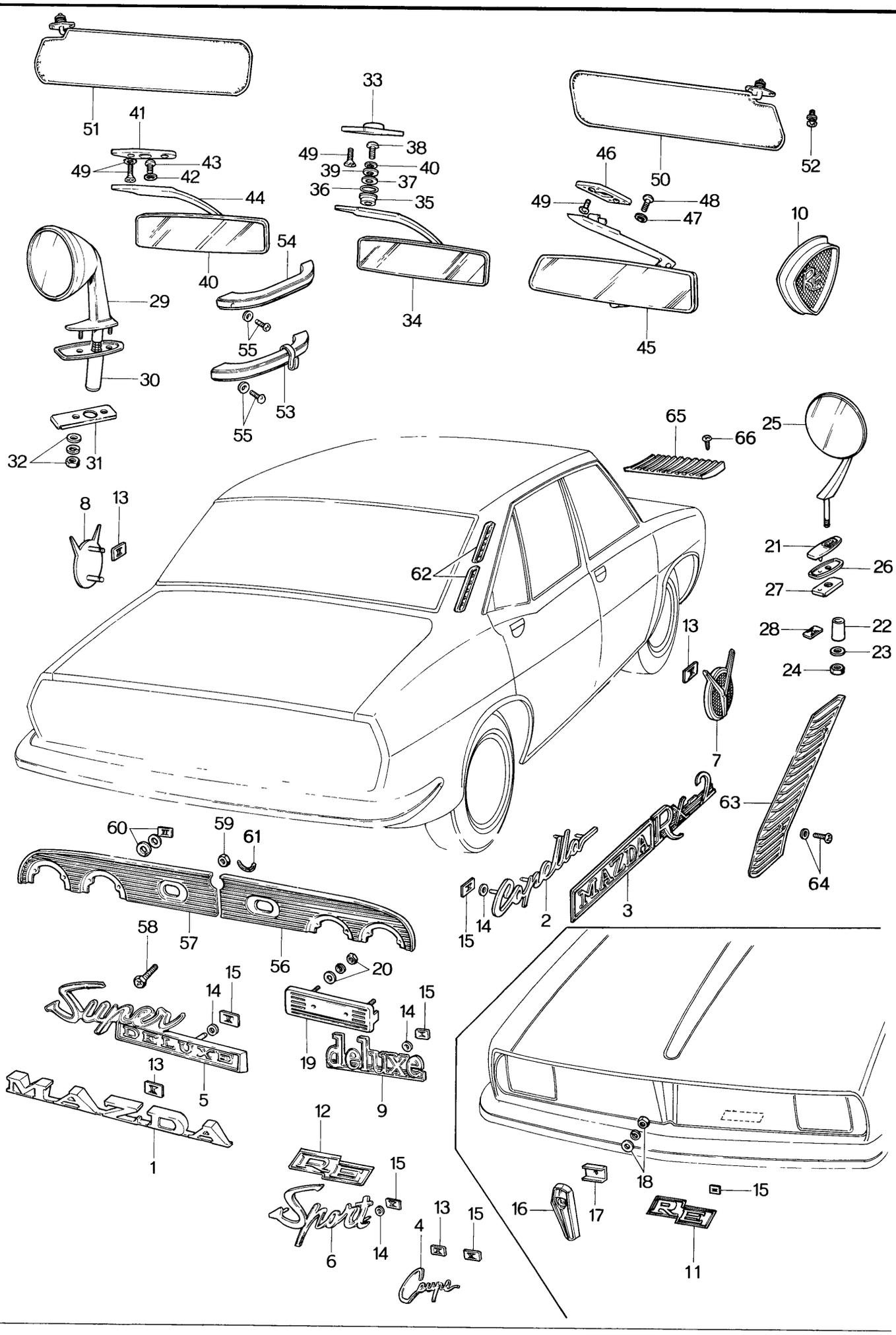
51
41
49
43
42
44
40
54
29
30
32
31
55
53
33
49
38
39
40
36
37
35
34
46
50
52
49
48
47
45
10
65
66
25
8
13
62
21
26
27
28
22
23
24
13
7
63
64
60
59
61
58
57
56
20
15
14
5
19
9
12
15
6
14
4
13
15
16
17
18
15
11
15
14
2
3

No.	Part Number	Description	Q'ty	Remarks
1	0305 69 052A	Ornament, MAZDA	1	
2	0305 69 053A	Ornament, Capella	2	
3	2324 69 053A	Ornament, MAZDA–RX–2	1	
●	2835 69 059	Ornament, (Automobiles) (For France)	3	Car No. 71042 7/4 ~Added Anew
4	0839 69 054B	Ornament, Coupe	1	
5	0305 69 055	Ornament, Super Deluxe	1	
6	0839 69 055A	Rear Ornament, Sport	1	
7	0305 69 056	Symbol Mark (R)	1	
8	0305 69 057	Symbol Mark (L)	1	
9	0259 69 063	Ornament, Deluxe	1	
10	0820 69 066A	"RE" Mark	2	
11	0839 69 076A	Front Mark, "RE"	1	
12	0839 69 078A	Rear Mark, "RE"	1	
13	0187 69 049A	Speed Nut	7	
● 14	0730 69 057A	Packing	10	
● 15	99579 3000	Speed Nut	16	
16	0839 69 071	Front Emblem	1	
17	0839 69 077A	Set Plate	2	
18	99906 0400	Nut, Front Emblem	2	
	99952 0400	Plain Washer	2	
	99971 0400	Spring Washer	2	
19	2864 69 090	Set Plate	1	
20	99906 0400	Nut, Set Plate	2	
	99952 0412	Plain Washer	2	
	99971 0400	Spring Washer	2	

No.	Part Number	Description	Q'ty	Remarks
	0305 69 080A	REAR VIEW MIRROR (R)	1	
	0305 69 090A	REAR VIEW MIRROR (L)	1	
21	0305 69 101A	Base	2	
22	0223 69 102	Spring	2	
23	0223 69 103	Plain Washer	2	
24	0223 69 105	Nut	2	
25	0305 69 110	Rear View Mirror (R)	1	
	0305 69 130	Rear View Mirror (L)	1	
26	0305 69 124A	Packing	2	
27	0305 69 125A	Reinforcement	2	
28	99579 6000	Speed Nut	2	
● 29	0839 69 080-01	REAR VIEW MIRROR (R) (Dark Grey)	1	Sport Mirror ©
●	0839 69 090-01	REAR VIEW MIRROR (L) (Dark Grey)	1	©
30	0839 69 124	Gasket	2	
31	0839 69 125	Reinforcement	2	
32	99906 0600	Nut, Rear View Mirror	4	
	99952 0600	Plain Washer	4	
	99971 0600	Spring Washer	4	

0305 69 170 ROOM MIRROR Ass'y, Sedan usel
Dropping Type

No.	Part Number	Description	Q'ty	Remarks
33	0305 69 171	Base	1	
34	0305 69 180	**ROOM MIRROR**, Sedan use	1	
35	0727 69 186	Catch	1	
36	0727 69 187	Stop Ring	1	
37	0727 69 188	Washer	1	
38	99833 0408	Screw	1	
39	99952 0412	Plain Washer	1	
40	99971 0400	Spring Washer	1	
	0310 69 170	**ROOM MIRROR**, Coupe use Dropping Type	1	
41	0839 69 171	Base	1	
42	0839 69 173	Washer	2	
43	0839 69 174	Screw	2	
44	0310 69 190	Room Mirror	1	
45	0839 69 170	**ROOM MIRROR**, Coupe use Dropping Type, Day and Night Convertible Type	1	
46	0839 69 171	Base	1	
47	0839 69 173	Washer	2	
48	0839 69 174	Screw	2	
49	907614 5 16	Set Screw, Room Mirror	2	

No.	Part Number	Description	Q'ty	Remarks	
● 50	0305 69 210-00	Sun Visor Ass'y (R)(R.H.H.D.), Sedanuse (Light Grey)	1		©
●	0839 69 210-09	Sun Visor Ass'y (R)(R.H.D.), Coupe use (Black)	1		©
●	2080 69 210-00	Sun Visor Ass'y (R)(L.H.D.), Coupe use (Light Grey)	1		©
●	2080 69 210-09	Sun Visor Ass'y (R) (L.H.D.), Coupe use (Black)	1		
●	2850 69 210-00	Sun Visor Ass'y (R)(L.H.D.), Sedan use (Light Grey)	1		©
● 51	0305 69 240-00	Sun Visor Ass'y (L)(R.H.D.), Sedan use (Light Grey)	1		©
●	0839 69 240-00	Sun Visor Ass'y (L)(R.H.D.), Coupe use (Light Grey)	1		©
●	0839 69 240-09	Sun Visor Ass'y (L)(L.H.D.), Coupe use (Black)	1		
●	2080 69 240-00	Sun Visor Ass'y (L)(L.H.D.), Coupe use (Light Grey)	1		©
●	2080 69 240-09	Sun Visor Ass'y (L)(L.H.D.), Coupe use (Black)	1		
●	2850 69 240-00	Sun Visor Ass'y (L)(L.H.D.), Sedan use (Light Grey)	1		©
52	99837 0516C	Screw, Sun Visor	4		
	99975 0500C	Toothed Washer	4		
● 53	0305 69 910-01	Assist Handle (Black)	2		©
● 54	0305 69 920-01	Assist Handle (Black)	1		©
55	908386 6 20	Set Screw, Assist Handle	6		
56	0839 68 980D	Finisher (R)	1		©
57	0839 68 980D	Finisher (L)	1		©
58	908056 6 16	Set Bolt, Finisher	1		
59	0187 69 049A	Speed Nut	2		
60	0305 68 951	Packing	14		
	0305 68 952	Washer	14		
	99579 4000	Speed Nut	14		
61	0839 68 955	Protector	1		
● 62	0833 70 941A-00	Garnish, Coupe use (Black)	4		©
●	0833 70 941B-00	Garnish, Coupe use (Black)	4	Car No. 29314 ※～○	
63	0305 70 951-01	Air Flow Grille (R) (Dark Grey)	1	Sedan use	©
●	0305 70 951-01	Air Flow Grille (L) (Dark Grey)	1	Sedan use	©
64	908641 4 12B	Set Screw, Air Flow Grille	4		
● 65	0305 70 991A-02	Grille (R) (Grey)	1		©

No.	Part Number	Description	Q'ty	Remarks	
●	0305 71 991A-02	Grille (L) (Grey)	1		©
66	99863 0410B	Screw, Grille	4		
	99863 0412B	Screw, Grille	4	Car No. 28074 ※～○	

TRIM & TOP CEILING

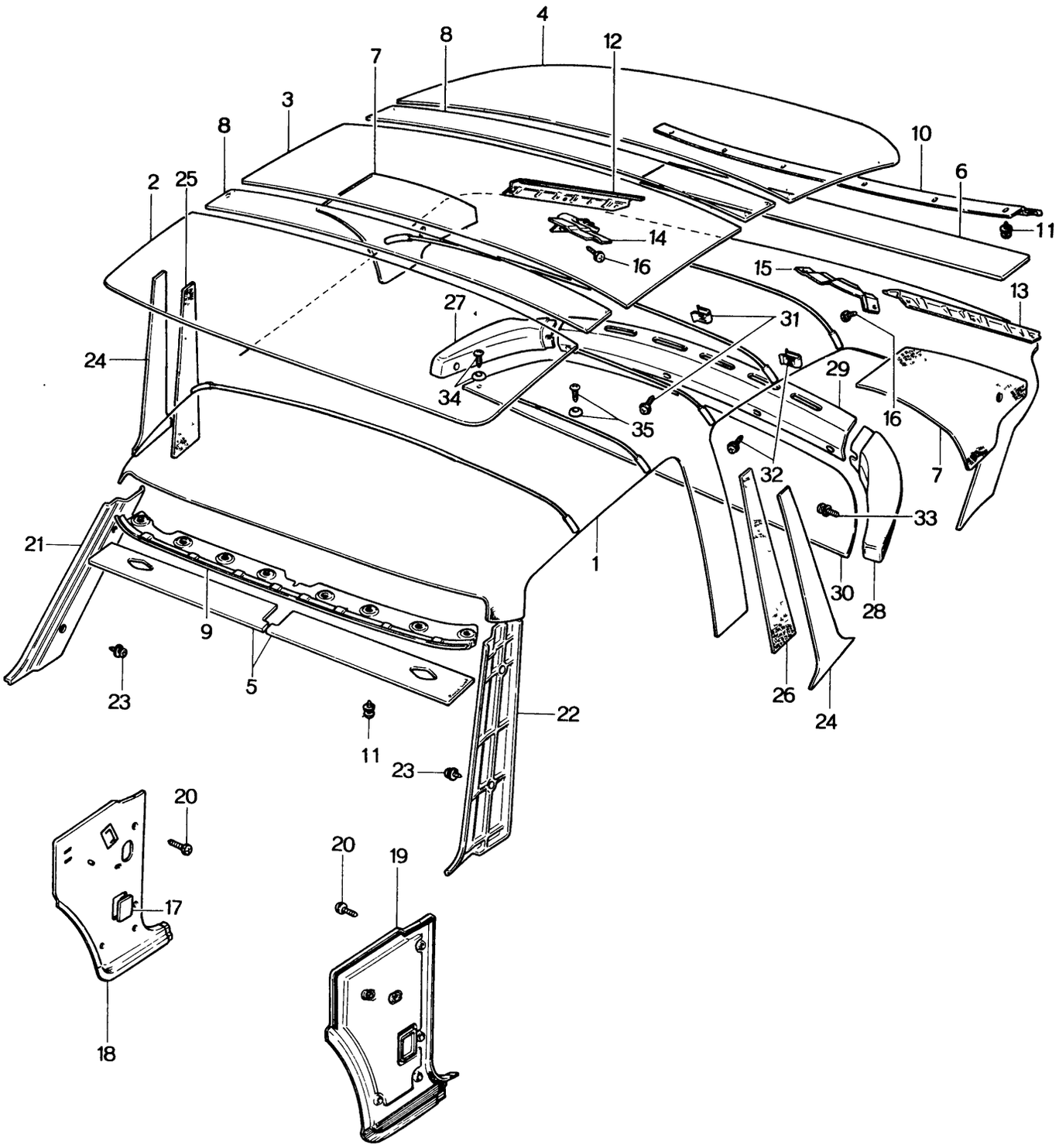

No.	Part Number	Description	Q'ty	Remarks	
● 1	0305 69 290C-00	Top Ceiling Ass'y, Sedan use (Black)	1		©
●	0839 69 290A-09	Top Ceiling Ass'y, Coupe tuse (Black)	1		
●	0839 69 290A-10	Top Ceiling Ass'y, Coupe use (Light Grey)	1		©
2	0305 69 311B	Roof Insulator No. 1, Sedan use	1		
	0839 69 311A	Roof Insulator No. 1, Coupe use	1		
3	0305 69 312B	Roof Insulator No. 2, Sedan use	1		
	0839 69 312B	Roof Insulator No. 2, Coupe use	1		
4	0305 69 313A	Roof Insulator No. 3, Sedan use	1		
	0839 69 313A	Roof Insulator No. 3, Coupe use	1		
5	0305 69 315	Pad, Front Header	2		
6	0305 69 316	Pad, Rear Header	1		
7	0305 69 317A	Rear Pillar Pad (R) } Sedan use	1		
	0305 69 318A	Rear Pillar Pad (L) } Sedan use	1		
	0839 69 314A	Rear Pillar Pad, Coupe use	2		
8	0317 69 319	Roof Insulator No. 3	2		
9	0305 69 321	Fixing Plate (Frt.), Sedan use	1		
	0305 69 321A	Fixing Plate (Frt.), Sedan use	1	Car No. 40071 70/12~×	
	0839 69 321	Fixing Plate (Frt.), Coupe use	1		
	0839 69 321A	Fixing Plate (Frt.), Coupe use	1	Car No. 40071 70/12~×	
10	0305 69 341A	Fixing Plate No. 1 (Rr.), Sedan use	1		
	0305 69 341B	Fixing Plate No. 1 (Rr.), Sedan use	1	Car No. 40071 70/12~×	
	0839 69 341A	Fixing Plate No. 1 (Rr.), Coupe use	1		
	0839 69 341B	Fixing Plate No. 1 (Rr.), Coupe use	1	Car No. 40071 70/12~×	
11	908640 4 12	Set Screw, Fixing Plate	24	Sedan use	
			24	Coupe use Car No. 40071 70/12~ Q'ty	
12	0305 69 342B	Fixing Plate No. 2 (Rr.), Sedan use	1		
	0305 69 342C	Fixing Plate No. 2 (Rr.), Sedan use	1	Car No. 40071 70/12~×	
	0839 69 342C	Fixing Plate No. 2 (Rr.), Coupe use	1		
	0839 69 342D	Fixing Plate No. 2 (Rr.), Coupe use	1	Car No. 40071 70/12~×	
13	0305 69 343B	Fixing Plate No. 3 (Rr.), Sedan use	1		
	0305 69 343C	Fixing Plate No. 3 (Rr.), Sedan use	1	Car No. 40071 70/12~×	
	0839 69 343C	Fixing Plate No. 3 (Rr.), Coupe use	1		
	0839 69 343D	Fixing Plate No. 3 (Rr.), Coupe use	1	Car No. 40071 70/12~×	
14	0839 69 344	Fixing Plate No. 4 (Rr.) } Coupe use	1		
	0839 69 344A	Fixing Plate No. 4 (Rr.) } Coupe use	1	Car No. 40071 70/12~×	
15	0839 69 345	Fixing Plate No. 4 (Rr.) } Coupe use	1		
	0839 69 345A	Fixing Plate No. 4 (Rr.) } Coupe use	1	Car No. 40071 70/12~×	
16	907440 4 12	Set Screw, Fixing Plate, Sedan use	8	Car No. 32016 70/10~Discarded	

No.	Part Number	Description	Q'ty	Remarks	
● 17	0305 69 351-00	Trim Hole Cover (Black)	2		©
● 18	0305 69 360B-00	Side Trim (R) (R.H.D.) (Black)	1		©
●	2835 69 360-00	Side Trim (R) (L.H.D.) (Black)	1		©
● 19	0305 69 380C-00	Side Trim (L) (R.H.D.) (Black)	1		©
●	2835 69 380-00	Side Trim (L) (L.H.D.) (Black)	1		©
20	908624 4 20B	Set Screw, Side Trim	8		
● 21	0305 69 411A-00	Front Pillar Trim Ass'y (R), Sedan use (Black)	1		©
●	0305 69 411B-00	Front Pillar Trim Ass'y (R), Sedan use (Black)	1	Car No. 32016 ⅞○～	©
●	0839 69 411A-00	Front Pillar Trim Ass'y (R), Coupe use (Black)	1		©
●	0839 69 411B-00	Front Pillar Trim Ass'y (R), Coupe use (Black)	1	Car No. 32016 ⅞○～	©
● 22	0305 69 431A-00	Front Pillar Trim Ass'y (L), Sedan use (Black)	1		©
●	0305 69 431B-00	Front Pillar Trim Ass'y (L), Sedan use (Black)	1	Car No. 32016 ⅞○～	©
●	0839 69 431A-00	Front Pillar Trim Ass'y (L), Coupe use (Black)	1		©
●	0839 69 431B-00	Front Pillar Trim Ass'y (L), Coupe use (Black)	1	Car No. 32016 ⅞○～	©
23	908624 4 12B	Set Screw, Front Pillar Trim	4		
24	0305 69 451	Center Pillar Pad, Sedan use	2		
	0839 69 318	Center Pillar Pad, Coupe use	2		
● 25	0305 69 461A-01	Center Pillar Trim (R) (Black)	2	Car No. 61926 ⅞ ～ Q'ty	©
	0305 69 461A-04	Center Pillar Trim (R) (Brown)	2		
● 26	0305 69 481A-01	Center Pillar Trim (L) (Black) — Sedan use	1	Car No. 61926 ⅞ ～ Discarded	©
	0305 69 481A-04	Center Pillar Trim (L) (Brown)	1		
● 27	0305 69 861-00	Package Tray Trim Upper (R), Sedan use (Black)	1		©
●	0839 69 861-00	Package Tray Trim Upper (R), Coupe use (Black)	1		©
● 28	0305 69 862-00	Package Tray Trim Upper (L), Sedan use (Black)	1		©
●	0839 69 862-00	Package Tray Trim Upper (L), Coupe use (Black)	1		©
● 29	0305 69 863-00	Package Tray Trim (C) (Black)	1		©
●	0839 69 863-00	Package Tray Trim (C)	1		©
● 30	0305 69 870-00	Package Tray Trim Lower (Black) — Sedan, Selective use	1		©
●	0841 69 870-00	Package Tray Trim Lower (Black) — Sedan, Selective use	1		©
●	0310 69 870-00	Package Tray Trim Lower (Black) — Coupe, Selective use	1		©
●	0839 69 870A-00	Package Tray Trim Lower (Black) — Coupe, Selective use	1		©
31	90862 4520B/	Set Screw, Package Tray Trim Upper	6		

No.	Part Number	Description	Q'ty		Remarks
	99896 0500	Spring Nut	6	Sedan use	
32	908624 5 18B	Set Screw, Package Tray Trim Upper	4		
●	908624 5 20B	Set Screw, Package Tray Trim Upper	4		Car No. 40071 ～ ○
	99896 0500	Spring Nut	4	Coupe use	
33	907424 5 30B	Set Screw, Package Tray Trim Upper	2		
34	908624 5 16B	Set Screw, Package Tray Trim Lower	3	Sedan use	
	99967 0500B	Washer	3		
35	908624 5 18B	Set Screw, Package Tray Trim Lower	3		
●	908624 5 20B	Set Screw, Package Tray Trim Lower	3	Coupe use	Car No. 40071 ～ ○
	99967 0500B	Washer	3		

TRIM & FLOOR MAT

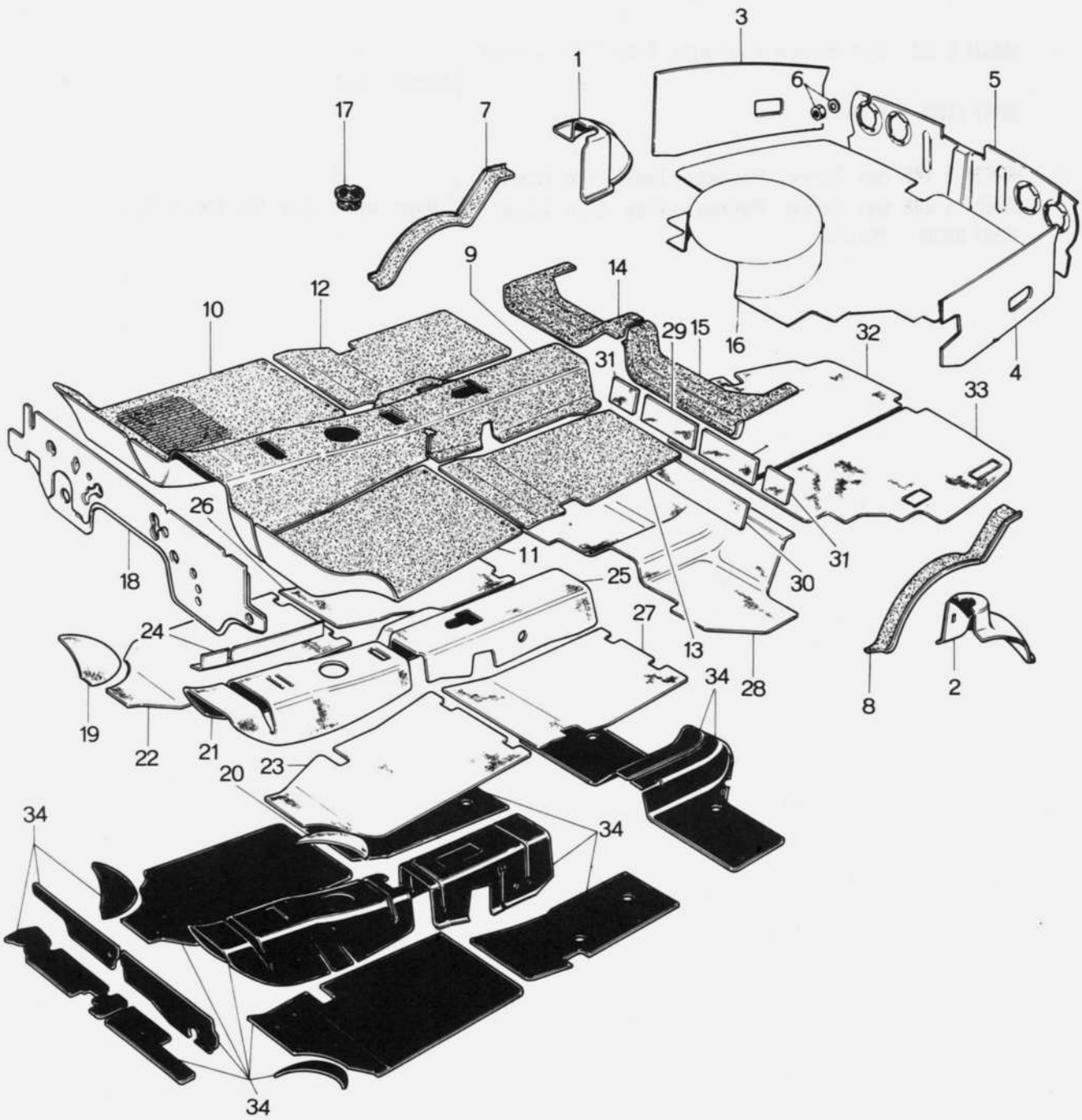

No.	Part Number	Description	Q'ty	Remarks	
● 1	0839 68 580A-00	Trunk Trim (R), Coupe use (Black)	1		©
●	0839 68 580C-00	Trunk Trim (R), Coupe use (Black)	1	Car No. 38158 ⁷⁰/₁₁ ~ ×	
●	0841 68 580A-00	Trunk Trim (R), Sedan use (Black)	1		©
●	0841 68 580C-00	Trunk Trim (R), Sedan use (Black)	1	Car No. 38158 ⁷⁰/₁₁ ~ ×	
2	0839 68 590A-00	Trunk Trim (L) (Black)	1		©
● 3	0305 68 610B-00	Trunk Trim (R), Side (Black) With hole for Rear Side Reflex Reflector	1		©
	2846 68 610	Trunk Trim (R), Side Without hole for Rear Side Reflex Reflector	1		©
● 4	0305 68 620B-00	Trunk Trim (L), Side (Black) With hole for Rear Side Reflex Reflector	1		©
	2846 68 620	Trunk Trim (L), Side Without hole for Rear Side Reflex Reflector	1		©
5	0839 68 630B	Trunk End Trim	1		©
6	99907 0500	Nut	4		©
	99907 0500B	Nut	4	Car No. 27392 ⁷⁰/₁₀ ~ ○	
	99952 0500	Plain Washer	4		©
	99952 0516B	Plain Washer	4	Car No. 27392 ⁷⁰/₁₀ ~ ○	
● 7	0305 69 541A-01	Tire House Trim (R) (Black)	1		©
8	0305 69 542A-01	Tire House Trim (L) (Black)	1		©
9	2080 69 611	Mat (Frt., C) (L.H.D.)	1		©
	2323 69 611-12	Mat (Frt., C) (R.H.D.) (Black) With hole for Console Box fix.	1		©
	2874 69 611A-12	Mat (Frt., C) (R.H.D.) (Black) Without hole for Console Box fix.	1		©
10	0833 69 612A-26	Mat (Frt., R) (R.H.D.) (Black)	1		©
	2080 69 612	Mat (Frt., R) (L.H.D.)	1		©
11	0833 69 613A-26	Mat (Frt., L) (R.H.D.) (Black)	1		©
	2080 69 613	Mat (Frt., L) (L.H.D.)	1		©
12	0833 69 617-26	Mat (Rr., R) (Black)	1		©
13	0833 69 618-26	Mat (Rr., L) (Black)	1		©
14	0833 69 625-08	Mat (R), End (Black)	1		©
15	0305 69 626-08	Mat (L), End (Black)	1		©
16	0839 69 627C-05	Mat, Trunk Room (Black)	1		©
●	0839 69 627D-05	Mat, Trunk Room (Black)	1	Car No. 40071 ⁷⁰/₁₂ ~ ×	
17	2981 69 623-19	Trim Cap	2		©
18	0839 69 660B	Insulator Ass'y (R.H.D.) Cars With Car Heater	1		

TRIM & FLOOR MAT

No.	Part Number	Description	Q'ty	Remarks
	2324 69 660A	Insulator Ass'y (R.H.D.) Without Car Heater	1	
	0857 69 660	Insulator Ass'y (R.H.D.) Without Car Heater	1	Car No. 34307 70/11 ~ ○
	2080 69 660A	Insulator Ass'y (L.H.D.)	1	
	2080 69 660A	Insulator Ass'y (L.H.D.)	1	Car No. 21039 70/8 ~ ○
	2080 69 660B	Insulator Ass'y (L.H.D.)	1	Car No. 33038 70/10 ~ ○
19	0305 69 681	Pad (R), Tire House	1	
20	0305 69 682	Pad (L), Tire House	1	
21	0839 69 683A	Pad (C), Front	1	
22	0839 69 684	Pad (R), Front	1	
23	0839 69 685	Pad (L), Front	1	
24	0839 69 686	Pad, Front	1	
25	0839 69 687A	Pad (C), Rear	1	
26	0839 69 688	Pad (R), Rear	1	
27	0839 69 689	Pad (L), Rear	1	
28	0305 69 692	Pad, End	1	
29	0305 69 693	Pad No. 1, Package Tray	2	
30	0305 69 694	Pad No. 2, Package Tray	1	
31	0305 69 695	Pad No. 3, Package Tray	2	
● 32	0839 69 696A	Pad (R), Trunk	1	
	0839 69 696B	Pad (R), Trunk	1	Car No. 38158 70/11 ~ ×
●	0839 69 696C	Pad (R), Trunk	1	Car No. 40001 70/12 ~ ×
●	0839 69 696D	Pad (R), Trunk	1	Car No. 61926 71/3 ~ ○
33	0839 69 697B	Pad (L), Trunk	1	
	0839 69 697C	Pad (L), Trunk	1	Car No. 38158 70/11 ~ ×
●	0839 69 697D	Pad (L), Trunk	1	Car No. 61926 71/3 ~ ○
34	0208 76 071	Silencer		
		A 30 cm Square object in Sheet form is Supplied Under Part No 0208 76 071 (Floor Silencer Revised Piece)		

VENTILATOR

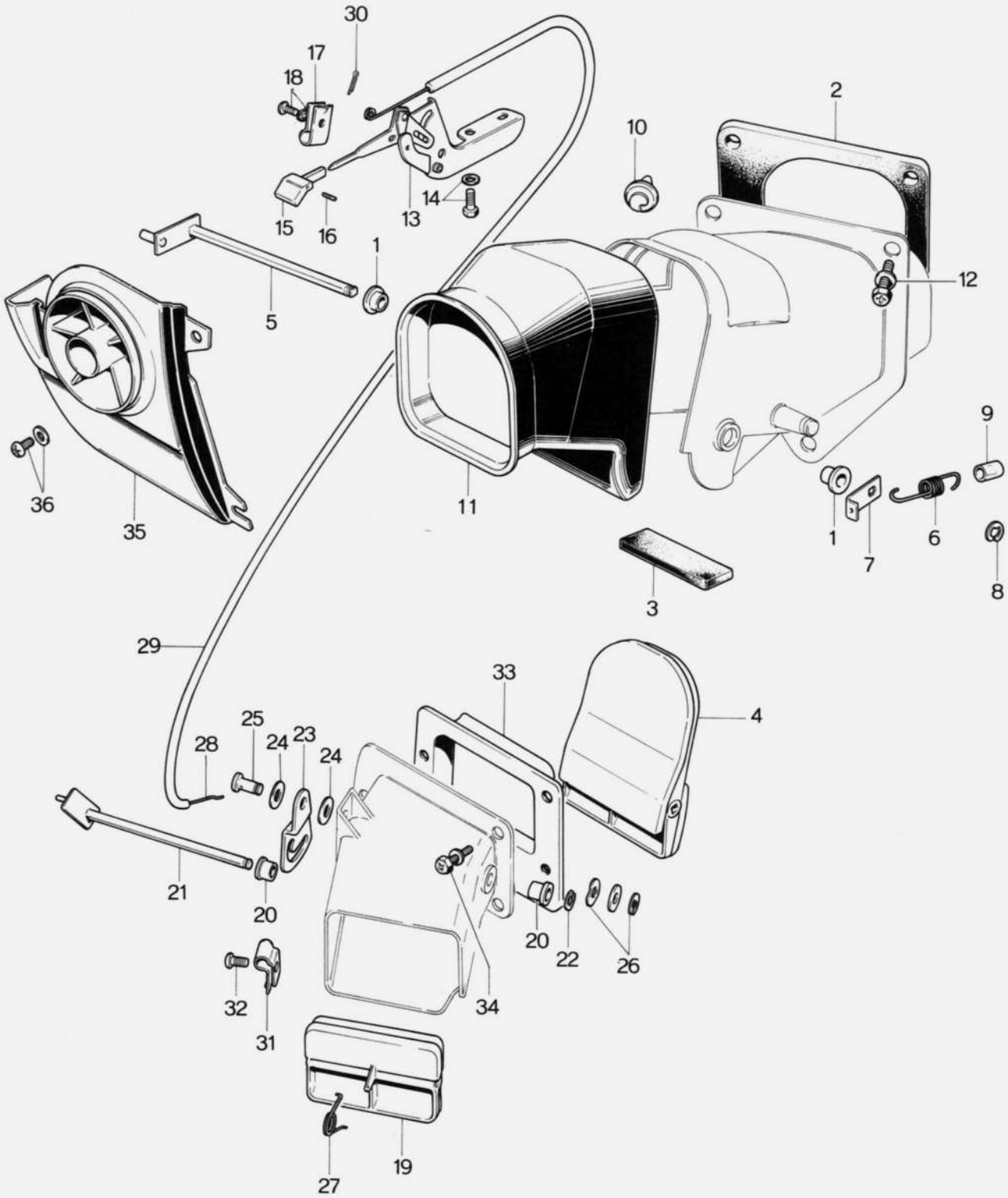
30
17
18
2
10
15
16
13
14
1
5
12
36
35
11
9
1
7
6
8
3
29
33
4
25
28
24
23
24
21
20
20
22
26
32
31
34
27
19

No.	Part Number	Description	Q'ty	Remarks
	0305 70 310B	FIRST VENTILATOR Ass'y (R)	1	
	0305 71 310B	FIRST VENTILATOR Ass'y (L)	1	
1	0317 70 307	Bush	4	
2	0305 70 312	Gasket	2	
3	0259 70 315	Cushion	2	
4	0305 70 320	Flap Ass'y	2	
5	0305 70 330	Lever Ass'y	2	
6	0305 70 342	Spring	2	
7	0305 70 343	Lever (R)	1	
	0305 71 343	Lever (L)	1	
8	99576 0400	Stop Ring	2	
9	99335 06001	Vinyl Pipe	2	
10	0305 70 335	Clip	2	
11	0305 70 345	Ventilator	2	
12	908046 5 20	Set Bolt, Ventilator	4	Car No. 24191 70/9 ~ Discarded
	99785 0520	Bolt	4	
●	99785 0516	Bolt	4	Car No. 52327 71/1 ~ ○
	99971 0500	Spring Washer	4	Car No. 24191 70/9 ~ Added Anew
	99952 0500	Plain Washer	4	
13	0305 70 380A	Link Ass'y (R)	1	
	0305 70 380B	Link Ass'y (R)	1	Car No. 24191 70/9 ~ ○
	0305 70 380C	Link Ass'y (R)	1	Car No. 27392 70/10 ~ △
	0305 71 380A	Link Ass'y (L)	1	
	0305 71 380B	Link Ass'y (L)	1	Car No. 24191 70/9 ~ ○
	0305 71 380C	Link Ass'y (L)	1	Car No. 27392 70/10 ~ △
14	908047 5 12	Set Bolt, Link	4	
	908047 5 16	Set Bolt, Link	4	Car No. 34307 70/11 ~ ○
15	0305 70 392A	Knob (R)	1	
	0305 70 392C	Knob (R)	1	Car No. 27392 70/10 ~ ×
	0305571 392A	Knob (L)	1	
	0305 71 392C	Knob (L)	1	Car No. 27392 70/10 ~ ×
16	99836 0312B	Screw, Knob	2	
17	0305 70 395A	Wire Clamp	2	
	0305 70 395B	Wire Clamp	2	Car No. 24191 70/9 ~ ○
18	908346 4 10	Set Screw, Wire Clamp	2	
	908332 4 10	Set Screw, Wire Clamp	2	Car No. 24191 70/9 ~ ○
	908336 4 10	Set Screw, Wire Clamp	2	Car No. 36206 70/11 ~ ○

70 71 VENTILATOR

No.	Part Number	Description	Q'ty	Remarks
	0305 70 350E	SECOND VENTILATOR Ass'y (R)	1	
	0305 70 350F	SECOND VENTILATOR Ass'y (R)	1	Car No. 24191 7/9 ~ ○
	0305 71 350E	SECOND VENTILATOR Ass'y (L)	1	
	0305 71 350F	SECOND VENTILATOR Ass'y (L)	1	Car No. 24191 7/9 ~ ○
19	0305 70 360	Flap Ass'y	2	
20	0317 70 307	Bush	4	
21	0305 70 370	Lever	2	
22	99576 0400	Stop Ring	2	
23	0305 70 375	Clamp (R)	1	
	0305 71 375	Clamp (L)	1	
24	0633 52 148	Washer	4	
25	99230 0811	Pin	2	
26	99972 0800	Wave Washer, Clamp	2	
	99952 0816	Plain Washer	2	
	99576 0500	Stop Ring	2	
27	0223 70 327	Spring	2	
	0305 70 397	Spring	2	Car No. 24191 7/9 ~ ○
● Ⓝ	0305 70 390	Wire Ass'y	2	Car No. 69368 7/4 ~ Added Anew
28	0305 70 393	Wire	2	☆
	0305 70 393A	Wire	2	Car No. 24191 7/9 ~ ○ Order Under 0305 70 390 ☆ ☆
29	0305 70 399	Outer Tube	2	
30	99221 2012	Split Pin	2	Car No. 24191 7/9 ~ Discarded
31	0305 70 396	Wire Clamp (R)	1	
	0305 71 396	Wire Clamp (L)	1	
32	99864 0410	Screw, Wire Clamp	2	Car No. 24191 7/9 ~ Discarded
	99860 0410	Screw, Wire Clamp	2	Car No. 24191 7/9 ~ Added Anew
	99952 0400	Washer, Wire Clamp	2	
33	0805 70 352A	Packing (R)	1	
	0305 71 352A	Packing (L)	1	
34	908046 5 20	Set Bolt, Ventilator	6	Car No. 24191 7/9 ~ Discarded
	99785 0520	Bolt	6	Car No. 24191 7/9 ~ Added Anew
	99971 0500	Spring Washer	6	
	99952 0500	Plain Washer	6	

No.	Part Number	Description	Q'ty	Remarks	
● 35	0305-70 400A-00	Decoration Panel (R) (Black)	1		©
●	0305 71 400A-00	Decoration Panel (L) (Black)	1		©
36	908331 5 12B	Set Screw, Decoration Panel	4		

WINDOW GLASS & MOULDING
(ALL COUPE MODELS)

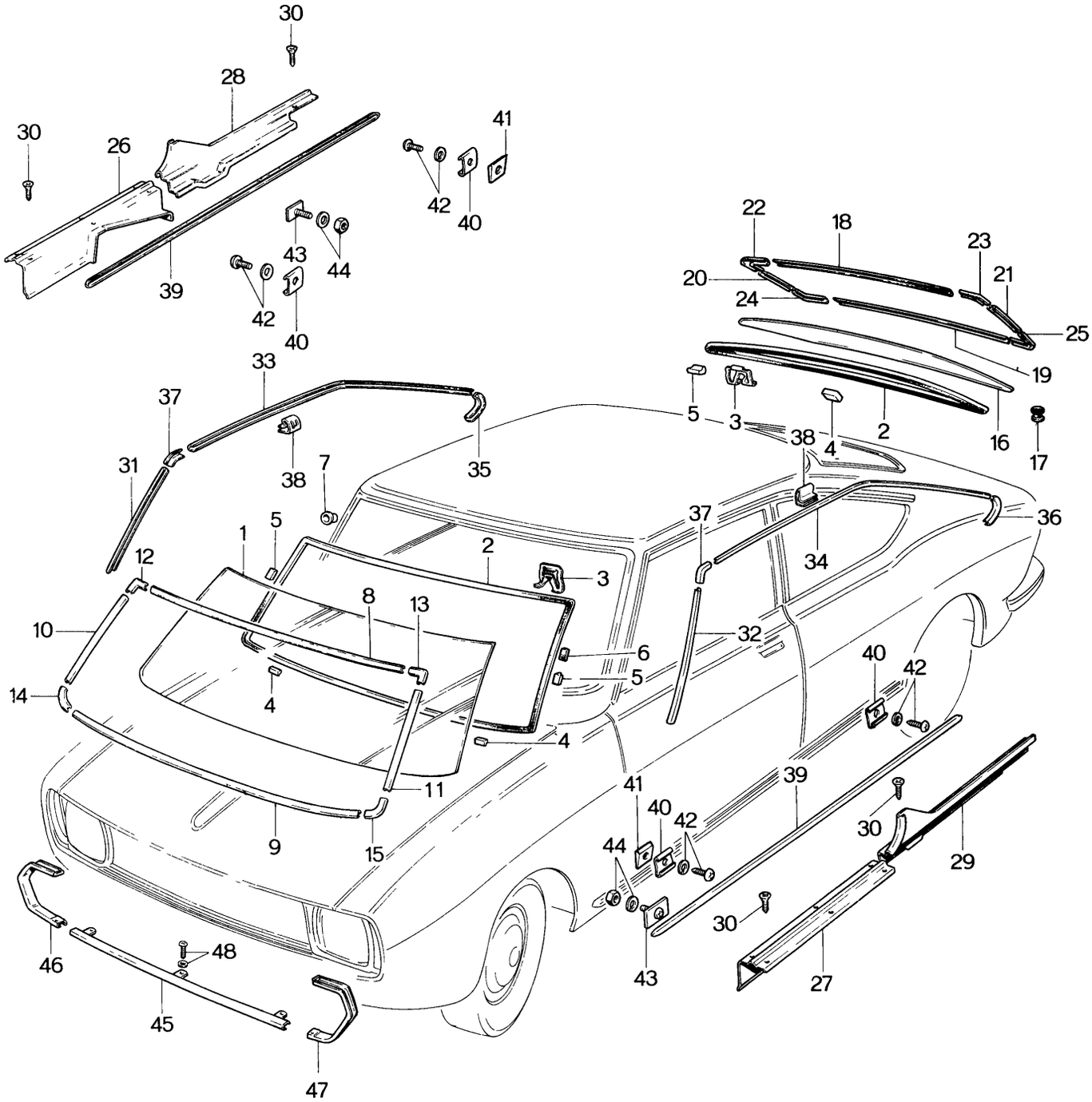

WINDOW GLASS & MOULDING

(ALL COUPE MODELS)

70 71

No.	Part Number	Description	Q'ty	Remarks
1	0839 70 441	Front Windshield Glass, Blue Pane Laminated (6.3mm)	1	
	0857 70 441	Front Windshield Glass, Transparent Laminated	1	Selective use
	2080 70 441	Front Windshield Glass, Blue Pane (H.P.R.) Laminated (6.6mm)	1	
	2866 70 441	Front Windshield Glass, Transparent (H.P.R.) Laminated	1	
2	0305 70 443B	Dam	2	
3	0305 70 445B	Clip	38	
4	0305 70 447B	Spacer "A"	4	
5	0305 70 448A	Spacer "B"	4	
6	0839 70 449	Spacer "C"	4	
7	0305 53 999	Stud	38	
8	0839 70 451A	Front Mould Upper	1	
9	0305 70 452A	Front Mould Lower	1	
10	0839 70 453A	Front Mould (R)	1	
11	0839 71 453A	Front Mould (L)	1	
12	0839 70 454A	Joint (R)	1	
13	0839 71 454A	Joint (L)	1	
14	0839 70 455	Joint (R)	1	
15	0839 71 455	Joint (L)	1	
16	0833 70 471	Back Window Glass, Blue Pane	1	
	0839 70 471C	Back Window Glass, Blue Pane (With Heating Wire)	1	Selective use
	2866 70 471	Back Window Glass, Transparent	1	
	2867 70 471C	Back Window Glass, Transparent (With Heating Wire)	1	
17	99681 1001	Protector, Back Window	1	
18	0839 70 481A	Rear Mould, Upper	1	
19	0839 70 482A	Rear Mould, Lower	1	
20	0839 70 483A	Rear Mould (R)	1	

WINDOW GLASS & MOULDING

(ALL COUPE MODELS)

No.	Part Number	Description	Q'ty	Remarks	
21	0839 71 483A	Rear Mould (L)	1		
22	0839 70 484A	Joint (R)	1		
23	0839 71 484A	Joint (L)	1		
24	0839 70 485A	Joint (R)	1		
25	0839 71 485A	Joint (L)	1		
● 26	0839 70 802A-00	Scarf Plate (Frt., R)(Black)	1		©
● 27	0839 71 802A-00	Scarf Plate (Frt., L)(Black)	1		©
● 28	0839 70 803A-00	Scarf Plate (Rr., R) (Black)	1		©
● 29	0839 71 803B-00	Scarf Plate (Rr., L) (Black)	1		©
30	99862 0414B	Screw, Scaf Plate	20		
31	0839 70 821	Drip Mould (Frt., R)	1		
32	0839 71 821	Drip Mould (Frt., L)	1		
33	0839 70 822	Drip Mould Center (R)	1		
34	0839 71 822	Drip Mould Center (L)	1		
35	0839 70 823B	Drip Mould End (R)	1		
36	0839 71 823B	Drip Mould End (L)	1		
37	0305 70 825	Corner (Frt.)	2		
38	0305 70 827A	Clip	18		
39	0305 70 851	Step Mould	2		
40	0305 70 861A	Clip	10		
41	0839 70 865	Spacer	4		
42	99863 0512	Screw, Step Mould	10		
	99971 0500	Spring Washer	10		
43	0223 70 870	Set Plate, Step Mould	2		
44	99906 0400	Nut, Step Mould	2		
	99971 040C	Spring Washer	2		

WINDOW GLASS & MOULDING
(ALL COUPE MODELS)

70 71

No.	Part Number	Description	Q'ty	Remarks
45	0305 70 911	Front Mould No. 1	1	
46	0305 70 921	Front Mould No. 2 (R)	1	
47	0305 71 921	Front Mould No. 2 (L)	1	
48	99863 0512	Screw, Front Mould No. 1, No. 2	9	
	99952 0500	Plain Washer	9	

WINDOW GLASS & MOULDING
(ALL SEDAN MODELS)

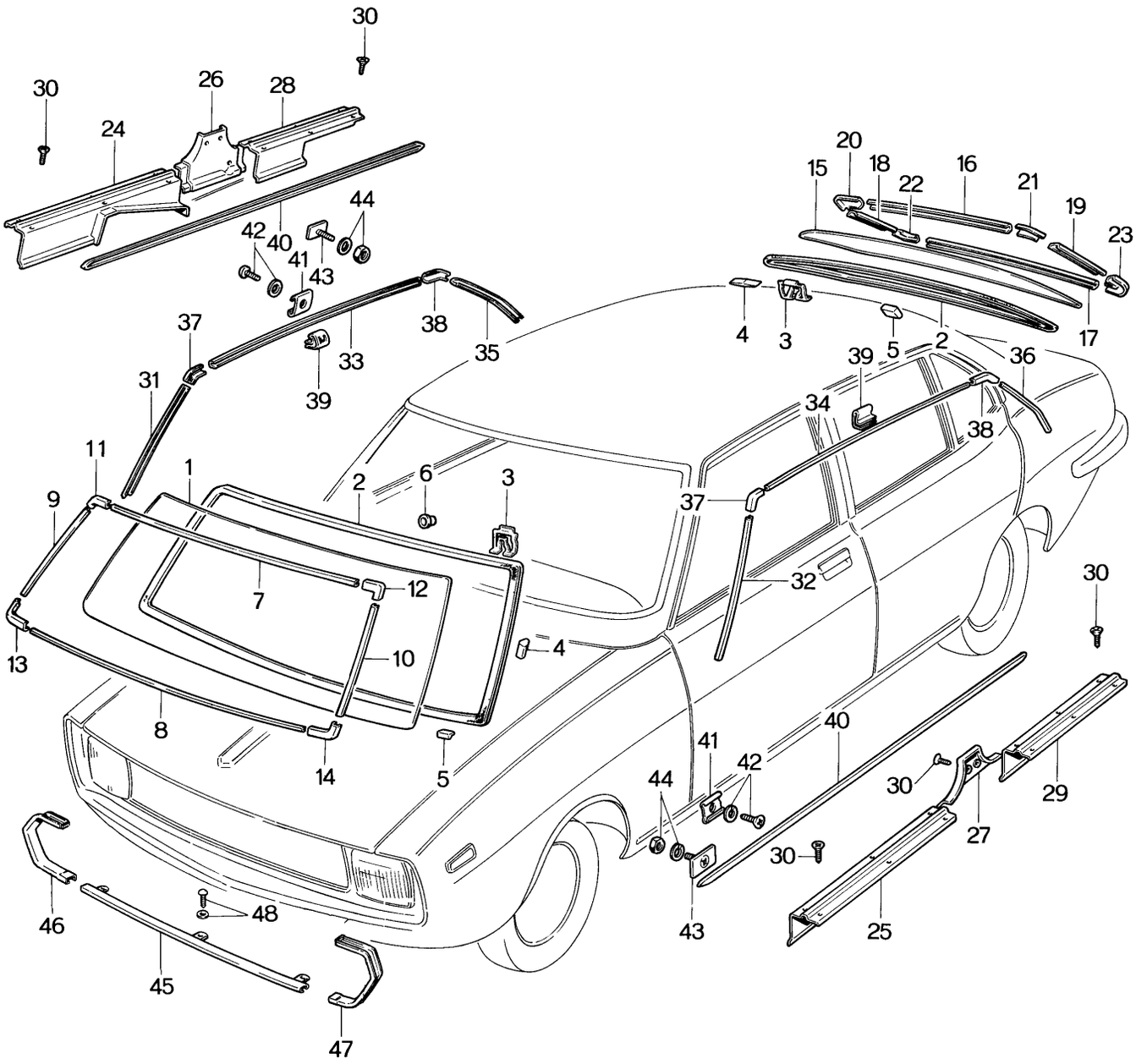

WINDOW GLASS & MOULDING
(ALL SEDAN MODELS)

70 71

No.	Part Number	Description	Q'ty	Remarks
1	0301 70 441	Windshield Glass Transparent Laminated (6.3mm)	1	
	0305 70 441	Windshield Glass, Blue Pane Laminated (6.3mm)	1	Selective use
	2835 70 441	Windshield Glass, Blue Pane (H.P.R.) (6.6mm)	1	
	2862 70 441	Windshield Glass, Transparent (H.P.R.) (6.7mm)	1	
2	0305 70 443B	Dam	2	
3	0305 70 445B	Clip	38	
4	0305 70 447B	Spacer "A"	4	
5	0305 70 448A	Spacer "B"	4	
6	0305 53 999	Stud	38	
7	0305 70 451A	Front Mould Upper	1	
8	0305 70 452A	Front Mould Lower	1	
9	0305 70 453A	Front Mould (R)	1	
10	0305 71 453A	Front Mould (L)	1	
11	0305 70 454A	Joint (R)	1	
12	0305 71 454	Joint (L)	1	
13	0305 70 455A	Joint (R)	1	
14	0305 71 455A	Joint (L)	1	
15	0301 70 471	Back Window Glass, Transparent	1	
	0304 70 471	Back Window Glass, Blue Pane	1	
	0305 70 471D	Back Window Glass, Blue Pane With Heating Wire	1	Selective use
	2862 70 471C	Back Window Glass, Transparent With Heating Wire	1	
16	0305 70 481A	Rear Mould Upper	1	
17	0305 70 482A	Rear Mould Lower	1	
18	0305 70 483A	Rear Mould (R)	1	
19	0305 71 483A	Rear Mould (L)	1	
20	0305 70 484B	Joint (R)	1	

WINDOW GLASS & MOULDING
(ALL SEDAN MODELS)

No.	Part Number	Description	Q'ty	Remarks
21	0305 71 484	Joint (L)	1	
22	0305 70 485A	Joint (R)	1	
23	0305 71 485A	Joint (L)	1	
● 24	0305 70 802-00	Scarf Plate (Frt., R) (Black)	1	©
● 25	0305 71 802-00	Scarf Plate (Frt., L) (Black)	1	©
● 26	0305 70 803A-00	Scarf Plate (R), Center (Black)	1	©
● 27	0305 71 803B-00	Scarf Plate (L), Center (Black)	1	©
● 28	0305 70 804A-00	Scarf Plate (Rr., R) (Black)	1	©
● 29	0305 71 804A-00	Scarf Plate (Rr., L) (Black)	1	©
30	99862 0414B	Tapping Screw, Scarf Plate	26	
31	0305 70 821	Drip Mould (Frt., R)	1	
32	0305 71 821	Drip Mould (Frt., L)	1	
33	0305 70 822	Drip Mould Center (R)	1	
34	0305 71 822	Drip Mould Center (L)	1	
35	0305 70 823	Drip Mould (Rr., R)	1	
36	0305 71 823	Drip Mould (Rr., L)	1	
37	0305 70 825	Corner (Frt.)	2	
38	0305 70 826	Corner (Rr.)	2	
39	0305 70 827A	Clip	22	
40	0305 70 851	Step Mould	2	
41	0305 70 861A	Clip	10	
42	99863 0512	Screw Clip	10	
	99971 0500	Spring Washer	10	
43	0223 70 870	Set Plate	2	
44	99906 0400	Nut, Set Plate	2	
	99971 0400	Spring Washer	2	

WINDOW GLASS & MOULDING
(ALL SEDAN MODELS)

70 71

No.	Part Number	Description	Q'ty	Remarks
45	0305 70 911	Front Mould No. 1	1	
46	0305 70 921	Front Mould No. 2 (R)	1	
47	0305 71 921	Front Mould No. 2 (L)	1	
48	99863 0512	Tapping Screw, Front Mould	9	
	99952 0500	Plain Washer	9	

REAR SIDE WINDOW
(ALL COUPE MODELS)

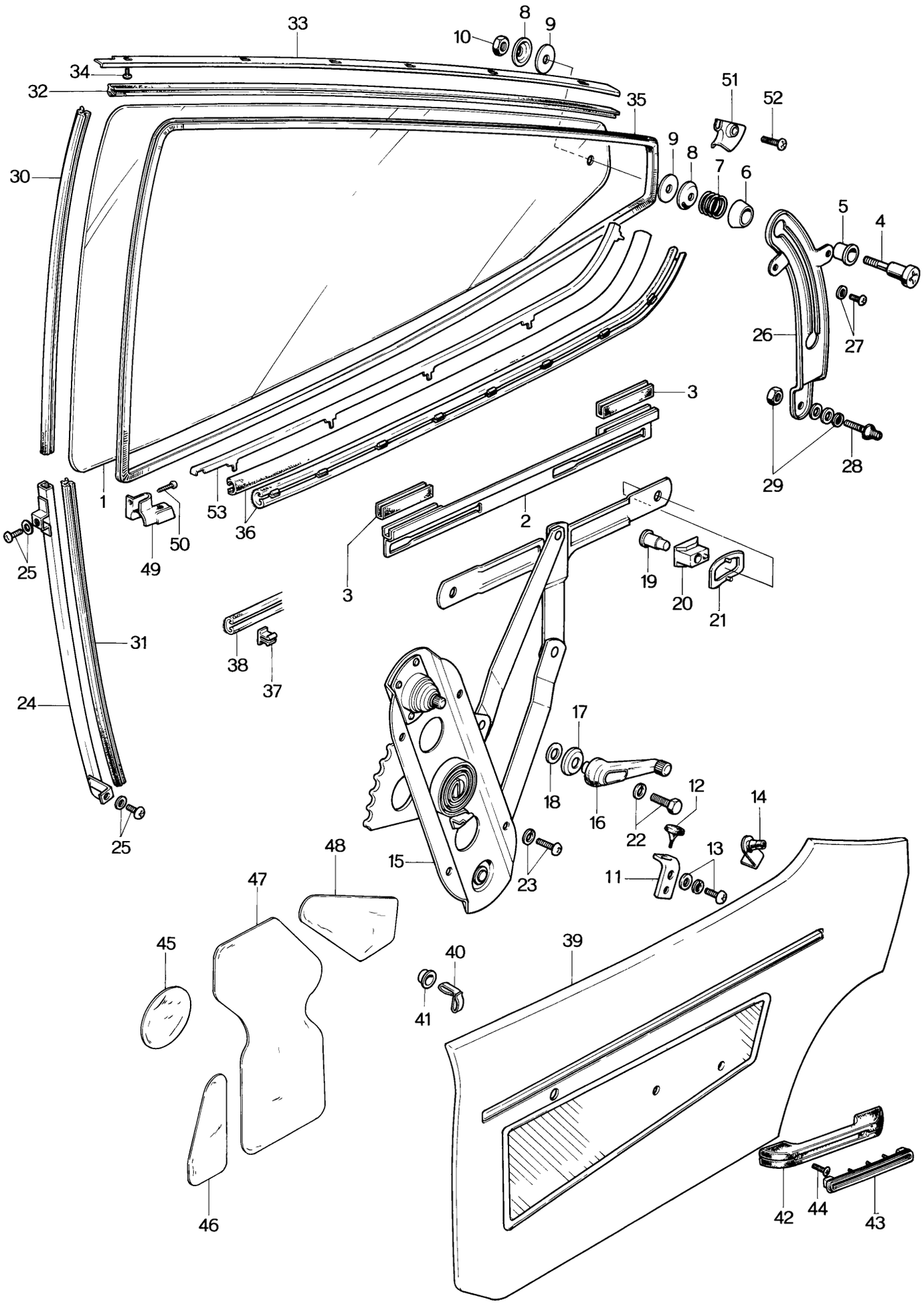

REAR SIDE WINDOW
(ALL COUPE MODELS)

70 71

No.	Part Number	Description	Q'ty	Remarks
1	0839 70 511	Window Glass (R), Blue Pane	1	
●	0839 70 511A	Window Glass (R), Blue Pane	1	Car No. 52327 $\frac{71}{1}$ ~ ×
	2866 70 511	Window Glass (R), Transparent	1	
●	2866 70 511A	Window Glass (R), Transparent	1	Car No. 52327 $\frac{71}{1}$ ~ ×
	0839 71 511	Window Glass (R), Blue Pane	1	
●	0839 71 511A	Window Glass (L), Blue Pane	1	Car No. 52327 $\frac{71}{1}$ ~ ×
	2866 71 511	Window Glass (L), Transparent	1	
●	2866 71 511A	Window Glass (L), Transparent	1	Car No. 52327 $\frac{71}{1}$ ~ ×
2	0839 70 515	Lift Bracket (R)	1	
	0839 71 515	Lift Bracket (L)	1	
● 3	0259 58 232	Rubber Strip	4	
●	2292 58 232	Rubber Strip	4	Cars No. 52327 $\frac{71}{1}$ ~ ×
4	0839 70 521	Pin	2	
5	0839 70 522	Roller	2	
6	0839 70 523A	Spring Seat	2	
7	0839 70 524	Spring	2	
8	0839 70 525	Washer	4	
9	0839 70 526	Seat	4	
10	99906 0500	Nut	2	
11	0839 70 550A	Bracket Ass'y	2	
12	0824 58 155	Stopper	2	
13	908062 6 12	Set Screw	4	
	99951 0618	Plain Washer	4	
14	0839 70 555	Cushion	2	
15	0839 70 570	Window Regulator (R)	1	
	2855 70 570	Window Regulator (R) Arctic Spec Model	1	Car No. 27392 $\frac{70}{10}$ ~ Added Anew
	0839 71 570	Window Regulator (L)	1	
	2855 71 570	Window Regulator (L) Arctic Spec Model	1	Car No. 27392 $\frac{70}{10}$ ~ Added Anew
16	0223 58 370B	Regulator Handle	2	
17	0223 58 375A	Escutcheon	2	
18	0223 72 305	Packing	2	
19	0223 58 303A	Pin, Regulator	4	
20	0223 58 304A	Guide, Regulator	4	

REAR SIDE WINDOW
(ALL COUPE MODELS)

No.	Part Number	Description	Q'ty	Remarks
21	0223 58 311	Spring Guide	4	
22	99806 0516	Bolt, Regulator Handle	2	
	99971 0500	Spring Washer	2	
23	908062 6 12	Set Screw, Regulator	8	
	99951 0618	Plain Washer	8	
24	0839 70 603	Glass Guide "A" (R)	1	
	0839 71 603	Glass Guide "A" (L)	1	
25	908062 6 12	Set Screw, Glass Guide	4	
	99951 0618	Plain Washer	4	
26	0839 70 604	Glass Guide "B" (R)	1	
	0839 71 604	Glass Guide "B" (L)	1	
27	908062 6 12	Set Screw, Glass Guide "B"	8	
	99951 0618	Plain Washer	8	
28	0824 70 621	Stud, Glass Guide "B"	2	
29	99906 0800	Nut, Glass Guide "B"	2	
	99951 0822	Plain Washer	2	
	99971 0800	Spring Washer	2	
30	0839 70 605C	Glass Channel "A"	2	
●	0839 70 605D	Glass Channel "A"	2	Car No. 52327 7/1 ~ ×
31	0839 70 606B	Glass Channel "B"	2	
●	0839 70 606C	Glass Channel "B"	2	Car No. 52327 7/1 ~ ×
32	0839 70 651A	Weatherstrip (R)	1	
	0839 71 651A	Weatherstrip (L)	1	
33	0839 70 652	Retainer (R)	1	
	0839 71 652	Retainer (L)	1	
34	99864 0408	Screw	12	
35	0839 70 655A	Seeming Welt Seaming	2	
●	0839 70 655B	Seaming Welt	2	Car No. 69368 7/4 ~ ○

REAR SIDE WINDOW
(ALL COUPE MODELS)

70 71

No.	Part Number	Description	Q'ty	Remarks	
36	0839 70 680B	WEATHERSTRIP (R)	2		
●	0839 70 680C	WEATHERSTRIP (R)	2	Car No. 55667 7/2 ~ ○	
	0839 71 680B	WEATHERSTRIP (L)	2		
●	0839 71 680C	WEATHERSTRIP (L)	2	Car No. 55667 7/2 ~ △	
37	0839 58 783A	Fastener	32		
●	0839 58 783C	Fastener	32	Car No. 55667 7/2 ~ △	
38	0839 70 681B	Weatherstrip	4		
● 39	0839 70 701A-01	Quarter Trim (R) (Black)	1		©
●	0839 70 701A-04	Quarter Trim (R) (Brown)	1		
●	0839 71 701A-01	Quarter Trim (L) (Black)	1		©
●	0839 71 701A-04	Quarter Trim (L) (Brown)	1		
40	0208 58 921	Fastener, Trim	6		
41	0187 58 922	Cap, Trim	6		
42	0305 58 821A-01	Arm Rest (Black)	2		©
43	0305 58 822A-02	Garnish (Grey)	2		©
44	99833 0516	Screw, Arm Rest	4		
45	0813 58 923	Door Screen No. 3	4		
●	0613 58 923	Door Screen No. 3	4	Car No. 61926 7/3 ~ ○	
46	0839 70 741A	Screen "A" (R)	1		
	0839 71 741A	Screen "A" (L)	1		
47	0839 70 742	Screen "B" (R)	1		
	0839 71 742	Screen "B" (L)	1		
48	0839 70 743	Screen "C" (R)	1		
	0839 71 743	Screen "C" (L)	1		
● 49	0839 70 751B-00	Cover "A" (R) (Black)	1		©
●	0839 70 751C-00	Cover "A" (R) (Black)	1	Car No. 69368 7/4 ~ ×	
●	0839 71 751B-00	Cover "A" (L) (Black)	1		©
●	0839 71 751C-00	Cover "A" (L) (Black)	1	Car No. 69368 7/4 ~ ×	
50	99864 0410B	Screw, Cover	2		
51	0839 70 752A	Cover "B" (R)	1		©
	0839 71 752A	Cover "B" (L)	1		©
52	99862 0418B	Screw, Cover	2		

REAR SIDE WINDOW
(ALL COUPE MODELS)

No.	Part Number	Description	Q'ty	Remarks
53	**0839 70 721A**	**Beltline Mould (R)**	1	
	0839 70 721B	**Beltline Mould (R)**	1	Car No. 25947 ~ O
	0839 71 721A	**Beltline Mould (L)**	1	
	0839 71 721B	**Beltline Mould (L)**	1	Car No. 25947 ~ O

REAR SIDE DOOR (GLASS, ALL SEDAN MODELS)

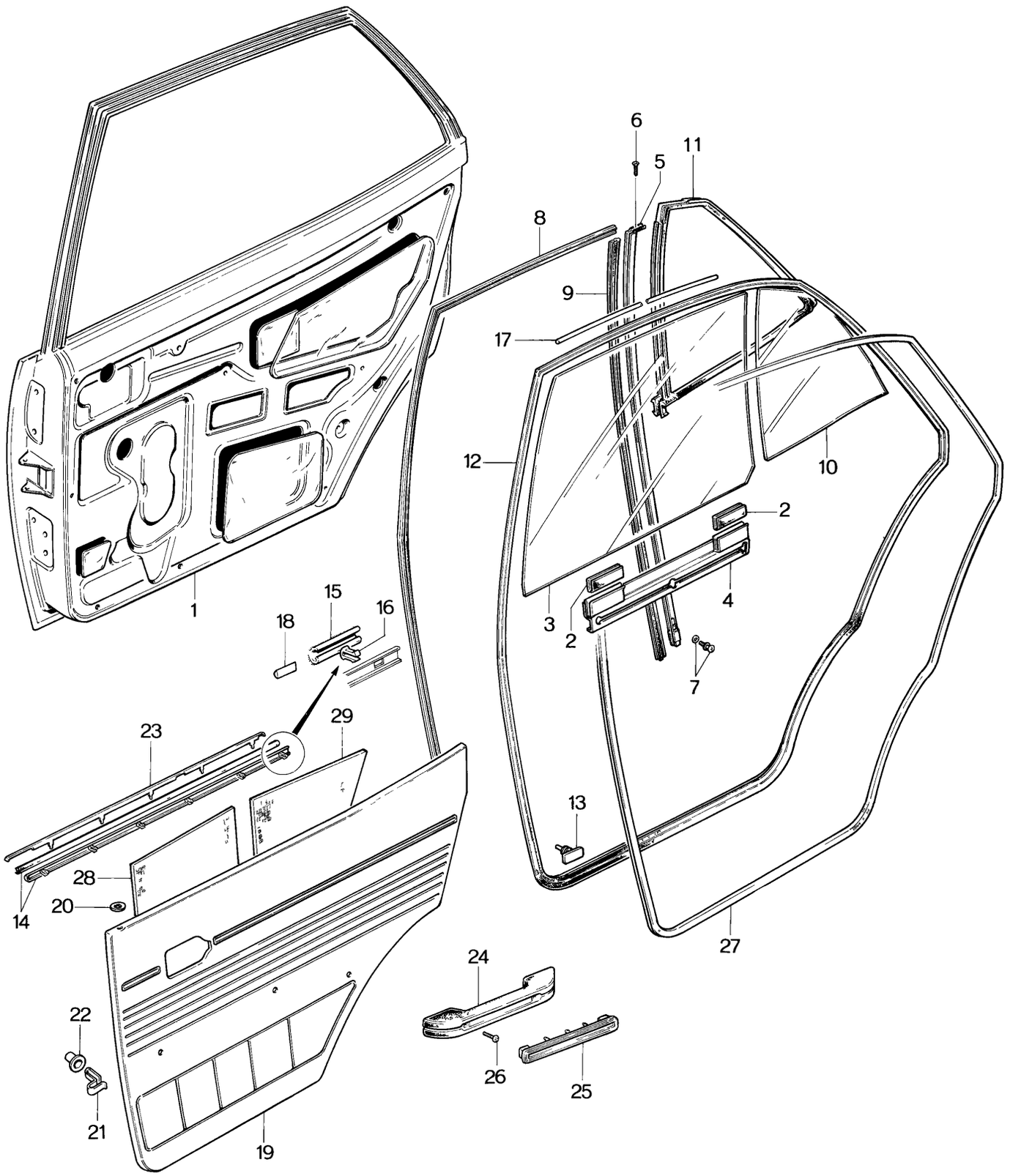

REAR SIDE DOOR (GLASS, ALL SEDAN MODELS)

72 73

No.	Part Number	Description	Q'ty	Remarks
1	0305 72 010E	DOOR BODY Ass'y (R)	1	
	0305 73 010E	DOOR BODY Ass'y (L)	1	
	0305 72 020A	Outer Panel (R)	1	
	0305 73 020A	Outer Panel (L)	1	
	0305 72 601D	Sash (R)	1	
	0305 73 601D	Sash (L)	1	
2	0259 58 232	Rubber Strip	4	
	2292 58 232	Rubber Strip	4	Car No. 27392 70/10 ~ ×
3	0301 72 501	Door Glass (R) (Transparent)	1	
	0301 72 501A	Door Glass (R) (Transparent)	1	Car No. 27392 70/10 ~ ×
	0301 73 501	Door Glass (L) (Transparent)	1	
	0301 73 501A	Door Glass (L) (Transparent)	1	Car No. 27392 70/10 ~ ×
	0305 72 501	Door Glass (R) (Blue Pane)	1	
	0305 72 501A	Door Glass (R) (Blue Pane)	1	Car No. 27392 70/10 ~ ×
	0305 73 501	Door Glass (L) (Blue Pane)	1	
	0305 73 501A	Door Glass (L) (Blue Pane)	1	Car No. 27392 70/10 ~ ×
4	0305 72 505	Lift Bracket (R)	1	
	0305 73 505	Lift Bracket (L)	1	
5	0305 72 602A	Center Channel (R)	1	
	0305 73 602A	Center Channel (L)	1	
6	99831 0408	Screw, Center Channel	4	
7	908062 6 10	Set Bolt, Center Channel	2	
	99951 0618	Plain Washer	2	
8	0305 72 605A	Glass Run Channel "A"	2	
	0305 72 605C	Glass Run Channel "A"	2	Car No. 27392 70/10 ~ ×
●	0305 72 605D	Glass Run Channel "A"	2	Car No. 61926 71/3 ~ ○
9	0305 72 606A	Glass Run Channel "B"	2	
	0305 72 606C	Glass Run Channel "B"	2	Car No. 27392 70/10 ~ ×
10	0301 72 661	Quarter Window Glass (R) (Transparent)	1	
	0301 72 661A	Quarter Window Glass (R) (Transparent)	1	Car No. 24191 70/9 ~ ○
	0301 73 661	Quarter Window Glass (L) (Transparent)	1	
	0301 73 661A	Quarter Window Glass (L) (Transparent)	1	Car No. 24191 70/9 ~ ○
	0305 72 661	Quarter Window Glass (R) (Blue Pane)	1	
	0305 72 662A	Quarter Window Glass (R) (Blue Pane)	1	Car No. 24191 70/9 ~ ○
	0305 73 661	Quarter Window Glass (L) (Blue Pane)	1	
	0305 73 661A	Quarter Window Glass (L) (Blue Pane)	1	Car No. 24191 70/9 ~ ○

72 73 REAR SIDE DOOR (GLASS, ALL SEDAN MODELS)

No.	Part Number	Description	Q'ty	Remarks
11	0305 72 662A	Weatherstrip	2	
	0305 72 662B	Weatherstrip	2	Car No. 27392 7/10 ~ ○
12	0305 72 760C	WEATHERSTRIP Ass'y (R)	1	
	0305 73 760C	WEATHERSTRIP Ass'y (L)	1	
13	0305 58 762	Fastener	58	
14	0305 72 780D	WEATHERSTRIP Ass'y (R)	2	
●	0305 72 780E	WEATHERSTRIP Ass'y (R)	2	Car No. 55667 7/2 ~ △
	0305 73 780D	WEATHERSTRIP Ass'y (L)	2	
●	0305 73 780E	WEATHERSTRIP Ass'y (L)	2	Car No. 55667 7/2 ~ △
		Right Side Outer is used for Left Side Inner		
15	0305 72 781B	Weatherstrip	4	
16	0839 58 783A	Fastener	12	
●	0839 58 783B	Fastener	12	Car No. 55667 7/2 ~ △
17	0305 72 768	Spacer, Weatherstrip	2	
18	0305 58 785	Adjuster	4	
●19	0305 72 810C-01	DOOR TRIM (R) (Black)	1	©
●	0305 72 810C-04	DOOR TRIM (R) (Brown)	1	
●	0305 73 810C-01	DOOR TRIM (L) (Black)	1	©
●	0305 73 810C-04	DOOR TRIM (L) (Brown)	1	
20	0223 58 692	Grommet	2	
21	0208 58 921	Fastener	20	
22	0187 58 922	Seal Fastener	20	
23	0305 72 831	Beltline Mould (R)	1	
	0305 72 831A	Beltline Mould (R)	1	Car No. 25947 7/9 ~ ○

REAR SIDE DOOR (GLASS, ALL SEDAN MODELS)

72 73

No.	Part Number	Description	Q'ty	Remarks	
	0305 73 831	Beltline Mould (L)	1		
	0305 73 831A	Beltline Mould (L)	1	Car No. 25947 ⅞ ~ ○	
● 24	0305 58 821A-01	Arm Rest (Black)	2		©
● 25	0305 58 822A-02	Garnish (Grey)	2		©
26	99833 0516	Screw, Arm Rest	4		
● 27	0305 72 755-00	Seaming Welt (Black)	2		©
●	0305 72 755A-00	Seaming Welt (Black)	2	Car No. 69368 ¼ ~ ○	
28	0305 72 851	Insulation "A"	2		
29	0305 72 852	Insulation "B"	2		

REAR SIDE DOOR (LOCK, ALL SEDAN MODELS)

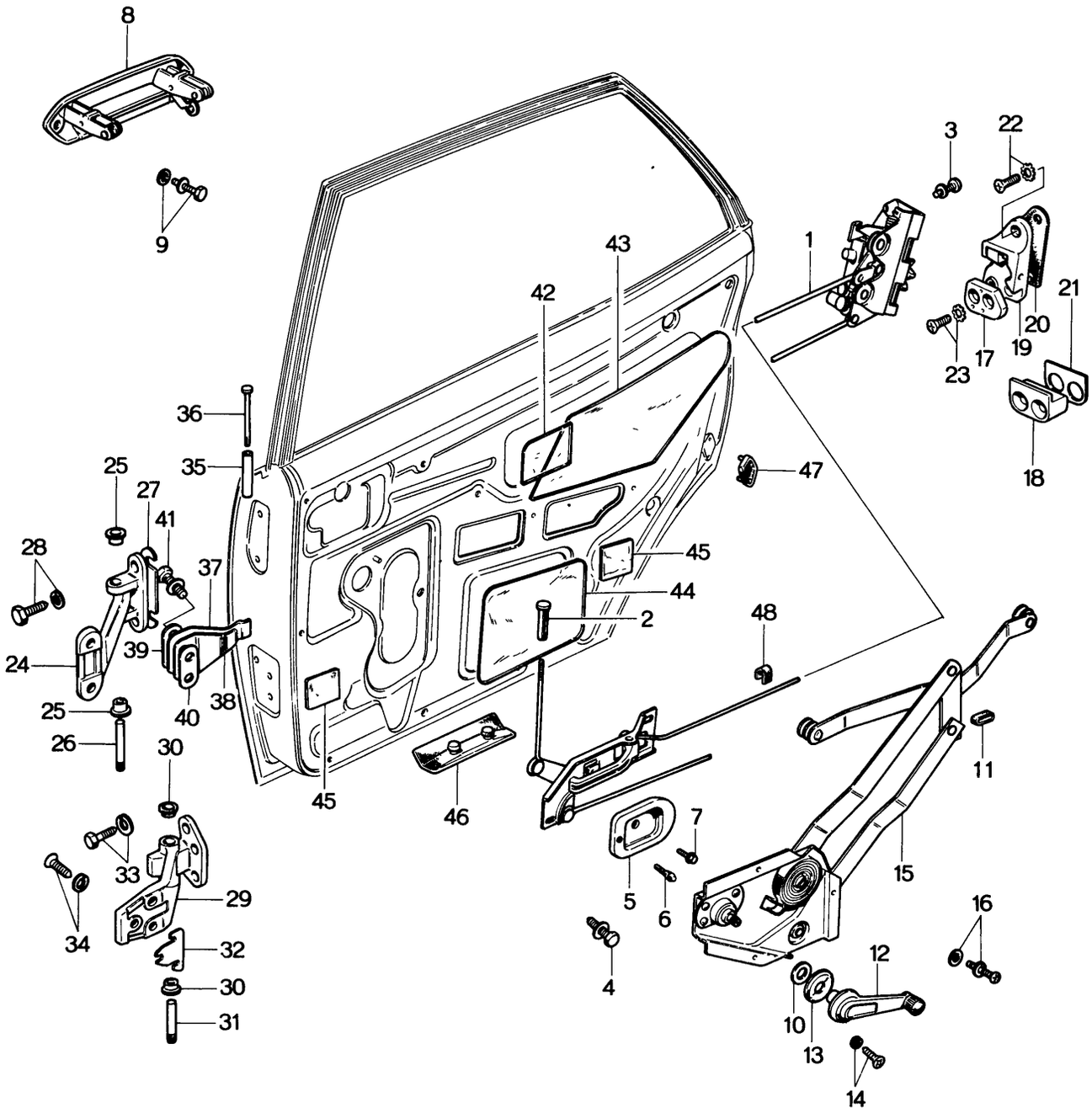

REAR SIDE DOOR (LOCK, ALL SEDAN MODELS)

72 73

No.	Part Number	Description	Q'ty	Remarks
1	0305 72 300D	DOOR LOCK Cpt. (R)	1	
	0305 73 300D	DOOR LOCK Cpt. (L)	1	
	2850 72 300	DOOR LOCK Cpt. (R) } Arctic Spec. Model	1	
	2850 73 300	DOOR LOCK Cpt. (L) } Arctic Spec. Model	1	
2	0259 58 691	Knob	2	
3	908324 6 12	Set Screw, Door Lock	6	
4	908066 5 10	Set Bolt, Inner Handle	4	
5	0223 58 611B	Cover	2	
	0223 58 611C	Cover	2	Car No. 24191 7/8 ~ ○
6	0259 58 612	Rubber Cushion	2	
7	99832 0408B	Screw, Cover	2	
8	0305 72 410B	Outer Handle (R)	1	
	99952 0822	Plain Washer	2	
● Ⓝ	0305 58 411	Bush	2	Car No. 42470 7/12 ~ Added Anew
9	907976 5 10	Set Bolt, Outer Handle	4	
	99952 0822	Plain Washer	2	
10	0223 8 305A	Packing	2	
11	0259 58 306	Cushion	2	
● 12	0223 58 370B-01	Regulator Handle (Black)	2	©
● 13	0223 58 375A-00	Escutcheon (Black)	2	©
14	99806 0516	Bolt, Regulator Handle	2	
	99971 0500	Washer	2	
15	0305 72 560	Window Regulator (R)	1	
	0305 73 560	Window Regulator (L)	1	
	2850 72 560	Window Regulator (R) } Arctic Spec. Models	1	
	2850 73 560	Window Regulator (L) } Arctic Spec. Models	1	

REAR SIDE DOOR (LOCK, ALL SEDAN MODELS)

No.	Part Number	Description	Q'ty	Remarks
● 16	908062 6 08	Set Screw, Window Regulator	2	Car No. 40657 70/12 ~ Quantity
●	908062 6 12	Set Screw, Window Regulator	4	Car No. 40657 70/12 ~ Added Anew
	99951 0618	Plain Washer	6	
17	0305 58 361	Rack (R)	1	
	0305 59 361	Rack (L)	1	
18	2826 58 365	Anti-burst Block	2	
19	0259 58 570	Striker Ass'y (R)	1	
	0259 59 570	Striker Ass'y (L)	1	
20	0187 58 592A	Striker Seat	2	
21	2350 58 593	Shim, Anti-burst Block	2	
22	907614 6 20	Set Screw, Striker	2	
23	907614 6 30	Set Screw, Striker & Anti-burst Block	8	
24	0305 72 210	UPPER HINGE Ass'y	2	
25	0223 58 721	Bush	4	
26	0187 58 731	Pin	2	
27	0305 72 201	Shim, Upper Hinge } Selective use	2	
	0305 72 203	Shim, Upper Hinge } Selective use	2	
28	907832 8 25	Set Bolt, Upper Hinge	8	
29	0305 72 240A	LOWER HINGE Ass'y (R)	1	
	0305 73 240A	LOWER HINGE Ass'y (L)	1	
30	0223 58 721	Bush	4	

No.	Part Number	Description	Q'ty	Remarks
31	0187 58 731	Pin	2	
32	0305 72 231	Shim, Lower Hinge	2	
33	907832 8 25	Set Bolt, Lower Hinge	6	
34	907832 8 28	Set Screw, Lower Hinge	6	
35	0317 58 831	Roller	2	
36	0317 58 832	Pin	2	
37	0305 72 261	Check Spring	2	
38	0305 72 262	Check Sub Spring	2	
39	0208 72 821	Adjust Washer No. 1	4	
40	0208 72 822	Adjust Washer No. 2	2	
41	908062 6 25	Set Bolt	4	
42	0305 72 861	Screen "A"	2	
43	0305 72 862	Screen "B" (R)	1	
	0305 73 862	Screen "B" (L)	1	
44	0305 72 863	Screen "C" (R)	1	
	0305 73 863	Screen "C" (L)	1	
45	0305 72 864	Screen "D"	4	
46	0305 58 872	Drain Valve	2	
47	0305 58 874	Cushion	2	
48	0259 72 509	Pad	4	

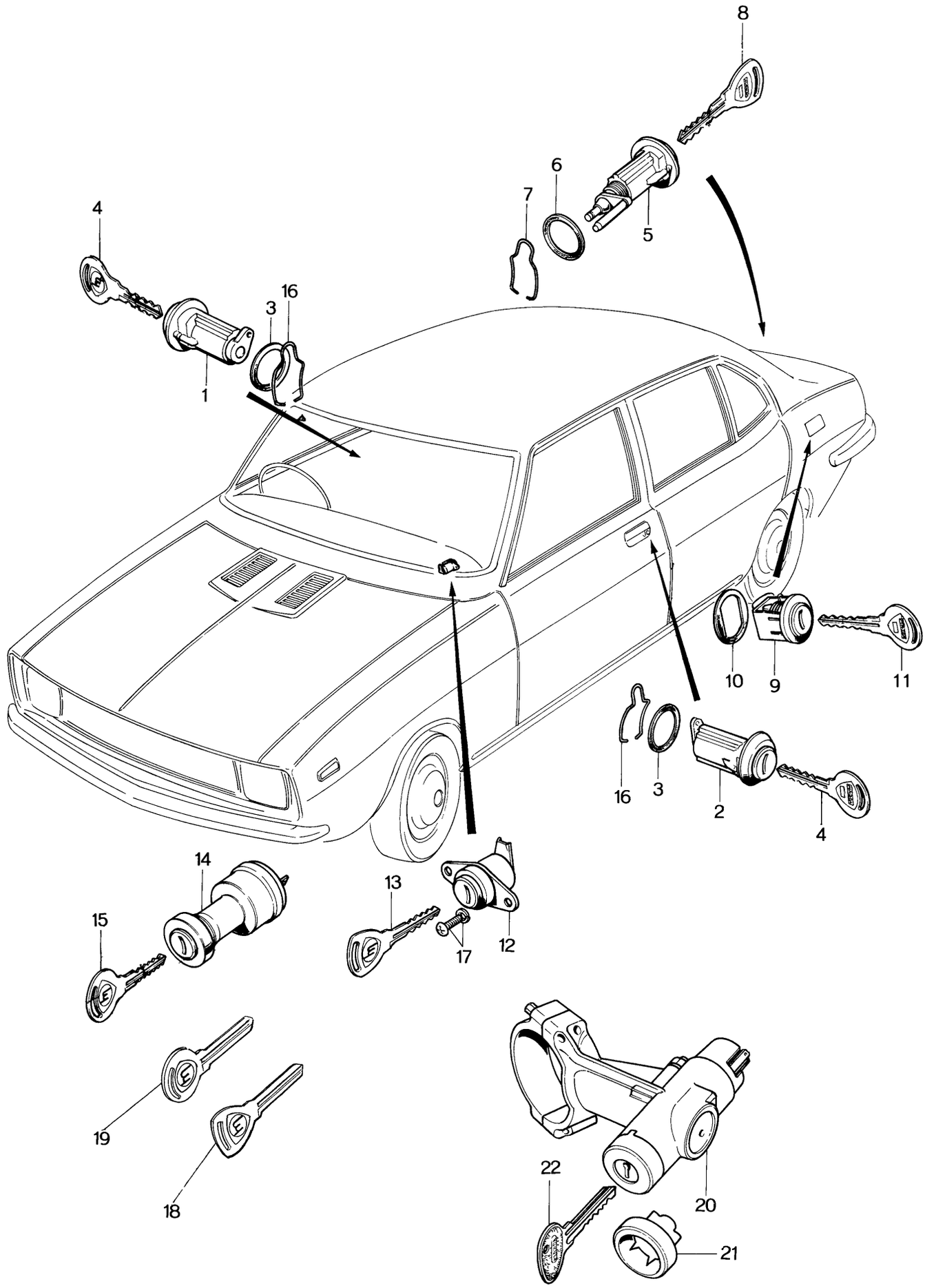
8
6
7
5
4
16
3
1
10
9
11
16
3
2
4
14
15
13
17
12
19
18
22
20
21

No.	Part Number	Description	Q'ty	Remarks	
	0833 09 010B	**KEY SET**	1		
	2324 09 010	**KEY SET,** For Cars with Steering Lock but without Key Cylinder For Steering Lock	1		
●	2080 09 010	**KEY SET,** For France	1		
	0839 74 910	FRONT DOOR KEY SET (L)	1		
●	2080 74 910	FRONT DOOR KEY SET (R) For France	1		
	0839 74 920	FRONT DOOR KEY SET (L)	1		
●	2080 74 920	FRONT DOOR KEY SET (L) For France	1		
1	0305 58 491	Key Cylinder (R)	1	Order Under No. 0839 74 910	☆
2	0305 59 491	Key Cylinder (L)	1	Order Under No. 0839 74 920	☆
3	0223 58 962	Packing	2		
4	0839 58 493A	Secondary Key	2		
●	2080 58 942	Secondary Key, For France	2		
	0839 74 930	TRUNK LID KEY SET	1		
●	2080 74 930	TRUNK LID KEY SET, For France	1		
5	0305 52 801	Key Cylinder	1	Order Under No. 0839 74 930	☆
6	0223 58 962	Packing	1		
7	0305 52 802	Retainer	1		
● 8	0839 58 492A	Primary Key	2		
●	2080 58 492	Primary Key, For France	2		
	0839 74 940	FILLER LID KEY SET	1		
●	2080 74 940	FILLER LID KEY SET, For France	1		
9	0305 42 440	Lock Ass'y	1	Order Under No. 0839 74 940	☆
10	0821 42 455	Seat	1		
11	0839 58 493A	Secondary Key	1		
●	2080 58 942	Secondary Key, For France	1		
	0839 74 950	GLOVE BOX KEY SET	1		
●	2080 74 950	GLOVE BOX KEY SET, For France	1		
12	0305 70 250	Lock Ass'y	1	Order Under No. 0839 74 950	☆

09 KEY SET

No.	Part Number	Description	Q'ty	Remarks
13	0839 58 492A	Primary Key	2	
●	2080 58 942	Primary Key, For France	2	
14	0304 60 430B	IGNITION SWITCH	1	
15	0839 58 493A	Secondary Key	1	
			1	
16	0223 58 961	Fastener, Key Cylinder	2	
17	908336 4 10B	Set Screw, Glove Box Lock	2	
18	0839 74 158	Primary Key Blank	1	Key Assortment No.2500~2999
●	2080 74 158	Primary Key Blank, For France	1	
	0839 74 168	Primary Key Blank	1	Key Assortment No.3000~3499
●	2080 74 168	Primary Key Blank, For France	1	
19	0305 74 159	Secondary Key Blank	1	Key Assortment No.2500~2999
	0305 74 169	Secondary Key Blank	1	Key Assortment No.3000~3499
●	2280 75 641	Key Blank, Steering Lock	2	
20	2370 60 430	STEERING LOCK (Not included in)	1	
	2835 60 430	STEERING LOCK	1	Car No. 21791 ⁷⁰⁄₈ ~ ○
●	2835 60 430A	STEERING LOCK	1	Car No. 55667 ⁷¹⁄₂ ~ ○
21	2835 60 421	Set Ring (2324 09 010 Key Set)	1	
22	2370 60 439	Key	1	Car No. 21790 ⁷⁰⁄₈ ~ Discarded
	2301 60 439	Key	1	Car No. 21791 ⁷⁰⁄₈ ~ Added Anew
●	2835 60 439	Key	1	Car No. 55667 ⁷¹⁄₂ ~ ○

0034 13 373～0183 41 043 INDEX.

Parts Number	Fig. Page	Parts Composition List Page	Fig. No.
0034 13 373	136	137	22
0034 42 633	136	137	21
0063 58 221	77	78	13
0103 17 411	51	52	12
	51	53	33
	51	53	42
0107 13 633	18	23	123
0107 13 654	18	23	107
0107 13 658	18	24	133
0107 13 668	18	24	131
0107 13 737A	18	21	57
0107 13 768A	18	19	21
0107 13 776A	18	20	28
0107 13 781	18	20	41
0107 13 795	18	22	96
0107 13 813	18	19	22
0107 18 201	54	56	19
0107 18 208	61	62	6
	64	65	12
0107 18 212	61	62	7
	64	65	16
0107 18 216A	61	62	20
	64	66	26
0107 18 221A	61	63	24
	64	66	25
0107 18 224	61	63	22
	64	66	24
0107 18 225	61	63	23
	64	66	23
0107 18 226A	61	63	21
	64	65	22
0107 18 227	61	62	10
	64	65	13
0107 18 231	61	62	14
	64	65	7
0107 18 266	61	63	25
	64	65	21
0107 18 274	27	28	14
0107 18 423A	70	72	30
0107 18 424	67	69	25
0110 26 345	82	84	34
0110 41 470	148	149	6
	152	153	6
0110 68 050	309	310	2
0111 17 323	51	52	17
0111 17 354	44	45	20
0111 32 173	112	113	11
0111 43 432	148	149	2
	152	153	2
0111 43 433	148	149	1
	152	153	1
0111 43 511	148	149	7
	152	153	7
0114 17 351	51	52	14
0114 27 262	86	88	17
0114 42 046A	132	133	2
0114 43 625	281	285	48
0114 66 905	57	59	27
0118 15 114	38	39	5
0118 15 118	38	39	9
0118 15 121	38	39	4
0118 17 313	51	52	7
0118 23 689	70	73	42
0118 23 689	74	76	28
0118 23 691	70	73	41
	74	76	30
0118 26 342	82	83	7
0118 26 832	82	83	9
0118 26 834	82	83	10
0118 26 897	82	84	31
0118 41 342	41	43	30
0118 41 375	161	162	19
	163	164	22
0118 41 380A	41	43	33
0118 41 669	294	295	13
0118 41 681	142	143	12
0118 41 682	142	143	13
0118 56 241	187	190	45
	281	286	54
0118 56 242B	187	190	46
0118 58 442	144	145	21
0118 68 180	309	310	6
0136 43 635	41	43	34
	161	162	2
	163	164	2
0136 44 043	144	146	26
0136 65 752	169	170	17
0136 66 715	57	59	28
0137 13 351B	139	140	12
0137 13 355A	139	140	8
0137 13 356A	139	140	7
0137 13 357A	139	140	9
0137 13 361A	139	140	11
0137 13 369B	139	140	5
0137 13 394A	139	141	17
0155 16 104	41	42	3
0164 13 398	18	22	102
0180 13 459	15	17	32
0180 16 215	41	42	18
0180 32 122A	92	95	32
	98	100	26
	104	106	24
0180 32 123A	92	95	33
	98	100	27
	104	106	25
0180 32 165A	92	95	41
	98	101	35
	104	106	32
0180 32 171A	92	95	42
	98	101	36
	104	106	33
0180 32 172A	92	95	42
	98	101	36
	104	106	33
0180 32 173A	92	95	42
	98	101	36
	104	107	33
0180 32 174A	92	95	42
	98	101	36
	104	107	33
0180 32 184	92	95	44
	98	101	38
0183 13 776	18	19	6
	18	22	77
0183 34 731	122	123	12
0183 41 043	144	145	7

INDEX. 0183 41 081～0221 43 694

0183 41 081	144	145	9
0183 41 308	158	159	18
0187 17 243	47	48	8
	47	48	18
0187 17 333	44	45	11
0187 17 346B	44	45	15
0187 17 351A	44	45	16
0187 17 352	44	45	17
0187 17 492	51	53	30
0187 24 566	67	68	15
	70	71	4
0187 24 577A	67	69	27
0187 24 579A	67	69	26
0187 26 154	79	80	18
0187 26 341	82	83	6
0187 26 821	82	84	30
0187 26 921	82	84	30
0187 32 235	92	96	61
	98	102	54
	104	108	50
0187 32 279A	119	120	13
0187 33 065A	115	116	8
0187 33 391	82	84	33
0187 43 029	144	145	5
0187 43 061	144	145	17
0187 43 642	161	162	4
	163	164	4
0187 46 683	144	145	12
0187 52 141	169	170	5
0187 52 145	169	170	9
0187 58 592A	234	236	15
	246	248	20
0187 58 731	234	237	31
	234	237	37
	246	248	26
	346	349	31
0187 58 922	229	233	23
	337	340	41
	342	344	22
0187 66 680A	281	285	45
0187 66 991	192	194	34
	196	198	38
0187 68 110	309	310	5
0187 69 049A	312	313	13
	312	316	59
0187 70 491	132	134	30
0190 13 389	139	140	2
	139	141	30
0191 17 491	51	53	31
0191 41 331	41	43	28
0193 23 325A	18	19	8
0193 23 333A	18	19	7
0193 23 334	18	19	9
	18	20	29
	18	22	78
	18	23	128
0193 23 367	18	20	48
0193 23 369	18	22	82
	18	23	125
0193 23 376A	18	24	144
0193 23 379	18	20	26
0193 23 383	18	23	105
0193 34 662	89	90	9
0193 53 462	251	254	35
	260	263	35
0200 23 519	70	71	5
	74	75	2
0200 23 531	67	68	8
	67	68	10
	70	71	3
0208 13 458	129	130	17
0208 24 523	67	68	3
0208 24 563A	67	68	17
0208 32 059	92	94	27
	98	100	20
	104	106	20
0208 32 188	92	96	48
	98	101	42
	104	107	38
0208 32 278	109	110	7
	109	110	16
	112	113	10
	112	114	16
	119	120	15
0208 56 615	187	190	47
0208 58 921	229	233	22
	337	340	40
	342	344	21
0208 66 949	281	285	49
0208 68 230	309	310	7
0208 72 821	346	349	39
0208 72 822	346	349	40
0208 76 071	322	324	34
0208 78 736	251	252	7
	260	261	7
0209 66 820	281	286	55
0209 66 821	281	286	56
0212 66 312	287	288	12
0212 66 371	287	288	13
	290	291	13
0212 66 372	290	291	12
0221 10 309	5	6	13
0221 14 115	27	29	28
0221 14 116	27	29	29
0221 14 117	27	30	30
0221 17 441	51	52	8
0221 17 462	51	52	18
0221 17 463	51	52	19
0221 17 472	51	52	23
0221 17 473	51	53	25
0221 17 474	51	53	27
0221 17 475A	51	53	28
0221 17 541	51	53	38
0221 17 551A	51	53	29
0221 17 552	51	53	40
0221 18 505	44	46	38
0221 23 215	139	140	3
0221 23 225	139	140	16
0221 23 226	139	140	15
0221 23 227	139	141	21
0221 23 228	139	141	21
0221 23 229	139	140	14
0221 23 231	139	140	14
0221 23 232	139	140	14
0221 23 233	139	141	24
0221 23 234	139	141	20
0221 26 672	82	84	22
0221 26 673	82	84	23
0221 27 141	86	87	5
0221 27 245	86	87	11
0221 27 255	86	87	15
0221 27 261	86	87	16
0221 27 305	86	88	20
0221 33 035	115	116	4
0221 33 698	115	116	7
0221 43 421	148	149	11
	152	153	11
0221 43 431	148	149	12
	152	153	12
0221 43 694	161	162	9

0221 43 694	161	162	20
	163	164	9
	163	164	23
0221 44 033	158	159	4
0221 44 044	158	159	7
0222 13 130B	15	17	36
0222 13 470A	136	138	25
0222 13 481	136	138	26
0222 13 493	5	8	44
	132	134	43
	136	138	24
0222 15 255	34	36	17
0222 18 374	57	58	7
0222 18 375	57	58	7
0222 18 376	57	58	7
0222 18 391	57	58	11
0222 23 261	18	20	49
0222 23 273B	18	19	23
0222 23 351	18	23	112
0222 23 365B	18	22	101
0222 23 366	18	22	100
0222 23 395A	18	21	59
0222 23 630	139	141	23
0222 24 568	67	68	16
0222 66 511	281	283	22
0222 66 911	281	286	69
0222 66 971	281	286	70
0222 67 340	290	291	4
0223 13 363	136	137	12
0223 23 205	34	35	13
0223 25 220D	77	78	9
0223 27 012	86	87	1
0223 27 020B	86	87	3
0223 27 030	86	87	4
0223 27 401	86	88	23
0223 27 402	86	88	23
0223 27 403	86	88	23
0223 27 404	86	88	23
0223 27 405	86	88	23
0223 27 406	86	88	23
0223 27 407	86	88	23
0223 27 408	86	88	23
0223 27 409	86	88	23
0223 27 411	86	88	23
0223 27 412	86	88	23
0223 27 413	86	88	23
0223 27 414	86	88	23
0223 27 415	86	88	23
0223 28 775	89	90	16
0223 28 776	89	91	17
0223 42 375	132	134	22
0223 42 376	132	134	23
0223 42 426	132	134	26
0223 42 427	132	134	27
0223 43 022	144	145	3
0223 43 064	144	145	19
0223 50 049	132	133	6
	166	167	2
0223 50 275	166	167	6
	166	167	16
0223 52 302	169	171	23
0223 54 225	57	59	22
0223 56 942	309	310	15
0223 56 950	309	310	17
0223 58 303A	337	338	19
0223 58 304A	337	338	20
0223 58 305A	346	347	10
0223 58 311	337	339	21
0223 58 370B	234	236	24
	337	338	16
0223 58 370B	346	347	12
0223 58 375A	234	236	25
	337	338	17
	346	347	13
0223 58 611C	234	235	7
	346	347	5
0223 58 660A	234	236	10
0223 58 692	229	232	20
	342	344	20
0223 58 721	169	170	16
	234	237	30
	234	237	36
	246	248	25
	246	248	30
0223 58 961	350	352	16
0223 58 962	350	351	3
	350	351	6
0223 66 291	281	282	5
0223 66 371	287	288	14
	290	291	14
0223 66 580	281	285	41
0223 69 102	312	314	22
0223 69 103	312	314	23
0223 69 105	312	314	24
0223 70 327	325	327	27
0223 70 870	329	331	43
	333	335	43
0223 72 305	337	338	18
0223 78 147	215	221	79
0223 78 149	215	221	80
0223 78 200B	215	221	82
0223 78 861	251	256	76
	260	265	82
0223 78 865	251	256	77
	260	265	83
0223 78 876	251	256	78
	260	266	84
0223 91 529	296	298	18
	299	301	20
0223 91 530	296	298	15
	299	300	17
0223 91 531	296	298	14
	299	300	16
0223 91 533	296	297	12
	299	300	14
0233 33 691	115	117	22
0233 49 656	152	155	36
0233 49 660	152	155	33
0233 49 665	152	155	32
0233 49 670	152	155	34
0233 66 790	144	147	51
0233 78 834	251	258	101
	260	267	105
0235 79 380	251	255	54
	260	264	60
0243 10 250B	5	7	28
0243 66 773	132	135	45
0245 72 926	234	238	53
0247 56 274	187	188	10
0247 56 275	187	188	11
0248 66 028	273	274	2
	273	274	6
0249 24 367	61	62	5
	64	65	11
0249 24 731	70	71	8
	70	72	25
	70	72	32
	74	75	15
	74	76	22
0249 41 671	142	143	8

INDEX. 0249 68 060～0259 57 109

0249 68 060	309	310	3
0254 88 164	203	204	7
	203	206	34
	209	210	7
	209	212	33
	215	216	7
	215	218	40
	222	223	7
	222	225	35
0257 57 109	203	205	27
	203	207	52
	209	211	26
	209	212	43
	209	213	57
	215	218	33
	215	219	57
	222	224	28
	222	226	54
0257 87 107	287	289	26
	290	292	24
0257 87 108	287	289	28
	290	292	25
0259 17 441	51	52	9
0259 18 510	38	39	13
0259 25 021B	77	78	1
0259 25 060	77	78	2
0259 25 071A	77	78	3
0259 25 072A	77	78	3
0259 25 073A	77	78	3
0259 25 074A	77	78	3
0259 25 075A	77	78	3
0259 25 076A	77	78	3
0259 25 077A	77	78	3
0259 25 078A	77	78	3
0259 25 079A	77	78	3
0259 26 041	79	80	5
0259 26 051	79	80	6
0259 26 064	79	80	8
0259 26 121	79	80	12
0259 26 129	79	80	16
0259 26 132	79	81	19
0259 26 141	79	80	17
0259 26 142	79	80	17
0259 26 152	79	80	14
0259 26 155	79	80	15
0259 32 071	92	94	29
	98	100	23
	104	106	21
0259 32 154	92	95	38
	98	101	32
	104	106	29
0259 32 155	92	95	38
	98	101	32
	104	106	29
0259 32 156	92	95	38
	98	101	32
	104	106	29
0259 32 157	92	95	38
	98	101	32
	104	106	29
0259 32 160	92	95	39
	98	101	33
	104	106	30
0259 32 163	92	95	40
	98	101	34
	104	106	31
0259 32 182	92	95	35
	98	100	29
	104	106	27
0259 32 279	92	96	53
0259 32 279	98	102	46
	104	107	42
	109	110	3
	112	113	4
0259 32 289	92	96	54
	98	102	47
	104	107	43
	109	110	4
	112	113	5
	119	120	14
0259 32 329	109	110	8
	109	110	13
0259 32 341	109	110	9
	109	110	14
	112	114	18
0259 33 047	115	116	2
0259 33 071	115	116	9
0259 33 165	82	84	35
	115	117	32
0259 33 691	41	43	25
	82	84	25
0259 33 693	41	43	26
	82	84	26
0259 34 012	119	120	2
0259 34 013	119	120	3
0259 34 015	119	120	5
0259 34 016	119	120	6
0259 34 019	119	120	7
0259 34 021	119	120	8
0259 34 110	125	126	10
0259 34 153	125	126	2
0259 34 155	125	126	3
0259 34 157	125	126	6
0259 34 158	125	126	7
0259 34 705	122	123	3
0259 34 708	122	123	5
0259 34 712	122	123	7
0259 34 719A	122	123	10
0259 34 730	122	123	11
0259 34 735A	122	123	—
0259 34 767	122	123	15
0259 34 768	122	123	16
0259 34 769B	122	123	17
0259 34 896	125	126	12
0259 34 897	125	126	13
0259 34 898	125	126	14
0259 39 340	127	128	6
0259 41 613	142	143	17
0259 41 644	142	143	4
	144	145	11
0259 42 425	132	134	25
0259 42 455A	132	134	20
0259 42 459	132	134	31
0259 42 792	132	134	39
0259 43 028	144	145	4
0259 43 065	144	146	29
0259 43 088	92	97	67
	98	102	60
	104	108	58
0259 52 301	169	170	21
0259 53 455	178	181	31
	183	186	35
0259 55 261	201	202	13
0259 55 951	192	194	24
	196	198	25
0259 57 109	203	205	17
	209	210	17
	215	217	17
	215	219	50
	222	224	17

0259 57 109	222	226	45
0259 58 305	234	236	22
0259 58 306	234	236	23
	346	347	11
0259 58 570	234	236	14
	246	248	19
0259 58 612	234	235	9
	346	347	6
0259 58 691	234	235	2
	346	347	2
0259 58 931	174	176	18
0259 59 570	234	236	14
	246	248	19
0259 66 016	273	274	1
	273	274	5
0259 66 438	281	285	36
0259 66 539	296	298	22
	299	301	24
0259 66 905	294	295	14
0259 68 250	203	205	24
	209	211	23
	215	217	30
	222	224	25
0259 69 063	312	313	9
0259 70 315	325	326	3
0259 72 509	234	238	56
	346	349	48
0259 87 101A	287	289	21
	290	292	19
0259 87 103	287	289	22
0259 87 104A	287	289	23
0259 87 105	287	289	24
	290	292	22
0259 87 106	287	289	25
	290	292	23
0259 87 107	287	289	27
0259 87 108A	287	289	29
0259 87 109A	287	289	30
0259 87 119	287	289	31
	290	292	29
0259 87 120	287	289	32
	290	292	30
0259 87 134	287	288	7
	290	291	7
0259 88 025	203	204	8
	203	206	35
	209	210	8
	209	212	34
	215	216	8
	215	218	41
	222	223	8
	222	225	36
0259 88 059	203	205	21
	203	207	48
	209	211	20
	209	213	53
	215	217	27
	215	219	53
	222	224	19
	222	226	47
0259 88 109	203	207	44
0259 88 123	203	204	10
	203	206	37
	209	210	10
	209	212	36
	215	216	10
	215	218	43
	222	223	10
	222	225	38
0259 88 259	203	204	2
0259 88 259	203	206	29
	209	210	2
	209	211	28
	215	216	2
	215	218	35
	222	223	2
	222	225	30
0259 88 273A	203	204	6
	209	210	6
	215	216	6
	222	223	6
0259 88 373	203	206	33
	209	211	32
	215	218	39
	222	225	34
0259 99 356	119	120	12
0271 17 461A	51	52	16
0271 17 471	51	52	20
0271 17 478	51	53	29
0271 17 510B	51	53	35
0274 66 191A	273	276	31
0274 66 480A	273	276	—
0274 66 490A	273	276	—
0274 87 192	273	276	32
0274 87 193	273	276	33
0274 87 194	273	276	34
0274 87 195	273	276	35
0274 87 196	273	276	36
0274 87 206	273	276	36
0275 55 195	302	304	30
0275 55 215	302	304	31
0275 57 107	209	211	18
	209	212	44
	215	217	18
	215	219	51
0275 67 175	132	135	46
0275 67 510A	294	295	15
0275 67 910	281	286	66
0275 87 123	277	280	29
0275 87 124	277	280	30
0290 17 241	47	48	6
0290 17 261	47	48	16
0290 23 521A	67	68	11
0290 23 541A	67	68	12
0290 23 542A	67	68	13
0290 24 501A	67	68	1
0290 24 505A	67	68	2
0290 24 510A	67	68	—
0290 24 511A	67	68	4
0290 24 513	67	69	21
0290 24 515	67	68	6
0290 24 517	67	69	24
0290 24 520A	67	68	—
0290 24 524	67	68	5
0290 24 556	67	69	22
0290 24 563	67	68	18
0290 24 581	67	69	28
0290 25 151	77	78	6
0290 27 231	86	87	10
0290 27 252	86	87	14
0290 27 253	86	87	14
0290 27 254	86	87	14
0290 27 301	86	88	18
0290 27 302	86	88	21
0290 27 341	86	88	19
0290 41 710	142	143	15
0296 33 636	115	117	26
0296 33 646	115	117	26
0296 67 860A	281	286	60
0296 87 485	281	283	19

INDEX. 0301 53 450～0305 32 141

0301 53 450	183	185	22
0301 54 450A	183	185	23
0301 58 501A	229	230	3
0301 59 501A	229	230	3
0301 61 050	174	177	—
0301 61 051	174	177	33
0301 61 052	174	177	34
0301 61 055	174	177	36
0301 66 905	192	195	61
	169	200	69
0301 70 441	333	334	1
0301 70 471	333	334	15
0301 72 501A	342	343	3
0301 72 661A	342	343	10
0301 73 501A	342	343	3
0301 73 661A	342	343	10
0301 79 360	294	295	—
0302 32 110	104	106	—
0302 32 411	104	108	52
0302 44 010A	158	159	1
0302 44 132	158	159	13
0303 32 110	92	94	—
	98	100	—
0303 32 120A	92	94	31
	98	100	25
	104	106	23
0303 44 010A	158	159	1
0303 44 032	158	159	3
0303 44 051A	158	159	8
0303 44 053	158	159	9
0303 44 150A	158	159	16
0303 44 410C	158	159	19
0303 44 439	158	159	20
0303 56 611	187	188	12
0303 56 612	187	188	13
0303 56 750C	187	189	18
0303 60 250A	192	194	40
0303 60 330B	192	195	55
0303 60 340A	192	195	56
0303 61 771A	251	257	86
	260	266	90
0303 61 772	251	257	87
	260	266	91
0303 61 773	251	257	88
	260	266	92
0303 61 774	251	257	89
	260	266	93
0303 61 775	251	257	90
	260	266	94
0303 61 780A	251	257	—
	260	266	—
0303 61 813	251	254	42
0303 61 840	251	256	79
	268	270	—
0303 66 870	299	300	—
0303 66 871	299	300	1
0303 66 873A	299	300	3
0303 66 900	299	300	4
0303 66 980	299	300	6
0303 68 852	306	307	8
0303 68 853	306	307	9
0303 68 862	306	307	2
	306	307	5
0303 68 880A	306	307	3
0303 68 890A	306	307	4
0303 68 910A	306	307	6
0303 76 702	251	257	91
	260	266	95
0303 76 703	251	257	92
	260	266	96
0303 76 704	251	257	93
	260	266	97
0303 76 705	251	257	95
	260	266	99
0303 76 813	268	271	37
0304 32 080	104	106	22
0304 32 130B	104	106	26
0304 32 410	104	108	51
0304 43 820	161	162	1
	163	164	1
0304 57 100A	203	204	—
	222	223	—
0304 57 120A	203	205	20
	222	224	18
0304 57 150A	203	206	—
	222	225	—
0304 57 170A	203	207	47
	222	226	46
0304 57 250A	222	227	63
0304 57 550A	203	206	—
	222	225	—
0304 60 430B	350	352	14
0304 67 131	281	286	62
0304 70 471	333	334	15
0304 88 420A	222	227	65
0305 13 361	136	137	9
0305 13 362	136	137	10
0305 13 366	136	137	11
0305 16 520	41	43	20
0305 17 327	47	49	37
0305 17 328	47	49	37
0305 17 341	47	50	43
0305 17 345	44	45	14
0305 19 628	148	150	19
0305 23 601	139	140	—
0305 23 626A	139	141	27
0305 26 080B	79	80	2
0305 26 251	82	83	1
0305 26 255	82	83	2
0305 26 280A	82	83	4
0305 26 290A	82	83	4
0305 26 310A	82	83	5
0305 26 465	82	83	14
0305 26 500	82	83	12
0305 26 800A	82	83	8
0305 26 810A	82	83	8
0305 27 171	86	87	9
0305 28 013A	89	90	4
0305 28 040	89	90	3
0305 28 111B	89	90	7
	89	90	12
0305 28 150C	89	90	6
0305 28 200D	89	90	10
0305 28 300C	89	90	11
0305 28 470	89	90	14
0305 28 591A	89	91	19
0305 28 700C	89	90	15
0305 32 059	92	97	69
	98	103	62
0305 32 089A	92	94	30
	98	100	24
0305 32 100	92	94	28
0305 32 119	92	96	50
	98	101	43
	104	107	39
	109	111	18
0305 32 130B	92	95	34
	98	100	28
0305 32 141	92	95	36
	98	101	30

0305 32 141	104	106	28
0305 32 250	109	110	6
0305 32 301B	119	120	9
0305 32 311B	119	120	9
0305 32 320	109	110	—
0305 32 321	109	111	20
0305 32 351	109	110	10
0305 32 365	109	111	22
0305 32 425	92	97	64
	89	102	57
	104	108	55
0305 32 426	92	97	65
	98	102	58
	104	108	56
0305 32 850A	92	97	—
	98	103	—
0305 32 860	92	97	75
	98	103	68
0305 32 881	92	97	70
	98	103	63
0305 32 882A	92	97	71
	98	103	64
0305 33 235	115	116	16
0305 33 251	115	116	6
0305 33 260	115	116	13
0305 33 280	115	116	17
0305 33 610	115	117	18
0305 33 625	115	117	24
0305 33 626A	115	117	25
0305 33 695	115	117	27
0305 33 696	115	117	28
0305 33 698	115	117	29
0305 33 699	115	117	31
0305 33 710	115	117	18
0305 33 725	115	117	30
0305 33 980A	115	116	15
0305 33 990A	115	116	15
0305 34 151	125	126	1
0305 34 156	125	126	4
0304 34 311	119	120	10
0305 34 701	122	123	2
0305 34 707	122	123	4
0305 34 710A	122	123	6
0305 34 713	122	123	8
0305 34 714	122	123	9
0305 34 720	122	124	—
0305 34 721A	122	124	19
0305 34 722A	122	124	20
0305 34 723	122	124	21
0305 34 724	122	124	22
0305 34 726A	122	124	23
0305 34 729A	122	124	24
0305 34 732A	122	123	13
0305 34 760A	122	123	14
0305 34 910D	119	121	26
	122	123	1
0305 40 061	129	130	3
0305 41 030A	144	145	1
0305 41 140	144	146	31
0305 41 400	144	146	28
	148	149	—
0305 41 440	148	149	3
	152	153	3
0305 41 451	148	149	—
	152	153	—
0305 41 461	148	149	5
	152	153	5
0305 41 610B	142	143	1
0305 41 641	142	143	2
0305 42 345A	132	134	35
0305 42 347B	132	133	11
0305 42 348	132	133	14
0305 42 349	132	134	32
0305 42 390	132	133	9
0305 42 410	132	133	17
0305 42 432	132	133	18
0305 42 433	132	133	19
0305 42 440	350	351	9
0305 42 441	132	133	15
0305 42 461	132	133	4
0305 42 465	132	134	40
0305 43 030	144	145	2
0305 43 070B	144	145	20
0305 43 093	144	147	45
0305 43 140	144	147	47
0305 43 635	161	162	3
	163	164	3
0305 43 650A	161	162	7
	163	164	7
0305 43 660A	161	162	8
	163	164	8
0305 43 810	161	162	11
	163	164	11
0305 43 820	161	162	12
	163	164	12
0305 43 842A	163	164	14
0305 44 471	158	160	22
0305 45 260A	161	162	22
0305 45 280A	161	162	23
	163	164	26
0305 45 310A	161	162	24
0305 45 320A	161	162	25
0305 45 510A	161	162	27
0305 49 620	148	150	16
0305 49 623	148	150	24
0305 49 625	148	150	17
0305 49 626	148	150	18
	148	150	—
0305 49 627C	148	150	25
0305 49 629	148	150	20
0305 49 630B	148	150	21
0305 49 638	148	150	22
0305 49 640C	148	150	23
0305 49 641	148	151	31
0305 49 642	148	150	26
0305 49 645	148	150	27
0305 49 646	148	151	28
0305 49 647	148	151	29
0305 49 648	148	151	30
0305 49 652	148	151	32
0305 49 656	148	151	33
0305 49 660	148	151	34
0305 49 665	148	151	35
0305 49 666	148	151	36
0305 49 670	148	151	37
0305 49 676	148	151	38
0305 50 160	166	167	4
0305 50 170	166	167	5
0305 50 180	166	167	9
0305 50 210A	166	168	31
0305 50 231	166	168	32
0305 50 250A	166	168	31
0305 50 310A	166	167	11
0305 50 320A	166	167	12
0305 50 340A	166	167	13
0305 50 360	166	167	14
0305 50 370	166	167	15
0305 50 381	166	168	19
0305 50 382	166	168	20
0305 50 398	166	168	21

INDEX. 0305 50 511B～0305 57 180A

0305 50 511B	166	168	23
0305 50 521A	166	168	24
0305 50 531	166	168	25
0305 50 541	166	168	26
0305 50 542	166	168	27
0305 50 543	166	168	28
0305 52 210	169	170	1
0305 52 260	169	170	2
0305 52 312A	169	170	6
0305 52 313	169	170	11
0305 52 320A	169	170	7
0305 52 330	169	170	8
0305 52 371A	169	170	10
0305 52 390	169	170	15
0305 52 410	169	170	22
0305 52 471	169	171	33
0305 52 472	169	171	34
0305 52 481	169	171	35
0305 52 491	169	171	36
0305 52 510C	183	184	1
	172	173	1
0305 52 610A	172	173	2
0305 52 620A	172	173	3
0305 52 628	172	173	13
0305 52 629	172	173	4
0305 52 661	172	173	6
0305 52 671	172	173	7
0305 52 750	172	173	8
0305 52 801	350	351	5
0305 52 802	350	351	7
0305 52 850A	172	173	10
0305 52 901	172	173	12
0305 53 180	174	175	7
0305 53 190B	174	175	9
0305 53 195A	174	175	11
0305 53 320A	178	180	2
	183	184	2
0305 53 329	178	181	30
	183	186	34
0305 53 330A	183	184	4
0305 53 340D	183	184	6
0305 53 350C	183	184	8
0305 53 380C	183	185	12
0305 53 410A	178	180	14
	183	185	14
0305 53 415	178	180	16
	183	185	16
0305 53 421A	183	185	18
0305 53 430B	183	185	20
0305 53 452	183	185	24
0305 53 591	183	185	28
0305 53 670	183	186	32
0305 53 700A	174	176	19
0305 53 707A	174	176	20
0305 53 708	174	176	21
0305 53 800B	187	188	1
0305 53 861	187	188	2
0305 53 901	183	186	36
0305 53 920	183	186	37
0305 53 941	183	186	38
0305 53 951B	183	186	39
0305 53 970	174	176	25
0305 53 990A	183	186	40
0305 53 999	329	330	7
	333	334	6
0305 54 180	174	175	8
0305 54 190B	174	175	10
0305 54 320A	178	180	3
	183	184	3
0305 54 330A	183	184	5
0305 54 340D	183	184	7
0305 54 350C	183	184	9
0305 54 370	178	180	12
	183	185	10
0305 54 380C	183	185	13
0305 54 410A	178	180	15
	183	185	15
0305 54 415	178	180	17
	183	185	17
0305 54 421A	183	185	19
0305 54 430B	183	185	21
0305 54 452	183	185	25
0305 54 591	183	185	29
0305 54 670	183	186	33
0305 55 325	192	193	1
	196	197	1
0305 55 326	192	193	3
	196	197	3
0305 55 327	192	193	4
	196	197	4
0305 55 340B	192	193	5
	196	197	5
0305 55 350	192	193	6
	196	197	7
0305 55 360	192	193	8
	196	197	9
0305 55 370	192	193	11
	196	197	12
0305 55 380	192	193	13
	196	197	14
0305 55 700A	192	193	16
	196	197	17
0305 55 890	302	303	1
0305 56 160	187	188	9
0305 56 231	136	138	37
0305 56 232	136	138	38
0305 56 321	187	189	19
0305 56 330A	187	189	21
0305 56 391	187	189	23
0305 56 400	187	190	36
0305 56 411	187	190	38
0305 56 681	187	188	6
0305 56 820A	187	189	20
0305 56 845	187	189	22
0305 56 850B	187	189	28
0305 56 870A	187	189	30
0305 56 900A	187	190	37
0305 56 911	187	190	39
0305 56 961B	187	190	40
0305 56 991	187	190	43
0305 57 011	203	208	55
	209	213	60
	215	219	60
	222	227	58
0305 57 100A	222	223	—
0305 57 110	203	204	1
	222	223	1
0305 57 120A	222	224	18
0305 57 130A	203	205	13
	222	224	13
0305 57 140	203	205	26
	209	211	25
	215	217	32
	222	224	27
0305 57 150A	222	225	—
0305 57 160	203	206	28
	222	225	29
	222	226	44
0305 57 170A	222	226	46
0305 57 180A	203	207	40

0305 57 180A	222	226	41
0305 57 190	203	207	51
	209	213	56
	215	219	56
	222	226	53
0305 57 200A	222	227	60
0305 57 250A	222	227	63
0305 57 909	215	221	73
0305 58 010C	229	230	1
0305 58 020C	229	230	1
0305 58 269	234	238	41
0305 58 270A	234	238	42
0305 58 272	234	238	43
0305 58 273	234	238	44
0305 58 274	234	238	45
0305 58 281A	234	238	47
0305 58 310C	234	235	1
0305 58 361	234	236	12
	246	248	17
0305 58 410A	234	236	19
0305 58 491	350	351	1
0305 58 501A	229	230	3
0305 58 505	229	231	4
0305 58 560A	234	236	27
0305 58 601A	229	230	1
0305 58 603	229	231	5
0305 58 604	229	231	6
0305 58 605B	229	231	10
0305 58 751A	229	233	29
0305 58 755A	229	233	28
0305 58 760C	229	231	11
0305 58 762	229	231	12
	342	344	13
0305 58 768	229	232	17
0305 58 780D	229	231	13
0305 58 781B	229	232	14
0305 58 785	229	232	18
	342	344	18
0305 58 810C	229	232	19
0305 58 821A	229	233	24
	337	340	42
	342	345	24
0305 58 822A	229	233	25
	337	340	43
	342	345	25
0305 58 831A	229	233	27
0305 58 852	229	233	30
0305 58 861	234	238	49
0305 58 862	234	238	50
0305 58 863	234	238	51
0305 58 864	234	238	52
0305 58 872	234	238	54
	346	349	46
0305 58 874	234	238	55
	346	349	47
0305 59 010G	229	230	1
0305 59 020C	229	230	1
0305 59 310C	234	235	1
0305 59 361	234	236	12
	246	248	17
0305 59 410A	234	236	19
0305 59 491	350	351	2
0305 59 501A	229	230	3
0305 59 505	229	231	4
0305 59 560A	234	237	27
0305 59 601A	229	230	1
0305 59 603	229	231	5
0305 59 604	229	231	6
0305 59 760C	229	231	11
0305 59 780D	229	231	13
0305 59 781B	229	232	14
0305 59 810C	229	232	19
0305 59 831A	229	233	27
0305 59 862	234	238	50
0305 59 863	234	238	51
0305 60 051	192	194	28
	196	198	32
0305 60 052	192	194	27
	196	198	31
0305 60 080A	192	194	30
	196	198	34
0305 60 101	302	303	5
0305 60 102	302	303	6
0305 60 130A	192	194	33
	196	198	37
0305 60 320A	192	195	54
	196	199	58
0305 60 490	192	194	37
	196	199	41
0305 60 540	192	194	38
	196	199	42
0305 60 690	302	303	3
0305 60 720	192	194	39
	196	199	43
0305 61 130B	239	240	—
0305 61 140C	239	240	12
	246	247	—
	251	258	105
0305 61 150B	239	241	15
0305 61 190B	239	241	16
	246	249	—
0305 61 232	239	241	24
	251	258	108
0305 61 233	239	241	25
	242	245	26
	251	258	109
	260	267	112
0305 61 801	251	254	36
	260	263	36
0305 61 819	251	255	43
	260	263	44
0305 61 821	251	255	59
	260	264	65
0305 61 824	251	255	44
	260	263	45
0305 61 825	251	255	45
	260	263	46
0305 61 826	251	255	46
0305 61 827	260	264	49
0305 61 828	251	255	47
	260	264	51
0305 61 829	251	255	48
	260	264	54
0305 61 830	251	255	49
	260	264	55
0305 61 840	251	256	79
	268	270	—
0305 61 842	251	257	80
0305 61 850A	251	255	50
	260	264	56
0305 61 851	251	255	60
0305 61 852	251	255	61
0305 61 853A	251	256	63
0305 61 854	251	257	82
0305 61 855	251	257	83
0305 61 856	251	257	84
0305 61 859	251	256	64
0305 61 860	251	256	66
	268	269	—
0305 61 862	251	256	68

INDEX. 0305 61 881～0305 70 360

0305 61 881	251	256	70
0305 61 888	251	256	71
	260	265	77
0305 61 889A	251	256	72
0305 61 890	251	256	73
	260	265	79
0305 61 901	251	255	51
	260	264	57
0305 66 030	273	274	—
0305 66 370	277	280	—
0305 66 410	281	282	—
0305 66 420	281	282	—
0305 66 570	281	282	—
0305 66 571	281	282	11
0305 66 572	281	282	12
0305 66 580	281	282	13
0305 66 671	277	280	32
0305 66 673	277	280	34
0305 66 674	277	280	35
0305 66 675	277	280	36
0305 66 676	277	280	37
0305 66 677	277	280	38
0305 66 678	277	280	39
0305 66 693	277	280	34
0305 66 694	277	280	35
0305 66 720	281	283	—
0305 66 721	281	283	15
0305 66 730	281	283	17
0305 66 760B	281	283	21
0305 66 780A	281	283	—
0305 66 781A	281	283	24
0305 66 790	281	284	25
0305 66 800	281	284	26
0305 66 870	296	297	—
0305 66 871	296	297	2
0305 66 872	296	297	4
	299	300	2
0305 66 900	296	297	1
0305 66 960	296	297	3
	299	300	5
0305 66 963	299	300	8
0305 66 966	296	297	8
0305 67 080A	281	285	46
0305 67 090B	281	285	47
0305 67 321	287	288	1
0305 67 325	287	288	3
0305 67 330	287	288	4
	290	291	4
0305 67 340B	287	288	—
0305 67 370	287	288	20
0305 67 500	294	295	—
0305 67 994	281	286	53
0305 68 020E	302	303	12
0305 68 040A	302	303	13
0305 68 050A	302	303	14
0305 68 180	302	304	18
0305 68 200	302	304	—
0305 68 610B	322	323	3
0305 68 620B	322	323	4
0305 68 790	309	310	—
0305 68 800	309	310	9
0305 68 803	309	310	13
0305 68 810	309	310	14
0305 68 951	312	316	60
0305 68 952	312	316	60
0305 69 052A	312	313	1
0305 69 053A	312	313	2
0305 69 055	312	313	5
0305 69 056	312	313	7
0305 69 057	312	313	8
0305 69 080A	312	314	—
0305 69 090A	312	314	—
0305 69 101A	312	314	21
0305 69 110	312	314	25
0305 69 124A	312	314	26
0305 69 125A	312	314	27
0305 69 130	312	314	25
0305 69 170	312	314	—
0305 69 171	312	315	33
0305 69 180	312	315	34
0305 69 210	312	316	50
0305 69 240	312	316	51
0305 69 290C	318	319	1
0305 69 311B	318	319	2
0305 69 312B	318	319	3
0305 69 313A	318	319	4
0305 69 315	318	319	5
0305 69 316	318	319	6
0305 69 317A	318	319	7
0305 69 318A	318	319	7
0305 69 321	318	319	9
0305 69 341A	318	319	10
0305 69 342B	318	319	12
0305 69 343B	318	319	13
0305 69 351	318	320	17
0305 69 360C	318	320	18
0305 69 380C	318	320	19
0305 69 411A	318	320	21
0305 69 431A	318	320	22
0305 69 451	318	320	24
0305 69 461A	318	320	25
0305 69 481A	318	320	26
0305 69 541A	322	323	7
0305 69 542A	322	323	8
0305 69 625	322	323	14
0305 69 626	322	323	15
0305 69 681	322	324	19
0305 69 682	322	324	20
0305 69 692	322	324	28
0305 69 693	322	324	29
0305 69 694	322	324	30
0305 69 695	322	324	31
0305 69 810B	302	304	20
0305 69 820A	302	304	24
0305 69 825	302	304	23
0305 69 861	318	320	27
0305 69 862	318	320	28
0305 69 863	318	320	29
0305 69 870	318	320	30
0305 69 910	312	316	53
0305 69 920	312	316	54
0305 70 020A	174	176	26
0305 70 201A	302	304	32
0305 70 202	302	305	34
0305 70 211B	302	305	36
0305 70 212	302	305	37
0305 70 221B	302	305	40
0305 70 230A	302	305	41
0305 70 250	350	351	12
0305 70 310B	325	326	—
0305 70 312	325	326	2
0305 70 320	325	326	4
0305 70 330	325	326	5
0305 70 335	325	326	10
0305 70 342	325	326	6
0305 70 343	325	326	4
0305 70 345	325	326	11
0305 70 350E	325	327	—
0305 70 352A	325	327	33
0305 70 360	325	327	19

0305 70 370	325	327	21
0305 70 375	325	327	23
0305 70 380A	325	326	13
0305 70 392A	325	326	15
0305 70 393	325	327	28
0305 70 395A	325	326	17
0305 70 396	325	327	31
0305 70 399	325	327	29
0305 70 400A	325	328	35
0305 70 431	174	176	22
0305 70 432	174	176	24
0305 70 441	333	334	1
0305 70 443B	329	330	2
	333	334	2
0305 70 445B	329	330	3
	333	334	3
0305 70 447B	329	330	4
	333	334	4
0305 70 448A	329	330	5
	333	334	5
0305 70 451A	333	334	7
0305 70 452A	329	330	9
	333	334	8
0305 70 453A	333	334	9
0305 70 454A	333	334	11
0305 70 455A	333	334	13
0305 70 471C	333	334	15
0305 70 481A	333	334	16
0305 70 482A	333	334	17
0305 70 483A	333	334	18
0305 70 484B	333	334	20
0305 70 485A	333	335	22
0305 70 802	333	335	24
0305 70 803A	333	335	26
0305 70 804A	333	335	28
0305 70 811	178	182	38
	183	186	42
0305 70 821	333	335	31
0305 70 822	333	335	33
0305 70 823	333	335	35
0305 70 825	329	331	37
	333	335	37
0305 70 826	333	335	38
0305 70 827A	329	331	38
	333	335	39
0305 70 851	329	331	39
	333	335	40
0305 70 861A	329	331	40
	333	335	41
0305 70 911	329	332	45
	333	336	45
0305 70 921	329	332	46
	333	336	46
0305 70 951	312	316	63
0305 70 991A	312	316	65
0305 71 310B	325	326	—
0305 71 343	325	326	4
0305 71 350E	325	327	—
0305 71 352A	325	327	33
0305 71 375	325	327	23
0305 71 380A	325	326	13
0305 71 392A	325	326	15
0305 71 396	325	327	31
0305 71 400A	325	328	35
0305 71 431	174	176	23
0305 71 453A	333	334	10
0305 71 454	333	334	12
0305 71 455A	333	334	14
0305 71 483A	333	334	19
0305 71 484	333	335	21
0305 71 485A	333	335	23
0305 71 802	333	335	25
0305 71 803B	333	335	27
0305 71 804A	333	335	29
0305 71 821	333	335	32
0305 71 822	333	335	34
0305 71 823	333	335	36
0305 71 921	329	332	47
	333	336	47
0305 71 951	312	316	63
0305 71 991A	312	317	65
0305 72 010E	342	343	1
0305 72 020A	342	343	1
0305 72 201	246	248	27
0305 72 203	246	248	27
0305 72 210	246	248	24
0305 72 231	346	349	32
0305 72 240A	246	248	29
0305 72 261	346	349	37
0305 72 262	346	349	38
0305 72 300D	346	347	1
0305 72 410B	346	347	8
0305 72 501A	342	343	3
0305 72 505	342	343	4
0305 72 560	346	347	15
0305 72 601D	342	343	1
0305 72 602A	342	343	5
0305 72 605B	342	343	8
0305 72 606B	342	343	9
0305 72 661A	342	343	10
0305 72 662B	342	344	11
0305 72 755	342	345	27
0305 72 760C	342	344	12
0305 72 768	342	344	17
0305 72 780D	342	344	14
0305 72 781B	342	344	15
0305 72 810C	342	344	19
0305 72 831	342	344	23
0305 72 851	229	233	29
	342	345	28
0305 72 852	342	345	29
0305 72 861	346	349	42
0305 72 862	346	349	43
0305 72 863	346	349	44
0305 72 864	346	349	45
0305 73 010E	342	343	1
0305 73 020A	342	343	1
0305 73 240A	246	248	29
0305 73 300D	346	347	1
0305 73 410B	346	347	8
0305 73 501A	342	343	3
0305 73 505	342	343	4
0305 73 560	346	347	15
0305 73 601D	342	343	1
0305 73 602A	342	343	5
0305 73 661	342	343	10
0305 73 760C	342	344	12
0305 73 780D	342	344	14
0305 73 810C	342	344	19
0305 73 831	342	345	23
0305 73 862	346	349	43
0305 73 863	346	349	44
0305 74 159	350	352	19
0305 74 169	350	352	19
0305 75 102	201	202	8
0305 75 107	201	202	10
0305 75 108	201	202	11
0305 76 081A	239	240	1
0305 76 082	239	240	2
0305 76 083	239	240	8

INDEX. 0305 76 084～0305 87 908

0305 76 084	239	240	9
	242	243	9
0305 76 086A	239	240	4
	242	243	4
0305 76 087A	239	240	5
	242	243	5
0305 76 088	239	240	6
	242	243	6
0305 76 089	239	240	7
	242	243	7
0305 76 110	246	247	1
0305 76 116	246	247	12
0305 76 117	246	248	30
0305 76 118	246	247	13
0305 76 123	246	247	14
0305 76 124	246	247	15
0305 76 125	246	247	16
0305 76 126	246	248	17
0305 76 127	246	248	21
0305 76 129	246	248	22
0305 76 131	246	248	24
0305 76 132	246	248	25
0305 76 135	246	248	27
0305 76 136	246	248	19
0305 76 137	246	248	28
0305 76 138	246	248	20
0305 76 139	246	248	29
0305 76 141	246	247	2
0305 76 142	246	247	3
0305 76 143	246	247	4
0305 76 144	246	247	5
0305 76 145	246	247	6
0305 76 146	246	247	7
0305 76 147	246	247	8
0305 76 149	246	247	9
0305 76 150	246	247	10
0305 76 151	246	247	11
0305 76 155A	246	249	34
0305 76 156A	246	249	35
0305 76 157	246	249	36
0305 76 158	246	249	37
0305 76 159	246	249	38
0305 76 160	246	249	39
0305 76 161	246	249	40
0305 76 162	246	249	41
0305 76 163A	246	249	42
0305 76 164	246	249	43
0305 76 165	246	249	44
0305 76 166	246	249	45
0305 76 167	246	250	46
0305 76 168	246	250	47
0305 76 173	246	250	51
0305 76 174	246	250	52
0305 76 175	246	250	53
0305 76 176	246	250	54
0305 76 704	251	257	94
	260	266	98
0305 76 721	268	269	1
0305 76 722	268	269	2
	268	271	32
0305 76 723	268	269	3
	268	271	33
0305 76 724	268	269	5
0305 76 725	268	269	5
0305 76 726	268	269	8
0305 76 727	268	271	35
0305 76 728	268	269	9
0305 76 729	268	269	15
0305 76 730	268	269	16
0305 76 731	268	269	10
0305 76 732	268	269	11
0305 76 733	268	269	12
0305 76 734	268	269	13
0305 76 735	268	269	14
0305 76 801	268	270	17
0305 76 802	268	270	18
0305 76 803	268	270	19
0305 76 804	268	270	21
0305 76 805	268	270	22
0305 76 806	268	270	24
0305 76 807	268	270	25
0305 76 808	268	270	26
0305 76 809	268	270	27
0305 76 810	268	270	29
0305 76 811	268	271	30
0305 76 812	268	271	36
0305 76 813	268	271	37
0305 76 814	268	271	38
0305 76 815	268	271	39
0305 76 816	268	271	40
0305 76 817	268	271	42
0305 76 818	268	271	44
0305 76 819	268	271	45
0305 76 820	268	271	46
0305 76 821	268	271	47
0305 76 822	268	271	48
0305 76 823	268	271	49
0305 76 824	268	272	51
0305 76 825	268	272	50
0305 76 826	268	272	50
0305 76 827	268	272	52
0305 76 828	268	272	53
0305 87 001	273	274	3
	273	274	7
0305 87 003	273	275	15
0305 87 005	273	275	17
0305 87 007	273	275	15
0305 87 010	273	274	4
0305 87 029	277	280	26
0305 87 031	277	280	27
0305 87 032	277	280	28
0305 87 033	281	282	1
0305 87 034	281	282	2
0305 87 035	281	282	3
0305 87 036	281	282	4
0305 87 037	281	282	7
0305 87 038	281	282	8
0305 87 081	281	283	18
0305 87 095	296	297	9
	299	300	11
0305 87 096	296	297	10
	299	300	12
0305 87 098	296	298	13
	299	300	15
0305 87 107	296	298	19
	299	301	21
0305 87 901	287	288	5
0305 87 902	287	288	6
0305 87 903	287	288	8
	290	291	8
0305 87 904	287	288	9
	290	291	9
0305 87 905	287	288	10
	290	291	10
0305 87 906	287	288	11
	290	291	11
0305 87 907	287	288	15
	290	291	15
0305 87 908	287	288	16
	290	291	16

0305 87 909	287	288	17
	290	291	17
0305 87 921	287	289	33
	290	292	31
0305 87 951	287	289	35
0305 87 956	290	292	35
0305 87 993	294	295	3
0305 88 009	203	205	23
	203	207	50
	209	211	22
	209	213	55
	215	217	29
	215	219	55
	222	224	24
	222	226	52
0305 88 010	203	204	3
	222	223	3
0305 88 060	203	204	4
	209	210	4
	215	216	4
	222	223	4
0305 88 062	203	204	9
	203	206	36
	209	210	9
	209	212	35
	215	216	9
	215	218	42
	222	223	9
	222	225	37
0305 88 070	203	204	5
	209	210	5
	222	223	5
0305 88 081	203	205	14
	203	207	41
	209	210	14
	209	212	40
	215	217	14
	215	219	47
	222	224	14
	222	226	42
0305 88 093	209	212	51
	215	217	25
0305 88 100A	203	205	22
	222	224	20
0305 88 150	203	205	16
	209	210	16
	215	217	16
	222	224	16
0305 88 160	203	207	43
	209	212	42
	215	219	49
0305 88 200	203	206	30
	222	225	31
0305 88 250	203	206	31
	215	218	37
	222	225	32
0305 88 260	203	206	32
	209	211	31
	215	218	38
	222	225	33
0305 88 280A	203	207	49
	222	226	48
0305 88 370A	222	227	62
0305 88 415	203	208	58
	209	213	63
	215	220	63
	222	227	61
0305 88 416	203	208	61
	209	213	66
	215	220	66
0305 88 416	222	227	64
0305 88 420A	222	227	65
0305 88 460	222	227	69
0305 99 430A	148	151	—
0305 99 431	148	149	—
	152	153	—
0310 53 990	178	181	36
0310 57 015	215	220	70
0310 57 150A	203	206	—
0310 57 180	203	207	40
0310 57 200A	203	208	57
0310 57 250A	203	208	60
0310 57 550A	203	206	—
0310 69 170	312	315	—
0310 69 190	312	315	44
0310 69 870	318	320	30
0310 88 370A	203	208	59
0310 88 420	203	208	62
0317 17 335	44	45	13
0317 26 151	79	80	13
0317 33 043	115	116	11
0317 33 049	115	116	3
0317 33 075	115	116	10
0317 34 460	119	120	11
0317 34 662	119	121	24
0317 34 663	119	121	25
0317 43 551	148	149	8
	152	153	8
0317 57 015	203	208	65
	209	214	70
	222	228	73
0317 58 700	234	237	29
0317 58 736	234	237	32
0317 58 750	234	237	35
0317 58 785	234	237	38
0317 58 831	346	349	35
0317 58 832	346	349	36
0317 59 750	234	237	35
0317 60 251	192	195	41
	196	199	45
0317 60 252	192	195	42
	196	199	46
0317 60 253	192	195	43
	196	199	47
0317 60 254	192	195	44
	196	199	48
0317 60 255	192	195	45
	196	199	49
0317 60 256	192	195	46
	196	199	50
0317 60 257	192	195	47
	196	199	51
0317 60 258	192	195	48
	196	199	52
0317 60 259	192	195	49
	196	199	53
0317 60 261	192	195	50
	196	199	54
0317 60 262	192	195	51
	196	199	55
0317 60 266	192	195	53
	196	199	57
0317 66 862	296	297	6
	299	300	7
0317 67 480	294	295	—
0317 67 511	294	295	1
0317 67 521	294	295	7
0317 69 319	318	319	8
0317 70 307	325	326	1
	325	327	20

INDEX. 0317 88 082～0813 14 641

0317 88 082	222	224	23
	222	226	51
	222	227	68
0324 25 130	77	78	4
0324 60 265	192	195	52
	196	199	56
0326 32 411	92	97	62
	98	102	55
0329 17 520	51	53	36
0329 33 061	115	116	5
0504 18 520	57	59	20
0600 11 502	12	14	32
0600 17 324	47	48	9
	47	48	19
0600 23 367	18	22	88
0600 23 398A	18	24	136
0600 23 617	74	75	19
0600 33 693	115	117	23
0603 16 102B	41	42	4
0603 16 103	41	42	2
0603 17 262	47	48	7
	47	48	17
0603 23 354	18	23	106
0603 23 388A	18	21	54
	18	21	69
0603 23 617	70	72	29
0603 32 315	92	96	55
	98	102	48
	104	107	44
0603 41 320	41	43	22
0603 41 322B	41	43	23
0603 41 323	41	43	24
0613 26 922	82	84	28
0613 33 681	82	84	24
0613 41 308	41	43	32
0621 42 371	132	134	38
0621 42 455	350	351	10
0633 52 148	325	327	24
0636 24 562A	67	69	19
0636 24 568B	67	68	7
	67	68	9
0652 23 351	18	24	137
0652 23 352	18	24	138
0652 23 353	18	24	139
0652 23 354	18	24	140
0662 33 042	115	116	1
0662 39 040	127	128	3
0710 26 352	82	83	15
0710 26 461	82	83	13
0710 32 352	109	110	11
0710 33 288	82	84	32
0710 45 191	15	17	28
0710 75 435	201	202	14
0710 75 436	201	202	14
0727 24 712	74	76	32
0727 41 442	148	149	4
	152	153	4
0727 43 552	144	146	36
	148	149	9
	152	153	9
0727 43 553	148	149	10
0727 69 186	312	315	35
0727 69 187	312	315	36
0727 69 188	312	315	37
0727 70 943	229	231	7
0727 87 992	294	295	2
0727 87 994	294	295	4
0727 87 995	294	295	5
0727 87 996	294	295	6
0730 23 837	31	32	4
0730 23 839	31	32	6
0730 23 842	31	32	8
0730 23 843	31	32	9
0730 23 845	31	32	11
0730 23 846	31	32	12
0730 23 848	31	32	15
0730 23 854	31	32	19
0730 26 060	79	80	—
0730 26 062	79	80	7
0730 26 063	79	80	10
0730 26 065	79	80	9
0730 69 057A	312	313	14
0738 87 801	287	288	18
0738 87 802	287	288	19
0738 87 803	287	289	36
	290	292	38
0738 87 804	287	289	37
	290	292	39
0755 27 141	86	87	6
0802 24 324	61	63	26
0810 10 171	1	2	7
	5	6	6
0810 11 403	12	14	24
0810 11 404	12	14	25
0810 11 711	12	14	35
0810 14 113	27	28	6
0810 14 114	27	28	7
0810 14 171	27	29	19
0810 14 204	27	28	16
0810 14 611	27	30	33
0810 15 119	38	39	10
0810 17 121	44	46	26
0810 17 204	47	49	26
0810 17 205	47	48	2
0810 17 381	44	46	30
0810 17 385	44	46	31
0810 17 402	51	52	1
0810 17 404	51	52	2
0810 18 276	27	30	39
0810 18 277	27	30	39
0810 26 651	82	84	20
0810 26 671	82	84	21
0810 40 356	129	131	25
0810 41 308	144	145	16
0810 56 639	187	190	48
0810 68 070	309	310	4
0313 10 172	1	2	8
	5	6	7
0813 10 173	1	2	9
	5	6	8
0813 10 174	1	2	10
	1	3	23
	5	6	9
0813 10 204	1	2	13
0813 10 405	1	2	5
0813 10 503	9	11	19
0813 10 554	12	14	19
0813 10 555	12	14	21
0813 10 605	1	3	30
0813 10 611	1	3	33
0813 10 612	1	3	34
0813 10 613	1	3	35
0813 11 405	12	14	26
0813 11 503	9	11	23
0813 11 505B	9	11	25
0813 11 541	9	11	32
0813 13 102A	15	16	2
0813 13 613	15	17	34
0813 14 623	27	30	37
0813 14 641	27	30	42

0813 14 716	34	37	35
0813 15 111	38	39	2
0813 15 117	38	39	8
0813 15 173	38	40	20
0813 17 245	47	48	10
	47	48	20
0813 17 312	47	50	39
0813 18 100A	54	55	1
0813 18 288	54	56	25
0813 18 501	5	6	14
0813 23 802A	27	29	23
0813 23 803	27	29	24
0813 24 303	61	62	3
	64	65	3
0813 24 306	64	65	6
0813 24 308	61	62	16
	64	65	8
0813 24 309	64	65	9
0813 24 316	61	62	8
	64	65	15
0813 24 703	70	71	15
0813 24 704	70	71	14
0813 24 723A	70	71	19
0813 24 724	70	71	20
0813 24 726	70	71	6
0813 26 610A	82	84	18
0813 44 031	158	159	2
0813 44 034	158	159	5
0813 44 035	158	159	6
0813 57 955A	215	221	84
0813 58 923	337	340	45
0813 66 498	281	283	16
	281	283	19
0813 66 732A	281	286	64
0813 66 879	294	295	9
0820 10 203	5	6	11
0820 10 305	5	7	22
0820 10 410B	5	7	25
0820 10 500A	9	10	17
0820 10 502	9	10	18
	12	13	18
0820 10 504	9	11	20
0820 10 550	12	13	17
0820 10 556A	12	14	20
0820 10 600G	1	3	24
0820 10 614	1	3	36
0820 10 631A	1	3	29
0820 10 641C	1	3	39
0820 10 861	1	4	44
0820 10 862A	5	8	41
0820 11 105	54	56	23
0820 11 317	9	10	8
	12	13	8
0820 11 321B	9	10	9
	12	13	9
0820 11 331	9	10	11
	12	13	11
0820 11 333	9	10	12
	12	13	12
0820 11 341	9	10	13
	12	13	13
0820 11 343	9	10	14
	12	13	14
0820 11 351	9	10	15
	12	13	15
0820 11 353	9	10	16
	12	13	16
0820 11 501A	9	11	21
0820 11 502	9	11	26
0820 11 506	9	11	26
0820 11 507	9	11	27
0820 11 508	9	11	26
0820 11 509	9	11	26
0820 11 512A	9	11	29
0820 11 521B	9	11	30
	27	28	12
0820 11 542	9	11	33
0820 11 703	12	14	33
0820 11 705	12	14	34
0820 11 712	12	14	36
0820 13 205	15	16	17
	18	24	145
0820 13 235	15	17	26
0820 13 237	15	17	29
0820 14 100C	27	28	1
0820 14 112C	27	28	5
0820 14 117A	27	28	8
0820 14 118	27	28	10
0820 14 119	27	28	11
0820 14 151C	27	28	13
0820 14 204	27	29	17
0820 14 205	27	29	17
0820 14 206	27	29	17
0820 14 250A	27	29	—
0820 14 251A	27	29	27
0820 14 252	27	30	31
0820 14 300A	27	29	—
0820 14 620	27	30	35
0820 14 625	27	30	36
0820 14 647	27	30	44
0820 15 106	34	35	3
0820 15 112	38	39	3
0820 15 115	38	39	6
0820 15 120	38	39	11
0820 15 130A	38	39	—
0820 15 131A	38	39	1
0820 15 132A	38	39	15
0820 15 151	34	35	5
0820 15 152	38	39	16
0820 15 312	34	35	14
	34	37	37
0820 16 510	41	42	14
0820 16 515	41	42	15
0820 18 111B	54	55	7
0820 18 114	54	55	12
0820 18 271C	54	56	20
0820 18 279A	54	56	26
0820 18 381	57	58	10
0820 23 175A	9	10	9
	12	13	9
0820 23 176	9	10	9
	12	13	9
0820 23 602	139	140	1
0820 23 603	139	140	4
0820 23 604	139	140	10
0820 23 615	139	140	—
0820 23 616	139	141	18
0820 23 621	139	141	19
0820 23 624	139	141	29
0820 23 625	139	141	22
0820 23 801A	27	29	22
0820 23 832B	31	32	1
0820 23 833A	31	32	2
0820 23 834A	31	32	3
0820 23 835A	31	32	5
0820 23 836	31	32	7
0820 23 839A	31	32	16
0820 23 840	31	32	17
0820 23 842	31	32	20
0820 23 843	31	32	21

INDEX. 0820 23 844A～0823 23 345A

0820 23 844A	31	32	22
0820 23 845A	31	32	23
0820 23 847A	31	32	24
0820 23 848A	31	33	26
0820 23 881	27	28	—
0820 23 882	27	28	4
0820 24 301	61	62	1
	64	65	1
0820 24 315	61	62	9
	64	65	14
0820 24 318	61	62	4
	64	65	17
0820 24 319	61	62	18
	64	65	18
0820 24 322	61	62	13
	64	65	19
0820 24 405	64	65	5
0820 24 423	64	65	20
0820 24 511	67	68	14
0820 24 519	67	69	20
0820 24 705	70	73	39
0820 24 706A	70	72	31
0820 24 707	70	72	33
0820 24 709	70	71	13
0820 24 710B	70	71	7
0820 24 712	70	71	11
	74	75	7
0820 24 713	70	71	10
	74	75	6
0820 24 741	70	71	9
	74	75	5
0820 24 716	70	71	17
0820 24 717	70	72	26
	74	75	12
0820 24 720	70	72	24
0820 24 721	70	71	18
0820 24 741	70	73	40
	74	76	29
0820 24 747	70	72	27
	74	76	24
0820 24 748	70	72	28
	74	76	25
0820 24 749	70	72	35
0820 24 751	70	72	34
0820 24 752	70	72	36
0820 24 754	70	72	23
	74	75	10
0820 24 755	70	72	22
	74	75	11
0820 24 756	70	72	21
0820 24 757	70	71	1
0820 24 759	70	71	2
	70	72	37
0820 26 570A	82	85	40
0820 27 150A	86	87	7
0820 27 251	86	87	13
0820 27 950C	86	88	24
0820 32 151	92	95	37
	98	101	31
0820 32 190	92	95	45
	98	101	39
0820 32 227	92	96	57
	98	102	50
	104	107	46
0820 33 091A	115	116	5
0820 33 165	82	85	35
	115	117	32
0820 33 180A	82	85	42
	115	117	34
0820 33 191A	82	85	43
0820 33 191A	115	117	35
0820 33 192A	82	85	44
	115	118	36
0820 39 021	127	128	1
0820 39 031A	127	128	2
0820 40 161	129	130	6
0820 40 165	129	130	7
0820 40 166	129	130	8
0820 40 170	129	130	9
0820 40 180	129	131	21
0820 55 951	192	194	25
	196	198	26
0820 56 905	242	245	31
0820 57 900A	215	221	75
0820 57 911	215	221	76
0820 60 870A	281	286	58
0820 66 131A	277	278	1
0820 66 136	277	278	6
	277	279	22
0820 66 137	277	278	7
	277	279	21
0820 66 138	277	278	8
0820 66 139	277	278	10
	277	279	24
0820 66 141	277	278	13
0820 66 159	277	278	9
0820 66 174	277	278	4
	277	279	18
0820 66 175	277	278	5
	277	279	19
0820 66 195	277	278	5
	277	279	19
0820 66 470A	281	285	39
0820 66 731	281	286	63
0820 66 840	158	160	23
0820 68 180	251	257	96
	260	266	100
0820 69 066A	312	313	10
0820 78 753B	251	252	4
	260	261	4
0820 78 756A	251	253	24
	260	262	24
0820 78 757	251	253	25
	260	262	25
0820 17 297	47	49	34
0821 17 303	47	49	33
0822 15 105	34	35	2
0823 10 455	5	7	31
	57	58	3
0823 13 221	15	17	19
0823 13 222	15	17	20
0823 13 445A	136	137	4
0823 14 600G	27	30	32
0823 15 171	38	40	18
0823 15 210A	251	252	1
	260	261	1
0823 18 107	54	55	5
0823 18 291	54	56	29
0823 23 304	18	19	5
0823 23 306	18	19	11
0823 23 307B	18	19	12
0823 23 322	18	20	27
0823 23 323	18	20	30
0823 23 326A	18	20	32
0823 23 333	18	20	35
0823 23 335	18	20	37
0823 23 337	18	20	39
0823 23 338	18	20	40
0823 23 343	18	20	44
0823 23 345A	18	20	50

0823 23 348	18	21	53
0823 23 351	18	21	56
0823 23 352	18	21	58
0823 23 353	18	21	60
0823 23 355	18	21	62
0823 23 356	18	21	63
0823 23 358	18	21	65
0823 23 359	18	21	66
0823 23 364	18	21	70
0823 23 365B	18	21	71
0823 23 366	18	21	72
0823 23 368	18	21	74
0823 23 369	18	21	75
0823 23 371A	18	21	76
0823 23 372	18	22	79
0823 23 373	18	22	80
0823 23 374	18	22	81
0823 23 375	18	22	83
0823 23 381	18	22	84
0823 23 382	18	22	85
0823 23 384	18	22	86
0823 23 388	18	22	87
	18	23	127
0823 23 389	18	22	89
0823 23 391	18	22	90
0823 23 394	18	22	91
0823 23 395	18	22	92
0823 23 396	18	22	93
0823 23 398B	18	22	94
0823 23 399	18	22	95
0823 23 402A	18	22	97
0823 23 404	18	22	98
0823 23 428	18	23	113
0823 23 461	18	23	121
0823 23 462A	18	23	122
0823 23 472	18	23	124
0823 23 478	18	24	130
0823 23 481A	18	24	132
0823 23 600G	31	32	—
0823 23 837A	31	32	13
0823 23 838	31	32	14
0823 23 841	31	32	18
0823 24 305	61	62	17
0824 17 524	51	53	37
0824 23 354	18	21	61
0824 28 012	89	90	2
0824 28 464A	89	90	5
0824 28 778A	89	91	18
0824 32 013A	92	93	3
0824 32 810	92	94	22
	98	99	15
	104	105	15
0824 40 401	129	130	4
	129	130	10
	129	131	23
0824 41 040	144	145	6
0824 41 051	144	145	8
0824 41 084	144	145	10
0824 41 131	144	146	32
0824 41 619	142	143	3
0824 42 403	132	133	5
0824 44 140	158	159	15
0824 49 710	156	157	—
0824 49 720	156	157	—
0824 49 745	156	157	1
0824 49 750	156	157	4
0824 49 770	156	157	6
0824 49 781	156	157	7
0824 49 782	156	157	8
0824 52 271	169	170	13
0824 52 281	169	170	14
0824 52 451	169	171	26
0824 56 944	309	310	16
0824 56 999	187	190	49
0824 58 155	337	338	12
0824 58 546	234	236	20
0824 68 794	309	310	10
0824 68 795	309	310	11
0824 68 796	309	310	12
0824 70 621	337	339	28
0824 75 140	201	202	9
0833 09 010B	350	351	—
0833 66 940	296	298	21
	299	301	23
0833 66 941	296	298	23
	299	301	25
0833 69 612A	322	323	10
0833 69 613A	322	323	11
0833 69 617	322	323	12
0833 69 618	322	323	13
0833 70 471	329	330	16
0833 70 941A	312	316	62
0833 79 210A	251	252	—
0836 56 127	187	190	32
0839 10 111B	1	2	6
	5	6	5
0839 10 320	5	6	15
0839 10 451A	5	7	29
0839 10 452B	5	7	30
0839 10 700A	5	7	32
0839 10 711	5	7	35
0839 10 721	5	7	36
0839 10 722	5	7	37
0839 10 723	5	7	38
0839 10 830	5	8	40
0839 10 871	5	8	43
0839 10 872A	1	4	46
0839 11 111A	9	10	2
	12	13	2
0839 11 301B	12	13	4
	9	10	4
0839 11 304	9	10	5
	12	13	5
0839 11 323	9	10	10
	12	13	10
0839 11 400H	12	14	23
0839 11 411A	12	14	28
0839 11 412	12	14	29
0839 11 504B	9	11	24
0839 11 511B	9	11	28
0839 11 531	9	11	31
0839 11 601B	9	11	34
0839 11 700A	12	14	31
0839 13 100B	15	16	1
0839 13 111	15	16	10
0839 13 210B	15	16	15
	18	19	—
0839 13 230B	15	16	18
0839 13 300G	15	17	21
	25	26	—
0839 13 307	15	17	23
0839 13 311A	15	17	24
0839 13 330A	15	16	12
0839 13 341A	15	16	14
0839 13 400D	136	137	17
	139	140	—
0839 13 433	136	137	18
0839 13 440A	136	137	2
0839 13 447	136	137	3
0839 13 448A	136	137	5

INDEX. 0839 13 450B～0839 23 424

0839 13 450B	136	137	6
0839 13 600C	15	17	30
0839 13 611B	15	17	33
0839 13 621	15	17	35
	129	130	15
0839 14 160A	27	29	18
0839 14 630	27	30	40
0839 14 640	27	30	41
0839 14 643	27	30	43
0839 14 651B	27	30	45
0839 14 700C	34	36	28
0839 14 720A	34	36	29
0839 14 730A	34	36	30
0839 14 740	34	36	33
0839 14 745	34	36	34
0839 15 010C	34	35	1
	38	39	–
0839 15 100C	38	39	12
0839 15 102	38	39	14
0839 15 172	38	40	19
0839 15 210	34	35	9
0839 15 250B	34	35	–
0839 15 310D	34	35	12
0839 15 350	34	36	16
0839 15 351B	34	36	18
0839 15 410A	34	36	21
0839 15 420B	34	36	22
0839 15 511A	34	36	25
0839 15 521A	34	36	26
0839 16 210A	41	42	1
0839 16 410A	41	42	16
0839 16 460C	41	43	19
0839 17 100B	44	45	1
0839 17 105	44	45	6
0839 17 111	44	45	8
0839 17 201A	47	48	1
0839 17 221	47	48	5
0839 17 230	47	48	12
0839 17 232	47	48	13
	47	48	15
	47	49	23
0839 17 250	47	48	14
0839 17 270	47	49	22
0839 17 275	47	49	21
0839 17 276	47	49	24
0839 17 277	47	49	24
0839 17 278	47	49	24
0839 17 281	47	49	27
0839 17 284	47	49	28
0839 17 285	47	49	29
0839 17 287	47	49	25
0839 17 288	47	49	25
0839 17 301	47	49	31
0839 17 302	47	49	32
0839 17 305	47	49	35
0839 17 310	47	50	38
0839 17 313	47	50	40
0839 17 321	47	50	41
0839 17 330	44	45	10
0839 17 361	44	46	22
0839 17 371	44	46	23
0839 17 375	44	46	24
0839 17 406	51	52	3
0839 17 410	51	52	4
0839 17 420	51	52	5
0839 17 431	51	52	6
0839 17 450	51	52	15
0839 17 520	44	46	33
0839 17 524	44	46	34
0839 17 540A	44	46	36
0839 18 100	54	55	2
0839 18 101	54	55	4
0839 18 110A	54	55	–
0839 18 115	54	55	8
0839 18 120	54	55	9
0839 18 130	54	55	13
0839 18 140	54	55	14
0839 18 150	54	55	–
0839 18 155	54	55	10
0839 18 160	54	55	11
0839 18 170	54	55	15
0839 18 180	54	55	16
0839 18 190	54	55	3
0839 18 200	54	56	17
	61	62	–
0839 18 270A	54	56	–
0839 18 272	54	56	21
0839 18 273A	54	56	22
0839 18 300	57	58	1
	67	68	–
0839 18 311B	1	3	22
	57	58	5
0839 18 361	57	58	6
0839 18 400A	57	58	13
	74	75	–
0839 18 600	54	56	30
0839 18 700	54	56	18
	64	65	–
0839 23 102	9	10	1
0839 23 103	9	10	1
0839 23 104	9	10	1
0839 23 112	12	13	1
0839 23 113	12	13	1
0839 23 114	12	13	1
0839 23 301	18	19	1
0839 23 302	18	19	2
0839 23 303	18	19	3
0839 23 305	18	19	10
0839 23 308	18	19	13
0839 23 309	18	19	14
0839 23 311	18	19	15
0839 23 312	18	19	16
0839 23 314	18	19	17
	136	137	1
0839 23 315	18	19	18
0839 23 318	18	19	19
0839 23 321	18	19	24
0839 23 325	18	20	31
0839 23 327	18	20	33
0839 23 328	18	24	142
0839 23 332	18	20	34
0839 23 334	18	20	36
0839 23 336	18	20	38
0839 23 341	18	20	42
0839 23 342	18	20	43
0839 23 344	18	20	45
0839 23 346	18	21	51
0839 23 347	18	21	52
0839 23 349	18	21	55
0839 23 357	18	21	64
0839 23 361	18	21	67
0839 23 362	18	21	68
0839 23 367	18	21	73
0839 23 401	18	24	141
0839 23 405	18	22	99
0839 23 406	18	23	118
0839 23 421	18	23	103
0839 23 422	18	23	104
0839 23 423	18	23	108
0839 23 424	18	23	109

0839 23 425	18	23	110
0839 23 426	18	23	111
0839 23 431	18	23	114
0839 23 432	18	23	115
0839 23 433	18	23	116
0839 23 435	18	23	117
0839 23 438	18	23	119
0839 23 475	18	23	126
0839 23 476	18	24	129
0839 23 483	18	24	143
0839 23 484	18	20	25
0839 23 485	18	24	134
0839 23 611	139	140	13
0839 23 618	139	140	6
0839 23 625	139	141	28
0839 23 628	139	141	25
0839 23 629	139	141	26
0839 23 671C	25	26	1
0839 23 672	25	26	6
0839 23 673A	25	26	3
0839 23 676A	25	26	7
0839 23 677	25	26	8
0839 23 678	25	26	9
0839 23 679	25	26	10
0839 23 684	25	26	11
0839 23 685	25	26	13
0839 23 686	25	26	12
0839 23 687	25	26	17
0839 23 688	25	26	18
0839 23 692	25	26	14
0839 23 693	25	26	15
0839 23 696	25	26	19
0839 24 304	61	62	19
0839 24 311	61	62	11
0839 24 404	64	65	4
0839 24 411	64	65	10
0839 24 530	67	69	23
0839 24 701	74	76	31
0839 24 702	74	75	18
0839 24 703	74	75	17
0839 24 705	74	76	26
0839 24 706	74	75	13
0839 24 709	74	75	8
0839 24 710	74	76	21
0839 24 715	74	75	14
0839 24 716	74	75	9
0839 24 718	74	75	20
0839 24 719	74	76	27
0839 24 720	74	76	35
0839 24 721	74	76	23
0839 24 722	74	76	36
0839 24 723	74	76	33
0839 24 724	74	76	34
0839 24 736	74	75	16
0839 24 757	74	75	1
0839 24 761	74	75	3
0839 24 762	74	75	4
0839 25 100C	77	78	—
0839 25 300A	77	78	5
0839 26 010B	79	80	1
0839 26 111	79	80	11
0839 28 011A	89	90	1
0839 32 011A	92	93	1
0839 32 012A	92	93	2
0839 32 014	92	93	17
	98	99	11
	104	105	11
0839 32 015A	92	93	18
	98	99	12
	104	105	12
0839 32 019	92	93	4
0839 32 025B	92	94	23
	98	99	16
	104	105	16
0839 32 026	92	93	7
	98	99	1
	104	105	1
0839 32 027	92	93	8
	98	99	2
	104	105	2
0839 32 028	92	93	9
	98	99	3
	104	105	3
0839 32 029	92	94	24
	98	99	17
	104	105	17
0839 32 030C	92	93	10
0839 32 039	92	94	25
	98	99	18
	104	105	18
0839 32 040A	92	93	11
0839 32 042A	92	93	12
	98	99	6
	104	105	6
0839 32 055	92	94	20
0839 32 800B	92	94	21
	98	99	14
	104	105	14
0839 32 820A	92	93	13
0839 32 980C	92	93	—
0839 34 011	119	120	1
0839 34 310	119	120	—
0839 34 320	119	120	—
0839 34 800B	125	126	9
0839 39 381	127	128	8
0839 40 060	129	130	2
0839 40 081A	129	130	16
0839 40 100E	129	130	1
0839 40 300C	129	130	13
0839 41 341	41	43	29
0839 41 660	142	143	7
0839 41 920	41	43	21
0839 42 310A	132	133	1
0839 42 350A	132	133	13
0839 42 381	132	133	8
0839 43 422A	148	150	13
	152	155	42
0839 43 423A	148	150	14
0839 43 550	144	146	—
0839 43 551	144	146	35
0839 43 553	144	146	37
0839 43 570	144	147	39
0839 43 770	161	162	13
	163	164	16
0839 43 800A	144	147	43
	156	157	—
0839 43 836	161	162	15
0839 43 849	144	147	46
0839 43 990B	144	146	34
	148	150	—
0839 45 071B	136	138	31
0839 45 330B	161	162	26
0839 45 610C	136	138	32
0839 49 686A	148	151	39
0839 49 699A	148	151	40
0839 49 760	156	157	5
0839 52 110	174	175	5
0839 52 461	169	171	29
0839 52 462	169	171	30
0839 52 463	169	171	31

INDEX. 0839 52 464～0839 61 772

0839 52 464	169	171	32
0839 52 510D	172	173	1
	178	179	1
0839 52 610	172	173	2
0839 52 620	172	173	3
0839 52 661A	172	173	6
0839 52 671A	172	173	7
0839 52 901	172	173	12
0839 53 010H	174	175	6
0839 53 190B	174	175	9
0839 53 330B	178	180	4
0839 53 340	178	180	6
0839 53 350F	178	180	8
0839 53 352	178	180	9
0839 53 421A	178	180	18
0839 53 430	178	180	20
0839 53 450	178	181	22
0839 53 500	178	181	24
0839 53 591	178	181	26
0839 53 800B	187	188	1
0839 53 901	178	181	32
0839 53 920	178	181	33
0839 53 941	178	181	34
0839 53 951	178	181	35
0839 54 210D	174	176	15
0839 54 330B	178	180	5
0839 54 340	178	180	7
0839 54 350F	178	180	10
0839 54 352	178	180	11
0839 54 421A	178	180	19
0839 54 430	178	181	21
0839 54 450	178	181	23
0839 54 500	178	181	25
0839 54 591	178	181	27
0839 55 430C	192	193	19
	196	197	20
	201	202	—
0839 56 010	187	188	4
0839 56 100	187	188	7
0839 56 121B	187	190	31
0839 56 125	187	190	33
0839 56 126A	187	190	34
0839 56 180	187	188	5
0839 56 200F	187	188	—
0839 56 201B	187	189	15
0839 56 250A	187	189	17
0839 56 340	187	189	26
0839 56 350B	187	189	27
0839 56 370A	187	189	29
0839 56 400	187	190	36
0839 56 420	187	189	24
0839 56 460E	187	189	25
0839 56 540G	174	176	17
0839 56 600A	187	188	8
0839 56 630C	187	189	16
0839 56 701	187	190	50
0839 56 702A	187	190	51
0839 56 703	187	191	52
0839 56 704	187	191	53
0839 56 705	187	191	54
0839 56 750B	187	189	18
0839 56 850	187	189	28
0839 56 900	187	190	37
0839 56 970	309	310	20
0839 56 981	125	126	16
0839 57 100A	209	210	—
0839 57 110	209	210	1
	215	216	1
0839 57 120A	209	211	19
	215	217	26
0839 57 130A	209	210	13
0839 57 150A	209	211	—
0839 57 160	209	211	27
	215	218	34
0839 57 170A	209	213	52
	215	219	52
0839 57 180A	209	212	39
0839 57 200A	209	213	62
	215	220	62
0839 57 250A	209	213	65
	215	220	65
0839 58 010F	229	230	1
0839 58 020B	229	230	1
0839 58 305	234	235	3
0839 58 310C	234	235	1
0839 58 492A	350	351	8
	350	352	13
0839 58 493A	350	351	4
	350	351	11
	350	352	15
0839 58 501	229	230	3
0839 58 601A	229	230	1
0839 58 605B	229	231	10
0839 755A 58	229	233	28
0839 58 760B	229	231	11
0839 58 780D	229	231	13
0839 58 781B	229	232	14
0839 58 783A	229	232	15
	337	340	37
	342	344	16
0839 58 789	229	232	16
0839 58 790B	229	232	13
0839 58 810C	229	232	19
0839 58 831A	229	233	27
0839 58 851	229	233	30
0839 58 862	234	238	50
0839 58 863	234	238	51
0839 59 010F	229	230	1
0839 59 020B	229	230	1
0839 59 310C	234	235	1
0839 59 501	229	230	3
0839 59 601A	229	230	1
0839 59 760B	229	231	11
0839 59 780D	229	231	13
0839 59 781B	229	232	14
0839 59 790B	229	232	13
0839 59 810C	229	232	19
0839 59 831A	229	233	27
0839 59 862	234	238	50
0839 60 050	192	194	26
0839 60 070A	192	194	29
0839 60 830A	239	241	28
	251	258	102
	302	303	9
0839 60 831	239	241	29
	242	245	29
	251	258	103
	302	303	10
0839 61 211B	239	241	19
	242	244	19
0839 61 212B	239	241	20
	242	244	20
0839 61 213A	239	241	21
	242	244	21
0839 61 214A	239	241	22
	242	244	22
0839 61 235A	5	6	19
0839 61 771	251	253	26
	260	262	26
0839 61 772	251	253	27

0839 61 772	260	262	27
0839 61 790B	251	254	31
	260	262	31
0839 61 800	251	254	—
	260	263	—
0839 61 802	251	254	37
	260	263	37
0839 61 811	251	254	40
0839 61 812A	251	254	41
	260	263	41
0839 61 815	251	254	32
	260	263	32
0839 61 816	251	254	33
	260	263	33
0839 61 817	251	254	34
	260	263	34
0839 61 831	260	267	107
0839 61 907A	251	255	52
0839 61 910	251	255	53
	260	264	59
0839 61 950A	251	252	—
	260	261	—
0839 61 951A	251	252	2
	260	261	2
0839 61 952	251	252	3
	260	261	3
0839 61 960A	251	252	5
	260	261	5
0839 61 963A	251	252	9
	260	261	9
0839 61 964	251	252	11
	260	261	11
0839 61 965	251	253	12
	260	261	12
0839 61 966	251	253	13
	260	261	13
0839 61 970	251	252	6
	260	261	6
0839 61 975A	251	253	15
	260	262	15
0839 61 976	251	253	16
	260	262	16
0839 61 980	251	253	17
	260	262	17
0839 66 790A	281	284	—
0839 66 791	281	284	27
0839 66 792A	281	284	28
0839 66 810A	281	285	37
0839 66 940	296	297	—
	299	300	—
0839 66 995	281	286	68
0839 67 010F	281	285	43
0839 67 030C	281	285	44
0839 67 080A	281	285	46
0839 67 105	57	60	31
0839 67 170	132	135	44
0839 67 321	287	288	2
0839 67 330	290	291	4
0839 67 900	281	284	32
0839 67 901	281	284	44
0839 67 910	281	284	29
0839 67 920	281	284	30
0839 68 580A	322	323	1
0839 68 590A	322	323	2
0839 68 630B	322	323	5
0839 68 660	309	310	—
0839 68 670	309	310	1
0839 68 720	309	310	8
0839 68 851	306	307	7
0839 68 930A	306	307	13
0839 68 936A	306	307	14
0839 68 937	306	307	15
0839 68 938	306	307	16
0839 68 940	306	308	21
0839 68 955	312	316	61
0839 68 960D	312	316	56
0839 68 980D	312	316	57
0839 69 051A	302	305	46
0839 69 054B	312	313	4
0839 69 055A	312	313	6
0839 69 071	312	313	16
0839 69 076A	312	313	11
0839 69 077A	312	313	17
0839 69 078A	312	313	12
0839 69 080	312	314	29
0839 69 090	312	314	29
0839 69 124	312	314	30
0839 69 125	312	314	31
0839 69 170	312	315	45
0839 69 171	312	315	41
	312	315	46
0839 69 173	312	315	42
	312	315	47
0839 69 174	312	315	43
	312	315	48
0839 69 210	312	316	50
0839 69 240	312	316	51
0839 69 290A	318	319	1
0839 69 311A	318	319	2
0839 69 312B	318	319	3
0839 69 313A	318	319	4
0839 69 314A	318	319	7
0839 69 318	318	320	24
0839 69 320	318	319	9
0839 69 341A	318	319	10
0839 69 342C	318	319	12
0839 69 343C	318	319	13
0839 69 344	318	319	14
0839 69 345	318	319	15
0839 69 411A	318	320	21
0839 69 431A	318	320	22
0839 69 627C	322	323	16
0839 69 660B	322	323	18
0839 69 683A	322	324	21
0839 69 684	322	324	22
0839 69 685	322	324	23
0839 69 686	322	324	24
0839 69 687A	322	324	25
0839 69 688	322	324	26
0839 69 689	322	324	27
0839 69 696A	322	324	32
0839 69 697B	322	324	33
0839 69 861	318	320	27
0839 69 862	318	320	28
0839 69 863	318	320	29
0839 69 870A	318	320	30
0839 70 100B	174	176	31
0839 70 441	329	330	1
0839 70 449	329	330	6
0839 70 451A	329	330	8
0839 70 453A	329	330	10
0839 70 454A	329	330	12
0839 70 455	329	330	14
0839 70 471B	329	330	16
0839 70 481A	329	330	18
0839 70 482A	329	330	19
0839 70 483A	329	330	20
0839 70 484A	329	331	22
0839 70 485A	329	331	24
0839 70 511A	337	338	1

INDEX. 0839 70 515～2046 43 839

0839 70 515	337	338	2
0839 70 521	337	338	4
0839 70 522	337	338	5
0839 70 523A	337	338	6
0839 70 524	337	338	7
0839 70 525	337	338	8
0839 70 526	337	338	9
0839 70 550A	337	338	11
0839 70 555	337	338	14
0839 70 570	337	338	15
0839 70 603	337	339	24
0839 70 604	337	339	26
0839 70 605C	337	339	30
0839 70 606B	337	339	31
0839 70 651A	337	339	32
0839 70 652	337	339	33
0839 70 655A	337	339	35
0839 70 680B	337	340	36
0839 70 681B	337	340	38
0839 70 701A	337	340	39
0839 70 721A	337	341	53
0839 70 741A	337	340	46
0839 70 742	337	340	47
0839 70 743	337	340	48
0839 70 751B	337	340	49
0839 70 752A	337	340	51
0839 70 802A	329	331	26
0839 70 803A	329	331	28
0839 70 821	329	331	31
0839 70 822	329	331	33
0839 70 823B	329	331	35
0839 70 865	329	331	41
0839 71 453A	329	330	11
0839 71 454A	329	330	13
0839 71 455	329	330	15
0839 71 483A	329	331	21
0839 71 484A	329	331	23
0839 71 485A	329	331	25
0839 71 511A	337	338	1
0839 71 515	337	338	2
0839 71 570	337	338	15
0839 71 603	337	339	24
0839 71 604	337	339	26
0839 71 651A	337	339	32
0839 71 652	337	339	33
0839 71 680B	337	340	36
0839 71 701A	337	340	39
0839 71 721A	337	341	53
0839 71 741A	337	340	46
0839 71 742	337	340	47
0839 71 743	337	340	48
0839 71 751B	337	340	49
0839 71 752A	337	340	51
0839 71 802A	329	331	27
0839 71 803B	329	331	29
0839 71 821	329	331	32
0839 71 822	329	331	34
0839 71 823B	329	331	36
0839 74 158	350	352	18
0839 74 168	350	352	18
0839 74 910	350	351	—
0839 74 920	350	351	—
0839 74 930	350	351	—
0839 74 940	350	351	—
0839 74 950	350	351	—
0839 75 090	201	202	—
0839 75 100	201	202	7
0839 75 101	201	202	1
0839 75 102	201	202	2
0839 75 103	201	202	3
0839 75 104	201	202	4
0839 75 105	201	202	5
0839 75 106	201	202	6
0839 79 210A	251	252	—
0839 87 001	296	297	11
	299	300	13
0839 87 002	296	298	16
	299	300	18
0839 87 006	296	298	17
	299	301	19
0839 88 010	209	210	3
	215	216	3
0839 88 100A	209	211	21
	215	217	28
0839 88 170	209	212	45
0839 88 171	209	212	46
0839 88 172	209	212	47
0839 88 173	203	205	18
	203	207	45
	209	212	49
	215	217	23
0839 88 174	203	205	19
	203	207	46
	209	212	50
	215	217	24
0839 88 200	209	211	29
	215	218	36
0839 88 250	209	211	30
0839 88 280A	209	213	54
	215	219	54
0839 88 370A	209	213	64
	215	220	64
0839 88 420	209	214	67
	215	220	67
0840 10 100A	1	2	1
0840 10 150A	5	6	1
0840 18 600	54	56	30
0841 32 030	92	93	10
	98	99	4
	104	105	4
0841 32 040	92	93	11
	98	99	5
	104	105	5
0841 32 820	92	93	13
	98	99	7
	104	105	7
0841 32 980A	92	93	—
	98	99	—
	104	105	—
0841 33 170E	82	85	39
	115	117	33
0841 56 200	187	188	—
0841 56 350B	187	189	27
0841 67 010F	281	285	43
0841 67 030C	281	285	44
0841 68 580A	322	323	1
0841 68 860A	306	307	1
0841 69 870	318	320	30
0841 88 001	222	224	21
	222	226	49
	222	227	66
0841 88 002	222	224	22
	222	226	50
	222	227	67
0848 18 600	54	56	30
0857 61 090	239	240	—
0857 70 441	329	330	1
2046 43 839	132	134	34
	161	162	16
	163	164	19

2046 49 620C	152	154	14
2046 49 622	152	154	19
2046 49 625A	152	154	15
2046 49 626A	152	154	16
2046 49 627B	152	154	17
2046 49 629A	152	154	18
2046 49 635A	152	154	—
2046 49 638	152	155	31
2046 49 666	152	155	30
2046 49 667	152	155	30
2046 49 668	152	155	30
2046 49 669	152	155	30
2046 49 676	152	155	37
2046 49 696	152	155	38
2046 49 746	156	157	2
2046 49 747	156	157	3
2046 49 783	156	157	9
2046 49 784	156	157	9
2065 53 300	183	184	—
2065 53 600	183	185	30
2065 54 300	183	184	—
2065 54 600	183	186	31
2065 56 200	187	188	—
2066 53 300	183	184	—
2066 54 300	183	184	—
2067 53 300	183	184	—
2067 54 300	183	184	—
2067 57 100	222	223	—
2067 57 150	222	225	—
2069 53 300	178	179	—
2069 54 300	178	179	—
2071 53 300	178	179	—
2071 54 300	178	179	—
2072 53 300	178	179	—
2072 54 300	178	179	—
2073 53 300	178	179	—
2073 54 300	178	179	—
2073 55 430	196	197	20
	201	202	—
2073 57 100	215	216	—
2073 57 150	215	218	—
2073 75 090	201	202	—
2073 75 101	201	202	1
2075 57 100	203	204	—
2075 57 130	203	205	13
2075 57 300	203	204	—
2075 61 710A	260	261	—
2080 10 300	5	6	10
2080 10 400	5	7	24
2080 13 200	15	16	15
	18	19	—
2080 23 303	18	19	4
2080 23 318	18	19	20
2080 23 344	18	20	46
2080 23 383	18	20	47
2080 32 261	112	113	1
2080 32 358	109	111	21
2080 32 800	92	94	21
	98	99	14
2080 32 810	92	94	22
	98	99	15
2080 41 610	142	143	1
2080 41 660	142	143	7
2080 43 830	163	164	13
2080 43 836	163	164	18
2080 45 071A	136	138	31
2080 45 510	163	165	30
2080 45 610	136	138	32
2080 51 120	174	175	2
2080 53 010A	174	175	6
2080 53 210	174	175	14
2080 53 300	178	179	—
2080 53 320	178	180	2
2080 53 350	178	180	8
2080 53 600	178	181	28
2080 54 210	174	176	15
2080 54 300	178	179	—
2080 54 350	178	180	10
2080 54 600	178	181	29
2080 56 010	187	188	4
2080 56 040	174	176	16
2080 56 200	187	188	—
2080 56 540	174	176	17
2080 57 100	215	216	—
2080 57 130	215	216	13
2080 57 150	215	218	—
2080 57 180	215	219	46
2080 57 300	215	216	—
2080 57 350	215	218	—
2080 58 010	229	230	1
2080 59 010	229	230	1
2080 60 050A	196	198	27
2080 60 070	196	198	33
2080 61 090	242	243	—
2080 61 710A	260	261	—
2080 61 811	260	263	40
2080 61 812A	260	263	42
2080 61 813A	260	263	43
2080 61 825	260	264	47
2080 61 827	260	264	50
2080 61 828	260	264	52
2080 66 210	277	278	—
2080 66 230	277	278	—
2080 66 240	277	279	—
2080 67 010	281	285	43
2080 69 210	312	316	50
2080 69 240	312	316	51
2080 69 611	322	323	9
2080 69 612	322	323	10
2080 69 613	322	323	11
2080 69 660	322	324	18
2080 70 100B	174	176	31
2080 70 441	329	330	1
2080 87 001	277	278	1
2080 87 002	277	278	1
2080 87 003	277	279	17
2080 87 005	277	279	20
2080 87 006	277	279	15
2080 87 007	277	279	15
2080 88 070	203	204	5
	215	216	5
2080 88 170	215	217	19
2080 88 171	215	217	20
2080 88 172	215	217	21
2082 57 100	222	223	—
2082 57 120	222	224	18
2082 57 150	222	225	—
2082 57 170	222	226	46
2082 57 250	222	227	63
2082 68 860	306	307	1
2082 88 420	222	227	65
2082 88 460	222	227	69
2091 18 520	057	59	20
2091 57 100	215	216	—
2091 57 110	215	216	1
2091 57 120	215	217	26
2091 57 150	215	218	—
2091 57 160	215	218	34
2091 57 170	215	219	52
2091 57 200	215	220	62

INDEX. 2091 57 250～2826 54 500

2091 57 250	215	220	65
2091 61 090	242	243	—
2091 61 212	242	244	20
2091 88 010	215	216	3
2091 88 100	215	217	28
2091 88 200	215	218	36
2091 88 280	215	219	54
2091 88 370	215	220	64
2091 88 420	215	220	67
2112 27 000	86	87	—
2112 27 018	86	87	2
2113 10 200	1	2	11
2113 10 203	1	2	12
2113 10 206	1	2	14
2113 23 674	25	26	4
2113 23 675	25	26	2
	25	26	5
2113 32 110	92	94	—
	98	100	—
2113 32 120	92	95	31
	98	100	25
2113 32 130	92	95	34
	98	100	28
2113 32 320B	112	113	—
2113 32 329	112	114	17
2113 32 330	112	113	12
2113 32 350B	112	113	13
2113 32 354	112	113	14
2113 32 356	112	114	15
2113 32 365	112	113	7
2113 54 295	57	59	24
2113 66 132	277	278	2
	277	279	16
2113 66 152	277	278	2
	277	279	16
2113 99 322	112	113	2
2123 10 200	1	2	11
2125 23 151	9	10	6
2125 23 152	9	10	7
2125 23 154	12	13	6
2125 23 155	12	13	7
2155 55 109	203	205	15
2155 57 109	203	207	42
	209	210	15
	209	212	41
	215	217	15
	215	219	48
	222	224	15
	222	226	43
2158 34 014	119	120	4
2158 34 340	119	121	17
2158 34 381	119	121	18
2158 34 390	119	121	19
2158 40 355	129	130	14
	129	131	27
2212 66 191	273	276	31
2212 66 480	273	276	—
2212 66 490	273	276	—
2244 32 423	92	97	63
	98	102	56
	104	108	54
2244 87 201	277	280	33
2276 68 881	309	310	19
2277 66 045	273	274	11
2288 66 045	273	274	11
2292 58 232	229	230	2
	337	338	3
	342	343	2
2301 43 061	144	145	18
2304 15 321	174	177	37
2321 53 210A	174	175	14
2321 53 300	183	184	—
2321 53 600A	183	186	30
2321 54 300	183	184	—
2321 54 600A	183	186	31
2321 57 100	222	223	—
2321 57 150	222	225	—
2323 53 300A	178	179	—
2323 53 600A	178	181	28
2323 54 300A	178	179	—
2323 54 600A	178	181	29
2323 69 611	322	323	9
2324 09 010	350	351	—
2324 32 220	92	96	52
	98	102	45
	104	107	41
2324 51 120	174	175	2
2324 53 210D	174	175	14
2324 53 300B	178	179	—
2324 53 600C	178	181	28
2324 54 300B	178	179	—
2324 54 600C	178	181	29
2324 56 040C	174	176	16
2324 57 100	209	210	—
2324 57 150	209	211	—
2324 58 310	234	235	1
2324 59 310	234	235	1
2324 61 710	251	252	—
2324 67 100A	57	59	26
2324 69 053A	312	313	3
2324 69 660A	322	324	18
2324 70 050C	178	182	37
	183	186	41
2325 66 130A	277	278	—
2325 66 133	277	278	3
2325 66 150A	277	278	—
2325 66 157	277	278	12
2329 11 613	9	11	37
2329 15 200A	34	35	8
2329 18 400	57	58	13
	70	71	—
2329 24 701	70	71	12
2329 24 702	70	71	16
2329 24 736	70	72	38
2334 66 170	277	279	—
2350 58 593	234	236	16
	246	248	21
2370 60 430	192	195	63
	196	200	67
	350	352	20
2370 60 439	192	195	64
	196	200	68
	350	352	22
2370 99 322	109	110	1
2370 99 324	109	110	2
	112	113	3
2545 23 496	61	62	2
	64	65	2
2587 24 335	61	62	15
2587 24 336	61	62	12
2677 45 910	136	138	33
2694 42 397	132	134	33
2756 13 657F	18	23	120
2780 17 561	51	53	41
2826 50 110A	166	167	1
2826 51 020	174	175	1
2826 53 290A	57	59	21
2826 53 299	57	59	23
2826 53 500	183	185	26
2826 54 500	183	185	27

2826 57 100	203	204	—
	222	223	—
2826 58 310	234	235	1
2826 58 365	234	236	13
	246	248	18
2826 59 310	234	235	1
2826 69 810	302	304	21
2828 45 461	161	162	17
	163	164	20
2828 61 780	251	258	110
2828 61 790	251	258	113
2828 66 870	296	297	—
2828 66 871	296	297	2
2828 66 900	296	297	1
2828 66 920	277	280	—
2828 66 922	277	280	33
2828 66 940	277	280	—
2828 67 111	57	60	29
2828 69 051	302	305	47
2828 69 810	302	304	22
2830 66 670	277	280	—
2830 66 690	277	280	—
2831 32 080	98	100	22
2832 57 550	203	206	—
2835 32 100	92	94	28
2835 32 220	92	96	52
	98	102	45
2835 41 030	144	145	1
2835 41 400	144	146	28
	152	153	—
2835 43 030	144	145	2
2835 43 070	144	145	20
2835 43 422	152	155	43
2835 43 800	144	147	43
	156	157	—
2835 43 849	144	147	46
2835 43 990	144	146	34
	152	154	—
2835 45 260A	163	164	25
2835 45 310	163	165	27
2835 45 320	163	165	28
2835 45 330	163	165	29
2835 49 623	152	154	22
2835 49 628A	152	154	23
2835 49 630	152	154	20
2835 49 640	152	154	21
2835 49 641A	152	155	29
2835 49 642A	152	154	24
2835 49 645A	152	154	25
2835 49 646A	152	154	26
2835 49 647A	152	154	27
2835 49 648	152	154	28
2835 49 652	152	155	35
2835 49 682	152	155	39
2835 49 686	152	155	40
2835 49 687	152	155	41
2835 49 760	156	157	5
2835 52 330	169	170	8
2835 52 410	169	170	22
2835 53 190	174	175	9
2835 53 320	178	180	2
	183	184	2
2835 53 350	183	184	8
2835 53 410	178	180	14
	183	185	14
2835 53 700	174	176	19
2835 53 707	174	176	20
2835 53 970	174	176	25
2835 54 190	174	175	10
2835 54 320	178	180	3

2835 54 320	183	184	3
2835 54 350	183	185	9
2835 54 410	178	180	15
	183	185	15
2835 55 340	192	193	5
	196	197	5
2835 58 010A	229	230	1
2835 59 010A	229	230	1
2835 60 045	196	198	28
2835 60 250	196	199	44
2835 60 330	196	199	59
2835 60 340	196	200	60
2835 60 421	192	195	62
	196	200	66
	350	352	21
2835 61 130	242	243	—
2835 61 140	242	244	12
	246	247	—
	260	267	109
2835 61 150	242	244	15
2835 61 190	242	244	16
	246	249	—
2835 61 233	242	245	27
	260	267	113
2835 61 840	268	270	—
2835 61 851	260	265	66
2835 61 852	260	265	67
2835 61 853	260	265	69
2835 61 854	260	266	86
2835 61 855	260	266	87
2835 61 856	260	266	88
2835 61 859	260	265	70
2835 61 860	260	265	72
	268	269	—
2835 61 862	260	265	74
2835 61 881	260	265	76
2835 61 889A	260	265	78
2835 66 030	273	274	—
2835 66 110	273	275	—
2835 66 140	273	275	—
2835 66 780A	281	284	—
2835 67 080A	281	285	46
2835 67 160	273	274	12
2835 67 321	290	291	1
2835 67 325	290	291	2
2835 67 340	290	291	—
2835 67 370	290	291	18
2835 67 910	281	284	29
2835 67 920	281	284	30
2835 69 360	318	320	18
2835 69 380	318	320	19
2835 69 810	302	304	20
2835 70 201	302	305	32
2835 70 211	302	305	36
2835 70 221	302	305	40
2835 70 441	333	334	1
2835 76 081	242	243	1
2835 76 082	242	243	2
2835 76 083	242	243	8
2835 76 110	246	247	1
2835 76 116	246	247	12
2835 76 125	246	247	16
2835 76 126	246	248	17
2835 76 127	246	248	21
2835 76 131	246	248	24
2835 76 132	246	248	25
2835 76 135	246	248	27
2835 76 145	246	247	6
2835 76 157	246	249	36
2835 76 163	246	249	42

INDEX. 2835 76 164～2874 54 300

2835 76 164	246	249	43
2835 76 166	246	249	45
2835 76 721	268	269	1
2835 76 726	268	269	8
2835 76 728	268	269	9
2835 76 801	268	270	17
2835 76 802	268	270	18
2835 76 804	268	270	21
2835 76 805	268	270	22
2835 76 807	268	270	25
2835 76 808	268	270	26
2835 76 817	268	271	42
2835 76 821	268	271	47
2835 87 001	273	275	13
2835 87 002	273	275	14
2835 87 003	273	274	9
2835 87 004	273	275	16
2835 87 005	273	274	10
2835 87 006	273	275	14
2835 87 008	273	275	16
2835 87 010	273	274	8
2835 87 011	273	275	19
2835 87 012	273	275	18
2835 87 013	273	275	20
2835 87 014	273	275	18
2835 87 901	290	291	5
2835 87 902	290	291	6
2835 87 922	290	292	28
2835 87 923	290	292	27
2835 87 924	290	292	20
2835 87 925	290	292	21
2835 87 926	290	292	33
2835 87 927	290	292	34
2835 87 928	290	292	26
2835 87 951	290	292	32
2835 87 957	290	292	36
2836 32 050	98	100	21
2836 66 030	273	274	—
2836 87 010	273	274	4
2837 66 030	273	274	—
2837 66 110	273	275	23
2837 66 140	273	275	23
2837 66 370	277	280	—
2837 87 010	273	274	8
2837 87 031	277	280	27
2840 61 840	260	266	85
	268	270	—
2840 67 325	290	291	3
2840 69 810	302	304	22
2843 57 100	203	204	—
2845 69 810	302	304	21
2846 60 830	242	245	28
	260	267	106
2846 61 907	260	264	58
2846 68 610	322	323	3
2846 68 620	322	323	4
2850 45 921	136	138	34
2850 56 921	174	177	38
2850 58 310	234	235	1
2850 58 560	234	237	27
2850 59 310	234	235	1
2850 59 560	234	237	27
2850 60 250	196	199	44
2850 60 330	196	200	59
2850 61 771	251	258	112
	260	267	116
2850 61 780	260	267	114
2850 61 790	260	267	117
2850 69 210	312	316	50
2850 69 240	312	316	51
2850 72 300	346	347	1
2850 72 560	346	347	15
2850 73 300	346	347	1
2850 73 560	346	347	15
2851 57 110	203	204	1
	222	223	1
2851 57 120	203	205	20
2851 57 160	203	206	28
	222	225	29
2851 57 170	203	207	47
2851 57 200	222	227	60
2851 57 550	203	206	—
2851 58 810	229	232	19
2851 58 891	229	232	21
2851 59 810	229	232	19
2851 61 130	242	243	—
2851 61 150	242	244	15
2851 61 232	242	245	26
2851 61 233	242	245	27
2851 61 242	242	245	32
2851 61 243	242	245	32
2851 61 244	242	245	33
2851 61 245	242	245	34
2851 61 246	242	245	34
2851 61 247	242	245	35
2851 61 248	242	245	35
2851 61 249	242	245	36
2851 76 081	242	243	1
2851 76 083	242	243	8
2851 76 086	242	243	4
2851 76 087	242	243	5
2851 88 010	203	204	3
	222	223	3
2851 88 100	203	205	22
	222	224	20
2851 88 200	203	206	30
	222	225	31
2851 88 280	203	207	49
	222	226	48
2851 88 370	222	227	62
2855 58 310	234	235	1
2855 59 310	234	235	1
2857 57 100	203	204	—
2857 57 200	203	208	57
2857 57 250	203	208	60
2857 69 810	302	304	20
2857 88 370	203	208	59
2857 88 420	203	208	62
2858 58 810	229	232	19
2858 59 810	229	232	19
2858 60 830	242	245	28
2860 53 190A	174	175	9
2862 32 050B	98	100	21
2862 32 080	98	100	22
2862 53 500	183	185	26
2862 54 500	183	185	27
2862 70 441	333	334	1
2862 70 471C	333	334	15
2864 66 870	296	297	—
2864 66 871	296	297	2
2864 66 900	296	297	1
2864 69 090	312	313	19
2866 70 441	329	330	1
2866 70 471	329	330	16
2866 70 511	337	338	1
2866 71 511	337	338	1
2867 70 471C	329	330	16
2874 53 300	183	184	—
2874 53 600	183	186	30
2874 54 300	183	184	—

2874 54 600	183	186	31
2874 61 710	251	252	—
2874 69 611A	322	323	9
2874 70 050A	178	182	37
	183	186	41
2875 53 300	183	184	—
2875 53 600A	183	186	30
2875 54 300	183	184	—
2875 54 600	183	186	31
2877 53 300A	178	179	—
2877 53 600A	178	181	28
2877 54 300A	178	179	—
2877 54 600A	178	181	29
2878 53 300B	178	179	—
2878 53 600C	178	181	28
2878 54 300B	178	179	—
2878 54 600C	178	181	29
2878 55 430A	192	193	19
	196	197	20
	201	202	—
2878 58 501	229	230	3
2878 59 501	229	231	3
2878 75 090	201	202	—
2878 75 101	201	202	1
2981 33 651	115	117	19
2981 33 671	115	117	20
2981 33 681	115	117	21
2981 57 976	215	221	77
2981 57 978	215	221	78
2981 66 495	281	283	16
	281	283	19
2981 66 496	281	283	19
2981 69 623	322	323	17
2994 17 510A	51	53	35
907424 5 30B	318	321	33
907436 5 16	273	275	22
	273	276	30
907436 6 16	281	283	23
907437 6 12B	306	308	23
907440 4 12	318	319	16
907614 5 16	312	315	49
907614 6 20	234	236	17
	246	248	22
907614 6 30	234	236	18
	246	248	23
907810 6 16	136	138	35
907812 6 16	47	50	42
907812 8 18	234	237	33
	234	237	39
907812 8 25	92	97	72
	98	103	65
907832 8 25	234	237	34
	234	237	40
	246	248	28
	346	349	33
907832 8 28	346	349	34
907976 5 08	234	236	21
907976 5 10	346	347	9
908010 8 25	51	52	21
908010 8 35	51	52	22
908012 8 16	92	96	46
	98	101	40
	104	107	34
908012 8 18	5	8	42
	12	14	22
908012 8 20	129	130	18
908012 8 45	54	55	6
908016 8 12	34	36	20
	34	36	24
908016 8 20	144	146	25
908016 8 22	38	39	17
908016 8 28	41	43	36
908016 8 35	1	3	40
908016 8 40	38	40	21
908016 8 50	1	3	41
908016 8 65	1	3	42
908016 8 75	1	3	43
908017 8 16	144	146	25
	169	170	3
908042 8 20	203	208	63
	209	214	68
	215	220	68
	222	228	71
908042 8 24	203	208	64
	209	214	69
	215	220	69
	222	228	72
908046 5 20	325	326	12
	325	327	34
908046 6 25	132	133	10
908046 8 25	203	207	53
	209	213	58
	215	219	58
	222	226	55
908047 5 12	325	326	14
908047 6 14	187	191	55
908056 6 16	312	313	58
908057 6 16	34	36	23
908057 6 20	174	175	3
908057 8 25	144	145	22
908061 5 10	187	188	3
908061 6 12	174	177	32
908061 6 20	125	126	17
908062 6 08	246	248	16
908062 6 10	5	7	23
	34	35	6
	34	37	36
	44	46	35
	44	46	37
	229	231	8
	342	343	7
908062 6 12	136	138	39
	229	231	9
	234	237	28
	337	338	13
	337	339	23
	337	339	25
	337	339	27
908062 6 14	44	46	21
	51	53	26
908062 6 16	5	8	39
	158	159	14
	163	164	15
908062 6 25	161	162	5
	163	164	5
	346	349	41
908062 6 35	161	162	18
	163	164	21
908062 8 14	172	173	11
908066 4 12	132	134	24
908066 5 10	234	236	11
	346	347	4
908066 5 12	174	176	27
	178	180	13
	183	185	11
908066 5 16	169	171	24
908066 6 10	27	29	21
908066 6 12	57	60	30
	281	286	67
	306	307	10

INDEX. 908066 6 14～99282 2600

908066 6 14	234	238	46
908066 6 16	281	286	59
	281	286	61
908066 6 18	34	35	11
	166	168	33
908066 6 22	44	46	25
908066 8 18	172	173	9
908067 5 10	296	298	20
	299	301	22
908067 5 12	296	297	5
	296	298	24
	299	301	26
	299	301	29
908067 6 14	174	175	4
	174	176	28
908067 6 16	169	170	12
908067 6 18	172	173	5
908067 6 20	142	143	9
908112 8 20	41	42	17
908314 6 14B	92	93	14
	98	99	8
	104	105	8
908324 5 16B	306	307	17
	306	308	20
908324 6 12	234	235	6
	346	347	3
908331 4 16B	302	305	35
908331 5 12B	325	328	36
908332 4 08	31	32	10
	82	83	16
	92	96	58
	98	102	51
	104	107	47
908332 4 12	196	200	61
908332 4 12B	192	195	59
	196	200	63
908332 4 16	92	93	15
	98	99	9
	104	105	9
908332 5 12	144	147	40
908332 5 16	281	283	20
908332 6 10	136	137	7
908332 6 16	142	143	6
908332 8 12	82	85	41
908336 4 08	192	195	58
	196	200	62
908336 4 10B	350	352	17
908336 4 12	158	160	24
	192	195	57
908336 5 12	132	134	21
908336 5 16	144	147	38
908337 5 08B	302	304	27
908337 5 12	132	133	16
	260	264	53
	302	304	25
908337 5 16	302	304	26
908346 4 10	251	253	28
	260	262	28
	325	326	18
908347 4 16	251	257	85
	260	266	89
908361 5 20B	192	194	21
	196	198	22
908386 4 10	251	258	99
	260	266	103
908386 5 10B	251	256	69
	260	265	75
908386 6 20	312	316	55
908391 5 16B	192	194	22
	196	198	23
908396 5 20B	192	194	23
	196	198	24
908624 4 12B	318	320	23
908624 4 20B	318	320	20
908624 5 16B	318	321	34
908624 5 18B	318	321	32
	318	321	35
908624 5 20B	318	320	31
908631 5 20	309	310	18
908632 4 10	187	190	44
908634 4 12	251	258	100
	260	266	104
908636 4 12	251	256	75
	260	265	81
908636 4 16B	306	307	11
908636 5 16	242	245	37
	251	255	56
	260	264	62
908636 6 12	251	255	55
	260	264	61
908640 4 12	318	319	11
908641 4 10	169	171	37
908641 4 12B	312	316	64
908681 4 14	192	193	10
	192	193	15
	196	197	11
	196	197	16
908682 3 08	92	94	26
	98	100	19
	104	105	19
908684 4 08	302	304	19
908686 4 12B	281	282	14
908687 4 16B	239	241	27
	242	245	25
	251	259	116
	260	267	120
908692 3 14	192	194	35
	196	198	39
908697 4 16	251	257	97
	260	266	101
	306	308	23
99023 3524	215	221	81
	215	221	83
99201 3500	215	221	81
	215	221	83
99221 1212	27	30	46
	132	134	29
99221 2012	142	143	19
	325	327	30
99221 2015	92	97	74
	98	103	67
	169	170	18
99221 2020	92	96	59
	98	102	52
	104	107	48
	109	110	—
	112	113	6
	144	147	50
99221 3020	109	110	15
	112	114	19
99221 4030	115	116	12
99230 0511	142	143	10
99230 0811	325	327	25
99230 0815	158	159	11
99231 0818	144	147	49
99233 1225	44	45	2
99234 1208	5	6	12
99236 0525	9	11	35
99282 1600	136	137	8
99282 2600	239	241	23

99282 2600	242	244	23
99282 4900	34	36	27
99282 5500	132	133	12
99285 0800	34	36	19
	144	147	41
	148	150	15
	152	155	44
99285 1200	132	134	37
99295 0606	44	45	7
99295 0610	44	46	29
99295 1008	38	40	22
99295 1508	15	17	27
	34	35	7
	57	60	32
99295 1510	41	42	13
99292 2008	57	59	17
99301 1100	203	208	67
	209	214	72
	215	220	72
	222	228	75
99305 2800	5	7	26
99306 3000	1	2	17
	5	6	18
99307 0600	1	3	25
99307 0800	1	2	15
99307 1200	1	2	16
	1	3	26
	5	6	17
99307 1400	1	3	27
	15	16	3
99307 1800	15	16	4
99335 0401	294	295	10
99335 04065	294	295	11
99335 04075	294	295	12
99335 06001	325	326	9
99336 12029	132	134	36
99340 06015	132	134	42
99340 06112	136	138	30
99340 0630	136	138	29
99340 0663	136	137	20
99381 1400	34	36	31
99384 1200	1	3	37
	34	37	39
99502 2000	104	107	35
99502 4000	44	45	9
99510 0800	15	16	5
99510 1000	5	7	27
	51	53	43
99511 1000	15	16	7
99511 1400	5	7	33
99541 00603	148	151	41
99541 01101	12	14	27
99541 01601	27	29	25
99541 02101	44	45	18
99560 1200	132	133	3
99562 1000	51	53	44
	161	162	6
	161	162	10
	161	162	21
	163	164	6
	163	164	10
	163	164	24
99562 1200	136	137	23
	161	162	14
	163	164	17
99562 1400	5	7	34
	51	52	10
	51	53	32
99562 1600	1	3	38
99562 1800	34	36	32
99564 0800	15	16	6
	51	53	38
99564 1000	5	7	27
	15	16	8
	41	43	35
	51	52	11
99564 1200	136	137	19
99564 1600	34	37	40
99564 1800	44	46	27
99573 1200	27	28	15
99573 2500	47	49	36
	47	50	45
99573 3200	47	48	11
99573 3500	47	48	4
99574 3500	38	39	7
99574 4700	251	252	8
	260	261	8
99574 5200	77	78	7
99575 0300	142	143	11
99575 0500	158	159	12
99575 0600	82	83	11
	142	143	5
	144	145	14
99576 0300	92	93	5
99576 0400	325	326	8
	325	327	22
99576 0500	325	327	26
99576 0800	27	30	38
99579 3000	192	193	2
	196	197	2
	302	303	16
	302	305	48
	306	308	19
	312	313	15
99579 4000	302	303	15
	312	316	60
99579 6000	312	314	28
99583 26388	92	96	47
	98	101	41
	104	107	36
99586 10207	44	45	19
99606 3307	47	48	3
99606 6205	77	78	8
99611 1500	41	43	27
	47	50	44
	82	84	27
99611 2000	12	14	30
99611 2500	51	52	13
	51	53	34
99620 21553	82	85	36
	115	118	37
	309	311	21
99620 41553	82	85	36
	115	118	37
	309	311	21
9962 11 6113	82	85	36
	115	118	37
	309	311	21
9962 12 6113	82	85	36
	115	118	37
	309	311	21
9963 01 1553	82	85	37
	115	118	37
	309	311	21
9963 01 6113	82	85	37
	115	118	37
	309	311	21
9965 11 4030	82	85	38
	115	118	37
	309	311	21

INDEX. 9965 12 4030～99813 10125

9965 12 4030	82	85	38
	115	118	37
	309	311	21
99655 30010	82	85	45
99655 30020	82	85	45
99655 30030	82	85	45
99655 30040	82	85	45
99655 30050	82	85	45
99655 30060	82	85	45
99681 1001	329	330	17
99683 0600	296	298	26
	299	301	28
99684 0600	281	286	50
99684 1000	281	286	51
99684 2000	281	286	52
99686 0700	192	194	31
	196	198	35
99701 1030	192	193	18
	196	197	19
	273	276	37
99701 2100	277	280	31
99701 3210	273	275	21
	277	279	23
99701 4215	277	278	11
99701 5030	192	193	9
	192	193	14
	196	197	10
	196	197	15
99701 5050	281	282	6
	281	282	9
99701 6030	201	202	12
99701 8100	277	278	12
99742 0420B	306	308	22
99743 0520	142	143	16
99744 0612	222	228	70
99752 30818	77	78	11
99753 3164	9	11	36
99753 41022	86	87	12
99753 81022	86	87	12
99761 0416B	302	305	33
99781 1020	125	126	5
99781 1090	92	96	49
	98	101	43
	104	107	39
99781 1092	109	110	17
	112	114	20
99781 1225	119	121	22
99781 1240	119	121	23
99795 1032	144	146	27
99797 0408	251	256	65
	260	265	71
99797 0510	187	190	42
	192	194	36
	196	198	40
	239	241	17
	242	244	17
	251	258	114
	260	267	118
99797 0525B	302	304	29
99797 0612	251	255	57
	260	264	63
99797 0616	251	254	38
	251	255	62
	260	263	38
99797 0812	251	253	29
	260	262	29
99797 0835	260	262	30
99799 0408	251	257	81
99799 0512	251	255	58
	251	256	67
99799 0512	260	264	64
	260	265	73
99799 0514	174	175	12
99799 0516	196	198	30
	302	303	7
99799 0616	251	255	62
	260	265	68
	268	272	54
99799 0620	251	254	39
	260	263	39
	281	285	38
99799 0625	287	289	38
	290	292	40
99799 0628	174	177	35
99799 0630	239	240	14
	242	244	14
	251	258	106
	260	267	110
99799 0820	281	284	34
99799 0832	92	97	66
	98	102	59
	104	108	57
99801 0814	82	84	17
	136	138	27
99801 0816	203	204	11
	203	206	38
	209	210	11
	209	212	37
	215	216	11
	215	218	44
	222	223	11
	222	225	39
99801 0822	9	11	22
	57	58	8
	127	128	4
99801 0828	57	58	14
	129	130	19
99801 1045	129	131	26
99802 0832	92	97	73
	98	103	66
99804 1022	77	78	12
99805 0830	166	167	3
99806 0508	57	59	19
99806 0510	287	289	34
	290	292	37
99806 0516	234	236	26
	337	339	22
	346	347	14
99806 0612	166	167	10
99806 0618	27	30	34
	125	126	11
99806 0622	132	133	7
99806 0630	27	30	34
99806 0832	251	254	30
99806 1035	251	252	10
	260	261	10
99808 0825	203	207	54
	209	213	59
	215	219	59
	222	226	56
99811 0812	86	88	22
99811 1010	5	6	16
99811 1022	115	116	14
99811 1032	41	42	11
99811 1045	41	42	10
99811 1050	41	42	9
	86	87	8
99811 1055	41	42	8
99811 1075	41	42	7
99813 10125	57	58	2

99813 1218	144	145	23
99830 0510	260	265	80
99831 0408	342	343	6
99831 0412B	251	257	98
	260	266	102
99831 0825	169	171	27
99832 0408B	192	195	60
	196	200	64
	234	235	8
	346	347	7
99833 0408	132	135	47
	312	315	38
99833 0410	132	135	48
99833 0512	174	175	13
99833 0514	142	143	16
99833 0514B	302	305	45
99833 0516	229	233	26
	337	340	44
	342	345	26
99833 0612	136	137	13
99833 0616	136	137	14
99833 0810	5	6	2
99833 0812	82	83	3
99834 0412	239	240	3
99834 0616	57	58	12
	166	168	22
99835 0308	268	270	23
99835 0408	239	240	10
	242	243	10
	268	271	41
99835 0414	246	248	23
	268	270	20
99835 0416	246	249	33
99835 0420	246	248	31
99835 0508	268	271	34
99835 0512	246	250	48
99835 0516	246	248	18
	246	250	49
	268	271	31
99836 0312B	325	326	16
99836 0410	268	270	28
	268	271	43
99836 0416	215	221	74
99836 0516	242	245	38
99837 0516C	312	316	52
99848 0312	92	93	16
	98	99	10
	104	105	10
99848 0320B	196	200	65
99851 0618	54	56	24
99851 0645	1	3	31
99851 0814	1	2	2
	44	45	12
	57	59	15
99851 0818	1	3	28
99851 0826	15	16	9
99851 0830	5	6	3
99851 0870	1	2	3
99851 1028	1	2	4
	5	6	4
99851 1032	15	17	31
99852 0610	44	45	3
99852 0612	82	84	19
99852 0614	27	28	2
99852 0645	1	3	32
	251	253	18
	260	262	18
99852 0820	79	80	3
99852 0822	1	2	20
	5	6	20
99852 0830	5	6	21
99852 0848	152	153	13
99852 0850	1	2	18
99852 0878	1	2	19
99852 0880	79	80	4
99855 0406	12	13	3
99855 1025	44	45	4
99855 1060	44	45	5
99859 1025	251	253	21
	260	262	21
99859 1055	251	253	22
	260	262	22
99859 1220	1	2	21
99860 0510	251	256	74
99860 0512	260	264	48
99860 0516	187	190	41
99860 0610	174	176	29
99861 0310B	302	305	38
99861 0410B	302	305	42
99861 0416B	302	305	43
99861 0512B	196	198	29
99862 0414B	329	331	30
	333	335	30
99862 0418B	337	340	52
99862 0516B	302	303	17
99863 0410B	312	317	66
99863 0412	242	243	3
99863 0416	281	282	10
99863 0425B	299	300	9
99863 0510B	132	134	41
99863 0512	329	331	42
	329	332	48
	333	335	42
	333	336	48
99864 0408	203	205	25
	209	211	24
	215	217	31
	222	224	26
	337	339	34
99864 0410	325	327	32
99864 0410B	337	340	50
99864 0412	268	269	7
	281	286	57
99864 0420B	166	168	29
99864 0508	268	269	4
99864 0510	239	241	30
	242	245	30
	251	258	104
	260	267	108
	302	303	11
	302	303	11
99864 0512	187	188	14
99866 0410B	192	193	7
	196	197	8
99866 0414B	192	193	12
	196	197	13
99868 0412	92	93	6
99869 0410B	302	303	2
99885 0406	9	10	3
99896 0400	166	168	30
	302	305	44
	306	307	12
99896 0500	302	303	17
	318	321	31
	318	321	32
99896 0600	174	176	30
99901 0800	1	4	45
	15	16	11
	15	16	16
	15	17	25

INDEX. 99901 0800～99921 1000

99901 0800	27	29	26
	34	35	4
	34	36	15
	34	37	38
	54	56	27
	57	59	16
	57	59	18
	79	81	20
	86	88	25
	89	91	21
	92	97	68
	98	102	61
	104	108	53
	119	121	20
	127	128	4
	127	128	7
	129	130	11
	129	130	20
	129	131	22
	144	145	15
	144	146	30
	144	147	42
	144	147	44
	158	159	10
	203	204	12
	203	206	39
	203	208	56
	203	208	66
	209	210	12
	209	212	38
	209	213	61
	209	214	71
	215	216	12
	215	218	45
	215	220	61
	215	220	71
	222	223	12
	222	225	40
	222	227	59
	222	228	74
99902 0800	129	131	22
	169	171	28
99902 1000	215	217	22
99904 0800	92	97	74
	98	103	67
99906 0400	25	26	16
	136	138	36
	192	193	20
	196	197	21
	246	248	23
	246	249	32
	251	257	85
	260	266	89
	268	270	20
	273	276	38
	296	297	7
	299	300	10
	312	313	18
	312	313	20
	329	331	44
	333	335	44
99906 0500	57	59	19
	57	59	19
	169	171	25
	192	193	17
	192	194	32
	196	197	18
	196	198	36
	234	235	4
	239	241	18
99906 0500	239	241	26
	242	244	18
	242	244	24
	246	250	50
	251	255	58
	251	258	115
	260	264	64
	260	267	119
	277	278	14
	277	279	25
	296	298	25
	299	301	27
	302	303	8
	306	307	18
	337	338	10
99906 0600	15	16	13
	27	28	3
	27	29	20
	34	35	10
	44	46	32
	54	56	28
	82	84	29
	125	126	11
	132	133	7
	136	137	15
	136	137	16
	158	159	21
	166	167	7
	166	167	10
	166	167	17
	172	173	4
	172	173	5
	234	238	48
	239	240	11
	239	240	13
	242	243	11
	242	244	13
	246	248	26
	251	253	19
	251	253	20
	251	254	39
	251	258	107
	251	258	111
	260	262	19
	260	262	20
	260	263	39
	260	267	111
	260	267	115
	281	284	35
	281	285	40
	281	285	42
	294	295	8
	302	304	28
	312	314	32
99906 0800	57	60	33
	169	170	4
	281	284	31
	337	339	29
99907 0500	322	323	6
99907 0600	31	32	25
	142	143	14
	234	238	48
99907 0800	18	24	135
	57	58	9
99911 0400	302	305	39
99911 0800	136	138	28
99921 1000	41	42	6
	41	42	12
	44	46	28
	57	58	4

99921 1000	89	91	20
	109	111	19
	112	114	21
	127	128	9
	166	167	8
	166	168	18
	187	190	35
	251	253	23
	260	262	23
99921 1200	122	123	18
	127	128	5
	144	146	24
99921 1400	89	90	8
	89	90	9
	89	90	13
	119	121	21
99921 1800	92	96	60
	89	102	53
	104	108	49
99922 0800	41	43	31
	144	146	33
99922 1000	89	91	20
	92	95	43
	92	96	56
	92	97	61
	98	101	37
	98	102	49
	98	102	54
	104	107	37
	104	107	45
	104	108	50
	144	146	27
	144	147	48
99922 1200	92	93	19
	98	99	13
	104	105	13
99922 1400	109	111	23
	112	113	8
99922 1800	77	78	10
99924 1000	92	96	59
	98	102	52
	104	107	48
	109	110	5
	112	113	6
99924 1200	109	110	11
	109	110	15
	112	114	19
99926 1400	251	253	14
	260	262	14
99941 0600	57	59	25
99941 0801	15	17	22
99942 1000	92	96	51
	98	101	44
	104	107	40
	125	126	15
99942 1200	119	120	16
99944 1400	109	111	24
	112	113	9
99945 0500B	192	194	36
	196	198	40
99945 1000	209	212	48
99947 0600	158	159	17
99947 1400	119	121	25
	125	126	8
99949 0800	129	130	5
	129	130	12
	129	131	24
99951 0618	166	167	7
	166	167	17
	166	168	22
99951 0618	172	173	5
	229	231	9
	234	237	28
	337	338	13
	337	339	23
	337	339	25
	337	339	27
	342	343	7
	246	248	16
99951 0800	34	36	15
	34	37	38
99951 0816	281	286	65
99951 0818	57	58	8
	129	130	20
	172	173	11
99951 0822	127	128	4
	166	167	3
	337	339	29
99951 1022	92	96	51
	98	101	44
	104	107	40
	166	167	8
	166	168	18
99951 1030	127	128	9
99951 1430	119	121	21
99952 0400	25	26	16
	136	138	36
	192	193	20
	196	198	21
	239	240	3
	239	240	10
	242	243	3
	242	243	10
	246	248	23
	246	249	31
	246	249	33
	251	256	65
	251	257	81
	260	265	71
	296	297	7
	299	300	10
	312	313	18
99952 0412	251	257	85
	260	266	89
	312	313	20
	312	315	39
99952 0500	57	59	19
	187	190	41
	187	190	42
	192	193	17
	192	194	32
	196	197	18
	196	198	36
	234	235	4
	239	241	17
	239	241	18
	242	244	17
	242	244	18
	246	248	18
	251	255	58
	251	256	67
	251	256	74
	251	258	114
	251	259	115
	260	264	48
	260	264	64
	260	265	73
	260	265	80
	260	267	118
	260	267	119

INDEX. 99952 0500～99967 0400B

99952 0500	268	271	31
	277	279	—
	277	279	25
	296	298	25
	306	308	18
	322	323	6
	329	332	48
	333	336	48
99952 0516	174	175	12
	174	175	13
	192	194	—
	196	198	30
	196	199	40
	239	241	26
	242	244	24
	299	301	27
	302	303	7
	302	303	8
	306	307	18
99952 0516B	132	134	41
	302	304	29
	302	305	45
99952 0600	54	56	28
	132	134	28
	196	197	6
	242	243	11
	251	254	38
	251	254	39
	251	255	57
	251	256	62
	251	258	107
	260	263	38
	260	263	39
	260	264	63
	260	265	68
	260	267	110
	268	272	54
	281	284	35
	281	285	38
	281	285	40
	281	285	42
	312	314	32
99952 0618	57	59	25
	132	133	7
	172	173	4
	174	177	35
	239	240	11
	239	240	13
	239	241	14
	242	244	13
	242	244	14
	251	258	106
	251	258	111
	260	267	111
	260	267	115
	287	289	38
	290	293	40
	302	304	28
99952 0800	15	16	11
	15	17	22
	57	59	18
	57	60	33
	89	91	21
	92	97	66
	92	97	68
	98	102	59
	98	102	61
	104	108	53
	104	108	57
	119	121	20
99952 0800	129	130	5
	129	131	24
	169	170	19
	251	253	29
	251	254	30
	260	262	29
	260	262	30
	281	284	34
	302	303	4
99952 0816	15	17	25
	144	145	13
	144	147	44
	203	204	11
	203	205	12
	203	206	38
	203	207	39
	209	210	11
	209	210	12
	209	212	37
	209	212	38
	215	216	11
	215	216	12
	215	218	44
	215	219	45
	222	223	11
	222	224	12
	222	225	39
	222	226	40
	325	327	26
99952 0822	169	170	4
	169	170	20
	203	208	56
	203	208	66
	209	213	61
	209	214	71
	215	220	61
	215	220	71
	222	227	59
	222	228	74
	281	284	34
	346	347	9
99952 1000	57	58	4
	251	252	10
	260	261	10
99952 1200	144	146	24
99952 1426	89	90	8
99953 0400	27	30	47
99953 0600	15	16	13
	27	28	3
	27	28	9
	27	30	34
	57	58	12
	136	137	16
	251	254	35
	260	263	35
99953 0800	27	29	26
	34	35	4
	54	56	27
	57	58	14
	142	143	18
99953 1000	41	42	5
	41	42	6
	41	42	12
	44	46	28
99953 1400	89	90	13
99963 3310	51	52	24
99963 3330	51	52	24
99963 6910	47	50	46
99963 6930	47	50	46
99967 0400B	306	308	22

99967 0500B	318	321	34
	318	321	35
99971 0300	268	270	23
99971 0400	25	26	16
	136	138	36
	192	193	20
	196	198	21
	239	240	10
	242	243	10
	246	248	23
	246	249	31
	246	249	33
	251	256	65
	251	257	81
	260	265	71
	268	269	7
	268	270	20
	268	271	41
	296	297	7
	299	300	10
	312	313	18
	312	313	20
	312	315	40
	329	331	44
	333	335	44
99971 0500	57	59	19
	192	193	17
	192	194	32
	192	194	36
	196	197	18
	196	198	30
	196	198	36
	196	199	40
	234	235	4
	234	236	26
	239	241	17
	239	241	18
	239	241	26
	242	244	17
	242	244	18
	242	244	24
	246	248	18
	246	250	48
	246	250	49
	246	250	50
	251	255	58
	251	256	67
	251	256	74
	251	258	114
	251	259	115
	260	264	48
	260	264	64
	260	265	73
	260	265	80
	260	267	118
	260	267	119
	268	269	4
	268	271	34
	287	289	26
	287	289	34
	290	292	24
	290	292	37
	302	303	7
	302	303	8
	306	308	18
	329	331	42
	333	335	42
	337	339	22
	346	347	14
99971 0500B	302	304	29

99971 0600	15	16	13
	27	28	3
	27	28	9
	27	29	20
	27	30	34
	31	33	25
	34	35	10
	44	46	32
	51	52	7
	54	56	28
	57	58	12
	57	59	25
	82	84	29
	125	126	11
	136	137	15
	136	137	16
	158	159	21
	166	167	7
	166	167	10
	166	167	17
	172	173	4
	174	177	35
	239	240	11
	239	240	13
	239	241	14
	242	244	11
	242	244	13
	242	244	14
	246	248	26
	251	253	19
	251	253	20
	251	254	38
	251	254	39
	251	255	57
	251	256	62
	251	258	106
	251	258	111
	260	262	19
	260	262	20
	260	263	38
	260	263	39
	260	264	63
	260	265	68
	260	267	110
	260	267	115
	268	272	54
	281	285	35
	281	285	38
	281	285	40
	281	285	42
	287	289	38
	290	293	40
	294	295	8
	302	304	28
	312	314	32
99971 0800	1	4	45
	15	16	11
	15	16	16
	15	17	25
	27	29	26
	34	35	4
	34	36	15
	34	37	38
	41	42	18
	51	53	30
	54	56	27
	57	58	8
	57	58	9
	57	58	14
	57	59	16

INDEX. 99971 0800～99978 3200

99971 0800	57	59	18
	57	60	33
	77	78	11
	79	81	20
	82	84	17
	86	88	22
	86	88	25
	89	91	21
	92	97	66
	92	97	74
	98	102	59
	98	103	67
	104	108	57
	119	121	20
	127	128	4
	127	128	7
	129	130	11
	129	130	12
	129	130	20
	136	138	27
	144	146	30
	144	147	42
	144	147	44
	158	159	10
	169	170	4
	203	204	11
	203	205	12
	203	206	38
	203	206	39
	203	207	54
	203	208	56
	203	208	66
	209	210	11
	209	210	12
	209	212	37
	209	212	38
	209	213	59
	209	213	61
	209	214	71
	215	216	11
	215	216	12
	215	218	44
	215	219	45
	215	219	59
	215	220	61
	215	220	71
	222	223	11
	222	223	12
	222	225	39
	222	225	40
	222	227	57
	222	227	59
	222	228	74
	251	253	29
	251	254	30
	260	262	29
	260	262	30
	281	284	31
	281	284	34
	337	339	29
99971 1000	5	6	16
	15	17	34
	41	42	5
	41	42	6
	41	42	12
	44	46	28
	57	58	4
	77	78	12
	86	87	8
	109	111	19
99971 1000	112	114	21
	115	116	7
	115	116	14
	125	126	5
	127	128	9
	129	130	14
	129	131	27
	166	167	8
	166	168	18
	187	190	35
	209	212	48
	215	217	22
	251	252	10
	251	253	23
	260	261	10
	260	262	23
99971 1200	92	94	19
	98	99	13
	104	105	13
	115	117	31
	119	121	22
	119	121	23
	127	128	5
	144	146	24
99971 1400	89	90	8
	89	90	9
	89	90	13
	119	121	21
	251	253	14
	260	262	14
99971 1800	77	78	10
	92	96	60
	98	102	53
	104	108	49
99972 0800	234	235	5
	325	327	26
99972 1000	172	173	4
99975 0500C	312	316	52
99978 3200	47	49	30

TOYO KOGYO CO.,LTD.

Printed in Japan