MAZDA RX-2
COUPE & SEDAN
PARTS CATALOG

Vol.-2



© 1971 by

TOYO KOGYO CO., LTD.

Rotary Engine : Licenced by NSU. Wankel

Revised Edition., June 1974

HOW TO USE THIS PARTS CATALOG

This parts catalog is compiled for the following models.
Model : RX-2 Coupe & Sedan (1971 Year Model) from Car No. 61649 $\frac{7}{3}$ ~
: RX-2 Coupe & Sedan (1972 Year Model) from Car No. 96267 $\frac{7}{9}$ ~
● : RX-2 Coupe & Sedan (1973 Year Model) from Car No. 139695 $\frac{7}{8}$ ~

Model No.	Model/Type	Description
2081	S122A-S	RX-2 Sedan Super DX ,4Door, Floor Shift Separate Reclining Seats, U S A Spec 1971 Model
2090	S122A-SCA	RX-2 Coupe Super DX ,2Door, Floor Shift Separate Reclining Seats, U S A Spec 1971 Model
2852	S122A-S	RX-2 Sedan Super DX ,4Door, Floor Shift Separate Reclining Seats, Canadian Spec 1971 Model
2869	S122A-SCA	RX-2 Coupe Super DX ,2Door, Floor Shift Separate Reclining Seats, Canadian Spec 1971 Model
1662	S122A-S	RX-2 Sedan Super DX ,4Door, Floor Shift Separate Reclining Seats, General American Spec 1972 Year Model
1663	S122A-SCA	RX-2 Coupe Super DX ,2Door, Floor Shift Separate Reclining Seats, General American Spec 1972 Year Model
1664	S122A-S	RX-2 Sedan Super DX ,4Door, Floor Shift Separate Reclining Seats, American Cold-Proof Spec 1972 Year Model
1665	S122A-SCA	RX-2 Coupe Super DX ,2Door, Floor Shift Separate Reclining Seats, American Cold-Proof Spec 1972 Year Model
1666	S122A-S	RX-2 Sedan Super DX ,4Door, Floor Shift General U S A Spec 1973 Model
1667	S122A-ST	RX-2 Sedan Super DX with Automatic T/mission,4Door, Floor Shift General U S A Spec 1973 Model
1668	S122A-SCA	RX-2 Coupe Super DX, Floor Shift General U S A Spec 1973 Model
1669	S122A-SCAT	RX-2 Coupe Super DX with Automatic T/mission, Floor Shift General U S A Spec 1973 Model
1670	S122A-S	RX-2 Sedan Super DX ,4Door, Floor Shift Canadian Spec 1973 Model
1671	S122A-ST	RX-2 Sedan Super DX with Automatic T/mission ,4Door, Floor Shift Canadian Spec 1973 Model
1672	S122A-SCA	RX-2 Coupe Super DX , Floor Shift Canadian Spec 1973 Model
1673	S122A-SCAT	RX-2 Coupe Super DX with Automatic T/mission, Floor Shift Canadian Spec 1973 Model
1686	S122A-S	RX-2 Sedan Super DX ,4Door, Floor Shift Northern U S A Spec 1973 Model
1687	S122A-SCA	RX-2 Coupe Super DX, Floor Shift Northern U S A Spec 1973 Model
1688	S122A-ST	RX-2 Sedan Super DX with Automatic T/mission, 4Door, Floor Shift Northern U S A Spec 1973 Model
1689	S122A-SCAT	RX-2 Coupe Super DX with Automatic T/mission, Floor Shift Northern U S A Spec 1973 Model
● 1913	S122A-S	RX-2 Sedan with Cooler,4Door Floor Shift General U S A Spec 1973 Model
● 1914	S122A-ST	RX-2 Sedan with Automatic T/mission & Cooler,4Door, Floor Shift General U S A Spec 1973 Model
● 1915	S122A-SCA	RX-2 Coupe with Cooler, Floor Shift General U S A Spec 1973 Model
● 1916	S122A-SCAT	RX-2 Coupe with Automatic T/mission & Cooler, Floor Shift General U S A Spec 1973 Model
● 1917	S122A-S	RX-2 Sedan with Cooler,4Door, Floor Shift Northern U S A Spec 1973 Model
● 1918	S122A-ST	RX-2 Sedan with Automatic T/mission & Cooler,4Door, Floor Shift Northern U S A Spec 1973 Model
● 1920	S122A-SCA	RX-2 Coupe with Cooler, Floor Shift Northern U S A Spec 1973 Model
● 1921	S122A-SCAT	RX-2 Coupe with Automatic T/mission & Cooler, Floor Shift Northern U S A Spec 1973 Model
● 1922	S122A-S	RX-2 Sedan with Cooler,4Door, Floor Shift Canadian Spec 1973 Model
● 1923	S122A-ST	RX-2 Sedan with Automatic T/mission & Cooler,4Door, Floor Shift Canadian Spec 1973 Model
● 1924	S122A-SCA	RX-2 Coupe with Cooler, Floor Shift Canadian Spec 1973 Model
● 1925	S122A-SCAT	RX-2 Coupe with Automatic T/mission & Cooler, Floor Shift Canadian Spec 1973 Model

(I) Layout

This parts catalog consists of groups, illustrations, composition lists and index of part numbers.

Pages listing parts, with no designation of applying models signify that the parts listed therein are used in common for all models, and whenever the page lists parts for specific models. this is shown by giving the applying models on the page.

(II) How to locate parts

1) When part number is not known.

A. Refer to index groups and locate the group to which the part belongs.

⇩

B. Open to group illustration page and locate part wanted.

⇩

C. See the number given for the part in the illustration and find corresponding number in the parts composition lists.

⇩

D. Then, you will find name and part number of the part on the right side of this number.

2) When part number is known but shape and name of part is unknown.

A. See index given at back of the parts catalog and find pages where illustration, part number and figure number is listed.

⇩

B. Open to page indicated and locate the part number in the parts composition list, and after this locate the part in the illustration by referring to figure number given at front of the part number.

⇩

C. The corresponding figure number in the illustration is for the part required.

On part Number

A. Exclusive parts

Example:

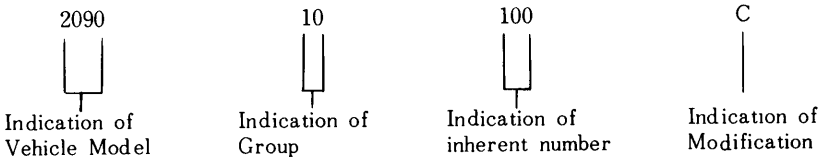

B. Standardized parts (General parts)

Example:

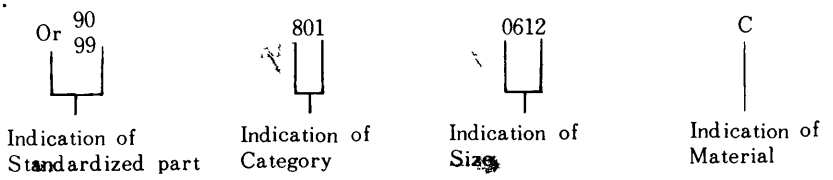

C. Standardized parts (Tires, Tubes, Disc Wheels, stc.)

Example:

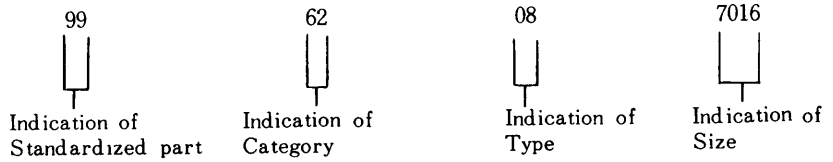

3) On Quantity

The quantity given in parts composition list shows number of parts used per vehicle and does not indicate selling unit.

4) Other Precautions

☆ Mark—Parts marked thus are not available as replacement parts, therefore, when these parts are required, order in the form of assemblies (or sets) including these parts or in the form of parts interchangeable with these parts.

5) Abbreviations

(R)	Right	EX.	Exhaust
(L)	Left	IN.	Inlet
(C)	Center	T/Mission	Transmission
(Frt.)	Front	©	Parts with Different Colours (Indicate Colour when Ordering)
(Rr.)	Rear	10	Indication of Group
Cpt.	Complete		
Ass'y	Assembly		
Std.	Standard		
O. S.	Over Size		
U. S.	Under Size		

(Ⅲ) On Groups

1) The figure enclosed by a triangle at the top of each page (Example 10) indicates group number.

2) Group numbers are determined according to structure and function of parts.

3) The group number given in index of groups coincide with the numerals (Example 10) of the illustration and parts composition pages.

(Ⅳ) Explanation on Parts Composition Lists

1) Indication of composition of assembly.

A. The largeness of the letters used for part names are given in three sizes.

(a) The largest letters show the largest composition of parts. Therefore, the parts printed in the largest letters always include parts printed offset to the right, and also printed in medium-size letters.

(b) The parts printed in medium-size letters always include parts printed in the smallest letters and offset to the right.

(c) The parts printed in smallest letters and offset to the right are always included in the parts printed in medium-sized letters or largest size letters that are located above.

(d) The parts printed in smallest letters and not offset to the right signify that these parts do not form any part of any assembly or sub assembly.

B. Indication of parts composition by spacing out between lines. In the case of an assembly or sub-assembly consisting of more than 2 parts, the space between parts forming the assembly or sub-assembly and the other is widened, to clearly indicate the parts forming the assembly or sub-assembly.

(a)	0839 41 920	CLUTCH RELEASE CYLINDER Ass'y	1
(b)—1	0259 33 691	Bleeder Vave	1
(c)	0803 41 320	CLUTCH PISTON	1
(b)—2	0803 41 322B	Piston Cap	1
(e)—3	0191 41 331	Boot	1
(f)—4	0813 41 308	Return Spring	1

(a)..... Includes (b) to (c) (e)
(c)..... Includes (d)
(f)..... Is not included in any ass'y nor sub ass'y

(V) Precautions to be taken when Placing orders for parts

1) Always specify part number, name of part and quantity required.

2) Be sure to list the parts in order of part number, when filling in order sheet.

3) As processing of orders received by us is done by electronic computers, importance is attached to the part number. Therefore, in case the part number and name of the part do not coincide with each other, the part will be sent to you in accordance with part number.

4) Distinction of colour of spare parts by code number is by figures number 11 and 12 of the part number. Therefore add to the end of the applying part number and order.

Example :

Part Number	Code No.	Description
0301 58 810D	-01	Door Trim (R) (Black)
←10Figures	←2 Fig.→ (Black)	
0301 53 810A	-04	Door Trim (R) (Brown)
←10Figures	←2 Fig.→ (Brown)	

(Ⅵ) Replacement pages and purport

Page replacements are supplied in monthly frequency as a rule, listing parts modified or newly added, and sequence number, month and year date will be printed in lower corner of each replacement page. Therefore it is essential that care be taken to check on these dates to confirm if the parts listed conform to the car imported, before ordering.

1) Explanation on designation given in remarks column

a. Car No. ····· Chassis no. of car that modification becomes effective from.

b. 7/1 ····· 70 designates year of modification and numerals 1 ~12 shows month of year.

c. ○ Mark ····· Indicates that modified part and former part are interchangeable.

d. ※ Mark ····· Indicates that former part has been superseded by new part and is no longer available.

e. × Mark ····· Indicates that modified part and old part are not interchangeable.

f. △ Mark ····· Indicates that new part is interchangeable with old part but that old part is not interchangeable as a replacement for cars utilizing the new part.

2) ● Mark ····· This dot at front of figure number show parts modified in each replacement page.

Group No.	Description	Fig.	Page	Part No.
	Engine Parts			
10	Rotor Housing (Front)	1		2~4-1
10	Rotor Housing (Rear)	5		6~8-2
10.11	Rotor (Front)	9		10~11-1
10.11	Rotor (Rear)	12		13~14-1
13	IN. & EX. System	15		16~18-2
13	Emission Control System (1971 Model)	19		20~22
13	Emission Control System (1972 Model)	22-1		22-2~22-3
● 13	Emission Control System (1973 Model)	22-4		22-5~22-6
13	Starting Assist System (Used From Car No. 111947 ~) Model No. 1664, 1665	22-3-A		22-3-B
● 13	Starting Assist System (1973 Model)	22-3-C		22-3-C
23	Carburettor (1971 Model)	22-A		22-B~22-G
23	Carburettor (1972 Model)	22-H		22-I~22-J
23	Carburettor (1973 Model)	22-K		22-P
23	Air Cleaner	23		24
14	Oil Pump	25		26~28
23	Metering Oil Pump	29		30~31
14.15	Cooling System	32		33~35-1
15	Water Pump	36		37~38
● 15	Water Pump (1973 Model)	38-A		38-B
16	Clutch Control System	39		40~41
17	Manual T/mission (Case)	42		43~44

INDEX.

Group No.	Description	Fig.	Page	Part No.
17	Manual T/mission (Gear)	45		46~48
17	Manual T/mission (Gear Control)	49		50~51
18	Electric Equipment (Engine No. 1)	52		53~55
18	Electric Equipment (Engine No. 2)	56		57~58-1
24	Distributor (Trailing Side) (1971 Model)	59		60~61
24	Distributor (Trailing Side) (1972, 1973 Model)	61-A		61-B~61-C
24	Distributor (Leading Side) (1971 Model)	62		63~64
24	Distributor (Leading Side) (1972 Model)	64-A		64-B~64-C
24	Distributor (Leading Side) (1973 Model)	64-D		64-E
24	Alternator	65		66~67
24	Alternator (Powerful Type, For Canada)	67-A		67-B~67-C
24	Alternator (U.S.A. & Canada) (Used From Car No. 105548 $^{71}/_{11}$~)	67-D		67-E
24	Starter (For U.S.A. Manual)	68		69~70
24	Starter (For Canada & U.S.A. Automatic)	71		72~73
19	Automatic T/mission (Converter, Oil Pump & Piping)	73-A		73-B~73-D
19	Automatic T/mission (Case)	73-E		73-F~73~G
19	Automatic T/mission (Clutch & Planetary Gear)	73-H		73-I~73-K
19	Automatic T/mission (Low, Reverse & Governor)	73-L		73-M~73-N
19	Automatic T/mission (Manual Linkage)	73-O		73-P
19	Automatic T/mission (Main Control)	73-Q		73-R~73-S

Chassis Parts

Group No.	Description	Fig. Page	Part No.
25	Propeller Shaft	75	75
26	Rear Axle	76	77~78
26	Rear Brake	79	80~82
27	Driving	83	84~85
28	Rear Suspension	86	87~88
32	Steering System (Wheel & Gear)	89	90~94
32	Steering System (Rod)	95	96~97
33	Front Axle	98	99~101
34	Front Suspension (Spring)	102	103~104
34	Front Suspension (Damper)	105	106~107
34	Front Suspension (Cross Member)	108	109
39	Engine & T/mission Support	110	111
40	Exhaust System	112	113~114
42	Fuel Tank	115	116~118
13.45	Fuel Piping	119	120~121
23	Fuel Pump (Used Up to Car No. 96266 7/9)	122	123~124
23	Fuel Pump & Piping (Used From Car No. 96267 7/9 ~)	124—A	124—B
41	Accelerator Control System	125	126
41.43	Clutch & Brake System	127	128~130
41.49	Clutch Master Cyl. & Tandem Master Cyl.	131	132~134
49	Power Brake	135	136

INDEX.

Group No.	Description	Fig.	Page	Part No.
44	Parking Brake System		137	138
43.45	Piping (Clutch & Brake)		139	140~141
● 46	Change Controls (Automatic)		141-A	141-B~141-C
	Body Parts			
50	Bumper & Grille		142	143~144
52	Bonnet Lock		145	146~147
52	Trunk Lid Lock		148	149
51~70	Body Panels (Front)		150	151~152
52~70	Body Panels (Side, All Coupe Models)		153	154~155
52~70	Body Panels (Side, All Sedan Models)		156	157~158
53.56	Package Tray & Floor Board		159	160~163
55.60	Dashboard (Meter & Switch)		164	165~167-2
55.75	Meter Set		168	169
● 57	Seat (All Coupe Models)		170	171~176-3
● 57	Seat (All Sedan Models)		177	178~183-3
58.59	Front Side Door (Glass)		184	185~188-2
58.59	Front Side Door (Lock)		189	190~193
61.76	Car Heater		194	195~197
61.76	Blower & Control		198	199~201
61~79	Car Cooler		202	203~210
61.76	Control & Cooling Unit		211	212~214

Group No.	Description	Fig.	Page	Part No.
66.87	Lamps (Front Side)	215		216~217
66.87	Lamps (Rear Side)	218		219~222
●66~87	Electric Equipment (Body)	223		224~228-2
67.87	Windshield Wiper	229		230~232
67.87	Screen Washer	233		234
66.79	Auto Radio	235		236~237
66.79	Stereo Radio	238		239~240
55~70	Crush Pad & Glove Box	241		242~244
68	Console Box	245		246~247
68	Service Tools	248		249
69	Attachment	250		251~252
69	Trim & Top Ceiling	253		254~255
68.69	Trim & Floor Mat	256		257~258-1
70.71	Ventilator	259		260~262
70.71	Window Glass & Moulding (All Coupe Models)	263		264~266
70.71	Window Glass & Moulding (All Sedan Models)	267		268~270
70.71	Rear Side Window (All Coupe Models)	271		272~275
72.73	Rear Side Door (Glass, All Sedan Models)	276		277~279
72.73	Rear Side Door (Lock, All Sedan Models)	280		281~283
09	Key Set	284		285
	INDEX.			286~319

ALPHABETICAL INDEX

Description	Page
ENGINE	
Bolt, Tension	7
Bracket, Alternator	3
Bracket, Engine	111
Cap. Oil Filler	7
Cover, Dust-Rotor Housing	7
Cover, Front	3
Gauge, Oil Level	8
Gear, Distributor Drive	11
Gear, Stationary-Front	10
Gear, Stationary-Rear	13
Hanger, Engine	1
Hanger, Engine-Sub	4
Housing, Front	2
Housing, Intermediate	7
Housing, Rotor (Frt.)	2
Housing, Rotor (Rr.)	6
Housing, Rear	6
Nozzle, Air-Rotor Housing	2, 6
Pan, Oil	8
Plate, Oil Baffle	11
Plunger, Pressure Control	3
Pulley	11
Ring Set, "O"	2
Rotor (Frt.)	10
Rotor (Rr.)	13
Rubber, Mounting-Engine	111
Seal, Apex	10, 13
Seal, Corner	10, 13
Senser, Thermo	7
Shaft, Eccentric	14
Sprocket, Drive	11
Weight, Balance	11
Wheel, Fly	14
EXHAUST SYSTEM	
Belt, "V"-Air Pump	20
Canister	21
Carburettor	16
Cleaner, Air	17, 24
Duct, Hot Air	17

Description	Page
Element, Air Cleaner	24
Hanger, Silencer	113, 114
Hook, Silencer	113
Hose, Air	20, 21
Hose, Evaporation	21
Hose, Hot Air	17
Insulator, Heat	17
Manifold, Inlet	16
Pipe Drain-Carburettor	17
Pipe, Exhaust-Front	113
Pipe, Joint-Ventilation Valve	21
Pump, Air	20
Reactor	17
Silencer, Main	113
Tray, Carburettor	16
Tube, Vacuum	20, 21
Valve, Air Control	20
Valve, Air Supply	21
Valve, Anti Afterburn	21
Valve, Check	20
Valve, Coasting	20
Valve, Ventilation	21
LUBRICATION	
Ajuster, Chain	26
Body, Oil Pump	26
Cartridge, Oil Filter	26
Chain, Oil Pump	26
Filter, Oil	26
Gear, Driven	27
Gear, Drive-Oil Pump	26
Plate, Middle-Oil Pump	26
Pump, Metering Oil	27, 30
Regulator, Pressure	27
Rod, Connecting	28
Rotor Set, Oil Pump	26
Shaft, Driven Gear	27
Shaft, Oil Pump	26
Strainer, Oil	26
Tube, Metering Oil	28
COOLING	

ALPHABETICAL INDEX

Description	Page
Connector, Hose-Water Pump	37
Cooler, Oil	35
Cover, Thermostat	38
Fan & Fan Drive	33
Hose, Oil	35
Hose, Water	35
Hose, Water-Reserve Tank	34
Pulley, Water Pump	33
Pump, Water	33, 37
Radiator	33
Shroud, Radiator	34
Tank, Reserve	34
Thermostat, Water	38
CLUTCH	
Clutch Master Cylinder Repair Kit	132
Collar, Release-Clutch	40
Cover, Clutch	40
Cover, Dust-Fork	40
Cylinder, Clutch Release	41
Cylinder, Master-Clutch	129, 132
Disc, Clutch	41
End, Fork-Clutch	129
Fork, Release	41
Housing, Clutch	40
Pedal, Clutch	128
Pipe, Clutch	141
Pipe, Flexible	41
Rod, Push	129
Seat, Spring	128
Spring, Clutch Release Collar	40
T / MISSION	
Boot, Dust	51
Case, Change Control	50
Case, T/mission	43
Cover, Blind	44
Cover, Under	44
Fork, Shift	50
Gate, Control Rod	50
Gear, Driven-Speedometer	43, 48
Gear, Low	47

Description	Page
Gear, Main Drive	46
Gear, Reverse	47
Gear, Reverse-Counter	47
Gear, Reverse Idle	48
Gear, Second	46
Gear, Third	47
Housing, Extention	43
Hub, Clutch	46
Knob, Change Lever	51
Lever, Change	51
Lever, Control	51
Member, Mounting-T/mission	111
Pass, Oil	44
Piece, Friction	51
Pin, Interlock	50
Plate, Cover	51
Plug, Magnet	44
Rod, Shift	50
Rubber, Mounting-T/mission	111
Shaft, Counter Gear	47
Shaft, Main	46
Shaft, Reverse Idle Gear	48
Sleeve, Clutch Hub	46
Sleeve, Gear	47
Sleeve, Speedometer	43
Spindle, Select Lock	51
Spring, Synchronizer	46
PROPELLER SHAFT & DRIVING	
Bearing, Differential	85
Carrier, Differential	84
Case, Differential Gear	84
Driving Differential Cpt.	84
Flange, Companion	84
Gear, Differential Side	84
Gear Set, Final	85
Joint, Universal	75
Piece, Distance	84
Pinion, Differential	84
Pin, Shaft-Differential	85
Screw, Adjust	85

ALPHABETICAL INDEX

Description	Page
Shaft, Pinion	84
Shaft, Propeller	75
Spacer, Pinion Height	85
Support, Center Bearing	75
Yoke	75
Yoke, Sliding	75
Yoke, Universal Joint	75
FRONT & REAR AXLE	
Adapter, Center Cap	82
Adapter, Mounting	99
Block, Anchor	80
Brake, Disc	99
Breather	77
Cap, Center	82,100
Cap, Hub	99
Cap, Wheel	82,100
Casing, Rear Axle	77
Cover, Brake Drum	80
Cover, Set	99
Cylinder, Wheel	81
Drum, Brake	80
Hub, Wheel	99
Lever, Operating	80
Pad, Disc Brake	100
Plate, Disc	99
Plug, Magnet Drain	77
Plug, Oil Level	77
Ring, Wheel	82,100
Rubber, Set-Center Cap	82,101
Shaft, Rear Axle	77
Shoe, Brake	80
Spring, Return	80
Strut, Operation	81
SUSPENSION	
Arm	103
Arm, Knuckle	103
Boot, Coil Spring	103
Bush, Rubber-Damper	87
Bush, Rubber-Stabilizer	109
Cushion, Upper	109

Description	Page
Damper, Front	104,106
Damper, Rear	87
Joint Set, Ball	103
Link, Lower	87
Link, Upper	87
Member, Cross-Front Suspension	109
Retainer, Damper	88
Rod, Lateral	87
Rubber, Mounting	104
Seat, Spring-Upper	87
Spring, Coil	87,103
Stabilizer	109
Stopper, Bound	88,109
STEERING	
Arm, Idler	96
Arm, Pitman	93
Boss, Steering Wheel	90
Bush, Shaft Support	91
Bush, Tapered	97
Cap, Horn	91
Cord, Earth	91
Cover, Column	167
Cover, Dust	93
Cover, End	92
Cover, Side	92
Gear, Steering	91
Housing, Gear	91
Joint, Steering	94
Lever, Horn	90
Link, Center	96
Link, Steering	96
Nut, Worm Ball	91
Rod, Tie	96
Rubber, Fixing	93
Shaft, Energy Absorbing	91
Shaft, Sector	92
Socket, Set	96
Spindle	96
Spring, Steering Wheel	90
Wheel, Steering	90

ALPHABETICAL INDEX

Description	Page
ACCELERATION CONTROLS	
Arm, Accelerator Pedal	126
Bracket, Arm	126
Pedal, Accelerator	126
Roller, Pedal	126
Spring, Return	126
Wire, Accelerator	126
Wire, Choke	166
Wire, Throttle	166
FOOT BRAKE	
Bracket, Master Cylinder	128
Clamp, Hose-Cylinder	140
Connector, Pipe	140
Cylinder, Tandem Master	129,132
End, Fork	130
Hose, Flexible	140
Indicator	140
Joint, Pipe	140
Pad, Pedal	128
Pedal, Brake	128
Pipe, Brake	140,141
Pipe, Main Brake	140
Pipe, Vacuum	140
Repair Kit "A"	136
Tandem Master Cylinder Repair Kit	134
Tank, Reserve	129
Vac, Master	130,136
Valve, Check	140
HAND BRAKE	
Button, Release	138
Cable, Front	138
Cable, Rear	138
Lever, Parking Brake	138
Ratchet	138
Rod, Release	138
Sector	138
FUEL SYSTEM	
Bracket, Check Valve	118
Bracket, Fuel Pump	120
Cap, Filler	118
Clamp, Fuel Filter	121
Clip, Fuel Pipe	120
Connector, Fuel Pipe	120
Element, Check Valve	118
Filter, Fuel	121
Hose, Joint	116
Lid, Fuel Filler	117
Pipe, Evaporation	120,121
Pipe, Filler	116
Pipe, Fuel	116,120,1
Pipe, Fuel Main	120
Pipe, Fuel Return	120,121
Protector, Fuel Pipe	120
Pump, Fuel	120,123
Tank, Condence	118
Tank, Fuel	116
Tube	116
Tube, Vent	116
Valve, Check	118
ELECTRIC EQUIPMENT	
Alternator	57, 66
Adapter, Wiring-Head Lamp	216
Antenna, Motor	236,239
Arm, Wiper	230
Battery	58
Belt, "V"	57
Blade, Wiper	230
Block, Fuse	225
Block, Main Fuse	225
Bracket, Alternator	57
Box, Control	55
Buzzer	228
Cable, Battery Positive	58,227
Cable, Speedometer	166
Clamp, Battery	58
Clock, Auto	165
Coil, Ignition	53
Condenser, Radio	228
Cord, High Tension	53
Diode	227

ALPHABETICAL INDEX

Description	Page
Distributor	54,60,63
Detector, Thermo	55
Fuse	225
Gauge, Fuel Tank	118
Horn, Electric	226
Joint, "T"-Vacuum Control	55
Lamp, Front Turn Signal	216
Lamp, Glove Box	242
Lamp, Head	216
Lamp, Main Room	224
Lamp, Marker-Front Side	217
Lamp, Marker-Rear Side	221
Lamp, Rear Combination No. 1	219
Lamp, Rear Combination No. 2	220
Lamp Set, Licence	220
Lamp, Step	224
Lamp, Sub Room	224
Lens, Illumination	165
Lighter, Cigar	166
Lock, Steering	167
Meter Set	165,169
Motor & Link, Wiper	230
Motor, Wiper	230
Nozzle, Screen Washer	234
Panel, Switch	165
Plug, Spark	55
Radio, Auto	236
Regulator	57
Relay, Horn	226
Relay, Horn-Triple Horn use	227
Relay, Ignition Coil	228
Relay, Lamp Checker	228
Relay, Wiper	228
Resistor, Ignition Coil	53
Socket, Distributor	54
Starter	57,69,72
Stereo & Radio	239
Switch, Antenna	166
Switch, Combination	166
Switch, Door	228
Switch, Oil Pressure	6
Switch, Parking Lamp	138
Switch, Reverse Lamp	44
Tube, Balance-Vacuum Control	55
Tube, Vacuum Control	55
Tray, Battery	58
Unit, Flasher	227
Unit, Hazard Flasher	227
Unit, Heat Gauge	37
Washer Set, Screen	234
Wire, Earth-Battery	58,228
Wire, Earth-Radio	228
Wire, Harness-Engine	227
Wire, Harness (Frt.)	227
Wire, Harness-Room Lamp	227
Wire, Harness (Rr.)	227
Wire, Harness-Step Lamp	227
Wire, Licence Lamp	221
Wire, Switch Panel	166

BODY & FITTINGS

Adjuster, Seat	171,178 173,180
Bar, Front Bumper	143
Belt, Front Safety	175,182
Belt, Rear Safety	176,183
Block, Anti-Burst-Door	190,282
Body, Front Door	185
Body, Rear Door	277
Boot, Change Lever	160
Bonnet	151
Bracket, Lift-Glass	185,272,277
Bumper, Rear	143
Button, Garnish-Seat	179,181,182
Carrier, Battery	151
Chamber, Air Flow	158
Channel, Center-Rear Door	277
Channel, Glass-Front Door	186
Channel, Glass Run-Rear Door	277
Channel, Glass-Side Window	273
Checker, Front Door	192
Cover, Hole-Side Sill	158

ALPHABETICAL INDEX

Description	Page
Cover, Package Tray	160
Cover, Service Hole	121, 162
Cover, Side Window	274
Cover, Under	109
Dam, Window Glass	264, 268
Frame, Front - Rear	160
Frame, Front Side	151
Frame, Rear Side	161
Frame, Side	154, 157
Garnish, Arm Rest	188, 274, 279
Glass, Back Window	264, 268
Glass, Front Door	185
Glass, Front Window	264, 268
Glass, Quarter Window	277
Glass, Rear Door	277
Glass, Side Window	272
Grille, Front	144
Guard, Bumper	144
Guide, Glass - Door	186, 273
Handle, Inner - Front Door	190
Handle, Outer - Door	191, 281
Handle, Regulator - Door	191, 272, 281
Hinge, Bonnet	146
Hinge, Door	191, 192, 282
Hinge, Trunk Lid	149
Holder, Belt	175, 182
Holder, Number Plate	143
Hook, Bonnet	146
Hook, Front Side Frame	152
Hook, Rear Side Frame	161
Insulator, Bonnet	147
Insulator, Pipe	162, 163
Knuckle, Seat	171, 178 173, 180
Lever, Assistance - Seat	171
Lever, Checker - Front Door	192
Lid, Trunk	149, 154, 157
Link, Ventilator	260
Lock, Bonnet	146
Lock, Front Door	190
Lock, Rear Door	281
Lock, Trunk Lid	149
Member, Cross	161
Mould, Back Window	264, 268
Mould, Bonnet	147
Mould, Beltline - Front Door	188
Mould, Beltline - Rear Door	278
Mould, Beltline - Side Window	275
Mould, Drip	265, 269
Mould, Front - Grille	265, 269
Mould, Front Window	264, 268
Mould, Step	265, 269
Nozzle, Defroster	187
Pad, Bumper	144
Panel, Cowl	152
Panel, Cowl Lower	151
Panel, Cowl Side	154, 157
Panel, Dash	151
Panel, Decoration	262
Panel, Front Fender	151
Panel, Front Skirt	152
Panel, Instrument	152
Panel, Rear Deck	155, 158
Panel, Rear End	155, 158
Panel, Rear Fender	155, 158
Panel, Roof	155, 158
Panel, Shroud	152
Panel, Side Sill - Inner	162
Panel, Side Sill - Outer	154, 157
Panel, Wheel Apron	151
Panel, Wheel House	161
Pan, Front Floor	160
Pan, Rear Floor	160
Plate, Corner - Dash Panel	151
Plate, Lock Guide - Bonnet	146
Plate, Scarf	256, 269
Protector, Fuel Pump	162
Rack, Striker - Door	190, 281
Regulator, Window	191, 272, 281
Retainer, Side Window	273
Rest, Arm - Door	188, 279

ALPHABETICAL INDEX

Description	Page
Rest, Arm - Seat	182
Rest, Arm - Side Window	274
Restraint, Head - Seat	171, 179 174, 181
Roller, Belt - Seat	176, 183
Seat, Front	171, 173, 178, 179
Seat, Front Back	171, 174, 179, 180
Seat, Front Cushion	171, 173, 178; 179
Seat, Rear Back	175, 182
Seat, Rear Cushion	174, 181
Spring, Balance - Trunk Lid	149
Spring, Check - Rear Door	283
Spring, Lift - Bonnet	146
Stay, Bonnet	146
Stay, Front Bumper	143
Stay, Rear Bumper	143
Striker, Door	190, 282
Striker, Lid Lock	149
Strip, Rubber - Glass	185, 272, 277
Stud, Window Glass	264, 268
Support, Center Bearing	161
Trim, Front Door	187
Trim, Quarter Window	274
Trim, Rear Door	278
Tray, Ash	171, 179
Tray, Package	160
Tube, Defroster - Door	193
Valve, Check - Side Sill	162
Valve, Drain - Door	193, 283
Valve, Drain - Wheel Apron	152
Ventilator, First	260
Ventilator, Second	261
Weatherstrip, Front Door	186
Weatherstrip, Inner - Front Door	186
Weatherstrip, Outer - Front Door	186
Weatherstrip, Quarter Glass	278
Weatherstrip, Rear Door Glass	278
Weatherstrip, Side Window	273, 274
Weatherstrip, Trunk Lid	149
Welt, Seaming - Front Door	188
Welt, Seaming - Rear Door	279
Wire, Release - Bonnet	146

ACCESSORIES & OPTIONAL PARTS

Description	Page
Belt, "V" - Pulley - Cooler	204
Blower, Heater	196, 199
Box, Glove	244
Bracket, Compressor - Cooler	203
Ceiling, Top	254
Clamp, Jack	249
Compressor, Cooler	206
Condenser, Cooler	204, 205
Conditioner, Air	203
Console, Front	246
Console, Rear	246
Console, Upper	246
Console, With Car Cooler	208
Control, Cooler	206, 209, 212
Control, Heater	196, 200
Cooler Set	203
Core, Heater	195
Diode, Cooler	207
Duct, Heater	196
Emblem, Front	251
Fan & Motor, Heater	199
Freon, Cooler	208
Garnish, Side	252
Grille, Air Flow	252
Grille, Cowl Panel	252
Guide, Lock - Glove Box	244
Handle, Assist	252
Handle, Jack	249
Heater Set	195
Hinge, Glove Box	244
Hose, Defroster	197
Hose, Drain - Cooler	207
Hose, Flexible - Cooler	205
Hose, Vacuum - Cooler	205
Hose, Ventilation	197, 242
Hose, Water - Heater	196
Insulator, Floor Mat	257
Jack	249

ALPHABETICAL INDEX

Description	Page
Key Blank	285
Key Set	285
Key Sub Set, Door	285
Key Sub Set, Filler Lid	285
Key Sub Set, Glove Box	285
Key Sub Set, Trunk	285
Lid, Outer-Glove Box	244
Lock, Steering	285
Mark, "RE"	251
Mark, Symbol	251
Mat, Floor	257
Mirror, Rear View	251
Mirror, Room	251, 252
Nozzle, Defroster	242
Nozzle, Defroster Side	197
Ornament, Coupe	251
Ornament, Glove Box	244
Ornament, Mazda	251
Ornament, Mazda RX—2	251
Pad, Center Pillar	255
Pad, Crush	242
Pad, Floor	257
Pad, Header	254
Pad, Pillar	254
Pulley, Idle-Cooler	203
Relay, Cooler	206, 207
Shelf, Parcel	243
Silencer, Floor	258
Striker, Glove Box	244
Switch, Idle Cut-Cooler	205
Switch, Thermo-Cooler	206
Tank, Liquid-Cooler	204
Tank, Vacuum-Cooler	207
Tools, Service	249
Tray, Ash-Front	243
Tray, Ash-Cooler use	208
Trim, Center Pillar	255
Trim, Front Pillar	255
Trim, Package Tray	255
Trim, Side	255
Trim, Tire House	257
Trim, Trunk	257
Unit, Cooling	207, 212
Valve, Water-Heater	195
Visor, Sun	252
Wire, Harness-Cooler	205
Wire, Harness-Cooler Control	207

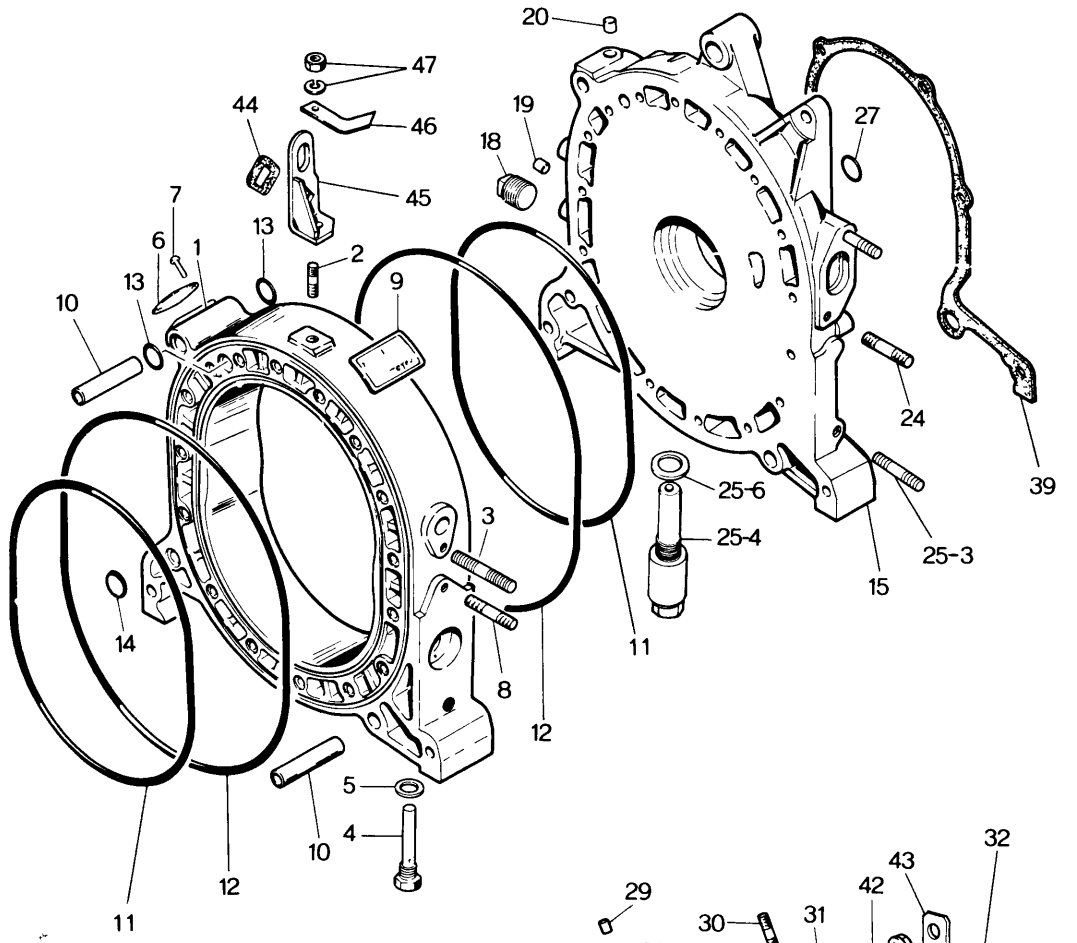
20
47
44
46
19
27
18
45
7
6
1
13
2
9
13
10
24
39
25-6
25-4
25-3
3
15
14
11
8
12
5
10
4
11
12

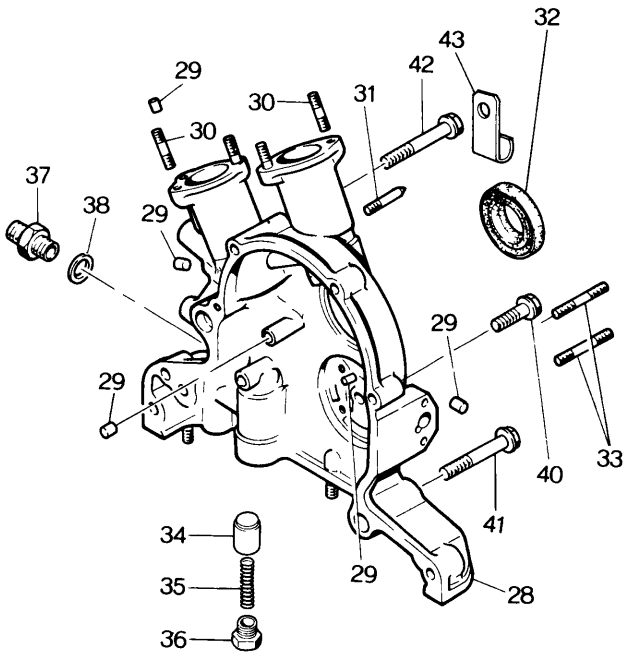
32
43
29
42
30
31
30
37
38
29
29
29
33
40
41
34
35
36
29
28

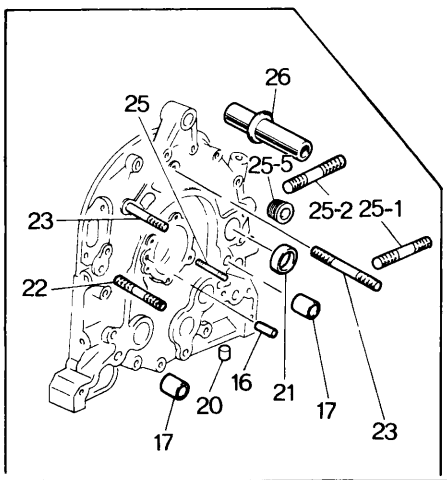
26
25
25-5
25-2
25-1
23
22
16
21
17
20
17
23

No.	Part Number	Description	Q'ty	Remarks
1	2090 10 100A	Housing (Frt.), Rotor	1	
	2090 10 100B	Housing (Frt.), Rotor	1	Car No. 70619 ~×
	2090 10 100D	Housing (Frt.), Rotor (1971,1972 Model)	1	Car No. 83579 ~○
	1665 10 100	Housing (Frt.), Rotor	1	Car No. 117998 ~○
	2090 10 100D	Housing (Frt.), Rotor	1	Car No. 131008 ~○
	2090 10 100E	Housing (Frt.), Rotor	1	Car No. 138194 ~○
	1669 10 100A	Housing (Frt.), Rotor	1	
●	1669 10 100B	Housing Ass'y, Rotor (1973 Model)	1	Car No. 203185 ~Δ
2	99851 0816	Stud, Engine Hanger	1	
	99851 0816A	Stud, Engine Hanger	1	
	99851 0814A	Stud, Engine Hanger	1	Car No. 102235 ~○
	0866 10 105	Stud, Engine Hanger	1	Car No. 130039 ~○
3	99851 0822	Stud, Inlet Manifold	1	
	99851 0822A	Stud, Inlet Manifold	1	Car No. 108122 ~○
4	2329 10 103B	Nozzle, Air (~~Manual~~)	2	1971,1972 Model
	~~2329 10 120~~	~~Nozzle, Air~~	~~2~~	~~1973 Model~~
	1617 10 120	Nozzle, Air ~~(Automatic)~~	2	1973 Model
5	99564 1200	Packing, Air Nozzle	2	
6	2329 10 104	Label, Caution	1	
7	99262 2503	Nail, Caution Label	2	
8	2329 10 105	Stud, Reactor	2	
●	0839 10 105	Stud, Reactor	2	Car No. 203185 ~Δ
10	0839 10 111B	Dowel, Tubular	2	
11	0810 10 171	Ring, "O"-Inner	2	
	1668 10 171	Ring, Square-Inner	2	Car No. 150542 ~○
12	0813 10 172	Ring, "O"-Outer	2	
13	0813 10 173	Ring, "O"-Tubular Dowel	4	
14	0813 10 174	Ring, "O"-Tension Bolt	36	Car No. 70618 ~Discarded

10 ROTOR HOUSING (FRONT)

No.	Part Number	Description	Q'ty	Remarks
	0820 23 040	"O" Ring Set (Fig. No. 11~14 included)	1 Set	Order Under No. 0820 23 040A
	0845 23 040	"O" Ring Set (Fig. No. 11~13 included)	1 Set	Car No. 69368 71/4~×
	0845 23 040A	"O" Ring Set (Fig. No. 11~13 included)	1	Car No. 150542 72/10~○
15	2359 10 200A	Housing, Front	1	
	2359 10 200C	Housing, Front	1	Car No. 69368 71/4~○
	2359 10 200D	Housing, Front	1	Car No. 74055 71/4~○
●	1665 10 200	Housing, Front	1	~~1664, 1665~~ Car No. 96267 71/9~Δ
●	~~0845 23 040A~~	~~"O" Ring Set (Fig. No. 11~13 included)~~	~~1~~	~~Car No. 150542 72/10~○~~
	1665 10 200A	Housing, Front (All Models)	1	Car No. 122636 72/3~○
		1665 10 200A has an interchangeability with	(1665 10 200C / 99852 0865A)	
	1665 10 200C	Housing, Front	1	Car No. 139695 72/8~×
	1665 10 200D	Housing, Front	1	Car No. 141225 72/9~○
16	0839 10 203	Pin, Dowel	1	
17	2329 10 204	Dowel, Tubular	2	
18	2113 10 206	Plug, Blind - Car Heater use	1	
19	99307 0800	Plug, Blind	1	
	0839 10 206	Plug, Blind	1	Car No. 74055 71/4~○
20	99307 1200	Plug, Blind	3	
	0839 10 205	Plug, Blind	3	Car No. 74055 71/4~○
21	99306 3000	Plug, Blind - Water	4	
● 22	99852 0865	Stud, Water Pump	~~1~~	
●	99852 0865A	Stud, Water Pump	~~1~~	Car No. 108122 71/12~○
●	99852 0878A	Stud, Water Pump	~~1~~	Car No. 137835 72/8~×
23	99852 0878	Stud, Water Pump	2	
	99852 0878A	Stud, Water Pump	2	Car No. 108122 71/12~○
24	99852 0822	Stud, Inlet Manifold	2	
	99852 0822A	Stud, Inlet Manifold	2	Car No. 108122 71/12~○
25	99852 0655	Stud	2	
25-1	99859 1220	Stud	2	

No.	Part Number	Description	Q'ty	Remarks
	99859 1220	Stud	1	Car No. 96092 7/9 ~ Q'ty
	99859 1220A	Stud	1	Car No. 108122 7/12 ~ ○
25-2	99859 1225	Stud	1	Car No. 96092 7/9 ~ Added Anew
	99859 1225A	Stud	1	Car No. 108122 7/12 ~ ○
25-3	99852 1016	Stud	1	Car No. 74055 7/4 ~ ○
25-4	1665 14 200D	Pellet, Oil	1	Car No. 96267 7/9 ~ Added Anew
25-5	99503 1000	Plug	1	
25-6	99564 1200	Packing	1	
26	0839 18 311B	Bracket, Alternator	1	
27	0813 10 174	Ring, "O"	1	
28	2329 10 600D	Cover, Front	1	
	2329 10 600E	Cover, Front	1	Car No. 153905 72/11 ~ △
	2329 10 600F	Cover, Front	1	73/3 ~ O
	2329 10 600G	Cover, Front	1	73/7 ~ O
29	99307 0600	Plug, Blind	5	
30	99851 0818	Stud, Distributor	4	
	99851 0818A	Stud, Distributor	4	Car No. 108122 7/12 ~ ○
31	0820 10 631A	Pin, Top Indicator	1	
32	0820 10 605	Oil Seal	1	
33	99855 1020	Stud	4	
	99855 1020A	Stud	4	Car No. 108122 7/12 ~ ○
34	0839 14 115	Plunger, Pressure Control	1	
35	0839 14 273	Spring, Return - Plunger	1	
	0839 14 273A	Spring, Return - Plunger	1	Car No. 153905 72/11 ~ △
36	0221 14 117	Plug, Plunger	1	
	0839 14 274	Plug, Plunger	1	Car No. 153905 72/11 ~ △
37	99384 1200	Joint, Union	1	
	99384 1200F	Joint, Union	1	Car No. 73/11 ~ O

10 ROTOR HOUSING (FRONT)

No.	Part Number	Description	Q'ty	Remarks
38	99564 1600	Packing, Union Joint	1	
	99562 1600	Packing, Union Joint	1	Car No. 84805 ~ ○
39	0839 10 641	Gasket, Front Cover	1	
40	99801 0840	Bolt, Front Cover	4	
	99952 0800	Washer, Plain	4	
	99971 0800	Washer, Spring	4	
41	99806 0865	Bolt, Front Cover	1	
	99952 0800	Washer, Plain	1	
	99971 0800	Washer, Spring	1	
42	99801 0875	Bolt, Front + Cover	2	
	99952 0800	Washer, Plain	2	
	99971 0800	Washer, Spring	2	
43	99295 2008	Clip, Wire Harness	1	
	2090 18 999	Clip	1	Car No. 72017 ~ ○
44	2329 10 864	Protector, Engine Hanger	1	
45	2329 10 860	Hanger, Engine - Sub	1	
	2869 10 860	Hanger, Engine	1	Car No. 72017 ~ ○
●	0871 10 862A	Hanger, Engine	1	Car No. 201308 ~ X
47	99901 0800	Nut, Engine Hanger	1	Car No. 201308 ~ Discarded
	99971 0800	Washer, Spring	1	Car No. 201308 ~ Discarded
●	1011 18 319	Clip	1	Car No. 201308 ~ Added Anew
●	0866 23 025	Protector	1	Car No. 191156 ~ Added Anew
	2090 99 100C	Gasket Set, Engine	1	
	2090 99 100E	Gasket Set, Engine	1	Car No. 70618 ~ X
	2090 23 200	Short Engine Set	1	1971 Model
	1663 23 200	Short Engine Set (For U.S.A.)	1	1972 Model
	1665 23 200	Short Engine Set (For Canada)	1	
	1668 23 200	Short Engine Set ((Manual)	1	1973 Model
	1669 23 200	Short Engine Set (Automatic)	1	

2090 99 100E	GASKET SET, ENGINE	1
0845 23 040A	"O" Ring Set	1
2090 13 891	Gasket	2
2090 13 889	Gasket	1
0839 10 341	Packing-Front Cover	1
0839 10 711	Packing-Oil Pan	1
2090 13 111B	Packing-In. Manifold	1
0823 13 221A	Packing-Carburettor	2
2090 13 724	Gasket	1
2090 13 754	Gasket	1
0822 15 105	Packing-Water Pump	1
0820 15 106	Packing-Water Pump	1

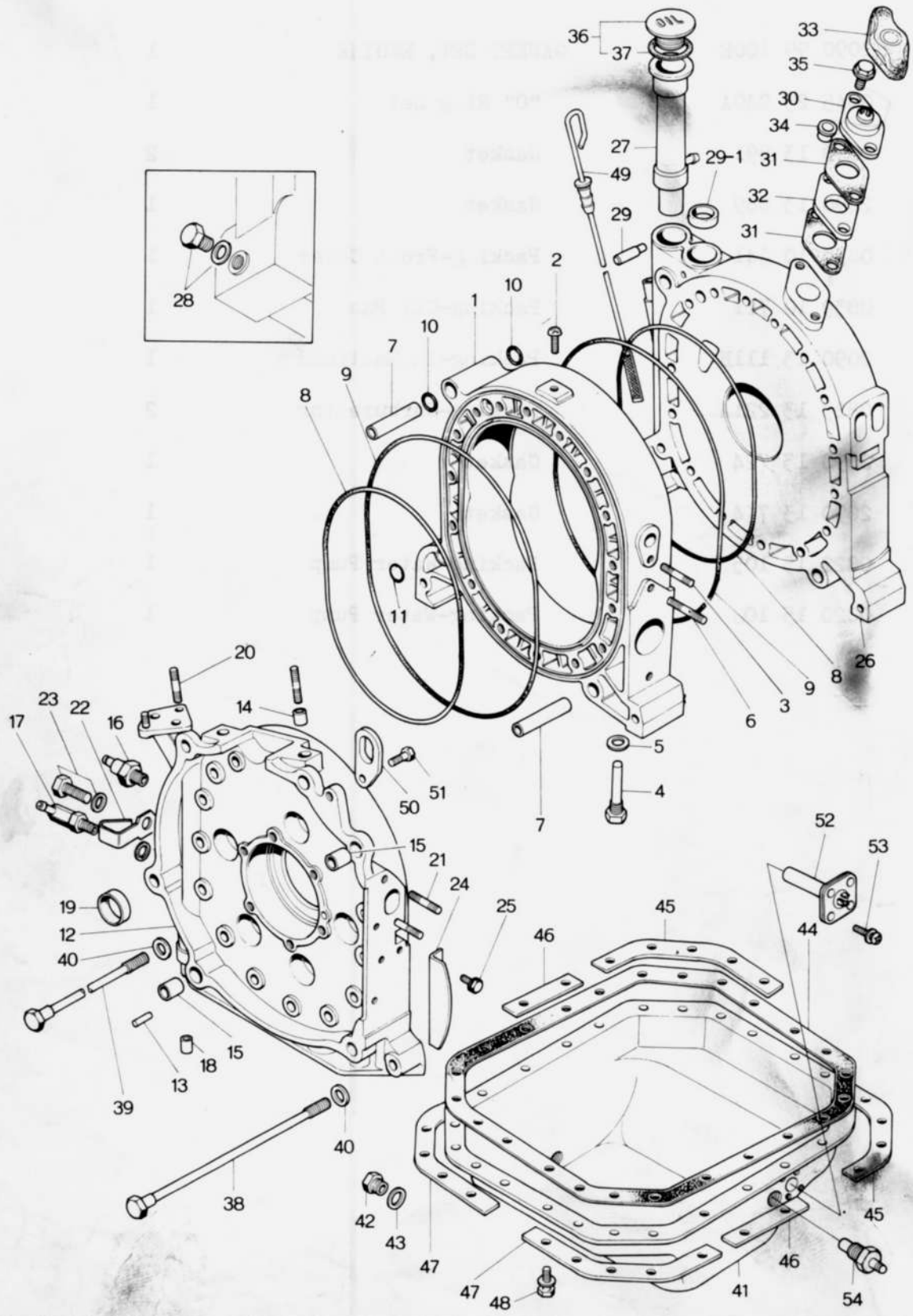
36
37
33
35
30
34
27
29-1
31
49
32
29
31
28
2
10
1
10
7
9
8
11
20
23
22
16
14
17
50
51
15
21
24
19
12
40
25
45
46
52
53
44
18
13
39
40
38
42
43
47
48
41
54
45
46
26
8
9
3
6
5
4
7

No.	Part Number	Description	Q'ty	Remarks
1	2090 10 150A	Housing (Rr.), Rotor	1	
	2090 10 150B	Housing (Rr.), Rotor	1	Car No. 70619 ~ ×
	2090 10 150D	Housing (Rr.), Rotor — 1971, 1972 Model	1	Car No. 83579 ~ ○
	1665 10 150	Housing (Rr.), Rotor	1	1664 1665 Car No. 117998 ~ ○
	2090 10 150D	Housing (Rr.), Rotor	1	Car No. 131008 ~ ○
	2090 10 150E	Housing (Rr.), Rotor	1	Car No. 138194 ~ ○
	1669 10 150A	Housing (Rr.), Rotor	1	
●	1669 10 150B	Housing Ass'y, Rotor — 1973 Model	1	Car No. 203185 ~ △
2	99833 0810	Screw	1	
●	99801 0812	Bolt	1	Car No. ~ ○
3	99851 0822	Stud, Inlet Manifold	1	
	99851 0822A	Stud, Inlet Manifold	1	Car No. 108122 ~ ○
4	2329 10 103B	Nozzle, Air	2	1971, 1972 Model
	~~2328 10 120~~	~~Nozzle, Air (Manual)~~	~~2~~	~~1973 Model~~
	1617 10 120	Nozzle, Air ~~(Automatic)~~	2	1973 Model
5	99564 1200	Packing, Air Nozzle	2	
6	2329 10 105	Stud, Reactor	2	
●	0839 10 105	Stud, Reactor	2	Car No. 203185 ~ △
7	0839 10 111B	Dowel, Tubular	2	
8	0810 10 171	Ring, "O" - Inner	2	
	1668 10 171	Ring, Square - Inner	2	Car No. 150542 ~ ○
9	0813 10 172	Ring, "O" - Outer	2	
10	0813 10 173	Ring, "O" - Tubular Dowel	4	
11	0813 10 174	Ring, "O" - Tension Bolt	36	Car No. 70618 ~ Discarded
	0820 23 040	"O" Ring Set (Fig. No. 8 ~ 11 Included)	1	Set Order Under No. 0820 23 040A
	0845 23 040	"O" Ring Set (Fig. No. 8 ~ 10 Included)	1	Set Car No. 69368 ~ ×
	0845 23 040A	"O" Ring Set (Fig. No. 8 ~ 10 Included)	1	Car No. 150542 ~ ○

10 ROTOR HOUSING (REAR)

No.	Part Number	Description	Q'ty	Remarks
12	2080 10 300D	Housing, Rear	1	
	2080 10 300E	Housing, Rear	1	Car No. 72017 7/4 ~ ○
	2080 10 300F	Housing, Rear	1	Car No. 74055 7/4 ~ ○
	2080 10 300G	Housing, Rear	1	Car No. 85627 7/7 ~ ○
	2080 10 300H	Housing, Rear	1	Car No. 140195 7/8 ~ ○
	0877 10 300B	Housing, Rear	1	Car No. 141225 7/9 ~ ○
13	0820 10 203	Pin, Knock - Gear	1	
14	99234 1208	Pin, Tubular - Starter	1	
15	0221 10 309	Pin, Tubular	2	
16	0813 18 501	Switch, Oil Pressure	1	
17	0839 10 320	Joint, Hose - With Car Heater	1	
18	99307 1200	Plug, Blind	1	
	0839 10 205	Plug, Blind	1	Car No. 74055 7/4 ~ ○
19	99306 3000	Plug, Blind - Water	5	
20	99852 0822	Stud	4	
	99852 0822A	Stud	4	Car No. 108122 7/12 ~ ○
21	99852 0830	Stud, Starter	2	
	99852 0830A	Stud, Starter	2	Car No. 108122 7/12 ~ ○
22	0839 61 235A	Clamp	1	
23	99811 1010	Bolt	1	
	99971 1000	Washer, Spring	1	
24	0820 10 305	Cover, Dust	1	
25	99806 0610	Bolt, Dust Cover	2	
	99971 0600	Washer, Spring	2	

No.	Part Number	Description	Q'ty	Remarks
26	2090 10 400D	Housing, Intermediate	1	
	2090 10 400E	Housing, Intermediate	1	Car No. 69368 ⁷⁄₄ ~ ○
	1663 10 400	Housing, Intermediate	1	Car No. 96092 ⁷⁄₉ ~ ○
	1663 10 400A	Housing, Intermediate	1	Car No. 85627 ⁷⁄₇ ~ ○
	1663 10 400B	Housing, Intermediate	1	Car No. 141225 ⁷⁄₇ ~ ○
27	2090 10 410A	Pipe, Oil Filler	1	
	0866 10 411	Pipe, Oil Filler	1	Car No. 87139 ⁷⁄₇ ~ ○
28	99510 1000	Plug	1	
	99564 1000	Packing	1	
29	2329 10 417	Pipe	1	
29-1	99305 2800	Plug, Expansion	1	1973 Model
30	2329 18 920A	Senser, Thermo	1	
	1663 18 920	Senser, Thermo	1	Car No. 96092 ⁷⁄₉ ~ ○
31	2329 18 921	Gasket, Thermo Senser	2	
32	2329 18 922	Insulator	1	
33	2329 18 923	Cover	1	
34	2329 18 924	Washer	2	
35	908016 8 25	Bolt Set, Thermo Senser	2	
36	0324 10 250	Cap, Oil Filler	1	
37	0324 10 252	Gasket	1	

10 ROTOR HOUSING (REAR)

No.	Part Number	Description	Q'ty	Remarks
38	0839 10 451A	Bolt, Tension	18	
	1011 10 451	Bolt, Tension	18	Car No. 149031 ~
●	1015 10 451	Bolt, Tension	18	
39	0839 10 452B	Bolt, Tension	1	
	1011 10 452	Bolt, Tension	1	Car No. 149031 ~
●	1015 10 452	Bolt, Tension	1	
40	0823 10 455	Washer, Plain - Tension Bolt	19	
	0839 10 455	Washer, Seal	19	Car No. 70619 ~
41	2090 10 700B	Pan, Oil	1	
	2090 23 240	Pan, Oil	1	Car No. 85627 ~
	2090 23 240C	Pan, Oil	1	Car No. 90015 ~
	1663 10 700A	Pan, Oil	1	1972 Model
	1668 10 700	Pan, Oil (Manual)	1	1973 Model
	1669 10 700	Pan, Oil (Automatic)	1	1973 Model
42	99511 1400	Plug, Drain	1	
43	99562 1400	Packing	1	
44	0839 10 711	Gasket, Oil Pan	1	
45	0839 10 721	Stiffener, Oil Pan	2	
46	0839 10 722	Stiffener, Oil Pan	2	
47	0839 10 723	Stiffener, Oil Pan	2	
48	908062 6 16	Bolt Set, Oil Pan	22	
49	0839 10 830	Gauge, Oil Level	1	
50	0820 10 862A	Hanger, Engine	1	
	2090 10 862A	Hanger, Engine	1	Car No. 72017 ~
51	908012 8 18	Bolt Set, Engine Hanger	1	
52	2090 10 730A	Switch, Oil Level Warning	1	

No.	Part Number	Description	Q'ty	Remarks
	2090 10 730B	Switch, Oil Level Warning	1 1	Car No. 73808 71/5 ~ × Car No. 137835 73/8 ~ Discarded
53	908332 4 16	Screw Set, Oil Level Warning Switch	4	
	908332 4 18	Screw Set, Oil Level Warning Switch	4 4	Car No. 79498 71/5 ~ × Car No. 137835 73/8 ~ Discarded
54	1617 18-950	Senser No. 2, Thermo	1	1972 Model
	1668 18 950	Senser No. 2, Thermo	1	1973 Model

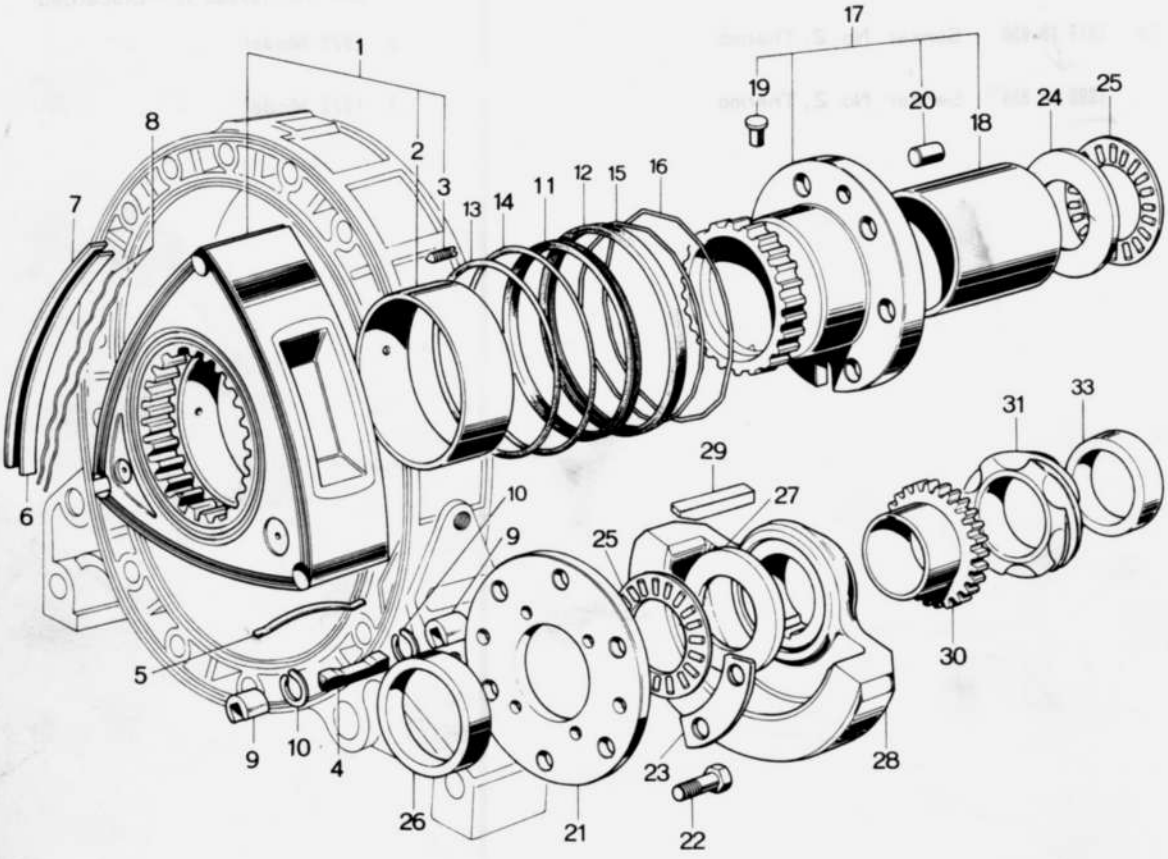
1
2
3
4
5
6
7
8
9
10
11
12
13
14
15
16
17
18
19
20
21
22
23
24
25
26
27
28
29
30
31
33

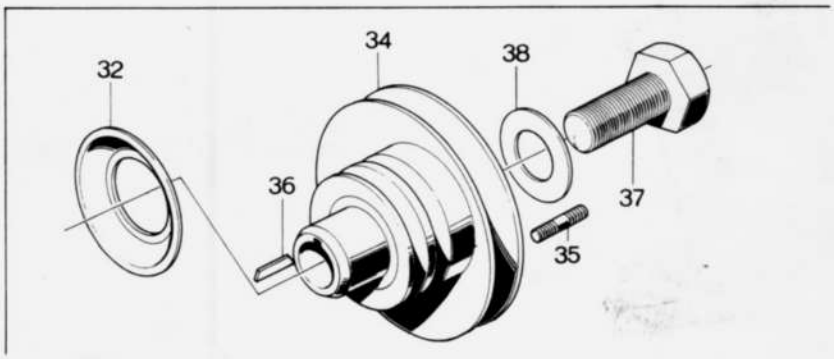
32
34
36
38
37
35

	No.	Part Number	Description	Q'ty	Remarks
	1	2090 23 103	Rotor, Front	1	
		2090 23 103A	Rotor, Front	1	Car No. 130039 $^{72}/_{5}$ ~ O
•	2	0839 11 111B	Bearing, Rotor	1	Order under No. 0839 99 118 (Fig. No. 3 Included)
•		1011 11 111	Bearing, Rotor	1	Car No. 195395 $^{73}/_{6}$ ~ X
•	3	99885 0406	Screw	3	Car No. 195395 $^{73}/_{6}$ ~ Discarded
	4	0839 11 301B	Seal, Apex (TR 230)	3	Car No. 181409 $^{73}/_{3}$ ~ Discarded
		2080 11 301	Seal, Apex (TMC 15T) — Selective use ~~(For General U.S.A.)~~	3	
		2090 11 301	Seal, Apex (TMC 115)	3	
		~~2868 11 301~~	~~Seal, Apex (TR 260)~~ — ~~(For Canada & Northern U.S.A.)~~	~~3~~	
		~~1865 11 301~~	~~Seal, Apex (TR 260)~~	~~3~~	~~Car No. 117988 $^{72}/_{2}$ ~ O~~
	5	0839 11 304	Spring, Apex Seal	3	
	6	2125 23 151	Seal, Side Outer	3	
•		1011 23 151	Seal, Side Outer (Frt.)	3	$^{73}/_{1}$ ~ O
•		1011 23 151A	Seal, Side Outer (Frt.)	3	$^{73}/_{4}$ ~ O
		2125 23 154	Seal, Side Outer	3	
•		1011 23 151	Seal, Side Outer (Rr.)	3	$^{73}/_{1}$ ~ O
•		1011 23 151A	Seal, Side Outer (Rr.)	3	$^{73}/_{4}$ ~ O
	7	2125 23 152	Seal, Side Inner	3	
•		1011 23 151	Seal, Side Inner (Frt.)	3	$^{73}/_{1}$ ~ O
•		1011 23 151A	Seal, Side Inner (Frt.)	3	$^{73}/_{4}$ ~ O
		2125 23 155	Seal, Side Inner	3	
•		1011 23 151	Seal, Side Inner (Rr.)	3	$^{73}/_{1}$ ~ O
•		1011 23 151A	Seal, Side Inner (Rr.)	3	$^{73}/_{4}$ ~ O
	8	0820 11 317	Spring, Side Seal	12	
	9	0820 11 321B	Seal, Corner	6	
		0820 11 321C	Seal, Corner	6	Car No. 128567 $^{72}/_{4}$ ~ O
		0820 23 175A	Seal, Corner (O.S. 0.2) — Selective use	6	
		0820 23 175B	Seal, Corner (O.S. 0.2) — Selective use	6	Car No. 130039 $^{72}/_{5}$ ~ O
		0820 23 176A	Seal, Corner (O.S. 0.03) — Selective use	6	
		0820 23 176B	Seal, Corner (O.S. 0.03) — Selective use	6	Car No. 128567 $^{72}/_{4}$ ~ O
	10	0839 11 323	Spring, Corner (For General U.S.A.)	6	
		0839 11 323A	Spring, Corner (For General U.S.A.)	6	Car No. 120481 $^{72}/_{2}$ ~ O
		1665 11 323	Spring, Corner (For Canada & Northern U.S.A.)	6	Car No. 120481 $^{72}/_{2}$ ~ O
•		0839 11 323A	Spring, Corner (For Canada & Northern U.S.A.)	6	Car No. $^{73}/_{2}$ ~ O

10 11 ROTOR (FRONT)

	No.	Part Number	Description	Q'ty	Remarks
	11	0820 11 331	Oil Seal, Inner	2	Order Under No. 0820 23 180
	12	0820 11 333	Oil Seal, Outer	2	
	11	0820 11 331A	Oil Seal, Inner	2	Order Under No. 0820 23 180A ~ O
	12	0820 11 333A	Oil Seal, Outer	2	
	11	~~0820 11 331A~~	~~Oil Seal, Inner~~	~~2~~	~~Order Under No. 0820 23 180B~~
	12	~~0820 11 333B~~	~~Oil Seal, Outer~~	~~2~~	
	11	0820 11 331B	Oil Seal, Inner	2	Order under No. 0820 23 180C Car No. 139695 $^{72}/_{8}$ ~ Δ
	12	0820 11 333C	Oil Seal, Outer	2	
	13	0820 11 341	Ring, "O" - Inner	2	
•		0820 11 341A	Ring, "O" - Inner	2	Car No. 135199 $^{72}/_{7}$ ~ O
	14	0820 11 343	Ring, "O" - Outer	2	
•		0820 11 343A	Ring, "O" - Outer	2	Car No. 135199 $^{72}/_{7}$ ~ O
		1665 11 343	Ring, "O" - Outer (For Canada & Northern U.S.A.)	2	
•		0820 11 343A	Ring, "O" - Outer (For Canada & Northern U.S.A.)	2	Car No. 135199 $^{72}/_{7}$ ~ O
	15	0839 11 351	Spring, Oil Seal - Inner (Frt.)	2	
		0839 11 351A	Spring, Oil Seal - Inner (Frt.)	1	Car No. 118908 $^{72}/_{2}$ ~ X
		0839 11 351B	Spring, Oil Seal - Inner (Frt.)	1	Car No. 130039 $^{72}/_{5}$ ~ O
•		1011 11 351	Spring, Oil Seal - Inner (Frt.)	1	Car No. $^{73}/_{4}$ ~ O
		0839 11 361	Spring, Oil Seal - Inner (Rr.)	1	Car No. 118908 $^{72}/_{2}$ ~ Added Anew
		0839 11 361A	Spring, Oil Seal - Inner (Rr.)	1	Car No. 130039 $^{72}/_{5}$ ~ O
•		1011 11 361	Spring, Oil Seal - Inner (Rr.)	1	Car No. $^{73}/_{4}$ ~ O
	16	0839 11 353	Spring, Oil Seal - Outer (Frt.)	2	
		0839 11 353A	Spring, Oil Seal - Outer (Frt.)	1	Car No. 133133 $^{72}/_{6}$ ~ X
•		1011 11 353	Spring, Oil Seal - Outer (Frt.)	1	Car No. $^{73}/_{4}$ ~ O
		0839 11 363	Spring, Oil Seal - Outer (Rr.)	1	Car No. 133133 $^{72}/_{6}$ ~ Added Anew
•		1011 11 363	Spring, Oil Seal - Outer (Rr.)	1	Car No. $^{73}/_{4}$ ~ O
	17	0839 10 500A	Gear, Stationary - Front	1	
		0839 10 500B	Gear, Stationary - Front	1	Car No. 74956 $^{71}/_{3}$ ~ O
	18	0820 10 502	Bearing, Main	1	
		0820 10 502B	Bearing, Main	1	Car No. 74956 $^{71}/_{3}$ ~ O
	19	~~0818 10 508~~	~~Pin, Lock Bush~~	~~1~~	
	20	0839 10 504	Pin, Knock	1	

No.	Part Number	Description	Q'ty	Remarks
21	0839 11 501	Plate	1	
22	99801 0822	Bolt, Stationary Gear	6	
	0839 11 515	Bolt, Stationary Gear	6	Car No. 92431 $^{71}/_{8}$ ~ ○
23	0820 11 503	Washer, Lock	3	
24	0839 11 504B	Plate, Thrust	1	
25	0813 11 505B	Bearing, Needle	2	
26	0839 11 502	Spacer, L = 8.02	1	
	0839 11 506	Spacer, L = 8.08		
	0839 11 508	Spacer, L = 8.04		
	0839 11 509	Spacer, L = 8.00		
		Selective use		
27	0820 11 507	Washer, Thrust	1	
28	2090 11 511A	Weight, Balance (Manual)	1	
	0839 11 511D	Weight, Balance (Manual)	1	Car No. $^{73}/_{1}$ ~ ○
	0842 11 511A	Weight, Balance (Automatic)	1	
29	0820 11 512A	Key	1	
30	0839 11 551	Sprocket, Drive	1	
	0839 11 551A	Sprocket, Drive	1	Car No. $^{73}/_{1}$ ~ ○
31	0839 11 531	Gear, Distributor Drive	1	
32	0813 11 541	Plate, Oil Baffle	1	
33	0820 11 542	Spacer	1	
34	2090 11 601	Pulley	1	
	2090 11 601A	Pulley	1	Car No. 96092 $^{71}/_{9}$ ~ △
	1668 11 601	Pulley	1	Car No. 147628 $^{72}/_{10}$ ~ X
35	99852 0616	Stud, Pulley	4	
	99852 0616A	Stud, Pulley	4	Car No. 108122 $^{71}/_{12}$ ~ ○
	99852 0618A	Stud, Pulley	4	Car No. 158061 $^{72}/_{11}$ ~ ○
36	99236 0525	Key	1	
37	0820 11 611B	Bolt, Pulley	1	
38	99564 2800	Washer, Pulley	1	

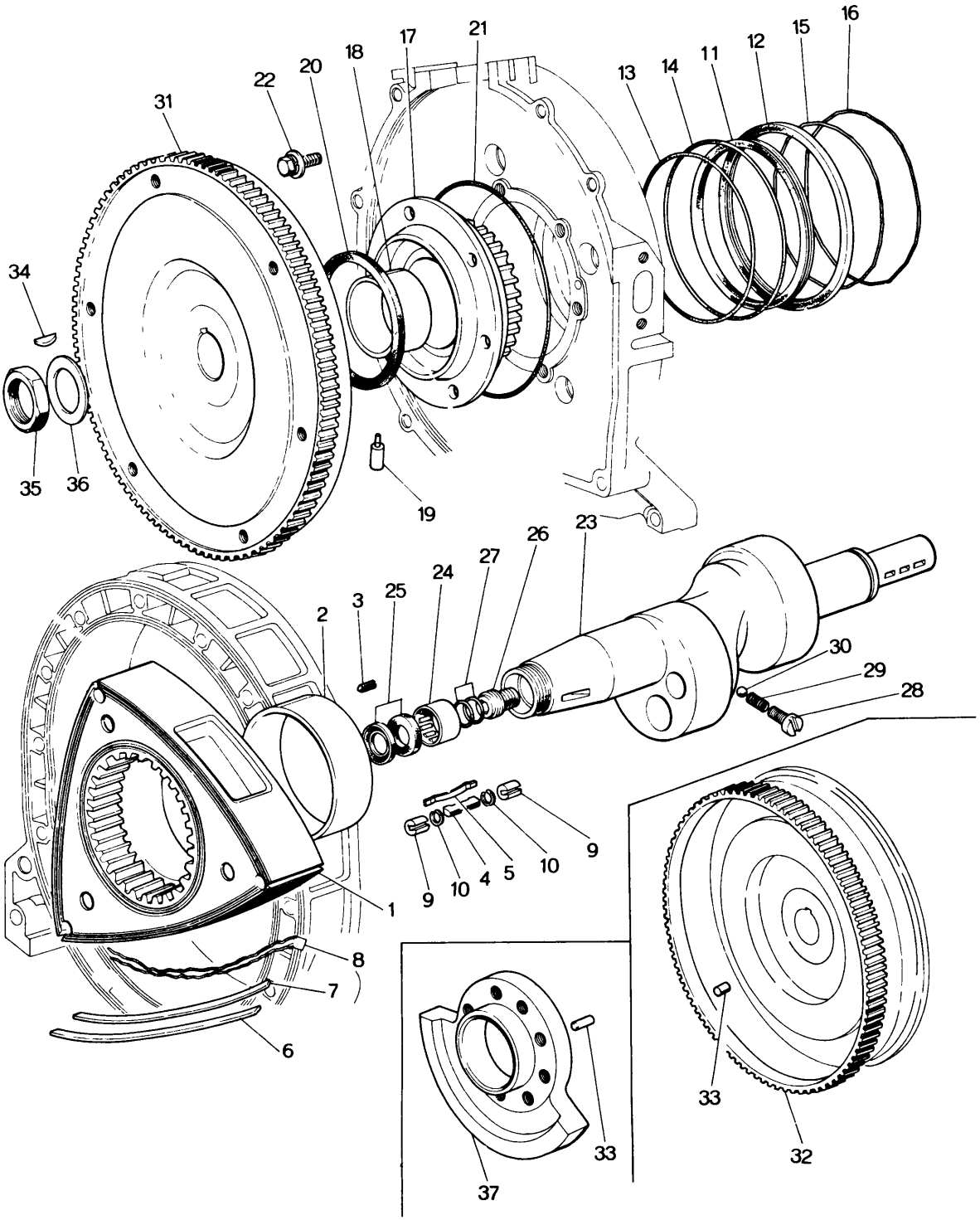
16
15
12
11
14
13
17
21
18
20
22
31
34
35
36
19
23
26
27
24
25
3
2
30
29
28
9
10
4
5
10
9
1
8
7
6
33
37
33
32

	No.	Part Number	Description	Q'ty	Remarks
	1	2090 23 113	Rotor (Rr.)	1	
		2090 23 113A	Rotor (Rr.)	1	Car No. 130039 $^{72}/_{5}$ ~ ○
●	2	0839 11 111B	Bearing, Rotor	1	Order Under No. 0839 99 118 (Fig. No. 3 Included)
●		1011 11 111	Bearing, Rotor	1	Car No. 195395 $^{73}/_{6}$ ~ X
●	3	99885 0406	Screw	3	Car No. 195395 $^{73}/_{6}$ ~ Discarded
	4	0839 11 301B	Seal, Apex (TR 230)	3	Car No. 179668 $^{73}/_{3}$ ~ Discarded
		2080 11 301	Seal, Apex (TMC 15T) — Selective use ~~(For General U.S.A.)~~	3	
		2090 11 301	Seal, Apex (TMC 115)	3	
		0839 23 131	Seal, Apex (TMC 115)	3	
		~~2868 11 301~~	~~Seal, Apex~~ — ~~(For Canada & Northern U.S.A.)~~	~~3~~	
		~~1665 11 301~~	~~Seal, Apex (TR 260)~~	~~3~~	~~Car No. 117988 $^{72}/_{2}$ ~ ○~~
	5	0839 11 304	Spring, Side Seal	3	
	6	2125 23 151	Seal, Side Outer	3	
●		1011 23 151	Seal, Side Outer (Frt.)	3	$^{73}/_{1}$ ~ ○
●		1011 23 151A	Seal, Side Outer (Frt.)	3	$^{73}/_{4}$ ~ ○
		2125 23 154	Seal, Side Outer	3	
●		1011 23 151	Seal, Side Outer (Rr.)	3	$^{73}/_{1}$ ~ ○
●		1011 23 151A	Seal, Side Outer (Rr.)	3	$^{73}/_{4}$ ~ ○
	7	2125 23 152	Seal, Side Inner	3	
●		1011 23 151	Seal, Side Inner (Frt.)	3	$^{73}/_{1}$ ~ ○
●		1011 23 151A	Seal, Side Inner (Frt.)	3	$^{73}/_{4}$ ~ ○
		2125 23 155	Seal, Side Inner	3	
●		1011 23 151	Seal, Side Inner (Rr.)	3	$^{73}/_{1}$ ~ ○
●		1011 23 151A	Seal, Side Inner (Rr.)	3	$^{73}/_{4}$ ~ ○
	8	0820 11 317	Spring, Side Seal	12	
	9	0820 11 321B	Seal, Corner	6	
		0820 11 321C	Seal, Corner	6	Car No. 128567 $^{72}/_{4}$ ~ ○
		0820 23 175A	Seal, Corner (O.S. 0.2) — Selective use	6	
		0820 23 175B	Seal, Corner (O.S. 0.2)	6	Car No. 128567 $^{72}/_{4}$ ~ ○
		0820 23 176A	Seal, Corner (O.S. 0.03)	6	
		0820 23 176B	Seal, Corner (O.S. 0.03)	6	Car No. 128567 $^{72}/_{4}$ ~ ○
	10	0839 11 323	Spring, Corner Seal (For General U.S.A.)	6	
		0839 11 323A	Spring, Corner Seal (For General U.S.A.)	6	Car No. 120481 $^{72}/_{2}$ ~ ○

No.	Part Number	Description	Q'ty	Remarks
	1665 11 323	Spring, Corner Seal (For Canada & Northern U.S.A.)	6	Car No. 120481 $^{72}/_{2}$ ~ ○
●	0839 11 323A	Spring, Corner Seal (For Canada & Northern U.S.A.)	6	Car No. $^{73}/_{2}$ ~ ○
11	0820 11 331	Oil Seal, Inner	2	Order Under No. 0820 23 180
12	0820 11 333	Oil Seal, Outer	2	
11	0820 11 331A	Oil Seal, Inner	2	Order Under No. 0820 23 180A ~ ○
12	0820 11 333A	Oil Seal, Outer	2	
11	~~0820 11 331A~~	~~Oil Seal, Inner~~	~~2~~	~~Order Under No. 0820 23 180B~~
12	~~0820 11 333B~~	~~Oil Seal, Outer~~	~~2~~	
11	0820 11 331B	Oil Seal, Inner	2	Order under No. 0820 23 180C Car No. 139695 $^{72}/_{8}$ ~ △
12	0820 11 333C	Oil Seal, Outer	2	
13	0820 11 341	Ring, "O" - Inner	2	
	0820 11 341A	Ring, "O" - Inner	2	Car No. 135199 $^{72}/_{7}$ ~ ○
14	0820 11 343	Ring, "O" - Outer (For General U.S.A.)	2	
	0820 11 343A	Ring, "O" - Outer (For General U.S.A.)	2	Car No. 135199 $^{72}/_{7}$ ~ ○
	1665 11 343	Ring, "O" - Outer (For Canada & Northern U.S.A.)	2	
●	0820 11 343A	Ring, "O" - Outer (For Canada & Northern U.S.A.)	2	Car No. 135199 $^{72}/_{7}$ ~ ○
15	0839 11 351	Spring, Oil Seal - Inner (Frt.)	2	
	0839 11 351A	Spring, Oil Seal - Inner (Frt.)	1	Car No. 117998 $^{72}/_{2}$ ~ X
	0839 11 351B	Spring, Oil Seal - Inner (Frt.)	1	Car No. 130039 $^{72}/_{5}$ ~ ○
●	1011 11 351	Spring, Oil Seal - Inner (Frt.)	1	Car No. $^{73}/_{4}$ ~ ○
	0839 11 361	Spring, Oil Seal - Inner (Rr.)	1	Car No. 117998 $^{72}/_{2}$ ~ Added Anew
	0839 11 361A	Spring, Oil Seal - Inner (Rr.)	1	Car No. 130039 $^{72}/_{5}$ ~ ○
●	1011 11 361	Spring, Oil Seal - Inner (Rr.)	1	Car No. $^{73}/_{4}$ ~ ○
16	0839 11 353	Spring, Oil Seal - Outer (Frt.)	2	
	0839 11 353A	Spring, Oil Seal - Outer (Frt.)	1	Car No. 133133 $^{72}/_{6}$ ~ X
●	1011 11 353	Spring, Oil Seal - Outer (Frt.)	1	Car No. $^{73}/_{4}$ ~ ○
	0839 11 363	Spring, Oil Seal - Outer (Rr.)	1	Car No. 133133 $^{72}/_{6}$ ~ Added Anew
●	1011 11 363	Spring, Oil Seal - Outer (Rr.)	1	Car No. $^{73}/_{4}$ ~ ○
17	0820 10 550A	Gear, Stationary - Rear	1	
	0820 10 550B	Gear, Stationary - Rear	1	Car No. 66431 $^{71}/_{3}$ ~ ○
●	1668 10 550	Gear, Stationary - Rear	1	Car No. 181549 $^{73}/_{3}$ ~ △
18	0820 10 502A	Bearing, Main	1	
	0820 10 502B	Bearing, Main	1	Car No. 66431 $^{71}/_{3}$ ~ ○
19	~~0813 10 554~~	~~Pin, Lock Bush~~	~~1~~	

No.	Part Number	Description		Q'ty	Remarks
20	0820 10 556A	Oil Seal, Stationary Gear	(N. D. K.) Selective use	1	
•	1668 10 556	Oil Seal, Stationary Gear		1	Car No. 181549 $^{73}/_{3}$ ~ Δ
	0839 10 556	Oil Seal, Stationary Gear		1	
21	0813 10 555	Ring, "O" - Stationary Gear		1	
22	908012 8 18	Bolt Seat, Stationary Gear		6	
23	0839 11 400I	Shaft, Eccentric (Manual)		1	
	0879 11 400	Shaft, Eccentric (Manual)		1	Car No. 160657 $^{72}/_{12}$ ~ Δ
	0842 11 400A	Shaft, Eccentric (Automatic)		1	
	0842 11 400B	Shaft, Eccentric (Automatic)		1	Car No. 160657 $^{72}/_{12}$ ~ Δ
24	0810 11 403	Bearing, Needle	(Manual)	2	
25	0810 11 404	Oil Seal		2	
26	0813 11 405	Plug, Blind		1	
27	99541 01101	Ring, "O"		2	
28	0839 11 411A	Plug, Oil Jet		2	
29	0839 11 412	Spring		2	
30	99611 2000	Ball, Steel		2	
31	2090 11 700A	Wheel, Fly	(Manual)	1	
	0839 11 700B	Wheel, Fly		1	Car No. $^{73}/_{1}$ ~ ○
32	0600 11 502	Gear, Ring		1	
33	0820 11 703	Pin		1	
34	0820 11 705	Key, Fly Wheel		1	
35	0810 11 711	Nut, Fly Wheel		1	
36	0820 11 712	Washer, Lock - Fly Wheel		1	
37	0842 11 750C	Weight, Counter (Automatic)		1	
	0842 11 750E	Weight, Counter (Automatic)		1	Car No. 143920 $^{72}/_{9}$ ~ ○

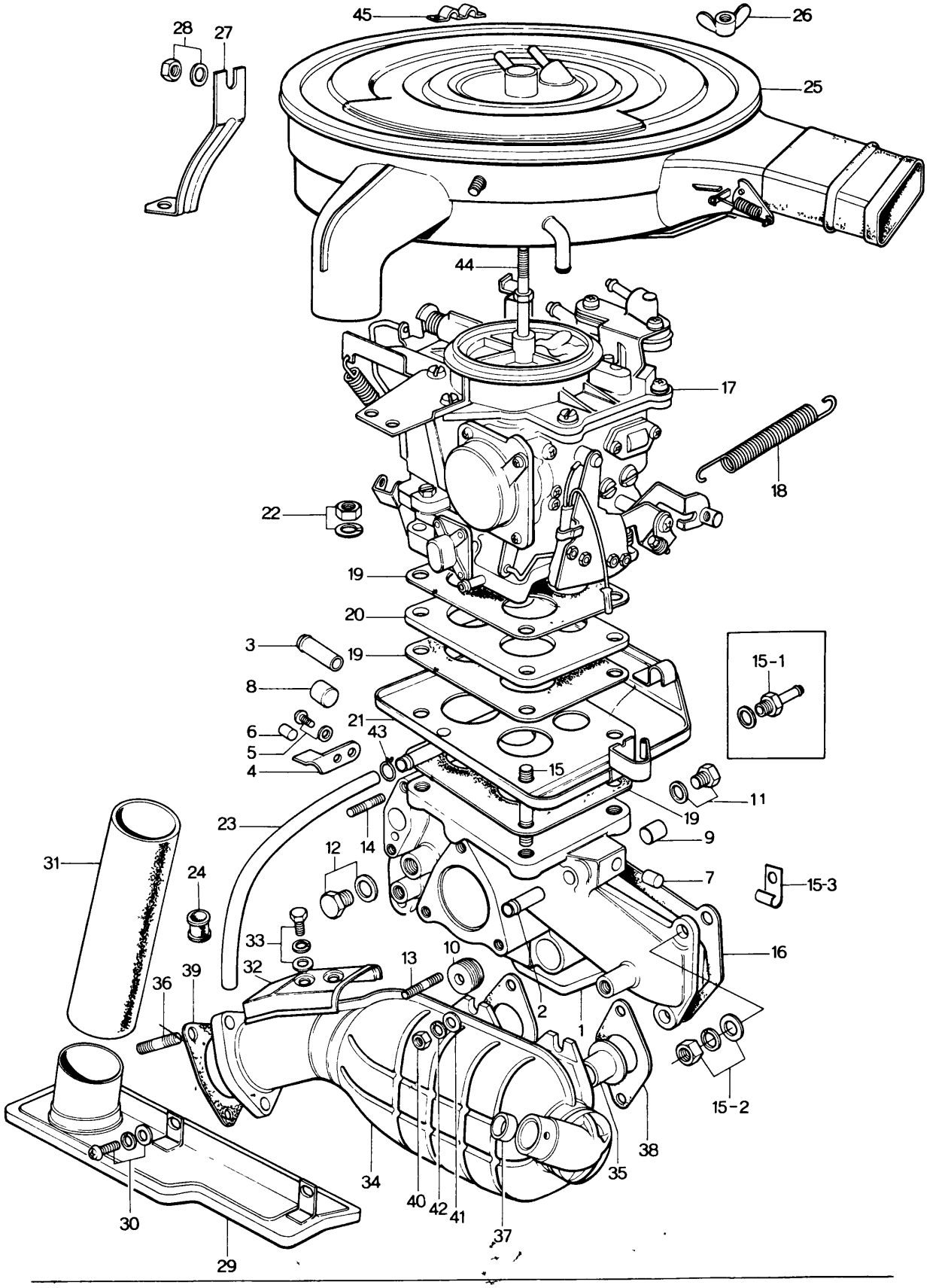
45
26
28
27
25
44
17
18
22
19
20
3
19
8
6
5
4
21
43
15
15-1
11
19
9
23
12
14
31
24
7
15-3
33
32
10
13
16
36
39
2
1
15-2
38
35
34
40
42
41
37
30
29

No.	Part Number	Description	Q'ty	Remarks
1	2090 13 100B	Manifold, Inlet (Manual)	1	1971, 1972 Model
•	1668 13 100A	Manifold, Inlet (Manual)	1	1973 Model
•	1669 13 100B	Manifold, Inlet (Automatic)	1	1973 Model
2	2090 13 105	Pipe	1	
3	2090 13 107A	Pipe	1	1971, 1972 Model
4	2090 13 109	Retainer	1	
5	99835 0510	Screw, Retainer	2	
	99833 0510	Screw	2	Car No. 77886 $^{71}/_{5}$ ~ O
	99971 0500	Washer, Spring	2	
6	99307 0400	Plug, Blind	1	
	99307 0600	Plug, Blind	1	Car No. 74956 $^{71}/_{5}$ ~ O
7	99307 0800	Plug, Blind	1	
8	99307 1200	Plug, Blind	1	
9	99307 1400	Plug, Blind	1	1971, 1972 Model
10	99307 1600	Plug, Blind	2	1971, 1972 Model
	99503 3000	Plug, Blind	2	Car No. 123135 $^{72}/_{3}$ ~ X
11	99510 0800	Plug (Manual)	1	
	99564 0800	Packing	1	
12	99511 1000	Plug	1	
	99564 1000	Packing	1	
13	99851 0620	Stud, Air Control Valve	2	
	99851 0622	Stud, Air Control Valve	2	Car No. 77886 $^{71}/_{5}$ ~ O
	99851 0622A	Stud, Air Control Valve	2	Car No. 108122 $^{71}/_{12}$ ~ O
	99851 0632	Stud, Air Control Valve	1	Car No. 77886 $^{71}/_{5}$ ~ O
	99851 0632A	Stud, Air Control Valve	1	Car No. 108122 $^{71}/_{12}$ ~ O
14	99851 0624	Stud, Anti After Burn Valve	2	

No	Part Number	Description	Q'ty	Remarks
	99851 0624A	Stud, Anti After Burn Valve	2	Car No. 108122 $^{71}/_{12}$ ~ O
15	~~99851 0826~~	Stud, Carburettor	3	Car No. 67879 $^{71}/_{3}$ ~ Q'ty
•	99851 0826			
	~~99851 0826A~~	Stud, Carburettor	3	Car No. 108122 $^{71}/_{12}$ ~ O
•	99851 0826A			
	~~99851 0828A~~	Stud, Carburettor	3	Car No. 119482 $^{72}/_{2}$ ~ O
•	99851 0828A			
	~~99852 0826~~	Stud, Carburettor	1	Car No. 67879 $^{71}/_{3}$ ~ Added Ar
•	99852 0826			
	~~99852 0826A~~	Stud, Carburettor	1	Car No. 108122 $^{71}/_{12}$ ~ O
•	99852 0826A			
	~~99852 0828A~~	Stud, Carburettor	1	Car No. 119482 $^{72}/_{2}$ ~ O
•	99852 0828A			
15-1	0842 19 910	Joint, Union (Automatic)	1	
15-2	99901 0800	Nut, Inlet Manifold	6	
	99953 0800	Washer, Plain	5	
	99971 0800	Washer, Spring	6	
15-3	99295 0606	Clip	1	
16	2090 13 111A	Gasket, Inlet Manifold	1	
	2090 13 111B	Gasket, Inlet Manifold	1	Car No. 117998 $^{72}/_{2}$ ~ O
17	2090 13 200F	Carburettor	1	
	2090 13 210B	Carburettor (1971 Model)	1	Car No. 68552 $^{71}/_{3}$ ~ O
	2090 13 210C	Carburettor (1971 Model)	1	Car No. 79042 $^{71}/_{4}$ ~ O
	2090 13 210D	Carburettor (1971 Model)	1	Car No. 92929 $^{71}/_{8}$ ~ O
	1663 13 200C	Carburettor (For General U.S.A.) (1972 Model)	1	
	1663 13 200D	Carburettor (For General U.S.A.) (1972 Model)	1	Car No. 106922 $^{71}/_{12}$ ~ Δ
	1665 13 200D	Carburettor (For Canada) (1972 Model)	1	
	1665 13 200E	Carburettor (For Canada) (1972 Model)	1	Car No. 130676 $^{72}/_{5}$ ~ O
	1668 13 200D	Carburettor	1	
•	1668 13 200E	Carburettor (Manual) 1973 Model (For General U.S.A.)	1	Car No. 145188 $^{72}/_{9}$ ~ Δ
•	1668 13 200G	Carburettor (Manual) 1973 Model (For General U.S.A.)	1	Car No. 161154 $^{72}/_{12}$ ~ Δ
	1669 13 200B	Carburettor (Automatic) 1973 Model	1	
•	1669 13 200C	Carburettor (Automatic) 1973 Model	1	Car No. 157691 $^{72}/_{11}$ ~ Δ
	1672 13 200C	Carburettor	1	
•	1672 13 200D	Carburettor (Manual) 1973 Model (For Canada & Northern U.S.A.)	1	Car No. 145188 $^{72}/_{9}$ ~ Δ
•	1672 13 200F	Carburettor (Manual) 1973 Model (For Canada & Northern U.S.A.)	1	Car No. 159494 $^{72}/_{11}$ ~ Δ

No.	Part Number	Description	Q'ty	Remarks
18	2090 13 208	Spring, Throttle	1	
	2090 13 208A	Spring, Throttle	1	Car No. 79042 $^{71}/_{5}$ ~ ○
	1663 13 208	Spring, Throttle	1	Car No. 122636 $^{72}/_{3}$ ~ ○
●	1663 13 208A	Spring, Throttle	1	Car No. 144905 $^{72}/_{9}$ ~ ○
19	0823 13 221A	Gasket, Carburettor	3	
20	0823 13 222A	Insulator, Carburettor	1	
21	2090 13 230A	Tray, Carburettor	1	
22	99901 0800	Nut, Carburettor	4	
	99971 0800	Washer, Spring	4	
23	2090 13 235	Pipe, Drain	1	
●	0866 13 235	Pipe, Drain	1	Car No. $^{72}/_{9}$ ~ ○
24	99681 1001	Protector, Drain Pipe	1	
25	2090 13 300B	Cleaner, Air (1971 Model)	1	
	2090 13 300C	Cleaner, Air (1971 Model)	1	Car No. $^{71}/_{3}$ ~ ○
	1663 13 300B	Cleaner, Air (1972 Model)	1	
●	1665 13 300	Cleaner, Air (1972 Model)	1	Car No. 122044 $^{72}/_{2}$ ~ △
●	1665 13 300A	Cleaner, Air (1972 Model)	1	Car No. $^{72}/_{4}$ ~ ○
	1668 13 300	Cleaner, Air (1973 Model)	1	
●	1668 13 300A	Cleaner, Air (1973 Model)	1	Car No. 189161 $^{73}/_{4}$ ~ △
26	99941 0800	Nut, Air Cleaner	1	
	99941 0801	Nut, Air Cleaner	1	Car No. 133832 $^{72}/_{7}$ ~ ○
27	0839 13 311A	Support, Air Cleaner	1	
28	99901 0800	Nut, Air Cleaner Support	2	
	99953 0800	Washer, Plain	2	
29	2090 13 330B	Duct, Hot Air	1	
	2090 13 330D	Duct, Hot Air	1	Car No. 127478 $^{72}/_{4}$ ~ ○
30	99801 0816	Bolt, Hot Air Duct	2	
	99952 0800	Washer, Plain	2	
	99971 0800	Washer, Spring	2	
31	2090 13 341	Hose, Hot Air	1	

No	Part Number	Description	Q'ty	Remarks
	2090 13 341A	Hose, Hot Air	1	Car No. 117998 $^{72}/_{2}$ ~ O
32	2090 13 343	Insulator, Heat	1	
	2090 13 343A	Insulator, Heat	1	Car No. 73455 $^{71}/_{4}$ ~ O
	2090 13 343B	Insulator, Heat	1	Car No. 123789 $^{72}/_{3}$ ~ O
33	2090 13 345	Bolt, Heat Insulator	2	
	99952 0600	Washer, Plain	2	
	99971 0600	Washer, Spring	2	
34	2090 13 800C	Reactor	1	
	2090 13 800D	Reactor	1	Car No. 82219 $^{71}/_{6}$ ~ O
	1663 13 800	Reactor	1	Car No. 96092 $^{71}/_{9}$ ~ O
	1663 13 800B	Reactor	1	Car No. 122418 $^{72}/_{2}$ ~ O
	1663 13 800C	Reactor	1	Car No. 130039 $^{72}/_{5}$ ~ O
35	2090 13 870A	Pipe, Inlet	2	
36	2329 13 876	Stud	3	
37	2090 13 742A	Insert, Air Hose	1	
38	2090 13 889	Gasket, Reactor	2	
39	2090 13 891	Gasket, Reactor	1	
40	2158 40 355	Nut, Reactor	4	
41	0823 10 455	Washer, Plain	4	1971 Model
	0839 13 614	Washer, Plain	4	1972, 1973 Model
42	2329 13 882	Washer, Spring	4	
43	0710 45 191	Clip, Drain Pipe	1	1972 Model

No.	Part Number	Description	Q'ty	Remarks
44	0839 13 201	Bolt, Cleaner Set	1	1972, 1973 Model
45	1617 13 305A	Clip, Air Cleaner	1	

2158.40.355

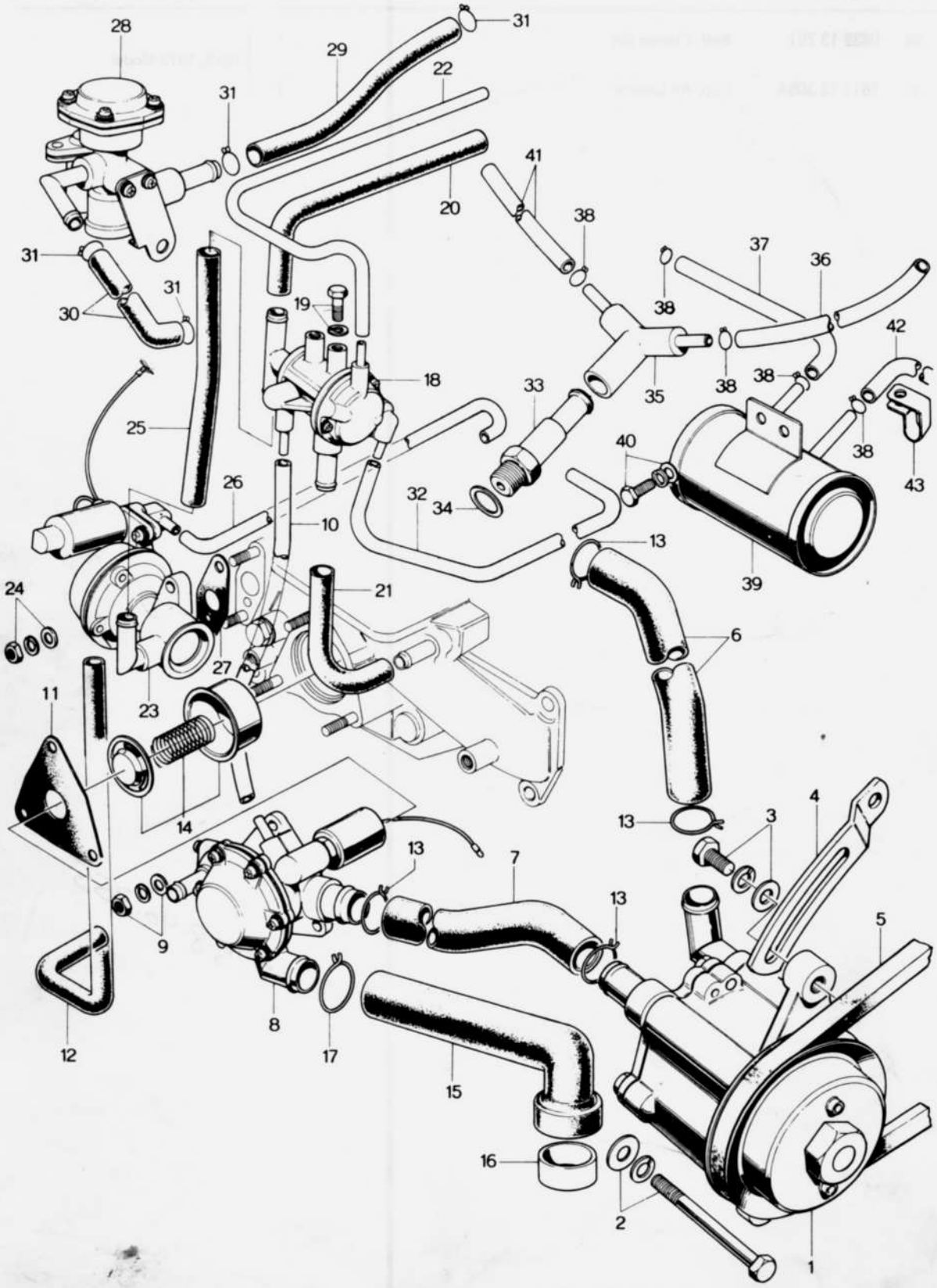
28
29
31
22
31
41
20
38
31
37
36
31
30
19
38
42
18
33
38
38
25
35
38
43
40
26
32
34
10
13
39
24
21
6
27
23
11
14
13
3
4
13
7
13
5
9
8
17
15
12
16
2
1

No.	Part Number	Description	Q'ty	Remarks
1	2090 13 710	Pump, Air	1	
2	99803 08100	Bolt, Air Pump	1	
	99951 0818	Washer, Plain	1	
	99971 0800	Washer, Spring	1	
3	99801 0822	Bolt, Air Pump	1	1562-18-381
	99953 0800	Washer, Plain	1	
	99971 0800	Washer, Spring	1	
4	2090 13 714	Strap, Air Pump	1	
	2090 13 714A	Strap, Air Pump	1	Car No. 77886 71/5 ~ ○
5	~~2329 13 715~~ 1562-18-381	Belt, "V"-Air Pump	1	
6	2090 13 717B	Hose, Air-Air Pump~Air Cleaner	1	
7	2090 13 718	Hose, Air-Air Control Valve~Air Pump	1	
8	2090 13 720C	Valve, Air Control	1	
9	99908 0600	Nut, Air Control Valve	3	
	99953 0600	Washer, Plain	3	
	99971 0600	Washer, Spring	3	
10	2329 13 754A	Tube, Vacuum-Air Control Valve~Coasting Valve	1	
11	2090 13 724	Gasket, Air Control Valve	1	
12	2090 13 725A	Hose, Air-Air Control Valve~Air Cleaner	1	
● 13	2329 13 726	Clip, Air Hose	2	Car No. 96092 71/9~Q'ty
14	2090 13 730	Valve Ass'y, Check	1	
15	2090 13 741B	Hose, Air-Air Control Valve~Reactor	1	Car No. 85626 71/7 ~ Discarded
	2090 13 741C	Hose, Air-Air Control Valve ~ Reactor	1	Car No. 85627 71/7 ~ Added Anew
16	2090 13 742	Insert, Air Hose	1	Car No. 85626 71/7~ Discarded
	2090 13 743	Gasket, Air Hose	1	
17	2090 13 748	Clip, Air Hose	1	Refer to Page 17
18	2090 13 750B	Valve, Coasting	1	
19	99808 0612	Bolt, Coasting Valve	2	
	99971 0600	Washer, Spring	2	

No.	Part Number	Description	Q'ty	Remarks
20	2090 13 752	Hose, Air-Coasting Valve ~ Air Cleaner	1	
21	2090 13 753A	Hose, Air-Coasting Valve ~ IN. Manifold	1	
●	1663 13 753	Hose, Air-Coasting Valve ~ IN. Manifold	1	Car No. 85629 71/7 ~ X
22	2090 13 754	Tube, Vacuum-Coasting Valve ~ Carburettor	1	
23	2090 13 760B	Valve, Anti-Afterburn	1	
24	99806 0600	Nut, Anti Afterburn Valve	2	
	99953 0600	Washer, Plain	2	
	99971 0600	Washer, Spring	2	
25	2090 13 762	Hose, Air-Anti Afterburn Valve ~ Coasting Valve	1	
26	2090 13 763A	Tube, Vacuum-Anti Afterburn Valve ~ Carburettor	1	
27	2090 13 764	Gasket, Anti Afterburn Valve	1	
28	2090 13 770A	Valve, Air Supply	1	
29	2090 13 772	Hose, Air-Air Supply Valve ~ Air Cleaner	1	
30	2090 13 773A	Hose, Air-Air Supply Valve ~ IN. Manifold	1	
31	2329 13 775	Clip, Air Hose	2	
32	2329 13 778	Hose, Air-Carburettor ~ Coasting Valve	1	
33	2329 13 780	Valve, Ventilation	1	
34	99584 1600	Packing, Ventilatior Valve	1	
35	2090 13 781	Pipe, Joint-Ventilation Valve	1	
36	2090 13 785	Hose, Ventilation-Joint Pipe ~ Oil Separator	1	
37	2090 13 786B	Hose, Ventilation-Intermediate Housing ~ Canister	1	
38	2329 13 787	Clip, Ventilation Hose	6	
	0222 13 493	Clip, Ventilation Hose	6	Car No. 74956 71/4 ~ O
39	2090 13 790	Canister	1	
40	99806 0812	Screw, Canister	2	
	99953 0600	Washer, Plain	2	
	99971 0600	Washer, Spring	2	
41	2090 13 792	Hose, Evaporation-Joint Pipe ~ Fuel Tank	1	

No.	Part Number	Description	Q'ty	Remarks
42	2090 13 793B	Hose, Evaporation - Canister ~ Air Cleaner	1	
43	2090 13 794A	Clip, Evaporation Pipe	1	

MODEL NO. 1662・1663・1664・1665

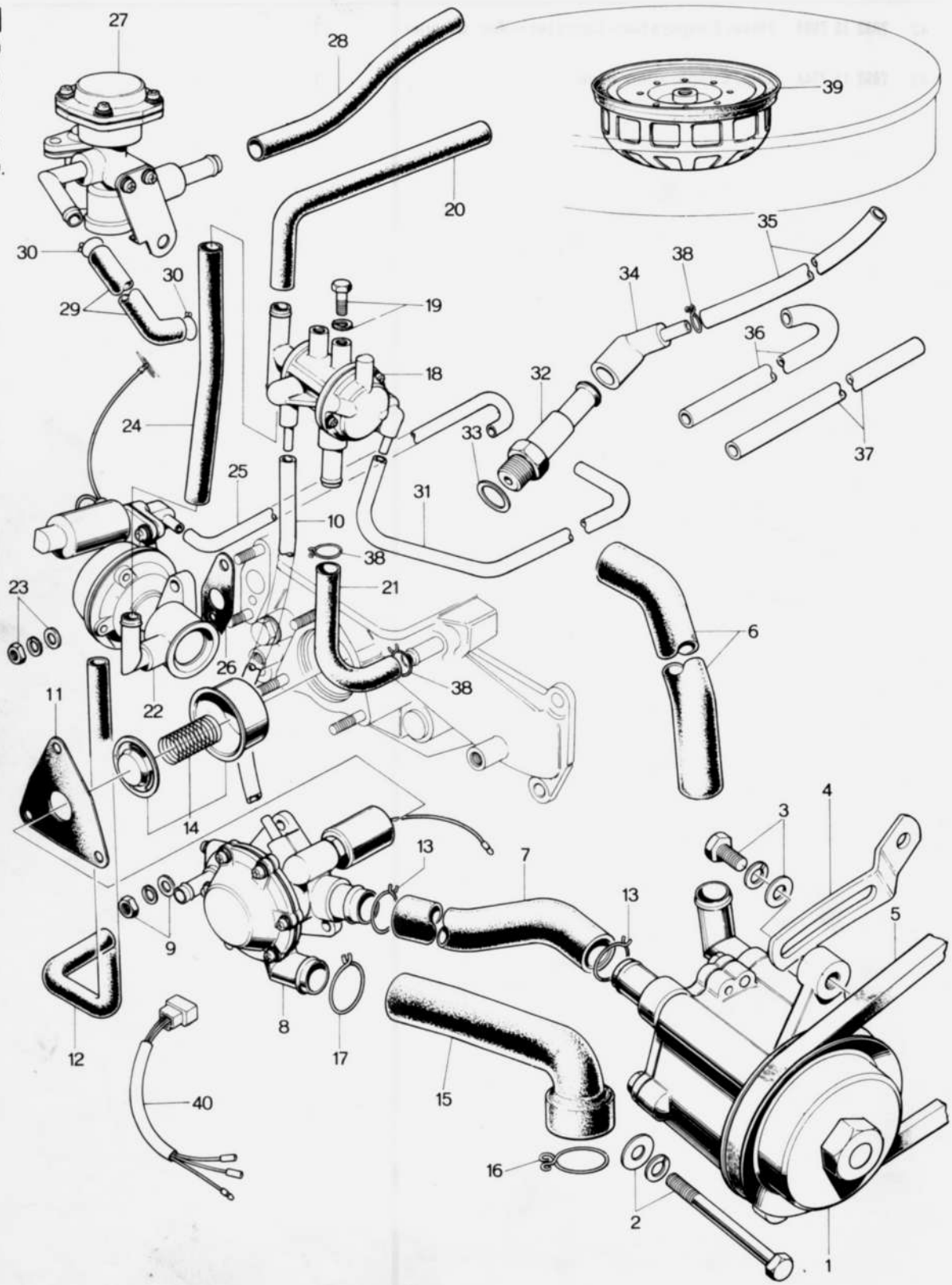

MODEL NO. 1662・1663・1664・1665

No.	Part Number	Description	Q'ty	Remarks
● 1	1617 13 710A	Pump, Air	1	
2	99803 08100	Bolt, Air Pump	1	
	99951 0818	Washer, Plain	1	
	99971 0800	Washer, Spring	1	
3	99801 0822	Bolt, Air Pump	1	
	99953 0800	Washer, Plain	1	
	99971 0800	Washer, Spring	1	
4	2090 13 714A	Strap, Air Pump	1	
5	~~2329 13 715~~ 1562-13-381	Belt, "V" - Air Pump	1	
6	2090 13 717B	Hose, Air - Air Pump ~ Air Cleaner	1	
7	2090 13 718	Hose, Air - Air Control Valve ~ Air Pump	1	
8	1663 13 720	Valve, Air Control	1	
9	99906 0600	Nut, Air Control Valve	3	
	99953 0800	Washer, Plain	3	
	99971 0600	Washer, Spring	3	
10	2329 13 754A	Tube, ~~Vacuum~~ Balance - Air Control Valve ~ Coasting Valve	1	
	1663 13 756	Tube, Vacuum - Air Control Valve - Coasting Valve	1	Car No. 128567 ~ 3/4 ~ Added Anew
11	2090 13 724	Gasket, Air Control Valve	1	
12	2090 13 725A	Hose, Air - Air Control Valve ~ Air Cleaner	1	
13	2329 13 726	Clip, Air Hose	2	
14	1663 13 730	Valve Ass'y, Check	1	
● ~~15~~	~~2090 13 741B~~	~~Hose, Air - Air Control Valve - Reactor~~	~~1~~	
● ~~16~~	~~2090 13 747~~	~~Clip, Air Hose~~	~~1~~	
● 17	2090 13 746	Clipe, Air Hose	2	
18	1617 13 750A	Valve, Coasting	1	
19	99806 0812	Bolt, Coasting Valve	2	
	99971 0600	Washer, Spring	2	

MODEL NO. 1662・1663・1664・1665

	No.	Part Number	Description	Q'ty	Remarks
	20	1663 13 752	Hose, Air~Coasting Valve~Air Cleaner	1	
	21	1663 13 753	Hose, Air-Coasting Valve~IN. Manifold	1	
	22	2090 13 760B	Valve, Anti-Afterburn	1	
	23	99906 0600	Nut, Anti Afterburn Valve	2	
		99953 0600	Washer, Plain	2	
		99971 0600	Washer, Spring	2	
	24	2090 13 762	Hose, Air-Anti Afterburn Valve~Coasting Valve	1	
	25	2090 13 763A	Tube, Vacuum-Anti Afterburn Valve~Carburettor	1	
	26	2090 13 764	Gasket, Anti Afterburn Valve	1	
	27	2090 13 770A	Valve, Air Supply	1	
	28	2090 13 772	Hose, Air-Air Supply Valve~Air Cleaner	1	
	29	2090 13 773A	Hose, Air-Air Supply Valve~IN. Manifold	1	
		1570 13 773	Hose, Air-Air Supply Valve~IN. Manifold	1	Car No 117998 ▽~O
	30	2329 13 775	Clip, Air Hose	2	
●	31	1663 13 756A	Tube, Vacuum	1	
	32	2329 13 780	Valve, Ventilation	1	
	33	99564 1600	Packing, Ventilation Valve	1	
●	34	2090 13 781	Pipe, Joint, Ventilation Valve	1	
	35	2090 13 785	Pipe, Joint, Ventilation-Joint Pipe~Oil Separator	1	
	36	1617 13 786A	Hose, Ventilation-Intermediate Housing~Canister	1	
	37	2090 13 792	Hose, Evaporation Pipe	1	
	38	0222 13 493	Clip, Ventilation Hose	6	
●	39	1617 13 790B	Filter, Charcoal	1	
		1617 13 790C	Filter, Charcoal	1	Car No. 117998 ▽~O
	40	1663 18 860	Wiring Ass'y, Valve	1	
●	Ⓝ	9928 24 300	Clamp Hose	1	
●	Ⓝ	1663 13 740	Pipe Ass'y	1	
●	Ⓝ	1663 13 741	Pipe	1	Order under No. 1663 13 740 ★
●	Ⓝ	1663 13 742	Cap	1	★
●		1663 13 744	Hose Air	1	

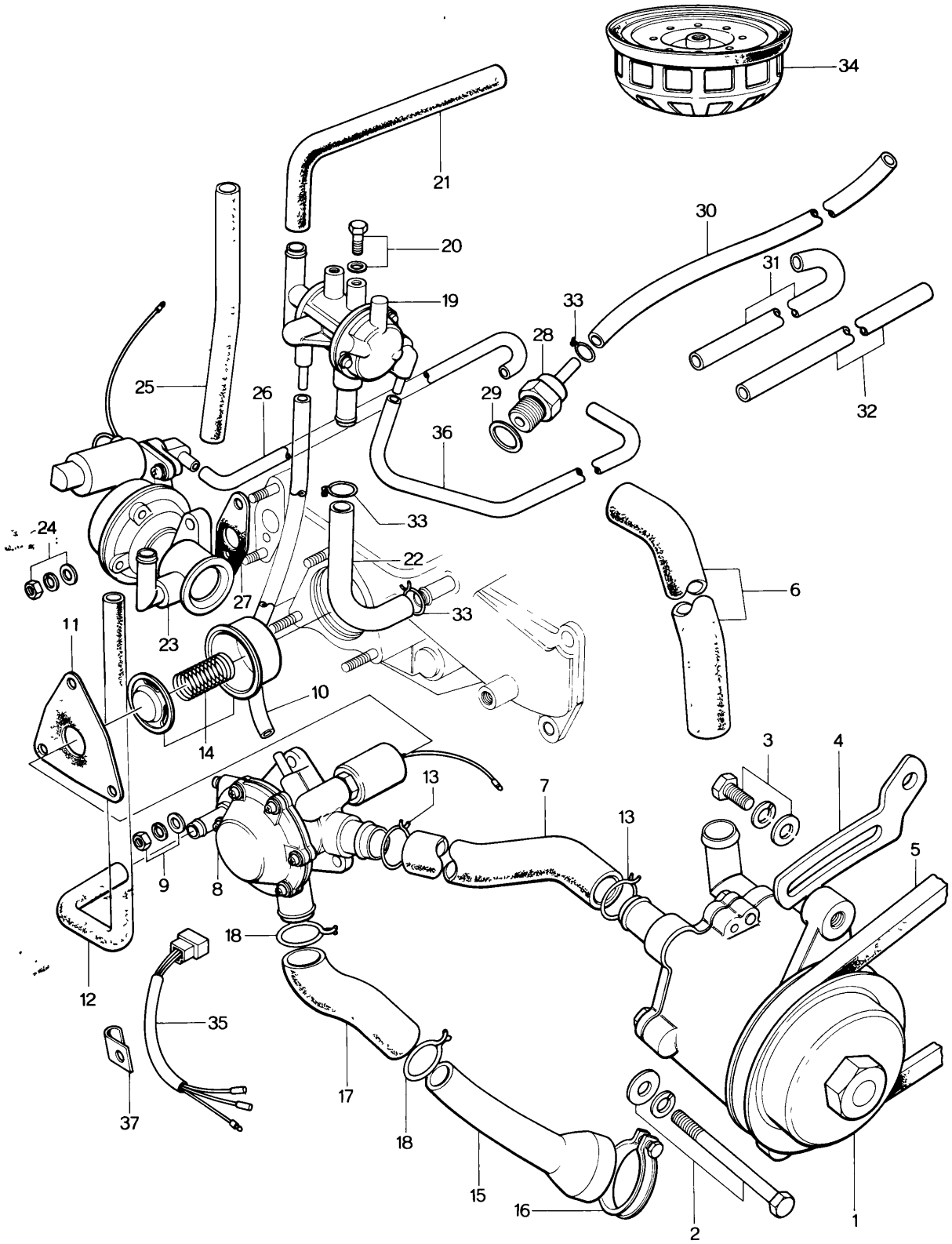
34
21
30
20
31
19
33
28
25
26
29
32
36
33
24
22
6
27
33
11
23
10
14
3
4
13
7
13
5
9
8
18
12
35
17
37
18
15
16
2
1

No.	Part Number	Description	Q'ty	Remarks
1	1619 13 710B ~~1617 13 710A~~	Pump, Air (Manual)	1	From Car No. 1
	~~1889 13 710 Pump, Air (Automatic)~~		~~1~~	
2	99803 08100	Bolt, Air Pump	1	
	99951 0818	Washer, Plain	1	
	99971 0800	Washer, Spring	1	
3	99801 0822	Bolt, Air Pump	1	
	99953 0800	Washer, Plain	1	
	99971 0800	Washer, Spring	1	
4	1668 13 714	Strap, Air Pump	1	
5	1562 13 381 ~~1872 13 715~~	Belt, "V" - Air Pump (For Canada & Northern U. S. A.)	1	From Car No. 1
	1562 13 381 ~~2329 13 715~~	Belt, "V" - Air Pump (For General U. S. A.)	1	From Car No. 1
6	2090 13 717B	Hose, Air - Air Pump ~ Air Cleaner	1	
7	2090 13 718	Hose, Air - Air Control Valve ~ Air Pump	1	
8	1663 13 720A	Valve, Air Control (Manual)	1	
	1669 13 720	Valve, Air Control (Automatic)	1	
9	99906 0600	Nut, Air Control Valve	3	
	99953 0600	Washer, Plain	3	
	99971 0600	Washer, Spring	3	
10	2329 13 754A	Tube, Vacuum - Air Control Valve ~ Coasting Valve	1	
11	2090 13 724	Gasket, Air Control Valve	1	
12	2090 13 725A	Hose, Air - Air Control Valve ~ Air Cleaner	1	
13	2329 13 726	Clip, Air Hose	2	
14	1663 13 730	Valve, Check (Manual)	1	
	1669 13 730	Valve, Check (Automatic)	1	
15	1663 13 740	Pipe, Air - Reactor	1	
16	99282 4300 ~~99284 309~~	Band, Hose ~~Band, Hose~~	1 ~~1~~	Car NO. 1T9668 '73/3 ~ Δ

No.	Part Number	Description	Q'ty	Remarks
17	1663 13 744	Hose, Air-Air Control Valve	1	
18	2090 13 746	Clip, Air Hose	2	
19	1668 13 750	Valve, Coasting	1	
20	99906 0610	Bolt, Coasting Valve	2	
	99971 0600	Washer, Spring	2	
21	1668 13 752	Hose, Air-Coasting Valve~Air Cleaner	1	
22	1668 13 753	Hose, Air-Coasting Valve~IN. Manifold	1	
23	2090 13 760B	Valve, Anti-Afterburn	1	
24	99906 0600	Nut, Anti Afterburn Valve	2	
	99953 0600	Washer, Plain	2	
	99971 0600	Washer, Spring	2	
25	1668 13 762	Hose, Air-Anti Afterburn Valve~Coasting Valve	1	
26	2090 13 763A	Tube, Vacuum-Anti Afterburn Valve~Carburettor	1	
27	2090 13 764	Gasket, Anti Afterburn Valve	1	
28	1668 13 780	Valve, Ventilation	1	
29	99564 1600	Packing, Ventilation Valve	1	
30	1668 13 785	Pipe, Ventilation Valve~Oil Separator	1	
31	1617 13 786A	Hose, Ventilation-Intermediate Housing	1	
32	2090 13 792	Hose, Evaporation Pipe	1	
33	0222 13 493	Clip, Ventilation Hose	6	
● 34	1617 13 790C	Filter, Charcoal	1	Car No. 189161 '73/4~ Discarded
35	1668 18 860A	Wiring, Valve	1	
36	1668 13 755	Tube, Vacuum	1	
37	2090 18 318	Clip, Valve Wiring	1	
●	1624 13 795	Insert.	2	Car No. 143920 '72/9~ Added Anew

STARTING ASSIST SYSTEM

(Used from Car No. 111947 72/1 ~)

MODEL NO. 1664·1665

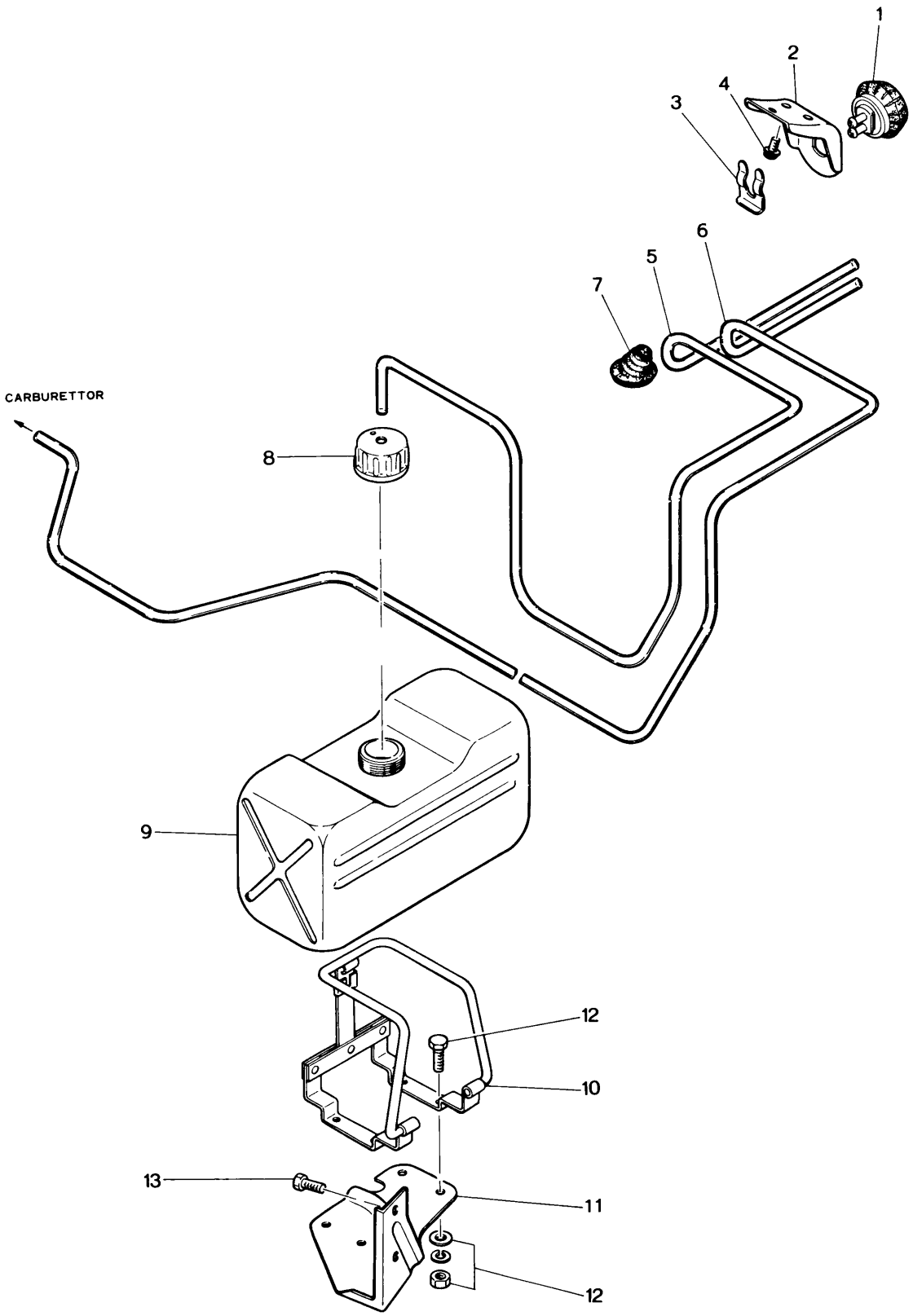

STARTING ASSIST SYSTEM

(Used from Car No. 111947 72/1 ~ **)**

13

MODEL NO. 1664·1665

No	Part Number	Description	Q'ty	Remarks
1	1665 13 520	Pump, Starting Fluid	1	
2	1665 13 525	Bracket, Pump	1	
3	0136 43 635	Clip, Flexible Hose	1	
4	908686 5 12	Screw Set, Pump Bracket	3	
5	99336 06155	Pipe, Vinyl	1	
6	1665 13 527	Hose	1	
7	1665 13 528	Grommet	2	
8	1665 13 512	Cap, Tank	1	
9	1665 13 511A	Tank, Starting Fluid	1	
10	0119 66 870	Holder, Tank	1	
11	1665 13 515	Bracket, Tank	1	
12	99834 0408	Screw, Tank Bracket	4	
	99940 0400	Nut	4	
	99952 0400	Washer, Plain	4	
	99971 0400	Washer, Spring	4	
13	99786 0612	Screw, Tapping	2	

STARTING ASSIST SYSTEM (1973 MODEL) 13

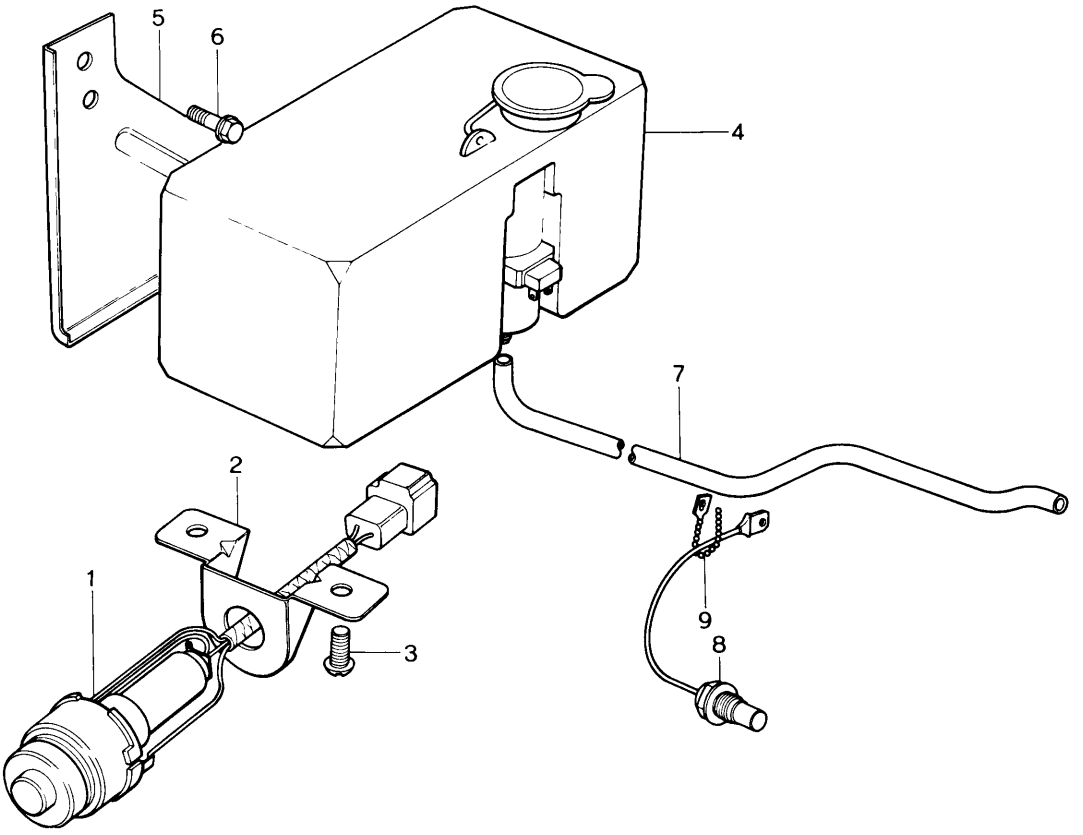

No.	Part Number	Description	Q'ty	Remarks
1	1668 13 520A	Switch, Starting Assist	1	From Car No. 1
2	1668 13 525A	Bracket, Switch	1	From Car No. 1
3	99786 0612B	Bolt, Switch Bracket	2	
4	1668 13 510	Tank, Starting Fluid	1	
5	1668 13 515A	Bracket, Tank	1	From Car NO. 1
6	90743 7614B ~~99786 0612~~	Screw, Tapping-Tank Bracket	2	
7	1668 13 527	Hose	1	
8	1668 13 531A	Unit, Thermo	1	From Car No. 1
9	99709 0108 ~~99788 2185~~	Band, Thermo Unit Cord	1	From Car No. 1
Ⓝ	99709 0115	Band.	1	From Car No. 1
	1668 13 513	Hose, Section	1	Car No. 73/4 ~ Added Anew

CARBURETTOR

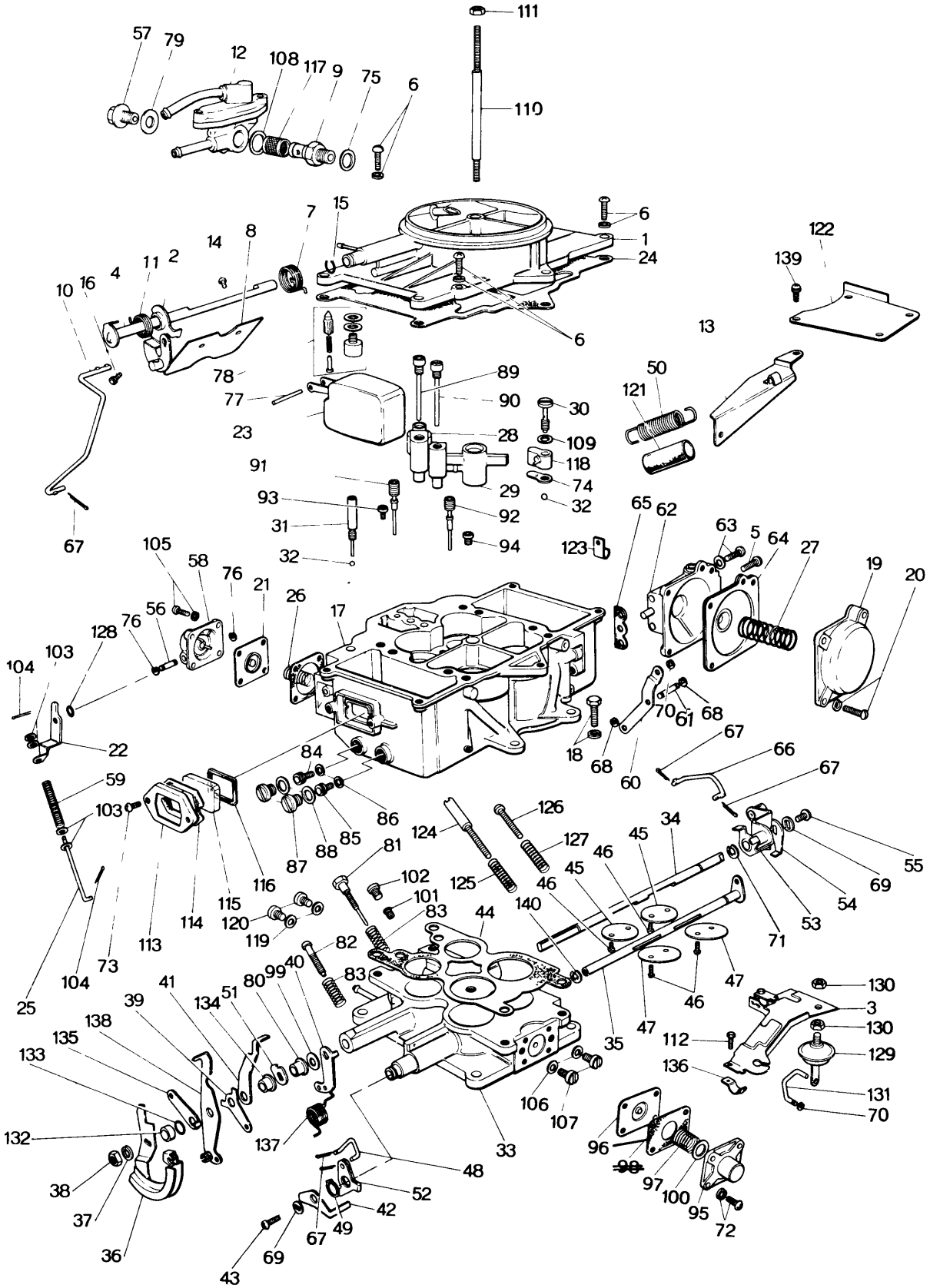

No.	Part Number	Description	Q'ty	Remarks
●	2090 13 200F	CARBURETTOR	1	
●	2090 13 210B	CARBURETTOR	1	Car No. 68552 71/3 ~ ○
●	2090 13 210C	CARBURETTOR	1	Car No. 70984 71/4 ~ ○
	~~2090 13 210D~~	CARBURETTOR	~~1~~ 1	Car No. 92929 71/8 ~ ○
1	0839 23 301B	Air Horn	1	
2	0839 23 302	Lever, Choke Valve	1	
3	2090 23 303A	Holder, Choke Wire	1	
4	0823 23 304	Shaft, Choke Lever	1	
5	0183 13 776	Screw, Diaphragm	2	
6	0750 23 652	Screw Set, Air Horn	7	
7	0839 23 305	Spring, Choke Lever	1	
8	0823 23 306	Valve, Choke	1	
9	0823 23 307B	Connector	1	
10	2080 23 308	Rod, Connecting - Starting	1	
11	0839 23 309	Spring, Choke Valve	1	
12	0823 23 314	Valve, Fuel Return	1	
13	2090 23 318	Hanger, Spring	1	
14	0107 13 768A	Screw, Choke Valve	2	
15	0107 13 813	Ring, Choke Lever	1	
16	0107 13 805A	Bolt, Choke Wire	1	
17	~~0839 23 321B~~ ~~2090 23 321B~~	Body	1	
18	0839 23 484A	Bolt, Body & Flange	4	
19	0823 23 322	Cover, Diaphragm	1	
20	~~0839 23 384~~ ~~0839 23 383~~	Screw, Cover	4	
21	0823 23 323	Diaphragm, Accelerator Pump	1	
22	0839 23 325	Arm, Accelerator Pump	1	
23	0823 23 326A	Float	2	
	0823 23 326B	Float	2	71/2 ~ ○
	0823 23 326C	Float	2	71/7 ~ ○
24	0839 23 327	Gasket, Body	1	
25	0839 23 332	Rod, Pump Connecting	1	

No.	Part Number	Description	Q'ty	Remarks
26	0823 23 333	Spring, Accelerator Pump	1	
27	2090 23 334	Spring, Diaphragm	1	
28	0823 23 335	Venturi (P), Small	1	
29	0839 23 336	Venturi (S), Small	1	
30	0823 23 337	Bolt, Pump Jet	1	
31	0823 23 338	Plug, Check Ball	1	
32	0107 13 781	Ball, Steel	2	
33	2090 23 341	Flange	1	
34	0839 23 342	Shaft (P), Throttle	1	
35	0839 23 343	Shaft (S), Throttle	1	
36	2080 23 344	Lever, Throttle	1	
37	0193 23 367	Washer, Spring-Throttle Shaft (P)	1	
38	0222 23 261	Nut, Throttle Shaft (P)	1	
39	0823 23 345A	Lever, Throttle Valve Lock	1	
● 40	0839 23 346 ~~0839 23 346A~~	Arm, Throttle Valve Adjust	1	
41	2080 23 347	Lever, Starting	1	
42	0839 23 348	Arm, Throttle Shaft	1	
43	0603 23 388A	Screw, Throttle Shaft (S)	1	
44	0839 23 349	Gasket, Flange	1	
45	0823 23 351	Valve (P), Throttle	2	
46	0107 13 737A	Screw, Throttle Valve	8	
47	2090 23 352	Valve (S), Throttle	2	
48	0823 23 355	Link, Throttle Lever	1	
49	0823 23 356	Ring, Throttle Shaft (S)	1	
50	0839 23 357A	Spring, Throttle Return	1	
51	2080 23 358	Arm, Throttle Shaft	1	

No.	Part Number	Description	Q'ty	Remarks
52	0823 23 359	Lever, Throttle Return (S)	1	
53	0839 23 361	Lever, Metering Pump	1	
54	0839 23 362	Arm, Metering Pump	1	
55	0603 23 388A	Screw, Lever	1	
56	0823 23 364	Pin, Pump Lever	1	
57	0107 13 856	Bolt, Union	1	
58	0823 23 366	Cover, Accelerator Pump Diaphragm	1	
59	0839 23 367	Spring, Diaphragm	1	
60	0823 23 368	Lever, Diaphragm	1	
61	0823 23 369	Pin, Diaphragm	1	
62	0823 23 371A ~~0823 23 371B~~	Chamber, Diaphragm	2	
	0823 23 371B	Chamber, Diaphragm	2	Car No. 71284 ~ 71/4 X
63	0750 23 652	Screw, Diaphragm	1	
64	0823 23 372	Diaphragm	1	
65	0823 23 373 ~~0823 23 373A~~	Gasket, Diaphragm	1	
	0823 23 373A	Gasket, Diaphragm	1	Car No. 71284 ~ 71/4 X
66	0823 23 374	Rod, Connecting	1	
67	0193 23 369	Pin, Connecting Rod	5	
68	0823 23 375	Ring, Stop-Diaphragm	2	
69	0603 23 389	Washer, Throttle Lever	2	
70	0823 23 382	Ring, Stop-Diaphragm	2	
71	0823 23 384	Ring, Stop	1	
72	0823 23 388A	Screw, Sub Slow Cover	4	
73	0823 23 389A	Screw, Level Gauge	4	
74	0823 23 391	Gasket, Pump Jet	1	
75	0823 23 394	Gasket, Fuel Connector	1	
76	0823 23 395	Ring, Stop-Pump Lever Pin	2	
77	0823 23 396	Pin, Float	2	

No.	Part Number	Description	Q'ty	Remarks
78	0839 23 460	Needle Valve Set	1	
●	0823 23 460	Needle Valve Set	1	7⅛~O
79	0222 23 318	Gasket, Fuel Connector	1	
80	0823 23 404	Collar, Throttle Shaft (P)	1	
81	2090 23 407	Screw, Idle Adjust	1	
82	2090 23 405	Screw, Throttle Adjust	1	
83	2090 23 408	Spring, Adjust Screw	2	
84	0839 23 421	Jet (P), Main	2	
85	0839 23 422	Jet (S), Main	2	
86	0193 23 383	Gasket, Main Jet	4	
87	0603 23 354	Plug, Main Jet	4	
88	0107 13 654	Gasket, Plug	4	
89	0839 23 423	Bleed (P), Air-Main	2	
90	2090 23 424	Bleed (S), Air-Main	2	
91	0839 23 425	Jet, Slow	2	
92	0839 23 426A	Jet, Step	2	
93	0288 23 336	Bleed, Air-Slow	2	
94	2090 23 428	Bleed, Air-Step	2	
95	0839 23 431	Cover, Sub Slow	1	
96	0839 23 432	Diaphragm, Sub Slow	1	
97	0839 23 433	Spring, Sub Slow	1	
● 98	~~0839 23 435~~	~~Gasket, Diaphragm~~	~~1~~	From Car No. 1
99	0839 23 406	Washer, Sub Slow	1	
● 100	0839 23 435 ~~0187 13 809~~	Shim, Sub Slow	3	
101	0839 23 438A	Jet, Sub Slow	1	
102	2756 13 657F	Plug, Blind	1	
103	0823 23 472	Retainer, Spring	4	

No.	Part Number	Description	Q'ty	Remarks
104	0193 23 369	Pin, Pump Connecting Rod	2	
105	0823 23 388A	Screw, Accelerator Pump Diaphragm	4	
106	0823 23 478	Gasket	2	
107	0107 13 668	Plug	2	
108	0823 23 481A	Gasket, Fuel Connector	1	
109	0107 13 658	Gasket, Pump Jet	1	
110	0839 23 485	Bolt, Cleaner Set	1	
111	99907 0800	Nut, Cleaner Set	1	
112	0600 23 398A	Screw, Choke Wire	1	
113	0652 23 351	Cover, Level Gauge	2	
114	0652 23 352	Gasket, Level Gauge	2	
115	0652 23 353	Glass, Level Gauge	2	
116	0652 23 354	Gasket, Level Gauge	2	
117	0839 23 401	Filter	1	
118	2090 23 328	Nozzle, Accelerator	1	
● 119	0839 23 483 ~~0839 23 438~~	Gasket, Step Port Plug	2	
120	0193 23 376A	Plug, Step Port	2	
121	0305 23 312A	Cover, Spring	1	
122	2090 23 319	Bracket, Coasting Valve	1	
123	2090 23 339	Clip	1	
124	0839 23 365	Screw, Throttle Lever Adjusting	1	
125	2080 23 387	Spring, Adjusting Screw	1	
126	2090 23 442	Screw, Fast Idle Adjust	1	
127	0193 23 375	Spring, Adjust Screw	1	
128	0839 23 489	Shim, Accelerator Pump Arm	1	
129	2090 23 451	Positioner, Throttle	1	

No.	Part Number	Description	Q'ty	Remarks
130	2090 23 452	Nut, Positioner	2	
131	2090 23 453	Rod, Positioner	1	
132	2090 23 444	Collar, Throttle Shaft (P)	1	
133	2090 23 445	Shim, Throttle Shaft (P)	3	Car No. 70984 $^{71}/_{4}$ ~ Q'ty
134	2090 23 443	Collar, Throttle Shaft (P)	1	
135	2090 23 454	Arm, Throttle Positioner	1	
●136	2090 23 491	Plate, Choke Wire	1	
137	2090 23 353	Spring, Throttle Lever Return	1	
●138	2090 23 441A	Lever, Fast Idle	1	
139	0839 23 387	Screw Set, Coasting Valve Bracket	1	
140	0839 23 385	Ring, Stop-Throttle Shaft (S)	1	
● Ⓝ	0839 23 530	Gasket Set, Carburettor	1	
● Ⓝ	2090 23 540	Repair Kit, Carbrettor	1	

CARBURETTOR (1972 MODEL)

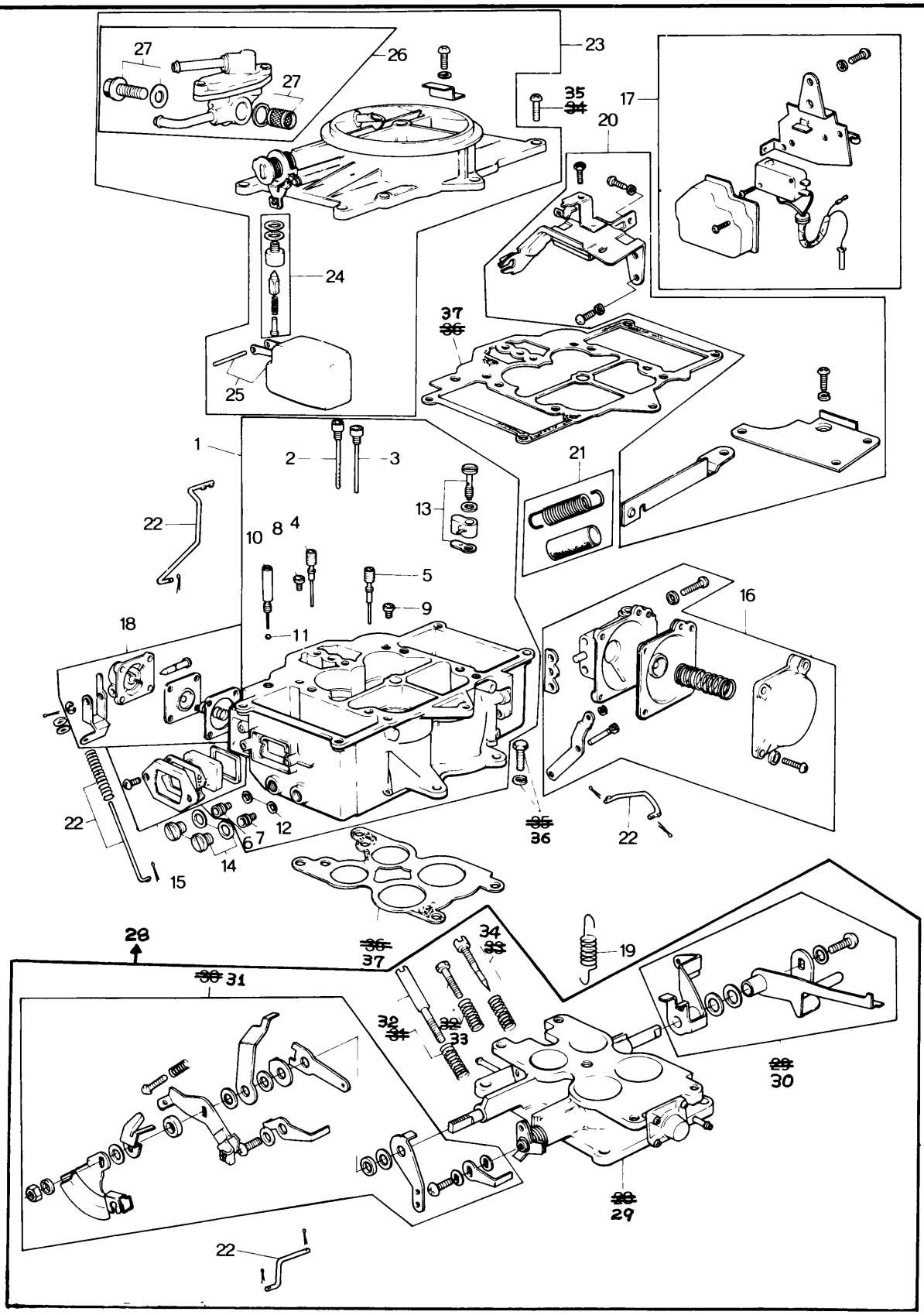

No.	Part Number	Description	Q'ty	Remarks
•	1663 13 200C	Carburettor } 1662, 1663 (For General U. S. A.)	1	
•	1663 13 200D	Carburettor } 1662, 1663 (For General U. S. A.)	1	Car No. 106922 $^{71}/_{12}$ ~ Δ
•	1665 13 200D	Carburettor } 1664, 1665 (For Canada)	1	
•	1665 13 200E	Carburettor } 1664, 1665 (For Canada)	1	Car No. 130676 $^{72}/_{5}$ ~ ○
1	1663 23 320A	Body Seat, Fig. Nc. 2 ~ 13 Included	1	
•	1570 23 320	Body Set, Fig. No. 2 ~ 13 Included	1	Car No. 131853 $^{72}/_{6}$ ~ X
2	0839 23 423	Jet, Main Air Bleed - 1st	2	
3	2090 23 424	Jet, Main Air Bleed - 2nd	2	
4	0839 23 425	Jet, Slow	2	
5	0839 23 426A	Jet, Step	2	
6	1663 23 421	Jet, Main - 1st	2	
7	0839 23 422	Jet, Main - 2nd	2	
8	0288 23 336	Jet, Slow Air Bleed	2	
9	2090 23 428	Jet, Step Air Bleed	2	
10	0823 23 338	Plug, Inlet Check Ball	1	
11	0107 13 781	Ball, Steel - 1/8	1	
12	0193 23 383	Gasket	4	
13	1663 23 490A	Accel. Nozzle Set	1	
•	1570 23 490	Accel. Nozzle Set	1	Car No. 131853 $^{72}/_{6}$ ~ X
14	1663 23 354	Main Passage Plug Set	1	
15	1663 23 340A	Level Gauge Cover Set	1	
16	1663 23 350A	Throttle Operating Diaphragm Set (1662, 1663)	1	
•	1665 23 350A	Throttle Operating Diaphragm Set (1664, 1665)	1	
17	1663 23 450B	Idle Switch Set	1	
18	1663 23 360A	Accel. Pump Set	1	
•	1663 23 360B	Accel. Pump Set	1	$^{72}/_{2}$ ~ ○
19	1663 23 455	Spring, Idle Switch Lever (1662, 1663)	1	
•	1665 23 455	Spring, Idle Switch Lever (1664, 1665)	1	
20	1663 23 370A	Bracket Set (1662, 1663)	1	
•	1665 23 370	Bracket Set (1664, 1665)	1	
21	1663 23 380	Throttle Return Spring Set	1	
22	1663 23 480A	Rod & Link Set (1662, 1663)	1	
•	1665 23 480	Rod & Link Set (1664, 1665)	1	
23	1663 23 310	Air Horn Set, Fig. No. 24 ~ 27 Included {1662 1663}	1	
•	1665 23 310	Air Horn Ser, Fig. No. 24 ~ 27 Included {1664 1665}	1	
24	1663 23 390	Float Valve Seat Set	1	

CARBURETTOR (1972 MODEL)

	No	Part Number	Description	Q'ty	Remarks
	25	1663 23 326B	Float Set	1	
	26	1663 23 319	Fuel Return Valve Set, Fig. No. 27 Included	1	
	27	1663 23 409	Strainer Set	1	
●	28	1663 23 330	Flange Ass'y (1662, 1663)	1	
●		1570 23 330A	Flange Ass'y (1664, 1665)	1	
	29	1663 23 410A	Flange Set (1662, 1663)	1	
●		1570 23 410A	Flange Set (1664, 1665)	1	
	30	1663 23 420A	Front Lever Set	1	
	31	1663 23 430A	Rear Lever Set (1662, 1663)	1	
●		1570 23 430	Rear Lever Set (1664, 1665)	1	
	32	1663 23 440A	Throttle Lever Adjust Screw Set	1	
	33	1663 23 460A	Main Idle Adjust Screw Set	1	
	34	1663 23 470A	Sub Idle Adjust Screw Set	1	
	35	0750 23 652	Screw, Air Horn	7	
	36	0839 23 484A	Bolt, Flange Set	4	
	37	1663 23 510	Gasket Set (1662, 1663)	1	
●		1570 23 510	Gasket Set (1664, 1665)	1	
		1663 23 530A	Pin & Washer Set (1662, 1663)	1	
●		1570 23 530	Pin & Washer Set (1664, 1665)	1	
●		1663 23 520A	Horn Semi Cpt. - Air (1662, 1663)	1	
●		1570 23 520	Horn Semi Cpt. - Air (1664, 1665)	1	
●		1663 23 540	Repair Kit - Carburettor (1662, 1663)	1	
●		1663 23 540A	Repair Kit - Carburettor (1662, 1663)	1	72/3 ~ O
●		1570 23 540	Repair Kit - Carburettor (1664, 1665)	1	
●		1665 23 500	Choke Set	1	
●		1665 23 501	Holder Set	1	
●		1665 23 502	Bimetal Cpt.	1	
●		0842 23 503	Screw Set - Retainer (1664, 1665) (For Canada)	1	
●		0842 23 509	Pipe Ass'y - Vacuum	1	
●		1570 23 505A	Connector Guide Set	1	
●		1570 23 507	Valve Set - Choke	1	

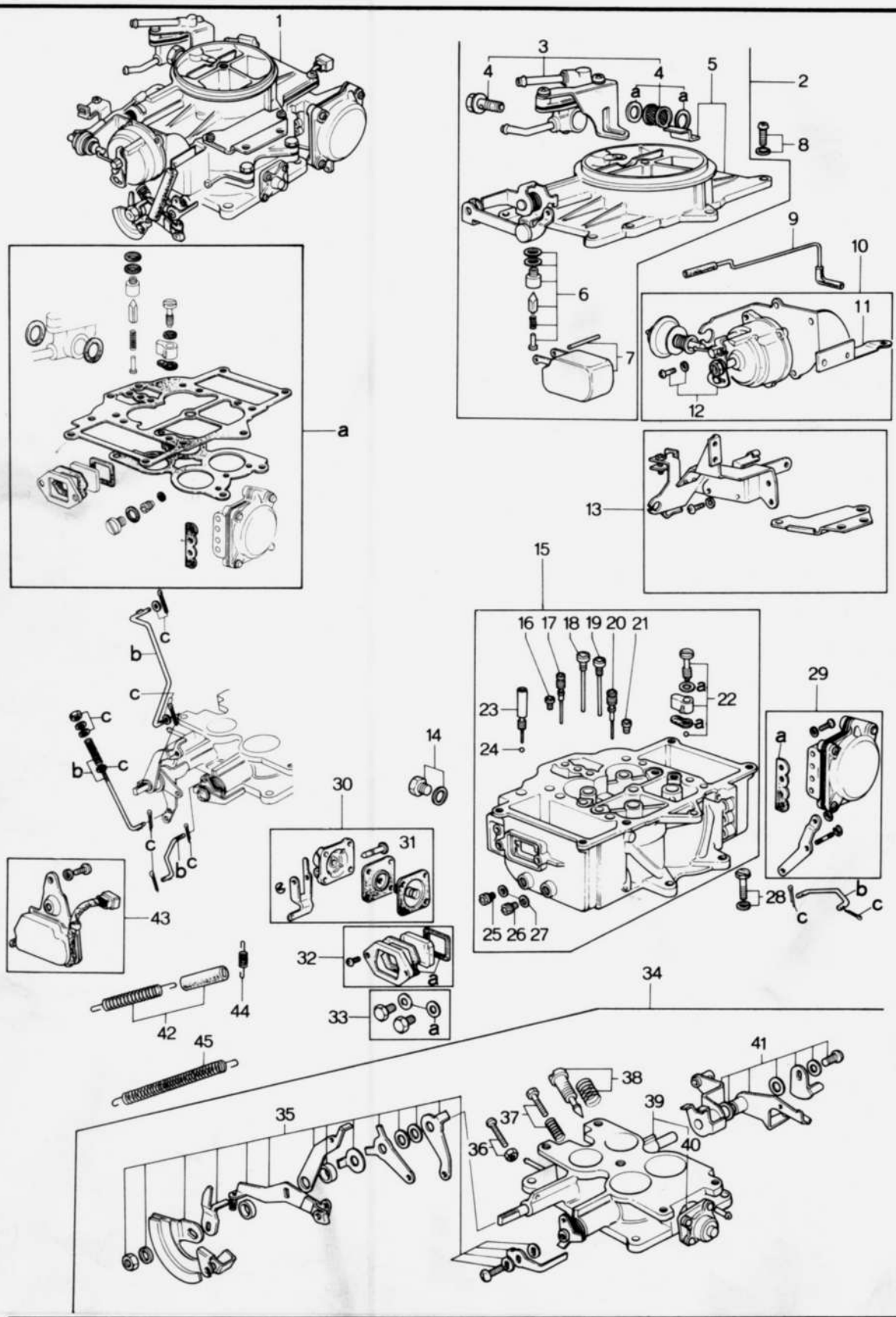
1
2
3
4
4
a
a
5
8
9
10
6
11
7
12
a
13
15
16 17 18 19 20 21
22
23
24
29
a
14
30
31
b
c
c
b
c
c
c
b
c
c
b
c
28
b
c
25 26 27
43
32
a
44
33
a
42
34
45
41
38
35
37
39
36
40

No.	Part Number	Description	Q'ty	Remarks
1	1668 13 200D	Carburettor	1	
	1668 13 200E	Carburettor (Manual) (For General U.S.A.)	1	Car No. 145188 7/9 ~ △
	1668 13 200G	Carburettor	1	Car No. 161154 7/12 ~ △
	1669 13 200B	Carburettor	1	
	1669 13 200C	Carburettor (Automatic)	1	Car No. 157691 7/11 ~ △
	1672 13 200C	Carburettor	1	
	1672 13 200D	Carburettor (Manual) (For Canada & Northern U.S.A.)	1	Car No. 145188 7/9 ~ △
	1672 13 200F	Carburettor	1	Car No. 159494 7/11 ~ △
2	1668 23 310	Horn Set, Air (Manual) (Fig. No. 3 ~ 7 Included)	1	
	1669 23 310	Horn Set, Air (Automatic) (Fig. No. 3 ~ 7 Included)	1	
3	1663 23 319	Valve Set, Fuel Return (Fig. No. 4 Included)	1	
4	1663 23 409	Strainer Set	1	
5	1668 23 520	Horn Sub Set, Air (Manual)	1	
	1669 23 520	Horn Sub Set, Air (Automatic)	1	
6	1663 23 390	Seat Set, Float Valve	1	
7	1663 23 326B	Float Set	1	
8	0750 23 652	Screw Set, Air Horn	7	
9	0842 23 509	Pipe, Vacuum	1	
10	1668 23 500	Semi Auto Choke Set (Manual) (For General U.S.A.) (Fig. No. 11 , 12 Included)	1	
	1669 23 500	Semi Auto Choke Set (Automatic) (Fig. No. 11 , 12 Included)	1	

No.	Part Number	Description	Q'ty	Remarks
	1672 23 500	Semi Auto Choke Set (Manual) (For Canada & Northern U.S.A.) (Fig. No. 11 , 12 Included)	1	
11	1668 23 501	Holder, Bimetal (Manual) (For General U.S.A.)	1	
	1669 23 501	Holder, Bimetal (Automatic)	1	
	1672 23 501	Holder, Bimetal (Manual) (For Canada & Northern U.S.A.)	1	
12	1668 23 502	Case Set, Bimetal (Manual)	1	
	1669 23 502	Case Set, Bimetal (Automatic)	1	
13	1668 23 370	Bracket Set	1	
	1668 23 370A	Bracket Set	1	Car No. 145188 ⁷²/₉ ~ △
14	1570 23 507	Valve Set, Check	1	
15	1668 23 320	Body Set (Manual) (Fig. No. 16~27 Included)	1	
	1668 23 320B	Body Set (Manual) (Fig. No. 16~27 Included)	1	Car No. 159494 ⁷²/₁₁ ~ △
	1669 23 320	Body Set (Automatic) (Fig. No. 16~27 Included)	1	
	1669 23 320A	Body Set (Automatic) (Fig. No. 16~27 Included)	1	Car No. 157691 ⁷²/₁₁ ~ △
16	0288 23 336	Jet, Slow Air Bleed	2	
17	0839 23 425	Jet, Slow (Manual)	2	
	1669 23 425	Jet, Slow (Automatic)	2	
18	0839 23 423	Jet, Main Air Bleed- 1 st (Manual)	2	
	1669 23 423A	Jet, Main Air Bleed- 1 st (Manual)	2	Car No. 159494 ⁷²/₁₁ ~ ×
	1669 23 423	Jet, Main Air Bleed- 1 st (Automatic)	2	
	1669 23 423A	Jet, Main Air Bleed- 1 st (Automatic)	2	Car No. 157691 ⁷²/₁₁ ~ ×

No.	Part Number	Description	Q'ty	Remarks
19	1668 23 424	Jet, Main Air Bleed- 2nd (Manual)	2	
	1668 23 424A	Jet, Main Air Bleed- 2nd (Manual)	2	Car No. 159494 ~ ×
	1669 23 424	Jet, Main Air Bleed- 2nd (Automatic)	2	
	1669 23 424A	Jet, Main Air Bleed- 2nd (Automatic)	2	Car No. 157691 ~ ×
20	0839 23 426A	Jet, Step	2	
21	2090 23 426	Jet, Step Air Bleed (Manual)	2	
	0823 23 426	Jet, Step Air Bleed (Automatic)	2	
22	1668 23 490	Nozzle Set, Accel. (Manual)	1	
	1669 23 490	Nozzle Set, Accel. (Automatic)	1	
23	0823 23 338	Plug, Inlet Check Valve	2	
24	0107 13 781	Ball, Steel	1	
25	1663 23 421	Jet, Main- 1st (Manual)	2	
	1669 23 421A	Jet, Main- 1st (Manual)	2	Car No. 159494 ~ Δ
●	0222 23 353A	Jet, Main- 1st	2	T3½~O
	1669 23 421	Jet, Main- 1st (Automatic)	2	
	1669 23 421A	Jet, Main- 1st (Automatic)	2	Car No. 157691 ~ ×
●	0222 23 353A	Jet, Main- 1st	2	T3½~O
26	0839 23 422	Jet, Main- 2nd (Manual)	2	
	0222 23 355A	Jet, Main- 2nd (Automatic)	2	
27	0193 23 383	Gasket, Main Jet	4	
28	0839 23 484A	Bolt, Flange Set	4	
29	1668 23 350	Chamber Set, Diaphragm (Manual) (For General U.S.A.)	1	
●	1668 23 350A	Chamber Set, Diaphragm. (Manual) {1666 1668	1	Car No. 173966 T3½~Δ

No.	Part Number	Description	Q'ty	Remarks
	1669 23 350	Chamber Set, Diaphragm (Automatic)	1	
●	1669 23 350A	Chamber Set, Diaphragm (Automatic)	1	Car No. 173966 73/2~X
	1672 23 350	Chamber Set, Diaphragm (Manual)	1	
●	1673 23 350A	Chamber Set, Diaphragm (Manual) (For Canada & Northern U.S.A.)	1	Car No. 173966 73/2~Δ
30	1663 23 360C	Pump Set, Accel. (Fig. No.,31 Included)	1	
31	1663 23 361A	Diaphragm, Accel. Pump	1	
32	1663 23 340A	Cover Set, Level Gauge	1	
33	1668 23 354	Plug Set, Main Passage	1	
34	1668 23 330	Flange Set (Manual) (Fig. No. 35~41 Included)	1	
	1669 23 330	Flange Set (Automatic) (Fig. No. 35~39 , 41 Included)	1	
35	1663 23 420A	Lever Set, Front	1	
36	1668 23 440	Screw Set, Throttle Adjust	1	
37	1668 23 460	Screw Set, Idle Adjust	1	
38	1668 23 470	Screw Set, Air Adjust	1	
39	1668 23 410	Flange Sub Set (Manual) (Fig. No. 40 Included)	1	
	1669 23 410	Flange Sub Set (Automatic)	1	
40	1663 23 411A	Diaphragm, Sub Slow (Manual)	1	
41	1570 23 430	Lever Set, Rear (Manual)	1	
	1570 23 430A	Lever Set, Rear (Manual)	1	Car No. 145188 7/9 ~ △
	1669 23 430	Lever Set, Rear (Automatic)	1	
42	1663 23 380	Spring Set, Throttle Return	1	
43	1668 23 450	Switch Set, Idle	1	

No.	Part Number	Description	Q'ty	Remarks
44	1663 23 455	Spring, Idle Switch	1	
45	1668 23 439	Spring, Choke Return	1	Car No. 145188 ~~7/9~~ ~Added Anew
a	1668 23 510	Gasket Set	1	
b	1668 23 480	Rod & Link Set	1	
c	1668 23 530	Pin & Washer Set	1	
●	1668 23 540	Repair Kit (Manual) (Fig. No. 4, 6, 31, ~~35, 36,~~ 37 38 40, a, c Included)	1	
●	1669 23 540	Repair Kit (Automatic) (Fig. No. 4, 6, 31, ~~35, 36,~~ 37 38 a, c Included)	1	

AIR CLEANER

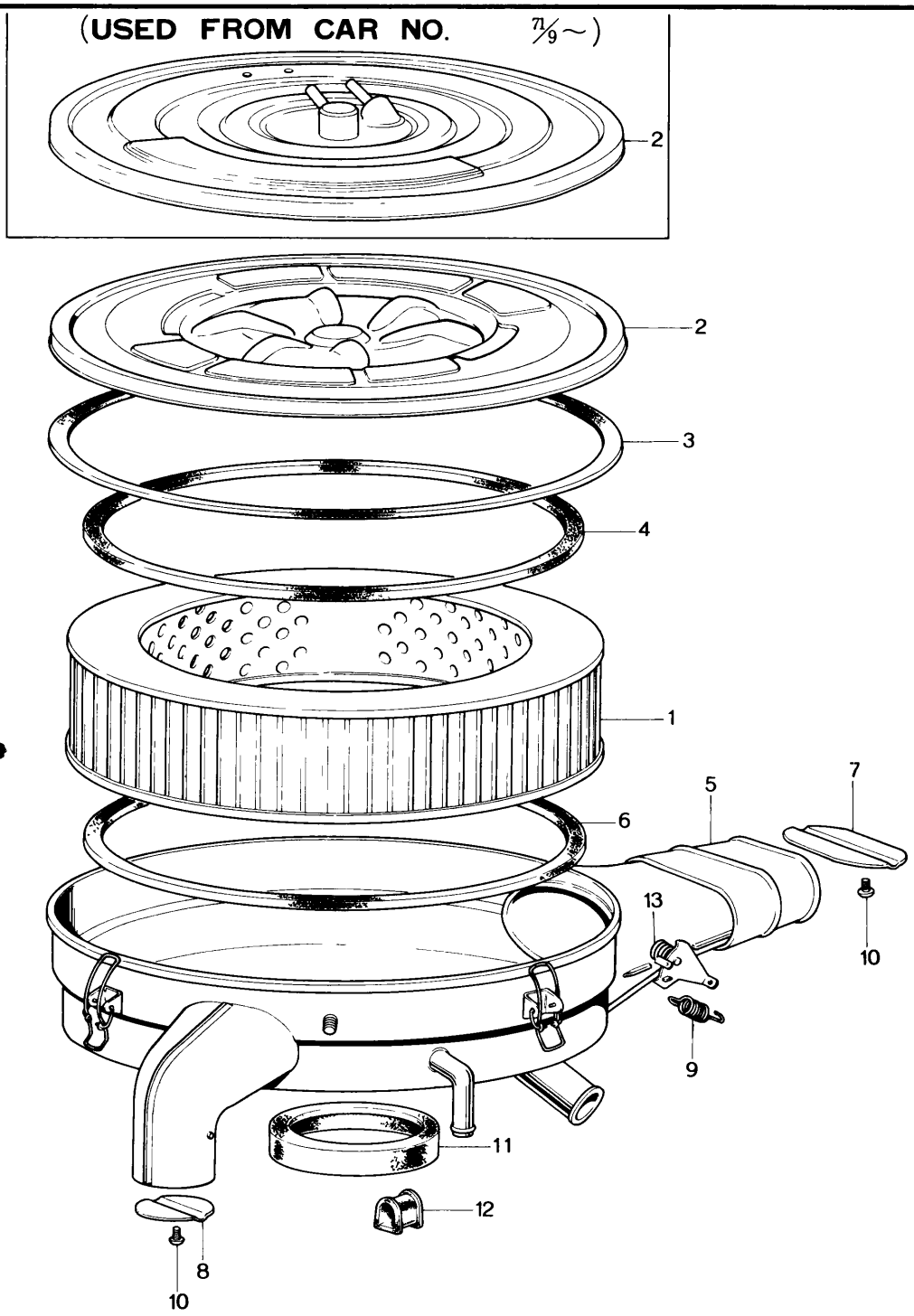

No.	Part Number	Description	Q'ty	Remarks
	2090 13 300B	CLEANER Ass'y, Air (TOKYO ROKI MAKE)	1	1971 Model
	2090 13 300C	CLEANER Ass'y, Air	1	1971 Model Car No. 68552 ~○
	1663 13 300B	CLEANER Ass'y, Air	1	1662,1663,1664,1665 (1972 Model)
●	1665 13 300A	CLEANER Ass'y, Air	1	1662,1663 Car No. 127478 ~○ 1664,1665 Car No. 122044 ~○
●	1668 13 300	CLEANER Ass'y, Air	1	1973 Model
●	1668 13 300A	CLEANER Ass'y, Air	1	Car No. 189161 ~Δ
1	0839 23 672	Element	1	
●	1665 23 672	Element	1	Car No. 122044 ~Δ
2	~~2090 23 673~~	~~COVER Ass'y~~	~~1~~	~~1971 Model~~ ★
	~~1663 23 673~~	~~COVER Ass'y~~	~~1~~	~~1972 Model~~ ★
●	~~1617 23 673~~	~~COVER Ass'y~~	~~1~~	~~1973 Model~~ ★
	1663 23 673A	COVER Ass'y (Charcoal Filter included)	1	Car No. 186151 ~Added Anew
	1668 23 673	COVER Ass'y	1	Car No. 202022 ~Δ
3	2113 23 674	Packing, Cover	1	
4	2113 23 675	Packing, Element	1	
5	~~2090 23 671~~	~~BODY Ass'y~~	~~1~~	~~1971 Model~~ ★
	~~1663 23 671~~	~~BODY Ass'y~~	~~1~~	~~1972 Model~~ ★
	~~1663 23 671A~~	~~BODY Ass'y~~	~~1~~	~~1972,1973 Model~~ ★
6	0839 23 687	Packing, Element No. 2	1	1971 Model
	0839 23 675	Packing, Element No. 2	1	1972,1973 Model
6-1	2090 23 698	Pipe	1	1973 Model
7	2080 23 676	Shutter, "A"	1	
8	2329 23 677	Shutter, "B"	1	
9	0820 23 678	Spring	2	
10	0839 23 678	Screw	2	
11	0839 23 679	Seal, Dust	1	1971,1972 Model
	1665 23 679	Seal, Dust	1	1662,1663 Car No. 127478 ~○ 1664,1665 Car No. 130039 ~○
12	2329 23 685	Protector	1	1972,1973 Model
13	2090 23 697	Spring	1	1972,1973 Model
Ⓝ	1668 23 680	Gasket Set	1	Car No. 141225 ~Added Anew
Ⓝ	2308 10 481	Cap-Air Cleaner Pipe	1	

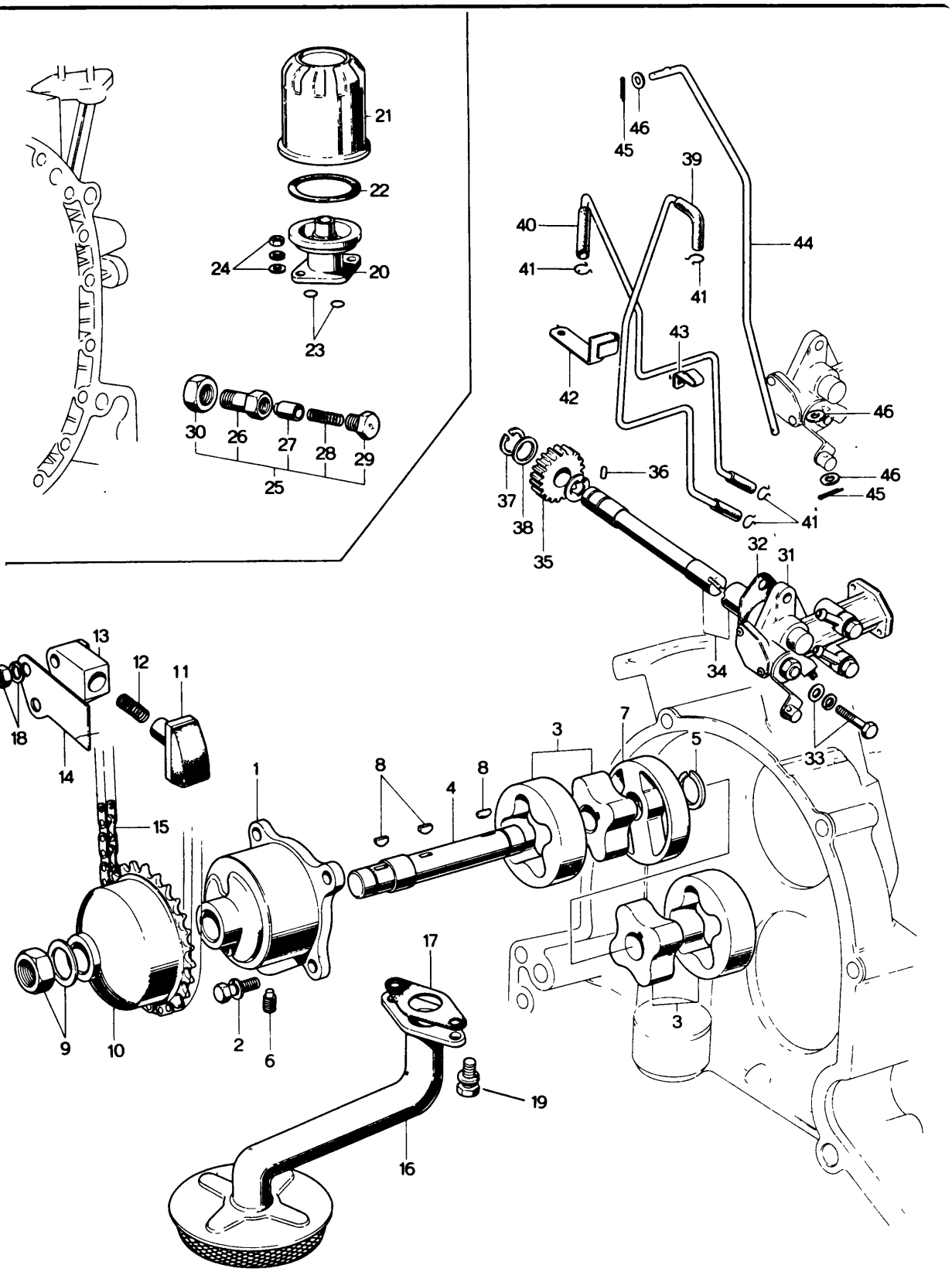
21
22
24
20
23
30
26
27
28
29
25
45
46
39
40
44
41
41
43
42
46
46
45
41
37
36
38
35
32
31
34
33
13
12
11
18
14
7
3
5
8
8
4
1
15
3
17
9
10
2
6
19
16

No.	Part Number	Description	Q'ty	Remarks
1	0839 14 101A	Body, Oil Pump	1	
	0839 14 101B	Body, Oil Pump	1	Car No. 82074 71/6 ~ ○
2	908066 6 18	Bolt, Set-Oil Pump Body	4	
3	0820 23 882A	Rotor Set, Oil Pump	2	
4	0839 14 112B	Shaft, Oil Pump	1	
5	0810 14 113	Ring, Snap	1	
6	0839 14 117	Bolt, Lock-Oil Pump	1	
7	0820 14 118C	Plate, Middle Oil Pump	1	
8	0839 14 119A	Key	3	
	0839 14 119B	Key	3	Car No. 71923 71/4 ~ ○
9	99922 1200	Nut	1	
	99979 1200	Washer, Tab	1	
10	0839 14 141A	Gear, Drive-Oil Pump	1	
●	0839 14 020	Adjuster Ass'y, Chain (Fig No. 10~14 Included)	1	
11	0823 14 130	Adjuster, Chain	1	
12	0823 14 131	Spring	1	
13	0839 14 132	Body	1	
14	0839 14 133	Plate, Giude	1	
15	0839 14 142	Chain	1	
16	0820 14 160D	Strainer, Oil	1	
	0820 14 160E	Strainer, Oil	1	Car No. 111947 73/1 ~ ○
●	0820 14 160F	Strainer, Oil	1	Car No. 133133 72/6 ~ △ 73/1 ~ ○
17	0820 14 160G 0810 14 171	Gasket, Oil Strainer	1	
18	99906 0600	Nut, Chain Adjust	2	
	99971 0600	Whasher, Spring	2	
19	908062 6 14	Bolt, Set-Oil Strainer	2	
	0839 14 300	FILTER, OIL	1	
20	0839 23 801	Cover	1	
21	0813 23 802A	Cartridge, Oil Filter (Fig. No. 21 Included)	1	
●	0813 23 802B	Cartridge, Oil Filter (Fig. No. 21 Included)	1	73/1 ~ ○
22	0813 23 803	Gasket	1	

14 OIL PUMP

No.	Part Number	Description	Q'ty	Remarks
23	99541 01601	Ring, "O"-Oil	2	
24	99901 0800	Nut, Oil Filter	2	
	99971 0800	Washer, Spring	2	
	99953 0800	Washer, Plain	2	
25	0820 14 250A	REGULATOR Ass'y. PRESSURE	1	
●	0820 14 250C	REGULATOR Ass'y, PRESSURE	1	Car No. 66431 ▽3~○
	0820 14 250D	REGULATOR Assy, PRESSURE	1	Car No. 188936 ▽3▽4~△
26	0820 14 251A	Body, Pressure Regulator	1	
	0820 14 251C	Body, Pressure Regulator	1	Car No. 66431 ▽3~○
27	0221 14 115	Plunger, Pressure Control	1	
28	0221 14 116	Spring, Pressure Contol	1	
29	0221 14 117	Plug	1	
30	0820 14 252	Nut	1	
31	2090 14 800	Pump Cpt. Metering Oil	1	
32	0810 14 611	Gasket, Metering Oil Pump	1	
33	99808 0630	Bolt, Metering Oil Pump	1	
	99808 0618	Bolt	1	
	99971 0800	Washer, Spring	2	
	99953 0800	Washer, Plain	2	
34	0820 14 620	Shaft, Driven Gear	1	
35	0820 14 625	Gear, Driven	1	
●	0820 14 625	Gear, Driven	1	▽3▽4~○
36	0813 14 623	Pin	1	
37	99576 0800	Ring, Snap	2	
38	0810 18 276	Shim, (t=0.6)-Adjust	2	
	0810 18 277	Shim, (t=0.3)-Adjust	2	

No.	Part Number	Description	Q'ty	Remarks
39	0839 14 630	Tube, Metering Oil	1	
40	0839 14 640	Tube, Metering Oil	1	
41	0813 14 641	Clip	4	
● 42	0839 14 643	Clip	1	
43	0820 14 647	Clip	1	
● 44	0839 14 651D	Rod, Connecting	1	
45	99221 1212	Pin, Split	2	
46	99953 0400	Washer, Plain	3	
Ⓝ	0839 14 100	OIL PUMP Ass'y (Fig No. 1, 3~8 included)	1	

METERING OIL PUMP

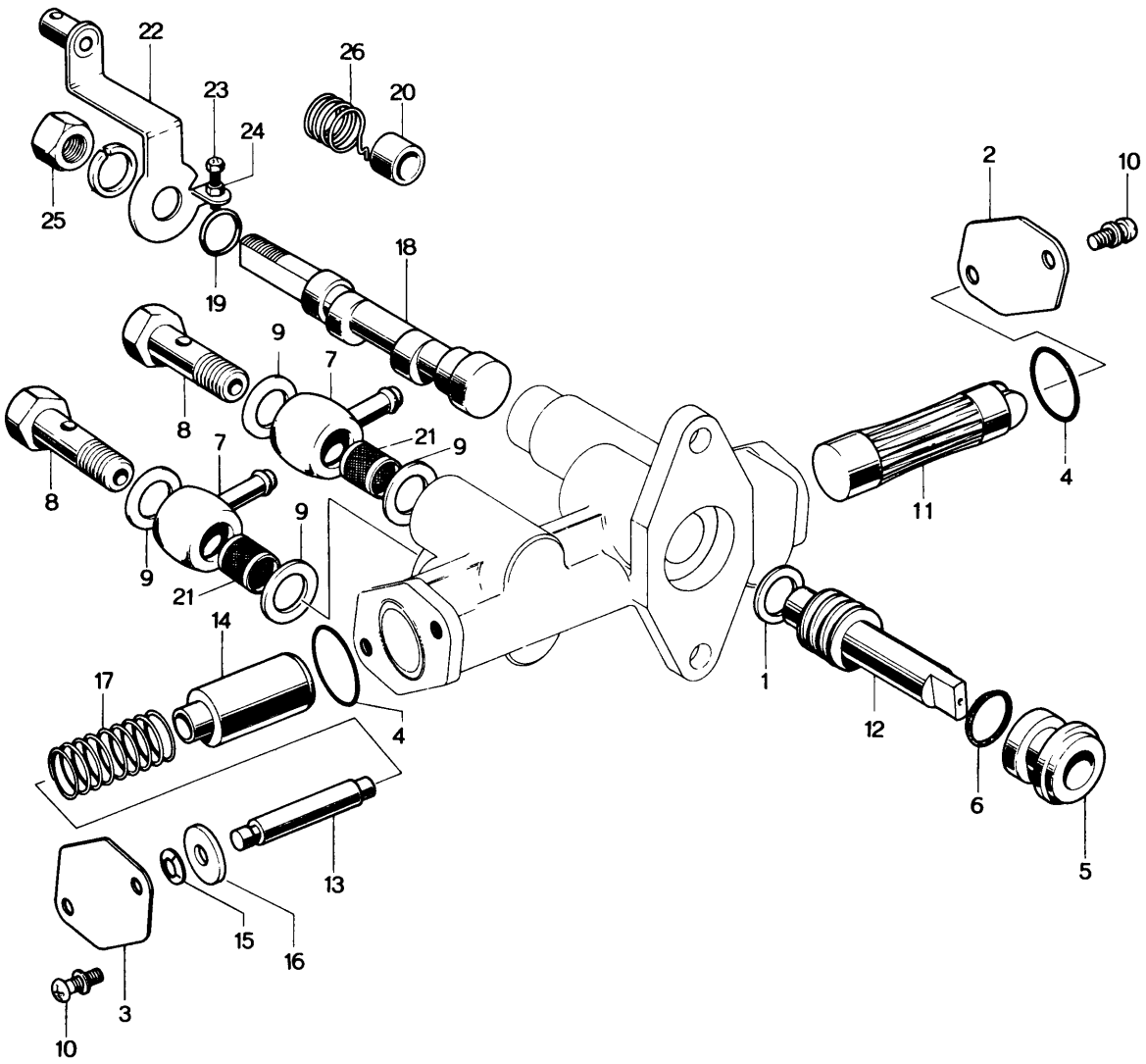

No.	Part Number	Description	Q'ty	Remarks
	2090 14 800	**PUMP Ass'y, Metering Oil**	1	
1	0820 23 832B	Washer, Thrust	1	
2	0820 23 833B	Plate	1	
3	0820 23 834B	Plate	1	
4	0730 23 837	Ring, "O"	2	
5	0820 23 835A	Bearing, Worm	1	
6	0730 23 839	Ring, "O"	1	
7	0820 23 836	Connector	2	
8	0730 23 842	Bolt, Connector	2	
9	0730 23 843	Washer, Connector	4	
10	908332 4 08	Screw, Set-Plate	4	
11	0730 23 845	Plunger	1	
12	0730 23 846	Worm, Driving	1	
13	2090 23 837	Plunger, Sub	1	
14	2090 23 838	Plunger, Differential	1	
● 15	0730 23 848	Nut, Push	1	Car No. 96092 7/9 ~ Discarded
● 16	0820 23 839A	Plate, Spring	1	Car No. 96092 7/9 ~ Discaded
● Ⓝ	2090 23 853	Nut Push	1	Car No. 96092 7/9 Added Anew
17	0820 23 840	Spring, Plunger	1	
18	2090 23 841	Pin, Control	1	
19	0730 23 854	Ring, "V"	1	
20	0820 23 842	Cap	1	
21	0820 23 843	Strainer	2	
22	2090 23 844	Lever, Control	1	
23	0820 23 845A	Screw, Adjust	1	
24	0820 23 847A	Nut, Adjust Screw	1	
25	99907 0800	Nut, Control Lever	1	

23 METERING OIL PUMP

No.	Part Number	Description	Q'ty	Remarks
	99971 0800	Washer, Spring	1	
26	0820 23 848A	Spring, Return	1	

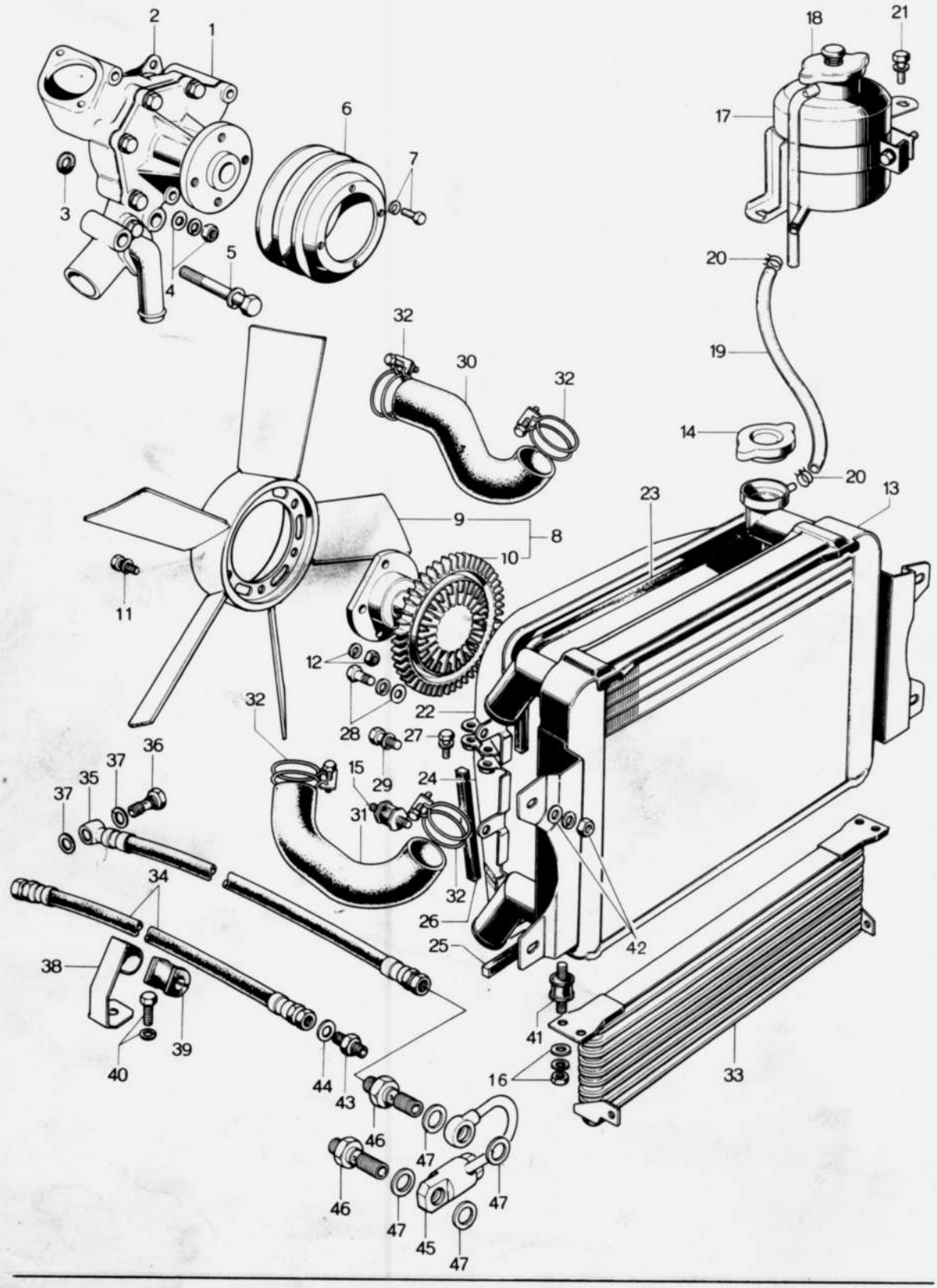
1
2
3
4
5
6
7
8
9
10
11
12
13
14
15
16
17
18
19
20
21
22
23
24
25
26
27
28
29
30
31
32
33
34
35
36
37
38
39
40
41
42
43
44
45
46
47

No.	Part Number	Description	Q'ty	Remarks
1	2090 15 010A	Pump Cpt., Water	1	
	2090 15 010B	Pump Cpt., Water 52.5o	1	Car No. 107517 71/12~×
	2090 15 010C	Pump Cpt., Water	1	Car No. 130039 73/5~○
●	2090 15 010D	Pump Cpt., Water	1	Car No. 140195 73/8~×
●	1668 15 010A	Pump Cpt., Water	1	1973 Model
●	1668 15 010B	Pump Cpt., Water	1	Car No. 73/2~○
2	0822 15 105	Gasket, Water Pump	1	
3	0820 15 106	Gasket, Water Pump	2	
4	99901 0800	Nut, Water Pump	3	
	99953 0800	Washer, Plain	3	
	99971 0800	Washer, Spring	3	
5	99801 0832	Bolt, Water Pump	1	
	99971 0800	Washer, Spring	1	
6	2329 15 151A	Pulley, Water Pump	1	
	1570 15 151	Pulley, Water Pump	1	1973 Model
7	908062 6 14	Bolt Set, Pulley	4	
	99952 0600	Washer, Plain	4	
	99806 0610	Bolt, Pulley	4	1973 Model
	99971 0600	Washer, Spring	4	1973 Model
8	2090 15 250C	Fan & Fan Drive	1	
	0877 15 250	Fan & Fan Drive	1	Car No. 98396 71/9~○
	0872 15 250	Fan & Fan Drive	1	1973 Model
9	0842 15 200A	Fan, Cooling	1	
	0877 15 200	Fan, Cooling	1	Car No. 98396 71/9~○
	0872 15 200	Fan, Cooling	1	1973 Model
10	2090 15 210	Drive, Fan	1	

No.	Part Number	Description	Q'ty	Remarks
11	908062 6 12	Bolt Set, Fan + Fan Drive	6	
12	99906 0600	Nut, Fan & Fan Drive	4	
	99971 0600	Washer, Spring	4	
13	2090 15 310	Radiator (Manual)	1	
	1669 15 310	Radiator (Automatic)	1	
14	0223 15 205	Cap	1	
15	0820 15 312	Rubber, Insulation - Radiator & Oil Cooler	4	
	0820 15 312A	Rubber, Insulation - Radiator & Oil Cooler	4	Car No. 111947 73/1 ~ ○
16	99901 0800	Nut, Insulation Rubber	8	
	99951 0822	Washer, Plain	8	
	99971 0800	Washer, Spring	8	
17	0839 15 350	Tank, Reserve	1	
●	0839 15 350A	Tank, Reserve	1	73/12 ~ O
18	0222 15 255	Cap	1	
19	0839 15 351B	Hose, Water - Reserve Tank ~ Radiator	1	
20	99285 0800	Clip, Water Hose	2	
21	908016 8 12	Bolt Set, Reserve Tank	2	

No.	Part Number	Description	Q'ty	Remarks
22	0839 15 410C	Shroud, Radiator - Upper	1	
	0839 15 410D	Shroud, Radiator - Upper	1	Car No. 69368 ~○ / Car No. 133133 ~Discarded
	0884 15 401	Shroud, Radiator (Unified Type)	1	Car No. 132134 ~Added Anew
●	0884 15 401B	Shroud, Radiator (Unified Type)	1	Car No. 147628 ~△
23	0839 15 414	Seal, Air	1	
	0839 15 414A	Seal, Air	1	Car No. 69368 ~○ / Car No. 133133 ~Discarded
24	0839 15 420D	Shroud, Radiator - Lower	1	
	0839 15 420E	Shroud, Radiator - Lower	1	Car No. 69368 ~○ / Car No. 133133 ~Discarded
25	0839 15 422A	Seal No. 1, Air	1	
	0839 15 422B	Seal No. 1, Air	1	Car No. 69368 ~○ / Car No. 133133 ~Discarded
26	0839 15 427A	Seal No. 2, Air	1	
	0839 15 427B	Seal No. 2, Air	1	Car No. 69368 ~○ / Car No. 133133 ~Discarded
27	908057 6 16	Bolt Set, Radiator Shroud	4	Car No. 133133 ~Discarded
28	908016 8 12	Bolt Set, Radiator Shroud	2	
29	908046 8 16	Bolt Set, Radiator Shroud	2	
30	2090 15 511	Hose, Water - Thermostat ~Radiator	1	
31	2090 15 521	Hose, Water - Radiator ~Water Pump	1	
	1668 15 521	Hose, Water - Radiator ~Water Pump	1	1973 Model
●	1668 15 521A	Hose, Water - Radiator ~Water Pump	1	Car No. 157800 ~△
32	99282 4900	Band, Hose - Water Hose	3	Car No. 137835 ~Q'ty
	99282 5300	Band, Hose - Water Hose	1	Car No. 137835 ~Added Anew
33	0839 14 700D	Cooler, Oil	1	
	0839 14 700E	Cooler, Oil (Manual)	1	Car No. 133133 ~△
●	1668 14 700	Cooler, Oil (Manual)	1	Car No. 150165 ~△
	1669 14 700A	Cooler, Oil (Automatic)	1	1973 Model
●	1669 14 700B	Cooler, Oil (Automatic)	1	Car No. 150165 ~△

COOLING SYSTEM

No.	Part Number	Description	Q'ty	Remarks
34	0839 14 720B	Hose, Oil	1	
	0839 14 720C	Hose, Oil	1	Car No. 102148 7/10~○
35	0839 14 730B	Hose, Oil	1	
	0839 14 730C	Hose, Oil	1	Car No. 105962 7/11~○
36	99381 1400	Bolt, Connector - Oil Hose	1	
37	99562 1800	Packing, Oil Hose	2	
38	2091 14 735	Bracket, Oil Hose	1	
	1663 14 735	Bracket, Oil Hose	1	Car No. 106922 7/12~○
39	0813 14 716	Protector, Oil Hose	1	
40	99811 1216	Bolt, Bracket	1	
	99921 1200	Nut, Bracket	1	Car No. 122636 7/3~×
	99971 1200	Washer, Spring	1	
	99951 1226	Washer, Plain	1	Car No. 96092 7/9~Added Anew
41	0839 15 312	Rubber, Insulation - Radiator	1	
	0839 15 312A	Rubber, Insulation - Radiator	1	Car No. 122636 7/3~△
42	99901 0800	Nut, Radiator	4	
●	99940 0802	Nut, Flange	4	Car No. 147628 7/10~○
	99951 0800	Washer, Plain	4	Car No. 147628 7/10~Discarded
	99951 0822	Washer, Plain	4	Car No. 100511 7/10~○
	99971 0800	Washer, Spring	4	
43	99384 1200	Joint, Union - Oil Hose	2	Car No. 122636 7/3~Discarded
44	99564 1600	Packing, Union Joint	2	
45	1665 14 780	Valve, Bypass	1	Car No. 122636 7/3~Added Anew
46	1665 14 771	Bolt, Connector - Bypass Valve (Manual)	2	
47	99562 1400	Packing, Connector Bolt	4	
Ⓝ	0710 15 203	Drain Cock	1	From Car No. 1

WATER PUMP

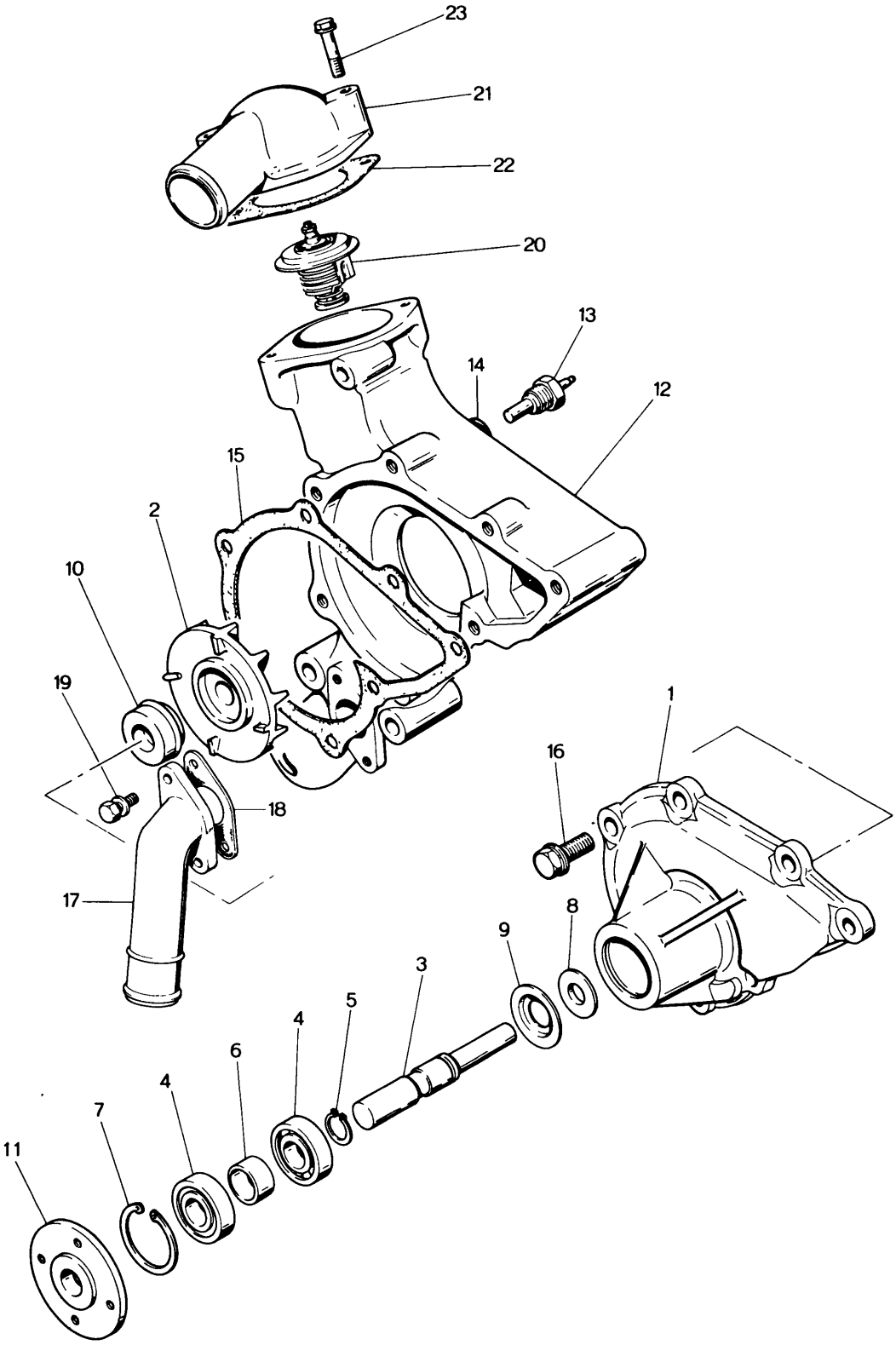

No.	Part Number	Description	Q'ty	Remarks
	2090 15 010A	**PUMP Cpt. WATER**	1	
	2090 15 010B	PUMP Cpt. - WATER	1 Car No. 107517	T4/12 ~ X
	2090 15 010C	PUMP Cpt. - WATER	1 Car No. 130039	T2/5 ~ O
	2090 15 010D	PUMP Cpt. - WATER	1 Car No. 140195	T2/8 ~ X
● X	2329 15 130A	**COVER Ass'y, Water Pump**	1	
1	2329 15 131A	Cover, Pump	1	
2	0813 15 111	Impeller	1	
	1620 15 111	Impeller	1 Car No. 141225	T2/9 ~ X
3	0820 15 112	Shaft	1	
4	0118 15 121	Bearing, Ball	2	
5	0118 15 114	Ring, Stopper	1	
6	0820 15 115	Spacer	1	
7	99574 3500	Ring, Snap	1	
8	0813 15 117	Plate, Baffle	1	
	0118 15 125	Plate, Baffle	1	T2/8 ~ O
9	0118 15 118	Plate, Dust Seal	1	
10	0820 15 120	Seal, Water	1	
11	2329 15 152	Boss, Water Pump Pulley	1	
	1011 15 152	Boss, Water Pump Pulley	1 Car No. 140195	T2/8 ~ X
12	2090 15 100A	**CASING Ass'y**	1	
	2090 15 100B	CASING Ass'y	1	T2/5 ~ O
13	0259 18 510	Unit, Heat Gauge	1	
14	0110 18 515	Ring, "O"	1	
15	2329 15 132A	Gasket	1	
16	908018 8 25	Bolt, Set Pump Cover	5	
17	2090 15 140A	Connector, Hose	1	

WATER PUMP

No.	Part Number	Description	Q'ty	Remarks
18	2090 15 143	Gasket	1	
19	908082 8 16	Bolt, Set-Hose Connector	2	
✗ 20	0823 15 171	Thermostat	1	
21	0839 15 172	Cover, Thermostat	1	
22	~~0813 15 178~~ 1757-15-173	Gasket, Thermostat Cover	1	
23	2090 15 104	Stud, Thermostat Cover	2	
	99953 0800	Washer, Plain	2	
	99971 0800	Washer, Spring	2	
	99907 0800	Nut	2	
●	99901 0800	Nut	2	73/3~0
Ⓝ ●	2090 99 150	Repair Kit, Water Pump (Fig. No. 2~5, 7, 9, 10 Included	1	

WATER PUMP (1973 MODEL)

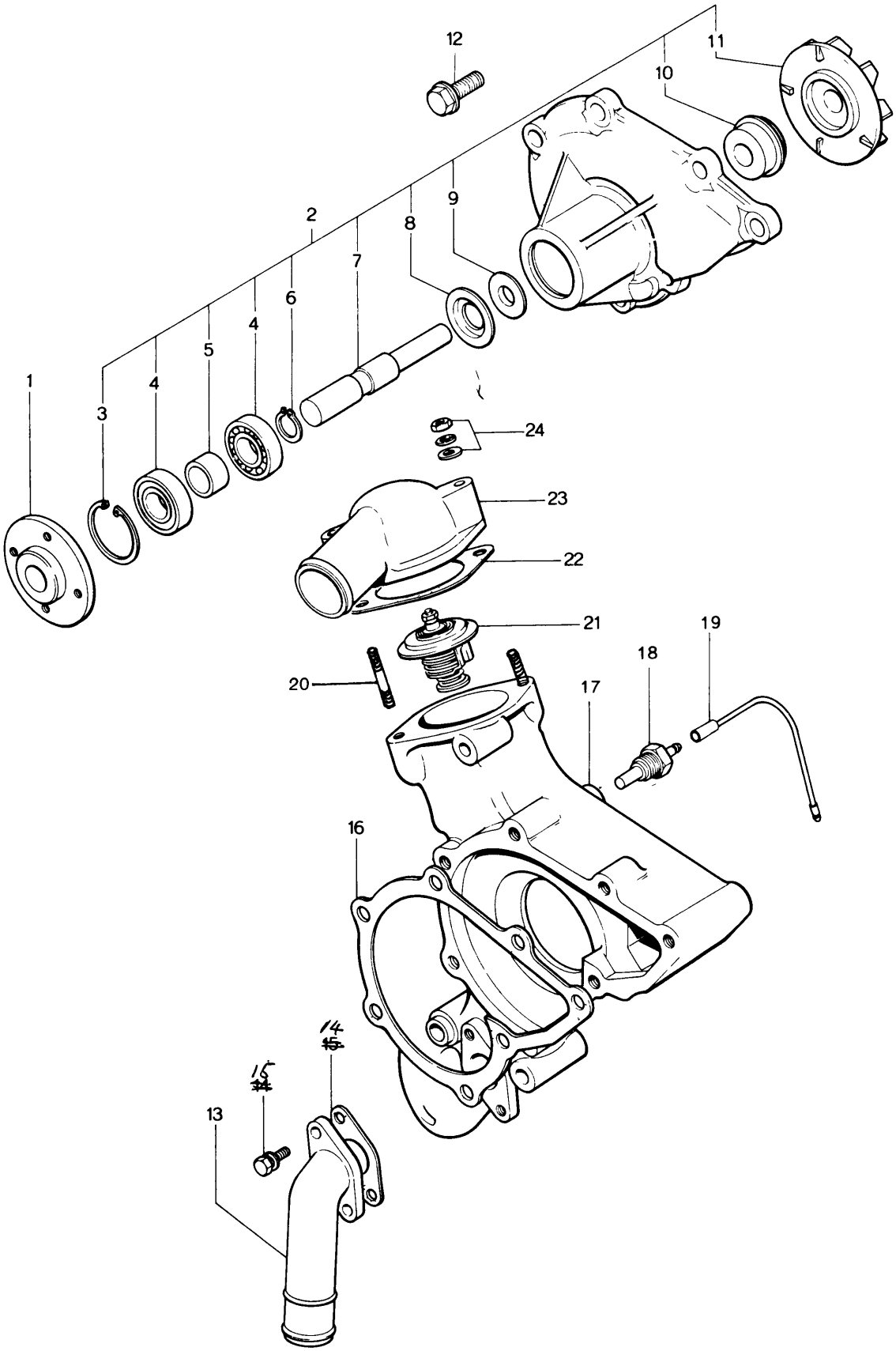

No.	Part Number	Description	Q'ty	Remarks
●	1668 15 010A	Pump Cpt., Water	1	
●	1668 15 010B	Pump Cpt., Water	1	Car No. 73½~C
1	1011 15 152	Boss, Water Pump Pulley	1	
2	1620 15 130	Cover, Water Pump (Fig. No. 3~11 Included)	1	
●	1620 15 130A	Cover, Water Pump (Fig. No. 3~11 Included)	1	Car No. 173966 73½~X
3	99574 3500	Ring, Snap	1	
4	0118 15 121	Bearing, Ball	2	
5	0820 15 115	Spacer, Bearing	1	
6	0118 15 114	Ring, Stopper	1	
7	0820 15 112	Shaft	1	
8	0118 15 118	Plate, Dust Seal	1	
9	0118 15 125	Plate, Baffle	1	
10	0820 15 120	Seal, Water	1	
11	1620 15 111	Impeller	1	
12	908018 8 25	Bolt Set, Pump Cover	3	
13	2090 15 140A	Connector, Hose	1	
14	2090 15 143	Gasket	1	
15	908062 8 16	Bolt Set, Hose Connector	1	
16	1620 15 132	Gasket	1	
●	1620 15 132A	Gasket	1	Car No. 73½~O
17	0110 18 515	Ring, "O"-Heat Gauge Unit	1	
18	0259 18 510	Unit, Heat Gauge	1	
19	0866 18 511	Wire, Heat Gauge Unit	1	
20	2090 15 104	Stud	2	
21	0823 15 171	Thermostat	1	
22	1757-15-173 ~~0813-15-178~~	Gasket, Thermostat Cover	1	
23	0839 15 172	Cover, Thermostat	1	
24	99901 0800	Nut, Thermostat Cover	2	
	99953 0800	Washer, Plain	2	
	99971 0800	Washer, Spring	2	

15 WATER PUMP (1973 MODEL)

No.	Part Number	Description	Q'ty	Remarks
●	1668 99 150	Repair Kit, Water Pump Fig. No. 3,4,6 ~8,10~11 included	1	
●	0862 99 150	Repair Kit, Water Pump Fig. No. 3 ~11,16 included	1	Car No. 72/10~△

CLUTCH CONTROL SYSTEM

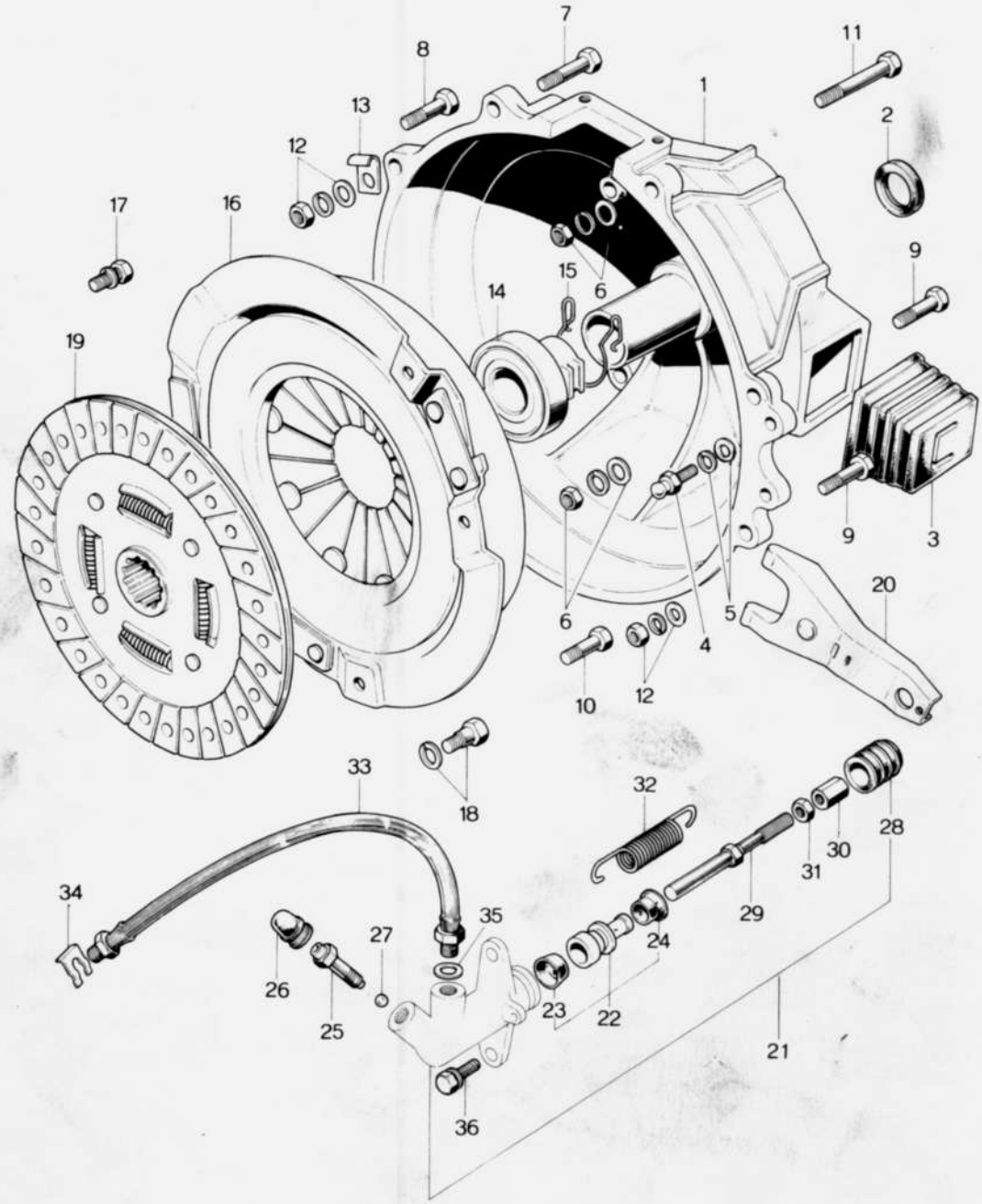

No.	Part Number	Description	Q'ty	Remarks
1	0839 16 210A	HOUSING Ass'y, Clutch,	1	
2	0603 16 103	Seal, Oil	1	
3	0155 16 104	Cover, Dust	1	
	0500 16 104	Cover, Dust	1	Car No. 96092 71/9 ~ ○
●	0370 16 214	Cover, Dust	1	Car No. 133832 73/7 ~ ○
4	0603 16 102B	Pin, Pivot	1	
5	99953 1000	Washer, Plain	1	
	99971 1000	Washer, Spring	1	
6	99921 1000	Nut, Clutch Housing + T/mission Case	8	
	99953 1000	Washer, Plain	8	Car No. 153905 '73/11 ~ Discarded
	99971 1000	Washer, Spring	8	
Ⓝ	99940 1001	Nut	8	Car No. 153905 '73/11 ~ Added Anew
7	99811 1075	Bolt, Clutch Housing	1	
Ⓝ	99940 1001	Nut		
8	99811 1055	Bolt	1	
9	99811 1050	Bolt	2	
	99796 1050	Bolt	2	73/5 ~ ○
10	99811 1045	Bolt	1	
	99796 1045	Bolt	1	73/5 ~ ○
11	99811 1032	Bolt	1	
	99761 0309	Bolt	1	73/5 ~ ○
12	99921 1000	Nut	4	
	99953 1000	Washer, Plain	6	
	99953 0300	Washer, Plain	1	Car No. 192565 '73/5 Added Anew
	99971 1000	Washer, Spring	6	
	99971 0300	Washer, Spring	1	Car No. 192565 '73/5 Added Anew
13	99295 1510	Clip	1	Car No. 153905 '73/11 ~ Discarded
14	0820 16 510	Collar, Release-Clutch	1	
15	0820 16 515	Spring, Clutch Release Collar	1	
16	0839 16 410B	Cover, Clutch	1	
17	99811 0820	Bolt, Clutch Cover	4	
	99753 78 118	Bolt, Clutch Cover	4	Car No. 73455 '71/4 ~ ○
	99971 0800	Washer, Spring	4	
18	0180 16 215	Bolt, Reamer-Clutch Cover	2	
	0839 16 432	Bolt, Reamer-Clutch Cover	2	Car No. 73455 '71/4 ~ ○

CLUTCH CONTROL SYSTEM

No.	Part Number	Description	Q'ty	Remarks
	99971 0800	Washer, Spring	2	
19	0839 16 4800	Disc, Clutch	1	
	0862 16 460 <	Disc, Clutch	1	~~T3~~ ~O
20	0305 16 520	Fork, Release	1	
21	0839 41 820	CYLINDER Ass'y, Clutch Release	1	
22	0803 41 320	PISTON, Clutch	1	
23	0803 41 322B	Cup, Piston	1	
24	0803 41 323	Cup, Secondary	1	
25	0259 33 691	Valve, Bleeder	1	
26	0259 33 693	Cap	1	
27	99811 1500	Ball, Steel	1	
28	0191 41 331	Boot	1	
29	0839 41 341	Rod, Clutch Release	1	
30	0118 41 342	Screw, Adjust	1	
31	99922 0800	Nut	1	
32	0813 41 308	Spring, Return	1	
33	0118 41 380A	Pipe, Flexible	1	
34	0136 43 635	Clip	1	
35	99564 1000	Packing	1	
36	900016 6 28	Bolt, Set-Releease Cylinder	2	

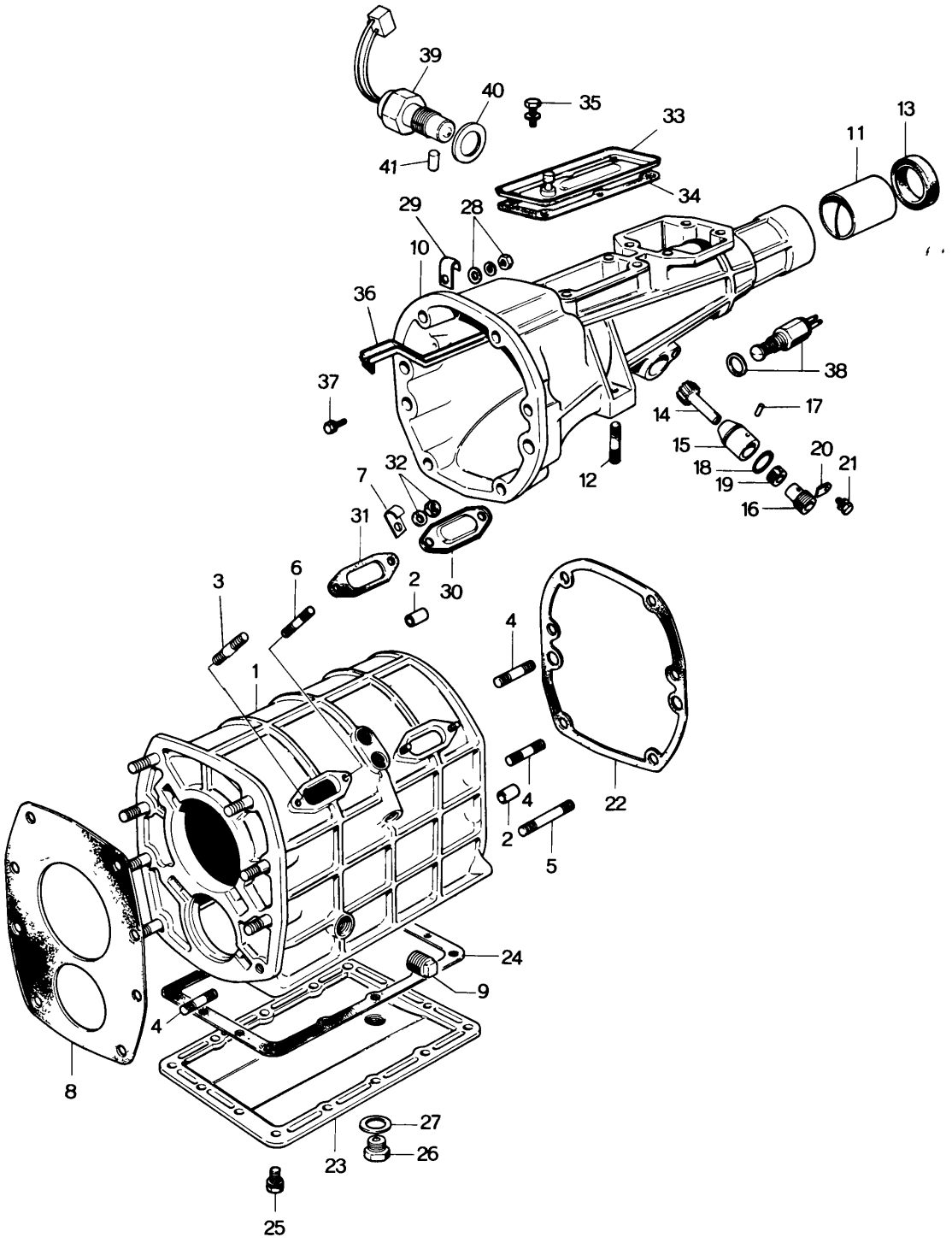
39
40
35
33
13
11
41
34
29
28
10
36
38
37
17
14
15
20
21
18
19
16
12
7
32
31
30
3
6
2
4
1
22
4
2
5
24
9
4
8
27
26
23
25

	No.	Part Number	Description	Q'ty	Remarks
	1	0839 17 100B	CASE Ass'y, T/mission	1	
o		0839 17 100C	CASE Ass'y, T/mission	1	Car No. 147628 '72/10~X
	2	99233 1225	Pin, Knock	2	
	3	99852 0610	Stud	3	
	4	99855 1025	Stud	12	
	5	99855 1060	Stud	2	
	6	0839 17 105	Stud	1	
	7	99295 0806	Clip, Back up Lamp Cord	1	
	8	0839 17 111	Gasket, Front	1	
	9	99502 4000	Plug	1	
	10	0839 17 330	HOUSING Ass'y, Extension	1	1971 Model
		1663 17 330	HOUSING Ass'y, Extension, General Export Model	1	1662,1663
●		1663 17 330	HOUSING Ass'y, (1664,1665 & 1973 Model)	1	Car No. 133832 '72/1~Added Anew
	11	0187 17 333	Bush	1	
●		1820 22 333	Bush	1	Car No. 111947 '72/1~C
	12	99851 0814	Stud	2	
	13	0317 17 335	Seal, Oil	1	
o		0376 17 335	Seal, Oil	1	'72/11~O
	14	0820 17 345A	Gear, Driven - Speedometer	1	
	15	0187 17 346B	Sleeve, Speedometer	1	
	16	0187 17 351A	Joint, Speedometer	1	
	17	0187 17 352	Pin, Dowel	1	
	18	99541 02101	Ring, "O"	1	
	19	99586 10207	Seal, Oil	1	
	20	0111 17 354	Plate, Lock - Joint	1	

	No.	Part Number	Description	Q'ty	Remarks
	21	908062 6 14	Bolt, Set-Lock Plate	1	1971 Model
		99806 0614	Bolt, Lock Plate	1	1972,1973 Model
		99971 0600	Washer, Spring	1	1972,1973 Model
	22	0839 17 361	Gasket, Extension Housing	1	
	23	0839 17 371	Cover, Under	1	
o		0862 17 371	Cover, Under	1	'73/4~O
	24	0839 17 375	Gasket, Under Cover	1	
o		0862 17 375	Gasket, Under Cover	1	'73/4~O
	25	908086 6 22	Bolt, Set-Under Cover	14	
	26	0810 17 121	Plug, Magnet	1	
	27	99564 1800	Packing, Magnet Plug	1	
	28	99921 1000	Nut, T/mission Case+Extension Housing	6	
		99953 1000	Washer, Plain	5	
		99971 1000	Washer, Spring	6	
	29	99295 0810	Clip, Back up Lamp Cord	1	
	30	0810 17 381	Cover, Blind	2	
	31	0810 17 385	Gasket, Blind Cover	2	
	32	99906 0600	Nut, Blind Cover	5	
		99971 0600	Washer, Spring	4	
	33	0839 17 520	Cover, Blind	1	
	34	0839 17 524	Gasket, Blind Cover	1	
	35	908062 6 10	Bolt, Set-Blind Cover	4	1971 Model
		99806 0610	Bolt, Blind Cover	4	1972,1973 Model
		99971 0600	Washer, Spring	4	1972,1973 Model
	36	0839 17 540A	Pass, Oil	4	
	37	908062 6 10	Bolt, Set-Oil Pass	1	1971 Model
		99806 0610	Bolt, Oil Pass	1	1972,1973 Model
		99971 0600	Washer, Spring	1	1972,1973 Model
	38	0221 18 505	Switch, Reverse Lamp	1	
o		0376 17 640 0376 17 640A	Switch, Back Lamp "	1 1	Car No. 98855 '71/10~O '73/4~O
	39	1663 17 630	Switch, Neutral	1	1662,1663
●		1663 17 630	Switch, Neutral (1664,1665 & 1973 Model)	1	Car No. 133832 '73/1~Added Anew
o		1114 17 630	" " (" " " ")	1	'73/4~O
	40	99564 1800	Packing	1	
	41	1663 17 635	Pin	1	
●		1663 17 635	Pin (1664,1665 & 1973 Model)	1	Car No. 133832 '73/1~Added Anew

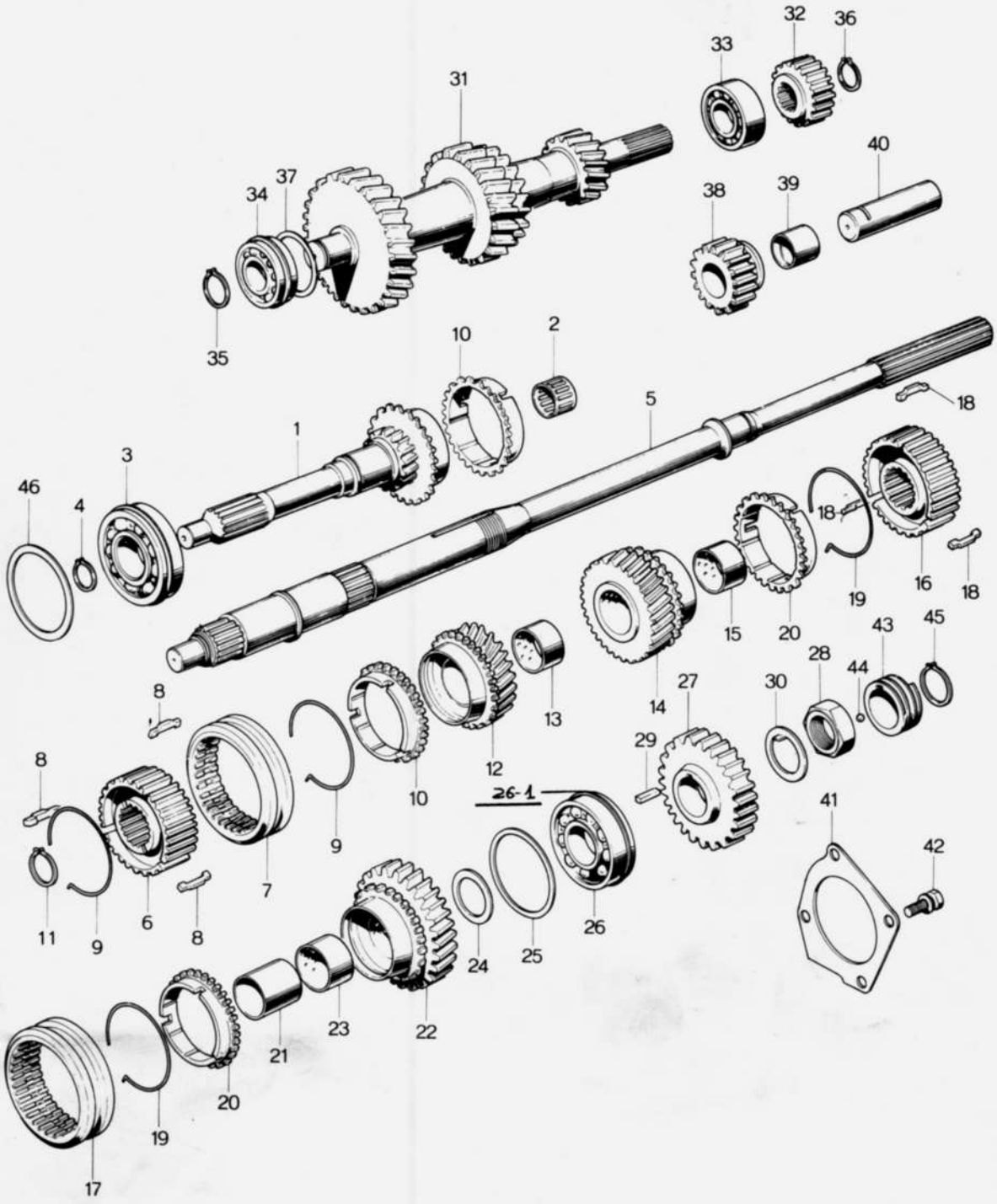
32
36
33
31
40
34
37
38
39
35
10
2
18
5
1
3
46
4
18
19
16
18
15
20
14
43
45
28
44
27
30
8
13
12
10
29
26-1
41
42
8
9
7
6
8
11
9
24
25
26
23
22
21
20
19
17

No.	Part Number	Description	Q'ty	Remarks
1	0839 17 201A	Gear, Main Drive	1	
	0839 17 201B	Gear, Main Drive	1	Car No. 85627 71/1 ~ ×
2	0810 17 205	Bearing, Needle Roller	1	
3	99606 33070	Bearing, Ball	1	
4	99573 3500	Ring, Snap	1	
5	0839 17 221	Shaft, Main	1	
6	0290 17 241A	Hub, Clutch (3.4)	1	
	0290 17 241B	Hub, Clutch (3.4)	1	Car No. 85627 71/1 ~ ○
7	0603 17 262	Sleeve, Clutch Hub (3.4)	1	
8	0187 17 243	Key, Synchronizer	3	
9	0600 17 324	Spring, Synchronizer	2	
10	0813 17 245	Ring, Synchronizer	2	
	0839 17 245	Ring, Synchronizer	2	Car No. 85627 71/1 ~ ×
●	0881 17 245	Ring, Synchronizer	2	Car No. 72/1 ~ O
●	0881 17 245A	Ring, Synchronizer	2	Car No. 72/9 ~ ○
11	0317 17 225	Ring, Snap	1	
12	0839 17 230	GEAR, Third	1	
	0839 17 230A	GEAR, Third	1	Car No. 85627 71/1 ~ ×
~~13~~	~~0839 17 232~~	~~Bush~~	~~1~~	
14	0839 17 250	GEAR, Second	1	
	0839 17 250A	GEAR, Second	1	Car No. 85627 71/1 ~ ×
~~15~~	~~0839 17 232~~	~~Bush~~	~~1~~	
16	0290 17 261A	Hub, Clutch (1.2)	1	
	0290 17 261B	Hub, Clutch (1.2)	1	Car No. 88356 71/1 ~ ○
17	0603 17 262	Sleeve, Clutch Hub (1.2)	1	
18	0187 17 243	Key, Synchronizer	3	
19	0600 17 324	Spring, Synchronizer	2	
20	0813 17 245	Ring, Synchronizer	2	
	0839 17 245	Ring, Synchronizer	2	Car No. 85627 71/1 ~ ×
●	0881 17 245	Ring, Synchronizer	2	Car No. 72/1 ~ O
●	0881 17 245A	Ring, Synchronizer	2	Car No. 72/9 ~ ○

No.	Part Number	Description	Q'ty	Remarks
21	0839 17 275	Sleeve, Gear	1	
22	0839 17 270	GEAR, LOW	1	
●	0839 17 270A	GEAR, LOW	1	Car No. 85627 71/1 ~ X
	1011 17 270	GEAR, LOW	1	Car No. 152409 72/10~O
23	0839 17 232	Bush	1	
24	0839 17 276	Washer, Thrust		
	0839 17 277	Washer, Thrust } Selective use	1	
	0839 17 278	Washer, Thrust		
25	0839 17 287	Shim, Adjust } Selective use	2	
	0839 17 288	Shim, Adjust	1	
26	0810 17 204	Bearing, Ball (Fig. No. 26-1 Included)	1	
26-1	0881 22 297	Clip, Ball Bearing	1	
27	0839 17 281	Gear, Reverse	1	
28	0839 17 284	Nut, Lock	1	
29	0839 17 285	Key	1	
30	99978 3200	Washer, Lock	1	
31	0839 17 301	Shaft, Counter Gear	1	
32	0839 17 302	Gear, Reverse-Conter	1	
33	0821 17 303	Bearing, Needle	1	
34	0821 17 287	Bearing, Ball	1	
35	0839 17 305	Ring, Snap	1	
36	99573 2500	Ring, Snap	1	
37	0305 17 327	Shim, Adjust } Selective use	2	
	0305 17 328	Shim, Adjust	1	

No.	Part Number	Description	Q'ty	Remarks
38	0839 17 310	GEAR, Reverse Idle	1	
39	0813 17 312	Bush	1	
40	0839 17 313	Shaft, Reverse Idle Gear	1	
41	0839 17 321	Stopper, Bearing	1	
	0839 17 321A	Stopper, Bearing	1	Car No. 147628 ~ X
42	99781 0616A	Bolt, Bearing Stopper	4	
	99801 0810	Bolt, Bearing Stopper	4	Car No. 147628 ~ X
	99971 0600	Washer, Spring	4	
	99971 0800	Washer, Spring	4	Car No. 147628 ~ X
43	0620 17 341B	Gear, Drive Speedometer	1	
44	99611 1500	Ball, Steel	1	
45	99573 2500	Ring, Snap	1	
46	99963 6910	Shim, Adjust } Selective use	2	
	99963 6930	Shim, Adjust } Selective use	1	

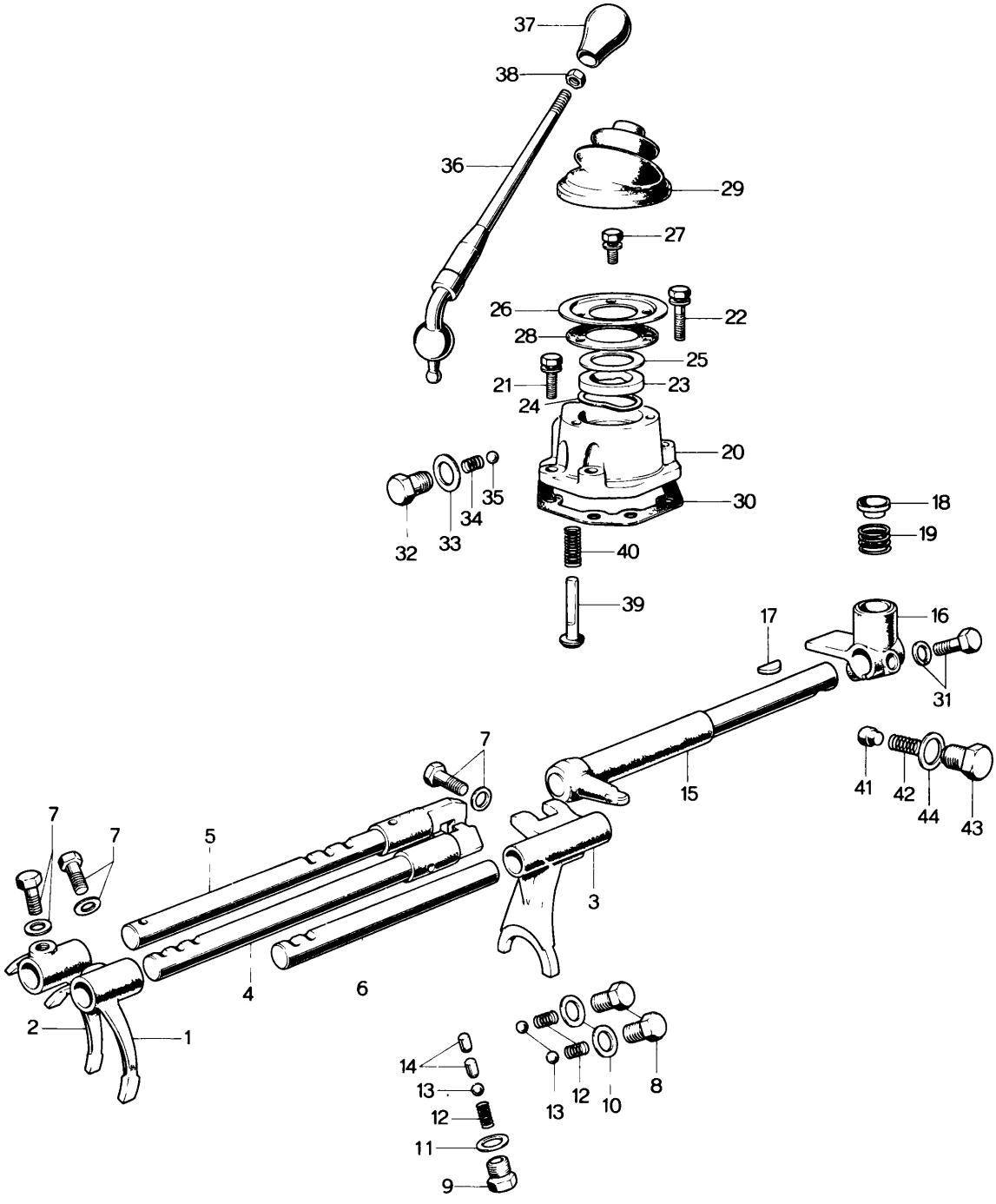
37
38
36
29
27
26
22
28
25
21
23
24
20
30
18
19
32
33
34
35
40
39
17
16
31
7
7
7
5
15
41
42
44
43
3
4
6
2
1
14
13
12
11
9
13
12
10
8

No.	Part Number	Description	Q'ty	Remarks
1	0810 17 402	Fork, Shift (1.2)	1	
2	0810 17 404	Fork, Shift (3.4)	1	
3	0839 17 406	Fork, Shift-Reverse	1	
4	0839 17 410	Rod, Shift (1.2)	1	
5	0839 17 420	Rod, Shift (3.4)	1	
6	0839 17 431	Rod, Shift-Reverse	1	
7	0118 17 313	Screw, Shift Fork	3	
	99971 0600	Washer, Spring	3	
●	99971 0601	Washer, Spring	3	Car No. 98855 ~○
8	0221 17 441	Cap, Spring	2	
9	0259 17 441	Cap, Spring	1	
10	99562 1400	Packing, Spring Cap	2	
11	99564 1000	Packing, Spring Cap	1	
12	0103 17 411	Spring —	3	
13	99611 2500	Ball, Steel	3	
14	0114 17 351	Pin, Interlock	2	
15	0839 17 450	Lever, Control (Without Neutral Switch)	1	
	1663 17 450	Lever, Control (With Neutral Switch)	1	
16	0271 17 461A	Gate, Control Rod	1	
	0398 17 461A	End, Control Lever	1	Car No. 79731 ~×
17	0111 17 323	Key, Control Gate	1	
18	0221 17 462	Seat, Spring	1	
	0398 17 462A	Seat, Change	1	Car No. 79731 ~×
19	0221 17 463	Spring	1	
20	0271 17 471	Case, Change Control	1	
	0303 17 470	Case, Change Control	1	Car No. 77771 ~○
21	99801 0825	Bolt, Control Case	2	
	99971 0800	Washer, Plain	2	
	99953 0800	Washer, Spring	2	
22	99801 0835	Bolt, Control Case	2	
	99971 0800	Washer, Spring	2	

No.	Part Number	Description	Q'ty	Remarks
	99953 0800	Washer, Plain	2	
23	0303 17 481	Bush	1	
24	0303 17 482	Washer, Wave	1	
25	99963 3310	Shim } Selective use	3	
	99963 3330	Shim } Selective use	1	
26	0221 17 473	Plate, Cover	1	
27	908062 8 14	Bolt, Set-Cover Plate	3	1971 Model
	99806 0614	Bolt, Cover Plate	3	1972,1973 Model
	99971 0600	Washer, Spring	3	1972,1973 Model
28	0303 17 474	Gasket, Cover Plate	1	
29	0221 17 475A	Boot, Dust	1	
	0221 17 475B	Boot, Dust	1	Car No. 99952 7/10～△
30	0271 17 478	Gasket	1	
31	0187 17 492	Bolt, Reamer	1	
	99971 0800	Washer, Spring	1	
32	0181 17 491	Cap, Spring	1	1971 Model
	0183 17 491	Cap, Spring	1	1972,1973 Model
33	99562 1400	Packing, Spring Cap	1	
34	0103 17 411	Spring	1	
35	99811 2500	Ball, Steel	1	
36	0839 17 510	Lever, Change	1	1971 Model
	0881 17 510A	Lever, Change	1	1972,1973 Model
37	0329 17 520	Knob, Change Lever	1	
●	0881 17 520	Knob, Change Lever (1973 Model)	1	Car No. 7/8～○
38	0824 17 524	Nut, Knob	1	
39	0221 17 551A	Spindle, Select Lock	1	
40	0221 17 552	Spring	1	
41	2780 17 561	Piece, Friction	1	
	0303 17 561	Piece, Friction	1	Car No. 85627 7/7～○
42	0103 17 411	Spring	1	
43	99510 1000	Plug	1	
	0259 17 441	Plug	1	Car No. 7/8～○
44	99562 1000	Packing	1	
	0221 17 540	Set Screw, Change Lever	1	Car No. 77771 7/4～Discarded
	99564 0800	Packing	1	Car No. 77771 7/4～Discarded

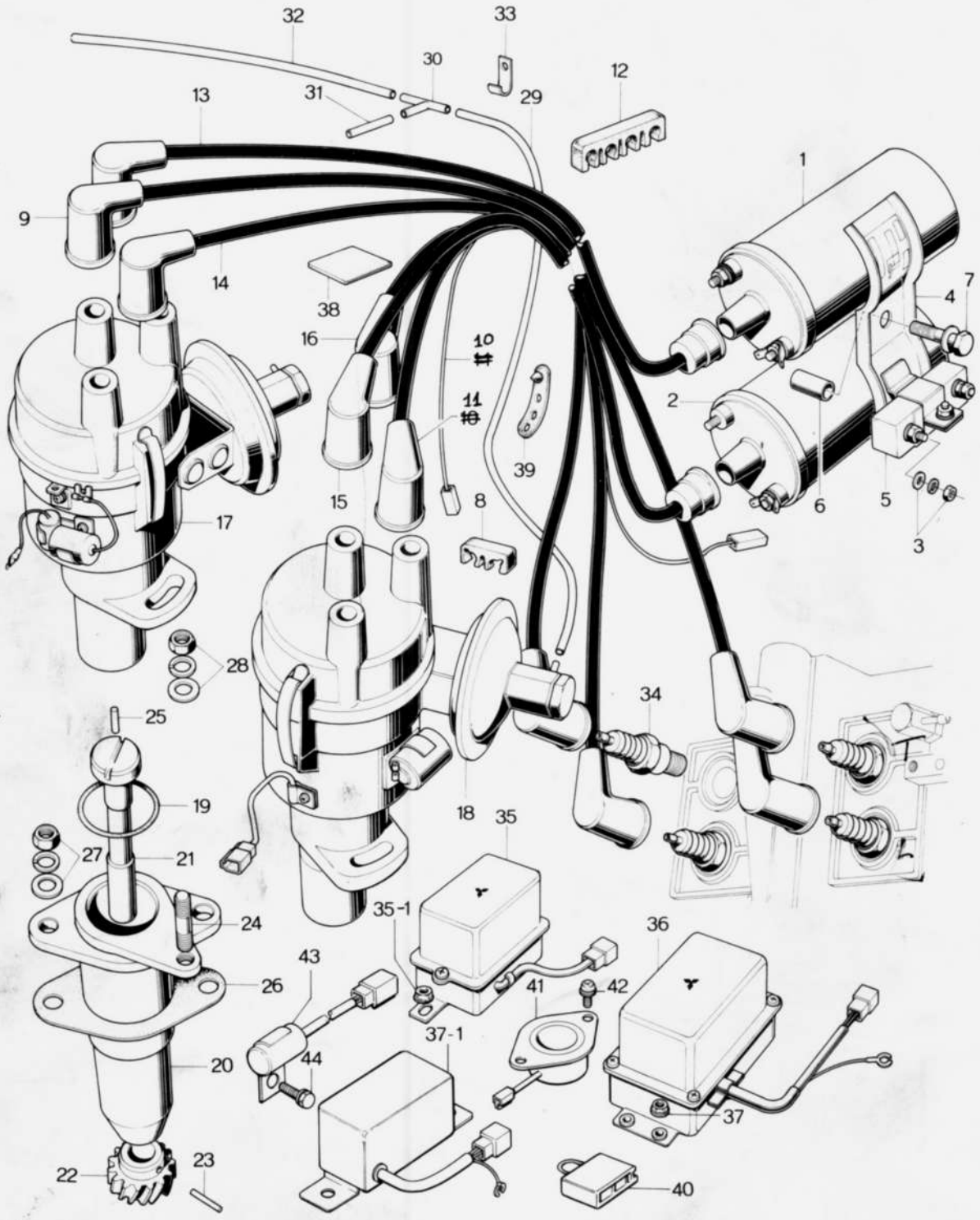
32
33
30
12
31
29
13
1
9
14
38
4
7
16
10
2
11
39
15
8
6
5
3
17
28
34
25
19
18
35
27
21
35-1
36
24
43
41
42
26
37-1
44
20
37
22
23
40

No.	Part Number	Description	Q'ty	Remarks
1	0820 18 100D	Coil, Ignition	1	
2	0823 18 100	Coil, Ignition	1	
	0866 18 100A	Coil, Ignition	1	Car No. 96503 7/9 ~ ×
3	99907 0500	Nut, Ignition Coil & Resister	4	
●	99906 0500	Nut, Ignition Coil & Resister	5	Car No. 124059 7/3 ~ ×
	99952 0500	Washer, Plain	4	
	99971 0500	Washer, Spring	4	
4	0839 18 190A	BRACKET Ass'y, Ignition Coil	1	
	0839 18 190B	BRACKET Ass'y, Ignition Coil	1	Car No. 96503 7/9 ~ ×
5	0845 18 101	Resister	1	
	0866 18 101	Resister	1	Car No. 96503 7/9 ~ ×
6	0823 18 107	Pipe, Ignition Coil Bracket	1	
7	99801 0850	Bolt, Ignition	1	
	99971 0800	Washer, Spring	1	
	2090 18 110	CORD Ass'y, High Tension	1	1971 Model
	1663 18 110A	CORD Ass'y, High Tension	1	1972 Model
	1663 18 110B	CORD Ass'y, High Tension	1	Car No. 96503 7/9 ~ ×
8	0820 18 111B	Supporter	1	
9	0839 18 120	Cord, High Tension - Coil ~ Distributor	1	
10	0820 18 155A	Cord, Coil ~ Distributor	1	1971 Model
	0820 18 115B	Cord, Coil ~ Distributor	1	1972, 1973 Model
11	0839 18 160	Cord, High Tension - Coil ~ Distributor	1	
	0877 18 160	Cord, High Tension - Coil ~ Distributor	1	Car No. 96503 7/9 ~ ×
	2359 18 150	CORD Ass'y, High Tension	1	
12	0820 18 114	Supporter	2	

No.	Part Number	Description	Q'ty	Remarks
13	2359 18 130	Cord, High Tension (T−1)	1	
14	0839 18 140	Cord, High Tension (T−2)	1	
15	2359 18 170	Cord, Hige Tension (L−1)	1	
16	0839 18 180	Cord, High Tension (L−2)	1	
17	2090 18 200	Distributor, Trailing	1	1971 Model
	1663 18 200	Distributor, Trailing (Order under No. 1663 24 300)	1	1972 Model Car No 99944 ~×
o	1663 24 300	Distributor, Trailing	1	
	1663 18 200A	Distributor, Trailing	1	
o	1663 18 200C	Distributor, Trailing	1	
●	1668 18 200	Distributor, Trailing (MANUAL)	1	1973 Model
●	1669 18 200	Distributor, Trailing (AUTOMATIC)	1	
18	2090 18 700	Distributor, Leading (Order Under No. 2090 24 400)	1	1971 Model
	2090 24 400	Distributor, Leading	1	
	1663 18 700A	Distributor, Leading	1	1972, 1973 Model
19	0107 18 201	Ring, "O" - Distributor	2	
	0839 18 270A	SOCKET Ass'y, Distributor	2	
	0839 18 270B	SOCKET Ass'y, Distributor	2	Car No. 69368 ~
	0839 18 270C	SOCKET Ass'y, Distributor	2	Car No. 95513 ~×
20	0820 18 271C	Socket	2	
	0820 18 271D	Socket	2	Car No. 69368 ~
21	0839 18 272	Shaft, Drive	2	
	0839 18 272A	Shaft, Drive	2	Car No. 95513 ~×
22	0839 18 273A	Gear, Drive	2	
23	0820 11 105	Pin, Spring	2	
o 24	99851 0618 ~~0818~~	Stud	2	
	99851 0618A	Stud	2	Car No. 69368 ~
25	0813 18 288	Insert	2	
26	0820 18 279A	Gasket, Distributor Socket	2	
27	99901 0800	Nut, Distributor Socket	4	
	99953 0800	Washer, Plain	4	
	99971 0800	Washer, Spring	4	
28	99906 0600	Nut, Distributor Socket	2	
	99952 0600	Washer, Plain	2	

No.	Part Number	Description	Q'ty	Remarks
	99971 0600	Washer, Spring	1	
29	2329 13 754A	Tube, Vacuum	1	
●	1663 13 756B	Tube, Vacuum	1	
30	2359 13 930	Joint, "T" - Vacuum Tube	1	
o	~~1700 13 945~~	~~Joint, "T"- Vacuum Tube~~ (Manual)	~~1~~	73/3~O
31	0118 18 294	Tube, Vacuum	1	
●	0636 13 682	Tube, Vacuum	1	Car No. 128567 72/4~
32	0813 18 791A	Tube, Vacuum	1	
o	0839 18 707	Tube, Vacuum	1	73/1~O
●	0823 18 291	Tube, Vacuum (Automatic)	1	
33	2090 18 297	Clip, Wire Harness	1	
34	~~0839 18 600~~ Plug, Spark ~~0868 18 600~~ Plug, Spark	Order unde No. 2328 18 600	~~4~~ 4	~~4 Car No. 102235 71/11~~
35	2359 18 910 ~~2359 18 510~~	Relay, Time Lag	1	1971 Model
35-1	99940 0600	Nut, Time Lag Relay	2	1971 Model
36	2090 18 940A	Box, Control	1	
	1663 18 940	Box No. 1, Control	1	Car No. 85627 71/8~
●	1668 18 940A	Box No. 1, Control (Manual)	1	1973 Model
●	1669 18 940A	Box No. 1, Control (Automatic)	1	1973 Model
	99706 0103	Fuse, Control	1	Car No.
37	99940 0600	Nut, Control Box	4	
● 37-1	1617 18 980	Box No. 2, Control (Manual)	1	1972, 1973 Model
●	1669 18 980	Box No. 2, Control (Automatic)	1	1973 Model
38	0208 66 949	Pad, Protector	4	
39	0187 66 991	Clip, Rubber	1	
40	2090 18 911A ~~2090 18 911A~~	Coupler, Time Lag	1	1971 Model
● 41	1668 18 890	Switch, Thermo	1	1973 Model
● 42	908482 5 12	Screw Set, Thermo Switch	2	
43	2329 18 930B	Detector, Thermo	1	
● 44	99786 0612	Bolt, Thermo Detector	1	

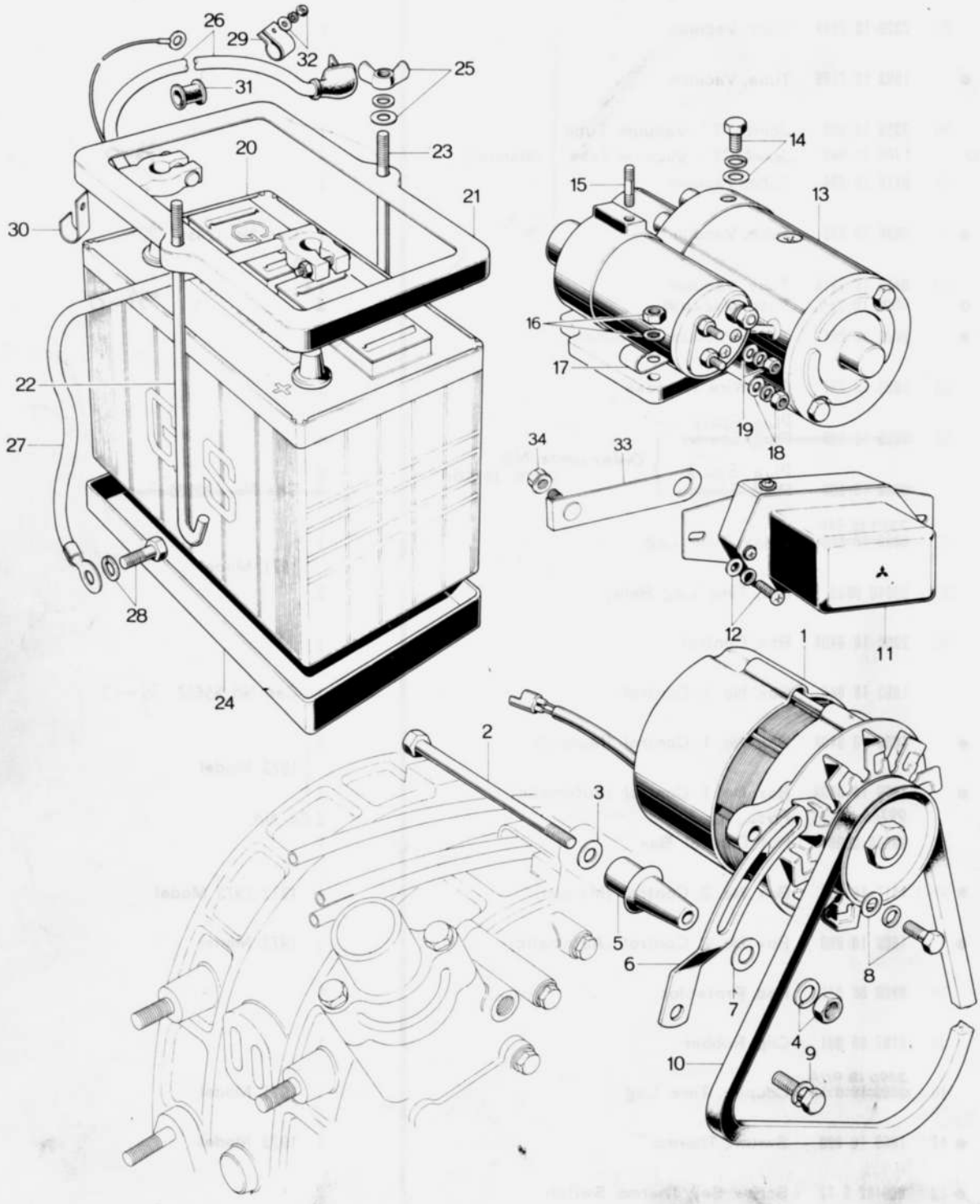
26
29
32
25
31
23
20
21
30
22
27
28
24
14
15
13
16
17
19
18
34
33
12
11
1
2
3
5
6
7
8
4
9
10

	No.	Part Number	Description	Q'ty	Remarks
	1	0839 18 300	Alternator (40A), (For U.S.A.)	1	
o		2869 18 300	Alternator (50A), (For Canada)	1	From Car No. 1
		0866 18 300	Alternator (50A), (For All Models)	1	Car No. 105548 ~ ×
o		1011 18 300	Alternator (50A), (For All Models)	1	Car No. 191156 ~ O
	2	99813 10125	Bolt, Alternator	1	
	3	99952 1000	Washer, Plain	1	
	4	99921 1000	Nut, Alternator	1	
		99952 1000	Washer, Plain	1	
		99971 1000	Washer, Spring	1	
	5	0839 18 311B	Bracket, Alternator	1	
	6	2090 18 361	Strap, Alternator	1	
	7	0222 18 377	Shim, Alternator (t=0.15)		
		0222 18 375	Shim, Alternator (t=0.3) } Selective use	1	
		0222 18 376	Shim, Alternator (t=0.5)		
	8	99801 0822	Bolt, Alternator	1	
		99951 0818	Washer, Plain	1	
		99971 0800	Washer, Spring	1	
	9	908012 8 20	Bolt Set, Strap	1	
●		908012 8 16	Bolt Set, Strap	1	Car No. 122636 ~ O
	10	2090 18 381	Belt, "V" (1971, 1972 Model) ~~(1973 General U.S.A.)~~	1	
		1688 18 381	Belt, "V" (1973 General U.S.A)	1	
●		1672 18 381A	Belt, "V" (Northern U.S.A. & Canada)	1	1973 Model
	11	0222 18 391C	Regulator	1	
●		0259 18 391B	Regulator	1	Car No. 137835 ~ ×
	12	99834 0616	Screw, Regulator	2	
		907976 6 12	Bolt Set, Regulator	2	Car No. 96092 ~ ○
		99952 0600	Washer, Plain	2	
		99971 0600	Washer, Spring	2	
	13	0845 18 400	Starter (1 KW) For U.S.A. (Manual)	1	

No.	Part Number	Description	Q'ty	Remarks
	2869 18 400	Starter (2KW) For U.S.A. (Automatic)	1	
●	2869 18 400A	Starter (2KW) For U.S.A. (Automatic)	1	Car No. 151324 ~'72/10 △
	0839 18 400B	Starter	1	
	0839 18 400C	Starter (For Canada)	1	Car No. 77886 '71/5 ~ △
	2869 18 400	Starter	1	1972, 1973 Model
●	2869 18 400A	Starter	1	Car No. 151324 ~'72/10 △
14	99801 0828	Bolt, Starter	2	
●	99801 0830	Bolt, Starter	2	Car No. 106922 '71/12 ~ ×
	99971 0800	Washer, Spring	2	
15	99851 0814	Stud, Starter-Cleaner Supporter	1	
	99851 0814A	Stud, Starter-Cleaner Supporter	1	Car No. 108122 '71/12 ~ ○
16	99901 0800	Nut, Starter	2	
	99971 0800	Washer, Spring	2	
17	99295 0408	Clip, Harness	1	
	99295 1008	Clip, Harness	1	Car No. 74956 '71/3 ~ ×
18	99901 0800	Nut, Starter	1	
	99952 0800	Washer, Plain	1	
	99971 0800	Washer, Spring	1	
19	99906 0500	Nut, Starter	1	
	99952 0500	Washer, Plain	1	
	99971 0500	Washer, Spring	1	
20	0504 18 520	Battery (N50Z)	1	
	0504 18 520A	Battery (N50Z)	1	Car No. 100511 '71/10 ~ ○
●	2869 18 520	Battery (N70), Arctic Spec Model	1	
●	1672 18 520	Battery (N70Z) (National Make) (For Manual Canada, General U. S. A. & Manual Northern U. S. A.)	1	1973 Model
	1689 18 520	Battery (Y110-5) (Yuasha Make) (For Automatic Canada & Automatic Northern U. S. A.)	1	1973 Model
21	2869 53 290	Clamp, Battery, (1971, 1972 Canada & 1973 ~~Model~~ Manual)	1	
●	2869 53 290A	Clamp, Battery (1971, 1972 Canada & 1973 Manual)	1	'73/8 ~ ○
	2467 54 290	Clamp, Battery (1972 General U.S.A. & Automatic)	1	
●	2467 54 290A	Clamp, Battery (1972 General U.S.A. & Automatic)	1	'73/8 ~ ○

	No.	Part Number	Description	Q'ty	Remarks
	22	0223 54 225	Bolt, Clamp No. 1	1	
●	23	0614 70 445	Bolt, Clamp No 2 (1971, 1972 Canada & 1973 Manual ~~Model~~)	1	
		2826 53 299B	Bolt, Clamp No 2 (1973 Automatic)	1	
●	24	2981 54 222	Tray, Battery (1971 Model, 1972 Canada & 1973 Manual ~~Model~~)	1	
		2113 54 295	Tray, Battery, (1972 General U S A & 1973 Automatic)	1	
	25	99941 0600	Nut, Wing-Battery	2	
		99952 0618	Washer, Plain	2	
		99971 0600	Washer, Spring	2	
●	26	2324 67 101	Cable, Battery Positive	1	
	27	2081 67 111	Wire, Earth-Battery	1	
	28	908066 6 12	Bolt Set, Earth Wire	1	
		99799 0620	Bolt, Earth Wire	1	Car No 79731 7/6 ~
		99971 0600	Washer, Spring	1	
	29	2081 67 105	Clip, Positive Cable	2	1971 Model
●		0839 67 105	Clip, Positive Cable	2	1972, 1973 Model
	30	99295 1508	Clip, Positive Cable	1	
	31	99686 1000	Protector	1	
	32	99906 0800	Nut, Clip-Positive Cable	2	
		99952 0800	Washer, Plain	2	
		99971 0800	Washer, Spring	2	
●	33	0839 18 390	Bracket, Regulator	1	Car No. 137835 7/8 ~ Added Anew
●	34	99940 0600	Nut, Bracket	1	

(1971 MODEL)

DISTRIBUTOR (TRAILING SIDE)

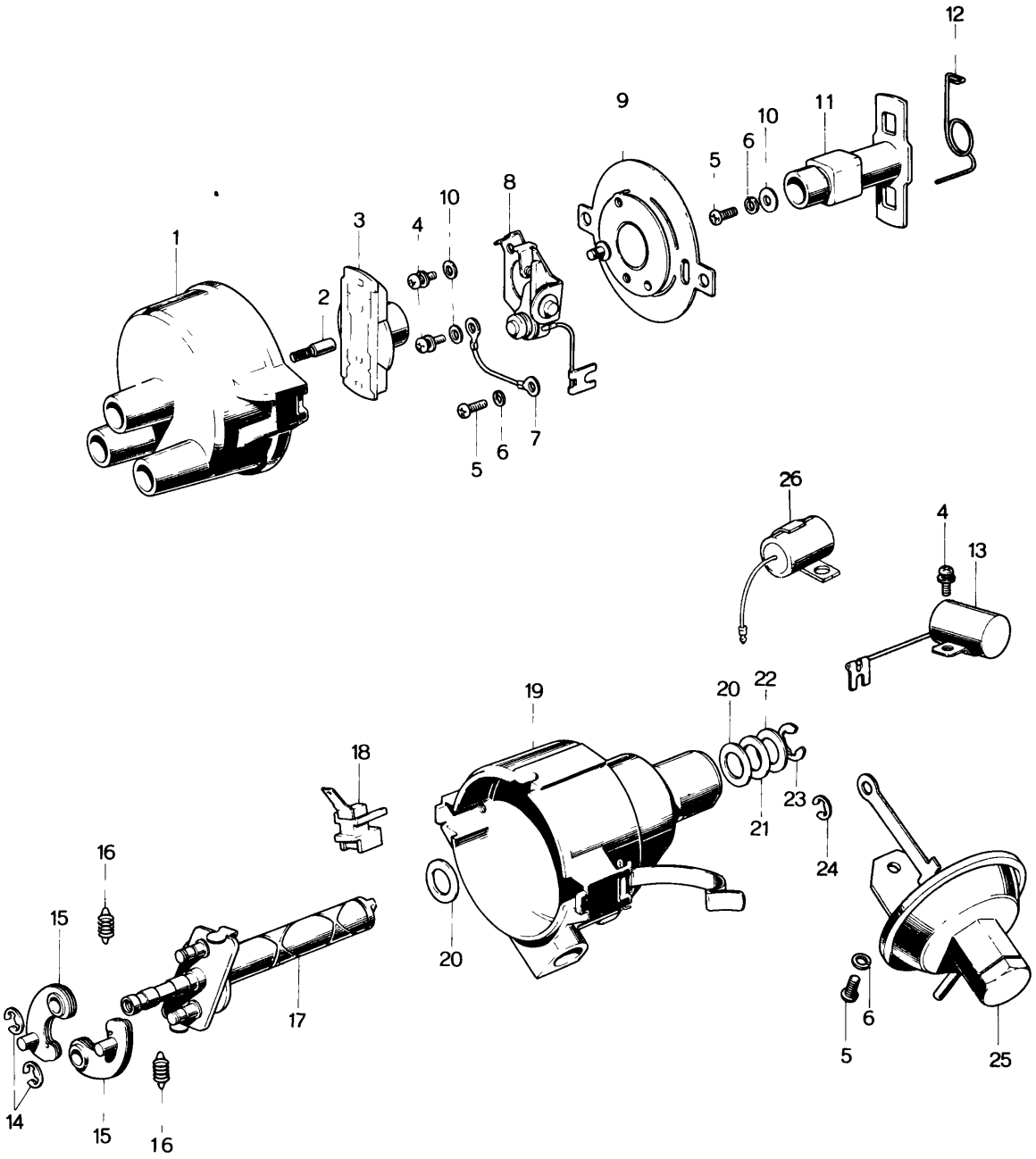

DISTRIBUTOR (TRAILING SIDE)

No.	Part Number	Description	Q'ty	Remarks
	2090 18 200	**DISTRIBUTOR Ass'y, Trailing**	1	
1	0820 24 301	**CAP Ass'y**	1	
2	2545 23 486	Carbon, Contact	1	
3	0813 24 303	Rotor	1	
4	0820 24 318	Screw, Set	3	
●	0820 24 312	Screw, Set	2	Car No. 85629 ⁷⁄₇～)
●	0839 24 312	Screw, Set	1	Car No. 85629 ⁷⁄₇～Added Anew
5	0249 24 367	Screw, (4 × 8)	5	
●	0813 24 312	Screw, Set	5	Car No. 85629 ⁷⁄₇～)
● 6	0107 18 208	Washer, Spring (4)	5	Car No. 85629 ⁷⁄₇～Discarded
7	0107 18 212	Wire, Earth	1	
8	0813 24 316	Support, Arm	1	
9	0820 24 315	Base, Breaker	1	
● 10	0107 18 227	Washer, (4.2×9.5×0.8)	3	Car No. 85629 ⁷⁄₇～Discarded
11	2090 24 311	Cam	1	
12	2587 24 336	Spring, Hair Pin	1	
13	0820 24 322	Condenser	1	
14	0107 18 231	Ring, Snap	2	
15	2587 24 335	Weight, Governor	2	
16	2090 24 308	Spring, Governor	2	
17	0823 24 305	Shaft	1	
18	0820 24 319	Terminal	1	
19	2090 24 304	**HOUSING Ass'y**	1	

(1971 MODEL)

DISTRIBUTOR (TRAILING SIDE)

No.	Part Number	Description	Q'ty	Remarks
20	0107 18 226A	Washer (12.7×20×1)	2	
21	0107 18 224	Washer (12.7×20×0.2)	1	
22	0107 18 225	Washer (12.7×20×0.1)	1	
23	0107 18 221A	Ring, Snap	1	
24	0107 18 266	Ring, Snap	1	
25	2090 24 323	Control, Vacuum	1	
●	2090 24 323A	Control, Vacuum	1	Car No. 85629 ～( )
26	0839 24 334	Condenser	1	

DISTRIBUTOR (TRAILING SIDE) (1972 MODEL)

MODEL NO. 1662・1663・1664・1665

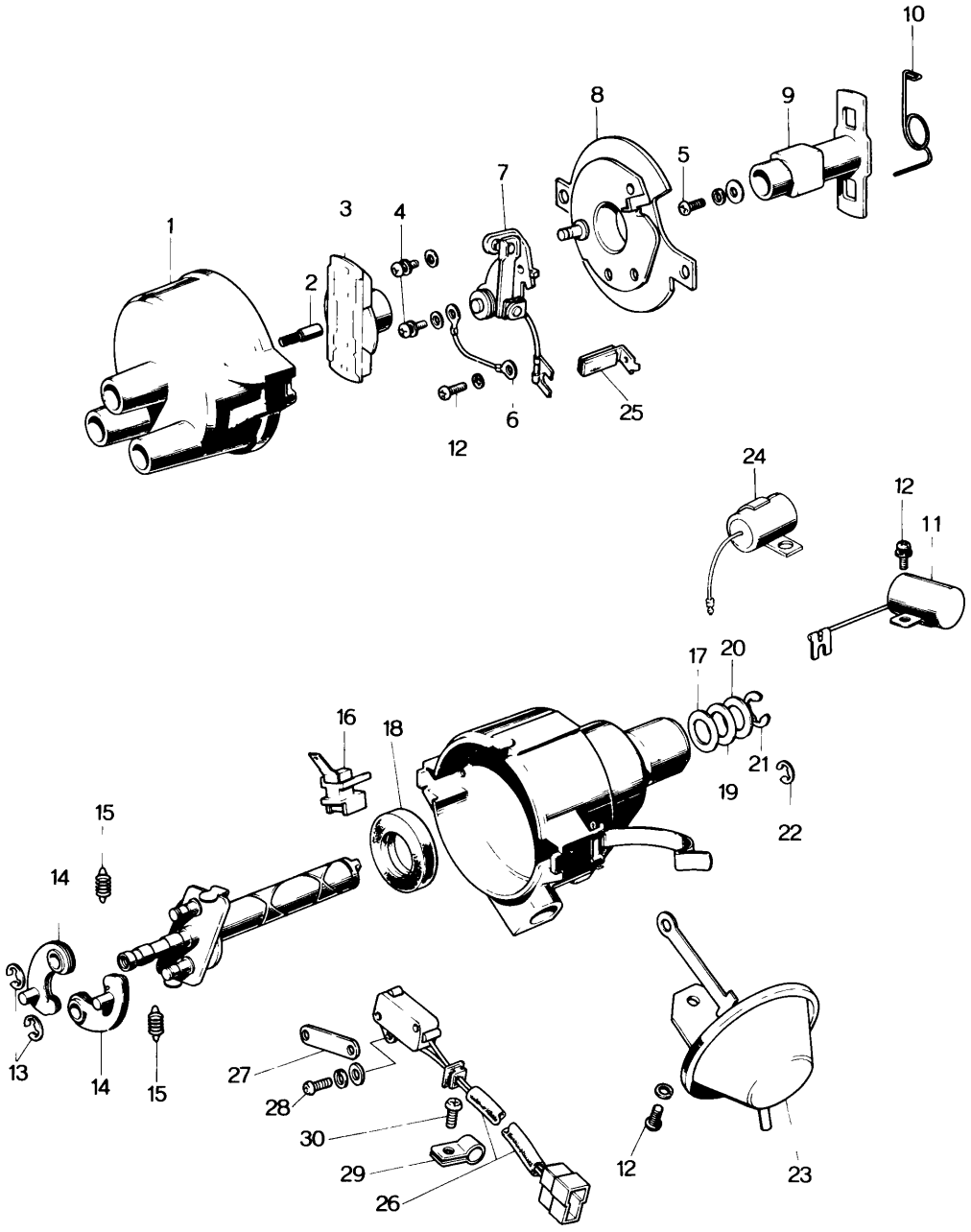

DISTRIBUTOR (TRAILING SIDE) (1972 MODEL)

No.	Part Number	Description	Q'ty	Remarks
●	1663 18 200	DISTRIBUTOR Ass'y, Trailing	1	(Order Under No. 1663 24 300)
●	1663 24 300	DISTRIBUTOR Ass'y, Trailing	1	
	1663 18 200A	DISTRIBUTOR Ass'y, Trailing	1	Car No. 99444 71/10～×
	1663 18 200C	DISTRIBUTOR Ass'y, Trailing	1	Car No 111947 72/1～O
1	0820 24 301	CAP Ass'y	1	
2	2545 23 496	Carbon, Contact Ass'y	1	
3	0813 24 303	Rotor Ass'y	1	
4	0820 24 312	Screw	3	
5	0839 24 312	Screw	1	
6	0107 18 212	Wire, Earth	1	
7	1617 24 316	Support, Arm Ass'y	1	
8	1617 24 315	Base, Breaker Ass'y	1	
9	1617 24 311	Cam Ass'y	1	
10	2587 24 336	Spring, Hair Pin	1	
11	0820 24 322	Condenser Ass'y	1	
12	0571 24 312	Screw	5	
13	0107 18 231	Ring, Snap	2	
14	2587 24 335	Weight, Governor Ass'y	2	
15	2090 24 308	Spring, Governor	2	
16	0820 24 319	Terminal Ass'y	1	
	1663 24 319	Terminal Ass'y	1	72/1～O
17	0107 18 226A	Washer (12.7×20×1)	1	
18	0107 18 216A	Seal, Oil	1	
19	0107 18 224	Washer (12.7×20×0.2)	1	
20	0107 18 225	Washer (12.7×20×0.1)	1	
21	0107 18 221A	Ring, Snap	1	
22	0107 18 266	Ring, Snap	1	

24 DISTRIBUTOR (TRAILING SIDE) (1972 MODEL)

MODEL NO. 1662・1663・1664・1665

No.	Part Number	Description	Q'ty	Remarks
23	1663 24 323	Control, Vacuum Ass'y	1	
24	0839 24 334	Condenser Ass'y	1	
25	2430 24 315	Wick Ass'y	1	
26	1617 24 334	Switch Ass'y	1	
●	1617 24 334B	Switch Ass'y	1	72/1~O
27	1617 24 338	Holder	1	
28	1617 24 312	Screw (3×18)	2	
29	2329 24 435	Clamp, Lead Wire	1	
30	0571 24 316	Screw (4×6)	1	
●	1823 24 498	Grommet Set	1	Car No. 117403 72/1~Added Anew

DISTRIBUTOR (TRAILING SIDE) (1973 MODEL)

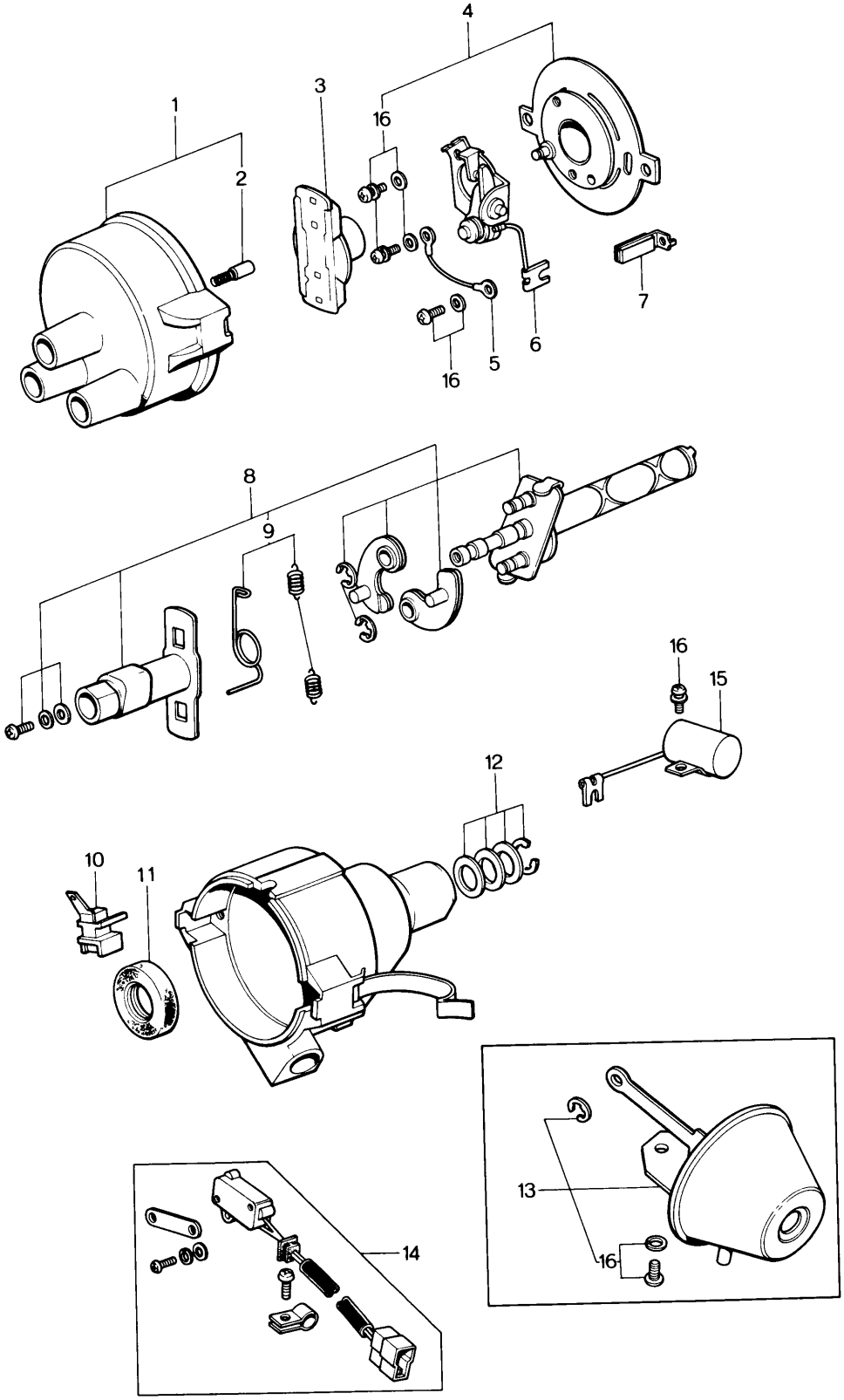

DISTRIBUTOR (TRAILING SIDE) (1973 MODEL)

No.	Part Number	Description	Q'ty	Remarks
	1668 18 200	Distributor (Manual)	1	
	1669 18 200	Distributor (Automatic)	1	
1	0820 24 301	Cap, Fig. No. 2 Included	1	
2	2545 23 496	Carbon, Contact	1	
3	0813 24 303	Rotor	1	
4	1668 24 313	Base, Breaker (Manual)	1	
	1669 24 313	Base, Breaker (Automatic)	1	
5	0107 18 212	Wire, Earth (Manual)	1	
6	1617 24 316	Support, Arm (Manual)	1	
	0813 24 316	Support, Arm (Automatic)	1	
7	2430 24 315	Felt Ass'y-Cam (Manual)	1	
8	1668 24 330	Governor Set (Manual)	1	
	1669 24 330	Governor Set (Automatic)	1	
9	1668 24 308	Spring Set	1	
10	1663 24 319	Terminal	1	
11	0107 18 216A	Oil Seal	1	
12	0884 24 325	Washer Set	1	
13	1668 24 350	Vacuum Control Set	1	
14	1668 24 334	Switch Set (Manual)	1	
15	0839 24 334	Condenser	1	
16	1668 24 360	Screw Set (Manual)	1	
	0884 24 360	Screw Set (Automatic)	1	

(1971 MODEL)

DISTRIBUTOR (LEADING SIDE)

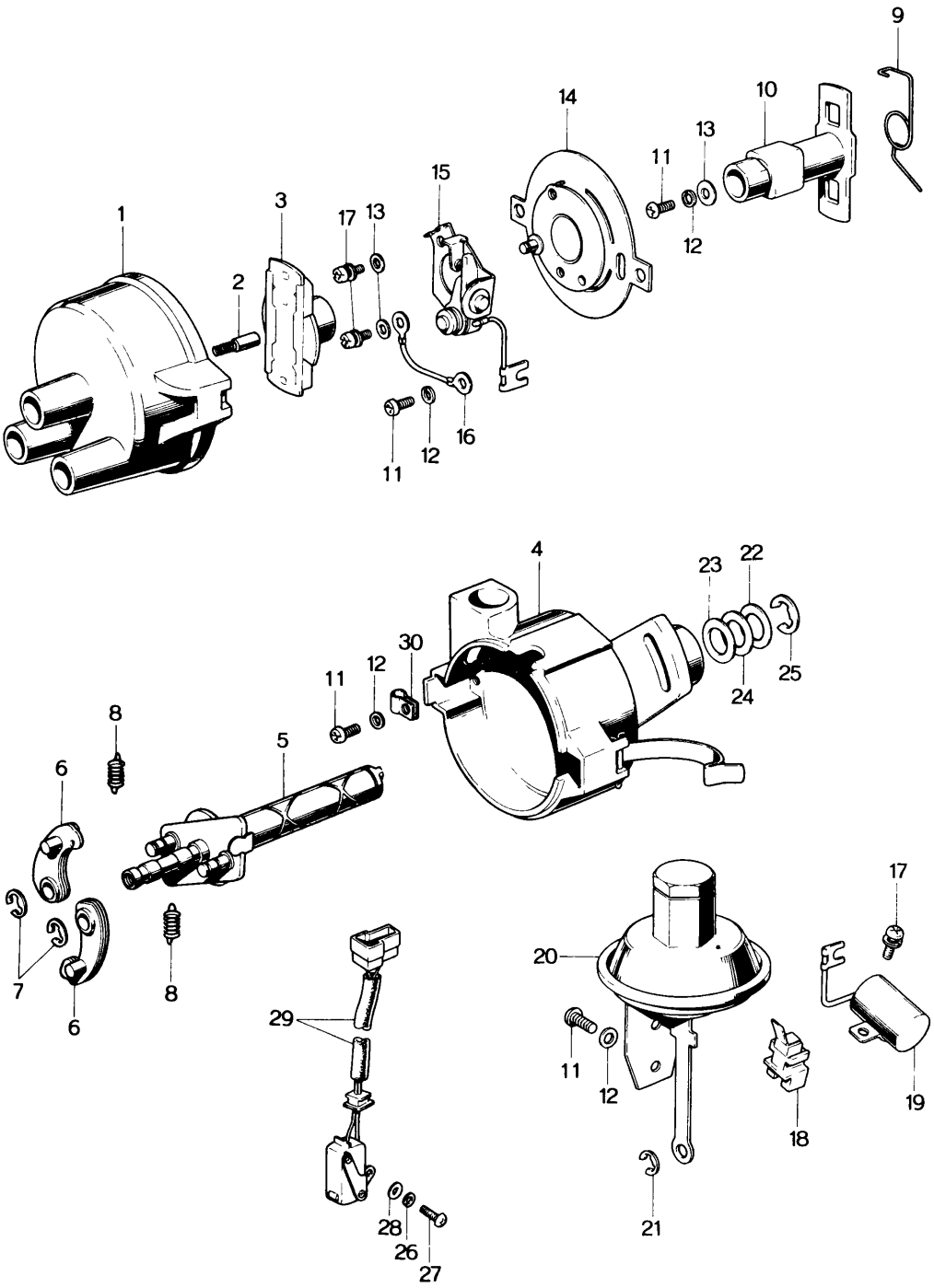

DISTRIBUTOR (LEADING SIDE)

No.	Part Number	Description	Q'ty	Remarks
●	2090 18 700	DISTRIBUTOR Ass'y, Leading	1	(Order Unber No 2090 24 400)
●	2090 24 400	DISTRIBUTOR Ass'y, Leading	1	
1	0820 24 301	CAP	1	
2	2545 23 496	Carbon, Contact	1	
3	0813 24 303	Rotor	1	
4	2090 24 404	Housing	1	
5	0820 24 405	Shaft	1	
6	0813 24 306	Weight, Governor	2	
7	0107 18 231	Washer, Lock	2	
8	2329 24 408	Spring, Governor	2	
9	0813 24 309	Spring, Hair Pin	1	
10	2329 24 411	Cam	1	
11	0249 24 367	Screw, Small (4 × 8)	6	
●	0813 24 312	Screw, Set	5	Car No. 85629 ⁷⁄₇～◯
●12	0107 18 208	Washer, (4.1×7.6×1.0)	6	Car No. 85629 ⁷⁄₇～Discarded
●13	0107 18 227	Washer, (4.2×9.5×0.8)	1	Car No. 85629 ⁷⁄₇～Discarded
14	2329 24 415	Base, Breaker	1	
15	0813 24 316	Support, Arm	1	
16	0107 18 212	Cord, Earth	1	
17	0820 24 318	Screw, Set	3	
●	0820 24 312	Screw, Set	2	Car No. 85629 ⁷⁄₇～Added Anew
●	0839 24 312	Screw, Set	2	Car No. 85629 ⁷⁄₇～Added Anew
18	0820 24 319	Terminal	1	
19	0820 24 322	Condenser	1	
20	2359 24 423	Control, Vacuum	1	
●	2359 24 423A	Control, Vacuum	1	Car No. 85629 ⁷⁄₇～◯
21	0107 18 266	Washer, Lock	1	
22	0107 18 226A	Washer (12.7×20×1.0)	1	

(1971 MODEL)

DISTRIBUTOR (LEADING SIDE)

No.	Part Number	Description	Q'ty	Remarks
23	0107 18 225	Washer, (12.7×20×0.1)	1	
24	0107 18 224	Washer, (12.7×20×0.2)	1	
25	0107 18 221A	Washer, Lock	1	
● 26	0118 23 684	Washer, Spring	1	Car No. 85629 ｱﾘ～Discarded
27	2090 24 412	Screw, (3×18)	1	
●	2090 24 432	Screw	1	Car No. 85629 ｱﾘ～○
● 28	2329 24 414	Washer, (3)	1	Car No. 85629 ｱﾘ～Discarded
29	2090 24 434	Switch, Micro	1	
●	2359 24 434A	Switch, Micro (Order Unber No. 2359 24 433)	1	Car No. 85629 ｱﾘ～×
●	2359 24 433	Switch Micro	1	
30	2329 24 435	Cover, Lead Wire	1	

DISTRIBUTOR (LEADING SIDE) (1972, 1973 MODEL)

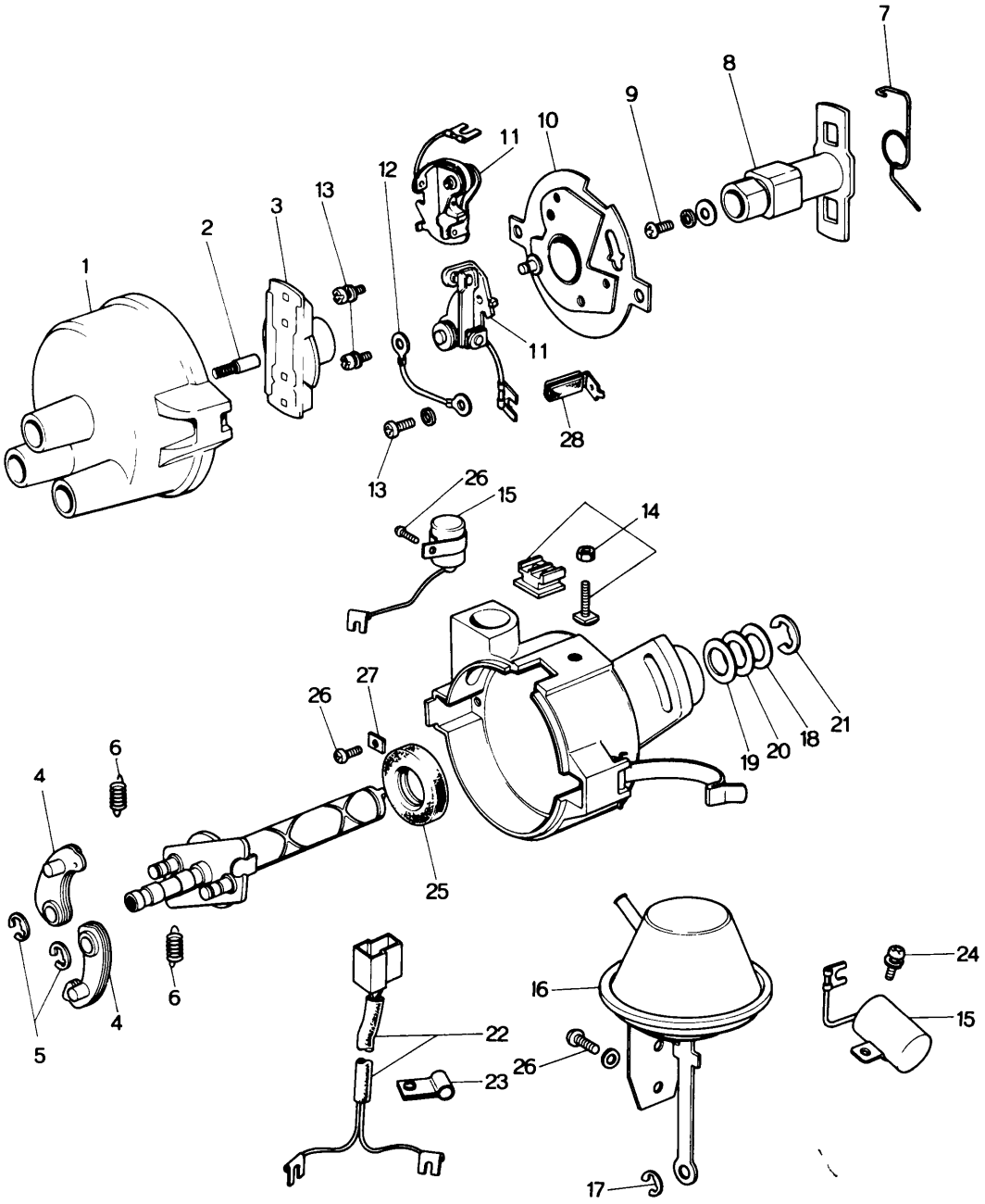

DISTRIBUTOR (LEADING SIDE) (1972, 1973 MODEL)

No.	Part Number	Description	Q'ty	Remarks
	1683 18 700A	DISTRIBUTOR Ass'y, Leading	1	
1	0820 24 301	CAP Ass'y	1	
2	2545 23 496	Carbon, Contact	1	
3	0813 24 303	Rotor Ass'y	1	
4	0813 24 306	Weight, Governor	2	
5	0107 18 231	Washer, Lock	2	
6	2329 24 408	Spring, Governor	2	
7	0813 24 309	Spring, Hair Pin	1	
8	1683 24 411	Cam Ass'y	1	
9	0839 24 312	Screw, Small	1	
10	1617 24 415	Base, Breaker Ass'y	1	
11	1617 24 316	Support, Arm Ass'y	2	
12	0107 18 212	Cord, Earth	1	
13	0324 24 316	Screw (4 × 9)	3	
14	1617 24 419	Terminal Ass'y	1	
15	0820 24 322	Condenser Ass'y	2	
16	1617 24 423	Control, Vacuum Ass'y	1	
17	0107 18 266	Washer, Lock	1	
18	0107 18 226A	Washer, (12.7×20×1.0)	1	
19	0107 18 225	Washer, (12.7×20×0.1)	1	
20	0107 18 224	Washer, (12.7×20×0.2)	1	
21	0107 18 221A	Washer, Lock	1	
22	1617 24 437	Wire, Lead Ass'y	1	

24. DISTRIBUTOR (LEADING SIDE) (1972, 1973 MODEL)

No.	Part Number	Description	Q'ty	Remarks
23	1617 24 435	Clamp, Lead Wire	1	
24	0813 24 312	Screw	1	
25	0107 18 216A	Seal, Oil	1	
26	0571 24 312	Screw	4	
27	1617 24 414	Washer	2	
28	2430 24 315	Wick Ass'y	1	

(For U. S. A.)
ALTERNATOR (Used up to Car No. 105547 71/10)

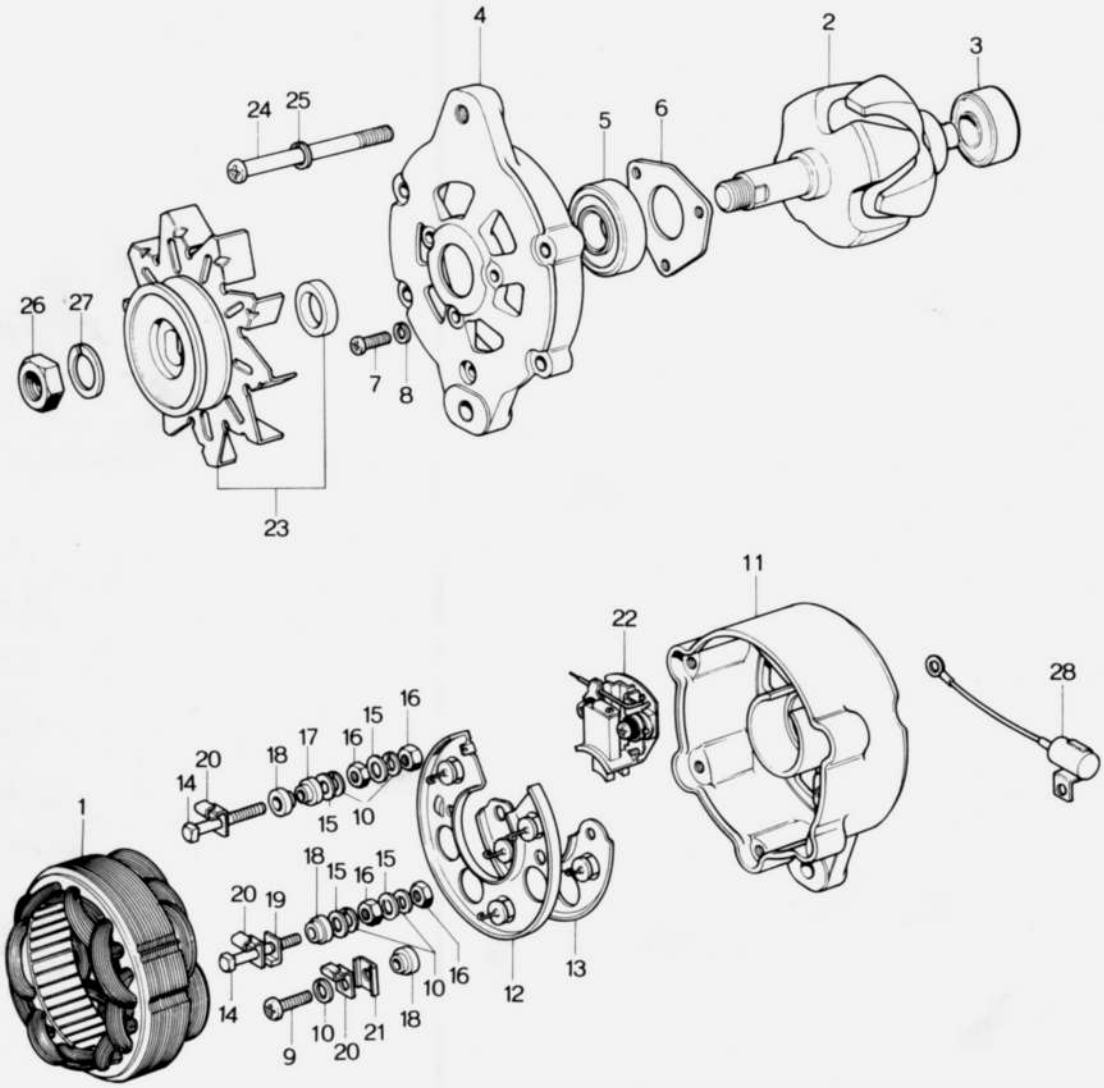

No.	Part Number	Description	Q'ty	Remarks
	0839 18 300	**ALTERNATOR**	1	
1	0290 24 501A	Stator	1	
2	0290 24 505A	Rotor	1	
3	0208 24 523	Bearing, Ball	1	
	0290 24 510A	**BRACKET Ass'y, Front**	1	
4	0290 24 511A	Bracket, Front	1	
5	0290 24 524	Bearing, Ball	1	
6	0290 24 515	Plate, Bearing Press	1	
7	0636 24 568B	Screw, (5×18)	3	
8	0200 23 531	Washer, Spring (5.1×9.2×1.3t)	3	
	0290 24 520A	**BRACKET Ass'y, Rear**	1	
9	0636 24 568B	Screw, (5×18)	1	
10	0200 23 531	Washer, Spring (5.1×9.2×1.3t)	5	
11	0290 24 521A	Bracket, Rear	1	
12	0290 24 541A	Sink Cpt., Heat ⊕	1	
13	0290 24 542A	Sink Cpt., Heat ⊖	1	
14	0820 24 511	Bolt, Square (5×36)	2	
15	0187 24 566	Washer, (5.5×10×0.8t)	4	
16	0222 24 568	Nut, (5×8B×4H)	4	
17	0208 24 563A	Plate, Insulator (5)	1	
18	0290 24 563	Plate, Insulator (5)	3	

(For U. S. A.)
ALTERNATOR (Used up to Car No. 105547 71/10)

No.	Part Number	Description	Q'ty	Remarks
19	0636 24 562A	Insulation, "L" Type (5)	1	
20	0820 24 519	Clamp	3	
21	0290 24 513	Insulation, "U" Type	1	
22	0290 24 556	Holder, Brush	1	
23	0839 24 530	Pulley Ass'y	1	
24	0290 24 517	Screw, (6×71)	3	
25	0107 18 424	Washe, Spring (6.1×12.2×1.5t)	3	
26	0187 24 579A	Nut, (12×22B×7H)	1	
27	0187 24 577A	Washer, Spring (12.2×21.5×3t)	1	
28	0290 24 581	Condenser	1	

(Used up to Car No. 105547 71/10)

ALTERNATOR (POWERFUL TYPE, FOR CANADA)

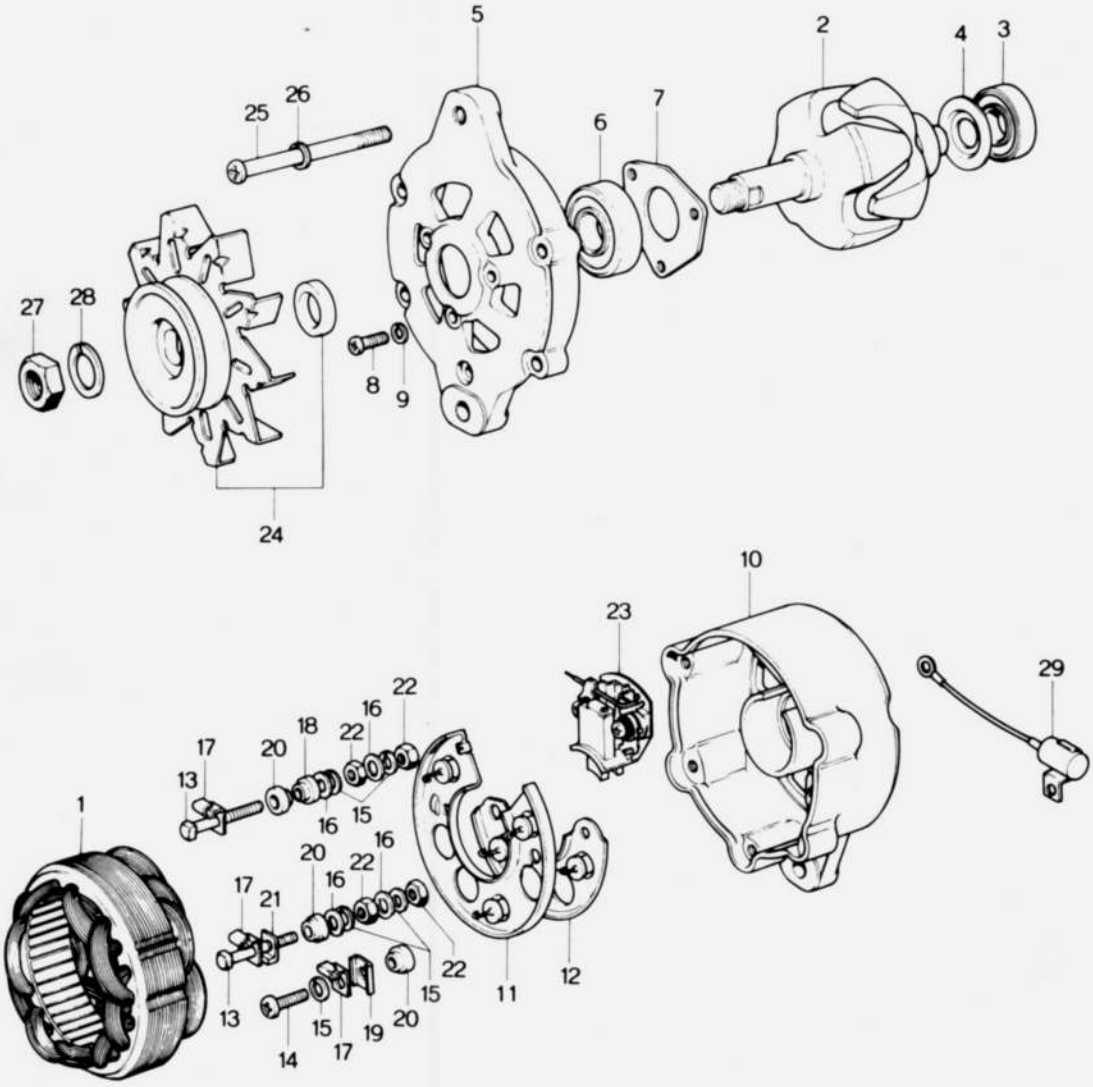

ALTERNATOR (POWERFUL TYPE, FOR CANADA)

No.	Part Number	Description	Q'ty	Remarks
•	2869 18 300	**ALTERNATOR (50 A)**	1	
1	0824 24 501	Stator	1	
2	0824 24 502	Rotor	1	
3	4002 24 523	Ball Bearing	1	
4	0823 24 504	Seal Washer	1	
	0823 24 521A	**FRONT BRACKET Ass'y**	1	
5	0823 24 522A	Front Bracket	1	
6	4002 24 514	Ball Bearing	1	
7	0823 24 525A	Bearing Retainer	1	
8	0636 24 568B	Small Screw (5×18)	3	
9	0200 23 531	Spring Washer (5.1×9.2×3t)	3	
	0824 24 505	**REAR BRACKET Ass'y**	1	
10	0824 24 508	Rear Bracket	1	
11	0290 24 541A	Heat Sink Cpt. ⊕	1	
12	0290 24 542A	Heat Sink Cpt. ⊖	1	
13	0820 24 511	Bolt (5×36)	2	
14	0636 24 568B	Small Screw (5×18)	1	
15	0200 23 531	Spring Washer (5.1×9.2×3t)	5	
16	0187 24 566	Washer (5.5×10×0.8t)	4	
17	0820 24 519	Clamp	3	
18	0208 24 563A	Insulation (5)	1	

(Used up to Car No. 105547 71/10)

ALTERNATOR (POWERFUL TYPE, FOR CANADA)

No.	Part Number	Description	Q'ty	Remarks
19	0290 24 513	"U" Insulation	1	
20	0290 24 583	Insulation (5)	3	
21	0636 24 582A	"L" Insulation	1	
22	0222 24 568	Nut (5 × 8B × 4H)	4	
23	0326 24 556	Brush Holder Ass'y	1	
● 24	0839 24 530	Pulley Ass'y	1	
25	0824 24 527	Small Screw (5×71)	4	
26	0200 23 531	Spring Washer (5.1×9.2×3t)	4	
27	0187 24 579A	Nut (12×22B × 7H)	1	
28	0187 24 577A	Spring Washer	1	
29	0290 24 581	Condenser	1	

ALTERNATOR (U.S.A. & CANADA)

(USED FROM CAR NO. 105548 71/11 ~ 191155 73/5)

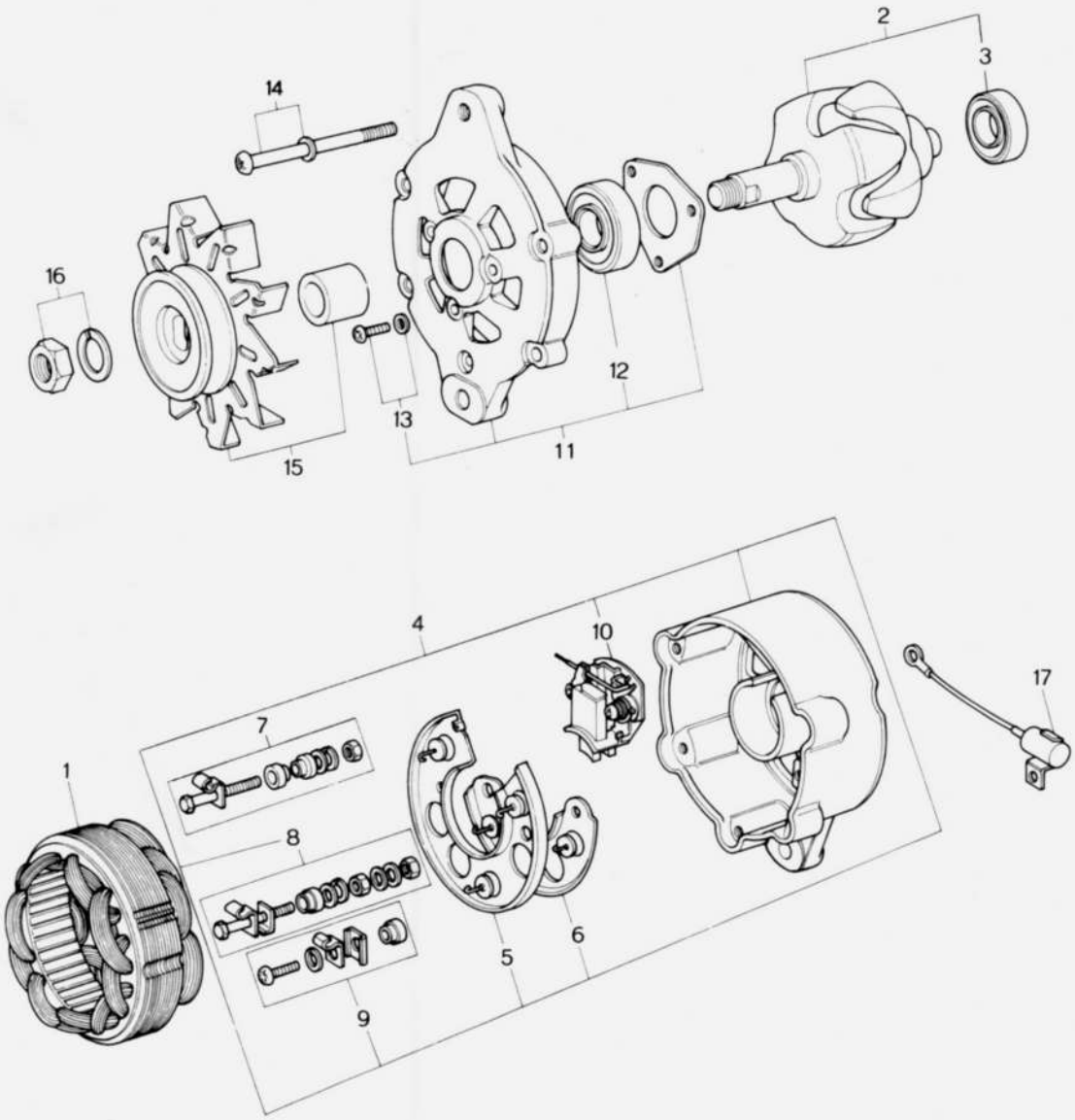

ALTERNATOR (U.S.A. & CANADA)

(USED FROM CAR NO. 105548 71/11 ~ 191155 73/5)

24

No.	Part Number	Description	Q'ty	Remarks
	0866 18 300	Alternator (50A)	1	
1	0866 24 501	Stator	1	
2	0866 24 540	Rotor (Fig. No. 3 included)	1	
3	0820 24 503	Bearing	1	
4	0866 24 560	Bracket, Rear (Fig No. 5 ~ 10 included)	1	
5	0290 24 541A	Heat Sink ⊕	1	
6	0290 24 542A	Heat Sink ⊖	1	
7	0866 24 548	Terminal Set (A)	1	
8	0866 24 549	Terminal Set (E)	1	
9	0866 24 534	Screw Set	1	
10	0866 24 541	Holder, Brush	1	
11	0866 24 550	Bracket, Front (Fig. No. 12 ~ 13 included)	1	
12	0208 24 514	Bearing	1	
13	0866 24 526	Screw	3	
14	0866 24 535	Screw Set	1	
15	0866 24 530	Pulley Ass'y	1	
16	0866 24 533	Nut Set	1	
17	0290 24 581	Condenser	1	

ALTERNATOR (USED FROM CAR NO. 191156 73/5~)

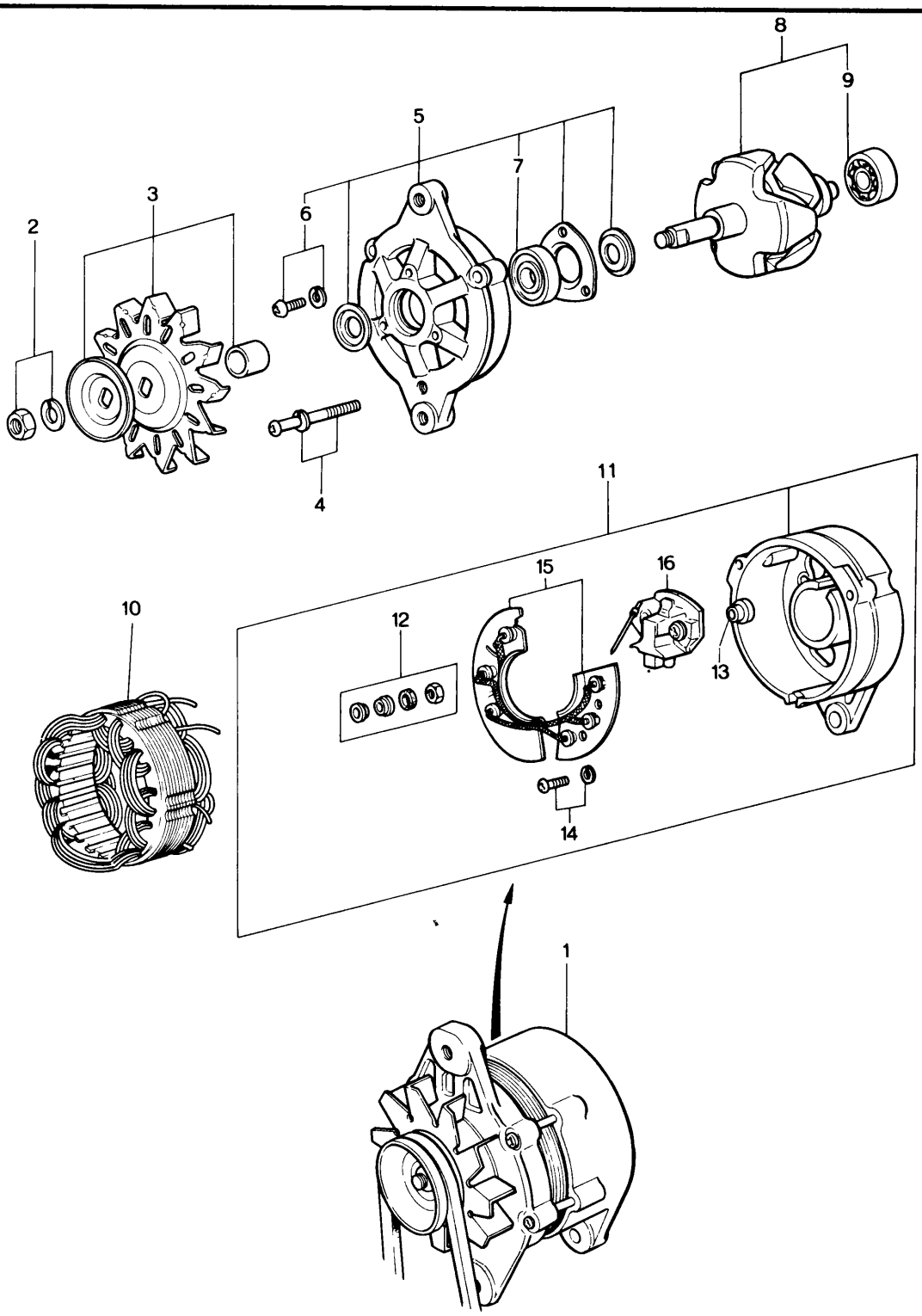

ALTERNATOR (USED FROM CAR NO. 191156 73/5 ~)

18 24

No.	Part Number	Description	Q'ty	Remarks
1	1011 18 300	Alternator	1	
2	0866 24 533	Nut Set	1	
3	0866 24 530	Pulley	1	
4	0866 24 535	Screw Set	1	
5	0866 24 550	Bracket, Front	1	
6	0866 24 526	Screw Set	3	
7	0208 24 514	Bearing, Ball	1	
8	0866 24 540	Rotor	1	
9	0820 24 503	Bearing, Ball	1	
10	1011 24 501	Starter	1	
11	1011 24 560	Bracket, Rear	1	
12	1011 24 533	Nut Set	1	
13	1011 24 563	Mould	1	
14	1011 24 534	Screw Set	1	
15	1011 24 510	Rectifier	1	
16	1011 24 541	Brush & Holder	1	
17	0290 24 581	Condenser	1	
18	1011 24 527	Screw, Condenser	1	

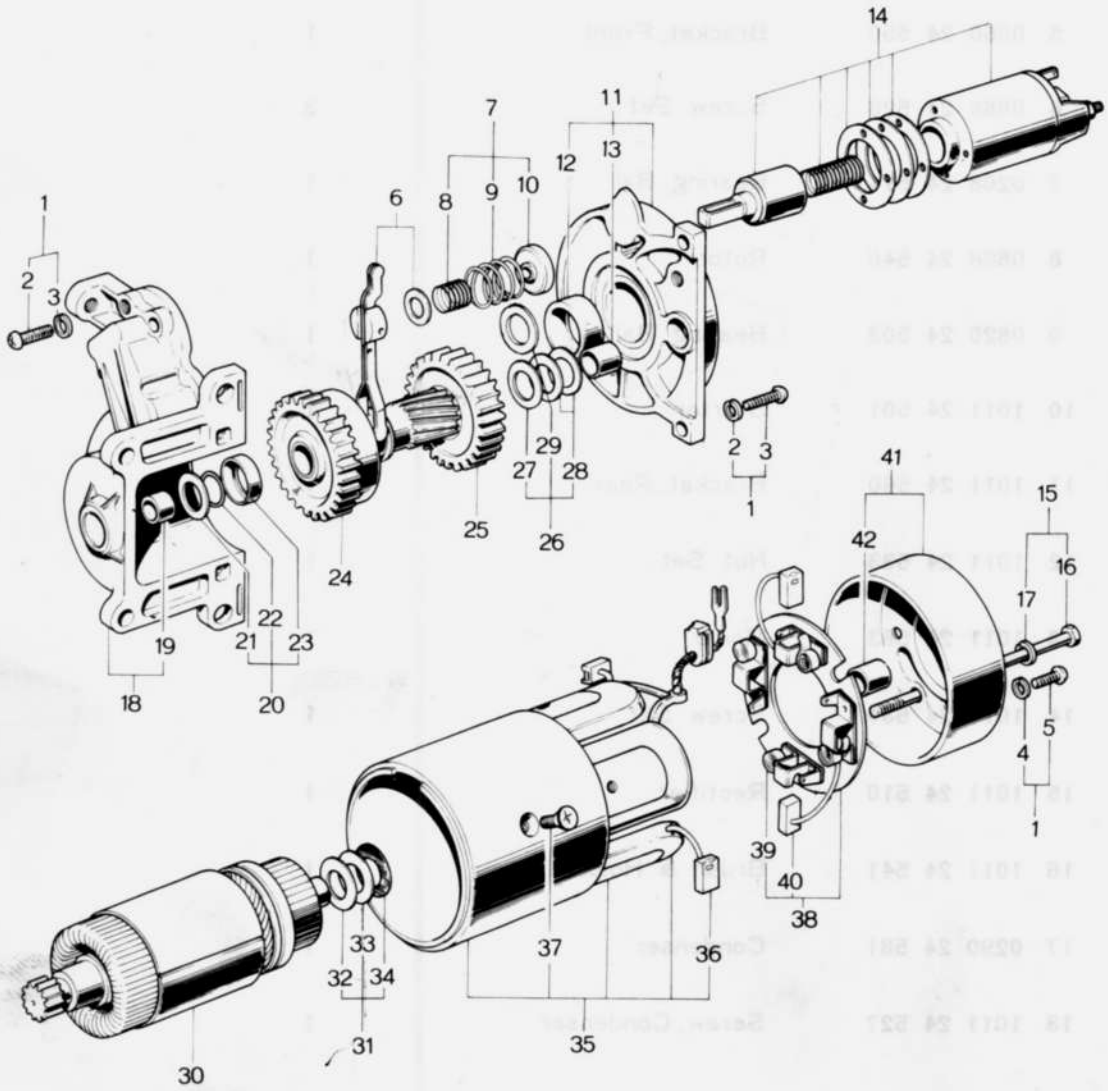
1
2
3
6
7
8
9
10
11
12
13
14
15
16
17
18
19
20
21
22
23
24
25
26
27
28
29
30
31
32
33
34
35
36
37
38
39
40
41
42
4
5

No.	Part Number	Description	Q'ty	Remarks
	0845 18 400	Starter	1	
● 1	0845 24 725	Screw Set (Fig. No. 2～5 included)	1	Car No. 187943 73/4～
2	0164 23 664	Screw (6×25)	6	Order Under No. 0845 24 725
3	0107 18 424	Washer, Spring (6.1×12.2×1.5)	6	
4	0200 23 531	Washer, Spring (5.9×9.2×1.3)	2	
5	0222 24 517	Screw (5×10)	2	
6	0845 24 716	Lever Ass'y	1	
● 7	0845 24 754	Spring Set (Fig. No. 8～10 included)	1	Car No. 187943 73/4～
8	0118 23 636	Lever, Spring	1	Order Under No. 0845 24 754
9	0118 23 637	Lever, Spring	1	
10	0845 24 717	Holder Ass'y	1	
11	0845 24 706	Bracket Ass'y, Center	1	
12	0820 24 707	Sleeve, Bearing (C)	1	
13	0222 24 741	Sleeve, Bearing (R)	1	
14	0222 24 760A	Switch Ass'y	1	
● 15	0426 24 731	Bolt Set (Fig. No. 16,17 included)	1	Car No. 187943 73/4～
16	0222 24 756	Bolt (6×134)	2	Order Under No. 0426 24 731
17	0107 18 424	Washer, Spring (6.1×12.2×1.5)	2	
18	0845 24 710	Bracket Ass'y, Front (Fig. No. 19included)	1	
19	0222 24 741	Bearing, Sleeve (R)	1	

24 STARTER (FOR U.S.A. MANUAL)

No.	Part Number	Description	Q'ty	Remarks
● 20	0845 24 712A	Stopper Set (Fig. No. 21~23 included)	1	Car No. 187943 73/4 ~
21	0820 24 714	Washer (4.4×26×1.6)	1	Order Under No. 0845 24 712A
22	0820 24 713	Ring	1	
23	0845 24 712	Stopper	1	
24	0845 24 709	Clutch, Over Running	1	
25	0845 24 721	Shaft Ass'y, Gear	1	
● 26	0845 24 748	Washer Set (Fig. No. 27~29 included)	1	Car No. 187943 73/4 ~
27	0820 24 747	Washer (14.4×26×0.8)	1	Order Under No. 0845 24 748
28	0820 24 748	Washer (14.4×26×0.2)	2	
29	0845 24 749	Washer (24.5×34×1.6)	1	
30	0845 24 705	Armature	1	
● 31	0426 24 726	Washer Set (Fig. No. 32~34 included)	1	Car No. 187943 73/4 ~
32	0107 18 406B	Washer (14.5×30×1.2)	1	Order Under No. 0426 24 426
33	0118 23 689	Washer (14.5×30×0.25)	2	
34	0118 23 691	Washer, Insulation (14.4×30×0.8)	1	
35	0845 24 701	Yoke Ass'y (Fig. No. 36,37 included)	1	
36	0222 24 753	Brush	2	
37	0866 24 704	Screw (10×15)	4	
38	0222 24 750	Holder Ass'y, Brush (Fig. No. 39,40 included)	1	
39	0222 24 752A	Spring, Brush	4	

No.	Part Number	Description	Q'ty	Remarks
40	0222 24 753	Brush	2	
●	0426 24 753	Brush	2	Car No. 187943 73/4~
41	0845 24 720	Bracket Ass'y, Rear (Fig No. 42 included)	1	
42	0222 24 741	Sleeve, Bearing (R)	1	

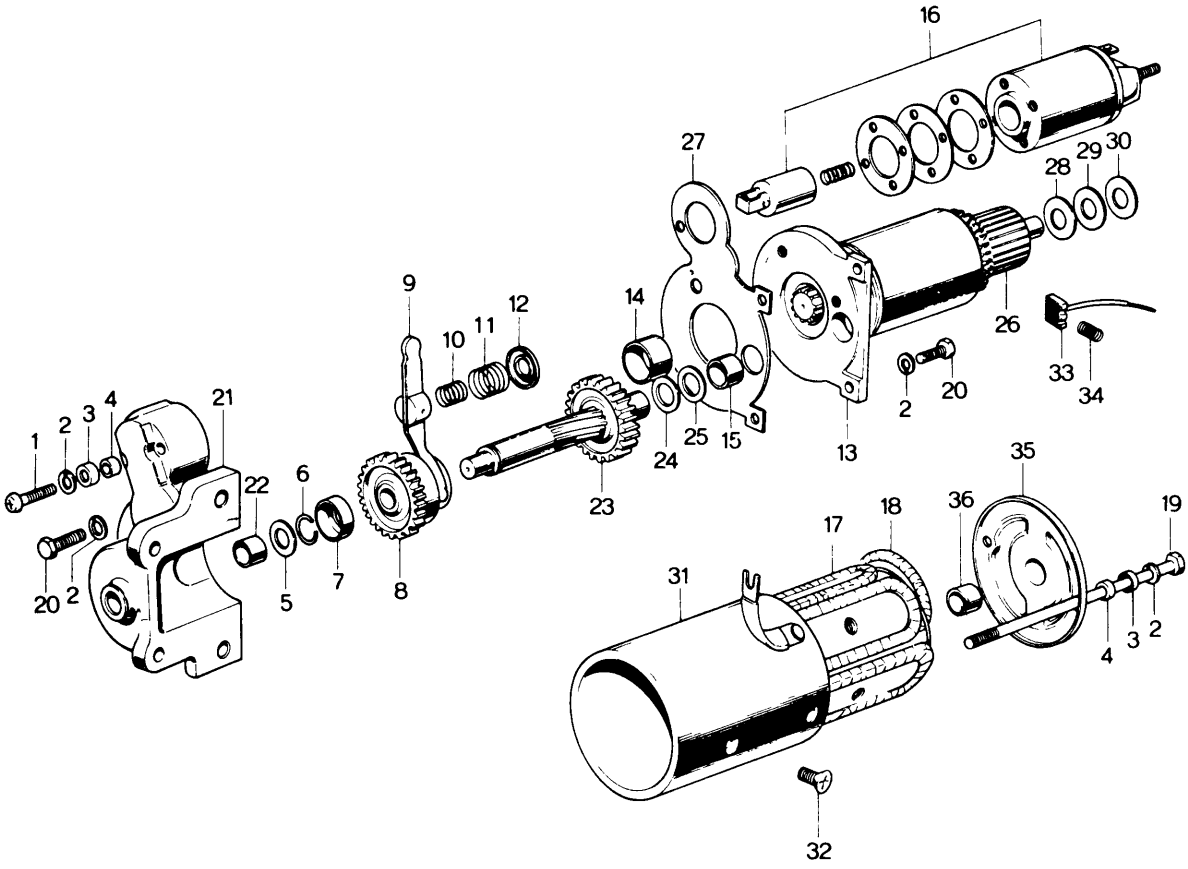
16
27
28
29
30
9
10
11
12
14
26
33
34
2
20
13
24
25
15
23
1
2
3
4
21
22
6
20
2
5
7
8
31
17
18
36
35
19
4
3
2
32

STARTER (FOR CANADA & U.S.A. AUTOMATIC) (Used Up To Car No. 151323 72/10)

No.	Part Number	Description	Q'ty	Remarks
	0839 18 400B	STARTER (Mitsubishi Make) } For Canada	1	
	0839 18 400C	STARTER (Mitsubishi Make) } For Canada	1	Car No. 77886 7/5 ~ △
	2869 18 400	STARTER (Mitsubishi Make) (2 KW) For Canada & U S A Automatic	1	1972,1973 Model
1	0839 24 758	Screw, (6×45)	2	
2	0200 23 519	Washer, Spring (6.1×12.2×1.5)	8	1971 Model
	0107 18 424	Washer, Spring (6.1×12.2×1.5)	8	1972,1973 Model
3	0839 24 761	Cover, Gasket	4	
4	0839 24 762	Gasket	4	
5	0820 24 714	Washer, (4.4×26×1.6)	1	
6	0820 24 713	Ring	1	
7	0820 24 712	Stopper, Pinion	1	
8	0839 24 709	Clutch, Over Running	1	
9	0839 24 716	Lever Ass'y	1	
10	0820 24 754	Spring, Lever (A)	1	
11	0820 24 755	Spring, Lever (B)	1	
12	0820 24 717	Seat, Spring	1	
13	0839 24 706	BRACKET, Center	1	
14	0839 24 715	Metal	1	
15	0249 24 731	Metal	1	1971 Model
	2869 24 749	Washer	1	1972,1973 Model
16	0839 24 736A	Switch Ass'y	1	
	0839 24 736B	Switch Ass'y	1	Car No. 77886 7/5 ~ ×
17	0839 24 703	Piece, Pole	4	
18	0839 24 702	Coil, Field	1	1971 Model
	2869 24 702	Coil, Field	1	1972,1973 Model
19	0839 24 764	Bolt, Through (6×155)	2	
20	0839 24 763	Bolt, (6×22)	4	

No.	Part Number	Description	Q'ty	Remarks
21	0839 24 710	**BRACKET**, Front	1	
22	0249 24 731	Metal	1	
Ⓝ	2869 24 749	Washer	1	
23	0839 24 721	Shaft, Pinion	1	
24	0820 24 747	Washer, (14.4×26×0.8)	1	
25	0820 24 748	Washer, (14.4×26×0.2)	2	
26	0839 24 705	Armature	1	
27	0839 24 719	Plate, Water Proof	1	
28	0118 23 689	Washer, (14.5×30×0.25)	2	
29	0820 24 741	Washer, (14.5×30×0.8)	1	
30	0118 23 691	Washer, Insulation (14.4×30×0.8)	1	
31	0839 24 701A	Yoke	1	1971 Model
	0839 24 701B	Yoke	1	
	2869 24 701	Yoke	1	1972,1973 Model
32	0727 24 712	Screw, (8×17)	4	
33	0839 24 723	Brush	4	
34	0839 24 724	Spring, Brush	4	
35	0839 24 720	**BRACKET**, Rear	1	1971 Model
	2869 24 720	**BRACKET**, Rear	1	1972,1973 Model
36	0839 24 722	Metal	1	1971 Model
	0249 24 731	Metal	1	1972,1973 Model

STARTER (FOR CANADA & U.S.A. AUTOMATIC)

(Used From Car No. 151324 72/10~)

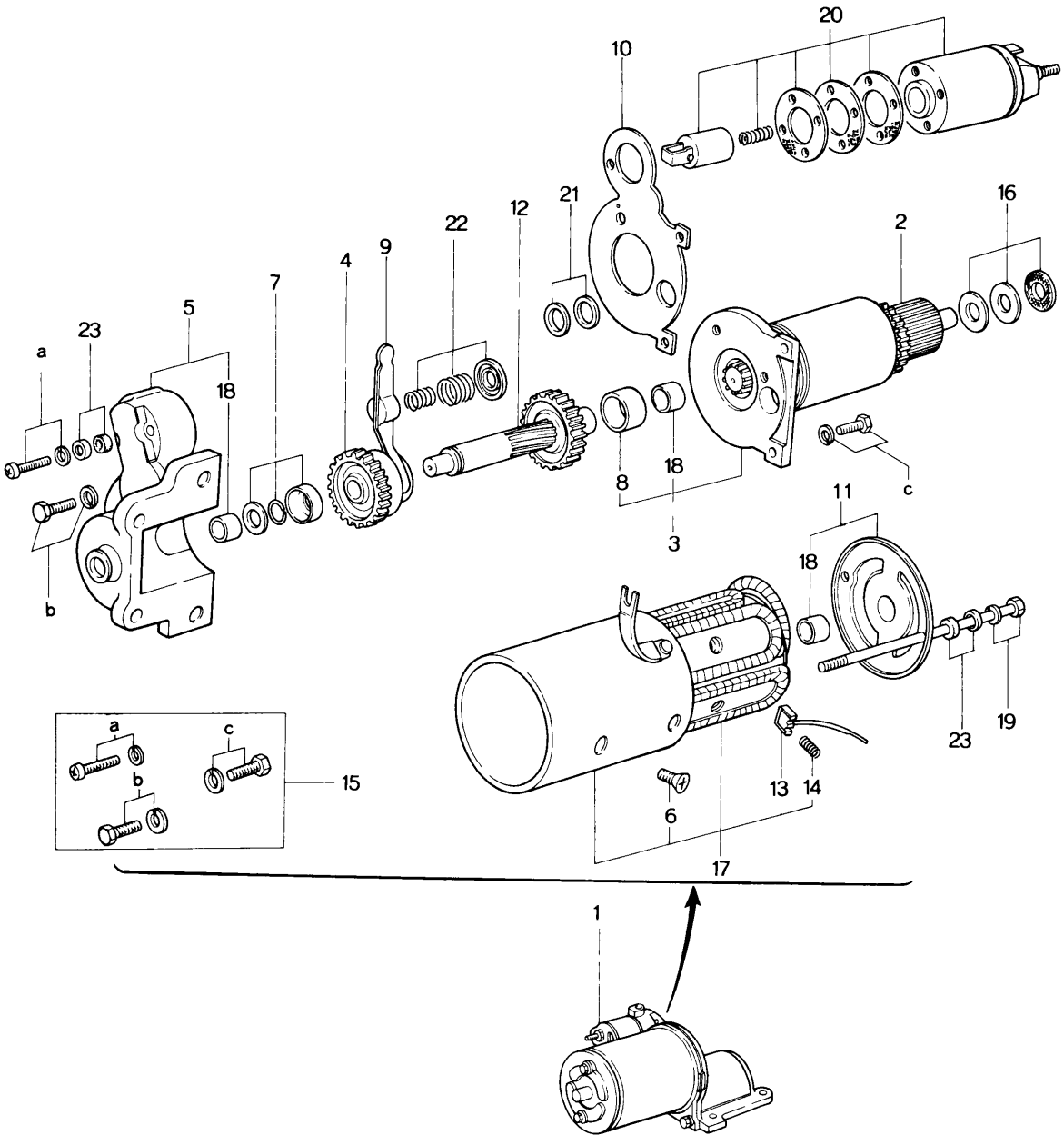

STARTER (FOR CANADA & U.S.A. AUTOMATIC) (Used From Car No. 151324 72/10~)

No.	Part Number	Description	Q'ty	Remarks
1	2869 18 400A	Starter	1	
2	0839 24 705	Armature	1	
3	0839 24 706	Bracket, Inner	1	
4	0839 24 709	Clutch, Over Running	1	
5	2869 24 710	Bracket, Front	1	
6	0727 24 712	Screw	4	
7	2869 24 712	Stopper Set	1	
8	0839 24 715	Metal	1	
9	0839 24 716	Lever	1	
10	0839 24 719	Plate, Water Proof	1	
11	2869 24 720	Bracket, Rear	1	
12	0839 24 721	Shaft, Pinion	1	
13	0839 24 723	Brush	4	
14	0839 24 724	Spring, Brush	4	
15	2869 24 725	Screw Set	1	
16	2869 24 726	Washer Set	1	
17	2869 24 730	Yoke	1	
18	0249 24 731	Metal, Bracket	3	
19	0559 24 731	Bolt Set, Through	2	
20	2869 24 736	Switch	1	

No.	Part Number	Description	Q'ty	Remarks
21	2869 24 748	Washer Set	1	
22	2869 24 754	Spring Set, Lever	1	
23	0559 24 760	Gasket Set	1	

AUTOMATIC T/MISSION

(CONVERTER, OIL PUMP & PIPING)

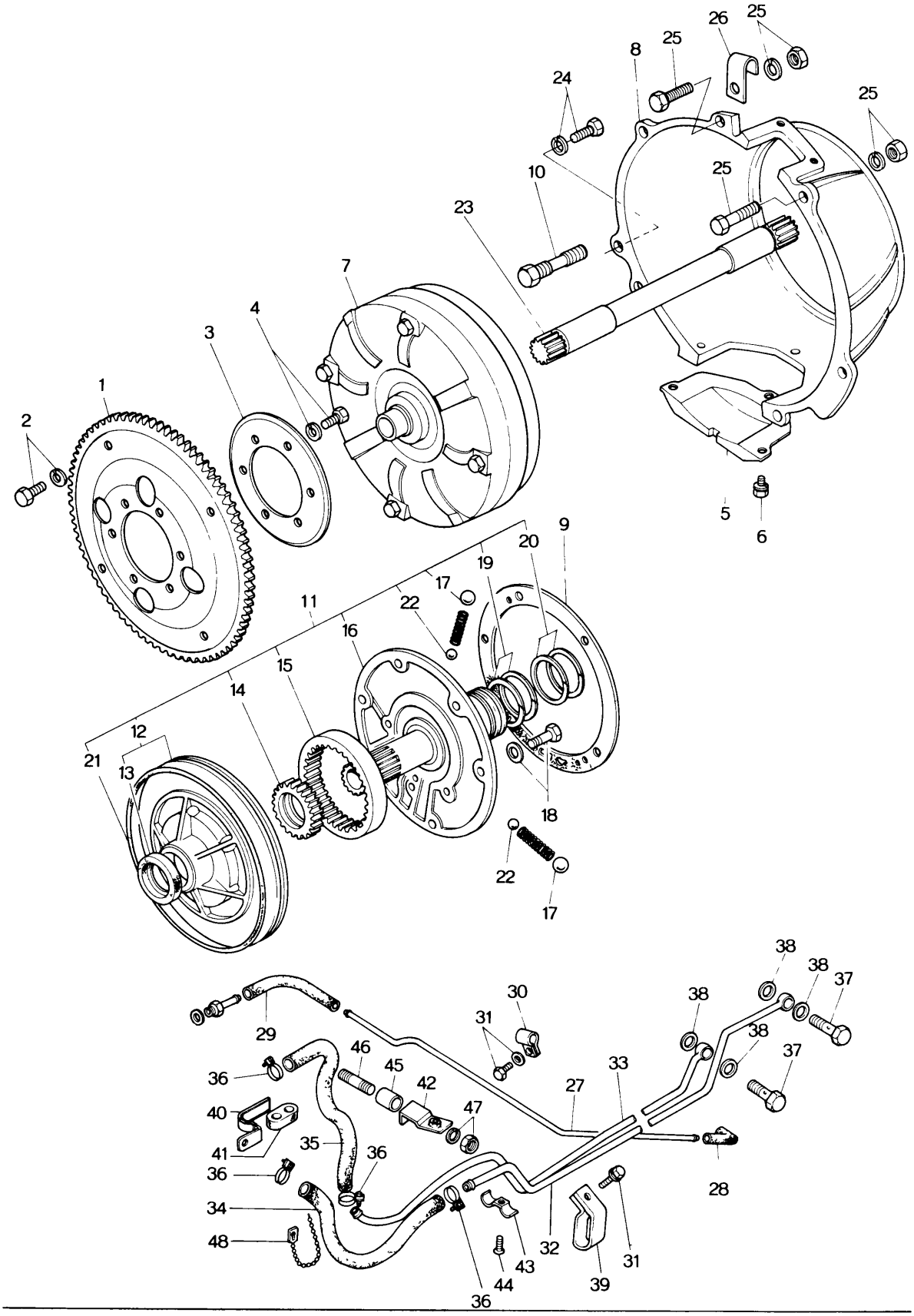

No.	Part Number	Description	Q'ty	Remarks
1	2070 19 020	Plate, Drive	1	
2	99781 1012	Bolt, Drive Plate	4	
	99971 1000	Washer, Spring	4	
3	0842 19 025	Plate, Backing	1	
4	99781 1018	Bolt, Backing Plate	6	
	99971 1000	Washer, Spring	6	
5	0842 19 027A	Cover, Under	1	
6	908062 6 10	Screw Set, Under Cover	3	
7	0338 19 100A	Convertor, Torque	1	
8	0842 19 211B	Housing, Convertor	1	
9	0338 19 215	Gasket, Oil Pump	1	
10	0338 19 216	Bolt, Housing	6	
11	0338 19 220	Pump, Oil	1	
12	0338 19 230	Housing, Fig. No. 13 Included	1	
13	0338 19 223	Oil Seal	1	
14	0338 19 234	Gear, Inner	1	
	0338 19 235	Gear, Inner (Selective use)		
	0338 19 236	Gear, Inner		
15	0338 19 237	Gear, Outer	1	
	0338 19 238	Gear, Outer (Selective use)		
	0338 19 239	Gear, Outer		
16	0338 19 240	Cover	2	
17	0338 19 245 ~~0337 19 705~~	~~Ball, Steel~~ Pulg. Tapered	2	From Car No. 1
18	0338 19 255	Bolt	5	

AUTOMATIC T/MISSION
(CONVERTER, OIL PUMP & PIPING)

No.	Part Number	Description	Q'ty	Remarks	
19	0338 19 256	Ring, Seal	2		
20	0338 19 257	Ring, Seal	2		
21	0338 19 258	Seal, Lathe Cut Ring	1		
22	99611 2000	Ball, Steel	2		
23	0338 19 678	Shaft, Input	1		
24	99811 1032	Bolt, Housing	1		
	99811 1050	Bolt	1		
	99971 1000	Washer, Spring	2		
25	99811 1045	Bolt, Housing	1		
o	99796 1045	Bolt, Housing	1		73/5~O
	99811 1050	Bolt	1		
o	99796 1050	Bolt	1		73/5~O
	99811 1055	Bolt	1		
o	99796 1045	Bolt	1	Car No. 192565	73/5~X
	99811 1075	Bolt	1		
o	99796 1080	Bolt	1		73/5~O
	99971 1000	Washer, Spring	4		
	99921 1000	Nut	4		
26	99295 1510	Clip	1		
27	2070 19 910	Pipe, Vacuum	1		
28	0338 19 904	Hose, Vacuum (Rr.)	1		
29	99340 05224	Hose, Vacuum (Frt.)	1		
30	0842 19 915A	Clip, Vacuum Pipe	1		
31	908062 6 14	Bolt Set, Clip	2		
32	2070 19 920	Pipe, Oil	1		
33	2070 19 930A	Pipe, Oil	1		
34	0842 19 933A	Hose, Oil	1		
35	0842 19 934B	Hose, Oil	1		

	No.	Part Number	Description	Q'ty	Remarks
	36	99282 1700	Band, Hose	4	
	37	99381 1000	Bolt, Connector-Oil Pipe	2	
	38	99564 1400	Gasket, Connector Bolt	4	
	39	0842 19 936	Clip, Oil Pipe	1	
	40	2070 19 938	Clip	1	
	41	2070 19 939	Protector	1	
	42	0842 19 940A	Bracket, Pipe	1	
	43	0842 19 942	Holder	1	
	44	908332 6 16	Screw Set, Holder	1	
	45	0842 19 943	Spacer	1	
	46	99859 1055	Stud, Pipe Bracket	1	
	47	99921 1000	Nut, Pipe Bracket	1	
		99971 1000	Washer, Spring	1	
	48	99709 0108	Band	4	
o	ⓝ	1633 19 938	Clip	1	Car No. 153905 '72/11~ Added Anew
		1669 19 090	Shipping T/mission	1	
o		1669 19 090A	Shipping T/mission	1	Car No. 151324 '72/10~△

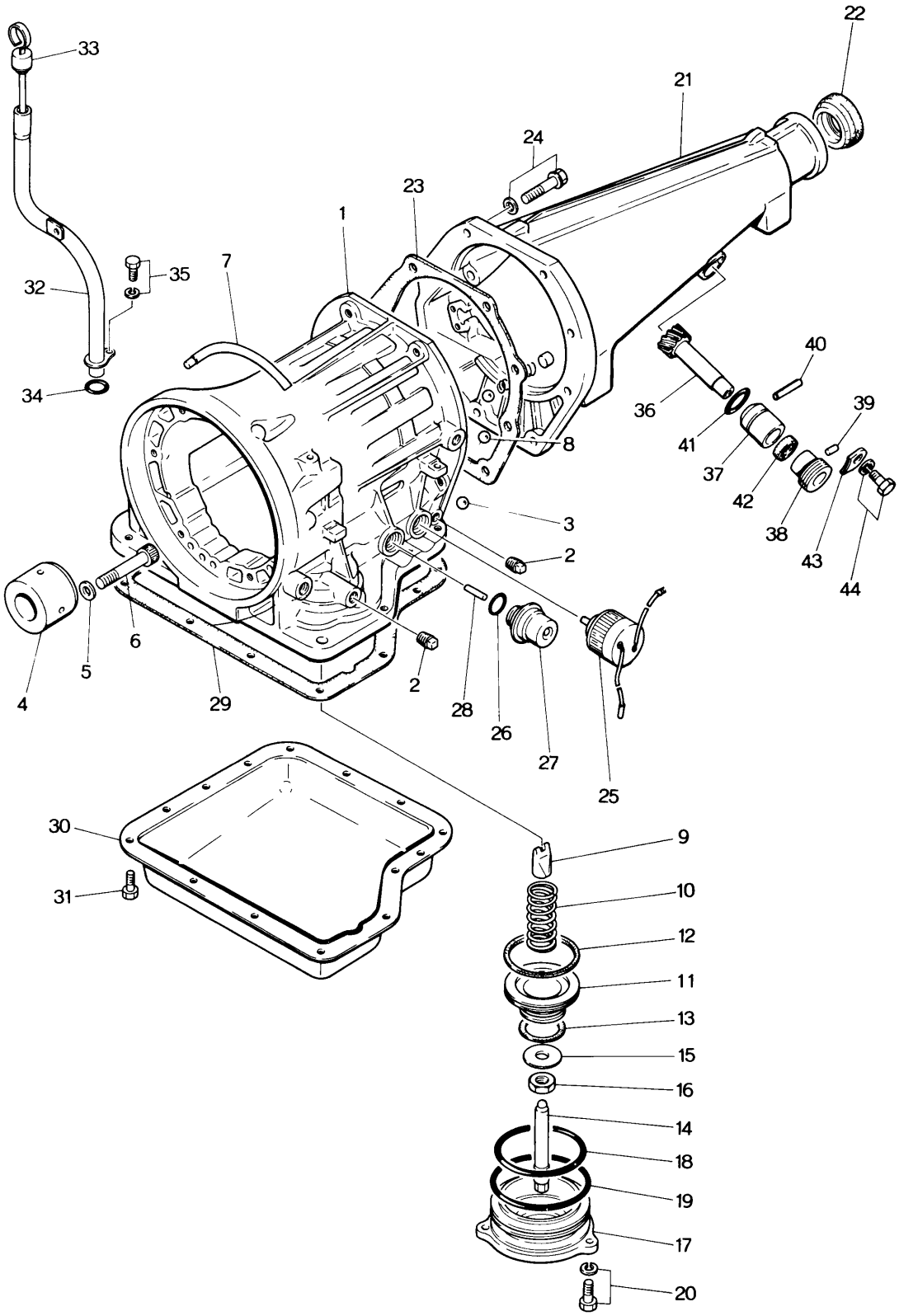
33
22
21
24
23
1
7
35
32
40
36
39
41
37
42
38
43
44
34
8
3
2
4
5
6
29
2
28
26
27
25
30
9
31
10
12
11
13
15
16
14
18
19
17
20

	No.	Part Number	Description	Q'ty	Remarks
	1	0338 19 310	Case, T / mission	1	
	2	0338 19 331	Plug, Square Head	3	
o		0338 19 331	Plug, Square Head	3	72/11~O
	3	0338 19 335	Ball, Steel	3	
o		99611 1750	Ball, Steel	3	72/11~O
	4	0338 19 336	Race, Inner	1	
	5	0338 19 337	Washer, Plain	8	
	6	0338 19 338	Bolt	8	
	7	0397 19 340	Breather, Air	1	
	8	99611 2000	Ball, Steel	2	
	9	0338 19 361	Strut, Band	1	
	10	0338 19 363	Spring, Return - Piston	1	
	11	0842 19 381	Piston, Band Servo	1	
	12	0338 19 384	Seal, Piston	1	
	13	0842 19 385	Seal, Piston	1	
	14	0338 19 386A	Stem, Piston	1	
	15	0338 19 388A	Washer, Plain	1	
	16	0338 19 389	Nut, Band Adjust	1	
	17	0842 19 391	Retainer, Servo	1	
	18	0842 19 394	Seal, Lathe Cut Ring	1	
	19	0338 19 395	Seal, "O" Ring	1	
	20	0338 19 397	Bolt	5	
	21	1875 19 710	Housing, Extension	1	
o		1840 19 710	Housing, Extension	1	73/2~O
	22	0317 17 335	Oil Seal	1	

No.	Part Number	Description	Q'ty	Remarks
23	0338 19 735	Gasket, Extension	1	
24	0338 19 737	Bolt	8	
	0338 19 739	Washer, Plain	8	
25	1675 19 821	Solenoid, Down Shift	1	
26	0338 19 822	Seal, "O" Ring	2	
27	0338 19 823	Diaphragm, Vacuum	1	
28	0338 19 825	Rod, Diaphragm (ℓ=30.0)		
	0338 19 826	Rod (ℓ=31.0)		
	0338 19 827	Rod (ℓ=30.5) Selective use	1	
	0338 19 828	Rod (ℓ=29.0)		
	0338 19 829	Rod (ℓ=29.5)		
29	0338 19 835	Gasket, Oil Pan	1	
●	0338 19 835A	Gasket, Oil Pan	1	'73/3~O
30	0338 19 836	Pan, Oil	1	
31	0338 19 837	Bolt	14	
32	2070 19 870	Tube, Oil	1	
33	0338 19 880	Gauge	1	
34	99541 01601	Ring, "O"	1	
35	908062 6 14	Bolt Set	1	
36	1669 17 441	Gear, Driven	1	
37	0862 17 442	Sleeve, Speedometer	1	
38	0862 17 351	Joint, Cable	1	
39	0187 17 352	Pin, Dowel	1	
40	99222 0216	Pin, Spring	1	
41	99541 02211	Ring, "O"	1	
42	99586 10207	Oil Seal	1	
43	0111 17 354	Plate, Lock	1	
44	908062 6 14	Bolt Set, Lock Plate	1	

AUTOMATIC T/MISSION
(CLUTCH & PLANETARY GEAR)

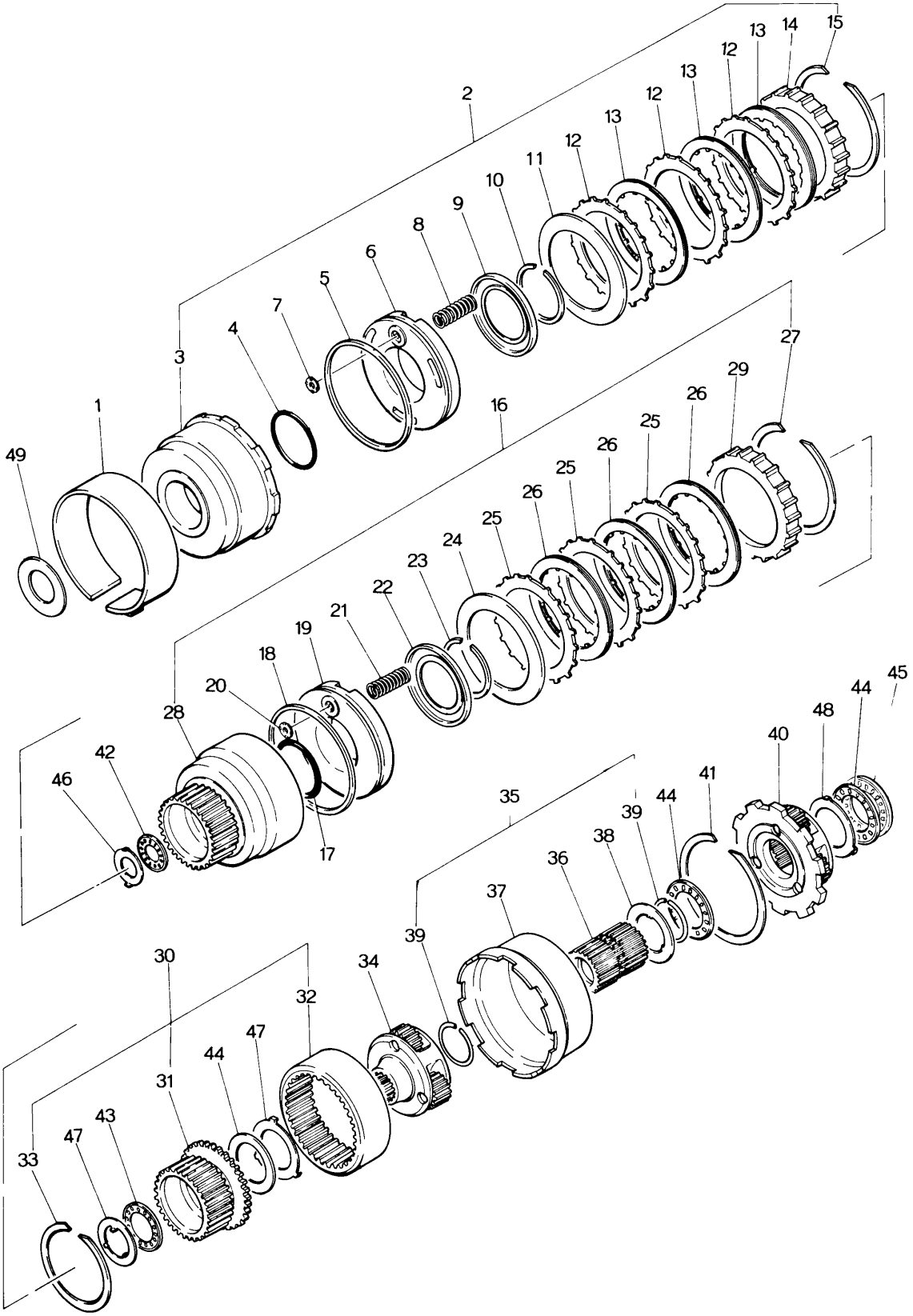

No.	Part Number	Description	Q'ty	Remarks
1	0338 19 360	Band, Brake	1	
2	0338 19 460	Clutch, Front	1	
3	0338 19 470	Drum, Clutch	1	
4	0338 19 475	Seal, "O" Ring	1	
5	0338 19 476	Seal, Lathe Cut	1	
6	0338 19 480	Piston, Clutch	1	
7	0338 19 493	Retainer, Ball	1	
8	0338 19 486	Spring, Piston Return	10	
9	0338 19 487	Retainer, Spring	1	
10	0338 19 488	Ring, Snap	1	
11	0338 19 498	Plate, Dished	1	
12	0338 19 499	Plate, Driven	3	
13	0338 19 500	Plate, Drive	3	
14	0338 19 503	Plate, Retaining	Selective use	1
	0338 19 504	Plate, Retaining		
	0338 19 505	Plate, Retaining		
	0338 19 506	Plate, Retaining		
	0338 19 507	Plate, Retaining		
	0338 19 508	Plate, Retaining		
15	0338 19 509	Ring, Snap	1	
16	0338 19 510	Clutch, Rear	1	
17	0338 19 475	Seal, "O" Ring	1	

AUTOMATIC T/MISSION
(CLUTCH & PLANETARY GEAR)

No.	Part Number	Description	Q'ty	Remarks
18	0338 19 476	Seal, Lathe Cut	1	
19	0338 19 480	Piston, Clutch	1	
20	0338 19 493	Retainer, Ball	1	
21	0338 19 486	Spring, Piston Return	10	
22	0338 19 487	Retainer, Spring	1	
23	0338 19 488	Ring, Snap	1	
24	0338 19 498	Plate, Dished	1	
25	0338 19 499	Plate, Driven	4	
26	0338 19 500	Plate, Driven	4	
27	0338 19 509	Ring, Snap	1	
28	0338 19 511	Drum, Rear Clutch	1	
29	0338 19 515	Plate, Retaining	1	
30	0338 19 530	Hub, Rear Clutch	1	
31	0338 19 531	Hub, Rear Clutch	1	
32	0338 19 533	Gear, Internal	1	
33	0338 19 534	Ring, Snap	1	
34	0338 19 540	Carrier, Front	1	
35	0338 19 550	Shell, Sun Gear	1	
36	0338 19 560	Gear, Sun	1	
37	0338 19 565	Shell, Connecting	1	

No.	Part Number	Description	Q'ty	Remarks
38	0338 19 566	Race, Bearing Seal	1	
39	0338 19 567	Ring, Snap	2	
40	0338 19 570	Carrier, Rear	1	
41	0338 19 598	Ring, Snap	1	
42	0338 19 621	Bearing, Needle	1	
43	0338 19 622	Bearing, Needle	1	
44	0338 19 623	Bearing, Needle	1	
45	0338 19 624	Bearing, Needle	1	
46	0338 19 631	Race, Bearing (t=1.2)	Selective use	1
	0338 19 632	Race, Bearing (t=1.4)		
	0338 19 633	Race, Bearing (t=1.6)		
	0338 19 634	Race, Bearing (t=1.8)		
	0338 19 635	Race, Bearing (t=2.0)		
	0338 19 636	Race, Bearing (t=2.2)		
47	0338 19 638	Race, Bearing-Rear Clutch	1	
48	0338 19 639	Race, Bearing	2	
49	0338 19 641	Washer, Front Clutch (t=1.90)	Selective use	1
	0338 19 642	Washer (t=2.10)		
	0338 19 643	Washer (t=2.30)		
	0338 19 644	Washer (t=2.50)		
	0338 19 645	Washer (t=2.70)		
	0338 19 646	Washer (t=1.50)		
	0338 19 647	Washer (t=1.70)		

AUTOMATIC T/MISSION
(LOW, REVERSE & GOVERNOR)

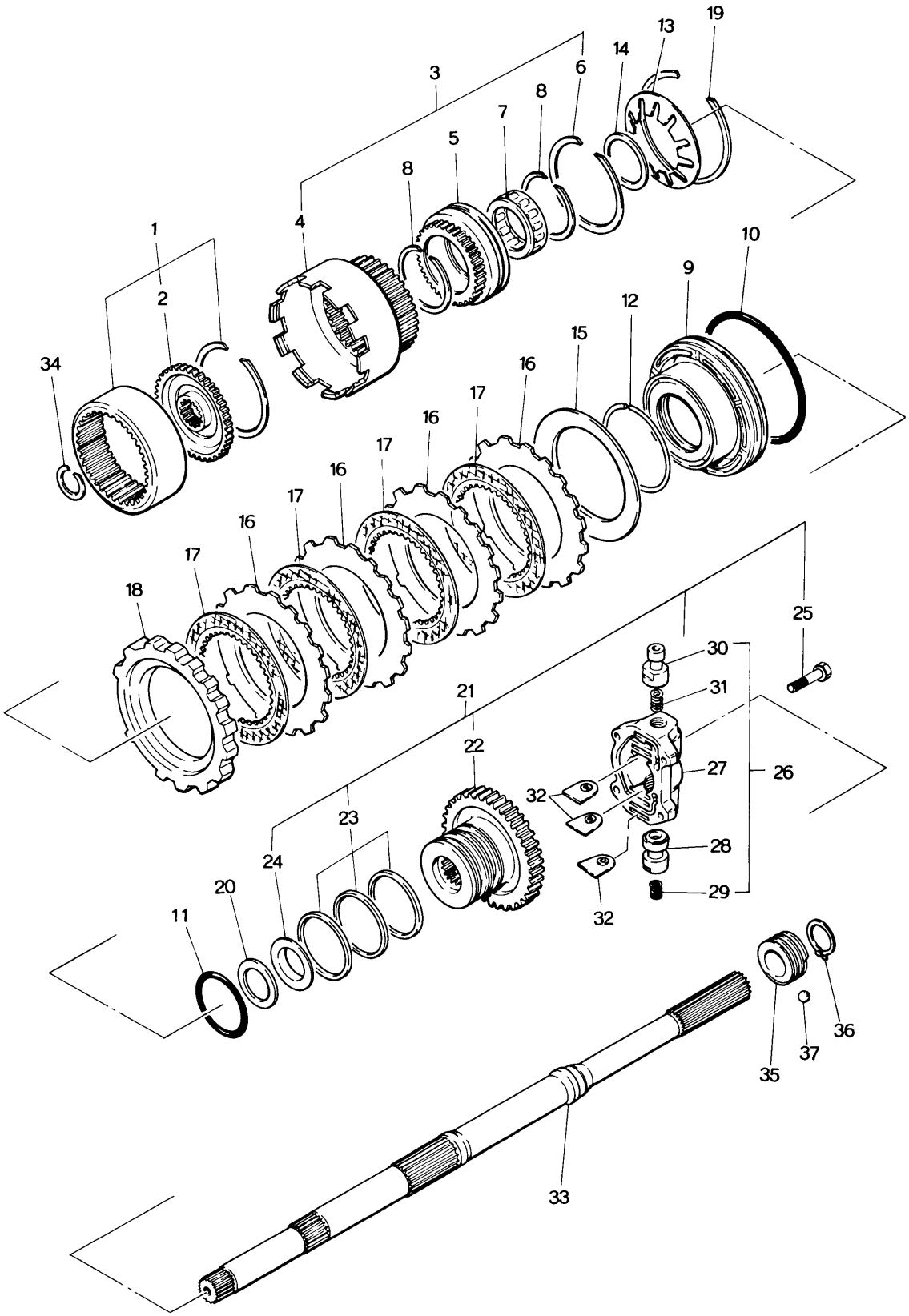

No.	Part Number	Description	Q'ty	Remarks
1	0338 19 580	Flange	1	
2	0338 19 581	Flange, Drive	1	
3	0338 19 590	Drum, Connecting	1	
4	0338 19 591	Drum, Connecting	1	
5	0338 19 593	Race, Outer	1	
6	0338 19 594	Ring, Snap	1	
7	0338 19 595	Clutch, One Way	1	
8	0338 19 596	Ring, Snap	2	
9	0338 19 601	Piston, Low & Reverse	1	
10	0338 19 603	Seal, Piston	1	
11	0338 19 604	Seal, "O" Ring	1	
12	0338 19 605	Ring, Thrust Spring	1	
13	0338 19 606	Spring, Piston	1	
14	0338 19 607	Ring, Snap	1	
15	0338 19 608	Plate, Dished	1	
16	0338 19 609	Plate, Driven	4	
17	0338 19 610	Plate, Drive	4	
18	0338 19 613A	Plate, Retaining (t=15.8)	Selective use	1
	0338 19 614A	Plate (t=16.0)		
	0338 19 615A	Plate (t=16.2)		
	0338 19 616A	Plate (t=16.4)		
	0338 19 617A	Plate (t=16.6)		

AUTOMATIC T/MISSION
(LOW, REVERSE & GOVERNOR)

No.	Part Number	Description	Q'ty	Remarks
	0338 19 618A	Plate (t=16.8)		
19	0338 19 619	Ring, Snap	1	
20	0338 19 622	Bearing, Needle	1	
21	0842 19 650	Distributor, Oil	1	
22	0338 19 651	Distributor	1	
23	0338 19 655	Ring, Seal	3	
24	0338 19 656	Race, Bearing	1	
25	0338 19 397	Bolt	4	
26	0842 19 660	Governor, Fig. No. 27~30 Included	1	
27	0338 19 661	Body	1	
28	0338 19 663	Valve	1	
29	0338 19 664	Spring	1	
30	0842 19 665	Valve	1	
31	0338 19 666	Spring, Governor	1	
32	0338 19 667	Plate, Retainer	3	
33	0338 19 670A	Shaft	1	
34	0338 19 676	Ring, Snap	1	
35	0862 17 341	Gear, Drive-Speedometor	1	
36	99573 2500	Ring, Snap	1	
37	99611 1500	Ball, Steel	1	

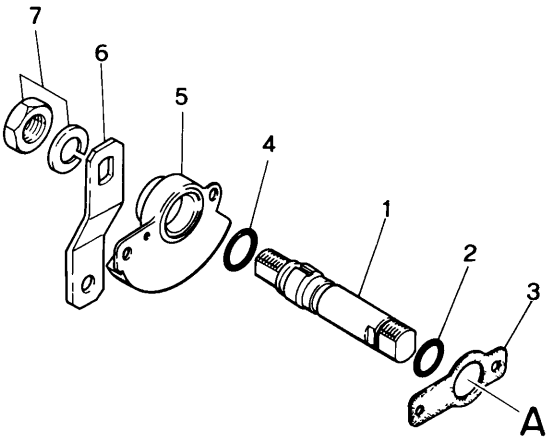
7
6
5
4
1
2
3
A

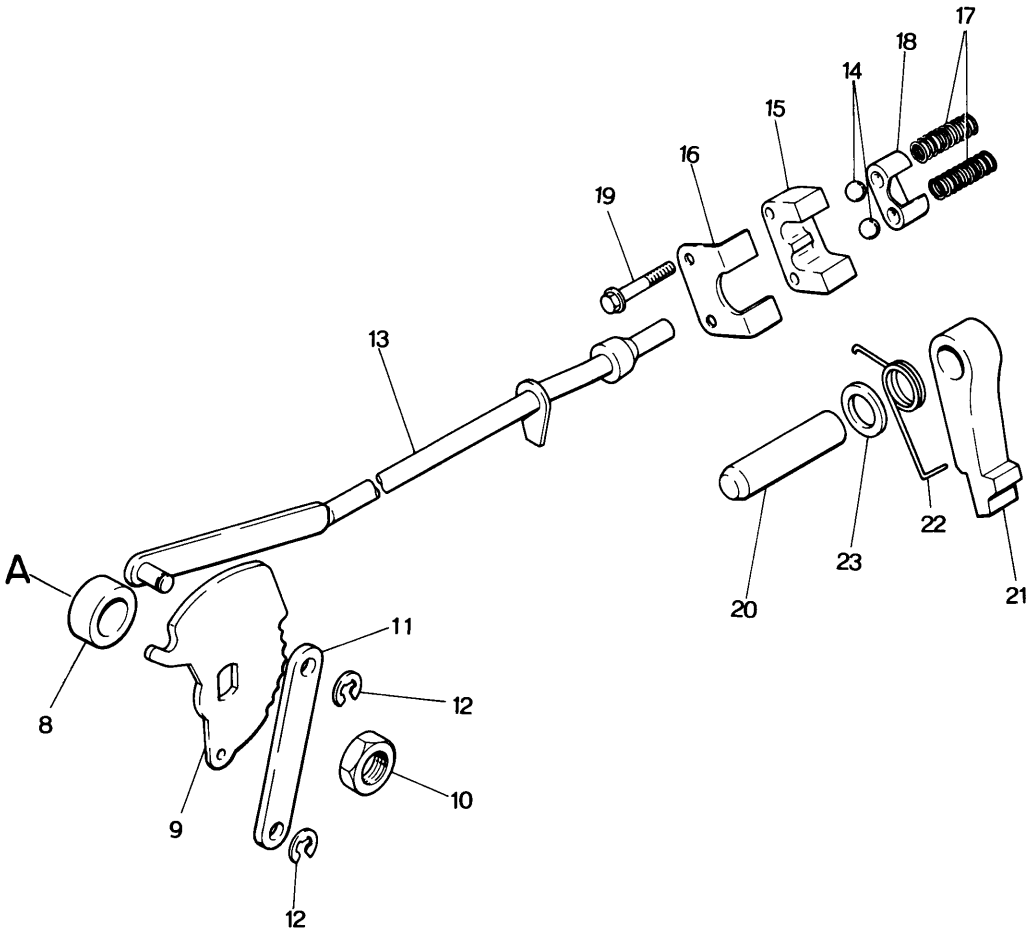
17
18
14
15
16
19
13
A
8
11
12
10
9
12
22
23
20
21

No.	Part Number	Description	Q'ty	Remarks
1	0338 19 431	Shaft, Manual	1	
2	0338 19 432	Seal, "O" Ring	1	
● 3	0338 19 445	Gasket, Switch	1	Car No. 151324 '72/10 ~ Discarded
4	0338 19 446	Seal, "O" Ring	1	
5	1675 19 444	Switch, Inhibitor	1	
●	1675 19 444A	Switch, Inhibitor	1	Car No. 151324 '72/10 ~ Δ
6	0842 19 031	Lever, Select	1	
7	99922 1400	Nut, Lever	1	
	99971 1400	Washer, Spring	1	
8	0338 19 433	Washer, Manual	1	
9	0338 19 440	Plate, Manual	1	
10	0338 19 443	Nut, Shaft	1	
11	0338 19 448	Lever, Parking	1	
12	0338 19 449	Ring, Snap	2	
13	0338 19 450	Rod, Parking	1	
14	0397 19 705	Ball, Steel	2	
15	0338 19 701	Support, Actuator	1	
16	0338 19 702	Plate, Retaining	1	
17	0338 19 703	Spring, Ball Park	2	
18	0338 19 704	Retainer	1	
19	0338 19 706	Bolt	2	
20	0338 19 731	Shaft, Parking Pawl	1	
21	0338 19 732	Pawl, Parking	1	
22	0338 19 733B	Spring, Pawl Return	1	
●	0338 19 733C	Spring, Pawl Return	1	'72/9 ~ O
23	0338 19 734A	Spacer, Pawl	1	

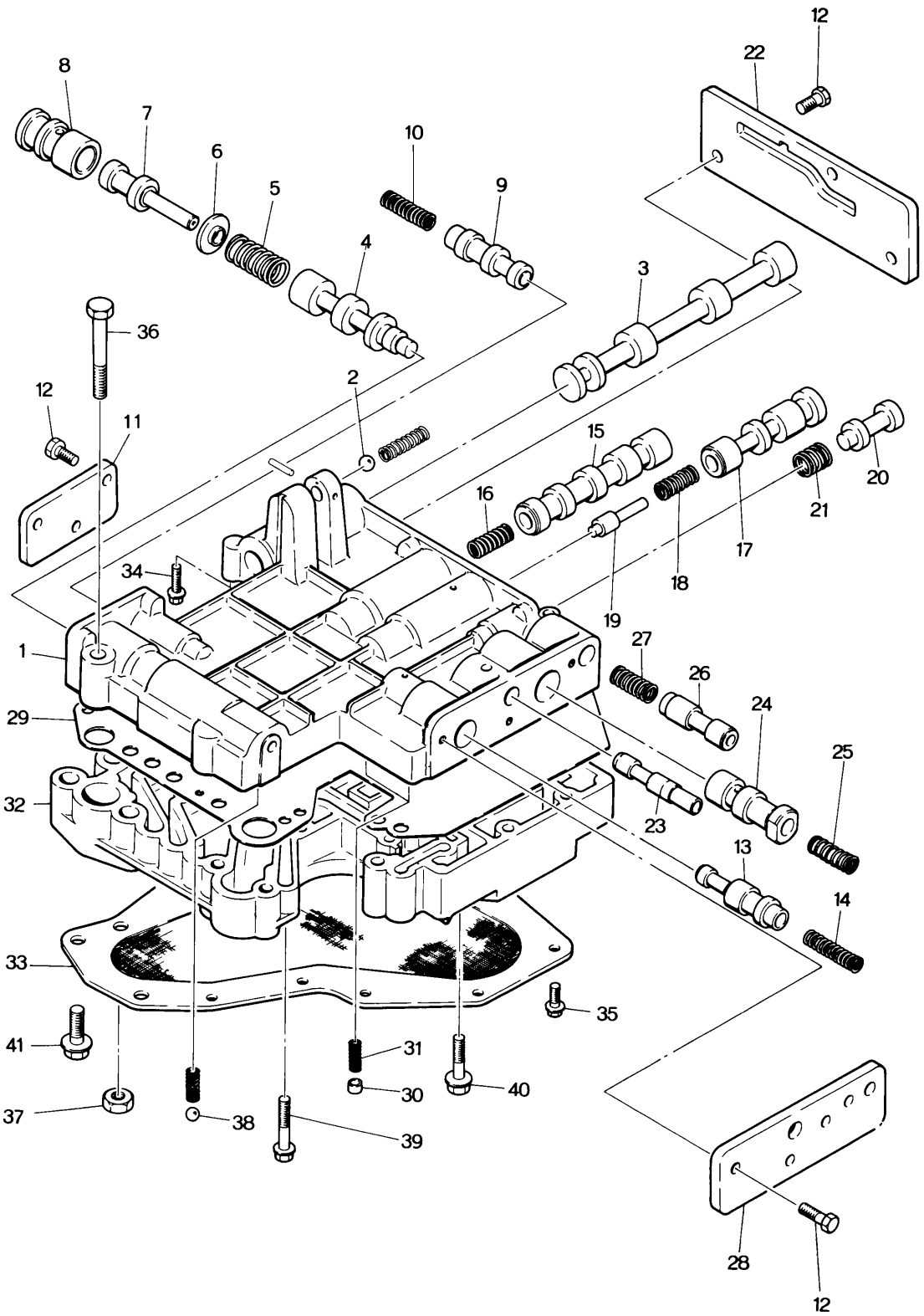
12
22
8
7
6
5
10
9
4
3
36
2
12
11
15
16
20
21
17
18
34
19
1
27
26
24
29
25
32
23
13
14
33
35
41
31
30
40
37
38
39
28
12

No.	Part Number	Description	Q'ty	Remarks
	0397 19 750	Valve, Control	1	
1	0338 19 760	Body, Fig. No. 2 Included	1	
2	99611 2500	Ball, Steel	1	
3	0338 19 768	Valve, Manual	1	
4	0338 19 771	Valve, Regulator Pressure	1	
5	0338 19 772	Spring, Regulator Pressure	1	
6	0338 19 773	Seat, Spring	1	
7	0397 19 774	Plug, Regulator Pressure	1	
8	0397 19 775	Sleeve, Plug	1	
9	0338 19 777	Valve, Second Lock	1	
10	0338 19 778	Spring, Second Lock	1	
11	0338 19 781	Plate, Side "D"	1	
12	0338 19 782	Screw	9	
13	0338 19 783	Valve, 2 ~ 3 Timing	1	
14	0338 19 784	Spring	1	
15	0338 19 785	Valve, 1 ~ 2 Shift	1	
16	0338 19 786	Spring	1	
17	0338 19 787	Valve, 2 ~ 3 Shift	1	
18	0338 19 788	Spring	1	
19	0338 19 789	Plug, 2 ~ 3 Shift	1	
20	0338 19 791	Valve, Modifier	1	
21	0338 19 792	Spring, Modifier	1	
22	0338 19 793	Plate, Side "A"	1	
23	0338 19 795	Valve, Vacuum Throttle	1	
24	0338 19 797	Valve, Throttle Back Up	1	
25	0338 19 798	Spring, Throttle Back Up	1	

No.	Part Number	Description	Q'ty	Remarks
26	0338 19 801	Valve, Down Shift	1	
27	0338 19 802	Spring, Down Shift	1	
28	0338 19 803	Plate, Side "B"	1	
29	0338 19 805	Plate, Separator	1	
30	0338 19 807	Valve, Orifice Check	2	
31	0338 19 808	Spring, Orifice Check	2	
32	0338 19 811	Body, Lower	1	
33	0338 19 815	Strainer, Oil	1	
34	0338 19 816	Screw	7	
35	0338 19 817	Screw	10	
36	0338 19 818	Bolt	2	
37	0338 19 819	Nut	2	
38	99611 2000	Ball, Steel	1	
39	0338 19 831	Bolt	3	
40	0338 19 832	Bolt	2	
41	0338 19 833	Bolt	2	

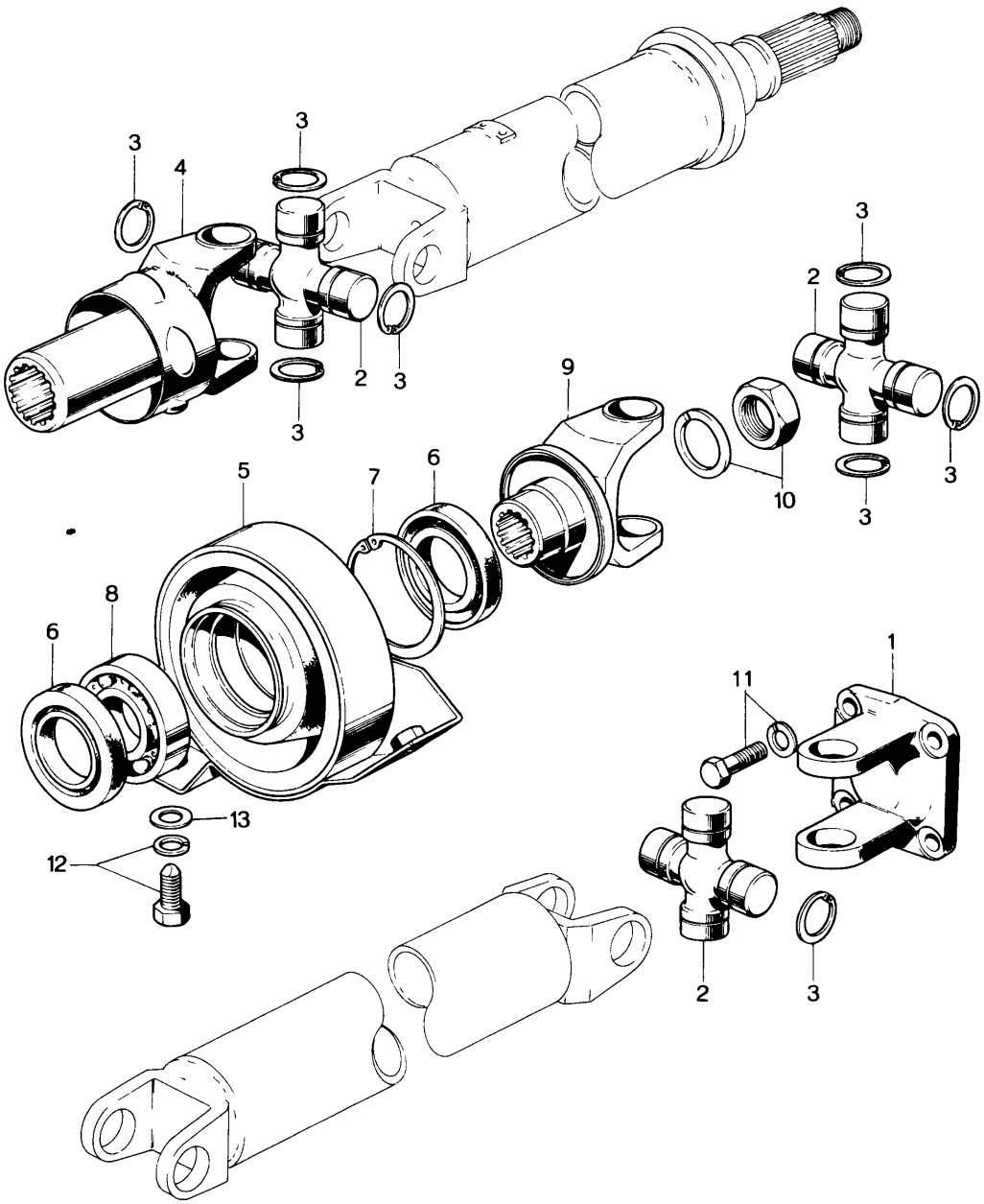
3
4
3
2
3
3
9
3
2
3
10
3
3
5
7
6
8
6
1
11
13
12
2
3

No.	Part Number	Description		Q'ty	Remarks
	0839 25 100C	SHAFT Ass'y, Propeller (Manual)		1	
●	0842 25 100A	SHAFT Ass'y, Propeller (Automatic)		1	
1	0259 25 021B	Yoke, Universal Joint		1	
2	0259 25 060	Joint, Universal		2	Order Under No. 0259 89 251 ~~8259 98 251~~ Universal Joint Set
3	0259 25 071A	Ring, Snap (t=1.22)	Selective use	12	
	0259 25 072A	Ring, Snap (t=1.24)			
	0259 25 073A	Ring, Snap (t=1.26)			
	0259 25 074A	Ring, Snap (t=1.28)			
	0259 25 075A	Ring, Snap (t=1.30)			
	0259 25 076A	Ring, Snap (t=1.32)			
	0259 25 077A	Ring, Snap (t=1.34)			
	0259 25 078A	Ring, Snap (t=1.36)			
	0259 25 079A	Ring, Snap (t=1.38)			
4	0324 25 130	Yoke Ass'y, Sliding		1	
	0866 25 130	Yoke Ass'y, Sliding		1	Car No. 97357 7/9 ~ ○
5	0839 25 300A	Support, Center Bearing		1	
	0842 25 300	Support, Center Bearing		1	Car No. 88202 7/7 ~ ○
6	0290 25 151	Seal, Oil		2	
7	99574 5200	Ring, Snap		2	
8	99606 62050	Bearing, Ball		1	
9	0223 25 220D	Yoke		1	
10	99922 1800	Nut		1	
	99971 1800	Washer, Spring		1	
11	99752 30818	Bolt, Propeller Shaft		4	
	99971 0800	Washer, Spring		4	
12	99804 1022	Bolt, Center Bearing Support		2	
	99971 1000	Washer, Spring		2	
13	0083 58 221	Washer, Adjust		2	

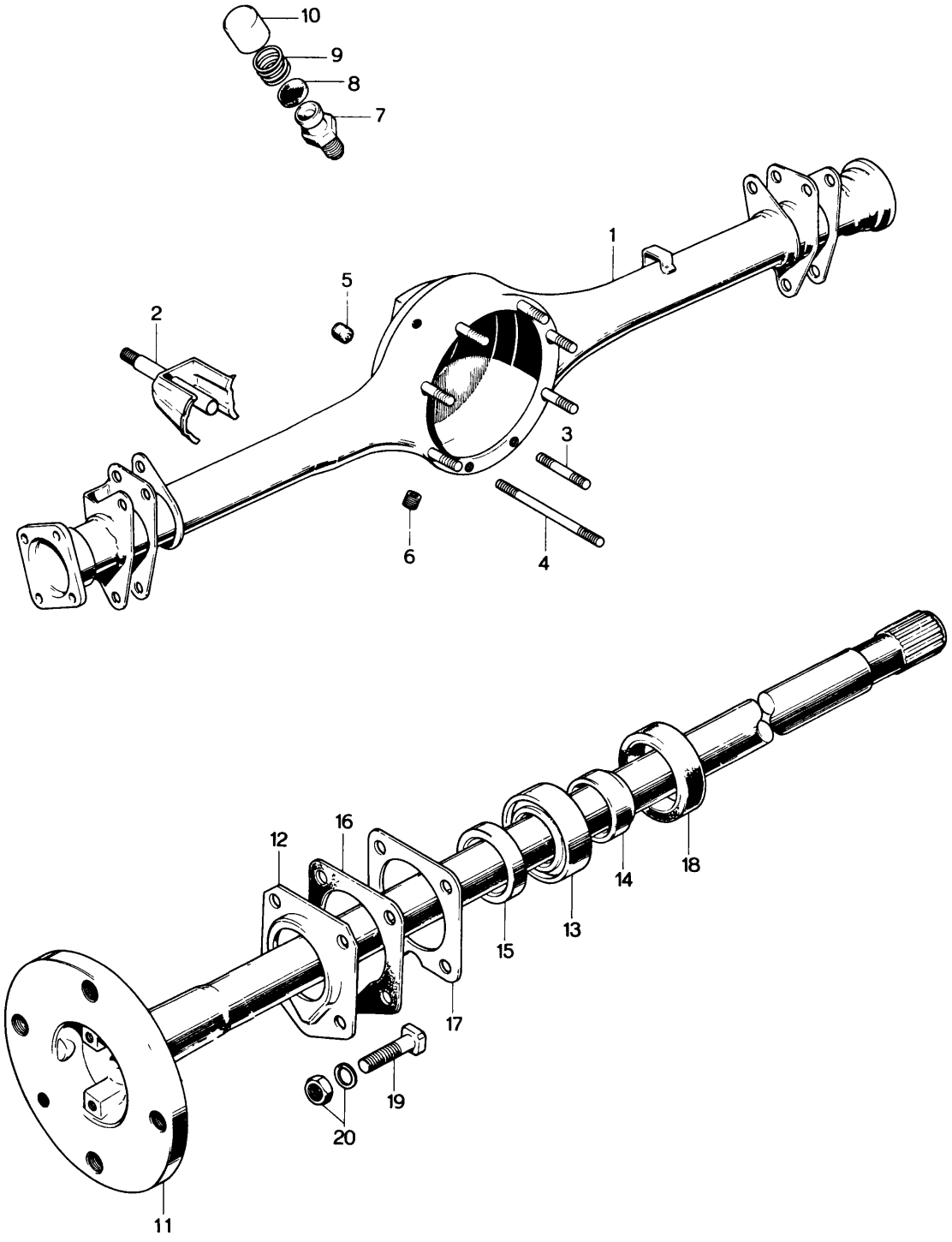
10
9
8
7
1
5
2
3
6
4
12
16
18
14
13
15
17
19
20
11

No.	Part Number	Description	Q'ty	Remarks
1	0839 26 010B	CASING, Rear Axle	1	
2	0305 26 080B	Bracket	1	
3	99852 0820	Stud	7	
4	99852 0880	Stud	1	
5	0259 26 041	Plug, Oil Level	1	
6	0259 26 051	Plug, Magnet Drain	1	
	0730 26 060	BREATHER Ass'y	1	
7	0730 26 062	Body, Breather	1	
8	0259 26 064	Rubber, Breather Cap	1	
9	0730 26 065	Spring, Breather Cap	1	
10	0730 26 063	Cap, Breather	1	
11	0839 26 111	Shaft, Rear Axle	2	
●	0839 26 111A	Shaft, Rear Axle	2	Car No. 111947 '72/1~○
12	0317 26 121	Retainer, Bearing	2	
13	0317 26 151A	Bearing	2	0317 99 265A Bearing Set
14	0259 26 152	Collar, Bearing	2	
15	0259 26 155	Spacer, Bearing	2	
16	0259 26 129	Packing	2	
17	0259 26 141	Shim, Adjust (Selective use)	4	
	0259 26 142	Shim, Adjust (Selective use)		
18	0187 26 154	Seal, Oil	2	

No.	Part Number	Description	Q'ty	Remarks
19	0259 26 132	Bolt	8	
20	99901 0800	Nut	8	
	99971 0800	Washer, Spring	8	

26 REAR BRAKE

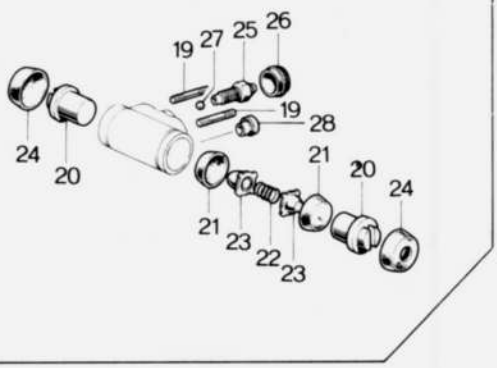

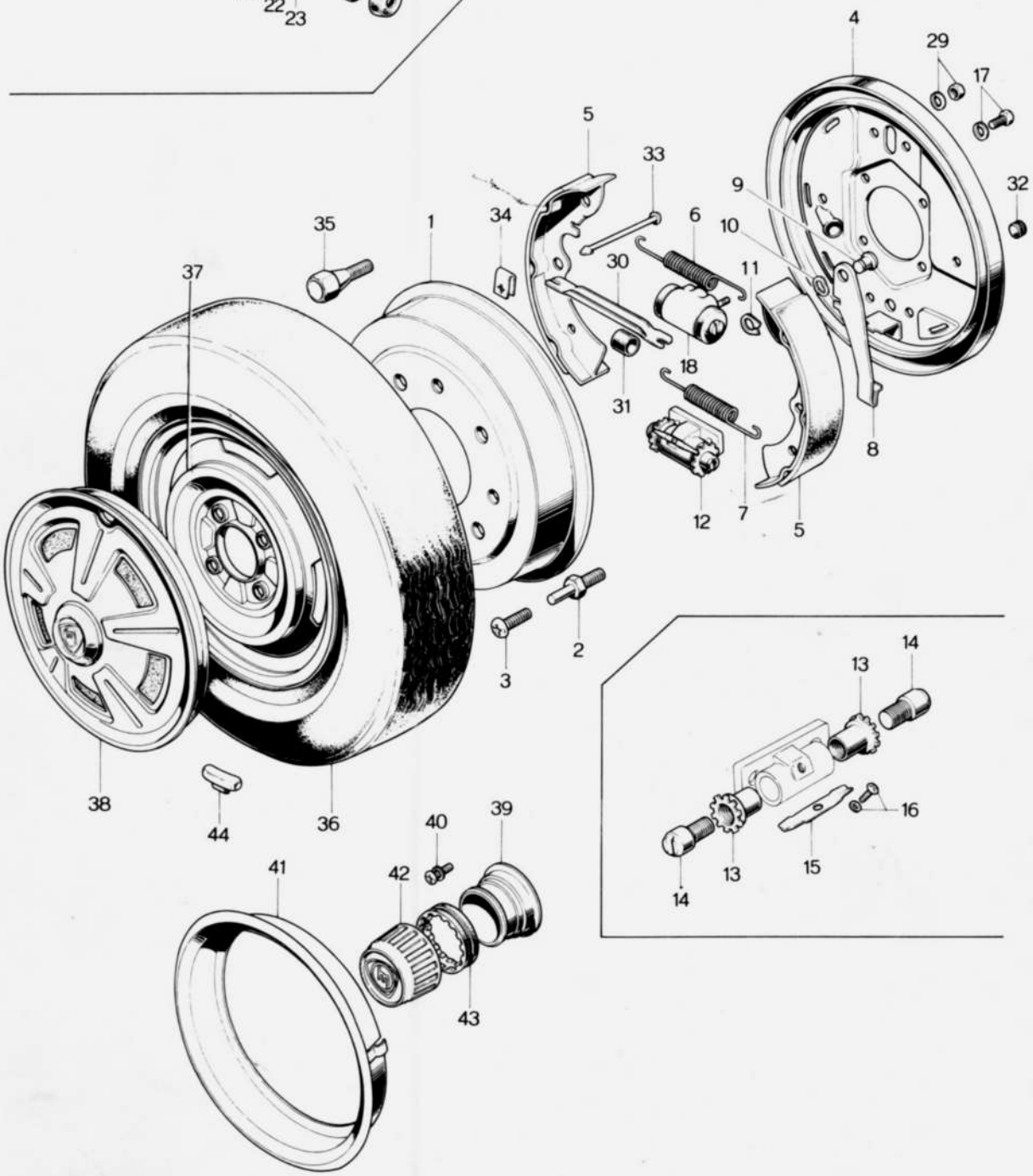

	No.	Part Number	Description	Q'ty	Remarks
	1	0305 26 251	Drum, Brake	2	
		0866 26 251	Drum, Brake	2	Car No. 93579 7/8 ~ ×
●		0305 26 251	Drum, Brake	2	Car No. 7/9 ~ ○ T2/10 ~ O
	2	0305 26 255	Bolt, Sedan use {0305 26 251A D. Brake}	1 4	
	3	99833 0812	Screw, Center Cap use	4	
	4	0305 26 280A	Cover, Brake Drum (R)	1	
		0305 26 280B	Cover, Brake Drum (R)	1	Car No. 82219 7/6 ~ ×
		0866 26 280A	Cover, Brake Drum (R)	1	Car No. 93579 7/8 ~ ×
		0866 26 280B	Cover, Brake Drum (R)	1	Car No. 96511 7/9 ~ ×
●		0398 26 280	Cover, Brake Drum (R)	1	Car No. 141225 7/9 ~ ×
		0305 26 290A	Cover, Brake Drum (L)	1	
		0305 26 290B	Cover, Brake Drum (L)	1	Car No. 82219 7/6 ~ ×
		0866 26 290A	Cover, Brake Drum (L)	1	Car No. 93579 7/8 ~ ×
		0866 26 290B	Cover, Brake Drum (L)	1	Car No. 96511 7/9 ~ ×
●		0398 26 290	Cover, Brake Drum (L)	1	Car No. 141225 7/9 ~ ×
	5	0305 26 310A	Shoe, Brake	4	
O		0305 26 310B	Shoe, Brake	4	T2/10 ~ O
	6	0187 26 341	Spring, Return	2	
	7	0118 26 342	Spring, Return	2	
	8	0305 26 800A	LEVER Ass'y, (R)	1	
		0305 26 810A	LEVER Ass'y, (L)	1	
	9	0118 26 832	Pin	2	
	10	0118 26 834	Washer, Wave	2	
	11	99575 0600	Ring, Retaining	2	
	12	0305 26 500	BLOCK Ass'y, Anchor	2	
●		0305 26 500A	BLOCK Ass'y, Anchor	2	Car No. 96092 7/9 ~ ×
	13	0710 26 461	Adjuster	4	
	14	0305 26 465	Screw, Adjuster	4	
	15	0710 26 352	Spring	2	
	16	908332 4 08	Screw, Set	2	

No.	Part Number	Description	Q'ty	Remarks
17	99801 0814	Bolt, Anchor Block	4	
	99971 0800	Washer, Spring	4	
18	0813 26 610A	CYLINDER Ass'y, Wheel	2	
19	99852 0812	Stud	4	
20	0810 26 651	Piston	4	
21	0810 26 671	Cup, Piston	4	
22	0221 26 672	Spring	2	
23	0221 26 673	Block, Filling	4	
24	0813 33 681	Cover, Dust	4	
25	0259 33 691	Screw, Bleeder	2	
26	0259 33 693	Cap, Beeder Screw	2	
27	99811 1500	Ball, Steel	2	
28	0813 26 922	Seat, Tube	2	
29	99906 0800	Nut, Wheel Cylinder	4	
	99971 0800	Washer, Spring	4	
30	0187 26 821	Strut, Operation (R)	1	
	0187 26 921	Strut, Operation (L)	1	
31	0118 26 897	Holder	2	
32	0710 33 288	Plug, Back Plate	4	
33	0187 33 391	Pin, Guide-Brake Shoe	4	
	0866 26 391	Pin, Guide-Brake Shoe	4	Car No. 69368 $^{71}/_{4}$ ~ X
34	0110 26 345	Spring, Clip	4	
	0223 26 345A	Spring, Clip	4	Car No. 69368 $^{71}/_{4}$ ~ X
35	0259 33 165	Bolt, Hub-Sedan use	8	

No.	Part Number	Description	Q'ty	Remarks
	0820 33 165	Bolt, Hub-Coupe use, Center Cap	8	
●	0820 33 165A	Bolt, Hub-Coupe use, Center Cap	8	Car No. 138461 73/8~Δ
36	9982 03 8413	Tire, 6.45S13- 4 PR Low Profile } Selective use	2	
	9962 04 1653	Tire, 165 S R13 Radial } Selective use		
●	9962 04 1653	Tire, 165 S R 13 Radial (Canada Excluded)	2	Car No. 73½~O
	9963 80 4140	Valve, Air T R 414	2	
37	9965 06 4530	Wheel, Disc- 4½—J×13WDC, Center Cap use	2	©
	9965 05 4530	Wheel, Disc- 4½—J×13WDC, Wheel Cap use	2	©
38	0841 33 170F	Cap, Wheel, Sedan use	2	
	0876 37 170A	Cap, Wheel, Sedan use	2	Car No. 79731 71/6~
●	0876 37 170B	Cap, Wheel, Sedan use	2	Car No 102235 71/11~
	0876 37 170C	Cap, Wheel, Sedan use	2	Car No. 173966 73/2~Δ
39	0820 26 570A	Adapter, Center Cap	2	
40	908332 8 12	Screw, Set-Adapter-Center Cap use	4	
41	0820 33 180A	Ring, Wheel-Center Cap use	2	
42	0820 33 191A	Cap, Center, Coupe use	2	
●	0881 37 191	Cap, Center, Coupe use	2	Car No. 96092 71/9~×
43	0820 33 192A	Rubber, Set-Center Cap use	2	
44	99655 30010	Weight, Balancing } Selective use		
	99655 20015	Weight, Balancing		
	99655 30020	Weight, Balancing		
	99655 30025	Weight Balancing		
	99655 30030	Weight, Balancing		
	99655 30035	Weight, Balancing		
	99655 30040	Weight; Balancing		
	99655 30045	Weight, Balancing		
	99655 30050	Weight, Balancing		
	99655 30060	Weight, Balancing		

425-1373
SUTHERLAND

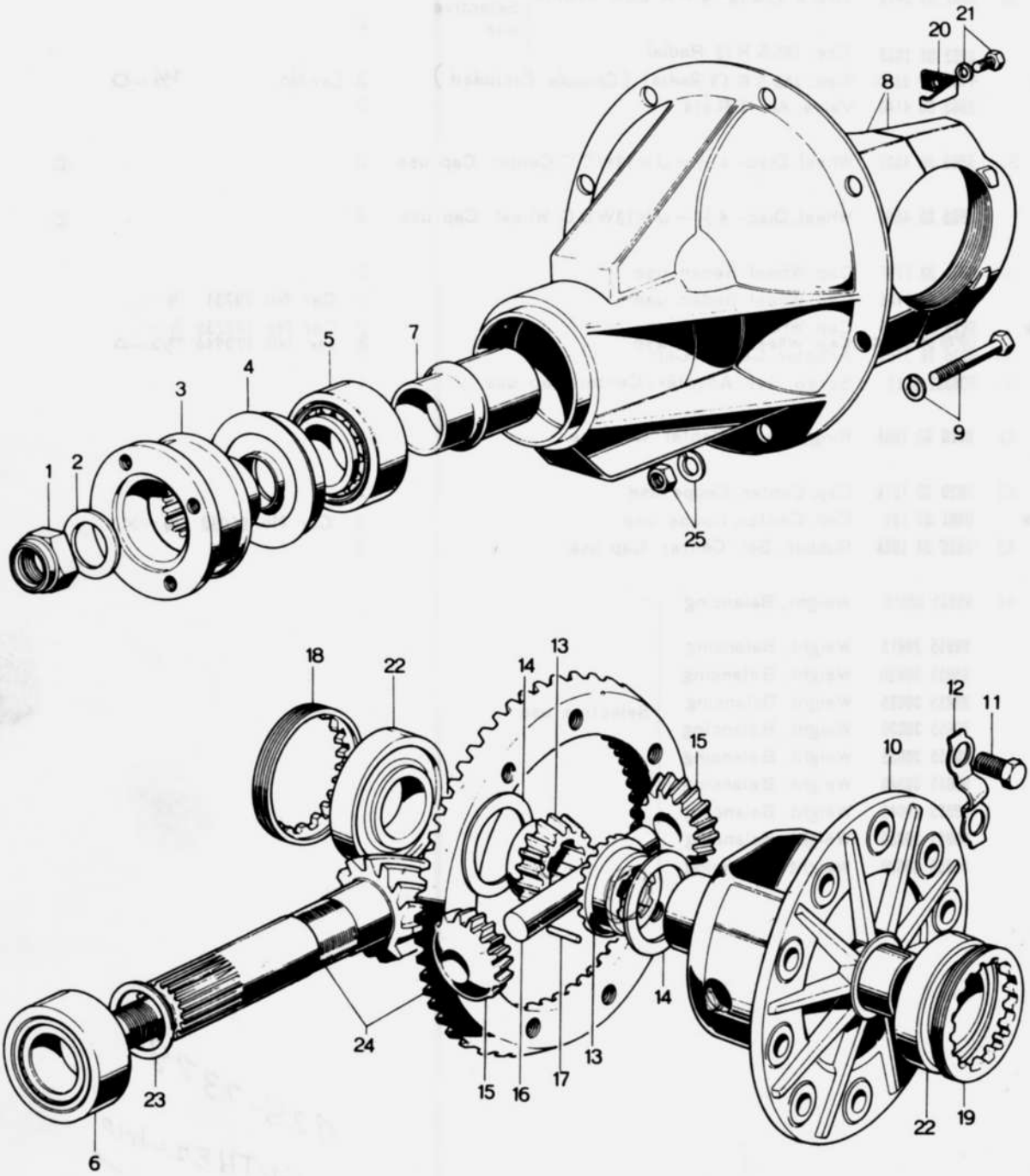
20
21
8
5
7
4
3
2
1
9
25
18
22
14
13
12
11
15
10
24
23
15
16
17
13
14
22
19
6

No.	Part Number	Description	Q'ty	Remarks
	2080 27 000	**DRIVING DIFFERENTIAL Cpt.**	1	
1	0223 27 030	Nut, Drive Pinion	1	
2	0223 27 012	Washer	1	
3	0223 27 0208	Flange, Companion	1	
4	2112 27 018	Seal, Oil-High Speed Type	1	
5	0755 27 141	Bearing, Drive Pinion (Frt.)	1	
6	0221 27 141	Bearing, Drive Pinion (Rr.)	1	
7	0305 27 171	Piece, Distance	1	Car No. 69368 7/4~Added Anew
	0223 27 112	Piece, Distance } Selective use	1	Car No. 69367 7/4~Discarded
	0223 27 113	Piece, Distance } Selective use		
	0223 27 114	Piece, Distance } Selective use		
	0223 27 115	Piece, Distance } Selective use		
	0603 27 121	Shim, Adjust } Selective use	3	
	0603 27 122	Shim, Adjust } Selective use		
	0603 27 123	Shim, Adjust } Selective use		
8	0820 27 150A	**CARRIER Ass'y, DIFFERENTIAL**	1	
●	0820 27 150B	**CARRIER Ass'y, DIFFERENTIAL**	1	Car No. 77886 7/5~×
9	99811 1050	Bolt, Bearing Cap	4	
	99971 1000	Washer, Spring	4	
10	0290 27 231	Case, Differential Gear	1	
11	997538 1022	Bolt, Ring Gear } Selective use	10	
	997534 1022	Bolt } Selective use		
12	0221 27 245	Washer, Lock	5	
	99958 1018	Washer, Plain	10	Car No. 102235 7/11~○
13	0820 27 251	Gear, Differential Side	2	
14	0290 27 252	Washer, Thrust } Selective use	—	
	0290 27 253	Washer, Thrust } Selective use		
	0290 27 254	Washer, Thrust } Selective use		
15	0221 27 255	Pinion, Differential	2	
16	0221 27 261	Shaft, Pinion	1	
●	0305 27 261	Shaft, Pinion	1	Car No. 87915 7/7 ~ ○

No.	Part Number	Description	Q'ty	Remarks
17	0114 27 282	Pin, Shaft-Differential	1	
18	0290 27 301	Screw, Adjust (R)	1	
19	0290 27 341	Screw, Adjust (L)	1	
	0290 27 301	Screw, Adjust	2	Car No. 86130 ～○
20	0290 27 302	Plate, Lock	2	
21	99811 0812	Bolt, Lock Plate	2	
	99871 0800	Washer, Spring	2	
22	0221 27 305	Bearing, Differential	2	
23	0223 27 401	Spacer, Pinion Height (t=3.08)	Selective use	
	0223 27 402	Spacer, (t=3.11)		
	0223 27 403	Spacer, (t=3.14)		
	0223 27 404	Spacer, (t=3.17)		
	0223 27 405	Spacer, (t=3.20)		
	0223 27 406	Spacer, (t=3.23)		
	0223 27 407	Spacer, (t=3.26)		
	0223 27 408	Spacer, (t=3.29)		
	0223 27 409	Spacer, (t=3.32)		
	0223 27 411	Spacer, (t=3.35)		
	0223 27 412	Spacer, (t=0.38)		
	0223 27 413	Spacer, (t=3.41)		
	0223 27 414	Spacer, (t=3.44)		
	0223 27 415	Spacer, (t=3.47)		
24	2080 27 110	Gear Set, Final	1	
25	99901 0800	Nut, Differential	8	
	99871 0800	Spring Washer	8	

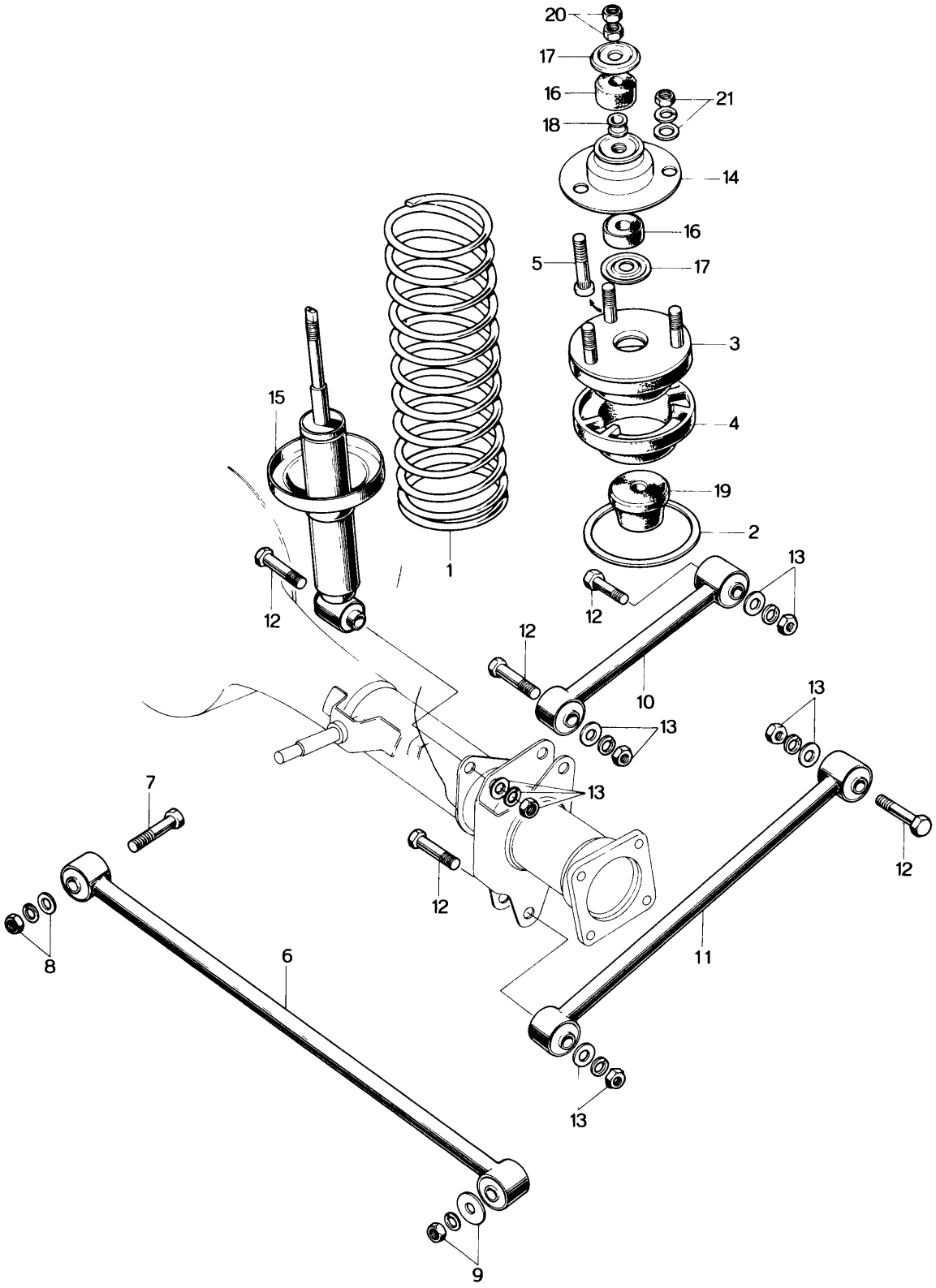
20
17
16
21
18
14
16
5
17
3
4
19
2
15
1
12
12
13
12
10
13
13
7
13
12
12
8
6
11
13
9

No.	Part Number	Description	Q'ty	Remarks
1	0838 28 011A	Spring, Coil	2	
2	0824 28 012	Shim, Adjust	2	
● 4	0305 28 013A	Seat, Rubber	2	
3	0305 28 040A	SEAT, Spring-Upper	2	
~~4~~	~~0305 28 013A~~	~~Seat, Rubber~~	~~2~~	
5	0824 28 464A	Bolt	6	
6	0305 28 150C	Rod Ass'y, Lateral	1	
7	0305 28 111B	Bolt	1	
8	99821 1400	Nut, Lateral Rod	1	
	99971 1400	Washer, Spring	1	
	99952 1428	Washer, Plain	2	
9	0193 34 662	Washer, Lateral Rod	1	
	99921 1400	Nut	1	
	99971 1400	Washer, Spring	1	
10	0305 28 200E	Link Ass'y, Upper	2	
11	0305 28 300D	Link Ass'y, Lower	2	
12	0305 28 111B	Bolt, Link	10	
13	99821 1400	Nut, Link	10	
	99971 1400	Washer, Spring	10	
	99953 1400	Washer, Plain	6	
14	0305 28 470	Plate, Set	2	
15	0305 28 700D	Damper, Rear	2	
16	0223 28 775	Bush, Rubber	4	

No.	Part Number	Description	Q'ty	Remarks
17	0223 28 776	Retainer	4	
18	0824 28 778A	Grommet	2	
●19	0305 28 581B	Stopper, Bound	2	
20	99921 1000	Nut, Damper	2	
	99822 1000	Nut	2	
21	99901 0800	Nut, Set Plate	6	
	99952 0800	Washer, Plain	6	
	99971 0800	Washer, Spring	6	

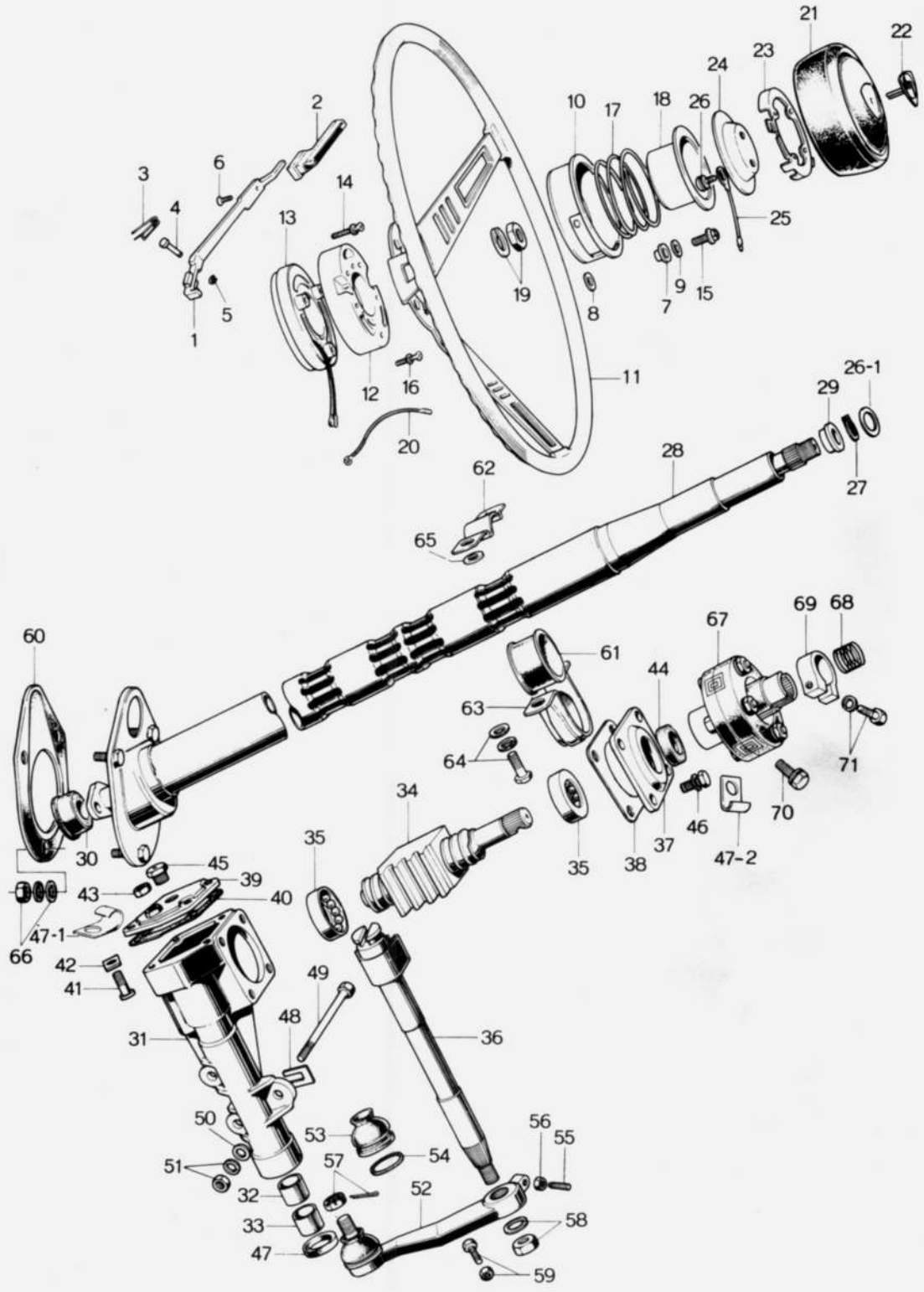
1
2
3
4
5
6
7
8
9
10
11
12
13
14
15
16
17
18
19
20
21
22
23
24
25
26
26-1
27
28
29
30
31
32
33
34
35
35
36
37
38
39
40
41
42
43
44
45
46
47
47-1
47-2
48
49
50
51
52
53
54
55
56
57
58
59
60
61
62
63
64
65
66
67
68
69
70
71

No.	Part Number	Description	Q'ty	Remarks
	0839 32 980C	BOSS Ass'y, Steering Wheel } Coupe use	1	
	2090 32 980	BOSS Ass'y, Steering Wheel } Coupe use	1	Car No. 71284 71/4 ~ O
●	2090 32 980A	BOSS Ass'y, Steering Wheel } Coupe use	1	72/8 ~ O
	0841 32 980A	BOSS Ass'y, Steering Wheel, Sedan use	1	
1	0839 32 011A	Lever, Horn	3	
2	0839 32 012A	End, Lever	3	
3	0824 32 013A	Spring, Return	3	
4	0839 32 019	Shaft } Triple Horn Lever use (for Coupe)	3	
5	99576 0300	Ring, Snap-Shaft	3	
6	99868 0412	Screw, Horn Lever	3	
7	0839 32 026	Insulator	3	
8	0839 32 027	Insulator	3	
9	0839 32 028	Washer	3	
10	0839 32 030C	Retainer, Cap, Coupe use	1	
	0841 32 030	Retainer, Cap, Sedan use	1	
11	0839 32 040A	Wheel, Steering, Coupe use	1	
●	0839 32 040B	Wheel, Steering, Coupe use	1	72/8 ~ O
	0841 32 040	Wheel, Steering, Sedan use	1	
●	0841 32 040A	Wheel, Steering, Sedan use	1	72/8 ~ O
12	0839 32 042A	Boss	1	
13	0839 32 820A	Terminal,	1	
	0839 32 820B	Terminal, } Coupe use	1	Car No. 69368 71/4 ~ X
	2090 32 820	Terminal, } Coupe use	1	Car No. 71284 71/4 ~ O
	0841 32 820	Terminal, Sedan use	1	
	0841 32 820A	Terminal, Sedan use	1	Car No. 69368 71/4 ~ X
14	908314 6 14	Screw, Set-Boss	5	
15	908332 4 16	Screw, Set	3	
16	99848 0312	Screw	3	
17	0839 32 014	Spring	1	
18	0839 32 015A	Cap, Contact	1	
19	99922 1200	Nut, Steering Wheel	1	

No.	Part Number	Description	Q'ty	Remarks
	99971 1200	Washer, Spring	1	
20	0839 32 055	Cord, Earth, Coupe use	1	
●	0813 66 732A	Cord, Earth, Coupe use	1	Car No. 167963 '73/1~△
21	2080 32 800	CAP Ass'y, Horn	1	
	0839 32 800B	CAP Ass'y, Horn	1	Car No. 103685 '71/11~○
22	2080 32 810	Emblem	1	
23	0839 32 025B	Retainer, Cap	1	
24	0839 32 029	Plate, Contact	1	
25	0839 32 039	Cord	1	
26	908682 308	Screw, Set	6	
● 26-1	0820 32 058	Washer, Stop	1	Car No. 129921 '72/5~Added Anew
27	0208 32 059	Ring, Stop	1	
28	0303 32 100A	Shaft, Energy Absorbing	1	
29	0258 32 071	Bush, Shaft Support	1	
30	0820 32 069	Bush, Centering	1	
	2113 32 110	STEERING GEAR Ass'y	1	
	2113 32 110A	STEERING GEAR Ass'y	1	Car No. 86391 '71/7~○
	2113 32 110B	STEERING GEAR Ass'y	1	Car No. 97025 '71/9~○
31	2113 32 120	HOUSING GEAR Ass'y	1	
32	0180 32 122A	Bush	1	
33	0180 32 123A	Bush	1	
34	2113 32 130	NUT Ass'y, Worm Ball	1	

No.	Part Number	Description	Q'ty	Remarks
35	0259 32 182	Bearing, Ball	2	
36	0305 32 141	Shaft, Sector	1	
37	0820 32 151	Cover, End	1	
38	0259 32 154	Shim, End Cover (t=0.05)		
	0259 32 155	Shim (t=0.075)	Selective use 1	
	0259 32 156	Shim (t=0.1)		
	0259 32 157	Shim (t=0.2)		
39	0259 32 160	Cover, Side	1	
40	0259 32 163	Packing, Side Cover	1	
41	0180 32 165A	Screw, Adjust	1	
42	0180 32 171A	Shim, Adjust (t=1.95)		
	0180 32 172A	Shim, Adjust (t=2.00)	Selective use 1	
	0180 32 173A	Shim, Adjust (t=2.05)		
	0180 32 174A	Shim, Adjust (t=2.10)		
43	99922 1000	Nut, Lock	1	
44	0180 32 184	Seal, Oil	1	
45	0820 32 190	Plug, Oil	1	
46	908012 8 16	Bolt, Set	8	
47	99583 26388	Seal, Oil	1	
● 47-1	99276 1008	Clip	1	Car No. 96092 7/9~Added Anew
● 47-2	99295 1508	Clip	1	Car No. 96092 7/9~Added Anew
48	0208 32 188	Shim, Adjust-Gear Housing	1	
49	99781 1090	Bolt, Gear Housing	3	
50	0305 32 119	Washer, Plain	3	

No.	Part Number	Description	Q'ty	Remarks
51	99942 1000	Nut, Gear Housing	3	
●	99942 1001	Nut, Gear Housing	3	Car No. 129840 72/4~○
	99951 1022	Washer, Plain	2	
52	2835 32 220	ARM Ass'y, Pitman	1	
●	2835 32 220A	ARM Ass'y, Pitman	1	Car No. 119482 72/2~○
53	0259 32 279	Seal, Dust	1	
54	0259 32 289	Ring, Set	1	
●	0187 32 289	Ring, Set	1	72/42~○
55	0603 32 315	Bolt	1	
●	0187 32 235	Bolt	1	Car No. 119482 72/2~○
56	99922 1000	Nut, Lock	1	
57	99924 1000	Nut	1	
	99221 2020	Pin, Split	1	
58	99921 1800	Nut, Pitman Arm	1	
	99971 1800	Washer, Spring	1	
59	0187 32 235	Bolt, Turning Radius Adjust	1	
	99922 1000	Nut, Lock	1	
60	0326 32 411	Cover, Dust	1	
61	2244 32 423	Rubber, Fixing	1	
62	0305 32 425	Bracket, Upper	1	
63	0305 32 426	Bracket, Lower	1	
64	99799 0832	Bolt, Bracket	2	
	99952 0800	Washer, Plain	2	
	99971 0800	Washer, Spring	2	
65	0259 43 088	Spacer	2	
66	99901 0800	Nut, Shaft Jacket	3	

No.	Part Number	Description	Q'ty	Remarks
	99952 0800	Washer, Plain	2	Car No. 122636 ~Q'ty
●	99952 0822	Washer, Plain	1	Car No. 122636 ~Added Anew
67	0187 32 850A	JOINT, Steering	1	
68	0187 32 860	Spring	1	
69	0187 32 886B	Clamp	1	
70	99781 0825	Bolt	1	
	99971 0800	Washer, Spring	1	
71	99781 0835	Bolt, Clamp	1	
●	99781 0832	Bolt, Clamp	1	Car No. 192058 73/5~△
	99971 0800	Washer, Spring	1	

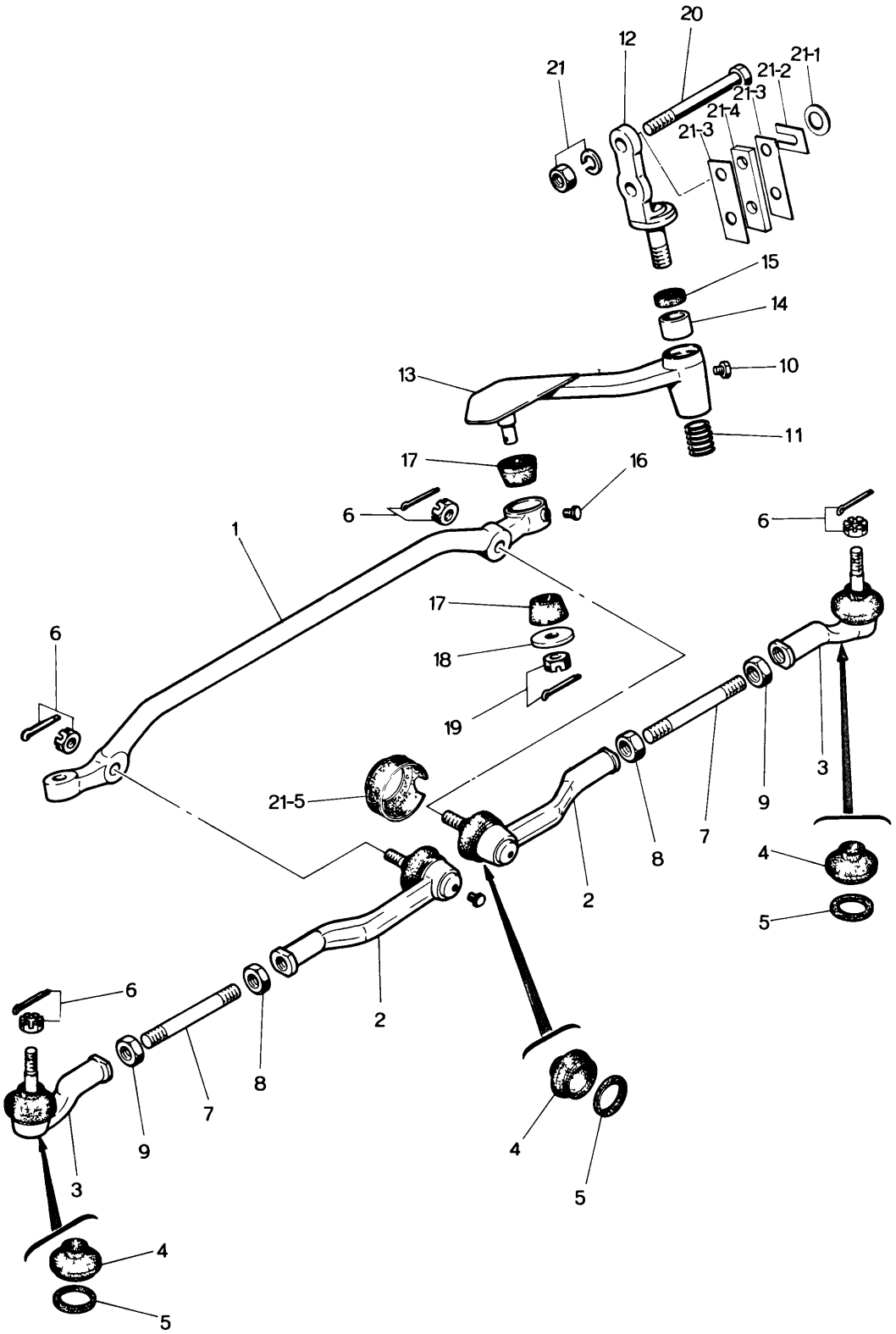
20
12
21
21-1
21-2
21-3
21-4
21-3
15
14
13
10
11
17
16
6
1
6
17
18
19
6
21-5
2
8
7
9
3
4
5
6
2
8
7
9
3
4
5
4
5

No.	Part Number	Description	Q'ty	Remarks
1	2080 32 261	Link , Center	1	
2	2113 99 322A	SOCKET Ass'y	2	
●	0662 99 322A	SOCKET Ass'y	1	Car No. 134108 73/1 ~ ○
3	2370 99 324	SOCKET Ass'y	2	
●	0305 99 324A	SOCKET Ass'y	2	Car No. 134108 73/1 ~ ○
4	0259 32 279	Seal, Dust	4	
5	0259 32 289	Ring, Set	4	
●	0187 32 289	Ring Set	4	73/12 ~ O
6	99924 1000	Nut, Socket	4	
	99221 2020	Pin, Split - Outer Side	2	Car No. 122636 73/3 ~ Q'ty
●	99221 2015	Pin, Split - Inner Side	2	Car No. 122636 73/3 ~ Added Anew
7	2113 32 365	Rod, Tie	2	
8	99922 1400	Nut, Lock-Tie Rod	2	
9	99944 1400	Nut, Lock-Tie Rod	2	
	2080 32 320	LINK Ass'y, STEERING	1	
	2080 32 320A	LINK Ass'y, STEERING	1	Car No. 87915 71/7 ~ △
●	2080 32 320B	LINK Ass'y, STEERING	1	73/12 ~ O
10	0208 32 278	Plug	1	
11	0111 32 173	Spring	1	
12	2080 32 330	Spindle	1	
●	2080 32 330A	Spindle	1	Car No. 87915 71/7 ~ △
13	2113 32 350C	ARM Ass'y, IDLER	1	
	2080 32 350	ARM Ass'y, IDLER	1	Car No. 87915 71/7 ~ △
●	2080 32 350A	ARM Ass'y, IDLER	1	73/12 ~ O
14	2113 32 354	Bush	1	
15	2113 32 356	Seal, Oil	1	

No.	Part Number	Description	Q'ty	Remarks
16	0208 32 278	Plug, Idler	1	
17	2113 32 329	Bush, Tapered	2	
18	0259 32 341	Washer	1	
19	99924 1200	Nut, Idler	1	
	99221 3020	Pin, Split	1	
20	99781 1085	Bolt, Idler	2	
	99783 1090	Bolt, Idler	2	Car No. 78407 $^{71/5}$ ~ ○
21	99922 1000	Nut, Idler	2	
	99971 1000	Washer, Spring	2	
● 21-1	0305 32 119	Washer, Plain	2	
● 21-2	0208 32 188	Shim, Adjust	1	
● 21-3	0305 32 321	Shim	2	
● 21-4	2080 32 358	Spacer	1	
● 21-5	1562 32 269	Protector	1	

33 FRONT AXLE

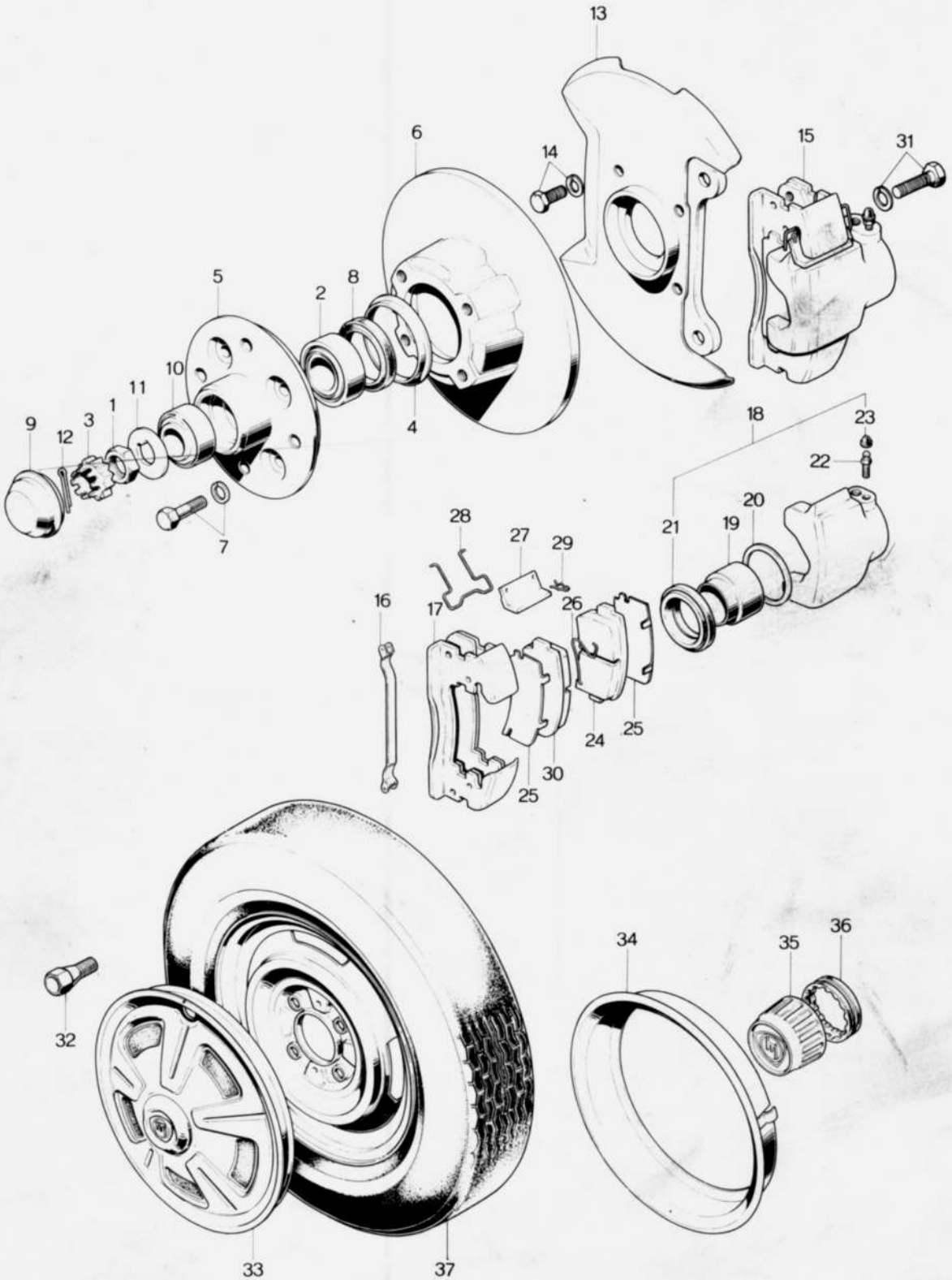

No.	Part Number	Description	Q'ty	Remarks
1	0662 33 042	Nut	2	
2	0259 33 047	Bearing, Inner	2	
3	0317 33 049	Cover, Set	2	
4	0221 33 035	Ring, Dust	2	
5	0329 33 061	Hub, Wheel (Sedan)	2	
●	0820 33 091A	Hub, Wheel (Sedan)	2	Car No. 137835 '73/8 ~ ○
	0820 33 091A	Hub, Wheel (Coupe)	2	
6	0305 33 251	Plate, Disc	2	
●	0305 33 251A	Plate, Disc	2	Car No. 128370 '73/4 ~ ○
	0305 33 251B	Plate, Disc	2	'73/10 ~ O
7	0221 33 698	Bolt, Disc Plate	8	
	99971 1000	Washer, Spring	8	
8	0187 33 085A	Seal, Oil	2	
	0398 33 065	Seal, Oil	2	Car No. 94730 '73/8 ~ ○
9	0259 33 071	Cap, Hub	2	
10	0317 33 075	Bearing, Outer	2	
11	0317 33 043	Washer, Tab	2	
●	1011 33 043	Washer, Tab	2	'73/2 ~ O
12	99221 4030	Pin, Split	2	
13	0305 33 260	Adapter Ass'y, Mounting	2	
14	99811 1022	Bolt, Mounting Adapter	8	
●	99811 1020	Bolt, Mounting Adapter	8	Car No. '73/8 ~ O
	99971 1000	Washer, Spring	8	
15	0305 33 980A	BRAKE Ass'y (R), DISC	1	
	0305 33 980C	BRAKE Ass'y (R), DISC	1	Car No. 85627 '73/1 ~ ○
●	0305 33 980D	BRAKE Ass'y (R), DISC ✓	1	Car No. 114011 '73/1 ~ O
	0305 33 990A	BRAKE Ass'y (L), DISC	1	
	0305 33 990C	BRAKE Ass'y (L), DISC	1	Car No. 85627 '73/1 ~ ○
●	0305 33 990D	BRAKE Ass'y (L), DISC	1	Car No. 114011 '73/1 ~ O
16	0305 33 235	Clip, Anti-Rattle Pad	4	
17	0305 33 280	Support, Mounting	2	

33 FRONT AXLE

No.	Part Number	Description	Q'ty	Remarks
18	0305 33 610	BODY & PISTON Ass'y (R)	1	
	0305 33 610C	BODY & PISTON Ass'y (R)	1	Car No. 77886 71/5 ~ ×
●	0305 33 610D	BODY & PISTON Ass'y (R)	1	Car No. 114011 72/1 ~ ○
	0305 33 710	BODY & PISTON Ass'y (L)	1	
	0305 33 710C	BODY & PISTON Ass'y (L)	1	Car No. 77886 71/5 ~ ×
●	0305 33 710D	BODY & PISTON Ass'y (L)	1	Car No. 114011 72/1 ~ ○
19	2981 33 651	Piston	2	
20	2981 33 671	Seal, Piston	2	
21	2981 33 681	Boot	2	
22	0233 33 691	Screw, Bleeder	2	
23	0600 33 693	Cap	2	
● Ⓝ	0305 33 685	Ring - Boot	2	Car No. 92431 71/8 ~ Added Anew
Ⓝ	0841 49 230	Pad Set (Fig. No. 16,24,25,26,30, & Grease Included)	1	
Ⓝ	0296 49 240	Seal Set (Fig. No. 20,21 & Grease Included)	1	
24	0305 33 625	Pad Ass'y, Outer	2	
25	0305 33 626A	Shim	4	
26	0296 33 636	Spring, Pad (R)	1	
	0296 33 646	Spring, Pad (L)	1	
27	0305 33 695	Plug, Support	4	
28	0305 33 696	Spring	4	
29	0305 33 698	Pin	8	
●	0305 33 698A	Pin	8	Car No. 126006 72/3 ~ ○
30	0305 33 725	Pad Ass'y, Inner	2	
31	~~0305 33 698 Bolt, Disc Brake~~		~~4~~	
●	0305 33 699	Bolt, Disc Brake	4	From Car No. 1
	99971 1200	Washer, Spring	4	
32	0259 33 165	Bolt, Wheel Set, Sedan use	8	
	0820 33 165	Bolt, Wheel Set, Coupe use	8	
●	0820 33 165A	Bolt, Wheel Set, Coupe use	8	Car No. 138596 73/8 ~ △
33	0841 33 170F	Cap, Wheel, Sedan use	2	
	0876 37 170B	Cap, Wheel, Sedan use	2	1972, 1973 Model
●	0876 37 170C	Cap, Wheel, Sedan use	2	Car No. 173966 73/2 ~ △
34	0820 33 180A	Ring, Wheel - Center Cap use	2	
35	0820 33 191A	Cap, Center, Coupe use	2	
●	0881 ~~33~~ 37 191	Cap, Center, Coupe use	2	Car No. 96092 71/9 ~ ×

No.	Part Number	Description	Q'ty	Remarks	
36	0820 33 192A	Rubber, Set-Center Cap use	2		
37	9962 03 6413	Tire, 6.45S13—4PR Low Profile } Selective use			
	9962 04 1653	Tire, 165 SR13 Radial } Selective use	2		
●	9962 07 1653	Tire, 165 SR13 Radial	2	72/2~O	
	9963 60 4140	Valve, Air-TR414	2		
	9965 06 4530	Wheel, 4½—J×13WDC Disc-Center Cap use	2		©
	9965 05 4530	Wheel, 4½—J×13WDC Disc-Wheel Cap use	2		©


7
21
20
19
18
6
17
2
3
4
5
1
26
16
9
22
23
8
13
14
24
11
12
15
11
10
25

No.	Part Number	Description	Q'ty	Remarks
1	0839 34 011	Spring, Coil	2	
2	0259 34 012	Seat, Rubber - Upper	2	
3	0259 34 013	Plate, Adjust (t=4.5)	2	
●	0259 34 013A	Plate, Adjust (t=4.5)	2	~73/9 ~ ○
4	2158 34 014	Ring, Dust Seal	2	
5	0259 34 015	Boot	2	
6	0259 34 016	Seal	2	
●	0259 34 016A	Seal	2	Car No. 122636 ~73/3 ~ ○
7	0259 34 019	Cap	2	
8	0259 34 021	Seat, Rubber - Lower	2	
	0839 34 310A	ARM Ass'y, (R)	1	
	0839 34 310B	ARM Ass'y, (R)	1	Car No. 111947 ~73/1 ~ ○
	0839 34 320A	ARM Ass'y, (L)	1	
	0839 34 320B	ARM Ass'y, (L)	1	Car No. 111947 ~73/1 ~ ○
9	0305 32 301B	Arm, Knuckle (R)	1	
	0305 32 301C	Arm, Knuckle (R)	1	Car No. 111947 ~73/1 ~ ×
	0305 32 311B	Arm, Knuckle (L)	1	
	0305 32 311C	Arm, Knuckle (L)	1	Car No. 111947 ~73/1 ~ ×
10	0305 34 311	Arm	2	
11	0317 34 480	Bush, Rubber	4	
12	0305 99 356	JOINT BALL Ass'y	2	
●	0305 99 356A	JOINT BALL Ass'y	2	Car No. 111947 ~73/1 ~ ×
13	0187 32 279A	Seal, Dust	2	
14	0259 32 289	Ring, Set	2	
●	0187 32 289	Ring, Set	2	~73/12 ~ ○
15	0208 32 278	Plug	2	
16	99842 1200	Nut, Self Lock	2	
	99924 1200	Nut, Self Lock	2	Car No. 111947 ~73/1 ~ ○
Ⓝ	99221 3020	Pin, Split	2	Car No. 111947 ~73/1 ~ Added Anew

34 FRONT SUSPENSION (SPRING)

No.	Part Number	Description	Q'ty	Remarks
17	2158 34 340	Seal, Spring - Upper	2	
18	2158 34 381	Bearing	2	
19	2158 34 380	Rubber, Mounting	2	
●	2158 34 390A	Rubber, Mounting	2	Car No. 122636 ~~72/3~~ ~C
20	99901 0800	Nut, Mounting Rubber	6	
	99952 0800	Washer, Plain	6	
	99971 0800	Washer, Spring	6	
21	99921 1400	Nut, Damper Upper Side	2	
	99951 1430	Washer, Plain	2	
	99971 1400	Washer, Spring	2	
22	99781 1225	Bolt, Socket	2	
	99971 1200	Washer, Spring	2	
23	99781 1240	Bolt, Socket	2	
	99971 1200	Washer, Spring	2	
24	0317 34 662	Washer No. 1	2	
25	0317 34 663	Washer No.2	2	
	99947 1400	Nut	2	
26	0305 34 910E	Damper Ass'y, Front	2	
	0305 34 910G	Damper Ass'y, Front	2	Car No. 69368 ~~7/4~~ ~O

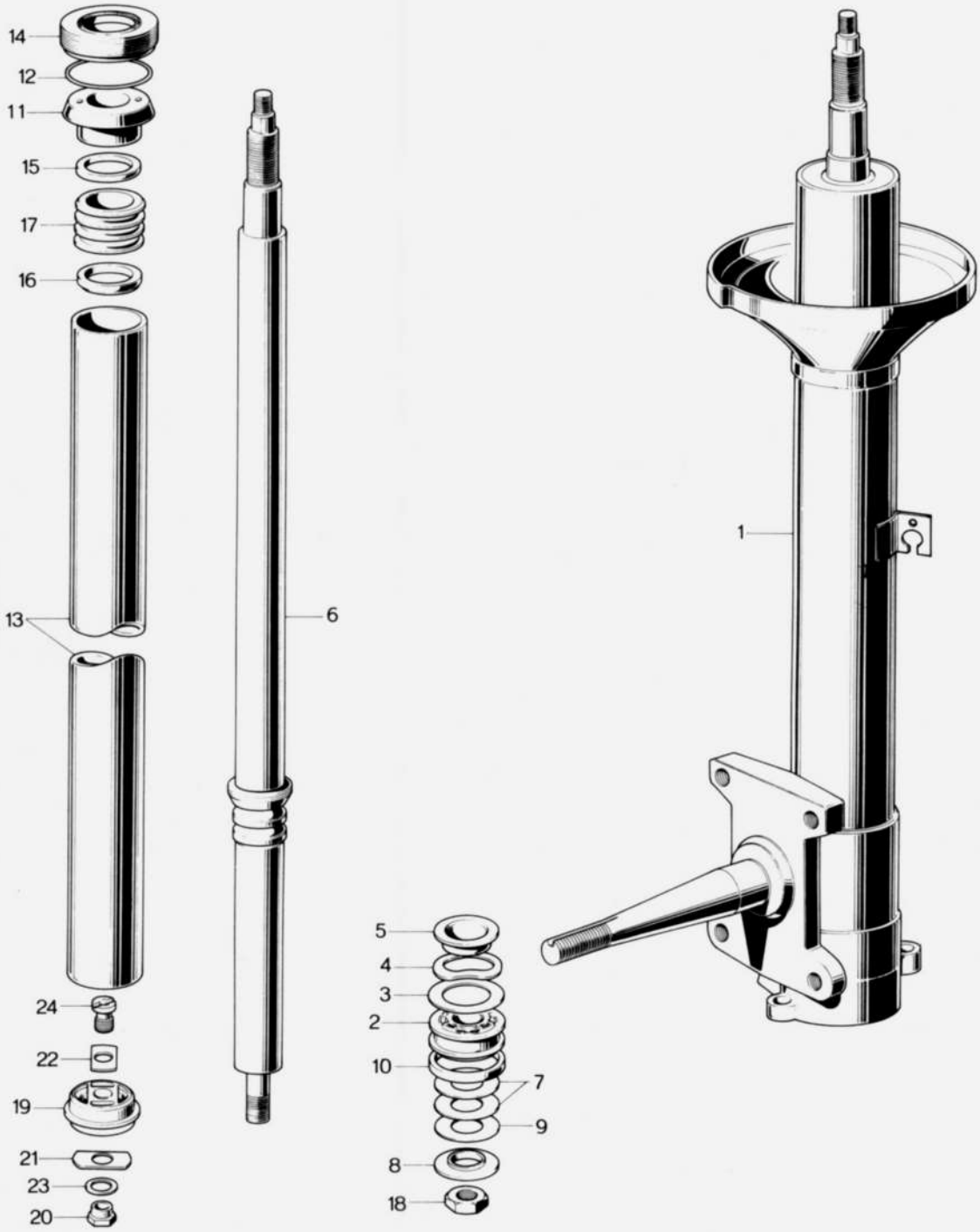
14
12
11
15
17
16
13
24
22
19
21
23
20
6
5
4
3
2
10
7
9
8
18
1

No.	Part Number	Description	Q'ty	Remarks
1	0305 34 810E	DAMPER, Front	2	
	0305 34 810G	DAMPER, Front	2	Car No. 69368 ~○
2	0305 34 701	Piston	2	
●	0305 34 701A	Piston	2	Car No. 79731 ~◯
3	0259 34 705	Valve, Check	2	
4	0305 34 707	Spring, Check Valve	2	
5	0259 34 708	Washer	2	
6	0839 34 710	Rod, Piston	2	
7	0259 34 712	Valve, Relief	12	Car No. 92431 ~Q'ty
8	0305 34 713	Washer	2	
9	0305 34 714	Valve	2	
10	0259 34 719A	Ring, Piston	2	
11	0259 34 730	Guide, Piston Rod	2	
	0866 34 730	Guide, Piston Rod	2	Car No. 92929 ~△
12	0183 34 731	Ring, "O"	2	
13	0305 34 732A	Tube, Pressure	2	
● Ⓝ	0613 28 719	Ring, Pressure Tube	4	Car No. 92929 ~Added Anew
14	0305 34 760A	SEAL Ass'y, Oil	2	
	0866 34 760	SEAL Ass'y, Oil	2	Car No. 92929 ~△
	0259 34 735A	Seal, Oil	2	
●	0866 34 735	Seal, Oil	2	Car No. 92929 ~
15	0259 34 787	Ring	2	
16	0259 34 788	Stopper, Guide	2	
17	0259 34 789B	Stopper	2	
18	0305 34 709	Nut	2	

No.	Part Number	Description	Q'ty	Remarks
	0305 34 720	VALVE Ass'y, BASE	2	
19	~~0305 34 721A~~	~~Casing~~	~~2~~	☆
20	~~0305 34 722A~~	~~Nut~~	~~2~~	
21	~~0305 34 723~~	~~Valve~~	~~10~~	
22	~~0305 34 724~~	~~Valve~~	~~8~~	
23	~~0305 34 726A~~	~~Washer~~	~~2~~	
24	~~0305 34 729A~~	~~Bolt~~	~~8~~	
● Ⓝ	0317 99 362	Piston Set (Fig. No. 2～5, 6～10 Included)	1	
● Ⓝ	0259 99 361	Seal Set (Fig. No. 11, 12, 14～17 Included)	1	

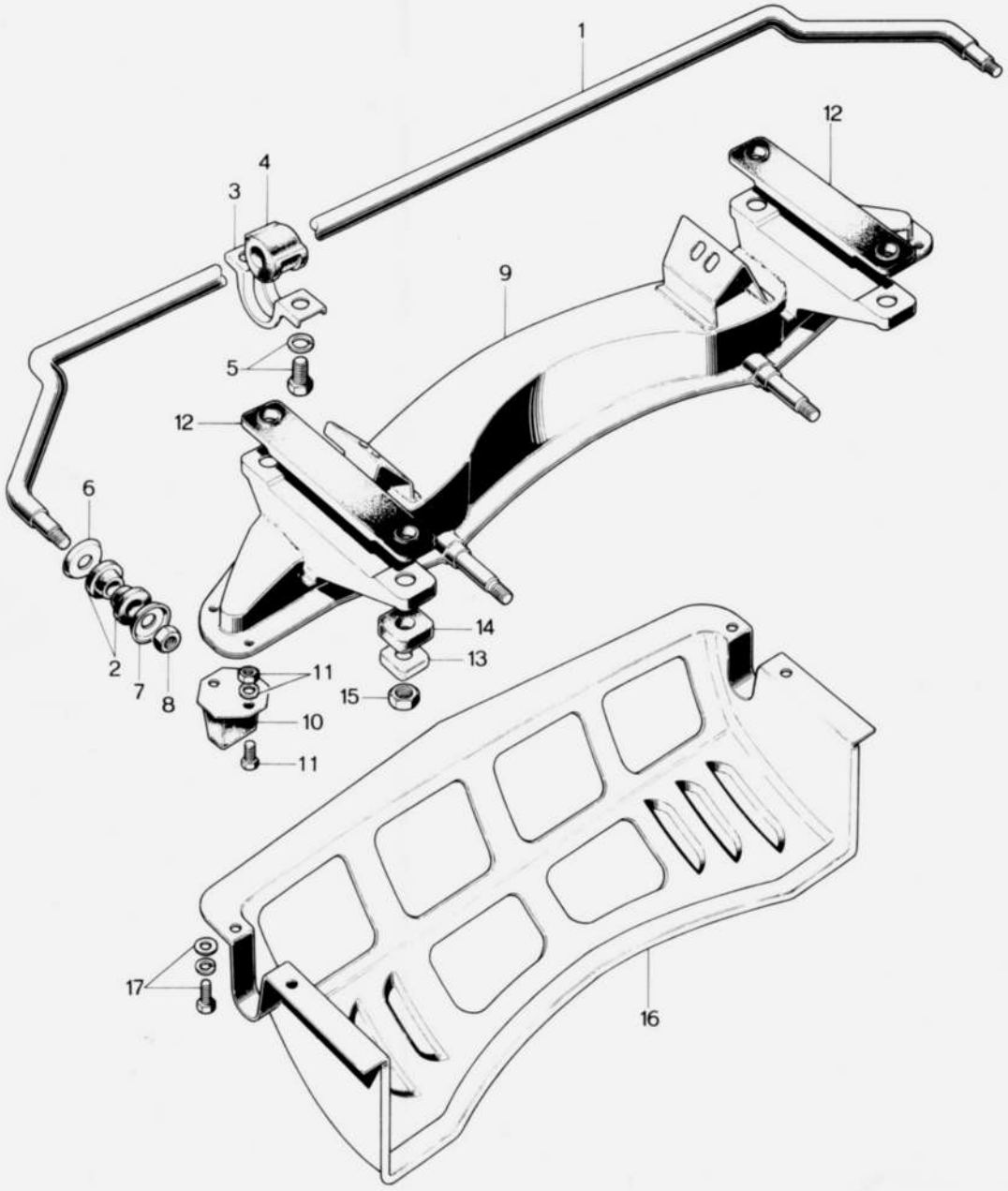
1
12
4
3
9
5
12
6
14
13
2
7
8
11
15
10
11
17
16

FRONT SUSPENSION (CROSS MEMBER) 34

No.	Part Number	Description	Q'ty	Remarks
1	0305 34 151A	Stabilizer	1	
2	0259 34 153	Bush, Rubber - Stabilizer	4	
3	0259 34 155	Plate, Stabilizer Support	2	
4	0305 34 156	Bush, Rubber	2	
5	99781 1025	Bolt, Stabilizer Support	4	
	99971 1000	Washer, Spring	4	
6	0259 34 157	Washer, Stabilizer (Frt.)	2	
7	0259 34 158	Washer, Stabilizer (Rr.)	2	
8	99947 1400	Nut	2	
9	2090 34 800	Member, Cross - Front Suspension	1	
10	0259 34 110	Stopper, Bound	2	
11	99808 0818	Bolt, Bound Stopper	4	
	99971 0800	Washer, Spring	4	
	99808 0800	Nut	4	
12	0259 34 896	Cushion, Upper	2	
13	0259 34 897	Washer	4	
14	0259 34 898	Cushion, Lower	4	
15	99942 1000	Nut, Self Lock	4	
16	0839 56 981A	Cover, Under	1	
•	0839 56 981B	Cover, Under	1	73/6 ~ O
17	908081 6 20	Bolt, Set-Under Cover	4	
	908067 6 20	Bolt, Set-Under Cover	4	Car No. 79731 71/6 ~ O

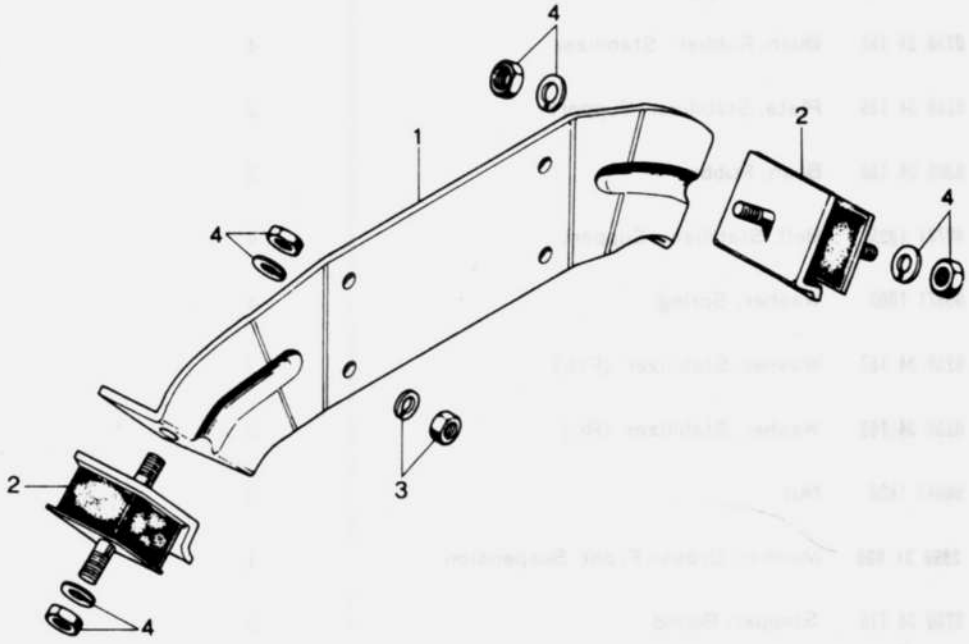
4
1
2
4
4
2
3
4

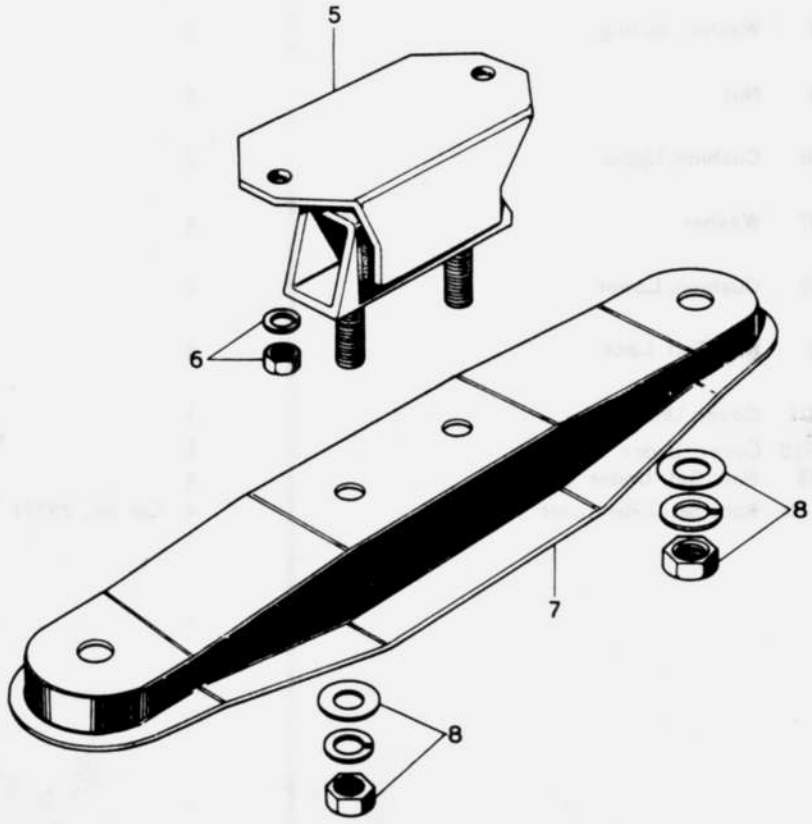
5
6
8
7
8

No.	Part Number	Description	Q'ty	Remarks
1	2090 39 021	Bracket, Engine	1	
●	1668 39 020	Bracket, Engine	1	Car No. 137835 72/8~ Δ
●	1668 39 020B	Bracket, Engine	1	Car No. 144905 72/9~ Δ
2	2325 39 040A	Rubber, Mounting-Engine	2	
●	~~1668 39 040~~	Rubber, Mounting-Engine	2	Car No. 137835 72/8~ Δ
●	1668 39 040C	Rubber, Mounting-Engine	2	Car NO. 73/2~O
3	99921 1000	Nut, Engine Bracket	4	
	99971 1000	Washer, Spring	4	
4	99921 1000	Nut, Mounting Rubber	4	
	99971 1000	Washer, Spring	4	
	99951 1030	Washer, Plain	2	
5	0259 39 340	Rubber, Mounting-T/mission	1	
●	1011 39 340A	Rubber, Mounting-T/mission	1	73/4~O
6	99901 0800	Nut, Mounting Rubber (Manual)	2	
	99971 0800	Washer, Spring (Manual)	2	
●	908012 8 18	Bolt, Set-Mounting Rubber (Automatic)	2	
7	0838 39 381	Member, Mounting-T/mission (Manual)	1	
●	2090 39 380	Member, Mounting-T/mission (Manual)	1	1973 Model
●	1667 39 380	Member, Mounting-T/mission (Automatic)	1	
8	99921 1000	Nut, Mounting Member	4	
	99951 1030	Washer, Plain	4	
●	99951 1030	Washer, Plain	8	Car No. 139695 73/8~ Q'ty
	99971 1000	Washer, Spring	4	
● Ⓝ	1668 39 045	Casing, Stoper	2	Car No. 137835 73/8 Added Anew
●	1668 39 045A	Casing, Stoper	2	Car No. 73/2~O

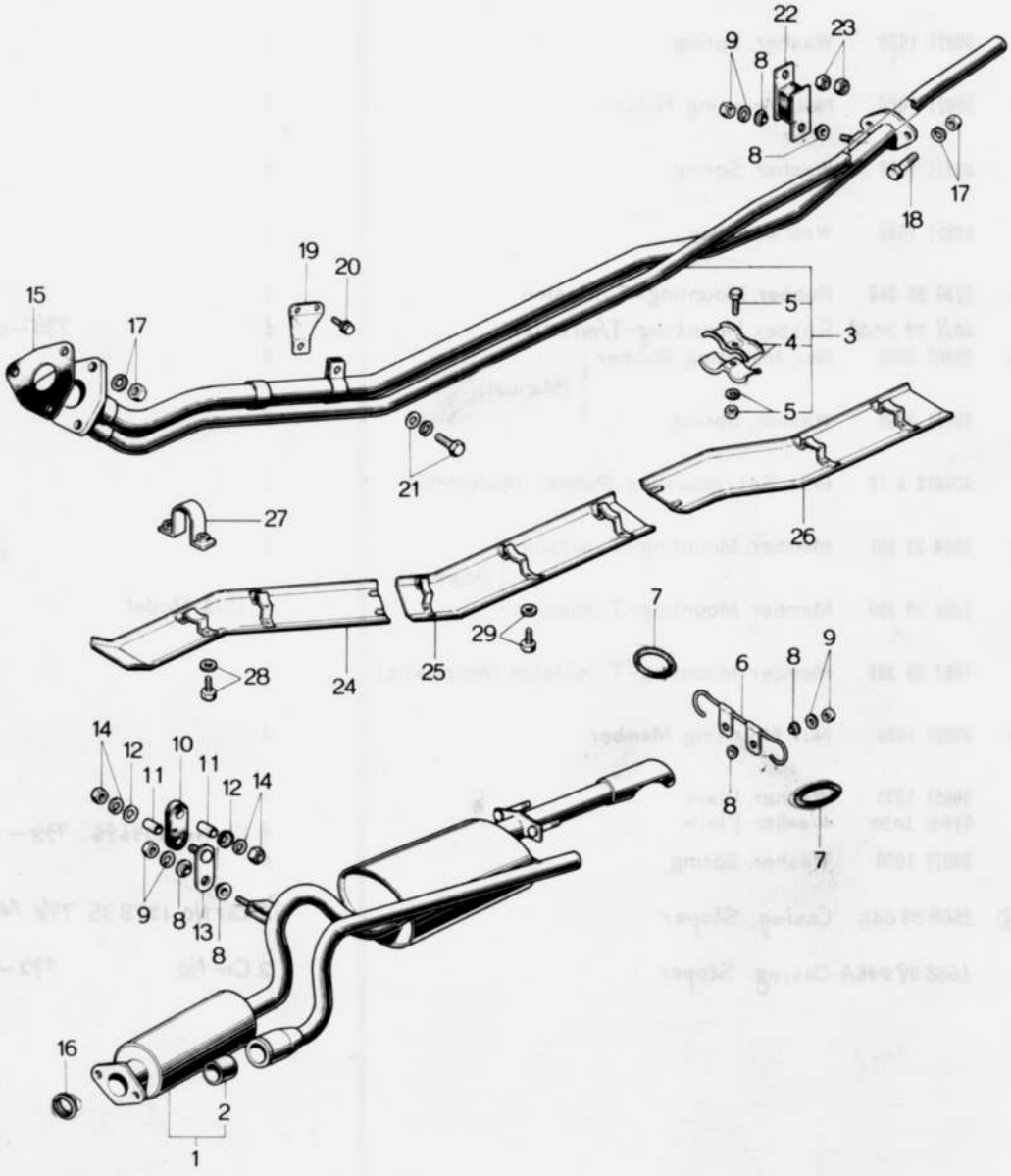
22
23
9
8
8
17
18
19
20
15
17
5
4
3
5
21
27
26
7
29
28
24
25
6
8
9
14
12
10
11
11
12
14
8
7
9
8
13
8
16
2
1

No.	Part Number	Description	Q'ty	Remarks
1	2090 40 500B	Silencer, Main	1	1971,1972 Model
●	1668 40 500	Silencer, Main	1	1973 Model
2	2090 40 508A	Joint, Rubber	1	
3	2090 40 600A	Pipe Ass'y, Exhaust-Front	1	
	2090 40 600B	Pipe Ass'y, Exhaust-Front	1	
●	1668 40 600	Pipe Ass'y, Exhaust-Front (Manual)	1	1973 Model
●	1669 40 600	Pipe Ass'y, Exhaust-Front (Automatic)	1	1973 Model
4	2090 40 307	Clamp	2	
5	99806 0640	Bolt, Clamp	1	
	99971 0600	Washer, Spring	1	
6	0839 40 060	Hook	1	
	0839 40 060A	Hook	1	Car No. 84473 7/6 ~ ○
	0839 40 060B	Hook	1	Car No. 106922 7/12 ~ ×
7	0305 40 061	Hanger, Silencer	2	
8	0824 40 401	Insulator	8	
9	99949 0800	Nut	4	
	99952 0822	Washer, Plain	4	
	99951 0822	Washer, Plain	4	Car No. 84473 7/6 ~ ○
10	0820 40 161	Hanger, Silencer	1	
11	0820 40 165	Pipe	2	
12	0820 40 166	Washer	2	
13	0820 40 170	Plate	1	

40 EXHAUST SYSTEM

No.	Part Number	Description	Q'ty	Remarks
14	99901 0800	Nut, Silencer Hanger	2	
	99971 0800	Washer, Spring	2	
●	99940 0800	Nut, Silencer Hanger	2	Car No. 131853 ~○
15	2090 13 891	Gasket	1	
● 16	08040 356 ~~0810 40 350~~ 08223 13621A	Gasket, Flange	1	From Car No. 1
17	2158 40 355	Nut	5	
	99971 1000	Washer, Spring	5	
18	99801 1045	Bolt, Flange	2	
19	2090 40 080	Bracket	1	
20	908012 8 20	Bolt, Set-Bracket	2	
21	99801 0832	Bolt, Bracket	1	
	99971 0800	Washer, Spring	1	
	99951 0822	Washer, Plain	1	
22	0820 40 180	Hanger, Silencer	1	
23	99901 0800	Nut, Silencer Hanger	1	
	99902 0800	Nut	1	
24	2090 40 810	Protector No. 1 (Manual)	1	
	2090 40 810A	Protector No. 1 (Manual)	1	Car No. 85627 ~×
●	1669 40 810	Protector No. 1 (Automatic)	1	
25	2090 40 820	Protector No. 2	1	
	2090 40 820A	Protector No. 2		Car No. 85627 ~×
26	2090 40 830	Protector No. 3	1	
	2090 40 830A	Protector No. 3	1	Car No. 85627 ~×
27	2090 40 850	Band	4 (Manual) 3 (Automatic)	
●	1669 40 850	Band, Protector No. 1 use	2	(Automatic)
28	908057 5 20	Bolt, Set-Protector	8 (Manual) 10 (Automatic)	
29	99860 0520	Bolt, Protector	4	
	99952 0516	Washer, Plain	4	

42 FUEL TANK

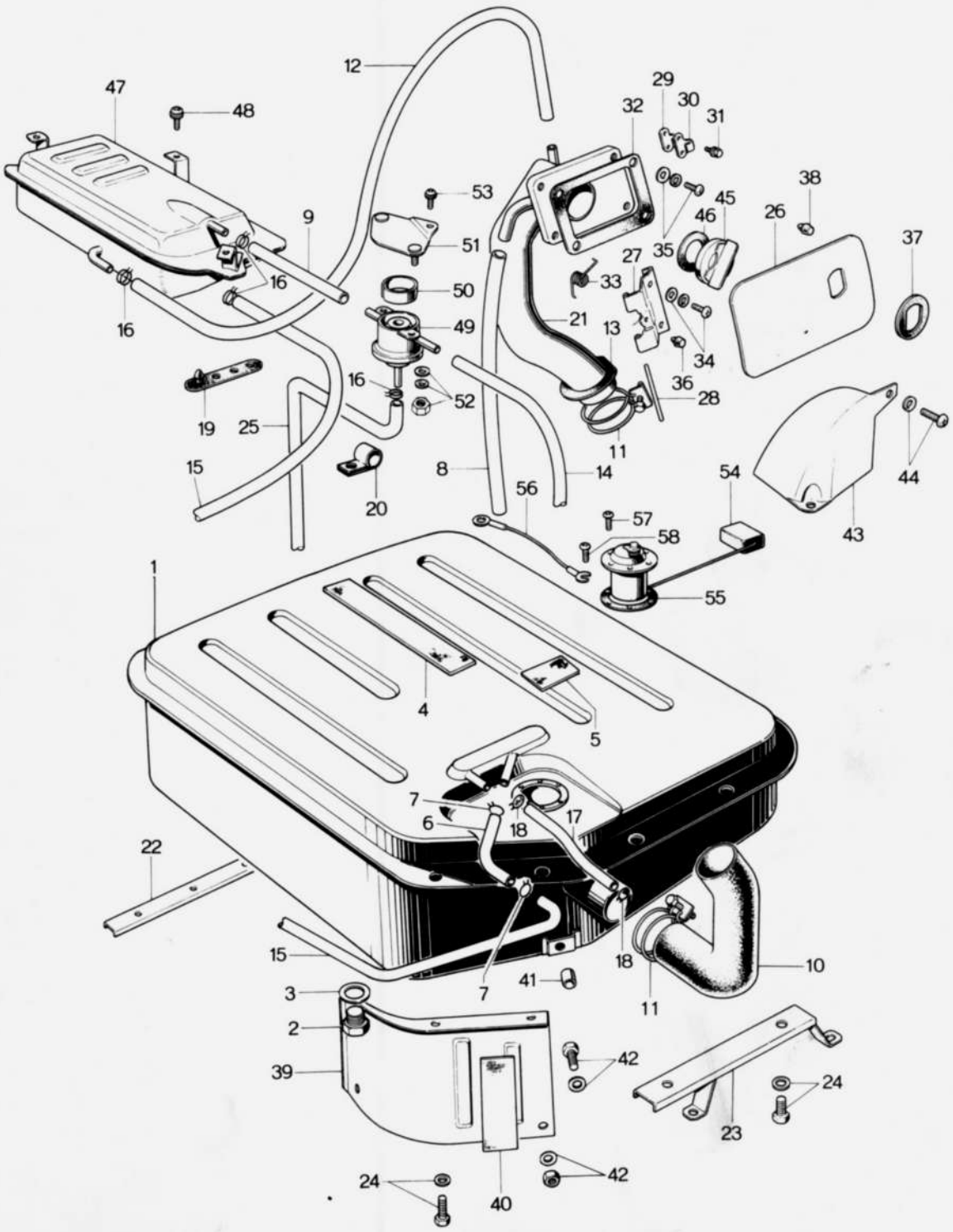
12
47
48
29
30
31
32
53
38
45
46
26
9
51
35
37
27
33
50
21
49
13
34
16
36
52
28
19
25
11
15
8
14
54
44
20
56
57
58
43
55
1
4
5
7
6
18
17
22
15
18
10
41
7
11
3
2
39
42
24
23
42
24
40

No.	Part Number	Description	Q'ty	Remarks
1	0839 42 310A	TANK Ass'y, Fuel	1	
2	0114 42 046A	Plug, Drain	1	
3	99560 1200	Packing	1	
	99564 1200	Packing	1	Car No. 79731 7/6 ~ ○
4	0621 42 371	Spacer, Upper Pan	1	
5	0259 42 792	Pad, Fuel Tank	1	
6	0305 42 345A	Tube	1	
●	0305 42 345B	Tube	1	Car No. 119306 7/2 ~ ○
7	2046 43 839	Clip, Tube	2	
●	99282 2001	Clip, Tube	2	73/12 ~ O
8	99336 12029	Pipe, Vinyl	1	
9	2090 42 348	Tube, Vent	1	Car No. 96266 7/9 ~ Discarded
	1663 42 348	Tube, Vent (1662, 1663)	1	Car No. 96267 7/9 ~ Added Anew
	2090 42 348	Tube, Vent (1664, 1665) & (1973 Model)	1	Car No. 122044 7/1 ~ Reverse
10	0305 42 347B	Hose, Joint	1	
	2090 42 347	Hose, Joint	1	Car No. 96267 7/9 ~ ○
11	99282 5500	Clamp, Hose "A"	2	
12	0603 45 071	Pipe, Fuel	1	
13	0305 42 348	Grommet	1	
14	2850 42 348A	Tube, Vent	1	Car No. 96266 7/9 ~ Discarded
	2850 42 348A	Tube, Vent (1973 Model)	1	Car No. 122044 7/1 ~ Reverse
15	0183 45 021	Pipe, Fuel - Strainer	1	
16	99285 0800	Clip, Wire	4	Car No. 96266 7/9 ~ Discarded
●	99285 1000	Clip, Wire (1664, 1665) & (1973 Model)	4	Car No. 122044 7/1 ~ Reverse
17	99340 06120	Pipe, Vinyl	1	
18	0222 13 493	Clip	2	
●	99283 1300	Clip	2	73/2 ~ O
19	~~0187 66 991~~	~~Clip~~	~~1~~	
●	0187 66 991	Clip	1	From Car No. 1
● 20	0164 10 491	Clip, Pipe	1	Car No. 72/12 ~ Discarded
21	2850 42 350	Pipe Ass'y, Filler	1	
22	0839 42 381	Washer, "A"	1	
23	0305 42 390	Washer Ass'y	1	
24	908046 6 25	Bolt Set	7	Car No. 69368 7/4 ~ Q'ty

42 FUEL TANK

No.	Part Number	Description	Q'ty	Remarks
25	2432 42 395	Tube, Vent	1	Car No. 96266 $^{71}/_{9}$~Discarded
●	2432 42 395	Tube, Vent	1	Car No. 122044 $^{72}/_{1}$~Reverse
26	~~2850 42 410~~ 1907-42-410A	LID, Fuel Filler	1	
27	0305 42 432	Hinge	1	
28	0305 42 433	Pin, Hinge	1	
29	0223 42 375	Plate, Back	1	
30	0223 42 376	Plate, Lock	1	
31	908068 4 12	Bolt, Set-Plate	2	
32	0305 42 441	Packing	1	
33	2244 42 455	Spring	1	
34	908336 5 12	Screw, Set-Hinge	2	
●	908046 5 16	Screw, Set-Hinge	2	Car No. 98855 $^{71}/_{10}$~×
35	908337 5 12	Screw, Set	4	
●	908046 5 16	Screw, Set	4	Car No. 98855 $^{71}/_{10}$~(
36	0259 42 459	Rubber, Cushion	1	
37	0621 42 455	Seat	1	
38	0187 70 491	Stopper	1	
39	0305 42 481	Protector, Fuel Tank	1	
40	0824 42 403	Pad, Fuel Tank "C"	1	
41	0223 50 049	Spacer	2	
42	99806 0822	Bolt, Protector	2	
	99806 0800	Nut	2	
	99852 0818	Washer, Plain	4	
43	0305 42 465	Protector	1	
44	99863 05108	Screw, Protector	2	

No.	Part Number	Description	Q'ty	Remarks
	99952 0516B	Washer, Plain	2	
45	2280 42 460	CAP, Filler	1	
46	2280 42 462	Packing	1	
●	2280 42 462A	Packing	1	Car No. 73/11 ~ ○
● Ⓝ	0391 49 684	packing	1	Car No. 191156 73/5 ~ Added Anew
47	2090 42 610	Tank Ass'y, Condence	1	
	2090 42 610A	Tank Ass'y, Condence	1	Car No. 73455 71/4 ~ ○
48	908337 5 16	Screw, Set-Condence Tank	4	
49	2691 42 710A	Valve, Check	1	Car No. 96266 71/9 ~ Discarded
50	2691 42 716	Element	1	
51	2691 42 750	Bracket, Check Valve	1	
52	99906 0500	Nut, Bracket	2	
	99952 0500	Washer, Plain	2	
	99971 0500	Washer, Spring	2	
53	908336 5 12	Screw, Set	1	
Ⓝ	~~99278 1104~~	~~Clip~~	~~3~~	~~Car No. 96267 71/9 ~ Added Anew~~
54	0839 67 170	GAUGE, Fuel Tank	1	
55	0243 66 773	Packing	1	
56	0275 67 175	Cord, Earth	1	
57	99833 0408	Screw	5	
58	99833 0410	Screw	1	
● Ⓝ	0223 56 942	Pad, Fuel Pipe	1	Car No. 116568 72/1 ~ Added Anew

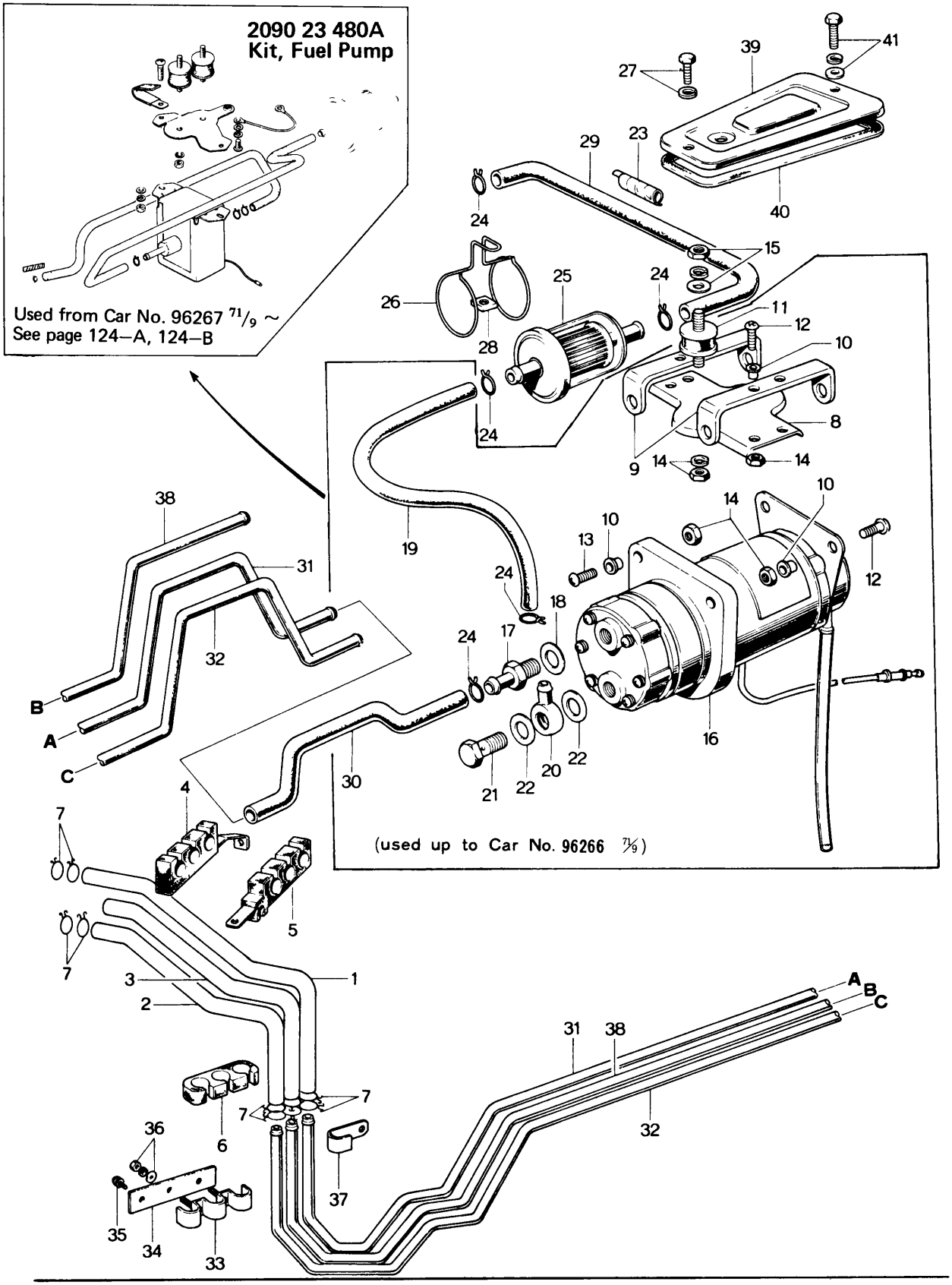
2090 23 480A
Kit, Fuel Pump
Used from Car No. 96267 71/9 ~
See page 124–A, 124–B
(used up to Car No. 96266 71/9)
A
B
C

No.	Part Number	Description	Q'ty	Remarks	
1	0839 13 442C	Pipe, Fuel Main	1		
2	99340 06670	Pipe, Fuel Return	1		
3	2090 13 792	Pipe, Evaporation	1		
4	2090 13 447	Clip, Fuel Pipe	1		
5	2090 13 448A	Clip, Fuel Pipe	1		
6	2080 13 449	Protector	2		
7	2329 13 787	Clip, Fuel Pipe	8		
	0222 13 493	Clip, Fuel Pipe	8	Car No. 74956 $^{71}/_{4}$ ~ O	
8	0305 13 361	Bracket, Fuel Pump	1		
	0305 13 361A	Bracket, Fuel Pump	1	Car No. 77731 $^{71}/_{6}$ ~ X	
9	0305 13 362	Supporter, Fuel Pump	2		
	0305 13 362B	Supporter, Fuel Pump	2	Car No. 69881 $^{71}/_{4}$ ~ O	
10	0305 13 366	Washer	4	Car No. 79731 $^{71}/_{6}$ ~ Q'ty	
11	0223 13 363	Rubber, Insulation			
12	99833 0612	Screw, Fuel Pump	2	Car No. 79731 $^{71}/_{6}$ ~ Q'ty	(Used up to Car No. 96266 $^{71}/_{9}$)
	0760 57 005	Rivet, Seat Lock Set	4	Car No. 79731 $^{71}/_{6}$ ~ O	
13	99833 0616	Screw, Fuel Pump	2		
14	99906 0600	Nut, Fuel Pump	4	Car No. 69881 $^{71}/_{4}$ ~ O	
	99971 0600	Washer, Spring	2		
15	99906 0600	Nut, Insulation Rubber	2		
	99953 0600	Washer, Plain	2		
	99971 0600	Washer, Spring	2		
16	~~0839 13 400E~~	~~Pump, Fuel~~	1	Order under No. 2090 23 480A ~ O	
•	2090 23 480A	Kit, Fuel Pump	1		
•	1663 13 400	Pump, Fuel	1	$^{71}/_{9}$ ~ O	
•	1663 13 400A	Pump, Fuel	1	$^{71}/_{12}$ ~ O	
17	0620 13 433	Connector, Fuel Pipe	1		
18	99564 1200	Packing, Connector	1		
19	0305 45 021	Pipe, Fuel	1		(Used up to Car No. 96266 $^{71}/_{9}$)
20	0034 42 633	Connector, Fuel Pipe	1		

No	Part Number	Description	Q'ty	Remarks
21	0034 13 373	Bolt, Connector	2	
22	99562 1200	Packing	4	
23	0823 18 111	Supporter, Fuel Pipe	1	
24	0222 13 493	Clip, Fuel Pipe	8	
•	99283 1300	Clip, Fiel Pipe	8	$^{73}/_{2}$ ~ O
25	0222 13 470A	Filter, Fuel	1	
•	0222 13 470B	Filter, Fuel	1	$^{73}/_{2}$ ~ O
26	0222 13 481	Clamp	1	
27	99801 0814	Bolt, Fuel Filter	1	
	99971 0800	Washer, Spring	1	
28	99911 0800	Nut, Square - Fuel Filter	1	
29	99340 06280	Pipe, Fuel	1	
30	0305 45 072	Pipe, Fuel	1	(used up to Car No. 96266 $^{71}/_{9}$)
31	0839 45 071D	Pipe, Fuel	1	
32	0839 45 610D	Pipe, Fuel Return	1	
33	2677 45 910	Clip, Fuel Pipe	1	1971 Model
	1650 45 910A	Clip, Fuel Pipe	1	1972, 1973 Model
34	2850 45 921	Clip, Fuel Pipe	1	1971 Model
	1650 45 921	Clip, Fuel Pipe	1	1972, 1973 Model
35	908046 6 16	Bolt, Set - Clip	1	1971 Model
	908042 6 16	Bolt, Set - Clip	3	1972, 1973 Model
36	99906 0400	Nut, Clip	2	
	99952 0400	Washer, Plain	2	1971 Model
	99971 0400	Washer, Spring	2	
37	99295 0606	Clip, Fuel Pipe & Brake Pipe	1	
38	2090 45 710	Pipe, Evaporation	1	
39	0305 56 231	Cover, Service Hole	1	
40	0305 56 232	Rubber, Seal	1	
41	908047 6 20	Bolt, Set - Service Hole Cover	1	

FUEL PUMP (USED UP TO CAR NO. 96266 71/9)

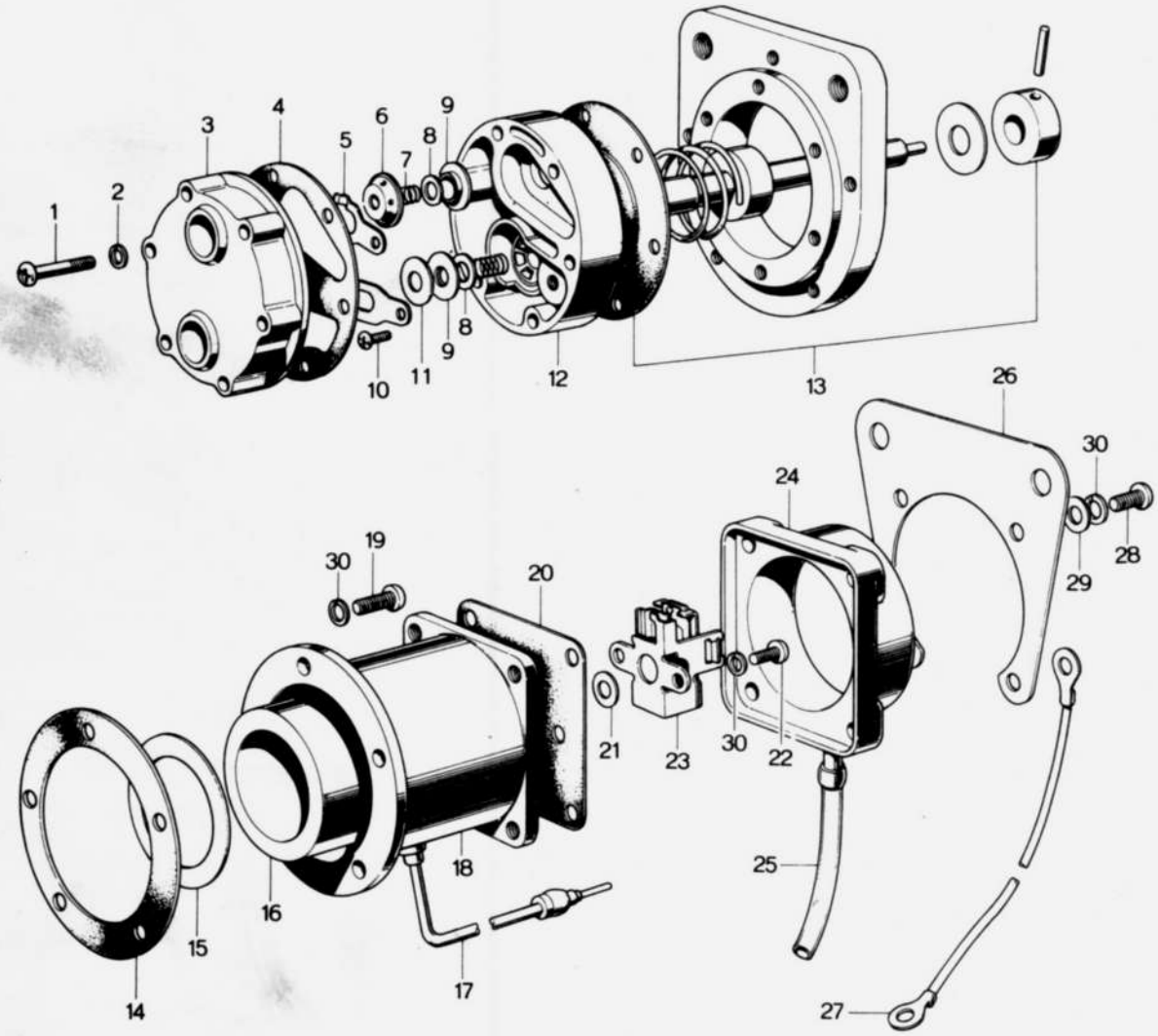

FUEL PUMP (USED UP TO CAR NO. 96266 71/9)

No.	Part Number	Description	Q'ty	Remarks
	0839 13 400E	PUMP, Fuel	1	
	0839 23 601	PUMP Ass'y	1	
1	0820 23 602	Screw	6	
2	0190 13 389	Washer, Spring	6	
3	0221 23 215	Cover	1	
4	0820 23 603	Gasket	1	
5	0137 13 369B	Retainer, Valve	2	
6	0839 23 618	Holder, Valve	1	
	0839 23 618A	Holder, Valve	1	Car No. 78939 71/5~○
7	0137 13 356A	Spring, Valve	2	
8	0137 13 355A	Valve	2	
9	0137 13 357A	Seat, Valve	2	
10	0820 23 604	Screw	2	
11	0137 13 361A	Seat, Valve-Holder	1	
12	0137 13 351B	Chamber, Valve	1	
13	0839 23 611	Diaphragm Ass'y	1	
14	0221 23 229	Packing (t=0.5)	1	
	0221 23 231	Packing (t=0.25)	1	
	0221 23 232	Packing (t=0.1)	1	
	0820 23 615	BODY Ass'y	1	
	0820 23 615A	BODY Ass'y	1	Car No. 85260 71/6~×
15	0221 23 226	Plate, Magnetic Permeable	1	
16	0221 23 225	Coil Ass'y	1	

23 FUEL PUMP (USED UP TO CAR NO. 96266 71/9)

No.	Part Number	Description	Q'ty	Remarks
17	0137 13 394A	Wire, Lead	1	
18	0820 23 616	Body	1	
	0820 23 616A	Body	1	Car No. 96092 71/9 ~ ×
19	0820 23 621	Screw	5	
20	0222 23 631	Packing, Cover	1	
	0222 23 631A	Packing, Cover	1	Car No. 80502 71/6 ~ ×
21	0221 23 227	Washer , Adjusting (t=0.25)	1	
	0221 23 228	Washer , Adjusting (t=0.6)	1	
22	0820 23 625	Screw	2	
23	0222 23 630B	Switch Ass'y	1	
24	0221 23 233	Cover	1	
	0222 23 233	Cover	1	Car No. 80502 71/6 ~ ×
25	0839 23 628	Pipe, Breather	1	
26	0839 23 629	Bracket	1	
	0839 23 629A	Bracket	1	Car No. 85260 71/6 ~ ×
27	0305 23 626A	Wire, Earth	1	
28	0839 23 625	Screw	4	
29	0820 23 624	Washer	3	
30	0190 13 389	Washer, Spring	11	

FUEL PUMP & PIPING

(USED FROM CAR NO. 96267 71/9~)

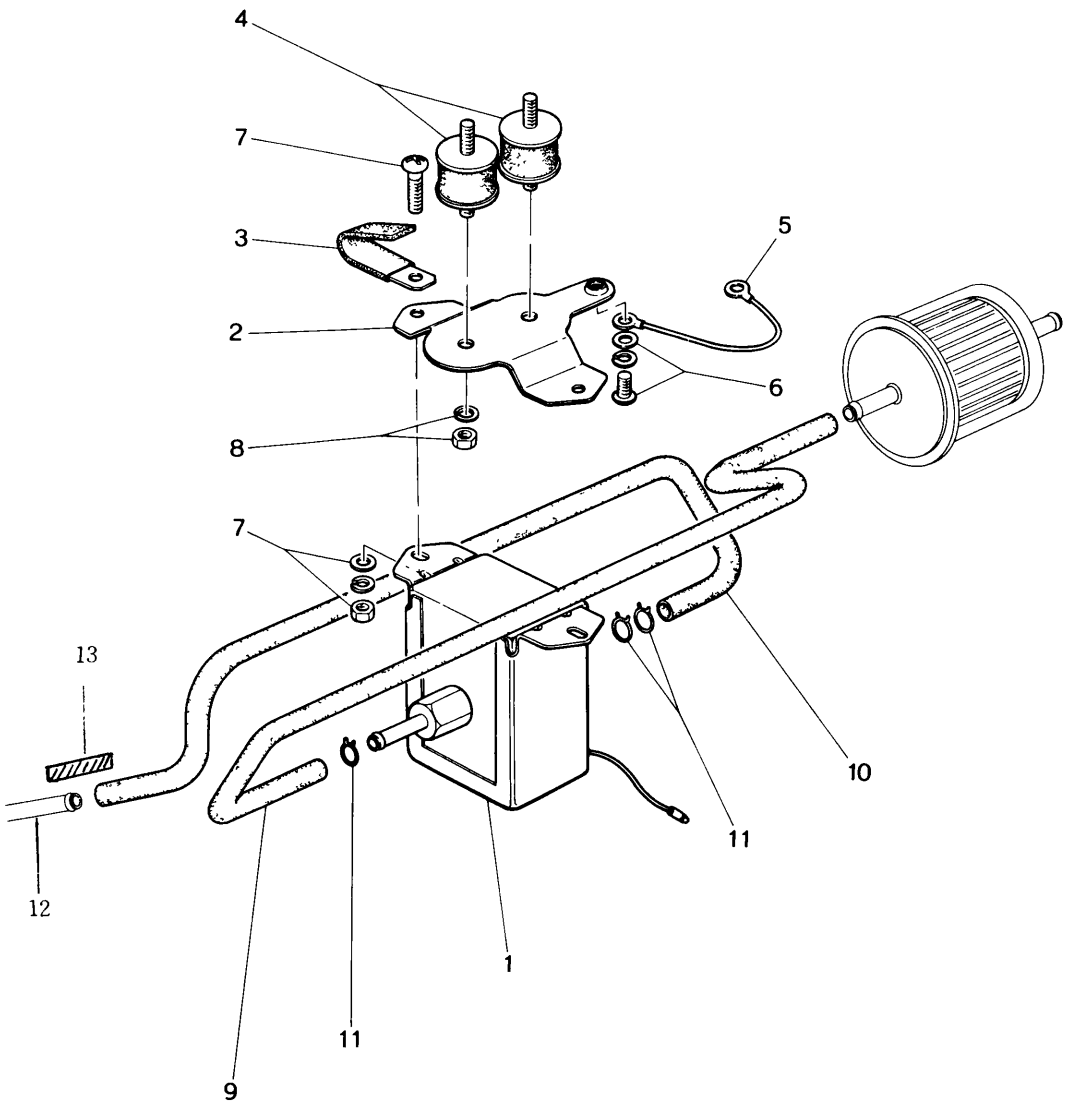

FUEL PUMP & PIPING

(USED FROM CAR NO. 96267 71/9~)

13 45

No.	Part Number	Description	Q'ty	Remarks
1	1663 13 400	Pump, Fuel	1	
	1663 13 400A	Pump, Fuel	1	Car No. 106922 $^{7}1/_{12}$ ~ O
2	1663 13 411	Bracket, Fuel Pump	1	
3	1663 13 412	Clip	1	
4	0222 13 363	Rubber, Insulation	2	
5	1663 13 413	Wire, Earth	1	
6	99833 0608	Screw, Earth Wire	2	
	99952 0600	Washer, Plain	2	
	99971 0600	Washer, Spring	2	
●	908336 6 08	Screw Set-Earth Wire	1	1973 Model
7	99833 0612	Screw, Fuel Pump & Bracket	2	
	99953 0600	Washer, Plain	2	
	99971 0600	Washer, Spring	2	
	99906 0600	Nut	2	
8	99906 0600	Nut, Insulation Rubber	2	
	99971 0600	Spring Washer	2	
9	1663 45 041	Pipe, Fuel (Fuel Filter ~ Fuel Pump)	1	
10	2090 23 482	Pipe, Fuel (Fuel Pump ~ Fuel Main Pipe)	1	
11	0222 13 493	Clip, Fuel Pipe	3	
12	2090 23 483	Pipe - Fuel	1	
13	0823 18 111	Supporter	1	
●	2090 23 480A	KIT, FUEL PUMP (Fig.No. 1-13 Included)	1	

ACCELERATOR CONTROL SYSTEM

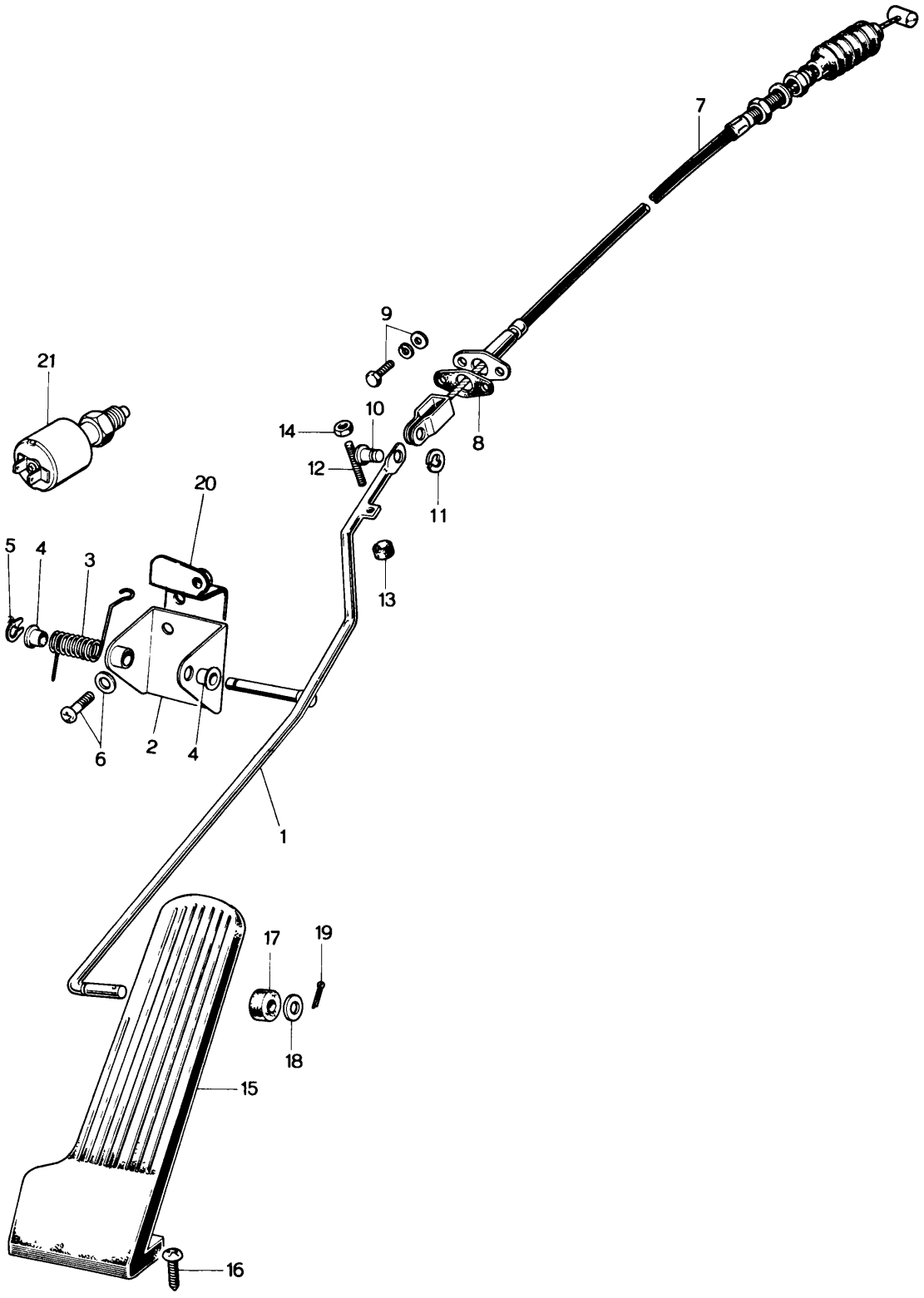

No.	Part Number	Description	Q'ty	Remarks
1	2080 41 610	Arm, Accelerator Pedal (Manual)	1	
●	2070 41 610	Arm, Accelerator Pedal (Automatic)	1	
2	0305 41 641	Bracket, Arm	1	
3	0824 41 619	Spring, Return	1	
4	0259 41 644	Bush	2	
5	98575 0600	Ring, "U" Stop	1	
6	908332 6 16	Screw, Set	2	
7	2080 41 660	Wire, Accelerator	1	
	2080 41 660A	Wire, Accelerator	1	Car No. 96381 ⅞~○
8	0249 41 671	Seat, Rubber-Accelerator Control Wire	1	
9	908067 6 20	Bolt, Set	2	
10	99230 0511	Pin	1	
11	99575 0300	Ring, "U" Stop	1	
12	0118 41 681	Stopper	1	
13	0118 41 682	Rubber	1	
14	99907 0600	Nut, Lock	1	
15	0290 41 710	Pedal Ass'y, Accelerator	1	
16	99833 0514	Screw, Accelerator Pedal	2	
17	0259 41 613	Roller, Pedal	1	
18	99953 0800	Washer, Plain-Roller	2	
19	99221 2012	Pin, Split-Roller	1	
● 20	0842 41 650	Bracket, Kick Down Switch (Automatic)	1	
● 21	2691 18 660	Switch, Kick Down (Automatic)	1	

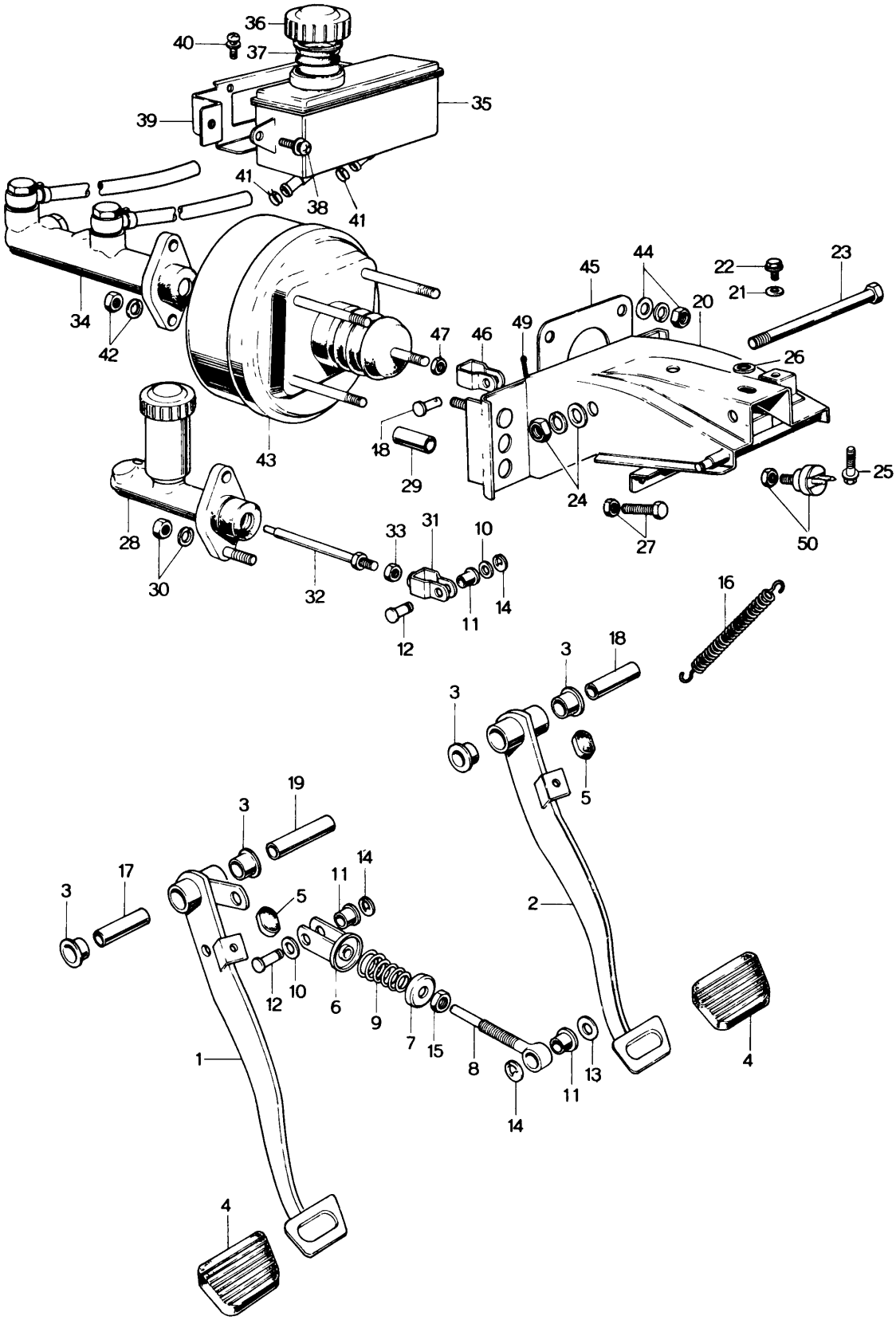
36
40
37
35
39
41
38
41
34
42
43
45
44
22
23
21
20
49
47
46
26
18
29
24
25
27
50
28
30
32
33
31
10
11
14
12
16
3
18
3
5
2
19
3
17
3
11
14
5
12
10
6
9
7
15
8
11
13
14
1
4
4

No.	Part Number	Description	Q'ty	Remarks
1	2835 41 030	Pedal, Clutch (Manual)	1	
	1663 41 030	Pedal, Clutch (Manual)	1	Car No. 98855 71/10～×
	2835 41 030	Pedal, Clutch (Manual)	1	Car No. 106922 71/12～○
2	2835 43 030	Pedal, Brake (Manual)	1	
●	2840 43 030	Pedal, Brake (Automatic)	1	
3	0223 43 022	Bush	4 (Manual) 2 (Automatic)	
4	0259 43 028	Pad, Pedal (Manual)	2	
●	0268 43 028	Pad, Pedal (Automatic)	1	
5	0187 43 029	Stopper	2 (Manual) 1 (Automatic)	
6	0824 41 040	Seat, Spring	1	
●	0559 41 040C	Seat, Spring	2	Car No. 133832 73/7～×
7	0183 41 043	Seat, Spring	1	
8	0824 41 051	Rod	1	
●	0824 41 051A	Rod	1	Car No. 133832 73/7～×
9	0183 41 081	Spring, Return	1	
	0559 41 081	Spring, Retun	1	Car No. 104626 71/11～○
●	0559 41 081A	Spring, Return	1	Car No. 133832 73/7～○
10	0824 41 084	Spacer	1	
11	0259 41 644	Bush	1	
12	0187 46 683	Pin, Fork End	1	Car No. 133832 73/7～Q'ty
●	0604 46 785	Pin, Spring Seat	1	Car No. 133832 73/7～Added Anew
13	99952 0816	Washer, Plain	1	
14	99575 0600	Ring, Retaining	3	
15	99801 0800	Nut, Rod	1	
●	99922 0800	Nut, Rod	1	Car No. 133832 73/7～○
16	0810 41 308	Spring, Return	1	
17	0187 43 061	Pin, Pedal (Manual)	1	
18	2301 43 061	Pipe	1	
19	0223 43 064	Spacer	1	
20	2835 43 070A	Bracket, Master Cylinder (Manual)	1	
●	0305 43 070B	Bracket, Master Cylinder (Automatic)	1	
21	0118 58 442	Seat	1	
22	908057 8 25	Bolt, Set-Master Cylinder Bracket	1	
23	99813 12180	Bolt, Pedal (Manual)	1	
●	99813 12135	Bolt, Pedal (Automatic)	1	
24	99921 1200	Nut, Pedal	1	
	99952 1200	Washer, Plain	1	
	99971 1200	Washer, Spring	1	

CLUTCH & BRAKE SYSTEM

No.	Part Number	Description		Q'ty	Remarks
25	908016 8 20	Bolt, Set-Master Cylinder Bracket		1	
26	0136 44 043	Spacer, Master Cylinder Bracket		1	
27	99795 1032	Bolt, Stopper	(Manual)	1	
	99922 1000	Nut, Stopper Bolt		1	
28	2835 41 400	Cylinder Ass'y, Master - Clutch		1	
	2835 41 400A	Cylinder Ass'y, Master - Clutch		1	Car No. 98855 $\frac{71}{10}$~○
29	0259 43 065	Pipe		2	
30	99901 0800	Nut, Master Cylinder or Plate		2	
	99971 0800	Washer, Spring		2	
31	0305 41 140	End, Fork-Clutch	(Manual)	1	
32	0824 41 131	Rod, Push		1	
33	99921 0800	Nut, Push Rod		1	
●	99922 0800	Nut, Push Rod		1	
34	2835 43 990A	Cylinder Ass'y, Tandem Master		1	
Ⓝ	2850 18 660	Clutch Switch		1	Car No. 103903 $\frac{71}{11}$~Discarded
Ⓝ	1663 18 865	Wirng Ass'y		1	
	0839 43 550	TANK Ass'y, Reserve		1	
35	0839 43 551	Tank, Reserve		1	
36	0727 43 552	Cap		1	
37	0839 43 553	Baffle		1	
●	0839 43 553A	Baffle		1	Car No. $\frac{72}{9}$~×
38	908336 5 16	Screw, Set-Reserve Tank		2	
39	0839 43 570	Bracket, Reserve Tank		1	
40	908332 5 12	Screw, Set-Bracket		2	
41	99285 0800	Clip, Pipe		2	
42	99901 0800	Nut, Tandem Master Cylinder		2	
	99971 0800	Washer, Spring		2	

No.	Part Number	Description	Q'ty	Remarks
43	2835 43 800	~~Vac Ass'y, Master~~ Power Brake	1	
44	99801 0800	Nut, ~~Master Vac~~ Power Brake	4	
	99852 0816	Washer, Plain	4	
	99871 0800	Washer, Spring	4	
45	0305 43 093	Packing, ~~Master Vac~~ Power Brake	1	Car No. 120481 7½~Discarded
46	0305 43 140	End, Fork	1	
47	99822 1000	Nut, Fork End	1	
48	99231 0818	Pin, Joint-Fork End	1	
49	99221 2020	Pin, Split	1	
50	0233 66 790	Switch, Stop	1	
Ⓝ	1663 41 060	Bracket, Clutch Switch	1 1	Car No. 98855 7/10~Added Anew Car No. 106922 7/12~Discarded
● Ⓝ	0225 43 092	Plate (Automatic)	1	

CLUTCH MASTER CYL. & TANDEM MASTER CYL.

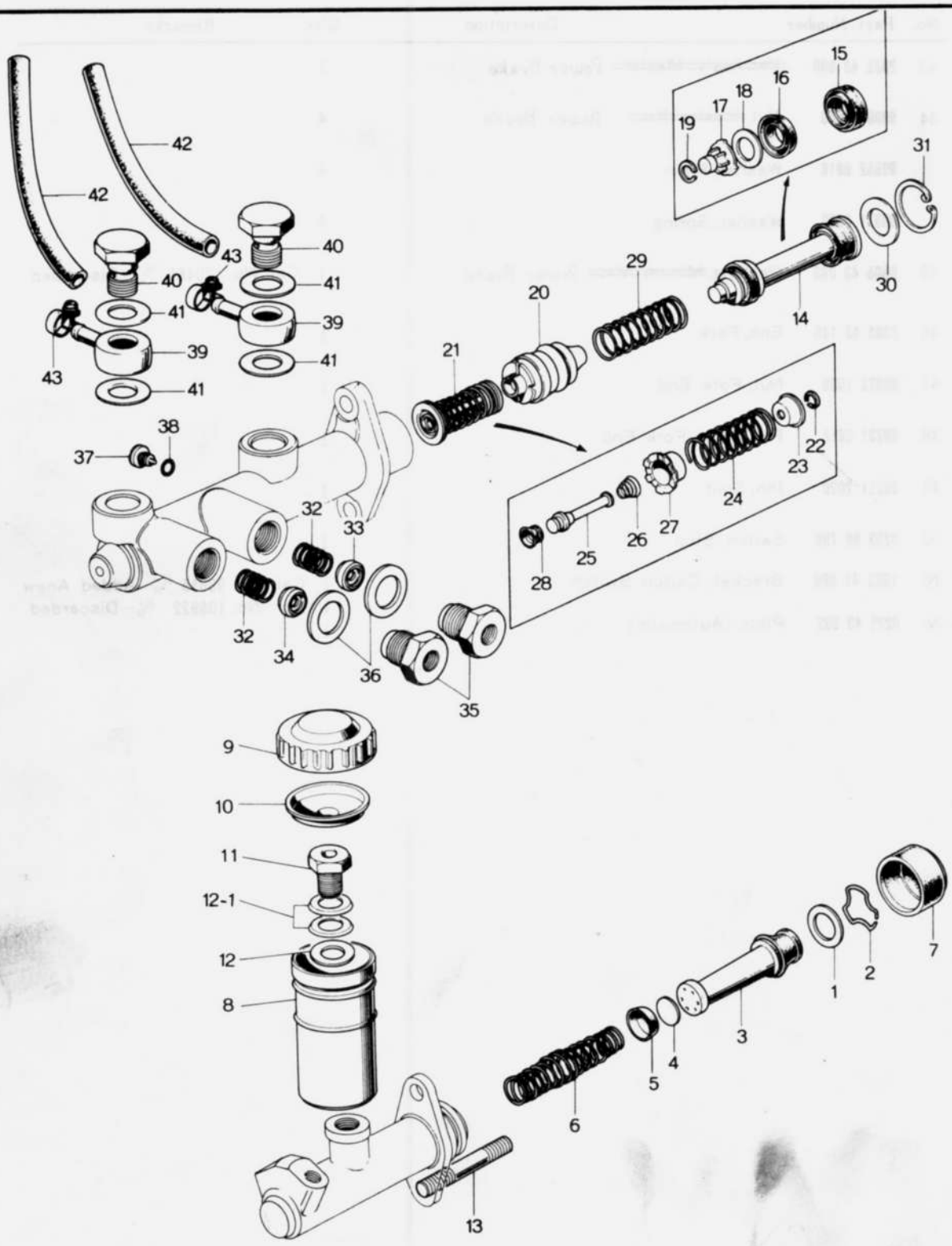

CLUTCH MASTER CYL. & TANDEM MASTER CYL.

41 49

No.	Part Number	Description	Q'ty	Remarks
	2835 41 400	CYLINDER Ass'y, Clutch Master	1	
	2835 41 400A	CYLINDER Ass'y, Clutch Master	1	Car No. 98855 7/10~○
1	0111 43 433	Washer, Piston Stop	1	
2	0111 43 432	Wire, Piston Stop	1	
3	0305 41 440	PISTON Ass'y	1	
	0839 41 440	PISTON Ass'y	1	Car No. 98855 7/10~×
	0305 41 451	Cup, Secondary	1	
4	0727 41 442	Spacer	1	
5	0305 41 461	Cup, Primary	1	
	0839 41 461	Cup, Primary	1	Car No. 98855 7/10~×
6	0110 41 470	Spring, Piston	1	
●	0110 41 470A	Spring, Piston	1	Car No. 133832 7/1~
7	0111 43 511	Boot	1	
8	0317 43 551	Tank, Reserve	1	
9	0727 43 552	Cap	1	
10	0839 43 553	Baffle, Oil	1	
	0839 43 553A	Baffle, Oil	1	Car No. 69368 7/4~○
11	0317 43 421	Plug	1	
12	0221 43 431	Washer	1	
●12-1	0317 43 428	Spring, Cone	2	Car No. 57330 7/2~Added Anew
13	99852 0848	Stud	1	
	0305 99 431	Clutch Master Cylinder Repair Kit (Fig. No. 1~7 included)	1	
	0839 89 431	Clutch Master Cylinder Repair Kit (Fig No 1~7 included)	1	Car No. 98855 7/10~○
●	0839 89 431A	Clutch Master Cylinder Repair Kit (Fig. NO. 1~7 included)	1	Car No. 133832 7/1~
	2835 43 990A	CYLINDER Ass'y, Tandem Master	1	
14	2046 49 620C	PISTON Ass'y, Primary	1	
15	2046 49 625A	Cup, Secondary	1	

Order Under No. 0317 89 436 Cap Set

Order Under No. 0317 89 435 Reserve Tank Set 1

CLUTCH MASTER CYL. & TANDEM MASTER CYL.

No.	Part Number	Description	Q'ty	Remarks
16	2046 49 626A	Cup, Primary	1	
17	2046 49 627B	Seat, Spring	1	
18	2046 49 629A	Spacer, Piston Cup	1	
19	2046 49 622	Ring, Stop	1	
20	2835 49 630A	PISTON Ass'y, Floating	1	
	2046 49 635A	Cup, Primary	2	
21	2835 49 640	VALVE Ass'y, Floating	1	
22	2835 49 623	Stopper	1	
23	2835 49 628A	Seat, Spring	1	
24	2835 49 642A	Spring, Floating Piston	1	
25	2835 49 645A	Rod, Valve	1	
26	2835 49 646A	Spring, Valve	1	
27	2835 49 647A	Case, Valve	1	
28	2835 49 648	Valve, Tipping	1	
29	2835 49 641A	Spring, Primary Piston	1	
30	2046 49 666	Washer, Piston (1)	1	Selective use
	2046 49 667	Washer, Piston (2)	1	
	2046 49 668	Washer, Piston (3)	1	
	2046 49 669	Washer, Piston (4)	1	
31	2046 49 638	Ring, Retaining	1	

CLUTCH MASTER CYL. & TANDEM MASTER CYL.

41 49

No.	Part Number	Description	Q'ty	Remarks
32	0233 49 665	Spring, Check Valve	2	
33	0233 49 660	Valve, Check	1	
34	0233 49 670	Valve, Check	1	
35	2835 49 652	Bolt, Joint	2	
36	0233 49 656	Gasket, Joint Bolt	2	
37	2046 49 676	Bolt, Set	1	
38	2046 49 696	Gasket, Set Bolt	1	
39	2835 49 682A	Union	2	
40	2835 49 686A	Bolt, Conector	2	
41	2835 49 687	Gasket	4	
42	0839 43 422C	Pipe, Oil (ℓ = 135)	2	
43	2835 49 685	Clamp	2	
	2835 99 430	Tandem Master Cylinder Repair Kit ~~(Fig. 14,20,21,29,30,31,32 included)~~ (Fig. No 14, 16~21, 29, 31 included)	1	
●	2835 89 439	Tandem Master Cylinder Repair Kit (Fig. No. 14, 16~21, 29, 31 included)	1 Car No.	73/5~O

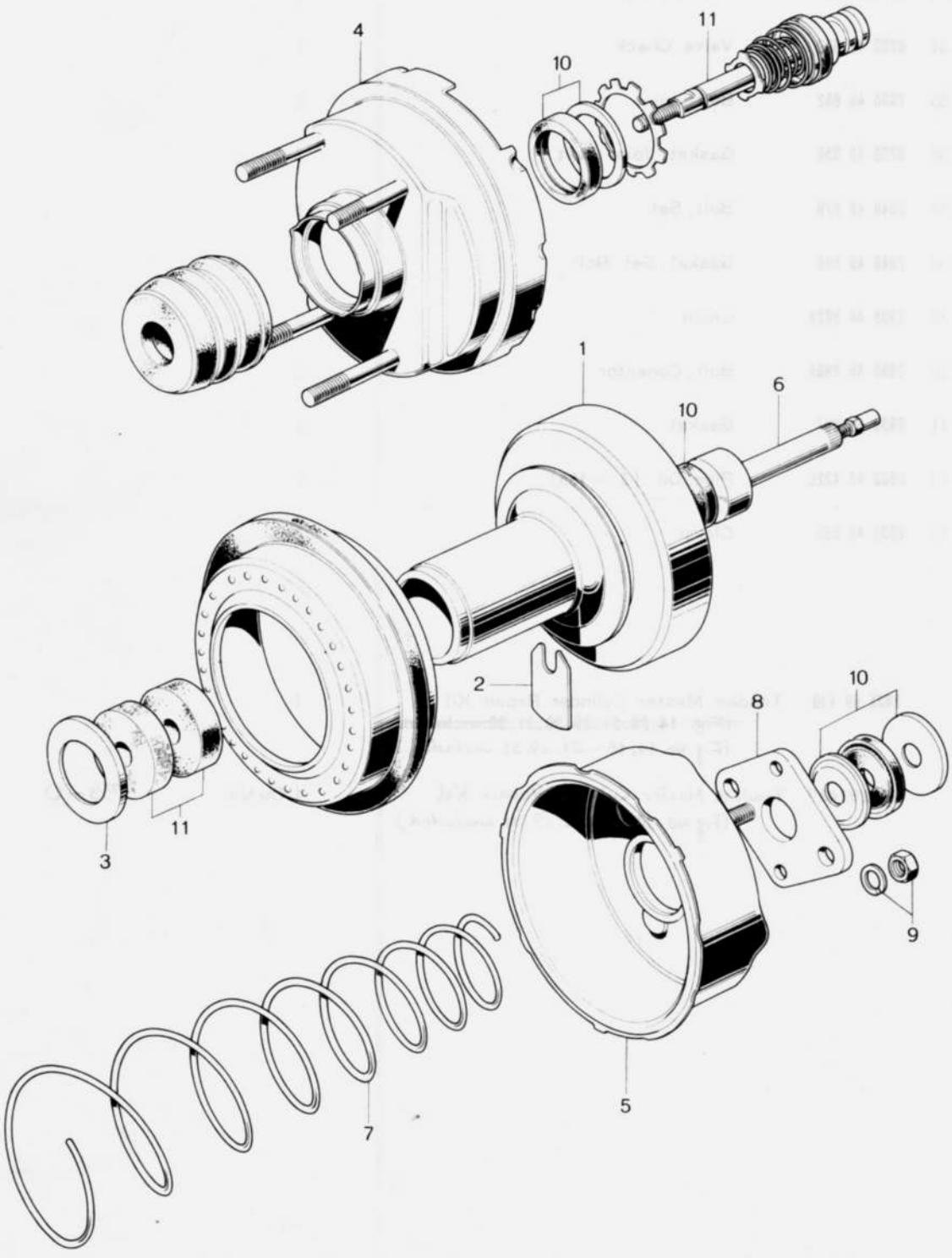
4
11
10
1
6
10
2
10
8
11
3
9
7
5

No.	Part Number	Description	Q'ty	Remarks
	2835 43 800	~~VAC Ass'y, Master~~ POWER BRAKE	1	
1	0824 49 745	Plate, Diaphragm	1	
2	2046 49 746	Key	1	
3	2046 49 747	Retainer, Silencer	1	
4	~~0824 49 750~~	~~Shell Ass'y, Rear & Stud~~	~~1~~	
5	~~2835 49 760~~	~~Shell Ass'y, Front & Stud~~	~~1~~	
6	0824 49 770	Rod Ass'y, Push	1	
	0870 49 770	Rod. Assy, Push	1	
7	0824 49 781	Spring	1	
8	0824 49 782	Flange	1	
9	2046 49 783	Washer, Spring	1	
	99971 0800	Washer, Spring	1	
	2046 49 784	Nut	1	
	99906 0800	Nut	1	
10	0824 49 710	Repair, Kit "A"	1	
11	0824 49 720A	Repair, Kit "B" (Kit "A" Included) — Parts not listed here are supplied under these Kits	1	
	2835 49 720	Repair, Kit 'B' Included	1	

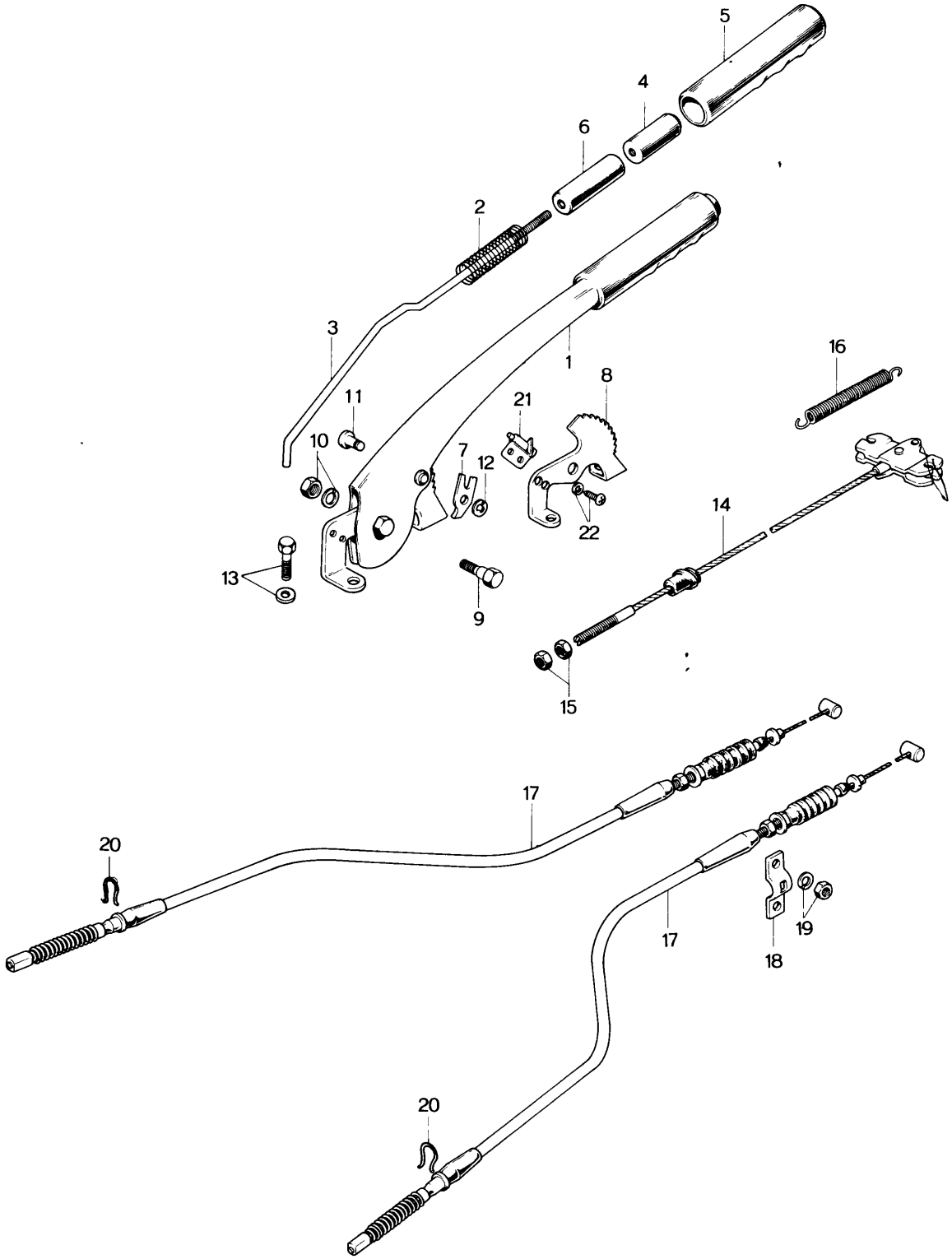
5
4
6
2
3
1
16
8
11
21
10
7
12
22
14
13
9
15
17
20
17
19
18
20

No.	Part Number	Description	Q'ty	Remarks
1	0303 44 010A	PARKING BRAKE, LEVER Ass'y	1	
●	0302 44 010A	PARKING BRAKE, LEVER Ass'y	1	Car No. 79731 71/6 ~ ○
2	0813 44 031	Spring	1	
3	0303 44 032	Rod, Release	1	
4	0221 44 033	Button, Release	1	
5	0813 44 034	Cap	1	
6	0813 44 035	Spacer	1	
7	0221 44 044	Ratchet	1	
8	0303 44 051A	Sector	1	
9	0303 44 053	Bolt	1	
10	99901 0800	Nut	1	
	99971 0800	Washer, Spring	1	
11	99230 0815	Pin	1	
12	99575 0500	Ring, Snap	1	
13	908062 6 16	Bolt, Set-Set Plate	4	
14	0303 44 150A	Cable, Front	1	
15	99947 0600	Nut, Front Cable	1	
16	0183 41 308	Spring, Return	1	
17	0303 44 410D	Cable, Rear	2	
●	0303 44 410E	Cable, Rear	2	73/1 ~ ○
●	0303 44 410F	Cable, Rear	2	Car No. 195013 73/5 ~ △
18	0303 44 439	Plate	2	
19	99906 0600	Nut, Plate	4	
	99971 0600	Washer, Spring	4	
20	0305 44 471	Clip	2	
21	0820 66 840	Switch, Parking Lamp	2	
22	908336 4 12	Screw, Set-Parking Lamp Switch	2	

PIPING (CLUTCH & BRAKE)

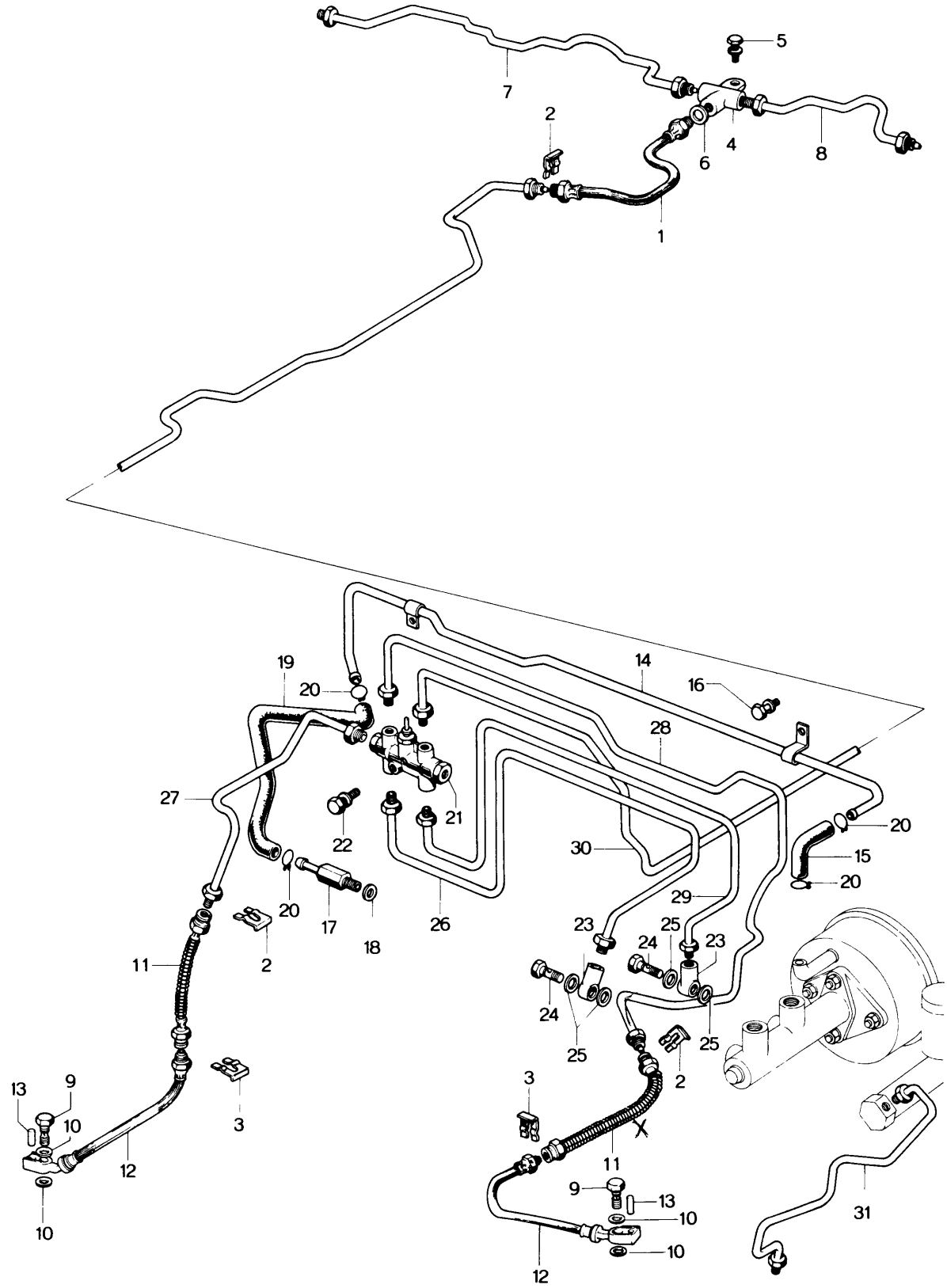

No.	Part Number	Description	Q'ty	Remarks
1	2853 43 820	Hose, Flexible	1	
2	0136 43 635	Clip	3	
3	0305 43 635	Clip	2	
4	0187 43 642	Joint, Pipe	1	
5	908062 6 25	Bolt, Set	1	
6	99562 1000	Packing	1	
7	0305 43 650A	Pipe, Brake (Rr, R)	1	
	2850 43 650	Pipe, Brake (Rr, R)	1	Car No. 98855 71/10~
	2850 43 650A	Pipe, Brake (Rr, R)	1	Car No. 106922 71/12~
●	0305 43 650A	Pipe, Brake (Rr, R)	1	73/12~O
8	0305 43 660A	Pipe, Brake (Rr, L)	1	
	2850 43 660	Pipe, Brake (Rr, L)	1	Car No 98855 71/10~
●	0305 43 660A	Pipe, Brake (Rr, L)	1	73/12~O
9	0221 43 694	Bolt Connector	2	Car No. 85626 71/7~Discarded
10	99562 1000	Packing	2	
11	2850 43 810A	Hose, Flexible	2	
	2850 43 810B	Hose, Flexible	2	Car No. 85627 71/7~△
	1541 43 820	Hose, Flexible	2	Car No. 106922 71/11~
12	2850 43 820	Hose, Flexible	2	Car No. 65431 71/3~Discarded
	~~2850 43 820B~~	~~Hose, Flexible~~	~~2~~	~~Car No. 65432 71/3~△~~
~~13~~	~~98022 8516~~	~~Pin~~	~~2~~	~~Car No. 65431 71/3~Discarded~~
14	2081 43 830	Pipe, Vacuum	1	
●	2081 43 830A	Pipe Vacuum	1	Car No. 65432 71/3~×
15	0305 43 842A	Hose, Vacuum	1	
16	908062 6 16	Bolt, Set - Vacuum Hose	1	
17	0839 43 770	Valve, Check	1	
	0839 43 770A	Valve, Check	1	Car No. 106922 71/12~
18	99562 1200	Packing	1	
●	99564 1200	Packing	1	73/4~O
19	2081 43 836A	Hose, Vacuum	1	
20	2046 43 839	Clamp, Hose	4	
●	99282 2001	Clamp, Hose	4	73/4~O
21	2229 43 890	Indicator	1	
	2229 43 890A	Indicator	1	Car No. 98855 71/10~
22	908062 6 35	Bolt, Set	1	
23	0118 41 375	Connector, Pipe	2	
24	0221 43 694	Bolt, Connector	2	
25	99562 1000	Packing	4	
26	2835 45 260A	Pipe, Main Brake (Frt)	1	
●	2090 45 260	Pipe, Main Brake (Frt)	1	Car No. 96267 71/9~ 73/11~O
	~~2835 45 260A~~		~~1~~	

PIPING (CLUTCH & BRAKE)

	No.	Part Number	Description	Q'ty	Remarks
	27	2090 45 280	Pipe, Brake (Frt., R)	1	
●		0305 45 280B	Pipe, Brake (Frt., R)	1	73/11~○
	28	2835 45 310	Pipe, Brake (Frt., L)	1	
		2090 45 310	Pipe, Brake (Frt., L)	1	Car No. 96267 71/9~○
●		2835 45 310	Pipe, Brake (Frt., L)	1	73/11~○
	29	2835 45 320A	Pipe, Brake (Rr)	1	
		2090 45 320	Pipe, Brake (Rr.)	1	Car No. 96267 71/9~○
●		2835 45 320A	Pipe, Brake (Rr)	1	73/11~○
	30	2835 45 330A	Pipe, Brake (Rr.) No. 2	1	
		2835 45 330B	Pipe, Brake (Rr.) No. 2	1	Car No. 79731 71/6~×
		2090 45 330	Pipe, Brake (Rr.) No. 2 (Manual)	1	Car No. 96267 71/9~○
●		2835 45 330B	Pipe, Brake (Rr.) No. 2 (Manual)	1	Car No 72/11~○
●		2835 45 330C	Pipe, Brake (Rr) No. 2 (Manual)	1	Car No. 211337 73/8~△
		1667 45 330	Pipe, Brake (Rr.) No. 2 (Automatic)	1	
●		2070 45 330	Pipe, Brake (Rr) No 2 (Automatic)	1	Car No. 72/11~○
●		2070 45 330A	Pipe, Brake (Rr) No. 2 (Automatic)	1	Car No. 211337 73/8~△
	31	2080 45 510	Pipe, Clutch (Manual)	1	

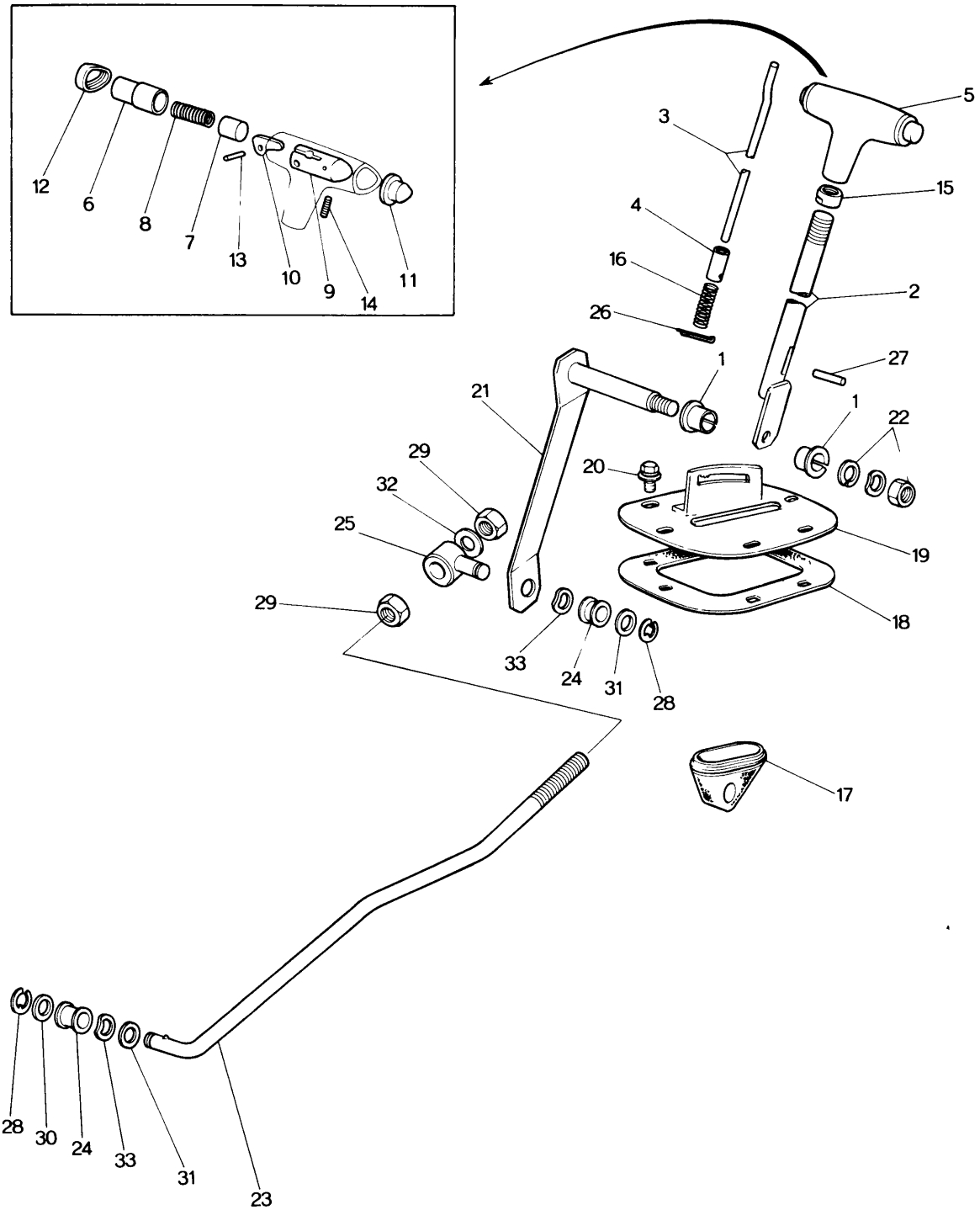
12
6
8
7
13
10
9
14
11
3
5
15
4
16
2
26
1
27
21
1
22
29
20
32
25
19
29
18
33
24
31
28
17
28
30
24
33
31
23

No.	Part Number	Description	Q'ty	Remarks
1	0259 43 022	Bush	2	
2	2375 46 010	Lever, Selector	1	
3	2375 46 021	Rod	1	
4	2375 46 022	Guide	1	
5	2375 46 030B	Knob	1	
6	2375 46 051A	Knob	1	
7	2375 46 052	Piston	1	
8	2375 46 053	Spring	1	
9	2375 46 054	Supporter	1	
10	2375 46 055	Lever	1	
11	2375 46 056A	Plug	1	
● 12	0308 46 057A ~~2375 46 057A~~	Cap	1	From Car No. 1
13	99225 0320	Pin	1	
14	99887 0412	Screw Set	1	
15	2375 46 061	Nut	1	
16	2375 46 062	Spring	1	
17	0842 46 081	Boot	1	
18	0308 46 083	Seal	1	
19	2070 46 110A	Bracket	1	
20	908067 6 16	Bolt Set, Bracket	6	

No.	Part Number	Description	Q'ty	Remarks
21	0842 46 150	Lever	1	
22	99922 1000	Nut	1	
	99971 1000	Washer, Spring	1	
	99972 1400	Washer, Wave	2	
23	0842 46 571	Rod	1	
●	0842 46 571A	Rod	1	73/5 ~ O
24	0604 46 684	Bush	2	
●	1015 46 684	Bush	2	73/5 ~ O
25	0259 46 691	Joint, "T"	1	
26	99221 2020	Pin, Split	1	
27	99222 0520	Pin	1	
28	99575 0600	Ring, Retaining	2	
29	99902 0800	Nut	2	
30	99952 0816	Washer, Plain	1	
31	99953 0800	Washer, Plain	2	
32	99971 0800	Washer, Spring	1	
33	99972 0800	Washer, Wave	2	

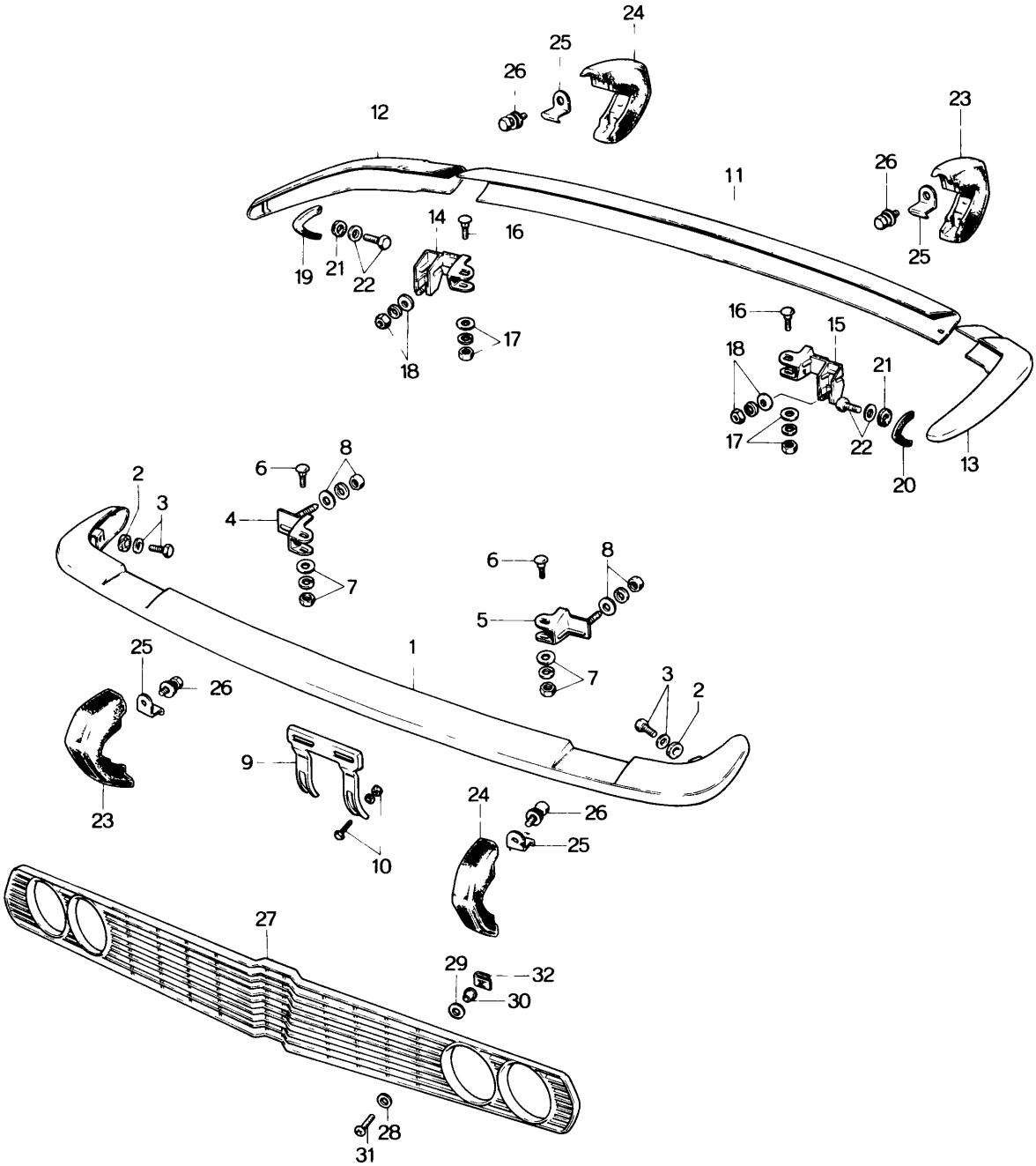
24
25
26
12
23
26
11
14
16
25
19
21
22
16
15
18
21
18
17
22
20
13
17
18
8
6
2
3
4
7
6
8
5
7
1
25
26
3
2
9
24
26
25
23
10
27
29
32
30
28
31

No.	Part Number	Description	Q'ty	Remarks
1	2826 50 110B	Bar Ass'y, Front Bumper	1	1971,1972 Model
●	1668 50 110A	Bar Ass'y, Front Bumper	1	1973 Model
2	0223 50 049	Spacer	2	
3	99805 0830	Bolt, Bumper	2	
	99951 0822	Washer, Plain	2	
4	0305 50 160A	Stay, Front Bumper (R)	1	1971,1972 Model
●	1668 50 160A	Stay, Front Bumper (R)	1	1973 Model
5	0305 50 170A	Stay, Front Bumper (L)	1	1971,1972 Model
●	1668 50 170A	Stay, Front Bumper (L)	1	1973 Model
6	0223 50 275	Screw, Front Bumper	4 2	1971,1972 Model
●	99744 0616	Screw, Front Bumper	4	1973 Model
●	99971 0600	Washer, Spring	4	
7	99906 0800	Nut, Front Bumper	4	
	99951 0618	Washer, Plain	4	1971,1972 Model
	99971 0600	Washer, Spring	4	
●	99940 0602	Nut, Front Bumper	2	1973 Model
8	99921 1000	Nut, Bumper Stay	2	
	99951 1022	Plain, Washer	2	
	99971 1000	Washer, Spring	2	
9	2850 50 181	Holder, Number Plate	2	
10	99806 0612	Bolt, Number Plate Holder	2	
	99906 0600	Nut	2	
	99971 0600	Washer, Spring	2	
11	2850 50 311A	Bumper, Rear (C)	1	
	2850 50 311B	Bumper, Rear (C)	1	Car No. 69368 7¼~×
●	1668 50 311A	Bumper, Rear (C)	1	1973 Model
12	0305 50 320B	Bumper, Rear (R)	1	
	0305 50 320C	Bumper, Rear (R)	1	Car No. 69368 7¼~×
13	0305 50 340B	Bumper, Rear (L)	1	
	0305 50 340C	Bumper, Rear (L)	1	Car No. 69368 7¼~×
14	2850 50 360	Stay, Rear Bumper (R)	1	1971,1972 Model
●	1668 50 360	Stay, Rear Bumper (R)	1	1973 Model
15	2850 50 370	Stay, Rear Bumper (L)	1	1971,1972 Model
●	1668 50 370	Stay, Rear Bumper (L)	1	1973 Model
16	0223 50 275	Screw, Rear Bumper	4	
17	99906 0600	Nut, Rear Bumper	4	
	99951 0618	Washer, Plain	4	
	99971 0600	Washer, Spring	4	

No.	Part Number	Description	Q'ty	Remarks	
18	99921 1000	Nut, Bumper Stay	2		
	99951 1022	Washer, Plain	2		
	99971 1000	Washer, Spring	2		
19	2850 50 381	Pad (R)	1		
●	0305 50 381	Pad (R)	1	1973 Model	
20	2850 50 382	Pad (L)	1		
●	0305 50 382	Pad (L)	1	1973 Model	
21	0305 50 398	Spacer	2		
22	99834 0616	Screw, Pad	2		
	99951 0618	Washer, Plain	2		
23	0305 50 210A-00	Guard, No. 1 - Bumper (R) (Blue)	2	1971, 1972 Model	©
●	1668 50 210	Guard, No. 1 - Front Bumper (R)	1	1973 Model	
24	0305 50 250A-00	Guard, No. 2 - Bumper (L) (Blue)	2	1971, 1972 Model	©
●	1668 50 250	Guard, No. 2 - Front Bumper (L)	1	1973 Model	
25	0303 50 231	Plate, Clamp - Bumper Guard	8		
26	99806 0618	Bolt	8		
	99971 0600	Spring, Washer	8		
	99952 0600	Plain, Washer	8		
27	2850 50 5110-02	Grille (Dark Grey)	1		©
	0398 50 5110-06	Grille (Dark Grey)	1	Car No. 79731 7/6 ~ ○	©
28	0305 50 541	Washer	8		
29	0305 50 542	Cushion	8		
30	0305 50 543	Spacer	8		
31	99864 04208	Screw	8		
32	99896 0400	Nut, Spring	8		

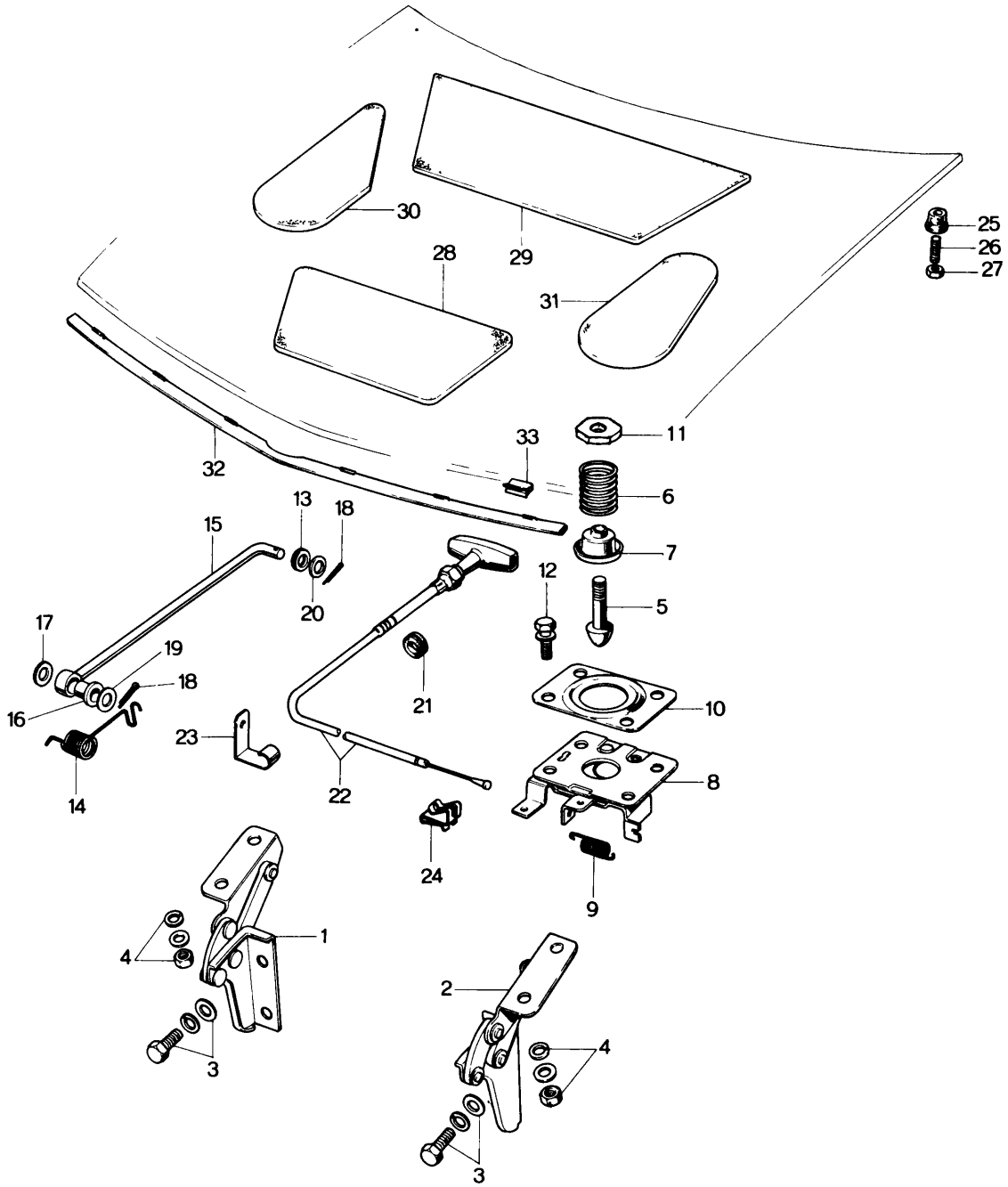
30
29
28
31
25
26
27
32
33
11
6
7
5
12
13
18
15
20
17
19
18
16
14
23
21
22
10
8
24
9
1
4
3
2
4
3

	No.	Part Number	Description	Q'ty	Remarks
	1	0305 52 210	Hinge (R)	1	
		0881 52 210	Hinge (R)	1	Car No. 79731 ~△
●		0881 52 210A	Hinge (R)	1	Car No. 137220 ~○
	2	0305 52 260	Hinge (L)	1	
		0881 52 260	Hinge (L)	1	Car No 79731 ~△
●		0881 52 260A	Hinge (L)	1	Car No. 137220 ~○
	3	99801 0816	Bolt, Hinge	4	
		99971 0800	Washer, Spring	4	
		99952 0800	Washer, Plain	4	
	4	99906 0800	Nut	4	
		99952 0822	Washer, Plain	4	
		99971 0800	Washer, Spring	4	
	5	0187 52 141	Hook, Bonnet	1	
	6	0305 52 312B	Spring, Lift	1	
	7	0305 52 322A	Seat, Spring-Lower	1	
	8	2835 52 330	Lock, Bonnet	1	
	9	0187 52 145	Spring, Lock Return	1	
●		0305 52 331	Spring, Lock Return	1	Car No. 82629 ~
	10	0305 52 371A	Plain, Lock Guide	1	
	11	0305 52 313	Seat, Spring Upper	1	
	12	99806 0616	Bolt, Lock	4	
		99971 0600	Washer, Spring	4	
		99952 0600	Washer, Plain	4	
	13	0824 52 271	Roller	1	
	14	2835 52 381	Spring	1	
	15	0305 52 390	Stay, Bonnet	1	
	16	0223 58 721	Bush	1	
	17	0136 65 752	Packing	1	
	18	99221 2015	Pin, Split	2	
	19	99952 0800	Washer, Plain	1	
	20	99952 0822	Washer, Plain	1	
	21	0259 52 301	Grommet	1	
	22	2835 52 410	Wire, Release	1	
	23	0820 10 872A	Clip	1	
	24	0223 52 302	Clamp, Release Wire	1	

52 BONNET LOCK

No.	Part Number	Description	Q'ty	Remarks
25	0824 52 451	Cushion	2	
26	99831 0825	Screw, Cushion	2	
27	99902 0800	Nut	2	
28	0839 52 461	Insulator, Bonnet "A"	1	
	0881 52 461	Insulator, Bonnet "A"	1	Car No. 79931 $^{71}/_{6}$ ~
29	0839 52 462	Insulator, Bonnet "B"	1	
	0839 52 462A	Insulator, Bonnet "B"	1	Car No. 79731 $^{71}/_{6}$ ~ ○
30	0839 52 463A	Insulator, Bonnet "C"	1	
31	0839 52 464	Insulator, Bonnet "D"	1	
32	0305 52 471	Mould, Bonnet	1	
33	0305 52 472	Clip, Mould	6	

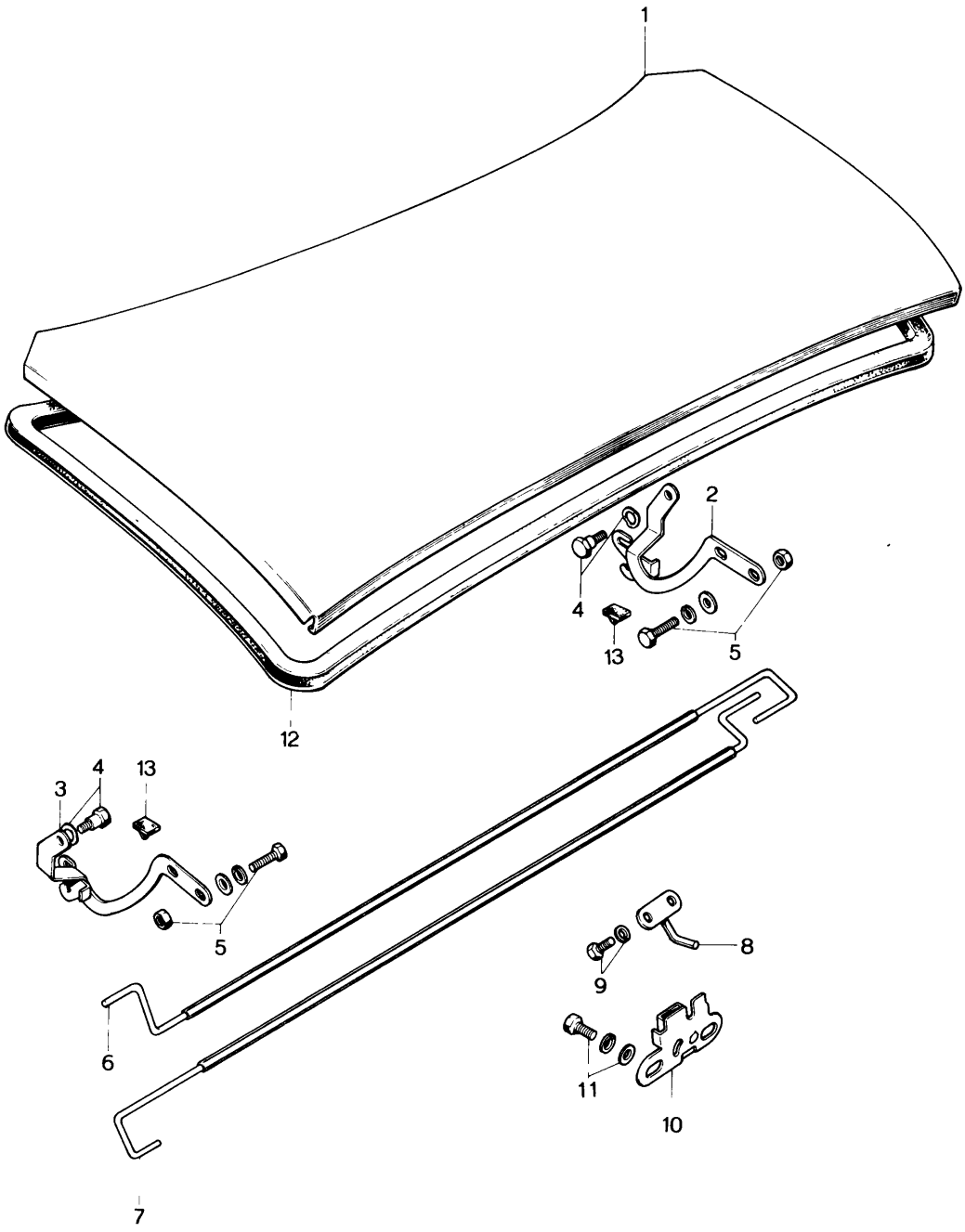
1
2
4
13
5
12
3
4
13
5
6
7
8
9
11
10

No.	Part Number	Description	Q'ty	Remarks
1	0305 52 510C	Lid Ass'y, Trunk-Sedan use	1	
	0839 52 510D	Lid Ass'y, Trunk-Coupe use	1	
●	0881 52 510	Lid Ass'y, Trunk-Coupe use	1	Car No. 79731 7/6 ~ △
2	0305 52 610A	Hinge Ass'y (R), Lid-Sedan use	1	
●	0305 52 610B	Hinge Ass'y (R), Lid-Sedan use	1	Car No. 173966 73/2 ~ △
	0839 52 610	Hinge Ass'y (R), Lid-Coupe use	1	
●	0839 52 610A	Hinge Ass'y (R), Lid-Coupe use	1	Car No. 173966 73/2 ~ △
3	0305 52 620A	Hinge Ass'y (L), Lid-Sedan use	1	
●	0305 52 620B	Hinge Ass'y (L), Lid-Sedan use	1	Car No. 173966 73/2 ~ △
	0839 52 620	Hinge Ass'y (L), Lid-Coupe use	1	
●	0839 52 620A	Hinge Ass'y (L), Lid-Coupe use	1	Car No. 173966 73/2 ~ △
4	0305 52 629	Bolt, Hinge-Lid Hinge } Sedan use	2	
	99972 1000	Washer, Wave } Sedan use	2	
	99906 0600	Nut } Coupe use	2	
	99952 0618	Washer, Spring } Coupe use	2	
	99971 0600	Washer, Spring } Coupe use	2	
5	908067 6 18	Bolt, Set-Lid Hinge	4	
	99906 0600	Nut	4	
	99951 0618	Washer, Plain	4	
6	0305 52 661	Spring, Balance (R)-Sedan use	1	
	0839 52 661A	Spring, Balance (R)-Coupe use	1	
7	0305 52 671	Spring, Balance (L)-Sedan use	1	
	0839 52 671A	Spring, Balance (L)-Coupe use	1	
8	0305 52 750	Striker Ass'y, Lid Lock	1	
9	908066 8 18	Bolt, Set-Striker	2	
10	0305 52 850A	Lock Ass'y, Trunk Lid	1	
11	908062 8 14	Bolt, Set-Lock Ass'y	2	
	99951 0818	Washer, Plain	2	
12	0305 52 901	Weatherstrip, Sedan use	1	
●	0305 52 901A	Weatherstrip, Sedan use	1	73/2 ~ O
	0839 52 901	Weatherstrip, Coupe use	1	
13	0305 52 628	Rubber, Cushion	2	
●	0111 53 771	Cushion Rubber	2	Car No. 79731 7/6 ~ Added Anew

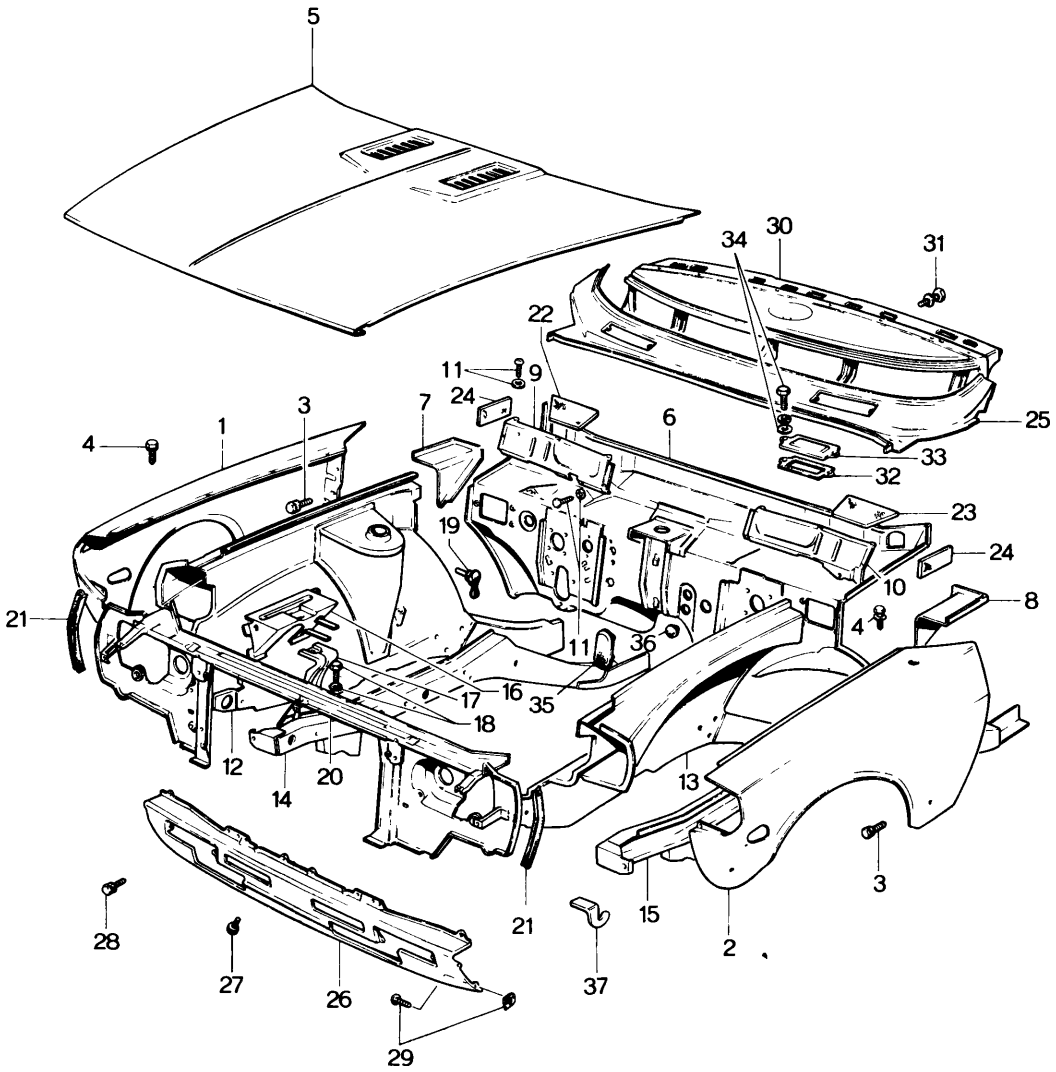
5
34
30
31
22
11
9
24
7
3
1
4
6
25
33
32
23
19
24
10
8
21
4
11
36
35
17
16
18
12
14
20
13
3
28
27
26
29
21
15
2
37

No.	Part Number	Description	Q'ty	Remarks
1	2090 51 020	Fender (Frt., R)	1	
●	~~2850 51 020~~	~~Fender (Frt., R)~~	~~1~~	~~Car No. 79731 71/6 ～×~~
2	2850 51 120	Fender (Frt., L)	1	
3	908057 6 20	Bolt, Set-Fender	8	
4	908067 6 14	Bolt, Set-Fender	10	
5	2835 52 110	Bonnet	1	
	2835 74 600	Bonnet	1	Car No. 79731 71/6 ～◠
●	0881 74 600	Bonnet	1	Car No 73/2 ～◯
	1650 52 110A	Bonnet (1972,1973 Model)	1	
●	0881 74 600	Bonnet	1	Car No. 73/2 ～◠
6	2080 53 010G	Panel Ass'y, Dash	1	
	2080 53 010H	Panel Ass'y, Dash	1	Car No. 79731 71/6 ～×
	1663 53 010	Panel Ass'y, Dash (1662,1663)	1	Car No. 103903 71/11 ～Added Anew
	1665 53 010	Panel Ass'y, Dash (1664,1665)	1	Car No. 16568 72/1 ～Added Anew
	1668 53 010	Panel Ass'y, Dash (Manual)	1	
●	1668 53 010A	Panel Ass'y, Dash (Manual)	1	Car No. 165516 72/12 ～◠
	1667 53 010	Panel Ass'y, Dash (Automatic) (1973 Model)	1	
●	1667 53 010A	Panel Ass'y, Dash (Automatic)	1	Car No. 165516 72/12 ～◯
●	1915 53 010A	Panel Ass'y, Dash (Manual)	1	
●	1914 53 010A	Panel Ass'y, Dash (Automatic) (With Car Cooler)	1	~~Car No. 73/1~~
7	0305 53 180	Plate, Corner (R)	1	~~Car No. 73/1~~
8	0305 54 180	Plate, Corner (L)	1	
9	2090 53 190	Panel, Cowl Lower (R)	1	
	2835 53 190C	Panel, Cowl Lower (R)	1	Car No. 72/8 ～◠
●	2835 53 190D	Panel, Cowl Lower (R)	1	Car No. 147628 72/10 ～◯
10	2835 54 190	Panel, Cowl Lower (L)	1	
	2835 54 190A	Panel, Cowl Lower (L)	1	Car No. 72/8 ～◠
11	99799 0514	Bolt, Cowl Panel	14	
	99952 0516	Washer, Plain	14	
	2081 67 151	Cover, Protector-Dash Panel	1	
	99860 0514	Screw, Tapping-Cover	3	Car No. 61926 71/3 ～◯
	99952 0500	Washer, Plain	3	
12	~~2080 53 210C~~	~~Panel Ass'y, Wheel Apron (R)-Coupe use~~	~~1~~	
	~~2081 53 210B~~	~~Panel Ass'y, Wheel Apron (R)-Sedan use~~	~~1~~	
	2835 74 020	Panel Ass'y, Wheel Apron (R)-All Models	1	~~Car No. 69368 71/4 ～◯~~
13	~~2080 54 210~~	~~Panel Ass'y, Wheel Apron (L)-Coupe use~~	~~1~~	
	~~2081 54 210~~	~~Panel Ass'y, Wheel Apron (L)-Sedan use~~	~~1~~	
	2080 74 030	Panel Ass'y, Wheel Apron (L)-All Models	1	~~Car No. 69368 71/4 ～◯~~
14	2080 56 040C	Frame, Front Side (R)	1	Order Under No 2080 74 380 ☆
	2080 74 380	Frame, Front Side (R)	1	Car No. 79731 71/6 ～◯
15	2080 56 540D	Frame, Front Side (L)	1	Order Under No. 2080 74 390 ☆
	2080 74 390	Frame, Front Side (L)	1	Car No. 79731 71/6 ～◯
16	~~2826 53 295B~~	~~Carrier, Battery, No. 1~~	~~1~~	
17	2826 53 295B	Carrier, Battery, No. 2	1	
●	2826 53 270	Carrier, Battery, No. 2 (R) Side	1	Car No. 152657 72/10 ～△
18	99804 0816	Bolt, Battery Carrier No 2	3	
	99952 0822	Washer, Plain	3	

BODY PANELS (FRONT)

No.	Part Number	Description		Q'ty	Remarks
19	0259 58 931	Valve, Drain		2	
20	2850 53 700	Panel Ass'y, Shroud		1	
	0881 53 700	Panel Ass'y, Shroud		1	Car No. 79731 7/6~○
21	0305 53 708	Rubber, Seal		2	
22	0305 70 431	Insulator, "A" (R)		1	
23	0305 71 431	Insulator, "A" (L)		1	
24	0305 70 432	Insulator, "B"		2	
25	2635 53 970	Panel Ass'y, Cowl		1	
26	0305 70 020B	Skirt Ass'y, Front		1	
	0305 70 020C	Skirt Ass'y, Front		1	Car No. 137835 7/8~○
27	99806 0512	Bolt, Front Skirt		2	
	99971 0500	Washer, Spring		2	
	99952 0500	Washer, Plain		2	
28	99806 0614	Bolt, Front Skirt		4	
	99971 0600	Washer, Spring		4	
	99952 0600	Washer, Plain		4	
29	99860 0612	Screw, Front Skirt		4	
	99896 0600	Nut, Spring		4	
30	2080 70 100E	Panel Ass'y, Instrument		1	
	2080 70 100F	Panel Ass'y, Instrument		1	Car No. 79731 7/6~○
●	2080 70 100G	Panel Ass'y, Instrument		1	Car No. 73/1~△
31	99806 0612	Bolt, Instrument Panel		4	
	99952 0600	Washer, Plain		4	
	0301 61 050	COVER Ass'y		1	
●	0301 61 050A	COVER Ass'y		1	Car No. 147628 73/10~○
32	0301 61 051	Packing		1	
●	0301 61 051A	Packing		1	Car No. 147628 73/10~○
33	0301 61 052	Plate		1	
●	0301 61 052A	Plate		1	Car No. 147628 73/10~○
34	99799 0628	Bolt, Cover	Without Car Heater	2	
	99952 0618	Washer, Plain		2	
	99971 0600	Washer, Spring		2	
35	0301 61 055	Grommet		1	
39	2304 15 321	Cap, Sealing		2	
37	2851 56 921A	Hook		1	

BODY PANELS (SIDE, ALL COUPE MODELS)

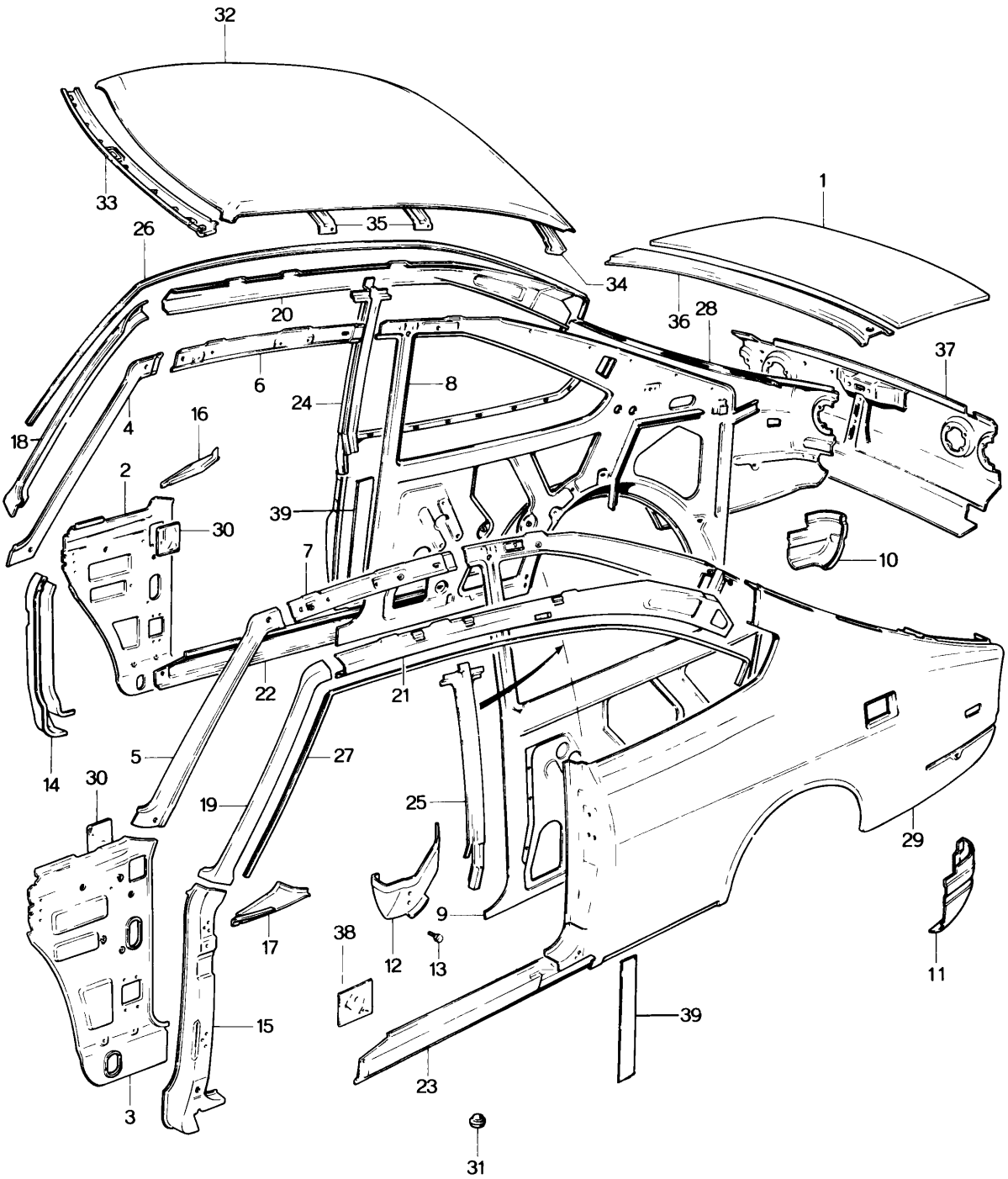

BODY PANELS (SIDE, ALL COUPE MODELS) 52~70

No.	Part Number	Description	Q'ty	Remarks
1	0839 52 510D	Lid Ass'y, Trunk	1	
	0881 52 510	Lid Ass'y, Trunk	1	Car No. 79731 7/6 ~ ○
	~~2080 53 300~~	FRAME Ass'y, Side (R)	1	
	~~2080 54 300~~	FRAME Ass'y, Side (L)	1	
2	2080 53 320	Panel, Cowl Side (R)	1	
	2835 53 320	Panel, Cowl Side (R)	1	Car No. 79731 7/6 ~ ○
3	2835 54 320	Panel, Cowl Side (L)	1	
4	0839 53 330B	Pillar, Front-Inner (R)	1	
5	0839 54 330B	Pillar, Front-Inner (L)	1	
6	0839 53 340A	Rail, Roof-Inner (R)	1	
7	0839 54 340	Rail, Roof-Inner (L)	1	
8	2080 53 350D	Panel, Quarter (R)	1	
9	2855 54 350D	Panel, Quarter (L)	1	1971 Model
	2090 54 350	Panel, Quarter (L)	1	1972,1973 Model
10	0839 53 352A	Plate, End (R)	1	
11	0839 54 352A	Plate, End (L)	1	
12	2850 54 370B	Plate, End	1	1971 Model
	0305 54 370	Plate, End	2	1972,1973 Model
13	99806 0512	Bolt, End Plate	2	
	99971 0500	Washer, Spring	2	
	99952 0500	Washer, Plain	1	
14	2835 53 410	Pillar, Hinge-Outer (R)	1	
15	2835 54 410	Pillar, Hinge-Outer (L)	1	
16	0305 53 415	Bracket, Cowl (R)	1	
17	0305 54 415	Bracket, Cowl (L)	1	
18	~~0839 53 421A~~	~~Pillar, Front-Outer (R)~~	~~1~~	
	0839 74 070	Pillar, Front-Outer (R)	1	~~Car No. 69368 7/4 ~ ○~~
19	~~0839 54 421A~~	~~Pillar, Front-Outer (L)~~	~~1~~	
	0839 74 075	Pillar, Front-Outer (L)	1	~~Car No. 69368 7/4 ~ ○~~
20	0839 53 430	Rail, Roof-Outer (R)	1	
21	0839 54 430	Rail, Roof-Outer (L)	1	
22	0839 53 451C	Panel, Side Sill (R)-Outer	1	

BODY PANELS (SIDE, ALL SEDAN MODELS)

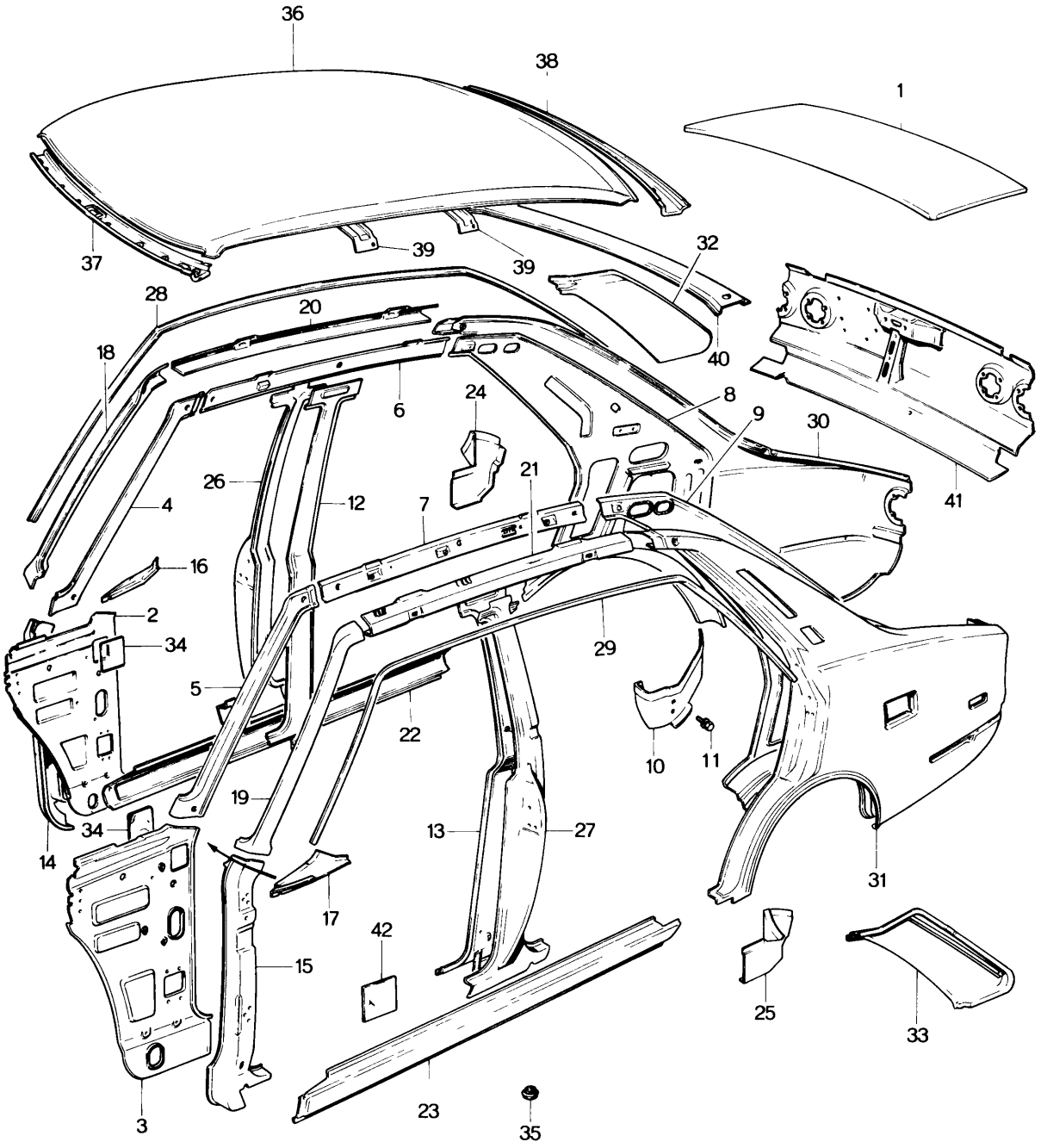

BODY PANELS (SIDE, ALL SEDAN MODELS) 52~70

No.	Part Number	Description	Q'ty	Remarks	
1	0305 52 510C	Lid Ass'y, Trunk	1		
	~~2081 53 300~~	~~FRAME Ass'y, Side (R)~~	~~1~~		★
	~~2081 54 300~~	~~FRAME Ass'y, Side (L)~~	~~1~~		★
2	2835 53 320	Panel, Cowl Side (R)	1		
3	2835 54 320	Panel, Cowl Side (L)	1		
4	0305 53 330A	Pillar, Front-Inner (R)	1		
5	0305 54 330A	Pillar, Front-Inner (L)	1		
6	0305 53 340D	Rail, Roof-Inner (R)	1		
7	0305 54 340D	Rail, Roof-Inner (L)	1		
8	2081 53 350	Pillar, Rear-Inner (R)	1		
	2835 53 350B	Pillar, Rear-Inner (R)	1	Car No. 65432 7/3~O	
9	2081 54 350	Pillar, Rear-Inner (L)	1		
	2850 54 350	Pillar, Rear-Inner (L)	1	Car No. 65432 7/3~O	
10	2850 54 370B	Plate, End (L)	1		
11	99806 0512	Bolt, End Plate	2		
	99971 0500	Washer, Spring	2		
	99952 0500	Washer, Plain	2		
12	0305 53 380C	Pillar, Center-Inner (R)	1		
	0305 53 380D	Pillar, Center-Inner (R)	1	Car No. 79731 71/6 ~ X	
13	0305 54 380C	Pillar, Center-Inner (L)	1		
	0305 54 380D	Pillar, Center-Inner (L)	1	Car No. 79731 71/6 ~ X	
14	2835 53 410	Pillar, Hinge-Outer (R)	1		
15	2835 54 410	Pillar, Hinge-Outer (L)	1		
16	0305 53 415	Bracket, Cowl (R)	1		
17	0305 54 415	Bracket, Cowl (L)	1		
18	0305 53 421A	Pillar, Front-Outer (R)	1		
	0305 74 070	Pillar, Front-Outer (R)	1	Car No. 69368 71/4 ~ O	
19	0305 54 421A	Pillar, Front-Outer (L)	1		
	0305 74 075	Pillar, Front-Outer (L)	1	Car No. 69368 71/4 ~ O	
20	0305 53 430B	Rail, Roof-Outer (R)	1		
21	0305 54 430B	Rail, Roof-Outer (L)	1		
22	0305 53 450A	Panel, Side Sill (R)-Outer	1		

BODY PANELS (SIDE, ALL SEDAN MODELS)

No.	Part Number	Description	Q'ty	Remarks
23	0305 54 450B	Panel, Side Sill (L)-Outer	1	
24	0305 53 452	Plate, Filler (R)	1	
25	0305 54 452	Plate, Filler (L)	1	
26	2850 53 500	Pillar, Center-Outer (R)	1	
●	2850 53 500A	Pillar, Center-Outer (R)	1	73/12~O
27	2850 54 500	Pillar, Center-Outer (L)	1	
●	2850 54 500A	Pillar, Center-Outer (L)	1	73/12~O
28	0305 53 591	Rail, Rain (R)	1	
29	0305 54 591	Rail, Rain (L)	1	
30	2081 53 600A	Panel, Fender (Rr.,R)	1	
●	2081 74 090	Panel, Fender (Rr., R)	1	From Car No. 1
31	2081 54 600A	Panel, Fender (Rr.,L)	1	
●	2081 74 095	Panel, Fender (Rr., L)	1	From Car No. 1
32	0305 53 670	Chamber, Air Flow (R)	1	
33	0305 54 670	Chamber, Air Flow (L)	1	
34	0305 53 329	Seat	2	
35	0258 53 455	Plug, Drain	6	
36	0305 53 901	Panel, Roof	1	
	0305 74 050	Panel Ass'y, Roof	1	Car No. 69368 71/4 ~ O
37	0305 53 920	Header Ass'y, Front	1	
	~~0398 53 950~~	~~Header Ass'y, Front~~	~~1~~	~~Car No. 79731 71/6 ~ X~~
38	0305 53 941A	Header, Rear	1	
39	0305 53 951B	Reinforcement, Roof	2	
	0398 53 951	Reinforcement, Roof	2	Car No. 79731 71/6 ~ O
40	0305 53 980A	Panel, Rear Deck	1	
	0305 74 080	Panel, Rear Deck	1	Car No. 69368 71/6 ~ O
41	2080 70 050	Panel, Rear End	1	
42	0305 70 811	Cover, Hole-Side Sill	6	
Ⓝ	0398 53 980	Bracket, Room Lamp	1	Car No. 96267 71/9~Added Anew

PACKAGE TRAY & FLOOR BOARD

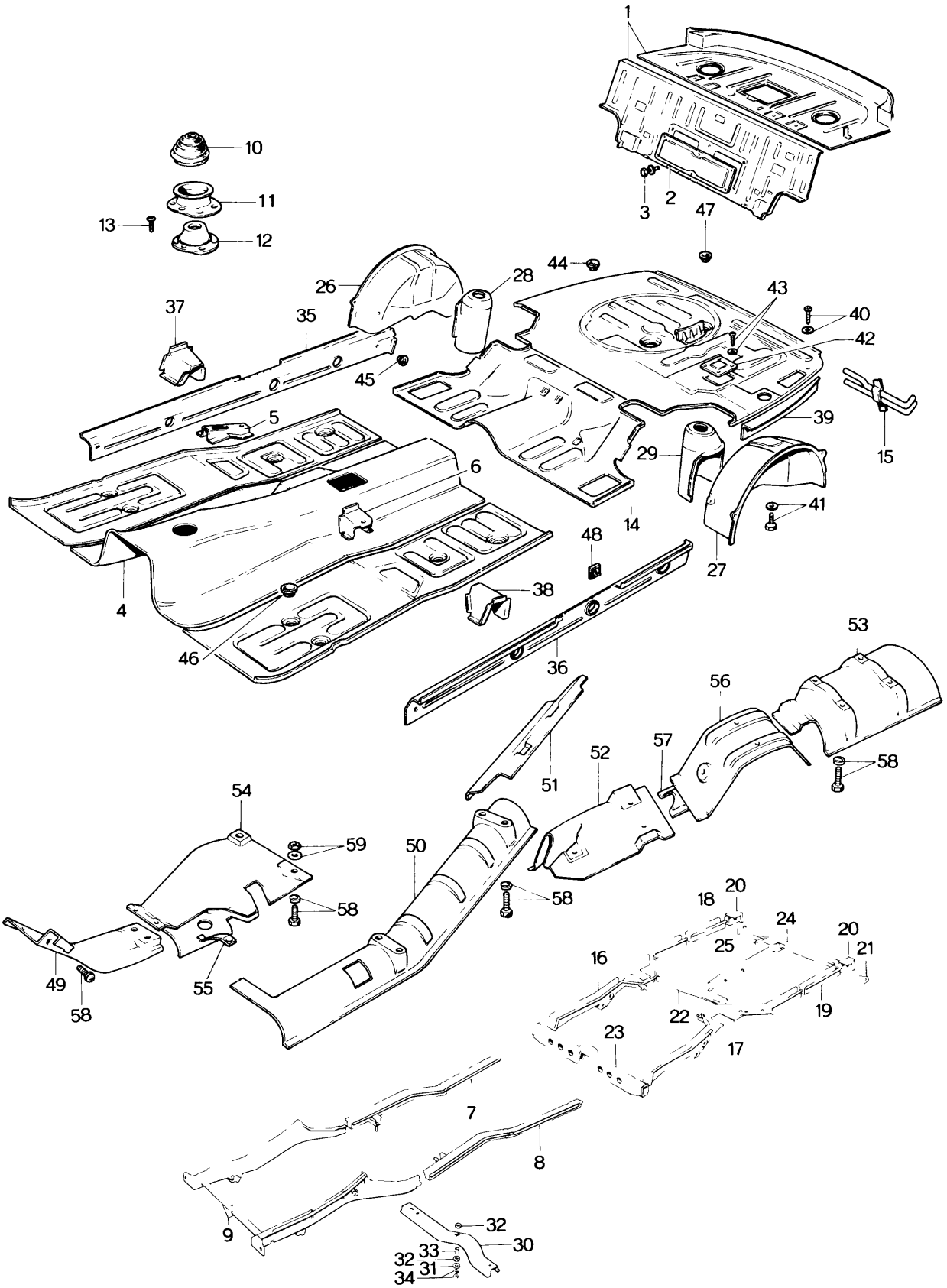

PACKAGE TRAY & FLOOR BOARD 53 56

No.	Part Number	Description	Q'ty	Remarks
1	2090 53 800	Tray Ass'y, Package-Coupe use	1	
	1663 53 800	Tray Ass'y, Package-Coupe use	1	1972,1973 Model
	2081 53 800	Tray Ass'y, Package-Sedan use	1	
	1662 53 800	Tray Ass'y, Package-Sedan use	1	1972,1973 Model
2	0305 53 881	Cover, Package Tray	1	
3	908061 5 10	Bolt, Set-Cover	6	
	0866 69 885	Fastener	6	Car No. 79731 7/6~×
4	2090 56 010	PAN Ass'y, Front Floor (Manual)	1	
●	1667 56 010	PAN Ass'y, Front Floor (Automatic)	1	
5	0839 56 180A	Bracket, Seat (R) (Manual)	1	
●	0305 56 180	Bracket, Seat (R) (Automatic)	1	
6	0305 56 881	Bracket, Seat (L)	1	
7	0839 56 100	Frame, Front-Rear (R)	1	
	0839 56 100A	Frame, Front-Rear (R)	1	Car No. 66004 7/3~○
8	2090 56 800	Frame, Front-Rear (L)	1	
	2090 56 800A	Frame, Front-Rear (L)	1	Car No. 66004 7/3~○
● 9	~~0305 56 180~~ 0305 56 181	Member, Cross No. 1	1	From Car No. 1
●	~~0305 56 180A~~	~~Member, Cross No. 1~~	~~1~~	~~Car No. 66004 7/3~○~~
10	0247 56 275	Boot	1	
11	0303 56 811	Seat (Manual)	1	
12	0303 56 812	Insulator	1	
13	99864 0512	Screw, Tapping-Insulator	6	
	2090 56 200A	PAN Ass'y, Rear Floor	1	
	2090 56 200C	PAN Ass'y, Rear Floor	1	Car No. 79731 7/6~×
	1663 56 200A	PAN Ass'y, Rear Floor	1	1972,1973 Model
14	2090 56 201B	Pan, Rear Floor	1	
	2090 56 201C	Pan, Rear Floor	1	Car No. 69368 7/4~○
	2090 56 201D	Pan, Rear Floor	1	Car No. 79731 7/6~×
	2090 56 201E	Pan, Rear Floor	1	Car No. 85627 7/7~Added Anew
●	1663 56 201B	Pan, Rear Floor	1	1973 Model
15	0839 56 630C	Tube Ass'y	1	

PACKAGE TRAY & FLOOR BOARD

No.	Part Number	Description	Q'ty	Remarks
16	2090 56 250	FRAME, Rear Side (R)-Coupe use	1	
	2090 56 250A	FRAME, Rear Side (R)-Coupe use	1	Car No. 98855 7/10～○
	2081 56 250	FRAME, Rear Side (R)-Sedan use	1	
	2081 56 250A	FRAME, Rear Side (R)-Sedan use	1	Car No. 98855 7/10～○
17	2855 56 750A	FRAME, Rear Side (L)-Coupe use	1	
	2855 56 750B	FRAME, Rear Side (L)-Coupe use	1	Car No. 98855 7/10～○
	2850 56 750A	FRAME, Rear Side (L)-Sedan use	1	
	2850 56 750B	FRAME, Rear Side (L)-Sedan use	1	Car No. 98855 7/10～○
18	0305 56 321A	Frame, Rear No. 3 (R)	1	
	2090 56 320	Frame, Rear No. 3 (R)	1	Car No. 98855 7/10～○
19	0305 56 820A	Frame, Rear No. 3 (L)	1	
	0305 56 820B	Frame, Rear No. 3 (L)	1	Car No. 98855 7/10～○
20	0305 56 331B	Bracket, Bumper	2	
	0305 56 331C	Bracket, Bumper	2	Car No. 98855 7/10～○
21	0305 56 845	Hook	1	Car No. 98855 7/10～Discarded
	2850 56 761	Hook	1	Car No. 98855 7/10～Added Auew
	99811 1028	Bolt	1	
	99952 1000	Washer, Plain	1	
	99971 1000	Washer, Spring	1	
22	0305 56 391A	Member, Cross No. 5	1	
23	0839 56 420	Member, Cross No. 3	1	
24	0839 56 460E	Member, Cross No. 4	1	
	0839 56 460F	Member, Cross No. 4	1	Car No. 106922 7/12～×
25	0839 56 340A	Reinforcement	1	
26	0839 56 350B	PANEL, Wheel House (R)-Coupe use	1	
	0839 56 350C	PANEL, Wheel House (R)-Coupe use	1	Car No. 79731 7/6～×
	0841 56 350B	PANEL, Wheel House (R)-Sedan use	1	
	0305 56 350C	PANEL, Wheel House (R)-Sedan use	1	Car No. 79731 7/6～×
27	0839 56 850	PANEL, Wheel House (L)-Coupe use	1	
	0305 56 850B	PANEL, Wheel House (L)-Sedan use	1	
28	0305 56 370A	Brackt, Damper (R)	1	
29	0305 56 870A	Bracket, Damper (L)	1	
30	0839 56 121C	Support, Center Bearing	1	
31	99952 1030	Washer	2	

PACKAGE TRAY & FLOOR BOARD 53 56

No.	Part Number	Description	Q'ty	Remarks
32	0839 56 125	Bush, Rubber	2	
33	0839 56 126A	Spacer	2	
34	99921 1000	Nut	2	
	99971 1000	Washer, Spring	2	
35	0839 56 400A	Panel, Side Sill (R) - Inner, Coupe, use	1	
	0305 56 400	Panel, Side Sill (R), - Inner, Sedan use	1	
36	0839 56 900A	Panel, Side Sill (L), - Inner, Coupe use	1	
	0305 56 900A	Panel, Side Sill (L), - Inner, Sedan use	1	
37	0305 56 411	Bracket, Seat (R)	1	
38	0305 56 911	Bracket, Seat (L)	1	
39	0305 56 961B	Protector	1	
40	99860 0516	Screw, Tapping - Protector	2	
	99952 0516	Washer, Plain	2	
41	99797 0510	Bolt, Protector	3	
	99952 0516	Washer, Plain	3	
42	0305 56 991	Cover, Service Hole	1	
43	908632 4 10	Screw, Set - Service Hole Cover	4	
●	99863 0408	Screw, Service Hole Cover	4	Car No. 98855 $71/10 \sim$ ○
44	0118 56 241	Plug, Drain	2	
45	0118 56 242B	Plug, Drain	2	
46	0208 56 615	Plug, Drain	10	
47	0810 56 639	Cover, Service Hole	2	
48	0824 56 999	Valve, Check - Side Sill, Coupe use	2	
49	0839 56 701B	Insulator, No. 1	1	
	0839 56 701C	Insulator, No. 1	1	Car No. 79731 $71/6 \sim$ ○
50	2090 56 702A	Insulator, No. 2	1	
●	2090 56 702B	Insulator, No. 2	1	Car No. 85629 $71/7 \sim$ ○
51	2090 56 703	Insulator, No. 3	1	
	2090 56 703A	Insulator, No. 3	1	Car No. 92431 $71/8 \sim$ ○
52	2090 56 704A	Insulator, No. 4	1	
●	2090 56 704C	Insulator, No. 4	1	Car $73/5 \sim$ ○

53 56 PACKAGE TRAY & FLOOR BOARD

No.	Part Number	Description	Q'ty	Remarks
53	0839 56 7058	Insulator, No. 6	1	
54	2090 56 707B	Insulator, No. 7	1	
●	2090 56 707D	Insulator No. 7	1	Car No. 137220 72/8 ~ ×
●	2090 56 707E	Insulator No. 7	1	Car No. 164465 72/12 ~ Δ
55	2090 56 709	Bracket Ass'y	1	
56	2090 56 705	Insulator No. 5	1	
●	2090 56 705A	Insulator No. 5	1	73/5 ~ O
57	2090 56 708A	Insulator No. 8	1	
	2090 56 708B	Insulator No. 8	1	Car No. 77886 71/5 ~ O
●	2090 56 708C	Insulator No. 8	1	73/5 ~ O
58	99804 0614	Bolt Insulator	21	
	99971 0600	Washer, Spring	21	
	99952 0600	Washer, Plain	21	

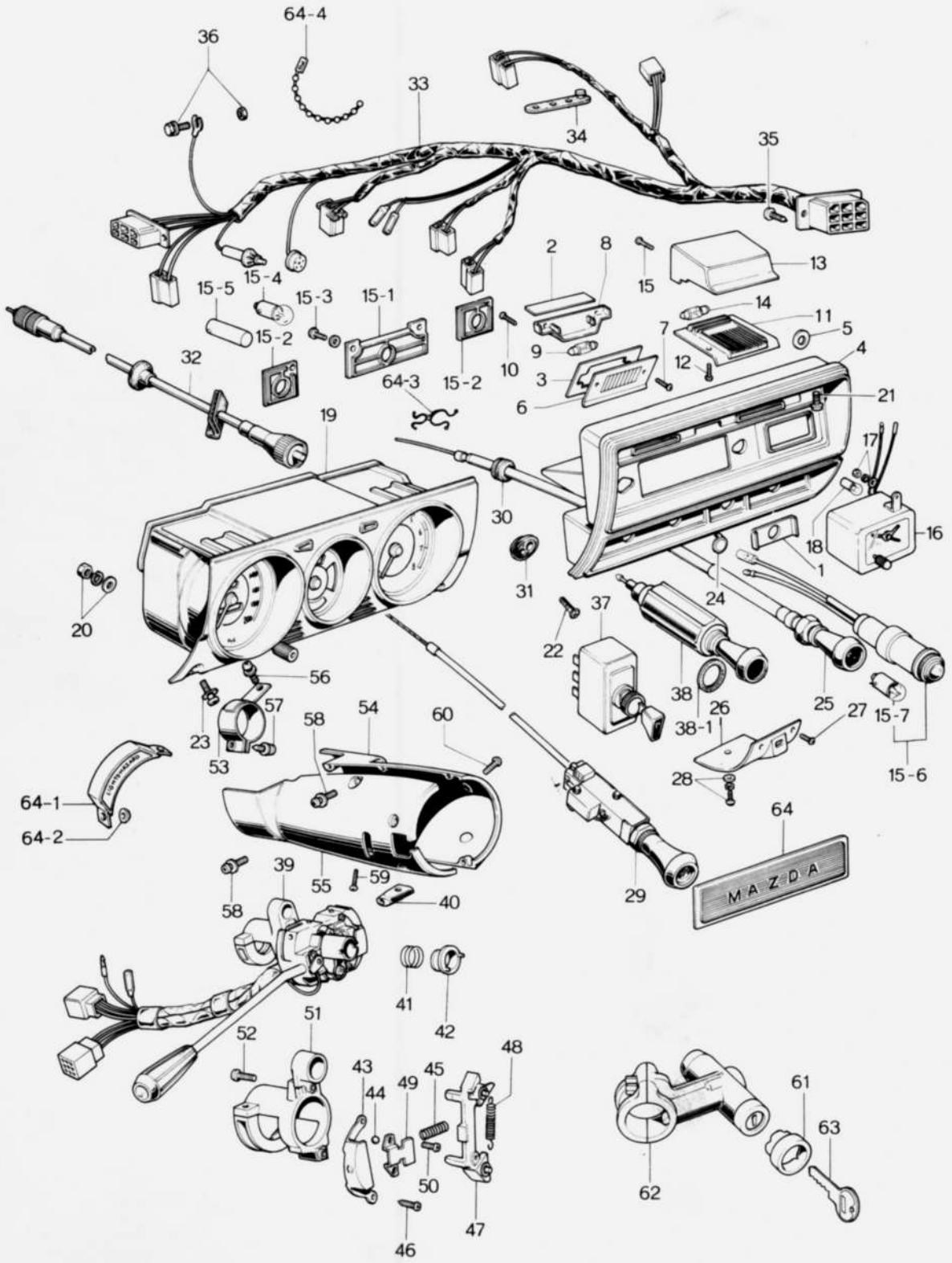
64-4
36
33
34
35
2
8
15
13
15-5
15-4
15-3
15-1
14
11
5
7
9
10
3
12
4
32
15-2
64-3
15-2
6
21
19
30
17
18
16
1
31
24
20
22
37
38
38-1
26
25
27
15-7
15-6
56
57
23
53
58
54
60
28
64-1
64-2
64
MAZDA
29
58
39
55
59
40
41
42
51
52
43
44
49
45
48
50
47
46
61
63
62

DASHBOARD (METER & SWITCH) 55 60

No.	Part Number	Description	Q'ty	Remarks
1	0305 55 325	Cover	1	©
2	0305 55 326	Plate	1	
3	0305 55 327	Plate	1	
4	0305 55 340B	Panel, Switch (With Car Heater use)	1	1971 Model
	0391 55 340A	Panel, Switch (With Car Heater use)	1	1972 Model
	2835 55 340	Panel, Switch (Without Car Heater use)	1	1971 Model
	2321 55 340	Panel, Switch (Without Car Heater use)	1	1972 Model
	1674 55 340	Panel, Switch (1973 Model)	1	
●	1674 55 340A	Panel, Switch (1973 Model)	1	Car No. 73/1 ~ △
●	1915 55 340	Panel, Switch (With Car Cooler)	1	Car No. 73/1
5	99952 0600	Washer, Plain	1	
6	0305 55 350	Lens No. 1, Illumination	1	
7	99866 0410B	Screw, Illumination Lens No. 1	2	
8	0305 55 360	Cover, Illumination Lens No. 1	1	
9	99701 5030	Bulb (0305 55 360 included)	1	
10	908681 4 14	Screw, Set-Illumination Cover	2	1971, 1972 Model
11	0305 55 370	Lens No. 2, Illumination	1	1971, 1972 Model
12	99868 0414B	Screw, Illumination Lens No. 2	2	1971 Model
	99866 0414B	Screw, Illumination Lens No. 2	2	1972 Model
13	0305 55 380	Cover, Illumination Lens No 2	1	
14	99701 5030	Bulb (0305 55 380 included)	1	1971, 1972 Model
15	908681 4 14	Screw, Set-Illumination Cover	1	
15-1	1674 55 348	Cover No. 2	1	
15-2	1674 55 349	Cover No. 3	2	
15-3	908681 4 14	Screw, Set-Cover	4	1973 Model
15-4	99701 1030	Bulb	3	
15-5	0301 55 323	Cap, Without Car Heater	3	
15-6	2090 60 080	Lamp, Warning	1	1972, 1973 Model

DASHBOARD (METER & SWITCH)

No.	Part Number	Description	Q'ty	Remarks
15-7	999701 1030	Bulb (2090 60 080 included)	1	
16	0305 55 700A	Clock Ass'y, Auto	1	1971,1972 Model
	1676 55 700	Clock Ass'y, Auto	2	1973 Model
17	99906 0500	Nut, Auto Clock	2	
	99952 0500	Washer, Plain	2	
	99971 0500	Washer, Spring	2	
18	99701 1030	Bulb, Auto Clock	1	
19	2878 55 430B	Meter Set	1	
●	2878 55 430C	Meter Set	1	Car No. 160657 $^{72}/_{12}$～△
20	99906 0400	Nut, Meter Set	2	
	99952 0400	Washer, Plain	2	
	99971 0400	Washer, Spring	2	
21	908361 5 20B	Screw, Set-Switch Panel	2	
22	908391 5 16B	Screw, Set-Switch Panel	2	
23	908396 5 20B	Screw, Meter Set-Lower Side	2	Car No. 85627 $^{71}/_{7}$～Q'ty
	99799 0516	Screw, Meter Set (Upper Side)	2	Car No. 85627 $^{71}/_{7}$～○
	99952 0500	Washer, Plain (Upper Side)	2	Car No. 85627 $^{71}/_{7}$～○
	99971 0500	Washer, Spring (Upper Side)	2	Car No. 85627 $^{71}/_{7}$～○
24	0820 55 951	Cover, Hole-Antenna Switch	1	
25	2080 60 050	Wire, Choke	1	1971 Model
	2080 60 050B	Wire, Choke	1	1971 Model, Car No. 69299 $^{71}/_{3}$～○
	1663 60 050A	Wire, Choke (1972 Model)	1	1662,1663
	1663 60 050B	Wire, Choke (1972 Model)	1	Car No. 130039 $^{72}/_{5}$～×
	1665 60 050A	Wire, Choke (1972 Model)	1	1664,1665
	1665 60 050B	Wire, Choke (1972 Model)	1	Car No. 130039 $^{72}/_{5}$～×
	1668 60 050	Wire, Choke (Manual)	1	
●	1668 60 050A	Wire, Choke (Manual)	1	Form Car No. 1
	1667 60 050	Wire, Choke (Automatic)	1	1973 Model
●	1667 60 050A	Wire, Choke (Automatic)	1	From Car No. 1

No.	Part Number	Description	Q'ty	Remarks
26	2835 60 045	Bracket	1	1971 Model
	2835 60 045A	Bracket	1	1972,1973 Model
27	99861 0512B	Screw, Bracket	2	
28	99799 0516	Screw, Bracket	1	
	99860 0512	Screw, Bracket	1	Car No. 89089 ~ ○
	99952 0516	Washer, Plain	1	
	99971 0500	Washer, Spring	1	
29	2090 60 050	Wire, Throttle	1	
	2090 60 050B	Wire, Throttle	1	1971 Model Car No. 69299 ~ ○
	2090 60 050C	Wire, Throttle	1	Car No. 92431 ~ ○
	1663 60 060	Wire, Throttle	1	1972,1973 Model
●	1663 60 060A	Wire, Throttle	1	Car No. 177100 ~ △
30	2090 60 052	Grommet	1	
31	0305 60 051	Grommet	1	Car No. 68552 ~ Q'ty
●	0259 52 301	Grommet	2	Car No. 96092 ~ ○
●	0259 52 301	Grommet	3	Car No. 140195 ~ Q'ty
32	2080 60 070	Cable, Speedometer	1	
33	0305 60 130A	Wire Ass'y, Panel	1	
	0305 60 130B	Wire Ass'y, Panel	1	Car No. 69299 ~ ○
	0391 60 130	Wire Ass'y, Panel	1	Car No. 79731 ~ ×
	1674 60 130	Wire Ass'y, Panel	1	1973 Model
34	0187 66 991	Clip, Rubber	3	
35	908692 3 14	Screw, Set-Panel Wire	2	
	99868 0312	Screw, Set-Panel Wire	2	Car No. 93013 ~ ○
36	908066 5 10	Bolt, Set-Earth	1	
	99945 0500B	Nut	1	
37	0305 60 540	Switch, Antenna	1	
	0305 60 540A	Switch, Antenna	1	Car No. 79731 ~ ○

DASHBOARD (METER & SWITCH)

No.	Part Number	Description	Q'ty	Remarks
38	0305 60 720	Lighter, Cigar	1	
38-1	0305 60 715	Shield. Heat	1	
39	2850 60 250	Switch, Combination	1	1971 Model
	2850 60 250A	Switch, Combination	1	1972 Model
	1668 60 250	Switch, Combination	1	1973 Model
40	0317 60 251	Knob	1	
41	0317 60 252	Spring	1	
42	0317 60 253	Cam, Cancel	1	
43	0317 60 254	Bracket, Fixing	1	1971 Model
	1674 60 254	Bracket, Fixing	1	1972,1973 Model
44	0317 60 255	Ball, Steel	1	
45	0317 60 256	Spring	1	
46	0317 60 257	Screw	2	
47	0317 60 258	Arm	1	
48	0317 60 259	Spring	1	
49	0317 60 261	Plate, Set	1	
50	0317 60 262	Screw	2	
51	0317 60 265	Holder, Band	1	1971,1972 Model
	0324 60 265	Holder, Band	1	1973 Model
52	0317 60 266	Screw	2	
53	0305 60 320A	Support Ass'y	1	
54	2850 60 3300-00	Cover, Column (R) (Black)	1	
●	2522 60 3300-00	Cover, Column (R) (Black)	1	Car No. 73/1～× ⓒ

No.	Part Number	Description	Q'ty	Remarks
55	2835 60 3400-00	Cover, Column (L) (Black)	1	©
●	2522 60 3400-00	Cover, Column (L) (Black)	1	Car No. 73/1～× ©
56	908332 4 12	Screw, Set-Support	1	
57	908336 4 08	Screw, Set-Support	1	
58	908332 4 12B	Screw, Set-Column Cover	2	1971 Model
			3	1672,1673 Model
59	99832 0408B	Screw, Column Cover	4	1971 Model
	99832 0408B	Screw, Column Cover	2	1972,1973 Model
	99832 0410B	Screw, Column Cover	2	1972 Model
	99832 0412B	Screw, Column Cover	2	1973 Model
60	99848 0320B	Screw	1	
61	2835 60 421	Ring, Set	1	
62	2850 60 430	Lock, Steering	1	
63	2301 60 439	Key, Steering Lock included	1	1971,1972 Model
	2835 60 439	Key, Steering Lock included	1	1973 Model
64	0301 66 905A	Cover, Tuner Hole	1	
64-1	1611 60 311	Plate, Name-Column Cover	1	1972,1973 Model
64-2	1611 60 312	Spacer, Column Cover	2	1972,1973 Model
64-3	99288 1608	Clip, Chek Wire	1	1973 Model
64-4	99709 0108	Band	1	1973 Model
● Ⓝ	1027 60 052	Nut, Ring Throttle	1	Car No. 195395 '73/6～Added Anew
● Ⓝ	1663 60 063	Knob-Throttle	1	Car No. 195395 '73/6～Added Anew

METER SET

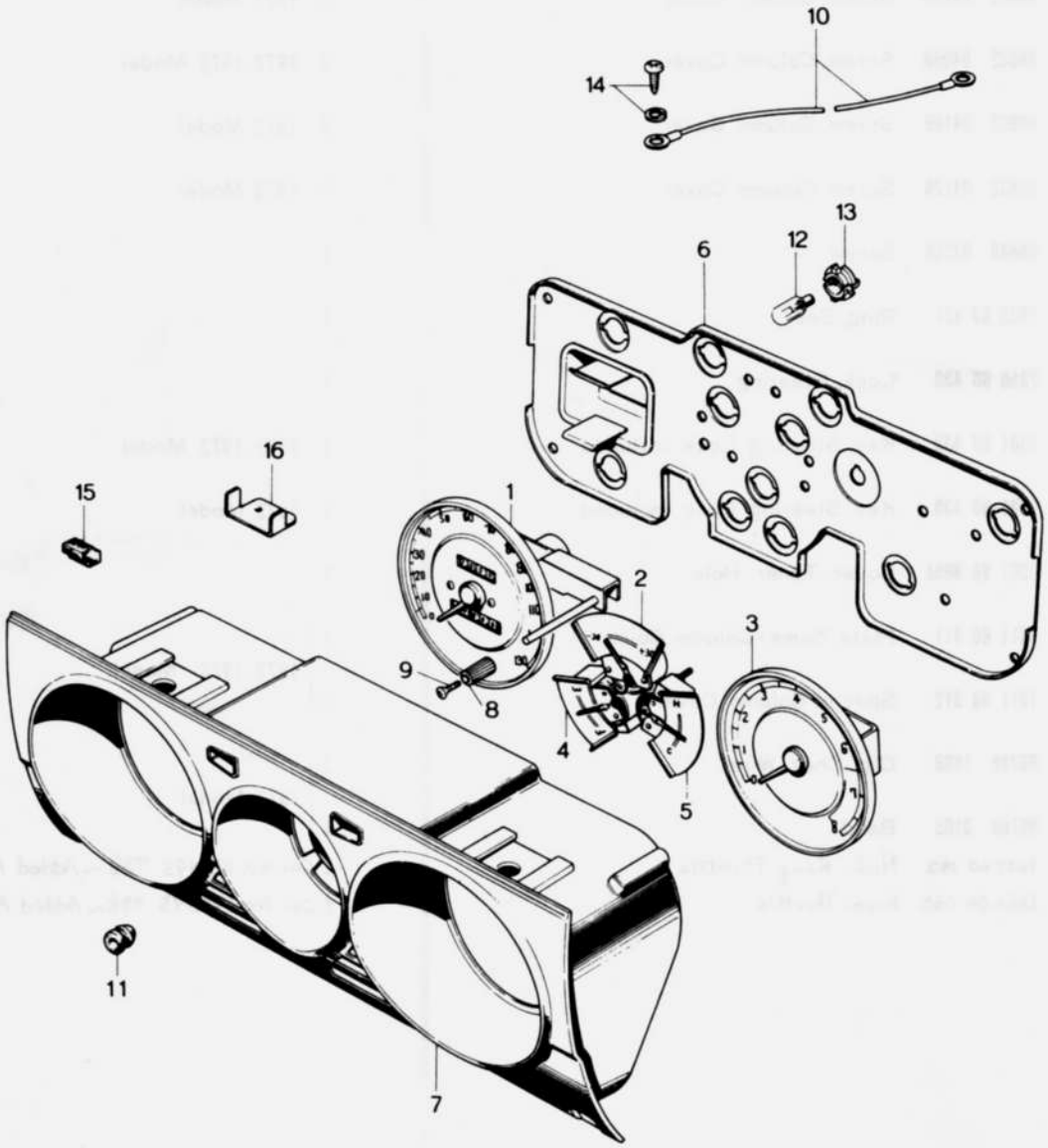

No.	Part Number	Description	Q'ty	Remarks
	2878 55 430B	METER SET	1	
●	2878 55 430C	METER SET	1	Car No. 160657 72/12~△
	2878 75 090A	METER, COMBINATION	1	
●	2878 75 090B	METER, COMBINATION	1	Car No. 179668 73/3~△
1	2878 75 101A	Speedometer	1	
2	0839 75 102	Ammeter	1	
3	0839 75 103	Tachometer	1	
●	2878 75 103	Tachometer	1	Car No. 160657 72/12~△
4	0839 75 104	Meter, Fuel	1	
5	0839 75 105	Thermometer	1	
	0839 75 105A	Thermometer	1	Car No. 104274 72/6~○
6	0839 75 106	Plate, Bottom	1	
●	2878 75 106	Plate, Bottom	1	Car No. 179668 73/3~△
7	0839 75 100	Case, Meter	1	
8	0305 75 102	Knob	1	
9	0824 75 140	Screw	1	
10	0305 75 107	Cord, Earth	1	
11	0305 75 108	Grommet	1	
12	99701 8030	Bulb	11	
13	0259 55 281	Socket	11	
14	0710 75 435	Washer, Spring	4	
	0710 75 436	Screw, Tapping	4	
● Ⓝ	1568 75 029	Buzzer	1	Car No. 160667 72/12~Added Anew
16	0839 75 109	Clip	1	

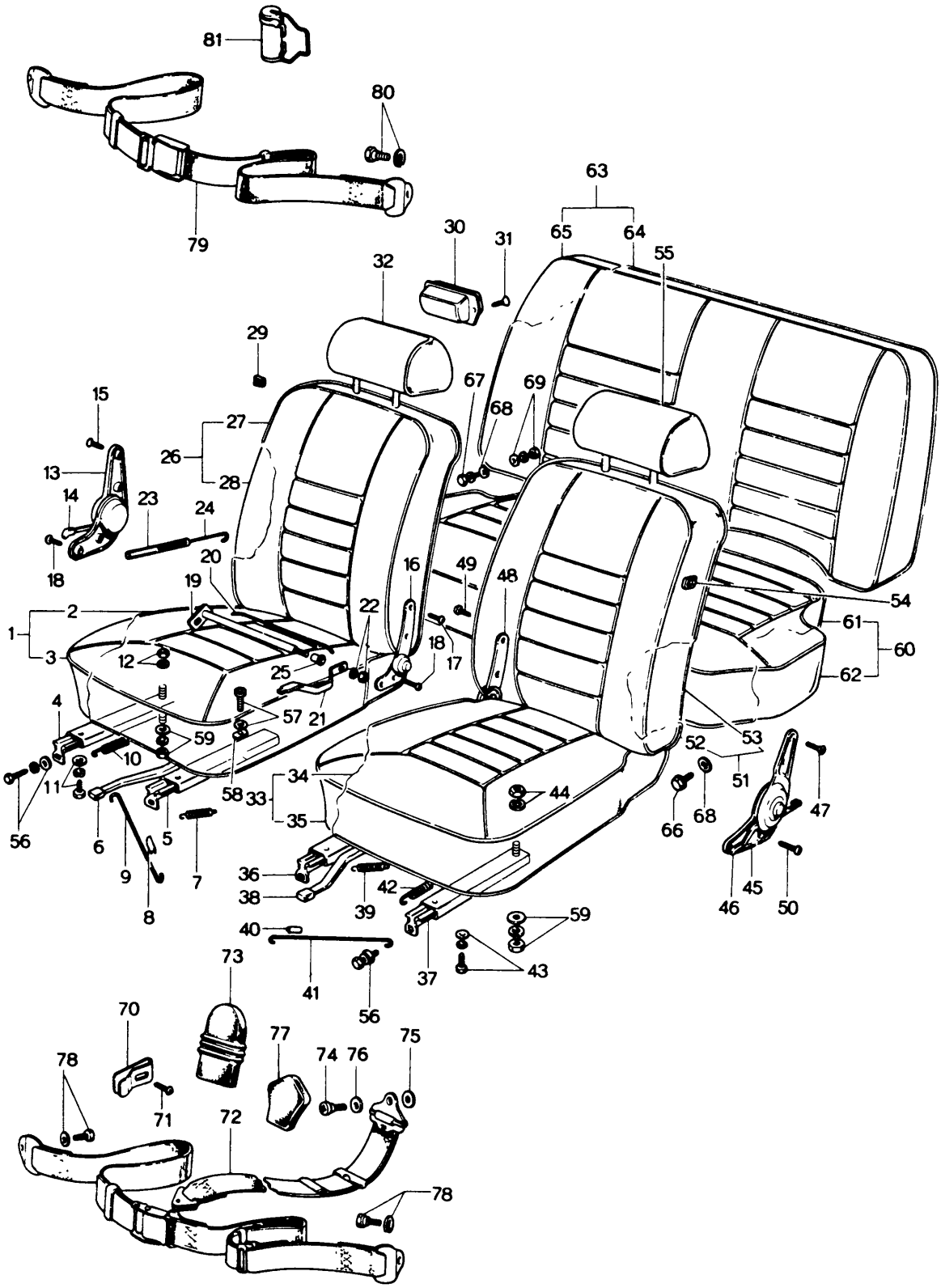
81
80
79
63
30
31
65
64
55
32
29
67
69
68
15
27
26
28
13
14
23
24
18
20
16
49
48
54
19
22
2
1
3
12
25
18
17
61
60
62
4
57
21
59
10
11
58
33
34
44
52
53
51
47
56
6
5
9
7
8
35
66
68
36
38
39
42
46
45
50
40
59
43
41
56
37
73
70
77
75
78
74
76
71
72
78

No.	Part Number	Description	Q'ty	Remarks	
		When ordering the following Seat, Head Restraint & Arm Rest Note : ① Add the 2 figures -00 (Black) -09 (Brown) after the part number. as Code nos. used up to Car No 96266 7/9~ ② Order with -00 (Black) -09 (Brown) -16 (Greyish Yellow) Colour Code Nos. from Car No. 96267 7/9~			
1	2080 57 100A	Set, Front (R) } For U.S.A.	1		©
	2090 57 100	Seat, Front (R) } For U.S.A.	1	Car No. 92431 7/8 ~ ○ 1971 Model	©
	2091 57 100	Seat, Front (R) } For Canada	1		©
	2869 57 100A	Seat, Front (R) } For Canada	1	Car No. 92431 7/8 ~ ○	©
	1663 57 100	Seat, Front (R) - For General U.S.A.	1	1972 Model	©
	1665 57 100	Seat, Front (R) - For Northern U.S.A.	1		©
●	1687 57 100	Seat, Front (R)	1	1973 Model	©
●	1687 57 100A	Seat, Front (R)	1	Car No. 160657 73/12~ △	
	0839 57 110	Seat, Front Cushion (R) } For U.S.A.	1		©
	2090 57 110	Seat, Front Cushion (R) } For U.S.A.	1	Car No. 92431 7/8 ~ ○ 1971 Model	©
	2091 57 110	Seat, Front Cushion (R) } For Canada	1		©
	2869 57 110	Seat, Front Cushion (R) } For Canada	1	Car No. 92431 7/8 ~ ○	©
	1663 57 110	Seat, Front Cushion (R) - For General U.S.A.	1	1972 Model	©
	1665 57 110	Seat, Front Cushion (R) - For Northern U.S.A.	1		©
●	1687 88 110	Seat, Front Cushion	1	1973 Model	©
2	0259 88 259	Cover	1		
3	0839 88 010	Trim (R), For U.S.A.	1	1971 Model	©
	2091 88 010	Trim (R), For Canada	1		©
	0881 88 010A	Trim (R), For General U.S.A.	1	1972 Model	©
	1665 88 010	Trim (R), For Northern U.S.A.	1		©

57 SEAT (ALL COUPE MODELS)

No.	Part Number	Description	Q'ty	Remarks	
●	1687 88 111	Trim (R)	1	1973 Model	©
4	0305 88 060	Adjuster No. 1 (R)	1		
	0305 88 060A	Adjuster No. 1 (R)	1	Car No. 92431 7/8 ~ ○	
5	2080 88 070A	Adjuster No. 2 (L)	1		
	2080 88 070B	Adjuster No. 2 (L)	1	Car No. 92431 7/8 ~ ○	
6	0259 88 273A	Knob (R)	1		
7	0254 88 164	Spring, Lock - Adjuster	2		
8	0259 88 025	Clip	2		
9	0305 88 062	Wire	1		
10	0259 88 123	Spring	1		
●	0398 88 061	Spring	1	Car No. 92431 7/8 ~ ○	
11	99801 0816	Bolt, Adjuster	2		
	99801 0820	Bolt, Adjuster	2	1972, 1973 Model	
	99952 0816	Washer, Plain	2		
	99971 0800	Washer, Spring	2		
12	99901 0800	Nut, Adjuster	2		
	99801 0820	Bolt, Adjuster	2	1972, 1973 Model	
	99971 0800	Washer, Spring	2		
13	2080 57 130	Knuckle (R)	1		
14	0305 88 081	Knob, Knuckle	1		
15	2155 57 109	Screw, Knuckle	2		
16	0305 88 150	Plate, Hinge (R)	1		
17	0259 57 109	Screw, Hinge Plate	2		
18	0275 57 107	Screw, Knuckle & Hinge Plate	4		
19	2080 88 170	Plate, Conduct	1		
20	2080 88 171	Bar, Torsion	1		

	No.	Part Number	Description	Q'ty	Remarks	
	21	2080 88 172	Lever, Assistance	1		
	22	99902 1000	Nut, Assistance Lever	1		
		99971 1000	Washer, Spring	1		
●	23	0839 88 173	~~Tube~~ Wire	1	From Car No. 1	
●	24	0839 88 174	~~Wire~~ Tube	1	From Car No. 1	
	25	0305 88 093	Bush	2		
	26	0839 57 120A	Seat, Front Back (R) - For U.S.A.	1	1971 Model	©
		2091 57 120	Seat, Front Back (R) - For Canada	1		©
		0881 57 120A	Seat, Front Back (R) - For General U.S.A.	1	1972 Model	©
		1665 57 120	Seat, Front Back (R) - For Northern U.S.A.	1		©
●		1687 88 130	Seat, Front Back (R)	1	1973 Model	©
	27	0259 88 059	Cover, Top	1		
	28	0839 88 100A	Trim (R), For U.S.A.	1	1971 Model	©
		2091 88 100	Trim (R), For Canada	1		©
		0881 88 100A	Trim (R), For General U.S.A.	1	1972 Model	©
		1665 88 100	Trim (R), For Northern U.S.A.	1		©
●		1687 88 131	Trim (R)	1	1973 Model	©
	29	0305 88 009	Knob, Head Restraint	1		
	30	0259 68 250	Tray, Ash	1		
	31	99864 0408	Screw, Tapping - Ash Tray	2		
		99864 0406	Screw, Tapping - Ash Tray	2	Car No. 77886 $^{7}/_{5}$ ~ ○	
	32	0305 57 140	Restraint, Head (R)	1		©
		2080 57 150	Seat, Front (L)	1	1971 Model Car No. 92431 $^{7}/_{8}$ ~ ○	©
		2090 57 150	Seat, Front (L)	1		©

No.	Part Number	Description	Q'ty	Remarks	
	2091 57 150	Seat, Front (L) } For Canada	1	1971 Model	©
	2869 57 150	Seat, Front (L) } For Canada	1	1971 Model Car No. 92431 7/8 ~ ○	©
	1663 57 150	Seat, Front (L) } For General U.S.A.	1		©
	2080 57 550A	Seat, Front (L) } For General U.S.A.	1	1972 Model Car No. 106922 7/12 ~ ×	©
	1665 57 150	Seat, Front (L) - For Northern U.S.A.	1		©
●	1687 ~~88~~ 57 150	Seat, Front (L)	1	1973 Model	©
●	1687 57 150A	Seat, Front (L)	1	Car No. 160657 72/12 ~ △	
33	0839 57 160	Seat, Front Cushion (L) } For U.S.A.	1		©
	2090 57 160	Seat, Front Cushion (L) } For U.S.A.	1	Car No. 92431 7/8 ~ ○	©
	2091 57 160	Seat, Front Cushion (L) } For Canada	1	1971 Model	©
	2869 57 160	Seat, Front Cushion (L) } For Canada	1	Car No. 92431 7/8 ~ ○	©
	1663 57 160	Seat, Front Cushion (L) } For General U.S.A.	1		©
	2080 57 560	Seat, Front Cushion (L) } For General U.S.A.	1	1972 Model Car No. 106922 7/12 ~ ×	©
	1665 57 160	Seat, Front Cushion (L) - For Northern U.S.A.	1		©
●	1687 88 160	Seat, Front Cushion (L)	1	1973 Model	©
34	0259 88 259	Cover, Top	1		
35	0839 88 200	Trim (L), For U.S.A.	1		©
	2091 88 200	Trim (L), For Canada	1	1971 Model	©
	0881 88 200	Trim (L), For General U.S.A.	1		©
	1665 88 200	Trim (L), For Northern U.S.A.	1	1972 Model	©
●	1687 88 161	Trim (L)	1	1973 Model	©
36	0305 88 250	Adjuster No. 3 (R)	1		
	0305 88 250A	Adjuster No. 3 (R)	1	Car No. 92431 7/8 ~ ○	
37	0305 88 260	Adjuster No. 4 (L)	1		
	0305 88 260A	Adjuster No. 4 (L)	1	Car No. 92431 7/8 ~ ○	
38	0259 88 373	Knob, Adjuster (L)	1		
39	0254 88 164	Spring, Lock - Adjuster	2		

No.	Part Number	Description	Q'ty	Remarks	
40	0259 88 025	Clip	2		
41	0305 88 062	Wire	1		
42	0259 88 123	Spring	1		
●	0398 88 061	Spring	1	Car No. 92431 7/8~○	
43	99801 0816	Bolt, Adjuster	2	1971 Model	
	99801 0820	Bolt, Adjuster	2	1972, 1973 Model	
	99952 0816	Washer, Plain	2		
	99971 0800	Washer, Spring	2		
44	99901 0800	Nut, Adjuster	2	1971 Model	
	99801 0820	Bolt, Adjuster	2	1972, 1973 Model	
	99971 0800	Washer, Spring	2		
45	2080 57 180	Knuckle (L)	1		
46	0305 88 081	Knob, Knuckle	1		
47	2155 57 109	Screw, Knuckle	2		
48	0305 88 160	Plate, Hinge (L)	1		
49	0259 57 109	Screw, Hinge Plate	2		
50	0275 57 107	Screw, Knuckle & Hinge Plate	4		
51	0839 57 170A	Seat, Front Back (L) - For U.S.A.	1	1971 Model	©
	2091 57 170	Seat, Front Back (L) - For Canada	1		©
	0881 57 170A	Seat, Front Back (L) - For General U.S.A.	1	1972 Model	©
	1665 57 170	Seat, Front Back (L) - For Northern U.S.A.	1		©
●	1687 88 180	Seat, Front Back (L)	1	1973 Model	©
52	0259 88 059	Cover, Top	1		
53	0839 88 280A	Trim (L), For U.S.A.	1	1971 Model	©
	2091 88 280	Trim (L), For Canada	1		©
	0881 88 280A	Trim (L), For General U.S.A.	1	1972 Model	©

No.	Part Number	Description	Q'ty	Remarks	
	1665 88 280	Trim (L), For Northern U.S.A.	1	1972 Model	©
●	1687 88 181	Trim (L)	1	1973 Model	©
54	0305 88 009	Knob, Head Restraint	1		
55	0305 57 190	Restraint, Head (L)	1		©
56	908046 8 25	Bolt, Set-Front Seat	4		
	99785 0825	Bolt, Front Seat	4	1972,1973 Model	
	99952 0822	Washer, Plain	4		
	99971 0800	Washer, Spring	4		
57	99808 0825	Bolt, Front Seat	1		
	99785 0825	Bolt, Front Seat	1	1972,1973 Model	
	99971 0800	Washer, Spring	1		
58	0305 57 011	Washer	1		
59	99901 0800	Nut, Front Seat	3		
	99952 0822	Washer, Plain	3		
	99971 0800	Washer, Spring	3		
60	0839 57 200A	Seat, Rear Cushion-For U.S.A.	1	1971 Model	©
	2091 57 200	Seat, Rear Cushion-For Canada	1		©
	0881 57 200A	Seat, Rear Cushion-For General U.S.A.	1	1972 Model	©
	1665 57 200	Seat, Rear Cushion-For Northern U.S.A.	1		©
●	1687 57 200	Seat, Rear Cushion	1	1973 Model	©
●	1687 57 200A	Seat, Rear Cushion	1	Car No. 160557 ~Δ	
61	0305 88 415	Cover, Top	1		
62	0839 88 370A	Trim, For U.S.A.	1	1971 Model	©

No.	Part Number	Description	Q'ty	Remarks	
	2091 88 370	Trim, For Canada	1	1971 Model	©
	0881 88 370A	Trim, For General U.S.A	1	1972 Model	©
	1665 88 370	Trim, For Northern U.S.A.	1	1972 Model	©
●	1687 88 201	Trim	1	1973 Model	©
63	0839 57 250A	Seat, Rear Back-For U.S.A.	1	1971 Model	©
	2091 57 250	Seat, Rear Back-For Canada	1	1971 Model	©
	0881 57 250A	Seat, Rear Back-For General U.S.A.	1	1972 Model	©
	1665 57 250	Seat, Rear Back-For Northern U.S.A.	1	1972 Model	©
●	1687 57 250	Seat, Rear Back	1	1973 Model	©
●	1687 57 250A	Seat, Rear Back	1	Car NO, 160657 '72/12~△	
64	0305 88 416	Cover, Top	1		
65	0839 88 420	Trim, For U.S.A.	1	1971 Model	©
	2091 88 420	Trim, For Canada	1	1971 Model	©
	0881 88 420A	Trim, For General U.S.A.	1	1972 Model	©
	1665 88 420	Trim, For Northern U.S.A.	1	1972 Model	©
●	1687 88 251	Trim	1	1973 Model	©
66	908042 8 20	Bolt, Set-Rear Seat	2		
	99785 0825	Bolt, Rear Seat	2	1972,1973 Model	
	99971 0800	Washer, Spring	2	1972,1973 Model	
67	908042 8 25	Bolt, Set-Rear Seat	2		
	99785 0825	Bolt, Rear Seat	2	1972,1973 Model	
	99971 0800	Washer, Spring	2	1972,1973 Model	
68	0317 57 015	Washer	4		

57 SEAT (ALL COUPE MODELS)

No.	Part Number	Description	Q'ty	Remarks
69	99901 0800	Nut, Rear Seat	2	
	99952 0822	Washer, Plain	2	
	99971 0800	Washer, Spring	2	
70	0305 57 909	Holder, Belt	2	1971,1972 Model
71	99836 0416	Screw, Belt Holder	4	1971 Model
	99861 0412	Screw, Belt Holder	4	1972 Model
72	0820 57 900B-00	Belt, Front Safety (Black)	2	©
	0305 57 920A	Belt, Front Safety (1971 Model)	2	Car No. 80502 7/6 ~ ○
	0305 57 920B	Belt, Front Safety (1971 Model)	2	Car No. 96092 7/9 ~ ○
	1650 57 9000-00	Belt, Front Safety (Black)	2	1972,1973 Model ©
73	0820 57 911	Cover, Mini Anchor	4	
74	2981 57 976	Screw	2	
75	2981 57 978	Spacer	2	
76	0223 78 147	Washer	6	Car No. 80502 7/6 ~ Discarded
77	0223 78 149	Cover	2	
78	99023 3524	Bolt	4	
	99201 3500	Washer, Spring	4	
79	0223 78 200C	Belt, Rear Safety (1971 Model)	2	
	0702 78 200B	Belt, Rear Safety (1971 Model)	2	Car No. 80502 7/6 ~ ○
	0702 78 200C	Belt, Rear Safety (1971 Model)	2	Car No. 96092 7/9 ~ ○
	1650 57 950	Belt, Rear Safety	2	1972,1973 Model
80	99023 3524	Bolt	4	Car No. 80502 7/6 ~ Discarded

No.	Part Number	Description	Q'ty	Remarks
	99201 3500	Washer, Spring	4	Car No. 80502 7/6 ~ Discarded
81	0813 57 955A	Roller, Belt	12	Car No. 80502 7/6 ~ Discarded
	0208 66 944	Clip, Warning Lamp Cord	1	Car No. 106922 7/12 ~ Q'ty
Ⓝ	99295 0808	Clip, Warning Lamp Cord	1	Car No. 106922 7/12 ~ Added Anew
	99860 0616	Screw, Clip	1	Car No. 106922 7/12 ~ Q'ty 1972, 1973 Model
	99952 0600	Washer, Plain	1	Car No. 106922 7/12 ~ Q'ty
	99971 0600	Washer, Spring	1	Car No. 106922 7/12 ~ Q'ty
Ⓝ	1540 88 035	Switch, Seat	1	1972 Model
	1674 88 120	Switch, Seat	1	1973 Model

SEAT (ALL SEDAN MODELS)

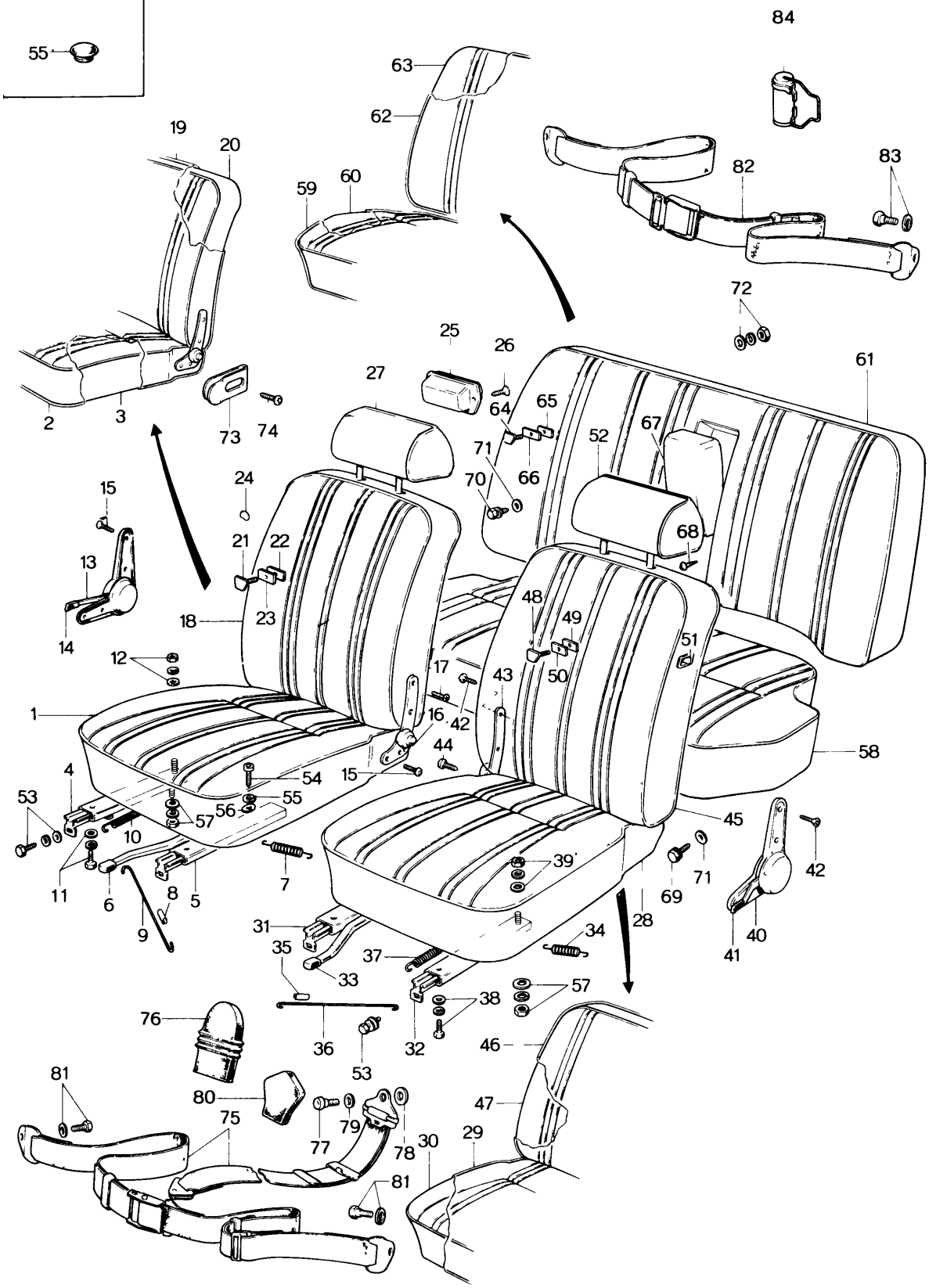

No.	Part Number	Description	Q'ty	Remarks	
		When ordering the following, Seat, Head Restraint & Arm Rest			
		Note : ①When ordering add the 2 figures. -00 (Black) -09 (Brown) after the part number as colour code nos. used up to Car No. 96266 ⁷¹/₉～ ②Order With -00 (Black) -09 (Brown) -16 (Greyish Yellow) colour code nos. from Car No. 96267 ⁷¹/₉～			
	0305 57 100A	Seat, Front (R) For U.S.A.	1	1971 Model	©
	2081 57 100	Seat, Front (R) For U.S.A.	1	1971 Model Car No. 92431 ⁷¹/₈～○	©
	2082 57 100	Seat, Front (R) For Canada	1	1971 Model	©
	2852 57 100	Seat, Front (R) For Canada	1	1971 Model Car No. 92431 ⁷¹/₈～○	©
	1662 57 100	Seat, Front (R) - For General U.S.A.	1	1972 Model	©
	1664 57 100	Seat, Front (R) - For Northern U.S.A.	1	1972 Model	©
●	1686 57 100	Seat, Front (R)	1	1973 Model	©
●	1686 57 100	Seat, Front (R)	1	Car No. 160657 ⁷²/₁₂～△	
1	0305 57 110	Seat, Front Cushion (R) For U.S.A.	1	1971 Model	©
	2081 57 110	Seat, Front Cushion (R) For U.S.A.	1	1971 Model Car No. 92431 ⁷¹/₈～○	©
	2851 57 110	Seat, Front Cushion (R) For Canada	1	1971 Model	©
	2493 57 110	Seat, Front Cushion (R) For Canada	1	1971 Model Car No. 92431 ⁷¹/₈～○	©
	1650 57 110	Seat, Front Cushion (R) - For General U.S.A.	1	1972 Model	©
	2851 57 510A	Seat, Front Cushion (R) - For Northern U.S.A.	1	1972 Model	©
●	1682 88 110	Seat, Front Cushion (R)	1	1973 Model	©
2	0259 88 259	Cover, Top	1		
3	0305 88 010	Trim (R), For U.S.A.	1	1971 Model	©
	2851 88 010	Trim (R), For Canada	1	1971 Model	©
	0398 88 010	Trim (R), For General U.S.A.	1	1972 Model	©

SEAT (ALL SEDAN MODELS)

No.	Part Number	Description	Q'ty	Remarks	
	2851 88 490	Trim (R), For Northern U.S.A.	1	1972 Model	©
●	1682 88 111	Trim (R)	1	1973 Model	©
4	0305 88 060	Adjuster No. 1 (R)	1		
	0305 88 060A	Adjuster No. 1 (R)	1	Car No. 92431 7/8~○	
5	0305 88 070	Adjuster No. 2 (L)	1		
	0305 88 070A	Adjuster No 2 (L)	1	Car No. 92431 7/8~○	
6	0259 88 273A	Knob, Adjuster (R)	1		
7	0254 88 164	Spring, Lock	2		
8	0259 88 025	Clip	2		
9	0305 88 062	Wire	1		
10	0259 88 123	Spring	1		
11	99801 0816	Bolt, Adjuster	2	1971 Model	
	99801 0820	Bolt, Adjuster	2	1972,1973 Model	
	99952 0816	Washer, Plain	2		
	99971 0800	Washer, Spring	2		
12	99901 0800	Nut, Adjuster	2	1971 Model	
	99801 0820	Bolt, Adjuster	2	1972,1973 Model	
	99952 0816	Washer, Plain	2		
	99971 0800	Washer, Spring	2		
13	0305 57 130A	Knuckle	1		
14	0305 88 081	Knob, Knuckle	1		
15	2155 57 109	Screw, Knuckle & Hinge Plate	6		
16	0305 88 150	Plate, Hinge (R)	1		
17	0259 57 109	Screw, Hinge Plate	2		
18	0305 57 120A	Seat, Front Back (R) - For U.S.A.	1	1971 Model	©
	2082 57 120	Seat, Front Back (R) - For Canada	1		©

No.	Part Number	Description	Q'ty	Remarks	
	0398 57 120	Seat, Front Back (R) - For General U.S.A.	1	1972 Model	©
	1664 57 120	Seat, Front Back (R) - For Northern U.S.A.	1	1972 Model	©
●	1684 88 130	Seat, Front Back (R)	1	1973 Model	©
19	0259 88 059	Cover, Top	1		
20	0305 88 100A	Trim (R), For U.S.A.	1	1971 Model	©
	2851 88 100	Trim (R), For Canada	1	1971 Model	©
	0398 88 100	Trim (R), For General U.S.A.	1	1972 Model	©
	1664 88 100	Trim (R), For Northern U.S.A.	1	1972 Model	©
●	1682 88 131	Trim (R)	1	1973 Model	©
21	0841 88 001	Button, Garnish	1		
22	0841 88 002	Stopper, Garnish Button	1		
23	0317 88 082	Spacer, Garnish Button	1		
24	0317 88 009	Knob, Head Restraint	1		
25	0259 68 250	Tray, Ash	1		
26	99864 0408	Screw, Tapping - Ash Tray	2		
	99864 0406	Screw, Tapping - Ash Tray	2	Car No. 77886 7/6 ~ ○	
27	0305 57 140	Restraint, Head (R)	1		©
	0305 57 150A	Seat, Front (L) - For U.S.A.	1	1971 Model	©
	2081 57 150	Seat, Front (L) - For U.S.A.	1	1971 Model Car No. 92431 7/8 ~ ○	©
	2082 57 150	Seat, Front (L) - For Canada	1	1971 Model	©
	2852 57 150	Seat, Front (L) - For Canada	1	1971 Model Car No. 92431 7/8 ~ ○	©
	1662 57 150	Seat, Front (L) - For General U.S.A.	1	1972 Model	©
	0398 57 150A	Seat, Front (L) - For General U.S.A.	1	1972 Model Car No. 106922 7/12 ~ ×	©
	1664 57 150	Seat, Front (L) - For Northern U.S.A.	1	1972 Model	©

	No.	Part Number	Description	Q'ty	Remarks	
●		1686 57 150	Seat, Front (L)	1	1973 Model	©
●		1686 57 150A	Seat, Front (L)	1	Car No. 160657 73/12~△	
	28	0305 57 160	Seat, Front Cushion (L) For U.S.A.	1	1971 Model	©
		2081 57 160	Seat, Front Cushion (L) For U.S.A.	1	Car No. 92431 73/8~○	©
		2851 57 160	Seat, Front Cushion (L) For Canada	1	1971 Model	©
		2493 57 160	Seat, Front Cushion (L) For Canada	1	Car No. 92431 73/8~○	©
		1650 57 160	Seat, Front Cushion (L) For General U.S.A.	1	1972 Model	©
		0398 57 160A	Seat, Front Cushion (L) For General U.S.A.	1	Car No. 106922 73/12~×	©
		2851 57 560A	Seat, Front Cushion (L) - For Northern U.S.A	1	1972 Model	©
●		1682 88 160	Seat, Front Cushion (L)	1	1973 Model	©
	29	0259 88 259	Cover, Top	1		
	30	0305 88 200	Trim (L), For U.S.A.	1	1971 Model	©
		2851 88 200	Trim (L), For Canada	1		©
		0398 88 200	Trim (L), For General U.S.A.	1	1972 Model	
		2851 88 530	Trim (L), For Northern U.S.A.	1		
●		1682 88 161	Trim (L)	1	1973 Model	
	31	0305 88 250	Adjuster No. 3 (R)	1		
		0305 88 250A	Adjuster No. 3 (R)	1	Car No. 92431 73/8~×	
	32	0305 88 260	Adjustor No. 3 (L)	1		
		0305 88 260A	Adjuster No. 3 (L)	1	Car No. 92431 73/8~×	
	33	0259 88 373	Knob, Adjuster (L)	1		
	34	0254 88 164	Spring, Lock	2		
	35	0259 88 025	Clip	2		
	36	0305 88 062	Wire	1		
	37	0259 88 123	Spring	1		
	38	99801 0816	Bolt, Adjuster	1	1971 Model	
		99801 0820	Bolt, Adjuster	2	1972, 1973 Model	

No.	Part Number	Description	Q'ty	Remarks	
	99952 0816	Washer, Plain	2		
	99971 0800	Washer, Spring	2		
39	99901 0800	Nut, Adjuster	2	1971 Model	
	99901 0820	Bolt, Adjuster	2	1972,1973 Model	
	99952 0816	Washer, Plain	2		
	99971 0800	Washer, Spring	2		
40	0305 57 180A	Knuckle (L)	1		
41	0305 88 081	Knob, Knuckle	1		
42	2155 57 109	Screw, Knuckle & Hinge Plate	6		
43	0305 88 160	Plate, Hinge (L)	1		
44	0259 57 109	Screw, Hinge Plate	2		
45	0305 57 170A	Seat, Front Back (L) - For U.S.A.	1	1971 Model	©
	2082 57 170	Seat, Front Back (L) - For Canada	1	1971 Model	©
	0398 57 170	Seat, Front Back (L) - For General U.S.A.	1	1972 Model	©
	1664 57 170	Seat, Front Back (L) - For Northern U.S.A.	1	1972 Model	©
●	1684 88 180	Seat, Front Back (L)	1	1973 Model	©
46	0259 88 059	Cover, Top	1		
47	0305 88 280A	Trim (L), For U.S.A.	1	1971 Model	©
	2851 88 280	Trim (L), For Canada	1	1971 Model	©
	0398 88 280	Trim (L), General U.S.A.	1	1972 Model	©
	1684 88 280	Trim (L), For Northern U.S.A.	1	1972 Model	©
●	1682 88 181	Trim (L)	1	1973 Model	©
48	0841 88 001	Button, Garnish	1		
49	0841 88 002	Stopper, Garnish Button	1		
50	0317 88 082	Spacer, Garnish Button	1		
51	0305 88 008	Knob, Head Restraint	1		

No.	Part Number	Description	Q'ty	Remarks	
52	0305 57 190	Restraint, Head (L)	1		©
53	908046 8 25	Bolt, Set-Front Seat	4	1971 Model	
	99785 0825	Bolt, Front Seat	4	1972,1973 Model	
	99952 0822	Washer, Plain	4	1972,1973 Model	
	99971 0800	Washer, Spring	4	1972,1973 Model	
54	99808 0825	Bolt, Front Seat	1	1971 Model	
	99785 0825	Bolt, Front Seat	1	1972,1973 Model	
55	99971 0800	Washer, Spring	1		
56	0305 57 011	Washer	1		
57	99901 0800	Nut, Front Seat	3		
	99952 0822	Washer, Plain	3		
	99971 0800	Washer, Spring	3		
58	0305 57 200A	Seat, Rear Cushion-For U.S.A.	1	1971 Model	©
	2851 57 200	Seat, Rear Cushion-For Canada	1	1971 Model	©
	0398 57 200	Seat, Rear Cushion	1	1972 Model	©
●	1682 57 200	Seat, Rear Cushion	1	1973 Model	©
●	1682 57 200A	Seat, Rear Cushion	1	Car No. 160657 '72/12~Δ	
59	0305 88 415	Cover, Top	1		
60	0305 88 370A	Trim, For U.S.A.	1	1971 Model	©
	2851 88 370	Trim, For Canada	1	1971 Model	©
	0398 88 370	Trim, For General U.S.A.	1	1972 Model	©
	2851 88 570	Trim, For Northern U.S.A.	1	1972 Model	©
●	1682 88 201	Trim	1	1973 Model	©

No.	Part Number	Description	Q'ty	Remarks	
61	0305 57 250A	Seat, Rear Back-For U.S.A.	1	1971 Model	©
	2082 57 250	Seat, Rear Back-For Canada	1		©
	0398 57 250A	Seat, Rear Back-For General U.S.A	1	1972 Model	©
	1664 57 250	Seat, Rear Back-For Northern U.S.A.	1		©
●	1686 57 250	Seat, Rear Back	1	1973 Model	©
●	1686 57 250A	Seat, Rear Back	1	Car No. 160657 73/12~Δ	
62	0305 88 416	Cover, Top	1		
63	0305 88 420A	Trim, For U.S.A.	1	1971 Model	©
	2082 88 420	Trim, For Canada	1		©
	0398 88 420	Trim, For General U.S.A.	1	1972 Model	©
	2851 88 420	Trim, For Northern U.S.A.	1		©
●	1686 88 251	Trim	1	1973 Model	©
64	0841 88 001	Button, Garnish	2		
65	0841 88 002	Stopper, Garnish Button	2		
66	0317 88 082	Spacer, Garnish Button	2		
67	0305 88 460	Rest, Arm-For U.S.A.	1	1971,1972 Model	©
	2082 88 460	Rest, Arm-For Canada	1	1971 Model	©
●	1686 88 270	Rest, Arm-For General U.S.A.	1	1973 Model	©
68	99744 0612	Screw, Arm Rest	2		
69	908042 8 20	Bolt, Set-Rear Seat	2	1971 Model	
	99785 0825	Bolt, Rear Seat	2	1972,1973 Model	
	99971 0800	Washer, Spring	2		
70	908042 8 25	Bolt, Rear Seat	2	1971 Model	
	99785 0825	Bolt, Rear Seat	2	1972,1973 Model	
	99971 0800	Washer, Spring	2		

No.	Part Number	Description	Q'ty	Remarks	
71	0317 57 015	Washer	4		
72	99901 0800	Nut, Rear	2		
	99952 0822	Washer, Plain	2		
	99971 0800	Washer, Spring	2		
73	0305 57 909	Holder, Belt	2		
74	99836 0416	Screw, Belt Holder	4	1971 Model	
	99861 0412	Screw, Belt Holder	4	1972,1973 Model	
75	0820 57 900B-00	Belt, Front Safety (Black)	2		©
	0305 57 920A-00	Belt, Front Safety (Black)	2	1971 Model Car No. 81488 7⅙～○	©
	1650 57 900D-00	Belt, Front Safety (Black)	2	1972,1973 Model	©
76	0820 57 911	Cover, Mini Anchor	4		
77	2981 57 976	Screw	2		
78	2981 57 978	Spacer	2		
79	0223 78 147	Washer	6	Car No. 81488 7⅙～Discarded	
80	0223 78 149	Cover	2		
81	99023 3524	Bolt	4		
	99201 3500	Washer, Spring	4		
82	0223 78 200C	Belt, Rear Safety	2		
	0702 78 200B	Belt, Rear Safety	2	1971 Model Car No. 81488 7⅙～○	
●	~~1650 57 950 1650 58 950~~	Belt, Rear Safety	2	1972,1973 Model	
83	99023 3524	Bolt	4		
	99201 3500	Washer, Spring	4	Car No. 81488 7⅙～Discarded	

No.	Part Number	Description	Q'ty	Remarks
84	0813 57 955A	Roller, Belt	12	Car No. 80502 7/6~Discarded
	0208 66 944	Clip, Warning Lamp Cord	1	Car No. 106922 7/12~Q'ty
	99295 0808	Clip	1	Car No. 106922 7/12~Added Anew
	99860 0616	Screw, Clip	1	1972,1973 Model
	99952 0600	Washer, Plain	1	
	99971 0600	Washer, Spring	1	
Ⓝ	1540 88 035	Switch, Seat	1	
●	1674 88 120	Switch, Seat	1	1972,1973 Model
●	1674 88 120A	Switch, Seat	1	Car No. 7 3/10~O

FRONT SIDE DOOR (GLASS)

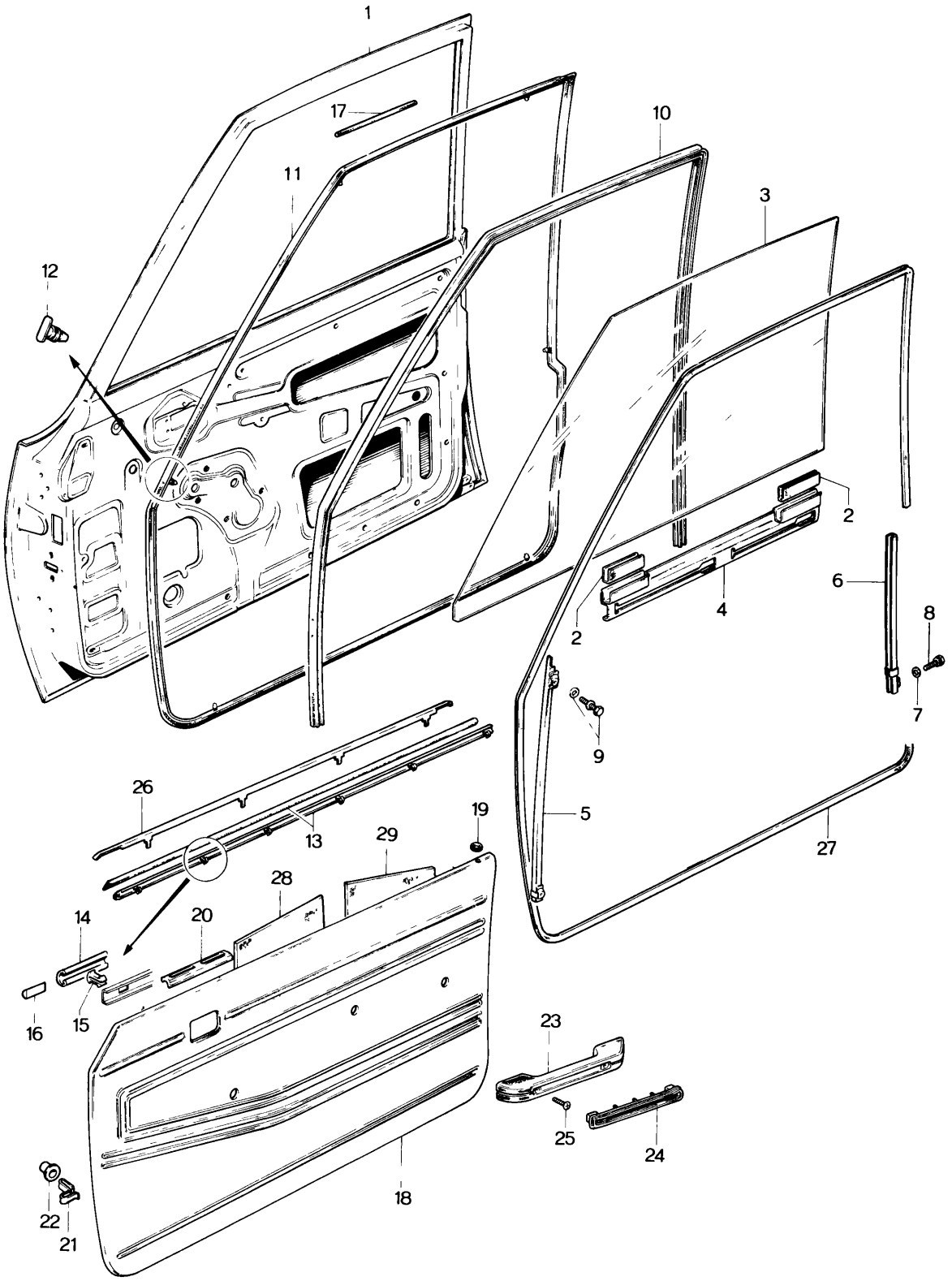

No.	Part Number	Description	Q'ty	Remarks
1	2835 58 010B	Body Ass'y, Door (R)	1	
	2835 58 010H	Body Ass'y, Door (R)	1	Car No. 79731 7/6 ~ △
	2850 59 010A	Body Ass'y, Door (L) — Sedan use	1	1971,1972 Model
	2850 59 010G	Body Ass'y, Door (L)	1	Car No. 79731 7/6 ~ △
	2850 59 010H	Body Ass'y, Door (L)	1	Car No. 92431 7/8 ~ ×
	2080 58 010B	Body Ass'y, Door (R)	1	
	2080 58 010G	Body Ass'y, Door (R)	1	Car No. 79731 7/6 ~ △
	2855 59 010B	Body Ass'y, Door (L) — Coupe use	1	1971,1972 Model
	2855 59 010G	Body Ass'y, Door (L)	1	Car No. 79731 7/6 ~ △
	2855 59 010H	Body Ass'y, Door (L)	1	Car No. 92431 7/8 ~ ×
●	1666 58 010	Body Ass'y, Door (R) — For U.S.A. Sedan use	1	1973 Model
●	1666 59 010	Body Ass'y, Door (L) — For U.S.A. Sedan use	1	
●	1668 58 010	Body Ass'y, Door (R) — For U.S.A. Coupe use	1	
●	1668 59 010	Body Ass'y, Door (L) — For U.S.A. Coupe use	1	
●	2835 58 010I	Body Ass'y, Door (R) — For Canada Sedan use	1	
●	2850 59 010I	Body Ass'y, Door (L) — For Canada Sedan use	1	
●	2080 58 010H	Body Ass'y, Door (R) — For Canada Coupe	1	
●	2855 59 010I	Body Ass'y, Door (L) — For Canada Coupe	1	
2	2292 58 232	Strip, Rubber - Sedan use	6	
	0259 58 232	Strip, Rubber - Coupe use	6	
3	0301 58 501A	Glass, Door (R) — Sedan use Transparent	1	
	0301 59 501A	Glass, Door (L) — Sedan use Transparent	1	
	0305 58 501A	Glass, Door (R) — Sedan use Blue Pane	1	
	0305 59 501A	Glass, Door (L) — Sedan use Blue Pane	1	
	0839 58 501	Glass, Door (R) — Coupe use Blue Pane	1	
	0839 59 501	Glass, Door (L) — Coupe use Blue Pane	1	

58 59 FRONT SIDE DOOR (GLASS)

No.	Part Number	Description	Q'ty	Remarks
	2878 58 501	Glass, Door (R) — Coupe use, Transparent	1	
~	2878 59 501	Glass, Door (L) — Coupe use, Transparent	1	
4	0305 58 505	Bracket, Lift (R)	1	
	0305 59 505	Bracket, Lift (L)	1	
5	0305 58 603A	Guide "A" - Glass (R)	1	
	0305 59 603A	Guide "A" - Glass (L)	1	
6	0305 58 604	Guide "B" - Glass (R)	1	
	0305 59 604	Guide "B" - Glass (L)	1	
7	0727 70 943	Washer, Glass Guide	2	
8	99806 0610	Bolt, Glass Guide	2	
	99971 0600	Washer, Spring	2	
9	99806 0612	Bolt, Glass Guide	4	
	99971 0600	Washer, Spring	4	
	99951 0618	Washer, Plain	4	
10	0305 58 605D	Channel, Glass - Sedan use	2	
	0839 58 605D	Channel, Glass - Coupe use	2	
	0305 58 606	Channel, Glass - Sedan use	2	Car No. 57330 7½ ~ Added Anew
	0839 58 606	Channel, Glass - Coupe use	2	Car No. 57330 7½ ~ Added Anew
11	0305 58 760C	Weatherstrip Ass'y (R) — Sedan use	1	
	0305 58 760D	Weatherstrip Ass'y (R) — Sedan use	1	Car No. 79731 7⅙ ~ ×
	0305 59 760C	Weatherstrip Ass'y (L) — Sedan use	1	
	0305 59 760D	Weatherstrip Ass'y (L) — Sedan use	1	Car No. 79731 7⅙ ~ ×
	0839 58 760B	Weatherstrip Ass'y (R) — Coupe use	1	
	0839 58 760C	Weatherstrip Ass'y (R) — Coupe use	1	Car No. 79731 7⅙ ~ ×

No.	Part Number	Description		Q'ty	Remarks
	0839 59 760B	Weatherstrip Ass'y (L)	Coupe use	1	
	0839 59 760C	Weatherstrip Ass'y (L)	Coupe use	1	Car No. 79731 7/6 ~ ×
12	0305 58 762	Fastener	Sedan	56	Car No. 79731 7/6 ~ Q'ty
			Coupe	54	
13	0305 58 780F	Weatherstrip Ass'y Outer (R)	Sedan use	1	
	0305 59 780F	Weatherstrip Ass'y, Outer (L)	Sedan use	1	
	0839 58 780E	Weatherstrip Ass'y, Outer (R)	Coupe use	1	
	0839 59 780E	Weatherstrip Ass'y, Outer (L)	Coupe use	1	
	0305 58 790	Weatherstrip Ass'y, Inner (R)	Sedan use	1	
	0305 58 790A	Weatherstrip Ass'y, Inner (R)	Sedan use	1	Car No. 79731 7/6 ~ ×
	0305 59 790	Weatherstrip Ass'y, Inner (L)	Sedan use	1	
	0305 59 790A	Weatherstrip Ass'y, Inner (L)	Sedan use	1	Car No. 79731 7/6 ~ ×
	0839 58 790C	Weatherstrip Ass'y, Inner (R)	Coupe use	1	
	0839 58 790D	Weatherstrip Ass'y, Inner (R)	Coupe use	1	Car No. 79731 7/6 ~ ×
	0839 59 790C	Weatherstrip Ass'y, Inner (L)	Coupe use	1	
	0839 59 790D	Weatherstrip Ass'y, Inner (L)	Coupe use	1	Car No. 79731 7/6 ~ ×
14	0305 58 781B	Weatherstrip (R) Outer (R), Inner (L)	Sedan use	2	
	0305 59 781B	Weatherstrip (L) Inner (R), Outer (L)	Sedan use	2	
	0839 58 781B	Weatherstrip (R) Outer (R), Inner (L)	Coupe use	2	
	0839 59 781B	Weatherstrip (L) Inner (R), Outer (L)	Coupe use	2	
15	0839 58 783B	Fastener		32	Sedan
				36	Coupe
16	0839 58 789	Spacer, Weatherstrip Outer		4	
17	0305 58 768	Spacer, Weatherstrip		2	

No.	Part Number	Description	Q'ty	Remarks	
		When ordering the following Door Trim			
		Note ① Add the 2 figures -01 (Black) -04 (Brown) after the part number as color code nos. used up to car no. 79730 7/5 ~			
		② Order with-01 (Black) - 04 (Brown) -11 (Greyish Yellow) color corde nos. used from car no. 79731 7/6 ~			
		③ Order with-13 (Black) -14 (Brown) -15 (Greyish Yellow) color code nos. used from car no. 102235 7/11 ~			
18	0305 58 810C	Trim, Door (R)	1		©
	~~8305 58 810D~~	~~Trim, Door (R)~~	‡	~~Car No. 79731 7/6 ~ ×~~	~~©~~
	0398 58 810A	Trim, Door (R)	1	Car No. 79731 7/6 ~ × 1971 Model	©
	0305 59 810C	Trim, Door (L)	1		©
	~~8305 58 810D~~	~~Trim, Door (L)~~	‡	~~Car No. 79731 7/6 ~ ×~~	~~©~~
	0398 59 810A	Trim, Door (L)	1	Car No. 79731 7/6 ~ ×	©
		Sedan use, For U.S.A.			
	0839 58 810D	Trim, Door (R)	1		©
	0404 58 810A	Trim, Door (R)	1	Car No. 79731 7/6 ~ × 1971 Model	©
	0839 59 810D	Trim, Door (L)	1		©
	0404 59 810A	Trim, Door (L)	1	Car No. 79731 7/6 ~ ×	©
		Coupe use, For U.S.A.			
	2851 58 810	Trim, Door (R)	1		©
	2851 58 810D	Trim, Door (R)	1	Car No. 79731 7/6 ~ × 1971 Model	©
	2851 59 810	Trim, Door (L)	1		©
	2851 59 810D	Trim, Door (L)	1	Car No. 79731 7/6 ~ ×	©
		Sedan use, For Canada			
	2858 58 810	Trim, Door (R)	1		©
	2839 58 810A	Trim, Door (R)	1	Car No. 79731 7/6 ~ × 1971 Model	©
	2858 59 810	Trim, Door (L)	1		©
	2839 59 810A	Trim, Door (L)	1	Car No. 79731 7/6 ~ ×	©
		Coupe use, For Canada			
	0876 58 810A	Trim, Door (R) Sedan use, For General U.S.A.	1	1972 Model	©

No.	Part Number	Description	Q'ty	Remarks	
	0876 59 810B	Trim, Door (L) - Sedan use, For General U.S.A.	1	1972 Model	©
	1663 58 810	Trim, Door (R)	1	1972 Model	©
	~~1663 59 810~~	Trim, Door (L) — Coupe use, For General U.S.A.	1		©
●	0881 59 810B	Trim, Door (L)	1	From Car No. 1	
	1664 58 810	Trim, Door (R)	1	1972 Model	©
	1664 59 810	Trim, Door (L) — Sedan use, For Northern U.S.A.	1		©
	1665 58 810	Trim, Door (R)	1	1972 Model	©
	1665 59 810	Trim, Door (L) — Coupe use, For Northern U.S.A.	1		©
●	1666 58 810	Trim, Door (R)	1	1973 Model	©
●	1666 59 810	Trim, Door (L) — Sedan use, For General U.S.A. & With Car Cooler For Canada	1		©
●	1668 58 810	Trim, Door (R)	1	1973 Model	©
●	1668 59 810	Trim, Door (L) — Coupe use, For General U.S.A. & With Car Cooler For Canada	1		©
	1670 58 810	Trim, Door (R)	1	1973 Model	©
	1670 59 810	Trim, Door (L) — Sedan use, For Northern U.S.A. & Canada	1		©
●	~~1666 58 810~~	Trim. Door (R) — Sedan use. For Northern U.S.A.	1	Car No. 167963 73/1~△	©
●	~~1666 59 810~~	Trim. Door (L) — Sedan use. For Northern U.S.A.	1	Car No. 167963 73/1~△	©
	1672 58 810	Trim, Door (R)	1	1973 Model	©
	1672 59 810	Trim, Door (L) — Coupe use, For Northern U.S.A. & Canada	1		©
●	~~1668 58 810~~	Trim. Door (R) — Coupe use. For Northern U.S.A.	1	Car No. 167963 73/1~△	©
●	~~1668 58 810~~	Trim. Door (L) — Coupe use. For Northern U.S.A.	1	Car No. 167963 73/1~△	©
19	0223 58 692	Grommet	2		
	0223 58 692A	Grommet	2	Car No. 79731 7/6~○	
20	2651 58 8910-00	Nozzle, Defroster (Black) - For Canada & Northern U.S.A.	2		©
21	0208 58 921	Fastener	18	Sedan use	
			22	Coupe use	
22	0187 58 922	Cap, Fastener Seal	18	Sedan use	
			22	Coupe use	
	0223 58 925	Cap, Fastener Seal - Sedan use, For 1971, 1972 Canada	18		
23	0305 58 821A-01	Rest, Arm (Black)	2		©
	~~0308 58 821A-00~~ ~~0308 58 821A-00~~	Rest, Arm (Black)	2	Car No. 79731 7/6~×	©
24	0305 58 822A-02	Garnish (Gray)	2		©

FRONT SIDE DOOR (GLASS)

No.	Part Number	Description	Q'ty	Remarks	
	0398 58 822D-00	Garnish (Black)	2	Car No. 79731 7/6 ~ ×	©
	0398 58 822A-00	Garnish (Black)	2	Car No. 109463 7/12 ~ ○	©
25	99833 0516	Screw, Arm Rest	4		
	99833 0520	Screw, Arm Rest	4	Car No. 79731 7/6 ~ ×	
	99952 0500	Washer, Plain	4		
	908331 5 20	Screw, Set Arm Rest	4	Car No. 95367 7/8 ~ ○	
26	0305 58 831B	Mould, Beltline (R) — Sedan use	1		
	0305 59 831B	Mould, Beltline (L) — Sedan use	1		
	0839 58 831B	Mould, Beltline (R) — Coupe use	1		
	0881 58 831	Mould, Beltline (R) — Coupe use	1	Car No. 79731 7/6 ~ ×	
●	0839 59 831B ~~0838 58 831B~~	Mould, Beltline (L) — Coupe use	1		
●	0881 59 831 ~~0881 58 831~~	Mould, Beltline (L) — Coupe use	1	Car No. 79731 7/6 ~ ×	
Ⓝ	0881 58 839	Spacer, Coupe use	8		
27	0305 58 755A-00	Welt, Seaming - Sedan use (Black)	2		©
	0305 58 755D-00	Welt, Seaming - Sedan use (Black)	2	Car No. 69368 7/4 ~ ○	©
	0839 58 755A-00	Welt, Seaming - Coupe use (Black)	2		©
	0839 58 755D-00	Welt, Seaming - Coupe use (Black)	2	Car No. 69368 7/4 ~ ○	©
	0398 58 755D-00	Welt, Seaming - All Models (Black)	2	Car No. 88202 7/7 ~ ○	©
28	0305 58 851A	Insulation, Sedan use	2		
	0223 58 839	Insulation, Sedan use	2	Car No. 74055 7/4 ~ ×	
	0305 72 851	Insulation, Coupe use	2		
	0376 58 851	Insulation, All Models	2	Car No. 79731 7/6 ~ ×	
29	0305 58 852	Insulation, Sedan use	2		
	0839 58 851	Insulation, Sedan use	2	Car No. 74055 7/4 ~ ×	
●	0839 58 851	Insulation, Sedan use	2		
●	0886 58 851	Insulation, ~~Coupe use~~ All Model	2	Car No. 79731 7/6 ~ ×	

FRONT SIDE DOOR (LOCK)

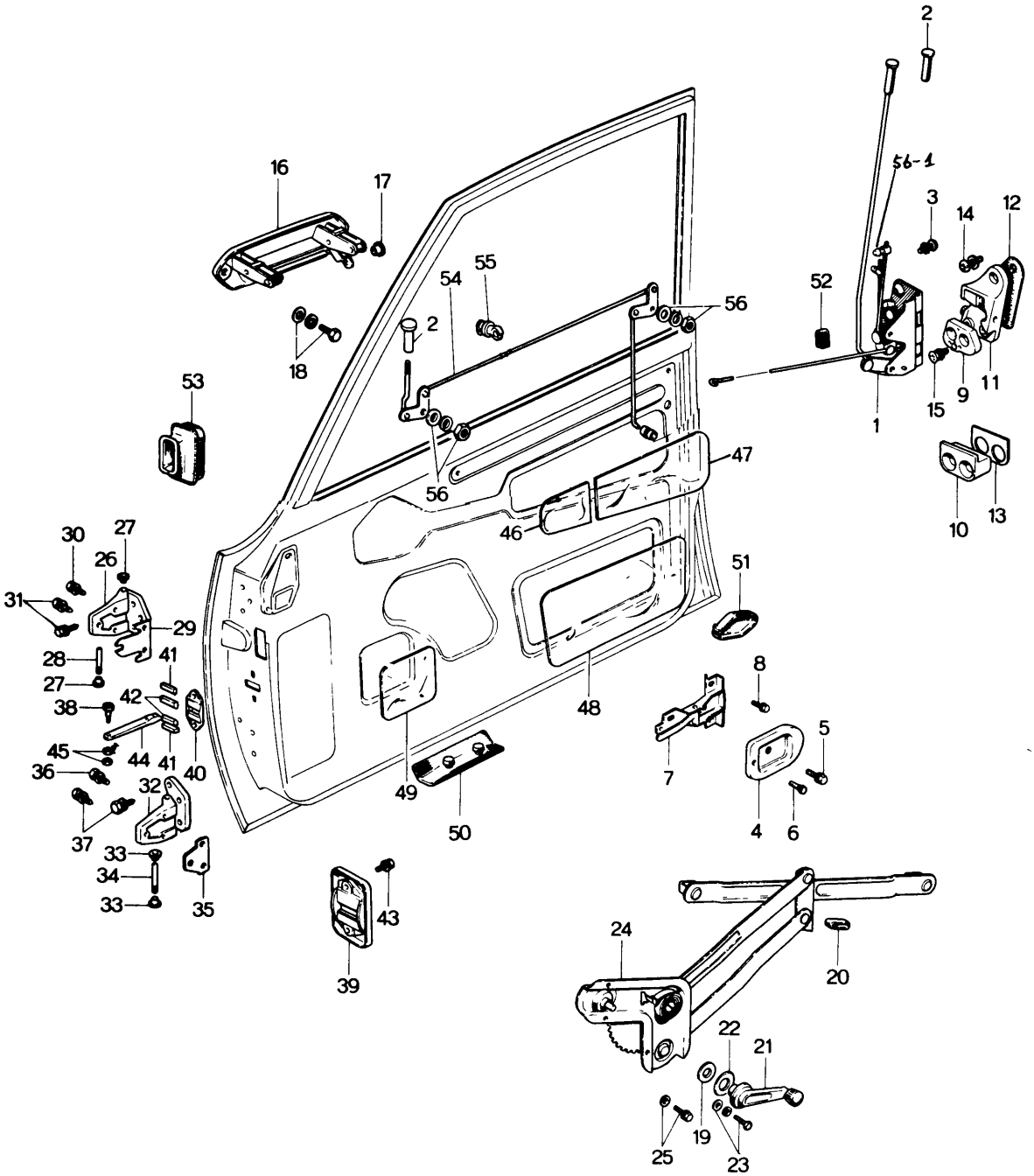

FRONT SIDE DOOR (LOCK) 58 59

No.	Part Number	Description	Q'ty	Remarks	
1	2850 58 310	LOCK Ass'y, Door (R)	1		
	2850 58 310A	LOCK Ass'y, Door (R)	1	Car No. 61926	71/3～○
	2850 58 310D	LOCK Ass'y, Door (R)	1	Car No. 79731	71/6～×
●	2850 58 310E	LOCK Ass'y, Door (R)	1	Car No.	72/6～※○
●	2850 58 310G	LOCK Ass'y, Door (R)	1		72/9～○
	2850 59 310	LOCK Ass'y, Door (L)	1		
	2850 59 310A	LOCK Ass'y, Door (L)	1	Car No. 61926	71/3～○
	2850 59 310D	LOCK Ass'y, Door (L)	1	Car No. 79731	71/6～×
●	2850 59 310E	LOCK Ass'y, Door (L)	1	Car No.	72/6～※○
●	2850 59 310G	LOCK Ass'y, Door (L)	1		72/9～○
	2855 58 310A	LOCK Ass'y, Door (R)	1		
	2855 58 310B	LOCK Ass'y, Door (R)	1	Car No. 61926	71/3～○
	2855 58 310E	LOCK Ass'y, Door (R)	1	Car No. 79731	71/6～×
●	2855 58 310F	LOCK Ass'y, Door (R)	1	Car No.	72/6～※○
●	2855 58 310G	LOCK Ass'y, Door (R)	1		72/9～○
	2855 59 310A	LOCK Ass'y, Door (L)	1		
	2855 59 310B	LOCK Ass'y, Door (L)	1	Car No. 61926	71/3～○
	2855 59 310E	LOCK Ass'y, Door (L)	1	Car No. 79731	71/6～×
●	2855 59 310F	LOCK Ass'y, Door (L)	1	Car No.	72/6～※○
●	2855 59 310G	LOCK Ass'y, Door (L)	1		72/9～○
2	0259 58 6910-00	Knob (Black)	2		©
3	908324 6 12	Screw, Set-Door Lock	6		
4	0223 58 611C-01	Cover (Black)	2		©
5	98832 0408B	Screw, Cover	2		
6	0259 58 612	Rubber, Cushion	2		
7	0223 58 660A	Handle, Inner	2		
8	99806 0510	Bolt-Inner Handle	8		
	99971 0500	Washer, Spring	8		
	99952 0500	Washer, Plain	8		
9	0305 58 361	Rack (R)	1		
	0305 59 361	Rack (L)	1		
10	2826 58 385	Block, Anti-Burst	2	1971,1972 Model	
●	1666 58 365	Block (R), Anti-Burst	1	1973 Model	
●	1666 59 365	Block (L), Anti-Burst	1	1973 Model	
11	0259 58 570	Striker Ass'y (R)	1		
	0259 59 570	Striker Ass'y (L)	1		
12	0187 58 592A	Seat, Striker	2		
13	2350 58 593	Shim, Anti-Burst Block	2		
14	907614 6 20	Screw, Set-Striker	2		
15	907614 6 30	Screw, Set-Striker & Anti-Burst Block	8 4	Coupe use Sedan use	
	2828 58 371A	Screw	4	Sedan use	
	99975 0600	Washer, Toothed	4	Sedan use	

FRONT SIDE DOOR (LOCK)

No.	Part Number	Description	Q'ty	Remarks	
16	0305 58 410A	HANDLE, Outer (R)	1		
	0305 58 410B	HANDLE, Outer (R)	1	Car No.	72/9 ~ ×
	0305 59 410A	HANDLE, Outer (L)	1		
	0305 59 410B	HANDLE, Outer (L)	1	Car No.	72/9 ~ ×
17	0305 58 411	Bush	4		
	0305 58 411A	Bush	4	Car No.	72/9 ~ ×
18	907976 5 08	Bolt Set, Outer Handle	4		
19	0259 59 305	Packing	2		
●	0259 59 305	Packing	2		72/9 ~ O
20	0259 58 306	Cushion	2		
21	0223 58 370B-01	Handle, Regulator (Black)	2	1971, 1972 Model	©
	0223 58 370C	Handle, Regulator (Black)	2	1971, 1972 Model	©
●	0824 58 370A-00	Handle, Regulator	2	1973 Model	©
22	0223 58 375A-00	Escutcheon (Black)	2		©
23	99806 0516	Bolt, Regulator Handle	2		
	99971 0500	Washer	2		
24	2850 58 560	Regulator, Window (R)	1		
	0305 58 560A	Regulator, Window (R)	1	Car No. 79731	71/6 ~ ○
	2850 59 560	Regulator, Window (L)	1		
	0305 59 560A	Regulator, Window (L)	1	Car No. 79731	71/6 ~ ○
25	908062 6 12	Bolt, Set-Window Regulator	8		
	99951 0618	Washer, Plain	8		
26	0317 58 700	HINGE Ass'y, Upper	2		
27	0223 58 721	Bush	4		
28	0187 58 731	Pin	2		
29	0317 58 736	Shim, Hinge	4		
30	907812 8 18	Bolt Set, Upper Hinge	4		
31	907832 8 25	Bolt Set, Upper Hinge	8		
●	99783 0828	Bolt, Upper Hinge	8	Car No. 117998	72/2 ~ ○
●	99971 0800	Washer, Spring	8	Car No. 117998	72/2 ~ ○

No.	Part Number	Description	Q'ty	Remarks
32	0317 58 750	HINGE Ass'y, Lower (R)	1	
	0317 58 750	HINGE Ass'y, Lower (L)	1	
33	0223 58 721	Bush	4	
34	0187 58 731	Pin	2	
35	0317 58 785	Washer, Lower Hinge	2	
36	907812 8 18	Bolt, Set-Lower Hinge	4	
37	907832 8 25	Bolt Set-Lower, Hinge	8	
●	99783 0828	Bolt, Lower Hinge	8	Car No. 117998 7/2~C
●	99971 0800	Washer, Spring	8	Car No. 117998 7/2~C
38	0305 58 269	Bolt, Checket	2	
39	0305 58 270A	CHECKER Ass'y	2	
40	0305 58 272	Case	2	
41	0305 58 273	Spring, Rubber	4	
42	0305 58 274	Block, Slide	4	
43	908066 8 14	Bolt, Set-Checker	4	
44	0305 58 281A	Lever, Checker	2	
45	99906 0600	Nut, Lever	2	
	99947 0600	Nut	2	
46	0305 58 861	Screen, "A"	2	
47	0305 58 862	Screen, "B" (R)	1	Sedan use
	0305 58 862	Screen, "B" (L)	1	Sedan use
	0839 58 862	Screen, "B" (R)	1	

FRONT SIDE DOOR (LOCK)

No.	Part Number	Description	Q'ty	Remarks
		Coupe use		
	0839 58 862	Screen, "B" (L)	1	
48	0305 58 863	Screen, "C" (R) — Sedan use	1	
	0305 58 863	Screen, "C" (L) — Sedan use	1	
●	0305 58 863	Screen, "C" (L) — Sedan use	1	72/8~ O
	0839 58 863	Screen, "C" - Coupe use	2	
49	0305 58 864	Screen, "D"	2	
50	0305 58 872	Valve, Drain	4	
51	0305 58 874	Cushion	2	
52	0259 72 509	Pad	4	Car No 96092 71/9~Discarded
53	2851 58 879	Tube, Defroster	2	
● 54	0398 58 3300	Rod, Handle (R) — Sedan use	1	
●	0398 59 3300	Rod, Handle (L) — Sedan use	1	
●	0881 58 3300	Rod, Handle (R) — Coupe use	1	
●	0881 59 3300	Rod, Handle (L) — Coupe use	1	Car No.144495 72/9~Added Anew
● 55	0305 58 309	Holder, Rod	2	
● 56	99907 0600	Nut, Rod	4	
●	99952 0600	Washer, Plain	4	
●	99971 0600	Washer, Spring	4	
● 56-1	0866 58 313	Joint	1	Car No. 131853 72/6~ Added Anew

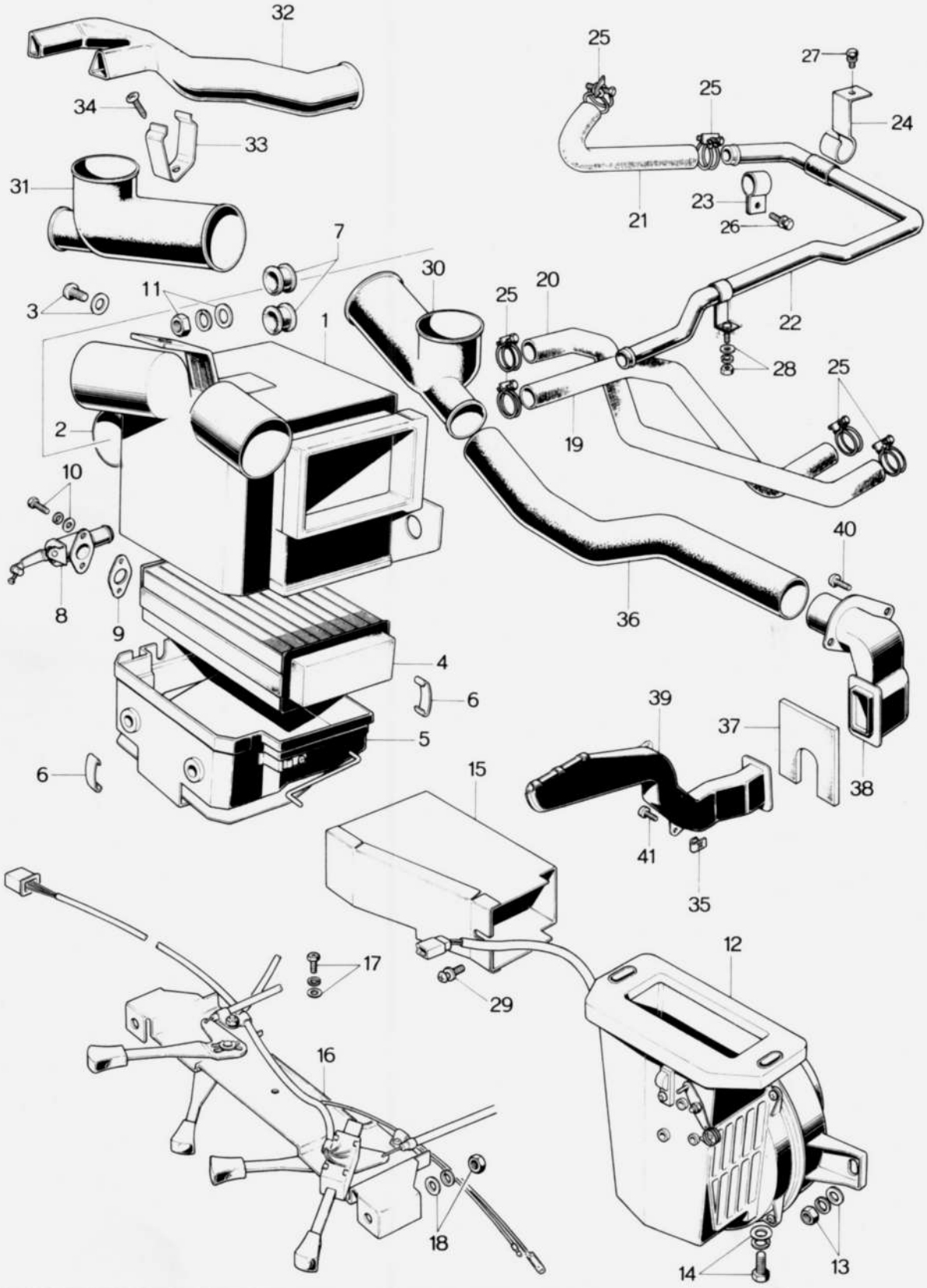
32
34
33
31
25
25
27
24
21
23
26
7
11
3
30
25
20
22
1
28
25
19
2
10
40
8
9
36
4
6
39
37
5
6
38
15
41
35
12
17
29
16
18
14
13

No.	Part Number	Description	Q'ty	Remarks
	2090 61 090	HEATER SET For U.S.A '71.72 Model	1	
	2852 61 090	HEATER SET, Powerful Type, For Canada '71.72 Model	1	
	1668 61 090	HEATER SET For General u.s.A.	1	
●	1668 61 090A	HEATER SET For General u.s.A	1	Car No. 154556 72/11~X
	1672 61 090	HEATER SET, Powerful Type For Northern U.S.A & Canada	1	1973 Model
●	1672 61 090A	HEATER SET, Powerful Type For Northern U.S.A & Canada	1	Car No. 154556 72/11~X
●	1687 61 090	HEATER SET, Powerful Type For Northern U.S.A & Canada	1	Car No. 160657 72/12~X
	2835 61 130	CORE Ass'y	1	
	2851 61 130	CORE Ass'y, Powerful Type	1	
1	2835 78 081	Core, Heater	1	
	2851 76 081	Core, Heater - Powerful Type	1	
●	2851 76 081A	Core, Heater - Powerful Type	1	Car No. 117998 72/2~X
2	2835 76 082	Pipe	1	
	2851 76 082	Pipe, Powerful Type	1	
3	99863 0412	Screw, Tapping	3	
	99952 0400	Washer, Plain	3	
4	0305 76 086A	Core, Heater	1	
	0306 76 086B	Core, Heater	1	Car No. 67166 71/3~X
	2851 76 086	Core, Heater - Powerful Type	1	
	2851 76 086A	Core, Heater - Powerful Type	1	Car No. 67166 71/3~X
5	0305 76 087A	Duct	1	
	2851 76 087	Duct, Powerful Type	1	
●	2851 76 087A	Duct, Powerful Type	1	Car No. 117998 72/2~X
6	0305 76 088	Clip	3	Car No. 80502 71/6~Q'ty
	2851 76 088	Clip 1971,1972 Model	1	Car No. 80502 71/6~Added Anew
			1	Car No. 117998 72/2~Discarded
	99868 0410	Clip 1971,1972 Model	1	Car No. 80502 71/6~Added Anew
7	0305 76 089	Grommet	2	
8	2835 76 083	Valve, Water	1	
	2851 76 083	Valve, Water - Powerfull Type	1	
9	0305 76 084	Packing	1	
	0305 76 084A	"O" Ring	1	Car No 67166 71/3~X
10	99835 0408	Screw	2	
	99952 0400	Washer, Plain	2	
	99971 0400	Washer, Spring	2	
11	99906 0600	Nut, Core	3	
	99952 0618	Washer, Plain	3	

No.	Part Number	Description	Q'ty	Remarks
	99971 0600	Washer, Spring	3	
12	2835 61 140	Blower	1	
13	99906 0800	Nut, Blower	2	
	99952 0618	Washer, Plain	2	
	99971 0600	Washer, Spring	2	
14	99799 0835	Bolt, Blower	2	
	99952 0618	Washer, Plain	2	
15	2835 61 150	Duct	1	
	2851 61 150	Duct, Powerful Type	1	
16	2835 61 190A	Control, Heater	1	1971, 1972 Model Car No. 82629 ~X
	2835 61 190B	Control, Heater	1	
●	~~1674 61 190 1874 85 190~~	Control, Heater	1	1973 Model, From Car No. 1
17	99797 0510	Bolt, Heater Control	1	
	99952 0500	Washer, Plain	1	
	99971 0500	Washer, Spring	1	
18	99906 0500	Nut, Heater Control	1	
	99952 0500	Washer, Plain	1	
	99971 0500	Washer, Spring	1	
● 19	~~0839 61 211B 0838 81 2118~~	Hose, Water No. 1	1	From Car No. 1
20	0839 61 212B	Hose, Water No. 2	1	
	2851 61 212	Hose, Water No. 2-Powerful Type	1	
21	2090 61 213	Hose, Water No. 3	1	
●	2090 61 213A	Hose, Water No. 3	1	Car No. 154556 ~X
22	2090 61 214	Pipe, Heater	1	
●	2090 61 214A	Pipe, Heater	1	Car No. 154556 ~X
23	2090 61 215	Clip	1	
24	0839 61 216	Clip	1	
25	99282 2600	Band, Hose	6	
26	99805 0512	Bolt	1	
	99971 0500	Washer, Spring	1	
27	99805 0516	Bolt	1	
	99971 0500	Washer, Spring	1	

No.	Part Number	Description	Q'ty	Remarks
28	99906 0500	Nut, Heater Pipe	1	
	99952 0516	Washer, Plain	1	
	99971 0500	Washer, Spring	1	
29	908687 4 16B	Screw, Set-Duct	2	
30	0305 61 233	Hose, Defroster (R)	1	
	2851 61 232	Hose, Defroster (R)-Powerful Type	1	
●	1687 61 250	Hose, Defroster (R)-Powerful Type	1	Car No. 160657 72/12~X
31	2835 61 233	Hose, Defroster (L)	1	
	2851 61 233	Hose, Defroster (L)-Powerful Type	1	
●	1687 61 260	Hose, Defroster (L)-Powerful Type	1	Car No. 160657 72/12~X
32	2846 60 830	Hose, Ventilation	1	
	2858 60 830A	Hose, Ventilation-Powerful Type	1	
33	0839 60 831	Clip	1	
34	99864 0510	Screw, Clip	1	
35	0820 56 905	Nut, Spring	4	
36	2851 61 242	Hose, Side (R)	1	
	2851 61 243	Hose, Side (L)	1	
37	2851 61 241	Insulator (R)	1	
	2851 61 244	Insulator (L)	1	
38	2851 61 245A	Duct, Side (R)	Powerfull Type 1	Car No. 160657 72/12~ Discarded
	2851 61 246A	Duct, Side (L)	1	
39	2851 61 247A	Nozzle, Defroster Side (R)	1	
	2851 61 248A	Nozzle, Defroster Side (L)	1	
40	908636 5 16	Screw, Set	4	
41	99836 0516	Screw	4	
●	99863 0516	Screw	4	Car No. 130039 71/5~○
	99952 0500	Washer, Plain	4	Car No. 130039 71/5~○

BLOWER & CONTROL

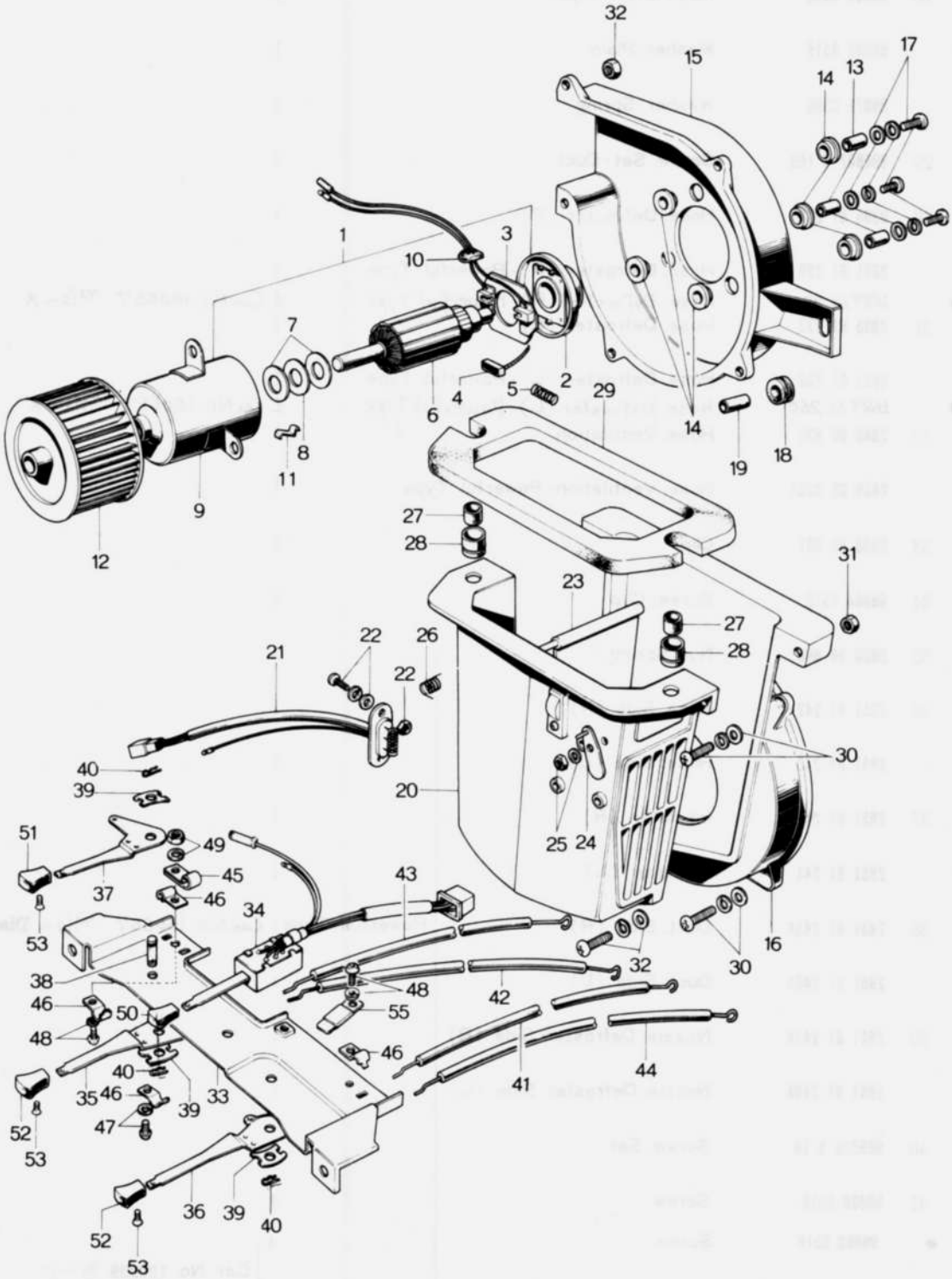

No.	Part Number	Description	Q'ty	Remarks
	2835 61 140	**BLOWER Ass'y**	1	
1	2835 76 110	**FAN & MOTOR**	1	
2	0305 76 141	Cover	1	
3	0305 76 142	Holder, Brush	1	
4	0305 76 143	Brush	2	
5	0305 76 144	Spring	2	
6	2835 76 145	Armature	1	
7	0305 76 146	Washer, Thrust	8	
8	0305 76 147	Washer, Bakelite	2	
9	0305 76 149	Yoke	1	
10	0305 76 150	Grommet	1	
11	0305 76 151	Spring, Lock	2	
12	2835 76 116	Fan, Sirocco	1	
13	0305 76 123	Collar	3	
14	0305 76 124	Damper	6	
15	2835 76 125	Case, Fan	1	
16	2835 76 126	Case, Fan	1	
17	99835 0516	Screw	3	
	99952 0500	Washer, Plain	3	
	99971 0500	Washer, Spring	3	
18	0305 76 136	Grommet	2	
19	0305 76 138	Collar	2	
20	2835 76 127	Duct	1	

BLOWER & CONTROL

No.	Part Number	Description	Q'ty	Remarks
21	0305 76 129	Resistor	1	
22	99835 0414	Screw, Resistor	2	
	99906 0400	Nut	2	
	99952 0400	Washer, Plain	2	
	99971 0400	Washer, Spring	2	
23	2835 76 131	Shutter	1	
24	2835 76 132	Lever	1	
25	99906 0600	Nut, Shutter+Lever	1	
	99971 0600	Washer, Spring	1	
26	2835 76 135	Spring	1	
27	0305 76 137	Grommet	2	
28	0305 76 138	Collar	2	
29	0305 76 117	Lining No. 1	1	
30	99835 0420	Screw	7	
	99952 0400	Washer, Plain	7	
	99971 0400	Washer, Spring	7	
31	99906 0400	Nut	7	
32	99835 0416	Screw	1	
	99952 0400	Washer, Plain	1	
	99971 0400	Washer, Spring	1	
	99906 0400	Nut	1	
	2835 61 190A	CONTROL Ass'y, Heater	1	1971, 1972 Model
	2835 61 190B	CONTROL Ass'y, Heater	1	1971, 1972 Model
●	1674 61 190	CONTROL Ass'y, Heater	1	1973 Model
33	0305 76 155A	Bracket	1	1971, 1972 Model
●	1674 76 401 1915 76 771	Bracket (Without Cooler)	1 1	1973 Model ~73/3
34	0305 76 156A 0305 76 156B	Switch	1 1	1973 Model

©

No.	Part Number	Description	Q'ty	Remarks
35	2835 76 157	Lever, Control	1	
	2835 76 157A	Lever, Control	1	Car No. 82629 7⅙～×
36	0305 76 158	Lever, Control	1	
	0305 76 158A	Lever, Control	1	Car No. 82629 7⅙～×
37	0305 76 159	Lever, Control	1	
	0305 76 159A	Lever, Control	1	Car No. 82629 7⅙～×
38	0305 76 160	Pin	1	
	0305 76 160A	Pin	1	Car No. 82629 7⅙～×
	1674 76 402	Pin	1	1973 Model
39	0305 76 161	Spring	3	
40	0305 76 162	Ring, Snap	3	
	0305 76 162A	Ring, Snap	3	Car No. 82629 7⅙～×
41	2835 76 163	Wire, Cable	1	
42	2835 76 164	Wire, Cable	1	
43	0305 76 165	Wire, Cable	1	
44	2835 76 166	Wire, Cable	1	
●	2835 76 164	Wire, Cable (Without Cooler)	1	Car No. 185585 73/3～△
45	0305 76 167	Clip	1	
46	0305 76 168	Clip	3	Car No. 82629 7⅙～Q'ty
Ⓝ	0305 76 169	Clip	1	Car No. 82629 7⅙～Added Anew
	0305 76 171	Clip	1	Car No. 82629 7⅙～Added Anew
47	99835 0512	Screw	2	
	99971 0500	Washer, Spring	2	
48	99835 0516	Screw	2	
	99971 0500	Washer, Spring	1	
49	99906 0500	Nut	1	Car No. 82629 7⅙～Discarded
	99971 0500	Washer, Spring	1	
50	0305 76 173	Knob	1	
	0305 61 191	Knob	1	Car No. 82629 7⅙～×
51	0305 76 174	Knob	1	
	0305 61 192	Knob	1	Car No 82629 7⅙～×
52	0305 76 175	Knob	2	
	0305 61 193	Knob	2	Car No. 82629 7⅙～×
53	0305 76 176	Screw	2	Car No 82629 7⅙～Discarded

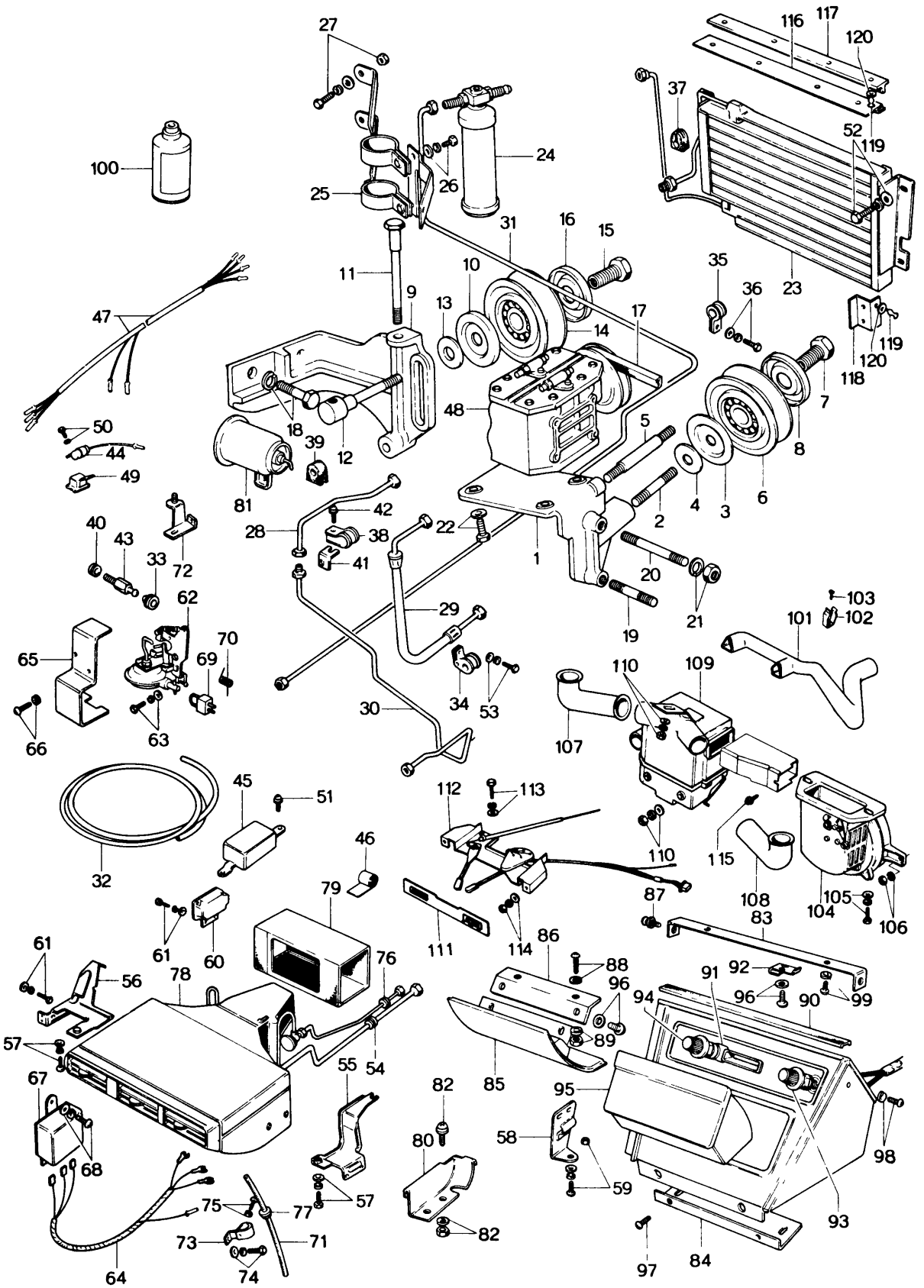
27
116
117
120
37
52
119
100
24
25
26
31
16
15
11
10
9
13
17
14
35
36
23
47
48
5
18
39
12
81
50
44
49
42
28
38
41
22
1
2
4
3
6
8
7
118
40
43
33
72
62
65
70
69
66
63
29
34
53
30
20
21
19
103
101
102
110
109
107
115
108
105
104
106
45
51
32
46
112
113
79
61
60
56
78
76
57
55
54
67
68
64
75
77
73
71
74
111
114
87
86
88
89
83
91
92
96
90
99
94
85
82
80
95
58
59
98
93
84
97

CAR COOLER (USED UP TO CAR NO. 169961 73/1)

No.	Part Number	Description	Q'ty	Remarks
	2081 61 710	CONDITIONER, Air-With Car Heater	1	1971,1972 Model
	2081 61 710A	CONDITIONER, Air-With Car Heater	1	Car No. 109660 71/12~○
	1668 61 610	CONDITIONER, Air-With Car Heater	1	1973 Model
	2090 61 710	COOLER SET	1	1971,1972 Model
	2090 61 710A	COOLER SET	1	Car No. 109660 71/12~○
•	0839 61 950B	BRACKET Ass'y, Compressor No. 1	1	Fig. No. 1 ~ 8 included
1	0839 61 951B	Bracket, No. 1	1	
2	0839 61 952A	Stud	1	
3	0839 61 964	Seal, Dust	1	
4	0839 61 968	Spacer	1	
5	99956 1040	Stud	1	
6	0839 61 970A	PULLEY Ass'y, Idle	1	
7	0839 61 963C	Shaft	1	
	0839 61 963D	Shaft	1	Car No. 122636 73/3~○
8	0839 61 965	Seal, Dust	1	
	0839 61 960B	BRACKET Ass'y, Compressor No 2	1	Fig. No. 9 ~ 20 included
9	0839 61 961C	Bracket, No 1	1	
10	0839 61 964	Seal, Dust	1	
11	0839 61 966A	Bolt, Adjust	1	
12	0839 61 967	Shaft, Adjust	1	
13	0839 61 968	Spacer	1	
14	0839 61 970A	PULLEY Ass'y, Idle	1	
15	0839 61 963C	Shaft	1	
	0839 61 963D	Shaft	1	Car No. 122636 73/3~○

No.	Part Number	Description	Q'ty	Remarks
16	0839 61 985	Seal, Dust	1	
17	0839 61 978	Belt, "V"-Pulley	1	
18	99801 0825	Bolt, Bracket No. 2	2	
	99871 0800	Washer, Spring	2	
19	99859 1025	Stud, Bracket No. 1	1	
20	99859 1050	Stud, Bracket No. 1	2	
21	99821 1000	Nut, Bracket	4	
	99971 1000	Washer, Spring	4	
22	99797 0835	Bolt, Compressor	4	
	99852 0800	Washer, Plain	3	
	99971 0800	Washer, Spring	3	
23	0839 61 790B	Condenser	1	
	0839 61 800	TANK Ass'y, Liquid	1	
24	0305 61 801	Tank	1	
25	0839 61 802	Bracket	1	
26	99797 0616	Bolt	2	
	99971 0600	Washer, Spring	2	
	99952 0600	Washer, Plain	2	
27	99799 0620	Bolt, Tank Bracket	2	
	99906 0600	Nut	1	

No.	Part Number	Description	Q'ty	Remarks
	99952 0800	Washer, Plain	2	
	99971 0800	Washer, Spring	2	
28	2080 61 811A	Hose, Flexible	1	
29	0838 61 812A	Hose, Flexible	1	
30	2080 61 812A	Pipe, No. 1	1	
31	2080 61 813A	Pipe	1	
32	0305 61 819	Hose, Vacuum	1	
	99709 0108	Band, Vacuum Hose	2	Car No. 70984 71/4 ~ Added Anew
33	0305 61 824	Grommet	1	
34	0305 61 825	Clip, No. 1	1	
35	2080 61 825	Clip	2	
36	99860 0512	Bolt, Clip	1	
	99952 0500	Washer, Plain	1	
	99971 0500	Washer, Spring	1	
37	0305 61 827	Protector	1	
38	2080 61 827A	Clip	1	
39	2090 61 827	Protector	1	
40	0305 61 828	Packing	1	
41	2080 61 828	Bracket	1	
42	99787 0512	Screw	1	
	99952 0500	Washer, Plain	1	
	99971 0500	Washer, Spring	1	
43	0305 61 829	Valve, Check	1	
44	0305 61 830	Condenser	1	
45	2850 61 850	Switch, Idle Cut	1	1971, 1972 Model
	2090 61 850	Switch, Idle Cut	1	1971, 1972 Model
	2090 61 850A	Switch, Idle Cut	1	Car No. 101564 71/10 ~ △
	2090 61 850B	Switch, Idle Cut	1	Car No. 109660 71/12 ~ ×
46	0305 61 901	Sealer	1	
47	2848 61 907	Wire, Harness	1	Car No. 95577 71/1 ~ Discarded

CAR COOLER (USED UP TO CAR NO. 169961 73/1)

No.	Part Number	Description	Q'ty	Remarks
48	0839 61 910	Compressor	1	
●	0839 61 910A	Compressor	1	Car No. 147628 72/10～×
49	0235 79 380	Relay, Cooler	1	
50	908636 6 12	Screw, Set	2	
51	908336 5 16	Screw, Set-Idle Cut Switch	2	1971, 1972 Model Car No. 73101 71/4～○
	908636 5 25	Screw, Set-Idle Cut Switch	2	
	99863 0525	Screw, Idle Cut Switch	2	1973 Model
	99952 0500	Washer, Spring	2	
52	99797 0612	Bolt, Condenser	4	
	99952 0600	Washer, Plain	4	
	99971 0600	Washer, Spring	4	
53	99799 0512	Bolt, Clip No. 1 & No 2	2	
	99906 0500	Nut	2	
	99952 0500	Washer, Plain	2	
	99971 0500	Washer, Spring	2	
54	0305 61 821	Grommet "L"	1	
55	2835 61 851	Bracket (R)	1	
56	2835 61 852	Bracket (L)	1	
57	99799 0616	Bolt, Bracket	6	
	99952 0600	Washer, Plain	6	
	99971 0600	Washer, Spring	6	
58	2835 61 853	Stay	1	
59	99799 0512	Screw, Stay	1	
	99952 0500	Washer, Plain	1	
	99971 0500	Washer, Spring	1	
	99906 0500	Nut	1	
60	2835 61 859	Switch, Thermo	1	
61	99797 0408	Bolt, Thermo Switch	2	
	99952 0400	Washer, Plain	2	
	99971 0400	Washer, Spring	2	
62	2835 61 860	Control	1	

CAR COOLER (USED UP TO CAR NO. 169961 73/1)

No.	Part Number	Description	Q'ty	Remarks
63	99788 0512	Bolt, Control	4	
	99952 0500	Washer, Plain	4	
	99971 0500	Washer, Spring	4	
64	0305 61 872	Wire, Harness - Control	1	
65	2835 61 862	Cover, Control	1	
66	908388 5 108	Screw, Set - Cover	2	
67	0305 61 871	Relay	1	
68	99860 0510	Screw, Relay	1	
	99952 0500	Washer, Plain	1	
	99971 0500	Washer, Spring	1	
69	0305 61 861	Diode	1	
70	2835 61 881	Spring	1	
71	0305 61 888	Hose, Drain	1	
72	2835 61 889A	Lever	1	
73	0305 61 890	Clip	1	
74	99860 0510	Screw, Tapping - Clip	1	
	99952 0500	Washer, Plain	1	
	99971 0500	Washer, Spring	1	
75	908636 4 12	Screw, Set - Clip	1	
76	0223 78 861	Grommet, No. 1	1	
77	0223 78 865	Grommet, No. 4	1	
78	2840 61 840	Unit, Cooling	1	
	2840 61 840A	Unit, Cooling	1	Car No 91752 71/7 ~ ×
79	2835 61 854	Duct	1	
80	2835 61 855	Clip	1	
81	0305 61 858A	Tank, Vacuum	1	
82	908347 4 16	Screw, Set - Clip	1	

No.	Part Number	Description	Q'ty	Remarks
	99906 0400	Nut	1	
	99952 0412	Washer, Plain	1	
83	0303 61 771A	Stay, No. 1	1	
84	0303 61 772	Stay, No. 2	1	
85	0303 61 773	Cover, Ash Tray	1	
86	0303 61 774	Stay, No. 4	1	
87	0303 61 775	Screw, Set-Stay	2	
88	908347 5 12	Screw, Set-Cover	2	
89	99906 0500	Nut, Cover	2	
	99952 0516	Washer, Plain	2	
	0303 61 780A	CONSOLE Ass'y	1	
90	0303 76 702	Packing	1	
91	0303 76 703	Lamp & Switch	1	
92	0303 76 704	Nut, Speed	2	
93	0305 76 704	Knob	1	
94	0303 76 705	Knob	1	
95	0820 68 180	Tray, Ash	1	
96	908697 4 16	Screw, Set	6	
97	99831 04128	Screw	2	
98	908386 4 10	Screw, Set	2	
99	908634 4 12	Screw, Set	2	
100	0233 76 834	Freon	4	

CAR COOLER (USED UP TO CAR NO. 169961 73/1)

No.	Part Number	Description	Q'ty	Remarks
101	2846 60 830	Hose, Ventilation	1	
102	0839 61 831	Clip, Ventilation Hose	1	
103	99864 0510	Screw	1	
104	2835 61 140	Blower	1	
105	99799 0830	Bolt, Blower	2	
	99952 0800	Washer, Plain	2	
	99971 0800	Washer, Spring	2	
106	99906 0800	Nut, Blower	2	
	99952 0618	Washer, Plain	2	
107	0305 61 233	Hose, Defroster	1	
108	2835 61 233	Hose, Defroster	1	
109	2850 61 780	Case, Heater	1	
110	99906 0600	Nut, Heater Case	3	
	99952 0618	Washer, Plain	3	
	99971 0600	Washer, Spring	3	
111	2850 61 771	Ornement	1	1971,1972 Model
112	2850 61 790	Control Ass'y	1	1971,1972 Model
	2850 61 790A	Control Ass'y	1	Car No 82629 71/6 ~ ×
	1674 61 790	Control Ass'y	1	1973 Model
113	99797 0510	Bolt	1	
	99952 0500	Washer, Plain	1	
	99971 0500	Washer, Spring	1	
114	99906 0500	Nut, Control	1	
	99952 0500	Washer, Plain	1	
	99971 0500	Washer, Spring	1	
115	908687 4 16B	Screw, Set	1	

61 CAR COOLER (USED UP TO CAR NO. 169961 73/1)

No.	Part Number	Description	Q'ty	Remarks
116	2090 70 982	Rubber, Seal No. 2	1	
●	2090 70 982A	Rubber, Seal No. 3	1	Car No. 139695 73/8~○
117	2090 70 983	Rubber, Seal No. 3	1	
118	0839 61 817	Rubber, Seal	2	Car No. 137835 73/8~Added Anew
● 119	0193 53 462	Fastener	11	Car No. 137835 73/8~Added Anew
120	99953 0600	Washer, Plain	11	Car No. 137835 73/8~Added Anew
	0305 61 192	Knob, No. 2	2	Car No. 82629 71/6~Added Anew
● Ⓝ	0881 61 814	Seal No. 1, Air-Lower (R)	1	Car No. 137835 73/8~Added Anew
● Ⓝ	0681 61 815	Seal No. 2, Air-Lower (L)	1	Car No. 137835 73/8~Added Anew
● Ⓝ	0881 61 816	Seal No. 3, Air-Upper	1	Car No. 137835 73/8~Added Anew
● Ⓝ	0881 61 817	Seal No. 4, Air-Upper (R)	1	Car No. 137835 73/8~Added Anew
● Ⓝ	0881 61 818	Seal No. 5, Air-Upper (L)	1	Car No. 137835 73/8~Added Anew
● Ⓝ	0881 61 819	Seal No. 6, Air-Lower	1	Car No. 137835 73/8~Added Anew

CAR COOLER (USED FROM CAR NO. 169962 73/1 ~)

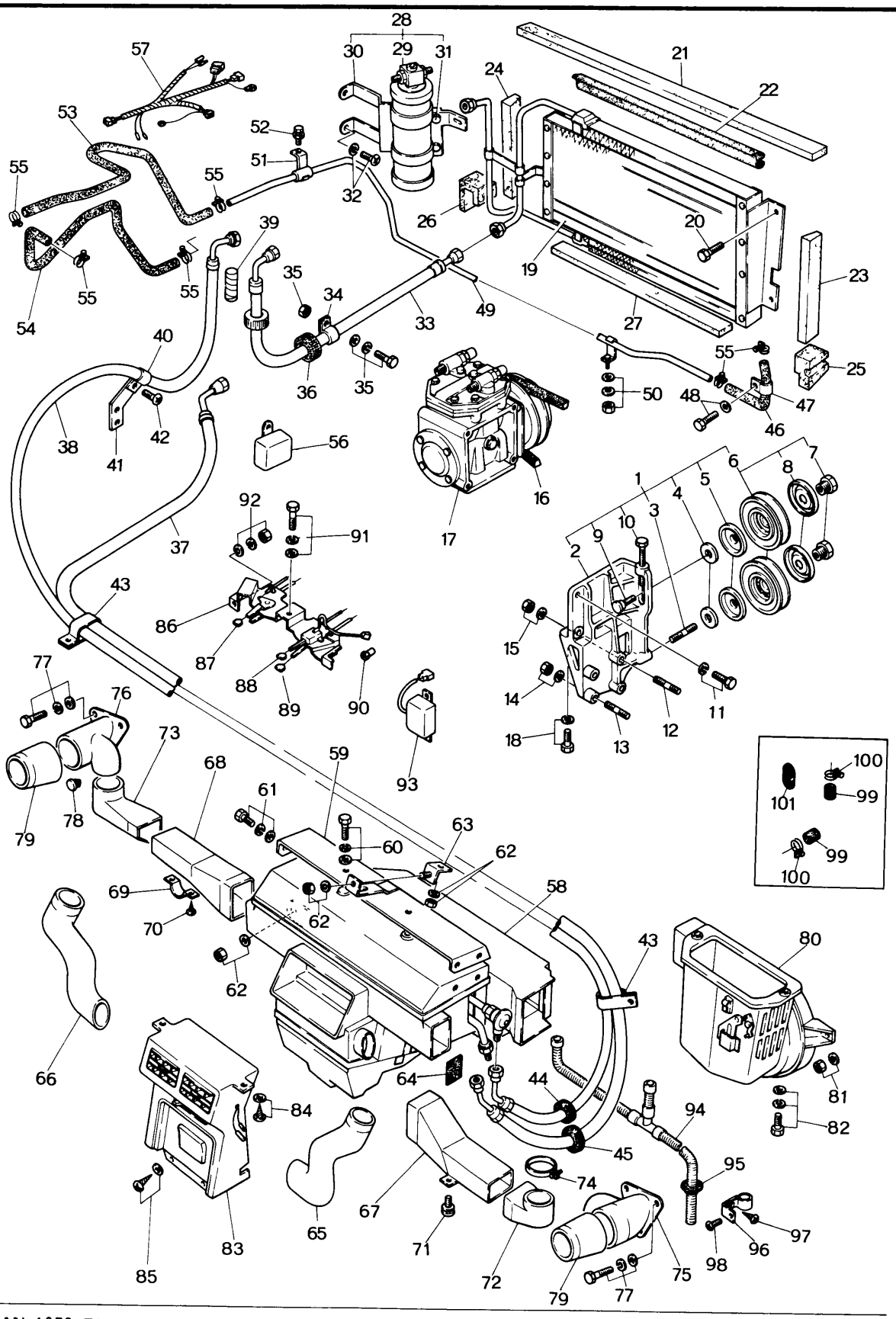

CAR COOLER (USED FROM CAR NO. 169962 73/1 ~)

No.	Part Number	Description	Q'ty	Remarks
		Ⓓ mark indicates Diesel Kiki mark		
1	1011 61 920	Bracket, Compressor (Fig. No. 2 ~ 10 Included)	1	Ⓓ
2	1011 61 921	Bracket, Compressor	1	Ⓓ
3	0839 61 952A	Stud, Pulley	1	Ⓓ
4	0839 61 968	Spacer, Pulley	2	Ⓓ
5	0839 61 964	Cover, Pulley	2	Ⓓ
6	0839 61 970A	Pulley (Fig. No. 7 , 8 Included)	2	Ⓓ
7	0839 61 963D	Shaft, Pulley	2	Ⓓ
8	0839 61 965	Cover, Pulley	2	Ⓓ
9	0839 61 967	Shaft, Pulley	1	Ⓓ
10	0839 61 966A	Bolt, Adjust Pulley	1	Ⓓ
11	99801 0825	Bolt, Compressor	2	
	99971 0800	Washer, Spring	2	
12	99859 1025A	Stud, Compressor Bracket	2	
13	99859 1050A	Stud, Compressor Bracket	2	
14	99921 1000	Nut, Compressor Bracket	4	
	99971 1000	Washer, Spring	4	
15	99921 1200	Nut, Compressor Bracket	1	
	99971 1200	Washer, Spring	1	

CAR COOLER (USED FROM CAR NO. 169962 73/1 ~)

No.	Part Number	Description	Q'ty	Remarks	
16	1011 15 906	Belt, "V"	1		Ⓓ
	1915 61 430	Engine Room Kit, With Car Heater	1		Ⓓ
		(Fig. No. 17,19,21~31,33,34,36~41,43~47,49,51 Included)			
	1916 61 430	Engine Room Kit, Without Car Heater	1		Ⓓ
		(Fig. No. 17,19,21~31,33,34,36~41,43~45 Included)			
17	1915 61 450	Compressor	1		Ⓓ
18	99801 0835	Bolt, Compressor	2		
	99971 0800	Washer, Spring	2		
19	0839 61 790B	Condenser	1		Ⓓ
20	99796 0610	Bolt, Condenser	4		
21	0881 61 816	Seal No. 3, Air	1		Ⓓ
22	2090 70 982A	Rubber, Seal	1		Ⓓ
23	0881 61 817	Seal No. 4, Air	1		Ⓓ
24	0881 61 818	Seal No. 5, Air	1		Ⓓ
25	0881 61 814	Seal No. 1, Air	1		Ⓓ
26	0881 61 815	Seal No. 2, Air	1		Ⓓ
27	0881 61 819	Seal No. 6, Air	1		Ⓓ
	0839 61 816	Seal No. 6, Air	1	73/7~O	
28	0839 61 800	Tank & Bracket (Fig. No. 29~31 Included)	1		Ⓓ
29	0305 61 801	Tank, Liquid	1		Ⓓ
30	0839 61 802	Bracket, Liquid Tank	1		Ⓓ
31	99796 0616	Bolt, Bracket+Liquid Tank	2		Ⓓ

CAR COOLER (USED FROM CAR NO. 169962 73/1 ~)

No.	Part Number	Description	Q'ty	Remarks	
	99952 0600	Washer, Plain	2		Ⓓ
	99971 0600	Washer, Spring	2		Ⓓ
32	99864 0516	Screw, Tapping-Liquid Tank	1		
	99952 0500	Washer, Plain	1		
33	0839 61 812A	Hose, Flexible-High ½"	1		Ⓓ
34	0305 61 825	Clip, Flexible Hose	1		Ⓓ
35	99799 0516	Bolt, Clip	1		
	99952 0500	Washer, Plain	1		
	99971 0500	Washer, Spring	1		
	99906 0500	Nut	1		
36	0305 61 827	Insulator, Flexible Hose	1		Ⓓ
37	1915 61 470	Hose, Flexible-Low ½"	1		Ⓓ
38	1915 61 460	Hose, Flexible-High ⅜"	1		Ⓓ
39	0823 18 111	Protector	2		
40	1915 61 471	Clip, Hose	1		Ⓓ
41	1915 61 472	Stay, Clip	1		Ⓓ
42	99833 0616	Screw, Clip	1		
	99952 0600	Washer, Plain	1		
	99971 0600	Washer, Spring	1		
43	1915 61 473	Clip, Hose	2		Ⓓ

61 CAR COOLER (USED FROM CAR NO. 169962 73/1 ~)

No.	Part Number	Description		Q'ty	Remarks	
44	1915 61 475	Grommet, Hose		1		Ⓓ
45	1915 61 478	Grommet, Hose		1		Ⓓ
46	2090 61 213A	Hose, Heater	With Car Heater	1		Ⓓ
47	2090 61 215	Clip, Heater Hose	With Car Heater	1		Ⓓ
48	99805 0612	Bolt, Clip	With Car Heater	1		
	99971 0600	Washe Spring	With Car Heater	1		
49	2090 61 214A	Pipe, Heater	With Car Heater	1		Ⓓ
50	99906 0500	Nut, Heater Pipe	With Car Heater	1		
	99952 0516	Washer, Plain	With Car Heater	1		
	99971 0500	Washer, Spring	With Car Heater	1		
51	0839 61 216	Clip, Heater Pipe	With Car Heater	1		Ⓓ
52	99805 0516	Bolt, Clip	With Car Heater	1		
	99952 0500	Washer, Plain	With Car Heater	1		
	99971 0500	Washer, Spring	With Car Heater	1		
	1915 61 440	Cabin Room Kit, With Car Heater (Fig. No. 53~59,63~69,72~76,79,80,83,86~89,93~96 Included)		1		Ⓓ
	1916 61 440	Cabin Room Kit, Without Car Heater (Fig. No. 56~59,63,64,67~69,72~76,79,80,83,86,88,89,93~96 Included)		1		Ⓓ
53	1915 61 212	Hose, Heater	With Car Heater	1		Ⓓ
54	1915 61 211	Hose, Heater	With Car Heater	1		Ⓓ
55	99282 2600	Clamp, Hose	With Car Heater	6		

CAR COOLER (USED FROM CAR NO. 169962 73/1 ~)

No.	Part Number	Description	Q'ty	Remarks
56	0235 79 380	Relay, Cooler	1	Ⓓ
57	1915 61 661	Wire, Harness (With Car Heater	1	Ⓓ
	1916 61 661	Wire, Harness (Without Car Heater)	1	Ⓓ
58	1915 61 525	Unit, Air-Con. (With Car Heater)	1	Ⓓ
	1916 61 525	Unit, Air-Con. (Without Car Heater)	1	Ⓓ
59	1915 61 521	Bracket, Air-Con. Unit	1	Ⓓ
60	99806 0612	Bolt, Bracket+Air-Con. Unit	2	
	99952 0600	Washer, Plain	2	
	99971 0600	Washer, Spring	2	
61	99806 0616	Bolt, Bracket+Air-Con. Unit	4	
	99952 0600	Washer, Plain	4	
	99971 0600	Washer, Spring	4	
62	99940 0600	Nut, Air-Con. Unit	3	
	99952 0618	Washer, Plain	3	
63	1915 61 522	Bracket, Air-Con. Unit	1	Ⓓ
64	0305 61 901	Tape, Coal-tar	1	Ⓓ
65	1915 61 151	Hose (R), Air } With Car Heater	1	Ⓓ
66	1915 61 161	Hose (L), Air } With Car Heater	1	Ⓓ
67	1915 61 561	Duct (R), Air	1	Ⓓ
68	1915 61 571	Duct (L), Air	1	Ⓓ

61 CAR COOLER (USED FROM CAR NO. 169962 73/1 ~)

No.	Part Number	Description	Q'ty	Remarks	
69	1915 61 574	Bracket	1		Ⓓ
70	99863 0516B	Bolt, Clip & Air Duct (L)	2		
	99952 0500B	Washer, Plain	2		
	99971 0500B	Washer, Spring	2		
71	99868 0416B	Screw, Air Duct (R)	1		
	99952 0412B	Washer, Plain	1		
	99971 0400B	Washer, Spring	1		
72	1915 61 562	Duct (R), Air	1		Ⓓ
73	1915 61 572	Duct (L), Air	1		Ⓓ
74	1915 61 566	Band	1		Ⓓ
75	1915 61 563	Duct (R), Air	1		Ⓓ
76	1915 61 573	Duct (L), Air	1		Ⓓ
77	99785 0516	Bolt, Duct	4		
	99952 0500	Washer, Plain	4		
	99971 0500	Washer, Spring	4		
78	99274 0821	Rivet, Air Duct	2		
79	1915 61 564	Duct, Air	2		Ⓓ
80	1915 61 140	Blower	1		Ⓓ
81	99940 0600	Nut, Blower	2		
	99952 0618	Washer, Plain	2		

CAR COOLER (USED FROM CAR NO. 169962 73/1 ~)

No.	Part Number	Description	Q'ty	Remarks	
82	99799 0635	Bolt, Blower	2		
	99952 0618	Washer, Plain	2		
	99971 0600	Washer, Spring	2		
83	1915 61 540	Grille, Outlet	1		Ⓓ
84	99743 0612B	Screw, Outlet Grille	2		
	99973 0600B	Washer, Toothed	2		
85	99742 0420B	Screw, Outlet Grille	2		
	99967 0400B	Washer	2		
86	1915 61 190	Control, Cooler (With Car Heater)	1		Ⓓ
	1916 61 190	Control, Cooler (Without Car Heater)	1		Ⓓ
87	0305 61 192	Knob, Control (With Car Heater)	1		Ⓓ
88	0305 61 191	Knob, Control	1		Ⓓ
89	0305 61 193	Knob, Control	2		Ⓓ
90	99701 1030	Bulb, Cooler Control	3		
91	99797 0510	Bolt, Cooler Control	1		
	99952 0500	Washer, Plain	1		
	99971 0500	Washer, Spring	1		
92	99906 0500	Nut, Cooler Control	1		
	99952 0500	Washer, Plain	1		
	99971 0500	Washer, Spring	1		

61 CAR COOLER (USED FROM CAR NO. 169962 73/1 ~)

No.	Part Number	Description	Q'ty	Remarks	
93	1915 61 850	Switch, Idle Cut	1		Ⓓ
94	1915 61 711	Hose, Drain	1		Ⓓ
95	0223 78 865	Grommet, Drain Hose	1		Ⓓ
96	0305 61 890	Clip, Drain Hose	1		Ⓓ
97	99869 0416	Screw, Clip	1		
	99952 0412	Washer, Plain	1		
	99971 0400	Washer, Spring	1		
98	99863 0412	Screw, Clip	1		
	99952 0400	Washer, Plain	1		
	99971 0400	Washer, Spring	1		
99	2304 15 321	Cap, Sealing	2	Without Car Heater	
100	99262 2600	Clamp, Hose	2	Without Car Heater	
101	0301 61 055	Grommet	1	Without Car Heater	

CONTROL & COOLING UNIT

(USED UP TO CAR NO. 169961 73/1)

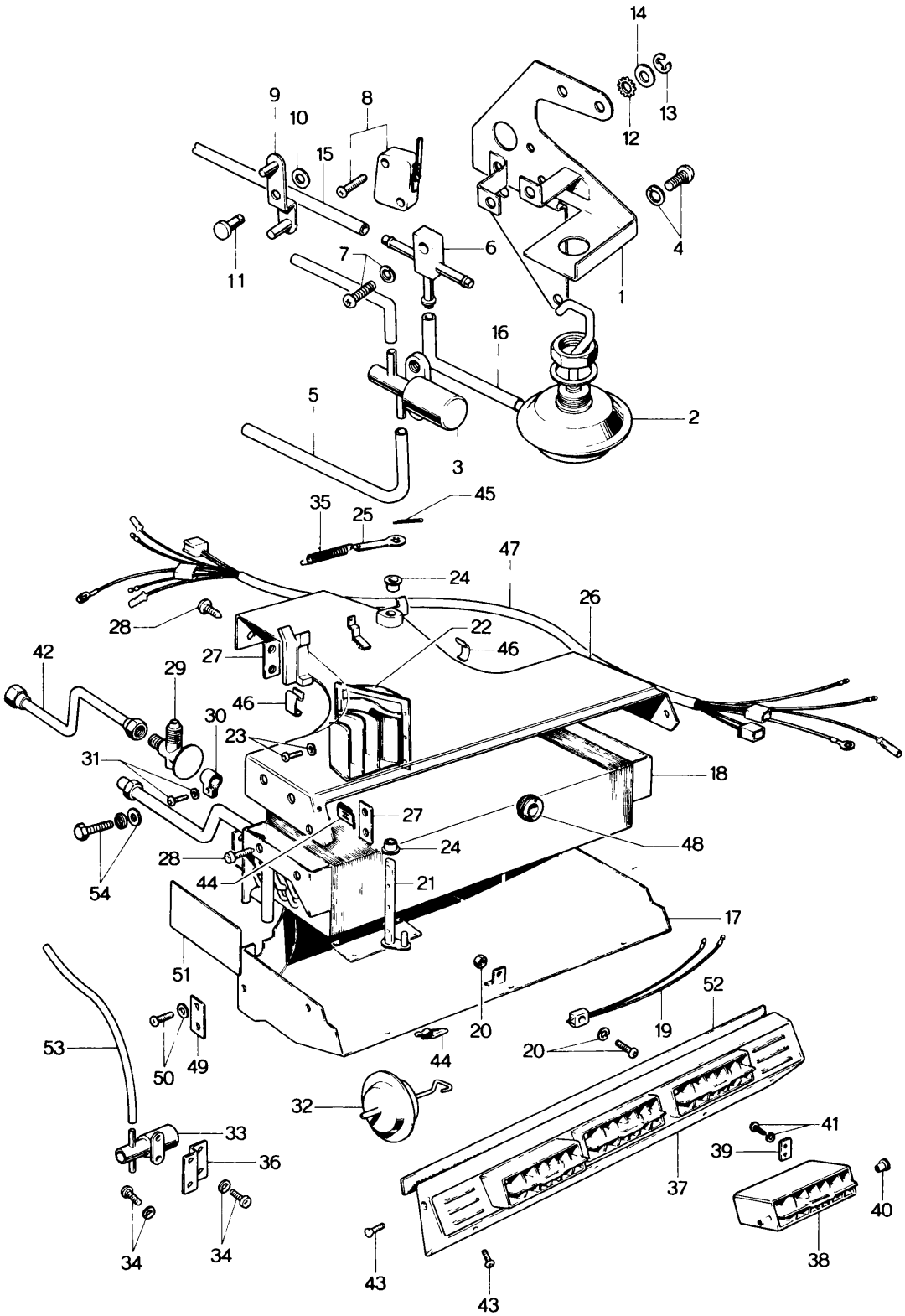

CONTROL & COOLING UNIT
(USED UP TO CAR NO. 169961 73/1)

61 76

No.	Part Number	Description	Q'ty	Remarks
	2835 61 860	CONTROL Ass'y	1	
1	2835 76 721	Bracket	1	
2	0305 76 722	Diaphragm	1	
3	0305 76 723	Switch, Vacuum	1	
4	99864 0508	Screw, Tapping	2	
	99971 0500	Washer, Spring	2	
5	0305 76 724	Hose, Vacuum	1	
6	0305 76 725	Joint, Three Way	1	
7	99864 0412	Screw, Tapping	1	
	99971 0400	Washer, Spring	1	
8	2835 76 726	Switch	1	
9	2835 76 728	Lever	1	
10	0305 76 731	Washer	1	
11	0305 76 732	Pin	1	
12	0305 76 733	Spring	1	
13	0305 76 734	Ring, Snap	1	
14	0305 76 735	Washer	1	
15	0305 76 729	Hose, Vacuum	1	
16	0305 76 730	Hose, Vacuum	1	
	2840 61 840	UNIT, COOLING	1	
	2840 61 840A	UNIT, COOLING	1	Car No. 91752 71/7 ~ ×
17	2835 76 801	Case, Lower	1	
18	2835 76 802	Evaporator	1	
19	0305 76 803	Sender	1	
20	99835 0414	Screw, Sender	1	

61 76 CONTROL & COOLING UNIT
(USED UP TO CAR NO. 169961 73/1)

No.	Part Number	Description	Q'ty	Remarks
	99906 0400	Nut	1	
	99971 0400	Washer, Spring	1	
21	2835 76 804	Shaft	1	
22	2835 76 805	Valve, Air	1	
23	99835 0308	Screw, Air Valve	3	
	99971 0300	Washer, Spring	3	
24	0305 76 806	Bush	2	
25	2835 76 807	Lever	1	
26	2835 76 808	Case, Upper	1	
27	0305 76 809	Nut, Plate	3	
28	99836 0410	Screw, Plate Nut	6	
29	0305 76 810	Valve	1	
30	0305 76 811	Clip	1	
31	99835 0516	Screw, Clip	1	
	99952 0500	Washer, Plain	1	
32	0305 76 722	Diaphragm	1	
33	0305 76 723	Switch, Vacuum	1	
34	99835 0508	Screw, Switch	4	
	99971 0500	Washer, Spring	4	
35	0305 76 727	Spring	1	
36	0305 76 812	Bracket	1	
37	2840 76 813	Frame	1	
38	0305 76 814	Grill	3	
39	0305 76 815	Plate	6	
40	0305 76 816	Bush	6	
41	99835 0408	Screw, Plate	12	

CONTROL & COOLING UNIT
(USED UP TO CAR NO. 169961 73/1)

61 76

No.	Part Number	Description	Q'ty	Remarks
	99971 0400	Washer, Spring	12	
42	2835 76 817	Connector	1	
43	99836 0410	Screw, Frame	5	
44	0305 76 818	Nut, Speed	5	
45	0305 76 819	Pin	2	
46	0305 76 820	Clamp	4	
47	2835 76 821	Wire	1	
48	0305 76 822	Grommet	1	
49	0305 76 823	Clip	2	
50	0305 76 825	Screw, Clip	2	
	0305 76 826	Washer	2	
51	0305 76 824	Tape	6	
52	0303 76 827	Packing	1	
53	0305 76 828	Hose, Vacuum	1	

COMPRESSOR (USED UP TO CAR NO. 169961 73/1)

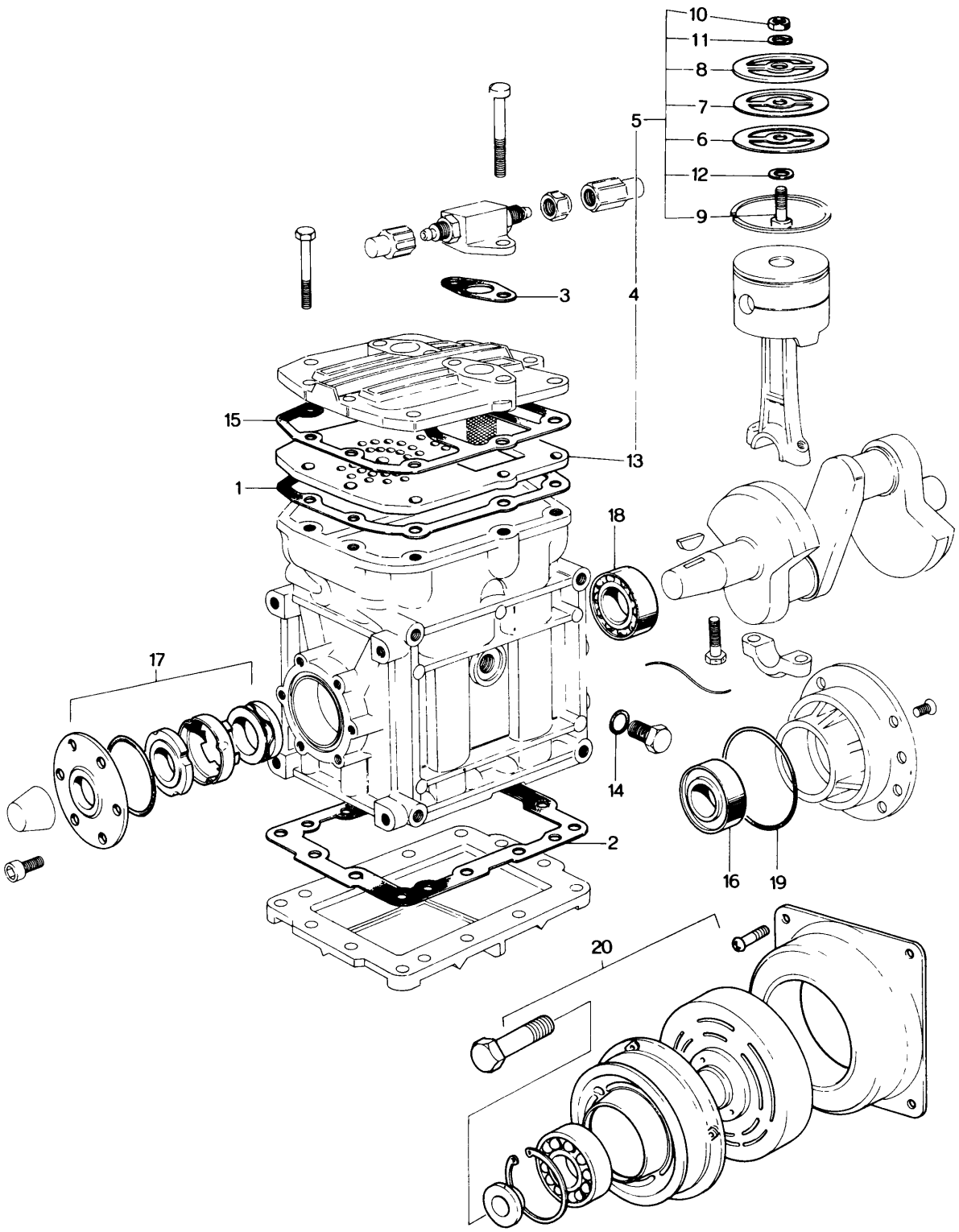

COMPRESSOR (USED UP TO CAR NO. 169961 73/1)

61 76

No.	Part Number	Description	Q'ty	Remarks
	0839 61 910	Compressor	1	
●	0839 61 910A	Compressor	1	Car No. 147628 73/10~×
1	0235 76 313	Gasket	1	
2	0235 76 314	Gasket	1	
3	0235 76 311	Gasket	2	
4	0235 76 330	Valve Liner Set Fig. No. 5~13 included	1	
5	0235 76 332	Valve Set Fig. No. 6~12 included	1	
6	0235 76 333	Valve, Suction	2	
7	0235 76 334	Valve, Delivery	2	
8	0235 76 335	Stopper, Valve	2	
9	0235 76 336	Bolt	2	
10	99806 0500	Nut	2	
11	99971 0500	Washer, Spring	2	
12	0235 76 338	Washer	2	
13	0235 76 331	Liner, Valve	1	
14	0235 76 321	Ring, "O"	2	
15	0235 76 312	Gasket	1	
16	0235 76 345	Bearing, Ball	1	
17	0235 76 340	Piece, Seal	1	
18	0235 76 346	Bearing, Ball	1	
19	0235 76 322	Ring, "O"	1	
20	0235 76 370	Clutch, Magnet	1	
●	0881 76 370	Clutch, Magnet	1	Car No. 156927 73/11~×

COMPRESSOR (USED FROM CAR NO. 169962 73/1 ~)

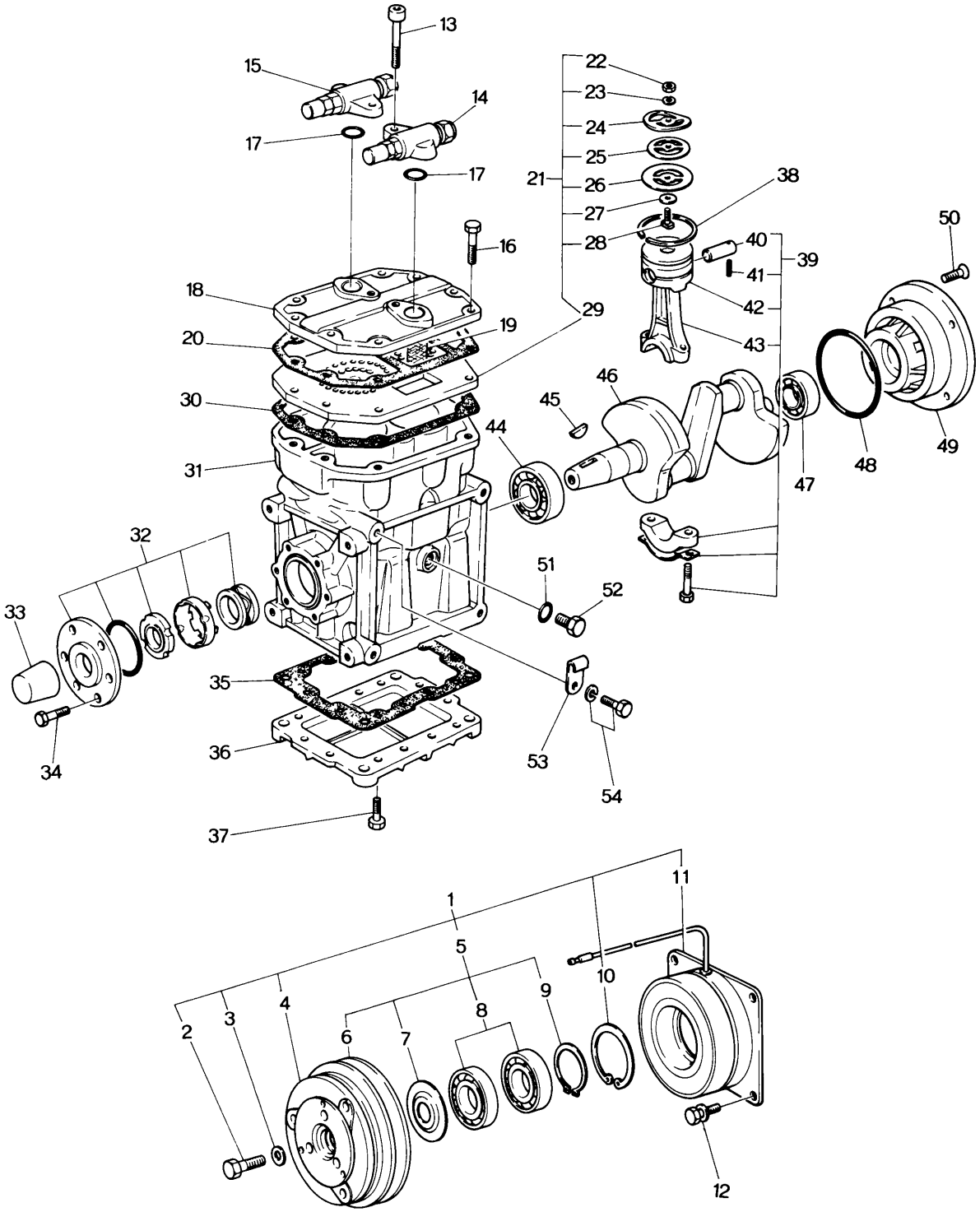

COMPRESSOR (USED FROM CAR NO. 169962 73/1~)

61 76

No.	Part Number	Description	Q'ty	Remarks
		All Parts are of Diesel Kiki Make		
	1915 61 450	Compressor (Fig. No. 1 ~ 54 Included)	1	
1	0881 76 370	Switch, Magnet (Fig. No. 2 ~ 12 Included)	1	
2	0881 76 739	Bolt	1	
3	0881 76 714	Washer, Fixing	1	
4	0881 76 738	Plate, Clutch	1	
5	0881 76 740	Pulley, "V" (Fig. No. 6 ~ 9 Included)	1	
6	0881 76 712	Pulley, "V"	1	
7	0235 76 374	Cover	1	
8	0235 76 373	Bearing, Ball	1	
9	0235 76 375	Ring, Snap	1	
10	0235 76 377	Ring, Snap	1	
11	0881 76 713	Magnet	1	
12	0881 76 741	Bolt, Magnet	4	
	1915 76 812	Compresser (Fig. No. 13~52 Included)	1	
13	1915 76 827	Bolt, Socket Head	2	
14	1915 76 828	Connector (SUC.)	1	
15	1915 76 826	Connector (DISCHA)	1	
16	99801 0835	Bolt, Cylinder Head	8	
17	0235 76 321	Ring, "O"	2	

COMPRESSOR (USED FROM CAR NO. 169962 73/1~)

No.	Part Number	Description	Q'ty	Remarks
18	1915 76 814	Head, Cylinder	1	
19	1915 76 815	Filter, Suction	1	
20	1915 76 816	Gasket	1	
21	1915 76 810	Liner, Valve (Fig. No. 22~29 Included)	1	
22	99906 0500	Nut	2	
23	99971 0500	Washer, Spring	2	
24	0235 76 335	Stopper, Valve	2	
25	0235 76 334	Valve, Delivery	2	
26	0235 76 333	Valve, Suction	2	
27	0235 76 338	Washer	2	
28	0235 76 336	Bolt	2	
29	1915 76 811	Liner, Valve	1	
30	1915 76 817	Gasket	1	
31	1915 76 813	Housing, Compressor	1	
32	1915 76 730	Seal, Mechanical	1	
33	0881 76 735	Cap	1	
34	99906 0810	Bolt, Mechanical Seal	6	
35	1915 76 819	Gasket, Oil Pan	1	
36	1915 76 818	Pan, Oil	1	
37	99906 0814	Bolt, Oil Pan	12	

COMPRESSOR (USED FROM CAR NO. 169962 73/1~)

61 76

No.	Part Number	Description	Q'ty	Remarks
38	0881 76 727	Ring, Piston	2	
39	1915 76 820	Piston (Fig. No. 40~43 Included)	2	
40	1915 76 822	Pin, Piston	2	
41	0881 76 728	Pin, Roll	2	
42	0881 76 724	Piston	2	
	0881 76 723	Piston	2	From Car No. 1
43	1915 76 821	Rod, Connecting	2	
44	1915 76 824	Bearing, Ball	1	
45	0881 76 734	Key	1	
46	1915 76 823	Crankshaft	1	
47	0235 76 345	Bearing, Ball	1	
48	0235 76 322	Ring, "O"	1	
49	1915 76 825	Plate, End	1	
50	99741 06168	Screw, End Plate	4	
51	0235 76 321	Ring, "O"	2	
52	0881 76 717	Plug	2	
53	0881 76 742	Clip	1	
54	99801 0816	Bolt, Clip	1	
	99971 0800	Washer, Spring	1	

AIR-CON. UNIT & OUTLET GRILLE

(USED FROM CAR NO. 169962 $\frac{73}{1}$ ~)

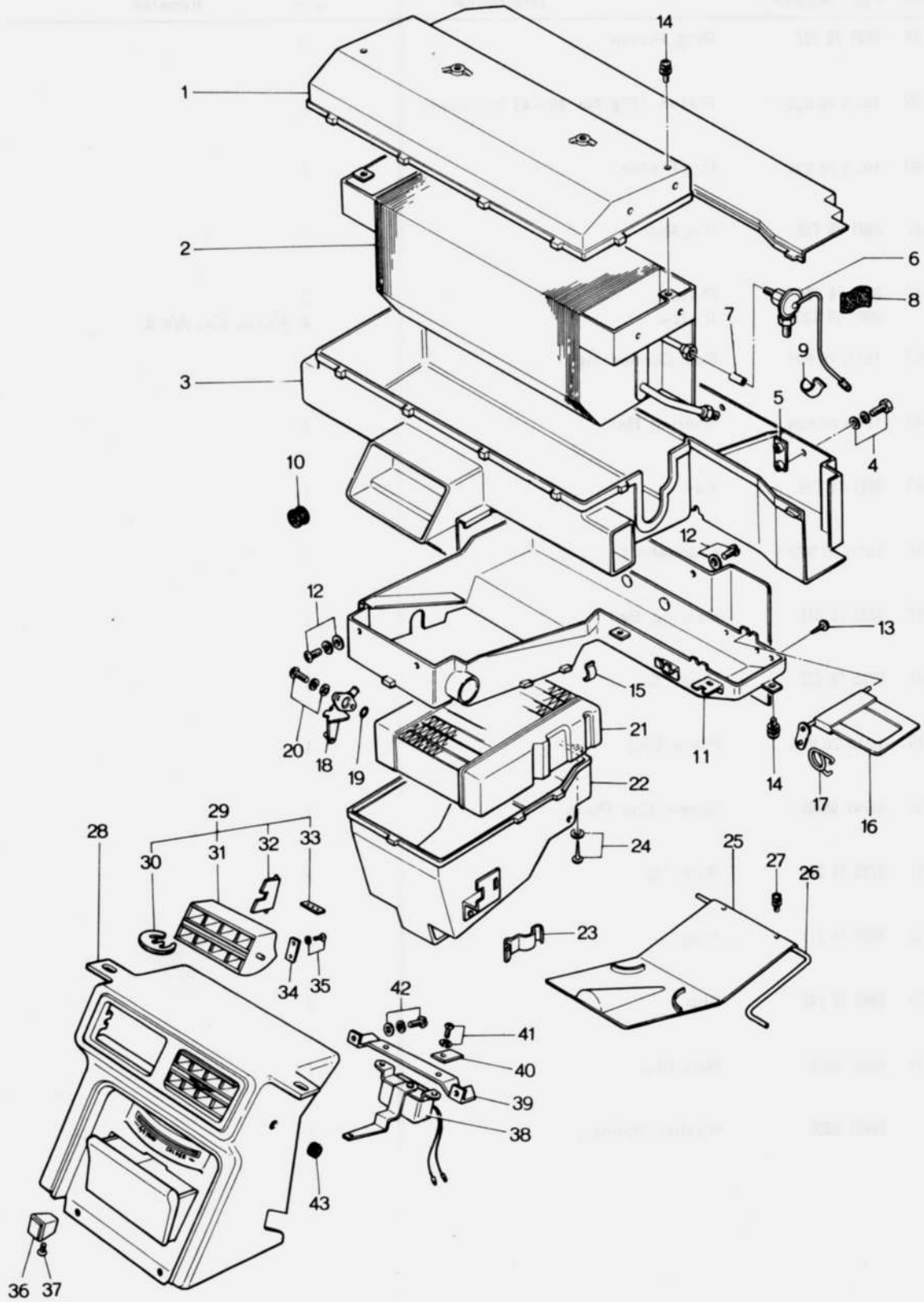

AIR - CON. UNIT & OUTLET GRILLE
(USED FROM CAR NO. 169962 '73/1~)

61 76

No.	Part Number	Description	Q'ty	Remarks
		All Parts are of Diesel Kiki Make		
	1915 61 520	Unit, Air-Con. (With Car Heater) Fig. No. 1~27 Included	1	
	1916 61 520	Unit, Air-Con. (Without Car Heater) Fig. No. 1~9, 11~15, 22, 24, Included	1	
1	1915 76 701	Case No. 1, Air-Con.	1	
2	1915 76 705	Evaporator	1	
3	1915 76 702	Case No. 2, Air-Con. (With Car Heater)	1	
	1916 76 702	Case No. 2, Air-Con. (Without Car Heater)	1	
4	99834 0408	Screw, Air-Con. Case	8	
	99953 0400	Washer, Plain	8	
	99971 0400	Washer, Spring	8	
5	0305 76 809	Nut, Plate	4	
6	1915 76 713	Valve, Expansion	1	
7	1915 76 711	Orifice	1	
8	1915 76 712	Tape, Coal-tar	3	
9	1915 76 715	Clip	1	
10	0305 76 089	Grommet (With Car Heater)	2	
11	1915 76 703	Case No. 3, Air-Con. (With Car Heater)	1	
	1916 76 703	Case No. 3, Air-Con. (Without Car Heater)	1	
12	99834 0514	Screw, Air-Con. Case	5	
	99952 0500	Washer, Plain	2	

61 76 AIR-CON. UNIT & OUTLET GRILLE
(USED FROM CAR NO. 169962 73/1~)

No.	Part Number	Description	Q'ty	Remarks
	99971 0500	Washer, Spring	5	
13	99868 0410	Screw, Control Case	3	
14	1915 76 718	Screw, Air-Con. Case	10	
15	1915 76 707	Clip	15	
16	1915 76 708	Shutter (With Car Heater)	1	
17	1915 76 709	Spring, Shutter (With Car Heater)	1	
18	1915 76 406	Cock, Water (With Car Heater)	1	
19	0305 76 084A	Ring, "O"-Water Cock (With Car Heater)	1	
20	99835 0408	Screw, Water Cock	2	
	99952 0400	Washer, Plain (With Car Heater)	2	
	99971 0400	Washer, Spring	2	
21	1915 76 401	Core, Heater (With Car Heater)	1	
22	1915 76 704	Case No. 4, Air-Con. (With Car Heater)	1	
	1916 76 704	Case No. 4, Air-Con. (Without Car Heater)	1	
23	1915 76 714	Clip, Cable (With Car Heater)	3	
	1011 76 714	Clip, Cable (With Car Heater)	3	73/6~O
24	99868 0420	Screw, Control Case	2	
	99952 0400	Washer, Plain	2	
25	1915 76 403	Shutter (With Car Heater)	1	
26	1915 76 404	Shaft, Shutter (With Car Heater)	1	
27	1915 76 721	Screw, Shutter (With Car Heater)	2	

AIR - CON. UNIT & OUTLET GRILLE

(USED FROM CAR NO. 169962 73/1~)

61 76

No.	Part Number	Description	Q'ty	Remarks
	1915 61 540	Grille, Outlet	1	
28	1915 76 731	Frame, Grille	1	
29	1915 76 730	Grille (Fig. No. 30~33 Included)	2	
30	1915 76 736	Connector	2	
31	1915 76 733	Grille	2	
32	1915 76 734	Blade	6	
33	1915 76 735	Rod	4	
34	1915 76 737	Spring	4	
35	1915 76 738	Screw, Tapping - Spring	8	
	99971 0300	Washer, Spring	8	
36	1915 76 745	Knob	1	
37	1915 76 746	Screw, Knob	1	
38	1915 76 743	Switch, Thermo	1	
39	1915 76 739	Bracket, Thermo Switch	1	
40	1915 76 744	Clip	1	
41	99835 0408	Screw, Bracket	2	
	99971 0400	Washer, Spring	2	
42	1915 76 742	Screw, Bracket	2	
	99971 0500	Washer, Spring	2	
	99952 0500	Washer, Plain	2	
43	1915 76 747	Grommet	1	

BLOWER & CONTROL

(USED FROM CAR NO. 169962 73/1 ~)

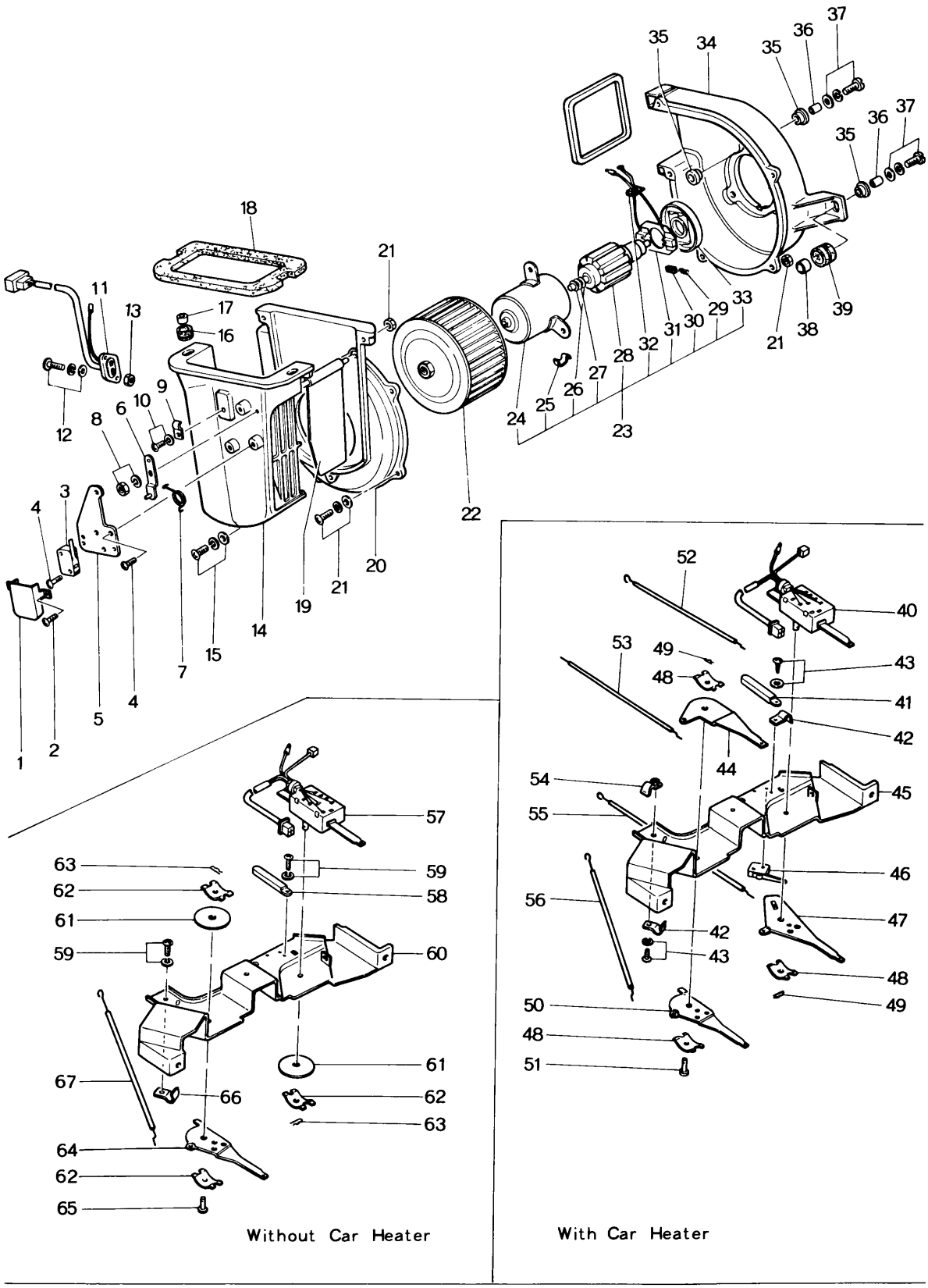

BLOWER & CONTROL

(USED FROM CAR NO169962 73/1 ~)

61 76

No.	Part Number	Description	Q'ty	Remarks
		All Parts are of Diesel Kiki Make		
	1915 61 140	Blower	1	
1	1915 76 759	Cover, Micro Switch	1	
2	1915 76 761	Screw, Cover	2	
3	1915 76 758	Switch, Micro	1	
4	1915 76 763	Screw, Micro Switch & Bracket	3	
5	1915 76 757	Bracket, Micro Switch	1	
6	1915 76 765	Lever, Control	1	
7	2835 76 135	Spring, Control Lever	1	
8	99906 0600	Nut, Control Lever	1	
	99971 0600	Washer, Spring	1	
9	1915 76 762	Clip, Cable	1	
10	99835 0510	Screw, Clip	1	
	99971 0500	Washer, Spring	1	
11	1915 76 764	Resistor	1	
12	99835 0414	Screw, Resistor	2	
	99952 0400	Washer, Plain	2	
	99971 0400	Washer, Spring	2	
13	99906 0400	Nut, Resistor	2	
14	2835 76 127	Duct	1	

BLOWER & CONTROL

(USED FROM CAR NO 1649623/1 ~)

No.	Part Number	Description	Q'ty	Remarks
15	99835 0416	Screw, Duct	1	
	99952 0400	Washer, Plain	1	
	99971 0400	Washer, Spring	1	
16	0305 76 137	Grommet	2	
17	0305 76 139	Collar	2	
18	0305 76 117	Lining	1	
19	2835 76 132	Shutter	1	
20	2835 76 126	Case, Fan	1	
21	99835 0420	Screw, Duct	7	
	99952 0400	Washer, Plain	7	
	99971 0400	Washer, Spring	7	
	99906 0400	Nut	8	
22	2835 76 110	Fan, Sirocco	1	
23	1915 76 750	Motor, Fan (Fig. No. 24~33 included)	1	
24	1915 76 756	Yoke	1	
25	0305 76 151	Spring, Lock	2	
26	0305 76 146	Washer, Thrust	4	
27	0305 76 147A	Washer, Wave	1	
28	1915 76 755	Armature	1	
29	1915 76 754	Spring, Brush	2	

No.	Part Number	Description	Q'ty	Remarks
30	1915 76 753	Brush	2	
31	1915 76 752	Holder, Brush	1	
32	0305 76 150	Grommet	1	
33	1915 76 751	Cover	1	
34	2835 76 125	Case, Fan	1	
35	0305 76 124	Damper	6	
36	0305 76 123	Collar	3	
37	99835 0516	Screw, Fan Case	3	
	99952 0500	Washer, Plain	3	
	99971 0500	Washer, Spring	3	
38	0305 76 138	Collar	2	
39	0305 76 136	Grommet	2	
	1915 61 190	Control, Cooler (With Car Heater) Fig. No. 40~56 Included	1	
40	0305 76 156B	Switch	1	
41	0305 76 167	Clip	1	
42	0305 76 168	Clip, Cable	3	
43	99835 0512	Screw, Clip	3	
	99971 0500	Washer, Spring	3	
44	0305 76 159A	Lever, Control	1	

BLOWER & CONTROL

(USED FROM CAR NO. 169962 73/1~)

No.	Part Number	Description	Q'ty	Remarks
45	1915 76 771	Bracket	1	
46	1915 76 776	Switch, Micro	1	
47	1915 76 772	Lever, Control	1	
48	0305 76 161	Spring	3	
49	0305 76 162A	Pin	3	
50	2835 76 157A	Lever, Control	1	
51	1674 76 402	Pin	1	
52	1915 76 775	Wire, Cable	1	
53	1915 76 773	Wire, Cable	1	
54	0305 76 170	Clip, Cable	1	
55	2835 76 166	Wire, Cable	1	
56	1915 76 774	Wire, Cable	1	
	1916 61 190	Control, Cooler (Without Car Heater) Fig. No. 57~67 Included	1	
57	0305 76 156B	Switch	1	
58	0305 76 167	Clip	1	
59	99835 0512	Screw	2	
	99971 0500	Washer, Spring	2	
60	1915 76 771	Bracket	1	
61	1674 76 707	Spacer	2	

BLOWER & CONTROL

(USED FROM CAR NO. 169962 73/1~)

61 76

No.	Part Number	Description	Q'ty	Remarks
62	0305 76 161	Spring	3	
63	0305 76 162A	Pin	2	
64	2835 76 157A	Lever, Control	1	
65	1674 76 702	Pin	1	
66	0305 76 171	Clip	1	
67	2835 76 166	Wire, Cable	1	

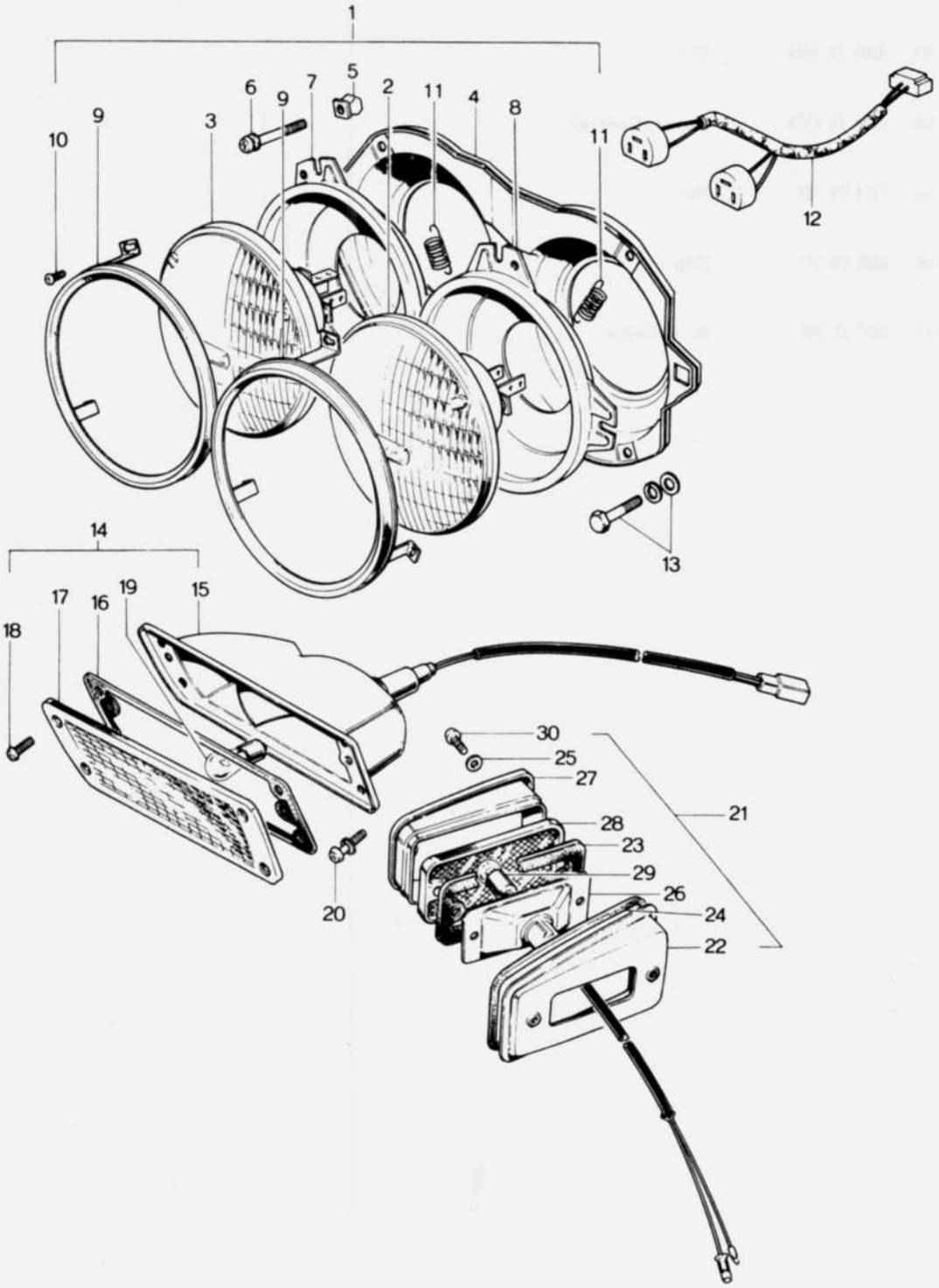
1
2
3
4
5
6
7
8
9
10
11
12
13
14
15
16
17
18
19
20
21
22
23
24
25
26
27
28
29
30

	No.	Part Number	Description	Q'ty	Remarks
	1	2850 66 030	LAMP Ass'y, Head (R)	1	
●		2850 89 661	LAMP Ass'y, Head (R) (Fig. No. 13 included)	1	73/1~O
		2850 66 060	LAMP Ass'y, Head (L)	1	
●		2850 89 666	LAMP Ass'y, Head (L) (Fig No. 13 included)	1	73/1~O
	2	0183 66 021	Beam, Sealed	2	
●	3	2801 66 022	Beam, Sealed	2	
	4	2850 87 001	Housing (R)	1	
		2850 87 013	Housing (L)	1	
	5	2850 87 003	Nut, Self Lock	8	
	6	2850 87 004	Screw, Adjust	8	
	7	2850 87 005	Ring, Mounting (R)	1	
		2850 87 014	Ring Mounting (L)	1	
	8	2850 87 007	Ring, Mounting (R)	1	
		2850 87 015	Ring, Mounting (L)	1	
	9	2850 87 008	Ring, Retaining	4	
	10	2850 87 011	Screw	12	
	11	2850 87 012	Spring	4	
	12	2850 87 160	Adapter, Wiring	2	
	13	99799 06168	Bolt, Head Lamp	8	
		99952 06008	Washer, Plain	8	
		99971 0600	Washer, Spring	8	
	14	2850 66 110	LAMP, Front Turn Signal (R)	1	
●		2850 89 662	LAMP, Front Turn Signal (R)	1	73/1~O
		2850 66 140	LAMP, Front Turn Signal (L)	1	
●		2850 89 667	LAMP, Front Turn Signal (L)	1	73/1~O
	15	2850 87 002	Socket (R)	1	

LAMPS (FRONT SIDE)

No.	Part Number	Description	Q'ty	Remarks
	2850 87 006	Socket (L)	1	
16	0305 87 003	Packing	2	
17	0305 87 004	Lens (R)	1	
●	0305 87 008	Lens (L)	1	
18	0305 87 005	Screw	8	
19	99701 4237	Bulb	2	
20	907438 5 16	Screw, Set-Front Turn Signal Lamp	4	
21	2850 86 480A	LAMP, Front Side Marker (R)	1	
●	2850 89 663	LAMP, Front Side Marker (R)	1	Car No. 73/1~O
	2850 86 490A	LAMP, Front Side Marker (L)	1	
●	2850 89 668	LAMP, Front Side Marker (L)	1	Car No. 73/1~O
22	0305 86 674	Plate, Mounting (R)	1	
	0305 86 684	Plate, Mounting (L)	1	
23	0305 86 675	Gasket	2	
24	0305 86 676	Packing, Sheet	2	
25	0305 86 678	Washer	4	
26	2850 87 026	Body (R)	1	
	2850 87 028	Body (L)	1	
27	2850 87 027	Rim (R)	1	
	2850 87 029	Rim (L)	1	
28	2244 87 191	Lens	2	
29	99701 2050	Bulb	2	
● 30	0305 66 677	Screw	4	

LAMP (REAR SIDE)

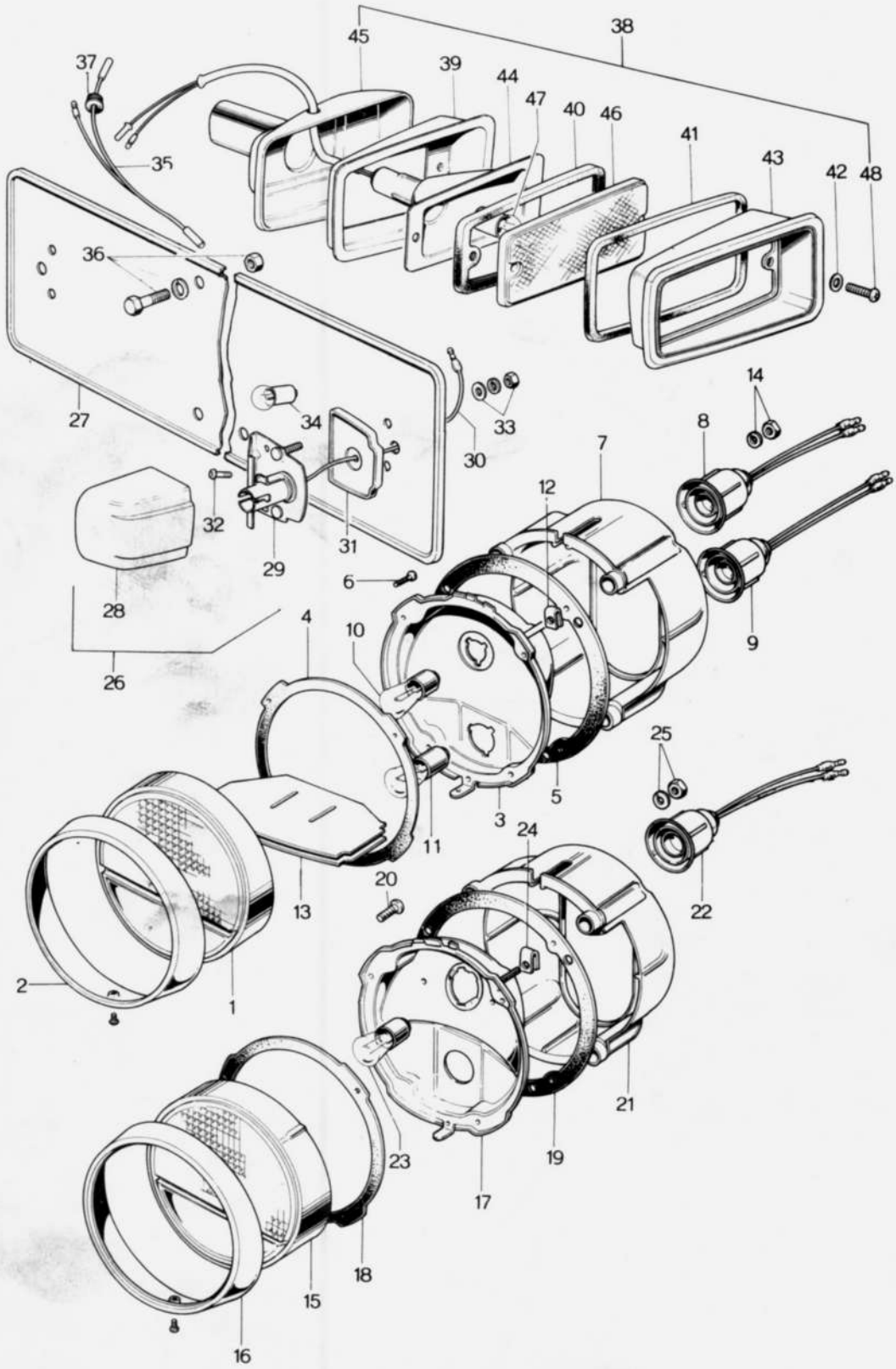

No.	Part Number	Description	Q'ty	Remarks
	0820 66 130	LAMP, Rear Combination No. 1 (R)	1	1971,1972 Model
●	1668 66 130	LAMP, Rear Combination No. 1 (R)	1	1973 Model
	0820 66 150	LAMP, Rear Combination No. 1 (L)	1	1971,1972 Model 72/12~O
●	1668 66 150	LAMP, Rear Combination No. 1 (L)	1	1973 Model
1	0820 66 131A	" Globe (R) " "	1	1971,1972 Model 72/12~O
●	1668 66 131	Globe (R)	1	1973 Model
	0820 66 151	Globe (L)	1	1971,1972 Model
●	1668 66 151	Globe (L)	1	1973 Model
2	~~0820 66 132~~	~~Brim (R)~~	~~1~~	
●	2335 66 172	Brim (R)	1	Form Car No. 1
	~~0820 66 152~~	~~Brim (L)~~	~~1~~	
●	2325 66 192	Brim (L)	1	From Car No. 1
3	0820 66 133	Body (R)	1	
	0820 66 153	Body (L)	1	
4	0820 66 134	Rubber, Seal (R)	1	
	0820 66 154	Rubber, Seal (L)	1	
5	0820 66 135	Rubber, Seat	2	
6	0820 66 136	Screw, Globe	8	
7	0820 66 137	Cover, Lamp	2	
8	0820 66 138	Socket, Tail Stop use	2	
● 9	0820 66 139	Socket, Reverse Lamp use	2	
10	0223 66 037	Bulb, 12V 25W / 8W	2	1971,1972 Model
●	99701 4237	Bulb, 12V ~23W / 8W	2	1973 Model
11	0223 66 174	Bulb, 12V 25W	2	1971,1972 Model
●	99701 3230	Bulb, 12V 23W	2	1973 Model
12	0820 66 159	Clip, Earth	2	
13	0820 66 141	Shade	2	
14	99906 0500	Nut, Lamp	8	
	99952 0500	Washer, Plain	8	

LAMPS (REAR SIDE)

No.	Part Number	Description	Q'ty	Remarks
	2113 66 170	LAMP, Rear Combination No. 2 (R)	1	1971,1972 Model
●	1668 66 170	LAMP, Rear Combination No. 2 (R)	1	1973 Model
	~~1668 69 674~~ 2113 66 190	LAMP, Rear Combination No. 2 (L)	1	1971,1972 Model
●	1668 66 190	LAMP, Rear Combination No. 2 (L)	1	1973 Model
15	~~1668 69 679~~ 0820 66 171	Globe ~~(R)~~	2	1971,1972 Model
●	1668 66 171	Globe	2	1973 Model
	~~0820 66 191~~	~~Globe (L)~~	~~1~~	
16	2325 66 172	Brim (R)	1	~~1971,1972 Model~~ From Car No. 1
●	2325 66 192	Brim (L)	1	~~1973 Model~~ From Car No. 1
	~~2113 66 192~~	~~Brim (L)~~	~~1~~	~~1971,1972 Model~~
●	~~0820 66 192~~	~~Brim (L)~~	~~1~~	~~1973 Model~~
17	2113 66 173	Body (R)	1	
	2113 66 193	Body (L)	1	
18	0820 66 174	Rubber, Seal	2	
19	0820 66 175	Rubber, Seat	2	
20	0820 66 136	Screw, Lamp Globe	8	
21	0820 66 137	Cover, Lamp	2	
22	0820 66 138	Socket, Tail Stop & Turn Signal	2	
23	99701 4237	Bulb, 12V 25W/8W	2	
●24	0820 66 159	Clip, Earth	2	
25	99906 0500	Nut, Lamp	8	
	99952 0500	Washer, Plain	8	
26	2850 66 370A	LAMP Cpt., Licence	1	
	2850 66 380	LAMP SUB SET, Licence (R)	1	Fig. No. 27 ~ 32 Included
	2850 66 390	LAMP SUB SET, Licence (L)	1	
27	2850 66 371	Plate	1	
28	2850 87 016	Housing Cpt.	2	
29	2850 87 017	Socket	2	
30	2850 87 018	Cord Ass'y	2	

No.	Part Number	Description	Q'ty	Remarks
● 31	2850 87 019	Base Gasket (R)	1	
●	2850 66 391	Base Gasket (L)	1	
32	2850 87 021	Screw	2	
● 33	2850 87 025	Nut	4	
●	2850 87 022	Washer, Plain	4	
●	2850 87 024	Washer, Spring	4	
34	99701 2080	Bulb (8W)	2	
35	2850 66 361	Wiring Ass'y	1	
● 36	90867 6 20	Bolt, Set-Licence Lamp	4	
	99906 0600	Nut	4	
●	99952 0600	Washer, Plain	4	
● 37	99684 0300	Grommet	1	
●	0603 53 436	Grommet	1	
38	2850 66 500	LAMP, Rear Side Marker (R)	1	
●	2850 89 673	LAMP, Rear Side Marker (R)	1	73/1~9
	2850 66 510	LAMP, Rear Side Marker (L)	1	
●	2850 89 678	LAMP, Rear Side Marker (L)	1	73/1~O
39	0305 66 674	Plate, Mounting (R)	1	
	0305 66 694	Plate, Mounting (L)	1	
40	0305 66 675	Gasket	2	
41	0305 66 676	Packing, Sheet	2	
42	0305 66 678	Washer	4	
43	2850 87 027	Rim (R)	1	
	2850 87 029	Rim (L) X	1	
44	2850 87 031	Body	2	
45	2850 87 032	Cover	2	
● 46	~~2244 87 201~~ ~~81182 2244~~	Lens	1	From Car No. 1

LAMPS (REAR SIDE)

No.	Part Number	Description	Q'ty	Remarks
●47	99701 2050	Bulb	2	
48		Screw	2	

ELECTRIC EQUIPMENT (BODY)

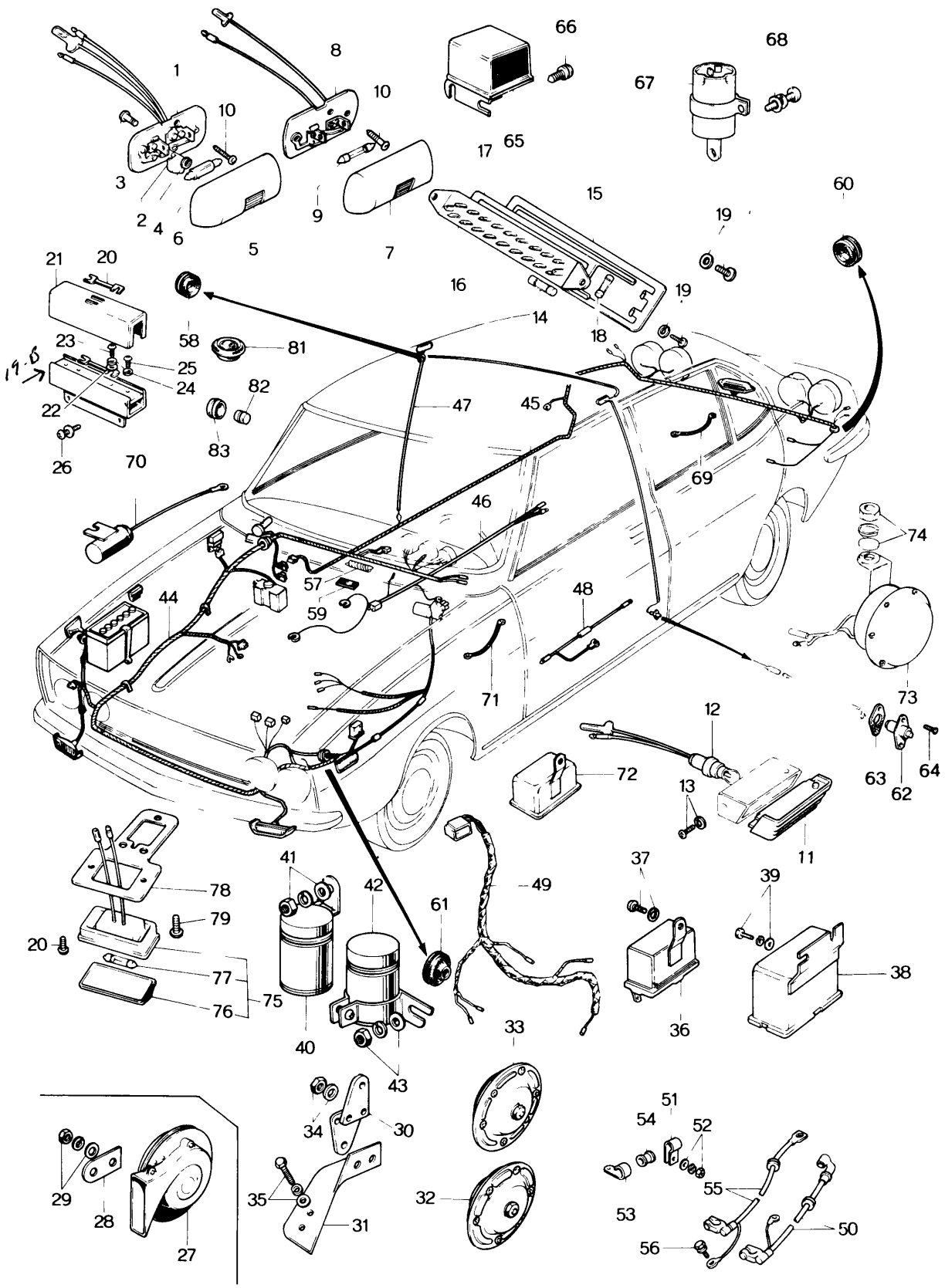

No.	Part Number	Description	Q'ty	Remarks
	0305 66 410	LAMP Ass'y, Main Room	1	1971 Model
	0390 66 410	LAMP Ass'y, Main Room	1	1972,1973 Model
1	0305 87 033	Base	1	1971 Model
	0390 66 411	Body	1	1972,1973 Model
2	0305 87 034	Handle	1	1971 Model
	0398 66 413	Knob	1	1972,1973 Model
3	0305 87 035	Rivet	1	
4	0305 87 036	Ring, Snap-"E" Type	1	1971 Model
5	0223 66 281	Lens	1	1971 Model
	0398 66 412	Lens	1	1972,1973 Model
6	99701 5050	Bulb, 5 W	1	
	0305 66 420	LAMP Ass'y, Sub Room	1	
7	0305 87 037	Lens	1	
8	0305 87 038	Base	1	
9	99701 5050	Bulb, 5 W	1	
10	99863 0416	Screw, Tapping-Room Lamp	4	
	99838 0514	Screw	2	1662,1663,1664,1665
	0305 66 570	LAMP, Step	1	
	0305 66 570A	LAMP, Step	1	Car No. 95577 7/8~)
11	0305 66 572	Lens	1	
12	0305 66 580	Bulb & Socket	1	
	0305 66 580A	Bulb & Socket	1	Car No. 95577 7/8~)
●	99701 6030	Bulb	1	
13	908666 4 128	Screw, Set-Step Lamp	2	

No.	Part Number	Description	Q'ty	Remarks
	~~0305 66 720~~	~~BLOCK Ass'y, Fuse~~	~~1~~	
	~~0398 66 720~~	~~BLOCK Ass'y, Fuse~~	~~1~~	~~Car No. 79731 7/6 ~ X~~
14	2981 66 495	Fuse, Spare-10 A	1	
●	99706 0110	Fuse, Spare-10 A	1	Car No. 7/8 ~ ○
	0613 66 498	Fuse, Spare-20 A	1	
●	99706 0120	Fuse, Spare-20 A	1	Car No. 7/8 ~ ○
15	0305 66 721	Cover, Fuse Block	1	
	0398 66 721	Cover, Fuse Block	1	Car No. 79731 7/6 ~ X
●	0397 66 721	Cover, Fuse Block	1	Car No. 137835 7/8 ~ X
●	0397 66 721A	Cover, Fuse Block	1	73/1 ~ O
	0305 66 730	BLOCK, Fuse	1	
	0398 66 730	BLOCK, Fuse	1	Car No. 79731 7/6 ~ X
●	0397 66 730	BLOCK, Fuse	1	Car No. 137835 7/8 ~ X
	0397 66 730A	BLOCK, Fuse	1	73/1 ~ O
16	0305 87 080	Body	1	☆
●	0397 66 731	Body	1	Car No. 137835 7/8 ~ X ☆
17	0305 87 081	Protector	1	
18	0296 87 485	Fuse, 3 A	1	
	2981 66 493	Fuse, 5 A	1	Car No. 79731 7/6 ~ X
	2981 66 493	Fuse, 5 A	1	Car No. 137835 7/8 ~ Discarded.
●	~~99706 0115~~	~~Fuse, 15 A~~	~~1~~	~~Car No. 7/8 ~ X~~
	2981 66 495	Fuse, 10 A	6	
●	99706 0110	Fuse, 10 A	6	Car No. 7/8 ~ ○
	2981 66 496	Fuse, 15 A	1	
●	99706 0115	Fuse, 15 A	1	Car No. 7/8 ~ ○
	99706 0120	Fuse, 20 A	1	Car No. 167963 73/1 ~ Δ
	0813 66 498	Fuse, 20 A	3	
●	99706 0120	Fuse, 20 A	3	Car No. 7/8 ~ ○
19	908332 5 16	Screw, Set-Fuse Block	2	
19 (B)	0305 66 760B	BLOCK, MAIN FUSE (40 A)	1	
	2852 66 760	BLOCK, MAIN FUSE (50 A)	1	Car No. 105548 7/11 ~ X
	2852 66 760	BLOCK, MAIN FUSE For Canada (50 A)	1	
20	0222 66 511A	Fuse, 40 A	2	
	2852 66 763	Fuse, 50 A	2	Car No. 105548 7/11 ~ X
	2852 66 763	Fuse, 50 A For Canada	2	
21	0222 87 372	Cover	1	
	2852 66 762	Cover } For Canada	1	
	0222 66 372	Cover } For Canada	2	Car No. 85627 7/7 ~ ○
22	0222 87 373	Washer	2	
23	0222 87 374	Screw	2	
●	0305 87 083	Washer, Spring	2	
24	0222 87 375	Washer, Spring	2	
25	0222 87 376	Screw	2	

No.	Part Number	Description	Q'ty	Remarks
26	907436 6 16	Screw, Set-Main Fuse Block	2	
27	0839 67 900	HORN, Electric-Vortical Type	1	
28	0839 67 901	Bracket	1	
		Coupe use (Triple Horn use)		
29	99906 0600	Nut, Horn	1	
	99952 0600	Washer, Plain	1	
	99971 0600	Washer, Spring	1	
	0839 66 790A	HORN, Electric-Flat Type	1	
●	0839 66 790B	HORN, Electric-Flat Type	1	Car No. 79731 7/6~○
30	0839 66 791	Bracket, No. 1	2	
●	0839 66 791A	Bracket, No. 1	2	Car No. 79731 7/6~○
31	0839 66 792A	Bracket, No. 2	1	
32	0839 67 910	Horn, High Tone	1	
33	0839 67 920	Horn, Low-Tone	1	
34	99906 0800	Nut	2	
	99971 0800	Washer, Spring	2	
35	99799 0820	Bolt, Horn	2	
	99952 0800	Washer, Plain	1	
	99952 0822	Washer, Plain	1	
	99971 0800	Washer, Spring	2	
36	0259 66 438	Relay, Horn-Sedan use	1	

No.	Part Number	Description	Q'ty	Remarks
37	99799 0620	Bolt, Horn Relay } Sedan use	1	
	99971 0600	Washer, Spring } Sedan use	1	
38	0839 66 810A	Relay, Horn	1	
39	99799 0620	Bolt, Horn Relay } Coupe use (Triple Horn use)	2	
	99952 0600	Washer, Plain } Coupe use (Triple Horn use)	2	
	99971 0600	Washer, Spring } Coupe use (Triple Horn use)	2	
40	2113 66 470	Unit, Flasher	1	
41	99906 0600	Nut, Flasher Unit	1	
	99952 0600	Washer, Plain	1	
	99971 0600	Washer, Spring	1	
42	0223 66 580A	Unit, Hazard Flasher	1	
43	99906 0600	Nut, Hazard Flasher Unit	2	
	99952 0600	Washer, Plain	2	
	99971 0600	Washer, Spring	2	
44	2081 67 010C	Harness, Wiring (Frt) - Sedan use	1	1971 Model Car No. 79731 7/6 ~ ×
	2081 67 010E	Harness, Wiring (Frt.) - Sedan use	1	1971 Model Car No. 79731 7/6 ~ ×
	1662 67 010E	Harness, Wiring (Frt.) - Sedan use	1	1972 Model Car No. 105186 7/11 ~ △ Car No. 130039 7/5 ~ ×
	1662 67 010H	Harness, Wiring (Frt.) - Sedan use	1	1972 Model Car No. 105186 7/11 ~ △ Car No. 130039 7/5 ~ ×
●	1664 67 010	Harness, Wiring (Frt.) - Sedan use	1	1972 Model Car No. 105186 7/11 ~ △ Car No. 130039 7/5 ~ ×
●	1666 67 010E	Harness, Wiring (Frt.) - Sedan use } 1973 Model	1	
●	1666 67 010F	Harness, Wiring (Frt.) - Sedan use } 1973 Model	1	Car No. 167963 73/1 ~ △
	2090 67 010C	Harness, Wiring (Frt) - Coupe use	1	1971 Model Car No. 79731 7/6 ~ ×
	2090 67 010E	Harness, Wiring (Frt.) - Coupe use	1	1971 Model Car No. 79731 7/6 ~ ×
	1663 67 010E	Harness, Wiring (Frt.) - Coupe use	1	1972 Model Car No. 105398 7/11 ~ △ Car No. 130039 7/5 ~ ×
	1663 67 010H	Harness, Wiring (Frt.) - Coupe use	1	1972 Model Car No. 105398 7/11 ~ △ Car No. 130039 7/5 ~ ×
●	1665 67 010	Harness, Wiring (Frt.) - Coupe use	1	1972 Model Car No. 105398 7/11 ~ △ Car No. 130039 7/5 ~ ×
●	1668 67 010E	Harness, Wiring (Frt) - Coupe use } 1973 Model	1	
●	1668 67 010F	Harness, Wiring (Frt.) - Coupe use } 1973 Model	1	Car No. 167963 73/1 ~ △
45	2081 67 030	Harness, Wiring (Rr.)	1	1971 Model
	1662 67 030E	Harness, Wiring (Rr.)	1	1972 Model
●	1668 67 030A	Harness, Wiring (Rr.)	1	1973 Model
46	2081 67 060C	Harness, Wiring - Engine	1	1971 Model
●	1662 67 060D	Harness, Wiring - Engine	1	Car No. 109061 7/12 ~ ○ 1972 Model Car No. 130039 7/5 ~ ○
●	1662 67 060F	Harness, Wiring - Engine	1	Car No. 109061 7/12 ~ ○ 1972 Model Car No. 130039 7/5 ~ ○
●	1662 67 060G	Horness, Wiring - Engine	1	Car No. 109061 7/12 ~ ○ 1972 Model Car No. 130039 7/5 ~ ○
●	1668 67 060C	Harness, Wiring - Engine (Manual)	1	1973 Model
●	1669 67 060B	Harness, Wiring - Engine (Automatic)	1	1973 Model

No.	Part Number	Description	Q'ty	Remarks
	0823 18 111	Supporter	1	
47	2850 67 080	Harness, Wiring-Room Lamp	1	1971 Model
	1662 67 080A	Harness, Wiring-Room Lamp	1	1972 Model
	1662 67 080C	Harness, Wiring-Room Lamp	1	Car No. 106922 7½～× 1972,1973 Model
	1662 67 085B	Harness, Room	1	Car No. 106922 7½～×
48	2850 67 090	Diode Ass'y	1	
	0823 18 111	Support, Engine Harness use	1	
49	0305 67 090B	Harness, Wiring-Step Lamp (Manual)	1	
●	0308 67 090B	Harness, Wiring-Step Lamp (Automatic)	1	
50	~~2324 67 101~~ ~~2081 67 108~~	Cable, Battery Positive	1	1971 Model
●	1662 67 100	Cable, Battery Positive	1	1972,1973 Model
51	2081 67 105	Clip, Cable	2	
	0839 67 105	Clip, Cable	2	1972,1973 Model
52	99906 0800	Nut, Clip	2	1971 Model
	99901 0800	Nut, Clip	2	1972 Model
●	99940 0800	Nut, Clip	2	1973 Model
	99953 0800	Washer, Plain	2	1971 Model
	99952 0800	Washer, Plain	2	1972Model
	99971 0800	Washer, Spring	2	1971,1972 Model
53	99295 1508	Clip	1	
54	99686 1000	Protector	1	
55	2081 67 111	Wire, Battery Earth	1	
	99908 0800	Nut, Earth Wire	1	
	99953 0800	Washer, Plain	1	Car No. 61926 7/3～○
	99971 0800	Washer, Spring	1	
56	99806 0612	Bolt-Earth Wire	1	
	99971 0600	Washer, Spring	1	
	99952 0600	Washer, Plain	1	
	99799 0620	Bolt, Earth Wire	1	Car No. 77886 7/5～Added Anew
	99971 0800	Washer, Spring	1	
57	0305 67 994	Supporter	2	

No.	Part Number	Description	Q'ty	Remarks
	0305 67 993A	Clip, Engine Harness use	1	1662,1663,1664,1665
58	0114 43 625	Protector	2	
	0305 67 159A	Protector, Side Sill Cut Off Part, Coupe use	1	
59	0208 66 949	Pad, Protector	17 19	Coupe use Sedan use
	0303 67 155	Protector, Cord	1	1972,1973 Model
60	99684 0600	Grommet	1	
	0303 67 156	Protector, Cord-Selective use	1	1662,1663,1664,1665
61	99684 1000	Grommet	2	
62	0209 66 820	Switch, Door	2 4	Coupe use Sedan use
63	0209 66 821	Washer, Adjust	2 4	Coupe use Sedan use
64	99864 0412	Screw, Door Switch	4 8	Coupe use Sedan use
65	0820 60 870A	Relay, Wiper	1	
66	908066 6 16	Screw, Set-Wiper Relay	2	
67	0296 67 860A	Relay, Lamp Checker	2	
68	908066 6 16	Screw, Set-Checker Relay	2	
69	0813 66 732A	Wire, Earth-Radio	1	
70	0820 66 992	Condenser	1	
71	2081 67 861	Wire, Earth-Radio	1	
72	0839 67 880	Relay, Ignition Coil	1	
73	0750 66 840	Buzzer (Steering Lock use)	1	
	0735 67 730	Buzzer (Seat Belt use)	1	1662,1663
●	0735 67 730A	Buzzer (1973 Model) (Seat Belt use)	1	Car No. 100256 ~○
	907436 6 16	Screw, Set-Buzzer	1	1972 Model
●	99840 0602	Nut, Buzzer	1	1973 Model
74	99906 0600	Nut, Buzzer	1	
	99952 0600	Washer, Plain	1	
	99971 0600	Washer, Spring	1	

No.	Part Number	Description	Q'ty	Remarks
75	1650 66 620	LAMP, Warning-Safety Belt	1	
76	1650 66 621	Lens	1	
77	99701 5050	Bulb	1	
78	1650 66 630	Bracket, Warning Lamp	1	1972 General U.S.A. & 1973 Model
79	99868 03088	Screw	1	
80	99869 0412	Screw, Tapping	2	
81	0222 66 911	Cover, Hole-Antenna	1	
82	0200 54 265	Rubber, Hole-Cover Stop	1	
83	0222 66 971	Cover, Hole-For Hole of Antenna Cord	1	
● Ⓝ	1674 67 070A	Harness, T/Mission (Manual)	1	
● Ⓝ	2081 67 151 ~~2081 67 160~~	Cover, Dash Panel	1	
● Ⓝ	1664 67 740	Relay, Choke (For Northern U.S.A., Canada & Automatic Model)	1	
● Ⓝ	1675 67 760	Relay, Neutral (Automatic)	1	
● Ⓝ	1540 60 930	Relay, Turn Signal	1	
● Ⓝ	99960 0602	Nut, Turn Signal Relay	2	
● Ⓝ	1669 67 890	Relay-Assy (Automatic)	1 Car No.	73/1 Added Anew
● Ⓝ	1915 67 161	Protector (With Cooler)	1 Car No.	73/1 Added Anew

WINDSHIELD WIPER

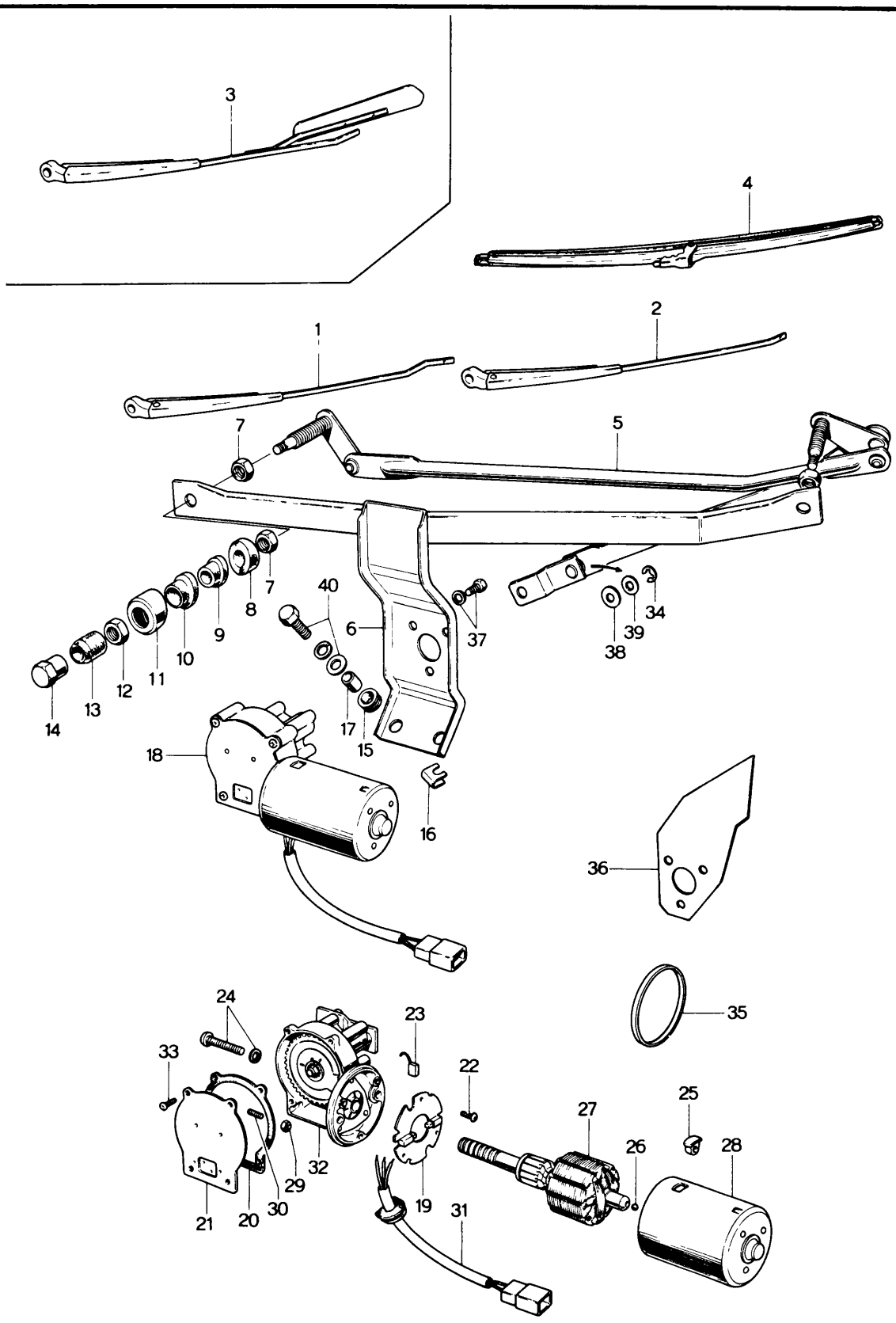

No.	Part Number	Description	Q'ty	Remarks
1	2835 67 321	Arm, Wiper (R)	1	
●	2835 67 321A	Arm, Wiper (R)	1	'73/11 ~ O
2	2835 67 325	Arm, Wiper (L)	1	
●	2835 67 325A	Arm. Wiper (L) — Selective use	1	'73/11 ~ O
3	2840 67 325	Arm, Wiper (L) - With Fin	1	
●	2840 67 325A	Arm. Wiper (L) - With Fin	1	'73/11 ~ O
4	2835 67 330	Blade, Wirer — 1971, 1972 Model Selective use	2	
	0839 67 330	Blade, Wiper - High Speed Fype — 1971, 1972 Model Selective use	2	1973 Model Selective use
●	0222 67 330	Blade, Snow	2	1973 Model Selective use
	2835 67 340	**MOTOR AND LINK**	1	
5	2835 87 901	Link	1	
6	2835 87 902	Frame	1	
7	0259 87 134	Nut	4	
8	0305 87 903	Bush, Inner	2	
9	0305 87 904	Packing	2	
10	0305 87 905	Bush, Outer	2	
11	0305 87 906	Washer, Cap	2	
12	0212 66 372	Nut	2	
13	0212 66 371	Cap	2	
14	0223 66 371	Nut	2	
15	0305 87 907	Grommet	2	
16	0305 87 908	Plate, Earth	1	
17	0305 87 909	Collar	2	
18	2835 67 370	**MOTOR**	1	

WINDSHIELD WIPER

No.	Part Number	Description	Q'ty	Remarks
19	0259 87 101A	Plate, Brush Holder	1	
20	2835 87 924	Packing	1	
21	2835 87 925	Plate, End	1	
22	0259 87 105	Screw	3	
23	0259 87 106	Brush	3	
24	0257 87 107	Bolt	2	
	99971 0500	Washer, Spring	2	
25	0257 87 108	Nut	2	
26	2835 87 928	Ball	2	
27	2835 87 923	Rotor	1	
28	2835 87 922	Yoke	1	
29	0259 87 119	Nut	1	
30	0259 87 120	Screw	1	
31	0305 87 921	Harness, Wire	1	
32	2835 87 951	Box, Gear	1	
33	2835 87 926	Screw	4	
34	2835 87 927	Ring, Retaining	1	
35	0305 87 958	Band	1	
36	2835 87 957	Cover, Seal	1	
37	99808 0510	Bolt	3	
	99971 0500	Washer	3	
38	0738 87 803	Felt	1	
39	0738 87 804	Washer, Plain	1	
40	99799 0625	Bolt	2	

No.	Part Number	Description	Q'ty	Remarks
●	2850 13 332	Washer	2	
	99971 0600	Washer, Spring	2	
● Ⓝ	2182 66 995	Suppresser-Noise	1	Car No. 189592 '73/4 ~ Added Anew

SCREEN WASHER

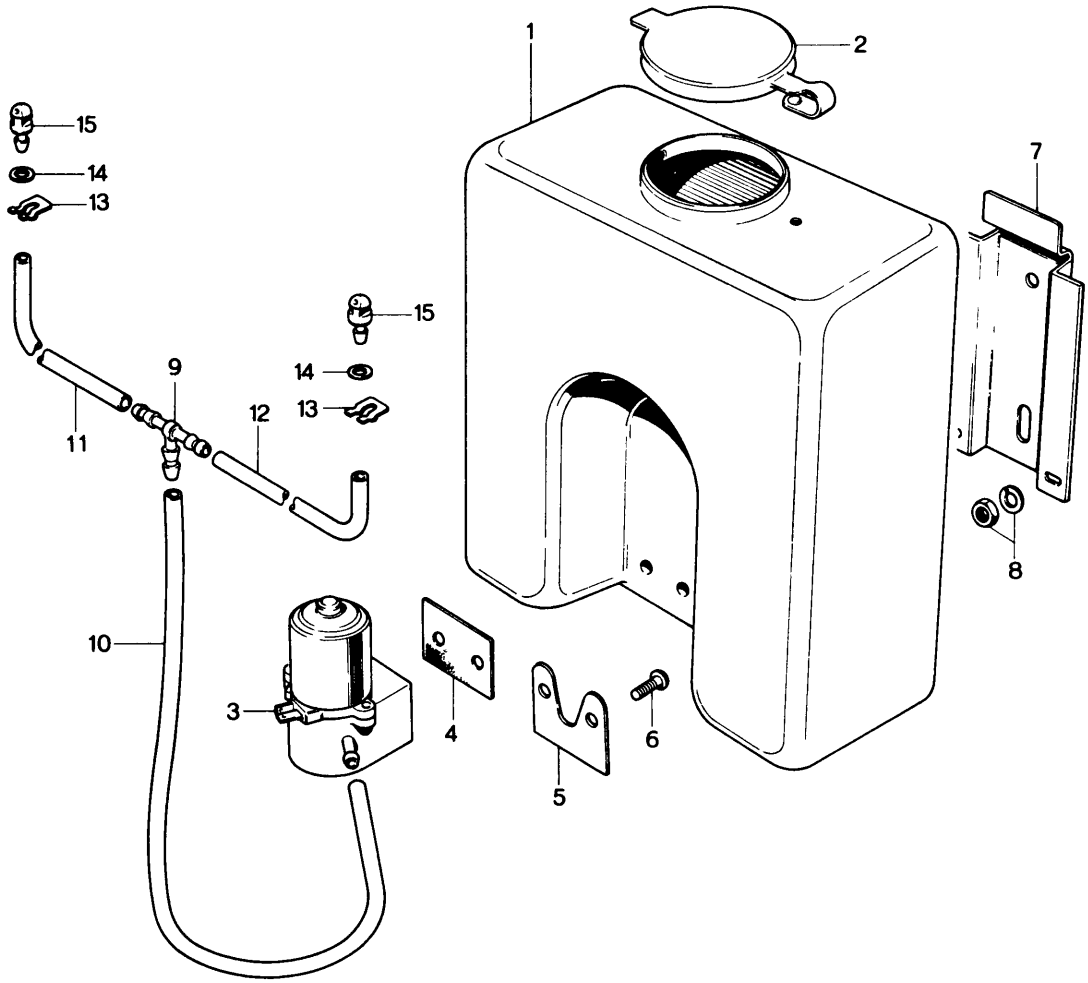

No.	Part Number	Description	Q'ty	Remarks
●	0301 79 370	**WASHER SET,** Screen	1	
	0317 67 480	**TANK Ass'y**	1	
1	0317 67 511	Tank	1	
2	0727 67 992	Cap	1	
3	0305 67 993	Pump	1	
4	0727 67 994	Packing	1	
5	0727 67 995	Plate	1	
● 6	~~0727 67 996~~	~~Screw~~	~~2~~	
7	0317 67 521	Bracket, Tank	1	
	0866 67 521	Bracket, Tank	1	Car No. 98855 7/10~○
8	99906 0600	Nut, Bracket	2	
	99971 0600	Washer, Spring	2	
	0305 67 500	**PIPE Ass'y**	1	
9	0813 66 879	Joint, Pipe	1	
10	99335 04010	Pipe (ℓ =100)	1	
11	99335 04065	Pipe (ℓ =650)	1	
12	99335 04075	Pipe (ℓ =750)	1	
13	0118 41 669	Clip	2	
14	0259 66 905	Packing	2	
15	0275 67 510A	Nozzle	2	

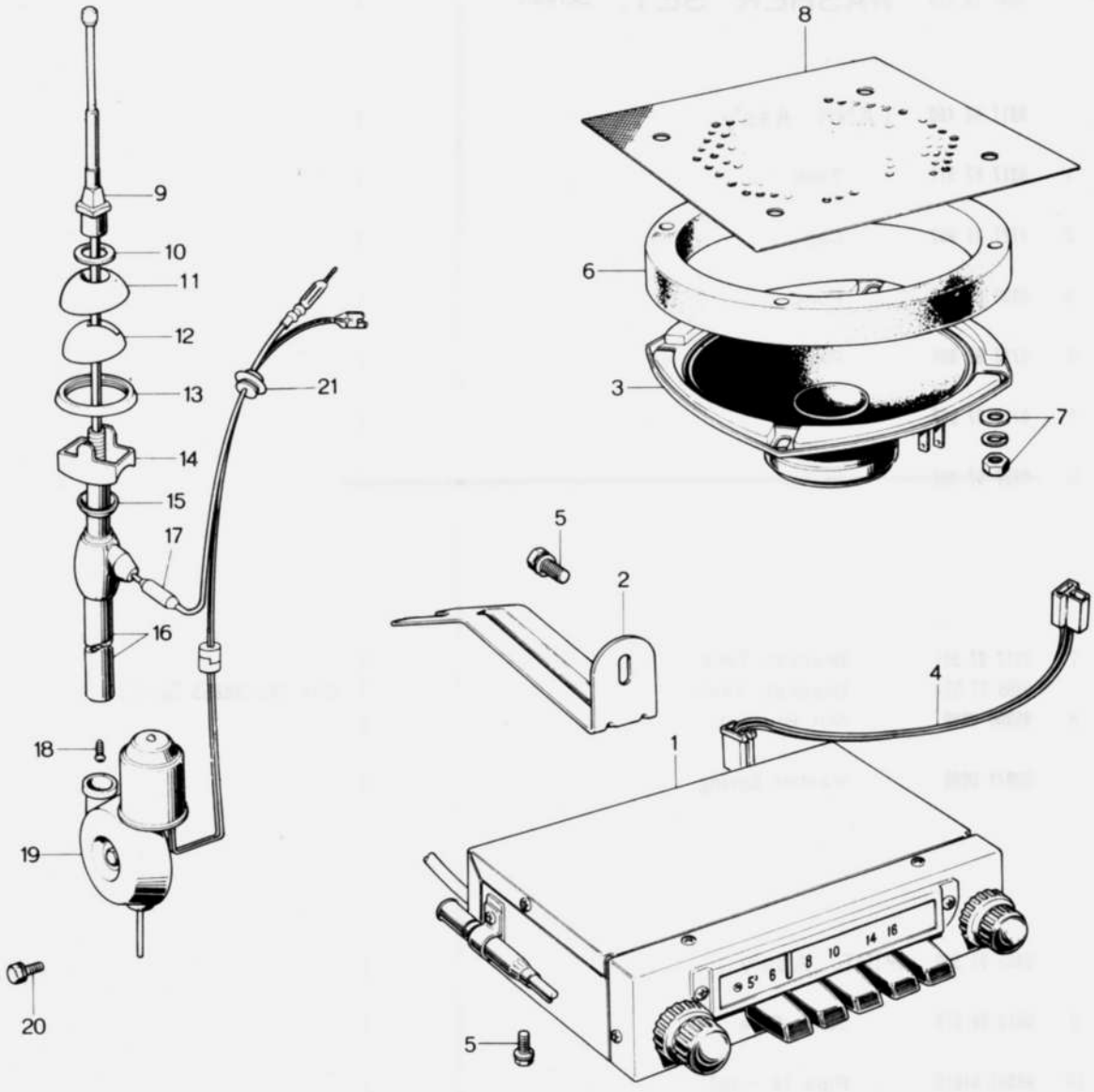
8
9
10
11
12
13
14
15
17
16
21
6
3
7
5
2
4
1
18
19
20
5

No.	Part Number	Description	Q'ty	Remarks
	2065 79 030	Radio Ass'y, Auto-Medium Wave	1	
	2321 79 030	Radio Ass'y, Auto-Medium Wave	1	Car No. 79731 7/6～×
	2075 79 030	Radio Ass'y, Auto-Medium Short Wave	1	
	2324 79 030	Radio Ass'y, Auto-Medium Short Wave	1	Car No. 79731 7/6～×
	2081 79 030	Radio Ass'y, Auto-Medium Wave FM	1	
	2323 79 030	Radio Ass'y, Auto-Medium Wave FM	1	Car No. 79731 7/6～×
●	1913 66 870	Radio Ass'y, Auto (AM)	1	
●	1914 66 870	Radio Ass'y, Auto (AM /SW) (With Car Cooler)	1	Car No. 73/1
●	1915 66 870	Radio Ass'y, Auto (AM /FM)	1	
1	0305 66 900	Tuner, Medium Wave	1	
	0391 66 900	Tuner, Medium Wave	1	Car No. 79731 7/6～×
	2828 66 900	Tuner, Medium Short Wave	1	
	2845 66 900	Tuner, Medium Short Wave	1	Car No. 79731 7/6～×
	2864 66 900	Tuner, Medium Wave FM	1	
	2075 66 900	Tuner, Medium Wave FM	1	Car No. 79731 7/6～×
●	2075 66 900A	Tuner, Medium Wave FM	1	Car No. 157800 73/11～○
2	0305 66 871	Bracket, Tuner-Medium Wave use	1	
	2835 66 871	Bracket, Tuner-Medium Wave use	1	Car No. 79731 7/6～×
	2828 66 871	Bracket, Tuner-Medium Short Wave use	1	
	2864 66 871	Bracket, Tuner-Medium Wave FM	1	
●	1913 66 871	Bracket, Tuner- (AM)	1	
●	1914 66 871	Bracket, Tuner- (AM /SW) (With Car Cooler)	1	Car No. 73/1
●	1915 66 871	Bracket, Tuner- (AM /FM)	1	
3	0305 66 980	Loud Speaker	1	
	0866 66 980	Loud Speaker	1	Car No. 79731 7/6～×
4	0305 66 872	Cord, Loud Speaker	1	
	0398 66 872	Cord, Loud Speaker	1	Car No. 79731 7/6～×
	2845 66 872	Cord, Loud Speaker-Medium Short Wave use	1	Car No. 79731 7/6～×
	2845 66 872	Cord, Loud Speaker- Medium Wave FM AM /SW & AM /FM	1	Car No. 96092 7/9～×
Ⓝ	0305 66 875	Plate, Decoration	1	
5	908067 5 12	Bolt, Set-Bracket	2	
	907876 5 10	Bolt, Set-Bracket	2	Car No. 79731 7/6～×
6	0317 66 862	Partition	1	
7	99906 0400	Nut, Loud Speaker	2	
	99952 0400	Washer, Plain	2	
	99971 0400	Washer, Spring	2	
8	0305 66 966	Nut, Loud Speaker	1	
●	99906 0600	Nut	1	
●	99952 0600	Washer, Plain	1	Car No. 73/1
●	99971 0600	Washer, Spring	1	
	0839 66 940A	Motor Antenna	1	
	2846 79 040	Motor Antenna	1	Car No. 79731 7/6～×
9	0305 87 095	Nut	1	
10	0305 87 096	Washer	1	
11	0839 87 001	Spacer	1	
12	0223 91 533	Insulator	1	

No.	Part Number	Description	Q'ty	Remarks
13	0305 87 098	Packing	1	
14	0305 87 099	Spacer	1	
	0223 91 531	Base, Ground	1	Car No. 79731 7/6 ~ ×
15	0305 87 101	Washer	1	
	0223 91 530	Washer	1	Car No. 79731 7/6 ~ ×
16	0839 87 002	Pole	1	
	0305 87 102	Pole	1	Car No. 79731 7/6 ~ ×
17	0839 87 006	Feeder	1	Car No. 79730 7/5 ~ Discarded
18	0223 91 529	Screw, Tapping	2	
19	0305 87 107	Cap	1	
	0305 66 945	Cable, No. 1 Rod	1	Car No. 79731 7/6 ~ ×
20	908066 5 10	Bolt, Set-Motor Antenna	2	
	907976 5 10	Bolt, Set-Motor Antenna	1	Car No. 79731 7/6 ~ ×
21	99683 0600	Protector	2	
	2846 66 931	Bracket, Antenna	1	
	2846 66 931A	Bracket, Antenna	1	Car No. 96936 7/9 ~ ○
	907976 5 10	Bolt, Set-Tuner Bracket	2	
	0305 67 159A	Protector	1	Car No. 79731 7/6 ~ Added Anew
	0881 67 159	Protector	1	

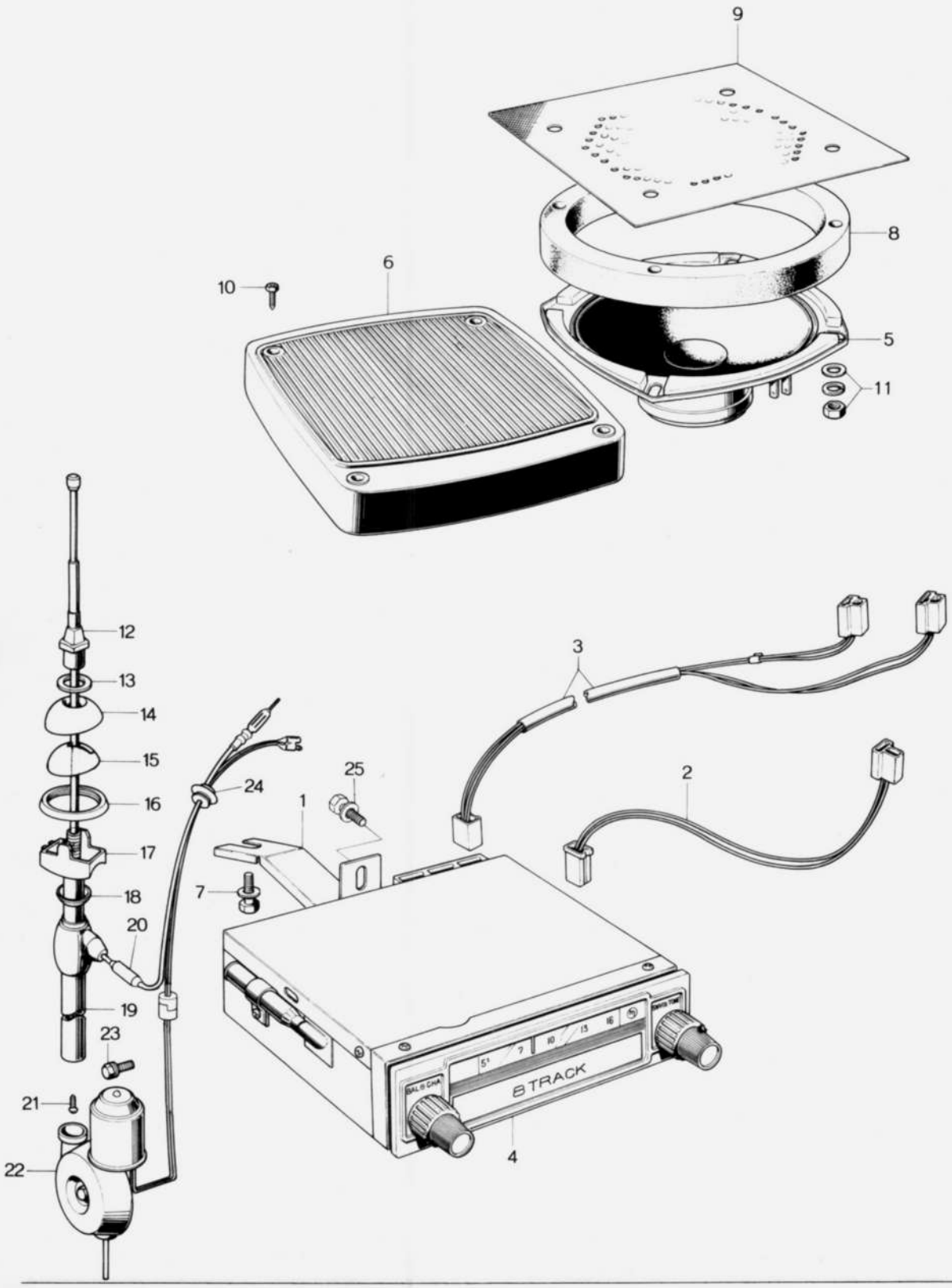
9
8
6
10
5
11
12
13
14
15
16
17
18
20
19
23
21
22
24
25
1
3
2
7
4
8 TRACK

No.	Part Number	Description	Q'ty	Remarks
	2080 79 030	STEREO & RADIO SET, Clarion Make	1	
	2322 79 030	STEREO & RADIO SET, Clarion Make	1	Car No. 79731 7/6 ~ ×
●	1916 66 870	STEREO & RADIO SET, (With Car Cooler)	1	Car No. 73/1 ~ ×
1	0303 66 871	Bracket, Tuner	1	
	2080 66 871	Bracket, Tuner	1	Car No. 79731 7/6 ~ ×
●	1916 66 871	Bracket, Tuner (With Car Cooler)	1	Car No 73/1
2	0305 66 872	Cord, Loud Speaker	1	
	0398 66 872	Cord, Loud Speaker	1	Car No. 79731 7/6 ~ ×
3	0303 66 973A	Cord, Loud Speaker No. 2	1	
	0881 66 873	Cord, Loud Speaker No. 2	1	Car No. 79731 7/6 ~ ×
4	0303 66 900	Tuner & Player	1	
	0880 66 900A	Tuner & Player	1	Car No. 79731 7/6 ~ ×
5	0305 66 960	Loud Speaker	1	
	0866 66 960	Loud Speaker	1	Car No. 79731 7/6 ~ ×
6	0303 66 980	Loud Speaker, Stereo	2	
	0880 66 875A	Panel, Decoration	1	
7	908067 5 12	Bolt, Set-Tuner Bracket	2	
	907976 5 10	Bolt, Set-Tuner Bracket	2	Car No. 79731 7/6 ~ ×
●	907976 5 10	Bolt, Set-Tuner Bracket (With Car Cooler)	4	Car No. 73/1
8	0317 66 862	Partition	1	
9	0305 66 966	Net, Loud Speaker	1	
10	99863 04258	Screw, Tapping-Loud Speaker	8	
11	99906 0400	Nut, Loud Speaker	2	
	99906 0600	Nut, Loud Speaker	1	Car No 79731 7/6 ~ Added Anew
	99952 0400	Washer, Plain	2	
	99952 0618	Washer, Plain	1	Car No 79731 7/6 ~ Added Anew
	99971 0400	Washer, Spring	2	
	99971 0600	Washer, Spring	1	Car No. 79731 7/6 ~ Added Anew
(N)	0208 66 949	Pad	8	
(N)	0881 66 159	Protector	1	
	0839 66 940A	MOTOR ANTENNA	1	
	2846 79 040	MOTOR ANTENNA	1	Car No 79731 7/6 ~ ×
12	0305 87 095	Nut	1	
13	0305 87 096	Washer	1	
14	0839 87 001	Spacer	1	
	0305 87 097	Spacer	1	Car No 79731 7/6 ~ ×
15	0223 91 533	Insulator	1	
16	0305 87 098	Packing	1	
17	0305 87 099	Spacer	1	
	0223 91 531	Base, Ground	1	Car No 79731 7/6 ~ ×

STEREO RADIO

No.	Part Number	Description	Q'ty	Remarks
18	0305 87 101	Washer	1	
	0223 91 530	Washer	1	Car No. 79731 7⅙～×
19	0839 87 002	Pole	1	
	0305 87 102	Pole	1	Car No. 79731 7⅙～×
20	0839 87 006	Feeder	1	Car No. 79730 7⅕～Discarded
21	0223 91 529	Screw, Tapping	2	
22	0305 87 107	Cap	1	
	0305 66 945	Cable, No. 1 Rod	1	Car No. 79731 7⅙～Added Anew
23	908066 5 10	Bolt, Set-Motor Antenna	2	
	907976 5 10	Bolt, Set-Motor Antenna	1	Car No. 79731 7⅙～×
24	99683 0600	Protector	2	
Ⓝ	2846 66 931	Bracket, Antenna	1	Car No. 79731 7⅙～×
25	2846 66 931A	Bracket, Antenna	1	Car No. 96936 7⅑～○
	908067 5 12	Bolt, Set-Tuner Bracket	2	
	907976 5 10	Bolt, Set-Tuner Bracket	2	Car No. 79731 7⅙～×
	0305 67 159A	Protector	1	Car No. 79731 7⅙～Added Anew
	0881 67 159	Protector	1	

CRUSH PAD & GLOVE BOX

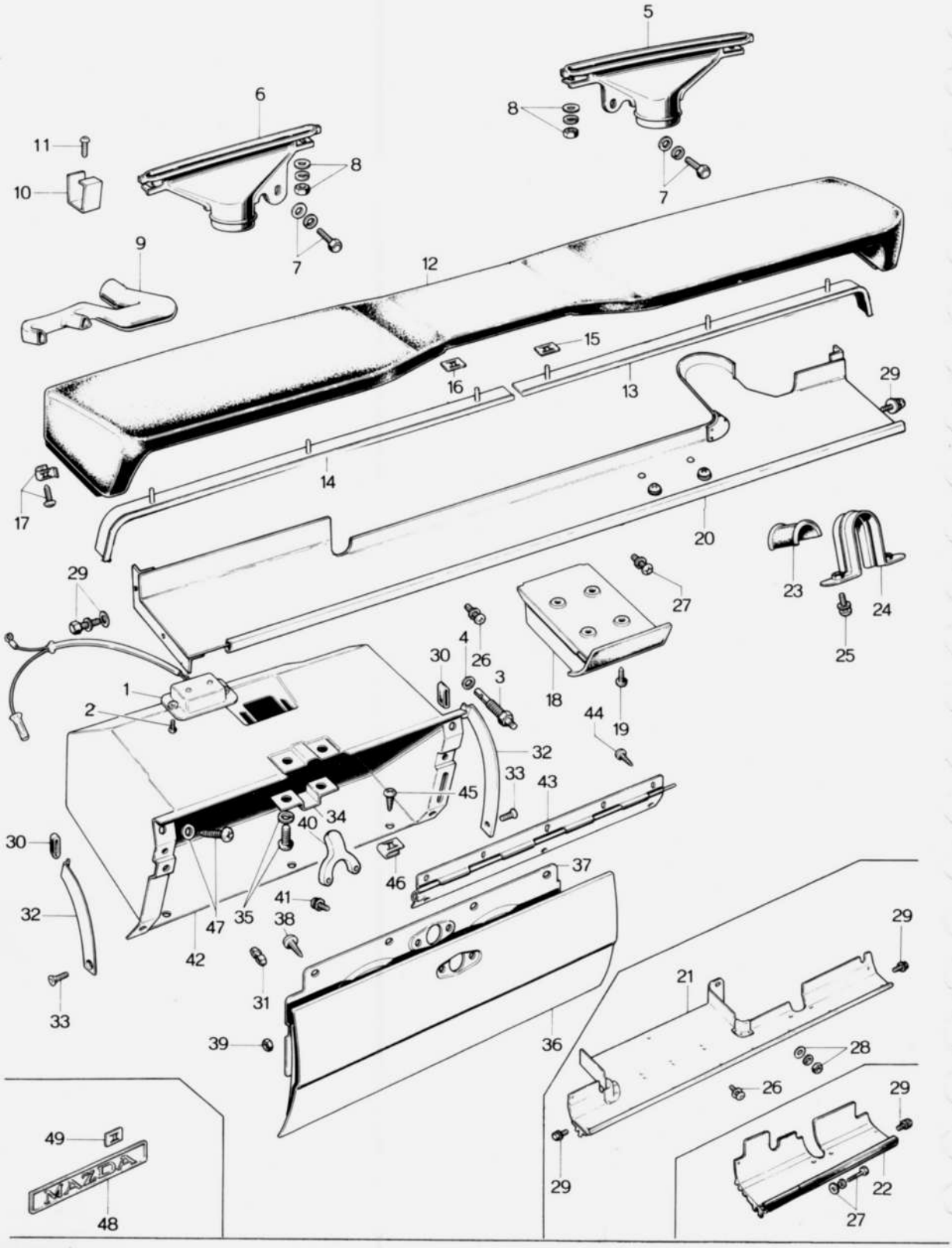

CRUSH PAD & GLOVE BOX 55~70

No.	Part Number	Description	Q'ty	Remarks	
1	0305 55 890	LAMP, Glove Box	1		
	0305 75 581	Body	1		
	0305 75 582	Cord	1		
	0305 75 585	Lens	1		
	99701 5050	Bulb	1		
2	99889 0410B	Screw, Lamp-Glove Box	2		
3	0305 60 890	Switch, Glove Box	1		
4	99952 0800	Washer, Plain	1		
5	0305 60 101	Nozzle, Defroster (R)	1		
6	0305 60 102	Nozzle, Defroster (L)	1		
7	99799 0516	Bolt, Defroster Nozzle	2		
	99952 0516	Washer, Plain	2		
	99971 0500	Washer, Spring	2		
8	99906 0500	Nut, Defroster Nozzle	4		
	99952 0516	Washer, Plain	4		
	99971 0500	Washer, Spring	4		
9	2858 60 830A	Hose, Ventilation	1		
10	0838 60 831	Clip, Ventilation Hose	1		
11	99864 0510	Screw, Clip	1		
12	0305 68 020E-00	PAD, Crush (Black)	1	1971 Model	©
	0305 68 020F-00	PAD, Crush (Black)	1	1972, 1973 Model	©
13	0305 68 040A	Mould (R)	1		
14	0305 68 050A	Mould (L)	1		

CRUSH PAD & GLOVE BOX

No.	Part Number	Description	Q'ty	Remarks
15	99579 4000	Nut, Speed	6	
16	99579 3000	Nut, Speed-Crush Pad	8	
17	99862 0516B	Screw, Tapping-Crush Pad	5	
	99896 0500	Nut, Spring	5	
18	0303 68 180	Tray Ass'y, Ash (Sedan use)	1	
●	0820 68 180	Tray Ass'y, Ash (With Car Cooler)	1	Car No. 73/1
	0303 68 201	Case, Inner (Sedan use)	1	
●	0613 69 230	Case, Inner (With Car Cooler)	1	Car No. 73/1
● Ⓝ	0839 68 945	Bracket, Ash Tray (With Car Cooler)	1	
19	908332 5 12	Screw Set, Ash Tray (Sedan use)	3	Car No. 73/1
●	908346 4 16	Screw Set, Ash Tray (With Car Cooler)	2	
20	2835 69 810A	Shelf Ass'y, Parcel With Car Heater	1	Car No. 73/1
	2857 69 810A	Shelf Ass'y, Parcel With Powerful Type Car Heater	1	
21	2845 69 ~~810~~ 810A	Shelf Ass'y, Parcel Without Car Heater	1	
22	2840 69 810A	Shelf Ass'y, Parcel (With Car Heater)	1	
●	1915 69 810	Shelf Ass'y, Parcel (R) (With Car Cooler)	1	Car No. 73/1
●	1915 69 820	Shelf Ass'y, Parcel (L) (With Car Cooler)	1	
23	0305 69 825	Rubber, Fixing	1	
24	0305 69 820A	Bracket, Parcel Shelf	1	
25	908337 5 12	Screw, Set-Bracket	2	
26	908337 5 16	Screw, Set-Parcel Shelf (With Car Heater)	1	
●	908631 5 16	Screw, Set-Parcel Shelf (With Car Cooler)	2	Car No. 73/1
27	908337 5 08B	Screw, Set-Parcel Shelf (With Car Heater)	1 2	With Car Cooler With Car Heater
28	99906 0600B	Nut, Parcel Shelf (Without Car Heater)	3	
●	99906 0600	Nut, Parcel Shelf (With Car Cooler)	1	Car No. 73/1
	99952 0618B	Washer, Plain	3	
●	99952 0618	Washer, Plain (With Car Cooler)	1	Car No. 73/1
	99971 0600B	Washer, Spring	3	
●	99971 0600	Washer, Spring (With Car Cooler)	1	Car No. 73/1
29	99797 0525B	Bolt, Parcel Shelf	2 4	With Car Cooler
	99952 0516B	Washer, Plain	2 4	With Car Cooler
	99971 0500B	Washer, Spring	2 4	With Car Cooler

No.	Part Number	Description	Q'ty	Remarks
30	0275 55 195	Rubber, Cushion-Glove Box Lid	1	
31	0275 55 215	Cushion	2	
32	2835 70 201	Stopper	1	
33	99761 0416B	Screw, Stopper	1	
34	0305 70 202	Striker	1	
35	908331 4 16B	Screw, Set-Striker	2	
36	2835 70 211	Lid, Outer	1	
37	0305 70 212	Lid, Inner	1	
38	99861 0310B	Screw, Lid Inner	4	
39	99911 0400	Nut, Lid Inner	1	
40	2280 55 182	Guide, Lock	1	
41	908336 4 16B	Screw, Set	2	
42	2835 70 221	Box, Glove	1	©
●	2835 70 221A	Box, Glove	1	Car No. 69881 71/4 ~ O
43	0305 70 230A	Hinge Ass'y	1	
44	99861 0410B	Screw, Hinge	5	
45	99866 0412B	Screw, Hinge	3	
46	99896 0400	Nut, Spring-Hinge	3	
47	99833 0514B	Screw, Glove Box	4	
	99952 0516B	Washer, Plain	4	
48	2828 69 051	Ornament, Glove Box	1	
49	99579 3000	Nut, Speed-Ornament	2	

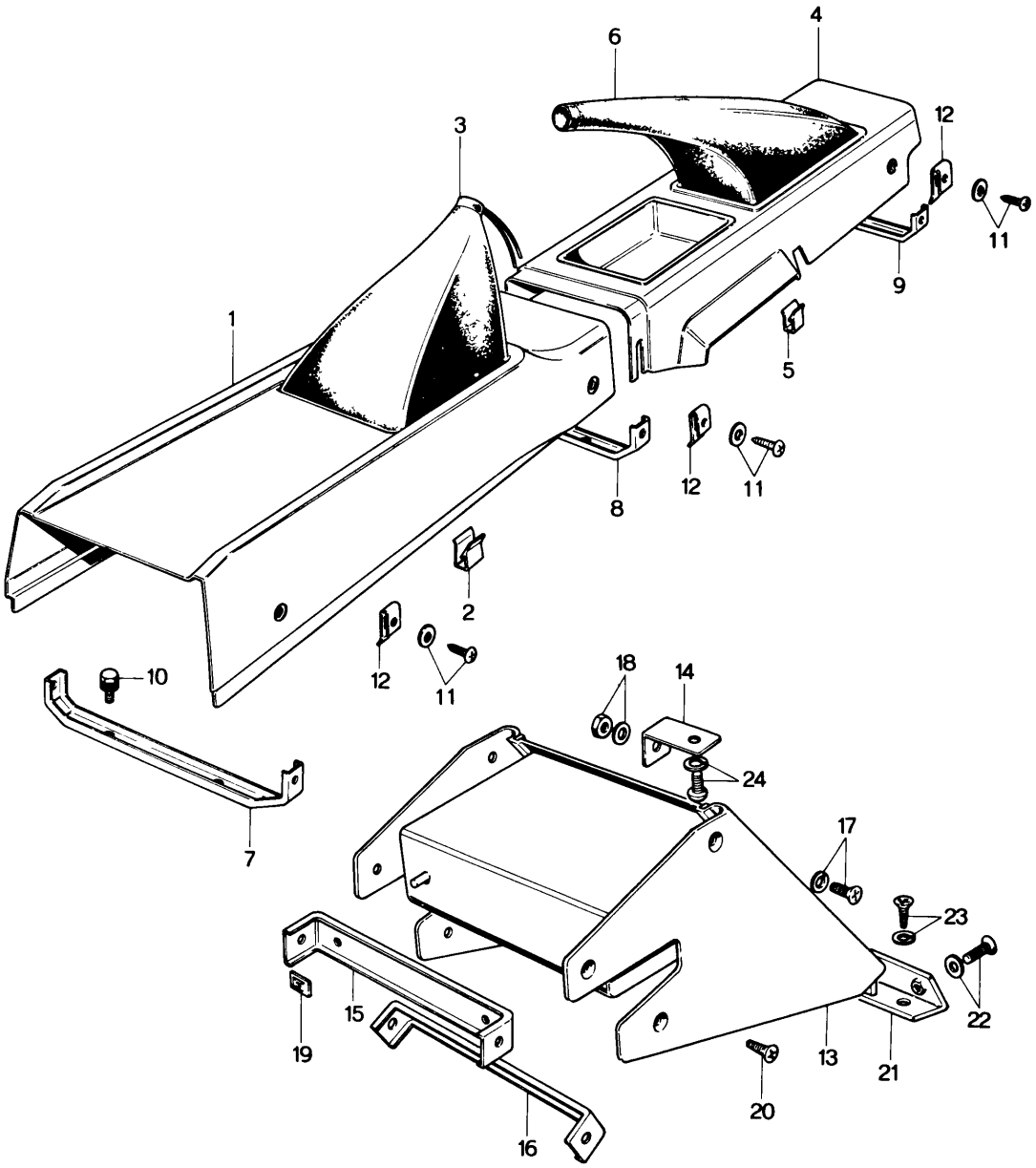
1
2
3
4
5
6
7
8
9
10
11
12
13
14
15
16
17
18
19
20
21
22
23
24

No.	Part Number	Description		Q'ty	Remarks
1	2075 68 860	Console Ass'y (Frt.)	(Manual)	1	2081, (1666)
	2324 68 860	Console Ass'y (Frt.)		1	2081, (1662) Car No. 80201 71/6 ~ ×
	2080 68 860	Console Ass'y (Frt.) With Car Cooler		1	2081, 2090, (1662), 1663 (1666) 1668
	2082 68 860A	Console Ass'y (Frt) Sedan use		1	2852, 1664, 1670, 1686
	2091 68 860A	Console Ass'y (Frt.) Coupe use		1	2869, 1665, 1672, 1687
●	1915 68 860	Console Ass'y (Frt.) (With Car Cooler)		1	Car No 73/1
	2840 68 860B	Console Ass'y (Frt)	(Automatic)	1	(1667), 1669
	2853 68 860A	Console Ass'y (Frt.) With Car Cooler		1	(1667)
	2494 68 860	Console Ass'y (Frt.) Sedan use		1	1671, 1688
	1689 68 860A	Console Ass'y (Frt.) Coupe use		1	1673, 1689
●	1916 68 860	Console Ass'y (Frt.) (With Car Cooler)		1	Car No 73/1
2	0303 68 862	Clip		4	
3	2855 68 880	Boot, Change Lever	(Manual)	1	
	2860 68 881	Boot, Change Lever		1	Car No. 80201 71/6 ~ ×
	2855 68 880	Boot, Change Lever		1	1973 Model
4	0303 68 890A	Console Ass'y (Rr)		1	
5	0303 68 862	Clip, Boot		4	
6	0303 68 910A	Boot, Hand Brake Lever		1	
7	0839 68 851	Bracket No. 1		1	
8	0303 68 852	Bracket No. 2		1	
9	0303 68 853	Bracket No. 3		1	
10	908066 6 12	Bolt Set, Bracket		6	
11	908636 4 16B	Screw Set, Bracket		6	
12	99896 0400	Nut Spring, Bracket		6	

No.	Part Number	Description	Q'ty	Remarks
13	0839 68 930B-00	Console Ass'y, Upper (Black)	1	©
14	0839 68 936A	Bracket "A"	2	
15	0839 68 937	Bracket "B"	1	
	0839 68 937	Bracket "B" (Coupe Without Car Cooler)	1	Car No. 179668 73/3~Discarded
16	0839 68 938	Bracket "C"	1	
17	908324 5 16B	Screw, Set	2	
	99832 0516B	Screw	2	Car No. 106922 71/12~ ×
	99975 0500	Washer, Toothed	2	Car No. 106922 71/12~ ×
18	99906 0500	Nut	6	
	99952 0516	Washer, Plain	2	
	99952 0500	Washer, Plain	4	
	99971 0500	Washer, Spring	6	
20	908324 5 12B	Screw, Set	4	
21	0839 68 940B	Bracket	1	
22	99742 0420B	Screw, Set	2	
	99967 0400B	Washer	2	
23	908697 4 16	Screw, Set	2	
24	907437 6 12B	Screw, Set	2	
Ⓝ	0820 68 180	Tray, Ash	1	
Ⓝ	908346 4 16	Screw, Ash Tray	1	
Ⓝ	0305 66 580A	Bulb & Socket	1	(Automatic)
Ⓝ	99701 6030	Bulb	1	(Automatic)

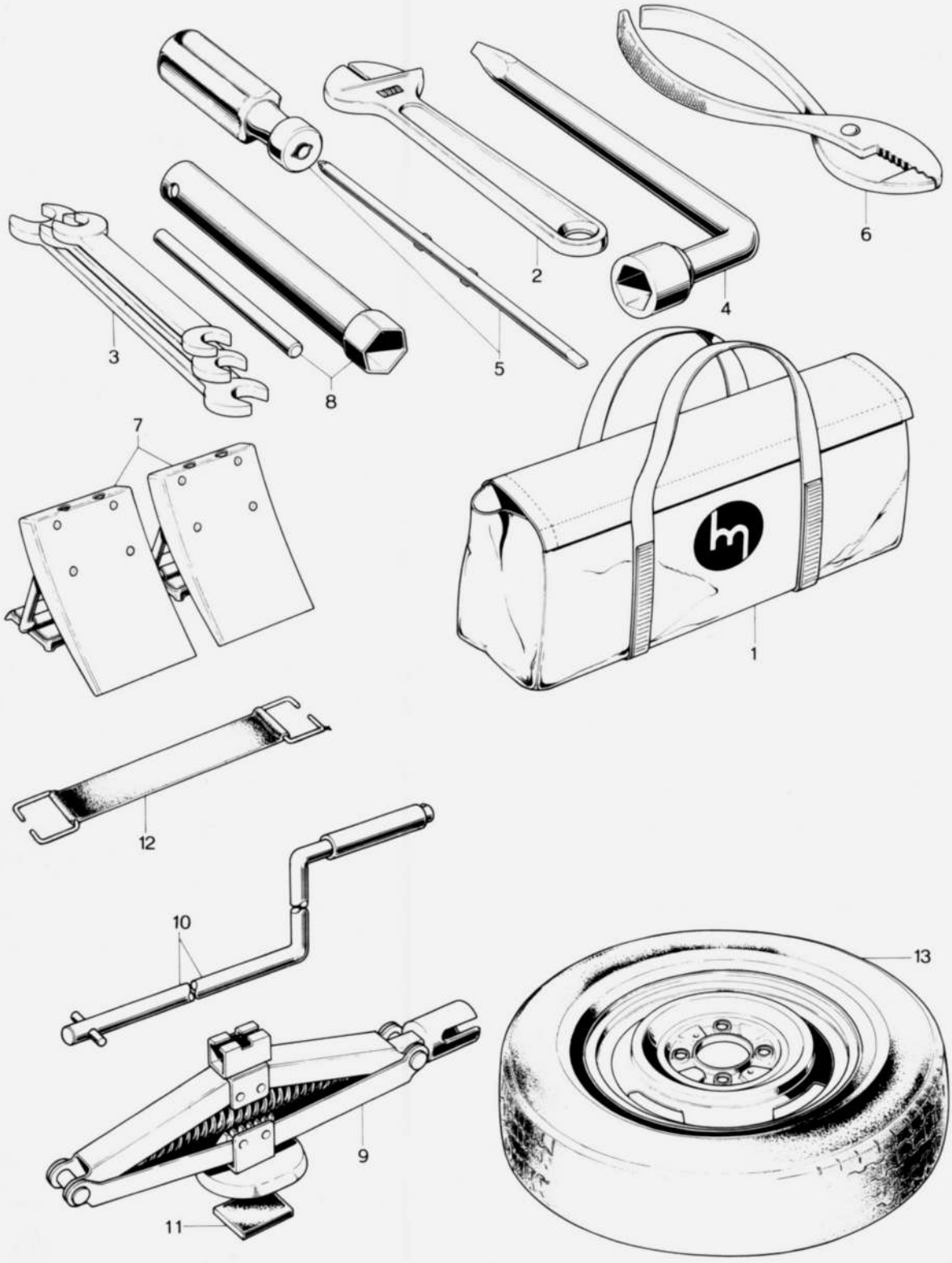
1
2
3
4
5
6
7
8
9
10
11
12
13

No.	Part Number	Description	Q'ty	Remarks
	0839 68 660	TOOL Ass'y	1	
1	0839 68 670A	Bag	1	
●	0839 68 670B	Bag	1	Car No. 111947 72/1~
2	0110 68 050	Wrench, Monkey - 8 inch	1	
●	0866 68 680	Wrench, Monkey	1	Car No. 126999 72/4~ 73/9~ Discarded.
3	0249 68 060	Spanner Set	1	
●	0249 68 060A	Spanner Set	1	Car No. 126999 72/4~
4	0810 68 070	Wrench, Hub Nut	1	
●	0810 68 070A	Wrench, Hub Nut.	1	73/10~
5	0187 68 110	Driver Set	1	
●	0187 68 110A	Driver Set	1	Car No. 126999 72/4~
6	0118 68 180	Plier, 6 inch	1	
●	0118 68 180A	Plier, 6 inch	1	Car No. 126999 72/4~
7	0208 68 230	Stopper, Wheel	2	
8	0839 68 720	Wrench, Plug	1	
9	0305 68 800A	Jack	1	
	0305 68 800B	Jack	1	Car No. 83266 71/6~
	0305 68 800E	Jack	1	Car No. 99797 71/10~
10	0305 68 810A	Handle	1	
11	0305 56 204	Seat, Jack	1	Car No. 98523 71/9~ Discarded
12	0223 56 950	Clamp, Jack	1	
13	9962 03 6413	Tire, Low Profile—6.45S13—4 PR	1	Selective use
	9962 04 1653	Tire, Radial—165SR13	1	Selective use
	9965 05 4530	Wheel, Disc—4½—J×13WDC, Sedan use	1	©
	9965 06 4530	Wheel, Disc—4½—J×13WDC, Coupe use	1	©

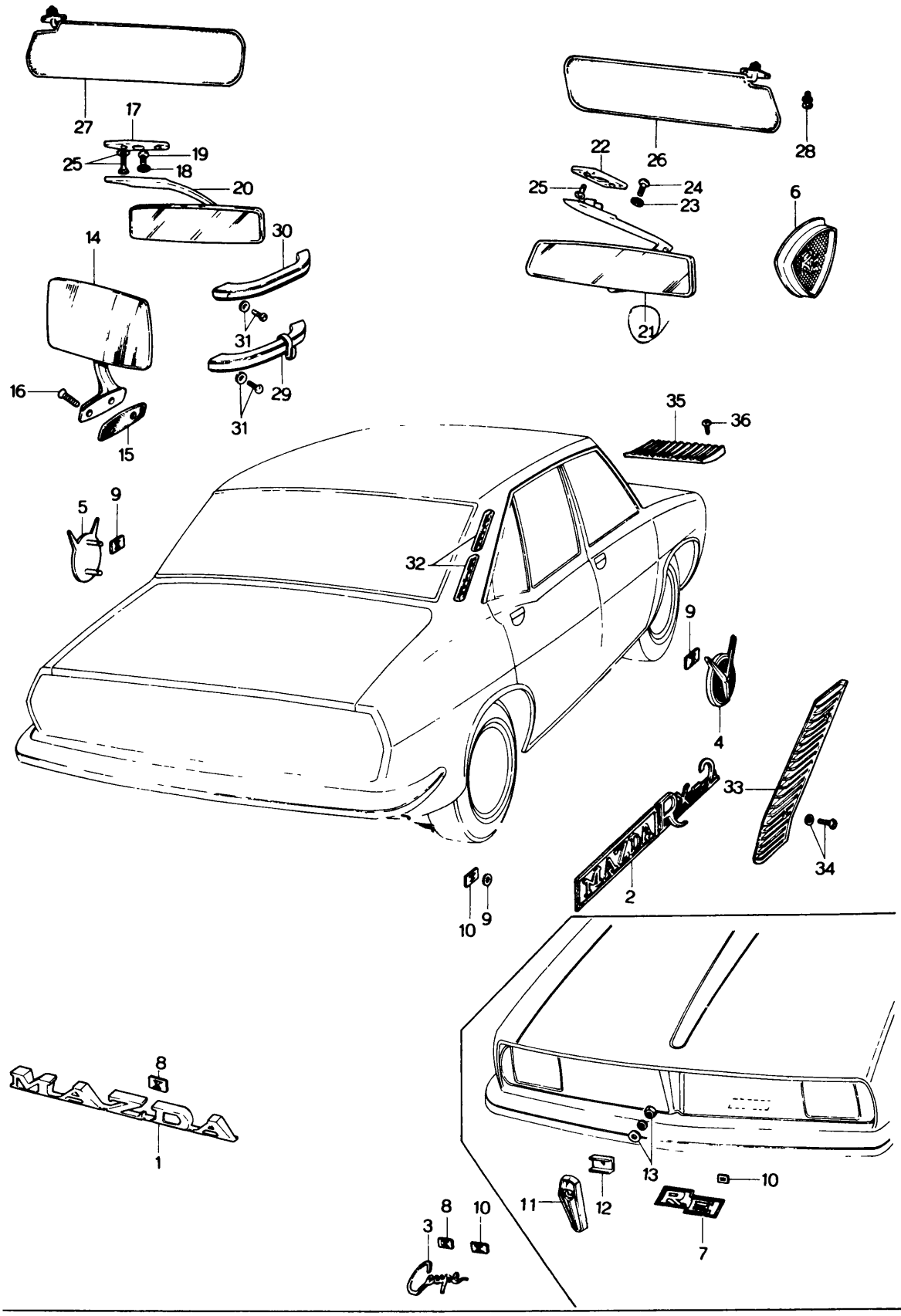
27
17
25
19
18
20
14
30
31
16
29
31
15
26
28
22
25
24
23
6
21
35
36
5
9
32
9
4
33
34
2
10
9
8
1
13
10
11
12
8
10
3
7

No	Part Number	Description	Q'ty	Remarks
1	0305 69 052A	Ornament, MAZDA	1	
2	2324 69 053A	Ornament, MAZDA - RX - 2	2	
3	0839 69 054B	Ornament, Coupe	1	1662, 1663, 1664, 1665 Discarded
4	0305 69 056	Mark, Symbol (R)	1	1971 Model
	0398 69 056-01	Mark, Symbol (Brown)	2	1972, 1973 Model
5	0305 69 057	Mark, Symbol (L)	1	
6	0820 69 066A	"RE" Mark	2	
	0881 69 067	"RE" Mark	2	Car No. 106922 $^{71}/_{12}$ ~ ○
7	0839 69 076A	Mark, "RE" - Front	1	
8	0187 69 049A	Nut, Speed	3	
9	0730 69 057A	Packing	8 10	Sedan use Coupe use
10	99579 3000	Nut, Speed	10 12	Sedan use Coupe use
11	0839 69 071-01	Emblem, Front (Blue)	1	
12	0839 69 077A	Plate, Set	2	
13	99906 0400	Nut, Front Emblem	2	
	99952 0400	Washer, Plain	2	
	99971 0400	Washer, Spring	2	
14	2850 69 090	View Mirror, Rear (L)	1	
15	2850 69 101	Packing	1	
16	99772 0516	Screw, Rear View Mirror	2	
	0310 69 170	**MIRROR,** Room - Sedan use	1	
17	0839 69 171	Base	1	
18	0839 69 173	Washer	2	
19	0839 69 174	Screw	2	
20	0310 69 190	Mirror, Room	1	

No	Part Number	Description	Q'ty	Remarks	
21	0839 69 170	**MIRROR,** Room-Coupe use	1		
22	0839 69 171	Base	1		
23	0839 69 173	Washer	2		
24	0839 69 174	Screw	2		
25	907614 5 16	Screw, Set - Room Mirror } 1971 Model	2		
	908614 5 16	Screw, Set - Room Mirror } 1971 Model	2	Car No. 193903 $^{71}/_{11}$ ~ ○	
	908314 5 16	Screw, Set - Room Mirror 1972, 1973 Model	2		
26	2080 69 210-00	Visor Ass'y, Sun (R) - Coupe use (Gray)	1		©
	2080 69 240-09	Visor Ass'y, Sun (R) - Coupe use (Black)	1		©
	1668 69 210-00	Visor Ass'y, Sun (R) - Coupe use (Gray)	1	1973 Model ~ △	©
•	1668 69 210-09	Visor Ass'y, Sun (R) - Coupe use (Black)	1	1973 Model ~ △	©
•	1668 69 210A-09	Visor Ass'y, Sun (R) - Coupe use (Black)	1	Car No. $^{72}/_{12}$ ~ ○	©
	2850 69 210-00	Visor Ass'y, Sun (R) - Sedan use (Gray)	1		©
	1674 69 210-00	Visor Ass'y, Sun (R) - Sedan use (Gray)	1	1973 Model ~ △	©
•	1674 69 210A-00	Visor Ass'y, Sun (R) - Sedan use (Gray)	1	Car No. $^{72}/_{12}$ ~ ○	©
27	2080 69 240-00	Visor Ass'y, Sun (L) - Coupe use (Gray)	1		©
	2080 69 240-09	Visor Ass'y, Sun (L) - Coupe use (Black)	1		©
•	1668 69 240-00	Visor Ass'y, Sun (L) - Coupe use (Grey)	1	1973 Model ~ △	©
•	1668 69 240A-00	Visor Ass'y, Sun (L) - Coupe use (Grey)	1	Car No. $^{72}/_{12}$ ~ ○	©
•	1668 69 240-00	Visor Ass'y, Sun (L) - Coupe use (Black)	1	1973, Model ~ △	©
•	1668 69 240A-09	Visor Ass'y, Sun (L) Coupe use (Black)	1	Car No. $^{72}/_{12}$ ~ ○	©
	2850 69 240-00	Visor Ass'y, Sun (L) - Sedan use (Gray)	1		©
	1674 69 240-09	Visor Ass'y, Sun (L) - Sedan use (Gray)	1	1973 Model ~ △	©
•	1674 69 240A-00	Visor Ass'y, Sun (L) - Sedan use (Gray)	1	Car No. $^{72}/_{12}$ ~ ○	©
28	99837 0516C	Screw, Sun Visor	4		
	99975 0500C	Washer, Toothed	4		
29	0305 69 910-01	Handle, Assist (Black)	2		©
30	0305 69 920-01	Handle, Assist (Black)	1		©
31	908386 6 20	Screw, Set - Assist Handle	6		

No.	Part Number	Description	Q'ty	Remarks	
32	0833 70 941B-00	Garnish, Coupe use (Black)	4		©
33	0305 70 951-01	Grille, Air Flow (R) (Gray)	1	Sedan use	©
	0305 71 951-01	Grille, Air Flow (L) (Gray)		Sedan use	©
34	908641 4 12B	Screw, Set - Air Flow Grille	4		
35	0305 70 991A-02	Grille (R) (Gray)	1		©
	0305 71 991A-02	Grille (L) (Gray)	1		©
36	99863 0412B	Screw, Grille	4		

TRIM & TOP CEILING

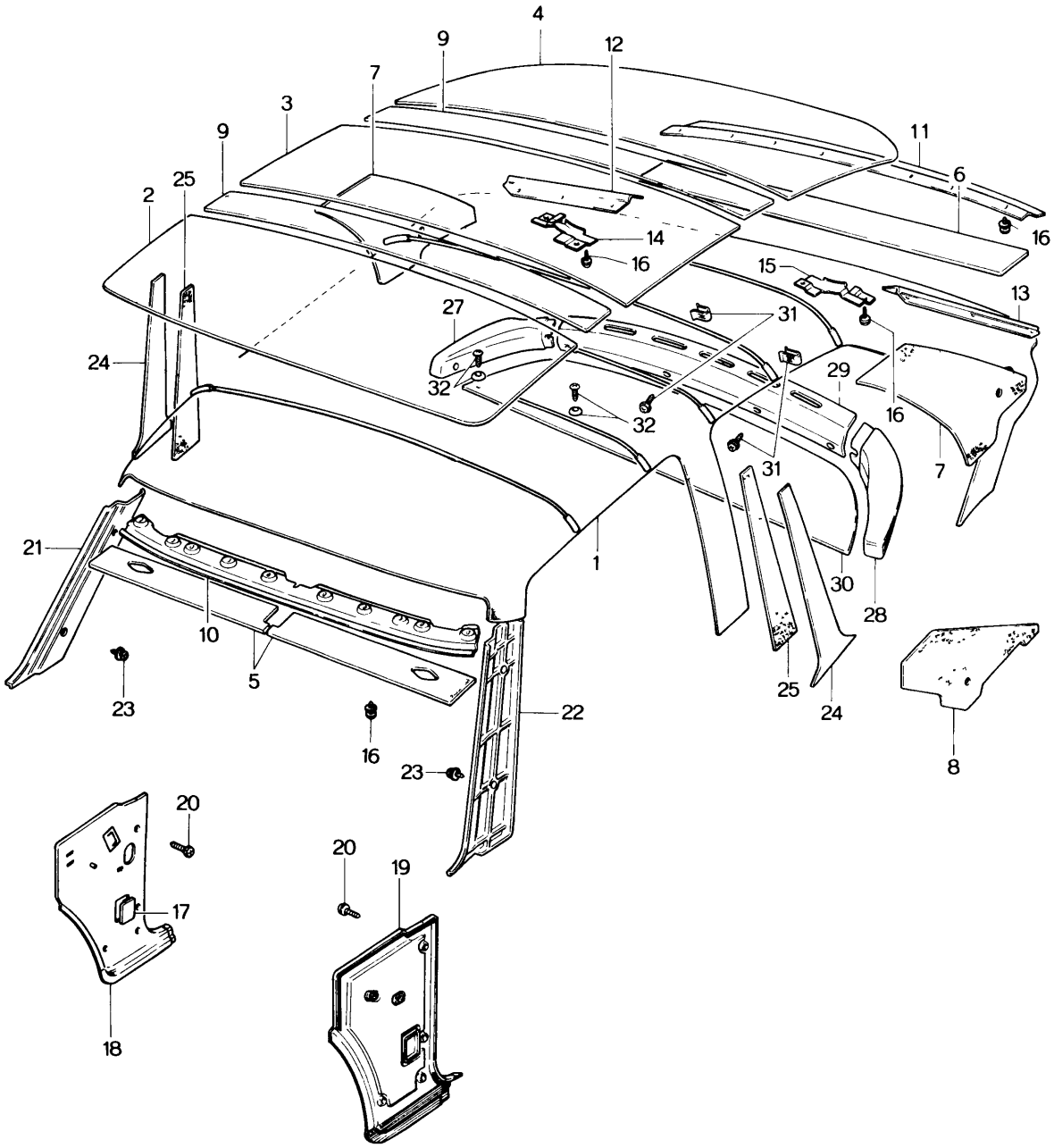

No.	Part Number	Description	Q'ty	Remarks	
1	0305 69 290C-00	Ceiling, Top - Sedan use	1		©
	1674 69 290-00	Ceiling, Top - Sedan use (Grey)	1	1973 Model ~ △	©
	0839 69 290A-10	Ceiling, Top - Coupe use (Gray)	1		©
	0839 69 290A-09	Ceiling, Top - Coupe use (Black)	1		©
	1668 69 290-10	Ceiling, Top - Coupe use (Grey)	1	1973 Model ~ △	©
•	1668 69 290-09	Ceiling, Top - Coupe use (Black)	1	1973 Model ~ △	©
2	0305 69 311B	Insulator No. 1, Roof - Sedan use	1		
•	0839 69 311B	Insulator No. 1, Roof - Sedan use	1	Car No. 141225 $^{72}/_{9}$ ~ ○	
	0839 69 311A	Insulator No. 1, Roof - Coupe use	1		
•	0839 69 311B	Insulator No. 1, Roof - Coupe use	1	Car No. 141225 $^{72}/_{9}$ ~ ○	
3	0305 69 312B	Insulator No. 2, Roof - Sedan use	1		
	0398 69 312	Insulator No. 2, Roof - Sedan use	1	Car No. 79731 $^{71}/_{6}$ ~ △	
	0839 69 312B	Insulator No. 2, Roof - Coupe use	1		
	0881 69 312	Insulator No. 2, Roof - Coupe use	1	Car No. 79731 $^{71}/_{6}$ ~ △	
4	0305 69 313A	Insulator No. 3, Roof - Sedan use	1		
	0839 69 313A	Insulator No. 3, Roof - Coupe use	1		
5	0305 69 315	Pad, Header - Front	2		
6	0305 69 316	Pad, Header - Rear	1		
7	0305 69 317A	Pad, Pillar - Rear (R) } Sedan use	1		
	0305 69 317B	Pad, Pillar - Rear (R) } Sedan use	1	Car No. 140195 $^{72}/_{8}$ ~ △	
	0305 69 318A	Pad, Pillar - Rear (L) } Sedan use	1		
	0305 69 318B	Pad, Pillar - Rear (L) } Sedan use	1	Car No. 140195 $^{72}/_{8}$ ~ △	
8	0839 69 314A	Pad, Pillar - Rear, Coupe use	2		
	0839 69 314B	Pad, Pillar - Rear, Coupe use	2	Car No. 140195 $^{72}/_{8}$ ~ △	
9	0317 69 319	Insulator No. 3, Roof	2		
10	0305 69 321A	Plate, Fixing (Frt.) - Sedan use	1		
	0839 69 321A	Plate, Fixing (Frt.) - Coupe use	1		
11	0305 69 341B	Plate No. 1, Fixing (Rr.) - Sedan use	1		
	0839 69 341B	Plate No. 1, Fixing (Rr.) - Coupe use	1		
12	0305 69 342C	Plate No. 2, Fixing (Rr.) - Sedan use	1		
	0839 69 342D	Plate No. 2, Fixing (Rr.) - Coupe use	1		
13	0305 69 343C	Plate No. 3, Fixing (Rr.) - Sedan use	1		
	0839 69 343D	Plate No. 3, Fixing (Rr.) - Coupe use	1		
14	0839 69 344A	Plate No. 4, Fixing (Rr.) } Coupe use	1		
15	0839 69 345A	Plate No. 4, Fixing (Rr.) } Coupe use	1		
16	908640 4 12	Screw, Set - Fixing Plate	24		
17	0305 69 351-00	Cover, Hole - Trim (Black)	2		©

No	Part Number	Description	Q'ty	Remarks	
18	2835 69 360-00	Trim, Side (R) (Black)	1		©
	2835 69 360A-00	Trim, Side (R) (Black)	1	Car No. 70884 $^{71}/_{4}$ ~ ○	©
•	2835 69 360B-00	Trim, Side (R) (Black)	1	Car No. $^{73}/_{1}$ ~ ○	©
•	2835 69 360C-00	Trim, Side (R) (Black)	1	Car No. $^{73}/_{5}$ ~ ○	©
19	2835 69 380-00	Trim, Side (L) (Black)	1		©
	2835 69 380A-00	Trim, Side (L) (Black)	1	Car No. 70984 $^{71}/_{4}$ ~ ○	©
•	2835 69 380B-00	Trim, Side (L) (Black)	1	$^{73}/_{1}$ ~ ○	©
•	2835 69 380C-00	Trim, Side (L) (Black)	1	$^{73}/_{5}$ ~ ○	©
20	908624 4 20B	Screw Set, Side Trim	8		
21	0305 69 411B-00	Trim Ass'y, Front Pillar (R) - Sedan use (Black)	1		©
	0839 69 411B-00	Trim Ass'y, Front Pillar (R) - Coupe use (Black)	1		©
22	0305 69 431B-00	Trim Ass'y, Front Pillar (L) - Sedan use (Black)	1		©
	0839 69 431B-00	Trim Ass'y, Front Pillar (L) - Coupe use (Black)	1		©
23	908624 4 12B	Screw Set, Front Pillar Trim	4		
	99862 0412B	Screw, Front Pillar Trim	4		
24	0305 69 451	Pad, Center Pillar - Sedan use	2		
	0305 69 451A	Pad, Center Pillar - Sedan use	2	Car No. 140195 $^{72}/_{8}$ ~ △	
25	0839 69 318	Pad, Center Pillar - Coupe use	2		
	0839 69 318A	Pad, Center Pillar - Coupe use	2	Car No. 140195 $^{72}/_{8}$ ~ △	
26	0305 69 461A-01	Trim, Center Pillar (Black) (Sedan)	2		©
	0305 69 461B-01	Trim, Center Pillar (Black) (Sedan)	2	Car No. 140195 $^{72}/_{8}$ ~ △	©
	0305 69 461A-04	Trim, Center Pillar (Brown) (Sedan)	2		©
	0305 69 461B-04	Trim, Center Pillar (Brown) (Sedan)	2	Car No. 140195 $^{72}/_{8}$ ~ △	©
•	0305 69 461A-16	Trim, Center Pillar (Greyish Yellow) (Sedan)	2		©
•	0305 69 461B-16	Trim, Center Pillar (Greyish Yellow) (Sedan)	2	Car No.	©
27	0305 69 861-00	Trim, Package Tray Upper (R) - Sedan use (Black)	1		©
	0839 69 861A-00	Trim, Package Tray Upper (R) - Coupe use (Black)	1		©
28	0305 69 862-00	Trim, Package Tray Upper (L) - Sedan use (Black)	1		©
	0839 69 862A-00	Trim, Package Tray Upper (L) - Coupe use (Black)	1		©
29	0305 69 863-00	Trim, Package Tray (C) - Sedan use (Black)	1		©
	0839 69 863-00	Trim, Package Tray (C) - Coupe use (Black)	1		©
30	0305 69 870-00	Trim, Package Tray Lower (Sedan Selective use (Black))	1		©
	0305 69 870A-00	Trim, Package Tray Lower (Sedan Selective use (Black))	1	$^{72}/_{1}$ ~ ○	©
	0841 69 870-00	Trim, Package Tray Lower (With Hole for Stereo Loud Speaker) (Sedan Selective use (Black))	1		©
	0841 69 870A-00	Trim, Package Tray Lower (With Hole for Stereo Loud Speaker) (Sedan Selective use (Black))	1	$^{72}/_{1}$ ~ ○	©
	0310 69 870-00	Trim, Package Tray Lower (Coupe Selective use (Black))	1		©
	0310 69 870A-00	Trim, Package Tray Lower (Coupe Selective use (Black))	1	$^{72}/_{1}$ ~ ○	©
	0839 69 870-00	Trim, Package Tray Lower (With Hole for Stereo Loud Speaker) (Coupe Selective use (Black))	1		©
	0839 69 870B-00	Trim, Package Tray Lower (With Hole for Stereo Loud Speaker) (Coupe Selective use (Black))	1	$^{72}/_{1}$ ~ ○	©
31	908624 5 20B	Screw, Set - Package Tray Trim Upper	6		
	99898 0500	Nut, Spring	6		
32	906624 5 20B	Screw, Set - Package Tray Trim Lower	3		
	99967 0500B	Washer	3		

TRIM & FLOOR MAT

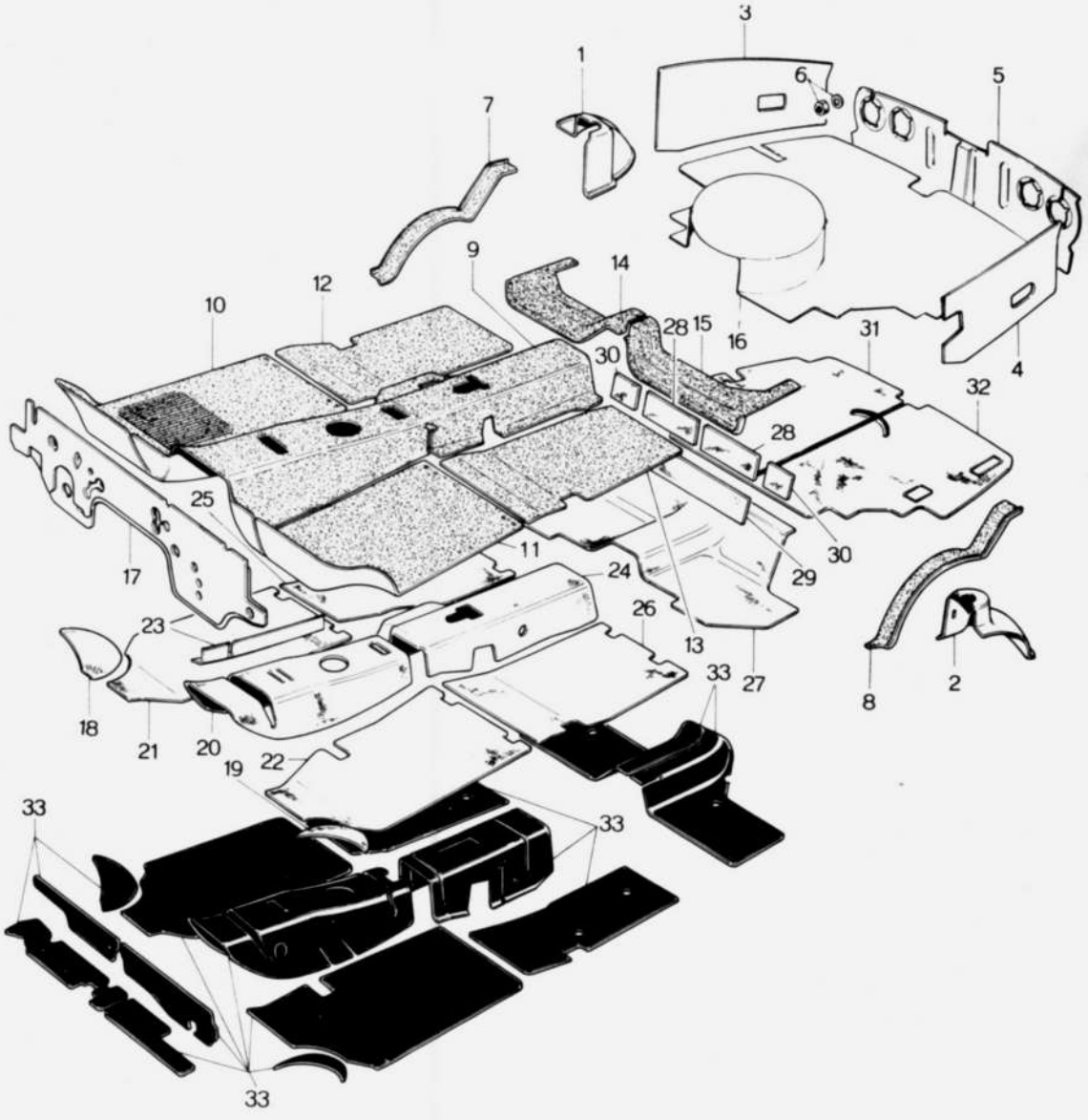

No.	Part Number	Description	Q'ty	Remarks	
1	0839 68 580C-00	Trim, Trunk (R) - Coupe use (Black)	1	1971 Model	©
	0841 68 580D-00	Trim, Trunk (R) - Sedan use (Black)	1		©
	0305 68 580A-00	Trim, Trunk (R) (Black)	1	1972, 1973 Model	©
2	0839 68 590A-00	Trim, Trunk (L) (Black)	1		©
3	0305 68 610B-00	Trim, Trunk (R) - Side (Black)	1		©
	0305 68 610C-00	Trim, Trunk (R) - Side (Black)	1	Car No. 85627 ~ ○	©
4	0305 68 620B-00	Trim, Trunk (L) - Side (Black)	1		©
	0305 68 620C-00	Trim, Trunk (L) - Side (Black)	1	Car No. 85627 ~ ○	©
5	0839 68 630B-00	Trim, Trunk End (Black)	1		©
	0839 68 630C-00	Trim, Trunk End (Black)	1	Car No. 96092 ~ ○	©
6	99907 0500B	Nut	4		
	99952 0516B	Washer, Plain	4		
7	0305 69 541A-01	Trim, Tire House (R) (Black)	1		©
	0305 69 541B-01	Trim, Tire House (R) (Black)	1	Car No. 140195 ~ △	©
8	0305 69 542A-01	Trim, Tire House (L) (Black) (Sedan)	1		©
	0305 69 542B-01	Trim, Tire House (L) (Black)	1	Car No. 140195 ~ △	©
9	2080 69 611 -26	Mat (Frt., C) (Black)	1		©
	2080 69 611A-26	Mat (Frt., C) (Black) (Manual)	1	Car No. 92431 ~ ×	©
●	2080 69 611B-34	Mat (Frt., C) (Black)	1	Car No. 102235 ~ ○	©
●	2853 69 611C-34	Mat (Frt., C) (Black) (Automatic)	1		©
10	2080 69 612 -26	Mat (Frt., R) (Black)	1		©
	2080 69 612A-26	Mat (Frt., R) (Black) (Manual)	1	Car No. 78680 ~ ○	©
●	2080 69 612B-34	Mat (Frt., R) (Black)	1	Car No. 102235 ~ ○	©
●	2853 69 612C-34	Mat (Frt., R) (Black) (Automatic)	1		©
11	2080 69 613 -26	Mat (Frt., L) (Black)	1		©
	2080 69 613A-26	Mat (Frt., L) (Black) (Manual)	1	Car No. 78680 ~ ○	©

TRIM & FLOOR MAT

No.	Part Number	Description	Q'ty	Remarks	
●	2080 69 613B-34	Mat (Frt., L) (Black) (Manual)	1	Car No. 102235 7/11～○	©
●	2853 69 613C-34	Mat (Frt., L) (Black) (Automatic)	1		©
12	0833 69 617 -26	Mat (Rr., R) (Black) } (Manual)	1		©
●	0833 69 617A-34	Mat (Rr., R) (Black) } (Manual)	1	Car No. 102235 7/11～○	©
●	0307 69 617A-34	Mat (Rr., R) (Black) (Automatic)	1		©
13	0833 69 618 -26	Mat (Rr., L) (Black)	1		©
●	0833 69 618A-34	Mat (Rr., L) (Black)	1	Car No. 102235 7/11～○	©
14	2090 69 625 -08	Mat (R), End (Black)	1		©
15	2090 69 626 -08	Mat (L), End (Black)	1		©
16	0839 69 627D-05	Mat, Trunk Room (Black)	1	1971 Model	©
●	0881 69 627 -~~15~~ 05	Mat, Trunk Room (Black)	1	1972, 1973 Model	©
17	2080 69 660B	Insulator Ass'y	1		
●	2080 69 660C	Insulator Ass'y	1	7/8～○	
18	0305 69 681	Pad (R), Tire House	1		
19	0305 69 682	Pad (L), Tire House	1		
20	0839 69 683A	Pad (C), Front (Manual)	1		
●	0308 69 683	Pad (C), Front (Automatic)	1		
21	0839 69 684	Pad (R), Front (Manual)	1		
●	2853 69 684	Pad (R), Front (Automatic)	1		
22	0839 69 685	Pad (L), Front (Manual)	1		
●	2853 69 685	Pad (L), Front (Automatic)	1		
23	0839 69 686	Pad, Front	1		
●	1570 69 686	Pad, Front	1	Car No. 117998 7/2～○	
24	0839 69 687A	Pad (C), Rear } (Manual)	1		
	0839 69 687B	Pad (C), Rear } (Manual)	1	Car No. 92431 7/8～△	
●	0303 69 687B	Pad (C), Rear (Automatic)	1		
25	0839 69 688	Pad (R), Rear	1		

No.	Part Number	Description	Q'ty	Remarks
26	0839 69 689	Pad (L), Rear	1	
● Ⓝ	1570 69 691	Pad, Tunnel Side Rear	1	1973 Model
27	0305 69 692	Pad, End	1	
28	0305 69 693	Pad No. 1, Package Tray	2	
29	0305 69 694	Pad No. 2, Package Tray	1	
30	0305 69 695	Pad No. 3, Package Tray	2	
31	0839 69 696D	Pad (R), Trunk	1	
32	0839 69 697D	Pad (L), Trunk	1	
● Ⓝ	1663 69 699A	Pad, Heat Insulation-Trunk Room	1	1973 Model
33	0208 76 071	Silencer	—	

A 30 cm square object in sheet form is supplied under part No. 0208 76 071
(Floor silencer revised piece)

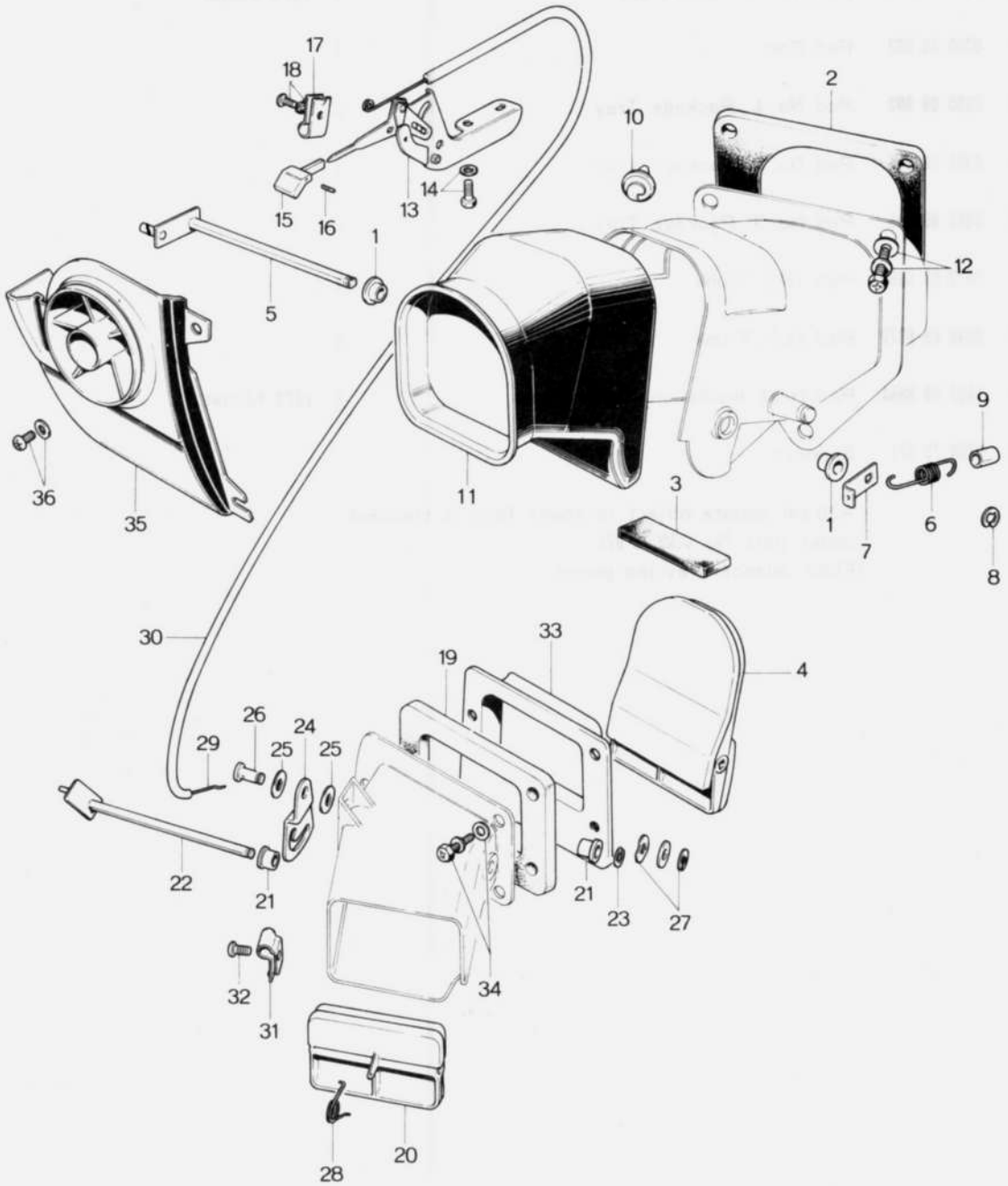
17
18
15
16
13
14
10
2
1
5
12
36
35
11
3
1
6
9
7
8
30
33
19
4
26
29
25
24
25
22
21
21
23
27
32
31
34
28
20

	No.	Part Number	Description	Q'ty	Remarks
●		0305 70 310B	VENTILATOR Ass'y, First (R)	1	
●		0305 71 310B	VENTILATOR Ass'y, First (L)	1	
●	1	0317 70 307	Bush	4	
●	2	0305 70 312	Gasket	2	
●	3	0259 70 315	Cushion	2	
●	4	0305 70 320	Flap Ass'y	2	
●	5	0305 70 330	Lever Ass'y	2	
●	6	0305 70 342	Spring	2	Car No. 73/1 Without Car Cooler
●	7	0305 70 343	Lever (R)	1	
●		0305 71 343	Lever (L)	1	
●	8	99576 0400	Stop Ring	2	
●	9	99335 06001	Pipe, Vinyl	2	
●	10	0305 70 335	Pipe, Clip	2	
●	11	0305 70 345	Ventilator	2	
	12	99785 0520	Bolt, Ventilator	4	
		99785 0516	Bolt, Ventilator	4	Car No. 52327 71/1 ~
		99952 0500	Washer, Plain	4	
		99971 0500	Washer, Spring	4	
	13	0305 70 380C	Link Ass'y (R)	1	
		0305 71 380C	Link Ass'y (L)	1	
	14	908047 5 16	Set Bolt, Link	4	
	15	0305 70 392C	Knob (R)	1	
		0305 71 392C	Knob (L)	1	
	16	99838 0312B	Screw, Knob	2	
	17	0305 70 395B	Clamp, Wire	2	

VENTILATOR

No.	Part Number	Description	Q'ty	Remarks
18	908338 4 10	Screw, Set-Wire Clamp	2	
	0305 70 350F	VENTILATOR Ass'y, Second (R)	1	
	0305 71 350F	VENTILATOR Ass'y, Second (L)	1	
19	0305 70 353	Gasket	2	
20	0305 70 360	Flap Ass'y	2	
21	0317 70 307	Bush	4	
22	0305 70 370	Lever	2	
23	99576 0400	Ring, Stop	2	
24	0305 70 375	Clamp (R)	1	
	0305 71 375	Clamp (L)	1	
25	0633 52 148	Washer	4	
26	99230 0811	Pin	2	
27	99972 0800	Washer, Wave-Clamp	2	
	99952 0816	Washer, Plain	2	
	99576 0500	Ring, Stop	2	
28	0305 70 397	Spring	2	
Ⓝ	0305 70 390	Wire Ass'y	2	Car No. 69368 7/4~ Added Anew
29	0305 70 393A	Wire	2	☆
30	0305 70 399	Tube, Outer	2	Order Under 0305 70 390 ☆
31	0305 70 396	Clamp, Wire (R)	1	
	0305 71 396	Clamp, Wire (L)	1	
32	99860 0410	Screw, Wire Clamp	2	
	99852 0400	Washer, Plain	2	

No.	Part Number	Description	Q'ty	Remarks
33	0305 70 352A	Packing (R)	1	
	0305 71 352A	Packing (L)	1	
34	99785 0520	Bolt, Ventilator	6	
	99952 0500	Washer, Plain	6	
	99971 0500	Washer, Spring	6	
35	0305 70 400A	Panel, Decoration (R)	1	
	0305 71 400A	Panel, Decoration (L)	1	
36	908331 5 12B	Screw, Set-Decoration Panel	4	
●	99831 0512B	Screw-Decoration Panel	4	Car No. 86391 71/~)
● Ⓝ	999670 5 00B	Nut	2	Car No. 86391 71/~Added Anew

WINDOW GLASS & MOULDING
(ALL COUPE MODELS)

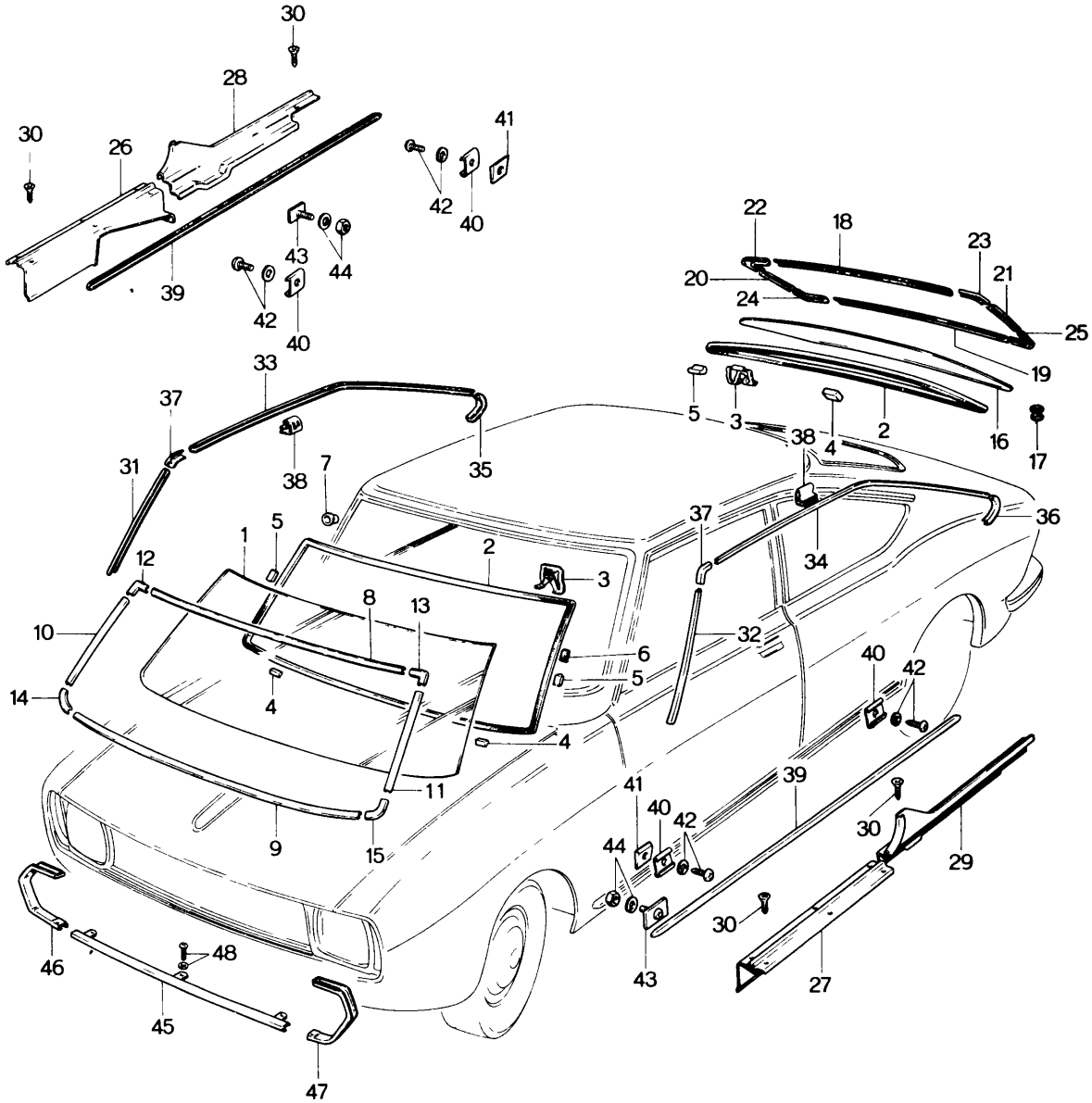

WINDOW GLASS & MOULDING
(ALL COUPE MODELS)

70 71

No.	Part Number	Description	Q'ty	Remarks
1	2080 70 441	Front Windshield Glass, Blue Pane (H.P.R.)	1	
	2866 70 441	Front Windshield Glass, Transparent (H.P.R.)	1	
2	0305 70 443B	Dam	2	
3	0305 70 445B	Clip	38	
4	0305 70 447B	Spacer "A"	4	
5	0305 70 448A	Spacer "B"	4	
6	0839 70 449	Spacer "C"	4	
7	0305 53 999	Stud	38	
8	0839 70 451A	Mould, Front Upper	1	
9	0305 70 452A	Mould, Front Lower	1	
10	0839 70 453A	Mould, Front (R)	1	
11	0839 71 453A	Mould, Front (L)	1	
12	0839 70 454A	Joint (R)	1	
13	0839 71 454A	Joint (L)	1	
14	0839 70 455	Joint (R)	1	
15	0839 71 455	Joint (L)	1	
16	0833 70 471	Glass, Back Window-Blue Pane	1	
	0839 70 471C	Glass, Back Window-Blue Pane (With Heating Wire)	1	
	2866 70 471	Glass, Back Window-Transparent	1	
	2867 70 471C	Glass, Back Window-Transparent (With Heating Wire)	1	
17	0839 70 479	Grommet , Heating Wire	1	
18	0839 70 481A	Mould, Rear Upper	1	
19	0839 70 482A	Mould, Rear Lower	1	
20	0839 70 483A	Mould, Rear (R)	1	
21	0839 71 483A	Mould, Rear (L)	1	

WINDOW GLASS & MOULDING
(ALL COUPE MODELS)

No.	Part Number	Description	Q'ty	Remarks	
22	0839 70 484A	Joint (R)	1		
23	0839 71 484A	Joint (L)	1		
24	0839 70 485A	Joint (R)	1		
25	0839 71 485A	Joint (L)	1		
26	0839 70 802A-00	Plate, Scarf (Frt., R) (Black)	1		©
27	0839 71 802A-00	Plate, Scarf (Frt., L) (Black)	1		©
28	0839 70 803A-00	Plate, Scarf (Rr., R) (Black)	1		©
	0830 70 803B-00	Plate, Scarf (Rr., R) (Black)	1	Car No. 106922 71/12~○	©
29	0839 71 803B-00	Plate, Scarf (Rr., L) (Black)	1		©
	0839 71 803C-00	Plate, Scarf (Rr., L) (Black)	1	Car No. 106922 71/12~○	©
30	99862 0414B	Screw, Scarf Plate	20		
31	0839 70 821	Mould, Drip (Frt., R)	1		
•	0839 70 821A	Mould, Drip (Frt., R)	1	73/11~○	
32	0839 71 821	Mould, Drip (Frt., L)	1		
•	0839 71 821A	Mould, Drip (Frt., L)	1	73/11~○	
33	0839 70 822	Mould, Drip (C., R)	1		
34	0839 71 822	Mould, Drip (C., L)	1		
35	0839 70 823B	Mould, Drip End (R)	1		
	0881 70 823A	Mould, Drip End (R)	1	Car No. 79731 71/6~○	
•	0881 70 823B	Mould, Drip End (R)	1	Car No. 122636 73/3~○	
36	0839 71 823B	Mould, Drip End (L)	1		
	0881 71 823A	Mould, Drip End (L)	1	Car No. 79731 71/6~○	
•	0881 71 823B	Mould, Drip End (L)	1	Car No. 122636 73/3~○	
37	0305 70 825	Corner (Frt.)	2		
38	0305 70 827A	Clip	18		
39	0305 70 851	Mould, Step	2		
40	0305 70 861B	Clip	10		
•	0305 70 861C	Clip	10	Car No. 98211 71/9~○	
41	0839 70 865	Spacer	4		
42	99863 0512	Screw, Step Mould	10		
	99971 0500	Washer, Spring	10		
43	0223 70 870	Plate, Set-Step Mould	2		
44	99906 0400	Nut, Step Mould	2		
	99971 0400	Washer, Spring	2		
45	0305 70 911	Mould, Front No. 1	1		

WINDOW GLASS & MOULDING
(ALL COUPE MODELS)

70 71

No.	Part Number	Description	Q'ty	Remarks
46	0305 70 921	Mould, Front No. 2 (R)	1	
47	0305 71 921	Mould, Front No. 2 (L)	1	
48	99863 0512	Screw, Front Mould No. 1, No. 2	9	
	99952 0500	Washer, Plain	9	

WINDOW GLASS & MOULDING
(ALL SEDAN MODELS)

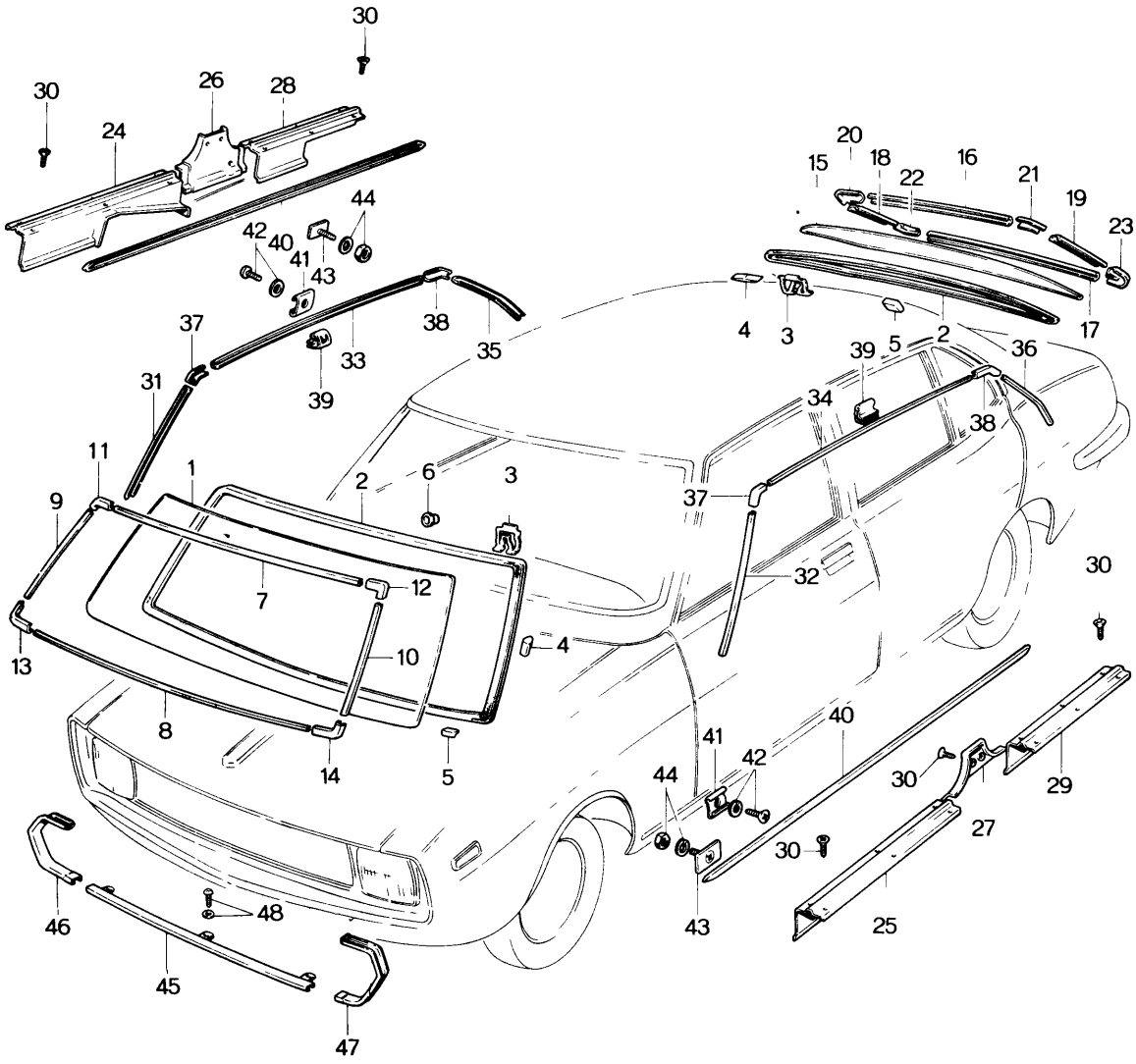

WINDOW GLASS & MOULDING
(ALL SEDAN MODELS)

70 71

No.	Part Number	Description	Q'ty	Remarks
1	2835 70 441	Glass, Windshield-Blue Pane (H.P.R.)	1	
	2862 70 441	Glass, Windshield-Transparent (H.P.R.)	1	
2	0305 70 443B	Dam	2	
3	0305 70 445B	Clip	38	
4	0305 70 447B	Spacer "A"	4	
5	0305 70 448A	Spacer "B"	4	
6	0305 53 999	Stud	38	
7	0305 70 451A	Mould, Front Upper	1	
8	0305 70 452A	Mould, Front Lower	1	
9	0305 70 453A	Mould, Front (R)	1	
10	0305 71 453A	Mould, Front (L)	1	
11	0305 70 454A	Joint (R)	1	
12	0305 71 454	Joint (L)	1	
13	0305 70 455A	Joint (R)	1	
14	0305 71 455A	Joint (L)	1	
15	0301 70 471	Glass, Back Window-Transparent	1	
	0304 70 471	Glass, Back Window-Blue Pane	1	
	0305 70 471D	Glass, Back Window-Blue Pane (With Heating Wire)	1	
	2862 70 471C	Glass, Back Window-Transparent (With Heating Wire)	1	
16	0305 70 481A	Mould, Rear Upper	1	
17	0305 70 482A	Mould, Rear Lower	1	
18	0305 70 483A	Mould, Rear (R)	1	
19	0305 71 483A	Mould, Rear (L)	1	
20	0305 70 484B	Joint (R)	1	
21	0305 71 484	Joint (L)	1	

WINDOW GLASS & MOULDING
(ALL SEDAN MODELS)

No.	Part Number	Description	Q'ty	Remarks	
22	0305 70 485A	Joint (R)	1		
23	0305 71 485A	Joint (L)	1		
24	0305 70 802-00	Plate, Scarf (Frt., R) (Black)	1		©
25	0305 71 802-00	Plate, Scarf (Frt., L) (Black)	1		©
26	0305 70 803A-00	Plate, Scarf (C., R) (Black)	1		©
27	0305 71 803B-00	Plate Scarf (C, L) (Black)	1		©
28	0305 70 804A-00	Plate, Scarf (Rr., R) (Black)	1		©
29	0305 71 804A-00	Plate, Scarf (Rr, L) (Black)	1		©
30	99862 0414B	Screw, Tapping-Scarf Plate	26		
31	0305 70 821	Mould, Drip (Frt., R)	1		
●	0305 70 821A	Mould, Drip (Frt., R)	1	72/11~O	
32	0305 71 821	Mould, Drip (Frt., L)	1		
●	0305 71 821A	Mould, Drip (Frt., L)	1	72/11~O	
33	0305 70 822	Mould, Drip (C., R)	1		
34	0305 71 822	Mould, Drip (C., L)	1		
35	0305 70 823	Mould, Drip (Rr., R)	1		
●	0305 70 823A	Mould, Drip (Rr., R)	1	72/11~O	
36	0305 71 823	Mould, Drip (Rr., L)	1		
●	0305 71 823A	Mould, Drip (Rr., L)	1	72/11~O	
37	0305 70 825	Corner (Frt)	2		
38	0305 70 826	Corner (Rr.)	2		
39	0305 70 827A	Clip	22		
40	0305 70 851	Mould, Step	2		
41	0305 70 861B	Clip	10		
●	0305 70 861C	Clip	10	Car No. 98211	71/9~C
42	99863 0512	Screw, Clip	10		
	99971 0500	Washer, Spring	10		
43	0223 70 870	Plate, Set	2		
44	99906 0400	Nut, Set Plate	2		
	99971 0400	Washer, Spring	2		
45	0305 70 911	Mould, Front No. 1	1		

No.	Part Number	Description	Q'ty	Remarks
46	0305 70 921	Mould, Front No. 2 (R)	1	
47	0305 71 921	Mould, Front No. 2 (L)	1	
48	99863 0512	Screw, Tapping-Front Mould	9	
	99952 0500	Washer, Plain	9	

REAR SIDE WINDOW
(ALL COUPE MODELS)

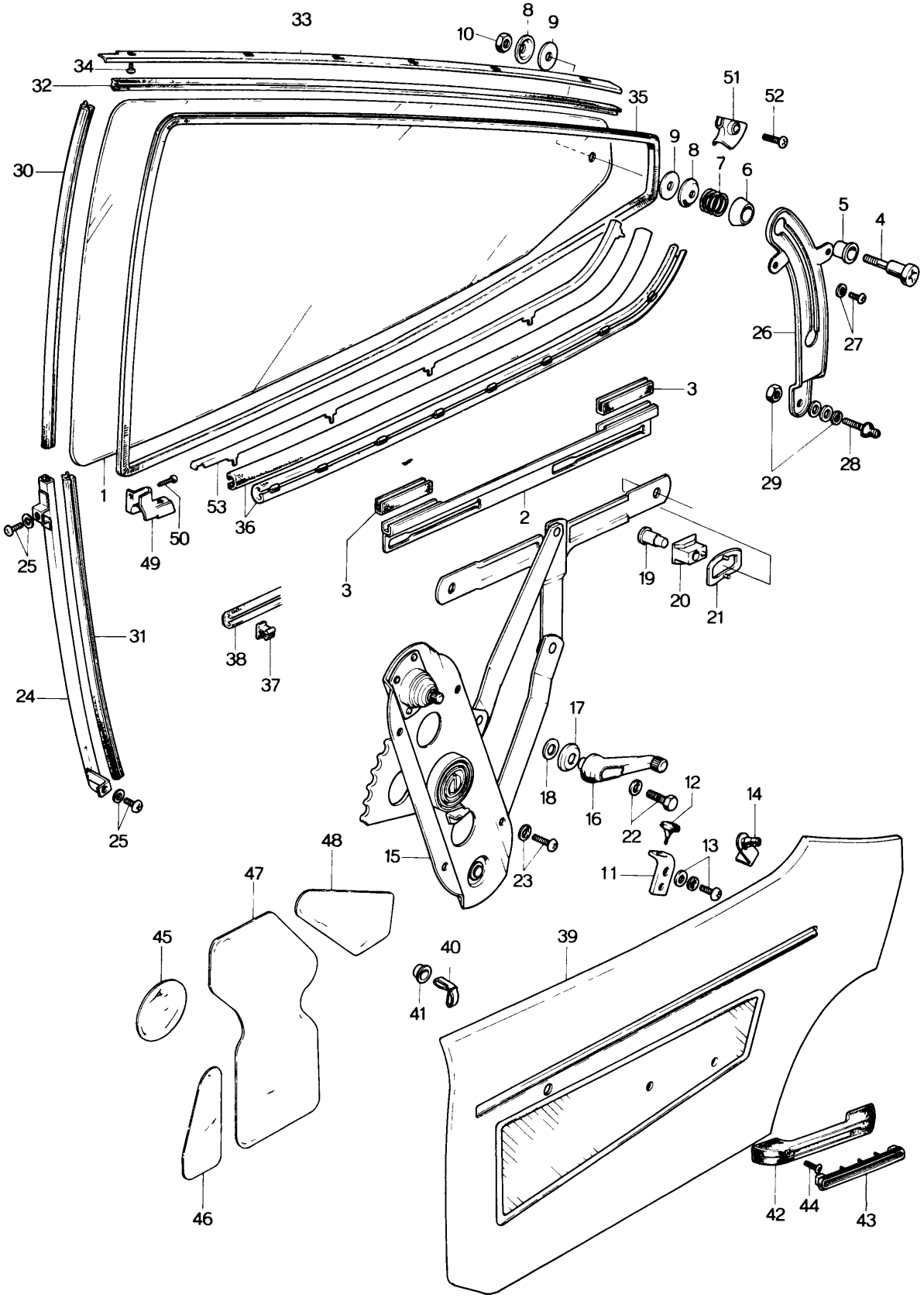

REAR SIDE WINDOW
(ALL COUPE MODELS)

70 71

No.	Part Number	Description	Q'ty	Remarks	
1	0839 70 511A	Glass, Window (R) – Blue Pane	1	Selective use	
	2866 70 511A	Glass, Window (R) – Transparent	1		
	0839 71 511A	Glass, Window (L) – Blue Pane	1	Selective use	
	2866 71 511A	Glass, Window (L) – Transparent	1		
2	0839 70 515	Bracket, Lift (R)	1		
	0839 71 515	Bracket, Lift (L)	1		
3	2292 58 232	Strip, Rubber	4		
4	0839 70 521	Pin	2		
5	0839 70 522	Roller	2		
6	0839 70 523A	Seat, Spring	2		
7	0839 70 524	Spring	2		
8	0839 70 525	Washer	4		
9	0839 70 526	Seat	4		
10	99906 0500	Nut	2		
11	0839 70 550A	Bracket Ass'y	2		
12	0824 58 155	Stopper	2		
13	908062 6 12	Screw, Set-Bracket	4		
	99951 0618	Washer, Plain	4		
14	0839 70 555	Cushion	2		
15	2855 70 570	Regulator, Window (R)	1		
●	0839 70 570	Regulator, Window (R)	1	Car No. 79731 71/6 ~ O	
	2855 71 570	Regulator, Window (L)	1		
●	0839 71 570	Regulator, Window (L)	1	Car No. 79731 71/6 ~ O	
16	0223 58 370B-01	Handle, Regulator (Black)	2		©
	0223 58 370C-00	Handle, Regulator	2	Car No. 79731 71/6 ~ O	©
●	0824 58 370A-01	Handle, Regulator	2	1973 Model	©
17	0223 58 375A-00	Escutcheon (Black)	2		

REAR SIDE WINDOW
(ALL COUPE MODELS)

No.	Part Number	Description	Q'ty	Remarks
18	0223 72 305	Packing	2	
19	0223 58 303A	Pin, Regulator	4	
20	0223 58 304A	Guide, Regulator	4	
21	0223 58 311	Guide, Spring	4	
22	99806 0516	Bolt, Regulator Handle	2	
	99971 0500	Washer, Spring	2	
23	908062 6 12	Screw, Set-Regulator	8	
	99951 0618	Washer, Plain	8	
24	0839 70 603	Guide, Glass "A" (R)	1	
	0839 71 603	Guide, Glass "A" (L)	1	
25	908062 6 12	Screw, Set-Glass Guide	4	
	99951 0618	Washer, Plain	4	
26	0839 70 604	Guide, Glass "B" (R)	1	
	0839 71 604	Guide, Glass "B" (L)	1	
27	908062 6 12	Screw, Set-Glass Guide "B"	8	
	99951 0618	Washer, Plain	8	
28	0824 70 621	Stud, Glass Guide "B"	2	
29	99906 0800	Nut, Glass Guide "B"	2	
	99951 0822	Washer, Plain	2	
	99971 0800	Washer, Spring	2	
30	0839 70 605D	Channel, Glass "A"	2	
31	0839 70 606C	Channel, Glass "B"	2	
32	0839 70 651A	Weatherstrip (R)	1	
	0839 71 651A	Weatherstrip (L)	1	
33	0839 70 652	Retainer (R)	1	
	0839 71 652	Retainer (L)	1	

REAR SIDE WINDOW
(ALL COUPE MODELS)

70 71

No.	Part Number	Description	Q'ty	Remarks
34	99864 0408	Screw	12	
35	0839 70 655A	Welt, Seaming	2	
	0839 70 655B	Welt, Seaming	2	Car No. 69368 $^{71}/_{4}$ ~ ○
	0881 70 655	Welt, Seaming	2	Car No. 88202 $^{71}/_{7}$ ~ ○
36	0839 70 680C	Weatherstrip (R), Outer	1	Car No. 79731 $^{71}/_{6}$ ~ Q'ty
	0839 71 680C	Weatherstrip (L), Outer	1	
	0839 70 690	Weatherstrip (R), Inner	1	Car No. 79731 $^{71}/_{6}$ ~ Added Anew
	0839 71 690	Weatherstrip (L), Inner	1	
37	0839 58 783B	Fastener	32	
38	0839 70 681B	Weatherstrip	4	
		When ordering the following Quarter Trim		
		Note : 1. When ordering add the 2 figures, 01 (Black), -04 (Brown) after the part number. As colour code nos. used up to Car No. 79730 $^{71}/_{5}$ ~		
		2. Order with -08 (Black), -09 (Brown), -10 (Greyish Yellow), colour code nos. from Car No. 79731 $^{71}/_{6}$ ~		
•		3. Order with -01 (Black), -04 (Brown), -11 (Greyish Yellow), colour code nos. from Car No. 96267 $^{71}/_{9}$ ~		
•		4. Order with -13 (Black), -14 (Brown), -15 (Greyish Yellow), colour code nos. from Car No. 133695 $^{72}/_{8}$ ~		
39	0839 70 701A	Trim, Quarter (R)	1	1971 Model
	0881 70 760A	Trim, Quarter (R)	1	
	0404 70 760	Trim, Quarter (R)	1	1972 Model
	1668 70 760	Trim, Quarter (R)	1	1973 Model $^{72}/_{8}$ ~ △
	0839 71 701A	Trim, Quarter (L)	1	1971 Model
	0881 71 760A	Trim, Quarter (L)	1	
	0404 71 760	Trim, Quarter (L)	1	1972 Model
	1668 71 760	Trim, Quarter (L)	1	1973 Model $^{72}/_{8}$ ~ △
	0208 58 921	Fastener, Trim	6	
	0208 58 921	Fastener, Trim	4	1972, 1973 Model
41	0187 58 922	Cap, Trim	6	
	0187 58 922	Cap, Trim	4	1972, 1973 Model
42	0305 58 821A-01	Rest, Arm (Black)	2	Ⓒ
	0398 58 821A-00	Rest, Arm (Black)	2	Car No. 79731 $^{71}/_{6}$ ~ X Ⓒ
43	0305 58 822A-02	Garnish (Black)	2	Ⓒ
	0398 58 822-00	Garnish (Black)	2	Car No. 79731 $^{71}/_{6}$ ~ X Ⓒ
	0398 58 822B-00	Garnish (Black)	2	Car No. 106921 $^{71}/_{12}$ ~ ○ Ⓒ
44	99833 0516	Screw, Arm Rest	4	
	99833 0520	Screw, Arm Rest	4	Car No. 79731 $^{71}/_{6}$ ~ X
	99952 0500	Screw, Arm Rest	4	
45	0613 58 923	Screw, Door No. 3	4	
46	0839 70 741A	Screen "A" (R)	1	
	0839 71 741A	Screen "A" (L)	1	
47	0839 70 742	Screen "B" (R)	1	
	0839 71 742	Screen "B" (L)	1	

70 71 REAR SIDE WINDOW
(ALL COUPE MODELS)

No	Part Number	Description	Q'ty	Remarks	
48	0839 70 743	Screen "C" (R)	1		
	0839 71 743	Screen "C" (L)	1		
49	0839 70 751B-00	Cover "A" (R) (Black)	1		©
	0839 70 751C-00	Cover "A" (R) (Black)	1	Car No. 69368 $^{71}/_{4}$ ~ X	©
	0839 71 751B-00	Cover "A" (L) (Black)	1		©
	0839 71 751C-00	Cover "A" (L) (Black)	1	Car No. 69368 $^{71}/_{4}$ ~ X	©
50	99864 0410B	Screw, Cover	2		
51	0839 70 752A-00	Cover "B" (R) (Black)	1		©
	0839 71 752A-00	Cover "B" (L) (Black)	1		©
52	99862 0418B	Screw, Cover	2		
53	0839 70 721B	Mould, Beltline (R)	1		
	0881 70 721	Mould, Beltline (R)	1	Car No. 79731 $^{71}/_{6}$ ~ X	
	0839 71 721B	Mould, Beltline (L)	1		
	0881 71 721	Mould, Beltline (L)	1	Car No. 79731 $^{71}/_{6}$ ~ X	
Ⓝ	0881 58 839	Spacer	6	Car No. 79731 $^{71}/_{6}$ ~ Added Anew	
Ⓝ	0839 70 681B	Weatherstrip	2		

REAR SIDE DOOR
(GLASS, ALL SEDAN MODELS)

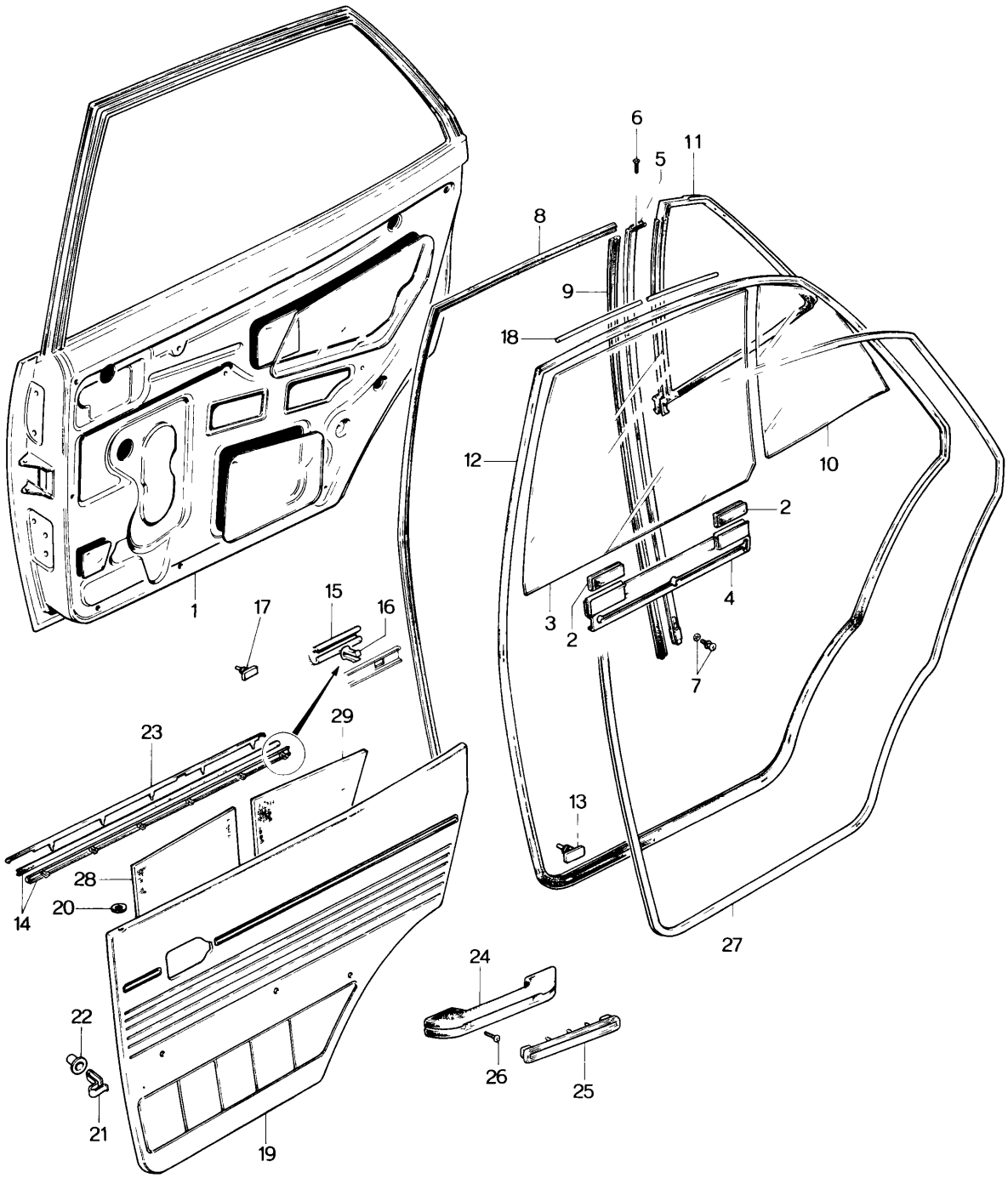

REAR SIDE DOOR
(GLASS, ALL SEDAN MODELS)

72 73

No.	Part Number	Description	Q'ty	Remarks
1	0305 72 010E	**BODY Ass'y,** Door (R)	1	
	0398 72 010A	**BODY Ass'y,** Door (R)	1	Car No. 79731 $^{71}/_{6}$ ~ △
	0305 73 010E	**BODY Ass'y,** Door (L)	1	
	0398 73 010A	**BODY Ass'y,** Door (L)	1	Car No. 79731 $^{71}/_{6}$ ~ △
•	1666 72 010A	**BODY Ass'y,** Door (R) } For U.S.A. Model	1	Car No. 167963 $^{73}/_{1}$ ~ △
•	1666 73 010A	**BODY Ass'y,** Door (L) } For U.S.A. Model	1	Car No. 167963 $^{73}/_{1}$ ~ △
	~~0398 72 010B~~	~~**BODY Ass'y,** Door (R)~~ } For 1973 Canada Model	~~1~~	
	~~0398 73 010B~~	~~**BODY Ass'y,** Door (L)~~ } For 1973 Canada Model	~~1~~	
	~~0305 72 020A~~	~~Panel, Outer (R)~~	~~1~~	
	~~0305 73 020A~~	~~Panel, Outer (L)~~	~~1~~	
	0305 72 601D	Sash (L)	1	
	0305 73 001D	Sash (R)	1	
2	2292 58 232	Strip, Rubber	4	
3	0301 72 501A	Glass, Door (R) } Transparent	1	
	0301 73 501A	Glass, Door (L) } Transparent	1	
	0305 72 501A	Glass, Door (R) } Blue Pane	1	
	0305 73 501A	Glass, Door (L) } Blue Pane	1	
4	0305 72 505	Bracket, Lift (R)	1	
	0305 73 505	Bracket, Lift (L)	1	
5	0305 72 602A	Channel, Center (R)	1	
	0398 72 602	Channel, Center (R)	1	Car No. 79731 $^{71}/_{6}$ ~ ○
	0305 73 602A	Channel, Center (L)	1	
	0398 73 602	Channel, Center (L)	1	Car No. 79731 $^{71}/_{6}$ ~ ○
6	99831 0408	Screw, Center Channel	4	
7	99806 0610	Bolt - Center Channel	2	
	99971 0600	Spring, Washer	2	
	99951 0618	Washer, Plain	2	
8	0305 72 605D	Channel, Glass Run "A"	2	
9	0305 72 606C	Channel, Glass Run "B"	2	
Ⓝ	0305 72 607	Channel, Glass Run "C"	2	
10	0301 72 661A	Glass, Quarter Window (R) } Transparent	1	
	0301 73 661A	Glass, Quarter Window (L) } Transparent	1	
	0305 72 661A	Glass, Quarter Window (R) } Blue Pane	1	
	0305 73 661A	Glass, Quarter Window (L) } Blue Pane	1	

REAR SIDE DOOR
(GLASS, ALL SEDAN MODELS)

No	Part Number	Description	Q'ty	Remarks	
11	0305 72 662B	Weatherstrip	2		
12	0305 72 760C	**WEATHERSTRIP Ass'y (R)**	1		
	0305 73 760C	**WEATHERSTRIP Ass'y (L)**	1		
13	0305 58 762	Fastener	56		
14	0305 72 780E	**WEATHERSTRIP Ass'y (R)** } Right Side Outer is used for Left Side Inner.	2		
	0305 73 780E	**WEATHERSTRIP Ass'y (L)** }	2		
15	0305 72 781B	Weatherstrip	4		
16	0839 58 783B	Fastener	12		
17	0305 58 762	Fastener	2		
18	0305 72 768	Spacer, Weatherstrip	2		
	0305 58 768	Spacer, Weatherstrip	2	Car No. 85629 $^{71}/_{7}$ ~ ○	
		When ordering the following door trim			
	Note :	1. When ordering add the 2 figures, -01 (Black), -04 (Brown) after the part number as colour code nos. used up to Car No. 79730 $^{71}/_{5}$ ~			
		2. Order with -01 (Black), -04 (Brown) -11 (Greyish Yellow) Colour code nos. used from Car No. 79731 $^{71}/_{6}$ ~			
		3. Order with -13 (Black), -14 (Brown) -15 (Greyish Yellow) Colour code nos. used from Car No. 96267 $^{71}/_{9}$ ~			
19	0305 72 810D	**TRIM,** Door (R) } 1971 Model	1		©
	0390 72 810	**TRIM,** Door (R) }	1	Car No. 79731 $^{71}/_{6}$ ~ X	©
	0876 72 810	**TRIM,** Door (R)	1	1972 Model	©
	1666 72 810	**TRIM,** Door (R)	1	1973 Model	©
	0305 73 810D	**TRIM,** Door (L) } 1971 Model	1		©
	0390 73 810	**TRIM,** Door (L) }	1	Car No. 79731 $^{71}/_{6}$ ~ X	©
	0876 73 810	**TRIM,** Door (L)	1	1972, Model	©
	1666 73 810	**TRIM,** Door (L)	1	1973 Model	©
20	0223 58 692	Grommet	2		
	0223 58 692A	Grommet	2	Car No. 79731 $^{71}/_{6}$ ~ ○	
21	0208 58 921	Fastener	20		
22	0187 58 922	Seal, Fastener	20		
23	0305 72 831A	Mould, Beltline (R)	1		

REAR SIDE DOOR
(GLASS, ALL SEDAN MODELS)

72 73

No.	Part Number	Description	Q'ty	Remarks	
	0305 73 831A	Mould, Beltline (L)	1		
24	0305 58 821A	Rest, Arm	2		©
	0398 58 821A	Rest, Arm	2	Car No. 79731 $^{71}/_{6}$ ~ X	©
25	0305 58 822A	Garnish	2		©
	0398 58 822	Garnish	2	Car No. 79731 $^{71}/_{6}$ ~ X	©
	0398 58 822A	Garnish	2	Car No. 109463 $^{71}/_{12}$ ~ O	©
26	99833 0516	Screw, Arm Rest	4	1971 Model	
	99833 0520	Screw, Arm Rest	2		
	99952 0500	Screw, Arm Rest	2		
27	0305 72 755	Welt, Seaming	2		©
	0305 72 755A	Welt, Seaming	2	Car No. 69368 $^{71}/_{4}$ ~ O	©
	0398 58 755	Welt, Seaming	2	Car No. 88202 $^{71}/_{7}$ ~ O	
28	0305 72 851	Insulation, "A"	2		
	0376 58 851	Insulation, "A"	2	Car No. 98307 $^{71}/_{9}$ ~ O	
			1	Car No. 101365 $^{71}/_{10}$ ~ Q'ty	
29	0305 72 852	Insulation, "B"	2		
	0305 72 852A	Insulation, "B"	2	Car No. 98307 $^{71}/_{9}$ ~ O	
			1	Car No. 101365 $^{71}/_{12}$ ~ Q'ty	

REAR SIDE DOOR
(LOCK, ALL SEDAN MODELS)

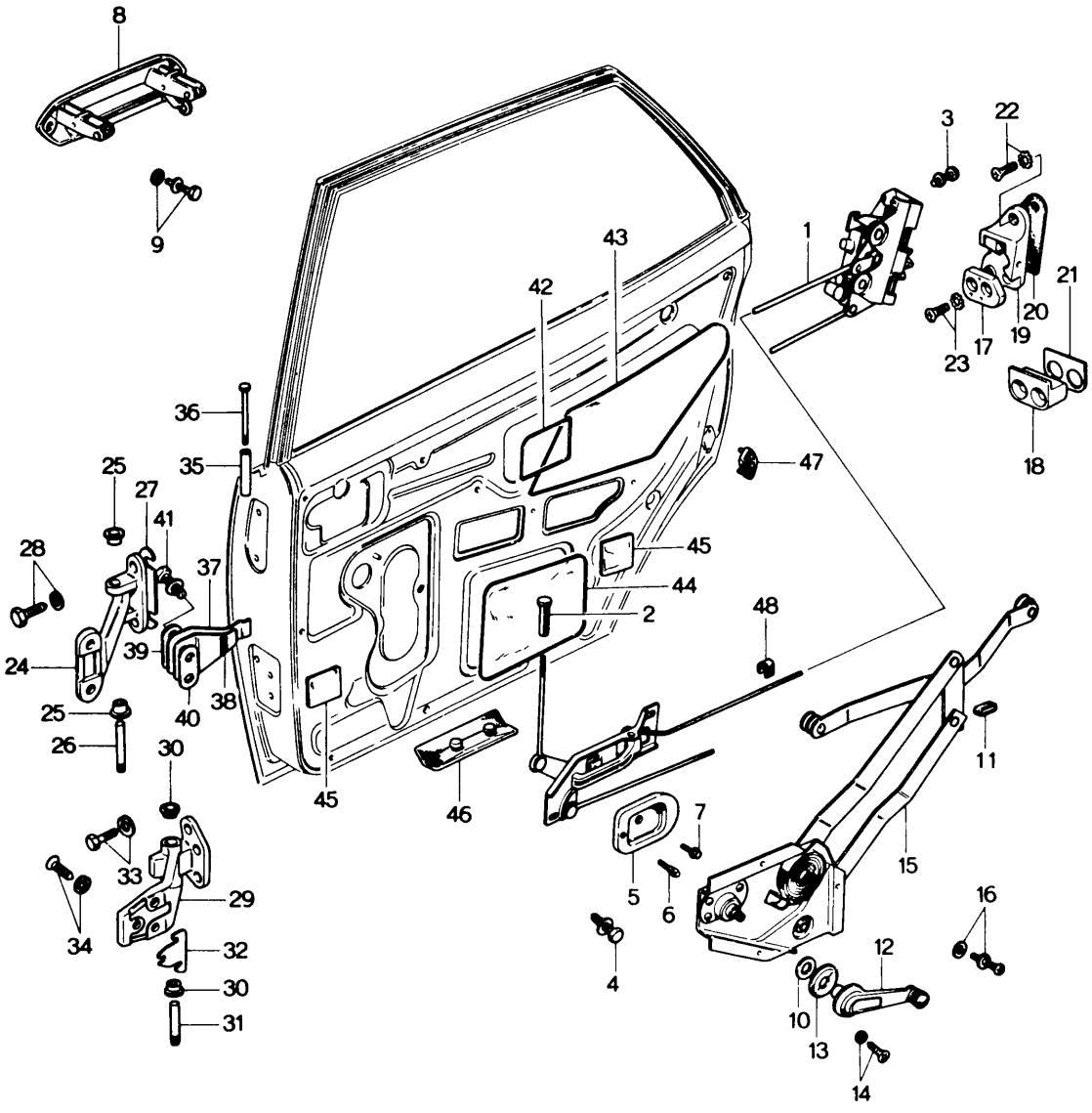

REAR SIDE DOOR
(LOCK, ALL SEDAN MODELS)

72 73

No.	Part Number	Description	Q'ty	Remarks	
1	2850 72 300	LOCK Cpt., Door (R)	1		
	2850 72 300A	LOCK Cpt., Door (R)	1	Car No. 79731	7⅙~○
●	2850 72 300B	LOCK Cpt., Door (R)	1	Car No.	72⅜~○
	2850 73 300	LOCK Cpt., Door (L)	1		
	2850 73 300A	LOCK Cpt., Door (L)	1	Car No. 79731	7⅙~○
●	2850 73 300B	LOCK Cpt., Door (L)	1	Car No.	72⅜~○
2	0259 58 6900-00	Knob (Black)	2		©
3	908324 6 12	Screw, Set-Door Lock	6		
4	908066 5 10	Bolt, Set-Inner Handle	4		
5	0223 58 611C-01	Cover (Black)	2		©
6	0259 58 612	Cushion, Rubber	2		
7	99832 0408B	Screw, Cover	2		
8	0305 72 410B	Handle, Outside (R)	1		
●	0305 72 410C	Handle, Outside (R)	1	Car No.	7⅜~○
	0305 73 410B	Handle, Outside (L)	1		
●	0305 73 410C	Handle, Outside (L)	1	Car No.	7⅜~○
9	907976 5 10	Bolt, Set-Outside Handle	4		
	99952 0822	Washer, Plain	2		
10	0223 58 305A	Packing	2		
11	0259 58 306	Cushion	2		
12	0223 58 370B-01	Handle, Regulator (Black)	2		©
	0223 58 370C	Handle, Regulator	2	Car No. 79731	7⅙~○ ©
●	0824 58 370A	Handle, Regulator	2	1973 Model	©
13	0223 58 375A-00	Escutcheon (Black)	2		©
14	99806 0516	Bolt, Regulator Handle	2		
	99971 0500	Washer, Spring	2		
15	2850 72 560	Regulator, Window (R)	1		
	0305 72 560	Regulator, Window (R)	1	Car No. 79731	7⅙~○
	2850 73 560	Regulator, Window (L)	1		
	0305 73 560	Regulator, Window (L)	1	Car No. 79731	7⅙~○
16	908062 6 08	Screw, Set-Window Regulator	2		
	908062 6 12	Screw, Set-Window Regulator	4		
	99951 0618	Washer, Plain	6		
17	0305 58 361	Rack (R)	1		
	0305 59 361	Rack (L)	1		

72 73 REAR SIDE DOOR
(LOCK, ALL SEDAN MODELS)

No.	Part Number	Description	Q'ty	Remarks
18	2826 58 365	Anti-burst Block	2	
●	1666 58 365	Anti-burst Block (R)	1	1973 Model
●	1666 58 365	Anti-burst Block (L)	1	1973 Model
19	0259 58 570	Striker Ass'y (R)	1	
	0259 58 570	Striker Ass'y (L)	1	
20	0187 58 592A	Seat, Striker	2	
21	2350 58 593	Shim, Anti-burst Block	2	
22	907614 6 20	Screw, Set-Striker	2	
23	907614 6 30	Screw, Set-Striker & Anti-Burst Black	8	
24	0305 72 210	HINGE Ass'y, UPPER	2	
25	0223 58 721	Bush	4	
26	0187 58 731	Pin	2	
27	0305 72 201	Shim, Upper Hinge	2	Selective use
	0305 72 203	Shim, Upper Hinge	2	Selective use
28	907832 8 25	Bolt, Set-Upper Hinge	8	
	99783 0828	Bolt-Upper Hinge	8	Car No. 117998 73½~○
	99971 0800	Washer, Spring	8	Car No. 117998 73½~○
29	0305 72 240A	HINGE Ass'y, Lower (R)	1	
	0305 73 240A	HINGE Ass'y, Lower (L)	1	
30	0223 58 721	Bush	4	
31	0187 58 731	Pin	2	
32	0305 72 231	Shim, Lower Hinge	2	
33	907832 8 25	Bolt, Set-Lower Hinge	6	
	99783 0828	Bolt, Lower Hinge	6	Car No. 117998 73½~○
●	99971 0800	Washer, Spring	6	Car No. 117998 73½~○
34	907832 8 28	Screw Set-Lower Hinge	6	

No.	Part Number	Description	Q'ty	Remarks
35	0317 58 831A	Roller	2	
36	0317 58 832	Pin	2	
37	0305 72 261	Spring, Check	2	
38	0305 72 262	Spring, Check Sub	2	
39	0208 72 821	Washer, Adjust No. 1	4	
40	0208 72 822	Washer, Adjust No. 2	2	
41	99806 0625	Bolt-Check Spring	4	
	99971 0600	Washer, Spring	4	
42	0305 72 861	Screen, "A"	2	
43	0305 72 862	Screen, "B" (R)	1	
	0305 73 862	Screen, "B" (L)	1	
44	0305 72 863	Screen, "C" (R)	1	
	0305 73 863	Screen, "C" (L)	1	
45	0305 72 864	Screen, "D"	4	
46	0305 58 872	Valve, Drain	4	
47	0305 58 874	Cushion	2	
48	0259 72 509	Pad	4	Car No. 96092 7/9~Discarded

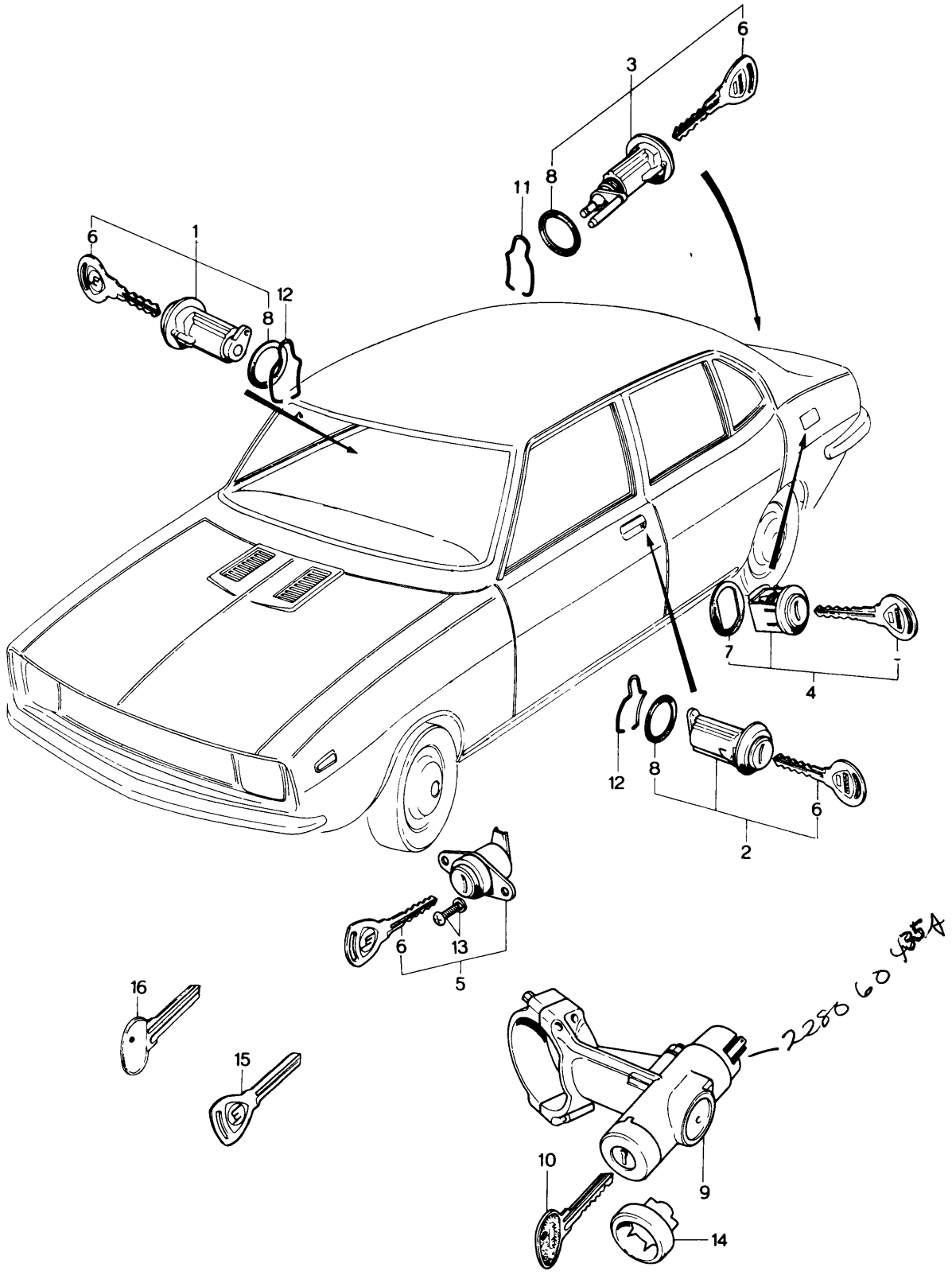
6
3
8
11
1
6
12
8
7
4
12
8
6
2
6
13
5
16
15
10
9
14
2280 60 435A

No.	Part Number	Description	Q'ty	Remarks
	2324 09 010	KEY SET, Fig No. 1～6 included	1	
●	2324 09 010A	KEY SET, Fig No. 1～6 included	1	Car No. 106922 ⁷⁄₁₂～○
1	0839 74 910	DOOR KEY SUB SET, (R)	1	
●	0839 74 910A	DOOR KEY SUB SET, (R)	1	Car No. 106922 ⁷⁄₁₂～○
2	0839 74 920	DOOR KEY SUB SET, (L)	1	
●	0839 74 920A	DOOR KEY SUB SET, (L)	1	Car No. 106922 ⁷⁄₁₂～○
3	0839 74 930	TRUNK LID KEY SUB SET	1	
4	[illegible] 940	FILLER LID KEY SUB SET	1	
	0437-75-940			
5	0839 74 950	GLOVE BOX KEY SUB SET	1	
6	0839 58 492A	Key	2	
7	0621 42 455	Seat, Filler Lid	1	
8	0223 58 962	Packing, Door & Trunk Lid	3	
9	2850 60 430	LOCK, Steering	1	
●10	2835 60 439	Key	1	
11	0305 52 802	Retainer, Trunk Lid	1	
12	0223 58 961	Fastener, Door	2	
13	908336 4 10B	Screw, Set-Glove Box	2	
14	2835 60 421	Ring, Set-Steering Lock	1	
15	0839 74 158	Key, Blank-Key Assortment No. 2500～2999	—	
	0839 74 168	Key, Blank-Key Assortment No. 3000～3499	—	
●16	2280 75 641A	Key, Blank-Steering Lock	—	

INDEX.

PARTS NUMBER	PARTS COMP. LIST PAGE	FIG. NO.
2324 09 010	285	
2324 09 010A	285	
1665 10 100	2	1
1669 10 100A	2	1
1669 10 100B	2	1
2090 10 100A	2	1
2090 10 100B	2	1
2090 10 100D	2	1
2090 10 100D	2	1
2090 10 100E	2	1
2329 10 103B	2	4
2329 10 103B	6	4
2329 10 104	2	6
0839 10 105	2	8
0839 10 105	6	6
0866 10 105	2	2
2329 10 105	2	8
2329 10 105	6	6
0839 10 111B	2	10
0839 10 111B	6	7
1617 10 120	2	4
1617 10 120	6	4
1665 10 150	6	1
1669 10 150A	6	1
1669 10 150B	6	1
2090 10 150A	6	1
2090 10 150B	6	1
2090 10 150D	6	1
2090 10 150D	6	1
2090 10 150E	6	1
0810 10 171	2	11
0810 10 171	6	8
1668 10 171	2	11
1668 10 171	6	8
0813 10 172	2	12
0813 10 172	6	9
0813 10 173	2	13
0813 10 173	6	10
0813 10 174	2	14
0813 10 174	4	27
0813 10 174	6	11
1665 10 200	3	15
1665 10 200A	3	15
1665 10 200C	3	15
1665 10 200D	3	15
2359 10 200A	3	15
2359 10 200C	3	15
2359 10 200D	3	15
0820 10 203	7	13
0839 10 203	3	16
2329 10 204	3	17
0839 10 205	3	20
0839 10 205	7	18
0839 10 206	3	19
2113 10 206	3	18
0324 10 250	8	36
0324 10 252	8	37
0877 10 300B	7	12
2080 10 300D	7	12
2080 10 300E	7	12
2080 10 300F	7	12
2080 10 300G	7	12
2080 10 300H	7	12
0820 10 305	7	24
0221 10 309	7	15
0839 10 320	7	17
1663 10 400	8	26
1663 10 400A	8	26
1663 10 400B	8	26
2090 10 400D	8	26
2090 10 400E	8	26
2090 10 410A	8	27
0866 10 411	8	27
2329 10 417	8	29
0839 10 451A	8-1	38
1011 10 451	8-1	38
1015 10 451	8-1	38
0839 10 452B	8-1	39
1011 10 452	8-1	39
1015 10 452	8-1	39
0823 10 455	8-1	40
0823 10 455	18-1	41
0839 10 455	8-1	40
2306 10 481	24	13
0164 10 491	116	20
0839 10 500A	11	17
0839 10 500B	11	17
0820 10 502	11	18
0820 10 502A	14	18
0820 10 502B	11	18
0820 10 502B	14	18
0839 10 504	11	20
0820 10 550A	14	17
0820 10 550B	14	17
1668 10 550	14	17
0813 10 555	14-1	21
0820 10 556A	14-1	20
0839 10 556	14-1	20
1668 10 556	14-1	20
2329 10 600D	4	28
2329 10 600E	4	28
2329 10 600F	4	28
2329 10 600G	4	28
0820 10 605	4	32

INDEX.

PARTS NUMBER	PARTS COMP. LIST PAGE	FIG. NO.
0820 10 631A	4	31
0839 10 641	4-1	39
0839 10 641	4-2	
1663 10 700A	8-1	41
1668 10 700	8-1	41
1669 10 700	8-1	41
2090 10 700B	8-1	41
0839 10 711	4-2	
0839 10 711	8-1	44
0839 10 721	8-1	45
0839 10 722	8-1	46
0839 10 723	8-1	47
2090 10 730A	8-1	52
2090 10 730B	8-2	52
0839 10 830	8-1	49
2329 10 860	4-1	45
2869 10 860	4-1	45
0820 10 862A	8-1	50
0871 10 862A	4-1	45
2090 10 862A	8-1	50
2329 10 864	4-1	44
0820 10 872A	146	23
0820 11 105	54	23
0839 11 111B	10	2
0839 11 111B	13	2
1011 11 111	10	2
1011 11 111	13	2
0839 11 301B	10	4
0839 11 301B	13	4
2080 11 301	10	4
2080 11 301	13	4
2090 11 301	10	4
2090 11 301	13	4
0839 11 304	10	5
0839 11 304	13	5
0820 11 317	10	8
0820 11 317	13	8
0820 11 321B	10	9
0820 11 321B	13	9
0820 11 321C	10	9
0820 11 321C	13	9
0839 11 323	10	10
0839 11 323	13	10
0839 11 323A	10	10
0839 11 323A	13	10
0839 11 323A	14	10
1665 11 323	10	10
1665 11 323	14	10
0820 11 331	11	11
0820 11 331	14	11
0820 11 331A	11	11
0820 11 331A	14	11
0820 11 331B	11	11
0820 11 331B	14	11
0820 11 333	11	12
0820 11 333	14	12
0820 11 333A	11	12
0820 11 333A	14	12
0820 11 333C	11	12
0820 11 333C	14	12
0820 11 341	11	13
0820 11 341	14	13
0820 11 341A	11	13
0820 11 341A	14	13
0820 11 343	11	14
0820 11 343	14	14
0820 11 343A	11	14
0820 11 343A	14	14
0820 11 343A	14	14
1665 11 343	11	14
1665 11 343	14	14
0839 11 351	11	15
0839 11 351	14	15
0839 11 351A	11	15
0839 11 351A	14	15
0839 11 351B	11	15
0839 11 351B	14	15
1011 11 351	11	15
1011 11 351	14	15
0839 11 353	11	16
0839 11 353	14	16
0839 11 353A	11	16
0839 11 353A	14	16
1011 11 353	11	16
1011 11 353	14	16
0839 11 361	11	15
0839 11 361	14	15
0839 11 361A	11	15
0839 11 361A	14	15
1011 11 361	11	15
1011 11 361	14	15
0839 11 363	11	16
0839 11 363	14	16
1011 11 363	11	16
1011 11 363	14	16
0839 11 400I	14-1	23
0842 11 400A	14-1	23
0842 11 400B	14-1	23
0879 11 400	14-1	23
0810 11 403	14-1	24

INDEX.

PARTS NUMBER	PARTS COMP. LIST PAGE	FIG. NO.	PARTS NUMBER	PARTS COMP. LIST PAGE	FIG. NO.	PARTS NUMBER	PARTS COMP. LIST PAGE	FIG. NO.
0810 11 404	14-1	25	0842 11 750C	14-1	37	1672 13 200F	22-L	1
0813 11 405	14-1	26	0842 11 750E	14-1	37	2090 13 200F	17	17
0839 11 411A	14-1	28	1668 13 100A	16	1	2090 13 200F	22-B	
0839 11 412	14-1	29	1669 13 100B	16	1	0839 13 201	18-2	44
0839 11 501	11-1	21	2090 13 100B	16	1	1663 13 208	18	18
0600 11 502	14-1	32	2090 13 105	16	2	1663 13 208A	18	18
0839 11 502	11-1	26	2090 13 107A	16	3	2090 13 208	18	18
0820 11 503	11-1	23	2090 13 109	16	4	2090 13 208A	18	18
0839 11 504B	11-1	24	2090 13 111A	17	16	2090 13 210B	17	17
0813 11 505B	11-1	25	2090 13 111B	4-2		2090 13 210B	22-B	
0839 11 506	11-1	26	2090 13 111B	17	16	2090 13 210C	17	17
0820 11 507	11-1	27	1663 13 200C	17	17	2090 13 210C	22-B	
0839 11 508	11-1	26	1663 13 200C	22-I		2090 13 210D	17	17
0839 11 509	11-1	26	1663 13 200D	17	17	2090 13 210D	22-B	
0839 11 511D	11-1	28	1663 13 200D	22-I		0823 13 221A	4-2	
0842 11 511A	11-1	28	1665 13 200D	17	17	0823 13 221A	18	19
2090 11 511A	11-1	28	1665 13 200D	22-I		0823 13 222A	18	20
0820 11 512A	11-1	29	1665 13 200E	17	17	2090 13 230A	18	21
0839 11 515	11-1	22	1665 13 200E	22-I		0866 13 235	18	23
0839 11 531	11-1	31	1668 13 200D	17	17	2090 13 235	18	23
0813 11 541	11-1	32	1668 13 200D	22-L	1	1663 13 300B	18	25
0820 11 542	11-1	33	1668 13 200E	17	17	1663 13 300B	24	
0839 11 551	11-1	30	1668 13 200E	22-L	1	1665 13 300	18	25
0839 11 551A	11-1	30	1668 13 200G	17	17	1665 13 300A	18	25
1668 11 601	11-1	34	1668 13 200G	22-L	1	1665 13 300A	24	
2090 11 601	11-1	34	1669 13 200B	17	17	1668 13 300	18	25
2090 11 601A	11-1	34	1669 13 200B	22-L	1	1668 13 300	24	
0820 11 611B	11-1	37	1669 13 200C	17	17	1668 13 300A	18	25
0839 11 700B	14-1	31	1669 13 200C	22-L	1	1668 13 300A	24	
2090 11 700A	14-1	31	1672 13 200C	17	17	2090 13 300B	18	25
0820 11 703	14-1	33	1672 13 200C	22-L	1	2090 13 300B	24	
0820 11 705	14-1	34	1672 13 200D	17	17	2090 13 300C	18	25
0810 11 711	14-1	35	1672 13 200D	22-L	1	2090 13 300C	24	
0820 11 712	14-1	36	1672 13 200F	17	17	1617 13 305A	18-2	45

PARTS NUMBER	PARTS COMP. LIST PAGE	FIG. NO.	PARTS NUMBER	PARTS COMP. LIST PAGE	FIG. NO.	PARTS NUMBER	PARTS COMP. LIST PAGE	FIG. NO.
0839 13 311A	18	27	1663 13 412	124-B	3	0107 13 658	22-F	109
2090 13 330B	18	29	1663 13 413	124-B	5	0107 13 668	22-F	107
2090 13 330D	18	29	0620 13 433	120	17	0636 13 682	55	31
2850 13 332	232	40	0839 13 442C	120	1	1617 13 710A	22-2	1
2090 13 341	18	31	2090 13 447	120	4	1617 13 710B	22-5	1
2090 13 341A	18-1	31	2090 13 448A	120	5	2090 13 710	20	1
2090 13 343	18-1	32	2080 13 449	120	6	1668 13 714	22-5	4
2090 13 343A	18-1	32	0222 13 470A	121	25	2090 13 714	20	4
2090 13 343B	18-1	32	0222 13 470B	121	25	2090 13 714A	20	4
2090 13 345	18-1	33	0222 13 481	121	26	2090 13 714A	22-2	4
0137 13 351B	123	12	0222 13 493	21	38	2329 13 715	20	5
0137 13 355A	123	8	0222 13 493	22-3	38	2329 13 715	22-2	5
0137 13 356A	123	7	0222 13 493	22-6	33	2329 13 715	22-5	5
0137 13 357A	123	9	0222 13 493	116	18	2090 13 717B	20	6
0137 13 361A	123	11	0222 13 493	120	7	2090 13 717B	22-2	6
0305 13 361	120	8	0222 13 493	121	24	2090 13 717B	22-5	6
0305 13 361A	120	8	0222 13 493	124-B	11	2090 13 718	20	7
0305 13 362	120	9	1668 13 510	22-9	4	2090 13 718	22-2	7
0305 13 362B	120	9	1665 13 511A	22-8	9	2090 13 718	22-5	7
0222 13 363	124-B	4	1665 13 512	22-8	8	1663 13 720	22-2	8
0223 13 363	120	11	1668 13 513	22-9	9	1663 13 720A	22-5	8
0305 13 366	120	10	1665 13 515	22-8	11	1669 13 720	22-5	8
0137 13 369B	123	5	1668 13 515A	22-9	5	2090 13 720C	20	8
0034 13 373	121	21	1665 13 520	22-8	1	2090 13 724	4-2	
1562 13 381	22-5	5	1668 13 520A	22-9	1	2090 13 724	20	11
0190 13 389	123	2	1665 13 525	22-8	2	2090 13 724	22-2	11
0190 13 389	124	30	1668 13 525A	22-9	2	2090 13 724	22-5	11
0137 13 394A	124	17	1665 13 527	22-8	6	2090 13 725A	20	12
0839 13 400E	123		1668 13 527	22-9	7	2090 13 725A	22-2	12
1663 13 400	120	16	1665 13 528	22-8	7	2090 13 725A	22-5	12
1663 13 400	124-B	1	1668 13 531A	22-9	8	2329 13 726	20	13
1663 13 400A	120	16	0839 13 614	18-1	41	2329 13 726	22-2	13
1663 13 400A	124-B	1	0107 13 654	22-E	88	2329 13 726	22-5	13
1663 13 411	124-B	2	2756 13 657F	22-E	102	1663 13 730	22-2	14

INDEX.

PARTS NUMBER	PARTS COMP. LIST PAGE	FIG. NO.	PARTS NUMBER	PARTS COMP. LIST PAGE	FIG. NO.	PARTS NUMBER	PARTS COMP. LIST PAGE	FIG. NO.
1663 13 730	22-5	14	1663 13 756	22-2	10	2090 13 781	21	35
1669 13 730	22-5	14	1663 13 756A	22-3	31	2090 13 781	22-3	34
2090 13 730	20	14	1663 13 756B	55	29	1668 13 785	22-6	30
0107 13 737A	22-C	46	2090 13 760B	21	23	2090 13 785	21	36
1663 13 740	22-3		2090 13 760B	22-3	22	2090 13 785	22-3	35
1663 13 740	22-5	15	2090 13 760B	22-6	23	1617 13 786A	22-3	36
1663 13 741	22-3		1668 13 762	22-6	25	1617 13 786A	22-6	31
2090 13 741B	20	15	2090 13 762	21	25	2090 13 786B	21	37
2090 13 741C	20	15	2090 13 762	22-3	24	2329 13 787	21	38
1663 13 742	22-3		2090 13 763A	21	26	2329 13 787	120	7
2090 13 742	20	16	2090 13 763A	22-3	25	1617 13 790B	22-3	39
2090 13 742A	18-1	37	2090 13 763A	22-6	26	1617 13 790C	22-3	39
2090 13 743	20	16	2090 13 764	4-2		1617 13 790C	22-6	34
1663 13 744	22-3		2090 13 764	21	27	2090 13 790	21	39
1663 13 744	22-6	17	2090 13 764	22-3	26	2090 13 792	21	41
2090 13 746	20	17	2090 13 764	22-6	27	2090 13 792	22-3	37
2090 13 746	22-2	17	0107 13 768A	22-B	14	2090 13 792	22-6	32
2090 13 746	22-6	18	2090 13 770A	21	28	2090 13 792	120	3
1617 13 750A	22-2	18	2090 13 770A	22-3	27	2090 13 793B	22	42
1668 13 750	22-6	19	2090 13 772	21	29	2090 13 794A	22	43
2090 13 750B	20	18	2090 13 772	22-3	28	1624 13 795	22-6	37
1663 13 752	22-3	20	1570 13 773	22-3	29	1663 13 800	18-1	34
1668 13 752	22-6	21	2090 13 773A	21	30	1663 13 800B	18-1	34
2090 13 752	21	20	2090 13 773A	22-3	29	1663 13 800C	18-1	34
1663 13 753	21	21	2329 13 775	21	31	2090 13 800C	18-1	34
1663 13 753	22-3	21	2329 13 775	22-3	30	2090 13 800D	18-1	34
1668 13 753	22-6	22	0183 13 776	22-B	5	0107 13 805A	22-B	16
2090 13 753A	21	21	2329 13 778	21	32	0107 13 813	22-B	15
2090 13 754	21	22	1668 13 780	22-6	28	0107 13 856	22-D	57
2329 13 754A	20	10	2329 13 780	21	33	2090 13 870A	18-1	35
2329 13 754A	22-2	10	2329 13 780	22-3	32	2329 13 876	18-1	36
2329 13 754A	22-5	10	0107 13 781	22-C	32	2329 13 882	18-1	42
2329 13 754A	55	29	0107 13 781	22-I	11	2090 13 889	4-2	
1668 13 755	22-6	36	0107 13 781	22-N	24	2090 13 889	18-1	38

PARTS NUMBER	PARTS COMP. LIST PAGE	FIG. NO.
2090 13 891	4-2	
2090 13 891	18-1	39
2090 13 891	114	15
2359 13 930	55	30
1700 13 945	55	30
0839 14 020	26	10
0839 14 100	28	46
0839 14 101A	26	1
0839 14 101B	26	1
0839 14 112B	26	4
0810 14 113	26	5
0221 14 115	27	27
0839 14 115	4	34
0221 14 116	27	28
0221 14 117	4	36
0221 14 117	27	29
0839 14 117	26	6
0820 14 118C	26	7
0839 14 119A	26	8
0839 14 119B	26	8
0823 14 130	26	11
0823 14 131	26	12
0839 14 132	26	13
0839 14 133	26	14
0839 14 141A	26	10
0839 14 142	26	15
0820 14 160D	26	16
0820 14 160E	26	16
0820 14 160F	26	16
0820 14 160G	26	16
0810 14 171	26	17
1665 14 200D	4	25
0820 14 250A	27	25
0820 14 250C	27	25
0820 14 250D	27	25
0820 14 251A	27	26
0820 14 251C	27	26
0820 14 252	27	30
0839 14 273	4	35
0839 14 273A	4	35
0839 14 274	4	36
0839 14 300	26	
2090 14 600	27	31
2090 14 600	30	
0810 14 611	27	32
0820 14 620	27	34
0813 14 623	27	36
0820 14 625	27	35
0820 14 625	27	35
0839 14 630	28	39
0839 14 640	28	40
0813 14 641	28	41
0839 14 641D	28	44
0839 14 643	28	42
0820 14 647	28	43
0839 14 700D	35	33
0839 14 700E	35	33
1668 14 700	35	33
1669 14 700A	35	33
1669 14 700B	35	33
0813 14 716	35-1	39
0839 14 720B	35-1	34
0839 14 720C	35-1	34
0839 14 730B	35-1	35
0839 14 730C	35-1	35
1663 14 735	35-1	38
2091 14 735	35-1	38
1665 14 771	35-1	46
1665 14 780	35-1	45
1668 15 010A	33	1
1668 15 010A	38-B	
1668 15 010B	33	1
1668 15 010B	38-B	
2090 15 010A	33	1
2090 15 010A	37	
2090 15 010B	33	1
2090 15 010B	37	
2090 15 010C	33	1
2090 15 010C	37	
2090 15 010D	33	1
2090 15 010D	37	
2090 15 100A	37	12
2090 15 100B	37	12
2090 15 104	38	23
2090 15 104	38-B	20
0822 15 105	4-2	
0822 15 105	33	2
0820 15 106	4-2	
0820 15 106	33	3
0813 15 111	37	2
1620 15 111	37	2
1620 15 111	38-B	11
0820 15 112	37	3
0820 15 112	38-B	7
0118 15 114	37	5
0118 15 114	38-B	6
0820 15 115	37	6
0820 15 115	38-B	5
0813 15 117	37	8
0118 15 118	37	9
0118 15 118	38-B	8
0820 15 120	37	10

INDEX.

PARTS NUMBER	PARTS COMP. LIST PAGE	FIG. NO.	PARTS NUMBER	PARTS COMP. LIST PAGE	FIG. NO.	PARTS NUMBER	PARTS COMP. LIST PAGE	FIG. NO.
0820 15 120	38-B	10	0877 15 250	33	8	0500 16 104	40	3
0118 15 121	37	4	2090 15 250C	33	8	0839 16 210A	40	1
0118 15 121	38-B	4	0222 15 255	34	18	0370 16 214	40	3
0118 15 125	37	8	1669 15 310	34	13	0180 16 215	40	18
0118 15 125	38-B	9	2090 15 310	34	13	0839 16 410B	40	16
1620 15 130	38-B	2	0820 15 312	34	15	0839 16 432	40	18
1620 15 130A	38-B	2	0820 15 312A	34	15	0839 16 460D	41	19
2329 15 130A	37		0839 15 312	35-1	41	0862 16 460	41	19
2329 15 131A	37	1	0839 15 312A	35-1	41	0820 16 510	40	14
1620 15 132	38-B	16	2304 15 321	152	39	0820 16 515	40	15
1620 15 132A	38-B	16	2304 15 321	210-I	99	0305 16 520	41	20
2329 15 132A	37	15	0839 15 350	34	17	0839 17 100B	43	1
2090 15 140A	37	17	0839 15 350A	34	17	0839 17 100C	43	1
2090 15 140A	38-B	13	0839 15 351B	34	19	0839 17 105	43	6
2090 15 143	38	18	0884 15 401	35	22	0839 17 111	43	8
2090 15 143	38-B	14	0884 15 401B	35	22	0810 17 121	44	26
1570 15 151	33	6	0839 15 410C	35	22	0839 17 201A	46	1
2329 15 151A	33	6	0839 15 410D	35	22	0839 17 201B	46	1
1011 15 152	37	11	0839 15 414	35	23	0810 17 204	47	26
1011 15 152	38-B	1	0839 15 414A	35	23	0810 17 205	46	2
2329 15 152	37	11	0839 15 420D	35	24	0839 17 221	46	5
0823 15 171	38	20	0839 15 420E	35	24	0317 17 225	46	11
0823 15 171	38-B	21	0839 15 422A	35	25	0839 17 230	46	12
0839 15 172	38	21	0839 15 422B	35	25	0839 17 230A	46	12
0839 15 172	38-B	23	0839 15 427A	35	26	0839 17 232	47	23
0813 15 173	38	22	0839 15 427B	35	26	0290 17 241A	46	6
0813 15 173	38-B	22	2090 15 511	35	30	0290 17 241B	46	6
0842 15 200A	33	9	1668 15 521	35	31	0187 17 243	46	8
0872 15 200	33	9	1668 15 521A	35	31	0187 17 243	46	18
0877 15 200	33	9	2090 15 521	35	31	0813 17 245	46	10
0710 15 203	35-1	47	1011 15 906	210-C	16	0813 17 245	46	20
0223 15 205	34	14	0603 16 102B	40	4	0839 17 245	46	10
2090 15 210	33	10	0603 16 103	40	2	0839 17 245	46	20
0872 15 250	33	8	0155 16 104	40	3	0881 17 245	46	10

INDEX.

PARTS NUMBER	PARTS COMP. LIST PAGE	FIG. NO.
0881 17 245	46	20
0881 17 245A	46	10
0881 17 245A	46	20
0839 17 250	46	14
0839 17 250A	46	14
0290 17 261A	46	16
0290 17 261B	46	16
0603 17 262	46	7
0603 17 262	46	17
0839 17 270	47	22
0839 17 270A	47	22
1011 17 270	47	22
0839 17 275	47	21
0839 17 276	47	24
0839 17 277	47	24
0839 17 278	47	24
0839 17 281	47	27
0839 17 284	47	28
0839 17 285	47	29
0839 17 287	47	25
0839 17 288	47	25
0821 17 297	47	34
0839 17 301	47	31
0839 17 302	47	32
0821 17 303	47	33
0839 17 305	47	35
0839 17 310	48	38
0813 17 312	48	39
0118 17 313	50	7
0839 17 313	48	40
0839 17 321	48	41
0839 17 321A	48	41
0111 17 323	50	17
0600 17 324	46	9
0600 17 324	46	19
0305 17 327	47	37
0305 17 328	47	37
0839 17 330	43	10
1663 17 330	43	10
1663 17 330	43	10
0187 17 333	43	11
0317 17 335	43	13
0317 17 335	73-F	22
0376 17 335	43	13
0620 17 341B	48	43
0862 17 341	73-N	35
0620 17 345A	43	14
0187 17 346B	43	15
0114 17 351	50	14
0187 17 351A	43	16
0862 17 351	73-G	38
0187 17 352	43	17
0187 17 352	73-G	39
0111 17 354	43	20
0111 17 354	73-G	43
0839 17 361	44	22
0839 17 371	44	23
0862 17 371	44	23
0839 17 375	44	24
0862 17 375	44	24
0810 17 381	44	30
0810 17 385	44	31
0810 17 402	50	1
0810 17 404	50	2
0839 17 406	50	3
0839 17 410	50	4
0103 17 411	50	12
0103 17 411	51	34
0103 17 411	51	42
0839 17 420	50	5
0839 17 431	50	6
0221 17 441	50	8
0259 17 441	50	9
0259 17 441	51	43
1669 17 441	73-G	36
0862 17 442	73-G	37
0839 17 450	50	15
1663 17 450	50	15
0271 17 461A	50	16
0398 17 461A	50	16
0221 17 462	50	18
0398 17 462A	50	18
0221 17 463	50	19
0303 17 470	50	20
0271 17 471	50	20
0221 17 473	51	26
0303 17 474	51	28
0221 17 475A	51	29
0221 17 475B	51	29
0271 17 478	51	30
0303 17 481	51	23
0303 17 482	51	24
0183 17 491	51	32
0191 17 491	51	32
0187 17 492	51	31
0839 17 510	51	36
0881 17 510A	51	36
0329 17 520	51	37
0839 17 520	44	33
0881 17 520	51	37
0824 17 524	51	38
0839 17 524	44	34

INDEX.

PARTS NUMBER	PARTS COMP. LIST PAGE	FIG. NO.	PARTS NUMBER	PARTS COMP. LIST PAGE	FIG. NO.	PARTS NUMBER	PARTS COMP. LIST PAGE	FIG. NO.
0221 17 540	51	44	0820 18 155A	53	10	0107 18 224	61-B	19
0839 17 540A	44	36	0839 18 160	53	11	0107 18 224	64	24
0221 17 551A	51	39	0877 18 160	53	11	0107 18 224	64-B	20
0221 17 552	51	40	2359 18 170	54	15	0107 18 224A	64	25
0303 17 561	51	41	0839 18 180	54	16	0107 18 225	61	22
2780 17 561	51	41	0839 18 190A	53	4	0107 18 225	61-B	20
1114 17 630	44	39	0839 18 190B	53	4	0107 18 225	64	23
1663 17 630	44	39	1663 18 200	54	17	0107 18 225	64-B	19
1663 17 630	44	39	1663 18 200	61-B		0107 18 226A	61	20
1663 17 635	44	41	1663 18 200A	54	17	0107 18 226A	61-B	17
1663 17 635	44	41	1663 18 200A	61-B		0107 18 226A	63	22
0376 17 640	44	38	1663 18 200C	54	17	0107 18 226A	64-B	18
0376 17 640A	44	38	1663 18 200C	61-B		0107 18 227	60	10
0820 18 100D	53	1	1668 18 200	54	17	0107 18 227	63	13
0823 18 100	53	2	1668 18 200	61-E		0107 18 231	60	14
0866 18 100A	53	2	1669 18 200	54	17	0107 18 231	61-B	13
0845 18 101	53	5	1669 18 200	61-E		0107 18 231	63	7
0866 18 101	53	5	2090 18 200	54	17	0107 18 231	64-B	5
0823 18 107	53	6	2090 18 200	60		0107 18 266	61	24
1663 18 110A	53		0107 18 201	54	19	0107 18 266	61-B	22
1663 18 110B	53		0107 18 208	60	6	0107 18 266	63	21
2090 18 110	53		0107 18 208	63	12	0107 18 266	64-B	17
0820 18 111B	53	8	0107 18 212	60	7	0839 18 270A	54	
0823 18 111	121	23	0107 18 212	61-B	6	0839 18 270B	54	
0823 18 111	124-B	13	0107 18 212	61-E	5	0839 18 270C	54	
0823 18 111	210-D	39	0107 18 212	63	16	0820 18 271C	54	20
0823 18 111	228	46	0107 18 212	64-B	12	0820 18 271D	54	20
0823 18 111	228	48	0107 18 216A	61-B	18	0839 18 272	54	21
0820 18 114	53	12	0107 18 216A	61-E	11	0839 18 272A	54	21
0820 18 115B	53	10	0107 18 216A	64-C	25	0839 18 273A	54	22
0839 18 120	53	9	0107 18 221A	61	23	0810 18 276	27	38
2359 18 130	54	13	0107 18 221A	61-B	21	0810 18 277	27	38
0839 18 140	54	14	0107 18 221A	64-B	21	0820 18 279A	54	26
2359 18 150	53		0107 18 224	61	21	0813 18 288	54	25

INDEX.

PARTS NUMBER	PARTS COMP. LIST PAGE	FIG. NO.
0823 18 291	55	32
0118 18 294	55	31
2090 18 297	55	33
0839 18 300	57	1
0839 18 300	66	
0866 18 300	57	1
0866 18 300	67-E	
1011 18 300	57	1
1011 18 300	67-G	1
2869 18 300	57	1
2869 18 300	67-B	
0839 18 311B	4	26
0839 18 311B	57	5
1011 18 319	4-1	47
2090 18 319	22-6	37
2090 18 361	57	6
0222 18 375	57	7
0222 18 376	57	7
0222 18 377	57	7
1668 18 381	57	10
1672 18 381A	57	10
2090 18 381	57	10
0839 18 390	58-1	33
0222 18 391C	57	11
0259 18 391B	57	11
0839 18 400B	58	13
0839 18 400B	72	
0839 18 400C	58	13
0839 18 400C	72	
0845 18 400	57	13
0845 18 400	69	
2869 18 400	58	13
2869 18 400	58	13
2869 18 400	72	
2869 18 400A	58	13
2869 18 400A	58	13
2869 18 400A	73-2	1
0107 18 406B	70	32
0107 18 424	67	25
0107 18 424	69	3
0107 18 424	69	17
0107 18 424	72	2
0813 18 501	7	16
0221 18 505	44	38
0259 18 510	37	13
0259 18 510	38-B	18
0866 18 511	38-B	19
0110 18 515	37	14
0110 18 515	38-B	17
0504 18 520	58	20
0504 18 520A	58	20
1672 18 520	58	20
1689 18 520	58	20
2869 18 520	58	20
2691 18 660	126	21
2850 18 660	129	34
1663 18 700A	54	18
1663 18 700A	64-B	
2090 18 700	54	18
2090 18 700	63	
0839 18 707	55	32
0813 18 791A	55	32
1663 18 860	22-3	40
1668 18 860A	22-6	35
1663 18 865	129	34
1668 18 890	55	41
2359 18 910	55	35
2090 18 911A	55	40
1663 18 920	8	30
2329 18 920A	8	30
2329 18 921	8	31
2329 18 922	8	32
2329 18 923	8	33
2329 18 924	8	34
2329 18 930B	55	43
1663 18 940	55	36
1668 18 940A	55	36
1669 18 940A	55	36
2090 18 940A	55	36
1617 18 950	8-2	54
1668 18 950	8-2	54
1617 18 980	55	37
1669 18 980	55	37
2090 18 999	4-1	43
2070 19 020	73-B	1
0842 19 025	73-B	3
0842 19 027A	73-B	5
0842 19 031	73-P	6
1669 19 090	73-D	
1669 19 090A	73-D	
0338 19 100A	73-B	7
0842 19 211B	73-B	8
0338 19 215	73-B	9
0338 19 216	73-B	10
0338 19 220	73-B	11
0338 19 223	73-B	13
0338 19 230	73-B	12
0338 19 234	73-B	14
0338 19 235	73-B	14
0338 19 236	73-B	14
0338 19 237	73-B	15
0338 19 238	73-B	15

INDEX.

PARTS NUMBER	PARTS COMP. LIST PAGE	FIG. NO.	PARTS NUMBER	PARTS COMP. LIST PAGE	FIG. NO.	PARTS NUMBER	PARTS COMP. LIST PAGE	FIG. NO.
0338 19 239	73-B	15	1675 19 444	73-P	5	0338 19 508	73-I	14
0338 19 240	73-B	16	1675 19 444A	73-P	5	0338 19 509	73-I	15
0338 19 245	73-B	17	0338 19 445	73-P	3	0338 19 509	73-J	27
0338 19 255	73-B	18	0338 19 446	73-P	4	0338 19 510	73-I	16
0338 19 256	73-C	19	0338 19 448	73-P	11	0338 19 511	73-J	28
0338 19 257	73-C	20	0338 19 449	73-P	12	0338 19 515	73-J	29
0338 19 258	73-C	21	0338 19 450	73-P	13	0338 19 530	73-J	30
0338 19 310	73-F	1	0338 19 460	73-I	2	0338 19 531	73-J	31
0338 19 331	73-F	2	0338 19 470	73-I	3	0338 19 533	73-J	32
0338 19 331	73-F	2	0338 19 475	73-I	4	0338 19 534	73-J	33
0338 19 335	73-F	3	0338 19 475	73-I	17	0338 19 540	73-J	34
0338 19 336	73-F	4	0338 19 476	73-I	5	0338 19 550	73-J	35
0338 19 337	73-F	5	0338 19 476	73-J	18	0338 19 560	73-J	36
0338 19 338	73-F	6	0338 19 480	73-I	6	0338 19 565	73-J	37
0397 19 340	73-F	7	0338 19 480	73-J	19	0338 19 566	73-K	38
0338 19 360	73-I	1	0338 19 486	73-I	8	0338 19 567	73-K	39
0338 19 361	73-F	9	0338 19 486	73-J	21	0338 19 570	73-K	40
0338 19 363	73-F	10	0338 19 487	73-I	9	0338 19 580	73-M	1
0842 19 381	73-F	11	0338 19 487	73-J	22	0338 19 581	73-M	2
0338 19 384	73-F	12	0338 19 488	73-I	10	0338 19 590	73-M	3
0842 19 385	73-F	13	0338 19 488	73-J	23	0338 19 591	73-M	4
0338 19 386A	73-F	14	0338 19 493	73-I	7	0338 19 593	73-M	5
0338 19 388A	73-F	15	0338 19 493	73-J	20	0338 19 594	73-M	6
0338 19 389	73-F	16	0338 19 498	73-I	11	0338 19 595	73-M	7
0842 19 391	73-F	17	0338 19 498	73-J	24	0338 19 596	73-M	8
0842 19 394	73-F	18	0338 19 499	73-I	12	0338 19 598	73-K	41
0338 19 395	73-F	19	0338 19 499	73-J	25	0338 19 601	73-M	9
0338 19 397	73-F	20	0338 19 500	73-I	13	0338 19 603	73-M	10
0338 19 397	73-N	25	0338 19 500	73-J	26	0338 19 604	73-M	11
0338 19 431	73-P	1	0338 19 503	73-I	14	0338 19 605	73-M	12
0338 19 432	73-P	2	0338 19 504	73-I	14	0338 19 606	73-M	13
0338 19 433	73-P	8	0338 19 505	73-I	14	0338 19 607	73-M	14
0338 19 440	73-P	9	0338 19 506	73-I	14	0338 19 608	73-M	15
0338 19 443	73-P	10	0338 19 507	73-I	14	0338 19 609	73-M	16

PARTS NUMBER	PARTS COMP. LIST PAGE	FIG. NO.	PARTS NUMBER	PARTS COMP. LIST PAGE	FIG. NO.	PARTS NUMBER	PARTS COMP. LIST PAGE	FIG. NO.
0338 19 610	73-M	17	0338 19 663	73-N	28	0338 19 781	73-R	11
0338 19 613A	73-M	18	0338 19 664	73-N	29	0338 19 782	73-R	12
0338 19 614A	73-M	18	0842 19 665	73-N	30	0338 19 783	73-R	13
0338 19 615A	73-M	18	0338 19 666	73-N	31	0338 19 784	73-R	14
0338 19 616A	73-M	18	0338 19 667	73-N	32	0338 19 785	73-R	15
0338 19 617A	73-M	18	0338 19 670A	73-N	33	0338 19 786	73-R	16
0338 19 618A	73-N	18	0338 19 676	73-N	34	0338 19 787	73-R	17
0338 19 619	73-N	19	0338 19 678	73-C	23	0338 19 788	73-R	18
0338 19 621	73-K	42	0338 19 701	73-P	15	0338 19 789	73-R	19
0338 19 622	73-K	43	0338 19 702	73-P	16	0338 19 791	73-R	20
0338 19 622	73-N	20	0338 19 703	73-P	17	0338 19 792	73-R	21
0338 19 623	73-K	44	0338 19 704	73-P	18	0338 19 793	73-R	22
0338 19 624	73-K	45	0397 19 705	73-P	14	0338 19 795	73-R	23
0338 19 631	73-K	46	0338 19 706	73-P	19	0338 19 797	73-R	24
0338 19 632	73-K	46	1675 19 710	73-F	21	0338 19 798	73-R	25
0338 19 633	73-K	46	1840 19 710	73-F	21	0338 19 801	73-S	26
0338 19 634	73-K	46	0338 19 731	73-P	20	0338 19 802	73-S	27
0338 19 635	73-K	46	0338 19 732	73-P	21	0338 19 803	73-S	28
0338 19 636	73-K	46	0338 19 733B	73-P	22	0338 19 805	73-S	29
0338 19 638	73-K	47	0338 19 734A	73-P	23	0338 19 807	73-S	30
0338 19 639	73-K	48	0338 19 735	73-G	23	0338 19 808	73-S	31
0338 19 641	73-K	49	0338 19 737	73-G	24	0338 19 811	73-S	32
0338 19 642	73-K	49	0338 19 738C	73-P	22	0338 19 815	73-S	33
0338 19 643	73-K	49	0338 19 739	73-G	24	0338 19 816	73-S	34
0338 19 644	73-K	49	0397 19 750	73-R		0338 19 817	73-S	35
0338 19 645	73-K	49	0338 19 760	73-R	1	0338 19 818	73-S	36
0338 19 646	73-K	49	0338 19 768	73-R	3	0338 19 819	73-S	37
0338 19 647	73-K	49	0338 19 771	73-R	4	1675 19 821	73-G	25
0842 19 650	73-N	21	0338 19 772	73-R	5	0338 19 822	73-G	26
0338 19 651	73-N	22	0338 19 773	73-R	6	0338 19 823	73-G	27
0338 19 655	73-N	23	0397 19 774	73-R	7	0338 19 825	73-G	28
0338 19 656	73-N	24	0397 19 775	73-R	8	0338 19 826	73-G	28
0842 19 660	73-N	26	0338 19 777	73-R	9	0338 19 827	73-G	28
0338 19 661	73-N	27	0338 19 778	73-R	10	0338 19 828	73-G	28

INDEX.

PARTS NUMBER	PARTS COMP. LIST PAGE	FIG. NO.	PARTS NUMBER	PARTS COMP. LIST PAGE	FIG. NO.	PARTS NUMBER	PARTS COMP. LIST PAGE	FIG. NO.
0338 19 829	73-G	28	0845 23 040A	6		0820 23 176A	10	9
0338 19 831	73-S	39	2090 23 103	10	1	0820 23 176A	13	9
0338 19 832	73-S	40	2090 23 103A	10	1	0820 23 176B	10	9
0338 19 833	73-S	41	2090 23 113	13	1	0820 23 176B	13	9
0338 19 835	73-G	29	2090 23 113A	13	1	1663 23 200	4-1	
0338 19 835A	73-G	29	0839 23 131	13	4	1665 23 200	4-1	
0338 19 836	73-G	30	1011 23 151	10	6	1668 23 200	4-1	
0338 19 837	73-G	31	1011 23 151	10	6	1669 23 200	4-1	
2070 19 870	73-G	32	1011 23 151	10	7	2090 23 200	4-1	
0338 19 880	73-G	33	1011 23 151	10	7	0221 23 215	123	3
0338 19 904	73-C	28	1011 23 151	13	6	0221 23 225	123	16
0842 19 910	17	15	1011 23 151	13	6	0221 23 226	123	15
2070 19 910	73-C	27	1011 23 151	13	7	0221 23 227	124	21
0842 19 915A	73-C	30	1011 23 151	13	7	0221 23 228	124	21
2070 19 920	73-C	32	1011 23 151A	10	6	0221 23 229	123	14
2070 19 930A	73-C	33	1011 23 151A	10	6	0221 23 231	123	14
0842 19 933A	73-C	34	1011 23 151A	10	7	0221 23 232	123	14
0842 19 934B	73-C	35	1011 23 151A	10	7	0221 23 233	124	24
0842 19 936	73-D	39	1011 23 151A	13	6	0222 23 233	124	24
1633 19 938	73-D	48	1011 23 151A	13	6	2090 23 240	8-1	41
2070 19 938	73-D	40	1011 23 151A	13	7	2090 23 240C	8-1	41
2070 19 939	73-D	41	1011 23 151A	13	7	0222 23 261	22-C	38
0842 19 940A	73-D	42	2125 23 151	10	6	0839 23 301B	22-B	1
0842 19 942	73-D	43	2125 23 151	13	6	0839 23 302	22-B	2
0842 19 943	73-D	45	2125 23 152	10	7	2090 23 303A	22-B	3
0881 22 297	47	26	2125 23 152	13	7	0823 23 304	22-B	4
1820 22 333	43	11	2125 23 154	10	6	0839 23 305	22-B	7
0866 23 025	4-1	47	2125 23 154	13	6	0823 23 306	22-B	8
0820 23 040	3		2125 23 155	10	7	0823 23 307B	22-B	9
0820 23 040	6		2125 23 155	13	7	2080 23 308	22-B	10
0845 23 040	3		0820 23 175A	10	9	0839 23 309	22-B	11
0845 23 040	6		0820 23 175A	13	9	1663 23 310	22-I	23
0845 23 040A	3		0820 23 175B	10	9	1665 23 310	22-I	23
0845 23 040A	4-2		0820 23 175B	13	9	1668 23 310	22-L	2

INDEX.

PARTS NUMBER	PARTS COMP. LIST PAGE	FIG. NO.
1669 23 310	22-L	2
0305 23 312A	22-F	121
0823 23 314	22-B	12
0222 23 318	22-E	79
2090 23 318	22-B	13
1663 23 319	22-J	26
1663 23 319	22-L	3
2090 23 319	22-F	122
1570 23 320	22-I	1
1663 23 320A	22-I	1
1668 23 320	22-M	15
1668 23 320B	22-M	15
1669 23 320	22-M	15
1669 23 320A	22-M	15
0839 23 321B	22-B	17
0823 23 322	22-B	19
0823 23 323	22-B	21
0839 23 325	22-B	22
0823 23 326A	22-B	23
0823 23 326B	22-B	23
0823 23 326C	22-B	23
1663 23 326B	22-J	25
1663 23 326B	22-L	7
0839 23 327	22-B	24
2090 23 328	22-F	118
1570 23 330A	22-J	28
1663 23 330	22-J	28
1668 23 330	22-O	34
1669 23 330	22-O	34
0839 23 332	22-B	25
0823 23 333	22-C	26
2090 23 334	22-C	27
0823 23 335	22-C	28
0288 23 336	22-E	93
0288 23 336	22-I	8
0288 23 336	22-M	16
0839 23 336	22-C	29
0823 23 337	22-C	30
0823 23 338	22-C	31
0823 23 338	22-I	10
0823 23 338	22-N	23
2090 23 339	22-F	123
1663 23 340A	22-I	15
1663 23 340A	22-O	32
2090 23 341	22-C	33
0839 23 342	22-C	34
0839 23 343	22-C	35
2080 23 344	22-C	36
0823 23 345A	22-C	39
0839 23 346	22-C	40
2080 23 347	22-C	41
0839 23 348	22-C	42
0839 23 349	22-C	44
1663 23 350A	22-I	16
1665 23 350A	22-I	16
1668 23 350	22-N	29
1668 23 350A	22-N	29
1669 23 350	22-O	29
1669 23 350A	22-O	29
1672 23 350	22-O	29
1672 23 350A	22-O	29
0652 23 351	22-F	113
0823 23 351	22-C	45
0652 23 352	22-F	114
2090 23 352	22-C	47
0222 23 353A	22-N	25
0222 23 353A	22-N	25
0652 23 353	22-F	115
2090 23 353	22-G	137
0603 23 354	22-E	87
0652 23 354	22-F	116
1663 23 354	22-I	14
1668 23 354	22-O	33
0222 23 355A	22-N	26
0823 23 355	22-C	48
0823 23 356	22-C	49
0839 23 357A	22-C	50
2080 23 358	22-C	51
0823 23 359	22-D	52
1663 23 360A	22-I	18
1663 23 360B	22-I	18
1663 23 360C	22-O	30
0839 23 361	22-D	53
1663 23 361A	22-O	31
0839 23 362	22-D	54
0823 23 364	22-D	56
0839 23 365	22-F	124
C823 23 366	22-D	58
0193 23 367	22-C	37
0839 23 367	22-D	59
0823 23 368	22-D	60
0193 23 369	22-D	67
0193 23 369	22-F	104
0823 23 369	22-D	61
1663 23 370A	22-I	20
1665 23 370	22-I	20
1668 23 370	22-M	13
1668 23 370A	22-M	13
0823 23 371A	22-D	62
0823 23 371B	22-D	62
0823 23 372	22-D	64
0823 23 373	22-D	65

INDEX.

PARTS NUMBER	PARTS COMP. LIST PAGE	FIG. NO.	PARTS NUMBER	PARTS COMP. LIST PAGE	FIG. NO.	PARTS NUMBER	PARTS COMP. LIST PAGE	FIG. NO.
0823 23 373A	22-D	65	2090 23 408	22-E	83	1669 23 425	22-M	17
0823 23 374	22-D	66	1663 23 409	22-J	27	0839 23 426A	22-E	92
0193 23 375	22-F	127	1663 23 409	22-L	4	0839 23 426A	22-I	5
0823 23 375	22-D	68	1570 23 410A	22-J	29	0839 23 426A	22-N	20
0193 23 376A	22-F	120	1663 23 410A	22-J	29	0823 23 428	22-N	21
1663 23 380	22-I	21	1668 23 410	22-O	39	2090 23 428	22-E	94
1663 23 380	22-O	42	1669 23 410	22-O	39	2090 23 428	22-I	9
0823 23 382	22-D	70	1663 23 411A	22-O	40	2090 23 428	22-N	21
0193 23 383	22-E	86	1663 23 420A	22-J	30	1570 23 430	22-J	31
0193 23 383	22-I	12	1663 23 420A	22-O	35	1570 23 430	22-O	41
0193 23 383	22-N	27	0839 23 421	22-E	84	1570 23 430A	22-O	41
0823 23 384	22-D	71	1663 23 421	22-I	6	1663 23 430A	22-J	31
0839 23 384	22-B	20	1663 23 421	22-N	25	1669 23 430	22-O	41
0839 23 385	22-G	140	1669 23 421	22-N	25	0839 23 431	22-E	95
0839 23 387	22-G	139	1669 23 421A	22-N	25	0839 23 432	22-E	96
2080 23 387	22-F	125	1669 23 421A	22-N	25	0839 23 433	22-E	97
0603 23 388A	22-C	43	0839 23 422	22-E	85	0839 23 435	22-E	100
0603 23 388A	22-D	55	0839 23 422	22-I	7	0839 23 438A	22-E	101
0823 23 388A	22-D	72	0839 23 422	22-N	26	1668 23 439	22-P	45
0823 23 388A	22-F	105	0839 23 423	22-E	89	1663 23 440A	22-J	32
0603 23 389	22-D	69	0839 23 423	22-I	2	1668 23 440	22-O	36
0823 23 389A	22-D	73	0839 23 423	22-M	18	2090 23 441A	22-G	138
1663 23 390	22-I	24	1669 23 423	22-M	18	2090 23 442	22-F	126
1663 23 390	22-L	6	1669 23 423A	22-M	18	2090 23 443	22-G	134
0823 23 391	22-D	74	1669 23 423A	22-M	18	2090 23 444	22-G	132
0823 23 394	22-D	75	1668 23 424	22-N	19	2090 23 445	22-G	133
0823 23 395	22-D	76	1668 23 424A	22-N	19	1663 23 450B	22-I	17
0823 23 396	22-D	77	1669 23 424	22-N	19	1668 23 450	22-O	43
0600 23 398A	22-F	112	1669 23 424A	22-N	19	2090 23 451	22-F	129
0839 23 401	22-F	117	2090 23 424	22-E	90	2090 23 452	22-G	130
0823 23 404	22-E	80	2090 23 424	22-I	3	2090 23 453	22-G	131
2090 23 405	22-E	82	0839 23 425	22-E	91	2090 23 454	22-G	135
0839 23 406	22-E	99	0839 23 425	22-I	4	1663 23 455	22-I	19
2090 23 407	22-E	81	0839 23 425	22-M	17	1663 23 455	22-P	44

PARTS NUMBER	PARTS COMP. LIST PAGE	FIG. NO.	PARTS NUMBER	PARTS COMP. LIST PAGE	FIG. NO.	PARTS NUMBER	PARTS COMP. LIST PAGE	FIG. NO.
1665 23 455	22-I	19	1669 23 500	22-L	10	1663 23 540	22-J	37
0823 23 460	22-E	78	1672 23 500	22-M	10	1663 23 540A	22-J	37
0839 23 460	22-E	78	1665 23 501	22-J	37	1668 23 540	22-P	
1663 23 460A	22-J	33	1668 23 501	22-M	11	1669 23 540	22-P	
1668 23 460	22-O	37	1669 23 501	22-M	11	2090 23 540	22-G	140
1663 23 470A	22-J	34	1672 23 501	22-M	11	0839 23 601	123	
1668 23 470	22-O	38	1665 23 502	22-J	37	0820 23 602	123	1
0823 23 472	22-E	103	1668 23 502	22-M	12	0820 23 603	123	4
0823 23 478	22-F	106	1669 23 502	22-M	12	0820 23 604	123	10
1663 23 480A	22-I	22	0842 23 503	22-J	37	0839 23 611	123	13
1665 23 480	22-I	22	1570 23 505A	22-J	37	0820 23 615	123	
1668 23 480	22-P	45	1570 23 507	22-J	37	0820 23 615A	123	
2090 23 480A	120	16	1570 23 507	22-M	14	0820 23 616	124	18
2090 23 480A	124-B		0842 23 509	22-J	37	0820 23 616A	124	18
0823 23 481A	22-F	108	0842 23 509	22-L	9	0839 23 618	123	6
2090 23 482	124-B	10	1570 23 510	22-J	37	0839 23 618A	123	6
0839 23 483	22-F	119	1663 23 510	22-J	37	0820 23 621	124	19
2090 23 483	124-B	12	1668 23 510	22-P	45	0820 23 624	124	29
0839 23 484A	22-B	18	0200 23 519	72	2	0820 23 625	124	22
0839 23 484A	22-J	36	1570 23 520	22-J	37	0839 23 625	124	28
0839 23 484A	22-N	28	1663 23 520A	22-J	37	0305 23 626A	124	27
0839 23 485	22-F	110	1668 23 520	22-L	5	0839 23 628	124	25
0839 23 489	22-F	128	1669 23 520	22-L	5	0839 23 629	124	26
1570 23 490	22-I	13	0839 23 530	22-G	140	0839 23 629A	124	26
1663 23 490A	22-I	13	1570 23 530	22-J	37	0222 23 630B	124	23
1668 23 490	22-N	22	1663 23 530A	22-J	37	0222 23 631	124	20
1669 23 490	22-N	22	1668 23 530	22-P	45	0222 23 631A	124	20
2090 23 491	22-G	136	0200 23 531	66	8	0118 23 636	69	8
2545 23 496	60	2	0200 23 531	66	10	0118 23 637	69	9
2545 23 496	61-B	2	0200 23 531	67-B	9	0750 23 652	22-B	6
2545 23 496	61-E	2	0200 23 531	67-B	15	0750 23 652	22-D	63
2545 23 496	63	2	0200 23 531	67-C	26	0750 23 652	22-J	35
1665 23 500	22-J	37	0200 23 531	69	4	0750 23 652	22-L	8
1668 23 500	22-L	10	1570 23 540	22-J	37	0164 23 664	69	2

INDEX.

PARTS NUMBER	PARTS COMP. LIST PAGE	FIG. NO.	PARTS NUMBER	PARTS COMP. LIST PAGE	FIG. NO.	PARTS NUMBER	PARTS COMP. LIST PAGE	FIG. NO.
0839 23 672	24	1	2090 23 838	30	14	0813 24 306	64-B	4
1665 23 672	24	1	0730 23 839	30	6	1668 24 308	61-E	9
1663 23 673A	24	2	0820 23 839A	30	16	2090 24 308	60	16
1668 23 673	24	2	0820 23 840	30	17	2090 24 308	61-B	15
2113 23 674	24	3	2090 23 841	30	18	0813 24 309	63	9
0839 23 675	24	6	0730 23 842	30	8	0813 24 309	64-B	7
2113 23 675	24	4	0820 23 842	30	20	1617 24 311	61-B	9
2080 23 676	24	7	0730 23 843	30	9	2090 24 311	60	11
2329 23 677	24	8	0820 23 843	30	21	0571 24 312	61-B	12
0820 23 678	24	9	2090 23 844	30	22	0571 24 312	64-C	26
0839 23 678	24	10	0730 23 845	30	11	0813 24 312	60	5
0839 23 679	24	11	0820 23 845A	30	23	0813 24 312	63	11
1665 23 679	24	11	0730 23 846	30	12	0813 24 312	64-C	24
1668 23 680	24	13	0820 23 847A	30	24	0820 24 312	60	4
0118 23 684	64	26	0730 23 848	30	15	0820 24 312	61-B	4
2329 23 685	24	12	0820 23 848A	31	26	0820 24 312	63	17
0839 23 687	24	6	2090 23 853	30	16	0839 24 312	60	4
0118 23 689	70	33	0730 23 854	30	19	0839 24 312	61-B	5
0118 23 689	73	28	0820 23 882A	26	3	0839 24 312	63	17
0118 23 691	70	34	1663 24 300	54	17	0839 24 312	64-B	9
0118 23 691	73	30	1663 24 300	61-B		1617 24 312	61-C	28
2090 23 697	24	13	0820 24 301	60	1	1668 24 313	61-E	4
2090 23 698	24	6	0820 24 301	61-B	1	1669 24 313	61-E	4
0839 23 801	26	20	0820 24 301	61-E	1	0820 24 315	60	9
0813 23 802A	26	21	0820 24 301	63	1	1617 24 315	61-B	8
0813 23 802B	26	21	0820 24 301	64-B	1	2430 24 315	61-C	25
0813 23 803	26	22	0813 24 303	60	3	2430 24 315	61-E	7
0820 23 832B	30	1	0813 24 303	61-B	3	2430 24 315	64-C	28
0820 23 833B	30	2	0813 24 303	61-E	3	0324 24 316	64-B	13
0820 23 834B	30	3	0813 24 303	63	3	0571 24 316	61-C	30
0820 23 835A	30	5	0813 24 303	64-B	3	0813 24 316	60	8
0820 23 836	30	7	2090 24 304	60	19	0813 24 316	61-E	6
0730 23 837	30	4	0823 24 305	60	17	0813 24 316	63	15
2090 23 837	30	13	0813 24 306	63	6	1617 24 316	61-B	7

INDEX.

PARTS NUMBER	PARTS COMP. LIST PAGE	FIG. NO.
1617 24 316	61-E	6
1617 24 316	64-B	11
0820 24 318	60	4
0820 24 318	63	17
0820 24 319	60	18
0820 24 319	61-B	16
0820 24 319	63	18
1663 24 319	61-B	16
1663 24 319	61-E	10
0820 24 322	60	13
0820 24 322	61-B	11
0820 24 322	63	19
0820 24 322	64-B	15
1663 24 323	61-C	23
2090 24 323	61	25
2090 24 323A	61	25
0884 24 325	61-E	12
1668 24 330	61-E	8
1669 24 330	61-E	8
0839 24 334	61	26
0839 24 334	61-C	24
0839 24 334	61-E	15
1617 24 334	61-C	26
1617 24 334B	61-C	26
1668 24 334	61-E	14
2587 24 335	60	15
2587 24 335	61-B	14
2587 24 336	60	12
2587 24 336	61-B	10
1617 24 338	61-C	27
1668 24 350	61-E	13
0884 24 360	61-E	16
1668 24 360	61-E	16
0249 24 367	60	5
0249 24 367	63	11
2090 24 400	54	18
2090 24 400	63	
2090 24 404	63	4
0820 24 405	63	5
2329 24 408	63	8
2329 24 408	64-B	6
1663 24 411	64-B	8
2329 24 411	63	10
2090 24 412	64	27
1617 24 414	64-C	27
2329 24 414	64	28
1617 24 415	64-B	10
2329 24 415	63	14
1617 24 419	64-B	14
1617 24 423	64-B	16
2359 24 423	63	20
2359 24 423A	63	20
2090 24 432	64	27
2359 24 433	64	29
2090 24 434	64	29
2359 24 434A	64	29
1617 24 435	64-C	23
2329 24 435	61-C	29
2329 24 435	64	30
1617 24 437	64-B	22
1823 24 498	61-C	30
0290 24 501A	66	1
0824 24 501	67-B	1
0866 24 501	67-E	1
1011 24 501	67-G	10
0824 24 502	67-B	2
0820 24 503	67-E	3
0820 24 503	67-G	9
0823 24 504	67-B	4
0290 24 505A	66	2
0824 24 505	67-B	
0824 24 506	67-B	10
0290 24 510A	66	
1011 24 510	67-G	15
0290 24 511A	66	4
0820 24 511	66	14
0820 24 511	67-B	13
0290 24 513	67	21
0290 24 513	67-C	19
0208 24 514	67-E	12
0208 24 514	67-G	7
4002 24 514	67-B	6
0290 24 515	66	6
0222 24 517	69	5
0290 24 517	67	24
0820 24 519	67	20
0820 24 519	67-B	17
0290 24 520A	66	
0290 24 521A	66	11
0823 24 521A	67-B	
0823 24 522A	67-B	5
0208 24 523	66	3
4002 24 523	67-B	3
0290 24 524	66	5
0823 24 525A	67-B	7
0866 24 526	67-E	13
0866 24 526	67-G	6
0824 24 527	67-C	25
1011 24 527	67-G	18
0839 24 530	67	23
0839 24 530	67-C	24
0866 24 530	67-E	15

INDEX.

PARTS NUMBER	PARTS COMP. LIST PAGE	FIG. NO.	PARTS NUMBER	PARTS COMP. LIST PAGE	FIG. NO.	PARTS NUMBER	PARTS COMP. LIST PAGE	FIG. NO.
0866 24 530	67-G	3	0187 24 566	67-B	16	0845 24 710	69	18
0866 24 533	67-E	16	0222 24 568	66	16	2869 24 710	73-2	5
0866 24 533	67-G	2	0222 24 568	67-C	22	0727 24 712	73	32
1011 24 533	67-G	12	0636 24 568B	66	7	0727 24 712	73-2	6
0866 24 534	67-E	9	0636 24 568B	66	9	0820 24 712	72	7
1011 24 534	67-G	14	0636 24 568B	67-B	8	0845 24 712	70	23
0866 24 535	67-E	14	0636 24 568B	67-B	14	0845 24 712A	70	20
0866 24 535	67-G	4	0187 24 577A	67	27	2869 24 712	73-2	7
0866 24 540	67-E	2	0187 24 577A	67-C	28	0820 24 713	70	22
0866 24 540	67-G	8	0187 24 579A	67	26	0820 24 713	72	6
0290 24 541A	66	12	0187 24 579A	67-C	27	0820 24 714	70	21
0290 24 541A	67-B	11	0290 24 581	67	28	0820 24 714	72	5
0290 24 541A	67-E	5	0290 24 581	67-C	29	0839 24 715	72	14
0866 24 541	67-E	10	0290 24 581	67-E	17	0839 24 715	73-2	8
1011 24 541	67-G	16	0290 24 581	67-G	17	0839 24 716	72	9
0290 24 542A	66	13	0839 24 701A	73	31	0839 24 716	73-2	9
0290 24 542A	67-B	12	0839 24 701B	73	31	0845 24 716	69	6
0290 24 542A	67-E	6	0845 24 701	70	35	0820 24 717	72	12
0866 24 548	67-E	7	2869 24 701	73	31	0845 24 717	69	10
0866 24 549	67-E	8	0839 24 702	72	18	0839 24 719	73	27
0866 24 550	67-E	11	2869 24 702	72	18	0839 24 719	73-2	10
0866 24 550	67-G	5	0839 24 703	72	17	0839 24 720	73	35
0290 24 556	67	22	0866 24 704	70	37	0845 24 720	70-1	41
0326 24 556	67-C	23	0839 24 705	73	26	2869 24 720	73	35
0866 24 560	67-E	4	0839 24 705	73-2	2	2869 24 720	73-2	11
1011 24 560	67-G	11	0845 24 705	70	30	0839 24 721	73	23
0636 24 562A	67	19	0839 24 706	72	13	0839 24 721	73-2	12
0636 24 562A	67-C	21	0839 24 706	73-2	3	0845 24 721	70	25
0208 24 563A	66	17	0845 24 706	69	11	0839 24 722	73	36
0208 24 563A	67-B	18	0820 24 707	69	12	0839 24 723	73	33
0290 24 563	66	18	0839 24 709	72	8	0839 24 723	73-2	13
0290 24 563	67-C	20	0839 24 709	73-2	4	0839 24 724	73	34
1011 24 563	67-G	13	0845 24 709	70	24	0839 24 724	73-2	14
0187 24 566	66	15	0839 24 710	73	21	0845 24 725	69	1

INDEX.

PARTS NUMBER	PARTS COMP. LIST PAGE	FIG. NO.	PARTS NUMBER	PARTS COMP. LIST PAGE	FIG. NO.	PARTS NUMBER	PARTS COMP. LIST PAGE	FIG. NO.
2869 24 725	73-2	15	0820 24 755	72	11	0259 26 064	77	8
0426 24 726	70	31	0222 24 756	69	16	0730 26 065	77	9
2869 24 726	73-2	16	0839 24 758	72	1	0305 26 080B	77	2
2869 24 730	73-2	17	0222 24 760A	69	14	0839 26 111	77	11
0249 24 731	72	15	0559 24 760	73-3	23	0839 26 111A	77	11
0249 24 731	73	22	0839 24 761	72	3	0317 26 121	77	12
0249 24 731	73	36	0839 24 762	72	4	0259 26 129	77	16
0249 24 731	73-2	18	0839 24 763	72	20	0259 26 132	78	19
0426 24 731	69	15	0839 24 764	72	19	0259 26 141	77	17
0559 24 731	73-2	19	0259 25 021B	75	1	0259 26 142	77	17
0839 24 736A	72	16	0259 25 060	75	2	0317 26 151A	77	13
0839 24 736B	72	16	0259 25 071A	75	3	0259 26 152	77	14
2869 24 736	73-2	20	0259 25 072A	75	3	0187 26 154	77	18
0222 24 741	69	13	0259 25 073A	75	3	0259 26 155	77	15
0222 24 741	69	19	0259 25 074A	75	3	0305 26 251	80	1
0222 24 741	70-1	42	0259 25 075A	75	3	0305 26 251	80	1
0820 24 741	73	29	0259 25 076A	75	3	0866 26 251	80	1
0820 24 747	70	27	0259 25 077A	75	3	0305 26 255	80	2
0820 24 747	73	24	0259 25 078A	75	3	0305 26 280A	80	4
0820 24 748	70	28	0259 25 079A	75	3	0305 26 280B	80	4
0820 24 748	73	25	0839 25 100C	75		0398 26 280	80	4
0845 24 748	70	26	0842 25 100A	75		0866 26 280A	80	4
2869 24 748	73-3	21	0324 25 130	75	4	0866 26 280B	80	4
0845 24 749	70	29	0866 25 130	75	4	0305 26 290A	80	4
2869 24 749	72	15	0290 25 151	75	6	0305 26 290B	80	4
2869 24 749	73	22	0223 25 220D	75	9	0398 26 290	80	4
0222 24 750	70	38	0839 25 300A	75	5	0866 26 290A	80	4
0222 24 752A	70	39	0842 25 300	75	5	0866 26 290B	80	4
0222 24 753	70	36	0839 26 010B	77	1	0305 26 310A	80	5
0222 24 753	70-1	40	0259 26 041	77	5	0305 26 310B	80	5
0426 24 753	70-1	40	0259 26 051	77	6	0187 26 341	80	6
0820 24 754	72	10	0730 26 060	77		0118 26 342	80	7
0845 24 754	69	7	0730 26 062	77	7	0110 26 345	81	34
2869 24 754	73-3	22	0730 26 063	77	10	0223 26 345A	81	34

INDEX.

PARTS NUMBER	PARTS COMP. LIST PAGE	FIG. NO.	PARTS NUMBER	PARTS COMP. LIST PAGE	FIG. NO.	PARTS NUMBER	PARTS COMP. LIST PAGE	FIG. NO.
0710 26 352	80	15	0755 27 141	84	5	0824 28 012	87	2
0866 26 391	81	33	0820 27 150A	84	8	0305 28 013A	87	4
0710 26 461	80	13	0820 27 150B	84	8	0305 28 040A	87	3
0305 26 465	80	14	0305 27 171	84	7	0305 28 111B	87	7
0305 26 500	80	12	0290 27 231	84	10	0305 28 111B	87	12
0305 26 500A	80	12	0221 27 245	84	12	0305 28 150C	87	6
0820 26 570A	82	39	0820 27 251	84	13	0305 28 200E	87	10
0813 26 610A	81	18	0290 27 252	84	14	0305 28 300D	87	11
0810 26 651	81	20	0290 27 253	84	14	0824 28 464A	87	5
0810 26 671	81	21	0290 27 254	84	14	0305 28 470	87	14
0221 26 672	81	22	0221 27 255	84	15	0305 28 591B	88	19
0221 26 673	81	23	0221 27 261	84	16	0305 28 700D	87	15
0305 26 800A	80	8	0305 27 261	84	16	0613 28 719	106	13
0305 26 810A	80	8	0114 27 262	85	17	0223 28 775	87	16
0187 26 821	81	30	0290 27 301	85	18	0223 28 776	88	17
0118 26 832	80	9	0290 27 301	85	19	0824 28 778A	88	18
0118 26 834	80	10	0290 27 302	85	20	2850 31 790	209	112
0118 26 897	81	31	0221 27 305	85	22	0839 32 011A	90	1
0187 26 921	81	30	0290 27 341	85	19	0839 32 012A	90	2
0613 26 922	81	28	0223 27 401	85	23	0824 32 013A	90	3
2080 27 000	84		0223 27 402	85	23	0839 32 014	90	17
0223 27 012	84	2	0223 27 403	85	23	0839 32 015A	90	18
2112 27 C18	84	4	0223 27 404	85	23	0839 32 019	90	4
0223 27 020B	84	3	0223 27 405	85	23	0839 32 025B	91	23
0223 27 030	84	1	0223 27 406	85	23	0839 32 026	90	7
2080 27 110	85	24	0223 27 407	85	23	0839 32 027	90	8
0223 27 112	84	7	0223 27 408	85	23	0839 32 028	90	9
0223 27 113	84	7	0223 27 409	85	23	0839 32 029	91	24
0223 27 114	84	7	0223 27 411	85	23	0839 32 030C	90	10
0223 27 115	84	7	0223 27 412	85	23	0841 32 030	90	10
0603 27 121	84	7	0223 27 413	85	23	0839 32 039	91	25
0603 27 122	84	7	0223 27 414	85	23	0839 32 040A	90	11
0603 27 123	84	7	0223 27 415	85	23	0839 32 040B	90	11
0221 27 141	84	6	0839 28 011A	87	1	0841 32 040	90	11

PARTS NUMBER	PARTS COMP. LIST PAGE	FIG. NO.	PARTS NUMBER	PARTS COMP. LIST PAGE	FIG. NO.	PARTS NUMBER	PARTS COMP. LIST PAGE	FIG. NO.
0841 32 040A	90	11	0208 32 188	97	21	2080 32 350A	96	13
0839 32 042A	90	12	0820 32 190	92	45	2113 32 350C	96	13
0839 32 055	91	20	2835 32 220	93	52	2113 32 354	96	14
0820 32 058	91	26	2835 32 220A	93	52	2113 32 356	96	15
0208 32 059	91	27	0187 32 235	93	55	2080 32 358	97	21
0259 32 071	91	29	0187 32 235	93	59	2113 32 365	96	7
0820 32 089	91	30	2080 32 261	96	1	0326 32 411	93	60
0303 32 100A	91	28	1562 32 269	97	21	2244 32 423	93	61
2113 32 110	91		0208 32 278	96	10	0305 32 425	93	62
2113 32 110A	91		0208 32 278	97	10	0305 32 426	93	63
2113 32 110B	91		0208 32 278	103	15	0839 32 800B	91	21
0305 32 119	92	50	0187 32 279A	103	13	2080 32 800	91	21
0305 32 119	97	21	0259 32 279	93	53	2080 32 810	91	22
2113 32 120	91	31	0259 32 279	96	4	0839 32 820A	90	13
0180 32 122A	91	32	0187 32 289	93	54	0839 32 820B	90	13
0180 32 123A	91	33	0187 32 289	96	5	0841 32 820	90	13
2113 32 130	91	34	0187 32 289	103	14	0841 32 820A	90	13
0305 32 141	92	36	0259 32 289	93	54	2090 32 820	90	13
0820 32 151	92	37	0259 32 289	96	5	0187 32 850A	94	67
0259 32 154	92	38	0259 32 289	103	14	0187 32 860	94	68
0259 32 155	92	38	0305 32 301B	103	9	0187 32 886B	94	69
0259 32 156	92	38	0305 32 301C	103	9	0839 32 980C	90	
0259 32 157	92	38	0305 32 311B	103	9	0841 32 980A	90	
0259 32 160	92	39	0305 32 311C	103	9	2090 32 980	90	
0259 32 163	92	40	0603 32 315	93	55	2090 32 980A	90	
0180 32 165A	92	41	2080 32 320	96		0221 33 035	99	4
0180 32 171A	92	42	2080 32 320A	96		0662 33 042	99	1
0180 32 172A	92	42	2080 32 320B	96		0317 33 043	99	11
0111 32 173	96	11	0305 32 321	97	21	1011 33 043	99	11
0180 32 173A	92	42	2113 32 329	97	17	0259 33 047	99	2
0180 32 174A	92	42	2080 32 330	96	12	0317 33 049	99	3
0259 32 182	92	35	2080 32 330A	96	12	0329 33 061	99	5
0180 32 184	92	44	0259 32 341	97	18	0398 33 065	99	8
0208 32 188	92	48	2080 32 350	96	13	0259 33 071	99	9

INDEX.

PARTS NUMBER	PARTS COMP. LIST PAGE	FIG. NO.	PARTS NUMBER	PARTS COMP. LIST PAGE	FIG. NO.	PARTS NUMBER	PARTS COMP. LIST PAGE	FIG. NO.
0317 33 075	99	10	2981 33 671	100	20	0259 34 019	103	7
0187 33 085A	99	8	0613 33 681	81	24	0259 34 021	103	8
0820 33 091A	99	5	2981 33 681	100	21	0259 34 110	109	10
0820 33 091A	99	5	0305 33 685	100	23	0305 34 151A	109	1
0259 33 165	81	35	0233 33 691	100	22	0259 34 153	109	2
0259 33 165	100	32	0259 33 691	41	25	0259 34 155	109	3
0820 33 165	82	35	0259 33 691	81	25	0305 34 156	109	4
0820 33 165	100	32	0259 33 693	41	26	0259 34 157	109	6
0820 33 165A	82	35	0259 33 693	81	26	0259 34 158	109	7
0820 33 165A	100	32	0600 33 693	100	23	0839 34 310A	103	
0841 33 170F	82	38	0305 33 695	100	27	0839 34 310B	103	
0841 33 170F	100	33	0305 33 696	100	28	0305 34 311	103	10
0820 33 180A	82	41	0221 33 698	99	7	0839 34 320A	103	
0820 33 180A	100	34	0305 33 698	100	29	0839 34 320B	103	
0820 33 191A	82	42	0305 33 698A	100	29	2158 34 340	104	17
0820 33 191A	100	35	0305 33 699	100	31	2158 34 381	104	18
0820 33 192A	82	43	0305 33 710	100	18	2158 34 390	104	19
0820 33 192A	101	36	0305 33 710C	100	18	2158 34 390A	104	19
0305 33 235	99	16	0305 33 710D	100	18	0317 34 460	103	11
0305 33 251	99	6	0305 33 725	100	30	0193 34 662	87	9
0305 33 251A	99	6	0305 33 980A	99	15	0317 34 662	104	24
0305 33 251B	99	6	0305 33 980C	99	15	0317 34 663	104	25
0305 33 260	99	13	0305 33 980D	99	15	0305 34 701	106	2
0305 33 280	99	17	0305 33 990A	99	15	0305 34 701A	106	2
0710 33 288	81	32	0305 33 990C	99	15	0259 34 705	106	3
0187 33 391	81	33	0305 33 990D	99	15	0305 34 707	106	4
0305 33 610	100	18	0839 34 011	103	1	0259 34 708	106	5
0305 33 610C	100	18	0259 34 012	103	2	0305 34 709	106	18
0305 33 610D	100	18	0259 34 013	103	3	0839 34 710	106	6
0305 33 625	100	24	0259 34 013A	103	3	0259 34 712	106	7
0305 33 626A	100	25	2158 34 014	103	4	0305 34 713	106	8
0296 33 636	100	26	0259 34 015	103	5	0305 34 714	106	9
0296 33 646	100	26	0259 34 016	103	6	0259 34 719A	106	10
2981 33 651	100	19	0259 34 016A	103	6	0305 34 720	107	

INDEX.

PARTS NUMBER	PARTS COMP. LIST PAGE	FIG. NO.	PARTS NUMBER	PARTS COMP. LIST PAGE	FIG. NO.	PARTS NUMBER	PARTS COMP. LIST PAGE	FIG. NO.
0259 34 730	106	11	1668 39 045A	111	8	2090 40 830A	114	26
0866 34 730	106	11	0259 39 340	111	5	1669 40 850	114	27
0183 34 731	106	12	1011 39 340A	111	5	2090 40 850	114	27
0305 34 732A	106	13	1667 39 380	111	7	1663 41 030	128	1
0259 34 735A	106	14	2090 39 380	111	7	2835 41 030	128	1
0866 34 735	106	14	0838 39 381	111	7	2835 41 030	128	1
0305 34 760A	106	14	0839 40 060	113	6	0559 41 040C	128	6
0866 34 760	106	14	0839 40 060A	113	6	0824 41 040	128	6
0259 34 767	106	15	0839 40 060B	113	6	0183 41 043	128	7
0259 34 768	106	16	0305 40 061	113	7	0824 41 051	128	8
0259 34 769B	106	17	2090 40 080	114	19	0824 41 051A	128	8
2090 34 800	109	9	0820 40 161	113	10	1663 41 060	130	50
0259 34 896	109	12	0820 40 165	113	11	0183 41 081	128	9
0259 34 897	109	13	0820 40 166	113	12	0559 41 081	128	9
0259 34 898	109	14	0820 40 170	113	13	0559 41 081A	128	9
0305 34 910E	104	26	0820 40 180	114	22	0824 41 084	128	10
0305 34 910E	106	1	2090 40 307	113	4	0824 41 131	129	32
0305 34 910G	104	26	2158 40 355	18-1	40	0305 41 140	129	31
0305 34 910G	106	1	2158 40 355	114	17	0183 41 308	138	16
2542 34 96	64-B	2	0810 40 356	114	16	0613 41 308	41	32
0876 37 170A	82	38	0824 40 401	113	8	0810 41 308	128	16
0876 37 170B	82	38	1668 40 500	113	1	0603 41 320	41	22
0876 37 170B	100	33	2090 40 500B	113	1	0603 41 322B	41	23
0876 37 170C	82	38	2090 40 508A	113	2	0603 41 323	41	24
0876 37 170C	100	33	1668 40 600	113	3	0191 41 331	41	28
0881 37 191	82	42	1669 40 600	113	3	0839 41 341	41	29
0881 37 191	100	35	2090 40 600A	113	3	0118 41 342	41	30
1668 39 020	111	1	2090 40 600B	113	3	0118 41 375	140	23
1668 39 020B	111	1	1669 40 810	114	24	0118 41 380A	41	33
2090 39 021	111	1	2090 40 810	114	24	2835 41 400	129	28
1668 39 040	111	2	2090 40 810A	114	24	2835 41 400	132	
1668 39 040C	111	2	2090 40 820	114	25	2835 41 400A	129	28
2325 39 040A	111	2	2090 40 820A	114	25	2835 41 400A	132	
1668 39 045	111	8	2090 40 830	114	26	0305 41 440	132	3

INDEX.

PARTS NUMBER	PARTS COMP. LIST PAGE	FIG. NO.	PARTS NUMBER	PARTS COMP. LIST PAGE	FIG. NO.	PARTS NUMBER	PARTS COMP. LIST PAGE	FIG. NO.
0839 41 440	132	3	2850 42 348A	116	14	0187 43 029	128	5
0727 41 442	132	4	2850 42 350	116	21	2835 43 030	128	2
0305 41 451	132	3	0621 42 371	116	4	2840 43 030	128	2
0305 41 461	132	5	0223 42 375	117	29	0187 43 061	128	17
0839 41 461	132	5	0223 42 376	117	30	2301 43 061	128	18
0110 41 470	132	6	0839 42 381	116	22	0223 43 064	128	19
0110 41 470A	132	6	0305 42 390	116	23	0259 43 065	129	29
2070 41 610	126	1	2432 42 395	117	25	0305 43 070B	128	20
2080 41 610	126	1	2432 42 395	117	25	2835 43 070A	128	20
0259 41 613	126	17	0824 42 403	117	40	0259 43 088	93	65
0824 41 619	126	3	2850 42 410	117	26	0225 43 092	130	50
0305 41 641	126	2	0305 42 432	117	27	0305 43 093	130	45
0259 41 644	126	4	0305 42 433	117	28	0305 43 140	130	46
0259 41 644	128	11	0305 42 441	117	32	0317 43 421	132	11
0842 41 650	126	20	0621 42 455	117	37	0839 43 422C	134	42
2080 41 660	126	7	0621 42 455	285	7	0317 43 428	132	12
2080 41 660A	126	7	2244 42 455	117	33	0221 43 431	132	12
0118 41 669	234	13	0259 42 459	117	36	0111 43 432	132	2
0249 41 671	126	8	2280 42 460	118	45	0111 43 433	132	1
0118 41 681	126	12	0305 42 461	117	39	0111 43 511	132	7
0118 41 682	126	13	2280 42 462	118	46	0839 43 550	129	
0290 41 710	126	15	2280 42 462A	118	46	0317 43 551	132	8
0839 41 920	41	21	0305 42 465	117	43	0839 43 551	129	35
0114 42 046A	116	2	2060 42 610A	118	47	0727 43 552	129	36
0839 42 310A	116	1	2090 42 610	118	47	0727 43 552	132	9
0305 42 345A	116	6	0034 42 633	120	20	0839 43 553	129	37
0305 42 345B	116	6	2691 42 710A	118	49	0839 43 553	132	10
0305 42 347B	116	10	2691 42 716	118	50	0839 43 553A	129	37
2090 42 347	116	10	2691 42 750	118	51	0839 43 553A	132	10
0305 42 348	116	13	0259 42 792	116	5	0839 43 570	129	39
1663 42 348	116	9	0223 43 022	128	3	0114 43 625	228-1	58
2090 42 348	116	9	0259 43 022	141-B	1	0136 43 635	22-B	3
2090 42 348	116	9	0259 43 028	128	4	0136 43 635	41	34
2850 42 348A	116	14	0268 43 028	128	4	0136 43 635	140	2

PARTS NUMBER	PARTS COMP. LIST PAGE	FIG. NO.	PARTS NUMBER	PARTS COMP. LIST PAGE	FIG. NO.	PARTS NUMBER	PARTS COMP. LIST PAGE	FIG. NO.
0305 43 635	140	3	0303 44 032	138	3	2070 45 330A	141	30
0187 43 642	140	4	0221 44 033	138	4	2090 45 330	141	30
0305 43 650A	140	7	0813 44 034	138	5	2835 45 330A	141	30
0305 43 650A	140	7	0813 44 035	138	6	2835 45 330B	141	30
2850 43 650	140	7	0136 44 043	129	26	2835 45 330B	141	30
2850 43 650A	140	7	0221 44 044	138	7	2835 45 330C	141	30
0305 43 660A	140	8	0303 44 051A	138	8	2080 45 510	141	31
0305 43 660A	140	8	0303 44 053	138	9	0839 45 610D	121	32
2850 43 660	140	8	0303 44 150A	138	14	2090 45 710	121	38
0221 43 694	140	9	0303 44 410D	138	17	1650 45 910A	121	33
0221 43 694	140	24	0303 44 410E	138	17	2677 45 910	121	33
0839 43 770	140	17	0303 44 410F	138	17	1650 45 921	121	34
0839 43 770A	140	17	0303 44 439	138	18	2850 45 921	121	34
2835 43 800	130	43	0305 44 471	138	20	2375 46 010	141-B	2
2835 43 800	136		0183 45 021	116	15	2375 46 021	141-B	3
2850 43 810A	140	11	0305 45 021	120	19	2375 46 022	141-B	4
2850 43 810B	140	11	1663 45 041	124-B	9	2375 46 030B	141-B	5
1541 43 820	140	11	0603 45 071	116	12	2375 46 051A	141-B	6
2850 43 820	140	12	0839 45 071D	121	31	2375 46 052	141-B	7
2850 43 820B	140	12	0305 45 072	121	30	2375 46 053	141-B	8
2853 43 820	140	1	0710 45 191	18-1	43	2375 46 054	141-B	9
2081 43 830	140	14	2090 45 260	140	26	2375 46 055	141-B	10
2081 43 830A	140	14	2835 45 260A	140	26	2375 46 056A	141-B	11
2081 43 836A	140	19	2835 45 260A	140	26	0308 46 057A	141-B	12
2046 43 839	116	7	0305 45 280B	141	27	2375 46 061	141-B	15
2046 43 839	140	20	2090 45 280	141	27	2375 46 062	141-B	16
0305 43 842A	140	15	2090 45 310	141	28	0842 46 081	141-B	17
2229 43 890	140	21	2835 45 310	141	28	0308 46 083	141-B	18
2229 43 890A	140	21	2835 45 310	141	28	2070 46 110A	141-B	19
2835 43 990A	129	34	2090 45 320	141	29	0842 46 150	141-C	21
2835 43 990A	132		2835 45 320A	141	29	0842 46 571	141-C	23
0302 44 010A	138	1	2835 45 320A	141	29	0842 46 571A	141-C	23
0303 44 010A	138	1	1667 45 330	141	30	0187 46 683	128	12
0813 44 031	138	2	2070 45 330	141	30	0604 46 684	141-C	24

INDEX.

PARTS NUMBER	PARTS COMP. LIST PAGE	FIG. NO.	PARTS NUMBER	PARTS COMP. LIST PAGE	FIG. NO.	PARTS NUMBER	PARTS COMP. LIST PAGE	FIG. NO.
1015 46 684	141-C	24	2046 49 676	134	37	2850 50 311A	143	11
0259 46 691	141-C	25	2835 49 682A	134	39	2850 50 311B	143	11
0604 46 785	128	12	0391 49 684	118	46	0305 50 320B	143	12
0841 49 230	100	23	2835 49 685	134	43	0305 50 320C	143	12
0296 49 240	100	23	2046 49 696	134	38	0305 50 340B	143	13
2046 49 620C	132	14	0824 49 710	136	10	0305 50 340C	143	13
2046 49 622	133	19	0824 49 720A	136	11	1668 50 360	143	14
2835 49 623	133	22	2835 49 720	136	11	2850 50 360	143	14
2046 49 625A	132	15	0824 49 745	136	1	1668 50 370	143	15
2046 49 626A	133	16	2046 49 746	136	2	2850 50 370	143	15
2046 49 627B	133	17	2046 49 747	136	3	0305 50 381	144	19
2835 49 628A	133	23	0824 49 770	136	6	2850 50 381	144	19
2046 49 629A	133	18	0870 49 770	136	6	0305 50 382	144	20
2835 49 630A	133	20	0824 49 781	136	7	2850 50 382	144	20
2046 49 635A	133	20	0824 49 782	136	8	0305 50 398	144	21
2046 49 638	133	31	2046 49 783	136	9	0398 50 5110 06	144	27
2835 49 640	133	21	2046 49 784	136	9	2850 50 5110 02	144	27
2835 49 641A	133	29	0223 50 049	117	41	0305 50 541	144	28
2835 49 642A	133	24	0223 50 049	143	2	0305 50 542	144	29
2835 49 645A	133	25	1668 50 110A	143	1	0305 50 543	144	30
2835 49 646A	133	26	2826 50 110B	143	1	2090 51 020	151	1
2835 49 647A	133	27	0305 50 160A	143	4	2850 51 120	151	2
2835 49 648	133	28	1668 50 160A	143	4	1650 52 110A	151	5
2835 49 652	134	35	0305 50 170A	143	5	2835 52 110	151	5
0233 49 656	134	36	1668 50 170A	143	5	0187 52 141	146	5
0233 49 660	134	33	2850 50 181	143	9	0187 52 145	146	9
0233 49 665	134	32	0305 50 210A 00	144	23	0633 52 148	261	25
2046 49 666	133	30	1668 50 210	144	23	0305 52 210	146	1
2835 49 666A	134	40	0303 50 231	144	25	0881 52 210	146	1
2046 49 667	133	30	0305 50 250A 00	144	24	0881 52 210A	146	1
2835 49 667	134	41	1668 50 250	144	24	0305 52 260	146	2
2046 49 668	133	30	0223 50 275	143	6	0881 52 260	146	2
2046 49 669	133	30	0223 50 275	143	16	0881 52 260A	146	2
0233 49 670	134	34	1668 50 311A	143	11	0824 52 271	146	13

INDEX.

PARTS NUMBER	PARTS COMP. LIST PAGE	FIG. NO.	PARTS NUMBER	PARTS COMP. LIST PAGE	FIG. NO.	PARTS NUMBER	PARTS COMP. LIST PAGE	FIG. NO.
0259 52 301	146	21	0839 52 620	149	3	2835 53 320	154	2
0259 52 301	167	31	0839 52 620A	149	3	2835 53 320	157	2
0259 52 301	167	31	0305 52 628	149	13	0305 53 329	155	30
0223 52 302	146	24	0305 52 629	149	4	0305 53 329	158	34
0305 52 312B	146	6	0305 52 661	149	6	0305 53 330A	157	4
0305 52 313	146	11	0839 52 661A	149	6	0839 53 330B	154	4
0305 52 322A	146	7	0305 52 671	149	7	0305 53 340D	157	6
2835 52 330	146	8	0839 52 671A	149	7	0839 53 340A	154	6
0305 52 331	146	9	0305 52 750	149	8	2080 53 350D	154	8
0305 52 371A	146	10	0305 52 802	285	11	2081 53 350	157	8
2835 52 381	146	14	0305 52 850A	149	10	2835 53 350B	157	8
0305 52 390	146	15	0305 52 901	149	12	0839 53 352A	154	10
2835 52 410	146	22	0305 52 901A	149	12	0305 53 380C	157	12
0824 52 451	147	25	0839 52 901	149	12	0305 53 380D	157	12
0839 52 461	147	28	1663 53 010	151	6	2835 53 410	154	14
0881 52 461	147	28	1665 53 010	151	6	2835 53 410	157	14
0839 52 462	147	29	1667 53 010	151	6	0305 53 415	154	16
0839 52 462A	147	29	1667 53 010A	151	6	0305 53 415	157	16
0839 52 463A	147	30	1668 53 010	151	6	0305 53 421A	157	18
0839 52 464	147	31	1668 53 010A	151	6	0305 53 430B	157	20
0305 52 471	147	32	1914 53 010A	151	6	0839 53 430	154	20
0305 52 472	147	33	1915 53 010A	151	6	0603 53 436	221	37
0305 52 510C	149	1	2080 53 010G	151	6	0305 53 450A	157	22
0305 52 510C	157	1	2080 53 010H	151	6	0839 53 451C	154	22
0839 52 510D	149	1	0305 53 180	151	7	0305 53 452	158	24
0839 52 510D	154	1	2090 53 190	151	9	0259 53 455	155	31
0881 52 510	149	1	2835 53 190C	151	9	0259 53 455	158	35
0881 52 510	154	1	2835 53 190D	151	9	0193 53 462	210	119
0305 52 610A	149	2	2826 53 270	151	17	0839 53 500	155	24
0305 52 610B	149	2	2869 53 290	58	21	2850 53 500	158	26
0839 52 61C	149	2	2869 53 290A	58	21	2850 53 500A	158	26
0839 52 610A	149	2	2826 53 295B	151	17	0305 53 591	158	28
0305 52 620A	149	3	2826 53 299B	58-1	23	0839 53 591	155	26
0305 52 620B	149	3	2080 53 320	154	2	2081 53 600A	158	30

INDEX.

PARTS NUMBER	PARTS COMP. LIST PAGE	FIG. NO.	PARTS NUMBER	PARTS COMP. LIST PAGE	FIG. NO.	PARTS NUMBER	PARTS COMP. LIST PAGE	FIG. NO.
2090 53 600A	155	28	2467 54 290A	58	21	2090 54 600A	155	29
0305 53 670	158	32	2113 54 295	58-1	24	0305 54 670	158	33
0881 53 700	152	20	2835 54 320	154	3	2280 55 182	244	40
2850 53 700	152	20	2835 54 320	157	3	0275 55 195	244	30
0305 53 708	152	21	0305 54 330A	157	5	0275 55 215	244	31
0111 53 771	149	13	0839 54 330B	154	5	0259 55 261	169	13
1662 53 800	160	1	0305 54 340D	157	7	0301 55 323	165	15
1663 53 800	160	1	0839 54 340	154	7	0305 55 325	165	1
2081 53 800	160	1	2081 54 350	157	9	0305 55 326	165	2
2090 53 800	160	1	2090 54 350	154	9	0305 55 327	165	3
0305 53 861	160	2	2850 54 350	157	9	0305 55 340B	165	4
0305 53 901	158	36	2855 54 350D	154	9	0391 55 340A	165	4
0839 53 901	155	32	0839 54 352A	154	11	1674 55 340	165	4
0305 53 920	158	37	0305 54 370	154	12	1674 55 340A	165	4
0839 53 920	155	33	2850 54 370B	154	12	1915 55 340	165	4
0305 53 941A	158	38	2850 54 370B	157	10	2321 55 340	165	4
0839 53 941A	155	34	0305 54 380C	157	13	2835 55 340	165	4
0305 53 951B	158	39	0305 54 380D	157	13	1674 55 348	165	15
0398 53 951	158	39	2835 54 410	154	15	1674 55 349	165	15
0839 53 951	155	35	2835 54 410	157	15	0305 55 350	165	6
0881 53 951	155	35	0305 54 415	154	17	0305 55 360	165	8
2635 53 970	152	25	0305 54 415	157	17	0305 55 370	165	11
0398 53 980	158	42	0305 54 421A	157	19	0305 55 380	165	13
0305 53 990A	158	40	0305 54 430B	157	21	2878 55 430B	166	19
0839 53 990	155	36	0839 54 430	154	21	2878 55 430B	169	
0305 53 999	264	7	0305 54 450B	158	23	2878 55 430C	166	19
0305 53 999	268	6	0839 54 451C	155	23	2878 55 430C	169	
0305 54 180	151	8	0305 54 452	158	25	0305 55 700A	166	16
2835 54 190	151	10	0839 54 500	155	25	1676 55 700	166	16
2835 54 190A	151	10	2850 54 500	158	27	0305 55 890	242	1
2981 54 222	58-1	24	2850 54 500A	158	27	0820 55 951	166	24
0223 54 225	58-1	22	0305 54 591	158	29	1667 56 010	160	4
0200 54 265	228-2	82	0839 54 591	155	27	2090 56 010	160	4
2467 54 290	58	21	2081 54 600A	158	31	2080 56 040C	151	14

INDEX.

PARTS NUMBER	PARTS COMP. LIST PAGE	FIG. NO.
0839 56 100	160	7
0839 56 100A	160	7
0839 56 121C	161	30
0839 56 125	162	32
0839 56 126A	162	33
0305 56 161	160	9
0305 56 18C	160	5
0839 56 180A	160	5
1663 56 200A	160	
2090 56 200A	160	
2090 56 200C	160	
1663 56 201B	160	14
2090 56 201B	160	14
2090 56 201C	160	14
2090 56 201D	160	14
2090 56 201E	160	14
0305 56 204	249	11
0305 56 231	121	39
0305 56 232	121	40
0118 56 241	162	44
0118 56 242B	162	45
2081 56 250	161	16
2081 56 250A	161	16
2090 56 250	161	16
2090 56 250A	161	16
0247 56 275	160	10
2090 56 32C	161	18
0305 56 321A	161	18
0305 56 331B	161	20
0305 56 331C	161	20
0839 56 340A	161	25
0305 56 350C	161	26
0839 56 350B	161	26
0839 56 350C	161	26
0841 56 350B	161	26
0305 56 370A	161	28
0305 56 391A	161	22
0305 56 400	162	35
0839 56 400A	162	35
0305 56 411	162	37
0305 56 411	191	17
0839 56 420	161	23
0839 56 460E	161	24
0839 56 460F	161	24
2080 56 540D	151	15
2090 56 600	160	8
2090 56 600A	160	8
0303 56 611	160	11
0303 56 612	160	12
0208 56 615	162	46
0839 56 630C	160	15
0810 56 639	162	47
0305 56 681	160	6
0839 56 701B	162	49
0839 56 701C	162	49
2090 56 702A	162	50
2090 56 702B	162	50
2090 56 703	162	51
2090 56 703A	162	51
2090 56 704A	162	52
2090 56 704C	162	52
0839 56 705B	163	53
2090 56 705	163	56
2090 56 705A	163	56
2090 56 707B	163	54
2090 56 707D	163	54
2090 56 707E	163	54
2090 56 708A	163	57
2090 56 708B	163	57
2090 56 708C	163	57
2090 56 709	163	55
2850 56 750A	161	17
2850 56 750b	161	17
2855 56 750A	161	17
2855 56 750B	161	17
2850 56 761	161	21
0305 56 820A	161	19
0305 56 820B	161	19
0305 56 845	161	21
0305 56 850B	161	27
0839 56 850	161	27
0305 56 870A	161	29
0305 56 900A	162	36
0839 56 900A	162	36
0820 56 905	197	35
0305 56 911	162	38
2851 56 921A	152	37
0223 56 942	118	58
0223 56 950	249	12
0305 56 961B	162	39
0839 56 981A	109	16
0839 56 981B	109	16
0305 56 991	162	42
0824 56 999	162	48
0760 57 005	120	12
0305 57 011	176	58
0305 57 011	183	56
0317 57 015	176-1	68
0317 57 015	183-2	71
0305 57 100A	178	
1662 57 100	178	
1663 57 100	171	1

INDEX.

PARTS NUMBER	PARTS COMP. LIST PAGE	FIG. NO.	PARTS NUMBER	PARTS COMP. LIST PAGE	FIG. NO.	PARTS NUMBER	PARTS COMP. LIST PAGE	FIG. NO.
1664 57 100	178		0305 57 120A	179	18	1665 57 160	174	33
1665 57 100	171	1	0398 57 120	180	18	2081 57 160	181	28
1686 57 100	178		0839 57 120A	173	26	2090 57 160	174	33
1686 57 100	178		0881 57 120A	173	26	2091 57 160	174	33
1687 57 100	171	1	1664 57 120	180	18	2493 57 160	181	28
1687 57 100A	171	1	1665 57 120	173	26	2851 57 160	181	28
2080 57 100A	171	1	2082 57 120	179	18	2869 57 160	174	33
2081 57 100	178		2091 57 120	173	26	0305 57 170A	182	45
2082 57 100	178		0305 57 130A	179	13	0398 57 170	182	45
2090 57 100	171	1	2080 57 130	172	13	0839 57 170A	175	51
2091 57 100	171	1	0305 57 140	173	32	0881 57 170A	175	51
2852 57 100	178		0305 57 140	180	27	1664 57 170	182	45
2869 57 100A	171	1	0305 57 150A	180		1665 57 170	175	51
0275 57 107	172	18	0398 57 150A	180		2082 57 170	182	45
0275 57 107	175	50	1662 57 150	180		2091 57 170	175	51
0259 57 109	172	17	1663 57 150	174		0305 57 180A	182	40
0259 57 109	175	49	1664 57 150	180		2080 57 180	175	45
0259 57 109	179	17	1665 57 150	174		0305 57 190	176	55
0259 57 109	182	44	1686 57 150	181		0305 57 190	183	52
2155 57 109	172	15	1686 57 150A	181		0305 57 200A	183	58
2155 57 109	175	47	1687 57 150	174		0398 57 200	183	58
2155 57 109	179	15	1687 57 150A	174		0839 57 200A	176	60
2155 57 109	182	42	2080 57 150	173		0881 57 200A	176	60
0305 57 110	178	1	2081 57 150	180		1665 57 200	176	60
0839 57 110	171	1	2082 57 150	180		1682 57 200A	183	58
1650 57 110	178	1	2090 57 150	173		1687 57 200	176	60
1663 57 110	171	1	2091 57 150	174		1687 57 200A	176	60
1665 57 110	171	1	2852 57 150	180		2091 57 200	176	60
2081 57 110	178	1	2869 57 150	174		2851 57 200	183	58
2090 57 110	171	1	0305 57 160	181	28	0305 57 250A	183-1	61
2091 57 110	171	1	0398 57 160A	181	28	0398 57 250A	183-1	61
2493 57 110	178	1	0839 57 160	174	33	0839 57 250A	176-1	63
2851 57 110	178	1	1650 57 160	181	28	0881 57 250A	176-1	63
2869 57 110	171	1	1663 57 160	174	33	1664 57 250	183-1	61

PARTS NUMBER	PARTS COMP. LIST PAGE	FIG. NO.
1665 57 250	176-1	63
1686 57 250	183-1	61
1686 57 250A	183-1	61
1687 57 250	176-1	63
1687 57 250A	176-1	63
2082 57 250	183-1	61
2091 57 250	176-1	63
2851 57 510A	178	1
2080 57 550A	174	
2080 57 560	174	33
2851 57 560A	181	28
0820 57 900B 00	176-2	72
0820 57 900B 00	183-2	75
1650 57 9000 00	176-2	72
1650 57 900C 00	183-2	75
0305 57 909	176-2	70
0305 57 909	183-2	73
0820 57 911	176-2	73
0820 57 911	183-2	76
0305 57 920A	176-2	72
0305 57 920A 00	183-2	75
0305 57 920B	176-2	72
1650 57 950	176-2	79
1650 57 950	183-2	82
0813 57 955A	176-3	81
0813 57 955A	183-3	84
2981 57 976	176-2	74
2981 57 976	183-2	77
2981 57 978	176-2	75
2981 57 978	183-2	78
1666 58 010	185	1
1668 58 010	185	1
2080 58 010B	185	1
2080 58 010G	185	1
2080 58 010H	185	1
2835 58 010B	185	1
2835 58 010H	185	1
2835 58 010I	185	1
0824 58 155	272	12
0063 58 221	75	13
0259 58 232	185	2
2292 58 232	185	2
2292 58 232	272	3
2292 58 232	277	2
0305 58 269	192	38
0305 58 270A	192	39
0305 58 272	192	40
0305 58 273	192	41
0305 58 274	192	42
0305 58 281A	192	44
0223 58 303A	273	19
0223 58 304A	273	20
0223 58 305A	281	10
0259 58 306	191	20
0259 58 306	281	11
0305 58 309	193	55
2850 58 310	190	1
2850 58 310A	190	1
2850 58 310D	190	1
2850 58 310E	190	1
2850 58 310G	190	1
2855 58 310A	190	1
2855 58 310B	190	1
2855 58 310E	190	1
2855 58 310F	190	1
2855 58 310G	190	1
0223 58 311	273	21
0866 58 313	193	56
0398 58 330D	193	54
0881 58 330D	193	54
0305 58 361	190	9
0305 58 361	281	17
1666 58 365	190	10
1666 58 365	282	18
2826 58 365	282	18
0223 58 370B 01	191	21
0223 58 370B 01	272	16
0223 58 370B 01	281	12
0223 58 370C	191	21
0223 58 370C	281	12
0223 58 370C 00	272	16
0824 58 370A	281	12
0824 58 370A 00	191	21
0824 58 370A 01	272	16
2828 58 371A	190	15
0223 58 375A 00	191	22
0223 58 375A 00	272	17
0223 58 375A 00	281	13
2826 58 385	190	10
0305 58 410A	191	16
0305 58 410B	191	16
0305 58 411A	191	17
0118 58 442	128	21
0839 58 492A	285	6
0301 58 501A	185	3
0305 58 501A	185	3
0839 58 501	185	3
2878 58 501	186	3
0305 58 505	186	4
0305 58 560A	191	24
2850 58 560	191	24
0259 58 570	190	11

INDEX.

PARTS NUMBER	PARTS COMP. LIST PAGE	FIG. NO.	PARTS NUMBER	PARTS COMP. LIST PAGE	FIG. NO.	PARTS NUMBER	PARTS COMP. LIST PAGE	FIG. NO.
0259 58 570	282	19	0305 58 755A 00	188-2	27	1664 58 810	188-1	18
0187 58 592A	190	12	0305 58 755D 00	188-2	27	1665 58 810	188-1	18
0187 58 592A	282	20	0398 58 755	279	27	1666 58 810	188-1	18
2350 58 593	190	13	0398 58 7550 00	188-2	27	1666 58 810	188-1	18
2350 58 593	282	21	0839 58 755A 00	188-2	27	1668 58 810	188-1	18
0305 58 603A	186	5	0839 58 755D 00	188-2	27	1668 58 810	188-1	18
0305 58 604	186	6	0305 58 760C	186	11	1670 58 810	188-1	18
0305 58 605D	186	10	0305 58 760D	186	11	1672 58 810	188-1	18
0839 58 605D	186	10	0839 58 760B	186	11	2839 58 810A	188	18
0305 58 606	186	10	0839 58 760C	186	11	2851 58 810	188	18
0839 58 606	186	10	0305 58 762	187	12	2851 58 810D	188	18
0223 58 611C 01	190	4	0305 58 762	278	13	2858 58 810	188	18
0223 58 611C 01	281	5	0305 58 762	278	17	0305 58 821A	279	24
0259 58 612	190	6	0305 58 768	187	17	0305 58 821A 01	188-1	23
0259 58 612	281	6	0305 58 768	278	18	0305 58 821A 01	274	42
0223 58 660A	190	7	0305 58 780F	187	13	0398 58 821A	279	24
0259 58 6900 00	281	2	0839 58 780E	187	13	0398 58 821A 00	188-1	23
0259 58 6910 00	190	2	0305 58 781B	187	14	0398 58 821A 00	274	42
0223 58 692	188-1	19	0839 58 781B	187	14	0305 58 822A	279	25
0223 58 692	278	20	0839 58 783B	187	15	0305 58 822A 02	188-1	24
0223 58 692A	188-1	19	0839 58 783B	274	37	0305 58 822A 02	274	43
0223 58 692A	278	20	0839 58 783B	278	16	0398 58 822	279	25
0317 58 700	191	26	0317 58 785	192	35	0398 58 822 00	274	43
0223 58 721	146	16	0839 58 789	187	16	0398 58 822A	279	25
0223 58 721	191	27	0305 58 790	187	13	0398 58 822A 00	188-2	24
0223 58 721	192	33	0305 58 790A	187	13	0398 58 822B 00	274	43
0223 58 721	282	25	0839 58 790C	187	13	0398 58 8220 00	188-2	24
0223 58 721	282	30	0839 58 790D	187	13	0305 58 831B	188-2	26
0187 58 731	191	28	0305 58 810C	188	18	0317 58 831A	283	35
0187 58 731	192	34	0398 58 810A	188	18	0839 58 831B	188-2	26
0187 58 731	282	26	0404 58 810A	188	18	0881 58 831	188-2	26
0187 58 731	282	31	0839 58 810D	188	18	0317 58 832	283	36
0317 58 736	191	29	0876 58 810A	188	18	0881 58 839	188-2	26
0317 58 750	192	32	1663 58 810	188-1	18	0881 58 839	275	53

PARTS NUMBER	PARTS COMP. LIST PAGE	FIG. NO.	PARTS NUMBER	PARTS COMP. LIST PAGE	FIG. NO.	PARTS NUMBER	PARTS COMP. LIST PAGE	FIG. NO.
0305 58 851A	188-2	28	1666 59 010	185	1	0305 59 505	186	4
0376 58 851	188-2	28	1668 59 010	185	1	0305 59 560A	191	24
0376 58 851	279	28	2850 59 010A	185	1	2850 59 560	191	24
0839 58 851	188-2	29	2850 59 010G	185	1	0259 59 570	190	11
0839 58 851	188-2	29	2850 59 010H	185	1	0259 59 570	282	19
0866 58 851	188-2	29	2850 59 010I	185	1	0305 59 603A	186	5
0305 58 852	188-2	29	2855 59 010B	185	1	0305 59 604	186	6
0305 58 861	192	46	2855 59 010G	185	1	0317 59 75C	192	32
0305 58 862	192	47	2855 59 010H	185	1	0305 59 760C	186	11
0839 58 862	192	47	2855 59 010I	185	1	0305 59 760D	186	11
0305 58 863	193	48	0259 59 305	191	19	0839 59 760B	187	11
0305 58 863	193	48	0259 59 305	191	19	0839 59 760C	187	11
0839 58 863	193	48	2850 59 310	190	1	0305 59 780F	187	13
0305 58 864	193	49	2850 59 310A	190	1	0839 59 780D	187	13
0305 58 872	193	50	2850 59 310D	190	1	0839 59 780E	187	13
0305 58 872	283	46	2850 59 310E	190	1	0305 59 781B	187	14
0305 58 874	193	51	2850 59 310G	190	1	0839 59 781B	187	14
0305 58 874	283	47	2855 59 310A	190	1	0305 59 790	187	13
2851 58 879	193	53	2855 59 310B	190	1	0305 59 790A	187	13
2851 58 8910 00	188-1	20	2855 59 310E	190	1	0839 59 790C	187	13
0208 58 921	188-1	21	2855 59 310F	190	1	0305 59 810C	188	18
0208 58 921	274	39	2855 59 310G	190	1	0398 59 810A	188	18
0208 58 921	274	39	0398 59 330D	193	54	0404 59 810A	188	18
0208 58 921	278	21	0881 59 330D	193	54	0839 59 810D	188	18
0187 58 922	188-1	22	0305 59 361	190	9	0876 59 810B	188-1	18
0187 58 922	274	41	0305 59 361	281	17	0881 59 810B	188-1	18
0187 58 922	274	41	1666 59 365	190	10	1664 59 810	188-1	18
0187 58 922	278	22	1666 59 365	282	18	1665 59 810	188-1	18
0613 58 923	274	45	0305 59 410A	191	16	1666 59 810	188-1	18
0223 58 925	188-1	22	0305 59 410B	191	16	1666 59 810	188-1	18
0259 58 931	152	19	0301 59 501A	185	3	1668 59 810	188-1	18
0223 58 939	188-2	28	0305 59 501A	185	3	1668 59 810	188-1	18
0223 58 961	285	12	0839 59 501	185	3	1670 59 810	188-1	18
0223 58 962	285	8	2878 59 501	186	3	1672 59 810	188-1	18

INDEX.

PARTS NUMBER	PARTS COMP. LIST PAGE	FIG. NO.	PARTS NUMBER	PARTS COMP. LIST PAGE	FIG. NO.	PARTS NUMBER	PARTS COMP. LIST PAGE	FIG. NO.
2839 59 810A	188	18	0305 60 102	242	6	2301 60 439	167-2	63
2851 59 810	188	18	0305 60 130A	167	33	2835 60 439	167-2	63
2851 59 810D	188	18	0305 60 130B	167	33	2835 60 439	285	10
2858 59 810	188	18	0391 60 130	167	33	0305 60 540	167	37
0305 59 831B	188-2	26	1674 60 130	167	33	0305 60 540A	167	37
0839 59 831B	188-2	26	1668 60 250	167-1	39	0305 60 690	242	3
0881 59 831	188-2	26	2850 60 250	167-1	39	0305 60 715	167-1	38
0305 59 862	192	47	2850 60 250A	167-1	39	0305 60 720	167-1	38
0839 59 862	193	47	0317 60 251	167-1	40	2846 60 830	197	32
0305 59 863	193	48	0317 60 252	167-1	41	2846 60 830	209	101
2835 60 045	167	26	0317 60 253	167-1	42	2858 60 830A	197	32
2835 60 045A	167	26	0317 60 254	167-1	43	2858 60 830A	242	9
1663 60 050A	166	25	1674 60 254	167-1	43	0839 60 831	197	33
1663 60 050B	166	25	0317 60 255	167-1	44	0839 60 831	242	10
1665 60 050A	166	25	0317 60 256	167-1	45	0820 60 870A	228-1	65
1665 60 050B	166	25	0317 60 257	167-1	46	1540 60 930	228-2	83
1667 60 050	166	25	0317 60 258	167-1	47	0301 61 050	152	
1667 60 050A	166	25	0317 60 259	167-1	48	0301 61 050A	152	
1668 60 050	166	25	0317 60 261	167-1	49	0301 61 051	152	32
1668 60 050A	166	25	0317 60 262	167-1	50	0301 61 051A	152	32
2080 60 050	166	25	0317 60 265	167-1	51	0301 61 052	152	33
2080 60 050B	166	25	0324 60 265	167-1	51	0301 61 052A	152	33
2090 60 050	167	29	0317 60 266	167-1	52	0301 61 055	152	35
2090 60 050B	167	29	1611 60 311	167-2	64	0301 61 055	210-I	101
2090 60 050C	167	29	1611 60 312	167-2	64	1668 61 090	195	
0305 60 051	167	31	0305 60 320A	167-1	53	1668 61 090A	195	
1027 60 052	167-2	64	2522 60 3300 00	167-1	54	1672 61 090	195	
2090 60 052	167	30	2850 60 3300 00	167-1	54	1672 61 090A	195	
1663 60 060	167	29	2522 60 3400 00	167-2	55	1687 61 090	195	
1663 60 060A	167	29	2835 60 3400 00	167-2	55	2090 61 090	195	
1663 60 063	167-2	64	2835 60 421	167-2	61	2852 61 090	195	
2080 60 070	167	32	2835 60 421	285	14	2835 61 130	195	
2090 60 080	165	15	2850 60 430	167-2	62	2851 61 130	195	
0305 60 101	242	5	2850 60 430	285	9	1915 61 140	210-G	80

PARTS NUMBER	PARTS COMP. LIST PAGE	FIG. NO.
1915 61 140	214-L	
2835 61 14C	199	
2835 61 140	209	104
2835 61 150	196	15
2851 61 150	196	15
1915 61 151	210-F	65
1915 61 161	210-F	66
1674 61 190	196	16
1674 61 19C	200	
1915 61 190	210-H	86
1915 61 190	214-N	
1916 61 190	210-H	86
1916 61 190	214-D	
2835 61 190A	196	16
2835 61 190A	200	
2835 61 190B	196	16
2835 61 190B	200	
0305 61 191	201	50
0305 61 191	210-H	88
0305 61 192	201	51
0305 61 192	210	120
0305 61 192	210-H	87
0305 61 193	201	52
0305 61 193	210-H	89
0839 61 211B	196	19
1915 61 211	210-E	54
0839 61 212B	196	20
1915 61 212	210-E	53
2851 61 212	196	20
2090 61 213	196	21
2090 61 213A	196	21
2090 61 213A	210-E	46
2090 61 214	196	22
2090 61 214A	196	22
2090 61 214A	210-E	49
2090 61 215	196	23
2090 61 215	210-E	47
0839 61 216	196	24
0839 61 216	210-E	51
2851 61 232	197	30
0305 61 233	197	30
0305 61 233	209	107
2835 61 233	197	31
2835 61 233	209	108
2851 61 233	197	31
0839 61 235A	7	22
2851 61 241	197	37
2851 61 242	197	36
2851 61 243	197	36
2851 61 244	197	37
2851 61 245A	197	38
2851 61 246A	197	38
2851 61 247A	197	39
2851 61 248A	197	39
1687 61 250	197	30
1687 61 260	197	31
1915 61 430	210-C	
1916 61 430	210-C	
1915 61 440	210-E	
1916 61 440	210-E	
1915 61 450	210-C	17
1915 61 450	214-D	
1915 61 460	210-D	38
1915 61 470	210-D	37
1915 61 471	210-D	40
1915 61 472	210-D	41
1915 61 473	210-D	43
1915 61 475	210-E	44
1915 61 478	210-E	45
1915 61 520	214-H	
1916 61 520	214-H	
1915 61 521	210-F	59
1915 61 522	210-F	63
1915 61 525	210-F	58
1916 61 525	210-F	58
1915 61 540	210-H	83
1915 61 540	214-J	
1915 61 561	210-F	67
1915 61 562	210-G	72
1915 61 563	210-G	75
1915 61 564	210-G	79
1915 61 566	210-G	74
1915 61 571	210-F	68
1915 61 572	210-G	73
1915 61 573	210-G	76
1915 61 574	210-G	69
1668 61 610	203	
1915 61 661	210-F	57
1916 61 661	210-F	57
2081 61 710	203	
2081 61 710A	203	
2090 61 710	203	
2090 61 710A	203	
1915 61 711	210-I	94
0303 61 771A	208	83
2850 61 771	209	111
0303 61 772	208	84
0303 61 773	208	85
0303 61 774	208	86
0303 61 775	208	87
0303 61 780A	208	
2850 61 780	209	109

INDEX.

PARTS NUMBER	PARTS COMP. LIST PAGE	FIG. NO.
0839 61 790B	204	23
0839 61 790B	210-C	19
1674 61 79C	209	112
2850 61 790A	209	112
0839 61 80C	204	
0839 61 800	210-C	28
0305 61 801	204	24
0305 61 801	210-C	29
0839 61 802	204	25
0839 61 802	210-C	30
2080 61 811A	205	28
0839 61 812A	205	29
0839 61 812A	210-D	33
2080 61 812A	205	30
2080 61 813A	205	31
0881 61 814	210	
0881 61 814	210-C	25
0881 61 815	210	
0881 61 815	210-C	26
0809 61 816	210-C	27
0881 61 816	210	
0881 61 816	210-C	21
0839 61 817	210	118
0881 61 817	210	
0881 61 817	210-C	23
0881 61 818	210	
0881 61 818	210-C	24
0305 61 819	205	32
0881 61 819	210	
0881 61 819	210-C	27
0305 61 821	206	54
0305 61 824	205	33
0305 61 825	205	34
0305 61 825	210-D	34
2080 61 825	205	35
0305 61 827	205	37
0305 61 827	210-D	36
2080 61 827A	205	38
2090 61 827	205	39
0305 61 828	205	40
2080 61 828	205	41
0305 61 829	205	43
0305 61 830	205	44
0839 61 831	209	102
2840 61 840	207	78
2840 61 840	212	
2840 61 840A	207	78
2840 61 840A	212	
1915 61 850	210-I	93
2090 61 850	205	45
2090 61 850A	205	45
2090 61 850B	205	45
2850 61 850	205	45
2835 61 851	206	55
2835 61 852	206	56
2835 61 853	206	58
2835 61 854	207	79
2835 61 855	207	80
0305 61 856A	207	81
2835 61 859	206	60
2835 61 860	206	62
2835 61 860	212	
0305 61 861	207	69
2835 61 862	207	65
0305 61 871	207	67
0305 61 872	207	64
2835 61 881	207	70
0305 61 888	207	71
2835 61 889A	207	72
0305 61 890	207	73
0305 61 890	210-I	96
0305 61 901	205	46
0305 61 901	210-F	64
2846 61 907	205	47
0839 61 910	206	48
0839 61 910	214-B	
0839 61 910A	206	48
0839 61 910A	214-B	
1011 61 920	210-B	1
1011 61 921	210-B	2
0839 61 950B	203	
0839 61 951B	203	1
0839 61 952A	203	2
0839 61 952A	210-B	3
0839 61 960B	203	
0839 61 961C	203	9
0839 61 963C	203	7
0839 61 963C	203	15
0839 61 963D	203	7
0839 61 963D	203	15
0839 61 963D	210-B	7
0839 61 964	203	3
0839 61 964	203	10
0839 61 964	210-B	5
0839 61 965	203	8
0839 61 965	204	16
0839 61 965	210-B	8
0839 61 966A	203	11
0839 61 966A	210-B	10
0839 61 967	203	12
0839 61 967	210-B	9
0839 61 968	203	4

INDEX.

PARTS NUMBER	PARTS COMP. LIST PAGE	FIG. NO.
0839 61 968	203	13
0839 61 968	210-B	4
0839 61 970A	203	6
0839 61 970A	203	14
0839 61 970A	210-B	6
0839 61 976	204	17
0136 65 752	146	17
0183 66 021	216	2
2801 66 022	216	3
2850 66 030	216	1
0223 66 037	219	10
2850 66 060	216	1
2850 66 110	216	14
0820 66 130	219	
1668 66 130	219	
0820 66 131A	219	1
1668 66 131	219	1
0820 66 133	219	3
0820 66 134	219	4
0820 66 135	219	5
0820 66 136	219	6
0820 66 136	220	20
0820 66 137	219	7
0820 66 137	220	21
0820 66 138	219	8
0820 66 138	220	22
0820 66 139	219	9
2850 66 140	216	14
0820 66 141	219	13
0820 66 150	219	
1668 66 150	219	
0820 66 151	219	1
1668 66 151	219	1
0820 66 153	219	3
0820 66 154	219	4
0820 66 159	219	12
0820 66 159	220	24
0881 66 159	239	11
1668 66 170	220	14
2113 66 170	220	14
0820 66 171	220	15
1668 66 171	220	15
2325 66 172	220	16
2335 66 172	219	2
2113 66 173	220	17
0223 66 174	219	11
0820 66 174	220	18
0820 66 175	220	19
1668 66 190	220	14
2113 66 190	220	14
2325 66 192	219	2
2325 66 192	220	16
2113 66 193	220	17
0223 66 291	224	5
2850 66 361	221	35
2850 66 370A	220	26
0212 66 371	230	13
0223 66 371	230	14
2850 66 371	220	27
0212 66 372	230	12
0222 66 372	225	21
2850 66 380	220	26
2850 66 390	220	26
2850 66 391	221	31
0305 66 410	224	
0390 66 410	224	
0390 66 411	224	1
0398 66 412	224	5
0398 66 413	224	2
0305 66 420	224	
0259 66 438	226	36
2113 66 470	227	40
2850 66 480A	217	21
2850 66 490A	217	21
2981 66 493	225	18
2981 66 493	225	18
2981 66 495	225	14
2981 66 495	225	18
2981 66 496	225	18
0613 66 498	225	14
0813 66 498	225	18
2850 66 500	221	38
2850 66 510	221	38
0222 66 511A	225	20
0305 66 570	224	
0305 66 570A	224	
0305 66 572	224	11
0223 66 580A	227	42
0305 66 580	224	12
0305 66 580A	224	12
0305 66 580A	247	24
1650 66 620	228-2	75
1650 66 621	228-2	76
1650 66 630	228-2	78
0305 66 674	217	22
0305 66 674	221	39
0305 66 675	217	23
0305 66 675	221	40
0305 66 676	217	24
0305 66 676	221	41
0305 66 677	217	30
0305 66 678	217	25

INDEX.

PARTS NUMBER	PARTS COMP. LIST PAGE	FIG. NO.
0305 66 678	221	42
0305 66 694	217	22
0305 66 694	221	39
0305 66 721	225	15
0397 66 721	225	15
0397 66 721A	225	15
0398 66 721	225	15
0305 66 730	225	
0397 66 730	225	
0397 66 730A	225	
0398 66 730	225	
0397 66 731	225	16
0813 66 732A	91	20
0813 66 732A	228-1	69
0305 66 760B	225	
2852 66 760	225	
2852 66 760	225	
2852 66 762	225	21
2852 66 763	225	20
2852 66 763	225	20
0243 66 773	118	55
0233 66 790	130	50
0839 66 790A	226	
0839 66 790B	226	
0839 66 791	226	30
0839 66 791A	226	30
0839 66 792A	226	31
0839 66 810A	227	38
0209 66 820	228-1	62
0209 66 821	228-1	63
0750 66 840	228-1	73
0820 66 840	138	21
0317 66 862	236	6
0317 66 862	239	8
0119 66 870	22-8	10
1913 66 870	236	
1914 66 870	236	
1915 66 870	236	
1916 66 870	239	
0303 66 871	239	1
0305 66 871	236	2
1913 66 871	236	2
1914 66 871	236	2
1915 66 871	236	2
1916 66 871	239	1
2080 66 871	239	1
2828 66 871	236	2
2835 66 871	236	2
2864 66 871	236	2
0305 66 872	236	4
0305 66 872	239	2
0398 66 872	236	4
0398 66 872	239	2
2845 66 872	236	4
2845 66 872	236	4
0881 66 873	239	3
0305 66 875	236	4
0880 66 875A	239	6
0813 66 879	234	9
0303 66 900	239	4
0305 66 900	236	1
0391 66 900	236	1
0880 66 900A	239	4
2075 66 900	236	1
2075 66 900A	236	1
2828 66 900	236	1
2845 66 900	236	1
2864 66 900	236	1
0259 66 905	234	14
0301 66 905A	167-2	64
0222 66 911	228-2	81
2846 66 931	237	21
2846 66 931	240	24
2846 66 931A	237	21
2846 66 931A	240	25
0839 66 940A	236	
0839 66 940A	239	
0208 66 944	176-3	81
0208 66 944	183-3	84
0305 66 945	237	19
0305 66 945	240	22
0208 66 949	55	38
0208 66 949	228-1	59
0208 66 949	239	11
0305 66 960	236	3
0305 66 960	239	5
0866 66 960	236	3
0866 66 960	239	5
0305 66 966	236	8
0305 66 966	239	9
0222 66 971	228-2	83
0303 66 973A	239	3
0303 66 980	239	6
0187 66 991	55	39
0187 66 991	116	19
0187 66 991	167	34
0820 66 992	228-1	70
2182 66 995	232	40
1662 67 010E	227	44
1662 67 010H	227	44
1663 67 010E	227	44
1663 67 010H	227	44

PARTS NUMBER	PARTS COMP. LIST PAGE	FIG. NO.	PARTS NUMBER	PARTS COMP. LIST PAGE	FIG. NO.	PARTS NUMBER	PARTS COMP. LIST PAGE	FIG. NO.
1664 67 010	227	44	2081 67 111	58-1	27	1664 67 740	228-2	83
1665 67 010	227	44	2081 67 111	228	55	1675 67 760	228-2	83
1666 67 010E	227	44	2081 67 151	151	11	0296 67 860A	228-1	67
1666 67 010F	227	44	2081 67 151	228-2	83	2081 67 861	228-1	71
1668 67 010E	227	44	0303 67 155	228-1	59	0839 67 880	228-1	72
1668 67 010F	227	44	0303 67 156	228-1	60	1669 67 890	228-2	83
2081 67 010C	227	44	0305 67 159A	228-1	58	0839 67 900	226	27
2081 67 010E	227	44	0305 67 159A	237	21	0839 67 901	226	28
2090 67 010C	227	44	0305 67 159A	240	25	0839 67 910	226	32
2090 67 010E	227	44	0881 67 159	237	21	0839 67 920	226	33
1662 67 030E	227	45	0881 67 159	240	25	0305 67 993A	228-1	57
1668 67 030A	227	45	2850 67 160	216	12	0305 67 994	228	57
2081 67 030	227	45	1915 67 161	228-2	83	0305 68 020E 00	242	12
1662 67 060D	227	46	0839 67 170	118	54	0305 68 020F 00	242	12
1662 67 060F	227	46	0275 67 175	118	56	0305 68 040A	242	13
1662 67 060G	227	46	2835 67 321	230	1	0110 68 050	249	2
1668 67 060C	227	46	2835 67 321A	230	1	0305 68 050A	242	14
1669 67 060B	227	46	2835 67 325	230	2	0249 68 060	249	3
2081 67 060C	227	46	2835 67 325A	230	2	0249 68 060A	249	3
1674 67 070A	228-2	83	2840 67 325	230	3	0810 68 070	249	4
1662 67 080A	228	47	2840 67 325A	230	3	0810 68 070A	249	4
1662 67 080C	228	47	0222 67 330	230	4	0187 68 110	249	5
2850 67 080	228	47	0839 67 330	230	4	0187 68 110A	249	5
1662 67 085B	228	47	2835 67 330	230	4	0118 68 180	249	6
0305 67 090B	228	49	2835 67 340	230		0118 68 180A	249	6
0308 67 090B	228	49	2835 67 370	230	18	0303 68 180	243	18
2850 67 090	228	48	0317 67 480	234		0820 68 180	208	95
1662 67 100	228	50	0305 67 500	234		0820 68 180	243	18
2324 67 101	58-1	26	0275 67 510A	234	15	0820 68 180	247	24
2324 67 101	228	50	0317 67 511	234	1	0303 68 201	243	18
0839 67 105	58-1	29	0317 67 521	234	7	0208 68 230	249	7
0839 67 105	228	51	0866 67 521	234	7	0259 68 250	173	30
2081 67 105	58-1	29	0735 67 730	228-1	73	0259 68 250	180	25
2081 67 105	228	51	0735 67 730A	228-1	73	0305 68 580A 00	257	1

INDEX.

PARTS NUMBER	PARTS COMP. LIST PAGE	FIG. NO.
0839 68 580C 00	257	1
0841 68 580D 00	257	1
0839 68 590A 00	257	2
0305 68 610B 00	257	3
0305 68 610C 00	257	3
0305 68 620B 00	257	4
0305 68 620C 00	257	4
0839 68 630B 00	257	5
0839 68 630C 00	257	5
0839 68 660	249	
0839 68 670A	249	1
0839 68 670B	249	1
0866 68 680	249	2
0839 68 720	249	8
0305 68 800A	249	9
0305 68 800B	249	9
0305 68 800E	249	9
0305 68 810A	249	10
0839 68 851	246	7
0303 68 852	246	8
0303 68 853	246	9
1689 68 860A	246	1
1915 68 860	246	1
1916 68 860	246	1
2075 68 860	246	1
2080 68 860	246	1
2082 68 860A	246	1
2091 68 860A	246	1
2324 68 860	246	1
2494 68 860	246	1
2840 68 860B	246	1
2853 68 860A	246	1
0303 68 862	246	2
0303 68 862	246	5
2855 68 880	246	3
2855 68 880	246	3
2860 68 881	246	3
0303 68 890A	246	4
0303 68 910A	246	6
0839 68 930B 00	247	13
0839 68 936A	247	14
0839 68 937	247	15
0839 68 937	247	15
0839 68 938	247	16
0839 68 940B	247	21
0839 68 945	243	18
0187 69 049A	251	8
2828 69 051	244	48
0305 69 052A	251	1
2324 69 053A	251	2
0839 69 054B	251	3
0305 69 056	251	4
0398 69 056 01	251	4
0305 69 057	251	5
0730 69 057A	251	9
0820 69 066A	251	6
0881 69 067	251	6
0839 69 071 01	251	11
0839 69 076A	251	7
0839 69 077A	251	12
2850 69 090	251	14
2850 69 101	251	15
0310 69 170	251	
0839 69 170	252	21
0839 69 171	251	17
0839 69 171	252	22
0839 69 173	251	18
0839 69 173	252	23
0839 69 174	251	19
0839 69 174	252	24
0310 69 190	251	20
1668 69 210 00	252	26
1668 69 210 09	252	26
1668 69 210A 09	252	26
1674 69 210 00	252	26
1674 69 210A 00	252	26
2080 69 210 00	252	26
2850 69 210 00	252	26
0613 69 230	243	18
1668 69 240 00	252	27
1668 69 240 00	252	27
1668 69 240A 00	252	27
1668 69 240A 09	252	27
1674 69 240 09	252	27
1674 69 240A 00	252	27
2080 69 240 00	252	27
2080 69 240 09	252	26
2080 69 240 09	252	27
2850 69 240 00	252	27
0305 69 290C 00	254	1
0839 69 290A 09	254	1
0839 69 290A 10	254	1
1668 69 290 09	254	1
1668 69 290 10	254	1
1674 69 290 00	254	1
0305 69 311B	254	2
0839 69 311A	254	2
0839 69 311B	254	2
0839 69 311B	254	2
0305 69 312B	254	3
0398 69 312	254	3
0839 69 312B	254	3

PARTS NUMBER	PARTS COMP. LIST PAGE	FIG. NO.
0881 69 312	254	3
0305 69 313A	254	4
0839 69 313A	254	4
0839 69 314A	254	8
0839 69 314B	254	8
0305 69 315	254	5
0305 69 316	254	6
0305 69 317A	254	7
0305 69 317B	254	7
0305 69 318A	254	7
0305 69 318B	254	7
0839 69 318	255	25
0839 69 318A	255	25
0317 69 319	254	9
0305 69 321A	254	10
0839 69 321A	254	10
0305 69 341B	254	11
0839 69 341B	254	11
0305 69 342C	254	12
0839 69 342D	254	12
0305 69 343C	254	13
0839 69 343D	254	13
0839 69 344A	254	14
0839 69 345A	254	15
0305 69 351 00	254	17
2835 69 360 00	255	18
2835 69 360A 00	255	18
2835 69 360B 00	255	18
2835 69 360C 00	255	18
2835 69 380 00	255	19
2835 69 380A 00	255	19
2835 69 380B 00	255	19
2835 69 380C 00	255	19
0305 69 411B 00	255	21
0839 69 411B 00	255	21
0305 69 431B 00	255	22
0839 69 431B 00	255	22
0305 69 451	255	24
0305 69 451A	255	24
0305 69 461A 01	255	26
0305 69 461A 04	255	26
0305 69 461A 16	255	26
0305 69 461B 01	255	26
0305 69 461B 04	255	26
0305 69 461B 16	255	26
0305 69 541A 01	257	7
0305 69 541B 01	257	7
0305 69 542A 01	257	8
0305 69 542B 01	257	8
2080 69 611 26	257	9
2080 69 611A 26	257	9
2080 69 611B 34	257	9
2853 69 611C 34	257	9
2080 69 612 26	257	10
2080 69 612A 26	257	10
2080 69 612B 34	257	10
2853 69 612C 34	257	10
2080 69 613 26	257	11
2080 69 613A 26	257	11
2080 69 613B 34	258	11
2853 69 613C 34	258	11
0307 69 617A 34	258	12
0833 69 617 26	258	12
0833 69 617A 34	258	12
0833 69 618 26	258	13
0833 69 618A 34	258	13
2090 69 625 08	258	14
2090 69 626 08	258	15
0839 69 627D 05	258	16
0881 69 627 05	258	16
2080 69 660B	258	17
2080 69 660C	258	17
0305 69 681	258	18
0305 69 682	258	19
0308 69 683	258	20
0839 69 683A	258	20
0839 69 684	258	21
2853 69 684	258	21
0839 69 685	258	22
2853 69 685	258	22
0839 69 686	258	23
1570 69 686	258	23
0303 69 687B	258	24
0839 69 687A	258	24
0839 69 687B	258	24
0839 69 688	258	25
0839 69 689	258-1	26
1570 69 691	258-1	26
0305 69 692	258-1	27
0305 69 693	258-1	28
0305 69 694	258-1	29
0305 69 695	258-1	30
0839 69 696D	258-1	31
0839 69 697D	258-1	32
1663 69 699A	258-1	32
1915 69 810	243	22
2835 69 810A	243	20
2840 69 810A	243	22
2845 69 810A	243	21
2857 69 810A	243	20
0305 69 820A	243	24
1915 69 820	243	22

INDEX.

PARTS NUMBER	PARTS COMP. LIST PAGE	FIG. NO.	PARTS NUMBER	PARTS COMP. LIST PAGE	FIG. NO.	PARTS NUMBER	PARTS COMP. LIST PAGE	FIG. NO.
0305 69 825	243	23	0305 70 310B	260		0614 70 445	58-1	23
0305 69 861 00	255	27	0305 70 312	260	2	0305 70 447B	264	4
0839 69 861A 00	255	27	0259 70 315	260	3	0305 70 447B	268	4
0305 69 862 00	255	28	0305 70 320	260	4	0305 70 448A	264	5
0839 69 862A 00	255	28	0305 70 330	260	5	0305 70 448A	268	5
0305 69 863 00	255	29	0305 70 335	260	10	0839 70 449	264	6
0839 69 863 00	255	29	0305 70 342	260	6	0305 70 451A	268	7
0305 69 870 00	255	30	0305 70 343	260	7	0839 70 451A	264	8
0305 69 870A 00	255	30	0305 70 345	260	11	0305 70 452A	264	9
0310 69 870 00	255	30	0305 70 350F	261		0305 70 452A	268	8
0310 69 870A 00	255	30	0305 70 352A	262	33	0305 70 453A	268	9
0839 69 870 00	255	30	0305 70 353	261	19	0839 70 453A	264	10
0839 69 870B 00	255	30	0305 70 360	261	20	0305 70 454A	268	11
0841 69 870 00	255	30	0305 70 370	261	22	0839 70 454A	264	12
0841 69 870A 00	255	30	0305 70 375	261	24	0305 70 455A	268	13
0866 69 885	160	3	0305 70 380C	260	13	0839 70 455	264	14
0305 69 910 01	252	29	0305 70 390	261	28	0301 70 471	268	15
0305 69 920 01	252	30	0305 70 392C	260	15	0304 70 471	268	15
0305 70 020B	152	26	0305 70 393A	261	29	0305 70 471D	268	15
0305 70 020C	152	26	0305 70 395B	260	17	0833 70 471	264	16
2090 70 050	155	37	0305 70 396	261	31	0839 70 471C	264	16
2090 70 050	158	41	0305 70 397	261	28	2862 70 471C	268	15
2080 70 100E	152	30	0305 70 399	261	30	2866 70 471	264	16
2080 70 100F	152	30	0305 70 400A	262	35	2867 70 471C	264	16
2080 70 100G	152	30	0305 70 431	152	22	0839 70 479	264	17
2835 70 201	244	32	0305 70 432	152	24	0305 70 481A	268	16
0305 70 202	244	34	2080 70 441	264	1	0839 70 481A	264	18
2835 70 211	244	36	2835 70 441	268	1	0305 70 482A	268	17
0305 70 212	244	37	2862 70 441	268	1	0839 70 482A	264	19
2835 70 221	244	42	2866 70 441	264	1	0305 70 483A	268	18
2835 70 221A	244	42	0305 70 443B	264	2	0839 70 483A	264	20
0305 70 230A	244	43	0305 70 443B	268	2	0305 70 484B	268	20
0317 70 307	260	1	0305 70 445B	264	3	0839 70 484A	265	22
0317 70 307	261	21	0305 70 445B	268	3	0305 70 485A	269	22

PARTS NUMBER	PARTS COMP. LIST PAGE	FIG. NO.
0839 70 485A	265	24
0187 70 491	117	38
0839 70 511A	272	1
2866 70 511A	272	1
0839 70 515	272	2
0839 70 521	272	4
0839 70 522	272	5
0839 70 523A	272	6
0839 70 524	272	7
0839 70 525	272	8
0839 70 526	272	9
0839 70 550A	272	11
0839 70 555	272	14
0839 70 570	272	15
2855 70 570	272	15
0839 70 603	273	24
0839 70 604	273	26
0839 70 605C	273	30
0839 70 606C	273	31
0824 70 621	273	28
0839 70 651A	273	32
0839 70 652	273	33
0839 70 655A	274	35
0839 70 655B	274	35
0881 70 655	274	35
0839 70 680C	274	36
0839 70 681B	274	38
0839 70 681B	275	53
0839 70 690	274	36
0839 70 701A	274	39
0839 70 721B	275	53
0881 70 721	275	53
0839 70 741A	274	46
0839 70 742	274	47
0839 70 743	275	48
0839 70 751B 00	275	49
0839 70 751C 00	275	49
0839 70 752A 00	275	51
0404 7C 760	274	39
0881 70 760A	274	39
1668 70 760	274	39
0305 70 802 00	269	24
0839 70 802A 00	265	26
0305 70 803A 00	269	26
0830 70 803B 00	265	28
0839 70 803A 00	265	28
0305 70 804A 00	269	28
0305 70 811	155	38
0305 70 811	158	42
0305 70 821	269	31
0305 70 821A	269	31
0839 70 821	265	31
0839 70 821A	265	31
0305 70 822	269	33
0839 70 822	265	33
0305 70 823	269	35
0305 70 823A	269	35
0839 70 823B	265	35
0881 70 823A	265	35
0881 70 823B	265	35
0305 70 825	265	37
0305 70 825	269	37
0305 70 826	269	38
0305 70 827A	265	38
0305 70 827A	269	39
0305 70 851	265	39
0305 70 851	269	40
0305 70 861B	265	40
0305 70 861B	269	41
0305 70 861C	265	40
0305 70 861C	269	41
0839 70 865	265	41
0223 70 870	265	43
0223 70 870	269	43
0305 70 911	265	45
0305 70 911	269	45
0305 70 921	266	46
0305 70 921	270	46
0833 70 941B 00	252-1	32
0727 70 943	186	7
0305 70 951 01	252-1	33
2090 70 982	210	116
2090 70 982A	210	116
2090 70 982A	210-C	22
2090 70 983	210	117
0305 70 991A 02	252-1	35
0305 71 310B	260	
0305 71 343	260	7
0305 71 350F	261	
0305 71 352A	262	33
0305 71 375	261	24
0305 71 380C	260	13
0305 71 392C	260	15
0305 71 396	261	31
0305 71 400A	262	35
0305 71 431	152	23
0305 71 453A	268	10
0839 71 453A	264	11
0305 71 454	268	12
0839 71 454A	264	13
0305 71 455A	268	14
0839 71 455	264	15

INDEX.

PARTS NUMBER	PARTS COMP. LIST PAGE	FIG. NO.	PARTS NUMBER	PARTS COMP. LIST PAGE	FIG. NO.	PARTS NUMBER	PARTS COMP. LIST PAGE	FIG. NO.
0305 71 483A	268	19	0305 71 804A 00	269	29	0305 72 505	277	4
0839 71 483A	264	21	0305 71 821	269	32	0259 72 509	193	52
0305 71 484	268	21	0305 71 821A	269	32	0259 72 509	283	48
0839 71 484A	265	23	0839 71 821	265	32	0305 72 560	281	15
0305 71 485A	269	23	0839 71 821A	265	32	2850 72 560	281	15
0839 71 485A	265	25	0305 71 822	269	34	0305 72 601D	277	1
0839 71 511A	272	1	0839 71 822	265	34	0305 72 602A	277	5
2866 71 511A	272	1	0305 71 823	269	36	0398 72 602	277	5
0839 71 515	272	2	0305 71 823A	269	36	0305 72 605D	277	8
0839 71 570	272	15	0839 71 823B	265	36	0305 72 606C	277	9
2855 71 570	272	15	0881 71 823A	265	36	0305 72 607	277	9
0839 71 603	273	24	0881 71 823B	265	36	0301 72 661A	277	10
0839 71 604	273	26	0305 71 921	266	47	0305 72 661A	277	10
0839 71 651A	273	32	0305 71 921	270	47	0305 72 662B	278	11
0839 71 652	273	33	0305 71 951 01	252-1	33	0305 72 755	279	27
0839 71 680C	274	36	0305 71 991A 02	252-1	35	0305 72 755A	279	27
0839 71 690	274	36	0305 72 010E	277	1	0305 72 760C	278	12
0839 71 701A	274	39	0398 72 010A	277	1	0305 72 768	278	18
0839 71 721B	275	53	1666 72 010A	277	1	0305 72 780E	278	14
0881 71 721	275	53	0305 72 201	282	27	0305 72 781B	278	15
0839 71 741A	274	46	0305 72 203	282	27	0305 72 810D	278	19
0839 71 742	274	47	0305 72 210	282	24	0390 72 810	278	19
0839 71 743	275	48	0305 72 231	282	32	0876 72 810	278	19
0839 71 751B 00	275	49	0305 72 240A	282	29	1666 72 810	278	19
0839 71 751C 00	275	49	0305 72 261	283	37	0208 72 821	283	39
0839 71 752A 00	275	51	0305 72 262	283	38	0208 72 822	283	40
0404 71 760	274	39	2850 72 300	281	1	0305 72 831A	278	23
0881 71 760A	274	39	2850 72 300A	281	1	0305 72 851	188-2	28
1668 71 760	274	39	2850 72 300B	281	1	0305 72 851	279	28
0305 71 802 00	269	25	0223 72 305	273	18	0305 72 852	279	29
0839 71 802A 00	265	27	0305 72 410B	281	8	0305 72 852A	279	29
0305 71 803B 00	269	27	0305 72 410C	281	8	0305 72 861	283	42
0839 71 803B 00	265	29	0301 72 501A	277	3	0305 72 862	283	43
0839 71 803C 00	265	29	0305 72 501A	277	3	0305 72 863	283	44

PARTS NUMBER	PARTS COMP. LIST PAGE	FIG. NO.
0305 72 864	283	45
0305 73 001D	277	1
0305 73 010E	277	1
0398 73 010A	277	1
1666 73 010A	277	1
0305 73 240A	282	29
2850 73 300	281	1
2850 73 300A	281	1
2850 73 300B	281	1
0305 73 410B	281	8
0305 73 410C	281	8
0301 73 501A	277	3
0305 73 501A	277	3
0305 73 505	277	4
0305 73 560	281	15
2850 73 560	281	15
0305 73 602A	277	5
0398 73 602	277	5
0301 73 661A	277	10
0305 73 661A	277	10
0305 73 760C	278	12
0305 73 780E	278	14
0305 73 810D	278	19
0390 73 810	278	19
0876 73 810	278	19
1666 73 810	278	19
0305 73 831A	279	23
0305 73 862	283	43
0305 73 863	283	44
2835 74 020	151	12
2080 74 030	151	13
0305 74 050	158	36
0839 74 050	155	32
0305 74 070	157	18
0839 74 070	154	18
0305 74 075	157	19
0839 74 075	154	19
0305 74 080	158	40
0839 74 080	155	36
2081 74 090	158	30
2090 74 090	155	28
2090 74 090A	155	28
2081 74 095	158	31
0839 74 158	285	15
0839 74 168	285	15
2080 74 380	151	14
2080 74 390	151	15
0881 74 600	151	5
0881 74 600	151	5
2835 74 600	151	5
0839 74 910	285	1
0839 74 910A	285	1
0839 74 920	285	2
0839 74 920A	285	2
0839 74 930	285	3
0839 74 940	285	4
0839 74 950	285	5
1568 75 029	169	14
2878 75 090A	169	
2878 75 090B	169	
0839 75 100	169	7
2878 75 101A	169	1
0305 75 102	169	8
0839 75 102	169	2
0839 75 103	169	3
2878 75 103	169	3
0839 75 104	169	4
0839 75 105	169	5
0839 75 105A	169	5
0839 75 106	169	6
2878 75 106	169	6
0305 75 107	169	10
0305 75 108	169	11
0839 75 109	169	16
0824 75 140	169	9
0710 75 435	169	14
0710 75 436	169	14
0305 75 561	242	1
0305 75 562	242	1
0305 75 585	242	1
2280 75 641A	285	16
0208 76 071	258-1	33
2851 76 081	195	1
2851 76 081A	195	1
2835 76 082	195	2
2851 76 082	195	2
2835 76 083	195	8
2851 76 083	195	8
0305 76 084	195	9
0305 76 084A	195	9
0305 76 084A	214-I	19
0305 76 086A	195	4
0306 76 086B	195	4
2851 76 086	195	4
2851 76 086A	195	4
0305 76 087A	195	5
2851 76 087	195	5
2851 76 087A	195	5
0305 76 088	195	6
2851 76 088	195	6
0305 76 089	195	7
0305 76 089	214-H	10

INDEX.

PARTS NUMBER	PARTS COMP. LIST PAGE	FIG. NO.
2835 76 110	199	1
2835 76 110	214-M	22
2835 76 116	199	12
0305 76 117	200	29
0305 76 117	214-M	18
0305 76 123	199	13
0305 76 123	214-N	36
0305 76 124	199	14
0305 76 124	214-N	35
2835 76 125	199	15
2835 76 125	214-N	34
2835 76 126	199	16
2835 76 126	214-M	20
2835 76 127	199	20
2835 76 127	214-L	14
0305 76 129	200	21
2835 76 131	200	23
2835 76 132	200	24
2835 76 132	214-M	19
2835 76 135	200	26
2835 76 135	214-L	7
0305 76 136	199	18
0305 76 136	214-N	39
0305 76 137	200	27
0305 76 137	214-M	16
0305 76 138	199	19
0305 76 138	214-N	38
0305 76 139	200	28
0305 76 139	214-M	17
0305 76 141	199	2
0305 76 142	199	3
0305 76 143	199	4
0305 76 144	199	5
2835 76 145	199	6
0305 76 146	199	7
0305 76 146	214-M	26
0305 76 147	199	8
0305 76 147A	214-M	27
0305 76 149	199	9
0305 76 150	199	10
0305 76 150	214-N	32
0305 76 151	199	11
0305 76 151	214-M	25
0305 76 155A	200	33
0305 76 156A	200	34
0305 76 156B	200	34
0305 76 156B	214-N	40
0305 76 156B	214-O	57
2835 76 157	201	35
2835 76 157A	201	35
2835 76 157A	214-O	50
2835 76 157A	214-P	64
0305 76 158	201	36
0305 76 158A	201	36
0305 76 159	201	37
0305 76 159A	201	37
0305 76 159A	214-N	44
0305 76 160	201	38
0305 76 160A	201	38
0305 76 161	201	39
0305 76 161	214-O	48
0305 76 161	214-P	62
0305 76 162	201	40
0305 76 162A	201	40
0305 76 162A	214-O	49
0305 76 162A	214-P	63
2835 76 163	201	41
2835 76 164	201	42
2835 76 164	201	44
0305 76 165	201	43
2835 76 166	201	44
2835 76 166	214-O	55
2835 76 166	214-P	67
0305 76 167	201	45
0305 76 167	214-N	41
0305 76 167	214-O	58
0305 76 168	201	46
0305 76 168	214-N	42
0305 76 169	201	46
0305 76 170	214-O	54
0305 76 171	201	46
0305 76 171	214-P	66
0305 76 173	201	50
0305 76 174	201	51
0305 76 175	201	52
0305 76 176	201	53
0235 76 311	214-B	3
0235 76 312	214-B	15
0235 76 313	214-B	1
0235 76 314	214-B	2
0235 76 321	214-B	14
0235 76 321	214-D	17
0235 76 321	214-F	51
0235 76 322	214-B	19
0235 76 322	214-F	48
0235 76 330	214-B	4
0235 76 331	214-B	13
0235 76 332	214-B	5
0235 76 333	214-B	6
0235 76 333	214-E	26
0235 76 334	214-B	7
0235 76 334	214-E	25

INDEX.

PARTS NUMBER	PARTS COMP. LIST PAGE	FIG. NO.	PARTS NUMBER	PARTS COMP. LIST PAGE	FIG. NO.	PARTS NUMBER	PARTS COMP. LIST PAGE	FIG. NO.
0235 76 335	214-B	8	1915 76 704	214-I	22	0305 76 729	212	15
0235 76 335	214-E	24	1916 76 704	214-I	22	0305 76 730	212	16
0235 76 336	214-B	9	0303 76 705	208	94	1915 76 730	214-E	32
0235 76 336	214-E	28	1915 76 705	214-H	2	1915 76 730	214-J	29
0235 76 338	214-B	12	1674 76 707	214-O	61	0305 76 731	212	10
0235 76 338	214-E	27	1915 76 707	214-I	15	1915 76 731	214-J	28
0235 76 340	214-B	17	1915 76 708	214-I	16	0305 76 732	212	11
0235 76 345	214-B	16	1915 76 709	214-I	17	0305 76 733	212	12
0235 76 345	214-F	47	1915 76 711	214-H	7	1915 76 733	214-J	31
0235 76 346	214-B	18	0881 76 712	214-D	6	0305 76 734	212	13
0235 76 370	214-B	20	1915 76 712	214-H	8	0881 76 734	214-F	45
0881 76 370	214-B	20	0881 76 713	214-D	11	1915 76 734	214-J	32
0881 76 370	214-D	1	1915 76 713	214-H	6	0305 76 735	212	14
0235 76 373	214-D	8	0881 76 714	214-D	3	0881 76 735	214-E	33
0235 76 374	214-D	7	1011 76 714	214-I	23	1915 76 735	214-J	33
0235 76 375	214-D	9	1915 76 714	214-I	23	1915 76 736	214-J	30
0235 76 377	214-D	10	1915 76 715	214-H	9	1915 76 737	214-J	34
1674 76 401	200	33	1915 76 716	214-I	14	0881 76 738	214-D	4
1915 76 401	214-I	21	0881 76 717	214-F	52	1915 76 738	214-J	35
1674 76 402	201	38	1915 76 721	214-I	27	0881 76 739	214-D	2
1674 76 402	214-O	51	2835 76 721	212	1	1915 76 739	214-J	39
1915 76 403	214-I	25	0305 76 722	212	2	0881 76 740	214-D	5
1915 76 404	214-I	26	0305 76 722	213	32	0881 76 741	214-D	12
1915 76 406	214-I	18	0305 76 723	212	3	0881 76 742	214-F	53
1915 76 701	214-H	1	0305 76 723	213	33	1915 76 742	214-J	42
0303 76 702	208	90	0881 76 723	214-F	42	1915 76 743	214-J	38
1674 76 702	214-P	65	0305 76 724	212	5	1915 76 744	214-J	40
1915 76 702	214-H	3	0881 76 724	214-F	42	1915 76 745	214-J	36
1916 76 702	214-H	3	0305 76 725	212	6	1915 76 746	214-J	37
0303 76 703	208	91	0881 76 726	214-F	41	1915 76 747	214-J	43
1915 76 703	214-H	11	2835 76 726	212	8	1915 76 750	214-M	23
1916 76 703	214-H	11	0305 76 727	213	35	1915 76 751	214-N	33
0303 76 704	208	92	0881 76 727	214-F	38	1915 76 752	214-N	31
0305 76 704	208	93	2835 76 728	212	9	1915 76 753	214-N	30

INDEX.

PARTS NUMBER	PARTS COMP. LIST PAGE	FIG. NO.	PARTS NUMBER	PARTS COMP. LIST PAGE	FIG. NO.	PARTS NUMBER	PARTS COMP. LIST PAGE	FIG. NO.
1915 76 754	214-M	29	1915 76 812	214-D	12	0223 78 147	176-2	76
1915 76 755	214-M	28	1915 76 813	214-E	31	0223 78 147	183-2	79
1915 76 756	214-M	24	2840 76 813	213	37	0223 78 149	176-2	77
1915 76 757	214-L	5	0305 76 814	213	38	0223 78 149	183-2	80
1915 76 758	214-L	3	1915 76 814	214-E	18	0223 78 200C	176-2	79
1915 76 759	214-L	1	0305 76 815	213	39	0223 78 200C	183-2	82
1915 76 761	214-L	2	1915 76 815	214-E	19	0702 78 200B	176-2	79
1915 76 762	214-L	9	0305 76 816	213	40	0702 78 200B	183-2	82
1915 76 763	214-L	4	1915 76 816	214-E	20	0702 78 200C	176-2	79
1915 76 764	214-L	11	1915 76 817	214-E	30	0233 78 834	208	100
1915 76 765	214-L	6	2835 76 817	214	42	0223 78 861	207	76
1915 76 771	200	33	0305 76 818	214	44	0223 78 865	207	77
1915 76 771	214-O	45	1915 76 818	214-E	36	0223 78 865	210-I	95
1915 76 771	214-O	60	0305 76 819	214	45	2065 79 030	236	
1915 76 772	214-O	47	1915 76 819	214-E	35	2075 79 030	236	
1915 76 773	214-O	53	0305 76 820	214	46	2080 79 030	239	
1915 76 774	214-O	56	1915 76 820	214-F	39	2081 79 030	236	
1915 76 775	214-O	52	1915 76 821	214-F	43	2321 79 030	236	
1915 76 776	214-O	46	2835 76 821	214	47	2322 79 030	239	
2835 76 801	212	17	0305 76 822	214	48	2323 79 030	236	
2835 76 802	212	18	1915 76 822	214-F	40	2324 79 030	236	
0305 76 803	212	19	0305 76 823	214	49	2846 79 040	236	
2835 76 804	213	21	1915 76 823	214-F	46	2846 79 040	239	
2835 76 805	213	22	0305 76 824	214	51	0301 79 370	234	
0305 76 806	213	24	1915 76 824	214-F	44	0235 79 380	206	49
2835 76 807	213	25	0305 76 825	214	50	0235 79 380	210-F	56
2835 76 808	213	26	1915 76 825	214-F	49	2835 81 140	196	12
0305 76 809	213	27	0305 76 826	214	50	0839 87 001	236	11
0305 76 809	214-H	5	1915 76 826	214-D	15	0839 87 001	239	14
0305 76 810	213	29	0303 76 827	214	52	2850 87 001	216	4
1915 76 810	214-E	21	1915 76 827	214-D	13	0839 87 002	237	16
0305 76 811	213	30	0305 76 828	214	53	0839 87 002	240	19
1915 76 811	214-E	29	1915 76 828	214-D	14	2850 87 002	216	15
0305 76 812	213	36	2835 78 081	195	1	0305 87 003	217	16

INDEX.

PARTS NUMBER	PARTS COMP. LIST PAGE	FIG. NO.	PARTS NUMBER	PARTS COMP. LIST PAGE	FIG. NO.	PARTS NUMBER	PARTS COMP. LIST PAGE	FIG. NO.
2850 87 003	216	5	0305 87 035	224	3	0222 87 374	225	23
0305 87 004	217	17	0305 87 036	224	4	0222 87 375	225	24
2850 87 004	216	6	0305 87 037	224	7	0222 87 376	225	25
0305 87 005	217	18	0305 87 038	224	8	0296 87 485	225	18
2850 87 005	216	7	0305 87 080	225	16	0738 87 803	231	38
0839 87 006	237	17	0305 87 081	225	17	0738 87 804	231	39
0839 87 006	240	20	0305 87 083	225	23	2835 87 901	230	5
2850 87 006	217	15	0305 87 095	236	9	2835 87 902	230	6
2850 87 007	216	8	0305 87 095	239	12	0305 87 903	230	8
0305 87 008	217	17	0305 87 096	236	10	0305 87 904	230	9
2850 87 008	216	9	0305 87 096	239	13	0305 87 905	230	10
2850 87 011	216	10	0305 87 097	239	14	0305 87 906	230	11
2850 87 012	216	11	0305 87 098	237	13	0305 87 907	230	15
2850 87 013	216	4	0305 87 098	239	16	0305 87 908	230	16
2850 87 014	216	7	0305 87 099	237	14	0305 87 909	230	17
2850 87 015	216	8	0305 87 099	239	17	0305 87 921	231	31
2850 87 016	220	28	0259 87 101A	231	19	2835 87 922	231	28
2850 87 017	220	29	0305 87 101	237	15	2835 87 923	231	27
2850 87 018	220	30	0305 87 101	240	18	2835 87 924	231	20
2850 87 019	221	31	0305 87 102	237	16	2835 87 925	231	21
2850 87 021	221	32	0305 87 102	240	19	2835 87 926	231	33
2850 87 022	221	33	0259 87 105	231	22	2835 87 927	231	34
2850 87 024	221	33	0259 87 106	231	23	2835 87 928	231	26
2850 87 025	221	33	0257 87 107	231	24	2835 87 951	231	32
2850 87 026	217	26	0305 87 107	237	19	0305 87 956	231	35
2850 87 027	217	27	0305 87 107	240	22	2835 87 957	231	36
2850 87 027	221	43	0257 87 108	231	25	0727 87 992	234	2
2850 87 028	217	26	0259 87 119	231	29	0305 87 993	234	3
2850 87 029	217	27	0259 87 120	231	30	0727 87 994	234	4
2850 87 029	221	43	0259 87 134	230	7	0727 87 995	234	5
2850 87 031	221	44	2244 87 191	217	28	0841 88 001	180	21
2850 87 032	221	45	2244 87 201	221	46	0841 88 001	182	48
0305 87 033	224	1	0222 87 372	225	21	0841 88 001	183-1	64
0305 87 034	224	2	0222 87 373	225	22	0841 88 002	180	22

INDEX.

PARTS NUMBER	PARTS COMP. LIST PAGE	FIG. NO.	PARTS NUMBER	PARTS COMP. LIST PAGE	FIG. NO.	PARTS NUMBER	PARTS COMP. LIST PAGE	FIG. NO.
0841 88 002	182	49	0305 88 070A	179	5	0305 88 150	172	16
0841 88 002	183-1	65	2080 88 070A	172	5	0305 88 150	179	16
0305 88 009	173	29	2080 88 070B	172	5	0305 88 160	175	48
0305 88 009	176	54	0305 88 081	172	14	0305 88 160	182	43
0305 88 009	182	51	0305 88 081	175	46	1682 88 160	181	28
0317 88 009	180	24	0305 88 081	179	14	1687 88 160	174	33
0305 88 010	178	3	0305 88 081	182	41	1682 88 161	181	30
0398 88 010	178	3	0317 88 082	180	23	1687 88 161	174	35
0839 88 010	171	3	0317 88 082	182	50	0254 88 164	172	7
0881 88 010A	171	3	0317 88 082	183-1	66	0254 88 164	174	39
1665 88 010	171	3	0305 88 093	173	25	0254 88 164	179	7
2091 88 010	171	3	0305 88 100A	180	20	0254 88 164	181	34
2851 88 010	178	3	0398 88 100	180	20	2080 88 170	172	19
0259 88 025	172	8	0839 88 100A	173	28	2080 88 171	172	20
0259 88 025	175	40	0881 88 100A	173	28	2080 88 172	173	21
0259 88 025	179	8	1664 88 100	180	20	0839 88 173	173	23
0259 88 025	181	35	1665 88 100	173	28	0839 88 174	173	24
1540 88 035	176-3	81	2091 88 100	173	28	1684 88 180	182	45
1540 88 035	183-3	84	2851 88 100	180	20	1687 88 180	175	51
0259 88 059	173	27	1682 88 110	178	1	1682 88 181	182	47
0259 88 059	175	52	1687 88 110	171	1	1687 88 181	176	53
0259 88 059	180	19	1682 88 111	179	3	0305 88 200	181	30
0259 88 059	182	46	1687 88 111	172	3	0398 88 200	181	30
0305 88 060	172	4	1674 88 120	176-3	81	0839 88 200	174	35
0305 88 060	179	4	1674 88 120	183-3	84	0881 88 200	174	35
0305 88 060A	172	4	1674 88 120A	183-3	84	1665 88 200	174	35
0305 88 060A	179	4	0259 88 123	172	10	2091 88 200	174	35
0398 88 061	172	10	0259 88 123	175	42	2851 88 200	181	30
0398 88 061	175	42	0259 88 123	179	10	1682 88 201	183	60
0305 88 062	172	9	0259 88 123	181	37	1687 88 201	176-1	62
0305 88 062	175	41	1684 88 130	180	18	0305 88 250	174	36
0305 88 062	179	9	1687 88 130	173	26	0305 88 250	181	31
0305 88 062	181	36	1682 88 131	180	20	0305 88 250A	174	36
0305 88 070	179	5	1687 88 131	173	28	0305 88 250A	181	31

PARTS NUMBER	PARTS COMP. LIST PAGE	FIG. NO.
1686 88 251	183-1	63
1687 88 251	176-1	65
0259 88 259	171	2
0259 88 259	174	34
0259 88 259	178	2
0259 88 259	181	29
0305 88 260	174	37
0305 88 260	181	32
0305 88 260A	174	37
0305 88 260A	181	32
1686 88 270	183-1	67
0259 88 273A	172	6
0259 88 273A	179	6
0305 88 280A	182	47
0398 88 280	182	47
0839 88 280A	175	53
0881 88 280A	175	53
1664 88 280	182	47
1665 88 280	176	53
2091 88 280	175	53
2851 88 280	182	47
0305 88 370A	183	60
0398 88 370	183	60
0839 88 370A	176	62
0881 88 370A	176-1	62
1665 88 370	176-1	62
2091 88 370	176-1	62
2851 88 370	183	60
0259 88 373	174	38
0259 88 373	181	33
0305 88 415	176	61
0305 88 415	183	59
0305 88 416	176-1	64
0305 88 416	183-1	62
0305 88 420A	183-1	63
0398 88 420	183-1	63
0839 88 420	176-1	65
0881 88 420A	176-1	65
1665 88 420	176-1	65
2082 88 420	183-1	63
2091 88 420	176-1	65
2851 88 420	183-1	63
0305 88 460	183-1	67
2082 88 460	183-1	67
2851 88 490	179	3
2851 88 530	181	30
2851 88 570	183	60
0839 89 431	132	13
0839 89 431A	132	13
2835 89 439	134	
2850 89 661	216	1
2850 89 662	216	14
2850 89 663	217	21
1668 89 664	219	
2850 89 666	216	1
2850 89 667	216	14
2850 89 668	217	21
1668 89 669	219	
2850 89 673	221	38
1668 89 674	220	14
2850 89 678	221	38
1668 89 679	220	14
0223 91 529	237	18
0223 91 529	240	21
0223 91 530	237	15
0223 91 530	240	18
0223 91 531	237	14
0223 91 531	239	17
0223 91 533	236	12
0223 91 533	239	15
2090 99 100C	4-1	47
2090 99 100E	4-1	47
2090 99 100E	4-2	
0862 99 150	38-C	
1668 99 150	38-C	
2090 99 150	38	23
0662 99 322A	96	2
2113 99 322A	96	2
0305 99 324A	96	3
2370 99 324	96	3
0305 99 356	103	12
0305 99 356A	103	12
0259 99 361	107	
0317 99 362	107	
2835 99 430	134	
0305 99 431	132	13
9066 24 520B	255	32
9074 36 516	217	20
9074 36 616	226	26
9074 36 616	228-1	73
9074 37 612B	247	24
9074 37 614B	22-9	6
9076 14 516	252	25
9076 14 620	190	14
9076 14 620	282	22
9076 14 630	190	15
9076 14 630	282	23
9078 12 818	191	30
9078 12 818	192	36
9078 32 825	191	31
9078 32 825	192	37
9078 32 825	282	28

INDEX.

PARTS NUMBER	PARTS COMP. LIST PAGE	FIG. NO.	PARTS NUMBER	PARTS COMP. LIST PAGE	FIG. NO.	PARTS NUMBER	PARTS COMP. LIST PAGE	FIG. NO.
9078 32 825	282	33	9080 46 625	116	24	9080 62 635	140	22
9078 32 828	282	34	9080 46 816	35	29	9080 62 814	149	11
9079 76 508	191	18	9080 46 825	176	56	9080 62 816	38	19
9079 76 510	236	5	9080 46 825	183	53	9080 62 816	38-B	15
9079 76 510	237	20	9080 47 516	260	14	9080 66 412	117	31
9079 76 510	237	21	9080 47 620	121	41	9080 66 510	167	36
9079 76 510	239	7	9080 57 520	114	28	9080 66 510	237	20
9079 76 510	239	7	9080 57 616	35	27	9080 66 510	240	23
9079 76 510	240	23	9080 57 620	151	3	9080 66 510	281	4
9079 76 510	240	25	9080 57 825	128	22	9080 66 612	58-1	28
9079 76 510	281	9	9080 61 510	160	3	9080 66 612	246	10
9079 76 612	57	12	9080 61 620	109	17	9080 66 614	192	43
9080 12 816	57	9	9080 62 608	281	16	9080 66 616	228-1	66
9080 12 816	92	46	9080 62 610	44	35	9080 66 616	228-1	68
9080 12 818	8-1	51	9080 62 610	44	37	9080 66 618	26	2
9080 12 818	14-1	22	9080 62 610	73-B	6	9080 66 622	44	25
9080 12 818	111	6	9080 62 612	34	11	9080 66 818	149	9
9080 12 820	57	9	9080 62 612	191	25	9080 67 512	236	5
9080 12 820	114	20	9080 62 612	272	13	9080 67 512	239	7
9080 16 812	34	21	9080 62 612	273	23	9080 67 512	240	25
9080 16 812	35	28	9080 62 612	273	25	9080 67 614	151	4
9080 16 820	129	25	9080 62 612	273	27	9080 67 616	141-B	20
9080 16 825	8	35	9080 62 612	281	16	9080 67 618	149	5
9080 16 825	37	16	9080 62 614	26	19	9080 67 620	109	17
9080 16 825	38-B	12	9080 62 614	33	7	9080 67 620	126	9
9080 16 828	41	36	9080 62 614	44	21	9083 14 516	252	25
9080 42 616	121	35	9080 62 614	51	27	9083 14 614	90	14
9080 42 820	176-1	66	9080 62 614	73-C	31	9083 24 512B	247	20
9080 42 820	183-1	69	9080 62 614	73-G	35	9083 24 516B	247	17
9080 42 825	176-1	67	9080 62 614	73-G	44	9083 24 612	190	3
9080 42 825	183-1	70	9080 62 616	8-1	48	9083 24 612	281	3
9080 46 516	117	34	9080 62 616	138	13	9083 31 416B	244	35
9080 46 516	117	35	9080 62 616	140	16	9083 31 512B	262	36
9080 46 616	121	35	9080 62 625	140	5	9083 31 520	188-2	25

INDEX.

PARTS NUMBER	PARTS COMP. LIST PAGE	FIG. NO.
9083 32 408	30	10
9083 32 408	80	16
9083 32 412	167-2	56
9083 32 412B	167-2	58
9083 32 416	8-2	53
9083 32 416	90	15
9083 32 418	8-2	53
9083 32 512	129	40
9083 32 512	243	19
9083 32 516	225	19
9083 32 616	73-D	44
9083 32 616	126	6
9083 32 812	82	40
9083 36 408	167-2	57
9083 36 410	261	18
9083 36 410B	285	13
9083 36 412	138	22
9083 36 416B	244	41
9083 36 512	117	34
9083 36 512	118	53
9083 36 516	129	38
9083 36 516	206	51
9083 36 608	124-B	6
9083 37 508B	243	27
9083 37 512	243	25
9083 37 516	118	48
9083 37 516	243	26
9083 46 416	243	19
9083 46 416	247	24
9083 47 416	207	82
9083 47 512	208	88
9083 61 520B	166	21
9083 86 410	208	98
9083 86 620	252	31
9083 88 510B	207	66
9083 91 516B	166	22
9083 96 520B	166	23
9084 82 512	55	42
9086 14 516	252	25
9086 24 412B	255	23
9086 24 420B	255	20
9086 24 520B	255	31
9086 31 516	243	26
9086 32 410	162	43
9086 34 412	208	99
9086 36 412	207	75
9086 36 416B	246	11
9086 36 516	197	40
9086 36 525	206	51
9086 36 612	206	50
9086 40 412	254	16
9086 41 412B	252-1	34
9086 76 20	221	36
9086 81 414	165	10
9086 81 414	165	15
9086 81 414	165	15
9086 82 308	91	26
9086 86 412B	224	13
9086 86 512	22-8	4
9086 87 416B	197	29
9086 87 416B	209	115
9086 92 314	167	35
9086 97 416	208	96
9086 97 416	247	23
9883 20 408B	190	5
9902 33 524	176-2	78
9902 33 524	176-2	80
9902 33 524	183-2	81
9902 33 524	183-2	83
9920 13 500	176-2	78
9920 13 500	176-3	80
9920 13 500	183-2	81
9920 13 500	183-2	83
9922 11 212	28	45
9922 12 012	126	19
9922 12 015	96	6
9922 12 015	146	18
9922 12 020	93	57
9922 12 020	96	6
9922 12 020	130	49
9922 12 020	141-C	26
9922 13 020	97	19
9922 13 020	103	
9922 14 030	99	12
9922 20 216	73-G	40
9922 20 520	141-C	27
9922 50 320	141-B	13
9923 00 511	126	10
9923 00 811	261	26
9923 00 815	138	11
9923 10 818	130	48
9923 31 225	43	2
9923 41 208	7	14
9923 60 525	11-1	36
9926 22 503	2	7
9927 40 821	210-G	78
9927 61 008	92	47
9928 21 700	73-D	36
9928 22 001	116	7
9928 22 001	140	20
9928 22 600	196	25
9928 22 600	210-E	55

INDEX.

PARTS NUMBER	PARTS COMP. LIST PAGE	FIG. NO.	PARTS NUMBER	PARTS COMP. LIST PAGE	FIG. NO.	PARTS NUMBER	PARTS COMP. LIST PAGE	FIG. NO.
9928 22 600	210-I	100	9930 70 800	3	19	9954 10 2211	73-G	41
9928 24 300	22-3		9930 70 800	16	7	9956 01 200	116	3
9928 24 300	22-5	16	9930 71 200	3	20	9956 21 000	51	44
9928 24 900	35	32	9930 71 200	7	18	9956 21 000	140	6
9928 25 300	35	32	9930 71 200	16	8	9956 21 000	140	10
9928 25 500	116	11	9930 71 400	16	9	9956 21 000	140	25
9928 31 300	116	18	9930 71 600	16	10	9956 21 200	121	22
9928 31 300	121	24	9933 50 4010	234	10	9956 21 200	140	18
9928 43 09	22-5	16	9933 50 4065	234	11	9956 21 400	8-1	43
9928 50 800	34	20	9933 50 4075	234	12	9956 21 400	35-1	47
9928 50 800	116	16	9933 50 6001	260	9	9956 21 400	50	10
9928 50 800	129	41	9933 60 6155	22-8	5	9956 21 400	51	33
9928 51 000	116	16	9933 61 2029	116	8	9956 21 600	4-1	38
9928 81 608	167-2	64	9934 00 5224	73-C	29	9956 21 800	35-1	37
9929 50 408	58	17	9934 00 6120	116	17	9956 40 800	16	11
9929 50 606	17	15	9934 00 6280	121	29	9956 40 800	51	44
9929 50 606	43	7	9934 00 6670	120	2	9956 41 000	8	28
9929 50 606	121	37	9938 11 000	73-D	37	9956 41 000	16	12
9929 50 610	44	29	9938 11 400	35-1	36	9956 41 000	41	35
9929 50 808	176-3	81	9938 41 200	4	37	9956 41 000	50	11
9929 50 808	183-3	84	9938 41 200	35-1	43	9956 41 200	2	5
9929 51 008	58	17	9938 41 200F	4	37	9956 41 200	4	25
9929 51 508	58-1	30	9950 24 000	43	9	9956 41 200	6	5
9929 51 508	92	47	9950 31 000	4	25	9956 41 200	116	3
9929 51 508	228	53	9950 33 000	16	10	9956 41 200	120	18
9929 51 510	40	13	9951 00 800	16	11	9956 41 200	140	18
9929 51 510	73-C	26	9951 01 000	8	28	9956 41 400	73-D	38
9929 52 008	4-1	43	9951 01 000	51	43	9956 41 600	4-1	38
9930 52 800	8	29	9951 11 000	16	12	9956 41 600	21	34
9930 63 000	3	21	9951 11 400	8-1	42	9956 41 600	22-3	33
9930 63 000	7	19	9954 10 1101	14-1	27	9956 41 600	22-6	29
9930 70 400	16	6	9954 10 1601	27	23	9956 41 600	35-1	44
9930 70 600	4	29	9954 10 1601	73-G	34	9956 41 800	44	27
9930 70 600	16	6	9954 10 2101	43	18	9956 41 800	44	40

INDEX.

PARTS NUMBER	PARTS COMP. LIST PAGE	FIG. NO.
9956 42 800	11-1	38
9957 32 500	47	36
9957 32 500	48	45
9957 32 50C	73-N	36
9957 33 500	46	4
9957 43 50C	37	7
9957 43 500	38-B	3
9957 45 200	75	7
9957 50 30C	126	11
9957 50 500	138	12
9957 50 600	80	11
9957 50 60C	126	5
9957 50 600	128	14
9957 50 600	141-C	28
9957 60 30C	90	5
9957 60 40C	260	8
9957 60 40C	261	23
9957 60 500	261	27
9957 60 80C	27	37
9957 93 000	243	16
9957 93 000	244	49
9957 93 00C	251	10
9957 94 00C	243	15
9958 32 6388	92	47
9958 61 0207	43	19
9958 61 0207	73-G	42
9960 63 3070	46	3
9960 66 2050	75	8
9961 11 500	41	27
9961 11 500	48	44
9961 11 50C	73-N	37
9961 11 500	81	27
9961 11 750	73-F	3
9961 12 000	14-1	30
9961 12 000	73-C	22
9961 12 000	73-F	8
9961 12 000	73-S	38
9961 12 500	50	13
9961 12 500	51	35
9961 12 500	73-R	2
9962 03 6413	82	36
9962 03 6413	101	37
9962 03 6413	249	13
9962 04 1653	82	36
9962 04 1653	101	37
9962 04 1653	249	13
9962 07 1653	82	36
9962 07 1653	101	37
9963 60 4140	82	36
9963 60 4140	101	37
9965 05 4530	82	37
9965 05 4530	101	37
9965 05 4530	249	13
9965 06 4530	82	37
9965 06 4530	101	37
9965 06 4530	249	13
9965 52 0015	82	44
9965 53 0010	82	44
9965 53 0020	82	44
9965 53 0025	82	44
9965 53 0030	82	44
9965 53 0035	82	44
9965 53 0040	82	44
9965 53 0045	82	44
9965 53 0050	82	44
9965 53 0060	82	44
9968 11 001	18	24
9968 30 600	237	21
9968 30 600	240	24
9968 40 300	221	37
9968 40 600	228-1	60
9968 41 000	228-1	61
9968 61 000	58-1	31
9968 61 000	228	54
9970 11 030	165	15
9970 11 030	166	18
9970 11 030	210-H	90
9970 12 050	217	29
9970 12 050	222	47
9970 12 080	221	34
9970 13 230	219	11
9970 14 237	217	19
9970 14 237	219	10
9970 14 237	220	23
9970 15 030	165	9
9970 15 030	165	14
9970 15 050	224	6
9970 15 050	224	9
9970 15 050	228-2	77
9970 15 050	242	1
9970 16 030	169	12
9970 16 030	224	12
9970 16 030	247	24
9970 60 103	55	36
9970 60 110	225	14
9970 60 110	225	18
9970 60 115	225	18
9970 60 120	225	14
9970 60 120	225	18
9970 60 120	225	18
9970 90 108	22-9	9
9970 90 108	73-D	48

INDEX.

PARTS NUMBER	PARTS COMP. LIST PAGE	FIG. NO.
9970 90 108	167-2	64
9970 90 108	205	32
9970 90 225	22-9	9
9974 10 616B	214-F	50
9974 20 420B	210-H	85
9974 20 420B	247	22
9974 30 612B	210-H	84
9974 40 612	183-1	68
9974 40 616	143	6
9975 23 0818	75	11
9975 34 1022	84	11
9975 37 8118	40	17
9975 38 1022	84	11
9976 10 309	40	11
9976 10 416B	244	33
9977 20 516	251	16
9978 10 616A	48	42
9978 10 825	94	70
9978 10 832	94	71
9978 10 835	94	71
9978 11 012	73-B	2
9978 11 018	73-B	4
9978 11 025	109	5
9978 11 085	97	20
9978 11 090	92	49
9978 11 225	104	22
9978 11 240	104	23
9978 30 828	191	31
9978 30 828	192	37
9978 30 828	282	28
9978 30 828	282	33
9978 31 090	97	20
9978 50 516	210-G	77
9978 50 516	260	12
9978 50 520	260	12
9978 50 520	262	34
9978 50 825	176	56
9978 50 825	176	57
9978 50 825	176-1	66
9978 50 825	176-1	67
9978 50 825	183	53
9978 50 825	183	54
9978 50 825	183-1	69
9978 50 825	183-1	70
9978 60 612	22-8	13
9978 60 612	55	44
9978 60 612B	22-9	3
9979 51 032	129	27
9979 60 610	210-C	20
9979 60 616	210-C	31
9979 61 045	40	10
9979 61 045	73-C	25
9979 61 045	73-C	25
9979 61 050	40	9
9979 61 050	73-C	25
9979 61 080	73-C	25
9979 70 408	206	61
9979 70 510	162	41
9979 70 510	196	17
9979 70 510	209	113
9979 70 510	210-H	91
9979 70 512	205	42
9979 70 525B	243	29
9979 70 612	206	52
9979 70 616	204	26
9979 70 835	204	22
9979 90 512	206	53
9979 90 512	206	59
9979 90 512	207	63
9979 90 514	151	11
9979 90 516	166	23
9979 90 516	167	28
9979 90 516	210-D	35
9979 90 516	242	7
9979 90 616	206	57
9979 90 616B	216	13
9979 90 620	58-1	28
9979 90 620	204	27
9979 90 620	227	37
9979 90 620	227	39
9979 90 620	228	56
9979 90 625	231	40
9979 90 628	152	34
9979 90 630	209	105
9979 90 635	210-H	82
9979 90 820	226	35
9979 90 832	93	64
9979 90 835	196	14
9980 10 800	128	15
9980 10 812	6	2
9980 10 814	81	17
9980 10 814	121	27
9980 10 816	18	30
9980 10 816	146	3
9980 10 816	172	11
9980 10 816	175	43
9980 10 816	179	11
9980 10 816	181	38
9980 10 816	214-F	54
9980 10 820	48	42
9980 10 820	172	11
9980 10 820	172	12

PARTS NUMBER	PARTS COMP. LIST PAGE	FIG. NO.
9980 10 820	175	43
9980 10 820	175	44
9980 10 820	179	11
9980 10 820	179	12
9980 10 820	181	38
9980 10 822	11-1	22
9980 10 822	20	3
9980 10 822	22-2	3
9980 10 822	22-5	3
9980 10 822	57	8
9980 10 825	50	21
9980 10 825	204	18
9980 10 825	210-B	11
9980 10 828	58	14
9980 10 830	58	14
9980 10 832	33	5
9980 10 832	114	21
9980 10 835	50	22
9980 10 835	210-C	18
9980 10 835	214-D	16
9980 10 840	4-1	40
9980 10 850	53	7
9980 10 875	4-1	42
9980 11 045	114	18
9980 30 8100	20	2
9980 30 8100	22-2	2
9980 30 8100	22-5	2
9980 40 614	163	58
9980 40 816	151	18
9980 41 022	75	12
9980 50 512	196	26
9980 50 516	196	27
9980 50 516	210-E	52
9980 50 612	210-E	48
9980 50 830	143	3
9980 60 510	190	8
9980 60 510	231	37
9980 60 512	152	27
9980 60 512	154	13
9980 60 512	157	11
9980 60 516	191	23
9980 60 516	273	22
9980 60 516	281	14
9980 60 610	7	25
9980 60 610	33	7
9980 60 610	44	35
9980 60 610	44	37
9980 60 610	186	8
9980 60 610	214-E	34
9980 60 610	277	7
9980 60 612	20	19
9980 60 612	21	40
9980 60 612	22-2	19
9980 60 612	143	10
9980 60 612	152	31
9980 60 612	186	9
9980 60 612	210-F	60
9980 60 612	228	56
9980 60 614	44	21
9980 60 614	51	27
9980 60 614	152	28
9980 60 614	214-E	37
9980 60 616	146	12
9980 60 616	210-F	61
9980 60 618	27	33
9980 60 618	109	11
9980 60 618	144	26
9980 60 622	117	42
9980 60 625	283	41
9980 60 630	27	33
9980 60 640	113	5
9980 60 865	4-1	41
9980 80 825	176	57
9980 80 825	183	54
9981 10 812	85	21
9981 10 820	40	17
9981 11 010	7	23
9981 11 020	99	14
9981 11 022	99	14
9981 11 028	161	21
9981 11 032	40	11
9981 11 032	73-C	24
9981 11 045	40	10
9981 11 045	73-C	25
9981 11 050	40	9
9981 11 050	73-C	24
9981 11 050	73-C	25
9981 11 050	84	9
9981 11 055	40	8
9981 11 055	73-C	25
9981 11 075	40	7
9981 11 075	73-C	25
9981 11 216	35-1	40
9981 31 0125	57	2
9981 31 2135	128	23
9981 31 2180	128	23
9983 10 408	277	6
9983 10 412B	208	97
9983 10 512B	262	36
9983 10 825	147	26
9983 20 408B	167-2	59
9983 20 408B	167-2	59

INDEX.

PARTS NUMBER	PARTS COMP. LIST PAGE	FIG. NO.
9983 20 408B	281	7
9983 20 410B	167-2	59
9983 20 412B	167-2	59
9983 20 516B	247	17
9983 30 408	118	57
9983 30 410	118	58
9983 30 510	16	5
9983 30 514	126	16
9983 30 514B	244	47
9983 30 516	188-2	25
9983 30 516	274	44
9983 30 516	279	26
9983 30 520	188-2	25
9983 30 520	274	44
9983 30 520	279	26
9983 30 608	124-B	6
9983 30 612	120	12
9983 30 612	124-B	7
9983 30 616	120	13
9983 30 616	210-D	42
9983 30 810	6	2
9983 30 812	80	3
9983 40 408	22-B	12
9983 40 408	214-H	4
9983 40 514	214-H	12
9983 40 616	57	12
9983 40 616	144	22
9983 50 308	213	23
9983 50 408	195	10
9983 50 408	213	41
9983 50 408	214-I	20
9983 50 408	214-J	41
9983 50 414	200	22
9983 50 414	212	20
9983 50 414	214-L	12
9983 50 416	200	32
9983 50 416	214-M	15
9983 50 420	200	30
9983 50 420	214-M	21
9983 50 508	213	34
9983 50 510	16	5
9983 50 510	214-L	10
9983 50 512	201	47
9983 50 512	214-N	43
9983 50 512	214-O	59
9983 50 516	199	17
9983 50 516	201	48
9983 50 516	213	31
9983 50 516	214-N	37
9983 60 312B	260	16
9983 60 410	213	28
9983 60 410	214	43
9983 60 416	176-2	71
9983 60 416	183-2	74
9983 60 516	197	41
9983 70 516C	252	28
9983 80 514	224	10
9984 80 312	90	16
9984 80 320B	167-2	60
9985 10 618	54	24
9985 10 618A	54	24
9985 10 620	16	13
9985 10 622	16	13
9985 10 622A	16	13
9985 10 624	16	14
9985 10 624A	17	14
9985 10 632	16	13
9985 10 632A	16	13
9985 10 814	43	12
9985 10 814	58	15
9985 10 814A	2	2
9985 10 814A	58	15
9985 10 816	2	2
9985 10 816A	2	2
9985 10 818	4	30
9985 10 818A	4	30
9985 10 822	2	3
9985 10 822	6	3
9985 10 822A	2	3
9985 10 822A	6	3
9985 10 826	17	15
9985 10 826A	17	15
9985 10 828A	17	15
9985 20 610	43	3
9985 20 612	81	19
9985 20 616	11-1	35
9985 20 616A	11-1	35
9985 20 618A	11-1	35
9985 20 655	3	25
9985 20 820	77	3
9985 20 822	3	24
9985 20 822	7	20
9985 20 822A	3	24
9985 20 822A	7	20
9985 20 826	17	15
9985 20 826A	17	15
9985 20 828A	17	15
9985 20 830	7	21
9985 20 830A	7	21
9985 20 848	132	13
9985 20 865	3	22
9985 20 865A	3	22

INDEX.

PARTS NUMBER	PARTS COMP. LIST PAGE	FIG. NO.	PARTS NUMBER	PARTS COMP. LIST PAGE	FIG. NO.	PARTS NUMBER	PARTS COMP. LIST PAGE	FIG. NO.
9985 20 878	3	23	9986 10 412	183-2	74	9986 40 512	160	13
9985 20 878A	3	22	9986 10 512B	167	27	9986 40 516	210-D	32
9985 20 878A	3	23	9986 20 412B	255	23	9986 60 410B	165	7
9985 20 880	77	4	9986 20 414B	265	30	9986 60 412B	244	45
9985 21 016	4	25	9986 20 414B	269	30	9986 60 414B	165	12
9985 51 020	4	33	9986 20 418B	275	52	9986 80 308B	228-2	79
9985 51 020A	4	33	9986 20 516B	243	17	9986 80 312	167	35
9985 51 025	43	4	9986 30 408	162	43	9986 80 410	195	6
9985 51 060	43	5	9986 30 412	195	3	9986 80 410	214-I	13
9985 61 040	203	5	9986 30 412	210-I	98	9986 80 412	90	6
9985 91 025	204	19	9986 30 412B	252-1	36	9986 80 414B	165	12
9985 91 025A	210-B	12	9986 30 416	224	10	9986 80 416B	210-G	71
9985 91 050	204	20	9986 30 425B	239	10	9986 80 420	214-I	24
9985 91 050A	210-B	13	9986 30 510B	117	44	9986 90 410B	242	2
9985 91 055	73-D	46	9986 30 512	265	42	9986 90 412	228-2	80
9985 91 220	3	25	9986 30 512	266	48	9986 90 416	210-I	97
9985 91 220	4	25	9986 30 512	269	42	9988 50 406	10	3
9985 91 220A	4	25	9986 30 512	270	48	9988 50 406	13	3
9985 91 225	4	25	9986 30 516	197	41	9988 70 412	141-B	14
9985 91 225A	4	25	9986 30 516B	210-G	70	9989 60 400	144	32
9986 00 410	261	32	9986 30 525	206	51	9989 60 400	244	46
9986 00 510	207	68	9986 40 406	173	31	9989 60 400	246	12
9986 00 510	207	74	9986 40 406	180	26	9989 60 500	243	17
9986 00 512	167	28	9986 40 408	173	31	9989 60 600	152	29
9986 00 512	205	36	9986 40 408	180	26	9989 80 500	255	31
9986 00 514	151	11	9986 40 408	274	34	9990 10 800	4-1	47
9986 00 516	162	40	9986 40 410B	275	50	9990 10 800	17	15
9986 00 520	114	29	9986 40 412	212	7	9990 10 800	18	22
9986 00 612	152	29	9986 40 412	228-1	64	9990 10 800	18	28
9986 00 616	176-3	81	9986 40 420B	144	31	9990 10 800	27	24
9986 00 616	183-3	84	9986 40 508	212	4	9990 10 800	33	4
9986 10 310B	244	38	9986 40 510	197	34	9990 10 800	34	16
9986 10 410B	244	44	9986 40 510	209	103	9990 10 800	35-1	42
9986 10 412	176-2	71	9986 40 510	242	11	9990 10 800	38	23

INDEX.

PARTS NUMBER	PARTS COMP. LIST PAGE	FIG. NO.
9990 10 80C	38-B	24
9990 10 800	54	27
9990 10 800	58	16
9990 10 80C	58	18
9990 10 800	78	20
9990 10 80C	85	25
9990 10 800	88	21
9990 10 800	93	66
9990 10 800	104	20
9990 10 800	111	6
9990 10 800	114	14
9990 10 80C	114	23
9990 10 800	129	30
9990 10 80C	129	42
9990 10 800	130	44
9990 10 80C	138	10
9990 10 800	172	12
9990 10 80C	175	44
9990 10 800	176	59
9990 10 80C	176-2	69
9990 10 800	179	12
9990 10 80C	182	39
9990 10 80C	183	57
9990 10 80C	183-2	72
9990 10 800	228	52
9990 10 82C	182	39
9990 20 800	114	23
9990 20 800	141-C	29
9990 20 800	147	27
9990 21 000	173	22
9990 60 400	121	36
9990 60 400	166	20
9990 60 400	200	22
9990 60 400	200	31
9990 60 400	200	32
9990 60 400	208	82
9990 60 400	213	20
9990 60 400	214-L	13
9990 60 400	214-M	21
9990 60 400	236	7
9990 60 400	239	11
9990 60 400	251	13
9990 60 400	265	44
9990 60 400	269	44
9990 60 500	53	3
9990 60 500	58	19
9990 60 500	118	52
9990 60 500	166	17
9990 60 500	196	18
9990 60 500	197	28
9990 60 500	201	49
9990 60 500	206	53
9990 60 500	206	59
9990 60 500	208	89
9990 60 500	209	114
9990 60 500	210-D	35
9990 60 500	210-E	50
9990 60 500	210-H	92
9990 60 500	214-B	10
9990 60 500	214-E	22
9990 60 500	219	14
9990 60 500	220	25
9990 60 500	242	8
9990 60 500	247	18
9990 60 500	272	10
9990 6C 600	20	9
9990 60 600	21	24
9990 60 600	22-2	9
9990 60 600	22-3	23
9990 60 600	22-5	9
9990 60 600	22-6	24
9990 60 600	26	18
9990 60 600	34	12
9990 60 60C	44	32
9990 60 600	54	28
9990 60 600	81	29
9990 60 60C	109	11
9990 60 60C	117	42
9990 60 600	120	14
9990 60 600	120	15
9990 60 600	124-B	7
9990 60 600	124-B	8
9990 60 60C	138	19
9990 60 600	143	10
999C 60 60C	143	17
9990 60 600	149	4
9990 60 600	149	5
9990 60 600	192	45
999C 60 600	195	11
9990 60 600	200	25
9990 60 600	204	27
9990 60 600	209	106
9990 60 600	209	110
9990 60 600	214-L	8
9990 60 600	221	36
9990 60 600	226	29
9990 60 600	227	41
9990 60 600	227	43
9990 60 600	228-1	74
9990 60 600	234	8
9990 60 600	236	8
9990 60 600	239	11

INDEX.

PARTS NUMBER	PARTS COMP. LIST PAGE	FIG. NO.
9990 60 60C	243	28
9990 60 600B	243	28
9990 60 610	22-6	20
9990 60 800	58-1	32
9990 60 80C	136	9
9990 60 80C	143	7
9990 60 80C	146	4
9990 60 80C	196	13
9990 60 80C	226	34
9990 60 80C	228	52
9990 60 80C	273	29
9990 70 50C	53	3
9990 70 500B	257	6
9990 70 600	30	25
9990 70 60C	126	14
9990 70 60C	193	56
9990 70 80C	22-F	111
9990 70 80C	38	23
9990 80 800	228	55
9991 10 400	244	39
9991 10 800	121	28
9992 10 80C	129	33
9992 11 000	40	6
9992 11 000	40	12
9992 11 000	44	28
9992 11 00C	57	4
9992 11 00C	73-C	25
9992 11 000	73-D	47
9992 11 000	88	20
9992 11 000	111	3
9992 11 000	111	4
9992 11 000	111	8
9992 11 000	143	8
9992 11 000	144	18
9992 11 000	162	34
9992 11 000	204	21
9992 11 000	210-B	14
9992 11 200	35-1	40
9992 11 200	128	24
9992 11 200	210-B	15
9992 11 400	87	8
9992 11 400	87	9
9992 11 400	87	13
9992 11 400	104	21
9992 11 800	93	58
9992 20 800	41	31
9992 20 800	128	15
9992 20 800	129	33
9992 21 000	88	20
9992 21 000	92	43
9992 21 000	93	56
9992 21 000	93	59
9992 21 000	97	21
9992 21 000	129	27
9992 21 000	130	47
9992 21 000	141-C	22
9992 21 200	26	9
9992 21 200	90	19
9992 21 400	73-P	7
9992 21 400	96	8
9992 21 800	75	10
9992 41 000	93	57
9992 41 000	96	6
9992 41 200	97	19
9992 41 200	103	16
9994 00 400	22-8	12
9994 00 600	55	35
9994 00 600	55	37
9994 00 600	58-1	34
9994 00 600	210-F	62
9994 00 600	210-G	81
9994 00 602	143	7
9994 00 602	228-1	73
9994 00 800	114	14
9994 00 800	228	52
9994 01 001	40	6
9994 01 001	40	7
9994 10 600	58-1	25
9994 10 800	18	26
9994 10 801	18	26
9994 21 000	93	51
9994 21 000	109	15
9994 21 001	93	51
9994 21 200	103	16
9994 41 400	96	9
9994 50 500B	167	36
9994 70 600	138	15
9994 70 600	192	45
9994 71 400	104	25
9994 71 400	109	8
9994 90 800	113	9
9995 10 618	143	7
9995 10 618	143	17
9995 10 618	144	22
9995 10 618	149	5
9995 10 618	186	9
9995 10 618	191	25
9995 10 618	272	13
9995 10 618	273	23
9995 10 618	273	25
9995 10 618	273	27
9995 10 618	277	7

INDEX.

PARTS NUMBER	PARTS COMP. LIST PAGE	FIG. NO.	PARTS NUMBER	PARTS COMP. LIST PAGE	FIG. NO.	PARTS NUMBER	PARTS COMP. LIST PAGE	FIG. NO.
9995 10 618	281	16	9995 20 400	214-M	15	9995 20 500	210-D	32
9995 10 800	35-1	42	9995 20 400	214-M	21	9995 20 500	210-D	35
9995 10 818	20	2	9995 20 400	236	7	9995 20 500	210-E	52
9995 10 818	22-2	2	9995 20 400	239	11	9995 20 500	210-G	77
9995 10 818	22-5	2	9995 20 400	251	13	9995 20 500	210-H	91
9995 10 818	57	8	9995 20 400	261	32	9995 20 500	210-H	92
9995 10 818	149	11	9995 20 412	208	82	9995 20 500	213	31
9995 10 822	34	16	9995 20 412	210-I	97	9995 20 500	214-H	12
9995 10 822	35-1	42	9995 20 412B	210-G	71	9995 20 500	214-J	42
9995 10 822	113	9	9995 20 500	53	3	9995 20 500	214-N	37
9995 10 822	114	21	9995 20 500	58	19	9995 20 500	219	14
9995 10 822	143	3	9995 20 500	118	52	9995 20 500	220	25
9995 10 822	273	29	9995 20 500	151	11	9995 20 500	247	18
9995 11 022	93	51	9995 20 500	152	27	9995 20 500	260	12
9995 11 022	143	8	9995 20 500	154	13	9995 20 500	262	34
9995 11 022	144	18	9995 20 500	157	11	9995 20 500	266	48
9995 11 030	111	4	9995 20 500	166	17	9995 20 500	270	48
9995 11 030	111	8	9995 20 500	166	23	9995 20 500	274	44
9995 11 030	111	8	9995 20 500	188-2	25	9995 20 500	279	26
9995 11 226	35-1	40	9995 20 500	190	8	9995 20 500B	210-G	70
9995 11 430	104	21	9995 20 500	196	17	9995 20 516	114	29
9995 20 400	22-8	12	9995 20 500	196	18	9995 20 516	151	11
9995 20 400	121	36	9995 20 500	197	41	9995 20 516	162	40
9995 20 400	166	20	9995 20 500	199	17	9995 20 516	162	41
9995 20 400	195	3	9995 20 500	205	36	9995 20 516	167	28
9995 20 400	195	10	9995 20 500	205	42	9995 20 516	197	28
9995 20 400	200	22	9995 20 500	206	51	9995 20 516	208	89
9995 20 400	200	30	9995 20 500	206	53	9995 20 516	210-E	50
9995 20 400	200	32	9995 20 500	206	59	9995 20 516	242	7
9995 20 400	206	61	9995 20 500	207	63	9995 20 516	242	8
9995 20 400	210-I	98	9995 20 500	207	68	9995 20 516	247	18
9995 20 400	214-I	20	9995 20 500	207	74	9995 20 516B	118	44
9995 20 400	214-I	24	9995 20 500	209	113	9995 20 516B	243	29
9995 20 400	214-L	12	9995 20 500	209	114	9995 20 516B	244	47

INDEX.

PARTS NUMBER	PARTS COMP. LIST PAGE	FIG. NO.
9995 20 516B	257	6
9995 20 600	18-1	33
9995 20 60C	33	7
9995 20 60C	54	28
9995 20 600	57	12
9995 20 60C	124-B	6
9995 20 60C	144	26
9995 20 60C	146	12
9995 20 600	152	28
9995 20 60C	152	31
9995 20 60C	163	58
9995 20 60C	165	5
9995 20 60C	176-3	81
9995 20 600	183-3	84
9995 20 60C	193	56
9995 20 60C	204	26
9995 20 600	205	27
9995 20 600	206	52
9995 20 60C	206	57
9995 20 600	209	105
9995 20 60C	210-D	31
9995 20 600	210-D	42
9995 20 60C	210-F	60
9995 20 600	210-F	61
9995 20 600	221	36
9995 20 600	226	29
9995 20 600	227	39
9995 20 600	227	41
9995 20 600	227	43
9995 20 600	228	56
9995 20 600	228-1	74
9995 20 600	236	8
9995 20 600B	216	13
9995 20 618	58-1	25
9995 20 618	117	42
9995 20 618	149	4
9995 20 618	152	34
9995 20 618	195	11
9995 20 618	196	13
9995 20 618	196	14
9995 20 618	209	110
9995 20 618	210-F	62
9995 20 618	210-G	81
9995 20 618	210-H	82
9995 20 618	239	11
9995 20 618	243	28
9995 20 618B	243	28
9995 20 800	4-1	40
9995 20 800	4-1	41
9995 20 800	4-1	42
9995 20 800	18	30
9995 20 800	58	18
9995 20 800	58-1	32
9995 20 800	88	21
9995 20 800	93	64
9995 20 800	94	66
9995 20 800	104	20
9995 20 800	146	3
9995 20 800	146	19
9995 20 800	204	22
9995 20 800	226	35
9995 20 800	228	52
9995 20 800	242	4
9995 20 816	128	13
9995 20 816	130	44
9995 20 816	141-C	30
9995 20 816	172	11
9995 20 816	175	43
9995 20 816	179	11
9995 20 816	179	12
9995 20 816	182	38
9995 20 816	182	39
9995 20 816	261	27
9995 20 822	94	66
9995 20 822	113	9
9995 20 822	146	4
9995 20 822	146	20
9995 20 822	151	18
9995 20 822	176	56
9995 20 822	176	59
9995 20 822	176-2	69
9995 20 822	183	53
9995 20 822	183	57
9995 20 822	183-2	72
9995 20 822	226	35
9995 20 822	281	9
9995 20 918	209	106
9995 21 000	57	3
9995 21 000	57	4
9995 21 000	161	21
9995 21 030	161	31
9995 21 200	128	24
9995 21 426	87	8
9995 30 300	40	12
9995 30 400	28	46
9995 30 400	214-H	4
9995 30 600	20	9
9995 30 600	21	24
9995 30 600	21	40
9995 30 600	22-2	9
9995 30 600	22-3	23
9995 30 600	22-5	9

INDEX.

PARTS NUMBER	PARTS COMP. LIST PAGE	FIG. NO.	PARTS NUMBER	PARTS COMP. LIST PAGE	FIG. NO.	PARTS NUMBER	PARTS COMP. LIST PAGE	FIG. NO.
9995 30 600	22-6	24	9996 70 500B	255	32	9997 10 500	118	52
9995 30 600	27	33	9996 70 500B	262	36	9997 10 500	152	27
9995 30 600	120	15	9997 01 1030	166	15	9997 10 500	154	13
9995 30 600	124-B	7	9997 10 300	40	12	9997 10 500	157	11
9995 30 600	210	120	9997 10 300	213	23	9997 10 500	166	17
9995 30 800	17	15	9997 10 300	214-J	35	9997 10 500	166	23
9995 30 800	18	28	9997 10 400	22-8	12	9997 10 500	167	28
9995 30 800	20	3	9997 10 400	121	36	9997 10 500	190	8
9995 30 800	22-2	3	9997 10 400	166	20	9997 10 500	191	23
9995 30 800	22-5	3	9997 10 400	195	10	9997 10 500	196	17
9995 30 800	27	24	9997 10 400	200	22	9997 10 500	196	18
9995 30 800	33	4	9997 10 400	200	30	9997 10 500	196	26
9995 30 800	38	23	9997 10 400	200	32	9997 10 500	196	27
9995 30 800	38-B	24	9997 10 400	206	61	9997 10 500	197	28
9995 30 800	50	21	9997 10 400	210-I	97	9997 10 500	199	17
9995 30 800	51	22	9997 10 400	210-I	98	9997 10 500	201	47
9995 30 800	54	27	9997 10 400	212	7	9997 10 500	201	48
9995 30 800	126	18	9997 10 400	213	20	9997 10 500	201	49
9995 30 800	141-C	31	9997 10 400	214	41	9997 10 500	205	36
9995 30 800	228	52	9997 10 400	214-H	4	9997 10 500	205	42
9995 30 800	228	55	9997 10 400	214-I	20	9997 10 500	206	53
9995 31 000	40	5	9997 10 400	214-J	41	9997 10 500	206	59
9995 31 000	40	6	9997 10 400	214-L	12	9997 10 500	207	63
9995 31 000	40	12	9997 10 400	214-M	15	9997 10 500	207	68
9995 31 000	44	28	9997 10 400	214-M	21	9997 10 500	207	74
9995 31 400	87	13	9997 10 400	236	7	9997 10 500	209	113
9995 81 018	84	12	9997 10 400	239	11	9997 10 500	209	114
9996 00 602	228-2	83	9997 10 400	251	13	9997 10 500	210-D	35
9996 33 310	51	25	9997 10 400	265	44	9997 10 500	210-E	50
9996 33 330	51	25	9997 10 400	269	44	9997 10 500	210-E	52
9996 36 910	48	46	9997 10 400B	210-G	71	9997 10 500	210-G	77
9996 36 930	48	46	9997 10 500	16	5	9997 10 500	210-H	91
9996 70 400B	210-H	85	9997 10 500	53	3	9997 10 500	210-H	92
9996 70 400B	247	22	9997 10 500	58	19	9997 10 500	212	4

INDEX.

PARTS NUMBER	PARTS COMP. LIST PAGE	FIG. NO.
9997 10 500	213	34
9997 10 500	214-B	11
9997 10 500	214-E	23
9997 10 500	214-I	12
9997 10 500	214-J	42
9997 10 500	214-L	10
9997 10 500	214-N	37
9997 10 500	214-N	43
9997 10 500	214-O	59
9997 10 500	231	24
9997 10 500	231	37
9997 10 500	242	7
9997 10 500	242	8
9997 10 500	247	18
9997 10 500	260	12
9997 10 500	262	34
9997 10 500	265	42
9997 10 500	269	42
9997 10 500	273	22
9997 10 500	281	14
9997 10 500B	210-G	70
9997 10 500B	243	29
9997 10 600	7	25
9997 10 600	18-1	33
9997 10 600	20	9
9997 10 600	20	19
9997 10 600	21	24
9997 10 600	21	40
9997 10 600	22-2	9
9997 10 600	22-2	19
9997 10 600	22-3	23
9997 10 600	22-5	9
9997 10 600	22-6	20
9997 10 600	22-6	24
9997 10 600	26	18
9997 10 600	27	33
9997 10 600	31	25
9997 10 600	33	7
9997 10 600	34	12
9997 10 600	44	21
9997 10 600	44	32
9997 10 600	44	35
9997 10 600	44	37
9997 10 600	48	42
9997 10 600	50	7
9997 10 600	51	27
9997 10 600	55	28
9997 10 600	57	12
9997 10 600	58-1	25
9997 10 600	58-1	28
9997 10 600	81	29
9997 10 600	109	11
9997 10 600	113	5
9997 10 600	120	14
9997 10 600	120	15
9997 10 600	124-B	6
9997 10 600	124-B	7
9997 10 600	124-B	8
9997 10 600	138	19
9997 10 600	143	6
9997 10 600	143	7
9997 10 600	143	10
9997 10 600	143	17
9997 10 600	144	26
9997 10 600	146	12
9997 10 600	149	4
9997 10 600	152	28
9997 10 600	152	34
9997 10 600	163	58
9997 10 600	176-3	81
9997 10 600	183-3	84
9997 10 600	186	8
9997 10 600	186	9
9997 10 600	193	56
9997 10 600	196	11
9997 10 600	196	13
9997 10 600	200	25
9997 10 600	204	26
9997 10 600	205	27
9997 10 600	206	52
9997 10 600	206	57
9997 10 600	209	105
9997 10 600	209	110
9997 10 600	210-D	31
9997 10 600	210-D	42
9997 10 600	210-E	48
9997 10 600	210-F	60
9997 10 600	210-F	61
9997 10 600	210-H	82
9997 10 600	214-L	8
9997 10 600	216	13
9997 10 600	226	29
9997 10 600	227	37
9997 10 600	227	39
9997 10 600	227	41
9997 10 600	227	43
9997 10 600	228	56
9997 10 600	228-1	74
9997 10 600	232	40
9997 10 600	234	8
9997 10 600	236	8
9997 10 600	239	11

INDEX.

PARTS NUMBER	PARTS COMP. LIST PAGE	FIG. NO.	PARTS NUMBER	PARTS COMP. LIST PAGE	FIG. NO.	PARTS NUMBER	PARTS COMP. LIST PAGE	FIG. NO.
9997 10 600	243	28	9997 10 800	58	14	9997 10 800	176-1	67
9997 10 600	277	7	9997 10 800	58	16	9997 10 800	176-2	69
9997 10 600	283	41	9997 10 800	58	18	9997 10 800	179	11
9997 10 600B	243	28	9997 10 800	58-1	32	9997 10 800	179	12
9997 10 601	50	7	9997 10 800	75	11	9997 10 800	182	38
9997 10 800	4-1	40	9997 10 800	78	20	9997 10 800	182	39
9997 10 800	4-1	41	9997 10 800	81	17	9997 10 800	183	53
9997 10 800	4-1	42	9997 10 800	85	21	9997 10 800	183	55
9997 10 800	4-1	47	9997 10 800	85	25	9997 10 800	183	57
9997 10 800	17	15	9997 10 800	88	21	9997 10 800	183-1	69
9997 10 800	18	22	9997 10 800	93	64	9997 10 800	183-1	70
9997 10 800	18	30	9997 10 800	94	70	9997 10 800	183-2	72
9997 10 800	20	2	9997 10 800	94	71	9997 10 800	191	31
9997 10 800	20	3	9997 10 800	104	20	9997 10 800	192	37
9997 10 800	22-2	2	9997 10 800	111	6	9997 10 800	204	18
9997 10 800	22-2	3	9997 10 800	114	14	9997 10 800	204	22
9997 10 800	22-5	2	9997 10 800	114	21	9997 10 800	210-B	11
9997 10 800	22-5	3	9997 10 800	121	27	9997 10 800	210-C	18
9997 10 800	27	24	9997 10 800	129	30	9997 10 800	214-F	54
9997 10 800	33	4	9997 10 800	129	42	9997 10 800	226	34
9997 10 800	33	5	9997 10 800	130	44	9997 10 800	226	35
9997 10 800	34	16	9997 10 800	136	9	9997 10 800	228	52
9997 10 800	35-1	42	9997 10 800	138	10	9997 10 800	228	55
9997 10 800	38	23	9997 10 800	141-C	32	9997 10 800	228	56
9997 10 800	38-B	24	9997 10 800	146	3	9997 10 800	273	29
9997 10 800	40	17	9997 10 800	146	4	9997 10 800	282	28
9997 10 800	41	18	9997 10 800	172	11	9997 10 800	282	33
9997 10 800	48	42	9997 10 800	172	12	9997 11 000	7	23
9997 10 800	50	21	9997 10 800	175	43	9997 11 000	40	5
9997 10 800	50	22	9997 10 800	175	44	9997 11 000	40	6
9997 10 800	51	31	9997 10 800	176	56	9997 11 000	40	12
9997 10 800	53	7	9997 10 800	176	57	9997 11 000	44	28
9997 10 800	54	27	9997 10 800	176	59	9997 11 000	57	4
9997 10 800	57	8	9997 10 800	176-1	66	9997 11 000	73-B	2

INDEX.

PARTS NUMBER	PARTS COMP. LIST PAGE	FIG. NO.	PARTS NUMBER	PARTS COMP. LIST PAGE	FIG. NO.	PARTS NUMBER	PARTS COMP. LIST PAGE	FIG. NO.
9997 11 000	73-B	4	9997 11 800	75	10			
9997 11 000	73-C	24	9997 11 800	93	58			
9997 11 000	73-C	25	9997 20 800	141-C	33			
9997 11 000	73-D	47	9997 20 800	261	27			
9997 11 000	75	12	9997 21 000	149	4			
9997 11 000	84	9	9997 21 400	141-C	22			
9997 11 000	97	21	9997 30 600B	210-H	84			
9997 11 000	99	7	9997 50 500	247	17			
9997 11 000	99	14	9997 50 500C	252	28			
9997 11 000	109	5	9997 50 600	190	15			
9997 11 000	111	3	9997 83 200	47	30			
9997 11 000	111	4	9997 91 200	26	9			
9997 11 000	111	8						
9997 11 000	114	17						
9997 11 000	141-C	22						
9997 11 000	143	8						
9997 11 000	144	18						
9997 11 000	161	21						
9997 11 000	162	34						
9997 11 000	173	22						
9997 11 000	204	21						
9997 11 000	210-B	14						
9997 11 200	35-1	40						
9997 11 200	91	19						
9997 11 200	100	31						
9997 11 200	104	22						
9997 11 200	104	23						
9997 11 200	128	24						
9997 11 200	210-B	15						
9997 11 400	73-P	7						
9997 11 400	87	8						
9997 11 400	87	9						
9997 11 400	87	13						
9997 11 400	104	21						

TOYO KOGYO CO.,LTD.

Printed in Japan