RX-2
SEDAN & COUPE
PARTS CATALOG



© 1973 by

TOYO KOGYO CO.,LTD.
Rotary Engine-Licence NSU. Wankel
JULY, 1973

HOW TO USE THIS PARTS CATALOGUE

This Parts Catalogue is compiled for the following models
Model : RX- 2 Sedan & Coupe (U.S.A. & Canada Rotary Engine 1974 Model)
from SRC # 21808

Model No.	Model / Type	Description
1905	S122A-N	RX- 2 Sedan, U.S A Spec., 1974 Model Manuf from Sept 1973
1906	S122A-NT	RX- 2 Sedan With Automatic T /mission, U.S A. Spec., 1974 Model Manuf from Sept 1973
1907	S122A-NCA	RX- 2 Coupe, U S A Spec., 1974 Model Manuf. from Sept 1973
1908	S122A-NCAT	RX- 2 Coupe With Automatic T /mission, U.S.A. Spec., 1974 Model Manuf from Sept. 1973
1909	S122A-N	RX- 2 Sedan, Canadian Spec., 1974 Model Manuf from Sept 1973
1910	S122A-NT	RX- 2 Sedan With Automatic T /mission, Canadian Spec., 1974 Model Manuf from Sept 1973
1911	S122A-NCA	RX- 2 Coupe, Canadian Spec., 1974 Model Manuf from Sept 1973
1912	S122A-NCAT	RX- 2 Coupe With Automatic T /mission, Canadian Spec , 1974 Model Manuf from Sept 1973
1972	S122A-N	RX- 2 Sedan With Cooler, U S A Spec., 1974 Model Manuf from Sept 1973
1973	S122A-NT	RX- 2 Sedan With Automatic T /mission & Cooler, U S.A. Spec., 1974 Model Manuf from Sept. 1973
1974	S122A-NCA	RX- 2 Coupe With Cooler, U S A Spec., 1974 Model Manuf from Sept 1973
1975	S122A-NCAT	RX- 2 Coupe With Automatic T /mission & Cooler, U.S.A. Spec., 1974 Model Manuf from Sept. 1973
1976	S122A-N	RX- 2 Sedan With Cooler, Canadian Spec , 1974 Model Manuf. from Sept 1973
1977	S122A-NT	RX- 2 Sedan With Automatic T /mission & Cooler, Canadian Spec , 1974 Model Manuf from Sept. 1973
1978	S122A-NCA	RX- 2 Coupe With Cooler, Canadian Spec., 1974 Model Manuf from Sept. 1973
1979	S122A-NCAT	RX- 2 Coupe With Automatic T /mission & Cooler, Canadian Spec., 1974 Model Manuf from Sept. 1973

(I) Layout of Parts Catalog

The spares relevent to each assembly are printed inset to the right, and parts that constitude a sub-assembly are indicated by illustrations and classified according to each assembly. Therefore, if a spare part is not printed inset to the right, this shows that the part does not constitude a part of the assembly.
Moreover, to aid identification of spares, "exploded" illustrations are incorporated in this catalog.

(II) How to locate parts

1) When part number is not known

A. Refer to index of groups and locate the group to which the part belongs.

⇩

B. Open to group illustration page and located part wanted.

⇩

C. See the number given for the part in the illustration and find corresponding number in the parts composition lists.

D. Then, you will find the name and the part number of the part on the right side of this number.

2) When part number is known but shape and name of part is unknown.

A. See index given at back of the parts catalog and find pages where illustration, part number and figure number is listed.

⇩

B. Open to page indicated and locate the part number in the parts composition list, and after this locate the part in the illustration by referring to figure number given at front of the part number.

⇩

C. The corresponding figure number in the illustration is for the part required.

3) Moreover as an alphabetical index is incorporated after the index of groups, utilize for locating principal parts.

(Ⅲ) On Groups

1) The figure enclosed by a triangle at the top of each page (Example ) indicates group number.

2) Group numbers are determined according to structure and function of parts.

3) The group number given in the index of groups coincide with the numerals (Example ) of the illustration and parts composition pages.

(Ⅳ) Explanation of Parts Composition Lists

1) Indication of composition of assembly.

(a) Only the description of the parts that comprise the assembly and are available as spares are inset to the right and given after the assembly part number and description. In this instance a wide space is taken in between for other spare parts.

(b) For parts of sub-assemblies that are included in an assembly and are available as spares, designation is made in the "Remarks" column, (Example: Fig. No. 3 included).

(c) When a parts description is not inset to the right, this signifies that the part is not included in any assembly or sub-assembly.

Example:

	No.	Part Number	Description	Q'ty	Remarks
(a)	1	1757 18 300	Alternator	1	
(b)	2	1757 24 501	Stator	1	
(c)	3	0820 24 503	Bearing, Ball	1	
	⋮	⋮	⋮	⋮	
(b)	13	1757 24 540	Rotor	1	Fig. No. 3 included
	⋮	⋮	⋮	⋮	
(d)	19	99906 0600	Nut, Alternator Terminal	1	

(a) ..... Includes (b) to (c)
(b) ..... Includes (c)
(d) ..... Is not included in any ass'y nor sub ass'y

2) On parts number

A. Exclusive parts

Example:

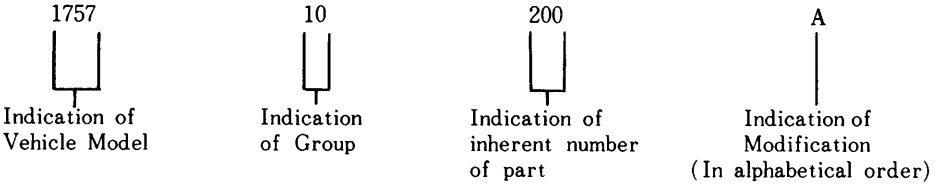

B. Standardized parts (General parts)

Example:

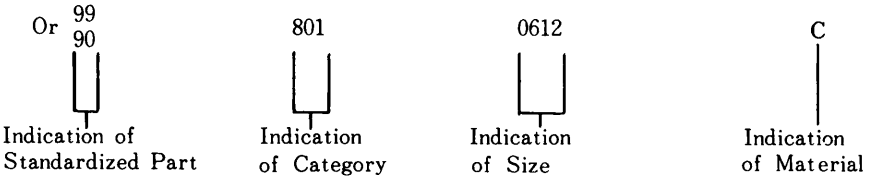

C. Standardized parts (Tires, Tubes, Disc Wheels, etc.)

Example:

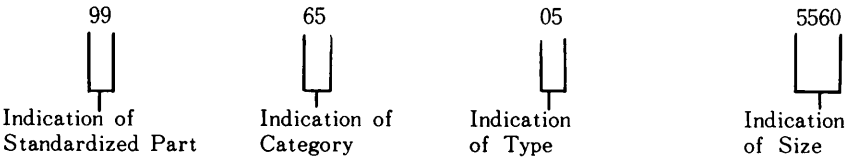

3) On Quantity

The quantity given in the parts composition list shows number of parts used per vehicle and does not indicate selling unit.

4) Other Precautions

☆ Mark ..... Parts marked thus are not available as replacement parts, therefore, when these parts are required, order in the form of assemblies (or sets) including these parts or in the form of parts interchangeable with these parts.

5) Abbreviations

(R) ..... Right
(L) ..... Left
(C) ..... Center
(Frt.) ..... Front
(Rr.) ..... Rear
Cpt. ..... Complete
Ass'y ..... Assembly
Std. ..... Standard
O.S. ..... Over Size
U.S. ..... Under Size

EX. ..... Exhaust
IN. ..... Inlet
T/mission ..... Transmission
© ..... Parts with Different Colours (Indicate Colour when Ordering)
10 ..... Indication of Group
Manual ..... Manual Transmission
Automatic ..... Automatic Transmission

BEIG ····· Beige	IVRY ····· Ivory
BLK ····· Black	L. BLU ····· Light Blue
BLU ····· Blue	L. GRN ····· Light Green
BLU. M ····· Blue Metallic	L. GRY ····· Light Gray
BLU / GRY ····· Bluish Gray	MRN ····· Maroon
BRN ····· Brown	PRPL / BLU····· Purplish Blue
D. BLU ····· Dark Blue	PRPL / WHT ····· Purplish White
D. BRN ····· Dark Brown	RED ····· Red
D. GRN ····· Dark Green	SILV. M ····· Silver Metallic
D. GRY ····· Dark Gray	WHT ····· White
D. YLW····· Dark Yellow	YLW ····· Yellow
GLD. M ····· Gold Metallic	YLW / D. GRN····· Yellowish Dark Green
GRN ····· Green	YLW / GRN ····· Yellowish Green
GRN. M ····· Green Metallic	YLW / WHT····· Yellowish White
GRY ····· Gray	DUL ····· Dull Finish
GRY / GRN ····· Grayish Green	S. DUL ····· Semi Dull Finish
GRY / YLW ····· Grayish Yellow	

(V) Precautions to be taken when placing orders for parts

1) Always specify part numbers, names of parts and quantity required.

2) Be sure to list the parts in order of part number, when filling in order sheet.

3) As processin g of orders received by us is done by electronic computers, importance is attached to the part number. Therefore, in case the part number and name of part do not coincide with each other, the part will be sent to you in accordance with the part nu mber.

4) Distinction of colour of spare parts by code number is done with figures numbér 11 and 12 of the parts number. Therefore, add to the end of the applying part number and order.

Example:	Part Number	Colour Code No.	Description
	1668 69 210A	05	
	←10 Figures→	←2 Figures→	
	1668 69 210A	20	
	←10 Figures→	←2 Figures→	

(VI) Replacement pages and purport

Page replacements are supplied every six months as a rule, listing parts modified or newly added and month and year date will be printed in lower corner of each replacement page. Therefore it is essential that care be taken to check on these dates to confirm if the parts listed conform to the car imported, before ordering.

1) Explanation on designation given in remarks column.

a. Car No. ····· Chassis no. of car that modification becomes effective from.

b. 73/7 ····· 73 designates year of modification and numerals 1～12 shows month of year.

c. ○ mark ····· Indicates that modified part and former part are interchangeable.

d. × mark ····· Indicates that modified part and old part are not interchangeable.

e. △ mark ····· Indicates that new part is interchangeable with old part but that old part is not interchangeable as a replacement for cars utilizing the new part.

2) ● mark ····· This dot at front of figure number of replacement pages show the parts that have been subject to modification.

List of chassis number

Month / Model	SEP. 73/9	OCT. 73/10	NOV. 73/11	DEC. 73/12	JAN. 74/1	FEB. 74/2	MAR. 74/3	APR. 74/4	MAY 74/5	JUN. 74/6	JUL. 74/7	AUG. 74/8
RX-2	211723	215984	218504	218643	218767	219092	219200	219357				

(Ⅶ) Colour Code Nos.

1) Whenever there is a part with only one colour, and there is an increase to two or more colours, colour codes will be established only for the colours added. Therefore, there will be parts with and without colour codes. (However, the colour will be described in the "Description" Column").
Therefore, care must be taken to attach the colour code after the part number if it is a colour code established afterwards, otherwise the part supplied will be the coloured part without the colour code.

Example:

1 0 0 3 6 4 6 1 0 0 5 Tray (Black) ····· Part without colour code

1 0 0 3 6 4 6 1 0 - 0 5 Tray (Brown) ····· Part with colour code

2) Location of © mark

As a precaution against dropping of the "Colour code No.", the "©" mark is located right after the part number.
Always attach the colour code when there is this "©" mark, moreover, be careful not to confuse it with the suffixes for part modifications.

Example:

Formerly ····· 1 9 0 5 5 7 1 0 0A Seat (R) ©

Newly ····· 1 9 0 5 5 7 1 0 0A © Seat (R)

INDEX.

Group No.	Description	Fig.	Page	Part No.
	Engine Parts			
10	Rotor Housing	1	2	2~7
10.11	Rotor	8	9	9~12
13	IN. Manifold & Thermal Reactor	13	14	14~15
● 13.23	Carburettor	16	17	17~17-3
13.23	Air Cleaner	18	19	19
13	Starting Assist System	20	21	21
● 13	Emission Control System	22	23	23~25-2
14	Oil Pump	26	27	27~31
14.15	Cooling System	32	33	33~37
16	Clutch (Manual)	38	39	39~40
17	Manual T/mission (Case)	41	42	42~43
17	Manual T/mission (Gear)	44	45	45~47
17	Manual T/mission (Change Controls)	48	49	49~51
18.24	Distributor	52	53	53~55
18.24	Alternator	56	57	57~58
18.24	Starter & Battery (Manual)	59	60	60~61
● 18.24	Starter & Battery (Automatic) (Used Up to 7½)	62	63	63~65
● 18.24	Starter & Battery (Automatic) (Used From 7⅓)	65-A	65-B	65-B~65-D
19	Automatic T/mission (Converter, Oil Pump & Piping)	66	67	67~69
● 19	Automatic T/mission (Case & Main Control) (Used Up to 7½)	70	71	71~74
● 19	Automatic T/mission (Case & Main Control) (Used From 7⅓)	74-A	74-B	74-B~74-E
19	Automatic T/mission (Clutch & Planetary Gear)	75	76	76~80

Group No.	Description	Fig. Page	Part No.
19	Automatic T/mission (Low, Reverse & Governor)	81	82~84
● 19	Automatic T/mission (Manual Linkage) (Used Up to 74½)	85	86~87
● 19	Automatic T/mission (Manual Linkage) (Used From 74⅓)	87-A	87-B~87-C
	Chassis Parts		
25	Propeller Shaft	88	89~90
26	Rear Axle	91	92
26	Rear Brake	93	94~97
27	Driving	98	99~101
28	Rear Suspension	102	103~104
32	Steering System (Wheel & Gear)	105	106~110
32	Steering System (Rod)	111	112~113
33	Front Axle	114	115~117
34	Front Suspension	118	119~122
39	Engine & T/mission Bracket	123	124
40	EX. Pipe & Silencer	125	126~127
●13.42	Fuel Tank & Piping	128	129~135-3
41	Accelerator Control System	136	137
41.43	Clutch & Brake Pedal	138	139~141
41	Clutch Release & Master Cylinder (Manual)	142	143~144
43.49	Tandem Master Cylinder & Vacuum Power Assist	145	146~147
44	Parking Brake System	148	149~150
43.45	Brake Piping	151	152~153

INDEX.

Group No.	Description	Fig.	Page	Part No.
46	Change Controls (Automatic)		154	155~156
	Body Parts			
50	Bumper & Grille		157	158~160
52	Bonnet		161	162~163
52	Trunk Lid		164	165~166
51~74	Body Panels (Front)		167	168~170
53~74	Body Panels (Side & Rear, Coupe)		171	172~174
53~74	Body Panels (Side & Rear, Sedan)		175	176~178
56	Body Panels (Floor)		179	180~182
55~68	Dashboard		183	184~189
55.75	Meter		190	191
57	Seat		192	193~196
58.59	Front Side Door (Glass)		197	198~201
58.59	Front Side Door (Lock)		202	203~207
61	Car Heater		208	209~210
● 61.76	Heater Unit & Control (Heater & Cooler)		210-A	210-B~210-E
61.76	Blower (Heater)		211	212~214
61	Car Cooler		215	216~222
61.76	Blower (Cooler)		223	224~226
61.76	Compressor (Cooler)		227	228~230
61.76	Cooling Unit		231	232~234
66.89	Lamps (Front Side)		235	236~237

Group No.	Description	Fig. Page	Part No.
66.89	Lamps (Rear Side)	238	239~240
66.67	Electric Equipment (Body)	241	242~247
67.87	Windshield Wiper	248	249~251
67.87	Screen Washer	252	253
66	Auto Radio	254	255~256
55~70	Crush Pad, Console & Glove Box	257	258~263
68	Service Tools	264	265
69	Attachment	266	267~269
69	Trim & Top Ceiling	270	271~273
68.69	Trim & Floor Mat	274	275~276
70.71	Ventilator	277	278~281
70.71	Window Glass & Moulding (Coupe)	282	283~285
70.71	Window Glass & Moulding (Sedan)	286	287~289
70.71	Rear Side Window (Coupe)	290	291~294
72.73	Rear Side Door (Glass, Sedan)	295	296~298
72.73	Rear Side Door (Lock, Sedan)	299	300~303
09	Key Set	304	305
	INDEX.		306~355

10 ROTOR HOUSING

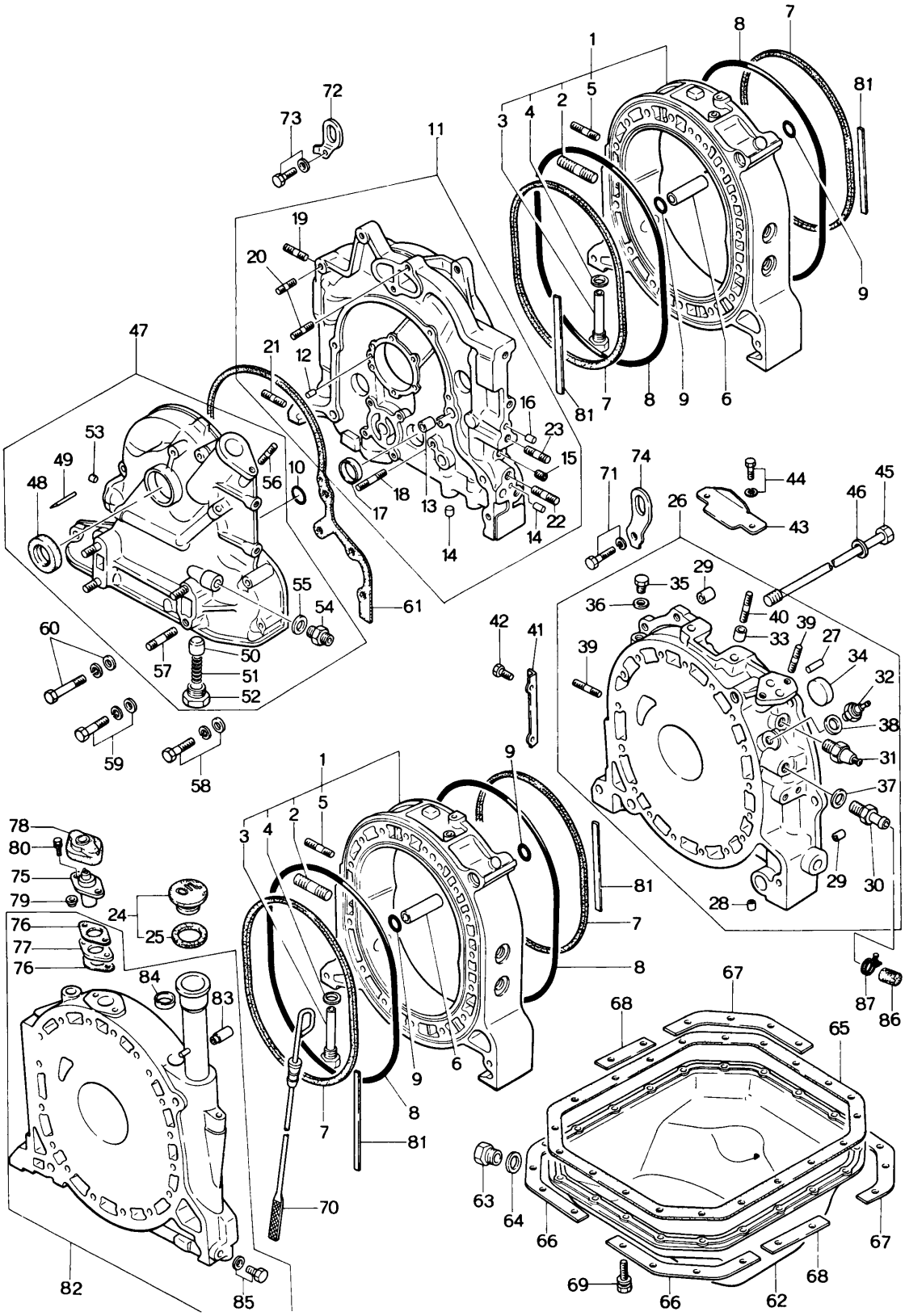

No.	Part Number	Description	Q'ty	Remarks
1	1881 10 100	Housing, Rotor	2	
2	2329 10 105	Stud	4	
3	1617 10 120	Nozzle, Air	4	
4	99562 1200	Gasket	4	
5	99851 0822A	Stud	2	
6	0839 10 111B	Dowel, Tubular	4	
7	1757 10 171	Ring, Square	4	
8	0813 10 172	Ring, "O" - Outer	4	
9	0813 10 173	Ring, "O" - Tubular Dowel	8	
10	0813 10 174	Ring, "O" - Front Cover	1	
11	1757 10 200A	Housing, Front	1	
12	0839 10 203	Pin, Dowel	1	
13	2329 10 204	Dowel, Tubular	2	
14	0839 10 205	Plug, Blind	3	
15	1757 10 206	Plug, Blind	1	
16	1757 10 207	Plug, Blind	1	
17	99306 3000	Plug, Blind - Water	3	
18	99852 0660	Stud	2	

10 ROTOR HOUSING

No.	Part Number	Description	Q'ty	Remarks
19	99852 0822A	Stud, IN. Manifold	2	
20	~~99852 0808A~~ 1757-10-208	Stud, Water Pump	4	
21	99852 1016	Stud	1	
22	99859 1220A	Stud, Mounting	1	
23	99859 1225A	Stud	1	
24	0324 10 250	Cap, Oil Filler	1	
25	0324 10 252	Gasket	1	
26	1907 10 300A	Housing, Rear (Manual)	1	
	1908 10 300A	Housing, Rear (Automatic)	1	
27	0820 10 203	Pin, Knock - Gear	1	
28	0839 10 205	Plug, Blind	1	
29	1757 10 309	Pin, Tubular	2	
30	0839 10 320	Joint, Hose	1	
31	0866 18 501A	Switch, Oil Pressure	1	
32	1757 18 510	Gauge Unit, Heat	1	
33	99234 1208	Pin, Tubular - Starter (Automatic)	2	
34	99306 3000	Plug, Blind - Water	5	
35	99511 1200	Plug	1	

No.	Part Number	Description	Q'ty	Remarks
36	99562 1200	Gasket, Plug	1	
37	99562 1600	Gasket, Hose Joint	1	
38	99564-0800	Gasket, Heat Gauge Unit	1	
39	99852 0822A	Stud, IN. Manifold & Oil Filter	4	
40	99852 0830A	Stud, Starter (Automatic)	2	
41	1757 10 305	Cover, Dust	1	(Manual)
42	99796 0610	Bolt, Dust Cover	2	(Manual)
43	1757 10 351	Cover, Dust	1	(Manual)
44	99796 0816	Bolt, Dust Cover	2	(Manual)
45	1015 10 451	Bolt, Tension	18	
	1015 10 452	Bolt, Tension	1	
46	0839 10 455	Washer, Seal	19	
47	1757 10 600	Cover, Front	1	
48	0820 10 605	Oil Seal	1	
49	0820 10 631B	Pin, Top Indicator	1	
50	0839 14 115	Plunger, Press	1	
51	0839 14 273A	Spring, Press Plunger	1	
52	0839 14 274	Plug, Press Plunger	1	

10 ROTOR HOUSING

No.	Part Number	Description	Q'ty	Remarks
53	99307 0600	Plug, Blind	3	
54	99384 1200	Joint, Union	1	
55	99562 1600	Gasket, Union Joint	1	
56	99851 0612A	Stud, Distributor	1	
57	99855 1020	Stud, Mounting	4	
58	99801 0840	Bolt, Front Cover	3	
	99952 0800	Washer, Plain	3	
	99971 0800	Washer, Spring	3	
59	99801 0865	Bolt, Front Cover	2	
	99952 0800	Washer, Plain	2	
	99971 0800	Washer, Spring	2	
60	99801 0875	Bolt, Front Cover	1	
	99952 0800	Washer, Plain	1	
	99971 0800	Washer, Spring	1	
61	1757 10 641	Gasket, Front Cover	1	
62	1907 10 700	Pan, Oil	1	
63	99511 1400	Plug, Drain	1	
64	99562 1400	Gasket	1	

No.	Part Number	Description	Q'ty	Remarks
65	0839 10 711	Gasket, Oil Pan	1	
66	0839 10 721	Plate, Seat-Oil Pan	2	
67	0839 10 722	Plate, Seat-Oil Pan	2	
68	0839 10 723	Plate, Seat-Oil Pan	2	
69	99806 0616	Bolt, Oil Pan	22	
	99971 0600	Washer, Spring	22	
70	0839 10 830	Gauge, Oil Level	1	
71	1757 10 845	Bolt, Rear Housing+Engine Hanger	1	
	99971 1000	Washer, Spring	1	
72	1757 10 861	Hanger, Engine	1	
73	99801 0818	Bolt, Engine Hanger	1	
	99971 0800	Washer, Spring	1	
74	1757 10 862	Hanger, Engine	1	
75	1663 18 920	Senser, Thermo	1	
76	2329 18 921	Gasket, Thermo Senser	2	
77	2329 18 922	Insulator, Thermo Senser (Included in Fig. No. 82)	1	
78	2329 18 923	Cover, Thermo Senser	1	
79	2329 18 924	Washer, Insulator	2	
80	99801 0825	Bolt, Thermo Senser	2	
	99952 0800	Washer, Plain	2	

10 ROTOR HOUSING

No.	Part Number	Description	Q'ty	Remarks
	99971 0800	Washer, Spring	2	
81	0866 23 025	Protector, "O" Ring	4	
82	1883 23 080	Housing, Intermediate (Fig. No. 77 Included)	1	
83	2329 10 417	Joint, Pipe	1	
84	99305 2800	Plug, Expansion	1	
85	99510 1000	Plug	1	
	99564 1000	Gasket	1	
86	0864 61 061A	Cover, Without Heater	1	
87	99282 2600	Clamp, Hose - Cover	1	
	1757 23 040	"O" Ring Set	1	
	1757 99 100	Engine Gasket Set	1	
		All gaskets and all "O" rings relative to Engine included		
	1907 23 200	Short Engine (Manual)	1	
	1908 23 200	Short Engine (Automatic)	1	

10 11 ROTOR

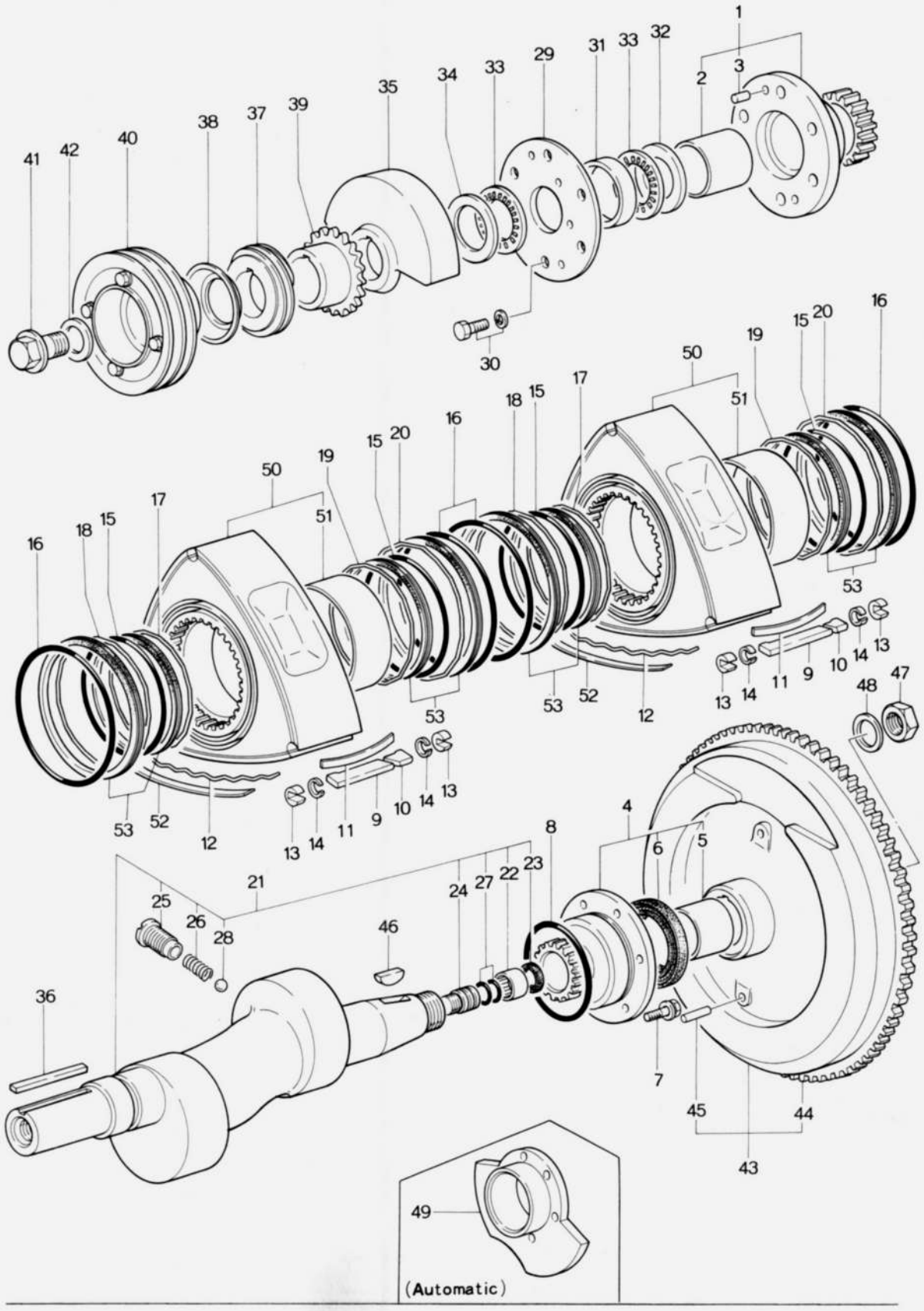
1
3
2
32
33
31
29
33
34
35
39
37
38
40
42
41
30
16
20
15
19
50
51
17
15
18
16
20
15
19
50
51
17
18
15
16
53
52
12
53
13
14
11
9
10
14
13
53
52
12
53
13
14
11
9
10
14
13
48
47
4
6
5
8
24
27
22
23
21
25
26
28
46
36
7
45
44
43
49
(Automatic)

No.	Part Number	Description	Q'ty	Remarks
1	0839 10 500B	Gear (Frt.), Stationary	1	
2	0820 10 502B	Bearing, Main	1	
3	0839 10 504	Pin, Knock	1	
4	1668 10 550	Gear (Rr.), Stationary	1	
5	0820 10 502B	Bearing, Main	1	
6	1668 10 556	Oil Seal	1	
7	99801 0818	Bolt, Stationary Gear	6	
	99971 0800	Washer, Spring	6	
8	0813 10 555	Ring, "O" - Stationary Gear	1	
9	~~1011 11 301B~~ 1881 11 301A	Seal, Apex	6	
10	1011 11 302B	Piece, Side	6	
11	1011 11 304A	Spring, Apex Seal	6	
12	0820 11 317	Spring, Side Seal	12	
13	1011 11 321	Seal, Corner	12	
	~~1011 23 175~~	~~Seal, Corner (O.S. 0.2)~~	12	
	1011 23 176	Seal, Corner (O.S. 0.03)	12	
14	0839 11 323A	Spring, Corner Seal	12	
15	0820 11 341	Ring, "O" - Inner	4	

10 11 ROTOR

No.	Part Number	Description	Q'ty	Remarks
16	0820 11 343	Ring, "O" - Outer	4	
17	1011 11 351	Spring, Oil Seal Inner (Frt.)	2	
18	1011 11 353	Spring, Oil Seal Outer (Frt.)	2	
19	1011 11 361	Spring, Oil Seal Inner (Rr.)	2	
20	1011 11 363	Spring, Oil Seal Outer (Rr.)	2	
21	1881 11 400	Shaft, Eccentric (Manual)	1	
	1883 11 400	Shaft, Eccentric (Automatic)	1	
22	1881 11 403	Bearing, Needle } (Manual)	1	
23	1881 11 404	Oil Seal } (Manual)	2	
24	0813 11 405	Plug, Blind	1	
25	0839 11 411A	Plug, Oil Jet	2	
26	0839 11 412	Spring	2	
27	99541 01101	Ring, "O"	2	
28	99611 2000	Ball, Steel	2	
29	1011 11 501	Plate	1	
30	99801 0822	Bolt, Plate & Stationary Gear	6	
	99971 0800	Washer, Spring	6	
31	0839 11 502	Spacer (L=8.02)	1	

No.	Part Number	Description	Q'ty	Remarks
	0839 11 506	Spacer (L=8.08) } Selective use	1	
	0839 11 508	Spacer (L=8.04)		
	0839 11 509	Spacer (L=8.00)		
32	1011 11 504	Plate, Thrust	1	
33	0813 11 505B	Bearing, Needle	2	
34	1011 11 507	Washer, Thrust	1	
35	1881 11 511	Weight, Balance	1	
36	1757 11 512	Key	1	
37	0839 11 531	Gear, Drive-Distributor	1	
38	1757 11 541	Plate, Oil Baffle	1	
39	1757 11 551	Gear, Drive-Oil Pump	1	
40	1757 11 600	Pulley	1	
41	0820 11 611B	Bolt, Pulley	1	
42	99564 2800	Gasket, Bolt	1	
43	1881 11 700	Wheel, Fly	1	
44	0866 11 702	Gear, Ring } (Manual)	1	
45	0820 11 703	Pin	1	
46	0820 11 705	Key, Fly Wheel	1	

10 11 ROTOR

No.	Part Number	Description	Q'ty	Remarks
47	0810 11 711	Nut, Lock	1	
48	0820 11 712	Washer, Lock	1	
49	1883 11 750	Weight, Control (Automatic)	1	
50	1011 23 103B	Rotor "C"	2	
51	1011 11 111	Bearing, Rotor	2	
52	1011 23 151A	Seal, Side	12	
53	1011 23 180	Oil Seal Set	4	Order Under No. 0820 23 180C

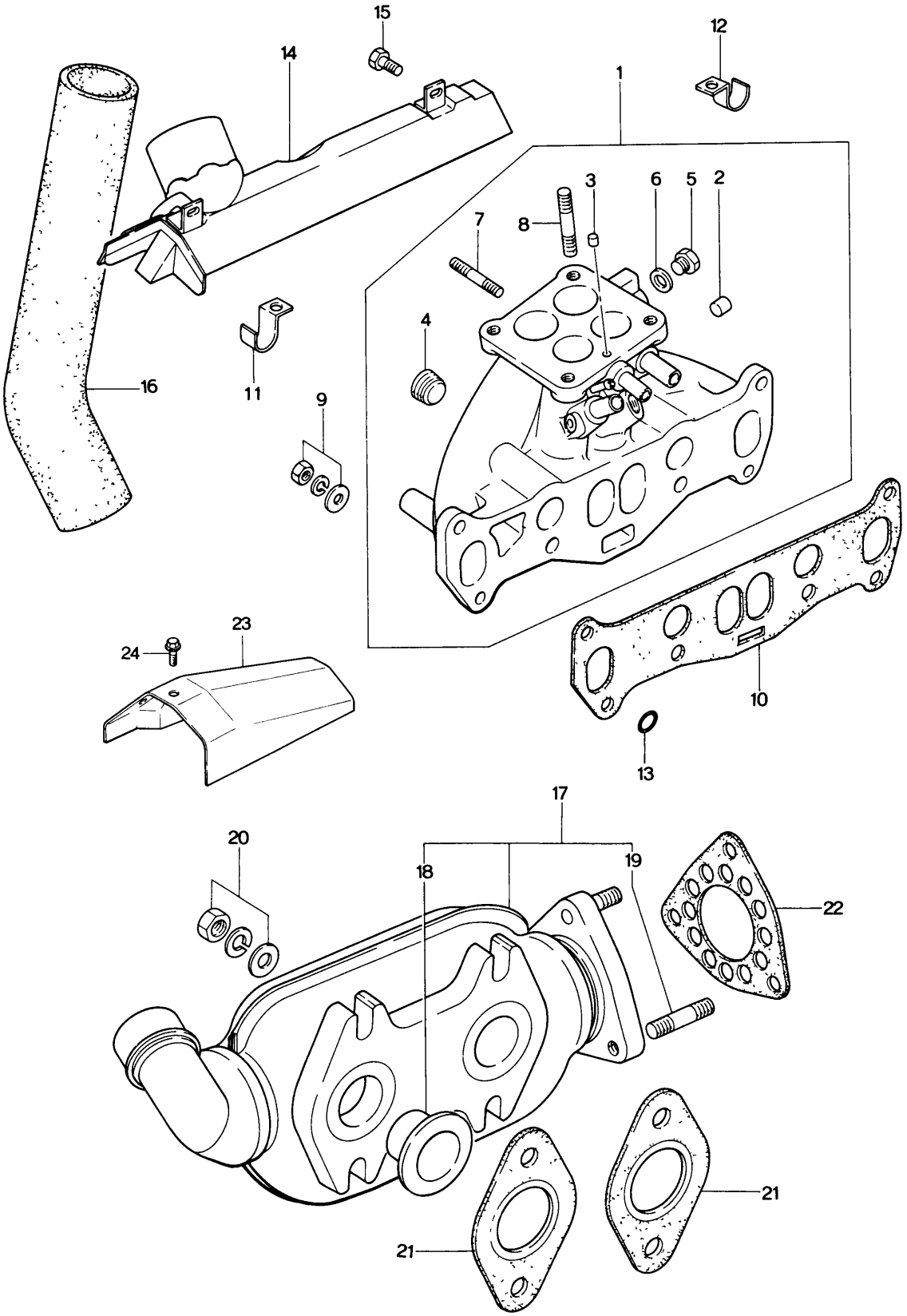
15
14
12
1
3
6
5
2
8
7
4
16
11
9
10
13
23
24
17
20
18
19
22
21
21

IN. MANIFOLD & THERMAL REACTOR 13

No.	Part Number	Description	Q'ty	Remarks	
1	1881 13 100	Manifold, IN	1		
2	99307 0800	Plug, Blind	1		
3	99307 1200	Plug, Blind	1		
4	99503 3000	Plug	3		
5	99511 1000	Plug	1		
6	99564 1000	Gasket	1		
7	99851 0622 A	Stud	3		
8	99851 0828 A	Stud	4		
9	99901 0800	Nut, IN. Manifold	6		
	99953 0800	Washer, Plain	6		
	99971 0800	Washer, Spring	6		
10	1881 13 111	Gasket, IN. Manifold	1		
11	1757 13 251	Clip, Valve Wiring	2		
●	1757 13 251 A	Clip, Valve Wiring	2		73/9 ~ ×
12	1883 13 255	Clip, Air Hose (Automatic)	2		
●	1883 13 255 A	Clip, Air Hose (Automatic)	2 2		73/10 ~ × 74/3 ~ Discarded
● 13	99541 02401	Ring, "O" - IN. Manifold	2		
14	1881 13 330	Duct, Hot Air	1		
●	1881 13 330 A	Duct, Hot Air	1	From Car No. 1	
●	1881 13 330 B	Duct, Hot Air	1		74/2 ~ ×
15	99796 0812	Bolt, Hot Air Duct	2		
16	0866 13 341 B	Hose, Hot Air	1		
●	1052 13 341 A	Hose, Hot Air	1		73/11 ~ ○

IN. MANIFOLD & THERMAL REACTOR

No.	Part Number	Description	Q'ty	Remarks	
17	1881 13 800	Reactor, Thermal	1		
~~● 18~~	~~2090 13 742A~~	~~Insert~~	~~1~~		☆
19	2329 13 876	Stud	3		
20	2158 40 355	Nut, Thermal Reactor	4		
	0839 13 614	Washer, Plain	4		
	2329 13 882	Washer, Spring	4		
21	1757 13 889	Gasket, Thermal Reactor	2		
22	1757 13 891	Gasket, Thermal Reactor	1		
● 23	1757 13 371	Insulator, Heat	1	From Car No. 1	
●	1757 13 371A	Insulator, Heat	1		$\frac{73}{11}$~○
●	1757 13 371B	Insulator, Heat	1		$\frac{74}{2}$~×
● 24	99786 0612	Bolt, Heat Insulator	2	From Car No. 1	
●	99952 0618	Washer, Plain	2	From Car No. 1	

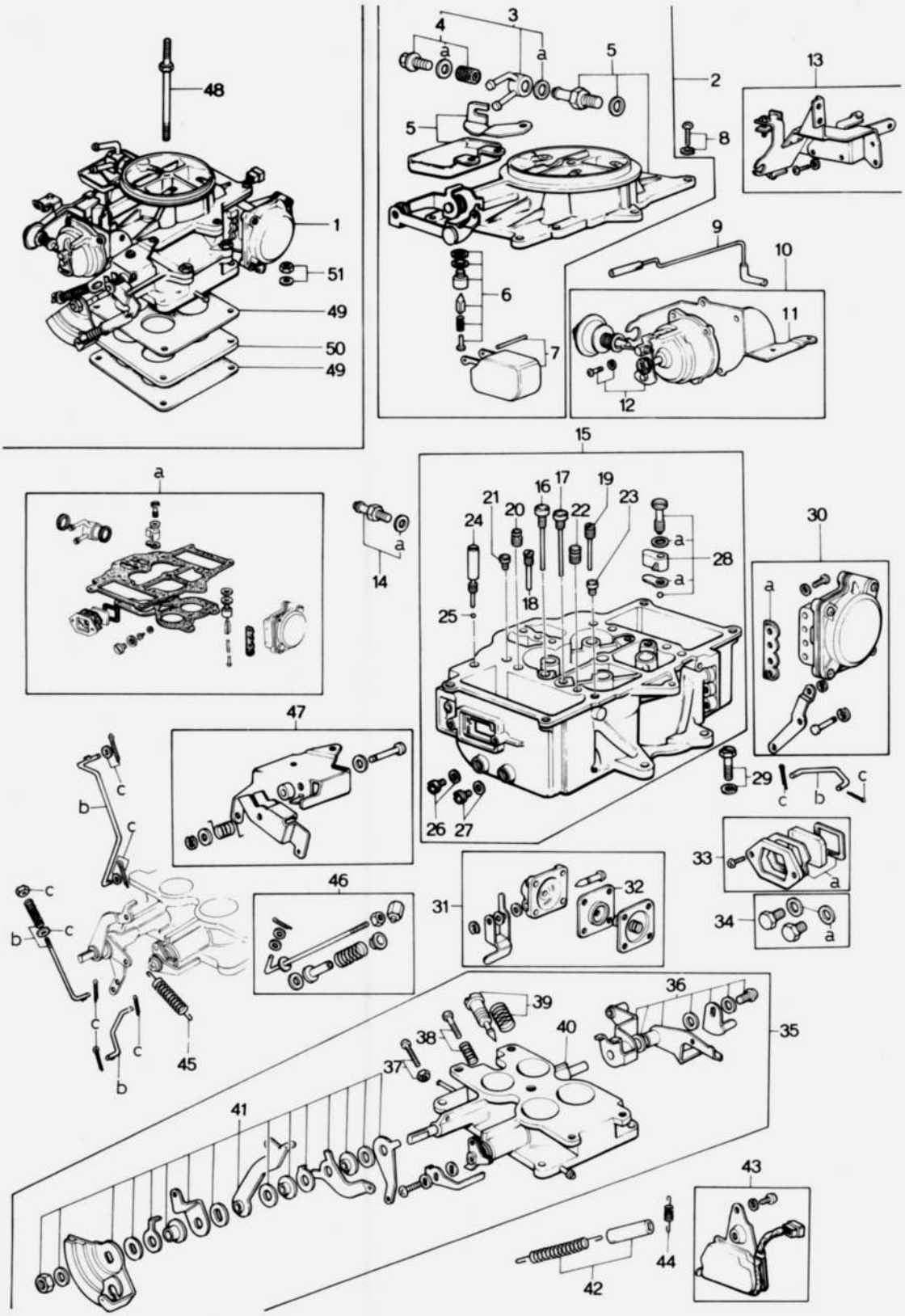
48
1
51
49
50
49
3
4
a
a
5
2
5
8
13
9
10
6
11
7
12
15
a
16
17
19
21
20
22
23
24
a
28
a
18
25
14
a
30
a
26
27
29
c
b
c
47
b
c
c
33
a
46
31
32
34
a
c
b
c
c
c
c
45
b
39
36
35
38
40
37
41
43
42
44

No.	Part Number	Description	Q'ty	Remarks
1	1881 13 200	Carburettor (Manual)	1	
	1881 13 200A	Carburettor (Manual)	1	73/9～×
	1883 13 200	Carburettor (Automatic)	1	
	1883 13 200A	Carburettor (Automatic)	1	73/9～×
2	1881 23 310	Horn Set, Air (Manual) (Fig. No. 3～7 included)	1	
	1883 23 310	Horn Set, Air (Automatic) (Fig. No. 3～7 included)	1	
3	1881 23 319	Connector, Fuel Return	1	
4	1663 23 409	Strainer Set	1	
5	1881 23 520	Horn Sub Set, Air (Manual)	1	
	1883 23 520	Horn Sub Set, Air (Automatic)	1	
6	1663 23 390	Seat Set, Float Valve	1	
7	1663 23 326B	Float Set	1	
8	0750 23 652	Screw Set, Air Horn	1	
9	1027 23 509	Pipe, Vacuum	1	
10	1881 23 500	Semi Auto Choke Set (Manual) (Fig. No. 11,12 included)	1	
	1883 23 500	Semi Auto Choke Set (Automatic) (Fig. No. 11,12 included)	1	
11	1881 23 501	Holder Set, Bimetal (Manual)	1	
	1883 23 501	Holder Set, Bimetal (Automatic)	1	
12	1881 23 502	Case Set, Bimetal	1	
13	1881 23 370	Bracket Set	1	

No.	Part Number	Description	Q'ty	Remarks
14	1570 23 507	Valve Set, Check	1	
15	1881 23 320	Body Set (Manual) (Fig. No. 16~28 included)	1	
	1883 23 320	Body Set (Automatic) (Fig. No. 16~28 included)	1	
16	1669 23 423A	Jet, Main Air Bleed- 1st	2	
17	1669 23 424A	Jet, Main Air Bleed- 2nd	2	
18	1881 23 431	Jet, Slow (Manual)	2	
	1883 23 431	Jet, Slow (Automatic)	2	
19	1881 23 432	Jet, Step (Manual)	2	
	1883 23 432	Jet, Step (Automatic)	2	
20	1881 23 427	Jet, Slow Air Bleed- 1st (Manual)	2	
	1883 23 427	Jet, Slow Air Bleed- 1st (Automatic)	2	
21	1881 23 433	Jet, Slow Air Bleed- 2nd	2	
22	2090 23 428	Jet, Step Air Bleed- 1st	2	
23	1881 23 434	Jet, Step Air Bleed- 2nd (Manual)	2	
	1883 23 434	Jet, Step Air Bleed- 2nd (Automatic)	2	
24	0823 23 338	Plug, Inlet Check Valve	1	
25	0107 13 781	Ball, Steel	1	
26	0222 23 353B	Jet, Main- 1st (Manual)	2	
	1881 23 421	Jet, Main- 1st (Automatic)	2	
27	0603 23 355B	Jet, Main- 2nd (Manual)	2	

No.	Part Number	Description	Q'ty	Remarks
	0453 23 402	Jet, Main - 2nd (Automatic)	2	
28	1881 23 490	Nozzle Set, Accel.	1	
29	0839 23 484A	Bolt, Flange Set	4	
30	1881 23 350	Chamber Set, Diaphragm	1	
31	1663 23 360C	Pump Set, Accel. (Fig. No. 32 included)	1	
32	1663 23 361A	Diaphragm, Accel. Pump	1	
33	1663 23 340A	Cover Set, Level Gauge	1	
34	1668 23 354	Plug Set, Main Passage	1	
35	1881 23 330	Flange Set (Manual) (Fig. No. 36~41 included)	1	
	1883 23 330	Flange Set (Automatic) (Fig. No. 36~41 included)	1	
36	1881 23 420	Lever Set, Front	1	
37	1668 23 440	Screw Set, Throttle Lever Adjust	1	
38	1668 23 460	Screw Set, Idle Adjust	1	
39	1668 23 470	Screw Set, Air Adjust	1	
40	1881 23 410	Flange Sub Set (Manual)	1	
	1883 23 410	Flange Sub Set (Automatic)	1	
41	1881 23 430	Lever Set, Rear (Manual)	1	
	1883 23 430	Lever Set, Rear (Automatic)	1	
42	1881 23 380	Spring Set, Throttle Return	1	
43	1668 23 450	Switch Set, Idle	1	

13 23 CARBURETTOR

No.	Part Number	Description	Q'ty	Remarks
44	1663 23 455	Spring, Idle Switch Lever	1	
45	1668 23 439	Spring, Choke Sub Return (Manual)	1	
	1121 23 439	Spring, Choke Sub Return (Automatic)	1	
46	1881 23 371	Holder Set, Return (Fig. No. 47 included)	1	
47	1881 23 372	Holder Set, Sub Return	1	
a	1668 23 510	Gasket Set	1	
b	1881 23 480	Rod & Link Set (Manual)	1	
	1883 23 480	Rod & Link Set (Automatic)	1	
c	1668 23 530	Pin & Washer Set	1	
48	0839 13 201	Bolt, Cleaner Set	1	
49	0823 13 221A	Gasket, Carburettor	2	
50	0823 13 222A	Insulator, Carburettor	1	
51	99901 0800	Nut, Carburettor	4	
	99971 0800	Washer, Spring	4	
	1881 23 540	Repair Kit, Carburettor (Manual)	1	
	1883 23 540	Repair Kit, Carburettor (Automatic)	1	
	1881 23 540	Repair Kit, Carburettor (Automatic)	1	$\frac{74}{3}$~○

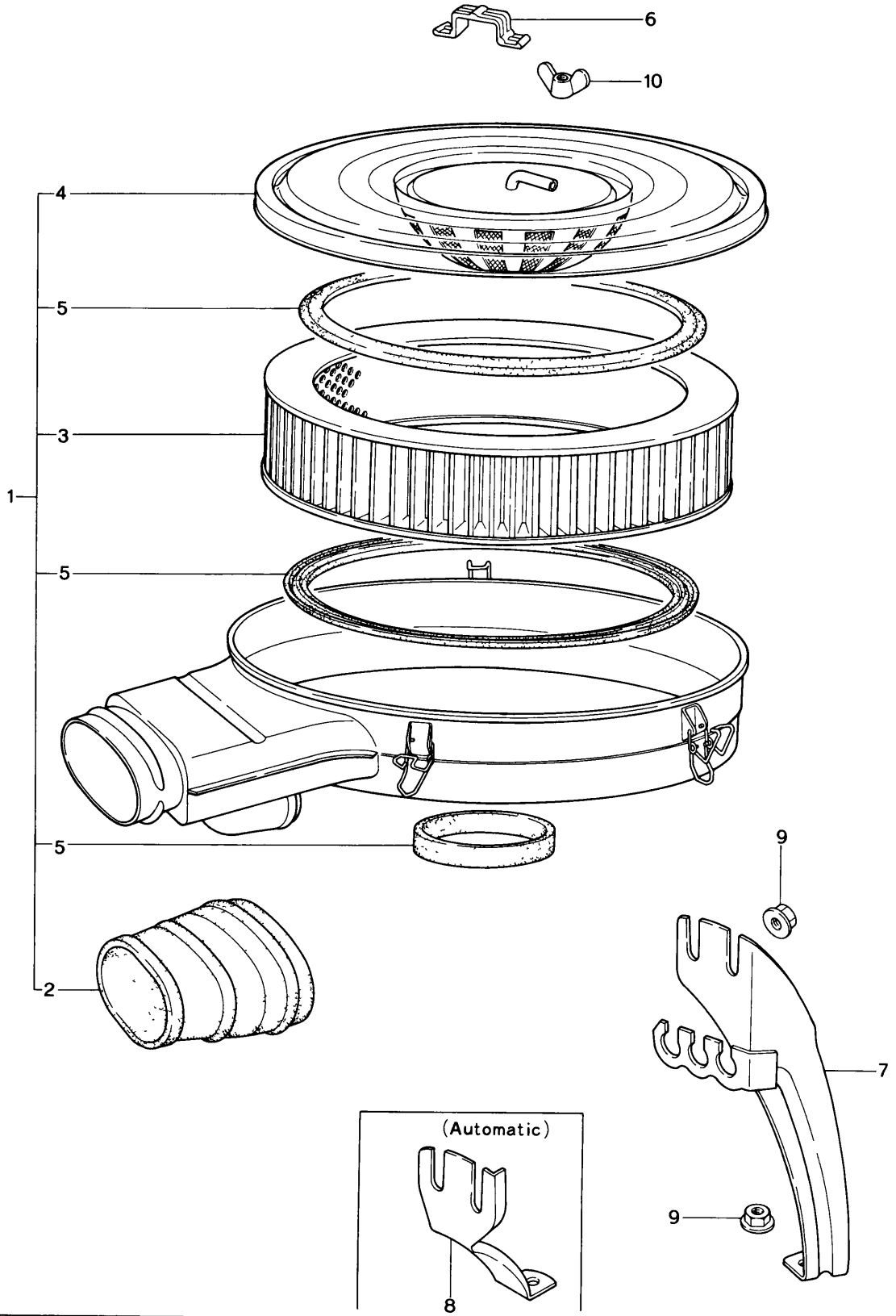
6
10
4
5
3
1
5
5
2
9
7
9
(Automatic)
8

No.	Part Number	Description	Q'ty	Remarks
1	1881 13 300	Cleaner, Air	1	
●	1881 13 300A	Cleaner, Air	1	From Car No. 1
●	1881 13 300B	Cleaner, Air	1	73/9 ~ ×
2	1881 13 351	Hose, Air	1	
3	1757 23 672	Element	1	
4	1113 23 673	Cover, With Charcoal Filter (BLU.)	1	
●	1757 23 673	Cover, With Charcoal Filter (BLU.)	1	74/3 ~ ○
5	1757 23 680	Gasket Set	1	
6	1617 13 305A	Clip	1	
7	1907 13 310	Support, Air Cleaner (Manual)	1	
●	1881 13 311A	Support, Air Cleaner (Manual)	1	73/10 ~ △
8	1908 13 311	Support, Air Cleaner (Automatic)	1	
●	1883 13 311A	Support, Air Cleaner (Automatic)	1	73/10 ~ △
●	1881 13 311A	Support, Air Cleaner (Automatic)	1	74/3 ~ ×
9	99940 0802	Nut, Air Cleaner (Manual) (Automatic)	2 3	
10	99941 0801	Nut, Wing-Air Cleaner	1	

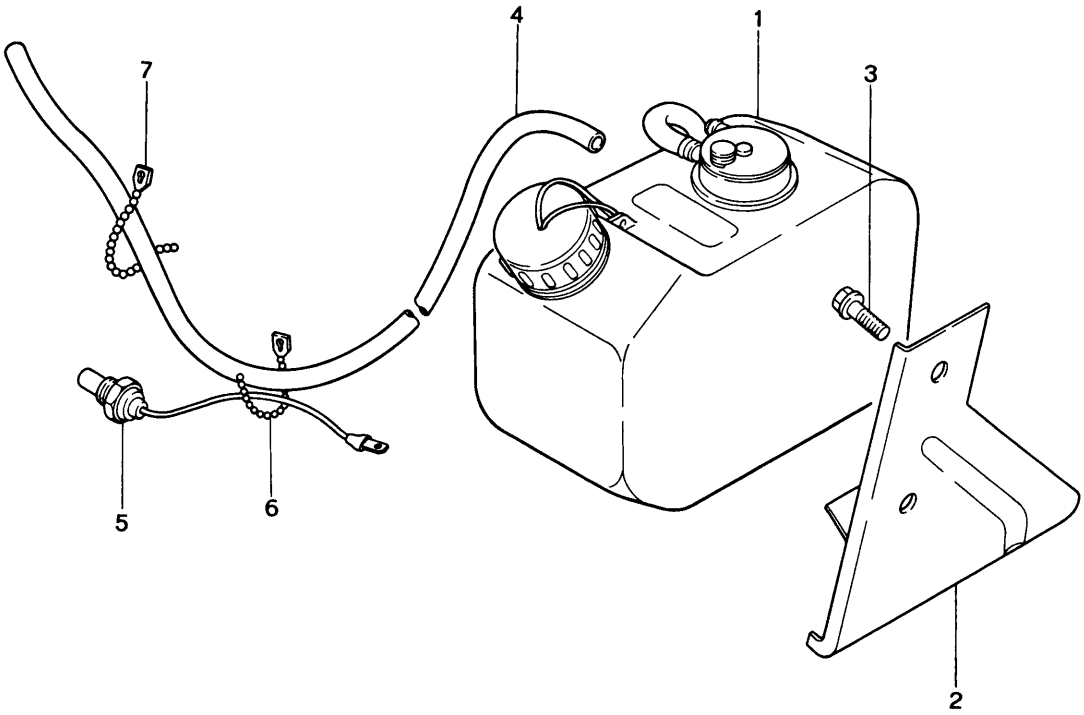
4
1
7
3
5
6
2

No.	Part Number	Description	Q'ty	Remarks
1	1881 13 510A	Tank, Starting Fluid	1	
●	1881 13 510E	Tank, Starting Fluid	1	73/9 ~○
2	1881 13 515	Bracket, Tank	1	
●	1881 13 515A	Bracket, Tank	1	73/9 ~○
3	99786 0812	Screw, Tank Bracket	2	
4	1668 13 527	Hose	1	
●	1854 13 527	Hose	1	73/9 ~○
5	1668 13 531A	Unit, Thermo	1	
6	99709 0108	Band	1	
7	99709 0225	Band	1	

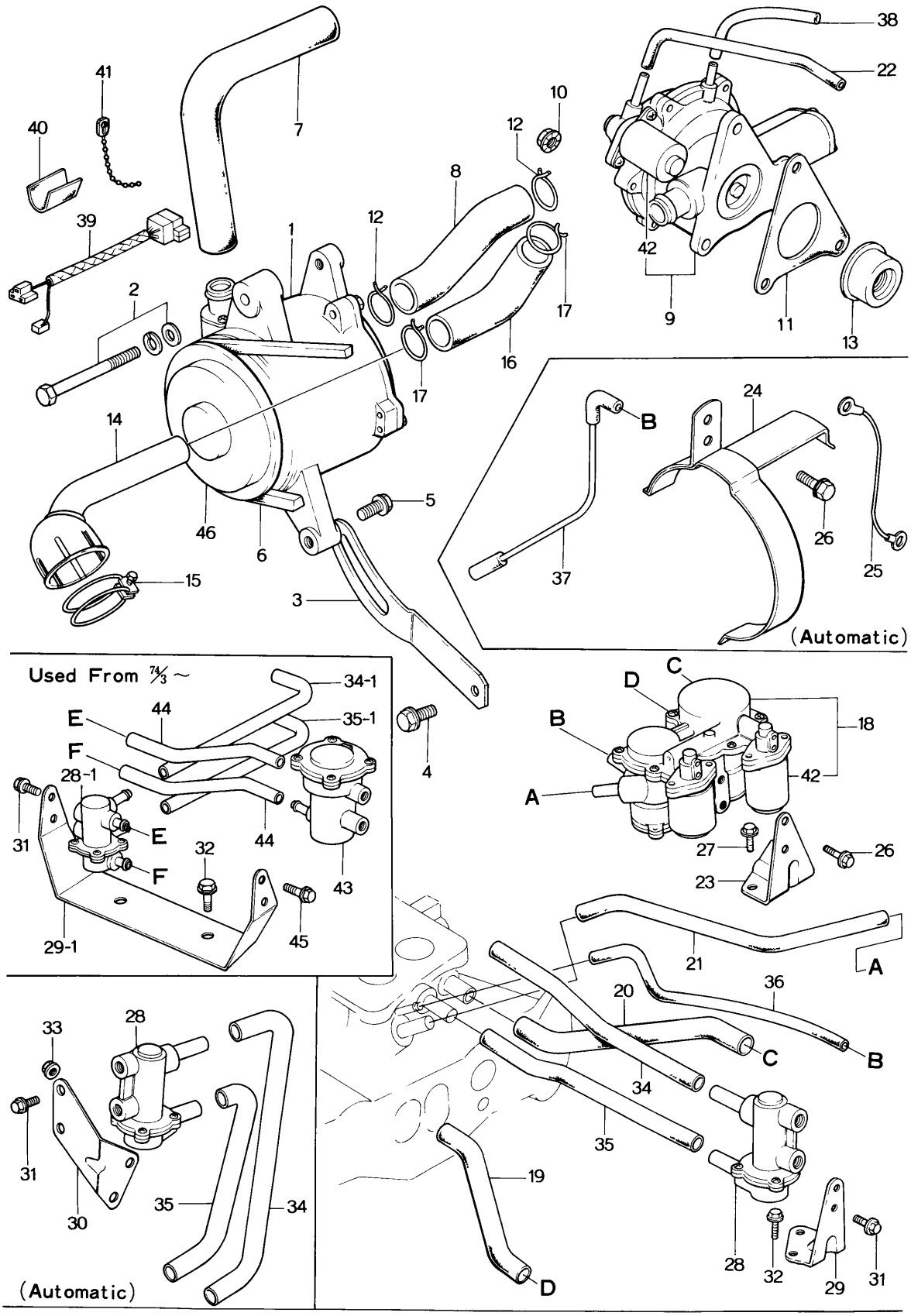
41
40
7
10
12
8
39
1
12
38
22
2
17
16
17
42
9
11
13
14
46
6
5
15
3
B
24
37
26
25
(Automatic)
Used From 74/3 ~
34-1
E
44
35-1
F
28-1
E
F
31
32
44
43
29-1
45
4
C
D
B
18
A
42
27
26
23
21
A
20
36
C
B
34
35
19
D
28
32
29
31
33
28
31
30
35
34
(Automatic)

	No.	Part Number	Description	Q'ty	Remarks
	1	1757 13 710	Pump, Air (Fig. No. 46 included)	1	
	2	99803 08100	Bolt, Air Pump	1	
		99951 0818	Washer, Plain	1	
●		99952 0800	Washer, Plain	1	74/3~○
		99971 0800	Washer, Spring	1	
	3	1757 13 714	Strap, Air Pump	1	
	4	99796 0814	Bolt, Strap	1	
	5	99801 0822	Bolt, Strap	1	
●		99796 0820	Bolt, Strap	1	73/10~○
		99952 0800	Washer, Plain	1	
●		99952 0818	Washer, Plain	1	73/10~○
●		99971 0800	Washer, Spring	1	73/10~Discarded
	6	1757 13 715	Belt, "V"-Air Pump	1	
	7	1757 13 717	Hose, Air-Air Pump~Air Cleaner	1	
	8	1757 13 718	Hose, Air-A.C. Valve~Air Pump	1	
	9	1757 13 720	Valve, Air Control (Manual) (Fig. No. 42 included)	1	
●		1881 13 720	Valve, Air Control (Manual) (Fig. No. 42 included)	1	74/2~△
		1758 13 720	Valve, Air Control (Automatic) (Fig. No. 42 inclded)	1	
●		1883 13 720	Valve, Air Control (Automatic) (Fig. No. 42 included)	1	74/2~△
	10	99906 0600	Nut, Air Control Valve	3	

	No.	Part Number	Description	Q'ty	Remarks
●		99940 0601	Nut, Air Control Valve	3	73/10～○
●		99953 0600	Washer, Plain	3	73/10～Discarded
●		99971 0600	Washer, Spring	3	73/10～Discarded
	11	1757 13 724	Gasket, Air Control Valve	1	
	12	2329 13 726	Clip, Air Hose	2	
	~~13~~	~~1758 13 730~~	~~Valve, Check~~	~~1~~	
●		1881 13 730	Valve, Check	1	74/1～○
	14	1757 13 740	Pipe, Air-Reactor Side	1	
	15	99282 4309	Band, Hose-Air Pipe	1	
	16	1757 13 744	Hose, Air-Reactor～A.C. Valve	1	
	17	2090 13 746	Clip, Air Hose	2	
	18	1757 13 750	Valve, Deceleration Control (Fig. No. 42 included)	1	
	19	1757 13 752	Hose, Air-D.C. Valve～Air Cleaner (Manual)	1	
		1883 13 752	Hose, Air-D.C. Valve～Air Cleaner (Automatic)	1	
●		1757 13 752	Hose, Air-D.C. Valve～Air Cleaner (Automatic)	1	74/3～×
	20	1757 13 753	Hose, Air-D.C. Valve～IN. Manifold (Manual)	1	
		1883 13 753	Hose, Air-D.C. Valve～IN. Manifold (Automatic)	1	
●		1883 13 753 A	Hose, Air-D.C. Valve～IN. Manifold (Automatic)	1	73/9～×
●		1757 13 753	Hose, Air-D.C. Valve～IN. Manifold (Automatic)	1	74/3～×
	21	1757 13 754	Hose, Air-D.C. Valve～IN. Manifold (Manual)	1	

	No.	Part Number	Description	Q'ty	Remarks
●		1757 13 754 A	Hose, Air-D.C. Valve~IN. Manifold (Manual)	1	From Car No. 1
●		1757 13 754 B	Hose, Air-D.C. Valve~IN. Manifold (Manual)	1	74/4~△
		1883 13 754	Hose, Air-D.C. Valve~IN. Manifold (Automatic)	1	
●		1883 13 754 B	Hose, Air-D.C. Valve~IN. Manifold (Automatic)	1	From Car No. 1
●		1757 13 754 A	Hose, Air-D.C. Valve~IN. Manifold (Automatic)	1	74/3~×
●		1757 13 754 B	Hose, Air-D.C. Valve~IN. Manifold (Automatic)	1	74/4~△
	22	2329 13 754 A	Tube, Balance-A.C. Valve~Carburettor	1	
	23	1757 13 757	Supporter, D.C. Valve (Manual)	1	
	24	1883 13 930	Supporter, D.C. Valve (Automatic)	1	
●		1883 13 930 B	Supporter, D.C. Valve (Automatic)	1	73/9~×
●		1883 13 930 C	Supporter, D.C. Valve (Automatic)	1	73/10~○
●		1757 13 757	Supporter, D.C. Valve (Automatic)	1	74/3~×
●	25	1883 13 936	Wire, Earth-D.C. Valve Supporter (Automatic)	1	74/3~Discarded
	26	99796 0610	Bolt, Supporter+D.C. Valve	2	
●	27	99796 0812	Bolt, D.C. Valve Supporter ~~(Manual)~~	2	
	28	1757 13 770	Compensator, Altitude	1	
●		1757 13 770 A	Compensator, Altitude	1	From Car No. 1
	28-1	1757 13 770 B	Compensator, Altitude	1	74/4~○
	29	1757 13 772	Bracket, Alt. Compensator (Manual)	1	
●		1757 13 772 A	Bracket, Alt. Compensator (Manual)	1	From Car No. 1

No.	Part Number	Description	Q'ty	Remarks
● 29-1	1757 13 772B	Bracket, Alt. Compensator (Manual)	1	74/4～×
30	1883 13 772	Bracket, Alt. Compensator (Automatic)	1	
●	1883 13 772B	Bracket, Alt. Compensator (Automatic)	1	73/10～△
● 29-1	1757 13 772B	Bracket, Alt. Compensator (Automatic)	1	74/4～×
31	99796 0610	Bolt, Alt. Compensator	2	
32	99786 0812	Bolt, Alt. Compensator (Manual)	2	
33	99940 0800	Nut, Alt. Compensator (Automatic)	2	
●	99786 0812	Bolt, Alt. Compensator (Automatic)	2	74/3～×
34	1883 13 775	Hose, Air-Alt. Compensator～Carburettor (Automatic)	1	
●	1883 13 775A	Hose, Air-Alt. Compensator～Carburettor (Automatic)	1	73/11～○
●	1757 13 775	Hose, Air-Alt. Compensator～Carburettor (Automatic)	1	74/3～×
● 34-1	99346 08190	Hose, Air-Alt Compensator～Carburettor (190㎜) (Automatic)	1	74/4～△
34	99340 06190	Hose, Air-Alt Compensator～Carburettor (190㎜) (Manual)	1	Ord. By 99344 06150 (15m)
●	99340 06200	Hose, Air-Alt Compensator～Carburettor (200㎜) (Manual)	1	From Car No. 1 Ord. By 99344 06150 (15m)
●	1757 13 775	Hose, Air-Alt. Compensator～Carburettor (Manual)	1	73/11～△
●	99346 08200	Hose, Air-Alt Compensator～Carburettor (200㎜) (Manual)	1	Ord. By 99349 08750 (1.75m) 73/11～△
● 34-1	99346 08190	Hose, Air-Alt Compensator～Carburettor (190㎜) (Manual)	1	Ord. By 99349 08750 (1.75m) 73/11～○
35	1757 13 776	Hose, Air-Alt. Compensator～IN. Manifold (Manual)	1	
● 35-1	99346 08190	Hose, Air-Alt Compensator～IN Manifold (190㎜) (Manual)	1	Ord. By 99349 08750 (1.75m) 74/4～△
35	1883 13 776	Hose, Air-Alt Compensator～IN Manifold (Automatic)	1	

	No.	Part Number	Description	Q'ty	Remarks
●		1883 13 776A	Hose, Air-Alt. Compensator~IN. Manifold (Automatic)	1	73/10~×
●		1883 13 776B	Hose, Air-Alt. Compensator~IN. Manifold (Automatic)	1	73/11~○
●		1757 13 776	Hose, Air-Alt. Compensator~IN. Manifold (Automatic)	1	74/3~×
●	35-1	99346 08190	Hose, Air-Alt Compensator~IN Manifold (190‰) (Automatic)	1	Ord. By 99349 08750 (1.75m) 74/4~△
	36	1757 13 778	Tube, Vacuum-D.C. Valve~IN. Manifold (Manual)	1	
	37	1883 13 910	Tube, Vacuum-D.C. Valve~IN. Manifold (Automatic)	1	
●		1757 13 778	Tube, Vacuum-D.C. Valve~IN. Manifold (Automatic)	1	74/3~×
	38	99340 04200	Hose, Air-A.C. Valve~Air Cleaner	1	
	39	1757 18 860	Wiring, Valve	1	
	40	0208 66 949	Pad, Protector-Valve Wiring	1	
	41	99709 0109	Band, Valve Wiring	1	
	42	1757 23 725	Valve, Solenoid (Included in Fig. No. 9 & 18)	3	
●	43	1757 13 910	Valve, E.C.	1	74/4~Added Anew
●	44	1757 13 912	Hose, Air-Alt. Compensator~E. C. Valve	2	74/4~Added Anew
●	45	99796 0610	Bolt, E. C. Valve	2	74/4~~Added Anew
●	46	1757 23 713	Pulley, Air Pump (Included in Fig. No. 1)	1	

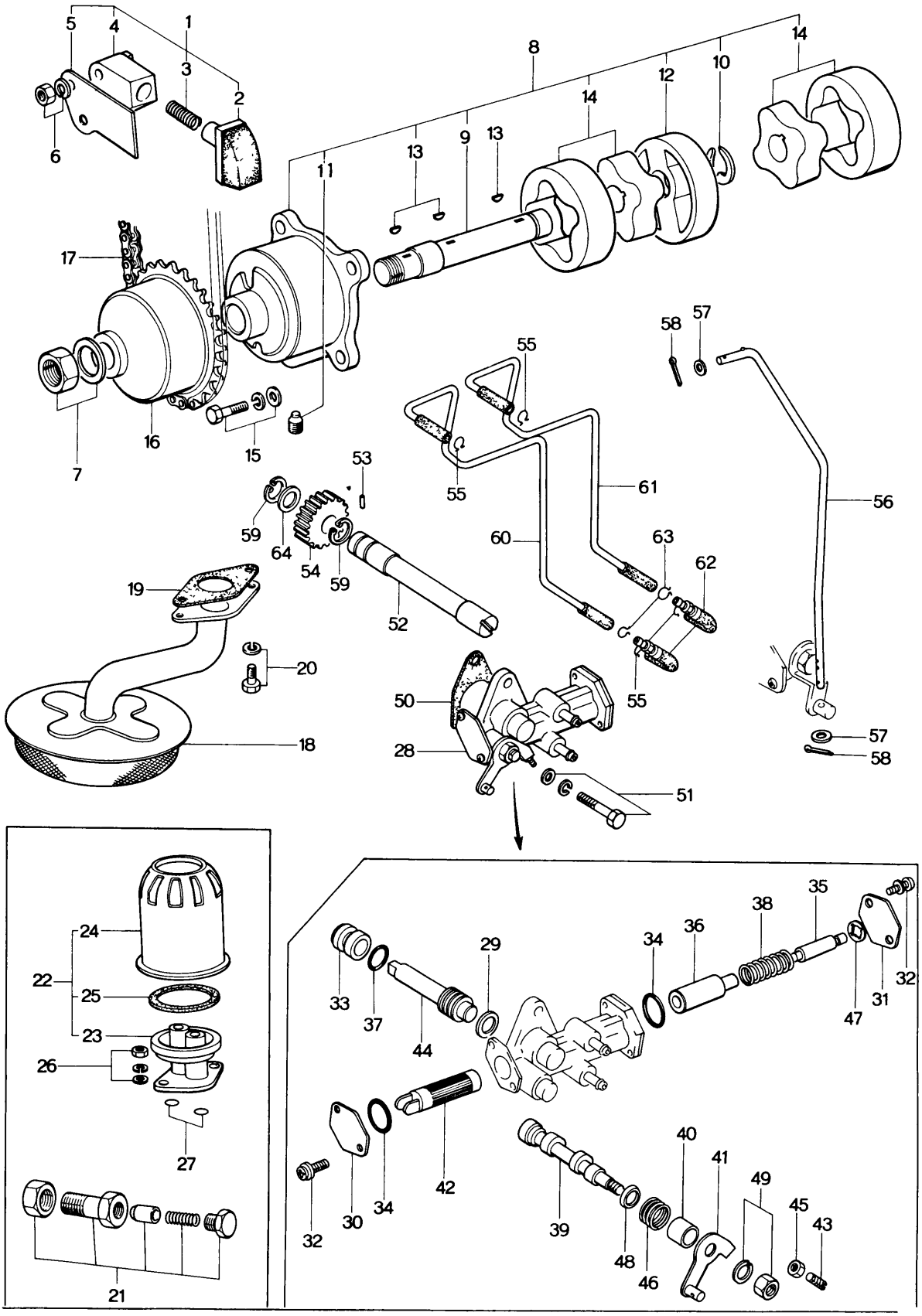
1
2
3
4
5
6
7
8
9
10
11
12
13
14
15
16
17
18
19
20
21
22
23
24
25
26
27
28
29
30
31
32
33
34
35
36
37
38
39
40
41
42
43
44
45
46
47
48
49
50
51
52
53
54
55
56
57
58
59
60
61
62
63
64

No.	Part Number	Description	Q'ty	Remarks
1	1757 14 020	Adjuster, Chain	1	
2	0823 14 130	Adjuster	1	
3	0823 14 131	Spring	1	
4	1757 14 132	Body	1	
5	0839 14 133	Plate, Guide	1	
6	99906 0600	Nut, Chain Adjuster	2	
	99971 0600	Washer, Spring	2	
7	99922 1200	Nut, Oil Pump Drive Gear	1	
	99979 1200	Washer, Tab	1	
8	1757 14 100	Pump, Oil	1	
9	1757 14 112	Shaft, Oil Pump	1	
10	0810 14 113	Ring, Snap	1	
11	0839 14 117	Bolt, Lock	1	
12	0820 14 118C	Plate, Middle - Oil Pump	1	
13	0839 14 119B	Key	3	
14	0820 23 882A	Rotor Set, Oil Pump	2	
15	99806 0618	Bolt, Oil Pump	4	

14 OIL PUMP

No.	Part Number	Description	Q'ty	Remarks
	99952 0600	Washer, Plain	4	
	99971 0600	Washer, Spring	4	
16	0839 14 141A	Gear, Drive - Oil Pump	1	
17	0839 14 142	Chain	1	
18	0820 14 160G	Strainer, Oil	1	
19	0810 14 171	Gasket, Oil Strainer	1	
20	99806 0614	Bolt, Oil Strainer	2	
	99971 0600	Washer, Spring	2	
21	0820 14 250D	Regulator, Pressure	1	
22	0839 14 300	Filter, Oil	1	
23	0839 23 801	Cover	1	
24	0813 23 802B	Cartridge, Oil Filter	1	
25	0813 23 803	Gasket	1	
26	99901 0800	Nut, Oil Filter	2	
	99953 0800	Washer, Plain	2	
	99971 0800	Washer, Spring	2	
27	99541 01601	Ring, "O" - Oil Filter	2	

No.	Part Number	Description	Q'ty	Remarks
28	1757 14 600	Pump, Metering Oil	1	
29	0820 23 832B	Washer, Thrust	1	
30	0820 23 833B	Plate, Cam Casing	1	
31	0820 23 834B	Plate, Cam Casing	1	
32	99833 0408	Screw, Cam Casing Plate	4	
	99971 0400	Washer, Plain	4	
33	0820 23 835A	Bearing, Worm	1	
34	0730 23 837	Ring, "O"	2	
35	1011 23 837	Plunger, Sub	1	
36	1011 23 838	Plunger, Differential	1	
37	0730 23 839	Ring, "O"	1	
38	0820 23 840	Spring, Plunger	1	
39	1011 23 841	Pin, Control	1	
40	0820 23 842	Cap	1	
41	1757 23 844	Lever, Control	1	
42	0730 23 845	Plunger	1	
43	0820 23 845A	Screw, Adjust	1	
44	0730 23 846	Worm, Bearing	1	
45	0820 23 847A	Nut, Adjust Screw	1	
46	0820 23 848A	Spring, Return	1	

14 OIL PUMP

No.	Part Number	Description	Q'ty	Remarks
47	2090 23 853	Nut, Push	1	
48	0730 23 854	Ring, "V"	1	
49	99907 0600	Nut, Control Lever	1	
	99971 0600	Washer, Spring	1	
50	1757 14 611	Gasket, Metering Oil Pump	1	
51	99806 0630	Bolt, Metering Oil Pump	1	
	99806 0618	Bolt	1	
	99953 0600	Washer, Plain	2	
	99971 0600	Washer, Spring	2	
52	0820 14 620	Shaft, Driven Gear	1	
53	0813 14 623	Pin, Driven Gear	1	
54	0820 14 625A	Gear, Driven	1	
55	0813 14 641	Clip, Metering Oil Tube	4	
56	1757 14 651	Rod, Connecting	1	
57	99953 0400	Washer, Plain	2	
58	99221 1212	Pin, Split	2	
59	99576 0800	Ring, Snap-Driven Gear Shaft	2	
60	1757 14 660	Tube, Metering Oil	1	
61	1757 14 670	Tube, Metering Oil	1	

No.	Part Number	Description	Q'ty	Remarks
62	1757 14 680	Valve, Check	2	
63	1011 14 683	Clip, Metering Oil Tube + Check Valve	2	
64	0810 18 276	Shim, Adjust (t=0.6) } Selective use	2	
	0810 18 277	Shim, Adjust (t=0.3) } Selective use	2	

COOLING SYSTEM

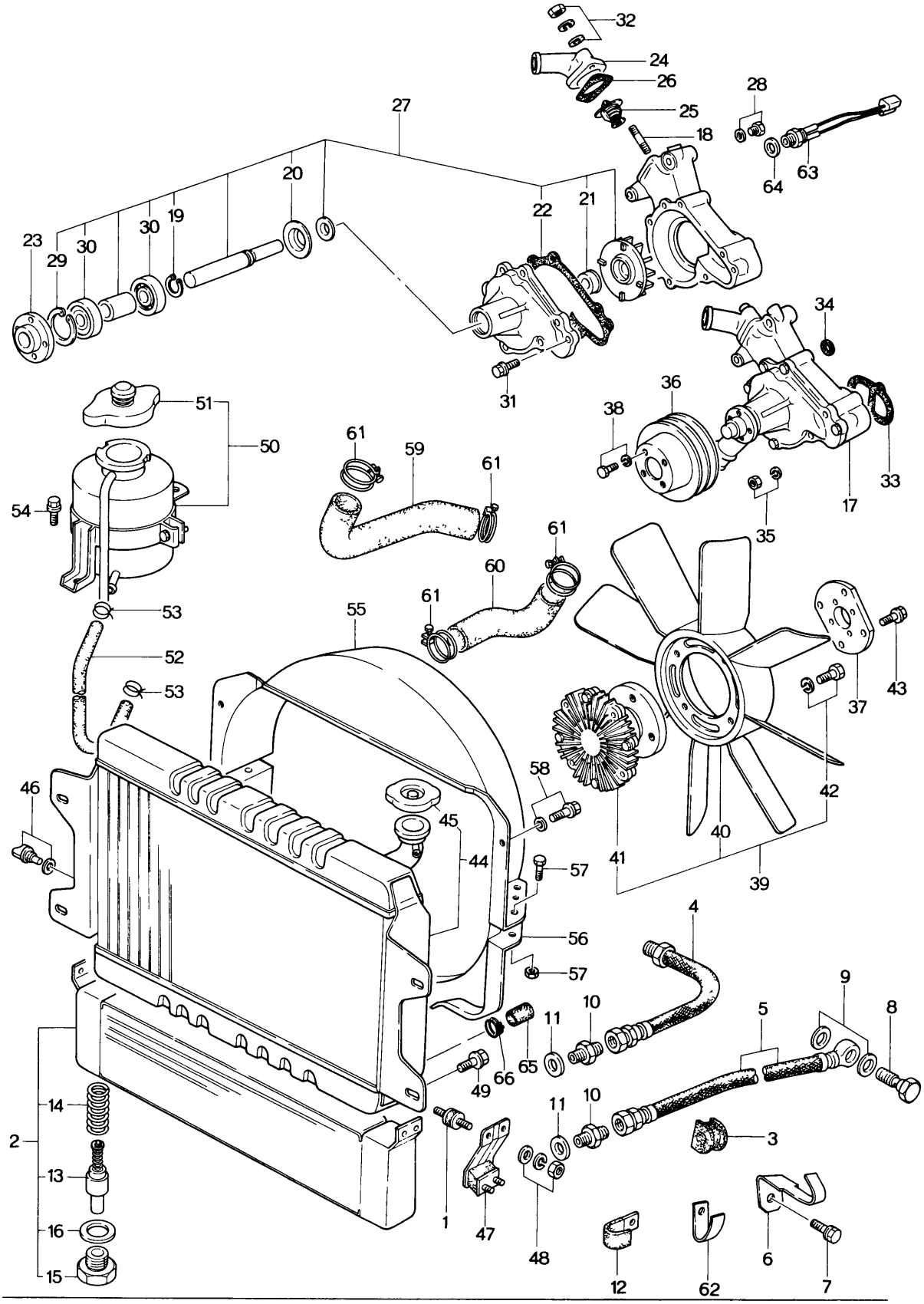

No.	Part Number	Description	Q'ty	Remarks
1	0222 13 363	Rubber, Insulation - Oil Cooler + Radiator	4	
2	1907 14 700	Cooler, Oil (Fig. No. 13~16 Included)	1	
3	0813 14 716	Protector, Oil Hose	1	
4	0865 14 720	Hose, Oil	1	
5	0881 14 730	Hose, Oil	1	
6	1907 14 735	Clip, Oil Hose	1	
7	99796 0810	Bolt, Clip	1	
8	99381 1400	Bolt, Connector - Oil Hose	1	
9	99562 1800	Gasket, Connector Bolt	2	
10	99384 1200F	Joint, Union - Oil Hose	2	
11	99564 1600	Gasket, Union Joint	2	
12	99276 2008	Clip, Wire Harness	1	
13	1757 14 810	Pallet, Thermo	1	(Included in Fig. No. 2)
14	1757 14 821	Spring, Pallet	1	
15	1757 14 822	Nut, Stopper	1	
16	99564 2200	Gasket	1	
17	1907 15 010	Pump, Water	1	
18	2090 15 104	Stud, Thermostat Cover	2	
19	1757 15 114	Ring, Snap	1	

No.	Part Number	Description	Q'ty	Remarks
20	1757 15 118	Plate, Dust Seal	1	
21	0820 15 120	Seal, Water	1	
22	1757 15 132	Gasket, Pump Cover	1	
23	1757 15 152	Boss, Pulley	1	
24	1757 15 170	Cover, Thermostat	1	
25	0823 15 171	Thermostat	1	
26	0813 15 173	Gasket, Thermostat	1	
27	1907 99 150	Repair Kit, Water Pump (Fig. No. 19~22,25,26 Included)	1 Set	
28	99511 1200	Plug	1	
	99562 1200	Gasket	1	
29	99574 4000	Ring, Retaining	1	
30	99606 72030	Bearing, Ball	2	
31	99801 0822	Bolt, Pump Cover	2	
	99971 0800	Washer, Spring	2	
32	99901 0800	Nut, Thermostat Cover	2	
	99953 0800	Washer, Plain	2	
	99971 0800	Washer, Spring	2	
33	1757 15 105	Gasket, Water Pump	1	
34	0820 15 106	Gasket, Water Pump	2	

No.	Part Number	Description	Q'ty	Remarks
35	99901 0800	Nut, Water Pump	4	
	99971 0800	Washer, Spring	4	
36	1757 15 151	Pulley, Water Pump	1	
37	1757 15 211	Spacer, Water Pump Pulley	1	
38	99796 0620	Bolt, Water Pump Pulley	4	
39	1907 15 250	Fan & Fan Drive	1	
40	1097 15 200	Fan, Cooling	1	
41	1907 15 210	Fan, Drive	1	
42	99806 0620	Bolt, Fan & Fan Drive	4	
	99971 0600	Washer, Spring	4	
43	99796 0620	Bolt, Fan & Fan Drive	4	
44	1907 15 310	Radiator (Manual)	1	
	1908 15 310	Radiator (Automatic)	1	
45	0223 15 205	Cap	1	
46	0842 15 316	Cock, Water Drain	1	
	0710 15 204	Gasket, Cock	1	

No.	Part Number	Description	Q'ty	Remarks
47	1097 15 312	Rubber, Insulation - Radiator + Oil Cooler	2	
48	99901 0600	Nut, Radiator + Oil Cooler	8	
	99952 0600	Washer, Plain	8	
	99971 0600	Washer, Spring	8	
49	99796 0816	Bolt, Radiator	4	
	99952 0822	Washer, Plain	4	
50	0839 15 350A	Tank, Sub	1	
51	0222 15 255	Cap	1	
52	0839 15 351B	Hose, Water - Sub Tank ~ Radiator	1	
53	99285 0800	Clip, Water Hose	2	
54	99796 0816	Bolt, Sub Tank	2	
55	1907 15 411	Shroud, Radiator - Upper	1	
56	1907 15 421	Shroud, Radiator - Lower	1	
57	99796 0614	Bolt, Radiator Shroud	4	
	99940 0602	Nut	4	
58	99796 0812	Bolt, Radiator Shroud	4	
	99952 0822	Washer, Plain	4	
59	1907 15 511	Hose, Water - Thermostat ~ Radiator	1	

No.	Part Number	Description	Q'ty	Remarks
60	1907 15 521	Hose, Water - Radiator ~ Water Pump	1	
61	99282 4900	Band, Hose - Water Hose	4	
62	0866 18 496	Clip, Cable	1	
63	1881 18 880	Switch, Temp.	1	
64	99564 1600	Gasket, Temp. Switch	1	
65	0864 61 061A	Cover, Without Car Heater	1	
66	99282 2600	Clamp, Hose - Cover	1	

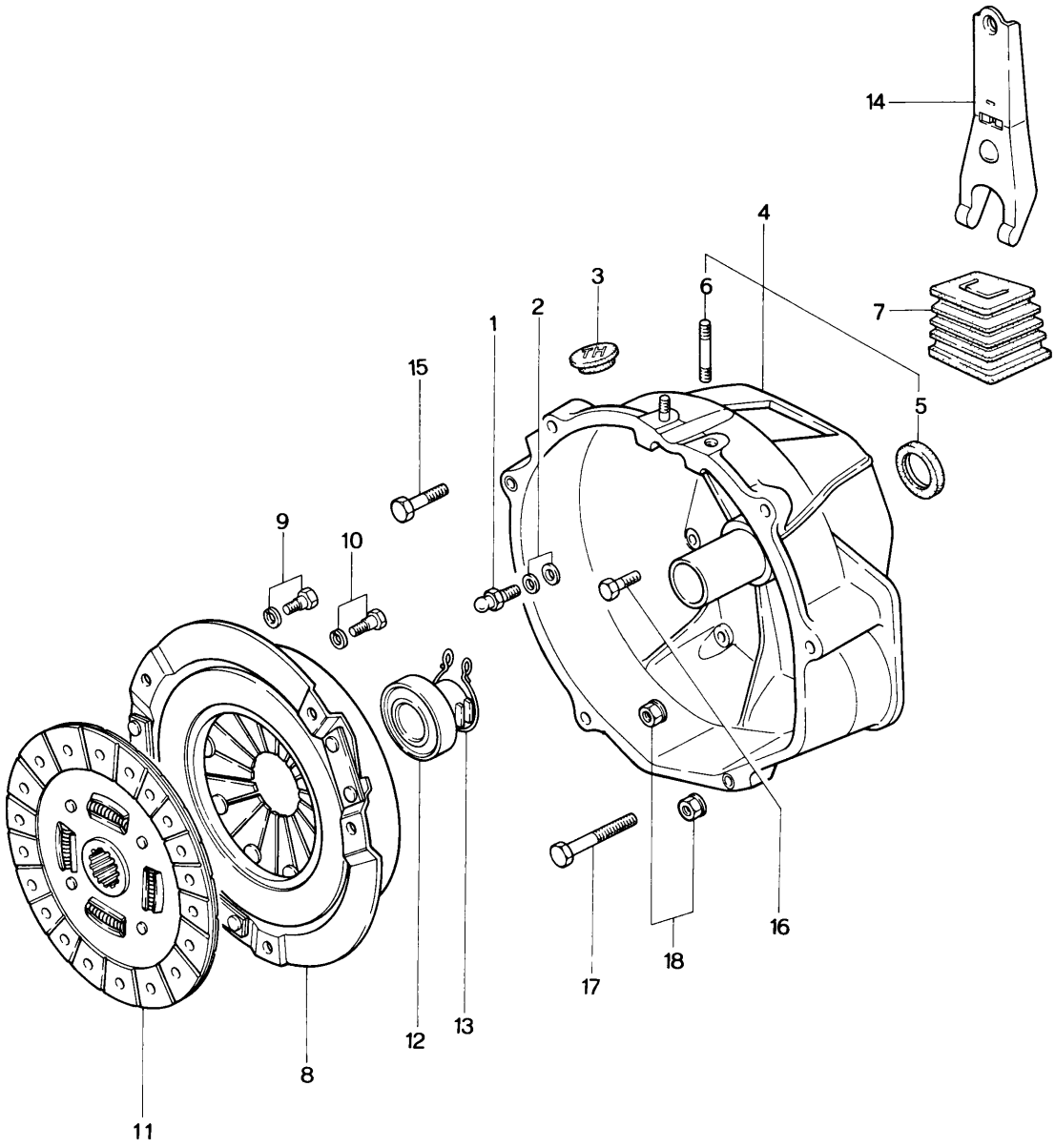
14
4
3
6
7
2
1
15
5
9
10
16
18
17
12
13
8
11

No.	Part Number	Description	Q'ty	Remarks
1	0603 16 102B	Pin, Pivot	1	
2	99953 1000	Washer, Plain	1	
	99971 1000	Washer, Spring	1	
3	0813 16 112	Cover, Top Hole	1	
4	1881 16 210A	Housing, Clutch	1	
5	0603 16 103	Oil Seal	1	
6	0222 16 105	Stud	2	
7	0866 16 214A	Cover, Dust	1	
8	0839 16 410B	Cover, Clutch	1	
9	0839 16 432	Bolt, Reamer-Clutch Cover	2	
	99971 0800	Washer, Spring	2	
10	~~99573~~ 99975 78118	Bolt, Clutch Cover	4	
	99971 0800	Washer, Spring	4	
11	0862 16 460	Disc, Clutch	1	
12	0820 16 510	Collar, Clutch Release	1	
13	0820 16 515	Spring, Clutch Release Collar	1	
14	0454 16 520	Fork, Clutch Release	1	
15	99796 1045	Bolt, Clutch Housing	1	

No.	Part Number	Description	Q'ty	Remarks
16	99796 1035	Bolt, Clutch Housing	2	
17	99796 1090	Bolt, Clutch Housing	1	
18	99940 1001	Nut, Clutch Housing	9	

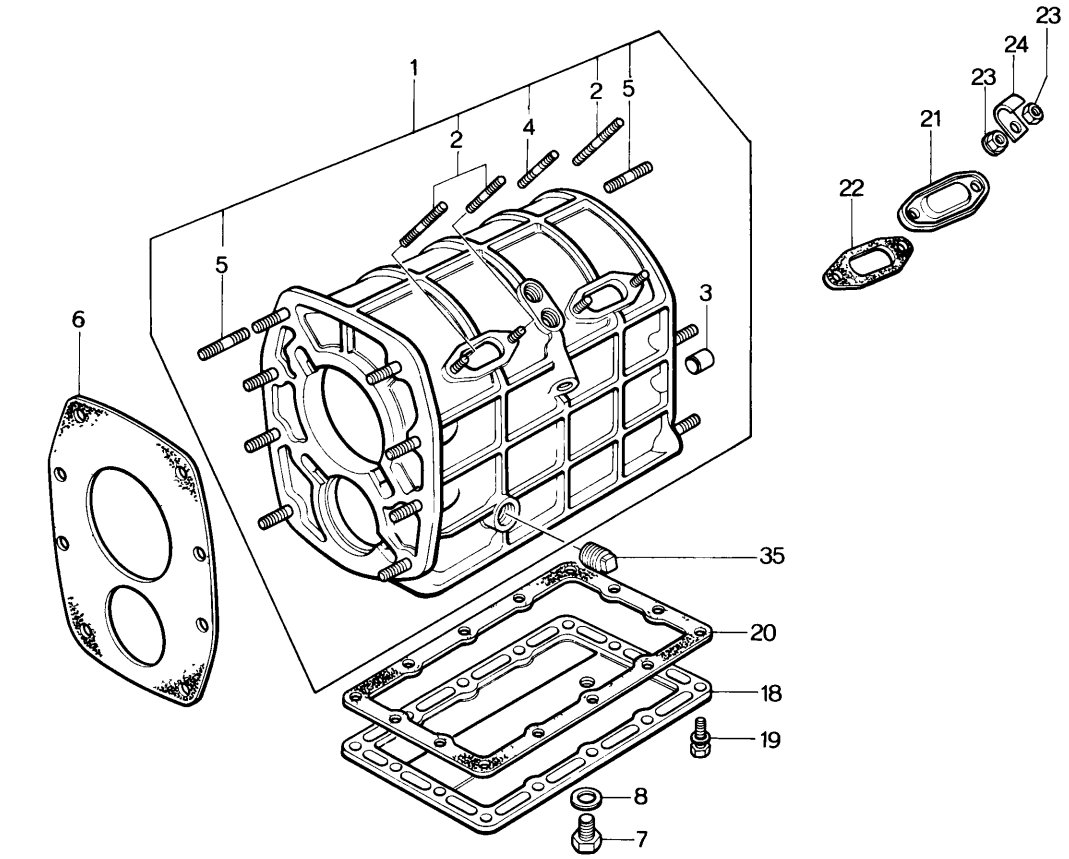
1
2
2
5
4
5
3
6
35
20
18
19
8
7
23
24
23
21
22

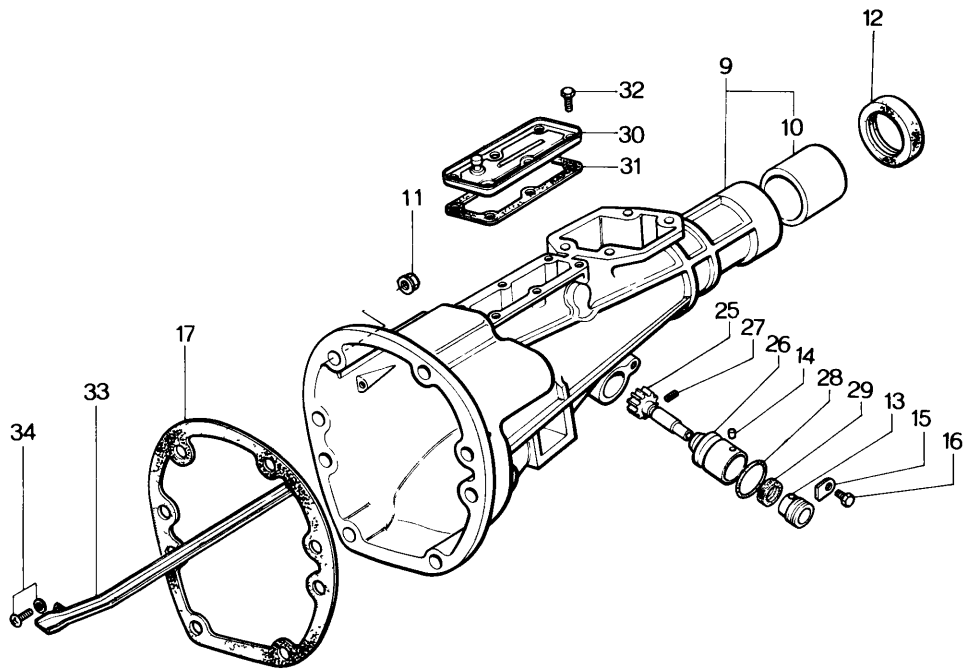
12
9
32
10
30
31
11
25
27
26
14
28
29
13
15
16
17
33
34

No.	Part Number	Description	Q'ty	Remarks
1	1011 17 100B	Case, T/mission	1	
2	0839 17 105	Stud, Blind Cover	3	
3	99233 1225	Pin, Knock	2	
4	99852 0610	Stud, Blind Cover	1	
5	99855 1025	Stud, Front & Rear	14	
6	0839 17 111	Gasket, T/mission Case Front	1	
7	0810 17 121	Plug, Magnet	1	
8	99564 1800	Gasket, Magnet Plug	1	
9	1620 17 330A	Housing, Extension	1	
10	0398 22 333	Bush, Extension Housing	1	
11	99940 1001	Nut, Extension Housing + T/mission Case	6	
12	0376 17 335	Oil Seal, Extension Housing	1	
13	0862 17 351	Joint, Cable-Speedometer	1	
14	0187 17 352	Pin, Dowel-Speedometer Driven Gear	1	
15	0111 17 354	Plate, Lock-Cable Joint	1	
16	99796 0614	Bolt, Lock Plate	1	
17	0839 17 361	Gasket, Extension Housing & T/mission Case	1	

No.	Part Number	Description	Q'ty	Remarks
18	0862 17 371	Cover, Under	1	
19	99796 0620	Bolt, Under Cover	14	
20	0862 17 375	Gasket, Under Cover	1	
21	0810 17 381	Cover, Blind	2	
22	0810 17 385	Gasket, Blind Cover	2	
23	99906 0600	Nut, Blind Cover & Clip	6	
	99971 0600	Washer	4	
24	99276 0506	Clip, Wire Harness	2	
25	1669 17 441	Gear, Driven - Speedometer	1	
26	0862 17 442	Sleeve, Driven Gear	1	
27	99222 0216	Pin, Spring - Driven Gear	1	
28	99541 02211	Ring, "O" - Driven Gear	1	
29	99586 10207	Oil Seal, Driven Gear	1	
30	1011 17 530	Cover, Blind	1	
31	1011 17 535	Gasket, Blind Cover	1	
32	99796 0608	Bolt, Blind Cover	6	
33	1011 17 540A	Pass, Oil	1	
34	99806 0614	Bolt, Oil Pass	1	
	99971 0600	Washer, Spring	1	
35	99502 4000	Plug	1	
	1011 89 175	Gasket Set, T/mission All Gaskets Relative to T/mission Included	1	Set

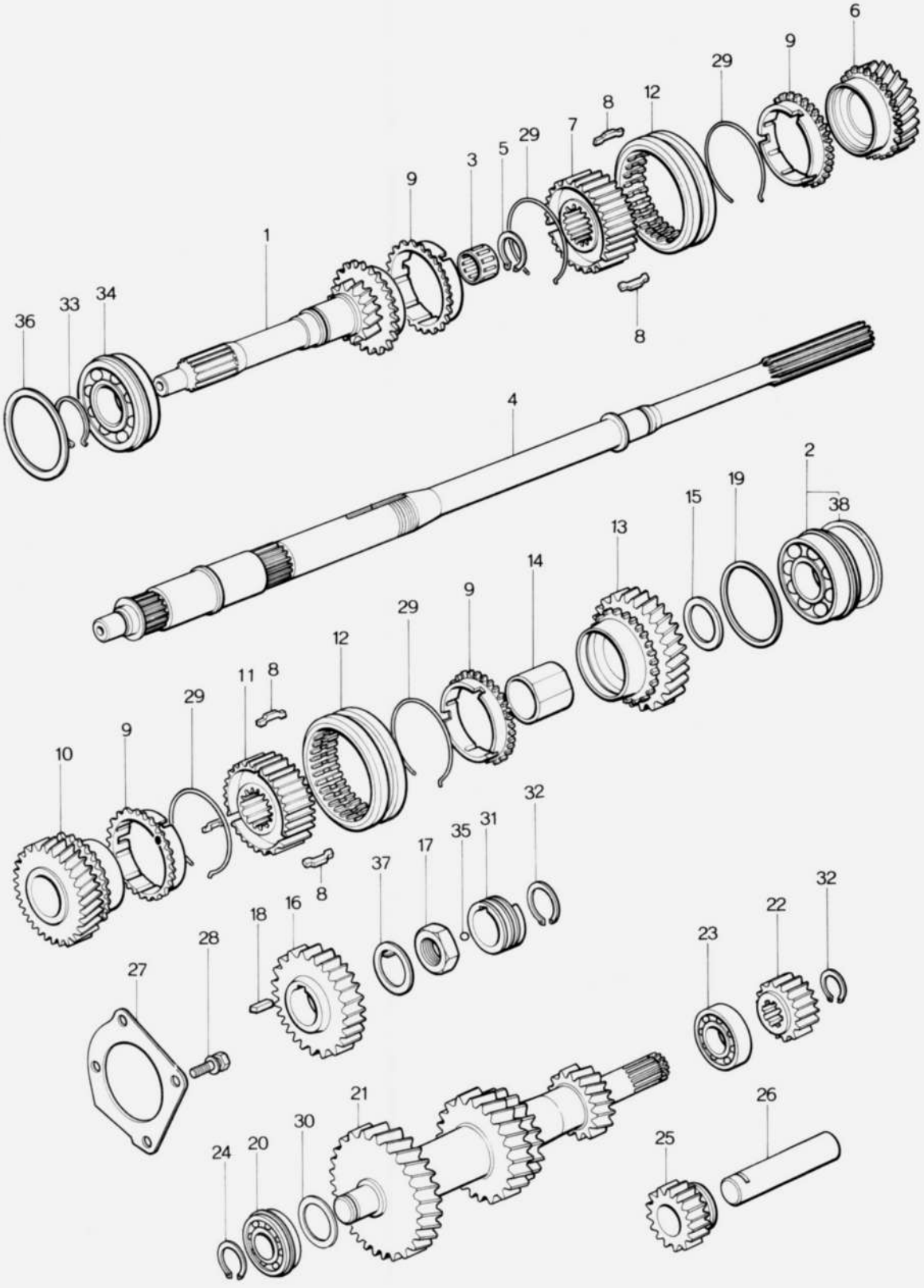
6
9
29
12
8
7
29
5
3
9
1
36
33
34
8
4
2
38
19
15
13
14
9
29
12
8
11
29
9
10
32
31
35
17
37
8
16
18
28
27
32
22
23
26
25
21
30
20
24

No.	Part Number	Description	Q'ty	Remarks
1	0862 17 201	Gear, Main Drive	1	
2	0810 17 204	Bearing, Ball (Fig No 38 Included)	1	
3	0810 17 205	Bearing, Needle Roller	1	
4	1011 17 221A	Shaft, Main	1	
5	0317 17 225	Ring, Snap	1	
6	0862 17 230	Gear (3rd)	1	
7	0862 17 241	Hub, Clutch (3rd & 4th)	1	
8	0187 17 243	Key, Synchronizer	6	
9	0881 17 245B	Ring, Synchronizer	4	
10	0862 17 250	Gear (2nd)	1	
11	0862 17 261	Hub, Clutch (1st & 2nd)	1	
12	0862 17 262A	Sleeve, Clutch Hub	2	
13	1011 17 270	Gear (1st)	1	
14	0839 17 275	Sleeve, Gear	1	
15	0839 17 276	Washer, Thrust (ℓ=2.5)		
	0839 17 277	Washer, Thrust (ℓ=3.0)	Selective use 1	
	0839 17 278	Washer, Thrust (ℓ=3.5)		
16	0839 17 281	Gear, Reverse	1	
17	0839 17 284	Nut, Lock	1	
18	0839 17 285	Key	1	

No.	Part Number	Description	Q'ty	Remarks
19	0839 17 287	Shim, Adjust (t=0.1) } Selective use	2	
	0839 17 288	Shim, Adjust (t=0.3) } Selective use	1	
20	0821 17 297	Bearing, Ball	1	
21	1011 17 301	Gear, Counter Shaft	1	
22	0839 17 302	Gear, Reverse-Counter	1	
23	0821 17 303	Bearing, Needle	1	
24	0839 17 305	Ring, Snap	1	
25	0839 17 310	Gear, Idle-Reverse	1	
26	0839 17 313	Shaft, Reverse Idle Gear	1	
27	0839 17 321A	Stopper, Bearing	1	
28	99801 0820	Bolt, Bearing Stopper	4	
	99971 0800	Washer, Spring	4	
29	0600 17 324	Spring, Synchronizer	4	
30	0305 17 327	Shim, Adjust (t=0.1) } Selective use	2	
	0305 17 328	Shim, Adjust (t=0.3) } Selective use	1	
31	0862 17 341	Gear, Drive-Speedometer	1	
32	99573 2500	Ring, Snap	2	
33	99573 3500	Ring, Snap	1	
34	99606 33070	Bearing, Ball	1	
35	99611 1500	Ball, Steel	1	

No.	Part Number	Description	Q'ty	Remarks
36	99963 6910	Shim, Adjust (t=0.1) } Selective use	2	
	99963 6930	Shim, Adjust (t=0.3) } Selective use	1	
37	99978 3200	Washer, Lock	1	
38	0881 22 297	Clip, Ball Bearing (Included in Fig. No. 2)	1	

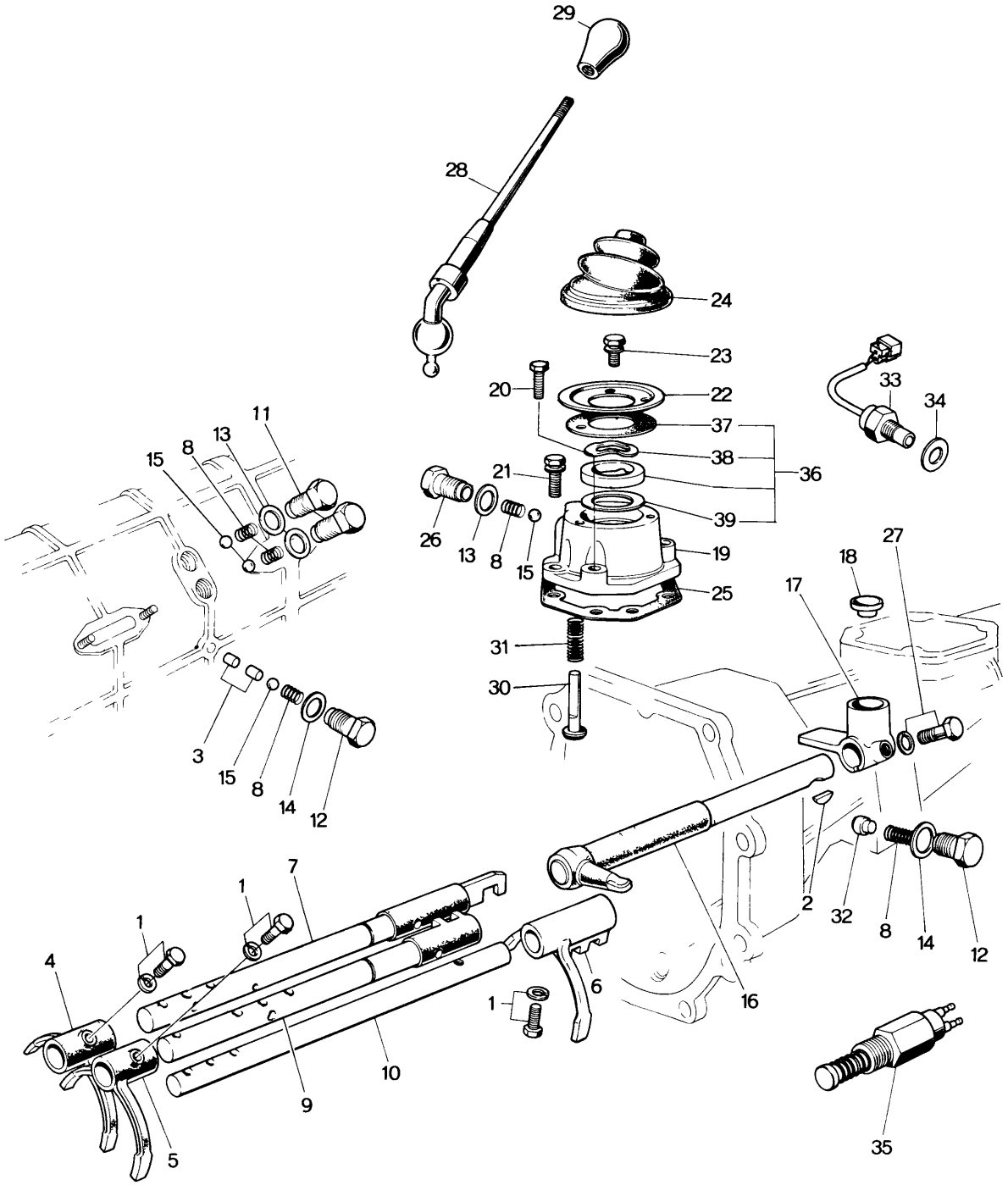
29
28
24
23
20
22
37
38
36
21
39
26
13
8
15
19
25
31
30
33
34
11
13
8
15
3
15
8
14
12
18
27
17
2
32
8
14
12
1
7
1
1
4
9
10
5
6
1
16
35

No.	Part Number	Description	Q'ty	Remarks
1	0118 17 313	Screw, Shift Fork & Rod	3	
	99971 0601	Washer, Spring	3	
2	0111 17 323	Key, Control Lever	1	
3	0114 17 351	Pin, Interlock	2	
4	0810 17 402	Fork, Shift (1 st & 2 nd)	1	
5	1010 17 404	Fork, Shift (3 rd & 4 th)	1	
6	1011 17 406	Fork, Shift (Reverse)	1	
7	1011 17 410	Rod, Shift (1 st & 2 nd)	1	
8	0103 17 411	Spring, Cap	5	
9	1010 17 420	Rod, Shift (3 rd & 4 th)	1	
10	0839 17 431	Rod, Shift (Reverse)	1	
11	0221 17 441	Plug, Cap- Spring	2	
12	0259 17 441	Plug, Cap- Spring	2	
13	99562 1400	Gasket, Cap Plug	3	
14	99564 1000	Gasket, Cap Plug	2	
15	99611 2500	Ball, Steel	4	
16	1620 17 450	Lever, Control	1	
17	0398 17 461A	End, Control Rod	1	
18	0398 17 462A	Seat, Spring	1	
19	0303 17 470	Case, Change Control	1	

No.	Part Number	Description	Q'ty	Remarks
20	99796 0822	Bolt, Change Control Case	2	
21	99796 0832	Bolt, Change Control Case	2	
22	0221 17 473	Plate, Cover	1	
23	99806 0614	Bolt, Cover Plate	3	
	99971 0600	Washer, Spring	3	
24	0221 17 475B	Boot, Dust	1	
25	0271 17 478	Gasket, Change Control Case	1	
26	0183 17 491	Plug, Cap- Spring	1	
27	0187 17 492	Bolt, Reamer- Control Rod End	1	
	99971 0800	Washer, Spring	1	
28	1907 17 510A	Lever, Change	1	
29	0881 17 520	Knob, Change Lever	1	
30	0221 17 551A	Spindle, Select Lock	1	
31	0221 17 552	Spring, Select Lock Spindle	1	
32	0303 17 561	Piece, Friction	1	
33	1114 17 630	Switch, Neutral	1	
34	99564 1800	Gasket, Neutral Switch	1	
35	0376 17 640A	Switch, Reverse Lamp	1	
36	0305 99 178	Change Bush Set	1	
37	0303 17 474	Gasket, Cover Plate	1	

No.	Part Number	Description	Q'ty	Remarks
38	0303 17 482	Washer, Wave	1	
39	99963 3310	Shim } Selective use	3	
	99963 3330	Shim } Selective use	1	

DISTRIBUTOR

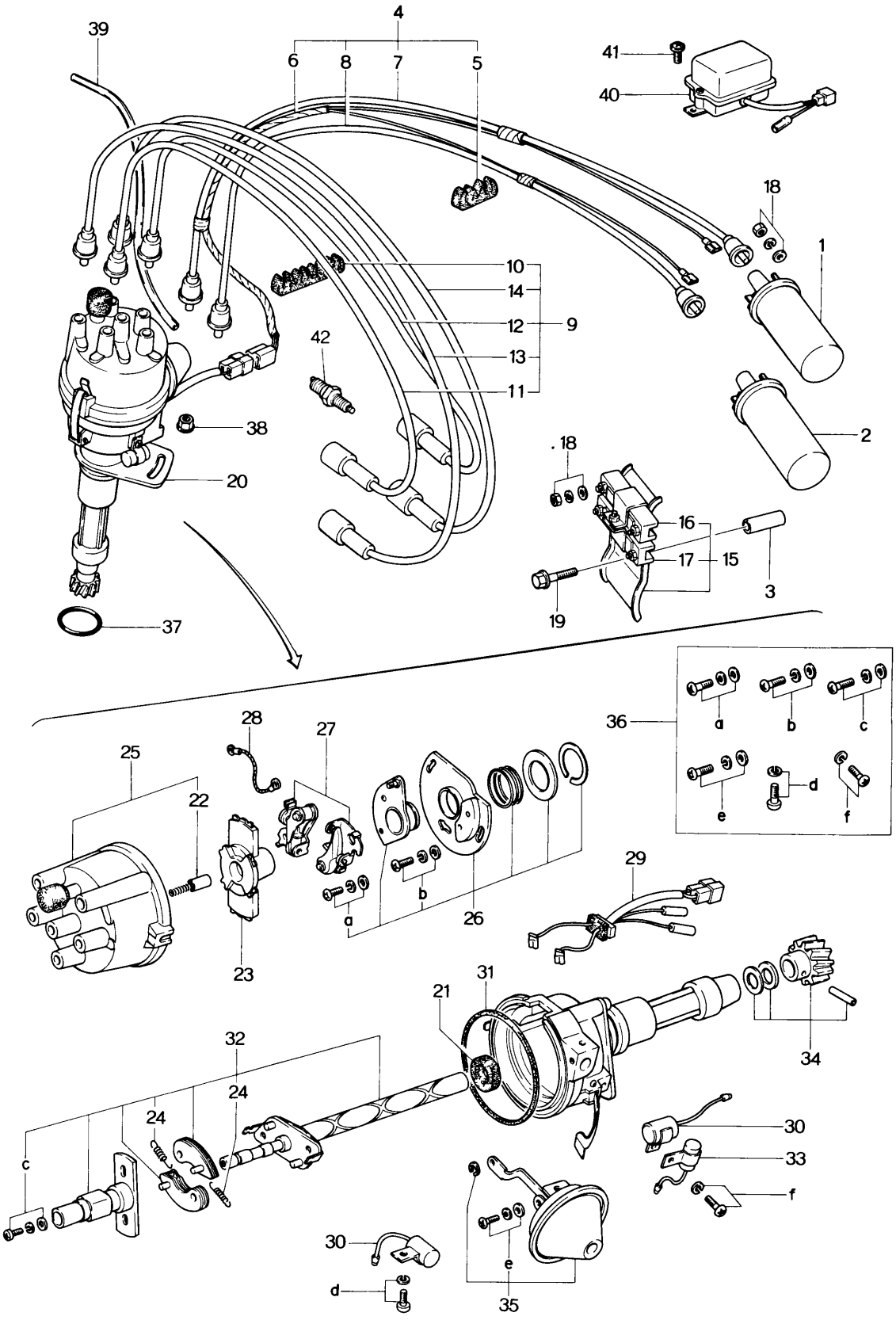

No.	Part Number	Description	Q'ty	Remarks
1	1562 18 100	Coil, Ignition (HP 5 - 13E)	1	
2	1672 18 100	Coil, Ignition (HP 5 - 13J)	1	
3	0823 18 107	Pipe, Ignition Coil Bracket	1	
4	1907 18 110	Cord, High Tension	1	
5	0820 18 111B	Supporter, High Tension Cord	1	
6	1907 18 115	Cord	1	
7	1907 18 120	Cord, High Tension (Trailing)	1	
8	1907 18 160	Cord, High Tension (Leading)	1	
9	1757 18 150	Cord, High Tension	1	
10	0820 18 114	Supporter, High Tension Cord	1	
11	1757 18 130	Cord, High Tension (T- 1)	1	
12	1757 18 140	Cord, High Tension (T- 2)	1	
13	1757 18 170	Cord, High Tension (L- 1)	1	
14	1757 18 180	Cord, High Tension (L- 2)	1	
15	1011 18 190	Bracket, Ignition Coil	1	
16	0845 18 101	Resistor	1	
17	0866 18 101	Resistor	1	

18 24 DISTRIBUTOR

No.	Part Number	Description	Q'ty	Remarks
18	99906 0500	Nut, Ignition Coil & Resistor Terminal	6	
	99952 0500	Washer, Plain	6	
	99971 0500	Washer, Spring	6	
19	99786 0850	Bolt, Ignition Coil Bracket	1	
20	1881 18 200	Distributor	1	
21	0107 18 216A	Oil Seal	1	
22	1757 24 302	Carbon, Contact	1	
23	1757 24 303	Rotor	1	
24	1881 24 308	Spring Set, Governor	1	
25	1757 24 310	Cap	1	
26	1757 24 313	Base, Breaker	1	
27	1757 24 314	Support, Arm	2	
28	1757 24 317	Wire, Lead	1	
29	1757 24 319	Wire, Lead	1	
30	1757 24 322	Condenser	2	
31	1757 24 328	Gasket, Housing	1	
32	1881 24 330	Governor Set	1	
33	1757 24 334	Condenser	1	
34	1757 24 340	Coupling	1	

No.	Part Number	Description	Q'ty	Remarks
35	1881 24 350	Vacuum Set	1	
36	1757 24 360	Screw Set	1	
37	99541 0350	Ring, "O" - Distributor	1	
38	99940 0601	Nut, Distributor	1	
39	0820 18 2918	Tube, Vacuum Control	1	
40	0259 18 3918	Regulator	1	
41	99786 0612	Screw, Regulator	2	
42	2328 18 600	Plug, Sparking (B 7 EM N.G.K. Make)	4	

ALTERNATOR

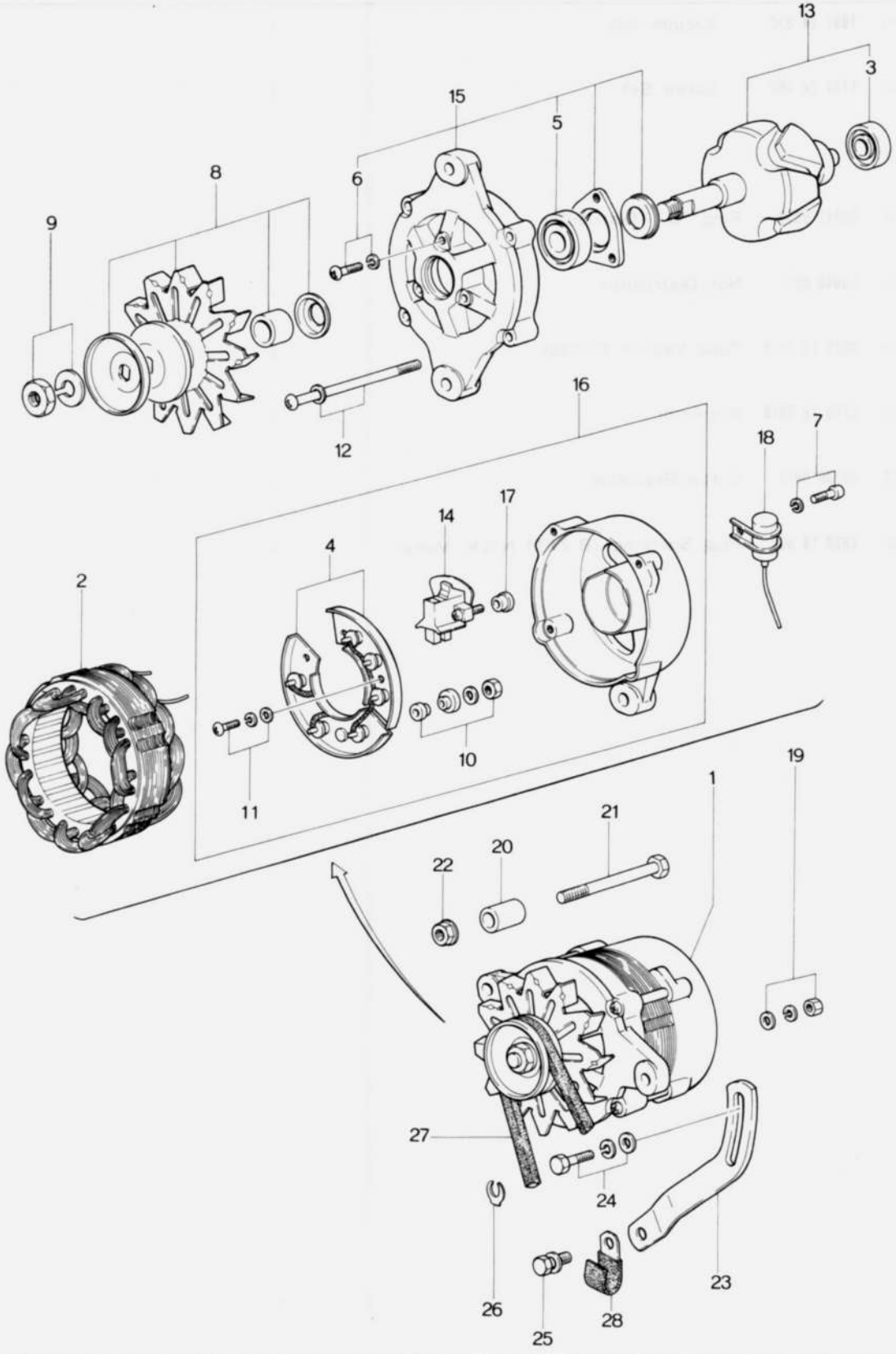

No.	Part Number	Description	Q'ty	Remarks
1	1757 18 300	Alternator	1	
2	1757 24 501	Stator	1	
3	0820 24 503	Bearing	1	
4	1757 24 510	Rectifier	1	
5	0208 24 514	Bearing	1	
6	1757 24 526	Screw Set	1	
7	1757 24 527	Screw, Condenser	1	
8	1757 24 530	Pulley	1	
9	0866 24 533	Nut Set	1	
10	1757 24 533	Nut Set	1	
11	1757 24 534	Screw	1	
12	1757 24 535	Screw Set	1	
13	1757 24 540	Rotor	1	
14	1011 24 541	Holder, Brush	1	
15	1757 24 550	Bracket, Front	1	
16	1757 24 560	Bracket, Rear	1	
17	1011 24 563	Mould	1	
18	1757 24 581	Condenser	1	
19	99906 0600	Nut, Alternator Terminal	1	

18 24 ALTERNATOR

No.	Part Number	Description	Q'ty	Remarks
	99952 0600	Washer, Plain	1	
	99971 0600	Washer, Spring	1	
20	1757 18 311	Bracket, Alternator	1	
21	99800 10115	Bolt, Alternator	1	
22	99940 1001	Nut, Alternator	1	
23	1757 18 361	Strap, Alternator	1	
24	99796 0825	Bolt, Strap	1	
25	99796 0816	Bolt, Alternator	1	
26	0222 18 375	Shim (t=0.3)		
	0222 18 376	Shim (t=0.5) Selective use	1	
	0222 18 377	Shim (t=0.7)		
27	1757 18 381	Belt, "V"	1	
28	99276 1608	Clip, Wire Harness	1	

STARTER & BATTERY (MANUAL)

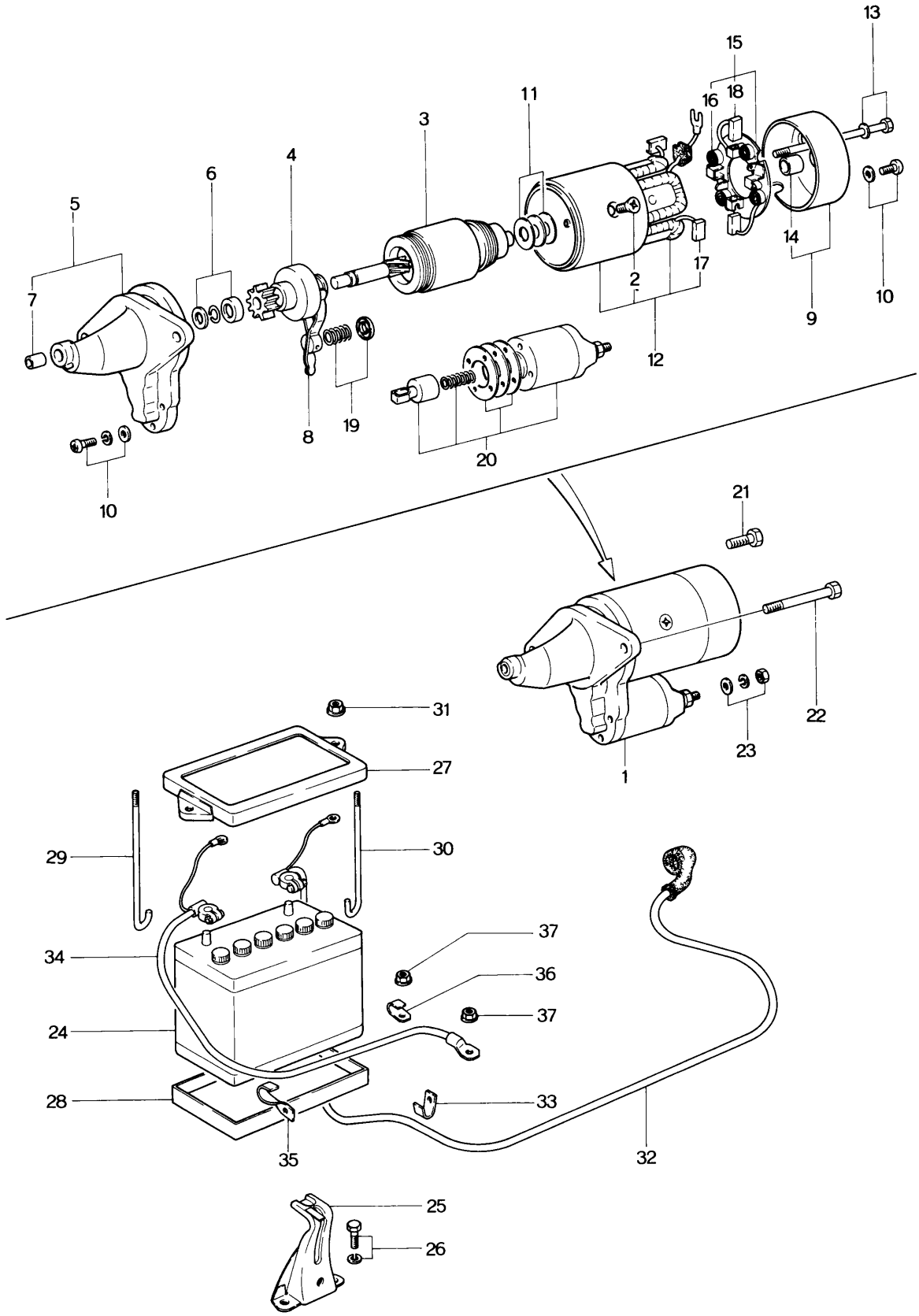

STARTER & BATTERY (MANUAL) 18 24

No.	Part Number	Description	Q'ty	Remarks
1	1907 18 400A	Starter	1	
2	0866 24 704	Screw	1	
3	1907 24 705	Armature	1	
4	1907 24 709	Clutch, Over Running	1	
5	1907 24 710	Bracket, Front	1	
6	0426 24 712	Stopper Set	1	
7	0426 24 715	Bearing, Sleeve Front Bracket	1	
8	0866 24 716	Lever	1	
9	1907 24 720	Bracket, Rear	1	
10	0426 24 725	Screw Set	1	
11	0426 24 726	Washer Set	1	
12	1907 24 730	Yoke	1	
13	0426 24 731	Bolt Set, Through	1	
14	0222 24 741	Bearing, Sleeve	1	
15	0222 24 750	Brush Holder	1	
16	0222 24 752A	Spring, Brush	4	
17	0222 24 753	Brush, Yoke	2	
18	0426 24 753	Brush, Brush Holder	2	
19	0426 24 754	Spring Set	1	
20	0222 24 760A	Switch	1	

No.	Part Number	Description	Q'ty	Remarks
21	99796 1030	Bolt, Starter	1	
22	99803 10120	Bolt, Starter	1	
23	99901 0800	Nut, Starter "B" Terminal	1	
	99952 0800	Washer, Plain	1	
	99971 0800	Washer, Spring	1	
24	1672 18 520	Battery (N70Z) (National Make)	1	
25	2826 53 270	Carrier, Battery	1	
26	99804 0816	Bolt, Battery Carrier	3	
	99952 0822	Washer, Plain	3	
27	2869 53 290A	Clamp, Battery	1	
28	2981 54 222	Tray, Battery	1	
29	0223 54 225	Bolt, Clamp-Battery	1	
30	0614 70 445	Bolt, Clamp-Battery	1	
31	99940 0602	Nut, Clamp Bolt	2	
32	1907 67 101	Cable, Battery Positive	1	
33	0381 18 997	Clip, Battery Positive Cable	2	
34	1098 67 111	Wire, Earth-Battery	1	
35	0249 13 595	Clip, Earth Wire	1	
36	99276 1208	Clip, Earth Wire	1	
37	99940 0800	Nut, Earth Wire	2	

STARTER & BATTERY (AUTOMATIC)

(USED UP TO 7½)

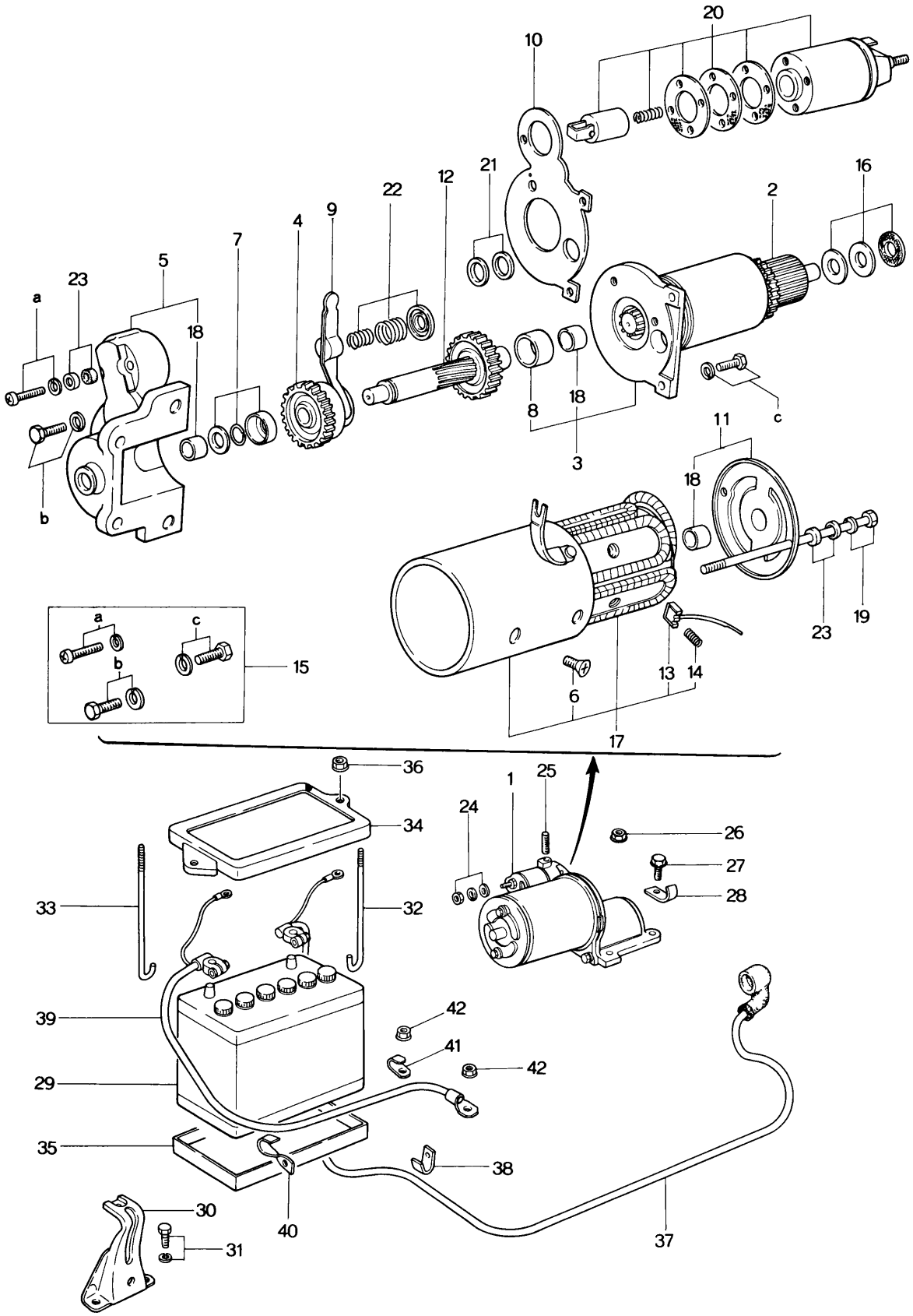

STARTER & BATTERY (AUTOMATIC)

(USED UP TO 74/2)

18 24

No.	Part Number	Description	Q'ty	Remarks
1	2869 18 400A	Starter	1	
2	0839 24 705	Armature	1	
3	0839 24 706	Bracket, Inner	1	
4	0839 24 709	Clutch, Over Running	1	
5	2869 24 710	Bracket, Front	1	
6	0727 24 712	Screw	4	
7	2869 24 712	Stopper Set	1	
8	0839 24 715	Metal	1	
9	0839 24 716	Lever	1	
10	0839 24 719	Plate, Water Proof	1	
11	2869 24 720	Bracket, Rear	1	
12	0839 24 721	Shaft, Pinion	1	
13	0839 24 723	Brush	4	
14	0839 24 724	Spring, Brush	4	
15	2869 24 725	Screw Set	1	
16	2869 24 726	Washer Set	1	
17	2869 24 730	Yoke	1	
18	0249 24 731	Metal, Bracket	3	
19	0559 24 731	Bolt Set, Through	2	
20	2869 24 736	Switch	1	

18 24 STARTER & BATTERY (AUTOMATIC)
(USED UP TO 74/2)

	No.	Part Number	Description	Q'ty	Remarks
	21	2869 24 748	Washer Set	1	
	22	2869 24 754	Spring Set, Lever	1	
	23	0559 24 760	Gasket Set	1	
	24	99901 0800	Nut, Starter "B" Terminal	1	
		99952 0800	Washer, Plain	1	
		99971 0800	Washer, Spring	1	
	25	99851 0814 A	Stud, Starter	1	
	26	99940 0800	Nut, Starter	2	
	27	99796 0825	Bolt, Starter	2	
	28	99276 0808	Clip	1	
	29	1689 18 520	Battery (Y110—5) (Yuasa Make)	1	
●		1672 18 520	Battery (N70Z) (National Make)	1	73/9 ~ ○
	30	2826 53 270	Carrier, Battery	1	
●		2826 53 270 A	Carrier, Battery	1	73/9 ~ △
	31	99804 0816	Bolt, Battery Carrier	3	
		99952 0822	Washer, Plain	3	
	32	2826 53 299 B	Bolt, Clamp-Battery	1	
●		0614 70 445	Bolt, Clamp-Battery	1	73/9 ~ ×
	33	0223 54 225	Bolt, Clamp-Battery	1	
	34	2467 54 290 A	Clamp, Battery	1	
●		2869 53 290 A	Clamp, Battery	1	73/9 ~ ×
	35	2113 54 295	Tray, Battery	1	
●		2981 54 ~~422~~ 222	Tray, Battery	1	73/9 ~ ×
	36	99940 0600	Nut, Clamp Bolt	2	

STARTER & BATTERY (AUTOMATIC)
(USED UP TO 74/2)

No.	Part Number	Description	Q'ty	Remarks
37	1098 67 101	Cable, Battery Positive	1	
●	1098 67 101A	Cable, Battery Positive	1	73/9 ~△
38	99276 1410	Clip, Battery Positive Cable	1	
39	1098 67 111	Wire, Earth-Battery	1	
●	1098 67 111A	Wire, Earth-Battery	1	73/9 ~△
40	0249 13 595	Clip, Earth Wire	1	
41	99276 1208	Clip, Earth Wire	1	
42	99940 0800	Nut, Earth Wire	2	
●	99796 0812	Bolt, Flange	2	73/9 ~×

STARTER & BATTERY
(AUTOMATIC USED FROM 74/3)

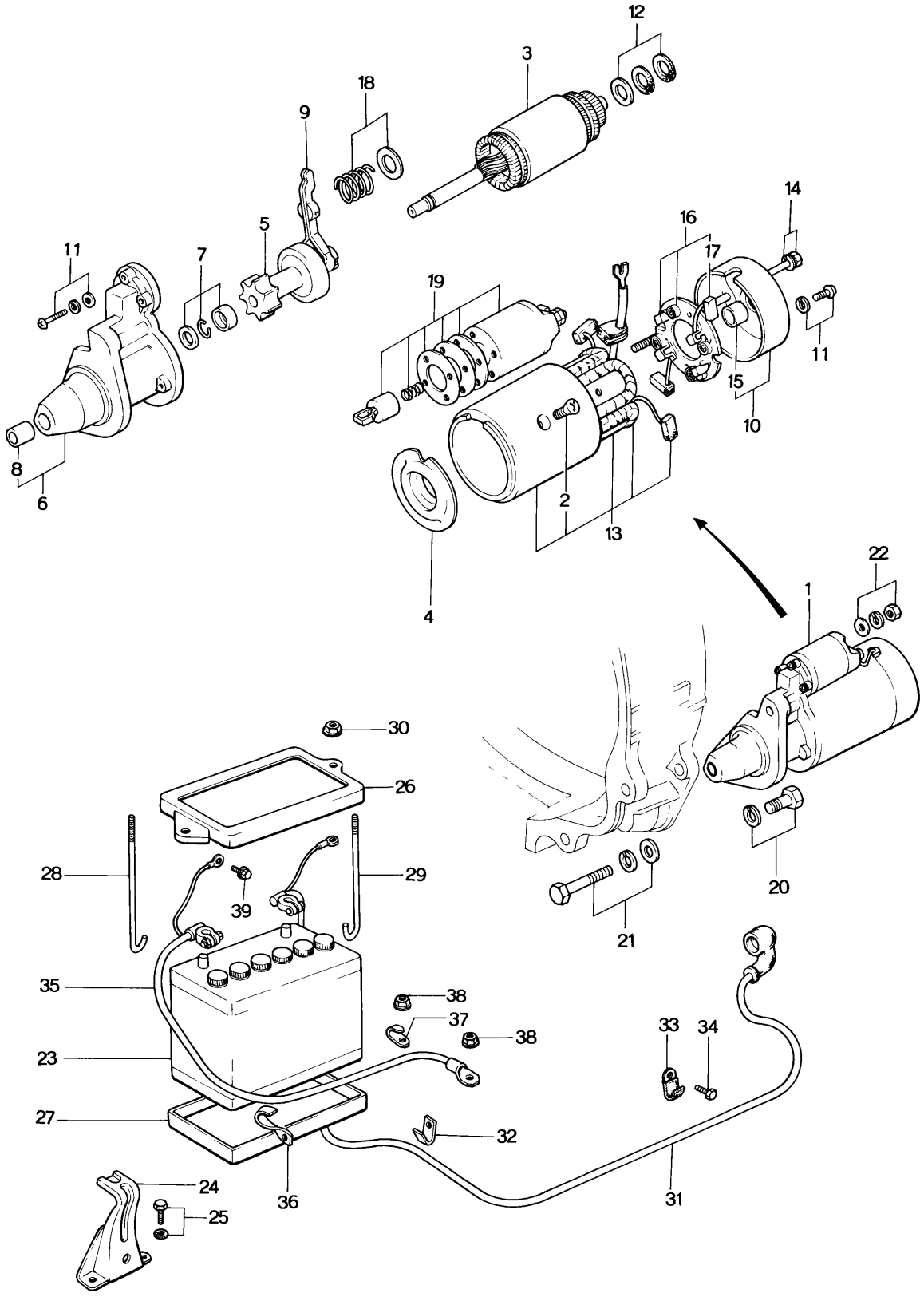

STARTER & BATTERY
(AUTOMATIC USED FROM 74/3)

18 24

No.	Part Number	Description	Q'ty	Remarks
1	1758 18 400A	Starter	1	
	1758 18 400B	Starter	1	74/4 ~ △
2	0866 24 704	Screw	4	
3	1758 24 705	Armature	1	
4	1758 24 706	Bracket, Center	1	
5	1757 24 709	Clutch, Over Running	1	
6	1758 24 710	Bracket, Front	1	
7	0426 24 712	Stopper Set	1	
8	0426 24 715	Bearing, Sleeve-Front Bracket	1	
9	0866 24 716	Lever	1	
10	0845 24 720	Bracket, Rear	1	
11	0426 24 725	Screw Set	1	
12	1758 24 726	Washer Set	1	
13	1758 24 730	Yoke	1	
	1758 24 730A	Yoke	1	74/4 ~ △
14	1758 24 731	Bolt Set	1	
15	0222 24 741	Bearing, Sleeve-Rear Bracket	1	
16	1758 24 750	Brush Holder	1	
17	0426 24 753	Brush	2	
18	0426 24 754	Spring Set	1	
19	1758 24 736	Switch	1	

18 24 STARTER & BATTERY
(AUTOMATIC USED FROM 74/3)

No.	Part Number	Description	Q'ty	Remarks
20	99801 1032	Bolt, Starter	1	
	99971 1000	Washer, Spring	1	
21	99801 1075	Bolt, Starter	1	
	99953 1000	Washer, Plain	1	
	99971 1000	Washer, Spring	1	
22	99901 0800	Nut, Starter "B" Terminal	1	
	99952 0800	Washer, Plain	1	
	99971 0800	Washer, Spring	1	
23	1620 18 520	Battery (N70Z) (GS Make)	1	Selective use
	1672 18 520	Battery (N70Z) (National Make)	1	Selective use
24	2826 53 270A	Carrier, Battery	1	
25	99804 0816	Bolt, Battery Carrier	3	
	99952 0822	Washer, Plain	3	
26	2869 53 290A	Clamp, Battery	1	
27	2981 54 222	Tray, Battery	1	
28	0223 54 225	Bolt, Clamp-Battery	1	
29	0614 70 445	Bolt, Clamp-Battery	1	
30	99940 0602	Nut, Clamp Bolt	2	
31	1907 67 101A	Cable, Battery Positive	1	
32	0381 18 997	Clip, Battery Positive Cable	2	

STARTER & BATTERY
(AUTOMATIC USED FROM 74/3)

18 24

No.	Part Number	Description	Q'ty	Remarks
33	99276 1406	Clip, Battery Positive Cable	1	
34	99796 0510	Bolt, Clip	1	
35	1098 67 111 A	Wire, Earth-Battery	1	
36	0249 13 595	Clip, Earth Wire	1	
37	99276 1208	Clip, Earth Wire	1	
38	99940 0800	Nut, Earth Wire	2	
39	99785 0616	Bolt, Clip	1	
	99971 0600	Washer, Spring	1	

AUTOMATIC T/MISSION
(CONVERTER, OIL PUMP & PIPING)

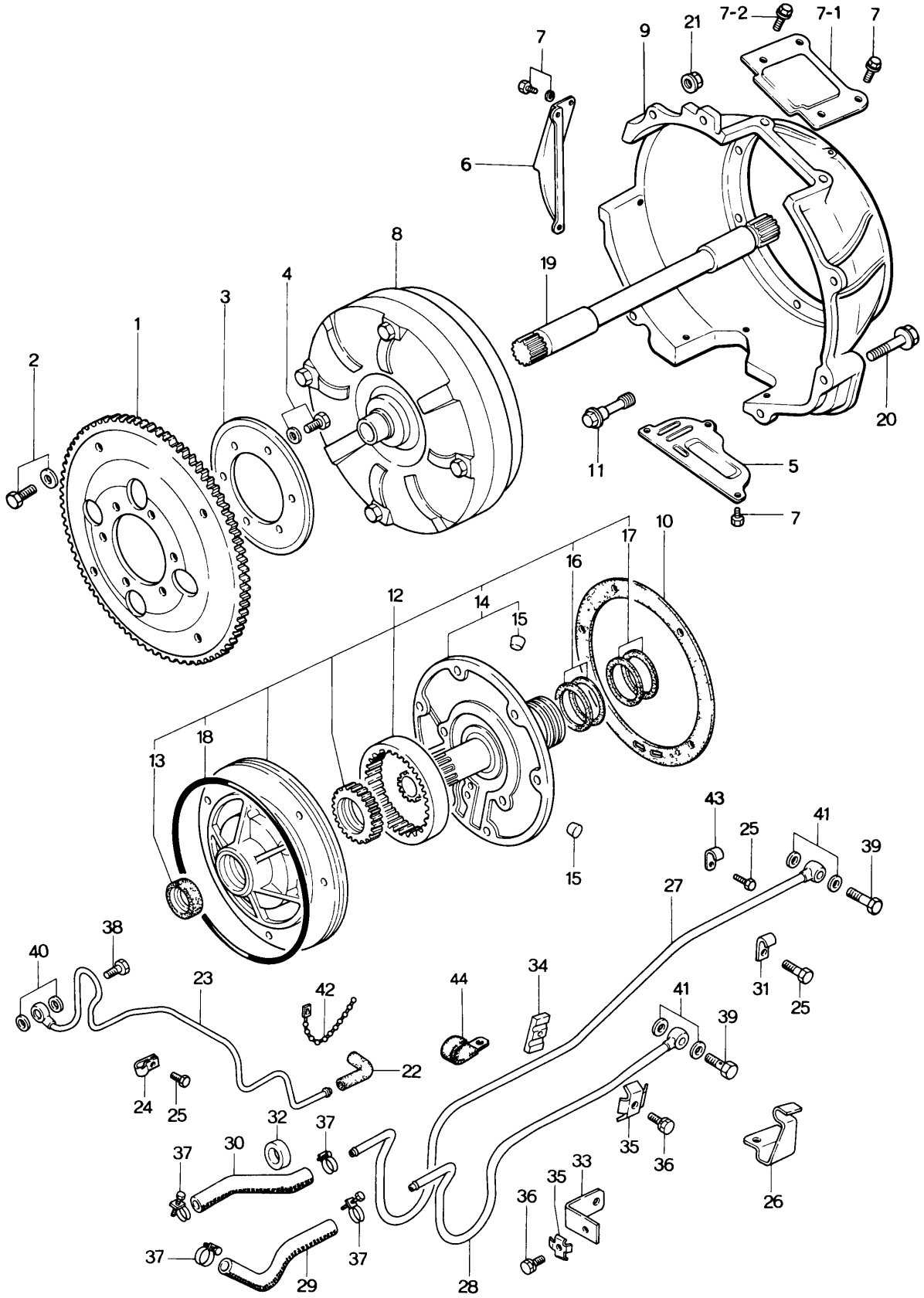

No.	Part Number	Description	Q'ty	Remarks
1	2070 19 020	Plate, Drive	1	
●	1758 19 020	Plate, Drive	1	7403~×
2	99781 1012	Bolt, Drive Plate	4	
	99971 1000	Washer, Spring	4	
3	0842 19 025	Plate, Backing	1	
4	99781 1018	Bolt, Backing Plate	6	
	99971 1000	Washer, Spring	6	
5	1908 19 027	Cover, Under	1	
6	0454 19 028	Cover, Side	1	
7	99806 0610	Bolt, Under Cover & Side Cover	7	
●	99796 0610	Bolt, Under Cover & Side Cover	8	7403~○
	99971 0600	Washer, Spring	7	7403~Discarded
● 7-1	1758 19 028	Cover, Top	1	7403~Added Anew
● 7-2	99796 0816	Bolt, Top Cover	2	7403~Added Anew
8	0338 19 100A	Converter, Torque	1	
9	1908 19 211	Housing, Converter	1	
●	1758 19 211A	Housing, Converter	1	7403~×
10	0338 19 215	Gasket, Oil Pump	1	
●	1758 19 215	Gasket, Oil Pump	1	7403~×
11	0338 19 216	Bolt, Housing	6	
12	0338 19 220	Pump, Oil	1	
●	1758 19 220	Pump, Oil	1	7403~×
13	0338 19 223	Oil Seal	1	
14	0338 19 240	Cover	1	
15	0338 19 245	Plug, Tapered	2	
●	0338 19 245A	Plug, Tapered	2	7401~○
16	0338 19 256	Ring, Seal	2	

AUTOMATIC T / MISSION
(CONVERTER, OIL PUMP & PIPING)

No.	Part Number	Description	Q'ty	Remarks
17	0338 19 257	Ring, Seal	2	
18	0338 19 258	Seal, Lathe Cut Ring	1	
19	0338 19 678	Shaft, Input	1	
20	99796 1035	Bolt, Housing	2	
	99796 1040	Bolt	1	
	99796 1045	Bolt	2	
21	99940 1001	Nut, Housing	2	
22	0338 19 904	Hose, Vacuum (Rr.)	1	
●	0338 19 904A	Hose, Vacuum (Rr.)	1	73/10 ~ △
23	1908 19 910	Pipe, Vacuum	1	
●	0808 19 910	Pipe, Vacuum	1	74/3 ~ ×
24	0842 19 915A	Clip, Vacuum Pipe	1	
25	99796 0610	Bolt, Clip	3	
●	99796 0610	Bolt, Clip	4	74/3 ~ ○
26	0436 19 917	Clip	1	
27	1098 19 920A	Pipe, Oil	1	
●	0808 19 920A	Pipe, Oil	1	74/3 ~ ×
28	1098 19 930A	Pipe, Oil	1	
●	0808 19 930A	Pipe, Oil	1	74/3 ~ ×
29	1098 19 933	Hose, Oil	1	
●	1098 19 933A	Hose, Oil	1	73/12 ~ △
30	1015 19 934B	Hose, Oil	1	
●	1098 19 933A	Hose, Oil	1	73/12 ~ △
31	1633 19 938	Clip, Pipe	1	74/3 ~ Discarded
32	1098 19 939	Guide, Oil Hose	1	
33	1908 19 940	Bracket, Pipe	1	
●	1908 19 940A	Bracket, Pipe	1	From Car No. 1

No.	Part Number	Description	Q'ty	Remarks
34	1015 19 945A	Plate, Spacer	1	
35	0866 45 903A	Clip, Pipe	2	
36	99796 0620	Bolt, Pipe Clip	2	
37	99282 1700	Band, Hose	4	
38	99381 0600	Bolt, Connector - Vacuum Pipe	1	
39	99381 1000	Bolt, Connector - Oil Pipe	2	
40	99564 1000	Gasket, Connector Bolt	2	
41	99564 1400	Gasket, Connector Bolt	4	
42	99709 0108	Band, Oil Pipe	1	
● 43	2579 19 989	Clip	1	74/3 ~Added Anew
● 44	99276 1006	Clip	1	74/3 ~Added Anew
	1908 19 090	Shipping, T /mission	1	
●	0808 19 090	Shipping, T /mission	1	74/3 ~×

AUTOMATIC T/MISSION
(CASE & MAIN CONTROL) (USED UP TO 74½)

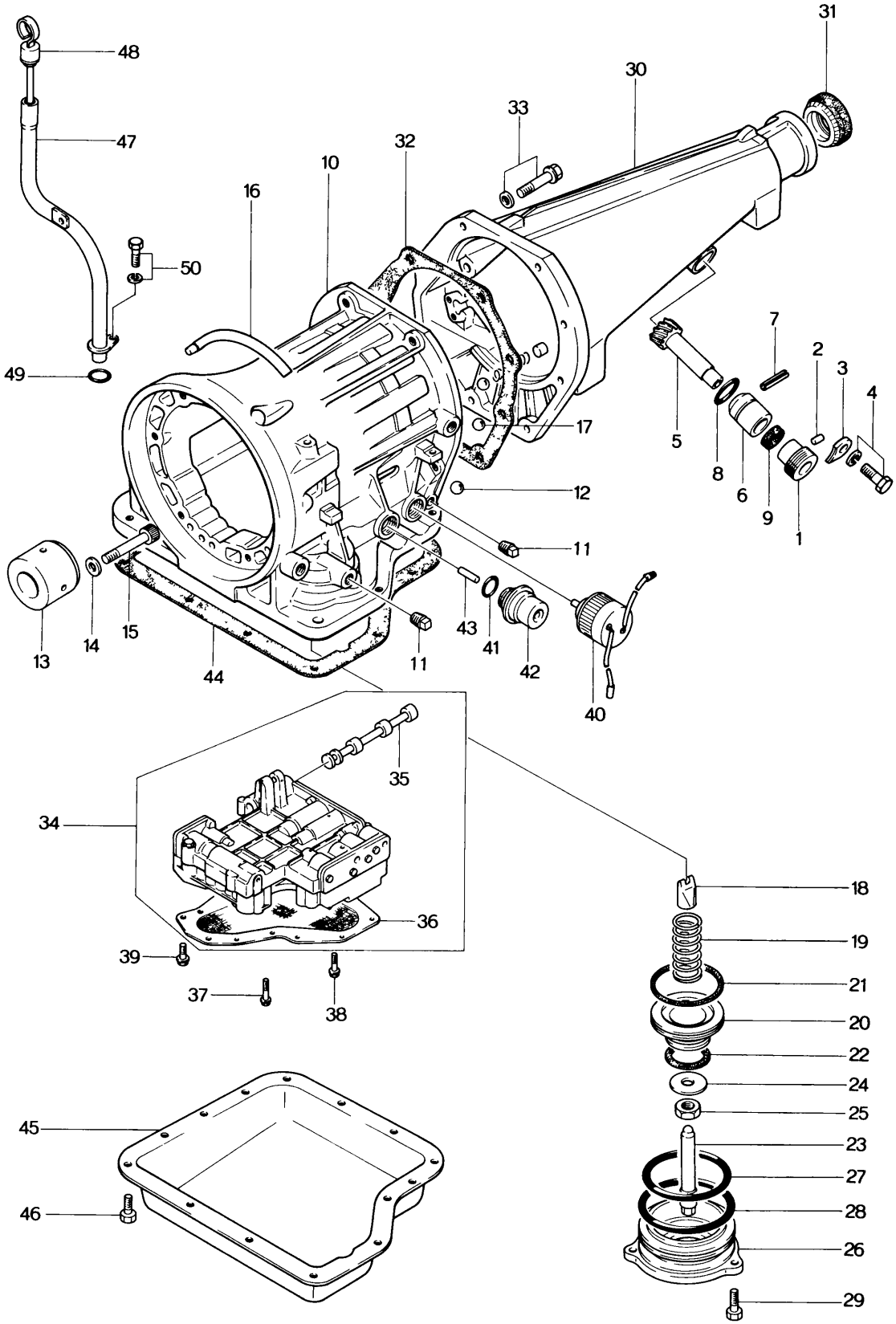

No.	Part Number	Description	Q'ty	Remarks
1	0862 17 351	Joint, Cable - Speedometer	1	
2	0187 17 352	Pin, Dowel - Driven Gear	1	
3	0111 17 354	Plate, Lock - Cable Joint	1	
4	99806 0614	Bolt, Lock Plate	1	
	99971 0600	Washer, Spring	1	
5	1669 17 441	Gear, Driven - Speedometer	1	
6	0862 17 442	Sleeve, Speedometer Driven Gear	1	
7	99222 0216	Pin, Spring - Driven Gear	1	
8	99541 02211	Ring, "O" - Driven Gear	1	
9	99586 10207	Oil Seal, Driven Gear	1	
10	0338 19 310	Case, T/mission	1	
11	0338 19 331A	Plug, Square Head	3	
12	99611 1750	Ball, Steel	3	
13	0338 19 336	Race, Inner	1	
14	0338 19 337	Washer, Plain	8	
15	0338 19 338	Bolt	8	
16	0397 19 340	Breather, Air	1	
17	99611 2000	Ball, Steel	2	

AUTOMATIC T / MISSION

(CASE & MAIN CONTROL) (USED UP TO 74/2)

No.	Part Number	Description	Q'ty	Remarks
18	0338 19 361	Strut, Band	1	
19	0338 19 363	Spring, Return - Piston	1	
20	0842 19 381	Piston, Band Servo	1	
21	0338 19 384	Seal, Piston	1	
22	0842 19 385	Seal, Piston	1	
23	0338 19 388A	Stem, Piston	1	
24	0338 19 388A	Washer, Plain	1	
25	0338 19 389	Nut, Band Adjust	1	
26	0842 19 391	Retainer, Servo	1	
27	0842 19 394	Seal, Lathe Cut Ring	1	
28	0338 19 395	Seal, "O" Ring	1	
29	0338 19 397	Bolt	3	
30	1840 19 710	Housing, Extension	1	
31	0378 17 335	Oil Seal	1	
32	0338 19 735	Gasket, Extension Housing	1	
33	0338 19 737	Bolt, Extension Housing	8	
	0338 19 739	Washer, Plain	8	

No.	Part Number	Description	Q'ty	Remarks
34	0397 19 750	Valve, Control	1	
35	0338 19 768	Valve, Manual	1	
36	0338 19 815	Strainer, Oil	1	
37	0338 19 831	Bolt, Control Valve	3	
38	0338 19 832	Bolt, Control Valve	2	
39	0338 19 833	Bolt, Control Valve	2	
40	1675 19 821	Solenoid, Down Shift	1	
41	0338 19 822	Seal, "O" Ring	2	
42	0338 19 823	Diaphragm, Vacuum	1	
43	0338 19 825	Rod, Diaphragm (ℓ =30.0)	Selective use	1
	0338 19 826	Rod (ℓ =31.0)		
	0338 19 827	Rod (ℓ =30.5)		
	0338 19 828	Rod (ℓ =29.0)		
	0338 19 829	Rod (ℓ =29.5)		
44	0338 19 835A	Gasket, Oil Pan	1	
45	0338 19 836	Pan, Oil	1	
46	0338 19 837	Bolt, Oil Pan	14	
47	2070 19 870	Tube, Oil Level	1	

AUTOMATIC T / MISSION

(CASE & MAIN CONTROL) (USED UP TO 74½)

No.	Part Number	Description	Q'ty	Remarks
48	0338 19 880	Gauge, Oil Level	1	
49	99541 01601	Ring, "O" - Oil Level Tube	1	
50	99806 0614	Bolt, Oil Level Tube	1	
	99971 0600	Washer, Spring	1	
	0397 22 100	Gasket & Seal Kit	1	Set
	0376 17 335	Oil Seal	1	
	0338 19 215	Gasket, Oil Pump	1	
	0338 19 223	Seal, Oil Pump Housing	1	
	0338 19 258	Seal, Lathe Cut Ring	1	
	0338 19 432	Seal, "O" Ring	1	
	0338 19 446	Seal, "O" Ring	1	
	0338 19 603	Seal, Piston	1	
	0338 19 604	Seal, "O" Ring	1	
	0338 19 735	Gasket, Extension Housing	1	
	0338 19 822	Seal, "O" Ring	2	
	0338 19 835A	Gasket, Oil Pan	1	

AUTOMATIC T/MISSION

(CASE & MAIN CONTROL USED FROM 74/3)

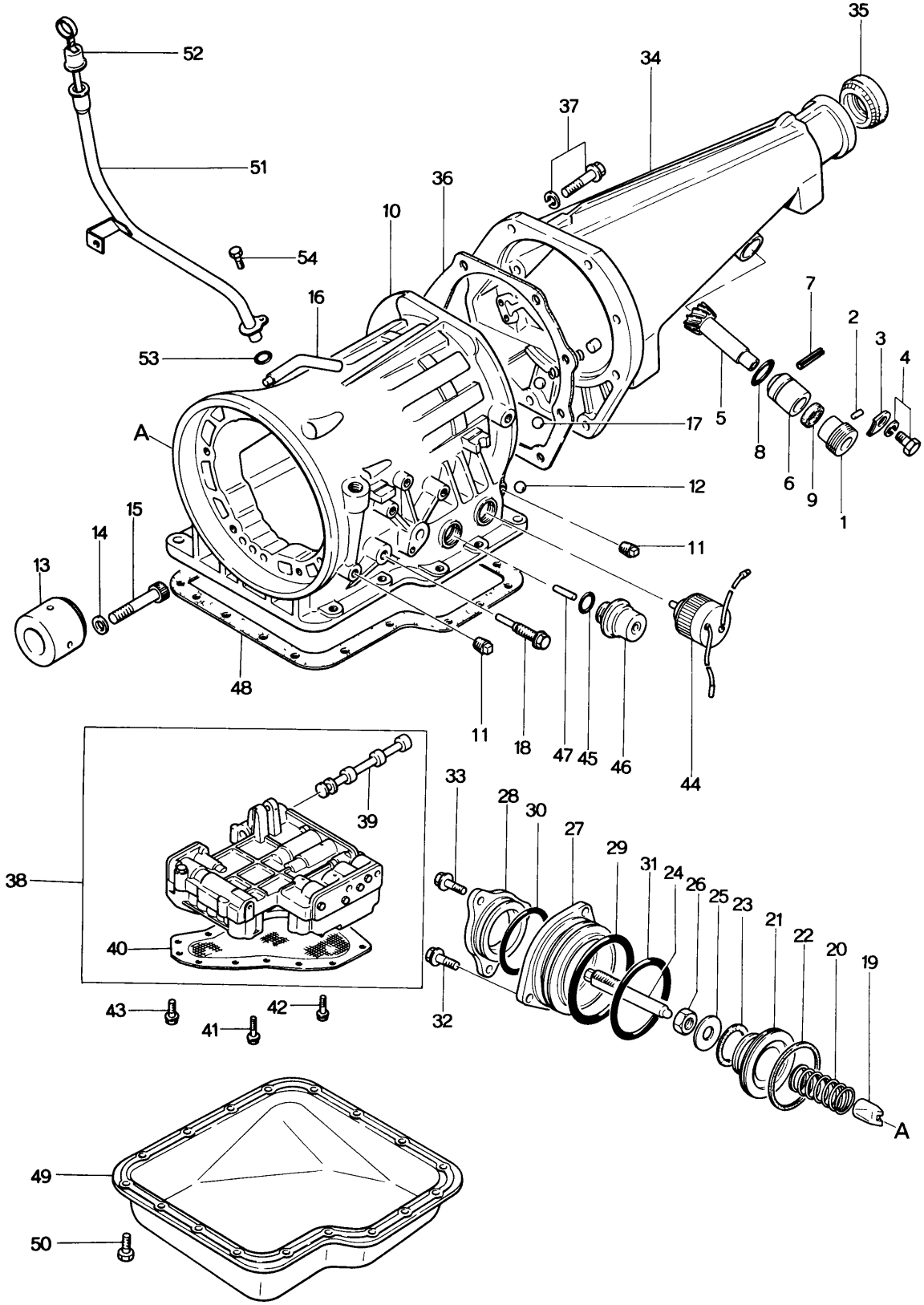

No.	Part Number	Description	Q'ty	Remarks
1	0862 17 351	Joint, Cable-Speed	1	
2	0187 17 352	Pin, Dowel-Driven Gear	1	
3	0111 17 354	Plate, Lock-Cable Joint	1	
4	99806 0614	Bolt, Lock Plate	1	
	99971 0600	Washer, Spring	1	
5	1669 17 441	Gear, Driven-Speedometer	1	
6	0862 17 442	Sleeve, Speedometer Driven Gear	1	
7	99222 0216	Pin, Spring-Driven Gear	1	
8	99541 02211	Ring, "O"-Driven Gear	1	
9	99586 10207	Oil Seal, Driven Gear	1	
10	1758 19 310	Case, T/mission	1	
11	0338 19 331A	Plug, Square Head	3	
12	99611 1750	Ball, Steel	1	
13	0338 19 336	Race, Inner	1	
14	0338 19 337	Washer, Plain	8	
15	0338 19 338	Bolt	8	
16	0378 19 344	Breather, Air	1	
17	99611 2000	Ball, Steel	3	

AUTOMATIC T/MISSION
(CASE & MAIN CONTROL USED FROM 74/3)

No.	Part Number	Description	Q'ty	Remarks
18	1758 19 341	Bolt, Anchor End	1	
19	0338 19 361	Strut, Band	1	
20	0338 19 363	Spring, Return-Piston	1	
21	0842 19 381	Piston, Band Servo	1	
22	0338 19 384	Seal, Piston	1	
23	0842 19 385	Seal, Piston	1	
24	1758 19 386	Stem, Piston	1	
25	0338 19 388A	Washer, Plain	1	
26	0338 19 389	Nut, Band Adjust	1	
27	1758 19 391	Retainer, Servo	1	
28	1758 19 392	Cover, Servo	1	
29	0842 19 394	Seal, Ring-Leather Cut	1	
30	1758 19 394	Ring, "O"	1	
31	0338 19 395	Seal, "O" Ring	1	
32	0338 19 397	Bolt, Servo Retainer	3	
33	1758 19 397	Bolt, Servo Cover	3	
34	1840 19 710	Housing, Extension	1	
35	0376 17 335	Oil Seal	1	

No.	Part Number	Description	Q'ty	Remarks
36	0338 19 735	Gasket, Extension Housing	1	
37	0338 19 737	Bolt, Extension Housing	8	
	0338 19 739	Washer, Plain	8	
38	1758 19 750	Valve, Control	1	
39	0338 19 768	Valve, Manual	1	
40	1758 19 815	Strainer, Oil	1	
41	0338 19 831	Bolt, Control Valve	3	
42	0338 19 832	Bolt, Control Valve	2	
43	0338 19 833	Bolt, Control Valve	2	
44	1675 19 821	Solenoid, Down Shift	1	
45	0338 19 822	Seal, "O" Ring	2	
46	1758 19 823	Diaphragm, Vacuum	1	
47	0338 19 825	Rod, Diaphragm (L=30.0)	Selective use 1	
	0338 19 826	Rod (L=31.0)		
	0338 19 827	Rod (L=30.5)		
	0338 19 828	Rod (L=29.0)		
	0338 19 829	Rod (L=29.5)		

AUTOMATIC T/MISSION
(CASE & MAIN CONTROL USED FROM 74/3)

No.	Part Number	Description	Q'ty	Remarks
48	1758 19 835	Gasket, Oil Pan	1	
49	1758 19 836	Pan, Oil	1	
50	0338 19 837	Bolt, Oil Pan	17	
51	0808 19 870	Tube, Oil Level Gauge	1	
52	1758 19 880	Gauge, Oil Level	1	
53	99541 01601	Ring, "O" - Oil Level	1	
54	99796 0610	Bolt, Oil Level Tube	1	

AUTOMATIC T/MISSION
(CLUTCH & PLANETARY GEAR)

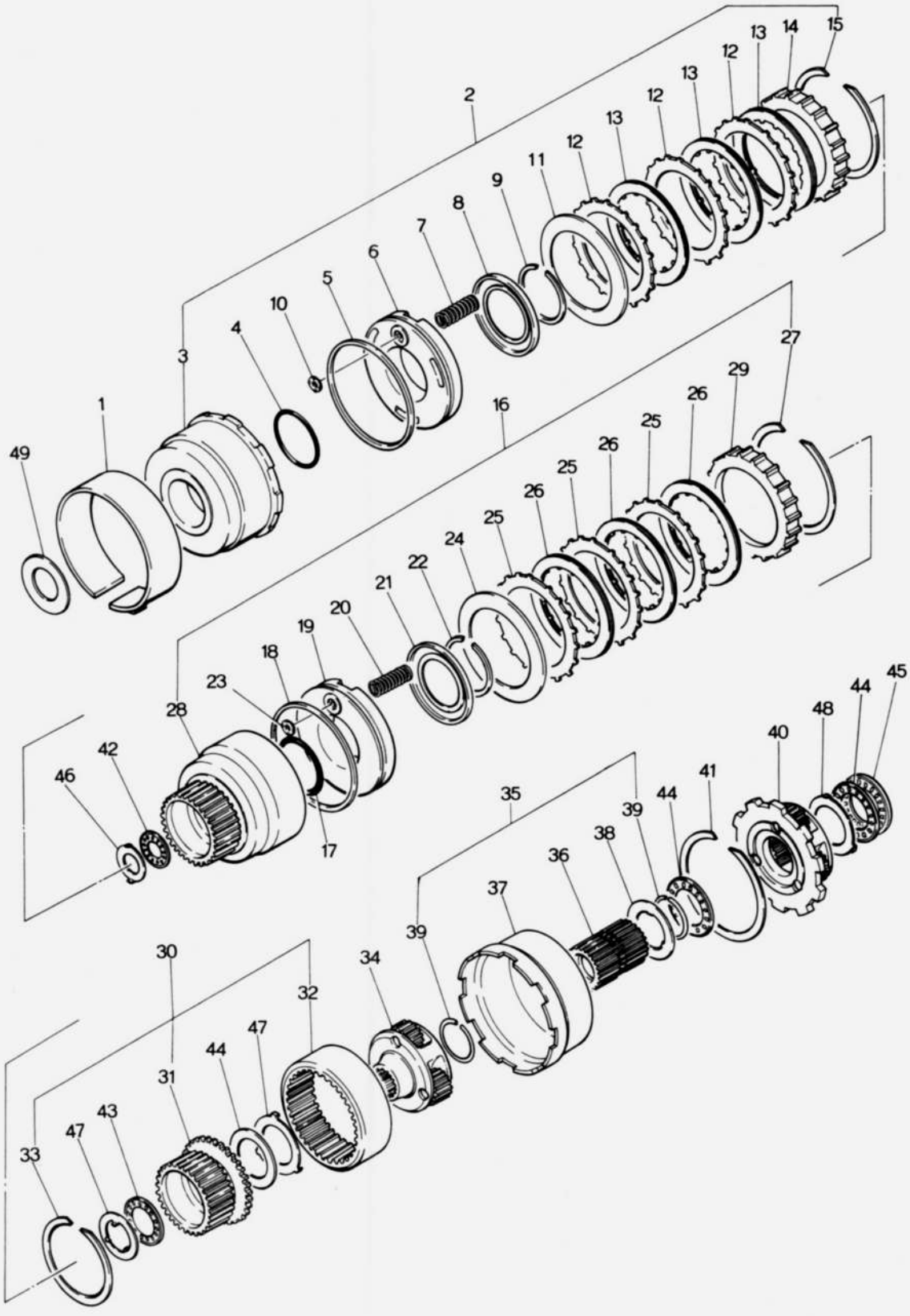

No.	Part Number	Description	Q'ty	Remarks
1	0338 19 360	Band, Brake	1	
2	0338 19 460	Clutch, Front	1	
3	0338 19 470	Drum, Clutch	1	
4	0338 19 475	Seal, "O" Ring	1	
5	0338 19 476	Seal, Lathe Cut	1	
6	0338 19 480	Piston, Clutch	1	
7	0338 19 486	Spring, Piston Return	10	
8	0338 19 487	Retainer, Spring	1	
9	0338 19 488	Ring, Snap	1	
10	0338 19 493	Retainer, Ball	1	
11	0338 19 498	Plate, Dished	1	
12	0338 19 499	Plate, Driven	3	
13	0338 19 500	Plate, Drive	3	
14	0338 19 503	Plate, Retaining	10.6	Selective use 1
	0338 19 504	Plate, Retaining	10.8	
	0338 19 505	Plate, Retaining	11.0	
	0338 19 506	Plate, Retaining	11.2	
	0338 19 507	Plate, Retaining	11.4	
	0338 19 508	Plate, Retaining	11.6	

AUTOMATIC T /MISSION

(CLUTCH & PLANETARY GEAR)

No.	Part Number	Description	Q'ty	Remarks
15	0338 19 509	Ring, Snap	1	
16	0338 19 510	Clutch, Rear	1	
17	0338 19 475	Seal, "O" Ring	1	
18	0338 19 476	Seal, Lathe Cut	1	
19	0338 19 480	Piston, Clutch	1	
20	0338 19 486	Spring, Piston Return	10	
21	0338 19 487	Retainer, Spring	1	
22	0338 19 488	Ring, Snap	1	
23	0338 19 493	Retainer, Ball	1	
24	0338 19 498	Plate, Dished	1	
25	0338 19 499	Plate, Driven	4	
26	0338 19 500	Plate, Drive	4	
27	0338 19 509	Ring, Snap	1	
28	0338 19 511	Drum, Rear Clutch	1	
29	0338 19 515	Plate, Retaining	1	
30	0338 19 530	Hub, Rear Clutch	1	
31	0338 19 531	Hub, Rear Clutch	1	
32	0338 19 533	Gear, Internal	1	

No.	Part Number	Description	Q'ty	Remarks
33	0338 19 534	Ring, Snap	1	
34	0338 19 540	Carrier, Front	1	
35	0338 19 550	Shell & Sun Gear	1	
36	0338 19 560	Gear, Sun	1	
37	0338 19 565	Shell, Connecting	1	
38	0338 19 566	Race, Bearing-Shell	1	
39	0338 19 567	Ring, Snap	2	
40	0338 19 570	Carrier, Rear	1	
41	0338 19 598	Ring, Snap	1	
42	0338 19 621	Bearing, Needle	1	
43	0338 19 622	Bearing, Needle	1	
44	0338 19 623	Bearing, Needle	3	
45	0338 19 624	Bearing, Needle	1	
46	0338 19 631	Race, Bearing (t=1.2)	Selective use	1
	0338 19 632	Race, Bearing (t=1.4)		
	0338 19 633	Race, Bearing (t=1.6)		
	0338 19 634	Race, Bearing (t=1.8)		

No.	Part Number	Description	Q'ty	Remarks
	0338 19 635	Race, Bearing (t=2.0)		
	0338 19 636	Race, Bearing (t=2.2)		
47	0338 19 638	Race, Bearing- Rear Clutch	1	
48	0338 19 639	Race, Bearing	2	
49	0338 19 641	Washer, Front Clutch (t=1.90)		
	0338 19 642	Washer (t=2.10)		
	0338 19 643	Washer (t=2.30)		
	0338 19 644	Washer (t=2.50)	Selective use 1	
	0338 19 645	Washer (t=2.70)		
	0338 19 646	Washer (t=1.50)		
	0338 19 647	Washer (t=1.70)		
	0397 22 200	Clutch, Repair Kit	1 Set	
	0338 19 475	Seal, "O" Ring	2	
	0338 19 476	Seal, Lathe Cut	2	
	0338 19 486	Spring, Piston Return	20	
	0338 19 487	Retainer, Spring	2	
	0338 19 488	Ring, Snap	2	
	0338 19 498	Plate, Dished	2	
	0338 19 499	Plate, Driven	7	

No.	Part Number	Description	Q'ty	Remarks
	0338 19 500	Plate, Drive	7	
	0338 19 509	Ring, Snap	2	
	0338 19 621	Bearing, Needle	1	
	0338 19 638	Race, Bearing-Rear Clutch	1	

AUTOMATIC T/MISSION
(LOW, REVERSE & GOVERNOR)

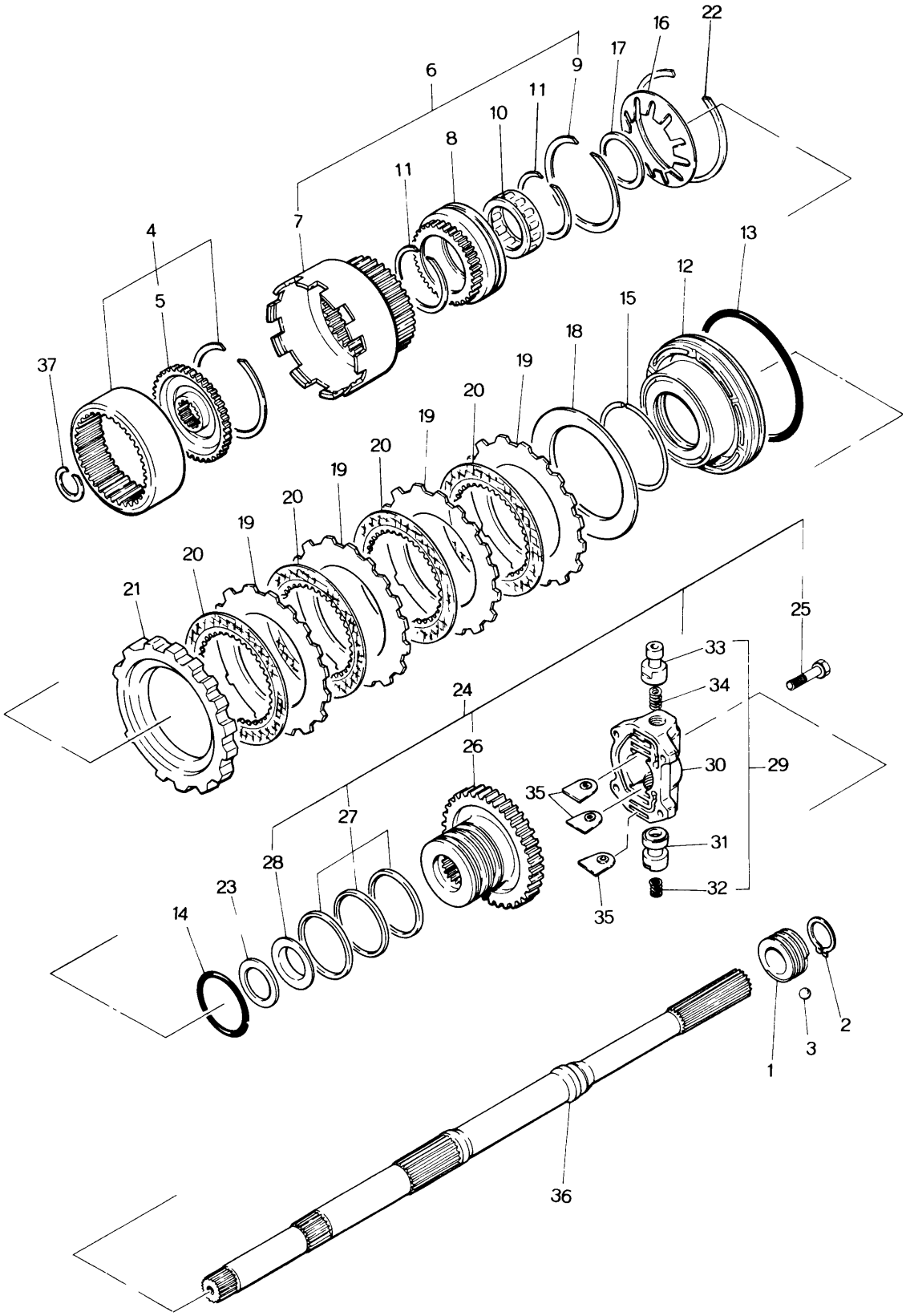

No.	Part Number	Description	Q'ty	Remarks
1	0862 17 341	Gear, Drive - Speedometer	1	
2	99573 2500	Ring, Snap - Drive Gear	1	
3	99611 1500	Ball, Steel	1	
4	0338 19 580	Flange	1	
5	0338 19 581	Flange, Drive	1	
6	0338 19 590	Drum, Connecting	1	
7	0338 19 591	Drum, Connecting	1	
8	0338 19 593	Race, Outer	1	
9	0338 19 594	Ring, Snap	1	
10	0338 19 595	Clutch, One Way	1	
11	0338 19 596	Ring, Snap	2	
12	0338 19 601	Piston, Low & Reverse	1	
13	0338 19 603	Seal, Piston	1	
14	0338 19 604	Seal, "O" Ring	1	
15	0338 19 605	Ring, Thrust Spring	1	
16	0338 19 606	Spring, Piston	1	
17	0338 19 607	Ring, Snap	1	

AUTOMATIC T/MISSION
(LOW, REVERSE & GOVERNOR)

No.	Part Number	Description	Q'ty	Remarks
18	0338 19 608	Plate, Dished	1	
19	0338 19 609	Plate, Driven	4	
20	0338 19 610	Plate, Drive	4	
21	0338 19 613A	Plate, Retaining (t=15.8)		
	0338 19 614A	Plate (t=16.0)		
	0338 19 615A	Plate (t=16.2)		
	0338 19 616A	Plate (t=16.4)	Selective use 1	
	0338 19 617A	Plate (t=16.6)		
	0338 19 618A	Plate (t=16.8)		
22	0338 19 619	Ring, Snap	1	
23	0338 19 622	Bearing, Needle	1	
24	0842 19 650	Distributor, Oil	1	
25	0338 19 397	Bolt	4	
26	0338 19 651	Distributor	1	
27	0338 19 655	Ring, Seal	3	
28	0338 19 656	Race, Bearing	1	
29	0842 19 660	Governor, Fig. No. 30~33 Included	1	
30	0338 19 661	Body	1	
31	0338 19 663	Valve	1	

No.	Part Number	Description	Q'ty	Remarks
32	0338 19 664	Spring	1	
33	0842 19 665	Valve	1	
34	0338 19 666	Spring, Governor	1	
35	0338 19 667	Plate, Retainer	3	
36	0338 19 670A	Shaft	1	
37	0338 19 676	Ring	1	

AUTOMATIC T / MISSION (MANUAL LINKAGE)
(USED UP TO 74/2)

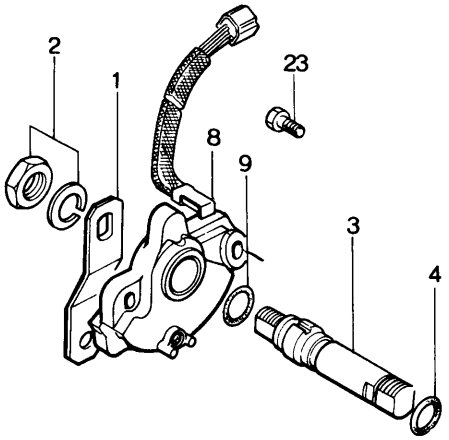

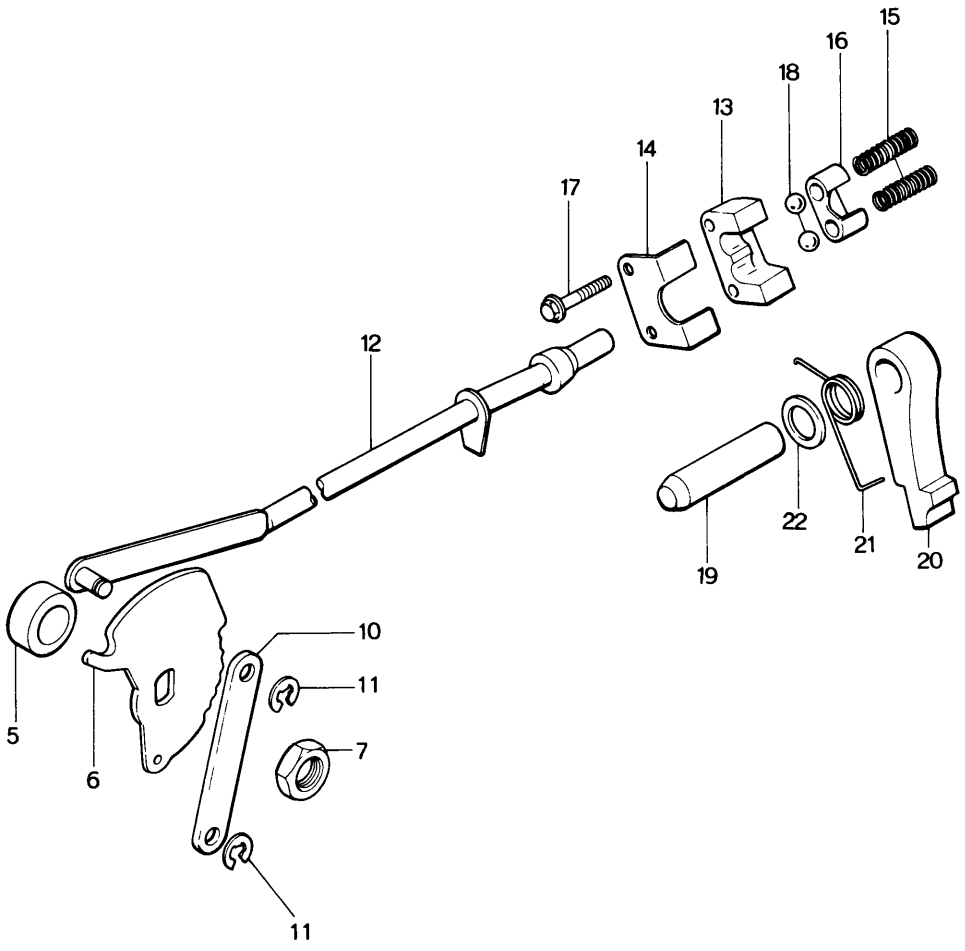

No.	Part Number	Description	Q'ty	Remarks
1	0842 19 031	Lever, Select	1	
2	99922 1400	Nut, Select Lever	1	
	99971 1400	Washer, Spring	1	
3	0338 19 431	Shaft, Manual	1	
4	0338 19 432	Seal, "O" Ring	1	
5	0338 19 433	Washer, Manual	1	
6	0338 19 440	Plate, Manual	1	
7	0338 19 443	Nut, Shaft	1	
8	1675 19 444A	Switch, Inhibitor	1	
9	0338 19 446	Ring, "O"	1	
10	0338 19 448	Lever, Parking	1	
11	0338 19 449	Ring, Snap	2	
12	0338 19 450	Rod, Parking	1	
13	0338 19 701	Support, Actuator	1	
14	0338 19 702	Plate, Retaining	1	
15	0338 19 703	Spring, Ball Park	2	
16	0338 19 704	Retainer	1	
17	0338 19 706	Bolt	2	
18	99611 2750	Ball, Steel	2	
19	0338 19 731	Shaft, Parking Pawl	1	

AUTOMATIC T / MISSION (MANUAL LINKAGE)
(USED UP TO 74/2)

No.	Part Number	Description	Q'ty	Remarks
20	0338 19 732	Pawl, Parking	1	
21	0338 19 733C	Spring, Pawl Return	1	
22	0338 19 734A	Spacer, Dowel	1	
23	0397 19 838	Bolt, Inhibitor Switch	2	

AUTOMATIC T/MISSION
(MANUAL LINKAGE USED FROM 74/3)

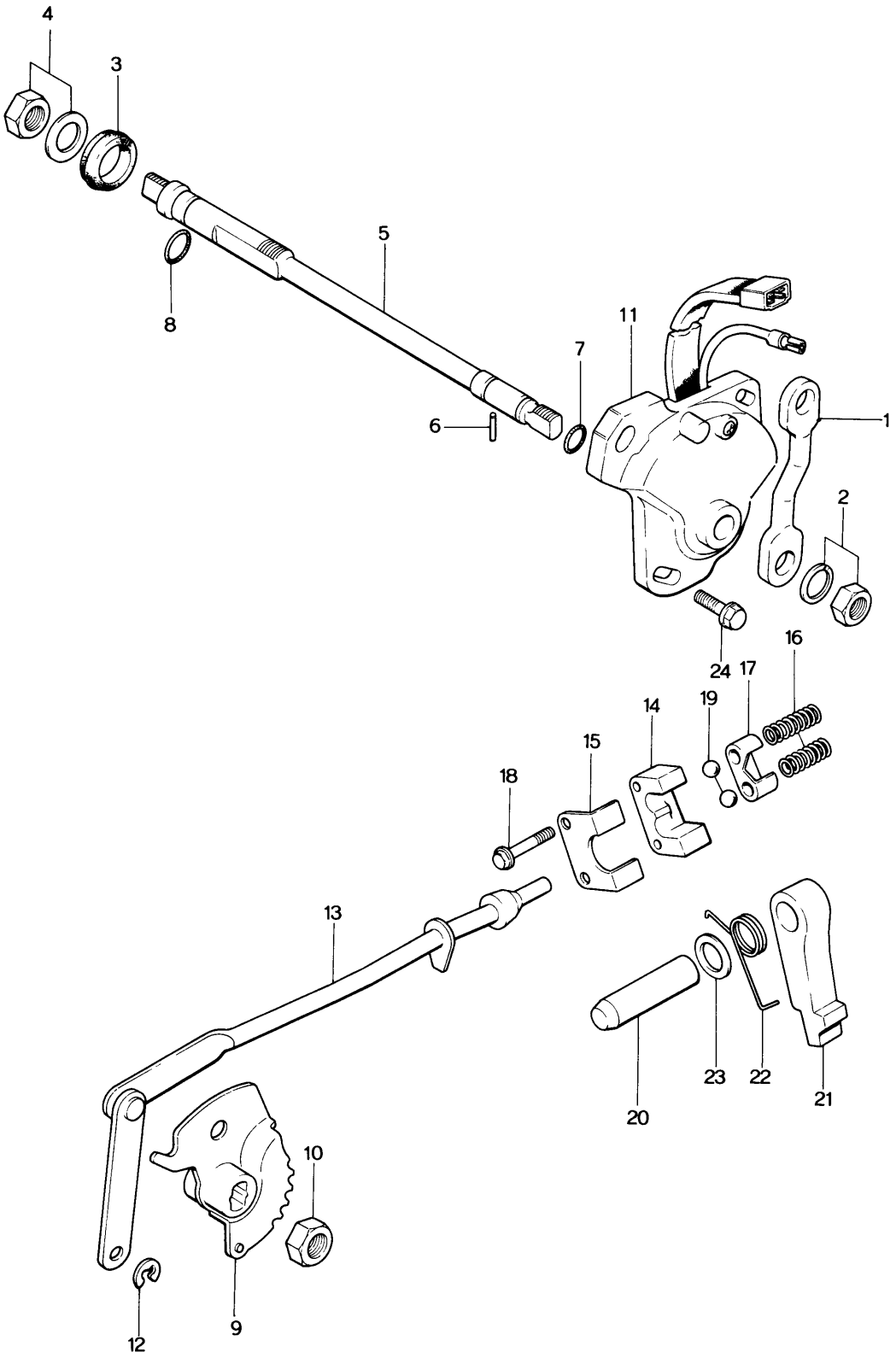

No.	Part Number	Description	Q'ty	Remarks
1	0808 19 031	Lever, Select	1	
2	99922 1200	Nut, Select Lever	1	
	99971 1200	Washer, Spring	1	
3	1758 19 036	Seal, Dust-Select Lever	1	
4	99922 1400	Nut, Select Lever	1	
	99953 1400	Washer, Plain	1	
5	1758 19 431	Shaft, Manual	1	
6	1758 19 434	Pin	1	
7	99541 00901	Ring, "O"	1	
8	99541 01201	Ring, "O"	1	
9	1758 19 440	Plate, Manual	1	
10	1758 19 443	Nut, Shaft	1	
11	1758 19 444	Switch, Inhibitor	1	
12	0338 19 449	Ring, Snap	2	
13	1758 19 450	Rod, Parking	1	
14	0338 19 701	Support, Actuator	1	
15	0338 19 702	Plate, Retaining	1	
16	0338 19 703	Spring, Ball Park	2	
17	0338 19 704	Retainer	1	
18	0338 19 706	Bolt	2	

19 AUTOMATIC T/MISSION
(MANUAL LINKAGE USED FROM 74/3)

No.	Part Number	Description	Q'ty	Remarks
19	99611 2750	Ball, Steel	2	
20	0338 19 731	Shaft, Parking Pawl	1	
21	0338 19 732	Pawl, Parking	1	
22	0338 19 733C	Spring, Pawl Return	1	
23	0338 19 734A	Spacer, Dowel	1	
24	0397 19 838	Bolt, Inhibitor Switch	3	

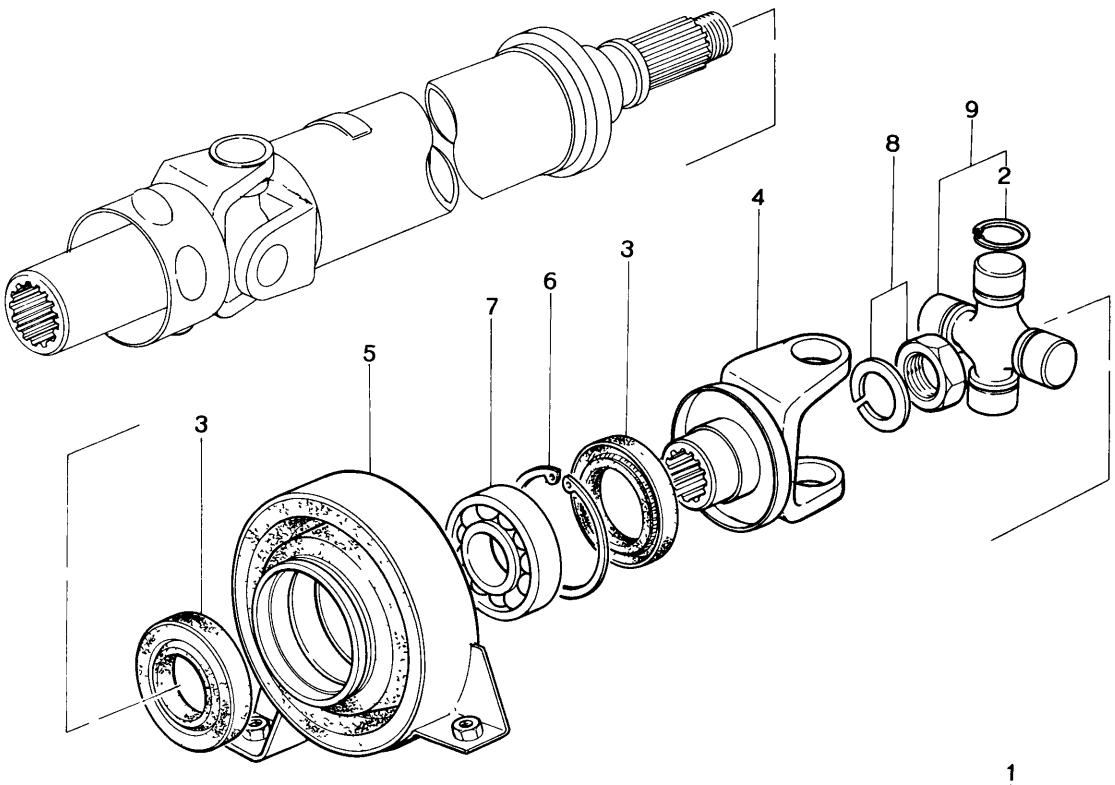
9
8
2
4
3
6
7
5
3

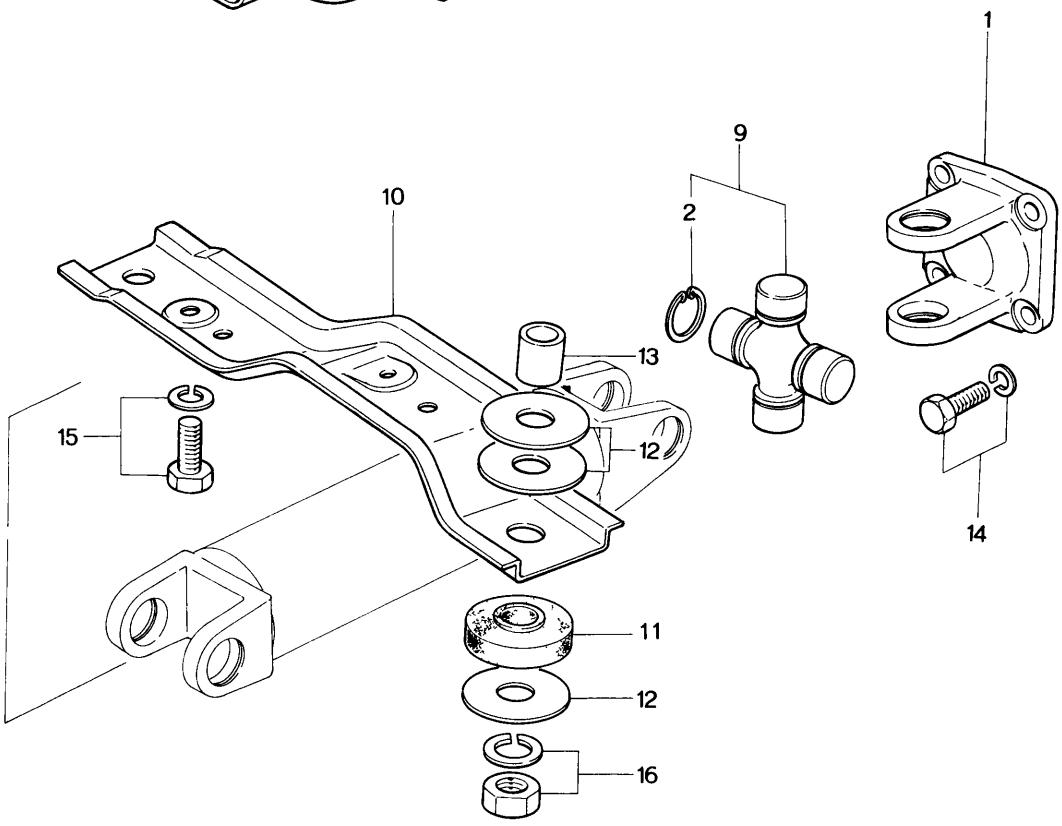
1
9
2
10
13
15
12
14
11
12
16

No.	Part Number	Description	Q'ty	Remarks
	1098 25 100	Shaft, Propeller	1	
1	0259 25 021B	Yoke, Universal Joint	1	
2	0259 25 071A	Ring, Snap (t=1.22)		
	0259 25 072A	Ring, Snap (t=1.24)		
	0259 25 073A	Ring, Snap (t=1.26)		
	0259 25 074A	Ring, Snap (t=1.28)		
	0259 25 075A	Ring, Snap (t=1.30)	Selective use 8	
	0259 25 076A	Ring, Snap (t=1.32)		
	0259 25 077A	Ring, Snap (t=1.34)		
	0259 25 078A	Ring, Snap (t=1.36)		
	0259 25 079A	Ring, Snap (t=1.38)		
3	0290 25 151	Oil Seal	2	
4	0223 25 220D	Yoke	1	
5	1097 25 300	Support, Center Bearing	1	
6	99574 5200	Ring, Snap	1	
7	99606 62050	Bearing, Ball	1	
8	99922 1800	Nut	1	
	99971 1800	Washer, Spring	1	
9	0259 89 251	Joint Set, Universal	2	

No.	Part Number	Description	Q'ty	Remarks
10	1097 25 319	Member, Bearing Support	1	
11	1114 25 331	Bush	2	
12	0866 32 341	Washer, Idler	6	
13	0839 56 126A	Spacer	2	
14	99752 30818	Bolt, Propeller Shaft	4	
	99971 0800	Washer, Spring	4	
15	99804 1022	Bolt, Center Bearing Support	2	
	99971 1000	Washer, Spring	2	
16	99921 1000	Nut	2	
	99971 1000	Washer	2	

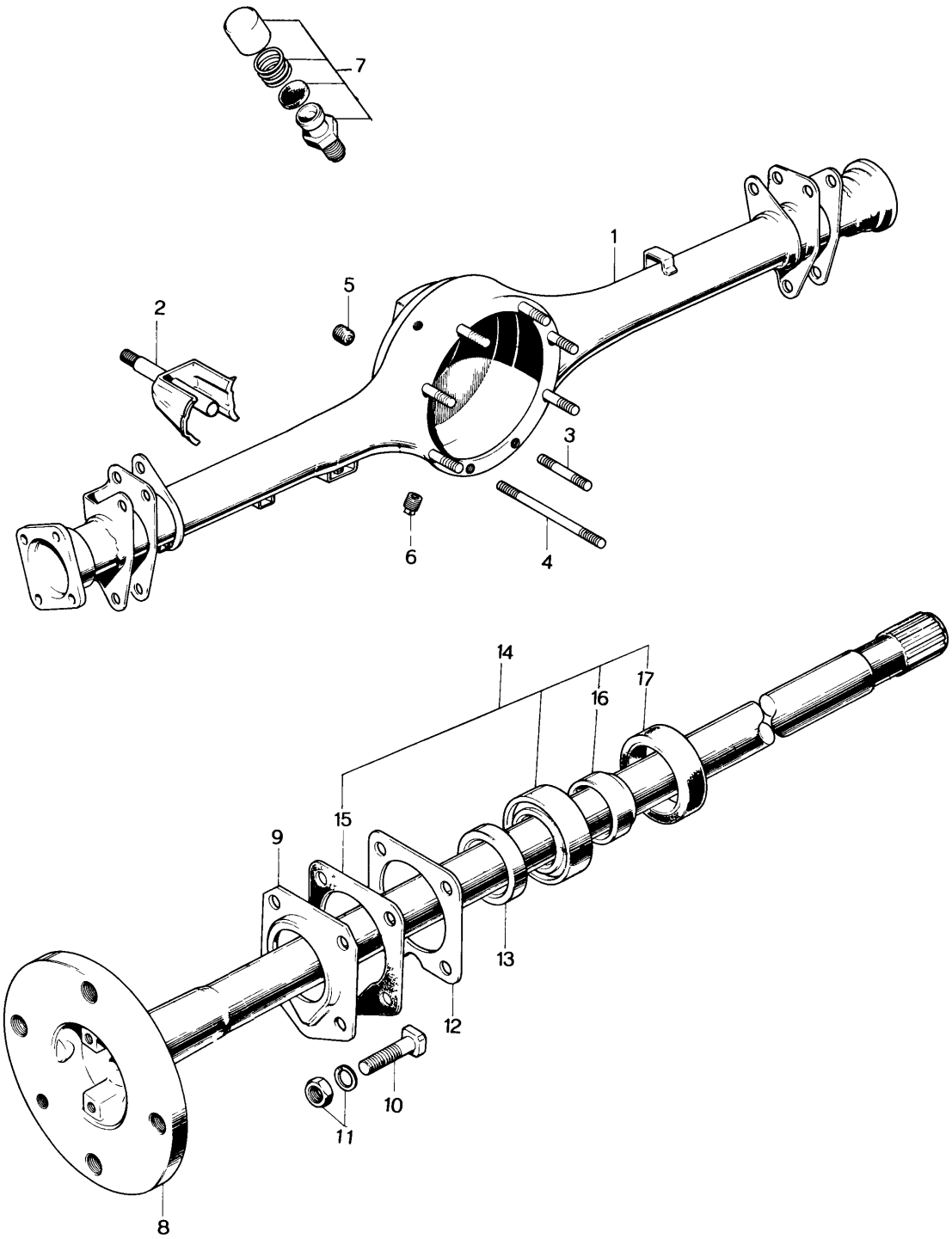
7
1
2
5
3
6
4
14
17
16
15
9
13
12
10
11
8

No.	Part Number	Description	Q'ty	Remarks
1	1097 26 010	Casing, Rear Axle	1	
2	0305 26 080B	Bracket	1	
3	99852 0820	Stud	7	
4	99852 0880	Stud	1	
5	0259 26 041	Plug, Oil Level	1	
6	0259 26 051	Plug, Magnet Drain	1	
7	0730 26 060	Breather	1	
8	0839 26 111A	Shaft, Rear Axle	2	
9	0317 26 121	Retainer, Bearing	2	
10	0259 26 132	Bolt	8	
11	99901 0800	Nut	8	
	99971 0800	Washer, Spring	8	
12	0259 26 141	Shim, Adjust } Selective use	4	
	0259 26 142	Shim, Adjust }		
13	0259 26 155	Spacer, Bearing	2	
14	0317 99 265B	Bearing Set	2	
15	0259 26 129	Gasket	2	
16	0259 26 152	Collar, Bearing	2	
17	0187 26 154	Oil Seal	2	

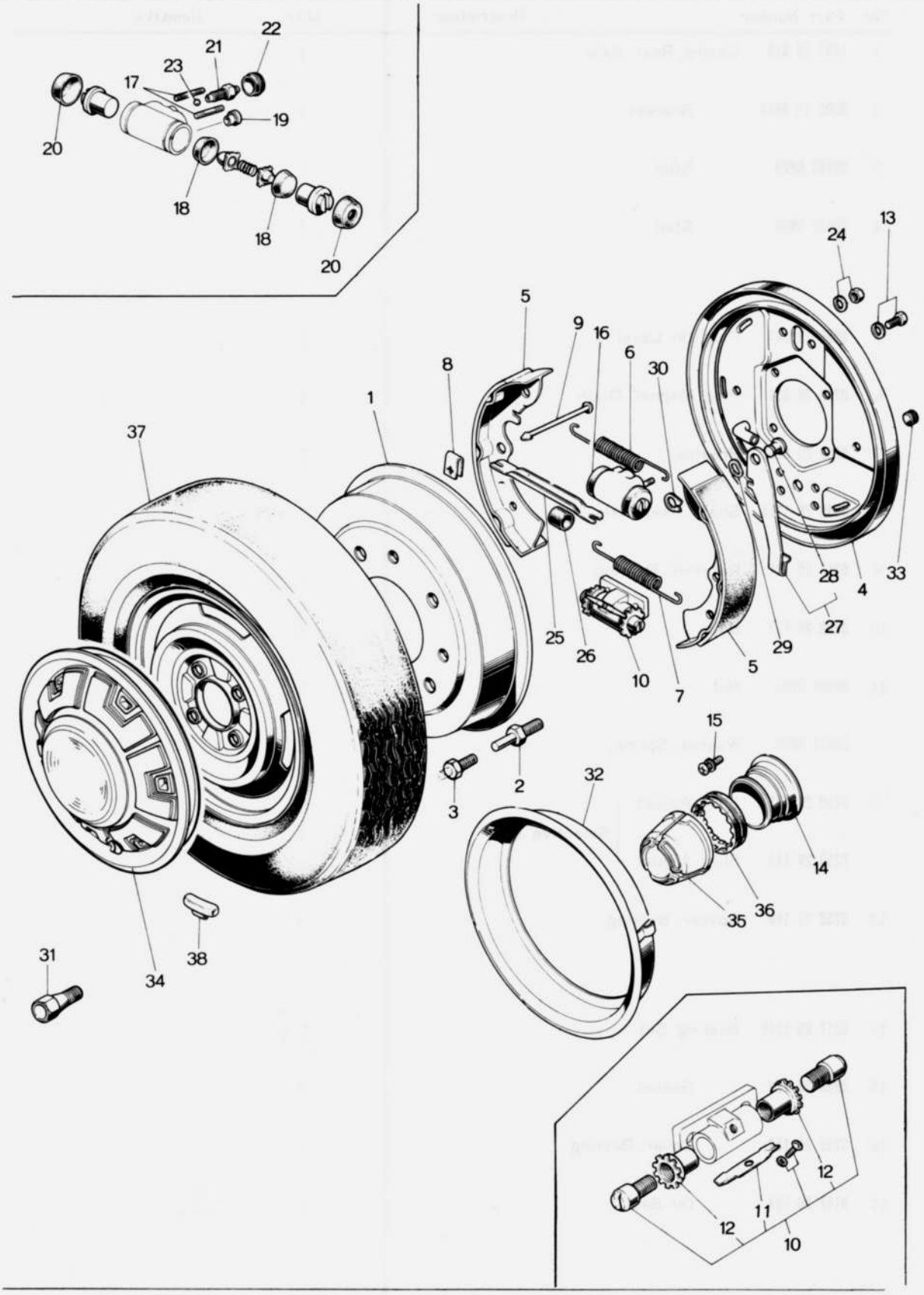
22
21
23
17
19
20
18
18
20
24
13
5
9
16
6
30
8
1
37
28
4
33
27
29
25
26
10
7
5
15
2
32
3
14
35
36
31
34
38
12
12
11
10

No.	Part Number	Description	Q'ty	Remarks
1	0305 26 251A	Drum, Brake	2	
2	0305 26 255	Bolt (Wheel Cap use)	4	
3	99833 0812	Screw (Center Cap use)	4	
4	0398 26 280	Cover, Brake Drum (R)	1	
	0398 26 290	Cover, Brake Drum (L)	1	
5	0305 26 310B	Shoe, Brake	4	
6	0187 26 341	Spring, Return	2	
7	0118 26 342	Spring, Return	2	
8	0223 26 345A	Spring, Clip	4	
9	0866 26 391	Pin, Guide-Brake Shoe	4	
10	0305 26 500A	Block, Anchor	2	
11	0710 26 352	Spring	2	
12	0710 26 461	Adjuster	4	
13	99801 0814	Bolt, Anchor Block	4	
	99971 0800	Washer, Spring	4	
14	0820 26 570A	Adapter (Center Cap use)	2	
15	99833 0812	Screw	2	
	99971 0800	Washer, Spring	2	

26 REAR BRAKE

No.	Part Number	Description	Q'ty	Remarks
16	0813 26 810A	Cylinder, Wheel	2	
17	99852 0612	Stud	4	
18	0810 26 671	Cup, Piston	4	
19	0613 26 922	Seat, Tube	2	
20	0613 33 681	Cover, Dust	4	
21	0259 33 691	Screw, Bleeder	2	
22	0259 33 693	Cap, Bleeder	2	
23	99611 1500	Ball, Steel	2	
24	99906 0600	Nut, Wheel Cylinder	4	
	99971 0600	Washer, Spring	4	
25	0187 26 821	Strut, Operation (R)	1	
	0187 26 921	Strut, Operation (L)	1	
26	0118 26 897	Holder	2	
27	0305 26 800A	Lever (R)	1	
	0305 26 810A	Lever (L)	1	
28	0118 26 832	Pin	2	
29	0118 26 834	Washer, Wave	2	

No.	Part Number	Description	Q'ty	Remarks
30	99575 0600	Ring, Retaining	2	
31	0259 33 165	Bolt, Wheel Set (Wheel Cap use)	8	
	0820 33 165A	Bolt, Wheel Set (Center Cap use)	8	
32	0820 33 180A	Ring, Wheel (Center Cap use)	2	
33	0710 33 288	Plug, Back Plate	4	
34	1905 37 170	Cap, Wheel	2	
35	0881 37 191	Cap, Center	2	
36	1011 37 192	Rubber Set	2	
37	9962 04 1653	Tire, Radial-165 SR—13 (Canada)	2	
	9962 07 1653	Tire, Radial-165 SR—13 (U.S.A.)	2	
	9963 60 4130	Air Valve, TR413 (Canada)	2	
	9963 60 4140	Air Valve, TR414 (U S A.)	2	
	9965 05 4530 00	Wheel, Disc-4 ½ × 13WDC (SIL M) (Wheel Cap use)	2	
	9965 06 4530 06	Wheel, Disc-4 ½ × 13WDC (D GRY) (Center Cap use)	2	
38	99655 30010	Weight, Balancing (10 g)	Selective use	—
	99655 30015	Weight, Balancing (15 g)		
	99655 30020	Weight, Balancing (20 g)		
	99655 30025	Weight, Balancing (25 g)		
	99655 30030	Weight, Balancing (30 g)		
	99655 30035	Weight, Balancing (35 g)		

No.	Part Number	Description	Q'ty	Remarks
	99655 30040 Weight, Balancing (40 g)	Selective use	—	
	99655 30045 Weight, Balancing (45 g)			
	99655 30050 Weight, Balancing (50 g)			
	99655 30060 Weight, Balancing (60 g)			

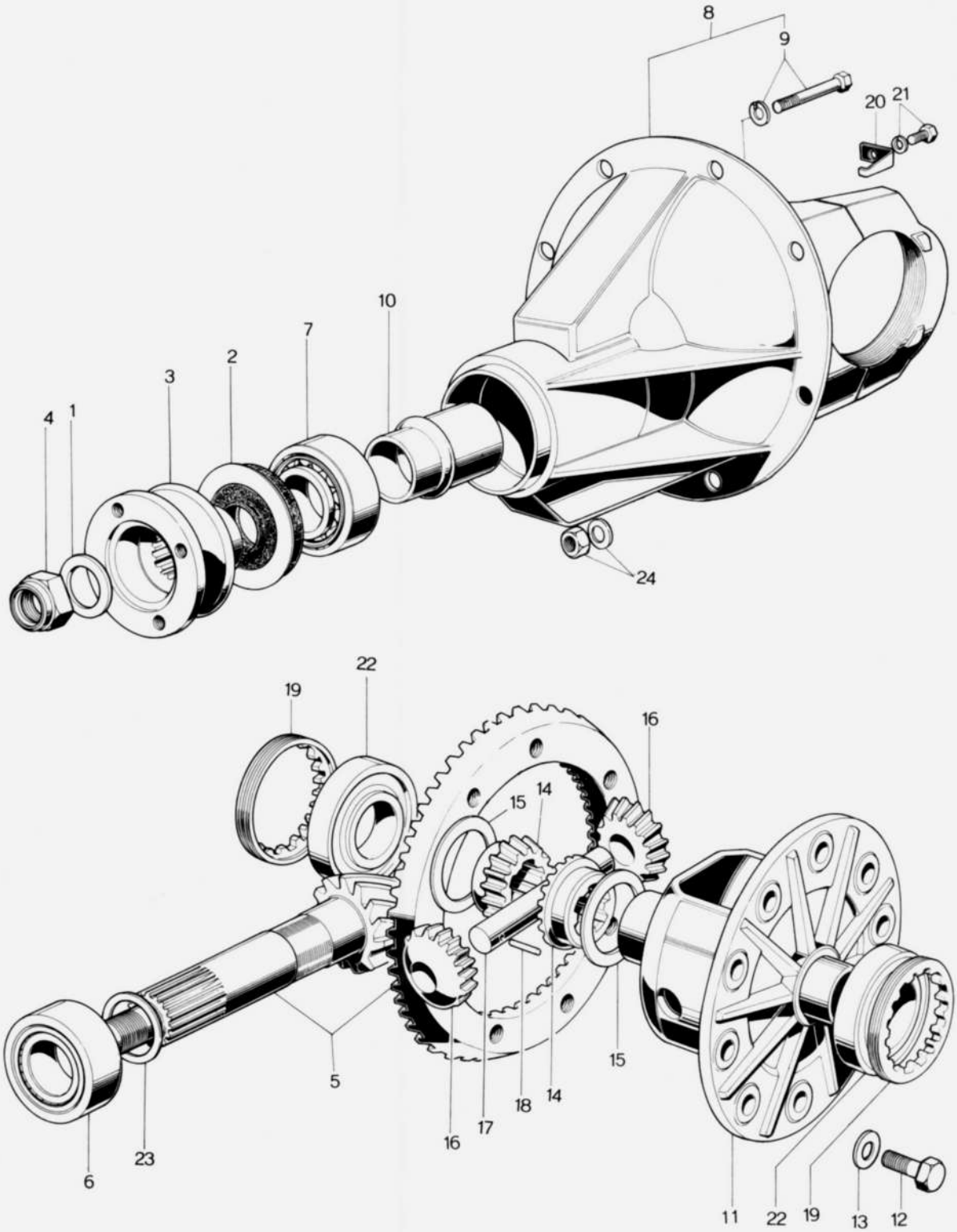
8
9
20
21
10
7
2
3
4
1
24
22
19
16
15
14
5
18
17
23
6
11
13
12

No.	Part Number	Description	Q'ty	Remarks
	2080 27 100	Driving & Differential	1	
1	0223 27 012	Washer	1	
2	2112 27 018	Oil Seal	1	
3	0223 27 020B	Flange, Companion	1	
4	0223 27 030	Nut, Drive Pinion	1	
5	2080 27 110	Gear Set, Final	1	
6	0221 27 141	Bearing, Drive Pinion (Rr.)	1	
7	0755 27 141	Bearing, Drive Pinion (Frt.)	1	
8	0820 27 150B	Carrier, Differential (Fig. No. 9 included)	1	
9	99811 1050	Bolt, Bearing Cap	4	
	99971 1000	Washer, Spring	4	
10	0305 27 171	Piece, Distance	1	
11	0290 27 231	Case, Differential Gear	1	
12	997538 1022	Bolt, Ring Gear	Selective use	
	997534 1022	Bolt	10	
13	99958 1018	Washer, Plain	10	
14	0820 27 251	Gear, Differential Side	2	
15	0290 27 252	Washer, Thrust		
	0290 27 253	Washer, Thrust	Selective use	—
	0290 27 254	Washer, Thrust		

No.	Part Number	Description	Q'ty	Remarks
16	0221 27 255	Pinion, Differential	2	
17	0305 27 261	Shaft, Pinion	1	
18	0114 27 262	Pin, Shaft-Differential	1	
19	0290 27 301	Screw, Adjust	2	
20	0290 27 302	Plate, Lock	2	
21	99811 0812	Bolt, Lock Plate	2	
	99971 0800	Washer, Spring	2	
22	0221 27 305	Bearing, Differential	2	
23	0223 27 401	Spacer, Pinion Height (t=3.08)		
	0223 27 402	Spacer (t=3.11)		
	0223 27 403	Spacer (t=3.14)		
	0223 27 404	Spacer (t=3.17)		
	0223 27 405	Spacer (t=3.20)		
	0223 27 406	Spacer (t=3.23)		Selective use
	0223 27 407	Spacer (t=3.26)		
	0223 27 408	Spacer (t=3.29)		
	0223 27 409	Spacer (t=3.32)		
	0223 27 411	Spacer (t=3.35)		
	0223 27 412	Spacer (t=0.38)		
	0223 27 413	Spacer (t=3.41)		

No.	Part Number	Description	Q'ty	Remarks
	0223 27 414	Spacer (t=3.44)		
	0223 27 415	Spacer (t=3.47)		
24	99901 0800	Nut, Differential	8	
	99971 0800	Washer, Spring	8	

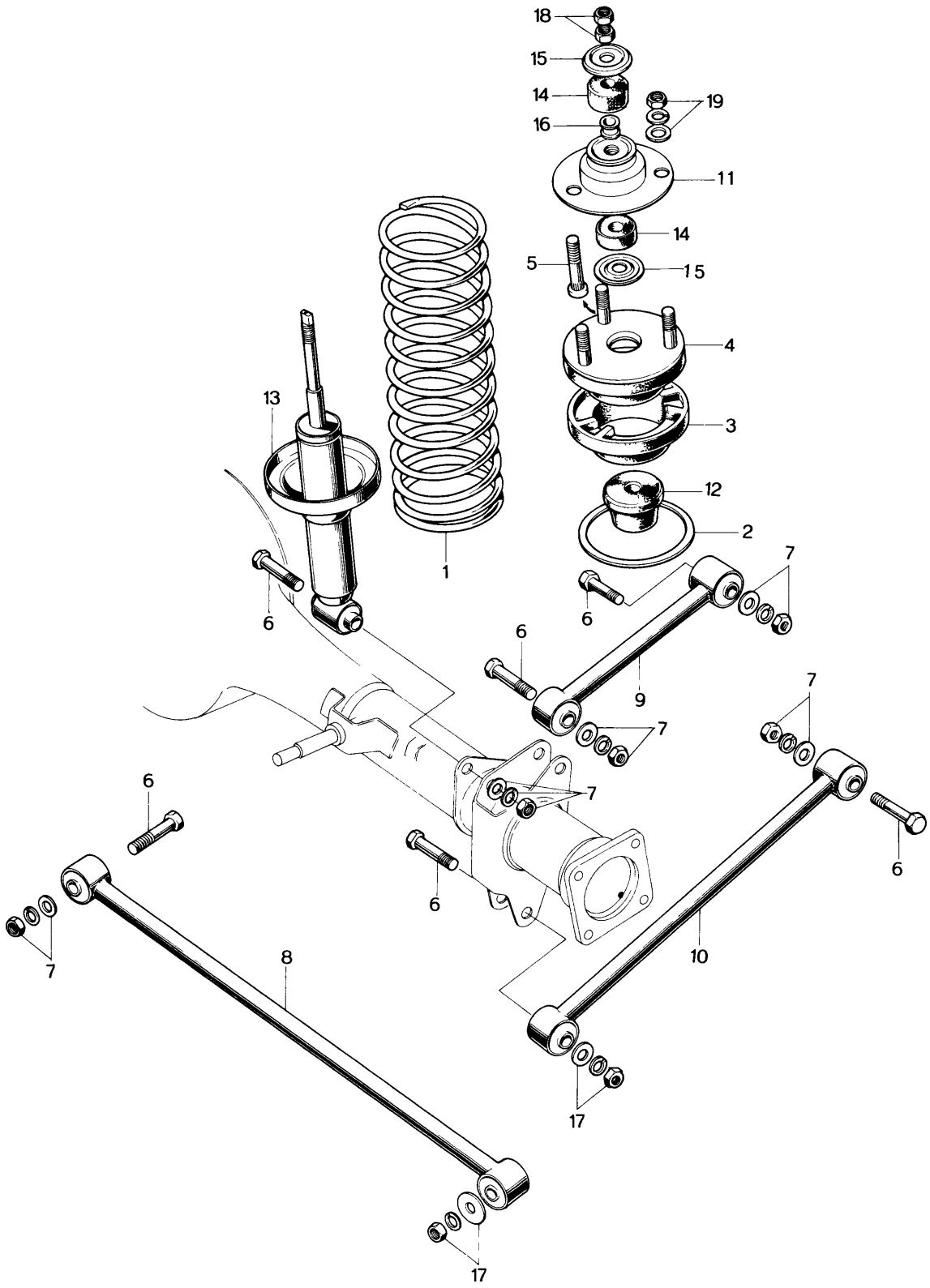
18
15
14
16
19
11
14
5
15
4
3
12
2
13
1
6
6
7
6
9
7
7
6
6
7
6
8
10
7
17
17

No.	Part Number	Description	Q'ty	Remarks
1	1907 28 011	Spring, Coil	2	
2	0824 28 012	Shim, Adjust	2	
3	0305 28 013A	Seat, Rubber	2	
4	0305 28 040A	Seat, Spring-Upper	2	
5	0824 28 464A	Bolt	6	
6	0305 28 111B	Bolt	11	
7	99921 1400	Nut, Lateral Rod	11	
	99971 1400	Washer, Spring	11	
	99952 1426	Washer, Plain	2	
	99953 1400	Washer, Plain	6	
8	0305 28 150C	Rod, Lateral	1	
9	0305 28 200E	Link, Upper	2	
10	0305 28 300D	Link, Lower	2	
11	0305 28 470	Set Plate	2	
12	0305 28 591B	Stopper, Bound	2	
13	0305 28 700D	Damper, Rear	2	
14	0223 28 775	Bush, Rubber	4	
15	0223 28 776	Retainer	4	

No.	Part Number	Description	Q'ty	Remarks
16	0824 28 778A	Grommet	2	
17	0193 34 662	Washer, Lateral Rod	1	
	99921 1400	Nut	1	
	99971 1400	Washer, Spring	1	
18	99921 1000	Nut, Damper	2	
	99922 1000	Nut	2	
19	99901 0800	Nut, Set Plate	6	
	99952 0800	Washer, Plain	6	
	99971 0800	Washer, Spring	6	

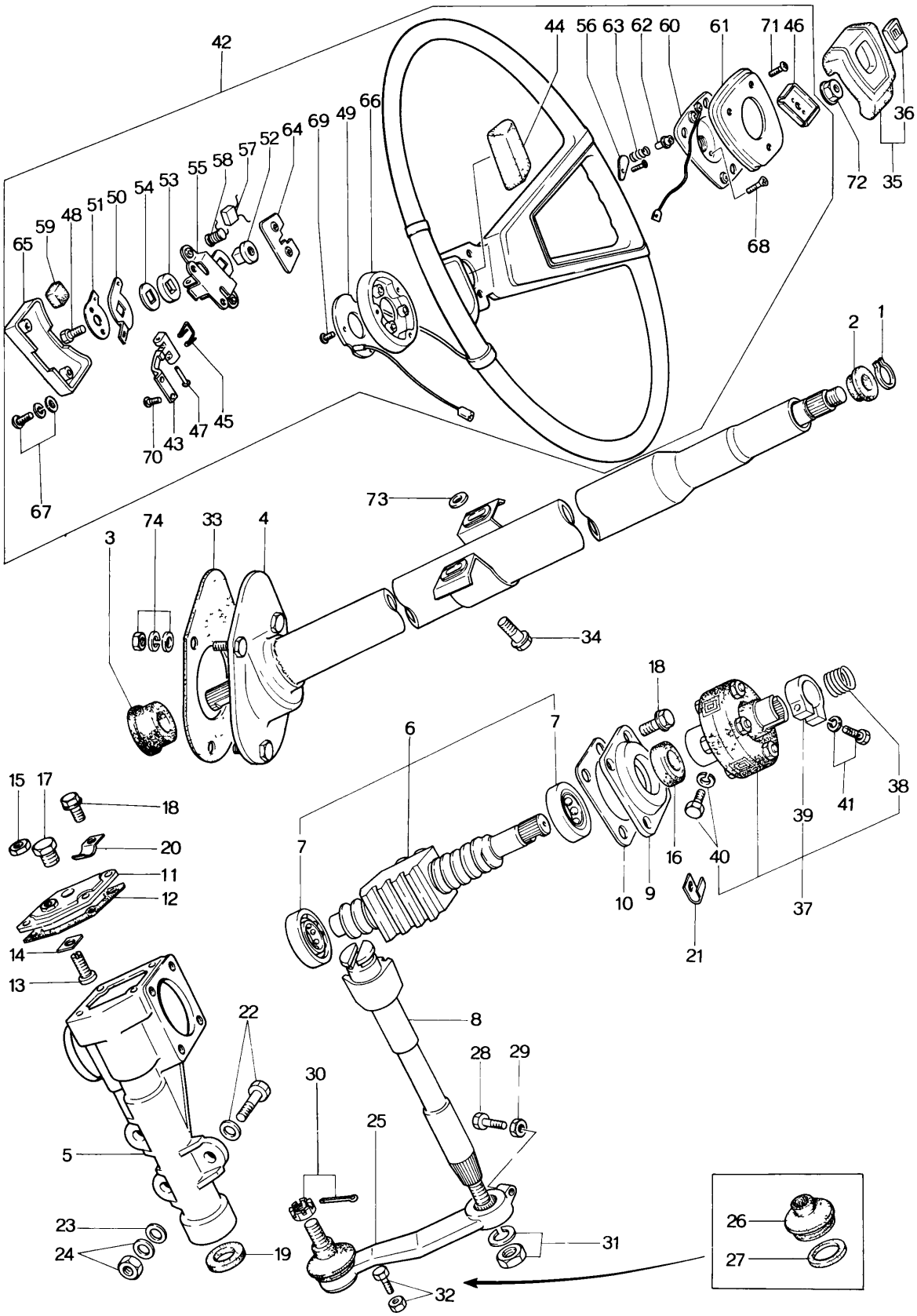
42
44 56 63 62 60 61 71 46
36
72 35
68
66 49 69 64 52 57 58 55 53 54 50 51 48 59 65
2 1
73
74 33 4 3
34
18
6 7
15 17 18
20
11
12
14
13
22
5
23
24
19
30
25
28 29
8
7
10 9 16 40
21
39 41 38
37
26
27
31
32
67
70 43 47 45

No.	Part Number	Description	Q'ty	Remarks
1	0208 32 059	Ring, Stop	1	
2	0259 32 071	Bush, Shaft Support	1	
3	0820 32 089	Bush, Centering	1	
4	1907 32 100	Shaft, Energy Absorbing	1	
5	2113 32 120	Housing, Gear	1	
6	2113 32 130	Ball Nut, Worm (Fig. No. 7 included)	1	
7	0259 32 182	Bearing, Ball	2	
8	0305 32 141	Shaft, Sector	1	
9	0820 32 151	Cover, End	1	
10	0259 32 154	Shim, End Cover (t=0.05)	1	Selective use
	0259 32 155	Shim (t=0.075)		
	0259 32 156	Shim (t=0.1)		
	0259 32 157	Shim (t=0.2)		
11	0259 32 160	Cover, Side	1	
12	0259 32 163	Gasket, Side Cover	1	
13	0180 32 165A	Screw, Adjust	1	
14	0180 32 171A	Shim, Adjust (t=1.95)	1	Selective use
	0180 32 172A	Shim, Adjust (t=2.00)		
	0180 32 173A	Shim, Adjust (t=2.05)		
	0180 32 174A	Shim, Adjust (t=2.10)		

No.	Part Number	Description	Q'ty	Remarks
15	99922 1000	Nut, Lock	1	
16	0180 32 184	Seal, Oil	1	
17	0820 32 190	Plug, Oil	1	
18	99801 0816	Bolt	8	
	99971 0800	Washer, Spring	8	
19	99583 26388	Seal, Oil	1	
20	99276 1008	Clip	1	
21	99295 1508	Clip	1	
22	99781 1090	Bolt, Gear Housing	3	
	99971 1000	Washer, Spring	3	
23	0305 32 119	Washer, Plain	3	
24	99921 1000	Nut, Gear Housing	3	
	99951 1022	Washer, Plain	2	
25	2835 32 220A	Arm, Pitman	1	
26	0259 32 279	Seal, Dust	1	
27	0187 32 289	Ring, Set	1	
28	0187 32 235	Bolt	1	
29	99922 1000	Nut, Lock	1	

No.	Part Number	Description	Q'ty	Remarks
30	99924 1000	Nut	1	
	99221 2020	Pin, Split	1	
31	99921 1800	Nut, Pitman Arm	1	
	99971 1800	Washer, Spring	1	
32	0187 32 235	Bolt, Turning Radius Adjust	1	
	99922 1000	Nut, Lock	1	
33	0326 32 411	Cover, Dust	1	
34	99786 0830	Bolt, Bracket	2	
35	1793 32 800	Cap, Horn	1	
36	1727 32 811	Emblem	1	
37	0187 32 850A	Joint, Steering	1	
38	0187 32 860	Spring	1	
39	0187 32 886B	Clamp	1	
40	99781 0825	Bolt	1	
	99971 0800	Washer, Spring	1	
41	99781 0835	Bolt, Clamp	1	
	99971 0800	Washer, Spring	1	

No.	Part Number	Description	Q'ty	Remarks
42	1175 32 980	Boss, Steering Wheel	1	
43	1011 32 011A	Lever, Horn	2	
44	1011 32 012	Button, Horn	2	
45	1011 32 013A	Spring	2	
46	1011 32 014	Spring, Cap	1	
47	1011 32 015	Shaft, Horn Lever	2	
48	1011 32 016	Bolt, Contact	2	
49	1011 32 018	Terminal	1	
50	1011 32 023A	Plate, Earth "A"	2	
51	1011 32 024	Plate, Earth "B"	1	
52	1011 32 026A	Insulator "A"	2	
53	1011 32 027A	Insulator "B"	2	
54	1011 32 028	Insulator "C"	2	
55	1011 32 029A	Support, Lever	2	
56	1175 32 030	Plate, Earth "C"	1	
57	1011 32 031	Condenser	2	
58	1011 32 032	Coil - Choke	2	
59	1011 32 033	Supporter	2	
60	1175 32 041	Plate Set	1	
61	1175 32 042	Cap Set	1	

No.	Part Number	Description	Q'ty	Remarks
62	1175 32 043	Insulator "D"	3	
63	1175 32 044	Spring	3	
64	1011 32 047	Cover, Horn Button	2	
65	1011 32 048	Cover, Under	2	
66	1011 32 049	Cover, Wheel Core	1	
67	99833 0410	Screw, Cover	4	
	99952 0400	Washer, Plain	4	
	99971 0400	Washer, Spring	4	
68	99831 0308	Screw	6	
69	99863 0308	Screw	3	
70	99863 0310	Screw	4	
71	99863 0312	Screw	6	
72	99948 1200	Nut, Steering Wheel	1	
73	0259 43 088	Spacer	2	
74	99901 0800	Nut, Shaft Jacket	3	
	99952 0800	Washer, Plain	2	
	99952 0822	Washer, Plain	1	

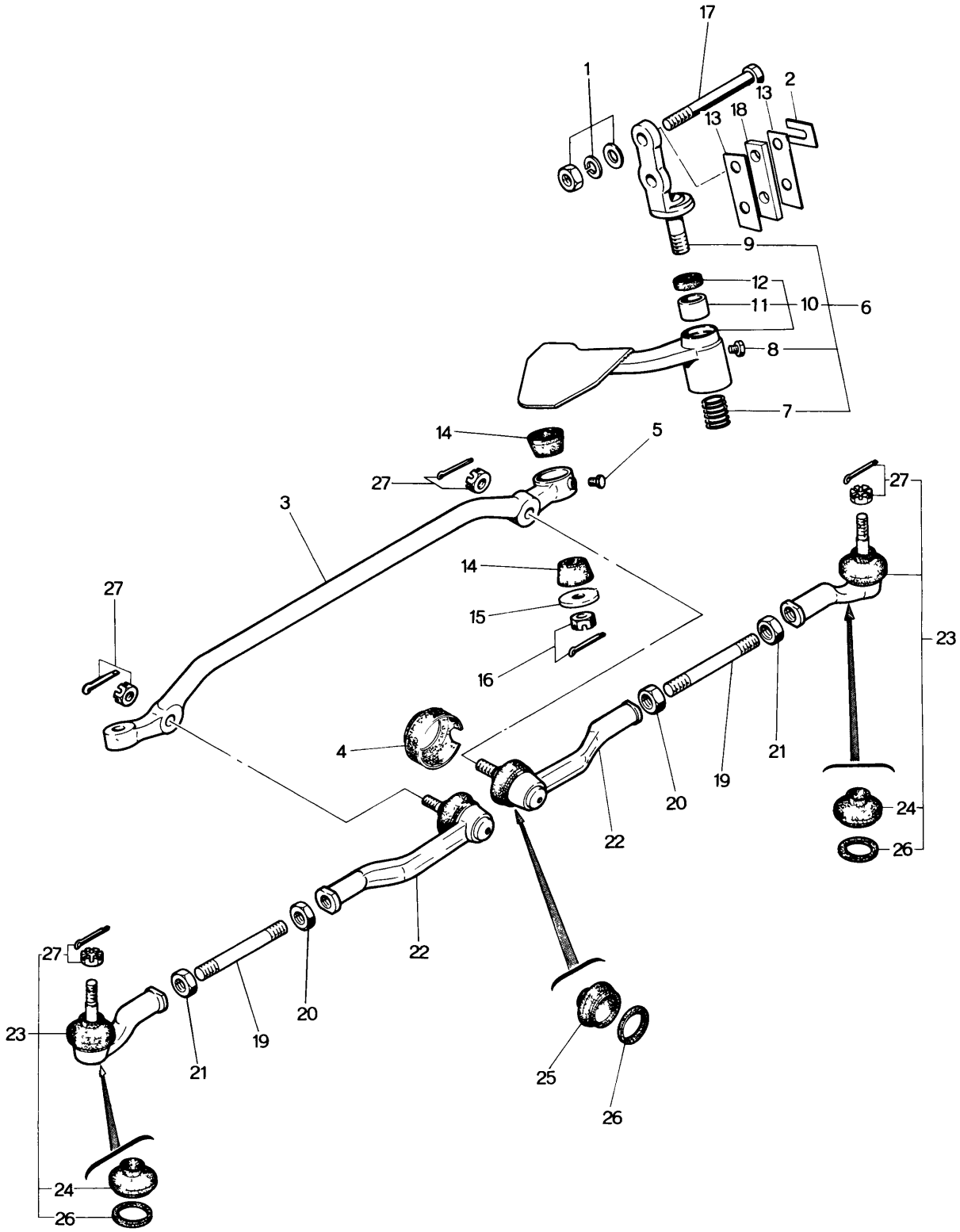
17
1
2
13
18
13
9
12
11
10
6
8
7
14
5
27
3
14
15
16
27
4
22
20
19
21
27
23
24
26
22
27
23
19
20
21
25
26
24
26

No.	Part Number	Description	Q'ty	Remarks
1	0305 32 119	Washer, Plain	2	
	99922 1000	Nut	2	
	99971 1000	Washer, Spring	2	
2	0208 32 188	Shim, Adjust	1	
3	2080 32 261	Link, Center	1	
4	1562 32 269	Protector	1	
5	0208 32 278	Plug, Idler	1	
6	2080 32 320B	Link, Steering	1	
7	0111 32 173	Spring	1	
8	0208 32 278	Plug	1	
9	2080 32 330A	Spindle	1	
10	2080 32 350A	Arm, Idler	1	
11	2113 32 354	Bush	1	
12	2113 32 356	Oil Seal	1	
13	0305 32 321	Shim	2	
14	2113 32 329	Bush, Tapered	2	
15	0259 32 341	Washer	1	
16	99924 1200	Nut, Idler	1	
	99221 3020	Pin, Split	1	

No.	Part Number	Description	Q'ty	Remarks
17	99783 1090	Bolt, Idler	2	
18	2080 32 358	Spacer	1	
19	2113 32 365	Rod, Tie	2	
20	99922 1400	Nut, Lock - Tie Rod	2	
21	99944 1400	Nut, Lock - Tie Rod	2	
22	0866 99 322	Socket Set	2	
23	1907 99 324	Socket Set	2	
24	0730 32 279	Seal, Dust	2	
25	1027 32 279	Seal, Dust	2	
26	0187 32 289	Ring Set	4	
27	99924 1000	Nut, Socket	4	
	99221 2020	Pin, Split - Outer Side	2	
	99221 2015	Pin, Split - Inner Side	2	

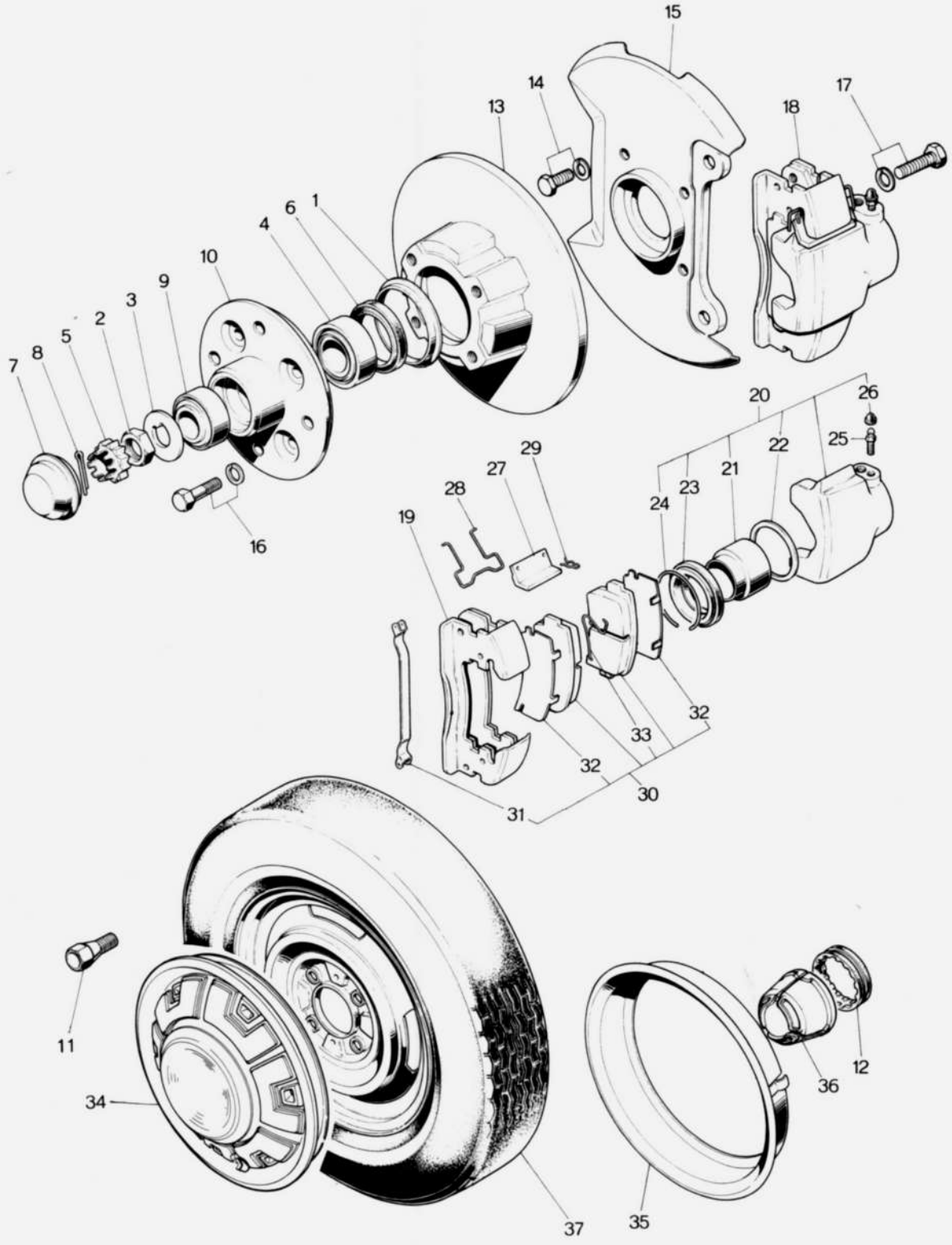
15
14
13
17
18
1
6
4
10
9
3
2
5
8
7
16
20
26
25
22
21
23
24
29
27
28
19
32
33
32
30
31
11
34
37
35
36
12

No.	Part Number	Description	Q'ty	Remarks
1	0221 33 035	Cover, Dust	2	
2	0662 33 042	Nut	2	
3	1011 33 043	Washer, Tab	2	
4	0259 33 047	Bearing, Front Wheel Inner	2	
5	0317 33 049	Cover Set	2	
6	0398 33 065	Oil Seal	2	
7	0259 33 071	Cap, Hub	2	
8	99221 4030	Pin, Split	2	
9	0317 33 075	Bearing, Front Wheel Outer	2	
10	0820 33 091A	Hub, Wheel	2	
11	0259 33 165	Bolt, Wheel Set (Wheel Cap use)	8	
	0820 33 165A	Bolt, Wheel Set (Center Cap use)	8	
12	0820 33 192A	Rubber Set	2	
13	0305 33 251B	Plate, Disc	2	
14	99811 1020	Bolt, Mounting Adapter	8	
	99971 1000	Washer, Spring	8	
15	0305 33 260	Adapter, Mounting	2	
16	0221 33 698	Bolt, Disc Plate	8	
	99971 1000	Washer, Spring	8	
17	0305 33 699	Bolt, Disc Brake	4	

No.	Part Number	Description	Q'ty	Remarks
	99971 1200	Washer, Spring	4	
18	0305 33 980D	Brake (R), Disc	1	
	0305 33 990D	Brake (L), Disc	1	
19	0305 33 280	Support, Mounting	2	
20	0305 33 610D	Body & Piston (R)	1	Fig. No. 21~26 Included
	0305 33 710D	Body & Piston (L)	1	
21	2981 33 651	Piston	2	
22	2981 33 671	Seal, Piston	2	
23	2981 33 681	Boot	2	
24	0305 33 685	Ring, Boot	2	
25	0233 33 691	Screw, Bleeder	2	
26	0600 33 693	Cap, Rubber	2	
27	0305 33 695	Plug, Support	4	
28	0305 33 696	Spring	4	
29	0305 33 698A	Pin	8	
30	0841 49 230	Pad Set (Fig. No. 31~33 Included)	1	
31	0305 33 235	Clip, Anti-Rattle Pad	4	
32	0305 33 626A	Shim	4	
33	0296 33 636	Spring (R), Pad	1	

No.	Part Number	Description	Q'ty	Remarks
	0296 33 646	Spring (L), Pad	1	
34	1905 37 170	Cap, Wheel	2	
35	0820 ~~37~~ 33 180A	Ring, Wheel	2	
36	0881 37 191	Cap, Center	2	
37	9962 04 1653	Tire, Radial - 165SR—13 (Canada)	2	
	9962 07 1653	Tire, Radial - 165SR—13 (U.S.A.)	2	
	9963 60 4130	Valve, Air - TR413 (Canada)	2	
	9963 60 4140	Valve, Air - TR414 (U.S.A.)	2	
	9965 05 4530 00	Wheel, Disc - 4 ½ 13WDC (SIL. M) (Wheel Cap use)	2	
	9965 06 4530 06	Wheel, Disc - 4 ½ 13WDC (D. GRY) (Center Cap use)	2	

34 FRONT SUSPENSION

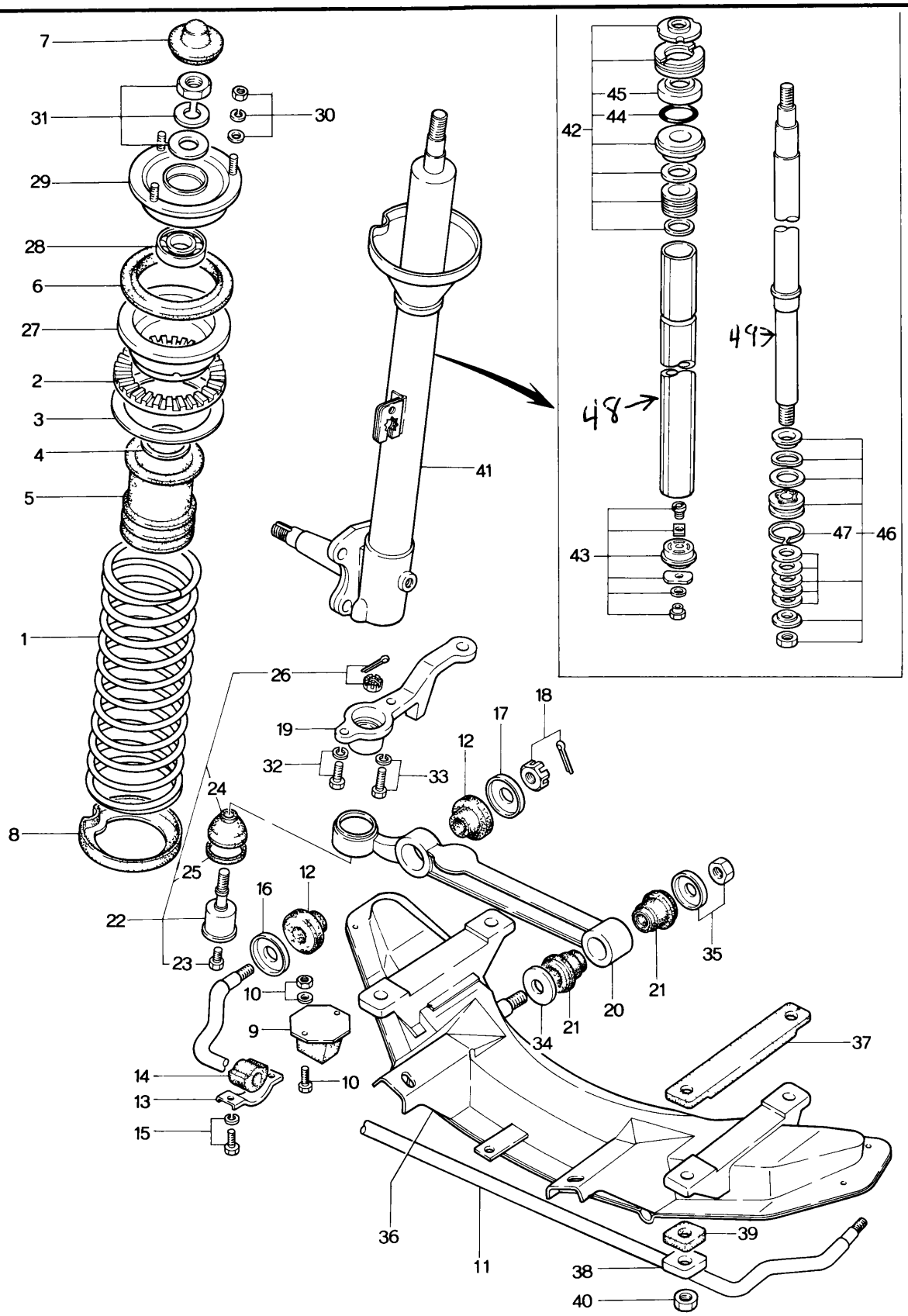

No.	Part Number	Description	Q'ty	Remarks
1	1907 34 011	Spring, Coil	2	
2	1907 34 012	Seat, Rubber-Upper	2	
3	0259 34 013	Plate, Adjust (t=4.5)	2	
4	2158 34 014	Ring, Dust Seal	2	
5	0259 34 015	Boot	2	
6	0259 34 016A	Seal	2	
7	0259 34 019	Cap	2	
8	0259 34 021	Seat, Rubber-Lower	2	
9	0259 34 110	Stopper, Bound	2	
10	99806 0618	Bolt, Bound Stopper	4	
	99971 0600	Washer, Spring	4	
	99906 0600	Nut	4	
11	1907 34 151	Stabilizer	1	
12	0259 34 153	Bush, Rubber-Stabilizer	4	
13	0259 34 155	Plate, Stabilizer Support	2	
14	0305 34 156	Bush, Rubber	2	
15	99781 1025	Bolt, Stabilizer Support	4	
	99971 1000	Washer, Spring	4	
16	0259 34 157	Washer, Stabilizer (Frt.)	2	
17	0259 34 158	Washer, Stabilizer (Rr.)	2	

No.	Part Number	Description	Q'ty	Remarks
18	99947 1400	Nut	2	
	99221 3030	Pin	2	
	1907 34 310	Arm (R)	1	
	1907 34 320	Arm (L)	1	
19	1907 32 301	Arm, Knuckle (R)	1	
	1907 32 311	Arm, Knuckle (L)	1	
20	0305 34 311	Arm	2	
21	0317 34 460	Bush, Rubber	4	
22	0305 99 356A	Ball Joint Set (Fig No. 23~26 included)	2	
23	0208 32 278	Plug	2	
24	0187 32 279A	Seal, Dust	2	
25	0259 32 289	Ring, Set	2	
26	99924 1200	Nut, Ball Joint	2	
	99221 3015	Pin, Split	2	
27	1907 34 340	Seal, Spring-Upper	2	
28	2158 34 381	Bearing	2	
29	2158 34 390A	Rubber, Mounting	2	
30	99901 0800	Nut, Mounting Rubber	6	

No.	Part Number	Description	Q'ty	Remarks
	99952 0800	Washer, Plain	6	
	99971 0800	Washer, Spring	6	
31	99921 1400	Nut, Damper Upper Side	2	
	99951 1430	Washer, Plain	2	
	99971 1400	Washer, Spring	2	
32	99781 1225	Bolt, Socket	2	
	99971 1200	Washer, Spring	2	
33	99781 1240	Bolt, Socket	2	
	99971 1200	Washer, Spring	2	
34	0317 34 662	Washer No 1	2	
35	0317 34 663	Washer No. 2	2	
	99947 1400	Nut	2	
36	1097 34 800A	Member, Cross-Front Suspension	1	
37	0259 34 896	Cushion, Upper	2	
38	0259 34 897	Washer	4	
39	0259 34 898	Cushion, Lower	4	
40	99942 1000	Nut, Self Lock	4	
41	0305 34 910G	Damper, Front	2	
42	0259 99 361	Damper Seal Set (Fig No. 44, 45 included)	2	

No.	Part Number	Description	Q'ty	Remarks
43	0305 34 720	Valve, Base	2	
44	0183 34 731	Ring, "O"	2	
45	0866 34 760	Oil Seal	2	
46	0317 99 362	Piston Set (Fig. No. 47 included)	2	
47	0259 34 719A	Ring, Piston	2	
48	0866-34-732	TUBE, PRESSURE		
49	0866-34-710	ROD, Piston		

ENGINE & T/MISSION BRACKET

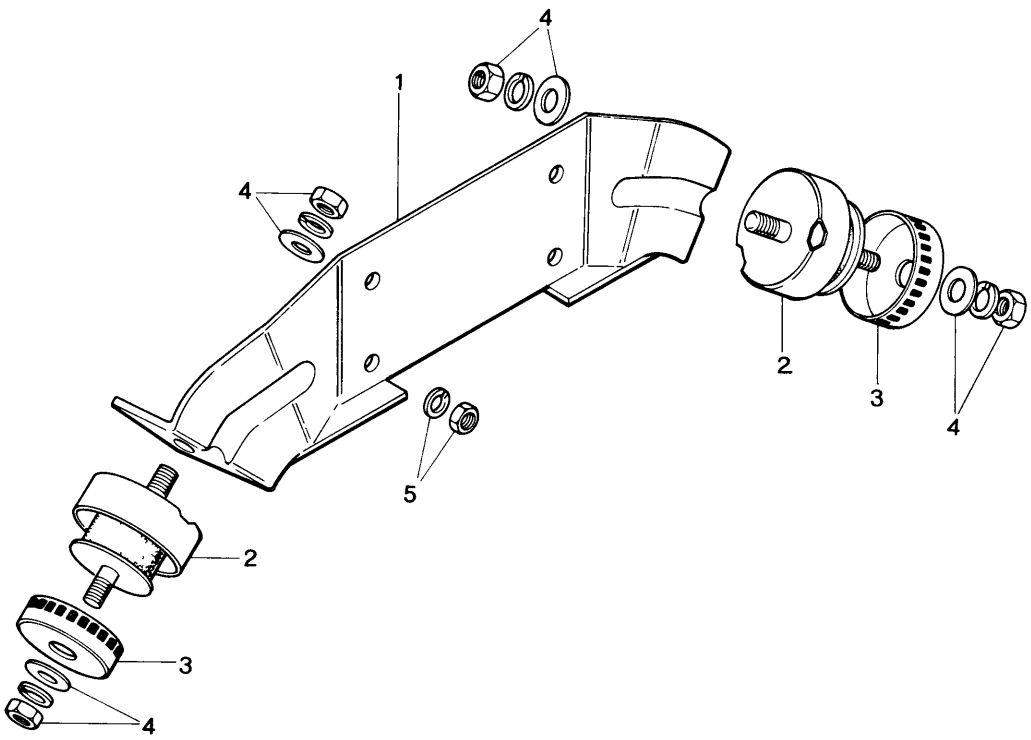

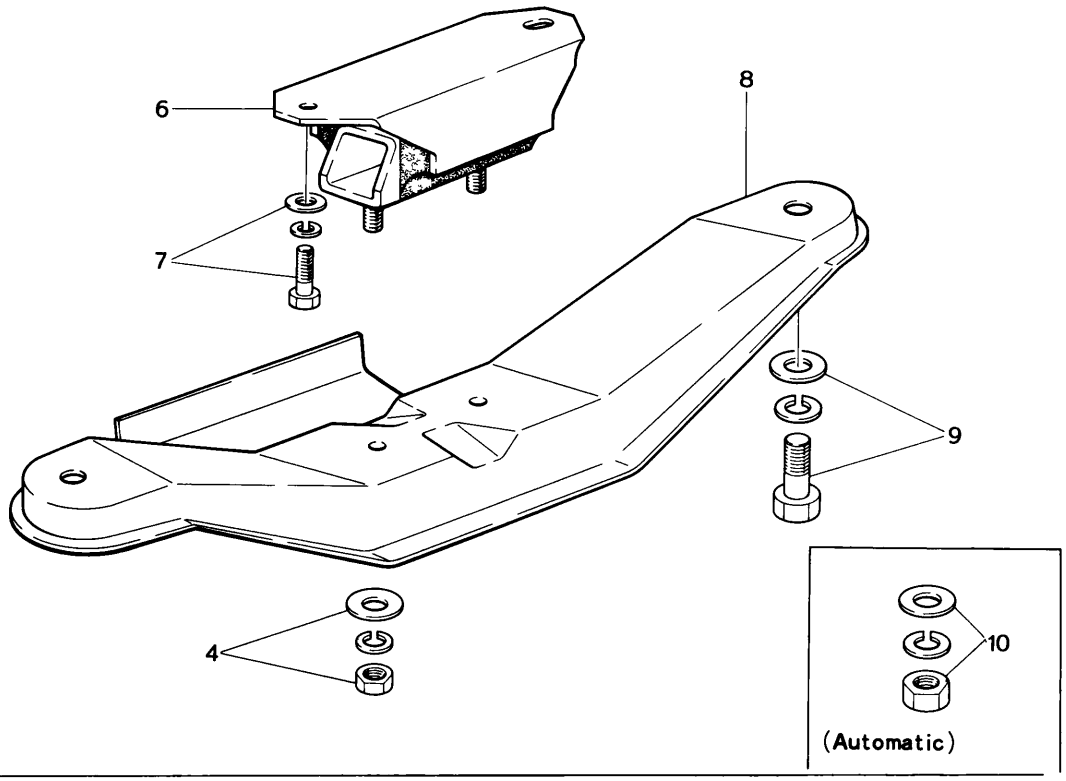

ENGINE & T / MISSION BRACKET

39

No.	Part Number	Description	Q'ty	Remarks
1	1668 39 020B	Bracket, Engine	1	
2	1668 39 040C	Rubber, Engine Mounting	2	
3	1668 39 045A	Casing, Stopper	2	
4	99921 1000	Nut, Engine & T / mission Mounting Member	6	
	99951 1030	Washer, Plain	6	
	99971 1000	Washer, Spring	6	
5	99921 1000	Nut, Engine Bracket	4	
	99971 1000	Washer, Spring	4	
6	1011 39 340	Rubber, T / mission Mounting	1	
7	99801 0820	Bolt, T / mission Mounting Rubber	2	
	99952 0800	Washer, Plain	2	
	99971 0800	Washer, Spring	2	
8	1011 39 380A	Member, T / mission Mounting	1	
9	99783 1028	Bolt	2	
	99951 1030	Washer, Plain (Manual)	2	
	99971 1000	Washer, Spring	2	
10	99921 1000	Nut	2	
	99951 1030	Washer, Plain (Automatic)	2	
	99971 1000	Washer, Spring	2	

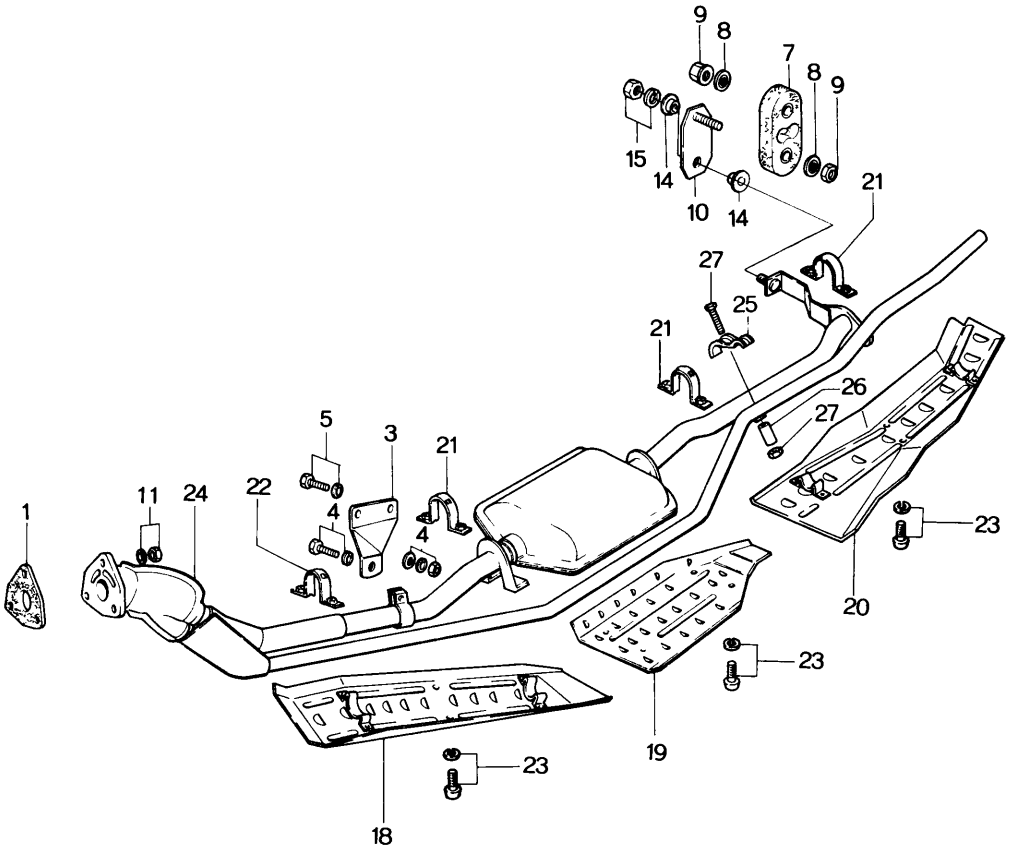
9
8
7
8
9
15
14
10
14
21
27
25
21
26
27
5
3
21
11
24
22
4
4
1
23
20
23
19
23
18

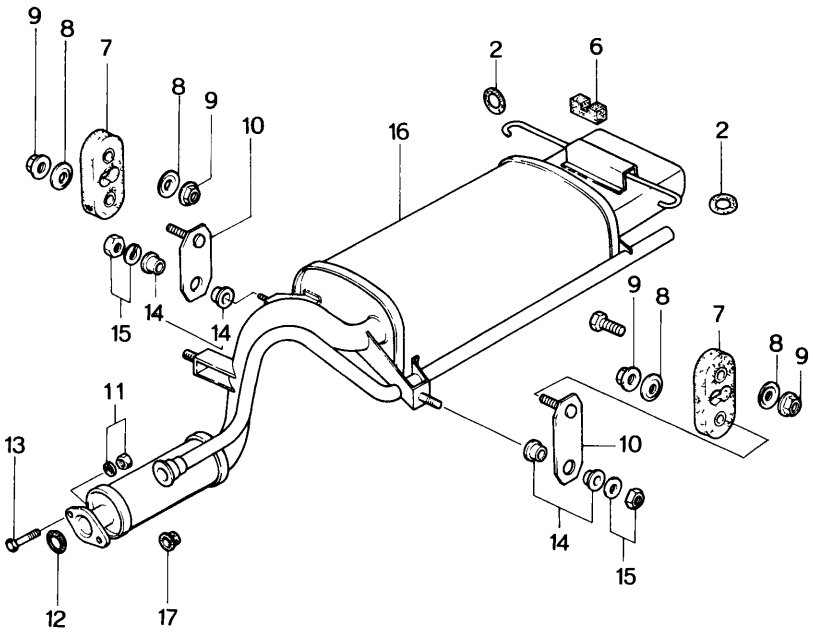
9
8
7
8
9
10
2
6
16
2
15
14
14
9
8
7
8
9
11
10
13
14
15
12
17

No.	Part Number	Description	Q'ty	Remarks
1	1757 13 891	Gasket	1	
2	1114 40 061	Hanger, Silencer	2	
3	1097 40 081	Bracket, Pre-Silencer	1	
4	99801 0832	Bolt, Bracket	1	
	99951 0822	Washer, Plain	2	
	99971 0800	Washer, Spring	1	
	99901 0800	Nut	1	
5	99801 0818	Bolt, Bracket	2	
	99971 0800	Washer, Spring	2	
6	1114 40 108B	Rubber, Stopper	1	
7	1114 40 160	Hanger, Silencer	3	
8	0820 40 166	Washer, Silencer Hanger	6	
9	99940 0800	Nut, Silencer Hanger	6	
10	1114 40 170	Plate, Silencer Hanger	3	
11	2158 40 355	Nut, Silencer	5	
	99971 1000	Washer, Spring	5	
12	0810 40 356	Gasket, Flange	1	
13	99801 1045	Bolt, Silencer	2	
14	0824 40 401	Insulator	6	
15	99949 0800	Nut, Silencer Hanger	3	

No.	Part Number	Description	Q'ty	Remarks
	99951 0822	Washer, Plain	3	
16	1907 40 500	Silencer, Main	1	
17	2090 40 508A	Rubber, Joint	1	
18	1097 40 810A	Protector (Frt.)	1	
19	1114 40 821A	Protector (C)	1	
20	1097 40 830A	Protector (Rr.)	1	
21	1114 40 850B	Band, Protector	3	
22	1128 40 850A	Band, Protector	1	
23	99796 0616	Bolt, Protector	16	
	99952 0618	Washer, Plain	16	
24	1907 40 600	Pipe, EX. -Front	1	
25	2090 40 307	Clamp	1	
26	1570 40 308	Pipe	1	
27	99806 0640	Bolt, Clamp	1	
	99906 0600	Nut	1	
	99971 0600	Washer, Spring	1	

FUEL TANK & PIPING

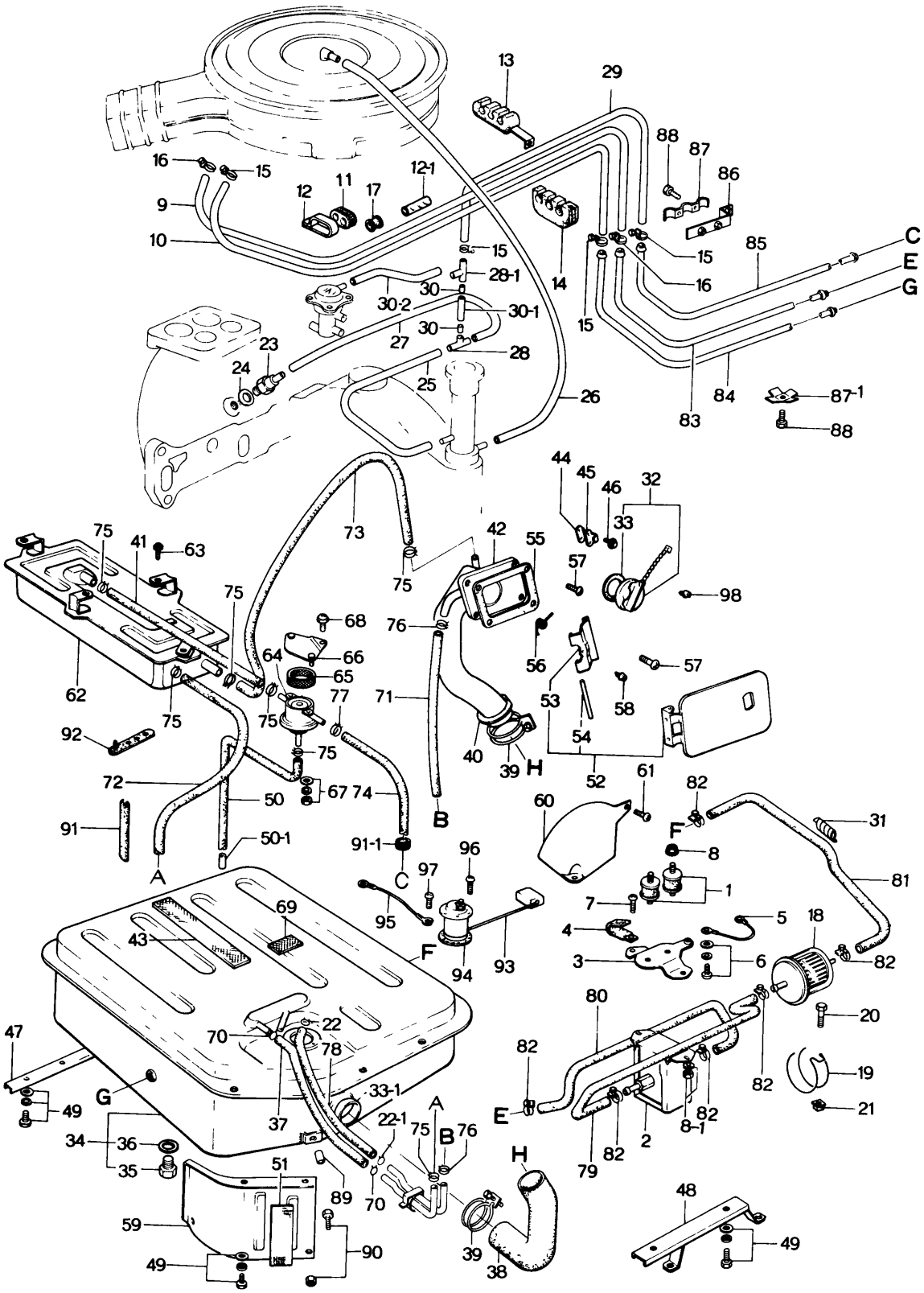

No.	Part Number	Description	Q'ty	Remarks
1	0223 13 363	Rubber, Insulation-Fuel Pump	2	
2	1907 13 400	Pump, Fuel	1	
3	1663 13 411	Bracket, Fuel Pump	1	
4	1663 13 412	Clip, Fuel Pump	1	
5	1663 13 413	Wire, Earth-Fuel Pump	1	
6	99833 0618	Screw, Earth Wire	1	
●	99833 0608	Screw, Earth Wire	1	From Car No. 1
	99952 0600	Washer, Plain	1	
	99971 0600	Washer, Spring	1	
7	99833 0612	Screw, Fuel Pump Bracket	2	
8	99940 0600	Nut, Fuel Pump	2	
● 8-1	99906 0600	Nut, Fuel Pump	4	
●	99953 0600	Washer, Plain	2	From Car No. 1
●	99971 0600	Washer, Spring	4	
9	99340 06650	Pipe, Fuel Main (Manual) (650㎜)	1	Ord. By 99344 06150 (15m)
●	99348 08640	Pipe, Fuel Main (Manual) (640㎜)	1	Ord. By 99349 08750 (1.75m) 73/11～×
	99340 06600	Pipe, Fuel Main (Automatic) (600㎜)	1	Ord. By 99344 06150 (15m)
●	99348 08640	Pipe, Fuel Main (Automatic) (640㎜)	1	Ord. By 99349 08750 (1.75m) 73/11～×
10	99340 60650	Pipe, Fuel Return (Manual) (650㎜)	1	Ord. By 99344 06150 (15m)
●	99346 08640	Pipe, Fuel Return (Manual) (640㎜)	1	Ord By 99349 08750 (1.75m) 73/11～×

13 42 FUEL TANK & PIPING

No.	Part Number	Description	Q'ty	Remarks
	99340 60600	Pipe, Fuel Return (Automatic) (600㎜)	1	Ord. By 99344 06150 (15m)
●	99346 08640	Pipe, Fuel Return (Automatic) (640㎜)	1	Ord. By 99349 06750 (1.75m) 73/11～×
● 11	0823 13 445A	Protector, Fuel Pipe (Automatic)	1	74/3～Discarded
● 12	0839 13 448B	Clip, Fuel Pipe (Automatic)	1	74/3～Discarded
● 12-1	1883 13 448	Protector, Fuel Pipe (Automatic)	1	74/1～Added Anew
13	2090 13 447	Clip, Fuel Pipe	1	
14	1907 13 449	Clip, Fuel Pipe	1	
15	99283 1100	Clip, Fuel Pipe-Return Pipe	2	
●	99283 1000	Clip, Fuel Pipe-Fuel Return & Evaporation Pipe	4	73/11～×
16	99283 1300	Clip, Fuel Pipe-Main Pipe & Evaporation Pipe	4	
●	99283 1200	Clip, Fuel Pipe-Fuel Main	2	73/11～×
● 17	99681 1503	Protector, Fuel Pipe	3 1	73/10～Q'ty
●	99681 1203	Protector, Fuel Pipe	2	73/10～×
●	99681 1503	Protector, Fuel Pipe	2	74/2～×
18	0222 13 470B	Filter, Fuel	1	
19	0381 13 481	Clamp, Fuel Filter	1	
20	99801 0814	Bolt, Fuel Filter Clamp	1	
●	99786 0816	Bolt, Fuel Filter Clamp	1	73/10～○
●	99952 0800	Washer, Plain	1	73/10～Discarded
●	99971 0800	Washer, Spring	1	73/10～Discarded

No.	Part Number	Description	Q'ty	Remarks
21	99911 0800	Nut, Square-Fuel Filter	1	
22	0222 13 493	Clip, Wire-Fuel Pipe	2	
●	99283 1200	Clip, Fuel Pipe	2	73/12～×
● 22-1	99283 1100	Clip, Fuel Pipe	1	73/12～Added Anew
23	1757 13 780	Valve, Ventilation	1	
24	99564 1600	Gasket, Ventilation Valve	1	
25	1757 13 785	Hose, Ventilation-Oil Filler Pipe～"T" Joint	1	
●	1757 13 785 A	Hose, Ventilation-Oil Filler Pipe～"T" Joint	1	73/11～○
26	1757 13 786	Hose, Ventilation-Air Cleaner～Intermediate Housing (Manual)	1	
●	1757 13 786 A	Hose, Ventilation-Air Cleaner～Intermediate Housing (Manual)	1	73/11～○
	1883 13 786	Hose, Ventilation-Air Cleaner～Intermediate Housing (Automatic)	1	
●	1883 13 786 A	Hose, Ventilation-Air Cleaner～Intermediate Housing (Automatic)	1	73/11～○
●	1757 13 786 A	Hose, Ventilation-Air Cleaner～Intermediate Housing (Automatic)	1	74/3～×
27	1757 13 788	Hose, Ventilation-Ventilation Valve～"T" Joint	1	
●	1757 13 788 A	Hose, Ventilation-Ventilation Valve～"T" Joint	1	73/11～○
28	0862 13 790	Joint, "T"	1	
●	1757 13 790	Joint, "T"	1	74/4～△
● 28-1	1029 13 790	Joint, "T"	1	74/4～Added Anew
29	1907 13 792	Hose, Evaporation～Condense Tank～"T" Joint	1	
●	1907 13 792 A	Hose, Evaporation～Condense Tank～"T" Joint	1	73/11～○

FUEL TANK & PIPING

No.	Part Number	Description	Q'ty	Remarks
●	1907 13 792B	Hose, Evaporation-Condense Tank～"T" Joint	1	73/11～○
●	99346 06640	Hose, Evaporation-Condense Tank～"T" Joint (640 m/m)	1	Ord. By 99349 06750 (1.75m) 74/4～○
30	1624 13 795	Insert, Evaporation Hose	1	
	1029 13 795A	Insert, Evaporation Hose	2	74/3～×
● 30-1	99346 06055	Hose, Evaporation-"T" Joint～"T" Joint (55 m/m)	1	Ord. By 99349 06750 (1.75m) 74/4～Added Anew
● 30-2	99340 04090	Tube, E.V.C. Valve～"T" Joint	1	74/4～Added Anew
31	0823 18 111	Supporter, Fuel Pipe	1	
32	1011 42 250	Cap, Filler	1	
33	2280 42 462A	Gasket	1	
●	2280 42 462B	Gasket	1	73/12～○
33-1	1624 42 280	Valve, Non Return	1	From Car No. 1
34	0839 42 310A	Tank, Fuel	1	
●	0839 42 310B	Tank, Fuel	1	From Car No. 1
35	0114 42 046A	Plug	1	
36	99564 1200	Gasket	1	
37	0305 42 345B	Tube, Fuel Tank～Condense Tank	1	

No.	Part Number	Description	Q'ty	Remarks
●	99346 06120	Pipe, Fuel Tank~Condense Tank (120 m/m)	1	Ord. By 99349 06750 (1.75m) 73/12~○
38	2090 42 347	Hose, Joint-Filler Pipe	1	
●	1907 42 347	Hose, Joint-Filler Pipe	1	73/12~○
39	99282 5500	Clamp, Hose	2	
40	0305 42 348	Grommet, Filler Pipe	1	
41	2090 42 348	Tube, Vent-Condense Tank~Check Valve	1	
●	99346 06480	Pipe, Condense Tank~Check Valve (480 m/m)	1	Ord. By 99349 06750 (1.75m) 73/12~○
42	2850 42 350	Pipe, Filler	1	
43	0621 42 371	Spacer, Upper Pan	1	
44	0223 42 375	Plate, Back-Filler Lid	1	
45	0223 42 376	Plate, Lock-Filler Lid	1	
46	99806 0412	Bolt, Plate	2	
●	99830 0412	Bolt, Plate	2	73/12~○
●	99952 0400	Washer, Plain	2	73/12~Discarded
●	99971 0400	Washer, Spring	2	
47	0839 42 381	Washer, "A"-Fuel Tank	1	
●	0839 42 381 A	Washer, "A"-Fuel Tank	1	74/4~○
48	0305 42 390	Washer, Fuel Tank	1	
49	99804 0625	Bolt, Fuel Tank Washer	7	
●	99785 0625	Bolt, Fuel Tank Washer	7	73/12~○

FUEL TANK & PIPING

No.	Part Number	Description	Q'ty	Remarks
	99952 0600	Washer, Plain	7	
	99971 0600	Washer, Spring	7	
50	2432 42 395	Tube, Vent-Check Valve~Floor	1	
●	99346 06580	Pipe, Check Valve~Floor (580m/m)	1	Ord. By 99349 06750 (1.75m) 74/12~○
● 50-1	0866 42 544	Elbow	1	From Car No. 1
51	0824 42 403	Pad, "C"-Fuel Tank	1	
52	1907 42 410	Lid, Fuel Filler	1	
53	0305 42 432	Hinge	1	
54	0305 42 433	Pin, Hinge	1	
55	0305 42 441	Gasket, Filler Lid	1	
56	2244 42 455	Spring, Filler Lid	1	
57	99804 0516	Screw, Hinge & Filler Pipe	6	
●	99786 0512	Screw, Hinge & Filler Pipe	6	74/3~△
●	99952 0500	Washer, Plain	6	74/3~Discarded
●	99971 0500	Washer, Spring	6	
58	0259 42 459	Rubber, Cushion-Filler Lid	1	
59	0305 42 461	Protector, Fuel Tank	1	
60	0305 42 465	Protector	1	

No.	Part Number	Description	Q'ty	Remarks
61	99863 0510B	Screw, Protector	2	
●	99865 0516B	Screw, Protector	2	73/12~○
62	2090 42 610A	Tank, Condense	1	
63	99833 0516	Screw, Condense Tank	4	
●	99830 0512	Screw, Condense Tank	4	73/12~△
●	99952 0516	Washer, Plain	4	73/12~Discarded
●	99971 0500	Washer, Spring	4	
64	2691 42 710A	Valve, Check	1	
●	1114 42 710A	Valve, Check	1	74/2~△
● 65	2691 42 716	Element	1	74/2~Discarded
66	2691 42 750	Bracket, Check Valve	1	
67	99906 0500	Nut, Bracket	2	
●	99940 0501	Nut, Bracket	2	74/3~○
●	99952 0500	Washer, Plain	2	74/3~Discarded
●	99971 0500	Washer, Spring	2	
68	99833 0512	Screw, Check Valve	1	
●	99830 0512	Screw, Check Valve	1	74/3~○
●	99952 0500	Washer, Plain	1	74/3~Discarded
●	99971 0500	Washer, Spring	1	
69	0259 42 792	Pad, Fuel Tank	1	

No.	Part Number	Description	Q'ty	Remarks
70	2046 43 839	Clip, Vent Tube	2	
71	99336 12029	Pipe, Vinyl-Filler Pipe~Fuel Tank	1	
●	99346 12290	Pipe, Filler Pipe~Fuel Tank (290㎜)	1	Ord. By 99349 12750 (1.75m) 73/12~○
72	0183 45 021	Pipe, Fuel-Condense Tank~Fuel Tank	1	
●	99346 06820	Pipe, Condense Tank~Fuel Tank (820㎜)	1	Ord. By 99349 06750 (1.75m) 73/12~○
73	0603 45 071	Pipe, Condense Tank~Filler Pipe	1	
●	99346 06540	Pipe, Condense Tank~Filler Pipe (540㎜)	1	Ord. By 99349 06750 (1.75m) 73/12~○
74	99340 60930	Pipe, Check Valve~Evaporation Pipe (930㎜)	1	Ord. By 99344 06150 (15m)
●	99346 06930	Pipe, Check Valve~Evaporation Pipe (930㎜)	1	Ord. By 99349 06750 (1.75m) 73/12~○
75	99282 1201	Clip, Wire-Pipe	7	
●	99283 1100	Clip, Pipe	6	73/12~×
●	99283 1200	Clip, Pipe	1	73/12~×
76	99282 2001	Clip, Wire-Pipe	2	
77	99282 1401	Clip, Wire-Pipe	2	
●	99283 1000	Clip, Pipe	1	73/12~×
●	99283 1100	Clip, Pipe-Check Valve Side	1	73/12~×
78	99340 06120	Pipe, Vinyl-Fuel Tank~Filler Pipe (120㎜)	1	Ord. By 99344 06150 (15m)
●	99346 12140	Pipe, Fuel Tank~Filler Pipe (140㎜)	1	Ord. By 99349 06750 (1.75m) 73/12~×
79	1663 45 041	Pipe, Fuel-Fuel Filter~Fuel Pump	1	
●	1907 45 021	Pipe, Fuel-Fuel Filter~Fuel Pump	1	73/12~○

No.	Part Number	Description	Q'ty	Remarks
80	1663 45 042	Pipe, Fuel-Fuel Pump~Fuel Main Pipe	1	
●	1907 45 022	Pipe, Fuel-Fuel Pump~Fuel Main Pipe	1	73/12~○
81	99340 06280	Pipe, Fuel-Fuel Filter~Fuel Tank (280 m/m)	1	Ord. By 99344 06150 (15m)
●	99348 08280	Pipe, Fuel-Fuel Filter~Fuel Tank (280 m/m)	1	Ord. By 99349 08750 (1.75m) 73/12~×
82	99282 1401	Clip, Fuel Pipe	5	
●	99283 1200	Clip, Fuel Pipe	6	73/12~○
83	1907 45 071	Pipe, Fuel Main	1	
●	1907 45 071A	Pipe, Fuel Main	1	74/1~○
84	~~1097 45 610~~	~~Pipe, Fuel Return~~	~~1~~	
●	1907 45 610	Pipe, Fuel Return	1	From Car No. 1
●	1907 45 610A	Pipe, Fuel Return	1	74/1~○
85	~~1097 45 711~~	~~Pipe, Evaporation~~	~~1~~	
●	1907 45 711	Pipe, Evaporation	1	From Car No. 1
86	1650 45 910A	Clip, Fuel Pipe	1	
87	1650 45 921	Clip, Fuel Pipe	1	
● 87-1	0866 45 903A	Clip, Pipe	7	From Car No. 1
88	99786 0612	Bolt, Clip	10	
89	0223 50 049	Spacer, Fuel Tank	2	
90	99806 0622	Bolt, Protector-Fuel Tank	2	
●	99796 0622	Bolt, Protector-Fuel Tank	2	73/12~○

FUEL TANK & PIPING

No.	Part Number	Description	Q'ty	Remarks
	99906 0600	Nut, Protector	2	
●	99940 0602	Nut, Protector	2	73/12~○
●	99952 0618	Washer, Plain	2	73/12~Q'ty
91	0223 56 942	Pad, Fuel Tank	1	
● 91-1	0317 61 931A	Protector, Pipe	1	73/12~ Added Anew
92	0187 66 991	Clip, Rubber	1	
93	0839 67 170	Gauge, Fuel Tank	1	
94	0243 66 773	Gasket	1	
95	0275 67 175	Cord, Earth	1	
96	99833 0408	Screw, Fuel Tank Gauge	5	
97	99833 0410	Screw, Fuel Tank Gauge+Earth Cord	1	
98	0187 70 491	Stopper, Filler Lid	1	

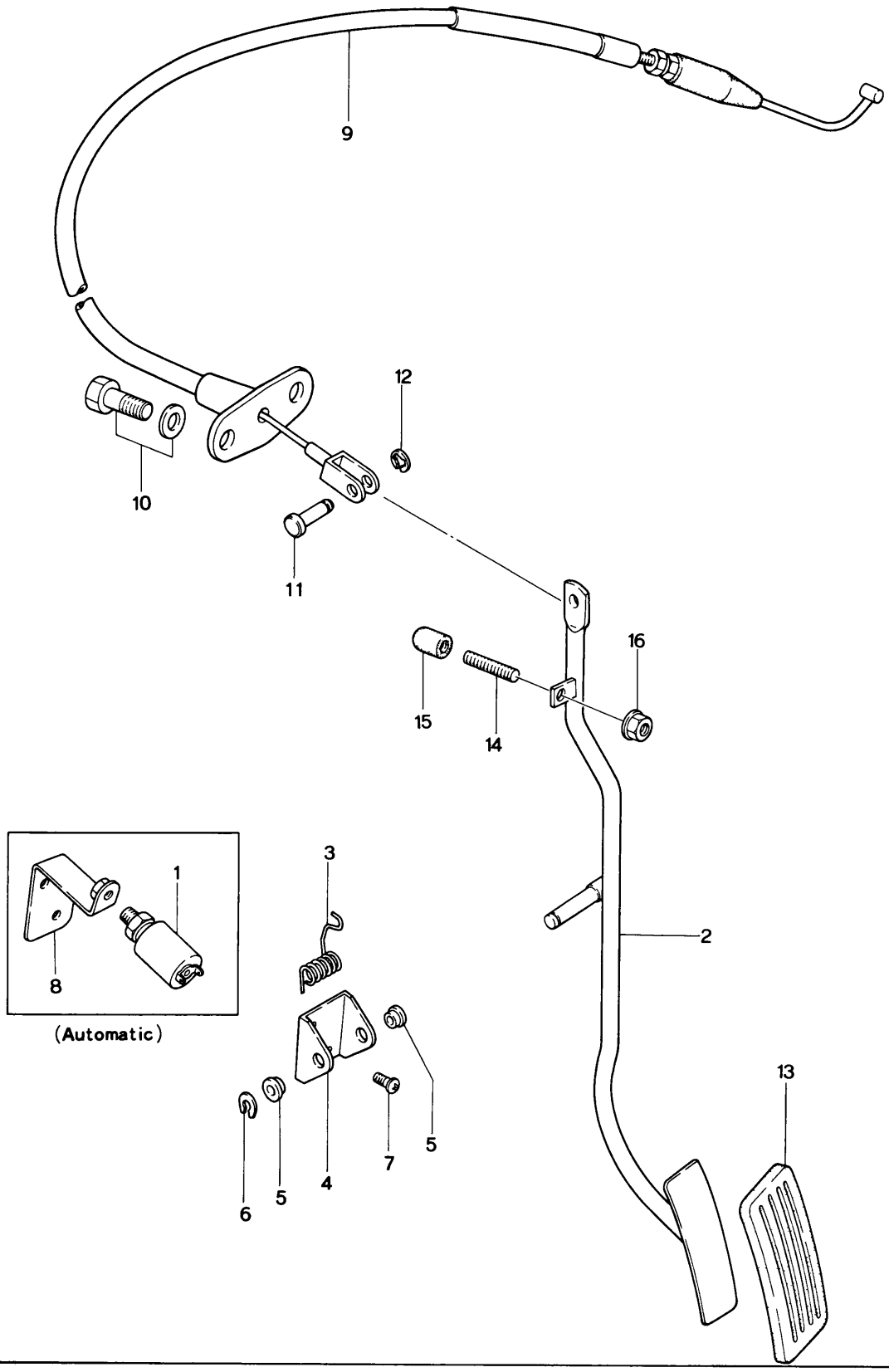
9
12
10
11
16
15
14
1
8
(Automatic)
3
2
13
5
7
5
6
5
4

No.	Part Number	Description	Q'ty	Remarks
1	2691 18 660	Switch, Kick Down (Automatic)	1	
2	1907 41 610	Pedal, Accelerator (Manual)	1	
	1908 41 610	Pedal, Accelerator (Automatic)	1	
3	0824 41 619	Spring, Return	1	
4	0305 41 641	Bracket, Arm	1	
5	0259 41 644	Bush	2	
6	99575 0600	Ring, "U" Stop	1	
7	99786 0616	Bolt	2	
8	0842 41 650	Bracket, Kick Down Switch (Automatic)	1	
9	1907 41 660	Wire, Accelerator	1	
10	99786 0620	Bolt	2	
	99952 0618	Washer, Plain	2	
11	99230 0511	Pin	1	
12	99575 0300	Ring, "U" Stop	1	
13	1708 41 711	Pad, Pedal	1	
14	0118 41 681	Stopper	1	
15	0118 41 682	Rubber	1	
16	99940 0600	Nut	1	

CLUTCH & BRAKE PEDAL

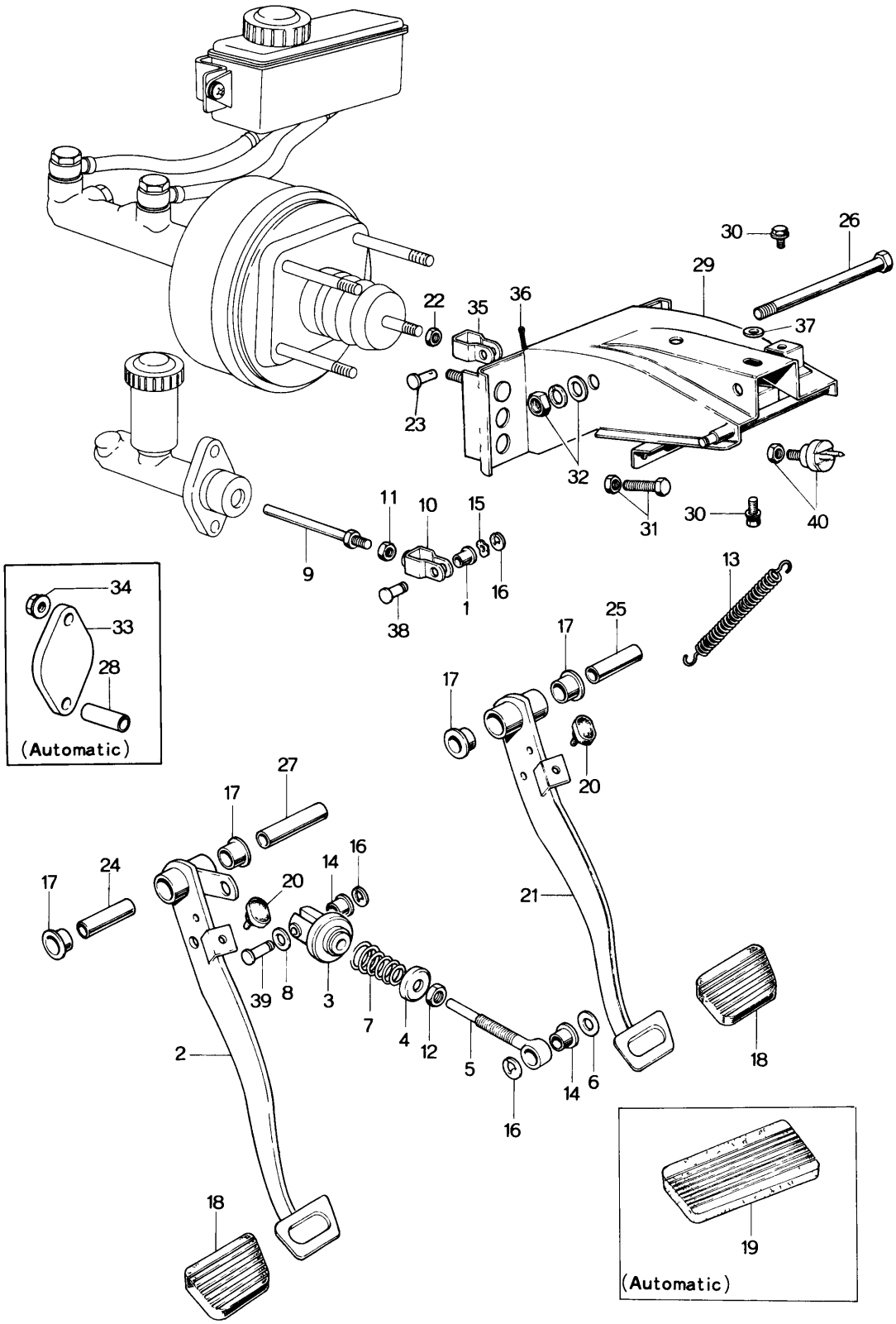

CLUTCH & BRAKE PEDAL 41 43

No.	Part Number	Description		Q'ty	Remarks
1	0727 41 023	Bush	(Manual)	1	
2	1907 41 030	Pedal, Clutch		1	
3	0559 41 040C	Seat, Spring		1	
4	0183 41 043	Seat, Spring		1	
5	0824 41 051A	Rod		1	
6	99952 0816	Washer, Plain		1	
7	0559 41 081A	Spring		1	
8	0824 41 084	Spacer		1	
9	0824 41 131	Rod, Push-Clutch		1	
10	1872 41 140	Fork, Clutch		1	
11	1872 41 142	Nut, Push, Rod		1	
12	99922 0800	Nut, Push Rod		1	
13	0810 41 308	Spring, Return-Brake		1	
14	0259 41 644	Bush	(Manual)	2	
15	99972 0800	Washer, Wave		1	
16	99575 0600	Ring, Retaining		3	
17	0223 43 022	Bush, Pedal	(Manual) (Automatic)	4 2	
18	0259 43 028	Pad, Pedal (Manual)		2	
19	0268 43 028	Pad, Pedal (Automatic)		1	
20	0187 43 029	Rubber, Stopper	(Manual) (Automatic)	2 1	

CLUTCH & BRAKE PEDAL

No.	Part Number	Description	Q'ty	Remarks
21	1907 ~~1097~~ 43 030	Pedal, Brake (Manual)	1	
	1908 ~~1098~~ 43 030	Pedal, Brake (Automatic)	1	
22	99940 1000	Nut, Brake Fork	1	
23	99231 0818	Pin, Joint - Brake	1	
24	0187 43 061	Pin, Clutch (Manual)	1	
25	2301 43 061	Pipe, Brake Pedal	1	
26	99813 12180	Bolt, Pedal (Manual)	1	
	99813 12135	Bolt, Pedal (Automatic)	1	
27	0223 43 064	Spacer	1	
28	0259 43 065	Pipe (Automatic)	2	
29	2835 43 070A	Bracket, Master Cylinder (Manual)	1	
	0305 43 070B	Bracket, Master Cylinder (Automatic)	1	
30	99786 0820	Bolt	2	
	99952 0822	Washer, Plain	2	
31	99795 1032	Bolt, Pedal Stopper } (Manual)	1	
	99922 1000	Nut } (Manual)	1	
32	99921 1200	Nut, Pedal	1	
	99971 1200	Washer, Spring	1	
	99952 1200	Washer, Plain (Manual)	1	
33	0225 43 092	Plate } (Automatic)	1	
34	99940 0800	Nut, Plate } (Automatic)	2	

No.	Part Number	Description	Q'ty	Remarks
35	1872 43 140	Fork, Brake	1	
36	99221 2020	Pin, Split	1	
37	0136 44 043	Spacer	1	
38	0223 46 683	Pin, Clutch Fork (Manual)	1	
39	0604 46 785	Pin (Manual)	1	
40	0233 66 790	Switch, Stop	1	

41 CLUTCH RELEASE & MASTER CYLINDER (MANUAL)

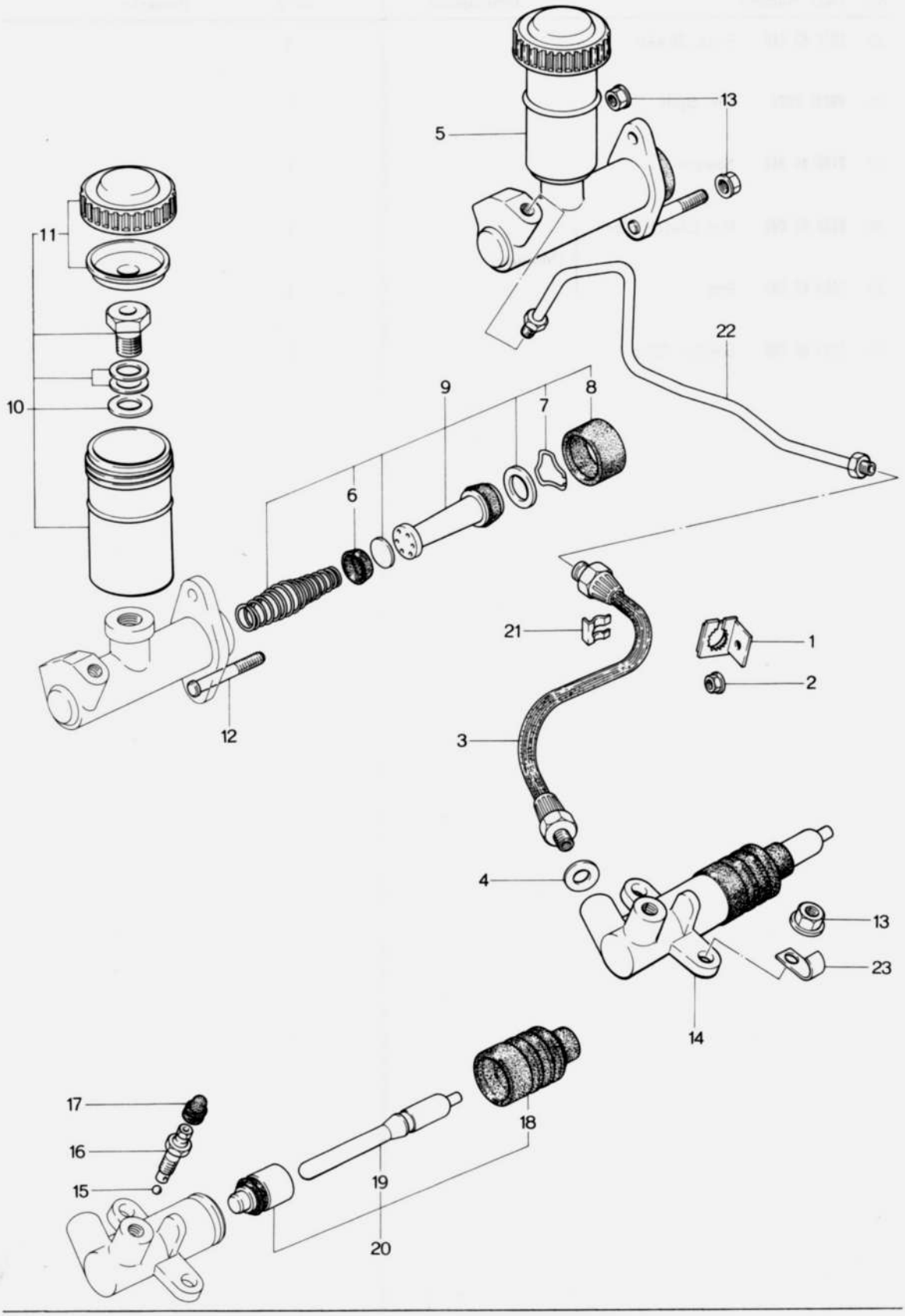

CLUTCH RELEASE & MASTER CYLINDER (MANUAL)

No.	Part Number	Description	Q'ty	Remarks
1	0866 41 370	Holder, Flexible Hose	1	
2	99940 0600	Nut, Holder	1	
3	1907 41 380	Hose, Flexible	1	
4	99564 1000	Gasket	1	
5	2835 41 400A	Cylinder, Clutch Master	1	
6	0839 41 461	Cap, Primary	1	
7	0111 43 432	Wire, Piston Stop	1	
8	0111 43 511	Boot	1	
9	0839 89 431A	Repair Kit, Clutch Master Cylinder	1	
10	0317 89 435	Tank Set, Reserve	1	
11	0317 89 436A	Cap Set, Reserve Tank	1	
12	99852 0848	Stud	1	
13	99940 0800	Nut, Cylinder	4	
14	1881 41 920	Cylinder, Clutch Release	1	
15	99611 1500	Ball, Steel	1	
16	0259 33 691	Valve, Bleeder	1	
17	0259 33 693	Cap, Bleeder	1	

41 CLUTCH RELEASE & MASTER CYLINDER (MANUAL)

No.	Part Number	Description	Q'ty	Remarks
18	0603 41 331	Boot	1	
19	1881 41 341	Rod, Push	1	
20	1029 89 411	Repair Kit	1	
21	0136 43 635	Clip, Flexible Hose	1	
22	1907 45 510	Pipe, Clutch	1	
23	99276 0808	Clip	1	

43 49 TANDEM MASTER CYLINDER & VACUUM POWER ASSIST

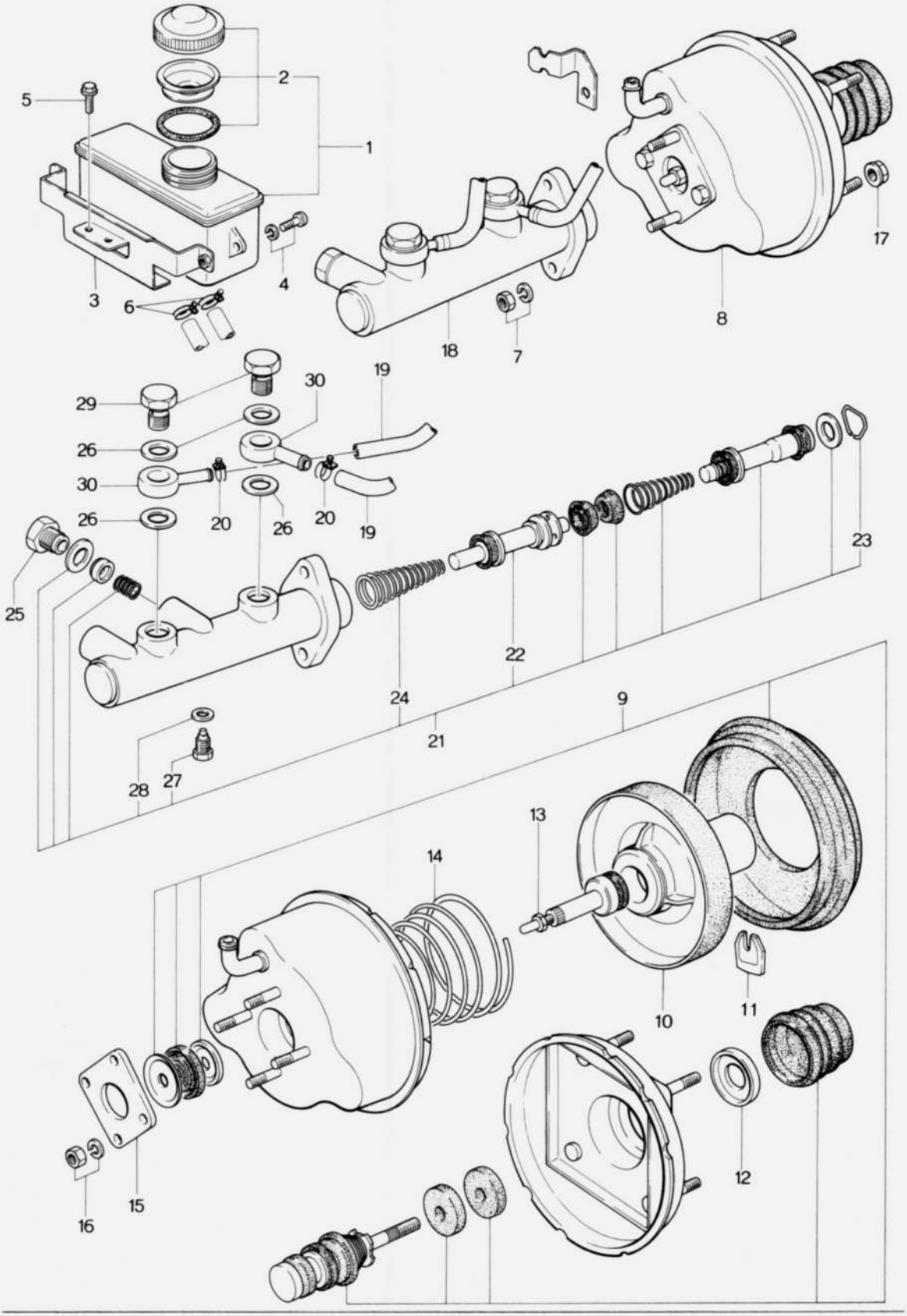

TANDEM MASTER CYLINDER & VACUUM POWER ASSIST

43 49

No.	Part Number	Description	Q'ty	Remarks
1	0839 43 550	Tank, Reserve	1	
2	0317 89 436A	Cap Set, Tank	1	
3	0839 43 570	Holder, Reserve Tank	1	
4	99833 0512	Screw, Tank Holder	2	
	99971 0500	Washer, Spring	2	
5	99786 0612	Bolt, Tank Holder	2	
6	99285 0800	Clamp, Hose	2	
7	99901 0800	Nut, Tandem Master Cylinder	2	
	99971 0800	Washer, Spring	2	
8	2835 43 800	Vacuum Power Assist	1	
9	0824 49 720A	Repair Kit	1	
10	0824 49 745	Plate, Diaphragm	1	
11	2046 49 746	Key	1	
12	2046 49 747	Retainer, Silencer	1	
13	0824 49 770	Rod, Push	1	
14	0824 49 781	Spring	1	
15	0824 49 782	Flange	1	
16	2046 49 784	Nut	2	

TANDEM MASTER CYLINDER & VACUUM POWER ASSIST

No.	Part Number	Description	Q'ty	Remarks
	2046 49 783	Washer, Spring	2	
17	99940 0800	Nut, Vacuum Power Assist	4	
18	1942 43 990	Cylinder, Tandem Master	1	
19	2835 43 422	Hose, Reserve	2	
20	99282 1401	Clamp, Hose	2	
21	1708 49 610	Repair Kit	1	
22	1708 49 630	Piston, Floating	1	
23	0305 49 638	Wire, Piston Stop	1	
24	1708 49 642	Spring, Floating Piston	1	
25	0512 49 651	Bolt, Joint	2	
26	0305 49 656	Gasket	2	
27	0512 49 676	Bolt "A"	Selective use	1
	0512 49 677	Bolt "B"		
28	0512 49 696	Gasket	1	
29	0512 49 686	Bolt, Connector	2	
30	0512 49 682	Joint, Union	2	

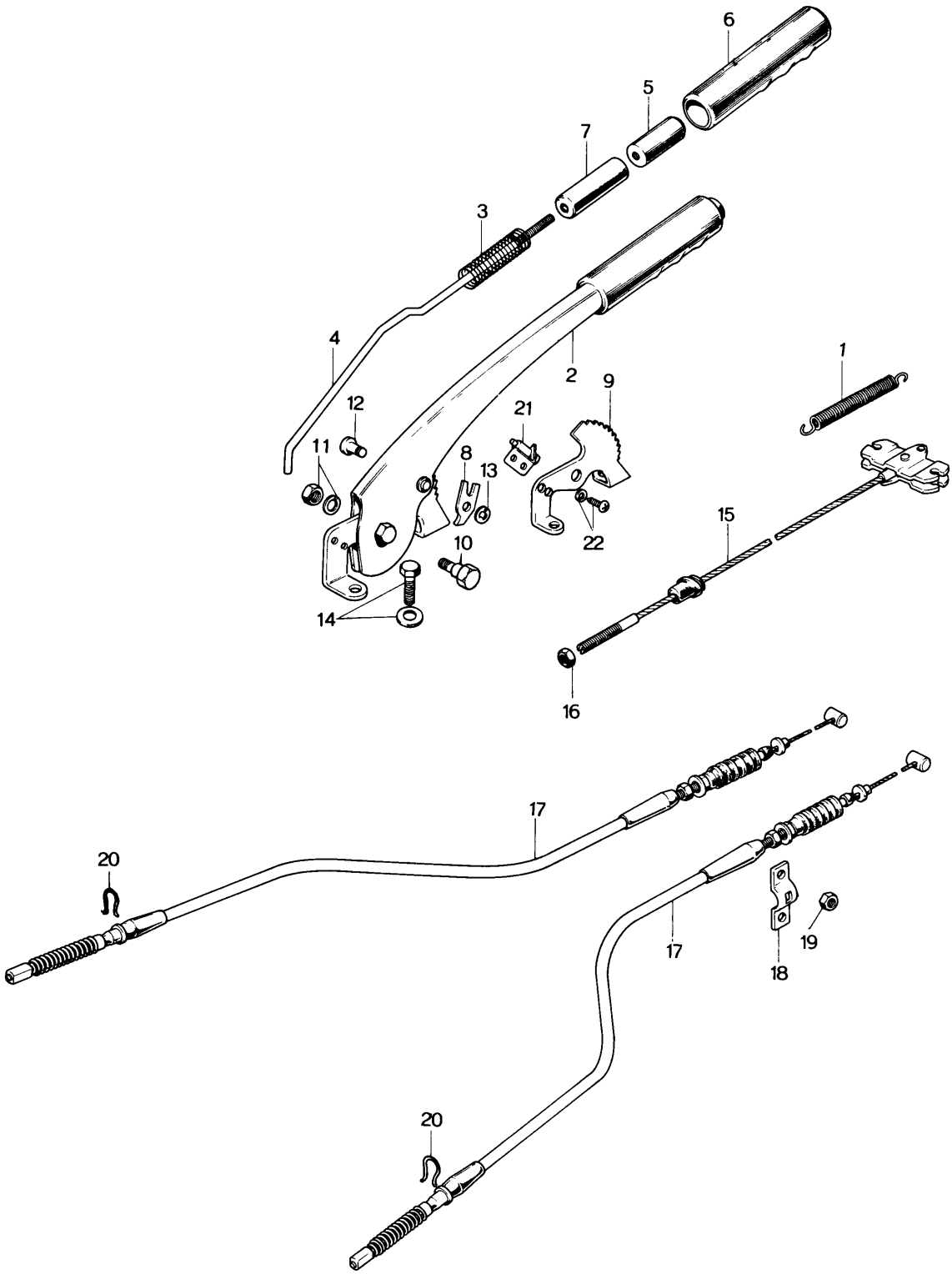
6
5
7
3
4
2
1
9
12
21
11
8
13
22
15
10
14
16
17
20
17
19
18
20

No.	Part Number	Description	Q'ty	Remarks
1	0183 41 308	Spring, Return	1	
2	0302 44 010A	Lever, Parking Brake	1	
3	0813 44 031	Spring	1	
4	0303 44 032	Rod, Release	1	
5	0221 44 033	Button, Release	1	
6	0813 44 034	Cap	1	
7	0813 44 035	Spacer	1	
8	0221 44 044	Ratchet	1	
9	0303 44 051	Sector	1	
10	0303 44 053	Bolt	1	
11	99901 0800	Nut	1	
	99971 0800	Washer, Spring	1	
12	99230 0815	Pin	1	
13	99575 0500	Ring, Snap	1	
14	99786 0616	Bolt Set, Plate	4	
15	0303 44 150A	Cable, Front	1	
16	99947 0600	Nut, Front Cable	1	
17	0303 44 410F	Cable, Rear	2	

No.	Part Number	Description	Q'ty	Remarks
18	0303 44 439	Plate	2	
19	99940 0600	Nut, Plate	4	
20	0305 44 471	Clip	2	
21	0820 66 840	Switch, Parking Lamp	1	
22	99833 0412	Screw, Parking Lamp Switch	2	
	99952 0400	Washer, Plain	2	
	99971 0400	Washer, Spring	2	

BRAKE PIPING

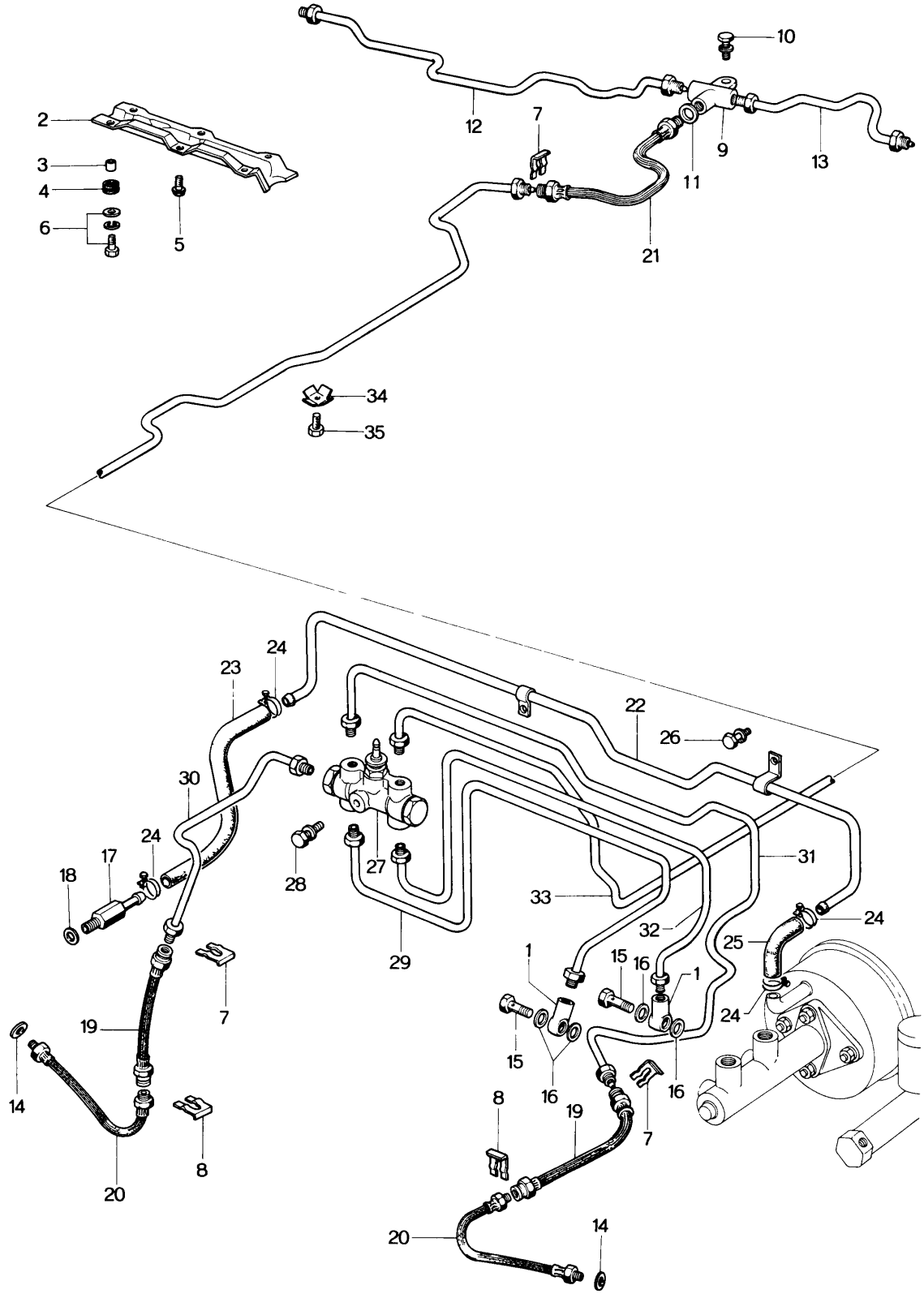

No.	Part Number	Description	Q'ty	Remarks
1	0118 41 375	Connector, Pipe	2	
2	1114 43 605C	Protector-Brake Pipe	1	
3	1114 43 608B	Spacer	4	
4	1114 43 609A	Rubber, Cushion	4	
5	99781 0818	Bolt, Protector	2	
	99952 0800	Washer, Plain	2	
	99971 0800	Washer, Spring	2	
6	99781 0822	Bolt, Protector	4	
	99951 0822	Washer, Plain	4	
	99971 0800	Washer, Spring	4	
7	0136 43 635	Clip, Flexible Hose	3	
8	0305 43 635	Clip, Flexible Hose	2	
9	0187 43 642	Joint, Pipe-Rear	1	
10	99806 0625	Bolt , Joint Pipe	1	
	99971 0600	Washer, Spring	1	
11	99562 1000	Gasket , Flexible Hose Rear	1	
12	1097 43 650	Pipe, Brake (Rr., R)	1	
13	0305 43 660A	Pipe, Brake (Rr., L)	1	
14	99562 1000	Gasket , Flexible Hose Front	2	
15	0221 43 694	Bolt, Connector	2	

43 45 BRAKE PIPING

No.	Part Number	Description	Q'ty	Remarks
16	99562 1000	Gasket, Connector Bolt	4	
17	0839 43 770A	Valve, Check	1	
18	99564 1200	Gasket, Check Valve	1	
19	1541 43 820	Hose, Flexible - Front	2	
20	2850 43 820B	Hose, Flexible - Front	2	
21	2853 43 820	Hose, Flexible - Rear	1	
22	2081 43 830A	Pipe, Vacuum	1	
23	1907 43 836	Hose, Vacuum	1	
24	99282 1007 → 101	Clamp, Hose	4	
25	2067 43 842A	Hose, Vacuum	1	
26	99806 0616	Bolt, Vacuum Hose	1	
	99971 0600	Washer, Spring	1	
27	2229 43 890A	Indicator	1	
28	99806 0635	Bolt, Indicator	1	
	99971 0600	Washer, Spring	1	
29	1907 45 260	Pipe, Main Brake (Frt.)	1	
30	0305 45 280B	Pipe, Brake (Frt., R)	1	
31	1907 45 310	Pipe, Brake (Frt., L)	1	
32	1907 45 320	Pipe, Brake (Rr.)	1	
33	1907 45 330	Pipe, Brake (Rr.) (No. 2)	1	
34	0868 45 903A	Clip, Pipe	15	
35	99786 0612	Bolt, Clip	15	

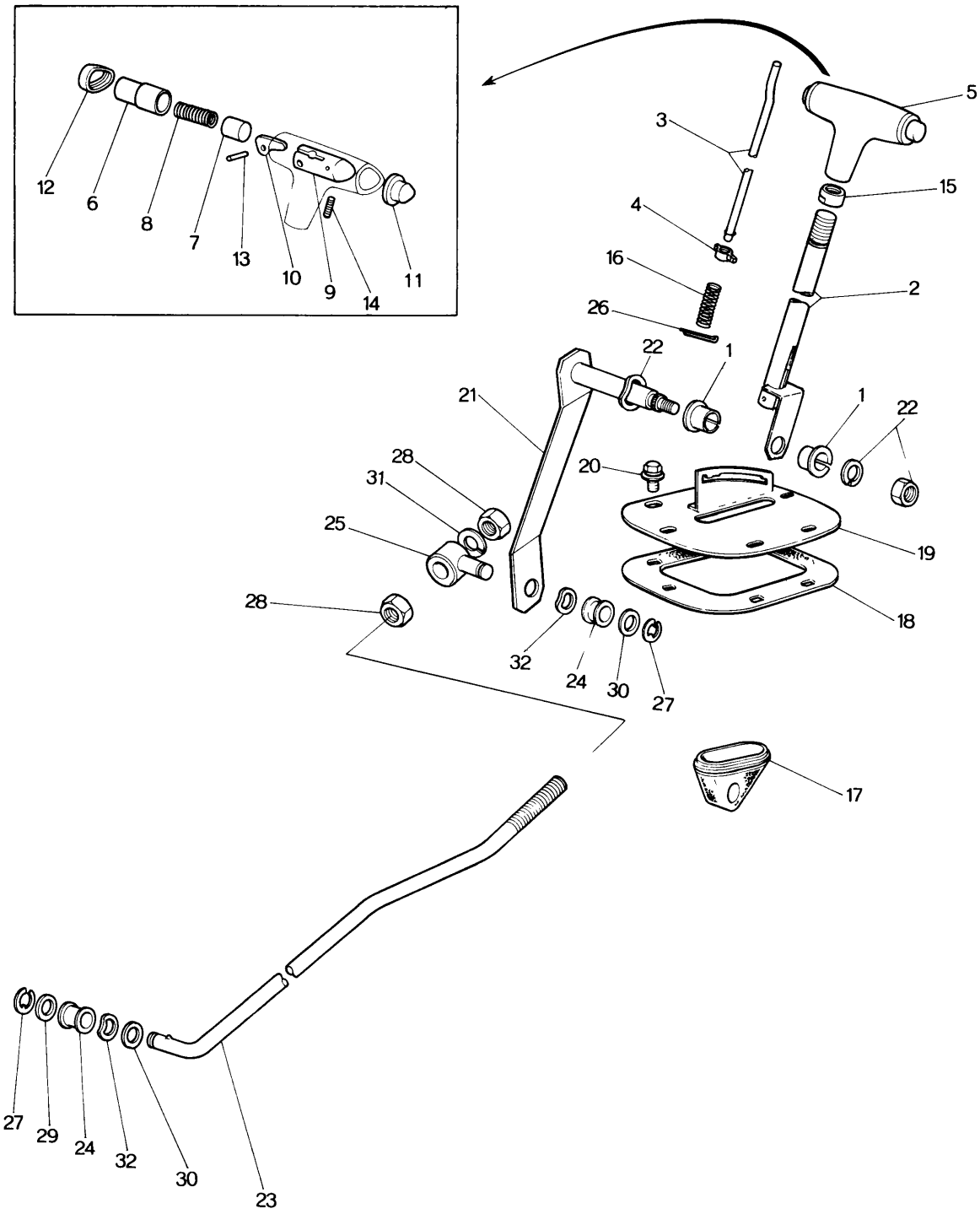
12
6
8
7
13
10
9
14
11
5
3
15
4
16
2
26
22
1
21
1
22
28
31
20
25
19
28
18
32
24
30
27
17
27
29
24
32
30
23

No.	Part Number	Description	Q'ty	Remarks
1	0259 43 022	Bush	2	
2	2375 46 010	Lever, Selector	1	
3	1840 46 021	Rod	1	
4	1840 46 022	Guide	1	
5	2375 46 030B	Knob	1	
6	2375 46 051A	Knob	1	
7	2375 46 052	Piston	1	
8	2375 46 053	Spring	1	
9	2375 46 054	Supporter	1	
10	2375 46 055	Lever	1	
11	2375 46 056A	Plug	1	
12	0308 46 057A	Cap	1	
13	99225 0320	Pin	1	
14	99887 0412	Screw	1	
15	2375 46 061	Nut	1	
16	2375 46 062	Spring	1	
17	0842 46 081	Boot	1	
18	0308 46 083	Seal	1	

CHANGE CONTROLS (AUTOMATIC)

No.	Part Number	Description	Q'ty	Remarks
19	2070 46 110A	Bracket	1	
20	99786 0616	Bolt, Bracket	6	
	99952 0618	Washer, Plain	6	
21	0842 46 150	Lever	1	
22	99922 1000	Nut	1	
	99971 1000	Washer, Spring	1	
	99972 1400	Washer, Wave	2	
23	0842 46 571A	Rod	1	
24	1015 46 684	Bush	2	
25	0259 46 691	Joint, "T"	1	
26	99221 2020	Pin, Split	1	
27	99575 0600	Ring, Retaining	2	
28	99902 0800	Nut	2	
29	99952 0816	Washer, Plain	1	
30	99953 0800	Washer, Plain	2	
31	99971 0800	Washer, Spring	1	
32	99972 0800	Washer, Wave	2	

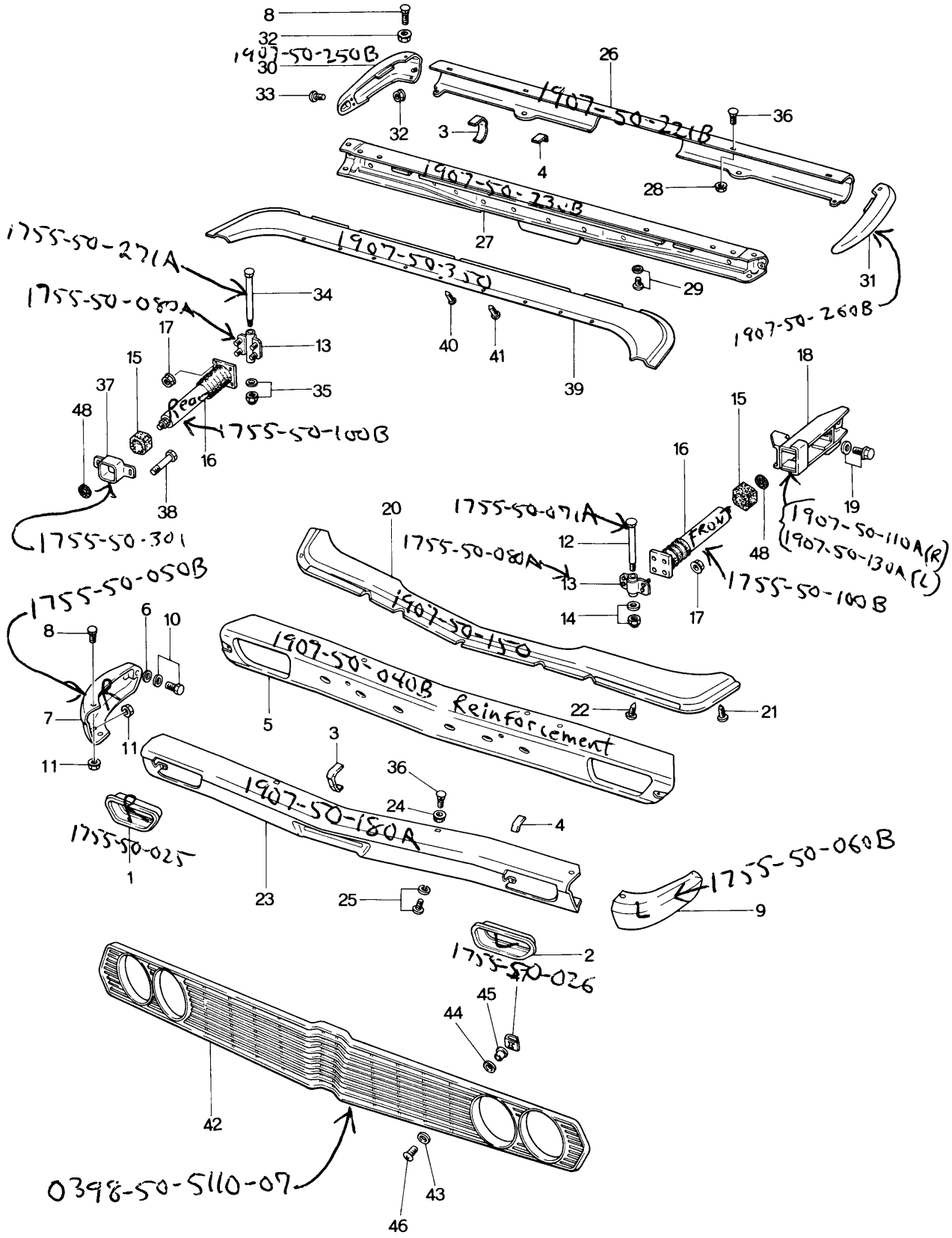
8
32
1907-50-250B
30
33
32
3
4
26
1907-50-220B
36
28
1907-50-230B
27
1907-50-350
29
31
1755-50-270A
1755-50-080A
34
13
17
15
37
48
35
1755-50-100B
16
38
1755-50-300
40
41
39
1907-50-260B
18
15
16
19
1907-50-110A(R)
1907-50-130A(L)
48
1755-50-070A
12
13
14
17
1755-50-100B
20
1755-50-080A
1907-50-150
1755-50-050B
8
6
10
7
11
11
5
1907-50-040B Reinforcement
22
21
3
36
24
4
1907-50-180A
1755-50-025
1
23
25
1755-50-060B
9
2
1755-50-026
45
44
42
0398-50-5110-07
43
46

No.	Part Number	Description	Q'ty	Remarks
1	1755 50 025	Ring (R), Front Turn Signal Lamp	1	
2	1755 50 026	Ring (L), Front Turn Signal Lamp	1	
3	1755 50 036	Spacer "A", Bumper	13	
4	1755 50 037	Spacer "B", Bumper	5	Order Under No. 1755 50 036
5	1907 50 040	Bumper (Frt., C)	1	
6	0223 50 049	Spacer, Bumper Side	2	
7	1755 50 050	Bumper (R), Front Side	1	
8	1755 50 055	Bolt, Side Bumper - Front ···4, Rear ···4	8	
9	1755 50 060	Bumper (L), Front Side	1	
10	99786 0825	Bolt, Side Bumper	2	
	99952 0822	Washer, Plain	2	
11	99940 0602	Nut, Side Bumper	6	
12	1755 50 071	Bolt, Hinge Plate	2	
13	1755 50 080	Plate, Hinge	4	
14	99945 0800	Nut, Hinge Plate	2	
	99971 0800	Washer, Spring	2	
15	1755 50 091	Rubber, Mounting	4	
16	1755 50 100	Absorber, Shock	4	
17	99940 0802	Nut, Shock Absorber	16	
18	1907 50 110	Bracket (Frt., R), Shock Absorber	1	

No.	Part Number	Description	Q'ty	Remarks
	1907 50 130	Bracket (Frt., L), Shock Absorber	1	
19	99786 0825	Bolt, Absorber Bracket	9	
	99952 0822	Washer, Plain	9	
20	1907 50 150-00	Cover, Bumper Front (GRY)	1	
21	99246 0752 ~~0725~~	Rivet, Bumper Cover	5	
22	99869 0414	Screw, Bumper Cover	4	
23	1907 50 180	Bumper (Frt., C), Outer	1	
24	99940 0602	Nut, Bumper (Frt., C)	2	
25	99774 0616	Screw, Bumper (Frt., C)	2	
	99971 0600	Washer, Spring	2	
26	1907 50 221	Bumper (Rr., C), Outer	1	
27	1907 50 230	Bumper (Rr., C)	1	
28	99940 0602	Nut, Bumper (Rr., C)	2	
29	99774 0616	Screw, Bumper (Rr., C)	2	
	99971 0600	Washer, Spring	2	
30	1907 50 250	Bumper (R), Rear Side	1	
31	1907 50 260	Bumper (L), Rear Side	1	
32	99940 0602	Nut, Rear Side Bumper	6	
33	99834 0616B	Screw, Rear Side Bumper	2	
34	1755 50 271	Bolt, Hinge Plate-Rear	2	

No.	Part Number	Description	Q'ty	Remarks
35	99945 1000	Nut, Hinge Plate-Rear	2	
	99971 1000	Washer, Spring	2	
36	0223 50 275	Screw, Bumper-Front···2, Rear···2	4	
37	1755 50 301	Bracket (Rr.), Shock Absorber	2	
38	~~90784-10258~~ 90784-41-0259	Bolt, Absorber Bracket	4	
	99952 1~~022~~ 000	Washer, Plain	4	
39	1907 50 350-00	Cover, Bumper Rear (GRY.)	1	
40	99264 ~~0725~~ 752	Rivet, Bumper Cover	5	
41	99869 0414	Screw, Bumper Cover	4	
42	0398 50 511-06	Grille, Radiator (SIL. M)	1	
43	0305 50 541	Washer, Grille	8	
44	0305 50 542	Cushion, Grille	8	
45	0305 50 543	Spacer, Grille	8	
46	99864 0420B	Screw, Grille	8	
47	99896 0400	Nut, Spring-Grille	8	
48	0111 57 111	Rubber, Shock Absorber	4	

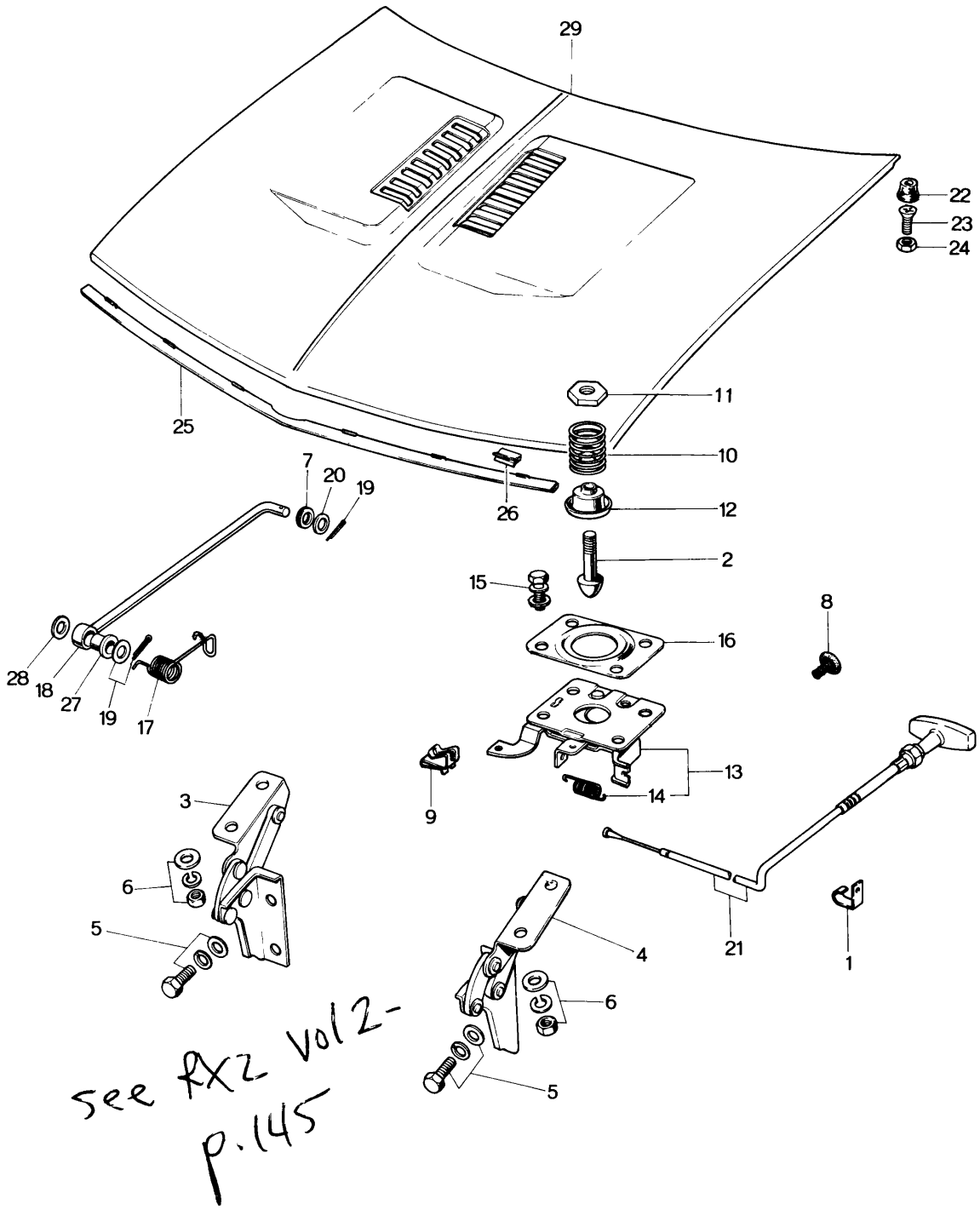

see fxz vol 2-
p. 145

No.	Part Number	Description	Q'ty	Remarks
1	0820 10 872A	Clip, Release Wire	1	
2	0187 52 141	Hook, Bonnet	1	
3	0881 52 210A	Hinge (R), Bonnet	1	
4	0881 52 260A	Hinge (L), Bonnet	1	
5	99801 0816	Bolt, Bonnet Hinge	4	
	99952 0822	Washer, Plain	4	
	99971 0800	Washer, Spring	4	
6	99906 0800	Nut, Bonnet Hinge	4	
	99952 0822	Washer, Plain	4	
	99971 0800	Washer, Spring	4	
7	0824 52 271	Roller, Bonnet Stay	1	
8	0259 52 301	Grommet, Bonnet Release Wire	1	
9	0223 52 302	Clamp, Bonnet Release Wire	1	
10	0305 52 312B	Spring, Lift-Bonnet	1	
11	0305 52 313	Seat, Spring-Upper-Bonnet	1	
12	0305 52 322A	Seat, Spring-Lower-Bonnet	1	
13	2835 52 330	Lock, Bonnet	1	
14	0305 52 331	Spring, Lock Return	1	

52 BONNET

No.	Part Number	Description	Q'ty	Remarks
15	99806 0616	Bolt, Bonnet Lock	4	
	99952 0618	Washer, Plain	4	
	99971 0800	Washer, Spring	4	
16	0305 52 371A	Plate, Lock Guide	1	
17	2835 52 381	Spring, Bonnet Stay	1	
18	0305 52 390	Stay, Bonnet	1	
19	99221 2015	Pin, Split-Bonnet Stay	2	
	99952 0800	Washer, Plain	1	
20	99952 0822	Washer, Plain-Bonnet Stay	1	
21	2835 52 410	Wire, Bonnet Release	1	
22	0824 52 451	Cushion, Bonnet	2	
23	99831 0825	Bolt, Bonnet Cushion	2	
24	99902 0800	Nut, Bonnet Cushion	2	
25	0305-52 471 ~~0805-52 471~~	Mould, Bonnet	1	
26	0305 52 472	Clip, Bonnet Mould	6	
27	0223 58 721	Bush, Bonnet Stay	1	
28	0136 65 752	Gasket, Bonnet Stay	1	
29	0881 74 600	Bonnet	1	

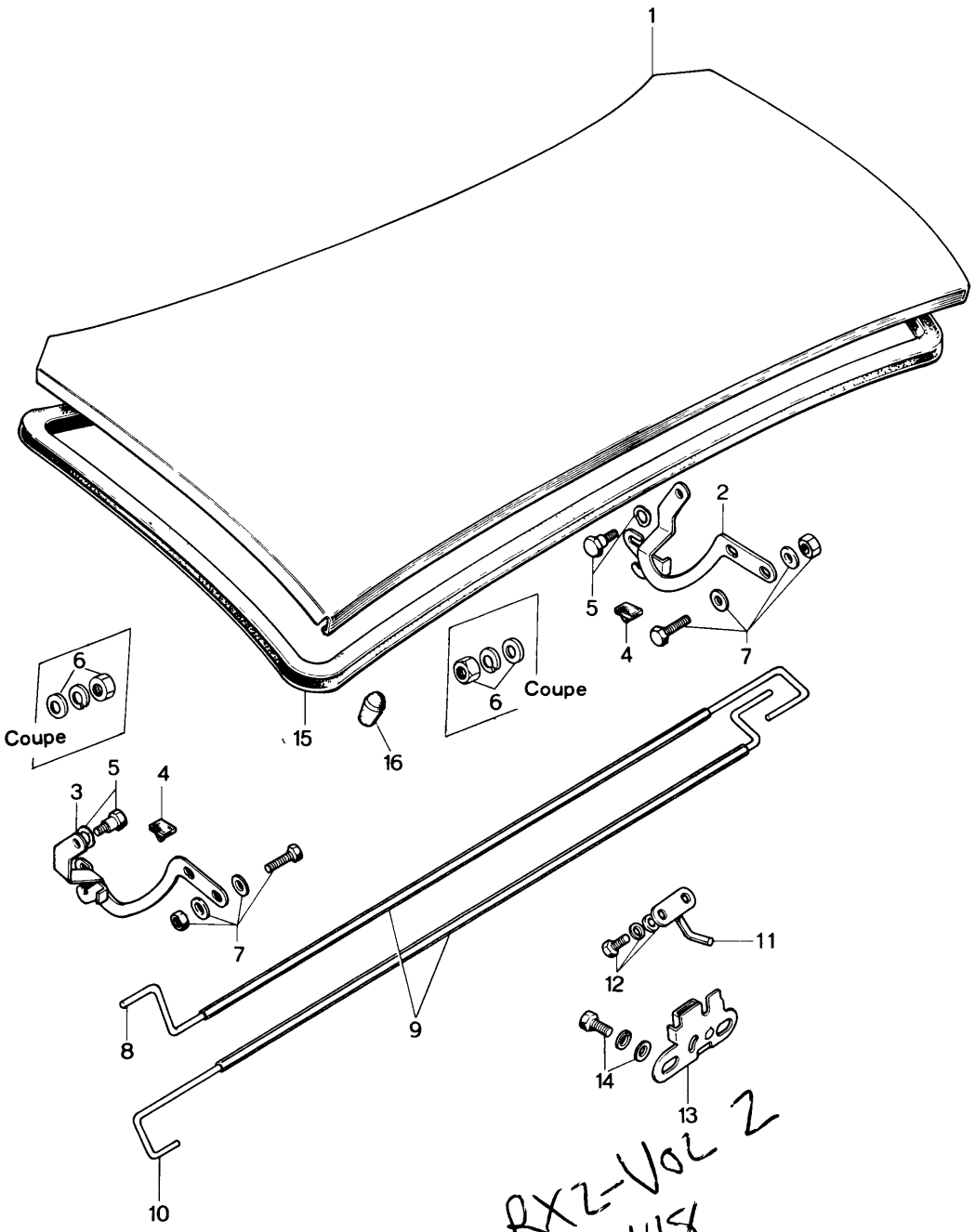

See RXZ-Vol 2
p. 148

No.	Part Number	Description	Q'ty	Remarks
1	0305 52 510C	Lid, Trunk (Sedan)	1	
	0881 52 510	Lid, Trunk (Coupe)	1	
2	0305 52 610B	Hinge (R), Trunk Lid (Sedan)	1	
	0839 52 610A	Hinge (R), Trunk Lid (Coupe)	1	
3	0305 52 620B	Hinge (L), Trunk Lid (Sedan)	1	
	0839 52 620A	Hinge (L), Trunk Lid (Coupe)	1	
4	0305 52 628	Rubber, Cushion-Trunk Lid Hinge	2	
5	0305 52 629	Bolt, Trunk Lid Hinge (Sedan)	2	
	99972 1000	Washer, Wave (Sedan)	2	
6	99906 0600	Nut, Trunk Lid Hinge (Coupe)	2	
	99952 0618	Washer, Plain (Coupe)	2	
	99971 0600	Washer, Spring (Coupe)	2	
7	99806 0618	Bolt, Trunk Lid Hinge	4	
	99952 0618	Washer, Plain	8	
	99906 0600	Nut	4	
8	0305 52 661	Spring (R), Balance-Trunk Lid (Sedan)	1	
	0839 52 661A	Spring (R), Balance-Trunk Lid (Coupe)	1	
9	0223 52 662	Protector, Balance Spring	2	
10	0305 52 671	Spring (L), Balance-Trunk Lid (Sedan)	1	
	0839 52 671A	Spring (L), Balance-Trunk Lid (Coupe)	1	

52 TRUNK LID

No.	Part Number	Description	Q'ty	Remarks
11	0305 52 750	Striker, Trunk Lid Lock	1	
12	99806 0818	Bolt, Striker	2	
	99952 0800	Washer, Plain	2	
	99971 0800	Washer, Spring	2	
13	0305 52 850A	Lock, Trunk Lid	1	
14	99806 0814	Bolt, Trunk Lid Lock	2	
	99971 0800	Washer, Spring	2	
	99951 0818	Washer, Plain	2	
15	0305 52 901A	Weatherstrip, Trunk Lid (Sedan)	1	
	0866 52 901A	Weatherstrip, Trunk Lid (Coupe)	1	
16	0111 53 771	Rubber, Cushion - Trunk Lid	2	

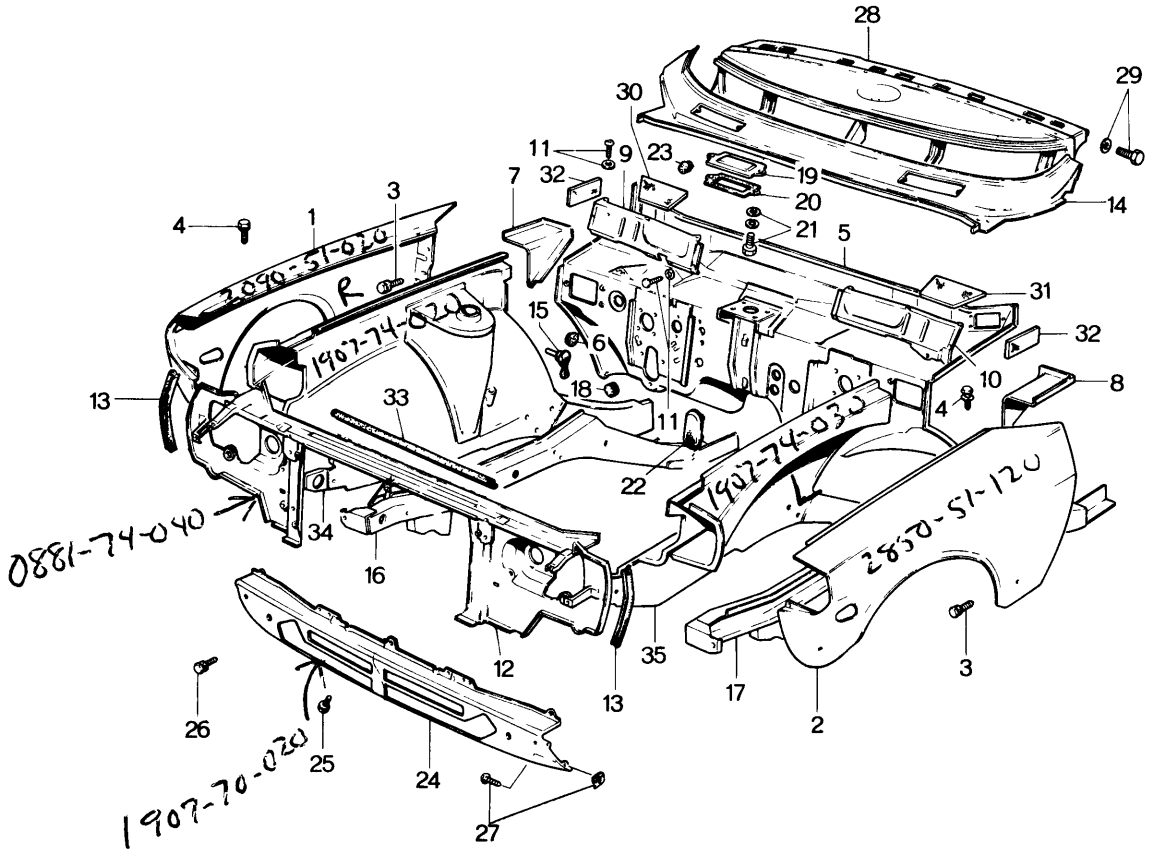
28
29
30
11
9
23
19
7
32
20
14
4
1
3
21
5
2090-51-020
R
31
15
6
32
1907-74-020
10
13
33
18
4
8
11
22
1907-74-030
L
0881-74-040
34
16
2850-51-120
3
35
12
13
17
2
26
25
24
1907-70-020
27

No.	Part Number	Description	Q'ty	Remarks
1	~~2850~~ 51 020 2850	Panel (R), Front Fender	1	
2	2850 51 120	Panel (L), Front Fender	1	
3	99805 0620	Bolt, Front Fender Panel	8	
	99952 0618	Washer, Plain	8	
	99971 0600	Washer, Spring	8	
4	99806 0614	Bolt, Front Fender Panel	10	
	99952 0618	Washer, Plain	10	
	99971 0600	Washer, Spring	10	
5	1907 53 010	Panel, Dash (Manual)	1	
	1908 53 010	Panel, Dash (Automatic)	1	
6	0187 53 134	Rubber, Dust Seal-Cooler Drain Hose use	1	
7	0305 53 180	Plate (R), Cover	1	
8	0305 54 180	Plate (L), Corner	1	
9	2835 53 190D	Panel (R), Cowl Lower	1	
10	2835 54 190B	Panel (L), Cowl Lower	1	
11	99799 0514	Screw, Cowl Lower Panel	14	
	99952 0516	Washer, Plain	14	
12	0881 53 700A	Panel, Shroud-Radiator	1	
13	0305 53 708	Rubber, Seal-Radiator Shroud Panel	2	
14	2835 53 970	Panel, Cowl	1	

No.	Part Number	Description	Q'ty	Remarks
15	0259 58 931	Valve, Drain-Wheel Apron	2	
16	1907 56 040	Frame (R), Front Side	1	
17	1907 56 540	Frame (L), Front Side	1	
18	1708 61 031	Grommet, Without Cooler Hose	2	
19	0301 61 051A	Plate	1	Without Heater
20	0301 61 052A	Gasket, Plate	1	
21	99799 0635	Bolt, Plate	2	
	99952 0618	Washer, Plain	2	
	99971 0600	Washer, Spring	2	
22	0301 61 055	Grommet	2	
23	0222 66 971	Rubber, Seal	1	
24	1907 70 020	Panel, Skirt-Front	1	
25	99806 0512	Bolt, Skirt Panel	2	
	99952 0500	Washer, Plain	2	
	99971 0500	Washer, Spring	2	
26	99806 0614	Bolt, Skirt Panel	4	
	99952 0618	Washer, Plain	4	
	99971 0600	Washer, Spring	4	
27	99860 0612	Screw, Skirt Panel	4	
	99896 0600	Nut, Spring	4	

No.	Part Number	Description	Q'ty	Remarks
28	1907 70 100	Panel, Instrument	1	
29	99806 0612	Bolt, Instrument Panel	4	
	99952 0600	Washer, Plain	4	
30	0305 70 431	Insulator "A" (R)	1	
31	0305 71 431	Insulator "A" (L)	1	
32	0305 70 432	Insulator "B"	2	
33	2090 70 982A	Rubber, Seal-Radiator Shroud	1	
34	1907 74 020	Panel (R), Wheel Apron	1	
35	1907 74 030	Panel (L), Wheel Apron	1	

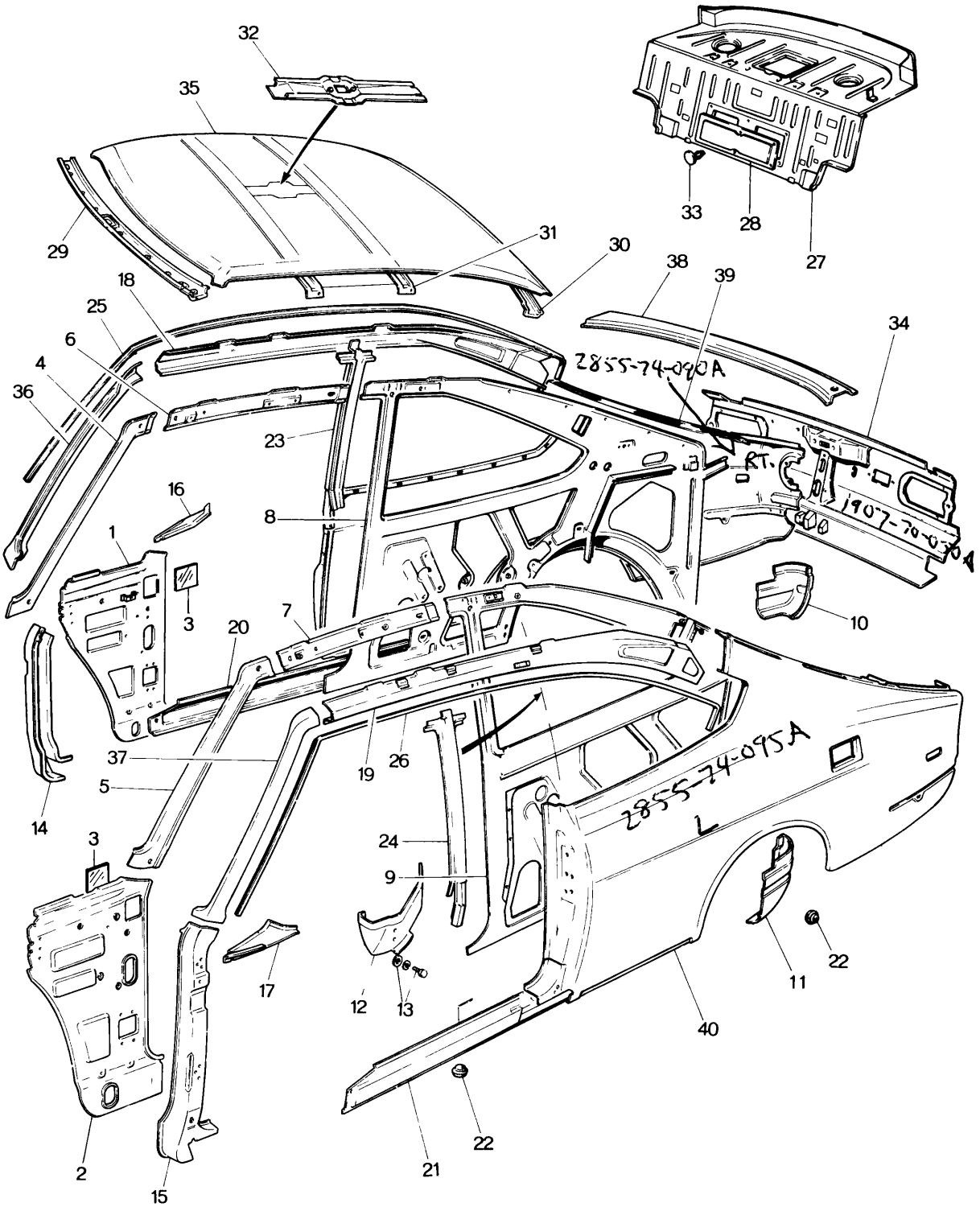
32
35
29
31
30
33
28
27
38
39
18
25
6
4
36
34
23
16
8
1
3
7
20
10
37
19
26
5
14
3
24
9
17
12
13
40
11
22
2
15
21
22

BODY PANELS (SIDE & REAR, COUPE) 53~74

No.	Part Number	Description	Q'ty	Remarks
1	1907 53 320	Panel (R), Cowl Side	1	
2	2835 54 320	Panel (L), Cowl Side	1	
3	0305 53 329A	Seat, Cowl Side Panel	2	
4	0839 53 330B	Pillar (R), Inner-Front	1	
5	0839 54 330B	Pillar (L), Inner-Front	1	
6	0839 53 340A	Rail (R), Roof-Inner	1	
7	0839 54 340	Rail (L), Roof-Inner	1	
8	2080 53 350E	Panel (R), Quarter	1	
9	1907 54 350	Panel (L), Quarter	1	
10	0839 53 352A	Plate (R), End	1	
11	0839 54 352A	Plate (L), End	1	
12	1907 54 370A	Plate, End	1	
13	99806 0512	Bolt, End Plate	2	
	99952 0500	Washer, Plain	2	
	99971 0500	Washer, Spring	2	
14	0305 53 410A	Pillar (R), Hinge-Outer	1	
15	0305 54 410B	Pillar (L), Hinge-Outer	1	
16	0305 53 415	Bracket (R), Cowl	1	
17	0305 54 415	Bracket (L), Cowl	1	
18	0839 53 430	Rail (R), Roof-Outer	1	

No.	Part Number	Description	Q'ty	Remarks
19	0839 54 430	Rail (L), Roof-Outer	1	
20	0839 53 451C	Panel (R), Side Sill-Outer	1	
21	0839 54 451C	Panel (L), Side Sill-Outer	1	
22	0259 53 455	Plug, Drain-Side Sill Panel	4	
23	0839 53 500	Pillar (R), Center-Outer	1	
24	0839 54 500	Pillar (L), Center-Outer	1	
25	0839 53 591	Rail (R), Rain	1	
26	0839 54 591	Rail (L), Rain	1	
27	1663 53 800	Tray, Package	1	
28	0305 53 861	Cover, Package Tray	1	
29	0839 53 920	Header, Front-Roof	1	
30	0839 53 941A	Header, Rear-Roof	1	
31	0881 53 951	Reinforcement, Roof	2	
32	0881 53 980	Bracket, Room Lamp	1	
33	0866 69 885	Fastener, Package Tray Cover (BLK.)	6	
34	1907 70 050	Panel, Rear End	1	
35	0839 74 050	Panel, Roof	1	
36	0839 74 070	Pillar (R), Front-Outer	1	
37	0839 74 075	Pillar (L), Front-Outer	1	
38	0839 74 080	Panel, Rear Deck	1	

No.	Part Number	Description	Q'ty	Remarks
39	2855 74 090	Panel (R), Rear Fender	1	
40	2855 74 095	Panel (L), Rear Fender	1	

BODY PANELS (SIDE & REAR SEDAN)

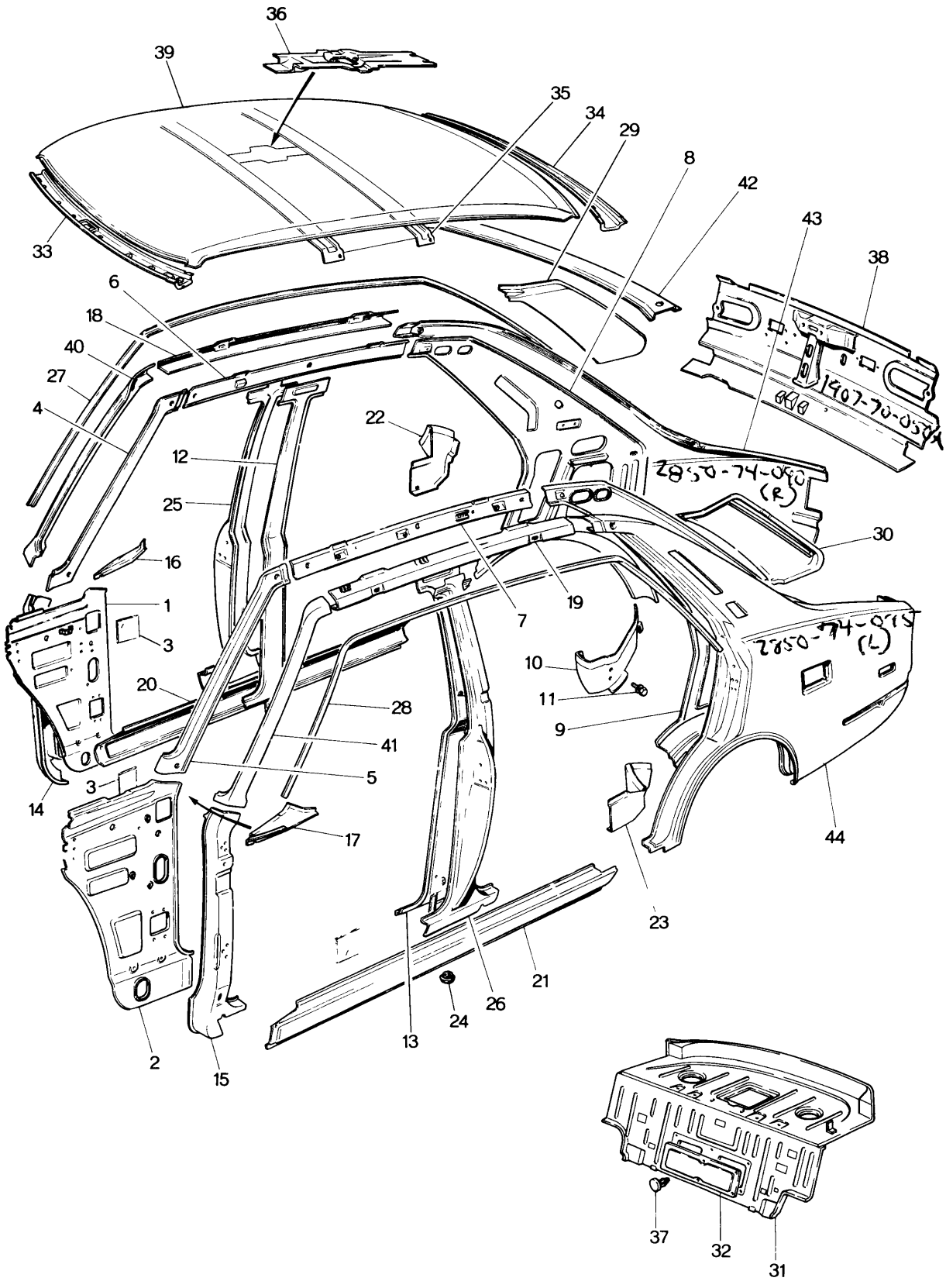

BODY PANELS (SIDE & REAR, SEDAN) 53~74

No.	Part Number	Description	Q'ty	Remarks
1	1907 53 320	Panel (R), Cowl Side	1	
2	2835 54 320	Panel (L), Cowl Side	1	
3	0305 53 329A	Seat, Cowl Side Panel	2	
4	0305 53 330A	Pillar (R), Front-Inner	1	
5	0305 54 330A	Pillar (L), Front-Inner	1	
6	0305 53 340D	Rail (R), Roof-Inner	1	
7	0305 54 340D	Rail (L), Roof-Inner	1	
8	2835 53 350B	Pillar (R), Rear-Inner	1	
9	1905 54 350	Pillar (L), Rear-Inner	1	
10	1907 54 370A	Plate, End	1	
11	99806 0512	Bolt, End Plate	2	
	99952 0500	Washer, Plain	2	
	99971 0500	Washer, Spring	2	
12	1905 53 380	Pillar (R), Center-Inner	1	
13	1905 54 380	Pillar (L), Center-Inner	1	
14	0305 53 410A	Pillar (R), Hinge-Outer	1	
15	0305 54 410B	Pillar (L), Hinge-Outer	1	
16	0305 53 415	Bracket (R), Cowl	1	
17	0305 54 415	Bracket (L), Cowl	1	
18	0305 53 430B	Rail (R), Roof-Outer	1	

BODY PANELS (SIDE & REAR, SEDAN)

No.	Part Number	Description	Q'ty	Remarks
19	0305 54 430B	Rail (L), Roof-Outer	1	
20	~~0305~~ 0301 53 450A	Panel (R), Side Sill-Outer	1	
21	~~0306~~ 0301 54 450B	Panel (L), Side Sill-Outer	1	
22	0305 53 452	Plate (R), Filler	1	
23	0305 54 452	Plate (L), Filler	1	
24	0259 53 455	Plug, Drain-Side Sill Panel	6	
25	2850 53 500A	Pillar (R), Center-Outer	1	
26	2850 54 500A	Pillar (L), Center-Outer	1	
27	0305 53 591	Rail (R), Rain	1	
28	0305 54 591	Rail (L), Rain	1	
29	0305 53 670	Chamber (R), Air Flow	1	
30	0305 54 670	Chamber (L), Air Flow	1	
31	1662 53 800	Tray, Package	1	
32	0305 53 861	Cover, Package Tray	1	
33	0305 53 920	Header, Front-Roof	1	
34	0305 53 941A	Header, Rear-Roof	1	
35	0398 53 951	Reinforcement, Roof	2	
36	0398 53 980	Bracket, Room Lamp	1	
37	0866 69 885	Fastener, Package Tray Cover (BLK.)	6	
38	1907 70 050	Panel, Rear End	1	

No.	Part Number	Description	Q'ty	Remarks
39	0305 74 050	Panel, Roof	1	
40	0305 74 070	Pillar (R), Front-Outer	1	
41	0305 74 075	Pillar (L), Front-Outer	1	
42	0305 74 080	Panel, Rear Deck	1	
43	2850 74 090	Panel (R), Rear Fender	1	
44	2850 74 095	Panel (L), Rear Fender	1	

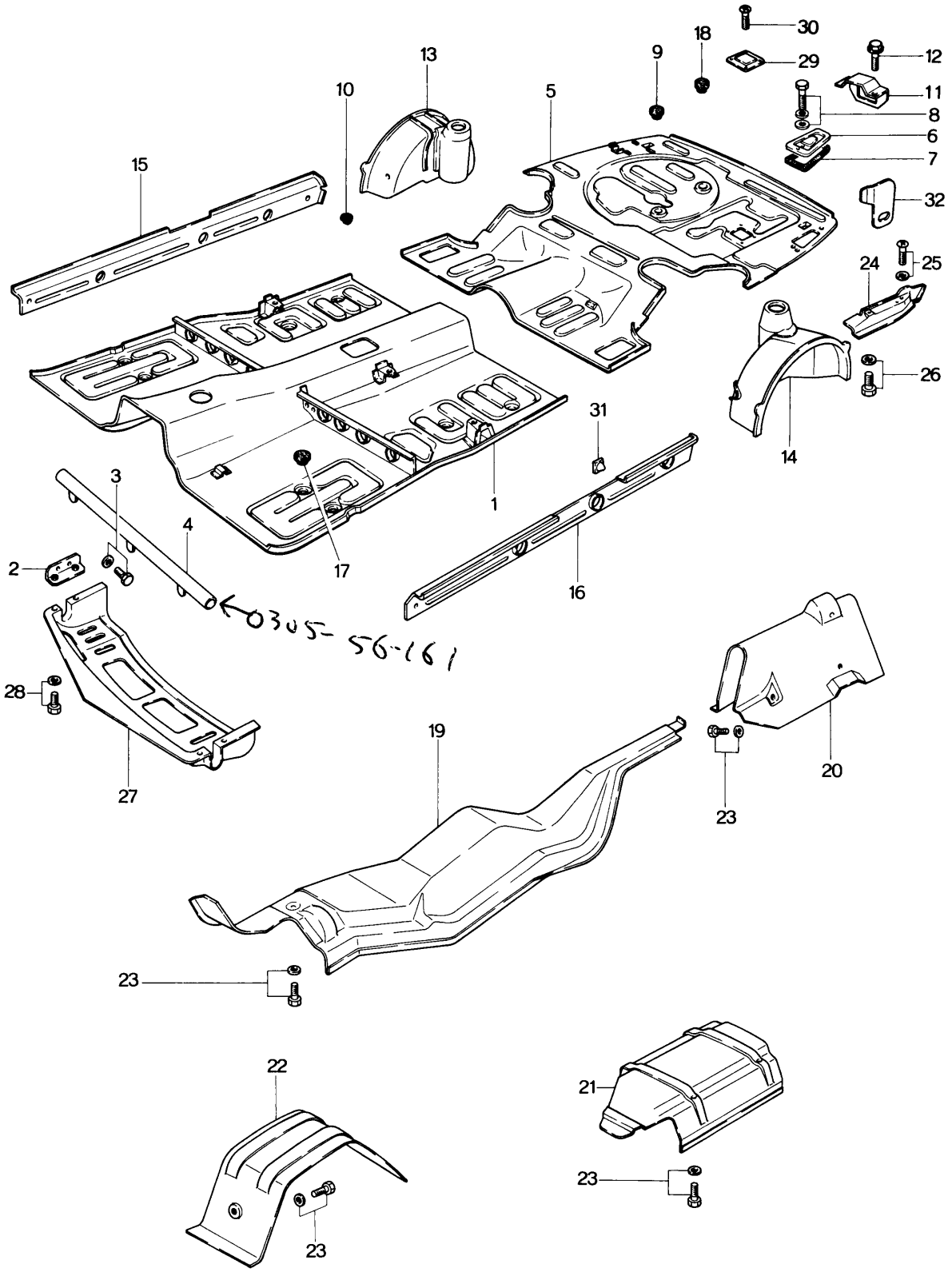
30
18
29
12
13
9
10
5
11
8
6
7
15
32
24
25
26
14
31
3
4
2
17
1
16
28
27
19
20
23
22
21

No.	Part Number	Description	Q'ty	Remarks
1	1907 56 010	Pan, Floor-Front (Manual)	1	
	1908 56 010	Pan, Floor-Front (Automatic)	1	
2	1097 56 090	Bracket, Under Cover	2	
3	99860 0514	Screw, Bracket	4	
	99952 0500	Washer, Plain	4	
4	0305 56 160A	Member No. 1, Cross	1	
5	1907 56 200	Pan, Floor-Rear	1	
6	0305 56 231	Cover, Service Hole-Fuel Filter	1	
7	0305 56 232	Gasket, Service Hole Cover	1	
8	99804 0620	Bolt, Service Hole Cover	2	
	99952 0618	Washer, Plain	2	
	99971 0600	Washer, Spring	2	
9	0118 56 241	Plug, Drain	2	
10	0118 56 242B	Plug, Drain	3	
11	1907 56 340	Bracket, Absorber "C"	2	
12	99796 ~~0815~~ 0816	Bolt, Absorber Bracket	4	
13	1093 56 350	Panel (R), Wheel House (Sedan)	1	
	1097 56 350	Panel (R), Wheel House (Coupe)	1	
14	1905 56 850A	Panel (L), Wheel House (Sedan)	1	
	1907 56 850A	Panel (L), Wheel House (Coupe)	1	

No.	Part Number	Description	Q'ty	Remarks
15	0305 56 400A	Panel (R), Side Sill-Inner (Sedan)	1	
	0839 56 400B	Panel (R), Side Sill-Inner (Coupe)	1	
16	0305 56 900B	Panel (L), Side Sill-Inner (Sedan)	1	
	0839 56 900B	Panel (L), Side Sill-Inner (Coupe)	1	
17	0208 56 615	Plug, Drain	10	
18	0810 56 639	Cover, Service Hole	2	
19	1097 56 700	Insulator No. 1, Heat	1	
20	2090 56 704C	Insulator No. 4, Heat	1	
21	1097 56 705A	Insulator No. 5, Heat	1	
22	2090 56 705A	Insulator No. 5, Heat	1	
23	99786 0612	Bolt, Heat Insulator	14	
	99952 0618	Washer, Plain	14	
24	0305 56 961B	Protector	1	
25	99860 0516	Screw, Protector	2	
	99952 0516	Washer, Plain	2	
26	99797 0510	Bolt, Protector	3	
	99952 0516	Washer, Plain	3	
27	0839 56 981C	Cover, Under	1	
28	99806 0620	Bolt, Under Cover	4	
	99952 0618	Washer, Plain	4	

No.	Part Number	Description	Q'ty	Remarks
	99971 0600	Washer, Spring	4	
29	0305 56 991	Cover, Service Hole	1	
30	99863 0408	Screw, Service Hole Cover	4	
31	0824 56 999	Valve, Check-Side Sill (Coupe)	2	
32	1907 56 761	Hook, Rear	1	

DASHBOARD

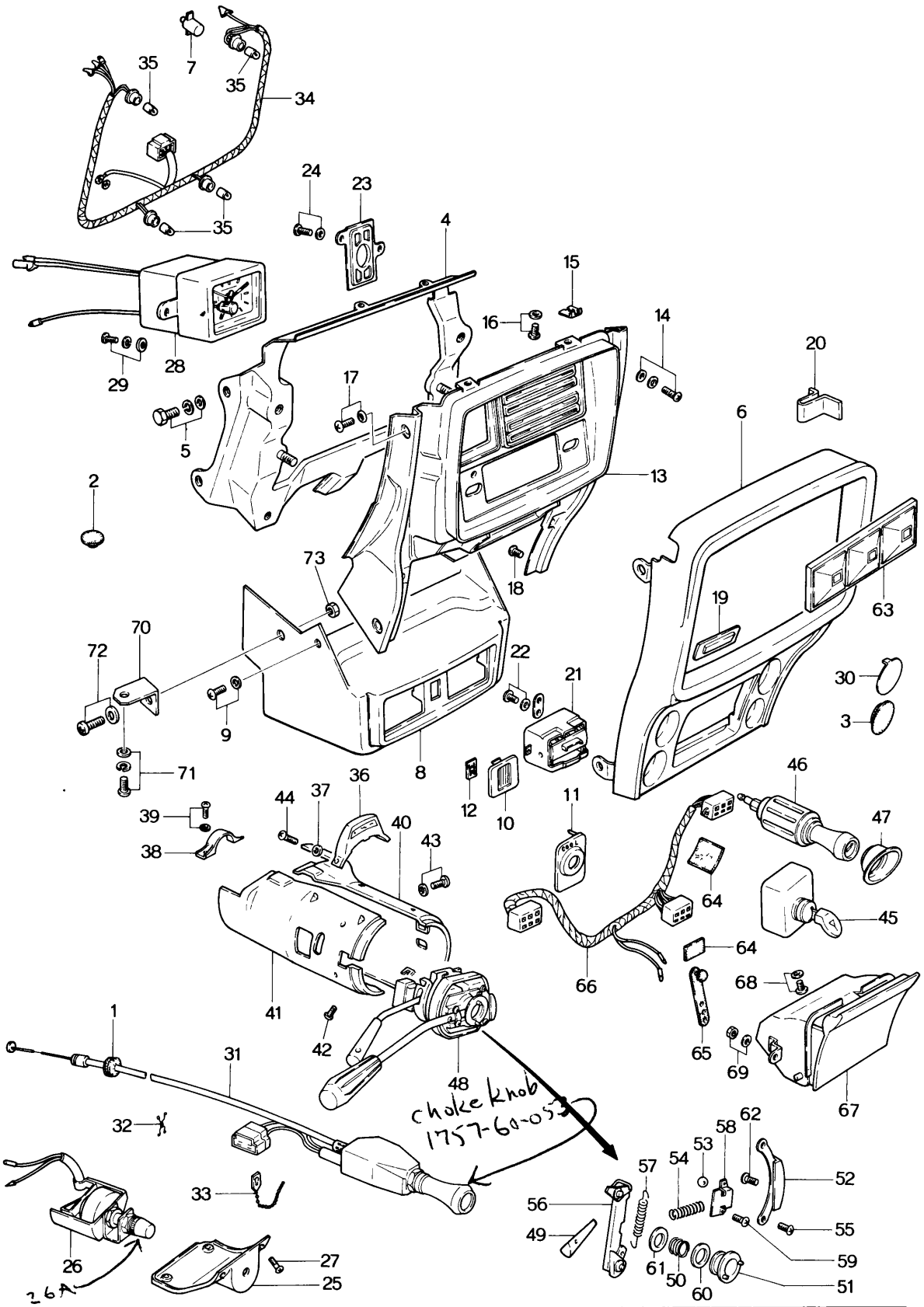
1
2
3
4
5
6
7
8
9
10
11
12
13
14
15
16
17
18
19
20
21
22
23
24
25
26
26A
27
28
29
30
31
32
33
34
35
35
35
36
37
38
39
40
41
42
43
44
45
46
47
48
choke knob
17577-60-03
49
50
51
52
53
54
55
56
57
58
59
60
61
62
63
64
64
65
66
67
68
69
70
71
72
73

No.	Part Number	Description	Q'ty	Remarks
1	0259 52 301	Grommet, Choke Wire	1	
2	0613 53 105	Grommet, Service Hole	1	
3	0187 53 202	Grommet, Switch	1	
4	1907 55 100	Bracket, Center Panel	1	
5	99806 0516	Bolt, Bracket	4	
	99952 0500	Washer, Plain	4	
	99971 0500	Washer, Spring	4	
6	1905 55 120	Pad, Center Panel (BRN.)	1	Selective use
	1907 55 120	Pad, Center Panel (BLK)	1	
7	0301 55 323	Cover, Hole - Without Heater	1	
8	1905 55 381	Panel, Center - Lower (BRN.)	1	Selective use
	1907 55 381	Panel, Center - Lower (BLK)	1	
9	99862 0416B	Screw, Center Panel Lower	4	
	99967 0400B	Washer	4	
10	1907 55 385	Cover, Hole - Without Cooler	1	
11	1974 55 385	Panel, Cooler Control - With Cooler	1	
12	99578 3000	Nut, Speed - Hole Cover & Control Panel	2	
13	1905 55 390	Panel, Center - Upper (BRN.)	1	Selective use Without Cooler
	1907 55 390	Panel, Center - Upper (BLK.)	1	
	1972 55 390	Panel, Center - Upper (BRN.), Selective use - With Cooler	1	

No.	Part Number	Description	Q'ty	Remarks
	1974 55 390	Panel, Center-Upper (BLK.), Selective use-With Cooler	1	
14	99833 0516	Screw, Center Panel Upper	4	
	99952 0516	Washer, Plain	4	
	99971 0500	Washer, Spring	4	
15	99896 0500	Nut, Speed-Center Panel Upper	2	
16	99862 0516B	Screw, Center Panel Upper	2	
	99967 0500B	Washer	2	
17	99832 0520B	Screw, Center Panel Upper	4	
	99967 0500B	Washer	4	
18	99868 0312	Screw, Center Panel	4	
19	0398 55 401	Lens, Illumination	2	
20	0398 55 402A	Clip, Center Panel Cord	6	
21	1907 55 410	Grille, Ventilator	2	
22	99868 0412	Screw, Ventilator Grille	4	
	99952 0400	Washer, Plain	4	
23	0398 55 417A	Cover, Bulb Socket	2	
24	99868 0412	Screw, Cover	3	
	99952 0400	Washer, Plain	3	
	99971 0400	Washer, Spring	3	
25	1907 55 485	Bracket, Panel Light Resistor	1	

No.	Part Number	Description	Q'ty	Remarks
26	1907 55 490	Resistor, Panel Light	1	
26A	1011-60-240A	Rheostat Knob		
27	99867 0512B	Screw, Panel Light Resistor	4	
28	0398 55 700	Clock, Auto	1	
29	99868 0412	Screw, Auto Clock	2	
	99952 0400	Washer, Plain	2	
	99971 0400	Washer, Spring	2	
30	0820 55 951	Cover, Hole-Switch	1	
31	1907 60 050A	Wire, Choke (Manual)	1	
	1908 60 050A	Wire, Choke (Automatic)	1	
32	99288 1608	Clip, Choke Wire	1	
33	99709 0108	Band, Choke Wire	1	
34	1907 60 130	Wiring, Center Panel	1	
35	99701 1030	Bulb, Illumination	4	
36	1907 60 311	Plate, Name	1	
37	1611 60 312	Spacer, Name Plate	2	
38	1907 60 321	Supporter, Column Cover	1	
39	99833 0408	Screw, Column Cover Supporter	2	
	99952 0400	Washer, Plain	2	
40	1905 60 330	Cover (R), Column (BRN.)	1	Selective use
	1907 60 330	Cover (R), Column (BLK.)	1	Selective use

No.	Part Number	Description	Q'ty	Remarks
41	1905 60 341	Cover (L), Column (BRN) } Selective use	1	
	1907 60 341	Cover (L), Column (BLK) } Selective use	1	
42	99832 0412B	Screw, Column Cover	2	
43	99832 0412B	Screw, Column Cover	2	
	99971 0400	Washer, Spring	2	
44	99832 0416B	Screw, Column Cover & Name Plate	2	
45	0305 60 540A	Switch, Antenna	1	
46	0305 60 720	Lighter, Cigar	1	
47	0398 60 7210 ~~Plate~~, Fire, Black 0398-60 7210-05 " , BROWN		1	
48	1708 66 110	Switch, Combination	1	
49	1011 66 121	Knob, Light	1	
50	0317 60 252	Spring, Cancel Cam	1	
51	0317 60 253	Cam, Cancel	1	
52	0317 60 254	Bracket, Fixing	1	
53	0317 60 255	Ball	1	
54	0317 60 256	Spring, Arm Set	1	
55	0317 60 257	Screw, Bracket	2	
56	0317 60 258	Arm	1	
57	0317 60 259	Spring, Ratchet	1	

No.	Part Number	Description	Q'ty	Remarks
58	0317 60 261	Plate Set	1	
59	0317 60 262	Screw, Set Plate	2	
60	0866 60 263	Washer, "A"	1	
61	0866 60 264	Washer, "B"	1	
62	0317 60 266	Screw, Tapping	2	
63	0301 66 905A	Cover, Tuner Hole - Without Auto Radio	1	
64	0208 66 949	Pad, Protector - Wire Harness	1	
65	0187 66 991	Clip, Rubber Clip - Wire Harness	1	
66	0398 67 050C	Wiring, Center Panel Lower	1	
67	0398 68 180A00	Tray, Ash (BLK.)	1	Selective use
	0404 68 180-05	Tray, Ash (BRN.)	1	
68	99838 0516	Screw, Ash Tray	1	
	99952 0500	Washer, Plain	1	
	99971 0500	Washer, Spring	1	
69	99906 0500	Nut, Ash Tray	2	
	99952 0500	Washer, Plain	2	
70	0839 68 936A	Bracket, Center Panel Lower	2	
71	99743 0516B	Screw, Bracket	2	
	99952 0500B	Washer, Plain	2	

No.	Part Number	Description	Q'ty	Remarks
	99971 0500B	Washer, Spring	2	
72	99832 0516B	Screw, Bracket	2	
	99967 0500B	Washer	2	
73	99940 0502	Nut, Bracket	2	

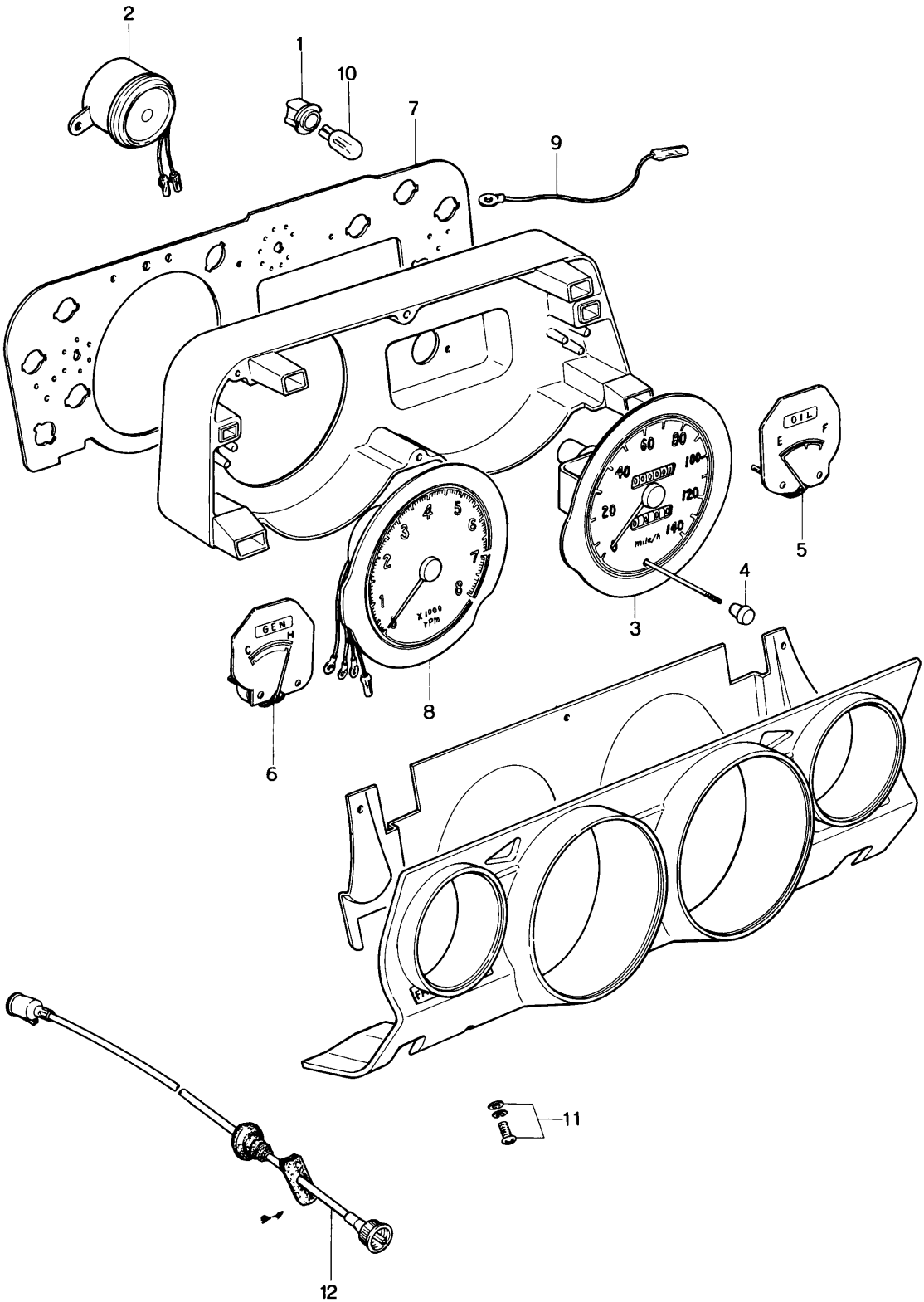
2
1
10
7
9
OIL
E
F
5
4
3
GEN
C
H
6
8
11
12

No.	Part Number	Description	Q'ty	Remarks
	1907 55 530A	Meter Set (BLK.) } Selective use	1	
	1907 55 550A	Meter Set (BRN.) } Selective use	1	
1	0259 55 261	Socket	13	
2	1568 75 029	Buzzer	1	
3	1907 75 101	Speedometer	1	
4	1907 75 102	Knob, Trip Meter	1	
5	1907 75 104	Meter, Fuel	1	
6	1907 75 105	Thermometer	1	
7	1907 75 106	Plate, Print	1	
8	1907 75 108	Tachometer	1	
9	1907 75 109	Cord	1	
10	99701 6030	Bulb	13	
11	99799 0520	Screw, Meter	4	
	99952 0500	Washer, Plain	4	
	99971 0500	Washer, Spring	4	
12	1907 60 070	Cable, Speedometer	1	

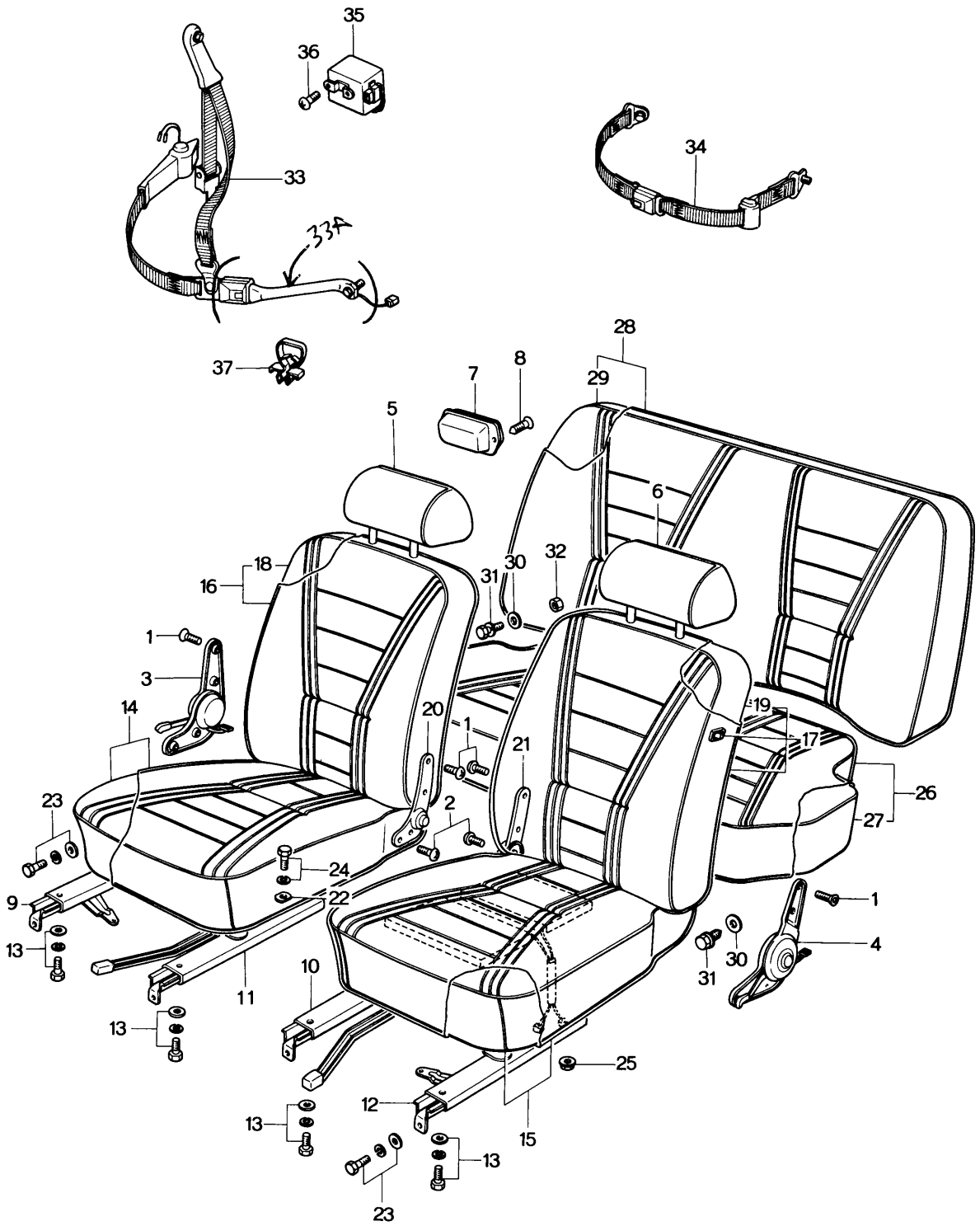
35
36
33
33A
34
37
28
29
8
7
5
6
18
16
30
31
32
1
3
14
20
1
21
19
17
26
27
23
2
24
22
9
13
11
10
13
25
12
15
13
23
1
4
30
31

No.	Part Number	Description	Q'ty	Remarks
		When ordering the following Seat & Trim		
		Add Colour Code nos. given below after parts number		
		-00 (BLK.) -16 (GRY. / YLW.) -20 (BRN.)		
	1905 57 100 ©	Seat (R), Front (Sedan)	1	
	1907 57 100 ©	Seat (R), Front (Coupe)	1	
	1905 57 150 ©	Seat (L), Front (Sedan)	1	
	1907 57 150 ©	Seat (L), Front (Coupe)	1	
1	0259 57 109	Screw, Knuckle & Hinge Plate	12	
2	2155 57 109	Screw, Knuckle	4	
3	0305 57 130	Knuckle (R), Reclining (Sedan)	1	
	2075 57 130	Knuckle (R), Reclining (Coupe)	1	
4	0305 57 180A	Knuckle (L), Reclining	1	
5	0305 57 140 ©	Restraint (R), Head	1	
6	0305 57 190 ©	Restraint (L), Head	1	
7	0259 88 250	Tray, Ash-(R) Seat	1	
8	99864 0406	Screw, Ash Tray	2	
9	0305 88 060A	Adjuster No. 1 (R)	1	
10	1905 88 103	Adjuster No. 2 (R) (Sedan)	1	
	1907 88 103	Adjuster No. 2 (R) (Coupe)	1	
11	1907 88 152	Adjuster No. 3 (L)	1	
12	0305 88 260A	Adjuster No. 4 (L)	1	

No.	Part Number	Description	Q'ty	Remarks
13	99801 0820	Bolt, Adjuster	8	
	99952 0816	Washer, Plain	4	
	99971 0800	Washer, Spring	8	
14	1905 88 110 ©	Cushion (R), Front Seat (Sedan)	1	
	1907 88 110 ©	Cushion (R), Front Seat (Coupe)	1	
15	1905 88 160 ©	Cushion (L), Front Seat (Sedan)	1	
	1907 88 160 ©	Cushion (L), Front Seat (Coupe)	1	
16	1687 88 130 ©	Seat (R), Back-Front	1	
17	1687 88 180 ©	Seat (L), Back-Front	1	
18	1687 88 131 ©	Trim (R), Front Back Seat	1	
19	1687 88 181 ©	Trim (L), Front Back Seat	1	
20	0305 88 150	Plate (R), Hinge	1	
21	0305 88 160	Plate (L), Hinge	1	
22	0305 57 011	Washer, Front Seat	1	
23	99786 08258	Bolt, Front Seat	4	
	99952 0822	Washer, Plain	4	
24	99785 08258	Bolt, Front Seat	1	
	99952 0822	Washer, Plain	1	
	99971 0800	Washer, Plain	1	

No.	Part Number	Description	Q'ty	Remarks
25	99940 0800	Nut, Front Seat	3	
26	1687 57 200A ©	Seat, Cushion-Rear (Coupe)	1	
	1905 57 200 ©	Seat, Cushion-Rear (Sedan)	1	
27	1687 88 201 ©	Trim, Rear Seat Cushion (Coupe)	1	
	1905 88 201 ©	Trim, Rear Seat Cushion ~~(Coupe)~~ (Sedan)	1	
28	1687 57 250A ©	Seat, Back-Rear (Coupe)	1	
	1905 57 250 ©	Seat, Back-Rear (Sedan)	1	
29	1687 88 251 ©	Trim, Rear Back Seat (Coupe)	1	
	1905 88 251 ©	Trim, Rear Back Seat (Sedan)	1	
30	0317 57 015	Washer, Rear Seat	4	
31	99786 0820B	Bolt, Rear Seat	4	
	99952 0822	Washer, Plain	4	
32	99940 0800	Nut, Rear Seat	2	
33	1905 57 900	Belt, Safety-Front Seat (Takata Make) (Sedan)	2	
	1907 57 900	Belt, Safety-Front Seat (Takata Make) (Coupe)	2	
33A	1907-88-901 (Sedan & Coupe)			
34	1881 57 940	Belt, Safety-Rear Seat (Takata Make)	2	
35	1757 57 999	Senser "G", Belt	1	

No.	Part Number	Description	Q'ty	Remarks
36	99784 0812	Screw, Senser "G"	2	
37	1011 87 812	Clip, Seat Switch Cord	2	

FRONT SIDE DOOR (GLASS)

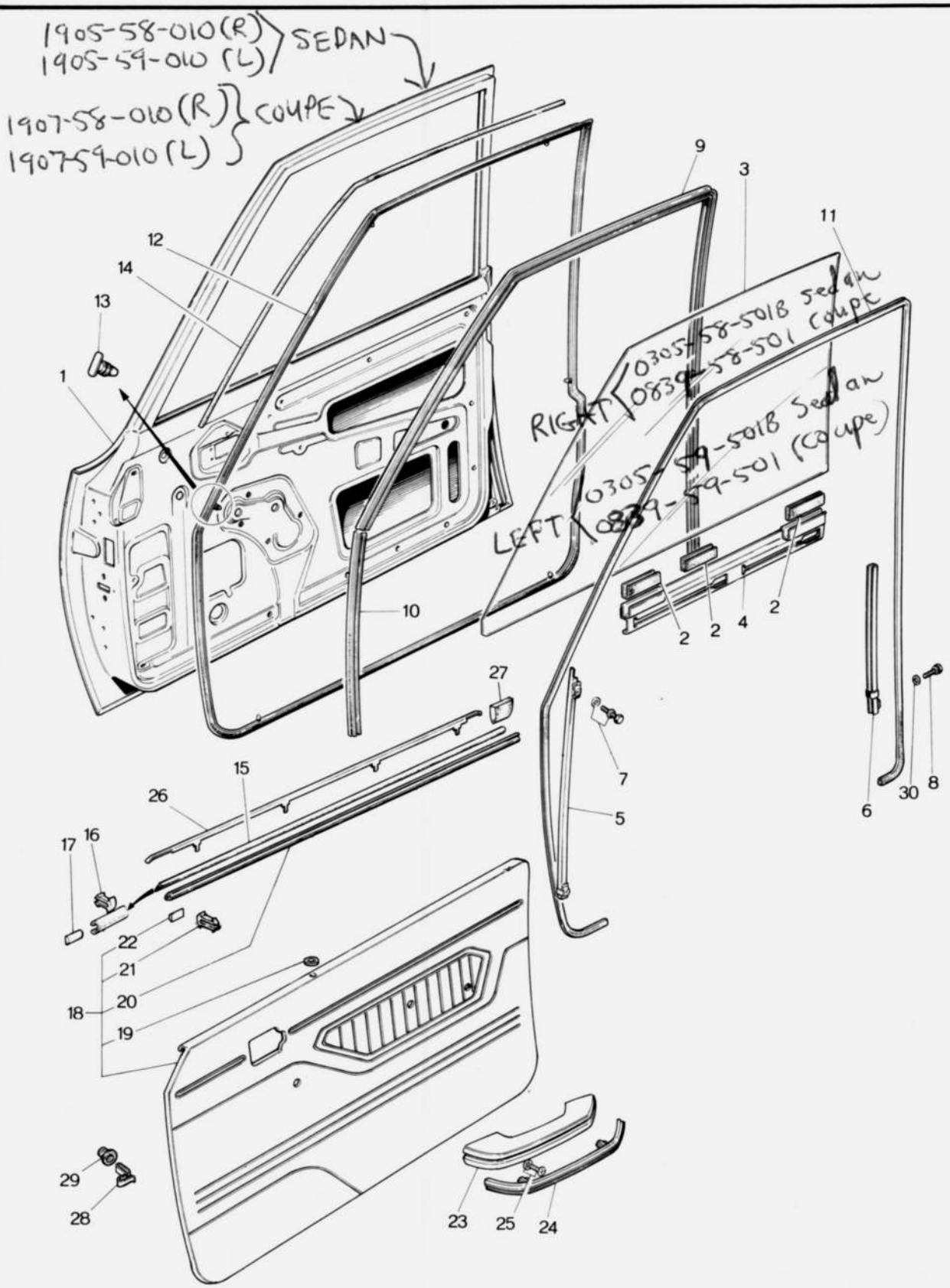

FRONT SIDE DOOR (GLASS) 58 59

No.	Part Number	Description	Q'ty	Remarks
1	1905 58 010	Body (R), Door (Sedan)	1	
	1905 59 010	Body (L), Door (Sedan)	1	
	1907 58 010	Body (R), Door (Coupe)	1	
	1907 59 010	Body (L), Door (Coupe)	1	
	0305 58 021C	Panel (R), Outer (Sedan)	1	
	1666 59 020	Panel (L), Outer (Sedan)	1	
	0881 58 021	Panel (R), Outer (Coupe)	1	
	1668 59 020	Panel (L), Outer (Coupe)	1	
2	0259 58 232	Strip, Rubber-Glass (Coupe)	6	
	2292 58 232	Strip, Rubber-Glass (Sedan)	6	
3	0305 58 501B	Glass (R), Door (Sedan)	1	
	0305 59 501B	Glass (L), Door (Sedan)	1	
	0839 58 501	Glass (R), Door (Coupe)	1	
	0839 59 501	Glass (L), Door (Coupe)	1	
4	0305 58 505	Bracket (R), Lift	1	
	0305 59 505	Bracket (L), Lift	1	
5	0305 58 603A	Guide "A" (R), Glass	1	
	0305 59 603A	Guide "A" (L), Glass	1	
6	0305 58 604	Guide "B" (R), Glass	1	

FRONT SIDE DOOR (GLASS)

No.	Part Number	Description	Q'ty	Remarks
	0305 59 604	Guide"B" (L), Glass	1	
7	99806 0610	Bolt, Glass Guide	2	
	99971 0600	Washer, Spring	2	
8	99806 0612	Bolt, Glass Guide	4	
	99951 0618	Washer, Plain	4	
	99971 0600	Washer, Spring	4	
9	0305 58 605D	Run Channel, Glass (Sedan)	1	
	0839 58 605D	Run Channel, Glass (Coupe)	1	
10	0305 58 606	Run Channel, Glass (Sedan)	1	
	0839 58 606	Run Channel, Glass (Coupe)	1	
11	0398 58 755-00	Welt, Seaming (BLK.)	2	
12	0305 58 760D	Weatherstrip (R) } (Sedan)	1	
	0305 59 760D	Weatherstrip (L) } (Sedan)	1	
	0839 58 760C	Weatherstrip (R) } (Coupe)	1	
	0839 59 760C	Weatherstrip (L) } (Coupe)	1	
13	0305 58 762	Fastener, Weatherstrip	2	
14	0305 58 768	Spacer, Weatherstrip	2	
15	0305 58 780F	Weatherstrip (R), Outer } (Sedan)	1	
	0305 59 780F	Weatherstrip (L), Outer } (Sedan)	1	

No.	Part Number	Description	Q'ty	Remarks
	0839 58 780E	Weatherstrip (R), Outer (Coupe)	1	
	0839 58 780E	Weatherstrip (L), Outer (Coupe)	1	
16	0839 58 783B	Fastener	18	
17	0839 58 789	Spacer	2	
	When ordering the following Trims Add Colour Code nos. given below after parts number -13 (BLK.) -15 (GRY. / YLW.) -20 (BRN.)			
18	1666 58 810 ©	Trim (R), Door (Sedan)	1	
	1666 59 810 ©	Trim (L), Door (Sedan)	1	
	1907 58 810 ©	Trim (R), Door (Coupe)	1	
	1907 59 810 ©	Trim (L), Door (Coupe)	1	
19	0223 58 692A	Grommet	2	
20	0305 58 790A	Weatherstrip (R), Inner (Sedan)	1	
	0305 59 790A	Weatherstrip (L), Inner (Sedan)	1	
	0839 58 790D	Weatherstrip (R), Inner (Coupe)	1	
	0839 59 790D	Weatherstrip (L), Inner (Coupe)	2	
21	0839 58 783B	Fastener	18	
22	0839 58 789	Spacer	2	
23	0398 58 821A00	Rest, Arm (BLK.) Selective use	2	
	0398 58 821A01	Rest, Arm (GRY. / YLW.) Selective use	2	

58 59 FRONT SIDE DOOR (GLASS)

No.	Part Number	Description		Q'ty	Remarks
	0398 58 821A20	Rest, Arm (BRN.)		2	
24	0398 58 822A00	Garnish, Arm Rest (BLK.)		2	
	0398 58 822A01	Garnish, Arm Rest (GRY. / YLW.)	Selective use	2	
	0398 58 822A20	Garnish, Arm Rest (BRN.)		2	
25	99833 0520	Screw, Arm Rest		4	
	99952 0500	Washer, Plain		4	
26	0305 58 831B	Mould (R), Beltline	(Sedan)	1	
	0305 59 831B	Mould (L), Beltline	(Sedan)	1	
	0881 58 831	Mould (R), Beltline	(Coupe)	1	
	0881 59 831	Mould (L), Beltline	(Coupe)	1	
27	0881 58 839	Spacer, Beltline Mould (Coupe)		8	
28	0208 58 921	Fastener, Door Trim		22	
29	0187 58 922	Cap, Fastener Seal-Door Trim		22	
30	0727 70 943	Washer, Glass Guide		2	

FRONT SIDE DOOR (LOCK)

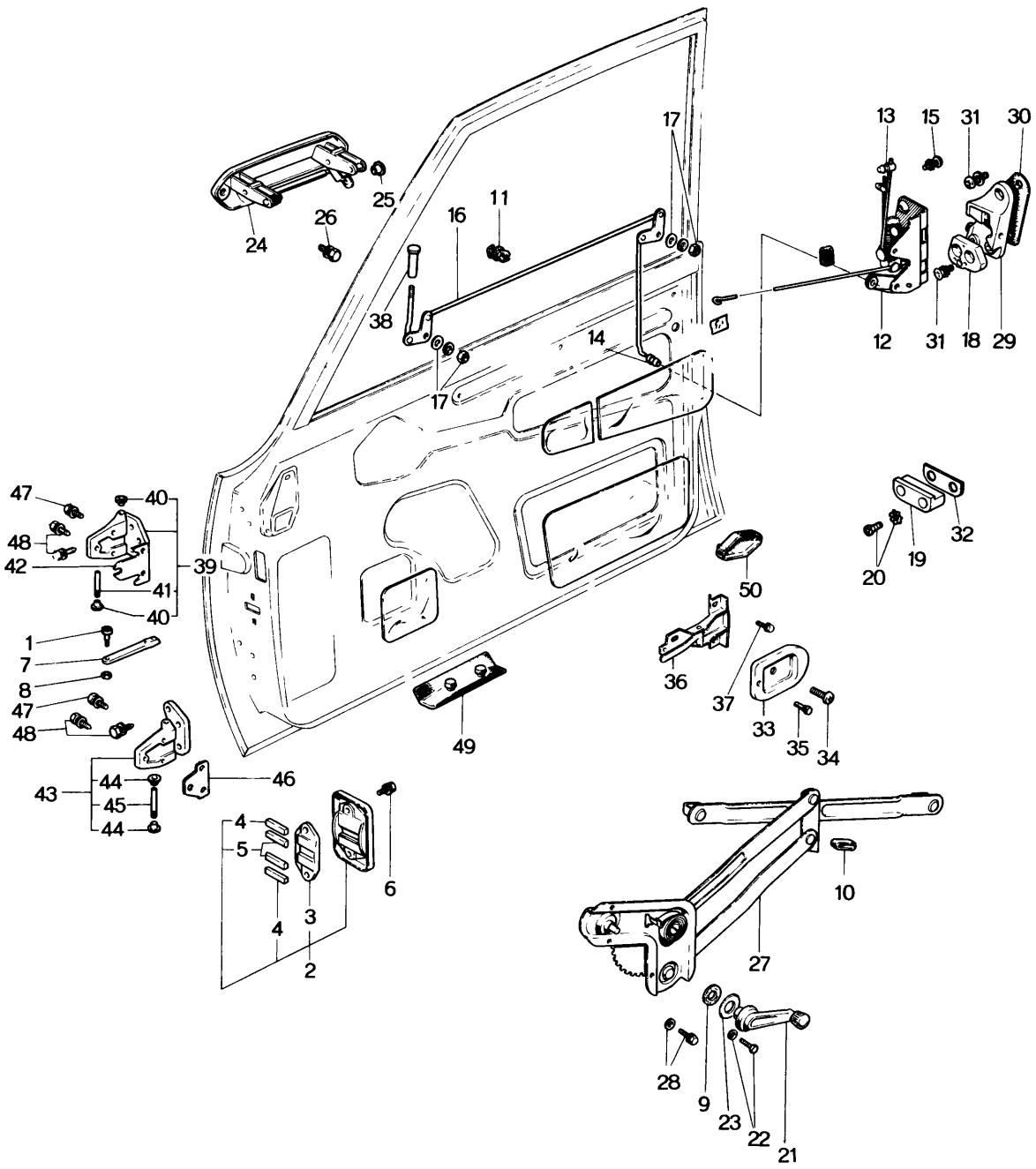

No.	Part Number	Description	Q'ty	Remarks
1	0305 58 269	Bolt, Door Checker	2	
2	0305 58 270A	Checker, Door	2	
3	0305 58 272	Case	2	
4	0305 58 273	Spring, Rubber	4	
5	0305 58 274	Block, Slide	4	
6	99806 0614	Bolt, Door Checker	4	
	99952 0600	Washer, Plain	4	
	99971 0600	Washer, Spring	4	
7	0305 58 281A	Lever, Checker	2	
8	99947 0600	Nut, Checker Lever	2	
9	0259 58 305A	Gasket, Regulator Handle	2	
10	0259 58 306	Cushion, Window Regulator	2	
11	0305 58 309	Holder, Rod-Door Lock	2	
12	2850 58 310G	Lock (R), Door	1	(Sedan)
	2850 59 310G	Lock (L), Door	1	(Sedan)
	2855 58 310G	Lock (R), Door	1	(Coupe)
	2855 59 310G	Lock (L), Door	1	(Coupe)

FRONT SIDE DOOR (LOCK)

No.	Part Number	Description	Q'ty	Remarks
13	0305 58 314B	Bush	2	
14	0398 58 319A	Bush	2	
15	99832 0612	Screw, Door Lock	6	
	99974 0600	Washer, Toothed	6	
16	0398 58 330D	Rod (R), Door Lock (Sedan)	1	
	0398 59 330D	Rod (L), Door Lock (Sedan)	1	
	0881 58 330D	Rod (R), Door Lock (Coupe)	1	
	0881 59 330D	Rod (L), Door Lock (Coupe)	1	
17	99907 0600	Nut, Rod	4	
	99952 0600	Washer, Plain	4	
	99971 0600	Washer, Spring	4	
18	0305 58 361	Rack (R), Door Striker	1	
	0305 59 361	Rack (L), Door Striker	1	
19	1666 58 365	Block (R), Anti-Burst	1	
	1666 59 365	Block (L), Anti-Burst	1	
20	2828 58 371A	Screw, Anti-Burst Block (Sedan)	4	
	99761 0630	Screw, Anti-Burst Block (Coupe)	4	
	99975 0600	Washer, Toothed	4	
21	0223 58 370D	Handle, Regulator (BLK.)	2	

No.	Part Number	Description	Q'ty	Remarks
22	99806 0516	Bolt, Regulator Handle	2	
	99971 0500	Washer, Spring	2	
23	0223 58 375A	Escutcheon, Regulator Handle (BLK.)	2	
24	0305 58 410C	Handle (R), Outer	1	
	0305 59 410C	Handle (L), Outer	1	
25	0305 58 411A	Bush	4	
26	99797 0508	Bolt, Outer Handle	4	
	99952 0500	Washer, Spring	4	
	99971 0500	Washer, Plain	4	
27	0305 58 560A	Regulator (R), Window	1	
	0305 59 560A	Regulator (L), Window	1	
28	99806 0612	Bolt, Regulator	8	
	99971 0600	Washer, Spring	8	
	99951 0618	Washer, Plain	8	
29	0259 58 570	Striker (R), Door	1	
	0259 59 570	Striker (L), Door	1	
30	0187 58 592A	Seat, Door Striker	2	
31	99761 0620	Screw, Door Striker	2	

58 59 FRONT SIDE DOOR (LOCK)

No.	Part Number	Description	Q'ty	Remarks
	99761 0630	Screw, Door Striker	4	
	99975 0600	Washer, Toothed	6	
32	2350 58 593	Shim, Anti-Burst Block	2	
33	0223 58 611C01	Cover, Inner Handle (BLK.)	2	
34	99832 0408B	Screw, Cover	2	
35	0259 58 612	Rubber, Cushion-Inner Handle Cover	2	
36	0223 58 660A	Handle, Inner	2	
37	99806 0510	Bolt, Inner Handle	8	
	99952 0500	Washer, Plain	8	
	99971 0500	Washer, Spring	8	
38	0259 58 691-00	Knob, Door Lock (BLK.)	2	
39	0317 58 700	Hinge, Door-Upper	2	
40	0223 58 721	Bush	4	
41	0187 58 731	Pin	2	
42	0317 58 736	Shim, Door Hinge Upper	4	
43	0317 58 750	Hinge (R), Door-Lower	1	
	0317 59 750	Hinge (L), Door-Lower	1	

No.	Part Number	Description	Q'ty	Remarks
44	0223 58 721	Bush	4	
45	0187 58 731	Pin	2	
46	0317 58 785	Washer, Door Hinge Lower	2	
47	99781 0818	Bolt, Door Hinge	8	
	99971 0800	Washer, Spring	8	
48	99783 0828	Bolt, Door Hinge	8	
	99971 0800	Washer, Spring	8	
49	0305 58 872	Valve, Drain	2	
50	0305 58 874	Cushion, Door	2	

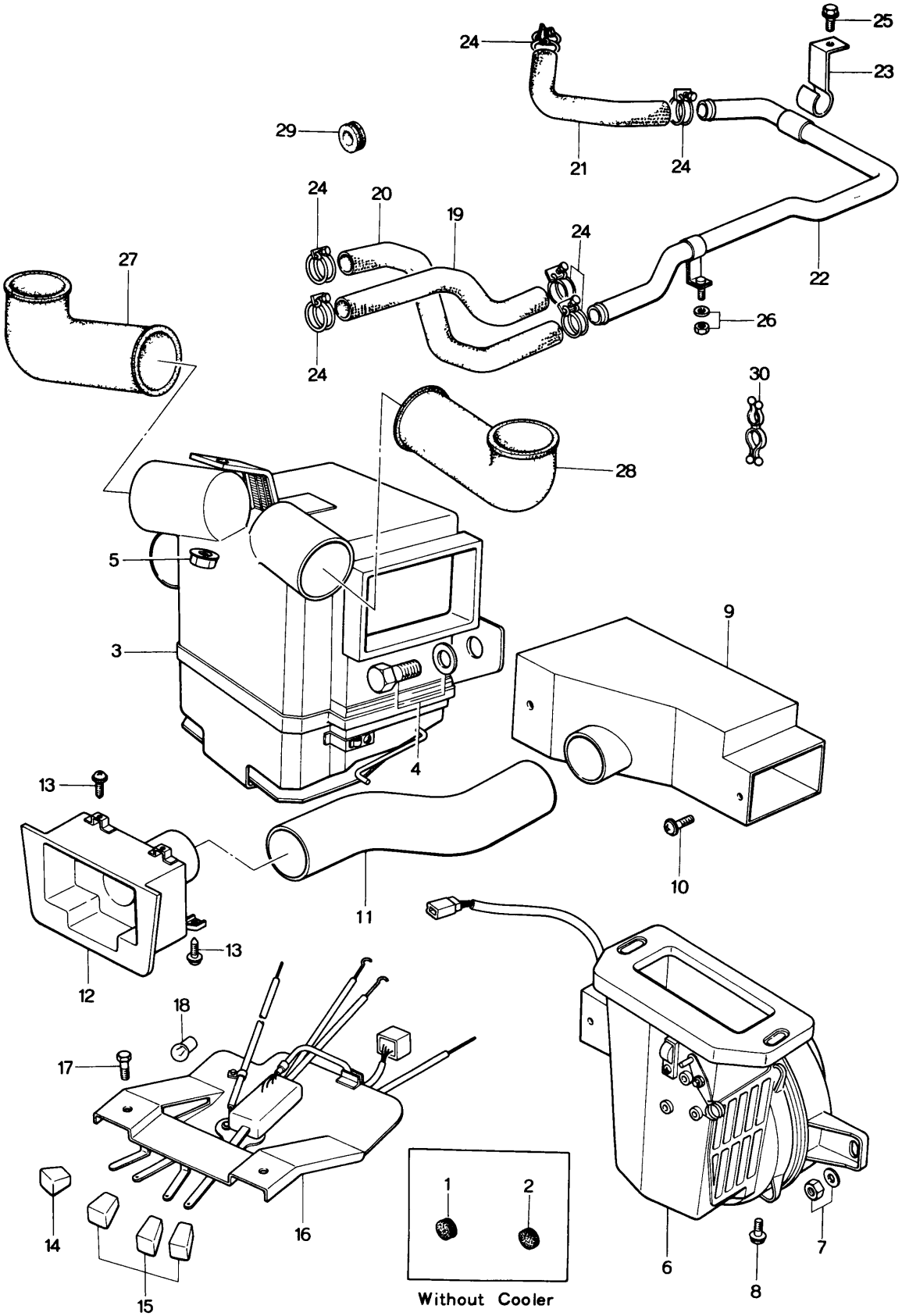
24
25
23
29
21
24
24
20
19
24
22
27
24
26
30
28
5
3
4
9
13
10
11
13
12
18
17
16
14
15
1
2
Without Cooler
6
7
8

No.	Part Number	Description	Q'ty	Remarks
	1907 61 090	Heater Set	1	
●	1907 61 090A	Heater Set	1	73/12~△
1	0187 53 134	Rubber, Seal } (Without Cooler)	1	
2	1708 61 031	Plug } (Without Cooler)	1	
3	1907 61 130	Core, Heater	1	
4	99794 0635	Bolt, Heater Core	1	
	99952 0618	Washer, Plain	1	
5	99940 0600	Nut, Heater Core	2	
6	2835 61 140	Blower	1	
7	99940 0600	Nut, Blower	2	
	99952 0618	Washer, Plain	2	
8	99794 0635	Bolt, Blower	2	
9	1907 61 150	Duct	1	
10	99868 0416B	Screw, Duct	2	
●	99865 0416B	Screw, Duct	2	73/12~○
	99952 0412B	Washer, Plain	2	
	99971 0400B	Washer, Spring	2	
11	1907 61 151	Hose, Ventilator	1	
12	1907 61 152	Box, Ventilator	1	
13	99865 0516	Screw, Ventilator Box	4	
●	99833 0610	Screw, Ventilator Box	4	
●	99952 0600	Washer, Plain	4	From Car No. 1
●	99971 0600	Washer, Spring	4	
14	0398 61 170A	Knob No. 1	1	
15	0398 61 180A	Knob No. 2	3	

No.	Part Number	Description	Q'ty	Remarks
16	1907 61 190	Control, Heater	1	
●	1907 61 190A	Control, Heater	1	From Car No. 1
17	99796 0510	Bolt, Heater Control	2	
18	99701 1030	Bulb, Control Panel	2	
19	1097 61 211	Hose No. 1, Water	1	
20	~~1097 61 212~~	~~Hose No. 2, Water~~	~~1~~	
●	1907 61 212	Hose No. 2, Water	1	From Car No. 1
21	1907 61 213	Hose No. 3, Water	1	
●	1907 61 213A	Hose No. 3, Water	1	73/12~ △
22	~~2090 62 214A~~	~~Pipe, Heater~~	~~1~~	
●	2090 61 214A	Pipe, Heater	1	From Car No. 1
23	0839 61 216	Clip, Heater Pipe	1	
24	99282 2600	Band, Hose	6	
25	99794 0516	Bolt, Clip	1	
	99952 0516	Washer, Plain	1	
26	99940 0500	Nut, Heater Pipe	1	
	99952 0516	Washer, Plain	1	
27	1687 61 250	Hose (R), Defroster	1	
●	1907 61 251	Hose (R), Defroster	1	From Car No. 1
28	1907 61 252	Hose (L), Defroster	1	
● 29	0305 61 827	Insulater	2	From Car No. 1
● 30	99288 2308	Clip	2	73/11~ Added Anew

HEATER UNIT & CONTROL
(HEATER & COOLER)

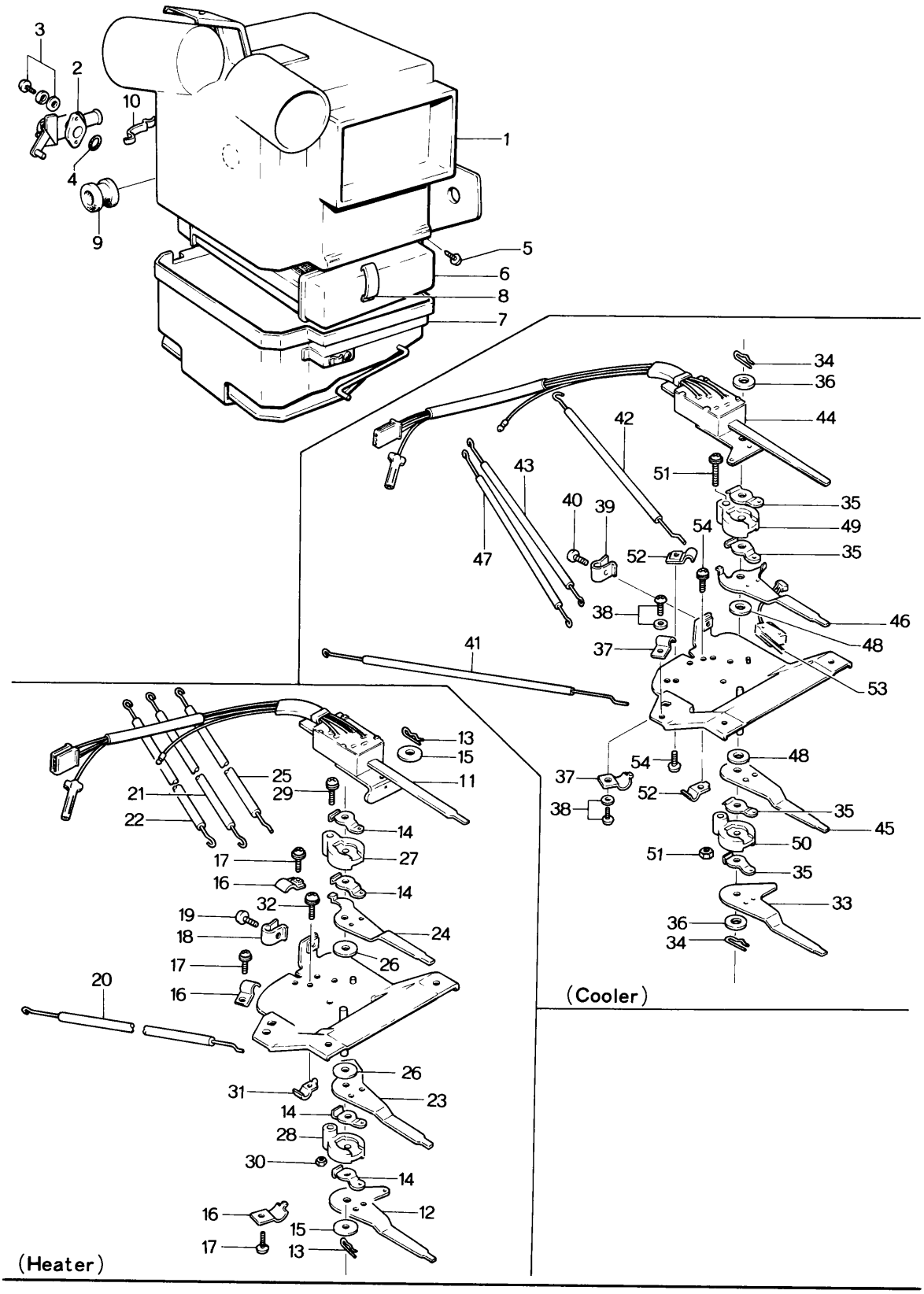

No.	Part Number	Description	Q'ty	Remarks
	1907 61 130	Unit, Heater	1	
1	1907 76 081	Case, Heater	1	
2	1907 76 083	Valve, Water	1	
3	99835 0408	Screw, Water Valve	2	
	99952 0400	Washer, Plain	2	
	99971 0400	Washer, Spring	2	
4	0305 76 084A	Ring, "O"	1	
5	1907 76 085	Screw, Tapping	2	
	99952 0400	Washer, Plain	2	
6	1907 76 086	Core Heater	1	
7	1907 76 087	Duct	1	
8	0305 76 088	Clip	2	
9	0305 76 089	Grommet	2	
10	1011 76 419	Clip, Cable	2	
	1907 61 190A	Control, Heater	1	
11	0398 76 156	Switch (COLD-HOT)	1	
12	0398 76 159	Lever, Control (DEF-HEAT)	1	
13	0305 76 162A	Ring, Snap	2	
14	0398 76 162	Spring	4	

HEATER UNIT & CONTROL
(HEATER & COOLER)

No.	Part Number	Description	Q'ty	Remarks
15	0398 76 164	Washer	2	
16	0305 76 168	Clip	3	
17	99833 0512	Screw, Clip	3	
	99971 0500	Washer, Spring	3	
18	0305 76 170	Clip	1	
19	99833 0408	Screw, Clip	1	
	99952 0400	Washer, Plain	1	
	99971 0400	Washer, Spring	1	
20	1907 76 501	Cable, Wire (COLD-HOT)	1	
21	1907 76 502	Cable, Wire (DEF-HEAT)	1	
22	1907 76 503	Cable, Wire (REC-FRESH)	1	
23	1907 76 506	Lever, Control (REC-FRESH)	1	
24	1907 76 507	Lever, Control (OFF-VENT)	2	
25	1907 76 509	Cable, Wire (OFF-VENT)	1	
26	1907 76 511	Washer	2	
27	1907 76 512	Spacer	1	
28	1907 76 513	Spacer	1	
29	99833 0420	Screw, Spacer	1	
	99971 0400	Washer, Spring	1	
30	99906 0400	Nut, Spacer	1	

No.	Part Number	Description	Q'ty	Remarks
31	1907 76 514	Clip, Cable	1	
32	99833 0512	Screw, Clip	1	
	99952 0500	Washer, Plain	1	
	99971 0500	Washer, Spring	1	
	1972 61 190A	Control, Cooler (Without Heater)	1	
	1974 61 190A	Control, Cooler (With Heater)	1	
33	0398 76 159	Lever, Control (With Heater)	1	
34	0305 76 162A	Ring, Snap	2	
35	0398 76 162	Spring	4	
36	0398 76 164	Washer	2	
37	0305 76 168	Clip	2	(With Heater)
38	99833 0512	Screw, Clip	2	(With Heater)
	99971 0500	Washer, Spring	2	(With Heater)
39	0305 76 170	Clip	1	
40	99833 0408	Screw, Clip	1	
	99952 0400	Washer, Plain	1	
	99971 0400	Washer, Spring	1	
41	1974 76 501	Cable, Wire (COLD-HOT) (With Heater)	1	
42	1974 76 502	Cable, Wire (DEF-HEAT) (With Heater)	1	

HEATER UNIT & CONTROL
(HEATER & COOLER)

No.	Part Number	Description	Q'ty	Remarks
43	1974 76 503	Cable, Wire	1	
44	1974 76 505	Switch	1	
45	1907 76 506	Lever, Control	1	
46	1974 76 507	Lever, Control (With Heater)	1	
47	1974 76 509	Cable, Wire (OFF-VENT) (With Heater)	1	
48	1907 76 511	Washer	2	
49	1907 76 512	Spacer	1	
50	1907 76 513	Spacer	1	
51	99833 0420	Screw	1	
	99971 0400	Washer, Spring	1	
	99906 0400	Nut	2	
52	1907 76 514	Clip, Cable	2	
53	1915 76 776	Switch, Micro (With Heater)	1	
54	99833 0512	Screw	2	
	99952 0500	Washer, Plain	2	
	99971 0500	Washer, Spring	2	

BLOWER (HEATER)

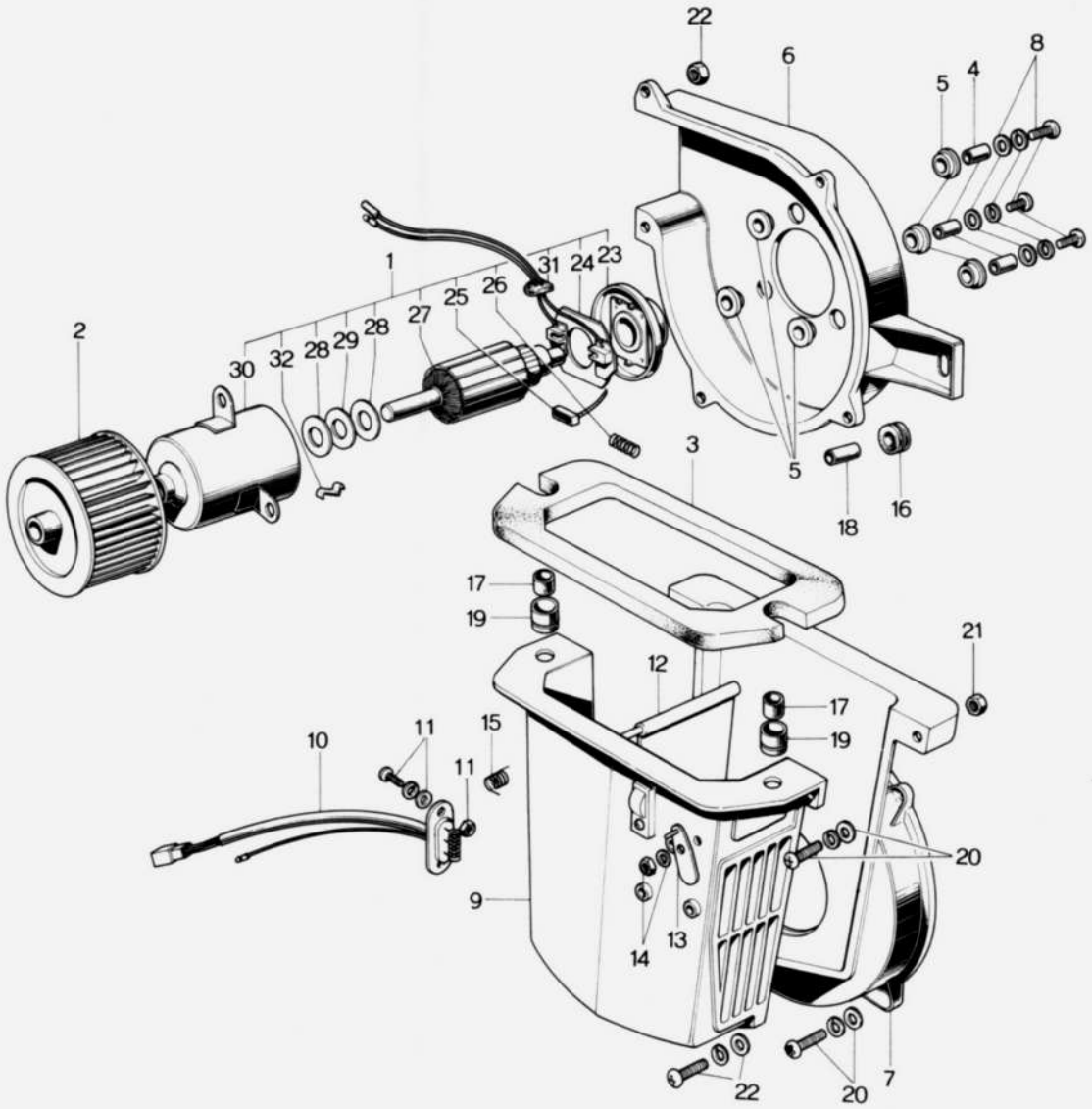

No.	Part Number	Description	Q'ty	Remarks
	2835 61 140	Blower	1	
1	2835 76 110	Motor, Fan (Fig. No. 23~32 included)	1	
2	2835 76 116	Fan, Sirocco	1	
3	0305 76 117	Lining No. 1	1	
4	0305 76 123	Collar	3	
5	0305 76 124	Damper	6	
6	2835 76 125	Case, Fan	1	
7	2835 76 126	Case, Fan	1	
8	99835 0516	Screw	3	
	99952 0500	Washer, Plain	3	
	99971 0500	Washer, Spring	3	
9	2835 76 127	Duct	1	
●	2835 76 127A	Duct	1	From Car No. 1
10	0305 76 129	Resistor	1	
11	99835 0414	Screw, Resistor	2	
	99906 0400	Nut	2	
	99952 0400	Washer, Plain	2	
	99971 0400	Washer, Spring	2	
12	2835 76 131	Shutter	1	
13	2835 76 132	Lever	1	
14	99906 0600	Nut, Shutter + Lever	1	

No.	Part Number	Description	Q'ty	Remarks
	99971 0600	Washer, Spring	1	
15	2835 76 135	Spring	1	
16	0305 76 136	Grommet	2	
17	0305 76 137	Grommet	2	
18	0305 76 138	Collar	2	
19	0305 76 139	Collar	2	
20	99835 0420	Screw	7	
	99952 0400	Washer, Plain	7	
	99971 0400	Washer, Spring	7	
21	99906 0400	Nut	7	
22	99835 0416	Screw	1	
	99952 0400	Washer, Plain	1	
	99971 0400	Washer, Spring	1	
	99906 0400	Nut	1	
23	0305 76 141	Cover	1	
24	0305 76 142	Holder, Brush	1	
25	0305 76 143	Brush	2	
26	0305 76 144	Spring	2	
27	2835 76 145	Armature	1	
28	0305 76 146	Washer, Thrust	8	

No.	Part Number	Description	Q'ty	Remarks
29	0305 76 147	Washer, Bakelite	2	
30	0305 76 149	Yoke	1	
31	0305 76 150	Grommet	1	
32	0305 76 151	Spring, Lock	2	

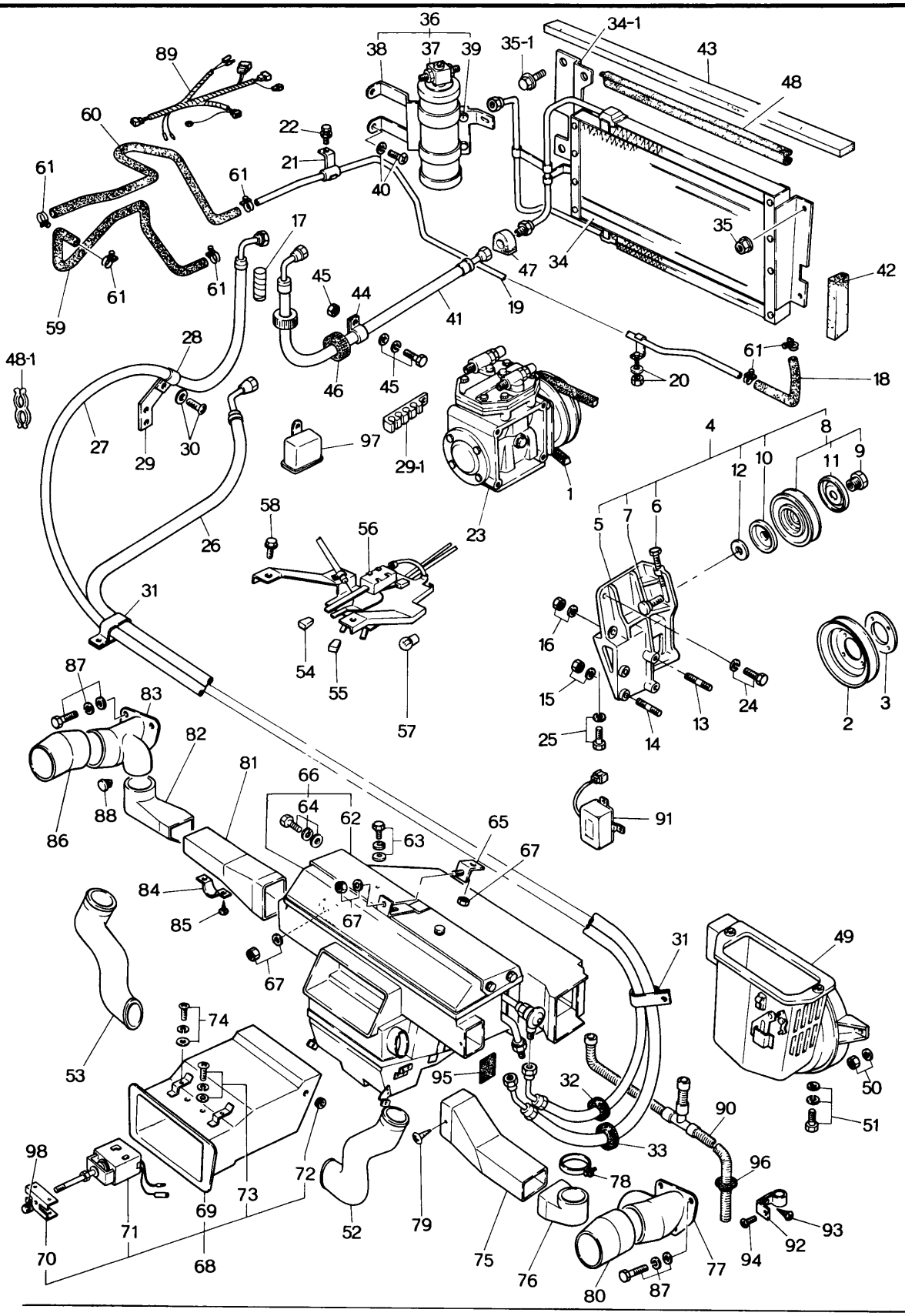
36
38
37
39
35-1
34-1
43
48
89
60
22
21
40
61
61
61
61
59
17
45
44
41
47
34
35
42
19
20
61
18
48-1
28
27
29
30
46
45
97
29-1
1
23
4
8
10
12
11
9
5
7
6
58
56
26
31
54
55
57
16
15
25
14
13
24
2
3
87
83
82
81
66
64
62
63
65
67
86
88
84
85
67
67
91
31
49
74
53
95
32
50
51
90
33
96
98
72
78
73
69
71
70
68
52
79
75
76
77
80
87
94
92
93

	No.	Part Number	Description	Q'ty	Remarks	
			Ⓓ Mark indicates Diesel Kiki Make			
	1	1757 15 906	Belt, "V"	1		Ⓓ
	2	1757 15 911	Pulley, "V" Belt	1		Ⓓ
●		1757 15 911A	Pulley, "V" Belt	1	From Car No. 1	Ⓓ
●		1757 15 911B	Pulley, "V" Belt	1	7/1~△	Ⓓ
				1	7/3~Discarded	Ⓓ
	3	1757 15 912	Stiffener, Pulley	1		
	4	1757 15 920	Bracket, Compressor	1		Ⓓ
	5	1757 15 921	Bracket, Compressor	1		Ⓓ
	6	1757 15 966	Bolt, Adjust-Pulley	1		Ⓓ
	7	1757 15 967	Shaft, Pulley	1		Ⓓ
	8	1757 15 970	Pulley (Fig. No. 9,11 Included)	1		Ⓓ
	9	0839 61 963D	Shaft, Pulley	2		Ⓓ
	10	0839 61 964	Cover, Pulley	2		Ⓓ
	11	0839 61 965	Cover, Pulley	2		Ⓓ
	12	0839 61 968	Spacer, Pulley	2		Ⓓ
●		99811 1022	Bolt, Compressor Bracket	1	From Car No. 1	
	13	99859 1025A	Stud, Compressor Bracket	2		
●		99859 1025A	Stud, Compressor Bracket	1	From Car No. 1	
	14	99859 1050A	Stud, Compressor Bracket	2		
●		99859 1035A	Stud, Compressor Bracket	2	From Car No. 1	
	15	99921 1000	Nut, Compressor Bracket	4		
		99971 1000	Washer, Spring	4		
	16	99921 1200	Nut, Compressor Bracket	1		
		99971 1200	Washer, Spring	1		

No.	Part Number	Description	Q'ty	Remarks	
	1972 61 430	Engine Room Kit (Without Heater) (Fig. No. 23,26~29,31~34,36~38,41~44,46,47 Included)	1		Ⓓ Non servicable part
	1974 61 430	Engine Room Kit (With Heater) (Fig. No. 18,19,21,23,26~29,31~34,36~38,41~44,46,47 Included)	1		Ⓓ
17	0823 18 111	Supporter	2		
18	1907 61 213	Hose, Heater	1		Ⓓ
●	1907 61 213A	Hose, Heater	1	73/12~△	Ⓓ
19	2090 61 214A	Pipe, Heater	1		Ⓓ
20	99940 0500	Nut, Heater Pipe (With Heater)	1		
●	99952 0516	Washer, Plain (With Heater)	1	74/4~○	
21	0839 61 216	Clip, Heater Pipe (With Heater)	1		Ⓓ
22	99794 0516	Bolt, Clip (With Heater)	1		
	99952 0516	Washer, Plain (With Heater)	1		
23	1915 61 450	Compressor	1		Ⓓ
24	99801 0825	Bolt, Compressor	2		
	99953 0800	Washer, Plain	2		
	99971 0800	Washer, Spring	2		
25	99801 0835	Bolt, Compressor	2		
	99953 0800	Washer, Plain	2		
	99971 0800	Washer, Spring	2		
26	1915 61 460	Hose, Flexible-Hight "3/8"	1		Ⓓ
27	1915 61 470	Hose, Flexible-Low "1/2"	1		Ⓓ
28	1915 61 471	Clip, Flexible Hose	1		Ⓓ
29	1915 61 472	Stay, Clip	1		Ⓓ
●	1915 61 472A	Stay, Clip	1	73/9~○	Ⓓ
● 29-1	0866 61 472	Clip	1	From Car No. 1	Ⓓ

No.	Part Number	Description	Q'ty	Remarks
30	99833 0616	Screw, Clip	1	
	99952 0600	Washer, Plain	1	
	99971 0600	Washer, Spring	1	
31	1915 61 473	Clip, Flexible Hose	2	Ⓓ
32	1915 61 475	Grommet, Flexible Hose	1	Ⓓ
33	1915 61 478	Grommet, Flexible Hose	1	Ⓓ
34	1097 61 480	Condenser	1	Ⓓ
●	1974 61 480	Condenser	1	74/5～○ Ⓓ
● 34-1	1974 61 485	Bracket, Condenser	1	74/5～Added Anew Ⓓ
35	99796 0610	Bolt, Condenser	4	
●	99940 0600	Nut, Condenser	4	74/1～×
● 35-1	99794 0610	Bolt, Condenser Bracket	2	74/5～Added Anew
36	0305 61 800	Tank & Bracket, Liquid (Fig. No. 37～39 Included)	1	Ⓓ
37	0305 61 801	Tank, Liquid	1	Ⓓ
38	0305 61 802	Bracket, Liquid Tank	1	Ⓓ
39	99796 0616	Bolt, Bracket+Liquid Tank	2	
	99952 0600	Washer, Plain	2	
	99971 0600	Washer, Spring	2	
40	99864 0516	Screw, Tapping-Liquid Tank	1	
	99952 0500	Washer, Plain	1	
41	0839 61 812A	Hose, Flexible-Height "1/2"	1	Ⓓ
42	~~1097 61 814~~	~~Seal No. 1, Air~~	~~2~~	Ⓓ
43	0881 61 816	Seal No. 3, Air	1	Ⓓ
44	0305 61 825	Clip, Flexible Hose	1	Ⓓ

No.	Part Number	Description	Q'ty	Remarks	
45	99794 0516	Bolt, Clip	1		
	99952 0516	Washer, Plain	1		
	99940 0500	Nut	1		
● 46	0305 61 827	Insulation, Flexible Hose	4		Ⓓ
47	2090 61 827	Protector	1		Ⓓ
48	2090 70 982A	Rubber, Seal	1		
● 48-1	99288 2308	Clip, Heater Hose + Meter Cable	1	From Car No. 1	
	1972 61 440	Cabin Room Kit (Without Heater) (Fig. No. 49,54~56,62,65,66,68~72,75~78,80~84,89~92,95~97 Included)	1		Ⓓ
	1974 61 440	Cabin Room Kit (With Heater) (Fig. No. 49,52~56,59,60,62,65,66,68~72,75~78,80~84,89~92,95~97 Included)	1		Ⓓ
49	1915 61 140	Blower	1		Ⓓ
50	99940 0600	Nut, Blower	2		
	99952 0618	Washer, Plain	2		
51	99794 0635	Bolt, Blower	2		
	99952 0618	Washer, Plain	2		
	99971 0600	Washer, Spring	2		
52	1915 61 151	Hose (R), Air (With Heater)	1		Ⓓ
53	1974 61 161	Hose (L), Air (With Heater)	1		Ⓓ
54	0398 61 170A	Knob No. 1, Control	1		Ⓓ
55	0398 61 180A	Knob No. 2, Control	3 1	(With Heater) (Without Heater)	Ⓓ
56	1972 61 190	Control, Cooler (Without Heater)	1		Ⓓ
●	1972 61 190A	Control, Cooler (Without Heater)	1	From Car No. 1	Ⓓ

No.	Part Number	Description	Q'ty	Remarks	
	1974 61 190	Control, Cooler (With Heater)	1		Ⓓ
●	1974 61 190A	Control, Cooler (With Heater)	1	From Car No. 1	Ⓓ
57	99701 1030	Bulb, Cooler Control	2		
58	99796 0510	Bolt, Cooler Control	2		
59	1974 61 211	Hose No. 1, Heater (With Heater)	1		Ⓓ
60	1974 61 212	Hose No. 2, Heater (With Heater)	1		Ⓓ
61	99282 2600	Clamp, Hose	6		
●	99282 2600	Clamp, Hose (Without Heater)	2		
62	1915 61 521	Bracket, Air Con. Unit	1		Ⓓ
63	99806 0612	Bolt, Bracket+Air Con. Unit	2		
	99952 0600	Washer, Plain	2		
	99971 0600	Washer, Spring	2		
64	99806 0616	Bolt, Bracket+Air Con. Unit	4		
	99952 0600	Washer, Plain	4		
	99971 0600	Washer, Spring	4		
65	1915 61 522	Bracket, Air Con. Unit	1		Ⓓ
66	1972 61 525	Unit, Air Con. (Without Heater)	1		Ⓓ
	1974 61 525	Unit, Air Con. (With Heater)	1		Ⓓ
67	99940 0600	Nut, Air Con. Unit	3		
	99952 0618	Washer, Plain	1		
	2850 13 332	Washer	1		
68	1974 61 540	Control, Thermo (Fig. No. 69~73 Included)	1		Ⓓ

No.	Part Number	Description	Q'ty	Remarks	
69	1974 76 741	Duct, Thermo Control	1		Ⓓ
70	1974 76 742	Bracket, Thermo Switch	1		Ⓓ
71	1974 76 743	Switch, Thermo	1		Ⓓ
72	1974 76 747	Grommet	1		Ⓓ
● 73	99833 0510	Screw	4		
●	99952 0500	Washer, Plain	4		
●	99971 0500	Washer, Spring	4		
74	99833 0610	Screw, Thermo Control	4		
	99952 0600	Washer, Plain	4		
	99971 0600	Washer, Spring	4		
75	1915 61 561	Duct (R), Air	1		Ⓓ
76	1915 61 562	Duct (R), Air	1		Ⓓ
77	1915 61 563	Duct (R), Air	1		Ⓓ
78	1915 61 566	Band	1		Ⓓ
79	99865 04166	Screw, Air Duct (R)	1		
80	~~1915 61 564~~	~~Duct (R), Air~~	~~1~~		Ⓓ
●	1974 61 564	Duct (R), Air	1	From Car No. 1	Ⓓ
81	1915 61 571	Duct (L), Air	1		Ⓓ
82	1915 61 572	Duct (L), Air	1		Ⓓ
83	1974 61 573	Duct (L), Air	1		Ⓓ
84	1915 61 574	Clip, Air Duct	1		Ⓓ

No.	Part Number	Description	Q'ty	Remarks	
85	99865 0518	Bolt, Clip	2		
86	1974 61 574	Duct (L), Air	1		Ⓓ
87	99785 0516	Bolt, Air Duct	4		
	99952 0500	Washer, Plain	4		
	99971 0500	Washer, Spring	4		
88	99274 0821	Rivet, Air Duct	2		
89	1915 61 661	Wire Harness (With Heater)	1		Ⓓ
	1916 61 661	Wire Harness (Without Heater)	1		Ⓓ
90	1915 61 711	Hose, Drain	1		Ⓓ
91	1915 61 850	Switch, Idle Cut	1		Ⓓ
●	1974 61 850	Switch, Idle Cut	1	From Car No. 1	Ⓓ
92	0305 61 890	Clip, Drain Hose	1		Ⓓ
93	99863 0412	Screw, Clip	1		
	99952 0400	Washer, Plain	1		
	99971 0400	Washer, Spring	1		
94	99865 0516	Screw, Clip	1		
95	0305 61 901	Tape, Coal-tar	2		Ⓓ
96	0223 78 865	Grommet, Drain Hose	1		Ⓓ
97	0235 79 380	Relay, Cooler	1		Ⓓ
●	1931 61 548	Relay, Cooler	1		Ⓓ
● 98	1011 76 738	Knob	1		Ⓓ

BLOWER (COOLER)

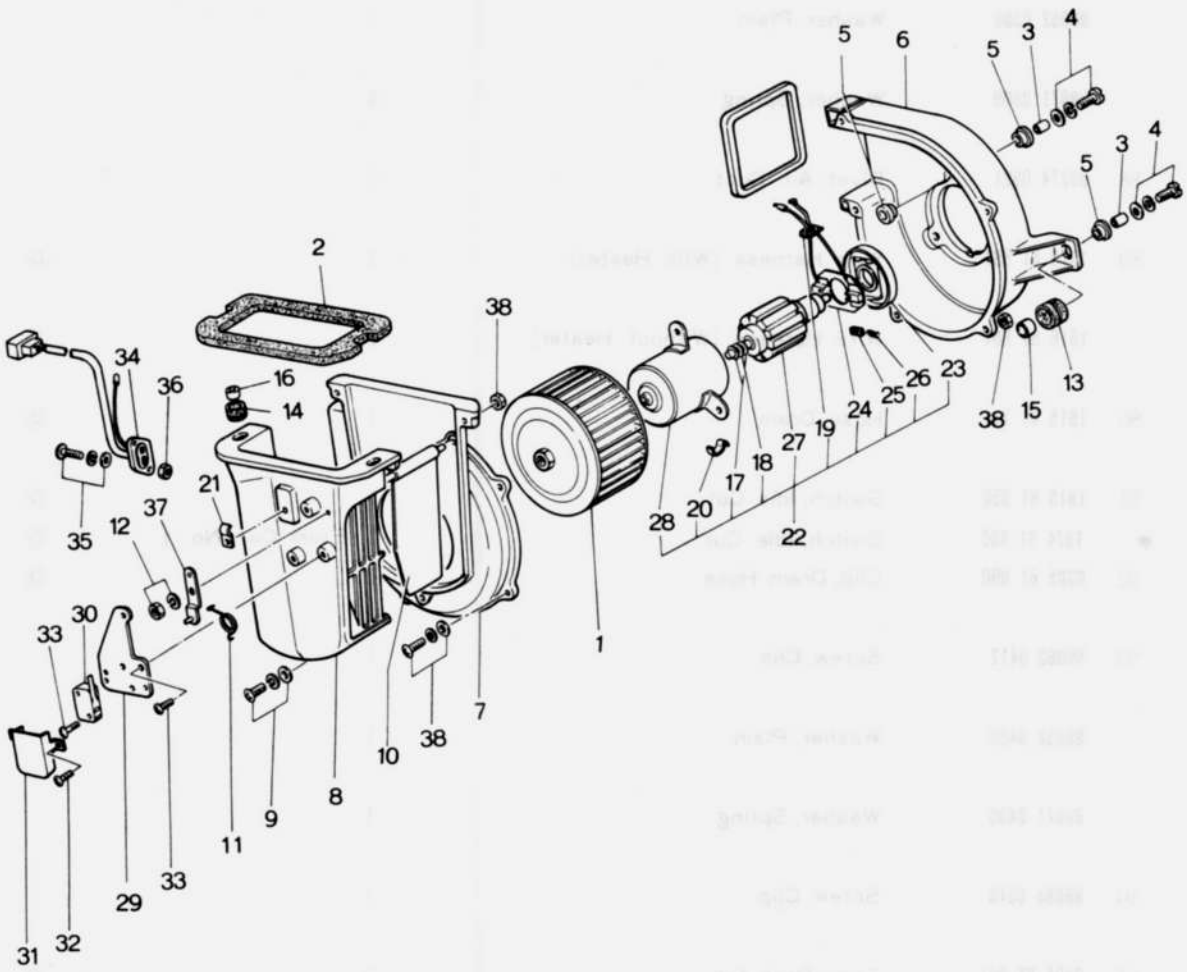

No.	Part Number	Description	Q'ty	Remarks
		All parts are of Diesel Kiki Make		
	1915 61 140	Blower	1	
1	2835 76 110	Fan, Sirocco	1	
2	0305 76 117	Lining	1	
3	0305 76 123	Collar	3	
4	99835 0516	Screw, Fan Case	3	
	99952 0500	Washer, Plain	3	
	99971 0500	Washer, Spring	3	
5	0305 76 124	Damper	6	
6	2835 76 125	Case, Fan	1	
7	2835 76 126	Case, Fan	1	
8	2835 76 127A	Duct	1	
9	99835 0416	Screw, Duct	1	
	99952 0400	Washer, Plain	1	
	99971 0400	Washer, Spring	1	
10	2835 76 132	Shutter	1	
11	2835 76 135	Spring, Control Lever	1	
12	99906 0600	Nut, Control Lever	1	
	99971 0600	Washer, Spring	1	
13	0305 76 136	Grommet	2	

No.	Part Number	Description	Q'ty	Remarks
14	0305 76 137	Grommet	2	
15	0305 76 138	Collar	2	
16	0305 76 139	Collar	2	
17	0305 76 146	Washer, Thrust	4	
18	0305 76 147	Washer, Wave	1	
19	0305 76 150	Grommet	1	
20	0305 76 151	Spring, Lock	2	
21	1011 76 419	Clip, Cable	1	
22	1915 76 750	Motor, Fan (Fig. No. 17~20,23~28 included)	1	
23	1915 76 751	Cover	1	
24	1915 76 752	Holder, Brush	1	
25	1915 76 753	Brush	2	
26	1915 76 754	Spring, Brush	2	
27	1915 76 755	Armature	1	
28	1915 76 756	Yoke	1	
29	1915 76 757	Bracket, Micro Switch	1	
30	1915 76 758	Switch, Micro	1	
31	1915 76 759	Cover, Micro Switch	1	
32	1915 76 761	Screw, Cover	2	
33	1915 76 763	Screw, Micro Switch & Bracket	3	

No.	Part Number	Description	Q'ty	Remarks
34	1915 76 764	Resistor	1	
35	99835 0414	Screw, Resistor	2	
	99952 0400	Washer, Plain	2	
	99971 0400	Washer, Spring	2	
36	99906 0400	Nut, Resistor	2	
37	1915 76 765	Lever, Control	1	
38	99835 0420	Screw, Duct	7	
	99952 0400	Washer, Plain	7	
	99971 0400	Washer, Spring	7	
	99906 0400	Nut	8	

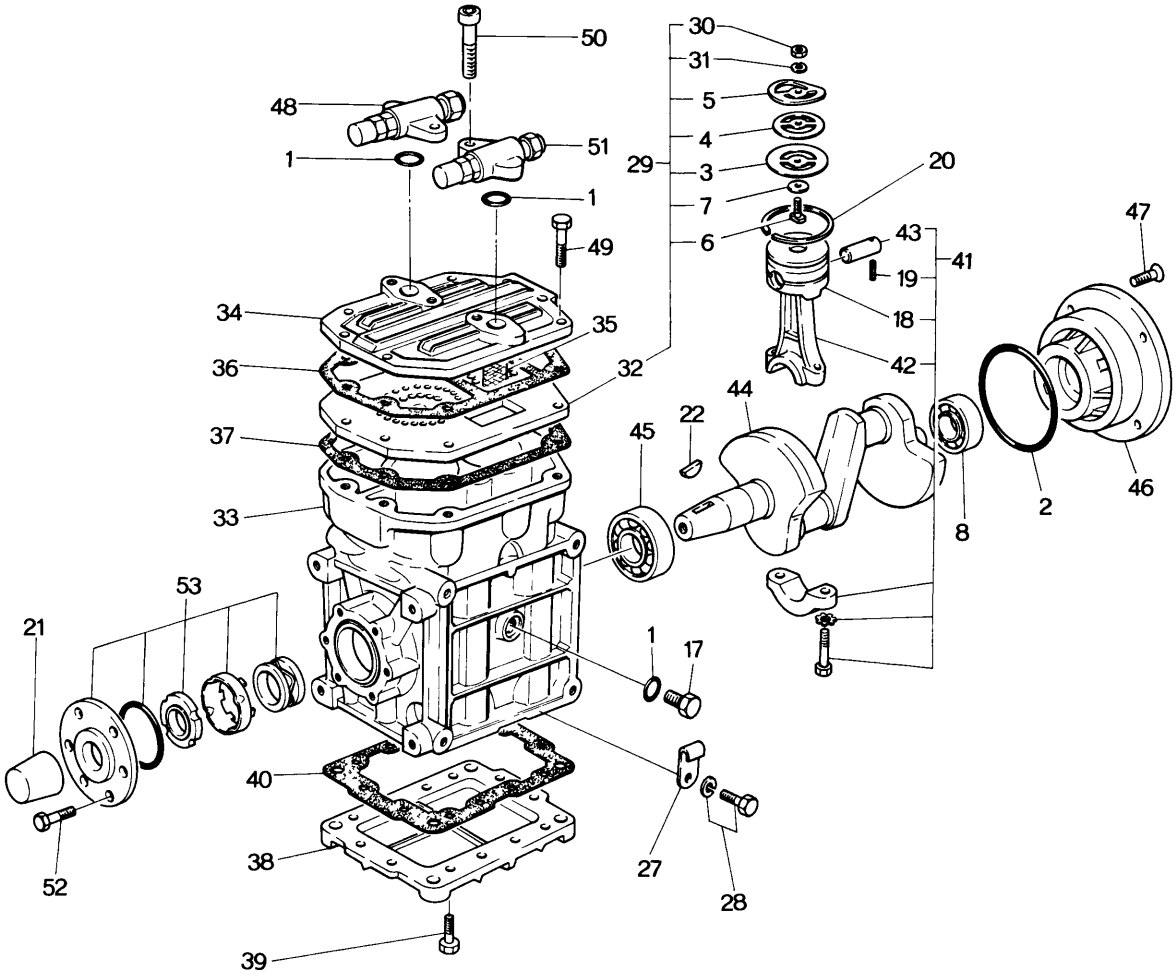
50
48
51
1
1
49
34
35
36
32
37
33
30
31
5
4
29
3
7
6
20
43
41
19
18
42
47
44
22
45
2
46
8
53
21
1
17
40
38
27
28
52
39

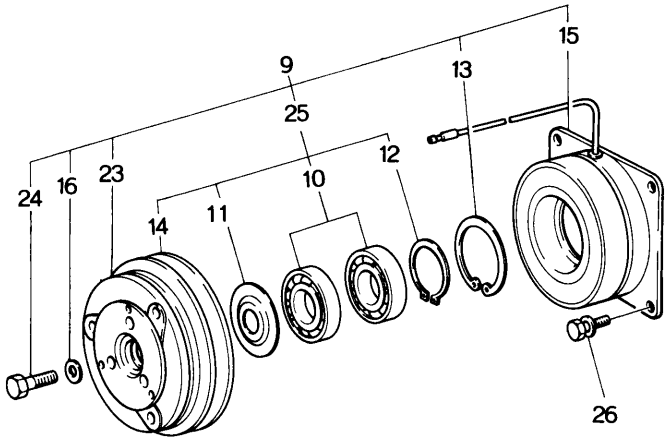
9
25
13
15
24
16
23
12
10
14
11
26

No.	Part Number	Description	Q'ty	Remarks
		All Parts are of Diesel Kiki Make		
	1915 61 450	Compressor	1	
1	0235 76 321	Ring, "O"	4	
2	0235 76 322	Ring, "O"	1	
3	0235 76 333	Valve, Suction	2	
4	0235 76 334	Valve, Delivery	2	
5	0235 76 335	Stopper, Valve	2	
6	0235 76 336	Bolt	2	
7	0235 76 338	Washer	2	
8	0235 76 345	Bearing, Ball	1	
9	0881 76 370	Switch, Magnet (Fig. No 10~16, 23~26 included)	1	
10	0235 76 373	Bearing, Ball	1	
11	0235 76 374	Cover	1	
12	0235 76 375	Ring, Snap	1	
13	0235 76 377	Ring, Snap	1	
14	0881 76 712	Pulley, "V"	1	
15	0881 76 713	Magnet	1	
16	0881 76 714	Washer, Fixing	1	
17	0881 76 717	Plug	2	
18	0881 76 723	Piston	2	

No.	Part Number	Description	Q'ty	Remarks
19	0881 76 726	Pin, Roll	2	
20	0881 76 727	Ring, Piston	2	
21	0881 76 735	Cap	1	
22	0881 76 734	Key	1	
23	0881 76 738	Plate, Clutch	1	
24	0881 76 739	Bolt	1	
25	0881 76 740	Pulley, "V" (Fig. No. 10～12, 14 included)	1	
26	0881 76 741	Bolt, Magnet	4	
27	0881 76 742	Clip	1	
28	99801 0816	Bolt, Clip	1	
	99971 0800	Washer, Spring	1	
29	1915 76 810	Liner, Valve (Fig. No. 3～7, 30 included)	1	
30	99906 0500	Nut	2	
31	99971 0500	Washer, Spring	2	
32	1915 76 811	Liner, Valve	1	
	1915 76 812	Compressor (Fig. No. 1～8, 17～22, 27～52 included)	1	
33	1915 76 813	Housing, Compressor	1	
34	1915 76 814	Head, Cylinder	1	
35	1915 76 815	Filter, Suction	1	
36	1915 76 816	Gasket	1	

No.	Part Number	Description	Q'ty	Remarks
37	1915 76 817	Gasket	1	
38	1915 76 818	Pan, Oil	1	
39	99806 0614	Bolt, Oil Pan	12	
40	1915 76 819	Gasket, Oil Pan	1	
41	1915 76 820	Piston (Fig. No. 18, 19, 42, 43 included)	2	
42	1915 76 821	Rod, Connecting	2	
43	1915 76 822	Pin, Piston	2	
44	1915 76 823	Crankshaft	1	
45	1915 76 824	Bearing, Ball	1	
46	1915 76 825	Plate, End	1	
47	99741 0616B	Screw, End Plate	4	
48	1915 76 826	Connector (DISCHA)	1	
49	99801 0835	Bolt, Cylinder Head	8	
50	1915 76 827	Bolt, Socket Head	2	
51	1915 76 828	Connector (SUC.)	1	
52	99806 0610	Bolt, Mechanical Seal	6	
53	1915 76 830	Seal, Mechanical	1	

COOLING UNIT

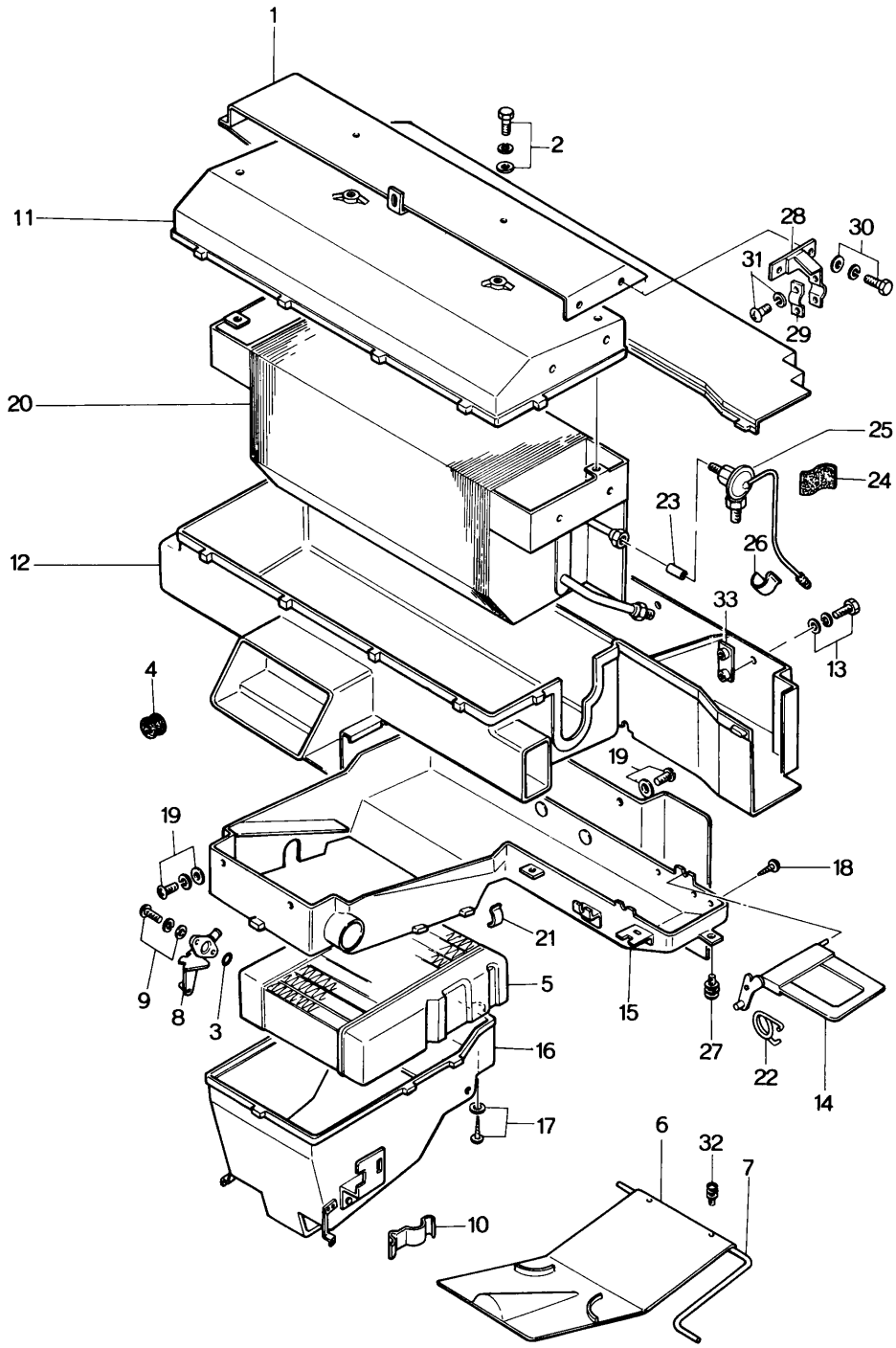

No.	Part Number	Description		Q'ty	Remarks
		All Parts are of Diesel Kiki Make			
	1972 61 525	Unit, Cooling (Without Heater)		1	
	1974 61 525	Unit, Cooling (With Heater)		1	
1	1915 61 521	Bracket		1	
2	99806 0612	Bolt, Bracket		2	
	99952 0600	Washer, Plain		2	
	99971 0600	Washer, Spring		2	
3	0305 76 084A	Ring, "O"		1	
4	0305 76 089	Grommet		1	
5	1974 76 401	Core, Heater		1	
6	1915 76 403	Shutter		1	
7	1915 76 404	Shaft, Shutter	(With Heater)	1	
8	1974 76 406	Cock, Water		1	
9	99835 0408	Screw, Water Cock		2	
	99952 0400	Washer, Plain		2	
	99971 0400	Washer, Spring		2	
10	1011 76 419	Clip, Cable		3	
11	1915 76 701	Case No. 1, Cooling		1	
12	1915 76 702	Case No. 2, Cooling (With Heater)		1	
	1916 76 702	Case No. 2, Cooling (Without Heater)		1	

COOLING UNIT

No.	Part Number	Description	Q'ty	Remarks
13	99834 0410	Screw, Cooling Case	8	
	99953 0400	Washer, Plain	8	
	99971 0400	Washer, Spring	8	
14	1974 76 702	Shutter (With Heater)	1	
15	1972 76 703	Case No. 3, Cooling (Without Heater)	1	
	1974 76 703	Case No. 3, Cooling (With Heater)	1	
16	1972 76 704	Case No. 4, Cooling (Without Heater)	1	
	1974 76 704	Case No. 5, Cooling (With Heater)	1	
17	99868 0420	Screw, Cooling Case	2	
	99952 0400	Washer, Plain	2	
18	99868 0410	Screw, Cooling Case	3	
19	99834 0514	Screw, Cooling Case	5	
	99952 0500	Washer, Plain	2	
	99971 0500	Washer, Spring	5	
20	1915 76 705	Evaporator	1	
21	1915 76 707	Clip	15	
22	1915 76 709	Spring (With Heater)	1	
23	1915 76 711	Orifice	1	
24	1915 76 712	Tape, Coal-Tar	3	
25	1915 76 713	Valve, Expansion	1	

No.	Part Number	Description	Q'ty	Remarks
26	1915 76 715	Clip	1	
27	1915 76 716	Screw, Cooling Case	10	
28	1915 76 717	Stay	1	
29	1915 76 718	Clip	1	
30	99806 0618	Bolt, Clip & Bracket	2	
	99806 0616	Bolt	2	
	99952 0600	Washer, Plain	4	
	99971 0600	Washer, Spring	4	
31	99835 0510	Screw, Clip	2	
	99971 0500	Washer, Spring	2	
32	1915 76 721	Screw, Shutter (With Heater)	2	
33	0305 76 809	Nut, Plate	4	

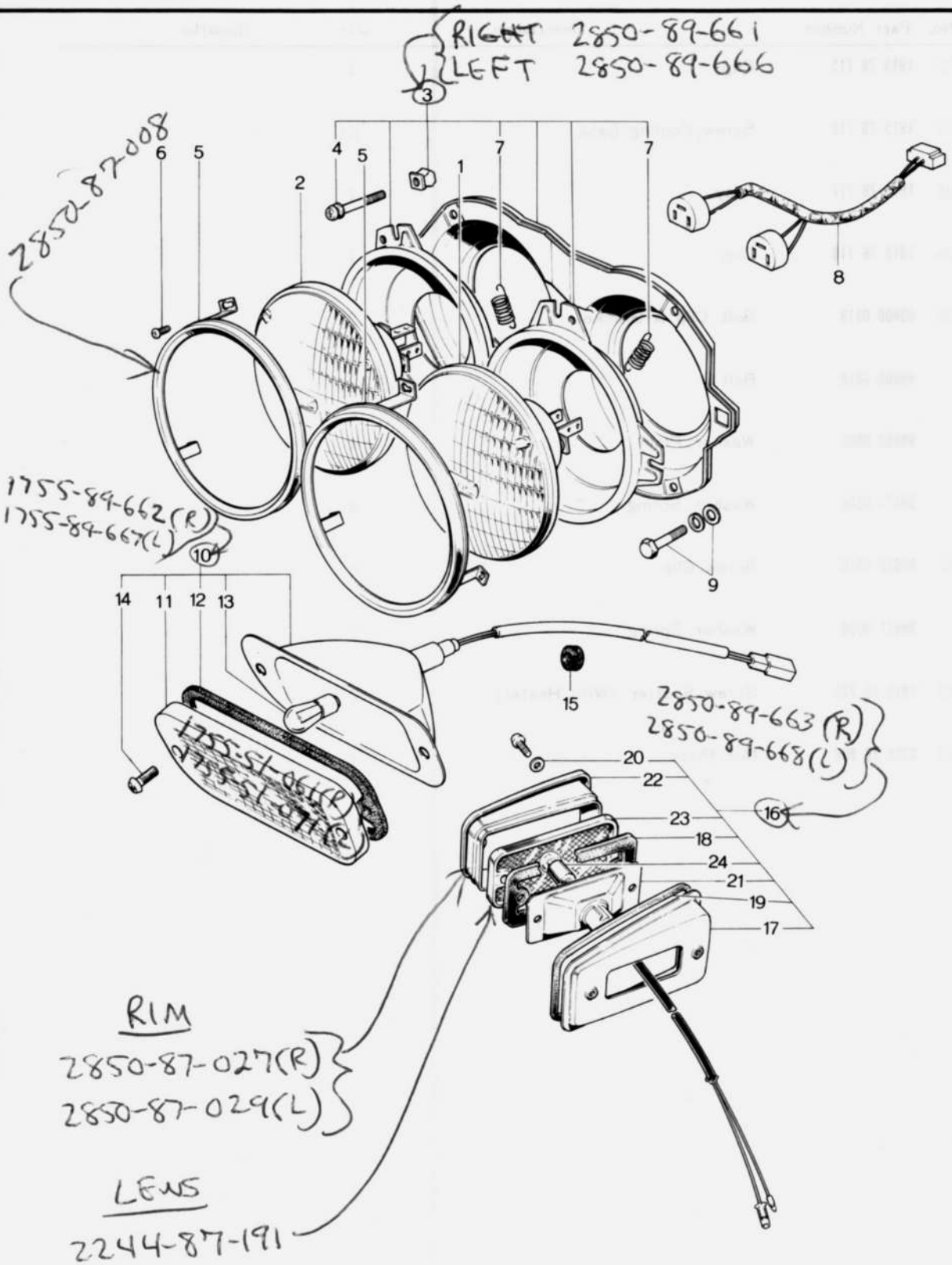
RIGHT 2850-89-661
LEFT 2850-89-666
3
4
5
6
5
2
1
7
7
8
2850-87-008
1755-89-662(R)
1755-89-667(L)
10
9
14
11
12
13
15
2850-89-663(R)
2850-89-668(L)
16
20
22
23
18
24
21
19
17
RIM
2850-87-027(R)
2850-87-029(L)
LENS
2244-87-191

No.	Part Number	Description	Q'ty	Remarks
1	G.E. No. 4001 Beam, Sealed (Upper Beam 12V, 37.5W) (G.E. Make)		2	Order from G.E. Agents
2	G.E. No. 4000 Beam, Sealed ("Plus 25" Lower & Upper Beam, 12V, 60/37.5W) (G.E Make)		2	
	2850-89-661 HEADLAMP ASS'Y (R)		1	
3	~~1868-88-040~~ Housing (R) NOT AVAILABLE		~~1~~	
	~~1868-88-070~~ Housing (L) "		~~1~~	
	2850-89-666 HEADLAMP ASS'Y (L)		1	
4	2850 87 004	Screw, Adjust	8	
5	2850 87 008	Ring, Retaining	4	
6	2850 87 011	Screw	12	
7	2850 87 012	Spring	4	
8	2850 87 160	Adapter, Wiring	2	
9	99799 0616A	Bolt, Head Lamp	8	
	99952 0600B	Washer, Plain	8	
	99971 0600	Washer, Spring	8	
10	1755 89 662	Lamp Set (R), Front Turn Signal	1	
	1755 89 667	Lamp Set (L), Front Turn Signal	1	
11	1755 51 061	Lens (R)	1	
	1755 51 071	Lens (L)	1	
12	1755 51 063	Gasket (R)	1	
	1755 51 073	Gasket (L)	1	
13	99701 4278	Bulb	2	

LAMPS (FRONT SIDE)

No.	Part Number	Description	Q'ty	Remarks
14	99835 0625C	Screw	4	
15	0866 67 152	Protector, Cord- Front Turn Signal Lamp	2	
16	2850 89 663	Lamp (R), Front Side Marker	1	
	2850 89 668	Lamp (L), Front Side Marker	1	
17	0305 66 674	Plate (R), Mounting	1	
	0305 66 694	Plate (L), Mounting	1	
18	0305 66 675	Gasket	2	
19	0305 66 676	Gasket, Sheet	2	
20	0305 66 678	Washer	4	
21	2850 87 026	Body (R)	1	
	2850 87 028	Body (L)	1	
22	2850 87 027	Rim (R)	1	
	2850 87 029	Rim (L)	1	
23	2244 87 191	Lens	2	
24	99701 2050	Bulb	2	

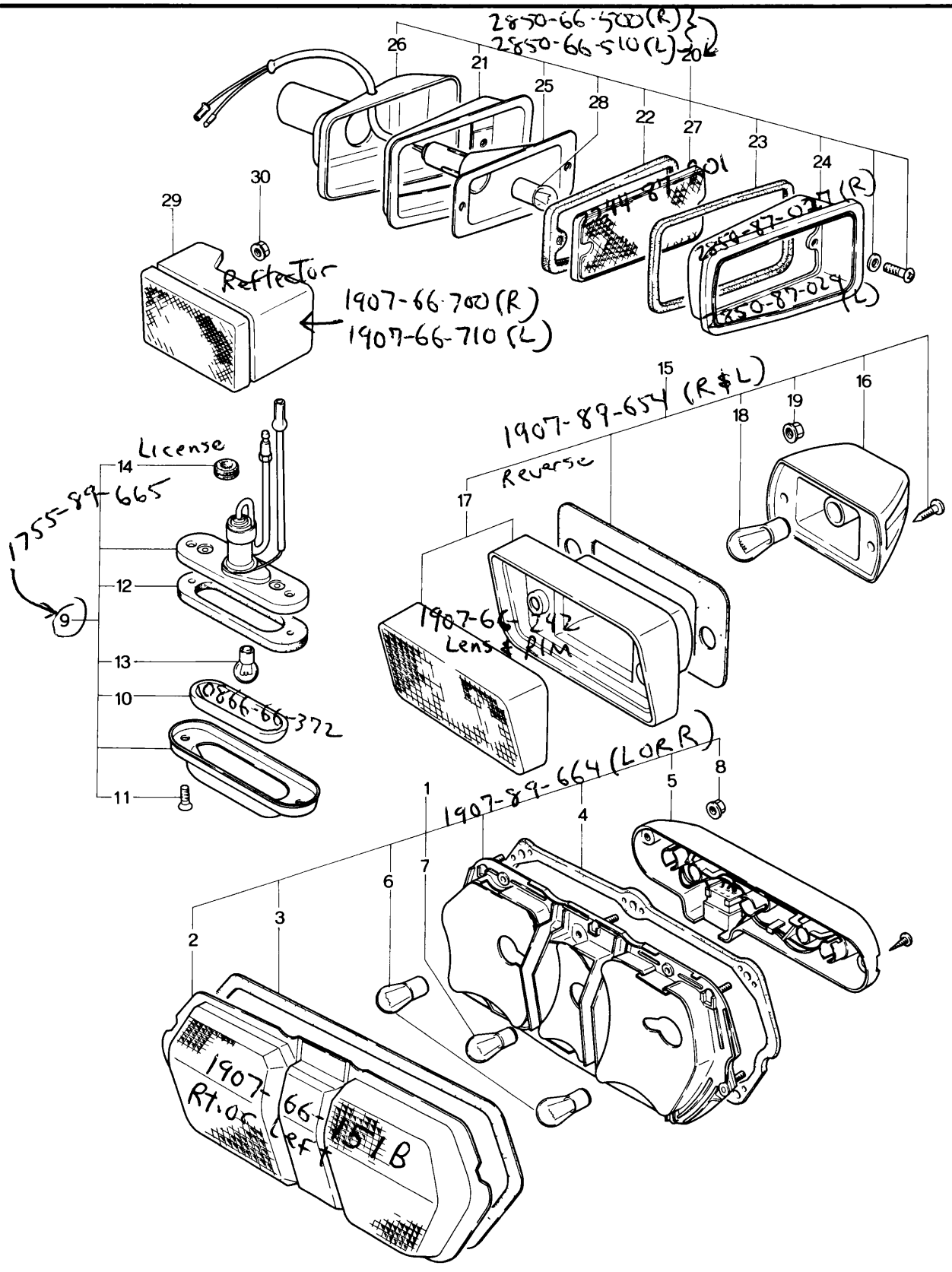
26
21
25
28
22
27
23
24
20
30
29
Reflector
1907-66-700 (R)
1907-66-710 (L)
15
1907-89-654 (R&L)
Reverse
19
18
16
17
License
14
1755-89-665
12
9
13
10
0886-66-372
11
1907-66-242
Lens & RIM
1907-89-664 (L OR R)
1
5
8
4
6
7
3
2
1907-66-
Rt. or Left
51B

No.	Part Number	Description	Q'ty	Remarks
1	1907 89 664	Lamp Set, Rear Combination	2	
2	1907 66 151A	Lens	2	
3	1907 66 152	Gasket	2	
4	1907 66 154	Gasket	2	
5	1907 66 156	Cover	2	
6	99701 4278	Bulb	4	
7	99701 3270	Bulb	2	
8	99940 0502	Nut	6	
9	1755 89 665	Lamp Set, Licence	1	
10	0866 66 372	Lens	1	
11	0305 87 032	Screw	2	
12	0275 87 123	Gasket	1	
13	99701 2070	Bulb	1	
14	99684 0600	Protector	1	
15	1907 89 654	Lamp Set, Back-Up	2	
16	1907 66 241	Cover	2	
17	1907 66 242	Lens & Body	2	
18	99700 8120	Bulb	2	

LAMPS (REAR SIDE)

No.	Part Number	Description	Q'ty	Remarks
19	99940 0502	Nut, Back-Up Lamp	4	
20	2850 89 673	Lamp (R), Rear Side Marker	1	
	2850 89 678	Lamp (L), Rear Side Marker	1	
21	0305 66 674	Plate (R), Mounting	1	
	0305 66 694	Plate (L), Mounting	1	
22	0305 66 675	Gasket	2	
23	0305 66 676	Gasket, Sheet	2	
24	2850 87 027	Rim (R)	1	
	2850 87 029	Rim (L)	1	
25	2850 87 031	Body	2	
26	2850 87 032	Cover	2	
27	2244 87 201	Lens	2	
28	99701 2050	Bulb	2	
29	1907 66 700	Reflector (R), Reflex	1	
	1907 66 710	Reflector (L), Reflex	1	
30	99940 0500	Nut, Reflex Reflector	4	

ELECTRIC EQUIPMENT (BODY)

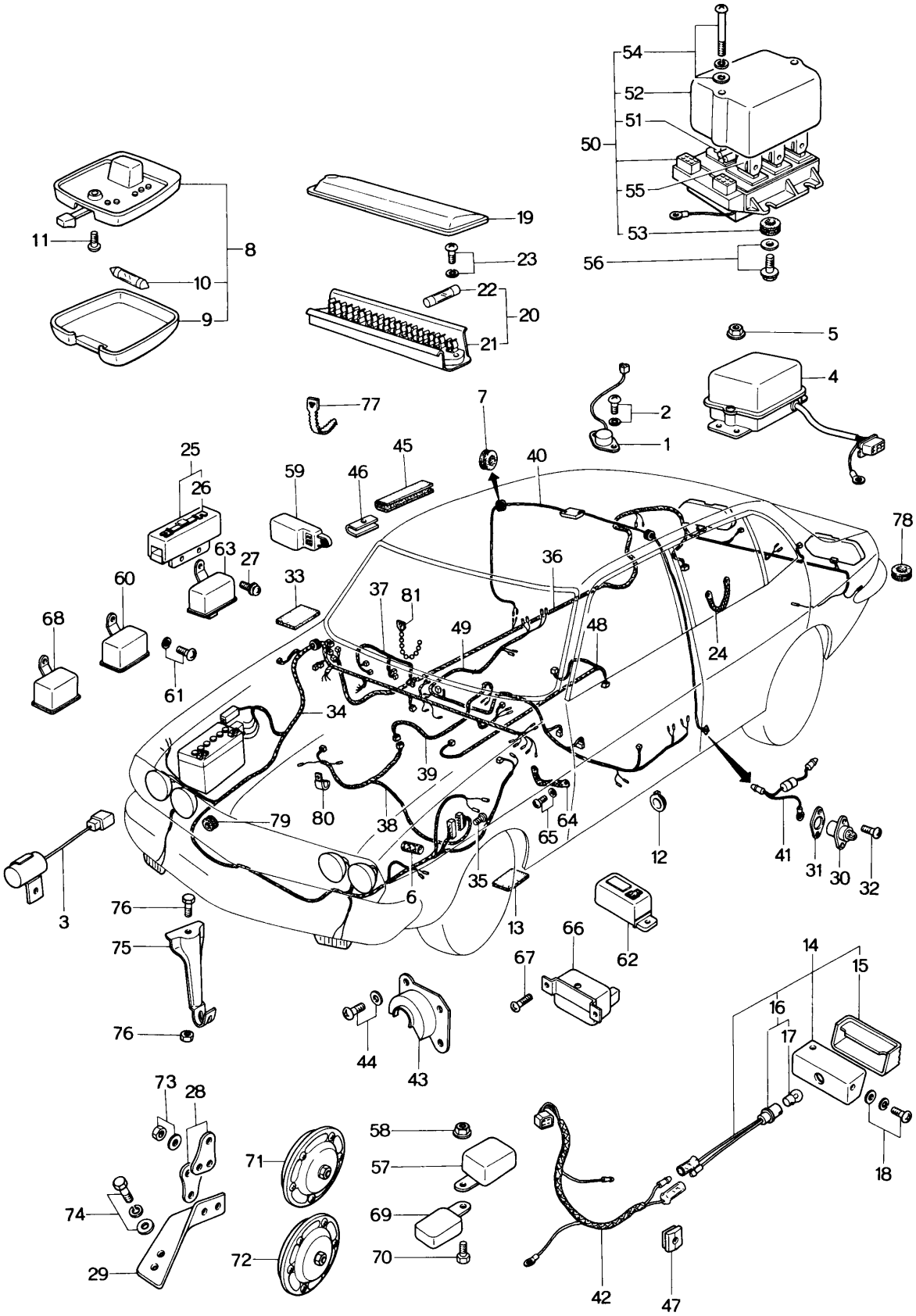

No.	Part Number	Description	Q'ty	Remarks
1	1114 18 890A	Switch, Thermo-Silencer	1	
2	99868 0510	Screw, Thermo Switch	2	
	99971 0500	Washer, Spring	2	
3	2329 18 930B	Detector, Thermo	1	
4	1757 18 940A	Unit, Control (Manual)	1	
	1758 18 940A	Unit, Control (Automatic)	1	
5	99940 0600	Nut, Control Unit	4	
6	0823 18 111	Support, Engine Harness	2	
7	0114 43 625	Protector, Room Lamp Cord	2	
8	1004 51 310	Lamp, Room	1	
9	1004 51 311	Lens	1	
10	99701 5050	Bulb	1	
11	99838 0514B	Screw, Room Lamp	2	
12	0820 55 951	Cover, Hole-Front Side Trim (L)	3	
13	0223 56 942	Pad, Cabin Side Frame Inner	1	
14	0305 66 570A	Lamp, Step	1	
15	0305 66 572	Lens	1	

No.	Part Number	Description	Q'ty	Remarks
16	0305 66 580A	Bulb & Socket	1	
17	99701 6030	Bulb	1	
18	99868 0412B	Screw, Step Lamp	2	
	99952 0400B	Washer, Plain	2	
	99971 0400B	Washer, Spring	2	
19	0397 66 721A	Cover, Fuse Block	1	
20	0397 66 730A	Block, Fuse	1	
21	0305 87 081	Protector	1	
22	99706 0110	Fuse (10A)	7	
	99706 0115	Fuse (15A)	1	
	99706 0120	Fuse (20A)	5	
23	99833 0516	Screw, Fuse Block	2	
	99971 0500	Washer, Spring	2	
24	0813 66 732A	Wire, Earth-Radio	1	
25	2852 66 760	Block, Main Fuse	1	
26	2852 66 763	Fuse (50A)	2	

No.	Part Number	Description	Q'ty	Remarks
27	99743 0616	Screw, Main Fuse Block	2	
	99952 0600	Washer, Plain	2	
	99971 0600	Washer, Spring	2	
28	0839 66 791A	Bracket No. 1, Horn	2	
29	0839 66 792A	Bracket No. 2, Horn	1	
30	0209 66 820	Switch, Door	2 4	(Coupe) (Sedan)
31	0209 66 821	Washer, Adjust	2 4	(Coupe) (Sedan)
32	99864 0412	Screw, Door Switch	4 8	(Coupe) (Sedan)
33	0208 66 949	Pad, Protector	12	
34	1907 67 010A	Harness (Frt.), Wiring	1	
35	99786 0625	Screw, Wiring Harness	1	
36	1907 67 030A	Harness (Rr.), Wiring	1	
37	0398 67 040C	Harness, Wiring-Dash Panel	1	
38	1907 67 060A	Harness, Wiring-Engine	1	
39	1881 67 065	Harness, Wiring-T/mission	1	
40	1907 67 080	Harness, Interior Lamp	1	
41	2850 67 090	Diode	1	
42	0308 67 090B	Harness, Wiring-Step Lamp	1	
43	2081 67 151	Cover, Protector	1	
44	99860 0516	Bolt, Cover	1	

No.	Part Number	Description	Q'ty	Remarks
	99952 0500	Washer, Plain	1	
45	0303 67 155	Protector, Cord	1	
46	0303 67 156	Protector, Cord	1	
47	0305 67 159A	Protector, Side Sill	1	
48	1757 67 220	Harness No. 1, E.I.S.	1	
49	1757 67 230	Harness No. 2, E.I.S.	1	
50	1755 67 560	Unit, Central Control	1	
51	1755 67 562	Unit, Flasher	1	
52	1755 67 566	Cover	1	
53	0866 67 717	Bush	4	
54	0866 67 718	Screw	2	
	99952 0500	Washer, Plain	2	
	99971 0500	Washer, Spring	2	
55	0866 67 719	Relay	4	
56	99786 0635	Bolt, Central Control Unit	3	
	99952 0618	Washer, Plain	3	
57	1011 67 660A	Relay, Lamp Checker	1	
58	99940 0600	Nut, Lamp Checker Relay	1	

No.	Part Number	Description	Q'ty	Remarks
59	1757 67 700	Timmer, Seat Belt	1	
60	1701 67 710	Relay, Neutral	1	
61	99860 0512	Screw, Neutral Relay (Automatic)	1	
	99952 0500	Washer, Plain	1	
62	1757 67 720	Buzzer, Seat Belt	1	
63	1664 67 740	Relay, Choke	1	
64	2081 67 861	Wire, Earth-Radio-T/mission Case	1	
65	99860 0516	Screw, Earth Wire	1	
	99952 0500	Washer, Plain	1	
66	1757 67 870	Unit, E.I.S.	1	
67	99794 0612	Screw, E.I.S. Unit	2	
68	0862 67 880	Relay, Ignition	1	
69	1757 67 880	Relay, Starter-Seat Belt	1	
70	99794 0612	Screw, Starter Relay	2	
71	0839 67 910	Horn, High Tone	1	
72	0839 67 920	Horn, Low Tone	1	
73	99906 0800	Nut, Horn	2	
	99971 0800	Washer, Spring	2	
74	99799 0820	Bolt, Horn	2	
	99952 0800	Washer, Plain	1	

No.	Part Number	Description	Q'ty	Remarks
	99952 0822	Washer, Plain	1	
	99971 0800	Washer, Spring	2	
75	0305 67 992	Clip, Battery Positive Cable	1	
76	99796 0614	Bolt, Clip	1	
	99940 0600	Nut	1	
77	0305 67 994	Clip, Cord	2	
78	99684 0600	Grommet	1	
79	99684 1500	Grommet, Side Turn Signal Lamp Cord	2	
80	99276 1410	Clip, Oil Pressure Switch Cord	1	
81	99709 1156	Band, Instrument Panel Wire Harness	1	

WINDSHIELD WIPER

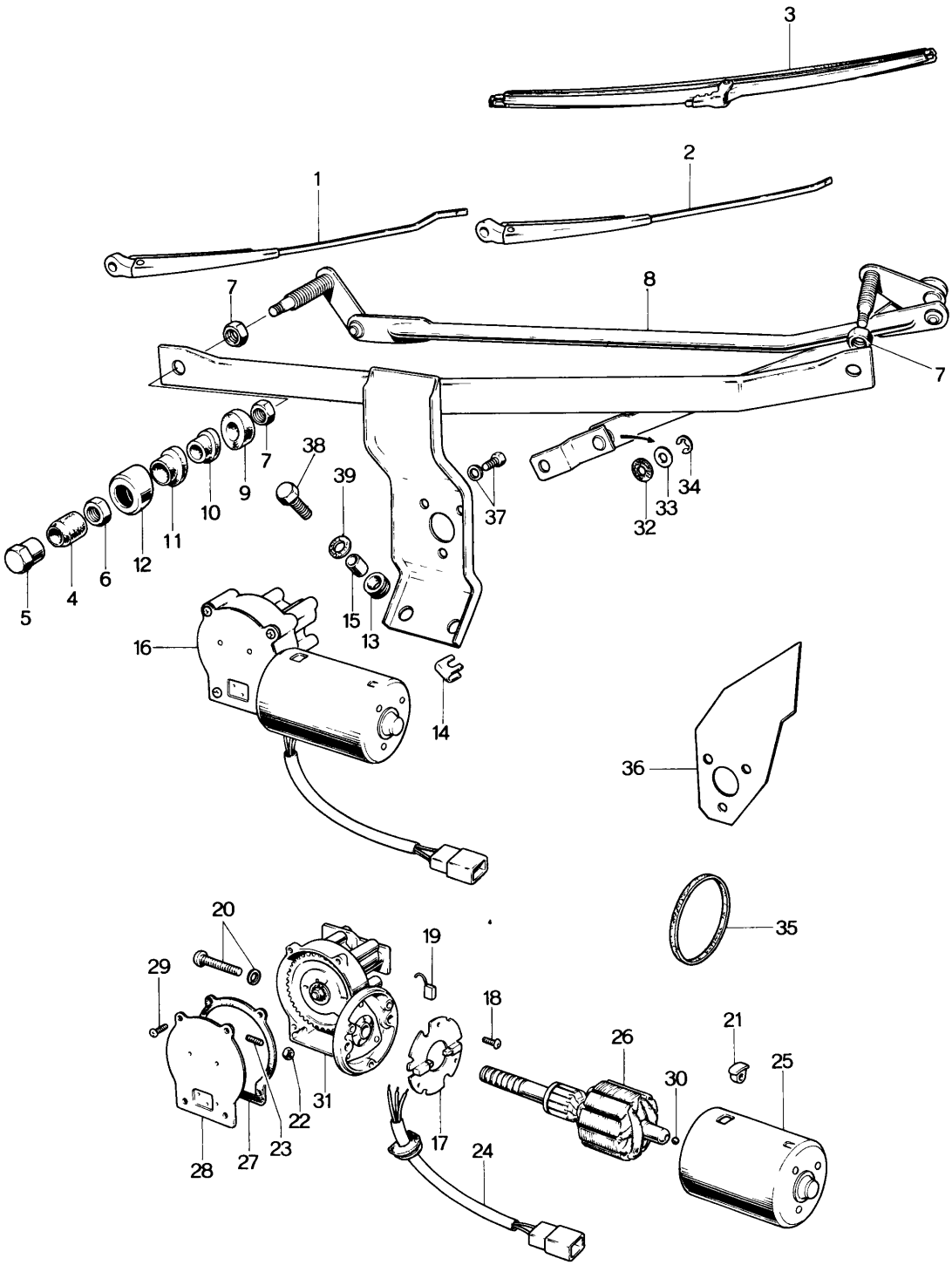

No.	Part Number	Description	Q'ty	Remarks
1	2835 67 321A	Arm (R), Wiper	1	
2	2835 67 325A	Arm (L), Wiper	1	
3	2835 67 330	Blade, Wiper	2	
	2835 67 340	Motor & Link	1	
4	0212 66 371	Cap	2	
5	0223 66 371	Nut	2	
6	0212 66 372	Nut	2	
7	0259 87 134	Nut	4	
8	2835 67 ~~881~~ 901	Link	1	
9	0305 87 903	Bush, Inner	2	
10	0305 87 904	Gasket	2	
11	0305 87 905	Bush, Outer	2	
12	0305 87 906	Washer, Cap	2	
13	0305 87 907	Grommet	2	
14	0305 87 908	Plate, Earth	1	
15	0305 87 909	Collar	2	
16	2835 67 370	Motor, Wiper (Fig No. 17~31 Included)	1	
17	0259 87 101A	Plate, Brush Holder	1	
18	0259 87 105	Screw	3	

WINDSHIELD WIPER

No.	Part Number	Description	Q'ty	Remarks
19	0259 87 106	Brush	3	
20	0257 87 107	Bolt	2	
	99971 0500	Washer, Spring	2	
21	0257 87 108	Nut	2	
22	0259 87 119	Nut	1	
23	0259 87 120	Screw	1	
24	0305 87 921	Harness, Wire	1	
25	2835 87 922	Yoke	1	
26	2835 87 923	Rotor	1	
27	2835 87 924	Gasket	1	
28	2835 87 925	Plate, End	1	
29	2835 87 926	Screw	4	
30	2835 87 928	Ball	2	
31	2835 87 951	Box, Gear	1	
32	0738 87 803	Felt	1	
33	0738 87 804	Washer, Plain	1	
34	2835 87 927	Ring, Retaining	1	
35	0305 87 956	Band	1	
36	2835 87 957	Cover, Seal	1	
37	99806 0510	Bolt	3	

No.	Part Number	Description	Q'ty	Remarks
	99971 0500	Washer, Spring	3	
38	99786 0625	Bolt, Wiper	2	
39	2850 13 332	Washer	2	

SCREEN WASHER

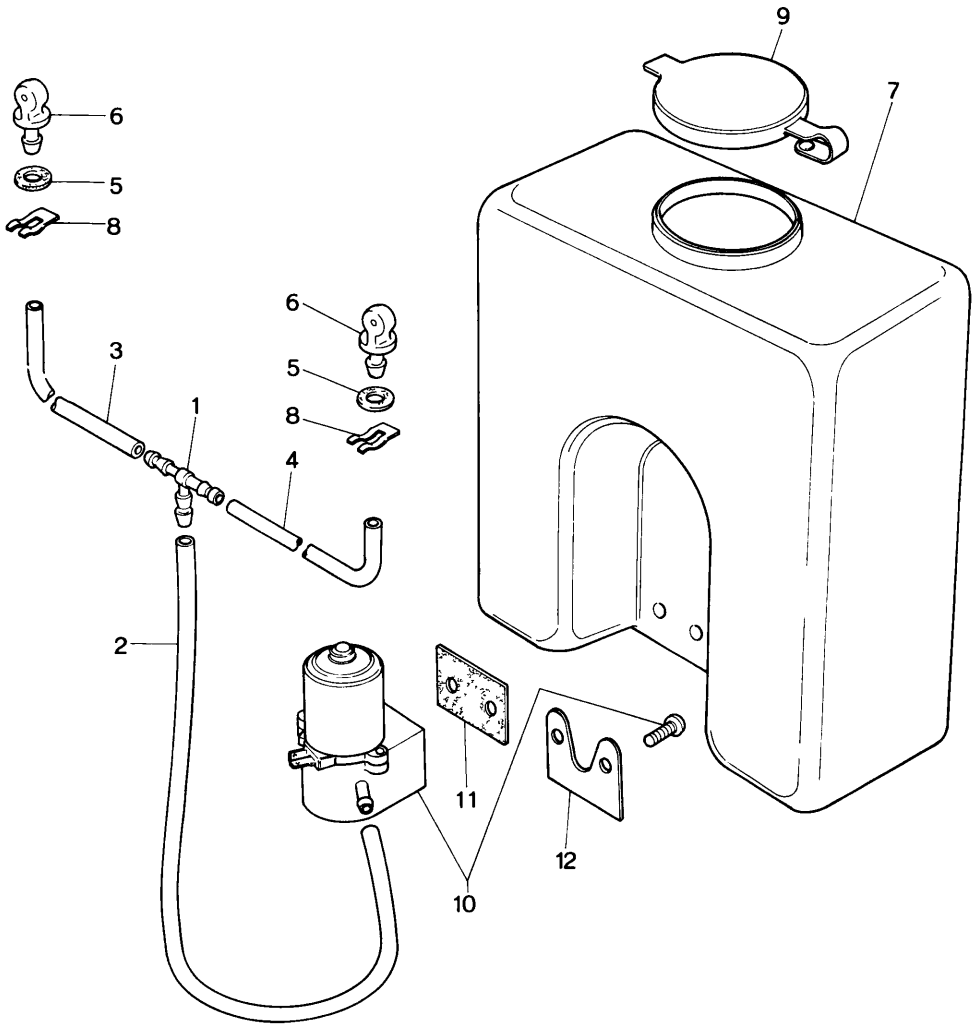

No.	Part Number	Description	Q'ty	Remarks
1	0813 66 879	Joint, Pipe	1	
2	99335 04010	Pipe (ℓ=100)	1	
3	99335 04065	Pipe (ℓ=650)	1	
4	99335 04075	Pipe (ℓ=750)	1	
5	0259 66 905	Gasket, Nozzle	2	
6	0275 67 510A	Nozzle, Washer	2	
7	0317 67 511	Tank	1	
8	1011 67 515	Clip, Nozzle	2	
9	0727 87 992	Cap, Tank	1	
10	0305 87 993	Pump Kit	1	
11	0727 87 994	Gasket	1	
12	0727 87 995	Plate	1	

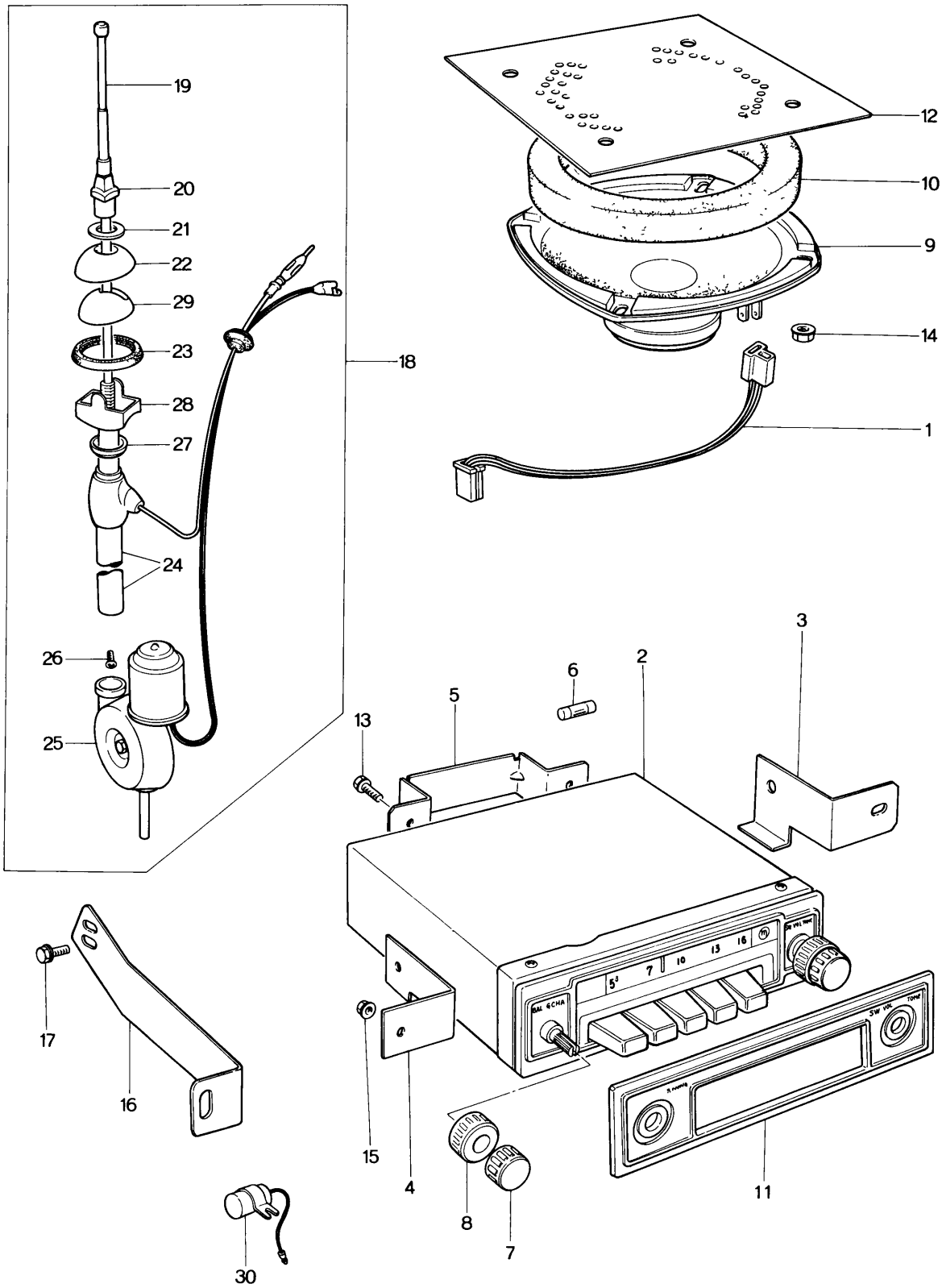
19
20
21
22
29
23
28
27
24
26
25
18
12
10
9
14
1
3
2
6
5
13
17
16
15
4
8
7
11
30

No.	Part Number	Description	Q'ty	Remarks
	0398 66 870	Radio, Auto (AM)	1	
	2070 66 870	Radio, Auto (AM / FM)	1	
	2840 66 870	Radio, Auto (AM / SW)	1	
1	0398 66 872	Cord, Loud Speaker (AM)	1	
	2845 66 872	Cord, Loud Speaker (AM / FM) (AM / SW)	1	
2	~~0307 66 900~~	~~Tuner (AM) (Ten Make)~~ NOT AVAILABLE	1	
	0398 66 900	Tuner (AM) (Clarion Make)	1	
	2070 66 900	Tuner (AM / FM)	1	
	2840 66 900	Tuner (AM / SW)	1	
3	0398 66 901	Bracket No 1, Tuner	1	
4	0398 66 902	Bracket No. 2, Tuner	1	
5	0398 66 903	Bracket No. 3, Tuner	1	
6	0398 66 906	Fuse (2 A)	1	
7	0305 87 084	Knob, Small	2	
8	0305 87 087	Knob, Large	2	
9	0866 66 960	Loud Speaker	1	
10	0317 66 862	Partition - Loud Speaker	1	
11	0866 66 905	Plate, Decoration	1	
12	0305 66 966	Net, Loud Speaker	1	

No.	Part Number	Description	Q'ty	Remarks
13	99786 0510	Screw, Tuner	2	
14	99940 0400	Nut, Loud Speaker	2	
15	99940 0500	Nut, Tuner	2	
16	2846 66 931A	Bracket, Antenna	1	
17	99806 0510	Bolt, Antenna Bracket	2	
	99952 0500	Washer, Plain	2	
	99971 0500	Washer, Spring	2	
18	0305 66 940	Antenna, Motor	1	
19	0305 66 945	Cable No. 1, Rod	1	
20	0305 87 095	Nut	1	
21	0305 87 096	Washer	1	
22	0305 87 097	Cover	1	
23	0305 87 098	Washer, Rubber	1	
24	0305 87 102	Pole	1	
25	0305 87 107	Drum	1	
26	0223 91 529	Screw	2	
27	0223 91 530	Washer	1	
28	0223 91 531	Base	1	
29	0223 91 533	Insulator	1	
30	0820 66 992	Condenser	1	

CRUSH PAD, CONSOLE & GLOVE BOX

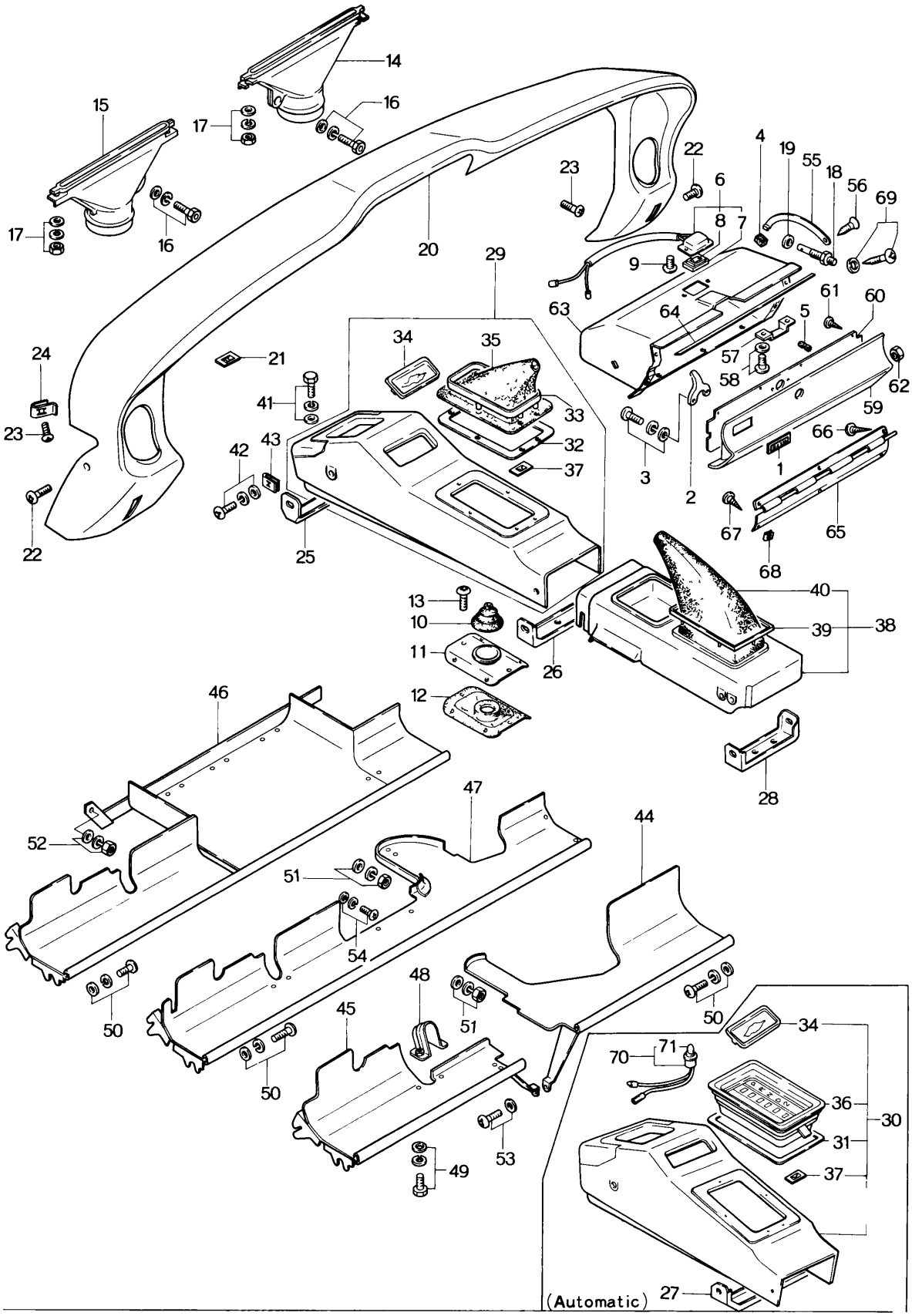

CRUSH PAD, CONSOLE & GLOVE BOX

55~70

No.	Part Number	Description	Q'ty	Remarks
1	1727 51 731	Ornament, Glove Box	1	
2	2280 55 182	Guide, Lock - Glove Box	1	
3	99833 0416B	Screw, Lock Guide	2	
	99952 0400B	Washer, Plain	2	
	99971 0400B	Washer, Spring	2	
4	0275 55 195A	Rubber, Cushion - Glove Box Lid	1	
5	0275 55 215	Cushion, Glove Box Lid	2	
6	0305 55 890	Lamp, Glove Box	1	
7	0305 75 585	Lens	1	
8	99701 5050	Bulb	1	
9	99869 0410B	Screw, Glove Box Lamp	2	
10	0247 56 275	Boot, Change Lever	1	(Manual)
11	1097 56 611	Seat, Boot	1	(Manual)
12	1097 56 612	Insulator, Boot	1	(Manual)
13	99864 0512	Screw, Boot Seat	6	(Manual)
14	0305 60 101	Nozzle (R), Defroster	1	
15	0305 60 102	Nozzle (L), Defroster	1	
16	99799 0516	Bolt, Defroster Nozzle	2	

CRUSH PAD, CONSOLE & GLOVE BOX

No.	Part Number	Description	Q'ty	Remarks
	99952 0516	Washer, Plain	2	
	99971 0500	Washer, Spring	2	
17	99906 0500	Nut, Defroster Nozzle	4	
	99952 0516	Washer, Plain	4	
	99971 0500	Washer, Spring	4	
18	0305 60 690	Switch, Glove Box Lamp	1	
19	99952 0800	Washer, Plain - Lamp Switch	1	
20	1905 68 020	Pad, Crush (BRN.)	1	
	1907 68 020	Pad, Crush (BLK.)	1	
21	99579 3000	Nut, Speed - Crush Pad	2	
22	99837 0514B	Screw, Crush Pad	2	
23	99862 0516B	Screw, Crush Pad	5	
24	99896 0500	Nut, Spring - Crush Pad	9	
25	1098 68 851	Bracket No. 1, Console (Without Cooler)	1	
26	1097 68 852	Bracket No. 2, Console (Manual)	1	
27	1098 68 852	Bracket No. 2, Console (Automatic)	1	
28	0303 68 853	Bracket No. 3, Console	1	
29	1905 68 860	Console (Frt.) (BRN.)	1	Selective use (U.S.A.) (Without Cooler)
	1907 68 860	Console (Frt.) (BLK.)	1	

CRUSH PAD, CONSOLE & GLOVE BOX

55 ~ 70

No.	Part Number	Description	Q'ty	Remarks
	1909 68 860	Console (Frt.) (BRN.) — Selective use (Canada) (Without Cooler) — (Manual)	1	
	1911 68 860	Console (Frt.) (BLK.) — Selective use (Canada) (Without Cooler) — (Manual)	1	
	1972 68 860	Console (Frt.) (BRN.) — Selective use (U.S.A.) (With Cooler)	1	
	1974 68 860	Console (Frt.) (BLK.) — Selective use (U.S.A.) (With Cooler)	1	
	1976 68 860	Console (Frt.) (BRN.) — Selective use (Canada) (With Cooler)	1	
	1978 68 860	Console (Frt.) (BLK.) — Selective use (Canada) (With Cooler)	1	
30	1906 68 860	Console (Frt.) (BRN.) — Selective use (Without Cooler) — (Automatic)	1	
	1908 68 860	Console (Frt.) (BLK.) — Selective use (Without Cooler) — (Automatic)	1	
	1973 68 860	Console (Frt.) (BRN.) — Selective use (With Cooler)	1	
	1975 68 860	Console (Frt.) (BLK.) — Selective use (With Cooler)	1	
31	0397 68 862	Plate, Indicator (Automatic)	1	
32	0398 68 862	Plate, Change Boot (Manual)	1	
33	0398 68 872	Mould, Console	1	
34	0398 68 875	Ornament, Tuner	1	
35	0398 68 880A	Boot, Change (Manual, U.S.A.)	1	
	2860 68 881	Boot, Change (Manual, Canada)	1	
36	1908 68 880	Indicator (Automatic)	1	
37	99579 3000	Nut, Speed-Change Boot & Indicator	6	
38	1097 68 890	Console (Rr.) (BLK.), Selective use	1	

CRUSH PAD, CONSOLE & GLOVE BOX

No.	Part Number	Description	Q'ty	Remarks
	1099 68 890	Console (Rr.) (BRN.), Selective use	1	
39	0303 68 893	Mould	1	
40	0303 68 910A	Boot, Parking Brake Lever	1	
41	99806 0612	Bolt, Console	6	
	99952 0600	Washer, Plain	6	
	99971 0600	Washer, Spring	6	
42	99863 0416B	Screw, Console	6	
	99952 0400B	Washer, Plain	6	
	99971 0400B	Washer, Spring	6	
43	99896 0400	Nut, Spring-Console	6	
44	1915 69 810	Shelf (R), Parcel (With Cooler)	1	
45	1915 69 820	Shelf (L), Parcel (With Cooler)	1	
46	2845 69 810A	Shelf, Parcel (Without Heater)	1	
47	2857 69 810A	Shelf, Parcel (With Heater)	1	
48	0305 69 820A	Bracket, Parcel Shelf	1	
49	99833 0512	Screw, Parcel Shelf	2	
	99953 0500	Washer, Plain	2	
	99971 0500	Washer, Spring	2	
50	99797 0525B	Bolt, Parcel Shelf	4	

CRUSH PAD, CONSOLE & GLOVE BOX

55 ~ 70

No.	Part Number	Description	Q'ty	Remarks
	99952 0516B	Washer, Plain	4	
	99971 0500B	Washer, Spring	4	
51	99906 0600	Nut, Parcel Shelf (With Cooler & Heater)	1	
	99952 0618	Washer, Plain	1	
	99971 0600	Washer, Spring	1	
52	99906 0600B	Nut, Parcel Shelf (Without Heater)	3	
	99952 0618B	Washer, Plain	3	
	99971 0600B	Washer, Spring	3	
53	99863 0516	Screw, Parcel Shelf (With Cooler)	2	
	99952 0500	Washer, Plain	2	
54	99833 0508[illegible]	Screw, Parcel Shelf (With Heater)	2	
	99953 0500[illegible]	Washer, Plain	2	
	99971 0500B	Washer, Spring	2	
55	2835 70 201	Stopper, Glove Box	1	
56	99761 0416B	Screw, Stopper	1	
57	0305 70 202	Striker, Glove Box	1	
58	99833 0416B	Screw, Striker	2	
	99952 0400B	Washer, Plain	2	
59	1905 70 211	Lid, Outer-Glove Box (BRN.)	1	
	1907 70 211	Lid, Outer-Glove Box (BLK.)	1	

CRUSH PAD, CONSOLE & GLOVE BOX

No.	Part Number	Description	Q'ty	Remarks
60	0305 70 212	Lid, Inner-Glove Box	1	
61	99861 0308B	Screw, Glove Lid Inner	4	
62	99911 0400	Nut, Glove Lid Inner	2	
63	1907 70 221	Box, Glove	1	
64	1907 70 225	Mould, Glove Box	1	
65	0305 70 230A	Hinge, Glove Box	1	
66	99861 0410B	Screw, Hinge	5	
67	99866 0412B	Screw, Hinge	3	
68	99896 0400	Nut, Spring-Hinge	3	
69	99833 0514B	Screw, Glove Box	4	
	99952 0516B	Washer, Plain	4	
70	0305 66 580A	Bulb & Socket, Console	1	(Automatic)
71	99701 6030	Bulb	1	(Automatic)

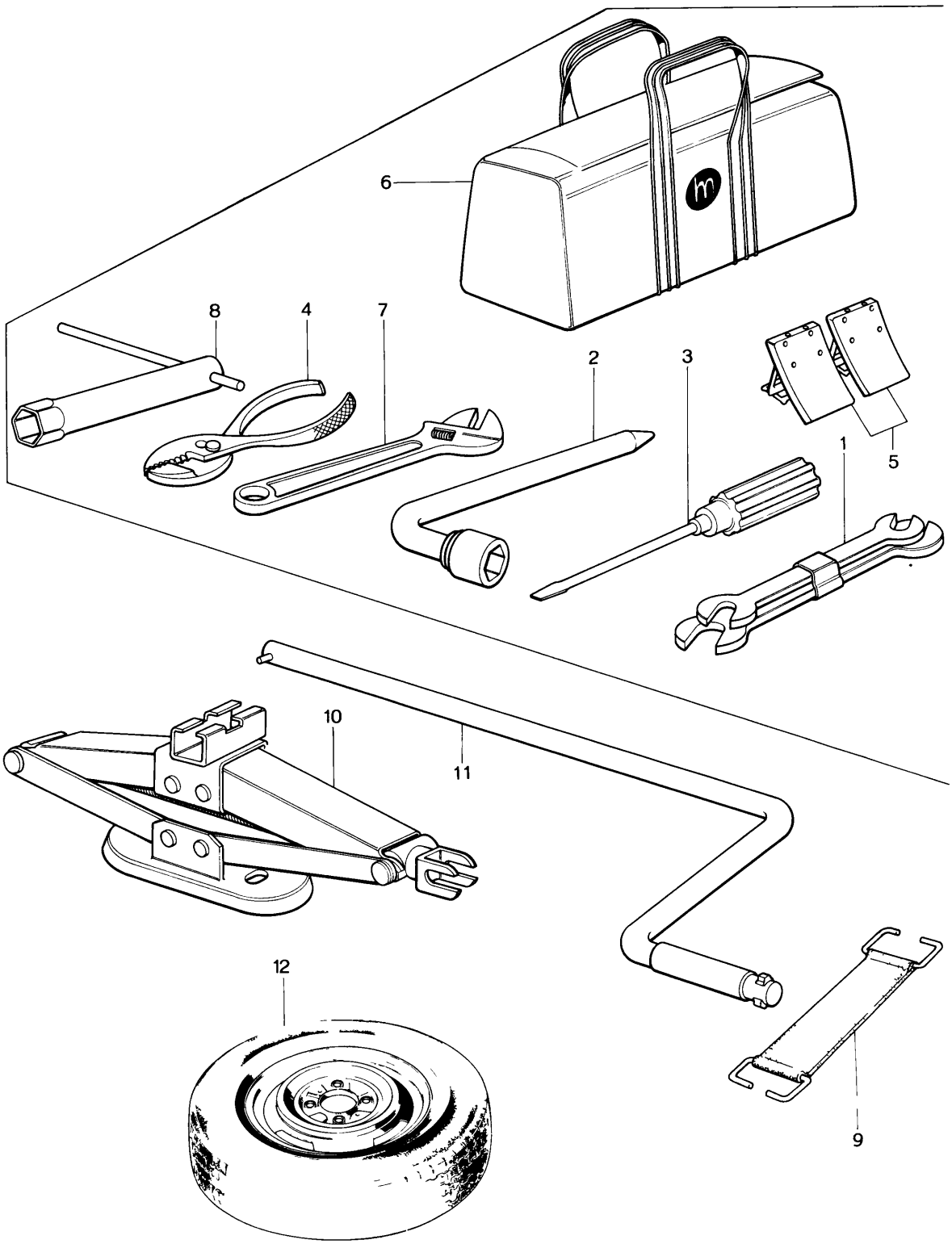
6
8
4
7
2
3
1
5
10
11
12
9

No.	Part Number	Description	Q'ty	Remarks
	0839 68 660	Tool Set	1	
1	0249 ~~83~~ 68 060A	Spanner Set	1	
2	0810 68 070A	Wrench, Hub Nut	1	
3	0187 68 110A	Driver Set	1	
4	0118 68 180A	Plier, 6 inch	1	
5	0208 68 230	Stopper, Wheel	2	
6	0839 68 670B	Bag, Tool	1	
7	0866 68 680	Wrench, Monkey	1	
8	0839 68 720	Wrench, Plug	1	
9	0223 56 950	Clamp, Jack	1	
10	0305 68 800F	Jack	1	
11	0305 68 810A	Handle, Jack	1	
12	9962 04 1653	Tire, Radial - 165 SR—13 (Canada)	1	
	9962 07 1653	Tire, Radial - 165 SR—13 (U.S.A.)	1	
	9963 60 4130	Valve, Air - TR413 (Canada)	1	
	9963 60 4140	Valve, Air - TR414 (U.S.A.)	1	
	9965 05 4530-00	Wheel, Disc - 4½ 13WDC (Wheel Cap use)	1	(SIL.M)
	9965 06 4530-06	Wheel, Disc - 4½ 13WDC (Center Cap use)	1	(D. GRY.)

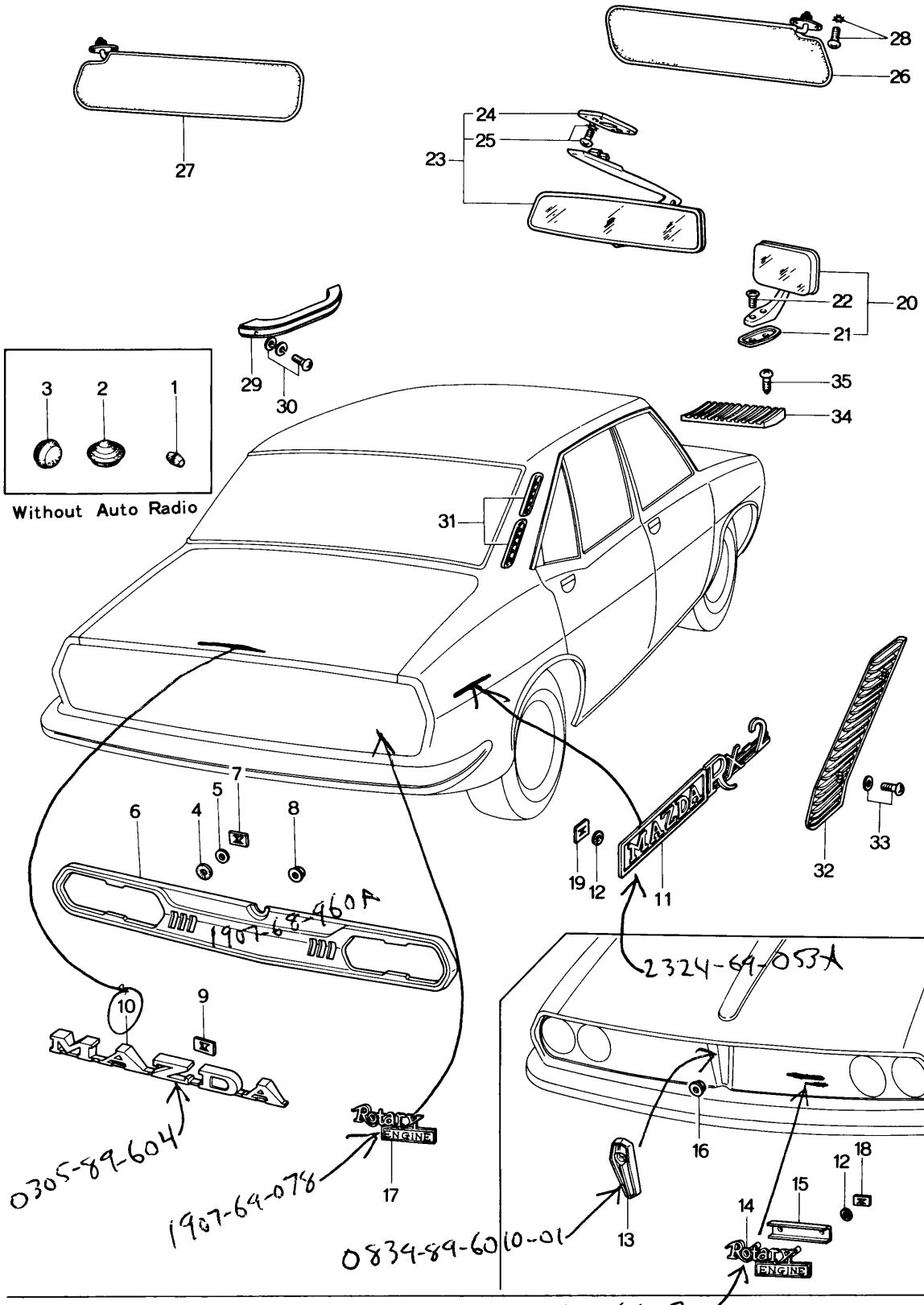
27
28
26
24
25
23
22
20
21
29
30
35
34
3
2
1
Without Auto Radio
31
7
5
6
4
8
19
12
11
32
33
1907-69-460A
2324-69-053A
10
9
0305-89-604
1907-69-076
17
16
18
12
15
14
13
0834-89-6010-01
1881-69-076

No.	Part Number	Description	Q'ty	Remarks
1	0200 54 265	Rubber, Hole Cover	1	
2	0222 66 911	Cover, Hole - Antenna	1	Without Auto Radio
3	0222 66 971	Cover, Hole - Antenna Cord	1	
4	0305 68 951	Gasket, Rear Finisher	2	
5	0305 68 952	Washer, Rear Finisher	2	
6	1907 68 960A	Finisher, Rear	1	
7	99579 4000	Nut, Speed - Rear Finisher	2	
8	99940 0502	Nut, Rear Finisher	12	
9	0187 69 049A	Nut, Speed - Ornament	3	
10	0305 69 052A	Ornament, MAZDA - Trunk Lid	1	
11	2324 69 053A	Ornament, MAZDA RX - 2	2	
12	0730 69 057A	Gasket, Ornament	10	
13	0839 69 071-01	Emblem, Front (BLU.)	1	
14	1881 69 076	Mark, "RE" - Front	1	
15	1907 69 077	Plate, Front Emblem	1	
16	99940 0400	Nut, Front Emblem	2	
17	1907 69 078	Mark, "RE" - Rear	1	
18	99578 3000	Nut, Speed - Emblem	2	
19	99579 3000	Nut, Speed - Emblem	8	

No.	Part Number	Description	Q'ty	Remarks
20	2850 69 090	Mirror (L), Rear View	1	
21	2850 69 101	Gasket	1	
22	99772 0516	Screw, Rear View Mirror	2	
23	0839 69 170	Mirror, Interior	1	
24	0839 69 171	Base	1	
25	99831 0516	Screw, Interior Mirror	2	
	99975 0500	Washer, Toothed	2	
26	1668 69 210A05	Visor (R), Sun (Coupe) (GRY.)	1	
	1668 69 210A20	Visor (R), Sun (Coupe) (BRN.)	1	
	1905 69 210	Visor (R), Sun (Sedan) (GRY.)	1	
27	1668 69 240A05	Visor (L), Sun (Coupe) (GRY.)	1	
	1668 69 240A20	Visor (L), Sun (Coupe) (BRN.)	1	
	1905 69 240	Visor (L), Sun (Sedan) (GRY.)	1	
28	99837 0516C	Screw, Sun Visor	4	
	99975 0500C	Washer, Toothed	4	
29	0305 69 ~~820-01~~ 910	Handle, Assist (BLK.)	2	
30	99838 0620	Screw, Assist Handle	4	

No.	Part Number	Description	Q'ty	Remarks
	99952 0600	Washer, Plain	4	
	99971 0600	Washer, Spring	4	
31	0833 70 941B[illegible]	Garnish, Air Flow (Coupe) (BLK.)	4	
32	0305 70 951-[illegible]	Grille (R), Air Flow (GRY.)	1	(Sedan)
	0305 71 951-[illegible]	Grille (L), Air Flow (GRY.)	1	(Sedan)
33	99864 0412B	Screw, Air Flow Grille	4	
	99952 0400B	Washer, Toothed	4	
34	0305 70 991A[illegible]	Grille (R), Cowl (GRY.)	1	
	0305 71 991A[illegible]	Grille (L), Cowl (GRY.)	1	
35	99863 0412B	Screw, Cowl Grille	4	

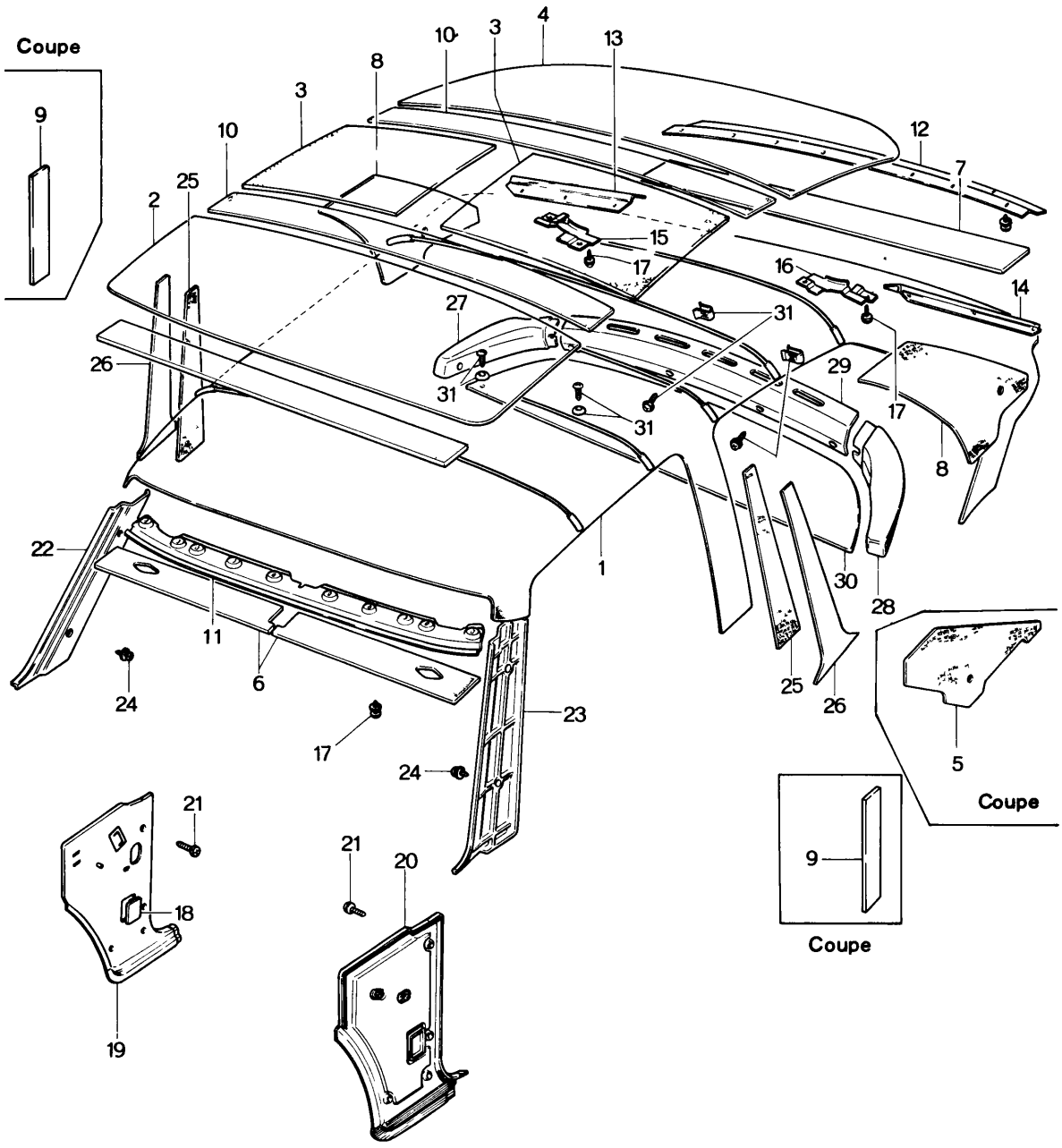
Coupe
9
10
3
4
13
8
3
10
12
7
2
25
15
17
16
14
27
31
26
31
31
29
17
8
22
1
30
28
11
6
24
25
26
23
17
24
5
Coupe
21
21
20
9
18
Coupe
19

No.	Part Number	Description	Q'ty	Remarks
1	1668 69 290-13	Ceiling, Top (Coupe) (GRY. / YLW.)	1	
	1668 69 290-20	Ceiling, Top (Coupe) (BRN.)	1	
	1668-69-290-09	" " " (BLK.)	1	
	1674 69 290-05	Ceiling, Top (Sedan) (GRY. / BLK.)	1	
2	0839 69 311B	Insulator No. 1, Roof	1	
3	0398 69 312	Insulator No. 2, Roof (Sedan)	2	
	0881 69 312	Insulator No. 2, Roof (Coupe)	2	
4	0305 69 313A	Insulator No. 3, Roof (Sedan)	1	
	0839 69 313A	Insulator No. 3, Roof (Coupe)	1	
5	0839 69 314B	Pad, Rear Pillar (Coupe)	2	
6	0305 69 315	Pad, Front Header	2	
7	0305 69 316	Pad, Rear Header	1	
8	0305 69 317B	Pad (R), Rear Pillar } (Sedan)	1	
	0305 69 318B	Pad (L), Rear Pillar } (Sedan)	1	
9	0839 69 318A	Pad, Center Pillar (Coupe)	2	
10	0317 69 319	Insulator, Roof	2	
11	0305 69 321A	Plate (Frt.), Fixing (Sedan)	1	
	0839 69 321A	Plate (Frt.), Fixing (Coupe)	1	
12	0305 69 341B	Plate No. 1 (Rr.), Fixing (Sedan)	1	
	0839 69 341C	Plate No. 1 (Rr.), Fixing (Coupe)	1	
13	0305 69 342C	Plate No. 2 (Rr.), Fixing (Sedan)	1	

No.	Part Number	Description	Q'ty	Remarks
	0839 69 342E	Plate No. 2 (Rr.), Fixing (Coupe)	1	
14	0305 69 343C	Plate No. 3 (Rr.), Fixing (Sedan)	1	
	0839 69 343E	Plate No. 3 (Rr.), Fixing (Coupe)	1	
15	0839 69 344A	Plate No. 4 (Rr.), Fixing } (Coupe)	1	
16	0839 69 345A	Plate No. 4 (Rr.), Fixing } (Coupe)	1	
17	99864 0412	Screw, Fixing Plate	24	
	99953 0400	Washer, Plain	24	
	99971 0400	Washer, Spring	24	
18	0305 69 351-00	Cover, Hole-Side Trim (BLK.)	2	
19	2835 69 360C[illegible]	Trim (R), Front Side (BLK)	1	
20	2835 69 380B[illegible]	Trim (L), Front Side (BLK.)	1	
21	99862 0420B	Screw, Front Side Trim	8	
	99975 0400	Washer, Toothed	8	
22	0305 69 411B00	Trim (R), Front Pillar (BLK.) } Selective use (Sedan)	1	
	1905 69 411	Trim (R), Front Pillar (BRN.) } Selective use (Sedan)	1	
	0839 69 411B00	Trim (R), Front Pillar (BLK.) } Selective use (Coupe)	1	
	1907 69 411	Trim (R), Front Pillar (BRN.) } Selective use (Coupe)	1	
23	0305 69 431B00	Trim (L), Front Pillar (BLK.) } Selective use (Sedan)	1	
	1905 69 431	Trim (L), Front Pillar (BRN.) } Selective use (Sedan)	1	
	0839 69 431B00	Trim (L), Front Pillar (BLK.) Selective use (Coupe)	1	

No.	Part Number	Description	Q'ty	Remarks
	1907 69 431	Trim (L), Front Pillar (BRN.) Selective use (Coupe)	1	
24	99862 0412B	Screw, Front Pillar Trim	4	
25	0305 69 451A	Pad, Center Pillar (Sedan)	2	
26	0305 69 461B06	Trim, Center Pillar (GRY. / YLW.)	2	Selective use (Sedan)
	0305 69 461B20	Trim, Center Pillar (BRN.)	2	
27	0305 69 861-00	Trim (R), Package Tray Upper (BLK.) (Sedan)	1	
	0839 69 861A00	Trim (R), Package Tray Upper (BLK.) (Coupe)	1	
28	0305 69 862-00	Trim (L), Package Tray Upper (BLK.) (Sedan)	1	
	0839 69 862A00	Trim (L), Package Tray Upper (BLK.) (Coupe)	1	
29	0305 69 863-00	Trim (C), Package Tray Upper (BLK.) (Sedan)	1	
	0839 69 863-00	Trim (C), Package Tray Upper (BLK.) (Coupe)	1	
30	0305 69 870A00	Trim, Package Tray Lower (BLK.)	1	Selective use (Sedan)
	0841 69 870-00	Trim, Package Tray Lower (BLK.) With Hole For Stereo Loud Speaker	1	
	0310 69 870A00	Trim, Package Tray Lower (BLK.)	1	Selective use (Coupe)
	0839 69 870B00	Trim, Package Tray Lower (BLK.) With Hole For Stereo Loud Speaker	1	
31	99862 0520B	Screw, Package Tray Trim	9	
	99975 0500B	Washer, Toothed	9	
	99898 0500	Nut, Spring	6	
	99967 0500B	Washer	3	

TRIM & FLOOR MAT

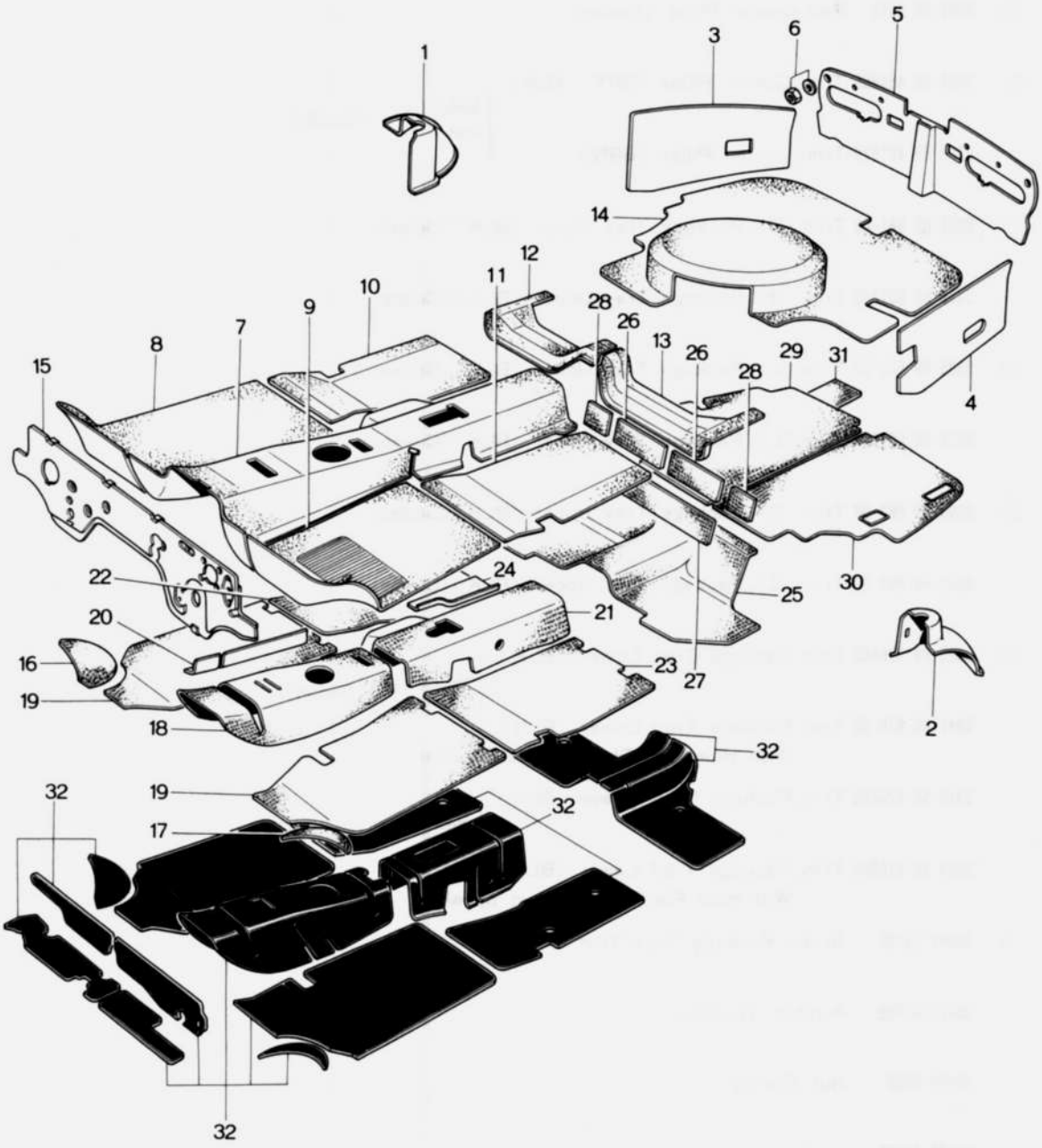

No.	Part Number	Description	Q'ty	Remarks
1	0305 68 580A00	Trim (R), Trunk Room (BLK.)	1	
2	0839 68 590A00	Trim (L), Trunk Room (BLK.)	1	
3	0305 68 610C00	Trim (R), Trunk Room (BLK.)	1	
4	0305 68 620C00	Trim (L), Trunk Room (BLK.)	1	
5	1907 68 630	Trim, Trunk Room End (BLK.)	1	
6	99945 0500B	Nut, Trunk Room Trim	4	
	99952 0516B	Washer, Plain	8	
		When ordering the following Mats Add Colour Code nos. given below after parts number -35 (BLK.) -36 (BRN.)		
7	1907 69 611 ©	Mat (Frt., C), Floor (Manual)	1	
	1908 69 611 ©	Mat (Frt., C), Floor (Automatic)	1	
8	1907 69 612 ©	Mat (Frt., R), Floor (Manual)	1	
	1908 69 612 ©	Mat (Frt., R), Floor (Automatic)	1	
9	1907 69 613 ©	Mat (Frt., L), Floor (Manual)	1	
	1908 69 613 ©	Mat (Frt., L), Floor (Automatic)	1	
10	1907 69 617 ©	Mat (Rr., R), Floor	1	USE 1907-69-617© (one piece)
11	1907 69 618 ©	Mat (Rr., L), Floor	1	
12	2090 69 625-08	Cover (R), Member (BLK.)	1	
13	2090 69 626-08	Cover (L), Member (BLK.)	1	
14	0881 69 627-05	Mat, Trunk Room (BLK.)	1	

TRIM & FLOOR MAT

No.	Part Number	Description	Q'ty	Remarks
15	1907 69 660	Insulator	1	
16	0305 69 681	Pad (R), Tire House	1	
17	0305 69 682	Pad (L), Tire House	1	
18	1097 69 683	Pad (C), Front	1	
19	1097 69 684	Pad, Front	2	
20	1570 69 686	Pad, Front-Tunnel Side	1	
21	0839 69 687B	Pad (C), Rear	1	
22	0839 69 688	Pad (R), Rear	1	
23	0839 69 689	Pad (L), Rear	1	
24	1570 69 691	Pad, Rear-Tunnel Side	1	
25	0305 69 692	Pad, End	1	
26	0305 69 693	Pad No 1, Package Tray	2	
27	0305 69 694	Pad No. 2, Package Tray	1	
28	0305 69 695	Pad No. 3, Package Tray	2	
29	0839 69 696D	Pad (R), Trunk Room	1	
30	0839 69 697D	Pad (L), Trunk Room	1	
31	1663 69 699B	Pad, Heat Insulator-Trunk Room	1	
32	0208 76 071	Silencer	—	

A 30 cm square object in sheet form is supplied under part no. 0208 76 071
(Floor Silencer Revised Piece)

VENTILATOR

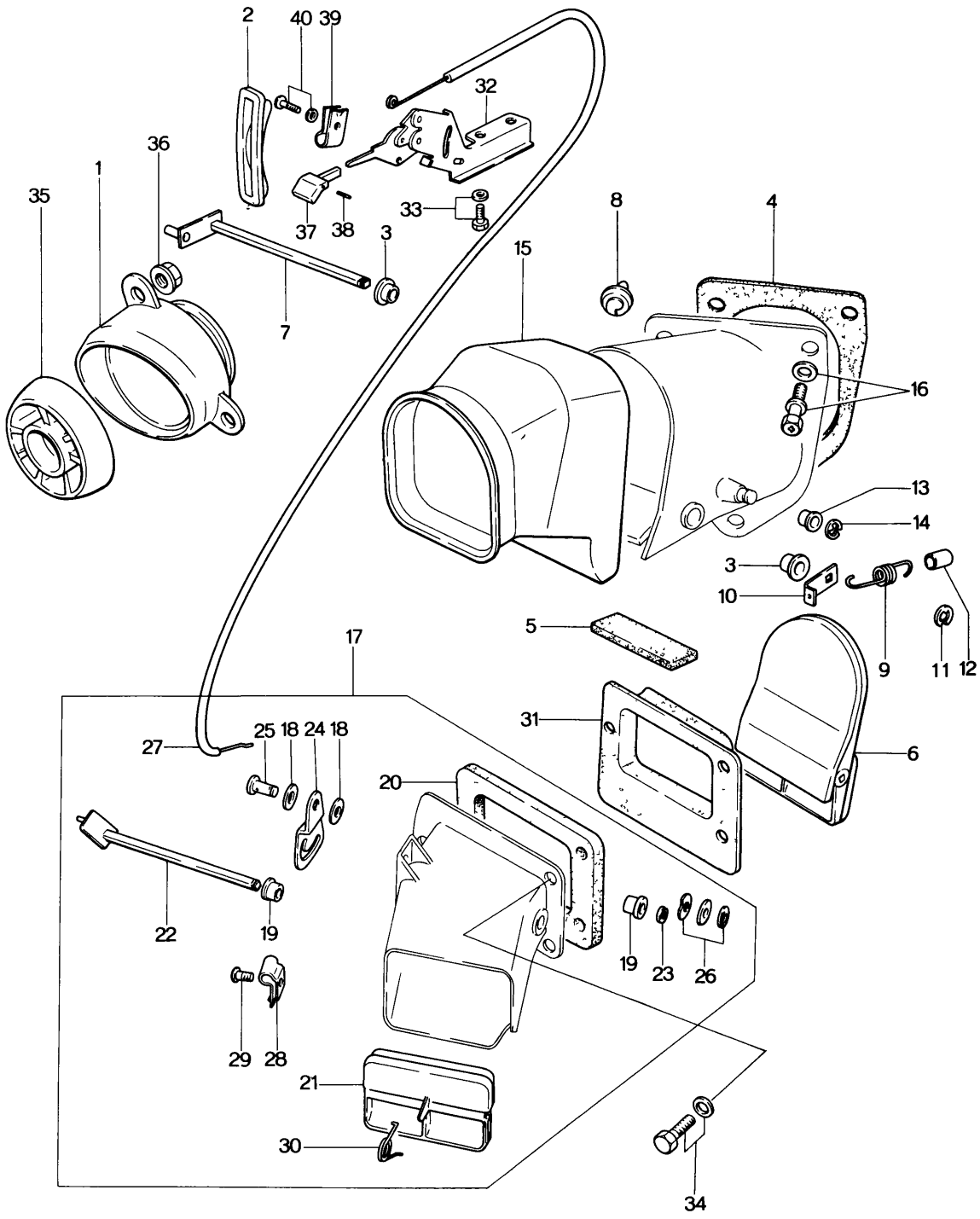
2
40
39
32
36
1
35
37
38
33
3
8
4
15
7
16
13
14
3
10
9
11
12
5
17
31
6
27
25
18
24
18
20
22
19
19
23
26
29
28
21
30
34

No.	Part Number	Description	Q'ty	Remarks
1	1905 68 050	Guide (R), Ventilator (BRN.) } Selective use	1	
	1907 68 050	Guide (R), Ventilator (BLK.) } Selective use	1	
	1905 68 060	Guide (L), Ventilator (BRN.) } Selective use	1	
	1907 68 060	Guide (L), Ventilator (BLK.) } Selective use	1	
2	1907 68 071	Guide, Ventilator Lever	2	
	1907 70 310	Ventilator (R), First	1	
	1907 71 310	Ventilator (L), First	1	
3	0317 70 307	Bush	4	
4	0305 70 312	Gasket	2	
5	0259 70 315	Cushion	2	
6	1907 70 320	Flap	2	
7	0305 70 330A	Lever	2	
8	0305 70 335	Pipe, Clip	2	
9	0305 70 342	Spring	2	
10	0305 70 343	Lever (R)	1	
	0305 71 343	Lever (L)	1	
11	99576 0400	Ring, Stop	2	
12	99335 06001	Pipe, Vinyl-Spring } (Without Cooler)	2	
13	1907 70 365	Bush } (Without Cooler)	2	

VENTILATOR

No.	Part Number	Description	Q'ty	Remarks
14	99576 0300	Ring, Stop	2	
15	1907 70 345	Duct (R), Ventilator	1	
	1907 71 345	Duct (L), Ventilator	1	
16	99785 0516	Bolt, Ventilator	4	
	99952 0508	Washer, Spring	4	
	99971 0500	Washer, Spring	4	
17	1907 70 350	Ventilator (R), Second	1	
	1907 71 350	Ventilator (L), Second	1	
18	0633 52 148	Washer	4	
19	0317 70 307	Bush	4	
20	0305 70 353	Gasket	2	
21	0305 70 360	Flap	2	
22	0305 70 370	Lever	2	
23	99576 0400	Ring, Stop	2	
24	1907 70 375	Clamp (R)	1	
	1907 71 375	Clamp (L)	1	
25	99230 0811	Pin	2	
26	99972 0800	Washer, Wave-Clamp	2	

No.	Part Number	Description	Q'ty	Remarks
	99953 0800	Washer, Plain	2	
	99576 0500	Ring, Stop	2	
27	0305 70 390	Wire	1	
28	0305 70 396	Clamp (R), Wire	1	
	0305 71 396	Clamp (L), Wire	1	
29	99860 0410	Screw, Wire Clamp	2	
	99952 0400	Washer, Plain	2	
30	0305 70 397	Spring	2	
31	0305 70 352A	Gasket (R), Ventilator	1	
	0305 71 352A	Gasket (L), Ventilator	1	
32	1907 70 360	Link (R), Ventilator	1	
	1907 71 360	Link (L), Ventilator	1	
33	99804 0516	Screw, Ventilator Link	4	
	99952 0516	Washer, Plain	4	
	99971 0500	Washer, Spring	4	
34	99785 0520	Bolt, Ventilator	6	
	99952 0500	Washer, Plain	6	
	99971 0500	Washer, Spring	6	
35	0866 70 371	Louver, Ventilator	2	

70 71 VENTILATOR

No.	Part Number	Description	Q'ty	Remarks
36	99940 0501	Nut, Ventilator Louver	6	
37	0305 70 392C	Knob (R), Ventilator	1	
	0305 71 392C	Knob (L), Ventilator	1	
38	99836 0312B	Screw, Knob	2	
39	0305 70 395B	Clamp, Wire	2	
40	99833 0410	Screw, Wire Clamp	2	
	99952 0400	Washer, Plain	2	
	99971 0400	Washer, Spring	2	

WINDOW GLASS & MOULDING
(COUPE)

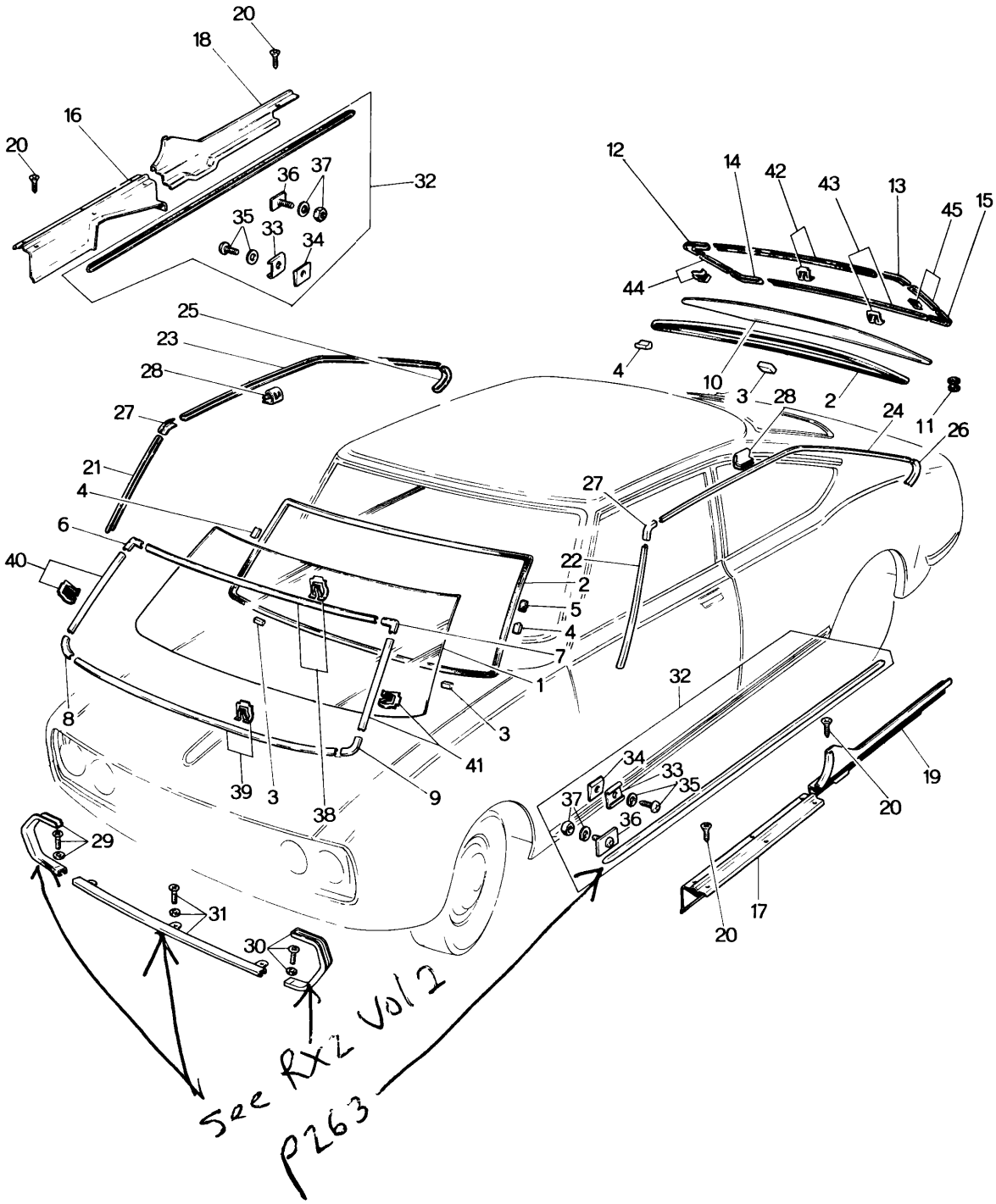

WINDOW GLASS & MOULDING
(COUPE)

70 71

No.	Part Number	Description	Q'ty	Remarks
1	2080 70 441	Glass, Front Windshield	1	
2	0305 70 443B	Dam, Windshield Glass	2	
3	0305 70 447B	Spacer "A" , Windshield Glass	4	
4	0305 70 448A	Spacer "B" , Windshield Glass	4	
5	0839 70 449	Spacer "C" , Windshield Glass	4	
6	0839 70 454A	Joint (R), Mould-Upper	1	
7	0839 71 454A	Joint (L), Mould-Upper	1	
8	0839 70 455	Joint (R), Mould-Lower	1	
9	0839 71 455	Joint (L), Mould-Lower	1	
10	0833 70 471	Glass, Back Window	1	
	0839 70 471C	Glass, Back Window-With Heating Wire	1	
11	0839 70 479	Grommet, Heating Wire	1	
12	0839 70 484A	Joint (R), Mould-Upper	1	
13	0839 71 484A	Joint (L), Mould-Upper	1	
14	0839 70 485A	Joint (R), Mould-Lower	1	
15	0839 71 485A	Joint (L), Mould-Lower	1	
16	0839 70 802A00	Plate (Frt., R), Scarf (BLK.)	1	
17	0839 71 802A00	Plate (Frt., L), Scarf (BLK.)	1	
18	1907 70 803	Plate (Rr., R), Scarf (BLK.)	1	
19	1907 71 803	Plate (Rr., L), Scarf (BLK.)	1	

WINDOW GLASS & MOULDING
(COUPE)

No.	Part Number	Description	Q'ty	Remarks
20	99862 0414B	Screw, Scarf Plate	20	
21	0839 70 821A	Mould (Frt., R), Drip	1	
22	0839 71 821A	Mould (Frt., L), Drip	1	
23	0839 70 822	Mould (C., R), Drip	1	
24	0839 71 822	Mould (C., L), Drip	1	
25	0881 70 823B	Mould (R), Drip End	1	
26	0881 71 823B	Mould (L), Drip End	1	
27	0305 70 825	Mould (Frt.), Corner	2	
28	0305 70 827A	Clip, Drip Mould	18	
29	0305 99 712	Mould Set (R), Front	1	
30	0305 99 713	Mould Set (L), Front	1	
31	0305 99 715	Mould Set No. I, Front	1	
32	0305 99 721	Mould Set, Step	2	
33	0305 70 861C	Clip, Step Mould	10	
34	0839 70 865	Spacer, Step Mould	4	
35	99863 0512	Screw, Step Mould	10	
	99971 0500	Washer, Spring	10	
36	0223 70 870	Plate Set, Step Mould	2	
37	99906 0400	Nut, Step Mould	2	

No.	Part Number	Description	Q'ty	Remarks
	99971 0400	Washer, Spring	2	
38	0839 99 741	Mould Set, Upper-Front Window	1	
39	0305 99 742	Mould Set, Lower-Front Window	1	
40	0839 99 743	Mould Set (R), Front Window	1	
41	0839 99 744	Mould Set (L), Front Window	1	
42	0839 99 746	Mould Set, Upper-Rear Window	1	
43	0839 99 747	Mould Set, Lower-Rear Window	1	
44	0839 99 748	Mould Set (R), Rear Window	1	
45	0839 99 749	Mould Set (L), Rear Window	1	

WINDOW GLASS & MOULDING
(SEDAN)

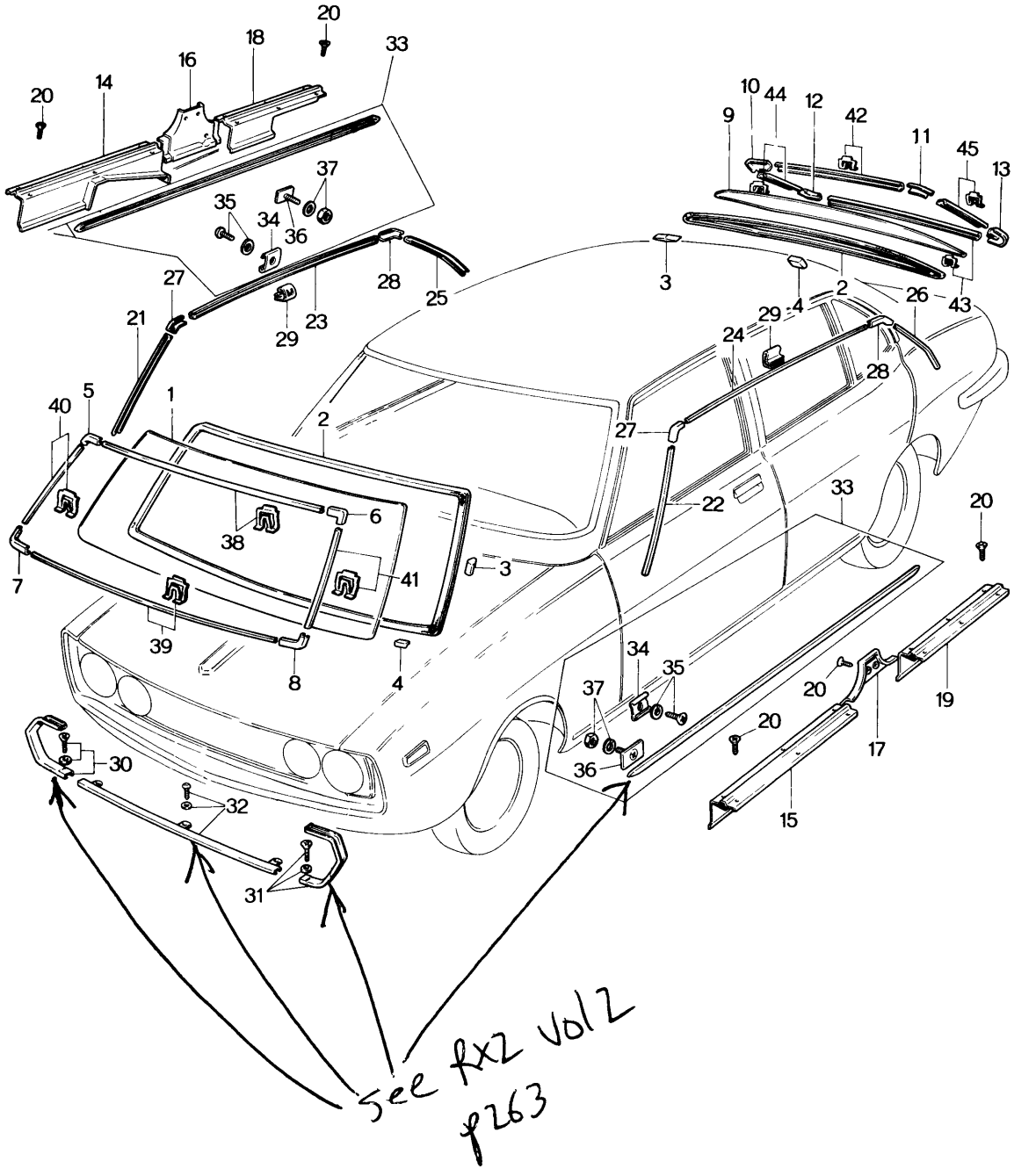

WINDOW GLASS & MOULDING
(SEDAN)

70 71

No.	Part Number	Description	Q'ty	Remarks
1	2835 70 441	Glass, Front Windshield	1	
2	0305 70 443B	Dam, Windshield Glass	2	
3	0305 70 447B	Spacer "A" , Windshield Glass	4	
4	0305 70 448A	Spacer "B" , Windshield Glass	4	
5	0305 70 454A	Joint (R), Mould-Upper	1	
6	0305 71 454A	Joint (L), Mould-Upper	1	
7	0305 70 455A	Joint (R), Mould-Lower	1	
8	0305 71 455A	Joint (L), Mould-Lower	1	
9	0304 70 471	Glass, Back Window	1	
	0305 70 471D	Glass, Back Window-With Heating Wire	1	
10	0305 70 484B	Joint (R), Mould-Upper	1	
11	0305 71 484	Joint (L), Mould-Upper	1	
12	0305 70 485A	Joint (R), Mould-Lower	1	
13	0305 71 485A	Joint (L), Mould-Lower	1	
14	0307 70 802-00	Plate (Frt., R), Scarf (BLK.)	1	
15	0305 71 802-00	Plate (Frt., L), Scarf (BLK.)	1	
16	1905 70 803	Plate (C., R), Scarf (BLK.)	1	
17	1905 71 803	Plate (C., L), Scarf (BLK.)	1	
18	0305 70 804A00	Plate (Rr., R), Scarf (BLK.)	1	
19	0305 71 804A00	Plate (Rr., L), Scarf (BLK.)	1	

WINDOW GLASS & MOULDING
(SEDAN)

No.	Part Number	Description	Q'ty	Remarks
20	99862 04148	Screw, Scarf Plate	26	
21	0305 70 821A	Mould (Frt., R), Drip	1	
22	0305 71 821A	Mould (Frt., L), Drip	1	
23	0305 70 822	Mould (C., R), Drip	1	
24	0305 71 822	Mould (C., L), Drip	1	
25	0305 70 823A	Mould (Rr., R), Drip	1	
26	0305 71 823A	Mould (Rr., L), Drip	1	
27	0305 70 825	Mould (Frt.), Corner	2	
28	0305 70 826	Mould (Rr.), Corner	2	
29	0305 70 827A	Clip, Drip Mould	22	
30	0305 99 712	Mould Set (R), Front	1	
31	0305 99 713	Mould Set (L), Front	1	
32	0305 99 715	Mould Set No. 1, Front	1	
33	0305 99 721	Mould Set, Step	2	
34	0305 70 861C	Clip, Step Mould	10	
35	99863 0512	Screw, Step Mould Clip	10	
	99971 0500	Washer, Spring	10	
36	0223 70 870	Plate Set, Step Mould	2	
37	99906 0400	Nut, Step Mould	2	

No.	Part Number	Description	Q'ty	Remarks
	99971 0400	Washer, Spring	2	
38	0305 99 741	Mould Set, Upper-Front Window	1	
39	0305 99 742	Mould Set, Lower-Front Window	1	
40	0305 99 743	Mould Set (R), Front Window	1	
41	0305 99 744	Mould Set (L), Front Window	1	
42	0305 99 746	Mould Set, Upper-Rear Window	1	
43	0305 99 747	Mould Set, Lower-Rear Window	1	
44	0305 99 748	Mould Set (R), Rear Window	1	
45	0305 99 749	Mould Set (L), Rear Window	1	

REAR SIDE WINDOW (COUPE)

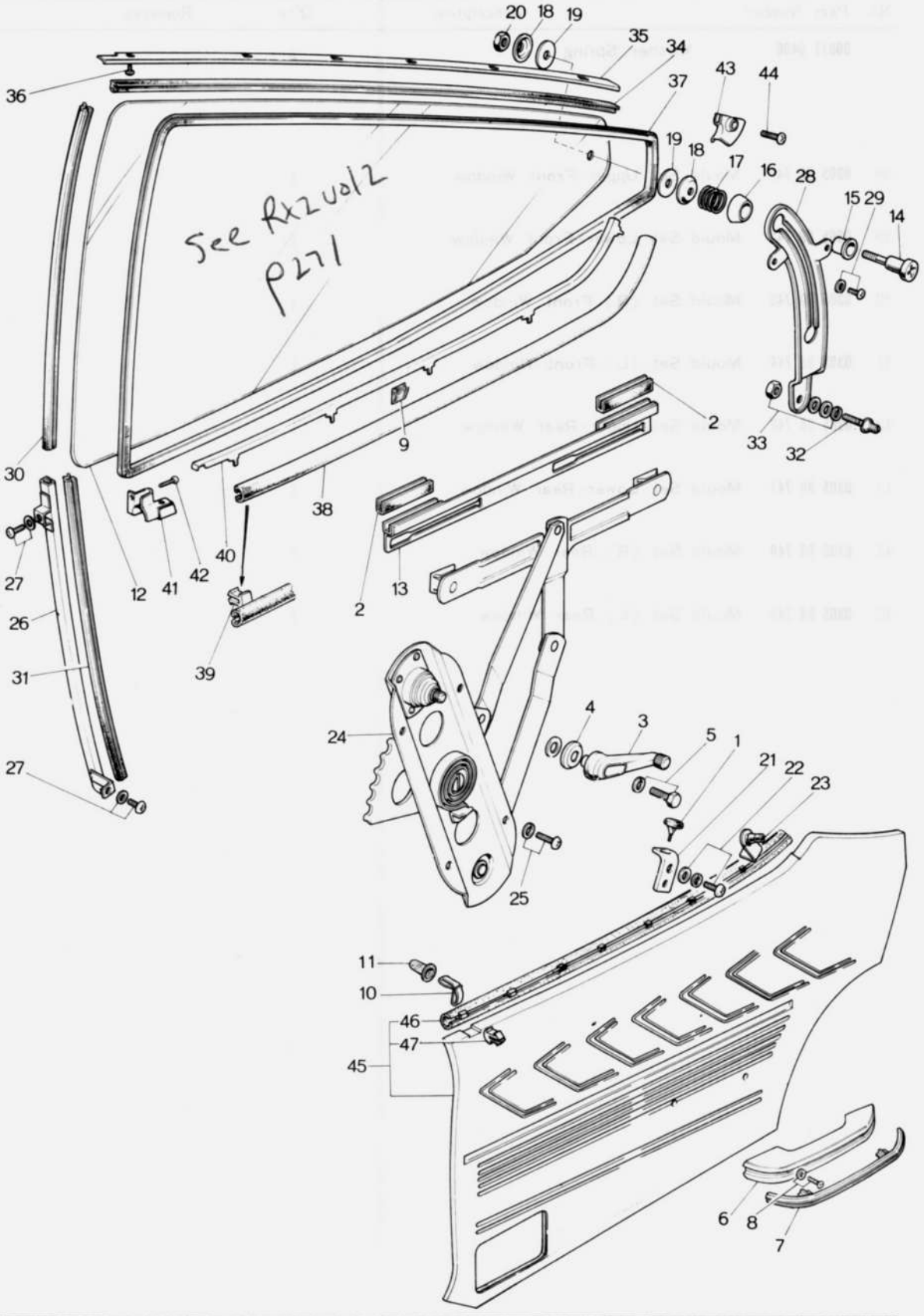

REAR SIDE WINDOW (COUPE) 70 71

No.	Part Number	Description	Q'ty	Remarks
1	0824 58 155	Stopper, Glass Down	2	
2	2292 58 232	Strip, Rubber - Glass	4	
3	0223 58 370D	Handle, Regulator (BLK.)	2	
4	0223 58 375A	Escutcheon, Regulator Handle (BLK.)	2	
5	99806 0516	Bolt, Regulator Handle	2	
	99971 0500	Washer, Spring	2	
6	0398 58 821A00	Rest, Arm (BLK.)	2	
	0398 58 821A01	Rest, Arm (GRY. / YLW.) Selective use	2	
	0398 58 821A20	Rest, Arm (BRN.)	2	
7	0398 58 822A00	Garnish, Arm Rest (BLK)	2	
	0398 58 822A01	Garnish, Arm Rest (GRY / YLW.) Selective use	2	
	0398 58 822A20	Garnish, Arm Rest (BRN.)	2	
8	99833 0520	Screw, Arm Rest	4	
	99952 0500	Washer, Plain	4	
9	0881 58 839	Spacer, Beltline Mould	6	
10	0208 58 921	Fastener, Quarter Trim	4	
11	0187 58 922	Cap, Fastener Seal - Quarter Trim	4	
12	0839 70 511A	Glass (R), Quarter Window	1	
	0839 71 511A	Glass (L), Quarter Window	1	
13	0839 70 515	Bracket (R), Lift	1	

70 71 REAR SIDE WINDOW (COUPE)

No.	Part Number	Description	Q'ty	Remarks
	0839 71 515	Bracket (L), Lift	1	
14	0839 70 521	Pin, Glass Guide	2	
15	0839 70 522	Roller, Glass Guide	2	
16	0839 70 523A	Seat, Spring-Glass Guide	2	
17	0839 70 524	Spring, Glass Guide	2	
18	0839 70 525	Washer, Glass Guide	4	
19	0839 70 526	Seat, Glass Guide	4	
20	99906 0500	Nut, Glass Guide	2	
21	0839 70 550A	Bracket, Glass Down	2	
22	99806 0612	Bolt, Bracket	4	
	99971 0600	Washer, Spring	4	
	99951 0618	Washer, Plain	4	
23	0839 70 555	Cushion, Glass Down	2	
24	0839 70 570	Regulator (R), Window	1	
	0839 71 570	Regulator (L), Window	1	
25	99806 0612	Bolt, Window Regulator	8	
	99971 0600	Washer, Spring	8	
	99952 0618	Washer, Plain	8	
26	0839 70 603	Guide "A" (R), Glass	1	
	0839 71 603	Guide "A" (L), Glass	1	

REAR SIDE WINDOW (COUPE) 70 71

No.	Part Number	Description	Q'ty	Remarks
27	99806 0612	Bolt, Glass Guide "A"	4	
	99971 0600	Washer, Spring	4	
	99952 0618	Washer, Plain	4	
28	0839 70 604	Guide "B" (R), Glass	1	
	0839 71 604	Guide "B" (L), Glass	1	
29	99806 0612	Bolt, Glass Guide "B"	8	
	99971 0600	Washer, Spring	8	
	99952 0618	Washer, Plain	8	
30	0839 70 605D	Run Channel "A", Glass	2	
31	0839 70 606C	Run Channel "B", Glass	2	
32	0824 70 621	Stud, Glass Guide "B"	2	
33	99906 0800	Nut, Glass Guide "B"	2	
	99951 0822	Washer, Plain	2	
	99971 0800	Washer, Spring	2	
34	0839 70 651A	Weatherstrip (R)	1	
	0839 71 651A	Weatherstrip (L)	1	
35	0839 70 652	Retainer (R)	1	
	0839 71 652	Retainer (L)	1	
36	99864 0408	Screw, Retainer	12	
37	0881 70 655-00	Welt, Seaming (BLK.)	2	

70 71 REAR SIDE WINDOW (COUPE)

No.	Part Number	Description	Q'ty	Remarks
38	0839 70 680C	Weatherstrip (R), Outer	1	
	0839 71 680C	Weatherstrip (L), Outer	1	
39	0839 58 783B	Fastener	16	
40	0881 70 721	Mould (R), Beltline	1	
	0881 71 721	Mould (L), Beltline	1	
41	0839 70 751C	Cover "A" (Frt, R), Corner (BLK.)	1	
	0839 71 751C	Cover "A" (Frt, L), Corner (BLK.)	1	
42	99864 0410B	Screw, Corner Cover	2	
43	0839 70 752A	Cover (Rr, R), Corner (BLK)	1	
	0839 71 752A	Cover (Rr., L), Corner (BLK.)	1	
44	99862 0418B	Screw, Corner Cover	2	

When ordering the following Trims
Add Colour Code nos. given below after parts number
-13 (BLK.) -15 (GRY. / YLW) -20 (BRN.)

45	1907 70 760 ©	Trim (R), Quarter	1	
	1907 71 760 ©	Trim (L), Quarter	1	
46	0839 70 690	Weatherstrip (R), Inner	1	
	0839 71 690	Weatherstrip (L), Inner	1	
47	0839 58 783B	Fastener	16	

See RX2 Vol 2 P.276

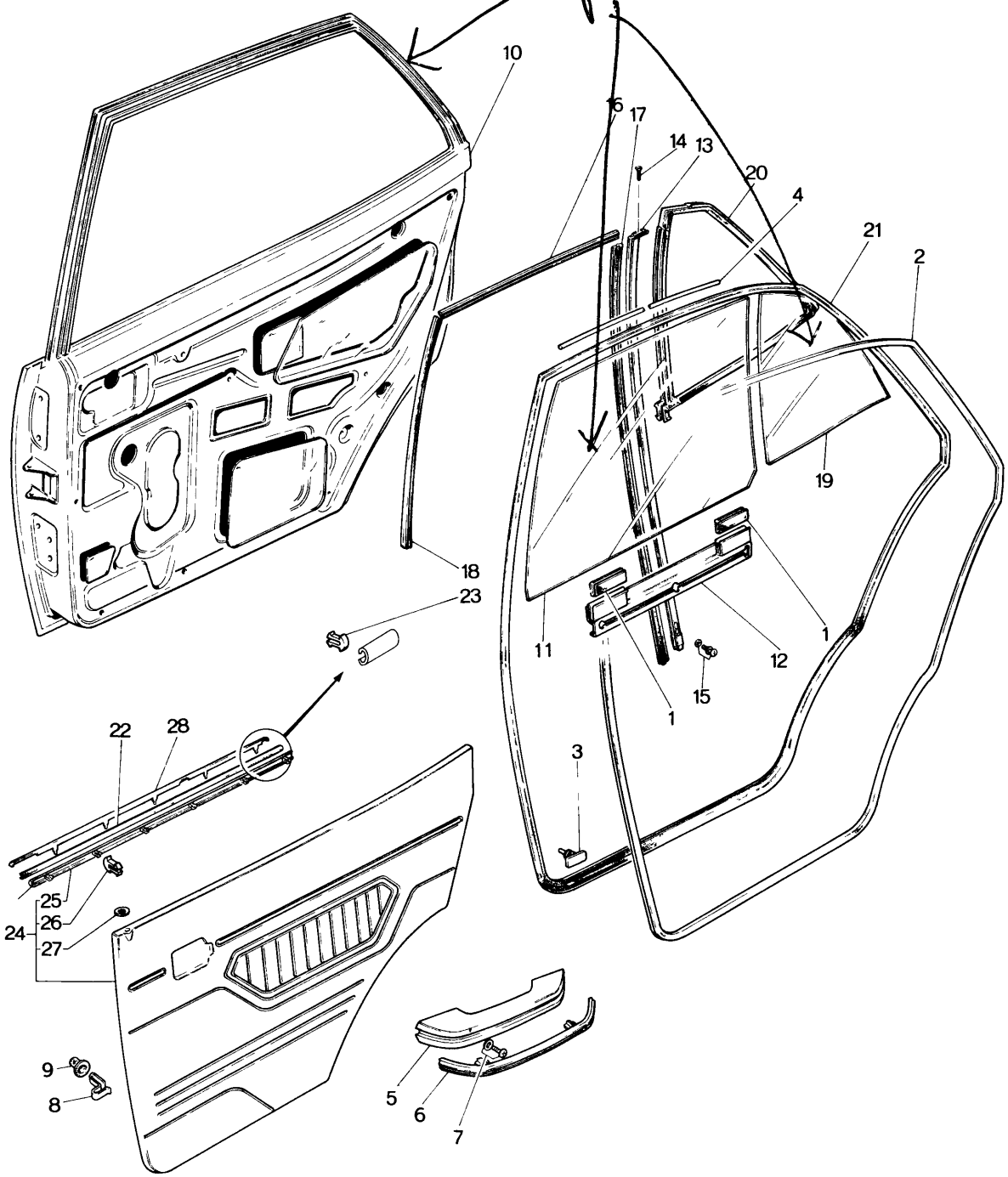

REAR SIDE DOOR (GLASS, SEDAN) 72 73

No.	Part Number	Description	Q'ty	Remarks
1	2292 58 232	Strip, Rubber - Glass	4	
2	0398 58 755-00	Welt, Seaming (BLK.)	2	
3	0305 58 762	Fastener, Weatherstrip	2	
4	0305 58 768	Spacer, Weatherstrip	2	
5	0398 58 821A00	Rest, Arm (BLK.)	2	
	0398 58 821A01	Rest, Arm (GRY. / YLW.) } Selective use	2	
	0398 58 821A20	Rest, Arm (BRN.)	2	
6	0398 58 822A00	Garnish, Arm Rest (BLK.)	2	
	0398 58 822A01	Garnish, Arm Rest (GRY. / YLW.) } Selective use	2	
	0398 58 822A20	Garnish, Arm Rest (BRN.)	2	
7	99833 0520	Screw, Arm Rest	4	
	99952 0500	Washer, Plain	4	
8	0208 58 921	Fastener, Door Trim	20	
9	0187 58 922	Cap, Fastener Seal - Door Trim	20	
10	1666 72 010A	Body (R), Rear Door	1	
	1666 73 010A	Body (L), Rear Door	1	
	0305 72 021B	Panel (R), Outer	1	
	0305 73 021B	Panel (L), Outer	1	

72 73 REAR SIDE DOOR (GLASS, SEDAN)

No.	Part Number	Description	Q'ty	Remarks
11	0305 72 501A	Glass (R), Door	1	
	0305 73 501A	Glass (L), Door	1	
12	0305 72 505	Bracket (R), Lift-Door Glass	1	
	0305 73 505	Bracket (L), Lift-Door Glass	1	
13	0398 72 602	Channel (R), Glass-Center	1	
	0398 73 602	Channel (L), Glass-Center	1	
14	99831 0408	Screw, Center Channel	4	
15	99806 0610	Bolt, Center Channel	2	
	99951 0618	Washer, Plain	2	
	99971 0600	Washer, Spring	2	
16	0305 72 605D	Run Channel "A"	2	
17	0305 72 606C	Run Channel "B", Glass	2	
18	0305 72 607	Run Channel "C", Glass	2	
19	0305 72 661A	Glass (R), Quarter Window	1	
	0305 73 661A	Glass (L), Quarter Window	1	
20	0305 72 662A	Weatherstrip, Quarter Window Glass	2	
21	0305 72 760C	Weatherstrip (R)	1	
	0305 73 760C	Weatherstrip (L)	1	
22	0305 72 780E	Weatherstrip (R), Outer	1	

REAR SIDE DOOR (GLASS, SEDAN) 72 73

No.	Part Number	Description	Q'ty	Remarks
	0305 73 780E	Weatherstrip (L), Outer	1	
23	0839 58 783B	Fastener	6	
		When ordering the following Trims Add Colour Code nos. given below after parts number -13 (BLK.) -~~88~~ 15 (GRY. / YLW.) -20 (BRN)		
24	1666 72 810 ©	Trim (R), Door	1	
	1666 73 810 ©	Trim (L), Door	1	
25	0305 72 790	Weatherstrip (R), Inner	1	
	0305 73 790	Weatherstrip (L), Inner	1	
26	0839 58 783B	Fastener, Weatherstrip	6	
27	0223 58 692A	Grommet, Door Lock	2	
28	0305 72 831A	Mould (R), Beltline	1	
	0305 73 831A	Mould (L), Beltline	1	

REAR SIDE DOOR (LOCK, SEDAN)

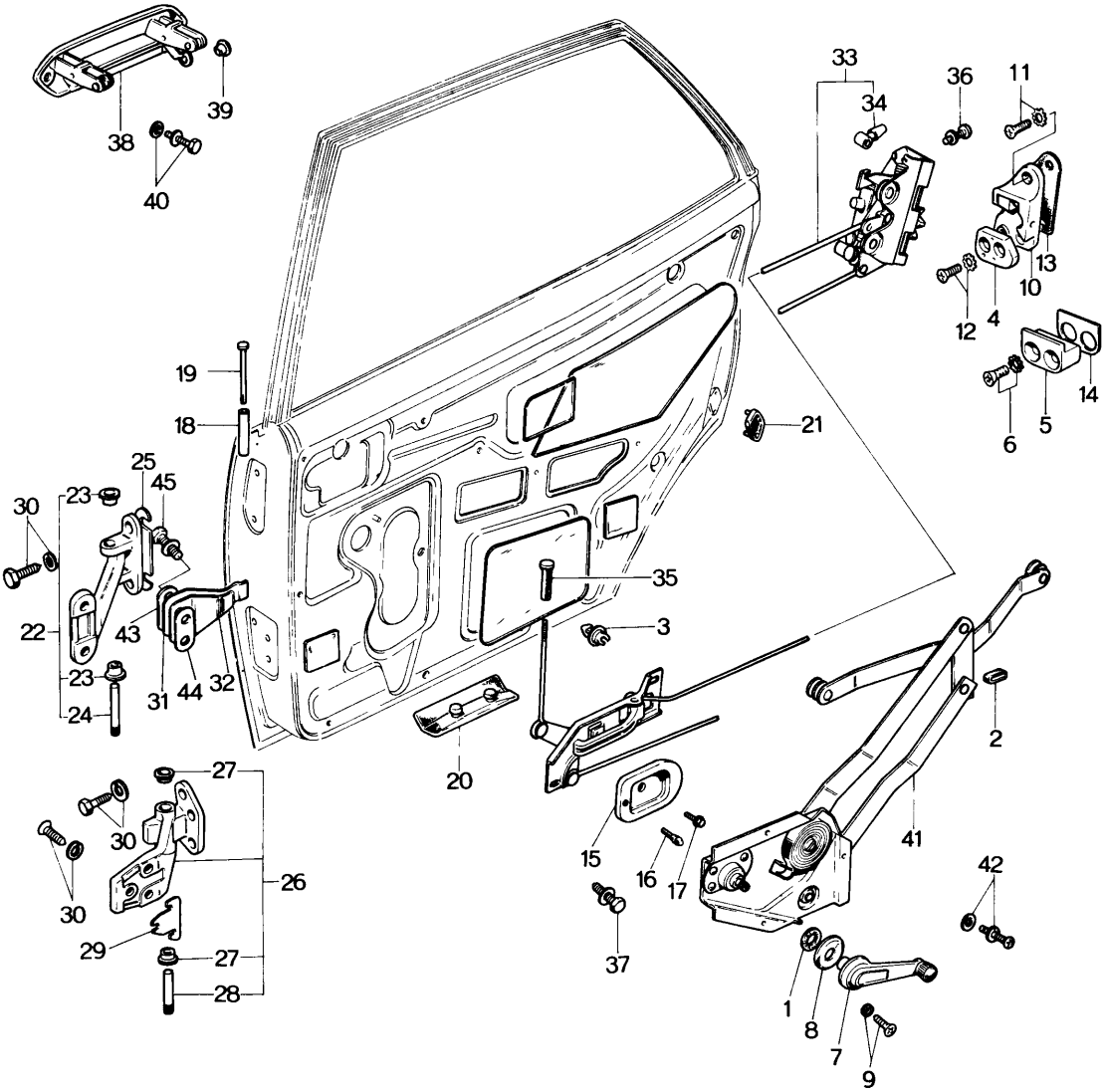

REAR SIDE DOOR (LOCK, SEDAN) 72 73

No.	Part Number	Description	Q'ty	Remarks
1	0223 58 305A	Gasket, Regulator Handle	2	
2	0259 58 306	Cushion, Window Regulator	2	
3	0305 58 309	Holder, Rod-Door Lock	4	
4	0305 58 361	Rack (R), Door Striker	1	
	0305 59 361	Rack (L), Door Striker	1	
5	1666 58 365	Block (R), Anti-Burst	1	
	1666 59 365	Block (L), Anti-Burst	1	
6	99761 0630	Screw, Anti-Burst Block	4	
	99975 0600	Washer, Toothed	4	
7	0223 58 370D	Handle, Regulator (BLK)	2	
8	0223 58 375A	Escutcheon, Regulator Handle (BLK.)	2	
9	99806 0516	Bolt, Regulator Handle	2	
	99971 0500	Washer, Spring	2	
10	0259 58 570	Striker (R), Door	1	
	0259 59 570	Striker (L), Door	1	
11	99761 0620	Screw, Door Striker	2	
	99975 0600	Washer, Toothed	2	
12	99761 0630	Screw, Door Striker	4	
	99975 0600	Washer, Toothed	4	
13	0187 58 592A	Seat, Door Striker	2	

REAR SIDE DOOR (LOCK, SEDAN)

No.	Part Number	Description	Q'ty	Remarks
14	2350 58 593	Shim, Anti-Burst Block	2	
15	0223 58 611C01	Cover, Inner Handle (BLK.)	2	
16	0259 58 612	Rubber, Cushion-Inner Handle Cover	2	
17	99832 0408B	Screw, Inner Handle Cover	2	
18	0317 58 831A	Roller, Door Check	2	
19	0317 58 832	Pin, Door Check Roller	2	
20	0305 58 872	Valve, Drain	4	
21	0305 58 874	Cushion, Door	2	
22	0305 72 210	Hinge, Door-Upper	2	
23	0223 58 721	Bush	4	
24	0187 58 731	Pin, Hinge	2	
25	0305 72 201	Shim, Door Hinge Upper	2	Selective use
	0305 72 203	Shim, Door Hinge Upper	2	
26	0305 72 240A	Hinge (R), Door-Lower	1	
	0305 73 240A	Hinge (L), Door-Lower	1	
27	0223 58 721	Bush	4	
28	0187 58 731	Pin, Hinge	2	

REAR SIDE DOOR (LOCK, SEDAN) 72 73

No.	Part Number	Description	Q'ty	Remarks
29	0305 72 231	Shim, Door Hinge Lower	2	
30	99783 0828	Bolt, Door Hinge	20	
	99971 0800	Washer, Spring	20	
31	0305 72 261	Spring, Check	2	
32	0305 72 262	Spring, Check Sub	2	
33	2850 72 300B	Lock (R), Door	1	
	2850 73 300B	Lock (L), Door	1	
34	0305 58 314B	Bush	2	
35	0259 58 691-00	Knob, Door Lock (BLK.)	2	
36	99832 0612	Screw, Door Lock	6	
	99974 0600	Washer, Toothed	6	
37	99806 0510	Bolt, Inner Handle	4	
	99952 0500	Washer, Plain	4	
	99971 0500	Washer, Spring	4	
38	0305 72 410D	Handle (R), Outer	1	
	0305 73 410D	Handle (L), Outer	1	
39	0305 58 411A	Bush	2	

REAR SIDE DOOR (LOCK, SEDAN)

No.	Part Number	Description	Q'ty	Remarks
40	99797 0510	Bolt, Outer Handle	4	
	99952 0500	Washer, Plain	4	
	99971 0500	Washer, Spring	4	
	99952 0822	Washer, Plain	4	
41	0305 72 560	Regulator (R), Window	1	
	0305 73 560	Regulator (L), Window	1	
42	99806 0608	Bolt, Window Regulator	2	
	99806 0612	Bolt	4	
	99971 0600	Washer, Spring	6	
	99951 0618	Washer, Plain	6	
43	0208 72 821	Washer No. 1, Adjust-Door Check	4	
44	0208 72 822	Washer No. 2, Adjust-Door Check	2	
45	99806 0625	Bolt, Check Spring	4	
	99971 0600	Washer, Spring	4	

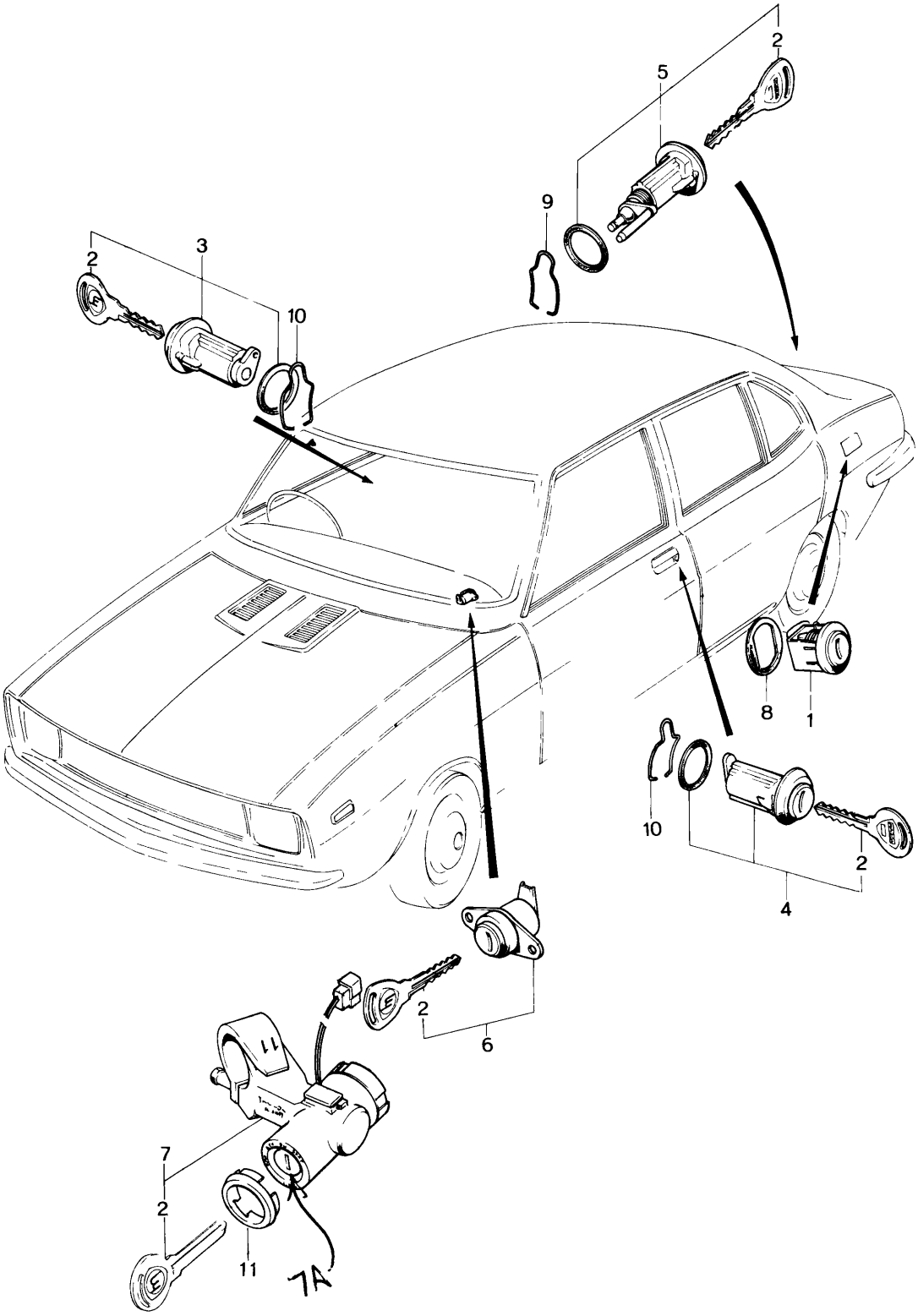
2
5
9
3
2
10
8
1
10
2
4
2
6
7
2
11
7A

No.	Part Number	Description	Q'ty	Remarks
	1907 09 010	Key Set	1	
1	0866 74 430	Lock, Filler Lid	1	Key No. 2500~2999
	0866 74 440	Lock, Filler Lid	1	Key No. 3000~3499
2	0839 58 492A	Key	2	
3	0839 74 910A	Key Sub Set (R), Door	1	
4	0839 74 920A	Key Sub Set (L), Door	1	
5	0839 74 930	Key Sub Set, Trunk Lid	1	
6	0839 74 950	Key Sub Set, Glove Box	1	
7	1757 75 990	Key Sub Set, Steering Lock	1	
7A	1175-66-155	SWITCH		
8	0621 42 455	Seat, Filler Lid Lock	1	
9	0305 52 802	Retainer, Trunk Lid Lock	1	
10	0223 58 961	Fastener, Door Lock	2	
11	2835 60 421	Ring, Steering Lock	1	
	0839 74 158	Key, Blank-Key Assortment No. 2500~2999	—	
	0839 74 159	Key, Blank-Key Assortment No. 3000~3499	—	

INDEX. 1907 09 010～1881 11 403

Parts Number	Parts Composition List Page	Fig. No.
1907 09 010	305	—
1881 10 100	2	1
2329 10 105	2	2
0839 10 111 B	2	6
1617 10 120	2	3
1757 10 171	2	7
0813 10 172	2	8
0813 10 173	2	9
0813 10 174	2	10
1757 10 200 A	2	11
0820 10 203	3	27
0839 10 203	2	12
2329 10 204	2	13
0839 10 205	2	14
	3	28
1757 10 206	2	15
1757 10 207	2	16
0324 10 250	3	24
0324 10 252	3	25
1907 10 300 A	3	26
1908 10 300 A	3	26
1757 10 305	4	41
1757 10 309	3	29
0839 10 320	3	30
1757 10 351	4	43
2329 10 417	7	83
1015 10 451	4	45
1015 10 452	4	45
0839 10 455	4	46
0839 10 500 B	9	1
0820 10 502 B	9	2
	9	5
0839 10 504	9	3
1668 10 550	9	4
0813 10 555	9	8
1668 10 556	9	6
1757 10 600	4	47
0820 10 605	4	48
0820 10 631 B	4	49
1757 10 641	5	61
1907 10 700	5	62
0839 10 711	6	65
0839 10 721	6	66
0839 10 722	6	67
0839 10 723	6	68
0839 10 830	6	70
1757 10 845	6	71
1757 10 861	6	72
1757 10 862	6	74
0820 10 872 A	162	1
1011 11 111	12	51
1011 11 301 B	9	9
1011 11 302 B	9	10
1011 11 304 A	9	11
0820 11 317	9	12
1011 11 321	9	13
0839 11 323 A	9	14
0820 11 341	9	15
0820 11 343	10	16
1011 11 351	10	17
1011 11 353	10	18
1011 11 361	10	19
1011 11 363	10	20
1881 11 400	10	21
1883 11 400	10	21
1881 11 403	10	22

1881 11 404	10	23
0813 11 405	10	24
0839 11 411 A	10	25
0839 11 412	10	26
1011 11 501	10	29
0839 11 502	10	31
1011 11 504	11	32
0813 11 505 B	11	33
0839 11 506	11	31
1011 11 507	11	34
0839 11 508	11	31
0839 11 509	11	31
1881 11 511	11	35
1757 11 512	11	36
0839 11 531	11	37
1757 11 541	11	38
1757 11 551	11	39
1757 11 600	11	40
0820 11 611 B	11	41
1881 11 700	11	43
0866 11 702	11	44
0820 11 703	11	45
0820 11 705	11	46
0810 11 711	12	47
0820 11 712	12	48

1883 11 750	12	49
1881 13 100	14	1
1881 13 111	14	10
1881 13 200	17	1
1883 13 200	17	1
0839 13 201	17	2
0823 13 221 A	17	3
0823 13 222 A	17	4
1757 13 251	14	11
1883 13 255	14	12
1881 13 300	19	1
1617 13 305 A	19	6
1907 13 310	19	7
1908 13 311	19	8
1881 13 330	14	14
2850 13 332	220	67
	251	39
0866 13 341 B	14	16
1881 13 351	19	2
0222 13 363	33	1
0223 13 363	129	1
1907 13 400	129	2
1663 13 411	129	3
1663 13 412	129	4
1663 13 413	129	5

0823 13 445 A	129	11
2090 13 447	129	13
0839 13 448 B	129	12
1907 13 449	129	14
0222 13 470 B	130	18
0381 13 481	130	19
0222 13 493	130	22
1881 13 510 A	21	1
1881 13 515	21	2
1668 13 527	21	4
1668 13 531 A	21	5
0249 13 595	61	35
	65	40
0839 13 614	15	20
1757 13 710	23	1
1758 13 710	23	1
1757 13 714	23	3
1757 13 715	23	6
1757 13 717	23	7
1757 13 718	23	8
1757 13 720	23	9
1758 13 720	23	9
1757 13 724	23	11
2329 13 726	23	12
1758 13 730	24	13

INDEX. 1757 13 740～1757 14 821

1757 13 740	24	14
2090 13 742 A	15	18
1757 13 744	24	16
2090 13 746	24	17
1757 13 750	24	18
1757 13 752	24	19
1883 13 752	24	19
1757 13 753	24	20
1883 13 753	24	20
1757 13 754	24	21
1883 13 754	24	21
2329 13 754 A	24	22
1757 13 757	24	23
1757 13 770	24	28
1757 13 772	24	29
1883 13 772	25	30
1883 13 775	25	34
1757 13 776	25	35
1883 13 776	25	35
1757 13 778	25	36
1757 13 780	130	23
1757 13 785	130	25
1757 13 786	130	26
1883 13 786	130	26
1757 13 788	130	27
0862 13 790	130	28
1907 13 792	130	29
1624 13 795	130	30
1881 13 800	15	17
2329 13 876	15	19
2329 13 882	15	20
1757 13 889	15	21
1757 13 891	15	22
	126	1
1883 13 910	25	37
1883 13 930	24	24
1883 13 936	24	25
1757 14 020	27	1
1757 14 100	27	8
1757 14 112	27	9
0810 14 113	27	10
0839 14 115	4	50
0839 14 117	27	11
0820 14 118 C	27	12
0839 14 119 B	27	13
0823 14 130	27	2
0823 14 131	27	3
1757 14 132	27	4
0839 14 133	27	5
0839 14 141 A	28	16
0839 14 142	28	17
0820 14 160 G	28	18
0810 14 171	28	19
0820 14 250 D	28	21
0839 14 273 A	4	51
0839 14 274	4	52
0839 14 300	28	22
1757 14 600	29	28
1757 14 611	30	50
0820 14 620	30	52
0813 14 623	30	53
0820 14 625 A	30	54
0813 14 641	30	55
1757 14 651	30	56
1757 14 660	30	60
1757 14 670	30	61
1757 14 680	31	62
1011 14 683	31	63
1907 14 700	33	2
0813 14 716	33	3
0865 14 720	33	4
0881 14 730	33	5
1907 14 735	33	6
1757 14 810	33	13
1757 14 821	33	14

1757 14 822	33	15
1907 15 010	33	17
2090 15 104	33	18
1757 15 105	34	33
0820 15 106	34	34
1757 15 114	33	19
1757 15 118	34	20
0820 15 120	34	21
1757 15 132	34	22
1757 15 151	35	36
1757 15 152	34	23
1757 15 170	34	24
0823 15 171	34	25
0813 15 173	34	26
1097 15 200	35	40
0710 15 204	35	46
0223 15 205	35	45
1097 15 210	35	41
1757 15 211	35	37
1907 15 250	35	39
0222 15 255	36	51
1907 15 310	35	44
1908 15 310	35	44
1097 15 312	36	47
0842 15 316	35	46
0839 15 350A	36	50
0839 15 351B	36	52
1907 15 411	36	55
1907 15 421	36	56
1907 15 511	36	59
1907 15 521	37	60
1757 15 906	216	1
1757 15 911	216	2
1757 15 912	216	3
1757 15 920	216	4
1757 15 921	216	5
1757 15 966	216	6
1757 15 967	216	7
1757 15 970	216	8
0603 16 102B	39	1
0603 16 103	39	5
0222 16 105	39	6
0813 16 112	39	3
1881 16 210A	39	4
0866 16 214A	39	7
0839 16 410B	39	8
0839 16 432	39	9
0862 16 460	39	11
0820 16 510	39	12
0820 16 515	39	13
0454 16 520	39	14
1011 17 100B	42	1
0839 17 105	42	2
0839 17 111	42	6
0810 17 121	42	7
0862 17 201	45	1
0810 17 204	45	2
0810 17 205	45	3
1011 17 221A	45	4
0317 17 225	45	5
0862 17 230	45	6
0862 17 241	45	7
0187 17 243	45	8
0881 17 245B	45	9
0862 17 250	45	10
0862 17 261	45	11
0862 17 262A	45	12
1011 17 270	45	13
0839 17 275	45	14
0839 17 276	45	15
0839 17 277	45	15
0839 17 278	45	15
0839 17 281	45	16
0839 17 284	45	17
0839 17 285	45	18

INDEX. 0839 17 287～0823 18 111

0839 17 287	46	19
0839 17 288	46	19
0821 17 297	46	20
1011 17 301	46	21
0839 17 302	46	22
0821 17 303	46	23
0839 17 305	46	24
0839 17 310	46	25
0118 17 313	49	1
0839 17 313	46	26
0839 17 321A	46	27
0111 17 323	49	2
0600 17 324	46	29
0305 17 327	46	30
0305 17 328	46	30
1620 17 330A	42	9
0376 17 335	42	12
	72	31
	74	—
0862 17 341	46	31
	82	1
0114 17 351	49	3
0862 17 351	42	13
	71	1
0187 17 352	42	14
0187 17 352	71	2
0111 17 354	42	15
	71	3
0839 17 361	42	17
0862 17 371	43	18
0862 17 375	43	20
0810 17 381	43	21
0810 17 385	43	22
0810 17 402	49	4
1010 17 404	49	5
1011 17 406	49	6
1011 17 410	49	7
0103 17 411	49	8
1010 17 420	49	9
0839 17 431	49	10
0221 17 441	49	11
0259 17 441	49	12
1669 17 441	43	25
	71	5
0862 17 442	43	26
	71	6
1620 17 450	49	16
0398 17 461A	49	17
0398 17 462A	49	18
0303 17 470	49	19
0221 17 473	50	22
0303 17 474	50	37
0221 17 475B	50	24
0271 17 478	50	25
0303 17 482	51	38
0183 17 491	50	26
0187 17 492	50	27
1907 17 510A	50	28
0881 17 520	50	29
1011 17 530	43	30
1011 17 535	43	31
1011 17 540A	43	33
0221 17 551A	50	30
0221 17 552	50	31
0303 17 561	50	32
1114 17 630	50	33
0376 17 640A	50	35
1562 18 100	53	1
1672 18 100	53	2
0845 18 101	53	16
0866 18 101	53	17
0823 18 107	53	3
1907 18 110	53	4
0820 18 111B	53	5
0823 18 111	130	31

0823 18 111	217	17
	242	6
0820 18 114	53	10
1907 18 115	53	6
1907 18 120	53	7
1757 18 130	53	11
1757 18 140	53	12
1757 18 150	53	9
1907 18 160	53	8
1757 18 170	53	13
1757 18 180	53	14
1011 18 190	53	15
1881 18 200	54	20
0107 18 216A	54	21
0810 18 276	31	64
0810 18 277	31	64
0820 18 291B	55	39
1757 18 300	57	1
1757 18 311	58	20
1757 18 361	58	23
0222 18 375	58	26
0222 18 376	58	26
0222 18 377	58	26
1757 18 381	58	27
0259 18 391B	55	40
1907 18 400A	60	1
2869 18 400A	63	1
0866 18 496	37	62
0866 18 501A	3	31
1757 18 510	3	32
1672 18 520	61	24
1689 18 520	64	29
2328 18 600	55	42
2691 18 660	137	1
1757 18 860	25	39
1881 18 880	37	63
1114 18 890A	242	1
1663 18 920	6	75
2329 18 921	6	76
2329 18 922	6	77
2329 18 923	6	78
2329 18 924	6	79
2329 18 930B	242	3
1757 18 940A	242	4
1758 18 940A	242	4
0381 18 997	61	33
2070 19 020	67	1
0842 19 025	67	3
1908 19 027	67	5
0454 19 028	67	6
0842 19 031	86	1
1908 19 090	69	—
0338 19 100A	67	8
1908 19 211	67	9
0338 19 215	67	10
	74	—
0338 19 216	67	11
0338 19 220	67	12
0338 19 223	67	13
	74	—
0338 19 240	67	14
0338 19 245	67	15
0338 19 256	67	16
0338 19 257	68	17
0338 19 258	68	18
	74	—
0338 19 310	71	10
0338 19 331A	71	11
0338 19 336	71	13
0338 19 337	71	14
0338 19 338	71	15
0397 19 340	71	16
0338 19 360	76	1
0338 19 361	72	18
0338 19 363	72	19

INDEX. 0842 19 381～0338 19 567

0842 19 381	72	20
0338 19 384	72	21
0842 19 385	72	22
0338 19 386A	72	23
0338 19 388A	72	24
0338 19 389	72	25
0842 19 391	72	26
0842 19 394	72	27
0338 19 395	72	28
0338 19 397	72	29
	83	25
0338 19 431	86	3
0338 19 432	74	—
	86	4
0338 19 433	86	5
0338 19 440	86	6
0338 19 443	86	7
1675 19 444A	86	8
0338 19 446	74	—
	86	9
0338 19 448	86	10
0338 19 449	86	11
0338 19 450	86	12
0338 19 460	76	2
0338 19 470	76	3
0338 19 475	76	4
	77	17
	79	—
0338 19 476	76	5
	77	18
	79	—
0338 19 480	76	6
	77	19
0338 19 486	76	7
	77	20
	79	—
0338 19 487	76	8
	77	21
	79	—
0338 19 488	76	9
	77	22
	79	—
0338 19 493	76	10
	77	23
0338 19 498	76	11
	77	24
	79	—
0338 19 499	76	12
	77	25
	79	—
0338 19 500	76	13
	77	26
	80	—
0338 19 503	76	14
0338 19 504	76	14
0338 19 505	76	14
0338 19 506	76	14
0338 19 507	76	14
0338 19 508	76	14
0338 19 509	77	15
	77	27
	80	—
0338 19 510	77	16
0338 19 511	77	28
0338 19 515	77	29
0338 19 530	77	30
0338 19 531	77	31
0338 19 533	77	32
0338 19 534	78	33
0338 19 540	78	34
0338 19 550	78	35
0338 19 560	78	36
0338 19 565	78	37
0338 19 566	78	38
0338 19 567	78	39

0338 19 570	78	40
0338 19 580	82	4
0338 19 581	82	5
0338 19 590	82	6
0338 19 591	82	7
0338 19 593	82	8
0338 19 594	82	9
0338 19 595	82	10
0338 19 596	82	11
0338 19 598	78	41
0338 19 601	82	12
0338 19 603	74	—
	82	13
0338 19 604	74	—
	82	14
0338 19 605	82	15
0338 19 606	82	16
0338 19 607	82	17
0338 19 608	83	18
0338 19 609	83	19
0338 19 610	83	20
0338 19 613A	83	21
0338 19 614	79	49
0338 19 614A	83	21
0338 19 615A	83	21
0338 19 616A	83	21
0338 19 617A	83	21
0338 19 618A	83	21
0338 19 619	83	22
0338 19 621	78	42
	80	—
0338 19 622	78	43
	83	23
0338 19 623	78	44
0338 19 624	78	45
0338 19 631	78	46
0338 19 632	78	46
0338 19 633	78	46
0338 19 634	78	46
0338 19 635	79	46
0338 19 636	79	46
0338 19 638	79	47
	80	—
0338 19 639	79	48
0338 19 641	79	49
0338 19 642	79	49
0338 19 643	79	49
0338 19 645	79	49
0338 19 646	79	49
0338 19 647	79	49
0842 19 650	83	24
0338 19 651	83	26
0338 19 655	83	27
0338 19 656	83	28
0842 19 660	83	29
0338 19 661	83	30
0338 19 663	83	31
0338 19 664	84	32
0842 19 665	84	33
0338 19 666	84	34
0338 19 667	84	35
0338 19 670A	84	36
0338 19 676	84	37
0338 19 678	68	19
0338 19 701	86	13
0338 19 702	86	14
0338 19 703	86	15
0338 19 704	86	16
0338 19 706	86	17
1840 19 710	72	30
0338 19 731	86	19
0338 19 732	87	20
0338 19 733C	87	21
0338 19 734A	87	22
0338 19 735	72	32

INDEX. 0338 19 735~0730 23 846

0338 19 735	74	—
0338 19 737	72	33
0338 19 739	72	33
0397 19 750	73	34
0338 19 768	73	35
0338 19 815	73	36
1675 19 821	73	40
0338 19 822	73	41
	74	—
0338 19 825	73	43
0338 19 826	73	43
0338 19 827	73	43
0338 19 828	73	43
0338 19 829	73	43
0338 19 831	73	37
0338 19 832	73	38
0338 19 833	73	39
	73	42
0338 19 835 A	73	44
	74	—
0338 19 836	73	45
0338 19 837	73	46
0397 19 838	87	23
2070 19 870	73	47
0338 19 880	74	48
0338 19 904	68	22
1908 19 910	68	23
0842 19 915 A	68	24
0436 19 917	68	26
1098 19 920 A	68	27
1098 19 930 A	68	28
1098 19 933	68	29
1015 19 934 B	68	30
1633 19 938	68	31
1098 19 939	68	32
1908 19 940	68	33
1015 19 945 A	69	34
0397 22 100	74	—
0397 22 200	79	—
0881 22 297	47	38
0398 22 333	42	10
0866 23 025	7	81
1757 23 040	7	—
1883 23 080	7	82
1011 23 103 B	12	50
1011 23 151 A	12	52
1011 23 175	9	13
1011 23 176	9	13
1011 23 180	12	53
1907 23 200	7	—
1908 23 200	7	—
1881 23 540	17	—
1883 23 540	17	—
1757 23 672	19	3
1113 23 673	19	4
1757 23 680	19	5
1757 23 725	25	42
0839 23 801	28	23
0813 23 802 B	28	24
0813 23 803	28	25
0820 23 832 B	29	29
0820 23 833 B	29	30
0820 23 834 B	29	31
0820 23 835 A	29	33
0730 23 837	29	34
1011 23 837	29	35
1011 23 838	29	36
0730 23 839	29	37
0820 23 840	29	38
1011 23 841	29	39
0820 23 842	29	40
1757 23 844	29	41
0730 23 845	29	42
0820 23 845 A	29	43
0730 23 846	29	44

0820 23 847A	29	45
0820 23 848A	29	46
2090 23 853	30	47
0730 23 854	30	48
0820 23 882A	27	14
1757 24 302	54	22
1757 24 303	54	23
1881 24 308	54	24
1757 24 310	54	25
1757 24 313	54	26
1757 24 314	54	27
1757 24 317	54	28
1757 24 319	54	29
1757 24 322	54	30
1757 24 328	54	31
1881 24 330	54	32
1757 24 334	54	33
1757 24 340	54	34
1881 24 350	55	35
1757 24 360	55	36
1757 24 501	57	2
0820 24 503	57	3
1757 24 510	57	4
0208 24 514	57	5
1757 24 526	57	6
1757 24 527	57	7
1757 24 530	57	8
0866 24 533	57	9
1757 24 533	57	10
1757 24 534	57	11
1757 24 535	57	12
1757 24 540	57	13
1011 24 541	57	14
1757 24 550	57	15
1757 24 560	57	16
1011 24 563	57	17
1757 24 581	57	18
0866 24 704	60	2
0839 24 705	63	2
1907 24 705	60	3
0839 24 706	63	3
0839 24 709	63	4
1907 24 709	60	4
1907 24 710	60	5
2869 24 710	63	5
0426 24 712	60	6
0727 24 712	63	6
2869 24 712	63	7
0426 24 715	60	7
0839 24 715	63	8
0839 24 716	63	9
0866 24 716	60	8
0839 24 719	63	10
1907 24 720	60	9
2869 24 720	63	11
0839 24 721	63	12
0839 24 723	63	13
0839 24 724	63	14
0426 24 725	60	10
2869 24 725	63	15
0426 24 726	60	11
2869 24 726	63	16
1907 24 730	60	12
2869 24 730	63	17
0249 24 731	63	18
0426 24 731	60	13
0559 24 731	63	19
2869 24 736	63	20
0222 24 741	60	14
2869 24 748	64	21
0222 24 750	60	15
0222 24 752A	60	16
0222 24 753	60	17
0426 24 753	60	18
0426 24 754	60	19

INDEX. 2869 24 754～0290 27 301

2869 24 754	64	22
0222 24 760 A	60	20
0559 24 760	64	23
0259 25 021 B	89	1
0259 25 071 A	89	2
0259 25 072 A	89	2
0259 25 073 A	89	2
0259 25 074 A	89	2
0259 25 075 A	89	2
0259 25 076 A	89	2
0259 25 077 A	89	2
0259 25 078 A	89	2
0259 25 079 A	89	2
1098 25 100	89	—
0290 25 151	89	3
0223 25 220 D	89	4
1097 25 300	89	5
1097 25 319	90	10
1114 25 331	90	11
1097 26 010	92	1
0259 26 041	92	5
0259 26 051	92	6
0730 26 060	92	7
0305 26 080 B	92	2
0839 26 111 A	92	8
0317 26 121	92	9
0259 26 129	92	15
0259 26 132	92	10
0259 26 141	92	12
0259 26 142	92	12
0259 26 152	92	16
0187 26 154	92	17
0259 26 155	92	13
0305 26 251 A	94	1
0305 26 255	94	2
0398 26 280	94	4
0398 26 290	94	4
0305 26 310 B	94	5
0187 26 341	94	6
0118 26 342	94	7
0223 26 345 A	94	8
0710 26 352	94	11
0866 26 391	94	9
0710 26 461	94	12
0305 26 500 A	94	10
0820 26 570 A	94	14
0813 26 610 A	95	16
0810 26 671	95	18
0305 26 800 A	95	27
0305 26 810 A	95	27
0187 26 821	95	25
0118 26 832	95	28
0118 26 834	95	29
0118 26 897	95	26
0187 26 921	95	25
0613 26 922	95	19
0223 27 012	99	1
2112 27 018	99	2
0223 27 020 B	99	3
0223 27 030	99	4
2080 27 100	99	—
2080 27 110	99	5
0221 27 141	99	6
0755 27 141	99	7
0820 27 150 B	99	8
0305 27 171	99	10
0290 27 231	99	11
0820 27 251	99	14
0290 27 252	99	15
0290 27 253	99	15
0290 27 254	99	15
0221 27 255	100	16
0305 27 261	100	17
0114 27 262	100	18
0290 27 301	100	19

0290 27 302	100	20
0221 27 305	100	22
0223 27 401	100	23
0223 27 402	100	23
0223 27 403	100	23
0223 27 404	100	23
0223 27 405	100	23
0223 27 406	100	23
0223 27 407	100	23
0223 27 408	100	23
0223 27 409	100	23
0223 27 411	100	23
0223 27 412	100	23
0223 27 413	100	23
0223 27 414	101	23
0223 27 415	101	23
1907 28 011	103	1
0824 28 012	103	2
0305 28 013 A	103	3
0305 28 040 A	103	4
0305 28 111 B	103	6
0305 28 150 C	103	8
0305 28 200 E	103	9
0305 28 300 D	103	10
0824 28 464 A	103	5
0305 28 470	103	11
0305 28 591 B	103	12
0305 28 700 D	103	13
0223 28 775	103	14
0223 28 776	103	15
0824 28 778 A	104	16
1011 32 011 A	109	43
1011 32 012	109	44
1011 32 013 A	109	45
1011 32 014	109	46
1011 32 015	109	47
1011 32 016	109	48
1011 32 018	109	49
1011 32 023 A	109	50
1011 32 024	109	51
1011 32 026 A	109	52
1011 32 027 A	109	53
1011 32 028	109	54
1011 32 029 A	109	55
1175 32 030	109	56
1011 32 031	109	57
1011 32 032	109	58
1011 32 033	109	59
1175 32 041	109	60
1175 32 042	109	61
1175 32 043	110	62
1175 32 044	110	63
1011 32 047	110	64
1011 32 048	110	65
1011 32 049	110	66
0208 32 059	106	1
0259 32 071	106	2
0820 32 089	106	3
1907 32 100	106	4
0305 32 119	107	23
	112	1
2113 32 120	106	5
2113 32 130	106	6
0305 32 141	106	8
0820 32 151	106	9
0259 32 154	106	10
0259 32 155	106	10
0259 32 156	106	10
0259 32 157	106	10
0259 32 160	106	11
0259 32 163	106	12
0180 32 165 A	106	13
0180 32 171 A	106	14
0180 32 172 A	106	14
0111 32 173	112	7

INDEX. 0180 32 173A~0259 33 693

0180 32 173A	106	14
0180 32 174A	106	14
0259 32 182	106	7
0180 32 184	107	16
0208 32 188	112	2
0820 32 190	107	17
2835 32 220A	107	25
0187 32 235	107	28
	108	32
2080 32 261	112	3
1562 32 269	112	4
0208 32 278	112	5
	112	8
	120	23
0187 32 279A	120	24
0259 32 279	107	26
0730 32 279	113	24
1027 32 279	113	25
0187 32 289	107	27
	113	26
0259 32 289	120	25
1907 32 301	120	19
1907 32 311	120	19
2080 32 320B	112	6
0305 32 321	112	13
2113 32 329	112	14
2080 32 330A	112	9
0259 32 341	112	15
0866 32 341	90	12
2080 32 350A	112	10
2113 32 354	112	11
2113 32 356	112	12
2080 32 358	113	18
2113 32 365	113	19
0326 32 411	108	33
1793 32 800	108	35
1727 32 811	108	36
0187 32 850A	108	37
0187 32 860	108	38
0187 32 886B	108	39
1175 32 980	109	42
0221 33 035	115	1
0662 33 042	115	2
1011 33 043	115	3
0259 33 047	115	4
0317 33 049	115	5
0398 33 065	115	6
0259 33 071	115	7
0317 33 075	115	9
0820 33 091A	115	10
0259 33 165	96	31
	115	11
0820 33 165A	96	31
	115	11
0820 33 180A	96	32
0820 33 192A	115	12
0305 33 235	116	31
0305 33 251B	115	13
0305 33 260	115	15
0305 33 280	116	19
0710 33 288	96	33
0305 33 610D	116	20
0305 33 626A	116	32
0296 33 636	116	33
0296 33 646	117	33
2981 33 651	116	21
2981 33 671	116	22
0613 33 681	95	20
2981 33 681	116	23
0305 33 685	116	24
0233 33 691	116	25
0259 33 691	95	21
	143	16
0259 33 693	95	22
	143	17

0600 33 693	116	26
0305 33 695	116	27
0305 33 696	116	28
0221 33 698	115	16
0305 33 698A	116	29
0305 33 699	115	17
0305 33 710D	116	20
0305 33 980D	116	18
0305 33 990D	116	18
1907 34 011	119	1
1907 34 012	119	2
0259 34 013	119	3
2158 34 014	119	4
0259 34 015	119	5
0259 34 016A	119	6
0259 34 019	119	7
0259 34 021	119	8
0259 34 110	119	9
1907 34 151	119	11
0259 34 153	119	12
0259 34 155	119	13
0305 34 156	119	14
0259 34 157	119	16
0259 34 158	119	17
1907 34 310	120	—

0305 34 311	120	20
1907 34 320	120	—
1907 34 340	120	27
2158 34 381	120	28
2158 34 390A	120	29
0317 34 460	120	21
0193 34 662	104	17
0317 34 662	121	34
0317 34 663	121	35
0259 34 719A	122	47
0305 34 720	122	43
0183 34 731	122	44
0866 34 760	122	45
1097 34 800A	121	36
0259 34 896	121	37
0259 34 897	121	38
0259 34 898	121	39
0305 34 910G	121	41
1905 37 170	96	34
	117	34
0820 37 180A	117	35
0881 37 191	96	35
	117	36
1011 37 192	96	36
1668 39 020B	124	1

1668 39 040C	124	2
1668 39 045A	124	3
1011 39 340	124	6
1011 39 380A	124	8
1114 40 061	126	2
1097 40 081	126	3
1114 40 108B	126	6
1114 40 160	126	7
0820 40 166	126	8
1114 40 170	126	10
2090 40 307	127	25
1570 40 308	127	26
2158 40 355	15	20
	126	11
0810 40 356	126	12
0824 40 401	126	14
1907 40 500	127	16
2090 40 508A	127	17
1907 40 600	127	24
1097 40 810A	127	18
1114 40 821A	127	19
1097 40 830A	127	20
1114 40 850B	127	21
1128 40 850A	127	22
0727 41 023	139	1

INDEX. 1907 41 030～0225 43 092

1907 41 030	139	2
0559 41 040C	139	3
0183 41 043	139	4
0824 41 051A	139	5
0559 41 081A	139	7
0824 41 084	139	8
0824 41 131	139	9
1872 41 140	139	10
1872 41 142	139	11
0183 41 308	149	1
0810 41 308	139	13
0603 41 331	144	18
1881 41 341	144	19
0866 41 370	143	1
0118 41 375	152	1
1907 41 380	143	3
2835 41 400A	143	5
0839 41 461	143	6
1907 41 610	137	2
1908 41 610	137	2
0824 41 619	137	3
0305 41 641	137	4
0259 41 644	137	5
	139	14
0842 41 650	137	8
1907 41 660	137	9
0118 41 681	137	14
0118 41 682	137	15
1708 41 711	137	13
1881 41 920	143	14
0114 42 046A	131	35
1011 42 250	130	32
0839 42 310A	131	34
0305 42 345B	131	37
2090 42 347	131	38
0305 42 348	131	40
2090 42 348	131	41
2850 42 350	131	42
0621 42 371	131	43
0223 42 375	131	44
0223 42 376	131	45
0839 42 381	131	47
0305 42 390	131	48
2432 42 395	132	50
0824 42 403	132	51
1907 42 410	132	52
0305 42 432	132	53
0305 42 433	132	54
0305 42 441	132	55
0621 42 455	305	8
2244 42 455	132	56
0259 42 459	132	58
0305 42 461	132	59
2280 42 462A	131	33
0305 42 465	132	60
2090 42 610A	132	62
2691 42 710A	133	64
2691 42 716	133	65
2691 42 750	133	66
0259 42 792	133	69
0223 43 022	139	17
0259 43 022	155	1
0259 43 028	139	18
0268 43 028	139	19
0187 43 029	139	20
1097 43 030	140	21
1098 43 030	140	21
0187 43 061	140	24
2301 43 061	140	25
0223 43 064	140	27
0259 43 065	140	28
0305 43 070B	140	29
2835 43 070A	140	29
0259 43 088	110	73
0225 43 092	140	33

1872 43 140	141	35
2835 43 422	147	19
0111 43 432	143	7
0111 43 511	143	8
0839 43 550	146	1
0839 43 570	146	3
1114 43 605C	152	2
1114 43 608B	152	3
1114 43 609A	152	4
0114 43 625	242	7
0136 43 635	144	21
	152	7
0305 43 635	152	8
0187 43 642	152	9
1097 43 650	152	12
0305 43 660A	152	13
0221 43 694	152	15
0839 43 770A	153	17
2835 43 800	146	8
1541 43 820	153	19
2850 43 820B	153	20
2853 43 820	153	21
2081 43 830A	153	22
1907 43 836	153	23
2046 43 839	133	70
2067 43 842A	153	25
2229 43 890A	153	27
1942 43 990	147	18
0302 44 010A	149	2
0813 44 031	149	3
0303 44 032	149	4
0221 44 033	149	5
0813 44 034	149	6
0813 44 035	149	7
0136 44 043	141	37
0221 44 044	149	8
0303 44 051	149	9
0303 44 053	149	10
0303 44 150A	149	15
0303 44 410F	149	17
0303 44 439	150	18
0305 44 471	150	20
0183 45 021	133	72
1663 45 041	134	79
1663 45 042	134	80
0603 45 071	133	73
1907 45 071	134	83
1907 45 260	153	29
0305 45 280B	153	30
1907 45 310	153	31
1907 45 320	153	32
1907 45 330	153	33
1907 45 510	144	22
1097 45 610	134	84
1097 45 711	134	85
0866 45 903A	69	35
	153	34
1650 45 910A	134	86
1650 45 921	134	87
2375 46 010	155	2
1840 46 021	155	3
1840 46 022	155	4
2375 46 030B	155	5
2375 46 051A	155	6
2375 46 052	155	7
2375 46 053	155	8
2375 46 054	155	9
2375 46 055	155	10
2375 46 056A	155	11
0308 46 057A	155	12
2375 46 061	155	15
2375 46 062	155	16
0842 46 081	155	17
0308 46 083	155	18
2070 46 110A	156	19

INDEX. 0842 46 150～0305 52 312B

0842 46 150	156	21
0842 46 571A	156	23
0223 46 683	141	38
1015 46 684	156	24
0259 46 691	156	25
0604 46 785	141	39
0841 49 230	116	30
1708 49 610	147	21
1708 49 630	147	22
0305 49 638	147	23
1708 49 642	147	24
0512 49 651	147	25
0305 49 656	147	26
0512 49 676	147	27
0512 49 677	147	27
0512 49 682	147	30
0512 49 686	147	29
0512 49 696	147	28
0824 49 720A	146	9
0824 49 745	146	10
2046 49 746	146	11
2046 49 747	146	12
0824 49 770	146	13
0824 49 781	146	14
0824 49 782	146	15
2046 49 783	147	16
2046 49 784	146	16
1755 50 025	158	1
1755 50 026	158	2
1755 50 036	158	3
1755 50 037	158	4
1907 50 040	158	5
0223 50 049	134	89
	158	6
1755 50 050	158	7
1755 50 055	158	8
1755 50 060	158	9
1755 50 071	158	12
1755 50 080	158	13
1755 50 091	158	15
1755 50 100	158	16
1907 50 110	158	18
1907 50 130	159	18
1907 50 150 00	159	20
1907 50 180	159	23
1907 50 221	159	26
1907 50 230	159	27
1907 50 250	159	30
1907 50 260	159	31
1755 50 271	159	34
0223 50 275	160	36
1755 50 301	160	37
1907 50 350 00	160	39
0398 50 511 06	160	42
0305 50 541	160	43
0305 50 542	160	44
0305 50 543	160	45
2850 51 020	168	1
1755 51 061	236	11
1755 51 063	236	12
1755 51 071	236	11
1755 51 073	236	12
2850 51 120	168	2
1004 51 310	242	8
1004 51 311	242	9
1727 51 731	258	1
0187 52 141	162	2
0633 52 148	279	18
0881 52 210A	162	3
0881 52 260A	162	4
0824 52 271	162	7
0259 52 301	162	8
	184	1
0223 52 302	162	9
0305 52 312B	162	10

0305 52 313	162	11
0305 52 322A	162	12
2835 52 330	162	13
0305 52 331	162	14
0305 52 371A	163	16
2835 52 381	163	17
0305 52 390	163	18
2835 52 410	163	21
0824 52 451	163	22
0305 52 471	163	25
0305 52 472	163	26
0305 52 510C	165	1
0881 52 510	165	1
0305 52 610B	165	2
0839 52 610A	165	2
0305 52 620B	165	3
0839 52 620A	165	3
0305 52 628	165	4
0305 52 629	165	5
0305 52 661	165	8
0839 52 661A	165	8
0223 52 662	165	9
0305 52 671	165	10
0839 52 671A	165	10
0305 52 750	166	11
0305 52 802	305	9
0305 52 850A	166	13
0305 52 901A	166	15
0866 52 901A	166	15
1907 53 010	168	5
1908 53 010	168	5
0613 53 105	184	2
0187 53 134	168	6
	209	1
0305 53 180	168	7
2835 53 190D	168	9
0187 53 202	184	3
2826 53 270	61	25
	64	30
2869 53 290A	61	27
2826 53 299B	64	32
1907 53 320	172	1
	176	1
0305 53 329A	172	3
	176	3
0305 53 330A	176	4
0839 53 330B	172	4
0305 53 340D	176	6
0839 53 340A	172	6
2080 53 350E	172	8
2835 53 350B	176	8
0839 53 352A	172	10
1905 53 380	176	12
0305 53 410A	172	14
	176	14
0305 53 415	172	16
	176	16
0305 53 430B	176	18
0839 53 430	172	18
0305 53 450A	177	20
0839 53 451C	173	20
0305 53 452	177	22
0259 53 455	173	22
	177	24
0839 53 500	173	23
2850 53 500A	177	25
0305 53 591	177	27
0839 53 591	173	25
0305 53 670	177	29
0881 53 700A	168	12
0305 53 708	168	13
0111 53 771	166	16
1662 53 800	177	31
1663 53 800	173	27
0305 53 861	173	28

INDEX. 0305 53 861～1907 56 040

0305 53 861	177	32
0305 53 920	177	33
0839 53 920	173	29
0305 53 941A	177	34
0839 53 941A	173	30
0398 53 951	177	35
0881 53 951	173	31
2835 53 970	168	14
0398 53 980	177	36
0881 53 980	173	32
0305 54 180	168	8
2835 54 190B	168	10
2981 54 222	61	28
0223 54 225	61	29
	64	33
0200 54 265	267	1
2467 54 290A	64	34
2113 54 295	64	35
2835 54 320	172	2
	176	2
0305 54 330A	176	5
0839 54 330B	172	5
0305 54 340D	176	7
0839 54 340	172	7
1905 54 350	176	9
1907 54 350	172	9
0839 54 352A	172	11
1907 54 370A	172	12
	176	10
1905 54 380	176	13
0305 54 410B	172	15
	176	15
0305 54 415	176	17
	172	17
0305 54 430B	177	19
0839 54 430	173	19
0305 54 450B	177	21
0839 54 451C	173	21
0305 54 452	177	23
0839 54 500	173	24
2850 54 500A	177	26
0305 54 591	177	28
0839 54 591	173	26
0305 54 670	177	30
1907 55 100	184	4
1905 55 120	184	6
1907 55 120	184	6
2280 55 182	258	2
0275 55 195A	258	4
0275 55 215	258	5
0259 55 261	191	1
0301 55 323	184	7
1905 55 381	184	8
1907 55 381	184	8
1907 55 385	184	10
1974 55 385	184	11
1905 55 390	184	13
1972 55 390	184	13
1974 55 390	185	14
0398 55 401	185	19
0398 55 402A	185	20
1907 55 410	185	21
0398 55 417A	185	23
1907 55 485	185	25
1907 55 490	186	26
1907 55 530A	191	—
1907 55 550A	191	—
0305 55 585	258	7
0398 55 700	186	28
0305 55 890	258	6
0820 55 951	186	30
	242	12
1907 56 010	180	1
1908 56 010	180	1
1907 56 040	169	16

1097 56 090	180	2
0839 56 126A	90	13
0305 56 160A	180	4
1907 56 200	180	5
0305 56 231	180	6
0305 56 232	180	7
0118 56 241	180	9
0118 56 242B	180	10
0247 56 275	258	10
1907 56 340	180	11
1093 56 350	180	13
1097 56 350	180	13
0305 56 400A	181	15
0839 56 400B	181	15
1907 56 540	169	17
1097 56 611	258	11
1097 56 612	258	12
0208 56 615	181	17
0810 56 639	181	18
1097 56 700	181	19
2090 56 704C	181	20
1097 56 705A	181	21
2090 56 705A	181	22
1907 56 761	182	32
1905 56 850A	180	14
1907 56 850A	180	14
0305 56 900B	181	16
0839 56 900B	181	16
0223 56 942	134	91
	242	13
0223 56 950	265	9
0305 56 961B	181	24
0839 56 981C	181	27
0305 56 991	182	29
0824 56 999	182	31
0305 57 011	194	22
0317 57 015	195	30
1905 57 100	193	—
1907 57 100	193	—
0259 57 109	193	1
2155 57 109	193	2
0111 57 111	160	48
0305 57 130	193	3
2075 57 130	193	3
0305 57 140	193	5
1905 57 150	193	—
1907 57 150	193	—
0305 57 180A	193	4
0305 57 190	193	6
1687 57 200A	195	26
1905 57 200	195	26
1687 57 250A	195	28
1905 57 250	195	28
1905 57 900	195	33
1907 57 900	195	33
1881 57 940	195	34
1755 57 999	195	35
1905 58 010	198	1
1907 58 010	198	1
0305 58 021C	198	1
0881 58 021	198	1
0824 58 155	291	1
0259 58 232	198	2
2292 58 232	198	2
	291	2
	296	1
0305 58 269	203	1
0305 58 270A	203	2
0305 58 272	203	3
0305 58 273	203	4
0305 58 274	203	5
0305 58 281A	203	7
0223 58 305A	300	1
0259 58 305A	203	9
0259 58 306	203	10

INDEX. 0259 58 306～0839 58 783B

0259 58 306	300	2
0305 58 309	203	11
	300	3
2850 58 310G	203	12
2855 58 310G	203	12
0305 58 314B	204	13
	302	34
0398 58 319A	204	14
0398 58 330D	204	16
0881 58 330D	204	16
0305 58 361	204	18
	300	4
1666 58 365	204	19
	300	5
0223 58 370D	204	21
	291	3
	300	7
2828 58 371A	204	20
0223 58 375A	205	23
	291	4
	300	8
0305 58 410C	205	24
0305 58 411A	205	25
	302	39
0839 58 492A	305	2
0305 58 501B	198	3
0839 58 501	198	3
0305 58 505	198	4
0305 58 560A	205	27
0259 58 570	205	29
	300	10
0187 58 592A	205	30
	300	13
2350 58 593	206	32
	301	14
0305 58 603A	198	5
0305 58 604	198	6
0305 58 605D	199	9
0839 58 605D	199	9
0305 58 606	199	10
0839 58 606	199	10
0223 58 611C01	206	33
	301	15
0259 58 612	206	35
	301	16
0223 58 660A	206	36
0259 58 691 00	206	38
	302	35
0223 58 692A	200	19
	298	27
0317 58 700	206	39
0223 58 721	163	27
	206	40
	207	44
	301	23
	301	27
0187 58 731	206	41
	207	45
	301	24
	301	28
0317 58 736	206	42
0317 58 750	206	43
0398 58 755 00	199	11
	296	2
0305 58 760D	199	12
0839 58 760C	199	12
0305 58 762	199	13
	296	3
0305 58 768	199	14
	296	4
0305 58 780F	199	15
0839 58 780E	200	15
0839 58 783B	200	16
	200	21
	294	39

0839 58 783B	294	47
	298	23
	298	26
0317 58 785	207	46
0839 58 789	200	17
	200	22
0305 58 790A	200	20
0839 58 790D	200	20
1666 58 810	200	18
1907 58 810	200	18
0398 58 821A00	200	23
	291	6
	296	5
0398 58 821A01	200	23
	291	6
	296	5
0398 58 821A20	201	23
	291	6
	296	5
0398 58 822A00	201	24
	291	7
	296	6
0398 58 822A01	201	24
	291	7
	296	6
0398 58 822A20	201	24
	291	7
	296	6
0305 58 831B	201	26
0317 58 831A	301	18
0881 58 831	201	26
0317 58 832	301	19
0881 58 839	201	27
	291	9
0305 58 872	207	49
	301	20
0305 58 874	207	50
	301	21
0208 58 921	201	28
	291	10
	296	8
0187 58 922	201	29
	291	11
	296	9
0259 58 931	169	15
0223 58 961	305	10
1905 59 010	198	1
1907 59 010	198	1
1666 59 020	198	1
1668 59 020	198	1
2850 59 310G	203	12
2855 59 310G	203	12
0398 59 330D	204	16
0881 59 330D	204	16
0305 59 361	204	18
	300	4
1666 59 365	304	19
	300	5
0305 59 410C	205	24
0305 59 501B	198	3
0839 59 501	198	3
0305 59 505	198	4
0305 59 560A	205	27
0259 59 570	205	29
	300	10
0305 59 603A	198	5
0305 59 604	199	6
0317 59 750	206	43
0305 59 760D	199	12
0839 59 760C	199	12
0305 59 780F	199	15
0839 59 780E	200	15
0305 59 790A	200	20
0839 59 790D	200	20
1666 59 810	200	18

INDEX. 1907 59 810～1915 61 450

1907 59 810	200	18
0305 59 831 B	201	26
0881 59 831	201	26
1907 60 050 A	186	31
1908 60 050 A	186	31
1907 60 070	191	12
0305 60 101	258	14
0305 60 102	258	15
1907 60 130	186	34
0317 60 252	187	50
0317 60 253	187	51
0317 60 254	187	52
0317 60 255	187	53
0317 60 256	187	54
0317 60 257	187	55
0317 60 258	187	56
0317 60 259	187	57
0317 60 261	188	58
0317 60 262	188	59
0866 60 263	188	60
0866 60 264	188	61
0317 60 266	188	62
1907 60 311	186	36
1611 60 312	186	37
1907 60 321	186	38
1905 60 330	186	40
1907 60 330	186	40
1905 60 341	187	41
1907 60 341	187	41
2835 60 421	305	11
0305 60 540 A	187	45
0305 60 690	259	18
0305 60 720	187	46
0398 60 721	187	47
1708 61 031	169	18
	209	2
0301 61 051 A	169	19
0301 61 052 A	169	20
0301 61 055	169	22
0864 61 061 A	7	86
	37	65
1907 61 090	209	—
1907 61 130	209	3
1915 61 140	219	49
	224	—
2835 61 140	209	6
	212	—
1907 61 150	209	9
1907 61 151	209	11
1915 61 151	219	52
1907 61 152	209	12
1974 61 161	219	53
0398 61 170 A	209	14
	219	54
0398 61 180 A	209	15
	219	55
1907 61 190	210	16
1972 61 190	219	56
1974 61 190	220	56
1097 61 211	210	19
1974 61 211	220	59
1097 61 212	210	20
1974 61 212	220	60
1097 61 213	210	21
1907 61 213	217	18
2090 61 214 A	217	19
0839 61 216	210	23
	217	21
1687 61 250	210	27
1907 61 252	210	28
1972 61 430	217	—
1974 61 430	217	—
1972 61 440	219	—
1974 61 440	219	—
1915 61 450	217	23

1915 61 450	228	—
1915 61 460	217	26
1915 61 470	217	27
1915 61 471	217	28
1915 61 472	217	29
1915 61 473	218	31
1915 61 475	218	32
1915 61 478	218	33
1097 61 480	218	34
1915 61 521	220	62
	232	1
1915 61 522	220	65
1972 61 525	220	66
	232	—
1974 61 525	220	66
	232	—
1974 61 540	220	68
1915 61 561	221	75
1915 61 562	221	76
1915 61 563	221	77
1915 61 564	221	80
1915 61 566	221	78
1915 61 571	221	81
1915 61 572	221	82
1974 61 573	221	83
1915 61 574	221	84
1974 61 574	222	86
1915 61 661	222	89
1916 61 661	222	89
1915 61 711	222	90
0305 61 800	218	36
0305 61 801	218	37
0305 61 802	218	38
0839 61 812 A	218	41
1097 61 814	218	42
0881 61 816	218	43
0305 61 825	218	44
0305 61 827	219	46
2090 61 827	219	47
1915 61 850	222	91
0305 61 890	222	92
0305 61 901	222	95
0839 61 963 D	216	9
0839 61 964	216	10
0839 61 965	216	11
0839 61 968	216	12
2090 62 214 A	210	22
0249 63 060 A	265	1
0136 65 752	163	28
1668 66 040	236	3
1668 66 070	236	3
1708 66 110	187	48
1011 66 121	187	49
1907 66 151 A	239	2
1907 66 152	239	3
1907 66 154	239	4
1907 66 156	239	5
1907 66 241	239	16
1907 66 242	239	17
0212 66 371	249	4
0223 66 371	249	5
0212 66 372	249	6
0866 66 372	239	10
0305 66 570 A	242	14
0305 66 572	242	15
0305 66 580 A	243	16
	263	70
0305 66 674	237	17
	240	21
0305 66 675	237	18
	240	22
0305 66 676	237	19
	240	23
0305 66 678	237	20
0305 66 694	240	21

INDEX. 0305 66 694～2835 67 370

0305 66 694	237	17
1907 66 700	240	29
1907 66 710	240	29
0397 66 721A	243	19
0397 66 730A	243	20
0813 66 732A	243	24
2852 66 760	243	25
2852 66 763	243	26
0243 66 773	135	94
0233 66 790	141	40
0839 66 791A	244	28
0839 66 792A	244	29
0209 66 820	244	30
0209 66 821	244	31
0820 66 840	150	21
0317 66 862	255	10
0398 66 870	255	—
2070 66 870	255	—
2840 66 870	255	—
0398 66 872	255	1
2845 66 872	255	1
0813 66 879	253	1
0397 66 900	255	2
0398 66 900	255	2
2070 66 900	255	2
2840 66 900	255	2
0398 66 901	255	3
0398 66 902	255	4
0398 66 903	255	5
0259 66 905	253	5
0301 66 905A	188	63
0866 66 905	255	11
0398 66 906	255	6
0222 66 911	267	2
2846 66 931A	256	16
0305 66 940	256	18
0305 66 945	256	19
0208 66 949	25	40
	188	64
	244	33
0866 66 960	255	9
0305 66 966	255	12
0222 66 971	169	23
	267	3
0187 66 991	134	92
	188	65
0820 66 992	256	30
1907 67 010A	244	34
1907 67 030A	244	36
0398 67 040C	244	37
0398 67 050C	188	66
1907 67 060A	244	38
1881 67 065	244	39
1907 67 080	244	40
0308 67 090B	244	42
2850 67 090	244	41
1098 67 101	65	37
1907 67 101	61	32
1098 67 111	61	34
	65	39
2081 67 151	244	43
0866 67 152	237	15
0303 67 155	245	45
0303 67 156	245	46
0305 67 159A	245	47
2850 67 160	236	8
0839 67 170	134	93
0275 67 175	135	95
1757 67 220	245	48
1757 67 230	245	49
2835 67 321A	249	1
2835 67 325A	249	2
2835 67 330	249	3
2835 67 340	249	—
2835 67 370	249	16

0275 67 510A	253	6
0317 67 511	253	7
1011 67 515	253	8
1755 67 560	245	50
1755 67 562	245	51
1755 67 566	245	52
1011 67 660A	245	57
1757 67 700	246	59
1701 67 710	246	60
0866 67 717	245	53
0866 67 718	245	54
0866 67 719	245	55
1757 67 720	246	62
1664 67 740	246	63
2835 67 801	249	8
2081 67 861	246	64
1757 67 870	246	66
0862 67 880	246	68
1757 67 880	246	69
0839 67 910	246	71
1011 67 912	196	37
0839 67 920	246	72
0305 67 992	247	75
0305 67 994	247	77
1905 68 020	259	20
1907 68 020	259	20
1905 68 050	278	1
1907 68 050	278	1
1905 68 060	278	1
1907 68 060	278	1
0810 68 070A	265	2
1907 68 071	278	2
0187 68 110A	265	3
0118 68 180A	265	4
0398 68 180A00	188	67
0404 68 180 05	188	67
0208 68 230	265	5
0259 68 250	193	7
0305 68 580A00	275	1
0839 68 590A00	275	2
0305 68 610C00	275	3
0305 68 620C00	275	4
1907 68 630	275	5
0839 68 660	265	—
0839 68 670B	265	6
0866 68 680	265	7
0839 68 720	265	8
0305 68 800F	265	10
0305 68 810A	265	11
1098 68 851	259	25
1097 68 852	259	26
1098 68 852	259	27
0303 68 853	259	28
1905 68 860	259	29
1906 68 860	260	30
1907 68 860	259	29
1908 68 860	260	30
1909 68 860	260	29
1911 68 860	260	29
1972 68 860	260	29
1973 68 860	260	30
1974 68 860	260	29
1975 68 860	260	30
1976 68 860	260	29
1978 68 860	260	29
0397 68 862	260	31
0398 68 862	260	32
0398 68 872	260	33
0398 68 875	260	34
0398 68 880A	260	35
1908 68 880	260	36
2860 68 881	260	35
1097 68 890	260	38
1099 68 890	261	38
0303 68 893	261	39

INDEX. 0303 68 910A～0305 69 681

0303 68 910 A	261	40
0839 68 936 A	188	70
0305 68 951	267	4
0305 68 952	267	5
1907 68 960 A	267	6
0187 69 049 A	267	9
0305 69 052 A	267	10
2324 69 053 A	267	11
0730 69 057 A	267	12
0839 69 071 01	267	13
1881 69 076	267	14
1907 69 077	267	15
1907 69 078	267	17
2850 69 090	268	20
2850 69 101	268	21
0839 69 170	268	23
0839 69 171	268	24
1668 69 210 A05	268	26
1668 69 210 A20	268	26
1905 69 210	268	26
1668 69 240 A05	268	27
1668 69 240 A20	268	27
1905 69 240	268	27
1668 69 290 13	271	1
1668 69 290 20	271	1
1674 69 290 05	271	1
0839 69 311 B	271	2
0398 69 312	271	3
0881 69 312	271	3
0305 69 313 A	271	4
0839 69 313 A	271	4
0839 69 314 B	271	5
0305 69 315	271	6
0305 69 316	271	7
0305 69 317 B	271	8
0305 69 318 B	271	8
0839 69 318 A	271	9
0317 69 319	271	10
0305 69 321 A	271	11
0839 69 321 A	271	11
0305 69 341 B	271	12
0839 69 341 C	271	12
0305 69 342 C	271	13
0839 69 342 E	272	13
0305 69 343 C	272	14
0839 69 343 E	272	14
0839 69 344 A	272	15
0839 69 345 A	272	16
0305 69 351 00	272	18
2835 69 360 C00	272	19
2835 69 380 B00	272	20
0305 69 411 B00	272	22
0839 69 411 B00	272	22
1905 69 411	272	22
1907 69 411	272	22
0305 69 431 B00	272	23
0839 69 431 B00	272	23
1905 69 431	272	23
1907 69 431	273	23
0305 69 451 A	273	25
0305 69 461 B06	273	26
0305 69 461 B20	273	26
1907 69 611	275	7
1908 69 611	275	7
1907 69 612	275	8
1908 69 612	275	8
1907 69 613	275	9
1908 69 613	275	9
1907 69 617	275	10
1907 69 618	275	11
2090 69 625 08	275	12
2090 69 626 08	275	13
0881 69 627 05	275	14
1907 69 660	276	15
0305 69 681	276	16

0305 69 682	276	17
1097 69 683	276	18
1097 69 684	276	19
1570 69 686	276	20
0839 69 687B	276	21
0839 69 688	276	22
0839 69 689	276	23
1570 69 691	276	24
0305 69 692	276	25
0305 69 693	276	26
0305 69 694	276	27
0305 69 695	276	28
0839 69 696D	276	29
0839 69 697D	276	30
1663 69 699B	276	31
1915 69 810	261	44
2845 69 810A	261	46
2857 69 810A	261	47
0305 69 820A	261	48
1915 69 820	261	45
0305 69 861 00	273	27
0839 69 861A00	273	27
0305 69 862 00	273	28
0839 69 862A00	273	28
0305 69 863 00	273	29
0839 69 863 00	273	29
0305 69 870A00	273	30
0310 69 870A00	273	30
0839 69 870B00	273	30
0841 69 870 00	273	30
0866 69 885	173	33
	177	37
0305 69 920 01	268	29
1907 70 020	169	24
1907 70 050	173	34
	177	38
1907 70 100	170	28
2835 70 201	262	55
0305 70 202	262	57
1905 70 211	262	59
1907 70 211	262	59
0305 70 212	263	60
1907 70 221	263	63
1907 70 225	263	64
0305 70 230A	263	65
0317 70 307	278	3
	279	19
1907 70 310	278	—
0305 70 312	278	4
0259 70 315	278	5
1907 70 320	278	6
0305 70 330A	278	7
0305 70 335	278	8
0305 70 342	278	9
0305 70 343	278	10
1907 70 345	279	15
1907 70 350	279	17
0305 70 352A	280	31
0305 70 353	279	20
0305 70 360	279	21
1907 70 360	280	32
1907 70 365	278	13
0305 70 370	279	22
0866 70 371	280	35
1907 70 375	279	24
0305 70 390	280	27
0305 70 392C	281	37
0305 70 395B	281	39
0305 70 396	280	28
0305 70 397	280	30
0305 70 431	170	30
0305 70 432	170	32
2080 70 441	283	1
2835 70 441	287	1
0305 70 443B	283	2

INDEX. 0305 70 443B~0305 71 343

0305 70 443B	287	2
0614 70 445	61	30
0305 70 447B	283	3
	287	3
0305 70 448A	283	4
	287	4
0839 70 449	283	5
0305 70 454A	287	5
0839 70 454A	283	6
0305 70 455A	287	7
0839 70 455	283	8
0304 70 471	287	9
0305 70 471D	287	9
0833 70 471	283	10
0839 70 471C	283	10
0839 70 479	283	11
0305 70 484B	287	10
0839 70 484A	283	12
0305 70 485A	287	12
0839 70 485A	283	14
0187 70 491	135	98
0839 70 511A	291	12
0839 70 515	291	13
0839 70 521	292	14
0839 70 522	292	15
0839 70 523A	292	16
0839 70 524	292	17
0839 70 525	292	18
0839 70 526	292	19
0839 70 550A	292	21
0839 70 555	292	23
0839 70 570	292	24
0839 70 603	292	26
0839 70 604	293	28
0839 70 605D	293	30
0839 70 606C	293	31
0824 70 621	293	32
0839 70 651A	293	34
0839 70 652	293	35
0881 70 655 00	293	37
0839 70 680C	294	38
0839 70 690	294	46
0881 70 721	294	40
0839 70 751C00	294	41
0839 70 752A00	294	43
1907 70 760	294	45
0307 70 802 00	287	14
0839 70 802A00	283	16
1905 70 803	287	16
1907 70 803	283	18
0305 70 804A00	287	18
0305 70 821A	288	21
0839 70 821A	284	21
0305 70 822	288	23
0839 70 822	284	23
0305 70 823A	288	25
0881 70 823B	284	25
0305 70 825	284	27
	288	27
0305 70 826	288	28
0305 70 827A	284	28
	288	29
0305 70 861C	284	33
	288	34
0839 70 865	284	34
0223 70 870	284	36
	288	36
0833 70 941B00	269	31
0727 70 943	201	30
0305 70 951 01	269	32
2090 70 982A	170	33
	219	48
0305 70 991A02	269	34
1907 71 310	278	—
0305 71 343	278	10

1907 71 345	279	15
1907 71 350	279	17
0305 71 352A	280	31
1907 71 360	280	32
1907 71 375	279	24
0305 71 392C	281	37
0305 71 396	280	28
0305 71 431	170	31
0305 71 454A	287	6
0839 71 454A	283	7
0305 71 455A	287	8
0839 71 455	283	9
0305 71 484	287	11
0839 71 484A	283	13
0305 71 485A	287	13
0839 71 485A	283	15
0839 71 511A	291	12
0839 71 515	292	13
0839 71 570	292	24
0839 71 603	292	26
0839 71 604	293	28
0839 71 651A	293	34
0839 71 652	293	35
0839 71 680C	294	38
0839 71 690	294	46
0881 71 721	294	40
0839 71 751C00	294	41
0839 71 752A00	294	43
1907 71 760	294	45
0307 71 802 00	287	15
0839 71 802A00	283	17
1905 71 803	287	17
1907 71 803	283	19
0305 71 804A00	287	19
0305 71 821A	288	22
0839 71 821A	284	22
0305 71 822	288	24
0839 71 822	284	24
0305 71 823A	288	26
0881 71 823B	284	26
0305 71 951 01	269	32
0305 71 991A02	269	34
1666 72 010A	296	10
0305 72 021B	296	10
0305 72 201	301	25
0305 72 203	301	25
0305 72 210	301	22
0305 72 231	302	29
0305 72 240A	301	26
0305 72 261	302	31
0305 72 262	302	32
2850 72 300B	302	33
0305 72 410D	302	38
0305 72 501A	297	11
0305 72 505	297	12
0305 72 560	303	41
0398 72 602	297	13
0305 72 605D	297	16
0305 72 606C	297	17
0305 72 607	297	18
0305 72 661A	297	19
0305 72 662A	297	20
0305 72 760C	297	21
0305 72 780E	297	22
0305 72 790	298	25
1666 72 810	298	24
0208 72 821	303	43
0208 72 822	303	44
0305 72 831A	298	28
1666 73 010A	296	10
0305 73 021B	296	10
0305 73 240A	301	26
2850 73 300B	302	33
0305 73 410D	302	38
0305 73 501A	297	11

INDEX. 0305 73 505~0305 76 142

0305 73 505	297	12
0305 73 560	303	41
0398 73 602	297	13
0305 73 661 A	297	19
0305 73 760 C	297	21
0305 73 780 E	298	22
0305 73 790	298	25
1666 73 810	298	24
0305 73 831 A	298	28
1907 74 020	170	34
1907 74 030	170	35
0305 74 050	178	39
0839 74 050	173	35
0305 74 070	178	40
0839 74 070	173	36
0305 74 075	178	41
0839 74 075	173	37
0305 74 080	178	42
0839 74 080	173	38
2850 74 090	178	43
2855 74 090	174	39
2850 74 095	178	44
2855 74 095	174	40
0839 74 158	305	—
0839 74 159	305	—
0866 74 430	305	1
0866 74 440	305	1
0881 74 600	163	29
0839 74 910 A	305	3
0839 74 920 A	305	4
0839 74 930	305	5
0839 74 950	305	6
1568 75 029	191	2
1907 75 101	191	3
1907 75 102	191	4
1907 75 104	191	5
1907 75 105	191	6
1907 75 106	191	7
1907 75 108	191	8
1907 75 109	191	9
1757 75 990	305	7
0208 76 071	276	32
0305 76 084 A	232	3
0305 76 089	232	4
2835 76 110	212	1
	224	1
2835 76 116	212	2
0305 76 117	212	3
	224	2
0305 76 123	212	4
0305 76 123	224	3
0305 76 124	212	5
	224	5
2835 76 125	212	6
	224	6
2835 76 126	212	7
	224	7
2835 76 127	212	9
2835 76 127 A	224	8
0305 76 129	212	10
2835 76 131	212	12
2835 76 132	212	13
	224	10
2835 76 135	213	15
	224	11
0305 76 136	213	16
	224	13
0305 76 137	213	17
	225	11
0305 76 138	213	18
	225	15
0305 76 139	213	19
	225	16
0305 76 141	213	23
0305 76 142	213	24

0305 76 143	213	25
0305 76 144	213	26
2835 76 145	213	27
0305 76 146	213	28
	225	17
0305 76 147	214	29
	225	18
0305 76 149	214	30
0305 76 150	214	31
	225	19
0305 76 151	214	32
	225	20
0235 76 321	228	1
0235 76 322	228	2
0235 76 333	228	3
0235 76 334	228	4
0235 76 335	228	5
0235 76 336	228	6
0235 76 338	228	7
0235 76 345	228	8
0881 76 370	228	9
0235 76 373	228	10
0235 76 374	228	11
0235 76 375	228	12
0235 76 377	228	13
1974 76 401	232	5
1915 76 403	232	6
1915 76 404	232	7
1974 76 406	232	8
1011 76 419	225	21
	232	10
1915 76 701	232	11
1915 76 702	232	12
1916 76 702	232	12
1974 76 702	233	14
1972 76 703	233	15
1974 76 703	233	15
1972 76 704	233	16
1974 76 704	233	16
1915 76 705	233	20
1915 76 707	233	21
1915 76 709	233	22
1915 76 711	233	23
0881 76 712	228	14
1915 76 712	233	24
0881 76 713	228	15
1915 76 713	233	25
0881 76 714	228	16
1915 76 715	234	26
1915 76 716	234	27
0881 76 717	228	17
1915 76 717	234	28
1915 76 718	234	29
1915 76 721	234	32
0881 76 723	228	18
0881 76 726	229	19
0881 76 727	229	20
0881 76 734	229	22
0881 76 735	229	21
0881 76 738	229	23
0881 76 739	229	24
0881 76 740	229	25
0881 76 741	229	26
1974 76 741	221	69
0881 76 742	229	27
1974 76 742	221	70
1974 76 743	221	71
1974 76 747	221	72
1915 76 750	225	22
1915 76 751	225	23
1915 76 752	225	24
1915 76 753	225	25
1915 76 754	225	26
1915 76 755	225	27
1915 76 756	225	28

INDEX. 1915 76 757～2835 87 923

1915 76 757	225	29
1915 76 758	225	30
1915 76 759	225	31
1915 76 761	225	32
1915 76 763	225	33
1915 76 764	226	34
1915 76 765	226	37
0305 76 809	234	33
1915 76 810	229	29
1915 76 811	229	32
1915 76 812	229	32
1915 76 813	229	33
1915 76 814	229	34
1915 76 815	229	35
1915 76 816	229	36
1915 76 817	230	37
1915 76 818	230	38
1915 76 819	230	40
1915 76 820	230	41
1915 76 821	230	42
1915 76 822	230	43
1915 76 823	230	44
1915 76 824	230	45
1915 76 825	230	46
1915 76 826	230	48
1915 76 827	230	50
1915 76 828	230	51
1915 76 830	230	53
0223 78 865	222	96
0235 79 380	222	97
2850 87 004	236	4
2850 87 008	236	5
2850 87 011	236	6
2850 87 012	236	7
2850 87 026	237	21
2850 87 027	237	22
2850 87 027 A	240	24
2850 87 028	237	21
2850 87 029	237	22
2850 87 029 A	240	24
2850 87 031	240	25
0305 87 032	239	11
2850 87 032	240	26
0305 87 081	243	21
0305 87 084	255	7
0305 87 087	255	8
0305 87 095	256	20
0305 87 096	256	21
0305 87 097	256	22
0305 87 098	256	23
0259 87 101 A	249	17
0305 87 102	256	24
0259 87 105	249	18
0259 87 106	250	19
0257 87 107	250	20
0305 87 107	256	25
0257 87 108	250	21
0259 87 119	250	22
0259 87 120	250	23
0275 87 123	239	12
0259 87 134	249	7
2244 87 191	237	23
2244 87 201	240	27
0738 87 803	250	32
0738 87 804	250	33
0305 87 903	249	9
0305 87 904	249	10
0305 87 905	249	11
0305 87 906	249	12
0305 87 907	249	13
0305 87 908	249	14
0305 87 909	249	15
0305 87 921	250	24
2835 87 922	250	25
2835 87 923	250	26

2835 87 924	250	27
2835 87 925	250	28
2835 87 926	250	29
2835 87 927	250	34
2835 87 928	250	30
2835 87 951	250	31
0305 87 956	250	35
2835 87 957	250	36
0727 87 992	253	9
0305 87 993	253	10
0727 87 994	253	11
0727 87 995	253	12
0305 88 060 A	193	9
1905 88 103	193	10
1907 88 103	193	10
1905 88 110	194	14
1907 88 110	194	14
1687 88 130	194	16
1687 88 131	194	18
0305 88 150	194	20
1907 88 152	193	11
0305 88 160	194	21
1905 88 160	194	15
1907 88 160	194	15
1687 88 180	194	17
1687 88 181	194	19
1687 88 201	195	27
1905 88 201	195	27
1687 88 251	195	29
1905 88 251	195	29
0305 88 260 A	193	12
1011 89 175	45	—
0259 89 251	89	9
1029 89 411	144	20
0839 89 431 A	143	9
0317 89 435	143	10
0317 89 436 A	143	11
	146	2
1907 89 654	239	15
1755 89 662	236	10
2850 89 663	237	16
1907 89 664	239	1
1755 89 665	239	9
1755 89 667 -	236	10
2850 89 668	237	16
2850 89 673	240	20
2850 89 678	240	20
0223 91 529	256	26
0223 91 530	256	27
0223 91 531	256	28
0223 91 533	256	29
1757 99 100	7	—
1907 99 150	34	27
0305 99 178	50	36
0317 99 265 B	92	14
0866 99 322	113	22
1907 99 324	115	23
0305 99 356 A	120	22
0259 99 361	121	42
0317 99 362	122	46
0305 99 712	284	29
	288	30
0305 99 713	284	30
	288	31
0305 99 715	284	31
	288	32
0305 99 721	284	32
	288	33
0305 99 741	289	38
0839 99 741	285	38
0305 99 742	285	39
	289	39
0305 99 743	289	40
0839 99 743	285	40
0305 99 744	289	41

INDEX. 0839 99 744～99340 0612

0839 99 744	285	41
0305 99 746	289	42
0839 99 746	285	42
0305 99 747	289	43
0839 99 747	285	43
0305 99 748	289	44
0839 99 748	285	44
0305 99 749	289	45
0839 99 749	285	45
99221 1212	30	58
99221 2015	113	27
	163	19
99221 2020	108	30
	113	27
	141	36
	156	26
99221 3015	120	26
99221 3020	112	16
99221 3030	120	18
99221 4030	115	8
99222 0216	43	27
	71	7
99225 0320	155	13
99230 0511	137	11
99230 0811	279	25
99230 0815	149	12
99231 0818	140	23
99233 1225	42	3
99234 1208	3	33
99246 0725	159	21
99264 0725	160	40
99274 0821	222	88
99276 0506	43	24
99276 0808	64	28
	144	23
99276 1008	107	20
99276 1208	61	36
	65	41
99276 1410	65	38
	247	80
99276 1608	58	28
99276 2008	33	12
99282 1201	133	75
99282 1401	134	77
	147	20
	134	82
99282 1700	69	37
99282 1907	153	24
99282 2001	133	76
99282 2600	7	87
99282 2600	37	66
	210	24
	220	61
99282 4309	24	15
99282 4900	37	61
99282 5500	131	39
99283 1100	129	15
99283 1300	129	16
99285 0800	36	53
	146	6
99288 1608	186	32
99295 1508	107	21
99305 2800	7	84
99306 3000	2	17
	3	34
99307 0600	5	53
99307 0800	14	2
99307 1200	14	3
99335 0401	253	2
99335 04065	253	3
99335 04075	253	4
99335 06001	278	12
99336 12029	133	71
99340 0420	25	38
99340 0612	134	78

99340 0619	25	34
99340 0628	134	81
99340 0660	129	9
99340 0665	129	9
99340 6060	129	10
99340 6065	129	10
99340 6093	133	74
99381 0600	69	38
99381 1000	69	39
99381 1400	33	8
99384 1200	5	54
99384 1200F	33	10
99502 4000	43	35
99503 3000	14	4
99511 1000	7	85
	14	5
99511 1200	3	35
	34	28
99511 1400	5	63
99541 01101	10	27
99541 01601	28	27
	74	49
99541 02211	43	28
	71	8
99541 0240	14	13
99541 0350	55	37
99562 1000	152	11
	152	14
	153	16
99562 1200	2	4
	4	36
	34	—
99562 1400	5	64
	49	13
99562 1600	4	37
	5	55
99562 1800	33	9
99564 0800	4	38
99564 1000	7	85
	14	6
	49	14
	69	40
	143	4
99564 1200	131	36
	153	18
99564 1400	69	41
99564 1600	33	11
	37	64
	130	24
99564 1800	42	8
99564 1800	50	34
99564 2200	33	16
99564 2800	11	42
99573 2500	46	32
	82	2
99573 3500	46	33
99573 78118	39	10
99574 4000	34	29
99574 5200	89	6
99575 0300	137	12
99575 0500	149	13
99575 0600	96	30
	137	6
	139	16
	156	27
99576 0300	279	14
99576 0400	278	11
	279	23
99576 0500	280	26
99576 0800	30	59
99578 3000	184	12
	267	18
99579 3000	259	21
	260	37
	267	19

INDEX. 99579 4000～99743 0616

99579 4000	267	7
99583 26388	107	19
99586 10207	43	29
	71	9
99606 3307	46	34
99606 6205	89	7
99606 7203	34	30
99611 1500	46	35
	82	3
	95	23
	143	15
99611 1750	71	12
99611 2000	10	28
	71	17
99611 2500	49	15
99611 2750	86	18
9962 04 1653	117	37
	96	37
	265	12
9962 07 1653	96	37
	117	37
	265	12
9963 60 4130	96	37
	117	37
	265	12
9963 60 4140	96	37
	117	37
	265	12
9965 05 4530 00	96	37
	117	37
	265	12
9965 06 4530 06	96	37
	117	37
	265	12
99655 30010	96	38
99655 30015	96	38
99655 30020	96	38
99655 30025	96	38
99655 30030	96	38
99655 30035	96	38
99655 30040	97	38
99655 30045	97	38
99655 30050	97	38
99655 30060	97	38
99681 1503	130	17
99684 0600	239	14
	247	78
99684 1500	247	79
99700 8120	239	18
99701 1030	186	35
99701 1030	210	18
	220	57
99701 2050	237	24
	240	28
99701 2070	239	13
99701 3270	239	7
99701 4278	236	13
	239	6
99701 5050	242	10
	258	8
99701 6030	191	10
	243	17
	263	71
99706 0110	243	22
99706 0115	243	22
99706 0120	243	22
99709 0108	21	6
	25	41
	69	42
	186	33
99709 0225	21	7
99709 1156	247	81
99741 0616B	230	47
99743 0516B	188	71
99743 0616	244	27

99752 30818	90	14
99753 41022	99	12
99753 81022	99	12
99761 0416B	262	56
99761 0620	205	31
	300	11
99761 0630	204	20
	206	31
	300	6
	300	12
99772 0516	268	22
99774 0616	159	25
	159	29
99781 0818	152	5
	207	47
99781 0822	152	6
99781 0825	108	40
99781 0835	108	41
99781 1012	67	2
99781 1018	67	4
99781 1025	119	15
99781 1090	107	22
99781 1225	121	32
99781 1240	121	33
99783 0828	207	48
99783 0828	302	30
99783 1028	124	9
99783 1090	113	17
99785 0516	222	87
	279	16
99785 0520	280	34
99785 0825B	194	24
99786 0510	256	13
99786 0612	21	3
	55	41
	134	88
	146	5
	153	35
	181	23
99786 0616	137	7
	149	14
	156	20
99786 0620	137	10
99786 0625	244	35
	251	38
99786 0635	245	56
99786 0816	36	54
99786 0820	140	30
99786 0820B	195	31
99786 0825	158	10
99786 0825	159	19
99786 0825B	194	23
99786 0830	108	34
99786 0850	54	19
99794 0516	210	25
	217	22
	219	45
99794 0612	196	36
	246	67
	246	70
99794 0635	209	4
	209	8
	219	51
99794 10259	160	38
99795 1032	140	31
99796 0510	210	17
	220	58
99796 0608	43	32
99796 0610	4	42
	24	26
	25	31
	68	25
	218	35
99796 0614	36	57
	42	16

INDEX. 99796 0614～99806 0510

99796 0614	247	76
99796 0616	127	23
	218	39
99796 0620	35	38
	35	43
	43	19
	69	36
99796 0810	33	7
99796 0812	14	15
	24	27
	25	32
	36	58
99796 0814	23	4
99796 0815	180	12
99796 0816	4	44
	36	49
	58	25
99796 0822	50	20
99796 0825	58	24
	64	27
99796 0832	50	21
99796 1030	61	21
99796 1035	40	16
	68	20
99796 1040	68	20
99796 1045	39	15
	68	20
99796 1090	40	17
99797 0508	205	26
99797 0510	181	26
	303	40
99797 0525 B	261	50
99799 0514	168	11
99799 0516	258	16
99799 0520	191	11
99799 0616 A	236	9
99799 0635	169	21
99799 0820	246	74
99800 10115	58	21
99801 0814	94	13
	130	20
99801 0816	107	18
	162	5
	229	28
99801 0818	6	73
	9	7
	126	5
99801 0820	46	28
	124	7
	194	13
99801 0822	10	30
	23	5
	34	31
99801 0825	6	80
	217	24
99801 0832	126	4
99801 0835	217	25
	230	49
99801 0840	5	58
99801 0865	5	59
99801 0875	5	60
99801 1045	126	13
99803 0810	23	2
99803 1012	61	22
99804 0516	132	57
	280	33
99804 0620	180	8
99804 0625	132	49
99804 0816	61	26
	64	31
99804 1022	90	15
99805 0620	168	3
99806 0412	131	46
99806 0510	206	37
	250	37

99806 0510	256	17
	302	37
99806 0512	169	25
	172	13
	176	11
99806 0516	184	5
	205	22
	291	5
	300	9
99806 0608	303	42
99806 0610	67	7
	199	7
	230	52
	297	15
99806 0612	170	29
	199	8
	205	28
	220	63
	232	2
	261	41
	292	22
	292	25
	293	27
	293	29
	303	42
99806 0614	28	20
	43	34
	50	23
	71	4
	74	50
	168	4
	169	26
	203	6
	230	39
99806 0616	6	69
	153	26
	163	15
	220	64
	234	30
99806 0618	27	15
	30	51
	119	10
	165	7
	234	30
99806 0620	35	42
	181	28
99806 0622	134	90
99806 0625	152	10
	303	45
99806 0630	30	51
99806 0635	153	28
99806 0640	127	27
99806 0814	166	14
99806 0818	166	12
99811 0812	100	21
99811 1020	115	14
99811 1050	99	9
99813 12135	140	26
99813 1218	140	26
99831 0308	110	68
99831 0408	297	14
99831 0516	268	25
99831 0825	163	23
99832 0408B	206	34
	301	17
99832 0412B	187	42
	187	43
99832 0416B	187	44
99832 0516B	189	72
99832 0520B	185	17
99832 0612	204	15
	302	36
99833 0408	29	32
	135	96
	186	39

INDEX. 99833 0410～99861 0410B

99833 0410	110	67
	135	97
	281	40
99833 0412	150	22
99833 0416B	258	3
	262	58
99833 0508B	262	54
99833 0510	221	73
99833 0512	133	68
	146	4
	261	49
99833 0514B	263	69
99833 0516	133	63
	185	14
	243	23
99833 0520	201	25
	291	8
	296	7
99833 0610	221	74
99833 0612	129	7
99833 0616	218	30
99833 0618	129	6
99833 0812	94	3
	94	15
99834 0410	233	13
99834 0514	233	19
99834 0616B	159	33
99835 0408	232	9
99835 0414	212	11
	226	35
99835 0416	213	22
	224	9
99835 0420	213	20
	226	38
99835 0510	234	31
99835 0516	212	8
	224	4
99835 0625C	237	14
99836 0312B	281	38
99837 0514B	259	22
99837 0516C	268	28
99838 0514B	242	11
99838 0516	188	68
99838 0620	268	30
99851 0612A	5	56
99851 0622A	14	7
99851 0814A	64	25
99851 0822A	2	5
99851 0828A	14	8
99852 0610	42	4
99852 0612	95	17
99852 0660	2	18
99852 0820	92	3
99852 0822A	3	19
	4	39
99852 0830A	4	40
99852 0848	143	12
99852 0880	92	4
99852 0880A	3	20
99852 1016	3	21
99855 1020	5	57
99855 1025	42	5
99859 1025A	216	13
99859 1050A	216	14
99859 1220A	3	22
99859 1225A	3	23
99860 0410	280	29
99860 0512	246	61
99860 0514	180	3
99860 0516	181	25
	244	44
	246	65
99860 0612	169	27
99861 0308B	263	61
99861 0410B	263	66

99862 0412B	273	24
99862 0414B	284	20
	288	20
99862 0416B	184	9
99862 0418B	294	44
99862 0420B	272	21
99862 0516B	185	16
	259	23
99862 0520B	273	31
99863 0308	110	69
99863 0310	110	70
99863 0312	110	71
99863 0408	182	30
99863 0412	222	93
99863 0412B	269	35
99863 0416B	261	42
99863 0510B	132	61
99863 0512	284	35
	288	35
99863 0516	262	53
99864 0406	193	8
99864 0408	293	36
99864 0410B	294	42
99864 0412	244	32
	272	17
99864 0412B	269	33
99864 0420B	160	46
99864 0512	258	13
99864 0516	218	40
99865 0416B	221	79
99865 0516	209	13
	222	85
	222	94
99866 0412B	263	67
99867 0512B	186	27
99868 0312	185	18
99868 0410	233	18
99868 0412	185	22
	185	24
	186	29
99868 0412B	243	18
99868 0416B	209	10
99868 0420	233	17
99868 0510	242	2
99869 0410B	258	9
99869 0414	159	22
	160	41
99887 0412	155	14
99896 0400	160	47
	261	43
99896 0400	263	68
99896 0500	185	15
	259	24
99896 0600	169	27
99898 0500	273	31
99901 0600	36	48
99901 0800	14	9
	17	5
	28	26
	34	32
	35	35
	61	23
	64	24
	92	11
	101	24
	104	19
	110	74
	120	30
	126	4
	146	7
	149	11
99902 0800	156	28
	163	24
99906 0400	212	11
	213	21

INDEX. 99906 0400～99940 0600

99906 0400	213	22
	226	36
	226	38
	284	37
	288	37
99906 0500	54	18
	133	67
	188	69
	229	30
	259	17
	292	20
99906 0600	23	10
	27	6
	43	23
	57	19
	95	24
	127	27
	134	90
	165	6
	165	7
	119	10
	212	14
	224	12
	262	51
99906 0600B	262	52
99906 0800	162	6
	246	73
	293	33
99907 0600	30	49
	204	17
99911 0400	263	62
99911 0800	130	21
99921 1000	90	16
	104	18
	107	24
	124	4
	124	5
	124	10
	216	15
99921 1200	140	32
	216	16
99921 1400	103	7
	104	17
	121	31
99921 1800	108	31
99922 0800	139	12
99922 1000	104	18
	107	15
	107	29
	108	32
99922 1000	112	1
	140	31
	156	22
99922 1200	27	7
99922 1400	86	2
	113	20
99922 1800	89	8
99924 1000	108	30
	113	27
99924 1200	112	16
	120	26
99940 0400	256	14
	267	16
99940 0500	210	26
	217	20
	219	45
	240	30
	256	15
99940 0501	281	36
99940 0502	189	73
	239	8
	240	19
	267	8
99940 0600	64	36
	129	8

99940 0600	137	16
	143	2
	150	19
	209	5
	209	7
	219	50
	220	67
	242	5
	245	58
	247	76
99940 0601	55	38
99940 0602	36	57
	61	31
	158	11
	159	28
	159	32
	159	24
99940 0800	25	33
	61	37
	64	26
	65	42
	126	9
	140	34
	143	13
	147	17

99940 0800	195	25
	195	32
99940 0802	19	9
	158	17
99940 1000	140	22
99940 1001	40	18
	42	11
	58	22
	68	21
99941 0801	19	10
99942 1000	121	40
99944 1400	113	21
99945 0500B	275	6
99945 0800	158	14
99945 1000	160	35
99947 0600	149	16
	203	8
99947 1400	120	18
	121	35
99948 1200	110	72
99949 0800	126	15
99951 0618	199	8
	205	28
	292	22
	297	15

99951 0618	303	42
99951 0818	23	2
	166	14
99951 0822	126	4
	127	15
99951 1022	107	24
99951 1030	124	4
	124	9
	124	10
99951 1430	121	31
99952 0400	110	67
	131	46
	150	22
	185	22
	185	24
	186	29
	186	39
	212	11
	213	20
	213	22
	222	93
	224	9
	226	35
	226	38
	232	9

INDEX. 99952 0400～99952 0600

99952 0400	233	17
	280	29
	281	40
99952 0400B	243	18
	258	3
	261	42
	262	58
	269	33
99952 0412B	209	10
99952 0500	54	18
	132	57
	133	67
	133	68
	169	25
	172	13
	176	11
	180	3
	188	68
	188	69
	184	5
	191	11
	201	25
	205	26
	206	37
	212	8

99952 0500	218	40
	221	73
	222	87
	224	4
	233	19
	245	44
	245	54
	246	61
	246	65
	256	17
	262	53
	279	16
	280	34
	291	8
	296	7
	302	37
	303	40
99952 0500B	188	71
99952 0516	133	63
	168	11
	181	25
	181	26
	185	14
	210	25
	210	26

99952 0516	217	22
	219	45
	259	16
	259	17
	280	33
99952 0516B	262	50
	263	69
	275	6
99952 0600	28	15
	36	48
	58	19
	129	6
	132	49
	170	29
	203	6
	204	17
	218	30
	218	39
	220	63
	220	64
	221	74
	232	2
	234	30
	244	27
	261	41

99952 0600	269	30
99952 0600B	236	9
99952 0618	127	23
	134	90
	137	10
	156	20
	163	15
	165	6
	165	7
	168	3
	168	4
	169	21
	169	26
	180	8
	181	23
	181	28
	209	4
	209	7
	219	50
	219	51
	220	67
	245	56
	262	51
	292	25
	293	27

99952 0618	293	29
99952 0618B	262	52
99952 0800	5	58
	5	59
	5	60
	6	80
	61	23
	64	24
	104	19
	110	74
	121	30
	124	7
	130	20
	152	5
	163	19
	166	12
	246	74
	259	19
99952 0816	139	6
	156	29
	194	13
99952 0822	36	49
	36	58
	61	26
	64	31

99952 0822	110	74
	140	30
	158	10
	159	19
	162	5
	162	6
	163	20
	194	23
	194	24
	195	31
	247	74
	303	40
99952 1022	160	38
99952 1200	140	32
99952 1426	103	7
99953 0400	30	57
	233	13
	272	17
99953 0500	261	49
99953 0500B	262	54
99953 0600	23	10
	30	51
99953 0800	14	9
	23	5
	28	26

INDEX. 99953 0800～99971 0500

99953 0800	34	32
	156	30
	217	24
	217	25
	280	26
99953 1000	39	2
99953 1400	103	7
99958 1018	99	13
99963 3310	51	39
99963 3330	51	39
99963 6910	47	36
99963 6930	47	36
99967 0400B	184	9
99967 0500B	185	16
	185	17
	189	72
	273	31
99971 0400	29	32
	110	67
	131	46
	150	22
	185	24
	186	29
	187	43
	212	11

99971 0400	213	20
	213	22
	222	93
	224	9
	226	35
	226	38
	232	9
	233	13
	272	17
	281	40
	285	37
	289	37
99971 0400B	209	10
	243	18
	258	3
	261	42
99971 0500	54	18
	132	57
	133	63
	133	67
	133	68
	146	4
	169	25
	172	13
	176	11

99971 0500	184	5
	185	14
	188	68
	191	11
	205	22
	205	26
	206	37
	212	8
	221	73
	222	87
	224	4
	229	31
	233	19
	234	31
	242	2
	243	23
	245	54
	250	20
	251	37
	256	17
	259	16
	259	17
	261	49
	279	16
	280	33

99971 0500	280	34
	284	35
	288	35
	291	5
	300	9
	302	37
	303	40
99971 0500B	189	71
	262	50
	262	54
99971 0600	6	69
	23	10
	27	6
	28	15
	28	20
	30	49
	30	51
	35	42
	36	48
	43	23
	43	34
	50	23
	58	19
	67	7
	71	4

99971 0600	74	50
	95	24
	119	10
	127	27
	129	6
	132	49
	152	10
	153	26
	153	28
	159	25
	159	29
	165	6
	168	3
	168	4
	169	21
	169	26
	180	8
	182	28
	199	7
	199	8
	203	6
	204	17
	205	28
	213	14
	218	30

99971 0600	218	39
	219	51
	220	63
	220	64
	221	74
	224	12
	232	2
	234	30
	236	9
	244	27
	261	41
	262	51
	269	30
	292	22
	292	25
	293	27
	293	29
	297	15
	303	42
	303	45
99971 0600B	262	52
99971 0601	49	1
99971 0800	5	58
	5	59
	5	60

INDEX. 99971 0800～99971 1000

99971 0800	6	73
	7	80
	9	7
	10	30
	14	9
	17	5
	23	2
	23	5
	28	26
	34	31
	34	32
	35	35
	39	9
	39	10
	46	28
	50	27
	61	23
	64	24
	90	14
	92	11
	94	13
	94	15
	100	21
	101	24
	104	19

99971 0800	107	18
	108	40
	108	41
	121	30
	124	7
	126	4
	126	5
	130	20
	146	7
	149	11
	152	5
	152	6
	156	31
	158	14
	162	5
	162	6
	163	15
	166	12
	166	14
	194	13
	194	24
	207	47
	207	48
	217	24
	217	25

99971 0800	229	28
	246	73
	247	74
	293	33
	302	30
99971 1000	6	71
	39	2
	67	2
	67	4
	90	15
	90	16
	99	9
	107	22
	112	1
	115	14
	115	16
	119	15
	124	4
	124	5
	124	9
	124	10
	126	11
	156	22
	160	35
	216	15

99971 1200	116	17
	121	32
	121	33
	140	32
	216	16
99971 1400	86	2
	103	7
	104	17
	121	31
99971 1800	89	8
	108	31
99972 0800	139	15
	156	32
	279	26
99972 1000	165	5
99972 1400	156	22
99974 0600	204	15
	302	36
99975 0400	272	21
99975 0500	268	25
99975 0500B	273	31
99975 0500C	268	28
99975 0600	204	20
	206	31
	300	6
99975 0600	300	11
	300	12
99978 3200	47	37
99979 1200	27	7

TOYO KOGYO CO.,LTD.

Printed in Japan