RX-3
SEDAN & COUPE
PARTS CATALOG



Issued by
TOYO KOGYO CO.,LTD.
Rotary Engine-Licence NSU. Wankel
August, 1971

HOW TO USE THIS PARTS CATALOG

This parts catalog is compiled for the following models (From Car No. 120642 $^{71}/_{11}$ ~)
Model : RX-3 Sedan & Coupe

Model No.	Model / Type	Description
1550	S102A	RX-3 Sedan Standard Australian Spec. Model (R. H. D.)
1551	S102A-DX	RX-3 Sedan Deluxe Australian Spec. Model (R. H. D.)
1552	S102A-DXT	RX-3 Sedan Deluxe with Automatic T/mission Australian Spec. Model (R. H. D.)
1553	S102A-DCA	RX-3 Coupé Deluxe Australian Spec. Model (R. H. D.)
1554	S102A-SCA	RX-3 Coupé Super Deluxe Australian Spec. Model (R. H. D.)
1555	S102A-DX	RX-3 Sedan Deluxe General Export Model (R. H. D.)
1556	S102A-DCA	RX-3 Coupé Deluxe General Export Model (R. H. D.)
1557	S102A-SCA	RX-3 Coupé Super Deluxe General Export Model (R. H. D.)
● 1558	S102A-DX	RX-3 Sedan Deluxe ECE Cold Proof Spec. Model (L. H. D.)
● 1559	S102A-DCA	RX-3 Coupé Deluxe ECE Cold Proof Spec. Model (L. H. D.)
1565	S102A-DX	RX-3 Sedan Deluxe General Export Model (L. H. D.)
1566	S102A-SCA	RX-3 Coupé Super Deluxe General Export Model (L. H. D.)
1567	S102A-DX	RX-3 Sedan Deluxe ECE Spec. Model (L. H. D.)
1568	S102A-DCA	RX-3 Coupé Deluxe ECE Spec. Model (L. H. D.)

INSTRUCTIONS FOR USE OF THIS PARTS CATALOG

(I) Layout of Parts Catalog

The spares relevent to each assembly are printed inset to the right, and parts that constitute a sub-assembly are indicated by illustrations and classified according to each assembly.
Therefore, if a spare part is not printed inset to the right, this shows that the part does not constitute a part of the assembly.
Moreover, to aid identification of spares, "exploded" illustrations are incorporated in this catalog.

(Ⅱ) How to locate parts

1) When part number is not known.

A. Refer to index of groups and locate the group to which the part belongs.

⇩

B. Open to group illustration page and locate part wanted.

⇩

C. See the number given for the part in the illustration and find corresponding number in the parts composition lists.

⇩

D. Then, you will find the name and the part number of the part on the right side of this number.

2) When part number is known but shape and name of part is unknown.

A. See index given at back of the parts catalog and find pages where illustration, part number and figure number is listed.

⇩

B. Open to page indicated and locate the part number in the part composition list, and after this locate the part in the illustration by referring to figure number given at front of the part number.

⇩

C. The corresponding figure number in the illustration is for the part required.

3) Moreover as an alphabetical index is incorporated after the index of groups, utilize for locating principal parts.

(Ⅲ) On Groups

1) The figure enclosed by a triangle at the top of each page (Example 

) indicates group number.

2) Group numbers are determined according to structure and function of parts.

3) The group number given in the index of groups coincide with the numerals (Example 

) of the illustration and parts composition pages.

(Ⅳ) Explanation of Parts Composition Lists

1) Indication of composition of assembly.

(a) The spares relevent to each assembly are printed inset to the right.

(b) Spares not printed inset to the right are parts that do not constitute a part of any assembly.

(c) The space between the parts that constitute an assembly or sub assembly is widened, to clearly indicate the parts of each assembly or sub assembly.

Example :

	No.	Part Number	Description	Q'ty	Remarks
(a)	1	0839 14 300	Filter, Oil	1	
(b)	2	0839 23 801	Cover	1	
	⋮		⋮	⋮	
	3	0823 23 802A	Guide (EX.), Valve	1	Fig. No. 4 included
(b)(c)	4	0813 23 803	Clip, Valve Guide	1	
(d)	5	99541 01601	Ring, "O"-Oil Filter	2	
	6	99901 0800	Nut, Oil Filter	2	

(a) ····· Includes (b) to (c)
(b) ····· Includes (c)
(d) ····· Is not included in any ass'y nor sub ass'y

2) On parts Number

A. Exclusive parts

Example :

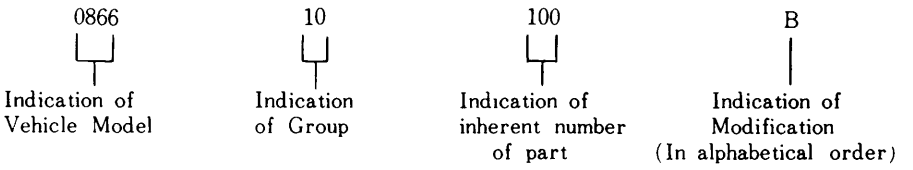

B. Standardized parts (General parts)

Example :

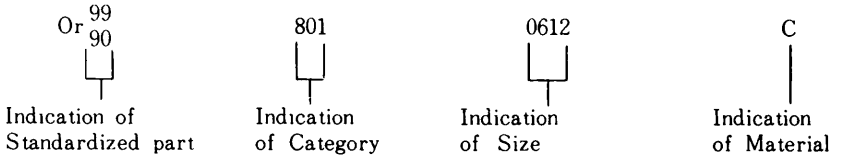

C. Standardized parts (Tires, Tubes, Disc Wheels, etc.)

Example :

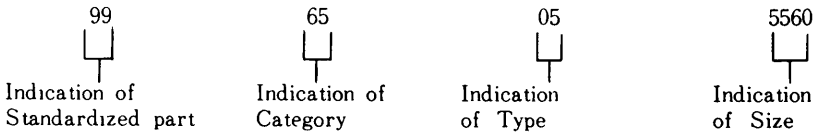

3) On Quantity

The quantity given in the parts composition list shows number of parts used per vehicle and does not indicate selling unit.

4) Other Precautions

☆ Mark····· Parts marked thus are not available as replacement parts, therefore, when these parts are required, order in the form of assemblies (or sets) including these parts or in the form of parts interchangeable with these parts.

5) Abbreviations

(R) ····· Right
(L) ····· Left
(C) ····· Center
(Frt.) ····· Front
(Rr.) ····· Rear
Cpt. ····· Complete
Ass'y ····· Assembly
Std. ····· Standard

O.S. ····· Over Size
U.S. ····· Under Size
EX. ····· Exhaust
IN. ····· Inlet
T/mission ····· Transmission
© ····· Parts with Different Colours (Indicate Colour when Ordering)
10 ····· Indication of Group
Manual ····· Manual Transmission
Automatic ····· Automatic Transmission

(V) Precautions to be taken when placing orders for parts

1) Always specify part numbers, names of parts and quantity required.

2) Be sure to list the parts in order of part number, when filling in order sheet.

3) As processing of orders received by us is done by electronic computers, importance is attached to the part number. Therefore, in case the part number and name of part do not coincide with each other, the part will be sent to you in accordance with the part number.

4) Distinction of colour of spare parts by code number is done by figures number 11 and 12 of the part number. Therefore add to the end of the applying part number and order.

Example:	Part Number	Code No.	Description
	0301 58 8100	-01	Door Trim (R) (Black)
	← 10 Figures →	← 2 Fig. →	
	0301 58 8100	-04	Door Trim (R) (Brown)
	← 10 Figures →	← 2 Fig. →	

(VI) Replacement pages and purport

Page replacements are supplied in monthly frequency as a rule, listing parts modified or newly added and month and year date will be printed in lower corner of each replacement page. Therefore it is essential that care be taken to check on these dates to confirm if the parts listed conform to the car imported, before ordering.

1) Explanation on designation given in remarks column

a. Car No. ..... Chassis no. of car that modification becomes effective from.

b. 69/ ..... 69 designates year of modification and numerals 1 ~ 12 shows month of year.

c. ○ mark ..... Indicates that modified part and former part are interchangeable.

d. ※ mark ..... Indicates that former part has been superseded by new part and is no longer available.

e. × mark ..... Indicates that modified part and old part are not interchangeable.

f. △ mark ..... Indicates that new part is interchangeable with old part but that old part is not interchangeable as a replacement for cars utilizing the new part.

2) ● mark ..... This dot at front of figure number of replacement pages show the parts that have been subject to modification.

Engine Parts

Group No.	Description	Fig.	Page	Part No.
10	Rotor Housing (Front)	1		2~4
10	Rotor Housing (Rear)	5		6~8
11	Rotor	9		10~13
13	IN. & EX. Maniforld	14		15~16
13.23	Air Cleaner	17		18
13.23	Carburettor	19		20
14	Oil Pump	21		22~23
23	Metering Oil Pump	24		25~26
14.15	Cooling System	27		28~31
16	Clutch (Manual)	32		33~34
17	Manual T/mission (Case)	35		36~37
17	Manual T/mission (Gear)	38		39~41
17	Manual T/mission (Change Control)	42		43~44
18.24	Distributor	45		46~49
18.24	Alternator	50		51~52
●18.24	Starter & Battery (Manual)	53		54~56-1
18.24	Starter & Battery (Automatic)	57		58~60
19	Automatic T/mission (Converter, Oil Pump & Piping)	61		62~64
19	Automatic T/mission (Case)	65		66~67
19	Automatic T/mission (Clutch & Planetary Gear)	68		69~71

INDEX.

Group No.	Description	Fig.	Page	Part No.
19	Automatic T/mission (Low, Reverse & Governor)	72		73~74
19	Automatic T/mission (Manual Linkage)	75		76
19	Automatic T/mission (Main Control)	77		78~79
	Chassis Parts			
25	Propeller Shaft	80		81
26	Rear Axle	82		83~84
26	Rear Brake	85		86~88
27	Driving	89		90~91
28	Rear Suspension	92		93~94
32	Steering System (Wheel & Gear, R.H.D.)	95		96~99
32	Steering System (Wheel & Gear, L.H.D.)	100		101~103
32	Steering System (Rod)	104		105~106
33	Front Axle	107		108~109
34	Front Suspension	110		111~113
39	Engine & T/mission Support	114		115
40	Exhaust System	116		117
42	Fuel Tank	118		119~121
13.45	Fuel Piping	122		123~124
41	Accelerator Control System (R.H.D.)	125		126
41	Accelerator Control System (L.H.D.)	127		128
41.43	Clutch & Brake System	129		130~132

Group No.	Description	Fig.	Page	Part No.
41	Clutch Release & Master Cylinder		133	134~135
43.49	Tandem Master Cylinder & Master Vac.		136	137~139
44	Parking Brake System		140	141~142
43.45	Piping (Clutch & Brake)		143	144~145
● 43.45	Piping (Clutch & Brake) (Arctic Spec. Model & Switzerland)		145-A	145-B~145-C
46	Change Controls (Automatic R.H.D.)		146	147~148

Body Parts

50	Bumper & Grille		149	150~151
52	Bonnet & Trunk Lid		152	153~155
51~70	Body Panels (Front)		156	157~158
53.54	Body Panels (Side, Coupe)		159	160~161
53.54	Body Panels (Side, Sedan)		162	163~164
56	Body Panels (Floor)		165	166~168
55.60	Dashboard		169	170~175
55.75	Meter		176	177~178
57	Seat (Coupe)		179	180~183
57	Seat (Sedan)		184	185~189
58.59	Front Side Door (Glass)		190	191~194
58.59	Front Side Door (Lock)		195	196~199
61	Car Heater		200	201~203
66	Lamps (Front Side)		204	205~206
● 66	Lamps (Rear Side)		207	208~209-1

INDEX.

Group No.	Description	Fig. Page	Part No.
66.67	Electric Equipment (Body)	210	211~215
66.87	Windshield Wiper	216	217~219
67.87	Screen Washer	220	221
66	Auto Radio	222	223~225
68	Crush Pad, Glove Pocket & Console Box	226	227~231
68	Service Tools	232	233
69~71	Attachment	234	235~238
69	Trim & Top Ceiling	239	240~241
69	Floor Mat & Trim	242	243~244
70.71	Ventilator	245	246
70.71	Glass & Moulding	247	248~250
72.73	Rear Side Window (Coupe)	251	252~255
72.73	Rear Side Door (Glass, Sedan)	256	257~259
72.73	Rear Side Door (Lock, Sedan)	260	261~264
09	Key Set	265	266~267
	INDEX.		268~301

ALPHABETICAL INDEX

Description	Page
ENGINE	
Bolt, Tension	7
Bracket, Engine Mounting	115
Cap, Limiter-Carburettor	20
Cap, Oil Filler	7
Carburettor	20
Cleaner, Air	18
Cord, Earth-Fuel Pump	123
Cover, Dust	7
Cover, Front-Rotor	3
Duct, Hot Air	15
Engine Packing Set	4
Gauge, Oil Level	8
Gear, Drive-Distributor	12
Gear, Stationary (Front)	11
Gear, Stationary (Rear)	11
Hanger, Engine	4, 8
Hose, Air	18
Hose, Hot Air	18
Hose, Ventilation	8
Housing, Front-Rotor	2
Housing, Intermediate	7
Housing, Gear-Rotor	6
Housing, Rotor-Front	2
Housing, Rotor-Rear	6
Joint, Hose	6
Manifold, IN.	15
Member, Engine Mounting	115
Oil Seal Set-Rotor	10
"O" Ring Set	2, 6
Pan, Oil	8
Plate, Oil Baffle	12
Plate, Thrust	11
Pulley	12
Rotor, Front	10
Rotor, Rear	10
Rubber, Engine Mounting	115
Seal, Apex	10
Seal, Corner	10
Seal, Side-Outer	10
Shaft, Eccentric	11
Spring, Apex Seal	10
Spring, Corner Seal	10
Spring, Oil Seal-Inner	10
Spring, Side Seal	10
Sprocket, Drive	12
Support, Air Cleaner	18
Tray, Carburettor	20
Tube, Vacuum	18
Weight, Balance (Manual)	12
Weight, Counter (Automatic)	13
Wheel, Fly	12
EXHAUST SYSTEM	
Hanger, Silencer	117
Joint, Main & Pre-Silencer	117
Manifold, EX.	15
Pre-Silencer	117
Silencer, Main	117
LUBRICATION	
Adjuster, Chain	22
Body, Oil Pump	22
Cartridge, Oil Filter	23
Chain, Timing	22
Filter, Oil	23
Gear, Driven	23
Plate, Middle-Oil Pump	22
Plunger, Pressure Control	3
Pump, Metering Oil	25
Regulator, Pressure	23
Rod, Connecting	23
Rotor, Set	22
Shaft, Driven-Gear	23
Sprocket, Driven	22
Strainer, Oil	22
Tube, Metering Oil	23
COOLING	
Boss, Pulley	28
Cock, Water Drain	30
Cooler, Oil	31
Fan & Fan Drive	29

ALPHABETICAL INDEX

Description	Page
Hose, Oil	31
Hose, Water	31
Joint, Union	31
Pulley, Water Pump	29
Pump, Water	28
Radiator	30
Repair Kit, Water Pump	28
Shroud, Radiator	30
Tank, Sub	30
Thermostat, Water	28
Water Seal	28
CLUTCH	
Cylinder, Clutch Master	134
Cylinder, Clutch Release	134
Collar, Release	33
Cover, Clutch	33
Cover, Dust	33
Disc, Clutch	33
Fork End, Push Rod	131
Fork, Release	33
Holder, Flexible Hose	135
Hose, Flexible	135
Housing, Clutch	33
Pedal, Clutch	130
Pin, Pivot	33
Pipe, Clutch	145
Repair Kit, Clutch Master Cylinder	134
Rod, Push-Clutch	131
TRANSMISSION	
Band, Brake Automatic	69
Boot, Automatic	147
Boot, Dust	44
Carrier, Front-Automatic	70
Carrier, Rear-Automatic	71
Case, Change Control	43
Case, T/mission-Manual	36
Case, T/mission-Automatic	66
Clutch, Front-Automatic	69
Clutch, Rear-Automatic	69
Converter, Torque-Automatic	62

Description	Page
Cover, Blind	37
Cover, Under-Automatic	62
Diaphragm, Vacuum-Automatic	67
Distributor, Oil-Automatic	74
Drum, Connecting-Automatic	73
End, Control Lever	43
Flange, Automatic	73
Fork, Shift-1st & 2nd	43
Fork, Shift-3rd & 4th	43
Fork, Shift-Reverse	43
Gear, Countershaft	40
Gear, Countershaft-Reverse	40
Gear, Drive-Automatic	74
Gear, Driven-Automatic	67
Gear, Low	40
Gear, Main Drive	39
Gear, Reverse	40
Gear, Reverse Idle	40
Gear, Second	39
Gear, Speedometer Drive	41
Gear, Speedometer Driven	37
Gear, Third	39
Governor-Automatic	74
Hose, Oil-Automatic	64
Hose, Vacuum (Rr).-Automatic	63
Housing, Automatic	62
Housing, Extension	37
Housing, Extension-Automatic	66
Hub, Clutch	39
Hub, Rear Clutch-Automatic	70
Joint, "T"-Automatic	148
Joint, Speedometer Cable	37
Key, Synchronizer	39
Knob	44
Knob, Automatic	147
Lever, Automatic	148
Lever, Change	44
Lever, Control	43
Lever, Select-Automatic	76
Lever, Selecter-Automatic	147

ALPHABETICAL INDEX

Description	Page
Member, T/mission Mount	115
Pan, Oil - Automatic	67
Pass, Oil	37
Pawl, Parking - Automatic	76
Pipe, Oil - Automatic	64
Pipe, Vacuum - Automatic	63
Piston, Low & Reverse - Automatic	73
Plate, Backing - Automatic	62
Plate, Drive - Automatic	62
Plate, Manual - Automatic	76
Plug, Magnet	36
Pump, Ass'y - Automatic	62
Retainer, Servo - Automatic	66
Ring, Synchronizer (3.4)	39
Rod, Automatic	148
Rod, Diaphragm - Automatic	67
Rod, Shift	43
Rubber, T/mission Mounting	115
Shaft, Input - Automatic	63
Shaft, Main	39
Shaft, Manual - Automatic	76
Shaft, Parking Pawl - Automatic	76
Shaft, Reverse Idle Gear	41
Shell, Sun Gear - Automatic	70
Sleeve, Clutch Hub (3.4)	39
Solenoid, Down Shift - Automatic	67
Spindle, Select Lock	44
Spring, Synchronizer	39
Strut, Band - Automatic	66
Support, Actuator - Automatic	76
Tube, Oil - Automatic	67
Valve, Control - Automatic	78

PROPELLER SHAFT & DRIVING

Description	Page
Carrier, Differential	90
Case, Differential Gear	90
Driving & Differential	90
Flange, Companion	90
Gear Set, Final	90
Gear, Differential Side	90
Joint, Universal	81
Piece, Distance	90
Pinion, Differential	90
Shaft, Propeller	81
Spacer	91
Yoke	81
Yoke, Sliding	81

FRT. & RR. AXLE

Description	Page
Adapter	86
Adapter, Mounting	108
Anchor Block	86
Brake, Disc	108
Breather	83
Cap, Center	88,109
Cap, Hub	108
Cap, Wheel	88,109
Casing, Rear Axle	83
Cylinder, Wheel	87
Drum, Rear Brake	86
Hub, Front	108
Lever, Operating	87
Plate, Brake Back	86
Plate, Disc	108
Plug, Magnet Drain	83
Plug, Oil Level	83
Ring, Dust	108
Ring, Wheel	88,109
Rubber, Set	88,109
Shaft, Rear Axle	83
Shoe, Brake	86
Strut, Operating	87
Tire, 155 SR - 13 Radial	88,109

SUSPENSION

Description	Page
Arm	112
Arm, Knuckle	112
Bracket, Shackle	93
Bumper, Bound	94,111
Casing, Stopper	94
Clamp, Spring	93
Damper, Front	113
Damper, Rear	94

ALPHABETICAL INDEX

Description	Page
Holder, Rubber Pad	94
Member, Cross	111
Pad, Rubber	94
Pin, Spring	93
Plate No. 1, Shackle	93
Rubber, Mounting	111
Rubber, Stopper	94
Spring, Coil	111
Spring, Rear	93
Stabilizer	111
STEERING	
Arm, Pitman	99,103
Boss, Steering Wheel	96, 97,101
Bracket, Lower-Shaft Jacket	99,101
Bush, Tapered	105
Button, Horn	96
Cap, Horn	96,101
Cover, Column	175
Cover, Dust	99,103
Cover, Side	98,102
Gear, Steering	97,102
Housing, Gear	98,103
Idler	105
Insulator	99
Jacket, Shaft (Without Energy Absorbing)	97,102
Link, Center	105
Nut, Worm Ball (Without Energy Absorbing)	97
Plate, Set	103
Plug, Oil	98,102
Rod, Tie	105
Rubber, Fixing-Shaft Jacket	101
Shaft, Energy Absorbing	97,102
Shaft, Sector	98,103
Socket Set	105
ACCELERATION CONTROLS	
Cable, Choke	173
Pedal, Accelerator	126,128
Retainer, Accelerator Rod	128
Rod, Accelerator Control	126,128
Wire, Accel.	126,128

Description	Page
FOOT BRAKE	
Bracket, Master Cylinder	131
Connector, Brake Pipe	144
Cylinder, Tandem Master	137
Fork End, Brake	131
Holder, Reserve Tank	138
Hose, Flexible	144
Hose, Vacuum	144
Joint, Pipe-Brake Pipe	144
Pad, Pedal	130
Pedal, Brake	130
Pipe No. 1, Rear Brake	144
Pipe, Connector-Vacuum Hose	144
Pipe, Vacuum	145
Repair Kit "A"	139
Repair Kit "B"	139
Tank, Reserve	138
Vac, Master	139
Valve, W. P.	144
PARKING BRAKE	
Boot	142
Cable, Front	141
Cable, Rear	141
Lever, Hand Brake	141
Ratchet	141
Rod, Release	141
Sector	141
FUEL SYSTEM	
Board, Partition-Fuel Tank	119
Cap, Filler	120
Elbow	120
Filter, Fuel	123
Hose, Joint	119
Lid, Filler	120
Pipe, Filler	119
Pipe, Fuel-Carburettor Side	123
Pipe, Fuel-Fuel Pump	123
Pipe, Soft Vinyl	119
Plate, Back Up	120
Pump, Fuel	123

ALPHABETICAL INDEX

Description	Page
Tank, Fuel	119
Tube, Vent	120
ELECTRICAL EQUIPMENT	
Alternator	51
Antenna, Auto Radio	223
Arm, Wiper	217
Auto Radio & Stereo	223
Auto Radio Cpt.	223
Battery	55, 59, 60
Beam Unit, Sealed No. 1	205
Belt, "V"	52
Blade, Wiper	217
Block, Fuse	211
Block, Main Fuse	211
Bracket, Alternator	52
Bracket, Ignition Coil	46
Bracket, Relay	215
Bulb & Socket	231
Cable, Battery Positive	56, 60
Cable, Speedometer	173
Clamp, Battery	55, 59, 60
Clock, Auto	171
Coil, Ignition	46
Condenser	224
Control Unit, Center	214
Cord, Back Window-Heating Wire use	215
Cord, Earth	121
Cord, High Tension	47
Cord, High Tension-Coil-Distributor	46
Cord, Parking Lamp Switch	142
Distributor	47
Flasher & Hazard Unit	214,215
Flasher Unit, For France	215
Gauge, Fuel Tank	120
Gauge Unit, Water Heat	28
Harness, Wire-Front	212
Harness, Wire-Rear	213
Harness, Wire-Engine	213
Harness, Wire-Ignition Coil Relay-Coil	213
Harness, Wire-Meter	213
Harness, Wire-Reverse Lamp	213
Horn, Electric	212
Lamp, Front Turn Signal	206
Lamp, Head	205
Lamp, Licence	208,209
Lamp, Rear Combination	208
Lamp, Room	211
Lamp, Side Turn Signal	206
Lens, Illumination	171
Lighter, Cigar	175
Loud Speaker	224
Meter Set	177
Meter, Combination	178
Motor, Wiper	217
Motor & Link-Wiper	217
Ornament, Without Auto Clock	172
Plug, Sparking	47
Reflector, Reflex-Rear	209
Regulator	49
Relay, Horn	212
Relay, Ignition Cord	214
Relay, Wiper Switch	214,215
Socket, Distributor	49
Starter	54, 58
Strap, Alternator	52
Switch, Combination	174
Switch, Door	215
Switch, Ignition & Steering Lock	266
Switch, Kick Down	126
Switch, Oil Level Warning	8
Switch, Oil Pressure	6
Switch, Parking Lamp	142
Switch, Reverse Lamp	44
Switch, Stop Lamp	132
Switch, Vacuum	18
Tray, Battery	55, 59, 60
Tube, Vacuum Control	49
Washer Set, Screen	221
Wire, Earth	60
Wire, Earth-Battery	56

ALPHABETICAL INDEX

BODY & FITTINGS

Description	Page
Adjuster No. 1, Seat	181,187
Bar, Front Bumper	150
Bar, Rear Bumper	150
Belt, Front Safety	183,189
Belt, Rear Safety	189
Bezel, Lamp	151
Blank Key, Primary Key	266
Body, Door-Front	191
Body, Door-Rear	257
Bonnet	153
Brace, Diagonal	161,164
Bracket, Lift-Front	191
Bracket, Lift-Rear (Coupe)	252
Bracket, Lift-Rear (Sedan)	257
Carrier, Battery	158
Chamber	237
Channel, Center	257
Channel, Glass Run-Front	192
Channel, Glass Run-Rear	253
Clamp, Release Wire-Bonnet	154
Cover, Inner Handle	197,261
Cover, Service Hole	168
Cover, Under	167
Cushion, Seat-Rear	182,187
Cushion, Seat	180,185
Dam, Window Glass	248,249
Duct, Ventilator	246
Extractor	237
Frame, Extractor	237
Frame, Front-Floor	166
Frame, Rear-Floor	166
Garnish	254
Garnish, Arm Rest	192,254,258
Glass, Back Window	248
Glass, Front Side Door	191
Glass, Front Window	248
Glass, Quarter Window	258
Glass, Rear Side Door	257
Glass, Side Window	252
Grille, Extractor	238
Grille, Radiator	151
Guard Set, Bumper	151
Guide "A", Glass	191,253
Handle, Outer Side	197,262
Handle, Inner	197,261
Handle, Regulator	198,253,262
Hinge, Bonnet	153
Hinge, Door	198,262,263
Hinge, Trunk Lid	154
Holder, Belt	183,189
Holder, Number Plate	150
Hook, Bonnet	153
Hook, Front & Rear Frame	166
Insulator No. 1	167
Knuckle, Seat	181,187
Lid, Trunk	154
Lock, Bonnet	153
Lock, Door	196,261
Lock, Lid	155
Louver	246
Member No. 1, Cross	166
Member No. 3, Cross	167
Mould "A", Sash	193
Mould, Beltline	193,254,259
Mould, Drip	250
Mould, Front	151
Mould, Rear	249
Mould, Lower-Front	248
Mould, Quarter Line	254
Mould, Sash	259
Mould, Step	250
Mould, Upper-Front	248
Panel, Rear End	161
Panel, Quarter Inner	160
Panel, Rear Deck	164
Panel, Rear End	164
Panel, Roof	164
Panel, Cowl Side	163

ALPHABETICAL INDEX

Description	Page
Panel, Cowl	157
Panel, Cowl Side	160
Panel, Dashboard - Lower	157
Panel, Dashboard - Upper	157
Panel, Floor Side	167
Panel, Front Fender	157
Panel, Front Skirt	158
Panel, Nose	158
Panel, Rear Deck	161
Panel, Rear Fender	160, 164
Panel, Roof	161
Panel, Shroud	157
Panel, Shroud - Upper	158
Panel, Wheel Apron	157
Panel, Wheel House	166
Pan, Front Floor	166
Pan, Rear Floor	166
Pan, Spare Tire	167
Pillar, Center - Outer	160, 163
Pillar, Front Inner	160, 163
Pillar, Hinge Outer	160, 163
Pillar, Rear Inner	163
Plate, Guide	158
Plate, Scarf - Front	249
Rack	199, 263
Regulator, Window	197, 252, 262
Rest, Arm	192, 254, 258
Rod, Door Lock	196, 261
Scoop, Air	154
Seat, Back	180, 182, 186, 188
Seat, Front	180, 185
Sill, Side - Inner	166
Sill, Side - Outer	160, 163
Spring, Balance	155
Spring, Lift	153
Stay, Front Bumper	150
Stay, Rear Bumper	150
Stopper, Bonnet	153
Stoneguard	250
Striker	155
Stripe, Front Fender	238
Stripe, Front Side Door	238
Tray, Ash	181, 187
Tray, Package	161, 164
Trim, Back Seat	181, 186
Trim, Cushion	180, 185, 188
Trim, Door	192, 258
Trim, Quarter	254
Trim, Rear Seat	182
Trim, Seat Back	182, 188
Valve, Check - Side Sill	161
Ventilator	246
Weatherstrip	155, 193, 257, 258
Weatherstrip, Inner	192
Weatherstrip, Outer	192, 258
Weatherstrip Outer "A"	253
Weatherstrip, Outer "B"	253
Welt, Seaming	193, 254, 259
Wire, Release	154
Wire, Ventilator Control	246

KITS, ACCESSORIES & OPTIONAL PARTS

Blower	201
Box, Hood Center	171
Box, Glove - Outer	229
Bracket, Center Panel	170
Bracket, Choke	173
Ceiling, Top	240
Cloth, Cover	227
Console, End	230
Console, Front	230
Cosole, Rear	230
Control	201
Duct	201
Emblem, Front	235
Garnish	227
Grille	237
Guide, Ventilator	174
Handle, Assist	237
Hanger, Coat	237
Heater Set	201

ALPHABETICAL INDEX

Description	Page
Heater Unit	201
Holder, Grille	170
Hood No. 1	170
Hood No. 2	171
Hose No. 1	202
Hose, Defroster	201
Insulator	243
Jack	233
Key Primary	266
Key Set	266
Key Sub Set	266
Key Sub Set, Filler Lid	266
Key Sub Set, Steering Lock	266
Key Sub Set, Trunk Lid	266
Key, Secondary	266
Lid, Glove Box	228
Mat (Frt., C)	243
Mat (Frt., L)	243
Mat (Frt., R)	243
Mat (Rr., C)	243
Mat (Rr., L)	243
Mat (Rr., R)	243
Mat, End	243
Mat, Trunk Room	243
Member, Lower	172
Mirror, Door	236
Mirror, Rear View	235
Mirror, Room	236
Name, Plate	235
Nozzle, Defroster	174
Ornament	235
Pad, Lower	227
Pad, Crush	227
Panel, Control	201
Pipe, Heater	202
Plate No. 2, Fixing-Rear	240
Plate, Center	171
Plate, Fixing-Front	240
Rest, Center Arm	230
Shelf, Parcel	229

Description	Page
Sun Visor	237
Tools	233
Tray, Ash (Frt.)	228
Tray, Ash-Rear	231
Trim, Center Pillar	241
Trim, Front Pillar	240
Trim, Front Side	240
Trim, Package Tray	241
Trim, Rear Pillar	241
Trim, Tire House	243
Wire, Jack	233

10 ROTOR HOUSING (FRONT)

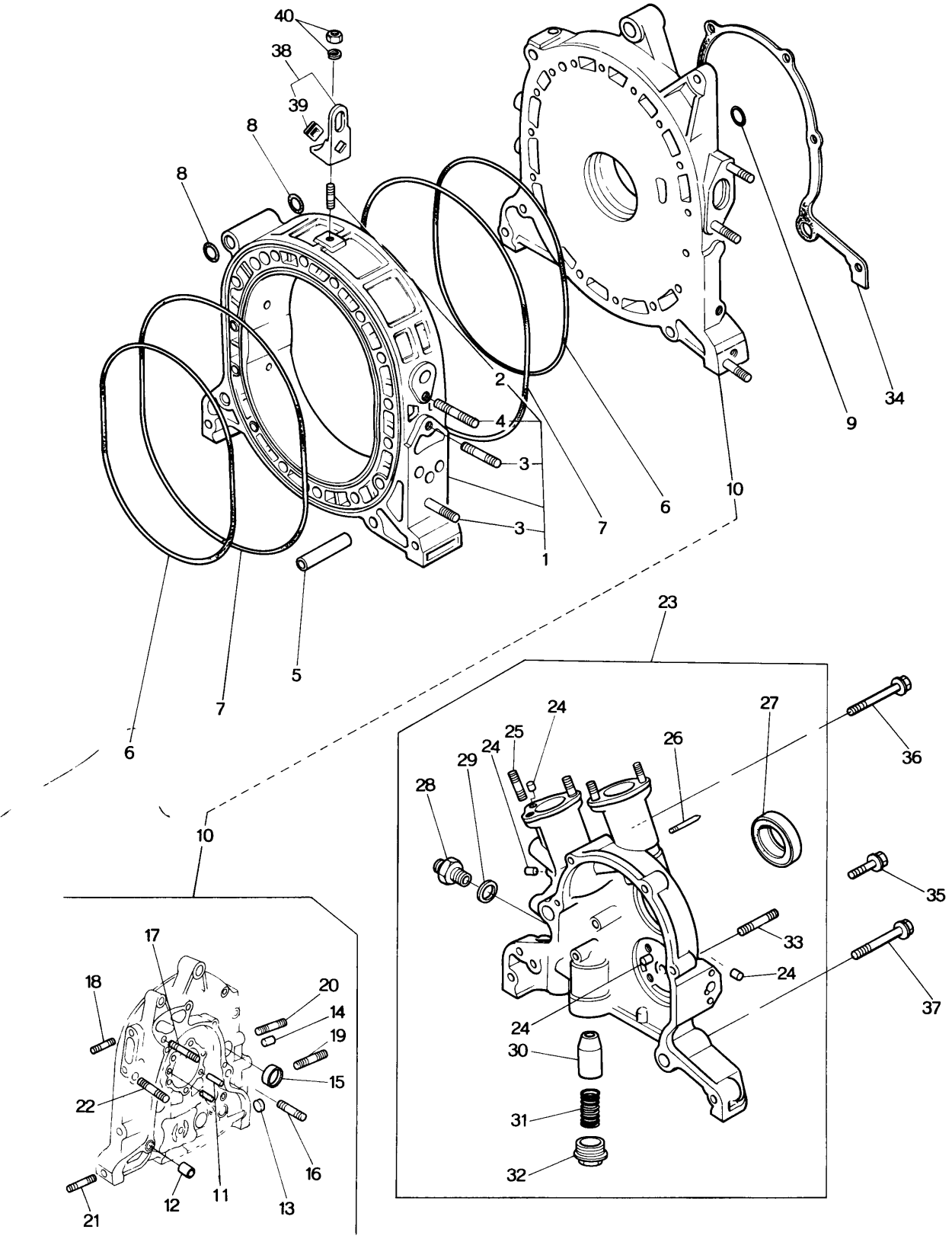

No.	Part Number	Description	Q'ty	Remarks
1	0866 10 100B	Housing, Rotor	1	
	0866 10 100C	Housing, Rotor	1	Car No. 144175 7¾~○
●	0866 10 100D	Housing, Rotor	1	Car No. 151984 7⅞~○
2	99851 0814A	Stud, Engine Hanger	1	
	0866 10 105	Stud, Engine Hanger	1	Car No. 146346 7⅝~○
3	0839 10 105	Stud, EX. Manifold	2	
4	99851 0850A	Stud, IN. Manifold	1	
5	0813 10 111	Dowel, Tubular	2	
6	0810 10 171	Ring, "O" - Inner	2	
7	0866 10 172A	Ring, "O" - Outer	2	
8	0813 10 173	Ring, "O" - Tubular Dowel	4	
9	0813 10 174	Ring, "O" - Tension Bolt	1	
	0866 23 040	"O" Ring Set (Fig. No. 6 ~ 9 included)	1	Set
●	(1665 10 200A) and { 1665 10 200C / 99852 0865A }	are interchangeable when exchanged as a Set		
●	(0866 10 200E) and { 0866 10 200H / 99852 0865A }	are interchangeable when exchanged as a Set		
10	0866 10 200E	Housing, Front	1	
●	0866 10 200H	Housing, Front	1	Car No. 7⅞~×
	0870 10 200C	Housing, Front	1	Car No. 7⅞~○
	2359 10 200D	Housing, Front } ECE Cold Spec. (1558,1559)	1	
	1665 10 200A	Housing, Front } ECE Cold Spec. (1558,1559)	1	Car No. 140779 7½~○
●	1665 10 200C	Housing, Front	1	Car No. 7⅞~×
	1665 10 200D	Housing, Front	1	Car No. 7⅞~○
11	0839 10 203	Pin, Dowel	1	
12	2329 10 204	Dowel, Tubular	2	
13	0839 10 206	Plug, Blind	1	
14	0839 10 205	Plug, Blind	3	
15	99306 3000	Plug, Blind - Water	4	
16	99852 0655	Stud	2	
17	99852 0878A	Stud, Water Pump	2	
18	99852 0822A	Stud, IN. Manifold	2	
19	99859 1220A	Stud, Mounting	1	
20	99859 1225A	Stud	1	
21	99852 1016	Stud	1	

10 ROTOR HOUSING (FRONT)

No.	Part Number	Description	Q'ty	Remarks
22	99852 0865A	Stud	1	
●	99852 0878A	Stud	1	Car No. 150526 7/8 ~ ×
23	0866 10 600	Cover, Front	1	
24	99307 0600	Plug, Blind	5	
25	99851 0818A	Stud, Distributor	4	
26	0820 10 631A	Pin, Indicator	1	
27	0820 10 605	Oil Seal	1	
28	99384 1200	Joint, Union	1	
29	99562 1600	Gasket	1	
30	0839 14 115	Plunger, Pressure Control	1	
31	0839 14 273	Spring	1	
32	0221 14 117	Plug	1	
33	99855 1020A	Stud	4	
34	0839 10 641	Gasket, Front Cover	1	
35	99801 0840	Bolt, Front Cover	4	
	99952 0800	Washer, Plain	4	
	99971 0800	Washer, Spring	4	
36	99801 0865	Bolt, Front Cover	1	
	99952 0800	Washer, Plain	1	
	99971 0800	Washer, Plain	1	
37	99801 0875	Bolt, Front Cover	2	
	99952 0800	Washer, Plain	2	
	99971 0800	Washer, Spring	2	

No.	Part Number	Description	Q'ty	Remarks
38	2869 10 860	Hanger, Engine	1	
39	2329 10 864	Protector, Hanger	1	
40	99901 0800	Nut, Engine Hanger	1	
	99971 0800	Washer, Spring	1	
	0868 99 100	Engine Packing Set	1 Set	
● Ⓝ	1665 14 2000	Pellet Oil	1	Car No. 135808 7½ ~Added Anew
● Ⓝ	99564 1000	Packing	1	
● Ⓝ	99503 1000	Plug, Blind	1	

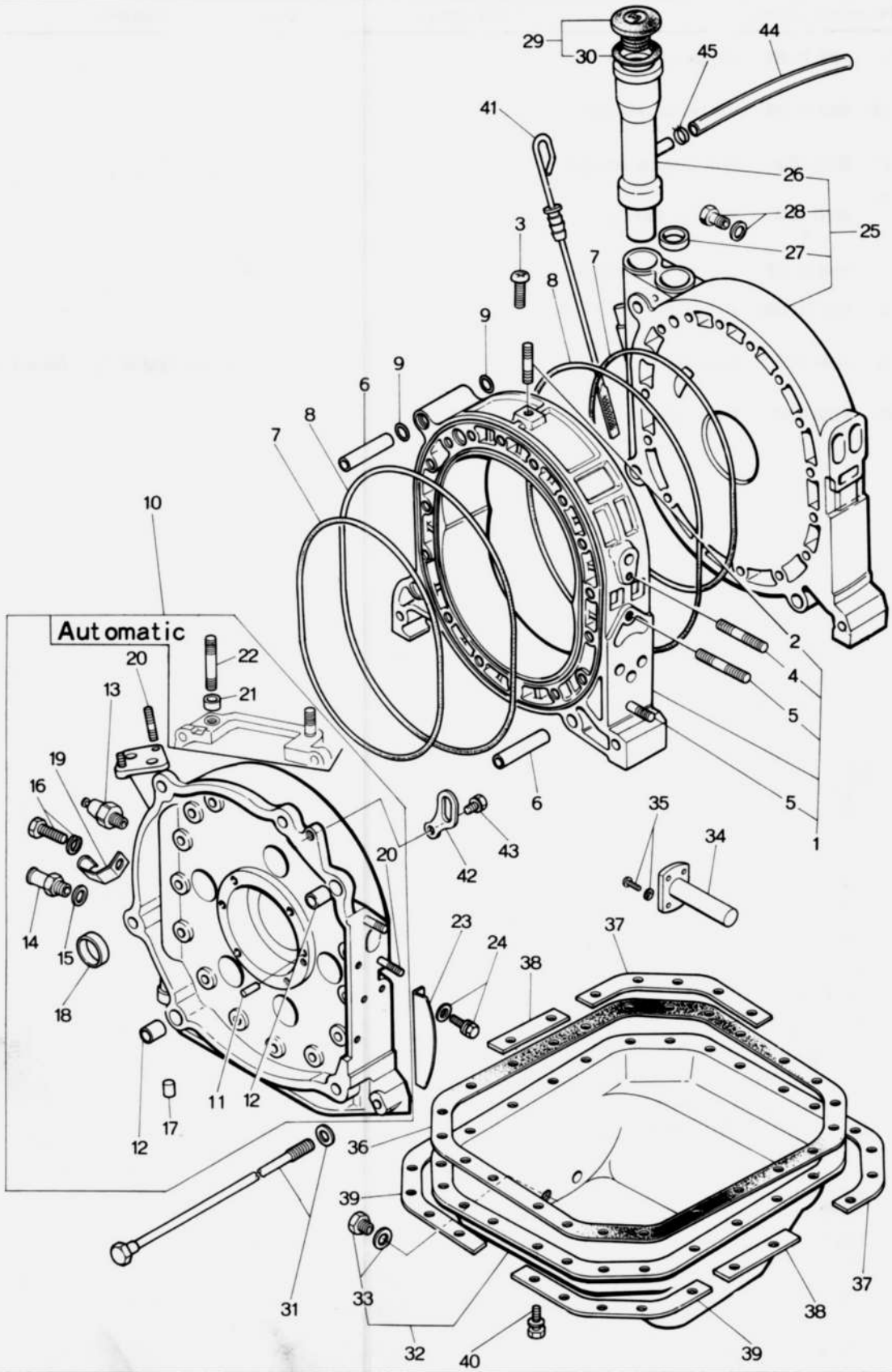
Automatic

No.	Part Number	Description	Q'ty	Remarks
1	0866 10 100B	Housing, Rotor	1	
	0866 10 100C	Housing, Rotor	1	Car No. 144175 72/4 ~ C
●	0866 10 100D	Housing, Rotor	1	Car No. 151984 72/8 ~ C
	0871 10 150A	Housing, Rotor (Automatic)	1	
	0871 10 150B	Housing, Rotor (Automatic)	1	Car No. 144175 72/4 ~ C
●	0871 10 150C	Housing, Rotor (Automatic)	1	Car No. 151984 72/8 ~ C
2	99851 0816A	Stud, Engine Hanger (Manual)	1	
3	99833 0810	Screw (Automatic)	1	
4	99851 0850A	Stud, IN. Manifold	1	
5	0839 10 105	Stud, EX. Manifold	2	
6	0813 10 111	Dowel, Tubular	2	
7	0810 10 171	Ring, "O"- Inner	2	
8	0866 10 172A	Ring, "O"- Outer	2	
9	0813 10 173	Ring, "O"- Tubular Dowel	4	
	0866 23 040	"O" Ring Set (Fig. No. 7 ~ 9 included)	1	Set
10	0866 10 300E	Housing, Rear (Manual)	1	
	0866 10 300G	Housing, Rear (Manual)	1	Car No. 72/8 ~ C
	0870 10 300B	Housing, Rear (Manual)	1	Car No. 72/9 ~ C
●	0871 10 300D	Housing, Rear (Automatic)	1	
	0871 10 300E	Housing, Rear (Automatic)	1	Car No 72/8 ~ C
	0872 10 300B	Housing, Rear (Automatic)	1	Car No. 72/9 ~ C
11	0820 10 203	Pin, Dowel	1	
12	0221 10 308	Pin, Tubular	2	
13	0866 18 501A	Switch, Oil Pressure	1	
14	0866 10 320A	Joint, Hose	1	
15	99562 1600	Gasket	1	
16	99811 1010	Bolt (Manual)	1	
	99971 1000	Washer, Spring (Manual)	1	
17	0839 10 205	Plug, Blind	1	
18	99306 3000	Plug, Blind	5	

10 ROTOR HOUSING (REAR)

No.	Part Number	Description	Q'ty	Remarks
19	0886 18 486	Clip (Manual)	1	
20	99852 0822A	Stud	4	
21	99234 1208	Pin, Tubular } (Automatic)	2	
22	99852 0830A	Stud } (Automatic)	2	
23	0820 10 305	Cover, Dust	1	
24	99806 0610	Bolt	2	
	99971 0600	Washer, Spring	2	
25	0886 10 400B	Housing, Intermediate	1	
	0870 10 400A	Housing, Intermediate	1	Car No. 7⅞~○
26	0886 10 411	Pipe, Oil Filler	1	
27	99305 2800	Plug, Expansion	1	
28	99510 1000	Plug	1	
	99564 1000	Gasket	1	
29	0324 10 250	Cap, Oil Filler	1	
30	0324 10 252	Gasket	1	
31	0822 10 451C	Bolt, Tension	18	
	0822 10 452D	Bolt, Tension	1	
	0839 10 455	Washer, Plain	19	

No.	Part Number	Description	Q'ty	Remarks
32	1562 10 700A	Pan, Oil	1	
●	0866 10 700B	Pan, Oil	1	Car No. 7/8～×
●	1562 10 700B	Pan, Oil	1	Car No. 7/8～×
33	99511 1400	Plug, Drain	1	
	99562 1400	Gasket	1	
● 34	2090 10 730B	Switch, Oil Level Warning	1	Car No. 150526 7/8～Discarded
● 35	99833 0418	Screw, Oil Level Warning Switch	4	Car No. 150526 7/8～Discarded
●	99971 0400	Washer, Spring	4	Car No. 150526 7/8～Discarded
36	0820 10 711	Gasket, Oil Pan	1	
37	0820 10 721	Stiffener	2	
38	0820 10 722	Stiffener	2	
39	0820 10 723	Stiffener	2	
40	99806 0616	Bolt, Oil Pan	22	
	99971 0600	Washer, Spring	22	
41	0866 10 830	Gauge, Oil Level	1	
42	2090 10 862A	Hanger, Engine	1	
	0871 10 862A	Hanger-Engine (Automatic)	1	Car No. 144175 7/4～○
43	99801 0818	Bolt, Engine Hanger	1	
	99801 0820	Bolt, Engine Hanger (Automatic)	1	Car No. 144175 7/4～○
	99971 0800	Washer, Spring	1	
44	0866 10 871	Hose, Ventilation	1	
45	0222 13 493	Clip	2	
Ⓝ	1566 23 200	Short Engine	1	1552 Excluded

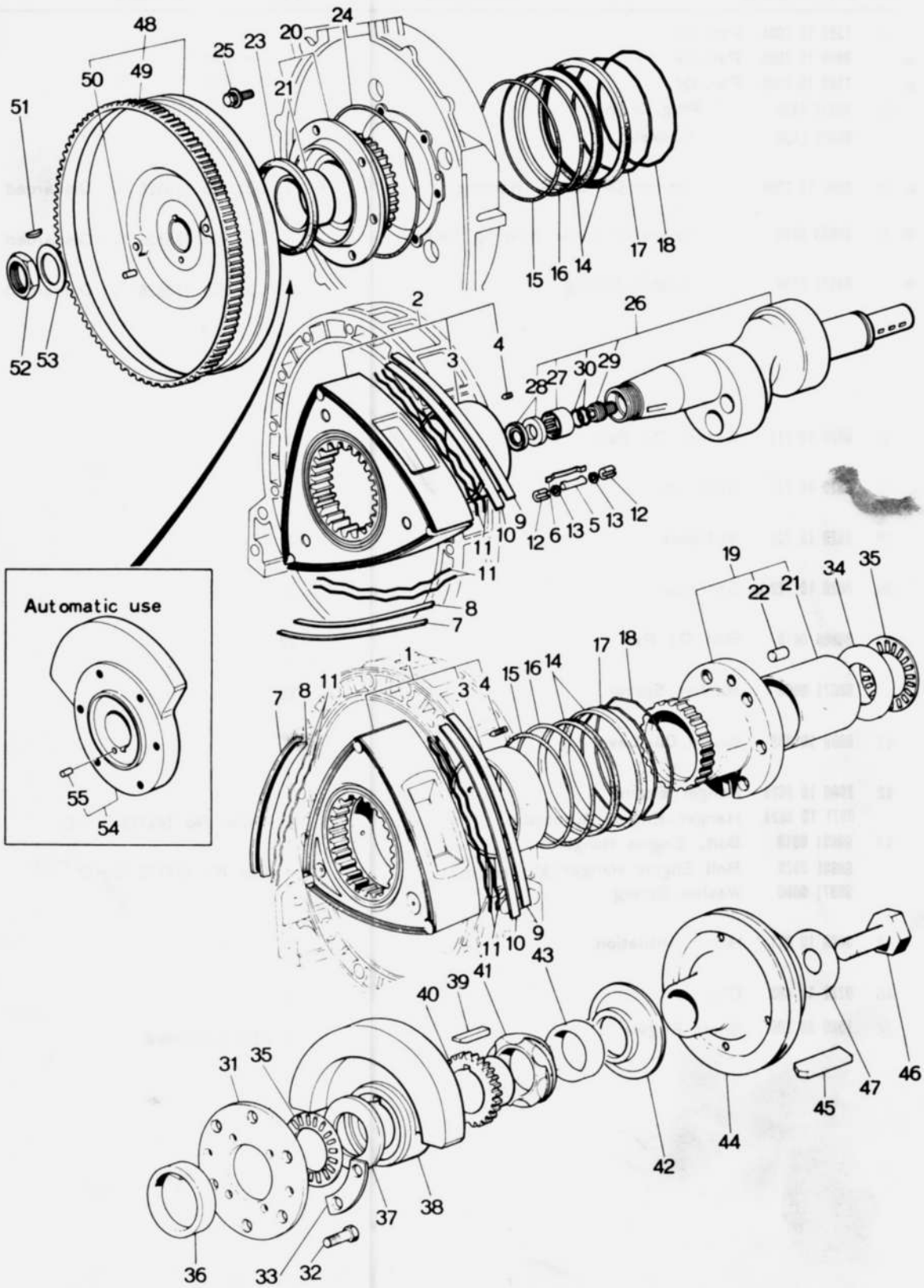
48
49
50
51
25
23
20
24
21
52
53
15
16
14
17
18
2
3
4
26
28
27
30
29
12
6
13
5
13
12
11
10
9
11
8
7
Automatic use
55
54
19
22
21
34
35
1
7
8
11
3
4
15
16
14
17
18
11
10
9
43
40
39
41
31
35
37
38
36
33
32
42
44
45
47
46

No.	Part Number	Description	Q'ty	Remarks
1	0820 23 103A	Rotor, Front	1	
●	0866 23 103	Rotor, Front	1	Car No. 120503 72/2 ~ △
2	0820 23 113A	Rotor, Rear	1	
●	0866 23 113	Rotor, Rear	1	Car No. 149132 72/2 ~ △
3	0820 11 111F	Bearing	2	
4	99885 0406	Screw	6	
5	0820 11 301C	Seal, Apex (TR230)	6	
	0871 11 301	Seal, Apex (TMC15T) (Automatic)	6	Car No. 142922 72/3 ~ ○
	2113 11 301	Seal, Apex (TMC 15 B) } Selective use	6	
	2329 11 301D	Seal, Apex (TMC 115)	6	
	2112 11 301	Seal, Apex - Arctic Spec. Model	6	
Ⓝ	0871 11 302	Piece Side (Automatic)	6	Car No. 142922 72/3 ~ Added Anew
6	0820 11 304A	Spring, Apex Seal	6	
	0871 11 304	Spring, Apex Seal (Automatic)	6	Car No. 142922 72/3 ~ ○
7	2125 23 151	Seal, Side - Outer } Front Side of Rotor	6	
8	2125 23 152	Seal, Side - Inner	6	
9	2125 23 154	Seal, Side - Outer } Rear Side of Rotor	6	
10	2125 23 155	Seal, Side - Inner	6	
11	0820 11 317	Spring, Side Seal	24	
● 12	0820 11 321B	Seal, Corner - Front & Rear	12	
●	0820 11 321C	Seal, Corner - Front & Rear	12	Car No. 145050 72/4 ~ ○
	0820 23 175A	Seal, Corner (O.S. 0.2)	12	
●	0820 23 175B	Seal, Corner (O.S. 0.2) } Selective use	12	Car No. 146342 72/5 ~ ○
●	0820 23 176	Seal, Corner (O.S. 0.03)	12	
	0820 23 176A	Seal, Corner (O.S. 0.03)	12	Car No. 141928 72/3 ~ ○
●	0820 23 176B	Seal, Corner (O.S. 0.03)	12	Car No. 146342 72/5 ~ ○
13	0839 11 323	Spring, Corner Seal	12	
	0839 11 323A	Spring, Corner Seal	12	Car No. 139865 72/2 ~ ○
14	0820 23 180	Oil Seal Set	4	
●	0820 23 180A	Oil Seal Set	4	Car No. 140448 72/2 ~ △
●	0820 23 180C	Oil Seal Set	4	Car No. 149232 72/6 ~ △
15	0820 11 341	Ring, "O" - Inner	4	
16	0820 11 343	Ring, "O" - Outer	4	
17	0839 11 351	Spring, Oil Seal - Inner	4	
	0839 11 351A	Spring, Oil Seal - Inner (F)	2	Car No. 140024 72/2 ~ ×
●	0839 11 351B	Spring, Oil Seal - Inner (F)	2	Car No. 140448 72/5 ~ ○
	0839 11 361	Spring, Oil Seal - Inner (R)	2	Car No. 140024 72/2 ~ Added Anew
●	0839 11 361A	Spring, Oil Seal - Inner (R)	2	Car No. 140448 72/5 ~ ○
18	0839 11 353	Spring, Oil Seal - Outer	4	
●	0839 11 353A	Spring, Oil Seal - Outer (F)	2	Car No. 149232 72/6 ~ ×
●	0839 11 363	Spring, Oil Seal - Outer (R)	2	Car No. 149232 72/6 ~ Added Anew

No.	Part Number	Description	Q'ty	Remarks
19	0839 10 500B	Gear, Stationary (Front)	1	
20	0820 10 550B	Gear, Stationary (Rear)	1	
21	0820 10 502B	Bearing, Main (Front & Rear)	2	
22	0839 10 504	Pin, Knock (Front)	1	
23	0820 10 556A	Oil Seal, Stationary Gear (Rear)	1	
24	0813 10 555	Ring, "O"- Stationary Gear (Rear)	1	
25	99801 0818	Bolt, Stationary Gear (Rear)	6	
	99971 0800	Washer, Spring	6	
26	0820 11 400G	Shaft, Eccentric (Manual)	1	
	0871 11 400	Shaft, Eccentric (Automatic)	1	
27	0810 11 403	Bearing, Needle } (Manual)	1	
28	0810 11 404	Oil Seal } (Manual)	2	
29	0813 11 405	Plug, Blind	1	
30	99541 01101	Ring, "O"	2	
31	0839 11 501	Plate	1	
32	0839 11 515	Bolt, Stationary Gear	6	
33	0820 11 503	Washer, Lock	3	
34	0839 11 504B	Plate, Thrust	1	
35	0813 11 505B	Bearing, Needle	2	
36	0839 11 502	Spacer (L=8.02)		

No.	Part Number	Description	Q'ty	Remarks
	0839 11 506 Spacer (L=8.08)	Selective use	1	
	0839 11 508 Spacer (L=8.04)			
	0839 11 509 Spacer (L=8.00)			
37	0820 11 507 Washer, Thrust		1	
38	0866 11 511A Weight, Balance (Manual)		1	
	0871 11 511 Weight, Balance (Automatic)		1	
39	0820 11 512A Key		1	
40	0839 11 551 Sprocket, Drive		1	
41	0839 11 531 Gear, Drive-Distributor		1	
42	0813 11 541 Plate, Oil Baffle		1	
43	0820 11 542 Spacer		1	
44	0839 11 601B Pulley		1	
45	99238 0525 Key, Pulley		1	
46	0820 11 611B Bolt, Pulley		1	
47	99564 2800 Gasket		1	
48	0866 11 700A Wheel, Fly	(Manual)	1	
49	0866 11 702 Gear, Ring		1	
50	0820 11 703 Pin		1	
51	0820 11 705 Key, Fly Wheel		1	
52	0810 11 711 Nut, Fly Wheel		1	
53	0820 11 712 Washer, Lock		1	

10 11 ROTOR

No.	Part Number	Description	Q'ty	Remarks
54	0871 11 750A Weight, Counter	(Automatic)	1	
●	0871 11 750B Weight, Counter		1	Car No. 127380 $^{71}/_{11}$ ~ ○
55	0820 11 703 Pin		1	

IN. & EX. MANIFOLD

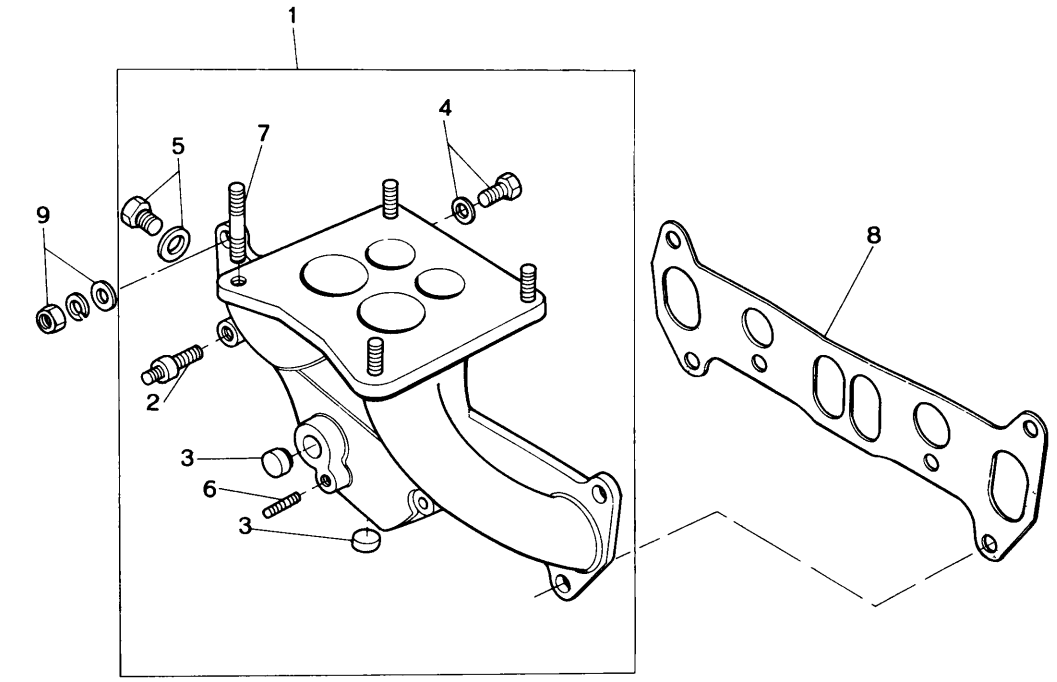

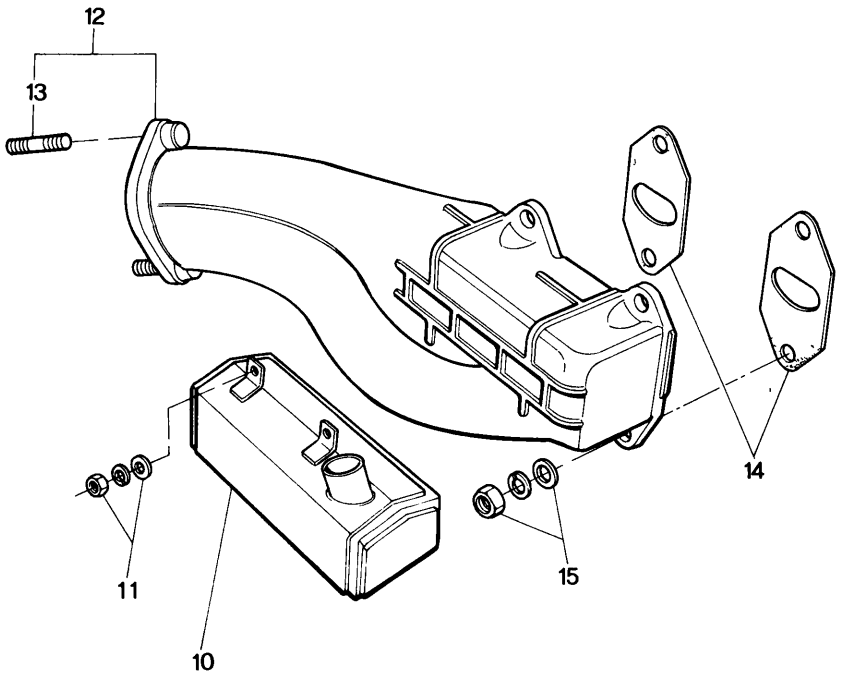

No.	Part Number	Description	Q'ty	Remarks
1	0866 13 100F	Manifold, IN. (Manual)	1	
	1559 13 100	Manifold, IN. (Manual)	1	1558,1558 Car No. 140779 72/2～×
	0871 13 100C	Manifold, IN. (Automatic)	1	
●	0871 13 100D	Manifold, IN. (Automatic)	1	Car No. 72/8～×
2	0839 13 338	Stud, Hot Ait Duct	1	
3	99307 1800	Plug, Blind	2	
	99503 3000	Plug, Blind	2	Car No. 146346 72/5～×
4	99510 0800	Plug, Blind	2 1	(Manual) (Automatic)
	99564 0800	Gasket	2 1	(Manual) (Automatic)
5	99511 1000	Plug, Blind	2	
	99564 1000	Gasket	2	
6	99851 0812A	Stud	1	
7	99851 0826A	Stud, Carburettor	4	
Ⓝ	99307 0600	Plug Blind (Automatic)	1	
Ⓝ	99307 0800	Plug Blind (Automatic)	2	
Ⓝ	99307 1200	Plug Blind (Automatic)	1	
Ⓝ	99851 0624A	Stud (Automatic)	2	
8	0866 13 111	Gasket, IN. Manifold	1	
	0866 13 111A	Gasket, IN Manifold	1	Car No 146346 72/5～○
9	99901 0800	Nut, IN. Manifold	6	
	99953 0800	Washer, Plain	5	
	99971 0800	Washer, Spring	6	
10	0866 13 330B	Duct, Hot Air	1	
11	99901 0800	Nut, Hot Air Duct	2	
	99953 0800	Washer, Plain	2	
	99971 0800	Washer, Spring	2	
12	0866 13 600A	Manifold, EX	1	
	0866 13 600B	Manifold, EX.	1	Car No 127396 71/12～○
●	0866 13 600C	Manifold, EX.	1	Car No. 140448 72/6～(
13	0866 13 603	Stud	2	
	2329 13 105	Stud	2	Car No 127396 71/12～×
14	0839 13 611E	Gasket, EX. Manifold	2	

13 IN. & EX. MANIFOLD

No.	Part Number	Description	Q'ty	Remarks
15	0839 13 613	Nut, EX. Manifold	4	
	0839 13 614	Washer, Plain	4	
	2329 13 882	Washer, Spring	4	
Ⓝ	99285 0608	Clip	1	
Ⓝ	0871 13250	Valve M. C.	1	
Ⓝ	0871 13 256	Hose Air	1	
Ⓝ	2090 13 764	Gasket	1	
Ⓝ	99906 0600	Nut	2	
Ⓝ	99953 0600	Washer, Plain	2	
Ⓝ	99971 0600	Washer, Spring	2	

AIR CLEANER

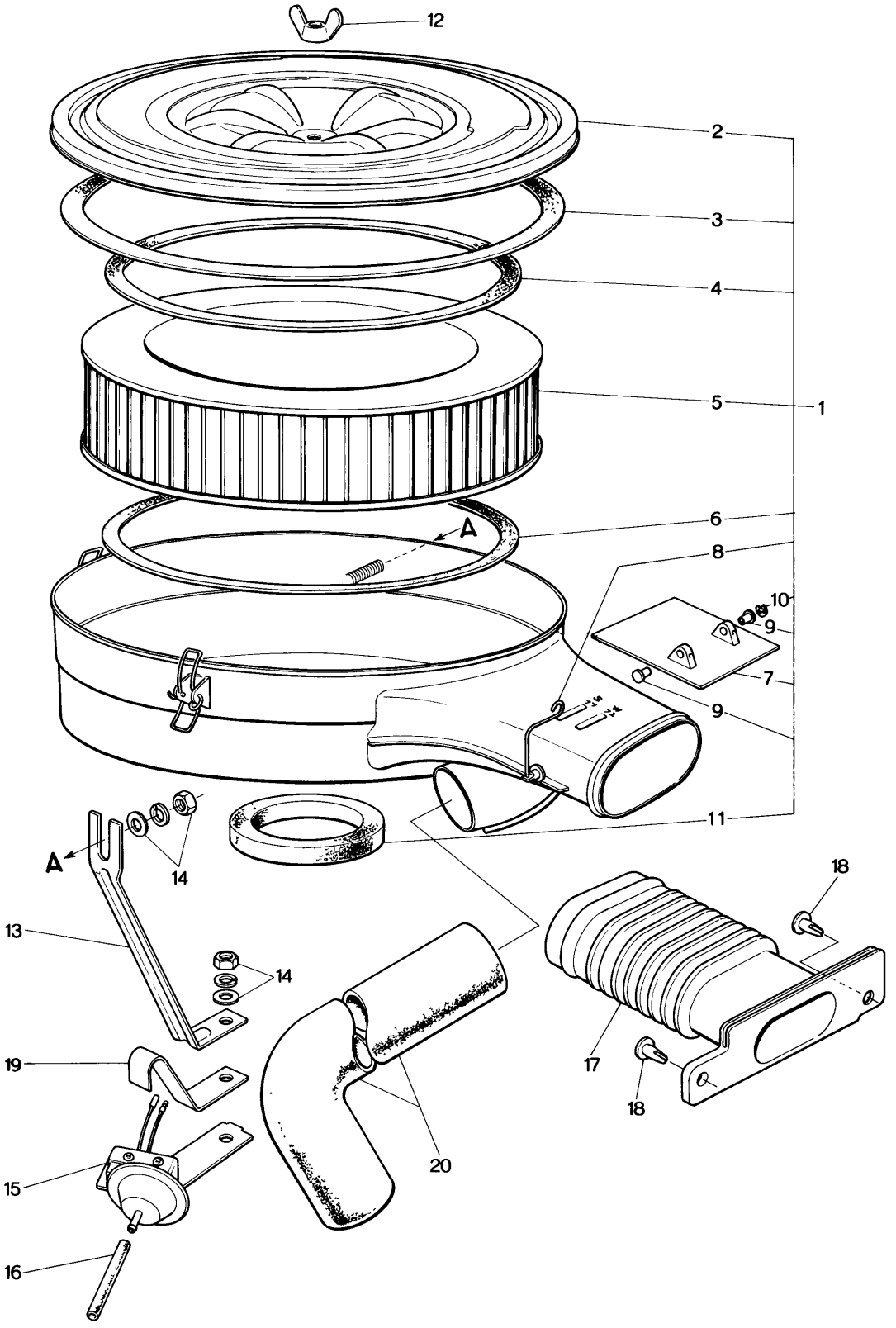

No.	Part Number	Description	Q'ty	Remarks
1	0866 13 300C	Cleaner, Air (Manual)	1	
	0871 13 300	Cleaner, Air (Automatic)	1	
●	0871 13 300A	Cleaner, Air (Automatic)	1	Car No. 129763 71/12～○
2	2090 23 673	Cover	1	
3	2113 23 674	Gasket, Cover	1	
4	2113 23 675	Gasket, Element	1	
5	0839 23 672	Element	1	
6	0839 23 675	Gasket, Element	1	
7	0866 23 676	Shutter	1	
8	0866 23 694	Shaft, Shutter	1	
9	0839 23 686	Bush	2	
10	0839 23 684	Ring, Stop	1	
11	2113 23 679	Gasket	1	
12	99941 0801	Nut, Wing-Air Cleaner	1	
13	0866 13 311	Support, Air Cleaner	1	
14	99901 0800	Nut, Supporter	2	
	99951 0822	Washer, Plain	2	
	99971 0800	Washer	2	
● 15	0866 13 240F	Switch, Vacuum	1	For L.H.D. Car No. 140779 72/2～Discarded
● Ⓝ	99971 0500	Washer, Spring	1	For L.H.D. Car No. 140779 72/2～Discarded
● Ⓝ	99811 0812	Bolt	1	For L.H.D. Car No. 140779 72/2～Discarded
● Ⓝ	99971 0800	Washer, Spring	1	For L.H.D. Car No. 140779 72/2～Discarded
● 16	0866 13 241E	Tube, Vacuum	1	For L.H.D. Car No. 140779 72/2～Discarded
17	0866 13 351A	Hose, Air	1	
18	99264 0702B	Rivet, Air Hose	1	
19	0866 18 999A	Clip	1	
20	0866 13 341B	Hose, Hot Air	1	
● Ⓝ	99295 0408	Clip	1	For L.H.D. Car No. 140779 72/2～Discarded
● Ⓝ	99806 0510	Bolt, Vacuum Switch	1	For L.H.D. Car No. 140779 72/2～Discarded

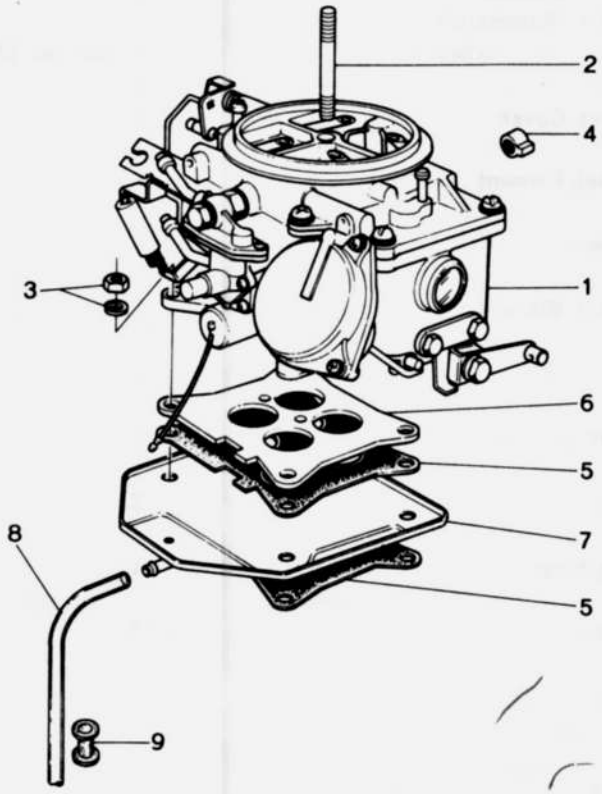
2
4
3
1
6
5
7
8
5
9

	No.	Part Number	Description	Q'ty	Remarks
	1	0868 13 209E	Carburettor (R.H.D. Manual)	1	
		0871 13 200A	Carburettor (R.H.D. Automatic)	1	
		1562 13 200B	Carburettor (L.H.D.)	1	
●		1562 13 200C	Carburettor (1558,1559)	1	Car No. 140779 ⁷⁄₂～×
●		1568 13 200	Carburettor (1565,1566,1567,1568)	1	Car No. 140779 ⁷⁄₂～Added Anew
	2	0820 13 201A	Stub, Carburettor & Air Cleaner	1	
	3	99901 0800	Nut, Carburettor	4	
		99971 0800	Washer, Spring	4	
●	4	0820 23 438A	Cap, Limiter - Carburettor	1	
	5	0820 13 221	Gasket, Carburettor	3	
	6	0820 13 222	Insulator, Carburettor	1	
	7	0868 13 230B	Tray, Carburettor	1	
●		1617 13 233	Clip	2	
	8	0868 13 235	Pipe, Drain	1	
	9	99881 1001	Protector, Drain Pipe	1	
●		1562 23 540	Repair Kit, Carburettor	1	
●		1552 23 540	Repair Kit, Carburettor (ECE Spec. Model)	1	

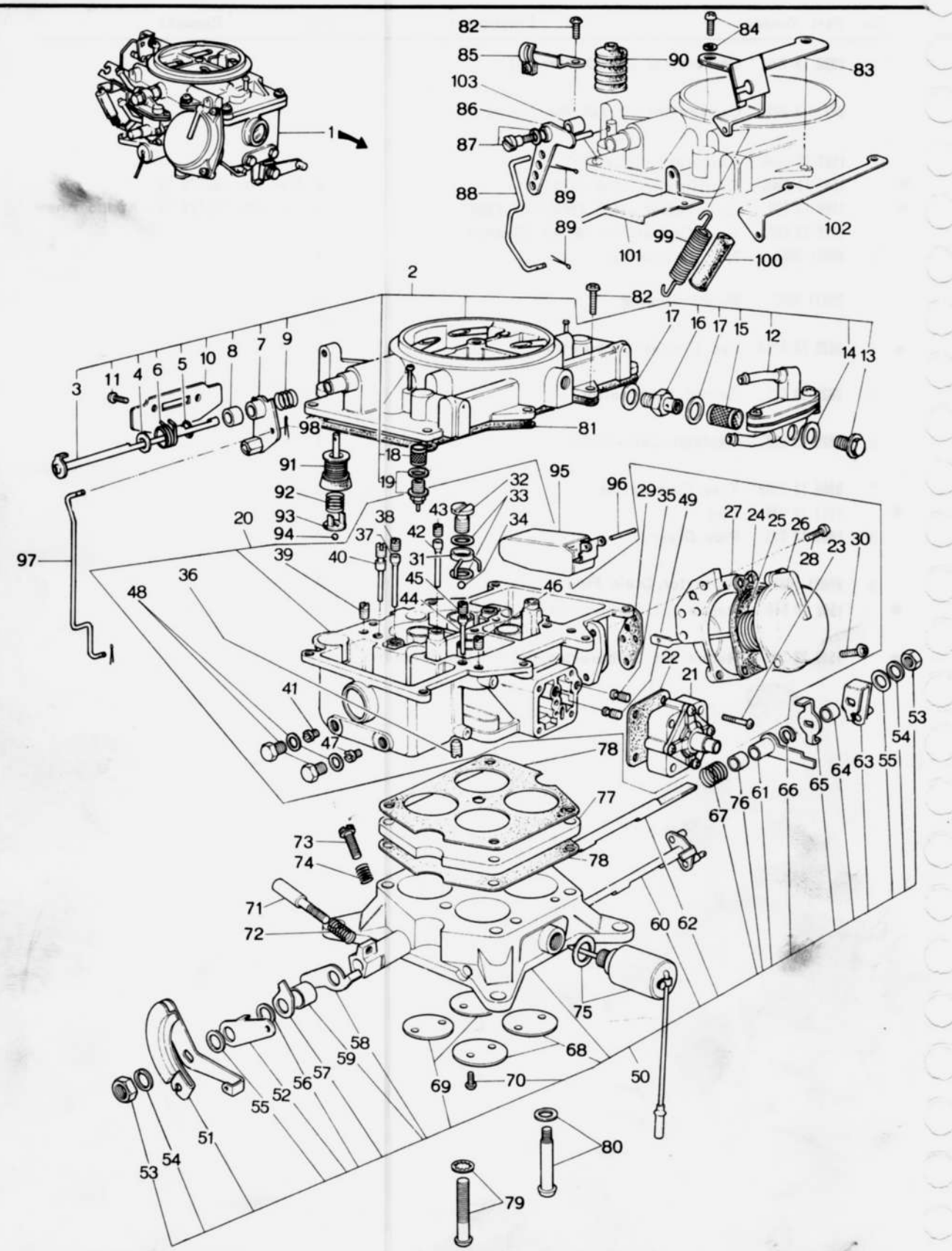
1
2
3
4
5
6
7
8
9
10
11
12
13
14
15
16
17
18
19
20
21
22
23
24
25
26
27
28
29
30
31
32
33
34
35
36
37
38
39
40
41
42
43
44
45
46
47
48
49
50
51
52
53
54
55
56
57
58
59
60
61
62
63
64
65
66
67
68
69
70
71
72
73
74
75
76
77
78
79
80
81
82
83
84
85
86
87
88
89
90
91
92
93
94
95
96
97
98
99
100
101
102
103

No.	Part Number	Description	Q'ty	Remarks
1	0866 13 200E	Carburettor (R.H.D.)	1	
	1562 13 200B	Carburettor (L.H.D.)	1	
	1562 13 200B	Carburettor (L.H.D.)	1	
	1562 13 200C	Carburettor (1558, 1558)	1	Car No. 140779 ～×
	1566 13 200	Carburettor (1565, 1566, 1567, 1568)	1	Car No. 140779 ～Added Anew
2	0866 23 300	Chamber	1	
3	0820 23 304A	Shaft, Choke	1	
4	0114 13 759	Sleeve	1	
5	0114 13 757	Clip	1	
6	0866 23 309	Spring, Choke Valve	1	
7	0820 23 302A	Lever, Choke	1	
8	0820 23 311	Sleeve	1	
9	0813 23 361	Spring, Choke	1	
10	0820 23 306	Valve, Choke	1	
11	0820 23 388	Screw (3 ϕ)	2	
12	0866 23 314	Valve, Fuel Return	1	
13	0118 23 398	Screw Set, Filter	1	
14	0813 23 385	Washer (8 ϕ)	1	
15	0813 23 401	Filter, Fuel Return Valve	1	
16	0813 23 307B	Connector	1	
17	0114 13 788A	Washer (12 ϕ)	2	
18	0820 23 499	Filter	2	
19	0820 23 398B	Valve, Needle	2	
	0221 23 314	Washer (10 ϕ)	2	
20	0866 23 320	Float Chamber	1	
●	1562 23 320	Float Chamber Ass'y	1	Car No. 150526 ～○
21	0866 23 324	Diaphragm	1	
22	0866 23 331	Gasket, Valve Body	1	
23	0866 23 335	Screw (4 ϕ)	4	

No.	Part Number	Description	Q'ty	Remarks
24	0866 23 372	Diaphragm	1	
25	0866 23 334	Spring, Diaphragm	1	
26	0820 23 322C	Cover, Diaphragm Chamber	1	
27	0820 23 371A	Chamber, Diaphragm	1	
28	1617 23 388	Screw (4 ϕ)	3	
29	0820 23 373	Gasket, Diaphragm Chamber	1	
30	1617 23 394	Screw (5 ϕ)	3	
31	0820 23 338	Injector, Pump	1	
	0820 23 338A	Injector, Pump	1	Car No. 138734 ~ ○
32	0813 23 328	Screw Set, Weight	1	
33	0187 23 356	Washer (7 ϕ)	2	
34	0866 23 339	Ball (4.2 ϕ)	1	
35	0268 23 393A	Slow Jet (#120)	1	
36	0118 23 329A	Air Bleed, Slow (#80)	1	
37	0866 23 329	Tube, Emulsion (P)	2	
38	0268 23 395	Air Bleed, Slow (#100)	2	
39	0268 23 394A	Air Bleed, Slow (#200)	2	
40	0866 23 425	Slow Jet (#42)	2	
41	0866 23 421	Main Jet (#92)	2	
42	0820 23 330	Tube, Emulsion (S)	2	
43	0114 13 662	Air Bleed, Slow (#140)	2	
44	0866 23 428	Air Bleed (#180)	2	
45	0820 23 426B	Slow Jet (#60)	2	
46	0820 23 433	Air Bleed, Slow (# 0)	2	
47	0820 23 422	Main Jet (#140)	2	
48	0221 23 395	Plug, Drain	4	
	0221 23 366	Washer (9 ϕ)	4	

No.	Part Number	Description	Q'ty	Remarks
49	2113 23 431	Slow Jet (#190)	1	
50	0866 23 340	Chamber, Throttle (R.H.D.)	1	
	1562 23 340	Chamber, Throttle (L.H.D.)	1	
●	1562 23 340A	Chamber, Throttle (L.H.D.) 1558, 1559	1	Car No. 150526 7/8 ~ ○
●	1566 23 340	Chamber, Throttle (L.H.D.) { 1565, 1566 / 1567, 1568 }	1	Car No. 150526 7/8 ~ ○
51	0866 23 344	Lever, Throttle (R.H.D.)	1	
	1562 23 344	Lever, Throttle (L.H.D.)	1	
52	0813 23 347	Lever, Starting	1	
53	0118 23 369	Nut (8 φ)	2	
54	0221 23 368	Washer, Spring (8 φ)	2	
55	0813 13 392	Washer (8 φ)	2	
56	0866 23 406	Piece, Distance	1	
57	0866 23 357	Lever, Adjust	1	
58	0866 23 346	Lever, Adjust	1	
59	0180 23 316	Collar, Shaft	1	
60	0820 23 343C	Shaft, Throttle (S)	1	
61	0866 23 345	Lever, Control	1	
62	0820 23 342B	Shaft, Throttle (P)	1	
63	0820 23 498	Lever, Metering	1	
64	0820 23 359	Spacer	1	
65	0820 23 358	Lever, Adjust	1	
66	0813 23 403	Clip	1	
67	0820 23 353	Spring, Control Lever	1	
68	0820 23 351	Valve, Throttle (S)	2	
69	0268 23 317	Valve, Throttle (P)	2	
70	0820 23 389	Screw (3 φ)	8	
71	0820 23 397B	Screw, Adjust-Throttle	1	
72	0820 23 387A	Spring, Adjust-Throttle	1	

No.	Part Number	Description	Q'ty	Remarks
73	0820 23 405A	Screw, Adjust-Idle	1	
74	0813 23 383	Spring, Adjust Screw-Idle	1	
● 75	0866 23 352	Valve, Solenoid	1	1565,1566,1567,1568
●	0118 23 348	Washer (8 φ)	1	1565,1566,1567,1568
76	0866 23 355	Spacer	1	
77	0866 23 354	Insulator	1	
78	0866 23 349	Gasket, Throttle Chamber	2	
79	0866 23 413	Screw (5 φ)	1	
	0820 23 399	Washer (5 φ)	1	
80	0866 23 411	Screw (6 φ)	4	
	0221 23 375	Washer (6 φ)	4	
81	0820 23 327	Gasket, Float Chamber	1	
82	1617 23 394	Screw (5 φ)	7	
83	0866 23 305	Arm, Wire (R.H.D.)	1	
84	1617 23 392	Screw (5 φ)	1	
85	0820 23 303A	Arm, Choke Wire	1	
86	0813 23 325	Lever, Pump	1	
87	0820 23 362	Shaft, Pump Lever (R.H.D.)	1	
	2125 23 362	Screw (5 φ)	1	Pump Lever (L.H.D.)
	0114 13 795	Washer, Spring (5 φ)	1	Pump Lever (L.H.D.)
88	0866 23 332	Rod, Connecting-Pump	1	
89	0136 13 717A	Pin, Cotter (1 φ)	3	
90	0118 23 342	Cover, Pump	1	
91	0866 23 323	Piston	1	
92	0813 23 333	Spring, Return-Piston	1	
93	0820 23 337A	Piece, Distance	1	

No.	Part Number	Description	Q'ty	Remarks
94	0820 23 471	Ball, Nylon (5/32)	1	
95	0813 23 326	Float	2	
96	0820 23 396	Shaft, Float	2	
97	0866 23 308	Rod, Connecting-Choke (R.H.D.)	1	
	1562 23 308	Rod, Connecting-Choke (L.H.D.)	1	
98	0114 13 715	Pin, Stop	1	
99	0820 13 202C	Spring, Return-Throttle	1	
100	0820 13 204	Cover, Spring	1	
101	1562 23 305	Supporter (L.H.D.)	1	
102	1562 23 318	Hanger, Spring (L.H.D.)	1	
103	2125 23 363	Guide (L.H.D.)	1	
Ⓝ	1665 23 506	Check Valve (1558,1559)	1	Car No. 140779 72/2～Added Anew
Ⓝ	0114 13 795	Washer, Spring (5 φ) (1565,1566,1567,1568)	1	Car No. 140779 72/2～Added Anew
Ⓝ	2125 23 362	Screw (5 φ) (1565,1566,1567,1568)	1	Car No. 140779 72/2～Added Anew
● Ⓝ	1665 23 506	Valve Check	1	
● Ⓝ	2329 23 443	Gasket Cover	1	
● Ⓝ	1562 23 442	Cover	1	
● Ⓝ	1562 23 445	Washer	1	1558,1559 Car No. 136920 72/2～Added Anew
● Ⓝ	1617 23 393	Screw, 5	3	
● Ⓝ	1562 23 444	Bleed-Air	2	
● Ⓝ	0118 23 348	Washer	2	

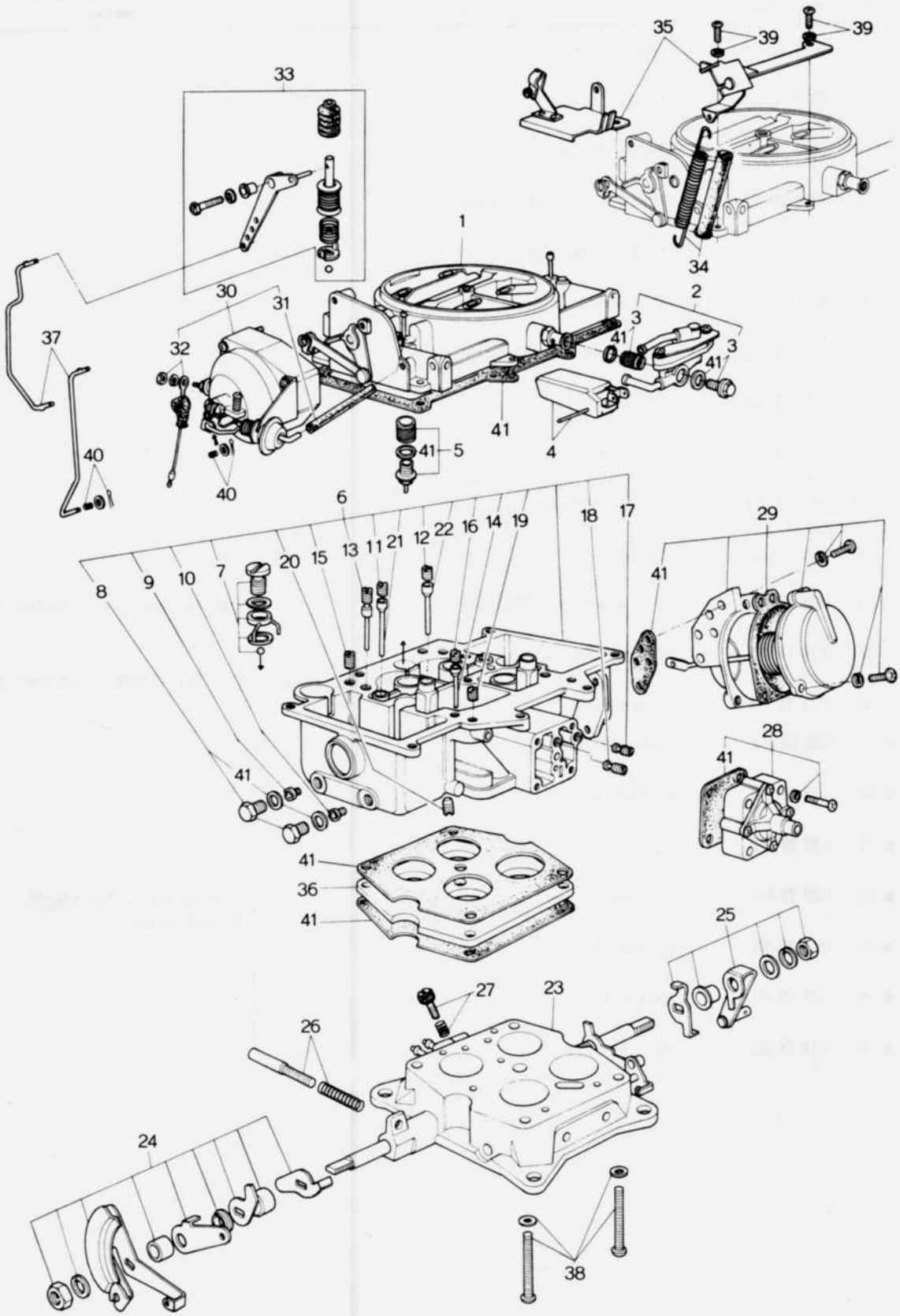
35
39
39
33
1
34
30
31
2
3
37
32
3
41
41
41
41
5
4
40
40
6
18
17
29
13
11
21
12
22
16
14
19
20
15
8
9
10
7
41
28
41
41
36
41
25
27
23
26
24
38

No.	Part Number	Description	Q'ty	Remarks
	0871 13 200C	Carburettor (R.H.D.)	1	
1	0871 23 310	Chamber, Choke	1	
2	0871 23 380	Valve Set, Fuel Return	1	Fig. No. 3 included
3	0871 23 381	Strainer Set	1	
4	0871 23 385	Float Set	1	
5	0871 23 390	Valve, Needle	1	
6	0871 23 320	Chamber, Float	1	Fig. No. 7 ~22 included
7	0871 23 490	Injector, Pump	1	
8	0871 23 495	Plug, Drain	1	
9	0866 23 421	# 92 Jet, Main (P)	2	
10	0820 23 422	#140 Jet, Main (S)	2	
11	0268 23 395	#100 Bleed, Main Air (P)	2	
12	0114 23 662	#140 Bleed, Main Air (S)	2	
13	0866 23 425	# 42 Jet, Slow (P)	2	
14	0820 23 426B	# 60 Jet, Slow (S)	2	
15	0268 23 394A	#200 Bleed, Slow Air (P)	2	
16	0866 23 428	#180 Bleed, Slow Air (P)	2	
17	2113 23 431	#180 Jet, Vacuum (P)	1	
18	0268 23 393A	#120 Jet, Vacuum (S)	1	
19	0820 23 433	# 0 Bleed, Slow Air	2	
20	0871 23 434	#180 Jet, Richer	1	
21	0866 23 329	Tube (P), Emulsion	2	
22	0820 23 330	Tube (S), Emulsion	2	
23	0871 23 330	Chamber, Throttle	1	
24	0871 23 360	Lever Set (Rr.)	1	
25	0871 23 365	Lever Set (Frt.)	1	

No.	Part Number	Description	Q'ty	Remarks
26	0871 23 370	Screw, Throttle Adjust	1	
27	0871 23 375	Screw, Idle Adjust	1	
28	0871 23 355	Valve, Vacuum	1	
29	0871 23 350	Chamber, Diaphragm	1	
30	0871 23 340	Thermostat	1	Fig. No. 31, 32 included
31	0871 23 346	Tube	1	
32	0871 23 345	Wire Set, Lead	1	
33	0871 23 410	Pump, Accelerator	1	
34	0871 23 420	Spring, Throttle Return	1	
35	0871 23 430	Bracket Set	1	
36	0866 23 354	Insulator	1	
37	0871 23 440	Rod Set	1	
38	0871 23 510	Screw Set, Throttle Chamber	1	
39	0871 23 520	Screw Set, Choke Chamber	1	
40	0871 23 540	Pin & Washer Set	1	
41	0871 23 530	Gasket Set	1	

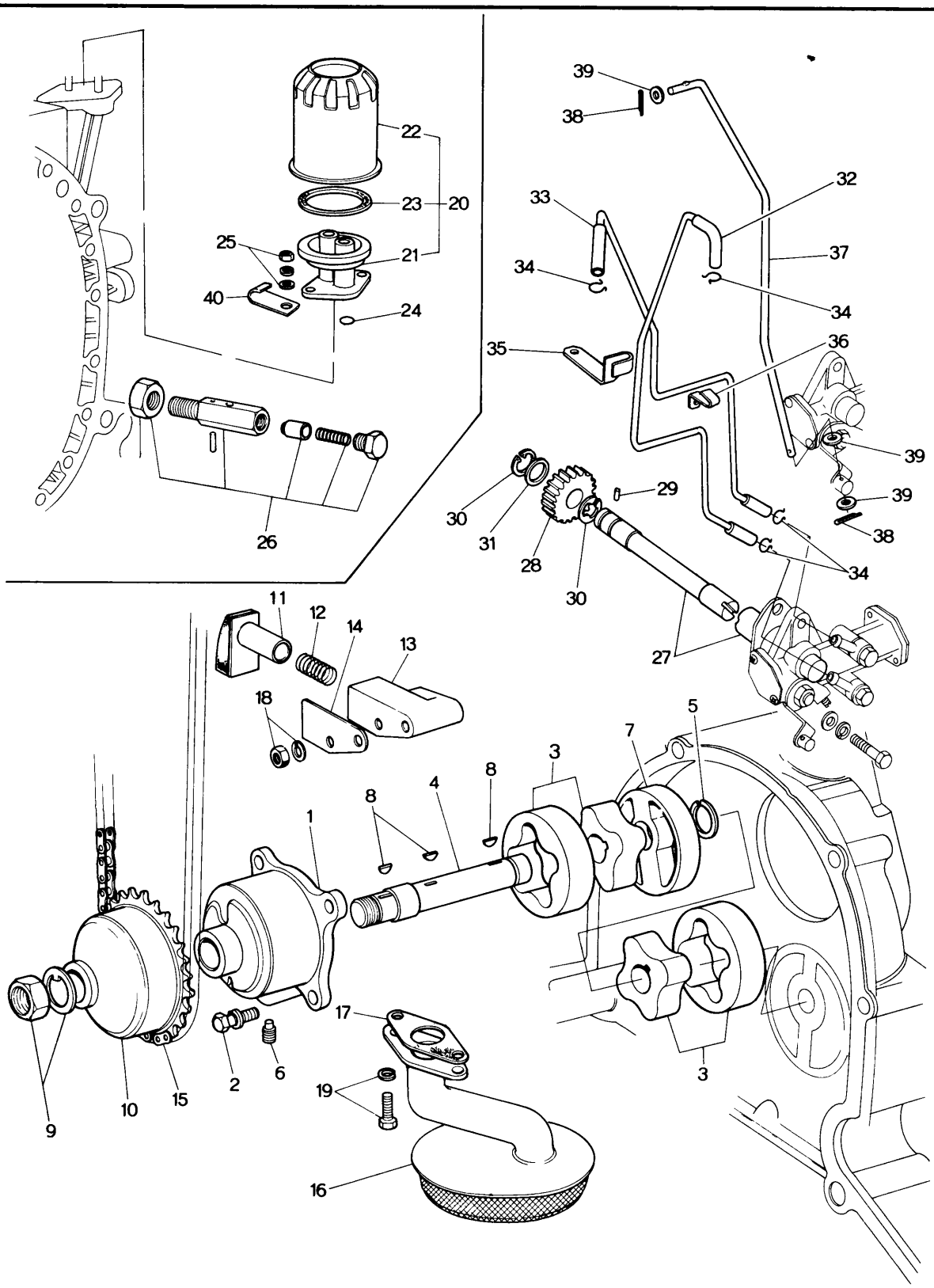
22
23
20
25
21
40
24
26
39
38
32
33
37
34
34
35
36
39
39
38
34
30
29
31
28
30
27
11
12
14
13
18
5
7
3
8
4
8
1
17
19
16
2
6
10
15
9
3

No.	Part Number	Description	Q'ty	Remarks
1	0839 14 101B	Body, Oil Pump	1	
2	99806 0618	Bolt, Oil Pump Body	4	
	99952 0600	Washer, Plain	4	
	99971 0600	Washer, Spring	4	
3	0820 23 882A	Rotor Set,	2	
4	0839 14 112B	Shaft,	1	
5	0810 14 113	Ring, Snap	1	
6	0839 14 117	Screw, Lock-Oil Pump	1	
7	0820 14 118C	Plate, Middle-Oil Pump	1	
8	0839 14 119B	Key	3	
9	99922 1200	Nut	1	
	99979 1200	Washer, Tab	1	
10	0839 14 141A	Sprocket, Driven	1	
11	0823 14 130	Adjuster, Chain	1	
12	0823 14 131	Spring	1	
13	0839 14 132	Body	1	
14	0839 14 133	Plate, Guide	1	
15	0839 14 142	Chain	1	
16	0866 14 160C	Strainer, Oil	1	
●	0866 14 160D	Strainer, Oil	1	Car No. 149072 ’76～△
●	0866 14 160E	Strainer, Oil	1	Car No. 150285 ’77～
17	0810 14 171	Gasket, Oil Strainer	1	
18	99906 0600	Nut, Chain Adjuster & Oil Strainer	2	
	99971 0600	Washer, Spring	2	
19	99806 0614	Bolt	2	
	99971 0600	Washer, Spring	2	

14 OIL PUMP

No.	Part Number	Description	Q'ty	Remarks
20	0839 14 300	Filter, Oil	1	
21	0839 23 801	Cover	1	
22	0813 23 802A	Cartridge, Oil Filter	1	
23	0813 23 803	Gasket	1	
24	99541 01601	Ring, "O" - Oil	2	
25	99901 0800	Nut, Oil Filter	2	
	99971 0800	Washer, Spring	2	
	99953 0800	Washer, Plain	1	
26	0820 14 250C	Regulator, Pressure	1	
27	0820 14 620	Shaft, Driven Gear	1	
28	0820 14 625	Gear, Driven	1	
29	0813 14 623	Pin	1	
30	99576 0800	Ring, Snap	2	
31	0810 18 276	Shim, Adjust (t=0.6)	2	Selective use
	0810 18 277	Shim, Adjust (t=0.3)	2	
32	0866 14 630	Tube, Metering Oil	1	
33	0866 14 640A	Tube, Metering Oil	1	
34	0813 14 641	Clip	4	
35	0820 14 643	Clip	1	
36	0820 14 647	Clip	1	
37	0866 14 651A	Rod, Connecting	1	
38	99221 1212	Pin, Split	2	
39	99953 0400	Washer Plain	3	
40	99295 1508	Clip, Battery Cable (Manual)	1	
	99275 2008	Clip, Batter Cable (Automatic)	1	

METERING OIL PUMP

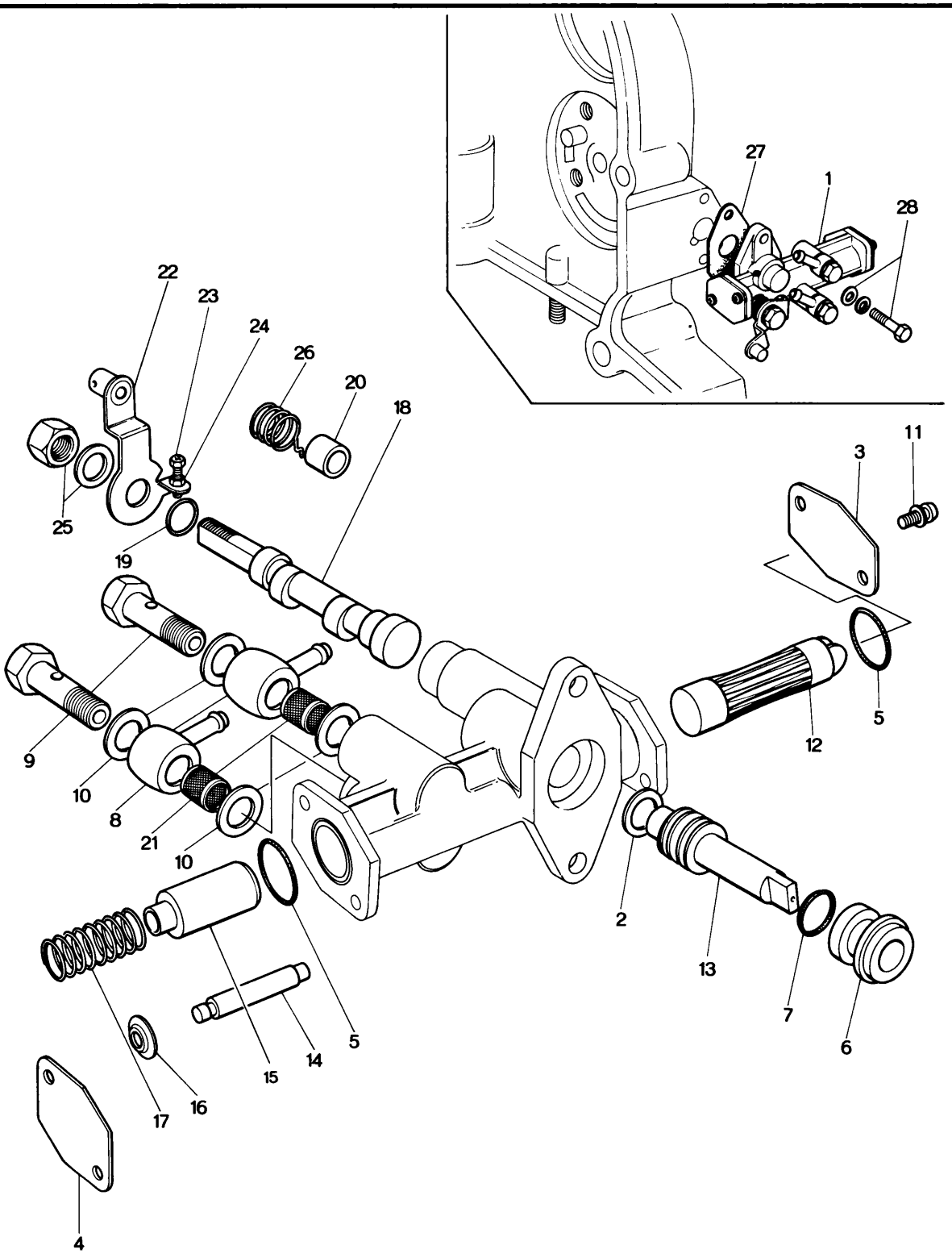

No.	Part Number	Description	Q'ty	Remarks
1	2090 14 600	Pump, Metering Oil	1	
●	2090 14 600A	Pump, Metering Oil	1	Car No. 79 ~
2	0820 23 832B	Washer, Thrust	1	
3	0820 23 833B	Plate	1	
4	0820 23 834B	Plate	1	
5	0730 23 837	Ring, "O"	2	
6	0820 23 835A	Bearing, Worm	1	
7	0730 23 839	Ring, "O"	1	
8	0820 23 836	Connector	2	
9	0730 23 842	Bolt, Connector	2	
10	0730 23 843	Washer, Connector	4	
11	99833 0408	Screw, Plate	4	
	99971 0400	Washer, Spring	4	
12	0730 23 845	Plunger	1	
13	0730 23 846	Worm, Driving	1	
14	2090 23 837	Plunger, Sub	1	
15	2090 23 838	Plunger, Differential	1	
16	2090 23 853	Nut, Push	1	
17	0820 23 840	Spring, Plunger	1	
18	2090 23 841	Pin, Control	1	
19	0730 23 854	Ring , "V"	1	
20	0820 23 842	Cap	1	
21	0820 23 843	Strainer	2	
22	2090 23 844	Lever, Control	1	
23	0820 23 845A	Screw, Adjust	1	
24	0820 23 847A	Nut, Adjust Screw	1	
25	99907 0600	Nut, Control Lever	1	

23 METERING OIL PUMP

No.	Part Number	Description	Q'ty	Remarks
	99971 0600	Washer, Spring	1	
26	0820 23 848A	Spring, Return	1	
27	0810 14 611	Gasket, Metering Oil Pump	1	
28	99806 0630	Bolt, Metering Oil Pump	1	
	99806 0618	Bolt	1	
	99953 0600	Washer, Plain	2	
	99971 0600	Washer, Spring	2	

COOLING SYSTEM

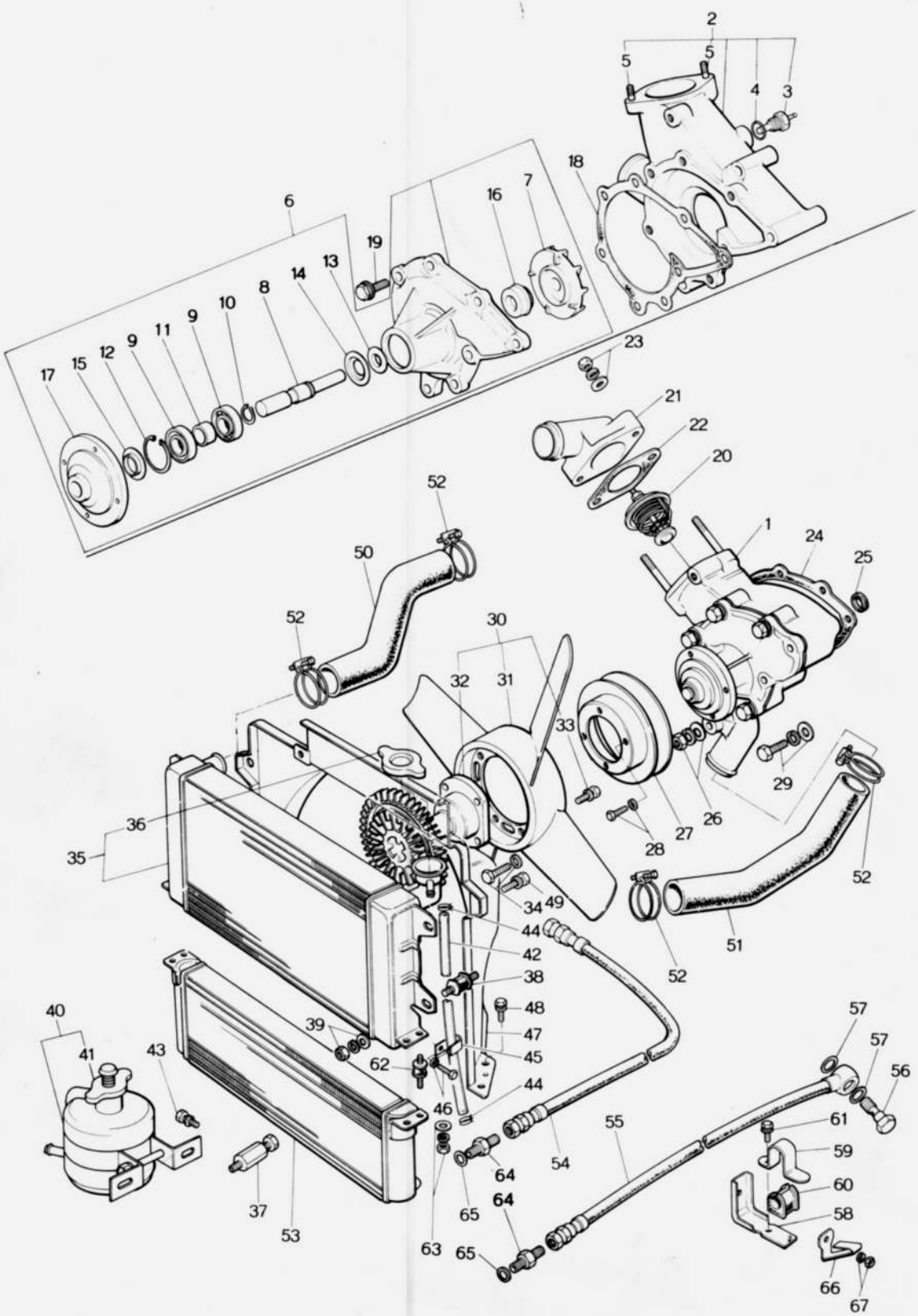

No.	Part Number	Description	Q'ty	Remarks
1	0866 15 010B	Pump, Water	1	
	0866 15 010C	Pump, Water	1	Car No. 128078 71/12~C
●	0866 15 010D	Pump, Water	1	Car No. 146346 72/5~C
●	0862 15 010	Pump, Water	1	Car No. 72/8~X
2	0866 15 100B	Casing	1	
	0866 15 100C	Casing	1	Car No. 128078 71/12~C
	0866 15 100D	Casing	1	Car No. 146346 72/5~C
●	0862 15 100	Casing	1	Car No. 72/8~X
3	0259 18 510	Gauge Unit, Water Heat	1	
	0866 18 511	Lead Heat Gauge Unit	1	
4	0110 18 515	Ring, "O" - Heat Gauge Unit	1	
5	2090 15 104	Stud, Themostat Cover	2	
6	0866 15 130	Cover, Pump	1	
●	1620 15 130	Cover, Pump	1	Car No. 72/8~X
7	0813 15 111	Impeller	1	
●	1620 15 111	Impeller	1	Car No. 72/8~X
8	0820 15 112	Shaft	1	
9	0118 15 121	Bearing, Ball	2	
10	0118 15 114	Ring, Snap	1	
11	0820 15 115	Spacer	1	
12	99574 3500	Ring, Snap	1	
13	0813 15 117	Plate, Baffle	1	
14	0118 15 118	Plate, Dust Seal	1	
15	0810 15 119	Plate, Dust Seal	1	
16	0820 15 120	Water Seal	1	
17	0820 15 152	Boss, Pulley	1	
18	2329 15 132A	Gasket, Pump Cover	1	
●	1620 15 132	Gasket, Pump Cover	1	Car No. 72/8~X
19	99801 0825	Bolt, Water Pump	5	
	99952 0800	Washer, Plain	5	
	99971 0800	Washer, Spring	5	
	0820 99 150	Repair Kit, Water Pump	1	Set
20	0823 15 171	Thermostat, Water	1	~~Selective use~~
●	~~0839 15 171A~~	~~Thermostat, Water~~		

No.	Part Number	Description	Q'ty	Remarks
21	0839 15 172	Cover, Thermostat	1	
22	0813 15 173	Gasket, Thermostat Cover	1	
23	99907 0800	Nut, Thermostat Cover	2	
●	99901 0800	Nut, Thermostat Cover	2	Car No. 143210 ~○
	99953 0800	Washer, Plain	2	
	99971 0800	Washer, Spring	2	
24	0822 15 105	Gasket, Water Pump	1	
25	0820 15 106	Gasket, Water Pump	2	
26	99901 0800	Nut, Water Pump	3	
	99953 0800	Washer, Plain	3	
	99971 0800	Washer, Spring	3	
27	0820 15 151	Pulley, Water Pump	1	
●	1011 15 151	Pulley, Water Pump	1	Car No. ~×
28	99806 0610	Bolt, Pulley	4	
	99971 0600	Washer, Spring	4	
29	99801 0832	Bolt, Water Pump	1	
	99953 0800	Washer, Plain	1	
	99971 0800	Washer, Spring	1	
30	0839 15 250D	Fan & Fan Drive (Manual)	1	
	0842 15 250C	Fan & Fan Drive (Automatic)	1	
31	0839 15 200	Fan, Cooling	1	
32	0839 15 210B	Fan Drive	1	
33	99806 0612	Bolt, Fan & Fan Drive	6	
	99971 0600	Washer, Spring	6	
34	908066 6 18	Bolt Set, Fan & Fan Drive	4	

No.	Part Number	Description	Q'ty	Remarks
35	0866 15 310C	Radiator (Manual)	1	
	0866 15 310D	Radiator (Manual)	1	Car No. 131046 $^{7}/_{12}$~△
●	0866 15 310E	Radiator (Maunal) ← 865 15 310	1	Car No. $^{7}/_{9}$~○
	0872 15 310	Radiator (Automatic)	1	
● 36	0222 15 205	Cap (Automatic)	1	
●	0866 15 316	Cap (Manual)	1	
●	0866 15 316A	Cap	1	Car No. 146710 $^{7}/_{5}$~△
37	0118 10 320	Cock, Water Drain (Manual)	1	Car No, 131046 $^{7}/_{12}$~Discarded
38	0820 15 312	Rubber, Insulation	4	
	0820 15 312A	Rubber, Insulation	4	Car No. 133210 $^{7}/_{1}$ ~ △
39	99901 0800	Nut, Radiator	4	
	99951 0822	Washer, Plain	4	
	99971 0800	Washer, Spring	4	
40	0866 15 350A	Tank, Sub	1	
	0866 15 350B	Tank, Sub	1	Car No. 127380 $^{7}/_{11}$ ~ ○
41	0222 15 255	Cap	1	
42	0866 15 351	Hose, Water-Reserve Tank	1	
	0866 15 351A	Hose, Water-Reserve Tank	1	Car No. 124708 $^{7}/_{11}$ ~ ○
43	99863 0612	Screw	2	
	99952 0600	Washer, Plain	2	
44	99295 0800	Clip, Water Hose	2	
45	99285 0800	Clip, Water Hose	2	
46	99804 0620	Bolt, Reserve Tank	2	
	99971 0600	Washer, Spring	2	
	99952 0600	Washer, Plain	2	
47	0866 15 401	Shroud, Radiator	1	
●	0866 15 401A	Shroud, Radiator	1	Car No. 149767 $^{7}/_{7}$~○
48	99806 0618	Bolt, Radiator Shroud	4	

No.	Part Number	Description	Q'ty	Remarks
	99971 0600	Washer, Spring	4	
	99952 0600	Washer, Plain	4	
49	99801 0812	Bolt	2	
	99971 0800	Washer, Spring	2	
	99952 0800	Washer, Plain	2	
50	0866 15 511	Hose, Water - Thermostat~Radiator	1	
51	0866 15 521A	Hose, Water - Radiator~Water Pump	1	
●	1620 15 521	Hose, Water - Radiator~Water Pump	1	Car No. 72/8 ~ ×
● 52	99282 4900	Band, Hose - Water	3	Car No. 72/8 ~ Q'ty
●	99282 5300	Band, Hose - Water	1	Car No. 72/8 ~ Added Anew
53	0866 14 700B	Cooler, Oil (Manual)	1	
●	0866 14 700C	Cooler, Oil (Manual)	1	Car No. 150306 72/7 ~ ×
	0865 14 700	Cooler, Oil (Automatic)	1	
●	0865 14 700A	Cooler, Oil (Automatic)	1	Car No. 150306 72/7 ~ ×
54	0866 14 720	Hose, Oil	1	
	0866 14 720A	Hose, Oil	1	Car No. 127396 71/12 ~ ○
55	0839 14 730A	Hose, Oil	1	
	0866 14 730	Hose, Oil	1	Car No. 127396 71/12 ~ ○
56	99381 1400	Bolt, Connector ~ Oil Hose	1	
57	99562 1800	Gasket	2	
58	0866 14 740	Bracket, Oil Hose	1	
	0866 14 740A	Bracket, Oil Hose	1	Car No. 127396 71/12 ~ ○
59	0839 14 745	Clip, Oil Hose	1	
60	0813 14 716	Protector, Oil Hose	1	
61	99806 0610	Bolt, Clip	1	
	99971 0600	Washer, Spring	1	
62	0222 13 363	Rubber, Insulation - Oil Cooler	4	
63	99906 0600	Nut, Oil Cooler	8	
	99952 0600	Washer, Plain	8	
	99971 0600	Washer, Spring	8	
64	99384 1200	Joint, Union	2	Car No. 143809 72/4 ~ Discarded
65	99564 1600	Gasket	2	Car No. 143809 72/4 ~ Discarded
66	0866 18 496	Clip	1	
67	99921 1200	Nut	1	
	99971 1200	Washer, Plain	1	

No.	Part Number	Description		Q'ty	Remarks
Ⓝ	1562 14 780	Valve Ass'y-Bypass	1558,1559	1	Car No. 143809 73/4～Added Anew
Ⓝ	1665 14 771	Bolt Connector		2	
Ⓝ	99562 1600	Packing		4	
● Ⓝ	0866 61 911	Packing		1	Car No. 137813 73/2～Added Anew
●	0866 61 912	Packing		1	
●	0866 61 913	Packing		1	
●	0866 61 914	Packing		1	

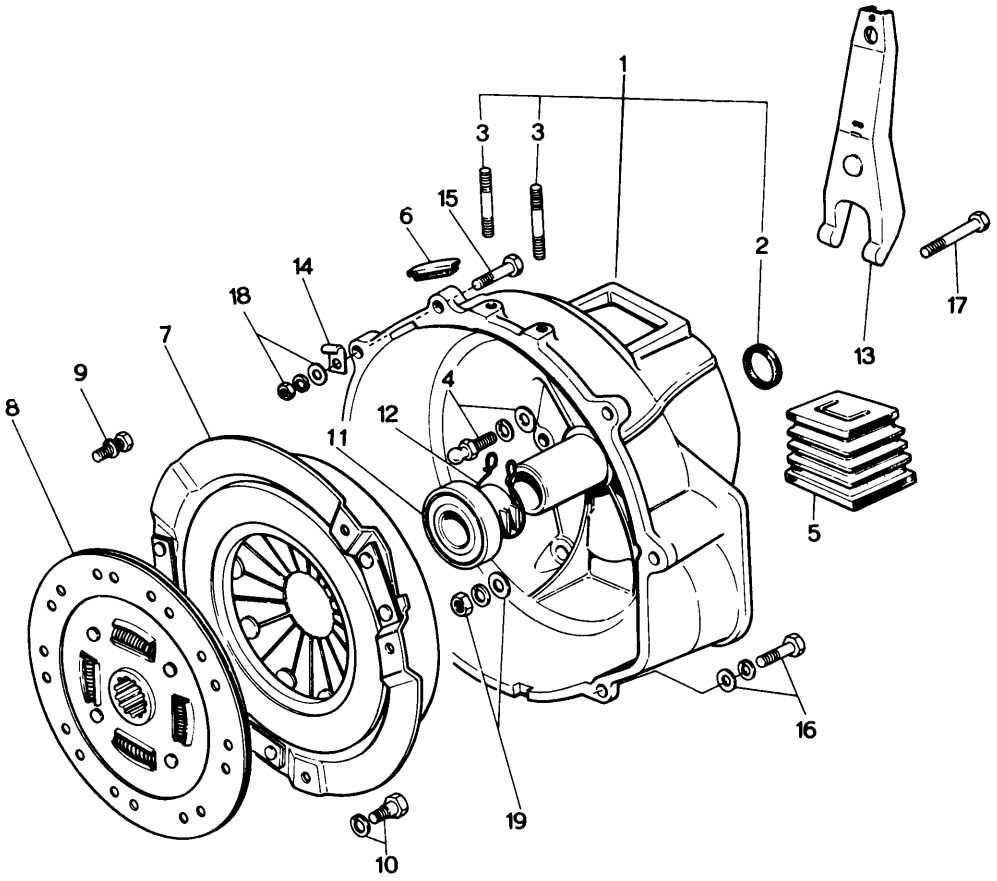
1
3
3
15
6
14
18
7
9
8
12
4
11
2
13
17
5
16
19
10

No.	Part Number	Description	Q'ty	Remarks
1	0866 16 210	Housing, Clutch	1	
2	0603 16 103	Oil Seal	1	
3	99851 0820	Stud	2	
4	0603 16 1026	Pin, Pivot	1	
	99953 1000	Washer, Plain	1	
	99971 1000	Washer, Spring	1	
5	0866 16 214	Cover, Dust	1	
●	0866 16 214A	Cover, Dust	1	Car No. 72/9 ~
6	0813 16 112	Cover, Top Hole	1	
7	4077 16 410	Cover, Clutch	1	
~~8~~	~~0866~~ 16 410	Cover, Clutch UPTO	1	Car No. 142765 72/3 ~ △
8	4077 16 460C	Disc, Clutch · 4077 22 460	1	
	0866 16 460	Disc, Clutch	1	Car No 135808 72/2 ~ △
9	0839 16 432	Bolt, Reamer	2	
	99971 0800	Washer, Spring	2	
10	99753 78118	Bolt	4	
	99971 0800	Washer, Spring	4	
11	0820 16 510	Collar, Release	1	
12	0820 16 515	Spring, Collar	1	
13	0820 16 230	Fork, Release	1	
~~14~~	~~99285 1518~~	~~Clip~~	~~1~~	
15	99811 1032	Bolt	1	
	99971 1000	Washer, Spring	1	
16	99811 1050	Bolt, Clutch Housing	2	
	99953 1000	Washer, Plain	2	
	99971 1000	Washer, Spring	2	
17	99811 1055	Bolt, Clutch Housing	1	

No.	Part Number	Description	Q'ty	Remarks
18	99921 1000	Nut	3	
	99952 1000	Washer, Plain	1	
	99953 1000	Washer, Plain	2	
	99971 1000	Washer, Spring	3	
19	99921 1200	Nut	6	
	99953 1200	Washer, Plain	6	
	99971 1200	Washer, Spring	6	

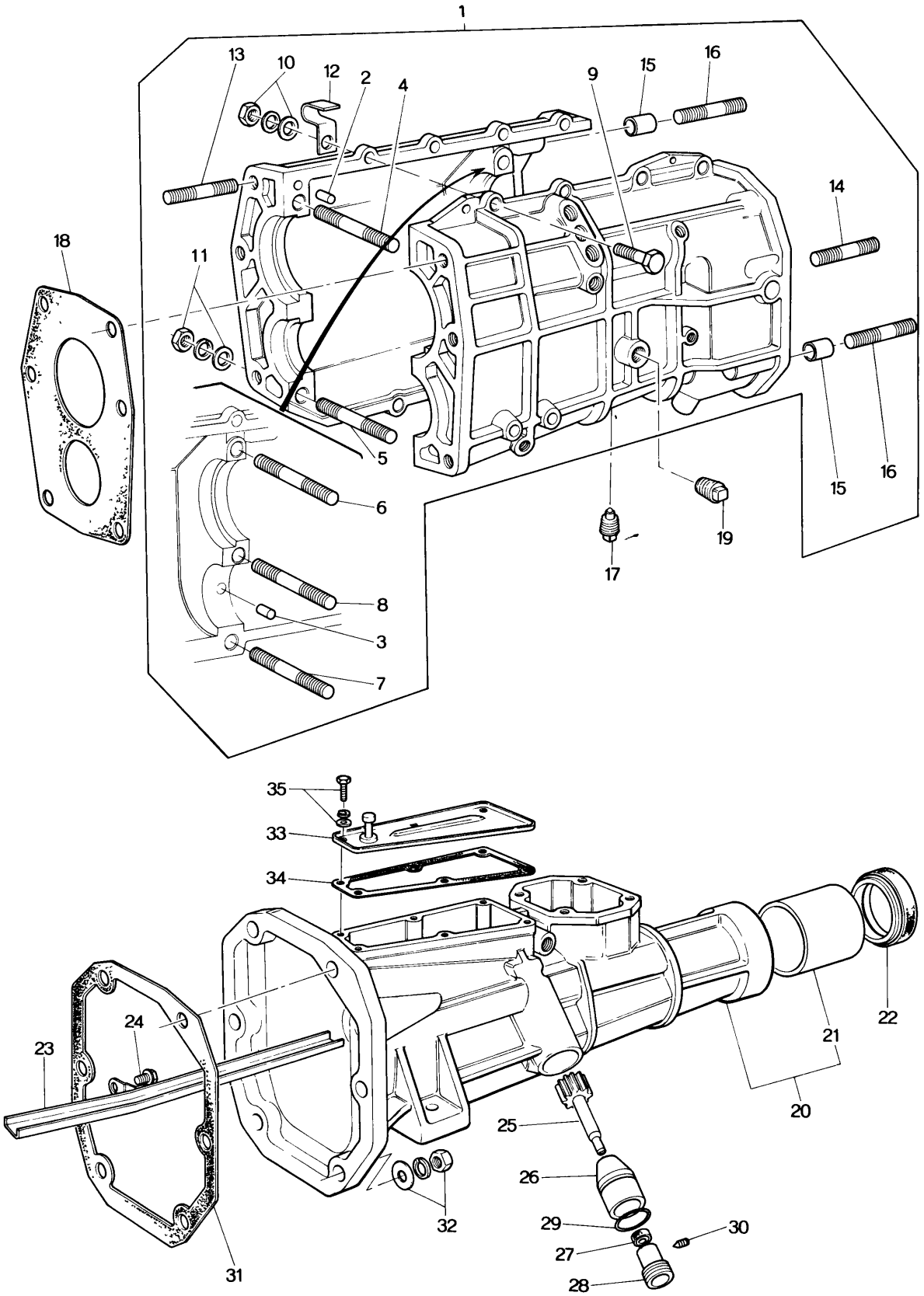
1
13
10
12
2
4
9
15
16
14
18
11
5
6
8
3
7
17
19
15
16
35
33
34
24
23
22
21
20
25
26
29
27
28
30
32
31

No.	Part Number	Description	Q'ty	Remarks
1	0866 17 100A	Case, T / mission	1	
2	99233 0816	Pin, Knock	1	
3	0603 17 104	Pin, Knock	1	
4	99855 1085	Stud	1	
5	99855 1078	Stud	1	
6	99855 1055	Stud	1	
7	99855 1040	Stud	1	
8	99851 0860	Stud	1	
9	99801 0845	Bolt	7	
10	99921 1000	Nut	4	
	99971 1000	Washer, Spring	4	
	99953 1000	Washer, Plain	4	
11	99901 0800	Nut	8	
	99971 0800	Washer, Spring	8	
	99953 0800	Washer, Plain	8	
12	0866 17 107	Clip	2	
13	99855 1232	Stud	6	
14	99855 1025	Stud	4	
15	0603 17 105	Pin, Tabular	2	
16	99855 1035	Stud	2	
17	0107 17 121	Plug, Magnet	1	
18	0603 17 131	Gasket, T / mission Case Front	1	
19	99502 4000	Plug, Tapered	1	

No.	Part Number	Description	Q'ty	Remarks
20	0866 17 330A	Housing, Extension	1	
21	0187 17 333	Bush	1	
●	1820 22 333	Bush	1	Car No. 133210 ~~73/1~~ ～○
22	~~0817~~ L437 17 335	Seal, Oil	1	
23	0866 17 540	Pass, Oil	1	
24	99833 0510	Screw, Oil Pass	1	
	99971 0500	Washer, Spring	1	
25	0820 17 345	Gear, Speedometer Driven	1	
26	0183 17 346	Sleeve, Speedometer	1	
27	99586 10207	Seal, Oil	1	
28	0183 17 351	Joint, Speedometer Cable	1	
29	99541 02101	Ring, "O"	1	
30	0180 17 353	Screw, Set	1	
31	0803 17 361	Gasket	1	
32	99921 1000	Nut	6	
	99953 1000	Washer, Plain	6	
	99971 1000	Washer, Spring	6	
33	0866 17 530	Cover, Blind	1	
34	0866 17 524	Gasket	1	
35	99806 0610	Bolt, Blind Cover	6	
	99971 0600	Washer, Spring	6	

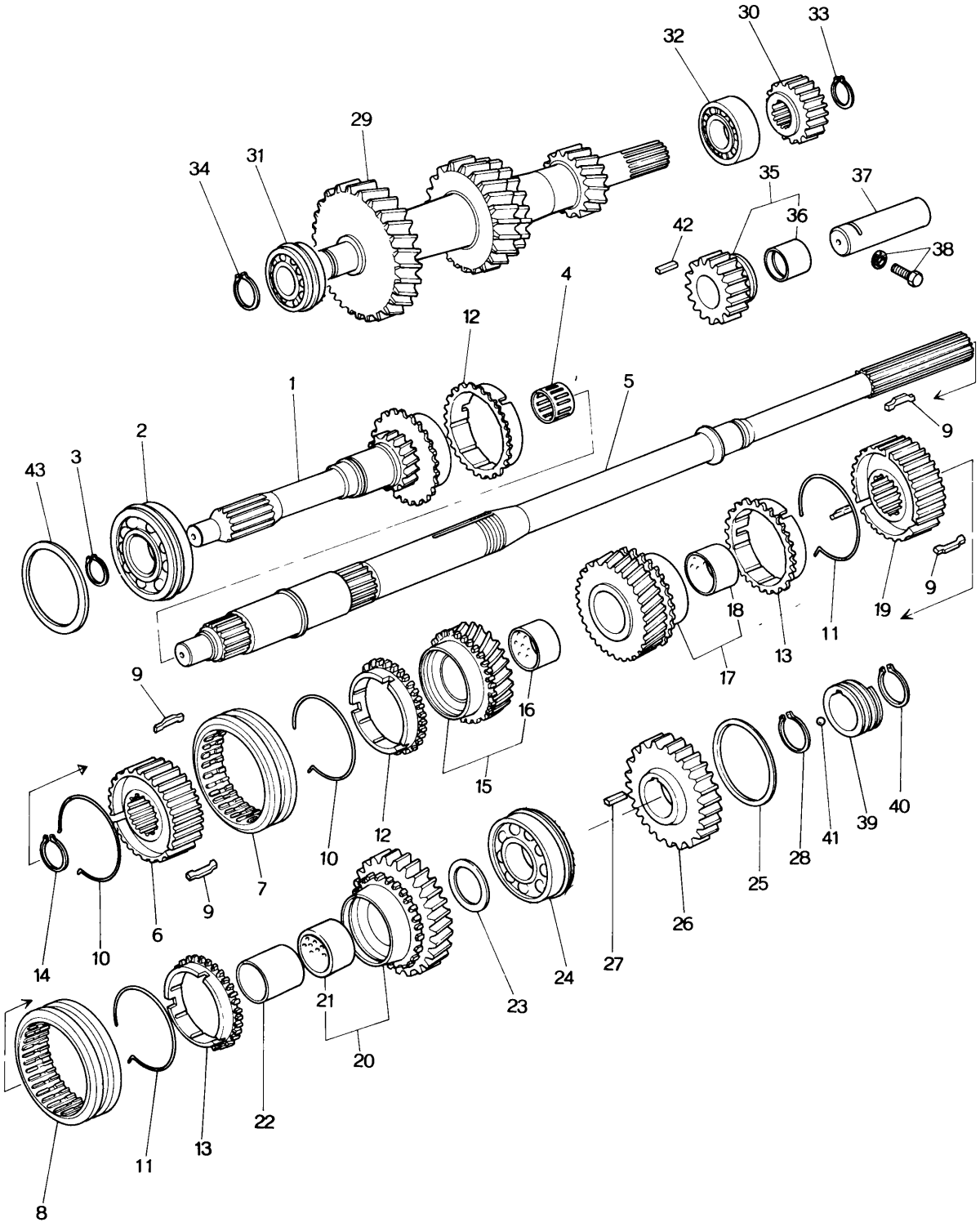
30
33
32
29
31
34
35
37
36
42
38
4
12
1
5
2
3
43
9
18
19
11
13
17
9
16
15
10
12
7
6
9
14
10
21
20
23
24
27
26
25
28
41
39
40
22
11
13
8

No.	Part Number	Description	Q'ty	Remarks
1	0866 17 201B	Gear, Main Drive	1	
2	99606 63060	Bearing, Ball	1	
3	99573 3000	Ring, Snap	1	
4	0603 17 210	Bearing, Needle	1	
5	0866 17 221	Shaft, Main	1	
	0866 17 221A	Shaft, Main	1	Car No. 127396 71/12 ~ X
6	0820 17 241B	Hub, (3.4) - Clutch	1	
	0290 17 241B	Hub, (3.4)–Clutch	1	Car No. 127396 71/12 ~ X
7	0187 17 242	Sleeve, Clutch Hub (3.4)	1	Car No. 127395 71/12 ~ Discarded
8	0603 17 262	Sleeve (1.2)	2	Car No. 127396 71/12 ~ Q'ty
9	0187 17 243	Key, Synchronizer	6	
10	0103 17 244A	Spring, Synchronizer	2	Car No. 127395 71/12 ~ Discarded
11	0600 17 324	Spring, Synchronizer (1.2)	4	Car No. 127396 71/12 ~ Q'ty
12	4069 17 245	Ring, Synchronizer (3.4)	2	Car No. 127395 71/12 ~ Discarded
13	0839 17 245	Ring, Synchronizer (1.2)	4	Car No. 127396 71/12 ~ Q'ty
●	0881 17 245A	Ring, Synchronizer (1.2)	4	Car No. 72/9 ~
14	0317 17 225	Ring, Snap	1	
	0866 17 276	Washer, Thrust } Selective use	1	Car No. 127395 71/12 ~ Added Anew
	0866 17 286A	Washer. Thrust }	1	
	0866 17 277	Washer, Thrust } Selective use	1	
	0866 17 285	Washer, Thrust }	1	
15	0603 17 230A	Gear, Third	1	
	0290 17 230A	Gear, Third	1	Car No. 127396 71/12 ~ X
16	0187 17 232	Bush, Third Gear	1	
17	0866 17 250	Gear, Second	1	
18	0187 17 272	Bush, Second Gear	1	
19	0290 17 261B	Hub, (1.2) - Clutch	1	

No.	Part Number	Description	Q'ty	Remarks
20	0866 17 270	Gear, Low	1	
21	0187 17 272	Bush, Low Gear	1	
22	0866 17 275	Sleeve, Gear	1	
23	0866 17 276	Washer, Thrust	1	
24	99606 33060	Bearing, Ball	1	
25	0866 17 285	Washer, Adjust (t=0.200)	1	
26	0866 17 281	Gear, Reverse	1	
27	0866 17 279	Key	1	
28	0866 17 288	Ring, Snap	1	Selective use
	0866 17 289	Ring, Snap		
	0866 17 291	Ring, Snap		
	0866 17 292	Ring, Snap		
29	0222 17 3018	Gear, Countershaft	1	
30	0603 17 302	Gear, Countershaft Reverse	1	
31	99606 63440	Bearing, Ball	1	
32	0603 17 303	Bearing, Needle Roller	1	
33	0603 17 305	Ring, Snap	1	
34	99573 2200	Ring, Snap	1	
35	0603 17 310	Gear, Reverse Idle	1	
36	0603 17 312	Bush	1	

No.	Part Number	Description	Q'ty	Remarks
37	0603 17 321	Shaft, Reverse Idle Gear	1	
38	0187 17 323	Screw Set, Gear Shaft	1	
	99564 0800	Gasket	1	
39	0820 17 341	Gear, Speedometer Drive	1	
40	99573 2500	Ring, Snap	1	
41	99611 1500	Ball, Steel	1	
42	0839 17 285	Key	1	
43	99963 6310	Shim } Selective use	1	
	99963 6330	Shim }		

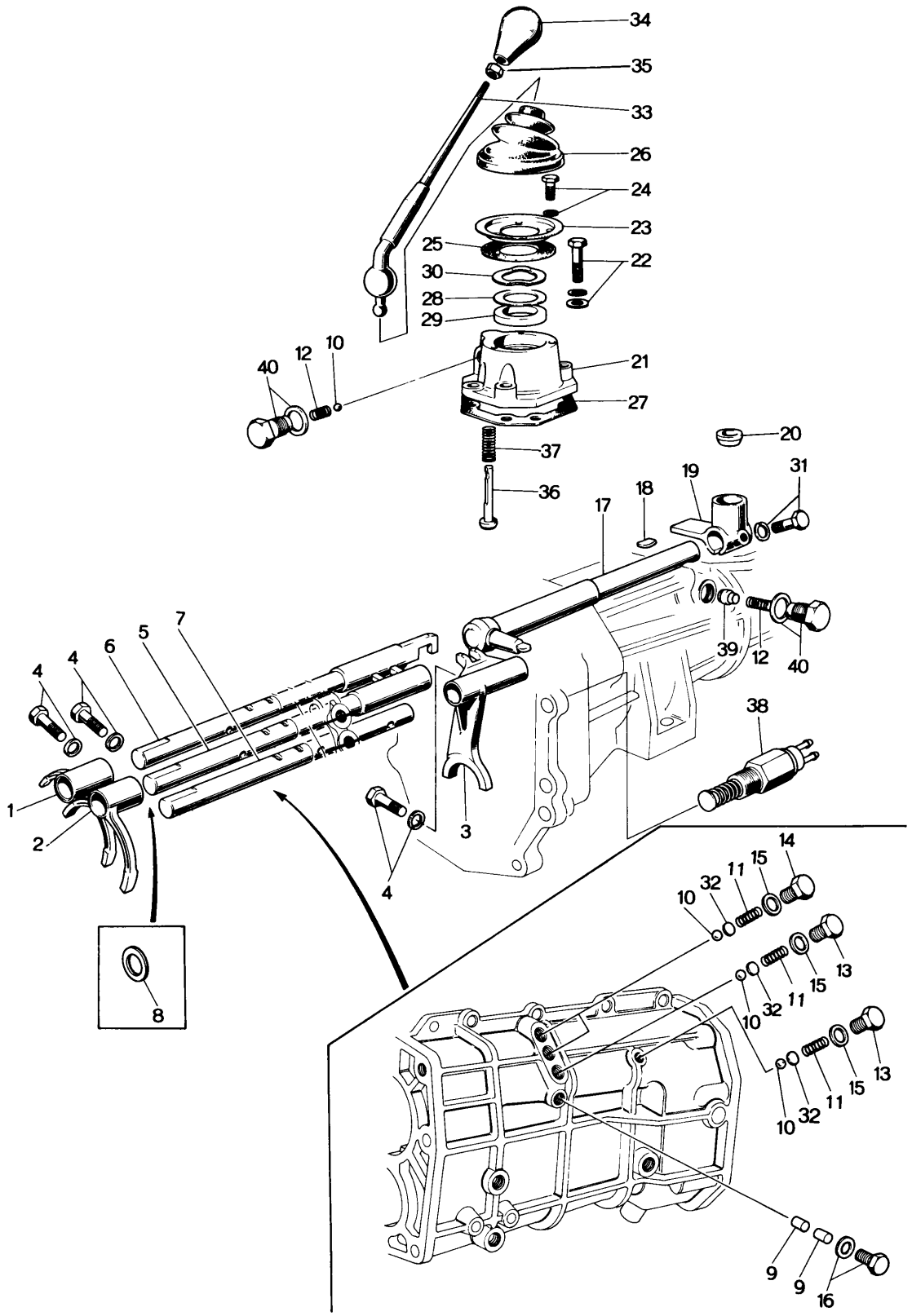
34
35
33
26
24
23
25
22
30
28
29
40
12
10
21
27
37
20
36
18
19
31
17
39
12
40
38
7
5
6
4
4
4
1
2
3
4
8
14
15
11
32
10
13
15
11
32
10
13
15
11
32
10
9
9
16

No.	Part Number	Description	Q'ty	Remarks
1	0290 17 402	Fork, Shift - 1st & 2nd	1	
2	0187 17 404	Fork, Shift - 3rd & 4th	1	
	0290 17 404	Fork, Shift (3rd & 4th)	1	Car No. 127396 $^{71}/_{12}$ ~ X
3	2981 17 406	Fork, Shift - Reverse	1	
4	0118 17 313	Bolt	3	
	99971 0600	Washer, Spring	3	
5	2981 17 410	Rod, Shift - 1st & 2nd	1	
6	2981 17 420	Rod, Shift - 3rd & 4th	1	
	0292 17 420	Rod, Shift (3rd & 4th)	1	Car No. 127396 $^{71}/_{12}$ ~ X
7	2981 17 431	Rod, Shift - Reverse	1	
8	0118 17 316	Spacer, Adjust	2	
9	0114 17 351	Pin, Interlock	2	
10	99611 2500	Ball, Steel	5	
11	0103 17 411	Spring	4	
12	0014 17 411	Spring	2	
13	0187 17 441A	Cap, Spring	2	
14	0221 17 441	Cap, Spring	2	
15	99562 1400	Gasket	4	
16	99510 1000	Plug	1	
●	0259 17 441	Plug Spring Set	1	Car No. 151014 $^{72}/_{8}$ ~
	99564 1000	Gasket	1	
17	0866 17 450	Lever, Control	1	
18	0111 17 323	Key	1	
19	0398 17 461A	End, Control Lever	1	
20	0398 17 462A	Seat, Spring	1	
21	0303 17 470	Case, Change Control	1	
22	99801 0825	Bolt, Change Control Case	2	
	99801 0835	Bolt	2	
	99971 0800	Washer, Spring	4	

No.	Part Number	Description	Q'ty	Remarks
23	0221 17 473	Plate, Cover	1	
24	99806 0614	Bolt, Cover Plate	3	
	99971 0600	Washer, Spring	3	
25	0303 17 474	Gasket, Cover Plate	1	
26	0221 17 475B	Boot, Dust	1	
27	0271 17 478	Gasket, Change Control	1	
28	99963 3310	Shim, Adjust } Selective use	1	
	99963 3330	Shim, Adjust }		
29	0303 17 481	Bush	1	
30	0303 17 482	Washer, Wave	1	
31	0187 17 492	Bolt, Reamer	1	
	99971 0800	Washer, Spring	1	
32	0183 17 493	Plate, Adjust - Selective use	2	
33	0866 17 510	Lever, Change	1	
34	0329 17 520	Knob	1	
35	0824 17 524	Nut, Change Lever Knob	1	
36	0221 17 551A	Spindle, Select Lock	1	
37	0221 17 552	Spring	1	
38	0376 17 640	Switch, Reverse Lamp	1	
39	0303 17 561	Piece, Friction	1	
40	0183 17 491	Cap, Spring	2	
	99562 1400	Gasket	2	

DISTRIBUTOR

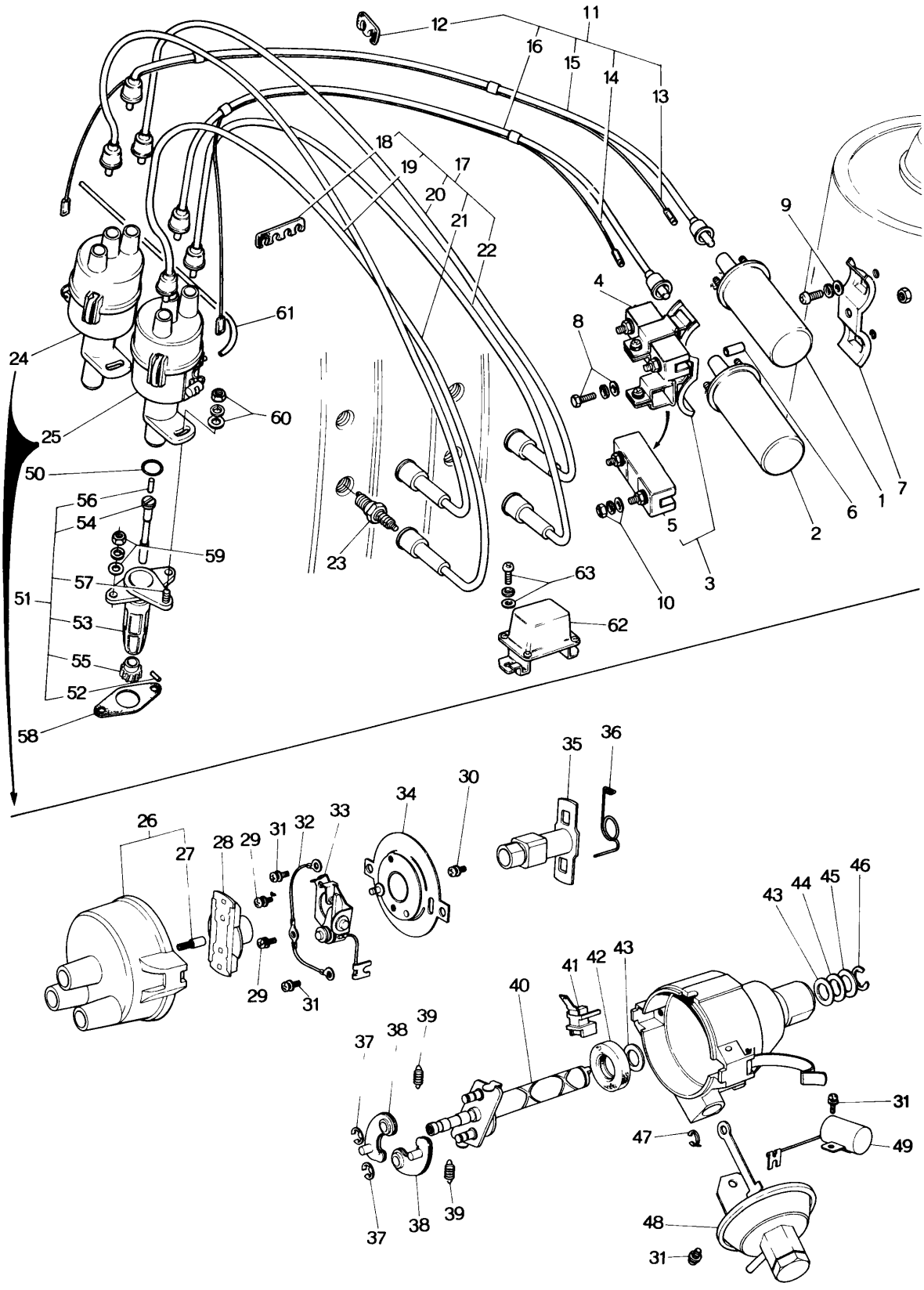

No.	Part Number	Description	Q'ty	Remarks
1	0823 18 100	Coil, Ignition	1	
●	1562 18 100	Coil, Ignition (Arctic Spec.)	1	Car No. 72/9 ~ C
●	1562 18 100	Coil, Ignition (General)	1	Optional
● 2	0866 18 100A	Coil, Ignition	1	
●	1672 18 100	Coil, Ignition (Arctic Spec.)	1	Car No. 72/9 ~ C
●	1672 18 100	Coil, Ignition (General)	1	Optional
3	0866 18 190A	Bracket, Ignition Coil	1	
4	0845 18 101	Resistor	1	
5	0866 18 101	Resistor	1	
6	0823 18 107	Pipe, Ignition Coil Bracket	1	
	0866 18 107	Pipe, Ignition Coil Bracket	1	Car No. 127396 71/12 ~ Δ
7	0866 18 810	Bracket, Ignition Coil	1	
8	99801 0850	Bolt, Ignition Coil Bracket	1	
	99801 0805	Bolt, Ignition Coil Bracket	1	Car No. 127396 71/12 ~ Δ
	99952 0800	Washer, Plain	1	
	99971 0800	Washer, Spring	1	
9	99797 0616	Bolt, Ignition Coil Bracket	2	
	99952 0600	Washer, Plain	2	
	99971 0600	Washer, Spring	2	
10	99907 0500	Nut, Ignition Coil, Resistor	5	
	99952 0500	Washer, Plain	7	Car No. 127396 71/12 ~ Q'ty
	99971 0500	Washer, Spring	5	
	99906 0500	Nut	1	Car No. 127396 71/12 ~ Added Anew
11	0866 18 110A	Cord, High Tension - Coil ~ Distributor	1	
12	0820 18 111B	Supporter, High - Tension - Cord	1	
13	0866 18 115	Cord, Trailing - Coil ~ Distributor	1	
14	0866 18 155	Cord, Leading - Coil ~ Distributor	1	

18 24 DISTRIBUTOR

No.	Part Number	Description	Q'ty	Remarks
15	0866 18 120	Cord, High Tension - Trailing	1	
16	0866 18 160A	Cord, High Tension - Leading	1	
17	0866 18 150	Cord, High Tension	1	
18	0820 18 114	Supporter, Cord	1	
19	0866 18 130	Cord, (T−1) - High Tension	1	
20	0866 18 140	Cord (T−2) - High Tension	1	
21	0866 18 170	Cord, (L−1) - High Tension	1	
22	0866 18 180	Cord, (L−2) - High Tension	1	
23	0866 18 600	Plug, Sparking (NGK B-7 EJ / DENSO W22EG2) Standard	4	
●	2182 18 600	Plug, Sparking (NGK BR-7 EM / DENSO W22EG2) Standard	4	For Europe Car No. 7210～×
	0840 18 600	Plug, Sparking (NGK B-8 EJ / DENSO W25EG2) High Speed	4	
	~~0840 18 600~~	~~Plug, Sparking (NGK B-6 EJ / DENSO W20EG2) Low Speed~~	~~4~~	
	~~0885 18 600~~	~~Plug, Sparking (NGK B-6 EM / DENSO W20EA) Low Speed~~	~~4~~	
	0867 18 600	Plug, Sparking (NGK B-8 EM / DENSO W25EA) High Speed	4	
●	2183 18 600	Plug, Sparking (NGK BR-8 EH / DENSO W25EAR) High Speed	4	For Earope Car No. 7210～×
24	0866 16 200	Distributor, Trailing	1	
25	0866 18 700	Distributor, Leading	1	
26	0820 24 301	Cap	1	
27	2545 23 496	Carbon, Contact	1	
28	0813 24 303	Rotor	1	
29	0820 24 312	Screw Set	2	
30	0839 24 312	Screw Set	1	
31	0813 24 312	Screw Set	5	
32	0107 18 212	Wire, Earth	1	

No.	Part Number	Description	Q'ty	Remarks
33	0813 24 316	Support, Arm	1	
34	0820 24 315	Base, Breaker	1	
35	0823 24 311	Cam (Trailing)	1	
	0866 24 411	Cam (Leading)	1	
36	2587 24 336	Spring, Hair Pin (Trailing)	1	
	0813 24 309	Spring, Hair Pin (Leading)	1	
37	0107 18 231	Ring, Snap	2	
38	2587 24 335	Weight, Governor (Trailing)	2	
	0813 24 306	Weight, Governor (Leading)	2	
39	0866 24 308	Spring, Governor (Trailing)	2	
	0866 24 408	Spring, Governor (Leading)	2	
40	0823 24 305	Shaft (Trailing)	1	
	0820 24 405	Shaft (Leading)	1	
41	0820 24 319	Terminal	1	
42	0107 18 216A	Oil Seal	1	
43	0107 18 226A	Washer (12.7×20×1)	1	
44	0107 18 224	Washer (12.7×20×0.2)	1	
45	0107 18 225	Washer (12.7×20×0.1)	1	
46	0107 18 221A	Ring, Snap	1	
47	0107 18 266	Ring, Snap	1	
48	0866 24 323	Control, Vacuum (Trailing)	1	
	0866 24 423	Control, Vacuum (Leading)	1	
49	0820 24 322	Condenser	1	
50	0107 18 201	Ring, "O" - Distributor	2	

18 24 DISTRIBUTOR

No.	Part Number	Description	Q'ty	Remarks
51	0820 18 270F	Socket, Distributor	2	
52	0820 11 105	Pin, Spring	2	
53	0820 18 271D	Socket	2	
54	0839 18 272A	Shaft	2	
55	0820 18 273A	Gear	2	
56	0813 18 288	Insert	2	
57	99851 0618A	Stud	2	
58	0820 18 279A	Gasket, Distributor Socket	2	
59	99901 0800	Nut, Distributor Socket	4	
	99953 0800	Washer, Plain	4	
	99971 0800	Washer, Spring	4	
60	99906 0600	Nut, Distributor & Socket	2	
	99952 0600	Washer, Plain	2	
	99971 0600	Washer, Spring	2	
61	0823 18 291	Tube, Vacuum Control	2	
62	0222 18 391C	Regulator	1	
●	0259 18 391B	Regulator	1	Car No. 150526 7/8 ~ ×
63	99833 0612	Screw, Regulator	2	
	99952 0600	Washer, Plain	2	
	99971 0600	Washer, Spring	2	
● Ⓝ	1620 18 390	Bracket Ass'y - Regulator	1	Car No. 150526 7/8 ~ Added Anew
● Ⓝ	99796 0610	Bolt	1	

ALTERNATOR

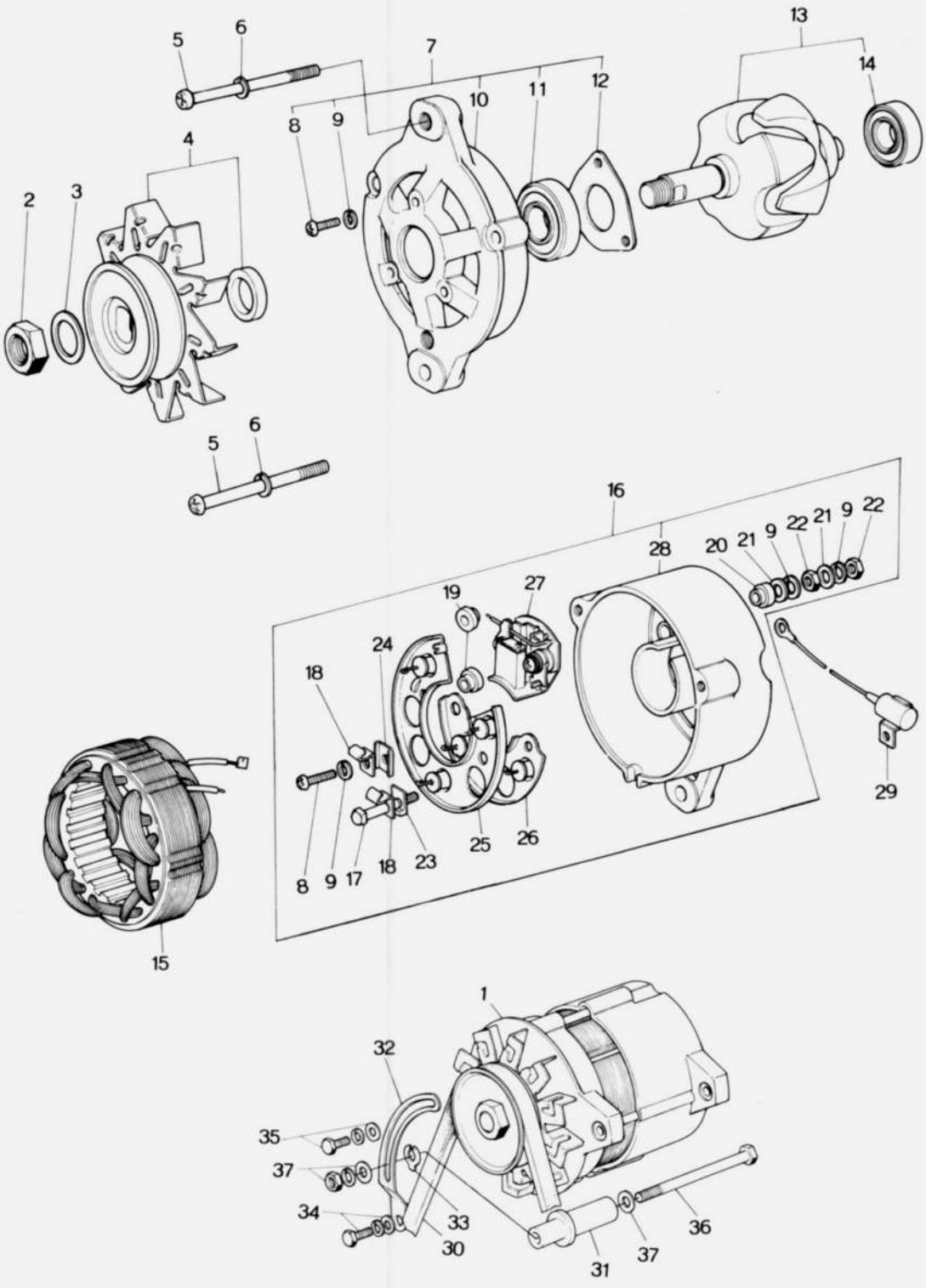
1
2
3
4
5
6
7
8
9
10
11
12
13
14
15
16
17
18
19
20
21
22
23
24
25
26
27
28
29
30
31
32
33
34
35
36
37

No.	Part Number	Description	Q'ty	Remarks
1	0839 18 300	Alternator	1	Used up to Car No. 1
2	0187 24 579A	Nut (12×23B×7H)	1	
3	0187 24 577A	Washer, Spring (12.2×21.5×3t)	1	
4	0839 24 530	Pulley	1	
5	0290 24 517	Screw (6×71)	3	
6	0107 18 424	Washer, Spring (6.1×12.2×1.5t)	3	
7	0290 24 510A	Bracket, Front	1	
8	0636 24 568B	Screw (5×18)	4	
9	0200 23 531	Washer, Spring (5.1×9.2×1.3t)	8	
10	0290 24 511A	Bracket, Front	1	
11	0290 24 524	Bearing, Ball	1	
12	0290 24 515	Plate, Bearing Press	1	
13	0290 24 505A	Rotor	1	
14	0208 24 523	Bearing, Ball	1	
15	0290 24 501A	Stator	1	
16	0290 24 520A	Bracket, Rear	1	
17	0820 24 511	Bolt, Square (5×36)	2	
18	0820 24 519	Clamp	3	
19	0290 24 563	Plate, Insulation (5)	3	
20	0208 24 563A	Plate, Insulation (5)	1	
21	0187 24 566	Washer, (5.5×10×0.8t)	4	
22	0222 24 568	Nut, (5×8B×4H)	4	
23	0636 24 562A	Insulation, "L" Type (5)	1	
24	0290 24 513	Insulation, "U" Type	1	
25	0290 24 541A	Heat Sink ⊕	1	
26	0290 24 542A	Heat Sink ⊖	1	

ALTERNATOR

No.	Part Number	Description	Q'ty	Remarks
27	0290 24 556	Holder, Brush	1	
28	0290 24 521A	Bracket, Rear	1	
29	0290 24 581	Condenser	1	
30	0820 18 381	Belt, "V"	1	
31	0839 18 311B	Bracket, Alternator	1	
32	2090 18 361	Strap, Alternator	1	
33	0222 18 375	Shim, Alternator (t=0.3)		
	0222 18 376	Shim, Alternator (t=0.5)	1	Selective use
	0222 18 377	Shim, Alternator (t=0.15)		
34	99801 0820	Bolt, Strap	1	
	99971 0800	Washer, Spring	1	
35	99801 0822	Bolt, Strap	1	
	99951 0818	Washer, Plain	1	
	99971 0800	Washer, Spring	1	
36	99813 10125	Bolt, Alternator	1	
37	99952 1000	Washer, Plain	2	
	99971 1000	Washer, Spring	1	
	99821 1000	Nut	1	

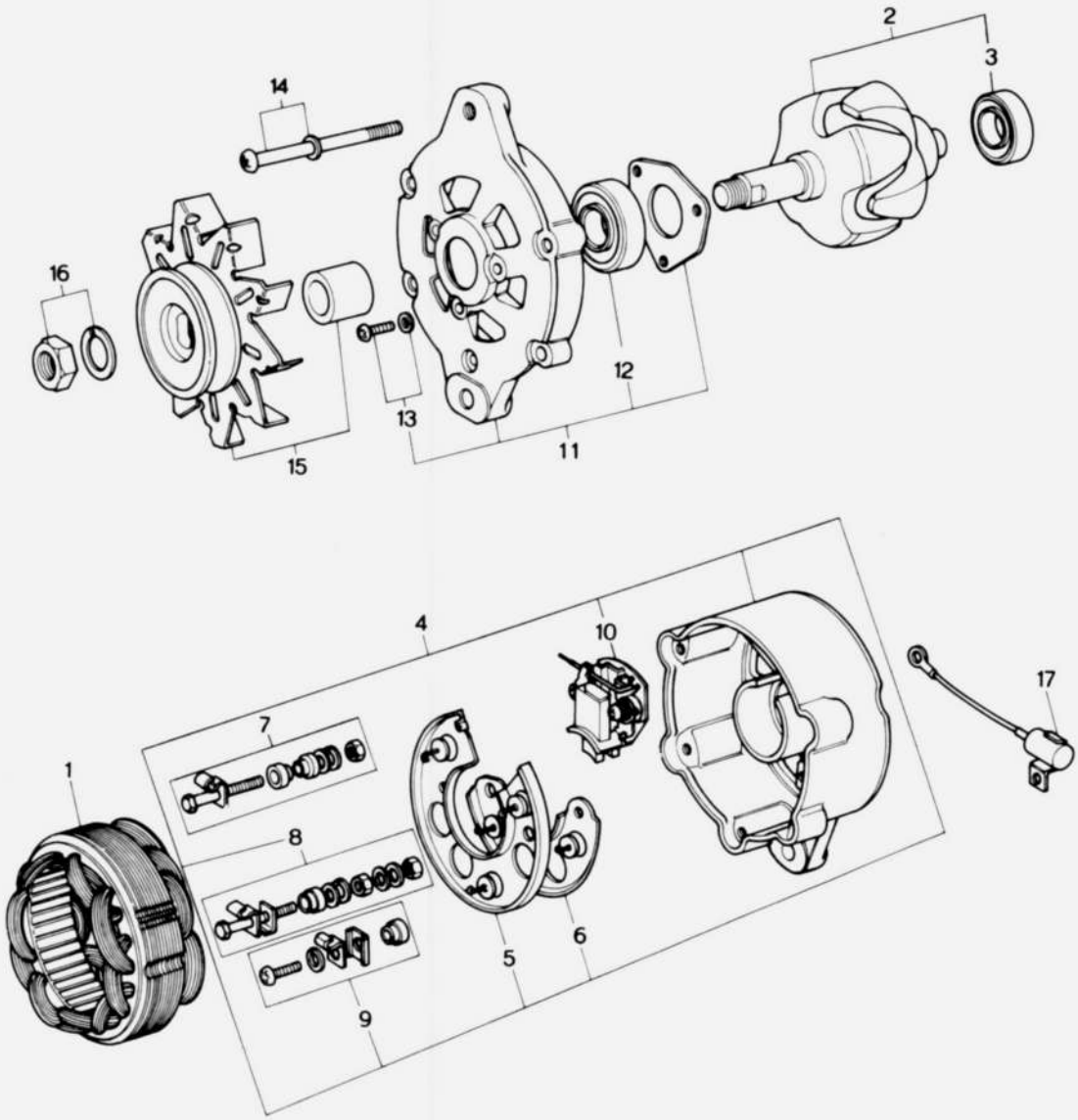
2
3
14
16
12
13
15
11
4
10
17
7
1
8
5
6
9

No.	Part Number	Description	Q'ty	Remarks
●	0866 18 300	Alternator (50A)	1	Used from Car No. 1
1	0866 24 501	Stator	1	
2	0866 24 540	Rotor (Fig. No. 3 included)	1	
3	0820 24 503	Bearing	1	
4	0866 24 560	Bracket, Rear (Fig. No. 5～10 included)	1	
5	0290 24 541A	Heat Sink ⊕	1	
6	0290 24 542A	Heat Sink ⊖	1	
7	0866 24 548	Terminal Set (A)	1	
8	0866 24 549	Terminal Set (E)	1	
9	0866 24 534	Screw Set	1	
10	0866 24 541	Holder, Brush	1	
11	0866 24 550	Bracket, Front (Fig. No. 12～13 included)	1	
12	0208 24 514	Bearing	1	
13	0866 24 526	Screw	3	
14	0866 24 535	Screw Set	1	
15	0866 24 530	Pulley Ass'y	1	
16	0866 24 533	Nut Set	1	
17	0290 24 581	Condenser	1	

STARTER & BATTERY (MANUAL)

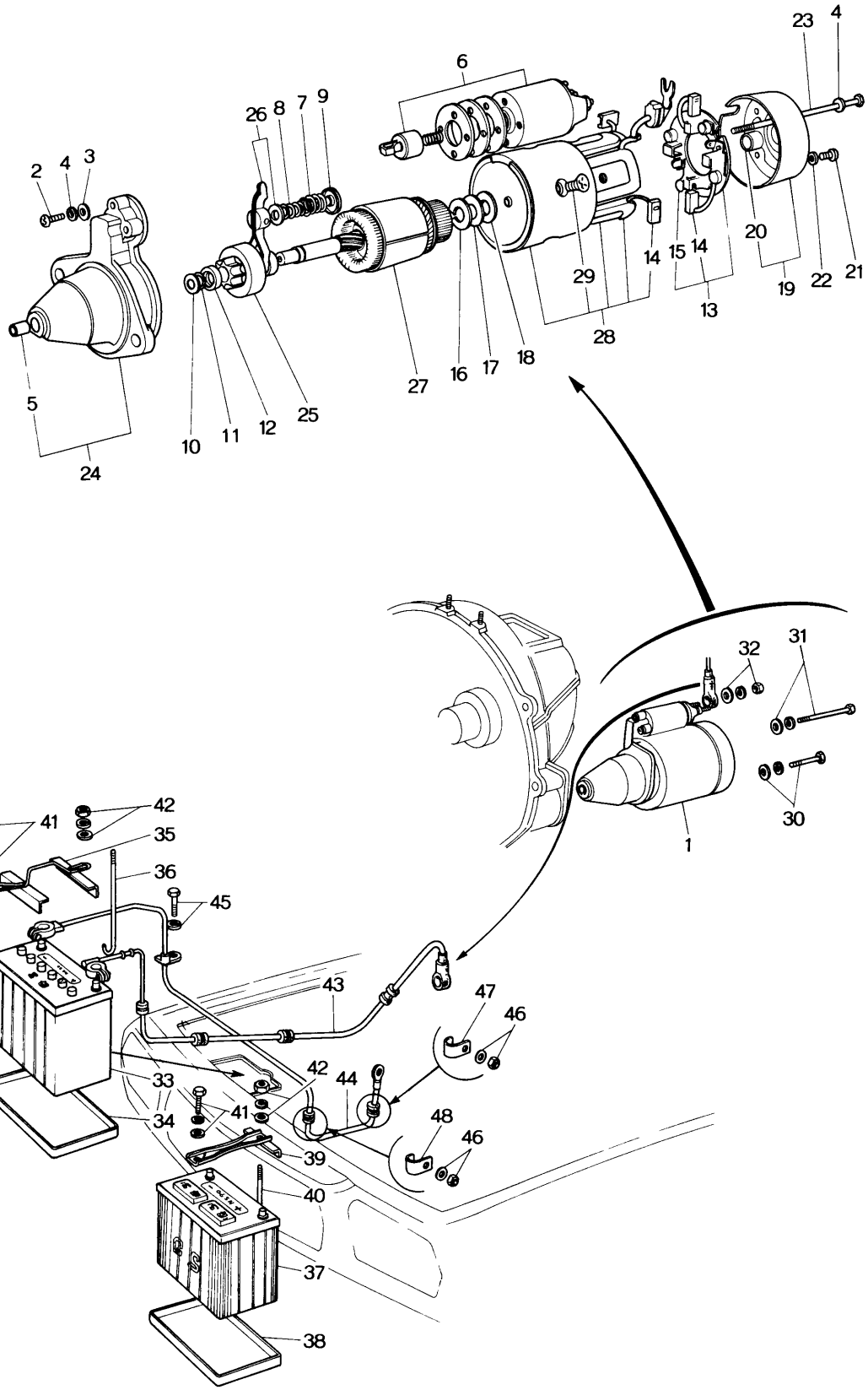

STARTER & BATTERY (MANUAL) 18 24

No.	Part Number	Description	Q'ty	Remarks
1	0866 18 400A	Starter	1	
	1562 18 400	Starter (Arctic Spec. Model)	1	
	0866 18 400A	Starter (All Models)	1	Car No. 144308 72/4 ~ ○
	1562 18 400	Starter (Optional)	1	Car No. 144308 72/4 ~ Added Anew
2	0164 23 664	Screw	3	
	1562 24 758	Screw (6×39) (1562 18 400 use)	2	
3	0222 24 714	Washer (6.1×12×1) (0866 18 400A use)	3	
4	0170 18 424	Washer, Spring (6)	5	
5	0114 18 422A	Sleeve, Bearing	1	
6	0222 24 760A	Switch	1	
	0839 24 736B	Switch (1562 18 400 use)	1	
7	0118 23 637	Spring, Lever	1	
	0820 24 755	Spring, Lever (1562 18 400 use)	1	
8	0118 23 636	Spring, Lever	1	
	0820 24 754	Spring, Lever (1562 18 400 use)	1	
9	0813 24 717	Holder, Spring	1	
	1562 24 719	Packing (1562 18 400 use)	1	
10	0222 24 725	Washer	1	
	1562 24 714	Washer (12.5×20×2.3) (1562 16 400 use)	1	
11	0107 18 417A	Ring	1	
	0636 24 753	Ring (1562 18 400 use)	1	
●12	~~0720 24 732~~	~~Stopper~~	~~1~~	
●	0730 24 732	Stopper	1	From Car No. 1
	1562 24 712	Stopper (1562 18 400 use)	1	
13	0222 24 750	Holder, Brush (0866 18 400A use)	1	
14	0222 24 753	Brush	4	
	0839 24 723	Brush (1562 18 400 use)	4	
15	0222 24 752A	Spring, Brush	4	
	0839 24 724	Spring, Brush (1562 18 400 use)	4	

No.	Part Number	Description	Q'ty	Remarks
16	0107 18 406B	Washer (14.4×30×1.6)	1	
17	0118 23 689	Washer (14.5×30×0.25)	1	
	1562 24 741	Washer (14.5×30×0.1) (1562 18 400 use)	1	
18	0118 23 691	Washer, Insulation (14.4×30×0.8)	1	
19	0845 24 720	Bracket, Rear	1	
	2869 24 720	Bracket, Rear (1562 18 400 use)	1	
20	0222 24 741	Sleeve, Bearing	1	
	0249 24 731	Sleeve, Bearing (1562 18 400 use)	1	
21	0222 24 517	Screw	2	
	1562 24 731	Screw (6×139) (1562 18 400 use)	2	
22	0200 23 531	Washer, Spring	2	
	0107 18 424	Washer, Spring	2	(1562 18 400 use)
	0839 24 761	Cap	2	
	0839 24 762	Packing	1	
23	0222 24 756	Bolt, Through (0866 18 400A use)	2	
24	0866 24 710	Bracket, Front	1	
	1562 24 710	Bracket, Front (1562 18 400 use)	1	
25	0866 24 709	Clutch, Over Running	1	
	1562 24 709	Clutch, Over Running (1562 18 400 use)	1	
26	0866 24 716	Lever	1	
	1562 24 716	Lever (1562 18 400 use)	1	
27	0866 24 705	Armature	1	
	1562 24 705	Armature (1562 18 400 use)	1	
28	0866 24 701	Yoke	1	
	1562 24 701	Yoke (1562 18 400 use)	1	
29	0866 24 704	Screw	4	

No.	Part Number	Description	Q'ty	Remarks
	0727 24 712	Screw (8×17) (1562 18 400 use)	4	
	1562 24 706	Bracket, Center	1	
	1562 24 725	Screw (6×10)	1	
	0839 24 762	Packing (1562 18 400 use)	1	
	0118 23 689	Washer	1	
30	99801 1035	Bolt, Starter	1	
	99971 1000	Washer, Spring	1	
	99953 1000	Washer, Plain	1	
31	99803 10110	Bolt, Starter	1	
	99952 1000	Washer, Plain	1	
	99971 1000	Washer, Spring	1	
32	99805 0500	Nut, Starter	1	
	99952 0500	Washer, Plain	1	
	99971 0500	Washer, Spring	1	
33	0820 18 520A	Battery, N S 60	1	
34	0810 56 863A	Tray, Battery	1	
35	0370 70 980	Clamp, Battery (N S 60 Battery use)	1	
36	0370 70 985A	Bolt, Battery	1	
37	0504 18 520A	Battery, N 50Z	1	
	0877 18 520	Battery, N S 70	1	
●	1672 18 520	Battery, NS70	1	Car No. 7/8～×
38	2113 54 295	Tray, Battery (N50Z & N S70 Battery use)	1	
●	2981 54 222	Tray, Battery	1	Car No. 7/8～×
39	1524 70 980	Clamp, Battery	1	
40	0243 56 231	Bolt, Battery	1	
41	99806 0620	Bolt, Clamp	1	

No.	Part Number	Description	Q'ty	Remarks
	99952 0618	Washer, Plain	1	
	99971 0600	Washer, Spring	1	
42	99906 0600	Nut, Clamp Bolt	1	
	99952 0618	Washer, Plain	1	
	99971 0600	Washer, Spring	1	
← 43	0666 67 100A	Cable, Battery Positive	1	
	1562 67 100A	Cable, Battery Positive (1562 18 400 use)	1	
← 44	0666 67 110A	Wire, Earth-Battery	1	
	0672 67 110	Wire, Earth-Battery (1562 18 400 use)	1	
45	99604 0620	Bolt, Earth Wire	1	
	99971 0600	Washer, Spring	1	
46	99907 0600	Nut	2	
	99971 0600	Washer, Spring	2	
47	99276 1608	Clip, Earth Wire	1	
48	99295 2008	Clip, Earth Wire	1	
Ⓝ	99685 1000	Protector, Positive Cable	6	
Ⓝ	99685 1400	Protector, Positive Cable	1	
Ⓝ	0666 67 105	Cap, Positive Cable	1	

STARTER & BATTERY (AUTOMATIC)

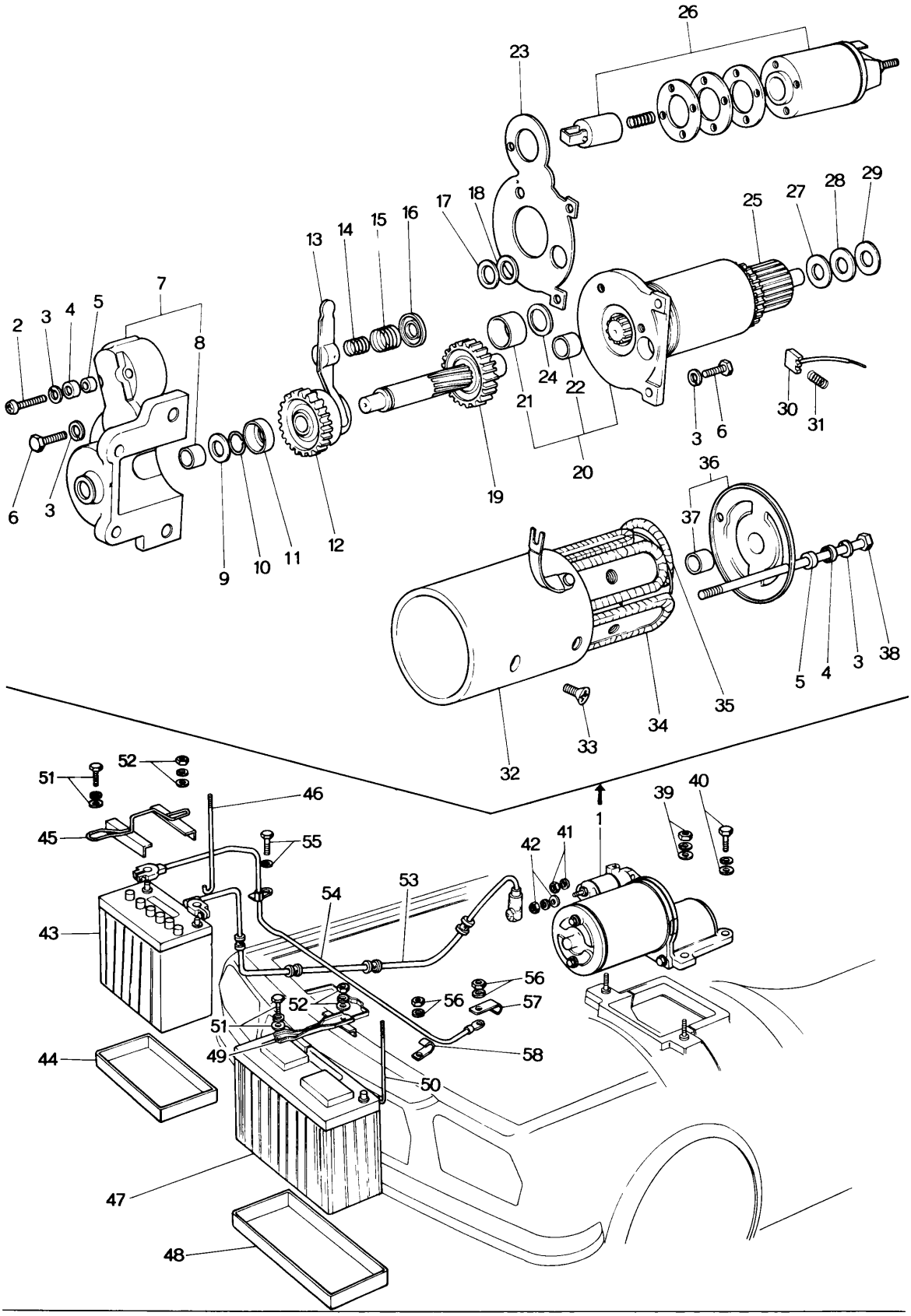

STARTER & BATTERY (AUTOMATIC) 18 24

No.	Part Number	Description	Q'ty	Remarks
1	2869 18 400	Starter (Mitusbishi Make)	1	
2	0839 24 758	Screw (6×44)	2	
3	0107 18 424	Washer, Spring (6.1×12.2×1.5)	8	
4	0839 24 761	Cover, Gasket	4	
5	0839 24 762	Gasket	4	
6	0839 24 763	Bolt (6×20)	4	
7	0839 24 710	Bracket, Front	1	
8	0249 24 731	Metal	1	
9	0820 24 714	Washer (14.4×26×1.6)	1	
10	0820 24 713	Ring	1	
11	0820 24 712	Stopper, Pinion	1	
12	0839 24 709	Clutch, Over Running	1	
13	0839 24 716	Lever	1	
14	0820 24 754	Spring, Lever (A)	1	
15	0820 24 755	Spring, Lever (B)	1	
16	0820 24 717	Seat, Spring	1	
17	0820 24 747	Washer (14.4×26×0.8)	1	
18	0820 24 748	Washer (14.4×26×0.2)	2	
19	0839 24 721	Shaft, Pinion	1	
20	0839 24 706	Bracket, Center	1	
21	0839 24 715	Metal	1	
22	0249 24 731	Metal	1	
23	0839 24 719	Plate, Washer Proof	1	
24	2869 24 749	Washer	1	
25	0839 24 705	Armature	1	
26	0839 24 736B	Switch	1	

18 24 STARTER & BATTERY (AUTOMATIC)

No.	Part Number	Description	Q'ty	Remarks
27	0118 23 689	Washer, (14.5×30×0.25)	2	
28	0820 24 741	Washer (14.5×30×0.8)	1	
29	0118 23 691	Washer, Insulation (14.4×30×0.8)	1	
30	0839 24 723	Brush	4	
31	0839 24 724	Spring, Brush	4	
32	2869 24 701	Yoke	1	
33	0727 24 712	Screw (8×17)	4	
34	0839 24 703	Piece, Pole	4	
35	2869 24 702	Coil, Field	1	
36	2869 24 720	Bracket, Rear	1	
37	0249 24 731	Metal	1	
38	0839 24 764	Bolt, Through (6×155)	2	
39	99901 0800	Nut	2	
	99971 0800	Washer, Spring	2	
	99953 0800	Washer, Plain	2	
40	99801 0828	Bolt	1	
	99971 0800	Washer, Spring	2	
	99953 0800	Washer, Plain	2	
41	99901 0800	Nut	1	
	99971 0800	Washer, Spring	1	
42	99907 0500	Nut	1	
	99952 0500	Washer, Plain	1	
	99971 0500	Washer, Spring	1	
43	0820 18 520A	Battery (NS60)	1	
44	0810 56 863A	Tray, Battery-NS60 use	1	
45	0370 70 980	Clamp, Battery	1	

No.	Part Number	Description	Q'ty	Remarks
46	0370 70 985A	Bolt, Battery Clamp (NS 60 use)	1	
47	0877 18 520	Battery (NS 70)	1	
48	2113 54 285	Tray, Battery	1	
49	1524 70 980	Clamp, Battery (NS 70 use)	1	
50	0243 58 231	Bolt, Battery Clamp	1	
51	99808 0620	Bolt, Battery Clamp	1	
	99952 0618	Washer, Plain	1	
	99971 0600	Washer, Spring	1	
52	99906 0600	Nut, Battery Clamp	1	
	99952 0618	Washer, Plain	1	
	99971 0600	Washer, Spring	1	
53	0871 67 100A	Cable, Battery Positive (NS 60 Battery)	1	
●	0871 67 100B	Cable, Battery Positive	1	Car No. 126396 $^{7}/_{12}$~○
	0872 67 100	Cable, Battery Positive (NS 70 Battery)	1	
●	0872 67 100A	Cable, Battery Positive	1	Car No. 126396 $^{7}/_{12}$~○
54	0866 67 110A	Wire, Earth (NS 60 Battery)	1	
	0872 67 110	Wire, Earth (NS 70 Battery)	1	
55	99804 0820	Bolt, Earth Wire	1	
	99971 0800	Washer, Spring	1	
56	99907 0800	Nut	2	
	99971 0800	Washer, Spring	2	
57	99295 1508	Clip, Earth Wire	1	
58	99295 2008	Clip, Earth Wire	1	
Ⓝ	99685 1000	Protector, Positive Cable	6	
Ⓝ	99685 1400	Protector, Positive Cable	1	
Ⓝ	0866 67 105	Cap, Positive Cable	1	
Ⓝ	99295 1008	Clip	2	Car No. 127396 $^{71}/_{12}$ ~ Added Anew

AUTOMATIC T/MISSION

(CONVERTER, OIL PUMP & PIPING)

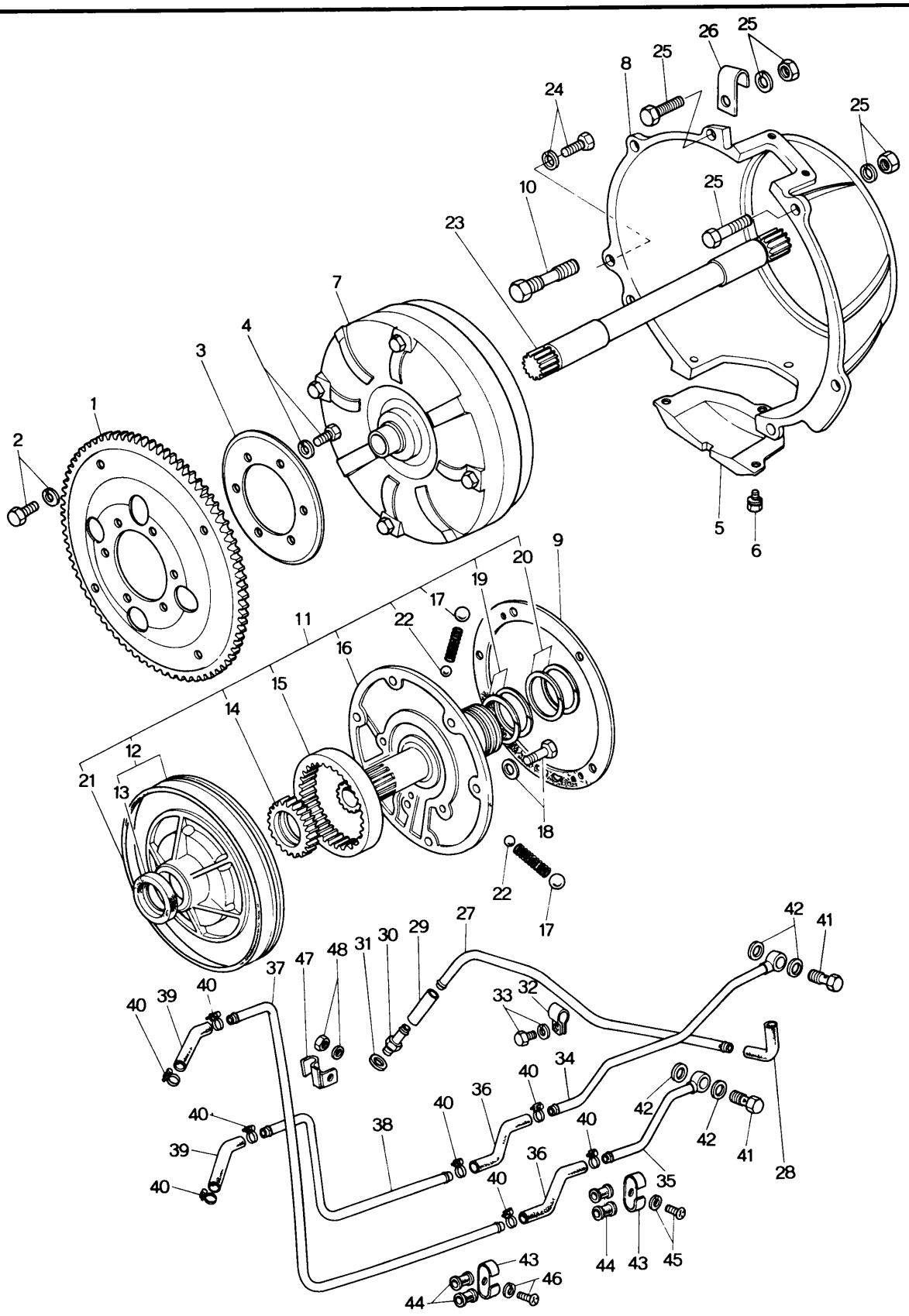

No.	Part Number	Description	Q'ty	Remarks
1	2070 19 020	Plate, Drive	1	
2	99781 1012	Bolt, Drive Plate	4	
	99971 1000	Washer, Spring	4	
3	0842 19 025	Plate, Backing	1	
4	99781 1018	Bolt, Backing	6	
	99971 1000	Washer, Spring	6	
5	0842 19 027A	Cover, Under	1	
6	99806 0610	Screw, Under Cover	3	
	99971 0600	Washer, Spring	3	
7	0338 19 100A	Converter, Torque	1	
8	0842 19 211B	Housing	1	
9	0338 19 215	Gasket, Oil Pump	1	
10	0338 19 216	Bolt, Housing	6	
11	0338 19 220	Pump, Ass'y-Oil	1	
12	0338 19 230	Housing	1	
13	0338 19 223	Oil Seal	1	
14	0338 19 234	Gear, Inner		
	0338 19 235	Gear — Selective use	1	
	0338 19 236	Gear		
15	0338 19 237	Gear, Outer		
	0338 19 238	Gear — Selective use	1	
	0338 19 239	Gear		
16	0338 19 240	Cover	1	
17	0338 19 245	Ball, Steel	2	
●	0397 19 705	Ball, Steel	2	Car No. 128982 7½~C

AUTOMATIC T / MISSION
(CONVERTER, OIL PUMP & PIPING)

No.	Part Number	Description	Q'ty	Remarks
18	0338 19 255	Bolt	5	
19	0338 19 256	Ring, Seal	2	
20	0338 19 257	Ring, Seal	2	
21	0338 19 258	Seal, Lathe Cut Ring	1	
22	99611 2000	Ball, Steel	2	
23	0338 19 678	Shaft, Input	1	
24	99811 1032	Bolt, Housing	1	
	99811 1050	Bolt	1	
	99971 1000	Washer, Spring	2	
25	99811 1045	Bolt, Housing	1	
	99811 1050	Bolt	1	
	99811 1055	Bolt	1	
	99811 1075	Bolt	1	
	99971 1000	Washer, Spring	4	
	99921 1000	Nut	4	
26	99295 1510	Clip	1	
27	0871 19 910	Pipe, Vacuum	1	
28	0338 19 904	Hose, Vacuum (Rr.)	1	
29	99340 05063	Hose, Vacuum (Frt.)	1	
30	0842 19 910	Union Joint, Vacuum Hose	1	
31	99564 0800	Gasket, Union Joint	1	
32	0842 19 915A	Clip, Vacuum Pipe	1	
33	99806 0614	Bolt, Clip	1	
	99971 0600	Washer, Spring	1	

No.	Part Number	Description	Q'ty	Remarks	
34	0871 19 920	Pipe, Oil	1		
35	0871 19 930	Pipe, Oil	1		
36	0871 19 961	Hose, Oil	2		
37	0871 19 970	Pipe, Oil	1		
● 38	0871 19 951A	Pipe, Oil	1	Order Under No 0871 19 970	☆
39	0871 19 962	Hose, Oil	2		
40	99282 1700	Band, Hose	8		
41	99381 1000	Bolt, Connector-Oil Pipe	2		
42	99564 1400	Gasket, Connector Bolt	4		
43	0871 19 963	Clip, Oil Pipe	1		
44	99686 0800	Protector, Oil Pipe	2		
45	99806 0614	Bolt, Clip	1		
	99971 0600	Washer, Spring	1		
46	99868 0512	Screw, Clip	2		
	99971 0500	Washer, Spring	2		
47	0871 19 964A	Clip, Oil Pipe	1		
48	99902 0800	Nut, Clip	1		
	99971 0800	Washer, Spring	1		

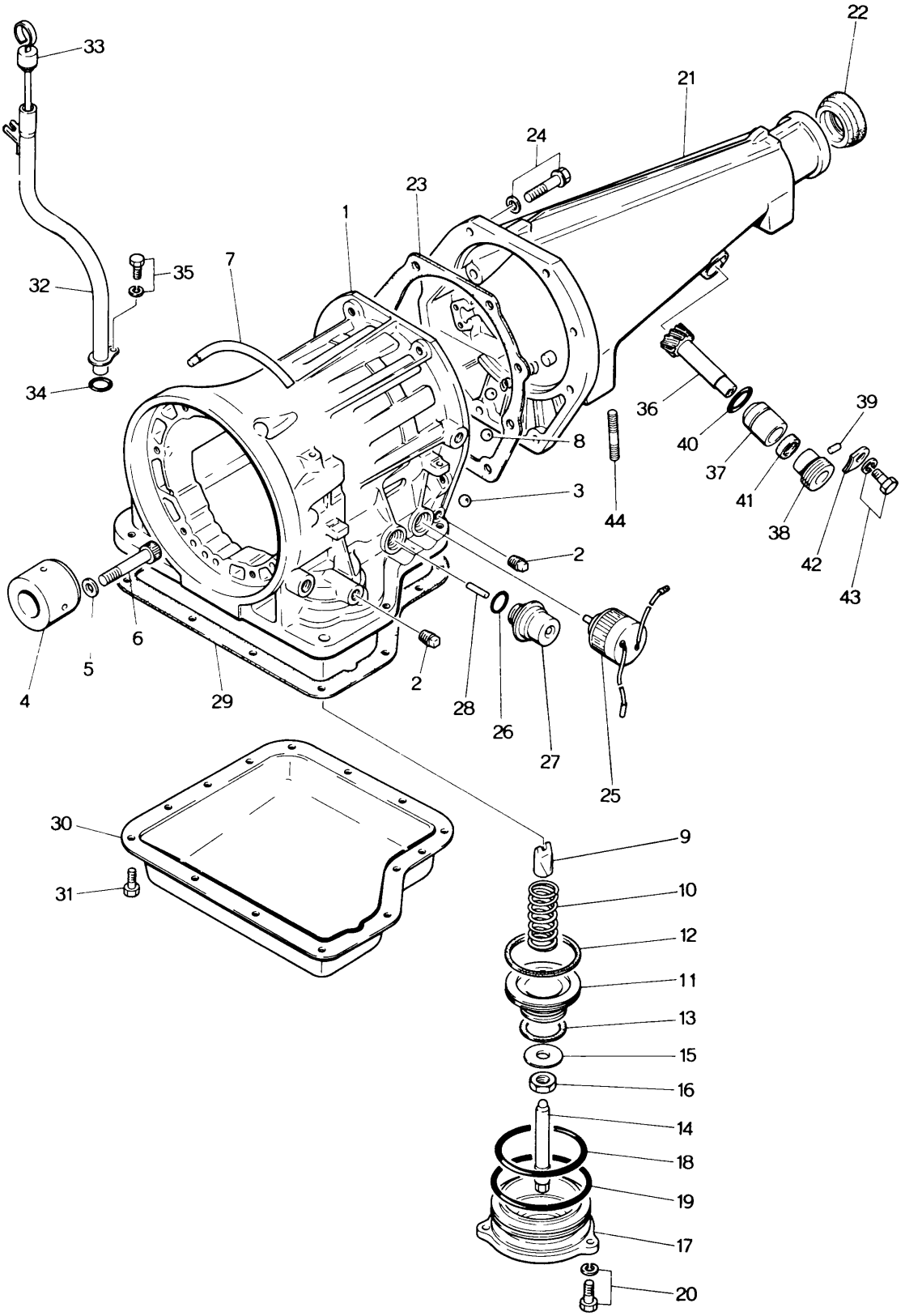
33
22
21
24
23
1
7
35
32
34
36
39
40
37
41
38
42
43
8
3
44
2
4
5
6
29
2
28
26
27
25
30
31
9
10
12
11
13
15
16
14
18
19
17
20

No.	Part Number	Description	Q'ty	Remarks
1	0338 19 310	Case, T/mission	1	
2	0338 19 331	Plug, Square Head	3	
3	0338 19 335	Ball, Steel	3	
4	0338 19 336	Race, Inner	1	
5	0338 19 337	Washer, Plain	8	
6	0338 19 338	Bolt	8	
7	0397 19 340	Breather Ass'y, Air	1	
8	99611 2000	Ball, Steel	2	
9	0338 19 361	Strut, Band	1	
10	0338 19 363	Return Spring, Piston	1	
11	0338 19 381A	Piston, Band Servo	1	
12	0338 19 384	Seal, Piston	1	
13	0338 19 385A	Seal, Piston	1	
14	0338 19 386	Stem, Piston	1	
	0338 19 386A	Stem, Piston	1	Car No. 133210 $^{72}/_{1}$ ~ ×
15	0338 19 388	Washer	1	
	0338 19 388A	Washer	1	Car No. 133210 $^{72}/_{1}$ ~ ×
16	0338 19 389	Nut, Band Adjust	1	
17	0338 19 391A	Retainer, Servo	1	
18	0338 19 393	Seal, Lathe Cut Ring	1	
19	0338 19 395	Seal, "O" Ring	1	
●20	0338 19 397	Bolt	5	
●	0397 19 838	Bolt	2	Car No. 143349 $^{72}/_{3}$ ~ Q'ty
			3	Car No. 143349 $^{72}/_{3}$ ~ Added Anew
21	0338 19 710A	Housing, Extension	1	
22	0317 17 335	Seal, Oil	1	

No.	Part Number	Description	Q'ty	Remarks
23	0338 19 735	Gasket, Extension	1	
24	0338 19 737	Bolt	8	
	0338 19 739	Washer, Plain	8	
25	0338 19 821	Solenoid, Down Shift	1	
●	1675 19 821	Solenoid, Down Shift	1	Car No. 150526 7/8 ~ ×
26	0338 19 822	Seal, "O" Ring	2	
27	0338 19 823	Diaphragm, Vacuum	1	
28	0338 19 825	Rod, Diaphragm (ℓ = 30.0)		
	0338 19 826	Rod (ℓ = 31.0)		
	0338 19 827	Rod (ℓ = 30.5)	Selective use 1	
	0338 19 828	Rod (ℓ = 29.0)		
	0338 19 829	Rod (ℓ = 29.5)		
29	0338 19 835	Gasket, Oil Pan	1	
30	0338 19 836	Pan, Oil	1	
31	0338 19 837	Bolt	14	
32	2070 19 870	Tube, Oil	1	
33	0338 19 880	Gauge	1	
34	99541 01601	Ring, "O"	1	
35	908062 6 14	Bolt, Set	1	
36	0305 17 345	Gear, Driven	1	
37	0187 17 346B	Sleeve	1	
38	0187 17 351A	Joint	1	
39	0187 17 352	Pin, Dowel	1	
40	99541 02101	Ring, "O'	1	
41	99586 10207	Seal, Oil	1	
42	0111 17 354	Plate, Lock	1	
43	908062 6 14	Bolt, Set-Lock Plate	1	
44	99851 0814	Stud, T/mission Support	2	

AUTOMATIC T/MISSION

(CLUTCH & PLANETARY GEAR)

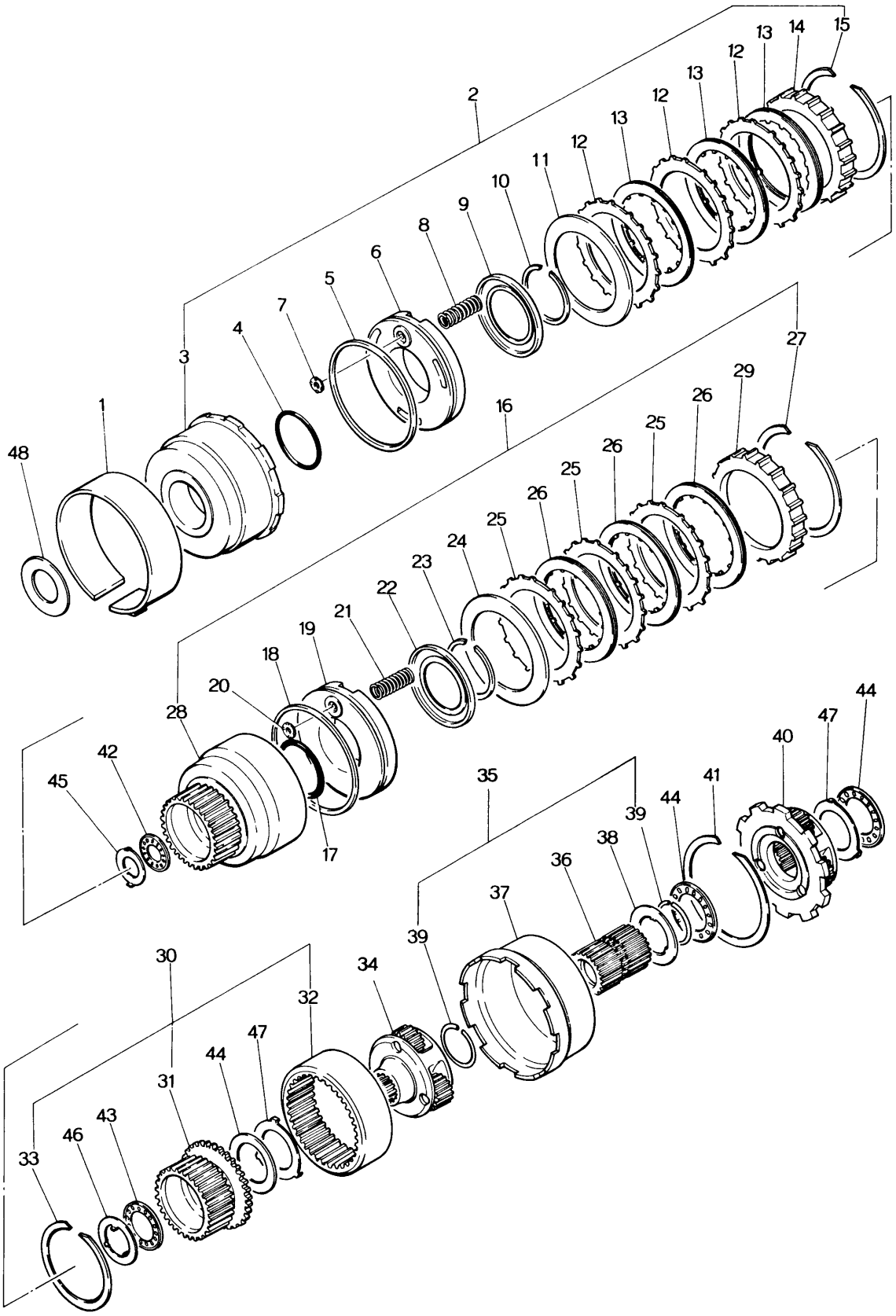

No.	Part Number	Description	Q'ty	Remarks
1	0338 19 360	Band, Brake	1	
2	0338 19 460	Clutch, Front	1	
3	0338 19 470	Drum, Clutch	1	
4	0338 19 475	Seal, "O" Ring	1	
5	0338 19 476	Seal, Lathe Cut	1	
6	0338 19 480	Piston, Clutch	1	
7	0338 19 493	Retainer, Ball	1	
8	0338 19 486	Spring, Piston Return	10	
9	0338 19 487	Retainer, Spring	1	
10	0338 19 488	Ring, Snap	1	
11	0338 19 498	Plate, Dished	1	
12	0338 19 499	Plate, Driven	3	
13	0338 19 500	Plate, Drive	3	
14	0338 19 503	Plate, Retaining	1	Selective use
	0338 19 504	Plate, Retaining		
	0338 19 505	Plate, Retaining		
	0338 19 506	Plate, Retaining		
	0338 19 507	Plate, Retaining		
	0338 19 508	Plate, Retaining		
15	0338 19 509	Ring, Snap	1	
16	0338 19 510	Clutch, Rear	1	
17	0338 19 475	Seal, "O" Ring	1	

AUTOMATIC T/MISSION
(CLUTCH & PLANETARY GEAR)

No.	Part Number	Description	Q'ty	Remarks
18	0338 19 476	Seal, Lathe Cut	1	
19	0338 19 480	Piston, Clutch	1	
20	0338 19 493	Retainer, Ball	1	
21	0338 19 486	Spring, Piston Return	10	
22	0338 19 487	Retainer, Spring	1	
23	0338 19 488	Ring, Snap	1	
24	0338 19 498	Plate, Dished	1	
25	0338 19 499	Plate, Driven	4	
26	0338 19 500	Plate, Drive	4	
27	0338 19 509	Ring, Snap	1	
28	0338 19 511	Drum, Rear Clutch	1	
29	0338 19 515	Plate, Retaining	1	
30	0338 19 530	Hub, Rear Clutch	1	
31	0338 19 531	Hub, Rear Clutch	1	
32	0338 19 533	Gear, Internal	1	
33	0338 19 534	Ring, Snap	1	
34	0338 19 540	Carrier, Front	1	
35	0338 19 550	Shell, Sun Gear	1	
36	0338 19 560	Gear, Sun	1	
37	0338 19 565	Shell, Connecting	1	

No.	Part Number	Description	Q'ty	Remarks
38	0338 19 566	Race, Bearing Seal	1	
39	0338 19 567	Ring, Snap	2	
40	0338 19 570	Carrier, Rear	1	
41	0338 19 598	Ring, Snap	1	
42	0338 19 621	Bearing, Needle	1	
43	0338 19 622	Beering, Needle	1	
44	0338 19 623	Beering, Needle	3	
45	0338 19 631	Race, Bearing (t=1.2)		
	0338 19 632	Race, Bearing (t=1.4)		
	0338 19 633	Race, Bearing (t=1.6)	Selective use	1
	0338 19 634	Race, Bearing (t=1.8)		
	0338 19 635	Race, Bearing (t=2.0)		
	0338 19 636	Race, Bearing (t=2.2)		
46	0338 19 638	Race, Bearing Rear Clutch	1	
47	0338 19 639	Race, Bearing	2	
48	0338 19 641	Washer, Front Clutch (t=1.90)		
	0338 19 642	Washer (t=2.10)		
	0338 19 643	Washer (t=2.30)		
	0338 19 644	Washer (t=2.50)	Selective use	1
	0338 19 645	Washer (t=2.70)		
	0338 19 646	Washer (t=1.50)		
	0338 19 647	Washer (t=1.70)		

AUTOMATIC T/MISSION

(LOW, REVERSE & GOVERNOR)

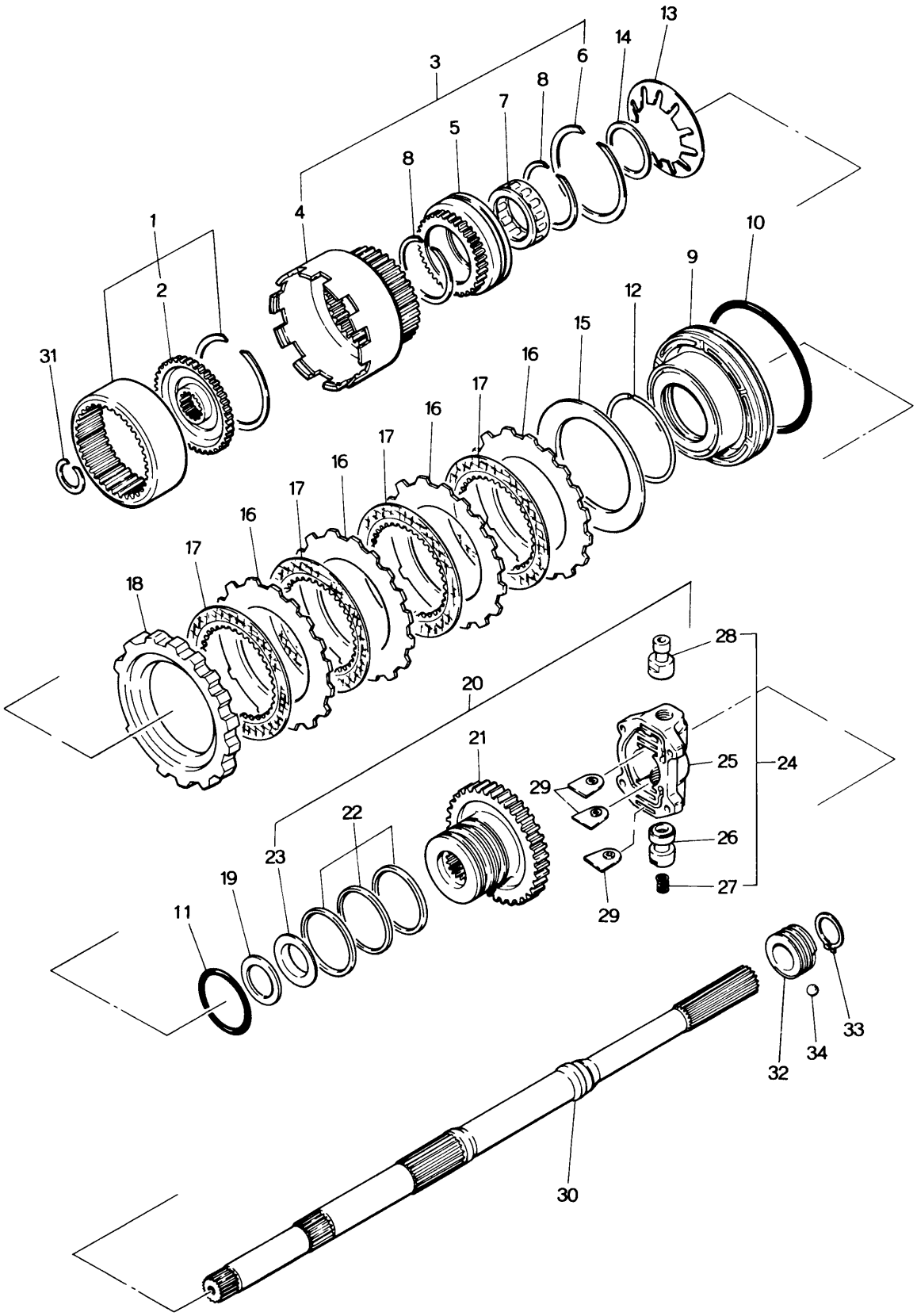

No.	Part Number	Description	Q'ty	Remarks
1	0338 19 580	Flange	1	
2	0338 19 581	Flange, Drive	1	
3	0338 19 590	Drum, Connecting	1	
4	0338 19 591	Drum, Connecting	1	
5	0338 19 593	Race, Outer	1	
6	0338 19 594	Ring, Snap	1	
7	0338 19 595	Clutch, One Way	1	
8	0338 19 596	Ring, Snap	2	
9	0338 19 601	Piston, Low & Reverse	1	
10	0338 19 603	Seal, Piston	1	
11	0338 19 604	Seal, "O" Ring	1	
12	0338 19 605	Ring, Thrust Spring	1	
13	0338 19 606	Spring, Piston	1	
14	0338 19 607	Ring, Snap	1	
15	0338 19 608	Plate, Dished	1	
16	0338 19 609	Plate, Driven	3	
17	0338 19 610	Plate, Drive	3	
● 18	0378 19 613	Plate, Retaining (t=15.8)	Selective use	1
●	0378 19 614	Plate (t=16.0)		
●	0378 19 615	Plate (t=16.2)		
●	0378 19 616	Plate (t=16.4)		
●	0378 19 617	Plate (t=16.6)		

AUTOMATIC T / MISSION
(LOW, REVERSE & GOVERNOR)

No.	Part Number	Description	Q'ty	Remarks
●	0378 19 618	Plate (t=16.8)		
19	0338 19 622	Bearing, Needle	1	
20	0842 19 650	Distributor, Oil	1	
21	0338 19 651	Distributor	1	
22	0338 19 655	Ring, Seal	3	
23	0338 19 656	Race, Bearing	1	
	0338 19 397	Bolt	4	
24	0842 19 660	Governor	1	
25	0338 19 661	Body	1	
26	0338 19 663	Valve	1	
27	0338 19 664	Spring	1	
28	0842 19 665	Valve	1	
● 29	0338 19 667	Plate, Retainer	3	
30	0338 19 670A	Shaft	1	
31	0338 19 676	Ring, Snap	1	
32	0305 17 341	Gear, Drive	1	
33	99573 2500	Ring, Snap	1	
34	99611 1500	Ball, Steel	1	

AUTOMATIC T/MISSION
(MANUAL LINKAGE)

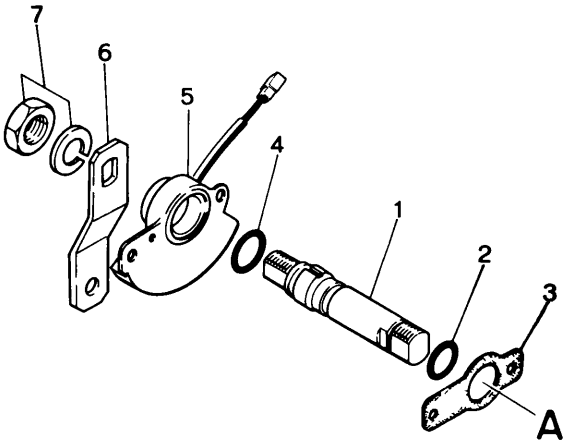

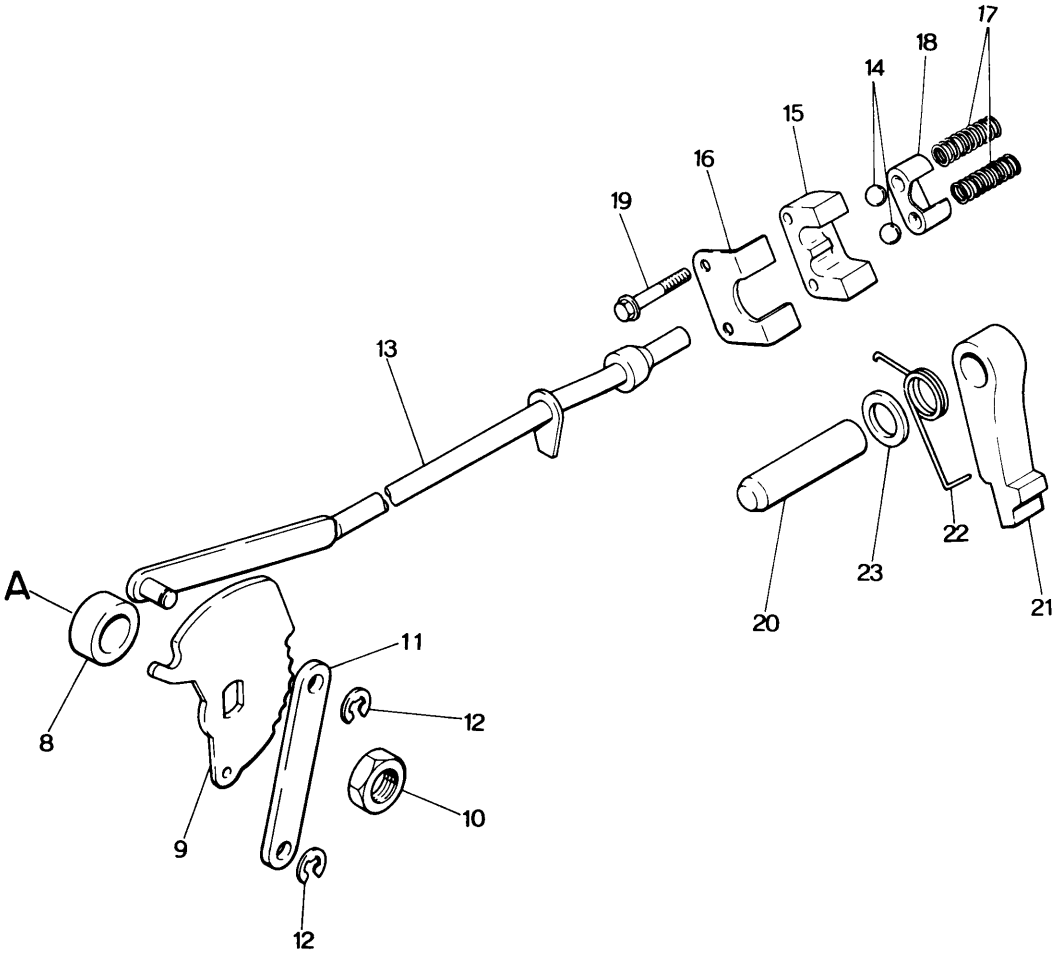

No.	Part Number	Description	Q'ty	Remarks
1	0338 19 431	Shaft, Manual	1	
2	0338 19 432	Seal, "O" Ring	1	
3	0338 19 445	Gasket, Switch	1	
4	0338 19 446	Seal, "O" Ring	1	
5	0338 19 444	Switch, Inhibitor	1	
●	0333 19 444A	Switch, Inhibitor	1	Car No. 143349 $^{72}/_{3}$ ~ ×
6	0842 19 031	Lever, Select	1	Noto :
7	99922 1400	Nut, Lever	1	0338 19 444A / 0397 19 838 } and (0338 19 444) are interchangeable when exchange as a set
	99971 1400	Washer, Spring	1	
8	0338 19 433	Washer, Manual	1	
9	0338 19 440	Plate, Manual	1	
10	0338 19 443	Nut, Shaft	1	
11	0338 19 448	Lever, Parking	1	
12	0338 19 449	Ring, Snap	1	
13	0338 19 450	Rod, Parking	1	
14	0338 19 245	Ball, Steel	2	
	0397 19 705	Ball, Steel	2	Car No. 128982 $^{71}/_{12}$ ~ ○
15	0338 19 701	Support, Actuator	1	
16	0338 19 702	Plate, Retaining	1	
17	0338 19 703	Spring, Ball Park	2	
18	0338 19 704	Retainer	1	
19	0338 19 706	Bolt	2	
20	0338 19 731	Shaft, Parking Pawl	1	
21	0338 19 732	Pawl, Parking	1	
22	0338 19 733	Spring, Pawl Return	1	
●	0338 19 733A	Spring, Pawl Return	1	Car No. 141594 $^{72}/_{2}$ ~ △
23	0338 19 734	Spacer, Pawl	1	
●	0338 19 734A	Spring, Pawl	1	Car No. 141594 $^{72}/_{2}$ ~ △

AUTOMATIC T/MISSION
(MAIN CONTROL)

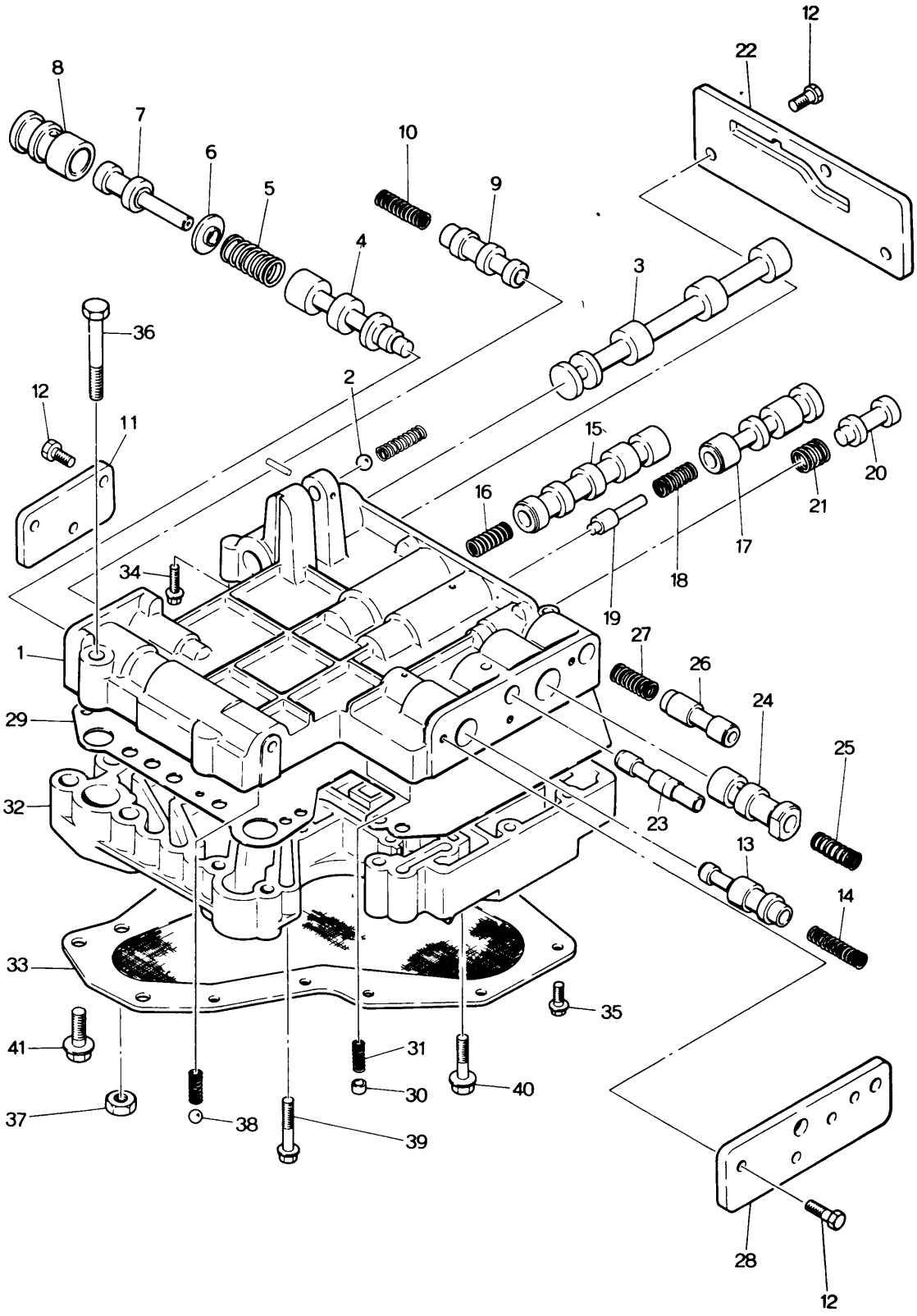

No.	Part Number	Description	Q'ty	Remarks
	0397 19 750	Valve, Control	1	
1	0338 19 760	Body	1	
2	99611 2500	Ball, Steel	1	
3	0338 19 768	Valve, Manual	1	
4	0338 19 771	Valve, Regulator Pressure	1	
5	0338 19 772	Spring, Regulator Pressure	1	
6	0338 19 773	Seat, Spring	1	
7	0397 19 774	Plug, Regulator Pressure	1	
8	0397 19 775	Sleeve, Plug	1	
9	0338 19 777	Valve, Second Lock	1	
10	0338 19 778	Spring, Second Lock	1	
11	0338 19 781	Plate, Side "D"	1	
12	0338 19 782	Screw	9	
13	0338 19 783	Valve, 2～3 Timing	1	
14	0338 19 784	Spring	1	
15	0338 19 785	Valve, 1～2 Shift	1	
16	0338 19 786	Spring	1	
17	0338 19 787	Valve, 2～3 Shift	1	
18	0338 19 788	Spring	1	
19	0338 19 789	Plug, 2～3 Shift	1	
20	0338 19 791	Valve, Modifier	1	
21	0338 19 792	Spring, Modifier	1	
22	0338 19 793	Plate, Side "A"	1	
23	0338 19 795	Valve, Vacuum Throttle	1	
24	0338 19 797	Valve, Throttle Back Up	1	
25	0338 19 798	Spring, Throttle Back Up	1	

No.	Part Number	Description	Q'ty	Remarks
26	0338 19 801	Valve, Down Shift	1	
27	0338 19 802	Spring, Down Shift	1	
28	0338 19 803	Plate, Side "B"	1	
29	0338 19 805	Plate, Separator	1	
30	0338 19 807	Valve, Orifice Check	2	
31	0338 19 808	Spring, Orifice Check	2	
32	0338 19 811	Body, Lower	1	
33	0338 19 815	Strainer, Oil	1	
34	0338 19 816	Screw	7	
35	0338 19 817	Screw	10	
36	0338 19 818	Bolt	2	
37	0338 19 819	Nut	2	
38	99611 2000	Ball, Steel	1	
39	0338 19 831	Bolt	3	
40	0338 19 832	Bolt	2	
41	0338 19 833	Bolt	2	

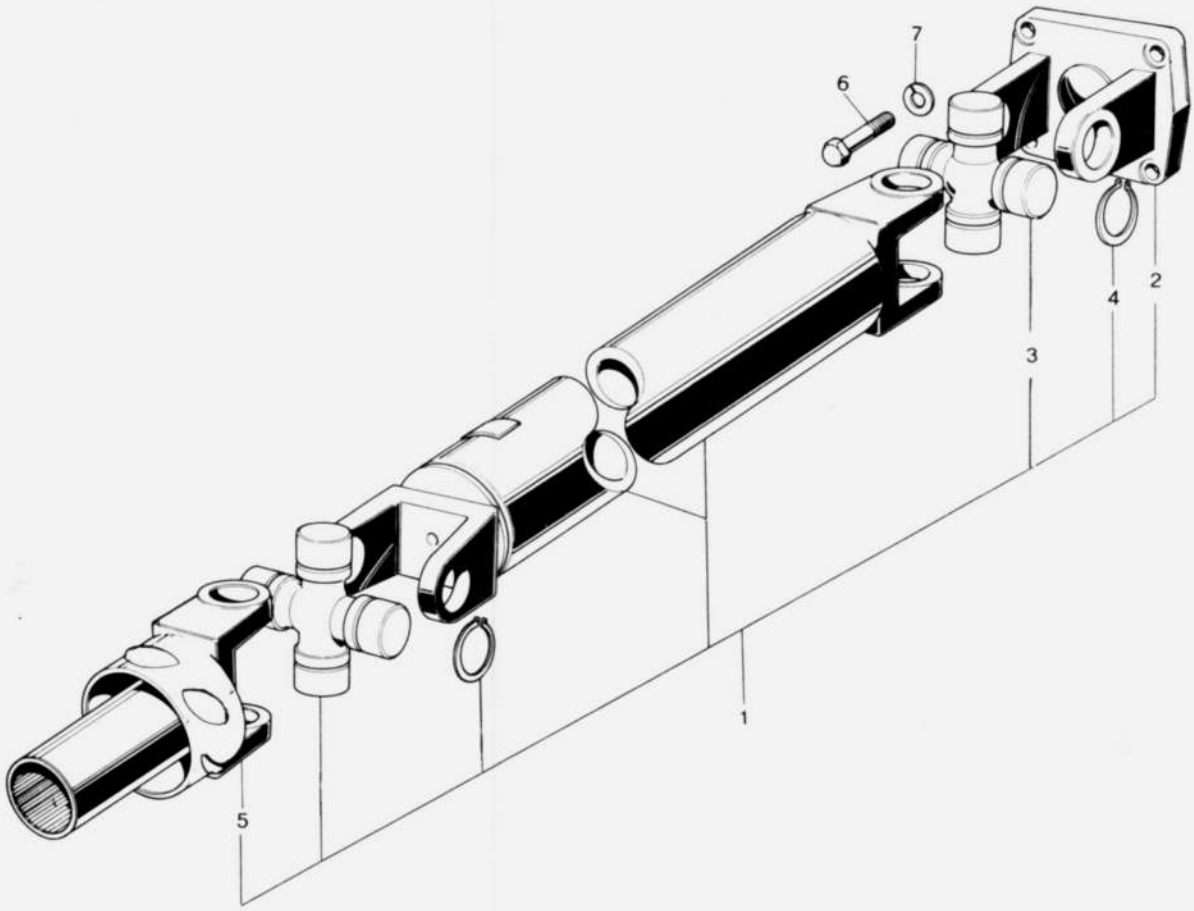
7
6
2
4
3
1
5

No.	Part Number	Description		Q'ty	Remarks
1	0866 25 100	Shaft, Propeller (Manual)		1	
●	0866 25 100A	Shaft, Propeller (Manual)		1	Car No. 149635 ~
	0871 25 100	Shaft, Propeller (Automatic)		1	
2	0259 25 021B	Yoke		1	
3	0259 ~~25 060~~ 84 251	Joint, Universal		2	
4	0259 25 071A	Ring, Snap (t=1.22)	Selective use	8	
	0259 25 072A	Ring, Snap (t=1.24)			
	0259 25 073A	Ring, Snap (t=1.26)			
	0259 25 074A	Ring, Snap (t=1.28)			
	0259 25 075A	Ring, Snap (t=1.30)			
	0259 25 076A	Ring, Snap (t=1.32)			
	0259 25 077A	Ring, Snap (t=1.34)			
	0259 25 078A	Ring, Snap (t=1.36)			
	0259 25 079A	Ring, Snap (t=1.38)			
● 5	~~0866 25 130~~	~~Yoke, Sliding~~		~~1~~	
6	0223 25 024	Bolt		4	
7	99971 0800	Washer, Spring		4	

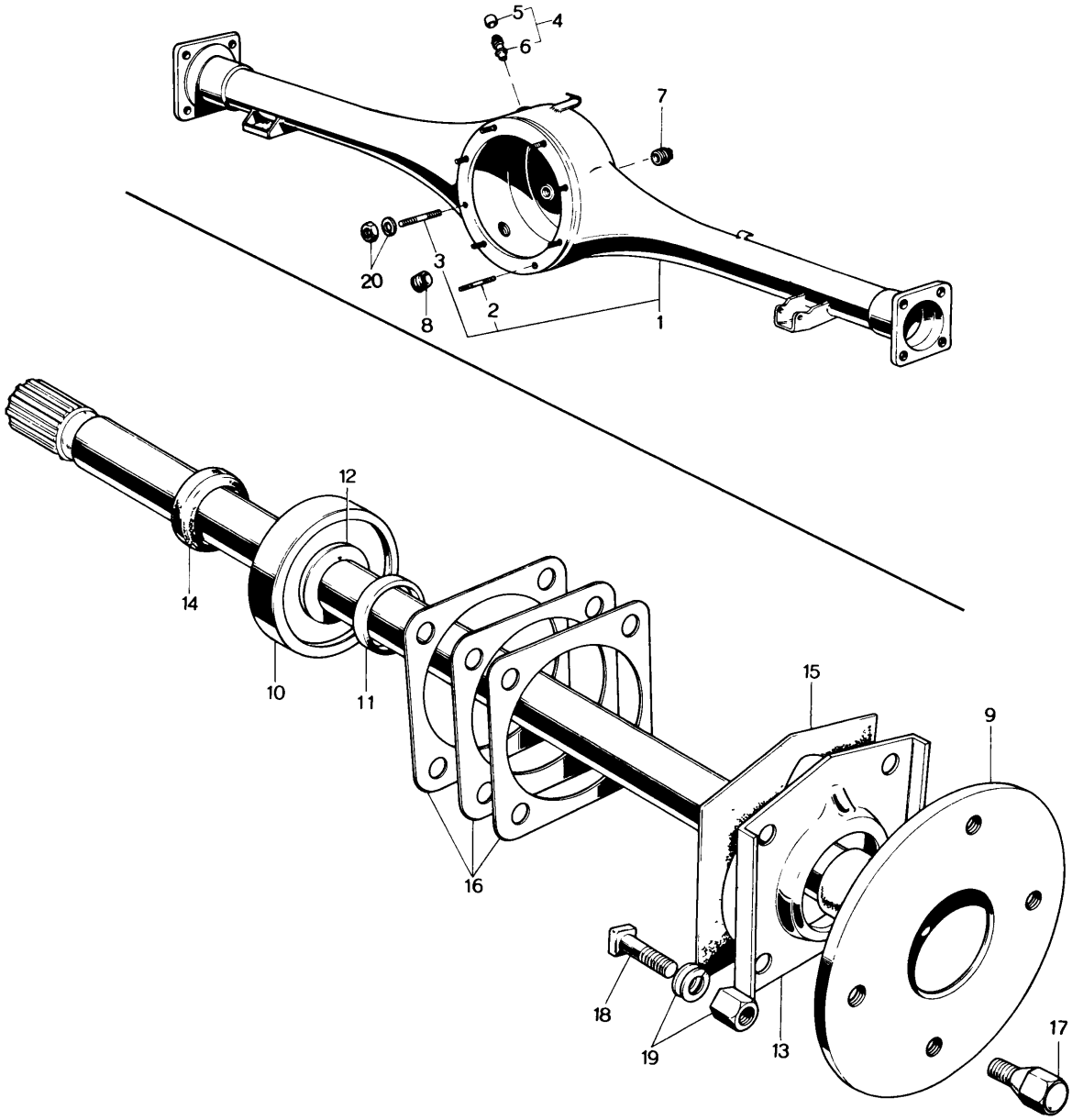
5
4
6
7
20
3
2
8
1
12
14
10
11
15
9
16
18
19
13
17

No.	Part Number	Description	Q'ty	Remarks
1	0866 26 010B	Casing, Rear Axle	1	
2	99852 0820	Stud	7	
3	99852 0880	Stud	1	
4	0866 26 060	Breather	1	
5	~~0866 26 062~~	~~Cap, Breather~~	~~1~~	
6	~~0866 26 063~~	~~Body, Breather~~	~~1~~	
7	0259 26 041	Plug, Oil Level	1	
8	0259 26 051	Plug, Magnet Drain	1	
9	0870 26 111A	Shaft (R), Rear Axle	1	
	0870 26 115A	Shaft (L), Rear Axle	1	
10	0317 26 151A	Bearing, Rear Wheel	2	
11	0259 26 155	Spacer, Bearing	2	
12	8531 ~~0259~~ 26 152	Collar, Bearing	2	
13	0317 26 121	Retainer, Bearing	2	
14	0187 26 154	Oil Seal	2	
15	0259 26 129	Gasket	2	
16	0259 26 141	Shim, Adjust (t=0.1)	2	Selective use
	0259 26 142	Shim, Adjust (t=0.4)		
17	0259 33 165	Bolt, Wheel Set	8	
	0820 33 165	Bolt, Wheel Set (With Center Cap)	8	
●	0820 33 165A	Bolt, Wheel Set (With Center Cap)	8	Car No. 151154 7/8 ~ △
18	0259 26 132	Bolt, Retainer	8	
19	99901 0800	Nut, Retainer	8	

No.	Part Number	Description	Q'ty	Remarks
	99971 0800	Washer, Spring	8	
20	99901 0800	Nut, Differential	8	
	99971 0800	Washer, Spring	8	

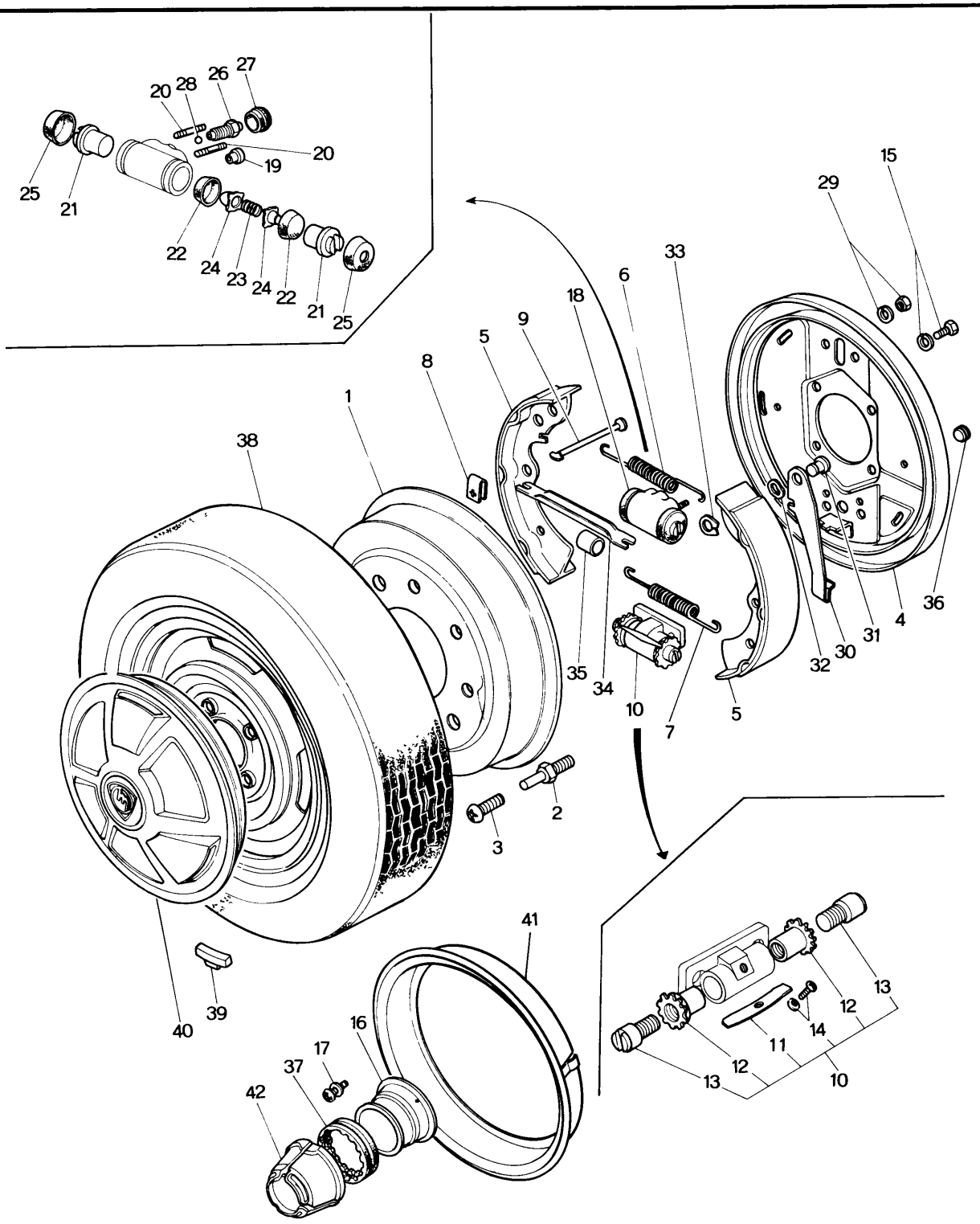
25
21
20
28
26
27
20
19
22
24
23
24
22
21
25
38
1
8
5
9
18
6
33
15
29
36
4
31
30
32
35
34
10
7
5
2
3
40
39
41
16
17
37
42
13
12
14
11
12
13
10

No.	Part Number	Description	Q'ty	Remarks
1	0866 26 251	Drum, Rear Brake	2	
●	0305 26 251	Drum, Rear Brake	2	Car No. 73/9 ~
	1504 26 251A	Drum, Rear Brake	2	1558, 1559
2	0305 26 255	Bolt	4	
3	99833 0812	Bolt, Center Cap	4	
4	0866 26 280B	Plate (R), Brake Back	1	
	0866 26 290B	Plate (L), Brake Back	1	
5	0866 26 310	Shoe, Brake (Front Disc Brake use)	4	
6	0187 26 341	Spring, Return - Wheel Cylinder Side	2	
7	0118 26 342	Spring, Return - Wheel Cylinder Side	2	
8	0223 26 345A	Spring, Shoe Hold	4	
9	0866 26 391	Pin, Shoe Hold Down	4	
10	0305 26 500A	Anchor Block	2	
11	0710 26 352	Spring	2	
12	0710 26 461	Adjuster	4	
13	0305 26 465	Screw, Adjust	4	
14	99833 0408	Screw	2	
	99971 0400	Washer, Spring	2	
15	99801 0814	Bolt, Anchor Block	4	
	99971 0800	Washer, Spring	4	
16	0820 26 570A	Adapter	2	
17	99833 0812	Screw, Adapter (Center Cap use)	2	
	99971 0800	Washer, Spring (Center Cap use)	4	

No.	Part Number	Description	Q'ty	Remarks
18	0813 26 610A	Cylinder, Wheel	2	
	0223 26 610A	Cylinder, Wheel	2	1558, 1559
19	0813 26 922	Tube Seat	2	
20	99852 0812	Stud	4	
21	0208 26 651	Piston	4	
	0221 26 651	Piston	4	1558, 1559
22	0208 26 671	Cup, Piston	4	
	0221 26 671	Cup, Piston	4	1558, 1559
23	0118 26 672	Spring	2	
	0221 26 672	Spring	2	1558, 1559
24	0317 33 673	Block, Filling	4	
	0221 26 673	Block, Filling	4	1558, 1559
25	0813 33 681	Cover, Dust	4	
26	0259 33 691	Screw, Bleeder	2	
27	0259 33 693	Cap	2	
28	99811 1500	Ball, Steel	2	
29	99906 0600	Nut, Wheel Cylinder	4	
	99971 0600	Washer, Spring	4	
30	0305 26 800A	Lever (R), Operating	1	
	0305 26 810A	Lever (L), Operating	1	
31	0118 26 832	Pin	2	
32	0118 26 834	Washer, Wave	2	
33	99575 0600	Ring, Retaining	2	
34	0187 26 821	Strut (R), Operating	1	
	0187 26 821	Strut (L), Operating	1	

No.	Part Number	Description	Q'ty	Remarks
35	0118 26 897	Holder	2	
36	0710 33 288	Plug	4	
37	0820 33 192A	Rubber, Set	2	
38	9962 04 1553	Tire, 155 SR−13 Radial	2	Selective use
	9962 07 1553	Tire, 155 HR−13 Radial (High Speed Type)	2	
	9963 01 1553	Tube, 155R−13	2	
	9965 05 4530	Wheel, 4½−J×13 WDC Disc	2	
	9965 06 4530	Wheel, 4½−J×13 WDC Disc (Center Cap use)	2	
39	99655 30010	Weight, Balance		
	99655 30015	Weight, Balance		
	99655 30020	Weight, Balance		
	99655 30025	Weight, Balance		
	99655 30030	Weight, Balance		
	99655 30035	Weight, Balance	Selective use 2	
	99655 30040	Weight, Balance		
	99655 30045	Weight, Balance		
	99655 30050	Weight, Balance		
	99655 30060	Weight, Balance		
40	0866 37 170B	Cap, Wheel	2	
41	0820 33 180A	Ring, Wheel	2	
42	0881 37 191	Cap, Center	2	

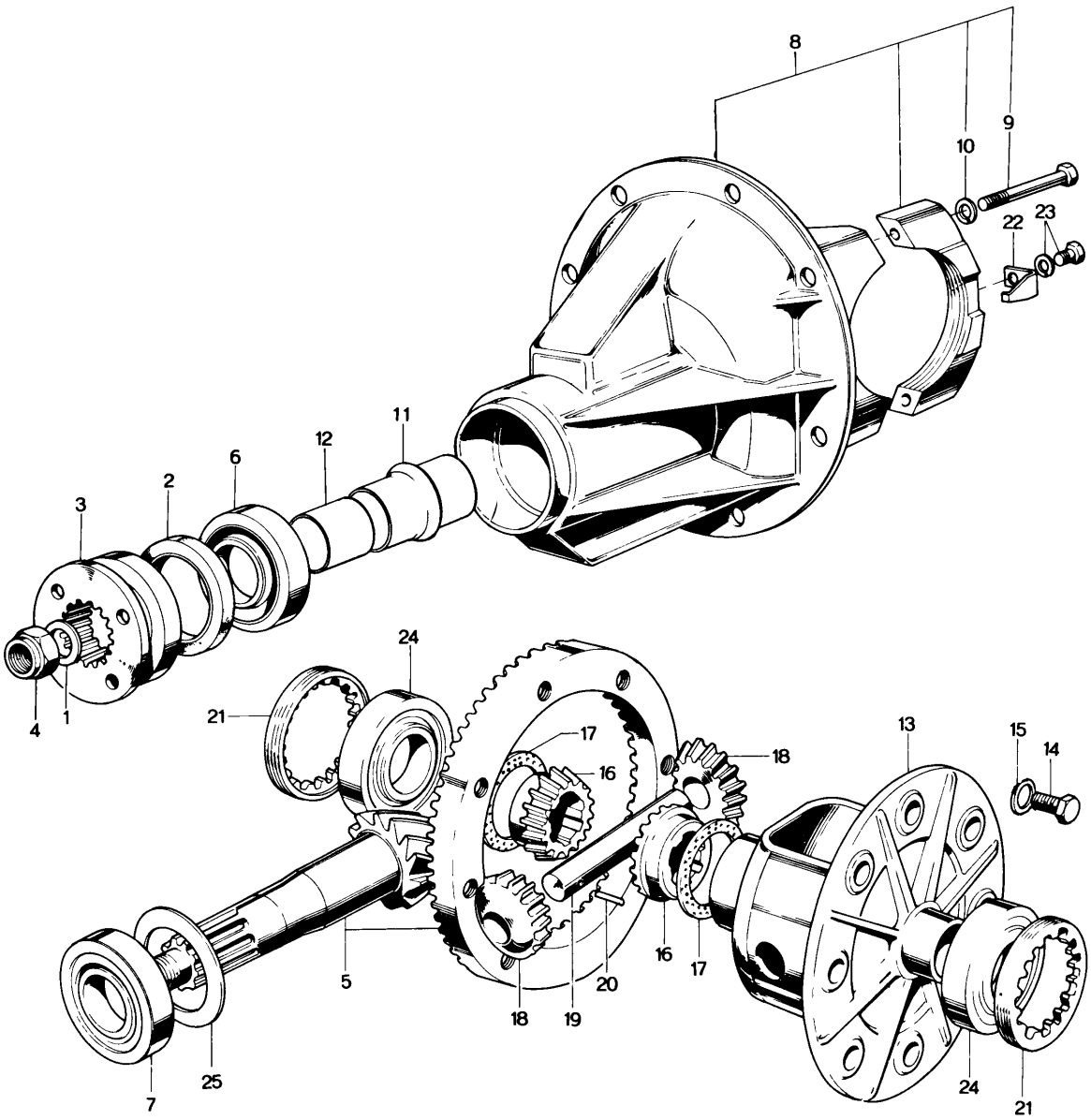
8
9
10
22
23
11
12
6
2
3
4
1
24
21
17
16
18
13
15
14
5
18
19
20
16
17
7
25
24
21

No.	Part Number	Description	Q'ty	Remarks
●	~~0866 27 100~~	~~Driving & Differential~~	~~1~~	
	1562 27 100	Driving & Differential	1	1558,1559
1	0223 27 012	Washer, Drive Pinion	1	
● 2	~~0223 27 018~~	~~Oil Seal~~	~~1~~	
	2112 27 018	Oil Seal	1	~~1558,1559~~
3	0223 27 020B	Flange, Companion	1	
4	0223 27 030	Nut, Lock	1	
5	0866 27 110	Gear Set, Final	1	
6	0755 27 141	Bearing	1	
7	0221 27 141	Bearing	1	
8	0866 27 150	Carrier, Differential	1	
9	99811 1050	Bolt	4	
10	99971 1000	Washer, Spring	4	
11	0305 27 171	Piece, Distance	1	
12	0866 27 172	Collar, Long	1	
13	0290 27 231	Case, Differential Gear	1	
14	99753 41022	Bolt, Ring Gear } Selective use	10	
	99753 81022	Bolt, Ring Gear }		
15	99958 1018	Washer	10	
16	0820 27 251	Gear, Differential Side	2	
17	0290 27 252	Washer, Thrust (t=1.6) }		
	0290 27 253	Washer, Thrust (t=1.7) } Selective use	2	
	0290 27 254	Washer, Thrust (t=1.8) }		
18	0221 27 255	Pinion, Differential	2	
19	0305 27 261	Shaft, Pinion	1	
20	0114 27 262	Pin, Pinion Shaft	1	
21	0290 27 301	Screw, Adjust	2	
22	0290 27 302	Plate, Lock	2	

No.	Part Number	Description		Q'ty	Remarks
23	99811 0812	Bolt, Lock Plate		2	
	99971 0800	Washer, Spring		2	
24	0221 27 305	Bearing		2	
25	0223 27 401	Spacer (t=3.08)	Selective use	1	
	0223 27 402	Spacer (t=3.11)			
	0223 27 403	Spacer (t=3.14)			
	0223 27 404	Spacer (t=3.17)			
	0223 27 405	Spacer (t=3.20)			
	0223 27 406	Spacer (t=3.23)			
	0223 27 407	Spacer (t=3.26)			
	0223 27 408	Spacer (t=3.29)			
	0223 27 409	Spacer (t=3.32)			
	0223 27 411	Spacer (t=3.35)			
	0223 27 412	Spacer (t=3.38)			
	0223 27 413	Spacer (t=3.41)			
	0223 27 414	Spacer (t=3.44)			
	0223 27 415	Spacer (t=3.47)			

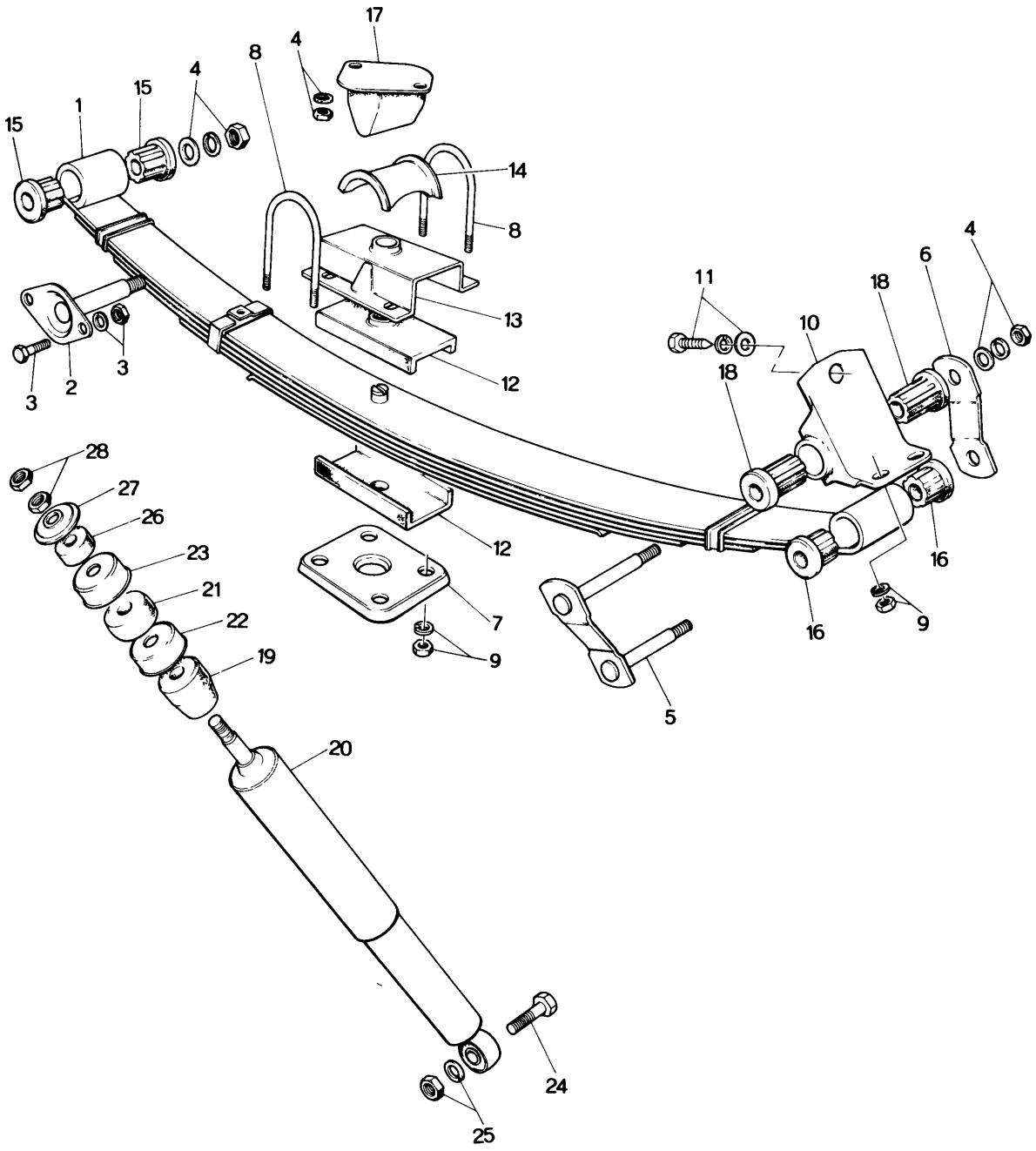
17
4
8
4
15
1
15
4
14
8
13
12
3
2
3
3
11
18
10
6
4
18
16
16
9
12
7
9
5
28
27
26
23
21
22
19
20
24
25

No.	Part Number	Description	Q'ty	Remarks
1	0376 28 010	Spring, Rear	2	
	0376 28 011	Spring No. 1, Leaf	2	
	0376 28 012	Spring No. 2, Leaf (Coupe use)	2	
	0376 28 013	Spring No. 3, Leaf	2	
	0376 28 014	Spring No. 4, Leaf	2	
	0866 28 010	Spring, Rear	2	
	0866 28 011	Spring No. 1, Leaf	2	
	0866 28 012	Spring No. 2, Leaf (Sedan use)	2	
	0866 28 013	Spring No. 3, Leaf	2	
	0866 28 014	Spring No. 4, Leaf	2	
2	0866 28 110	Pin, Spring	2	
3	99801 0820	Bolt, Spring Pin	4	
	99901 0800	Nut	4	
	99971 0800	Washer, Spring	4	
4	99901 0800	Nut	12	
	99971 0800	Washer, Spring	12	
5	0866 28 140	Plate No. 1, Shackle	2	
	0866 28 140A	Plate No. 1, Shackle	2	Car No. 133210 ~
6	0866 28 143	Plate No. 2, Shackle	2	
7	0866 28 151	Clamp, Spring	2	
8	0652 28 161	Bolt, Lock	4	
9	99921 1000	Nut	8	
	99971 1000	Washer, Spring	8	
10	0866 28 180A	Bracket, Shackle	2	

No.	Part Number	Description	Q'ty	Remarks
11	99703 1028	Bolt, Shackle Bracket	2	
	99952 1000	Washer, Plain	2	
	99971 1000	Washer, Spring	2	
12	0259 28 102	Pad, Rubber	4	
13	0866 28 103A	Holder, Rubber Pad	2	
14	0866 28 322	Seat, Lock Bolt	2	
15	0866 28 333B	Bush (Frt.)	4	
16	0866 28 343B	Bush No. 1 (Rr.)	4	
17	0866 28 350	Rubber, Stopper	1	
18	0866 28 353B	Bush No. 2 (Rr.)	4	
19	0866 28 591	Bumper, Bound	2	
20	0866 28 700	Damper, Rear	2	
●	0866 28 700A	Damper, Rear	2	Car No. 150816 7/8 ~
21	0866 28 774	Bush, Rubber	2	
22	0866 28 778A	Casing, Stopper	2	
23	0866 28 779	Holder	2	
24	0866 28 799	Bolt, Rear Damper	2	
25	99921 1200	Nut, Rear Damper	2	
	99971 1200	Washer, Spring	2	
26	0603 34 153	Bush, Rubber	2	
27	0187 34 776	Retainer	2	
28	99921 1000	Nut, Rear Damper	2	
	99922 1000	Nut	2	

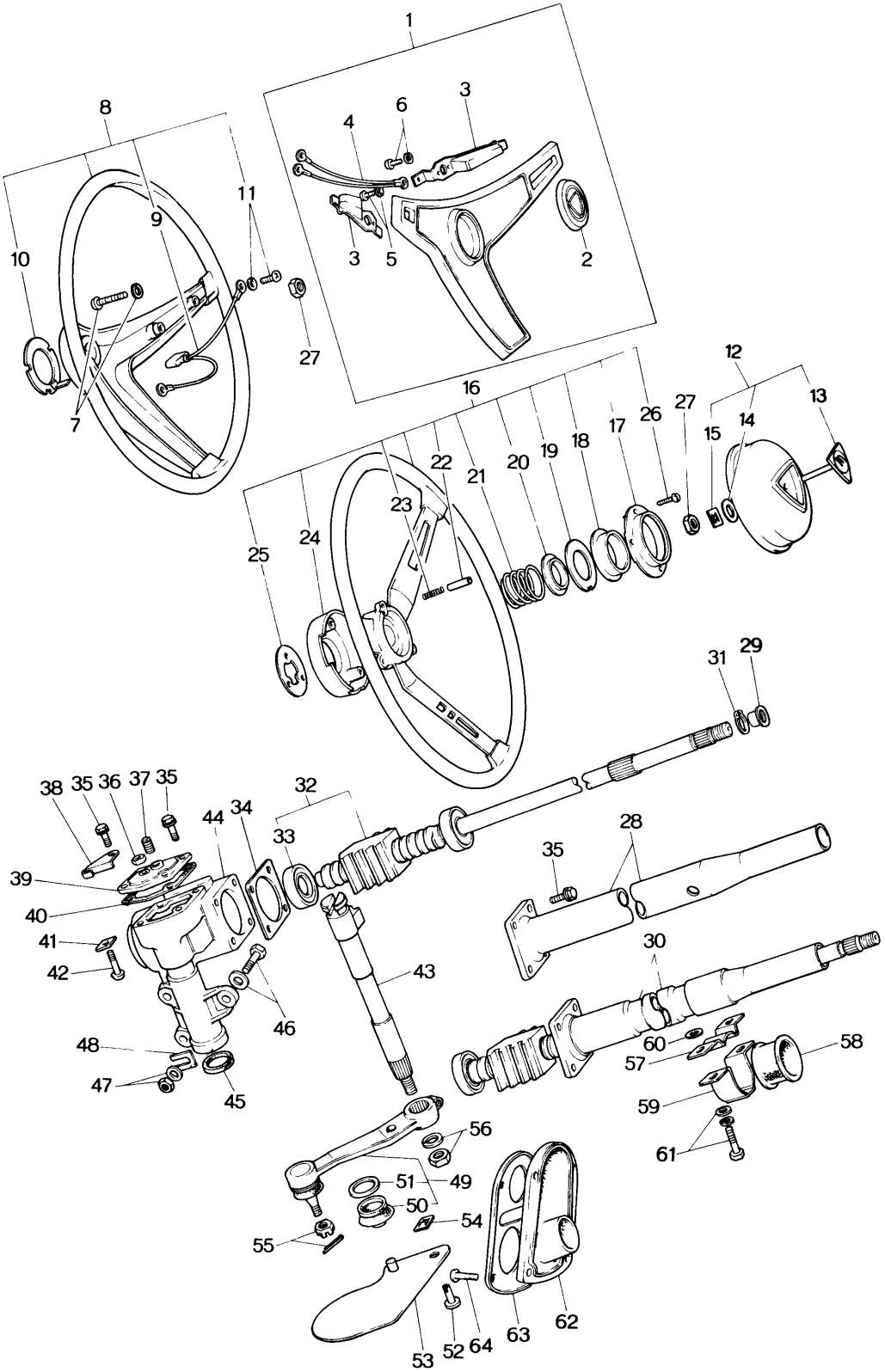
1
2
3
4
5
6
7
8
9
10
11
12
13
14
15
16
17
18
19
20
21
22
23
24
25
26
27
27
28
29
30
31
32
33
34
35
35
35
36
37
38
39
40
41
42
43
44
45
46
47
48
49
50
51
52
53
54
55
56
57
58
59
60
61
62
63
64

No.	Part Number	Description	Q'ty	Remarks	
1	0865 32 8000-00	Cap Set, Horn	1	1550	©
2	0866 32 811	Emblem	1		
	1570 32 811	Emblem	1	Car No. 140779 72/2 ~ ○	
3	0370 32 030	Button, Horn	2		
	0370 32 030A	Button, Horn (L)	1	Car No. 144308 72/4 ~ ×	
	0370 32 090	Button, Horn (R)	1	Car No. 144308 72/4 ~ Added Anew	
4	0370 32 037	Cord	1		
5	99833 0408	Screw, Cap Retainer & Return Spring	2		
	99971 0400	Washer, Spring	2		
6	99868 0410	Screw, Cap Retainer & Return Spring	2		
	99971 0400	Washer, Spring	2		
7	99868 0420	Screw, Horn Cap & Steering Wheel Boss	3		
	99971 0400	Washer, Spring	3		
● 8	0370 32 980	Boss, Steering Wheel	1	1550	
9	0370 32 039	Cord	1		
10	~~0370 32 920~~	~~Terminal~~	~~1~~		
11	99868 0308	Screw, Cord	1		
	99971 0300	Washer, Spring	1		
● 12	1562 32 800	Cap, Horn	1	1551 ~ 1557	©
13	1562 32 811	Emblem	1		
14	0223 58 472	Washer, Emblem	1		
15	99579 3000	Nut, Speed-Emblem	1		

No.	Part Number	Description	Q'ty	Remarks
● 16	1562 32 980	Boss, Steering Wheel	1	1551～1557
17	0329 32 031A	Retainer, Sub	1	
18	0329 32 013A	Retainer, Cap	1	
19	0329 32 016	Plate, Contact	1	
20	0329 32 015	Insulator	1	
21	0329 32 014	Spring	1	
22	0329 32 033	Pipe	1	
23	0329 32 019	Spring	1	
24	1562 32 049	Cover, Wheel Core	1	
25	0329 32 034	Terminal	1	
26	99866 0420	Screw	3	
27	99948 1200	Nut, Self Lock-Wheel & Shaft	1	
	0376 32 110A	Gear, Steering	1	
	0376 32 110B	Gear, Steering	1	Car No. 127396 71/12～○
	0866 32 110A	Gear, Steering-Energy Absorbing	1	
	0866 32 110B	Gear, Steering-Energy Absorbing	1	Car No. 127396 71/12～○
28	0370 32 080	Jacket, Shaft (Without Energy Absorbing)	1	
	0370 32 080A	Jacket, Shaft (Without Energy Absorbing)	1	Car No. 127396 71/12～○
29	~~0258 32 071~~ SS11 49101	Bush, Support	1	
30	0866 32 100	Shaft, Energy Absorbing	1	
	0866 32 100A	Shaft, Energy Absorbing	1	Car No. 127396 71/12～○
31	0208 32 059	Ring, Stop	1	
32	0370 32 130	Nut, Worm Ball (Without Energy Absorbing)	1	
	0370 32 130A	Nut, Worm Ball (Without Energy Absorbing)	1	Car No. 127396 71/12～○
33	0259 32 182	Bearing, Worm Ball Nut	1	
34	0259 32 154	Shim, End Cover (t=0.05)	Selective use	
	0259 32 155	Shim (t=0.075)	Selective use 1	

No.	Part Number	Description	Q'ty	Remarks
	0259 32 156	Shim (t=0.1)		
	0259 32 157	Shim (t=0.2)		
35	99801 0816	Bolt, End Cover & Side Cover	8	
	99971 0800	Washer, Spring	8	
36	99922 1000	Nut, Sector Adjust Screw	1	
37	99502 2000	Plug, Oil	1	
38	0259 55 556	Clip	1	
39	0259 32 160	Cover, Side	1	
40	0259 32 163	Gasket, Side Cover	1	
41	0180 32 171A	Shim, Adjust (t=1.95)		
	0180 32 172A	Shim, Adjust (t=2.00)	Selective use 1	
	0180 32 173A	Shim, Adjust (t=2.05)		
	0180 32 174A	Shim, Adjust (t=2.10)		
42	0180 32 165A	Screw, Sector Adjust	1	
43	0866 32 141	Shaft, Sector	1	
44	~~0866 32 121A~~	~~Housing, Gear~~	~~1~~	
45	0317 32 129	Oil Seal, Sector	1	
46	99781 1085	Bolt, Gear Housing	3	
	0305 32 119	Washer, Plain	3	
47	99942 1000	Nut, Steering Gear	3	
●	99942 1001	Nut, Steering Gear	3	Car No 146203 72/4 ~
	99951 1022	Washer, Plain	2	
48	0208 32 188	Shim, Adjust - Steering Gear Housing	2	

No.	Part Number	Description	Q'ty	Remarks
49	0866 ~~32 220A~~ 49320	Arm, Pitman	1	
50	0730 32 279	Seal, Dust	1	
51	0259 32 289	Ring, Set	1	
52	0866 32 226	Pin, Insulator	1	Car No. 7⅛ ~Discarded
53	0866 32 230	Insulator	1	
54	99579 3000	Nut, Speed	1	Car No. 7⅛ ~Discarded
	90833 2408	Washer and Screw	1	Car No 7⅛ ~Added Anew
55	99924 1000	Nut, Pitman Arm & Center Link	1	
	99221 2020	Pin, Split	1	
56	99921 1800	Nut, Pitman Arm & Sector Shaft	1	
	99971 1800	Washer, Spring	1	
57	0866 32 425	Bracket, Upper-Shaft Jacket	1	
58	2244 32 423	Rubber, Fixing-Shaft Jacket	1	
59	0866 32 420	Bracket, Lower-Shaft Jacket	1	
60	0259 43 088	Sheet, Fixing Bracket	2	
61	99799 0832	Bolt, Fixing Bracket	2	
	99952 0800	Washer, Plain	4	
	99971 0800	Washer, Spring	2	
62	0866 32 411	Cover, Dust	1	
63	0370 32 412	Plate, Set	1	
64	99869 0512	Screw, Set Plate	4	

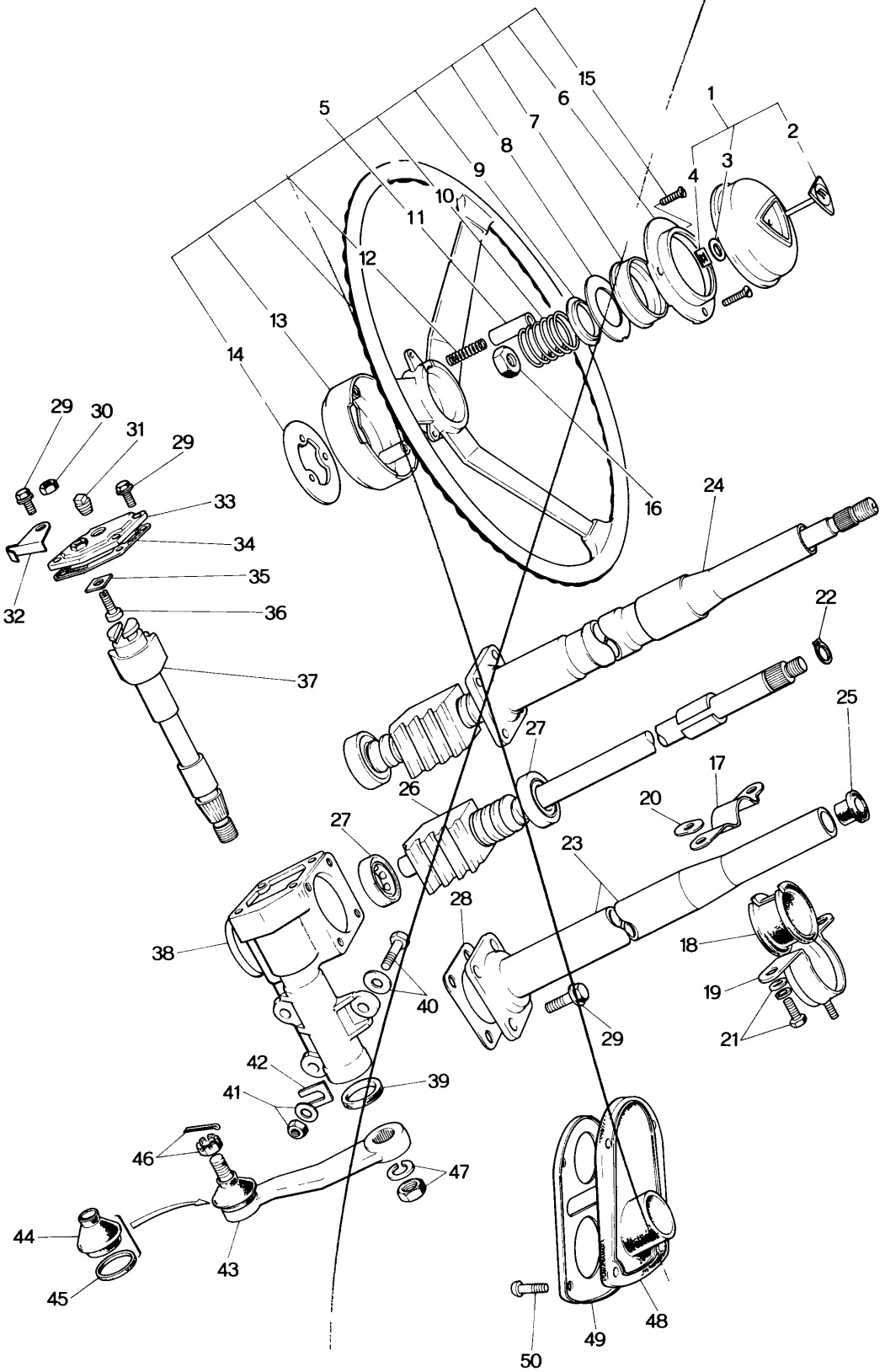
1
2
3
4
5
6
7
8
9
10
11
12
13
14
15
16
17
18
19
20
21
22
23
24
25
26
27
28
29
30
31
32
33
34
35
36
37
38
39
40
41
42
43
44
45
46
47
48
49
50

No.	Part Number	Description	Q'ty	Remarks
1	1562 32 800	Cap, Horn	1	©
2	1562 32 811	Emblem	1	
3	0223 58 472	Washer, Emblem	1	
4	99579 3000	Nut, Speed-Emblem	1	
5	1562 32 980	Boss, Steering Wheel	1	
6	0329 32 031A	Retainer, Sub	1	
7	0329 32 013A	Retainer, Cap	1	
8	0329 32 016	Plate, Contact	1	
9	0329 32 015	Insulator	1	
10	0866 32 014	Spring	1	
11	0329 32 033	Pipe	1	
12	0329 32 019	Spring	1	
13	1562 32 049	Cover, Wheel Core	1	
14	0329 32 034	Terminal	1	
15	99866 0420	Screw	3	
Ⓝ	0820 32 058	Washer, Stop (Selective use)	2	
16	99948 1200	Nut, Self Lock-Wheel & Shaft	1	
17	0866 32 425	Bracket, Upper-Shaft Jacket	1	
18	2244 32 423	Rubber, Fixing-Shaft Jacket	1	
19	0866 32 420	Bracket, Lower-Shaft Jacket	1	
20	0259 43 088	Sheet, Shaft Jacket	2	
21	99799 0832	Bolt, Shaft Jacket & Fixing Bracket	2	
	99852 0800	Washer, Plain	2	

No.	Part Number	Description	Q'ty	Remarks
	99871 0800	Washer, Spring	6	
	1524 32 110	Gear, Steering	1	
●	1524 32 110A	Gear, Steering	1	Car No. 127396 71/12~○
	1562 32 110	Gear, Steering-Energy Absorbing	1	
●	1562 32 110A	Gear, Steering-Energy Absorbing	1	Car No. 127396 71/12~○
22	0208 32 059	Ring, Stop	1	
23	0370 32 080	Jacket, Shaft	1	
●	0370 32 080A	Jacket, Shaft	1	Car No. 127396 71/12~○
24	1562 32 100	Jacket, Shaft-Energy Absorbing	1	
●	1562 32 100A	Jacket, Shaft-Energy Absorbing	1	Car No. 127396 71/12~○
25	0259 32 071	Bush, Support	1	
26	1524 32 130	Nut, Worm Ball (Without Energy Absorbing)	1	
●	1524 32 130A	Nut, Worm Ball (Without Energy Absorbing)	1	Car No. 127396 71/12~○
27	0259 32 182	Bearing, Worm Ball Nut	2	
28	0259 32 154	Shim, End Cover (t=0.05)	Selective use 1	
	0259 32 155	Shim (t=0.075)		
	0259 32 156	Shim (t=0.1)		
	0259 32 157	Shim (t=0.2)		
29	99801 0816	Bolt, End Cover & Side Cover	8	
	99871 0800	Washer, Spring	8	
30	99922 1000	Nut, Lock-Sector Adjust Screw	1	
31	99502 2000	Plug, Oil	1	
32	0259 55 556	Clip	1	
33	0259 32 180	Cover, Side	1	
34	0259 32 183	Gasket, Side Cover	1	
35	0180 32 171A	Shim, Adjust (t=1.95)	Selective use 1	
	0180 32 172A	Shim, Adjust (t=2.00)		
	0180 32 173A	Shim, Adjust (t=2.05)		
	0180 32 174A	Shim, Adjust (t=2.10)		

No.	Part Number	Description	Q'ty	Remarks
36	0180 32 165A	Screw, Sector Adjust	1	
37	0866 32 141	Shaft, Sector	1	
38	~~1524 32 121A~~	~~Housing, Gear~~	~~1~~	
39	0317 32 129	Oil Seal, Sector	1	
40	99781 1085	Bolt, Gear Housing	3	
	0305 32 119	Washer, Plain	3	
41	99942 1000	Nut, Gear Housing	3	
●	99942 1001	Nut, Gear Housing	3	Car No. 146203 72/4 ~
	99951 1022	Washer, Plain	3	
42	0208 32 188	Shim, Adjust-Gear Housing	2	
43	1524 32 220	Arm, Pitman	1	
44	0730 32 279	Seal, Dust	1	
45	0259 32 289	Ring, Set	1	
46	99924 1000	Nut, Pitman Arm & Center Link	1	
	99221 2020	Pin, Split	1	
47	99921 1800	Nut, Pitman Arm & Sector Shaft	1	
	99971 1800	Washer, Spring	1	
48	0866 32 411	Cover, Dust	1	
49	0370 32 412	Plate, Set	1	
50	99869 0512	Screw, Set Plate	4	
Ⓝ	0820 32 058	Washer Stop, Selective use		Car No. 146346 72/5 ~ Added Anew

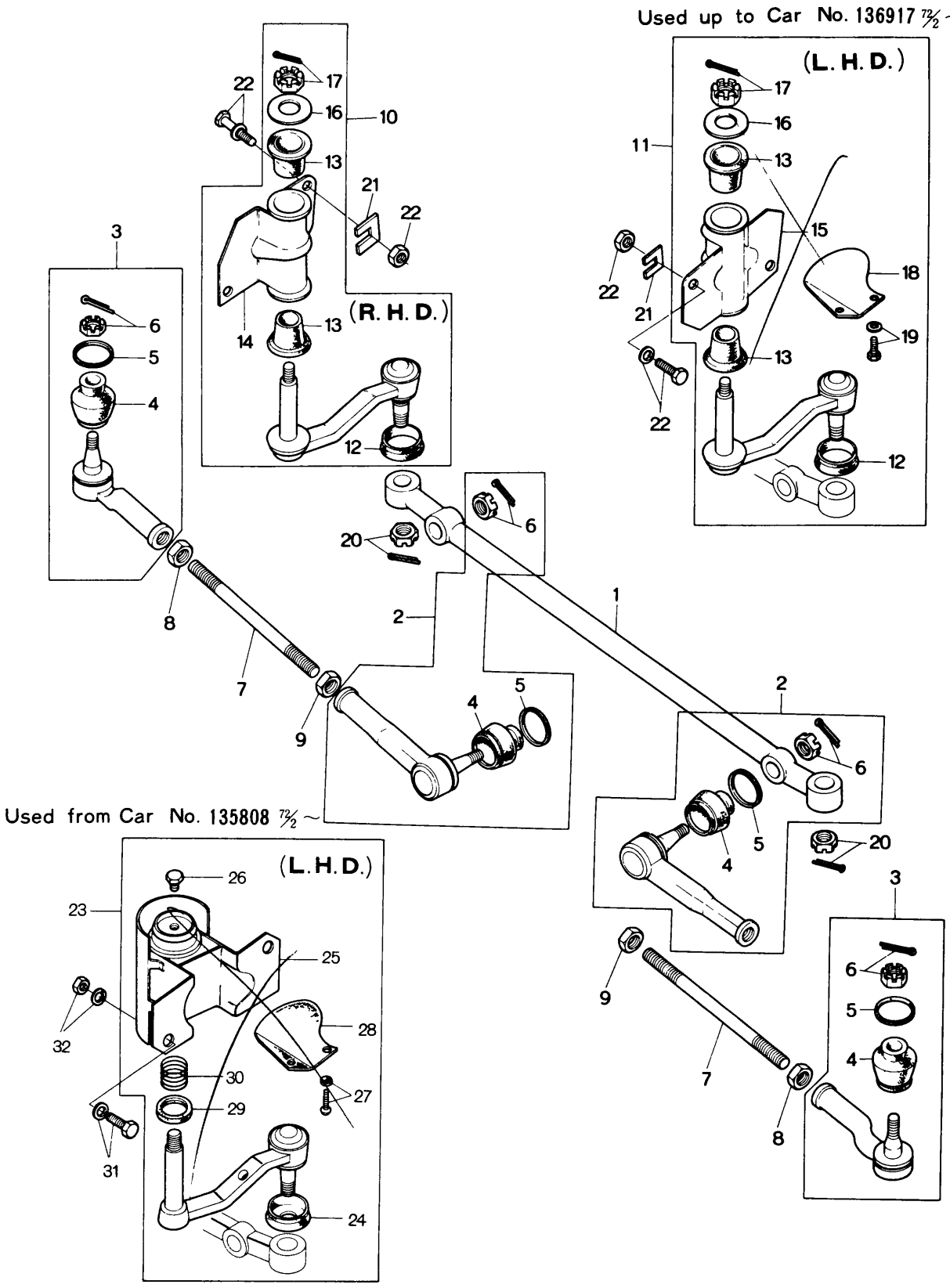
Used up to Car No. 136917 72½ ~
(L. H. D.)
(R. H. D.)
Used from Car No. 135808 72½ ~
(L. H. D.)

No.	Part Number	Description	Q'ty	Remarks
1	0866 32 261	Link, Center (R.H.D.)	1	
	1524 32 261	Link, Center (L.H.D.)	1	
2	~~1524~~ 99 322	Socket Set	2	
3	~~1524~~ 98 324	Socket Set	2	
4	0730 32 279	Seal, Dust	4	
5	0258 32 289	Ring, Set	4	
6	99924 1000	Nut	4	
	99221 2020	Pin, Split	2	
	99221 2015	Pin, Split	2	
7	0305 32 365	Rod, Tie	2	
8	99922 1400	Nut	2	
9	99944 1400	Nut	2	
10	0866 32 320	Idler (R.H.D.)	1	
11	1562 32 320A	Idler (L.H.D.)	1	
12	0866 32 279	Seal, Dust	1	
13	~~0866~~ 32 329A	Bush, Tapered	2	
14	0866 32 330A	Bracket (R.H.D.)	1	
15	1562 32 330A	Bracket (L.H.D.)	1	
16	0866 32 341	Washer	1	
17	99221 3020	Pin, Split (L.H.D.)	1	

No.	Part Number	Description		Q'ty	Remarks
	99924 1200	Nut		1	
18	0866 32 227A	Insulator	(L.H.D.)	1	
19	0866 32 228	Pin		1	
	99579 3000	Nut, Speed		1	
Ⓝ	99242 0308	Pin		1	
20	99924 1000	Nut, Idler & Center Link		1	
	99221 2015	Pin, Split		1	
21	0208 32 188	Shim, Adjust - Idler		—	
22	99781 1080	Bolt, Idler		2	
	0305 32 119	Washer, Plain		4	
●	99942 1000	Nut		3	
●	99942 1001	Nut		3	Car No. 146203 72/4 ~
23	1562 32 320B	Idler	(L.H.D.)	1	Used from Car No. 135808 72/2 ~
24	0866 32 279	Seal, Dust		1	
25	1562 32 330C	Bracket		1	
26	0208 32 278	Plug		1	
27	99833 0408	Screw		2	
	99971 0400	Washer, Spring		2	
28	0866 32 230	Insulator		1	
29	2113 32 356	Oil Seal		1	
30	0111 32 173	Spring		1	
31	99781 1080	Bolt Idler		1	
	0305 32 119	Washer, Plain		1	
32	99921 1000	Nut		2	
	99971 1000	Washer, Spring		2	

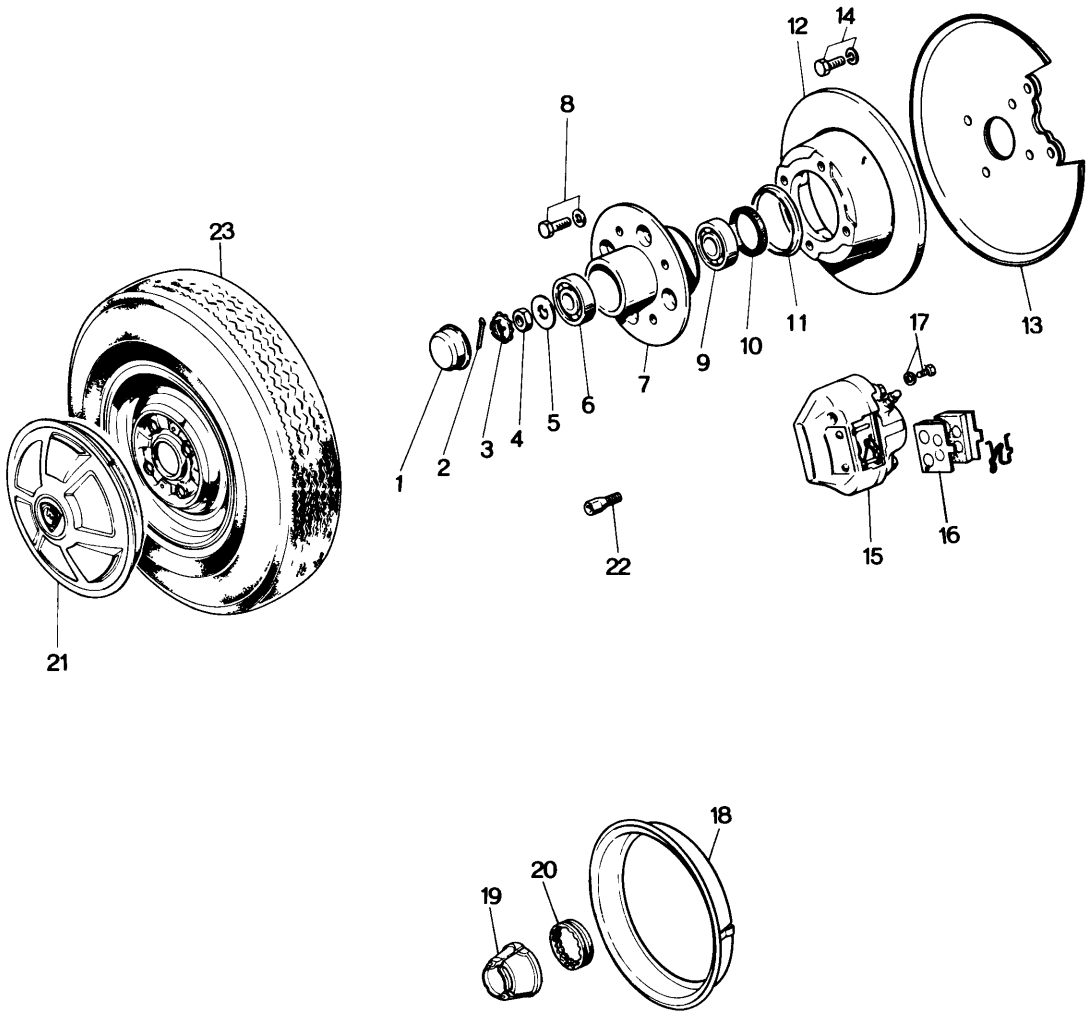
1
2
3
4
5
6
7
8
9
10
11
12
13
14
15
16
17
18
19
20
21
22
23

No.	Part Number	Description	Q'ty	Remarks
1	0259 33 071	Cap, Hub	2	
2	99221 4030	Pin, Split	2	
3	0317 33 049	Cover, Set	2	
4	0662 33 042	Nut	2	
5	0317 33 043	Washer	2	
6	0317 33 075	Bearing, Wheel Outer	2	
7	0820 33 091A	Hub, Front	2	
8	0221 33 698	Bolt, Hub	8	
	99971 1000	Washer, Spring	8	
9	0259 33 047	Bearing, Wheel Inner	2	
10	0398 33 065	Oil Seal	2	
11	0221 33 035	Ring, Dust	2	
12	0866 33 251	Plate, Disc	2	
13	0866 33 260	Adapter (R), Mounting	1	
	0866 33 270	Adapter (L), Mounting	1	
14	99811 1018	Bolt, Mounting Adapter	8	
●	99811 1020	Bolt, Mounting Adapter	8	Car No. 152249 ~
	99971 1000	Washer, Spring	8	
15	0870 33 990A	Brake (R), Disc	1	
	0870 33 990A	Brake (L), Disc	1	
16	0870 49 230A	Pad, Set	1	
17	997501 1018	Bolt, Disc Brake	4	
	99971 1000	Washer, Spring	4	

No.	Part Number	Description	Q'ty	Remarks
18	0820 33 180A	Ring, Wheel-Center Cap use	1	
19	0881 37 191	Cap, Center	1	
20	0820 33 192A	Rubber, Set-Center Cap	2	
21	0866 37 170B	Cap, Wheel	2	
22	0259 33 165	Bolt, Wheel Set	8	
	0820 33 165	Bolt, Wheel Set-Center Cap use	8	
●	0820 33 165A	Bolt, Wheel Set-Center Cap use	8	Car No. 151154 7/8 ~ △
23	9962 04 1553	Tire, 155SR—13 Radial	3	
	9962 07 1553	Tire, 155HR—13 Radial	3	
	9963 01 1553	Tube, 155R—13	3	
	9965 05 4530	Wheel, 4½—J×13WDC Disc	2	
	9965 06 4530	Wheel, 4½—J×13WDC Disc (Center Cap)	2	

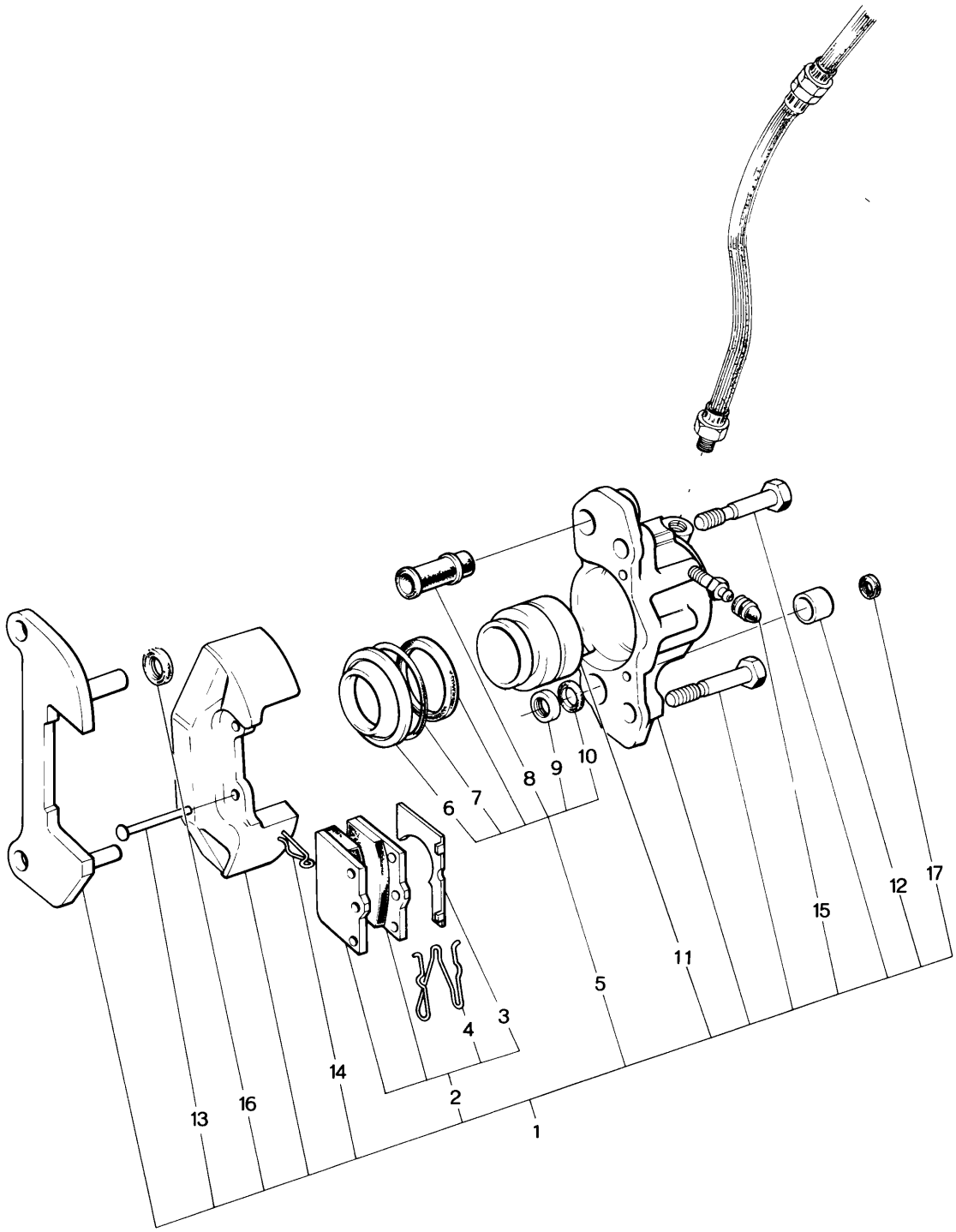
1
2
3
4
5
6
7
8
9
10
11
12
13
14
15
16
17

No.	Part Number	Description	Q'ty	Remarks
1	0870 33 980A	Brake (R), Disc	1	
	0870 33 990A	Brake (L), Disc	1	
2	0870 49 230A	Pad Set	2	
3	0866 49 231	Shim (R)	1	
	0866 49 232	Shim (L)	1	
4	0866 49 235	Spring	2	
5	0866 49 240	Seal Kit	2	
●	~~0866 49 247~~	~~Grease~~	~~1~~	
●	~~0866 49 248~~	~~Grease~~	~~1~~	
● 6	~~0866 49 242~~	~~Seal, Dust~~	~~2~~	
● 7	~~0866 49 243~~	~~Ring, Retaining~~	~~2~~	
● 8	~~0866 49 244~~	~~Bush~~	~~2~~	
● 9	~~0866 49 245~~	~~Seal, Wiper~~	~~2~~	
● 10	~~0866 49 246~~	~~Retainer, Seal~~	~~2~~	
11	0866 49 111	Piston	2	
12	0866 49 112	Cap, Pin	2	
13	0866 49 114	Pin	4	
14	0866 49 115	Clip	4	
15	0820 33 693	Cap, Bleeder	2	
16	0866 49 116	Spacer	2	
17	0866 49 117	Plug, Cap	2	

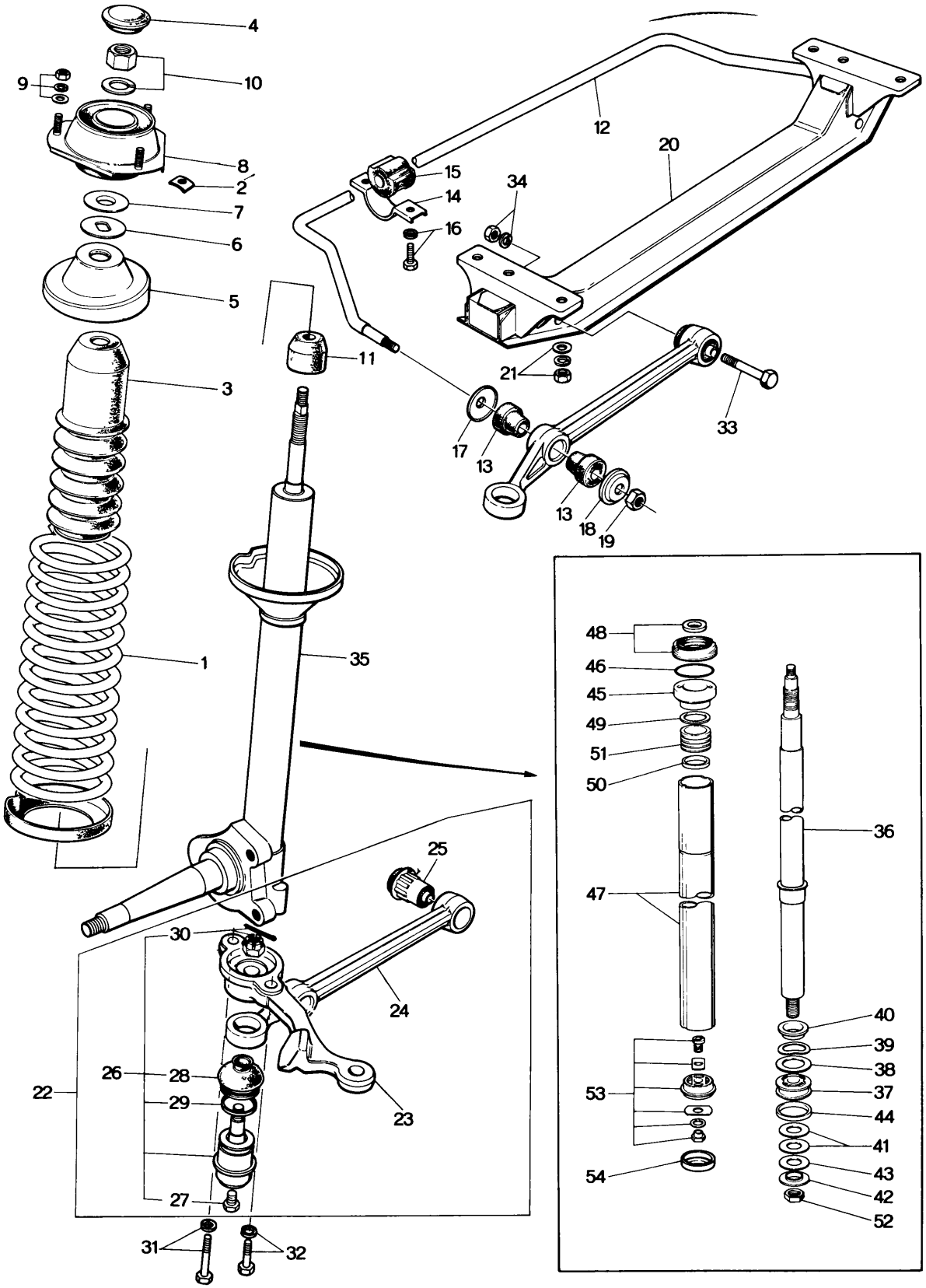
4
10
9
8
2
7
6
5
3
1
11
12
20
15
14
16
34
21
33
17
13
18
19
35
48
46
45
49
51
50
36
47
40
39
38
37
44
41
43
42
52
53
54
25
30
24
26
28
29
22
23
27
31
32

No.	Part Number	Description	Q'ty	Remarks
1	0866 34 011	Spring, Coil	2	
2	0866 34 013A	Plate, Adjusting	6	
3	0866 34 015	Cover, Dust	2	
4	0866 34 019	Cap	2	
5	0866 34 340	Seat, Spring	2	
6	0866 34 381	Bearing	2	
7	0866 34 382	Seat, Bearing	2	
8	0866 34 390	Rubber, Mounting	2	
9	99901 0800	Nut	6	
	99952 0800	Washer, Plain	6	
	99971 0800	Washer, Spring	6	
10	99942 1400	Nut	2	
	99952 1400	Washer, Spring	2	
11	0866 34 111	Bumper, Bound	2	
12	0866 34 151A	Stabilizer	1	
13	0866 34 153A	Bush, Rubber - Stabilizer	4	
14	0259 34 155	Plate	2	
15	0259 34 156	Bush, Rubber	2	
16	99783 1035	Bolt, Stabilizer & Frame	4	
	99971 1000	Washer, Spring	4	
17	0866 34 157	Washer, Stabilizer	2	
18	0866 34 158	Washer	2	
19	99947 1400	Nut	2	
20	0866 34 800B	Member, Cross	1	
21	99921 1000	Nut, Cross Member & Frame	4	
	99951 1030	Washer, Plain	4	

No.	Part Number	Description	Q'ty	Remarks
	99971 1000	Washer, Spring	4	
22	0866 34 310	Arm (R)	1	
	0866 34 320	Arm (L)	1	
23	0866 32 301	Arm (R), Knuckle	1	
	0866 32 311	Arm (L), Knuckle	1	
24	0866 34 311	Arm	2	
25	0866 34 460	Bush	2	
26	0866 99 356	Ball Joint	2	
27	0208 32 278	Plug	2	
28	3SC 0243 34 565	Seal, Dust	2	
29	0187 34 536	Ring, Dush Seal	2	
30	99221 3020	Pin, Split	2	
	99924 1200	Nut	2	
31	99781 1225	Bolt, Arm & Damper	2	
	99971 1200	Washer, Spring	2	
32	99781 1235	Bolt, Arm & Damper	2	
	99971 1200	Washer, Spring	2	
● 33	0866 34 313A	Bolt, Arm & Cross Member	2	
34	99921 1000	Nut, Arm	2	
	99971 1000	Washer, Spring	2	

No.	Part Number	Description	Q'ty	Remarks
35	0866 34 910A	Damper, Front (R)	1	
	0866 34 969A	Damper (L)	1	
36	0866 34 710	Rod, Piston	2	
37	0305 34 701A	Piston	2	
38	0259 34 705	Valve, Check	2	
39	0305 34 707	Spring, Check Valve	2	
40	0259 34 708	Washer	2	
41	0259 34 712	Valve	12	
42	0305 34 713	Washer	2	
43	0305 34 714	Valve	2	
44	0259 34 719A	Ring, Piston	2	
45	0866 34 730	Guide, Piston Rod	2	
46	0183 34 731	Ring, "O"	2	
47	0866 34 732	Tube, Pressure	2	
48	0866 34 760	Oil Seal	2	
	0866 34 735	Oil Seal	2	
49	0259 34 767	Ring	2	
50	0259 34 768	Guide, Stopper	2	
51	0259 34 769B	Stopper	2	
52	0305 34 709	Nut	2	
53	0305 34 720	Valve Base	2	
54	0866 34 738	Cap	2	

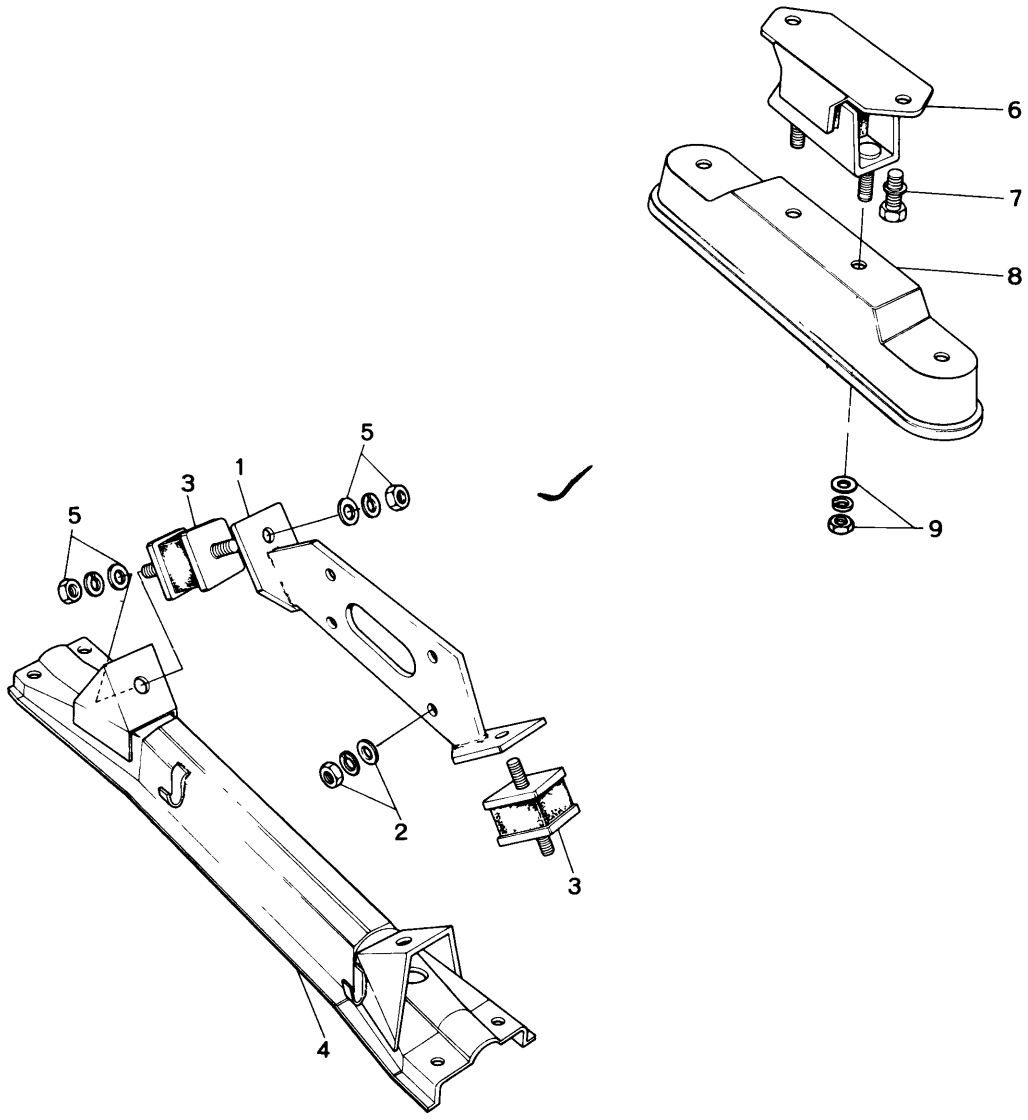
6
7
8
9
5
3
1
5
2
3
4

ENGINE & T/MISSION BRACKET

39

No.	Part Number	Description	Q'ty	Remarks
1	0866 39 020	Bracket, Engine Mounting	1	
2	99921 1000	Nut, Bracket & Engine	4	
	99971 1000	Washer, Spring	4	
3	0866 39 040A	Rubber, Engine Mounting	2	
●	0866 39 040B	Rubber, Engine Mounting	2	Car No. 145214 $^{73}/_{4}$ ~ △
4	0866 39 060B	Member, Engine Mounting	1	
5	99921 1000	Nut, Member & Rubber	4	
	99951 1030	Washer, Plain	4	
	99971 1000	Washer, Spring	4	
6	~~0259~~ 0237 39 340	Rubber, T/mission Mounting	1	
7	99801 0818	Bolt, Rubber & T/mission	2	
	99971 0800	Washer, Spring	2	
8	0866 39 381A	Member, T/mission Mount	1	
9	99921 1000	Nut, Member & Rubber	4	
	99951 1030	Washer, Plain	4	
	99971 1000	Washer, Spring	4	

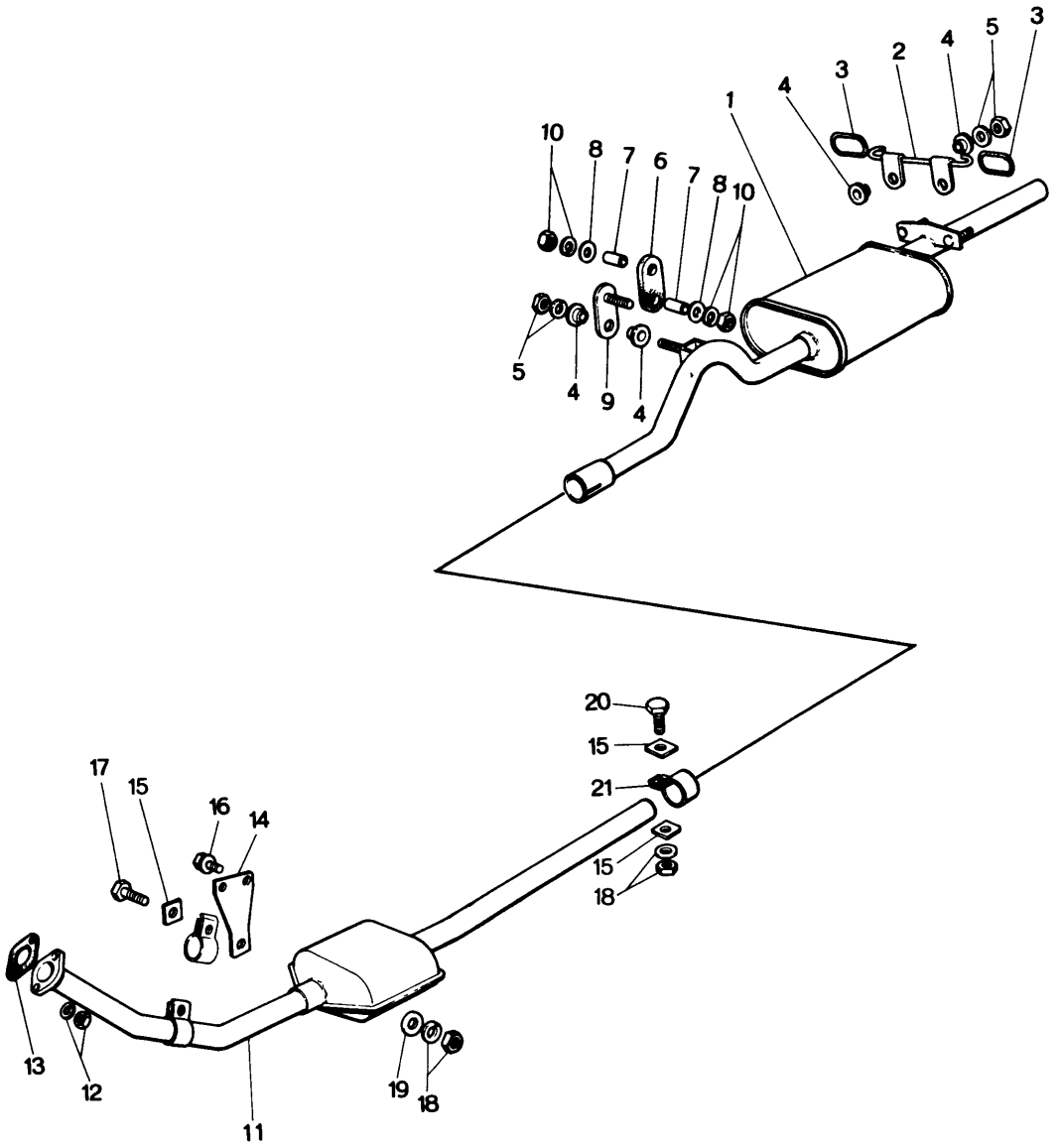
1
2
3
4
5
6
7
8
9
10
11
12
13
14
15
16
17
18
19
20
21

No.	Part Number	Description	Q'ty	Remarks
1	0866 40 100	Silencer, Main	1	
2	0866 40 060	Hook	1	
3	0305 40 061	Hanger, Silencer	2	
4	0824 40 401	Insulator	6	
5	99949 0800	Nut, Hook & Main Silencer	3	
	99951 0822	Washer, Plain	3	
6	0820 40 161	Hanger, Silencer	1	
7	0820 40 165	Pipe	2	
8	0820 40 166	Washer	2	
9	0820 40 170	Plate	1	
10	99901 0800	Nut, Silencer Hanger	2	
	99971 0800	Washer, Spring	2	
11	0866 40 300	Pre- Silencer	1	
	0866 40 300A	Pre-Silencer	1	Car No. 127396 $^{71}/_{12}$ ~ Δ
12	2158 40 355	Nut	2	
	99971 1000	Washer, Spring	1	
13	0866 13 621	Gasket	1	
14	0866 40 081	Bracket, Joint	1	
●	0866 40 081A	Bracket, Joint	1	Car No. 136920 $^{7}/_{2}$ ~○
15	0208 13 458	Clamp	3	
16	99801 0820	Bolt, Bracket	2	
	99971 0800	Washer Spring	2	
17	99801 0832	Bolt	1	
●18	99901 0800	Nut	1	Car No. 136920 $^{7}/_{2}$ ~Q'ty
●	99902 0800	Nut	1	Car No. 136920 $^{7}/_{2}$ ~Added Anew
	99971 0800	Washer, Spring	2	
19	99951 0818	Washer, Plain	1	
20	99801 0828	Bolt	1	
21	0866 40 091	Joint, Main & Pre-Silencer	1	

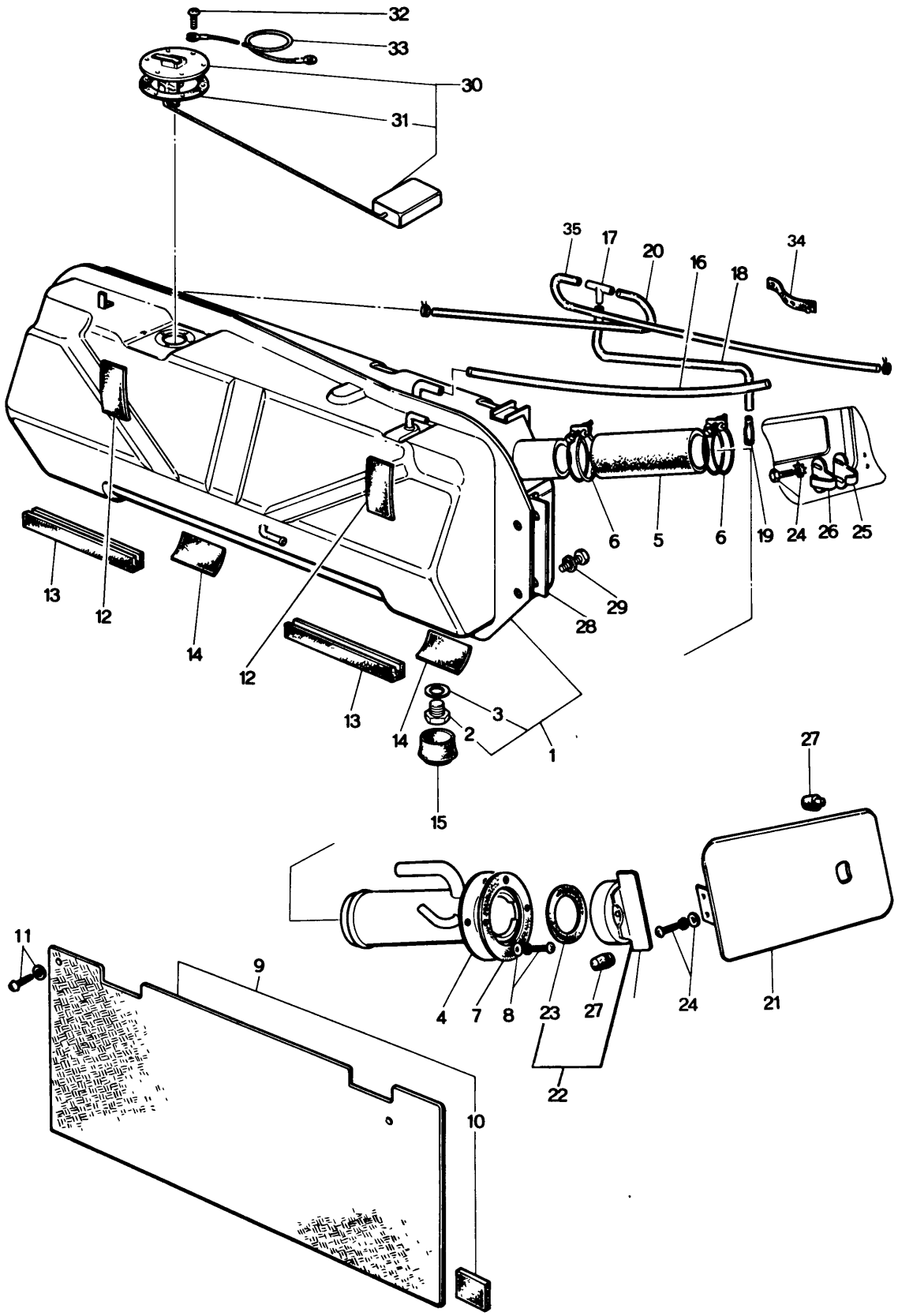
32
33
30
31
35
17
20
16
18
34
6
5
6
19
24
26
25
13
12
14
12
28
29
13
14
3
2
1
15
27
11
9
4
7
8
23
27
24
21
22
10

No.	Part Number	Description	Q'ty	Remarks
1	0866 42 310C	Tank, Fuel	1	
	0866 42 310D	Tank, Fuel	1	Car No. 141928 72/3 ~ ○
2	0114 42 046A	Plug, Drain	1	
3	99564 1200	Packing	1	
4	0866 42 350	Pipe, Filler	1	
	0866 42 350A	Pipe, Filler	1	Car No. 141928 72/3 ~ ○
5	0259 42 364	Hose, Joint	1	
6	99282 5500	Clamp	2	
7	0866 42 368	Packing, Inlet Pipe	1	
8	99804 0516	Screw	4	
	99971 0500	Washer, Spring	4	
9	0866 42 530	Board, Partition	1	
●	0866 42 380	Board, Partition	1	From Car No. 1
10	0866 42 382	Spacer	4	
11	99863 0412	Screw, Tapping	2	
	99952 0412	Washer, Plain	2	
12	0866 42 523	Pad, Fuel Tank "C"	2	
13	0866 42 521	Pad, Fuel Tank "A"	2	
14	0866 42 522	Pad, Fuel Tank "B"	2	
15	0187 42 371	Rubber, Dust Seal	1	
16	99336 12040	Pipe, Soft Vinyl-Body Side	1	
17	0259 42 390	Joint, "T"	1	

42 FUEL TANK

No.	Part Number	Description	Q'ty	Remarks
18	0866 42 542A	Tube, Vent	1	
	1504 42 542	Tube, Vent (1558, 1559)	1	
19	0866 42 544	Elbow	1	
20	0866 42 542A	Tube, Vent	1	
	1504 42 542	Tube, Vent (1558, 1559)	1	
21	0376 42 410	Lid, Filler (Coupe)	1	
	0866 42 410	Lid, Filler (Sedan)	1	
22	2280 42 460	Cap, Filler	1	
23	2280 42 462	Gasket, Filler Cap	1	
24	99804 0516	Bolt	4	
	99952 0500	Washer, Plain	4	
	99971 0500	Washer, Spring	4	
25	0866 42 552	Plate, Back up	1	
26	0866 42 551	Plate, Lock	1	
27	0110 52 265	Rubber, Cushion	2	
28	0866 42 561	Washer	2	
29	99804 0825	Bolt	4	
	99952 0800	Washer, Plain	4	
	99971 0800	Washer, Spring	4	
30	0866 67 170	Gauge, Fuel Tank	1	
31	0243 66 773	Gasket	1	

No.	Part Number	Description	Q'ty	Remarks
32	99833 0410	Screw	1	
	99833 0408	Screw	5	
● 33	~~0866 67 175~~	~~Cord, Earth~~	~~1~~	
●	0866 67 176	Cord, Earth	1	From Car No. 1 $^{71}/_{11}$~
● 34	0187 66 991	Clip, Rubber	1	
	99709 0108	Band	1	
35	0866 42 541	Tube, Vent	1	
	1504 42 541	Tube, Vent (1558, 1559)	1	
	1504 42 543	Tube, Vent (1558, 1559)	1	
	99282 1301	Band	5	
	99282 2000	Band	2	

FUEL PIPING

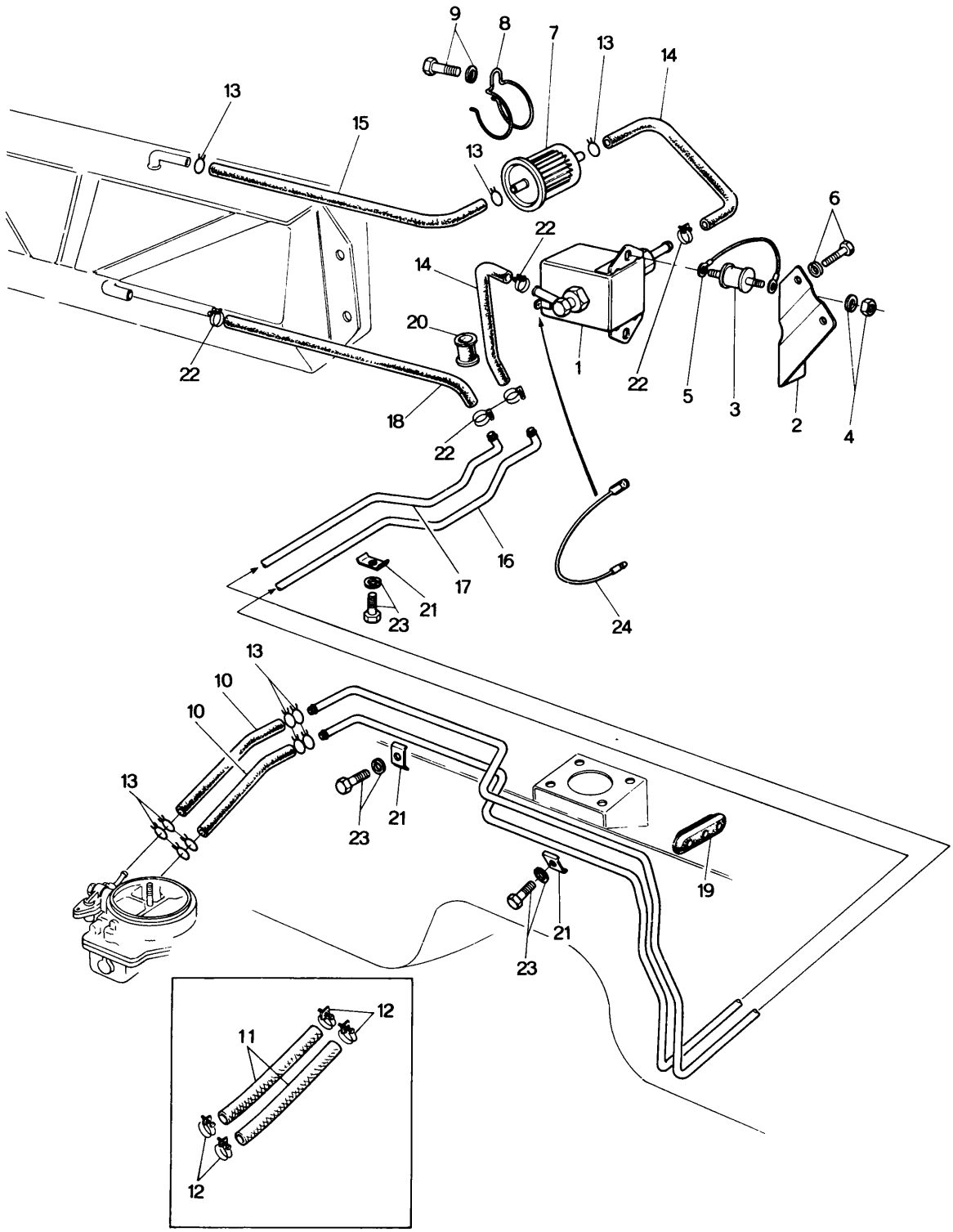
9
8
7
13
14
13
15
13
6
22
14
20
1
22
5
3
2
4
22
18
22
16
17
21
23
24
13
10
10
13
23
21
19
21
23
12
11
12

No.	Part Number	Description	Q'ty	Remarks
1	0868 13 400D	Pump, Fuel	1	
	0866 13 400F	Pump, Fuel	1	Car No. 120642 $^{7}/_{11}$ ~ ○
2	0868 13 401A	Bracket, Fuel Pump	1	
3	0222 13 383	Rubber, Insulation - Fuel Pump	2	
4	99908 0800	Nut, Insulation Rubber + Fuel Pump	4	
	99971 0800	Washer, Spring	4	
5	0868 13 402A	Cord, Earth - Fuel Pump	1	
6	99808 0812	Bolt, Fuel Pump Bracket	2	
	99952 0816	Washer, Plain	2	
	99971 0800	Washer, Spring	2	
7	0222 13 470A	Filter, Fuel	1	
8	0381 13 481	Clamp, Fuel Filter	1	
9	99808 0812	Bolt, Fuel Filter	1	
	99952 0816	Washer, Plain	1	
	99971 0800	Washer, Spring	1	
● 10	99340 06340	Pipe, Fuel - Carburettor Side	1	Car No. 134786 $^{7}/_{1}$ ~ Q'ty
●	0866 13 442	Pipe, Fuel	1	Car No. 134786 $^{7}/_{1}$ ~ Added Anew
11	1568 13 440	Pipe, Fuel - Carburettor Side	2	1567, 1568
	1594 13 421	Pipe, Fuel - Carburettor Side	2	1558, 1559 (Only for Norway)
12	99282 1600	Band, Fuel Pipe	4	1567, 1568
	99282 1601	Band, Fuel Pipe (1558, 1559)	4	1558, 1559 (Only for Norway)
13	0222 13 493	Clip, Fuel Pipe	18	
14	99340 06180	Pipe, Fuel - Fuel Pump	2	
15	99340 06670	Pipe, Fuel, Tank ~ Filter	1	
16	0868 45 061A	Pipe, Fuel Main	1	
17	0868 45 811B	Pipe, Fuel Return	1	
18	99340 06320	Pipe, Fuel Return Pipe ~ Tank	1	
19	0868 45 808A	Grommet, Fuel Pipe	1	
20	99868 1200	Protector, Fuel Pipe	3	
21	0868 45 903A	Clip, Fuel Pipe	9	

No.	Part Number	Description	Q'ty	Remarks
22	99282 1301	Clamp, Hose	4	
23	99785 0614	Bolt, Clip	9	
	99971 0600	Washer, Spring	9	
~~24~~	~~9999 07 102~~	~~Cord, Fuel Pump~~	~~1~~	
Ⓝ	99288 0651	Clip, Fuel Pipe	1	

ACCELERATOR CONTROL SYSTEM (R. H. D.)

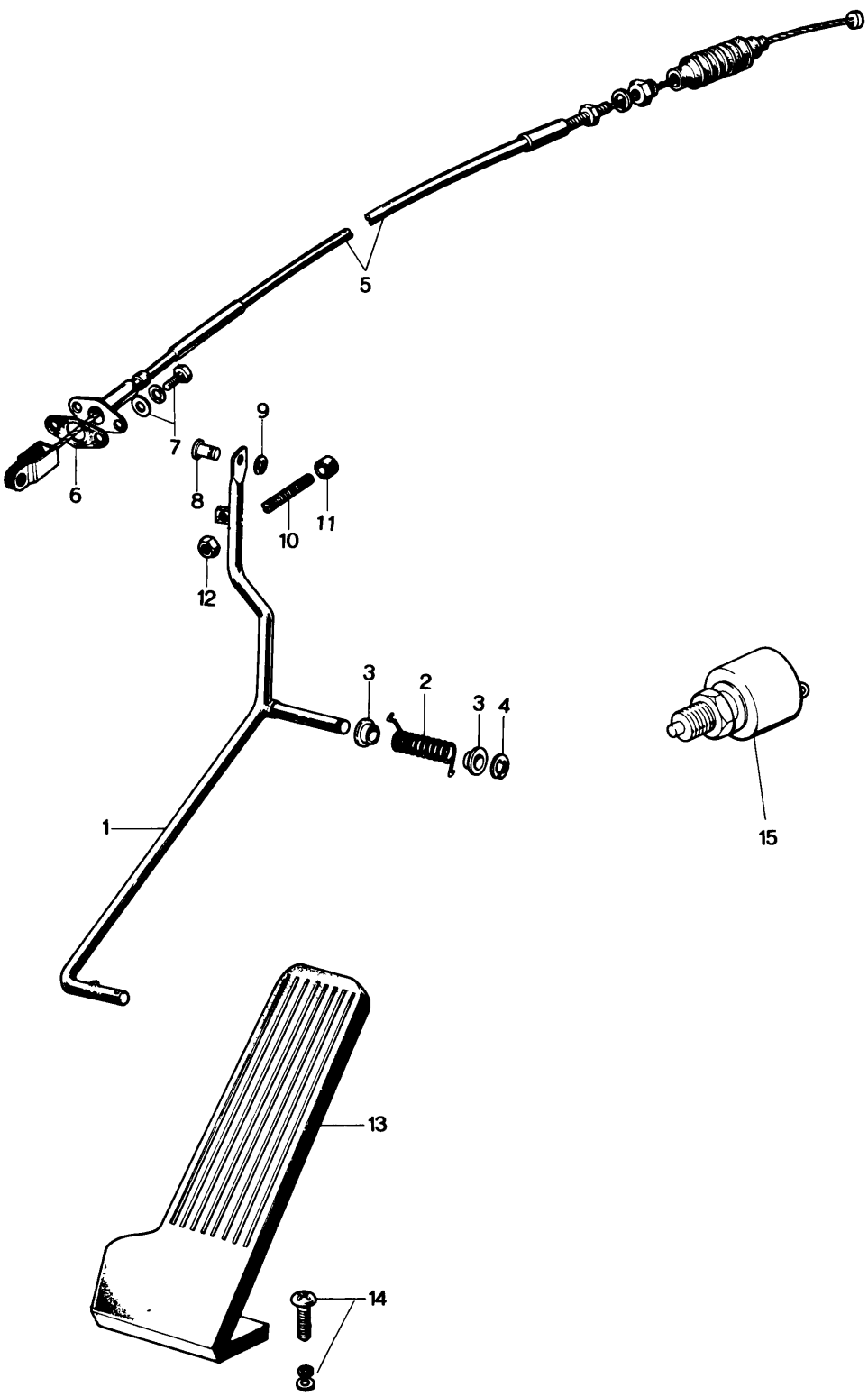

ACCELERATOR CONTROL SYSTEM (R.H.D.)

No.	Part Number	Description	Q'ty	Remarks
1	0378 41 610	Rod, Accelerator Control (Automatic)	1	
	0866 41 610	Rod, Accelerator Control (Manual)	1	
2	0370 41 619	Spring, Return	1	
3	0259 41 644	Bush	2	
4	99575 0600	Ring, Retaining	1	
5	0866 41 660	Wire, Accelerator	1	
6	0249 41 671	Seat, Rubber	1	
7	99785 0620	Bolt, Accelerator Control Wire	2	
	99952 0618	Washer, Plain	2	
	99971 0600	Washer, Spring	2	
8	99230 0511	Pin	1	
9	99575 0300	Ring, Stop	1	
10	0118 41 681	Stopper	1	
11	0118 41 682	Rubber	1	
12	99907 0600	Nut, Lock	1	
● 13	0559 41 710B	Pedal, Accelerator	1	
14	99765 0616	Screw	2	
	99952 0600	Washer, Plain	2	
	99971 0600	Washer, Spring	2	
15	2691 18 660	Switch, Kick Down (Automatic)	1	

ACCELERATOR CONTROL SYSTEM (L.H.D.)

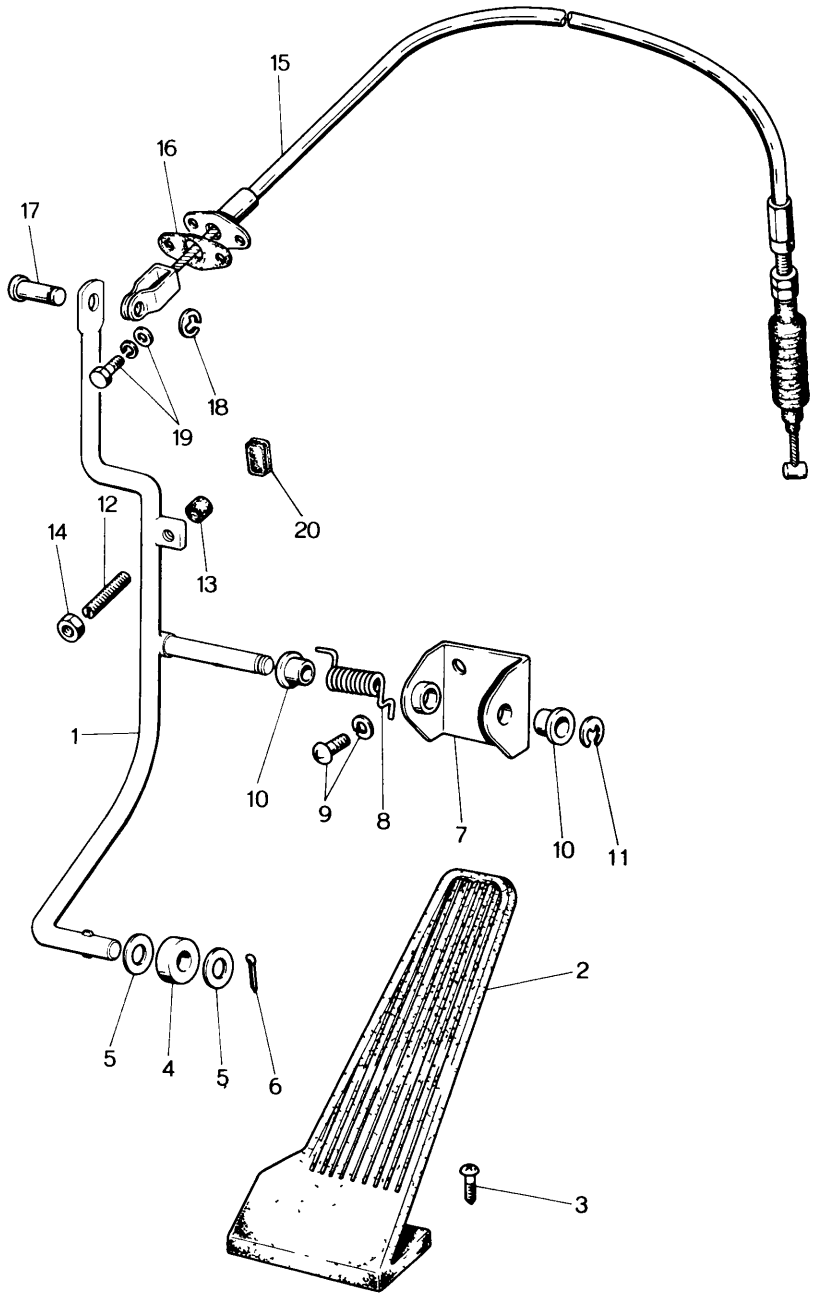

ACCELERATOR CONTROL SYSTEM (L.H.D.)

No.	Part Number	Description	Q'ty	Remarks
1	1524 41 620	Rod, Accelerator Control	1	
●	1524 41 620A	Rod, Accelerator Control	1	Car No. 148407 ⁷⁄₆～◯
2	0290 41 710	Pedal, Accelerator	1	
3	99765 0516	Screw, Accelerator Pedal	2	
4	0259 41 613	Roller, Pedal	1	
5	99953 0800	Washer, Plain-Pedal Roller	2	
6	99221 2012	Pin, Split-Pedal Roller	1	
7	0305 41 641	Retainer, Accelerator Rod	1	
8	0259 41 619	Spring, Return	1	
9	99765 0616	Screw, Retainer	2	
	99971 0600	Washer, Spring	2	
10	0259 41 644	Bush, Retainer	2	
11	99575 0600	Ring, Snap-Retainer	1	
12	0118 41 681	Stopper	1	
13	0118 41 682	Rubber, Stopper	1	
14	99907 0600	Nut, Stopper	1	
15	1582 41 660	Wire Accel.	1	
16	0249 41 671	Seat	1	
17	99230 0511	Pin, Accel. Wire	1	
18	99575 0300	Ring, Stop	1	
19	99765 0620	Bolt, Accel. Wire	2	
	99952 0618	Washer, Plain	2	
	99971 0600	Washer, Spring	2	
● 20	1524 41 678	Seal	1	

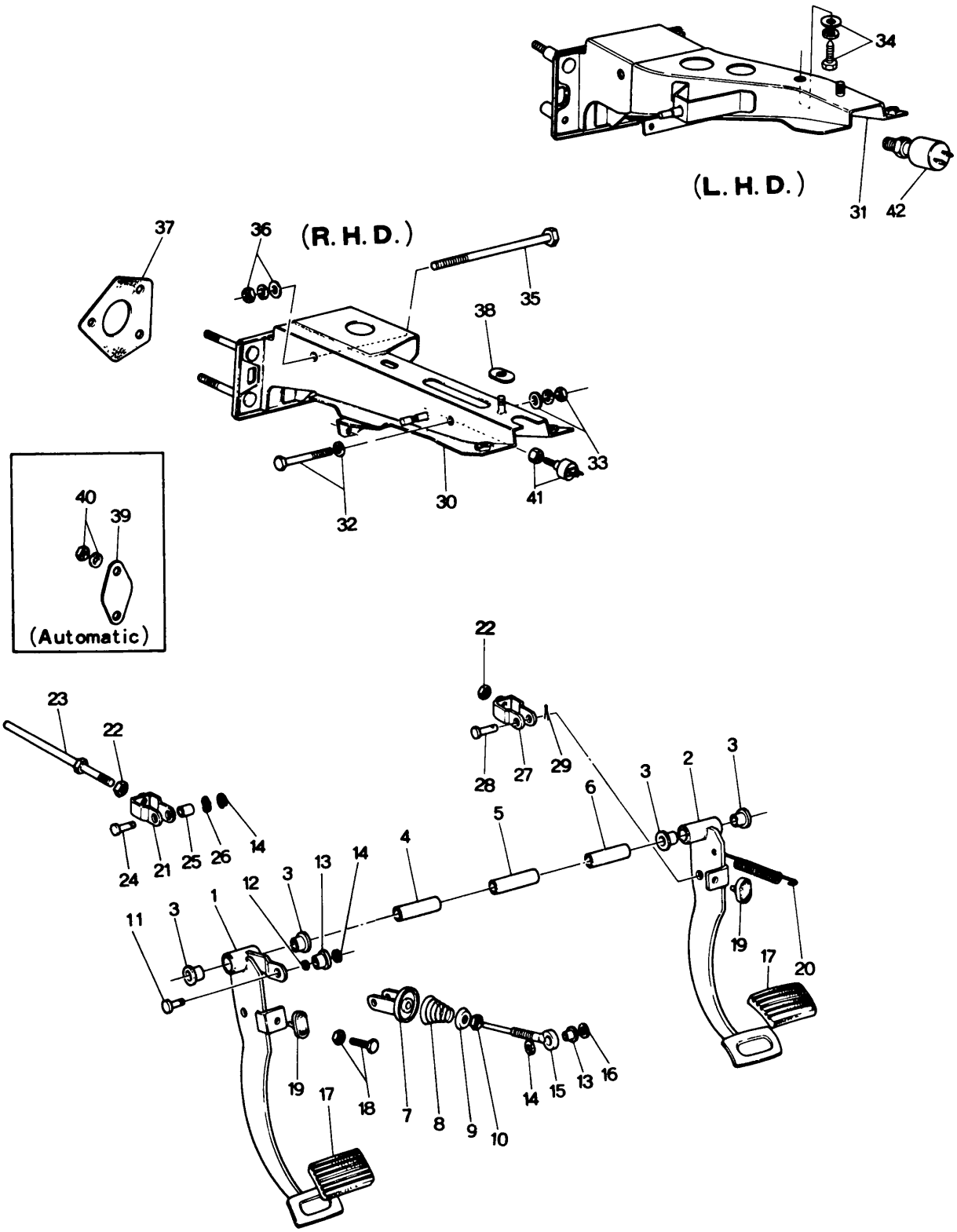
34
(L. H. D.)
31
42
37
36
(R. H. D.)
35
38
33
32
30
41
40
39
(Automatic)
22
23
22
28
27
29
3
2
3
6
3
5
4
24
21
25
26
14
13
14
12
3
1
3
11
19
17
18
7
8
9
10
14
15
13
16
19
17
20

No.	Part Number	Description	Q'ty	Remarks
1	0866 41 030A	Pedal, Clutch (R.H.D.)	1	
	0866 41 030B	Pedal, Clutch (R.H.D.) (Manual)	1	Car No. 133210 72/1 ~ ○
	1562 41 030A	Pedal, Clutch (L.H.D.)	1	
2	0866 43 030	Pedal, Brake (R.H.D.) (Manual)	1	
	1524 43 030	Pedal, Brake (L.H.D.) (Manual)	1	
	0378 43 030	Pedal, Brake (R.H.D.) (Automatic)	1	
3	0259 43 022	Bush, Pedal	4	
4	0866 43 061	Pipe, Pedal	1	
5	0866 43 063	Pipe, Pedal	1	
6	0866 43 062	Pipe, Pedal	1	
7	0824 41 040	Seat, Spring-Clutch	1	
●	0559 41 040C	Seat, Spring-Clutch	1	Car No. 149635 72/1 ~ ×
8	0559 41 081	Spring, Return	1	
●	0559 41 081A	Spring, Return	1	Car No. 149635 72/1 ~ ○
9	0183 41 043	Seat, Spring	1	
10	99901 0800	Nut, Spring	1	
●	99922 0800	Nut, Spring	1	Car No. 149635 72/1 ~ ×
11	0187 46 883	Pin, Spring Seat	1	
●	0604 46 785	Pin, Spring Seat	1	Car No. 149635 72/1 ~ ○
12	0824 41 084	Spacer	1	
13	0259 41 644	Bush	2	
14	99575 0800	Ring, Snap	3	
15	0824 41 051	Rod	1	
●	0824 41 051A	Rod	1	Car No. 149635 72/1 ~ ×
16	99952 0816	Washer, Plain	1	
17	0118 43 028A	Pad, Pedal (L.H.D.) (Manual)	2	
	0259 43 028	Pad, Pedal (R.H.D.) (Manual)	2	
	0268 43 028	Pad, Pedal (R.H.D.) (Automatic)	1	
18	99795 1032	Bolt, Stopper-Clutch	1	
	99922 1000	Nut, Stopper & Push Rod	2	
19	0187 43 029	Rubber, Stopper (Manual)	2	
		(Automatic)	1	
20	0613 41 308	Spring, Return-Brake	1	

CLUTCH & BRAKE SYSTEM

No.	Part Number	Description	Q'ty	Remarks
21	0259 43 140	Fork End, Clutch	1	
22	99922 0800	Nut, Fork End - Clutch	1	
	99922 1000	Nut, Fork End - Brake	1	
23	0223 41 131A	Rod, Push - Clutch	1	
24	0223 46 883	Pin, Fork End - Clutch	1	
25	0727 41 023	Bush, Fork End Clutch	1	
26	99972 0800	Washer, Wave - Fork End, Clutch	1	
27	0305 43 140	Fork End, Brake (R.H.D.)	1	
	1524 43 140	Fork End, Brake (L.H.D.)	1	
28	99231 0818	Pin, Joint - Fork End (R.H.D.)	1	
	99231 0820	Pin, Joint - Fork End (L.H.D.)	1	
29	99221 2020	Pin, Split - Fork End	1	
30	0866 43 070A	Bracket, Master Cylinder (R.H.D.)	1	
31	1524 43 070B	Bracket, Master Cylinder (L.H.D.)	1	
	1504 43 070A	Bracket, Master Cylinder (L.H.D.)	1	(1558,1559)
32	99805 0865	Bolt, Master Cylinder Bracket	1	
	99952 0822	Washer, Plain	1	
33	99901 0800	Nut, Master Cylinder Bracket (R.H.D.)	1	
	99971 0800	Washer, Spring	1	
	99952 0822	Washer, Plain	1	
34	99805 0825	Bolt, Master Cylinder Bracket	1	
	99952 0816	Washer, Plain (L.H.D.)	1	
	99971 0800	Washer, Spring	1	
35	99813 10155	Bolt, Master Cylinder Bracket (Manual)	1	
	99813 10110	Bolt, Master Cylinder Bracket (Automatic)	1	
36	99921 1000	Nut, Master Cylinder Bracket	1	
	99952 1000	Washer, Plain	1	
	99971 1000	Washer, Spring	1	

No.	Part Number	Description	Q'ty	Remarks
37	0866 43 093	Gasket, Master Cylinder	1	
38	0259 43 088	Seat, Master Cylinder Bracket	2	
39	0225 43 092	Plate	1	
40	99901 0800	Nut, Plate (Automatic)	2	
	99971 0800	Washer, Spring (Automatic)	2	
41	0233 66 790	Switch, Stop Lamp	1	
● 42	2305 60 490	Switch, Brake Lining	1	1558,1559

CLUTCH RELEASE & MASTER CYLINDER

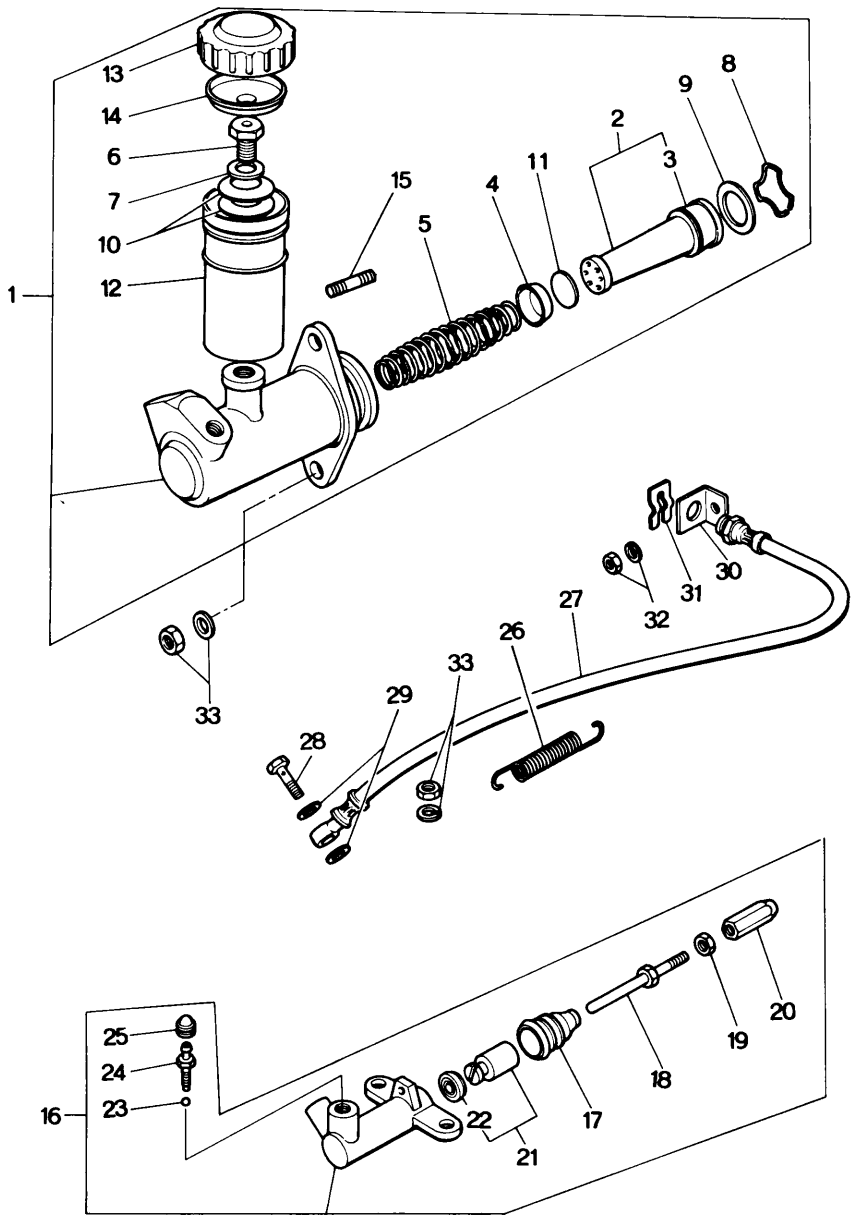

CLUTCH RELEASE & MASTER CYLINDER

No.	Part Number	Description	Q'ty	Remarks
1	0866 41 400	Cylinder, Clutch Master (R.H.D.)	1	
	1524 41 400	Cylinder, Clutch Master (L.H.D.)	1	
2	0305 41 440	Piston	1	(Fig. No. 3 included)
	0839 41 440	Piston	1	Car No. 127396 $^{7}1/_{12}$ ~ X
3	0305 41 451	Cup, Secondary	1	
4	0305 41 461	Cup, Primary	1	
	0839 41 461	Cup, Primary	1	Car No. 127396 $^{7}1/_{12}$ ~ X
5	0110 41 470	Spring, Return	1	
●	0110 41 470A	Spring, Return	1	Car No. 149635 $^{7}2/_{1}$ ~ ○
6	0317 43 421	Plug	1	
7	0221 43 431	Washer	1	
8	0111 43 432	Wire, Stop	1	
9	0111 43 433	Washer, Stop	1	
10	0317 43 428	Spring, Cone	2	
11	0727 41 442	Spacer	1	
12	0317 43 551	Tank, Reserve	1	
13	0727 43 552	Cap, Reserve Tank	1	
14	0839 43 553A	Baffle	1	
15	99852 0848	Stud (L.H.D.)	1	
	0305 99 431	Repair Kit, Clutch Cylinder	1	(Fig. No. 2 ~ 5, 8, 9, 11 included)
	0839 89 431	Repair Kit, Clutch Cylinder	1	Car No. 127396 $^{7}1/_{12}$ ~ ○
●	0839 89 431A	Repair Kit, Clutch Cylinder	1	Car No. 149635 $^{7}2/_{1}$ ~ ○
16	0866 41 920	Cylinder, Clutch Release	1	
17	0191 41 331	Boot	1	
18	0187 41 341	Rod	1	
19	99922 0800	Nut	1	
20	0118 41 342	Screw, Adjust	1	
21	0866 41 320	Piston	1	(Fig. No. 22 included)

41 CLUTCH RELEASE & MASTER CYLINDER

No.	Part Number	Description	Q'ty	Remarks
22	0603 41 322B	Cup, Piston	1	
23	99611 1500	Ball, Steel	1	
24	0259 33 691	Screw, Bleeder	1	
25	0259 33 693	Cap	1	
26	0183 41 308	Spring, Return - Clutch Release Cylinder	1	
27	0866 41 380	Hose, Flexible	1	
28	0221 43 694	Bolt, Hose & Release Cylinder	1	
29	99562 1000	Gasket	2	
30	0866 41 370	Holder, Flexible Hose	1	
31	0136 43 635	Clip, Flexible Hose	1	
32	99906 0600	Nut, Holder	1	
	99971 0600	Washer, Spring	1	
33	99901 0800	Nut, Clutch Master Cylinder	2	
	99971 0800	Washer, Spring	2	

43 49 TANDEM MASTER CYLINDER & MASTER VAC

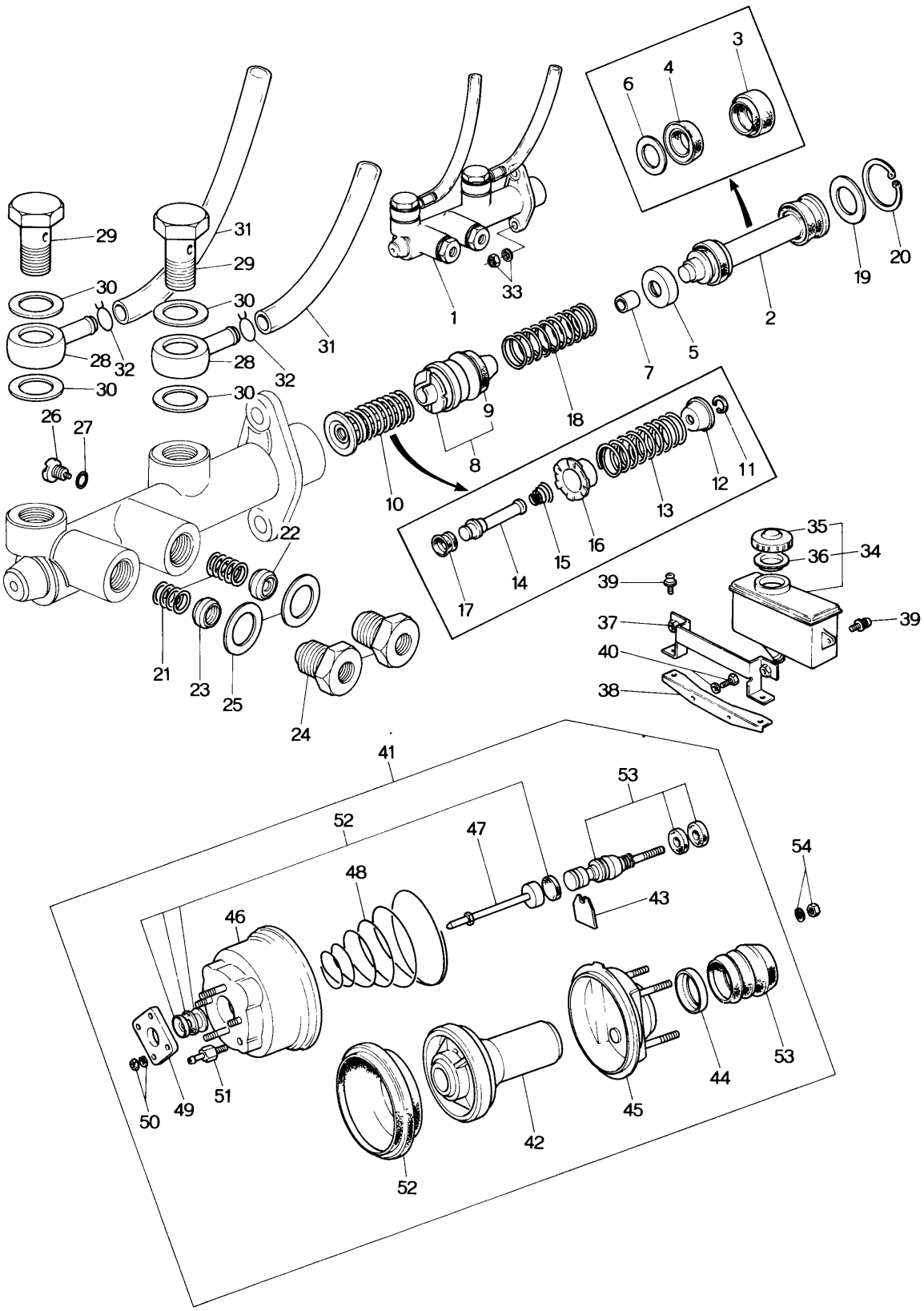

TANDEM MASTER CYLINDER & MASTER VAC

43 49

No.	Part Number	Description	Q'ty	Remarks	
1	0870 43 990	Cylinder, Tandem Master (R.H.D.)	1		
	1582 43 990A	Cylinder, Tandem Master (L.H.D.)	1		
2	2048 49 620C	Piston, Primary	1		
3	2048 49 625A	Cup, Secondary	1		
4	2048 49 626A	Cup, Primary	1		
5	2048 49 627B	Seat, Spring	1		
6	2048 49 629A	Spacer, Piston Cup	1		
7	2048 49 622	Ring, Stop	1		
8	2835 49 630A	Piston, Floating	1		
9	2048 49 635A	Cup, Secondary	2		
10	2835 49 640	Valve, Floating	1		
11	2835 49 623	Stopper	1	Order Under No. 2835 49 640	☆
12	2835 49 628A	Seat, Spring	1		☆
13	2835 49 642A	Spring, Floating Piston	1		☆
14	2835 49 645A	Rod, Valve	1		☆
15	2835 49 646A	Spring, Valve	1		☆
16	2835 49 647A	Case, Valve	1		☆
17	2835 49 648	Valve, Tipping	1		☆
18	2835 49 641A	Spring, Primary Piston	1		
19	2048 49 666	Washer (1), Piston	Selective use	1	
	2048 49 667	Washer (2), Piston			
	2048 49 668	Washer (3), Piston			
	2048 49 669	Washer (4), Piston			
20	2048 49 638	Ring, Retaining	1		
21	0233 49 665	Spring, Check Valve	2		
22	0233 49 660	Valve, Check	1		

43 49 TANDEM MASTER CYLINDER & MASTER VAC

No.	Part Number	Description	Q'ty	Remarks
23	0233 49 670	Valve, Check	1	
24	2835 49 652	Bolt, Joint	2	
25	0233 49 658	Gasket, Joint Bolt	2	
26	2048 49 676	Bolt Set	1	
27	2048 49 696	Gasket, Joint Bolt	1	
28	2835 49 682A	Union	2	
29	2835 49 688A	Bolt, Connector	2	
30	2835 49 687	Gasket	4	
31	0870 43 422A	Pipe, Oil	2 1	(R.H.D.) (L.H.D.)
	1562 43 422	Pipe, Oil	1	(L.H.D.)
32	2835 49 685	Clip	2	
●	2835 89 439	Repair Kit-Tandem Master Cylinder	1	Set
33	99908 0800	Nut, Tandem Master Cylinder	2	
	99971 0800	Washer, Spring	2	
Ⓝ	99285 0800	Clip, Wire	2	
34	0839 43 550	Tank, Reserve	1	
	1559 43 550	Tank, Reserve	1	1558,1559
35	0727 43 552	Cap	1	
36	0839 43 553A	Baffle, Oil	1	
37	0870 43 570	Holder, Reserve Tank	1	
38	0870 43 580	Holder, Reserve Tank	1	
39	99833 0512	Screw, Holder	4	
	99971 0500	Washer, Spring	4	
40	99785 0612	Screw, Holder	2	

TANDEM MASTER CYLINDER & MASTER VAC

No.	Part Number	Description	Q'ty	Remarks
	99971 0600	Washer, Spring	2	
41	0870 43 800B	Vac, Master (R.H.D.)	1	
	1562 43 800	Vac, Master (L.H.D.)	1	
42	0870 49 745	Plate, Diaphragm	1	
43	2046 49 746	Key	1	
44	2046 49 747	Retainer, Silencer	1	
45	0870 49 750	Shell & Stud, Rear	1	
46	0870 49 760	Shell & Stud, Front (R.H.D.)	1	
	1562 49 760	Shell & Stud, Front (L.H.D.)	1	
47	0870 49 770	Push Rod	1	
48	0824 49 781	Spring	1	
49	2046 49 782	Flange	1	
50	2046 49 783	Washer, Spring	1	
	2046 49 784	Nut	1	
51	0870 49 785	Valve, Check	1	
52	0870 49 710	Repair Kit "A"	1	
53	0870 49 720	Repair Kit "B" ("A" Kit & Fig. No. 51 included) (Parts Not Listed here are supplied under These Kits)	1	
54	99901 0800	Nut, Master Vac	3	
	99971 0800	Washer, Spring	3	
●	99952 0816	Washer, Plain	3	

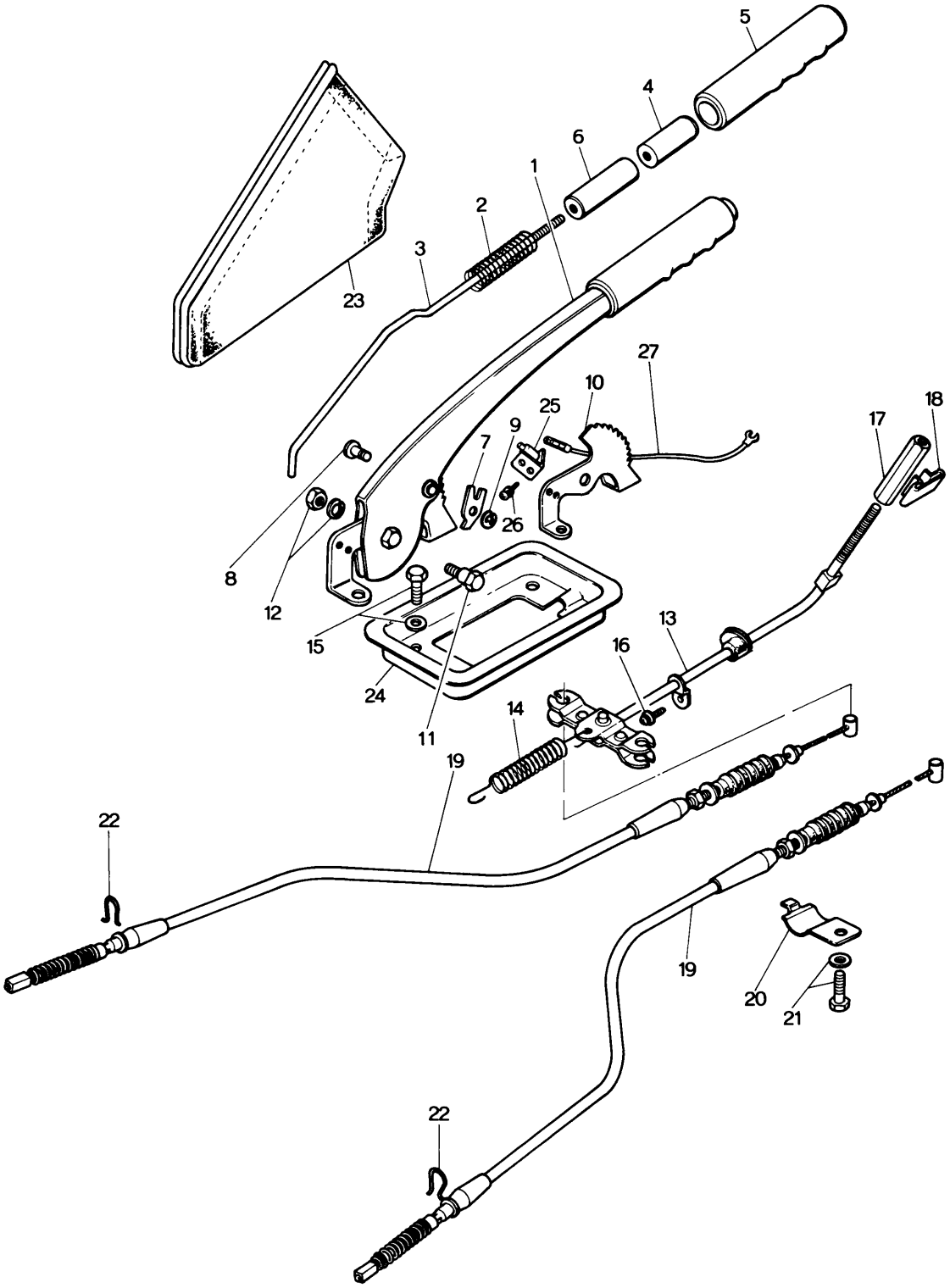
5
4
6
1
2
3
23
27
10
25
9
7
26
18
17
8
12
15
24
11
13
16
14
19
22
19
20
21
22

No.	Part Number	Description	Q'ty	Remarks
1	0886 44 010	Lever, Hand Brake	1	
2	0813 44 031	Spring	1	
3	0303 44 032	Rod, Release	1	
4	0221 44 033	Button	1	
5	0813 44 034	Cap	1	
6	0813 44 035	Spacer	1	
7	0221 44 044	Ratchet	1	
8	99230 0815	Pin	1	
●	99230 0815B	Pin	1	Car No. 133210 ~○
9	99575 0500	Ring, Stop	1	
10	0886 44 051	Sector	1	
11	0303 44 053	Bolt, Hand Brake Lever	1	
12	99901 0800	Nut	1	
●	99901 0800B	Nut	1	Car No. 133210 ~○
	99971 0800	Washer, Spring	1	
	4116			
13	~~0886~~ 44 150	Cable, Front	1	
●	~~0886~~ 44 150A	Cable, Front	1	Car No. 133210 ~○
14	0183 41 308	Spring, Return	1	
15	99785 0618	Bolt, Front Cable	4	
	99971 0800	Washer, Spring	4	
16	99868 0508	Screw, Tapping	1	
	99971 0500	Washer, Spring	1	
17	0886 44 187	Screw, Adjust	1	
18	0886 44 189	Clip	1	
● 19	~~0886 44 410~~	~~Cable, Rear~~	~~2~~	
	1504 44 410	Cable, Rear	2	~~1558, 1559~~
20	0886 44 439	Clip, Cable	2	
21	99971 0800	Washer, Spring	2	

No.	Part Number	Description	Q'ty	Remarks
	99785 0620	Bolt	2	
22	0305 44 471	Clip	2	
23	0824 44 140	Boot } Without Console Box	1	
24	0302 44 132	Plate } Without Console Box	1	
25	0820 66 840	Switch, Parking Lamp	1	
26	99833 0412	Screw, Switch	2	
	99971 0400	Washer, Spring	2	
27	0866 67 131	Cord, Parking Lamp Switch	1	

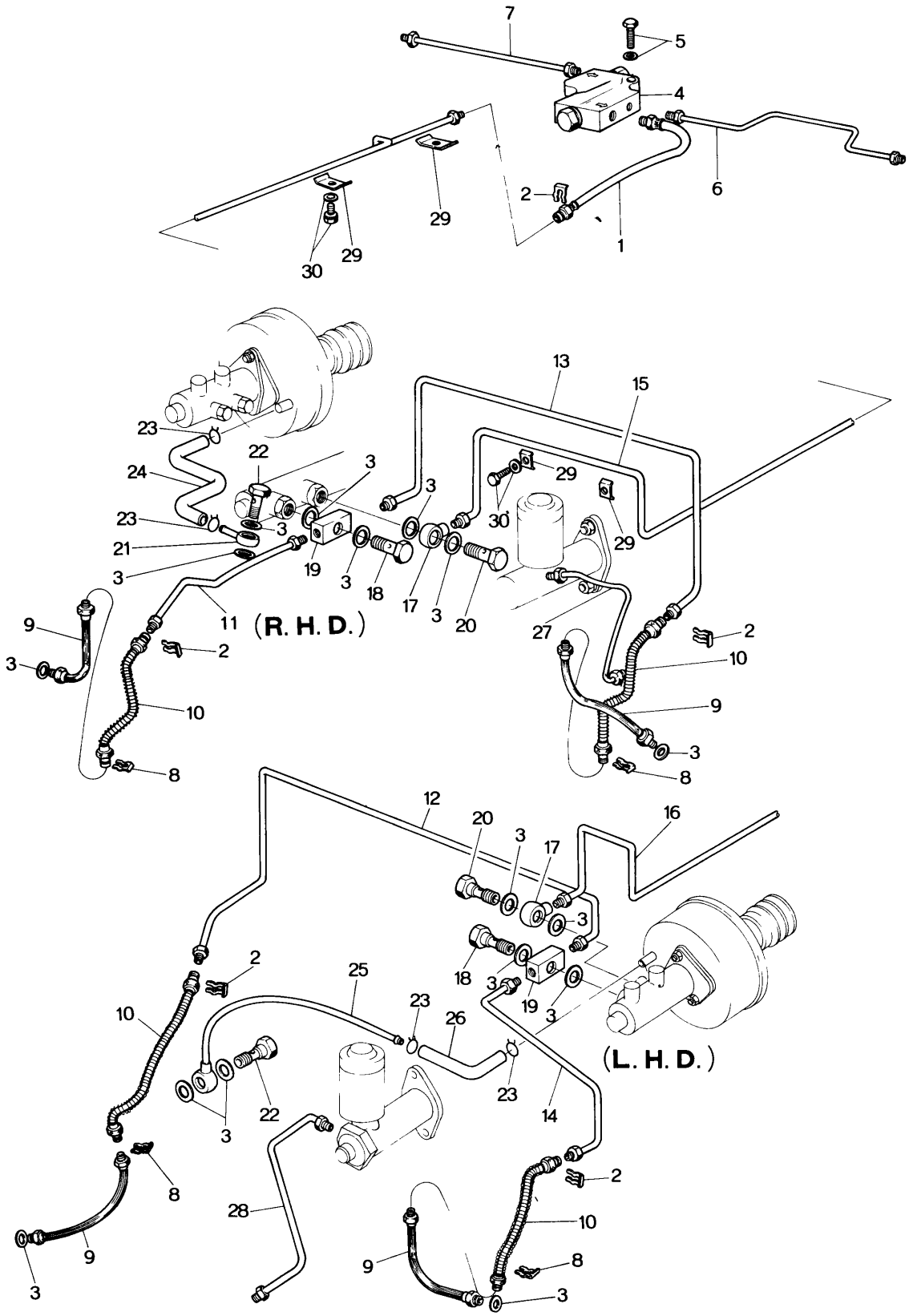
(R. H. D.)
(L. H. D.)

No.	Part Number	Description	Q'ty	Remarks
1	0866 43 820	Hose, Flexible	1	
2	0136 43 635	Clip, Flexible Hose	3	
3	99562 1000	Gasket	8	
4	0866 43 900	Valve, W.P	1	
5	99805 0640	Bolt, W.P Valve	2	
	99971 0600	Washer, Spring	2	
6	0866 43 650B	Pipe No. 1, Rear Brake	1	
7	0866 43 660B	Pipe No. 2, Rear Brake	1	
8	0305 43 635	Clip, Flexible Hose	2	
9	0866 43 810	Hose, Flexible	2	
10	0613 43 820A	Hose, Flexible	2	
11	0870 45 280B	Pipe (Frt., R), Brake (R.H.D.)	1	
	0866 45 280A	Pipe (Frt. R), Brake (1552)	1	
12	~~1563 45 280C~~	~~Pipe, (Frt., R) Brake (L.H.D.) General~~	~~1~~	
	1568 45 280B	Pipe, (Frt. R), Brake (L.H.D.)	1	
13	0870 45 320B	Pipe (Frt., L), Brake (R.H.D.)	1	
	0866 45 320B	Pipe, (Frt, L), Brake (1552)	1	
14	~~1563 45 320C~~	~~Pipe, (Frt., L) Brake (L.H.D.) General~~	~~1~~	
	1568 45 320A	Pipe, (Frt, L), Brake (L.H.D.)	1	
15	0870 45 350B	Pipe (Rr.), Brake (R.H.D.)	1	
	0866 45 350B	Pipe (Rr.,), Brake (1552)	1	
16	~~1563 45 350C~~	~~Connection, Brake Pipe, (Rr.) General~~	~~1~~	
	1568 45 350B	Connection, Brake Pipe (Rr.) (L.H.D.)	1	
17	0118 41 375	Connector, Brake Pipe (Rr.)	1	
18	0221 43 894	Bolt, Connector - Brake Pipe Rear	1	
19	0866 45 452	Joint, Pipe - Brake Pipe (Frt.)	1	
20	0118 43 505	Bolt, Connector - Brake Pipe (Frt.)	1	
	0118 43 505A	Bolt, Connector - Brake Pipe (Frt.)	1	Car No. 144175 $^{72}/_{4}$ ~○
21	0870 43 830	Pipe, Connector - Vacuum Hose (R.H.D.)	1	
22	2046 43 894	Bolt, Connector - Vacuum Pipe	1	
23	2046 43 839	Clamp, Hose	2	
24	0870 43 842A	Hose, Vacuum (R.H.D.)	1	
	0870 43 842B	Hose, Vacuum (R.H.D.)	1	Car No. 129763 $^{71}/_{12}$ ~○

PIPING (CLUTCH & BRAKE)

No.	Part Number	Description	Q'ty	Remarks
25	1562 43 830A	Pipe, Vacuum (L.H.D.)	1	
	1562 43 830B	Pipe, Vacuum (L.H.D.)	1	Car No. 137394 72½~○
26	1570 43 842	Hose, Vacuum (L.H.D.)	1	
	1570 43 842A	Hose, Vacuum (L.H.D.)	1	Car No. 140779 72½~○
●	1570 43 842B	Hose, Vacuum	1	Car No. 72⅞~△
	~~1558 43 836A~~	~~Hose, Vacuum~~	~~1~~	~~1558, 1559~~
27	0866 45 510	Pipe, Clutch (R.H.D.) (1552 Excluded)	1	
	0866 45 611B	Pipe, Clutch (1552)	1	
	99340 06205	Pipe, Clutch (1552)	1	
28	1562 45 510A	Pipe, Clutch (L.H.D.)	1	
29	0866 45 903A	Clip	8	
30	99785 0614	Bolt, Clip	8	
	99971 0600	Washer, Spring	8	

PIPING (CLUTCH & BRAKE)
(ARCTIC SPEC. MODEL & SWITZERLAND)

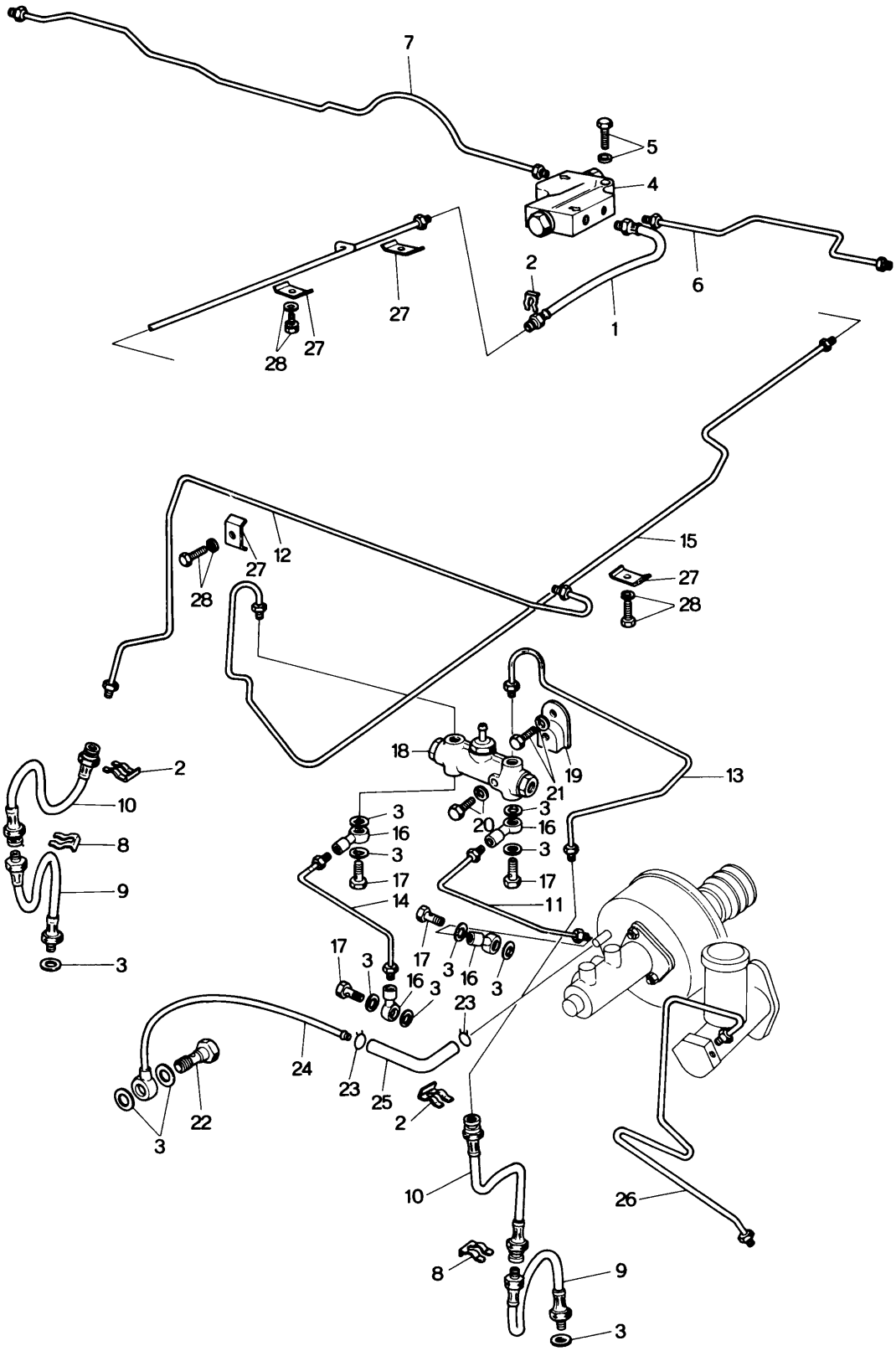

PIPING (CLUTCH & BRAKE)
(ARCTIC SPEC. MODEL & SWITZERLAND)

43 45

No.	Part Number	Description	Q'ty	Remarks
1	0866 43 820	Hose, Flexible	1	
2	0136 43 635	Clip, Flexible Hose	3	
3	99562 1000	Gasket	12	
4	0866 43 900	Valve, W. P. (For Sweden & Denmark)	1	
	1559 43 900	Joint, Pipe	1	
5	99805 0640	Bolt, W. P. Valve	2	
	99971 0600	Washer, Spring	2	
6	1562 43 650B	Pipe. No. 1, Rear Brake	1	
7	1562 43 660	Pipe No. 2, Rear Brake	1	
●	1562 43 660A	Pipe No. 2, Rear Brake	1	Car No. 148407 72/6 ~ △
8	0305 43 635	Clip, Flexible Hose	2	
9	0866 43 810	Hose, Flexible	2	
10	0813 43 820A	Hose, Flexible	2	
11	1559 45 250	Pipe (Frt.), Brake-Main	1	
12	1540 45 280A	Pipe (Frt., R), Brake	1	
13	1540 45 320	Pipe (Frt., L), Brake	1	
14	1559 45 350	Pipe (Rr.), Brake-Main	1	
15	1504 45 360	Pipe (Rr.), Brake	1	
16	0118 41 375	Connector, Brake Pipe	4	
17	0221 43 694	Bolt, Brake Pipe Connector	4	
18	1540 45 890	Indicator, Fail	1	
19	1540 45 920A	Bracket, Fail Indicator	1	
20	99806 0635	Bolt, Fail Indicator	1	
	99971 0600	Washer, Spring	1	
21	908066 6 16	Bolt Set, Bracket	1	
22	2046 43 694	Bolt, Connector-Vacuum Pipe	1	
23	99262 1900	Clamp, Hose	2	

PIPING (CLUTCH & BRAKE)
(ARCTIC SPEC. MODEL & SWITZERLAND)

No.	Part Number	Description	Q'ty	Remarks
24	1562 43 830A	Pipe, Vacuum	1	
	1562 43 830B	Pipe, Vacuum	1	Car No. 137394 7½~○
25	1559 43 836A	Hose, Vacuum	1	
●	1559 43 836B	Hose, Vacuum	1	Car No. 140779 7½~△
●	1559 43 836C	Hose, Vacuum	1	Car No. 152377 7⅞~△
26	1562 45 510A	Pipe, Clutch	1	
27	0866 45 903A	Clip	8	
28	99785 0814	Bolt, Clip	8	
	99971 0800	Washer, Spring	8	

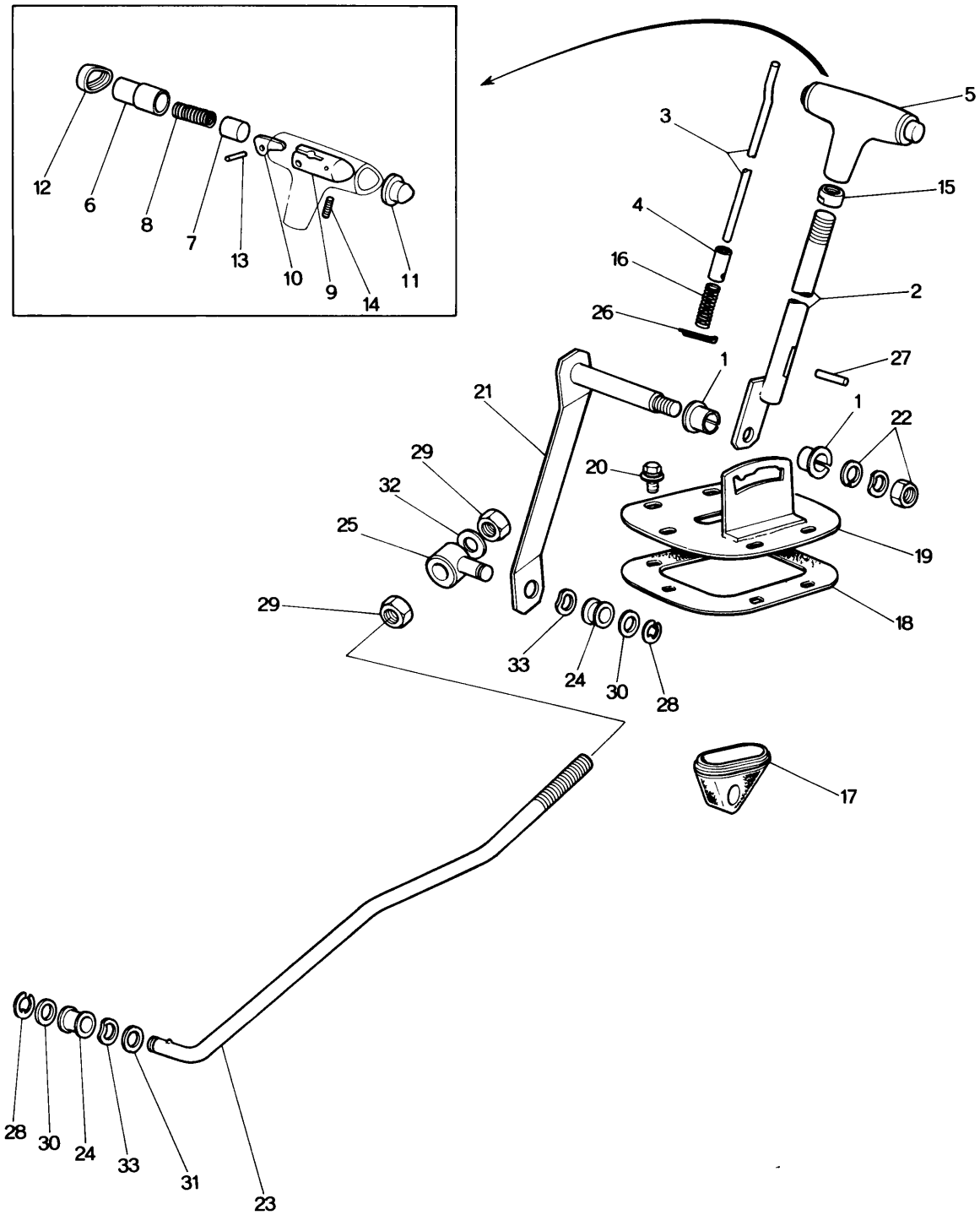
12
6
8
7
13
10
9
14
11
5
3
15
4
16
2
26
1
27
21
1
22
29
20
32
25
19
29
18
33
24
30
28
17
28
30
24
33
31
23

No.	Part Number	Description	Q'ty	Remarks
1	0259 42 022	Bush	2	
2	2840 46 010	Lever, Selecter	1	
3	2375 46 021	Rod	1	
4	2375 46 022	Guide	1	
5	0308 46 030A	Knob	1	
●	0308 46 020B	Knob	1	Car No. 72/10~C
6	2375 46 051	Knob	1	
7	2375 46 052	Piston	1	
8	2375 46 053	Spring	1	
9	0308 46 054	Supporter	1	
10	2375 46 055	Lever	1	
11	0308 46 056	Plug	1	
12	0308 46 057	Cap	1	
13	99225 0320	Pin	1	
14	99887 0412	Screw	1	
15	2375 46 061	Nut	1	
16	2375 46 062	Spring	1	
17	0842 46 081	Boot	1	
18	0308 46 083	Seal	1	
19	0842 46 110A	Bracket	1	
20	99785 0616	Bolt	6	
	99952 0618	Washer, Plain	6	
	99971 0600	Washer, Spring	6	

CHANGE CONTROLS (AUTOMATIC, R.H.D.)

No.	Part Number	Description	Q'ty	Remarks
21	0378 46 150	Lever	1	
22	99922 1000	Nut	1	
	99971 1000	Washer, Spring	1	
	99972 1400	Washer, Wave	2	
23	0871 46 571	Rod	1	
24	0604 46 684	Bush	2	
25	0259 46 691	Joint, "T"	1	
26	99221 2020	Pin, Split	1	
27	99222 0520	Pin	1	
●	99222 0522	Pin	1	Car No. 150526 7/8 ~ C
28	99575 0600	Ring, Retaining	1	
29	99902 0800	Nut	2	
30	99952 0816	Washer, Plain	1	
31	99953 0800	Washer, Plain	2	
32	99971 0800	Washer, Spring	1	
33	99972 0800	Washer, Wave	2	

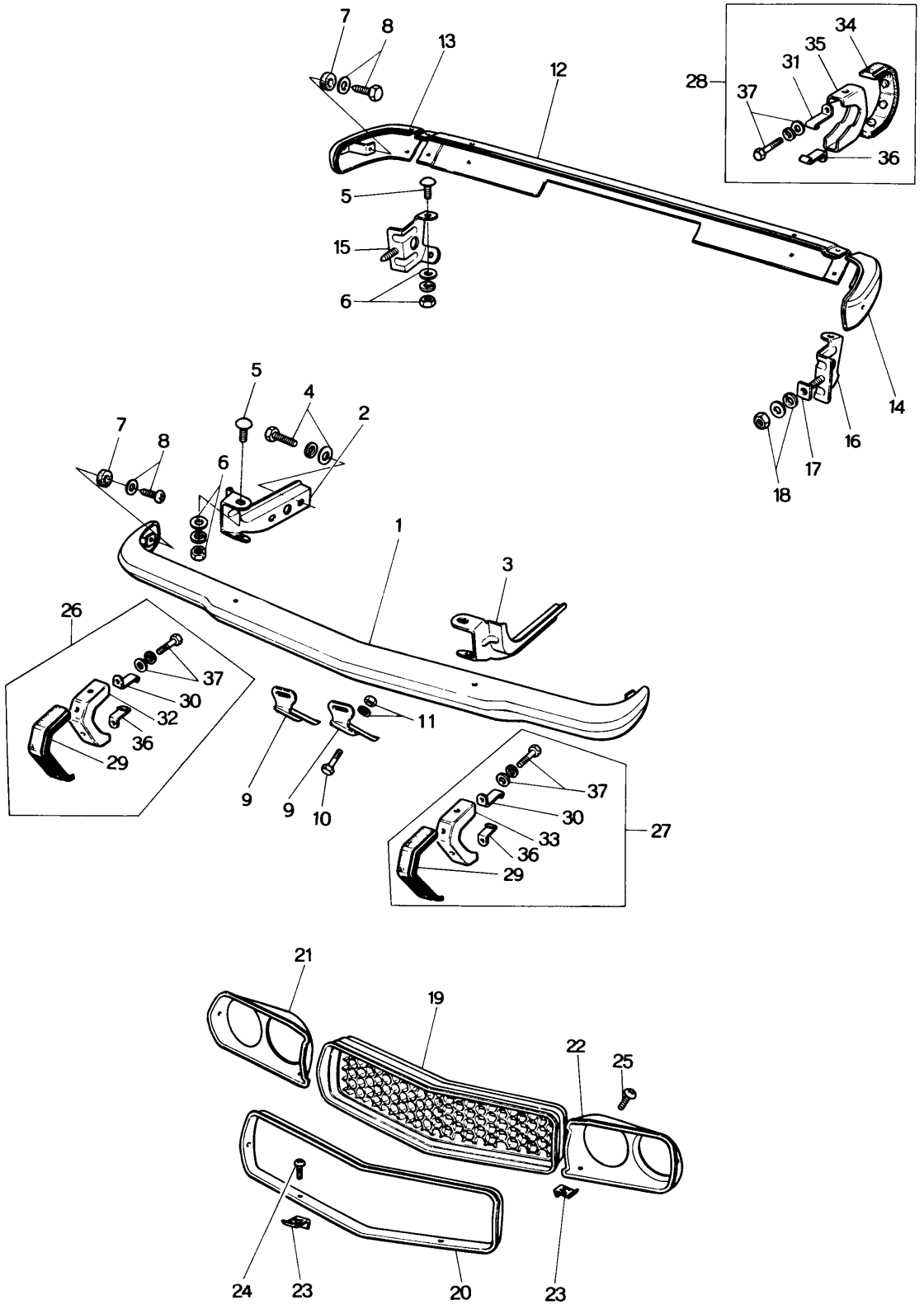
7
8
13
12
34
35
31
28
37
36
5
15
6
14
16
17
18
5
4
2
7
8
6
1
3
26
37
30
32
36
29
11
9
9
10
37
30
33
36
29
27
21
19
22
25
24
23
20
23

No.	Part Number	Description	Q'ty	Remarks
1	0866 50 110A-66	Bar, Front Bumper	1	
2	0866 50 141	Stay (R), Front Bumper	1	
3	0866 50 151	Stay (L), Front Bumper	1	
4	99785 0820	Screw, Stay & Front Frame	4	
	99781 1028	Screw, Stay & Front Frame	4	Car No. 144308 ⁷⁄₄～○
	99951 0818	Washer, Plain	4	
	99951 1022	Washer, Plain	4	Car No. 144308 ⁷⁄₄～○
	99971 0800	Washer, Spring	4	
	99971 1000	Washer, Spring	4	Car No. 144308 ⁷⁄₄～○
5	0223 50 275	Screw, Bumper & Stay	12	
6	99906 0600	Nut, Bumper & Stay	12	
	99951 0618	Washer, Plain	12	
	99971 0600	Washer, Spring	12	
7	0866 50 102A	Spacer, Bumper	2	
8	99805 0622	Bolt, Bumper & Bracket	4	
	99951 0618	Washer, Plain	4	
9	0866 50 181A	Holder, Number Plate	2	
10	99806 0612	Bolt, Holder	2	
11	99906 0600	Nut, Holder	2	
	99971 0600	Washer, Spring	2	
12	1562 50 311	Bar (C), Rear Bumper	1	
13	0866 50 320B-66	Bar (R), Rear Bumper	1	
14	0866 50 330B-66	Bar (L), Rear Bumper	1	
15	0866 50 340	Stay (R), Rear Bumper	1	
16	0866 50 350	Stay (L), Rear Bumper	1	
17	0111 57 111	Set Rubber	2	
18	99921 1000	Nut, Stay & Rear Bumper	2	
	99951 1030	Washer, Plain	2	
	99971 1000	Washer, Spring	2	

BUMPER & GRILLE

No.	Part Number	Description	Q'ty	Remarks
19	0866 50 511A	Grille, Radiator	1	
20	0866 50 521A	Mould, Front	1	
21	0866 50 531	Bezel (R), Lamp	1	
22	0866 50 541	Bezel (L), Lamp	1	
23	0866 55 501	Nut, Spring-Grille	14	
●	0866 50 501	Nut, Spring-Grille	8	From Car No. 1
●	99869 0500	Nut, Spring-Grille	8	Car No. 927396 $^{71}/_{12}$~○
24	99737 0514	Screw, Grille	8	
25	99862 0516B	Screw, Bezel	6	
26	0866 99 801	Guard Set (R), Front Bumper	1	
●27	~~0866 99 901~~	~~Guard Set (L), Front Bumper~~	~~1~~	
●	0866 99 802	Guard Set (L), Front Bumper	1	From Car No. 1
28	0866 99 806	Guard Set, Rear Bumper	1	
29	0866 78 701A	Rubber, Cushion (Frt.)	2	
30	0866 78 702	Plate, Clamp (Frt.)	2	
31	0866 78 702	Plate, Clamp (Rr.)	2	
32	0866 78 710	Guard (R), Front Bumper	1	
33	0866 78 750	Guard (L), Front Bumper	1	
34	0866 78 801A	Rubber Cushion (Rr.)	2	
35	0866 78 810	Guard, Rear Bumper	2	
36	0305 50 231	Plate, Clamp	4	
37	~~99798 0628~~	~~Bolt, Bumper Guard~~	~~8~~	
	~~99952 0618~~	~~Washer, Plain~~	~~8~~	
	~~99971 0808~~	~~Washer, Spring~~	~~8~~	
	90797 6620	Washer & Bolt	8	

BONNET & TRUNK LID

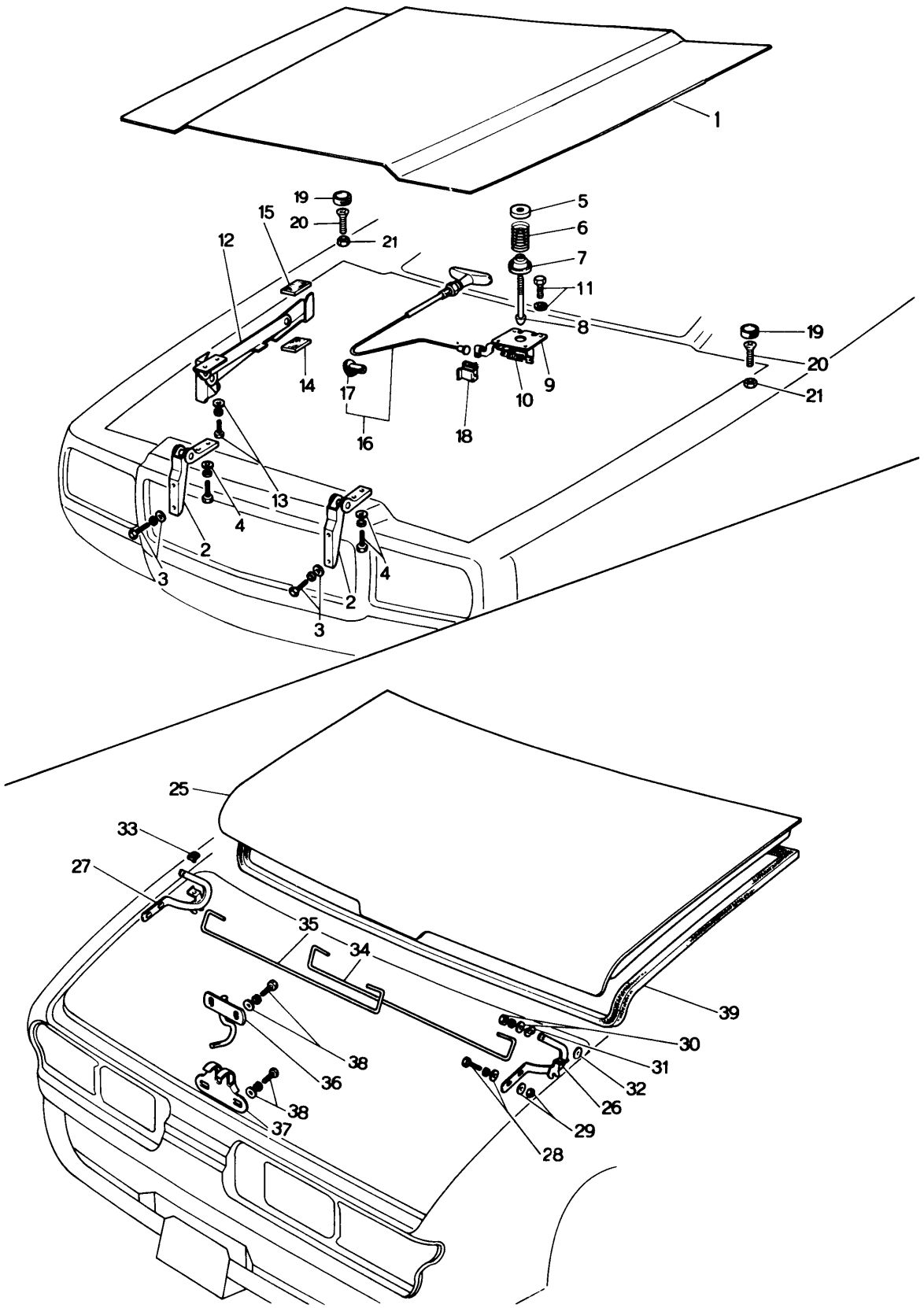

No.	Part Number	Description		Q'ty	Remarks
1	0370 52 110	Bonnet (R. H. D.)		1	
	1524 52 110	Bonnet (L. H. D.)		1	
	0866 74 250	Bonnet (All Models)		1	Used from Car No. 135808 ⁷³⁄₂ ~○
2	0866 52 210	Hinge, Bonnet		2	
3	99783 0825	Bolt, Hinge & Shroud Panel		4	
	99952 0816	Washer, Plain		4	
	99971 0800	Washer, Spring		4	Order Under No. 0866 99 522
4	99801 0816	Bolt, Bonnet & Hinge		4	
	99952 0816	Washer, Plain		4	
	99971 0800	Washer, Spring		4	
5	0305 52 313	Seat, Spring-Upper		1	
6	0305 52 312B	Spring, Lift		1	Order Under No. 0305 99 521
7	0305 52 322A	Seat, Spring-Lower		1	
8	0187 52 141	Hook, Bonnet		1	
9	0305 52 330A	Lock, Bonnet (R. H. D.)		1	
	2835 52 330A	Lock, Bonnet (L. H. D.)		1	
10	0305 52 331	Spring, Lock		1	
11	99806 0616	Bolt, Bonnet Lock		4	
	99952 0616	Washer, Plain		4	
	99971 0600	Washer, Spring		4	
12	0866 52 390	Stopper, Bonnet (R.H.D.)		1	
	1524 52 390	Stopper, Bonnet (L.H.D.)		1	
13	99806 0616	Bolt, Stopper		4	
	99952 0800	Washer, Plain		4	
	99971 0800	Washer, Spring		4	
● 14	0259 52 257	Pad, Stopper		1	
15	0866 52 397	Pad, Stopper ~~(R.H.D.)~~	(R.H.D.)	2	
			(L.H.D.)	1	
	0866 52 397A	Pad, Stopper	(R.H.D.)	2	Car No. 135808 ⁷³⁄₂ ~△
			(L.H.D.)	1	

No.	Part Number	Description	Q'ty	Remarks
	0183 53 074	Pad, Stopper (L. H. D.)	1	
16	0866 52 410	Wire, Release (R. H. D.)	1	
	1524 52 410	Wire, Release (L. H. D.)	1	
17	0259 52 301	Grommet, Release Wire	1	
18	0223 52 302	Clamp, Release Wire (L. H. D.)	1	
19	0866 52 451	Cushion, Bonnet	2	
20	99831 0640	Bolt, Cushion	2	
21	99907 0600	Nut	2	
22	~~0866 52 480~~	~~Scoop (R), Air~~	~~1~~	
23	~~0866 52 490~~	~~Scoop (L), Air~~	~~1~~	
24	~~0187 82 873~~	~~Washer, Air Scoop~~	~~4~~	
	~~99948 0488~~	~~Nut~~	~~4~~	
25	0376 52 510	Lid, Trunk (Coupe)	1	
	0866 52 510	Lid, Trunk (Sedan)	1	
26	0866 52 610	Hinge (R), Trunk Lid	1	
27	0866 52 620	Hinge (L), Trunk Lid	1	
28	99806 0618	Bolt, Bonnet & Hinge	4	
	99952 0618	Washer, Plain	4	
	99971 0600	Washer, Spring	4	
29	99906 0600	Nut, Trunk Lid & Hinge	4	
	99951 0618	Washer, Plain	4	
30	99906 0600	Nut, Hinge	2	
	99952 0600	Washer, Plain	2	
	99971 0600	Washer, Spring	2	
31	0866 52 631	Washer, Wave-Hinge	2	
32	99952 0822	Washer, Plain-Hinge	2	

No.	Part Number	Description	Q'ty	Remarks
33	0305 52 628	Rubber, Cushion	2	
34	0866 52 661 A	Spring (R), Balance	1	
35	0866 52 671 A	Spring (L), Balance	1	
36	0866 52 750 A	Striker	1	
37	0305 52 850A	Lock, Lid	1	
38	99806 0616	Bolt, Lid Lock & Striker	4	
	99951 0618	Washer, Plain	4	
	99971 0600	Washer, Spring	4	
39	0376 52 901	Weatherstrip (Coupe)	1	
●	0376 52 901A	Weatherstrip (Coupe)	1	Car No. 72/10~◯
	0866 52 901	Weatherstrip (Sedan)	1	
●	0866 52 901A	Weatherstrip (Sedan)	1	Car No. 72/8~◯

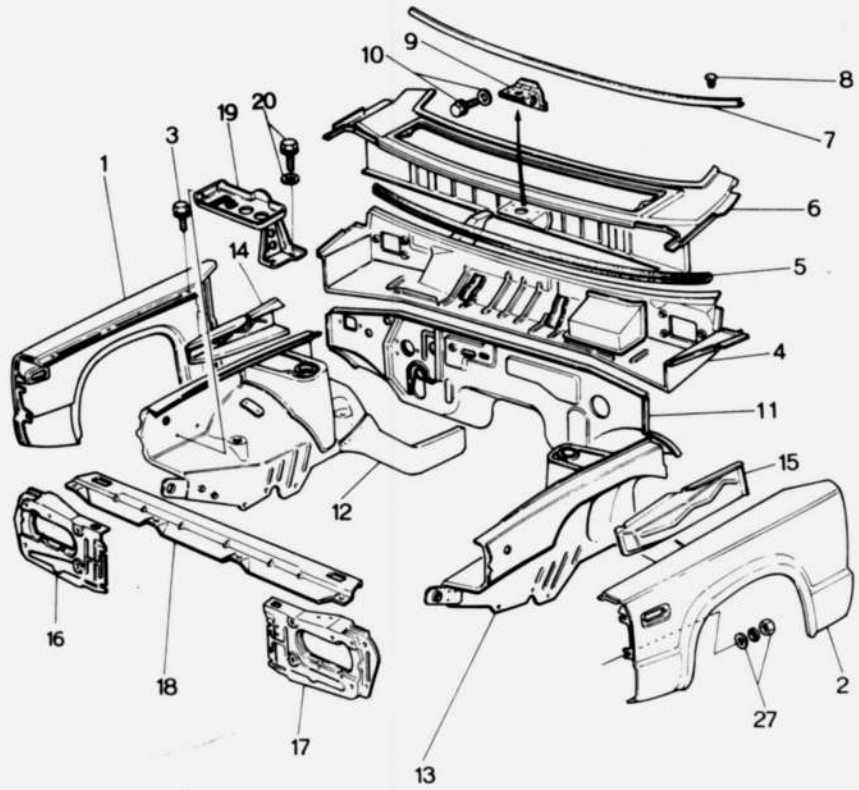

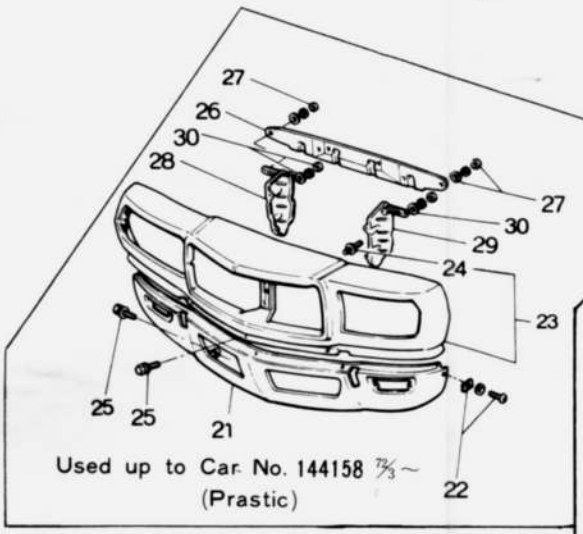

Used up to Car No. 144158 73/3 ~
(Prastic)

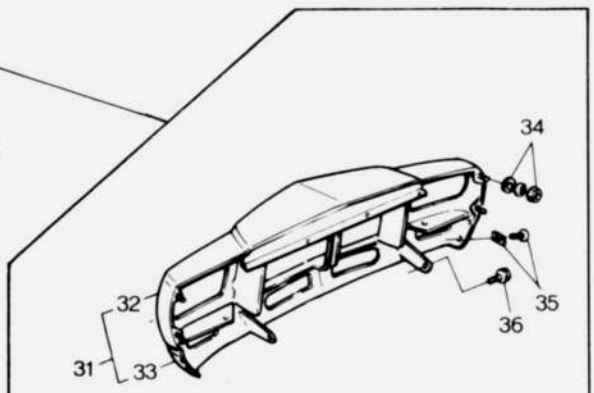

Used From Car No. 144160 73/4 ~
(Steel Plate)

No.	Part Number	Description	Q'ty	Remarks
1	1524 51 020A	Panel (R), Front Fender	1	
2	1524 51 120A	Panel (L), Front Fender	1	
3	99806 0614	Bolt, Front Fender	12	
	99971 0600	Washer, Spring	12	
	99952 0600	Washer, Plain	12	
4	0866 53 020F	Panel, Dashboard-Upper (R.H.D.)	1	
	1524 53 020D	Panel, Dashboard-Upper (L.H.D.)	1	
●	1524 53 020E	Panel, Dashboard-Upper (L.H.D.)	1	Car No. 150526 7/8~○
5	0866 53 029A	Rubber, Edge-Dashboard & Cowl Panel	1	
6	0866 53 970A	Panel, Cowl (R.H.D.)	1	
	0866 74 040	Panel, Cowl (R.H.D.)	1	From Car No. 1 7/11~○
	1524 53 970B	Panel, Cowl (L.H.D.)	1	
	1524 74 040	Panel, Cowl (L.H.D.)	1	From Car No. 1 7/11~○
7	0866 53 979A	Rubber, Seal-Cowl Panel	1	
8	99264 0531B	Fastener, Cowl Panel & Seal Rubber	8	
9	0866 53 981	Bracket, Lock-Bonnet	1	
●	0378 53 100H	Panel, Dashboard-Lower (Automatic R.H.D.) (1552)	1	Car No. 7/8~○
●	0866 53 100G	Panel, Dashboard-Lower (Manual R.H.D.)	1	Car No. 7/8~○
10	99806 0616	Bolt, Lock Bracket & Cowl Panel	4	
	99971 0600	Washer, Spring	4	
	99952 0600	Washer, Plain	4	
11	0866 53 100C	Panel, Dashboard-Lower (Manual) (R.H.D.)	1	
	0866 53 100D	Panel, Dashboard-Lower (Manual) (R.H.D.)	1	Car No. 133676 7/1~○
	0866 53 100E	Panel, Dashboard-Lower (Manual) (R.H.D.)	1	Car No. 148513 7/6~○
●	0866 53 100F	Panel, Dashboard-Lower (Manual) (R.H.D.)	1	Car No. 149635 7/7~○
	0378 53 100C	Panel, Dashboard-Lower (Automatic) (R.H.D.)	1	
	0378 53 100D	Panel, Dashboard-Lower (Automatic) (R.H.D.)	1	Car No. 127396 7/12~○
	0378 53 100E	Panel, Dashboard-Lower (Automatic) (R.H.D.)	1	Car No. 133676 7/1~○
	0378 53 100F	Panel, Dashboard-Lower (Automatic) (R.H.D.)	1	Car No. 148513 7/6~○
●	0378 53 100G	Panel, Dashboard-Lower (Automatic) (R.H.D.)	1	Car No. 149635 7/7~○
	1524 53 100C	Panel, Dashboard-Lower (L.H.D.)	1	
	1524 53 100D	Panel, Dashboard-Lower (L.H.D.)	1	Car No. 148513 7/6~○
●	1524 53 100E	Panel, Dashboard-Lower (L.H.D.)	1	Car No. 7/8~○
12	0866 53 220E	Panel (R), Wheel Apron (R.H.D.)	1	
	0866 53 220F	Panel (R), Wheel Apron (R.H.D.)	1	Car No. 148513 7/6~○
	1524 53 220D	Panel (R), Wheel Apron (L.H.D.)	1	
	1524 53 220E	Panel (R), Wheel Apron (L.H.D.)	1	Car No. 148513 7/6~○
13	0866 54 220B	Panel (L), Wheel Apron (R.H.D.)	1	
	0866 54 220C	Panel (L), Wheel Apron (R.H.D.)	1	Car No. 148513 7/6~○
	1524 54 220B	Panel (L), Wheel Apron (L.H.D.)	1	
	1524 54 220C	Panel (L), Wheel Apron (1558,1559 Excluded)	1	Car No. 140779 7/2~○
	1524 54 220C	Panel (L), Wheel Apron (1558,1559)	1	Car No. 140779 7/2~△
	1524 54 220D	Panel (L), Wheel Apron (L.H.D.)	1	Car No. 148513 7/6~○
●	1524 54 220E	Panel (L), Wheel Apron (L.H.D.)	1	Car No. 7/8~○
14	0866 53 281A	Reinforcement (R), Wheel Apron Panel	1	
15	0866 54 281A	Reinforcement (L), Wheel Apron Panel	1	
16	0866 53 720	Panel (R), Shroud	1	

No.	Part Number	Description	Q'ty	Remarks
17	0868 54 720	Panel (L), Shroud	1	
18	0868 53 750	Panel, Shroud-Upper	1	
19	0868 53 780A	Carrier, Battery	1	
20	99801 0816	Bolt, Battery Carrier & Wheel Apron Panel	4	
	99952 0800	Washer, Plain	4	
21	0868 70 160B	Panel, Front Skirt	1	
	0868 70 160C	Panel, Front Skirt	1	Car No. 133676 7½~○
	0868 70 160D	Panel, Front Skirt	1	Car No. 7/6~○
22	99864 0616	Screw, Skirt & Fender	2	
	99952 0618	Washer, Plain	2	
	99896 0800	Nut, Spring	2	
23	0868 70 120	Panel, Nose	1	
24	0868 70 122	Stud, Nose Panel	12	
25	99806 0614	Bolt, Nose & Skirt	11	
	99952 0600	Washer, Plain	11	
	99971 0600	Washer, Spring	11	
26	0868 70 131A	Bracket, Nose Panel	1	
27	99906 0600	Nut, Nose Panel & Bracket	4	
	99952 0600	Washer, Plain	4	
	99971 0600	Washer, Spring	4	
28	0868 70 180	Plate (R), Guide	1	
29	0868 71 180	Plate (L), Guide	1	
30	99906 0800	Nut, Guide Plate & Nose Panel	8	
	99952 0618	Washer, Plain	8	
	99971 0800	Washer, Spring	8	

No.	Part Number	Description	Q'ty	Remarks
31	0866 70 120A	Panel Cpt, Nose	1	
32	0866 74 200	Panel Nose	1	
33	0866 70 160C	Skirt	1	
34	99906 0600	Nut	4	
	99952 0618	Washer, Plain	4	
	99971 0600	Washer, Spring	4	
35	99864 0616	Screw	2	
	99896 0600	Nut, Spring	2	
36	908067 614	Bolt, Set	6	

BODY PANELS (SIDE, COUPE)

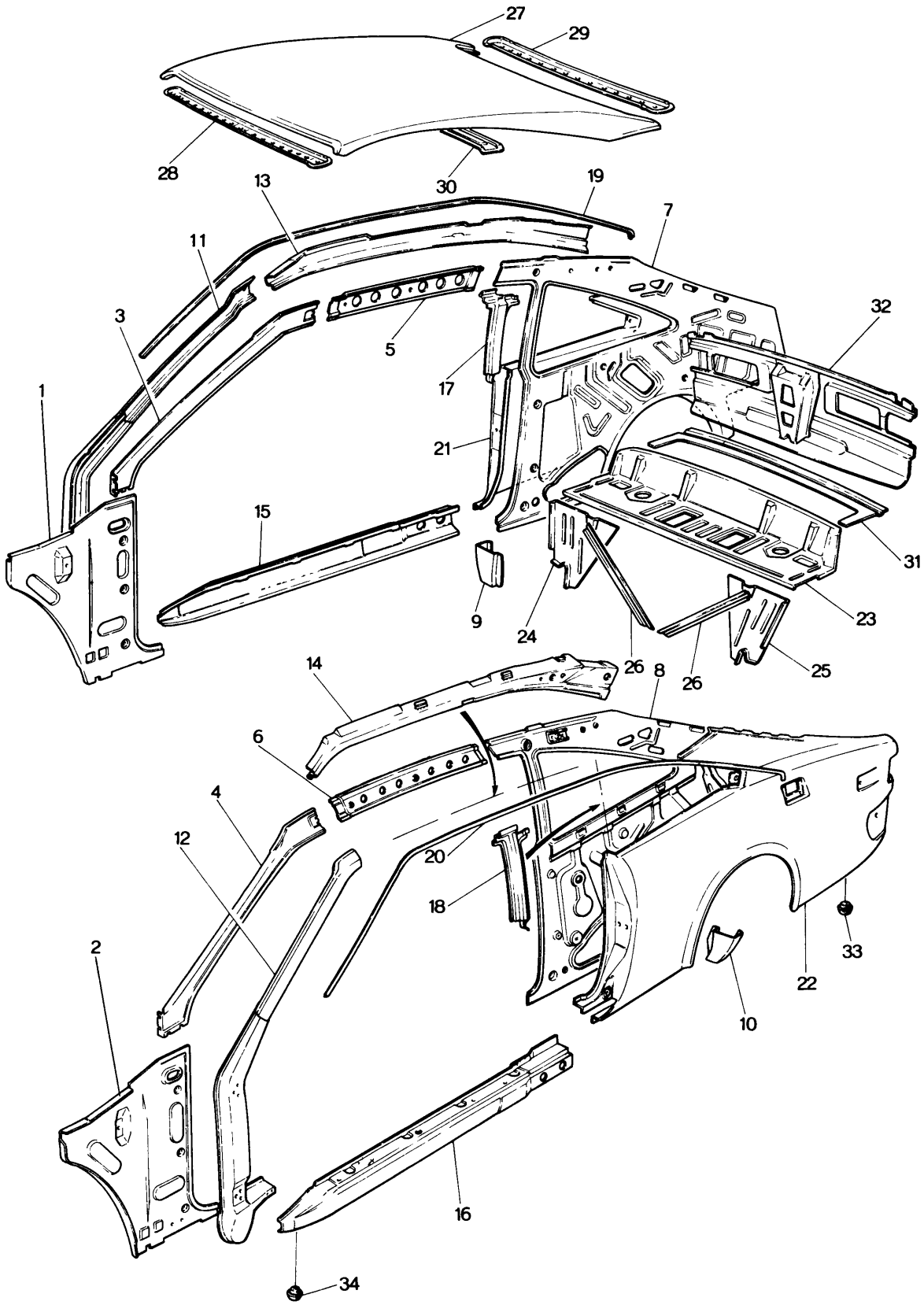

No.	Part Number	Description	Q'ty	Remarks
1	0866 53 320	Panel (R), Cowl Side (R.H.D.)	1	
	1524 53 320A	Panel (R), Cowl Side (L.H.D.)	1	
2	0866 54 320	Panel (L), Cowl Side (R.H.D.)	1	
	1524 54 320A	Panel (L), Cowl Side (L.H.D.)	1	
●	1524 54 320B	Panel (L), Cowl Side (L.H.D.)	1	Car No. 140779 $^{7}/_{2}$~○
3	0376 53 330	Pillar (R), Front Inner	1	
4	0376 54 330	Pillar (L), Front Inner	1	
5	0376 53 340	Rail (R), Roof Inner	1	
6	0376 54 340	Rail (L), Roof Inner	1	
7	0376 53 350B	Panel (R), Quarter Inner	1	1559 Excluded
	1559 53 350A	Panel (R), Quarter Inner	1	1559
8	0376 54 350C	Panel (L), Quarter Inner	1	1559 Excluded
	1559 54 350A	Panel (L), Quarter Inner	1	1559
9	0376 53 391	Plate (R), End-Inner	1	
10	0376 54 391	Plate (L), End-Inner	1	
11	0376 53 410	Pillar (R), Hinge Outer (R.H.D.)	1	
	0376 74 090	Pillar (R), Hinge Outer (R.H.D.)	1	From Car No. 1 $^{71}/_{11}$ ~ ○
	1562 53 410	Pillar (R), Hinge Outer (L.H.D.)	1	
	1562 74 090	Pillar (R), Hinge Outer (L.H.D.)	1	From Car No. 1 $^{71}/_{11}$ ~ ○
12	0376 54 410	Pillar (L), Hinge Outer (R.H.D.)	1	
	0376 74 120	Pillar (L), Hinge Outer (R.H.D.)	1	From Car No. 1 $^{71}/_{11}$ ~ ○
	1562 54 410	Pillar (L), Hinge Outer (L.H.D.)	1	
	1562 74 120	Pillar (L), Hinge Outer (L.H.D.)	1	From Car No. 1 $^{71}/_{11}$ ~ ○
13	0376 53 430	Rail (R), Roof Outer	1	
14	0376 54 430	Rail (L), Roof Outer	1	
15	0380 53 451	Sill (R), Side Outer	1	
16	0380 54 451	Sill (L), Side Outer	1	
17	0376 53 500A	Pillar (R), Center-Outer	1	
18	0376 54 500A	Pillar (L), Center-Outer	1	
19	0376 53 591	Rail (R), Rain	1	
20	0376 54 591	Rail (L), Rain	1	
21	0376 53 600C	Panel (R), Rear Fender	1	
	0376 74 100	Panel (R), Rear Fender	1	From Car No. 1 $^{71}/_{11}$ ~ ○
22	0376 54 600B	Panel (L), Rear Fender	1	
	0376 74 130	Panel (L), Rear Fender	1	From Car No. 1 $^{71}/_{11}$ ~ ○

53 54 BODY PANELS (SIDE, COUPE)

No.	Part Number	Description	Q'ty	Remarks
23	0376 53 810B	Tray, Package	1	
24	0866 53 830A	Brace (R), Side	1	
25	0866 54 830A	Brace (L), Side	1	
26	0866 53 845	Brace, Diagonal	2	
27	0376 53 901	Panel, Roof	1	
	0376 74 030	Panel, Roof	1	From Car No. 1 $^{7}1/_{11}$ ~ O
28	0376 53 920	Header, Front	1	
29	0376 53 941	Header, Rear	1	
30	0376 53 950	Reinforcement, Roof	1	
31	0376 53 991	Panel, Rear Deck	1	
	0376 74 050	Panel, Rear Deck	1	From Car No. 1 $^{7}1/_{11}$ ~ O
32	1527 70 050	Panel, Rear End	1	
33	0259 53 455	Plug, Drain	6	
34	0824 56 989	Valve, Check-Side Sill	2	

BODY PANELS (SIDE, SEDAN)

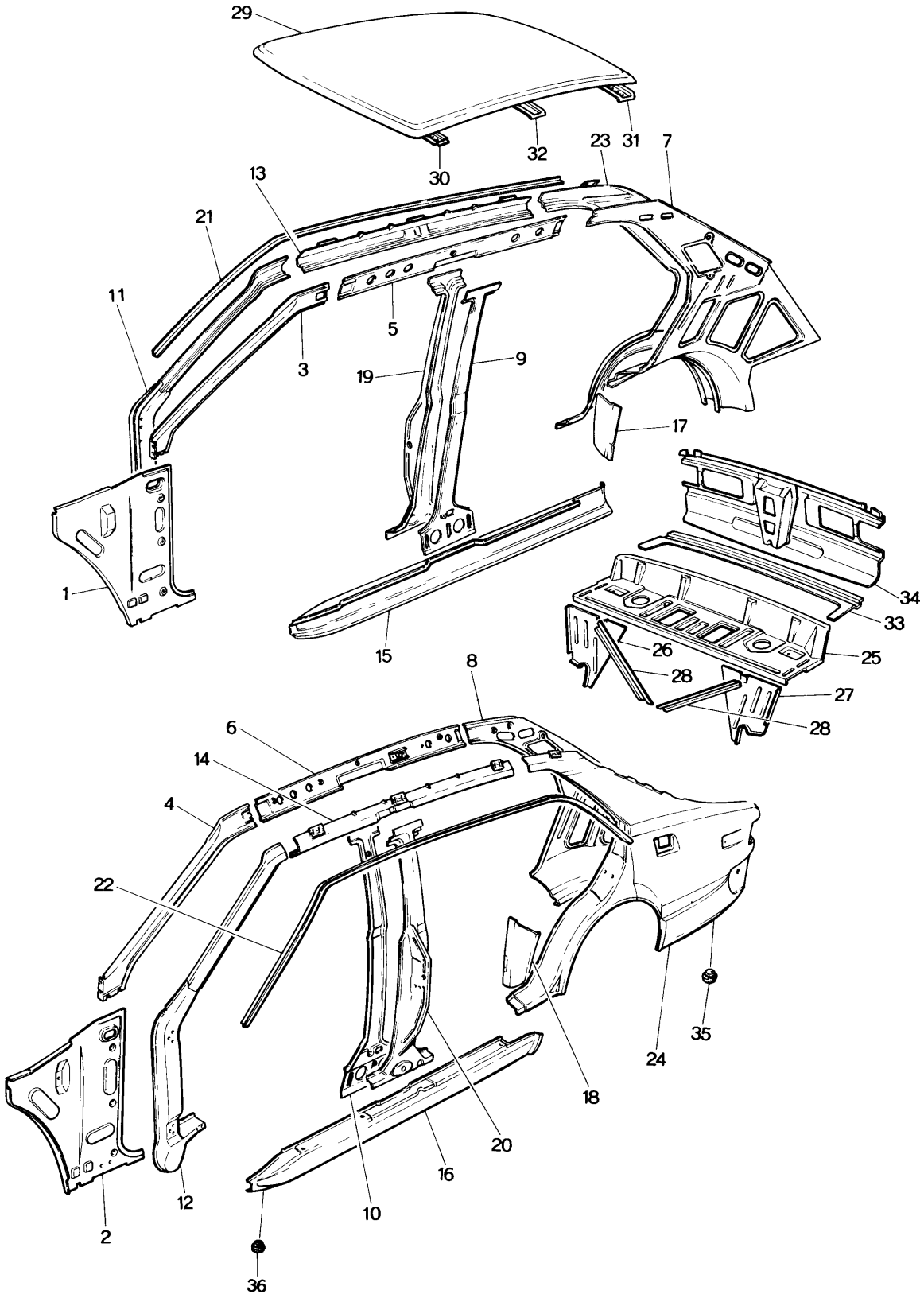

No.	Part Number	Description	Q'ty	Remarks
1	0866 53 320	Panel (R), Cowl Side (R.H.D.)	1	
	1524 53 320A	Panel (R), Cowl Side (L.H.D.)	1	
2	0866 54 320	Panel (L), Cowl Side (R.H.D.)	1	
	1524 54 320A	Panel (L), Cowl Side (L.H.D.)	1	
	1524 54 320B	Panel (L), Cowl Side (L.H.D.)	1	Car No. 140779 ~○
3	0866 53 330	Pillar (R), Front Inner	1	
4	0866 54 330	Pillar (L), Front Inner	1	
5	0866 53 340A	Rail (R), Roof Inner	1	1558 Excluded
	1504 53 340B	Rail (R), Roof Inner	1	1558
6	0866 54 340	Rail (L), Roof Inner	1	1558 Excluded
	1504 54 340A	Rail (L), Roof Inner	1	1558
7	~~0866 53 350A~~	~~Pillar (R), Rear Inner~~	~~1~~	
	1531 53 350C	Pillar (R), Rear Inner ~~(For E.C.E.)~~	1	
8	~~0866 54 350A~~	~~Pillar (L), Rear Inner~~	~~1~~	
	1531 54 350C	Pillar (L), Rear Inner ~~(For E.C.E.)~~	1	
9	0866 53 381	Pillar (R), Center-Inner	1	
10	0866 54 381	Pillar (L), Center-Inner	1	
11	0370 53 410	Pillar (R), Hinge Outer	1	
12	0866 54 410	Pillar (L), Hinge Outer (R.H.D.)	1	
	1524 54 410	Pillar (L), Hinge Outer (L.H.D.)	1	
13	0866 53 430	Rail (R), Roof Outer	1	
14	0866 54 430	Rail (L), Roof Outer	1	
15	0366 53 451	Sill (R), Side Outer	1	
16	0366 54 451	Sill (L), Side Outer	1	
17	0866 53 452	Plate (R), Filler	1	
18	0866 54 452	Plate (L), Filler	1	
19	0866 53 500	Pillar (R), Center-Outer	1	
20	0866 54 500	Pillar (L), Center-Outer	1	
21	0866 53 591	Rail (R), Rain	1	
22	0866 54 591	Rail (L), Rain	1	

53 54 BODY PANELS (SIDE, SEDAN)

No.	Part Number	Description	Q'ty	Remarks
23	0386 53 600	Panel (R), Rear Fender (R.H.D.)	1	
	0866 53 600B	Panel (R), Rear Fender (L.H.D.)	1	
24	0386 54 600	Panel (L), Rear Fender (R.H.D.)	1	
	0866 54 600A	Panel (L), Rear Fender (L.H.D.)	1	
25	0866 53 810B	Tray, Package	1	
26	0866 53 830A	Brace (R), Side	1	
27	0866 54 830A	Brace (L), Side	1	
28	0866 53 845	Brace, Diagonal	2	
29	0866 53 901	Panel, Roof	1	
●	0866 74 030	Panel, Roof	1	From Car No. 1 7X11~C
30	0866 53 920	Header, Front	1	
31	0866 53 941	Header, Rear	1	
32	0866 53 950	Reinforcement, Roof	1	
33	0866 53 991	Panel, Rear Deck	1	
●	0866 74 050	Panel, Rear Deck	1	From Car No. 1 7X11~C
34	1524 70 050	Panel, Rear End	1	
35	0259 53 455	Plug, Drain (Side Seal Outer··· 6, Rear Fender···2)	8	
36	0118 56 242B	Plug, Drain	2	

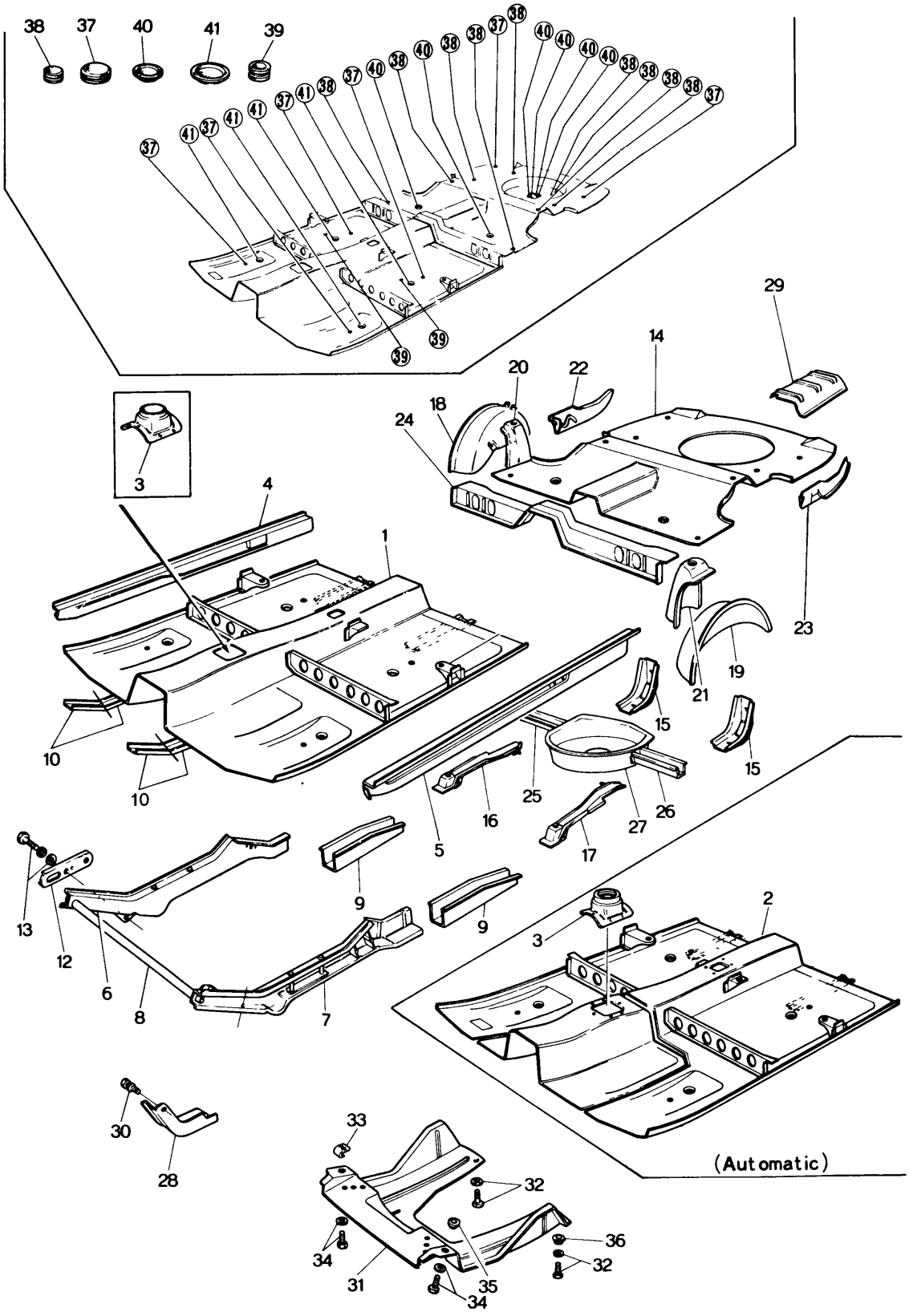
38
37
40
41
39
3
4
1
10
10
5
16
25
26
27
17
15
15
19
21
23
29
14
20
22
18
24
9
9
13
12
6
8
7
2
3
(Automatic)
30
28
33
32
34
31
35
34
36
32

No.	Part Number	Description	Q'ty	Remarks
1	0866 56 010G	Pan, Front Floor, Manual (R.H.D.)	1	
●	0866 56 010I	Pan, Front Floor, Manual (R.H.D.)	1	Car No. 150526 ⁷²⁄₈~○
●	0870 56 010	Pan, Front Floor, Manual (R.H.D.)	1	Car No. ⁷²⁄₉~○
	1562 56 010D	Pan, Front Floor (L.H.D.)	1	
●	1562 56 010E	Pan, Front Floor (L.H.D.)	1	Car No. 150526 ⁷²⁄₈~○
●	1562 56 010F	Pan, Front Floor (L.H.D.)	1	Car No. ⁷²⁄₉~○
2	0871 56 010G	Pan, Front Floor (Automatic)	1	
3	0866 56 981	Insulator	1	
Ⓝ	0367 68 832A	Set, Boot	6	
Ⓝ	99864 0512	Screw, Tapping	1	
4	0376 56 080B	Sill (R), Side-Inner (Coupe)	1	
●	0376 56 080C	Sill (R), Side-Inner (Coupe)	1	Car No. 133210 ⁷²⁄₁~○
	0866 56 080B	Sill (R), Side-Inner (Sedan)	1	
●	0866 56 080C	Sill (R), Side-Inner (Sedan)	1	Car No. 133210 ⁷²⁄₁~○
5	0376 56 580A	Sill (L), Side-Inner (Coupe)	1	
	0866 56 580A	Sill (L), Side-Inner (Sedan)	1	
6	1511 56 110D	Frame (R), Front (R.H.D.)	1	
	1511 56 110E	Frame (R), Front (R.H.D.)	1	Car No. 135808 ⁷²⁄₂~○
	1511 56 110F	Frame (R), Front (R.H.D.)	1	Car No. 148513 ⁷²⁄₆~○
	1524 56 110F	Frame (R), Front (L.H.D.)	1	
	1524 56 110G	Frame (R), Front (L.H.D.)	1	Car No. 135808 ⁷²⁄₂~○
	1524 56 110H	Frame (R), Front (L.H.D.)	1	Car No. 148513 ⁷²⁄₆~○
7	1511 56 610	Frame (L), Front (R.H.D.)	1	
	1511 56 610A	Frame (L), Front (R.H.D.)	1	Car No. 135808 ⁷²⁄₂~○
	1511 56 610B	Frame (L), Front (R.H.D.)	1	Car No. 148513 ⁷²⁄₆~○
	1524 56 610C	Frame (L), Front (L.H.D.)	1	
	1524 56 610D	Frame (L), Front (L.H.D.)	1	Car No. 135808 ⁷²⁄₂~○
	1524 56 610E	Frame (L), Front (L.H.D.)	1	Car No. 148513 ⁷²⁄₆~○
8	0866 56 171	Member No. 1, Cross	1	
9	0866 56 181A	Frame "B", Front (L)	1	
	0866 56 180	Frame "B", Front (R)	1	
10	1524 56 117	Reinforcement "A"	2	
	1524 56 118	Reinforcement "B"	2	
12	0866 78 541	Hook, Front & Rear Frame	2	
13	99781 1028	Bolt, Hook	2	
	99951 1022	Washer, Plain	2	
	99971 1000	Washer, Spring	2	
14	0866 56 210C	Pan, Rear Floor	1	
15	0866 56 215	Bracket, Bumper	2	
16	0866 56 310A	Frame (R), Rear	1	
17	0866 56 810A	Frame (L), Rear	1	
18	0866 56 330	Panel (R), Wheel House	1	
19	0866 56 830	Panel (L), Wheel House	1	

No.	Part Number	Description	Q'ty	Remarks
20	0866 56 350	Bracket (R), Damper	1	
21	0866 56 850	Bracket (L), Damper	1	
22	0866 56 381	Panel (R), Floor Side (Sedan)	1	
	0376 56 381	Panel (R), Floor Side (Coupe)	1	
23	0866 56 881	Panel (L), Floor Side (Sedan)	1	
	0376 56 881	Panel (L), Floor Side (Coupe)	1	
24	0866 56 400	Member No. 3, Cross	1	
25	0866 56 450A	Member No. 4 (R), Cross	1	
26	0866 56 470A	Member No. 4 (L), Cross	1	
27	0866 56 481A	Pan, Spare Tire	1	
28	0866 56 701	Insulator No. 1 (Manual)	1	
●	0866 56 701	Insulator No. 1 (Manual)	1	Car No. 150526 $^{73}/_{8}$~○
	0871 56 701	Insulator No. 1 (Automatic)	1	
	0871 56 701A	Insulator No. 1 (Automatic)	1	Car No. 127396 $^{71}/_{12}$ ~ ○
29	0866 56 702	Insulator No. 2	1	
30	99804 0614	Bolt, Insulator	7	
	99952 0600	Washer, Plain	7	
	99971 0600	Washer, Spring	7	
31	0866 56 901B	Cover, Under	1	
●	0866 56 901C	Cover, Under	1	Car No. 149635 $^{73}/_{7}$~○
32	99785 0820	Bolt, Under Cover	4	
	99952 0618	Washer, Plain	4	
33	0820 56 905	Nut, Spring	4	
34	99863 0516	Screw	4	
	99952 0500	Washer, Plain	4	
35	0820 56 906	Spacer	2	
36	0223 52 007	Spacer	2	
37	0118 56 241	Plug, Drain	6	
38	0118 56 242B	Plug, Drain	Sedan 10 Coupe 11	

No.	Part Number	Description	Q'ty	Remarks
39	0208 56 615	Plug, Drain (Sedan)	2	
40	0810 56 639	Cover, Service Hole	6	
41	0866 56 971	Cover, Hole	4	
● Ⓝ	0866 56 489	Pad (Pan, Rear Floor)	4	Car No. 131172 7½~Added Anew

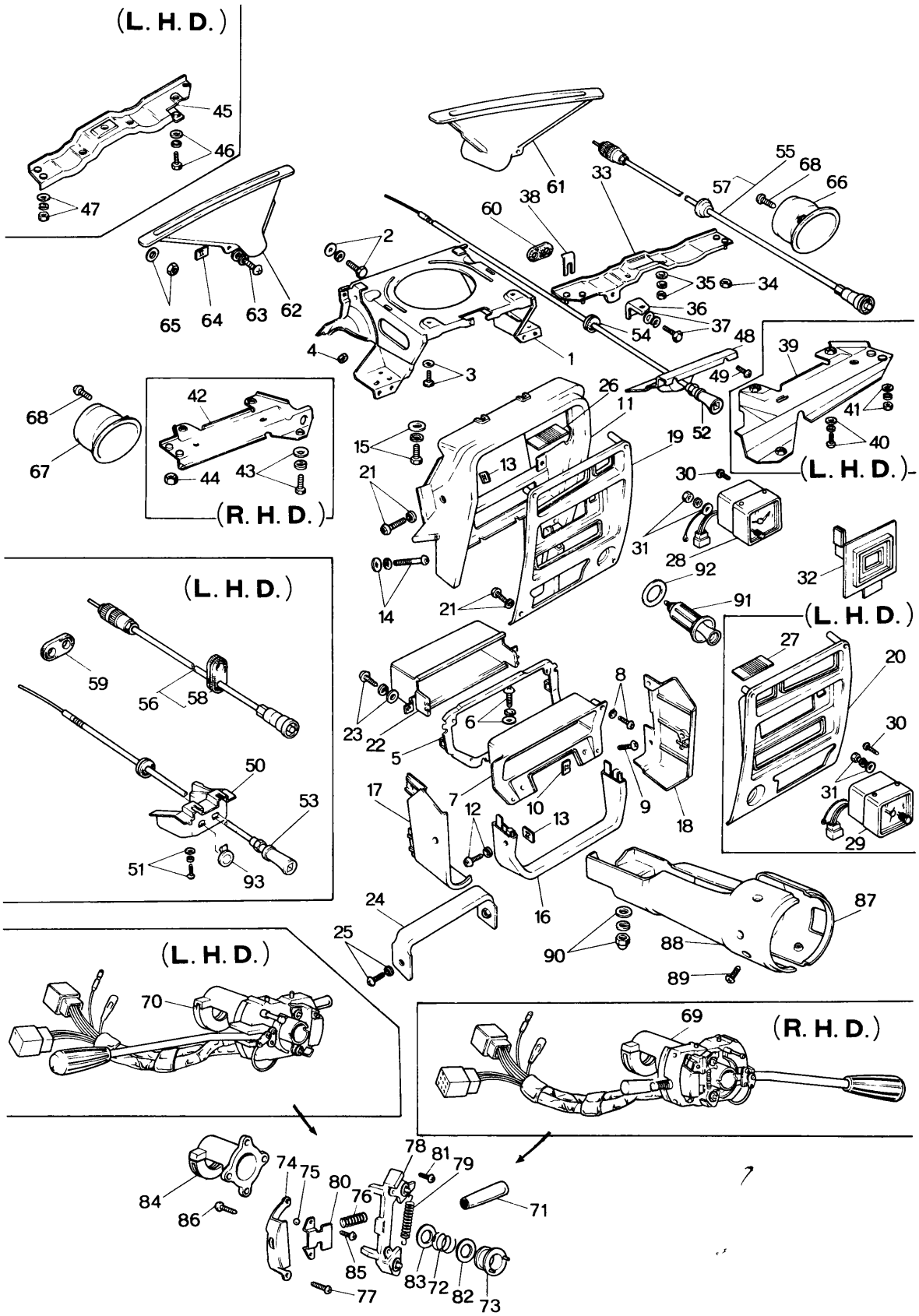
(L. H. D.)
45
46
47
65
64
63
62
61
38
60
33
55
68
57
66
2
35
34
36
37
54
48
4
3
1
49
52
39
41
40
(L. H. D.)
68
67
42
44
43
(R. H. D.)
26
11
15
21
13
19
30
31
28
92
91
32
14
21
(L. H. D.)
59
56
58
50
53
51
93
(L. H. D.)
27
20
30
31
29
23
22
5
6
8
9
18
17
7
12
10
13
16
24
25
87
88
90
89
(L. H. D.)
70
(R. H. D.)
69
84
86
74
75
80
76
78
81
79
71
85
77
83
72
82
73

No.	Part Number	Description	Q'ty	Remarks
1	0866 55 100F	Bracket, Center Panel	1	
2	99806 0818	Bolt, Center Panel Bracket	2	
	99952 0822	Washer, Plain	2	
	99971 0800	Washer, Spring	2	
3	99805 0816	Bolt, Center Panel Bracket	2	
	99952 0800	Washer, Plain	2	
	99971 0800	Washer, Spring	2	
4	99940 0802	Nut, Self Lock-Center Panel Bracket	2	
5	0866 55 360C	Holder, Grille	1	
6	99838 0616	Screw	1	
	99952 0618	Washer, Plain	1	
	99971 0600	Washer, Spring	1	
7	0866 55 365B	Body, Grille	1	
	0866 55 365C	Body, Grille	1	Car No. 142300 7/3 ~ ◯
Ⓝ	0866 55 368	Ornament, Tuner	1	Car No. 142300 7/3 ~ Added Anew
8	99838 0412	Screw, Grille Body	2	
	99971 0400	Washer, Spring	2	
9	99861 0414B	Screw, Grille Body	2	
10	99869 0400	Nut, Spring-Grille Body	2	
11	0865 55 401D	Hood No. 1 ~~(L.H.D.)~~	1	◯
	~~0866 55 401B~~	~~Hood No. 1 (R.H.D.)~~	~~1~~	~~◯~~
12	99862 0525B	Screw, Hood No. 1	4	
	99967 0500B	Washer	4	
13	0820 56 905	Nut, Spring-Hood No. 1 & No. 2	4	
14	99743 0650	Screw, Hood No. 1	2	
	99952 0600	Washer, Plain	2	
	99971 0600	Washer, Spring	2	
15	99797 0618	Bolt, Hood No. 1	2	

No.	Part Number	Description	Q'ty	Remarks
	99952 0618	Washer, Plain	2	
	99971 0600	Washer, Spring	2	
16	0865 55 402B	Hood No. 2	1	©
	~~0865 55 402A~~	~~Hood No. 2~~	~~1~~	~~©~~
17	0865 55 403B	Hood No. 3 (R)	1	©
	~~0865 55 403A~~	~~Hood No. 3 (R)~~	~~1~~	~~©~~
18	0865 55 404A	Hood No. 3 (L)	1	©
	~~0865 55 404A~~	~~Hood No. 3 (L)~~	~~1~~	~~©~~
19	0866 55 405C	Plate, Center (R.H.D.)	1	
20	1562 55 405	Plate, Center (L.H.D.)	1	
21	99863 0510	Screw, Center Plate	4	
	99952 0600	Washer, Plain	6	
22	0866 55 406B	Box, Hood Center	1	©
23	99838 0412	Screw, Hood Box	2	
	99952 0400	Washer, Plain	2	
	99971 0400	Washer, Spring	2	
24	0866 55 590	Stiffener	1	
25	99837 0525B	Screw	2	
	99987 0500	Washer	2	
● 26	0866 55 412A	Lens, Illumination ~~(R.H.D.)~~	1	
27	~~1562 55 412~~	~~Lens, Illumination (L.H.D.)~~	~~1~~	
28	0866 55 710	Clock, Auto (R.H.D.)	1	
29	1562 55 710	Clock, Auto (L.H.D.)	1	
30	99831 0416B	Screw, Auto Clock	4	
31	99906 0500	Nut, Auto Clock	1	
	99952 0516	Washer, Plain	1	

No.	Part Number	Description	Q'ty	Remarks
	99971 0500	Washer, Spring	1	
32	0866 55 720A	Ornament, Without Auto Clock (R.H.D.)	1	
	1561 55 720A	Ornament, Without Auto Clock (L.H.D.)	1	
33	0866 55 210B	Member (R), Lower	1	
34	99840 0602	Nut, Member	4	
35	99906 0800	Nut, Member	1	
	99952 0800	Washer, Plain	1	
	99971 0800	Washer, Spring (R.H.D.)	1	
36	0866 55 215A	Bracket, Meter	1	
37	99833 0618	Bolt, Meter Bracket	2	
	99952 0618	Washer, Plain	2	
	99971 0600	Washer, Spring	2	
38	0866 55 216	Shim (t=1.0)		
	0866 55 217	Shim (t=2.0) Selective use	1	
	0866 55 218	Shim (t=3.2)		
39	1524 55 230B	Member (R), Lower	1	
40	99797 0614	Bolt, Member	1	
	99952 0600	Washer, Plain	1	
	99971 0600	Washer, Spring (L.H.D.)	1	
41	99906 0600	Nut, Member	2	
	99952 0600	Washer, Plain	2	
	99971 0600	Washer, Spring	2	
42	0866 55 230D	Member (L), Lower	1	
43	99806 0614	Bolt, Member	2	
	99952 0618	Washer, Plain	2	
	99971 0600	Washer, Spring (R.H.D.)	2	

No.	Part Number	Description	Q'ty	Remarks
44	99940 0602	Nut, Member	2	
45	1524 55 210B	Member (L), Lower	1	
46	99797 0616	Bolt, Member	1	
	99951 0618	Washer, Plain	1	
	99971 0600	Washer, Spring (L.H.D.)	1	
47	99906 0600	Nut, Member	4	
	99951 0618	Washer, Plain	4	
	99971 0600	Washer, Spring	4	
48	0370 55 331A	Bracket, Choke (R.H.D.)	1	
49	99834 0535	Screw, Choke Bracket (R.H.D.)	2	
50	1524 55 330A	Bracket, Choke	1	
51	99839 0520B	Screw, Choke Bracket (L.H.D.)	2	
	99952 0500B	Washer, Plain	2	
	99971 0500	Washer, Spring	2	
52	0866 60 050	Cable, Choke (R H.D.)	1	
	0871 60 050B	Cable, Choke (R.H.D. Automatic T/mission)	1	
53	1562 60 050	Cable, Choke (L H.D.)	1	
54	0305 60 053	Protector, Choke Cable (R.H.D.)	1	
55	0866 60 070	Cable, Speedometer (R.H.D.)	1	
●	0866 60 070A	Cable, Speedometer (R.H.D.)	1	Car No. 152249 7/8~○
56	1562 60 070	Cable, Speedometer (L.H.D.)	1	
57	0866 60 071	Grommet (R.H.D.)	1	
58	0370 60 071	Grommet (L.H.D.)	1	
Ⓝ	9968 60800	Protector, Speedometer Cable	1	
59	0370 60 073A	Grommet (L.H.D.)	1	
	0370 60 073B	Grommet (L.H.D.)	1	Car No. 132360 7 1/12~△
60	0866 60 073	Grommet (R.H.D.)	1	

No.	Part Number	Description	Q'ty	Remarks	
61	0866 60 101	Nozzle (R), Defroster	1		
62	0866 60 102	Nozzle (L), Defroster	1		
63	99863 0516	Bolt, Defroster Nozzle	2		
	99952 0518	Washer, Plain	2		
	99971 0500	Washer, Spring	2		
64	99896 0500	Nut, Spring-Defroster Nozzle	2		
65	99940 0501	Nut, Defroster Nozzle	4		
	99952 0516	Washer	4		
66	0866 60 120	Guide (R), Ventilator	1		
67	0866 60 130	Guide (L), Ventilator	1		
68	99869 0412	Screw, Ventilator Guide	4		
69	~~0866 60 250B-00~~	Switch, Combination (R H D) (Black)	1		©
●	1511 60 250	Switch, Combination (R.H.D.)	1	Car No. 133210 ⅞~△	
70	1524 60 250A-00	Switch, Combination (L.H D.) (Black)	1		©
	1531 60 250A-00	Switch, Combination (L H D.) (Black) Without Hazard Switch For France	1		©
71	0866 60 251	Knob	1		
72	0317 60 252	Spring, Cancel Cam	1		
73	0317 60 253	Cam, Cancel	1		
74	0317 60 254	Bracket, Fixing	1		
75	0317 60 255	Ball	1		
76	0317 60 256	Spring, Arm Set	1		
77	0317 60 257	Screw, Bracket	2		
78	0317 60 258	Arm	1		
79	0317 60 259	Spring, Ratchet	1		
80	0317 60 261	Plate, Set	1		

No.	Part Number	Description	Q'ty	Remarks
81	0317 60 262	Screw, Set Plate	2	
82	0866 60 263	Washer "A"	1	
83	0866 60 264	Washer "B"	1	
84	0866 60 265A	Band	1	
85	0317 60 266	Screw	2	
86	0866 60 267	Screw, Light Switch	2	
87	0866 60 335A	Cover (R), Column (R.H.D.)	1	
	1524 60 335A	Cover (R), Column (L.H.D.)	1	
	1531 60 335	Cover (R), Column, Without Hazard Switch	1	
88	0866 60 345A	Cover (L), Column (R.H.D.)	1	
	1524 60 345A	Cover (L), Column (L.H.D.)	1	
89	99832 04088	Screw, Column Cover	4	
90	99945 0500B	Nut, Cap-Column Cover	1	
	99952 0500B	Washer, Plain	1	
	99971 0500	Washer, Spring	1	
91	0866 60 720	Lighter, Cigar	1	
92	0305 60 715	Shield, Heat-Cigar Lighter	1	
93	0259 55 951	Cover, Hole, Fog Lamp Switch	1	
● Ⓝ	0370 55 351	Sheet-Meter (R.H.D.)	1	Car No. 141928 72/3~Added Anew
● Ⓝ	1524 55 351	Sheet-Meter (L.H.D.)	1	

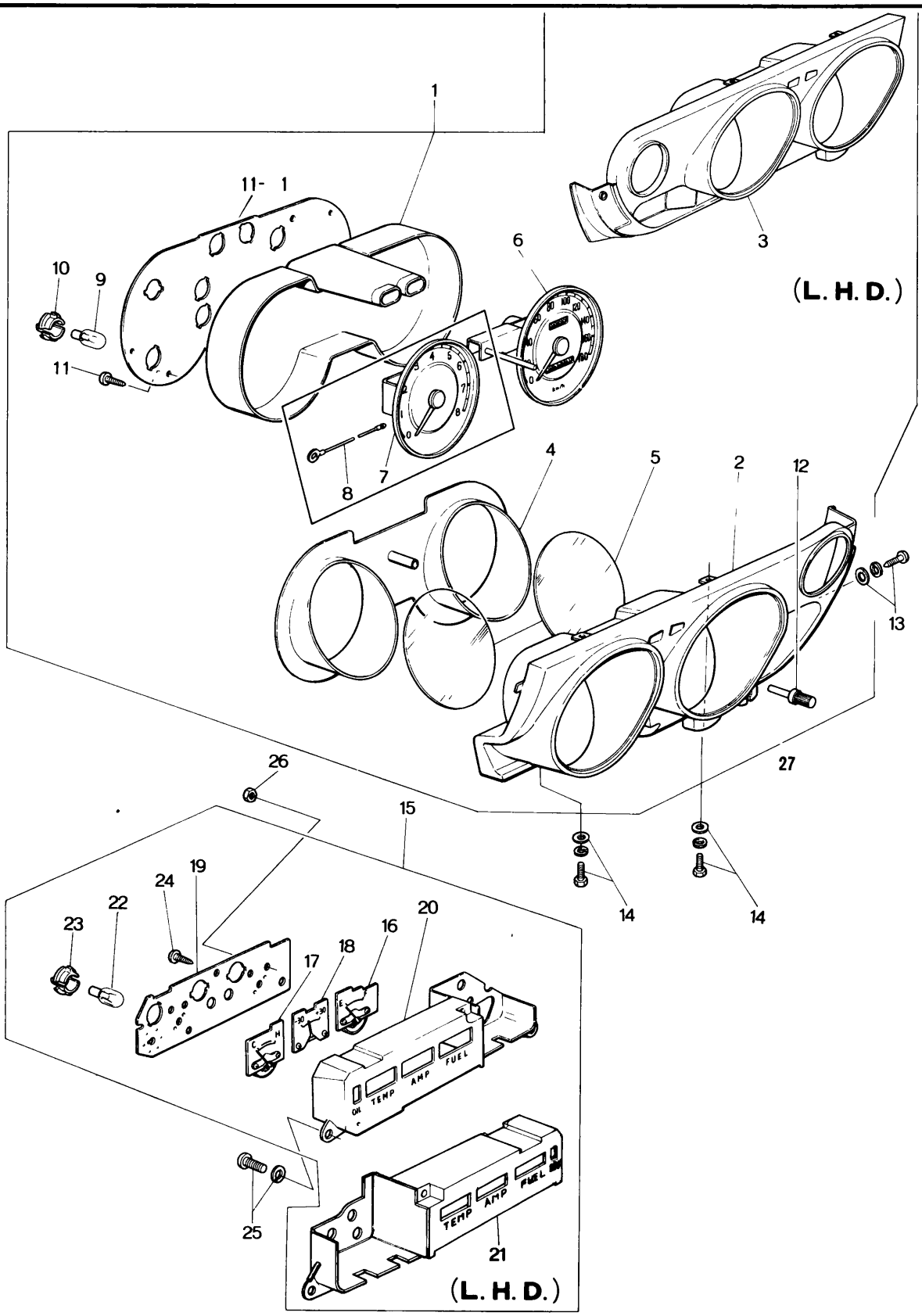
1
11- 1
10
9
11
6
8
7
4
5
2
12
3
(L. H. D.)
13
27
26
15
14
14
19
24
22
23
16
20
17
18
25
21
TEMP
AMP
FUEL
(L. H. D.)

No.	Part Number	Description	Q'ty	Remarks	
1	0865 55 430D	Meter Set (Km) (R.H.D.)	1		©
●	0865 55 430E	Meter Set (Km) (R.H.D.)	1	1555～1557 Car No.	～○
●	1553 55 430	Meter Set (Km) (R.H.D.)	1	1550～1554 Car No.	～△
	1554 55 530B	Meter Set (Mile) (R.H.D.)	1		©
●	1554 55 530C	Meter Set (Mile) (R.H.D.)	1	1555～1557 Car No.	～○
●	1553 55 530	Meter Set (Mile) (R.H.D.)	1	1550～1554 Car No.	～△
	1562 55 430C	Meter Set (Km) Arctic Spec. Model (L.H.D.)	1		©
	1568 55 530C	Meter Set (Mile) Arctic Spec. Model (L.H.D.)	1		©
2	0370 75 010	Hood (R.H.D.)	1		©
●	0370 75 010A	Hood (R.H.D.)	1	Car No. ～△	
3	1524 75 010	Hood (L.H.D.)	1		©
4	0866 75 011	Plate, Window	1		
5	0866 75 013	Glass, Window	2		
6	0866 75 021	Meter, Speed (Km) (R.H.D.)	1		
	1514 75 021	Meter, Speed (Mile) (R.H.D.)	1		
	1562 75 021	Meter, Speed (Km) (L.H.D.)	1		
	1514 75 021	Meter, Speed (Mile) (L.H.D.)	1		
7	0866 75 026	Tachometer	1		
8	0866 75 028	Wire, Lead-Tachometer	1		
9	99701 6030	Bulb	9		
10	0259 55 261	Socket	9		
11	0710 75 436	Screw, Tapping	3		
● 11-1	0866 75 025	Circuit, Print	1	From Car No. 1	
12	0370 75 018	Knob, Trip	1		©
Ⓝ	0866 75 025	Plate, Print	1		
13	99833 0612	Screw, Meter	3		
	99952 0618	Washer, Plain	3		
	99971 0600	Washer, Spring	3		
14	99787 0630	Bolt, Meter	2		
	99952 0618	Washer, Plain	2		
	99971 0600	Washer, Spring	2		

METER

No.	Part Number	Description	Q'ty	Remarks
15	0866 55 460C	Meter, Combination (R.H.D.)	1	
	1562 55 460B	Meter, Combination (L.H.D.)	1	
16	0866 75 122A	Meter, Fuel (R.H.D.)	1	
	1562 75 122A	Meter, Fuel (L.H.D.)	1	
17	0866 75 123A	Thermometer (R.H.D.)	1	
	1562 75 123A	Thermometer (L.H.D.)	1	
18	0866 75 124A	Ammeter (R.H.D.)	1	
	1562 75 124A	Ammeter (L.H.D.)	1	
19	0866 75 125	Plate, Print (R.H.D.)	1	
●	1562 75 125	Plate, Print (L.H.D.)	1	
20	0866 75 200A	Case (R.H.D.)	1	
21	1562 75 200A	Case (L.H.D.)	1	
22	99701 6030	Bulb	3	
23	0259 55 261	Socket	3	
24	0275 75 140	Screw, Tapping	4	
25	99863 0512	Screw, Tapping - Combination Meter	3	
	~~99952 0500~~	~~Washer, Plain~~	~~3~~	
26	99940 0400	Nut, Combination Meter	3	
● 27	1510 75 040	Resister - Panel Light (For Australia)	1	Car No. ~~73~~~ Added Anew

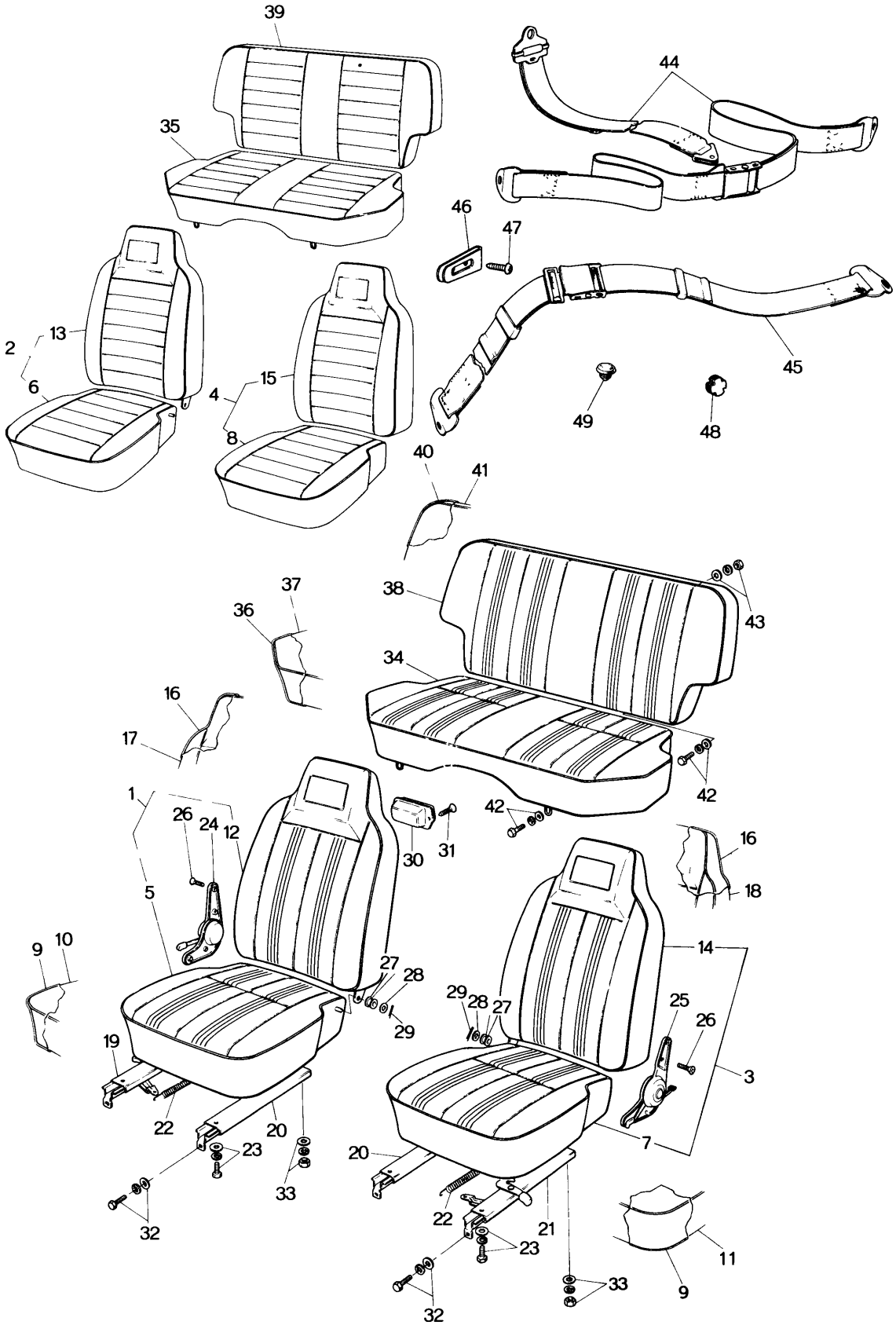
39
35
44
46
47
2
13
6
15
4
8
45
49
48
40
41
37
36
38
43
34
16
17
42
1
26
24
12
30
31
42
16
18
5
9
10
27
28
29
29
28
27
25
26
14
3
19
22
20
23
33
32
20
22
21
23
33
32
7
11
9

No.	Part Number	Description	Q'ty	Remarks		
	When ordering the following Seat & Trim					
	Note : 1, Add					
	-03 (Black) -12 (Brown) -13 (Grayish Yellow)					
	after the parts number as color code nos.					
1	~~1553 57 100~~	~~Seat (Frt., R) (R.H.D.), With Ash Tray~~	~~1~~			©
2	1554 57 100	Seat (Frt., R) (R.H.D.)	1			©
	1562 57 100	Seat (Frt., R) (L.H.D.)-Arctic Spec.	1			©
●	1562 57 100A	Seat (Frt., R) (L.H.D.) - Arctic Spec.	1	Car No.	7/8~○	©
	1568 57 100	Seat (Frt., R) (L.H.D.)	1			©
3	~~1553 57 150~~	~~Seat (Frt., L) (R.H.D.)~~	~~1~~			~~©~~
4	1554 57 150	Seat (Frt., L) (R.H.D.)	1			©
	1562 57 150	Seat (Frt., L) (L.H.D.)-Arctic Spec.	1			©
●	1562 57 150A	Seat (Frt., L) (L.H.D.) - Arctic Spec.	1	Car No.	7/8~○	©
	1568 57 150	Seat (Frt., L) (L.H.D.)	1			©
5	~~1532 88 110~~	~~Cushion (R), Seat~~	~~1~~			©
6	1562 88 110	Cushion (R), Seat-Arctic Spec.	1			©
	1568 88 110	Cushion (R), Seat	1			©
7	~~1532 88 160~~	~~Cushion (L), Seat~~	~~1~~			©
8	1562 88 160	Cushion (L), Seat-Arctic Spec.	1			©
	1568 88 160	Cushion (L), Seat	1			©
9	0259 88 259	Cover, Top	1			
10	~~0368 88 111~~	~~Trim (R), Cushion~~	~~1~~			©
	1562 88 111	Trim (R), Cushion-Arctic Spec.	1			©
	0866 88 111	Trim (R), Cushion	1			©

No.	Part Number	Description	Q'ty	Remarks	
11	~~0866 88 161~~	~~Trim (L), Cushion~~	~~1~~		©
	1562 88 161	Trim (L), Cushion-Arctic Spec.	1		©
	0866 88 161	Trim (L), Cushion	1		©
12	~~0866 88 130~~	~~Seat (R), Back~~	~~1~~		©
13	1562 88 130	Seat (R), Back-Arctic Spec.	1		©
	0866 88 130	Seat (R), Back	1		©
14	~~0866 88 180~~	~~Seat (L), Back~~	~~1~~		©
15	1562 88 180	Seat (L), Back-Arctic Spec.	1		©
	0866 88 180	Seat (L), Back	1		©
16	0866 88 105	Cover, Top	2		
17	~~0866 88 131~~	~~Trim (R), Back Seat~~	~~1~~		
	1562 88 131	Trim (R), Back Seat-Arctic Spec.	1		
	0866 88 131	Trim (R), Back Seat	1		
18	~~0866 88 181~~	~~Trim (L), Back Seat~~	~~1~~		
	1562 88 181	Trim (L), Back Seat-Arctic Spec.	1		
	0866 88 181	Trim (L), Back Seat	1		
19	0866 88 102	Adjuster No. 1	1		
20	0866 88 103	Adjuster No. 2	2		
21	0866 88 152	Adjuster No. 3	1		
22	0866 88 123	Spring, Return	2		
23	99801 0816	Bolt, Adjuster	8		
	99952 0816	Washer, Plain	8		
	99971 0800	Washer, Spring	8		
24	0866 88 101	Knuckle (R) (R.H.D.)	1		
	1562 88 101	Knuckle (R) (L.H.D.) With Foot Pedal	1		

No.	Part Number	Description	Q'ty	Remarks	
25	0376 88 151	Knuckle (R.H.D.) With Foot Pedal	1		
	0866 88 151	Knuckle (L.H.D.)	1		
26	2155 57 109	Screw, Knuckle	8		
27	0866 57 105	Bush	2		
28	0259 57 105	Washer	2		
29	99221 3015	Pin, Split	2		
30	0259 68 250	Tray, Ash	1		
31	99864 0406	Screw, Ash Tray	2		
32	99785 0825	Bolt, Front Seat	4		
	99952 0822	Washer, Plain	4		
	99971 0800	Washer, Spring	4		
33	99901 0800	Nut, Front Seat	4		
	99952 0822	Washer, Plain	4		
	99971 0800	Washer, Spring	4		
34	0375 57 200	Cushion, (Rr.), Seat	1		©
35	0376 57 200	Cushion (Rr.), Seat	1		©
	1562 57 200	Cushion (Rr.), Seat-Arctic Spec.	1		©
36	0866 88 375	Cover, Top	1		
37	~~0375 88 201~~	~~Trim~~	~~1~~		©
	0376 88 201	Trim	1	1553, 1554, 1556, 1557, 1568	©
	1562 88 201	Trim, Arctic Spec.	1		©
	0866 88 201	Trim	1	1556	©

57 SEAT (COUPE)

No.	Part Number	Description	Q'ty	Remarks
● 38	0370 57 250	Seat (Rr.), Back	1	©
● 39	0866 57 250	Seat (Rr.), Back	1	©
	1562 57 250	Seat	1	©
40	0259 88 229	Cover, Top	1	
41	~~0370 88 251~~	~~Trim~~	~~1~~	~~©~~
	0866 88 251	Trim	1	©
	1562 88 251	Trim, Arctic Spec.	1	©
42	99785 0825	Bolt, Rear Seat	4	
	99971 0800	Washer, Spring	4	
	0317 57 015	Washer	4	
43	99901 0800	Nut, Rear Seat Back	2	
	99952 0822	Washer, Plain	2	
	99971 0800	Washer, Spring	2	
44	0820 57 900B	Belt, Front Safety	2	
45	0702 78 200C	Belt, Rear Safety	2	
46	0305 57 909	Holder, Belt	2	
47	99861 0412	Screw, Belt Holder	4	
48	2981 69 623	Cap, Trim	2	
49	99301 1100	Cap (Without Safety Belt)	6	
	99302 1100C	Cap	1	

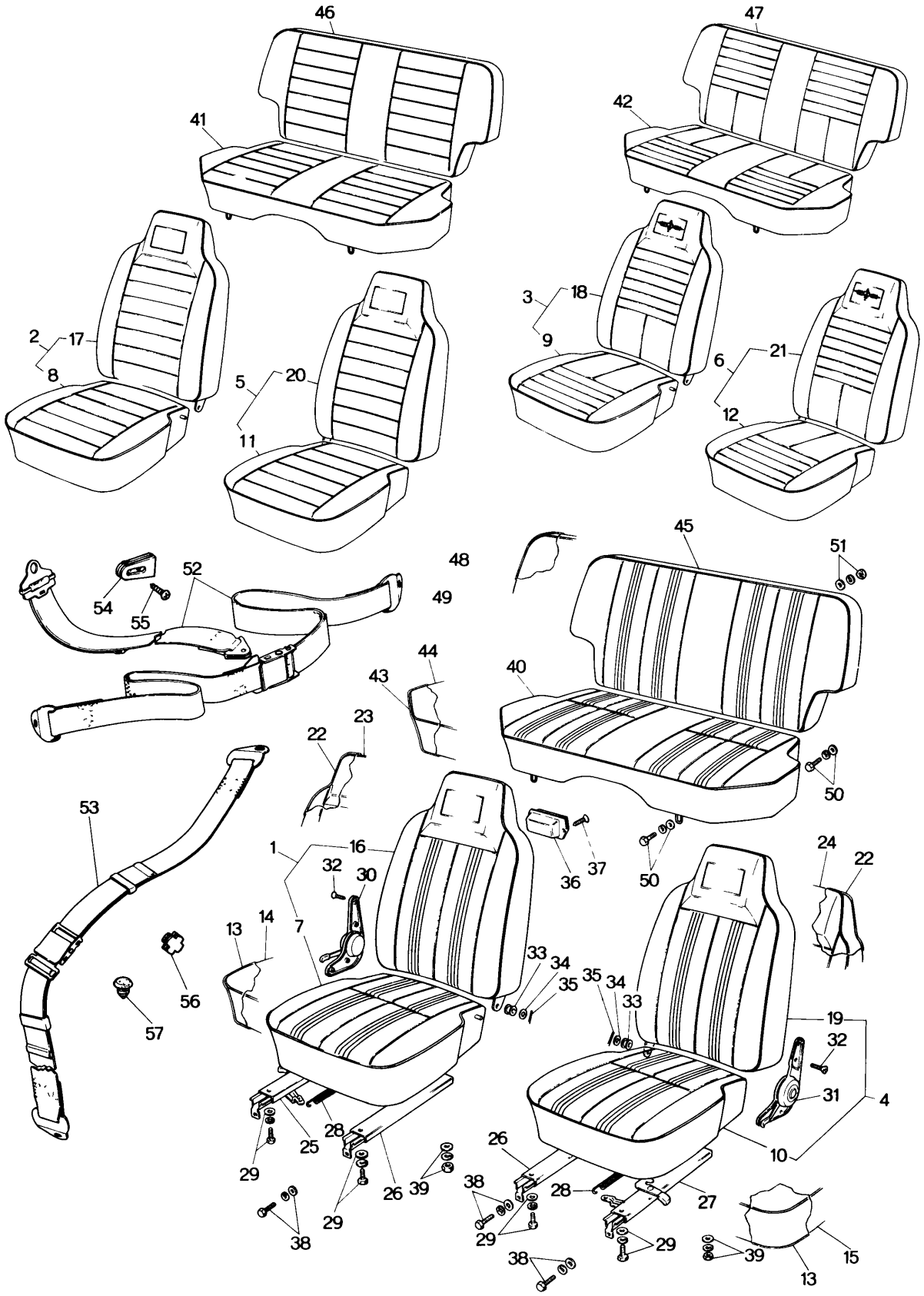
46
47
41
42
2
17
8
5
20
11
3
18
9
6
21
12
48
49
52
54
55
45
51
44
43
40
22
23
50
53
1
16
32
30
36
37
24
22
13
14
7
56
57
33
34
35
19
32
31
4
25
28
26
29
39
38
27
10
15

No.	Part Number	Description	Q'ty	Remarks		
	When ordering the following Seat & Trim					
	Note : 1. Add					
	-03 (Black) -12 (Brown) -13 (Grayish Yellow)					
	after the parts number as colour code nos.					
1	0370 57 100A	Seat (Frt., R), Vinyl With Ash Tray	1	1550		©
	~~1524 57 100A~~	~~Seat (Frt., R), Arctic Spec. Vinyl~~	~~1~~			~~©~~
2	0866 57 100A	Seat (Frt., R), Vinyl	1			©
●	0866 57 100B	Seat (Frt., R), Vinyl	1	Car No.	72/9~○	©
	1560 57 100	Seat (Frt., R), Arctic Spec. Vinyl	1			©
●	1560 57 100A	Seat (Frt., R), Arctic Spec. Vinyl	1	Car No.	72/8~○	©
3	~~0866 57 300A~~	~~Seat (Frt., R), Cloth~~	~~1~~			~~©~~
4	0370 57 150A	Seat (Frt., L), Vinyl	1			©
	1524 57 150	Seat (Frt., L), Arctic Spec. Vinyl	1			©
5	0866 57 150A	Seat (Frt., L), Vinyl	1			©
●	0866 57 150B	Seat (Frt., L), Vinyl	1	Car No.	72/9~○	©
	1560 57 150	Seat (Frt., L), Arctic Spec. Vinyl	1			©
●	1560 57 150A	Seat (Frt., L), Arctic Spec. Vinyl	1	Car No.	72/8~○	©
6	~~0866 57 350A~~	~~Seat (Frt., L), Cloth~~	~~1~~			~~©~~
7	0370 88 110	Cushion (R), Seat-Vinyl	1	1550		©
	~~1524 57 110~~	~~Cushion (R), Seat-Arctic Spec., Vinyl~~	~~1~~			~~©~~
8	0866 88 110	Cushion (R), Seat-Vinyl	1			©
	1560 88 110	Cushion (R), Seat-Arctic Spec., Vinyl	1			©
9	~~0866 57 310A~~	~~Cushion (R), Seat-Cloth~~	~~1~~			~~©~~
10	0370 88 160	Cushion (L), Vinyl	1	1550		©
	~~1524 57 160~~	~~Cushion (L), Arctic Spec., Vinyl~~	~~1~~			~~©~~
11	0866 88 160	Cushion (L), Vinyl	1			©
	1560 88 160	Cushion (L), Arctic Spec., Vinyl	1			©

No.	Part Number	Description	Q'ty	Remarks	
12	~~0866 57 360A~~	~~Cushion (L), Cloth~~	~~1~~		~~©~~
13	0259 88 259	Cover, Top	2		
14	0370 88 111	Trim (R), Cushion-Vinyl	1	1550	©
	~~1524 88 111~~	~~Trim (R), Cushion-Arctic Vinyl~~	~~1~~		~~©~~
	0866 88 111	Trim (R), Cushion-Vinyl	1		©
	1562 88 111	Trim (R), Cushion-Arctic Spec. Vinyl	1		©
	~~0866 88 490~~	~~Trim (R), Cushion-Cloth~~	~~1~~		~~©~~
15	0370 88 161	Trim (L), Cushion-Vinyl	1	1550	©
	~~1524 88 200~~	~~Trim (L), Cushion-Arctic Spec., Vinyl~~	~~1~~		~~©~~
	0866 88 161	Trim (L), Cushion-Vinyl	1		©
	1562 88 161	Trim (L), Cushion-Arctic Spec., Vinyl	1		©
	~~0866 88 530~~	~~Trim (L), Cushion-Cloth~~	~~1~~		~~©~~
16	0370 88 130	Seat (R), Back-Vinyl	1	1550	©
●	1524 88 130	Seat (R), Back-Arctic Spec., Vinyl	1		©
17	0866 88 130	Seat (R), Back-Vinyl	1		©
	1562 88 130	Seat (R), Back-Arctic Spec., Vinyl	1		©
18	~~0866 57 320~~	~~Seat (R), Back-Cloth~~	~~1~~		~~©~~
19	0370 88 180	Seat (L), Back-Vinyl	1	1550	©
	~~1524 57 170~~	~~Seat (L), Back-Arctic Spec., Vinyl~~	~~1~~		~~©~~
20	0866 88 180	Seat (L), Back-Vinyl	1		©
	1562 88 180	Seat (L), Back-Arctic Spec., Vinyl	1		©
21	~~0866 57 370~~	~~Seat (L), Back-Cloth~~	~~1~~		~~©~~
22	0866 88 105	Cover, Top	2		
23	0370 88 131	Trim (R), Back Seat-Vinyl	1	1550	©
	~~1524 88 100~~	~~Trim (R), Back Seat-Arctic Spec., Vinyl~~	~~1~~		~~©~~
	0866 88 131	Trim (R), Back Seat-Vinyl	1		©

No.	Part Number	Description	Q'ty	Remarks	
	1562 88 131	Trim (R), Back Seat-Arctic Spec., Vinyl	1		©
	~~0866 88 500~~	~~Trim (R), Back Seat, Cloth~~	~~1~~		~~©~~
24	0370 88 181	Trim (L), Back Seat-Vinyl	1	1550	
	~~1524 88 280~~	~~Trim (L), Back Seat-Arctic Spec. Vinyl~~	~~1~~		~~©~~
	0866 88 181	Trim (L), Back Seat-Vinyl	1		©
	1562 88 181	Trim (L), Back Seat-Arctic Spec. Vinyl	1		©
	~~0866 88 540~~	~~Trim (L), Back Seat-Cloth~~	~~1~~		~~©~~
● 25	0866 88 102	Adjuster No. 1	1		
● 26	0866 88 103	Adjuster No. 2	2		
● 27	0866 88 152	Adjuster No. 3	1		
28	0259 88 123	Spring, Return	2		
29	99801 0816	Bolt, Adjuster	8		
	99952 0816	Washer, Plain	8		
	99971 0800	Washer, Spring	8		
30	0866 88 101	Knuckle (R)	1		
31	0866 88 151	Knuckle (L)	1		
32	2155 57 109	Screw, Knuckle	8		
33	0866 57 105	Bush	2		
34	0259 57 105	Washer	2		
35	99221 3015	Pin, Split	2		
36	0259 68 250	Tray, Ash	1		
37	99864 0406	Screw, Ash Tray	1		

No.	Part Number	Description	Q'ty	Remarks	
38	99785 0825	Bolt, Front Seat	4		
	99952 0822	Washer, Plain	4		
	99971 0800	Washer, Spring	4		
39	99901 0800	Nut, Front Seat	4		
	99952 0822	Washer, Plain	4		
	99971 0800	Washer, Spring	4		
40	0370 57 200A	Cushion (Rr.), Seat-Vinyl	1	1550	©
	~~1524 57 200~~	~~Cushion (Rr.), Seat-Arctic Spec. Vinyl~~	~~1~~		~~©~~
41	0866 57 200A	Cushion (Rr.), Seat-Vinyl	1		©
	1560 57 200	Cushion (Rr.), Seat-Arctic Spec. Vinyl	1		©
42	~~0866 57 400~~	~~Cushion (Rr.), Seat-Cloth~~	~~1~~		~~©~~
43	0866 88 375	Cover, Top	1		
44	0370 88 201	Trim Vinyl	1	1550	©
	~~1524 88 370~~	~~Trim, Arctic Spec. Vinyl~~	~~1~~		~~©~~
	0866 88 201	Trim, Vinyl	1		©
	1560 88 201	Trim, Arctic Spec. Vinyl	1		©
	~~0866 88 570~~	~~Trim, Cloth~~	~~1~~		~~©~~
45	0370 57 250	Seat (Rr.), Back-Vinyl	1	1550	©
	~~1524 57 250~~	~~Seat (Rr.), Back-Arctic Spec. Vinyl~~	~~1~~		~~©~~
46	0866 57 250	Seat (Rr.), Back-Vinyl	1		©
	1562 57 250	Seat (Rr.), Back-Arctic Spec. Vinyl	1		©
47	~~0866 57 450~~	~~Seat (Rr.), Back-Cloth~~	~~1~~		~~©~~

No.	Part Number	Description	Q'ty	Remarks	
48	0259 88 229	Cover, Top	1		
49	0370 88 251	Trim, Vinyl	1		©
	~~1524 88 420~~	~~Trim, Arctic Spec.~~	~~1~~		~~©~~
	0866 88 251	Trim, Vinyl	1		©
	1562 88 251	Trim, Arctic Spec. Vinyl	1		©
	~~0866 88 580~~	~~Trim, Cloth~~	~~1~~		~~©~~
50	99785 0825	Bolt, Rear Seat	4		
	99971 0800	Washer, Spring	4		
	0317 57 015	Washer	4		
51	99901 0800	Nut, Rear Seat Back	2		
	99952 0800	Washer, Plain	2		
	99971 0800	Washer, Spring	2		
● 52	0305 57 920B	Belt, Front Safety	2		
53	0702 78 200C	Belt, Rear Safety	2		
54	0305 57 909	Holder, Belt	2		
55	99861 0412	Screw, Belt Holder	4		
56	2981 69 623	Cap, Trim	2		
57	99301 1100	Cap	6	Without Safety Belt	
	99302 1100	Cap	1		

FRONT SIDE DOOR (GLASS)

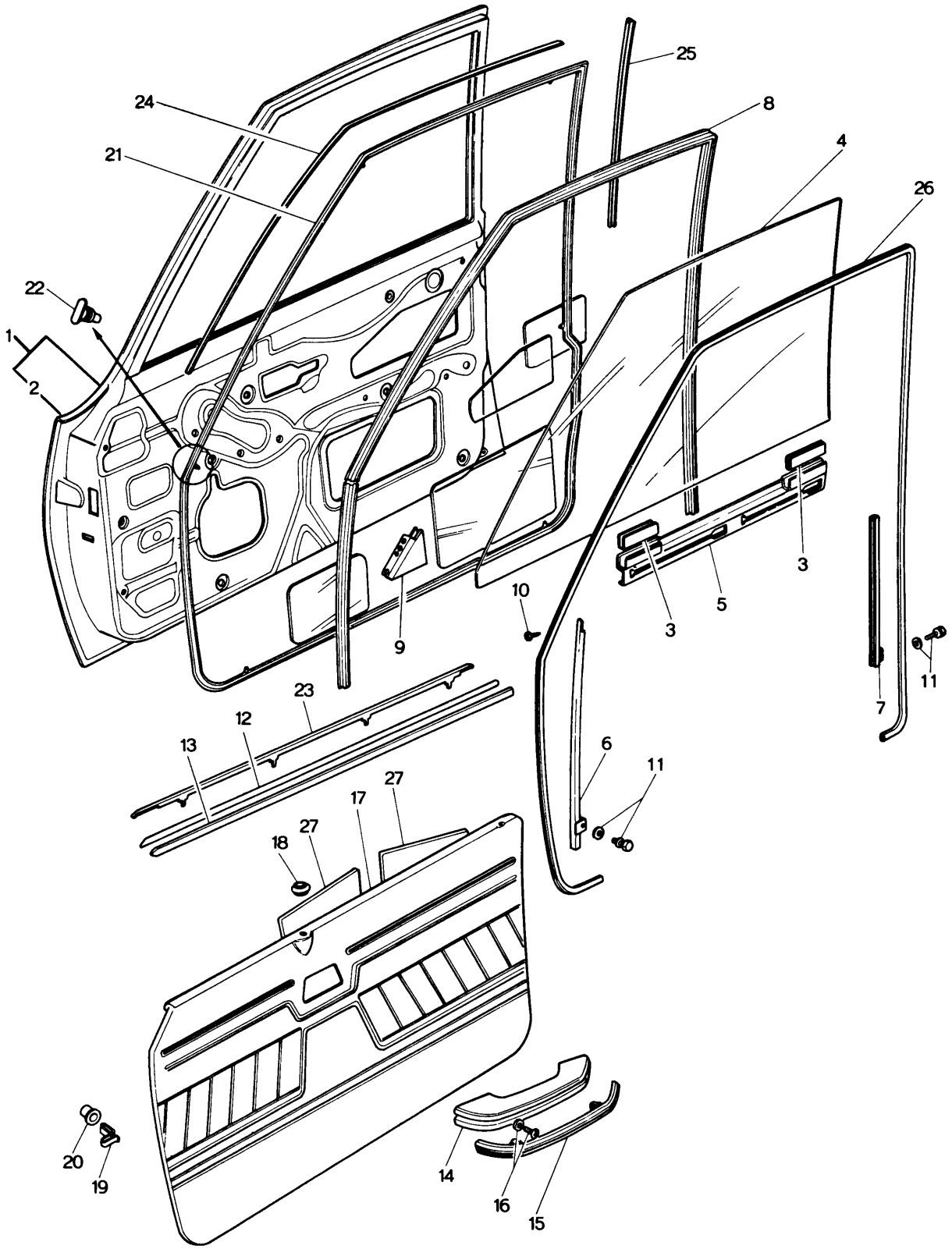

No.	Part Number	Description			Q'ty	Remarks
1	0376 58 010B	Body (R), Door	(Coupe)		1	
●	0376 58 010C	Body (R), Door	(Coupe)		1	Car No. 134345 72/1 ~ ○
	1554 58 010	Body (R), Door - For Australia	(Coupe)		1	
●	1554 58 010A	Body (R), Door - For Australia	(Coupe)		1	Car No. 134345 72/1 ~ ○
	0376 59 010B	Body (L), Door	(Coupe)		1	
●	0376 59 010C	Body (L), Door	(Coupe)		1	Car No. 134345 72/1 ~ ○
	0866 58 010C	Body (R), Door	(Sedan)		1	
●	0866 58 010D	Body (R), Door	(Sedan)		1	Car No. 134345 72/1 ~ ○
	1511 58 010A	Body (R), Door - For Australia	(Sedan)		1	
●	1511 58 010B	Body (R), Door - For Australia	(Sedan)		1	Car No. 134345 72/1 ~ ○
	0866 59 010C	Body (L), Door	(Sedan)		1	
●	0866 59 010D	Body (L), Door	(Sedan)		1	Car No. 134345 72/1 ~ ○
2	1554 58 020	Panel (R), Outer	(Coupe)	For Australia	1	
	0376 59 020A	Panel (L), Outer	(Coupe)	For Australia	1	
	1511 58 020A	Panel (R), Outer	(Sedan)	For Australia	1	
	0866 59 020A	Panel (L), Outer	(Sedan)	For Australia	1	
●	0376 58 020A	Panel (R), Outer	(Coupe)	For England	1	
●	0376 59 020A	Panel (L), Outer	(Coupe)	For England	1	
●	0866 58 020A	Panel (R), Outer	(Sedan)	For England	1	
●	0866 59 020A	Panel (L), Outer	(Sedan)	For England	1	
3	2292 58 232	Rubber, Strip, Door Glass			4	
4	0368 58 501	Glass (R)	Transparent	(Sedan)	1	
	0368 59 501	Glass (L)	Transparent	(Sedan)	1	
	0866 58 501	Glass (R)	Blue Pane	(Sedan)	1	
	0866 59 501	Glass (R)	Blue Pane	(Sedan)	1	
	0374 58 501	Glass (R)	Transparent	(Coupe)	1	
	0374 59 501	Glass (L)	Transparent	(Coupe)	1	
	0376 58 501	Glass (R)	Blue Pane	(Coupe)	1	
	0376 59 501	Glass (L)	Blue Pane	(Coupe)	1	
5	0305 58 505	Bracket (R), Lift			1	
	0305 59 505	Bracket (L), Lift			1	
6	0866 58 603	Guide "A" (R), Glass			1	
	0866 59 603	Guide "A" (L), Glass			1	
7	0376 58 604	Guide "B" (R), Glass			1	

FRONT SIDE DOOR (GLASS)

No.	Part Number	Description	Q'ty	Remarks
	0376 59 604	Guide "B" (L), Glass Coupe	1	
	0866 58 604	Guide "B" (R), Glass Sedan	1	
	0866 59 604	Guide "B" (R), Glass Sedan	1	
8	0376 58 605	Channel, Glass Run (Coupe)	2	
	0866 58 605	Channel, Glass Run (Sedan)	2	
9	0866 58 620	Bracket, Corner	2	
10	99831 0408	Screw, Glass Guide	4	
11	99806 0612	Bolt, Glass Guide	4	
	99971 0600	Washer, Spring	4	
	99951 0618	Washer, Plain	2	
●	0727 70 943	Washer, Plain	2	
● 12	0376 58 781D	Weatherstrip, Outer Coupe	2	
	~~0376 59 781A~~	~~Weatherstrip, Outer~~	~~1~~	
●	0866 58 781D	Weatherstrip, Outer Sedan	2	
	~~0866 59 781A~~	~~Weatherstrip, Outer~~	~~1~~	
13	0376 58 791	Weatherstrip, Inner (R) Coupe	1	
●	0376 59 791	Weatherstrip, Inner (L) Coupe	1	
	0866 58 791	Weatherstrip, Inner (R) Sedan	1	
	0866 59 791	Weatherstrip, Inner (L) Sedan	1	
14	0398 58 821A	Rest	2	
15	0398 58 822	Garnish, Arm Rest	2	
●	0398 58 822A	Garnish, Arm Rest	2	Car No. 130590 7/12~○
16	99833 0520	Screw, Tapping-Arm Rest	4	
	99952 0500	Washer, Plain	4	

No.	Part Number	Description	Q'ty	Remarks

When ordering the following trims,

Add color code nos, given below after parts number

-03 (Black) -12 (Brown) -13 (Grayish Yellow)

● 17	0370 58 811A	Trim (R), Door	1550	1	©
●	0370 59 811A	Trim (L), Door		1	©
	1560 58 810A	Trim (R), Door	(Sedan) (1550 Excluded)	1	©
	0866 59 810C	Trim (L), Door		1	©
	1561 58 810	Trim (R), Door	(Coupe DX)	1	©
	0376 59 810	Trim (L), Door		1	©

When ordering the following trims

Add color code nos. given below after parts number

-14 (Black) -17 (Borwn) -18 (Grayish Yellow)

17	1562 58 810D	Trim (R), Door	(Coupe Super Deluxe)	1	©
	0870 59 810F	Trim (L), Door		1	©
18	0223 58 692A	Grommet		1	
19	0208 58 921	Fastener, Door Trim		1	
20	0187 58 922	Seal, Fastener-Door Trim		1	
21	0376 58 760A	Weatherstrip (R)	(Coupe)	1	
	0376 59 760A	Weatherstrip (L)		1	

FRONT SIDE DOOR (GLASS)

No.	Part Number	Description	Q'ty	Remarks
	0866 58 760A	Weatherstrip (R) (Sedan)	1	
	0866 59 760A	Weatherstrip (L) (Sedan)	1	
22	0305 58 762	Fastener	54	
23	0866 58 831A	Mould (R), Beltline (Sedan)	1	
	0866 58 831B	Mould (R), Beltline (Sedan)	1	Car No. 127396 $^{71}/_{12}$ ~ △
●	0866 58 831C	Mould (R), Beltline (Sedan)	1	Car No. 144578 $^{72}/_{4}$ ~ △
	0866 59 831A	Mould (L), Beltline (Sedan)	1	
	0866 59 831B	Mould (L), Beltline (Sedan)	1	Car No. 127396 $^{71}/_{12}$ ~ △
●	0866 59 831C	Mould (L), Beltline (Sedan)	1	Car No. 144578 $^{72}/_{4}$ ~ △
	0376 58 831A	Mould (R), Beltline (Coupe)	1	
	0376 58 831B	Mould (R), Beltline (Coupe)	1	Car No. 127396 $^{71}/_{12}$ ~ △
●	0376 58 831C	Mould (R), Beltline (Coupe)	1	Car No. 144578 $^{72}/_{4}$ ~ △
	0376 59 831A	Mould (L), Beltline (Coupe)	1	
	0376 59 831B	Mould (L), Beltline (Coupe)	1	Car No. 127396 $^{71}/_{12}$ ~ △
●	0376 59 831C	Mould (L), Beltline (Coupe)	1	Car No. 144578 $^{72}/_{4}$ ~ △
24	0866 58 841A	Mould "A" (R), Sash (Sedan)	1	
	0866 59 841A	Mould "A" (L), Sash (Sedan)	1	
25	0866 58 842A	Mould "B" (R), Sash (Sedan)	1	
	0866 59 842A	Mould "B" (L), Sash (Sedan)	1	
26	0398 58 755	Welt, Seaming	2	
27	0866 58 851	Insulation (Sedan)	4	
	0376 58 851	Insulation (Coupe)	4	

FRONT SIDE DOOR (LOCK)

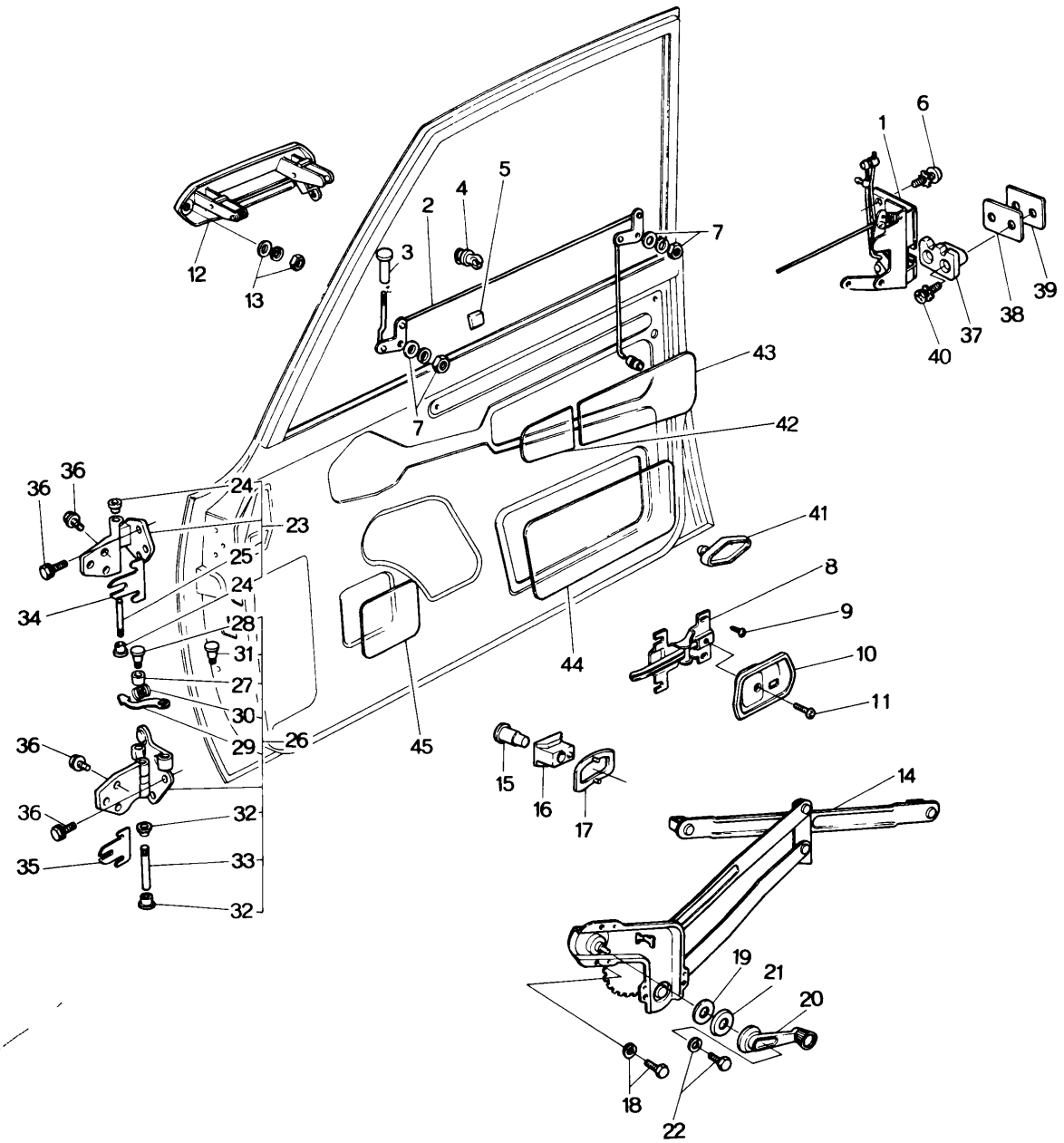

No.	Part Number		Description		Q'ty	Remarks
1	0376 58 310A	Lock (R), Door	(R.H.D. Coupe)		1	
	0376 58 310D	Lock (R), Door			1	Car No. 134345 ~ ○
●	0376 58 310F	Lock (R), Door			1	Car No. 150526 ~ ×
	0376 59 310A	Lock (L), Door			1	
	0376 59 310D	Lock (L), Door			1	Car No. 134345 ~ ○
●	0376 59 310F	Lock (L), Door			1	Car No. 150526 ~ ×
	1562 58 310A	Lock (L), Door	Arctic Spec.	(L.H.D. Coupe)	1	
	1562 58 310D	Lock (R), Door			1	Car No. 134345 ~ ○
●	1562 58 310F	Lock (R), Door			1	Car No. 150526 ~ ×
	1562 59 310A	Lock (L), Door			1	
	1562 59 310D	Lock (L), Door			1	Car No. 134345 ~ ○
●	1562 59 310F	Lock (L), Door			1	Car No. 150526 ~ ×
	1566 58 310A	Lock (R), Door			1	
	1566 58 310D	Lock (R), Door			1	Car No. 134345 ~ ○
●	1566 58 310F	Lock (R), Door			1	Car No. 150526 ~ ×
	1566 59 310A	Lock (L), Door			1	
	1566 59 310D	Lock (L), Door			1	Car No. 134345 ~ ○
●	1566 59 310F	Lock (L), Door			1	Car No. 150526 ~ ×
	0866 58 310A	Lock (R), Door	(R.H.D. Sedan)		1	
	0866 58 310D	Lock (R), Door			1	Car No. 134345 ~ ○
●	0866 58 310F	Lock (R), Door			1	Car No. 150526 ~ ×
	0866 59 310A	Lock (L), Door			1	
	0866 59 310D	Lock (L), Door			1	Car No. 134345 ~ ○
●	0866 59 310F	Lock (L), Door			1	Car No. 150526 ~ ×
	1524 58 310A	Lock (R), Door	Arctic Spec.	(L.H.D. Sedan)	1	
	1524 58 310D	Lock (R), Door			1	Car No. 134345 ~ ○
●	1524 58 310F	Lock (R), Door			1	Car No. 150526 ~ ×
	1524 59 310A	Lock (L), Door			1	
	1524 59 310D	Lock (L), Door			1	Car No. 134345 ~ ○
●	1524 59 310F	Lock (L), Door			1	Car No. 150526 ~ ×
	1534 58 310A	Lock (R), Door			1	
	1534 58 310D	Lock (R), Door			1	Car No. 134345 ~ ○
●	1534 58 310F	Lock (R), Door			1	Car No. 150526 ~ ×
	1534 59 310A	Lock (L), Door			1	
	1534 59 310D	Lock (L), Door			1	Car No. 134345 ~ ○
●	1534 59 310F	Lock (L), Door			1	Car No. 150526 ~ ×
2	0376 58 330A	Rod (R)	(Coupe)		1	
	0376 58 330B	Rod (R)			1	Car No. 134345 ~ ○
	0376 59 330A	Rod (L)			1	
	0376 59 330B	Rod (L)			1	Car No. 134345 ~ ○
	0866 58 330A	Rod (R)	(Sedan)		1	
	0866 58 330B	Rod (R)			1	Car No. 134345 ~ ○
	0866 59 330A	Rod (L)			1	
	0866 59 330B	Rod (L)			1	Car No. 134345 ~ ○
● 3	0259 58 691	Knob			2	
4	0305 58 309	Holder, Rod			4	
5	0259 72 509	Pad, Door Lock			4	
6	99832 0630	Screw, Door Lock			6	
	99974 0600	Washer, Toothed			6	
	99975 0600	Washer, Toothed			6	

58 59 FRONT SIDE DOOR (LOCK)

No.	Part Number	Description		Q'ty	Remarks
7	99907 0600	Nut, Door Lock		4	
	99952 0600	Washer, Plain		4	
	99971 0600	Washer, Spring		4	
8	0866 58 321B	Handle, Inner		2	
9	99806 0510	Bolt, Inner Handle		6	
	99952 0518	Washer, Plain		6	
	99971 0500	Washer, Spring		6	
10	0368 58 303	Cover (R), Inner Handle	(Std.)	1	
	0368 59 303	Cover (L)	(Std.)	1	
	0866 58 303B-00	Cover (R)	(Std. Excluded)	1	©
	0866 59 303B-00	Cover (L)	(Std. Excluded)	1	©
11	99832 04088	Screw, Cover		2	
12	0866 58 410	Handle (R), Outer Side		1	
	0866 59 410	Handle (L), Outer Side		1	
13	99906 0500	Nut, Outer		4	
	99951 0618	Washer, Plain		4	
	99971 0500	Washer, Spring		4	
14	0866 58 560	Regulator (R)		1	
	0866 59 560	Regulator (L)		1	
15	0223 58 303A	Pin		4	
16	0223 58 304A	Guide		4	
17	0223 58 311	Spring		4	

No.	Part Number	Description	Q'ty	Remarks
18	99806 0612	Bolt, Window Regulator	8	
	99971 0600	Washer, Spring	8	
	99951 0618	Washer, Plain	8	
19	0259 58 305	Gasket, Window Regulator	2	
20	0824 58 370A	Handle, Regulator	2	
21	0223 58 375A	Escutcheon	2	
22	99806 0516	Bolt, Regulator Handle	2	
	99971 0500	Washer, Spring	2	
23	0866 58 210	Hinge "A"	2	
24	0223 58 721	Bush	4	
25	0187 58 731	Pin, Hinge	2	
26	0866 58 240A	Hinge "B" (R)	1	
	0866 59 240A	Hinge "B" (L)	1	
27	0866 58 281	Roller	2	
28	0866 58 282	Pin "A"	2	
29	0866 58 291A	Lever, Check	2	
30	0866 58 292A	Spring, Check	2	
31	0866 58 283	Pin "B"	2	
32	0223 58 721	Bush	4	
33	0187 58 731	Pin, Hinge	2	

FRONT SIDE DOOR (LOCK)

No.	Part Number	Description	Q'ty	Remarks
●34	0866 58 201	Shim, Hinge "A" - Selective use	4	
35	0866 58 231	Shim, Hinge "B" - Selective use	4	
●	1011 58 231	Shim, Hinge "B" - Selective use	4	Car No. 7/9～○
36	907832 8 28	Bolt Set, Hinge	24	
37	0866 58 361	Rack (R)	1	
	1540 58 361	Rack (R)	1	Car No. 134345 7/1～○
●	0866 58 361B	Rack (R)	1	Car No. 150526 7/8～×
	0866 58 361	Rack (L)	1	
	1540 58 361	Rack (L)	1	Car No. 134345 7/1～○
●	0866 58 361B	Rack (L)	1	Car No. 150526 7/8～×
38	0866 58 363	Seat, Striker	2	Used up to Car No. 150526 7/8～×
39	0866 58 364A	Plate, Base	2	
●	0866 58 364B	Plate, Base	2	Car No. 150526 7/8～×
40	907614 6 40	Screw Set Rack	4	Car No. 134344 7/1～Discarded
	1540 58 371	Screw	4	Car No. 134345 7/1～Added Anew
	99975 0600	Washer	4	
41	0258 58 906	Cushion	2	
42	0866 58 861A	Screen "A"	2	
43	0866 58 862A	Screen "B" ~~(R)~~	2	
	~~0866 58 862~~	~~Screen "B" (L)~~	~~1~~	
44	0866 58 863	Screen "C"	2	
45	0866 58 864	Screen "D"	2	
●	0305 58 864	Screen "D"	2	Car No. 150526 7/8～○

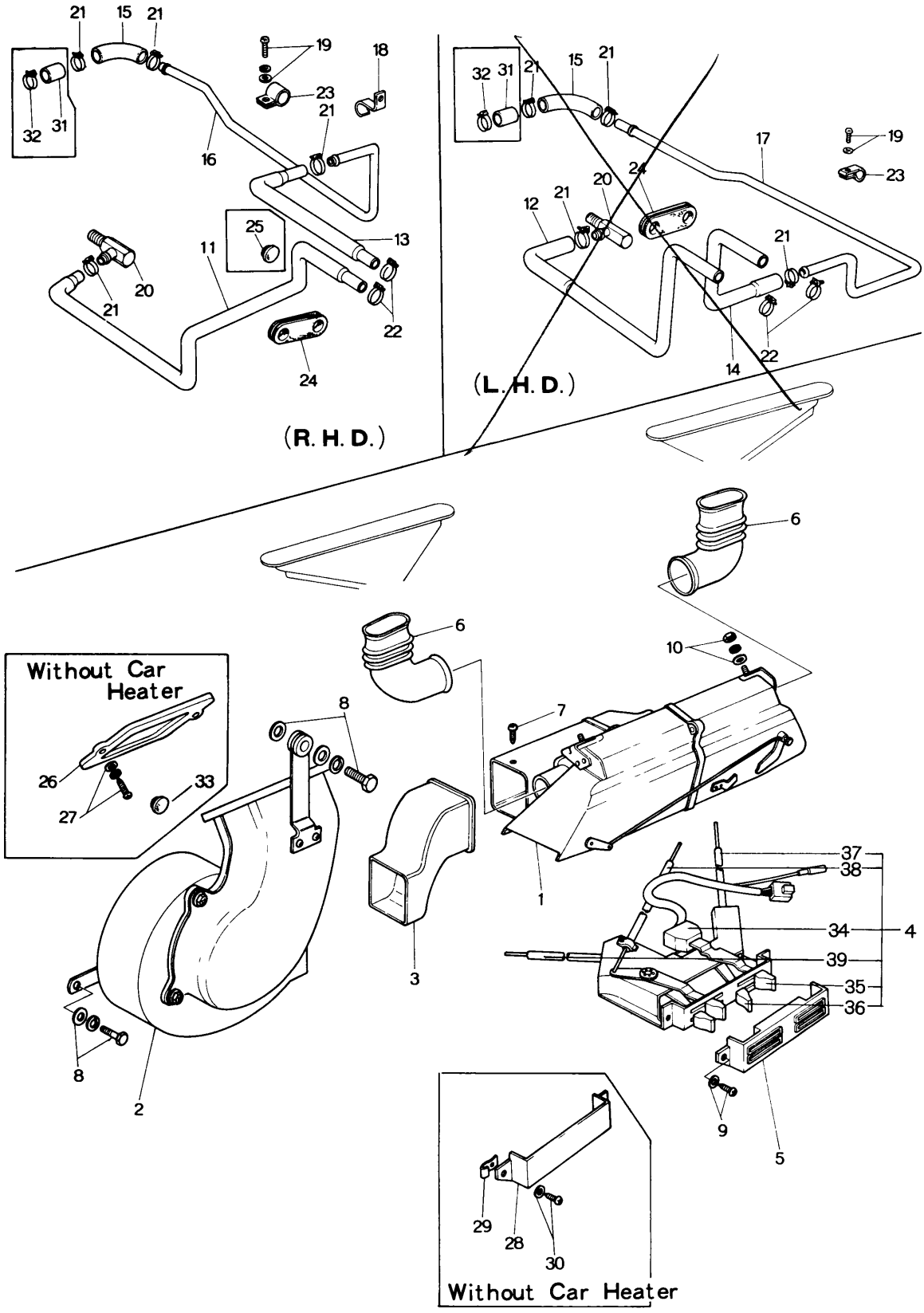
(R. H. D.)
(L. H. D.)
Without Car Heater
Without Car Heater

No.	Part Number	Description	Q'ty	Remarks
	~~8866 61 070~~	~~Heater Set (Nichira Make)~~ (R. H. D.)	~~1~~	
	0866 61 080	Heater Set (Denso Make) (R. H. D.)	1	
	1562 61 080	Heater Set (L. H. D.)	1	
1	~~8866 61 130A~~	~~Heater Unit (Nichira Make)~~ (R. H. D.)	~~1~~	
	0866 61 130B	Heater Unit (Denso Make) (R. H. D.)	1	
	1524 61 130A	Heater Unit (L. H. D.)	1	
	1524 61 130B	Heater Unit (L. H. D.)	1	Car No. 141928 73/3 ~ ×
2	~~8866 61 140A~~	~~Blower (Nichira Make)~~ (R. H. D.)	~~1~~	
	0866 61 140C	Blower (Denso Make) (R. H. D.)	1	
	1524 61 140B	Blower (L. H. D.)	1	
3	~~8866 61 151A~~	~~Duct (Nichira Make)~~ (R. H. D.)	~~1~~	
	0866 61 151A	Duct (Denso Make) (R. H. D.)	1	
	1524 61 151A	Duct (L. H. D.)	1	
4	~~8866 61 190B~~	~~Control (Nichira Make)~~ (R. H. D.)	~~1~~	
	0866 61 190B	Control (Denso Make) (R. H. D.)	1	Fig. No. 5 Included
	0866 61 190D	Control (R. H. D.)	1	Car No. 139297 73/2 ~ ×
	1562 61 190A	Control (L. H. D.)	1	
	1562 61 190C	Control (L. H. D.)	1	Car No. 141184 73/2 ~ ×
5	0866 61 195	Panel, Control (R.H.D.)	1	
●	0866 61 195B	Panel, Control (R.H.D.)	1	Car No. 141184 73/2 ~ ×
●	99863 0516	Screw, Tapping	2	
●	99952 0500	Washer, Plain	2	
●	0820 56 905	Clip	2	
6	0866 61 251	Hose, Defroster	2	
7	99971 0500	Washer, Spring (Duct & Heater Units)	2	
	99952 0500	Washer, Plain (Duct & Heater Units)	2	
	99863 0512	Bolt (Duct & Heater Units)	2	
8	99805 0830	Bolt, Blower	3	
	99952 0818	Washer, Plain	3	
	99971 0800	Washer, Spring	3	
	99952 0822	Washer, Plain	1	
9	99833 0512	Screw, Control	3	
	99952 0500	Washer, Plain	3	
	99971 0500	Washer, Spring	3	

No.	Part Number	Description	Q'ty	Remarks
10	99906 0800	Nut, Heater Unit	3	
	99952 0800	Washer, Plain	3	
	99971 0800	Washer, Spring	3	
11	0866 61 211C	Hose No. 1 (R. H. D.)	1	
12	~~1562 61 211B~~	Hose No. 1 (L. H. D.)	1	
	~~1562 61 211C~~	Hose No. 1 (L. H. D.)	1	Car No. 141928 ⁷⁄₃ ~ ×
13	0866 61 212B	Hose No. 2 (R. H. D.)	1	
14	~~1562 61 212A~~	Hose No. 2 (L. H. D.)	1	
	~~1562 61 212B~~	Hose No. 2 (L. H. D.)	1	Car No. 141928 ⁷⁄₃ ~ ×
15	0866 61 213	Hose No. 3	1	
16	0866 61 214A	Pipe, Heater (R. H. D.)	1	
17	1562 61 214A	Pipe, Heater (L. H. D.)	1	
18	0866 61 217	Clip, Pipe (R. H. D.)	1	
19	99868 0512	Screw, Pipe	2	
	99952 0516	Washer, Plain	2	
	99971 0500	Washer, Spring	2	
20	0820 15 330	Joint, Hose	1	
21	99282 2600	Band, Hose	4	
22	99282 2200	Band, Hose	2	
	99282 2600	Band, Hose (L.H.D.)	2	Car No. 141928 ⁷⁄₃ ~ Added Anew
23	0824 61 192	Clip, Heater Pipe	1	
24	0866 61 235	Grommet	1	
25	0257 61 051	Grommet	1	
26	0366 61 070A	Cover, Dash Panel Upper	1	
27	99863 0516	Screw, Cover	2	
	99952 0500	Washer, Plain	2	Without Car Heater
	99971 0500	Washer, Spring	2	
28	0866 61 195	Panel, Control	1	
	0866 61 195B	Panel, Control	1	Car No. 139297 ⁷⁄₂ ~ ×
29	0820 56 905	Clip	2	

No.	Part Number	Description		Q'ty	Remarks
30	99863 0516	Screw, Control Panel		2	
	99952 0500	Washer, Plain	Without Car Heater	2	
31	0864 61 061A	Cover		1	
32	99282 2600	Band, Hose		2	
33	0118 56 242B	Plug, Hole		2	
● 34	0370 76 403	Switch, Control (OFF~FALI)		1	
● 35	0370 76 409	Knob (Upper)		2	
● 36	0370 76 411	Knob (Lower)		2	
● 37	0866 76 406	Control Wire No. 1 (COLD~HOT)	(R.H.D.)	1	
●	0866 76 406A	Control Wire No. 1 (COLD~HOT)	(R.H.D.)	1	Car No. 139297 ⅞~×
●	1562 76 406	Control Wire No. 1 (COLD~HOT)	(L.H.D.)	1	
●	1562 76 406A	Control Wire No. 1 (COLD~HOT)	(L.H.D.)	1	Car No. 141184 ⅞~×
● 38	0866 76 407	Control Wire No. 2 (DEF~HEAT)	(R.H.D.)	1	
●	0866 76 407A	Control Wire No. 2 (DEF~HEAT)	(R.H.D.)	1	Car No. 139297 ⅞~×
●	1562 76 407	Control Wire No. 2 (DEF~HEAT)	(L.H.D.)	1	
●	1562 76 407A	Control Wire No. 2 (DEF~HEAT)	(L.H.D.)	1	Car No. 141184 ⅞~×
● 39	0866 76 408	Control Wire No. 3 (REC~FRESH)	(R.H.D.)	1	
●	0866 76 408A	Control Wire No. 3 (REC~FRESH)	(R.H.D.)	1	Car No. 139297 ⅞~×
●	1562 76 408	Control Wire No. 3 (REC~FRESH)	(L.H.D.)	1	
●	1562 76 408A	Control Wire No. 3 (REC~FRESH)	(L.H.D.)	1	Car No. 141184 ⅞~×

HEATER UNIT & BLOWER (R.H.D.)

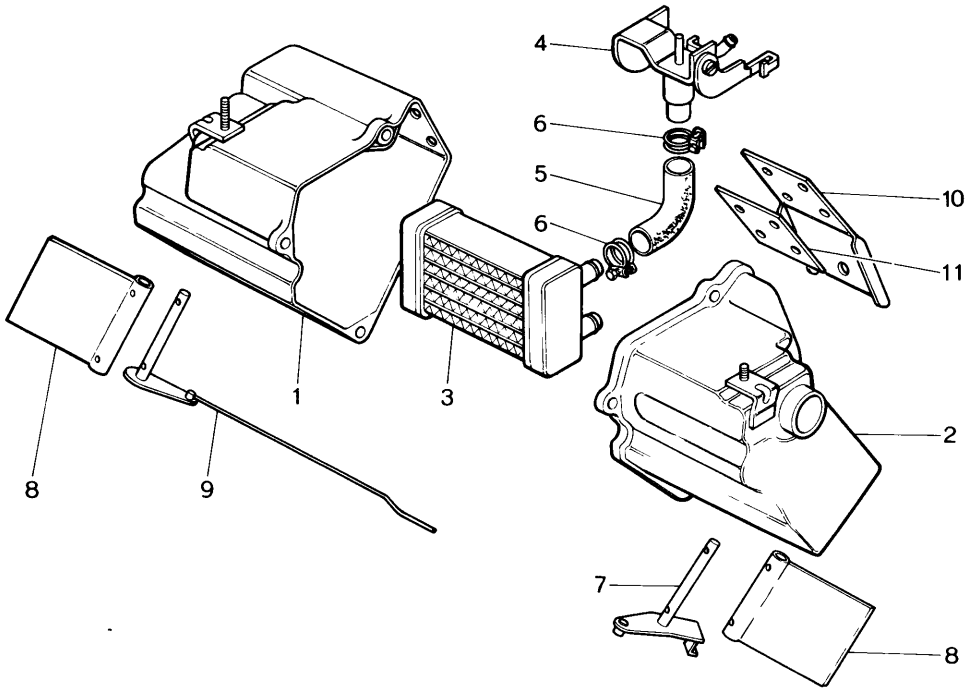

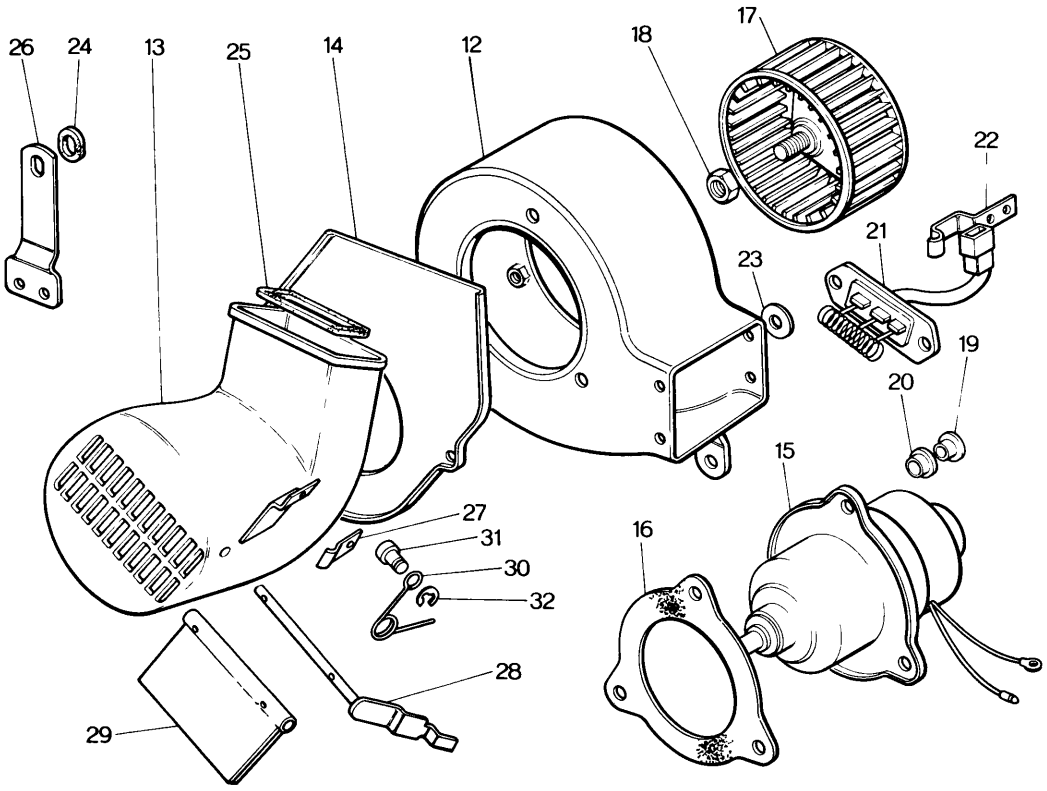

No.	Part Number	Description	Q'ty	Remarks
	0866 79 310	Cooler, Car	1	
	1557 61 390	Cooler, Car-Heater Less	1	
1	0877 15 250	Fan & Fan Drive (Fig. No. 2～4 Included)	1	
●	0871 15 250	Fan & Fan Drive (Fig. No. 2～4 Included)	1	Car No. 149072 ⅞～△
2	0877 15 200	Fan, Cooling	1	
●	0871 15 200	Fan, Cooling	1	Car No. 149702 ⅞～△
3	2090 15 210	Fan Drive	1	
●	0871 15 210	Fan Drive	1	Car No. 149702 ⅞～△
4	99806 0612	Bolt, Fan & Fan Drive	6	
	99971 0600	Washer, Spring	6	
5	99852 0635	Stud, Fan & Fan Drive	4	
6	99907 0600	Nut, Fan & Fan Drive	4	
	99952 0600	Washer, Plain	4	
	99971 0600	Washer, Spring	4	
7	0866 15 906	Belt, "V"	1	
8	0866 15 920B	Bracket, Compressor (Fig. No. 9～13 Included)	1	
9	0866 15 923A	Shaft	1	
10	0866 15 932	Bolt, Idle Pulley	1	
11	0866 15 940A	Pulley, Idle	2	
12	0839 61 966A	Bolt, Adjust	1	
13	0317 78 034	Collar	2	
14	99859 1025	Stud, Compressor Bracket	2	
15	99859 1050	Stud, Compressor Bracket	2	
16	99859 1225	Stud, Compressor Bracket	1	
17	99921 1000	Nut, Compressor Bracket	4	
	99971 1000	Washer, Spring	4	
18	99921 1200	Nut, Compressor Bracket	1	
	99971 1200	Washer, Spring	1	
19	99295 1508	Clip	1	
20	99801 0840	Bolt, Compressor Bracket	2	

CAR COOLER (R. H.D.)

No.	Part Number	Description	Q'ty	Remarks
	99971 0800	Washer, Spring	2	
21	99801 0825	Bolt, Compressor Bracket	4	
	99971 0800	Washer, Spring	4	
22	0866 61 450	Compressor	1	
23	0839 61 975C	Pulley, "V" Belt	1	
24	0866 61 461	Hose, Flexible	1	
25	0866 61 462	Hose, Flexible	1	
26	0866 61 463	Pipe No. 1	1	
27	0866 61 464A	Pipe No. 2	1	
28	0370 61 467	Clip	4	
29	0866 61 467	Clip	1	
30	0866 61 474	Elbow	1	
31	0259 78 857	Clip	2	
32	0259 78 858	Packing, Rubber	2	
33	0259 78 868	Clip	1	
34	99868 0512	Screw, Clip	13	
	99952 0500	Washer, Plain	13	
	99971 0500	Washer, Spring	13	
35	99797 0512	Screw	1	
	99952 0500	Washer, Plain	1	
36	99906 0500	Nut	1	
	99952 0500	Washer, Plain	1	
	99971 0500	Washer, Spring	1	
37	0866 61 472	Clip	1	
38	99806 0814	Bolt, Clip	1	
	99971 0800	Washer, Spring	1	

No.	Part Number	Description	Q'ty	Remarks
39	0866 61 475	Grommet	1	
40	0866 61 476	Protector	1	
41	0317 61 612	Cushion	1	
42	0208 78 875	Grommet	1	
43	0866 61 480	Condenser	1	
●	0866 61 490	Condenser	1	Car No. 146346 73/5~△
44	99906 0600	Nut, Condenser	4	
	99952 0618	Washer, Plain	4	
	99971 0600	Washer, Spring	4	
45	0866 61 500	Tank, Receiver	1	
46	99801 0612	Bolt, Receiver Tank	3	
	99952 0618	Washer, Plain	3	
	99971 0600	Washer, Spring	3	
47	99906 0600	Nut, Receiver Tank	1	
	99952 0600	Washer, Plain	1	
48	0866 61 520	Cooler Unit	1	
49	0866 61 525A	Hose, Drain	1	
50	0866 61 527	Clip, Drain Hose	1	
51	99868 0512	Screw, Clip	1	
	99952 0500	Washer, Plain	1	
	99971 0500	Washer, Spring	1	
52	0866 61 526A	Duct, Rubber	1	
53	0866 61 531	Bracket No. 1, Cooler Unit	1	
54	0866 61 532	Bracket No. 2, Cooler Unit	1	
55	0866 61 533	Bracket No. 3, Cooler Unit	1	
56	0866 61 534	Bracket No. 4, Cooler Unit	1	
57	0866 61 535	Bracket No. 5, Cooler Unit	1	

CAR COOLER (R.H.D.)

No.	Part Number	Description	Q'ty	Remarks
58	0866 61 536	Bracket No. 6, Cooler Unit	1	
59	99797 0616	Bolt, Bracket	14	
	99952 0600	Washer, Plain	12	
	99952 0618	Washer, Plain	2	
	99971 0600	Washer, Spring	14	
60	99906 0600	Nut, Bracket	2	
	99952 0618	Washer, Plain	2	
61	99906 0800	Nut, Bracket	2	
	99952 0800	Washer, Plain	2	
	99971 0800	Washer, Spring	2	
62	0824 61 236A	Valve, Magnet	1	
63	0866 61 541	Valve, Check	1	
64	0866 61 542	Connector, Vacuum Hose	1	
65	99564 1000	Gasket, Connector	1	
66	0866 61 549	Spacer	1	
67	0866 61 543A	Hose, Vacuum	1	
68	0866 61 545	Stabilizer, Amplifier	1	
69	0866 61 548	Bracket, Stabilizer	1	
70	99833 0512	Screw, Bracket	2	
	99952 0500	Washer, Plain	2	
	99971 0500	Washer, Spring	2	
71	0866 61 546	Harness	1	
72	0866 61 551	Grille	1	
73	0866 61 552	Holder, Grille	2	
74	99868 0308	Screw	4	
75	0820 78 883	Grommet	2	

No.	Part Number	Description	Q'ty	Remarks
76	1518 61 140	Blower	1	
●77	1568 61 190A	Control	1	
●	1568 61 190B	Control	1	Car No. 141928 7⅔～×
78	0866 61 195A	Panel, Control	1	
79	1531 61 411	Cover, Cooler	1	
80	99805 0830	Bolt, Blower	2	
	99952 0800	Washer, Plain	2	
	99971 0800	Washer, Spring	2	
81	99833 0512	Screw, Control	3	
	99971 0500	Washer, Spring	3	
82	99906 0800	Nut, Blower	1	
	99952 0822	Washer, Plain	1	
	99971 0800	Washer, Spring	1	
83	0866 61 911	Packing No. 1	1	
84	0866 61 912	Packing No. 2	1	
85	0866 61 913	Packing No. 3	1	
86	0866 61 914	Packing No. 4	1	

CAR COOLER (L.H.D.)

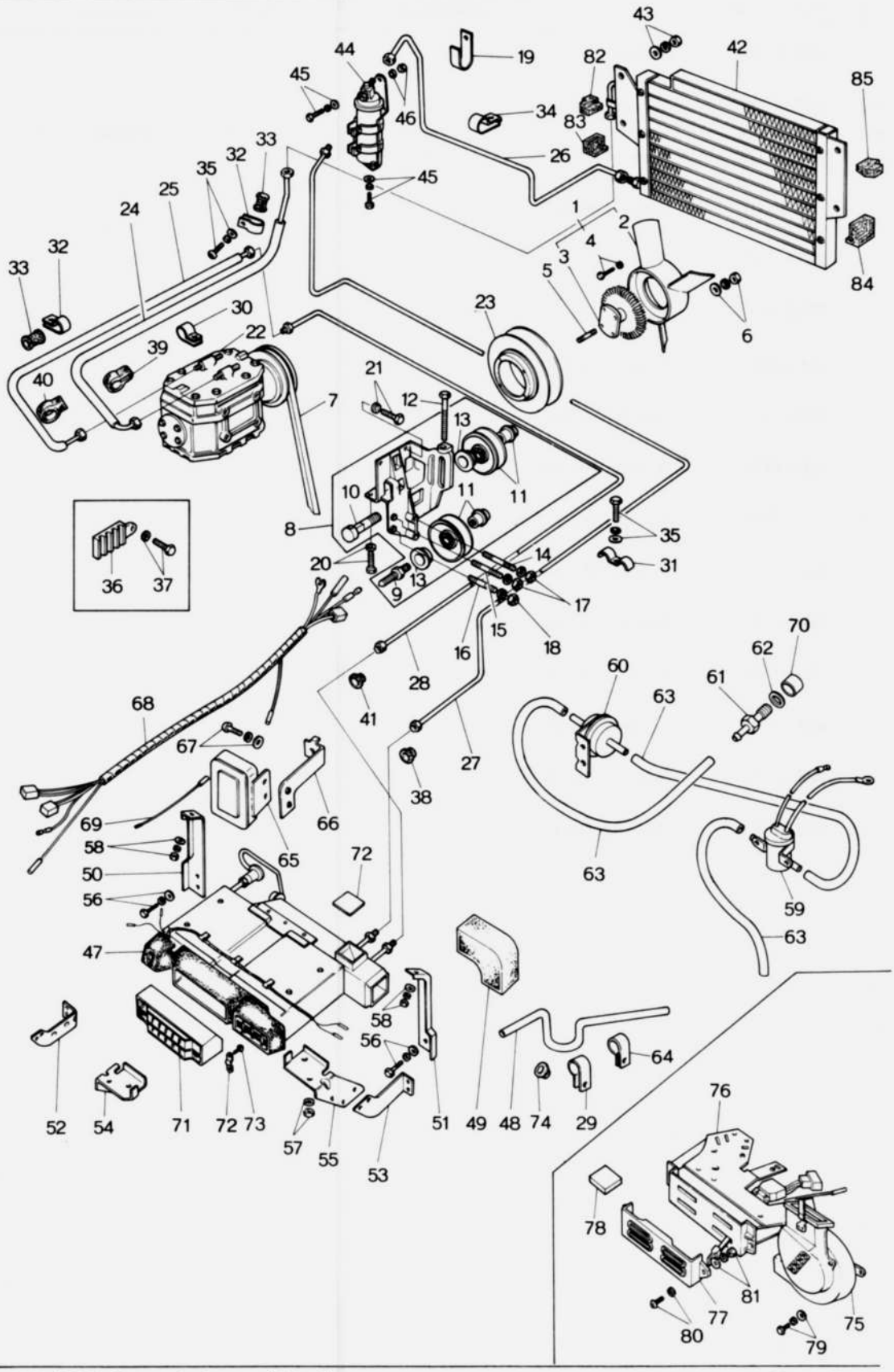

No.	Part Number	Description	Q'ty	Remarks
	1562 61 400	Cooler, Car	1	
	1568 61 390	Cooler, Car-Heater Less	1	
1	0877 15 250	Fan & Fan Drive (Fig. No. 2 ~ 4 included)	1	
●	0871 15 250	Fan & Fan Drive (Fig. No. 2 ~ 4 included)	1	Car No. 149702 ⁷⁄₆~△
2	0877 15 200	Fan	1	
●	0871 15 200	Fan	1	Car No. 149702 ⁷⁄₆~△
3	2090 15 210	Fan Drive	1	
●	0871 15 210	Fan Drive	1	Car No. 149702 ⁷⁄₆~△
4	99806 0612	Bolt	6	
	99971 0600	Washer, Spring	6	
5	99852 0635	Stud, Fan & Fan Drive	4	
6	99907 0600	Nut, Fan & Fan Drive	4	
	99952 0600	Washer, Spring	4	
	99971 0600	Washer, Plain	4	
7	0866 15 906	Belt, "V"	1	
8	0866 15 920B	Bracket, Compressor (Fig. No. 9 ~ 13 included)	1	
9	0866 15 923A	Shaft	1	
10	0866 15 932	Bolt, Idle Pulley	1	
11	0866 15 940A	Pulley, Idle	2	
12	0839 61 966A	Bolt, Adjust	1	
13	0317 78 034	Collar	2	
14	99859 1025	Stud, Compressor Bracket	2	
15	99859 1050	Stud, Compressor Bracket	2	
16	99859 1225	Stud, Compressor Bracket	1	
17	99921 1000	Nut, Compressor Bracket	4	
	99971 1000	Washer, Spring	4	
18	99921 1200	Nut, Compressor Bracket	1	
	99971 1200	Washer, Spring	1	
19	99295 1508	Clip	1	

61 CAR COOLER (L.H.D.)

No.	Part Number	Description	Q'ty	Remarks
20	99801 0840	Bolt, Compressor Bracket	2	
	99971 0800	Washer, Spring	2	
21	99801 0825	Bolt, Compressor Bracket	4	
	99971 0800	Washer, Spring	4	
22	0868 61 450	Compressor	1	
23	0839 61 975C	Pulley, "V" Belt	1	
24	1562 61 461	Hose, Flexible	1	
25	1562 61 462	Hose, Flexible	1	
26	0866 61 463	Pipe, No. 1	1	
27	1524 61 464A	Pipe, No. 2	1	
28	1562 61 465	Pipe, No. 3	1	
29	0370 61 467	Clip	4	
30	1562 61 467	Clip	1	
31	0370 61 471	Clip	4	
32	0259 78 857	Clip	2	
33	0259 78 858	Packing, Rubber	2	
34	0259 78 868	Clip	1	
35	99868 0512	Screw, Clip	16	
	99952 0500	Washer, Plain	16	
	99971 0500	Washer, Spring	16	
36	0866 61 472	Clip	1	
	99806 0814	Bolt, Clip	1	
37	99971 0800	Washer, Spring	1	
38	0866 61 475	Grommet	1	
39	0866 61 476	Protector	1	
40	0317 61 612	Cushion	1	

No.	Part Number	Description	Q'ty	Remarks
41	0208 78 785	Grommet	1	
42	0866 61 480	Condenser	1	
●	1562 61 490	Condenser	1	Cor No. 146346 ～△
43	99906 0600	Nut, Condenser	4	
	99952 0618	Washer, Plain	4	
	99971 0600	Washer, Spring	4	
44	0866 61 500	Tank, Receiver	1	
45	99801 0612	Bolt, Receiver Tank	3	
	99952 0618	Washer, Plain	3	
	99971 0600	Washer, Spring	3	
46	99906 0600	Nut	1	
	99952 0600	Washer, Plain	1	
47	1562 61 520	Cooler Unit	1	
48	0866 61 525A	Hose, Drain	2	
49	1524 61 526	Duct, Rubber	1	
50	0866 61 531	Bracket No. 1, Cooler Unit	1	
51	0866 61 532	Bracket No. 2, Cooler Unit	1	
52	0866 61 533	Bracket No. 3, Cooler Unit	1	
53	0866 61 534	Bracket No. 4, Cooler Unit	1	
54	0866 61 535	Bracket No. 5, Cooler Unit	1	
55	0866 61 536	Bracket No. 6, Cooler	1	
56	99797 0616	Bolt, Bracket	14	
	99952 0600	Washer, Plain	12	
	99971 0600	Washer, Spring	14	
57	99906 0600	Nut	2	
	99951 0618	Washer, Plain	4	
58	99906 0800	Nut, Bracket	2	

No.	Part Number	Description	Q'ty	Remarks
	99952 0800	Washer, Plain	2	
	99971 0800	Washer, Spring	2	
59	0824 61 238A	Valve, Magnet	1	
60	0866 61 541	Valve, Check	1	
61	0866 61 542	Connector	1	
62	99564 1000	Gasket	1	
63	0866 61 543A	Hose No. 1, Vacuum	1	
64	0866 61 527	Clip	1	
65	0866 61 545	Stabilizer, Amplifier	1	
66	1524 61 548	Bracket, Stabilizer	1	
67	99833 0512	Screw, Bracket	2	
	99952 0500	Washer, Plain	2	
	99971 0500	Washer, Spring	2	
68	1562 61 546	Harness	1	
69	1524 61 547	Wire	1	
70	0866 61 549	Spacer	1	
71	0866 61 551	Grille	1	
72	0866 61 552	Holder, Grille	2	
73	99868 0308	Screw	4	
74	0820 78 883	Grommet	2	
75	1531 61 140	Blower	1	
76	1568 61 190A	Control(Fig. No.77 included)	1	
	1568 61 190B	Control	1	Car No. 141928 ⅞～×
77	0866 61 195A	Panel, Control	1	
78	1531 61 411	Cover, Cooler	1	
79	99805 0830	Bolt, Control Panel	2	
	99952 0800	Washer, Plain	2	

No.	Part Number	Description	Q'ty	Remarks
	99971 0800	Washer, Spring	2	
80	99833 0512	Screw, Control	3	
	99971 0500	Washer, Spring	3	
81	99906 0800	Nut, Control Panel	1	
	99952 0822	Washer, Plain	1	
	99971 0800	Washer, Spring	1	
82	0866 61 911	Packing No. 1	1	
83	0866 61 912	Packing No. 2	1	
84	0866 61 913	Packing No. 3	1	
85	0866 61 914	Packing No. 4	1	

COOLER UNIT

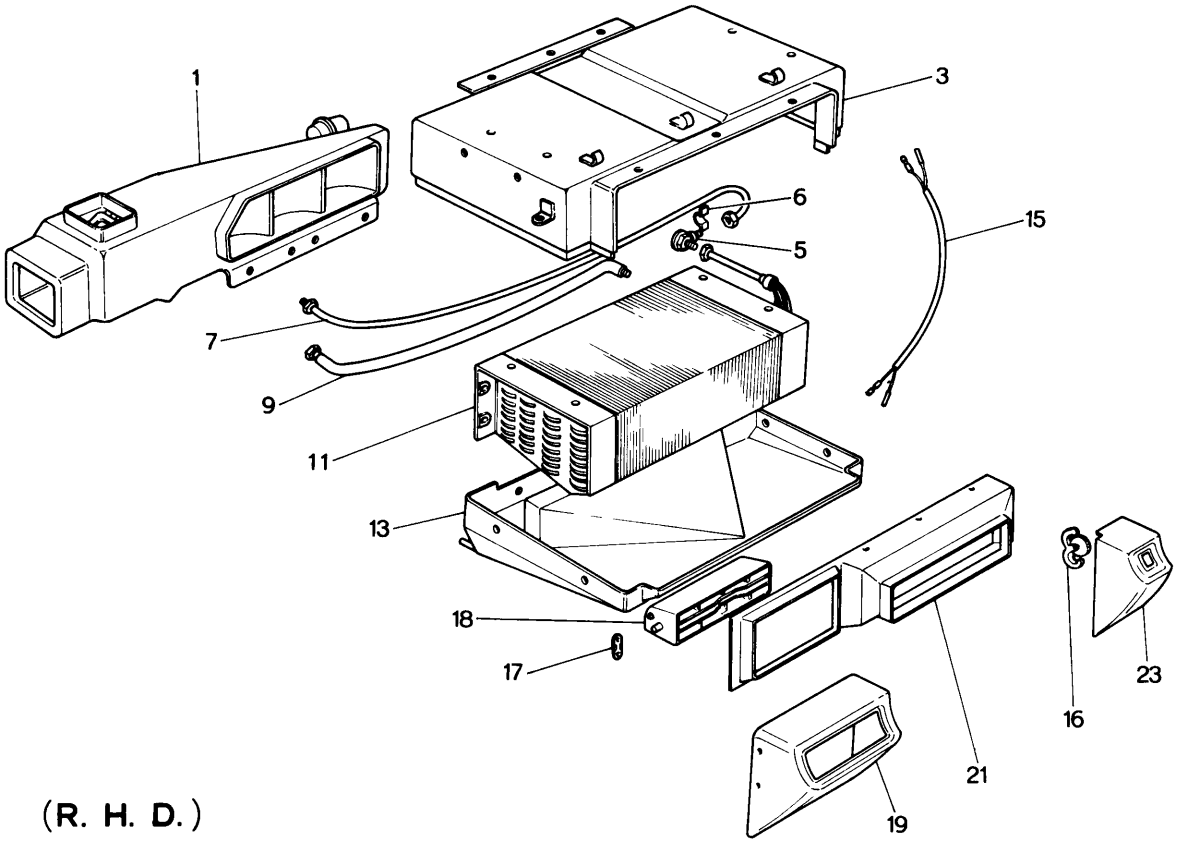

(R. H. D.)

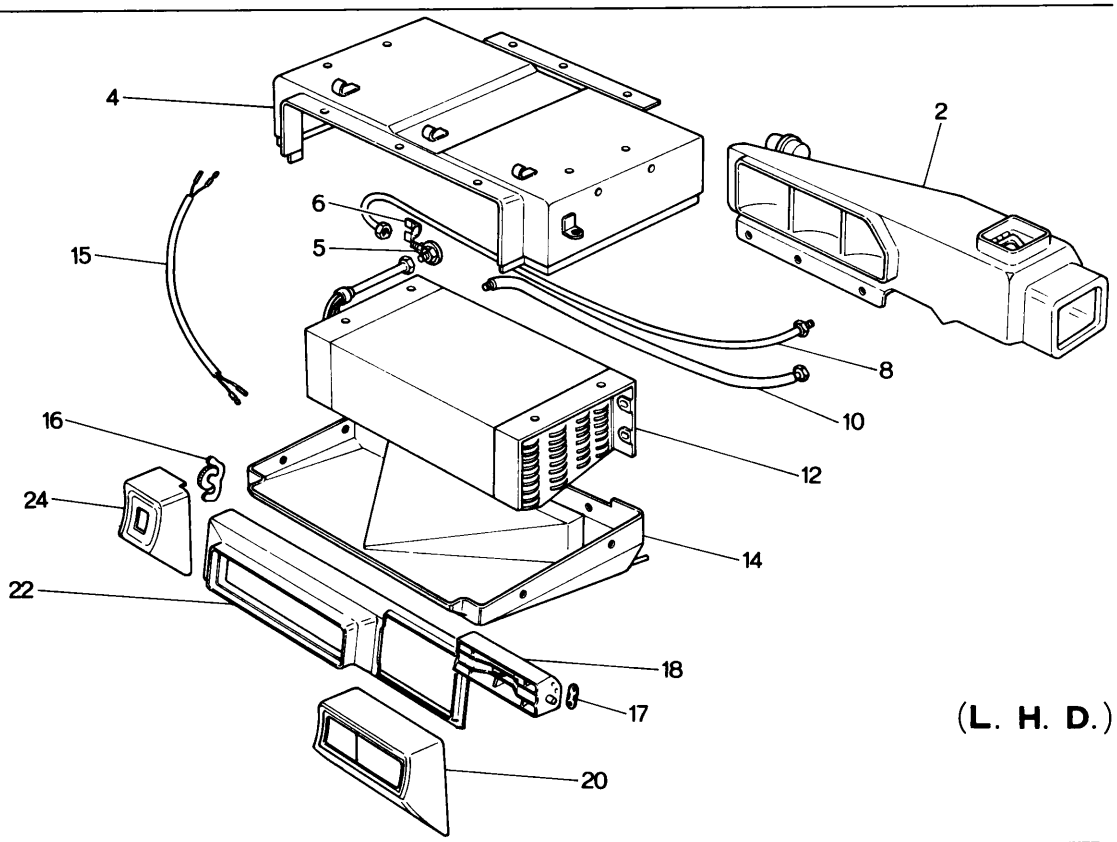

(L. H. D.)

No.	Part Number	Description	Q'ty	Remarks
	0866 61 520	Unit, Cooler (R.H.D.)	1	
	1562 61 520	Unit, Cooler (L.H.D.)	1	
1	0370 76 701	Duct, Air (R.H.D.)	1	
2	1524 76 701	Duct, Air (L.H.D.)	1	
3	0370 76 702	Case, Main (R.H.D.)	1	
4	1524 76 702	Case, Main (L.H.D.)	1	
5	0370 76 703	Valve, Expansion	1	
6	0370 76 704	Holder, Valve	1	
7	0370 76 705	Pipe No. 1 (R.H.D.)	1	
8	1524 76 705	Pipe No. 1 (L.H.D.)	1	
9	0370 76 706	Pipe No. 2 (R.H.D.)	1	
10	1524 76 706	Pipe No. 2 (L.H.D)	1	
11	0370 76 708	Evaporator (R.H.D)	1	
12	1524 76 708	Evaporator (L.H.D.)	1	
13	0370 76 709	Case, Main (R.H.D.)	1	
14	1524 76 709	Case, Main (L.H.D.)	1	
15	0370 76 707	Thermistor	1	
16	0866 76 711	Resistor	1	
17	0866 61 552	Holder, Grille	2	
18	0866 76 715	Grille	1	
19	0866 76 716	Body, Grille (R.H.D.)	1	
20	1562 76 716	Body, Grille (L.H.D.)	1	
21	0866 76 717	Duct, Air (R H.D.)	1	
22	1562 76 717	Duct, Air (L.H.D.)	1	
23	0866 76 718	Base, Grille (R H D)	1	
24	1562 76 718	Base, Grille (L H D)	1	

COMPRESSOR (CAR COOLER)

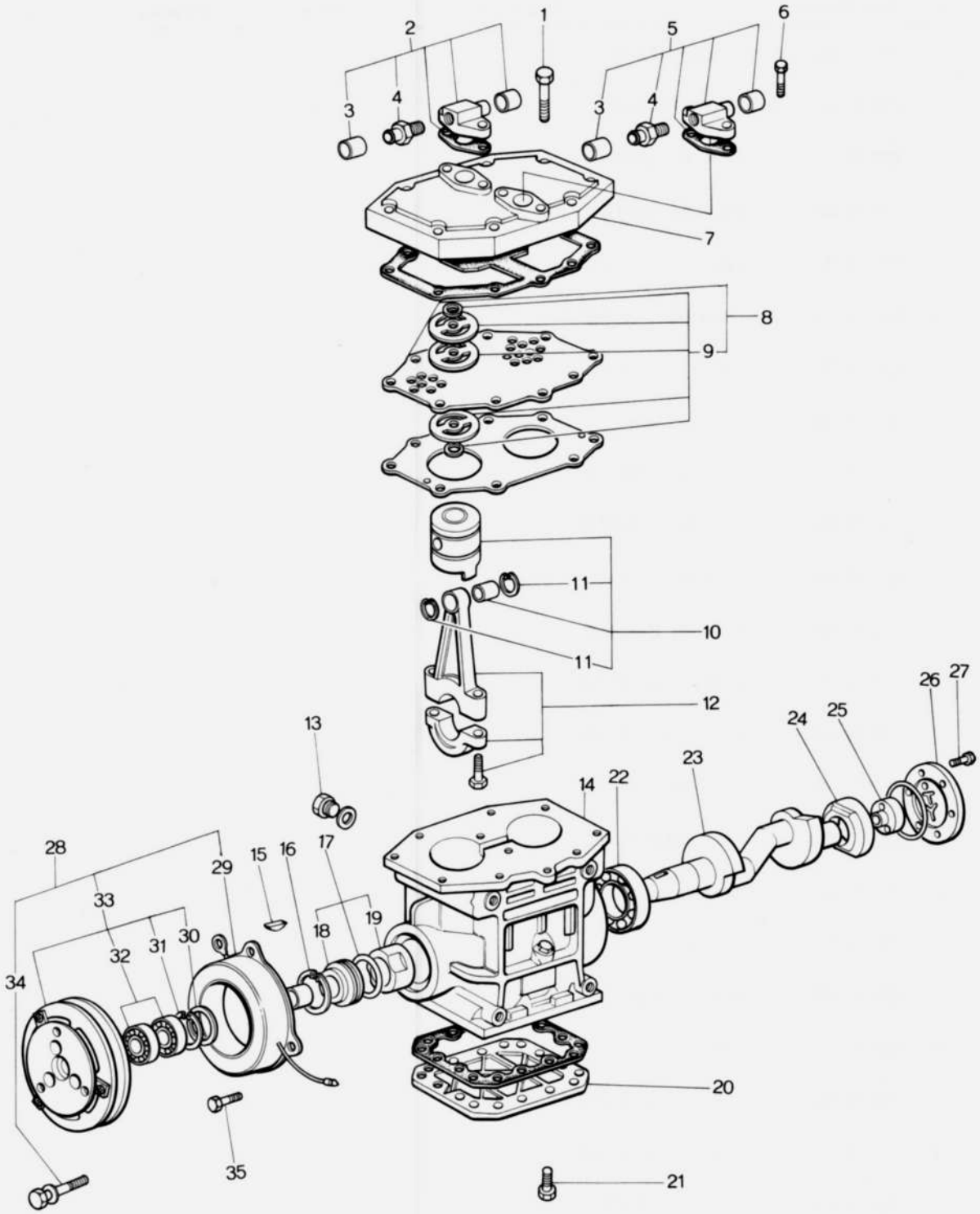

COMPRESSOR (CAR COOLER)

No.	Part Number	Description	Q'ty	Remarks
	0866 61 450	Compressor	1	
	0866 76 710	Compressor Cpt., Fig No. 1～27 Included	1	
1	0866 76 701	Bolt	4	
2	0866 76 810	Valve Kit, Service	1	
3	0866 76 755	Cap, Service Valve	2	
4	0866 76 754	Valve, Service	2	
5	0866 76 820	Valve Kit	1	
6	0866 76 702	Bolt	8	
7	0866 76 752	Head, Cylinder	1	
8	0866 76 760	Valve Ass'y	1	
9	0866 76 703	Valve Kit, Lead	2	
10	0866 76 830	Piston Ass'y	2	
11	0866 76 739	Ring, Snap	4	
12	0866 76 750	Connecting Rod Ass'y	2	
13	0866 76 704	Plug, Oil	1	
14	0866 76 721	Block, Cylinder	1	
15	0866 76 723	Key, Woodruff	1	
16	0866 76 734	Clip	1	
17	0866 76 730	Seal Cpt., Shaft	1	
18	0866 76 733	Plate, Seal	1	
19	0866 76 731	Seal Cpt.	1	
20	0866 76 743	Plate, Bottom	1	
21	0866 76 705	Bolt	16	
22	0866 76 722	Bearing	1	
23	0866 76 724	Shaft, Crank	1	
24	0866 76 725	Bearing	1	

COMPRESSOR (CAR COOLER)

No.	Part Number	Description	Q'ty	Remarks
25	0866 76 726	Pump Ass'y	1	
26	0866 76 729	Plate, Cover	1	
27	0866 76 706	Bolt	6	
28	0866 76 720	Clutch Ass'y, Fig No. 29～34 Included	1	
29	0866 76 763	Stator	1	
30	0866 76 764	Cover, Dust	1	
31	0866 76 765	Ring "E"	1	
32	0866 76 766	Bearing, Ball	2	
33	0866 76 790	Magnet Clutch	1	
34	0866 76 707	Bolt	1	
35	0866 76 708	Screw	3	
	0866 76 709	Gasket Kit	1	

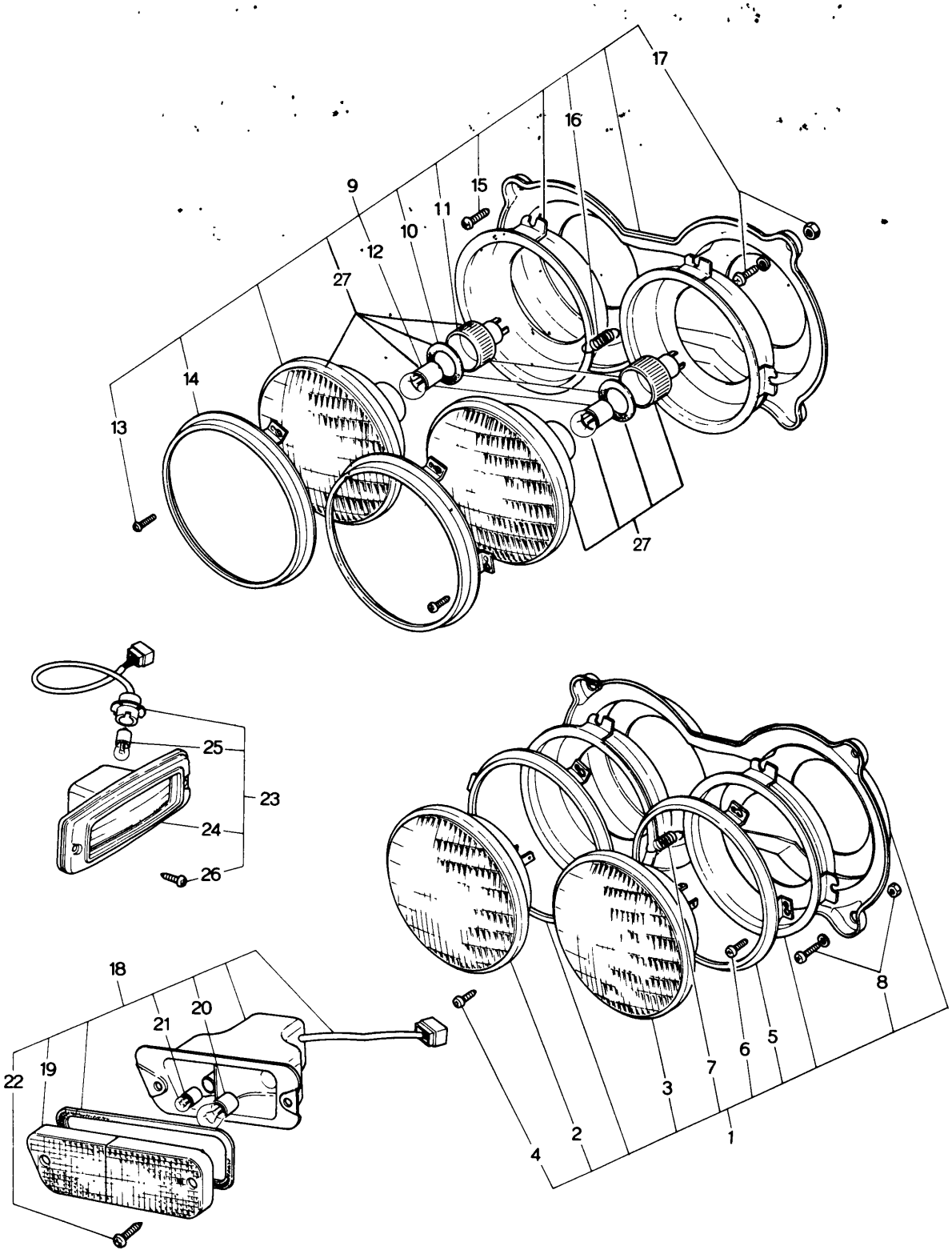
17
16
9
15
11
10
12
27
14
13
27
25
23
24
26
18
21
20
22
19
8
6
5
7
3
2
1
4

No.	Part Number	Description	Q'ty	Remarks
1	0865 89 661	Lamp (R), Head	1	
●	0865 66 001	Housing (R)	1	(Toshiba Make)
	0865 89 666	Lamp (L), Head	1	
●	0865 66 011	Housing (L)	1	(R. H. D.)
	0866 89 661	Lamp (R), Head	1	(Koito Make)
	0866 89 666	Lamp (L), Head	1	
	1540 89 661	Lamp (R), Head	1	(L. H. D.) Sealed Beam Type
	1540 89 666	Lamp (L), Head	1	
2	0865 87 008	Beam Unit, Sealed No. 1 (Toshiba Make)	2	
	0183 66 021	Beam Unit, Sealed No. 1 (Koito Make)	2	
3	0865 87 009	Beam Unit, Sealed No. 2 (Toshiba Make)	2	
	0183 66 022	Beam Unit, Sealed No. 2 (R.H.D.)	2	(Koito Make)
	2801 66 022	Beam Unit, Sealed No. 2 (L.H.D.)	2	
4	0275 87 007	Screw	12	
5	0727 87 014	Holder, Lamp	4	
6	0727 87 016	Screw	8	
7	2850 87 012	Spring	4	
8	99860 0816	Screw, Tapping	8	
	99910 0601	Nut	8	
	99952 0816	Washer, Plain	8	
●	0727 87 012	Holder (R)	1	
●	0727 87 013	Holder (L)	1	
●	0727 87 022	Holder (R)	1	
●	0727 87 023	Holder (L)	1	
9	1562 89 661	Lamp (R), Head (Bulb White)	1	(L. H. D.) Semi Sealed Beam Type
	1562 89 666	Lamp (L), Head (Bulb White)	1	
	1568 89 661	Lamp (R), Head (Bulb Yellow (France))	1	
	1568 89 666	Lamp (L), Head (Bulb Yellow (France))	1	
10	2276 66 042	Gasket	4	
11	2276 66 044	Ring Set	4	

No.	Part Number	Description	Q'ty	Remarks
12	2288 66 045	Bulb - White Color	4	
	2360 66 045	Bulb - Amber Color	4	
13	0275 87 007	Screw	12	
14	0727 87 014	Holder, Lamp	4	
15	0727 87 016	Screw	8	
16	2850 87 012	Spring	4	
17	99860 0616	Screw, Tapping	8	
	99910 0601	Nut	8	
	99952 0816	Washer, Plain	8	
18	1524 89 662 A	Lamp (R), Front Turn Signal	1	
	1524 89 667 A	Lamp (L), Front Turn Signal	1	
19	1524 66 112A	Lens (R)	1	
	1524 66 142A	Lens (L)	1	
20	99701 2050	Bulb	2	
21	99701 3210	Bulb	2	
22	99835 0625C	Screw	4	
●	1524 66 111	Housing	1	
●	1524 66 141	Housing	1	
23	0866 89 663	Lamp (R), Side Turn Signal } For General	1	
	0866 89 668	Lamp (L), Side Turn Signal } For General	1	
	1531 89 663	Lamp (R), Side Turn Signal } For Europe	1	
	1531 89 668	Lamp (L), Side Turn Signal } For Europe	1	
● Ⓝ	0865 66 482	Socket	2	
24	0866 66 481A	Lens & Body (R) (For General)	1	
●	1531 66 481	Lens & Body (R) (For Europe)	1	
	0866 66 491A	Lens & Body (L) (For General)	1	
●	1531 66 491	Lens & Body (L) (For Europe)	1	
25	99701 6030	Bulb (For General)	2	
●	99701 2050	Bulb (For Europe)	2	
26	99769 0416	Screw, Lamp	4	

No.	Part Number	Description	Q'ty	Remarks
27	2288 66 040	Lamp Unit Type E 1	1	Bulb White
	2288 66 070	Lamp Unit Type E 2	1	Bulb White
●	2212 66 040	Lamp Unit Type E 1	1	Bulb Yellow (For France)
●	2212 66 070	Lamp Unit Type E 2	1	Bulb Yellow (For France)

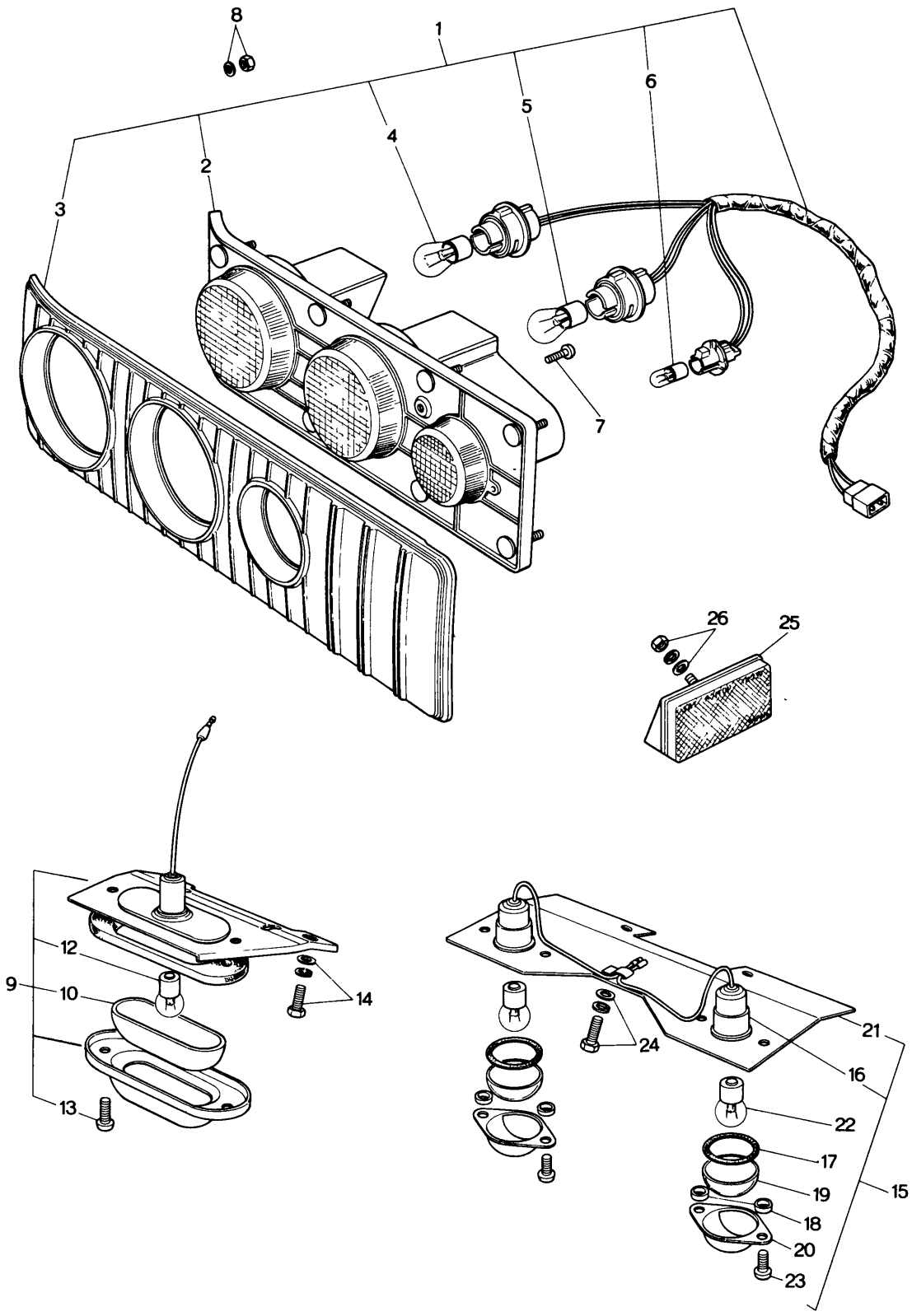
8
1
6
5
4
2
3
7
26
25
12
9
10
14
13
24
21
16
22
17
19
15
18
20
23

No.	Part Number	Description	Q'ty	Remarks
1	1554 89 664	Lamp (R), Rear Combination } For Australia	1	
	1554 89 669	Lamp (L), Rear Combination } For Australia	1	
	1562 89 664A	Lamp (R), Rear Combination } For General	1	
	1562 89 669A	Lamp (L), Rear Combination } For General	1	
	1568 89 664A	Lamp (R), Rear Combination } For France	1	
	1568 89 669A	Lamp (L), Rear Combination } For France	1	
2	1562 66 211A	Unit (R) } For Australia & General	1	
	1562 66 231A	Unit (L) } For Australia & General	1	
	1568 66 211A	Unit (R) } For France	1	
	1568 66 231A	Unit (L) } For France	1	
3	0866 66 212	Rim (R)	1	
	0866 66 232	Rim (L)	1	
4	99701 3210	Bulb, Turn Signal	2	
5	99701 4215	Bulb, Tail & Stop	2	
6	99701 8100	Bulb, Back Up Lamp	2	
	99701 3230	Bulb, Back Up- Australia	2	
7	99868 0414	Screw	6	
●	0866 66 213	Packing	2	
●	0866 66 214	Packing	2	
8	99906 0500	Nut, Rear Combination Lamp	18	
	99952 0516	Washer, Plain	18	
9	0866 89 665	Lamp, Licence (For General)	1	
	1524 89 665	Lamp, Licence (For All ECE Spec. Models Excluded, France & Italy)	1	
10	0866 66 372	Lens	1	
11	~~0824 88 374~~	~~Cover~~	~~1~~	
12	99701 2050	Bulb (12.5W) (For All ECE territory Excluded, France & Italy)	1	
	99701 2080	Bulb (12V, 8W) (For General)	1	

No.	Part Number	Description	Q'ty	Remarks
13	0305 87 032	Screw	2	
14	99797 0612	Bolt, Licence Lamp	2	
	99952 0600	Washer, Plain	2	
	99971 0600	Washer, Spring	2	
15	1531 89 665	Lamp, Licence (For France & Italy)	2	
16	1531 66 371	Body	2	
17	1531 66 372	Gasket	2	
18	1531 66 373	Spacer	4	
19	1531 66 374	Lens	2	
20	1531 66 375A	Rim	2	
21	1531 66 376	Bracket	1	
22	99701 2050	Bulb	2	
23	99773 0412	Screw	4	
24	99797 0612	Bolt, Licence Lamp	2	
	99952 0600	Washer, Plain	2	
	99971 0600	Washer, Spring	2	
	1511 89 673	Ornament - Side (R)	1	For Australia
	1511 89 678	Ornament - Side (L)	1	For Australia
	1524 89 673	Ornament - Side (R)	1	For General
	1524 89 678	Ornament - Side (L)	1	For General
	99974 0416	Screw Ornament	4	
	99940 0416	Nut	4	
25	0868 66 700A	Reflector, Reflex - Rear	2	
26	99940 0500	Nut, Reflex Reflector	2	
~~—~~	~~99952 0600~~	~~Washer, Plain~~	~~2~~	~~—~~
~~—~~	~~99971 0600~~	~~Washer, Spring~~	~~2~~	~~—~~

ELECTRIC EQUIPMENT (BODY)

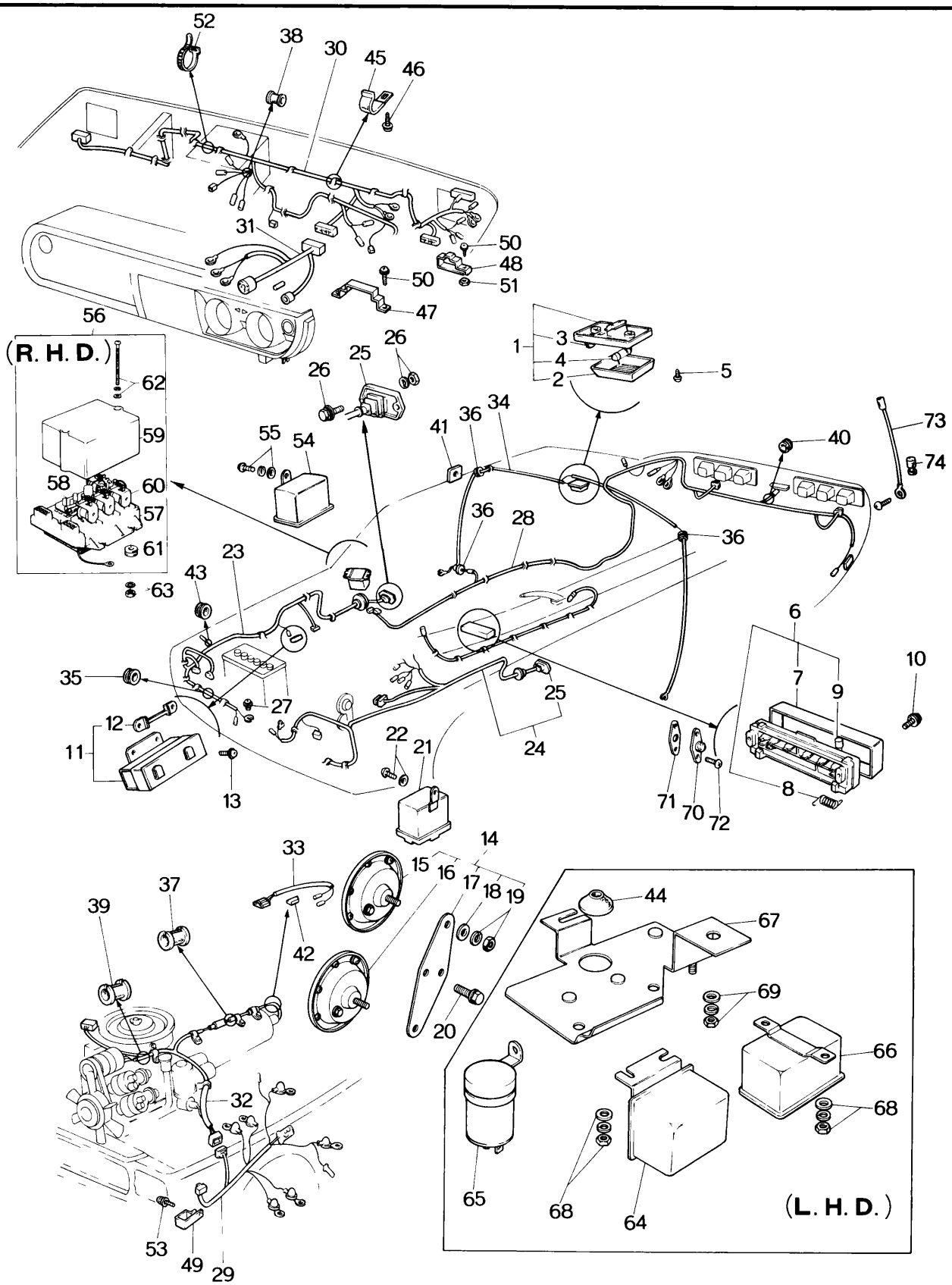

No.	Part Number	Description	Q'ty	Remarks
1	0390 66 410	Lamp, Room	1	
2	0398 66 412	Lens	1	
3	0398 66 413	Knob	1	
4	99701 5050	Bulb	1	
● Ⓝ	0390 66 411	Body	1	
5	99838 0514	Screw, Room Lamp	2	
6	0866 66 730B	Block, Fuse	1	
●	0862 66 730	Block, Fuse	1	Car No. 150526 ⁷³⁄₈～×
●	0866 66 731	Body	1	
●	0862 66 731	Body	1	Car No. 150526 ⁷³⁄₈～○
7	0866 66 732	Cover	1	
●	0862 66 732	Cover	1	Car No. 150526 ⁷³⁄₈～×
8	0866 66 733	Spring, Return	1	
9	99706 0105	Fuse, 5A	1	Car No. 150526 ⁷³⁄₈～Discarded
	99706 0115	Fuse, 5A	1	Car No. 150526 ⁷³⁄₈～Added Anew
	99706 0110	Fuse, 10A, Spare Fuse Included	7	
	99706 0115	Fuse, 15A	2	
	99706 0120	Fuse, 20A, Spare Fuse Included	3	
10	99833 0625	Screw, Fuse Block	2	
	99971 0600	Washer, Spring	2	
11	0865 66 760	Block, Main Fuse	1	
12	2852 66 763	Fuse, 50A	2	

No.	Part Number	Description		Q'ty	Remarks
13	99743 0620	Screw, Main Fuse Block		2	
	99952 0600	Washer, Plain		2	
	99971 0600	Washer, Spring		2	
14	0865 66 780	Horn, Electric		1	
	1531 66 780	Horn, Electric (For Europe) (England Excluded)		1	
15	0865 66 790	Horn (High Tone)		1	
	1531 66 790	Horn (High Tone) (For Europe) (England Excluded)		1	
16	0865 66 800	Horn (Low Tone)		1	
	1531 66 800	Horn (Low Tone) (For Europe) (England Excluded)		1	
17	0865 66 805	Holder		1	
18	0865 66 809	Washer, Holder		2	
19	99906 0600	Nut		2	
	99971 0600	Washer, Spring		2	
20	99801 0816	Bolt, Electric Horn		2	
	99971 0800	Washer, Spring		2	
21	1524 68 810	Relay, Horn		1	
22	99806 0612	Bolt, Horn Relay		1	
	99952 0600	Washer, Plain		1	
	99971 0600	Washer, Spring		1	
23	0866 67 010A	Harness, Wire (Frt., R)		1	
	0866 67 010C	Harness, Wire (Frt., R)		1	Car No. 140779 $\frac{72}{2}$ ~ ○
●	0862 67 010A	Harness, Wire (Frt., R)		1	Car No. 150461 $\frac{72}{7}$ ~ ×
	1504 67 010	Harness, Wire (Frt., R)		1	1558,1559
	1504 67 010B	Harness, Wire (Frt., R)		1	Car No. 140779 $\frac{79}{2}$ ~ ○
●	1504 67 010D	Harness, Wire (Frt., R)		1	Car No. 150526 $\frac{72}{8}$ ~ ×
24	0866 67 020B	Harness, Wire (Frt., L)	(R.H.D.)	1	
	0866 67 020C	Harness, Wire (Frt., L)	(R.H.D.)	1	Car No. 136920 $\frac{72}{2}$ ~ ○
	0866 67 020E	Harness, Wire (Frt., L)	(R.H.D.)	1	Car No. 140779 $\frac{72}{2}$ ~ ○
●	0862 67 020C	Harness, Wire (Frt., L)	(R.H.D.)	1	Car No. 150526 $\frac{72}{8}$ ~ ×
	1524 67 020B	Harness, Wire (Frt., L)	(L.H.D.)	1	
	1524 67 020C	Harness, Wire (Frt., L)	(L.H.D.)	1	Car No. 130590 $\frac{71}{12}$ ~ ○
	1524 67 020F	Harness, Wire (Frt., L)	(L.H.D.)	1	Car No. 140779 $\frac{72}{2}$ ~ ○
●	1524 67 020I	Harness, Wire (Frt., L)	(L.H.D.)	1	Car No. 150526 $\frac{72}{8}$ ~ ×
	1504 67 020	Harness, Wire (Frt., L)	1558,1559	1	
	1504 67 020F	Harness, Wire (Frt., L)	1558,1559	1	Car No. 142350 $\frac{72}{3}$ ~ ○
●	1524 67 020I	Harness, Wire (Frt., L)	1558,1559	1	Car No. 150526 $\frac{72}{8}$ ~ ×

No.	Part Number	Description	Q'ty	Remarks
25	0866 67 151	Protector, Wire Harness Front	2	
26	99806 0625	Bolt	4	
	99852 0600	Washer, Plain	4	
	99806 0600	Nut	4	
	99971 0600	Washer, Spring	4	
27	99833 0812	Screw, Wire Herness Front Earth	1	
	99952 0800	Washer, Plain	1	
	99971 0800	Washer, Spring	1	
●	0862 67 040	Warness Wire - Ignition Coil Rolay~Coil	1	Car No. 150526 7/8~×
28	0866 67 030	Harness, Wire (Rr.)	1	
	0866 67 030B	Harness, Wire (Rr.)	1	Car No. 142383 7/3~△
29	0866 67 040E	Harness, Wire - Ignition Coil Relay~Coil	1	
30	0866 67 050H	Harness, Wire - Meter Panel (R.H.D.)	1	
	0866 67 050I	Harness, Wire - Meter Panel (R.H.D.)	1	Car No. 133210 7/1~○
	0865 67 050	Harness, Wire - Meter Panel (R.H.D.)	1	Car No. 136920 7/2~○
●	1511 67 050	Harness, Wire - Meter Panel (R.H.D.)	1	Car No. 150526 7/8~×
	1524 67 050C	Harness, Wire - Meter Panel (L.H.D.)	1	
●	1524 67 050F	Harness, Wire - Meter Panel (L.H.D.)	1	Car No. 150526 7/8~×
Ⓝ	1504 67 050B	Harness, Wire - Meter Panel (L.H.D.) (1558,1559)	1	
●	1504 67 050D	Harness, Wire - Meter Panel (L.H.D.) (1558,1559)	1	Car No. 150526 7/8~×
31	0866 67 070B	Harness, Wire - Meter	1	
●	0866 67 070C	Harness, Wire - Meter	1	Car No. 150306 7/7~△
●	1558 67 070	Harness, Wire - Meter (1558,1559)	1	
●	1558 67 070A	Harness, Wire - Meter (1558,1559)	1	Car No. 150526 7/8~×
32	0866 67 060C	Harness, Wire - Engine	1	
	0866 67 060E	Harness, Wire - Engine (Manual)	1	Car No. 130590 7/12~○
	0866 67 060F	Harness, Wire - Engine (Manual)	1	Car No. 133822 7/1~○
●	0862 67 060A	Harness, Wire - Engine (Manual)	1	Car No. 150526 7/8~×
	0871 67 060C	Harness, Wire - Engine	1	
	0871 67 060F	Harness, Wire - Engine (Automatic)	1	Car No. 133210 7/1~△
	0871 67 060G	Harness, Wire - Engine (Automatic)	1	Car No. 136920 7/2~○
	0871 67 060H	Harness, Wire - Engine (Automatic)	1	Car No. 141184 7/2~○
●	0872 67 060A	Harness, Wire - Engine (Automatic)	1	Car No. 150526 7/8~×
●	1560 67 060	Harness, Wire - Engine (1558 1559)	1	Car No. 150526 7/8~×
33	0866 67 065	Harness, Wire - Reverse Lamp	1	
●	0862 67 065A	Harness, Wire - Reverse Lamp	1	Car No. 150526 7/8~×
Ⓝ	0866 67 155	Protector, Wire Harness	1	
34	0866 67 080	Cord, Room Lamp	1	
~~35~~	~~0258 88 885~~	~~Protector, Front~~	~~2~~	
36	0114 43 625	Protector, Room Lamp Cord	2	
	0866 67 153A	Pad, Protector - Room Lamp Cord (Sedan)	1	
	0820 67 151	Protector (Coupe)	1	
37	99686 1000	Protector, Cord	5	
38	99686 1200	Protector (Automatic)	1	
39	99686 1600	Protector Cord - Engine	1	
40	0866 67 156	Protector, Licence Lamp Cord	1	
41	0559 67 151A	Protector, Room Lamp Cord (Sedan)	2	
●	0866 67 153	Pad Protector - Room Lamp Cord (R.H.D. Sedan)	1	
	99295 0406	Clip, Rear Combination Lamp	1	
42	0208 66 949	Pad, Protector - Reverse Lamp	5	
43	0866 67 152	Protector, Cord - Side Turn Signal Lamp	6	

No.	Part Number	Description	Q'ty	Remarks
44	1524 67 155	Protector, Cord-Relay (L.H.D.)	1	
45	0866 67 059	Clip, Wiring Harness (Panel)	4	
46	99863 0512	Screw, Clip	4	
	99952 0500	Washer, Plain	4	
47	0866 67 905A	Clip, Wiring Harness (Meter)	1	
48	0866 67 906	Clip, Dash Panel Upper	3	
49	0866 67 908	Clip, Ignition Coil Harness	1	
50	99869 1508	Screw, Clip	4	
Ⓝ	99869 0512	Screw, Tapping-Clip	3	
	99971 0500	Washer, Spring	4	
Ⓝ	99952 0500	Washer, Plain	3	
51	99940 0600	Nut, Clip	1	
52	0305 67 993A	Clip	1	
53	99833 0612	Screw, Clip	1	
	99952 0600	Washer, Plain	1	
	99971 0600	Washer, Spring	1	
54	0839 67 880	Relay, Ignition Cord	2	Car No. 150526 $\frac{7}{8}$~×
●	0862 67 880	Relay, Ignition Cord	2	
55	99806 0612	Bolt, Relay	2	Car No. 130590 $\frac{7}{12}$~Q'ty
	99952 0600	Washer, Plain	2	
	99971 0600	Washer, Spring	2	
56	0866 67 710D	Control Unit, Center	1	(R. H. D.)
57	0866 67 711	Socket	1	
58	0866 67 712C	Flasher & Hazard Unit	1	
59	866 67 716	Cover	1	
60	0866 67 719	Relay, Wiper Switch	1	
61	0866 67 717	Bush	4	

No.	Part Number	Description	Q'ty	Remarks
62	0866 67 718	Screw	2	
	99952 0500	Washer, Plain	2	
	99971 0500	Washer, Spring	2	
● 63	99906 0600	Nut, Center Control Unit	3	
●	99952 0618	Washer, Plain	3	
64	0820 60 870A	Relay, Wiper Switch	1	
65	0820 66 470A	Flasher Unit For France	1	
66	0848 66 830	Flasher & Hazard Unit	1	
● Ⓝ	1524 67 715	Cord Relay Unit	1	
● 67	1524 67 720B	Bracket, Relay	1	
68	99906 0600	Nut	4	
	99952 0600	Washer, Plain	4	(L.H.D.)
	99971 0600	Washer, Spring	4	
	99952 0618	Washer, Plain	1	
69	99906 0600	Nut	2	
	99952 0600	Washer, Plain	2	
	99971 0600	Washer, Spring	2	
70	0209 66 820	Switch, Door	4	
71	0209 66 821	Washer, Adjust-Door Switch	8	
72	99864 0412	Screw, Door Switch	8	
73	0866 67 133	Cord, Back Window-Heating Wire use	1	
74	99684 0600	Protector, Cord	1	

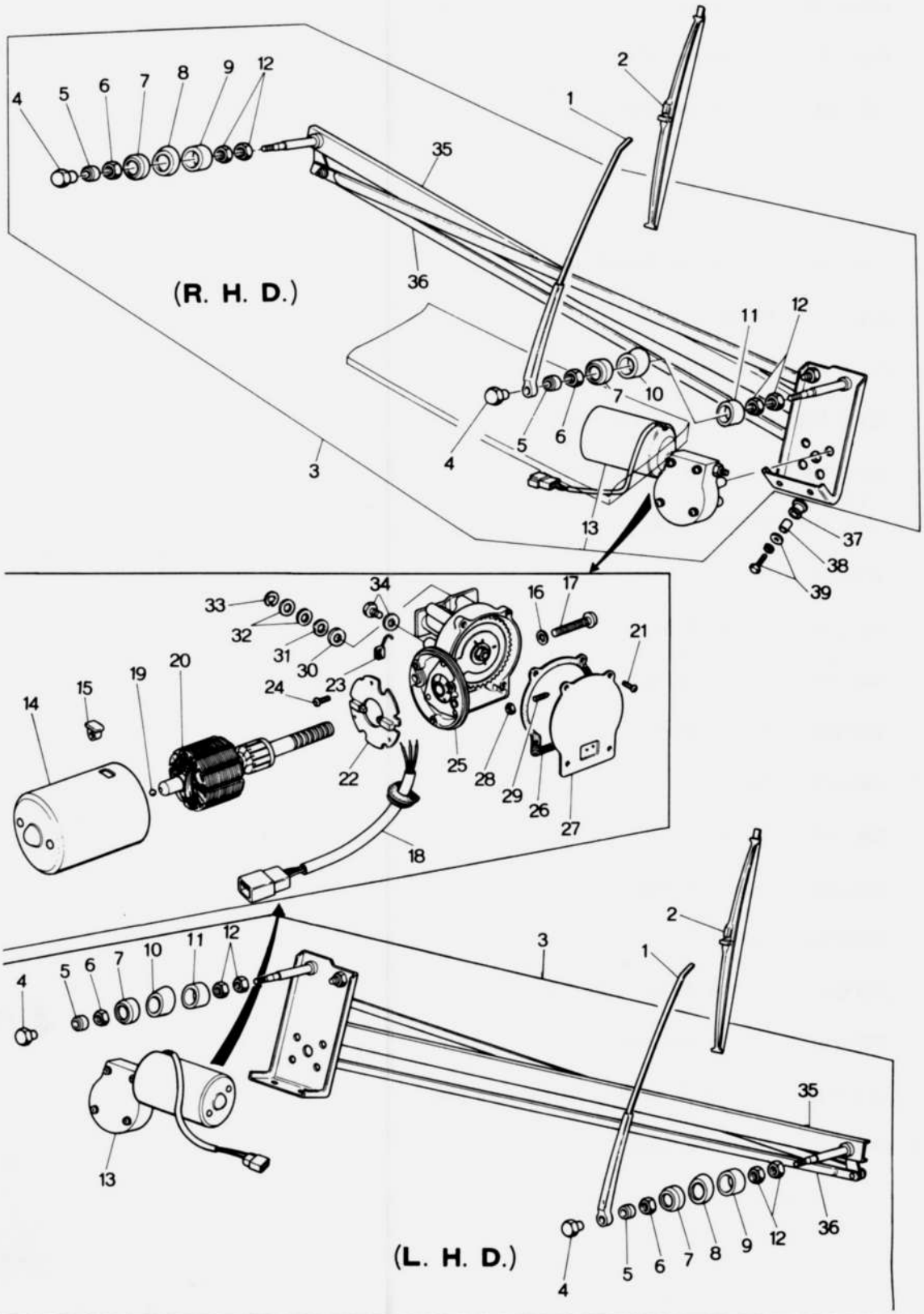
(R. H. D.)
(L. H. D.)

No.	Part Number	Description	Q'ty	Remarks
● 1	0866 67 321	Arm, Wiper (R.H.D.)	2	
●	1524 67 321	Arm, Wiper (L.H.D.)	2	
● 2	0305 67 330A	Blade, Wiper (R.H.D.)	2	
●	2835 67 330	Blade, Wiper (L.H.D.)	2	
3	0866 67 340C	Motor & Link (R.H.D.)	1	
	1524 67 340B	Motor & Link (L.H.D.)	1	
4	0223 66 371	Nut, Cap	2	
5	0212 66 371	Cap, Seal	2	
6	0212 66 372	Nut	2	
7	0305 67 906	Washer	2	
8	0866 76 604	Bush, Outer (R.H.D.)	1	
	1524 76 604	Bush, Outer (L.H.D.)	1	
9	0866 76 603	Bush, Inner (R.H.D.)	1	
	1524 76 603	Bush, Inner (L.H.D.)	1	
● 10	1823 67 352	Bush, Outer	1	
11	0866 76 605	Bush, Inner	1	
12	0259 67 134	Nut	4	
13	0866 67 350	Motor (R.H.D.)	1	Fig. No. 14~33 included
	1524 67 350	Motor (L.H.D.)	1	Fig. No. 14~33 included
14	0259 67 109A	Yoke	1	
15	0257 67 108	Nut	2	
16	99971 0500	Washer, Spring	6	
17	0257 67 107	Screw	2	
18	0866 76 607	Wire, Lead (R.H.D.)	1	

WINDSHIELD WIPER

No.	Part Number	Description	Q'ty	Remarks
	1524 76 607	Wire, Lead (L.H.D.)	1	
19	0259 87 107	Ball	2	
20	0259 87 108A	Rotor	1	
21	0259 87 105	Screw	7	
22	0259 87 101A	Plate, Brush Holder	1	
23	0259 87 106	Brush	3	
24	99806 0510	Bolt	4	
25	0866 76 608	Box, Gear (R.H.D.)	1	
	1524 76 608	Box, Gear (L.H.D.)	1	
26	0259 87 103	Gasket	1	
27	2158 87 104	Plate, End (R.H.D.)	1	
	0259 87 104A	Plate, End (L.H.D.)	1	
28	0259 87 119	Nut	1	
29	0259 87 120	Screw	1	
30	0738 87 803	Felt	1	
31	0702 87 135	Washer, Wave	1	
32	0738 87 804	Washer	2	
33	0702 87 138	Ring, Retaining	1	
34	99806 0510	Bolt, Motor	4	
	99971 0500	Washer, Spring	4	
35	0866 76 602	Frame, Wiper (R.H.D.)	1	
	1524 76 602	Frame, Wiper (L.H.D.)	1	
36	0866 76 601	Link, Wiper (R.H.D.)	1	
	1524 76 601	Link, Wiper (L.H.D.)	1	

No.	Part Number	Description	Q'ty	Remarks
37	0866 67 301A	Washer, Rubber	2	
38	0866 67 302	Spacer	2	
39	99783 0625	Bolt	3	
	99952 0618	Washer, Plain	3	
	99971 0600	Washer, Spring	3	

SCREEN WASHER

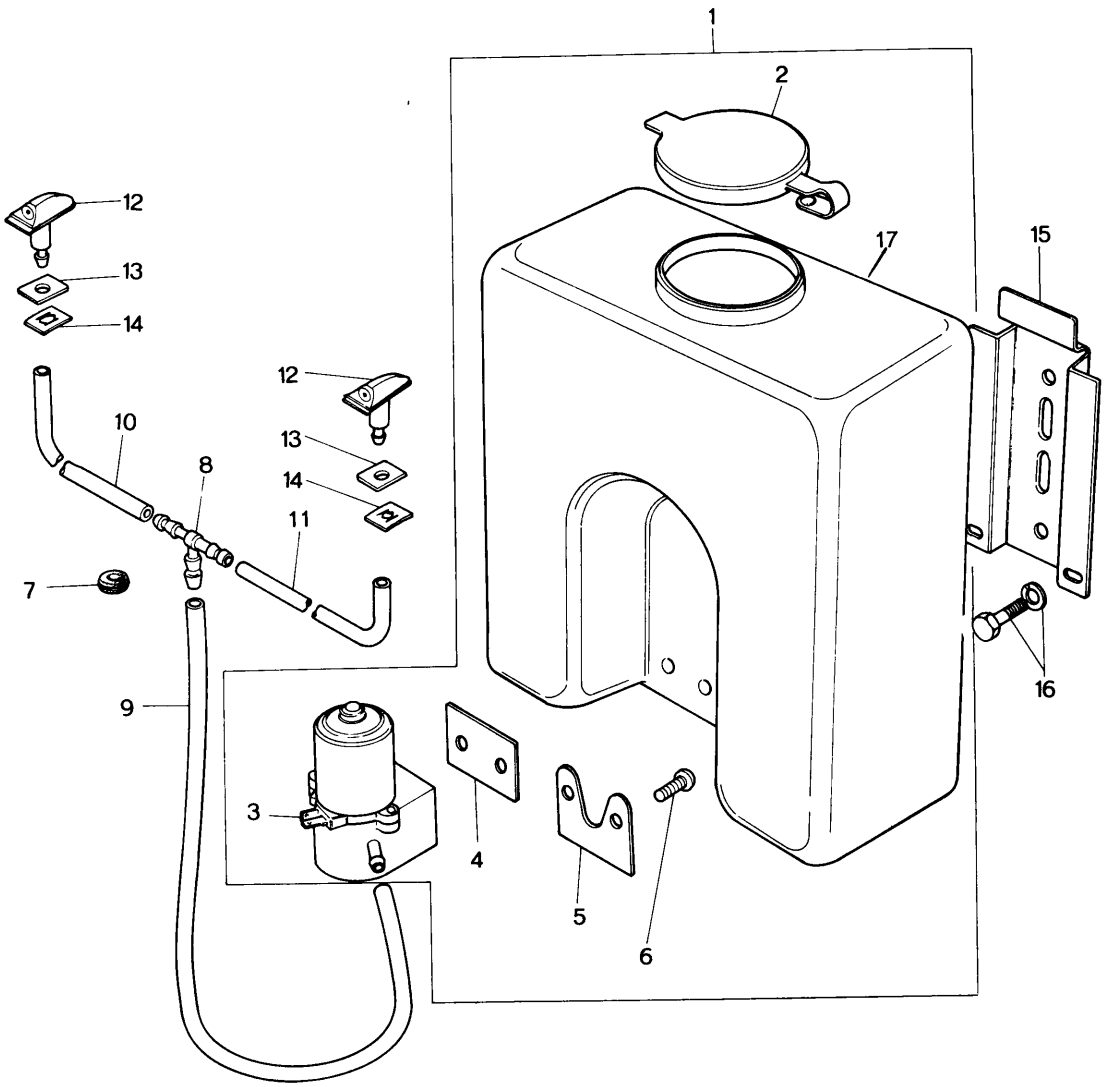

No.	Part Number	Description	Q'ty	Remarks	
●	~~0866 67 470~~	~~Washer Set, Screen (R.H.D.)~~	~~1~~		☆
●	~~1524 67 470~~	~~Washer Set, Screen (L.H.D.)~~	~~1~~		☆
1	0317 67 480	Tank & Motor	1		
2	0727 87 992	Cap	1		
3	0305 87 993	Pump	1		
4	0727 87 994	Gasket	1		
5	0727 87 995	Plate	1		
6	0727 87 996	Screw, Pump	2		
7	0111 41 692	Grommet	1		
8	0813 66 879	Joint, Pipe	1		
9	99335 04015	Pipe	1		
10	~~99335 04065~~	~~Pipe~~	~~1~~		
	99335 04066	Pipe	2		
11	~~99335 04070~~	~~Pipe~~	~~1~~		
12	0866 67 510A	Nozzle	2		
13	0866 67 511A	Washer, Nozzle	2		
14	0866 67 512	Nut, Speed-Nozzle	2		
15	0866 67 521	Bracket, Tank	1		
16	99781 0612	Bolt, Bracket	2		
	99971 0600	Washer, Spring	2		
● 17	0317 67 511	Tank	1		

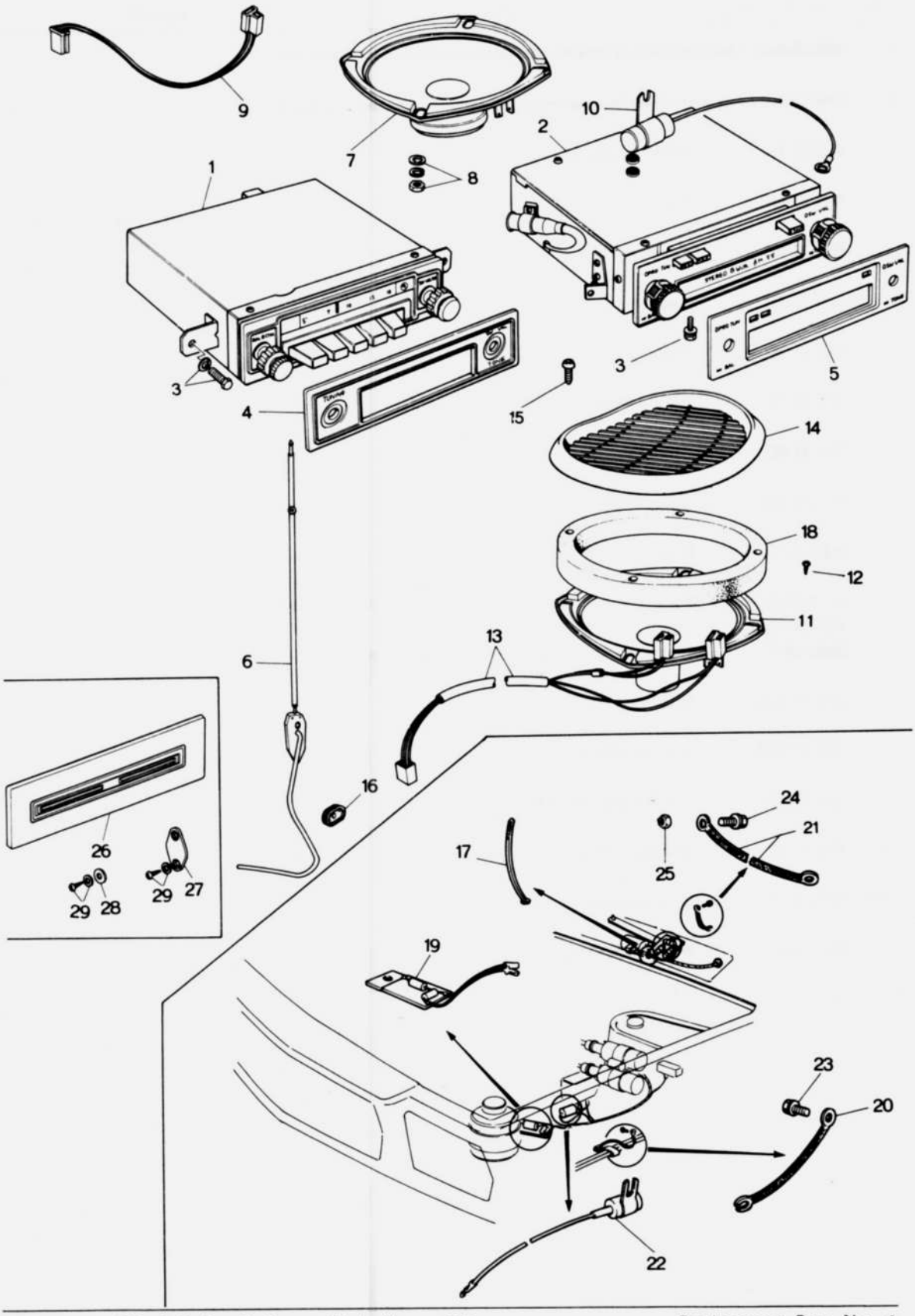
9
7
8
10
2
1
3
4
3
5
15
14
18
12
11
13
6
16
26
29
28
29
27
17
25
24
21
19
23
20
22

No.	Part Number	Description	Q'ty	Remarks
	0865 66 860B	Auto Radio Cpt. AM (R.H.D.)	1	
	1550 66 860A	Auto Radio Cpt. AM/SW (R.H.D.)	1	
	1551 66 860A	Auto Radio Cpt. AM/FM (R.H.D.)	1	
	0870 66 860B	Auto Radio & Stereo Cpt. (R.H.D.)	1	
	1560 66 860B	Auto Radio Cpt. AM (L.H.D.)	1	
	1561 66 860B	Auto Radio Cpt. AM/SW (L.H.D.)	1	
	1562 66 860B	Auto Radio Cpt. AM/FM (L.H.D.)	1	
	1564 66 860B	Auto Radio & Stereo (L.H.D.)	1	
	~~0865 66 870A~~	~~Auto Radio AM (R.H.D.)~~	~~1~~	
	~~1550 66 870~~	~~Auto Radio AM/SW (R.H.D.)~~	~~1~~	
	~~1551 66 870~~	~~Auto Radio AM/FM (R.H.D.)~~	~~1~~	
	~~0870 66 870A~~	~~Auto Radio & Stereo (R.H.D.)~~	~~1~~	
	~~1560 66 870~~	~~Auto Radio AM (L.H.D.)~~	~~1~~	
	~~1561 66 870~~	~~Auto Radio AM/SW (L.H.D.)~~	~~1~~	
	~~1562 66 870~~	~~Auto Radio AM/FM (L.H.D.)~~	~~1~~	
	~~1564 66 870~~	~~Auto Radio & Stereo (L.H.D.)~~	~~1~~	
1	0868 66 900	Tuner, AM	1	
	1561 66 900	Tuner, AM/SW	1	
	1562 66 900	Tuner, AM/FM	1	
2	0870 66 900A	Tuner & Player	1	
3	99797 0512	Bolt, Tuner	2	
	99852 0500	Washer, Plain	2	
	99971 0500	Washer, Spring	2	
4	0868 66 905	Plate, Decoration-Radio	1	
5	0870 66 905	Plate, Decoration-Radio & Stereo	1	
6	0370 66 930B	Antenna (R.H.D.)	1	

No.	Part Number	Description	Q'ty	Remarks
	1524 66 930A	Antenna (L.H.D.)	1	
7	0866 66 960	Loud Speaker	1	
	0275 68 088	Spacer	8	
~~8~~	~~00000 0000~~	~~Nut, Loud Speaker~~	~~8~~	
	99940 0500	Nut, Flange	4	
	~~00000 0000~~	~~Washer, Plain~~	~~4~~	
	~~00000 0000~~	~~Washer, Spring~~	~~4~~	
9	0866 66 965	Cord, Loud Speaker	1	
10	0839 66 992	Condencer	1	
11	0870 66 970	Loud Speaker, Stereo	2	
12	99864 0410	Screw, Loud Speaker-Stereo	8	
13	0870 66 975	Cord, Stereo Loud Speaker	1	
14	0870 66 980	Grill, Loud Speaker-Stereo use	1	
15	99748 0410	Screw, Grille	8	
16	0866 67 153A	Protector, Antenna Cord	1	
17	0305 67 993A	Clip, Wire Harness (Excluded 0870 66 860B use)	1	
18	0317 66 862	Partition, Loud Speaker	1	
19	0866 66 865	Suppresser„Ignition	1	
20	0866 66 871	Wire, Earth	2	
~~21~~	~~0000 00 000~~	~~Wire, Earth~~	~~1~~	
22	0839 66 992	Condenser	1	
●	0820 66 992	Condenser	1	Car No. 150526 ⅞～×
23	99833 0512	Screw	1	
	99952 0500	Washer, Plain	1	
24	99860 0512	Screw	1	
	99953 0500	Washer, Plain	1	
	99971 0500	Washer, Spring	1	
25	99940 0502	Nut, Flange	1	

No.	Part Number	Description		Q'ty	Remarks
26	0316 66 865A	Ornament		1	
27	0727 66 991A	Cover, Hole-Antenna		1	
28	0727 66 992	Cover, Hole-Antenna	Without Auto Radio	1	
29	99863 0410B	Screw, Hole Cover		3	
	99953 0400B	Washer, Plain		3	

CRUSH PAD, GLOVE POCKET & CONSOLE BOX

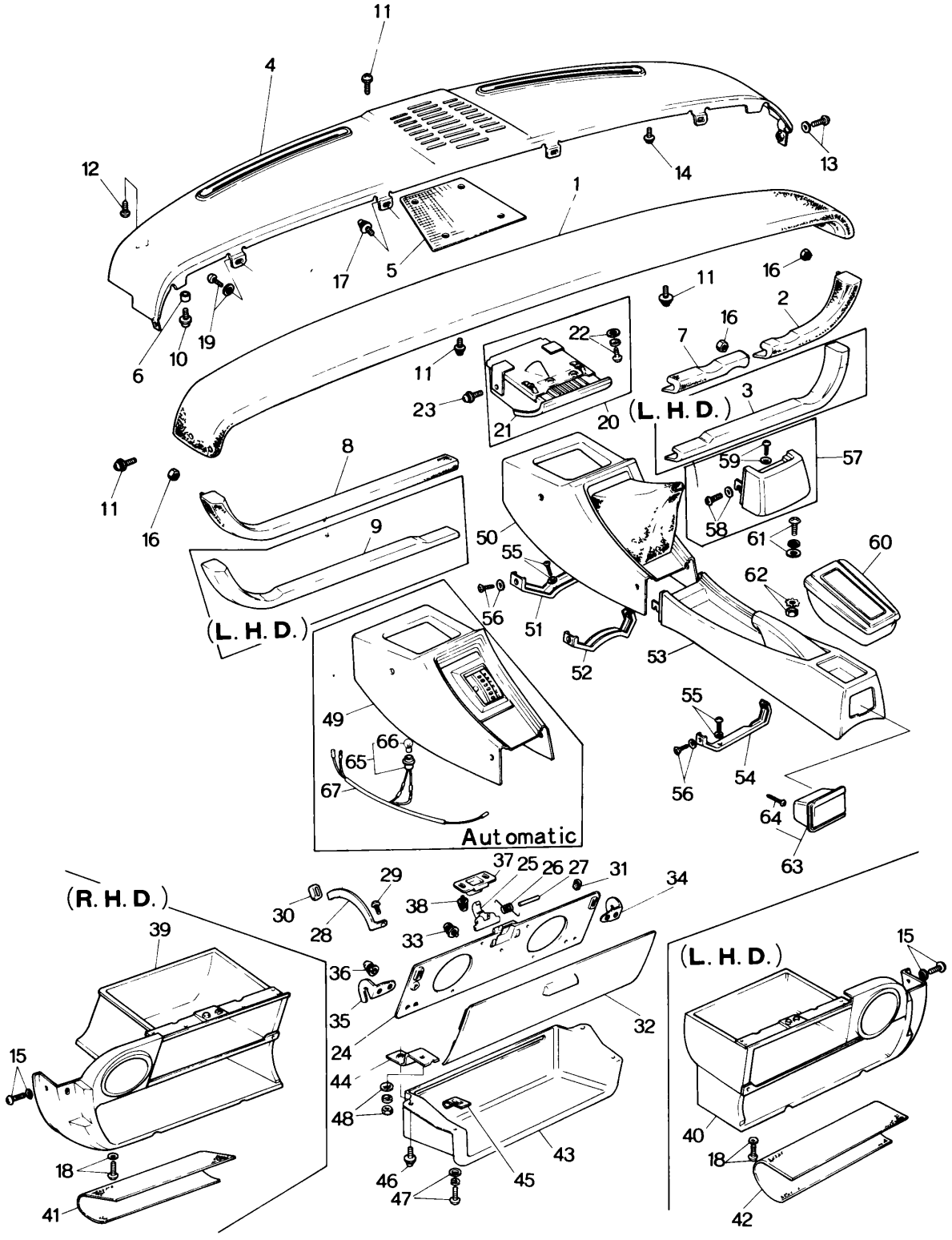

CRUSH PAD GLOVE POCKET & CONSOLE BOX

No.	Part Number	Description	Q'ty	Remarks	
1	0865 68 020B	Pad, Crush	1		©
2	0865 68 040C	Pad (R), Lower (R.H.D.)	1		©
3	1562 68 040A	Pad (R), Lower (L.H.D.)	1		©
4	0866 68 090B	Garnish	1		©
5	0866 68 095	Cloth, Cover	1		©
~~6~~	~~0275 68 088~~	~~Spacer~~	~~2~~		
7	0865 68 060C	Pad (R), Lower (R.H.D.)	1		©
8	0865 68 140C	Pad (L), Lower (R.H.D.)	1		©
9	1562 68 140B	Pad (L), Lower (L.H.D.)	1		©
10	99805 0822	Bolt, Crush Pad	2		
	99952 0818	Washer, Plain	2		
	99971 0800	Washer, Spring	2		
11	99834 0512B	Screw	4		
	99952 0500B	Washer, Plain	4		
	99971 0500	Washer, Spring	4		
12	99833 0516B	Screw	2		
	99952 0500B	Washer, Plain	2		
	99971 0500	Washer, Spring	2		
13	99833 0512B	Screw	1		
	99952 0516B	Washer, Plain	1		
14	99833 0616B	Screw, Crush Pad & Garnish	4		
	99952 0600B	Washer, Plain	4		
	99971 0600	Washer, Spring	4		
15	99836 0516B	Screw, Garnish	1		
	99967 0500B	Washer, Plain	1		
16	99940 0501	Nut, Pad Lower	7		

68 CRUSH PAD, GLOVE POCKET & CONSOLE BOX

No.	Part Number	Description	Q'ty	Remarks
17	99833 0512	Screw, Garnish	2	
	99952 0500	Washer, Plain	2	
	99971 0500	Washer, Spring	2	
18	99834 06168	Screw, Garnish	2	
	99952 06188	Washer, Plain	2	
	99971 0600	Washer, Spring	2	
19	99863 0512	Screw, Garnish	2	
	99952 0500	Washer, Plain	2	
	99971 0500	Washer, Spring	2	
20	0866 68 180A	Tray, Ash (Frt.)	1	
21	0866 68 201	Case Inner	1	
●	0866 68 201A	Case, Inner	1	Car No. 152461 7/8～△
Ⓝ	0866 68 175	Plate Set	1	
22	99833 0512	Screw, Ash Tray	2	
	99952 0500	Washer, Plain	2	
	99971 0500	Washer, Spring	2	
23	99833 0512	Screw, Ash Tray	2	
	99952 0500	Washer, Plain	2	
	99971 0500	Washer, Spring	2	
24	0866 68 331	Lid, Glove-Inner	1	
25	0866 68 332	Hook	1	
26	0866 68 333	Spring	1	
27	0866 68 334	Pin	1	
28	0866 68 335A	Stopper	1	
29	99831 04088	Screw, Stopper	1	
30	0275 55 195	Cushion, Rubber	1	
31	0317 70 269	Cushion	2	
32	0865 68 340	Lid, Glove-Outer (Without Painting)	1	©

CRUSH PAD, GLOVE POCKET & CONSOLE BOX

No.	Part Number	Description	Q'ty	Remarks
	0866 68 340	Lid, Glove-Outer (With Painting)	1	©
33	99262 1806B	Screw, Glove Lid	8	
34	0866 68 351A	Hinge (R), Glove Lid	1	
35	0866 68 352A	Hinge (L), Glove Lid	1	
36	99834 0412B	Screw, Hinge	4	
	99952 0412B	Washer, Plain	4	
	99971 0400	Washer, Spring	4	
37	0866 68 361	Striker	1	
38	99833 0514B	Screw, Striker	2	
	99952 0500B	Washer, Plain	2	
	99971 0500	Washer, Spring	2	
39	0866 68 380C	Box, Glove-Outer (R.H.D.)	1	
40	1524 68 380A	Box, Glove-Outer (L.H.D.)	1	
41	0866 68 011	Sheet, Glove Tray (R.H.D.)	1	
42	1524 68 011	Sheet, Glove Tray (L.H.D.)	1	
43	0866 69 811	Shelf, Parcel	1	
44	0866 69 820	Bracket, Parcel Shelf	1	
●	0866 69 821A	Bracket, Parcel Shelf	1	Car No. 150526 7/8~○
45	0820 56 905	Nut, Spring-Parcel Shelf	2	
● Ⓝ	99896 0500	Nut, Spring-Parcel Shelf	1	Car No. 150526 7/8~Added Anew
46	99806 0616	Bolt, Parcel Shelf	3	
●	99806 0616	Bolt, Parcel Shelf	1	Car No. 150526 7/8~Q'ty
	99952 0616	Washer, Plain	3	
●	99952 0616	Washer, Plain	1	Car No. 150526 7/8~Q'ty
	99971 0600	Washer, Spring	3	
●	99971 0600	Washer, Spring	1	Car No. 150526 7/8~Q'ty
47	99863 0520B	Screw, Parcel Shelf	2	
●	99863 0520B	Screw, Parcel Shelf	3	Car No. 150526 7/8~Q'ty
	99952 0500B	Washer, Plain	2	
●	99952 0500B	Washer, Plain	3	Car No. 150526 7/8~Q'ty
	99971 0500	Washer, Spring	2	
●	99971 0500	Washer, Spring	3	Car No. 150526 7/8~Q'ty
48	99906 0600	Nut, Bracket	1	
	99952 0616	Washer, Plain	1	

68. CRUSH PAD, GLOVE POCKET & CONSOLE BOX

No.	Part Number	Description	Q'ty	Remarks	
	99971 0600	Washer, Spring	1		
49	0378 68 890A	Console, Front (Automatic) (R.H.D.)	1	1552	©
50	0378 68 890A	Console, Front (Manual)	1		©
	0376 68 890B	Console, Front (Manual)	1	1567,1568 Car No. 127396 7½~○	
			1		©
	1524 68 890	Console, Front (Manual)	1	1558,1559,1567,1568	©
51	0376 68 900	Bracket No. 1, Console (Manual)	1		
	0378 68 900	Bracket No. 1, Console (Automatic)	1		
52	0376 68 910	Bracket No. 2	1		
53	0376 68 940	Console, Rear	1		©
	0870 68 940	Console, Rear-With Arm Rest	1	1566,1554,1557,1562	©
54	0376 68 950	Bracket, Rear Console	1		
55	99804 0816	Screw, Console	5		
	99971 0600	Washer, Spring	5		
56	99832 0516B	Screw, Console	6		
	99967 0500B	Washer	6		
57	0370 68 920	Console, End	1		©
58	99804 0616	Bolt	4		
	99971 0600	Washer, Spring	4		
59	99832 0516B	Screw, Console End	4		
	99967 0600B	Washer	4		
60	0870 68 960	Rest, Center Arm	1	1566,1554,1557,1562	©
61	99836 0420B	Screw, Center Arm Rest	4		
	99952 0400B	Washer, Plain	4		
	99971 0400	Washer, Spring	4		
62	99906 0400	Nut, Center Arm Rest	4		
	99975 0400	Washer, Toothed	4		

Without Rear Console

CRUSH PAD, GLOVE POCKET & CONSOLE BOX

No.	Part Number	Description	Q'ty	Remarks
63	0866 68 250	Tray, Ash-Rear	1	
64	99839 0416	Screw, Ash Tray	2	
65	0305 66 580 A	Bulb & Socket (Automatic)	1	
66	99701 6030	Bulb (Automatic)	1	
● 67	0378 67 131A	Cord	1	
Ⓝ	0367 68 832A	Seat, Boot	1	
Ⓝ	99864 0512	Screw-Tapping, Seat-Boot	6	
Ⓝ	99834 0612B	Screw-Box, Glove-Outer	2	
Ⓝ	99264 0732B	Rivet-Console, Front	4	

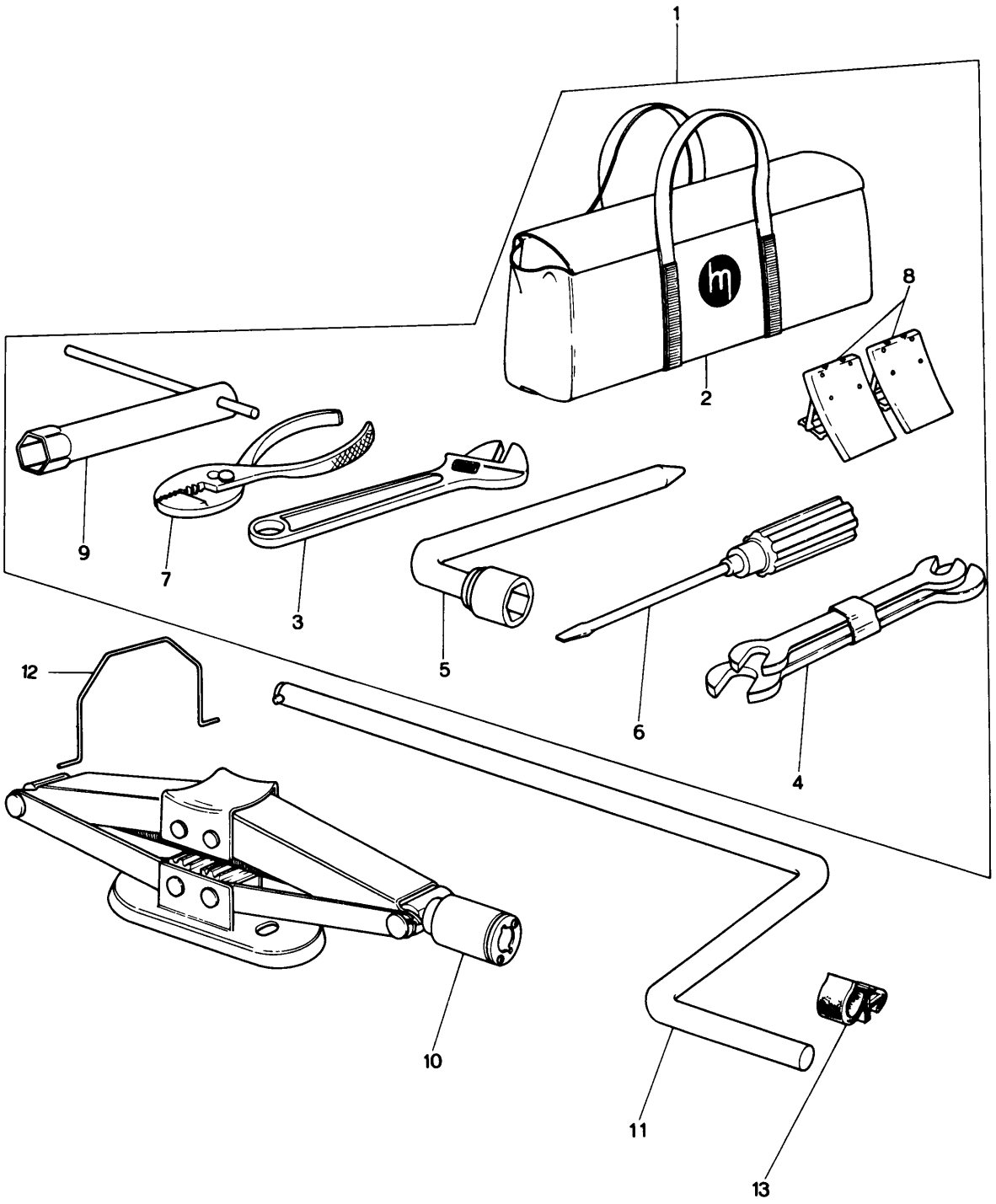
1
2
8
9
7
3
5
6
4
12
10
11
13

No.	Part Number	Description	Q'ty	Remarks
1	0839 68 660	Tool	1	
2	0839 68 670A	Bag, Tool	1	
●	0839 68 670B	Bag, Tool	1	Car No. 133210 $\frac{73}{1}$ ~○
3	0110 68 050A	Wrench, Monkey	1	
●	0866 68 680	Wrench, Monkey	1	Car No. 144308 $\frac{73}{4}$ ~○
4	0249 68 060A	Spanner Set	1	
5	0810 68 070	Wrench, Hub Nut	1	
6	0187 68 110A	Driver Set	1	
7	0118 68 180A	Plier	1	
8	0208 68 230	Stopper	1	
9	0839 68 720	Wrench, Plug	1	
10	0305 68 800E	Jack	1	
11	0305 68 810A	Handle, Jack	1	
12	0866 56 991	Wire, Jack	1	
13	99715 1101	Holder, Rod-Jack Handle	1	

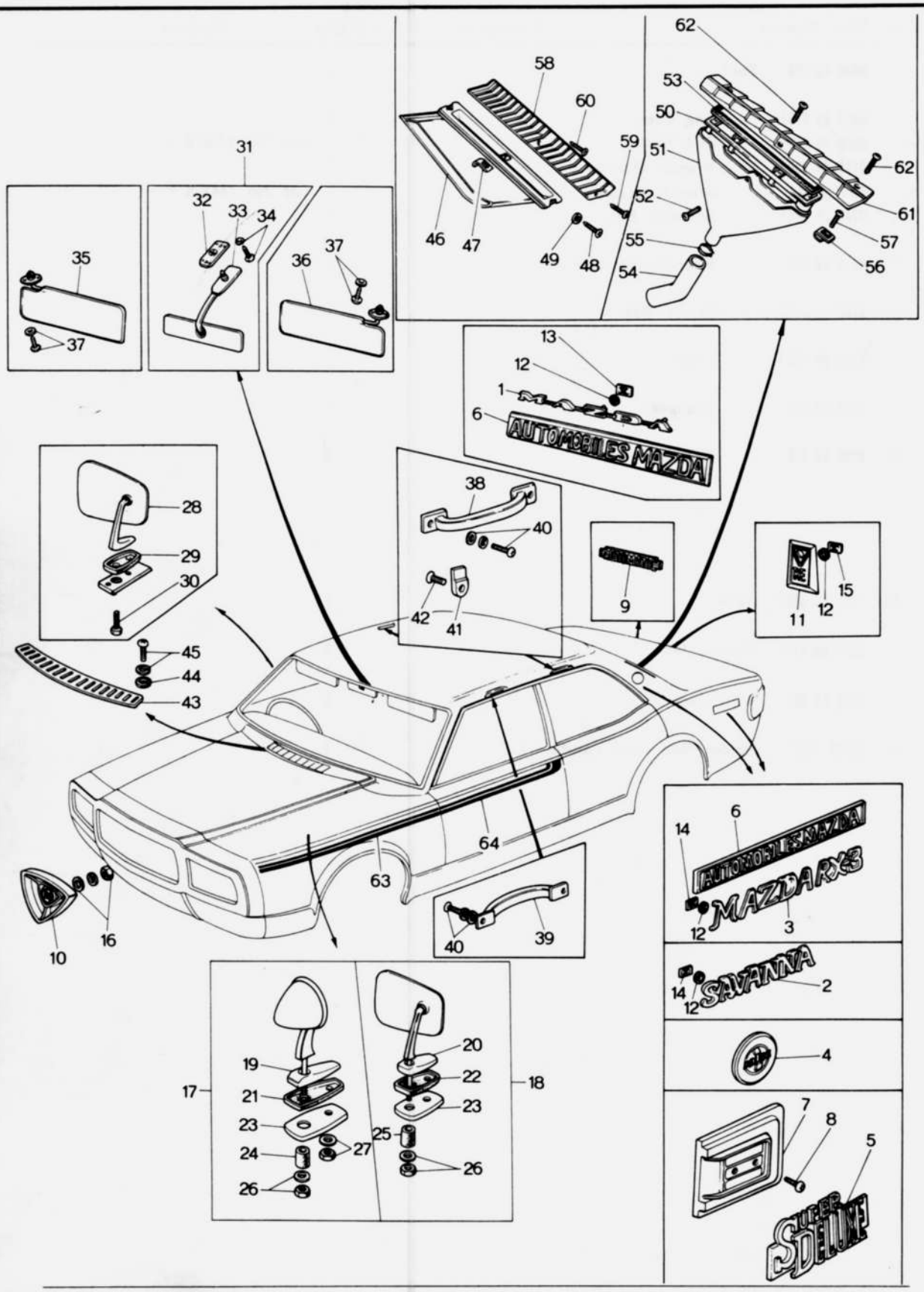
AUTOMOBILES MAZDA
MAZDA RX3
SAVANNA
SUPER DELUXE

No.	Part Number	Description	Q'ty	Remarks
1	0866 69 052	Ornament (MAZDA)	1	
2	0866 69 053A	Name, SAVANNA } Selective use	2	
3	1562 69 053	Name, RX−3 } Selective use	2	
4	0368 69 055A	Ornament (DX), For Sedan	2	
	0374 69 055	Ornament (DX), For Coupe	2	
	0374 69 055A	Ornament (DX), For Coupe	2	Car No. 127396 $^{71}/_{12}$ ~ ○
5	1562 69 055	Ornament Super Deluxe (Side··· 2, Rear ··· 1)	3	
	1562 69 055A	Ornament Super Deluxe (Side··· 2, Rear ··· 1)	3	Car No. 127396 $^{71}/_{12}$ ~ △
6	2835 69 059	Plate, Automobiles-For France	3	
7	0376 69 061C	Base (R), Ornament	1	
	0376 69 061D	Base (R), Ornament	1	Car No. 127396 $^{71}/_{12}$ ~ ○
	0376 69 065C	Base (L), Ornament	1	
	0376 69 065D	Base (L), Ornament	1	Car No. 127396 $^{71}/_{12}$ ~ ○
8	99863 0414C	Screw, Base	4	
● 9	0378 69 066	Ornament, Automatic	1	
●	0378 69 066A	Ornament, Automatic	1	Car No. 146346 $^{72}/_{5}$~○
●	0397 69 066B	Ornament, Automatic (1552)	1	Car No. $^{72}/_{9}$~○
10	0866 69 071A	Emblem, Front	1	
11	0866 69 081B	Emblem, Rear	1	
12	0730 69 057A	Gasket, Ornament	6	
13	0187 69 049A	Nut, Speed-Ornament	3	
14	99579 3000	Nut, Speed-Ornament	6	
~~15~~	~~99579 4000~~	~~Nut, Speed-Emblem~~	~~3~~	
16	99906 0500	Nut, Front Emblem	2	
	99952 0500	Washer, Plain	2	
	99971 0500	Washer, Spring	2	
17	0376 69 110A	Mirror (R), Rear View } (Coupe)	1	
	0376 69 110B	Mirror (R), Rear View } (Coupe)	1	Car No. 127396 $^{71}/_{12}$~○
●	0376 69 110C	Mirror (R), Rear View } (Coupe)	1	Car No. 148407 $^{72}/_{6}$~○
	0376 69 130A	Mirror (L), Rear View } (Coupe)	1	
	0376 69 130B	Mirror (L), Rear View } (Coupe)	1	Car No. 127396 $^{71}/_{12}$~○
●	0376 69 130C	Mirror (L), Rear View } (Coupe)	1	Car No. 148407 $^{72}/_{6}$~○
18	0866 69 110	Mirror (R), Rear View } (Sedan)	1	
	0866 69 110A	Mirror (R), Rear View } (Sedan)	1	Car No. 133210 $^{72}/_{1}$~○
	0866 69 130	Mirror (L), Rear View } (Sedan)	1	
	0866 69 130A	Mirror (L), Rear View } (Sedan)	1	Car No. 133210 $^{72}/_{1}$~○

No.	Part Number	Description	Q'ty	Remarks
19	0376 69 111	Base (R) (Coupe)	1	
●	0376 69 111A	Base (R) (Coupe)	1	Car No. 148407 72/6~○
	0376 69 131	Base (L) (Coupe)	1	
●	0376 69 131A	Base (L) (Coupe)	1	Car No. 148407 72/6~○
20	0866 69 111A	Base (Sedan)	2	
21	0376 69 112	Gasket (Coupe)	2	
22	0866 69 112	Gasket (Sedan)	2	
23	0866 69 113A	Reinforcement	2	
●	0376 69 113	Reinforcement	2	Car No. 148407 72/6~○
24	0376 69 114	Spring (Coupe)	2	Used up to Car No. 148407 72/6~
25	0223 69 102	Spring (Sedan)	2	
26	0223 69 103	Washer	2	
●	0223 69 103	Washer (Coupe)	2	Used up to Car No. 148407 72/6~
	0866 68 737	Nut	2	
27	99906 0600	Nut (Coupe)	4	
●	99940 0600	Nut (Coupe)	4	Car No. 148407 72/6~○
	99971 0600	Washer, Spring (Coupe)	2	
	99579 6000	Nut, Speed	2	
28	1511 69 110A	Mirror, Door (For Australia)	1	
	1511 69 110B	Mirror, Door (For Australia)	1	Car No. 132360 71/12~○
29	1540 69 101	Gasket, Door Mirror (For Australia)	1	
30	99772 0516	Screw, Door Mirror (For Australia)	1	
	99772 0525	Screw, Door Mirror (For Australia)	1	
31	0305 69 170	Mirror, Room	1	
	2835 69 170A	Mirror, Room	1	For France
32	0305 69 171	Base	1	
33	0305 69 180	Mirror	1	
34	99761 0516	Screw, Room Mirror	2	
	99831 0516	Screw	2	Car No. 127396 71/12 ~ ○
	99974 0500	Spring	2	
	99975 0500	Washer, Toothed	2	

No.	Part Number	Description		Q'ty	Remarks	
35	0866 69 210-13	Sun Visor (R)	For General (Black)	1		©
	0866 69 210-14	Sun Visor (R)	For General (Grey)	1		©
	1511 69 210-13	Sun Visor (R)	For Australia (Black)	1		©
	1511 69 210-14	Sun Visor (R)	For Australia (Grey)	1		©
	1504 69 210-13	Sun Visor (R)	For Arctic Spec. (Black)	1	Car No. 141928 7/3~Added Anew	©
	1504 69 240-14	Sun Visor (R)	For Arctic Spec. (Grey)	1	Car No. 141928 7/3~Added Anew	©
36	0866 69 240-13	Sun Visor (L)	For General (Black)	1		©
	0866 69 240-14	Sun Visor (L)	For General (Grey)	1		©
	1511 69 240-13	Sun Visor (L)	For Australia (Black)	1		©
	1511 69 240-14	Sun Visor (L)	For Australia (Grey)	1		©
	1504 69 240-13	Sun Visor (L)	For Arctic Spec (Black)	1	Car No. 141928 7/3~Added Anew	©
	1504 69 240-14	Sun Visor (L)	For Arctic Spec (Grey)	1	Car No. 141928 7/3~Added Anew	©
37	99837 0516C	Screw, Sun Visor		4		
	99975 0500	Washer, Toothed		2		
38	0866 69 910	Handle, Assist-Rear		2		
39	0866 69 920	Handle, Assist-Front		1		
40	99838 0620	Screw, Assist Handle		6		
	99952 0600	Washer, Plain		6		
	99971 0600	Washer, Spring		6		
41	0376 69 941	Hanger, Coat		1		
42	99776 0620	Screw, Coat Hanger		1		
43	0866 70 401A	Grille (R.H.D.)		1		
	1524 70 401A	Grille (L.H.D.)		1		
44	0866 56 405	Rubber, Cushion		4		
45	99864 0412B	Screw, Grille		4		
	99952 0412B	Washer, Plain		4		
46	0866 70 420	Extractor (R)	(Sedan)	1		
	0866 71 420	Extractor (L)	(Sedan)	1		
47	0866 70 412	Nut, Spring-Extractor	(Sedan)	6		
48	99864 0414	Screw, Extractor	(Sedan)	4		
49	~~0223 58 445~~	~~Seat, Extractor~~	~~(Sedan)~~	~~4~~		
50	0376 70 421	Frame (R), Extractor	Coupe	1		
	0376 71 421	Frame (L), Extractor	Coupe	1		
51	0376 70 422	Chamber (R)	Coupe	1		
	0376 71 422	Chamber (L)	Coupe	1		
52	99864 0410	Screw, Frame & Chamber	Coupe	4		

No.	Part Number	Description		Q'ty	Remarks
53	0376 70 426	Gasket	Coupe	2	
54	0376 70 427	Pipe		2	
55	0376 70 428	Clip		2	
56	0820 56 905	Nut, Spring-Extractor		8	
57	99864 0414	Screw, Extractor		8	
58	0370 70 431C	Grille (R), Extractor	Sedan	1	
	0370 71 431C	Grille (L), Extractor		1	
	0866 70 431C	Grille (R), Extractor		1	
	0866 70 431D	Grille (R), Extractor		1	Car No. 138761 ~○
	0866 71 431C	Grille (L), Extractor		1	
	0866 71 431D	Grille (L), Extractor		1	Car No. 138761 ~○
59	99863 0412B	Screw, Tapping-Grille		2	
60	99863 0425B	Screw, Tapping-Grille		2	
61	0376 70 431A	Grille, Extractor	Coupe	1	
	0376 71 431A	Grille, Extractor		1	
62	99864 0416B	Screw, Tapping-Grille		6	
● 63	0376 70 891-00	Stripe (R), Front Fender		1	©BROWN
●	0376 70 891-01	Stripe (R), Front Fender		1	©WHITE
●	0376 71 891-00	Stripe (L), Front Fender		1	©BROWN
●	0376 71 891-01	Stripe (L), Front Fender		1	©WHITE
●64	0376 70 892A-00	Stripe (R), Front Side Door		1	©BROWN
●	0376 70 892A-01	Stripe (R), Front Side Door		1	©WHITE
●	0376 71 892A-00	Stripe (L), Front Side Door		1	©BROWN
●	0376 71 892A-01	Stripe (L), Front Side Door		1	©WHITE

TOP CEILING & TRIM

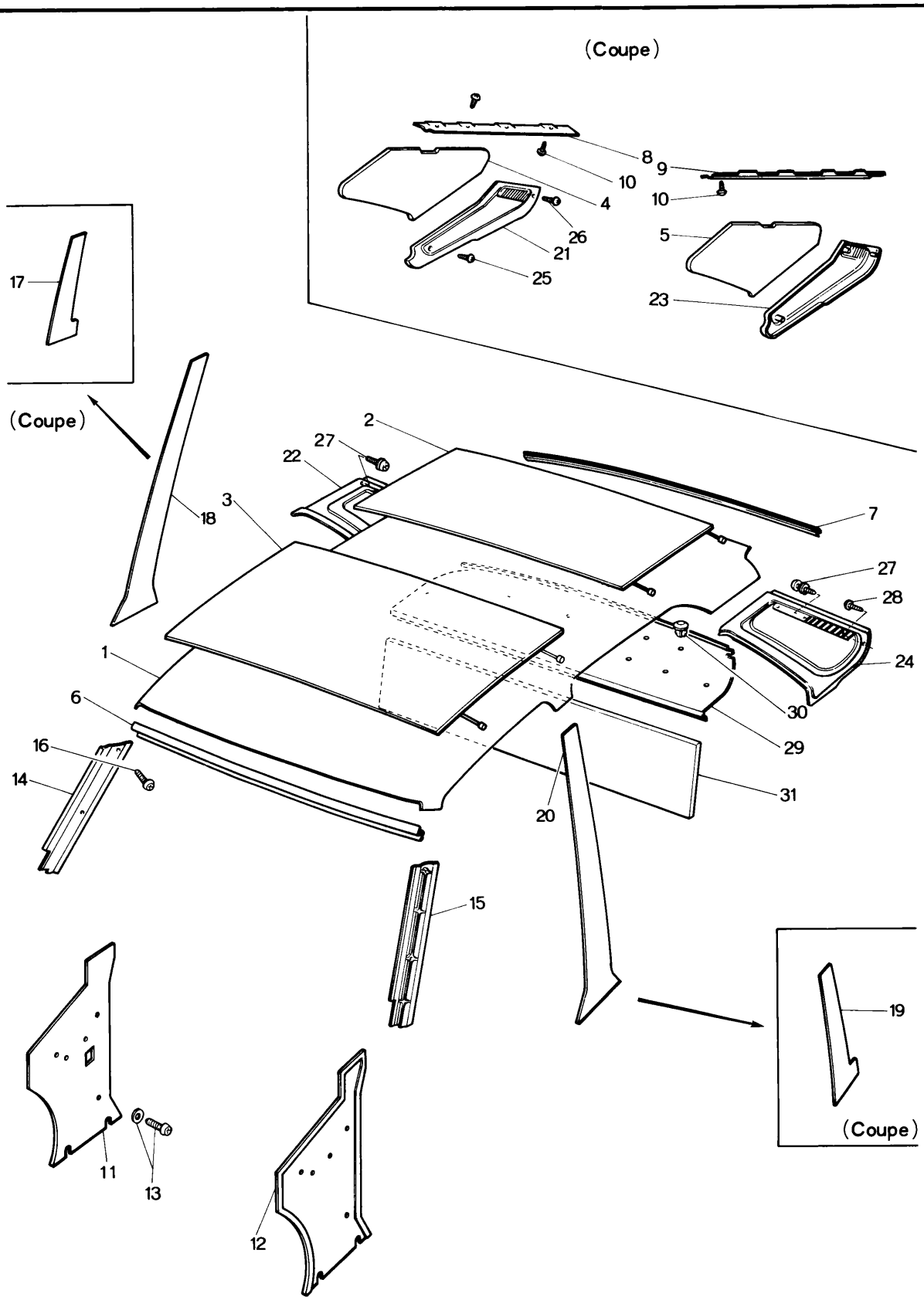

No.	Part Number	Description	Q'ty	Remarks	
1	0376 69 290A	Ceiling, Top (Coupe)	1		©
	0866 69 290	Ceiling, Top (Sedan)	1		©
2	0259 69 311	Insulator No. I	1		
3	0866 69 311	Lining, Head	1		
4	0376 69 314	Pad, Rear Pillar (Coupe)	2		
●	0376 69 314A	Pad, Rear Pillar (Coupe)	2	Car No. 150526 7/8~○	
5	0866 69 314	Pad, Rear Pillar (Sedan)	2		
●	0866 69 314A	Pad, Rear Pillar (Sedan)	2	Car No. 150526 7/8~○	
6	0376 69 321	Plate, Fixing-Front (Coupe)	1		
	0866 69 321	Plate, Fixing-Front (Sedan)	1		
7	0376 69 341	Plate, Fixing-Rear (Coupe)	1		
	0866 69 341	Plate, Fixing-Rear (Sedan)	1		
8	0376 69 342	Plate No. 2, Fixing-Rear	1		
9	0376 69 343	Plate No. 3, Fixing-Rear	1		
10	99864 0412	Screw, Fixing Plate (Coupe)	8		
	~~99952 0408~~	~~Washer, Plain~~	~~8~~		
	~~99871 0408~~	~~Washer, Spring~~	~~8~~		
11	0866 69 360A	Trim (R), Front Side (R.H.D.)	1		©
	1524 69 360A	Trim (R), Front Side (L.H.D)	1		©
12	0866 69 380B	Trim (L), Front Side (R.H.D.)	1		©
	1524 69 380A	Trim (L), Front Side (L.H.D)	1		©
13	99862 0512B	Screw, Front Side	4		
	99967 0500B	Washer	4		
14	0376 69 411	Trim (R), Front Pillar (Coupe)	1		©
	0866 69 411	Trim (R), Front Pillar (Sedan)	1		©
15	0376 69 431	Trim (L), Front Pillar (Coupe)	1		©
	0866 69 431	Trim (L), Front Pillar (Sedan)	1		©
16	99862 0412B	Screw, Front Pillar Trim	4		

No.	Part Number	Description	Q'ty	Remarks	
	99974 0400	Washer, Toothed	4		
17	0376 69 462	Trim (R), Center Pillar (Coupe)	2	Car No. 142300 7/3~Q'ty	©
●	0376 69 462A	Trim (R), Center Pillar (Coupe)	2	Car No. 150526 7/8~○	©
18	0866 69 461 A	Trim (R), Center Pillar (Sedan)	2		©
●	0866 69 461B	Trim (R), Center Piller (Sedan)	2	Car No. 150526 7/8~○	©
19	0376 69 482	Trim (L), Center Pillar (Coupe)	1	Car No. 142300 7/3~ Discarded	©
20	~~0866 69 481~~	~~Trim (L), Center Pillar (Sedan)~~	~~1~~		©
21	0376 69 511	Trim (R), Rear Pillar (Coupe)	1		©
22	0866 69 511	Trim (R), Rear Pillar (Sedan)	1		©
23	0376 69 521	Trim (L), Rear Pillar (Coupe)	1		©
24	0866 69 521	Trim (L), Rear Pillar (Sedan)	1		©
25	99864 05168	Screw, Rear Pillar Trim (Coupe)	4		
26	99864 05208	Screw, Rear Pillar Trim (Coupe)	2		
27	99864 0412	Screw, Rear Pillar Trim (Sedan)	2		
	~~99952 04085~~	~~Washer, Plain~~ (Sedan)	~~4~~		
	~~99971 0408~~	~~Washer, Spring~~ (Sedan)	~~4~~		
28	99864 0416	Screw, Rear Pillar Trim (Sedan)	4		
	~~99967 0408A~~	~~Washer~~ (Sedan)	~~2~~		
29	0376 69 870B-00	Trim, Package Tray (Coupe)	1		©
	0870 69 870B-00	Trim, Package Tray-With Car Stereo Hole (Coupe)	1		©
	0866 69 870C-00	Trim, Package Tray (Sedan)	1		©
	1524 69 870C-00	Trim, Package Tray-With Car Stereo Hole (Sedan)	1		©
30	0866 69 885	Fastener, Package Tray Trim	2		
31	0866 69 694	Pad, Package Tray	1		

FLOOR MAT & TRIM

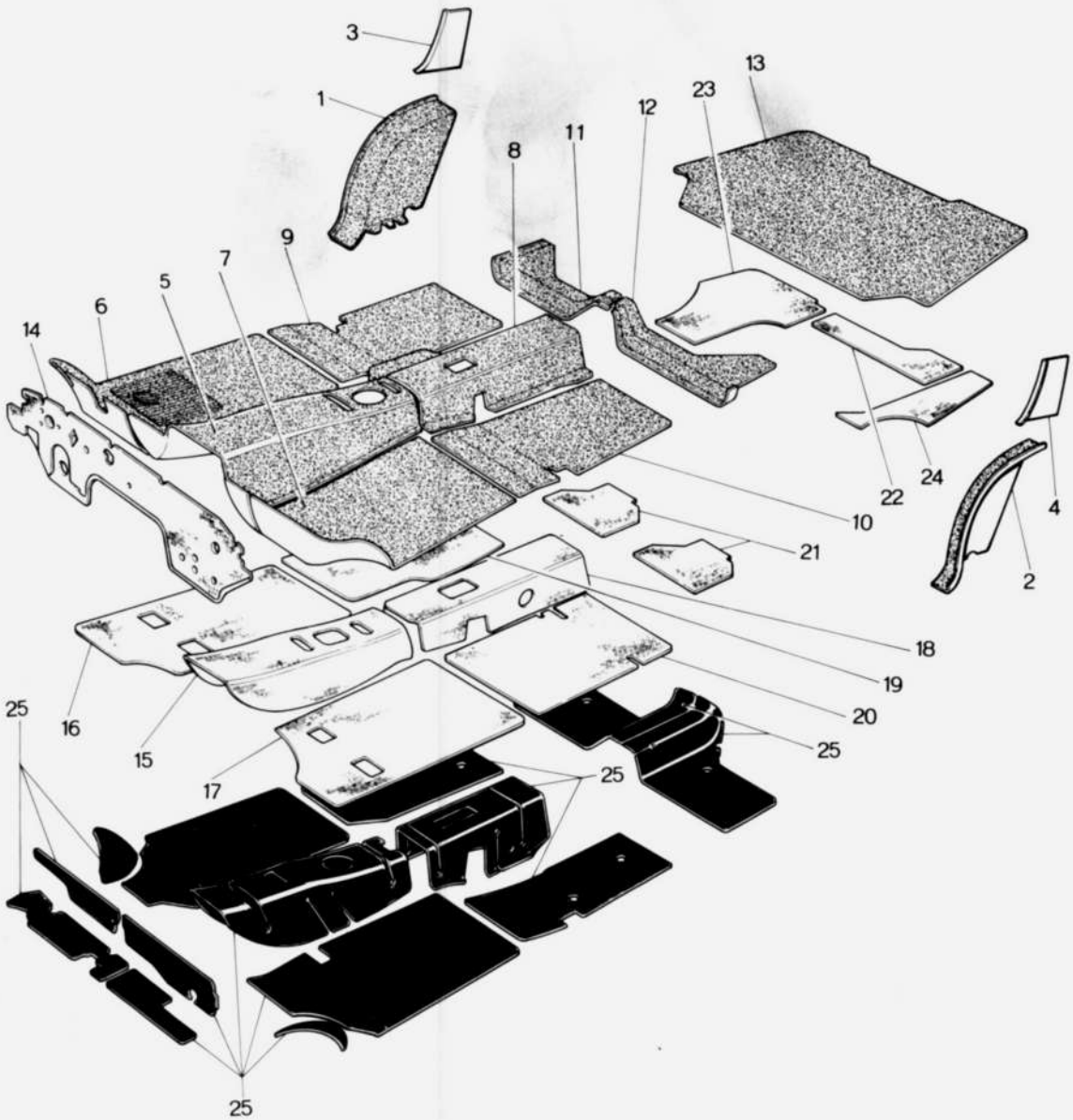

No.	Part Number	Description		Q'ty	Remarks	
		When ordering the following trims, Add color code nos. given below after part number -03 (Black) -12 (Brown) -13 (Grayish Yellow)				
1	0866 69 541	Trim (R), Tire House		1		©
2	0866 69 542	Trim (L), Tire House		1		©
3	0866 69 543	Trim (R), Rear Seat Side		1		©
●	0866 69 543A	Trim (R), Rear Seat Side	Sedan	1	Car No. 149635 ⁷³⁄₁₁~○	©
4	0866 69 544	Trim (L), Rear Seat Side		1		©
●	0866 69 544A	Trim (L), Rear Seat Side		1	Car No. 149635 ⁷³⁄₁₁~○	©
		When ordering the following mats (Carpet) Add color code nos. given below after parts number -32 (Yellowish Green) -34 (Black)				
5	0378 69 611	Mat (Frt., C)	Automatic	1		©
●	0378 69 611A	Mat (Frt., C)	Automatic (R.H.D.)	1	Car No. ⁷³⁄₉~○	©
	0585 69 6110-05	Mat (Frt., C) Vinyl	Manual (R.H.D.)	1		©
	0866 69 611	Mat (Frt., C)	Manual (R.H.D.)	1		©
●	0866 69 611A	Mat (Frt., C)	Manual (R.H.D.)	1	Car No. ⁷³⁄₉~○	©
	1524 69 611	Mat (Frt., C) (L.H.D.)	Manual	1		©
6	0378 69 612A	Mat (Frt., R)	Automatic (R.H.D.)	1		©
	0585 69 6120-05	Mat (Frt., R) Vinyl	Manual (R.H.D.)	1		©
	0866 69 612A	Mat (Frt., R)	Manual (R.H.D.)	1		©
	1524 69 612	Mat (Frt., R) (L.H.D.)	Manual	1		©
7	0378 69 613A	Mat (Frt., L)	Automatic (R.H.D.)	1		©
	0585 69 6130-05	Mat (Frt., L) Vinyl	Manual (R.H.D.)	1		©
	0866 69 613A	Mat (Frt., L)	Manual (R.H.D.)	1		©

No.	Part Number	Description	Q'ty	Remarks	
	1524 69 613	Mat (Frt., L) (L.H.D.)	1		©
8	0585 69 616A-05	Mat (Rr., C), Vinyl	1		©
	0866 69 616A	Mat (Rr., C)	1		©
9	0585 69 6170-05	Mat (Rr., R), Vinyl	1		©
	0866 69 617	Mat (Rr., R),	1		©
10	0585 69 6180-05	Mat (Rr., L), Vinyl	1		©
	0866 69 618	Mat (Rr., L)	1		©
11	0866 69 6250-05	Mat (R), End	1		©
	0866 69 625A-05	Mat (R), End	1	Car No. 127396 71/12 ~ ○	©
12	0866 69 6260-05	Mat (L), End	1		©
	0866 69 626A-05	Mat (L), End	1	Car No. 127396 71/12 ~ ○	©
13	0866 69 6270-10	Mat, Trunk Room	1		©
14	0866 69 660C	Insulator (R.H.D.)	1		
●	0866 69 660D	Insulator (R.H.D.)	1	Car No. 150526 72/8 ~ ○	
	1562 69 660A	Insulator (L.H.D.)	1		
	1562 69 660B	Insulator (L.H.D.)	1	Car No. 135734 72/1 ~ ○	
	1562 69 660C	Insulator (L.H.D.)	1	Car No. 140779 72/2 ~ ○	
●	1562 69 660D	Insulator (L.H.D.)	1	Car No. 150526 72/8 ~ ○	
15	0378 69 683	Pad (Frt., C), Automatic	1		
●	0378 69 683B	Pad (Frt., C), Automatic	1	Car No. 72/9 ~ ○	
	0866 69 683	Pad (Frt., C), Manual	1		
●	0866 69 683B	Pad (Frt., C), Manual	1	Car No. 72/9 ~ ○	
16	0866 69 684	Pad (Frt., R), Manual	1	Car No. 72/9 ~ ○	
	0870 69 684	Pad (Frt., R), Automatic	1		
17	0866 69 684	Pad (Frt., L), Manual	1		
	0871 69 685	Pad (Frt., L), Automatic	1		
18	0866 69 687A	Pad (Rr., C)	1		
●	0866 69 687B	Pad (Rr., C)	1	Car No. 72/9 ~ ○	
19	0866 69 688	Pad (Rr., R)	1		
20	0866 69 689	Pad (Rr., L)	1		
21	0866 69 692	Pad, End	2		
22	0866 69 696	Pad (C), Trunk Room	1		
23	0866 69 697	Pad (R), Trunk Room	1		

No.	Part Number	Description	Q'ty	Remarks
24	0866 69 698	Pad (L), Trunk Room	1	
25	0208 76 071	Silencer	1	

A 30 cm square object in sheet form is supplied under part, 0208 76 071
(Floor Silencer Revised Piece)

VENTILATOR

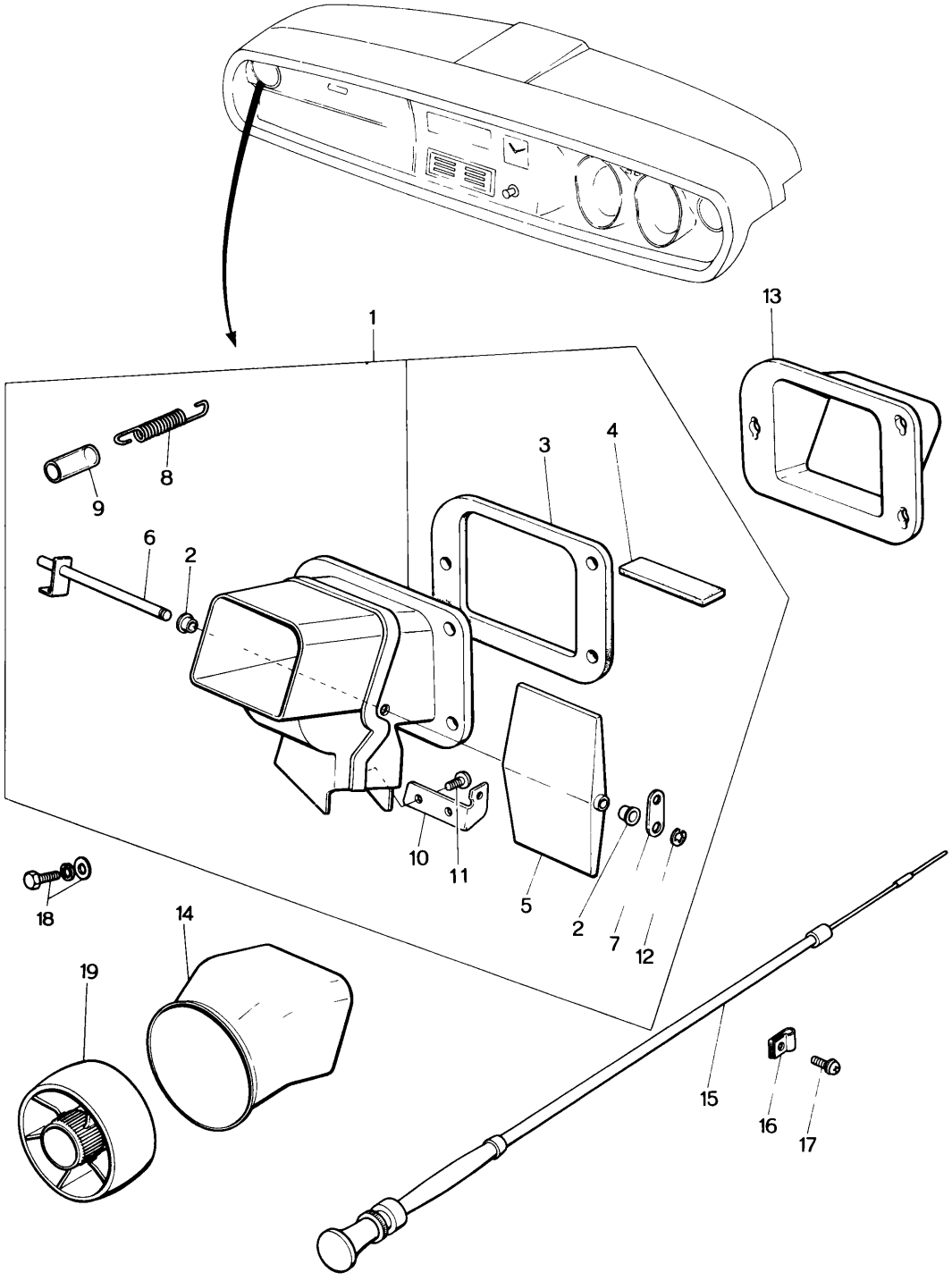

No.	Part Number	Description	Q'ty	Remarks
1	0866 70 310A	Ventilator (R)	1	
	0866 71 310A	Ventilator (L)	1	
2	0317 70 307	Bush	4	
3	0866 70 313	Gasket	2	
4	0866 70 314	Cushion	2	Car No. 146702 72/5 ~Discarded
5	0866 70 320	Flap	2	
6	0866 70 330	Lever	2	
	0866 70 330A	Lever	2	Car No. 146702 72/5 ~×
7	0866 70 341	Lever	2	
●	0866 70 341A	Lever	2	Car No. 146702 72/5 ~×
8	0866 70 342	Spring	2	
9	99335 08003	Pipe	2	
10	0866 70 343	Bracket (R)	1	
	0866 71 343	Bracket (L)	1	
11	99864 0410	Screw, Tapping	4	
12	99576 0400	Ring, Snap	2	
Ⓝ	0866 70 365	Holder, Spring	2	Car No. 146702 72/5 ~Added Anew
Ⓝ	0866 70 366	Roller	2	
Ⓝ	0866 70 367	Spring	2	
13	0866 70 351	Gasket (R)	1	
	0866 71 351	Gasket (L)	1	
14	0866 70 352	Duct (R), Ventilator	1	
	0866 71 352	Duct (L), Ventilator	1	
15	0866 70 360A	Wire, Ventilator Control	2	
	0866 70 360B	Wire, Ventilator Control	2	Car No. 146702 72/5 ~×
16	0305 70 395B	Clamp, Wire	2	
	0866 70 395	Clamp, Wire	2	Car No. 146702 72/5 ~△
17	908332 4 10	Screw Set, Control Knob	2	
18	99785 0620	Bolt, Ventilator & Gasket	3	
	99952 0600	Washer, Plain	3	
	99971 0600	Washer, Spring	3	
19	0866 70 371	Louver	2	

WINDOW GLASS & MOULDING

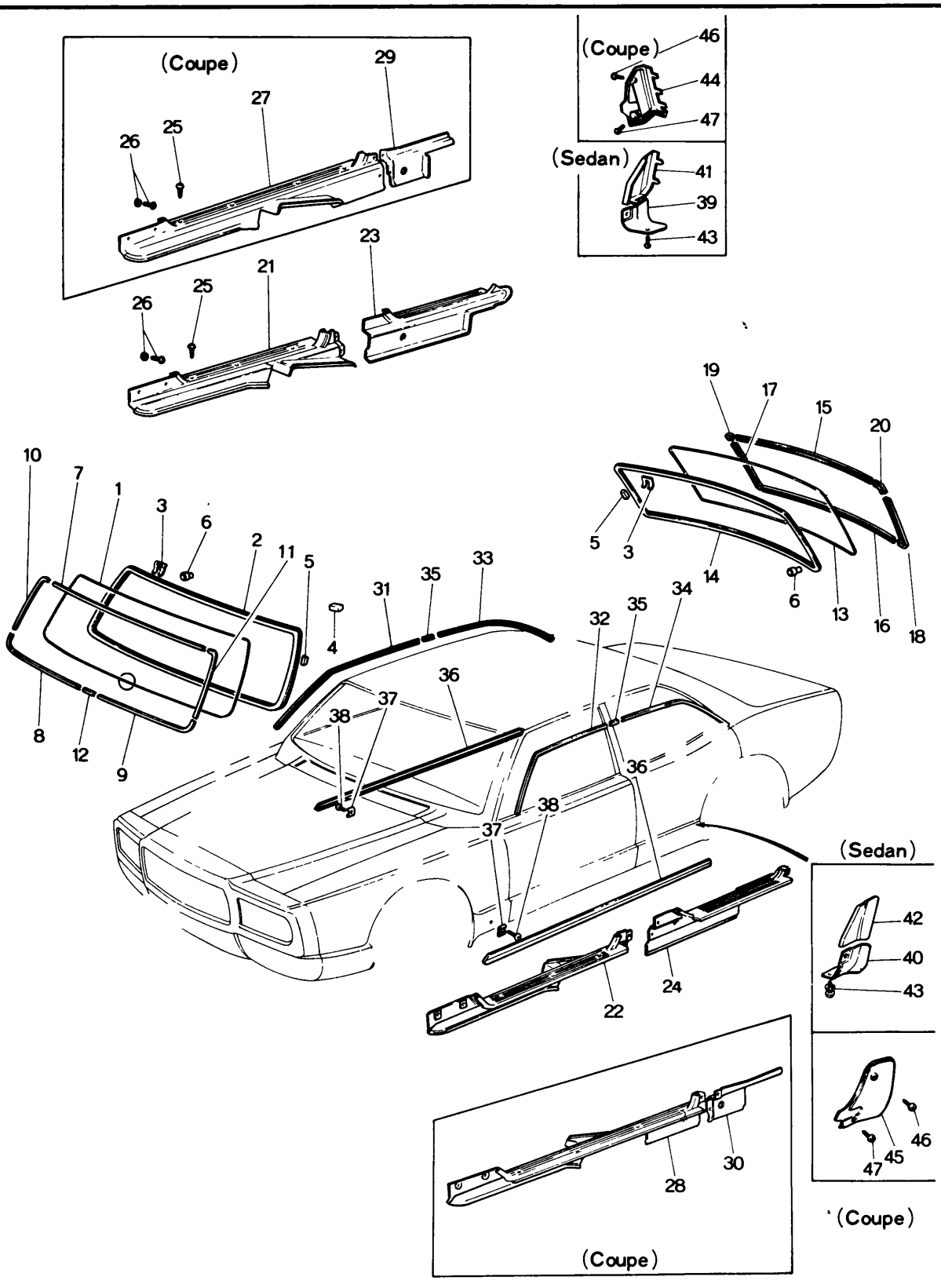

No.	Part Number	Description	Q'ty	Remarks
1	0368 70 441	Glass, Front Window (Transparent)	1	
	0370 70 441	Glass, Front Window (Blue Pane)	Sedan 1	
	1531 70 441	Glass, Front Window (Transparent H.P.R.)	1	
	0374 70 441	Glass, Front Window (Transparent)	1	
	0376 70 441	Glass, Front Window (Blue Pane)	Coupe 1	
	1568 70 441	Glass, Front Window (Transparent H.P.R.)	1	
2	0305 70 443B	Dam, Front Window Glass	1	
	10/1 50 506			
3	~~0305 70 445B~~	Clip, Front Window···19 Back Window···17	36	
4	0305 70 447B	Spacer "A"	4	
5	0305 70 448A	Spacer "B"	4	
6	0305 53 999	Stud, Front Window···19 Back Window···17	36	
7	0376 70 451	Mould, Upper-Front (Coupe)	1	
●	0376 70 451A	Mould, Upper-Front (Coupe)	1	Car No. 132009 $^{71}/_{12}$~△
	0866 70 451	Mould, Upper-Front (Sedan)	1	
●	0866 70 451A	Mould, Upper-Front (Sedan)	1	Car No. 133994 $^{72}/_{1}$~△
8	0866 70 452	Mould, Lower (R)-Front	1	
●	0866 70 452A	Mould, Lower (R)-Front	1	Car No. 133994 $^{72}/_{1}$~△
9	0866 71 452	Mould, Lower (L)-Front	1	
●	0866 71 452A	Mould, Lower (L)-Front	1	Car No. 133994 $^{72}/_{1}$~△
10	0376 70 453	Mould (R), Front (Coupe)	1	
●	0376 70 453A	Mould (R), Front (Coupe)	1	Car No. 132009 $^{71}/_{12}$~△
	0866 70 453	Mould (R), Front (Sedan)	1	
●	0866 70 453A	Mould (R), Front (Sedan)	1	Car No. 133994 $^{72}/_{1}$~△
11	0376 71 453	Mould (L), Front (Coupe)	1	
●	0376 71 453A	Mould (L), Front (Coupe)	1	Car No. 132009 $^{71}/_{12}$~△
	0866 71 453	Mould (L), Front (Sedan)	1	
●	0866 71 453A	Mould (L), Front (Sedan)	1	Car No. 133994 $^{72}/_{1}$~△
12	0866 70 454	Joint, Front Mould	1	
13	1510 70 471	Glass, Back Window (Transparent 5 $^{m}/_{m}$)	1	
	1511 70 471	Glass, Back Window (Transparent 5 $^{m}/_{m}$) (With Heating Wire)	1	
	1523 70 471	Glass, Back Window (Transparent 4 $^{m}/_{m}$)	1	
	1524 70 471	Glass, Back Window (Transparent 4 $^{m}/_{m}$) (With Heating Wire)	Sedan 1	
	1534 70 471	Glass, Back Window (Blue Pane 4 $^{m}/_{m}$) (With Heating Wire)	1	
	1535 70 471	Glass, Back Window (Blue Pane 4 $^{m}/_{m}$)	1	

WINDOW GLASS & MOULDING

No.	Part Number	Description		Q'ty	Remarks	
	0374 70 471	Glass, Back Window (Transparent 4 m/m)		1		
	0375 70 471	Glass, Back Window (Blue Pane 4 m/m)		1		
	0376 70 471	Glass, Back Window (Blue Pane 4 m/m) (With Heating Wire)		1		
	1514 70 471	Glass, Back Window (Transparent 5 m/m)	Coupe	1		
	1554 70 471	Glass, Back Window (Transparent 5 m/m) (With Heating Wire)		1		
	1562 70 471	Glass, Back Window (Transparent 4 m/m) (With Heating Wire)		1		
14	0866 70 473	Dam, Back Window Glass		1		
15	0376 70 481	Mould, Upper-Rear (Coupe)		1		
●	0376 70 481A	Mould, Upper-Rear (Coupe)		1	Car No. 132009 71/12~△	
	0866 70 481	Mould, Upper-Rear (Sedan)		1		
●	0866 70 481A	Mould, Upper-Rear (Sedan)		1	Car No. 133994 72/1~△	
16	0376 70 482	Mould, Lower-Rear (Coupe)		1		
●	0376 70 482A	Mould, Lower-Rear (Coupe)		1	Car No. 132009 71/12~△	
	0866 70 482	Mould, Lower-Rear (Sedan)		1		
●	0866 70 482A	Mould, Lower-Rear (Sedan)		1	Car No. 133994 72/1~△	
17	0376 70 483	Mould (R), Rear (Coupe)		1		
●	0376 70 483A	Mould (R), Rear (Coupe)		1	Car No. 132009 71/12~△	
	0866 70 483	Mould (R), Rear (Sedan)		1		
●	0866 70 483A	Mould (R), Rear (Sedan)		1	Car No. 133994 72/1~△	
18	0376 71 483	Mould (L), Rear (Coupe)		1		
●	0376 71 483A	Mould (L), Rear (Coupe)		1	Car No. 132009 71/12~△	
	0866 71 483	Mould (L), Rear (Sedan)		1		
●	0866 71 483A	Mould (L), Rear (Sedan)		1	Car No. 133994 72/1~△	
19	0376 70 484	Joint (R) (Coupe)		1		
●	0376 70 484A	Joint (R) (Coupe)		1	Car No. 132009 71/12~△	
	0866 70 484	Joint (R) (Sedan)		1		
●	0866 70 484A	Joint (R) (Sedan)		1	Car No. 133994 72/1~△	
20	0376 71 484	Joint (L) (Coupe)		1		
●	0376 71 484A	Joint (L) (Coupe)		1	Car No. 132009 71/12~△	
	0866 71 484	Joint (L) (Sedan)		1		
●	0866 71 484A	Joint (L) (Sedan)		1	Car No. 133994 72/1~△	
21	0866 70 801A-00	Plate (R), Scarf-Front	(Sedan)	1		©
22	0866 71 801A-00	Plate (L), Scarf-Front		1		©
23	0866 70 802B-00	Plate (R), Scarf-Rear		1		©
24	0866 71 802B-00	Plate (L), Scarf-Rear		1		©
25	99862 0425B	Screw, Scarf Plate		8		
26	99864 0414B	Screw, Scarf Plate		14		
	99952 0516B	Washer, Plain		14		

No.	Part Number	Description	Q'ty	Remarks
27	0376 70 801A-00	Plate (R), Scarf-Front (Coupe)	1	©
28	0376 71 801A-00	Plate (L), Scarf-Front	1	©
29	0376 70 802A-00	Plate (R), Scarf-Rear (Coupe)	1	©
30	0376 71 802A-00	Plate (L), Scarf-Rear	1	©
31	0376 70 821A	Mould (R), Drip-Front (Coupe)	1	
	0866 70 821A	Mould (R), Drip-Front (Sedan)	1	
32	0376 71 821A	Mould (L), Drip-Front (Coupe)	1	
	0866 71 821A	Mould (L), Drip-Front (Sedan)	1	
33	0376 70 822A	Mould (R), Drip-Rear (Coupe)	1	
	0866 70 822B	Mould (R), Drip-Rear (Sedan)	1	
34	0376 71 822A	Mould (L), Drip-Rear (Coupe)	1	
	0866 71 822B	Mould (L), Drip-Rear (Sedan)	1	
35	0866 70 823A	Joint, Drip Mould	2	
36	0866 70 851	Mould, Step	2	
37	0305 70 861C	Clip, Step Mould	10	
38	99863 0512	Screw, Step Mould	10	
39	0866 70 852	Guard "A" (R), Stone	1	
40	0866 71 852	Guard "A" (L), Stone	1	
41	0866 70 853A	Guard "B" (R), Stone (Sedan)	1	
●	0866 70 853C	Guard "B" (R), Stone	1	Car No. 144308 ⁷³⁄₄～○
42	0866 71 853A	Guard "B" (L), Stone	1	
●	0866 71 853C	Guard "B" (L), Stone	1	Car No. 144308 ⁷³⁄₄～○
43	908631 5 12	Screw Set, Stone Guard	4	
●	0870 70 875	Screw	2	Car No. 144308 ⁷³⁄₄～Added Anew
44	0376 70 855	Guard (R), Stone	1	
45	0376 71 855	Guard (L), Stone (Coupe)	1	
46	99767 0410	Screw, Stone Guard	2	
47	99769 0408	Screw, Stone Guard	2	

REAR SIDE WINDOW (COUPE)

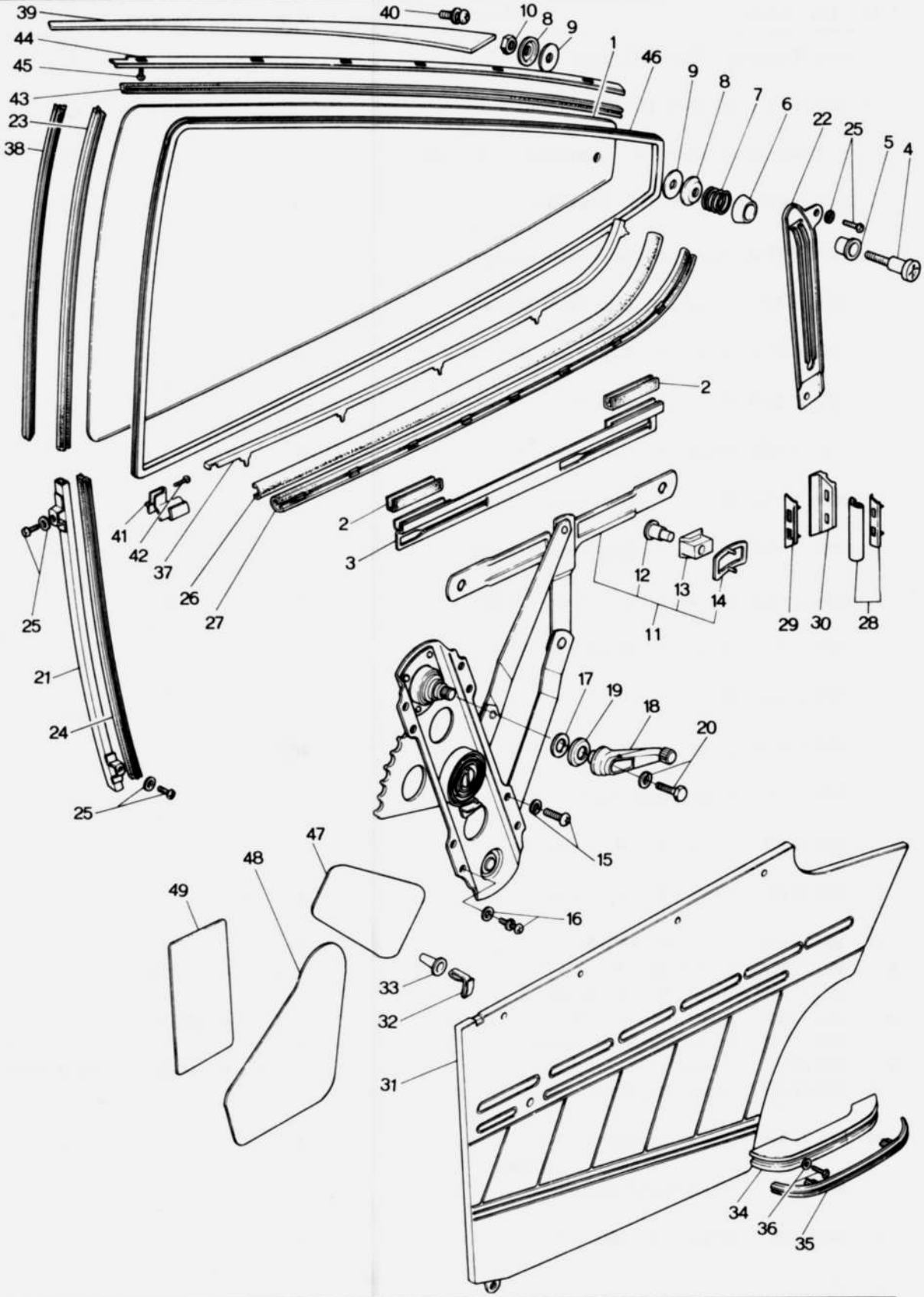

REAR SIDE WINDOW (COUPE)

No.	Part Number	Description	Q'ty	Remarks
1	0374 72 501	Glass (R), Window } Transparent	1	
	0374 73 501	Glass (L), Window } Transparent	1	
	0376 72 501	Glass (R), Window } Blue Pane	1	
	0376 73 501	Glass (L), Window } Blue Pane	1	
2	2292 58 232	Strip, Rubber	4	
3	0376 72 505	Bracket, Lift	4	
4	0839 70 521	Pin	2	
5	0839 70 522	Roller	2	
6	0839 70 523A	Seat, Spring	2	
7	0839 70 524	Spring	2	
8	0839 70 525	Washer	4	
9	0839 70 526	Seat	4	
10	99906 0500	Nut	2	
11	0376 72 560	Regulator (R), Window	1	
	0376 73 560	Regulator (L), Window	1	
12	0223 58 303A	Pin	4	
13	0223 58 304A	Guide	4	
14	0223 58 311	Spring, Guide	4	
15	99805 0616	Bolt, Regulator	4	
	99952 0600	Washer, Plain	4	
	99971 0600	Washer, Spring	4	
16	99806 0612	Bolt, Regulator	8	

72 73 REAR SIDE WINDOW (COUPE)

No.	Part Number	Description	Q'ty	Remarks
	99971 0600	Washer, Spring	8	
	99951 0618	Washer, Plain	8	
17	0259 72 305	Gasket, Regulator	2	
18	0824 58 370A	Handle, Regulator	2	
19	0223 58 375A	Escutcheon	2	
20	99806 0516	Bolt, Regulator Handle	2	
	99971 0500	Washer, Spring	2	
21	0376 72 602	Guide A (R), Glass	1	
	0376 73 602	Guide A (L), Glass	1	
22	0376 72 603	Guide B (R), Glas	1	
	0376 73 603	Guide B (L), Glass	1	
23	0376 72 605	Channel A, Glass Run	2	
24	0376 72 606	Channel B, Glass Run	2	
25	99806 0612	Bolt, Glass Guide	8	
	99971 0600	Washer, Spring	8	
	99951 0618	Washer, Plain	8	
● 26	0376 72 781C	Weatherstrip, Outer A (R)	1	
	~~0376 73 781C~~	~~Weatherstrip, Outer A (L)~~	~~1~~	
●	0376 72 781C	Weatherstrip, Outer A (L)	1	From Car No. 1
27	0376 72 790	Weatherstrip, Inner A (R)	1	
	0376 73 790	Weatherstrip, Inner A (L)	1	
28	0376 72 890	Weatherstrip, Inner B (R) } Rear Pillar Trim	1	
	0376 73 890	Weatherstrip, Inner B (L) } Rear Pillar Trim	1	
29	0376 72 901C	Weatherstrip, Outer "B"	2	
30	0376 72 902B	Plate, Set	2	

No.	Part Number	Description	Q'ty	Remarks	
	When ordering the following trims, Add color code nos. given below after parts number -03 (Black) -12 (Brown) -13 (Grayish Yellow)				
31	0376 72 810A	Trim (R), Quarter	1		©
	0376 73 810A	Trim (L), Quarter	1		©
32	0208 58 921	Fastener, Quarter Trim	4		
33	0187 58 922	Cap, Fastener-Quarter Trim	4		
34	0398 58 821A	Rest, Arm	2		
35	0398 58 822	Garnish, Arm Rest	2		
●	0398 58 822 A	Garnish, Arm Rest	2	Car No. 130590 $^{70}/_{12}$~○	
36	99833 0520	Screw, Arm Rest	4		
	99952 0500	Washer, Plain	4		
37	0376 72 831A	Mould (R), Beltline	1		
●	0376 72 831 B	Mould (R), Beltline	1	Car No. 144578 $^{72}/_{4}$~△	
	0376 73 831A	Mould (L), Beltline	1		
●	0376 73 831 B	Mould (L), Beltline	1	Car No. 144578 $^{72}/_{4}$~△	
38	0376 72 851A	Garnish (R)	1		
●	0376 72 851 B	Garnish (R)	1	Car No. 130590 $^{71}/_{12}$~○	
	0376 73 851A	Garnish (L)	1		
●	0376 73 851 B	Garnish (L)	1	Car No. 130590 $^{71}/_{12}$~○	
39	0376 72 855	Mould (R), Quarter Line	1		
	0376 73 855	Mould (L), Quarter Line	1		
40	99863 0410	Screw, Quarter Line Mould	2		
	99971 0400	Washer, Spring	2		
	99952 0412	Washer, Plain	2		
41	0376 72 881	Cover (R)	1		
	0376 73 881	Cover (L)	1		
42	99864 0410B	Screw, Cover	2		

72 73 REAR SIDE WINDOW (COUPE)

No.	Part Number	Description	Q'ty	Remarks
43	0376 72 761	Weatherstrip (R)	1	
	0376 73 761	Weatherstrip (L)	1	
44	0376 72 771	Retainer	1	
	0376 73 771	Retainer	1	
45	99864 0408	Screw, Weatherstrip	8	
46	0376 72 755A	Welt, Seaming	2	
47	0376 72 861A	Screen, Door "A"	2	
● 48	0376 72 862	Screen, Door "B" ~~(R)~~	2	
●	~~0376 73 862~~	~~Screen, Door "B" (L)~~	~~1~~	
49	0376 72 863	Screen "C"	2	

REAR SIDE DOOR (GLASS, SEDAN)

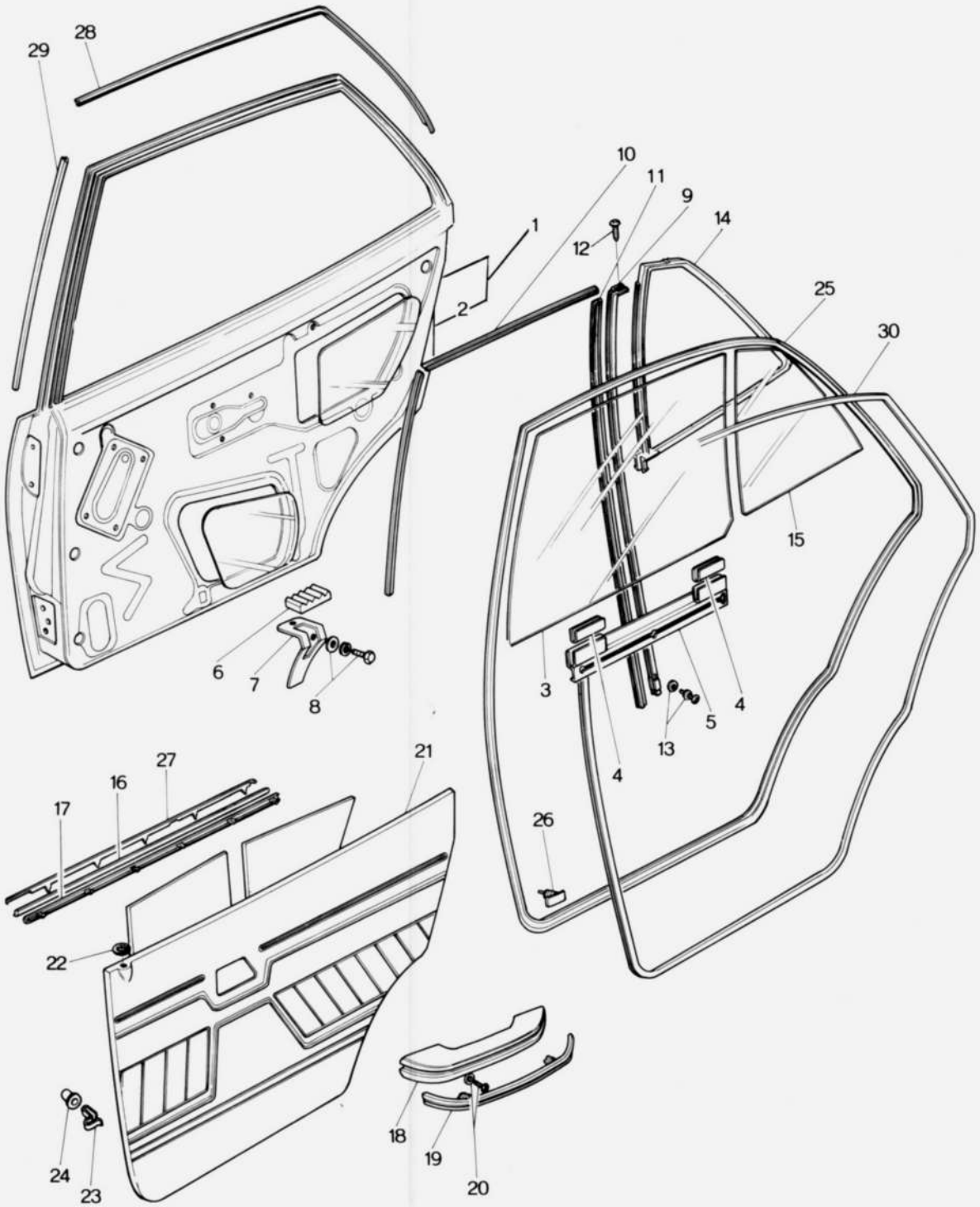

REAR SIDE DOOR (GLASS, SEDAN) 72 73

No.	Part Number	Description	Q'ty	Remarks
1	0866 72 010B	Body (R), Door	1	
●	0866 72 010C	Body (R), Door	1	Car No. 144308 72/4 ~○
	0866 73 010B	Body (L), Door	1	
●	0866 73 010C	Body (L), Door	1	Car No. 144308 72/4 ~○
2	0866 72 020A	Panel (R), Outer } For Australia & England	1	
	0866 73 020A	Panel (L), Outer } For Australia & England	1	
3	0368 72 501	Glass (R), Door } Transparent	1	
	0368 73 501	Glass (L), Door } Transparent	1	
	0866 72 501	Glass (R), Door } Blue Pane	1	
	0866 73 501	Glass (L), Door } Blue Pane	1	
4	0866 72 502	Strip, Rubber-Door Glass	2	
5	0259 72 210	Bracket, Lift-Door Glass	2	
6	0187 56 235	Rubber, Support	2	
7	0259 72 080	Stop, Glass	2	
8	99806 0612	Bolt, Glass Stop	2	
	99971 0600	Washer, Spring	2	
	99952 0618	Washer, Plain	2	
● 9	0866 72 602A	Channel (R), Center	1	
●	0866 73 602A	Channel (L), Center	1	
10	0866 72 605	Channel "A", Glass Run	2	
11	0866 72 606	Channel "B", Glass Run	2	
12	99831 0408	Screw, Center Channel	4	
13	99806 0608	Bolt, Glass Run Channel	2	
	99971 0600	Washer, Spring	2	
	99952 0618	Washer, Plain	2	
14	0866 72 651A	Weatherstrip	2	
●	0866 72 651B	Weatherstrip	2	Car No. 129763 71/12 ~○

REAR SIDE DOOR (GLASS, SEDAN)

No.	Part Number	Description		Q'ty	Remarks
15	1511 72 661A	Glass (R), Quarter Window	Transparent (For Australia)	1	
	1511 73 661A	Glass (L), Quarter Window		1	
	1524 72 661B	Glass (R), Quarter Window	Transparent	1	
	1524 73 661B	Glass (L), Quarter Window		1	
	1540 72 661A	Glass (R), Quarter Window	Blue Pane	1	
	1540 73 661A	Glass (L), Quarter Window		1	
● 16	0866 72 781C	Weatherstrip, Outer		2	
17	0866 72 791	Weatherstrip, Inner		2	
18	0398 58 821A	Rest, Arm		2	
19	0398 58 822	Garnish, Arm Rest		2	
●	0398 58 822 A	Garnish, Arm Rest		2	Car No. 130590 71/12~○
20	99833 0520	Screw, Arm Rest		4	
	99952 0500	Washer, Plain		4	

When ordering the following trims,
Add color code nos. given below after parts number
-03 (Black) -12 (Brown) -13 (Grayish Yellow)

21	0866 72 810B	Trim (R), Door		1	©
	0866 73 810B	Trim (L), Door		1	©
22	0223 58 692A	Grommet		2	
23	0208 58 921	Fastener		12	
24	0187 58 922	Cap, Fastener		12	

REAR SIDE DOOR (GLASS, SEDAN) 72 73

No.	Part Number	Description	Q'ty	Remarks
25	**0866 72 760**	**Weatherstrip (R)**	1	
	0866 72 760 A	Weatherstrip (R)	1	Car No. 139297 72/2~○
	0866 73 760	**Weatherstrip (L)**	1	
	0866 73 760 A	Weatherstrip (L)	1	Car No. 139297 72/2~○
26	**0305 58 762**	**Fastener, Weatherstrip**	50	
27	0866 72 831 A	Mould (R), Beltline	1	
	0866 72 831 C	Mould (R), Beltline	1	Car No. 127396 71/12~△
	0866 72 831 D	Mould (R), Beltline	1	Car No. 144308 72/4~△
	0866 73 831 A	Mould (L), Beltline	1	
	0866 73 831 C	Mould (L), Beltline	1	Car No. 127396 71/12~△
	0866 73 831 D	Mould (L), Beltline	1	Car No. 144308 72/4~△
28	0866 72 841 A	Mould (R), Sash	1	
	0866 73 841A	**Mould (L), Sash**	1	
29	**0866 72 842A**	**Mould (R), Sash**	1	
	0866 73 842A	**Mould "B" (L), Sash**	1	
30	**0398 58 755-00**	**Welt Seaming**	2	

REAR SIDE DOOR (LOCK, SEDAN)

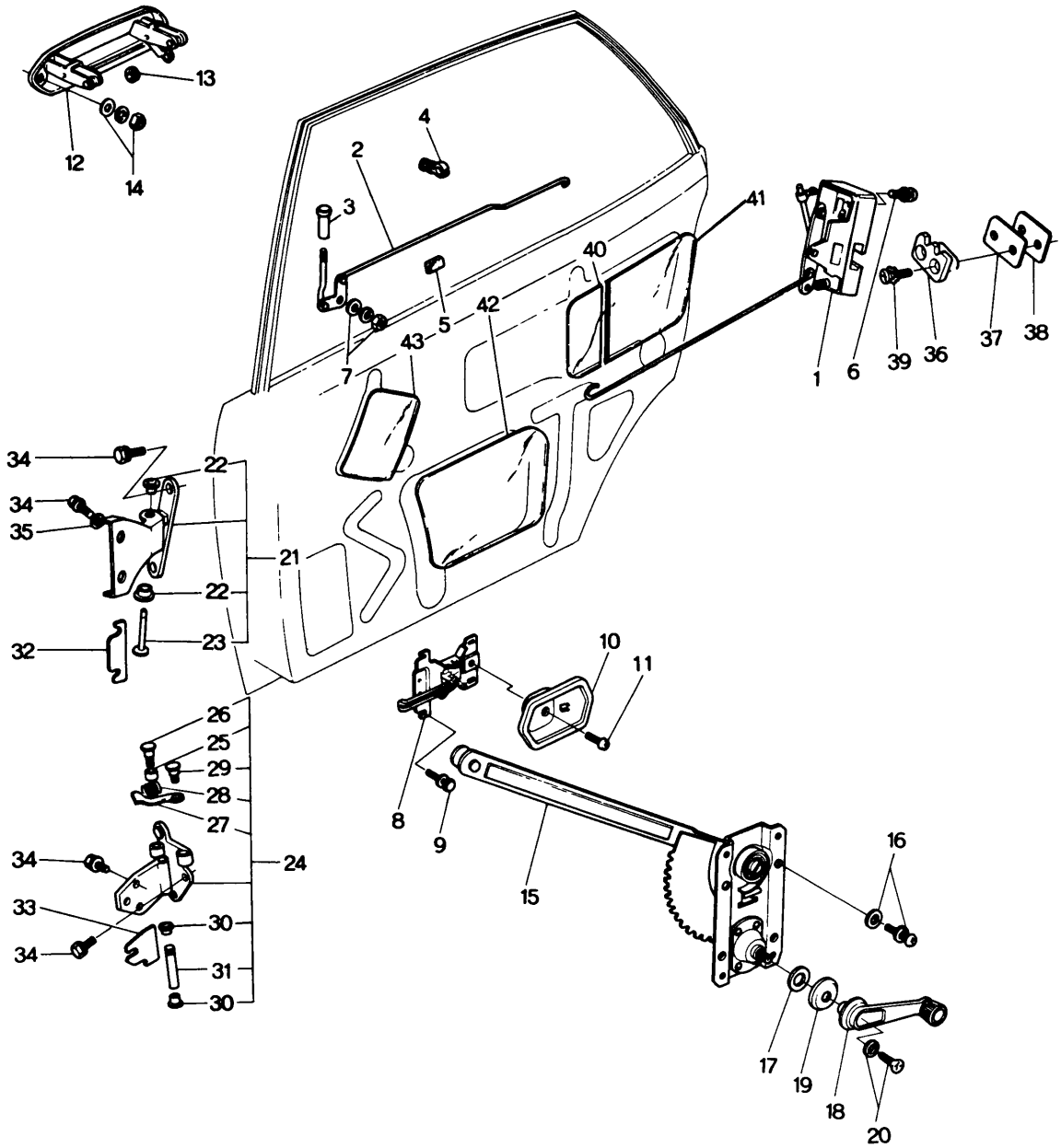

REAR SIDE DOOR (LOCK, SEDAN) 72 73

No.	Part Number	Description	Q'ty	Remarks
1	0866 72 310B	Lock (R), Door	1	
●	0866 72 310E	Lock (R), Door	1	Car No. 150526 ⁷³⁄₈～×
	0866 73 310B	Lock (L), Door	1	
●	0866 73 310E	Lock (L), Door	1	Car No. 150526 ⁷³⁄₈～×
	1524 72 310B	Lock (R), Door } Arctic Spec	1	
●	1524 72 310E	Lock (R), Door } Arctic Spec	1	Car No. 150526 ⁷³⁄₈～×
	1524 73 310B	Lock (L), Door } Arctic Spec	1	
●	1524 73 310E	Lock (L), Door } Arctic Spec	1	Car No. 150526 ⁷³⁄₈～×
2	0866 72 330A	Rod (R) Order Under No. { 0866 72 310B / 1524 72 310B }	1	
	0866 73 330A	Rod (L) Order Under No. { 0866 73 310B / 1524 73 310B }	1	
● 3	0259 58 691	Knob	2	
4	0305 58 309	Holder, Rod	4	
5	0259 72 509	Pad, Door Lock	2	
6	99833 0630	Screw, Door Lock	6	
	99974 0600	Washer, Toothed	6	
7	99907 0600	Nut, Door Lock	2	
	99952 0600	Washer, Plain	2	
	99971 0600	Washer, Spring	2	
8	0866 58 321B	Handle, Inner	2	
9	99806 0510	Bolt, Inner Handle	6	
	99952 0500	Washer, Plain	6	
	99971 0500	Washer, Spring	6	
10	0866 58 303B-00	Cover (R)	1	©
	0866 59 303B-00	Cover (L)	1	©
11	99832 0408B	Screw, Cover	2	

REAR SIDE DOOR (LOCK, SEDAN)

No.	Part Number	Description	Q'ty	Remarks
12	0866 72 410	Handle (R), Outer Side	1	
	0866 73 410	Handle (L), Outer Side	1	
13	0305 58 411	Bush, Outer Handle	2	
14	99906 0500	Nut, Outer Side Handle	4	
	99951 0618	Washer, Plain	4	
	99971 0500	Washer, Spring	4	
15	0866 72 560	Regulator (R), Window	1	
	0866 73 560	Regulator (L), Window	1	
16	99806 0612	Bolt, Window Regulator	8	
	99952 0600	Washer, Plain	8	
	99971 0600	Washer, Spring	8	
17	0259 58 305	Gasket, Window Regulator	2	
18	0223 58 370C	Handle, Regulator (Std.)	2	
	0824 58 370A	Handle, Regulator (Std. Excluded)	2	
19	0223 58 375A	Escutcheon	2	
20	99806 0516	Bolt, Regulator Handle	2	
	99971 0500	Washer, Spring	2	
21	0866 72 210B	Hinge "A" (R)	1	
	0866 73 210B	Hinge "A" (L)	1	
22	0223 58 721	Bush	4	
23	0866 72 212A	Pin, Hinge	2	

No.	Part Number	Description	Q'ty	Remarks
24	0866 72 240	Hinge "B" (R)	1	
	0866 73 240	Hinge "B" (L)	1	
25	0866 58 281	Roller	2	
26	0866 58 282	Pin "A"	2	
27	0866 58 291A	Lever, Check	2	
28	0866 58 292 A	Spring, Check	2	
29	0866 58 293	Pin "B"	2	
30	0223 58 721	Bush	4	
31	0187 58 731	Pin, Hinge	2	
32	0866 72 201	Shim, Hinge "A"-Selective use	4	
33	0866 58 231	Shim, Hinge "B"-Selective use	4	
●	1011 58 231	Shim, Hinge "B"-Selective use	4	Car No. 72/9~○
34	99783 0828	Bolt, Hinge	20	
	99971 0800	Washer, Spring	20	
35	99951 0822	Washer, Plain-Hinge "A"	4	
36	0866 58 361	Rack (R)	1	
	1540 58 361	Rack (R)	1	Car No. 134345 72/1~○
●	0866 58 361B	Rack (R)	1	Car No. 150526 72/8~×
	0866 59 361	Rack (L)	1	
	1540 59 361	Rack (L)	1	Car No. 134345 72/1~○
●	0866 59 361B	Rack (L)	1	Car No. 150526 72/8~×
● 37	0866 58 363	Seat, Striker	2	Used up to Car No. 150526 72/8~
38	0866 58 364 A	Plate, Base	2	
●	0866 58 364B	Plate, Base	2	Car No. 150526 72/8~×
39	99761 0640	Screw, Rack	4	
	1540 58 371	Screw, Rack	4	Car No. 134345 72/1~○
	99975 0600	Washer, Toothed	4	
40	0223 72 921A	Screen "A"	2	
41	0866 72 862A	Screen "B"	2	
42	0866 72 863	Screen "C"	2	

REAR SIDE DOOR (LOCK, SEDAN)

No.	Part Number	Description	Q'ty	Remarks
43	0305 72 864	Screen "D"	2	

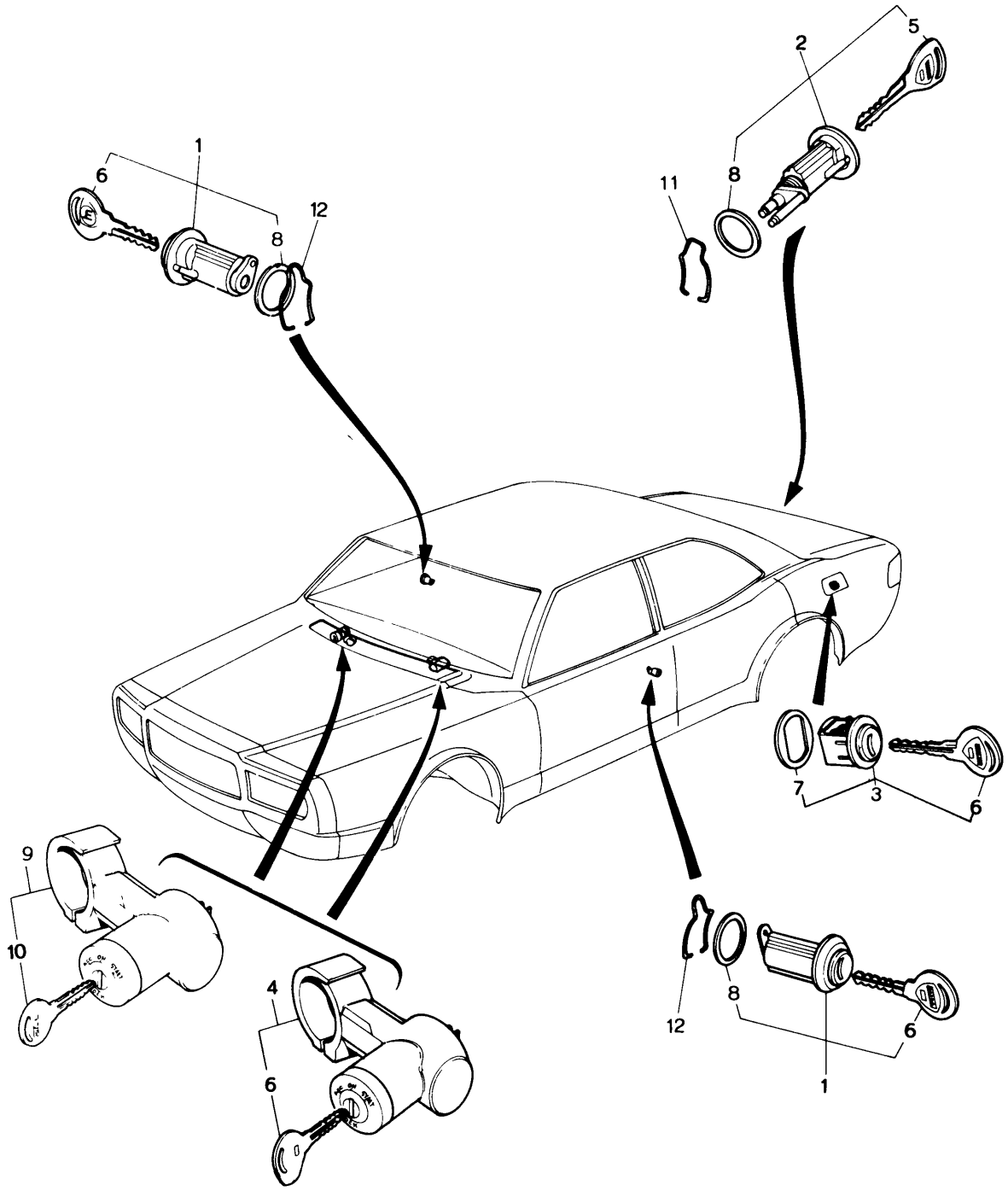
1
6
8
12
2
5
11
8
7
3
6
9
10
4
6
12
8
6
1

No.	Part Number	Description	Q'ty	Remarks
	1554 09 010	Key Set, Steering Lock Included	1	
●	1554 09 010A	Key Set, Steering Lock Included	1	Car No. 127396 7½~○
	1562 09 010	Key Set	1	
●	1562 09 010A	Key Set	1	Car No. 127396 7½~○
●	0866 09 010	Key Set	1	1555,1556,1557
●	0866 09 010A	Key Set	1	Car No. 127396 7½~○
	1568 09 010	Key Set, For France	1	
●	1568 09 010A	Key Set, For France	1	Car No. 127396 7½~○
1	0839 74 910	Key Sub Set, Door	2	
●	0839 74 910A	Key Sub Set, Door	2	Car No. 127396 7½~○
	2080 74 910	Key Sub Set, Door-For France	2	
●	2080 74 910A	Key Sub Set, Door-For France	2	Car No. 127396 7½~○
2	0866 75 930	Key Sub Set, Trunk Lid	1	
	1568 75 930	Key Sub Set, Trunk Lid-For France	1	
● 3	0866 75 940	Key Sub Set, Filler Lid	1	
●	1568 75 940	Key Sub Set, Filler Lid (For France)	1	
4	1554 75 990	Key Sub Set, Steering Lock(For Australia)	1	
●	0866 75 990	Key Sub Set, Steering (R.H.D. General)	1	
5	0839 58 492A	Key, Primary	2	
	2080 58 492	Key, Primary-For France	2	
6	0839 58 493A	Key, Secondary	1	
7	0621 42 455	Seat, Filler Lid Lock	1	
8	0223 58 962	Gasket, Door & Trunk Lid	3	
● 9	2370 60 430A	Steering Lock (L.H.D.)	1	
● 10	2835 60 439	Key (L.H.D.)	2	
11	0305 52 802	Retainer, Trunk Lid	1	
12	0223 58 961	Fastener, Door	2	
	0839 74 158	Blank Key, Primary Key No. 2500~2900	—	
	0839 74 168	Blank Key, Primary Key No. 3000~3499	—	
	0839 74 159	Blank Key, Secondary Key No. 2500~2999	—	
	0839 74 169	Blank Key, Secondary Key No. 3000~3499	—	

No.	Part Number	Description	Q'ty	Remarks
	2080 74 158 Blank Key	Key No. 2500～2999 (For France)	—	
	2080 74 168 Blank Key	Key No. 3000～3499 (For France)	—	
	2280 75 641A Blank Key, Steering Lock		—	

0014 17 411～0187 26 341 INDEX.

Parts Number	Fig. Page	Parts Composition List Page	Fig. No.
0014 17 411	42	43	12
0103 17 244A	38	39	10
0103 17 411	42	43	11
0106 40 861	116	117	21
0107 17 121	35	36	17
0107 18 201	45	48	50
0107 18 212	45	47	32
0107 18 216A	45	48	42
0107 18 221A	45	48	46
0107 18 224	45	48	44
0107 18 225	45	48	45
0107 18 226A	45	48	43
0107 18 231	45	48	37
0107 18 266	45	48	47
0107 18 406B	53	54	16
0107 18 417A	53	54	11
0107 18 424	50	51	6
	53	54	4
	57	58	3
0110 18 515	27	28	4
0110 41 470	133	134	5
0110 68 050A	232	233	3
0111 17 323	42	43	18
0111 17 354	65	67	42
0111 41 692	210	213	40
	220	221	7
0111 43 432	133	134	8
0111 43 433	133	134	9
0111 57 111	149	150	17
0114 17 351	42	43	9
0114 18 422A	53	54	5
0114 27 262	89	90	20
0114 42 046A	118	119	2
0114 43 625	210	213	36
0118 10 320	27	30	37
0118 15 114	27	28	10
0118 15 118	27	28	14
0118 15 121	27	28	9
0118 17 313	42	43	4
0118 17 316	42	43	8
0118 23 636	53	54	8
0118 23 637	53	54	7
0118 23 689	53	54	17
	57	59	27
0118 23 691	53	54	18
	57	59	29
0118 26 342	85	86	7
0118 26 672	85	87	23
0118 26 832	85	87	31
0118 26 834	85	87	32
0118 26 897	85	88	35
0118 41 342	133	134	20
0118 41 375	143	144	17
0118 41 681	125	126	10

Parts Number	Fig. Page	Parts Composition List Page	Fig. No.
0118 41 681	127	128	12
0118 41 682	125	126	11
	127	128	13
0118 43 028A	129	130	17
0118 43 505	143	144	20
0118 56 241	165	167	37
0118 56 242B	162	164	36
	165	167	38
	200	203	33
0118 68 180A	232	233	7
0136 43 635	133	135	31
	143	144	2
0164 23 664	53	54	2
0180 17 353	35	37	30
0180 32 165A	95	98	42
	100	103	36
0180 32 171A	95	98	41
	100	102	35
0180 32 172A	95	98	41
	100	102	35
0180 32 173A	95	98	41
	100	102	35
0180 32 174A	95	98	41
	100	102	35
0183 17 346	35	37	26
0183 17 351	35	37	28
0183 17 491	42	44	40
0183 17 493	42	44	32
0183 34 731	110	113	46
0183 41 043	129	130	9
0183 41 081	129	130	8
0183 41 308	133	135	26
	140	141	14
0183 53 074	152	154	15
0183 66 021	204	205	2
0183 66 022	204	205	3
0187 17 232	38	39	16
0187 17 242	38	39	7
0187 17 243	38	39	9
0187 17 272	38	39	18
	38	40	21
0187 17 323	38	41	38
0187 17 333	35	37	21
0187 17 346B	65	67	37
0187 17 351A	65	67	38
0187 17 352	65	67	39
0187 17 404	42	43	2
0187 17 441A	42	43	13
0187 17 492	42	44	31
0187 24 566	50	51	21
0187 24 577A	50	51	3
0187 24 579A	50	51	2
0187 26 154	82	83	14
0187 26 341	85	86	6

INDEX. 0187 26 821 ~0223 58 311

0187 26 821	85	87	34
0187 26 921	85	87	34
0187 34 536	110	112	29
0187 34 776	92	94	27
0187 41 341	133	134	18
0187 42 371	118	119	15
0187 43 029	129	130	19
0187 46 683	129	130	11
0187 52 141	152	153	8
0187 56 235	256	257	6
0187 58 731	195	198	25
	195	198	33
	260	263	31
0187 58 922	190	193	20
	251	254	33
	256	258	24
0187 62 973	152	154	24
0187 68 110A	232	233	6
0187 69 049A	234	235	13
0191 41 331	133	134	17
0200 23 531	50	51	9
	53	54	22
0208 13 458	116	117	15
0208 24 523	50	51	14
0208 24 563A	50	51	20
0208 26 651	85	87	21
0208 26 671	85	87	22
02 8 32 059	95	97	31
	100	102	22
0208 32 188	95	98	48
	100	103	42
	104	106	21
0208 32 278	110	112	27
0208 56 615	165	168	39
0208 58 921	190	193	19
	251	254	32
	256	258	23
0208 66 949	210	213	42
0208 68 230	232	233	8
0208 76 071	242	244	25
0209 66 820	210	215	70
0209 66 821	210	215	71
0212 66 371	216	217	5
0212 66 372	216	217	6
0221 10 309	5	6	12
0221 14 117	1	3	32
0221 17 441	42	43	14
0221 17 473	42	44	23
0221 17 475A	42	44	26
0221 17 551A	42	44	36
0221 17 552	42	44	37
0221 27 141	89	90	7
0221 27 255	89	90	18
0221 27 305	89	91	24
0221 33 035	107	108	11
0221 33 698	107	108	8
0221 43 431	133	134	7
0221 43 694	133	135	28
0221 43 694	143	144	18
0221 44 033	140	141	4
0221 44 044	140	141	7
0222 13 363	27	31	62
	122	123	3
0222 13 470A	122	123	7
0222 13 481	122	123	8
0222 13 493	5	8	45
	122	123	13
0222 15 205	27	30	36
0222 15 255	27	30	41
0222 17 301B	38	40	29
0222 18 375	50	52	33
0222 18 376	50	52	33
0222 18 377	50	52	33
0222 18 391C	45	49	62
0222 24 517	53	54	21
0222 24 568	50	51	22
0222 24 714	53	54	3
0222 24 725	53	54	10
0222 24 741	53	54	20
0222 24 750	53	54	13
0222 24 752A	53	54	15
0222 24 753	53	54	14
0222 24 756	53	54	23
0222 24 760A	53	54	6
0222 66 511A	210	211	12
0223 25 024	80	81	6
0223 26 345A	85	86	8
0223 27 012	89	90	1
0223 27 018	89	90	2
0223 27 020B	89	90	3
0223 27 030	89	90	4
0223 27 401	89	91	25
0223 27 402	89	91	25
0223 27 403	89	91	25
0223 27 404	89	91	25
0223 27 405	89	91	25
0223 27 406	89	91	25
0223 27 407	89	91	25
0223 27 408	89	91	25
0223 27 409	89	91	25
0223 27 411	89	91	25
0223 27 412	89	91	25
0223 27 413	89	91	25
0223 27 414	89	91	25
0223 27 415	89	91	25
0223 41 131A	129	131	23
0223 46 683	129	131	24
0223 50 275	149	150	5
0223 52 007	165	167	36
0223 52 302	152	154	18
0223 58 303A	195	197	15
	251	252	12
0223 58 304A	195	197	16
	251	252	13
0223 58 311	195	197	17
	251	252	14

0223 58 370C	260	262	18
0223 58 375A	195	198	21
	251	253	19
	260	262	19
0223 58 445	234	237	49
0223 58 472	95	96	14
	100	101	3
0223 58 692A	190	193	18
	256	258	22
0223 58 721	195	198	24
	195	198	32
	260	262	22
	260	263	30
0223 58 939	190	194	27
0223 58 961	265	266	12
0223 58 962	265	266	8
0223 66 371	216	217	4
0223 69 102	234	236	25
0223 69 103	234	236	26
0223 69 105	234	236	26
0225 43 092	129	132	39
0233 49 656	136	138	25
0233 49 660	136	137	22
0233 49 665	136	137	21
0233 49 670	136	138	23
0233 66 790	129	132	41
0243 34 565	110	112	28
0243 56 231	53	55	40
	57	60	50
0243 66 773	118	120	31
0249 24 731	57	58	8
	57	58	22
	57	59	37
0249 41 671	125	126	6
	127	128	16
0249 68 060A	232	233	4
0257 61 051	200	202	25
0257 87 107	216	217	17
0257 87 108	216	217	15
0259 18 510	27	28	3
0259 25 021B	80	81	2
0259 25 060	80	81	3
0259 25 071A	80	81	4
0259 25 072A	80	81	4
0259 25 073A	80	81	4
0259 25 074A	80	81	4
0259 25 075A	80	81	4
0259 25 076A	80	81	4
0259 25 077A	80	81	4
0259 25 078A	80	81	4
0259 25 079A	80	81	4
0259 26 041	82	83	7
0259 26 051	82	83	8
0259 26 129	82	83	15
0259 26 132	82	83	18
0259 26 141	82	83	16
0259 26 142	82	83	16
0259 26 152	82	83	12
0259 26 155	82	83	11
0259 28 182	92	94	12
0259 32 071	95	97	29
	100	102	25
0259 32 154	95	97	34
	100	102	28
0259 32 155	95	97	34
	100	102	28
0259 32 156	95	98	34
	100	102	28
0259 32 157	95	98	34
	100	102	28
0259 32 160	95	98	39
	100	102	33
0259 32 163	95	98	40
	100	102	34
0259 32 182	95	97	33
	100	102	27
0259 32 289	95	99	51
	100	103	45
	104	105	5
0259 33 047	107	108	9
0259 33 071	107	108	1
0259 33 165	82	83	17
	107	109	22
0259 33 691	85	87	26
	133	135	24
0259 33 693	85	87	27
	133	135	25
0259 34 155	110	111	14
0259 34 156	110	111	15
0259 34 705	110	113	38
0259 34 708	110	113	40
0259 34 712	110	113	41
0259 34 719A	110	113	44
0259 34 767	110	113	49
0259 34 768	110	113	50
0259 34 769B	110	113	51
0259 39 340	114	115	6
0259 41 613	127	128	4
0259 41 619	127	128	8
0259 41 644	125	126	3
	127	128	10
	129	130	13
0259 42 022	146	147	1
0259 42 364	118	119	5
0259 42 390	118	119	17
0259 43 022	129	130	3
0259 43 028	129	130	17
0259 43 088	95	99	60
	100	101	20
	129	132	38
0259 43 140	129	131	21
0259 46 691	146	148	25
0259 52 257	152	153	14
0259 52 301	152	154	17
0259 53 455	159	161	33
	162	164	35

INDEX. 0259 55 261 ~0305 57 909

0259 55 261	176	177	10
	176	178	23
0259 55 556	95	98	38
	100	102	32
0259 55 951	169	175	93
0259 57 105	179	181	28
	184	187	34
0259 58 305	195	198	19
	260	262	17
0259 58 691	195	196	3
	260	261	3
0259 58 906	195	199	41
0259 61 405	200	202	24
0259 66 685	210	213	35
0259 68 250	179	181	30
	184	187	36
0259 69 311	239	240	2
0259 72 080	256	257	7
0259 72 210	256	257	5
0259 72 305	251	253	17
0259 72 509	195	196	5
	260	261	5
0259 87 101A	216	218	22
0259 87 103	216	218	26
0259 87 104A	216	218	27
0259 87 105	216	218	21
0259 87 106	216	218	23
0259 87 107	216	218	19
0259 87 108A	216	218	20
0259 87 109A	216	217	14
0259 87 119	216	218	28
0259 87 120	216	218	29
0259 87 134	216	217	12
0259 88 123	179	181	22
	184	187	28
0259 88 229	179	182	40
	184	188	48
0259 88 259	179	180	9
	184	185	13
0268 43 028	129	130	17
0271 17 478	42	44	27
0275 55 195	226	228	30
	234	237	44
0275 68 088	226	227	6
0275 75 140	176	178	24
0275 87 007	204	205	4
	204	206	13
0290 17 261B	38	39	19
0290 17 402	42	43	1
0290 24 501A	50	51	15
0290 24 505A	50	51	13
0290 24 510A	50	51	7
0290 24 511A	50	51	10
0290 24 513	50	51	24
0290 24 515	50	51	12
0290 24 517	50	51	5
0290 24 520A	50	51	16
0290 24 521A	50	52	28
0290 24 524	50	51	11
0290 24 541A	50	51	25
0290 24 542A	50	51	26
0290 24 556	50	52	27
0290 24 563	50	51	19
0290 24 581	50	52	29
0290 27 231	89	90	13
0290 27 252	89	90	17
0290 27 253	89	90	17
0290 27 254	89	90	17
0290 27 301	89	90	21
0290 27 302	89	90	22
0290 41 710	127	128	2
0302 44 132	140	142	24
0303 17 470	42	43	21
0303 17 474	42	44	25
0303 17 481	42	44	29
0303 17 482	42	44	30
0303 17 561	42	44	39
0303 44 032	140	141	3
0303 44 053	140	141	11
0305 17 341	72	74	32
0305 17 345	65	67	36
0305 26 255	85	86	2
0305 26 465	85	86	13
0305 26 500	85	86	10
0305 26 800A	85	87	30
0305 26 810A	85	87	30
0305 27 171	89	90	11
0305 27 261	89	90	19
0305 32 119	95	98	46
	100	103	40
	104	106	22
0305 32 365	104	105	7
0305 34 701A	110	113	37
0305 34 707	110	113	39
0305 34 709	110	113	52
0305 34 713	110	113	42
0305 34 714	110	113	43
0305 34 720	110	113	52
0305 40 061	116	117	3
0305 41 440	133	134	2
0305 41 451	133	134	3
0305 41 461	133	134	4
0305 41 641	127	128	7
0305 43 140	129	131	27
0305 43 635	143	144	8
0305 44 471	140	142	22
0305 50 231	149	151	36
0305 52 312B	152	153	6
0305 52 313	152	153	5
0305 52 322A	152	153	7
0305 52 330A	152	153	9
0305 52 331	152	153	10
0305 52 628	152	155	33
0305 52 802	265	266	11
0305 53 999	247	248	6
0305 57 909	179	183	46

0305 57 909	184	189	54
0305 58 309	195	196	4
	260	261	4
0305 58 411	260	262	13
0305 58 505	190	191	5
0305 58 762	190	193	22
	256	258	26
0305 59 505	190	191	5
0305 60 053	169	173	54
0305 60 715	169	175	92
0305 66 580	226	231	65
0305 67 330A	216	217	2
0305 67 993A	210	214	52
	222	224	17
0305 68 800C	232	233	10
0305 68 810A	232	233	11
0305 69 170	234	236	31
0305 69 171	234	236	32
0305 69 180	234	236	33
0305 70 395B	245	246	16
0305 70 443B	247	248	2
0305 70 445B	247	248	3
0305 70 448A	247	248	5
0305 70 449B	247	248	4
0305 70 861B	247	250	37
0305 72 864	260	264	43
0305 87 032	207	209	13
0305 87 065	226	231	66
0305 87 906	216	217	7
0305 87 993	220	221	3
0305 99 431	133	134	—
0308 46 030	146	147	5
0308 46 054	146	147	9
0308 46 056	146	147	11
0308 46 057	146	147	12
0308 46 083	146	147	18
0316 66 865A	222	225	26
0317 17 225	38	39	14
0317 17 335	35	37	22
	65	66	22
0317 26 121	82	83	13
0317 26 151A	82	83	10
0317 32 129	95	98	45
	100	103	39
0317 33 043	107	108	5
0317 33 049	107	108	3
0317 33 075	107	108	6
0317 33 673	85	87	24
0317 43 421	133	134	6
0317 43 428	133	134	10
0317 43 551	133	134	12
0317 57 015	179	183	42
	184	189	50
0317 60 252	169	174	72
0317 60 253	169	174	73
0317 60 254	169	174	74
0317 60 255	169	174	75
0317 60 256	169	174	76
0317 60 257	169	174	77
0317 60 258	169	174	78
0317 60 259	169	174	79
0317 60 261	169	174	80
0317 60 262	169	175	81
0317 60 266	169	175	85
0317 66 862	222	224	18
0317 67 480	220	221	1
0317 70 269	226	228	31
0317 70 307	245	246	2
0324 10 250	5	7	29
0324 10 252	5	7	30
0329 17 520	42	44	34
0329 32 013A	95	97	18
	100	101	7
0329 32 014	95	97	21
0329 32 015	95	97	20
	100	101	9
0329 32 016	95	97	19
	100	101	8
0329 32 019	95	97	23
	100	101	12
0329 32 031A	95	97	17
	100	101	6
0329 32 033	95	97	22
	100	101	11
0329 32 034	95	97	25
	100	101	14
0338 10 667	72	74	29
0338 19 100A	61	62	7
0338 19 215	61	62	9
0338 19 216	61	62	10
0338 19 220	61	62	11
0338 19 223	61	62	13
0338 19 230	61	62	12
0338 19 234	61	62	14
0338 19 235	61	62	14
0338 19 236	61	62	14
0338 19 237	61	62	15
0338 19 238	61	62	15
0338 19 239	61	62	15
0338 19 240	61	62	16
0338 19 245	61	62	17
	75	76	14
0338 19 255	61	63	18
0338 19 256	61	63	19
0338 19 257	61	63	20
0338 19 258	61	63	21
0338 19 310	65	66	1
0338 19 331	65	66	2
0338 19 335	65	66	3
0338 19 336	65	66	4
0338 19 337	65	66	5
0338 19 338	65	66	6
0338 19 360	68	69	1
0338 19 361	65	66	9
0338 19 363	65	66	10
0338 19 381A	65	66	11

INDEX. 0338 19 384～0338 19 664

0338 19 384	65	66	12
0338 19 385A	65	66	13
0338 19 386	65	66	14
0338 19 388	65	66	15
0338 19 389	65	66	16
0338 19 391A	65	66	17
0338 19 393	65	66	18
0338 19 395	65	66	18
	65	66	19
0338 19 397	65	66	20
	72	74	23
0338 19 431	75	76	1
0338 19 432	75	76	2
0338 19 433	75	76	8
0338 19 440	75	76	9
0338 19 443	75	76	10
0338 19 444	75	76	5
0338 19 445	75	76	3
0338 19 446	75	76	4
0338 19 448	75	76	11
0338 19 449	75	76	12
0338 19 450	75	76	13
0338 19 460	68	69	2
0338 19 470	68	69	3
0338 19 475	68	69	4
	68	69	17
0338 19 476	68	69	5
	68	70	18
0338 19 480	68	69	6
	68	70	19
0338 19 486	68	69	8
	68	70	21
0338 19 487	68	69	9
	68	70	22
0338 19 488	68	69	10
	68	70	23
0338 19 493	68	69	7
	68	70	20
0338 19 498	68	69	11
	68	70	24
0338 19 499	68	69	12
	68	70	25
0338 19 500	68	69	13
	68	70	26
0338 19 503	68	69	14
0338 19 504	68	69	14
0338 19 505	68	69	14
0338 19 506	68	69	14
0338 19 507	68	69	14
0338 19 508	68	69	14
0338 19 509	68	69	15
	68	70	27
0338 19 510	68	69	16
0338 19 511	68	70	28
0338 19 515	68	70	29
0338 19 530	68	70	30
0338 19 531	68	70	31
0338 19 533	68	70	32
0338 19 534	68	70	33
0338 19 540	68	70	34
0338 19 550	68	70	35
0338 19 560	68	70	36
0338 19 565	68	70	37
0338 19 566	68	71	38
0338 19 567	68	71	39
0338 19 570	68	71	40
0338 19 580	72	73	1
0338 19 581	72	73	2
0338 19 590	72	73	3
0338 19 591	72	73	4
0338 19 593	72	73	5
0338 19 594	72	73	6
0338 19 595	72	73	7
0338 19 596	72	73	8
0338 19 598	68	71	41
0338 19 601	72	73	9
0338 19 603	72	73	10
0338 19 604	72	73	11
0338 19 605	72	73	12
	72	73	12
0338 19 606	72	73	13
0338 19 607	72	73	14
0338 19 608	72	73	15
0338 19 609	72	73	16
0338 19 610	72	73	17
0338 19 613A	72	73	18
0338 19 614A	72	73	18
0338 19 615A	72	73	18
0338 19 616A	72	73	18
0338 19 617A	72	73	18
0338 19 618A	72	74	18
0338 19 621	68	71	42
0338 19 622	68	71	43
	72	74	19
0338 19 623	68	71	44
0338 19 631	68	71	45
0338 19 632	68	71	45
0338 19 633	68	71	45
0338 19 634	68	71	45
0338 19 635	68	71	45
0338 19 636	68	71	45
0338 19 638	68	71	46
0338 19 639	68	71	47
0338 19 641	68	71	48
0338 19 642	68	71	48
0338 19 643	68	71	48
0338 19 644	68	71	48
0338 19 645	68	71	48
0338 19 646	68	71	48
0338 19 647	68	71	48
0338 19 651	72	74	21
0338 19 655	72	74	22
0338 19 656	72	74	23
0338 19 661	72	74	25
0338 19 663	72	74	26
0338 19 664	72	74	27

0338 19 670A	72	74	30
0338 19 676	72	74	31
0338 19 678	61	63	23
0338 19 701	75	76	15
0338 19 702	75	76	16
0338 19 703	75	76	17
0338 19 704	75	76	18
0338 19 706	75	76	19
0338 19 710A	65	66	21
0338 19 731	75	76	20
0338 19 732	75	76	21
0338 19 733	75	76	22
0338 19 734	75	76	23
0338 19 735	65	67	23
0338 19 737	65	67	24
0338 19 739	65	67	24
0338 19 760	77	78	1
0338 19 768	77	78	3
0338 19 771	77	78	4
0338 19 772	77	78	5
0338 19 773	77	78	6
0338 19 777	77	78	9
0338 19 778	77	78	10
0338 19 781	77	78	11
0338 19 782	77	78	12
0338 19 783	77	78	13
0338 19 784	77	78	14
0338 19 785	77	78	15
0338 19 786	77	78	16
0338 19 787	77	78	17
0338 19 788	77	78	18
0338 19 789	77	78	19
0338 19 791	77	78	20
0338 19 792	77	78	21
0338 19 793	77	78	22
0338 19 795	77	78	23
0338 19 797	77	78	24
0338 19 798	77	78	25
0338 19 801	77	79	26
0338 19 802	77	79	27
0338 19 803	77	79	28
0338 19 805	77	79	29
0338 19 807	77	79	30
0338 19 808	77	79	31
0338 19 811	77	79	32
0338 19 815	77	79	33
0338 19 816	77	79	34
0338 19 817	77	79	35
0338 19 818	77	79	36
0338 19 819	77	79	37
0338 19 821	65	67	25
0338 19 822	65	67	26
0338 19 823	65	67	27
0338 19 825	65	67	28
0338 19 826	65	67	28
0338 19 827	65	67	28
0338 19 828	65	67	28
0338 19 829	65	67	28
0338 19 831	77	79	39
0338 19 832	77	79	40
0338 19 833	77	79	41
0338 19 835	65	67	29
0338 19 836	65	67	30
0338 19 837	65	67	31
0338 19 880	65	67	33
0338 19 904	61	63	28
0366 53 451	162	163	15
0366 53 600	162	164	23
0366 54 451	162	163	16
0366 54 600	162	164	24
0366 61 070	200	202	26
0368 57 120	179	180	12
0368 57 170	179	180	14
0368 58 303	195	197	10
0368 58 501	190	191	4
0368 59 303	195	197	10
0368 59 501	190	191	4
0368 69 055A	234	235	4
0368 70 441	247	248	1
0368 72 501	256	257	3
0368 73 501	256	257	3
0368 88 010	179	180	10
0368 88 100	179	181	17
0368 88 200	179	180	11
0368 88 280	179	181	18
0370 32 030	95	96	3
0370 32 037	95	96	4
0370 32 039	95	96	9
0370 32 080	95	97	28
	100	102	23
0370 32 130	95	97	32
0370 32 412	95	99	63
	100	103	49
0370 32 820	95	96	10
0370 32 980	95	96	8
0370 41 619	125	126	2
0370 52 110	152	153	1
0370 53 410	162	163	11
0370 55 331A	169	173	48
0370 57 100A	184	185	1
0370 57 110A	184	185	7
0370 57 120	184	186	16
0370 57 150A	184	185	4
0370 57 160A	184	185	10
0370 57 170	184	186	19
0370 57 200A	184	187	40
0370 57 250	184	188	45
0370 60 071	169	173	58
0370 60 073A	169	173	59
0370 66 930B	222	223	6
0370 68 920	226	230	57
0370 70 431D	234	238	58
0370 70 441	247	248	1
0370 70 980	53	55	35
	57	59	45
0370 70 985A	53	55	36

INDEX. 0370 70 985A～0376 70 421

0370 70 985A	57	60	46
0370 71 431D	234	238	58
0370 75 010	176	177	2
0370 75 011	176	177	4
0370 75 013	176	177	5
0370 75 018	176	177	12
0370 88 010	184	185	14
0370 88 100	184	186	23
0370 88 200	184	186	15
0370 88 250	179	182	38
0370 88 280	184	186	24
0370 88 370	184	188	44
0370 88 420	179	182	41
	184	188	49
0374 58 501	190	191	4
0374 59 501	190	191	4
0374 69 055	234	235	4
0374 70 441	247	248	1
0374 70 471	247	249	13
0374 72 501	251	252	1
0374 73 501	251	252	1
0375 57 200	179	182	34
0375 70 471	247	249	13
0375 88 370	179	182	37
0376 17 640	42	44	38
0376 28 010	92	93	1
0376 28 011	92	93	1
0376 28 012	92	93	1
0376 28 013	92	93	1
0376 28 014	92	93	1
0376 32 110A	95	97	—
0376 42 410	118	120	21
0376 52 510	152	154	25
0376 52 901	152	155	39
0376 53 330	159	160	3
0376 53 340	159	160	5
0376 53 350B	159	160	7
0376 53 391	159	160	9
0376 53 410	159	160	11
0376 53 430	159	160	13
0376 53 500A	159	160	17
0376 53 591	159	160	19
0376 53 600C	159	160	21
0376 53 810B	159	161	23
0376 53 901	159	161	27
0376 53 920	159	161	28
0376 53 941	159	161	29
0376 53 950	159	161	30
0376 53 991	159	161	31
0376 54 330	159	160	4
0376 54 340	159	160	6
0376 54 350C	159	160	8
0376 54 391	159	160	10
0376 54 410	159	160	12
0376 54 430	159	160	14
0376 54 500A	159	160	18
0376 54 591	159	160	20
0376 54 600B	159	160	22
0376 56 080A	165	166	4
0376 56 381	165	167	22
0376 56 580A	165	166	5
0376 56 881	165	167	23
0376 57 180	179	181	25
0376 57 200	179	182	35
0376 58 010B	190	191	1
0376 58 310	195	196	1
0376 58 330	195	196	2
0376 58 501	190	191	4
0376 58 604	190	191	7
0376 58 605	190	192	8
0376 58 755	190	193	26
0376 58 760A	190	193	21
0376 58 781A	190	192	12
0376 58 791	190	192	13
0376 58 810C	190	193	17
0376 58 831	190	193	23
0376 59 010B	190	191	1
0376 59 020A	190	191	2
0376 59 310	195	196	1
0376 59 330	195	196	2
0376 59 501	190	191	4
0376 59 604	190	192	7
0376 59 760A	190	193	21
0376 59 781A	190	192	12
0376 59 791	190	192	13
0376 59 810B	190	193	17
0376 59 831	190	193	23
0376 68 890A	226	230	50
0376 68 900	226	230	51
0376 68 910	226	230	52
0376 68 940	226	230	53
0376 68 950	226	230	54
0376 69 061A	234	235	7
0376 69 065A	234	235	7
0376 69 110A	234	235	17
0376 69 111	234	236	19
0376 69 112	234	236	21
0376 69 114	234	236	24
0376 69 130A	234	235	17
0376 69 131	234	236	19
0376 69 290	239	240	1
0376 69 314	239	240	4
0376 69 318	239	240	5
0376 69 321	239	240	6
0376 69 341	239	240	7
0376 69 342	239	240	8
0376 69 343	239	240	9
0376 69 411	239	240	14
0376 69 431	239	240	15
0376 69 462	239	241	17
0376 69 482	239	241	19
0376 69 511	239	241	21
0376 69 521	239	241	23
0376 69 870	239	241	29
0376 69 941	234	237	41
0376 70 421	234	237	50

0376 70 422	234	237	51
0376 70 426	234	238	53
0376 70 427	234	238	54
0376 70 428	234	238	55
0376 70 431A	234	238	61
0376 70 441	247	248	1
0376 70 451	247	248	7
0376 70 453	247	248	10
0376 70 471	247	249	13
0376 70 481	247	249	15
0376 70 482	247	249	16
0376 70 483	247	249	17
0376 70 484	247	249	19
0376 70 801	247	250	27
0376 70 802	247	250	29
0376 70 821	247	250	31
0376 70 822	247	250	33
0376 70 855	247	250	44
0376 70 891	234	238	63
0376 70 892A	234	238	64
0376 71 421	234	237	50
0376 71 422	234	237	51
0376 71 431A	234	238	61
0376 71 453	247	248	11
0376 71 483	247	249	18
0376 71 484	247	249	20
0376 71 801	247	250	28
0376 71 802	247	250	30
0376 71 821	247	250	32
0376 71 822	247	250	34
0376 71 855	247	250	45
0376 71 891	234	238	63
0376 71 892A	234	238	64
0376 72 501	251	252	1
0376 72 505	251	252	3
0376 72 560	251	252	11
0376 72 602	251	253	21
0376 72 603	251	253	22
0376 72 605	251	253	23
0376 72 606	251	253	24
0376 72 755	251	254	46
0376 72 761	251	254	43
0376 72 771	251	254	44
0376 72 781A	251	253	26
0376 72 790	251	253	27
0376 72 810A	251	254	31
0376 72 831	251	254	37
0376 72 851A	251	254	38
0376 72 855	251	254	39
0376 72 861A	251	255	47
0376 72 862	251	255	48
0376 72 863	251	255	49
0376 72 881	251	254	41
0376 72 890	251	253	28
0376 72 900B	251	253	29
0376 72 902B	251	253	30
0376 73 501	251	252	1
0376 73 560	251	252	11
0376 73 602	251	253	21
0376 73 603	251	253	22
0376 73 761	251	254	43
0376 73 771	251	254	44
0376 73 781A	251	253	26
0376 73 790	251	253	27
0376 73 801A	251	254	31
0376 73 831	251	254	37
0376 73 851A	251	254	38
0376 73 855	251	254	39
0376 73 862	251	255	48
0376 73 881	251	254	41
0376 73 890	251	253	28
0376 88 370	179	182	37
0378 19 344	65	66	7
0378 41 610	125	126	1
0378 43 030	129	130	2
0378 46 150	146	148	21
0378 53 100A	156	157	11
0378 67 131	226	231	67
0378 68 890	226	230	49
0378 68 900	226	230	51
0378 69 066	234	235	9
0378 69 611	242	243	5
0378 69 612A	242	243	6
0378 69 613A	242	243	7
0378 69 683	242	244	15
0380 53 451	159	160	15
0380 54 451	159	160	16
0390 66 410	210	211	1
0397 19 750	77	78	—
0397 19 774	77	78	7
0397 19 775	77	78	8
0398 17 461A	42	43	19
0398 17 462A	42	43	20
0398 33 065A	107	108	10
0398 58 755	190	194	26
	256	259	30
0398 58 821A	190	192	14
	251	254	34
	256	258	18
0398 58 822	190	192	15
	251	254	35
	256	258	19
0398 66 412	210	211	2
0398 66 413	210	211	3
0500 16 104	32	33	5
0504 18 520A	53	55	37
0559 41 710A	125	126	13
0559 67 151A	210	213	41
	222	224	16
0585 69 611	242	243	5
0585 69 612	242	243	6
0585 69 613	242	243	7
0585 69 616A	242	243	8
0585 69 617	242	243	9
0585 69 618	242	243	10
0600 17 324	38	39	11

INDEX. 0603 16 102B～0820 10 605

0603 16 102B	32	33	4
0603 16 103	32	33	2
0603 17 104	35	36	3
0603 17 105	35	36	15
0603 17 131	35	36	18
0603 17 210	38	39	4
0603 17 230A	38	39	15
0603 17 262	38	39	8
0603 17 302	38	40	30
0603 17 303	38	40	32
0603 17 305	38	40	33
0603 17 310	38	40	35
0603 17 312	38	40	36
0603 17 321	38	41	37
0603 17 361	35	37	31
0603 34 153	92	94	26
0603 41 322B	133	135	22
0604 46 684	146	148	24
0613 26 610A	85	87	18
0613 26 922	85	87	19
0613 33 681	85	87	25
0613 41 308	129	130	20
0613 43 820A	143	144	10
0621 42 455	265	266	7
0636 24 562A	50	51	23
0636 24 568B	50	51	8
0652 28 161	92	93	8
0662 33 042	107	108	4
0702 78 200B	179	183	45
	184	189	53
0702 87 135	216	218	31
0702 87 138	216	218	33
0710 26 352	85	86	11
0710 26 461	85	86	12
0710 33 288	85	88	36
0710 55 436	176	177	11
0727 24 712	57	59	33
0727 41 023	129	131	25
0727 41 442	133	134	11
0727 43 552	133	134	13
	136	138	35
0727 66 991A	222	225	27
0727 66 992	222	225	28
0727 72 943	190	192	11
0727 87 014	204	205	5
	204	206	14
0727 87 016	204	205	6
	204	206	15
0727 87 992	220	221	2
0727 87 994	220	221	4
0727 87 995	220	221	5
0727 87 996	220	221	6
0730 23 837	24	25	5
0730 23 839	24	25	7
0730 23 842	24	25	9
0730 23 843	24	25	10
0730 23 845	24	25	12
0730 23 846	24	25	13
0730 23 854	24	25	19
0730 24 732	53	54	12
0730 32 279	95	99	50
	100	103	44
	104	105	4
0730 69 057A	234	235	12
0738 87 803	216	218	30
0738 87 804	216	218	32
0755 27 141	89	90	6
0810 10 171	1	2	6
	5	6	7
0810 11 403	9	11	27
0810 11 404	9	11	28
0810 11 711	9	12	52
0810 14 113	21	22	5
0810 14 171	21	22	17
0810 14 611	24	26	27
0810 15 119	27	28	15
0810 18 276	21	23	31
0810 18 277	21	23	31
0810 56 639	165	168	40
0810 56 863A	53	55	34
	57	59	44
0810 68 070	232	233	5
0813 10 111	1	2	5
	5	6	6
0813 10 173	1	2	8
	5	6	9
0813 10 174	1	2	9
0813 10 555	9	11	24
0813 11 405	9	11	29
0813 11 505B	9	11	35
0813 11 541	9	12	42
0813 14 623	21	23	29
0813 14 641	21	23	34
0813 14 716	27	31	60
0813 15 111	27	28	7
0813 15 117	27	28	13
0813 15 173	27	29	22
0813 16 112	32	33	6
0813 18 288	45	49	56
0813 23 803	21	23	23
0813 24 303	45	47	28
0813 24 306	45	48	38
0813 24 309	45	48	36
0813 24 312	45	47	31
0813 24 316	45	48	33
0813 24 717	53	54	9
0813 44 031	140	141	2
0813 44 034	140	141	5
0813 44 035	140	141	6
0813 66 879	220	221	8
0820 10 203	5	6	11
0820 10 305	5	7	23
0820 10 502B	9	11	21
0820 10 550B	9	11	20
0820 10 556A	9	11	23
0820 10 605	1	3	27

0820 10 631A	1	3	26
0820 10 711	5	8	36
0820 10 721	5	8	37
0820 10 722	5	8	38
0820 10 723	5	8	39
0820 11 105	45	49	52
0820 11 111F	9	10	3
0820 11 301C	9	10	5
0820 11 304A	9	10	6
0820 11 317	9	10	11
0820 11 321C	9	10	12
0820 11 341	9	10	15
0820 11 343	9	10	16
0820 11 400G	9	11	26
0820 11 503	9	11	33
0820 11 507	9	12	37
0820 11 512A	9	12	39
0820 11 542	9	12	43
0820 11 611B	9	12	46
0820 11 703	9	12	50
	9	13	55
0820 11 705	9	12	51
0820 11 712	9	12	53
0820 13 201A	19	20	2
0820 14 118C	21	22	7
	21	22	7
0820 14 250C	21	23	26
0820 14 620	21	23	27
0820 14 625	21	23	28
0820 14 643	21	23	35
0820 14 647	21	23	36
0820 15 106	27	29	25
0820 15 112	27	28	8
0820 15 115	27	28	11
0820 15 120	27	28	16
0820 15 151	27	29	27
0820 15 152	27	28	17
0820 15 312	27	30	38
0820 15 330	200	202	20
0820 16 230	32	33	13
0820 16 510	32	33	11
0820 16 515	32	33	12
0820 17 241B	38	39	6
0820 17 341	38	41	39
0820 17 345	35	37	25
0820 18 111B	45	46	12
0820 18 114	45	47	18
0820 18 270E	45	49	51
0820 18 271D	45	49	53
0820 18 273A	45	49	55
0820 18 279A	45	49	58
0820 18 381	50	52	30
0820 18 520A	53	55	33
	57	59	43
0820 23 103A	9	10	1
0820 23 113A	9	10	2
0820 23 175A	9	10	12
0820 23 176A	9	10	12
0820 23 180	9	10	14
0820 23 221	19	20	5
0820 23 222	19	20	6
0820 23 436	19	20	4
0820 23 832B	24	25	2
0820 23 833B	24	25	3
0820 23 834B	24	25	4
0820 23 835A	24	25	6
0820 23 836	24	25	8
0820 23 840	24	25	17
0820 23 842	24	25	20
0820 23 843	24	25	21
0820 23 845A	24	25	23
0820 23 847A	24	25	24
0820 23 848A	24	26	26
0820 23 882A	21	22	3
0820 24 301	45	47	26
0820 24 312	45	47	29
0820 24 315	45	48	34
0820 24 319	45	48	41
0820 24 322	45	48	49
0820 24 405	45	48	40
0820 24 511	50	51	17
0820 24 519	50	51	18
0820 24 712	57	58	11
0820 24 713	57	58	10
0820 24 714	57	58	9
0820 24 717	57	58	16
0820 24 741	57	59	28
0820 24 747	57	58	17
0820 24 748	57	58	18
0820 24 754	57	58	14
0820 24 755	57	58	15
0820 26 570A	85	86	16
0820 27 251	89	90	16
0820 33 091A	107	108	7
0820 33 165	82	83	17
	107	109	22
0820 33 180A	85	88	41
	107	109	18
0820 33 192A	85	88	37
	107	109	20
0820 40 161	116	117	6
0820 40 165	116	117	7
0820 40 166	116	117	8
0820 40 170	116	117	9
0820 56 905	149	151	23
	165	167	33
	169	170	13
	200	202	29
	226	229	45
	234	238	56
0820 56 906	165	167	35
0820 57 900B	179	183	44
	184	189	52
0820 58 999	190	194	27
0820 60 870A	210	215	64
0820 66 470A	210	215	65

INDEX. 0820 66 840～0839 70 524

0820 66 840	140	142	25
0820 66 992	222	224	10
0820 99 150	27	28	—
0822 10 451C	5	7	31
0822 10 452D	5	7	31
0822 15 105	27	29	24
0823 14 130	21	22	11
0823 14 131	21	22	12
0823 15 171	27	28	20
0823 18 100	45	46	1
0823 18 107	45	46	6
0823 18 291	45	49	61
0823 23 802A	21	23	22
0823 24 305	45	48	40
0823 24 311	45	48	35
0824 17 524	42	44	35
0824 40 401	116	117	4
0824 41 040	129	130	7
0824 41 051	129	130	15
0824 41 084	129	130	12
0824 44 140	140	142	23
0824 49 781	136	139	48
0824 56 999	159	161	34
0824 58 370A	195	198	20
	251	253	18
	260	262	18
0824 61 192	200	202	23
0824 66 375	207	208	11
0839 10 105	1	2	3
	5	6	5
0839 10 203	1	2	11
0839 10 205	1	2	14
	5	6	17
0839 10 206	1	2	13
0839 10 455	5	7	31
0839 10 500B	9	11	19
0839 10 504	9	11	22
0839 10 641	1	3	34
0839 11 323	9	10	13
0839 11 351	9	10	17
0839 11 353	9	10	18
0839 11 501	9	11	31
0839 11 502	9	11	36
0839 11 504B	9	11	34
0839 11 506	9	12	36
0839 11 508	9	12	36
0839 11 509	9	12	36
0839 11 515	9	11	32
0839 11 531	9	12	41
0839 11 551	9	12	40
0839 11 601B	9	12	44
0839 13 338	14	15	2
0839 13 613	14	16	15
0839 13 614	14	16	15
0839 14 101B	21	22	1
0839 14 112B	21	22	4
0839 14 115	1	3	30
0839 14 117	21	22	6
0839 14 119B	21	22	8
0839 14 132	21	22	13
0839 14 133	21	22	14
0839 14 141A	21	22	10
0839 14 142	21	22	15
0839 14 273	1	3	31
0839 14 300	21	23	20
0839 14 730B	27	31	55
0839 14 745	27	31	59
0839 15 171	27	28	20
0839 15 172	27	29	21
0839 15 200	27	29	31
0839 15 210B	27	29	32
0839 15 250	27	29	30
0839 16 432	32	33	9
0839 17 245	38	39	13
0839 17 285	38	41	42
0839 18 272	45	49	54
0839 18 300	50	51	1
0839 18 311B	50	52	31
0839 23 672	17	18	5
0839 23 675	17	18	6
0839 23 684	17	18	10
0839 23 686	17	18	9
0839 23 801	21	23	21
0839 24 312	45	47	30
0839 24 530	50	51	4
0839 24 703	57	59	34
0839 24 705	57	58	25
0839 24 706	57	58	20
0839 24 709	57	58	12
0839 24 710	57	58	7
0839 24 715	57	58	21
0839 24 716	57	58	13
0839 24 719	57	58	23
0839 24 721	57	58	19
0839 24 723	57	59	30
0839 24 724	57	59	31
0839 24 736B	57	58	26
0839 24 758	57	58	2
0839 24 761	57	58	4
0839 24 762	57	58	5
0839 24 763	57	58	6
0839 24 764	57	59	38
0839 43 550	136	138	34
0839 43 553A	133	134	14
	136	138	36
0839 58 492A	265	266	5
0839 58 493A	265	266	6
0839 66 992	222	224	22
0839 67 880	210	214	54
0839 68 660	232	233	1
0839 68 670A	232	233	2
0839 68 720	232	233	9
0839 70 521	251	252	4
0839 70 522	251	252	5
0839 70 523A	251	252	6
0839 70 524	251	252	7

0839 70 525	251	252	8
0839 70 526	251	252	9
0839 74 158	265	266	12
0839 74 159	265	266	12
0839 74 168	265	266	12
0839 74 169	265	266	12
0839 74 910	265	266	1
0840 18 600	45	47	23
0842 19 025	61	62	3
0842 19 027A	61	62	5
0842 19 031	75	76	6
0842 19 211B	61	62	8
0842 19 650	72	74	20
0842 19 660	72	74	24
0842 19 665	72	74	28
0842 19 910	61	63	30
0842 19 915A	61	63	32
0842 46 081	146	147	17
0842 46 110A	146	147	19
0845 18 101	45	46	4
0845 24 720	53	54	19
0848 18 600	45	47	23
0848 66 830	210	215	66
0864 61 061A	200	203	31
0865 32 800	95	96	1
0865 55 401D	169	170	11
0865 55 402B	169	171	16
0865 55 403B	169	171	17
0865 55 404B	169	171	18
0865 55 430D	176	177	1
0865 61 130A	200	201	1
0865 61 140A	200	201	2
0865 61 151A	200	201	3
0865 61 190B	200	201	4
0865 66 780	210	212	14
0865 66 790	210	212	15
0865 66 800	210	212	16
0865 66 805	210	212	17
0865 66 809	210	212	18
0865 66 860B	222	223	—
0865 66 870A	222	223	—
0865 68 020A	226	227	1
0865 68 040C	226	227	2
0865 68 060C	226	227	7
0865 68 140C	226	227	8
0865 68 340	226	228	32
0865 87 008	204	205	2
0865 87 009	204	205	3
0865 89 661	204	205	1
0865 89 666	204	205	1
0866 10 100B	1	2	1
	5	6	1
0866 10 172A	1	2	7
	5	6	8
0866 10 200E	1	2	10
0866 10 300E	5	6	10
0866 10 320A	5	6	14
0866 10 400B	5	7	25
0866 10 411	5	7	26
0866 10 600	1	3	23
0866 10 830	5	8	41
0866 10 871	5	8	44
0866 11 511A	9	12	38
0866 11 700A	9	12	48
0866 11 702	9	12	49
0866 13 100E	14	15	1
0866 13 111	14	15	8
0866 13 200D	19	20	1
0866 13 230A	19	20	7
0866 13 235	19	20	8
0866 13 240B	17	18	15
0866 13 241C	17	18	16
0866 13 300C	17	18	1
0866 13 311	17	18	13
0866 13 330B	14	15	10
0866 13 341B	17	18	20
0866 13 351A	17	18	17
0866 13 400D	122	123	1
0866 13 401A	122	123	2
0866 13 402A	122	123	5
0866 13 600A	14	15	12
0866 13 603	14	15	13
0866 13 611B	14	15	14
0866 13 621	116	117	13
0866 14 160A	21	22	16
0866 14 630	21	23	32
0866 14 640	21	23	33
0866 14 651A	21	23	37
0866 14 700B	27	31	53
0866 14 720	27	31	54
0866 14 740	27	31	58
0866 15 010B	27	28	1
0866 15 100B	27	28	2
0866 15 130	27	28	6
0866 15 211C	200	202	11
0866 15 212B	200	202	13
0866 15 310C	27	30	35
0866 15 350A	27	30	40
0866 15 351	27	30	42
0866 15 401	27	30	47
0866 15 511	27	31	50
0866 15 521A	27	31	51
0866 16 210	32	33	1
0866 17 100A	35	36	1
	35	36	1
0866 17 107	35	36	12
0866 17 201	38	39	1
0866 17 221	38	39	5
0866 17 250	38	39	17
0866 17 270	38	40	20
0866 17 275	38	40	22
0866 17 276	38	40	23
0866 17 279	38	40	27
0866 17 281	38	40	26
0866 17 285	38	40	25
0866 17 288	38	40	28

INDEX. 0866 17 289～0866 34 153A

0866 17 289	38	40	28
0866 17 291	38	40	28
0866 17 292	38	40	28
0866 17 330A	35	37	20
0866 17 450	42	43	17
0866 17 510	42	44	33
0866 17 524	35	37	34
0866 17 530	35	37	33
0866 17 540	35	37	23
0866 18 100	45	46	2
0866 18 101	45	46	5
0866 18 110	45	46	11
0866 18 115	45	46	13
0866 18 120	45	47	15
0866 18 130	45	47	19
0866 18 140	45	47	20
0866 18 150	45	47	17
0866 18 155	45	46	14
0866 18 160	45	47	16
0866 18 170	45	47	21
0866 18 190A	45	46	3
0866 18 200	45	47	24
0866 18 400A	53	54	1
0866 18 496	5	7	19
	27	31	66
0866 18 501A	5	6	13
0866 18 600	45	47	23
0866 18 700	45	47	25
0866 18 810	45	46	7
0866 18 999	17	18	19
0866 23 040	1	2	9
	5	6	9
0866 23 676	17	18	7
0866 23 694	17	18	8
0866 24 308	45	48	39
0866 24 323	45	48	48
0866 24 408	45	48	39
0866 24 411	45	48	35
0866 24 423	45	48	48
0866 24 701	53	55	28
0866 24 704	53	55	29
0866 24 705	53	55	27
0866 24 709	53	54	25
0866 24 710	53	54	24
0866 24 716	53	55	26
0866 25 100	80	81	1
0866 25 130	80	81	5
0866 26 010A	82	83	1
0866 26 060	82	83	4
0866 26 062	82	83	5
0866 26 063	82	83	6
0866 26 251	85	86	1
0866 26 280A	85	86	4
0866 26 290A	85	86	4
0866 26 310	85	86	5
0866 26 391	85	86	9
0866 27 100	89	90	—
0866 27 110	89	90	5
0866 27 150	89	90	8
0866 27 172	89	90	12
0866 28 010	92	93	1
0866 28 011	92	93	1
0866 28 012	92	93	1
0866 28 013	92	93	1
0866 28 014	92	93	1
0866 28 110	92	93	2
0866 28 140	92	93	5
0866 28 143	92	93	6
0866 28 151	92	93	7
0866 28 180A	92	93	10
0866 28 183A	92	94	13
0866 28 322	92	94	14
0866 28 333B	92	94	15
0866 28 343B	92	94	16
0866 28 350	92	94	17
0866 28 353B	92	94	18
0866 28 591	92	94	19
0866 28 700	92	94	20
0866 28 774	92	94	21
0866 28 778A	92	94	22
0866 28 779	92	94	23
0866 28 799	92	94	24
0866 32 014	100	101	10
0866 32 100	95	97	30
0866 32 110A	95	97	—
0866 32 121	95	98	44
0866 32 141	95	98	43
	100	103	37
0866 32 227A	104	106	18
0866 32 228	95	99	52
0866 32 230	95	99	53
0866 32 261	104	105	1
0866 32 279	104	105	12
0866 32 301	110	112	23
0866 32 311	110	112	23
0866 32 320	104	105	10
0866 32 329A	104	105	13
0866 32 330A	104	105	14
0866 32 341	104	105	16
0866 32 411	95	99	62
	100	103	48
0866 32 420	95	99	59
	100	101	19
0866 32 425	95	99	57
	100	101	17
0866 32 811	95	96	2
0866 33 251	107	108	12
0866 33 260	107	108	13
0866 33 270	107	108	13
0866 34 011	110	111	1
0866 34 013A	110	111	2
0866 34 015	110	111	3
0866 34 019	110	111	4
0866 34 111	110	111	11
0866 34 151A	110	111	12
0866 34 153A	110	111	13

0866 34 157	110	111	17
0866 34 158	110	111	18
0866 34 310	110	112	22
0866 34 311	110	112	24
0866 34 313	110	112	33
0866 34 320	110	112	22
0866 34 340	110	111	5
0866 34 381	110	111	6
0866 34 382	110	111	7
0866 34 390	110	111	8
0866 34 460	110	112	25
0866 34 710	110	113	36
0866 34 730	110	113	45
0866 34 732	110	113	47
0866 34 735	110	113	48
0866 34 738	110	113	53
0866 34 760	110	113	48
0866 34 800B	110	111	20
0866 34 910A	110	113	35
0866 34 960A	110	113	35
0866 37 170B	85	88	40
	107	109	21
0866 39 020	114	115	1
0866 39 040A	114	115	3
0866 39 060B	114	115	4
0866 39 381A	114	115	8
0866 40 060	116	117	2
0866 40 081	116	117	14
0866 40 100	116	117	1
0866 40 300	116	117	11
0866 41 030A	129	130	1
0866 41 320	133	134	21
0866 41 370	133	135	30
0866 41 380	133	135	27
0866 41 400	133	134	1
0866 41 610	125	126	1
0866 41 660	125	126	5
0866 41 920	133	134	16
0866 42 310C	118	119	1
0866 42 350	118	119	4
0866 42 366	118	119	7
0866 42 382	118	119	10
0866 42 410	118	120	21
0866 42 440	265	266	3
0866 42 521	118	119	13
0866 42 522	118	119	14
0866 42 523	118	119	12
0866 42 530	118	119	9
0866 42 541	118	120	20
0866 42 542A	118	120	18
0866 42 544	118	120	19
0866 42 551	118	120	26
0866 42 552	118	120	25
0866 42 555	118	120	27
0866 42 561	118	120	28
0866 43 030	129	130	2
0866 43 061	129	130	4
0866 43 062	129	130	6
0866 43 063	129	130	5
0866 43 070A	129	131	30
0866 43 093	129	132	37
0866 43 650B	143	144	6
0866 43 660B	143	144	7
0866 43 810	143	144	9
0866 43 820	143	144	1
0866 43 900	143	144	4
0866 44 010	140	141	1
0866 44 051	140	141	10
0866 44 150	140	141	13
0866 44 187	140	141	17
0866 44 189	140	141	18
0866 44 410	140	141	19
0866 44 439	140	141	20
0866 45 061A	122	123	16
0866 45 452	143	144	19
0866 45 510	143	145	27
0866 45 611B	122	123	17
0866 45 806	122	123	19
0866 45 903A	122	123	21
	143	145	29
0866 50 102	149	150	7
0866 50 110A	149	150	1
0866 50 141	149	150	2
0866 50 151	149	150	3
0866 50 181A	149	150	9
0866 50 320A	149	150	13
0866 50 330A	149	150	14
0866 50 340	149	150	15
0866 50 350	149	150	16
0866 50 511A	149	151	19
0866 50 521A	149	151	20
0866 50 531	149	151	21
0866 50 541	149	151	22
0866 52 210	152	153	2
0866 52 390	152	153	12
0866 52 398	152	153	15
0866 52 410	152	154	16
0866 52 451	152	154	19
0866 52 480	152	154	22
0866 52 490	152	154	23
0866 52 510	152	154	25
0866 52 610	152	154	26
0866 52 620	152	154	27
0866 52 631	152	154	31
0866 52 661A	152	155	34
0866 52 671A	152	155	35
0866 52 750A	152	155	36
0866 52 850A	152	155	37
0866 52 901	152	155	39
0866 53 020F	156	157	4
0866 53 029	156	157	5
0866 53 100A	156	157	11
0866 53 220D	156	157	12
0866 53 281A	156	157	14
0866 53 320	159	160	1
	162	163	1

INDEX. 0866 53 330～0866 58 281

0866 53 330	162	163	3
0866 53 340	162	163	5
0866 53 350A	162	163	7
0866 53 381	162	163	9
0866 53 430	162	163	13
0866 53 452	162	163	17
0866 53 500	162	163	19
0866 53 591	162	163	21
0866 53 720	156	157	16
0866 53 750	156	158	18
0866 53 780A	156	158	19
0866 53 810B	162	164	25
0866 53 830A	159	161	24
	162	164	26
0866 53 845	159	161	26
	162	164	28
0866 53 901	162	164	29
0866 53 920	162	164	30
0866 53 941	162	164	31
0866 53 950	162	164	32
0866 53 970A	156	157	6
0866 53 979	156	157	7
0866 53 981	156	157	9
0866 53 991	162	164	33
0866 54 220B	156	157	13
0866 54 281A	156	157	15
0866 54 320	159	160	2
	162	163	2
0866 54 330	162	163	4
0866 54 340	162	163	6
0866 54 350A	162	163	8
0866 54 381	162	163	10
0866 54 410	162	163	12
0866 54 430	162	163	14
0866 54 452	162	163	18
0866 54 500	162	163	20
0866 54 591	162	163	22
0866 54 720	156	158	17
0866 54 830A	159	161	25
	162	164	27
0866 55 100E	169	170	1
0866 55 210B	169	172	33
0866 55 215A	169	172	36
0866 55 216	169	172	38
0866 55 217	169	172	38
0866 55 218	169	172	38
0866 55 230D	169	172	42
0866 55 360C	169	170	5
0866 55 365B	169	170	7
0866 55 401D	169	170	11
0866 55 402A	169	171	16
0866 55 403B	169	171	17
0866 55 404B	169	171	18
0866 55 405C	169	171	19
0866 55 406A	169	171	22
0866 55 412A	169	171	26
0866 55 460B	176	178	15
0866 55 710	169	171	28
0866 55 720	169	172	32
0866 56 010D	165	166	1
0866 56 080B	165	166	4
0866 56 171	165	166	8
0866 56 181	165	166	9
0866 56 210C	165	166	14
0866 56 215	165	166	15
0866 56 310	165	166	16
0866 56 330	165	166	18
0866 56 350	165	167	20
0866 56 381	165	167	22
0866 56 400	165	167	24
0866 56 450A	165	167	25
0866 56 470A	165	167	26
0866 56 481A	165	167	27
0866 56 580A	165	166	5
0866 56 610B	165	166	7
0866 56 701	165	167	28
0866 56 702	165	167	29
0866 56 810A	165	166	17
0866 56 830	165	166	19
0866 56 850	165	167	21
0866 56 881	165	167	23
0866 56 901A	165	167	31
0866 56 971	165	168	41
0866 56 981	165	166	3
0866 56 991	232	233	12
0866 57 100A	184	185	2
	184	185	5
0866 57 105	179	181	27
	184	187	33
0866 57 110A	184	185	8
0866 57 120	179	180	13
	184	186	17
0866 57 130	179	181	24
	184	187	30
0866 57 160A	184	185	11
0866 57 170	179	181	15
	184	186	20
0866 57 180	179	181	25
	184	187	31
0866 57 200A	184	188	41
0866 57 250	184	188	46
0866 57 300A	184	185	3
0866 57 310A	184	185	9
0866 57 320	184	186	18
0866 57 350A	184	185	6
0866 57 360A	184	185	12
0866 57 370	184	186	21
0866 57 400A	184	188	42
0866 57 450	184	188	47
0866 58 010C	190	191	1
0866 58 201	195	199	34
0866 58 210	195	198	23
0866 58 231	195	199	35
	260	263	33
0866 58 240A	195	198	26
0866 58 281	195	198	27

0866 58 281	260	263	25
0866 58 282	195	198	28
	260	263	26
0866 58 291A	195	198	29
	260	263	27
0866 58 292A	195	198	30
	260	263	28
0866 58 293	195	198	31
	260	263	29
0866 58 303A	195	197	10
	260	261	10
0866 58 310	195	196	1
0866 58 321A	195	197	8
	260	261	8
0866 58 330	195	196	2
0866 58 361	195	199	37
	260	263	36
0866 58 363	195	199	38
	260	263	37
0866 58 364	195	199	39
	260	263	38
0866 58 410	195	197	12
0866 58 501	190	191	4
0866 58 560	195	197	14
0866 58 590	169	171	24
0866 58 603	190	191	6
0866 58 604	190	192	7
0866 58 605	190	192	8
0866 58 620	190	192	9
0866 58 760A	190	193	21
0866 58 781A	190	192	12
0866 58 791	190	192	13
0866 58 810C	190	192	17
0866 58 831	190	193	23
0866 58 841A	190	193	24
0866 58 842A	190	193	25
0866 58 861	195	199	42
0866 58 862	195	199	43
0866 58 863	195	199	44
0866 58 864	195	199	45
0866 59 010C	190	191	1
0866 59 020A	190	191	2
0866 59 240A	195	198	26
0866 59 303A	195	197	10
	260	261	10
0866 59 310	195	196	1
0866 59 330	195	196	2
0866 59 361	195	199	37
	260	263	36
0866 59 410	195	197	12
0866 59 501	190	191	4
0866 59 560	195	197	14
0866 59 603	190	191	6
0866 59 604	190	192	7
0866 59 760A	190	193	21
0866 59 781A	190	192	12
0866 59 791	190	192	13
0866 59 810B	190	192	17
0866 59 831	190	193	23
0866 59 841A	190	193	24
0866 59 842A	190	193	25
0866 59 862	195	199	43
0866 60 050	169	173	52
0866 60 070	169	173	55
0866 60 071	169	173	57
0866 60 073	169	173	60
0866 60 101	169	174	61
0866 60 102	169	174	62
0866 60 120	169	174	66
0866 60 130	169	174	67
0866 60 250B	169	174	69
0866 60 251	169	174	71
0866 60 263	169	175	82
0866 60 264	169	175	83
0866 60 265A	169	175	84
0866 60 267	169	175	86
0866 60 335A	169	175	87
0866 60 345A	169	175	88
0866 60 720	169	175	91
0866 61 070	200	201	—
0866 61 080	200	201	—
0866 61 130B	200	201	1
0866 61 140C	200	201	2
0866 61 151A	200	201	3
0866 61 195	200	201	5
	200	202	28
0866 61 213	200	202	15
0866 61 214A	200	202	16
0866 61 217	200	202	18
0866 61 251	200	201	6
0866 66 190B	200	201	4
0866 66 212	207	208	3
0866 66 232	207	208	3
0866 66 372	207	208	10
0866 66 481A	204	206	24
0866 66 491A	204	206	24
0866 66 700A	207	209	25
0866 66 730B	210	211	6
0866 66 732	210	211	7
0866 66 733	210	211	8
0866 66 760	210	211	11
0866 66 865	222	224	19
0866 66 871	222	224	20
0866 66 872	222	224	21
0866 66 900	222	223	1
0866 66 905	222	223	4
0866 66 960	222	224	7
0866 66 965	222	224	9
0866 67 010A	210	212	23
0866 67 020B	210	212	24
0866 67 030	210	213	28
0866 67 040C	210	213	29
0866 67 050H	210	213	30
0866 67 059	210	214	45
0866 67 060C	210	213	32
0866 67 065	210	213	33

INDEX. 0866 67 070B～0866 70 343

0866 67 070B	210	213	31
0866 67 080	210	213	34
0866 67 100	53	56	43
0866 67 110	53	56	44
	57	60	54
0866 67 131	140	142	27
0866 67 132	122	124	24
0866 67 133	210	215	73
0866 67 151	210	213	25
0866 67 152	210	213	43
0866 67 170	118	120	30
0866 67 175	118	121	33
0866 67 301A	216	219	37
0866 67 302	216	219	38
0866 67 321	216	217	1
0866 67 340C	216	217	3
0866 67 350	216	217	13
0866 67 470	220	221	—
0866 67 510A	220	221	12
0866 67 511A	220	221	13
0866 67 512	220	221	14
0866 67 521	220	221	15
0866 67 710A	210	214	56
0866 67 711	210	214	57
0866 67 712A	210	214	58
0866 67 716	210	214	59
0866 67 717	210	214	61
0866 67 718	210	215	62
0866 67 719	210	214	60
0866 67 905A	210	214	47
0866 67 906	210	214	48
0866 67 908	210	214	49
0866 68 011	226	229	41
0866 68 090B	226	227	4
0866 68 095	226	227	5
0866 68 180A	226	228	20
0866 68 201	226	228	21
0866 68 250	226	231	63
0866 68 331	226	228	24
0866 68 332	226	228	25
0866 68 333	226	228	26
0866 68 334	226	228	27
0866 68 335A	226	228	28
0866 68 340	226	229	32
0866 68 351A	226	229	34
0866 68 352A	226	229	35
0866 68 361	226	229	37
0866 68 380	226	229	39
0866 68 890A	226	230	50
0866 69 052	234	235	1
0866 69 053A	234	235	2
0866 69 071A	234	235	10
0866 69 081B	234	235	11
0866 69 110	234	235	18
0866 69 111	234	236	20
0866 69 112	234	236	22
0866 69 113	234	236	23
0866 69 130	234	235	18
0866 69 210	234	237	35
0866 69 240	234	237	36
0866 69 290	239	240	1
0866 69 311	239	240	3
0866 69 321	239	240	6
0866 69 341	239	240	7
0866 69 360	239	240	11
0866 69 380	239	240	12
0866 69 411	239	240	14
0866 69 431	239	240	15
0866 69 460	239	241	18
0866 69 480	239	241	20
0866 69 511	239	241	22
0866 69 521	239	241	24
0866 69 541	242	243	1
0866 69 542	242	243	2
0866 69 543	242	243	3
0866 69 544	242	243	4
0866 69 611	242	243	5
0866 69 612A	242	243	6
0866 69 613A	242	243	7
0866 69 616A	242	243	8
0866 69 617	242	243	9
0866 69 618	242	243	10
0866 69 625	242	243	11
0866 69 626	242	243	12
0866 69 627	242	243	13
0866 69 660	242	243	14
0866 69 683	242	244	15
0866 69 684	242	244	16
0866 69 685	242	244	17
0866 69 687A	242	244	18
0866 69 688	242	244	19
0866 69 689	242	244	20
0866 69 692	242	244	21
0866 69 694	239	241	31
0866 69 696	242	244	22
0866 69 697	242	244	23
0866 69 698	242	244	24
0866 69 811	226	229	43
0866 69 820	226	229	44
0866 69 870	239	241	29
0866 69 885	239	241	30
0866 69 910	234	237	38
0866 69 920	234	237	39
0866 70 120	156	158	23
0866 70 122	156	158	24
0866 70 131A	156	158	26
0866 70 160B	156	158	21
0866 70 180	156	158	28
0866 70 310	245	246	1
0866 70 313	245	246	3
0866 70 314	245	246	4
0866 70 320	245	246	5
0866 70 330	245	246	6
0866 70 341	245	246	7
0866 70 342	245	246	8
0866 70 343	245	246	10

0866 70 351	245	246	13
0866 70 352	245	246	14
0866 70 360	245	246	15
0866 70 371	245	246	19
0866 70 401	234	237	43
0866 70 412	234	237	47
0866 70 420	234	237	46
0866 70 431D	234	238	58
0866 70 451	247	248	7
0866 70 452	247	248	8
0866 70 453	247	248	10
0866 70 454	247	248	12
0866 70 473	247	249	14
0866 70 481	247	249	15
0866 70 482	247	249	16
0866 70 483	247	249	17
0866 70 484	247	249	19
0866 70 801	247	249	21
0866 70 802A	247	249	23
0866 70 821	247	250	31
0866 70 822A	247	250	33
0866 70 823	247	250	35
0866 70 851	247	250	36
0866 70 852	247	250	39
0866 70 853	247	250	41
0866 71 180	156	158	29
0866 71 310	245	246	1
0866 71 343	245	246	10
0866 71 351	245	246	13
0866 71 352	245	246	14
0866 71 420	234	237	46
0866 71 431D	234	238	58
0866 71 452	247	248	9
0866 71 453	247	248	11
0866 71 483	247	249	18
0866 71 484	247	249	20
0866 71 801	247	249	22
0866 71 802A	247	249	24
0866 71 821	247	250	32
0866 71 822A	247	250	34
0866 71 852	247	250	40
0866 71 853	247	250	42
0866 72 010B	256	257	1
0866 72 020A	256	257	2
0866 72 201	260	263	32
0866 72 210B	260	262	21
0866 72 212A	260	262	23
0866 72 240	260	263	24
0866 72 310	260	261	1
0866 72 330	260	261	2
0866 72 410	260	262	12
0866 72 501	256	257	3
0866 72 502	256	257	4
0866 72 560	260	262	15
0866 72 602	256	257	9
0866 72 605	256	257	10
0866 72 606	256	257	11
0866 72 651A	256	257	14
0866 72 760	256	258	25
0866 72 781A	256	258	16
0866 72 791	256	258	17
0866 72 810B	256	258	21
0866 72 831A	256	259	27
0866 72 841A	256	259	28
0866 72 861	260	263	40
0866 72 862	260	263	41
0866 72 863	260	263	42
0866 73 010B	256	257	1
0866 73 020A	256	257	2
0866 73 210B	260	262	21
0866 73 240	260	263	24
0866 73 310	260	261	1
0866 73 330	260	261	2
0866 73 410	260	262	12
0866 73 501	256	257	3
0866 73 560	260	262	15
0866 73 602	256	257	9
0866 73 755	256	259	30
0866 73 760	256	258	25
0866 73 810B	256	258	21
0866 73 831A	256	259	27
0866 73 841	256	259	28
0866 73 842A	256	259	29
0866 73 862	260	263	41
0866 73 863	260	264	42
0866 75 014	176	177	8
0866 75 021	176	177	6
0866 75 026	176	177	7
0866 75 122	176	178	16
0866 75 123	176	178	17
0866 75 124	176	178	18
0866 75 125	176	178	19
0866 75 200	176	178	20
0866 75 930	265	266	2
0866 76 601	216	218	36
0866 76 602	216	218	35
0866 76 603	216	217	9
0866 76 604	216	217	8
0866 76 605	216	217	11
0866 76 606	216	217	10
0866 76 607	216	217	18
0866 76 608	216	218	25
0866 78 541	165	166	12
0866 78 701A	149	151	29
0866 78 702	149	151	30
	149	151	31
0866 78 710	149	151	32
0866 78 750	149	151	33
0866 78 801A	149	151	34
0866 78 810	149	151	35
0866 88 010	179	180	10
	184	185	14
0866 88 060	179	181	19
	184	187	25
0866 88 070	179	181	20
	184	187	26

INDEX. 0866 88 100～1524 51 020A

0866 88 100	179	181	17
	184	186	23
0866 88 105	179	181	16
	184	186	22
0866 88 200	179	180	11
	184	186	15
0866 88 250	179	181	21
	179	182	39
	184	187	27
0866 88 280	179	181	18
	184	186	24
0866 88 370	184	188	44
0866 88 375	179	182	36
	184	188	43
0866 88 420	179	182	41
	184	188	49
0866 88 490	184	185	14
0866 88 500	184	186	23
0866 88 530	184	186	15
0866 88 540	184	186	24
0866 88 570	184	188	44
0866 88 580	184	188	49
0866 89 661	204	205	1
0866 89 663	204	206	23
0866 89 665	207	208	9
0866 89 666	204	205	1
0866 89 668	204	206	23
0866 99 100	1	4	—
0866 99 356	110	112	26
0866 99 801	149	151	26
	149	151	27
0866 99 806	149	151	28
0870 26 111	82	83	9
0870 26 115	82	83	9
0870 33 625	107	108	16
0870 33 980	107	108	15
0870 33 990	107	108	15
0870 43 422	136	138	31
0870 43 570	136	138	37
0870 43 580	136	138	38
0870 43 800B	136	139	41
0870 43 830	143	144	21
0870 43 842	143	144	24
0870 43 990	136	137	1
0870 45 280A	143	144	11
0870 45 320B	143	144	13
0870 45 350B	143	144	15
0870 49 710	136	139	52
0870 49 720	136	139	53
0870 49 745	136	139	42
0870 49 750	136	139	45
0870 49 760	136	139	46
0870 49 770	136	139	47
0870 49 785	136	139	51
0870 58 810C	190	193	17
0870 59 810B	190	193	17
0870 66 900A	222	223	2
0870 66 905	222	223	5
0870 66 970	222	224	11
0870 66 975	222	224	13
0870 66 980	222	224	14
0870 68 940	226	230	53
0870 68 960	226	230	60
0870 69 684	242	244	16
0870 69 870	239	241	29
0871 10 300C	5	6	10
0871 11 400	9	11	26
0871 11 511	9	12	38
0871 11 750A	9	13	54
0871 13 200	19	20	1
0871 15 310B	27	30	35
0871 18 520	53	55	37
0871 19 910	61	63	27
0871 19 920	61	64	34
0871 19 930	61	64	35
0871 19 940	61	64	37
0871 19 951	61	64	38
0871 19 961	61	64	36
0871 19 962	61	64	39
0871 19 963	61	64	43
0871 19 964A	61	64	47
0871 25 100	80	81	1
0871 46 571	146	148	23
0871 56 010E	165	166	2
0871 56 701	165	167	28
0871 67 060B	210	213	32
0871 67 100	57	60	53
0871 69 685	242	244	17
0872 67 100	57	60	53
0872 67 110	53	56	44
	57	60	54
0877 18 520	57	60	47
0881 37 191	85	88	42
	107	109	19
1510 70 471	247	248	13
1511 56 110A	165	166	6
1511 58 010	190	191	1
1511 58 020	190	191	2
1511 69 110	234	236	28
1511 70 471	247	248	13
1511 72 661	256	258	15
1511 73 661	256	258	15
1514 70 471	247	249	13
1523 70 471	247	248	13
1524 32 110	100	102	—
1524 32 121A	100	103	38
1524 32 130	100	102	26
1524 32 220	100	103	43
1524 32 261	104	105	1
1524 41 400	133	134	1
1524 41 620	127	128	1
1524 41 678	127	128	20
1524 43 030	129	130	2
1524 43 070A	129	131	31
1524 43 140	129	131	27
1524 51 020A	156	157	1

1524 51 120A	156	157	2
1524 52 390	152	153	12
1524 52 410	152	154	16
1524 53 020B	156	157	4
1524 53 100B	156	157	11
1524 53 220C	156	157	12
1524 53 320	159	160	1
	162	163	1
1524 53 970A	156	157	6
1524 54 220B	156	157	13
1524 54 320	159	160	2
	162	163	2
1524 54 410	162	163	12
1524 55 210A	169	173	45
1524 55 230B	169	172	39
1524 55 330	169	173	50
1524 56 110D	165	166	6
1524 56 610B	165	166	7
1524 57 100A	184	185	1
1524 57 110	184	185	7
1524 57 120	184	186	16
1524 57 150	184	185	4
1524 57 160	184	185	10
1524 57 170	184	186	19
1524 57 200	184	188	40
1524 57 250	184	188	45
1524 58 310	195	196	1
1524 59 310	195	196	1
1524 60 250A	169	174	70
1524 60 335A	169	175	87
1524 60 345A	169	175	88
1524 61 130A	200	201	1
1524 61 140B	200	201	2
1524 61 151A	200	201	3
1524 66 110A	204	206	18
1524 66 111	204	206	19
1524 66 140A	204	206	18
1524 66 141	204	206	19
1524 66 810	210	212	21
1524 66 930A	222	224	6
1524 67 020	210	212	24
1524 67 050A	210	213	30
1524 67 155	210	214	44
1524 67 321	216	217	1
1524 67 340B	216	217	3
1524 67 350	216	217	13
1524 67 470	220	221	—
1524 67 720A	210	215	67
1524 68 011	226	229	42
1524 68 380A	226	229	40
1524 68 890	226	230	50
1524 69 360	239	240	11
1524 69 380	239	240	12
1524 69 611	242	243	5
1524 69 612	242	243	6
1524 69 613	242	243	7
1524 69 870	239	241	29
1524 70 050	162	164	34
1524 70 401	234	237	43
1524 70 471	247	248	13
1524 70 980	53	55	39
	57	60	49
1524 72 310	260	261	1
1524 72 661A	256	258	15
1524 73 310	260	261	1
1524 73 661A	256	258	15
1524 75 010	176	177	3
1524 76 601	216	218	36
1524 76 602	216	218	35
1524 76 603	216	217	9
1524 76 604	216	217	8
1524 76 607	216	218	18
1524 76 608	216	218	25
1524 88 010	184	185	14
1524 88 100	184	186	23
1524 88 200	184	186	15
1524 88 280	184	186	24
1524 88 370	184	188	44
1524 88 420	184	188	49
1524 99 322	104	105	2
1524 99 324	104	105	3
1531 53 350B	162	163	7
1531 54 350B	162	163	8
1531 56 117	165	166	10
1531 56 617	165	166	11
1531 60 250A	169	174	70
1531 66 370	207	209	15
1531 66 371	207	209	16
1531 66 372	207	209	17
1531 66 373	207	209	18
1531 66 374	207	209	19
1531 66 375	207	209	20
1531 66 376	207	209	21
1531 66 780	210	212	14
1531 66 790	210	212	15
1531 66 800	210	212	16
1531 70 441	247	248	1
1532 57 110	179	180	5
1532 57 160	179	180	7
1534 58 310	195	196	1
1534 59 310	195	196	1
1534 70 471	247	248	13
1535 70 471	247	248	13
1540 66 030	204	205	1
1540 69 101	234	236	29
1540 72 661	256	258	15
1540 73 661	256	258	15
1550 66 860A	222	223	—
1550 66 870	222	223	—
1551 66 860A	222	223	—
1551 66 870	222	223	—
1552 66 860A	222	223	—
1552 66 870	222	223	—
1553 57 100	179	180	1
1553 57 150	179	180	3
1554 09 010	265	266	—

INDEX. 1554 32 220～1562 88 370

1554 32 220	95	99	49
1554 55 530B	176	177	1
1554 57 100	179	180	2
1554 57 150	179	180	4
1554 58 010	190	191	1
1554 58 020	190	191	2
1554 66 210	207	208	1
1554 66 230	207	208	1
1554 70 471	247	249	13
1554 75 021	176	177	6
1554 75 990	265	266	4
1560 57 100	184	185	2
1560 57 110	184	185	8
1560 57 150	184	185	5
1560 57 160	184	185	11
1560 57 200	184	188	41
1560 66 060	204	205	1
1560 66 860B	222	223	—
1560 66 870	222	223	—
1560 88 370	184	188	44
1561 55 720A	169	172	32
1561 66 860	222	223	—
1561 66 870	222	223	—
1561 66 900	222	223	1
1562 00 471	247	249	13
1562 09 010	265	266	—
1562 10 700	5	8	32
1562 13 200	19	20	1
1562 15 212A	200	202	14
1562 18 400	53	54	1
1562 32 049	95	97	24
	100	101	13
1562 32 100	100	102	24
1562 32 110	100	102	—
1562 32 320	104	105	11
1562 32 330A	104	105	15
1562 32 800	95	96	12
	100	101	1
1562 32 811	95	96	13
	100	101	2
1562 32 980	95	97	16
	100	101	5
1562 41 030A	129	130	1
1562 41 660	127	128	15
1562 43 660	143	144	7
1562 43 800	136	139	41
1562 43 830	143	145	25
1562 43 836	143	145	26
1562 43 990	136	137	1
1562 45 280B	143	144	12
1562 45 320A	143	144	14
1562 45 350B	143	144	16
1562 45 510	143	145	28
1562 49 760	136	139	46
1562 50 311	149	150	12
1562 52 110	152	153	1
1562 53 410	159	160	11
1562 54 410	159	160	12
1562 55 405	169	171	20
1562 55 412	169	171	27
1562 55 430B	176	177	1
1562 55 460A	176	178	15
1562 55 710	169	171	29
1562 56 010C	165	166	1
1562 57 100	179	180	2
1562 57 110	179	180	6
1562 57 120	179	180	13
	184	186	17
1562 57 130	179	181	24
1562 57 150	179	180	4
1562 57 160	179	180	8
1562 57 170	179	180	15
	184	186	20
1562 57 200	179	182	35
1562 57 250	179	182	39
	184	188	46
1562 57 420	179	182	41
1562 58 310	195	196	1
1562 59 310	195	196	1
1562 60 050	169	173	53
1562 60 070	169	173	56
1562 61 080	200	201	—
1562 61 190A	200	201	4
1562 61 211B	200	202	12
1562 61 214A	200	202	17
1562 66 030	204	205	9
1562 66 042	204	205	10
1562 66 060	204	205	9
1562 66 210A	207	208	1
1562 66 211A	207	208	2
1562 66 230A	207	208	1
1562 66 231A	207	208	2
1562 66 860B	222	223	—
1562 66 870	222	223	—
1562 66 900	222	223	1
1562 67 100	53	56	43
1562 68 040A	226	227	3
1562 68 140A	226	227	9
1562 69 053	234	235	3
1562 69 055	234	235	5
1562 69 660A	242	244	15
1562 70 050	159	161	32
1562 75 021	176	177	6
1562 75 122	176	178	16
	176	178	17
1562 75 124	176	178	18
1562 75 200	176	178	21
1562 88 010	179	180	10
	184	185	14
1562 88 100	179	181	17
	184	186	23
1562 88 200	179	180	11
	184	186	15
1562 88 280	179	181	18
	184	186	24
1562 88 370	179	182	37

1562 88 420	184	188	49
1566 58 310	195	196	1
1566 59 310	195	196	1
1568 09 010	265	266	—
1568 13 440	122	123	11
1568 55 530B	176	177	1
1568 57 100	179	180	2
1568 57 110	179	180	6
1568 57 150	179	180	4
1568 57 160	179	180	8
1568 66 030	204	205	9
1568 66 060	204	205	9
1568 66 210A	207	208	1
1568 66 211A	207	208	2
1568 66 230A	207	208	1
1568 66 231A	207	208	2
1568 66 860A	222	223	—
1568 66 870	222	223	—
1568 70 441	247	248	1
1568 75 021	176	177	6
1568 75 930	265	266	2
2046 43 694	143	144	22
2046 43 839	143	144	23
2046 49 620C	136	137	2
2046 49 622	136	137	7
2046 49 625A	136	137	3
2046 49 626A	136	137	4
2046 49 627B	136	137	5
2046 49 629A	136	137	6
2046 49 635A	136	137	9
2046 49 638	136	137	20
2046 49 666	136	137	19
2046 49 667	136	137	19
2046 49 668	136	137	19
2046 49 669	136	137	19
2046 49 676	136	138	26
2046 49 696	136	138	27
2046 49 746	136	139	43
2046 49 747	136	139	44
2046 49 782	136	139	49
2046 49 783	136	139	50
2046 49 784	136	139	50
2070 19 020	61	62	1
2070 19 870	65	67	32
2070 60 430A	265	266	9
2080 58 492	265	266	5
2080 74 158	265	267	12
2080 74 168	265	267	12
2080 74 910	265	266	1
2090 10 730B	5	8	34
2090 10 862A	5	8	42
2090 14 600	24	25	1
2090 15 104	27	28	5
2090 18 361	50	52	32
2090 23 673	17	18	2
2090 23 837	24	25	14
2090 23 838	24	25	15
2090 23 841	24	25	18
2090 23 844	24	25	22
2090 23 853	24	25	16
2112 11 301	9	10	5
2113 11 301	9	10	5
2113 23 674	17	18	3
2113 23 675	17	18	4
2113 23 679	17	18	11
2113 54 295	53	55	38
	57	60	48
2125 23 151	9	10	7
2125 23 152	9	10	8
2125 23 154	9	10	9
2125 23 155	9	10	10
2155 57 109	179	181	26
	184	187	32
2158 40 355	116	117	12
2158 87 104	216	218	27
2244 32 423	95	99	58
	100	101	18
2276 66 044	204	205	11
2280 42 460	118	120	22
2280 42 462	118	120	23
2280 75 641A	265	267	12
2288 66 045	204	206	12
2292 58 232	190	191	3
	251	252	2
2329 10 204	1	2	12
2329 10 864	1	4	39
2329 11 301D	9	10	5
2329 13 882	14	16	15
2329 15 132A	27	28	18
2360 66 045	204	206	12
2375 46 021	146	147	3
2375 46 022	146	147	4
2375 46 051	146	147	6
2375 46 052	146	147	7
2375 46 053	146	147	8
2375 46 055	146	147	10
2375 46 061	146	147	15
2375 46 062	146	147	16
2545 23 496	45	47	27
2587 24 335	45	48	38
2587 24 336	45	48	36
2691 18 660	125	126	15
2801 66 022	204	205	3
2820 87 012	204	206	16
2835 49 623	136	137	11
2835 49 628A	136	137	12
2835 49 630A	136	137	8
2835 49 640	136	137	10
2835 49 641A	136	137	18
2835 49 642A	136	137	13
2835 49 645A	136	137	14
2835 49 646A	136	137	15
2835 49 647A	136	137	16
2835 49 648	136	137	17
2835 49 652	136	138	24
2835 49 682A	136	138	28
2835 49 685	136	138	32

INDEX. 2835 49 686A～99562 1400

2835 49 686A	136	138	29
2835 49 687	136	138	30
2835 52 330	152	153	9
2835 60 439	265	266	10
2835 67 330	216	217	2
2835 69 059	234	235	6
2840 46 010	146	147	2
2850 87 012	204	205	7
2869 10 860	1	4	38
2869 18 400	57	58	1
2869 24 701	57	59	32
2869 24 702	57	59	35
2869 24 720	57	59	36
2869 24 749	57	58	24
2981 17 406	42	43	3
2981 17 410	42	43	5
2981 17 420	42	43	6
2981 17 431	42	43	7
2981 69 623	179	183	48
	184	189	56
4069 17 245	38	39	12
4077 16 410	32	33	7
4077 16 460B	32	33	8
907614 6 40	195	199	40
907832 8 28	195	199	36
908062 6 14	65	67	35
	65	67	43
908066 6 18	27	29	34
908332 4 10	245	246	17
908631 5 12	247	250	43
99221 1212	21	23	38
99221 2012	127	128	6
99221 2015	104	105	6
	104	106	20
99221 2020	95	99	55
	100	103	46
	104	105	6
	129	131	29
	146	148	26
99221 3015	179	181	29
	184	187	35
99221 3020	104	105	17
	110	112	30
99221 4030	107	108	2
99222 0520	146	148	27
99225 0320	146	147	13
99230 0511	125	126	8
	127	128	17
99230 0815	140	141	8
99231 0818	129	131	28
99231 0820	129	131	28
99233 0816	35	36	2
99234 1208	5	7	21
99236 0525	9	12	45
99262 1806B	226	229	33
99264 0531B	156	157	8
99264 0702B	17	18	18
99275 2008	21	23	40
99282 1301	122	124	22
99282 1600	122	123	12
99282 1700	61	64	40
99282 2200	200	202	22
99282 2600	200	202	21
	200	203	32
99282 4900	27	31	52
99282 5500	118	119	6
99285 0800	27	30	45
99295 0800	27	30	44
99295 1508	21	23	40
	53	56	47
	57	60	57
99295 1510	32	33	14
	61	63	26
99295 2008	53	56	48
	57	60	58
99301 1100	179	183	49
	184	189	57
99302 1100	179	183	49
	184	189	57
99305 2800	5	7	27
99306 3000	1	2	15
	5	6	18
99307 0600	1	3	24
99307 1800	14	15	3
99335 04015	220	221	8
99335 04065	220	221	10
99335 0407	220	221	11
99335 08003	245	246	9
99336 12038	118	119	16
99340 05063	61	63	29
99340 0618	122	123	14
99340 0632	122	123	18
99340 0634	122	123	10
99340 0665	122	123	15
99381 1000	61	64	41
99381 1400	27	31	56
99384 1200	1	3	28
	27	31	64
99502 2000	95	98	37
	100	102	31
99502 4000	35	36	19
99510 0800	14	15	4
99510 1000	5	7	28
	42	43	16
99511 1000	14	15	5
99511 1400	5	8	33
99541 01101	9	11	30
99541 01601	21	23	24
	65	67	34
99541 02101	35	37	29
	65	67	40
99562 1000	133	135	29
	143	144	3
99562 1400	5	8	33
	42	43	15
	42	44	40

99562 1600	1	3	29
	5	6	15
99562 1800	27	31	57
99564 0800	14	15	4
	38	41	38
	61	63	31
99564 1000	5	7	28
	14	15	5
	42	43	16
99564 1200	118	119	3
99564 1400	61	64	42
99564 1600	27	31	65
99564 2800	9	12	47
99573 2200	38	40	34
99573 2500	38	41	40
	72	74	33
99573 3000	38	39	3
99574 3500	27	28	12
99575 0300	125	126	9
	127	128	18
99575 0500	140	141	9
99575 0600	85	87	33
	125	126	4
	127	128	11
	129	130	14
	146	148	28
99576 0400	245	246	12
99576 0800	21	23	30
99579 3000	95	96	15
	95	99	54
	100	101	4
	234	235	14
99579 4000	234	235	15
99586 10207	35	37	27
	65	67	41
99606 3306	38	40	24
99606 6306	38	39	2
99606 6344	38	40	31
99611 1500	38	41	41
	72	74	34
	85	87	28
	133	135	23
99611 2000	61	63	22
	65	66	8
	77	79	38
99611 2500	42	43	10
	77	78	2
9962 04 1553	85	88	38
	107	109	23
9962 07 1553	85	88	38
	107	109	23
9963 01 1553	85	88	38
	107	109	23
9965 05 453	85	88	38
	107	109	23
9965 06 453	85	88	38
	107	109	23
99655 30010	85	88	39
99655 30015	85	88	39
99655 30020	85	88	39
99655 30025	85	88	39
99655 30030	85	88	39
99655 30035	85	88	39
99655 30040	85	88	39
99655 30045	85	88	39
99655 30050	85	88	39
99655 30060	85	88	39
99681 1001	19	20	9
99684 0600	210	215	74
99686 0800	61	64	44
99686 1000	210	213	37
99686 1200	122	123	20
	210	213	38
99686 1600	210	213	39
99701 2050	204	206	20
	207	209	22
99701 2080	207	208	12
99701 3210	204	206	21
	207	208	4
99701 3230	207	208	6
99701 4215	207	208	5
99701 5050	210	211	4
99701 6030	176	177	9
	176	178	22
	204	206	25
99701 8100	207	208	6
99706 0105	210	211	9
99706 0110	210	211	9
99706 0115	210	211	9
99706 0120	210	211	9
99715 1101	232	233	13
99737 0514	149	151	24
99743 0616	210	212	13
99743 0650	169	170	14
99748 0410	222	224	15
99750 11018	107	108	17
99753 41022	89	90	14
99753 78118	32	33	10
99753 81022	89	90	14
99761 0516	234	236	34
99761 0640	260	263	39
99765 0516	127	128	3
99765 0616	125	126	14
	127	128	9
99767 0410	247	250	46
99769 0408	247	250	47
99772 0516	234	236	30
99772 0525	234	236	30
99773 0412	207	209	23
99776 0620	234	237	42
99781 0612	220	221	16
99781 1012	61	62	2
99781 1018	61	62	4
99781 1028	165	166	13
99781 1080	104	106	22
99781 1085	95	98	46

INDEX. 99781 1085～99806 0616

99781 1085	100	103	40
99781 1225	110	112	31
99781 1235	110	112	32
99783 0625	216	219	39
99783 0825	152	153	3
99783 0828	260	263	34
99783 1028	92	94	11
99783 1035	110	111	16
99785 0612	136	138	40
99785 0614	122	124	23
	143	145	30
99785 0616	146	147	20
99785 0618	140	141	15
99785 0620	125	126	7
	127	128	19
	140	142	21
	165	167	32
99785 0820	149	150	4
99785 0825	179	182	32
	179	183	42
	184	187	38
	184	188	50
99785 1620	245	246	18
99790 0620	149	151	37
99795 1032	129	130	18
99797 0512	222	223	3
99797 0612	207	209	14
	207	209	24
99797 0614	169	172	40
99797 0616	45	46	9
	169	173	46
99797 0618	169	170	15
99797 0630	176	177	14
99799 0832	95	99	61
	100	101	21
99801 0812	27	31	49
99801 0814	85	86	15
99801 0816	95	98	35
	100	102	29
	152	153	4
	156	158	20
	179	181	23
	184	187	29
99801 0818	5	8	43
	9	11	25
	114	115	7
99801 0820	50	52	34
	92	93	3
	116	117	16
99801 0822	50	52	35
99801 0825	27	28	19
	42	43	22
99801 0828	57	59	40
	116	117	20
99801 0832	27	29	29
	116	117	17
99801 0835	42	43	22
99801 0840	1	3	35
99801 0845	35	36	9
99801 0850	45	46	8
99801 0865	1	3	36
99801 0875	1	3	37
99801 1035	53	55	30
99803 1011	53	55	31
99804 0516	118	119	8
	118	120	24
99804 0614	165	167	30
99804 0616	27	30	46
	226	230	55
	226	230	58
99804 0820	53	56	45
	57	60	55
99804 0825	118	120	29
99805 0616	251	252	15
99805 0622	149	150	8
99805 0640	143	144	5
99805 0816	169	170	3
	226	227	10
99805 0825	129	131	34
99805 0830	200	201	8
99805 0865	129	131	32
99806 0510	195	197	9
	216	218	24
	216	218	34
	260	261	9
99806 0516	195	198	22
	251	253	20
	260	262	20
99806 0608	256	257	13
99806 0610	5	7	24
	27	29	28
	27	31	61
	35	37	35
	61	62	6
99806 0612	27	29	33
	122	123	6
	122	123	9
	149	150	10
	190	192	11
	195	198	18
	210	212	22
	210	214	55
	251	253	25
	256	257	8
	260	262	16
99806 0614	21	22	19
	42	44	24
	61	63	33
	61	64	45
	156	157	3
	156	158	25
	169	172	43
99806 0616	5	8	40
	152	153	11
	152	153	13
	152	155	38

99806 0616	156	157	10
	226	229	46
99806 0618	21	22	2
	24	26	28
	27	30	48
	152	154	28
99806 0620	53	55	41
	57	60	51
99806 0625	210	213	26
99806 0630	24	26	28
99806 0816	210	212	20
99806 0818	169	170	2
99811 0812	89	91	23
99811 1010	5	6	16
99811 1018	107	108	14
99811 1032	32	33	15
	61	63	24
99811 1045	61	63	25
99811 1050	32	33	16
	61	63	24
	61	63	25
	89	90	9
99811 1055	32	33	17
	61	63	25
99811 1075	61	63	25
99813 1011	129	131	35
99813 10125	50	52	36
99813 10155	129	131	35
99831 0408	190	192	10
	256	257	12
99831 04088	226	228	29
99831 0416B	169	171	30
99831 0640	152	154	20
99832 0408B	169	175	89
	260	261	11
	195	197	11
99832 0516B	226	230	56
	226	230	59
99832 0630	195	196	6
99833 0408	24	25	11
	85	86	14
	95	96	5
	104	106	19
	118	121	32
99833 0410	118	121	32
99833 0412	140	142	26
99833 0418	5	8	35
99833 0510	35	37	24
99833 0512	136	138	39
	200	201	9
	222	224	23
	226	228	17
99833 0512B	226	227	13
99833 0514B	226	229	38
99833 0516B	226	227	12
99833 0520	190	192	16
	251	254	36
	256	258	20

99833 0612	45	49	63
	176	177	13
	210	214	53
99833 0616	169	172	37
99833 0616B	226	227	14
99833 0625	210	211	10
99833 0630	260	261	6
99833 0810	5	6	3
99833 0812	85	86	3
	85	86	17
	210	213	27
99834 0412B	226	229	36
99834 0510	226	228	22
99834 0512	226	228	23
99834 0512B	226	227	11
99834 0535	169	173	49
99834 0616B	226	228	18
99835 0625C	204	206	22
99836 0414B	226	230	61
99836 0516	226	227	15
99837 0516C	234	237	37
99837 0525B	169	171	25
99838 0412	169	170	8
	169	171	23
99838 0514	210	211	5
99838 0616	169	170	6
99838 0620	234	237	40
99839 0416	226	231	64
99839 0520B	169	173	51
99851 0618A	45	49	57
99851 0812A	14	15	6
99851 0814	65	67	44
99851 0814A	1	2	2
	5	6	2
99851 0818A	1	3	25
99851 0820	32	33	3
99851 0826A	14	15	7
99851 0850A	1	2	4
	5	6	4
99851 0860	35	36	8
99852 0612	85	87	20
99852 0655	1	2	16
99852 0820	82	83	2
99852 0822A	1	2	18
	5	7	20
99852 0830A	5	7	22
99852 0848	133	134	15
99852 0865A	1	3	22
99852 0878A	1	2	17
99852 0880	82	83	3
99852 1016	1	2	21
99855 1020A	1	3	33
99855 1025	35	36	14
99855 1035	35	36	16
99855 1040	35	36	7
99855 1055	35	36	6
99855 1078	35	36	5
99855 1085	35	36	4

INDEX. 99855 1232～99906 0600

99855 1232	35	36	13
99859 1220A	1	2	19
99859 1225A	1	2	20
99860 0512	222	224	24
99860 0616	204	205	8
	204	206	17
99861 0412	179	183	47
	184	189	55
99861 0414B	169	170	9
99862 0412B	239	240	16
99862 0420E	239	241	28
99862 0425B	247	249	25
99862 0512B	239	240	13
99862 0516B	149	151	25
99862 0525B	169	170	12
99863 0410	251	254	40
99863 0410B	222	225	29
99863 0412	118	119	11
	239	240	10
99863 0412B	234	238	59
99863 0412E	239	241	27
99863 0414C	234	235	8
99863 0425B	234	238	60
99863 0510	169	171	21
99863 0512	176	178	25
	210	214	46
	226	228	19
	247	250	38
99863 0516	165	167	34
	169	174	63
	200	202	27
	200	203	30
99863 0520B	226	229	47
99863 0612	27	30	43
99864 0406	179	181	31
	184	187	37
99864 0408	251	254	45
99864 0410	222	224	12
	234	237	52
	245	246	11
99864 0410B	251	254	42
99864 0412	210	215	72
99864 0412B	234	237	45
99864 0414	234	237	48
99864 0416B	204	206	26
	234	238	62
99864 0516B	239	241	25
99864 0520B	239	241	26
99864 0616	156	158	22
99866 0420	95	97	26
	100	101	15
99868 0308	95	96	11
99868 0410	95	96	6
	200	201	7
99868 0414	207	208	7
99868 0420	95	96	7
99868 0508	140	141	16
99868 0512	61	64	46
99868 0512	200	202	19
99869 0400	169	170	10
99869 0412	169	174	68
99869 0508	210	214	50
99869 0512	95	99	64
	100	103	50
99884 0414	234	238	57
99885 0406	9	10	4
99887 0412	146	147	14
99896 0500	169	174	64
99896 0600	156	158	22
99901 0800	1	4	40
	14	15	9
	14	15	11
	17	18	14
	19	20	3
	21	23	25
	27	29	26
	27	30	39
	35	36	11
	45	49	59
	57	59	39
	57	59	41
	82	83	19
	82	84	20
	92	93	3
	92	93	4
	110	111	9
	116	117	10
	116	117	18
	129	130	10
	129	131	33
	129	132	40
	133	135	33
	136	138	33
	136	139	54
	140	141	12
	179	182	33
	179	183	43
	184	187	39
	184	189	51
99902 0800	61	64	48
	146	148	29
99905 0500	53	55	32
99906 0400	226	230	62
99906 0500	169	171	31
	195	197	13
	207	208	8
	207	209	26
	222	224	8
	234	235	16
	251	252	10
	260	262	14
99906 0600	21	22	18
	27	31	63
	45	49	60
	53	56	42
	57	60	52

99906 0600	85	87	29
	122	123	4
	133	135	32
	149	150	6
	149	150	11
	152	154	29
	152	154	30
	156	158	27
	156	158	30
	169	172	41
	169	173	47
	210	212	19
	210	213	26
	210	215	63
	210	215	68
	210	215	69
	226	229	48
	234	236	27
99906 0800	169	172	35
	200	202	10
99907 0500	45	46	10
	57	59	42
99907 0600	24	25	25
	125	126	12
	127	128	14
	152	154	21
	195	197	7
	260	261	7
99907 0800	27	29	23
	53	56	46
	57	60	56
99910 0601	204	205	8
	204	206	17
99921 1000	32	34	18
	35	36	10
	35	37	32
	50	52	37
	61	63	25
	92	93	9
	92	94	28
	110	111	21
	110	112	34
	114	115	2
	114	115	5
	114	115	9
	129	131	36
	149	150	18
99921 1200	27	31	67
	32	34	19
	92	94	25
99921 1800	95	99	56
	100	103	47
99922 0800	129	131	22
	133	134	19
99922 1000	92	94	28
	95	98	36
	100	102	30
	129	130	—
99922 1000	146	148	22
99922 1200	21	22	9
99922 1400	75	76	7
	104	105	8
99924 1000	95	99	55
	100	103	46
	104	105	6
	104	106	20
99924 1200	104	106	17
	110	112	30
99940 0400	152	154	24
	176	178	26
99940 0501	169	174	65
	226	227	16
99940 0502	222	224	25
99940 0600	210	214	51
99940 0602	169	172	34
	169	173	44
99940 0802	169	170	4
99941 0801	17	18	12
99942 1000	95	98	47
	100	103	41
	104	106	22
99942 1400	110	111	10
99944 1400	104	105	9
99945 0500B	169	175	90
99947 1200	100	101	16
99947 1400	110	111	19
99948 1200	95	97	27
99949 0800	116	117	5
99950 0618	256	257	13
99951 0618	149	150	6
	149	150	8
	152	154	29
	152	155	38
	169	173	46
	169	173	47
	190	192	11
	195	197	13
	195	198	18
	251	253	16
	251	253	25
	260	262	14
99951 0818	50	52	35
	116	117	19
	149	150	4
99951 0822	17	18	14
	27	30	39
	116	117	5
	260	263	35
99951 1022	95	98	47
	100	103	41
	165	166	13
99951 1030	110	111	21
	114	115	5
	114	115	9
	149	150	18
99952 0400	169	171	23

INDEX. 99952 0400～99952 0800

99952 0400	239	240	10
99952 0400B	226	230	61
99952 0400E	239	241	27
99952 0412	118	119	11
	251	254	40
99952 0412B	226	229	36
	234	237	45
	247	249	26
99952 0500	45	46	10
	53	55	32
	57	59	42
	118	120	24
	165	167	34
	176	178	25
	190	192	16
	200	202	27
	200	203	30
	207	209	26
	210	214	46
	210	215	62
	222	223	3
	222	224	8
	222	224	23
	226	228	17
	226	228	19
	226	228	22
	226	228	23
	234	235	16
	251	254	36
	256	258	20
	260	261	9
99952 0500B	169	173	51
	169	175	90
	226	227	11
	226	227	12
	226	229	38
	226	229	47
99952 0516	169	171	31
	169	174	65
	200	202	19
	207	208	8
	226	227	13
99952 0518	169	174	63
	195	197	9
99952 0600	21	22	2
	27	30	43
	27	30	46
	27	31	48
	27	31	63
	45	46	9
	45	49	60
	45	49	63
	125	126	14
	152	154	30
	156	157	3
	156	157	10
	156	158	25
	156	158	27
99952 0600	165	167	30
	169	170	14
	169	171	21
	169	172	40
	169	172	41
	195	197	7
	207	209	14
	207	209	24
	210	212	13
	210	212	22
	210	213	26
	210	214	53
	210	214	55
	210	215	68
	210	215	69
	234	237	40
	245	246	18
	251	252	15
	260	262	7
	260	262	16
99952 0600B	226	227	14
99952 0616	122	123	6
	122	123	9
99952 0618	53	55	41
	53	56	42
	57	60	51
	57	60	52
	125	126	7
	127	128	19
	146	147	20
	149	151	37
	152	153	11
	152	154	28
	156	158	22
	156	158	30
	165	167	32
	169	170	6
	169	171	15
	169	172	37
	169	172	43
	176	177	13
	176	177	14
	210	215	63
	210	215	68
	216	219	39
	226	229	46
	226	229	48
	256	257	8
99952 0618B	226	228	18
99952 0800	1	3	35
	1	3	36
	1	3	37
	27	28	19
	27	31	49
	45	46	8
	95	99	61
	100	101	21
	110	111	9

99952 0800	118	120	29
	152	153	13
	156	158	20
	169	170	3
	169	172	35
	184	189	51
	200	202	10
	210	213	27
99952 0816	129	130	16
	129	131	34
	146	148	30
	152	153	3
	152	153	4
	179	181	23
	184	187	29
	204	205	8
	204	206	17
99952 0818	200	201	8
	226	227	10
99952 0822	129	131	32
	129	131	33
	152	154	32
	169	170	2
	179	182	32
	179	182	33
	179	183	43
	184	187	38
	184	187	39
	200	201	8
99952 1000	32	34	18
	50	52	37
	53	55	31
	92	94	11
	129	131	36
99952 1400	110	111	10
99953 0400	21	23	39
99953 0400B	222	225	29
99953 0500	222	224	24
99953 0600	24	26	28
99953 0800	14	15	9
	14	15	11
	21	23	25
	27	29	23
	27	29	26
	27	29	29
	35	36	11
	45	49	59
	57	59	39
	57	59	40
	127	128	5
	146	148	31
99953 1000	32	33	4
	32	33	16
	32	34	18
	35	36	10
	35	37	32
	53	55	30
99953 1200	32	34	19
99958 1018	89	90	15
99963 3310	42	44	28
99963 3330	42	44	28
99963 6310	38	41	43
99963 6330	38	41	43
99967 0400A	239	241	28
99967 0500	169	171	25
99967 0500B	169	170	12
	226	227	15
	226	230	56
	239	240	13
99967 0600B	226	230	59
99971 0300	95	96	11
99971 0400	5	8	35
	24	25	11
	85	86	14
	95	96	5
	95	96	6
	95	96	7
	104	106	19
	140	142	26
	169	170	8
	169	171	23
	226	229	36
	226	230	61
	239	240	10
	239	241	27
	251	254	40
99971 0500	35	37	24
	45	46	10
	53	55	32
	57	59	42
	61	64	46
	118	119	8
	118	120	24
	136	138	39
	140	141	16
	169	172	31
	169	173	51
	169	174	63
	169	175	90
	195	197	9
	195	197	13
	195	198	22
	200	201	9
	200	202	19
	200	202	27
	207	209	26
	210	214	50
	210	215	62
	216	217	16
	216	218	34
	222	223	3
	222	224	8
	222	224	24
	226	227	11
	226	227	12
	226	228	17

INDEX. 99971 0500~99971 0800

99971 0500	226	228	19
	226	228	22
	226	228	23
	226	229	38
	226	229	47
	234	235	16
	251	253	20
	260	261	9
	260	262	14
	260	262	20
99971 0600	5	7	24
	5	8	40
	21	22	2
	21	22	18
	21	22	19
	24	26	25
	24	26	28
	27	29	28
	27	29	33
	27	30	46
	27	31	48
	27	31	61
	27	31	63
	35	37	35
	42	43	4
	42	44	24
	45	46	9
	45	49	60
	45	49	63
	53	56	41
	53	56	42
	57	60	51
	57	60	52
	61	62	6
	61	63	33
	61	64	45
	85	87	29
	122	123	4
	122	123	6
	122	123	9
	122	124	23
	125	126	7
	125	126	14
	127	128	9
	127	128	19
	133	135	32
	136	139	40
	140	141	15
	140	141	21
	143	144	5
	143	145	30
	146	147	20
	149	150	6
	149	150	11
	149	151	37
	152	153	11
	152	154	28
	152	154	30
99971 0600	152	155	38
	156	157	3
	156	157	10
	156	158	25
	156	158	27
	156	158	30
	165	167	30
	169	170	6
	169	170	14
	169	171	15
	169	172	37
	169	172	40
	169	172	41
	169	172	43
	169	173	46
	169	173	47
	176	177	13
	176	177	14
	190	192	11
	195	197	7
	195	198	18
	207	209	14
	207	209	24
	210	211	10
	210	212	13
	210	212	19
	210	212	22
	210	213	26
	210	214	53
	210	214	55
	210	215	68
	210	215	69
	216	219	39
	220	221	16
	226	227	14
	226	228	18
	226	229	46
	226	230	48
	226	230	55
	226	230	58
	234	236	27
	234	237	40
	245	246	18
	251	252	15
	251	253	16
	251	253	25
	256	257	8
	256	257	13
	260	261	7
	260	262	16
99971 0800	1	3	35
	1	3	36
	1	3	37
	1	4	40
	5	8	43
	9	11	25
	14	15	9
	14	15	11

99971 0800	17	18	14
	19	20	3
	21	23	25
	27	28	19
	27	29	23
	27	29	26
	27	29	29
	27	30	39
	27	31	49
	32	33	9
	32	33	10
	35	36	11
	42	43	22
	42	44	31
	45	46	8
	45	49	59
	50	52	34
	50	52	35
	53	56	45
	53	56	46
	57	59	39
	57	59	40
	57	59	41
	57	60	55
	57	60	56
	61	64	48
	80	81	7
	82	84	19
	82	84	20
	85	86	15
	85	86	17
	89	91	23
	92	93	3
	92	93	4
	95	98	35
	95	99	61
	100	102	21
	100	102	29
	110	111	9
	114	115	7
	116	117	10
	116	117	16
	116	117	18
	118	120	29
	129	131	33
	129	131	34
	129	132	40
	133	135	33
	136	138	33
	136	139	54
	140	141	12
	146	148	32
	149	150	4
	152	153	3
	152	153	4
	152	153	13
	169	170	2
	169	170	3
99971 0800	169	172	35
	179	181	23
	179	182	32
	179	182	33
	179	183	42
	179	183	43
	184	187	29
	184	187	38
	184	187	39
	184	189	50
	184	189	51
	200	201	8
	200	202	10
	210	212	20
	210	213	27
	226	227	10
	260	263	34
99971 1000	5	6	16
	32	33	4
	32	33	15
	32	33	16
	32	34	18
	35	36	10
	35	37	32
	50	52	37
	53	55	30
	53	55	31
	61	62	2
	61	62	4
	61	63	24
	61	63	25
	89	90	10
	92	93	9
	92	94	11
	107	108	8
	107	108	14
	107	108	17
	110	111	16
	110	112	21
	110	112	34
	114	115	2
	114	115	5
	114	115	9
	116	117	12
	129	131	36
	146	148	22
	149	150	18
	165	166	13
99971 1200	27	31	67
	32	34	19
	92	94	25
	110	112	31
	110	112	32
99971 1400	75	76	7
99971 1800	95	99	56
	100	103	47
99972 0800	129	131	26
	146	148	33

INDEX. 99972 1400～99979 1200

99972 1400	146	148	22
99974 0400	239	241	16
99974 0600	195	196	6
	260	261	6
	260	263	39
99975 0400	226	230	62
99975 0500	234	236	34
	234	237	37
99975 0600	195	196	6
99979 1200	21	22	9

TOYO KOGYO CO., LTD.

Printed in Japan