RX-3

SEDAN & COUPE

PARTS CATALO

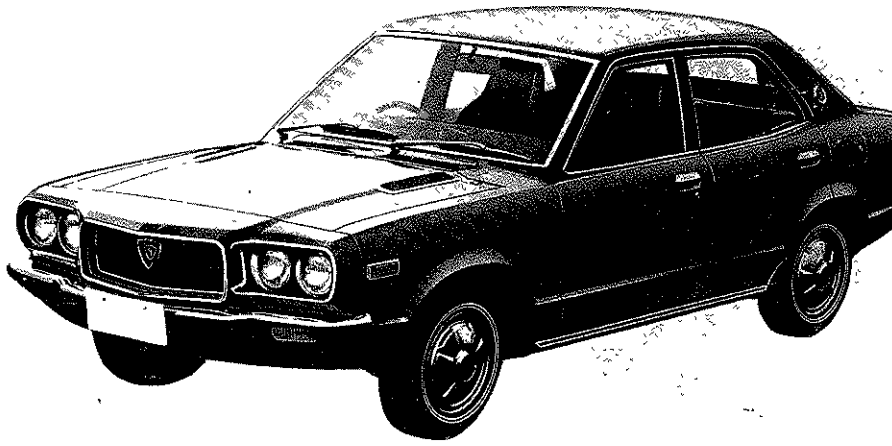

Issued by

TOYO KOGYO CO.,LTD.

Rotary Engine-Licence NSU. Wankel

August, 1971

HOW TO USE THIS PARTS CATALOG

This parts catalog is compiled for the following models (From Car No. 120642 7/11～)

Model : RX-3 Sedan, Coupe & Rotary Wagon

● : RX-3 Sedan Deluxe with Automatic T/mission, Manuf. From April, 1974

Model No.	Model / Type	Description	
1550	S102A	RX-3 Sedan Standard Australian Spec. Model	
1551	S102A-DX	RX-3 Sedan Deluxe Australian Spec. Model	
1552	S102A-DXT	RX-3 Sedan Deluxe With Automatic T/mission Australian Spec. Model	
1553	S102A-DCA	RX-3 Coupé Deluxe Australian Spec. Model	
1554	S102A-SCA	RX-3 Coupé Super Deluxe Australian Spec. Model	
1555	S102A-DX	RX-3 Sedan Deluxe General Export Model	
1556	S102A-DCA	RX-3 Coupé Deluxe General Export Model	
1557	S102A-SCA	RX-3 Coupé Super Deluxe General Export Model	Obsolete from S Car No. 179250
1558	S102A-DX	RX-3 Sedan Deluxe ECE Cold Proof Spec. Model	
1559	S102A-DCA	RX-3 Coupé Deluxe ECE Cold Proof Spec. Model	
1565	S102A-DX	RX-3 Sedan Deluxe General Export Model	
1566	S102A-SCA	RX-3 Coupé Super Deluxe General Export Model	
1567	S102A-DX	RX-3 Sedan Deluxe ECE Spec. Model	
1568	S102A-DCA	RX-3 Coupé Deluxe ECE Spec. Model	
1569	S102W-DX	RX-3 Rotary Wagon Deluxe, British Spec. Model Manuf. From Feb. 13, 1973	
3501	S124A-DX	RX-3 Sedan Deluxe General Export Model, Manuf. From Car No. 160623	
● 3502	S124A-DXT	RX-3 Sedan Deluxe with Automatic T/mission General Export Model, Manuf. From April, 1974	
3503	S124A-SCA	RX-3 Coupé Super Deluxe General Export Model, Manuf. From Car No. 160623	
3516	S124A-DX	RX-3 Sedan Deluxe General Export Model, Manuf. From Car No. 160623	
3517	S124A-SCA	RX-3 Coupé Super Deluxe General Export Model, Manuf. From Car No. 160623	

Caution :

There is a repitition of car number for obsolete and new models from car no. 160623 to car no. 179250, caused from a new car numbering system adopted from Oct. 1973.

HOW TO USE THIS PARTS CATALOG

This parts catalog is compiled for the following models (From Car No. 120642 '71/11
Model : RX-3 Sedan & Coupe

Model No.	Model /Type	Description
1550	S102A	RX-3 Sedan Standard Australian Spec. Model
1551	S102A-DX	RX-3 Sedan Deluxe Australian Spec. Model
1552	S102A-DXT	RX-3 Sedan Deluxe with Automatic T/mission Australian Spec. Model
1553	S102A-DCA	RX-3 Coupé Deluxe Australian Spec. Model
1554	S102A-SCA	RX-3 Coupé Super Deluxe Australian Spec. Model
1555	S102A-DX	RX-3 Sedan Deluxe General Export Model
1556	S102A-DCA	RX-3 Coupé Deluxe General Export Model
1557	S102A-SCA	RX-3 Coupé Super Deluxe General Export Model
1558	S102A-DX	RX-3 Sedan Deluxe ECE Cold Proof Spec. Model
1559	S102A-DCA	RX-3 Coupé Deluxe ECE Cold Proof Spec. Model
1565	S102A-DX	RX-3 Sedan Deluxe General Export Model
1566	S102A-SCA	RX-3 Coupé Super Deluxe General Export Model
1567	S102A-DX	RX-3 Sedan Deluxe ECE Spec. Model
1568	S102A-DCA	RX-3 Coupé Deluxe ECE Spec. Model
1569	S102W-DX	RX-3 Rotary Wagon Deluxe British Spec. Model

INSTRUCTIONS FOR USE OF THIS PARTS CATALO

(I) Layout of Parts Catalog

The spares relevent to each assembly are printed inset to the right, and parts th
sub-assembly are indicated by illustrations and classified according to each assem
Therefore, if a spare part is not printed inset to the right, this shows that the
constitute a part of the assembly.
Moreover, to aid identification of spares, "exploded" illustrations are incorporate
catalog.

(II) How to locate parts

1) When part number is not known.

A. Refer to index of groups and locate the group to which the part belongs.

⇩

B. Open to group illustration page and locate part wanted.

⇩

C. See the number given for the part in the illustration and find corresponding number in the parts composition lists.

⇩

D. Then, you will find the name and the part number of the part on the right side of this number.

2) When part number is known but shape and name of part is unknown.

A. See index given at back of the parts catalog and find pages where illustration, part number and figure number is listed.

⇩

B. Open to page indicated and locate the part number in the part composition list, and after this locate the part in the illustration by referring to figure number given at front of the part number.

⇩

C. The corresponding figure number in the illustration is for the part required.

3) Moreover as an alphabetical index is incorporated after the index of groups, utilize for locating principal parts.

(III) On Groups

1) The figure enclosed by a triangle at the top of each page (Example 

) indicates group number.

2) Group numbers are determined according to structure and function of parts.

3) The group number given in the index of groups coincide with the numerals (Example 

) of the illustration and parts composition pages.

(IV) Explanation of Parts Composition Lists

1) Indication of composition of assembly.

(a) The spares relevent' to each assembly are printed inset to the right.

(b) Spares not printed inset to the right are parts that do not constitute a part of any assembly.

(c) The space between the parts that constitute an assembly or sub assembly is widened, to clearly indicate the parts of each assembly or sub assembly.

Example :

	No.	Part Number	Description	Q'ty	Remarks
(a)	1	0839 14 300	Filter, Oil	1	
(b)	2	0839 23 801	Cover	1	
	⋮		⋮	⋮	
	3	0823 23 802A	Guide (EX.), Valve	1	Fig. No. 4 included
(b)(c)	4	0813 23 803	Clip, Valve Guide	1	
(d)	5	99541 01601	Ring, "O"-Oil Filter	2	
	6	99901 0800	Nut, Oil Filter	2	

(Ⅰ) Layout of Parts Catalog

The spares relevent to each assembly are printed inset to the right, and parts t
a sub-assembly are indicated by illustrations and classified according to each asse
Therefore, if a spare part is not printed inset to the right, this shows that the
not constitute a part of the assembly.
moreover, to aid identification of spares, "exploded" illustrations are incorporate
catalog.

(Ⅱ) How to locate parts

1) When part number is not known.

A. Refer to index of groups and locate the group to which the part belongs.
⇩
B. Open to group illustration page and located part wanted.
⇩
C. See the number given for the part in the illustration and find corresponding
the parts composition lists.

D. Then, you will find the name and the part number of the part on the right s
this number.

2) When part number is known but shape and name of part is unknown.

A. See index given at back of the parts catalog and find pages where illustratio
number and figure number is listed.
⇩
B. Open to page indicated and locate the part number in the parts composition l
after this locate the part in the illustration by referring to figure number gi
front of the part number.
⇩
C. The corresponding figure number in the illustration is for the part required.

3) Moreover as an alphabetical index is incorporated after the index of groups, util
locating principal parts.

(Ⅲ) On Groups

1) The figure enclosed by a triangle at the top of each page (Example 

) indi
number.

2) Group numbers are determined according to structure and function of parts.

3) The group number given in the index of groups coincide with the numerals (Exam
of the illustration and parts composition pages.

(Ⅳ) Explanation of Parts Composition Lists

1) Indication of composition of assembly.

(a) The spares relevent to each assembly are printed inset to the right.

(b) Spares not printed inset to the right are parts that do not constitute a pa
assembly.

(c) The space between the parts that constitute an assembly or sub assembly is
to clearly indicate the parts of each assembly or sub assembly.

Example:

	No.	Part Number	Description	Q'ty	Remarks
(a)	1	0839 14 300	Filter, Oil	1	
(b)	2	0839 23 801	Cover	1	
	3	0823 23 802A	Guide (EX.), Valve	1	Fig. No. 4 included
(b)(c)	4	0813 23 803	Clip, Valve Guide	1	
(d)	5	99541 01601	Ring, "O" - Oil Filter	2	
	6	99901 0800	Nut, Oil Filter	2	

(a) ..... Includes (b) to (c)
(b) ..... Includes (c)
(d) ..... Is not included in any ass'y nor sub ass'y

2) On parts number

A. Exclusive parts

Example:

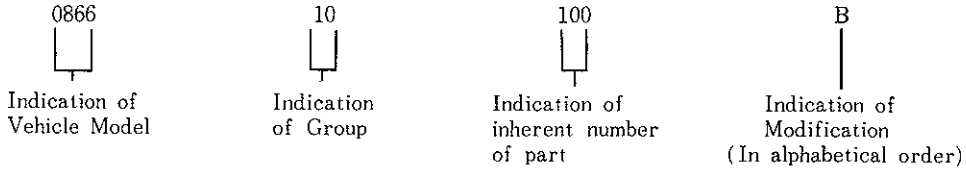

B. Standardized parts (General parts)

Example:

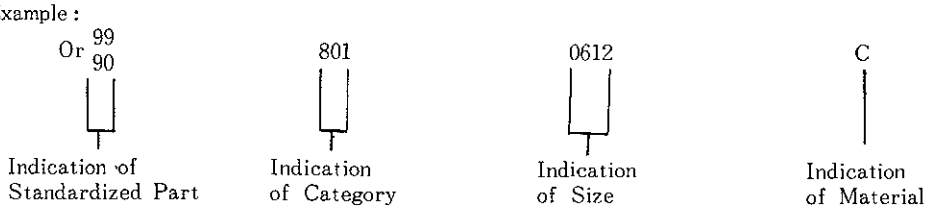

C. Standardized parts (Tires, Tubes, Disc Wheels, etc.)

Example:

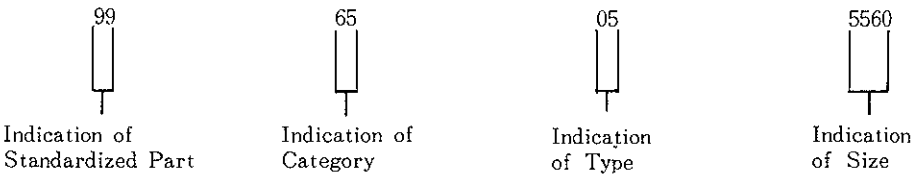

3) On Quantity

The quantity given in the parts composition list shows number of parts used per vehicle and does not indicate selling unit.

4) Other Precautions

☆ Mark····· Parts marked thus are not available as replacement parts, the these parts are required, order in the form of assemblies (or these parts or in the form of parts interchangeable with these

5) Abbreviations

(R)	Right	EX.	Exhaust
(L)	Left	IN.	Inlet
(C)	Center	T/mission	Transmission
(Frt.)	Front	©	Parts with Diffe (Indicate Colour
(Rr.)	Rear		
Cpt.	Complete	10	Indication of Gr
Ass'y	Assembly		
Std.	Standard	Manual	Manual Transmis
O.S.	Over Size	Automatic	Automatic Trans
U.S.	Under Size		

(V) Precautions to be taken when placing orders for parts

1) Always specify part numbers, names of parts and quantity required.

2) Be sure to list the parts in order of part number, when filling in order sheet.

3) As processing of orders received by us is done by electronic computers, importa attached to the part number. Therefore, in case the part number and name of coincide with each other, the part will be sent to you in accordance with the pa

4) Distinction of colour of spare parts by code number is done with figures numbe of the parts number. Therefore, add to the end of the applying part number a

Example :	Part Number	Colour Code No.	Descr
	0301 58 8100 ← 10 Figures →	-01 ← 2 Figures →	Door Trim (R)(
	0301 58 8100 ← 10 Figures →	-04 ← 2 Figures →	Door Trim (R)(

(VI) Replacement pages and purport

Page replacements are supplied every six months as a rule, listing parts modified or added and month and year date will be printed in lower corner of each replacement pa Therefore, it is essential that care be taken to check on these dates to confirm if tl listed conform to the car imported, before ordering.

1) Explanation on designation given in remarks column.

a. Car No. ····· Chassis no. of car that modification becomes effective fro However, for cars produced from January, 1974, refer to "List of chassis numbers" given below. (for car numbers)

b. 69/1 ····· 69 designates year of modification and numerals 1 ~12 shows month of year.

c. ○ mark ····· Indicates that modified part and former part are interchan

d. × mark ····· Indicates that modified part and old part are not interchar

e. △ mark····· Indicates that new part is interchangeable with old part but that old part is not interchangeable as a replacement for cars utilizing the new part.

2) ● mark····· This dot at front of figure number of replacement pages show the parts that have been subject to modification.

List of chassis numbers

Year / Month / Model	1974											
	JAN.	FEB.	MAR.	APR.	MAY	JUN.	JUL.	AUG.	SEP.	OCT.	NOV.	DEC.
RX-3 Sedan & Coupe	165673	166888	169214	171719	173263	173659	174171	174571	174610	174665	174762	174775

1975

YEAR / Model	JAN	FEB	MAR	APR	MAY	JUN	JUL	AUG	SEP	OCT	NOV	DEC
RX3 SEDAN & COUPE	174808	174864										
RX3 WAGON												

1973 - 1974.

YEAR	73/10	73/11	73/12	74/1	74/2	74/3	74/4	74/5	74/6	74/7	74/8	74/9
Month	OCT	NOV	DEC	JAN	FEB	MAR	APR	MAY	JUNE	JUL	AUG	SEPT
RX3 wagon	154758	156387	158480	159642	160488	161716	163044	165138	165454	166252	166421	166504

1974 ~ 1975.

Year	74/10	74/11	74/12	75/1	75/2	75/3	75/4	75/5	75/6	75/7	75/8	75/9
Month	OCT	NOV	DEC	JAN	FEB	MAR	APR	MAY	JUNE	JULY	AUG	SEPT
RX3 wagon	166504	166504	166504	166504	166504							

(a) ····· Includes (b) to (c)
(b) ····· Includes (c)
(d) ····· Is not included in any ass'y nor sub ass'y

2) On parts Number

A. Exclusive parts

Example :

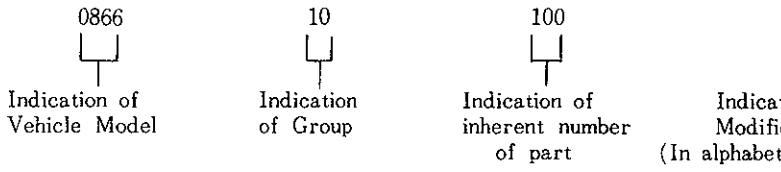

B. Standardized parts (General parts)

Example :

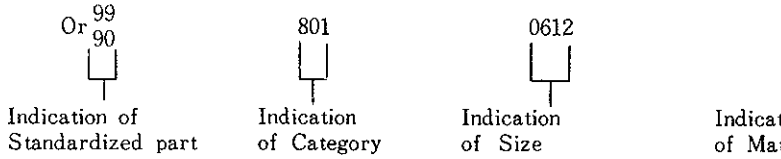

C. Standardized parts (Tires, Tubes, Disc Wheels, etc.)

Example :

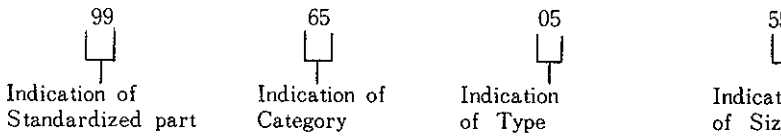

3) On Quantity

The quantity given in the parts composition list shows number of parts used per ve
and does not indicate selling unit.

4) Other Precautions

☆ Mark····· Parts marked thus are not available as replacement parts, therefore,
these parts are required, order in the form of assemblies (or sets)
these parts or in the form of parts interchangeable with these parts.

5) Abbreviations

(R) ····· Right	O.S. ····· Over Size
(L) ····· Left	U.S. ····· Under Size
(C) ····· Center	EX. ····· Exhaust
(Frt.) ····· Front	IN. ····· Inlet
(Rr.) ····· Rear	T/mission ····· Transmission
Cpt. ····· Complete	© ····· Parts with Differ
Ass'y ····· Assembly	(Indicate Colour
Std. ····· Standard	10 ····· Indication of Gro
	Manual ····· Manual Transmis
	Automatic ····· Automatic Transr

(V) Precautions to be taken when placing orders for parts

1) Always specify part numbers, names of parts and quantity required.

2) Be sure to list the parts in order of part number, when filling in order sheet.

3) As processing of orders received by us is done by electronic computers, importance is attached to the part number. Therefore, in case the part number and name of part do not coincide with each other, the part will be sent to you in accordance with the part number.

4) Distinction of colour of spare parts by code number is done by figure's number 11 and 12 of the part number. Therefore add to the end of the applying part number and order.

Example:	Part Number	Code No.	Description
	0301 58 8100	-01	Door Trim (R) (Black)
	← 10 Figures →	← 2 Fig. →	
	0301 58 8100	-04	Door Trim (R) (Brown)
	← 10 Figures →	← 2 Fig. →	

(VI) Replacement pages and purport

Page replacements are supplied in monthly frequency as a rule, listing parts modified or newly added and month and year date will be printed in lower corner of each replacement page. Therefore it is essential that care be taken to check on these dates to confirm if the parts listed conform to the car imported, before ordering.

1) Explanation on designation given in remarks column

a. Car No. ..... Chassis no. of car that modification becomes effective from.

b. 69/ ..... 69 designates year of modification and numerals 1 ~ 12 shows month of year.

c. ○ mark ..... Indicates that modified part and former part are interchangeable.

d. ※ mark ..... Indicates that former part has been superseded by new part and is no longer available.

e. X mark ..... Indicates that modified part and old part are not interchangeable.

f. △ mark ..... Indicates that new part is interchangeable with old part but that old part is not interchangeable as a replacement for cars utilizing the new part.

2) ● mark ..... This dot at front of figure number of replacement pages show the parts that have been subject to modification.

Group No.	Description	Fig.

Engine Parts

10	Rotor Housing (Front) (Used up to Car No. 179250 73/9)	
10	Rotor Housing (Rear) (Used up to Car No. 179250 73/9)	
10	Rotor Housing (Used from Car No. 160623 73/10)	8
10, 11	Rotor (Used up to Car No. 179250 73/9)	
10, 11	Rotor (Used from Car No. 160623 73/10)	13—A
13	IN. & EX. Manifold	1
13	Starting Assist System (Model No. 1558, 1559) (Used up to Car No. 152815)	16
13	Starting Assist System (Model No. 1558, 1559) (Used from Car No. 152816 ~)	16
13, 23	Air Cleaner (Used up to Car No. 179250 73/9)	1
13, 23	Air Cleaner (Used from Car No. 160623 73/10)	18
13, 23	Carburettor	19
13, 23	Carburettor (Manual) (Used up to Car No. 179250 73/9)	20—A
● 13, 23	Carburettor (Automatic) (Used up to 74/3)	20—G
● 13, 23	Carburettor (Automatic Used from 74/4 / Manual Used from 73/10)	20—J
14	Oil Pump	21
23	Metering Oil Pump	24
14, 15	Cooling System (Used up to Car No. 179250 73/9)	27
14, 15	Cooling System (Used from Car No. 160623 73/10)	31—A
16	Clutch (Manual)	32
17	Manual T/mission (Case) (Used up to Car No. 179250 73/9)	35

INDEX.

Group No.	Description	Fig.	Page	Part No.
17	Manual T/mission (Case) (Used from Car No. 160623 73/10)	37-A		37-B~37-D
17	Manual T/mission (Gear) (Used up to Car No. 179250 73/9)		38	39~41
17	Manual T/mission (Gear) (Used from Car No. 160623 73/10)	41-A		41-B~41-D
17	Manual T/mission (Change Control)		42	43~44-2
18.24	Distributor (Used up to Car No. 179250 73/9)		45	46~49
18.24	Distributor (Used from Car No. 160623 73/10)	49-A		49-B~49-D
18.24	Alternator		50	51~52-1
24	Alternator (Used up to Car No. 179250 73/9)	52-A		52-B
18.24	Alternator (Used from Car No. 160623 73/10)	52-C		52-D~52-E
● 18.24	Starter & Battery (Manual) (Used up to Car No. 179250 73/9)		53	54~56-3
● 18.24	Starter & Battery (Manual Used from Car No. 160623 73/10, Automatic Used from 74/4)	56-A		56-B~56-C
● 18.24	Starter & Battery (Automatic) (Used up to 74/3)		57	58~60-2
● 19	Automatic T/mission (Converter, Oil Pump & Piping) (Used up to 74/3)		61	62~64
● 19	Automatic T/mission (Converter, Oil Pump & Piping) (Used from 74/4)	64-A		64-B~64-D
19	Automatic T/mission (Case) (Used up to 74/3)		65	66~67
● 19	Automatic T/mission (Case & Main Control) (Used from 74/4)	67-A		67-B~67-E
19	Automatic T/mission (Clutch & Planetary Gear)		68	69~71
● 19	Automatic T/mission (Low, Reverse & Governor)		72	73~74-1
● 19	Automatic T/mission (Manual Linkage) (Used up to 74/3)		75	76
● 19	Automatic T/mission (Manual Linkage) (Used from 74/4)	76-A		76-B~76-C
● 19	Automatic T/mission (Main Control) (Used up to 74/3)		77	78~79

Chassis Parts

25	Propeller Shaft		80	81

Group No.	Description	Fig.
26	Rear Axle	82
26	Rear Brake	85
27	Driving	89
● 28	Rear Suspension (Sedan & Coupe)	92
28	Rear Suspension (Station Wagon)	94—A
32	Steering System (Wheel & Gear, R.H.D.)	95
32	Steering System (Wheel & Gear, L.H.D.)	100
32	Steering System (Rod)	104
33	Front Axle	107
33, 49	Disc Brake	109—A
34	Front Suspension	110
39	Engine & T/mission Bracket (Used up to Car No. 179250 7/9)	114
39	Engine & T/mission Bracket (Used from Car No. 160623 7/10)	115—A
40	Exhaust System	116
42	Fuel Tank (Sedan & Coupe)	118
42	Fuel Tank (Station Wagon)	121—A 12
● 13, 45	Fuel Piping (Sedan & Coupe) (Used up to 7/4)	122
● 13, 45	Fuel Piping (Sedan & Coupe) (Used from 7/5)	124—1—A 124—
13, 45	Fuel Piping (Station Wagon)	124—A 12
41	Accelerator Control System (R.H.D.)	125
41	Accelerator Control System (L.H.D.) (Used up to Car No. 179250 7/9)	127

INDEX.

Groupe No.	Description	Fig.	Page	Part No.
41	Accelerator Control System (L.H.D.) (Used from Car No. 160623 7/10)	128—A		128—B
41 . 43	Clutch & Brake System		129	130~132—1
41	Clutch Release & Master Cylinder		133	134~135—1
43 . 49	Tandem Master Cylinder & Vacuum Power Assist (Used up to Car No. 179250 7/9)		136	137~139
43 . 49	Tandem Master Cylinder & Vacuum Power Assist (Used from Car No. 160623 7/10)	139—A		139—B~139—D
44	Parking Brake System		140	141~142
43 . 45	Piping (Clutch & Brake)		143	144~145—2
43 . 45	Piping (Clutch & Brake) (Arctic Spec. Model & Switzerland)	145—A		145—B~145—C
46	Change Controls (Automatic, R.H.D.)		146	147~148
	Body Parts			
50	Bumper & Grille (Used up to Car No. 179250 7/9)		149	150~151—2
50	Bumper & Grille (Used from Car No. 160623 7/10)	151—A		151—B~151—C
52	Bonnet & Trunk Lid		152	153~155
53 . 54	Body Panels (Front) (Used up to Car No. 179250 7/9)		156	157~158—3
53 . 54	Body Panels (Front) (Used from Car No. 160623 7/10)	158—A		158—B~158—C
53 . 54	Body Panels (Side, Coupe)		159	160~161—1
53 . 54	Body Panels (Side, Sedan)		162	163~164—1
53 . 54	Body Panels (Side, Station Wagon)	164—A		164—B~164—D
56	Body Panels (Floor, Sedan & Coupe)		165	166~168—2
56	Body Panels (Floor) (Station Wagon)	168—A		168—B~168—D

Group No.	Description	Fig. P
● 55.60	Dashboard	169
● 55.75	Meter	176
● 57	Seat (Coupe)	179
● 57	Seat (Sedan)	184
57	Seat (Station Wagon)	189—A 18
58.59	Front Side Door (Glass)	190
● 58.59	Front Side Door (Lock)	195
61	Car Heater	200
● 61.76	Heater Unit & Blower (R.H.D.)	203—1 20
● 61.76	Heater Unit & Blower (L.H.D.)	203—4 20
● 61.79	Car Cooler (R.H.D.)	203—A 203—
● 61.79	Car Cooler (L.H.D.) (Used up to Car No. 179250 73/9)	203—G 20
● 61.79	Car Cooler (L.H.D.) (Used From Car No. 160623 73/10)	203—L—1 203—L—
● 61.76	Cooler Unit	203—M 203—
● 61.76	Cooler Unit & Control Panel (L.H.D.) (Used from Car No. 160623 73/10)	203—N—
● 61.76	Compressor (Car Cooler)	203—0 203—
● 62.63	Back Door (Station Wagon)	203—R 20
66	Lamps (Front Side)	204
● 66	Lamps (Rear Side)	207
● 66	Lamps (Rear Side)	209—A 20

INDEX.

Group No.	Description	Fig.	Page	Part No.
● 66.67	Electric Equipment (Body)		210	211~215-6
66.87	Windshield Wiper		216	217~219
67.87	Screen Washer		220	221
● 66	Auto Radio		222	223~225-1
● 68	Crush Pad, Glove Pocket & Console Box		226	227~231-1
● 68	Service Tools		232	233~233-1
● 69~71	Attachment (Sedan & Coupe)		234	235~238-4
69~71	Attachment (Station Wagon)		238-A	238-B~238-D
69	Top Ceiling & Trim (Sedan & Coupe)		239	240~241
69	Top Ceiling & Trim (Station Wagon)		241-A	241-B~241-D
69	Floor Mat & Trim		242	243~244-2
70.71	Ventilator		245	246
● 70.71	Window Glass & Moulding (Sedan & Coupe)		247	248~250-5
70.71	Window Glass & Moulding (Station Wagon)		250-A	250-B~250-D
● 72.73	Rear Side Window (Coupe)		251	252~255-1
● 72.73	Rear Side Door (Glass) (Sedan & Station Wagon)		256	257~259-3
● 72.73	Rear Side Door (Lock) (Sedan & Station Wagon)		260	261~264-2
09	Key Set		265	266~267
	INDEX.			268~301

ALPHABETICAL INDEX

Description	Page
ENGINE	
Bolt, Tension	7
Bracket, Engine Mounting	115
Cap, Limiter-Carburettor	20
Cap, Oil Filler	7
Carburettor	20
Cleaner, Air	18
Cord, Earth-Fuel Pump	123
Cover, Dust	7
Cover, Front-Rotor	3
Duct, Hot Air	15
Engine Packing Set	4
Gauge, Oil Level	8
Gear, Drive-Distributor	12
Gear, Stationary (Front)	11
Gear, Stationary (Rear)	11
Hanger, Engine	4, 8
Hose, Air	18
Hose, Hot Air	18
Hose, Ventilation	8
Housing, Front-Rotor	2
Housing, Intermediate	7
Housing, Gear-Rotor	6
Housing, Rotor-Front	2
Housing, Rotor-Rear	6
Joint, Hose	6
Manifold, IN.	15
Member, Engine Mounting	115
Oil Seal Set-Rotor	10
"O" Ring Set	2, 6
Pan, Oil	8
Plate, Oil Baffle	12
Plate, Thrust	11
Pulley	12
Rotor, Front	10
Rotor, Rear	10
Rubber, Engine Mounting	115
Seal, Apex	10
Seal, Corner	10
Seal, Side-Outer	10

Description	Page
Shaft, Eccentric	
Spring, Apex Seal	
Spring, Corner Seal	
Spring, Oil Seal-Inner	
Spring, Side Seal	
Sprocket, Drive	
Support, Air Cleaner	
Tray, Carburettor	
Tube, Vacuum	
Weight, Balance (Manual)	
Weight, Counter (Automatic)	
Wheel, Fly	
EXHAUST SYSTEM	
Hanger, Silencer	
Joint, Main & Pre-Silencer	
Manifold, EX.	
Pre-Silencer	
Silencer, Main	
LUBRICATION	
Adjuster, Chain	
Body, Oil Pump	
Cartridge, Oil Filter	
Chain, Timing	
Filter, Oil	
Gear, Driven	
Plate, Middle-Oil Pump	
Plunger, Pressure Control	
Pump, Metering Oil	
Regulator, Pressure	
Rod, Connecting	
Rotor, Set	
Shaft, Driven-Gear	
Sprocket, Driven	
Strainer, Oil	
Tube, Metering Oil	
COOLING	
Boss, Pulley	
Cock, Water Drain	
Cooler, Oil	
Fan & Fan Drive	

ALPHABETICAL INDEX

Description	Page
Hose, Oil	31
Hose, Water	31
Joint, Union	31
Pulley, Water Pump	29
Pump, Water	28
Radiator	30
Repair Kit, Water Pump	28
Shroud, Radiator	30
Tank, Sub	30
Thermostat, Water	28
Water Seal	28
CLUTCH	
Cylinder, Clutch Master	134
Cylinder, Clutch Release	134
Collar, Release	33
Cover, Clutch	33
Cover, Dust	33
Disc, Clutch	33
Fork End, Push Rod	131
Fork, Release	33
Holder, Flexible Hose	135
Hose, Flexible	135
Housing, Clutch	33
Pedal, Clutch	130
Pin, Pivot	33
Pipe, Clutch	145
Repair Kit, Clutch Master Cylinder	134
Rod, Push-Clutch	131
TRANSMISSION	
Band, Brake Automatic	69
Boot, Automatic	147
Boot, Dust	44
Carrier, Front-Automatic	70
Carrier, Rear-Automatic	71
Case, Change Control	43
Case, T/mission-Manual	36
Case, T/mission-Automatic	66
Clutch, Front-Automatic	69
Clutch, Rear-Automatic	69
Converter, Torque-Automatic	62

Description	Page
Cover, Blind	37
Cover, Under-Automatic	62
Diaphragm, Vacuum-Automatic	67
Distributor, Oil-Automatic	74
Drum, Connecting-Automatic	73
End, Control Lever	43
Flange, Automatic	73
Fork, Shift-1st & 2nd	43
Fork, Shift-3rd & 4th	43
Fork, Shift-Reverse	43
Gear, Countershaft	40
Gear, Countershaft-Reverse	40
Gear, Drive-Automatic	74
Gear, Driven-Automatic	67
Gear, Low	40
Gear, Main Drive	39
Gear, Reverse	40
Gear, Reverse Idle	40
Gear, Second	39
Gear, Speedometer Drive	41
Gear, Speedometer Driven	37
Gear, Third	39
Governor-Automatic	74
Hose, Oil-Automatic	64
Hose, Vacuum (Rr).-Automatic	63
Housing, Automatic	62
Housing, Extension	37
Housing, Extension-Automatic	66
Hub, Clutch	39
Hub, Rear Clutch-Automatic	70
Joint, "T"-Automatic	148
Joint, Speedometer Cable	37
Key, Synchronizer	39
Knob	44
Knob, Automatic	147
Lever, Automatic	148
Lever, Change	44
Lever, Control	43
Lever, Select-Automatic	76
Lever, Selecter-Automatic	147

ALPHABETICAL INDEX

Description	Page
Member, T/mission Mount	115
Pan, Oil - Automatic	67
Pass, Oil	37
Pawl, Parking - Automatic	76
Pipe, Oil - Automatic	64
Pipe, Vacuum - Automatic	63
Piston, Low & Reverse - Automatic	73
Plate, Backing - Automatic	62
Plate, Drive - Automatic	62
Plate, Manual - Automatic	76
Plug, Magnet	36
Pump, Ass'y - Automatic	62
Retainer, Servo - Automatic	66
Ring, Synchronizer (3.4)	39
Rod, Automatic	148
Rod, Diaphragm - Automatic	67
Rod, Shift	43
Rubber, T/mission Mounting	115
Shaft, Input - Automatic	63
Shaft, Main	39
Shaft, Manual - Automatic	76
Shaft, Parking Pawl - Automatic	76
Shaft, Reverse Idle Gear	41
Shell, Sun Gear - Automatic	70
Sleeve, Clutch Hub (3.4)	39
Solenoid, Down Shift - Automatic	67
Spindle, Select Lock	44
Spring, Synchronizer	39
Strut, Band - Automatic	66
Support, Actuator - Automatic	76
Tube, Oil - Automatic	67
Valve, Control - Automatic	78

PROPELLER SHAFT & DRIVING

Description	Page
Carrier, Differential	90
Case, Differential Gear	90
Driving & Differential	90
Flange, Companion	90
Gear Set, Final	90
Gear, Differential Side	90
Joint, Universal	81
Piece, Distance	
Pinion, Differential	
Shaft, Propeller	
Spacer	
Yoke	
Yoke, Sliding	

FRT. & RR. AXLE

Description
Adapter
Adapter, Mounting
Anchor Block
Brake, Disc
Breather
Cap, Center
Cap, Hub
Cap, Wheel
Casing, Rear Axle
Cylinder, Wheel
Drum, Rear Brake
Hub, Front
Lever, Operating
Plate, Brake Back
Plate, Disc
Plug, Magnet Drain
Plug, Oil Level
Ring, Dust
Ring, Wheel
Rubber, Set
Shaft, Rear Axle
Shoe, Brake
Strut, Operating
Tire, 155 SR-13 Radial

SUSPENSION

Description
Arm
Arm, Knuckle
Bracket, Shackle
Bumper, Bound
Casing, Stopper
Clamp, Spring
Damper, Front
Damper, Rear

ALPHABETICAL INDEX

Description	Page
Holder, Rubber Pad	94
Member, Cross	111
Pad, Rubber	94
Pin, Spring	93
Plate No. 1, Shackle	93
Rubber, Mounting	111
Rubber, Stopper	94
Spring, Coil	111
Spring, Rear	93
Stabilizer	111
STEERING	
Arm, Pitman	99,103
Boss, Steering Wheel	96, 97,101
Bracket, Lower-Shaft Jacket	99,101
Bush, Tapered	105
Button, Horn	96
Cap, Horn	96,101
Cover, Column	175
Cover, Dust	99,103
Cover, Side	98,102
Gear, Steering	97,102
Housing, Gear	98,103
Idler	105
Insulator	99
Jacket, Shaft (Without Energy Absorbing)	97,102
Link, Center	105
Nut, Worm Ball (Without Energy Absorbing)	97
Plate, Set	103
Plug, Oil	98,102
Rod, Tie	105
Rubber, Fixing-Shaft Jacket	101
Shaft, Energy Absorbing	97,102
Shaft, Sector	98,103
Socket Set	105
ACCELERATION CONTROLS	
Cable, Choke	173
Pedal, Accelerator	126,128
Retainer, Accelerator Rod	128
Rod, Accelerator Control	126,128
Wire, Accel.	126,128

Description	Page
FOOT BRAKE	
Bracket, Master Cylinder	131
Connector, Brake Pipe	144
Cylinder, Tandem Master	137
Fork End, Brake	131
Holder, Reserve Tank	138
Hose, Flexible	144
Hose, Vacuum	144
Joint, Pipe-Brake Pipe	144
Pad, Pedal	130
Pedal, Brake	130
Pipe No. 1, Rear Brake	144
Pipe, Connector-Vacuum Hose	144
Pipe, Vacuum	145
Repair Kit "A"	139
Repair Kit "B"	139
Tank, Reserve	138
Vac, Master	139
Valve, W. P.	144
PARKING BRAKE	
Boot	142
Cable, Front	141
Cable, Rear	141
Lever, Hand Brake	141
Ratchet	141
Rod, Release	141
Sector	141
FUEL SYSTEM	
Board, Partition-Fuel Tank	119
Cap, Filler	120
Elbow	120
Filter, Fuel	123
Hose, Joint	119
Lid, Filler	120
Pipe, Filler	119
Pipe, Fuel-Carburettor Side	123
Pipe, Fuel-Fuel Pump	123
Pipe, Soft Vinyl	119
Plate, Back Up	120
Pump, Fuel	123

ALPHABETICAL INDEX

Description	Page
Tank, Fuel	119
Tube, Vent	120
ELECTRICAL EQUIPMENT	
Alternator	51
Antenna, Auto Radio	223
Arm, Wiper	217
Auto Radio & Stereo	223
Auto Radio Cpt.	223
Battery	55, 59, 60
Beam Unit, Sealed No. 1	205
Belt, "V"	52
Blade, Wiper	217
Block, Fuse	211
Block, Main Fuse	211
Bracket, Alternator	52
Bracket, Ignition Coil	46
Bracket, Relay	215
Bulb & Socket	231
Cable, Battery Positive	56, 60
Cable, Speedometer	173
Clamp, Battery	55, 59, 60
Clock, Auto	171
Coil, Ignition	46
Condenser	224
Control Unit, Center	214
Cord, Back Window-Heating Wire use	215
Cord, Earth	121
Cord, High Tension	47
Cord, High Tension-Coil-Distributor	46
Cord, Parking Lamp Switch	142
Distributor	47
Flasher & Hazard Unit	214, 215
Flasher Unit, For France	215
Gauge, Fuel Tank	120
Gauge Unit, Water Heat	28
Harness, Wire-Front	212
Harness, Wire-Rear	213
Harness, Wire-Engine	213
Harness, Wire-Ignition Coil Relay-Coil	213
Harness, Wire-Meter	213
Harness, Wire-Reverse Lamp	
Horn, Electric	
Lamp, Front Turn Signal	
Lamp, Head	
Lamp, Licence	
Lamp, Rear Combination	
Lamp, Room	
Lamp, Side Turn Signal	
Lens, Illumination	
Lighter, Cigar	
Loud Speaker	
Meter Set	
Meter, Combination	
Motor, Wiper	
Motor & Link-Wiper	
Ornament, Without Auto Clock	
Plug, Sparking	
Reflector, Reflex-Rear	
Regulator	
Relay, Horn	
Relay, Ignition Cord	
Relay, Wiper Switch	
Socket, Distributor	
Starter	
Strap, Alternator	
Switch, Combination	
Switch, Door	
Switch, Ignition & Steering Lock	
Switch, Kick Down	
Switch, Oil Level Warning	
Switch, Oil Pressure	
Switch, Parking Lamp	
Switch, Reverse Lamp	
Switch, Stop Lamp	
Switch, Vacuum	
Tray, Battery	
Tube, Vacuum Control	
Washer Set, Screen	
Wire, Earth	
Wire, Earth-Battery	

ALPHABETICAL INDEX

BODY & FITTINGS

Description	Page
Adjuster No. 1, Seat	181,187
Bar, Front Bumper	150
Bar, Rear Bumper	150
Belt, Front Safety	183,189
Belt, Rear Safety	189
Bezel, Lamp	151
Blank Key, Primary Key	266
Body, Door-Front	191
Body, Door-Rear	257
Bonnet	153
Brace, Diagonal	161,164
Bracket, Lift-Front	191
Bracket, Lift-Rear (Coupe)	252
Bracket, Lift-Rear (Sedan)	257
Carrier, Battery	158
Chamber	237
Channel, Center	257
Channel, Glass Run-Front	192
Channel, Glass Run-Rear	253
Clamp, Release Wire-Bonnet	154
Cover, Inner Handle	197,261
Cover, Service Hole	168
Cover, Under	167
Cushion, Seat-Rear	182,187
Cushion, Seat	180,185
Dam, Window Glass	248,249
Duct, Ventilator	246
Extractor	237
Frame, Extractor	237
Frame, Front-Floor	166
Frame, Rear-Floor	166
Garnish	254
Garnish, Arm Rest	192,254,258
Glass, Back Window	248
Glass, Front Side Door	191
Glass, Front Window	248
Glass, Quarter Window	258
Glass, Rear Side Door	257
Glass, Side Window	252
Grille, Extractor	238
Grille, Radiator	151
Guard Set, Bumper	151
Guide "A", Glass	191,253
Handle, Outer Side	197,262
Handle, Inner	197,261
Handle, Regulator	198,253,262
Hinge, Bonnet	153
Hinge, Door	198,262,263
Hinge, Trunk Lid	154
Holder, Belt	183,189
Holder, Number Plate	150
Hook, Bonnet	153
Hook, Front & Rear Frame	166
Insulator No. 1	167
Knuckle, Seat	181,187
Lid, Trunk	154
Lock, Bonnet	153
Lock, Door	196,261
Lock, Lid	155
Louver	246
Member No. 1, Cross	166
Member No. 3, Cross	167
Mould "A", Sash	193
Mould, Beltline	193,254,259
Mould, Drip	250
Mould, Front	151
Mould, Rear	249
Mould, Lower-Front	248
Mould, Quarter Line	254
Mould, Sash	259
Mould, Step	250
Mould, Upper-Front	248
Panel, Rear End	161
Panel, Quarter Inner	160
Panel, Rear Deck	164
Panel, Rear End	164
Panel, Roof	164
Panel, Cowl Side	163

ALPHABETICAL INDEX

Description	Page
Panel, Cowl	157
Panel, Cowl Side	160
Panel, Dashboard - Lower	157
Panel, Dashboard - Upper	157
Panel, Floor Side	167
Panel, Front Fender	157
Panel, Front Skirt	158
Panel, Nose	158
Panel, Rear Deck	161
Panel, Rear Fender	160, 164
Panel, Roof	161
Panel, Shroud	157
Panel, Shroud - Upper	158
Panel, Wheel Apron	157
Panel, Wheel House	166
Pan, Front Floor	166
Pan, Rear Floor	166
Pan, Spare Tire	167
Pillar, Center - Outer	160, 163
Pillar, Front Inner	160, 163
Pillar, Hinge Outer	160, 163
Pillar, Rear Inner	163
Plate, Guide	158
Plate, Scarf - Front	249
Rack	199, 263
Regulator, Window	197, 252, 262
Rest, Arm	192, 254, 258
Rod, Door Lock	196, 261
Scoop, Air	154
Seat, Back	180, 182, 186, 188
Seat, Front	180, 185
Sill, Side - Inner	166
Sill, Side - Outer	160, 163
Spring, Balance	155
Spring, Lift	153
Stay, Front Bumper	150
Stay, Rear Bumper	150
Stopper, Bonnet	153
Stoneguard	250
Striker	155

Description
Stripe, Front Fender
Stripe, Front Side Door
Tray, Ash
Tray, Package
Trim, Back Seat
Trim, Cushion
Trim, Door
Trim, Quarter
Trim, Rear Seat
Trim, Seat Back
Valve, Check - Side Sill
Ventilator
Weatherstrip
Weatherstrip, Inner
Weatherstrip, Outer
Weatherstrip Outer "A"
Weatherstrip, Outer "B"
Welt, Seaming
Wire, Release
Wire, Ventilator Control

KITS, ACCESSORIES & OPTIO

Description
Blower
Box, Hood Center
Box, Glove - Outer
Bracket, Center Panel
Bracket, Choke
Ceiling, Top
Cloth, Cover
Console, End
Console, Front
Cosole, Rear
Control
Duct
Emblem, Front
Garnish
Grille
Guide, Ventilator
Handle, Assist
Hanger, Coat
Heater Set

ALPHABETICAL INDEX

Description	Page
Heater Unit	201
Holder, Grille	170
Hood No. 1	170
Hood No. 2	171
Hose No. 1	202
Hose, Defroster	201
Insulator	243
Jack	233
Key Primary	266
Key Set	266
Key Sub Set	266
Key Sub Set, Filler Lid	266
Key Sub Set, Steering Lock	266
Key Sub Set, Trunk Lid	266
Key, Secondary	266
Lid, Glove Box	228
Mat (Frt., C)	243
Mat (Frt., L)	243
Mat (Frt., R)	243
Mat (Rr., C)	243
Mat (Rr., L)	243
Mat (Rr., R)	243
Mat, End	243
Mat, Trunk Room	243
Member, Lower	172
Mirror, Door	236
Mirror, Rear View	235
Mirror, Room	236
Name, Plate	235
Nozzle, Defroster	174
Ornament	235
Pad, Lower	227
Pad, Crush	227
Panel, Control	201
Pipe, Heater	202
Plate No. 2, Fixing-Rear	240
Plate, Center	171
Plate, Fixing-Front	240
Rest, Center Arm	230
Shelf, Parcel	229

Description	Page
Sun Visor	237
Tools	233
Tray, Ash (Frt.)	228
Tray, Ash-Rear	231
Trim, Center Pillar	241
Trim, Front Pillar	240
Trim, Front Side	240
Trim, Package Tray	241
Trim, Rear Pillar	241
Trim, Tire House	243
Wire, Jack	233

ROTOR HOUSING (FRONT)

(USED UP TO CAR NO. 179250 73/9)

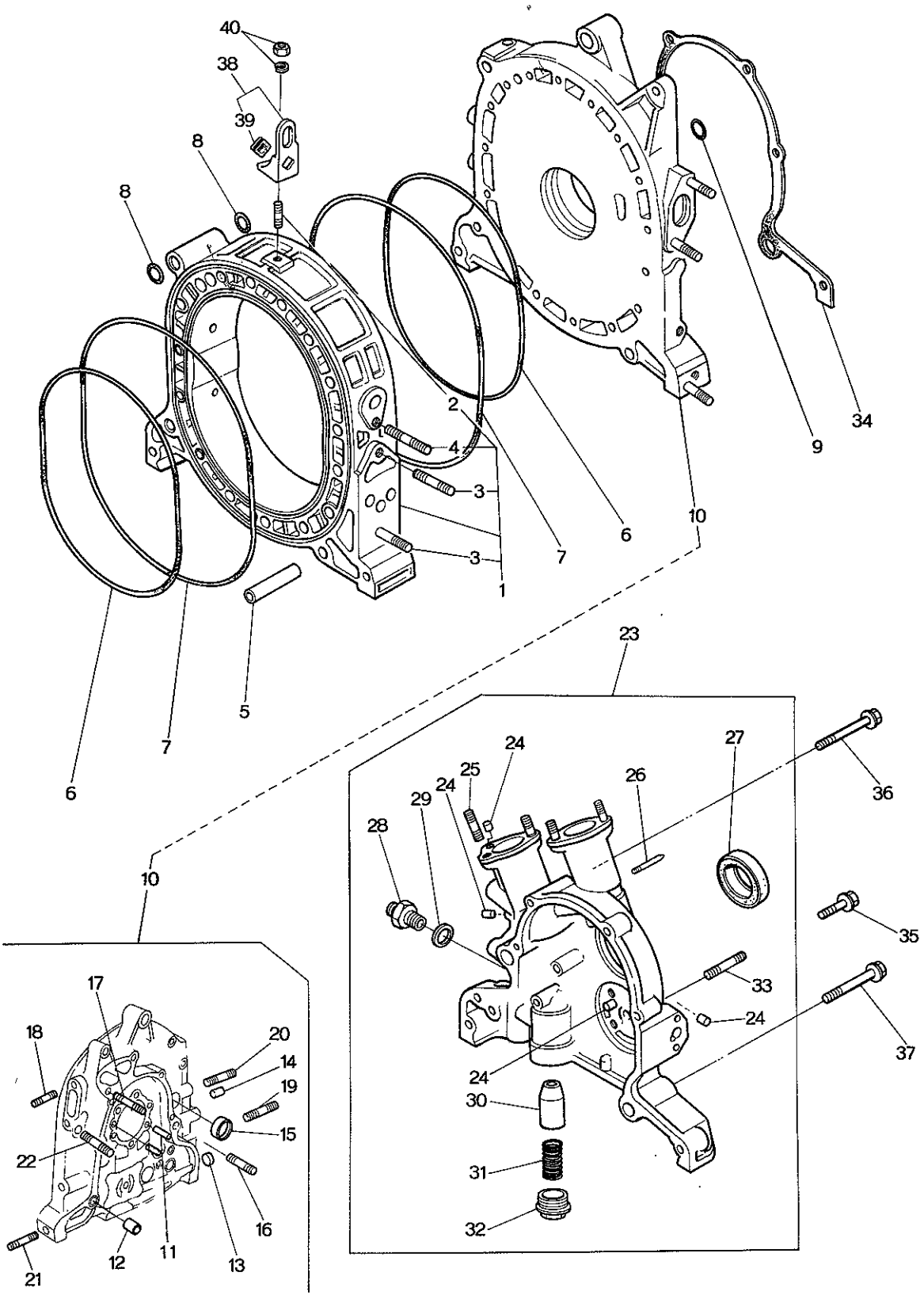

ROTOR HOUSING (F

(USED UP TO CAR NO. 1792

No.	Part Number	Description	Q'ty	Remar
1	0866 10 100B	Housing, Rotor	1	
	0866 10 100C	Housing, Rotor	1	Car No. 1441
	0866 10 100D	Housing, Rotor	1	Car No. 1519
2	99851 0814A	Stud, Engine Hanger	1	
	0866 10 105	Stud, Engine Hanger	1	Car No. 1463
3	0839 10 105	Stud, EX. Manifold	2	
4	99851 0850A	Stud, IN. Manifold	1	
5	0813 10 111	Dowel, Tubular	2	
6	0810 10 171	Ring, "O" - Inner	2	
	1668 10 171	Ring, "O" - Inner	2	Car No. 1555
7	0866 10 172A	Ring, "O" - Outer	2	
8	0813 10 173	Ring, "O" - Tubular Dowel	4	
9	0813 10 174	Ring, "O" - Tension Bolt	1	
	0866 23 040	"O" Ring Set (Fig. No. 6~9 included)	1 Set	
	0866 23 040A	"O" Ring Set (Fig. No. 6~9 included)	1	Car No. 1555
	(1665 10 200A)	and { 1665 10 200C, 99852 0865A }	are interchangeable when exc	
	(0866 10 200E)	and { 0866 10 200A, 99852 0865A }		

10 ROTOR HOUSING (FRONT)
(USED UP TO CAR NO. 179250 73/9)

No.	Part Number	Description	Q'ty	Remarks
● 10	0866 10 200E	Housing, Front	1	
●	0866 10 200H	Housing, Front — General Spec. without Block Heater Hole	1	Car No. 152816 73/9~×
●	0870 10 200C	Housing, Front — General Spec. without Block Heater Hole	1	Car No. 152816 73/9~○
●	2359 10 200D	Housing, Front	1	
●	1665 10 200A	Housing, Front — ECE Cold Spec. (1558,1559) with Block Heater Hole	1	Car No. 140779 72/2~△
●	1665 10 200C	Housing, Front — ECE Cold Spec. (1558,1559) with Block Heater Hole	1	Car No. 152816 73/9~×
●	1665 10 200D	Housing, Front — ECE Cold Spec. (1558,1559) with Block Heater Hole	1	Car No. 152816 73/9~○
11	0839 10 203	Pin, Dowel	1	
12	2329 10 204	Dowel, Tubular	2	
13	0839 10 206	Plug, Blind	1	
14	0839 10 205	Plug, Blind	3	
15	99306 3000	Plug, Blind-Water	4	
16	99852 0655	Stud	2	
17	99852 0878A	Stud, Water Pump	2	
18	99852 0822A	Stud, IN. Manifold	2	
19	99859 1220A	Stud, Mounting	2	
20	99859 1225A	Stud	1	
21	99852 1016	Stud	1	
22	99852 0865A	Stud	1	
	99852 0878A	Stud	1	Car No. 150526 73/8~×

ROTOR HOUSING (F
(USED UP TO CAR NO. 1792

No.	Part Number	Description	Q'ty	Rema
23	0866 10 600	Cover, Front	1	
	0866 10 600A	Cover, Front	1	Car No. 1594
24	99307 0600	Plug, Blind	5	
25	99851 0818A	Stud, Distributor	4	
26	0820 10 631A	Pin, Indicator	1	
27	0820 10 605	Oil Seal	1	
28	89384 1200	Joint, Union	1	
●	99384 1200F	Joint, Union	1	Car No. 1752
●	99384 1200	Joint, Union	1	Car No. 1635
29	99562 1600	Gasket	1	
30	0839 14 115	Plunger, Pressure Control	1	
31	0839 14 273	Spring	1	
	0839 14 273A	Spring	1	Car No. 15944
32	0221 14 117	Plug	1	
	0839 14 274	Plug	1	Car No. 15944
33	99855 1020A	Stud	4	
34	0839 10 641	Gasket, Front Cover	1	
35	99801 0840	Bolt, Front Cover	4	
	99952 0800	Washer, Plain	4	

10 ROTOR HOUSING (FRONT)
(USED UP TO CAR NO. 179250 '73/9)

No.	Part Number	Description	Q'ty	Remarks
	99971 0800	Washer, Spring	4	
36	99801 0865	Bolt, Front Cover	1	
	99952 0800	Washer, Plain	1	
	99971 0800	Washer, Spring	1	
37	99801 0875	Bolt, Front Cover	2	
	99952 0800	Washer, Plain	2	
	99971 0800	Washer, Spring	2	
38	2869 10 860	Hanger, Engine	1	
●	0871 10 862A	Hanger, Engine	1	Car No. 171556 '73/6~×
●	1011 18 319	Clip	1	Car No. 171556 '73/6~Added Anew
39	2329 10 864	Protector, Hanger	1	
40	99901 0800	Nut, Engine Hanger	1	Car No. 171556 '73/6~Discarded
	99971 0800	Washer, Spring	1	
	0866 99 100C	Engine Parking Set	1	Set
Ⓝ	1665 14 200D	Pellet Oil	1	
Ⓝ	99564 1000	Packing	1	Car No. 135808 '73/12~Added Anew
Ⓝ	99503 1000	Plug, Blaind	1	

ROTOR HOUSING (REAR)

(USED UP TO CAR NO. 179250 73/9)

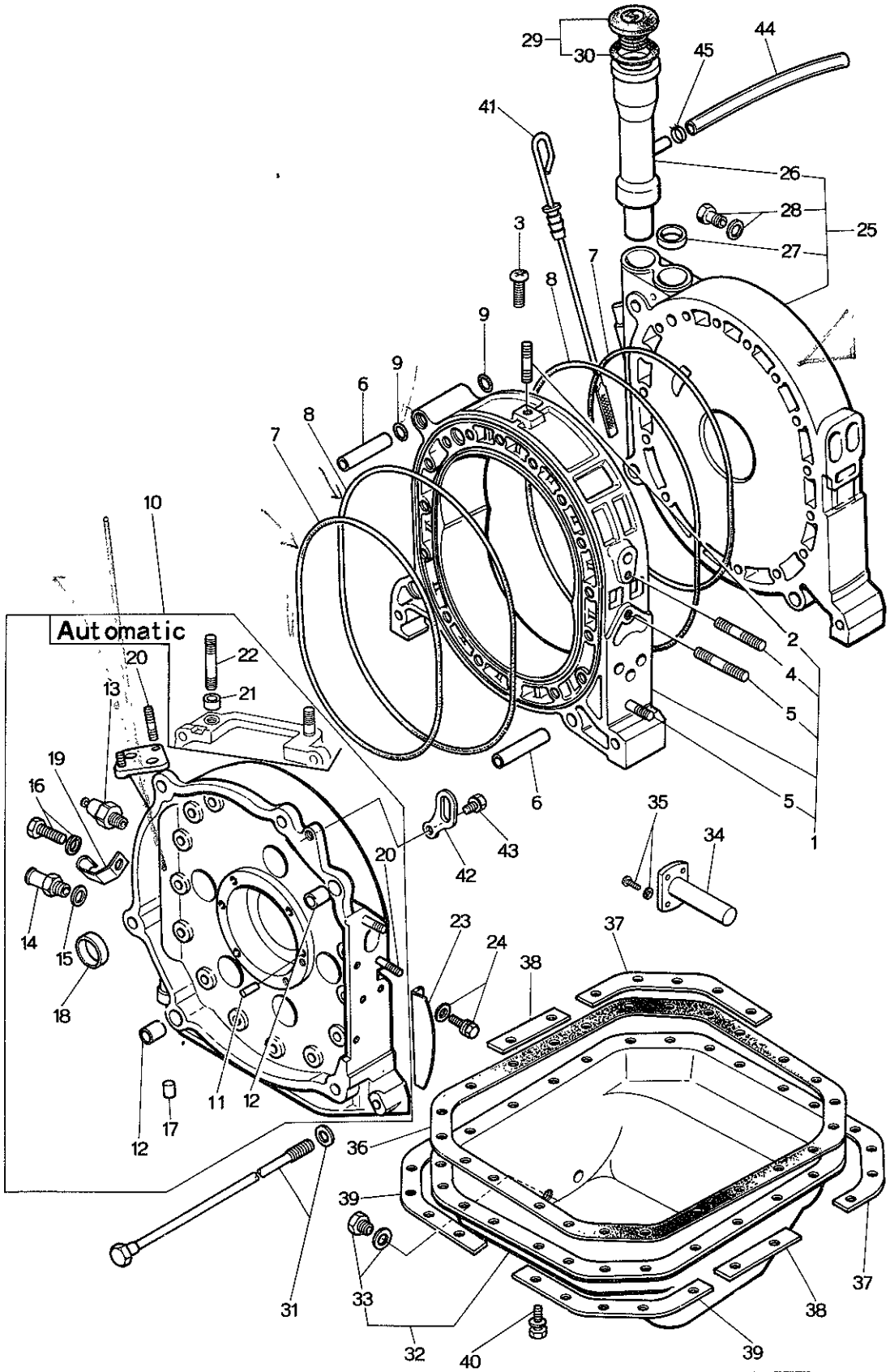

ROTOR HOUSING
(USED UP TO CAR NO. 179

No.	Part Number	Description	Q'ty	Rema
1	0866 10 100B	Housing, Rotor (Manual)	1	
	0866 10 100C	Housing, Rotor (Manual)	1	Car No. 1441
	0866 10 100D	Housing, Rotor (Manual)	1	Car No. 1519
	0871 10 150A	Housing, Rotor (Automatic)	1	
	0871 10 150B	Housing, Rotor (Automatic)	1	Car No. 1441
	0871 10 150C	Housing, Rotor (Automatic)	1	Car No. 1519
2	99851 0816A	Stud, Engine Hanger (Manual)	1	
	0866 10 105	Stud, Engine Hanger (Manual)	1	Car No. 1463
√3	99833 0810	Screw (Automatic)	1	
● √	99801 0812	Screw (Automatic)	1	Car No. 1594
4	99851 0850A	Stud, IN. Manifold	1	
5	0839 10 105	Stud, EX. Manifold	2	
6	0813 10 111	Dowel, Tubular	2	
7	0810 10 171	Ring, "O"-Inner	2	
	1668 10 171	Ring, "O"-Inner	2	Car No. 15559
8	0866 10 172A	Ring, "O"-Outer	2	
9	0813 10 173	Ring, "O"-Tubular Dowel	4	
	0866 23 040	"O" Ring Set (Fig. No. 7 ~ 9 included)	1	Set
	0866 23 040A	"O" Ring Set (Fig. No. 7 ~ 9 included)	1	Set Car No. 1
● Ⓝ	0866 23 025	Protector	4	Car No. 167747

10 ROTOR HOUSING (REAR)
(USED UP TO CAR NO. 179250 73/9)

No.	Part Number	Description	Q'ty	Remarks
10	0866 10 300E	Housing, Rear (Manual)	1	
	0866 10 300G	Housing, Rear (Manual)	1	Car No. 152816 72/9 ~○
	0870 10 300B	Housing, Rear (Manual)	1	Car No. 152816 72/9 ~○
	0871 10 300D	Housing, Rear (Automatic)	1	
	0871 10 300E	Housing, Rear (Automatic)	1	Car No. 152816 72/9 ~○
	0872 10 300B	Housing, Rear (Automatic)	1	Car No. 152816 72/9 ~○
11	0820 10 203	Pin, Dowel	1	
12	0221 10 309	Pin, Tubular	2	
13	0866 18 501A	Switch, Oil Pressure	1	
14	0866 10 320A	Joint, Hose	1	
15	99562 1600	Gasket	1	
16	99811 1010	Bolt (Manual)	1	
	99971 1000	Washer, Spring (Manual)	1	
17	0839 10 205	Plug, Blind	1	
18	99306 3000	Plug, Blind	5	
19	0866 18 496	Clip (Manual)	1	
20	99852 0822A	Stud	3	
21	99234 1208	Pin, Tubular (Automatic)	2	
22	99852 0830A	Stud (Automatic)	2	

ROTOR HOUSING (
(USED UP TO CAR NO. 179

No.	Part Number	Description	Q'ty	Rema
23	0820 10 305	Cover, Dust	1	
24	99806 0610	Bolt	2	
	99971 0600	Washer, Spring	2	
25	0866 10 400B	Housing, Intermediate	1	
	0870 10 400A	Housing, Intermediate	1	Car No. 1528
26	0866 10 411	Pipe, Oil Filler	1	
27	99305 2800	Plug, Expansion	1	
28	99510 1000	Plug	1	
	99564 1000	Gasket	1	
29	0324 10 250	Cap, Oil Filler	1	
30	0324 10 252	Gasket	1	
31	0822 10 451C	Bolt, Tension	18	
	0822 10 452D	Bolt, Tension	1	
	0839 10 455	Washer, Plain	19	
32	1562 10 700A	Pan, Oil	1	
	0866 10 700B	Pan, Oil	1	Car No. 15281

10 ROTOR HOUSING (REAR)
(USED UP TO CAR NO. 179250 73/9)

No.	Part Number	Description	Q'ty	Remarks
	1562 10 700B	Pan, Oil	1	Car No. 152816 72/9～×
33	99511 1400	Plug, Drain	1	
	99562 1400	Gasket	1	
34	2090 10 730B	Switch, Oil Level Warning	1	Car No. 150526 72/8～Discarded
35	99833 0418	Screw, Oil Level Warning Switch	4	Car No. 150526 72/8～Discarded
	99971 0400	Washer, Spring	4	Car No. 150526 72/8～Discarded
36	0820 10 711	Gasket, Oil Pan	1	
37	0820 10 721	Stiffener	2	
38	0820 10 722	Stiffener	2	
39	0820 10 723	Stiffener	2	
40	99806 0616	Bolt, Oil Pan	22	
	99971 0600	Washer, Spring	22	
41	0866 10 830	Gauge, Oil Level	1	
42	2090 10 862A	Hanger, Engine	1	
	0871 10 862A	Hanger-Engine (Automatic)	1	Car No. 144175 72/4～○
	2090 10 862A	Hanger-Engine (Automatic)	1	Car No. 155593 72/10～△
43	99801 0818	Bolt, Engine Hanger	1	
	99801 0820	Bolt, Engine Hanger (Automatic)	1	Car No. 144175 72/4～○
	99971 0800	Washer, Spring	1	

ROTOR HOUSING
(USED UP TO CAR NO. 179

No.	Part Number	Description	Q'ty	Rema
44	0866 10 871	Hose, Ventilation	1	
	99340 06340	Hose, Ventilation	1	Car No. 160
45	0222 13 493	Clip	2	
Ⓝ	1566 23 200	Short Engine	1	1552 Exclud

ROTOR HOUSING
(USED FROM CAR NO. 160623 73/10)

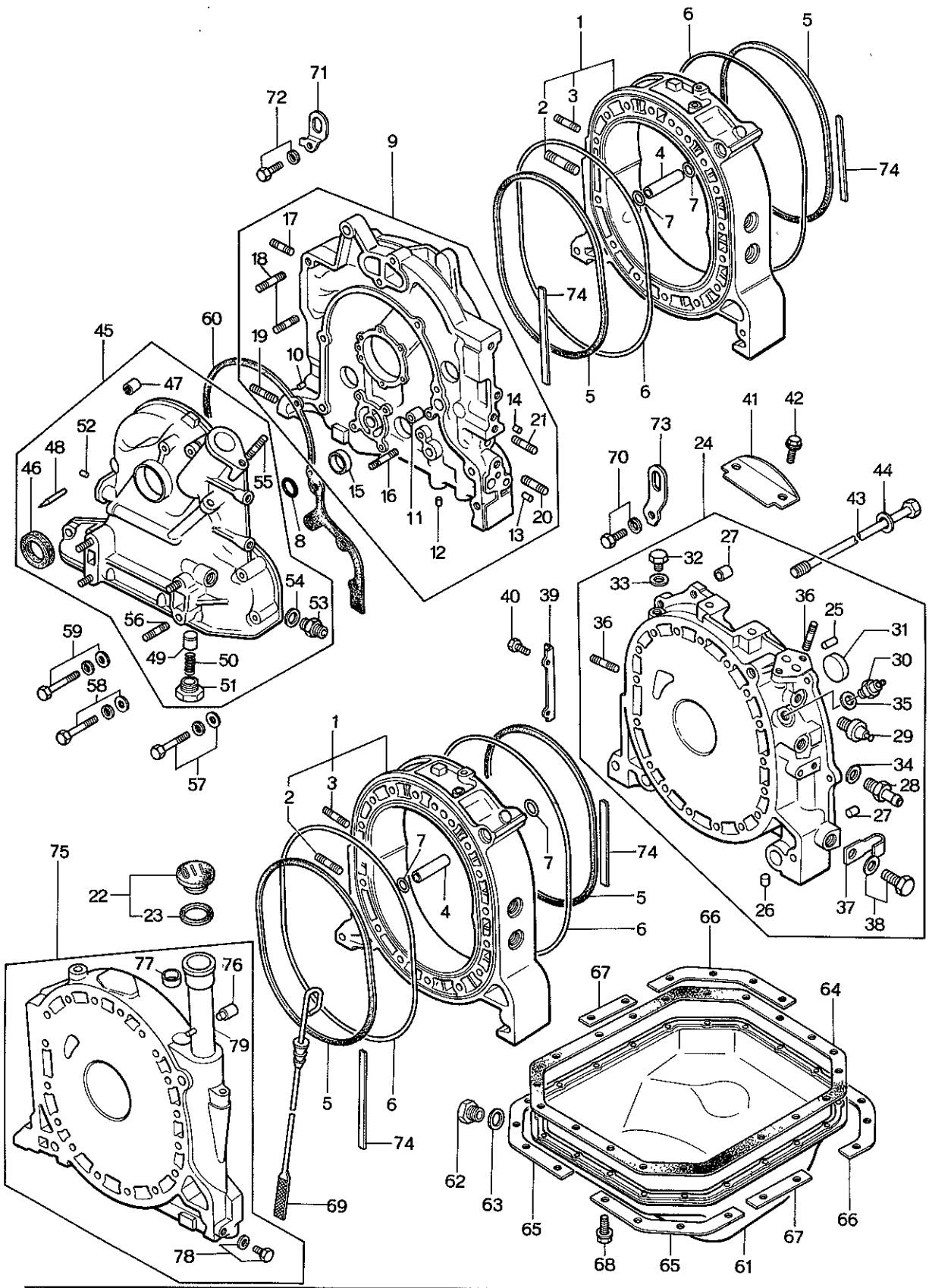

ROTOR HOUSING
(USED FROM CAR NO. 16

No.	Part Number	Description	Q'ty	Remar
1	1708 10 100B	Housing, Rotor	2	
2	0839 10 105	Stud	4	
3	99851 0822A	Stud	2	
4	0839 10 111B	Dowel, Tubular	4	
5	1757 10 171A	Ring, Square	4	
6	0813 10 172	Ring, "O" Outer	4	
7	0813 10 173	Ring, "O" - Tubular Dowel	4	
8	0813 10 174	Ring, "O" - Front Cover	1	
9	1757 10 200C	Housing, Front	1	
10	0839 10 203	Pin, Dowel	1	
11	2329 10 204	Dowel, Tubular	2	
12	0839 10 205	Plug, Blind	3	
13	1757 10 206	Plug, Blind	1	
	1757 10 206A	Plug, Blind	1	Car No. 16327
14	1757 10 207	Plug, Blind	1	
15	99306 3000	Plug, Blind Water	3	
16	99852 0660	Stud	2	
17	99852 0822A	Stud, IN. Manifold	2	

10 ROTOR HOUSING
(USED FROM CAR NO. 160623 73/10)

No.	Part Number	Description	Q'ty	Remarks
18	1757 10 208	Stud, Water Pump	4	
19	99852 1016	Stud	1	
20	99859 1220A	Stud, Mounting	1	
21	~~99852 1225A~~	~~Stud~~	~~1~~	
●	99859 1225A	Stud	1	From Car No. 1
22	0324 10 250	Cap, Oil Filler	1	
23	0324 10 252	Gasket	1	
24	1881 10 300A	Housing, Rear	1	
25	0820 10 203	Pin, Knock-Gear	1	
26	0839 10 205	Plug, Blind	1	
27	1757 10 309	Pin, Tubular	1	
28	0866 10 320A	Joint, House	1	
29	0866 18 501A	Switch, Oil Pressure	1	
30	1757 18 510	Gauge Unit, Heat	1	
●	1757 18 510A	Gauge Unit, Heat	1	73/3 ~ △
31	99306 3000	Plug, Blind-Water	5	
32	99511 1200	Plug	1	
33	99562 1200	Gasket, Plug	1	
34	99562 1600	Gasket, Hose Joint	1	
35	99564 0800	Gasket, Heat Gauge Unit	1	

No.	Part Number	Description		Q'ty	Remar
36	99852 0822A	Stud, IN. Manifold & Oil Filter		4	
37	99276 1210	Clip		1	
38	99811 1010	Bolt, Clip		1	
	99971 1000	Washer, Spring		1	
√● 39	1757 10 305	Cover, Dust	(Manual)	1	
● 40	99796 0610	Bolt, Dust Cover	(Manual)	2	
√● 41	1757 10 351	Cover, Dust	(Manual)	1	
● 42	99796 0816	Bolt, Dust Cover	(Manual)	2	
43	1015 10 451	Bolt, Tension		18	
	1015 10 452	Bolt, Tension		1	
44	0839 10 455	Washer, Seal		19	
45	1757 10 600B	Cover, Front		1	
46	0820 10 605	Oil Seal		1	
47	1757 10 609	Pin, Spring		1	
48	0820 10 631B	Pin, Top Indicator		1	
49	0839 14 115	Plunger, Press		1	
50	0839 14 273A	Spring, Press Plunger		1	
51	0839 14 274	Plug, Press Plunger		1	

10 ROTOR HOUSING
(USED FROM CAR NO. 160623 73/10)

No.	Part Number	Description	Q'ty	Remarks
52	99307 0600	Plug, Blind	2	
53	~~99834 1200~~	~~Joint, Union~~	~~1~~	
●	99384 1200	Joint, Union	1	From Car No. 1
54	99562 1600	Gasket, Union Joint	1	
55	99851 0612A	Stud	1	
56	99855 1020	Stud	4	
57	99801 0840	Bolt, Front Cover	3	
	99952 0800	Washer, Plain	3	
	99971 0800	Washer, Spring	3	
58	99801 0865	Bolt, Front Cover	2	
	99952 0800	Washer, Plain	2	
	99971 0800	Washer, Spring	2	
59	99801 0875	Bolt, Front Cover	1	
	99952 0800	Washer, Plain	1	
	99971 0800	Washer, Spring	1	
60	1757 10 641	Gasket, Front Cover	1	
61	0862 10 700	Pan, Oil	1	
62	99511 1400	Plug, Drain	1	
63	99562 1400	Gasket	1	

ROTOR HOUSING
(USED FROM CAR NO. 160

No.	Part Number	Description	Q'ty	Remar
64	0839 10 711	Gasket, Oil Pan	1	
65	0839 10 721	Plate, Seat	2	
66	0839 10 722	Plate, Seat	2	
67	0839 10 723	Plate, Seat	2	
68	99806 0616	Bolt, Oil Pan	22	
	99971 0600	Washer, Spring	22	
69	0866 10 830	Gauge, Oil Level	1	
70	1757 10 845	Bolt, Rear Housing+Engine Hanger	1	
	99971 1000	Washer, Spring	1	
71	1757 10 861 3565 10 860	Hanger, Engine ~ ~	1 1	 ~ Δ
72	99801 0816	Bolt, Engine Hanger	1	
	99971 0800	Washer, Spring	1	
73	1757 10 862	Hanger, Engine	1	
74	0866 23 025	Protector, "O" Ring	4	
75	~~1708 99 105~~	~~Housing, Intermediate~~	~~1~~	
●	1708 23 070	Housing, Intermediate	1	From Car No
76	2329 10 417	Joint, Pipe	1	
77	99305 2800	Plug, Expansion	1	
78	99510 1000	Plug	1	
	99564 1000	Gasket	1	
●	79 1011 10 410 3565 10 410	Pipe, Oil Filler ~ ~ ~	1 1	From Car No ~

10 ROTOR HOUSING
(USED FROM CAR NO. 160623 73/10)

No.	Part Number	Description	Q'ty	Remarks
	1757 23 040	"O" Ring Set	1	
	1757 10 171 A	Ring, "O" - Inner	4	
	0813 10 172	Ring, "O" - Outer	4	
	0813 10 173	Ring, "O"	4	
	0813 10 174	Ring, "O"	1	
	0813 10 455	Ring, "O"	19	
	0813 10 555	Ring, "O"	1	
	99541 01601	Ring, "O"	2	
	99541 0240	Ring, "O"	2	
	99541 0350	Ring, "O"	1	
● √	1029 10 308	Ring, "O"	1	74/3 ~ Added Anew
	1708 23 200	Short Engine	1	
	1708 99 100	Engine Gasket Set	1	
●	1708 99 100 A	Engine Gasket Set	1	73/12 ~ △
●	1708 99 100 B	Engine Gasket Set	1	74/1 ~ △

All gaskets and all "O" rings relative to engine included.

ROTOR
(USED UP TO CAR NO. 179250 73/9)

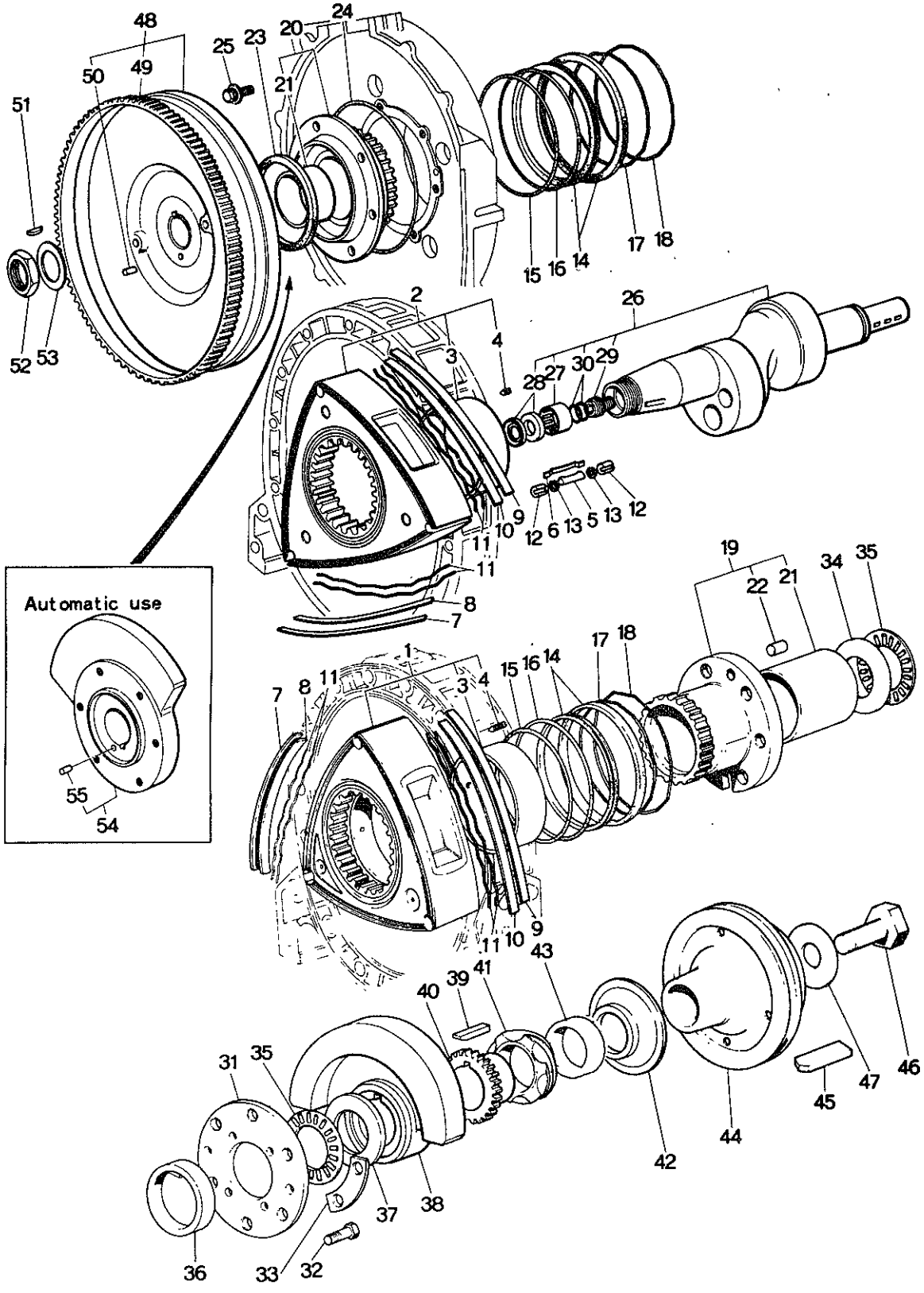

ROTOR
(USED UP TO CAR NO. 179250 73/9)

No.	Part Number	Description	Q'ty	Remar
1	0820 23 103A	Rotor, Front	1	
	0866 23 103	Rotor, Front	1	Car No. 1205(
●	0866 23 103A	Rotor, Front	1	Car No. 1619(
●	0866 23 103B	Rotor, Front	1	Car No. 1715(
2	0820 23 113A	Rotor, Rear	1	
	0866 23 113	Rotor, Rear	1	Car No. 1205(
●	0866 23 113A	Rotor, Rear	1	Car No. 1619(
●	0866 23 113B	Rotor, Rear	1	Car No. 1715(
3	0820 11 111F	Bearing	2	
4	99885 0406	Screw	6	
5	0820 11 301C	Seal, Apex (TR230)	6	Car No. 16774
	0871 11 301	Seal, Apex (TMC15T) (Automatic)	6	Car No. 14292
●	1552 11 301	Seal, Apex (TMC15T) (Automatic)	6	Car No. 17527
	2113 11 301	Seal, Apex (TMC15B)	6	Selective use
●	1550 11 301	Seal, Apex (TMC15B)	6	Car No. 17527(
	2329 11 301D	Seal, Apex (TMC115)	6	Car No. 17527(
	2112 11 301	Seal, Apex-Arctic Spec. Model	6	Car No. 16774(
Ⓝ	0871 11 302	Piece Side (Automatic)	6	Car No. 142922
6	0820 11 304A	Spring, Apex Seal	6	

10 11 ROTOR
(USED UP TO CAR NO. 179250 73/9)

No.	Part Number	Description		Q'ty	Remarks
	0871 11 304	Spring, Apex Seal (Automatic)		6	Car No. 142922 72/3~○
7	2125 23 151	Seal, Side-Outer	Front Side of Rotor	6	
●	1011 23 151	Seal, Side-Outer		6	Car No. 161998 73/1~○
●	1011 23 151A	Seal, Side-Outer		6	Car No. 167748 73/4~○
8	2125 23 152	Seal, Side-Inner		6	
●	1011 23 151	Seal, Side-Inner		6	Car No. 161998 73/1~○
●	1011 23 151A	Seal, Side-Inner		6	Car No. 167748 73/4~○
9	2125 23 154	Seal, Side-Outer	Rear Side of Rotor	6	
●	2125 23 151	Seal, Side-Outer		6	Car No. 149622 72/7~○
●	1011 23 151	Seal, Side-Outer		6	Car No. 161998 73/1~○
10	2125 23 155	Seal, Side-Inner		6	
●	2125 23 152	Seal, Side-Inner		6	Car No. 149622 72/7~○
●	1011 23 151	Seal, Side-Inner		6	Car No. 161998 73/1~○
11	0820 11 317	Spring, Side Seal		24	
12	0820 11 321B	Seal, Corner-Front & Rear	Selective use	12	
	0820 11 321C	Seal, Corner-Front & Rear		12	Car No. 145050 72/4~○
	0820 23 175A	Seal, Corner (O.S. 0.2)		12	
	0820 23 175B	Seal, Corner (O.S. 0.2)		12	Car No. 146342 72/5~○
	0820 23 176	Seal, Corner (O.S. 0.03)		12	
	0820 23 176A	Seal, Corner (O.S. 0.03)		12	Car No. 141928 72/3~○
	0820 23 176B	Seal, Corner (O.S. 0.03)		12	Car No. 146342 72/5~○

ROTOR
(USED UP TO CAR NO. 179250 73/9)

	No.	Part Number	Description	Q'ty	Rema
	13	0839 11 323	Spring, Corner Seal	12	
		0839 11 323A	Spring, Corner Seal	12	Car No. 1398
	14	0820 23 180	Oil Seal Set	4	
		0820 23 180A	Oil Seal Set	4	Car No. 1404
		0820 23 180C	Oil Seal Set	4	Car No. 1492
	15	0820 11 341	Ring, "O"-Inner	4	
	16	0820 11 343	Ring, "O"-Outer	4	
	17	0839 11 351	Spring, Oil Seal-Inner	4	
		0839 11 351A	Spring, Oil Seal-Inner (F)	2	Car No. 1400
		0839 11 351B	Spring, Oil Seal-Inner (F)	2	Car No. 1404
✓	●	1011 11 351	Spring, Oil Seal-Inner (F)	2	Car No.
		0839 11 361	Spring, Oil Seal-Inner (R)	2	Car No. 140024
		0839 11 361A	Spring, Oil Seal-Inner (R)	2	Car No. 14044
✓	●	1011 11 361	Spring, Oil Seal-Inner (R)	2	Car No. 16613
	18	0839 11 353	Spring, Oil Seal-Outer	4	
		0839 11 353A	Spring, Oil Seal-Outer (F)	2	Car No. 14923
✓	●	1011 11 353	Spring, Oil Seal-Outer (F)	2	Car No. 16613
		0839 11 363	Spring, Oil Seal-Outer (R)	2	Car No. 149232
✓	●	1011 11 363	Spring, Oil Seal-Outer (R)	2	Car No. 16613
	19	0839 10 500B	Gear, Stationary (Front)	1	

10 11 ROTOR
(USED UP TO CAR NO. 179250 73/9)

No.	Part Number	Description	Q'ty	Remarks
● 20	0820 10 550B	Gear, Stationary (Rear) (Fig. No. 23included)	1	
●	1668 10 550	Gear, Stationary (Rear) (Fig. No. 23included)	1	Car No. 165314 73/3 ~△
21	0820 10 502B	Bearing, Main (Front & Rear)	2	
22	0839 10 504	Pin, Knock (Front)	1	
● 23	0820 10 556A	Oil Seal, Stationary Gear (Rear)	1	
●	1668 10 556	Oil Seal, Stationary Gear (Rear)	1	Car No. 165314 73/3 ~△
24	0813 10 555	Ring, "O"-Stationary Gear (Rear)	1	
25	99801 0818	Bolt, Stationary Gear (Rear)	6	
	99971 0800	Washer, Spring	6	
26	0820 11 400G	Shaft, Eccentric (Manual)	1	
	0820 11 400H	Shaft, Eccentric (Manual)	1	Car No. 160378 73/12 ~△
	0871 11 400	Shaft, Eccentric (Automatic)	1	
	0871 11 400A	Shaft, Eccentric (Automatic)	1	Car No. 160378 73/12 ~△
27	0810 11 403	Bearing, Needle (Manual)	1	
28	0810 11 404	Oil Seal (Manual)	2	
29	0813 11 405	Plug, Blind	1	
30	99541 01101	Ring, "O"	2	

ROTOR
(USED UP TO CAR NO. 179250 73/9)

No.	Part Number	Description	Q'ty	Remar
31	0839 11 501	Plate	1	
32	0839 11 515	Bolt, Stationary Gear	6	
33	0820 11 503	Washer, Lock	3	
34	0839 11 504B	Plate, Thrust	1	
35	0813 11 505B	Bearing, Needle	2	
36	0839 11 502	Spacer (L=8.02)		
	0839 11 506	Spacer (L=8.08)		
	0839 11 508	Spacer (L=8.04)	Selective use 1	
	0839 11 509	Spacer (L=8.00)		
37	0820 11 507	Washer, Thrust	1	
38	0866 11 511A	Weight, Balance (Manual)	1	
	0871 11 511	Weight, Balance (Automatic)	1	
39	0820 11 512A	Key	1	
40	0839 11 551	Sprocket, Drive	1	
●	0839 11 551A	Sprocket, Drive	1	Car No. 16115
41	0839 11 531	Gear, Drive-Distributor	1	
42	0813 11 541	Plate, Oil Baffle	1	
43	0820 11 542	Spacer	1	
44	0839 11 601B	Pulley	1	
●	0839 11 601C	Pulley	1	Car No. 163843

10 11 ROTOR
(USED UP TO CAR NO. 179250 73/9)

No.	Part Number	Description		Q'ty	Remarks
45	99236 0525	Key, Pulley		1	
46	0820 11 611B	Bolt, Pulley		1	
47	99564 2800	Gasket		1	
48	0866 11 700A	Wheel, Fly	(Manual)	1	
49	0866 11 702	Gear, Ring		1	
50	0820 11 703	Pin		1	
51	0820 11 705	Key, Fly Wheel		1	
52	0810 11 711	Nut, Fly Wheel		1	
53	0620 11 712	Washer, Lock		1	
54	0871 11 750A	Weight, Counter	(Automatic)	1	
	0871 11 750B	Weight, Counter		1	Car No. 127380 71/11 ~ ○
●	0871 11 750C	Weight, Counter		1	Car No. 167747 73/5 ~ ○
55	0820 11 703	Pin		1	

ROTOR
(USED FROM CAR NO. 160623 73/10)

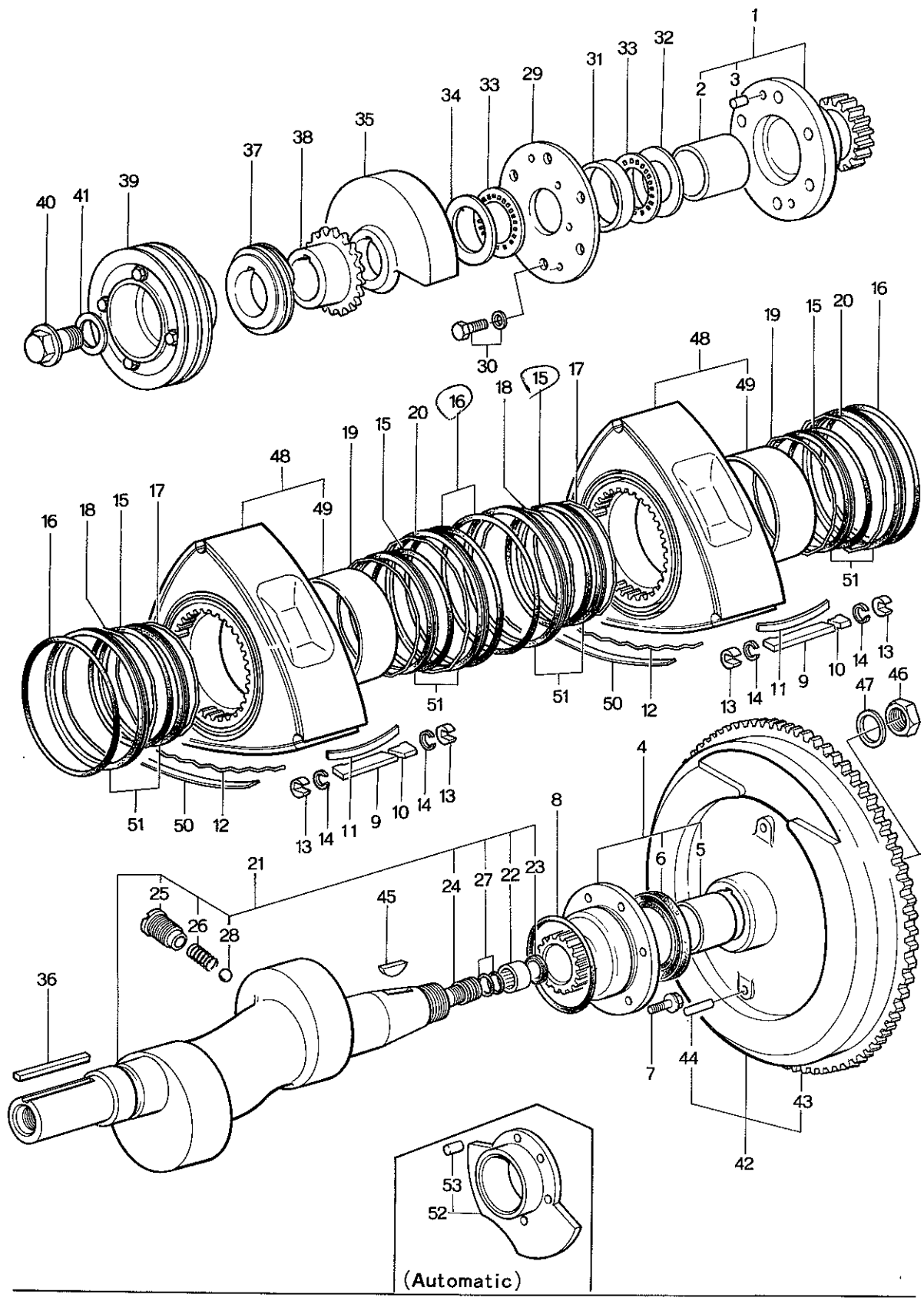

ROTOR
(USED FROM CAR NO. 160623 73/10)

No.	Part Number	Description	Q'ty	Remar
1	0839 10 500B	Gear (Frt.), Stationary	1	
2	0820 10 502B	Bearing, Main	1	
3	0839 10 504	Pin, Knock	1	
4	1668 10 550	Gear (Rr.), Stationary	1	
5	0820 10 502B	Bearing, Main	1	
6	1668 10 556	Oil Seal	1	
7	99801 0818	Bolt, Stationary Gear	6	
	99971 0800	Washer, Spring	6	
8	0813 10 555	Ring, "O" - Stationary Gear	1	
9	1881 11 301A	Seal, Apex	6	
10	1011 11 302C	Piece, Side	6	
11	1011 11 304A	Spring, Apex Seal	6	
12	0820 11 317	Spring, Side Seal	12	
13	1011 11 321	Seal, Corner (Std.)	12	Selective use
	1011 23 176	Seal, Corner (O.S. 0.03)	12	
14	0839 11 323A	Spring, Corner Seal	12	
15	0820 11 341	Ring, "O" - Inner	4	
16	0820 11 343	Ring, "O" - Outer	4	

ROTOR
(USED FROM CAR NO. 160623 '73/10)

No.	Part Number	Description	Q'ty	Remarks
17	1011 11 351	Spring, Oil Seal Inner (Frt.)	2	
18	1011 11 353	Spring, Oil Seal Outer (Frt.)	2	
19	1011 11 361	Spring, Oil Seal Inner (Rr.)	2	
20	1011 11 363	Spring, Oil Seal Outer (Rr.)	2	
√ ● 21	1881 11 400A	Shaft, Eccentric (Manual)	1	
√ ●	1883 11 400A	Shaft, Eccentric (Automatic)	1	
√ ● 22	1881 11 403	Bearing, Needle } (Manual)	1	
√ ● 23	1881 11 404	Oil, Seal } (Manual)	1	
24	0813 11 405	Plug, Blind	1	
25	0839 11 411A	Plug, Oil Jet	2	
26	0839 11 412	Spring	2	
27	99541 01101	Ring, "O"	2	
28	99611 2000	Ball, Steel	2	
29	1011 11 501	Plate	1	
30	99801 0822	Bolt, Plate & Stationary Gear	6	
	99701 0800	Washer, Spring	6	
31	0839 11 502	Spacer (L=8.02) } Selective use	1	
	0839 11 506	Spacer (L=8.08) } Selective use	1	
	0839 11 508	Spacer (L=8.04) } Selective use	1	

ROTOR
(USED FROM CAR NO. 160623 73/10)

No.	Part Number	Description	Q'ty	Remar
	0839 11 509	Spacer (L=8.00)		
32	1011 11 504	Plate, Thrust	1	
33	0813 11 505B	Bearing, Needle	2	
34	1011 11 507	Washer, Thrust	1	
35	1881 11 511	Weight, Balance	1	
36	1757 11 512	Key	1	
37	0839 11 531	Gear, Drive-Distributor	1	
38	1757 11 551	Gear, Drive-Oil Pump	1	
39	1757 11 600C	Pulley	1	
√●	1757 11 600D	Pulley	1	
√●	1881 11 600	Pulley	1	
40	0820 11 611B	Bolt, Pulley	1	
41	99564 2800	Gasket, Bolt	1	
√● 42	1881 11 700	Wheel, Fly	1	
43	0866 11 702	Gear, Ring (Manual)	1	
44	99222 0610	Pin	1	
45	0820 11 705	Key, Fly Wheel	1	
46	0810 11 711	Not, Lock	1	
47	0820 11 712	Washer, Lock	1	

10 11 ROTOR
(USED FROM CAR NO. 160623 73/10)

No.	Part Number	Description	Q'ty	Remarks
48	1011 23 103B	Rotor "C"	2	
49	1011 11 111	Bearing, Rotor	2	
50	1011 23 151A	Seal, Side	12	
51	0820 23 180C	Oil Seal Set	4	
√ ● 52	1883 11 750	Weight, Counter	1	(Automatic)
● 53	99222 0610	Pin	1	(Automatic)

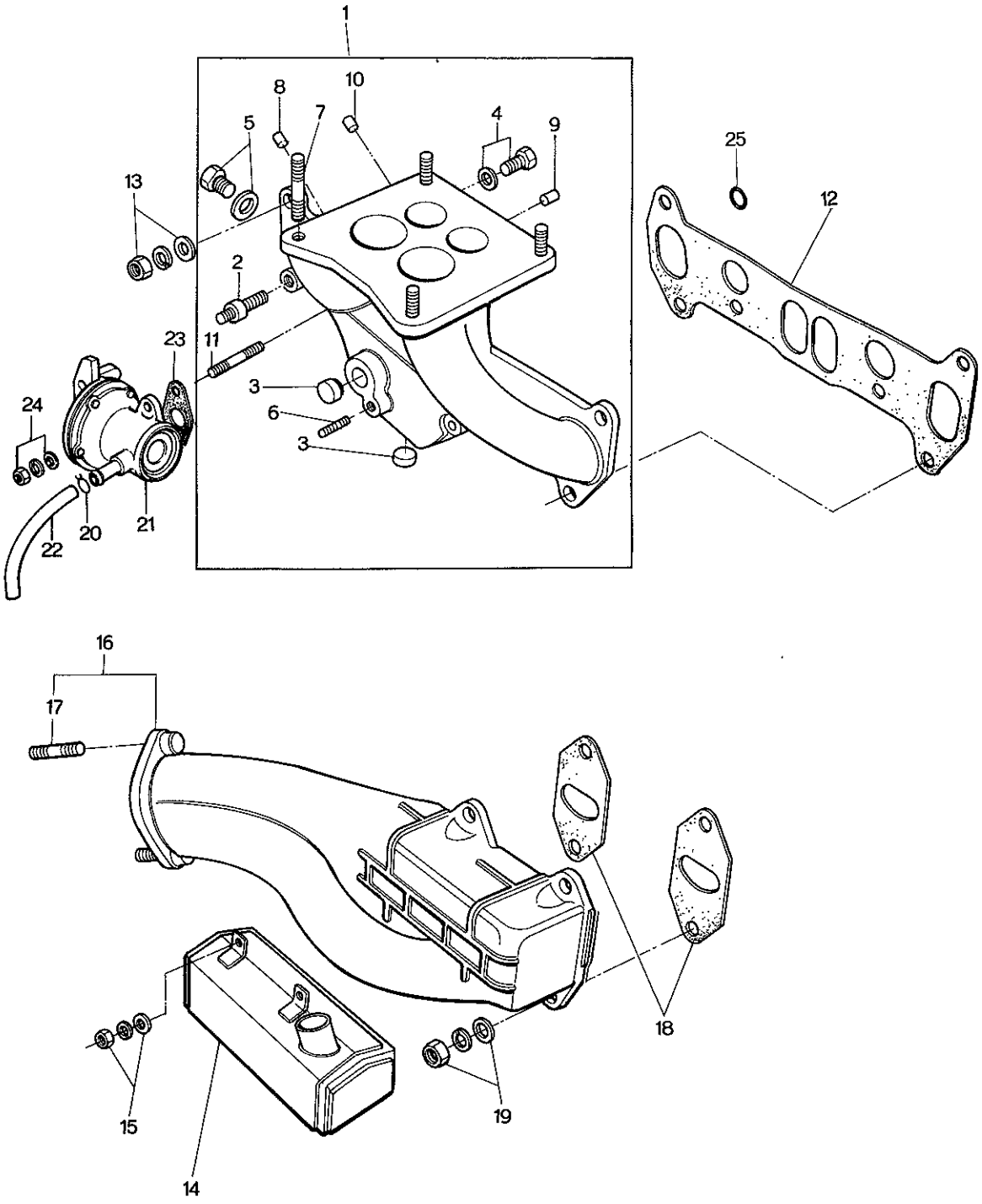
1
8
10
5
7
4
9
25
13
12
2
23
11
3
6
3
24
22
20
21
16
17
18
15
19
14

No.	Part Number	Description	Q'ty	Rema
1	~~0866 13 100F~~	~~Manifold, IN. (Manual)~~	~~1~~	
	0866 13 100E	Manifold, IN. (Manual)	1	From Car N
	1559 13 100	Manifold, IN. (Manual)	1	1558,1559 Ca
	1708 13 100	Manifold, IN. (Manual)	1	Car No. 160
	0871 13 100C	Manifold, IN. (Automatic)	1	
	0871 13 100D	Manifold, IN. (Automatic)	1	Car No. 152
∀●	1708 13 100	Manifold, IN. (Automatic)	1	Car No. 160
2	0839 13 338	Stud, Hot Air Duct	1	Car No. 160
3	99307 1800	Plug, Blind	2	
	99503 3000	Plug, Blind	2	Car No. 146
4	99510 0800	Plug, Blind	2	Car No. 160
	99564 0800	Gasket	2	Car No. 160
5	99511 1000	Plug, Blind	2	
	99564 1000	Gasket	2	
6	99851 0812A	Stud	1	
7	99851 0826A	Stud, Carburettor	4	
	99851 0828A	Stud, Carburettor	4	Car No. 160
8	99307 0600	Plug, Blind	1	
9	99307 0800	Plug, Blind	2	
10	99307 1200	Plug, Blind (Automatic)	1	
11	99851 0624A	Stud	2	

13 IN. & EX. MANIFOLD

No.	Part Number	Description	Q'ty	Remarks
12	0866 13 111	Gasket, IN. Manifold	1	
	0866 13 111A	Gasket, IN. Manifold	1	Car No. 146346 72/5~○
	1881 13 111	Gasket, IN. Manifold	1	Car No. 160623 73/10~×
13	99901 0800	Nut, IN. Manifold	6	
	~~99953 0800~~	~~Washer, Plain~~	~~6~~	
●	99952 0800	Washer, Plain	6	From Car No. 1
	99971 0800	Washer, Spring	6	
14	0866 13 330B	Duct, Hot Air	1	
	0862 13 330	Duct, Hot Air	1	Car No. 160623 73/10~×
15	99901 0800	Nut, Hot Air Duct	2	
	99940 0802	Nut	2	Car No. 142383 72/3~○
	99953 0800	Washer, Plain	2	Car No. 142382 72/3~Discarded
	99971 0800	Washer, Spring	2	
	99796 0812	Bolt	2	Car No. 160623 73/10~Added Anew
16	0866 13 600A	Manifold, EX.	1	
	0866 13 600B	Manifold, EX.	1	Car No. 127396 71/12~○
	0866 13 600C	Manifold, EX.	1	Car No. 140448 72/6~○
	1708 13 600B	Manifold, EX.	1	Car No. 160623 73/10~×
17	0866 13 603	Stud	2	
	0823 13 603	Stud	2	Car No. 160623 73/10~×
	~~2329 13 105~~	Stud	2	~~Car No. 127396 71/12~×~~
	2329 10 105	Stud	2	Car No. 127396 71/12~×

No.	Part Number	Description	Q'ty	Rem
18	0839 13 611E	Gasket, EX. Manifold	2	
	1757 13 889 B	Gasket, EX. Manifold	2	Car No. 16
19	0839 13 613	Nut, EX. Manifold	4	
	0839 13 614	Washer, Plain	4	
	2329 13 882	Washer, Spring	4	
20	99285 0608	Clip	1	
21	0871 13 250	Valve, Mixture Control	1	
	0871 13 250A	Valve, Mixture Control	1	Car No. 166
22	0871 13 256	Hose, Air	1	Car No. 160
23	2090 13 764	Gasket	1	
24	99906 0600	Nut, Mixture Control Valve	2	
	99953 0600	Washer, Plain	2	
	99971 0600	Washer, Spring	2	
● 25	99541 0240	Ring, "O"	2	From Car N

STARTING ASSIST SYSTEM
(USED UP TO CAR NO. 152815 72/8)

MODEL NO. 1558·1559

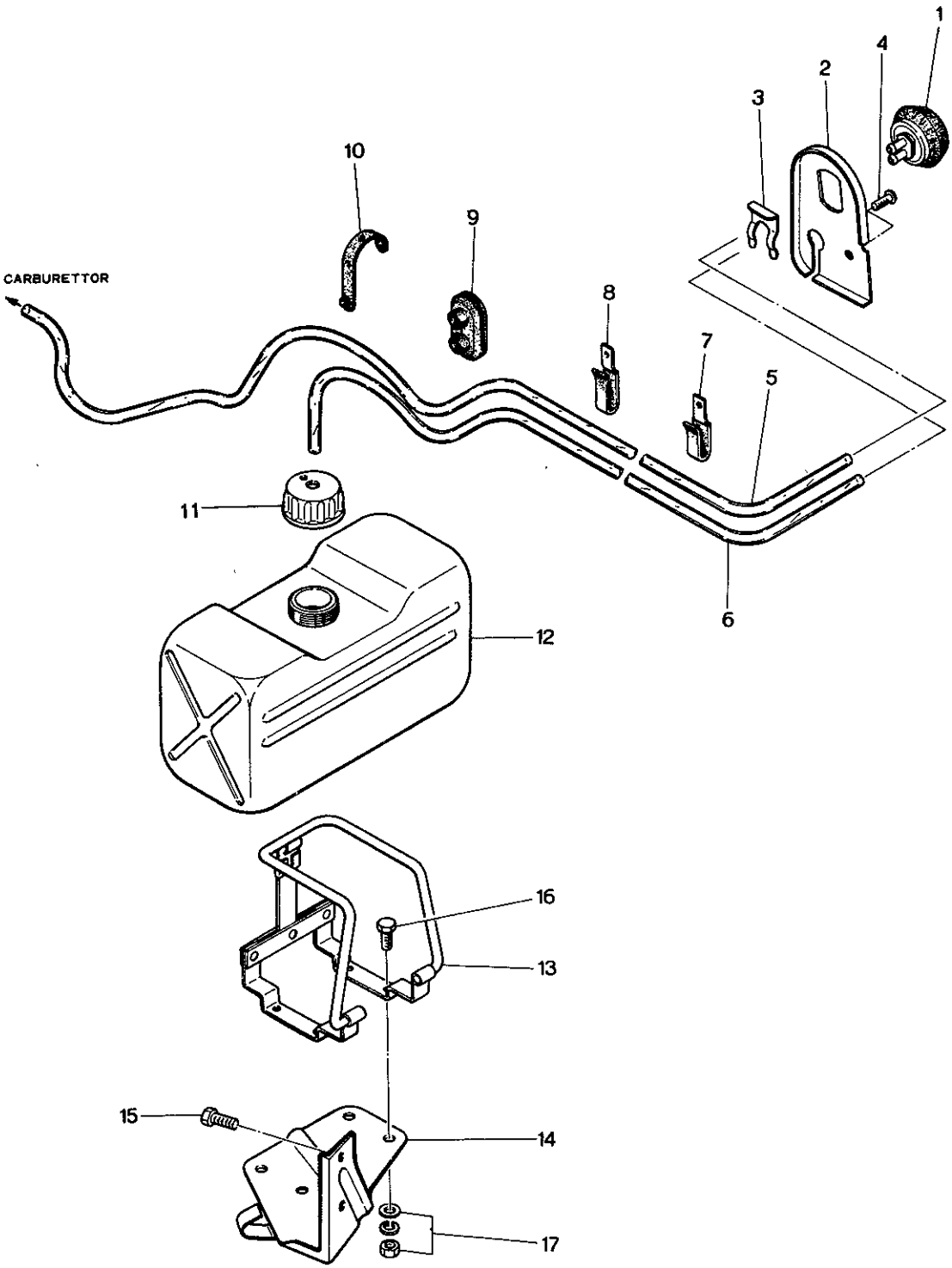

STARTING ASSIST SYST

(USED UP TO CAR NO. 152815 72/8)

No.	Part Number	Description	Q'ty	Rem
1	1665 13 520	Pump, Starting Fluid	1	
2	1559 13 525	Bracket, Pump	1	
3	0136 43 635	Clip, Flexible Hose	1	
4	99765 0610	Screw, Tapping	1	
5	1559 13 527	Hose	1	
6	99336 06100	Pipe, Vinyl	1	
7	99276 1408	Clip	1	
8	99276 2208	Clip	1	
9	1559 13 528	Grommet	1	
10	0187 66 991	Clip, Rubber	1	
11	1665 13 512	Cap, Tank	1	
12	1665 13 511A	Tank, Starting Fluid	1	
13	0119 66 870	Holder, Tank	1	
14	1559 13 510	Bracket, Tank	1	
15	99786 0612	Screw, Tapping	2	
16	99834 0408	Screw	4	
17	99906 0400	Nut	4	
	99952 0400	Washer, Plain	4	
	99971 0400	Washer, Spring	4	

STARTING ASSIST SYSTEM
(USED FROM CAR NO. 152816 72/8 ~)

MODEL NO.

1558・1559

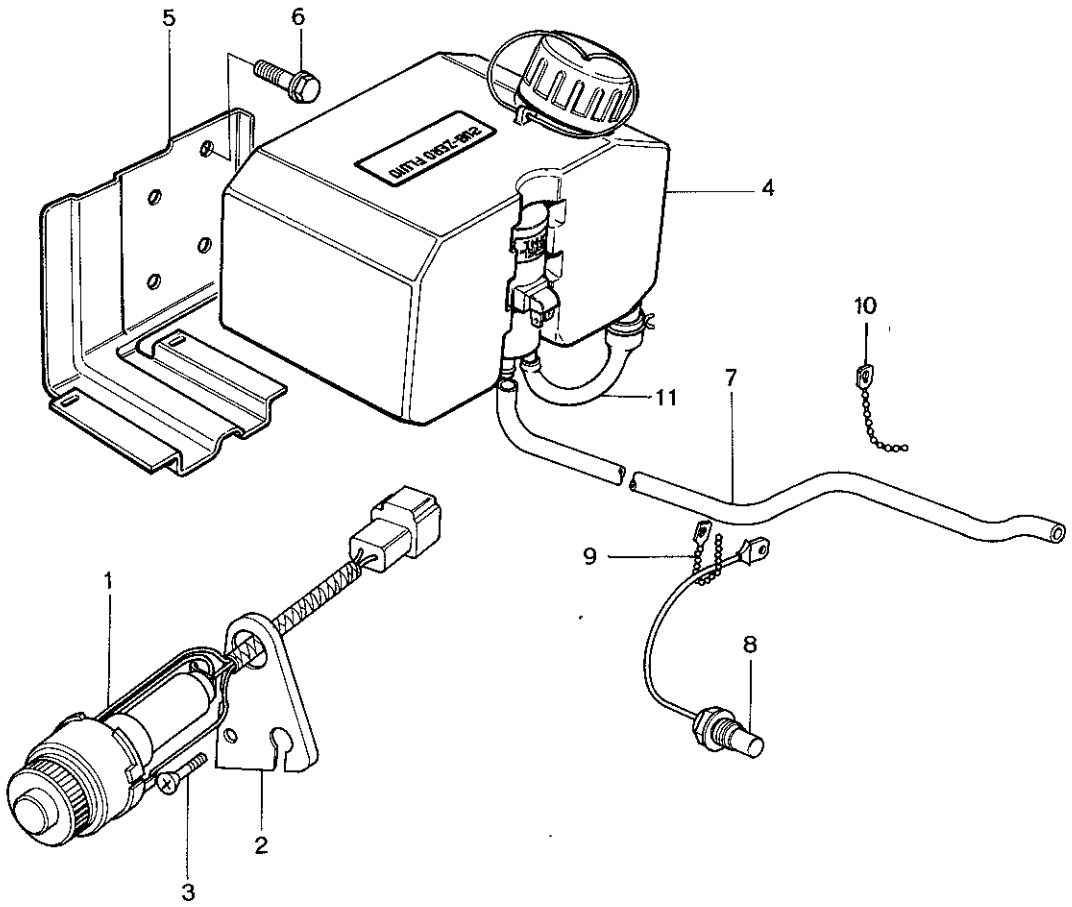

STARTING ASSIST SYS
(USED FROM CAR NO. 152816 7/8 ~)

No.	Part Number	Description	Q'ty	Rema
1	1668 13 520A	Switch, Starting Assist	1	
2	1620 13 525A	Bracket, Switch	1	
3	99765 0610B	Screw, Bracket	1	
4	1668 13 510	Tank, Starting Fluid	1	
5	1668 13 515A	Bracket, Tank	1	
6	99786 0612	Screw	2	
7	1668 13 527	Hose	1	
8	1668 13 531A	Unit, Thermo	1	
9	99709 0108	Band	1	
10	99709 0225	Band	1	
● 11	1668 13 513	Hose-Saction	1	Car No. 167748

AIR CLEANER
(USED UP TO CAR NO. 179250 73/9)

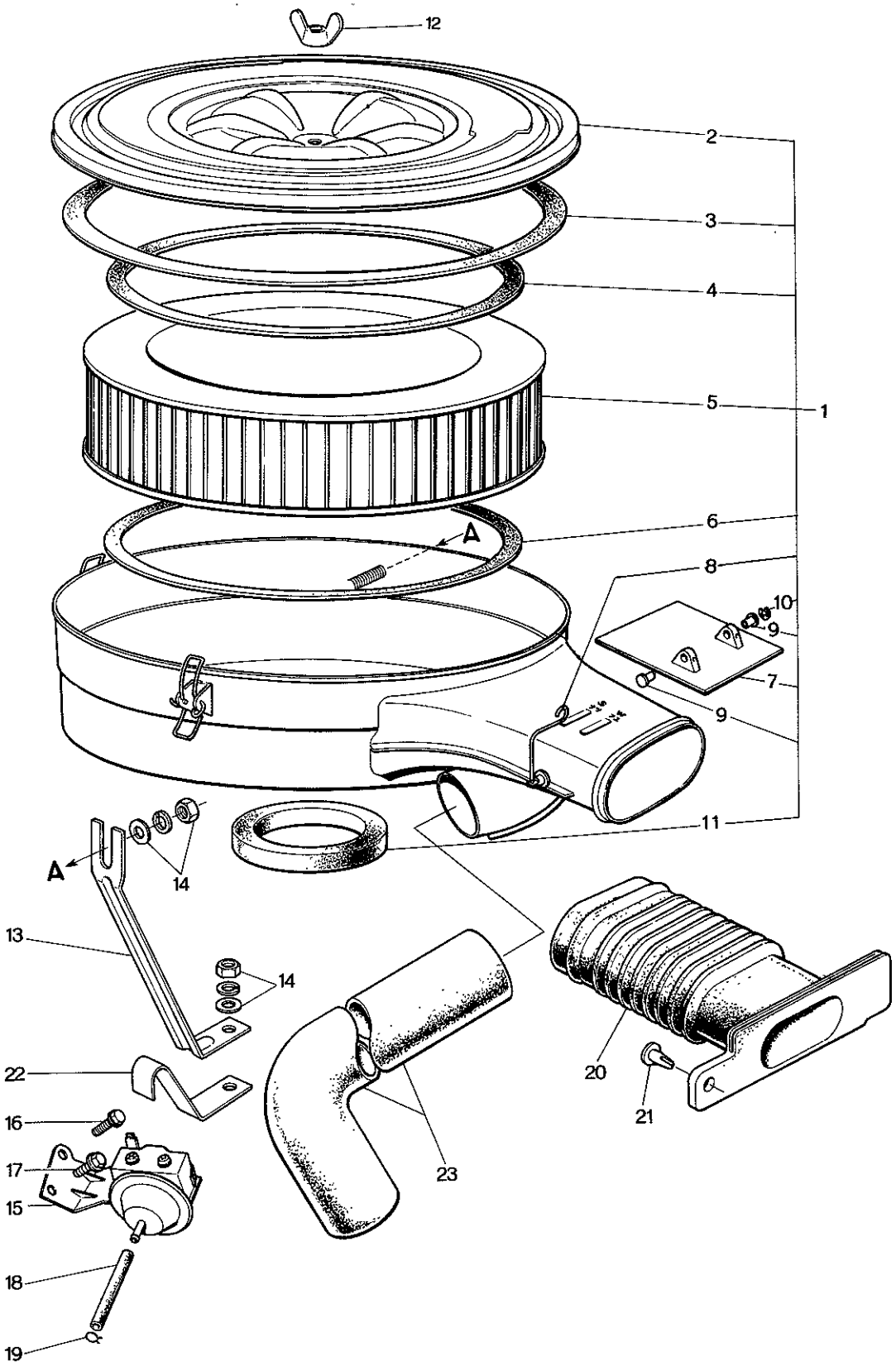

AIR CLEANER
(USED UP TO CAR NO. 179250 73/9)

No.	Part Number	Description	Q'ty	Remark
1	0866 13 300C	Cleaner, Air (Manual)	1	
	0871 13 300	Cleaner, Air (Automatic)	1	
	0871 13 300A	Cleaner, Air (Automatic)	1	Car No. 12976
2	2090 23 673	Cover	1	
● 3	2113 23 674	Gasket, Cover	1	Order Under No. 0866 23 6
● 4	2113 23 675	Gasket, Element	1	
5	0839 23 672	Element	1	
●	~~1655 23 672~~	~~Element~~	~~1~~	~~Car No. 159525~~
●	1665 23 672	Element	1	Car No. 159525
● 6	0839 23 675	Gasket, Element	1	Order Under No. 0866 23 6
7	0866 23 676	Shutter	1	
8	0866 23 694	Shaft, Shutter	1	
9	0839 23 686	Bush	2	
10	0839 23 684	Ring, Stop	1	
● 11	2113 23 679	Gasket	1	Order Under No. 0866 23 6
	0866 23 680	Gasket Set (Fig. No. 3,4,6,11 included)	1	Car No. 159525 ?
12	99941 0801	Nut, Wing-Air Cleaner	1	
13	0866 13 311	Support, Air Cleaner	1	
14	99901 0800	Nut, Supporter	2	

13 23 AIR CLEANER
(USED UP TO CAR NO. 179250 73/9)

No.	Part Number	Description	Q'ty	Remarks
	99940 0802	Nut	2	Car No. 142383 72/3 ~ ○
	99951 0822	Washer, Plain	2	Car No. 142383 Discarded
	99971 0800	Washer, Spring	2	Car No. 142383 Discarded
✓● 15	0866 13 240F	Switch, Vacuum	1	For L.H.D. Car No. 140779 72/2 ~ Discarded
✓●	0866 13 240G	Switch, Vacuum	1	For R.H.D. Car No. 155593 72/10 ~ ○
16	99811 0812	Bolt, Vacuum Switch	1	
	99971 0800	Washer, Spring	1	
17	99806 0510	Bolt, Vacuum Switch	1	For L.H.D. Car No. 140779 72/2 ~ Discarded
	99971 0500	Washer, Spring	1	For L.H.D. Car No. 140779 72/2 ~ Discarded
18	0866 13 241E	Tube, Vacuum	1	
19	99295 0408	Clip	1	
20	0866 13 351A	Hose, Air	1	
21	99264 0702B	Rivet, Air Hose	1	
22	0866 18 999A	Clip	1	
✓●	0370 13 441	Clip	1	Car No. 175279 73/7 ~ △
23	0866 13 341B	Hose, Hot Air	1	

AIR CLEANER
(USED FROM CAR NO. 160623 73/10)

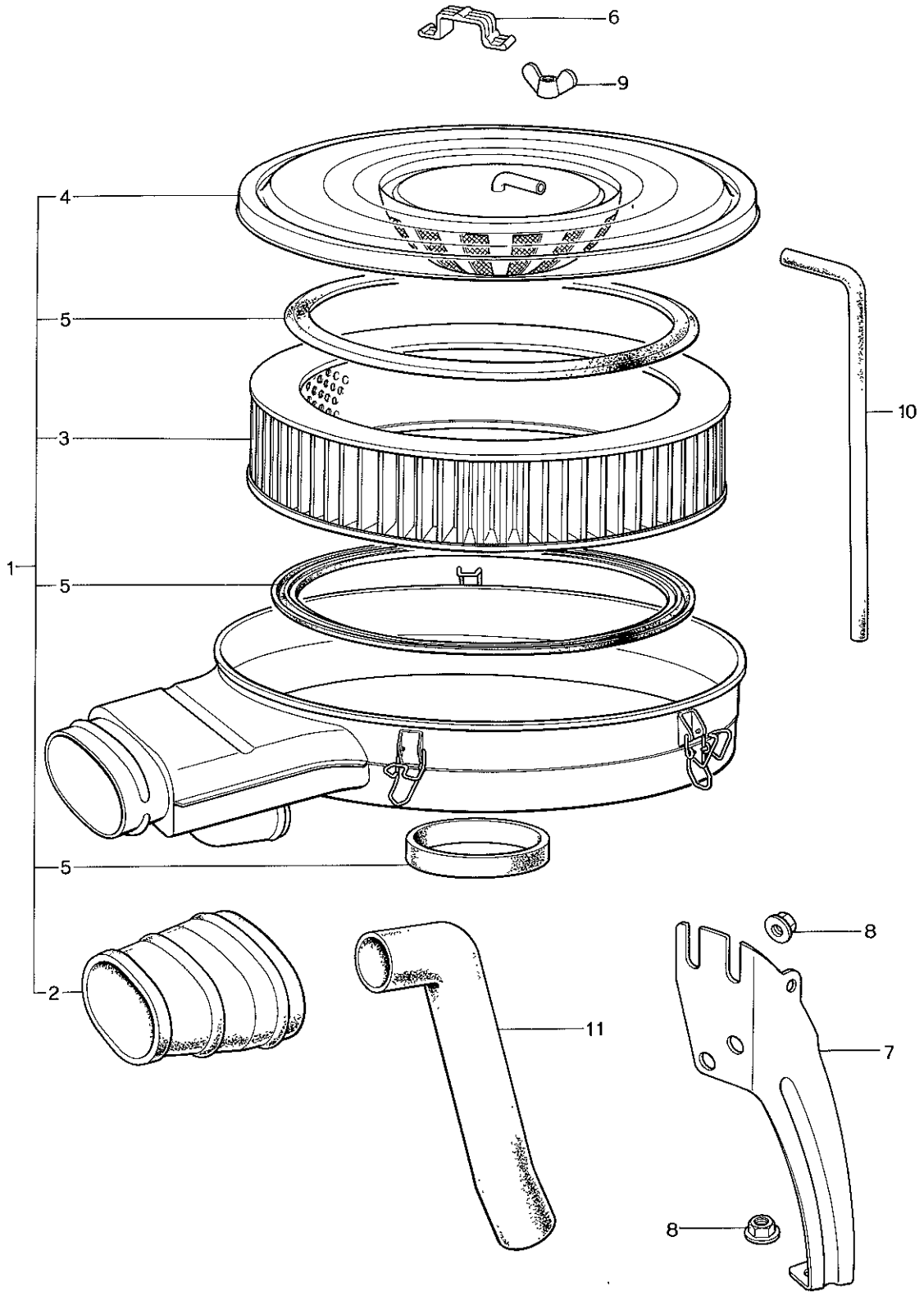

AIR CLEANER
(USED FROM CAR NO. 160623 73/10)

No.	Part Number	Description	Q'ty	Remark
1	3511 13 300A	Cleaner, Air	1	
2	1881 13 351	Hose, Air	1	
3	1757 23 672	Element	1	
4	1790 23 673	Cover	1	
5	1757 23 680	Gasket Set	1	
6	1617 13 305A	Clip	1	
7	1881 13 311A	Support, Air Cleaner	1	
8	99940 0802	Nut	2	
9	99941 0801	Nut, Wing-Air Cleaner	1	
10	1757 13 786A	Hose, Ventilation	1	
11	1052 13 341A	Hose, Hot Air	1	

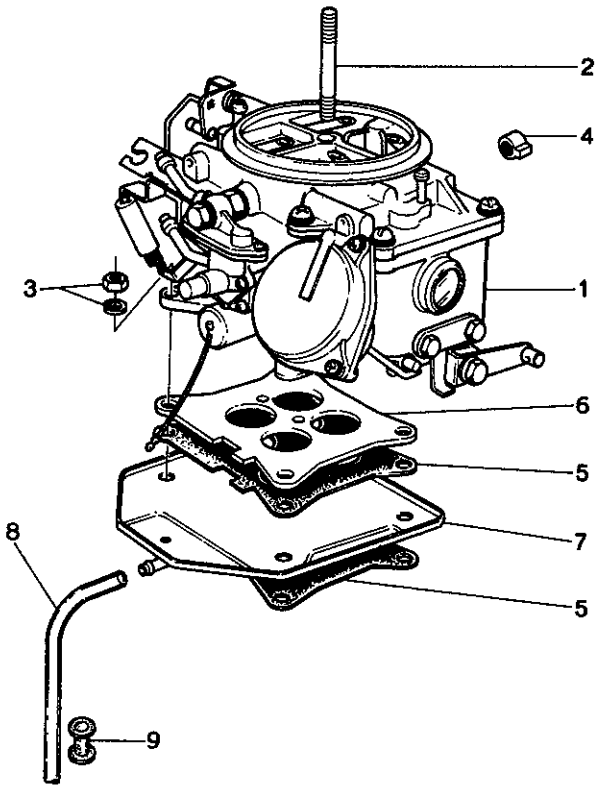
2
4
3
1
6
5
7
8
5
9

No.	Part Number	Description	Q'ty	Rema
1	0866 13 200E	Carburettor (R.H.D. Manual)	1	
	3503 13 200C	Carburettor (R.H.D. Manual)	1	Car No. 1606
	0871 13 200A	Carburettor (R.H.D. Automatic)	1	
● √	1955 13 200C	Carburettor (R.H.D. Automatic)	1	
	1562 13 200B	Carburettor (L.H.D.)	1	
	1708 13 200C	Carburettor (L.H.D.)	1	Car No. 1606
	1562 13 200C	Carburettor (1558,1559)	1	Car No. 1407
	1566 13 200	Carburettor (1565,1566,1567,1568)	1	Car No. 14077
2	0820 13 201A	Stub, Carburettor & Air Cleaner	1	
	0839 13 201	Bolt, Carburettor Set	1	Car No. 1606
3	99901 0800	Nut, Carburettor	4	
	99971 0800	Washer, Spring	4	
4	0820 23 436A	Cap, Limiter-Carburettor	1	
5	0820 13 221	Gasket, Carburettor	3	
	0823 13 221A	Gasket, Carburettor	2	Car No. 1606
6	0820 13 222	Insulator, Carburettor	1	
	1570 13 222	Insulator, Carburettor	1	Car No. 1606
7	0866 13 230B	Tray, Carburettor	1	Car No. 1606
	1617 13 233	Clip	2	
8	0866 13 235	Pipe, Drain	1	
9	99681 1001	Protector, Drain Pipe	1	
	1562 23 540	Repair Kit, Carburettor	1	Car No. 1606
	1552 23 540	Repair Kit, Carburettor (ECE Spec. Model)	1	
	1708 23 540	Repair Kit, Carburettor	1	Car No. 1606

CARBURETTOR (MANUAL)

(USED UP TO CAR NO. 179250 73/9)

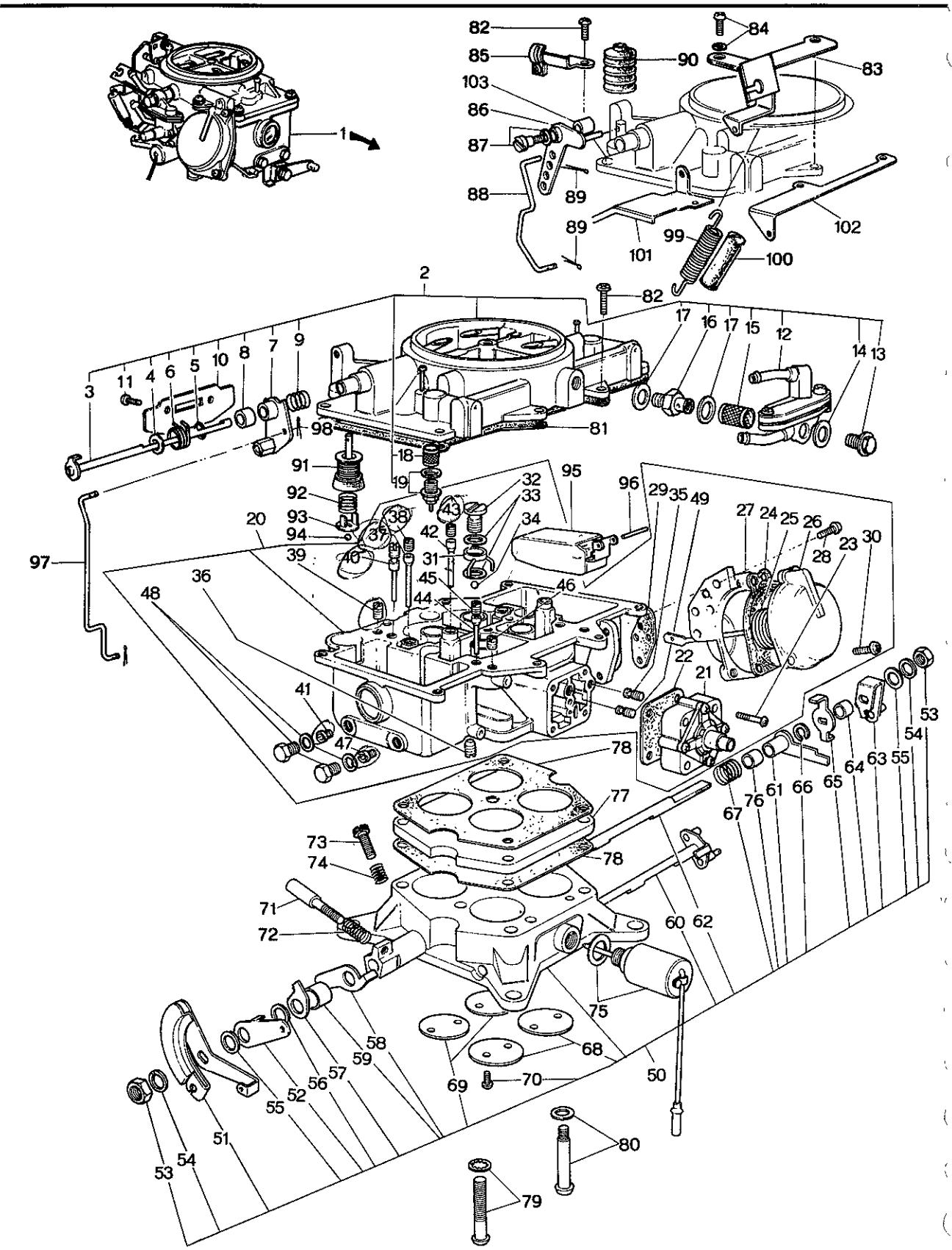

CARBURETTOR (MANUAL)
(USED UP TO CAR NO. 179250 73/9)

No.	Part Number	Description	Q'ty	Rema
1	0866 13 200E	Carburettor (R.H.D.)	1	
	1562 13 200B	Carburettor (L.H.D.)	1	
●	1562 13 200C	Carburettor (1558,1559)	1	Car No. 1407
	1566 13 200	Carburettor (1565,1566,1567,1568)	1	Car No. 140779
2	0866 23 300	Chamber	1	
3	0820 23 304A	Shaft, Choke	1	
4	0114 13 759	Sleeve	1	
5	0114 13 757	Clip	1	
6	0866 23 309	Spring, Choke Valve	1	
7	0820 23 302A	Lever, Choke	1	
8	0820 23 311	Sleeve	1	
9	0813 23 361	Spring, Choke	1	
10	0820 23 306	Valve, Choke	1	
11	0820 23 388	Screw (3 ϕ)	2	
12	0866 23 314	Valve, Fuel Return	1	
13	0118 23 398	Screw Set, Filter	1	
14	0813 23 395	Washer (8 ϕ)	1	
15	0813 23 401	Filter, Fuel Return Valve	1	
16	0813 23 307B	Connector	1	
17	0114 13 788A	Washer (12ϕ)	2	
18	0820 23 499	Filter	2	
19	0820 23 398B	Valve, Needle	2	
	0221 23 314	Washer (10ϕ)	2	
20	0866 23 320	Float Chamber	1	
	1562 23 320	Float Chamber Ass'y	1	Car No. 15052
21	0866 23 324	Diaphragm	1	
22	0866 23 331	Gasket, Valve Body	1	
23	0866 23 335	Screw (4 ϕ)	4	

CARBURETTOR (MANUAL)
(USED UP TO CAR NO. 179250 73/9)

No.	Part Number	Description	Q'ty	Remarks
24	0866 23 372	Diaphragm	1	
25	0866 23 334	Spring, Diaphragm	1	
26	0820 23 322C	Cover, Diaphragm Chamber	1	
27	0820 23 371A	Chamber, Diaphragm	1	
28	1617 23 388	Screw (4 ϕ)	3	
29	0820 23 373	Gasket, Diaphragm Chamber	1	
30	1617 23 394	Screw (5 ϕ)	3	
31	0820 23 338	Injector, Pump	1	
	0820 23 338A	Injector, Pump	1	Car No. 138734 72/2 ~ O
32	0813 23 328	Screw Set, Weight	1	
33	0187 23 356	Washer (7 ϕ)	2	
34	0866 23 339	Ball (4.2 ϕ)	1	
35	0268 23 393A	Slow Jet (#120)	1	
36	0118 23 329A	Air Bleed, Slow (#80)	1	
37	0866 23 329	Tube, Emulsion (P)	2	
38	0268 23 395	Air Bleed, Slow (#100)	2	
39	0268 23 394A	Air Bleed, Slow (#200)	2	
40	0866 23 425	Slow Jet (#42)	2	
41	0866 23 421	Main Jet (#92)	2	
42	0820 23 330	Tube, Emulsion (S)	2	
43	0114 13 662	Air Bleed, Slow (#140)	2	
44	0866 23 428	Air Bleed (#180)	2	
45	0820 23 426B	Slow Jet (#60)	2	
46	0820 23 433	Air Bleed, Slow (# 0)	2	
47	0820 23 422	Main Jet (#140)	2	
48	0221 23 395	Plug, Drain	4	
	0221 23 366	Washer (9 ϕ)	4	

No.	Part Number	Description	Q'ty	Remar
49	2113 23 431	Slow Jet (#190)	1	
50	9866 23 340	Chamber, Throttle (R.H.D.)	1	
	1562 23 340	Chamber, Throttle (L.H.D.)	1	
	1562 23 340A	Chamber, Throttle (L.H.D.) 1558,1559	1	Car No. 150526
	1566 23 340	Chamber, Throttle (L.H.D.) { 1565,1566 / 1567,1568 }	1	Car No. 150526
51	0866 23 344	Lever, Throttle (R.H.D.)	1	
	1562 23 344	Lever, Throttle (L.H.D.)	1	
52	0813 23 347	Lever, Starting	1	
53	0118 23 369	Nut (8 ϕ)	2	
54	0221 23 368	Washer, Spring (8 ϕ)	2	
55	0813 13 392	Washer (8 ϕ)	2	
56	0866 23 406	Piece, Distance	1	
57	0866 23 357	Lever, Adjust	1	
58	0866 23 346	Lever, Adjust	1	
59	0180 23 316	Collar, Shaft	1	
60	0820 23 343C	Shaft, Throttle (S)	1	
61	0866 23 345	Lever, Control	1	
62	0820 23 342B	Shaft, Throttle (P)	1	
63	0820 23 498	Lever, Metering	1	
64	0820 23 359	Spacer	1	
65	0820 23 358	Lever, Adjust	1	
66	0813 23 403	Clip	1	
67	0820 23 353	Spring, Control Lever	1	
68	0820 23 351	Valve, Throttle (S)	2	
69	0268 23 317	Valve, Throttle (P)	2	
70	0820 23 389	Screw (3 ϕ)	8	
71	9820 23 397B	Screw, Adjust-Throttle	1	
72	0820 23 387A	Spring, Adjust-Throttle	1	

No.	Part Number	Description	Q'ty	Remarks
73	0820 23 405A	Screw, Adjust-Idle	1	
74	0813 23 383	Spring, Adjust Screw-Idle	1	
75	0866 23 352	Valve, Solenoid	1	1565,1566,1567,1568
	0118 23 348	Washer (8 ϕ)	1	1565,1566,1567,1568
76	0866 23 355	Spacer	1	
77	0866 23 354	Insulator	1	
78	0866 23 349	Gasket, Throttle Chamber	2	
79	0866 23 413	Screw (5 ϕ)	1	
	0820 23 399	Washer (5 ϕ)	1	
80	0866 23 411	Screw (6 ϕ)	4	
	0221 23 375	Washer (6 ϕ)	4	
81	0820 23 327	Gasket, Float Chamber	1	
82	1617 23 394	Screw (5 ϕ)	7	
83	0866 23 305	Arm, Wire (R.H.D.)	1	
84	1617 23 392	Screw (5 ϕ)	1	
85	0820 23 303A	Arm, Choke Wire	1	
86	0813 23 325	Lever, Pump	1	
87	0820 23 362	Shaft, Pump Lever (R.H.D.)	1	
	2125 23 362	Screw (5 ϕ)	1	
	0114 13 795	Washer, Spring (5 ϕ)	1	Pump Lever (L.H.D.)
88	0866 23 332	Rod, Connecting-Pump	1	
89	0136 13 717A	Pin, Cotter (1 ϕ)	3	
90	0118 23 342	Cover, Pump	1	
91	0866 23 323	Piston	1	
92	0813 23 333	Spring, Return-Piston	1	
93	0820 23 337A	Piece, Distance	1	

No.	Part Number	Description	Q'ty	Rem
94	0820 23 471	Ball, Nylon (5/32)	1	
95	0813 23 326	Float	2	
96	0820 23 396	Shaft, Float	2	
97	0866 23 398	Rod, Connecting-Choke (R.H.D.)	1	
	1562 23 398	Rod, Connecting-Choke (L.H.D.)	1	
98	0114 13 715	Pin, Stop	1	
99	0820 13 202C	Spring, Return-Throttle	1	
100	0820 13 204	Cover, Spring	1	
101	1562 23 305	Supporter (L.H.D.)	1	
102	1562 23 318	Hanger, Spring (L.H.D.)	1	
103	2125 23 363	Guide (L.H.D.)	1	
Ⓝ	1865 23 506	Check Valve (1558,1559)	1	Car No. 14077
Ⓝ	0114 13 795	Washer, Spring (5 φ) (1565,1566,1567,1568)	1	Car No. 14077
Ⓝ	2125 23 362	Screw (5 φ) (1565,1566,1567,1568)	1	Car No. 14077
Ⓝ	1665 23 506	Valve Check	1	1558,1559 Car Added Anew
Ⓝ	2329 23 443	Gasket Cover	1	
Ⓝ	1562 23 442	Cover	1	
Ⓝ	1562 23 445	Washer	1	
Ⓝ	1617 23 393	Screw, 5	3	
Ⓝ	1562 23 444	Bleed-Air	2	
Ⓝ	0118 23 348	Washer	2	

CARBURETTOR (AUTOMATIC)

(USED UP TO 74/3)

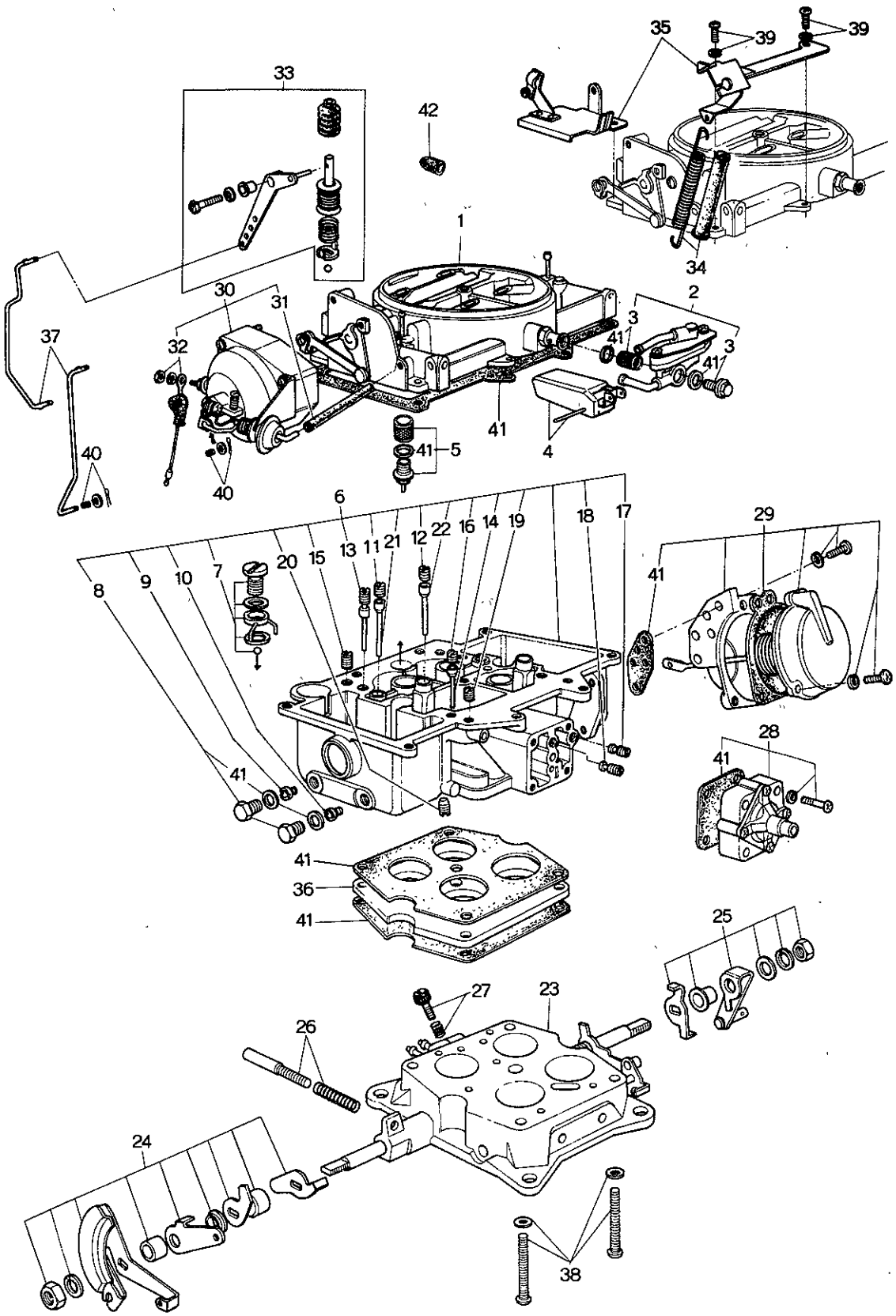

CARBURETTOR (AUTOMATIC)
(USED UP TO 74/3)

No.	Part Number	Description	Q'ty	Rema
	0871 13 200C	Carburettor (R.H.D.)	1	
●	0871 13 200E	Carburettor (R.H.D.)	1	Car No. 1673
1	0871 23 310	Chamber, Choke	1	
2	0871 23 380	Valve Set, Fuel Return	1	Fig. No. 3 inc
3	0871 23 381	Strainer Set	1	
4	0871 23 385	Float Set	1	
5	0871 23 390	Valve, Needle	1	
6	0871 23 320	Chamber, Float } Fig. No. 7～22 included	1	
●	0871 23 320B	Chamber, Float } Fig. No. 7～22 included	1	Car No. 1673
7	0871 23 490	Injector, Pump	1	
8	0871 23 495	Plug, Drain	1	
9	0866 23 421	# 92 Jet, Main (P)	2	
10	0820 23 422	#140 Jet, Main (S)	2	
11	0268 23 395	#100 Bleed, Main Air (P)	2	
12	0114 23 662	#140 Bleed, Main Air (S)	2	
13	0866 23 425	# 42 Jet, Slow (P)	2	
14	0820 23 426B	# 60 Jet, Slow (S)	2	
15	0268 23 394A	#200 Bleed, Slow Air (P)	2	
16	0866 23 428	#180 Bleed, Slow Air (P)	2	
17	2113 23 431	#180 Jet, Vacuum (P)	1	
18	0268 23 393A	#120 Jet, Vacuum (S)	1	
19	0820 23 433	# 0 Bleed, Slow Air	2	
20	0871 23 434	#180 Jet, Richer	1	
21	0866 23 329	Tube (P), Emulsion	2	
22	0820 23 330	Tube (S), Emulsion	2	
23	0871 23 330	Chamber, Throttle	1	
●	0872 23 330	Chamber, Throttle	1	
24	0871 23 360	Lever Set (Rr.)	1	
25	0871 23 365	Lever Set (Frt.)	1	

CARBURETTOR (AUTOMATIC)
(USED UP TO 74/3)

No.	Part Number	Description	Q'ty	Remarks
26	0871 23 370	Screw, Throttle Adjust	1	
27	0871 23 375	Screw, Idle Adjust	1	
28	0871 23 355	Valve, Vacuum	1	
29	0871 23 350	Chamber, Diaphragm	1	
30	0871 23 340	Thermostat	1	Fig. No. 31, 32 included
31	0871 23 346	Tube	1	
32	0871 23 345	Wire Set, Lead	1	
33	0871 23 410	Pump, Accelerator	1	
34	0871 23 420	Spring, Throttle Return	1	
35	0871 23 430	Bracket Set	1	
36	0866 23 354	Insulator	1	
37	0871 23 440	Rod Set	1	
38	0871 23 510	Screw Set, Throttle Chamber	1	
39	0871 23 520	Screw Set, Choke Chamber	1	
40	0871 23 540	Pin & Washer Set	1	
●	0871 23 540A	Pin & Washer Set	1	Car No. 167343 73/4 ~△
41	0871 23 530	Gasket Set	1	
● 42	0559 13 104	Cap, Blind	1	Car No. 160623 73/9 ~Added Anew

CARBURETTOR

(AUTOMATIC USED FROM 74/4
MANUAL USED FROM 73/10)

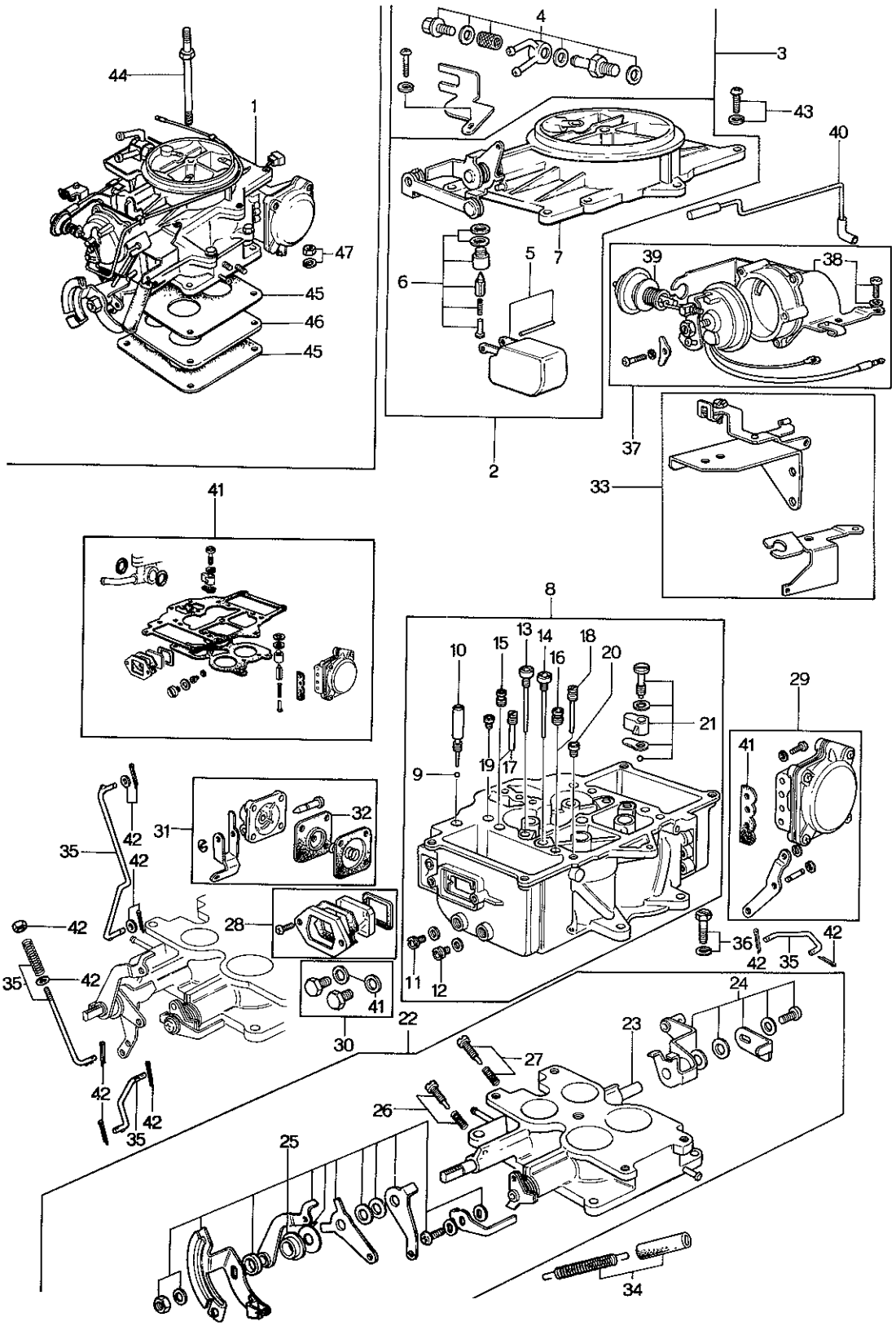

CARBURETTOR

(AUTOMATIC USED FROM 74/4
MANUAL USED FROM 73/10)

	No.	Part Number	Description	Q'ty	Rema
√	1	1708 13 200C	Carburettor (Manual) (L.H.D.)	1	
√		1955 13 200C	Carburettor (Automatic) (R.H.D.)	1	
√		3503 13 200C	Carburettor (Manual) (R.H.D.)	1	
	2	1955 23 310	Horn Set, Air-Fig. No. 3,5,6,7 included (Automatic)	1	
		3503 23 310	Horn Set, Air-Fig. No. 3,5,6,7 included (Manual)	1	
	3	1881 23 319	Connector Set, Fuel-Fig. No. 4 included	1	
	4	1663 23 409	Strainer Set	1	
	5	1663 23 326B	Float Set	1	
	6	1663 23 390	Seat Set, Float Valve	1	
	7	1955 23 520	Horn Sub Set, Air (Automatic)	1	
		3503 23 520	Horn Sub Set, Air (Manual)	1	
	8	1955 23 320	Body Set-Fig. No.9~21 included	1	
√	9	0107 13 781	Ball, Steel	1	
	10	0823 23 338	Plug, Check Ball	1	
	11	1955 23 421	Jet Set, Main (P)	2	
	12	1955 23 422	Jet Set, Main (S)	2	
	13	1955 23 423	Jet, Main Air Bleed (P)	2	
	14	0839 23 424	Jet, Main Air Bleed (S)	2	
	15	1881 23 427	Jet, Slow Air Bleed	2	
	16	1955 23 428	Jet, Step Air Bleed (S)	2	

CARBURETTOR

(AUTOMATIC USED FROM 7404
MANUAL USED FROM 7310)

No.	Part Number	Description	Q'ty	Remarks
17	1955 23 431	Jet, Slow	2	
18	1883 23 432	Jet, Step	2	
19	1955 23 433	Jet, Slow Air Bleed	2	
20	1955 23 434	Jet, Step Air Bleed	2	
21	1955 23 490	Nozzle Set, Accel.	1	
22	1708 23 330	Flange Set-Fig. No. 23~27 included (Manual) (L.H.D.)	1	
	1955 23 330	Flange Set-Fig. No. 23~27 included (Automatic) (R.H.D.)	1	
	3503 23 330	Flange Set-Fig. No. 23~27 included (Manual) (R.H.D.)	1	
23	1955 23 410	Flange Sub Set (Automatic)	1	
	3503 23 410	Flange Sub Set (Manual)	1	
24	1955 23 420	Lever Set, Front	1	
25	1708 23 430	Lever Set, Rear (Manual) (L.H.D.)	1	
	1955 23 430	Lever Set, Rear (Automatic) (R.H.D.)	1	
	3503 23 430	Lever Set, Rear (Manual) (R.H.D.)	1	
26	0842 23 440	Screw Set, Throttle Lever Adjust	1	
27	0842 23 460	Screw Set, Idle Adjust	1	
28	1668 23 340A	Cover Set, Level Gauge	1	
29	1955 23 350	Chamber Set, Diaphragm	1	
30	1668 23 354	Plug Set, Main Passage	1	
31	1663 23 360C	Pump Set, Accel.-Fig. No. 32 included	1	

No.	Part Number	Description	Q'ty	Rema
32	1663 23 361 A	Diaphragm, Accel. Pump	1	
33	1708 23 370	Bracket Set (Manual) (L.H.D.)	1	
	1951 23 370	Bracket Set (Automatic) (R.H.D.)	1	
	3503 23 370	Bracket Set (Manual) (R.H.D.)	1	
34	1663 23 380	Spring Set, Return	1	
35	1955 23 480	Rod & Link Set (Automatic)	1	
	3503 23 480	Rod & Link Set (Manual)	1	
36	0839 23 484 A	Screw, Flange Set	4	
37	1955 23 500	Choke Set, Semi Auto Fig. No. 38,39 included (Automatic)	1	
38	1955 23 501	Holder Set, Bimetal (Automatic)	1	
39	1955 23 502	Bimetal Set (Automatic)	2	
40	1027 23 509	Pipe, Vacuum (Automatic)	1	
41	0862 23 510	Gasket Set	1	
42	1668 23 530	Pin & Washer Set	1	
43	0750 23 652	Screw & Washer Set	7	
	1708 23 540	Repair Kit, Carburettor	1	
√ 44	0839 13 201	Bolt, Cleaner Set	1	
√45	0823 13 221 A	Gasket, Carburettor	2	
√46	1570 13 222	Insulator, Carburettor	1	

CARBURETTOR
(AUTOMATIC USED FROM 74/4 MANUAL USED FROM 73/10)

No.	Part Number	Description	Q'ty	Remarks
47	99901 0800	Nut, Carburettor	4	
	99971 0800	Washer, Spring	4	

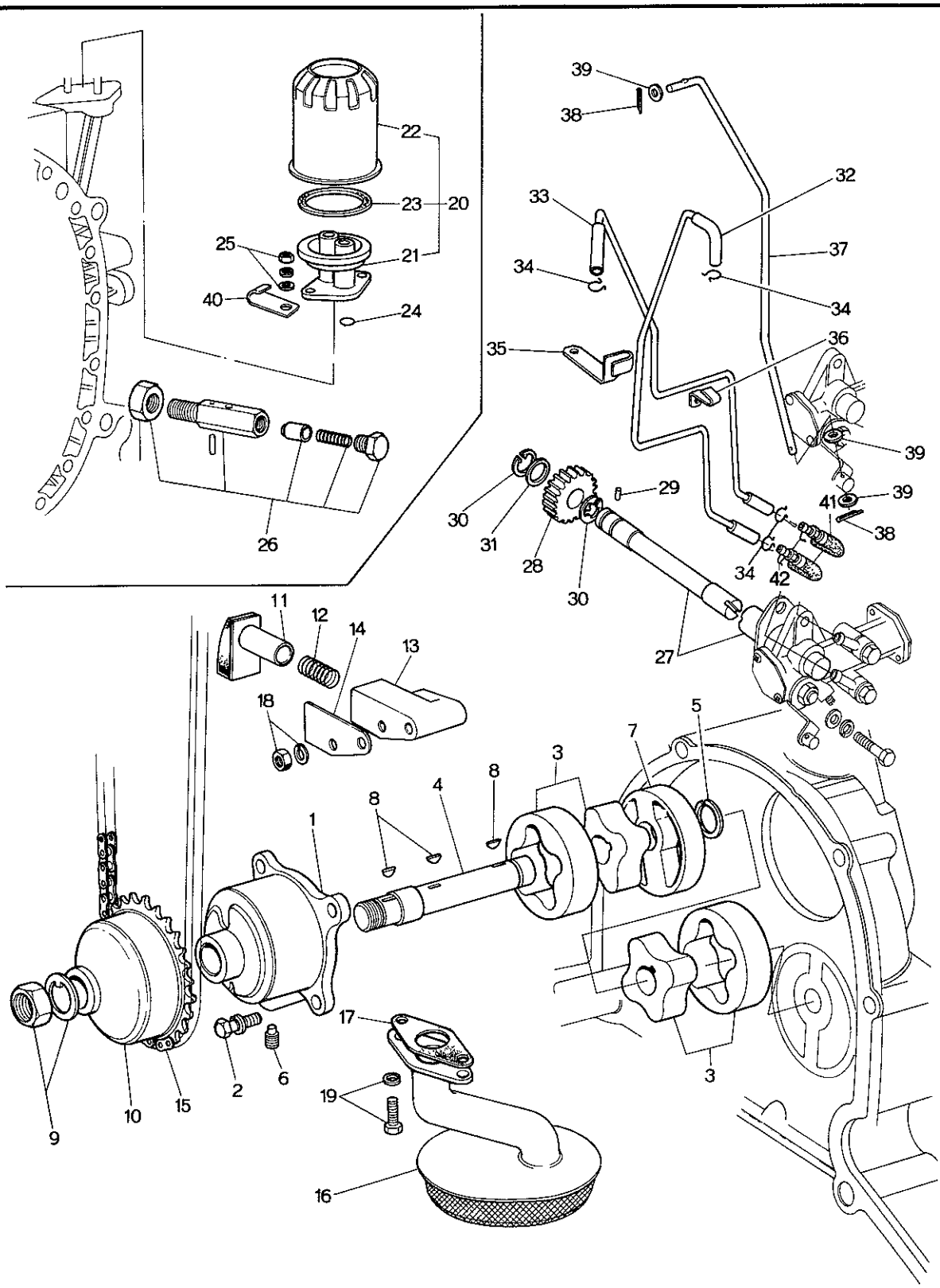
22
23
20
25
21
40
24
26
39
38
32
33
37
34
34
35
36
39
29
30
39
41
38
31
28
34
42
30
27
11
12
14
13
18
5
7
3
8
4
8
1
3
17
2
6
19
10
15
9
16
3

No.	Part Number	Description	Q'ty	Remarl
1	0839 14 101B	Body, Oil Pump	1	
2	99806 0618	Bolt, Oil Pump Body	4	
	99952 0600	Washer, Plain	4	
	99971 0600	Washer, Spring	4	
3	0820 23 882A	Rotor Set	2	
4	0839 14 112B	Shaft	1	
●	1757 14 112	Shaft	1	Car No. 16062
5	0810 14 113	Ring, Snap	1	
6	0839 14 117	Screw, Lock - Oil Pump	1	
7	0820 14 118C	Plate, Middle - Oil Pump	1	
8	0839 14 119B	Key	3	
9	99922 1200	Nut	1	
	99979 1200	Washer, Tab	1	
10	0839 14 141A	Sprocket, Driven	1	
11	0823 14 130	Adjuster, Chain	1	
12	0823 14 131	Spring	1	
13	0839 14 132	Body	1	
●	1757 14 132	Body	1	Car No. 160623
14	0839 14 133	Plate, Guide	1	
15	0839 14 142	Chain	1	
16	0866 14 160C	Strainer, Oil	1	

No.	Part Number	Description	Q'ty	Remarks
	0866 14 160D	Strainer, Oil	1	Car No. 149072 '72/6~△
	0866 14 160E	Strainer, Oil	1	Car No. 150285 '72/7~○
17	0810 14 171	Gasket, Oil Strainer	1	
18	99906 0600	Nut, Chain Adjuster & Oil Strainer	2	
	99971 0600	Washer, Spring	2	
19	99806 0614	Bolt	2	
	99971 0600	Washer, Spring	2	
20	0839 14 300	Filter, Oil	1	
21	0839 23 801	Cover	1	
22	0813 23 802A	Cartridge, Oil Filter (Fig. No. 23 included)	1	
●	0813 23 802B	Cartridge, Oil Filter (Fig. No. 23 included)	1	Car No. 161187 '73/1~○
23	0813 23 803	Gasket	1	
24	99541 01601	Ring, "O" - Oil Filter	2	
25	99901 0800	Nut, Oil Filter	2	
	99971 0800	Washer, Spring	2	
	99953 0800	Washer, Plain	1	
26	0820 14 250C	Regulator, Pressure	1	
●	0820 14 250D	Regulator, Pressure	1	Car No. 167714 '73/4~△
27	0820 14 620	Shaft, Driven Gear	1	

	No.	Part Number	Description	Q'ty	Remar
●		0820 14 620A	Shaft, Driven Gear	1	Car No. 1606
	28	0820 14 625	Gear, Driven	1	
●		0820 14 625A	Gear, Driven	1	Car No. 1661
	29	0813 14 623	Pin	1	
	30	99576 0800	Ring, Snap	2	
	31	0810 18 276	Shim, Adjust (t=0.6) } Selective use	2	
		0810 18 277	Shim, Adjust (t=0.3) } Selective use	2	
	32	0866 14 630	Tube, Metering Oil	1	
●		1757 14 660	Tube, Metering Oil	1	Car No. 16062
	33	0866 14 640A	Tube, Metering Oil	1	
●		1757 14 670	Tube, Metering Oil	1	Car No. 16062
	34	0813 14 641	Clip	4	
●	35	0820 14 643	Clip	1	Car No. 16062
●	36	0820 14 647	Clip	1	Car No. 16062
	37	0866 14 651A	Rod, Connecting	1	
●		1757 14 651	Rod, Connecting	1	Car No. 16062
	38	99221 1212	Pin, Split	2	
●	39	99953 0400	Washer, Plain	1	Car No. 16271
	40	99295 1508	Clip, Battery Cable (Manual)	1	
		99275 2008	Clip, Batter Cable (Automatic)	1	
		99276 2008	clip	1	
		3565 10 865	~	1	~ X7
		3568 10 365 A	~	1	Δ

No.	Part Number	Description	Q'ty	Remarks
● 41	1757 14 680	Check, Valve	2	Car No. 160623 73/10~Added Anew
● 42	1011 14 683	Clip, Metering Oil Tube+Check Valve	2	Car No. 160623 73/10~Added Anew
●	1757 14 652	Shim-HET. Adjust	1	Car No. 162719 73/11~Added Anew
●	1757 14 653	Shim-HET. Adjust	1	
●	1757 14 654	Shim-HET. Adjust	1	

23 METERING OIL PUMP

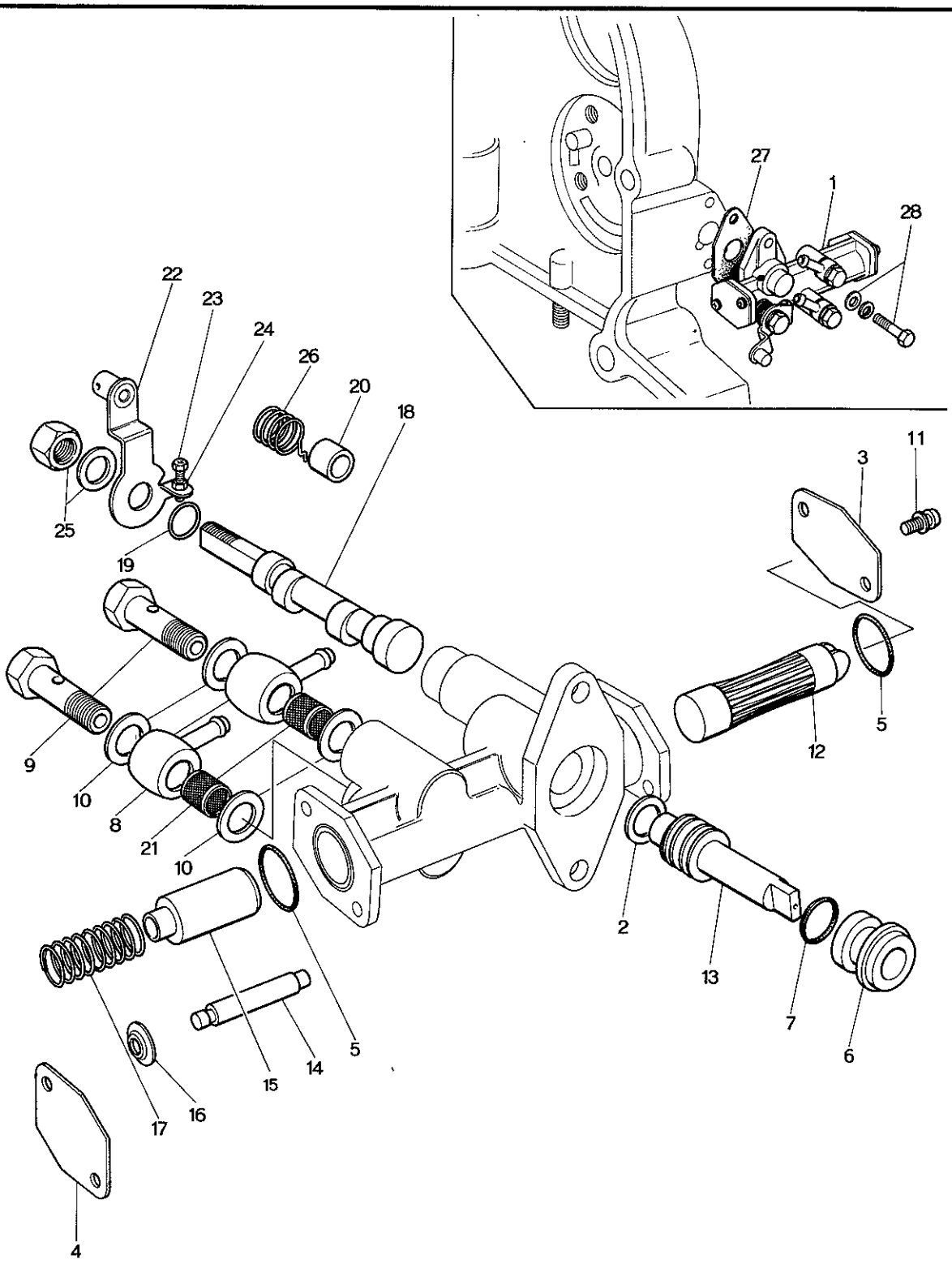

No.	Part Number	Description	Q'ty	Remarl
1	2090 14 600	Pump, Metering Oil	1	
	2090 14 600 A	Pump, Metering Oil	1	Car No.
●	1757 14 600	Pump, Metering Oil	1	Car No. 16062
2	0820 23 832 B	Washer, Thrust	1	
3	0820 23 833 B	Plate	1	
4	0820 23 834 B	Plate	1	
5	0730 23 837	Ring, "O"	2	
6	0820 23 835 A	Bearing, Worm	1	
7	0730 23 839	Ring, "O"	1	
8	0820 23 836	Conector	2	
●	1757 23 836	Pipe	2	Car No. 160623
● 9	0730 23 842	Bolt, Connector	2	Car No. 160623
● 10	0730 23 843	Washer, Connector	4	Car No. 160623
11	99833 0408	Screw, Plate	4	
	99971 0400	Washer, Spring	4	
12	0730 23 845	Plunger	1	
13	0730 23 846	Worm, Driving	1	
14	2090 23 837	Plunger, Sub	1	
●	1011 23 837	Plunger, Sub	1	Car No. 160623
15	2090 23 838	Pluger, Differential	1	

23 METERING OIL PUMP

	No.	Part Number	Description	Q'ty	Remarks
●		1011 23 838	Plunger, Differential	1	Car No. 160623 73/10~×
	16	2090 23 853	Nut, Push	1	
	17	0820 23 840	Spring, Plunger	1	
	18	2090 23 841	Pin, Control	1	
●		1011 23 841	Pin, Control	1	Car No. 160623 73/10~×
	19	0730 23 854	Ring, "V"	1	
	20	0820 23 842	Cap	1	
●	21	0820 23 843	Strainer	2	Car No. 160623 73/10~Discarded
	22	2090 23 844	Lever, Control	1	
●		1757 23 844	Lever, Control	1	Car No. 160623 73/10~×
	23	0820 23 845 A	Screw, Adjust	1	
	24	0820 23 847 A	Nut, Adjust Screw	1	
	25	99907 0600	Nut, Control Lever	1	
		99971 0600	Washer, Spring	1	
	26	0820 23 848 A	Spring, Return	1	
	27	0810 14 611	Gasket, Metering Oil Pump	1	
●		1757 14 611	Gasket, Metering Oil Pump	1	Car No. 160623 73/10~×
	28	99806 0630	Bolt, Metering Oil Pump	1	
●		9080 66630	Bolt Set	1	Car No. 160730 72/12~○
●		9080 66630	Bolt Set	1	Car No. 160623 73/10~Discarded
		99806 0618	Bolt	1	
●		90806 6618	Bolt Set	1	Car No. 160730 72/12~○
●		99806 0618	Bolt	2	Car No. 160623 73/10~Added Anew
●		99953 0600	Washer, Plain	2	Car No. 160730 72/12~Discarded
●		99971 0600	Washer, Spring	2	Car No. 160730 72/12~Discarded

COOLING SYSTEM
(USED UP TO CAR NO. 179250 73/9)

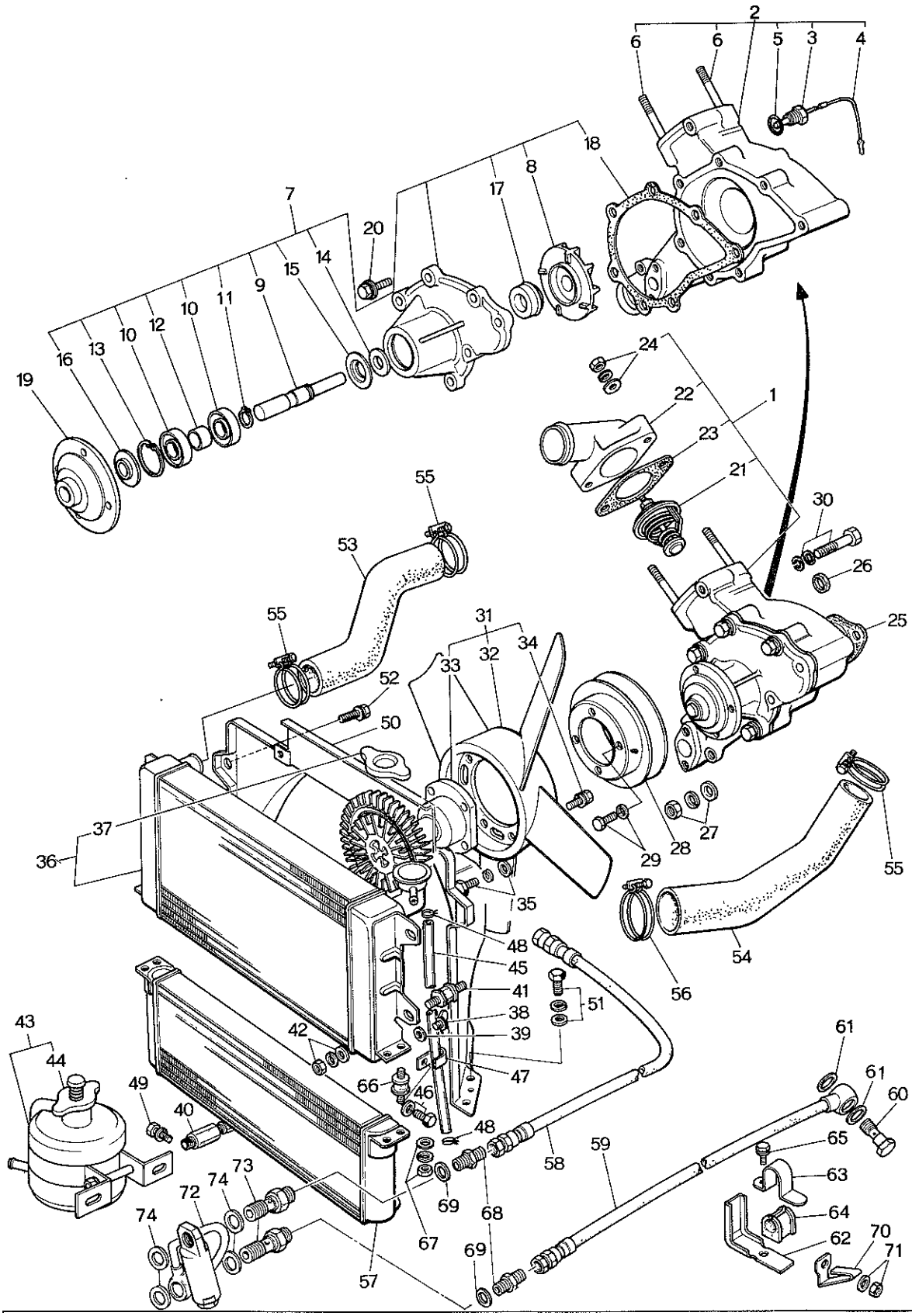

COOLING SYSTEM

(USED UP TO CAR NO. 179250 73/9)

No.	Part Number	Description	Q'ty	Rema
1	0866 15 010B	Pump, Water	1	
	0866 15 010C	Pump, Water	1	Car No. 1280
	0866 15 010D	Pump, Water	1	Car No. 1463
	0862 15 010	Pump, Water	1	Car No. 1528
	0862 15 010A	Pump, Water	1	Car No.
●	0862 15 010B	Pump, Water	1	Car No. 1715
2	~~0866 15 100D~~	~~Casing~~	~~1~~	
	~~0866 15 100C~~	~~Casing~~	~~1~~	~~Car No. 1280~~
	~~0866 15 100D~~	~~Casing~~	~~1~~	~~Car No. 1463~~
	~~0862 15 100~~	~~Casing~~	~~1~~	~~Car No. 1528~~
3	0259 18 510	Gauge Unit, Water Heat	1	
4	0866 18 511	Cord, Heat Gauge Unit	1	
5	0110 18 515	Ring, "O"-Heat Gauge Unit	1	
6	2090 15 104	Stud, Thermostat Cover	2	
7	~~0866 15 130~~	~~Cover, Pump~~	~~1~~	
	~~1620 15 130~~	~~Cover, Pump~~	~~1~~	~~Car No. 15281~~
	0820 99 150	Repair Kit, Water Pump (Fig. No. 8,9,10,11,15,16,17 included)	1	
	0862 99 150	Repair Kit, Water Pump (Fig. No. 8,9,10,11,12,14,15,17,18 included)	1	Car No. 15281
	0862 99 150A	Repair Kit, Water Pump (Fig. No. 8,9,10,11,12,14,15,17,18 included)	1	Car No.
8	0813 15 111	Impeller	1	
	1620 15 111	Impeller	1	Car No. 15281

COOLING SYSTEM
(USED UP TO CAR NO. 179250 7/9)

No.	Part Number	Description	Q'ty	Remarks
9	0820 15 112	Shaft	1	
10	0118 15 121	Bearing, Ball	2	
11	0118 15 114	Ring, Snap	1	
12	0820 15 115	Spacer	1	
13	99574 3500	Ring, Snap	1	
14	0813 15 117	Plate, Baffle	1	
	0118 15 125	Plate, Baffle	1	Car No. 152816 7/9~×
15	0118 15 118	Plate, Dust Seal	1	
16	0810 15 119	Plate, Dust Seal	1	Car No. 152815 7/8~Discarded
17	0820 15 120	Water Seal	1	
18	2329 15 132A	Gasket	1	
	1620 15 132	Gasket	1	Car No. 152816 7/9~×
	1620 15 132A	Gasket	1	Car No. 7/2~×
19	0820 15 152	Boss, Pulley	1	
	1011 15 152	Boss, Pulley	1	Car No. 152816 7/9~×
20	99801 0825	Bolt, Water Pump	5	
	99801 0825	Bolt	3	Car No. 152816 7/9~Q'ty
	99952 0800	Washer, Plain	5	
	99952 0800	Washer, Plain	3	Car No. 152816 7/9~Q'ty
	99971 0800	Washer, Spring	5	

COOLING SYSTEM
(USED UP TO CAR NO. 179250 73/9)

No.	Part Number	Description	Q'ty	Rema
	99971 0800	Washer, Spring	3	Car No. 1528
21	0823 15 171	Thermostat, Water	1	
	~~0838 15 171A~~	~~Thermostat, Water~~	~~1~~	
22	0839 15 172	Cover, Thermostat	1	
●	1114 15 170	Cover, Thermostat	1	Car No. 1715
23	0813 15 173	Gasket, Cover	1	
24	99907 0800	Nut, Cover	2	
	99901 0800	Nut, Cover	2	Car No. 1432
	99971 0800	Washer, Spring	2	
25	0822 15 105	Gasket, Water Pump	1	
26	0820 15 106	Gasket, Water Pump	2	
27	99901 0800	Nut, Water Pump	3	
	99953 0800	Washer, Plain	3	
	99971 0800	Washer, Spring	3	
28	0820 15 151	Pulley, Water Pump	1	
	1011 15 151	Pulley, Water Pump	1	Car No. 15281
29	99806 0610	Bolt, Pulley	4	
	99971 0600	Washer, Spring	4	
30	99801 0832	Bolt, Water Pump	1	

No.	Part Number	Description	Q'ty	Remarks
	99953 0800	Washer, Plain	1	
	99971 0800	Washer, Spring	1	
31	0839 15 250D	Fan & Fan Drive (Manual)	1	
	0842 15 250C	Fan & Fan Drive (Automatic)	1	
32	0839 15 200	Fan, Cooling	1	
33	0839 15 210B	Fan Drive	1	
34	99806 0612	Bolt, Fan & Fan Drive	6	
	99971 0600	Washer, Spring	6	
35	908066 6 18	Bolt Set, Fan & Fan Drive	4	
36	0866 15 310C	Radiator (Manual)	1	
	0866 15 310D	Radiator (Manual)	1	Car No. 131046 73/12~△
	0866 15 310E	Radiator (Manual)	1	Car No. 153087 73/9~○
	0872 15 310	Radiator (Automatic)	1	
37	0222 15 205	Cap (Automatic)	1	

COOLING SYSTEM
(USED UP TO CAR NO. 179250 73/9)

No.	Part Number	Description	Q'ty	Remar
	0866 15 316	Cap (Manual)	1	
	0866 15 316A	Cap (Manual)	1	Car No. 1467
38	0866 15 317	Cock, Drain (Manual)	1	
	2228 15 207	Cock, Drain (Automatic)	1	
39	0866 15 318	Gasket (Manual)	1	
	2228 15 208	Gasket (Automatic)	1	
40	0118 10 320	Cock, Water Drain (Manual)	1	Car No. 13104
41	0820 15 312	Rubber, Insulation	4	
	0820 15 312A	Rubber, Insulation	4	Car No. 13321
42	99901 0800	Nut, Radiator	4	
	99940 0800	Nut	4	Car No. 14238
	99952 0822	Washer, Plain	4	Car No. 14238
	99971 0800	Washer, Spring	4	
43	0866 15 350A	Tank, Sub	1	
	0866 15 350B	Tank, Sub	1	Car No. 12738(
●	0866 15 350C	Tank, Sub	1	Car No. 16119(
44	0222 15 255	Cap	1	

COOLING SYSTEM
(USED UP TO CAR NO. 179250 73/9)

No.	Part Number	Description	Q'ty	Remarks
45	0866 15 351	Hose, Water - Reserve Tank	1	
	0866 15 351A	Hose, Water - Reserve Tank	1	Car No. 124708 73/11~○
46	~~99983 0812~~	~~Screw~~	~~2~~	From Car No. 1
	~~99952 0800~~	~~Washer, Plain~~	~~2~~	
47	~~99285 0800~~	~~Clip, Water Hose~~	~~2~~	
	99289 0701	Clip, Water Hose	2	From Car No. 1
48	99285 0800	Clip, Water Hose	2	
49	99804 0620	Bolt	2	
	99786 0620	Bolt	2	Car No. 142383 73/3~○
	99952 0600	Washer, Plain	2	Car No. 142383 73/3~Discarded
	99971 0600	Washer, Spring	2	
50	0866 15 401	Shroud, Radiator	1	
	0866 15 401A	Shroud, Radiator	1	Car No. 149767 73/1~○
51	99806 0618	Bolt, Radiator Shroud	4	
	99971 0600	Washer, Spring	4	
	99952 0800	Washer, Plain	4	
52	99801 0812	Bolt	2	
	99796 0812	Bolt	2	Car No. 142383 73/3~○
	99952 0800	Washer, Plain	2	Car No. 142383 73/3~Discarded
	99971 0800	Washer, Spring	2	

COOLING SYSTEM
(USED UP TO CAR NO. 179250 73/9)

No.	Part Number	Description	Q'ty	Remar
53	0866 15 511	Hose, Water-Thermostat~Radiator	1	
54	0866 15 521A	Hose, Water-Radiator~Water Pump	1	
	1620 15 521	Hose, Water-Radiator~Water Pump	1	Car No. 1528
55	99282 4900	Band	3	Car No. 1528
56	99282 5300	Band	1	Car No. 152816
57	0866 14 700B	Cooler, Oil (Manual)	1	
	0866 14 700C	Cooler, Oil (Manual)	1	Car No. 1503(
	0865 14 700	Cooler, Oil (Automatic)	1	
	0865 14 700A	Cooler, Oil (Automatic)	1	Car No. 15030
58	0866 14 720	Hose, Oil	1	
	0866 14 720A	Hose, Oil } Selective use	1	Car No. 12739
	0865 14 720	Hose, Oil } Selective use	1	Car No. 132360
59	0839 14 730A	Hose, Oil	1	
	0866 14 730	Hose, Oil } Selective use	1	Car No. 12739
	0865 14 730	Hose, Oil } Selective use	1	Car No. 132360
60	99381 1400	Bolt, Connector~Oil Hose	1	
61	99562 1800	Gasket	2	
62	0866 14 740	Bracket, Oil Hose	1	
	0866 14 740A	Bracket, Oil Hose	1	Car No. 127396
63	0839 14 745	Clip, Oil Hose	1	

COOLING SYSTEM
(USED UP TO CAR NO. 179250 73/9)

No.	Part Number	Description	Q'ty	Remarks
64	0813 14 716	Protector	1	
65	99806 0610	Bolt	1	
	99806 0816	Bolt	1	Car No. 127396 73/12~○
	99971 0600	Washer, Spring	1	
66	0222 13 363	Rubber, Insulation	4	
67	99906 0600	Nut	8	
	99952 0600	Washer, Plain	8	
	99971 0600	Washer, Spring	8	
68	99834 1200	Joint, Union	2	(1558) (1559) Car No. 143809 74/4~Discarded
69	99564 1600	Gasket	2	
70	0866 18 496	Clip	1	
71	99921 1200	Nut	1	
	99971 1200	Washer, Plain	1	
72	1562 14 780	Valve Ass'y-By Pass	1	Car No. 143809 74/4~Added Anew
73	1665 14 771	Bolt, Connector	2	
74	99562 1600	Packing	4	
~~(N)~~	~~0866-61-811~~	~~Packing~~	~~1~~	~~Car No. 137813 73/12~Added Anew~~
~~(N)~~	~~0866-61-812~~	~~Packing~~	~~1~~	
~~(N)~~	~~0866-61-813~~	~~Packing~~	~~1~~	
~~(N)~~	~~0866-61-814~~	~~Packing~~	~~1~~	

COOLING SYSTEM
(USED FROM CAR NO. 160623 73/10)

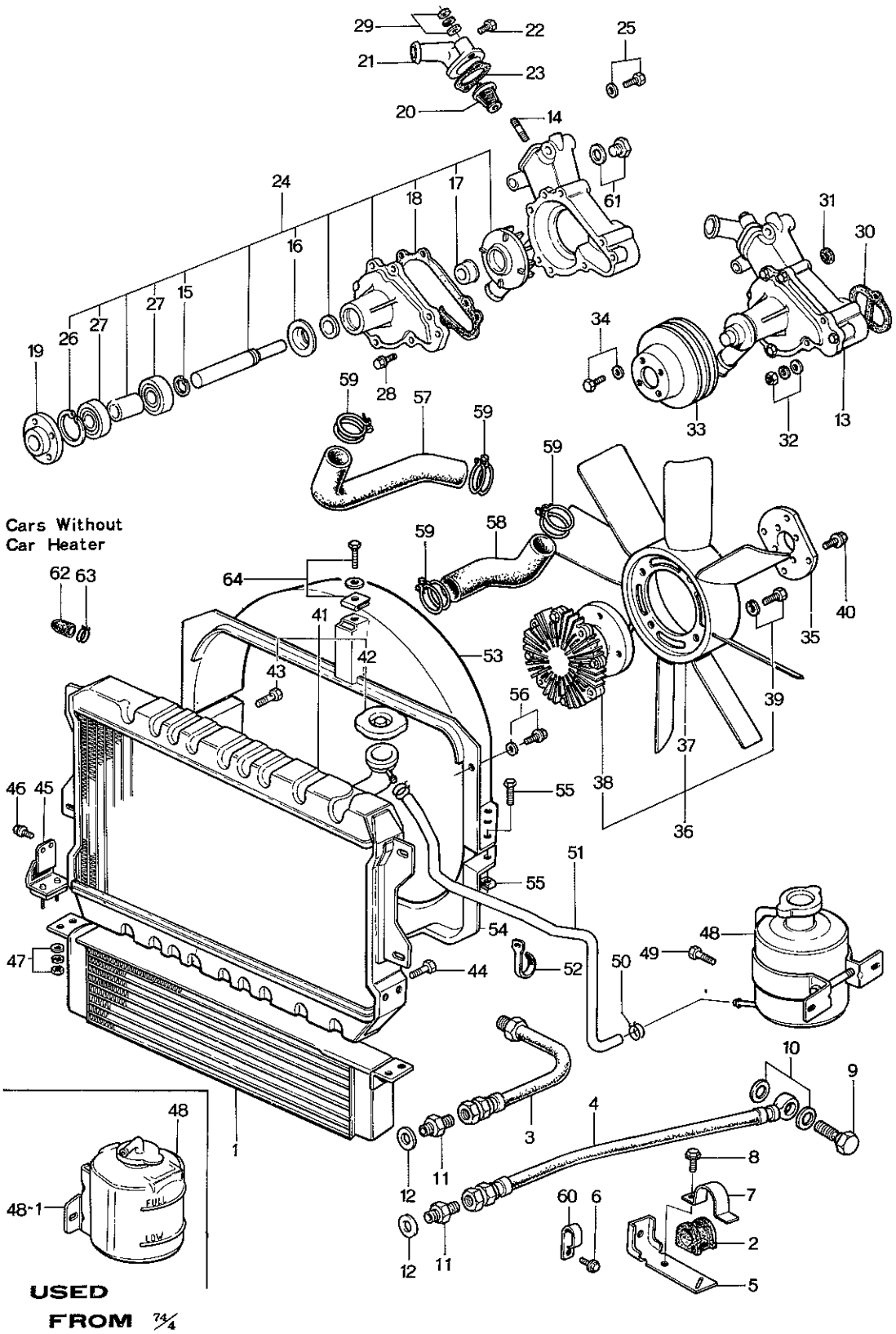

COOLING SYSTEM
(USED FROM CAR NO. 160623 73/10

No.	Part Number	Description	Q'ty	Rema
1	1128 14 700	Cooler, Oil	1	
2	0813 14 716	Protector, Oil Hose	1	
3	0865 14 720	Hose, Oil	1	
4	0881 14 730	Hose, Oil	1	
5	1757 14 740	Bracket, Oil Hose	1	
6	99796 0810	Bolt	1	
7	0839 14 745	Clip, Oil Hose	1	
8	99806 0616	Bolt, Clip	1	
	99971 0600	Washer, Spring	1	
9	99381 1400	Bolt, Connector - Oil Hose	1	
10	99562 1800	Gasket	2	
11	99384 1200F	Joint, Union	2	
12	99564 1600	Gasket	2	
13	1907 15 010C	Pump, Water	1	
√●	1052 15 010	Pump, Water	1	
14	2090 15 104	Stud	2	
15	1757 15 114	Ring, Snap	1	
16	1757 15 118	Plate, Dust Seal	1	
17	1757 15 120	Seal, Water	1	
18	1757 15 132	Gasket, Pump Cover	1	

14 15 COOLING SYSTEM
(USED FROM CAR NO. 160623 73/10)

	No.	Part Number	Description	Q'ty	Remarks
	19	1757 15 152A	Boss, Pulley	1	
	20	0823 15 171	Thermostat	1	
	21	1757 15 170	Cover, Thermostat	1	
●		1052 15 170	Cover, Thermostat	1	73/3~○
	22	99502 3000	Plug, Thermostat Cover	1	
	23	0813 15 173	Gasket, Thermostat	1	
●	V	1757 15 173	Gasket, Thermostat	1	73/3~○
	24	1907 99 150A	Repair Kit, Water Pump	1	
●		1907 99 150B	Repair Kit, Water Pump	1	73/3~△
	25	99511 1200	Plug	1	73/3~Discarded
		99562 1200	Gasket	1	73/3~Discarded
	26	99574 4000	Ring, Retaining	1	
	27	99606 72030	Bearing, Ball	2	
	28	99796 0820	Bolt, Pump Cover	2	
	29	99901 0800	Nut, Thermostat Cover	2	
		99953 0800	Washer, Plain	2	
		99971 0800	Washer, Spring	2	
	30	1757 15 105	Gasket, Water Pump	1	
●	V	1757 15 105A	Gasket, Water Pump	1	74/1~△
	31	0820 15 106	Gasket, Water Pump	2	
●	V	1757 15 106	Shim, Water Pump	2	74/2~△
	32	99901 0800	Nut, Water Pump	4	
		99971 0800	Washer, Spring	4	
	33	1757 15 151A	Pulley, Water Pump	1	
		1757 15 190	Gasket-W. THERMO (L.H.D)	1	74/1~ Added anew (YM. APR '74)

	No.	Part Number	Description	Q'ty	Rema
	34	99796 0620	Bolt	4	
	35	1907 15 211	Spacer, Fan Drive	1	
	36	1907 15 250	Fan & Fan Drive	1	
	37	1097 15 200	Fan, Cooling	1	
	38	1907 15 210	Fan, Drive	1	
	39	99806 0620	Bolt, Fan & Fan Drive	4	
		99971 0600	Washer, Spring	4	
	40	99796 0620	Bolt, Fan Drive	4	
	41	1128 15 310B	Radiator	1	
●	√	1128 15 310D	Radiator (Manual)	1	
●	√	1129 15 310D	Radiator (Automatic)	1	
	42	0222 15 205	Cap	1	
●	√	0488 15 205	Cap	1	
	43	1128 15 317	Cock, Water Drain	1	
	44	99786 0816	Bolt, Radiator	4	
●		99952 0822	Washer, Plain	4	
	45	1128 15 312A	Rubber, Insulation	2	
	46	99786 0610	Bolt, Radiator	4	
	47	99906 0600	Nut, Radiator & Oil Cooler	4	
		99952 0600	Washer, Plain	4	

COOLING SYSTEM
(USED FROM CAR NO. 160623 73/10)

No.	Part Number	Description	Q'ty	Remarks
	99971 0600	Washer, Spring	4	
48	0866 15 350C	Tank, Sub	1	
● √	0806 15 350	Tank, Sub	1	74/4～×
	2981 15 205	Cap	1	74/4～Discarded
√ ● 48-1	0494 15 251	Bracket, Sub Tank	1	74/4～Added Anew
49	99786 0620	Bolt, Sub Tank	2	
50	99285 0800	Clip, Water Hose	2	
●	99283 1300	Clip, Water Hose	2	74/4～×
51	0866 15 351A	Hose, Water-Sub Tank	1	
● √	1881 15 351A	Hose, Water-Sub Tank	1	74/4～×
52	99289 0701	Clip	2	
53	1881 15 411C	Shroud, Radiator-Upper	1	
54	1881 15 421B	Shroud, Radiator-Lower	1	
55	99863 0516	Screw, Tapping	4	
	99952 0500	Washer, Plain	4	
	0820 56 905	Nut, Spring	4	
56	99796 0812	Bolt, Radiator Shroud	4	
● √	99952 0816	Washer, Plain	4	
57	1881 15 511	Hose, Water-Thermostat～Radiator	1	
58	1881 15 521	Hose, Water-Radiator～Water Pump	1	
59	99282 4900	Band, Hose-Water Hose	4	
60	0866 18 496	Clip	1	
● √	2090 18 999	Clip	1	74/3～×
61	99511 1600	Plug, HEX.-Head (Cars Without Car Heater)	1	

No.	Part Number	Description		Q'ty	Rema
	99564 1600	Gasket		1	
62	0864 61 061A	Cover	(Cars Without Car Heater)	2	
63	99282 2600	Band Hose		2	
64	99860 0514	Screw, Radiator Shroud		1	
	99952 0500	Washer, Plain		1	
	0820 56 906	Nut, Spring		1	

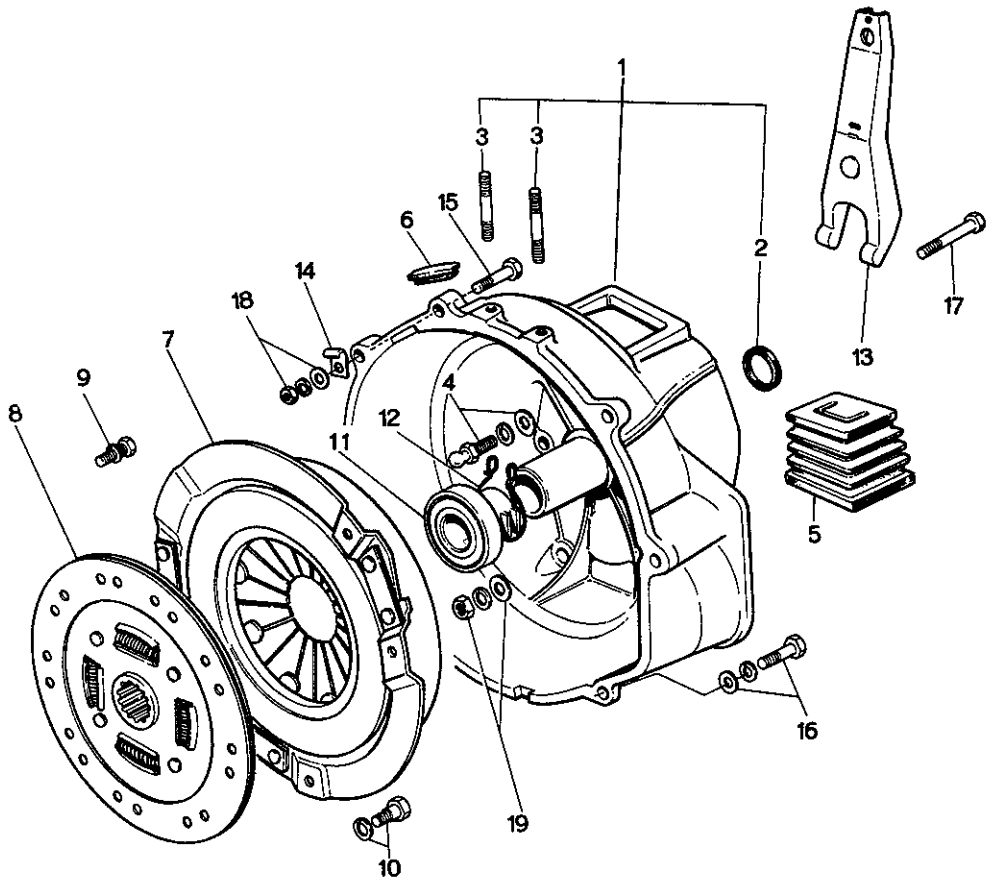
1
3
3
15
6
14
18
7
9
8
11
12
4
2
13
17
5
16
19
10

No.	Part Number	Description	Q'ty	Remar
1	0866 16 210	Housing, Clutch	1	
●	1881 16 210A	Housing, Clutch	1	Car No. 1606
2	0603 16 103	Oil Seal	1	
3	99851 0820	Stud	2	
●	0222 16 105	Stud	2	Car No. 1606
4	0603 16 102B	Pin, Pivot	1	
	99953 1000	Washer, Plain	1	
	99971 1000	Washer, Spring	1	
5	0866 16 214	Cover, Dust	1	
	0866 16 214A	Cover, Dust	1	Car No. 1530
6	0813 16 112	Cover, Top Hole	1	
7	4077 16 410	Cover, Clutch	1	
	0866 16 410	Cover, Clutch	1	Car No. 1427
●	0839 16 410B	Cover, Clutch	1	Car No. 1606
8	4077 16 460C	Disc, Clutch	1	
	0866 16 460	Disc, Clutch	1	Car No. 1358
	0866 16 460A	Disc, Clutch	1	Car No. 1575
●	0862 16 460 0862 16 460A	Disc, Clutch "	1	Car No. 1606
9	0839 16 432	Bolt, Reamer	2	

No.	Part Number	Description	Q'ty	Remarks
	99971 0800	Washer, Spring	2	
10	99753 78118	Bolt	4	
	99971 0800	Washer, Spring	4	
11	0820 16 510	Collar, Release	1	
12	0820 16 515	Spring, Collar	1	
13	0820 16 230	Fork, Release	1	
●	0454 16 520	Fork, Release	1	Car No. 160623 73/10～×
14	~~99295 1510~~	~~Clip~~	~~1~~	
15	99811 1032	Bolt	1	
●	99761 0309	Bolt	1	Car No. 167748 73/5～○
●	99971 1000	Washer, Spring	1	Car No. 167748 73/5～Discarded
●	99953 0300	Washer, Plain	1	Car No. 167748 73/5～Added Anew
●	99971 0300	Washer, Spring	1	Car No. 167748 73/5～Added Anew
16	99811 1050	Bolt, Clutch Housing	2	
●	99796 1050	Bolt, Clutch Housing	2	Car No. 167748 73/5～○
	99953 1000	Washer, Plain	2	Car No. 167748 73/5～Discarded
	99971 1000	Washer, Spring	2	Car No. 167748 73/5～Discarded
17	99811 1055	Bolt, Clutch Housing	1	
●	99796 1045	Bolt, Clutch Housing	1	Car No. 167748 73/5～×
18	99921 1000	Nut	3	

	No.	Part Number	Description	Q'ty	Remar
●		99940 1001	Nut-Flange	3	Car No. 1677
		99952 1000	Washer, Plain	1	
●		99953 1000	Washer, Plain	2	Car No. 1677
●		99971 1000	Washer, Spring	3	Car No. 1677
	19	99921 1200	Nut	6	
		99953 1200	Washer, Plain	6	
		99971 1200	Washer, Spring	6	
●		99940 1001	Nut	8	Car No. 160623

MANUAL T/MISSION (CASE)

(USED UP TO CAR NO. 179250 73/9)

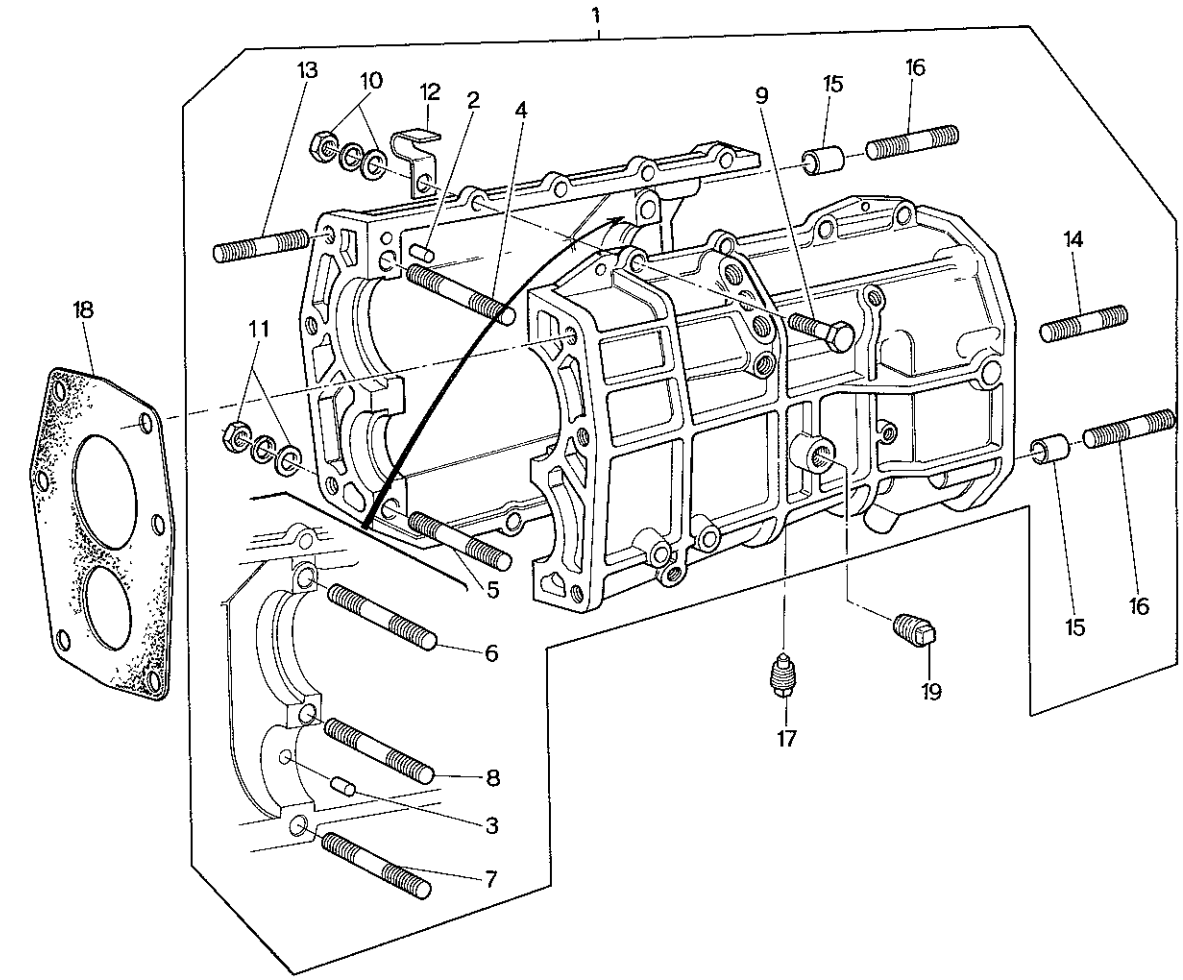

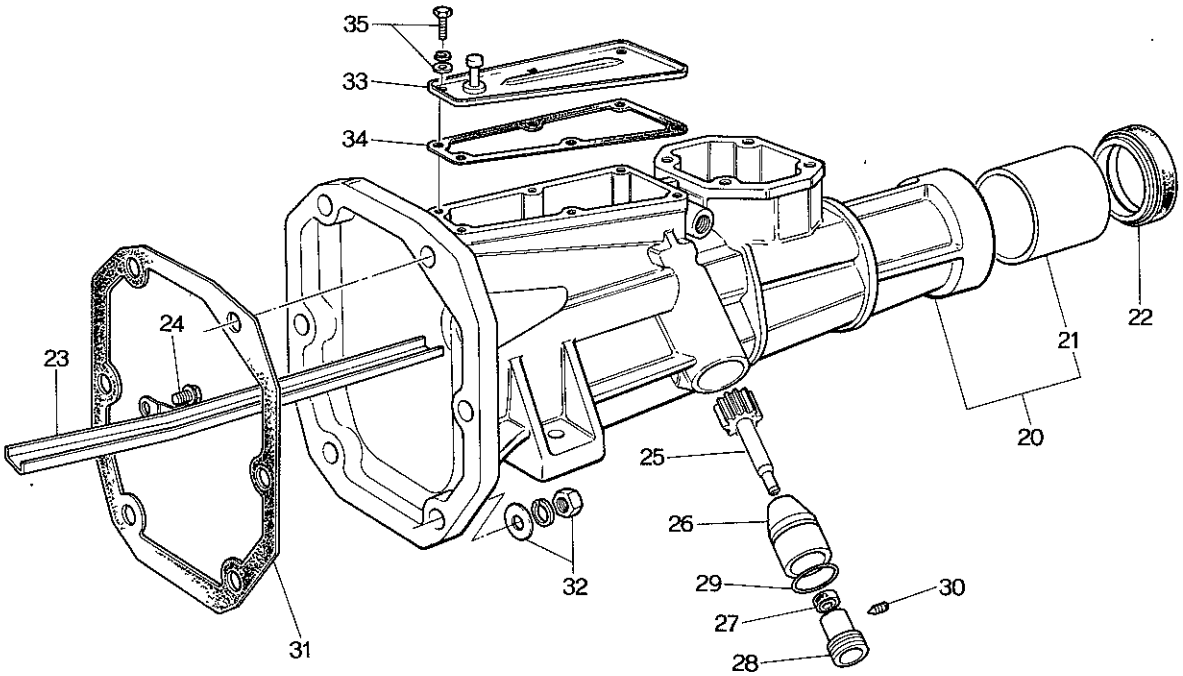

No.	Part Number	Description	Q'ty	Remar
1	0866 17 100A	Case, T / mission	1	
2	99233 0816	Pin, Knock	1	
3	0603 17 104	Pin, Knock	1	
4	99855 1085	Stud	1	
5	99855 1078	Stud	1	
6	99855 1055	Stud	1	
7	99855 1040	Stud	1	
8	99851 0860	Stud	1	
9	99801 0845	Bolt	7	
10	99921 1000	Nut	4	
	99871 1000	Washer, Spring	4	
	99953 1000	Washer, Plain	4	
11	99801 0800	Nut	8	
	99971 0800	Washer, Spring	8	
	99953 0800	Washer, Plain	8	
12	0866 17 107	Clip	2	
13	99855 1232	Stud	6	
14	99855 1025	Stud	4	
15	0603 17 105	Pin, Tabular	2	
16	99855 1035	Stud	2	
17	0107 17 121	Plug, Magnet	1	
18	0603 17 131	Gasket, T / mission Case Front	1	
19	99502 4000	Plug, Tapered	1	

MANUAL T/MISSION (CASE)
(USED UP TO CAR NO. 179250 73/9)

No.	Part Number	Description	Q'ty	Remarks
20	0866 17 330A	Housing, Extension	1	
21	0187 17 333	Bush	1	
	1820 22 333	Bush	1	Car No. 133210 72/1～○
22	0317 17 335	Seal, Oil	1	
	0376 17 335	Seal, Oil	1	Car No. 159447 72/11～○
23	0866 17 540	Pass, Oil	1	
24	99833 0510	Screw, Oil Pass	1	
	99971 0500	Washer, Spring	1	
25	0820 17 345	Gear, Speedometer Driven	1	
26	0183 17 346	Sleeve, Speedometer	1	
27	99586 10207	Seal, Oil	1	
28	0183 17 351	Joint, Speedometer Cable	1	
29	99541 02101	Ring, "O"	1	
30	0180 17 353	Screw, Set	1	
31	0603 17 361	Gasket	1	
32	99921 1000	Nut	6	
	99953 1000	Washer, Plain	6	
	99971 1000	Washer, Spring	6	
33	0866 17 530	Cover, Blind	1	
34	0866 17 524	Gasket	1	
35	99806 0610	Bolt, Blind Cover	6	
	99971 0600	Washer, Spring	6	

MANUAL T / MISSION (CASE)

(USED FROM CAR NO. 160623 73/10)

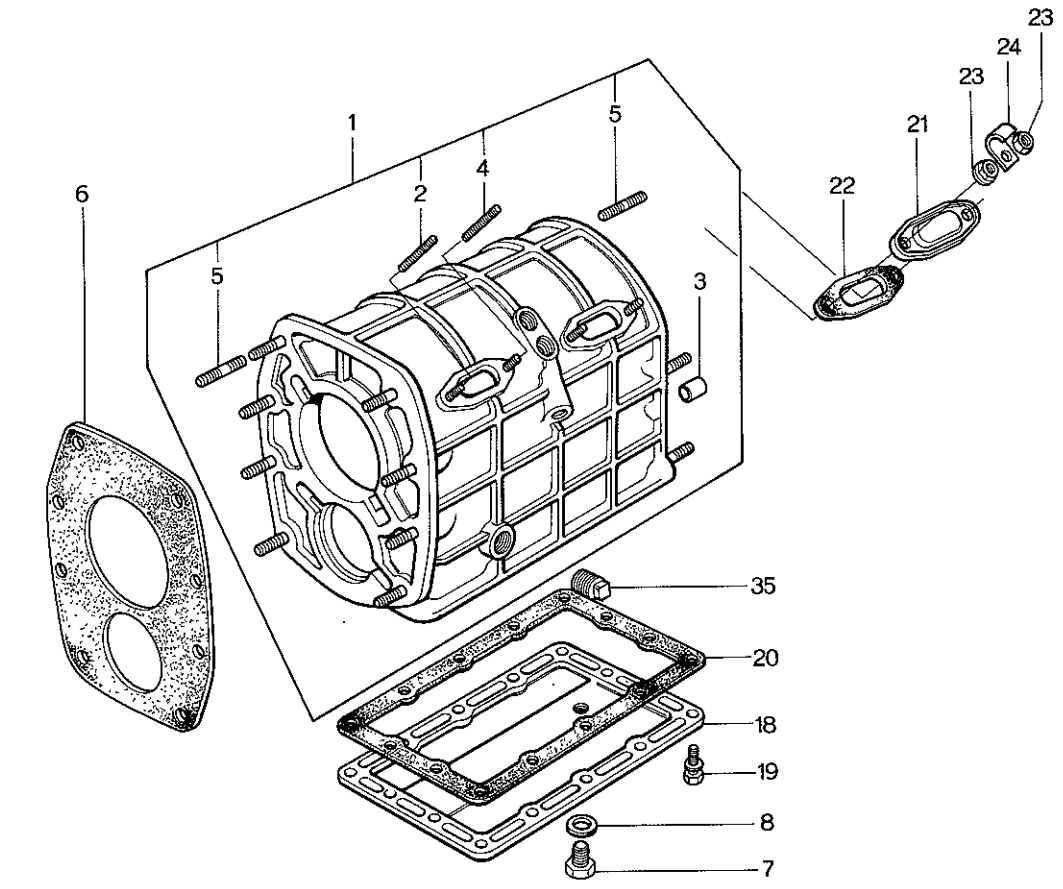

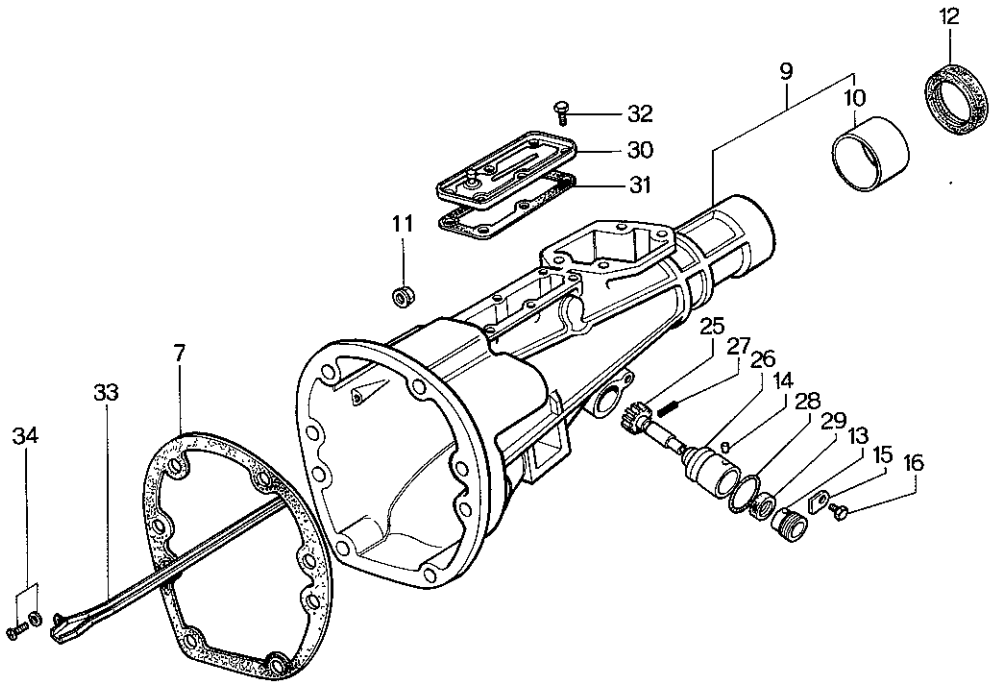

No.	Part Number	Description	Q'ty	Remark
1	1011 17 100B	Case, T/mission	1	
2	0839 17 105	Stud, Blind Cover	2	
3	99233 1225	Pin, Knock	2	
4	99852 0610F	Stud, Blind Cover	2	
5	99855 1025	Stud, Front & Rear	12	
	99855 1025F	Stud, Front & Rear	2	
6	0839 17 111	Gasket, T/mission Case Front	1	
7	0810 17 121	Plug, Magnet	1	
8	99564 1800	Gasket, Magnet Plug	1	
9	1011 17 330A	Housing, Extension Housing	1	
10	0398 22 333	Bush, Extension Housing	1	
11	99940 1001	Not, Extension Housing+T/mission Case	6	
12	0376 17 335	Oil Seal, Extension Housing	1	
13	0862 17 351	Joint, Cable-Speedometer	1	
14	0187 17 352	Pin, Dowel	1	
15	0111 17 354	Plate, Lock-Cable Joint	1	
16	99796 0614	Bolt, Lock Plate	1	

MANUAL T/MISSION (CASE)
(USED FROM CAR NO. 160623 73/10)

No.	Part Number	Description	Q'ty	Remarks
17	0839 17 361	Gasket, Extension Housing+T/mission Case	1	
18	0862 17 371	Cover, Under	1	
19	99796 0620	Bolt, Under Cover	14	
20	0862 17 375	Gasket, Under Cover	1	
21	0810 17 381	Cover, Blind	2	
22	0810 17 385	Gasket, Blind Cover	2	
23	99906 0600	Nut, Blind Cover & Clip	6	
	99971 0600	Washer	4	
24	99276 0506	Clip, Wire Harness	2	
25	0862 17 441	Gear, Drive-Speedometer	1	
26	0862 17 442	Sleeve, Driven Gear	1	
27	99222 0216	Pin, Spring-Driven Gear	1	
28	99541 02211	Ring, "O"-Driven Gear	1	
29	99586 10207	Oil Seal, Driven Gear	1	
30	1011 17 530	Cover, Blind	1	
31	1011 17 535	Gasket, Blind Cover	1	
32	99796 0608	Bolt, Blind Cover	6	
33	1011 17 540A	Pass, Oil	1	
34	99806 0614	Bolt, Oil Pass	1	
	99971 0600	Washer, Spring	1	

No.	Part Number	Description	Q'ty	Rema
35	99502 4000	Plug	1	
	1011 89 175	Gasket Set, T/mission	1 Set	

All Gaskets Relative to T/mission Included

MANUAL T/MISSION (GEAR)

(USED UP TO CAR NO. 179250 73/9)

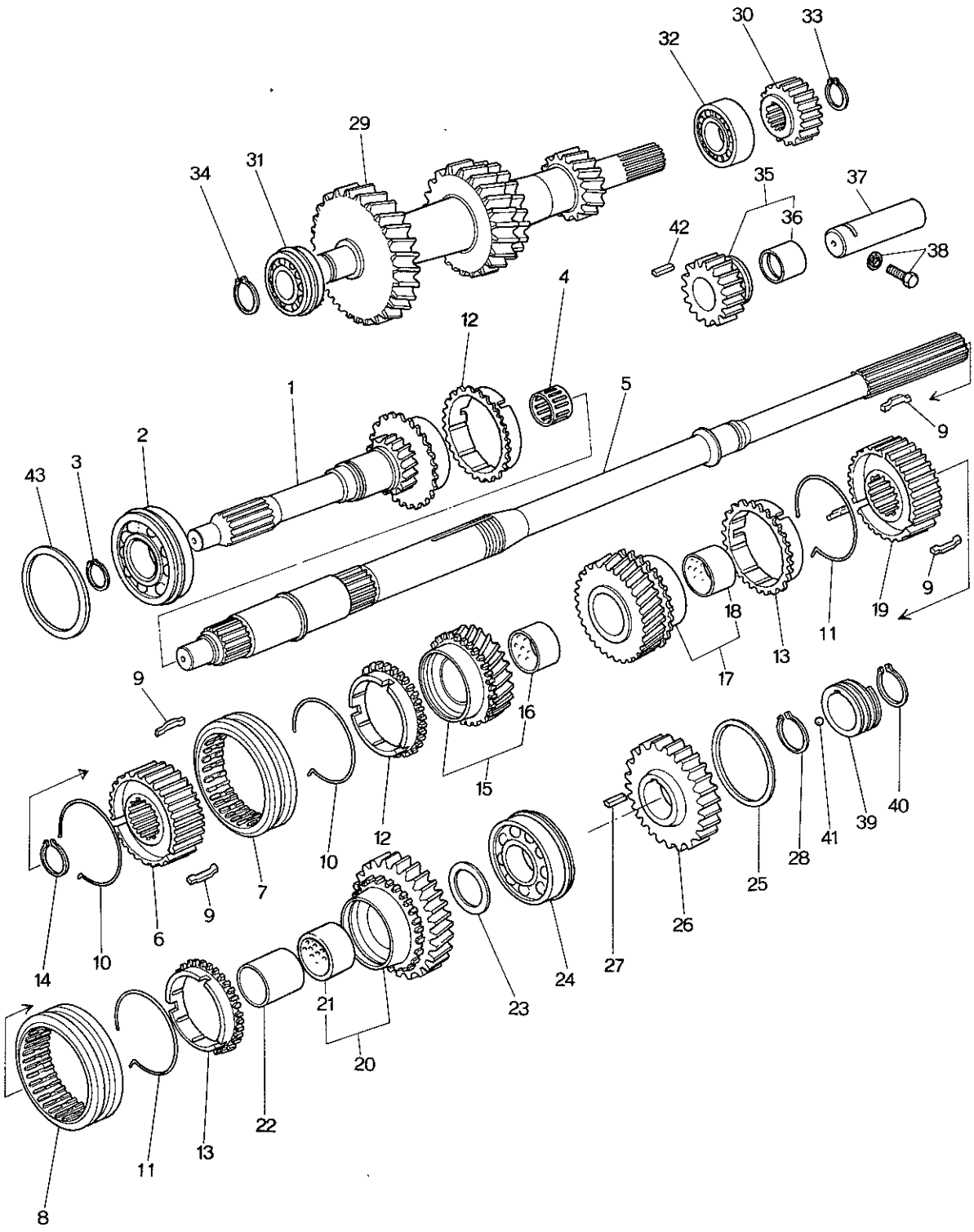

No.	Part Number	Description	Q'ty	Remar
1	0866 17 201	Gear, Main Drive	1	
	0866 17 201B	Gear, Main Drive	1	Car No. 127396
2	99606 63060	Bearing, Ball	1	
3	99573 3000	Ring, Snap	1	
4	0603 17 210	Bearing, Needle	1	
5	0866 17 221	Shaft, Main	1	
	0866 17 221A	Shaft, Main	1	Car No. 127396
6	0820 17 241B	Hub, (3.4) - Clutch	1	
	0290 17 241B	Hub, (3.4) - Clutch	1	Car No. 127396
7	0187 17 242	Sleeve, Clutch Hub (3.4)	1	
	0603 17 262	Sleeve, Clutch	1	Car No. 127396
8	0603 17 262	Sleeve (1.2)	1	
9	0187 17 243	Key, Synchronizer	6	
10	0103 17 244A	Spring, Synchronizer	2	
	0600 17 324	Spring, Synchronizer	2	Car No. 127396
11	0600 17 324	Spring, Synchronizer (1.2)	2	
12	4069 17 245	Ring, Synchronizer (3.4)	2	
	0839 17 245	Ring, Synchronizer (3.4)	2	Car No. 127396
	0881 17 245A	Ring, Synchronizer (3.4)	2	Car No. 152816
13	0839 17 245	Ring, Synchronizer (1.2)	2	Car No. 127396
	0881 17 245A	Ring, Synchronizer (1.2)	2	Car No. 152816
14	0317 17 225	Ring, Snap	1	
	~~0866 17 270 Washer, Thrust~~	~~Selective use~~	~~1~~	
	~~0866 17 280A Washer, Thrust~~		~~1~~	~~Car No. 127396~~
	~~0866 17 277 Washer, Thrust~~	~~Selective use~~	~~1~~	
	~~0866 17 285 Washer, Thrust~~		~~1~~	
15	0603 17 230A	Gear, Third	1	
	0290 17 230A	Gear, Third	1	Car No. 127396
16	0187 17 232	Bush, Third Gear	1	
17	0866 17 250	Gear, Second	1	
18	0187 17 272	Bush, Second Gear	1	
19	0290 17 261B	Hub, (1.2) - Clutch	1	

MANUAL T/MISSION (GEAR)
(USED UP TO CAR NO. 179250 73/9)

No.	Part Number	Description	Q'ty	Remarks
20	0866 17 270	Gear, Low	1	
21	0187 17 272	Bush, Low Gear	1	
22	0866 17 275	Sleeve, Gear	1	
23	0866 17 276	Washer, Thrust (t=3.0) } Selective use	1	
	0866 17 277	Washer, Thrust (t=3.5) } Selective use	1	Car No. 127395 7/12~Added Anew
24	99606 33060	Bearing, Ball	1	
25	0866 17 285	Washer, Adjust (t=2.00) } Selective use	1	
	0866 17 286A	Washer, Adjust (t=2.50) } Selective use	1	Car No. 127395 7/12~Added Anew
26	0866 17 281	Gear, Reverse	1	
27	0866 17 279	Key	1	
28	0866 17 288	Ring, Snap } Selective use	1	
	0866 17 289	Ring, Snap		
	0866 17 291	Ring, Snap		
	0866 17 292	Ring, Snap		
29	0222 17 3018	Gear, Countershaft	1	
30	0603 17 302	Gear, Countershaft Reverse	1	
31	99606 63440	Bearing, Ball	1	
32	0603 17 303	Bearing, Needle Roller	1	
33	0603 17 305	Ring, Snap	1	
34	99573 2200	Ring, Snap	1	
35	0603 17 310	Gear, Reverse Idle	1	
36	0603 17 312	Bush	1	

No.	Part Number	Description	Q'ty	Remar
37	0603 17 321	Shaft, Reverse Idle Gear	1	
38	0187 17 323	Screw Set, Gear Shaft	1	
	99564 0800	Gasket	1	
39	0820 17 341	Gear, Speedometer Drive	1	
40	99573 2500	Ring, Snap	1	
41	99611 1500	Ball, Steel	1	
42	0839 17 285	Key	1	
43	99963 6310	Shim } Selective use	1	
	99963 6330	Shim }		

MANUAL T/MISSION (GEAR)

(USED FROM CAR NO. 160623 73/10)

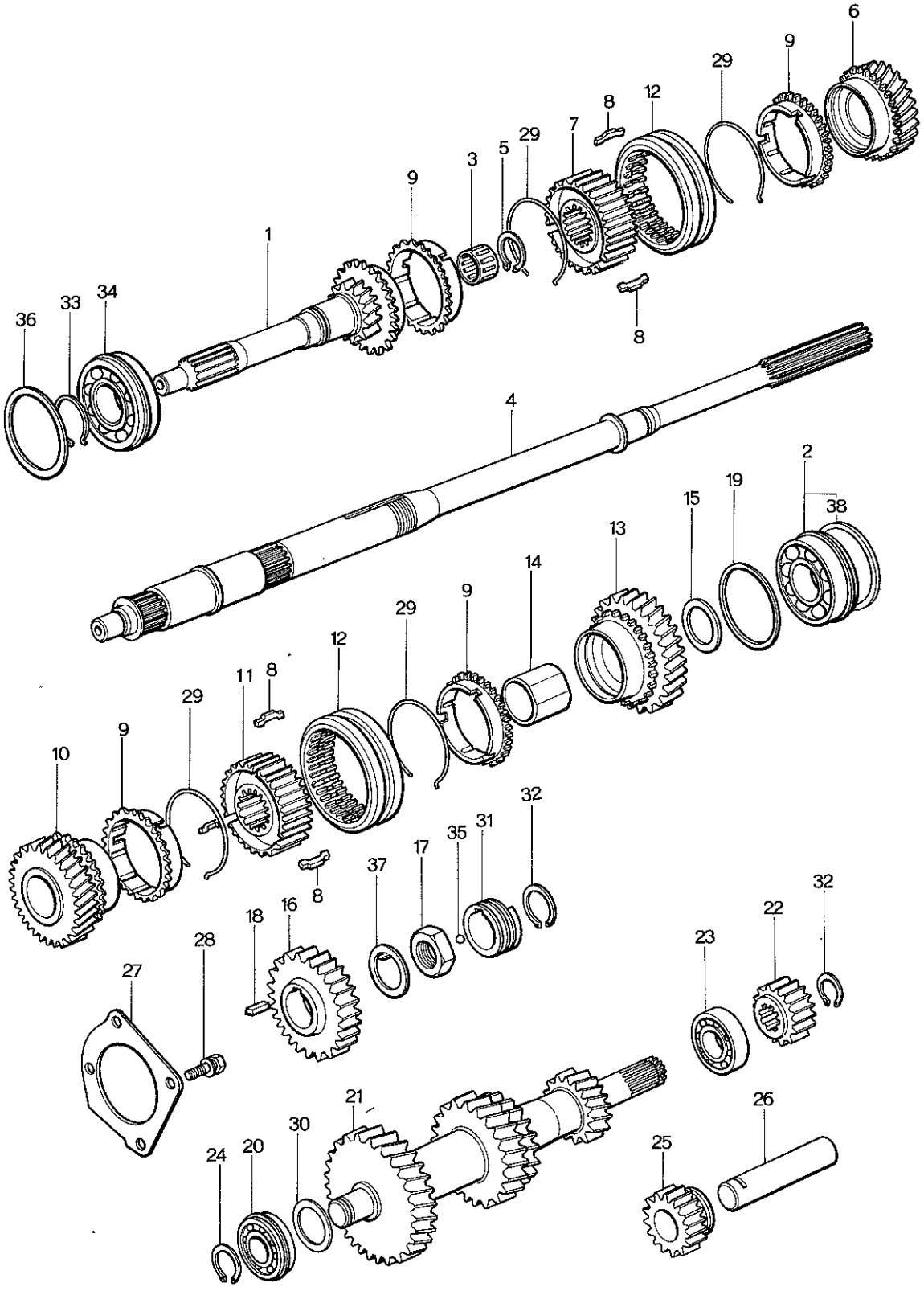

No.	Part Number	Description	Q'ty	Remar
1	0862 17 201	Gear, Main Drive	1	
2	0810 17 204	Bearing, Ball	1	
3	0810 17 205	Bearing, Needle Roller	1	
4	1011 17 221A	Shaft, Main	1	
5	0317 17 225	Ring, Snap	1	
6	0862 17 230	Gear (3rd)	1	
7	0862 17 241	Hub, Clutch (3rd & 4th)	1	
8	0187 17 243	Key, Synchronizer	6	
9	0881 17 245B	Ring, Synchronizer	4	
10	0862 17 250	Gear (2nd)	1	
11	0867 17 261	Hub, Clutch (1st & 2nd)	1	
12	0862 17 262A	Sleeve, Clutch Hub	2	
13	1011 17 270	Gear (1st)	1	
14	0839 17 275	Sleeve, Gear	1	
15	0839 17 276	Washer, Thrust (ℓ =2.5)		
	0839 17 277	Washer, Thrust (ℓ =3.0) Selective use	1	
	0839 17 278	Washer, Thrust (ℓ =3.5)		
16	0839 17 281	Gear, Reverse	1	
17	0839 17 284	Nut, Lock	1	
18	0839 17 285	Key	1	

No.	Part Number	Description	Q'ty	Remarks
19	0839 17 287	Shim, Adjust (t=0.1) } Selective use	2	
	0839 17 288	Shim, Adjust (t=0.3) } Selective use	1	
20	0821 17 297	Bearing, Ball	1	
21	1011 17 301	Gear, Counter Shaft	1	
22	0839 17 302	Gear, Reverse-Counter	1	
23	0821 17 303	Bearing, Needle	1	
24	0839 17 305	Ring, Snap	1	
25	0839 17 310	Gear, Idle-Reverse	1	
26	0839 17 313	Shaft, Reverse Gear	1	
27	0839 17 321A	Stopper, Bearing	1	
28	99801 0820	Bolt, Bearing Stopper	4	
	99971 0800	Washer, Spring	4	
29	0600 17 324	Spring Synchronizer	4	
30	0305 17 327	Shim, Adjust (t=0.1) } Selective use	2	
	0305 17 328	Shim, Adjust (t=0.3) } Selective use	1	
31	0862 17 341	Gear, Drive-Speedometer	1	
32	99573 2500	Ring, Snap	2	
33	99573 3500	Ring, Snap	1	
34	99606 33070	Bearing, Ball	1	
35	99611 1500	Ball, Steel	1	

No.	Part Number	Description	Q'ty	Remar
36	99963 6910	Shim, Adjust (t=0.1) } Selective use	2	
	99963 6930	Shim, Adjust (t=0.3) } Selective use	1	
37	99978 3200	Washer, Lock	1	
38	0881 22 297	Clip, Ball Bearing	1	

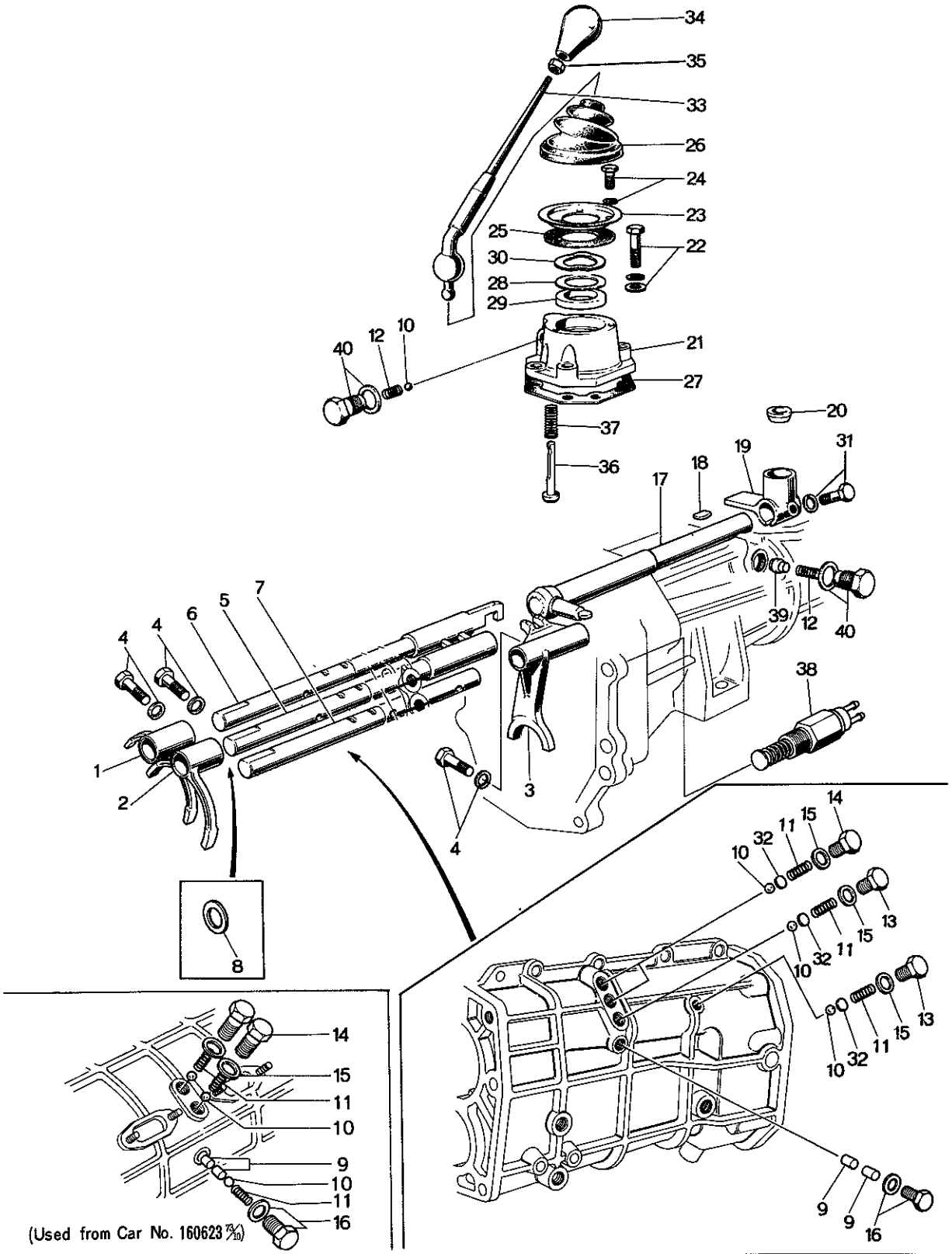
34
35
33
26
24
23
25
22
30
28
29
40
12
10
21
27
20
37
31
36
19
18
17
7
5
6
4
4
39
12
40
38
1
2
3
4
14
15
11
10
32
13
8
9
16
(Used from Car No. 160623 73/10)

No.	Part Number	Description	Q'ty	Rema
1	0290 17 402	Fork, Shift - 1st & 2nd	1	
●	0810 17 402	Fork, Shift - 1st & 2nd	1	Car No. 1606
2	0187 17 404	Fork, Shift - 3rd & 4th	1	
	0290 17 404	Fork, Shift - 3rd & 4th	1	Car No. 1273
●	0810 17 404	Fork, Shift - 3rd & 4th	1	Car No. 1606
3	2981 17 406	Fork, Shift - Reverse	1	
●	1011 17 406	Fork, Shift - Reverse	1	Car No. 1606
4	0118 17 313	Bolt	3	
V	99971 0600	Washer, Spring	3	
● V	99971 0601	Washer, Spring	3	Car No. 1606
5	2981 17 410	Rod, Shift - 1st & 2nd	1	
●	1011 17 410	Rod, Shift - 1st & 2nd	1	Car No. 1606
●	1011 17 410A	Rod, Shift - 1st & 2nd	1	Car No. 1640
6	2981 17 420	Rod, Shift - 3rd & 4th	1	
	0292 17 420	Rod, Shift - 3rd & 4th	1	Car No. 1273
●	1011 17 420	Rod, Shift - 3rd & 4th	1	Car No. 1606
7	2981 17 431	Rod, Shift - Reverse	1	
●	0839 17 431	Rod, Shift - Reverse	1	Car No. 1606
8	0118 17 316	Spacer, Adjust	2	
9	0114 17 351	Pin, Interlock	2	

No.	Part Number	Description	Q'ty	Remarks
10	99611 2500	Ball, Steel	5	
●	99611 2500	Ball, Steel	4	Car No. 160623 73/10~Q'ty
11	0103 17 411	Spring	4	
● 12	0014 17 411	Spring	2	Car No. 160623 73/10~Discarded
● 13	0187 17 441 A	Cap, Spring	2	Car No. 160623 73/10~Discarded
14	0221 17 441	Cap, Spring	2	
15	99562 1400	Gasket	4	
●	99562 1400	Gasket	3	Car No. 160623 73/10~Q'ty
● 16	99510 1000	Plug	1	Car No. 160623 73/10~Discarded
	0259 17 441	Plug, Spring Set	1	Car No. 151014 72/8~○
●	0259 17 441	Plug Spring Set	2	Car No. 160623 73/10~Q'ty
	99564 1000	Gasket	1	
●	99564 1000	Gasket	2	Car No. 160623 73/10~Q'ty
17	0866 17 450	Lever, Control	1	
●	1011 17 450	Lever, Control	1	Car No. 160623 73/10~×
18	0111 17 323	Key	1	
19	0398 17 461 A	End, Control Lever	1	
20	0398 17 462 A	Seat, Spring	1	
21	0303 17 470	Case, Change Control	1	
22	99801 0825	Bolt, Change Control Case	2	

No.	Part Number	Description	Q'ty	Rema
●	99796 0822	Bolt, Change Control Case	2	Car No. 1606
	99801 0835	Bolt	2	
●	99796 0832	Bolt, Change Control Case	2	Car No. 1606
●	99953 0800	Washer, Plain	4 4	From Car N Car No. 1606
●	99971 0800	Washer, Spring	4	Car No. 1606
23	0221 17 473	Plate, Cover	1	
24	99806 0614	Bolt, Cover Plate	3	
	99971 0601	Washer, Spring	3	From Car N
●	99971 0600	Washer, Spring	3	Car No. 1604
25	0303 17 474	Gasket, Cover Plate	1	
26	0221 17 475B	Boot, Dust	1	
27	0271 17 478	Gasket, Change Control	1	
28	99963 3310	Shim, Adjust (Selective use)	1	
	99963 3330	Shim, Adjust (Selective use)		
29	0303 17 481	Bush	1	
30	0303 17 482	Washer, Wave	1	
31	0187 17 492	Bolt, Reamer	1	
	99971 0800	Washer, Spring	1	
32	0183 17 493	Plate, Adjust-Selective use	2	
33	0866 17 510	Lever, Change	1	

No.	Part Number	Description	Q'ty	Remarks
●	1011 17 510B	Lever, Change	1	Car No. 162719 73/11~×
34	0329 17 520	Knob	1	
●	0831 17 520	Knob	1	Car No. 170670 73/5~○
●	1882 17 520	Knob	1	Car No. 162719 73/11~×
35	0824 17 524	Nut, Change Lever Knob	1	
●	0824 17 524	Nut, Change Lever Knob	1	Car No. 162719 73/11~Discarded
36	0221 17 551A	Spindle, Select Lock	1	
37	0221 17 552	Spring	1	
38	0376 17 640	Switch, Reverse Lamp	1	
●	0376 17 640A	Switch, Reverse Lamp	1	Car No. 167748 73/4~○
39	0303 17 561	Piece, Friction	1	
40	0183 17 491	Cap, Spring	2	
	99562 1400	Gasket	2	

DISTRIBUTOR

(USED UP TO CAR NO. 179250 73/9)

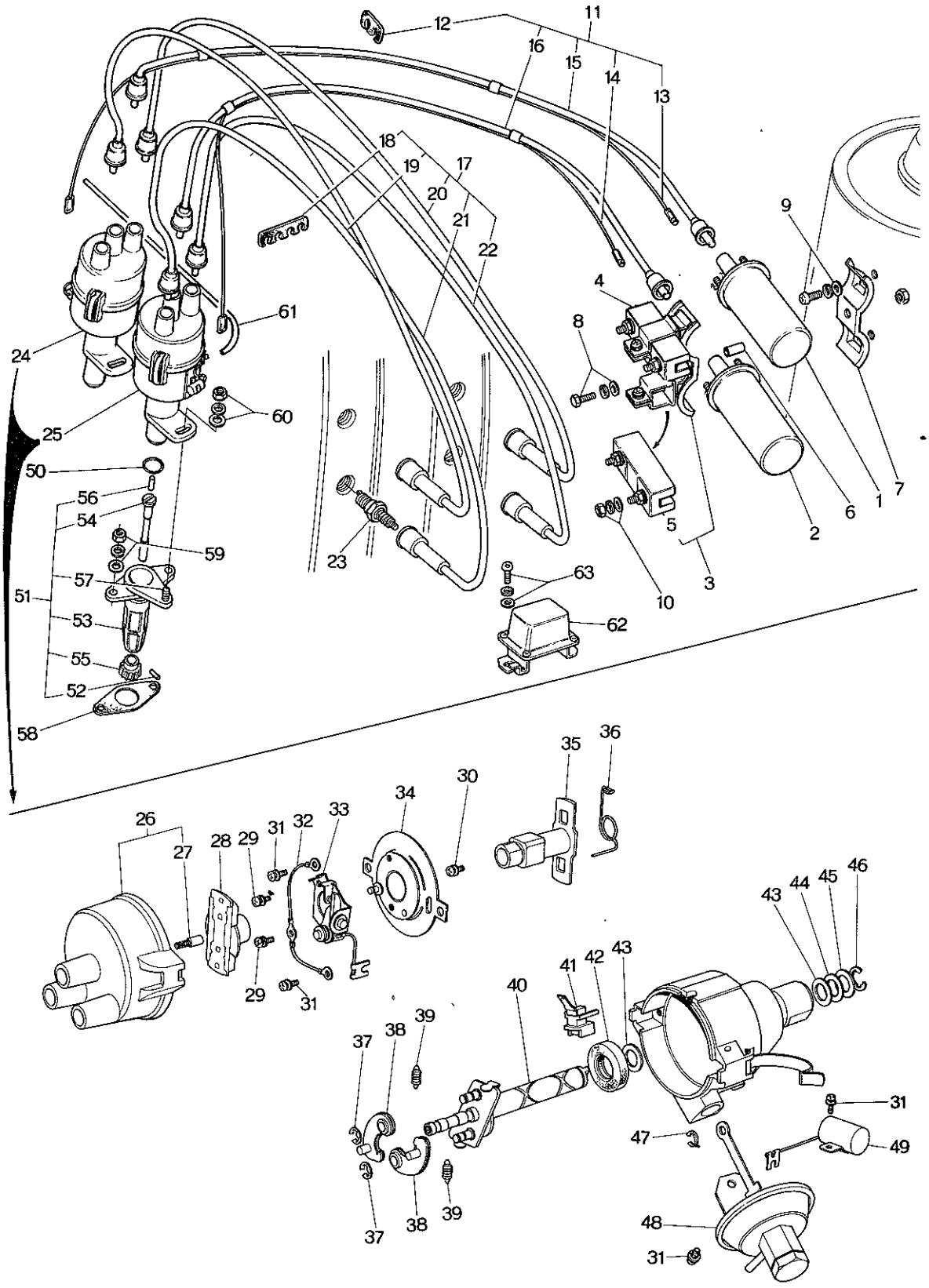

DISTRIBUTOR
(USED UP TO CAR NO. 179250 7/9)

No.	Part Number	Description	Q'ty	Rema
1	0823 18 100	Coil, Ignition	1	
	1562 18 100	Coil, Ignition (Arctic Spec.)	1	Car No. 1528
	1562 18 100	Coil, Ignition (General)	1	Optional
2	0866 18 100A	Coil, Ignition	1	
	1672 18 100	Coil, Ignition (Arctic Spec.)	1	Car No. 1528
	1672 18 100	Coil, Ignition (General)	1	Optional
3	0866 18 190A	Bracket, Ignition Coil	1	
●	1011 18 190	Bracket, Ignition Coil	1	Car No. 1775
4	0845 18 101	Resistor	1	
5	0866 18 101	Resistor	1	
6	0823 18 107	Pipe, Ignition Coil Bracket	1	
	0866 18 107	Pipe, Ignition Coil Bracket	1	Car No. 1273
7	0866 18 810	Bracket, Ignition Coil	1	
8	99801 0850	Bolt, Ignition Coil Bracket	1	
	~~99001 0005~~	~~Bolt, Ignition Coil Bracket~~	~~1~~	~~Car No. 1273~~
	99794 0845	Bolt, Ignition Coil Bracket	1	Car No. 1423
	99952 0800	Washer, Plain	1	
	99971 0800	Washer, Spring	1	
9	99797 0616	Bolt, Ignition Coil Bracket	2	
	99952 0600	Washer, Plain	2	
	99971 0600	Washer, Spring	2	
10	99907 0500	Nut, Ignition Coil Resistor	5	
	99952 0500	Washer, Plain	7	Car No. 1273
	99971 0500	Washer, Spring	5	
	99906 0500	Nut, Ignition Coil	1	
	99952 0500	Washer, Plain	1	Car No. 127396
	99971 0500	Washer, Spring	1	
11	0866 18 110A	Cord, High Tension-Coil~Distributor	1	
12	0820 18 111B	Supporter, High Tension Cord	1	
13	0866 18 115	Cord, Trailing-Coil~Distributor	1	
14	0866 18 155	Cord, Leading-Coil~Distributor	1	

DISTRIBUTOR
(USED UP TO CAR NO. 179250 73/9)

No.	Part Number	Description	Q'ty	Remarks
15	0866 18 120	Cord, High Tension - Trailing	1	
16	0866 18 160A	Cord, High Tension - Leading	1	
17	0866 18 150	Cord, High Tension	1	
18	0820 18 114	Supporter, Cord	1	
19	0866 18 130	Cord (T— 1) - High Tension	1	
20	0866 18 140	Cord (T— 2) - High Tension	1	
21	0866 18 170	Cord (L— 1) - High Tension	1	
22	0866 18 180	Cord (L— 2) - High Tension	1	
23	0866 18 600	Plug, Sparking (NGK B- 7 EJ / DENSO W22EG 2) Standard	4	
	2182 18 600	Plug, Sparking (NGK BR- 7 EM / DENSO W22EG 2) Standard	4	For Europe Car No. 72/10~×
	0840 18 600	Plug, Sparking (NGK B- 8 EJ / DENSO W25EG 2) High Speed	4	
	~~0840 18 600~~	~~Plug, Sparking (NGK B- 6 EJ / DENSO W20EG 2) Low Speed~~	~~4~~	
	~~0885 18 600~~	~~Plug, Sparking (NGK B- 6 EM / DENSO W20EA) Low Speed~~	~~4~~	
	0867 18 600	Plug, Sparking (NGK B- 8 EM / DENSO W25EA) High Speed	4	
	2183 18 600	Plug, Sparking (NGK BR- 8 EH / DENSO W25EAR) High Speed	4	For Europe Car No. 72/10~×
●	~~1503 18 600~~	~~Plug, Sparking (CHAMPION RN-80B) High Speed~~	~~4~~	~~Car No. 155593 73/10~ Added Anew~~
● 24	0866 18 200	Distributor, Trailing	1	
25	0866 18 700	Distributor, Leading	1	
26	0820 24 301	Cap	1	
27	2545 23 496	Carbon, Contact	1	
28	0813 24 303	Rotor	1	
29	0820 24 312	Screw Set	2	
30	0839 24 312	Screw Set	1	
31	0813 24 312	Screw Set	5	
32	0107 18 212	Wire, Earth	1	

DISTRIBUTOR
(USED UP TO CAR NO. 179250 73/9)

No.	Part Number	Description	Q'ty	Remar
33	0813 24 316	Support, Arm	1	
34	0820 24 315	Base, Breaker	1	
35	0823 24 311	Cam (Trailing)	1	
	0866 24 411	Cam (Leading)	1	
36	2587 24 336	Spring, Hair Pin (Trailing)	1	
	0813 24 309	Spring, Hair Pin (Leading)	1	
37	0107 18 231	Ring, Snap	2	
38	2587 24 335	Weight, Governor (Trailing)	2	
	0813 24 306	Weight, Governor (Leading)	2	
39	0866 24 308	Spring, Governor (Trailing)	2	
	0866 24 408	Spring, Governor (Leading)	2	
40	0823 24 305	Shaft (Trailing)	1	
	0820 24 405	Shaft (Leading)	1	
41	0820 24 319	Terminal	1	
42	0107 18 216A	Oil Seal	1	
43	0107 18 226A	Washer (12.7×20×1)	1	
44	0107 18 224	Washer (12.7×20×0.2)	1	
45	0107 18 225	Washer (12.7×20×0.1)	1	
46	0107 18 221A	Ring, Snap	1	
47	0107 18 266	Ring, Snap	1	
48	0866 24 323	Control, Vacuum (Trailing)	1	
	0866 24 423	Control, Vacuum (Leading)	1	
49	0820 24 322	Condenser	1	
50	0107 18 201	Ring, "O" - Distributor	2	

DISTRIBUTOR
(USED UP TO CAR NO. 179250 73/9)

No.	Part Number	Description	Q'ty	Remarks
51	0820 18 270F	Socket, Distributor	2	
52	0820 11 105	Pin, Spring	2	
53	0820 18 271D	Socket	2	
54	0839 18 272A	Shaft	2	
55	0820 18 273A	Gear	2	
56	0813 18 288	Insert	2	
57	99851 0618A	Stud	2	
58	0820 18 279A	Gasket, Distributor Socket	2	
59	99901 0800	Nut, Distributor Socket	4	
	99953 0800	Washer, Plain	4	
	99971 0800	Washer, Spring	4	
60	99906 0600	Nut, Distributor & Socket	2	
	99952 0600	Washer, Plain	2	
	99971 0600	Washer, Spring	2	
61	0823 18 291	Tube, Vacuum Control	2	
62	0222 18 391C	Regulator	1	
●	0259 18 391B	Regulator	1	Car No. 150526 73/8 ~ ×
63	99833 0612	Screw, Regulator	2	
	99952 0600	Washer, Plain	2	
	99971 0600	Washer, Spring	2	
●	Ⓝ 1620 18 390	Bracket Ass'y - Regulator	1	Car No. 150526 73/8 ~ Added Anew
●	Ⓝ 99796 0610	Bolt	1	

DISTRIBUTOR
(USED FROM CAR NO. 160623 73/10)

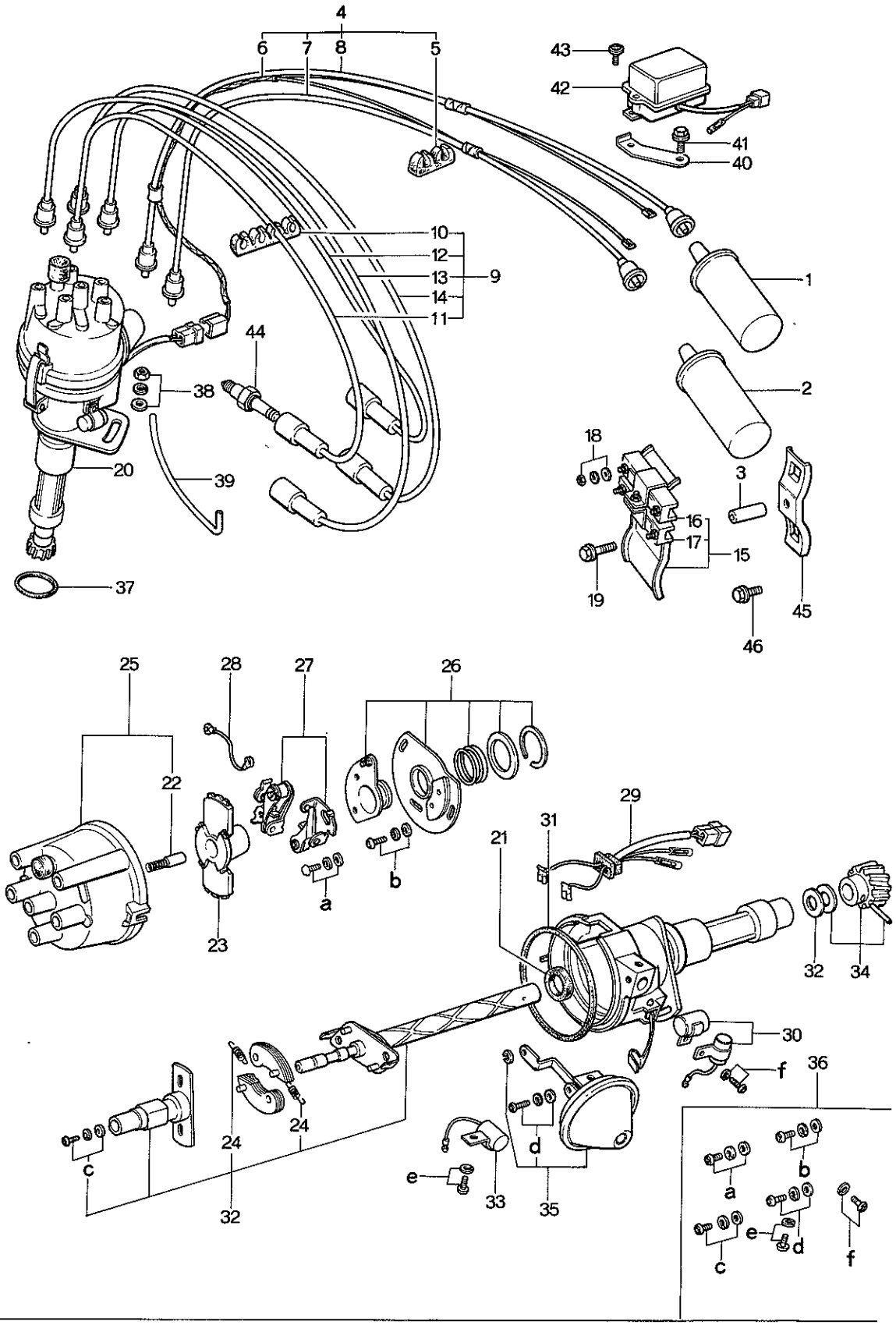

DISTRIBUTOR
(USED FROM CAR NO. 160623 73/10)

No.	Part Number	Description	Q'ty	Rema
1	0823 18 100	Coil, Ignition (HP 5 — 13E)	1	
2	0866 18 100A	Coil, Ignition (HP 5 — 13J)	1	
3	0866 18 107	Pipe	1	
4	1757 18 110	Cord, High Tension	1	
	1757 18 110A	Cord, High Tension	1	Car No.
5	0820 18 111B	Supporter, High Tension	1	
6	1757 18 115	Cord	1	
	1757 18 115A	Cord	1	Car No.
7	1757 18 120	Cord, High Tension (Trailing)	1	
8	1757 18 160	Cord, High Tension (Leading)	1	
9	1757 18 150B	Cord, High Tension	1	
	1757 18 150C	Cord, High Tension	1	Car No.
10	0820 18 114	Supporter, High Tension	1	
11	1757 18 130	Cord, High Tension (T— 1)	1	
	1757 18 130A	Cord, High Tension (T— 1)	1	Car No.
12	1757 18 140	Cord, High Tension (T —2)	1	
	1757 18 140A	Cord, High Tension (T— 2)	1	Car No.
13	1757 18 170	Cord, High Tension (L— 1)	1	

DISTRIBUTOR
(USED FROM CAR NO. 160623 73/10)

No.	Part Number	Description	Q'ty	Remarks
	1757 18 170A	Cord, High Tension (L— 1)	1	Car No. 74/2～○
14	1757 18 180	Cord, High Tension (L— 2)	1	
	1757 18 180A	Cord, High Tension (L— 2)	1	Car No. 74/2～○
15	1011 18 190	Bracket, Ignition Coil	1	
16	0845 18 101	Resistor	1	
17	0866 18 101	Resistor	1	
18	99906 0500	Nut, Ignition Coil & Resistor Terminal	6	
	99952 0500	Washer, Plain	6	
	99971 0500	Washer, Spring	6	
19	99786 0845	Bolt, Ignition Coil Bracket	1	
20	1757 18 200A	Distributor	1	
21	0107 18 216A	Oil Seal	1	
22	1757 24 302	Contact	1	
23	1757 24 303	Rotor	1	
24	1757 24 308	Spring Set	1	
25	1757 24 310	Cap	1	
26	1757 24 313	Base, Breaker	1	

DISTRIBUTOR

(USED FROM CAR NO. 160623 73/10)

No.	Part Number	Description	Q'ty	Remar
27	1757 24 314	Support, Arm	2	
28	1757 24 317	Wire (E), Lead	1	
29	1757 24 319	Wire, Lead	1	
30	1757 24 322	Condenser	2	
31	1757 24 328	Gasket	1	
32	1757 24 330	Governor Set	1	
33	1757 24 334	Condenser	1	
34	1757 24 340	Coupling Set	1	
35	1757 24 350	Vacuum Set	1	
36	1757 24 360	Screw Set	1	
37	99541 0350	Ring, "O" - Distributor	1	
38	99940 0603	Nut, Distributor	1	
39	99340 04350	Tube, Vacuum Control	1	
40	1620 18 390	Bracket, Regulator	1	
41	99796 0610	Bolt, Regulator Bracket	1	
42	0453 18 391	Regulator	1	
43	99786 0612	Screw, Regulator	2	
44	0866 18 600	Plug, Spark (B 7 EM) (N.G.K. Make)	4	
45	0866 18 810	Bracket	1	
46	99786 0612	Screw	2	

ALTERNATOR

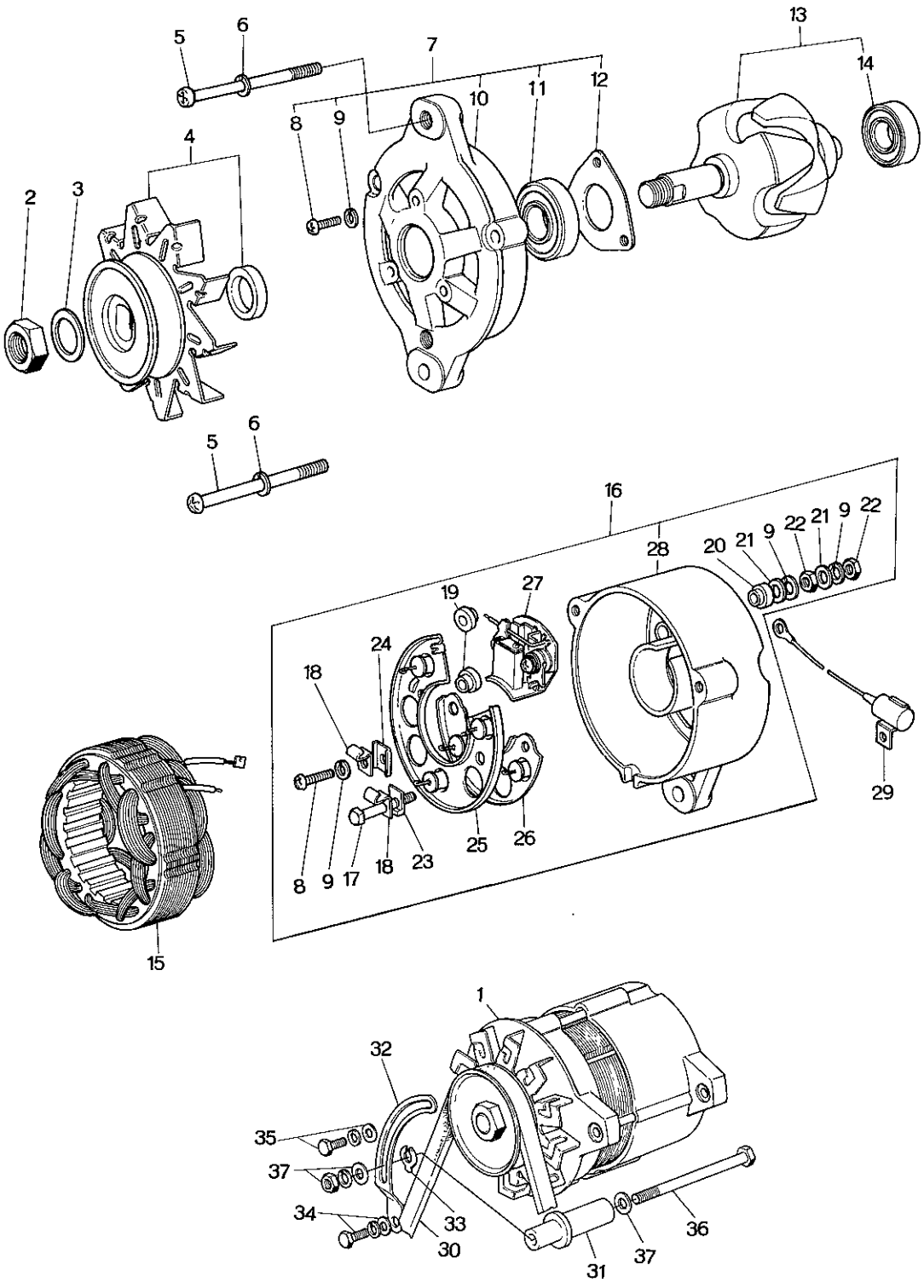
5
6
7
13
14
8
9
10
11
12
4
2
3
5
6
16
28
20
21
9
22
21
9
22
19
27
24
18
29
8
9
17
18
23
25
26
15
1
32
35
37
34
33
30
31
37
36

ALTERNATOR

No.	Part Number	Description	Q'ty	Rem
1	0839 18 300	Alternator	1	
2	0187 24 579A	Nut (12×23B×7 H)	1	
3	0187 24 577A	Washer, Spring (12.2×21.5×3 t)	1	
4	0839 24 530	Pulley	1	
5	0290 24 517	Screw (6 ×71)	3	
6	0107 18 424	Washer, Spring (6.1 ×12.2×1.5 t)	3	
7	0290 24 510A	Bracket, Front	1	
8	0636 24 568B	Screw (5 ×18)	4	
9	0200 23 531	Washer, Spring (5.1 ×9.2 ×1.3 t)	8	
10	0290 24 511A	Bracket, Front	1	
11	0290 24 524	Bearing, Ball	1	Used up to
12	0290 24 515	Plate, Bearing Press	1	
13	0290 24 505A	Rotor	1	
14	0208 24 523	Bearing, Ball	1	
15	0290 24 501A	Stator	1	
16	0290 24 520A	Bracket, Rear	1	
17	0820 24 511	Bolt, Square (5 ×36)	2	
18	0820 24 519	Clamp	3	
19	0290 24 563	Plate, Insulation (5)	3	
20	0208 24 563A	Plate, Insulation (5)	1	

18 24 ALTERNATOR

No.	Part Number	Description	Q'ty	Remark
21	0187 24 566	Washer (5.5×10×0.8t)	4	
22	0222 24 568	Nut (5×8B×4H)	4	
23	0636 24 562A	Insulation, "L" Type (5)	1	
24	0290 24 513	Insulation, "U" Type	1	
25	0290 24 541A	Heat Sink ⊕	1	Used up to Car
26	0290 24 542A	Heat Sink ⊖	1	
27	0290 24 556	Holder, Brush	1	
28	0290 24 521A	Bracket, Rear	1	
29	0290 24 581	Condenser	1	
√ 30	~~0820 18 381~~	~~Belt, "V"~~	~~1~~	
√●	2329 13 715	Belt, "V"	1	From Car No. 1
√●	1562 18 381	Belt, "V" (ECE COLD PROOF)	1	Car No. 152816 ⅞
√●	2329 13 715	Belt, "V" (Station Wagon)	1	
31	0839 18 311B	Bracket, Alternator	1	
32	2090 18 361	Strap, Alternator	1	
33	0222 18 375	Shim, Alternator (t=0.3)		
	0222 18 376	Shim, Alternator (t=0.5)	Selective use 1	
	0222 18 377	Shim, Altenator (t=0.15)	1	
34	99801 0820	Bolt, Strap	1	

	No.	Part Number	Description	Q'ty	Rer
		99971 0800	Washer, Spring	1	
	35	99801 0822	Bolt, Strap	1	
		99951 0818	Washer, Plain	1	
		99971 0800	Washer, Spring	1	
	36	99813 10125	Bolt, Alternator	1	
	37	99952 1000	Washer, Plain	2	
		99971 1000	Washer, Spring	1	
		99921 1000	Nut	1	
✓ ●		99276 1608	Clip, Wire Harness	1	
✓ ●		99906 0500	Nut, Alternator Terminal	1	
✓ ●		99952 0500	Washer, Plain	1	
✓ ●		99971 0500	Washer, Spring	1	

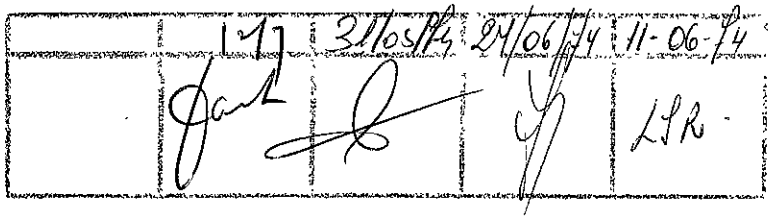
17
31/05/24
24/06/24
11-06-24
LSR

ALTERNATOR
(USED UP TO CAR NO. 167747 73/5)

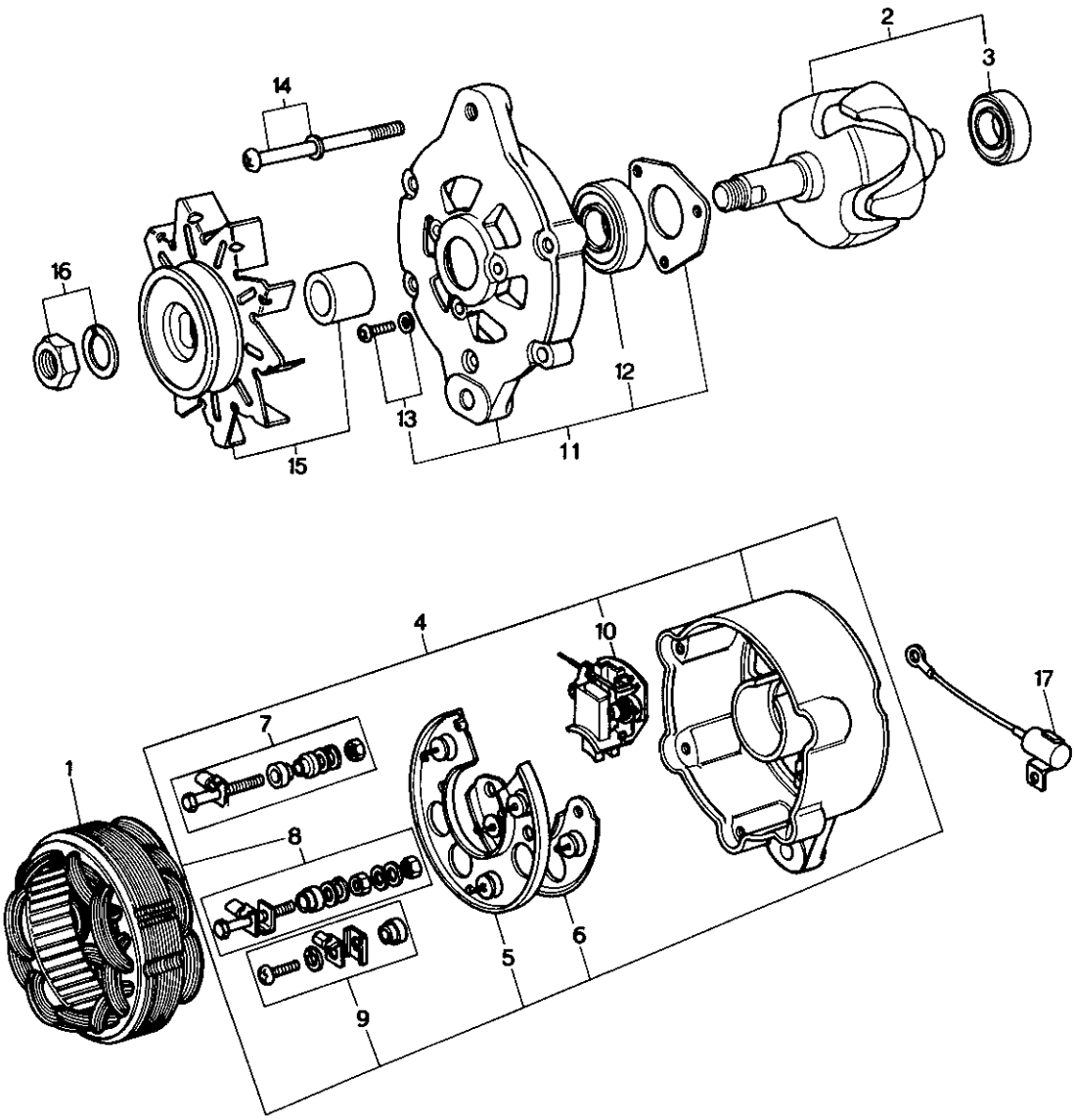

ALTERNATOR
(USED UP TO CAR NO. 16

No.	Part Number	Description	Q'ty	Rem
√	0888 18 300	Alternator (50A)	1	Used from C
1	0888 24 501	Stator	1	
2	0888 24 540	Rotor (Fig. No. 3 included)	1	
3	0820 24 503	Bearing	1	
4	0888 24 560	Bracket, Rear (Fig. No. 5～10 included)	1	
5	0290 24 541A	Heat Sink ⊕	1	
6	0290 24 542A	Heat Sink ⊖	1	
7	0888 24 548	Terminal Set (A)	1	
8	0888 24 549	Terminal Set (E)	1	
9	0888 24 534	Screw Set	1	
10	0888 24 541	Holder, Brush	1	
11	0888 24 550	Bracket, Front (Fig. No. 12～13 included)	1	
12	0208 24 514	Bearing	1	
13	0888 24 526	Screw	3	
14	0888 24 535	Screw Set	1	
15	0888 24 530	Pulley Ass'y	1	
16	0888 24 533	Nut Set	1	
17	0290 24 581	Condenser	1	

ALTERNATOR

(USED FROM CAR NO. 167748 73/5 TO CAR NO. 179250 73/9)

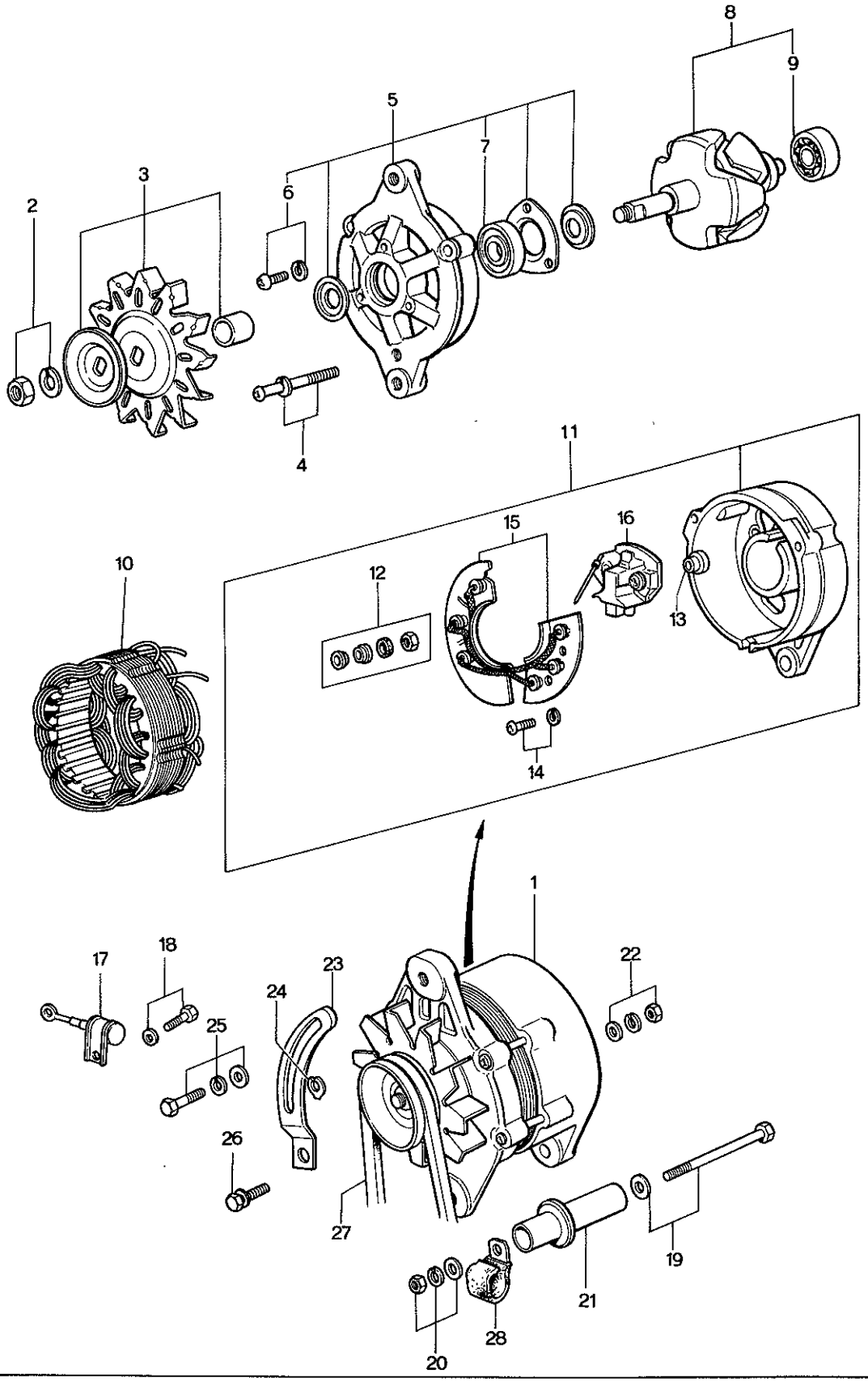

ALTERNATOR

(USED FROM CAR NO. 167748 73/5 TO CAR NO. 179250 73/9

No.	Part Number	Description	Q'ty	Rema
✓ 1	1011 18 300	Alternator	1	
2	0866 24 533	Nut Set	1	
3	0866 24 530	Pulley	1	
4	0866 24 535	Screw Set	1	
5	0866 24 550	Bracket, Front	1	
6	0866 24 526	Screw Set	3	
7	0208 24 514	Bearing, Ball	1	
8	0866 24 540	Rotor	1	
9	0820 24 503	Bearing, Ball	1	
10	1011 24 501	Starter	1	
11	1011 24 560	Bracket, Rear	1	
12	1011 24 533	Nut Set	1	
13	1011 24 563	Mould	1	
14	1011 24 534	Screw Set	1	
15	1011 24 510	Rectifier	1	
16	1011 24 541	Brush & Holder	1	
17	0290 24 581	Condenser	1	
18	1011 24 527	Screw, Condenser	1	
19	99813 10125	Bolt, Alternator	1	

18 24 ALTERNATOR
(USED FROM CAR NO. 167748 73/5 TO CAR NO. 179250 73/9)

No.	Part Number	Description	Q'ty	Remarks
	99952 1000	Washer, Plain	1	
20	99921 1000	Nut, Alternator	1	
	99952 1000	Washer, Plain	1	
	99971 1000	Washer, Spring	1	
√ 21	0839 18 311 B	Bracket, Alternator	1	
22	99906 0600	Nut, Alternator Terminal "B"	1	
	99952 0500	Washer, Plain	1	
	99971 0500	Washer, Spring	1	
√ 23	2090 18 361	Strap, Alternator	1	
√ 24	0222 18 375	Shim (t=0.3)		
√	0222 18 376	Shim (t=0.5)	Selective use 1	
√	0222 18 377	Shim (t=0.15)		
25	99801 0822	Bolt, Strap	1	
	99951 0818	Washer, Plain	1	
	99971 0800	Washer, Spring	1	
26	908012 8 16	Bolt Set, Strap	1	
√ 27	2329 13 715	Belt, "V" (Except E.C.E. Cold Spec.)	1	
√	1562 18 381	Belt, "V" (E.C.E. Cold Spec.)	1	
√ 28	1011 18 319	Clip	1	

ALTERNATOR
(USED FROM CAR NO. 160623 73/10)

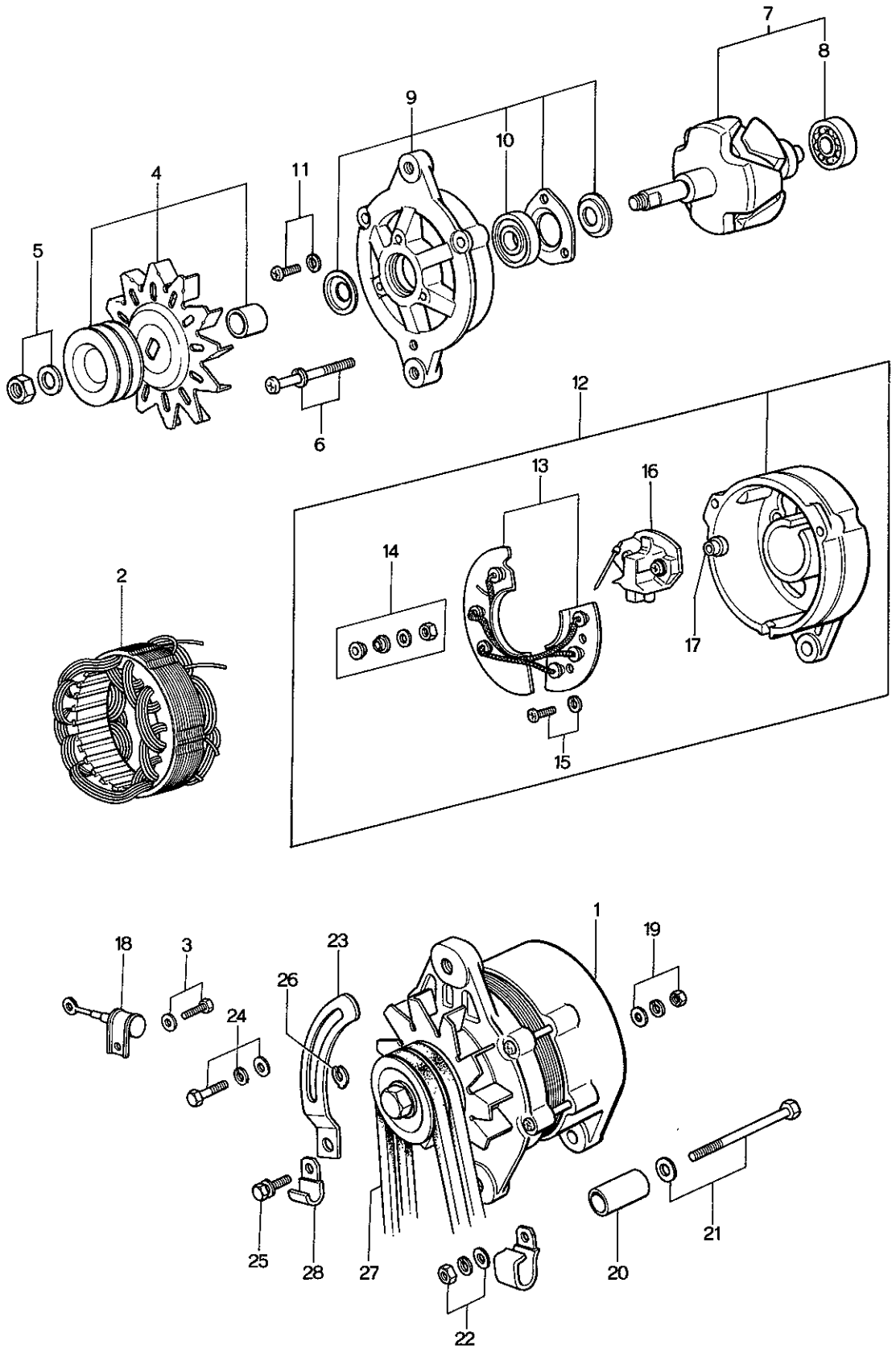

ALTERNATOR
(USED FROM CAR NO. 160623 73/10)

No.	Part Number	Description	Q'ty	Remar
1	3511 18 300	Alternator	1	
2	1011 24 501	Starter	1	
3	1011 24 527	Screw	1	
4	3511 24 530	Pulley	1	
5	1708 24 533	Nut Set	1	
6	0866 24 535	Screw Set	1	
7	0866 24 540	Rotor (Fig. No. 8 included)	1	
8	0820 24 503	Bearing	1	
9	3511 24 550	Bracket, Front (Fig. No. 10 included)	1	
10	4028 24 514	Bearing	1	
11	0866 24 526	Screw	3	
12	1011 24 560	Bracket, Rear (Fig. No. 13~17 included)	1	
13	1011 24 510	Rectifier Ass'y	1	
14	1011 24 533	Nut Set	1	
15	1011 24 534	Screw	1	
16	1011 24 541	Holder, Brush	1	
17	1011 24 563	Mould	1	
18	0290 24 581	Condenser	1	
19	99906 0500	Nut, Alternator Terminal	1	

18 24 ALTERNATOR
(USED FROM CAR NO. 160623 73/10)

No.	Part Number	Description	Q'ty	Remarks
	99952 0500	Washer, Plain	1	
	99971 0500	Washer, Spring	1	
20	1757 18 311	Spacer, Alternator	1	
21	99800 10115	Bolt, Alternator	1	
22	99940 1001	Nut, Alternator	1	
23	1881 18 361	Strap, Alternator	1	
24	99796 0825	Bolt, Strap	1	
25	90796 0820	Bolt, Alternator	1	
26	0222 18 375	Shim (t=0.3)		
	0222 18 376	Shim (t=0.5) } Selective use	1	
	0222 18 377	Shim (t=0.7)		
27	1672 18 381A	Belt, "V"	2	
28	99276 2008	Clip, Wire Harness	2	

STARTER & BATTERY (MANUAL)

(USED UP TO CAR NO. 179250 73/9)

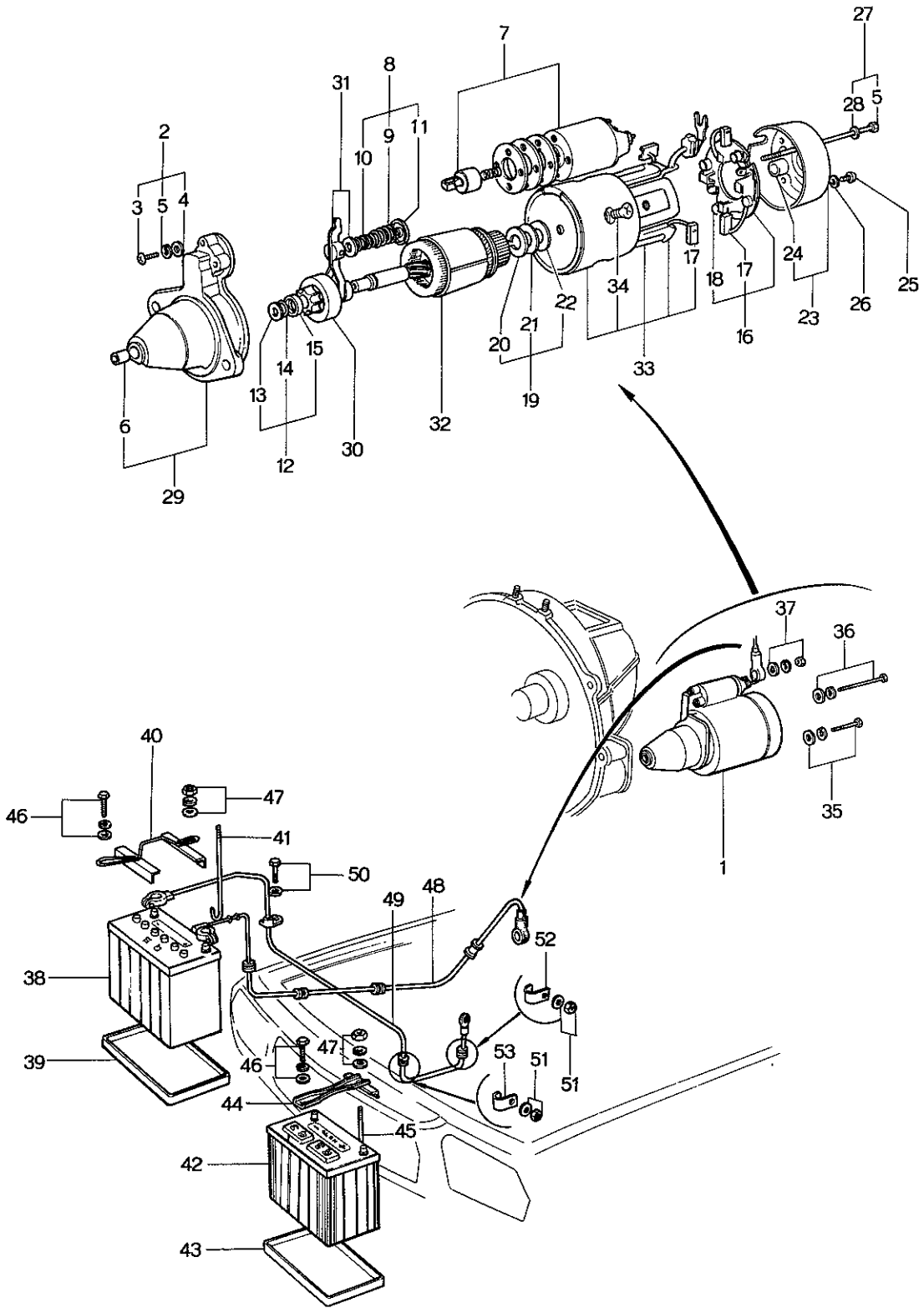

STARTER & BATTERY (MANUAL

(USED UP TO CAR NO. 179250 73/9)

No.	Part Number	Description	Q'ty	Rema
1	0866 18 400A	Starter	1	
	1562 18 400	Starter (Arctic Spec. Model)	1	
	0866 18 400A	Starter (All Models)	1	Car No. 1443(
	1562 18 400	Starter (Optional)	1	Car No. 1443(Added Anew
2	0426 24 725	Screw Set (Fig. No. 3~5,25,26 included) (0866 18 400A use)	1	Car No. 17067
3	0164 23 664	Screw (0866 18 400A use)	3	Order Under No. 0426 24
	1562 24 758	Screw (6×39) (1562 18 400 use)	2	
4	0222 24 714	Washer (6.1×12×1) (0866 18 400A use)	3	Order Under No. 0426 24
5	~~0170 18 424~~	~~Washer, Spring (6)~~	~~5~~	
	0107 18 424	Washer, Spring (6)	5	From Car No
6	0114 18 422A	Sleeve, Bearing	1	
	0426 24 715	Sleeve, Bearing (0866 18 400A use)	1	Car No. 17067
7	0222 24 760A	Switch (0866 18 400A use)	1	
	0839 24 736B	Switch (1562 18 400 use)	1	
8	0426 24 754	Spring Set (Fig. No. 9~11 included) (0866 18 400A use)	1	Car No. 17067
9	0118 23 637	Spring, Lever (0866 18 400A use)	1	Order Under No. 0426 24
	0820 24 755	Spring, Lever (1562 18 400 use)	1	
10	0118 23 636	Spring, Lever (0866 18 400A use)	1	Order Under No. 0426 24
	0820 24 754	Spring, Lever (1562 18 400 use)	1	
11	0813 24 717	Holder, Spring (0866 18 400A use)	1	Order Under No. 0426 24

STARTER & BATTERY (MANUAL)

(USED UP TO CAR NO. 179250 73/9)

No.	Part Number	Description	Q'ty	Remarks
	1562 24 719	Packing (1562 18 400 use)	1	
12	0426 24 712	Stopper Set (Fig. No. 13~15 included) (0866 18 400A use)	1	Car No. 170670 73/4~○
13	0222 24 725	Washer (0866 18 400A use)	1	Order Under No. 0426 24 712
	1562 24 714	Washer (12.5×20×2.3) (1562 18 400 use)	1	
14	0107 18 417A	Ring (0866 18 400A use)	1	Order Under No. 0426 24 712
	0636 24 753	Ring (1562 18 400 use)	1	
15	~~0720 24 732~~	~~Stopper~~	~~1~~	
	0730 24 732	Stopper (0866 18 400A use)	1	From Car No. 1 Order Under No. 0426 24 712
	1562 24 712	Stopper (1562 18 400 use)	1	
16	0222 24 750	Holder, Brush (0866 18 400A use)	1	
17	0222 24 753	Brush	2	
	0426 24 753	Brush (0866 18 400A use)	2	Car No. 170670 73/4~○
	0839 24 723	Brush (1562 18 400 use)	4	
18	0222 24 752A	Spring, Brush (0866 18 400A use)	4	
	0839 24 724	Spring, Brush (1562 18 400 use)	4	
19	0426 24 726	Washer Set (Fig. No. 20~22 included) (0866 18 400A use)	1	Car No. 170670 73/4~○
20	0107 18 406B	Washer (14.4×30×1.6)	1	Order Under No. 0426 24 726
21	0118 23 689	Washer (14.5×30×0.25) (0866 18 400A use)	1	
	1562 24 741	Washer (14.5×30×0.1) (1562 18 400 use)	1	
22	0118 23 691	Washer, Insulation (14.4×30×0.8)	1	Order Under No. 0426 24 726

STARTER & BATTERY (MANUAL

(USED UP TO CAR NO. 179250 7/9)

No.	Part Number	Description	Q'ty	Rema
23	0845 24 720	Bracket, Rear (0866 18 400A use)	1	
	2869 24 720	Bracket, Rear (1562 18 400 use)	1	
24	0222 24 741	Sleeve, Bearing (0866 18 400A use)	1	
	0249 24 731	Sleeve, Bearing (1562 18 400 use)	1	
25	0222 24 517	Screw (0866 18 400A use)	2	Order Under No. 0426 24
	1562 24 731	Screw (6×139) (1562 18 400 use)	2	
26	0200 23 531	Washer, Spring (0866 18 400A use)	2	Order Under No. 0426 24
	0107 18 424	Washer, Spring	2	
	0839 24 761	Cap (1562 18 400 use)	2	
	0839 24 762	Packing	1	
27	0426 24 731	Bolt Set (Fig. No. 5,28 included) (0866 18 400A use)	1	Car No. 1706
28	0222 24 756	Bolt, Through (0866 18 400A use)	2	Order Under No. 0426 24
29	0866 24 710	Bracket, Front (0866 18 400A use)	1	
	1562 24 710	Bracket, Front (1562 18 400 use)	1	
30	0866 24 709	Clutch, Over Running (0866 18 400A use)	1	
	1562 24 709	Clutch, Over Running (1562 18 400 use)	1	
31	0866 24 716	Lever (0866 18 400A use)	1	
	1562 24 716	Lever (1562 18 400 use)	1	
32	0866 24 705	Armature (0866 18 400A use)	1	
	1562 24 705	Armature (1562 18 400 use)	1	

STARTER & BATTERY (MANUAL)

(USED UP TO CAR NO. 179250 ⅞)

No.	Part Number	Description	Q'ty	Remarks
33	0866 24 701	Yoke (0866 18 400A use)	1	
	1562 24 701	Yoke (1562 18 400 use)	1	
34	0866 24 704	Screw (0866 18 400A use)	4	
	0727 24 712	Screw (8 × 17) (1562 18 400 use)	4	
	1562 24 706	Bracket, Center	1	(1562 18 400 use)
	1562 24 725	Screw (6 × 10)	1	
	0839 24 762	Packing	1	
	0118 23 689	Washer	1	
35	99801 1035	Bolt, Starter	1	
	99971 1000	Washer, Spring	1	
	99953 1000	Washer, Plain	1	
36	99803 10110	Bolt, Starter	1	
	99952 1000	Washer, Plain	1	
	99971 1000	Washer, Spring	1	
37	99905 0500	Nut, Starter	1	
	99952 0500	Washer, Plain	1	
	99971 0500	Washer, Spring	1	
38	0820 18 520A	Battery, NS60	1	
39	0810 56 863A	Tray, Battery-NS60 Battery use	1	

STARTER & BATTERY (MANUAL

(USED UP TO CAR NO. 179250 73/9)

No.	Part Number	Description	Q'ty	Rema
40	0370 70 980	Clamp, Battery	1	
41	0370 70 985A	Bolt, Battery	1	
		NS60 Battery use		
42	0504 18 520A	Battery, N50Z	1	
	0877 18 520	Battery, NS70	1	
	1672 18 520	Battery, NS70	1	Car No. 1528
43	2113 54 295	Tray, Battery	1	
	2981 54 222	Tray, Battery	1	Car No. 1528
44	1524 70 980	Clamp, Battery	1	
45	0243 56 231	Bolt, Battery	1	
		N50Z & NS70 Battery use		
46	99806 0620	Bolt, Clamp	1	
	907860 6 16	Bolt Set	1	Car No. 1423
	99952 0618	Washer, Plain	1	Car No. 1423 Discarded
	99971 0600	Washer, Spring	1	
47	99906 0600	Nut, Clamp Bolt	1	
	99940 0602	Nut, Clamp Bolt	1	Car No. 1423
	99952 0618	Washer, Plain	1	Car No. 1423 Discarded
	99971 0600	Washer, Spring	1	
48	0866 67 100A	Cable, Battery Positive	1	
●	0866 67 100B	Cable, Battery Positive	1	Car No. 1767
	1562 67 100A	Cable, Battery Positive (1562 18 400 use)	1	
49	0866 67 110A	Wire, Earth-Battery	1	

STARTER & BATTERY (MANUAL)

(USED UP TO CAR NO. 179250 73/9)

No.	Part Number	Description	Q'ty	Remarks
	0872 67 110	Wire, Earth-Battery (1562 18 400 use)	1	
50	99804 0820	Bolt, Earth Wire	1	
	99971 0800	Washer, Spring	1	
51	99907 0800	Nut	2	
	99971 0800	Washer, Spring	2	
52	99276 1608	Clip, Earth Wire	1	
53	99295 2008	Clip, Earth Wire	1	
Ⓝ	99685 1000	Protector, Positive Cable	6	
Ⓝ	99685 1400	Protector, Positive Cable	1	
Ⓝ	0866 67 105	Cap, Positive Cable	1	

STARTER & BATTERY

(MANUAL USED FROM CAR NO. 160623 73/10
AUTOMATIC USED FROM 74/4)

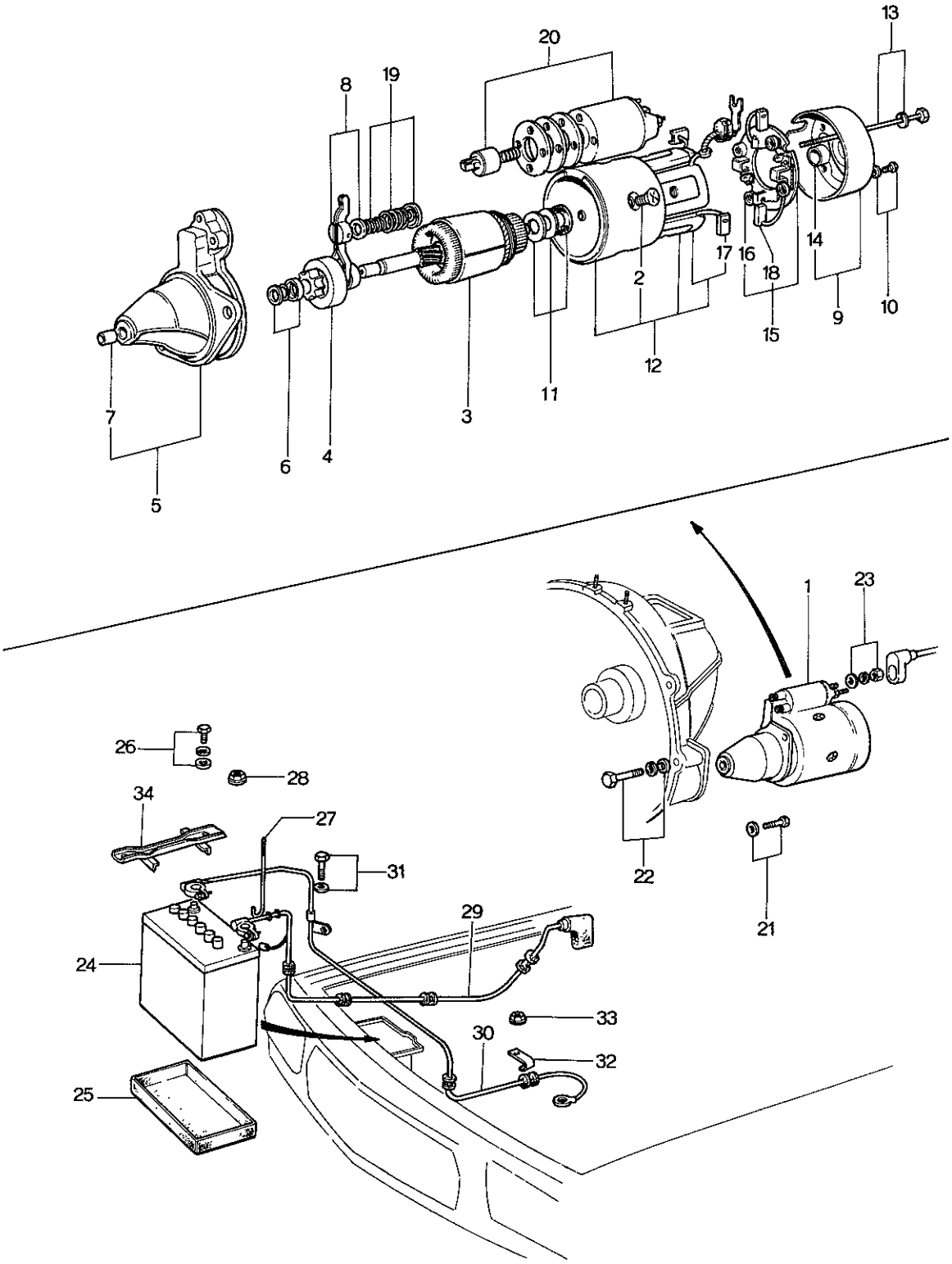

STARTER & BATTERY

(MANUAL USED FROM CAR NO. 160623 73/10
AUTOMATIC USED FROM 74/4)

No.	Part Number	Description	Q'ty	Rema
1	1757 18 400A	Starter (Manual)	1	
● √	1030 18 400A	Starter (Automatic)	1	
2	0866 24 704	Screw	4	
3	1757 24 705	Armature	1	
4	1757 24 709	Clutch, Over Running	1	
5	1757 24 710	Bracket, Front (Manual)	1	
●	1030 24 710	Bracket, Front (Automatic)	1	
6	0426 24 712	Stopper Set, Piston	1	
7	0426 24 715	Sleeve	1	
8	0866 24 716	Lever	1	
9	0845 24 720	Bracket, Rear	1	
10	0426 24 725	Screw Set	1	
11	0426 24 726	Washer Set	1	
12	1757 24 730	Yoke	1	
● 13	0426 24 731	Bolt Set (Manual)	1	
●	1030 24 731	Bolt Set (Automatic)	1	
14	0222 24 741	Sleeve	1	
15	0222 24 750	Holder	1	
16	0222 24 752A	Spring, Brush	4	
17	0222 24 753	Brush	2	
18	0426 24 753	Brush	2	
19	0426 24 754	Spring Set	1	
● 20	0324 24 760	Switch, Starter (Manual)	1	
●	0222 24 760A	Switch, Starter (Automatic)	1	

STARTER & BATTERY

(MANUAL USED FROM CAR NO. 160623 73/10
AUTOMATIC USED FROM 74/4)

No.	Part Number	Description	Q'ty	Remarks
21	99801 1035	Bolt, Starter	1	
	99971 1000	Washer, Spring	1	
● 22	99803 10120	Bolt, Starter (Manual)	1	
●	99801 1075	Bolt, Starter (Automatic)	1	
	99953 1000	Washer, Plain	1	
	99971 1000	Washer, Spring	1	
23	99901 0800	Nut, Starter Terminal	1	
	99952 0800	Washer, Plain	1	
	99971 0800	Washer, Spring	1	
24	0504 18 520A	Battery (N50Z)	1	
25	2113 54 295	Tray, Battery	1	
26	90786 0616	Bolt, Battery Clamp	1	
27	0243 56 231	Bolt, Clamp	1	
28	99940 0602	Nut	1	
29	1881 67 100	Cable, Battery Positive	1	
●	1881 67 100A	Cable, Battery Positive	1	74/2 ~△
30	0872 67 110	Wire, Battery Earth	1	
31	99804 0820	Bolt, Earth Wire	1	
	99971 0800	Washer, Spring	1	
32	99276 1208	Clip	1	
33	99940 0800	Nut, Earth Wire	1 2	
34	1524 70 980	Clamp, Battery	1	

STARTER & BATTERY (AUTOMATIC)

(USED UP TO 74/3)

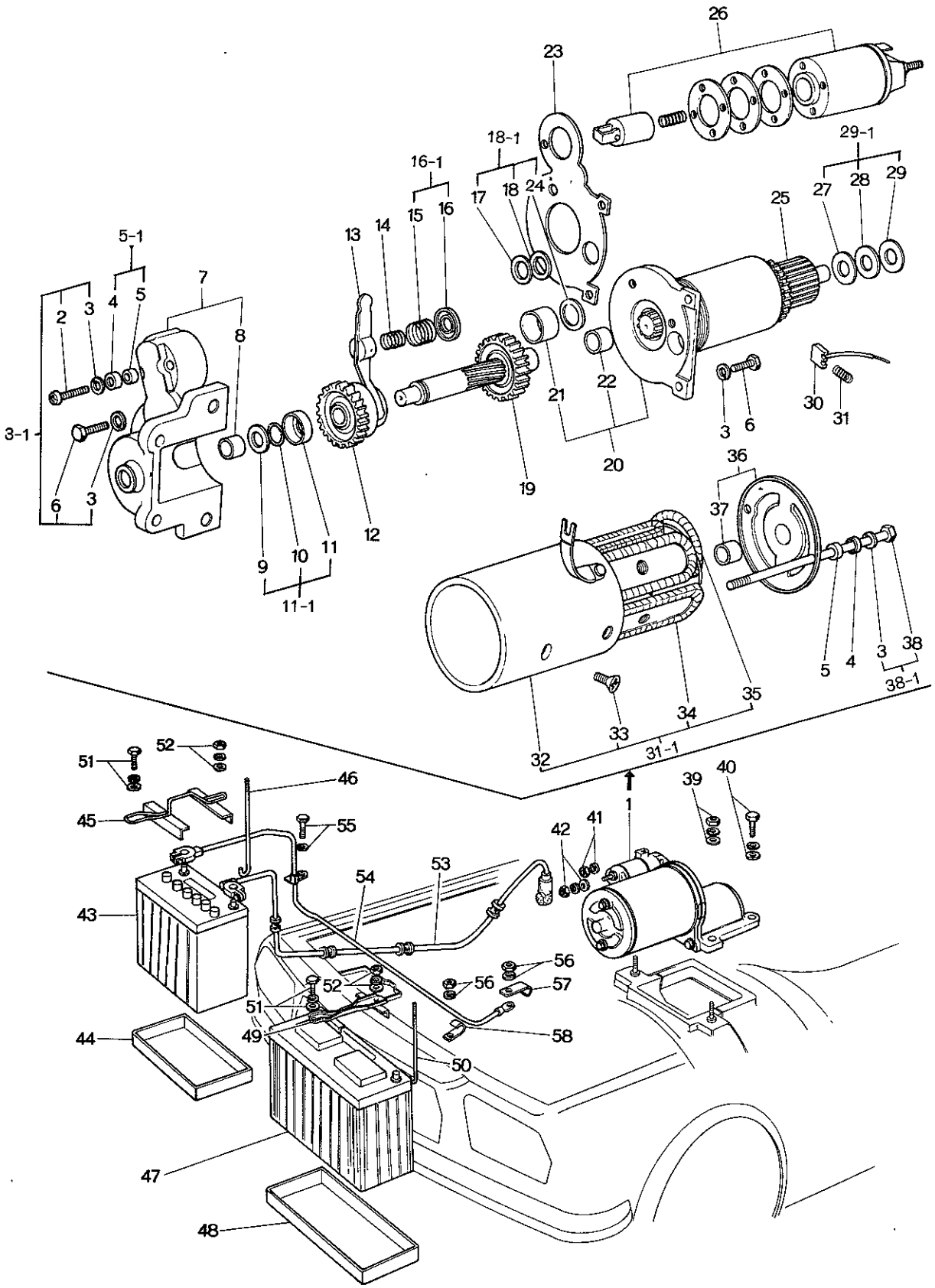

STARTER & BATTERY (AUTOMATIC
(USED UP TO 74/3)

No.	Part Number	Description	Q'ty	Rema
1	2869 18 400	Starter (Mitsubishi Make)	1	
	2869 18 400A	Starter (Mitsubishi Make)	1	Car No. 15559
2	0839 24 758	Screw (6×44)	2	Car No. 15559
3	0107 18 424	Washer, Spring (6.1×12.2×1.5)	8	
3-1	2869 24 725	Screw Set	1	Car No. 15559
4	0839 24 761	Cover, Gasket	4	Car No. 15559
5	0839 24 762	Gasket	4	
5-1	0559 24 760	Gasket Set	1	Car No. 15559
6	0839 24 763	Bolt (6×20)	1	Car No. 15559
7	0839 24 710	Bracket, Front	1	
	2869 24 710	Bracket, Front	1	Car No. 15559
8	0249 24 731	Metal	1	
9	0820 24 714	Washer (14.4×26×1.6)	1	Car No. 15559
10	0820 24 713	Ring	1	
11	0820 24 712	Stopper, Pinion	1	
11-1	2869 24 712	Stopper Set	1	Car No. 15559
12	0839 24 709	Clutch, Over Running	1	
13	0839 24 716	Lever	1	
14	0820 24 754	Spring, Lever (A)	1	Car No. 15559
15	0820 24 755	Spring, Lever (B)	1	Car No. 15559

STARTER & BATTERY (AUTOMATIC)

(USED UP TO 74/3)

No.	Part Number	Description	Q'ty	Remarks
16	0820 24 717	Seat, Spring	1	Car No. 155592 73/10~Discarded
16-1	2869 24 754	Spring Set	1	Car No. 155593 73/10~○
17	0820 24 747	Washer (14.4×26×0.8)	1	Car No. 155592 73/10~Discarded
18	0820 24 748	Washer (14.4×26×0.2)	1	Car No. 155592 73/10~Discarded
18-1	2869 24 748	Washer Set (Fig. No. 24 included)	1	Car No. 155593 73/10~○
19	0839 24 721	Shaft, Pinion	1	
20	0839 24 706	Bracket, Center	1	
21	0839 24 715	Metal	1	
22	0249 24 731	Metal	1	
23	0839 24 719	Plate, Water Proof	1	
24	2869 24 749	Washer	1	Car No. 155592 73/10~Discarded
25	0839 24 705	Armature	1	
26	0839 24 736B	Switch	1	
	2869 24 736	Switch	1	Car No. 155593 73/10~×
27	0118 23 669	Washer (14.5×30×0.25)	2	Car No. 155592 73/10~Discarded
28	0820 24 741	Washer (14.5×30×0.8)	1	Car No. 155592 73/10~Discarded
29	0118 23 691	Washer, Insulation (14.4×30×0.6)	1	Car No. 155592 73/10~Discarded
29-1	2869 24 726	Washer Set	1	Car No. 155593 73/10~○
30	0839 24 723	Brush	4	
31	0839 24 724	Spring, Brush	4	

STARTER & BATTERY (AUTOMATIC
(USED UP TO 74/3)

No.	Part Number	Description	Q'ty	Rema
31-1	2869 24 730	Yoke (Fig. No. 30,31 included)	1	Car No. 155593
32	2869 24 701	Yoke	1	Car No. 155592
33	0727 24 712	Screw (8×17)	4	
34	0839 24 703	Piece, Pole	4	Car No. 155592
35	2869 24 702	Coil, Field	1	
36	2869 24 720	Bracket, Rear	1	
37	0249 24 731	Metal	1	
38	0839 24 764	Bolt, Through (6×155)	2	Car No. 155592
38-1	0559 24 731	Bolt Set (Fig. No. 3 included)	1	Car No. 155593
39	99901 0800	Nut	2	
	99971 0800	Washer, Spring	2	
	99953 0800	Washer, Plain	2	
40	99801 0826	Bolt	2	
	99971 0800	Washer, Spring	2	
	99953 0800	Washer, Plain	2	
41	99901 0800	Nut	1	
	99971 0800	Washer, Spring	1	
42	99907 0500	Nut	1	

STARTER & BATTERY (AUTOMATIC)

(USED UP TO 7⅓)

No.	Part Number	Description	Q'ty	Remarks
	99952 0500	Washer, Plain	1	
	99971 0500	Washer, Spring	1	
43	0820 18 520A	Battery (NS 60)	1	
44	0810 56 863A	Tray, Battery	1	
45	0370 70 980	Clamp, Battery (NS 60 use)	1	
46	0370 70 985A	Bolt, Battery Clamp	1	
47	0877 18 520	Battery (NS 70)	1	
48	2113 54 295	Tray, Battery	1	
49	1524 70 980	Clamp, Battery (NS 70 use)	1	
50	0243 56 231	Bolt, Battery Clamp	1	
51	99806 0620	Bolt, Battery Clamp	1	
	99852 0618	Washer, Plain	1	
	99971 0600	Washer, Spring	1	
52	99906 0600	Nut	1	
	99952 0618	Washer, Plain	1	
	99971 0600	Washer, Spring	1	
53	0871 67 100A	Cable, Battery Positive (NS 60 Battery)	1	
J	0871 67 100B	Cable, Battery Positive (NS 60 Battery)	1	Car No. 126396 7½~○
●	0871 67 100C	Cable, Battery Positive (NS 60 Battery)	1	Car No. 176736 7⅔~△
	0872 67 100	Cable, Battery Positive (NS 70 Battery)	1	
J	0872 67 100A	Cable, Battery Positive (NS 70 Battery)	1	Car No. 126396 7½~○
●	0872 67 100B	Cable, Battery Positive (NS 70 Battery)	1	Car No. 176736 7⅔~△

STARTER & BATTERY (AUTOMATIC)

(USED UP TO 74/3)

No.	Part Number	Description	Q'ty	Rema
54	0866 67 110A	Wire, Earth (NS 60)	1	
	0872 67 110	Wire, Earth (NS 70)	1	
55	99804 0820	Bolt, Earth Wire	1	
	99971 0800	Washer, Spring	1	
56	99907 0800	Nut	2	
	99971 0800	Washer, Spring	2	
57	99295 1508	Clip	1	
58	99295 2008	Clip, Earth Wire	1	
Ⓝ	99685 1000	Protector, Positive Cable	6	
Ⓝ	99685 1400	Protector, Positive Cable	1	
Ⓝ	0866 67 105	Cap, Positive Cable	1	
Ⓝ	99295 1008	Clip	2	Car No. 127396

AUTOMATIC T/MISSION

(CONVERTER, OIL PUMP & PIPING) (USED UP TO 74/3)

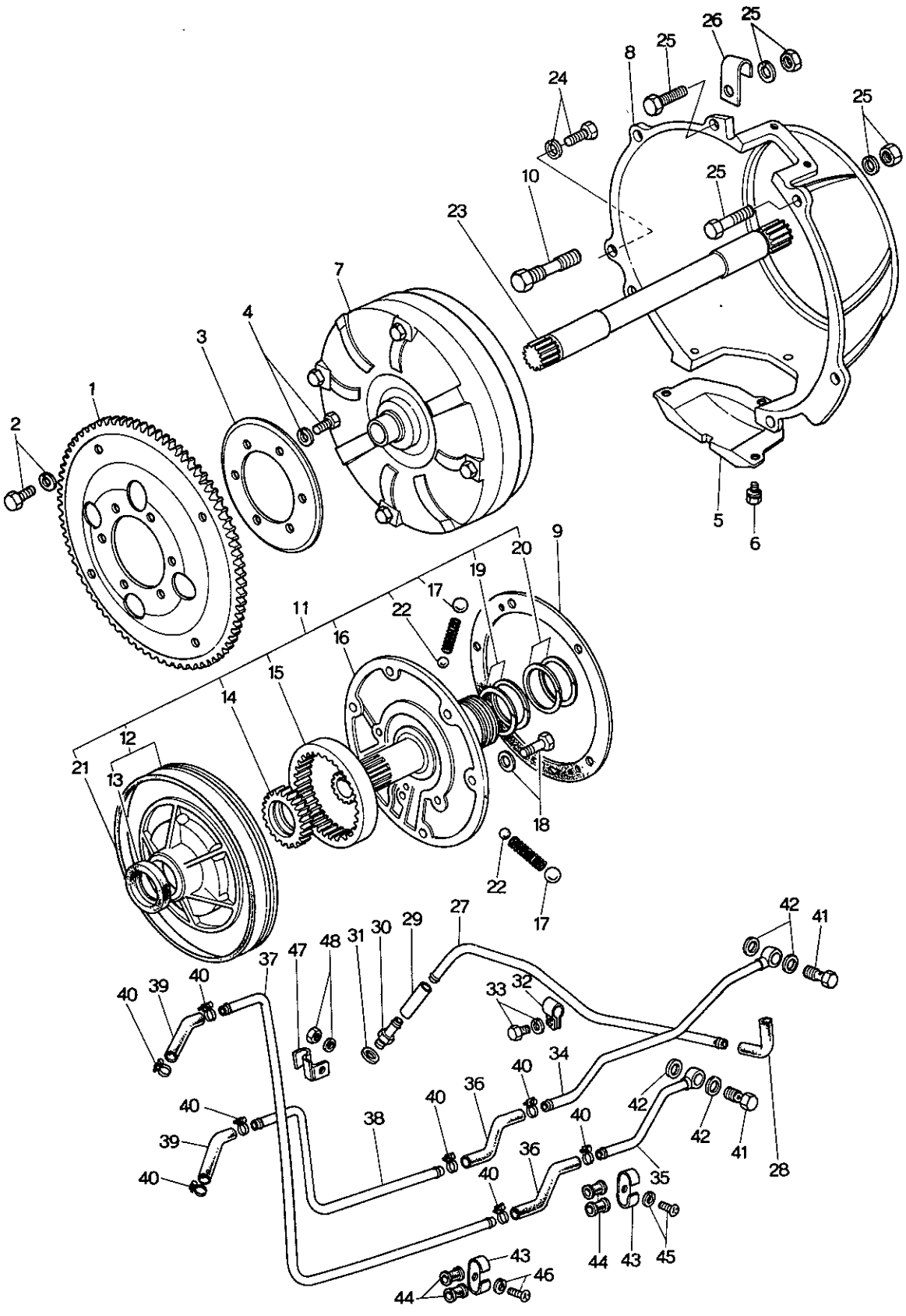

AUTOMATIC T/MISSION
(CONVERTER, OIL PUMP & PIPING) (USED UP T

No.	Part Number	Description	Q'ty	Remar
1	2070 19 020	Plate, Drive	1	
2	99781 1012	Bolt, Drive Plate	4	
	99971 1000	Washer, Spring	4	
3	0842 19 025	Plate, Backing	1	
4	99781 1018	Bolt, Backing	6	
	99971 1000	Washer, Spring	6	
5	0842 19 027A	Cover, Under	1	
6	99806 0610	Screw, Under Cover	3	
	99971 0600	Washer, Spring	3	
7	0338 19 100A	Converter, Torque	1	
8	0842 19 211B	Housing	1	
9	0338 19 215	Gasket, Oil Pump	1	
10	0338 19 216	Bolt, Housing	6	
11	0338 19 220	Pump, Ass'y-Oil	1	
12	0338 19 230	Housing	1	
13	0338 19 223	Oil Seal	1	
14	0338 19 234	Gear, Inner		
	0338 19 235	Gear	Selective use	1
	0338 19 236	Gear		
15	0338 19 237	Gear, Outer		
	0338 19 238	Gear	Selective use	1
	0338 19 239	Gear		
16	0338 19 240	Cover	1	
17	0338 19 245	Ball, Steel	2	
	~~0337 19 705~~	~~Ball, Steel~~	~~2~~	~~Car No. 128982~~

AUTOMATIC T/MISSION
(CONVERTER, OIL PUMP & PIPING) (USED UP TO 74/3)

No.	Part Number	Description	Q'ty	Remarks
18	0338 19 255	Bolt	5	
19	0338 19 256	Ring, Seal	2	
20	0338 19 257	Ring, Seal	2	
21	0338 19 258	Seal, Lathe Cut Ring	1	
22	99611 2000	Ball, Steel	2	
23	0338 19 678	Shaft, Input	1	
24	99811 1032	Bolt, Housing	1	
●	99796 10309	Bolt, Housing	1	73/5~○
●	99952 1030	Washer, Plain	1	73/5~ Added Anew
	99811 1050	Bolt	1	
●	99796 1050	Bolt	1	Car No. 170670 73/5~×
	99971 1000	Washer, Spring	2	
25	99811 1045	Bolt, Housing	1	
●	99796 1045	Bolt, Housing	1	73/5~○
	99811 1050	Bolt	1	
●	99796 1050	Bolt	1	Car No. 170670 73/5~×
	99811 1055	Bolt	1	
●	99796 1045	Bolt	1	73/5~○
	99811 1075	Bolt	1	
●	99796 1080	Bolt	1	73/5~○
	99971 1000	Washer, Spring	4	Car No. 170670 73/5~Discarded
	99921 1000	Nut	4	
●	99940 1001	Nut	4	73/5~○
26	99295 1510	Clip	1	
27	0871 19 910	Pipe, Vacuum	1	
28	0338 19 904	Hose, Vacuum (Rr.)	1	
29	99340 05063	Hose, Vacuum (Frt.)	1	
30	0842 19 910	Union Joint, Vacuum Hose	1	
31	99564 0800	Gasket, Union Joint	1	
32	0842 19 915A	Clip, Vacuum Pipe	1	
33	99806 0614	Bolt, Clip	1	
	99971 0600	Washer, Spring	1	

No.	Part Number	Description	Q'ty	Remar
34	0871 19 920	Pipe, Oil	1	
35	0871 19 930	Pipe, Oil	1	
36	0871 19 961	Hose, Oil	2	
37	0871 19 970	Pipe, Oil	1	
38	0871 19 951A	Pipe, Oil	1	Order Under N 0871 19 9
39	0871 19 962	Hose, Oil	2	
40	99282 1700	Band, Hose	8	
41	99381 1000	Bolt, Connector-Oil Pipe	2	
42	99564 1400	Gasket, Connector Bolt	4	
43	0871 19 963	Clip, Oil Pipe	1	
44	99686 0800	Protector, Oil Pipe	2	
45	99806 0614	Bolt, Clip	1	
	99971 0600	Washer, Spring	1	
46	99868 0512	Screw, Clip	2	
	99971 0500	Washer, Spring	2	
47	0871 19 964A	Clip, Oil Pipe	1	
	0871 19 964B	Clip, Oil Pipe	1	Car No. 159789 ?
48	99902 0800	Nut, Clip	1	
	99940 0800	Nut, Clip	1	Car No. 150526 ?
	99971 0800	Washer, Spring	1	Car No. 150526 ?

AUTOMATIC T/MISSION

(CONVERTER, OIL PUMP & PIPING) (USED FROM 74/4)

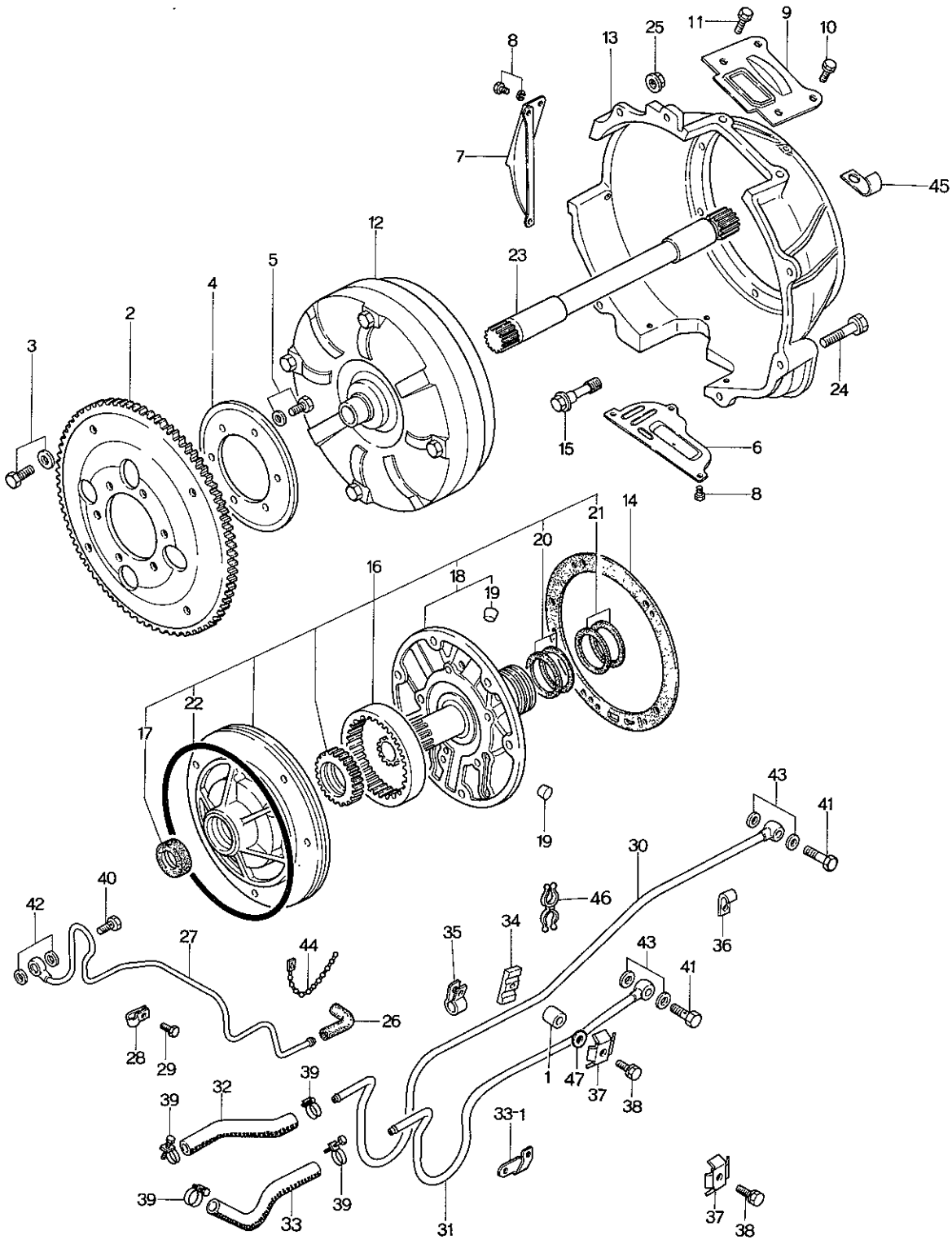

AUTOMATIC T / MISSION
(CONVERTER, OIL PUMP & PIPING) (USED FRO

No.	Part Number	Description	Q'ty	Re
√1	2850 13 331	Spacer, Oil Pipe	1	
√ 2	1758 19 020	Plate, Drive	1	
3	99781 1012	Bolt, Drive Plate	4	
	99971 1000	Washer, Spring	4	
√ 4	0842 19 025	Plate, Backing	1	
5	99781 1018	Bolt, Backing Plate	6	
	99971 1000	Washer, Spring	6	
√ 6	1908 19 027	Cover, Under	1	
√ 7	0454 19 028	Cover, Side	1	
8	99796 0610	Bolt, Under & Side Cover	7	
√ 9	1758 19 028	Cover, Top	1	
10	99796 0610	Bolt, Top Cover	1	
11	99796 0816	Bolt, Top Cover	2	
√ 12	0338 19 100A	Converter, Torque	1	
√ 13	1758 19 211A	Housing, Converter	1	
●	1758 19 211 B	— —	1	
√ 14	1758 19 215	Gasket, Oil Pump	1	
√ 15	0338 19 216	Bolt, Housing	6	
√ 16	1758 19 220	Pump, Oil	1	
√ 17	0338 19 223	Oil Seal	1	

AUTOMATIC T/MISSION
(CONVERTER, OIL PUMP & PIPING) (USED FROM 74/4)

No.	Part Number	Description	Q'ty	Remarks
18	1758 19 240	Cover	1	
19	0338 19 245A	Ball	2	
20	0338 19 256	Ring, Seal	2	
21	0338 19 257	Ring, Seal	2	
22	0338 19 258	Seal, Lathe Cut Ring	1	
23	0338 19 678	Shaft, Input	1	
24	99796 1035	Bolt, Housing	2	
	99796 1040	Bolt	1	
	99796 1045	Bolt	1	
25	99940 1001	Nut, Housing	1	
26	0338 19 904A	Hose, Vacuum (Rr.)	1	
27	0808 19 910	Pipe, Vacuum	1	
28	0842 19 915A	Clip, Vacuum Pipe	1	
29	99796 0610	Bolt, Clip	3	
30	1053 19 920A	Pipe, Oil	1	
31	1053 19 930A	Pipe, Oil	1	
32	1129 19 933	Hose, Oil	1	
33	1129 19 934	Hose, Oil	1	
33-1	1758 19 940	Bracket, Pipe	1	74/6 ~Discarded
34	1015 19 945A	Plate, Spacer	1	

AUTOMATIC T/MISSION
(CONVERTER, OIL PUMP & PIPING) (USED FR

No.	Part Number	Description	Q'ty	Rema
35	2579 19 989	Clip, Pipe	1	
36	99276 1006	Clip, Pipe	1	
37	0866 45 903A	Clip, Pipe	2	
38	99796 0620	Bolt, Clip	2	
39	99282 1700	Band, Hose	4	
40	99381 0600	Bolt, Connector - Vacuum Pipe	1	
41	99381 0800	Bolt, Connector - Oil Pipe	2	
42	99564 1000	Gasket, Connector Bolt	2	
43	99564 1200	Gasket, Connector Bolt	4	
44	99709 0108	Band, Oil Pipe	1	
45	99276 0806	Clip, Wire Harness	1	
46	99288 0808	Clip, Oil Pipe	1	
47	99952 0600	Washer, Plain	1	
	0808 19 090	Shipping T/mission	1	

AUTOMATIC T / MISSION (CASE)

(USED UP TO 74/3)

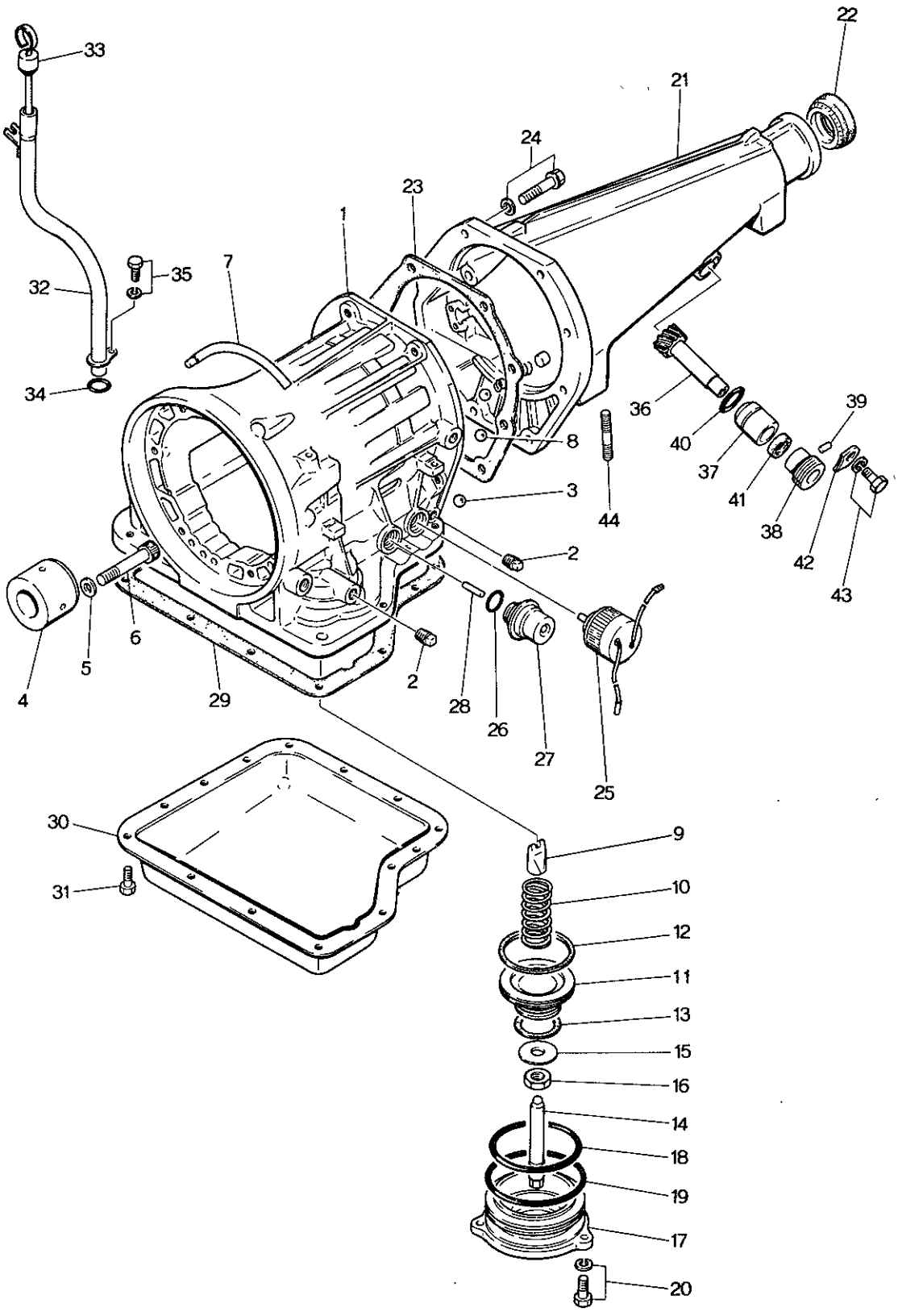

AUTOMATIC T/MISSION
(USED UP TO 74/3)

No.	Part Number	Description	Q'ty	Rem
1	0338 19 310	Case, T/mission	1	
2	0338 19 331	Plug, Square Head	3	
	0338 19 331A	Plug, Square Head	3	Car No. 159
3	0338 19 335	Ball, Steel	3	
●	9961 11 750	Ball, Steel	3	
4	0338 19 336	Race, Inner	1	
5	0338 19 337	Washer, Plain	8	
6	0338 19 338	Bolt	8	
7	0397 19 340	Breather Ass'y, Air	1	
8	99611 2000	Ball, Steel	2	
9	0338 19 361	Strut, Band	1	
10	0338 19 363	Return Spring, Piston	1	
11	0338 19 381A	Piston, Band Servo	1	
12	0338 19 384	Seal, Piston	1	
13	0338 19 385A	Seal, Piston	1	
14	0338 19 386	Stem, Piston	1	
	0338 19 386A	Stem, Piston	1	Car No. 133
15	0338 19 388	Washer	1	
	0338 19 388A	Washer	1	Car No. 133
16	0338 19 389	Nut, Band Adjust	1	
17	0338 19 391A	Retainer, Servo	1	
18	0338 19 393	Seal, Lathe Cut Ring	1	
19	0338 19 395	Seal, "O" Ring	1	
20	0338 19 397	Bolt	5	
	0397 19 838	Bolt	3 2	Car No. 1433 Car No. 1433
21	0338 19 710A	Housing, Extension	1	
	1675 19 710	Housing, Extension	1	
●	1840 19 710	Housing, Extension	1	
22	0317 17 335	Oil Seal	1	

AUTOMATIC T / MISSION (CASE)
(USED UP TO 74/3)

No.	Part Number	Description	Q'ty	Remarks
23	0338 19 735	Gasket, Extension	1	
24	0338 19 737	Bolt	8	
	0338 19 739	Washer, Plain	8	
25	0338 19 821	Solenoid, Down Shift	1	
	1675 19 821	Solenoid, Down Shift	1	Car No. 150526 73/8 ~ ×
26	0338 19 822	Seal, "O" Ring	2	
27	0338 19 823	Diaphragm, Vacuum	1	
28	0338 19 825	Rod, Diaphragm (ℓ = 30.0)		
	0338 19 826	Rod (ℓ = 31.0)		
	0338 19 827	Rod (ℓ = 30.5) Selective use	1	
	0338 19 828	Rod (ℓ = 29.0)		
	0338 19 829	Rod (ℓ = 29.5)		
29	0338 19 835	Gasket, Oil Pan	1	
●	0338 19 835A	Gasket, Oil Pan	1	73/3 ~ ○
30	0338 19 836	Pan, Oil	1	
31	0338 19 837	Bolt	14	
32	2070 19 870	Tube, Oil	1	
33	0338 19 880	Gauge	1	
34	99541 01601	Ring, "O"	1	
35	908062 6 14	Bolt, Set	1	
36	0305 17 345	Gear, Driven	1	
	0862 17 441	Gear, Driven	1	Car No. 73/1 ~ ×
37	0187 17 346B	Sleeve	1	
	0862 17 442	Sleeve	1	Car No. 73/1 ~ ×
38	0187 17 351A	Joint	1	
	0862 17 351	Joint	1	Car No. 73/1 ~ ×
39	0187 17 352	Pin, Dowel	1	
40	99541 02101	Ring, "O'	1	
	99541 02211	Ring, "O"	1	Car No. 73/1 ~ ×
41	99586 10207	Seal, Oil	1	
42	0111 17 354	Plate, Lock	1	
43	908062 6 14	Bolt, Set-Lock Plate	1	
44	99851 0814	Stud, T/mission Support	2	

AUTOMATIC T/MISSION

(CASE & MAIN CONTROL) (USED FROM 74/4)

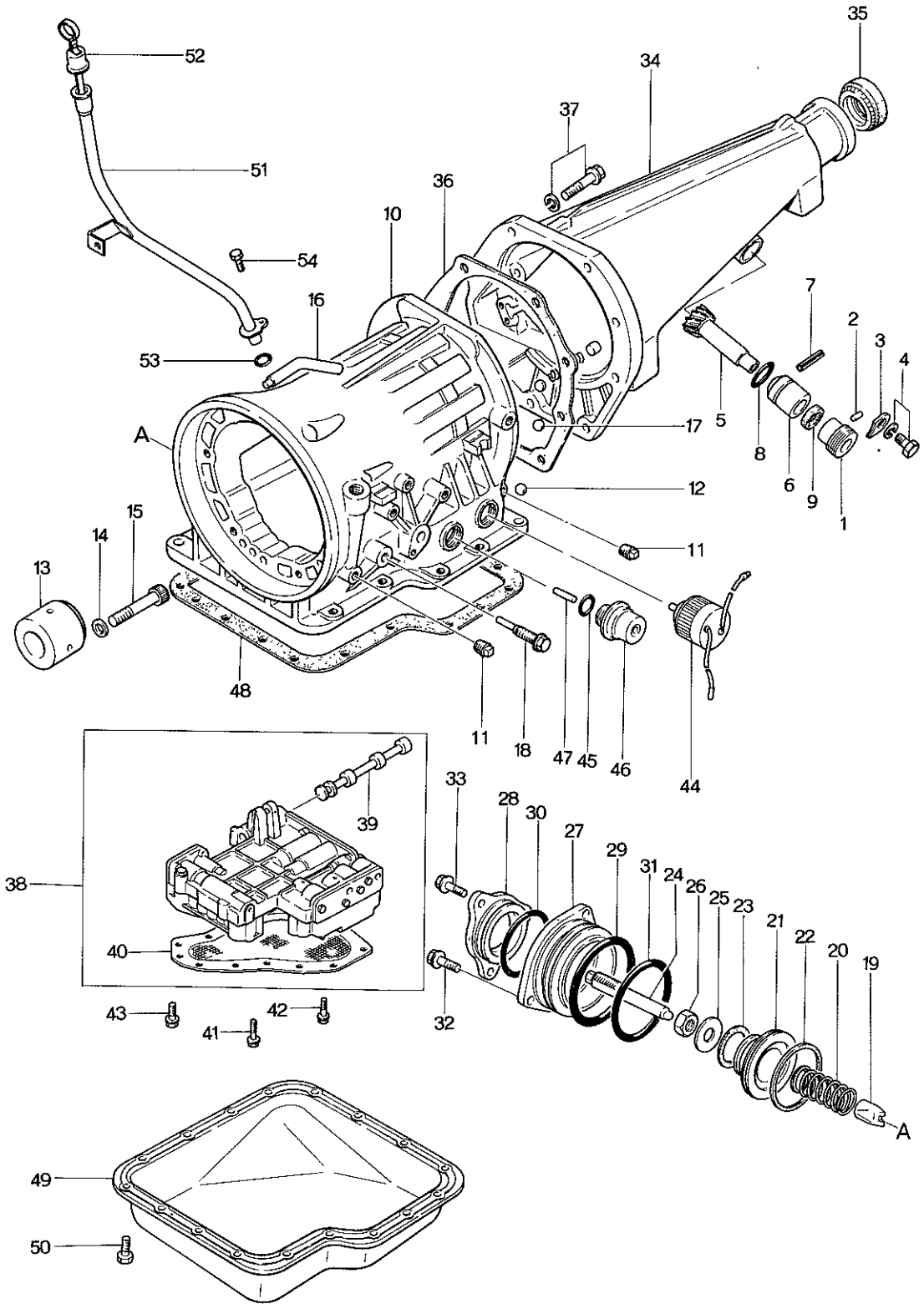

No.	Part Number	Description	Q'ty	Re
1	0862 17 351	Joint, Cable - Speedometer	1	
2	0187 17 352	Pin, Dowel - Driven Gear	1	
3	0111 17 354	Plate, Lock - Cable Joint	1	
4	99806 0614	Bolt, Lock Plate	1	
	99971 0600	Washer, Spring	1	
5	0862 17 441	Gear, Driven - Speedometer	1	
6	0862 17 442	Sleeve, Speedometer Driven Gear	1	
7	99222 0216	Pin, Spring	1	
8	99541 02211	Ring, "O" - Driven Gear	1	
9	99586 10207	Oil Seal, Driven Gear	1	
10	1758 19 310	Case, T/mission	1	
11	0338 19 331A	Plug, Square Head	3	
12	99611 1750	Ball, Steel	3	
13	0338 19 336	Race, Inner	1	
14	0338 19 337	Washer, Plain	8	
15	0338 19 338	Bolt	8	
16	0378 19 344	Breather, Air	1	
17	99611 2000	Ball, Steel	2	

AUTOMATIC T/MISSION
(CASE & MAIN CONTROL) (USED FROM 74/4)

No.	Part Number	Description	Q'ty	Remarks
18	1758 19 341	Bolt, Anchor End	1	
19	0338 19 361	Strut, Band	1	
20	0338 19 363	Spring, Return - Piston	1	
21	0842 19 381	Piston, Band Servo	1	
22	0338 19 384	Seal, Piston	1	
23	0842 19 385	Seal, Piston	1	
24	1758 19 386	Stem, Piston	1	
25	0338 19 388A	Washer, Plain	1	
26	0338 19 389	Nut, Band Adjust	1	
27	1758 19 391	Retainer, Servo	1	
28	1758 19 392	Cover, Servo	1	
29	0842 19 394	Seal, Lathe Cut Ring	1	
30	1758 19 394	Ring, "O"	1	
31	0338 19 395	Seal, "O" Ring	1	
32	0338 19 397	Bolt	3	
33	1758 19 397	Bolt, Servo	3	
34	1840 19 710	Housing, Extension	1	
35	0376 17 335	Oil Seal	1	

No.	Part Number	Description			Q'ty	Rem
36	0338 19 735	Gasket, Extension Housing			1	
37	0338 19 737	Bolt, Extension Housing			8	
	0338 19 739	Washer, Plain			8	
38	1758 19 750	Valve, Control			1	
39	0338 19 768	Valve, Manual			1	
40	1758 19 815	Strainer, Oil			1	
41	0338 19 831	Bolt, Control Valve			3	
42	0338 19 832	Bolt, Control Valve			2	
43	0338 19 833	Bolt, Control Valve			2	
44	1675 19 821	Solenoid, Down Shift			1	
45	0338 19 822	Seal, "O" Ring			2	
46	1758 19 823	Diaphragm, Vacuum			1	
47	0338 19 825	Rod, Diaphragm	(ℓ = 30.0)			
	0338 19 826	Rod	(ℓ = 31.0)			
	0338 19 827	Rod	(ℓ = 30.5)	Selective use	1	
	0338 19 828	Rod	(ℓ = 29.0)			
	0338 19 829	Rod	(ℓ = 29.5)			

No.	Part Number	Description	Q'ty	Remarks
48	1758 19 835	Gasket, Oil Pan	1	
49	1758 19 836	Pan, Oil	1	
50	0338 19 837	Bolt, Oil Pan	17	
51	0808 19 870	Tube, Oil Level	1	
52	1758 19 880	Gauge, Oil Level	1	
53	99541 01601	Ring, "O" - Oil Level Tube	1	
54	99796 0610	Bolt, Oil Level Tube	1	

AUTOMATIC T/MISSION

(CLUTCH & PLANETARY GEAR)

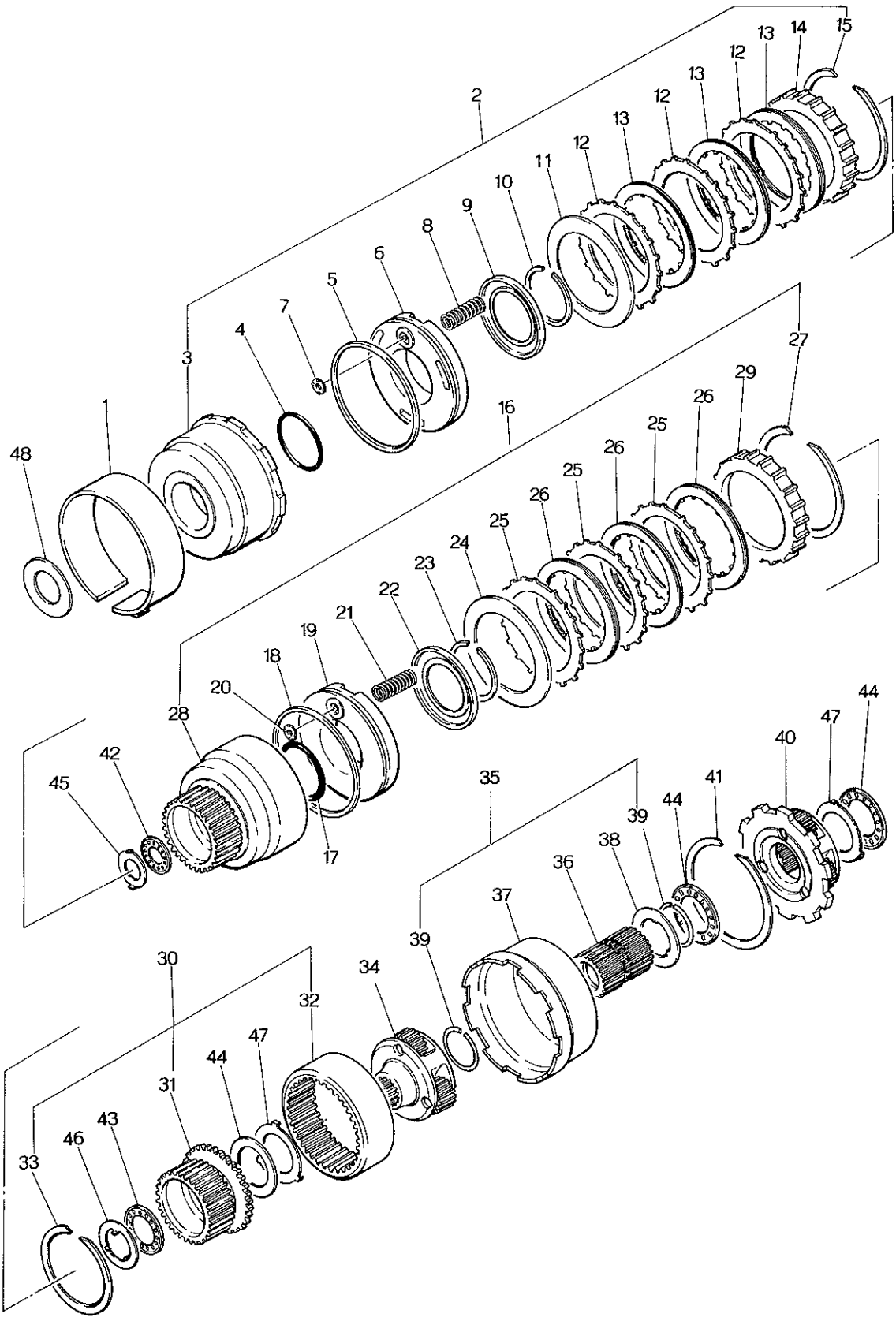

No.	Part Number	Description	Q'ty	Rem
1	0338 19 360	Band, Brake	1	
2	0338 19 460	Clutch, Front	1	
3	0338 19 470	Drum, Clutch	1	
4	0338 19 475	Seal, "O" Ring	1	
5	0338 19 476	Seal, Lathe Cut	1	
6	0338 19 480	Piston, Clutch	1	
7	0338 19 493	Retainer, Ball	1	
8	0338 19 486	Spring, Piston Return	10	
9	0338 19 487	Retainer, Spring	1	
10	0338 19 488	Ring, Snap	1	
11	0338 19 498	Plate, Dished	1	
12	0338 19 499	Plate, Driven	3	
13	0338 19 500	Plate, Drive	3	
14	0338 19 503	Plate, Retaining	Selective use	1
	0338 19 504	Plate, Retaining		
	0338 19 505	Plate, Retaining		
	0338 19 506	Plate, Retaining		
	0338 19 507	Plate, Retaining		
	0338 19 508	Plate, Retaining		
15	0338 19 509	Ring, Snap	1	
16	0338 19 510	Clutch, Rear	1	
17	0338 19 475	Seal, "O" Ring	1	

AUTOMATIC T / MISSION
(CLUTCH & PLANETARY GEAR)

No.	Part Number	Description	Q'ty	Remarks
18	0338 19 476	Seal, Lathe Cut	1	
19	0338 19 480	Piston, Clutch	1	
20	0338 19 493	Retainer, Ball	1	
21	0338 19 486	Spring, Piston Return	10	
22	0338 19 487	Retainer, Spring	1	
23	0338 19 488	Ring, Snap	1	
24	0338 19 498	Plate, Dished	1	
25	0338 19 499	Plate, Driven	4	
26	0338 19 500	Plate, Drive	4	
27	0338 19 509	Ring, Snap	1	
28	0338 19 511	Drum, Rear Clutch	1	
29	0338 19 515	Plate, Retaining	1	
30	0338 19 530	Hub, Rear Clutch	1	
31	0338 19 531	Hub, Rear Clutch	1	
32	0338 19 533	Gear, Internal	1	
33	0338 19 534	Ring, Snap	1	
34	0338 19 540	Carrier, Front	1	
35	0338 19 550	Shell, Sun Gear	1	
36	0338 19 560	Gear, Sun	1	
37	0338 19 565	Shell, Connecting	1	

No.	Part Number	Description	Q'ty	Remar
38	0338 19 566	Race, Bearing Seal	1	
39	0338 19 567	Ring, Snap	2	
40	0338 19 570	Carrier, Rear	1	
41	0338 19 598	Ring, Snap	1	
42	0338 19 621	Bearing, Needle	1	
43	0338 19 622	Beering, Needle	1	
44	0338 19 623	Beering, Needle	3	
45	0338 19 631	Race, Bearing (t=1.2)		
	0338 19 632	Race, Bearing (t=1.4)		
	0338 19 633	Race, Bearing (t=1.6)	Selective use 1	
	0338 19 634	Race, Bearing (t=1.8)		
	0338 19 635	Race, Bearing (t=2.0)		
	0338 19 636	Race, Bearing (t=2.2)		
46	0338 19 638	Race, Bearing Rear Clutch	1	
47	0338 19 639	Race, Bearing	2	
48	0338 19 641	Washer, Front Clutch (t=1.90)		
	0338 19 642	Washer (t=2.10)		
	0338 19 643	Washer (t=2.30)		
	0338 19 644	Washer (t=2.50)	Selective use 1	
	0338 19 645	Washer (t=2.70)		
	0338 19 646	Washer (t=1.50)		
	0338 19 647	Washer (t=1.70)		
49	0338 19 624	Bearing, Needle	1	From Car

AUTOMATIC T/MISSION
(LOW, REVERSE & GOVERNOR)

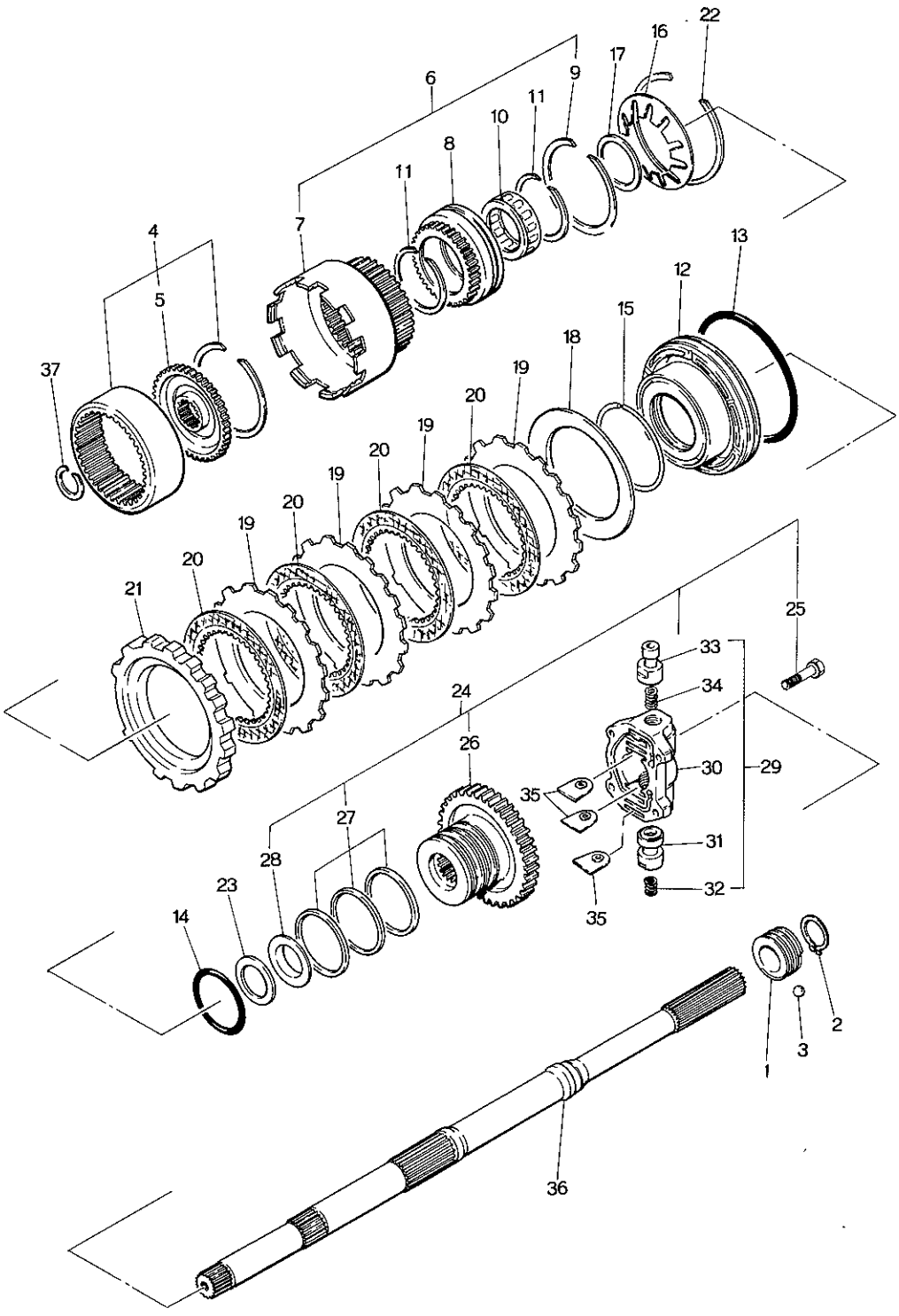

No.	Part Number	Description	Q'ty	Re
1	0305 17 341	Gear, Drive - Speedometer	1	
●	0862 17 341	Gear, Drive - Speedometer	1	Car No.
2	99573 2500	Ring, Snap - Drive Gear	1	
3	99611 1500	Ball, Steel	1	
4	0338 19 580	Flange	1	
5	0338 19 581	Flange, Drive	1	
6	0338 19 590	Drum, Connecting	1	
7	0338 19 591	Drum, Connecting	1	
8	0338 19 593	Race, Outer	1	
9	0338 19 594	Ring, Snap	1	
10	0338 19 595	Clutch, One Way	1	
11	0338 19 596	Ring, Snap	2	
12	0338 19 601	Piston, Low & Reverse	1	
13	0338 19 603	Seal, Piston	1	
14	0338 19 604	Seal, "O" Ring	1	
15	0338 19 605	Ring, Thrust Spring	1	
16	0338 19 606	Spring, Piston	1	
17	0338 19 607	Ring, Snap	1	

	No.	Part Number	Description		Q'ty	Remarks
	18	0338 19 608	Plate, Dished		1	
	19	0338 19 609	Plate, Driven		4	
	20	0338 19 610	Plate, Driven		4	
	21	0378 19 613	Plate, Retaining	(t=15.8)		
√ ●		0338 19 613A	Plate	(t=15.8)		
		0378 19 614	Plate	(t=16.0)		
√ ●		0338 19 614A	Plate	(t=16.0)		
		0378 19 615	Plate	(t=16.2)		
√ ●		0338 19 615A	Plate	(t=16.2)	1	
		0378 19 616	Plate	(t=16.4)	Selective use 1	7¼~×
√ ●		0338 19 616A	Plate	(t=16.4)		
		0378 19 617	Plate	(t=16.6)		
√ ●		0338 19 617A	Plate	(t=16.6)		
		0378 19 618	Plate	(t=16.8)		
√ ●		0338 19 618A	Plate	(t=16.8)		
√ ●	22	0338 19 619	Ring, Snap		1	
	23	0338 19 622	Bearing, Needle		1	
	24	0842 19 650	Distributor, Oil		1	
	25	0338 19 397	Bolt		4	
	26	0338 19 651	Distributor		1	
	27	0338 19 655	Ring, Seal		3	
	28	0338 19 656	Race, Bearing		1	
	29	0842 19 660	Governor, Fig. No. 30~33 included		1	
	30	0338 19 661	Body		1	
	31	0338 19 663	Valve		1	

No.	Part Number	Description	Q'ty	Rem
32	0338 19 664	Spring	1	
33	0842 19 665	Valve	1	
34	0338 19 666	Spring, Governor	1	
35	0338 19 667	Plate, Retainer	3	
36	0338 19 670A	Shaft	1	
37	0338 19 676	Ring	1	

AUTOMATIC T/MISSION

(MANUAL LINKAGE) (USED UP TO 74/3)

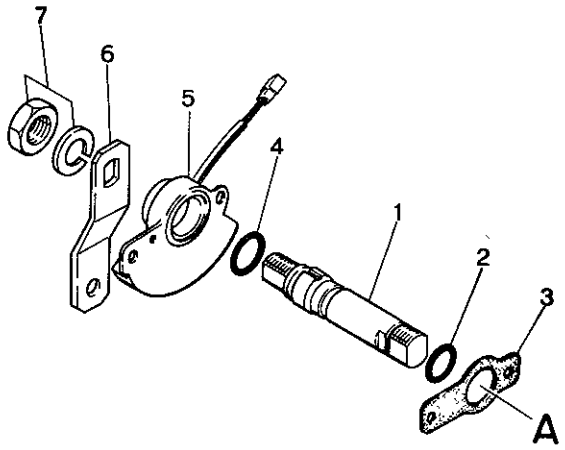

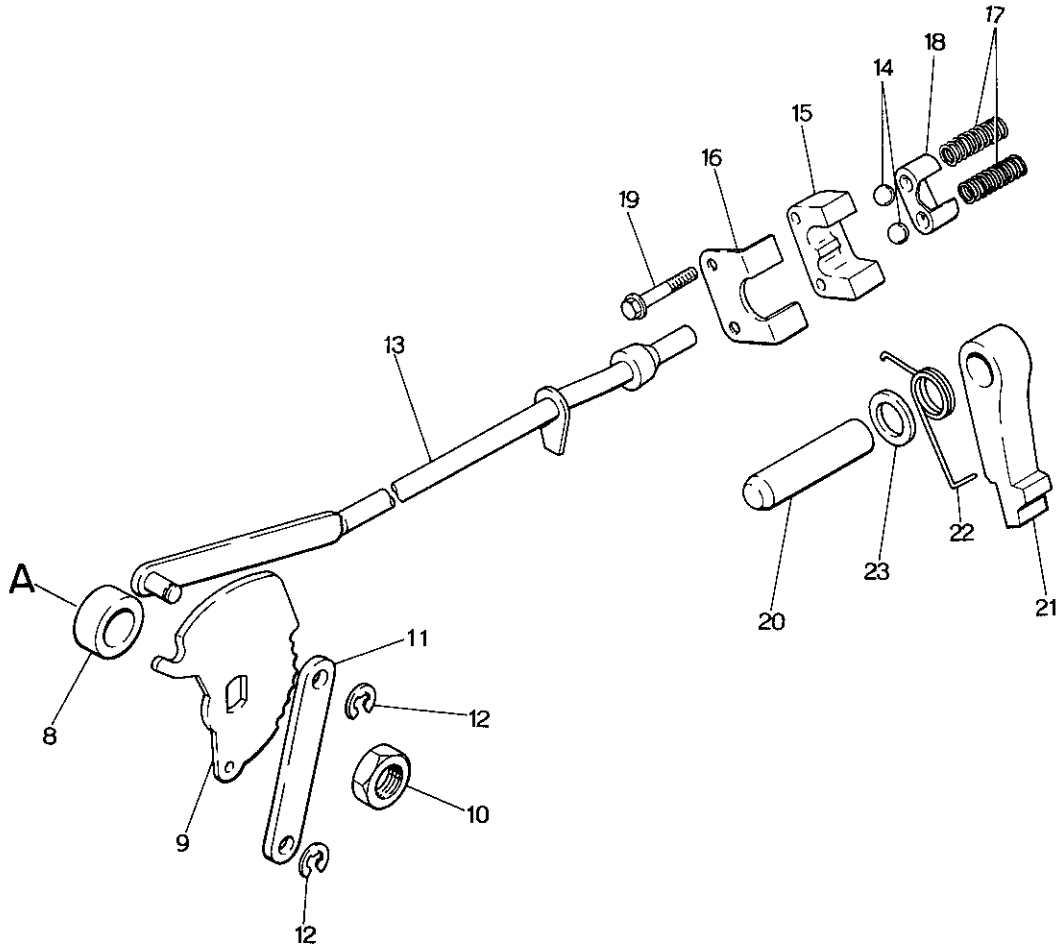

No.	Part Number	Description	Q'ty	Rem
1	0338 19 431	Shaft, Manual	1	
2	0338 19 432	Seal, "O" Ring	1	
3	0338 19 445	Gasket, Switch	1	Car No. 155
4	0338 19 446	Seal, "O" Ring	1	
5	0338 19 444	Switch, Inhibitor	1	
	~~0333 19 444A~~	~~Switch, Inhibitor~~	~~1~~	~~Car No. 143~~
	0338 19 444A	Switch, Inhibitor	1	Car No. 143
	1675 19 444	Switch, Inhibitor	1	Car No. 150
	1675 19 444A	Switch, Inhibitor	1	Car No. 157
6	0842 19 031	Lever, Select	1	Noto :
7	99922 1400	Nut, Lever	1	0338 19 44 0397 19 83
	99971 1400	Washer, Spring	1	are intercha exchanged a
8	0338 19 433	Washer, Manual	1	
9	0338 19 440	Plate, Manual	1	
10	0338 19 443	Nut, Shaft	1	
11	0338 19 448	Lever, Parking	1	
12	0338 19 449	Ring, Snap	1	
13	0338 19 450	Rod, Parking	1	
14	0338 19 245	Ball, Steel	2	
	0397 19 705	Ball, Steel	2	Car No. 128
● V	9961 12 750	Ball, Steel	2	
15	0338 19 701	Support, Actuator	1	
16	0338 19 702	Plate, Retaining	1	
17	0338 19 703	Spring, Ball Park	2	
18	0338 19 704	Retainer	1	
19	0338 19 706	Bolt	2	
20	0338 19 731	Shaft, Parking Pawl	1	
21	0338 19 732	Pawl, Parking	1	
22	0338 19 733	Spring, Pawl Return	1	
	0338 19 733A	Spring, Pawl Return	1	Car No. 1415
●	0338 19 733B	Spring, Pawl Return	1	Car No. 1438
●	0338 19 733C	Spring, Pawl Return	1	
23	0338 19 734	Spacer, Pawl	1	
	0338 19 734A	Spring, Pawl	1	Car No. 1415

AUTOMATIC T/MISSION

(MANUAL LINKAGE) (USED FROM 74/4)

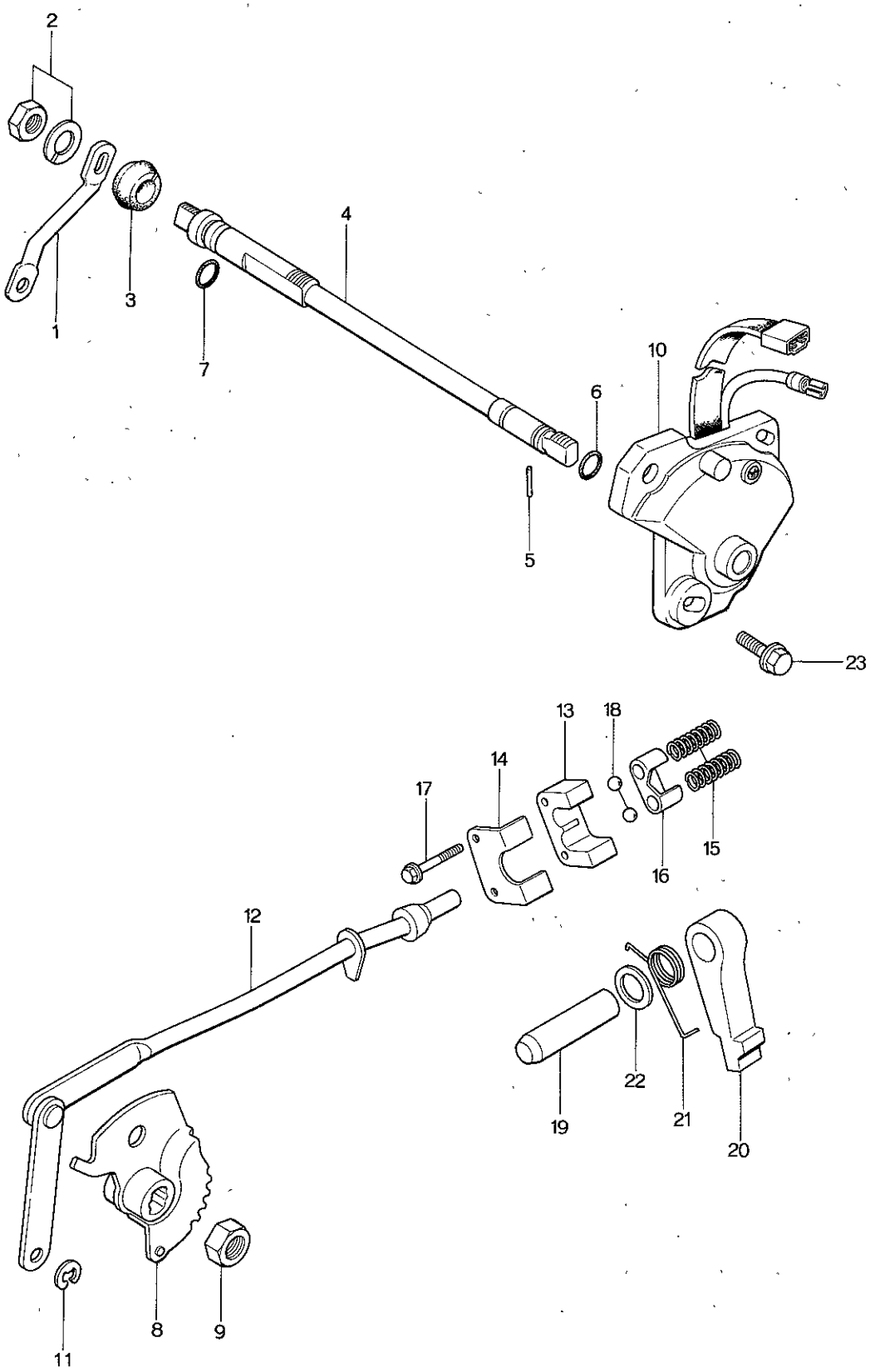

No.	Part Number	Description	Q'ty	Rem
1	1015 19 031	Lever, Select	1	
2	99922 1400	Nut, Select Lever	1	
	99971 1400	Washer, Spring	1	
3	1758 19 036	Seal, Dust	1	
4	1758 19 431	Shaft, Manual	1	
5	1758 19 434	Pin, Manual Shaft	1	
6	99541 00901	Ring, "O"-Manual Shaft	1	
7	99541 01201	Ring, "O"	1	
8	1758 19 440	Plate, Manual	1	
9	1758 19 443	Nut, Manual Shaft	1	
10	1758 19 444	Switch, Inhibitor	1	
11	0338 19 449	Ring, Snap	2	
12	1758 19 450	Rod, Parking	1	
13	0338 19 701	Support, Actuator	1	
14	0338 19 702	Plate, Retaining	1	
15	0338 19 703	Spring, Ball Park	2	
16	0338 19 704	Retainer, Actuator Support	1	
17	0338 19 706	Bolt, Actuator Support	2	
18	99611 2750	Ball, Steel	2	
19	0338 19 731	Shaft, Parking Pawl	1	

AUTOMATIC T / MISSION
(MANUAL LINKAGE) (USED FROM 74/4)

No.	Part Number	Description	Q'ty	Remarks
20	0338 19 732	Pawl, Parking	1	
21	0338 19 733C	Spring, Pawl Return	1	
22	0338 19 734A	Spacer, Dowel	1	
23	0397 19 838	Bolt, Inhibitor Switch	3	

AUTOMATIC T/MISSION

(MAIN CONTROL) (USED UP TO 74/3)

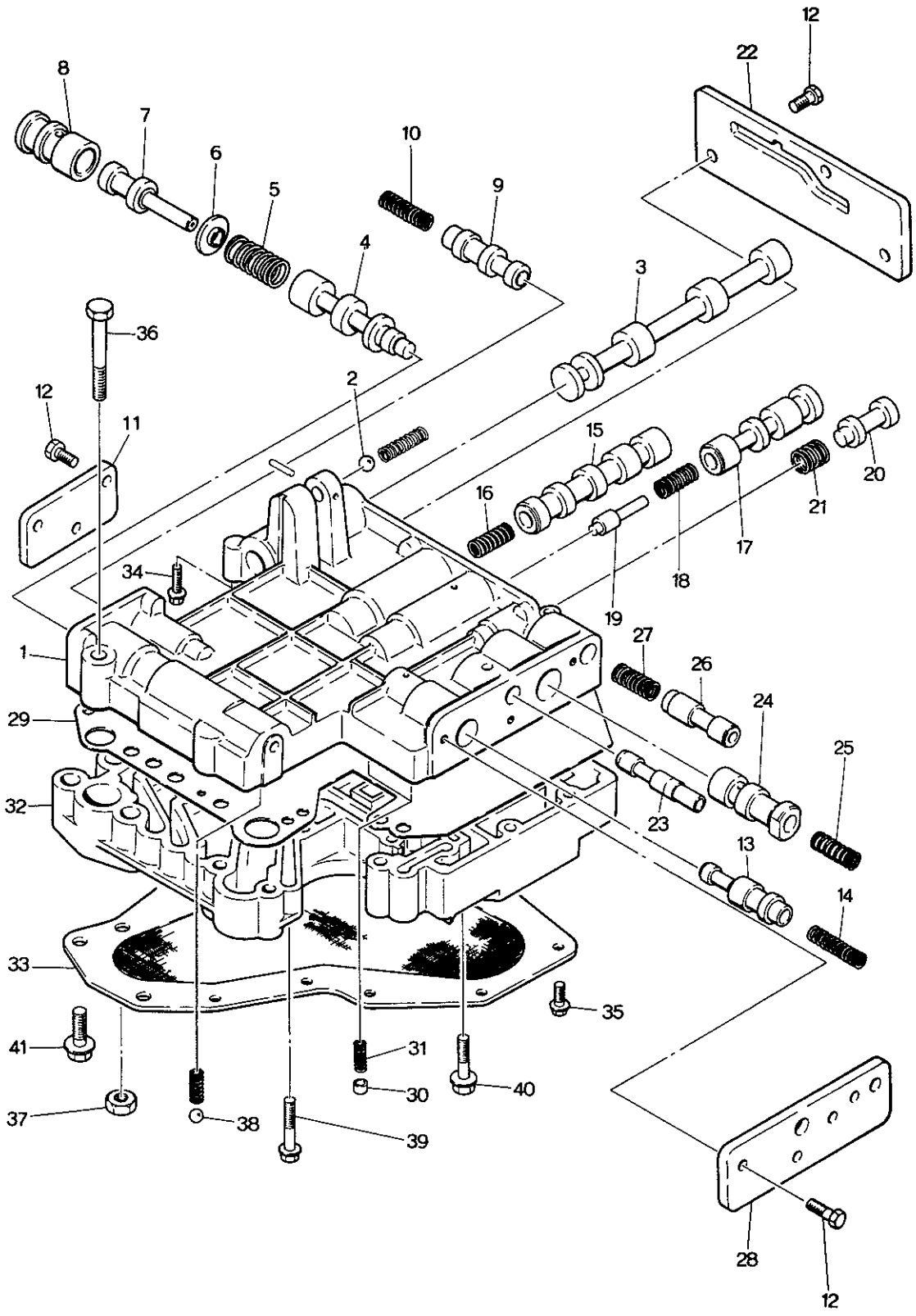

No.	Part Number	Description	Q'ty	Rem
	0397 19 750	Valve, Control	1	
1	0338 19 760	Body	1	Order Unde 0397 19 750
2	99611 2500	Ball, Steel	1	
3	0338 19 768	Valve, Manual	1	
4	0338 19 771	Valve, Regulator Pressure	1	
5	0338 19 772	Spring, Regulator Pressure	1	
6	0338 19 773	Seat, Spring	1	
7	0397 19 774	Plug, Regulator Pressure	1	
8	0397 19 775	Sleeve, Plug	1	
9	0338 19 777	Valve, Second Lock	1	
10	0338 19 778	Spring, Second Lock	1	
11	0338 19 781	Plate, Side "D"	1	
12	0338 19 782	Screw	9	
13	0338 19 783	Valve, 2 ~ 3 Timing	1	
14	0338 19 784	Spring	1	Order Under 0397 19 750
15	0338 19 785	Valve, 1 ~ 2 Shift	1	
16	0338 19 786	Spring	1	
17	0338 19 787	Valve, 2 ~ 3 Shift	1	
18	0338 19 788	Spring	1	
19	0338 19 789	Plug, 2 ~ 3 Shift	1	
20	0338 19 791	Valve, Modifier	1	
21	0338 19 792	Spring, Modifier	1	
22	0338 19 793	Plate, Side "A"	1	
23	0338 19 795	Valve, Vacuum Throttle	1	
24	0338 19 797	Valve, Throttle Back Up	1	
25	0338 19 798	Spring, Throttle Back Up	1	

No.	Part Number	Description	Q'ty	Remarks
26	0338 19 801	Valve, Down Shift	1	
27	0338 19 802	Spring, Down Shift	1	
28	0338 19 803	Plate, Side "B"	1	
29	0338 19 805	Plate, Separator	1	Order Under No. 0397 19 750
30	0338 19 807	Valve, Orifice Check	2	
31	0338 19 808	Spring, Orifice Check	2	
32	0338 19 811	Body, Lower	1	
33	0338 19 815	Strainer, Oil	1	
34	0338 19 816	Screw	7	
35	0338 19 817	Screw	10	
36	0338 19 818	Bolt	2	Order Under No. 0397 19 750
37	0338 19 819	Nut	2	
38	99611 2000	Ball, Steel	1	
39	0338 19 831	Bolt	3	
40	0338 19 832	Bolt	2	
41	0338 19 833	Bolt	2	

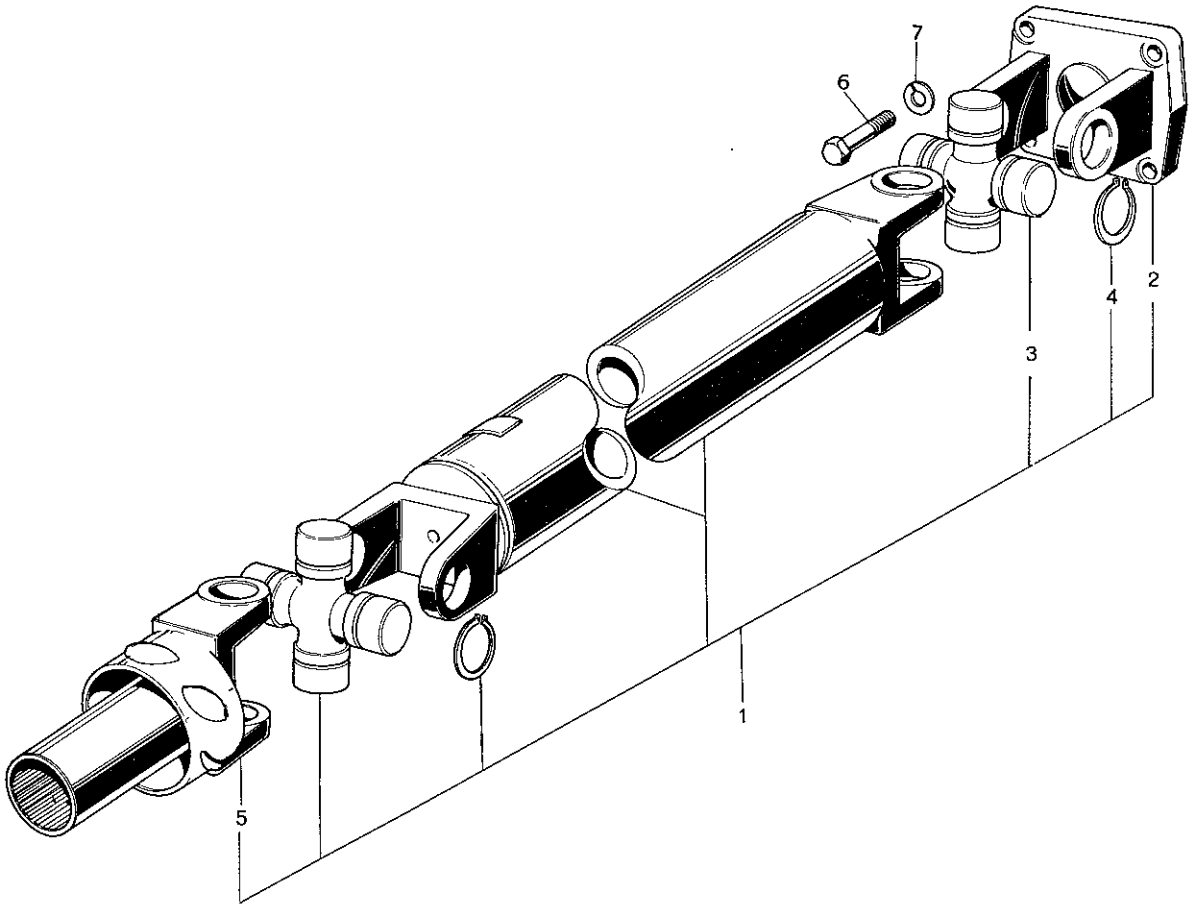
7
6
4
2
3
1
5

No.	Part Number	Description	Q'ty	Rema
1	0866 25 100	Shaft, Propeller (Manual)	1	
	0866 25 100A	Shaft, Propeller (Manual)	1	Car No. 1496
	0862 25 100A	Shaft, Propeller (Manual)	1	Car No. 1606
	0871 25 100	Shaft, Propeller (Automatic)	1	
2	0259 25 021B	Yoke	1	
3	0259 25 060	Joint, Universal	1	
4	0259 25 071A	Ring, Snap (t=1.22)		
	0259 25 072A	Ring, Snap (t=1.24)		
	0259 25 073A	Ring, Snap (t=1.26)		
	0259 25 074A	Ring, Snap (t=1.28)		
	0259 25 075A	Ring, Snap (t=1.30)	Selective use 1	
	0259 25 076A	Ring, Snap (t=1.32)		
	0259 25 077A	Ring, Snap (t=1.34)		
	0259 25 078A	Ring, Snap (t=1.36)		
	0259 25 079A	Ring, Snap (t=1.38)		
5	~~0866 25 130~~	~~Yoke, Sliding~~	~~1~~	
6	0223 25 024	Bolt	4	
	997523 0818	Bolt	4	Car No. 15773
7	99971 0800	Washer, Spring	4	

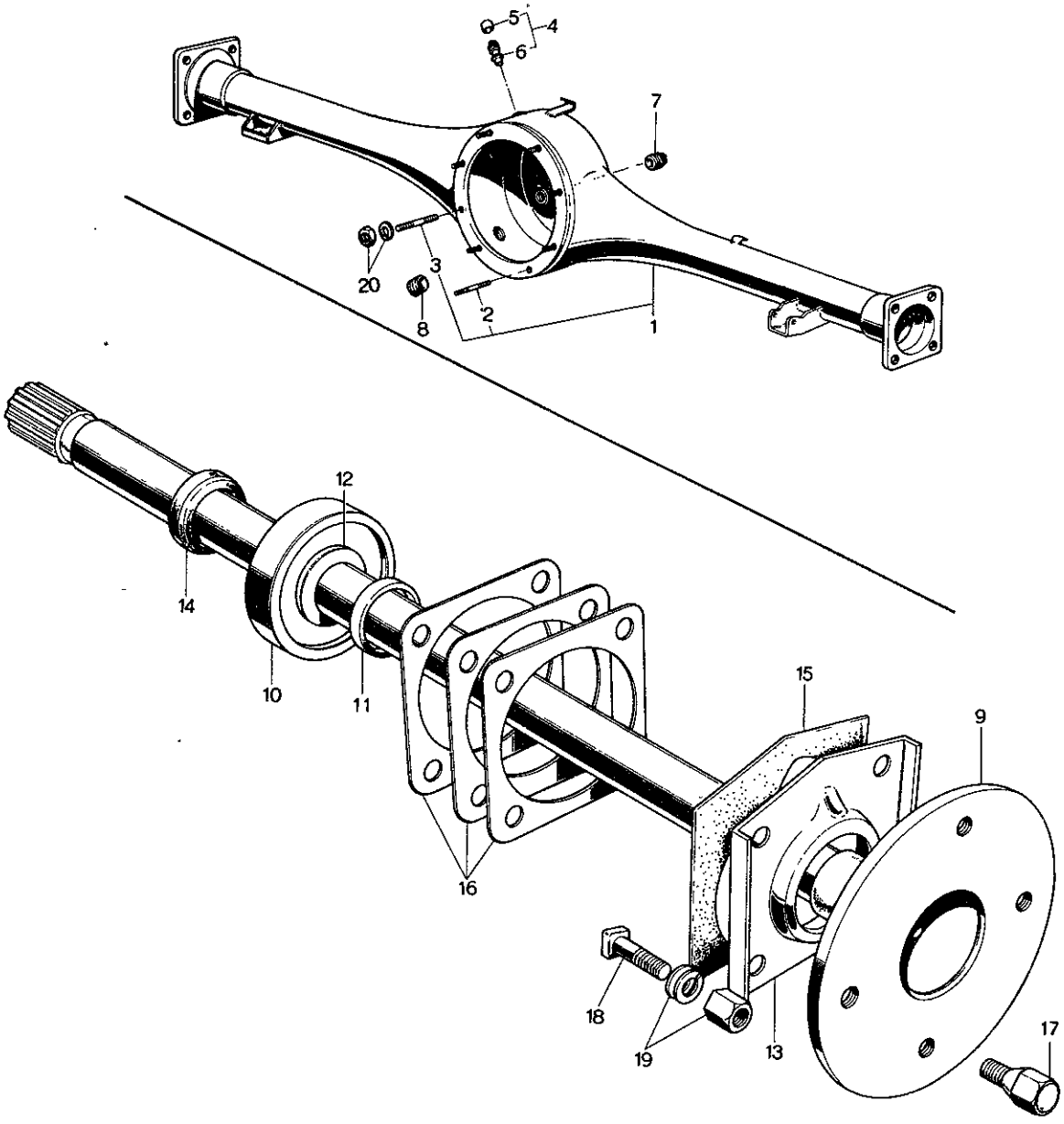
5
4
6
7
20
3
8
2
1
12
14
10
11
15
9
16
18
19
13
17

No.	Part Number	Description	Q'ty	Rema
1	0866 26 010B	Casing, Rear Axle	1	
2	99852 0820	Stud	7	
	99852 0820F	Stud	7	
●	99789 0820F	Stud	7	
3	99852 0880	Stud	1	
	99852 0880F	Stud	1	
●	99789 0880F	Stud	1	
4	0866 26 060	Breather	1	
5	~~0866 26 062~~	~~Cap, Breather~~	~~1~~	
6	~~0866 26 063~~	~~Body, Breather~~	~~1~~	
7	0259 26 041	Plug, Oil Level	1	
8	0259 26 051	Plug, Magnet Drain	1	
9	0870 26 111A	Shaft (R), Rear Axle	1	
	0870 26 115A	Shaft (L), Rear Axle	1	
10	0317 26 151A	Bearing, Rear Wheel	2	
11	0259 26 155	Spacer, Bearing	2	
12	0259 26 152	Collar, Bearing	2	
13	0317 26 121	Retainer, Bearing	2	
14	0187 26 154	Oil Seal	2	
15	0259 26 129	Gasket	2	

No.	Part Number	Description	Q'ty	Remarks
16	0259 26 141	Shim, Adjust (t=0.1) } Selective use	2	
	0259 26 142	Shim, Adjust (t=0.4) } Selective use		
17	0259 33 165	Bolt, Wheel Set	8	
	0820 33 165	Bolt, Wheel Set (With Center Cap)	8	
	0820 33 165A	Bolt, Wheel Set (With Center Cap)	8	Car No. 151154 7/8 ~△
18	0259 26 132	Bolt, Retainer	8	
19	99901 0800	Nut, Retainer	8	
	99971 0800	Washer, Spring	8	
20	99901 0800	Nut, Differential	8	
	99971 0800	Washer, Spring	8	

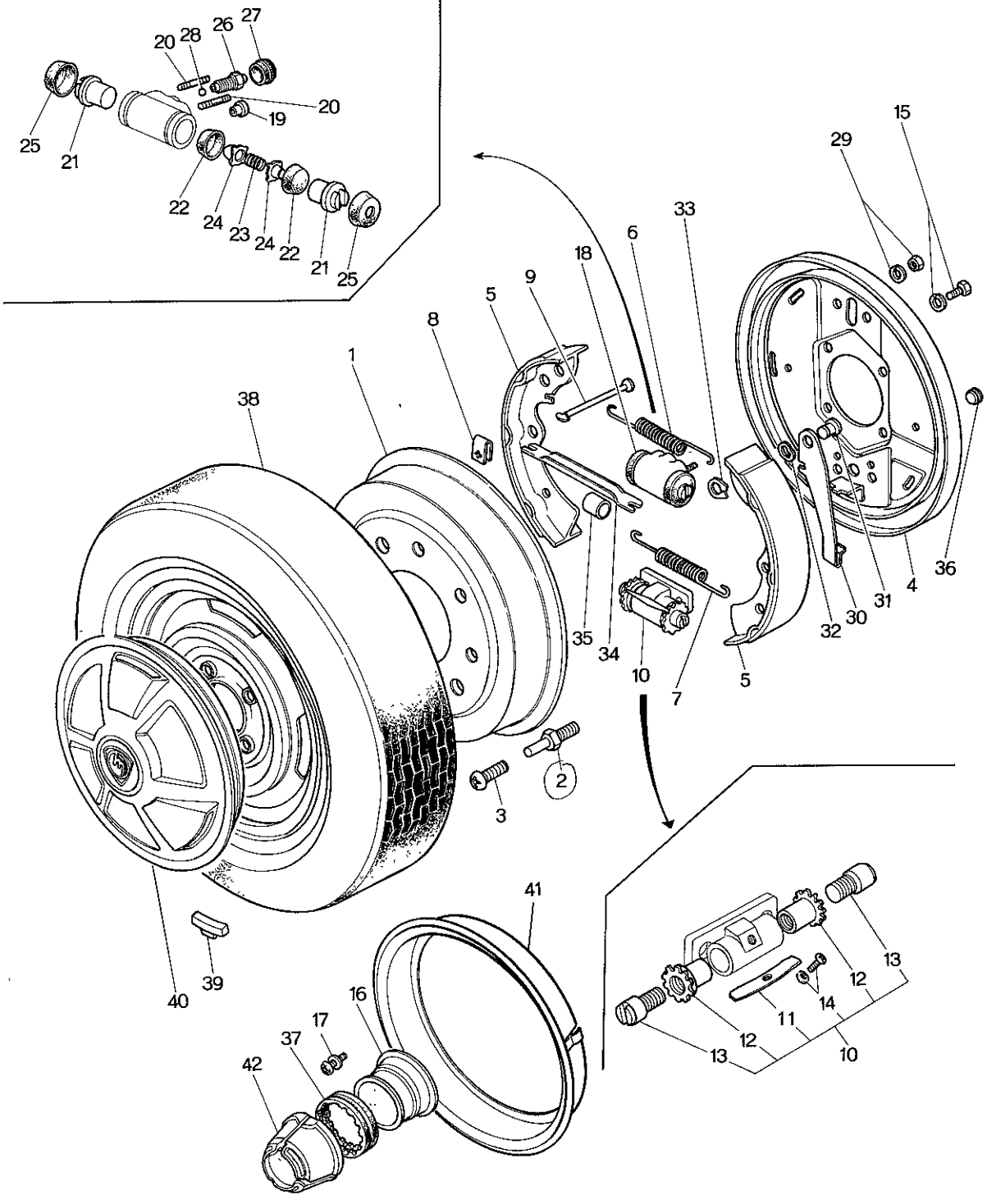
20
28
26
27
25
21
19
20
22
24
23
24
22
21
25
15
29
33
6
18
9
5
8
1
38
4
36
31
30
32
35
34
10
7
5
2
3
41
40
39
16
17
37
42
13
12
14
11
12
13
10

No.	Part Number	Description	Q'ty	Remark
1	0866 26 251	Drum, Rear Brake	2	
	0305 26 251	Drum, Rear Brake	2	Car No. 15281
	0305 26 251 A	Drum, Rear Brake	2	Car No. 15559
	~~1504 26 251 A~~	~~Drum, Rear Brake~~	~~2~~	~~1558, 1559~~
●	1504 26 251 B	Drum, Rear Brake	2	
	1504 26 251 A	Drum, Rear Brake	2	1558, 1559 From Car No
2	0305 26 255	Bolt	4	
3	99833 0812	Bolt, Center Cap	4	
4	0866 26 280 B	Plate (R), Brake Back	1	
	0866 26 290 B	Plate (L), Brake Back	1	
5	0866 26 310	Shoe, Brake (Front Disc Brake use)	4	
	0866 26 310 A	Shoe, Brake (Front Disc Brake use)	4	Car No. 15559
6	0187 26 341	Spring, Return-Wheel Cylinder Side	2	
7	0118 26 342	Spring, Return-Wheel Cylinder Side	2	
8	0223 26 345 A	Spring, Shoe Hold	4	
●	0110 26 345	Spring, Shoe Hold	4	Car No. 162808
9	0866 26 391	Pin, Shoe Hold Down	4	
●	0187 33 391 A	Pin, Shoe Hold Down	4	Car No. 162808
10	0305 26 500A	Anchor Block	2	

No.	Part Number	Description	Q'ty	Remarks
11	0710 26 352	Spring	2	
12	0710 26 461	Adjuster	4	
13	0305 26 465	Screw, Adjust	4	
14	99833 0408	Screw	2	
	99971 0400	Washer, Spring	2	
15	99801 0814	Bolt, Anchor Block	4	
	99971 0800	Washer, Spring	4	
16	0820 26 570A	Adapter	2	
●	1004 26 571	Adapter	2	Car No. 160623 73/10～×
17	99833 0812	Screw, Adapter	2	Center Cap use
	99971 0800	Washer, Spring	4	
18	0613 26 610A	Cylinder, Wheel	2	
	0223 26 610A	Cylinder, Wheel	2	1558,1559
	0813 26 610A	Cylinder, Wheel (Station Wagon)	2	1569
19	0613 26 922	Tube Seat	2	
20	99852 0612	Stud	4	
21	0208 26 651	Piston	4	
	0221 26 651	Piston	4	1558,1559

No.	Part Number	Description	Q'ty	Remar
	0810 26 651	Piston (Station Wagon)	4	1569
22	0208 26 671	Cup, Piston	4	
	0221 26 671	Cup, Piston	4	1558,1559
	0810 26 671	Cup, Piston (Station Wagon)	4	1569
23	0118 26 672	Spring	2	
	0221 26 672	Spring	2	1558,1559,156
24	0317 33 673	Block, Filling	4	
	0221 26 673	Block, Filling	4	1558,1559,156
25	0613 33 681	Cover, Dust	4	
26	0259 33 691	Screw, Bleeder	2	
27	0259 33 693	Cap	2	
28	99611 1500	Ball, Steel	2	
29	99906 0600	Nut, Wheel Cylinder	4	
	99971 0600	Washer, Spring	4	
30	0305 26 800A	Lever (R), Operating	1	
	0305 26 810A	Lever (L), Operating	1	
31	0118 26 832	Pin	2	

No.	Part Number	Description	Q'ty	Remarks
32	0118 26 834	Washer, Wave	2	
33	99575 0600	Ring, Retaining	2	
34	0187 26 821	Strut (R), Operating	1	
	0187 26 921	Strut (L), Operating	1	
35	0118 26 897	Holder	2	
36	0710 33 288	Plug	4	
● 37	0820 33 192A	Rubber, Set (Center Cap use)	2	
●	1011 37 192	Rubber, Set (Center Cap use)	2	Car No. 160623 73/10~△
38	9962 04 1553	Tire, 155 SR—13 Radial	2	
●	9962 10 1553	Tire, 155 SR—13 Radial	2	1550~1554 Car No. 73/10~Added Anew
●	9962 13 1553	Tire, 155 SR—13 Radial	2	73/10~○
	9962 07 1553	Tire, 155 HR—13 Radial (High Speed Type)	2	
●	9962 11 1553	Tire, 155 HR—13 Radial (High Speed Type)	2	1550~1554 Car No. 73/10~Added Anew
●	9962 14 1553	Tire, 155 HR—13 Radial (High Speed Type)	2	73/10~○
	9963 01 1553	Tube, 155 HR—13	2	
	9965 05 4530	Wheel, 4½—J×13 WDC Disc	2	
●	9965 18 4530	Wheel, 4½—J×13 WDC Disc	2	73/10~○
	9965 06 4530	Wheel, 4½—J×13 WDC Disc (Center Cap use)	2	
●	9965 19 4530	Wheel, 4½—J×13 WDC Disc (Center Cap use)	2	73/10~○

Selective use

No.	Part Number	Description		Q'ty	Remar
39	99655 30010	Weight, Balance	Selective use	2	
	99655 30015	Weight, Balance			
	99655 30020	Weight, Balance			
	99655 30025	Weight, Balance			
	99655 30030	Weight, Balance			
	99655 30035	Weight, Balance			
	99655 30040	Weight, Balance			
	99655 30045	Weight, Balance			
	99655 30050	Weight, Balance			
	99655 30060	Weight, Balance			
40	0866 37 170B	Cap, Wheel		2	
	0866 37 170C	Cap, Wheel		2	Car No. 163339
41	0820 33 180A	Ring, Wheel	(Center Cap use)	2	
	1011 37 180A ~	~		2	
	1011 37 180B ~	~		2 ~	Δ-7
42	0881 37 191	Cap, Center		2	

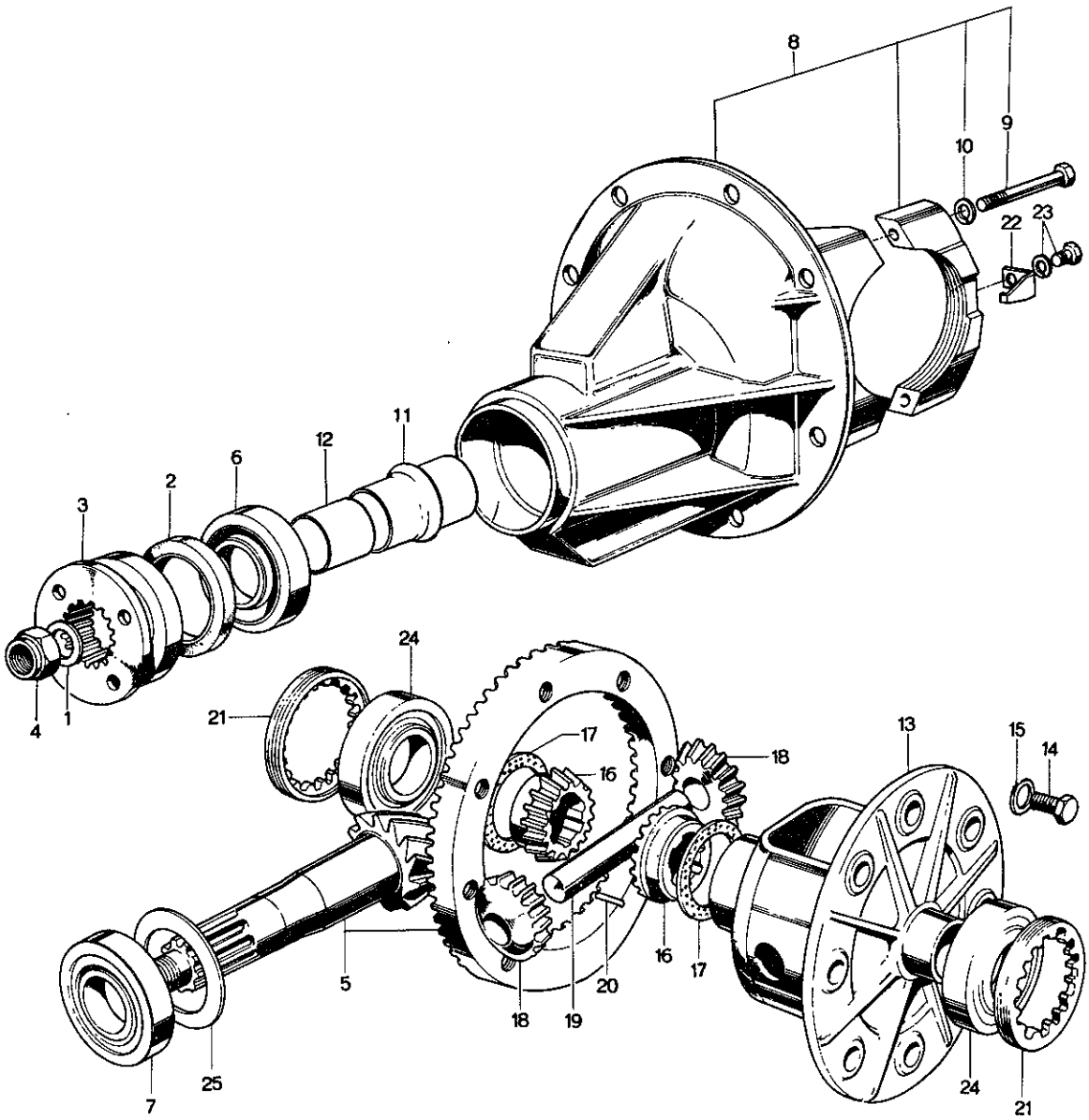
8
9
10
22
23
11
12
6
2
3
4
1
24
21
17
16
18
13
15
14
5
18
19
20
16
17
7
25
24
21

No.	Part Number	Description	Q'ty	Remar
	~~0800 27 100~~	~~Driving & Differential~~	~~1~~	
	1562 27 100	Driving & Differential	1	~~1558, 1559~~
	~~0866 27 100~~	~~Driving & Differential (Station Wagon)~~	~~1~~	
●	1562 27 100	Driving & Differential (Station Wagon)	1	From Car No
1	0223 27 012	Washer, Drive Pinion	1	
2	~~0229 27 018~~	~~Oil Seal~~	~~1~~	
	2112 27 018	Oil Seal	1	1558, 1559
	~~0223 27 018~~	~~Oil Seal (Station Wagon)~~	~~1~~	
●	2122 27 018	Oil Seal (Station Wagon)	1	From Car No.
3	0223 27 020B	Flange, Companion	1	
4	0223 27 030	Nut, Lock	1	
5	0866 27 110	Gear Set, Final	1	
6	0755 27 141	Bearing	1	
7	0221 27 141	Bearing	1	
8	0866 27 150	Carrier, Differential	1	
9	99811 1050	Bolt	4	
10	99971 1000	Washer, Spring	4	
11	0305 27 171	Piece, Distance	1	
12	0866 27 172	Collar, Long	1	
13	0290 27 231	Case, Differential Gear	1	

No.	Part Number	Description	Q'ty	Remarks
●	0290 27 231 A	Case, Differential Gear	1	Car No. 74½~△
14	99753 41022	Bolt, Ring Gear } Selective use	10	
	99753 81022	Bolt, Ring Gear } Selective use	10	
15	99958 1018	Washer	10	
16	0820 27 251	Gear, Differential Side	2	
●	0820 27 251 A	Gear, Differential Side	2	Car No. 74½~△
17	0290 27 252	Washer, Thrust (t=1.6) } Selective use	2	
	0290 27 253	Washer, Thrust (t=1.7) } Selective use	2	
	0290 27 254	Washer, Thrust (t=1.8) } Selective use	2	
18	0221 27 255	Pinion, Differential	2	
19	0305 27 261	Shaft, Pinion	1	
20	0114 27 262	Pin, Pinion Shaft	1	
21	0290 27 301	Screw, Adjust	2	
22	0290 27 302	Plate, Lock	2	
23	99811 0812	Bolt, Lock Plate	2	
	99971 0800	Washer, Spring	2	
24	0221 27 305	Bearing	2	
25	0223 27 401	Spacer (t=3.08)		
	0223 27 402	Spacer (t=3.11)		
	0223 27 403	Spacer (t=3.14)		

No.	Part Number	Description	Q'ty	Rema
	0223 27 404	Spacer (t=3.17)	Selective use 1	
	0223 27 405	Spacer (t=3.20)		
	0223 27 406	Spacer (t=3.23)		
	0223 27 407	Spacer (t=3.26)		
	0223 27 408	Spacer (t=3.29)		
	0223 27 409	Spacer (t=3.32)		
	0223 27 411	Spacer (t=3.35)		
	0223 27 412	Spacer (t=3.38)		
	0223 27 413	Spacer (t=3.41)		
	0223 27 414	Spacer (t=3.44)		
	0223 27 415	Spacer (t=3.47)		

REAR SUSPENSION (SEDAN & COUPE)

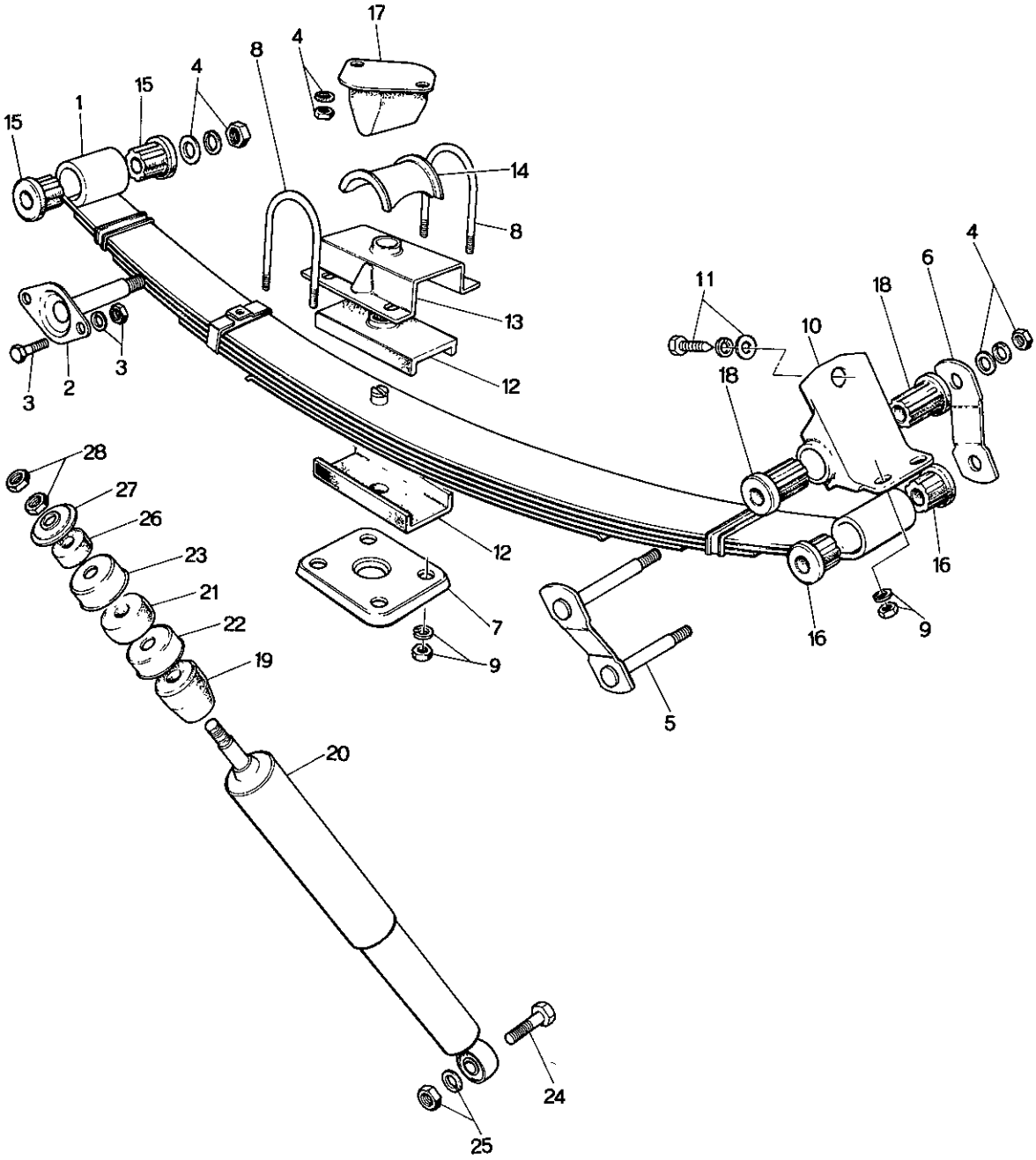

REAR SUSPENSION (SEDAN & C

No.	Part Number	Description		Q'ty	Remar
1	0376 28 010	Spring, Rear	Coupe use	2	
●	0376 28 010A	Spring, Rear		2	Car No. 1788
	0376 28 011	Spring No. 1, Leaf		2	
●	0376 28 011A	Spring No. 1, Leaf		2	Car No. 1788
	0376 28 012	Spring No. 2, Leaf		2	
●	0376 28 012A	Spring No. 2, Leaf		2	Car No. 1788
	0376 28 013	Spring No. 3, Leaf		2	
●	0376 28 013A	Spring No. 3, Leaf		2	Car No. 1788
	0376 28 014	Spring No. 4, Leaf		2	
●	0376 28 014A	Spring No. 4, Leaf		2	Car No. 1788
	0866 28 010	Spring, Rear	Sedan use	2	
●	0866 28 010A	Spring, Rear		2	Car No. 1788
	0866 28 011	Spring No. 1, Leaf		2	
●	0866 28 011A	Spring No. 1, Leaf		2	Car No. 1788
	0866 28 012	Spring No. 2, Leaf		2	
●	0866 28 012A	Spring No. 2, Leaf		2	Car No. 1788
	0866 28 013	Spring No. 3, Leaf		2	
●	0866 28 013A	Spring No. 3, Leaf		2	Car No. 1788
	0866 28 014	Spring No. 4, Leaf		2	

REAR SUSPENSION (SEDAN & COUPE)

No.	Part Number	Description	Q'ty	Remarks
●	0866 28 014A	Spring No. 4, Leaf	2	Car No. 178812 73/8 ~ ×
●	0866 28 019	Spring, Inter Leaf	2	Car No. 178812 73/8 ~ Added Anew
2	0866 28 110	Pin, Spring	2	
	0866 28 110A	Pin, Spring	2	Car No. 157735 72/10 ~ △
●	1881 28 110	Pin, Spring	2	Car No. 178812 73/8 ~ ×
3	99801 0820	Bolt, Spring Pin	4	
●	99801 0822	Bolt, Spring Pin	4	73/8 ~ ○
	99901 0800	Nut, Spring Pin	4	
	99971 0800	Washer, Spring	4	
● 4	99901 0800	Nut, Shackle	~~12~~ 6	From Car No. 1
●	99971 0800	Washer, Spring	~~12~~ 6	From Car No. 1 ~ O
●	99940 0800	Nut, Rubber Stopper	2	73/9 ~ ○
5	0866 28 140	Plate No. 1, Shackle	2	
	0866 28 140A	Plate No. 1, Shackle	2	Car No. 133210 72/1 ~ ○
	0866 28 140B	Plate No. 1, Shackle	2	Car No. 157735 72/10 ~ △
6	0866 28 143	Plate No. 2, Shackle	2	
7	0866 28 151	Clamp, Spring	2	
8	0652 28 161	Bolt, Lock	4	
9	99921 1000	Nut	8	

No.	Part Number	Description	Q'ty	Rema
	99971 1000	Washer, Spring	8	
10	0866 28 180A	Bracket, Shackle	2	
11	99783 1028	Bolt, Shackle Bracket	2	
	99952 1000	Washer, Plain	2	
	99971 1000	Washer, Spring	2	
12	0259 28 182	Pad, Rubber	4	
13	0866 28 183A	Holder, Rubber Pad	2	
14	0866 28 322	Seat, Lock Bolt	2	
15	0866 28 333B	Bush (Frt.)	4	
●	0866 28 333C	Bush (Frt.)	4	Car No. 1788
16	0866 28 343B	Bush No. 1 (Rr.)	4	
17	0866 28 350	Rubber, Stopper	1	
18	0866 28 353B	Bush No. 2 (Rr.)	4	
19	0866 28 591	Bumper, Bound	2	
20	0866 28 700	Damper, Rear	2	
	0866 28 700A	Damper, Rear	2	Car No. 15081
●	0866 28 700B	Damper, Rear	2	Order Under No
	0866 99 281B	—	2	Car No. 17925
●	0866 99 281C	—	2	74/1
21	0866 28 774	Bush, Rubber	2	
22	0866 28 778A	Casing, Stopper	2	
23	0866 28 779	Holder	2	

REAR SUSPENSION (SEDAN & COUPE)

No.	Part Number	Description	Q'ty	Remarks
24	0866 28 799	Bolt, Rear Damper	2	
25	99921 1200	Nut, Rear Damper	2	
	99971 1200	Washer, Spring	2	
26	0603 34 153	Bush, Rubber	2	
27	0187 34 776	Retainer	2	
28	99921 1000	Nut, Rear Damper	2	
	99922 1000	Nut	2	

REAR SUSPENSION (STATION WAGON)

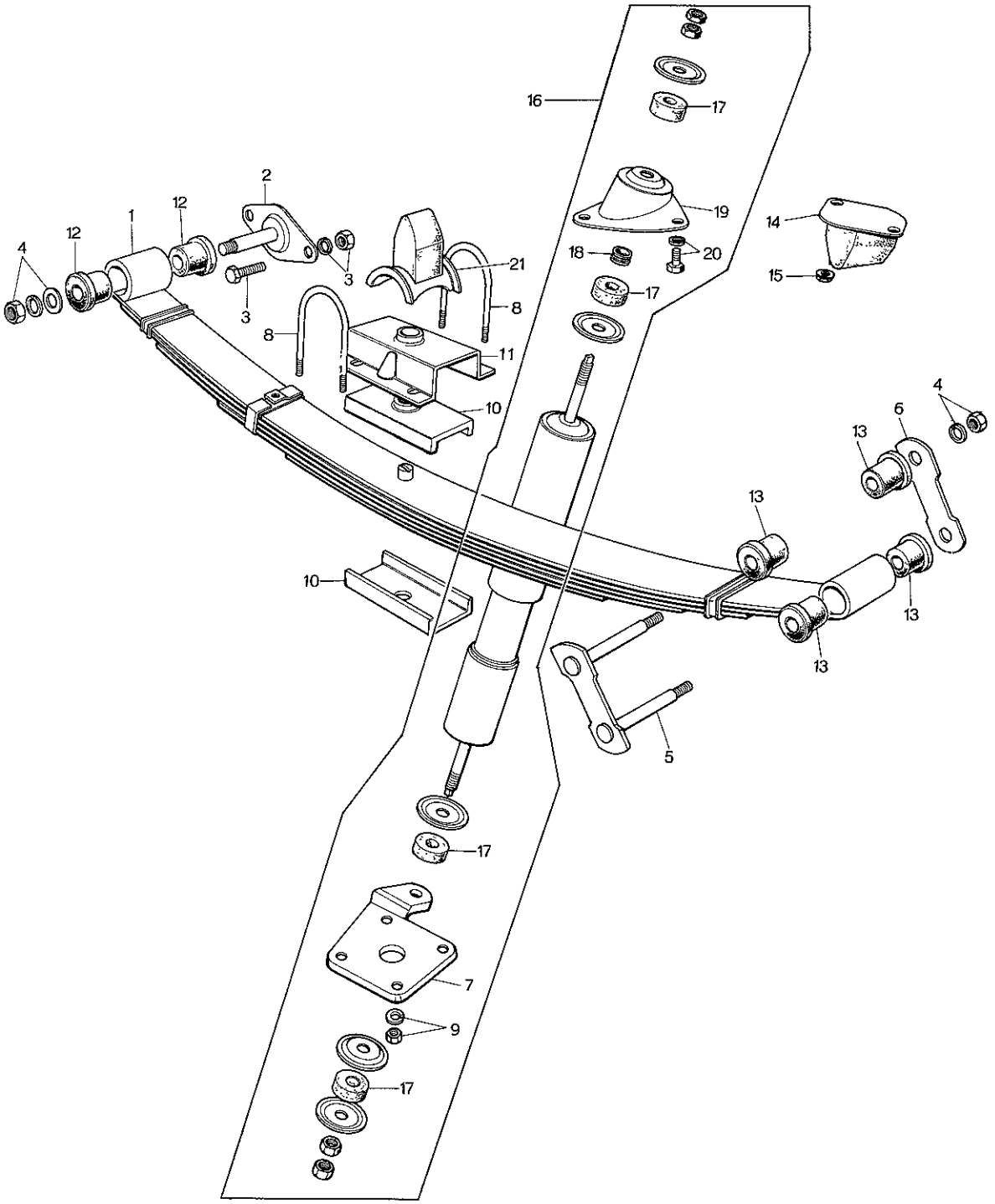

REAR SUSPENSION (STATION

No.	Part Number	Description	Q'ty	Rem
1	2190 28 010	Spring, Rear	2	
	2160 28 011	Spring No. 1, Leaf	2	
	2160 28 012	Spring No. 2, Leaf	2	
	2160 28 013	Spring No. 3, Leaf	2	
	2160 28 014	Spring No. 4, Leaf	2	
2	0259 28 110	Pin, Spring	2	
3	99801 0822	Bolt	4	
	99901 0800	Nut	4	
	99971 0800	Washer, Spring	4	
4	99921 1000	Nut	6	
	99952 1000	Washer, Plain	2	
	99971 1000	Washer, Spring	6	
5	0259 28 140	Plate No. 1, Shackle	2	
6	0259 28 143	Plate No. 2, Shackle	2	
7	0899 28 150A	Clamp (R), Spring	1	
	0899 28 170A	Clamp (L), Spring	1	
8	0193 28 161	Bolt, Lock	4	
9	99921 1000	Nut, Lock Bolt	8	
	99971 1000	Washer, Spring	8	

REAR SUSPENSION (STATION WAGON)

No.	Part Number	Description	Q'ty	Remarks
10	0259 28 182	Pad, Rubber	4	
11	0259 28 183	Holder, Rubber Pad	2	
12	0259 28 333	Bush (Frt.)	4	
13	0259 28 343	Bush (Rr.)	8	
14	0866 28 350	Rubber, Stopper	1	
15	99940 0800	Nut, Flange	2	
16	0585 99 281	Damper, Rear	2	
17	0223 28 775	Bush, Rubber	8	
18	0259 28 778	Grommet	2	
19	0585 28 180A	Bracket (R), Damper	1	
	0585 28 190A	Bracket (L), Damper	1	
20	99785 0825	Bolt, Damper Bracket	6	
	99971 0800	Washer, Spring	6	
21	0699 28 320	Bumper, Bound	2	

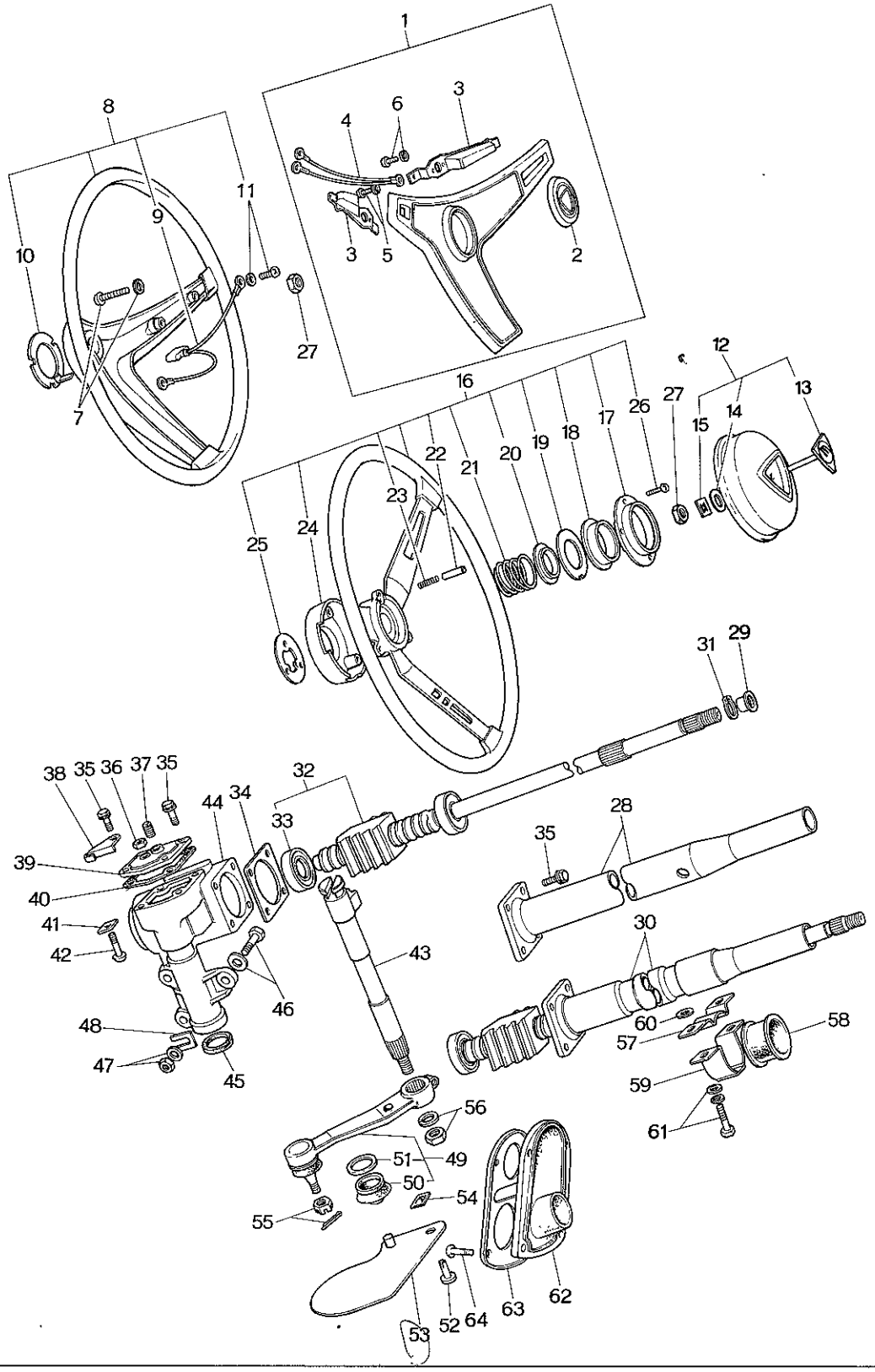
1
2
3
4
5
6
7
8
9
10
11
12
13
14
15
16
17
18
19
20
21
22
23
24
25
26
27
27
28
29
30
31
32
33
34
35
35
35
36
37
38
39
40
41
42
43
44
45
46
47
48
49
50
51
52
53
54
55
56
57
58
59
60
61
62
63
64

No.	Part Number	Description	Q'ty	Rema
1	0865 32 800-00	Cap Set, Horn	1	1550
2	0866 32 811	Emblem	1	
	1570 32 811	Emblem	1	Car No. 1407
	0370 32 030	Button, Horn	2	
	0370 32 030A	Button, Horn (L)	1	Car No. 1443
	0370 32 090	Button, Horn (R)	1	Car No. 144308
4	0370 32 037	Cord	1	
5	99833 0408	Screw, Cap Retainer & Return Spring	2	
	99971 0400	Washer, Spring	2	
6	99868 0410	Screw, Cap Retainer & Return Spring	2	
	99971 0400	Washer, Spring	2	
7	99868 0420	Screw, Horn Cap & Steering Wheel Boss	3	
	99971 0400	Washer, Spring	3	
8	0370 32 980	Boss, Steering Wheel	1	1550
9	0370 32 039	Cord	1	
~~10~~	~~0370 32 820~~	~~Terminal~~	~~1~~	
11	99868 0308	Screw, Cord	1	
	99971 0300	Washer, Spring	1	

STEERING SYSTEM
(WHEEL & GEAR, R.H.D.)

No.	Part Number	Description	Q'ty	Remarks
12	1562 32 800	Cap, Horn	1	©
13	1562 32 811	Emblem	1	1551~1557, 1569, 3501, 3503, 3502
14	0223 58 472	Washer, Emblem	1	
15	99579 3000	Nut, Speed-Emblem	1	
16	1562 32 980	Boss, Steering Wheel (1551~1557)	1	
	1562 32 980A	Boss, Steering Wheel (1551~1557, 1569, 3501, 3502 & 3503)	1	Car No. 160822 73/12~○
17	0329 32 031A	Retainer, Sub	1	
18	0329 32 013A	Retainer, Cap	1	
19	0329 32 016	Plate, Contact	1	
20	0329 32 015	Insulator	1	
21	0329 32 014	Spring	1	
22	0329 32 033	Pipe	1	
23	0329 32 019	Spring	1	
24	1562 32 049	Cover, Wheel Core	1	
25	0329 32 034	Terminal	1	
26	99866 0420	Screw	3	
27	99948 1200	Nut, Self Lock-Wheel & Shaft	1	
Ⓝ	0820 32 058	Washer, Stop-Selective use	2	
	0820 32 058A	Washer, Stop-Selective use	2	74/6~△

No.	Part Number	Description	Q'ty	Remar
	0376 32 110A	Gear, Steering	1	
	0376 32 110B	Gear, Steering	1	Car No. 1273
●	0376 32 110C	Gear, Steering	1	Car No. 1715
	0866 32 110A	Gear, Steering-Energy Absorbing	1	
	0866 32 110B	Gear, Steering-Energy Absorbing	1	Car No. 1273
●	0866 32 110C	Gear, Steering-Energy Absorbing	1	Car No. 1715
28	0370 32 080	Jacket, Shaft (Without Energy Absorbing)	1	
	0370 32 080A	Jacket, Shaft (Without Energy Absorbing)	1	Car No. 1273
●	1524 32 080	Jacket, Shaft (Without Energy Absorbing)	1	Car No. 1715
29	0259 32 071	Bush, Support	1	
30	0866 32 100	Shaft, Energy Absorbing	1	
	0866 32 100A	Shaft, Energy Absorbing	1	Car No. 1273
31	0208 32 059	Ring, Stop	1	
32	0370 32 130	Nut, Worm Ball (Without Energy Absorbing)	1	
	0370 32 130A	Nut, Worm Ball (Without Energy Absorbing)	1	Car No. 1273
33	0259 32 182	Bearing, Worm Ball Nut	1	
34	0259 32 154	Shim, End Cover (t=0.05)	Selective use 1	
	0259 32 155	Shim (t=0.075)		
	0259 32 156	Shim (t=0.1)		
	0259 32 157	Shim (t=0.2)		

STEERING SYSTEM
(WHEEL & GEAR, R.H.D.)

No.	Part Number	Description	Q'ty	Remarks
35	99801 0816	Bolt, End Cover & Side Cover	8	
	99971 0800	Washer, Spring	8	
36	99922 1000	Nut, Sector Adjust Screw	1	
37	99502 2000	Plug, Oil	1	
38	0259 55 556	Clip	1	
39	0259 32 160	Cover, Side	1	
40	0259 32 163	Gasket, Side Cover	1	
41	0180 32 171A	Shim, Adjust (t=1.95)	Selective use 1	
	0180 32 172A	Shim, Adjust (t=2.00)		
	0180 32 173A	Shim, Adjust (t=2.05)		
	0180 32 174A	Shim, Adjust (t=2.10)		
42	0180 32 165A	Screw, Sector Adjust	1	
43	0866 32 141	Shaft, Sector	1	
44	0866 32 121A	Housing, Gear	1	
45	0317 32 129	Oil Seal, Sector	1	
●	1128 32 129	Oil Seal, Sector	1	Car No. 172856 73/6 ~ ×
46	99781 1085	Bolt, Gear Housing	3	
	0305 32 119	Washer, Plain	3	
47	99942 1000	Nut, Steering Gear	3	

No.	Part Number	Description	Q'ty	Rema
	99942 1001	Nut, Steering Gear	2	Car No. 146
	99951 1022	Washer, Plain	2	
48	0208 32 188	Shim, Adjust - Steering Gear Housing	2	
49	0866 32 220A	Arm, Pitman	1	
●	0866 32 220C	Arm, Pitman	1	Car No. 1606
50	0730 32 279	Seal, Dust	1	
	1027 32 279	Seal, Dust	1	Car No. 1653
51	0259 32 289	Ring, Set	1	
	0187 32 289	Ring, Set	1	Car No. 1608
	1823 32 289	Ring, Set	1	Car No. 1653
52	~~0866 32 228~~	~~Pin, Insulator~~	~~1~~	From Car N
53	0866 32 230	Insulator	1	
●	1128 32 227C	Insulator	1	Car No. 1606
●	1128 32 227D	Insulator	1	
54	~~99679 3000~~	~~Nut, Speed~~	~~1~~	
●	90833 2408	Washer and Screw	1 2	From Car N
● 55	99924 1000	Nut, Pitman Arm & Center Link	1 3	
●	99221 2020	Pin, Split	1 3	
56	99921 1000	Nut, Pitman Arm & Sector Shaft	1	
●	99921 1800	Nut, Pitman Arm & Sector Shaft	1	From Car N
	99971 1800	Washer, Spring	1	
57	0866 32 425	Bracket, Upper - Shaft Jacket	1	

STEERING SYSTEM
(WHEEL & GEAR, R.H.D.)

No.	Part Number	Description	Q'ty	Remarks
58	2244 32 423	Rubber, Fixing-Shaft Jacket	1	
59	0866 32 420	Bracket, Lower-Shaft Jacket	1	
60	0259 43 088	Sheet, Fixing Bracket	2	
61	99799 0832	Bolt, Fixing Bracket	2	
	99786 0825	Bolt, Fixing Bracket	2	Car No. 142383 ?/3~○
	99952 0800	Washer, Plain	2	
	99971 0800	Washer, Spring	1	
62	0866 32 411	Cover, Dust	1	
63	0370 32 412	Plate, Set	4	
64	99869 0512	Screw, Set Plate	4	

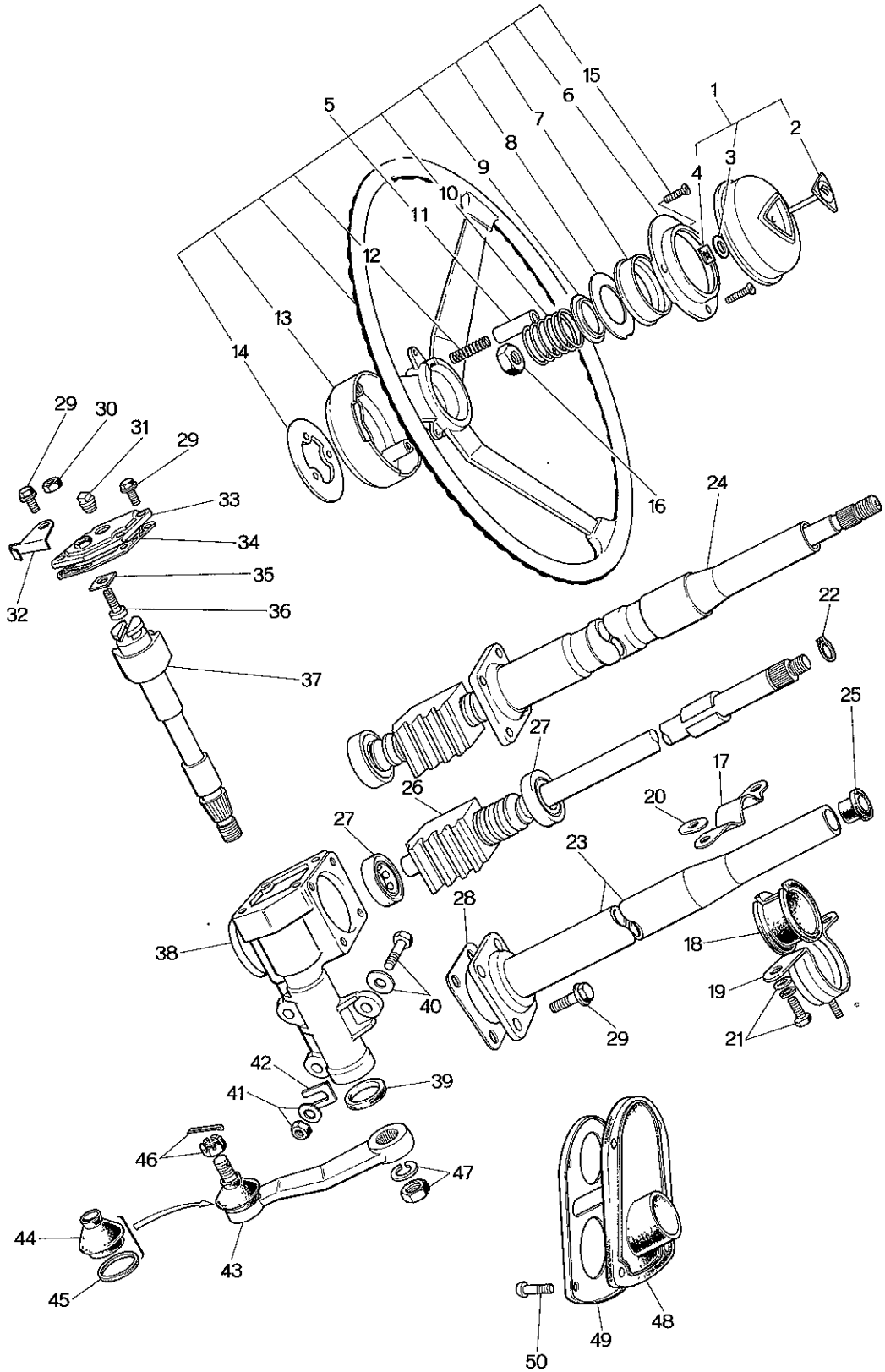
1
2
3
4
5
6
7
8
9
10
11
12
13
14
15
16
17
18
19
20
21
22
23
24
25
26
27
28
29
30
31
32
33
34
35
36
37
38
39
40
41
42
43
44
45
46
47
48
49
50

STEERING SYSTEM (WHEEL & GEAR,

No.	Part Number	Description	Q'ty	Rem
1	1562 32 800	Cap, Horn	1	
2	1562 32 811	Emblem	1	
3	0223 58 472	Washer, Emblem	1	
4	99579 3000	Nut, Speed-Emblem	1	
5	1562 32 980	Boss, Steering Wheel	1	
●	1562 32 980A	Boss, Steering Wheel	1	Car No. 1608
6	0329 32 031A	Retainer, Sub	1	
7	0329 32 013A	Retainer, Cap	1	
8	0329 32 016	Plate, Contact	1	
9	0329 32 015	Insulator	1	
10	~~0329 32 014~~	~~Spring~~	~~1~~	
●	0329 32 014	Spring	1	From Car No
11	0329 32 033	Pipe	1	
12	0329 32 019	Spring	1	
13	1562 32 049	Cover, Wheel Core	1	
14	0329 32 034	Terminal	1	
15	99866 0420	Screw	3	
Ⓝ	0820 32 058	Washer, Stop (Selective use)	2	
16	99848 1200	Nut, Self Lock-Wheel & Shaft	1	
17	0886 32 425	Bracket, Upper-Shaft Jacket	1	
18	2244 32 423	Rubber, Fixing-Shaft Jacket	1	
19	0886 32 420	Bracket, Lower-Shaft Jacket	1	
20	0259 43 088	Sheet, Shaft Jacket	2	
21	99799 0832	Bolt, Shaft Jacket & Fixing Bracket	2	
	99852 0800	Washer, Plain	2	

No.	Part Number	Description	Q'ty	Remarks
	99971 0800	Washer, Spring	6	
	1524 32 110	Gear, Steering	1	
	1524 32 110A	Gear, Steering	1	Car No. 127396 7/12~○
√ ●	1524 32 110B	Gear, Steering	1	Car No. 159447 7/10~△
	1562 32 110	Gear, Steering-Energy Absorbing	1	
	1562 32 110A	Gear, Steering-Energy Absorbing	1	Car No. 127396 7/12~○
√ ●	1562 32 110B	Gear, Steering-Energy Absorbing	1	Car No. 159447 7/10~△
22	0208 32 059	Ring, Stop	1	
23	0370 32 080	Jacket, Shaft	1	
	0370 32 080A	Jacket, Shaft	1	Car No. 127396 7/12~○
24	1562 32 100	Jacket, Shaft-Energy Absorbing	1	
	1562 32 100A	Jacket, Shaft-Energy Absorbing	1	Car No. 127396 7/12~○
25	0259 32 071	Bush, Support	1	
26	1524 32 130	Nut, Worm Ball (Without Energy Absorbing)	1	
	1524 32 130A	Nut, Worm Ball (Without Energy Absorbing)	1	Car No. 127396 7/12~○
27	0259 32 182	Bearing, Worm Ball Nut	2	
28	0259 32 154	Shim, End Cover (t=0.05)	Selective use 1	
	0259 32 155	Shim (t=0.075)		
	0259 32 156	Shim (t=0.1)		
	0259 32 157	Shim (t=0.2)		
29	99801 0816	Bolt, End Cover & Side Cover	8	
	99971 0800	Washer, Spring	8	
30	99922 1000	Nut, Lock-Sector Adjust Screw	1	
31	99502 2000	Plug, Oil	1	
32	0259 55 556	Clip	1	
33	0259 32 160	Cover, Side	1	
34	0259 32 163	Gasket, Side Cover	1	
35	0180 32 171A	Shim, Adjust (t=1.95)	Selective use 1	
	0180 32 172A	Shim, Adjust (t=2.00)		
	0180 32 173A	Shim, Adjust (t=2.05)		
	0180 32 174A	Shim, Adjust (t=2.10)		

STEERING SYSTEM (WHEEL & GEAR,

No.	Part Number	Description	Q'ty	Rem
36	0180 32 165A	Screw, Sector Adjust	1	
37	0866 32 141	Shaft, Sector	1	
38	~~1524 32 121A~~	~~Housing, Gear~~	~~1~~	
39	0317 32 129	Oil Seal, Sector	1	
40	99781 1085	Bolt, Gear Housing	3	
	0305 32 119	Washer, Plain	3	
41	99942 1000	Nut, Gear Housing	3	
✓●	99942 1001	Nut, Gear Housing	3	Car No. 146203
	99951 1022	Washer, Plain	3	
42	0208 32 188	Shim, Adjust-Gear Housing	2	
43	1524 32 220	Arm, Pitman	1	
44	0730 32 279	Seal, Dust	1	
45	0259 32 289	Ring, Set	1	
√●	0187 32 289	Ring, Set	1	Car No. 160822
46	99924 1000	Nut, Pitman Arm & Center Link	1	
	99221 2020	Pin, Split	1	
47	99921 1800	Nut, Pitman Arm & Sector Shaft	1	
	99971 1800	Washer, Spring	1	
48	0866 32 411	Cover, Dust	1	
49	0370 32 412	Plate, Set	1	
50	99869 0512	Screw, Set Plate	4	
Ⓝ	0820 32 058	Washer Stop, Selective use		Car No. 146346

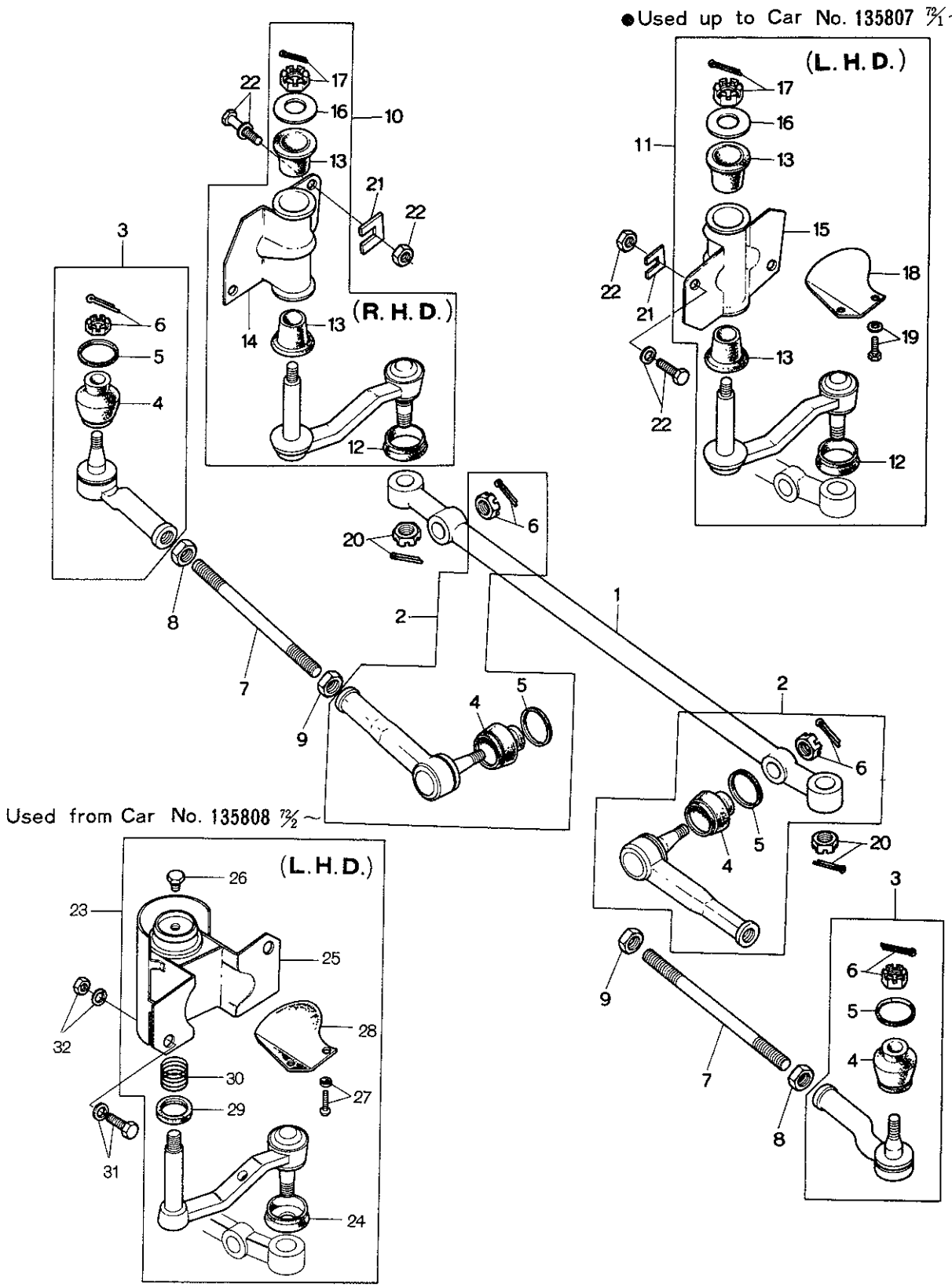
●Used up to Car No. 135807 72/1 ~
(L. H. D.)
(R. H. D.)
Used from Car No. 135808 72/2 ~
(L.H.D.)

No.	Part Number	Description	Q'ty	Rem
1	0866 32 261	Link, Center (R.H.D.)	1	
	1524 32 261	Link, Center (L.H.D.)	1	
2	1524 99 322	Socket Set	2	
	0866 99 322	Socket Set	2	Car No. 150
3	1524 99 324	Socket Set	2	
	0866 99 324	Socket Set	2	Car No. 150
4	0730 32 279	Seal, Dust	4	
5	0259 32 289	Ring, Set	4	
	0187 32 289	Ring, Set	4	Car No. 160
6	99924 1000	Nut	4	
	99221 2020	Pin, Split	2	
	99221 2015	Pin, Split	2	
7	0305 32 365	Rod, Tie	2	
8	99922 1400	Nut	2	
9	99944 1400	Nut	2	
10	0866 32 320	Idler (R.H.D.)	1	
●	0866 32 320A	Idler (R.H.D.)	1	Car No. 161
●	0866 32 320B	Idler (R.H.D.)	1	Car No. 176
11	1562 32 320A	Idler (L.H.D.)	1	Used up to C
●	1562 32 320B	Idler (L.H.D.)	1	Car No. 136
●	1562 32 320C	Idler (L.H.D.)	1	Car No. 161
●	1562 32 320D	Idler (L.H.D.)	1	Car No. 165
●	1562 32 320E	Idler (L.H.D.)	1	Car No. 176
●	1562 32 320F	Idler (L.H.D.)	1	Car No. 176
12	0866 32 279	Seal, Dust	1	
13	0866 32 329A	Bush, Tapered	2	
14	0866 32 330A	Bracket (R.H.D.)	1	
15	1562 32 330A	Bracket (L.H.D.)	1	Used up to C
16	0866 32 341	Washer	1	
17	99221 3020	Pin, Split ~~(L.H.D.)~~	1	

No.	Part Number	Description		Q'ty	Remarks
	99924 1200	Nut		1	
18	0866 32 227A	Insulator	(L.H.D.)	1	
●	0866 32 230	Insulator	(L.H.D.)	1	From Car No. 1
●	1128 32 227C	Insulator	(L.H.D.)	1	Car No. 160623 73/11 ~○ Used up to Car No. 135807 73/1
●	1128 32 227D	Insulator	(L.H.D.)	1	
19	0866 32 228	Pin	(L.H.D.)	1	
	99579 3000	Nut, Speed	(L.H.D.)	1	
Ⓝ	99242 0308	Pin		1	
20	99924 1000	Nut, Idler & Center Link		1 3	
	99221 2015	Pin, Split		1 3	
21	0208 32 188	Shim, Adjust-Idler		—	
22	99781 1080	Bolt, Idler		2	
	0305 32 119	Washer, Plain		4	
	99942 1000	Nut		3	
	99942 1001	Nut		3	Car No. 146203 73/4 ~○
23	1562 32 320B	Idler	(L.H.D.)	1	
	1562 32 320C	Idler	(L.H.D.)	1	73/1 ~○
24	0866 32 279	Seal, Dust	(L.H.D.)	1	
25	1562 32 330C	Bracket	(L.H.D.)	1	
26	0208 32 278	Plug	(L.H.D.)	1	
27	99833 0408	Screw	(L.H.D.)	2	
	99971 0400	Washer, Spring	(L.H.D.)	2	Used from Car No. 135808 72/2 ~
28	0866 32 230	Insulator	(L.H.D.)	1	
29	2113 32 356	Oil Seal	(L.H.D.)	1	
30	0111 32 173	Spring	(L.H.D.)	1	
31	99781 1080	Bolt, Idler	(L.H.D.)	1	
	0305 32 119	Washer, Plain	(L.H.D.)	1	
32	99921 1000	Nut	(L.H.D.)	2	
	99971 1000	Washer, Spring	(L.H.D.)	2	

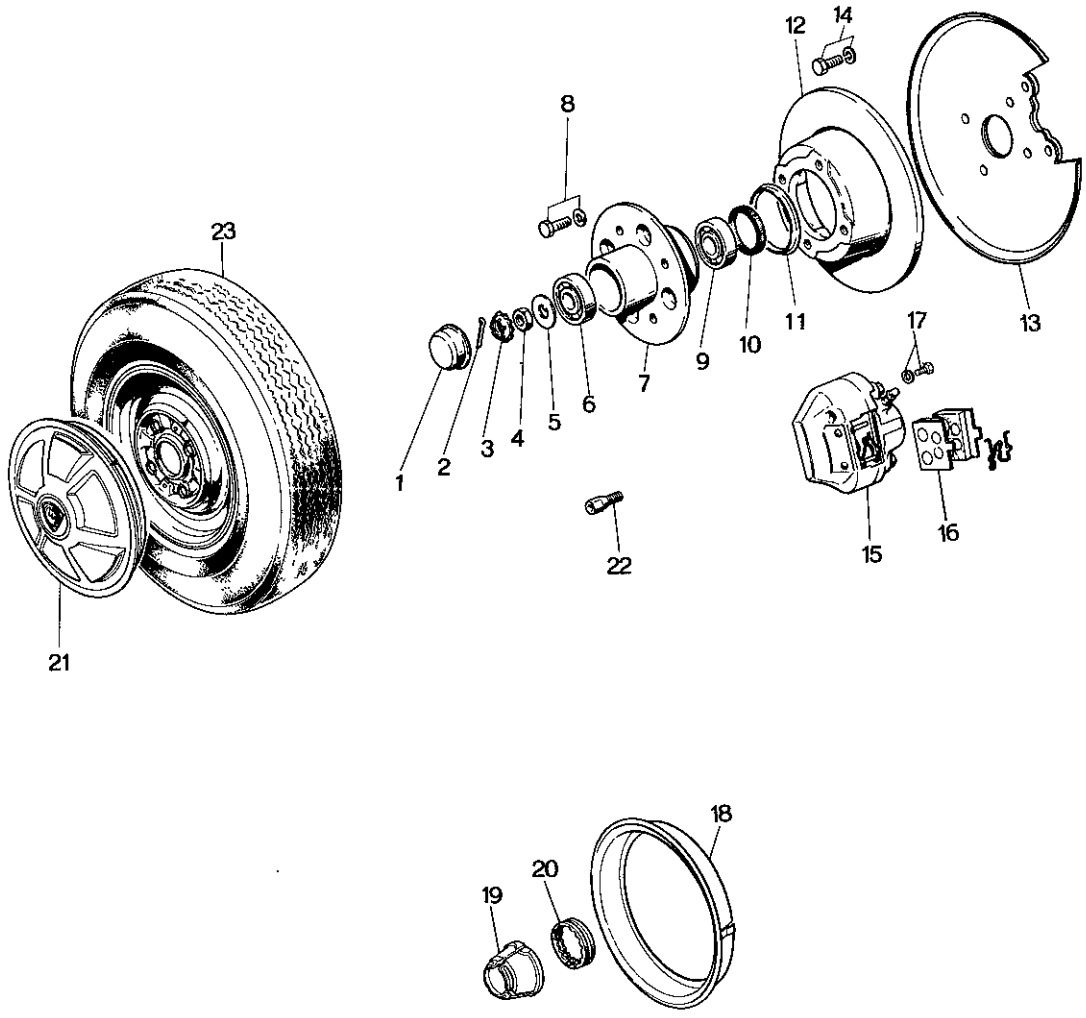
23
21
12
14
8
1
2
3
4
5
6
7
9
10
11
13
17
22
15
16
18
19
20

No.	Part Number	Description	Q'ty	Ren
1	0259 33 071	Cap, Hub	2	
2	99221 4030	Pin, Split	2	
3	0317 33 049	Cover, Set	2	
4	0662 33 042	Nut	2	
5	0317 33 043	Washer	2	
	1011 33 043	Washer	2	
6	0317 33 075	Bearing, Wheel Outer	2	
7	0820 33 091 A	Hub, Front	2	
●	0820 33 091 B	Hub, Front	2	
8	0221 33 698	Bolt, Hub	8	
	99971 1000	Washer, Spring	8	
9	0259 33 047	Bearing, Wheel Inner	2	
10	0398 33 065	Oil Seal	2	
11	0221 33 035	Ring, Dust	2	
12	0866 33 251	Plate, Disc	2	
	0866 33 251 A	Plate, Disc	2	
13	0866 33 260	Adapter (R), Mounting	1	
●	0866 33 260 A	Adapter (R), Mounting	1	
	0866 33 270	Adapter (L), Mounting	1	
●	0866 33 270 A	Adapter (L), Mounting	1	
14	99811 1018	Bolt, Mounting Adapter	8	
	99811 1020	Bolt, Mounting Adapter	8	Car No. 152
	99971 1000	Washer, Spring	8	

33 FRONT AXLE

No.	Part Number	Description	Q'ty	Remarks
15	0870 33 980A	Brake (R), Disc	1	
●	0870 33 980B	Brake (R), Disc	1	74/1~○
	0870 33 990A	Brake (L), Disc	1	
●	0870 33 990B	Brake (L), Disc	1	74/1~○
16	0870 49 230A	Pad, Set	1	
	0870 49 230B	Pad, Set	1	73/9~○
17	997501 1018	Bolt, Disc Brake	4	
	99971 1000	Washer, Spring	4	
● 18	0820 33 180A	Ring, Wheel-Center Cap use	1 2	From Car No. 1
● 19	0881 37 191	Cap, Center	1 2	From Car No. 1
20	0820 33 192A	Rubber, Set-Center Cap	2	
	1011 37 192	Rubber, Set-Center Cap	2	Car No. 160623 73/10~○
21	0866 37 170B	Cap, Wheel	2	
	0866 37 170C	Cap, Wheel	2	Car No. 163322 73/2~△
22	0259 33 165	Bolt, Wheel Set	8	
	0820 33 165	Bolt, Wheel Set-Center Cap use	8	
	0820 33 165A	Bolt, Wheel Set-Center Cap use	8	Car No. 151154 73/8~△
23	9962 04 1553	Tire, 155 SR—13 Radial	2	
	9962 10 1553	Tire, 155 SR—13 Radial	2	1550~1554 Car No. 73/2~Added Anew
	9962 13 1553	Tire, 155 SR—13 Radial	2	73/10~○
	9962 07 1553	Tire, 155 HR—13 Radial	2	

No.	Part Number	Description	Q'ty	Remar
●	9962 11 1553	Tire, 155 HR — 13 Radial	2	1550～1554 Car No.
●	9962 14 1553	Tire, 155 HR — 13 Radial	2	
	9963 01 1553	Tube, 155 R — 13	3	
	9965 05 4530	Wheel, 4½ — J × 13 WDC Disc	2	
● √	9965 18 4530	Wheel, 4½ — J × 13 WDC Disc	2	
	9965 06 4530	Wheel, 4½ — J × 13 WDC Disc (Center Cap)	2	

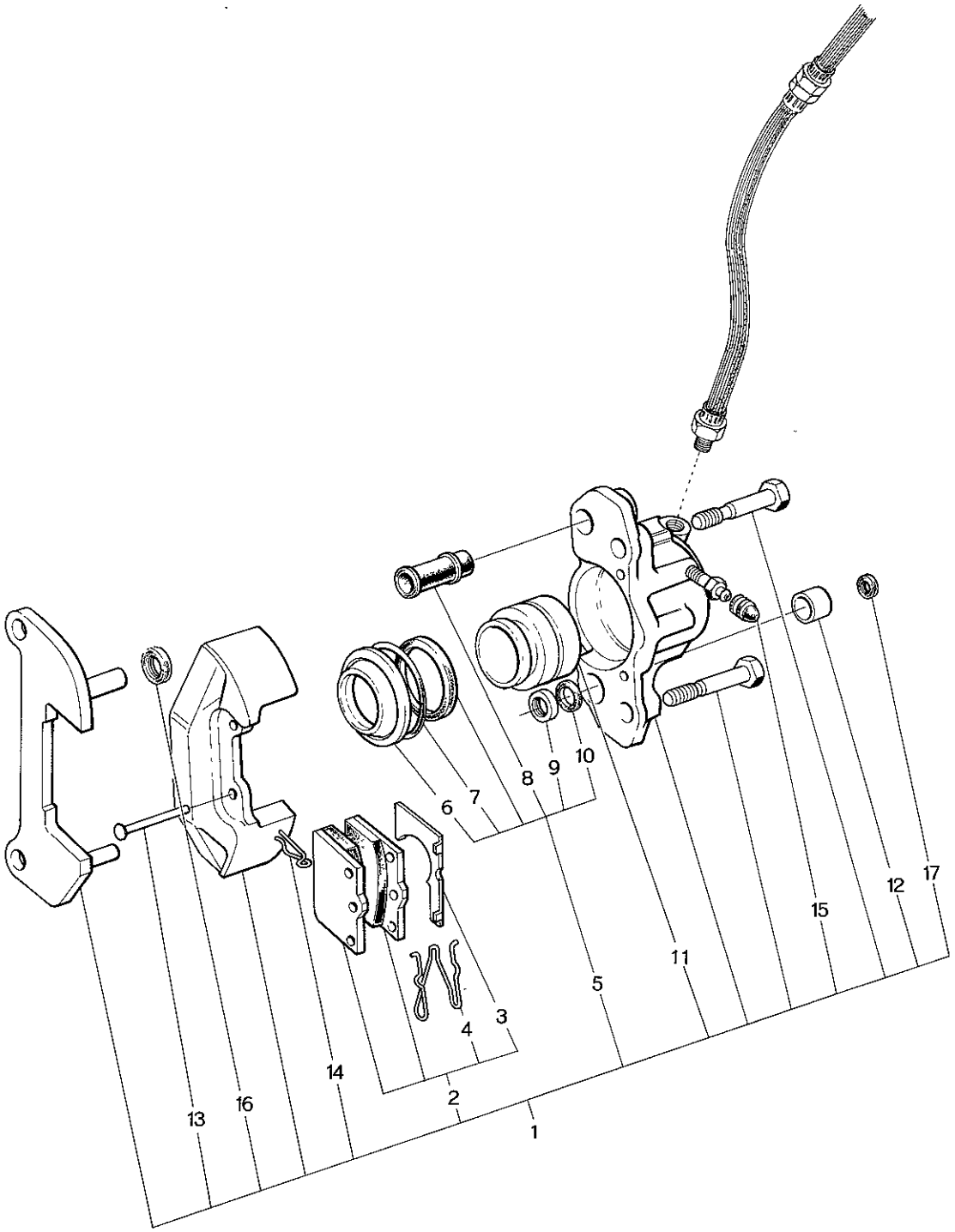
1
2
3
4
5
6
7
8
9
10
11
12
13
14
15
16
17

No.	Part Number	Description	Q'ty	Rem
1	0870 33 980A	Brake (R), Disc	1	
●	0870 33 980B	Brake (R), Disc	1	
	0870 33 990A	Brake (L), Disc	1	
●	0870 33 990B	Brake (L), Disc	1	
● 2	0870 49 230A	Pad Set (Fig. No. 3,4 included)	2	
●	0870 49 230B	Pad Set (Fig. No. 3,4 included)	2	
3	0866 49 231	Shim (R)	1 2	From Car N
	0866 49 232	Shim (L)	1 2	From Car N
4	0866 49 235	Spring	2	
5	0866 49 240	Seal Kit	2	
	~~0866 49 247~~	~~Grease~~	~~1~~	
	~~0866 49 248~~	~~Grease~~	~~1~~	
6	~~0866 49 242~~	~~Seal, Dust~~	~~2~~	
7	~~0866 49 243~~	~~Ring, Retaining~~	~~2~~	
8	~~0866 49 244~~	~~Bush~~	~~2~~	
9	~~0866 49 245~~	~~Seal, Wiper~~	~~2~~	
10	~~0866 49 246~~	~~Retainer, Seal~~	~~2~~	
11	0866 49 111	Piston	2	
12	0866 49 112	Cap, Pin	2	
13	0866 49 114	Pin	4	
14	0866 49 115	Clip	4	
15	0820 33 693	Cap, Bleeder	2	
16	0866 49 116	Spacer	2	Car No. 1641
17	0866 49 117	Plug, Cap	2	

FRONT SUSPENSION

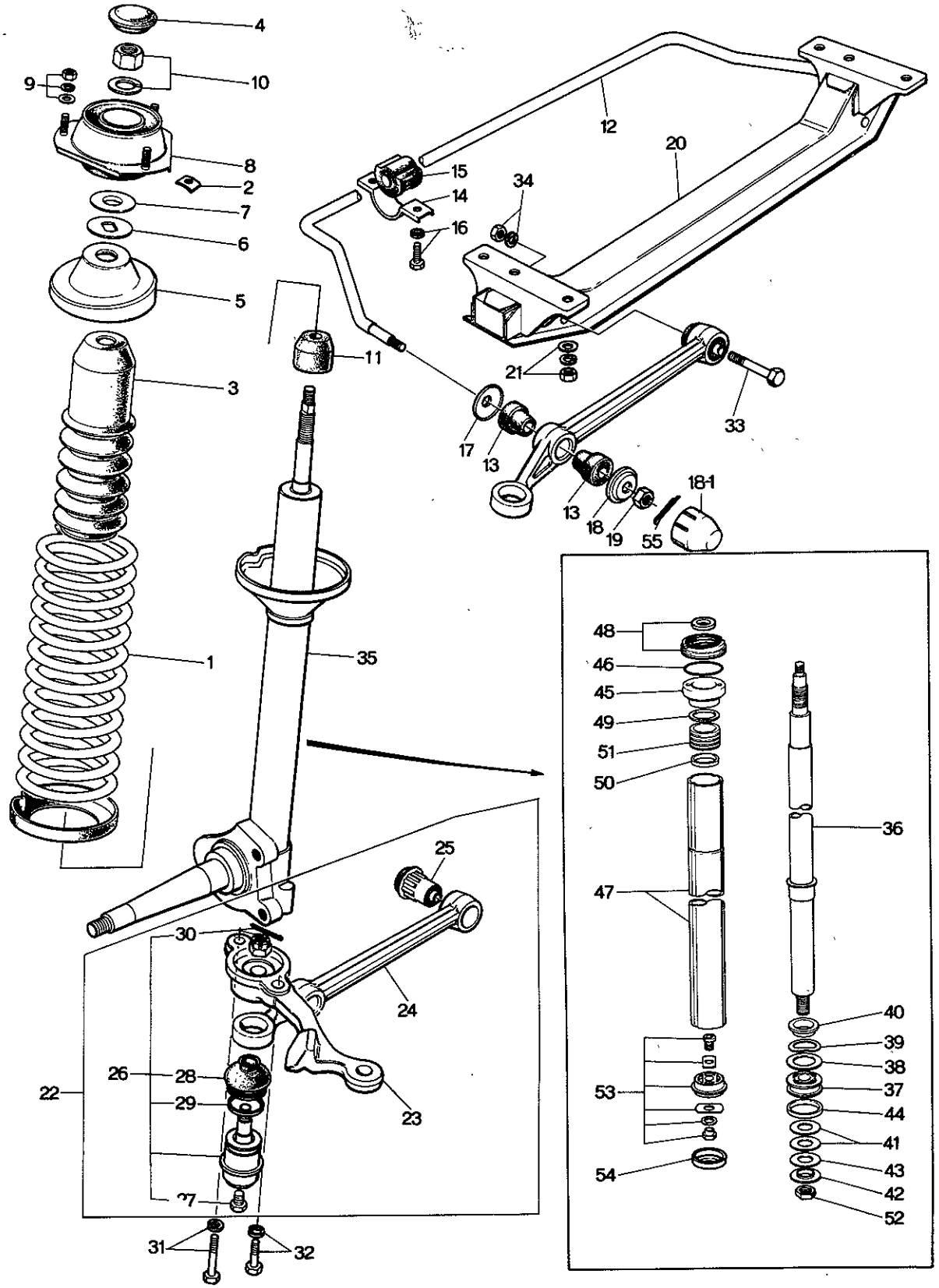

FRONT SUSPENSION

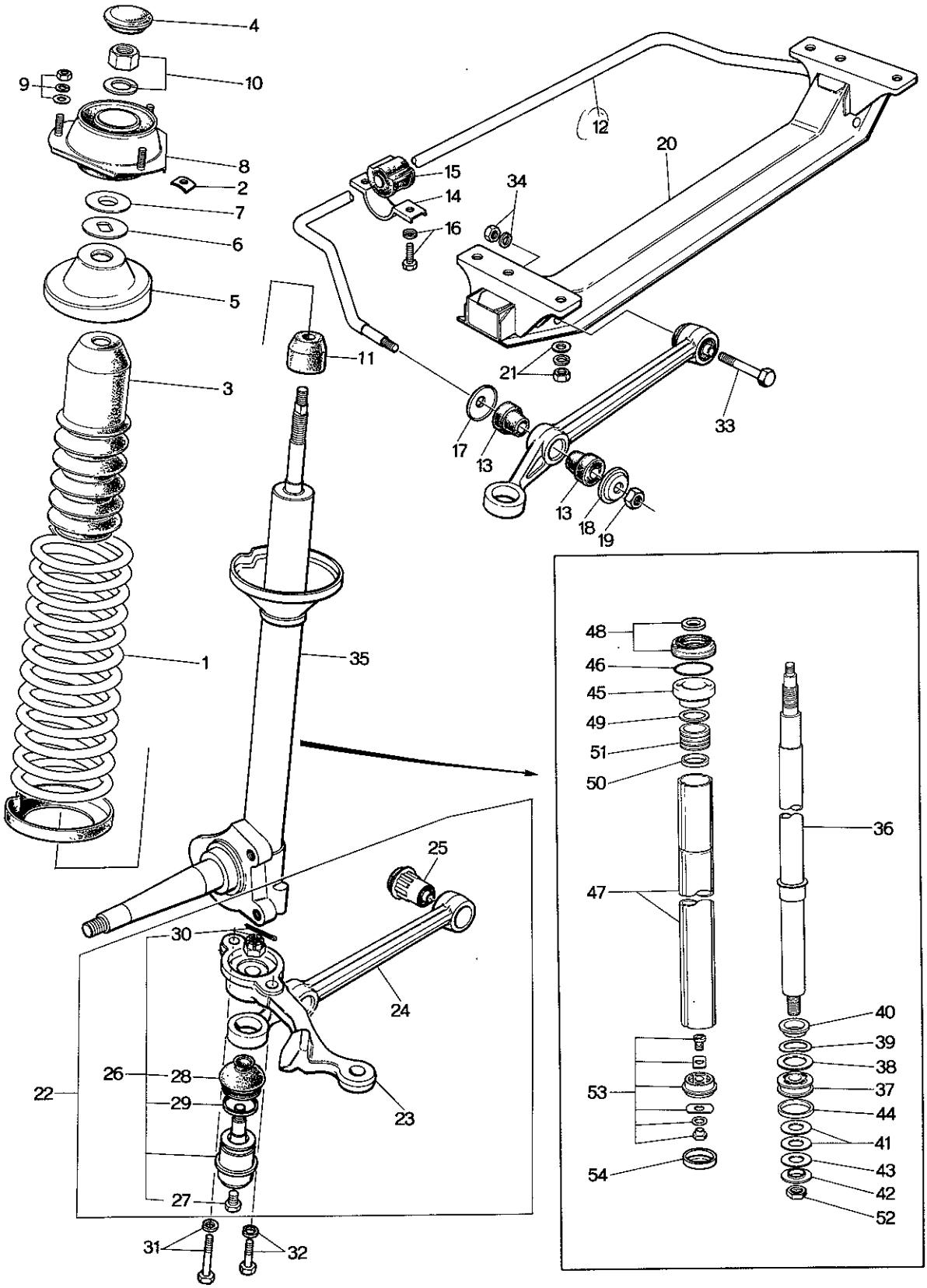

No.	Part Number	Description	Q'ty	Remar
1	0866 34 011	Spring, Coil	2	
	1570 34 011	Spring, Coil	2	Car No. 1606
2	0866 34 013A	Plate, Adjusting	6	
3	0866 34 015	Cover, Dust	2	
4	0866 34 019	Cap	2	
	1011 34 019	Cap	2	
5	0866 34 340	Seat, Spring	2	
6	0866 34 381	Bearing	2	
7	0866 34 382	Seat, Bearing	2	
8	0866 34 390	Rubber, Mounting	2	
9	99901 0800	Nut	6	
	99940 0802	Nut	6	Car No. 1419
	99952 0800	Washer, Plain	6	Car No. 1419
	99971 0800	Washer, Spring	2	
10	99942 1400	Nut	2	
	99952 1400	Washer, Spring	2	
	99951 1430	Washer, Spring	2	
11	0866 34 111	Bumper, Bound	2	
12	0866 34 151A	Stabilizer	1	
	0866 34 151B	Stabilizer	1	
●	0866 34 151C	Stabilizer	1	

No.	Part Number	Description	Q'ty	Remarks
13	0866 34 153A	Bush, Rubber - Stabilizer	4	—
●	1004 34 153	Bush, Rubber - Stabilizer	4	Car No. 160623 74/3～△
14	0259 34 155	Plate	2	
15	0259 34 156	Bush, Rubber	2	
16	99783 1035	Bolt, Stabilizer & Frame	4	
	99971 1000	Washer, Spring	4	
17	0866 34 157	Washer, Stabilizer	2	
18	0866 34 158	Washer	2	
18-1	1011 34 159	Stopper, Steering	2	Car No. 159630 73/11～Added Anew
●	1011 34 159A	Stopper, Steering	2	74/4～△
19	99947 1400	Nut	2	
	99923 1400	Nut	2	73/8～○
20	0866 34 800B	Member, Cross	1	
21	~~99921 1000~~	~~Nut, Cross Member & Frame~~	~~4~~	
	99942 1000	Nut, Cross Member & Frame	4	From Car No. 1
	99951 1030	Washer, Plain	4	
	99971 1000	Washer, Spring	4	
22	0866 34 310	Arm (R)	1	
	0866 34 310A	Arm (R)	1	Car No. 155593 73/10～△
	0866 34 320	Arm (L)	1	

No.	Part Number	Description	Q'ty	Remark
	0866 34 320 A	Arm (L)	1	Car No. 15559
23	0866 32 301	Arm (R), Knuckle	1	
	0866 32 301 A	Arm (R), Knuckle	1	Car No. 14276
	0866 32 311	Arm (L), Knuckle	1	
	0866 32 311 A	Arm (L), Knuckle	1	Car No. 14276
24	0866 34 311	Arm	2	
	1011 34 311	Arm	2	Car No. 15958
25	0866 34 460	Bush	2	
26	0866 99 356	Joint, Ball	2	
	0866 99 356 A	Joint, Ball	2	Car No. 16333
27	0208 32 278	Plug	2	
28	0243 34 565	Seal, Dust	2	
	0866 34 565	Seal, Dust	2	Car No. 15559
29	0187 34 536	Ring, Dust Seal	2	
30	99221 3020	Pin, Split	2	
	99924 1200	Nut	2	
31	99781 1225	Bolt, Arm & Damper	2	
	99971 1200	Washer, Spring	2	
32	99781 1235	Bolt, Arm & Damper	2	

No.	Part Number	Description	Q'ty	Remarks
	99971 1200	Washer, Spring	2	
33	0866 34 313A	Bolt, Arm & Cross Member	2	
34	99921 1000	Nut, Arm	2	
	99971 1000	Washer, Spring	2	
35	0866 34 910A	Damper, Front (R)	1	
	0866 34 910C	Damper (R)	1	Car No. 159447 ⁷⁴/₁₁～○
●	0866 34 910D	Damper (R)	1	⁷⁴/₂～△
	0866 34 960A	Damper (L)	1	
	0866 34 960C	Damper (L)	2	Car No. 159447 ⁷⁴/₁₁～○
●	0866 34 960D	Damper (L)	1	⁷⁴/₂～△
36	0866 34 710	Rod, Piston	2	
37	0305 34 701A	Piston	2	
●	0305 34 701B	Piston	2	⁷⁴/₂～△
38	0259 34 705	Valve, Check	2	
39	0305 34 707	Spring, Check Valve	2	
● 40	0259 34 708	Washer	~~12~~ 2	From Car No. 1
● 41	0259 34 712	Valve	~~2~~ 12	From Car No. 1
42	0305 34 713	Washer	2	
43	0305 34 714	Valve	2	
44	0259 34 719A	Ring, Piston	2	
45	0866 34 730	Guide, Piston Rod	2	
46	0183 34 731	Ring, "O"	2	

No.	Part Number	Description	Q'ty	Remar
47	0866 34 732	Tube, Pressure	2	
48	0866 34 760	Oil Seal	2	
	0866 34 735	Oil Seal	2	
49	~~0258 34 767~~	~~Ring~~	~~2~~	
●	0259 34 767	Ring	2	From Car No
50	0259 34 768	Guide, Stopper	2	
51	0259 34 769B	Stopper	2	
52	0305 34 709	Nut	2	
53	0305 34 720	Valve Base	2	
54	0866 34 738	Cap	2	
55	99221 3035	Pin, Split	2	Car No. 73/10

ENGINE & T/MISSION BRACKET
(USED UP TO CAR NO. 179250 73/9)

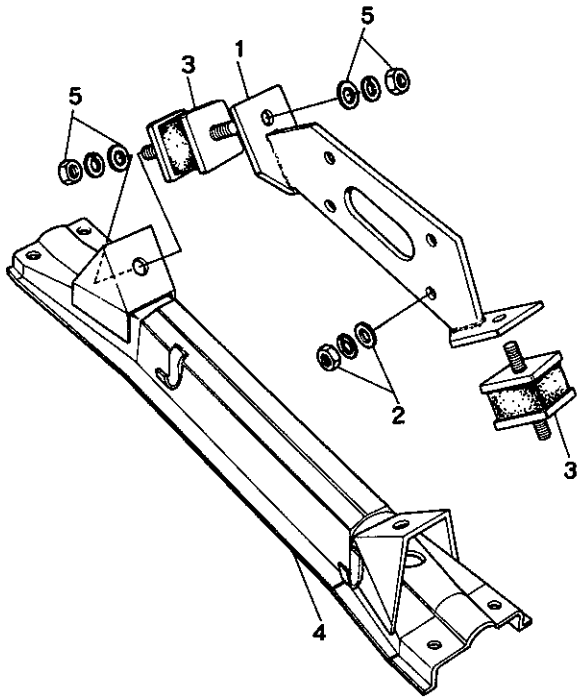

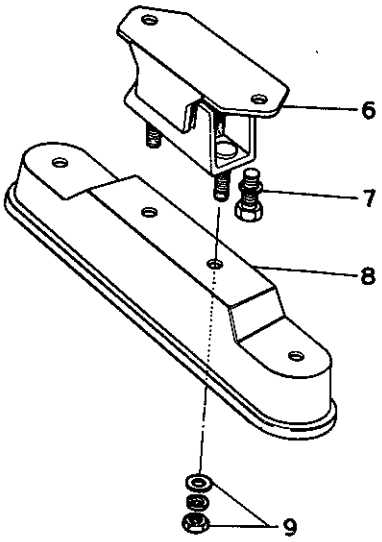

ENGINE & T/MISSION BRACI
(USED UP TO CAR NO. 179250 73/9)

No.	Part Number	Description	Q'ty	Remar
1	0866 39 020	Bracket, Engine Mounting	1	
2	99921 1000	Nut, Bracket & Engine	4	
	99971 1000	Washer, Spring	4	
3	0866 39 040A	Rubber, Engine Mounting	2	
	0866 39 040B	Rubber, Engine Mounting	2	Car No. 14521
4	0866 39 060B	Member, Engine Mounting	1	
5	99921 1000	Nut, Member & Rubber	4	
	99951 1030	Washer, Plain	4	
	99971 1000	Washer, Spring	4	
6	0259 39 340	Rubber, T/mission Mounting	1	
●	1011 39 340A	Rubber, T/mission Mounting	1	
●	0259 39 340	Rubber, T/mission Mounting	1	
7	99801 0818	Bolt, Rubber & T/mission	2	
	99971 0800	Washer, Spring	2	
8	0866 39 381A	Member, T/mission Mount	1	
●	1570 39 380	Member, T/mission Mounting	1	
9	99921 1000	Nut, Member & Rubber	4	
	99951 1030	Washer, Plain	4	
	99971 1000	Washer, Spring	4	

ENGINE & T/MISSION BRACKET

(USED FROM CAR NO. 160623 73/10)

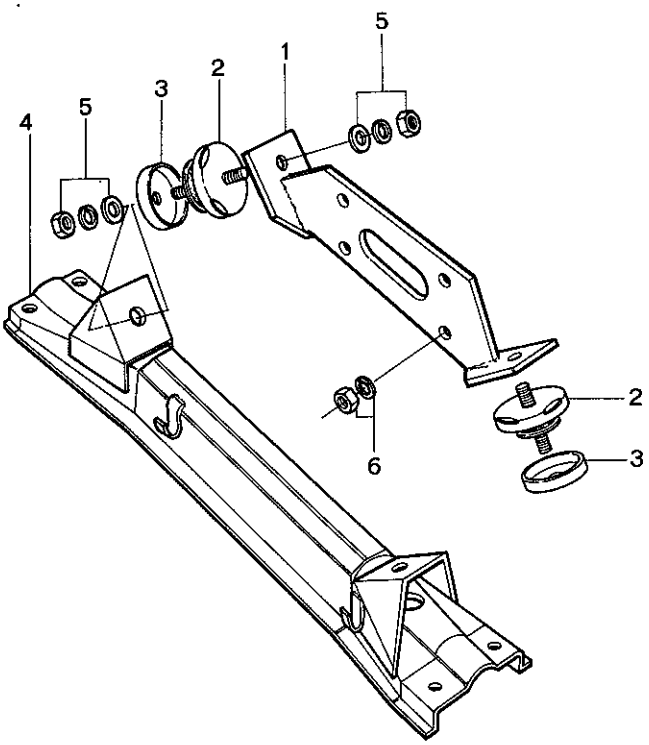

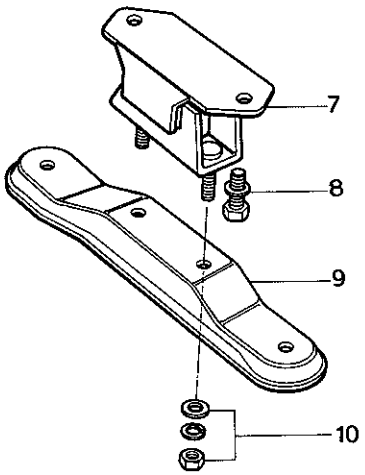

ENGINE & T/MISSION BRAC
(USED FROM CAR NO. 160623 73/10)

No.	Part Number	Description	Q'ty	Rema
1	1622 39 020	Bracket, Engine Mounting	1	
2	1668 39 040C	Rubber, Engine Mounting	2	
3	1668 39 045A	Casing, Stopper	2	
4	0866 39 060B	Member, Engine Mounting	1	
5	99921 1000	Nut, Member & Rubber	4	
	99951 1030	Washer, Plain	4	
	99971 1000	Washer, Spring	4	
6	99921 1000	Nut, Bracket & Engine	4	
	99971 1000	Washer, Spring	4	
7	0259 39 340	Rubber, T/mission Mounting	1	
8	99801 0818	Bolt, Rubber & T/mission	2	
	99971 0800	Washer, Spring	2	
9	1570 39 380	Member, T/mission Mount (Manual)	1	
●	1621 39 380	Member, T/mission Mount (Automatic)	1	
10	99921 1000	Nut, Member & Rubber	4	
	99951 1030	Washer, Plain	4	
	99971 1000	Washer, Spring	4	
●	1175 39 080D	Eng. mtg. RUBBER	1	
	1668 39 040C	~ ~ ~	1	

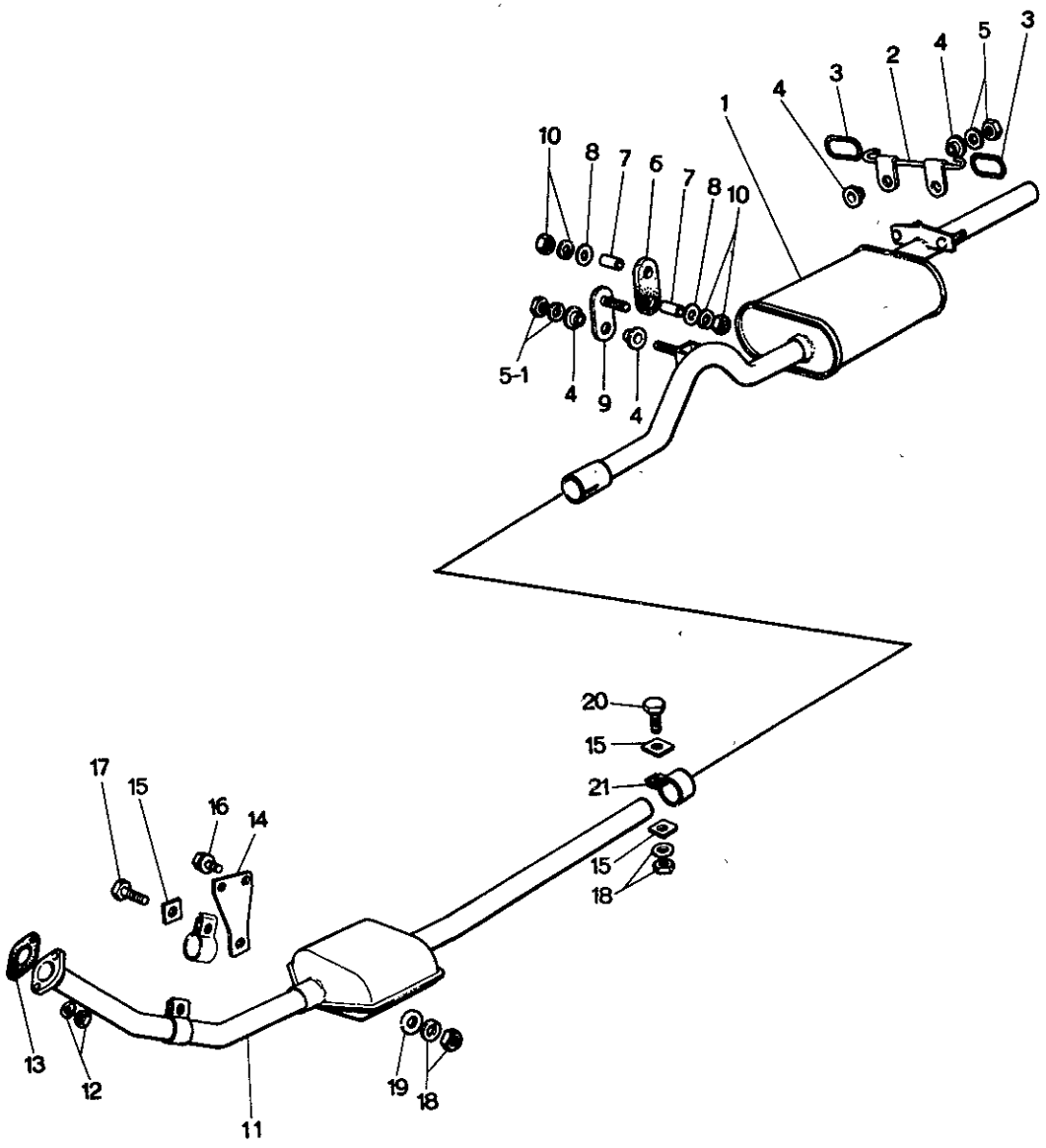
1
2
3
4
5
6
7
8
9
10
5-1
11
12
13
14
15
16
17
18
19
20
21

No.	Part Number	Description	Q'ty	Rem
1	0866 40 100	Silencer, Main	1	
	0899 40 100A	Silencer, Main (Station Wagon)	1	
2	0866 40 060	Hook	1	
3	0305 40 061	Hanger, Silencer	2	
4	0824 40 401	Insulator	6	
5	99949 0800	Nut, Hook & Main Silencer	3	
	99949 0800	Nut, Hook	2	Car No. 13692
	99951 0800	Washer, Plain	3	
	99951 0822	Washer, Plain	3	Car No. 13692
5-1	99901 0800	Nut, Hanger	1	
	99902 0800	Nut	1	Car No. 13692
	99952 0822	Washer, Plain	1	
6	0820 40 161	Hanger, Silencer	1	
7	0820 40 185	Pipe	2	
8	0820 40 166	Washer	2	
9	0820 40 170	Plate	1	
10	99901 0800	Nut, Silencer Hanger	2	
	99940 0800	Nut, Silencer Hanger	3	Car No. 14192
	99971 0800	Washer, Spring	3	Car No. 14192
11	0866 40 300	Pre-Silencer	1	
	0866 40 300A	Pre-Silencer	1	Car No. 12739
12	2158 40 355	Nut	2	
	99971 1000	Washer, Spring	2	
13	0866 13 621	Gasket	1	
14	0866 40 081	Bracket, Joint	1	
	0866 40 081A	Bracket, Joint	1	Car No. 13692
15	0208 13 458	Clamp	3	
16	99801 0820	Bolt, Bracket	2	
	99971 0800	Washer, Spring	1	
17	99801 0832	Bolt	1	
18	99901 0800	Nut	1	Car No. 13692
	~~99902 0800~~	~~Nut~~	~~1~~	~~Car No. 13692~~
	99971 0800	Washer, Spring	2	
19	99951 0818	Washer, Plain	1	
20	99801 0828	Bolt	1	
21	0866 40 091	Joint, Main & Pre-Silencer	1	

FUEL TANK (SEDAN & COUPE)

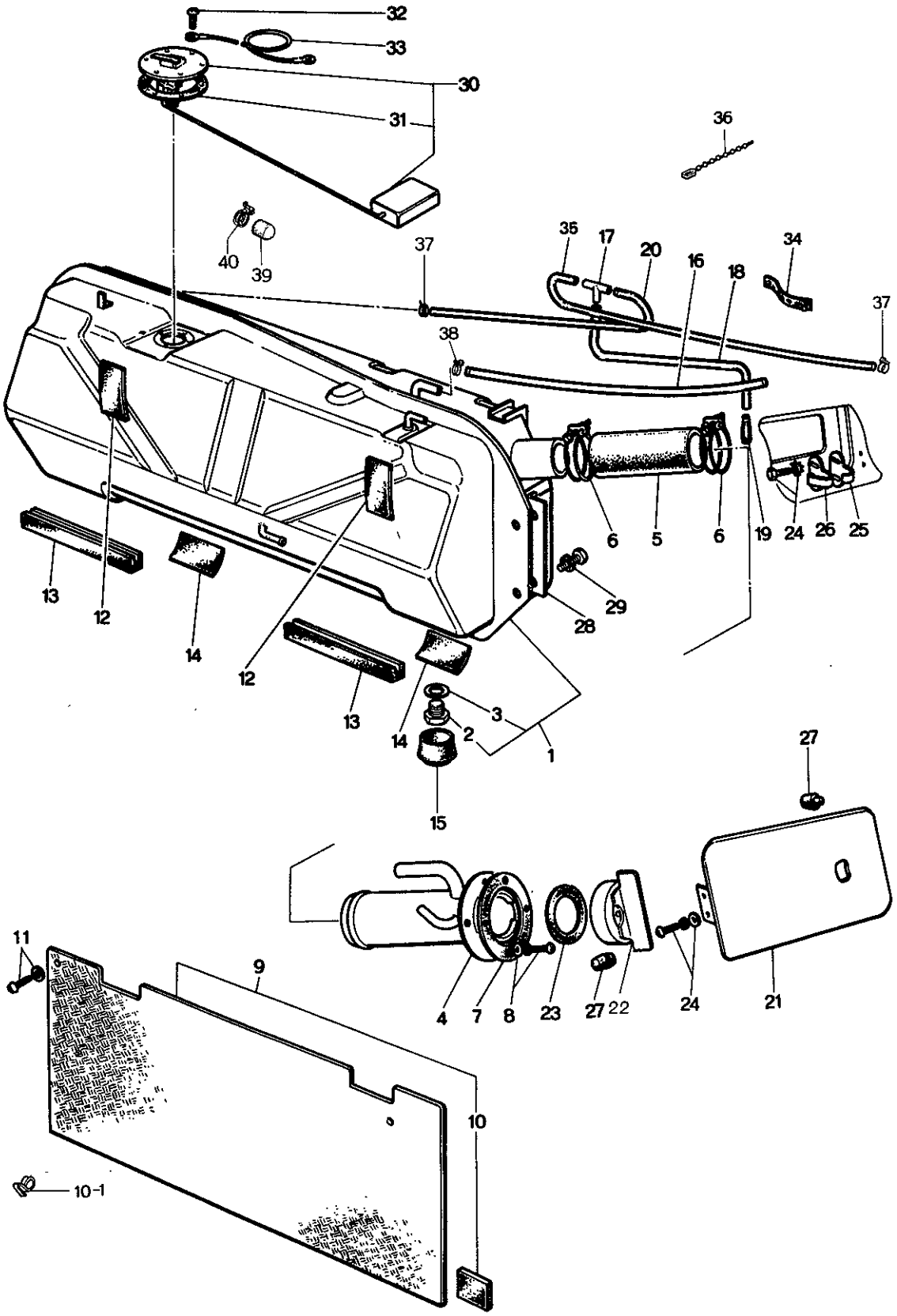

FUEL TANK (SEDAN &

No.	Part Number	Description	Q'ty	Re
1	0866 42 310C	Tank, Fuel	1	
	0866 42 310D	Tank, Fuel	1	Car No. 14
	0866 42 310E	Tank, Fuel	1	Car No. 16
●	0866 42 310G	Tank, Fuel	1	
2	0114 42 046A	Plug, Drain	1	
●	99796 1012	Bolt	1	
3	99564 1200	Packing	1	
●	99564 1000	Gasket	1	
4	0866 42 350	Pipe, Filler	1	
	0866 42 350A	Pipe, Filler	1	Car No. 141
	0866 42 350B	Pipe, Filler	1	Car No. 161
5	0259 42 364	Hose, Joint	1	
●	0259 42 364B	Hose, Joint	1	
6	99282 5500	Clamp	2	
7	0866 42 366	Gasket, Inlet Pipe	1	
8	99804 0516	Screw	4	
●	99786 0516	Screw, Filler Pipe	4	
	99971 0500		4	
9	0866 42 530	Board, Partition	1	

42 FUEL TANK (SEDAN & COUPE)

No.	Part Number	Description	Q'ty	Remarks
	0866 42 380	Board, Partition	1	
	1570 42 381A	Board, Partition	1	Car No. 178812 73/8 ~ △
10	0866 42 382	Spacer	4	Car No. 178812 73/8 ~ Discarded
10-1	1011 69 885	Fastener	2	Car No. 178813 73/8 ~ Added Anew
11	99863 0412	Screw, Tapping	2	
	99952 0412	Washer, Plain	2	
12	0866 42 523	Pad, Fuel Tank "C"	2	
13	0866 42 521	Pad, Fuel Tank "A"	2	
14	0866 42 522	Pad, Fuel Tank "B"	2	
15	0187 42 371	Rubber, Dust Seal	1	
16	99336 12040	Pipe, Soft Vinyl-Body Side	1	
●	99346 12400	Pipe, Soft Vinyl-Body Side (400m/m)	1	Order Under No. 99349 12750 (1.75m)
	1504 42 543	Pipe, Soft Vinyl-Body Side (1558, 1559)	1	
17	0259 42 390	Joint, "T"	1	
18	0866 42 542A	Tube, Vent-"T" Joint~Flow	1	
●	99346 06850	Tube, Vent-"T" Joint~Flow (850m/m)	1	Order Under No. 99343 06035 (3.5m) 73/12 ~ ○
	1504 42 542	Tube, Vent (1558, 1559)	1	
●	99346 06850	Tube, Vent (ECE Cold) (850m/m)	1	Order Under No. 99343 06035 (3.5m) 73/12 ~ ○
19	0866 42 544	Elbow	1	
20	0866 42 542A	Tube, Vent-"T" Joint-Fuel Tank	1	

FUEL TANK (SEDAN &

	No.	Part Number	Description	Q'ty	Rer
●		99346 06880	Tube, Vent-"T" Joint~Fuel Tank (880%)	1	Order Und 99343 060
		1504 42 542	Tube, Vent-"T" Joint~Fuel Tank (1558, 1559)	1	
●		99346 06850	Tube, Vent-"T" Joint~Fuel Tank (ECE Cold) (850%)	1	Order Und 99343 060
	21	0376 42 410	Lid, Filler (Coupe)	1	
		0866 42 410	Lid, Filler (Sedan)	1	
	22	2280 42 460	Cap, Filler	1	
●		1011 42 250	Cap, Filler	1	
	23	2280 42 462	Gasket	1	
		2280 42 462A	Gasket	1	Car No. 159
●		2280 42 462B	Gasket	1	
	24	99804 0516	Bolt, Filler Lid	4	
●		99786 0512	Bolt, Filler Lid Plate	2	
●		99786 0516	Bolt, Filler Lid	2	
		99952 0500	Washer, Plain	4	
		99971 0500	Washer, Spring	4	
	25	0866 42 552	Plate, Back Up	1	
	26	0866 42 551	Plate, Lock	1	
	27	0110 52 265	Rubber, Cushion	2	

42 FUEL TANK (SEDAN & COUPE)

No.	Part Number	Description	Q'ty	Remarks
28	0866 42 561	Washer	2	
29	99804 0825	Bolt, Fuel Tank	4	
●	99786 0820	Bolt, Fuel Tank	4	
	99952 0800	Washer, Plain	4	
●	99952 0818	Washer, Plain	4	
	99971 0800	Washer, Spring	4	
30	0866 67 170	Gauge, Fuel Tank	1	
31	0243 66 773	Gasket	1	
32	99833 0410	Screw, Fuel Tank Gauge	6	
	99833 0408	Screw, Fuel Tank Gauge	6	
33	~~0866 67 175~~	~~Cord, Earth~~	~~1~~	
	0866 67 176	Cord, Earth	1	From Car No.
	0866 67 175	Cord, Earth	1	
34	0187 66 991	Clip, Rubber	1	
	~~99709 0108~~	~~Band~~	~~1~~	
35	0866 42 541	Tube, Vent	1	
●	99347 06450	Tube, Vent-"T" Joint~Filler Pipe (450㎜)	1	Order Under 99343 06035
	1504 42 541	Tube, Vent (1558,1559)	1	

FUEL TANK (SEDAN & C

No.	Part Number	Description	Q'ty	Rema
●	99347 06450	Tube, Vent (ECE. Cold) (450㎜)	1	Order Unde 99343 0603
	1504 42 543	Tube, Vent (1558,1559)	1	
●	99346 12400	Tube, Vent (ECE. Cold) (400㎜)	1	Order Unde 99349 1275
	~~99282 1301~~	~~Band~~	~~5~~	
	~~99282 2000~~	~~Band~~	~~2~~	
●	36 99709 0108	Band	1	
	37 99282 1201	Clip, Vent Tube	5	
●	99283 1100	Clip, Vent Tube	2	
●	99283 1200	Clip, Vent Tube	3	
	99282 1301	Clip, Vent Tube (1558,1559)	5	
●	38 99282 2001	Clip, Vent Tube	2	
	99282 2000	Clip, Vent Tube (1558,1559)	2	
●	39 0223 42 307	Cap	1	From Car N
	40 99283 1300	Clip, Cap	1	

FUEL TANK (STATION WAGON)

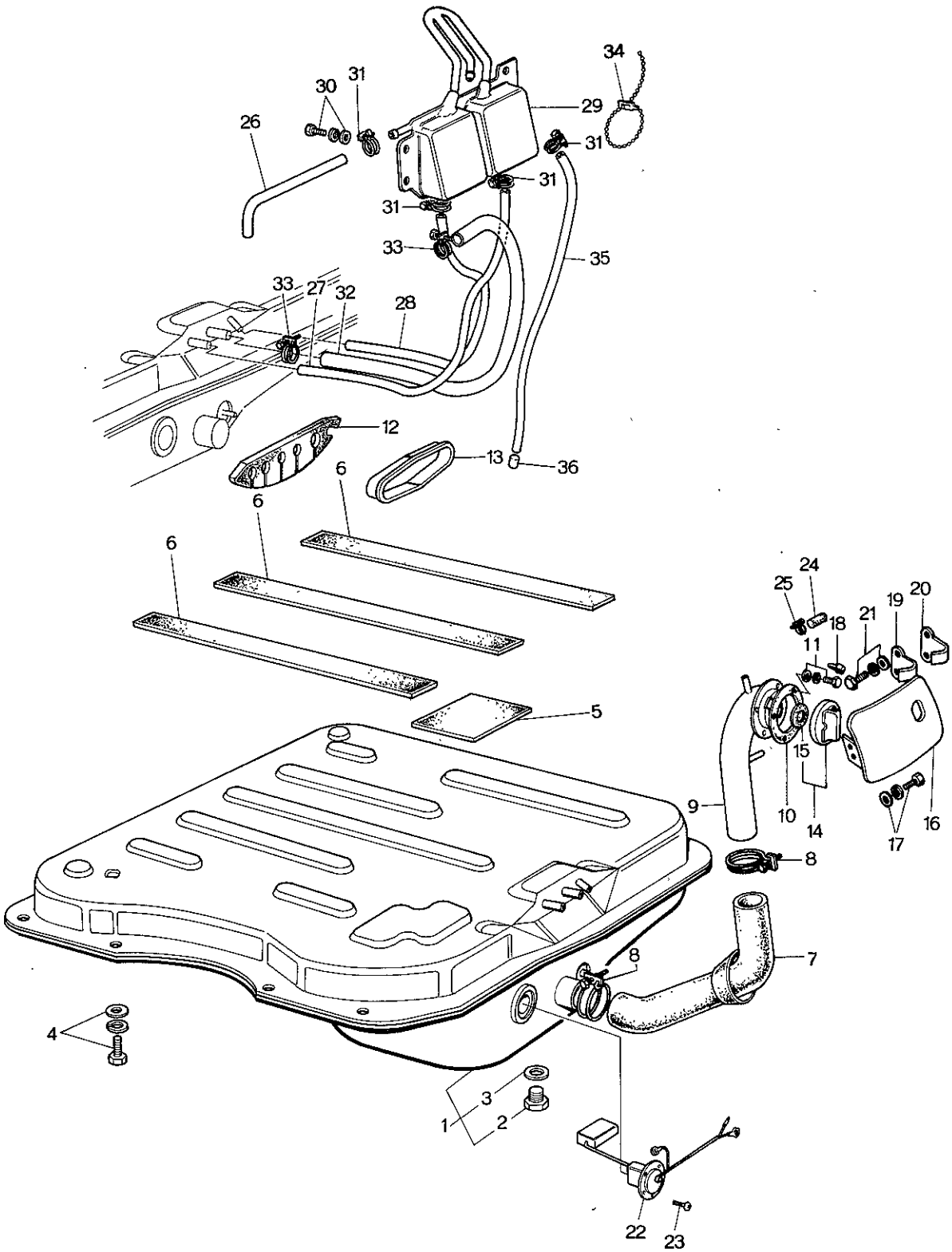

FUEL TANK (STATION

No.	Part Number	Description	Q'ty	Rem
1	0899 42 310D	Tank, Fuel	1	
2	0114 42 046A	Plug, Drain	1	
3	99564 1200	Packing	1	
4	99796 1020	Bolt, Fuel Tank	8	
	99952 1030	Washer, Plain	8	
5	0652 42 304	Pad	4	
6	0585 42 305	Pad	3	
7	0585 42 307	Hose, Joint	1	
8	99282 6000	Clamp, Hose	2	
9	0585 42 350	Pipe, Filler	1	
10	0866 42 366	Packing	1	
11	99786 0516	Screw, Tapping	4	
12	0899 42 302	Protector	1	
13	0585 42 306	Protector	1	
14	1011 42 250	Cap, Filler	1	
15	2280 42 462A	Gasket, Filler Pipe	1	
16	0585 42 410	Lid, Filler	1	

42 FUEL TANK (STATION WAGON)

No.	Part Number	Description	Q'ty	Remarks
17	99786 0516	Screw, Tapping-Filler Lid	2	
18	0110 52 265	Rubber, Cushion	2	
19	0866 42 551	Plate, Lock	1	
20	0866 42 552	Plate, Back Up	1	
21	99786 0512	Screw, Tapping-Plate	2	
22	0899 67 170B	Gauge, Fuel Tank	1	
23	99833 0408	Screw, Fuel Tank	6	
24	0223 42 307	Cap	2	
25	99282 1401	Clip, Wire-Cap	2	
26	2432 42 381A	Tube, Vent-Condense Tank~Filler Pipe	1	
27	1544 42 613	Tube, Vent-Condense Tank~Fuel Tank	1	
28	1544 42 614	Tube, Vent-Condense Tank~Fuel Tank	1	
29	1544 42 610B	Tank, Condense	1	
30	99786 0616	Bolt, Condense Tank	2	
	99952 0618	Washer, Plain	2	
31	99282 1201	Band, Hose-Vent Tube	7	
32	99336 10070	Tube, Fuel Tank~Filler Pipe	1	
33	99282 1801	Clamp, Tube	2	
34	99709 0255	Band, Vent Tube	2	

No.	Part Number	Description	Q'ty	Rema
35	0585 42 570A	Tube, Vent	1	
36	0866 42 544	Elbow	1	

FUEL PIPING (SEDAN & COUPE)
(USED UP TO 74)

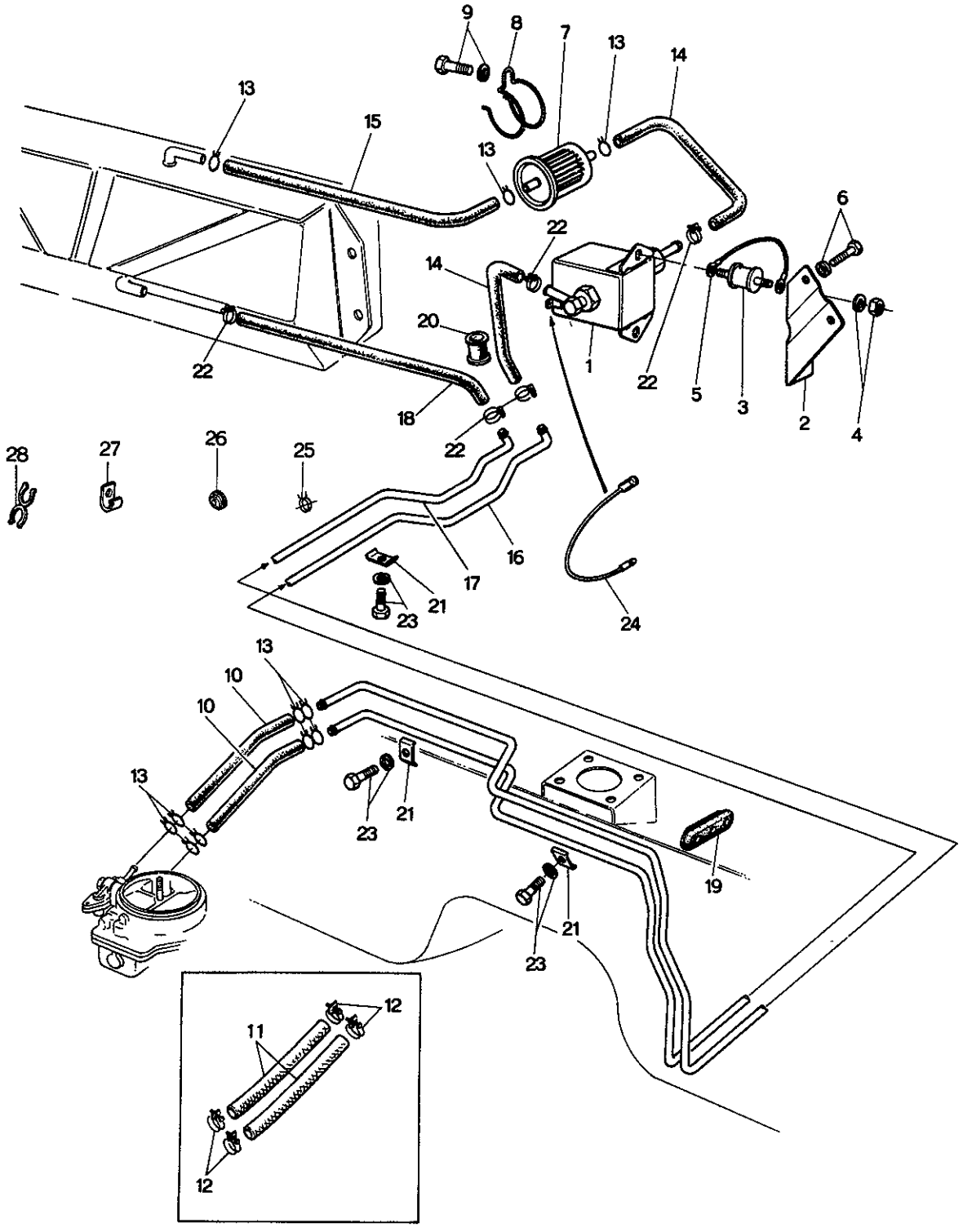

FUEL PIPING (SEDAN & COUPE
(USED UP TO 74/4)

No.	Part Number	Description	Q'ty	Rema
1	0866 13 400D	Pump, Fuel	1	
	0866 13 400F	Pump, Fuel	1	Car No. 1206
	1881 13 400	Pump, Fuel	1	Car No. 1606
2	0886 13 401A	Bracket, Fuel Pump	1	
3	0222 13 363	Rubber, Insulation-Fuel Pump	2	
	0223 13 363	Rubber, Insulation-Fuel Pump	2	Car No. 1606
4	99906 0800	Nut, Insulation Rubber+Fuel Pump	4	
	99971 0600	Washer, Spring	4	
	99940 0600	Nut	4	
5	0866 13 402A	Cord, Earth-Fuel Pump	1	
6	99806 0612	Bolt, Fuel Pump Bracket	2	
	99952 0616	Washer, Plain	2	
	99971 0600	Washer, Spring	2	
	99786 0616	Screw, Tapping	2	
7	0222 13 470A	Filter, Fuel	1	
	0222 13 470B	Filter, Fuel	1	
8	0381 13 481	Clamp, Fuel Filter	1	
9	99806 0612	Bolt, Fuel Filter	1	
	99796 0612	Bolt, Fuel Filter	1	
	99952 0616	Washer, Plain	1	

FUEL PIPING (SEDAN & COUPE)
(USED UP TO 74/4)

No.	Part Number	Description	Q'ty	Remarks
	99952 0612	Washer, Plain	1	73/10~○
	99971 0800	Washer, Spring	1	
10	99340 06340	Pipe, Fuel-Carburettor Side	1	Car No. 134786 72/1~Q'ty
	0866 13 442	Pipe, Fuel	1	Car No. 134786 72/1~Added Anew
11	1568 13 440	Pipe, Fuel-Carburettor Side	2	1567,1568
	1594 13 421	Pipe, Fuel-Carburettor Side	2	1558,1559 (Only for Norway)
	0866 13 442	Pipe, Fuel-Carburettor Side	2	1558,1559 (Only for Norway) Car No. 73/3~×
12	99282 1600	Band, Fuel Pipe	4	1567,1568
	99282 1601	Band, Fuel Pipe (1558,1559)	4	1558,1559 (Only for Norway)
13	0222 13 493	Clip, Fuel Pipe	18	
V	99283 1300	Clip, Fuel Pipe	18	Car No. 73/2~○
	99283 1100	Clip, Fuel Pipe	2	Car No. 160623 73/10~×
14	99340 06180	Pipe, Fuel-Fuel Pump	2	
	99348 08180	Pipe, Fuel-Fuel Pump (Order Under No. 99343 08150 M=15)	2	Car No. 160623 73/10~×
15	99340 06670	Pipe, Fuel Tank~Filter	1	
	99348 08680	Pipe, Fuel Tank~Filter (Order Under No. M=15 99343 08150)	1	Car No. 160623 73/10~×
16	0866 45 061A	Pipe, Fuel Main	1	
	1881 45 061	Pipe, Fuel Main	1	Car No. 160623 73/10~△
17	0886 45 611B	Pipe, Fuel Return	1	
	1881 45 611	Pipe, Fuel Return	1	Car No. 160623 73/10~△

FUEL PIPING (SEDAN & COUPE)
(USED UP TO 74/4)

No.	Part Number	Description	Q'ty	Remar
18	98340 06320	Pipe, Fuel Return Pipe~Tank	1	
	99348 06330	Pipe, Fuel Return Pipe~Tank	1	Car No. 16062
19	0866 45 806A	Grommet, Fuel Pipe (99343 06150)	1	
20	99868 1200	Protector, Fuel Pipe	3	
21	0866 45 803A	Clip, Fuel Pipe	9	
	0866 45 903A	Clip, Fuel Pipe	16	Car No.
22	99282 1301	Clamp, Hose	4	
	99283 1200	Clip	5	Car No. 16062
23	99785 0614	Bolt, Clip	9	
	99971 0600	Washer, Spring	9	
	99786 0612	Bolt	17	Car No. 16062
24	~~0866 87 102~~	~~Cord, Fuel Pump~~	~~1~~	
Ⓝ	99289 0851	Clip, Fuel Pipe	1	Car No. 17925
25	99283 1000	Clip	1	Car No. 160623
26	0118 56 241	Plug, Drain	1	Car No. 160623
27	99295 0606	Clip	1	Car No. 160623
28	99288 0808B	Clip	1	Car No. 160623

FUEL PIPING (USED FROM 74/5)

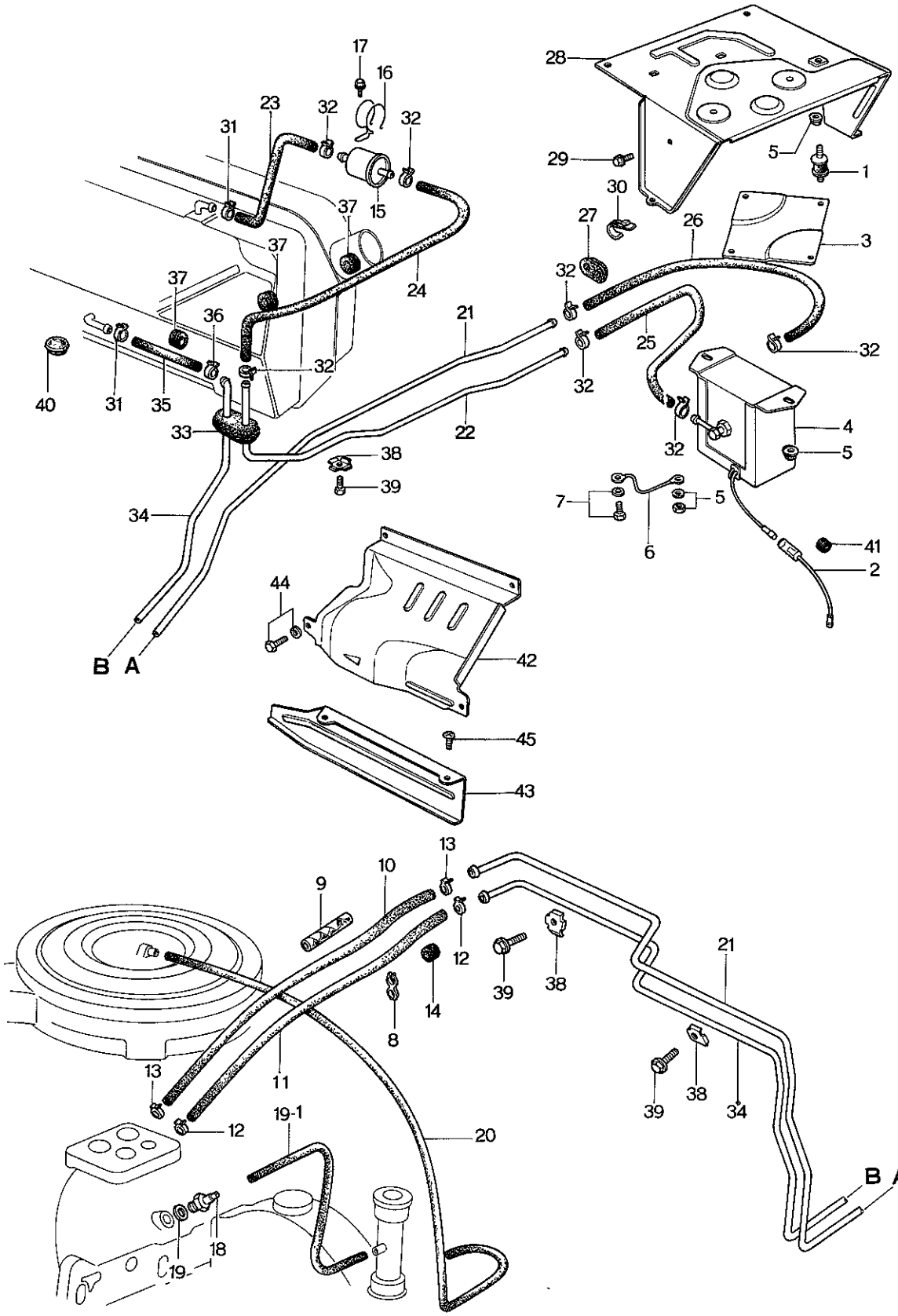

FUEL PIPING (USED FROM 74/5)

No.	Part Number	Description	Q'ty	Rema
✓ 1	0223 13 363	Rubber, Insulation-Fuel Pump	4	
✓ 2	1690 13 359	Cord, Fuel Pump	1	
✓ 3	1690 13 361	Bracket, Fuel Pump	1	
✓ 4	1173 13 400A	Pump, Fuel	1	
5	99940 0600	Nut, Fuel Pump	8	
	99952 0600	Washer, Plain	1	
✓ 6	0866 13 402A	Wire, Earth-Fuel Pump	1	
7	99796 0610	Bolt, Earth Wire	1	
	99952 0600	Washer, Plain	1	
✓ 8	1570 13 447	Clip, Fuel Hose	2	
✓ 9	1883 13 448	Protector, Fuel Hose (Automatic)	2	
10	99348 08430	Hose, Fuel Main (430m/m)	1	Order Under 99343 08035
11	99348 06430	Hose, Fuel Return (430m/m)	1	Order Under 99343 06035
12	99283 1000	Clip, Fuel Hose-Fuel Return Hose	2	
13	99283 1200	Clip, Fuel Hose-Fuel Main Hose	2	
14	99681 1503	Protector, Fuel Hose	2	
✓ 15	0222 13 470B	Filter, Fuel	1	
✓ 16	0381 13 481	Clamp, Fuel Filter	1	
17	99786 0612	Bolt, Filter Clamp	1	
	99952 0618	Washer, Plain	1	

FUEL PIPING (USED FROM 74/5)

No.	Part Number	Description	Q'ty	Remarks
18	1757 13 780	Valve, Ventilation	1	
19	99564 1600	Gasket, Ventilation Valve	1	
19-1	99346 08300 1790 13 785 B	Hose Ventilator-Valve~Pipe (300m/m)	1	Order Under No. 99343 08035 (3.5 m)
20	1757 13 786 A	Hose, Ventilation-Air Cleaner~Housing	1	74/12 ~ (4/M JAN. 14, '75)
21	1881 45 061 A	Pipe, Fuel Main-Carburettor Side	1	
22	0866 45 062	Pipe, Fuel Main-Fuel Tank Side	1	
23	99348 08180	Hose, Fuel-Tank~Filter (180m/m)	1	Order Under No. 99343 08035 (3.5 m)
24	99348 08640	Hose, Fuel-Filter~Fuel Pipe (640m/m)	1	Order Under No. 99343 08035 (3.5 m)
25	0866 45 801	Hose, Fuel-Filter~Pump, Tank Side	1	
26	0866 45 802	Hose, Fuel-Pump~Fuel Pipe	1	
27	0866 45 807	Protector, Pipe	1	
28	0866 45 810 A	Cover, Fuel Pump	1	
29	99786 0612	Bolt, Fuel Pump Cover	2	
30	99278 1201	Clip, Fuel Hose	2	
31	99283 1100	Clip, Fuel Hose	2	
32	99283 1200	Clip, Fuel Hose	7	
33	0866 45 806 A	Grommet, Fuel Pipe	1	
34	1881 45 611	Pipe, Fuel Return	1	
35	99348 06330	Hose, Fuel Return (330m/m)	1	Order Under No. 99343 06035 (3.5 m)
36	99283 1000	Clip, Fuel Hose	1	

FUEL PIPING (USED FROM 74/5

No.	Part Number	Description	Q'ty	Rema
37	99686 1200	Protector, Fuel Hose	3	
38	0866 45 903A	Clip, Pipe	10	
39	99786 0612	Bolt, Clip	10	
40	0118 56 241	Plug, Drain	1	
41	0208 66 683	Protector, Pump Cord	1	
42	0866 56 781	Cover, Fuel Pump	1	
43	0866 56 782	Protector, Fuel Pump Cover	1	
44	99786 0616	Screw, Fuel Pump Cover	4	
	99952 0618	Washer, Plain	4	
45	99786 0612	Screw, Fuel Pump Cover	2	

FUEL PIPING (STATION WAGON)

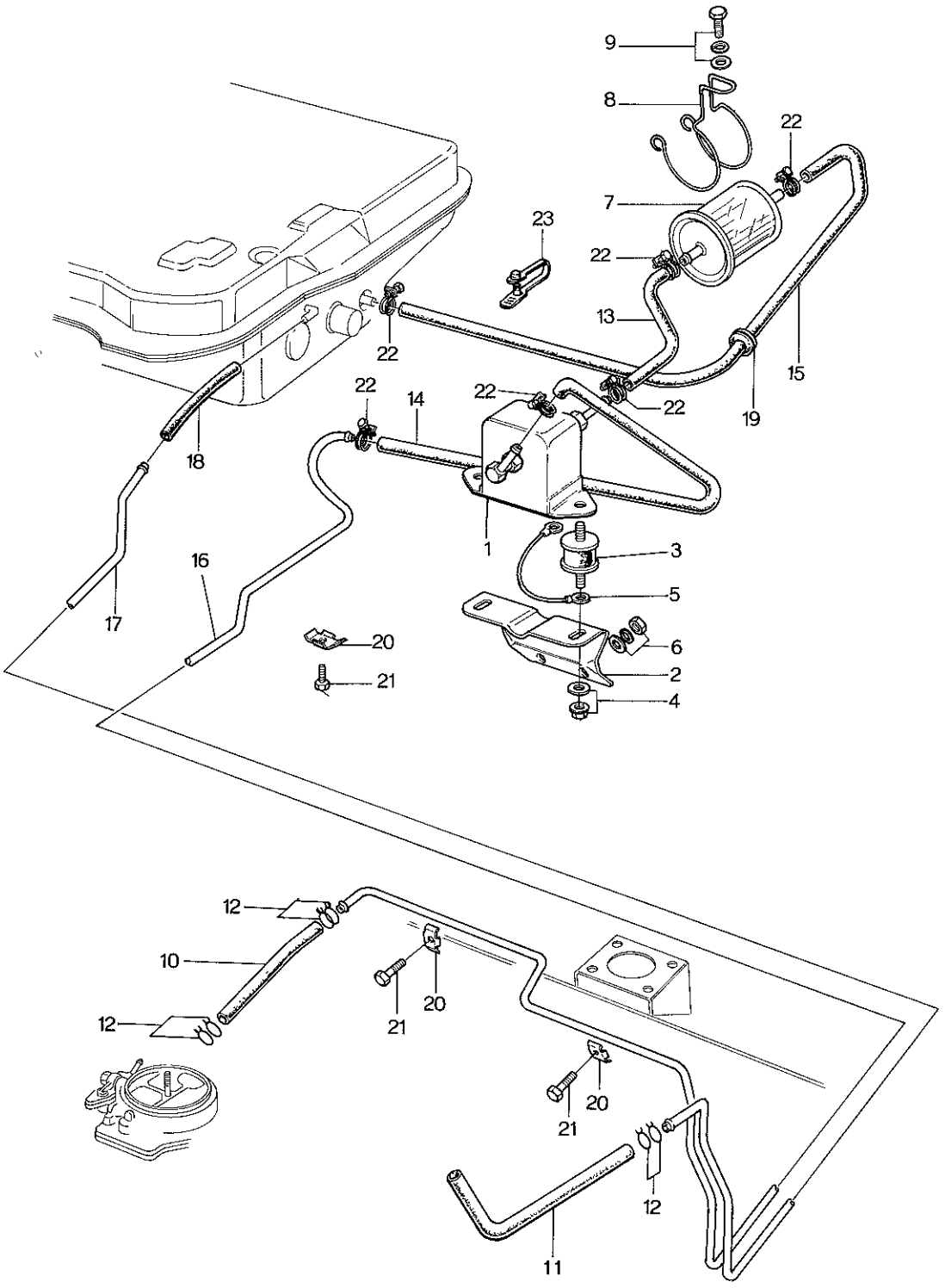

FUEL PIPING (STATION WAGON)

No.	Part Number	Description	Q'ty	Rema
1	0866 13 400F	Pump, Fuel	1	
2	0899 13 401	Bracket, Fuel Pump	1	
3	0223 13 363	Rubber, Insulation - Fuel Pump	2	
4	99940 0600	Nut, Insulation Rubber	4	
	99971 0600	Washer, Spring	4	
5	0866 13 402A	Cord, Earth - Fuel Pump	1	
6	99940 0600	Nut, Fuel Pump Bracket	2	
	99952 0600	Washer, Plain	2	
	99971 0600	Washer, Spring	2	
7	0222 13 470B	Filter, Fuel	1	
8	0381 13 481	Clamp, Fuel Filter	1	
9	99806 0612	Bolt, Fuel Filter	1	
	99952 0600	Washer, Spring	1	
	99971 0600	Washer, Spring	1	
10	99340 06460	Pipe, Fuel - Carburettor Side	2	Order Under
11	0866 13 442	Pipe	1	
12	0222 13 493	Clip, Wire - Pipe	8	
13	99340 06224	Pipe, Fuel - Filter ~ Pump	1	Order Under
14	0899 45 091	Pipe, Pump ~ Main Pipe	1	
15	99340 06500	Pipe, Tank ~ Filter	1	Order Under

FUEL PIPING (STATION WAGON)

No.	Part Number	Description	Q'ty	Remarks
16	0899 45 071C	Pipe, Fuel Main	1	
17	0899 45 611B	Pipe, Fuel Return	1	
18	99340 06140	Pipe, Fuel Return Pipe~Tank	1	Order Under No. 99344 06150
19	0866 45 805	Protector	1	
20	0866 45 903A	Clip, Fuel Pipe	9	
21	99786 0612	Screw, Tapping	9	
22	99282 1401	Clamp, Hose	6	
23	99289 0851	Clip, Fuel Pipe	1	

ACCELERATOR CONTROL SYSTEM (R. H. D.)

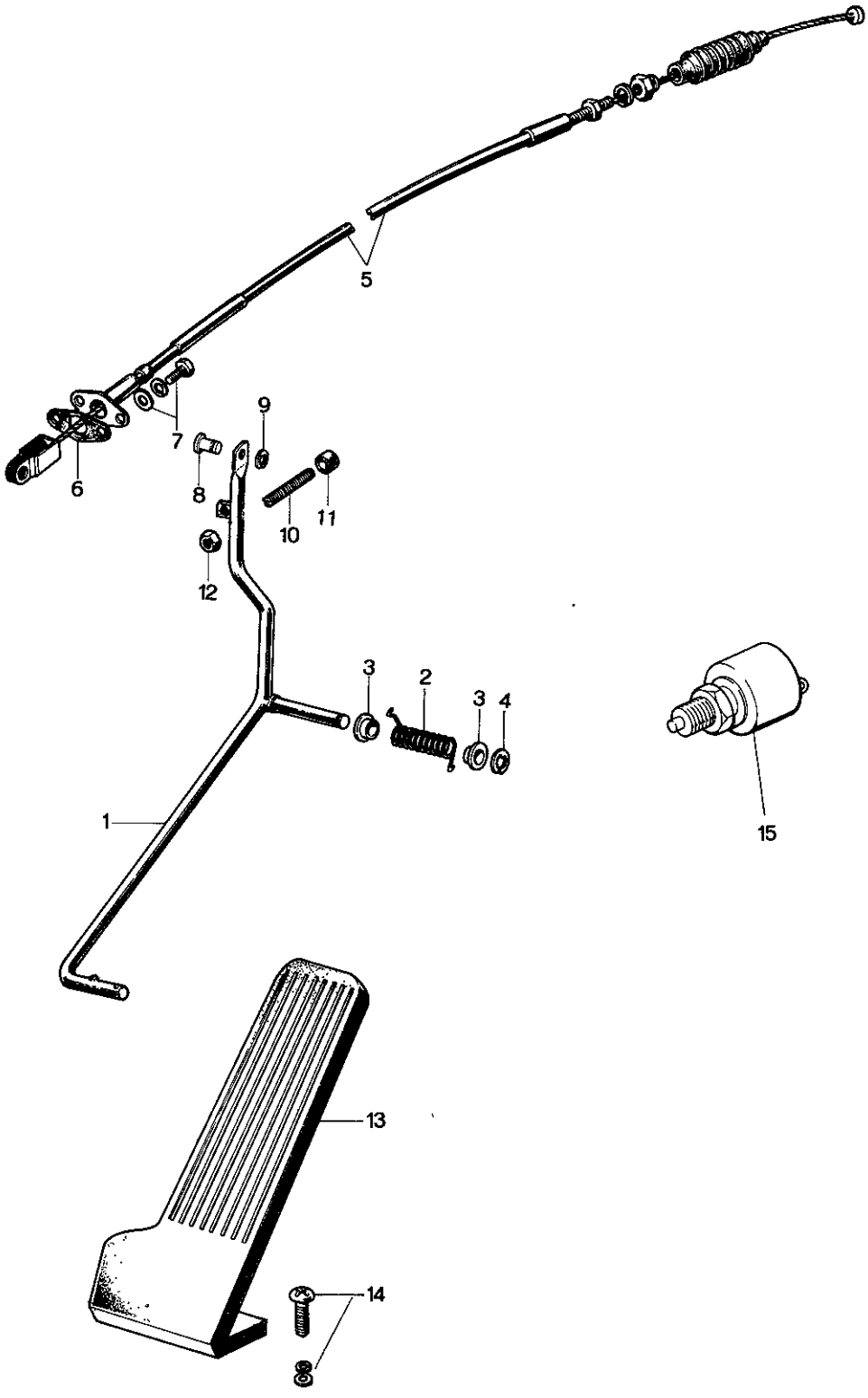

ACCELERATOR CONTI
SYSTEM (R.H.D.)

No.	Part Number	Description	Q'ty	Remar
1	0378 41 610	Rod, Accelerator Control (Automatic)	1	
	0866 41 610	Rod, Accelerator Control (Manual)	1	
2	0370 41 619	Spring, Return	1	
3	0259 41 644	Bush	2	
4	99575 0600	Ring, Retaining	1	
5	0866 41 660	Wire, Accelerator	1	
●	0862 41 660B	Wire, Accelerator	1	Car No. 16062
6	0249 41 671	Seat, Rubber	1	
7	99785 0620	Bolt, Accelerator Control Wire	2	
	99786 0620	Bolt, Accelerator Control Wire	2	Car No. 14192
	99952 0618	Washer, Plain	2	
	99971 0600	Washer, Spring	2	
8	99230 0511	Pin	1	
9	99575 0300	Ring, Stop	1	
10	0118 41 681	Stopper	1	
11	0118 41 682	Rubber	1	
12	99907 0600	Nut, Lock	1	
13	0559 41 710B	Pedal, Accelerator	1	
14	99765 0616	Screw	2	
	99786 0616	Screw	2	Car No. 141928
	99952 0600	Washer, Plain	2	Car No. 141927
	99971 0600	Washer, Spring	2	Car No. 141927
15	2691 18 660	Switch, Kick Down (Automatic)	1	
Ⓝ	0866 41 617	Protector, Accelerator Pedal	1	From Car No.
Ⓝ	99576 0600	Ring, Stop-Protector	1	From Car No.

ACCELERATOR CONTROL SYSTEM (L.H.D.) (USED UP TO CAR NO. 179250 73/9)

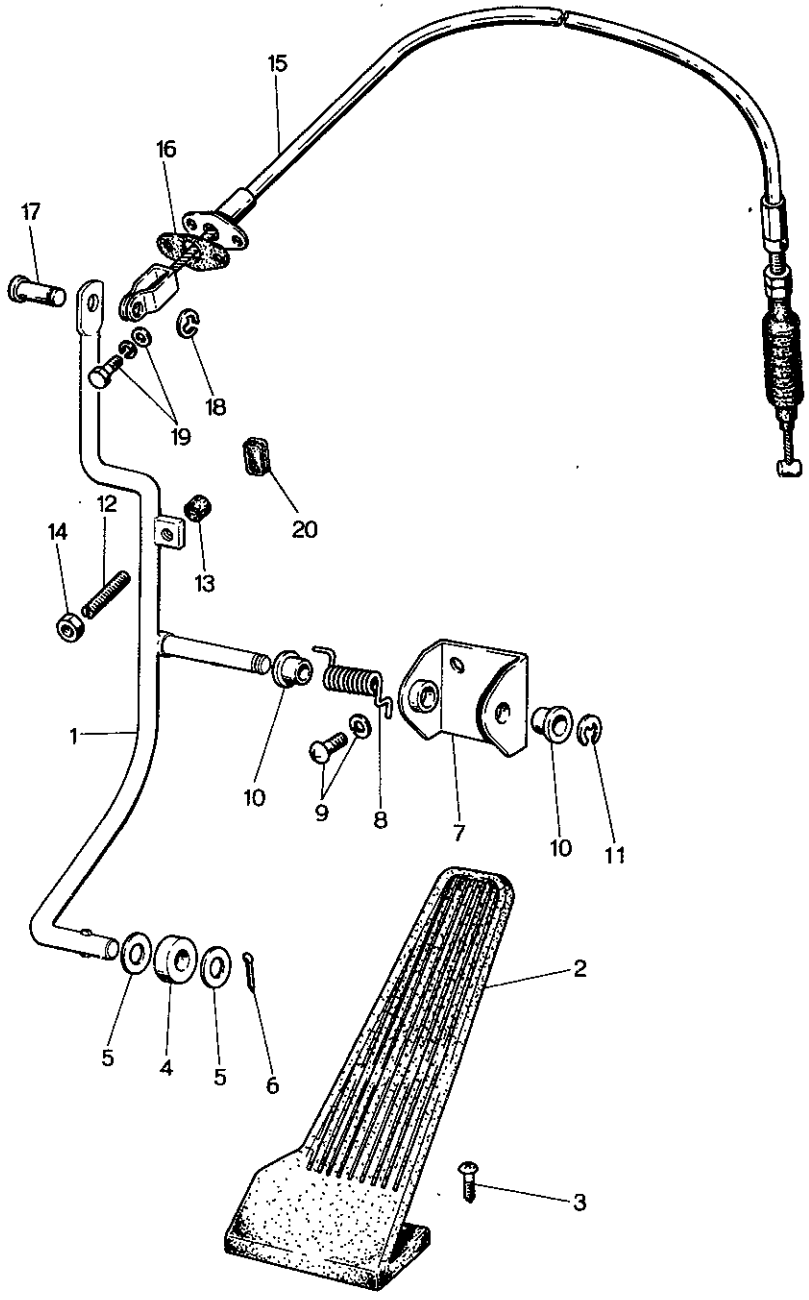

ACCELERATOR CONTROL SYSTEM (L.H.D.) (USED UP TO CAR NO. 17

No.	Part Number	Description	Q'ty	Remar
1	1524 41 620	Rod, Accelerator Control	1	
✓●	1524 41 620A	Rod, Accelerator Control	1	Car No. 148407
2	0290 41 710	Pedal, Accelerator	1	
3	99785 0516	Screw, Accelerator Pedal	2	
4	0259 41 613	Roller, Pedal	1	
5	99853 0800	Washer, Plain - Pedal Roller	2	
6	99221 2012	Pin, Split - Pedal Roller	1	
7	0305 41 641	Retainer, Accelerator Rod	1	
8	0259 41 619	Spring, Return	1	
9	99785 0816	Screw, Retainer	2	
	99971 0800	Washer, Spring	2	
10	0259 41 644	Bush, Retainer	2	
11	99575 0800	Ring, Snap - Retainer	1	
12	0118 41 681	Stopper	1	
13	0118 41 682	Rubber, Stopper	1	
14	99907 0800	Nut, Stopper	1	
15	1582 41 680	Wire Accel.	1	
16	0249 41 671	Seat	1	
17	99230 0511	Pin, Accel. Wire	1	
18	99575 0300	Ring, Stop	1	
19	99785 0820	Bolt, Accel. Wire	2	
	99852 0818	Washer, Plain	2	
	99971 0800	Washer, Spring	2	
✓● 20	1524 41 678	Seal	1	

ACCELERATOR CONTROL SYSTEM (L.H.D.) (USED FROM CAR NO. 160623 73/10)

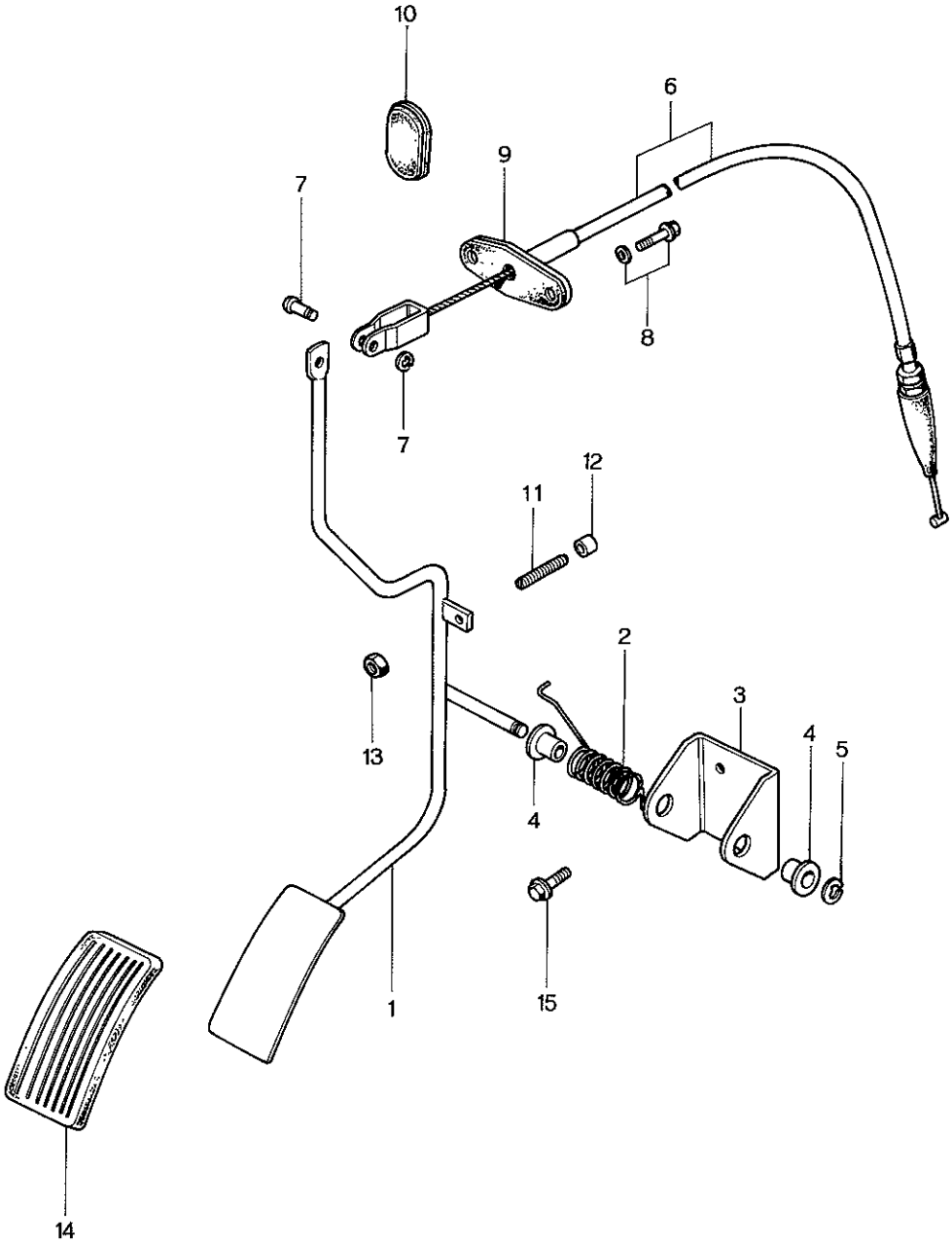

ACCELERATOR CONTROL SYSTEM (L.H.D.) (USED FROM CAR NO. 160

No.	Part Number	Description	Q'ty	Rema
1	1881 41 610A	Pedal, Accelerator	1	
2	0370 41 619	Spring, Return	1	
3	0305 41 641	Retainer	1	
4	0259 41 644	Bush	2	
5	99575 0600	Ring, Retaining	1	
6	1881 41 660B	Wire, Accelerator	1	
7	99230 0511	Pin, Joint - Accelerator Wire	1	
	99575 0300	Ring, Snap	1	
8	99786 0620	Bolt, Accelerator Wire	2	
	99952 0618	Washer, Plain	2	
9	0249 41 671	Seat	1	
10	1524 41 678	Seal	1	
11	0118 41 681	Stopper	1	
12	0118 41 682	Rubber, Stopper	1	
13	99940 0600	Nut	1	
14	1708 41 711	Pad, Pedal	1	
15	99786 0616	Bolt	2	

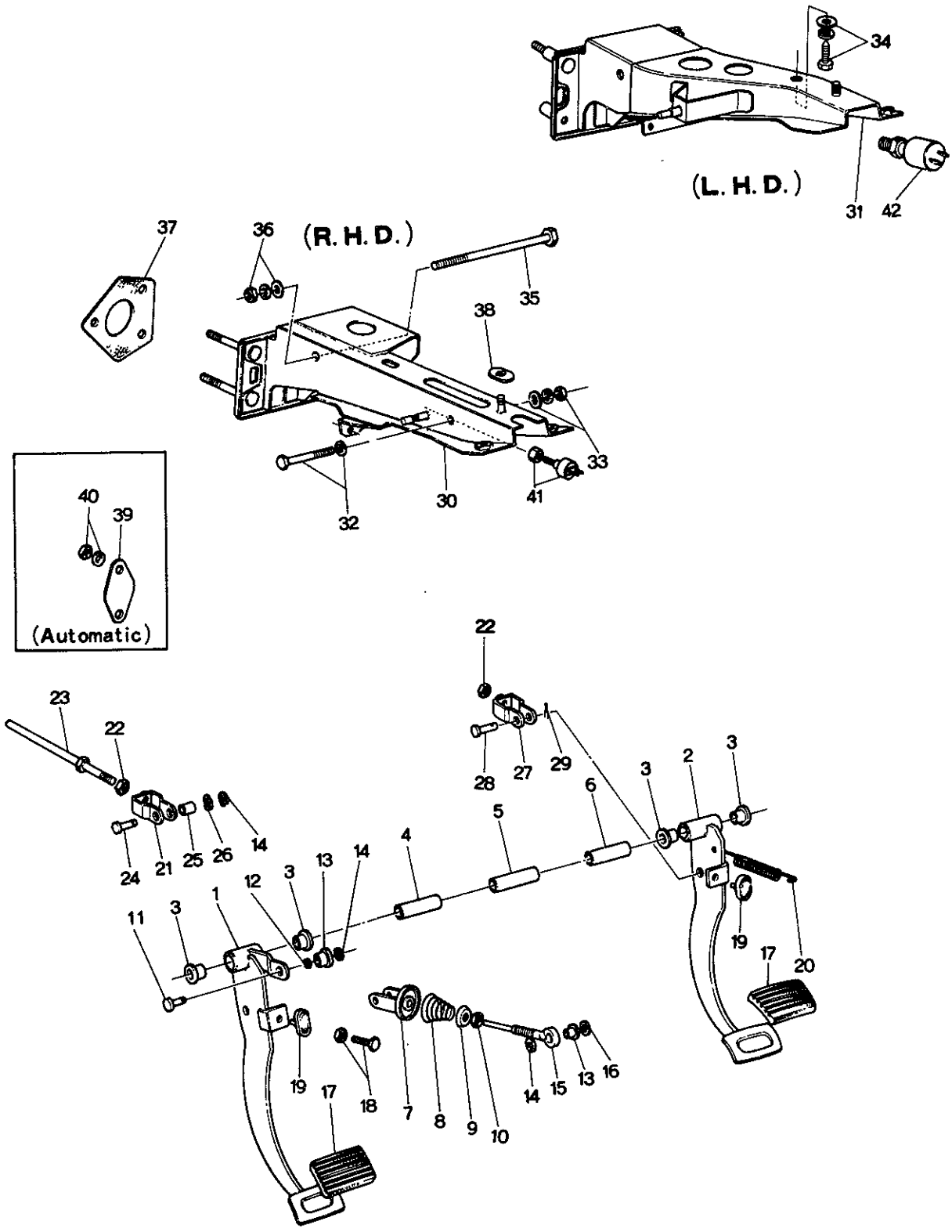
34
(L. H. D.)
31
42
37
36
(R. H. D.)
35
38
33
32
30
41
40
39
(Automatic)
22
23
22
28
27
29
3
2
3
6
3
5
4
24
21
25
26
14
13
14
12
3
1
11
3
19
17
20
19
17
18
7
8
9
10
14
15
13
16

No.	Part Number	Description		Q'ty	Remar
1	0866 41 030A	Pedal, Clutch (R.H.D.)		1	
	0866 41 030B	Pedal, Clutch (R.H.D.)	(Manual)	1	Car No. 13321
	1562 41 030A	Pedal, Clutch (L.H.D.)		1	
2	0866 43 030	Pedal, Brake (R.H.D.)		1	
	1524 43 030	Pedal, Brake (L.H.D.)	(Manual)	1	
	0378 43 030	Pedal, Brake (R.H.D.)	(Automatic)	1	
3	0259 43 022	Bush, Pedal		4	
●	1015 46 085	Bush, Pedal (Automatic)		4	Car No. 17881
4	0866 43 061	Pipe, Pedal		1	
5	0866 43 083	Pipe, Pedal		1	
6	0866 43 062	Pipe, Pedal		1	
7	0824 41 040	Seat, Spring-Clutch		1	
	0559 41 040C	Seat, Spring-Clutch		1	Car No. 14963
8	0559 41 081	Spring, Return		1	
	0559 41 081A	Spring, Return		1	Car No. 14963
9	0183 41 043	Seat, Spring		1	
10	99801 0800	Nut, Spring		1	
	99922 0800	Nut, Spring		1	Car No. 14963
11	0187 46 683	Pin, Spring Seat		1	
	0604 46 785	Pin, Spring Seat		1	Car No. 14963

No.	Part Number	Description	Q'ty	Remarks
12	0824 41 084	Spacer	1	
13	0259 41 644	Bush	2	
14	99575 0800	Ring, Snap	3	
●	99575 0600	Ring, Snap	3	From Car No. 1
15	0824 41 051	Rod	1	
	0824 41 051 A	Rod	1	Car No. 149635 '72/7~×
16	99952 0816	Washer, Plain	1	
17	0118 43 028 A	Pad, Pedal (L.H.D.) (Manual)	2	
	0259 43 028	Pad, Pedal (R.H.D.) (Manual)	2	
	0268 43 028	Pad, Pedal (R.H.D.) (Automatic)	1	
18	99795 1032	Bolt, Stopper-Clutch	1	
	99922 1000	Nut, Stopper & Push Rod	2	
19	0187 43 028	Rubber, Stopper (Manual) (Automatic)	2 1	
20	0813 41 308	Spring, Return-Brake	1	
21	0259 43 140	Fork End, Clutch	1	
●	1872 41 140	Fork End, Clutch	1	Car No. 160623 '73/10~×
22	99922 0800	Nut, Fork End-Clutch	1	
	1872 41 142	Nut, Fork End	1	'73/10~ Added Anew
	99922 1000	Nut, Fork End-Brake	1	
23	0223 41 131 A	Rod, Push-Clutch	1	

No.	Part Number	Description	Q'ty	Remar
24	0223 46 683	Pin, Fork End-Clutch	1	
25	0727 41 023	Bush, Fork End-Clutch	1	
26	99972 0800	Washer, Wave-Fork End-Clutch	1	
27	0305 43 140	Fork End, Brake (R.H.D.)	1	
	1524 43 140	Fork End, Brake (L.H.D.)	1	
28	99231 0818	Pin, Joint-Fork End (R.H.D.)	1	
	99231 0820	Pin, Joint-Fork End (L.H.D.)	1	
29	99221 2020	Pin, Split-Fork End	1	
30	0866 43 070A	Bracket, Master Cylinder (R.H.D.)	1	
●	0866 43 070B	Bracket, Master Cylinder (R.H.D.)	1	
31	1524 43 070B	Bracket, Master Cylinder (L.H.D.)	1	
	1504 43 070A	Bracket, Master Cylinder (L.H.D.)	1	(1558,1559)
32	99805 0865	Bolt, Master Cylinder Bracket	1	
●	99801 0860	Bolt, Master Cylinder Bracket	1	Car No. 16062
	99952 0822	Washer, Plain	1	
33	99901 0800	Nut, Master Cylinder Bracket	1 (R.H.D.)	
	99971 0800	Washer, Spring	1	
	99952 0822	Washer, Plain	1	
● 34	99805 0825	Bolt, Master Cylinder Bracket	1	
●	99952 0816	Washer, Plain	1 (L.H.D.)	Car No. 179250

CLUTCH & BRAKE SYSTEM

No.	Part Number	Description	Q'ty	Remarks
●	99971 0800	Washer, Spring	1	
35	99813 10155	Bolt, Master Cylinder Bracket (Manual)	1	
	99813 10110	Bolt, Master Cylinder Bracket (Automatic)	1	
36	99921 1000	Nut, Master Cylinder Bracket	1	
	99952 1000	Washer, Plain	1	
	99971 1000	Washer, Spring	1	
37	0866 43 093	Gasket, Master Cylinder	1	
38	0259 43 088	Seat, Master Cylinder Bracket	2	
39	0225 43 092	Plate	1	
40	99901 0800	Nut, Plate (Automatic)	2	
	99971 0800	Washer, Spring	2	
41	0233 66 790	Switch, Stop Lamp	1	
● 42	~~2305 60 490~~	~~Switch, Brake Lining~~	~~1~~	~~(1558,1559)~~
	1504 60 490	Switch, Brake Lining	1	(1558,1559)
● 43	99940 0800	Nut	1	Car No. 150623 73/10~ Added Anew

CLUTCH RELEASE & MASTER CYLINDER

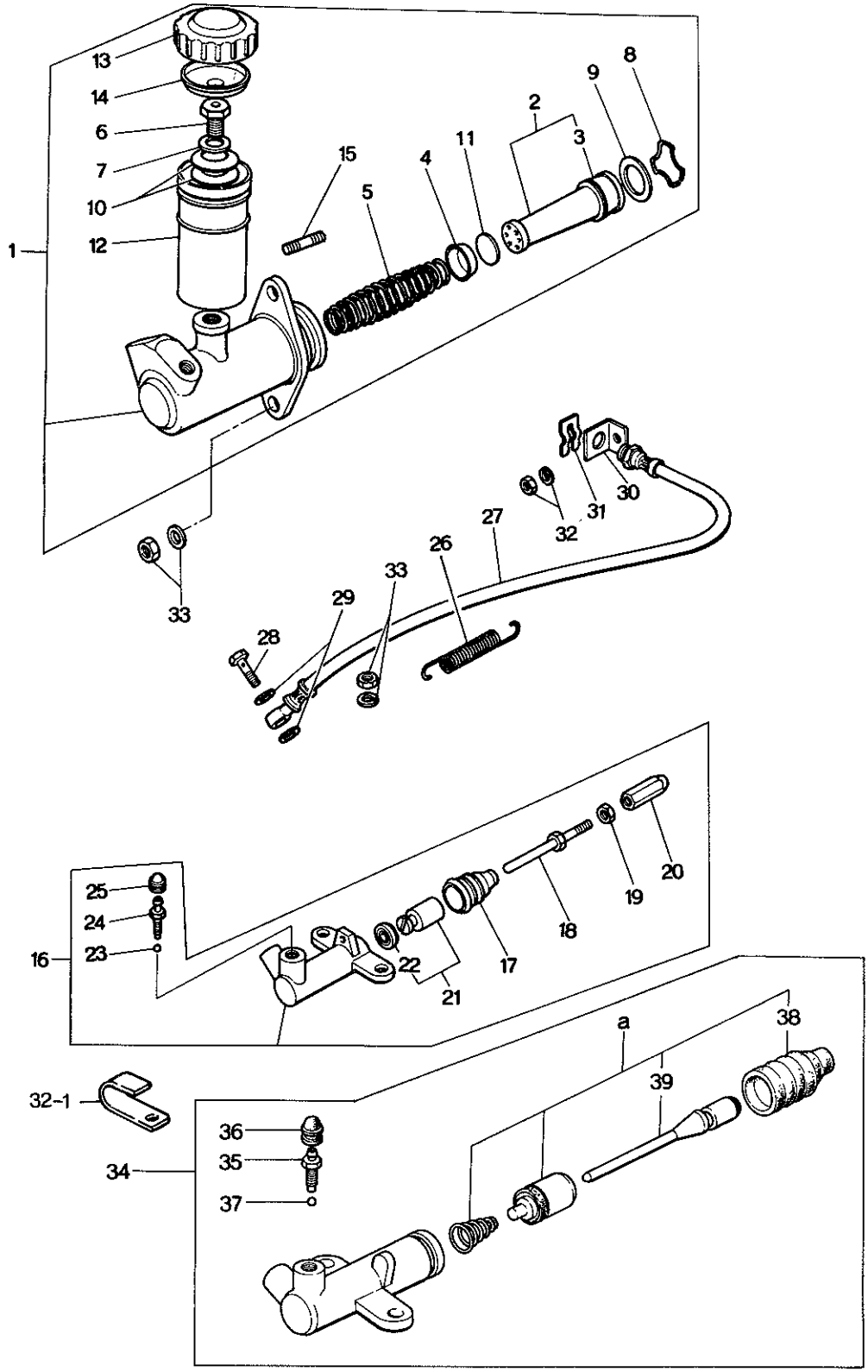

CLUTCH RELEASE & MAST CYLINDER

No.	Part Number	Description	Q'ty	Remarl
1	0866 41 400	Cylinder, Clutch Master (R.H.D.)	1	
●	0866 41 400A	Cylinder, Clutch Master (R.H.D.)	1	
	1524 41 400	Cylinder, Clutch Master (L.H.D.)	1	
●	1524 41 400A	Cylinder, Clutch Master (L.H.D.)	1	
2	0305 41 440	Piston	1	(Fig. No. 3 inc
	0839 41 440	Piston	1	Car No. 12739
3	0305 41 451	Cup, Secondary	1	
4	0305 41 461	Cup, Primary	1	
	0839 41 461	Cup, Primary	1	Car No. 12739
5	0110 41 470	Spring, Return	1	
	0110 41 470A	Spring, Return	1	Car No. 14963
6	0317 43 421	Plug	1	
●	0317 43 421A	Plug	1	
7	0221 43 431	Washer	1	
●	0221 43 431A	Washer	1	
8	0111 43 432	Wire, Stop	1	
9	0111 43 433	Washer, Stop	1	
10	0317 43 428	Spring, Cone	2	
11	0727 41 442	Spacer	1	
12	0317 43 551	Tank, Reserve	1	

41 CLUTCH RELEASE & MASTER CYLINDER

No.	Part Number	Description	Q'ty	Remarks
13	0727 43 552	Cap, Reserve Tank	1	
14	0839 43 553A	Baffle	1	
√ 15	99852 0848	Stud (L.H.D.)	1	
	0305 99 431	Repair Kit, Clutch Cylinder	1	(Fig. No. 2～5,8,9,11 included)
	0839 89 431	Repair Kit, Clutch Cylinder	1	Car No. 127396 71/12～○
	0839 89 431A	Repair Kit, Clutch Cylinder	1	Car No. 149635 73/1～○
√	~~0839 89 431B~~	Repair Kit, Clutch Cylinder ERROR (HPM-813) HV +LMP. 5-11-74		73/1～○ 22/10.
16	0866 41 920	Cylinder, Clutch Release	1	
17	0191 41 331	Boot	1	
18	0187 41 341	Rod	1	
19	99922 0800	Nut	1	
20	0118 41 342	Screw, Adjust	1	
21	0866 41 320	Piston	1	Car No. 179250 73/9～Discarded (Fig. No. 22 included)
22	0603 41 322B	Cup, Piston	1	
23	99611 1500	Ball, Steel	1	
24	0259 33 691	Screw, Bleeder	1	
25	0259 33 693	Cap	1	

CLUTCH RELEASE & MAST
CYLINDER

No.	Part Number	Description	Q'ty	Remar
26	0183 41 308	Spring, Return - Clutch Release Cylinder	1	
27	0866 41 380	Hose, Flexible	1	
28	0221 43 694	Bolt, Hose & Release Cylinder	1	
29	99562 1000	Gasket	2	
30	0866 41 370	Holder, Flexible Hose	1	
31	0136 43 635	Clip, Flexible Hose	1	
32	99906 0600	Nut, Holder	1	
	99940 0600	Nut, Holder	1	Car No. 14192
	99971 0600	Washer, Spring	1	Car No. 14192
● 32-1	99276 0808	Clip	1	
33	99901 0800	Nut, Clutch Master Cylinder	4	
	99971 0800	Washer, Spring	4	
●	99940 0800	Nut	4	Car No. 160623
● 34	1881 41 920A	Cylinder, Clutch Release	1	
● 35	0259 36 691	Screw, Bleeder	1	
● 36	0259 33 693	Cap	1	
● 37	99611 1500	Ball, Steel	1	Car No. 160623
● 38	0603 41 331	Boot	1	
● 39	1881 41 341	Rod, Push	1	
a	1029 89 411	Repair Kit, Clutch Release	1	

TANDEM MASTER CYLINDER & VACUUM POWER ASSIST (USED UP TO CAR NO. 179250 73/9)

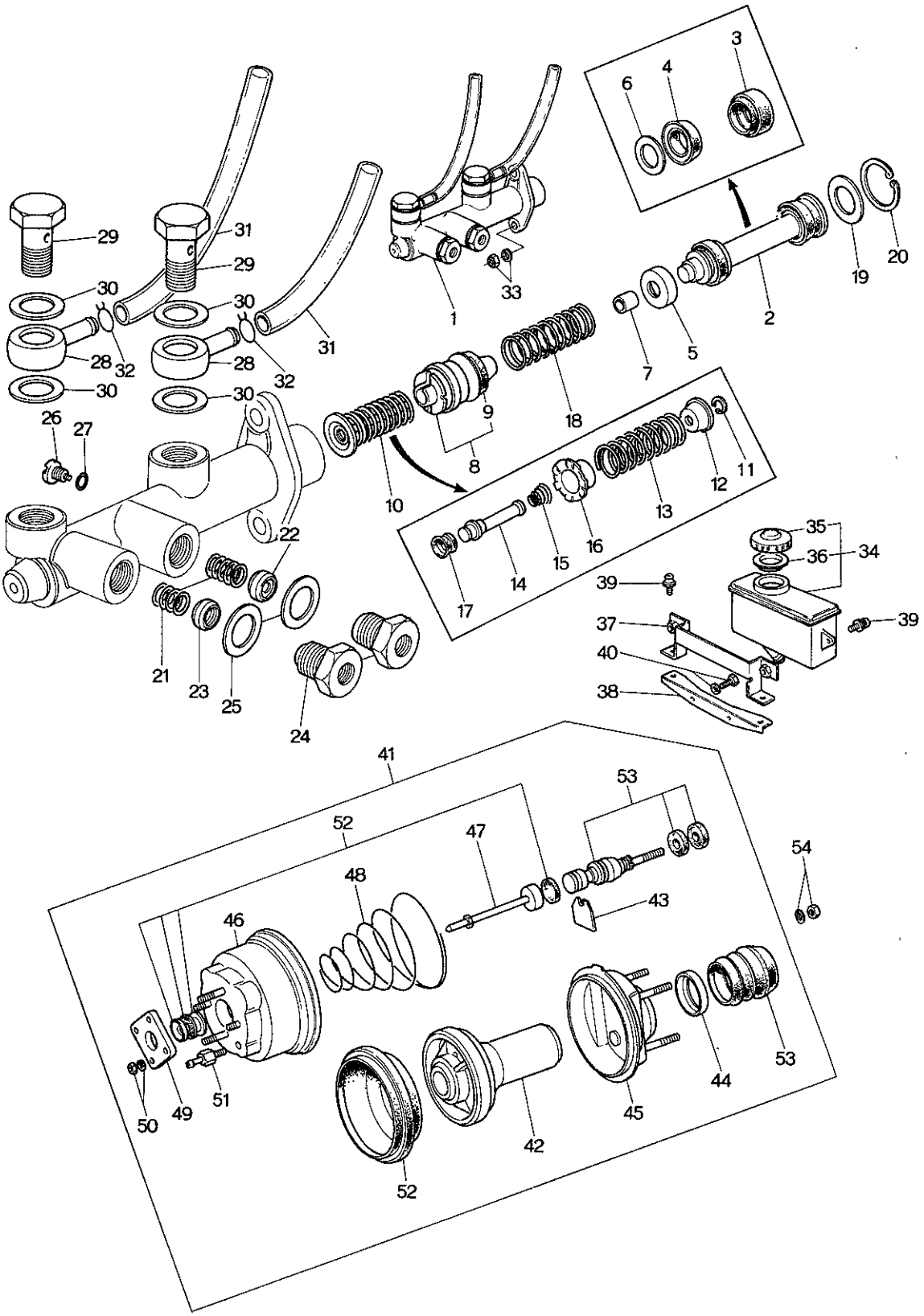

TANDEM MASTER CYLINDER & POWER BRAKE

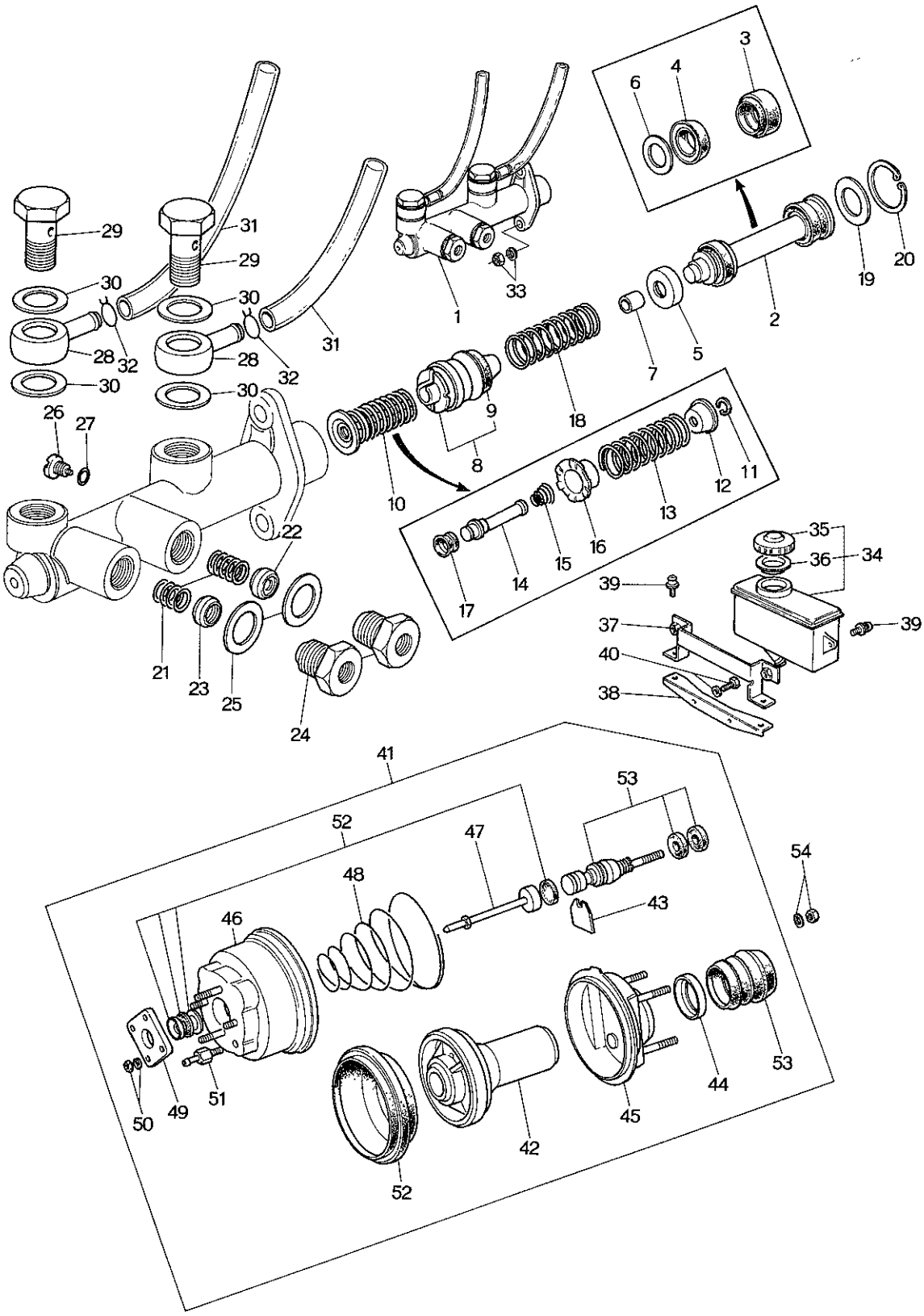

TANDEM MASTER CYLINDER & VACUUM POWER ASSIST (USED UP TO CAR NO. 179250 73/9)

No.	Part Number	Description	Q'ty	Remar
1	0870 43 990	Cylinder, Tandem Master (R.H.D.)	1	
	1562 43 990A	Cylinder, Tandem Master (L.H.D.)	1	
2	2046 49 620C	Piston, Primary	1	
3	2046 49 625A	Cup, Secondary	1	
4	2046 48 626A	Cup, Primary	1	
5	2046 49 627B	Seat, Spring	1	
6	2046 48 629A	Spacer, Piston Cup	1	
7	2046 48 622	Ring, Stop	1	
8	2835 48 630A	Piston, Floating	1	
9	2046 48 635A	Cup, Secondary	2	
10	2835 49 640	Valve, Floating	1	
11	2835 49 623	Stopper	1	Order Under N
12	2835 49 628A	Seat, Spring	1	
13	2835 49 642A	Spring, Floating Piston	1	
14	2835 49 645A	Rod, Valve	1	
15	2835 49 646A	Spring, Valve	1	
16	2835 49 647A	Case, Valve	1	
17	2835 49 648	Valve, Tipping	1	
18	2835 49 641A	Spring, Primary Piston	1	
19	2046 49 666	Washer(1), Piston	Selective use 1	
	2046 49 667	Washer(2), Piston		
	2046 49 668	Washer(3), Piston		
	2046 49 669	Washer(4), Piston		
20	2046 49 638	Ring, Retaining	1	
21	0233 49 665	Spring, Check Valve	2	
22	0233 49 660	Valve, Check	1	

43 49 TANDEM MASTER CYLINDER & VACUUM POWER ASSIST (USED UP TO CAR NO. 179250 73/9)

No.	Part Number	Description	Q'ty	Remarks
23	0233 49 670	Valve, Check	1	
24	2835 49 652	Bolt, Joint	2	
25	0233 49 656	Gasket, Joint Bolt	2	
26	2046 49 676	Bolt Set	1	
27	2046 49 696	Gasket, Joint Bolt	1	
28	2835 49 682A	Union	2	
29	2835 49 686A	Bolt, Connector	2	
30	2835 49 687	Gasket	4	
31	0870 43 422A	Pipe, Oil	2 1	(R.H.D.) (L.H.D.)
	1562 43 422	Pipe, Oil	1	(L.H.D.)
32	2835 49 685	Clip	2	
	2835 89 439	Repair Kit-Tandem Master Cylinder (Fig. No. 2~10,18 & 20 included)	1	Set
33	99906 0800	Nut, Tandem Master Cylinder	2	
	99971 0800	Washer, Spring	2	
Ⓝ	99285 0800	Clip, Wire	2	
34	0839 43 550	Tank, Reserve	1	
	1559 43 550	Tank, Reserve	1	1558,1559
35	0727 43 552	Cap	1	
36	0839 43 553A	Baffle, Oil	1	
Ⓝ	0391 49 684	Packing	1	Car No. 170670 73/5~Added Anew
37	0870 43 570	Holder, Reserve Tank	1	
38	0870 43 580	Holder, Reserve Tank	1	
39	99833 0512	Screw, Holder	4	
	99971 0500	Washer, Spring	4	
40	99785 0612	Screw, Holder	2	

TANDEM MASTER CYLINDER & VACUUM POWER ASSIST (USED UP TO CAR NO. 179250 7/9)

No.	Part Number	Description	Q'ty	Remar
	99971 0600	Washer, Spring	2	
41	0870 43 800B	Vac, Master (R.H.D.)	1	
	1562 43 800	Vac, Master (L.H.D.)	1	
42	0870 49 745	Plate, Diaphragm	1	
43	2046 49 746	Key	1	
44	2046 49 747	Retainer, Silencer	1	
45	0870 49 750	Shell & Stud, Rear	1	
46	0870 49 760	Shell & Stud, Front (R.H.D.)	1	
	1562 49 760	Shell & Stud, Front (L.H.D.)	1	
47	0870 49 770	Push Rod	1	
48	0824 49 781	Spring	1	
49	2046 49 782	Flange	1	
50	2046 49 783	Washer, Spring	1	
	2046 49 784	Nut	1	
51	0870 49 785	Valve, Check	1	
52	0870 49 710	Repair Kit "A"	1	
53	0870 49 720	Repair Kit "B" ("A" Kit & Fig. No. 51 included) (Parts Not Listed here are supplied under These Kits)	1	
54	99901 0800	Nut, Master Vac	3	
	99971 0800	Washer, Spring	3	
	99952 0816	Washer, Plain	3	

TANDEM MASTER CYLINDER & VACUUM POWER ASSIST (USED FROM CAR NO. 160623 ⁷⁄₁₀)

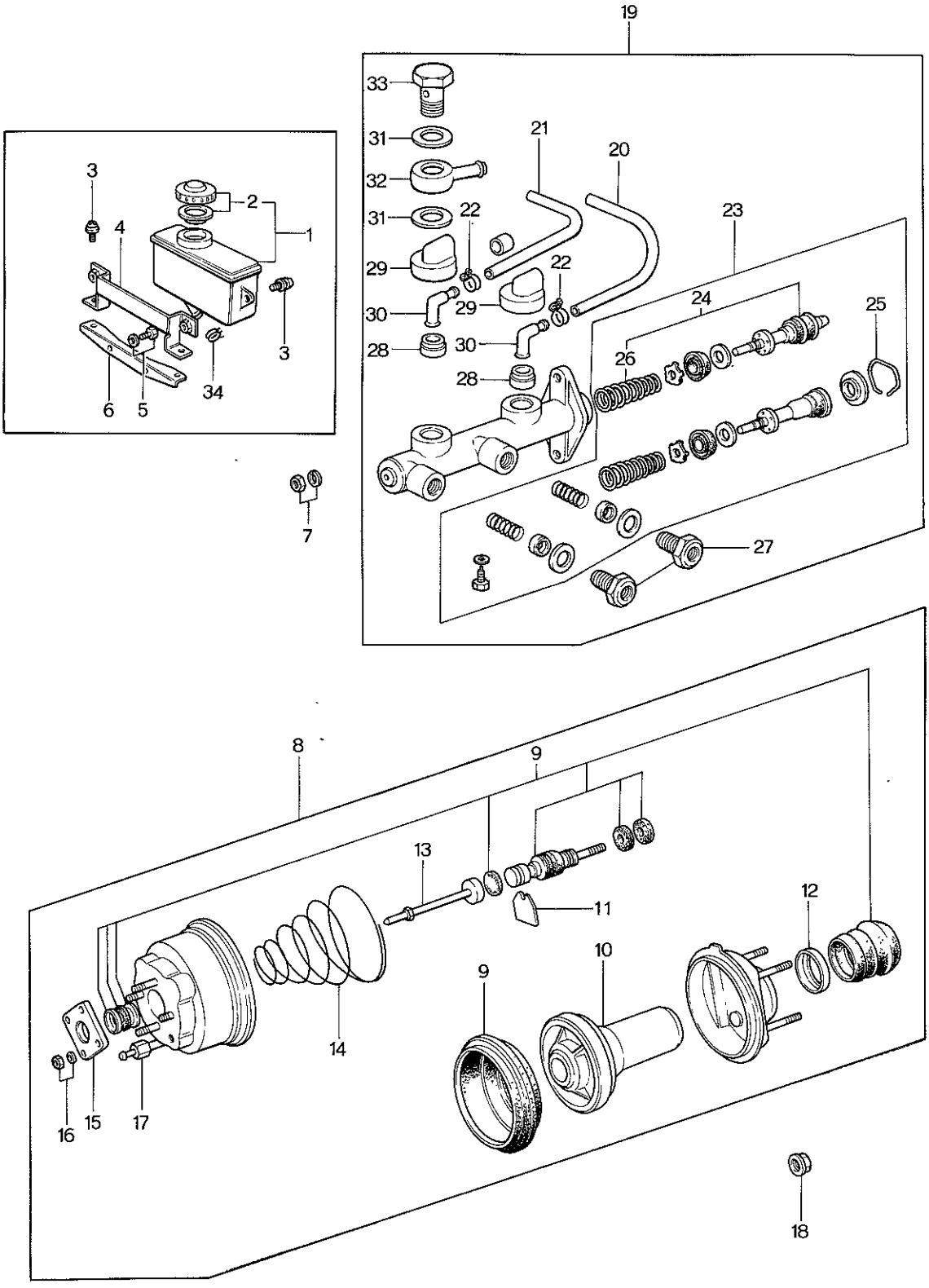

TANDEM MASTER CYLINDER & VACUUM POWER ASSIST (USED FROM CAR NO. 160623 73/10)

No.	Part Number	Description	Q'ty	Remar
1	0839 43 550	Tank, Reserve	1	
2	0317 89 436A	Cap, Set	1	
3	99833 0512	Bolt, Holder & Reserve Tank	4	
	99971 0500	Washer, Spring	4	
4	0870 43 570	Holder, Reserve Tank	1	
5	99785 0612	Bolt, Holder	2	
	99971 0600	Washer, Spring	2	
6	0870 43 580	Holder, Reserve Tank	1	
7	99940 0800	Nut, Master Cylinder	2	
8	0870 43 800B	Assist, Vacuum Power (R.H.D.)	1	
	1562 43 800	Assist, Vacuum Power (L.H.D.)	1	
9	0870 49 720	Kit, Repair	1	
10	0870 49 745	Plate, Diaphragm	1	
11	2046 49 746	Key	1	
12	2046 49 747	Retainer, Silencer	1	
13	0870 49 770	Rod, Push	1	
14	0824 49 781	Spring	1	
15	2046 49 782	Flange	1	

TANDEM MASTER CYLINDER & VACUUM POWER ASSIST (USED FROM CAR NO. 160623 ~)

No.	Part Number	Description	Q'ty	Remarks
16	2046 49 783	Washer, Spring	2	
	2046 49 784	Nut	2	
17	0870 49 785	Valve, Check	1	
18	99940 0800	Nut, Flange	3	
19	1128 43 990A	Cylinder, Tandem Master (R.H.D.)	1	
	1620 43 990A	Cylinder, Tandem Master (L.H.D.)	1	
20	0870 43 422A	Hose, Reserve (R.H.D.)	1	
21	1562 43 422	Hose, Reserve (R.H.D.)	1	
	1881 43 422	Hose, Reserve (L.H.D.)	2	
22	99282 1401	Clamp, Hose	2	
23	1128 49 610	Kit, Inner Parts	1	
24	1128 49 630	Piston, Floating	1	
25	0305 49 638	Wire, Piston Stop	1	
26	0512 49 642	Spring, Floating	1	
27	0512 49 651	Bolt, Joint	2 1	(R.H.D.) (L.H.D.)
	1620 49 651	Bolt, Joint (L.H.D.)	1	
28	0839 49 686A	Bush, Elbow Joint (R.H.D.)	2	
29	0839 49 698	Cover, Elbow Joint (R.H.D.)	2	

TANDEM MASTER CYLINDER & VACUUM POWER ASSIST (USED FROM CAR NO. 160623 ⅞)

No.	Part Number	Description	Q'ty	Remarks
30	0839 49 699 A	Joint, Elbow (R.H.D.)	2	
31	0305 49 656	Gasket, Joint Bolt (L.H.D.)	4	
32	0512 49 682 A	Joint, Union (L.H.D.)	2	
33	0512 49 686	Bolt, Connector (L.H.D.)	2	
34	99285 0800	Clip, Wire-Oil Pipe	2	

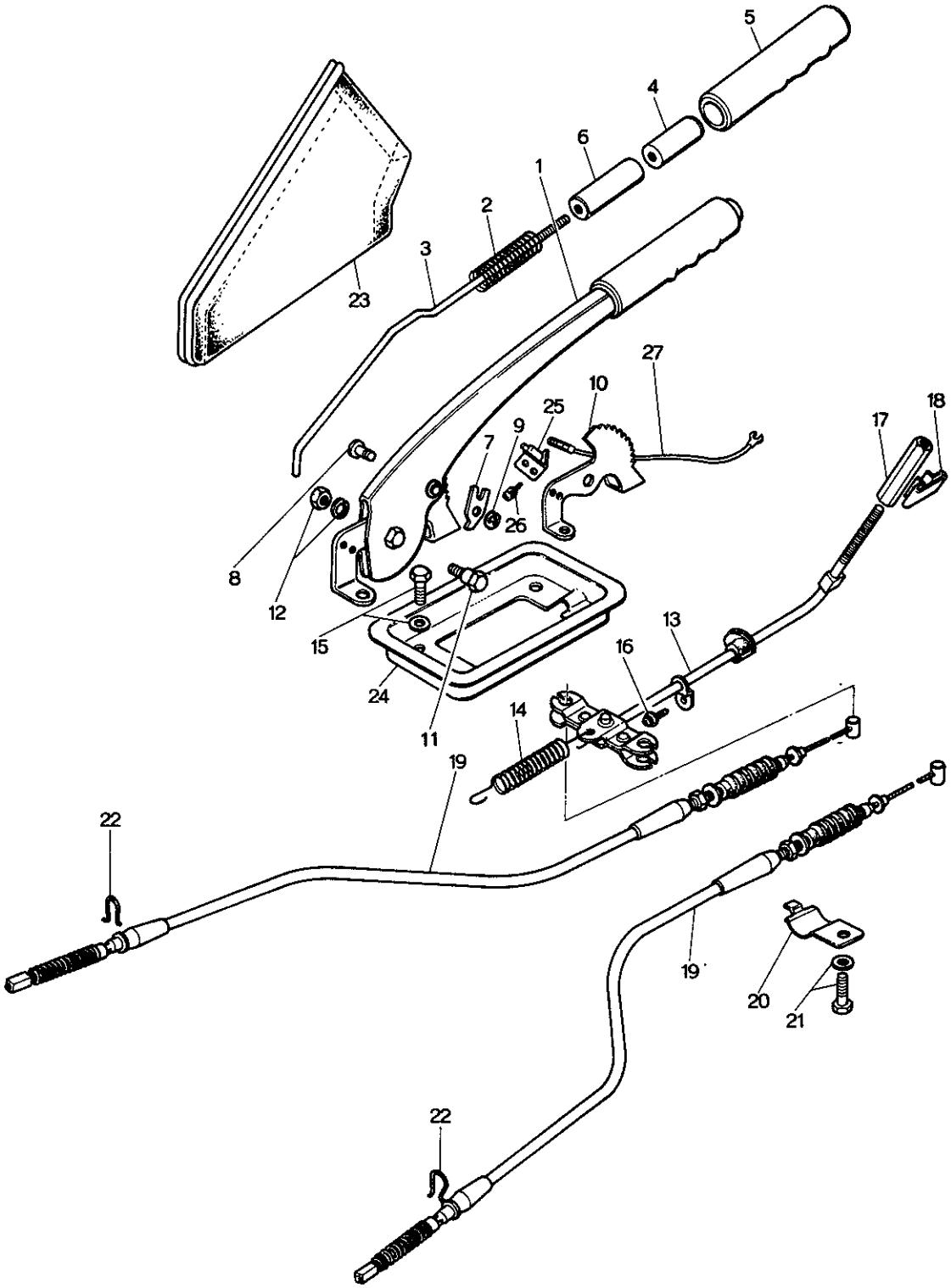
5
4
6
1
2
3
23
27
10
25
9
7
26
18
17
8
12
15
24
11
13
16
14
19
22
19
20
21
22

No.	Part Number	Description	Q'ty	Rem
1	0866 44 010	Lever, Hand Brake	1	
2	0813 44 031	Spring	1	
3	0303 44 032	Rod, Release	1	
4	0221 44 033	Button	1	
5	0813 44 034	Cap	1	
6	0813 44 035	Spacer	1	
7	0221 44 044	Ratchet	1	
8	99230 0815	Pin	1	
	99230 0815B	Pin	1	Car No. 133
9	99575 0500	Ring, Stop	1	
10	0866 44 051	Sector	1	
11	0303 44 053	Bolt, Hand Brake Lever	1	
12	99901 0800	Nut	1	
	99901 0800B	Nut	1	Car No. 133
	99971 0800	Washer, Spring	1	
13	0866 44 150	Cable, Front	1	
	0866 44 150A	Cable, Front	1	Car No. 133
14	0183 41 308	Spring, Return	1	
15	99785 0618	Bolt, Front Cable	4	
	99786 0616	Screw, Tapping-Front Cable	4	Car No. 143
	99971 0600	Washer, Spring	4	
16	99868 0508	Screw, Tapping	1	
	99971 0500	Washer, Spring	1	
17	0866 44 187	Screw, Adjust	1	
	0866 44 187A	Screw, Adjust	1	Car No. 155
18	0866 44 189	Clip	1	
19	0866 44 410	Cable, Rear	2	
	0866 44 410A	Cable, Rear	2	Car No. 155
●	0866 44 410B	Cable, Rear	2	
●	0866 44 410B	Cable (L), Rear	1	
●	1570 44 410C	Cable (R), Rear	1	Car No. 1606
	1504 44 410	Cable, Rear	2	1558, 1559
20	0866 44 439	Clip, Cable	2	
21	99971 0600	Washer, Spring	2	Car No. 1438

PARKING BRAKE SYSTEM

No.	Part Number	Description	Q'ty	Remarks
	99785 0620	**Bolt**	2	
	99786 0616	Screw, Tapping	2	Car No. 143809 ~○
22	**0305 44 471**	**Clip**	2	
23	**0824 44 140**	**Boot** } **Without Console Box**	1	
24	**0302 44 132**	**Plate** } **Without Console Box**	1	
25	**0820 66 840**	**Switch, Parking Lamp**	1	
26	**99833 0412**	**Screw, Switch**	2	
	~~99871 0406~~	~~Washer, Spring~~	~~2~~	
	99952 0400	Washer, Plain	2	From Car No. 1
27	**0866 67 131**	**Cord, Parking Lamp Switch**	1	

PIPING (CLUTCH & BRAKE)

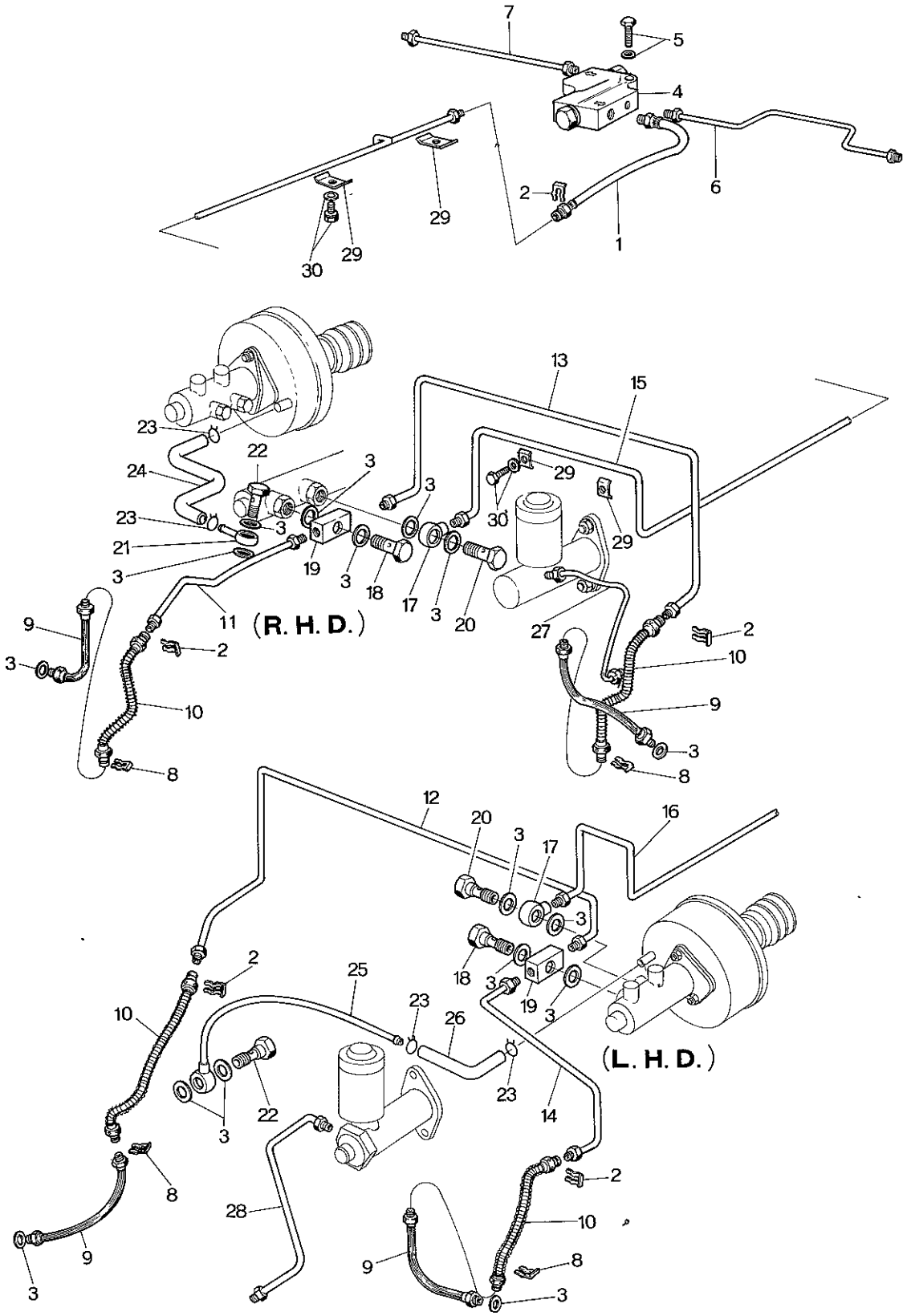

No.	Part Number	Description	Q'ty	Remar
1	0866 43 820	Hose, Flexible (Sedan & Coupe)	1	
	0370 43 820	Hose, Flexible (Station Wagon)	1	
2	0136 43 635	Clip, Flexible Hose	3	
● 3	99562 1000	Gasket } (Sedan & Coupe)	8	
●	99562 1000	Gasket }	6	Car No. 16062
●	99562 1200	Gasket, Vacuum Pipe Connector Bolt	2	Car No. 16062
	99562 1000	Gasket (Station Wagon)	9	From Car No
4	0866 43 900	Valve, Double Proportioning (Sedan & Coupe)	1	
	0118 43 853	Joint, Pipe (Station Wagon)	1	
5	99805 0640	Bolt, D.P. Valve (Sedan & Coupe)	2	
	99806 0625	Bolt, Pipe Joint (Station Wagon)	1	
	99971 0600	Washer, Spring	2	
6	0866 43 650B	Pipe No. 1, Rear Brake (Sedan & Coupe)	1	
	0585 43 650A	Pipe No. 1, Rear Brake (Station Wagon)	1	
7	0866 43 660B	Pipe No. 2, Rear Brake (Sedan & Coupe)	1	
	0899 43 660	Pipe No. 2, Rear Brake (Station Wagon)	1	
8	0305 43 635	Clip, Flexible Hose	2	
9	0866 43 810	Hose, Flexible	2	
10	0613 43 820A	Hose, Flexible	2	
11	0870 45 280B	Pipe (Frt., R), Brake (R.H.D.)	1	
●	1128 45 280	Pipe (Frt., R), Brake (R.H.D.)	1	Car No.

No.	Part Number	Description	Q'ty	Remarks
●	1128 45 280A	Pipe (Frt., R), Brake (R.H.D.)	1	73/8 ~○
	0866 45 280A	Pipe (Frt., R), Brake (1552)	1	
12	~~1562 45 280C~~	~~Pipe (Frt., R), Brake (L.H.D.) General~~	~~1~~	
	1568 45 280B	Pipe (Frt., R), Brake (L.H.D.)	1	
	1562 45 280C	Pipe (Frt., R), Brake (L.H.D.)	1	Car No. 155593 72/10 ~○
●	1597 45 280	Pipe (Frt., R), Brake (L.H.D.)	1	Car No. 176731 73/7 ~×
13	0870 45 320B	Pipe (Frt., L), Brake (R.H.D.)	1	
	0866 45 320B	Pipe (Frt., L), Brake (1552)	1	
14	~~1562 45 320B~~	~~Pipe (Frt., L), Brake (L.H.D.) General~~	~~1~~	
	1568 45 320A	Pipe (Frt., L), Brake (L.H.D.)	1	
	1562 45 320B	Pipe (Frt., L), Brake (L.H.D.)	1	Car No. 155593 72/10 ~○
●	1597 45 320	Pipe (Frt., L), Brake (L.H.D.)	1	Car No. 176736 73/7 ~×
15	0870 45 350B	Pipe (Rr.), Brake (R.H.D.) (Sedan & Coupe)	1	
	1137 45 350	Pipe (Rr.), Brake (R.H.D.) (Station Wagon)	1	
	0866 45 350B	Pipe (Rr.), Brake (1552)	1	
16	~~1562 45 350C~~	~~Connection, Brake Pipe (Rr.) General~~	~~1~~	
	1568 45 350B	Connection, Brake Pipe (Rr.) (L.H.D.)	1	
	1562 45 350C	Connection, Brake Pipe (Rr.) (L.H.D.)	1	Car No. 155593 72/10 ~○
17	0118 41 375	Connection, Brake Pipe (Rr.)	1	
18	0221 43 694	Bolt, Connector-Brake Pipe Rear	1	

No.	Part Number	Description	Q'ty	Rem
19	0866 45 452	Joint, Pipe-Brake Pipe (Frt.)	1	
	1128 45 452	Joint, Pipe-Brake Pipe (Frt.)	1	Car No. 160
20	0118 43 505	Bolt, Connector-Brake Pipe (Frt.)	1	
	0118 43 505A	Bolt, Connector-Brake Pipe (Frt.)	1	Car No. 144
21	0870 43 830	Pipe, Connector-Vacuum Hose (R.H.D.)	1	
	0862 43 830	Pipe, Connector-Vacuum Hose (R.H.D.)	1	Car No. 160
22	2046 43 694	Bolt, Connector-Vacuum Pipe	1	
	1570 43 694	Bolt, Connector-Vacuum Pipe	1	Car No. 160
23	2046 43 839	Clamp, Hose	2	
	99282 2001	Clamp, Hose	2	Car No. 160
	99282 1901	Clamp, Hose	2	
24	0870 43 842A	Hose, Vacuum (R.H.D.)	1	
	0870 43 842B	Hose, Vacuum (R.H.D.)	1	Car No. 129
25	1562 43 830A	Pipe, Vacuum	1	
	1562 43 830B	Pipe, Vacuum	1	Car No. 137
	1881 43 830	Pipe, Vacuum (L.H.D.)	1	Car No. 160
26	1570 43 842	Hose, Vacuum	1	
	1570 43 842A	Hose, Vacuum	1	Car No. 140
	1570 43 842B	Hose, Vacuum	1	Car No. 152
	~~1560 43 836A~~	~~Hose, Vacuum~~	~~1~~	~~1558, 1559~~

No.	Part Number	Description	Q'ty	Remarks
	1559 43 836C	Hose, Vacuum	1	Car No. 160623 73/10~Added Anew
● 27	0866 45 510	Pipe, Clutch (R.H.D.) (Manual)	1	
	~~0866 45 611B~~	~~Pipe, Clutch (1552)~~	~~1~~	
	~~99340 06205~~	~~Pipe, Clutch (1552)~~	~~1~~	
28	1562 45 510A	Pipe, Clutch (L.H.D.)	1	
	1562 45 510B	Pipe, Clutch (L.H.D.)	1	Car No. 149635 72/7~△
29	0866 45 903A	Clip	9	Car No. 141928 72/3~Q'ty
30	99785 0614	Bolt, Clip	8	
	99786 0612	Screw, Tapping	9	Car No. 141928 72/3~○
	99971 0600	Washer, Spring	8	Car No. 141927 72/3~Discarded

PIPING (CLUTCH & BRAKE)
(ARCTIC SPEC. MODEL & SWITZERLAND)

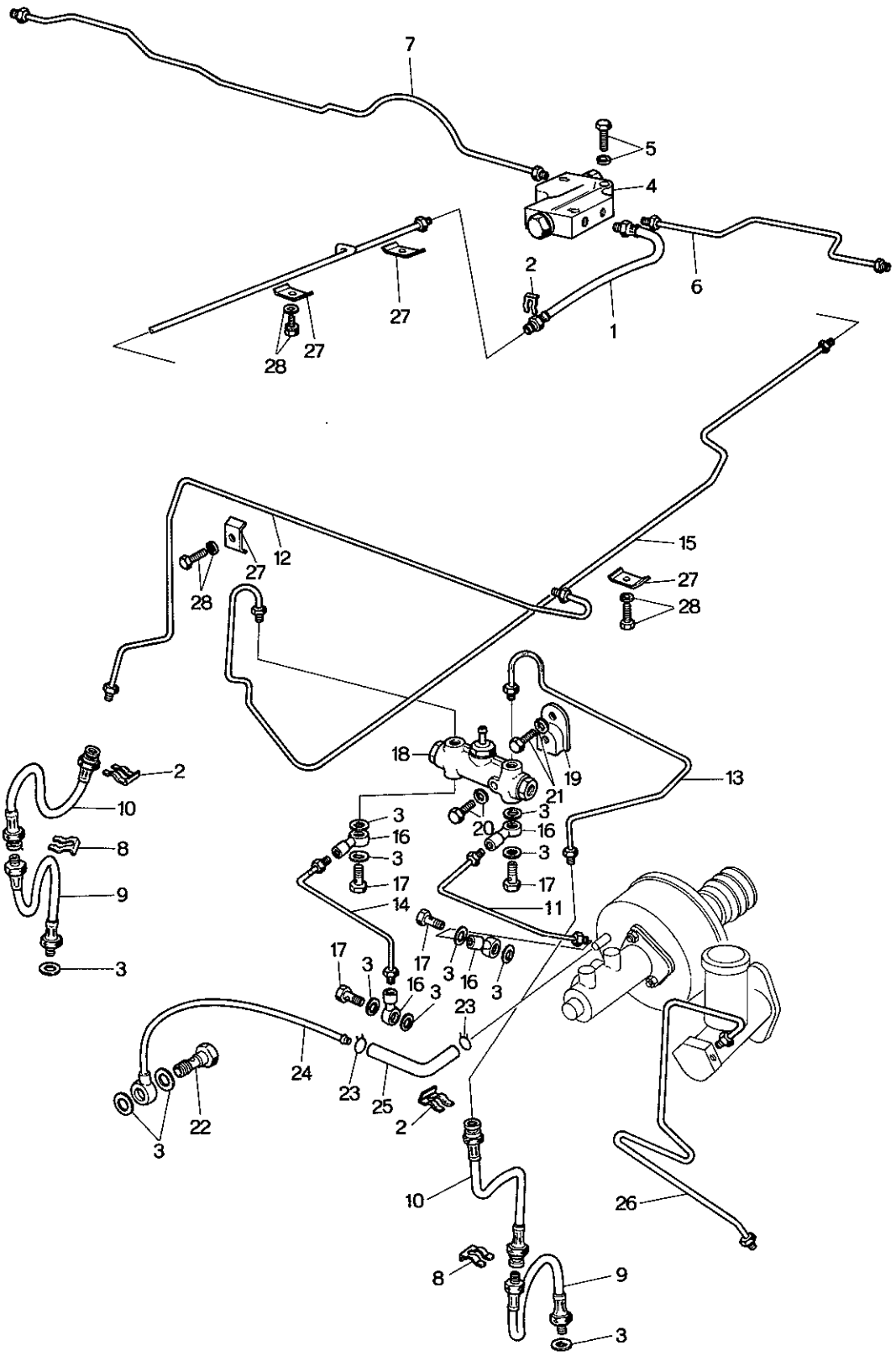

PIPING (CLUTCH & BRAKE)
(ARCTIC SPEC. MODEL & SWITZERLAND)

No.	Part Number	Description	Q'ty	Remar
1	0866 43 820	Hose, Flexible	1	
2	0138 43 835	Clip, Flexible Hose	3	
3	99562 1000	Gasket	12	
4	0866 43 900	Valve, W. P. (For Sweden & Denmark)	1	
	1559 43 900	Joint, Pipe	1	
5	99805 0840	Bolt, W. P. Valve	2	
	99971 0600	Washer, Spring	2	
● 6	~~1562 43 650B~~	~~Pipe, No. 1, Rear Brake~~	~~1~~	
● ✓	1562 43 650	Pipe No. 1, Rear Brake	1	From Car No.
● ✓	0866 43 650B	Pipe No. 1, Rear Brake	1	Car No. 159525
7	1562 43 660	Pipe No. 2, Rear Brake	1	
	1562 43 660A	Pipe No. 2, Rear Brake	1	Car No. 148407
	0866 43 660B	Pipe No. 2, Rear Brake	1	Car No. 159525
8	0305 43 635	Clip, Flexible Hose	2	
9	0866 43 810	Hose, Flexible	2	
10	0813 43 820A	Hose, Flexible	2	
11	1559 45 250	Pipe (Frt.), Brake-Main	1	
12	1540 45 280A	Pipe (Frt., R), Brake	1	
13	1540 45 320	Pipe (Frt., L), Brake	1	
14	1559 45 350	Pipe (Rr.), Brake-Main	1	
15	1504 45 360	Pipe (Rr.), Brake	1	
16	0118 41 375	Connector, Brake Pipe	4	
17	0221 43 694	Bolt, Brake Pipe Connector	4	
18	1540 45 890	Indicator, Fail	1	
19	1540 45 920A	Bracket, Fail Indicator	1	
20	99806 0835	Bolt, Fail Indicator	1	
	99971 0600	Washer, Spring	1	
21	908086 6 16	Bolt Set, Bracket	1	
22	2048 43 694	Bolt, Connector-Vacuum Pipe	1	
23	99282 1900	Clamp, Hose	2	

PIPING (CLUTCH & BRAKE)
(ARCTIC SPEC. MODEL & SWITZERLAND)

No.	Part Number	Description	Q'ty	Remarks
24	1562 43 830A	Pipe, Vacuum	1	
	1562 43 830B	Pipe, Vacuum	1	Car No. 137394 '72½~○
25	1559 43 836A	Hose, Vacuum	1	
	1559 43 836B	Hose, Vacuum	1	Car No. 140779 '72½~△
	1559 43 836C	Hose, Vacuum	1	Car No. 152377 '72⅜~△
26	1562 45 510A	Pipe, Clutch	1	
27	0866 45 903A	Clip	8	
28	99785 0814	Bolt, Clip	8	
	99971 0800	Washer, Spring	8	

CHANGE CONTROLS (AUTOMATIC, R. H. D.)

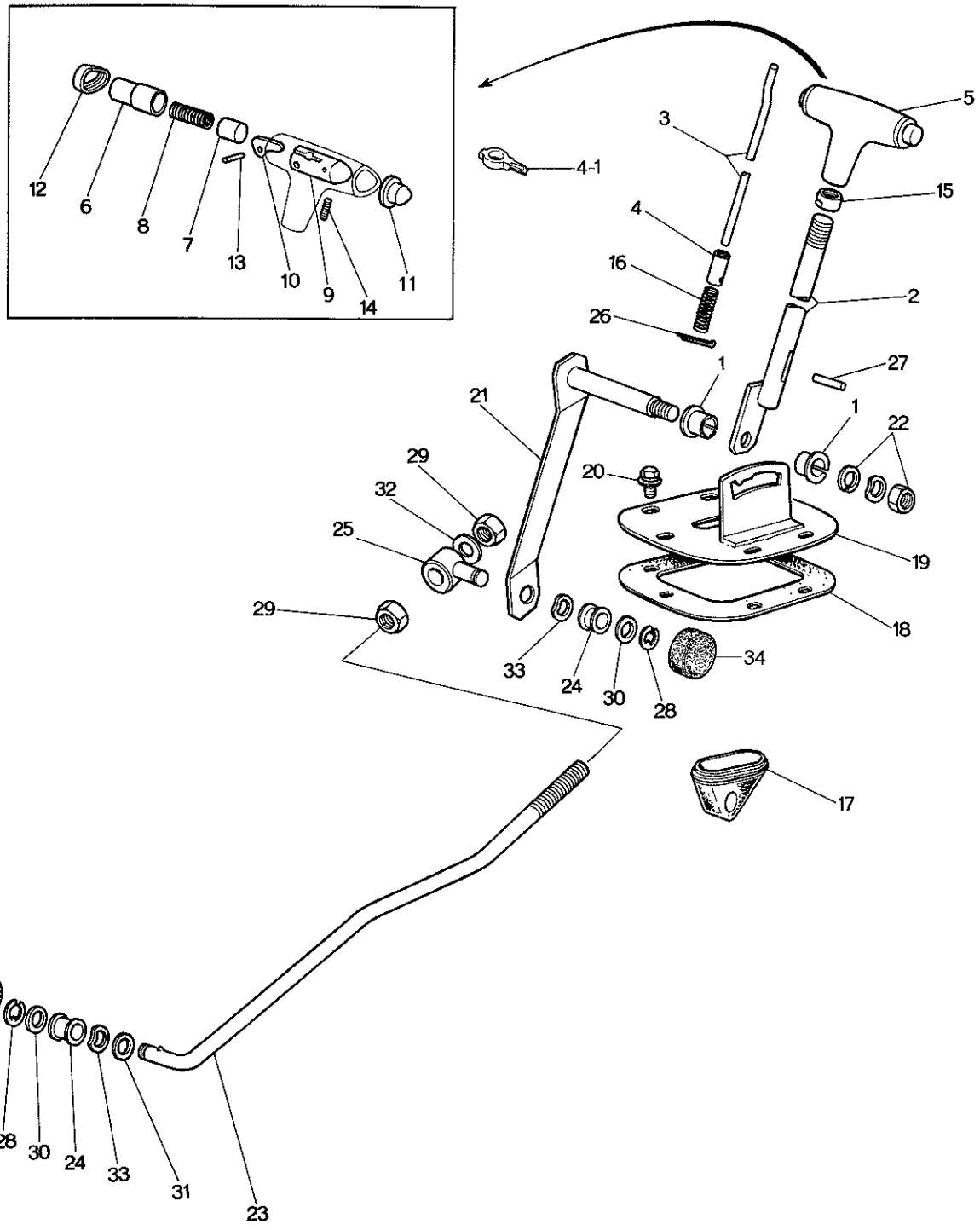

CHANGE CONTROLS (AUTOMATIC

No.	Part Number	Description	Q'ty	Rem
1	~~0259 42 022~~	~~Bush~~	~~2~~	
	0259 43 022	Bush	2	From Car N
●	1015 46 085	Bush (3502)	1	
2	2840 46 010	Lever, Selecter	1	
●	1932 46 010	Lever, Selecter (3502)	1	
3	2375 46 021	Rod	1	
●	1840 46 021	Rod (3502)	1	
4	2375 46 022	Guide	1	
● 4-1	1840 46 022	Guide (3502)	1	
5	0308 46 030A	Knob	1	
	0308 46 030B	Knob	1	Car No. 159
●	0308 46 030C	Knob	1	Car No. 178
6	2375 46 051	Knob	1	
●	0308 46 051	Knob (3502)	1	
7	2375 46 052	Piston	1	
8	2375 46 053	Spring	1	
9	0308 46 054	Supporter	1	
10	2375 46 055	Lever	1	
11	0308 46 056	Plug	1	
12	0308 46 057	Cap	1	
13	99225 0320	Pin	1	
14	99887 0412	Screw	1	
15	2375 46 061	Nut	1	
16	2375 46 062	Spring	1	
17	0842 46 081	Boot	1	
18	0308 46 083	Seal	1	
19	0842 46 110A	Bracket	1	
20	99785 0616	Bolt	6	
●	99786 0616	Bolt	6	
	99952 0618	Washer, Plain	6	
	99971 0600	Washer, Spring	6	

CHANGE CONTROLS (AUTOMATIC; R.H.D.)

No.	Part Number	Description	Q'ty	Remarks
21	0378 46 150	Lever	1	
●	1053 46 150	Lever (3502)	1	
22	99922 1000	Nut	1	
	99971 1000	Washer, Spring	1	
	99972 1400	Washer, Wave	2	
23	0871 46 571	Rod	1	
●	1856 46 571	Rod (3502)	1	
24	0604 46 684	Bush	2	
●	1015 46 684	Bush	2	73/4~○
25	0259 46 691	Joint, "T"	1	
●	1015 46 691	Joint, "T" (3502)	1	
26	99221 2020	Pin, Split	1	
27	99222 0520	Pin	1	
	99222 0522	Pin	1	Car No. 150526 7/8~○
28	99575 0600	Ring, Retaining	1	
29	99902 0800	Nut	2	
30	99952 0816	Washer, Plain	1	
31	99953 0800	Washer, Plain	2	
32	99971 0800	Washer, Spring	1	
33	99972 0800	Washer, Wave	2	
● 34	1015 46 648	Cover, Dust (3502)	2	

BUMPER & GRILLE

(USED UP TO CAR NO. 179250 73/9)

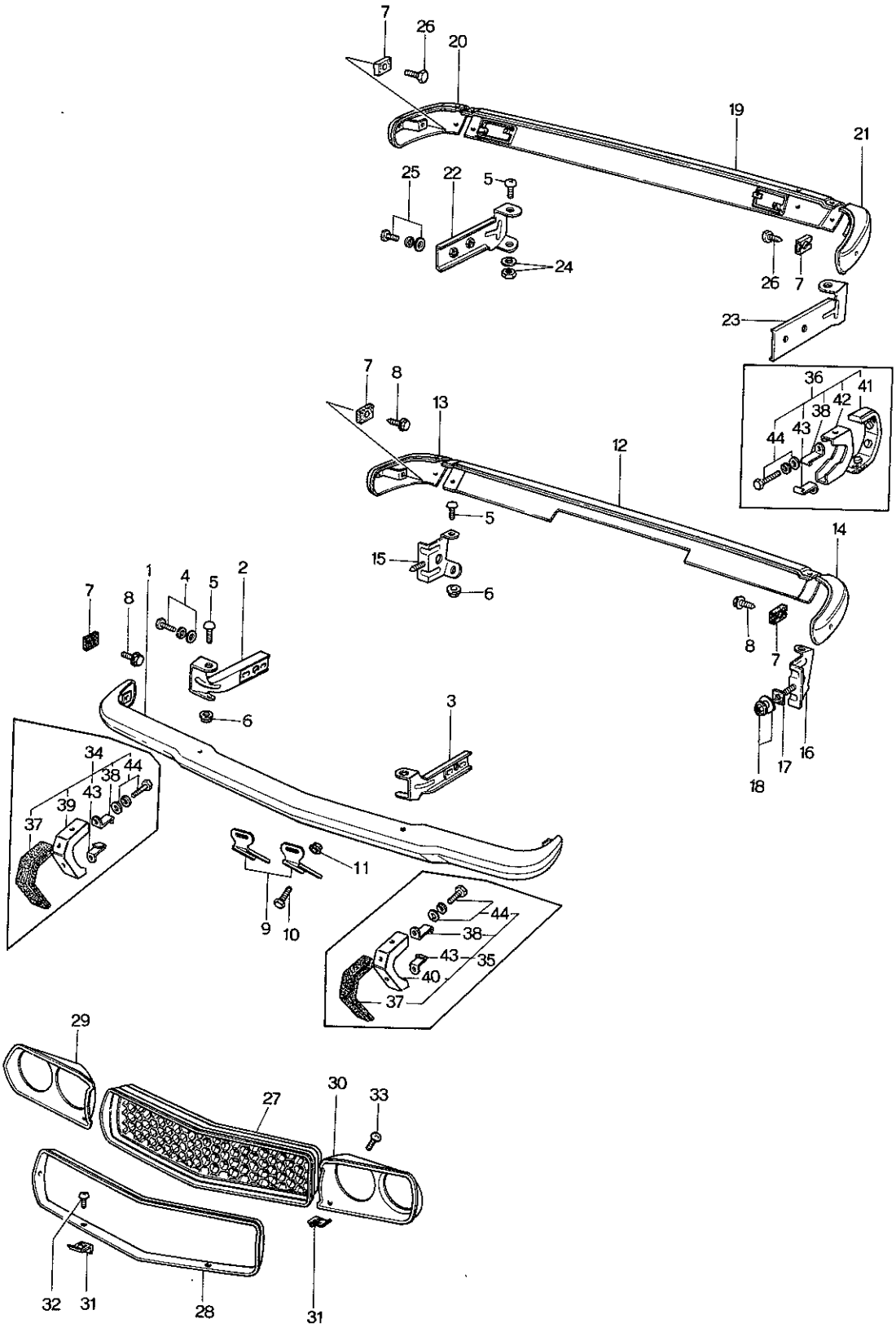

BUMPER & GRI
(USED UP TO CAR NO. 179

No.	Part Number	Description	Q'ty	Rema
1	0866 50 110A	Bar, Front Bumper	1	
2	0866 50 141	Stay (R), Front Bumper	1	
3	0866 50 151	Stay (L), Front Bumper	1	
4	99785 0820	Screw, Stay & Front Frame	4	
	99781 1028	Screw, Stay & Front Frame	4	Car No. 144308
	99794 10259	Bolt, Stay & Front Frame	4	Car No. 160378
	99951 0818	Washer, Plain	4	
	99951 1022	Washer, Plain	4	Car No. 144308
	99871 0800	Washer, Spring	4	
	99871 1000	Washer, Spring	4	Car No. 144308
5	0223 50 275	Screw, Bumper & Stay	12	
6	99906 0600	Nut, Bumper & Stay	12	
	99940 0602	Nut, Bumper & Stay	12	Car No. 152377
	99951 0818	Washer, Plain	12	Car No. 152377
	99971 0600	Washer, Spring	12	
7	0866 50 102A	Spacer, Bumper	4	
8	99805 0622	Bolt, Bumper & Bracket	2	
	99796 0622	Bolt, Bumper & Bracket	2	Car No. 141928
	99951 0618	Washer, Plain	2	
9	0866 50 181A	Holder, Number Plate	2	

BUMPER & GRILLE

(USED UP TO CAR NO. 179250 73/9)

No.	Part Number	Description		Q'ty	Remarks
10	99806 0612	Bolt, Holder		2	
11	99906 0600	Nut, Holder		2	
	99940 0602	Nut, Holder		2	Car No. 152377 72/8~△
	99971 0800	Washer, Spring		2	Car No. 152377 72/8~Discarded
12	1562 50 311	Bar (C), Rear Bumper	(Sedan & Coupe)	1	
13	0866 50 320B	Bar (R), Rear Bumper		1	
14	0866 50 330B	Bar (L), Rear Bumper		1	
15	0866 50 340	Stay (R), Rear Bumper		1	
16	0866 50 350	Stay (L), Rear Bumper		1	
17	0111 57 111	Set Rubber		2	
18	99921 1000	Nut, Stay & Rear Bumper		2	
	99951 1030	Washer, Plain		2	
	99971 1000	Washer, Spring		2	
19	0585 50 310A	Bar (C), Rear Bumper	(Station Wagon)	1	
20	0585 50 320D	Bar (R), Rear Bumper		1	
21	0585 50 330D	Bar (L), Rear Bumper		1	
22	0585 50 360	Stay (R), Rear Bumper		1	
23	0585 50 370	Stay (L), Rear Bumper		1	
24	99940 0602	Nut		8	
25	99794 10259	Bolt, Stay & Frame		4	

No.	Part Number	Description	Q'ty	Remar
	99951 1022	Washer, Plain } (Station Wagon)	4	
26	99786 0620	Bolt, Spacer } (Station Wagon)	2	
27	0866 50 511A 02	Grille, Radiator (GRY. Semi Dull Finish)	1	
	~~0866 50 511 06~~	~~Grille, Radiator~~	~~1~~	~~Car No.~~
●	0866 50 511A 06	Grille, Radiator (GRY. Semi Dull Finish	1	Car No. 16531
28	0866 50 521A	Mould, Front	1	
29	0866 50 531	Bezel (R), Lamp	1	
●	0866 50 531- 01	Bezel (R), Lamp (GRY. Dull Finish)	1	
●	0866 50 531- 02	Bezel (R), Lamp (GRY. Semi Dull Finish)	1	Car No. 16531
30	0866 50 541	Bezel (L), Lamp	1	
●	0866 50 541 00	Bezel (L), Lamp (GRY. Dull Finish)	1	
●	0866 50 541 02	Bezel (L), Lamp (GRY. Semi Dull Finish)	1	Car No. 16531
31	0866 50 501	Nut, Spring-Grille	8	
	99896 0500	Nut, Spring-Grille	14	Car No. 12739
32	99737 0514	Screw, Tapping	8	
33	99862 0516B	Screw, Tapping	6	
34	0866 99 801	Guard (R), Front Bumper	1	
35	0866 99 802	Guard (L), Front Bumper	1	
36	0866 99 806	Guard Set, Rear Bumper (Sedan & Coupe)	2	

BUMPER & GRILLE
(USED UP TO CAR NO. 179250 73/9)

No.	Part Number	Description	Q'ty	Remarks
37	0866 78 701A	Rubber, Cushion (Front)	2	
38	0866 78 702	Plate, Clamp	4 2	(Sedan & Coupe) (Station Wagon)
39	0866 78 710	Guard (R), Front Bumper	1	
40	0866 78 750	Guard (L), Front Bumper	1	
41	0866 78 801A	Rubber, Cushion (Rr.) (Sedan & Coupe)	2	
42	0866 78 810	Guard, Rear Bumper (Sedan & Coupe)	2	
43	0305 50 231	Plate	4	
44	99797 0620	Bolt, Bumper Guard	8	
	99952 0600	Washer, Plain	8	
	99971 0600	Washer, Spring	8	

BUMPER & GRILLE
(USED FROM CAR NO. 160623 73/10)

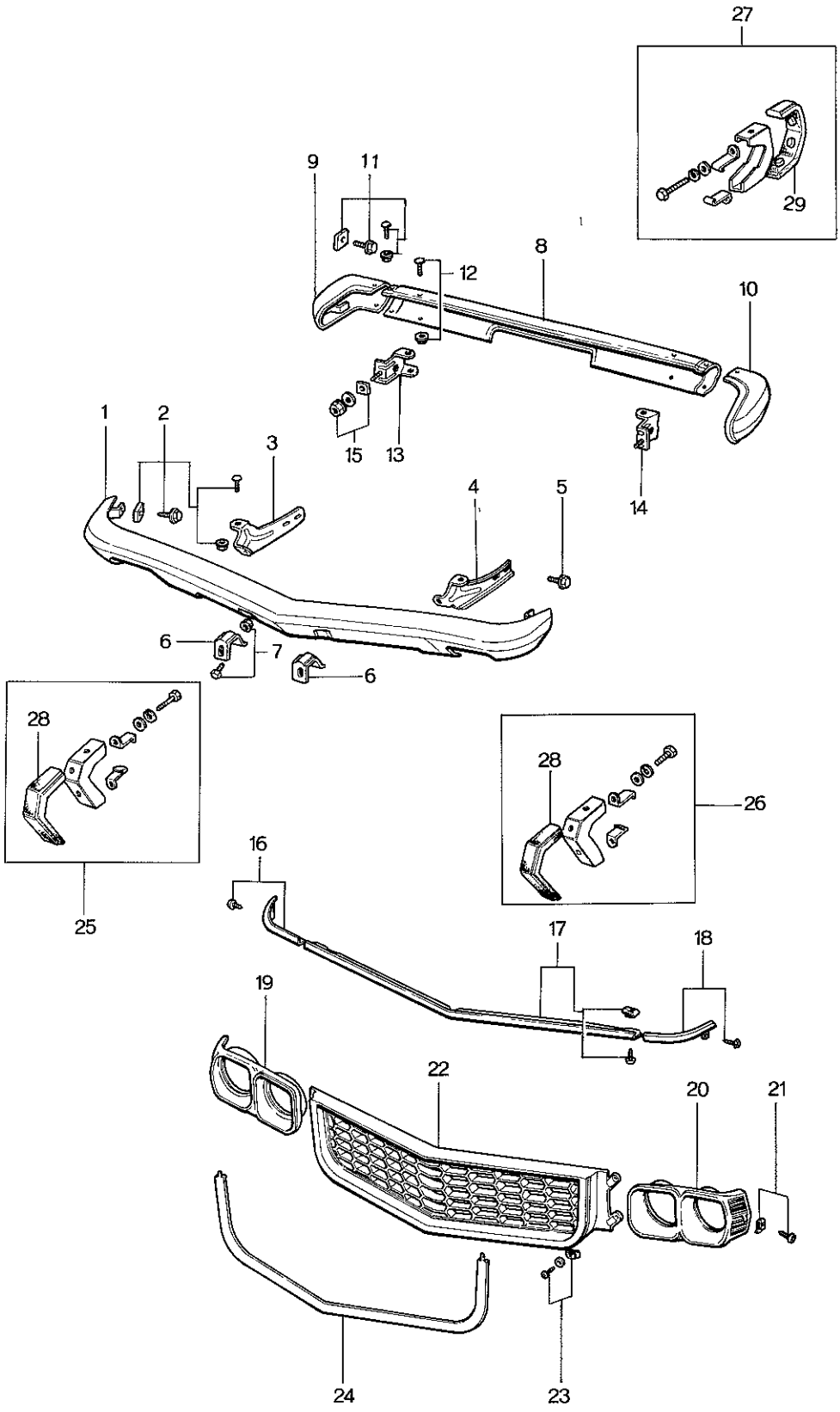

BUMPER & GRIL
(USED FROM CAR NO. 1606

No.	Part Number	Description	Q'ty	Remark
1	1128 50 110B	Bar, Front Bumper	1	
2	0370 99 916	Fixing Set, Bumper-Front	2	
3	1128 50 141	Stay (R), Front Bumper	1	
4	1128 50 151	Stay (L), Front Bumper	1	
5	90794 10259	Bolt, Stay	4	
6	1128 50 181	Holder, Number Plate	2	
7	99806 0612	Bolt, Number Plate Holder	2	
	99940 0602	Nut	2	
8	1562 50 311	Bar (C), Rear Bumper	1	
9	0866 50 320B	Bar (R), Rear Bumper	1	
10	0866 50 330B	Bar (L), Rear Bumper	1	
11	0370 99 916	Fixing Set, Rear Bumper (R) & (L)	2	→LMP. 10-74
12	0243 99 916	Fixing Set, Rear Bumper (C)	2	
13	0866 50 340	Stay (R), Rear Bumper	1	
14	0866 50 350	Stay (L), Rear Bumper	1	
15	99940 1002	Nut, Stay	2	
	99951 1030	Washer, Plain	2	
	0111 57 111	Rubber, Set	2	
16	1128 99 712	Mould Set (R), Nose	1	
17	1128 99 711	Mould Set (C), Nose	1	

BUMPER & GRILLE
(USED FROM CAR NO. 160623 73/10)

No.	Part Number	Description	Q'ty	Remarks
18	1128 99 713	Mould Set (L), Nose	1	
19	1128 50 531A	Bezel (R), Lamp	1	
20	1128 50 541A	Bezel (L), Lamp	1	
21	99769 0420B	Screw, Tapping	6	
	99869 0400	Nut, Spring	6	
22	1128 50 511A01	Grille, Radiator (D. GRY. M)	1	
23	99769 0420B	Screw, Tapping	6	
	99952 0512	Washer, Plain	6	
	99896 0400	Washer, Spring	6	
24	1128 50 521	Mould, Grille	1	
25	1128 99 801	Guard Set (R), Front Bumper	1	
26	1128 99 802	Guard Set (L), Front Bumper	1	
27	0866 99 806	Guard Set, Rear Bumper	2	
28	0866 78 701A	Rubber, Cushion (Frt.)	2	
29	0866 78 801A	Rubber, Cushion (Rr.)	2	

BONNET & TRUNK LID

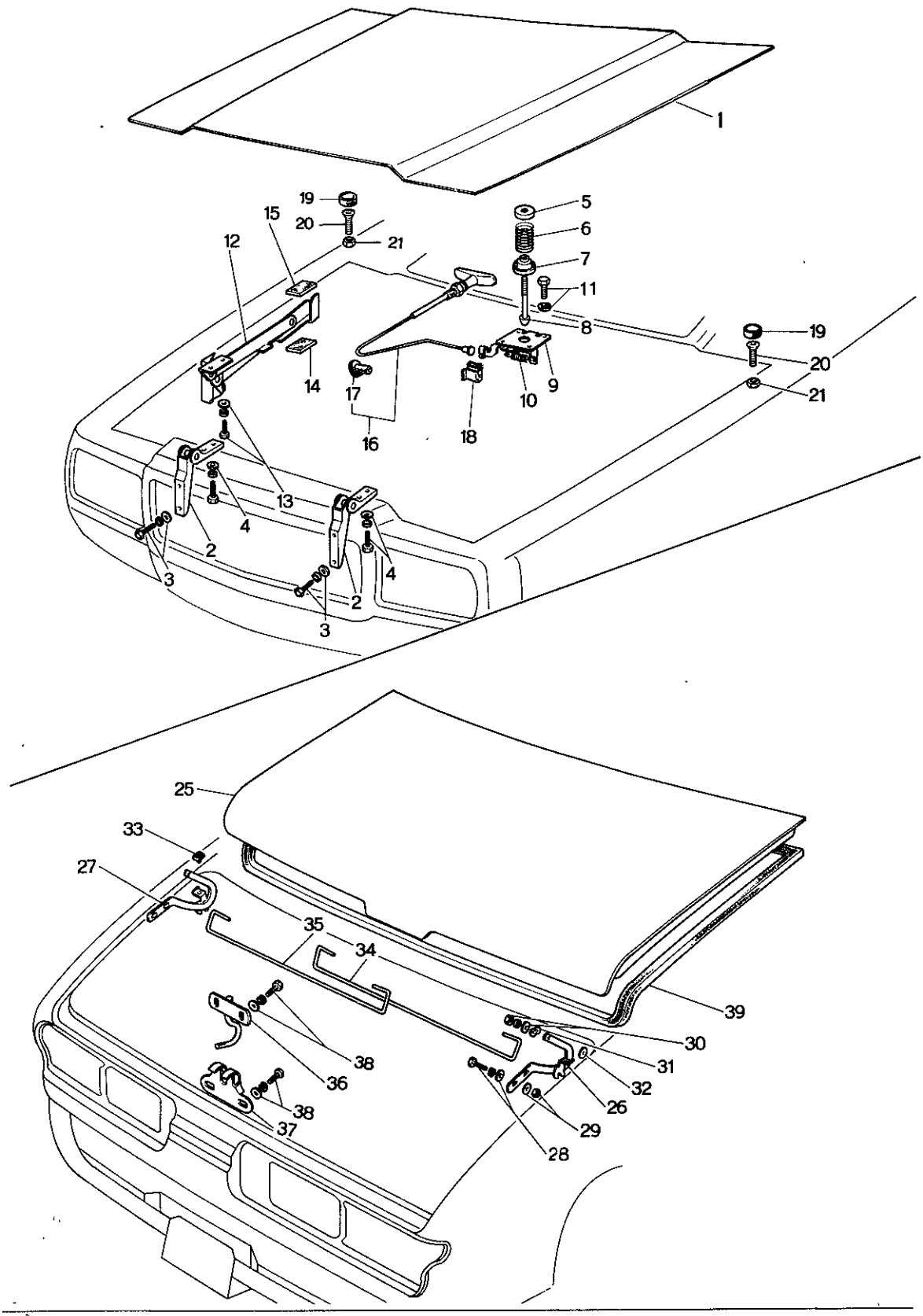

No.	Part Number	Description	Q'ty	Remar
1	0370 52 110	Bonnet (R. H. D.)	1	
	1524 52 110	Bonnet (L. H. D.)	1	
	0866 74 250	Bonnet (All Models)	1	Used from Car
2	0866 52 210	Hinge, Bonnet	2	
3	99783 0825	Bolt, Hinge & Shroud Panel	4	
	99852 0816	Washer, Plain	4	
	99871 0800	Washer, Spring	4	Order Under 0866 99 522
4	99801 0818	Bolt, Bonnet & Hinge	4	
	99805 0818	Bolt, Bonnet & Hinge	4	Car No. 129763
	99852 0816	Washer, Plain	4	
	99871 0800	Washer, Spring	4	
5	0305 52 313	Seat, Spring-Upper	1	
6	0305 52 312B	Spring, Lift	1	Order Under 0305 99 521
7	0305 52 322A	Seat, Spring-Lower	1	
8	0187 52 141	Hook, Bonnet	1	
9	0305 52 330A	Lock, Bonnet (R. H. D.)	1	
	~~2835 52 330A~~	~~Lock, Bonnet (L. H. D.)~~	~~1~~	
	2835 52 330	Lock, Bonnet (L.H.D.)	1	From Car No.
10	0305 52 331	Spring, Lock	1	
11	99806 0816	Bolt, Bonnet Lock	4	
	99952 9618	Washer, Plain	4	
	99971 0800	Washer, Spring	4	
12	0866 52 390	Stopper, Bonnet (R.H.D.)	1	
	1524 52 390	Stopper, Bonnet (L.H.D.)	1	
13	99806 0816	Bolt, Stopper	4	
	99852 0800	Washer, Plain	4	
	99971 0800	Washer, Spring	4	
14	~~0259 52 257~~	~~Pad, Stopper~~	~~1~~	
	0223 52 306	Pad, Stopper	1	From Car No.
15	0866 52 397	Pad, Stopper ~~(R.H.D.)~~	(R.H.D.) 2	
			(L.H.D.) 1	
	0866 52 397A	Pad, Stopper	(R.H.D.) 2	Car No. 135808
			(L.H.D.) 1	

No.	Part Number	Description	Q'ty	Remarks
	0183 53 074	Pad, Stopper (L. H. D.)	1	
16	0866 52 410	Wire, Release (R. H. D.)	1	
	1524 52 410	Wire, Release (L. H. D.)	1	
17	0259 52 301	Grommet, Release Wire	1	
18	0223 52 302	Clamp, Release Wire (L. H. D.)	1	
●	0223 52 302	Clamp, Release Wire (R.H.D.)	1	From Car No. 1
19	0866 52 451	Cushion, Bonnet	2	
20	99831 0640	Bolt, Cushion	2	
21	99807 0600	Nut	2	
	0111 53 771	Cushion, Bonnet	2	
22	~~0866 52 480~~	~~Scoop (R), Air~~	~~1~~	
23	~~0866 52 490~~	~~Scoop (L), Air~~	~~1~~	
24	~~0187 82 873~~	~~Washer, Air Scoop~~	~~4~~	
	~~99940 0400~~	~~Nut~~	~~4~~	
25	0376 52 510	Lid, Trunk (Coupe)	1	
	0866 52 510	Lid, Trunk (Sedan)	1	
26	0866 52 610	Hinge (R), Trunk Lid	1	
27	0866 52 620	Hinge (L), Trunk Lid	1	
28	99806 0618	Bolt, Bonnet & Hinge	4	
	99952 0618	Washer, Plain	4	
	99971 0600	Washer, Spring	4	(Sedan & Coupe)
29	99806 0600	Nut, Trunk Lid & Hinge	4	
	99951 0618	Washer, Plain	4	
30	99806 0600	Nut, Hinge	2	
	99952 0600	Washer, Plain	2	
	99971 0600	Washer, Spring	2	
31	0866 52 631	Washer, Wave-Hinge	2	
32	99952 0822	Washer, Plain-Hinge	2	

No.	Part Number	Description		Q'ty	Rema
33	0305 52 828	Rubber, Cushion		2	
34	0886 52 861 A	Spring (R), Balance		1	
35	0886 52 871 A	Spring (L), Balance		1	
36	0886 52 750 A	Striker		1	
37	0305 52 850A	Lock, Lid		1	
38	99808 0816	Bolt, Lid Lock & Striker	(Sedan & Coupe)	4	
	99851 0818	Washer, Plain		4	
	99871 0800	Washer, Spring		4	
39	0376 52 901	Weatherstrip (Coupe)		1	
	0376 52 901A	Weatherstrip (Coupe)		1	Car No. 155593
	0886 52 901	Weatherstrip (Sedan)		1	
	0886 52 901A	Weatherstrip (Sedan)		1	Car No. 155593

BODY PANELS (FRONT)
(USED UP TO CAR NO. 179250. 73/9)

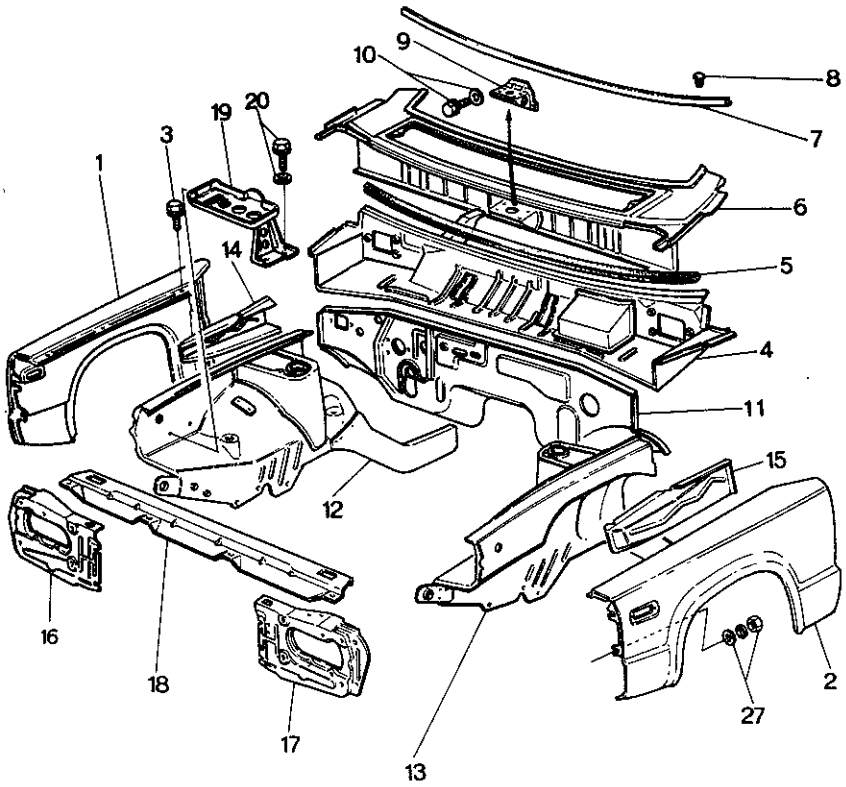

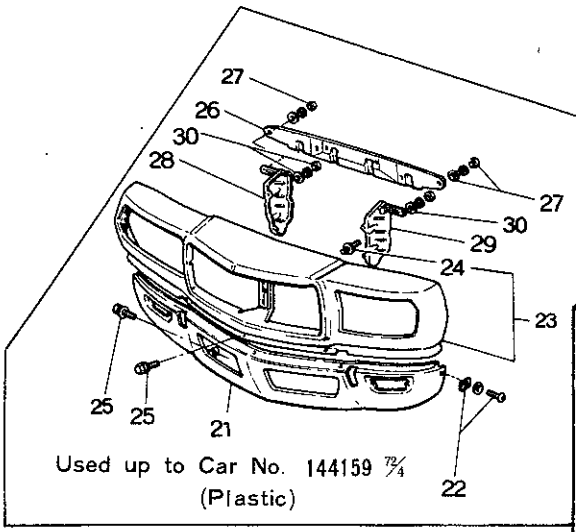

Used up to Car No. 144159 73/4
(Plastic)

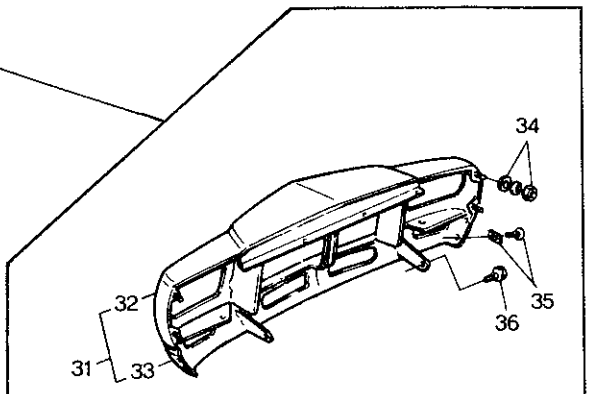

Used From Car No. 144160 73/4 ~
(Steel Plate)

BODY PANELS (FRONT)
(USED UP TO CAR NO. 179250 73/9)

No.	Part Number	Description	Q'ty	Rema
1	1524 51 020A	Panel (R), Front Fender	1	
2	1524 51 120A	Panel (L), Front Fender	1	
3	99806 0614	Bolt, Front Fender	12	
	99971 0600	Washer, Spring	12	
	99952 0600	Washer, Plain	12	
4	0866 53 020F	Panel, Dashboard-Upper (R.H.D.)	1	
✓●	0866 53 020G	Panel, Dashboard-Upper (R.H.D.)	1	
	1524 53 020D	Panel, Dashboard-Upper (L.H.D.)	1	
	1524 53 020E	Panel, Dashboard-Upper (L.H.D.)	1	Car No. 15052
✓●	1524 53 020G	Panel, Dashboard-Upper (L.H.D.)	1	
5	0866 53 029A	Rubber, Edge-Dashboard & Cowl Panel	1	
6	0866 53 970A	Panel, Cowl (R.H.D.)	1	
	0866 74 040	Panel, Cowl (R.H.D.)	1	From Car No
	1524 53 970B	Panel, Cowl (L.H.D.)	1	
	1524 74 040	Panel, Cowl (L.H.D.)	1	From Car No.
7	0866 53 979A	Rubber, Seal-Cowl Panel	1	
8	99264 0531B	Fastener, Cowl Panel & Seal Rubber	8	
9	0866 53 981	Bracket, Lock-Bonnet	1	
10	99806 0616	Bolt, Lock Bracket & Cowl Panel	4	
	99971 0600	Washer, Spring	4	

BODY PANELS (FRONT)
(USED UP TO CAR NO. 179250 73/9)

No.	Part Number	Description	Q'ty	Remarks
	99952 0600	Washer, Plain	4	
11	0866 53 100C	Panel, Dashboard-Lower (Manual) (R.H.D.)	1	
	0866 53 100D	Panel, Dashboard-Lower (Manual) (R.H.D.)	1	Car No. 133676 73/1~○
	0866 53 100E	Panel, Dashboard-Lower (Manual) (R.H.D.)	1	Car No. 148513 73/6~○
	0866 53 100F	Panel, Dashboard-Lower (Manual) (R.H.D.)	1	Car No. 149635 73/7~○
	0866 53 100G	Panel, Dashboard-Lower (Manual) (R.H.D.)	1	Car No. 152816 73/9~○
	0378 53 100C	Panel, Dashboard-Lower (Automatic) (R.H.D.)	1	
	0378 53 100D	Panel, Dashboard-Lower (Automatic) (R.H.D.)	1	Car No. 127396 71/12~○
	0378 53 100E	Panel, Dashboard-Lower (Automatic) (R.H.D.)	1	Car No. 133676 73/1~○
	0378 53 100F	Panel, Dashboard-Lower (Automatic) (R.H.D.)	1	Car No. 148513 73/6~○
	0378 53 100G	Panel, Dashboard-Lower (Automatic) (R.H.D.)	1	Car No. 149635 73/7~○
	0378 53 100H	Panel, Dashboard-Lower (Automatic R.H.D.) (1552)	1	Car No. 152816 73/9~○
	1524 53 100C	Panel, Dashboard-Lower (L.H.D.)	1	
	1524 53 100D	Panel, Dashboard-Lower (L.H.D.)	1	Car No. 148513 73/6~○
	1524 53 100E	Panel, Dashboard-Lower (L.H.D.)	1	Car No. 152816 73/9~○
12	0866 53 220E	Panel (R), Wheel Apron (R.H.D.)	1	
	0866 53 220F	Panel (R), Wheel Apron (R.H.D.)	1	Car No. 148513 73/6~○
	1524 53 220D	Panel (R), Wheel Apron (L.H.D.)	1	
	1524 53 220E	Panel (R), Wheel Apron (L.H.D.)	1	Car No. 148513 73/6~○
	1524 53 220F	Panel (R), Wheel Apron (L.H.D.)	1	Car No. 152816 73/9~○

BODY PANELS (FRONT)
(USED UP TO CAR NO. 179250 73/9)

No.	Part Number	Description	Q'ty	Remarl
13	0866 54 220B	Panel (L), Wheel Apron (R.H.D.)	1	
	0866 54 220C	Panel (L), Wheel Apron (R.H.D.)	1	Car No. 14851
●	0866 54 220E	Panel (L), Wheel Apron (R.H.D.)	1	
●	0866 54 220F	Panel (L), Wheel Apron (R.H.D.)	1	
	1524 54 220B	Panel (L), Wheel Apron (L.H.D.)	1	
	1524 54 220C	Panel (L), Wheel Apron (1558,1559 Excluded)	1	Car No. 14077
	1524 54 220C	Panel (L), Wheel Apron (1558,1559)	1	Car No. 14077
	1524 54 220D	Panel (L), Wheel Apron (L.H.D.)	1	Car No. 14851
	1524 54 220E	Panel (L), Wheel Apron (L.H.D.)	1	Car No. 15281
●	1524 54 220F	Panel (L), Wheel Apron (L.H.D.)	1	
●	1524 54 220G	Panel (L), Wheel Apron (L.H.D.)	1	
14	0866 53 281A	Reinforcement (R), Wheel Apron Panel	1	
15	0866 54 281A	Reinforcement (L), Wheel Apron Panel	1	
16	0866 53 720	Panel (R), Shroud	1	
	0866 53 720A	Panel (R), Shroud	1	Car No. 152377
17	0866 54 720	Panel (L), Shroud	1	
18	0866 53 750	Panel, Shroud-Upper	1	
19	0866 53 780A	Carrier, Battery	1	
20	99801 0816	Bolt, Battery Carrier & Wheel Apron Panel	4	
	99952 0800	Washer, Plain	4	

BODY PANELS (FRONT)
(USED UP TO CAR NO. 179250 73/9)

No.	Part Number	Description	Q'ty	Remarks
21	0866 70 160B	Panel, Front Skirt	1	
	0866 70 160C	Panel, Front Skirt	1	Car No. 133676 71/12~○
22	99864 0616	Screw, Skirt & Fender	2	Used up to Car No. 144159 72/4
	99952 0618	Washer, Plain	2	
	99896 0600	Nut, Spring	2	
23	0866 70 120	Panel, Nose	1	
24	0866 70 122	Stud, Nose Panel	12	
25	99806 0614	Bolt, Nose & Skirt	11	Used up till Car No. 144159 72/4
	99952 0600	Washer, Plain	11	
	99971 0600	Washer, Spring	11	
26	0866 70 131A	Bracket, Nose Panel	1	
27	99906 0600	Nut, Nose Panel & Bracket	4	
	99952 0600	Washer, Plain	4	
	99971 0600	Washer, Spring	4	
28	0866 70 180	Plate (R), Guide	1	
29	0866 71 180	Plate (L), Guide	1	
30	99906 0600	Nut, Guide Plate & Nose Panel	8	Used up till Car No. 144159 72/4
	99952 0618	Washer, Plain	8	
	99971 0600	Washer, Spring	8	
31	0866 70 120A	Panel Cpt., Nose	1	Used from Car No. 144160 72/4~ Car No. 148513 72/6~○

BODY PANELS (FRONT)
(USED UP TO CAR NO. 179250 73/9)

No.	Part Number	Description	Q'ty	Remar
32	0866 74 200	Panel, Nose	1	
	0866 74 200A	Panel, Nose	1	Used from Car
33	0866 70 160C	Skirt	1	Car No. 14851
	0866 70 160D	Skirt	1	Car No. 14851
34	99906 0600	Nut	4	
	99952 0618	Washer, Plain	4	
	99971 0600	Washer, Spring	4	
35	99864 0616	Screw	2	Used from Car
	99896 0600	Nut, Spring	2	
36	908067 6 14	Bolt Set	6	

BODY PANELS (FRONT)

(USED FROM CAR NO. 160623 73/10)

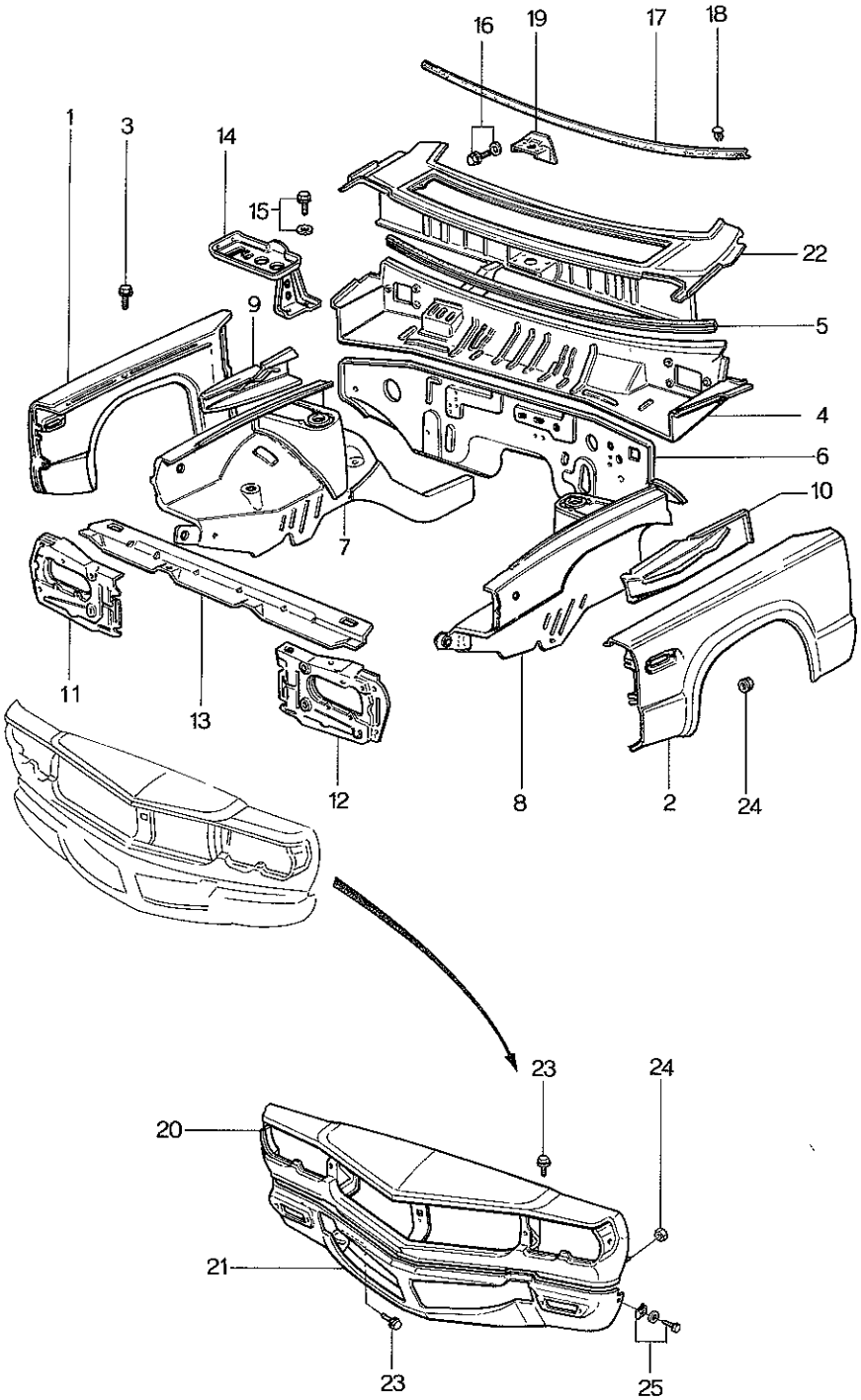

BODY PANELS (FRONT)
(USED FROM CAR NO. 160623 73/10)

No.	Part Number	Description	Q'ty	Remar
1	1524 51 020A	Panel (R), Front Fender	1	
2	1524 51 120A	Panel (L), Front Fender	1	
3	99806 0614	Bolt, Fender	12	
	99952 0600	Washer, Plain	12	
	99971 0600	Washer, Spring	12	
4	0866 53 020G	Panel, Dashboard Upper (R.H.D.)	1	
	1524 53 020G	Panel, Dashboard Upper (L.H.D.)	1	
5	0866 53 029A	Rubber, Edge	1	
6	0866 53 100 I	Panel, Dashboard-Lower (R.H.D.)	1	
	1524 53 100G	Panel, Dashboard-Lower(L.H.D.)W/O Cooler	1	
	1620 53 100B	Panel, Dashboard-Lower(L.H.D.) With Cooler	1	
7	0866 53 220F	Panel (R), Wheel Apron (R.H.D.)	1	
	1524 53 220G	Panel (R), Wheel Apron (L.H.D.)	1	
8	0866 54 220F	Panel (L), Wheel Apron (R.H.D.)	1	
	1524 54 220G	Panel (L), Wheel Apron (L.H.D.)	1	
9	0866 53 281A	Reinforcement (R)	1	
10	0866 54 281A	Reinforcement (L)	1	
11	0866 53 720A	Panel (R), Shroud	1	
	0866 53 720B	Panel (R), Shroud	1	
12	0866 54 720	Panel (L), Shroud	1	
13	0866 53 750	Panel, Shroud-Upper	1	
14	0866 53 780A	Carrier, Battery	1	
	0866 53 780B	Carrier, Battery	1	73/11

BODY PANELS (FRONT)

(USED FROM CAR NO. 160623 73/10)

No.	Part Number	Description	Q'ty	Remarks
15	99801 0816	Bolt, Battery Carrier	4	
	99952 0822	Washer, Plain	4	
	99971 0800	Washer, Spring	4	
16	99806 0616	Bolt, Lock Bracket	4	
	99952 0600	Washer, Plain	4	
	99971 0600	Washer, Spring	4	
17	0866 53 979 A	Rubber, Seal	1	
18	99264 0531 B	Clip, Seal Rubber	8	
19	0866 53 980	Bracket, Lock	1	
20	1128 70 120	Panel Ass'y, Nose	1	
21	1128 70 160	Skirt, Front	1	
22	0866 74 040	Panel, Cowl (R.H.D.)	1	
	1524 74 040	Panel, Cowl (L.H.D.)	1	
23	99796 0614	Bolt (Nose & Shroud ··4, Skirt & Frame··2)	6	
	99952 0618	Washer, Plain	6	
24	99940 0602	Nut, Nose & Skirt	4	
25	99864 0616	Screw, Skirt & Fender	2	
	99952 0618	Washer, Plain	2	
	99896 0600	Nut, Spring	2	

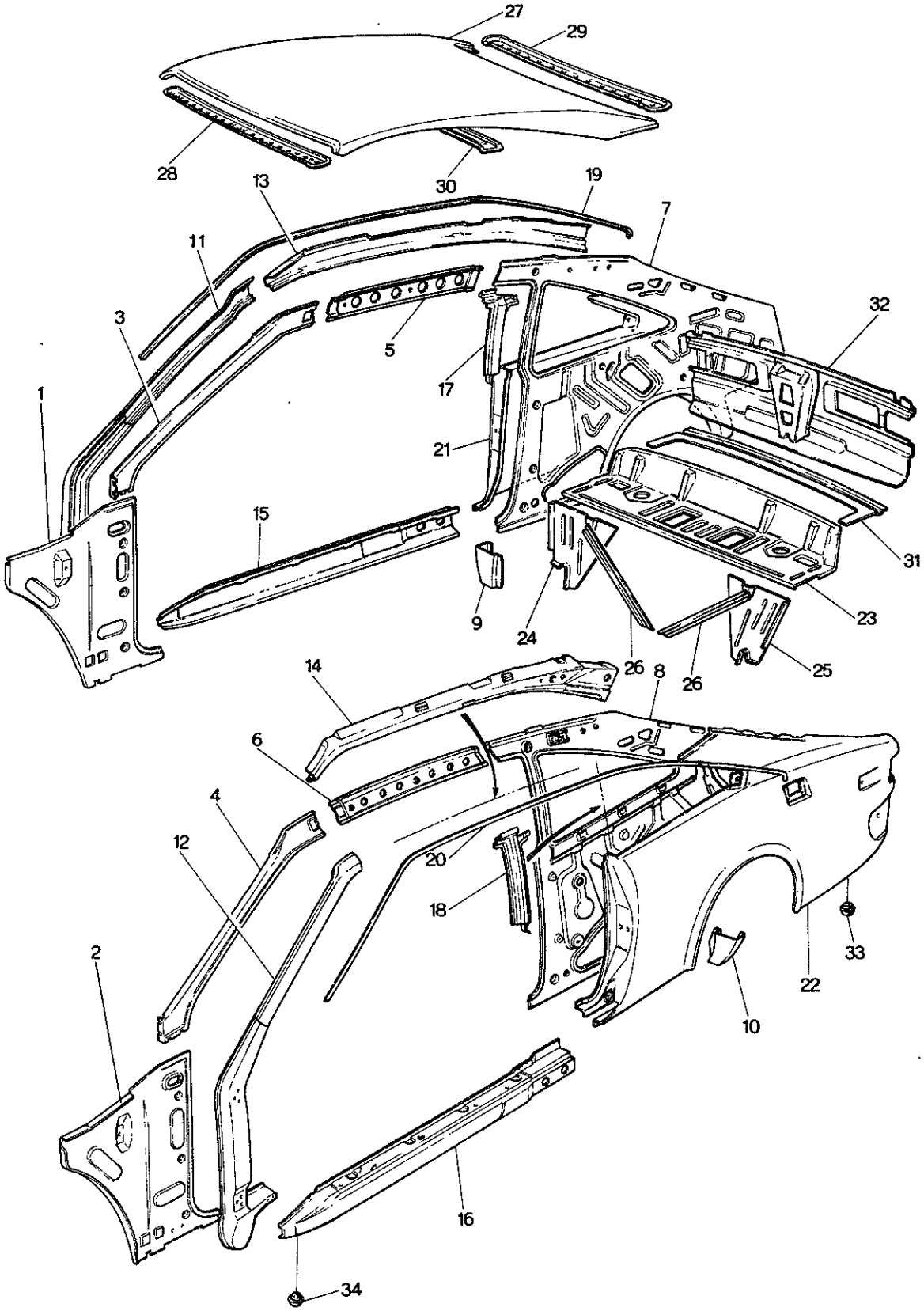
27
29
28
30
13
19
7
11
3
5
32
17
1
21
15
31
9
24
26
23
26
25
14
8
6
4
12
20
18
33
2
22
10
16
34

BODY PANELS (SIDE, COUPE)

No.	Part Number	Description	Q'ty	Remar
1	0866 53 320	Panel (R), Cowl Side (R.H.D.)	1	
	1524 53 320 A	Panel (R), Cowl Side (L.H.D.)	1	
2	0866 54 320	Panel (L), Cowl Side (R.H.D.)	1	
	1524 54 320 A	Panel (L), Cowl Side (L.H.D.)	1	
	1524 54 320 B	Panel (L), Cowl Side (L.H.D.)	1	Car No. 14077
3	0376 53 330	Pillar (R), Front Inner	1	
4	0376 54 330	Pillar (L), Front Inner	1	
5	0376 53 340	Rail (R), Roof Inner	1	
6	0376 54 340	Rail (L), Roof Inner	1	
7	0376 53 350 B	Panel (R), Quarter Inner	1	1559 Excluded
●	0376 53 350 C	Panel (R), Quarter Inner	1	(1559 Excluded)Car
	1559 53 350 A	Panel (R), Quarter Inner	1	1559
●	1559 53 350 B	Panel (R), Quarter Inner	1	1559 Car No.
8	0376 54 350 C	Panel (L), Quarter Inner	1	1559 Excluded
●	0376 54 350 D	Panel (L), Quarter Inner	1	(1559 Excluded)Car
●	0376 54 350 E	Panel (L), Quarter Inner	1	1559 Excluded
●	1559 54 350 C	Panel (L), Quarter Inner	1	(1559 Excluded) Car
	1559 54 350 A	Panel (L), Quarter Inner	1	1559
●	1559 54 350 B	Panel (L), Quarter Inner	1	1559 Car No.
9	0376 53 391	Plate (R), End-Inner	1	
●	0376 53 391 A	Plate (R), End-Inner	1	Car No. 166069

BODY PANELS (SIDE, COUPE)

No.	Part Number	Description	Q'ty	Remarks
10	0376 54 391	Plate (L), End-Inner	1	
	0376 54 391 A	Plate (L), End-Inner	1	Car No. 166069 73/3~△
11	0376 53 410	Pillar (R), Hinge Outer (R.H.D.)	1	
√	0376 74 090	Pillar (R), Hinge Outer (R.H.D.)	1	From Car No. 1 71/11~○
	1562 53 410	Pillar (R), Hinge Outer (L.H.D.)	1	
√	1562 74 090	Pillar (R), Hinge Outer (L.H.D.)	1	From Car No. 1 71/11~○
12	0376 54 410	Pillar (L), Hinge Outer (R.H.D.)	1	
√	0376 74 120	Pillar (L), Hinge Outer (R.H.D.)	1	From Car No. 1 71/11~○
	1562 54 410	Pillar (L), Hinge Outer (L.H.D.)	1	
√	1562 74 120	Pillar (L), Hinge Outer (L.H.D.)	1	From Car No. 1 71/11~○
13	0376 53 430	Rail (R), Roof Outer	1	
14	0376 54 430	Rail (L), Roof Outer	1	
15	0380 53 451	Sill (R), Side Outer	1	
√ ●	0376 53 451	Sill (R), Side Outer	1	Car No. 160623 73/10~×
16	0380 54 451	Sill (L), Side Outer	1	
√ ●	0376 54 451	Sill (L), Side Outer	1	Car No. 160623 73/10~×
17	0376 53 500 A	Pillar (R), Center-Outer	1	
18	0376 54 500 A	Pillar (L), Center-Outer	1	
19	0376 53 591	Rail (R), Rain	1	
20	0376 54 591	Rail (L), Rain	1	

BODY PANELS (SIDE, COUPE)

No.	Part Number	Description	Q'ty	Remar
21	0376 53 600C	Panel (R), Rear Fender	1	
V	0376 74 100	Panel (R), Rear Fender	1	From Car N
22	0376 54 600B	Panel (L), Rear Fender	1	
V	0376 74 130	Panel (L), Rear Fender	1	From Car N
23	0376 53 810B	Tray, Package	1	
24	0866 53 830A	Brace (R), Side	1	
25	0866 54 830A	Brace (L), Side	1	
26	0866 53 845	Brace, Diagonal	2	
27	0376 53 901	Panel, Roof	1	
V	0376 74 030	Panel, Roof	1	From Car No
28	0376 53 920	Header, Front	1	
29	0376 53 941	Header, Rear	1	
30	0376 53 950	Reinforcement, Roof	1	
31	0376 53 991	Panel, Rear Deck	1	
V	0376 74 050	Panel, Rear Deck	1	From Car No.
V 32.	1527 70 050	Panel, Rear End	1	
33	0259 53 455	Plug, Drain	6	
34	0824 56 999	Valve, Check-Side Sill	2	

BODY PANELS (SIDE, SEDAN)

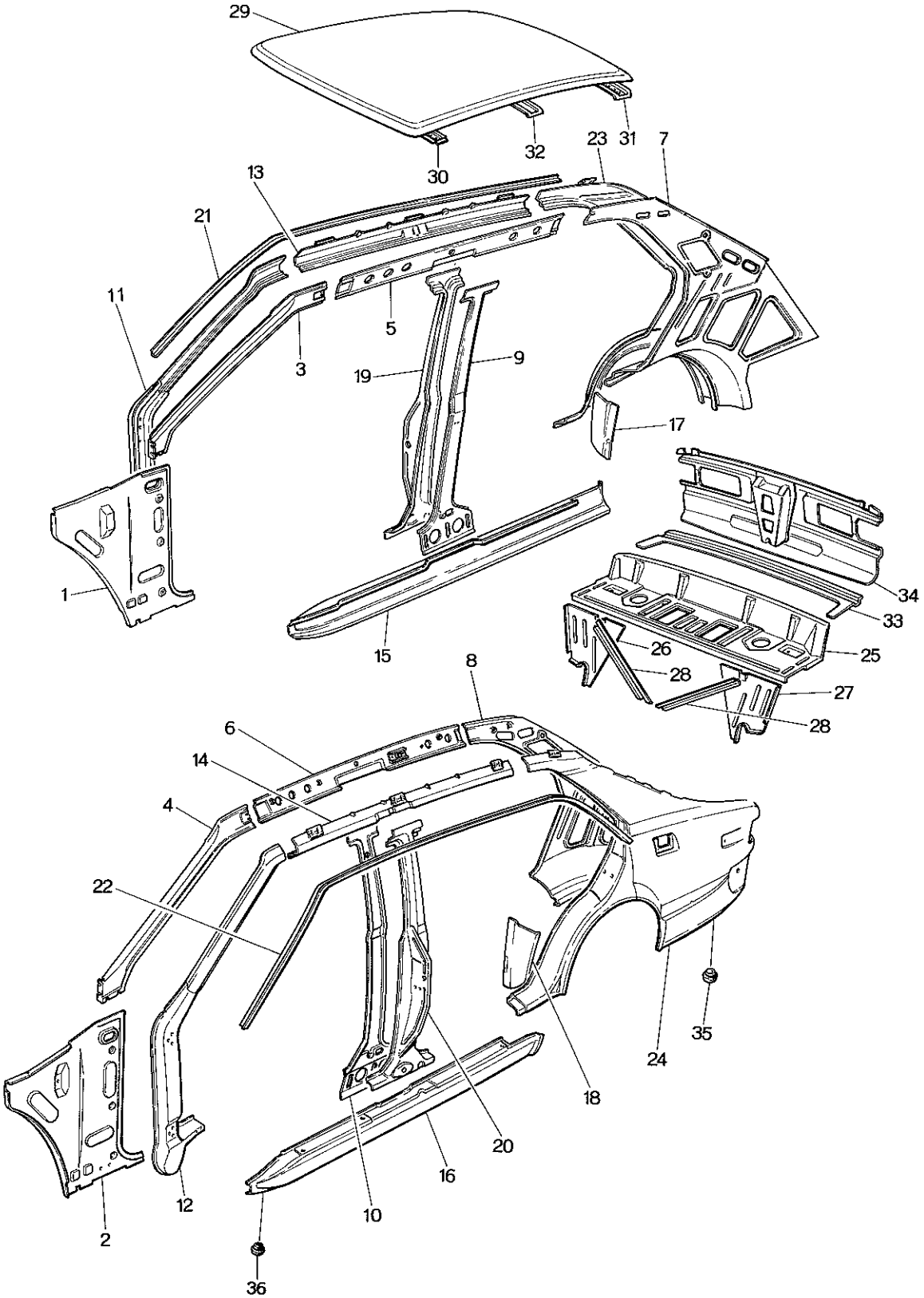

	No.	Part Number	Description	Q'ty	Remar
	1	0866 53 320	Panel (R), Cowl Side (R.H.D.)	1	
		1524 53 320A	Panel (R), Cowl Side (L.H.D.)	1	
	2	0866 54 320	Panel (L), Cowl Side (R.H.D.)	1	
		1524 54 320A	Panel (L), Cowl Side (L.H.D.)	1	
		1524 54 320B	Panel (L), Cowl Side (L.H.D.)	1	Car No. 14077
	3	0866 53 330	Pillar (R), Front Inner	1	
	4	0866 54 330	Pillar (L), Front Inner	1	
	5	0866 53 340A	Rail (R), Roof Inner	1	1558 Excluded
◡●		0866 53 340B	Rail (R), Roof-Inner	1	
		1504 53 340B	Rail (R), Roof Inner	1	1558
	6	0866 54 340	Rail (L), Roof Inner	1	1558 Excluded
✓●		0866 54 340A	Rail (L), Roof Inner	1	
		1504 54 340A	Rail (L), Roof Inner	1	1558
	7	~~0866 53 350A~~	~~Pillar (R), Rear Inner~~	~~1~~	
		1531 53 350C	Pillar (R), Rear Inner ~~(For E.C.E.)~~	1	
	8	~~0866 54 350A~~	~~Pillar (L), Rear Inner~~	~~1~~	
		1531 54 350C	Pillar (L), Rear Inner ~~(For E.C.E.)~~	1	
	9	0866 53 381	Pillar (R), Center-Inner	1	
√●		0866 53 381A	Pillar (R), Center-Inner	1	
	10	0866 54 381	Pillar (L), Center-Inner	1	

BODY PANELS (SIDE, SEDAN)

No.	Part Number	Description	Q'ty	Remarks
●	0866 54 381A	Pillar (L), Center-Inner	1	73/11～○
11	~~0370 53 410~~	~~Pillar (R), Hinge Outer~~	~~1~~	
	0866 53 410	Pillar (R), Hinge Outer	1	From Car No. 1
12	0866 54 410	Pillar (L), Hinge Outer (R.H.D.)	1	
	1524 54 410	Pillar (L), Hinge Outer (L.H.D.)	1	
13	0866 53 430	Rail (R), Roof Outer	1	
14	0866 54 430	Rail (L), Roof Outer	1	
●	15 0866 53 451	Sill (R), Side Outer	1	
●	16 0866 54 451	Sill (L), Side Outer	1	
17	0866 53 452	Plate (R), Filler	1	
18	0866 54 452	Plate (L), Filler	1	
19	0866 53 500	Pillar (R), Center-Outer	1	
	0866 53 500A	Pillar (R), Center-Outer	1	Car No. 157735 72/10～△
20	0866 54 500	Pillar (L), Center-Outer	1	
	0866 54 500A	Pillar (L), Center-Outer	1	Car No. 157735 72/10～△
21	0866 53 591	Rail (R), Rain	1	
22	0866 54 591	Rail (L), Rain	1	
23	~~0866 53 600~~	~~Panel (R), Rear Fender (R.H.D.)~~	~~1~~	
	0866 53 600B	Panel (R), Rear Fender ~~(L.H.D.)~~	1	
	0866 74 100	Panel (R), Rear Fender	1	From Car No. 1

No.	Part Number	Description	Q'ty	Remar
24	~~0866 54 600~~	~~Panel (L), Rear Fender (R.H.D.)~~	~~1~~	
	0866 54 600A	Panel (L), Rear Fender ~~(L.H.D.)~~	1	
	0866 74 130	Panel (L), Rear Fender	1	From Car N
25	0866 53 810B	Tray, Package	1	
	0866 53 810C	Tray, Package	1	Car No. 1603
26	0866 53 830A	Brace (R), Side	1	
27	0866 54 830A	Brace (L), Side	1	
28	0866 53 845	Brace, Diagonal	2	
29	0866 53 901	Panel, Roof	1	
	0866 74 030	Panel, Roof	1	From Car No
30	0866 53 920	Header, Front	1	
31	0866 53 941	Header, Rear	1	
32	0866 53 950	Reinforcement, Roof	1	
33	0866 53 991	Panel, Rear Deck	1	
	0866 74 050	Panel, Rear Deck	1	From Car No
34	1524 70 050	Panel, Rear End	1	
35	0259 53 455	Plug, Drain (Side Seal Outer···6, Rear Fender···2)	8	
36	0118 56 242B	Plug, Drain	2	

BODY PANELS (SIDE, STATION WAGON)

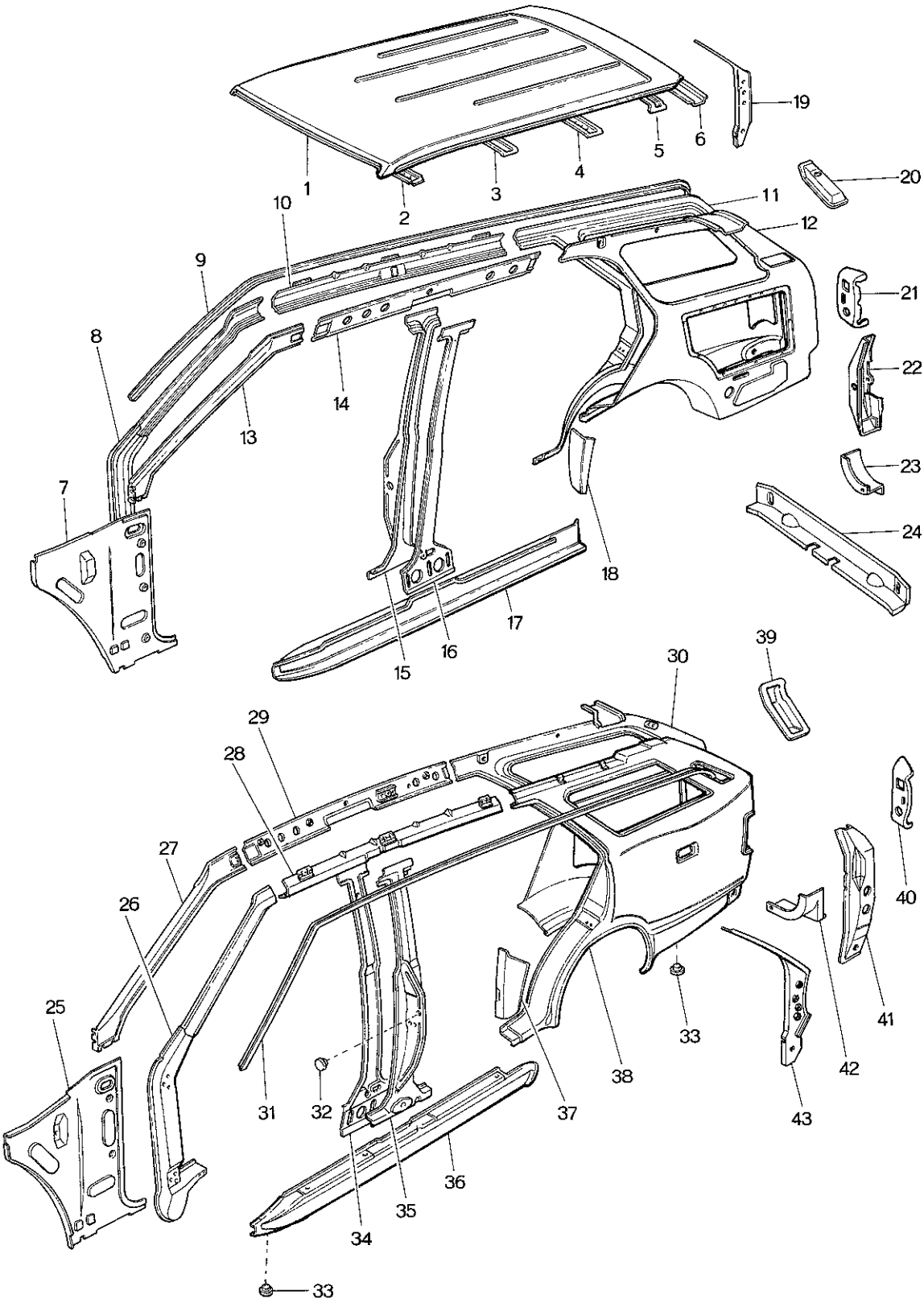

BODY PANELS (SIDE, STATION WAGO

No.	Part Number	Description	Q'ty	Rem
1	0585 74 030	Panel, Roof	1	
2	0866 53 920	Header, Rear	1	
3	0866 53 950	Reinforcement, Roof	1	
4	0866 53 951	Reinforcement, Roof	1	
5	0585 53 970A	Reinforcement, Roof	1	
6	0585 53 941	Header, Rear	1	
7	0866 53 320	Panel (R), Cowl Side	1	
8	0866 74 090	Pillar (R), Hinge Outer	1	
9	0585 53 591	Rail (R), Rain	1	
10	0585 53 430	Rail (R), Roof Outer	1	
11	1529 53 600A	Panel (R), Rear Fender	1	
12	0585 53 310	Panel (R), Inside	1	
13	0866 53 330	Pillar (R), Front Inner	1	
14	0585 53 340	Rail (R), Roof Inner	1	
15	0866 53 500A	Pillar (R), Center-Outer	1	
16	0866 53 381	Pillar (R), Center-Inner	1	
17	0866 53 451	Sill (R), Side Outer	1	
18	0866 53 452	Plate (R), Filler	1	
19	0585 53 670A	Pillar (R), Rear Outer	1	
20	0585 53 480B	Chamber (R)	1	

BODY PANELS (SIDE, STATION WAGON)

No.	Part Number	Description	Q'ty	Remarks
21	0585 53 651	Housing (R), Lamp	1	
22	0585 53 680A	Reinforcement (R)	1	
23	0585 53 691	Junction (R), Corner	1	
24	0585 53 701A	Crossmember, Rear Outer	1	
25	0866 54 320	Panel (L), Cowl Side	1	
26	0866 74 120	Pillar (L), Hinge Outer	1	
27	0866 54 330	Pillar (L), Front Inner	1	
28	0585 54 430	Rail (L), Roof Outer	1	
29	0585 54 340	Rail (L), Roof Inner	1	
30	0585 54 310A	Panel (L), Inside	1	
31	0585 54 591	Rail (L), Rain	1	
32	0118 56 242B	Plug, Drain-Center Pillar	2	
33	0259 53 455	Plug, Drain (Side Sill ···6, Rear Fender ··· 2)	8	
34	0866 54 381	Pillar (L), Center-Inner	1	
35	0866 54 500A	Pillar (L), Center-Outer	1	
36	0866 54 451	Sill (L), Side Outer	1	
37	0866 54 452	Plate (L), Filler	1	
38	1529 54 600A	Panel (L), Rear Fender	1	
39	0585 54 480B	Chamber (L)	1	
40	0585 54 651	Housing (L), Lamp	1	

BODY PANELS (SIDE, STATION WAGON

No.	Part Number	Description	Q'ty	Rem
41	0585 54 660A	Reinforcement (L)	1	
42	0585 54 691	Junction (L), Corner	1	
43	0585 54 670A	Pillar (L), Rear Outer	1	

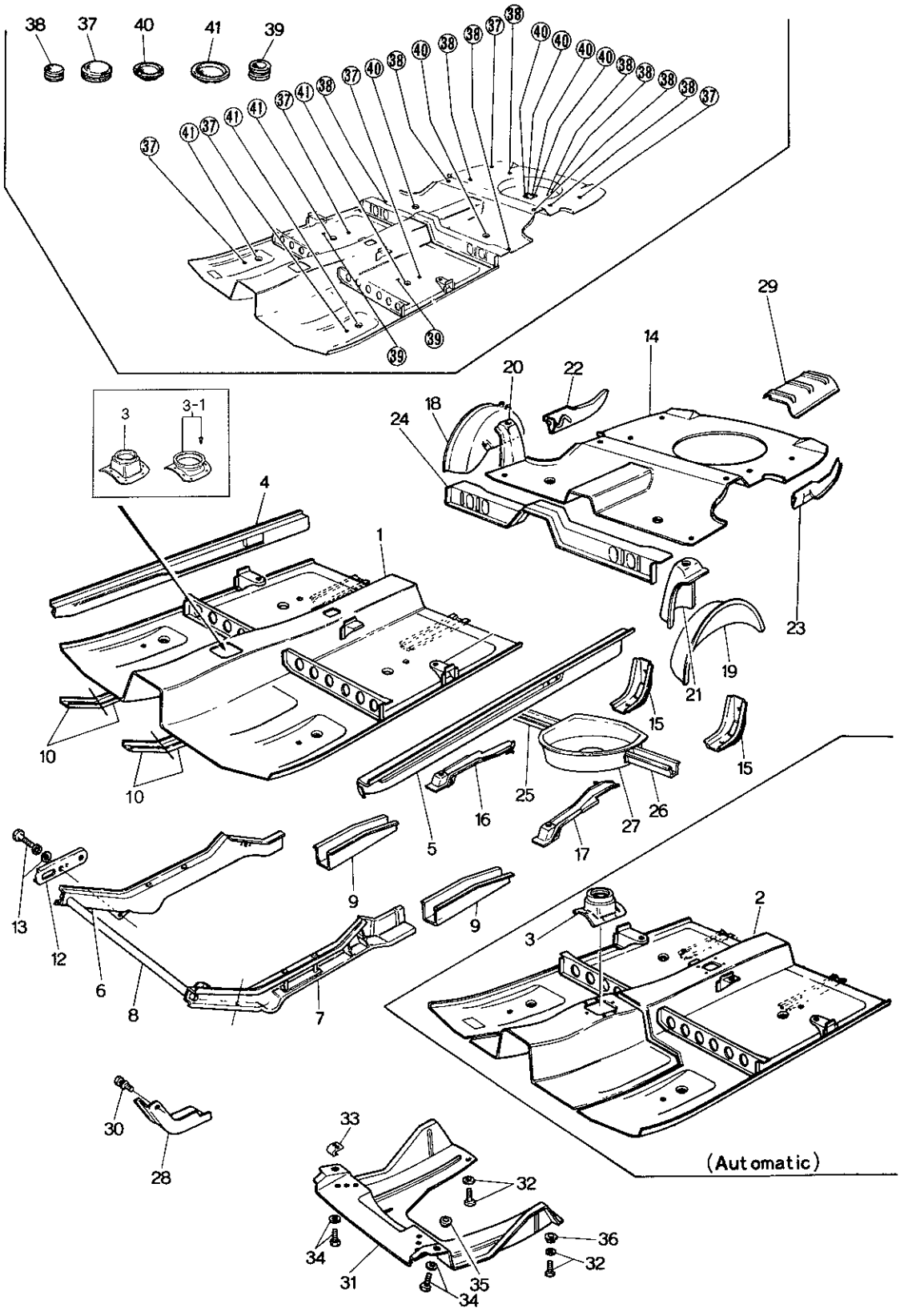
38
37
40
41
39
3
3-1
4
1
10
10
5
16
25
26
27
17
15
15
19
21
23
24
18
20
22
14
29
9
9
13
12
6
8
7
2
3
(Automatic)
30
28
33
32
34
31
35
34
36
32

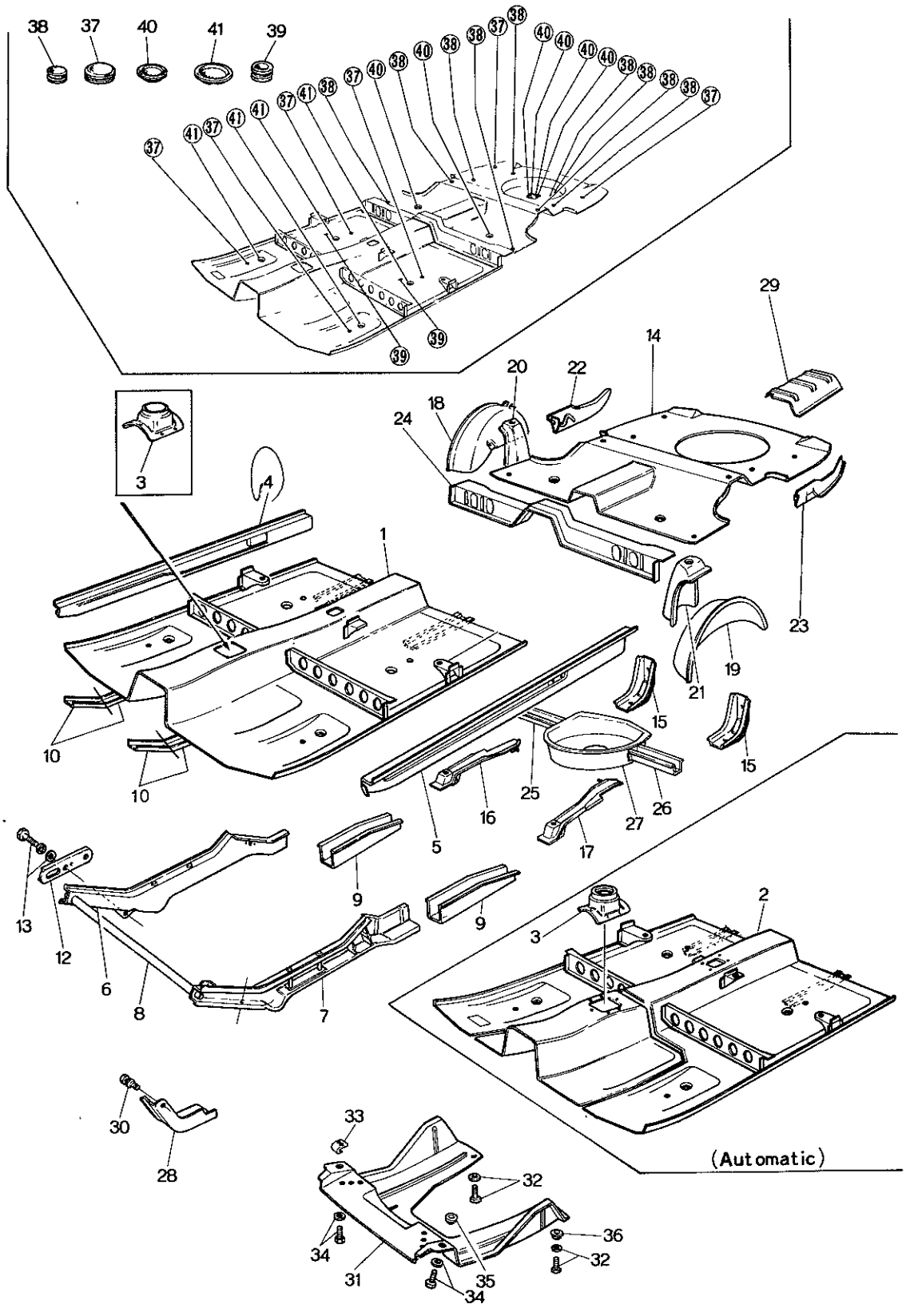
38
37
40
41
39
29
14
20
22
18
24
3
4
1
23
19
21
15
10
25
26
27
16
5
17
9
13
12
6
8
7
2
30
28
33
32
34
36
31
35
(Automatic)

BODY PANELS (FLOOR) (SEDAN &

No.	Part Number	Description	Q'ty	Rema
1	0866 56 010G	Pan, Front Floor, Manual (R.H.D.)	1	
	0866 56 010I	Pan, Front Floor, Manual (R.H.D.)	1	Car No. 1505
	0870 56 010	Pan, Front Floor, Manual (R.H.D.)	1	Car No. 1528
	1128 56 010A	Pan, Front Floor, Manual (R.H.D.)	1	Car No. 1606
	1562 56 010D	Pan, Front Floor (L.H.D.)	1	
	1562 56 010E	Pan, Front Floor (L.H.D.)	1	Car No. 1505
	1562 56 010F	Pan, Front Floor (L.H.D.)	1	Car No. 1528
	1128 56 010A	Pan, Front Floor (L.H.D.)	1	Car No. 1606
2	0871 56 010G	Pan, Front Floor (Automatic)	1	
●	0871 56 010H	Pan, Front Floor (Automatic)	1	
3	0866 56 981	Insulator	1	
~~3-1~~	~~0376 68 832A~~	~~Set, Boot~~	~~1~~	
●	0367 68 832A	Seat, Set-Boot (Manual)	1	From Car N
	99864 0512	Screw, Tapping	6	
4	0376 56 080B	Sill (R), Side-Inner (Coupe)	1	
	0376 56 080C	Sill (R), Side-Inner (Coupe)	1	Car No. 1332
	0866 56 080B	Sill (R), Side-Inner (Sedan)	1	
	0866 56 080C	Sill (R), Side-Inner (Sedan)	1	Car No. 1332
	0866 56 080D	Sill (R), Side-Inner (Sedan)	1	
5	0376 56 580A	Sill (L), Side-Inner (Coupe)	1	
	0866 56 580A	Sill (L), Side-Inner (Sedan)	1	
	0866 56 580B	Sill (L), Side-Inner (Sedan)	1	

No.	Part Number	Description	Q'ty	Remarks
6	1511 56 110D	Frame (R), Front (R.H.D.)	1	
	1511 56 110E	Frame (R), Front (R.H.D.)	1	Car No. 135808 72½~○
	1511 56 110F	Frame (R), Front (R.H.D.)	1	Car No. 148513 72⅚~○
	0866 56 110H	Frame (R), Front (R.H.D.)	1	73/10~○
	1524 56 110F	Frame (R), Front (L.H.D.)	1	
	1524 56 110G	Frame (R), Front (L.H.D.)	1	Car No. 135808 72½~○
	1524 56 110H	Frame (R), Front (L.H.D.)	1	Car No. 148513 72⅚~○
7	1511 56 610	Frame (L), Front (R.H.D.)	1	
	1511 56 610A	Frame (L), Front (R.H.D.)	1	Car No. 135808 72½~○
	1511 56 610B	Frame (L), Front (R.H.D.)	1	Car No. 148513 72⅚~○
	0866 56 610D	Frame (L), Front (R.H.D.)	1	73/10~○
	1524 56 610C	Frame (L), Front (L.H.D.)	1	
	1524 56 610D	Frame (L), Front (L.H.D.)	1	Car No. 135808 72½~○
	1524 56 610E	Frame (L), Front (L.H.D.)	1	Car No. 148513 72⅚~○
8	0866 56 171	Member No. 1, Cross	1	
	0866 56 171A	Member No. 1, Cross	1	73⅚~○
9	0866 56 181A	Frame "B", Front (L)	1	
	0866 56 180	Frame "B", Front (R)	1	
10	1524 56 117	Reinforcement "A" (L.H.D.)	2	
	1524 56 118	Reinforcement "B" (L.H.D.)	2	

BODY PANELS (FLOOR) (SEDAN &

No.	Part Number	Description	Q'ty	Re
12	0866 78 541	Hook, Front & Rear Frame	2	
13	99781 1028	Bolt, Hook	2	
	99951 1022	Washer, Plain	2	
	99971 1000	Washer, Spring	2	
14	0866 56 210C	Pan, Rear Floor	1	
	0866 56 200C	Pan, Rear Floor	1	
15	0866 58 215	Bracket, Bumper	2	
16	0866 56 310A	Frame (R), Rear	1	
	0866 56 310B	Frame (R), Rear	1	Car No. 164
17	0866 56 810A	Frame (L), Rear	1	
	0866 56 810B	Frame (L), Rear	1	Car No. 164
18	0866 56 330	Panel (R), Wheel House	1	
19	0866 56 830	Panel (L), Wheel House	1	
20	0866 56 350	Bracket (R), Damper	1	
21	0866 56 850	Bracket (L), Damper	1	
22	0866 56 381	Panel (R), Floor Side (Sedan)	1	
	0866 56 381A	Panel (R), Floor Side (Sedan)	1	
	0378 56 381	Panel (R), Floor Side (Coupe)	1	
	0376 56 381A	Panel (R), Floor Side (Coupe)	1	

BODY PANELS (FLOOR) (SEDAN & COUPE)

No.	Part Number	Description	Q'ty	Remarks
23	0866 56 881	Panel (L), Floor Side (Sedan)	1	
	0866 56 881A	Panel (L), Floor Side (Sedan)	1	73/6~○
	0376 56 881	Panel (L), Floor Side (Coupe)	1	
	0376 56 881A	Panel (L), Floor Side (Coupe)	1	73/6~○
24	0866 56 400	Member No. 3, Cross	1	
25	0866 56 450A	Member No. 4 (R), Cross	1	
26	0866 56 470A	Member No. 4 (L), Cross	1	
27	0866 56 481A	Pan, Spare Tire	1	
28	0866 56 701	Insulator No. I (Manual)	1	
	0866 56 701A	Insulator No. I (Manual)	1	Car No. 150526 73/8~○
	0866 56 701B	Insulator No. I (Manual)	1	73/10~○
	0871 56 701	Insulator No. I (Automatic)	1	
	0871 56 701A	Insulator No. I (Automatic)	1	Car No. 127396 71/12~○
●	0871 56 701B	Insulator No. I (Automatic)	1	73/8~○
29	0866 56 702	Insulator No. 2	1	
30	99804 0614	Bolt, Insulator	7	
	99952 0600	Washer, Plain	7	
	99971 0600	Washer, Spring	7	
	90786 0612	Screw, Tapping	7	73/10~○
31	0866 56 901B	Cover, Under	1	

BODY PANELS (FLOOR) (SEDAN & C

No.	Part Number	Description	Q'ty	Remar
	0866 56 901C	Cover, Under	1	Car No. 14963
●	1128 56 901B	Cover, Under	1	Car No. 16491
32	99785 0620	Bolt, Under Cover	4	
	99952 0618	Washer, Plain	4	
●	90786 0616	Screw, Tapping	4	
33	0820 56 905	Nut, Spring	4	
34	99863 0516	Screw	4	
	99952 0500	Washer, Plain	4	
35	0820 56 906	Spacer	2	
36	0223 52 007	Spacer	2	
37	0118 56 241	Plug, Drain	6	
38	0118 56 242B	Plug, Drain	(Sedan) 10 (Coupe) 11	
39	0208 56 615	Plug, Drain (Sedan)	2	
40	0810 56 639	Cover, Service Hole	6	
41	0866 56 971	Cover, Hole	4	
Ⓝ	0866 56 489	Pad (Pan, Rear Floor)	4	Car No. 131172 ~

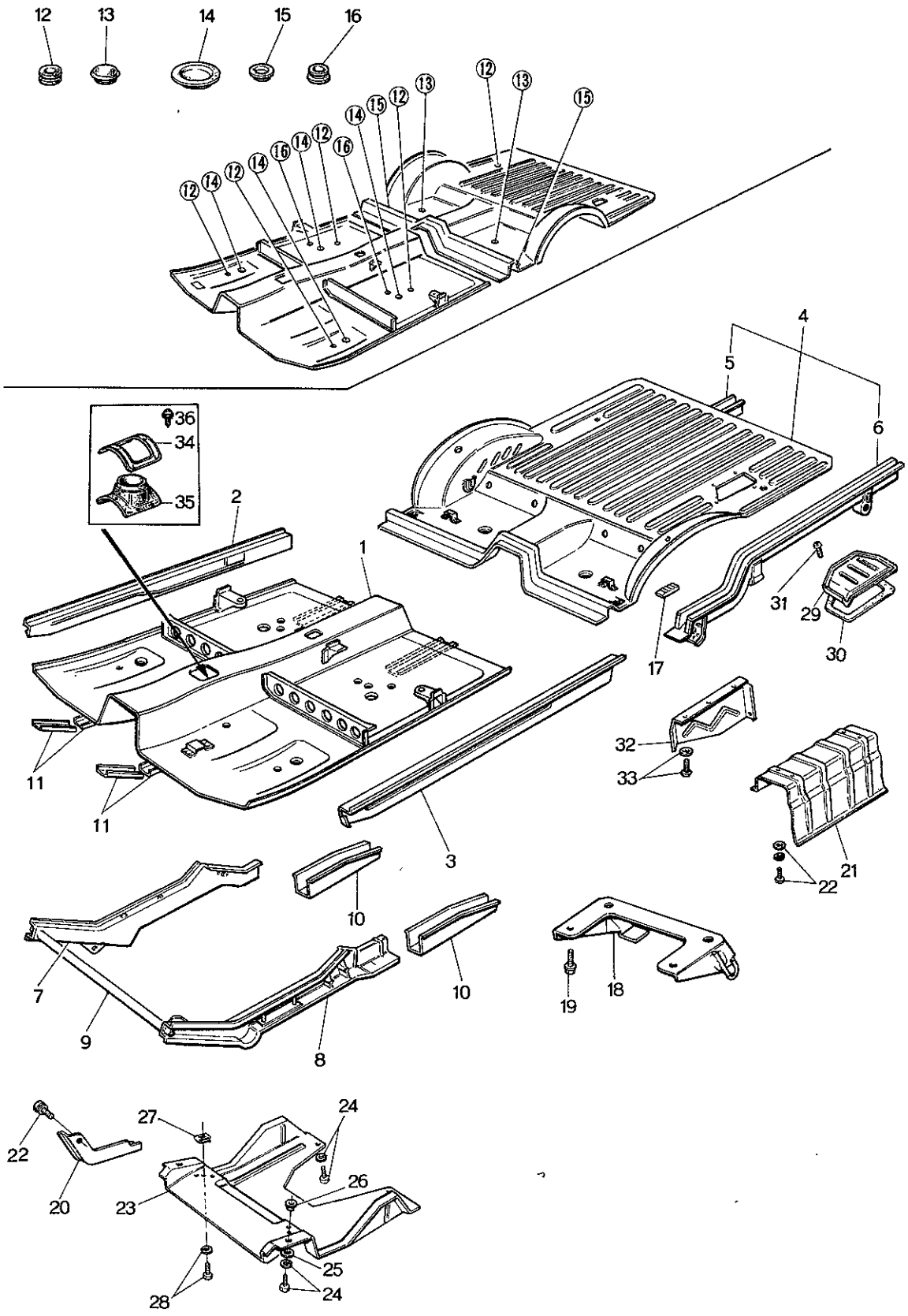
12
13
14
15
16
36
34
35
2
1
4
5
6
31
29
30
17
32
33
11
11
3
21
22
10
10
7
9
8
19
18
22
20
27
24
23
26
25
28
24

BODY PANELS (FLOOR) (STATION W

No.	Part Number	Description	Q'ty	Rema
1	0870 56 010A	Pan, Front Floor	1	
2	0866 56 080C	Sill (R), Side-Inner	1	
3	0866 56 580A	Sill (L), Side-Inner	1	
4	0899 56 300E	Floor, Rear	1	
5	0585 56 330B	Member (R), Rear	1	
6	0585 56 830D	Member (L), Rear	1	
7	1511 56 110F	Frame (R), Front	1	
8	1511 56 610B	Frame (L), Front	1	
9	0866 56 171	Member No. 1	1	
10	0866 56 180A	Frame "B", Front (R)	1	ML 08-10.Y
	0866 56 181A	Frame "B", Front (L)	1	
11	1524 56 117	Reinforcement "A"	2	
	1524 56 118	Reinforcement "B"	2	
12	0118 56 241	Plug, Drain	5	
13	0810 56 639	Cover, Hole	2	
14	0866 56 971	Cover, Hole	4	
15	0118 56 242B	Plug, Drain	3	
16	0208 56 615	Plug, Drain	2	

No.	Part Number	Description	Q'ty	Remarks
17	0187 56 235	Supporter, Seat	2	
18	0585 56 540A	Hanger, Silencer	1	
19	99786 0820	Bolt, Silencer Hanger	4	
	99952 0822	Washer, Plain	4	
20	0866 56 701A	Insulator No. 1	1	
21	0899 56 921B	Insulator No. 2	1	
22	99786 0612	Bolt, Insulator	7	
	99952 0618	Washer, Plain	7	
23	0866 56 901C	Cover, Under	1	
24	99786 0616	Bolt, Under Cover	4	
	99952 0618	Washer, Plain	4	
25	0223 52 007	Spacer	2	
26	0820 56 906	Spacer	2	
27	0820 56 905	Nut, Spring	4	
28	99863 0516	Screw, Under Cover	4	
	99952 0500	Washer, Plain	4	
29	0585 56 901A	Cover, Service Hole	1	
30	0585 56 902	Tape	1	
31	99868 0408	Screw, Tapping-Service Hole Cover	4	
32	0585 56 911A	Protector	1	

No.	Part Number	Description	Q'ty	Rema
33	99860 0510	Screw, Tapping - Protector	4	
	99952 0600	Washer, Plain	4	
34	0866 56 981	Insulator	1	
35	0367 68 832A	Seat, Boot	1	
36	99864 0512	Screw, Boot Seat	4	

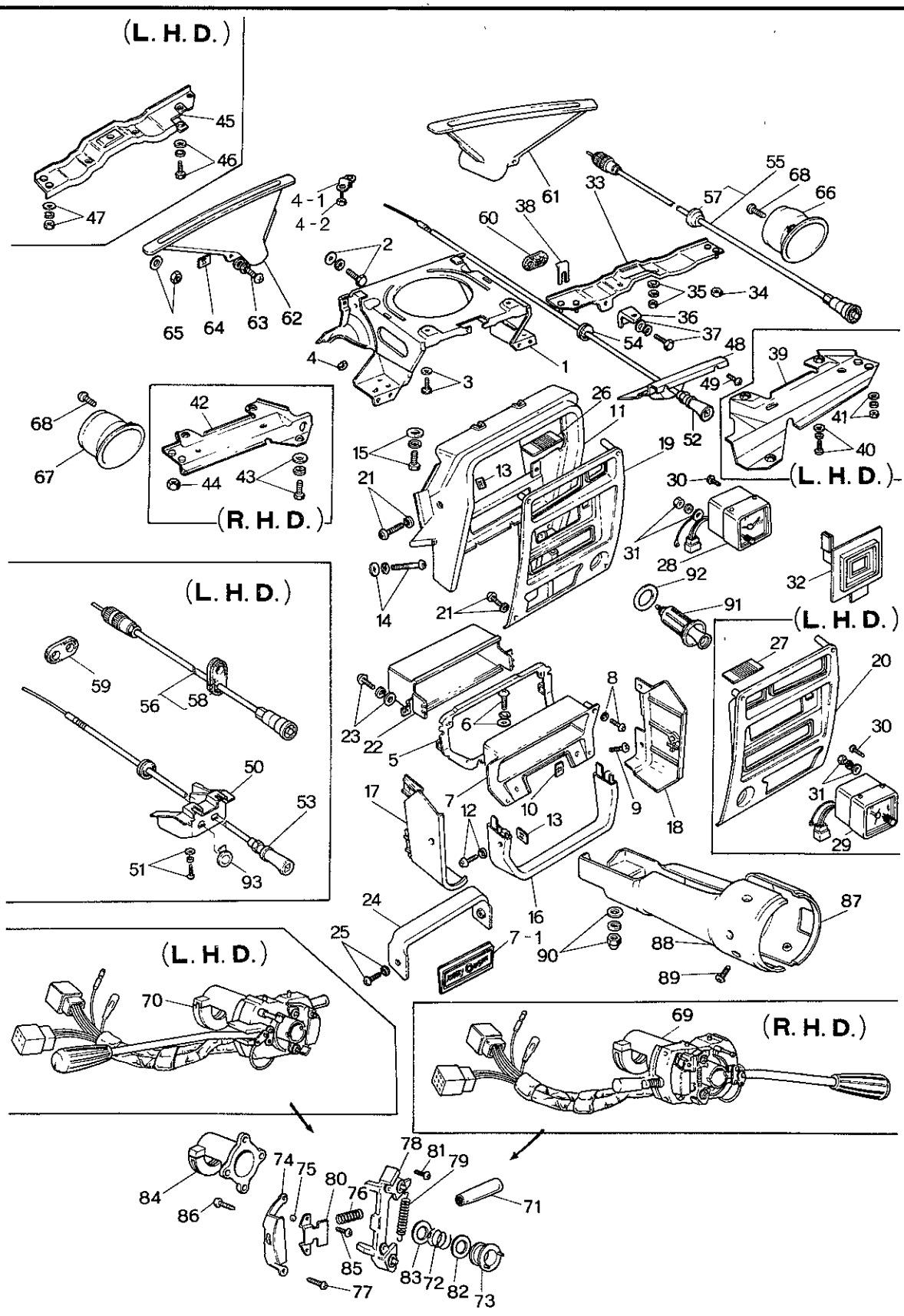
(L. H. D.)
45
46
47
4 - 1
4 - 2
65
64
63
62
2
4
3
1
61
38
60
33
57
55
68
66
54
37
36
35
34
48
49
52
39
41
40
(L. H. D.)
42
68
67
44
43
(R. H. D.)
26
11
15
13
19
21
14
30
31
28
92
91
32
(L. H. D.)
(L. H. D.)
59
56
58
50
53
51
93
23
22
5
6
8
9
18
17
7
12
10
13
16
24
25
7 - 1
90
87
88
89
27
20
30
31
29
(L. H. D.)
70
(R. H. D.)
69
84
86
74
75
80
76
78
81
79
71
85
77
83
72
82
73

No.	Part Number	Description	Q'ty	Remar
1	0866 55 100F	Bracket, Center Panel	1	
√2	99806 0818	Bolt, Center Panel Bracket	2	
√	99786 0820	Bolt, Center Panel Bracket	2	Car No. 1419
	99952 0822	Washer, Plain	2	
	99971 0800	Washer, Spring	2	Car No. 141928
3	99805 0816	Bolt, Center Panel Bracket	2	
	99786 0816	Bolt, Center Panel Bracket	2	
√	99952 0800	Washer, Plain	2	Car No. 14192
	99971 0800	Washer, Spring	2	
4	99940 0802	Nut, Self Lock-Center Panel Bracket	2	Car No. 141928
√●	4-1 0370 55 150	Bracket, Cooler	1	
●	4-2 99940 0602	Nut	2	From Car No
5	0866 55 360C	Holder, Grille	1	From Car No.
6	99838 0616	Screw	1	
	99952 0618	Washer, Plain	1	
	99971 0600	Washer, Spring	1	
7	0866 55 365B	Body, Grille	1	
	0866 55 365C	Body, Grille	1	
√●	7-1 0866 55 368	Ornament, Tuner	1	Car No. 142300
8	99838 0412	Screw, Grille Body	2	Car No. 142300 ↗

No.	Part Number	Description	Q'ty	Remarks	
	99971 0400	Washer, Spring	2		
9	99861 0414 B	Screw, Grille Body	2		
10	99869 0400	Nut, Spring-Grille Body	2		
11	0865 55 401 D	Hood No. 1 ~~(L.H.D.)~~	1		©
	~~0865 55 401 D~~	~~Hood No. 1 (R.H.D.)~~	~~1~~		~~©~~
12	99862 0525 B	Screw, Hood No. 1	4		
	99967 0500 B	Washer	4		
13	0820 56 905	Nut, Spring-Hood No. 1 & No. 2	4		
14	99743 0650	Screw, Hood No. 1	2		
	99952 0600	Washer, Plain	2		
	99971 0600	Washer, Spring	2		
15	99797 0618	Bolt, Hood No. 1	2		
	99952 0618	Washer, Plain	2		
	99971 0600	Washer, Spring	2		
16	0865 55 402 B	Hood No. 2	1		©
	~~0866 55 402 A~~	~~Hood No. 2~~	~~1~~		~~©~~
17	0865 55 403 B	Hood No. 3 (R)	1		©
	~~0866 55 403 A~~	~~Hood No. 3 (R)~~	~~1~~		~~©~~
18	~~0865 55 404 A~~	~~Hood No. 3 (L)~~	~~1~~		~~©~~
●	0865 55 404 B00	Hood No. 4 (L)	1	From Car No. 1	©

No.	Part Number	Description	Q'ty	Rema
~~—~~	~~0866 55 404A~~	~~Hood No. 3 (L)~~	~~1~~	
19	0866 55 405C	Plate, Center (R.H.D.)	1	
20	1562 55 405	Plate, Center (L.H.D.)	1	
21	99863 0510	Screw, Center Plate	4	
	99952 060C	Washer, Plain	6	
22	0866 55 406B	Box, Hood Center	1	
23	99838 0412	Screw, Hood Box	2	
	99952 0400	Washer, Plain	2	
	99971 0400	Washer, Spring	2	
24	0866 55 590	Stiffener	1	
25	99837 0525B	Screw	2	
	99967 0500	Washer	2	
26	0866 55 412A	Lens, Illumination ~~(R.H.D.)~~	1	
27	~~1582 55 412~~	~~Lens Illumination (L.H.D.)~~	1	
28	0866 55 710	Clock, Auto (R.H.D.)	1	
29	1562 55 710	Clock, Auto (L.H.D.)	1	
30	99831 0416B	Screw, Auto Clock	4	
31	99906 0500	Nut, Auto Clock	1	
	99952 0516	Washer, Plain	1	

No.	Part Number	Description		Q'ty	Remarks
	99971 0500	Washer, Spring		1	
32	0866 55 720A	Ornament, Without Auto Clock (R.H.D.)		1	
	1561 55 720A	Ornament, Without Auto Clock (L.H.D.)		1	
33	0866 55 210B	Member (R), Lower	(R.H.D.)	1	
34	99940 0602	Nut, Member	(R.H.D.)	4	
35	99906 0800	Nut, Member	(R.H.D.)	1	
	99952 0800	Washer, Plain	(R.H.D.)	1	
	99971 0800	Washer, Spring	(R.H.D.)	1	
36	0866 55 215A	Bracket, Meter	(R.H.D.)	1	
37	99833 0616	Bolt, Meter Bracket	(R.H.D.)	2	
	99952 0618	Washer, Plain	(R.H.D.)	2	
	99971 0600	Washer, Spring	(R.H.D.)	2	
38	0866 55 216	Shim (t=1.0)	Selective use	1	
	0866 55 217	Shim (t=2.0)	Selective use	1	
	0866 55 218	Shim (t=3.2)	Selective use	1	
39	1524 55 230B	Member (R), Lower	(L.H.D.)	1	
40	99797 0614	Bolt, Member	(L.H.D.)	1	
	99952 0600	Washer, Plain	(L.H.D.)	1	
	99971 0600	Washer, Spring	(L.H.D.)	1	
41	99906 0600	Nut, Member	(L.H.D.)	2	

No.	Part Number	Description		Q'ty	Remark
	99952 0600	Washer, Plain		2	
	99971 0600	Washer, Spring		2	
42	0866 55 230 D	Member (L), Lower		1	
43	99806 0614	Bolt, Member		2	
● ✓	99786 0616	Bolt, Member	(R.H.)	2	Car No. 14192
	99952 0618	Washer, Plain		2	
● ✓	99971 0600	Washer, Spring		2	Car No. 141928
44	99940 0602	Nut, Member		2	
45	1524 56 210 B	Member (L), Lower		1	
✓46	99797 0616	Bolt, Member		1	
	99951 0618	Washer, Plain		1	
	99971 0600	Washer, Spring	(L.H.D.)	1	
47	99906 0600	Nut, Member		4	
	99951 0618	Washer, Plain		4	
	99971 0600	Washer, Spring		4	
48	0370 55 331 A	Bracket, Choke (R.H.D.)		1	
● ✓	1128 55 331	Bracket, Choke (R.H.D.)		1	
49	99834 0535	Screw, Choke Bracket (R.H.D.)		2	
50	1524 55 330 A	Bracket, Choke		1	
● ✓	1524 55 330 B	Bracket, Choke		1	Car No. 15237(

No.	Part Number	Description	Q'ty	Remarks
51	99839 0520B	Screw, Choke Bracket (L.H.D.)	2	
	99952 0500B	Washer, Plain	2	
	99971 0500	Washer, Spring	2	
52	0866 60 050	Cable, Choke (R.H.D.)	1	
●	3503 60 050	Cable, Choke (R.H.D.)	1	Car No. 160623 73/10~×
	0871 60 050B	Cable, Choke (R.H.D. Automatic T/mission)	1	
53	1562 60 050	Cable, Choke (L.H.D.)	1	
●	3511 60 050	Cable, Choke (L.H.D.)	1	Car No. 160623 73/10~×
54	0305 60 053	Protector, Choke Cable (R.H.D.)	1	
55	0866 60 070	Cable, Speedometer (R.H.D.)	1	
	0866 60 070A	Cable, Speedometer (R.H.D.)	1	Car No. 152249 73/8~○
56	1562 60 070	Cable, Speedometer (L.H.D.)	1	
57	0866 60 071	Grommet (R.H.D.)	1	
58	0370 60 071	Grommet (L.H.D.)	1	
Ⓝ	9968 60800	Protector, Speedometer Cable	1	
59	0370 60 073A	Grommet (L.H.D.)	1	
	0370 60 073B	Grommet (L.H.D.)	1	Car No. 132360 71/12~△
60	0866 60 073	Grommet (R.H.D.)	1	

No.	Part Number	Description	Q'ty	Remark
61	0866 60 101	Nozzle (R), Defroster	1	
62	0866 60 102	Nozzle (L), Defroster	1	
63	99863 0516	Bolt, Defroster Nozzle	2	
	99952 0518	Washer, Plain	2	
	99971 0500	Washer, Spring	2	
64	99896 0500	Nut, Spring-Defroster Nozzle	2	
65	99940 0501	Nut, Defroster Nozzle	4	
	99952 0516	Washer	4	
66	0866 60 120	Guide (R), Ventilator	1	
67	0866 60 130	Guide (L), Ventilator	1	
68	99869 0412	Screw, Ventilator Guide	4	
69	0866 60 250 B00	Switch, Combination (R.H.D.) (BLK.)	1	
	1511 60 250	Switch, Combination (R.H.D.)	1	Car No. 133
70	1524 60 250 A00	Switch, Combination (L.H.D.) (BLK.)	1	
	1524 60 250 B00	Switch, Combination (L.H.D.) (BLK.)	1	Car No. 159525
●	3514 66 120	Switch, Combination (L.H.D.) (BLK.)	1	Car No. 163273
	1531 60 250 A00	Switch, Combination (L.H.D.) (BLK.) Without Hazard Switch For France	1	
71	0866 60 251	Knob	1	
	1011 66 121	Knob (L.H.D.)	1	Car No. 164070

No.	Part Number	Description	Q'ty	Remarks
72	0317 60 252	Spring, Cancel Cam	1	
73	0317 60 253	Cam, Cancel	1	
74	0317 60 254	Bracket, Fixing	1	
●	1634 60 254	Bracket, Fixing (L.H.D.)	1	Car No. 164070 72/11~×
75	0317 60 255	Ball	1	
76	0317 60 256	Spring, Arm Set	1	
77	0317 60 257	Screw, Bracket	2	
78	0317 60 258	Arm	1	
79	0317 60 259	Spring, Ratchet	1	
80	0317 60 261	Plate, Set	1	
81	0317 60 262	Screw, Set Plate	2	
82	0866 60 263	Washer "A"	1	
83	0866 60 264	Washer "B"	1	
84	0866 60 265 A	Band	1	
	1011 60 125	Band (L.H.D.)	1	Car No. 164070 72/11~×
85	0317 60 266	Screw	2	
86	0866 60 267	Screw, Light Switch	2	
Ⓝ	99709 0255	Clip	1	Car No. 164070~Added Anew
87	0866 60 335 A	Cover (R), Coulmn (R.H.D.)	1	

No.	Part Number	Description	Q'ty	Remark
	1524 60 335 A	Cover (R), Column (L.H.D.)	1	
	1531 60 335	Cover (R), Column, Without Hazard Switch	1	
88	0866 60 345 A	Cover (L), Column (R.H.D.)	1	
	1524 60 345 A	Cover (L), Column (L.H.D.)	1	
89	99832 0408 B	Screw, Column Cover	4	
90	99945 0500 B	Nut, Cap-Column Cover	1	
	99952 0500 B	Washer, Plain	1	
	99971 0500	Washer, Spring	1	
91	0866 60 720	Lighter, Cigar	1	
●	0866 60 720 A	Lighter, Cigar	1	Car No.
92	0305 60 715	Shield, Heat-Cigar Lighter	1	
93	0259 55 951	Cover, Hole-Fog Lamp Switch	1	
Ⓝ	0370 55 351	Sheet-Meter (R.H.D.)	1	Car No. 141928 ?
Ⓝ	1524 55 351	Sheet-Meter (L.H.D.)	1	
Ⓝ	99709 010 B	Band, Speedometer Cable	1	From Car No.

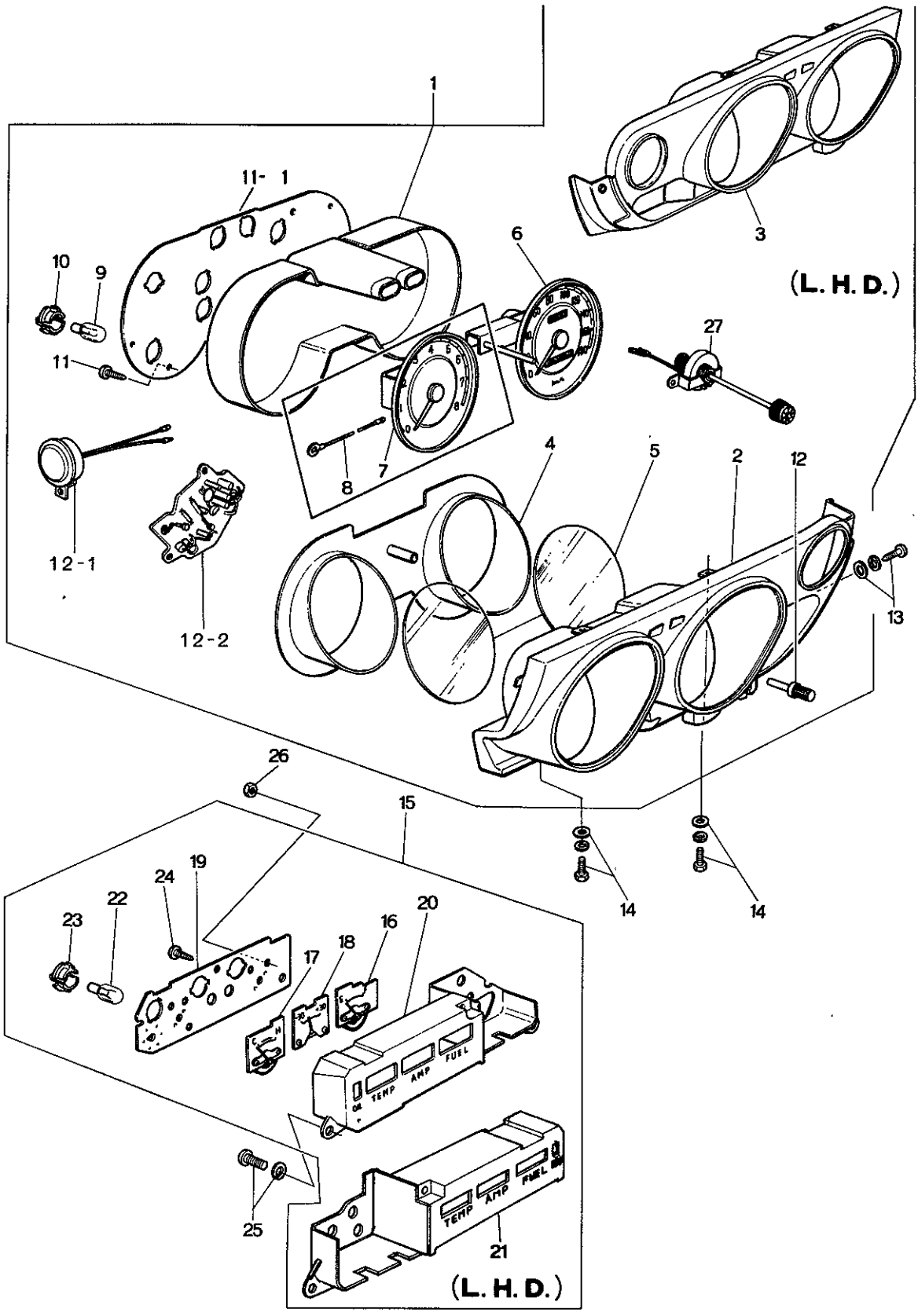
1
11- 1
3
(L. H. D.)
6
10
9
11
27
8
7
4
5
2
12
13
12-1
12-2
14
14
26
15
19
24
22
23
20
16
18
17
TEMP
AMP
FUEL
25
21
(L. H. D.)

No.	Part Number	Description		Q'ty	Remar
1	0865 55 430D	Meter Set (Km)		1	
	0865 55 430E	Meter Set (Km)		1	1555~1557 Car No. 1528
	3502 55 430	Meter Set (Km) (Automatic)		1	
	1553 60 530	Meter Set (Km & Mile)		1	1555~1557 Car No.
	1553 60 530A	Meter Set (Km & Mile)		1	1555~1557 Car No. 1677
	3502 60 530	Meter Set (Km & Mile) (Automatic)		1	
	1553 55 430	Meter Set (Km)	(R.H.D.)	1	1550~1554 Car No. 1528
	1553 60 530	Meter Set (Km & Mile)		1	1550~1554, 35 Car No. 1661
	1554 55 530B	Meter Set (Mile)		1	
	1554 55 530C	Meter Set (Mile)		1	1555~1557 Car No. 1528
	1554 55 530D	Meter Set (Mile)		1	1555~1557 Car No. 1677
	1553 55 530	Meter Set (Mile)		1	1550~1554 Car No. 1528
	1553 60 530	Meter Set (Mile & Km)		1	1550~1554, 156 Car No. 1603
	1553 60 530A	Meter Set (Mile & Km)		1	1550~1554, 156 Car No. 1677
	1562 55 430C	Meter Set (Km) (Arctic Spec. Model)		1	
	1562 55 430E	Meter Set (Km) (Arctic Spec. Model)		1	Car No. 1677
	1562 55 430F	Meter Set (Km) (Arctic Spec. Model)		1	Car No. 1788
	1568 55 530C	Meter Set (Mile)	(L.H.D.)	1	
	1568 55 530D	Meter Set (Mile)		1	Car No. 1603
	1568 55 530E	Meter Set (Mile)		1	Car No. 1653
	1568 55 530F	Meter Set (Mile)		1	Car No. 1606

No.	Part Number	Description	Q'ty	Remarks	
2	0370 75 010	Hood (R.H.D.)	1		©
	0370 75 010A	Hood (R.H.D.)	1	Car No. 152816 72/9 ~ △	©
	1510 75 010	Hood (R.H.D.) (Km & Mile)	1	Car No. 160623 73/10 ~ ×	©
●	0370 75 010A	Hood (R.H.D.) (Km) (Automatic)	1		©
●	1510 75 010	Hood (R.H.D.) (Km & Mile) (Automatic)	1		©
3	1524 75 010	Hood (L.H.D.)	1		©
	1524 75 010A	Hood (L.H.D.)	1	Car No. 178812 73/8 ~ ×	©
4	0866 75 011	Plate, Window	1		
5	0866 75 013	Glass, Window	2		
6	0866 75 021	Speedometer (Km) (R.H.D.)	1		
	1513 75 021	Speedometer (Km) (R.H.D.)	1	Car No. 164116 73/3 ~ △	
	1514 75 021	Speedometer (Mile) (R.H.D.)	1		
	1513 75 021	Speedometer (Mile & Km) (R.H.D.)	1	Car No. 160378 72/12 ~ △	
	1562 75 021	Speedometer (Km) (L.H.D.)	1		
	1514 75 021	Speedometer (Mile) (L.H.D.)	1		
7	0866 75 026	Tachometer	1		
	1568 75 026	Tachometer	1	1565 ~ 1568 Car No. 160378 72/12 ~ △	
	0866 75 026A	Tachometer	1	Car No. 167748 73/5 ~ △	
●	1053 75 026	Tachometer (Automatic)	1	74/4 ~ △	
8	0866 75 028	Wire, Lead-Tachometer	1		
9	99701 6030	Bulb	9		
10	0259 55 261	Socket	9		
11	0710 75 436	Screw, Tapping	3		

No.	Part Number	Description	Q'ty	Rema
11-1	0866 75 025	Circuit, Print	1	From Car N
	1128 75 025A	Circuit, Print	1	Car No. 1677
	1562 75 025	Plate, Print	1	Car No. 1606
●	1881 75 025	Plate, Print (Automatic)	1	
12	0370 75 018	Knob, Trip	1	
	Ⓝ 0866 75 025	Plate, Print	1	
● 12-1	1568 75 029	Buzzer } (Manual)	1	Car No. 167748
● 12-2	1114 55 465	Relay } (Manual)	1	Car No. 167748
13	99833 0612	Screw, Meter	3	
	99952 0618	Washer, Plain	3	
	99971 0600	Washer, Spring	3	
14	99797 0630	Bolt, Meter	2	
	99952 0618	Washer, Plain	2	
	99971 0600	Washer, Spring	2	
15	0866 55 460C	Meter, Combination (R.H.D.)	1	
	3507 55 460	Meter, Combination (R.H.D.)	1	Car No. 1606
	1562 55 460B	Meter, Combination (L.H.D.)	1	
	1881 55 460	Meter, Combination (L.H.D.)	1	Car No. 1606
16	0866 75 122A	Meter, Fuel (R.H.D.)	1	
	1562 75 122A	Meter, Fuel (L.H.D.)	1	

No.	Part Number	Description	Q'ty	Remarks
17	0866 75 123A	Thermometer (R.H.D.)	1	
	1562 75 123A	Thermometer (L.H.D.)	1	
18	0866 75 124A	Ammeter (R.H.D.)	1	
	3507 75 124	Ammeter (R.H.D.)	1	Car No. 160623 73/10~×
	1562 75 124A	Ammeter (L.H.D.)	1	
	1881 75 124	Ammeter (L.H.D.)	1	Car No. 160623 73/10~×
19	0866 75 125	Plate, Print (R.H.D.)	1	
	3507 75 125	Plate, Print (R.H.D.)	1	Car No. 160623 73/10~×
	1562 75 125	Plate, Print (L.H.D.)	1	
	1881 75 125	Plate, Print (L.H.D.)	1	Car No. 160623 73/10~×
20	0866 75 200A	Case (R.H.D.)	1	
21	1562 75 200A	Case (L.H.D.)	1	
22	99701 6030	Bulb	3	
23	0259 55 261	Socket	3	
24	0275 75 140	Screw, Tapping	4	
25	99863 0512	Screw, Tapping-Combination Meter	3	
~~—~~	~~99952 0500~~	~~Washer, Plain~~	~~3~~	

No.	Part Number	Description	Q'ty	Rem
26	99940 0400	Nut, Combination Meter	3	
27	1510 75 040	Resistor - Panel Light (For Australia & England)	1	Car No. 152816
	1511 75 040	Resistor (R.H.D.) (Mile)	1	Car No. 160
●	1511 75 040	Resistor (R.H.D.) (Mile & Km) Automatic	1	

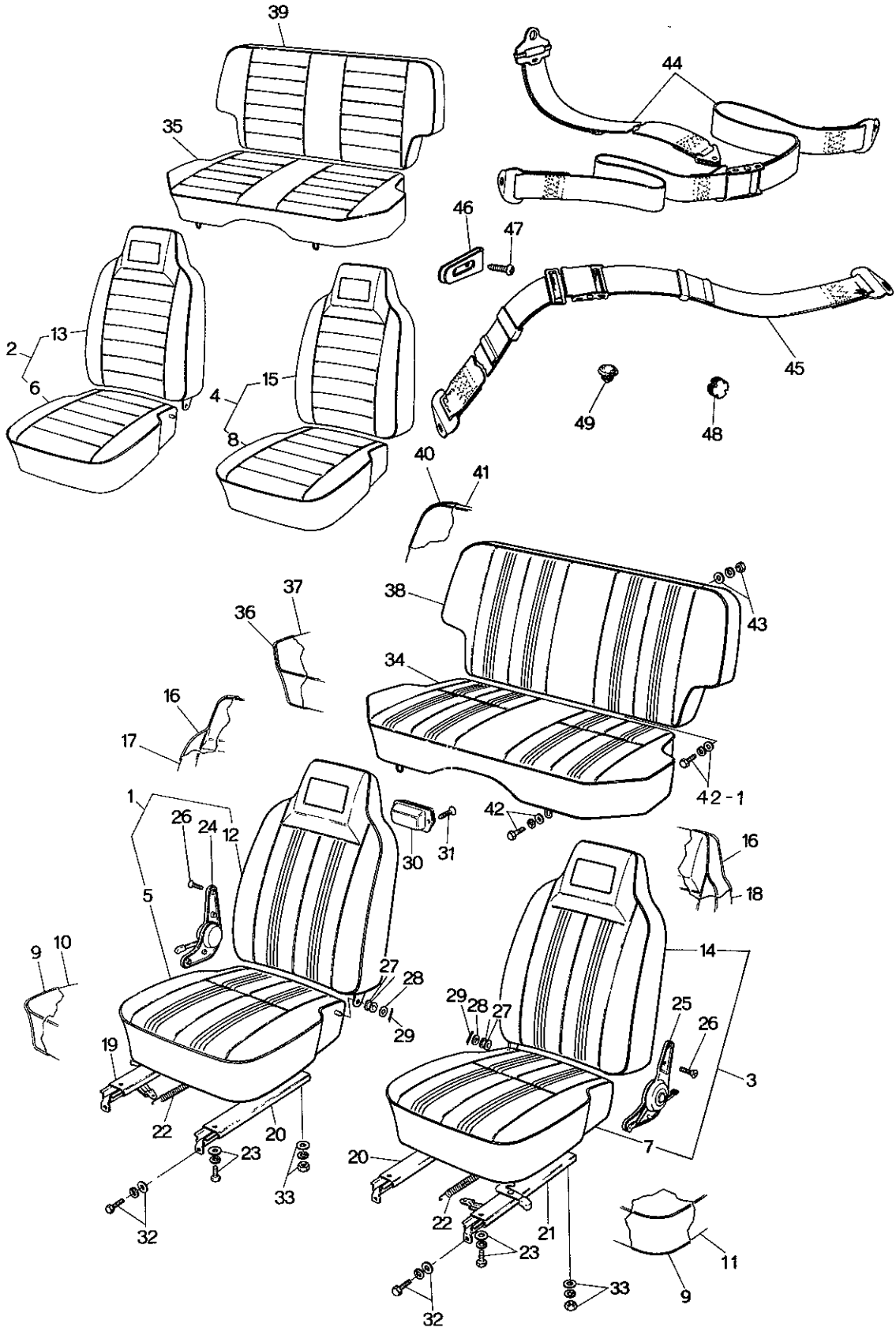
39
35
44
46
47
2
13
6
4
15
8
45
49
48
40
41
37
36
38
43
34
16
17
42-1
1
26
24
12
30
31
42
16
18
5
9
10
27
28
29
14
29
28
27
25
26
3
19
22
20
23
33
32
7
20
22
21
23
33
32
11
9

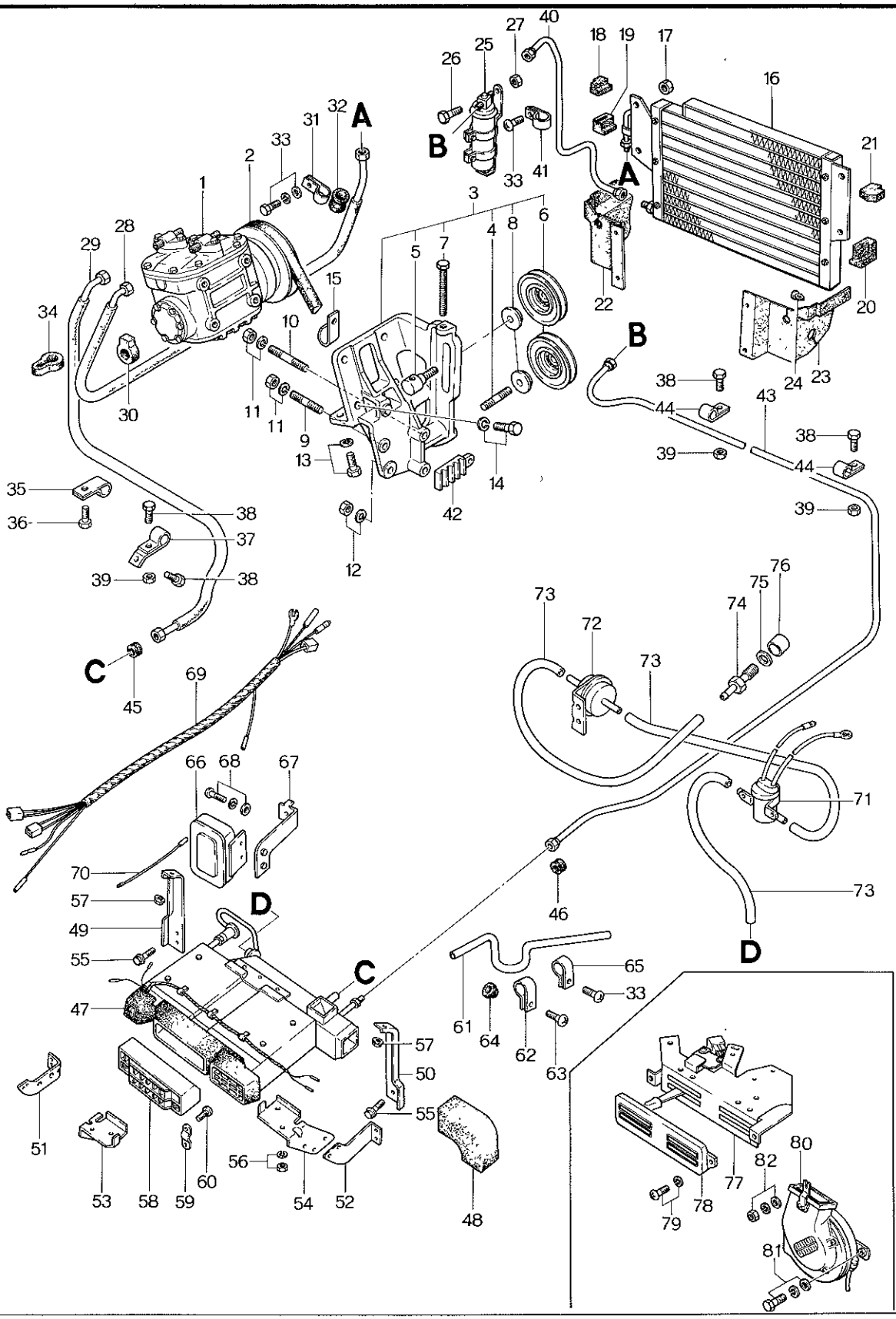
A
B
C
D
1
2
3
4
5
6
7
8
9
10
11
12
13
14
15
16
17
18
19
20
21
22
23
24
25
26
27
28
29
30
31
32
33
34
35
36
37
38
39
40
41
42
43
44
45
46
47
48
49
50
51
52
53
54
55
56
57
58
59
60
61
62
63
64
65
66
67
68
69
70
71
72
73
74
75
76
77
78
79
80
81
82

No.	Part Number	Description	Q'ty	Re
	1620 61 400	Cooler, Car (With Car Heater)	1	
	1620 61 390	Cooler, Car (Without Car Heater)	1	
1	0866 61 450	Compressor	1	
2	0866 15 906	Belt, "V"	1	
3	0866 15 920B	Bracket, Compressor (Fig. No. 4 ~ 8 Included)	1	
4	0866 15 923A	Shaft	1	
5	0866 15 932	Bolt, Idle Pulley	1	
6	0866 15 940A	Pulley, Idle	2	
7	0839 61 966A	Bolt, Adjust	1	
8	0317 78 034	Collar	2	
9	99859 1025	Stud, Compressor Bracket	2	
10	99859 1050	Stud, Compressor Bracket	2	
11	99921 1000	Nut, Compressor Bracket	4	
	99971 1000	Washer, Spring	4	
12	99921 1200	Nut, Compressor Bracket	1	
	99971 1200	Washer, Spring	1	
13	99801 0840	Bolt, Compressor Bracket	2	
	99971 0800	Washer, Spring	2	
14	99801 0825	Bolt, Compressor	4	
	99971 0800	Washer, Spring	4	

No.	Part Number	Description	Q'ty	Remarks
15	99295 1508	Clip	1	
16	1562 61 490	Condenser	1	
17	99940 0602B	Nut, Condenser	4	
18	0866 61 911	Packing No. 1	1	
19	0866 61 912	Packing No. 2	1	
20	0866 61 913	Packing No. 3	1	
21	0866 61 914	Packing No. 4	1	
22	1620 61 925	Rubber (R), Seal	1	
23	1620 61 926	Rubber (L), Seal	1	
24	99264 0531B	Rivet	4	
25	0866 61 500	Tank, Receiver	1	
26	99794 0612	Bolt, Receiver Tank	3	
27	99940 0602	Nut	2	
28	0866 61 461	Hose, Flexible	1	
29	1562 61 462A	Hose, Flexible	1	
30	0317 61 612	Cushion, Flexible Hose	1	
31	0820 78 857	Clip, Flexible Hose	2	
32	0259 78 858	Protector, Flexible Hose	2	
33	99865 0512	Screw, Clip	12	
34	0866 61 476	Protector, Flexible Hose	1	

No.	Part Number	Description	Q'ty	Re
35	1562 61 474	Clip, Flexible Hose	1	
36	99794 0630	Bolt, Clip	1	
37	1562 61 469	Clip, Flexible Hose	1	
38	99794 0616	Bolt, Clip	5	
39	99940 0602	Nut	3	
40	0866 61 463	Pipe No. 1	1	
41	0259 78 868	Clip, Pipe No. 1	2	
42	0866 61 472	Clip	1	
43	1562 61 464	Pipe No. 2	1	
44	1562 61 473	Clip	3	
45	0866 61 475	Grommet	1	
46	0208 78 875	Grommet	1	
47	1568 61 520	Unit, Cooler	1	
48	1524 61 526	Duct, Rubber	1	
49	0866 61 531	Bracket No. 1, Cooler Unit	1	
50	0866 61 532	Bracket No. 2, Cooler Unit	1	
51	0866 61 533	Bracket No. 3, Cooler Unit	1	
52	0866 61 534	Bracket No. 4, Cooler Unit	1	
53	0866 61 535	Bracket No. 5, Cooler Unit	1	
54	0866 61 536	Bracket No. 5, Cooler Unit	1	

No.	Part Number	Description	Q'ty	Remarks
55	99794 0616	Bolt, Bracket	14	
56	99940 0602	Nut, Bracket	2	
57	99940 0800	Nut, Bracket	2	
58	0866 61 551	Grille	1	
59	0866 61 552	Holder, Grille	2	
60	99868 0308	Screw, Grille Holder	4	
61	0866 61 525A	Hose, Drain	2	
62	0866 61 527	Clip	1	
63	99868 0512	Screw, Clip	1	
	99952 0500	Washer, Plain	1	
	99971 0500	Washer, Spring	1	
64	0820 78 883	Grommet, Drain Hose	2	
65	0370 61 467	Clip, Drain Hose	4	
66	0866 61 545	Stabilizer, Amplifier	1	
67	1524 61 548A	Bracket, Stabilizer	1	
68	99740 0512	Screw, Bracket	2	
69	1562 61 546	Harness	1	
70	1524 61 547	Cord	1	
71	0824 61 236A	Valve, Magnet	1	
72	0866 61 541	Valve, Check	1	

No.	Part Number	Description		Q'ty	Re
73	0866 61 543A	Hose, Vacuum		1	
74	0866 61 542	Connector		1	
75	99564 1000	Gasket, Connector		1	
76	0866 61 549	Spacer		1	
77	1568 61 190C	Control		1	
78	0866 61 195B	Panel, Control		1	
79	99833 0512	Screw, Control Panel		3	
	99971 0500	Washer, Spring		3	
80	1531 61 140	Blower		1	
81	99805 0830	Bolt, Blower	Without Car Heater	2	
	99952 0800	Washer, Plain		2	
	99971 0800	Washer, Spring		2	
82	99906 0800	Nut, Blower		1	
	99952 0822	Washer, Plain		1	
	99971 0800	Washer, Spring		1	

COOLER UNIT

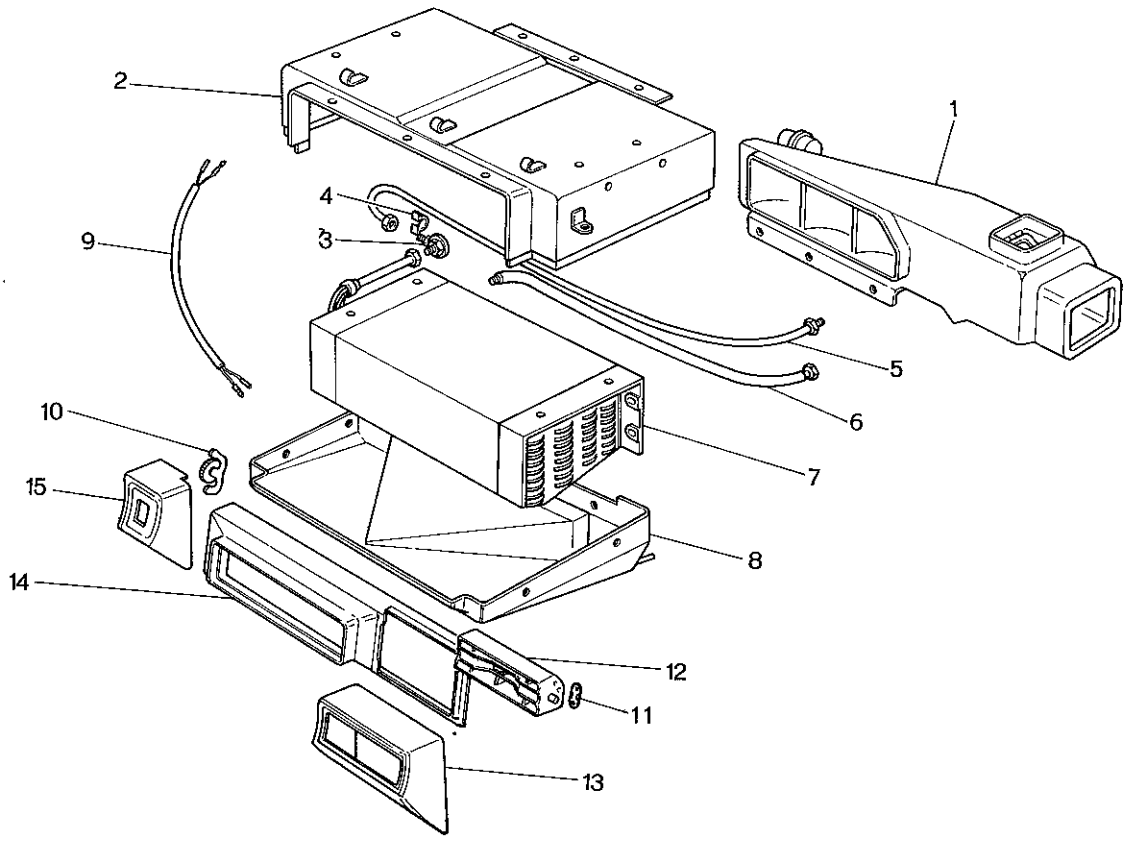

No.	Part Number	Description	Q'ty	Re
-	1568 61 520	Unit, Cooler	1	
1	1531 76 701	Duct, Air	1	
2	1524 76 702	Case, Main – Upper	1	
3	0370 76 703	Valve, Expansion	1	
4	0370 76 704	Holder, Valve	1	
5	1524 76 705	Pipe No. 1	1	
6	1524 76 706	Pipe No. 2	1	
7	1524 76 708	Evaporator	1	
8	1524 76 709	Case, Main – Lower	1	
9	0370 76 707	Thermister	1	
10	0866 76 711	Resister	1	
11	0866 61 552	Holder, Grille	2	
12	0866 76 715	Grille	1	
13	1562 76 716	Body, Grille	1	
14	1562 76 717	Duct, Air	1	
15	1562 76 718	Base, Grille	1	

COMPRESSOR (CAR COOLER)

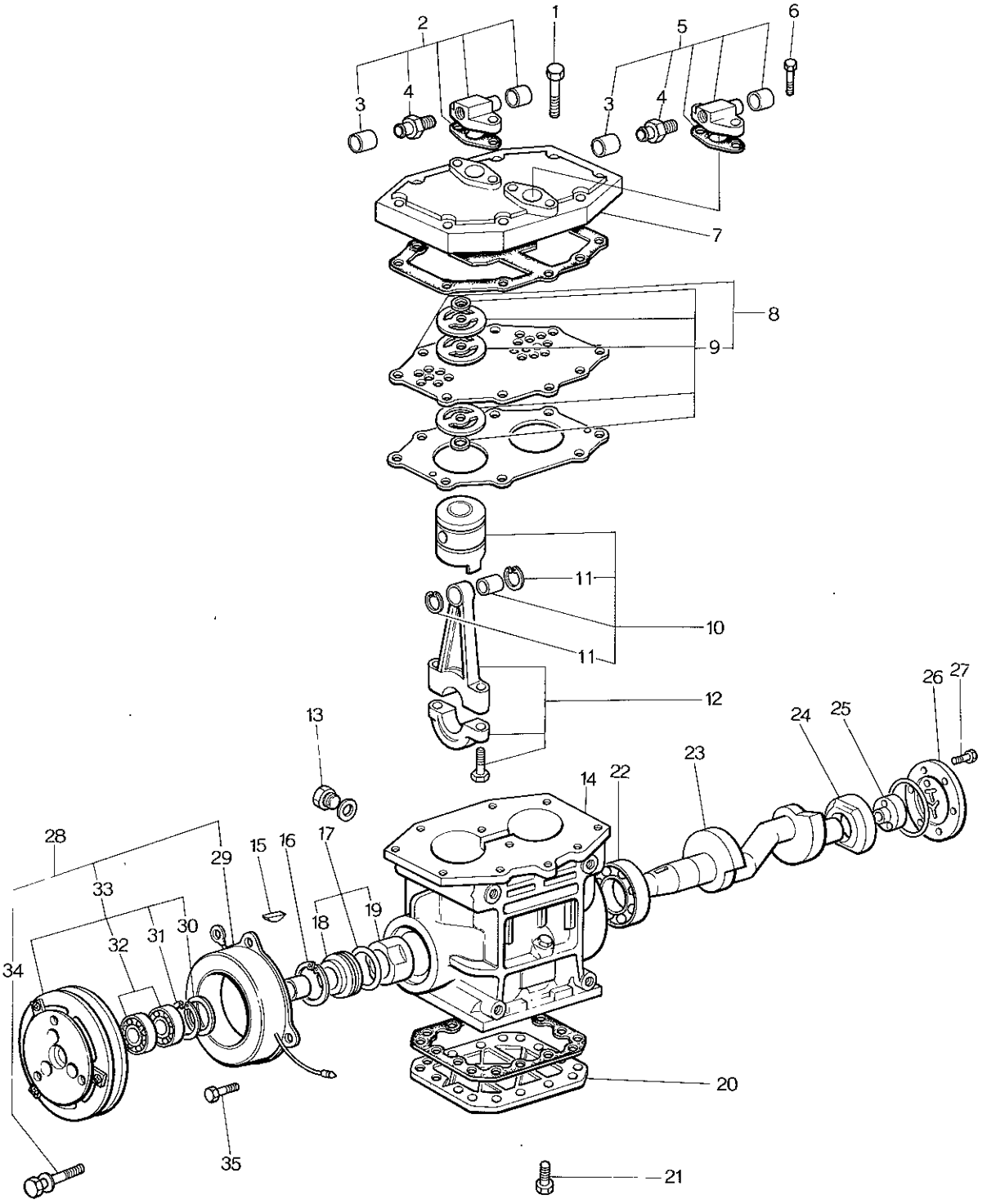

COMPRESSOR (CAR COOLER

No	Part Number	Description	Q'ty	Re
	0866 61 450	Compressor	1	
	0866 76 710	Compressor (Fig. No. 1 ~ 27 Included)	1	
1	0866 76 701	Bolt	4	
2	0866 76 810	Valve Kit, Service (Fig. No. 3, 4 included)	1	
3	0866 76 755	Cap, Service Valve	2	
4	0866 76 754	Valve, Service	2	
5	0866 76 820	Valve Kit, Fig. No. 3, 4 Included	1	
6	0866 76 702	Bolt, Cylinder Head	8	
7	0866 76 752	Head, Cylinder	1	
8	0866 76 760	Valve Set, Fig. No. 9 Included	1	
9	0866 76 703	Valve Kit, Lead	2	
10	0866 76 830	Piston Set, Fig. No. 11 Included	2	
11	0866 76 739	Ring, Snap	4	
12	0866 76 750	Rod, Connecting	2	
13	0866 76 704	Plug, Oil	1	
14	0866 76 721A	Block, Cylinder	1	
15	0866 76 723	Key, Woodruff	1	
16	0866 76 734	Clip	1	
17	0866 76 730	Seal Set, Shaft	1	
18	0866 76 733	Plate, Seal	1	

COMPRESSOR (CAR COOLER)

No.	Part Number	Description	Q'ty	Remarks
19	0866 76 731	Seal	1	
20	0866 76 743A	Plate, Bottom	1	
21	0866 76 705	Bolt	16	
22	0866 76 722	Bearing	1	
23	0866 76 724	Shaft, Crank	1	
24	0866 76 725	Bearing	1	
25	0866 76 726	Pump	1	
26	0866 76 729	Plate, Cover	1	
27	0866 76 706	Bolt	6	
28	0866 76 720	Clutch, Fig. No. 29 ~ 34 Included	1	
29	0866 76 763	Stator	1	
30	0866 76 764	Cover, Dust	1	
31	0866 76 765	Ring, "E" Stop	1	
32	0866 76 766	Bearing, Ball	2	
33	0866 76 790	Clutch, Magnet	1	
34	0866 76 707	Bolt	1	
35	0866 76 708	Screw	3	
	0866 76 709A	Gasket Set	1	

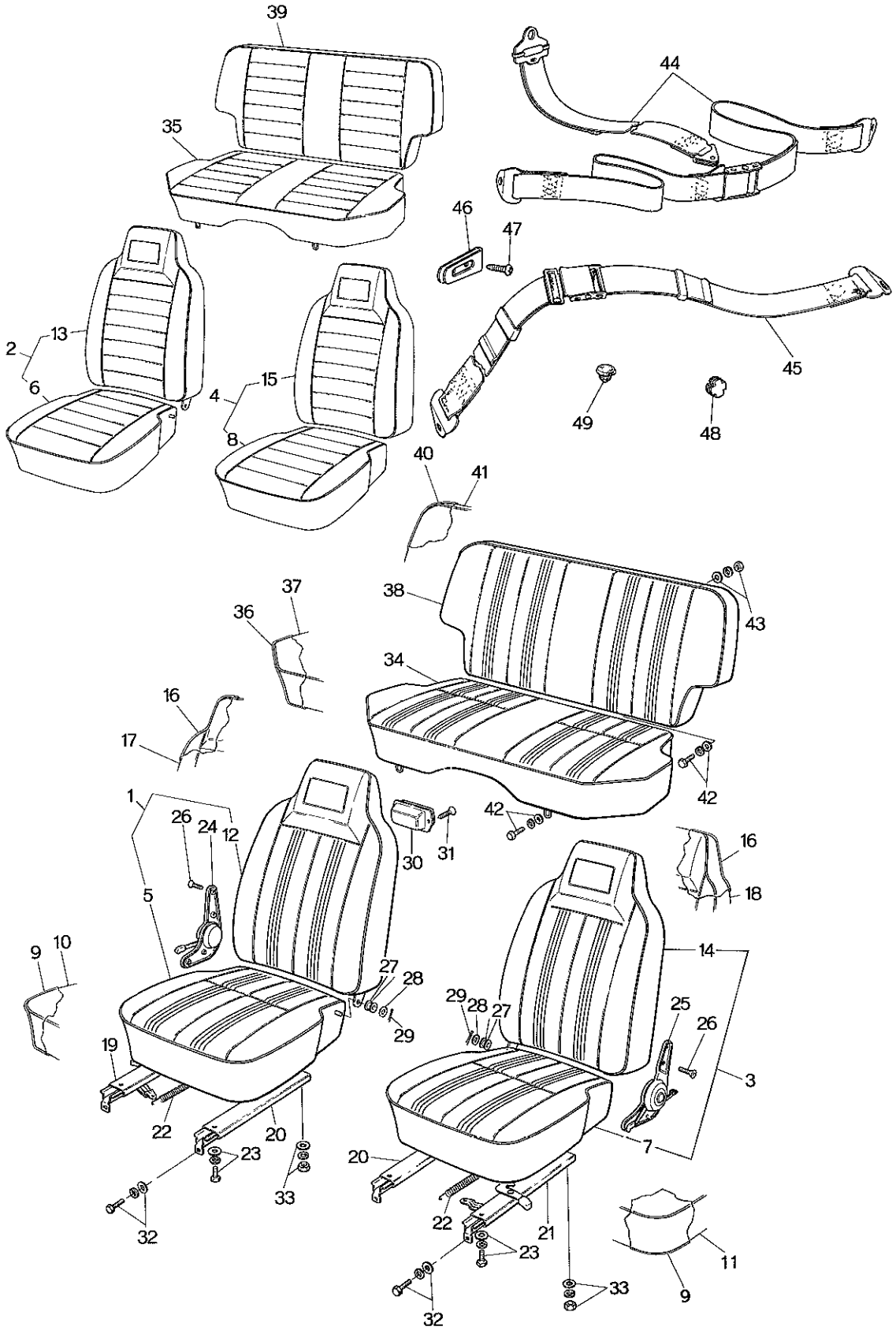
39
35
44
46
47
45
49
48
2
13
6
4
15
8
40
41
37
36
38
43
34
16
17
42
1
26
24
12
30
31
5
9
10
27
28
29
19
22
20
23
33
32
16
18
14
29
28
27
25
26
3
7
20
22
21
23
33
32
11
9

No.	Part Number	Description	Q'ty	Remar
	When ordering the following Seat & Trim			
	Note : 1, Add			
	- 03 (BLK.) - 12 (BRN.) - 13 (GRY. / YLW.)			
	after the parts number as color code nos.			
1	~~1553 57 100~~	~~Seat (Frt., R) (R.H.D.), With Ash Tray~~	~~1~~	
2	1554 57 100	Seat (Frt., R) (R.H.D.)	1	
●	1554 57 100 A	Seat (Frt., R) (R.H.D.)	1	
	1562 57 100	Seat (Frt., R) (L.H.D.) - Arctic Spec.	1	
	1562 57 100 A	Seat (Frt., R) (L.H.D.) - Arctic Spec.	1	Car No. 15281
	1568 57 100	Seat (Frt., R) (L.H.D.)	1	
●	1568 57 100 A	Seat (Frt., R) (L.H.D.) 1566, 1568	1	
●	1568 57 100 B	Seat (Frt., R) (L.H.D.)	1	Car No. 16062
3	~~1553 57 150~~	~~Seat (Frt., L) (R.H.D.)~~	~~1~~	
4	1554 57 150	Seat (Frt., L) (R.H.D.)	1	
●	1554 57 150 A	Seat (Frt., L) (R.H.D.)	1	
●	1554 57 150 B	Seat (Frt., L) (R.H.D.)	1	Car No. 16062
	1562 57 150	Seat (Frt., L) (L.H.D.) - Arctic Spec.	1	
	1562 57 150 A	Seat (Frt., L) (L.H.D.) - Arctic Spec.	1	Car No. 15281
	1568 57 150	Seat (Frt., L) (L.H.D.)	1	
●	1568 57 150 A	Seat (Frt., L) (L.H.D.) 1566, 1568	1	

No.	Part Number	Description	Q'ty	Remarks	
5	~~1532 88 110~~	~~Cushion (R), Seat~~	~~1~~		©
6	1562 88 110	Cushion (R), Seat-Arctic Spec.	1		©
	1568 88 110	Cushion (R), Seat	1		©
7	~~1532 88 160~~	~~Cushion (L), Seat~~	~~1~~		©
8	1562 88 160	Cushion (L), Seat-Arctic Spec.	1		©
	1568 88 160	Cushion (L), Seat	1		©
9	0259 88 259	Cover, Top	1		
10	~~0368 88 111~~	~~Trim (R), Cushion~~	~~1~~		©
	1562 88 111	Trim (R), Cushion-Arctic Spec.	1		©
	0866 88 111	Trim (R), Cushion	1		©
11	~~0368 88 161~~	~~Trim (L), Cushion~~	~~1~~		©
	1562 88 161	Trim (L), Cushion-Arctic Spec.	1		©
	0866 88 161	Trim (L), Cushion	1		©
12	~~0368 88 130~~	~~Seat (R), Back~~	~~1~~		©
13	1562 88 130	Seat (R), Back-Artic Spec.	1		©
● V	1562 88 130A	Seat (R), Back-Arctic Spec.	1	Car No. 7⅞~×	©
	0866 88 130	Seat (R), Back	1		©
14	~~0368 88 180~~	~~Seat (L), Back~~	~~1~~		©
15	1562 88 180	Seat (L), Back-Arctic Spec.	1		©
● V	1562 88 180A	Seat (L), Back-Arctic Spec.	1	Car No. 7⅞~×	©

No.	Part Number	Description	Q'ty	Remar
	0866 88 180	Seat (L), Back	1	
16	~~0866 88 105~~	~~Cover, Top~~	~~2~~	
	0866 88 135	Cover, Top	2	From Car No
17	~~0368 88 131~~	~~Trim (R), Back Seat~~	~~1~~	
	1562 88 131	Trim (R), Back Seat - Arctic Spec.	1	
	0866 88 131	Trim (R), Back Seat	1	
18	~~0368 88 181~~	~~Trim (L), Back Seat~~	~~1~~	
	1562 88 181	Trim (L), Back Seat - Arctic Spec.	1	
	0866 88 181	Trim (L), Back Seat	1	
19	0866 88 102	Adjuster No. 1	1	
√●	1882 88 102	Adjuster No. 1 (L.H.D.)	1	Car No. 16062
20	0866 88 103	Adjuster No. 2	2	
21	0866 88 152	Adjuster No. 3	1	
√●	1554 88 153	Adjuster No. 4 (R.H.D.)	1	Car No. 16062
22	0866 88 123	Spring, Return	2	
23	99801 0816	Bolt, Adjuster	8	
	99952 0816	Washer, Plain	8	
	99971 0800	Washer, Spring	8	
24	0866 88 101	Knuckle (R) (R.H.D.)	1	
	1562 88 101	Knuckle (R) (L.H.D.), With Foot Pedal	1	

No.	Part Number	Description	Q'ty	Remarks
●	1882 88 101	Knuckle (R) (L.H.D.), With Foot Pedal	1	Car No. 160623 73/10~×
25	0376 88 151	Knuckle (L) (R.H.D.), With Foot Pedal	1	
●	1554 88 151	Knuckle (L) (R.H.D.), With Foot Pedal	1	Car No. 160623 73/10~×
	0866 88 151	Knuckle (L) (L.H.D.)	1	
26	2155 57 109	Screw, Knuckle	8	
27	~~0866 57 105~~	~~Bush~~	~~2~~	
	0866 88 105	Bush	2	From Car No. 1
28	0259 57 105	Washer	2	
29	99221 3015	Pin, Split	2	
30	0259 68 250	Tray, Ash	1	
31	99864 0406	Screw, Ash Tray	2	
32	99785 0825	Bolt, Front Seat	4	
●	99786 0820B	Bolt, Front Seat	4	73/3~○
	99952 0822	Washer, Plain	4	
	99971 0800	Washer, Spring	4	
33	99901 0800	Nut, Front Seat	4	
●	99901 0800	Nut, Front Seat	4	73/3~○
	99952 0822	Washer, Plain	4	
	99971 0800	Washer, Spring	4	

No.	Part Number	Description	Q'ty	Remark
34	0375 57 200	Cushion (Rr.), Seat	1	
35	0376 57 200	Cushion (Rr.), Seat	1	
	1562 57 200	Cushion (Rr.), Seat - Arctic Spec.	1	
36	0866 88 375	Cover, Top	1	
37	~~0375 88 201~~	~~Trim~~	~~1~~	
● ✓	0376 88 201	Trim	1	1553, 1554, 1556 1568, 3503, 3517
	1562 88 201	Trim, Arctic Spec.	1	
	0866 88 201	Trim	1	1556
38	0370 57 250	Seat (Rr.), Back	1	
39	0866 57 250	Seat (Rr.), Back	1	
	1562 57 250	Seat (Rr.), Back	1	
40	0259 88 229	Cover, Top	1	
41	~~0370 88 251~~	~~Trim~~	~~1~~	
	0866 88 251	Trim	1	
	1562 88 251	Trim, Arctic Spec.	1	
42	99785 0825	Bolt, Rear Seat Cushion	2	
●	99786 0825B	Bolt, Rear Seat	2	
	99971 0800	Washer, Spring	2	

No.	Part Number	Description	Q'ty	Remarks
	0317 57 015	Washer	2	
● 42-1	907860 8 20B	Bolt, Rear Seat Back	2	From Car No. 1
●	99952 0822	Washer, Plain	2	From Car No. 1
43	99901 0800	Nut, Rear Seat Back	2	
●	99940 0800	Nut, Rear Seat Back	2	72/3~○
	99952 0822	Washer, Plain	2	
	99971 0800	Washer, Spring	2	
44	0820 57 900B	Belt, Front Safety	2	
	0305 57 920B	Belt, Front Safety	2	Car No. 160623 73/10~×
45	0702 78 200C	Belt, Rear Safety	2	
46	0305 57 909	Holder, Belt	2	
47	99861 0412	Screw, Belt Holder	4	
48	2981 69 623	Cap, Trim	2	
49	99301 1100	Cap	6	Without Safety Belt
	99302 1100C	Cap	1	

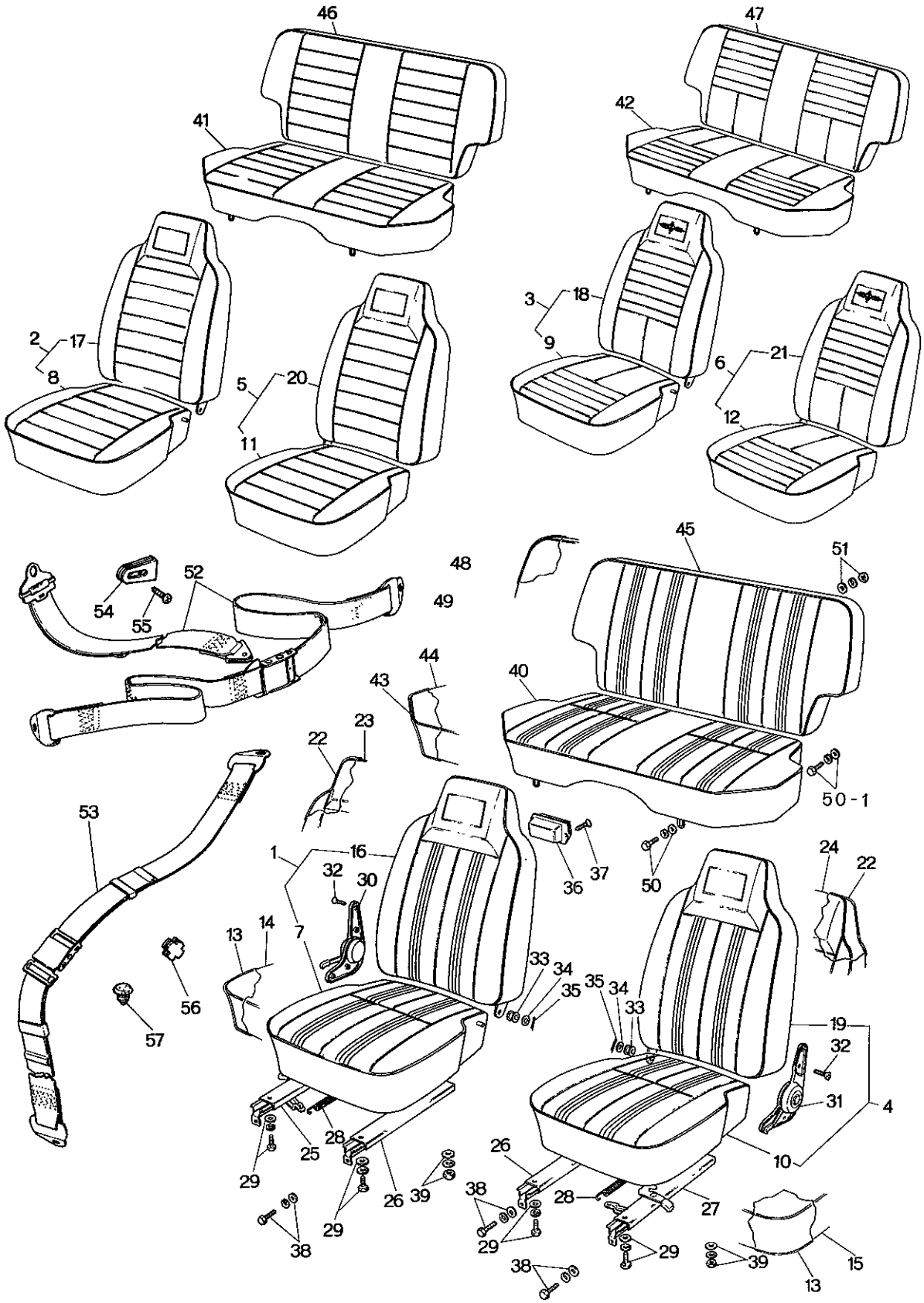
46
47
41
42
2
17
8
5
20
11
3
18
9
6
21
12
48
49
52
54
55
45
51
44
43
40
23
22
50-1
53
1
16
32
30
36
37
50
24
22
13
14
7
56
57
33
34
35
35
34
33
19
32
31
4
10
25
28
29
26
39
38
29
26
28
27
29
38
39
15
13

No.	Part Number	Description	Q'ty	Remar
	When ordering the following Seat & Trim			
	Note : 1, Add			
	- 03 (BLK.) - 12 (BRN.) - 13 (GRY. / YLW.)			
	after the parts number as colour code nos.			
1	0370 57 100A	Seat (Frt., R), Vinyl	1	1550
●	0370 57 100B	Seat (Frt., R), Vinyl	With Ash Tray 1	1550 Car No.
	~~1524 57 100A~~	~~Seat (Frt., R), Arctic Spec., Vinyl~~	~~1~~	
2	0866 57 100A	Seat (Frt., R), Vinyl	1	
	0866 57 100B	Seat (Frt., R), Vinyl	1	Car No. 15281
	1560 57 100	Seat (Frt., R), Arctic Spec., Vinyl	1	
	1560 57 100A	Seat (Frt., R), Arctic Spec., Vinyl	1	Car No. 15281
3	~~0866 57 300A~~	~~Seat (Frt., R), Cloth~~	~~1~~	
4	0370 57 150A	Seat (Frt., L), Vinyl	1	
●	0370 57 150B	Seat (Frt., L), Vinyl	1	Car No.
	1524 57 150	Seat (Frt., L), Arctic Spec., Vinyl	1	
5	0866 57 150A	Seat (Frt., L), Vinyl	1	
●	0866 57 150B	Seat (Frt., L), Vinyl	1	Car No. 15281
●	1560 57 150	Seat (Frt., L), Arctic Spec., Vinyl	1	
●	1560 57 150A	Seat (Frt., L), Arctic Spec., Vinyl	1	Car No. 15281
6	~~0866 57 350A~~	~~Seat (Frt., L), Cloth~~	~~1~~	

No.	Part Number	Description	Q'ty	Remarks	
7	0370 88 110	Cushion (R), Seat-Vinyl	1	1550	©
	~~1524 57 110~~	~~Cushion (R), Seat-Arctic Spec., Vinyl~~	~~1~~		~~©~~
8	0866 88 110	Cushion (R), Seat-Vinyl	1		©
	1560 88 110	Cushion (R), Seat-Arctic Spec., Vinyl	1		©
9	~~0866 57 310A~~	~~Cushion (R), Seat Cloth~~	~~1~~		~~©~~
10	0370 88 160	Cushion (L), Vinyl	1	1550	©
	~~1524 57 160~~	~~Cushion (L), Arctic Spec., Vinyl~~	~~1~~		~~©~~
11	0866 88 160	Cushion (L), Vinyl	1		©
	1560 88 160	Cushion (L), Arctic Spec., Vinyl	1		©
12	~~0866 57 360A~~	~~Cushion (L), Cloth~~	~~1~~		~~©~~
13	0259 88 259	Cover, Top	2		
14	0370 88 111	Trim (R), Cushion-Vinyl	1	1550	©
	~~1524 88 111~~	~~Trim (R), Cushion-Arctic Spec., Vinyl~~	~~1~~		~~©~~
	0866 88 111	Trim (R), Cushion-Vinyl	1		©
	1562 88 111	Trim (R), Cushion-Arctic Spec., Vinyl	1		©
	~~0866 88 490~~	~~Trim (R), Cushion-Cloth~~	~~1~~		~~©~~
15	0370 88 161	Trim (L), Cushion-Vinyl	1	1550	©
	~~1524 88 200~~	~~Trim (L), Cushion-Arctic Spec., Vinyl~~	~~1~~		~~©~~
	0866 88 161	Trim (L), Cushion-Vinyl	1		©
	1562 88 161	Trim (L), Cushion-Arctic Spec., Vinyl	1		©

No.	Part Number	Description	Q'ty	Remar
~~—~~	~~0866 88 530~~	~~Trim (L), Cushion-Cloth~~	~~1~~	
16	0370 88 130	Seat (R), Back-Vinyl	1	1550
● V	0370 88 130A	Seat (R), Back-Vinyl	1	1550 Car No. 1528
	1524 88 130	Seat (R), Back-Arctic Spec., Vinyl	1	
17	0866 88 130	Seat (R), Back-Vinyl	1	
● V	0866 88 130A	Seat (R), Back-Vinyl	1	Car No. 1528
	1562 88 130	Seat (R), Back-Arctic Spec., Vinyl	1	
18	~~0866 57 320~~	~~Seat (R), Back-Cloth~~	~~1~~	
19	0370 88 180	Seat (L), Back-Vinyl	1	1550
● V	0370 88 180A	Seat (L), Back-Vinyl	1	1550 Car No. 1528
~~—~~	~~1524 57 170~~	~~Seat (L), Back-Arctic Spec., Vinyl~~	~~1~~	
20	0866 88 180	Seat (L), Back-Vinyl	1	
● V	0866 88 180A	Seat (L), Back-Vinyl	1	Car No. 1528
	1562 88 180	Seat (L), Back-Arctic Spec., Vinyl	1	
21	~~0866 57 370~~	~~Seat (L), Back-Cloth~~	~~1~~	
22	~~0866 88 105~~	~~Cover, Top~~	~~2~~	
	0866 88 135	Cover, Top	2	From Car No.
23	0370 88 131	Trim (R), Back Seat-Vinyl	1	1550
~~—~~	~~1524 88 100~~	~~Trim (R), Back Seat-Arctic Spec., Vinyl~~	~~1~~	
	0866 88 131	Trim (R), Back Seat-Vinyl	1	

No.	Part Number	Description	Q'ty	Remarks	
	1562 88 131	Trim (R), Back Seat - Arctic Spec., Vinyl	1		©
	~~0866 88 500~~	~~Trim (R), Back Seat, Cloth~~	~~1~~		~~©~~
24	0370 88 181	Trim (L), Back Seat - Vinyl	1	1550	©
	~~1524 88 280~~	~~Trim (L), Back Seat - Arctic Spec., Vinyl~~	~~1~~		~~©~~
	0866 88 181	Trim (L), Back Seat - Vinyl	1		©
	1562 88 181	Trim (L), Back Seat - Arctic Spec., Vinyl	1		©
	~~0866 88 540~~	~~Trim (L), Back Seat - Cloth~~	~~1~~		~~©~~
25	0866 88 102	Adjuster No. 1	1		
26	0866 88 103	Adjuster No. 2	2		
27	0866 88 152	Adjuster No. 3	1		
28	0259 88 123	Spring, Return	2		
29	99801 0816	Bolt, Adjuster	8		
	99952 0816	Washer, Plain	8		
	99971 0800	Washer, Spring	8		
30	0866 88 101	Knuckle (R)	1		
31	0866 88 151	Knuckle (L)	1		
32	2155 57 109	Screw, Knuckle	8		
33	~~0866 57 105~~	~~Bush~~	~~2~~		
	0866 88 105	Bush	2	From Car No. 1	
34	0259 57 105	Washer	2		

No.	Part Number	Description	Q'ty	Remar
35	99221 3015	Pin, Split	2	
36	0259 68 250	Tray, Ash	1	
37	99864 0406	Screw, Ash Tray	1	
38	99785 0825	Bolt, Front Seat	4	
● V	99786 0825B	Bolt, Front Seat	4	
	99952 0822	Washer, Plain	4	
	99971 0800	Washer, Spring	4	
39	99901 0800	Nut, Front Seat	4	
● V	99940 0800	Nut, Front Seat	4	
	99952 0822	Washer, Plain	4	
	99971 0800	Washer, Spring	4	
40	0370 57 200A	Cushion (Rr.), Seat - Vinyl	1	1550
	~~1524 57 200~~	~~Cushion (Rr.), Seat - Arctic Spec., Vinyl~~	~~1~~	
41	0866 57 200A	Cushion (Rr.), Seat - Vinyl	1	
	1560 57 200	Cushion (Rr.), Seat - Arctic Spec., Vinyl	1	
42	~~0866 57 400~~	~~Cushion (Rr.), Seat - Clutch~~	~~1~~	
43	0866 88 375	Cover, Top	1	
44	0370 88 201	Trim, Vinyl	1	1550

No.	Part Number	Description	Q'ty	Remarks	
	~~1524 88 370~~	~~Trim, Arctic Spec., Vinyl~~	~~1~~		~~©~~
	0866 88 201	Trim, Vinyl	1		©
	1560 88 201	Trim, Arctic Spec., Vinyl	1		©
	~~0866 88 570~~	~~Trim, Cloth~~	~~1~~		~~©~~
45	0370 57 250	Seat (Rr.), Back - Vinyl	1	1550	©
	~~1524 57 250~~	~~Seat (Rr.), Back - Arctic Spec., Vinyl~~	~~1~~		~~©~~
46	0866 57 250	Seat (Rr.), Back - Vinyl	1		©
	1562 57 250	Seat (Rr.), Back - Arctic Spec., Vinyl	1		©
47	~~0866 57 450~~	~~Seat (Rr.), Back - Cloth~~	~~1~~		~~©~~
48	0259 88 229	Cover, Top	1		
49	0370 88 251	Trim, Vinyl	1		©
	~~1524 88 420~~	~~Trim, Arctic Spec.~~	~~1~~		~~©~~
	0866 88 251	Trim, Vinyl	1		©
	1562 88 251	Trim, Arctic Spec., Vinyl	1		©
	~~0866 88 580~~	~~Trim, Cloth~~	~~1~~		~~©~~
50	99785 0825	Bolt, Rear Seat	2		
●	99786 0825 B	Bolt, Rear Seat Cushion	2		78/3 ~ ○
	99971 0800	Washer, Spring	2		

No.	Part Number	Description	Q'ty	Remarl
	0317 57 015	Washer	2	
50-1	907860 8 20B	Bolt, Rear Seat Back	2	From Car No
●	99952 0822	Washer, Plain	2	From Car No
51	99901 0800	Nut, Rear Seat Back	2	
	99952 0800	Washer, Plain	2	
	99971 0800	Washer, Spring	2	
52	0305 57 920B	Belt, Front Safety	2	
53	0702 78 200C	Belt, Rear Safety	2	
54	0305 57 909	Holder, Belt	2	
55	99861 0412	Screw, Belt Holder	4	
56	2981 69 623	Cap, Trim	2	
57	99301 1100	Cap (Without Safety Belt)	6	
	99302 1100	Cap (Without Safety Belt)	1	

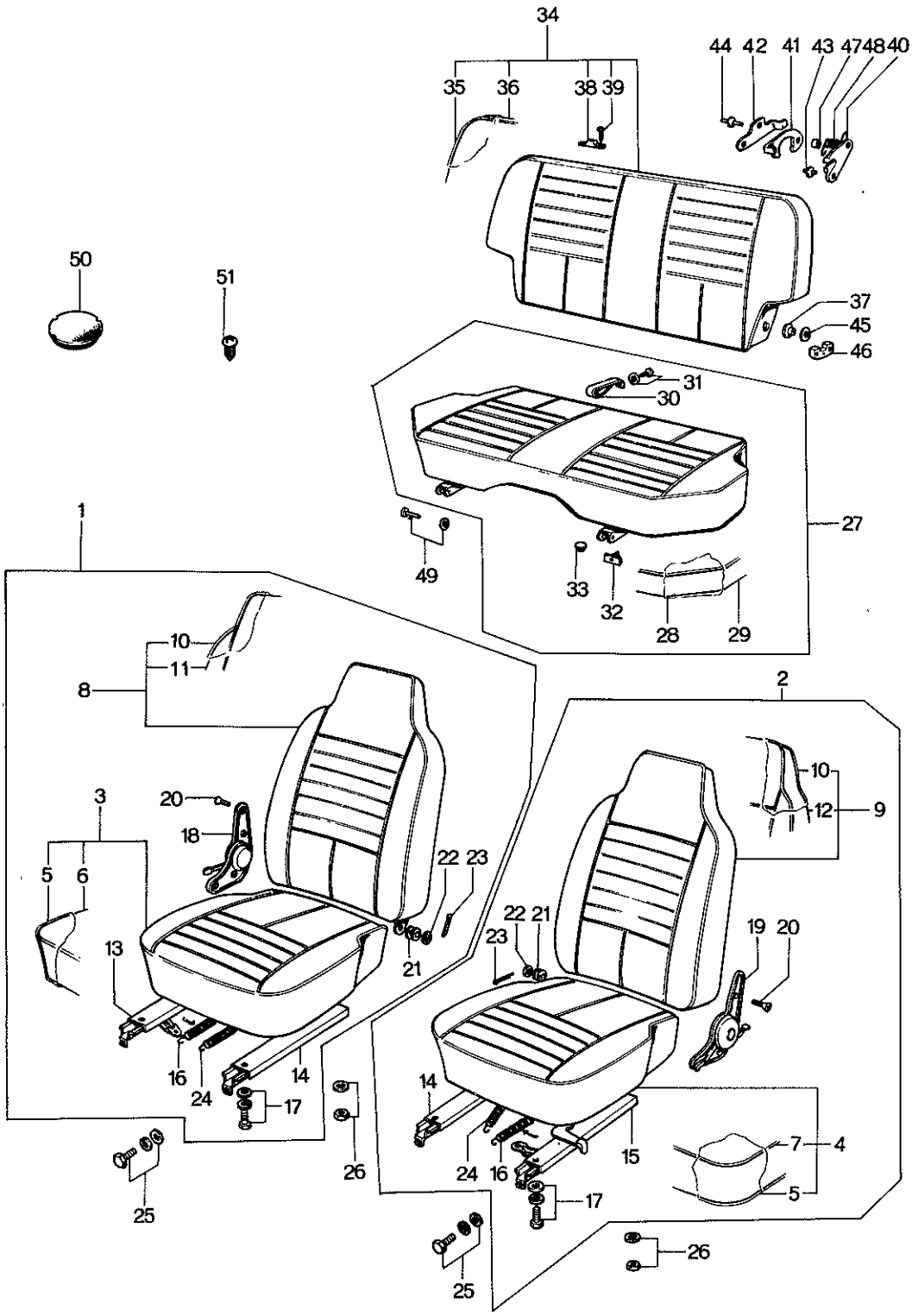
34
35
36
38
39
44
42
41
43
47
48
40
50
51
37
45
46
31
30
27
49
33
32
28
29
1
10
11
8
2
3
20
18
5
6
22
23
21
13
16
24
14
17
26
25
10
12
9
22
21
23
19
20
14
24
16
15
7
4
5
17
26
25

No.	Part Number	Description	Q'ty	Rem
		When ordering the following Seat & Trim Note : 1 Add -03 (Black) -12 (Brown) -13 (Grayish Yellow) after the parts number as colour code nos.		
1	0866 57 100B	Seat (R), Front	1	
2	0866 57 150B	Seat (L), Front	1	
3	0866 88 110	Cushion (R), Seat	1	
4	0866 88 160	Cushion (L), Seat	1	
5	0820 57 114	Cover, Top-Seat Cushion	2	
6	0866 88 111	Trim (R)	1	
7	0866 88 161	Trim (L)	1	
8	0866 88 130A	Seat (R), Back-Front	1	
9	0866 88 180A	Seat (L), Back-Front	1	
10	0866 88 135	Cover, Top-Seat Back	2	
11	0866 88 131A	Trim (R), Back Seat	1	
12	0866 88 181A	Trim (L), Back Seat	1	
13	0866 88 102	Adjuster No. 1	1	
14	0866 88 103	Adjuster No. 2	2	
15	0866 88 152	Adjuster No. 3	1	
16	0259 88 123	Spring, Return - Adjuster	2	
17	99801 0820	Bolt, Adjuster	8	

No.	Part Number	Description	Q'ty	Remarks
	99952 0816	Washer, Plain	8	
	99971 0800	Washer, Spring	8	
18	0866 88 101	Knuckle (R)	1	
19	0866 88 151	Knuckle (L)	1	
20	2155 57 109	Screw, Knuckle	8	
21	0866 88 105	Bush, Hinge	2	
22	0866 88 106	Washer, Hinge	2	
23	99221 3020	Pin, Split	2	
24	3450 88 107	Spring, Return	2	
25	99786 0820B	Bolt, Front Seat	4	
	99952 0822	Washer, Plain	4	
26	99940 0800	Nut, Front Seat	4	
	99952 0822	Washer, Plain	4	
27	0899 57 200A	Cushion, Rear Seat	1	©
28	0652 88 209	Cover, Top	1	
29	0899 88 201	Trim	1	©
30	0652 88 219	Band	1	
31	0760 88 218	Rivet, Band	1	

No.	Part Number	Description	Q'ty	Rem
	99953 0400	Washer, Plain	1	
32	0621 57 701A	Stopper	2	
33	0603 53 436	Grommet	1	
34	0899 57 250	Seat, Rear Back	1	
35	0652 88 229	Cover, Top	1	
36	0899 88 251	Trim	1	
37	0187 57 751	Tube	2	
38	0621 57 753	Stopper	2	
39	99832 0625B	Screw, Stopper	4	
40	0585 57 012	Stopper (R)	1	
	0585 57 013	Stopper (L)	1	
41	0585 57 015	Plate, Lock	1	
42	0585 57 016	Washer (R), Stopper	1	
	0585 57 017	Washer (L), Stopper	1	
43	0710 57 022	Rivet, Stopper	3	
44	0710 57 023	Rivet, Stopper	3	
45	0187 57 052	Washer, Adjust	2	
46	0621 57 054	Retainer	2	

SEAT (STATION WAGON)

No.	Part Number	Description	Q'ty	Remarks
47	0585 57 019	Bush	1	
48	0585 57 018	Spring, Return	1	
49	99230 0852	Pin, Rear Seat Cushion	2	
	99576 0500	Ring, Snap	2	
50	2981 68 623	Cap, Trim	2	
51	99301 1100	Cap	6	

FRONT SIDE DOOR (GLASS)

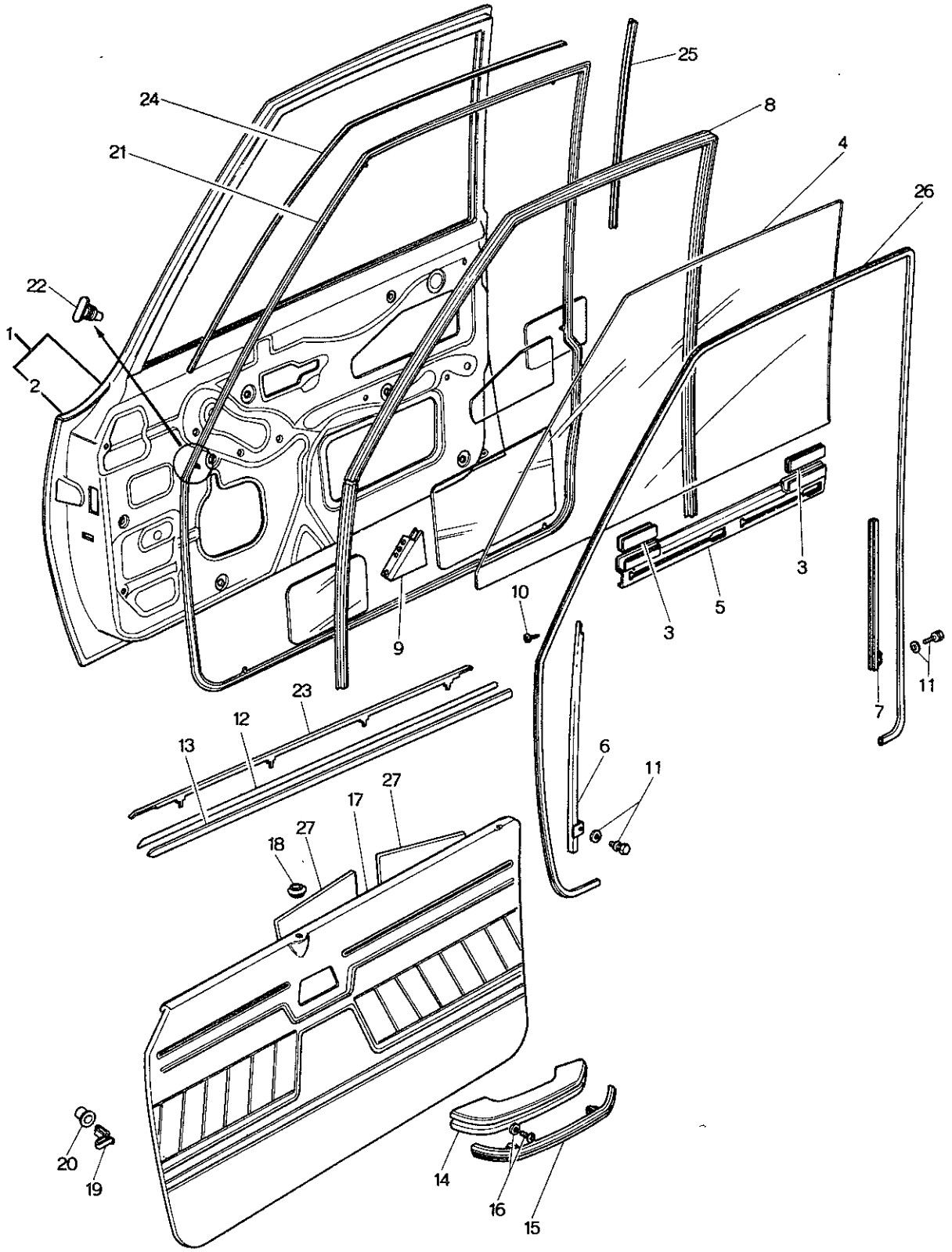

FRONT SIDE DOOR (GLASS)

No.	Part Number	Description		Q'ty	Rema
1	0376 58 010B	Body (R), Door		1	
	0376 58 010C	Body (R), Door		1	Car No. 134345
	0376 58 010D	Body (R), Door		1	Car No. 152249
	0376 58 010E	Body (R), Door		1	Car No. 160378
	1554 58 010	Body (R), Door	(For Australia & England)	1	
	1554 58 010A	Body (R), Door		1	Car No. 134345
	1554 58 010B	Body (R), Door		1	Car No. 152249
	1554 58 010C	Body (R), Door		1	Car No. 160378
	0376 59 010B	Body (L), Door	(Coupe)	1	
	0376 59 010C	Body (L), Door		1	Car No. 134345
	0376 59 010D	Body (L), Door		1	Car No. 152249
	0376 59 010E	Body (L), Door		1	Car No. 160378
	0866 58 010C	Body (R), Door		1	
	0866 58 010D	Body (R), Door		1	Car No. 134345
	0866 58 010E	Body (R), Door		1	Car No. 157510
	0866 58 010F	Body (R), Door		1	Car No. 160378
	1511 58 010A	Body (R), Door	(For Australia & England)	1	
	1511 58 010B	Body (R), Door		1	Car No. 134345
	1511 58 010C	Body (R), Door		1	Car No. 157510
	1511 58 010D	Body (R), Door		1	Car No. 160378

FRONT SIDE DOOR (GLASS)

No.	Part Number	Description	Q'ty	Remarks
	0866 59 010C	Body (L), Door	1	
	0866 59 010D	Body (L), Door	1	Car No. 134345 72/1~○
	0866 59 010E	Body (L), Door (Sedan & Station Wagon)	1	Car No. 157510 72/10~○
	0866 59 010F	Body (L), Door	1	Car No. 160378 72/12~○
2	0376 58 020A	Panel (R)	1	
	1554 58 020	Panel (R) (For Australia & England) (Coupe)	1	
	0376 59 020A	Panel (L)	1	
	0866 58 020A	Panel (R)	1	
	1511 58 020	Panel (R) (For Australia & England) (Sedan & Station Wagon)	1	
	0866 59 020A	Panel (L)	1	
3	2292 58 232	Rubber, Strip-Door Glass	4	
4	0368 58 501	Glass (R) Transparent (Sedan & Station Wagon)	1	
●	0368 58 501A	Glass (R) Transparent (Sedan & Station Wagon)	1	73/10~○
	0368 59 501	Glass (L) Transparent (Sedan & Station Wagon)	1	
●	0368 59 501A	Glass (L) Transparent (Sedan & Station Wagon)	1	73/10~○
	0866 58 501	Glass (R) Blue Pane (Sedan & Station Wagon)	1	
●	0866 58 501A	Glass (R) Blue Pane (Sedan & Station Wagon)	1	73/10~○
	0866 59 501	Glass (L) Blue Pane (Sedan & Station Wagon)	1	
●	0866 59 501A	Glass (L) Blue Pane (Sedan & Station Wagon)	1	73/10~○

FRONT SIDE DOOR (GLASS)

No.	Part Number	Description		Q'ty	Remar
	0374 58 501	Glass (R)	Transparent (Coupe)	1	
●	0374 58 501A	Glass (R)	Transparent (Coupe)	1	
	0374 59 501	Glass (L)	Transparent (Coupe)	1	
●	0374 59 501A	Glass (L)	Transparent (Coupe)	1	
	0376 58 501	Glass (R)	Blue Pane (Coupe)	1	
●	0376 58 501A	Glass (R)	Blue Pane (Coupe)	1	
	0376 59 501	Glass (L)	Blue Pane (Coupe)	1	
●	0376 59 501A	Glass (L)	Blue Pane (Coupe)	1	
5	0305 58 505	Bracket (R), Lift		1	
	0305 59 505	Bracket (L), Lift		1	
6	0866 58 603	Guide "A" (R), Glass		1	
	0866 59 603	Guide "A" (L), Glass		1	
7	0376 58 604	Guide "B" (R), Glass	(Coupe)	1	
	0376 59 604	Guide "B" (L), Glass	(Coupe)	1	
	0866 58 604	Guide "B" (R), Glass	(Sedan & Station Wagon)	1	
	0866 59 604	Guide "B" (L), Glass	(Sedan & Station Wagon)	1	
8	0376 58 605	Channel, Glass Run (Coupe)		2	
	0866 58 605	Channel, Glass Run (Sedan & Station Wagon)		2	
9	0866 58 620	Bracket, Corner		2	
10	99831 0408	Screw, Glass Guide		4	

No.	Part Number	Description	Q'ty	Remarks
11	99806 0612	Bolt, Glass Guide	4	
	99971 0600	Washer, Spring	4	
	99951 0618	Washer, Plain	2	
	0727 70 943	Washer, Plain	2	
●	2850 13 332	Washer, Plain	2	74/1~○
12	0376 58 781D	Weatherstrip, Outer (Coupe)	2	
	~~0376 59 781A~~	~~Weatherstrip, Outer~~	~~1~~	
	0866 58 781D	Weatherstrip, Outer (Sedan & Station Wagon)	2	
	~~0866 59 781A~~	~~Weatherstrip, Outer~~	~~1~~	
13	0376 58 791	Weatherstrip, Inner (R) (Coupe)	1	
	0376 59 791	Weatherstrip, Inner (L) (Coupe)	1	
	0866 58 791	Weatherstrip, Inner (R) (Sedan & Station Wagon)	1	
	0866 59 791	Weatherstrip, Inner (L) (Sedan & Station Wagon)	1	
14	0398 58 821A	Rest, Arm	2	
15	0398 58 822	Garnish, Arm Rest	2	
	0398 58 822A	Garnish, Arm Rest	2	Car No. 130590 71/12~○
16	99833 0512	Screw, Tapping-Arm Rest	4	
●	99833 0520	Screw, Tapping-Arm Rest	4	Car No. 160623 73/10~△
	99952 0500	Washer, Plain	4	Car No. 160623 73/10~△

No.	Part Number	Description		Q'ty	Remar
		When ordering the following trims Add color code nos. given below after parts number -03 (BLK.) -12 (BRN.) -13 (GRY./YLW.)			
17	0370 58 811A	Trim (R), Door	(1550)	1	
●	0370 58 811B	Trim (R), Door	(1550)	1	
	0370 59 811A	Trim (L), Door	(1550)	1	
●	0370 59 811B	Trim (L), Door	(1550)	1	
	1560 58 810A	Trim (R), Door	(Sedan & Station Wagon) (1550 Excluded)	1	
	1560 58 810B	Trim (R), Door	(Sedan & Station Wagon) (1550 Excluded)	1	Car No. 160378
	~~0866 59 610C~~	~~Trim (L), Door~~	(Sedan & Station Wagon) (1550 Excluded)	~~1~~	
	0866 59 810B	Trim (L), Door	(Sedan & Station Wagon) (1550 Excluded)	1	From Car No.
●	0866 59 810C	Trim (L), Door	(Sedan & Station Wagon) (1550 Excluded)	1	
	~~1581 58 810~~	~~Trim (R), Door~~	(Coupe DX.)	~~1~~	
	1561 58 810D	Trim (R), Door	(Coupe DX.)	1	From Car No.
	1561 58 810E	Trim (R), Door	(Coupe DX.)	1	Car No. 160378
	0376 59 810D	Trim (L), Door	(Coupe DX.)	1	
●	0376 59 810F	Trim (L), Door	(Coupe DX.)	1	
		When ordering the following trims Add color code, given below after parts number -14 (BLK.) -17{BRN. (Upper) OLIV. (Lower) -25{BRN. (Upper) BLK. (Lower) -18{GRY./YLW. OLIV. (Lowe		26 {GRY./Y BLK. (L	

FRONT SIDE DOOR (GLASS)

No.	Part Number	Description		Q'ty	Remarks
	1562 58 810D	Trim (R), Door	(Coupe Super Deluxe)	1	©
	1562 58 810E	Trim (R), Door		1	Car No. 160378 ~○ ©
	~~0870 59 810E~~	~~Trim (L), Door~~		~~1~~	
	0870 59 810E	Trim (L), Door		1	From Car No. 1 ©
	0870 59 810F	Trim (L), Door		1	Car No. 160378 ~○ ©
18	0223 58 692A	Grommet		2	
● 19	0208 58 921	Fastener, Door Trim		14 18	(Sedan) (Coupe)
● 20	0187 58 922	Seal, Fastener-Door Trim		14 18	(Sedan) (Coupe)
21	0376 58 760A	Weatherstrip (R)	(Coupe)	1	
	0376 59 760A	Weatherstrip (L)		1	
	0866 58 760A	Weatherstrip (R)	(Sedan & Station Wagon)	1	
	0866 59 760A	Weatherstrip (L)		1	
22	0305 58 762	Fastener		54	
23	0866 58 831A	Mould (R), Beltline	(Sedan & Station Wagon)	1	
	0866 58 831B	Mould (R), Beltline		1	Car No. 127396 ~△
	0866 58 831C	Mould (R), Beltline		1	Car No. 144578 ~△
	0866 59 831A	Mould (L), Beltline		1	
	0866 59 831B	Mould (L), Beltline		1	Car No. 127396 ~△

FRONT SIDE DOOR (GLASS)

No.	Part Number	Description		Q'ty	Remar
	0866 59 831C	Mould (L), Beltline	(Sedan & Station Wagon)	1	Car No. 14457
	~~0376 58 381A~~	~~Mould (R), Beltline~~		~~1~~	
●	0376 58 831A	Mould (R), Beltline		1	From Car No
	~~0376 58 381B~~	~~Mould (R), Beltline~~		~~1~~	~~Car No. 12739~~
●	0376 58 831B	Mould (R), Beltline		1	Car No. 12739
	~~0376 58 381C~~	~~Mould (R), Beltline~~		~~1~~	~~Car No. 14457~~
●	0376 58 831C	Mould (R), Beltline	(Coupe)	1	Car No. 14457
	~~0376 59 381A~~	~~Mould (L), Beltline~~		~~1~~	
●	0376 59 831A	Mould (L), Beltline		1	From Car No
	~~0376 59 381B~~	~~Mould (L), Beltline~~		~~1~~	~~Car No. 12739~~
●	0376 59 831B	Mould (L), Beltline		1	Car No. 12739
	~~0376 59 381C~~	~~Mould (L), Beltline~~		~~1~~	~~Car No. 14457~~
●	0376 59 831C	Mould (L), Beltline		1	Car No. 14457
24	0866 58 841A	Mould "A" (R), Sash		1	
	0866 59 841A	Mould "A" (L), Sash	(Sedan & Station Wagon)	1	
25	0866 58 842A	Mould "B" (R), Sash		1	
	0866 59 842A	Mould "B" (L), Sash		1	
26	0398 58 755	Welt, Seaming		2	
27	0866 58 851	Insulation (Sedan & Station Wagon)		4	
	0376 58 851	Insulation (Coupe)		4	

FRONT SIDE DOOR (LOCK)

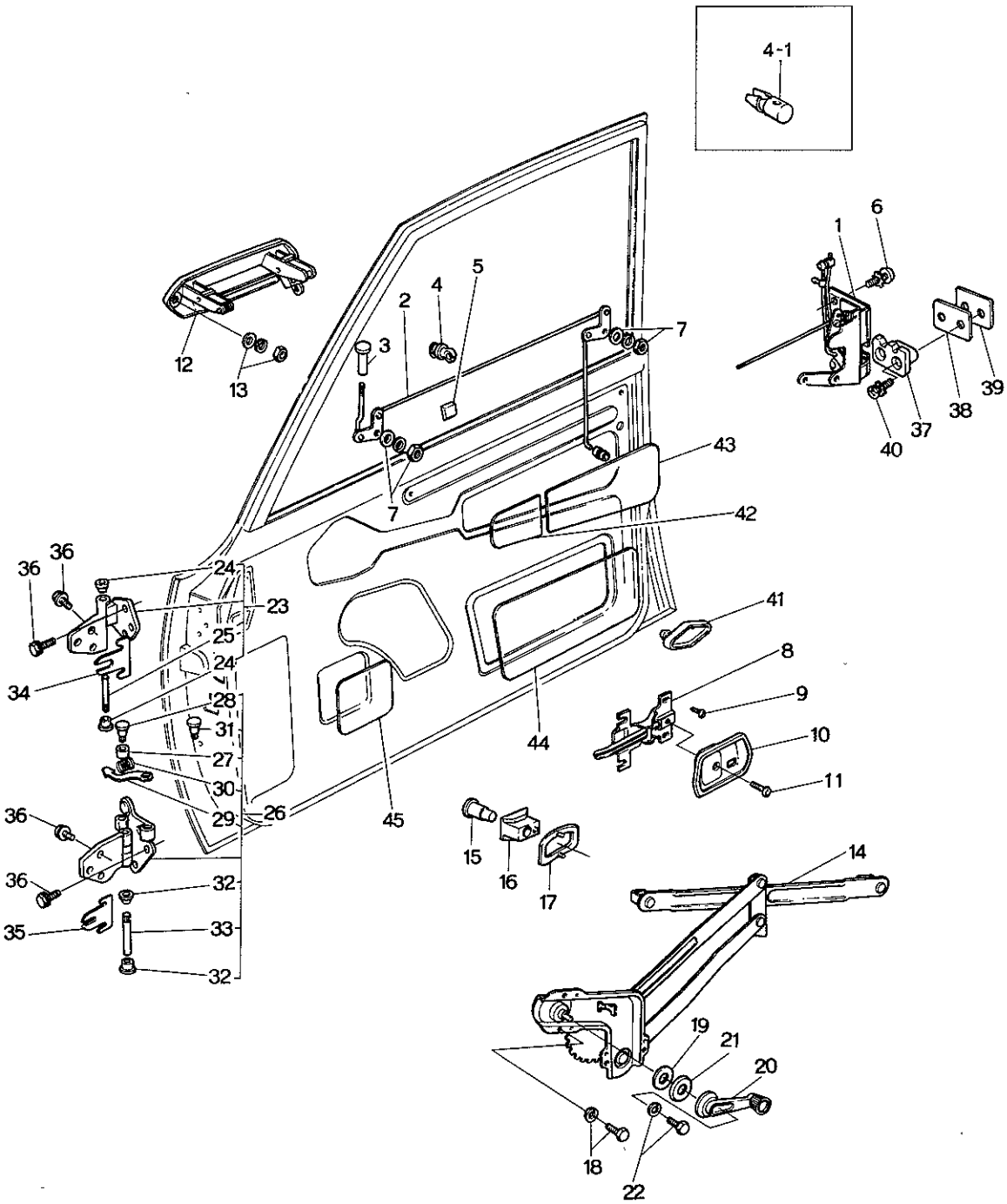

FRONT SIDE DOOR (LOCK)

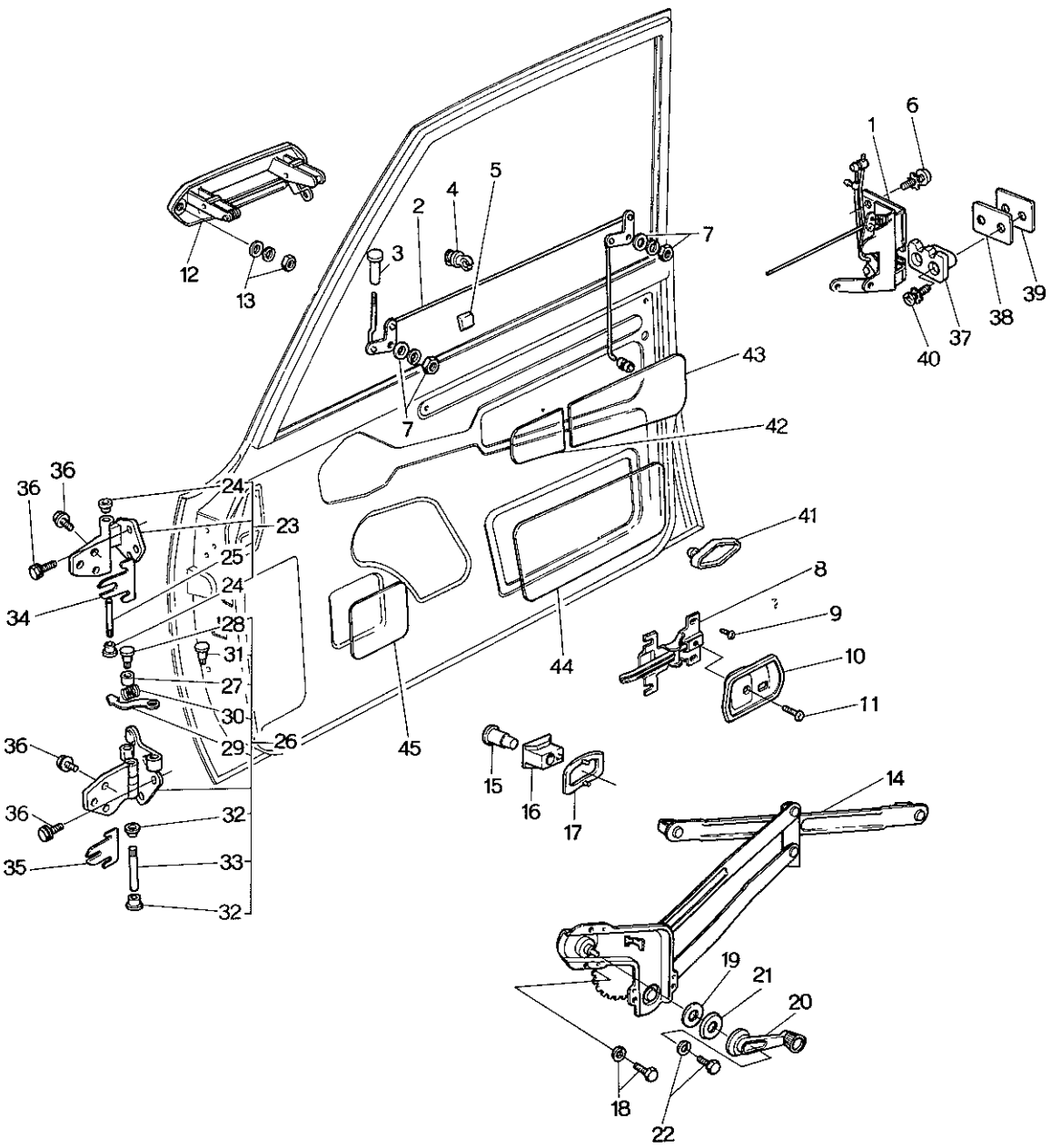

FRONT SIDE DOOR (LOCK)

No.	Part Number	Description		Q'ty	Remar
1	0376 58 310A	Lock (R), Door	(R.H.D. Coupe)	1	
	0376 58 310D	Lock (R), Door		1	Car No. 13434
	0376 58 310F	Lock (R), Door		1	Car No. 15052
	0376 58 310G	Lock (R), Door		1	Car No. 15351
●	0376 58 310H	Lock (R), Door		1	Car No. 16774
	0376 59 310A	Lock (L), Door		1	
	0376 59 310D	Lock (L), Door		1	Car No. 13434
	0376 59 310F	Lock (L), Door		1	Car No. 15052
	0376 59 310G	Lock (L), Door		1	Car No. 15351
●	0376 59 310H	Lock (L), Door		1	Car No. 16774
	1562 58 310A	Lock (R), Door	Arctic Spec. (All Models) (L.H.D. Coupe)	1	
	1562 58 310D	Lock (R), Door		1	Car No. 13434
	1562 58 310F	Lock (R), Door		1	Car No. 15052
	1562 58 310G	Lock (R), Door		1	Car No. 15351
●	1562 58 310H	Lock (R), Door		1	Car No. 16774
	1562 59 310A	Lock (L), Door		1	
	1562 59 310D	Lock (L), Door		1	Car No. 13434
	1562 59 310F	Lock (L), Door		1	Car No. 15052
	1562 59 310G	Lock (L), Door		1	Car No. 15351
●	1562 59 310H	Lock (L), Door		1	Car No. 16774

No.	Part Number	Description	Q'ty	Remarks
	1566 58 310A	Lock (R), Door	1	
	1566 58 310D	Lock (R), Door	1	Car No. 134345 ~○
	1566 58 310F	Lock (R), Door	1	Car No. 150526 ~×
●	1566 58 310H	Lock (R), Door	1	Car No. 167748 ~△
	1566 59 310A	Lock (L), Door (L.H.D. Coupe)	1	
	1566 59 310D	Lock (L), Door	1	Car No. 134345 ~○
	1566 59 310F	Lock (L), Door	1	Car No. 150526 ~×
●	1566 59 310H	Lock (L), Door	1	Car No. 167748 ~△
	0866 58 310A	Lock (R), Door	1	
	0866 58 310D	Lock (R), Door	1	Car No. 134345 ~○
	0866 58 310F	Lock (R), Door	1	Car No. 150526 ~×
	0866 58 310G	Lock (R), Door	1	Car No. 153515 ~○
●	0866 58 310H	Lock (R), Door	1	Car No. 167748 ~△
	0866 59 310A	Lock (L), Door (R.H.D. Sedan & Station Wagon)	1	
	0866 59 310D	Lock (L), Door	1	Car No. 134345 ~○
	0866 59 310F	Lock (L), Door	1	Car No. 150526 ~×
	0866 59 310G	Lock (L), Door	1	Car No. 153515 ~○
●	0866 59 310H	Lock (L), Door	1	Car No. 167748 ~△
	1524 58 310A	Lock (R), Door	1	
	1524 58 310D	Lock (R), Door (Arctic Spec.) (L.H.D. Sedan)	1	Car No. 134345 ~○

FRONT SIDE DOOR (LOCK)

No.	Part Number	Description		Q'ty	Remar
	1524 58 310F	Lock (R), Door	Arctic Spec.	1	Car No. 15052
	1524 58 310G	Lock (R), Door	(All Models)	1	Car No. 15351
●	1524 58 310H	Lock (R), Door		1	Car No. 16774
	1524 59 310A	Lock (L), Door		1	
	1524 59 310D	Lock (L), Door	Arctic Spec.	1	Car No. 13434
	1524 59 310F	Lock (L), Door		1	Car No. 15052
	1524 59 310G	Lock (L), Door	(All Models)	1	Car No. 15351
●	1524 59 310H	Lock (L), Door		1	Car No. 16774
	1534 58 310A	Lock (R), Door		1	
	1534 58 310D	Lock (R), Door		1	Car No. 13434
	1534 58 310F	Lock (R), Door		1	Car No. 15052
●	1534 58 310G	Lock (R), Door		1	
	1534 59 310A	Lock (L), Door		1	
	1534 59 310D	Lock (L), Door		1	Car No. 13434
	1534 59 310F	Lock (L), Door		1	Car No. 15052
●	1534 59 310G	Lock (L), Door		1	

(L.H.D. Sedan)

2	0376 58 330A	Rod (R)		1	
	0376 58 330B	Rod (R)	(Coupe)	1	Car No. 134345
	0376 58 330C	Rod (R)		1	Car No. 153515

No.	Part Number	Description	Q'ty	Remarks
	0376 59 330A	Rod (L) (Coupe)	1	
	0376 59 330B	Rod (L) (Coupe)	1	Car No. 134345 ⁷²⁄₁ ~ ○
	0376 59 330C	Rod (L) (Coupe)	1	Car No. 153515 ⁷²⁄₉ ~ ○
	0866 58 330A	Rod (R) (Sedan & Station Wagon)	1	
	0866 58 330B	Rod (R) (Sedan & Station Wagon)	1	Car No. 134345 ⁷²⁄₁ ~ ○
	0866 58 330C	Rod (R) (Sedan & Station Wagon)	1	Car No. 153515 ⁷²⁄₉ ~ ○
	0866 59 330A	Rod (L) (Sedan & Station Wagon)	1	
	0866 59 330B	Rod (L) (Sedan & Station Wagon)	1	Car No. 134345 ⁷²⁄₁ ~ ○
	0866 59 330C	Rod (L) (Sedan & Station Wagon)	1	Car No. 153515 ⁷²⁄₉ ~ ○
3	~~0259 58 681~~	~~Knob~~	~~2~~	
●	0259 58 691	Knob	2	From Car No. 1
4	0305 58 309	Holder, Rod	4	
● 4-1	0866 58 313	Joint-Key Cylinder	2	Car No. 167748 ⁷³⁄₄ ~ Added Anew
5	0259 72 509	Pad, Door Lock	4	
6	99832 0630	Screw, Door Lock	6	
	99974 0600	Washer, Toothed	6	
	99975 0600	Washer, Toothed	6	
7	99907 0600	Nut, Door Lock	4	
	99952 0600	Washer, Plain	4	

FRONT SIDE DOOR (LOCK)

No.	Part Number	Description	Q'ty	Remar
	99971 0600	Washer, Spring	4	
● 7	99940 0600	Nut, Door Lock	4	
8	0866 58 321B	Handle, Inner	2	
9	99806 0510	Bolt, Inner Handle	6	
	99952 0518	Washer, Plain	6	
	99971 0500	Washer, Spring	6	
●	99796 0508	Bolt, Inner Handle	6	
10	0368 58 303	Cover (R), Inner Handle (Std.)	1	
	0368 59 303	Cover (L) (Std.)	1	
	~~0866 58 303B00~~	~~Cover (R)~~	~~1~~	
●	~~0866 58 303 01~~	~~Cover (R)~~	~~1 From Car No~~	
●	0866 58 303B01	Cover (R) (Std. Excluded)	1	From Car No
●	~~0866 59 303B00~~	~~Cover (L)~~	~~1 From Car No~~	
	0866 59 303B01	Cover (L)	1	From Car No
11	99832 0408B	Screw, Cover	2	
12	0866 58 410	Handle (R), Outer Side	1	
	0866 58 410A	Handle (R), Outer Side	1	Car No. 153515
	0866 59 410	Handle (L), Outer Side	1	
	0866 59 410A	Handle (L), Outer Side	1	Car No. 153515
13	99906 0500	Nut, Outer	4	

No.	Part Number	Description	Q'ty	Remarks
	99951 0618	Washer, Plain	4	
	99971 0500	Washer, Spring	4	
14	0866 58 560	Regulator (R)	1	
	0866 59 560	Regulator (L)	1	
15	0223 58 303A	Pin	4	
16	0223 58 304A	Guide	4	
17	0223 58 311	Spring	4	
18	99806 0612	Bolt, Window Regulator	8	
	99971 0600	Washer, Spring	8	
	99951 0818	Washer, Plain	8	
● V	99951 0618	Washer, Plain	8	Car No. 160623 73/10～Added Anew
19	0259 58 305	Gasket, Window Regulator	2	
	0259 58 305A	Gasket, Window Regulator	2	Car No. 152816 73/9～○
●	0259 58 305B	Gasket, Window Regulator	2	Car No. 74/1～△
20	0824 58 370A	Handle, Regulator	2	
	0824 58 370B	Handle, Regulator	2	Car No. 157510 73/10～△
●	0223 58 370D	Handle, Regulator	2	Car No. 160623 73/10～×
21	0223 58 375A	Escutcheon	2	

No.	Part Number	Description	Q'ty	Remar
22	99808 0516	Bolt, Regulator Handle	2	
	99971 0500	Washer, Spring	2	
23	0866 58 210	Hinge "A"	2	
24	0223 58 721	Bush	4	
25	0187 58 731	Pin, Hinge	2	
26	0866 58 240A	Hinge "B" (R)	1	
	0866 58 240C	Hinge "B" (R)	1	Car No. 16082
	0866 59 240A	Hinge "B" (L)	1	
	0866 59 240C	Hinge "B" (L)	1	Car No. 16082
27	0866 58 281	Roller	2	
	0866 58 281A	Roller	2	Car No. 15978
	0866 58 281B	Roller	2	Car No. 16082
28	0866 58 282	Pin "A"	2	
	0866 58 282A	Pin "A"	2	Car No. 16082
29	0866 58 291A	Lever, Check	2	
30	0866 58 292A	Spring, Check	2	
31	0866 58 293	Pin "B"	2	
32	0223 58 721	Bush	4	

No.	Part Number	Description	Q'ty	Remarks
33	0187 58 731	Pin, Hinge	2	
34	0866 58 201	Shim, Hinge "A" } Selective use	4	
35	0866 58 231	Shim, Hinge "B" } Selective use	4	
	1011 58 231	Shim, Hinge "B" } Selective use	4	Car No. 152816 72/9 ~ ○
36	907832 8 28	Bolt Set, Hinge	24	
37	0866 58 361	Rack (R)	1	
	1540 58 361	Rack (R)	1	Car No. 134345 72/1 ~ ○
	0866 58 361B	Rack (R)	1	Car No. 150526 72/8 ~ ×
●	0866 58 361C	Rack (R)	1	Car No. 167748 73/5 ~ △
	0866 59 361	Rack (L)	1	
	1540 59 361	Rack (L)	1	Car No. 134345 72/1 ~ ○
	0866 59 361B	Rack (L)	1	Car No. 150526 72/8 ~ ×
●	0866 59 361C	Rack (L)	1	Car No. 166140 73/4 ~ △
38	0866 58 363	Seat, Striker	2	Used up to Car No. 150526 72/8
39	0866 58 364A	Plate, Base	2	
	0866 58 364B	Plate, Base	2	Car No. 150526 72/8 ~ ×
40	907614 6 40	Screw Set, Rack	4	Car No. 134344 72/1 ~ Discarded
	1540 58 371	Screw	4	Car No. 134345 72/1 ~ Added Anew
	99975 0600	Washer	4	Car No. 134345 72/1 ~ Added Anew

No.	Part Number	Description	Q'ty	Remar
41	0259 58 906	Cushion	2	
42	0866 58 861A	Screen "A"	2	
● 43	0866 59 862A	Screen "B" (R)	2	
	~~0866 59 862~~	~~Screen "B" (L)~~	~~1~~	
● 44	0866 58 863	Screen "C"	2	
● 45	0866 58 864	Screen "D"	2	
●	0305 58 864	Screen "D"	2	Car No. 15052

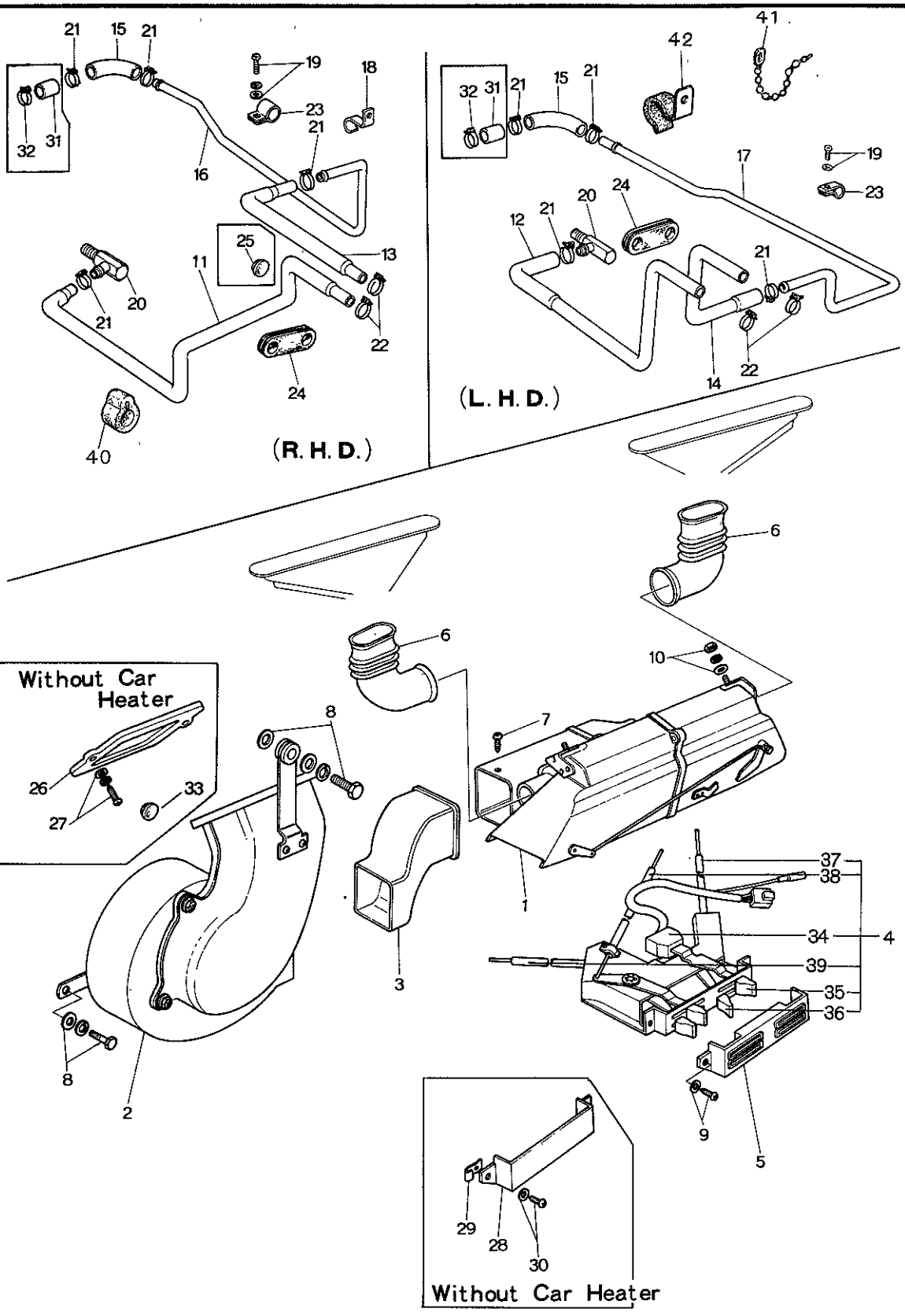
(R. H. D.)
(L. H. D.)
Without Car Heater
Without Car Heater

No.	Part Number	Description	Q'ty	Remar
	~~0866 81 070~~	~~Heater Set (Nichira Make)~~ (R.H.D.)	~~1~~	
	0866 61 080	Heater Set (Denso Make) (R.H.D.)	1	
	1562 61 080	Heater Set (L.H.D.)	1	
1	~~0605 61 130 A~~	~~Heater Unit (Nichira Make)~~ (R.H.D.)	~~1~~	
	0866 61 130 B	Heater Unit (Denso Make) (R.H.D.)	1	
	0862 61 130	Heater Unit	1	Car No. 15559
	1524 61 130 A	Heater Unit (L.H.D.)	1	
	1524 61 130 B	Heater Unit (L.H.D.)	1	Car No. 14192
2	~~0605 61 140 A~~	~~Blower (Nichira Make)~~ (R.H.D.)	~~1~~	
	0866 61 140 C	Blower (Denso Make) (R.H.D.)	1	
	1524 61 140 B	Blower (L.H.D.)	1	
3	~~0605 61 151 A~~	~~Duct (Nichira Make)~~ (R.H.D.)	~~1~~	
	0866 61 151 A	Duct (Denso Make) (R.H.D.)	1	
	1524 61 151 A	Duct (L.H.D.)	1	
4	~~0865 61 190 B~~	~~Control (Nichira Make)~~ (R.H.D.)	~~1~~	
	0866 61 190 B	Control (Denso Make) (R.H.D.)	1	Fig. No. 5 Inclu
	0866 61 190 D	Control (R.H.D.)	1	Car No. 139297
	1562 61 190 A	Control (L.H.D.)	1	
	1562 61 190 C	Control (L.H.D.)	1	Car No. 141184
5	0866 61 195	Panel, Control ~~(R.H.D.)~~	1	

No.	Part Number	Description		Q'ty	Remarks
	0866 61 195B	Panel, Control ~~(R.H.D.)~~		1	Car No. 141184 72/2~×
	99863 0516	Screw, Tapping		2	
	99952 0500	Washer, Plain		2	
	0820 56 905	Clip		2	
6	0866 61 251	Hose, Defroster		2	
7	99971 0500	Washer, Spring	Duct & Heater Unit	2	
	99952 0500	Washer, Plain		2	
	99863 0512	Bolt		2	
8	99805 0830	Bolt, Blower		3	
	99952 0818	Washer, Plain		3	
	99971 0800	Washer, Spring		3	
	99952 0822	Washer, Plain		1	
9	99833 0512	Screw, Control		3	
	99952 0500	Washer, Plain		3	
	99971 0500	Washer, Spring		3	
10	99906 0800	Nut, Heater Unit		3	
	99940 0800	Nut, Heater Unit		3	Car No. 141928 72/3~△
	99952 0800	Washer, Plain		3	Car No. 141928 72/3~Discarded
	99971 0800	Washer, Spring		3	

No.	Part Number	Description	Q'ty	Remark
11	0866 61 211C	Hose No. 1 (R.H.D.)	1	
12	1562 61 211B	Hose No. 1 (L.H.D.)	1	
	1562 61 211C	Hose No. 1 (L.H.D.)	1	Car No. 14192
13	0866 61 212B	Hose No. 2 (R.H.D.)	1	
14	1562 61 212A	Hose No. 2 (L.H.D.)	1	
	1562 61 212B	Hose No. 2 (L.H.D.)	1	Car No. 14192
●	1620 61 212	Hose No. 2	1	Car No. 16062
15	0866 61 213	Hose No. 3	1	
16	0866 61 214A	Pipe, Heater (R.H.D.)	1	
17	1562 61 214A	Pipe, Heater (L.H.D.)	1	
●	1881 61 214A	Pipe, Heater (L.H.D.)	1	Car No. 16062
18	0866 61 217	Clip, Pipe (R.H.D.)	1	
19	99868 0512	Screw, Pipe	2	
	99952 0516	Washer, Plain	2	
	99971 0500	Washer, Spring	2	
20	0820 15 330	Joint, Hose	1	
21	99282 2600	Band, Hose	4	
22	99282 2200	Band, Hose	2	
	99282 2600	Band, Hose (L.H.D.)	2	Car No. 141928
23	0824 61 192	Clip, Heater Pipe	1	

No.	Part Number	Description	Q'ty	Remarks
24	0866 61 235	Grommet	1	
25	0257 61 051	Grommet	1	
26	~~0366 01 070 A~~	~~Cover, Dash Panel Upper~~	~~1~~	
	0366 61 071	Cover, Dash Panel Upper	1	From Car No. 1
	0366 61 072	Packing, Cover	1	From Car No. 1
27	99863 0516	Screw, Cover	2	
	99952 0500	Washer, Plain	2	Without Car Heater
	99971 0500	Washer, Spring	2	
28	0868 61 195	Panel, Control	1	
	0866 61 195 B	Panel, Control	1	
29	0820 56 905	Clip	2	
30	99863 0516	Screw, Control Panel	2	
	99952 0500	Washer, Plain	2	
31	0864 61 061 A	Cover	1	Without Car Heater
32	99282 2600	Band, Hose	2	
33	0118 56 242 B	Plug, Hole	2	
34	0370 76 403	Switch, Control (OFF~FAN)	1	
35	0370 76 409	Knob (Upper)	2	
● V	0862 76 409	Knob (Upper)	2	73/3~○
36	0370 76 411	Knob (Lower)	2	

No.	Part Number	Description	Q'ty	Remar
●	0862 76 411	Knob (Lower)	2	
●	0370 76 416	Clip, Lower Control Knob	4	From Car No
37	0866 76 406	Control Wire No. 1 (COLD~HOT)	1 (R.H.D.)	
	0866 76 406 A	Control Wire No. 1 (COLD~HOT)	1	Car No. 13929
	1562 76 406	Control Wire No. 1 (COLD~HOT)	1 (L.H.D.)	
	1562 76 406 A	Control Wire No. 1 (COLD~HOT)	1	Car No. 14118
38	0866 76 407	Control Wire No. 2 (DEF~HEAT)	1 (R.H.D.)	
	0866 76 407 A	Control Wire No. 2 (DEF~HEAT)	1	Car No. 13929
	1562 76 407	Control Wire No. 2 (DEF~HEAT)	1 (L.H.D.)	
	1562 76 407 A	Control Wire No. 2 (DEF~HEAT)	1	Car No. 14118
39	0866 76 408	Control Wire No. 3 (REC~FRESH)	1 (R.H.D.)	
	0866 76 408 A	Control Wire No. 3 (REC~FRESH)	1	Car No. 13929
	1562 76 408	Control Wire No. 3 (REC~FRESH)	1 (L.H.D.)	
	1562 76 408 A	Control Wire No. 3 (REC~FRESH)	1	Car No. 14118
● 40	1620 61 225	Clip	1	Car No. 7/8
● 41	99709 0108	Band	1	
● 42	0866 61 476	Protector	1	

HEATER UNIT & BLOWER (R.H.D.)

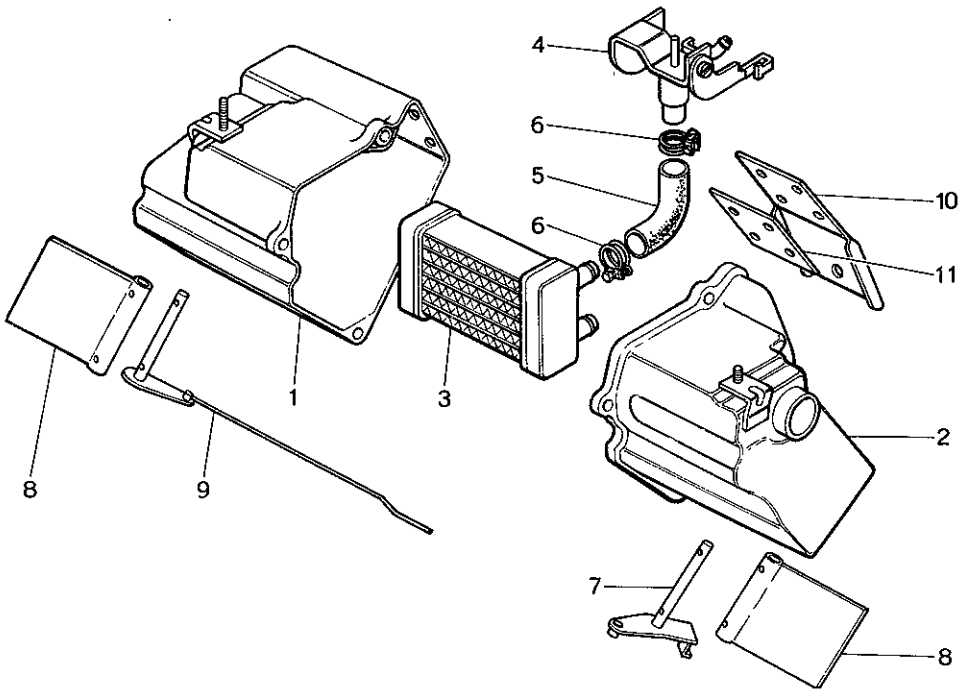

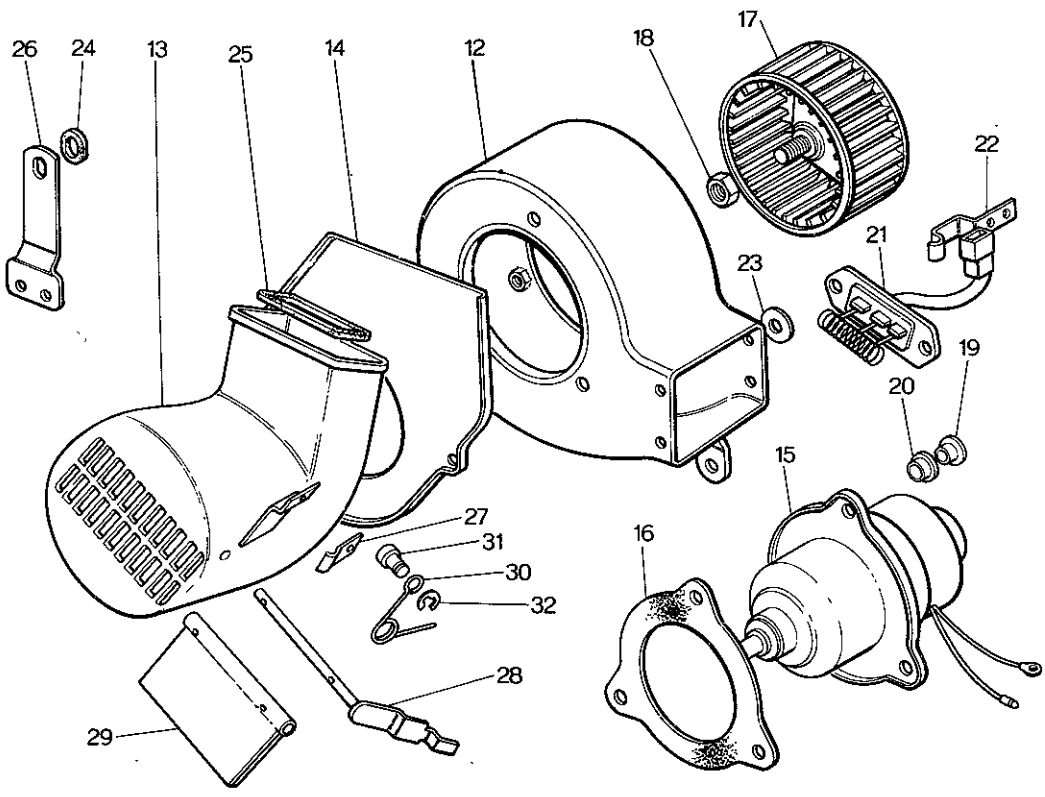

HEATER UNIT & BLOWER (R.H.D.)

No.	Part Number	Description	Q'ty	Remar
●	~~0866 61 130~~	~~Unit, Heater~~	~~1~~	
●	0866 61 130B	Unit, Heater	1	From Car No.
●	0862 61 130	Unit, Heater	1	Car No. 155593
1	0866 76 501	Case, Unit	1	
2	0866 76 502	Case, Unit	1	
3	0866 76 503	Radiator, Unit	1	
4	0866 76 504	Valve, Water	1	
5	0866 76 505	Hose, Water	1	
6	99282 2200	Band, Hose	2	
7	0866 76 506	Shaft	1	
8	0866 76 507	Damper	2	
9	0866 76 508	Shaft	1	
10	0866 76 509	Bracket	1	
11	0866 76 511	Plate	1	
	0866 61 140C	Blower, Heater	1	
12	0866 76 451	Case, Blower	1	
13	0866 76 452	Duct, Air	1	
14	0866 76 453	Flange	1	
15	0866 76 454	Motor	1	
16	0866 76 455	Gasket	1	
17	0866 76 456	Blower	1	
18	0866 76 472	Nut	1	
19	0866 76 457	Insert	3	
20	0866 76 458	Gasket	3	
21	0866 76 459	Resistance	1	
22	0866 76 461	Clamp "B"	1	

HEATER UNIT & BLOWER (R.H.D.)

No.	Part Number	Description	Q'ty	Remarks
23	0866 76 462	Gasket "A"	1	
24	0866 76 463	Gasket	1	
25	0866 76 464	Gasket "B"	1	
26	0866 76 465	Bracket	1	
27	0866 76 466	Bracket "C"	1	
●	0862 76 572	Bracket "C"	1	Car No. 166140 73/4~×
28	0866 76 467	Shaft	1	
29	0866 76 468	Damper	1	
30	0866 76 469	Spring	1	
31	0866 76 471	Piece Set	1	
32	99576 0400	Ring, Retaining	1	
● Ⓝ	0866 76 473	Packing	1	Car No. 166140 73/4~Added Anew

HEATER UNIT & BLOWER (L. H. D.)

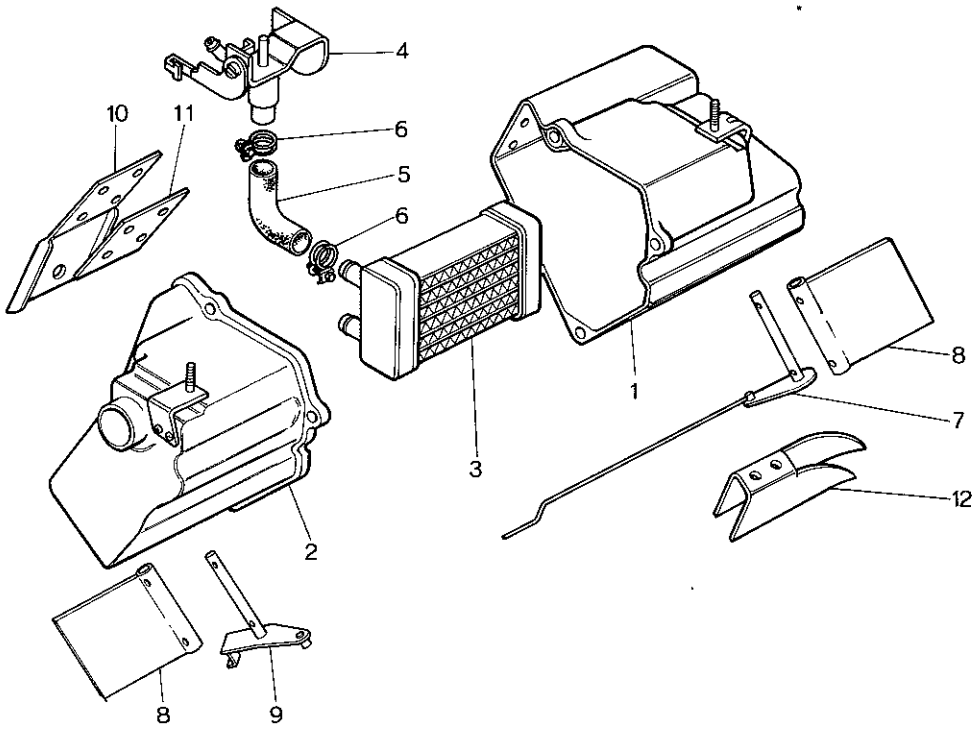

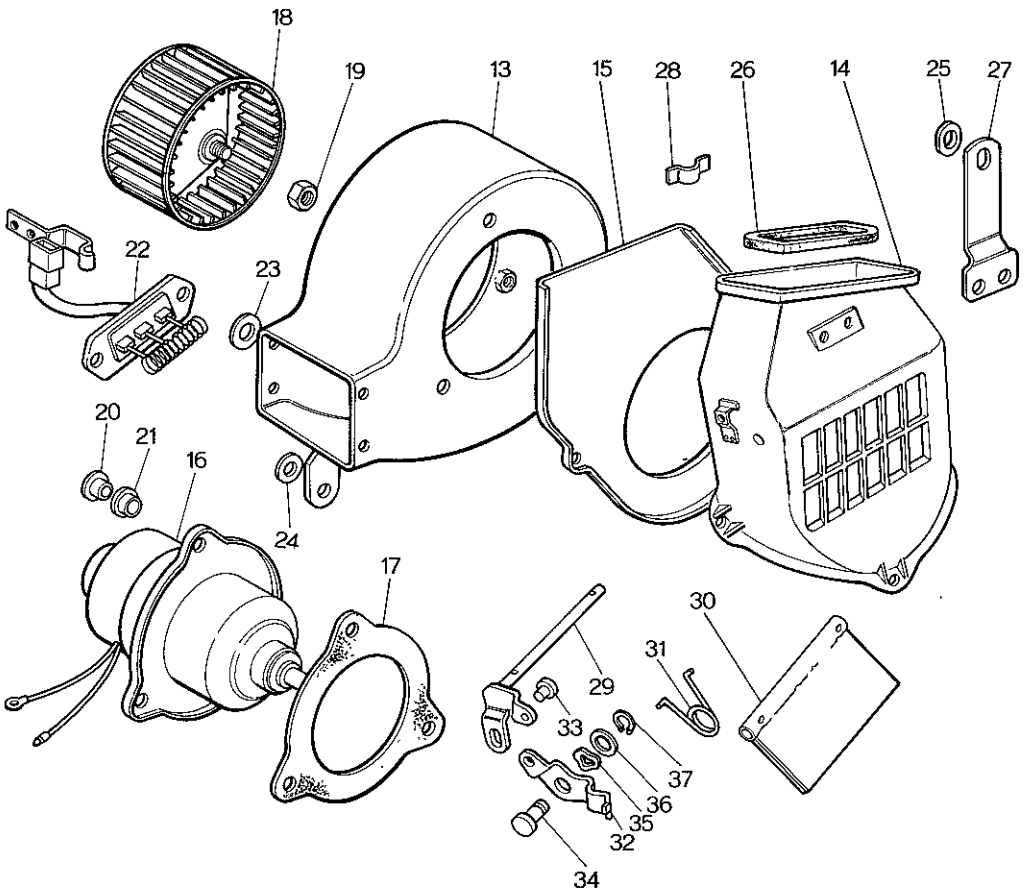

HEATER UNIT & BLOWER (L.H.D

No.	Part Number	Description	Q'ty	Rem
	1524 61 130A	Unit, Heater	1	
	1524 61 130B	Unit, Heater	1	Car No. 14192
1	1524 76 501	Case, Unit	1	
	1524 76 501A	Case, Unit	1	Car No. 14192
2	1524 76 502	Case, Unit	1	
	1524 76 502A	Case, Unit	1	Car No. 14192
3	1524 76 503	Radiator, Unit	1	
	1524 76 503A	Radiator, Unit	1	Car No. 14192
4	1524 76 504	Valve, Water	1	
	1524 76 504A	Valve, Water	1	Car No. 14192
5	1524 76 505	Hose, Water	1	
	1524 76 505A	Hose, Water	1	Car No. 14192
6	99282 2600	Band, Hose	2	
7	0866 76 506	Shaft	1	
8	0866 76 507	Damper	2	
9	0866 76 508	Shaft	1	
10	0866 76 509	Bracket	1	
11	0866 76 511	Plate	1	
12	1524 76 512	Guide, Air	1	
	~~1524 87 140B~~	~~Blower~~	~~1~~	
●	1524 61 140B	Blower	1	From Car No
13	1524 76 451	Case, Blower	1	
14	1524 76 452	Duct, Air	1	
15	1524 76 453	Flange	1	
16	1524 76 454	Motor	1	
17	0866 76 455	Gasket	1	
18	1524 76 456	Blower	1	
19	0866 76 472	Nut	1	
20	0866 76 457	Insert	3	
21	0866 76 458	Gasket	1	
22	0866 76 459	Resistance	1	

No.	Part Number	Description	Q'ty	Remarks
23	0866 76 461	Clamp "B"	1	
24	0866 76 462	Gasket "A"	1	
25	0866 76 463	Gasket	1	
26	0866 76 464	Gasket "B"	1	
27	1524 76 465	Bracket	1	
28	0866 76 466	Bracket "C"	1	
29	1524 76 467	Shaft	1	
30	0866 76 468	Damper	1	
31	1524 76 469	Spring	1	
32	1524 76 471	Lever, Control	1	
33	1524 76 472	Cooler	1	
34	1524 76 473	Pin	1	
35	99972 0500	Washer, Wave	1	
36	0315 76 022	Washer	1	
37	99576 0300	Ring, Retaining	1	

CAR COOLER (R.H.D.)

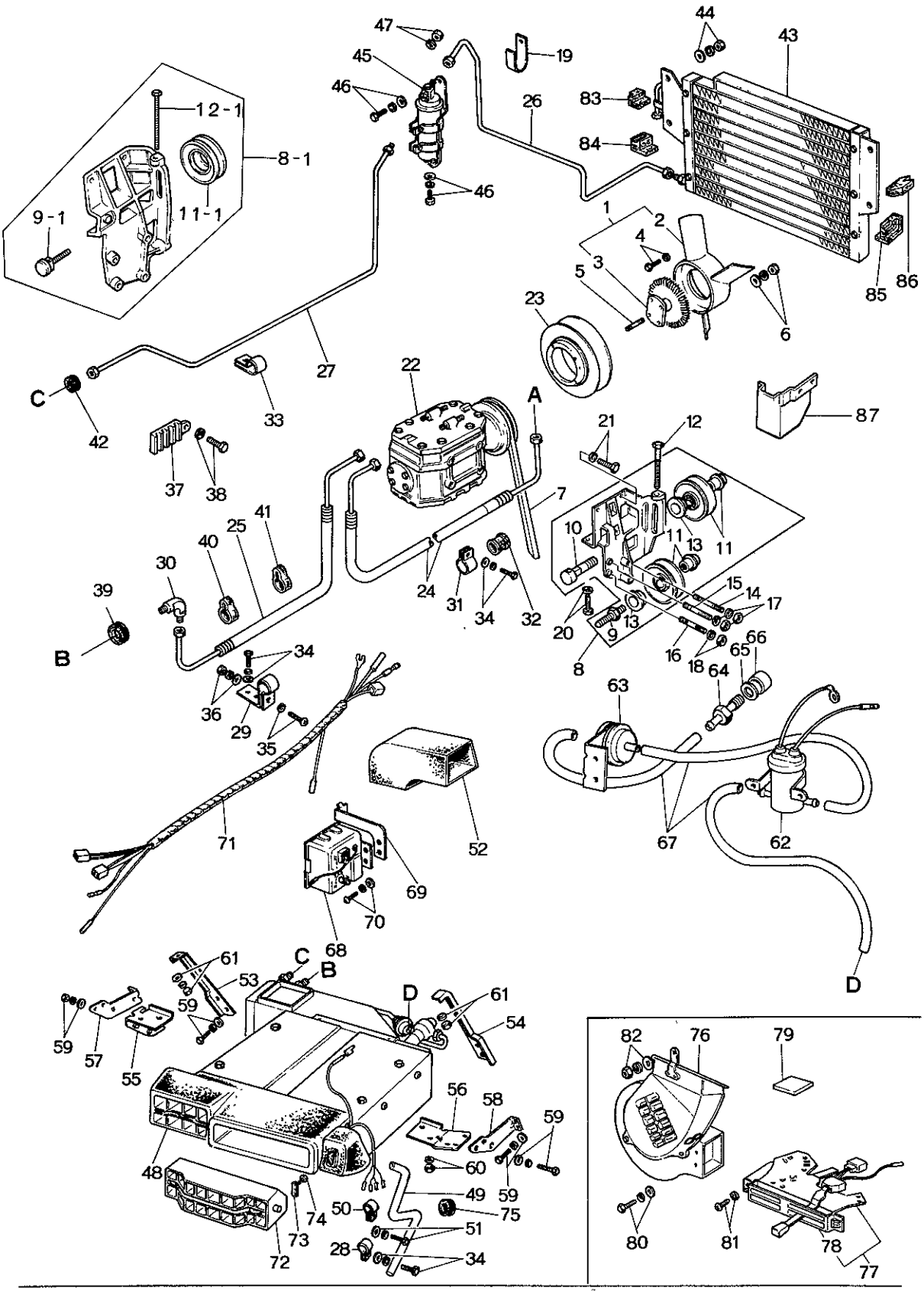

No.	Part Number	Description	Q'ty	Remar
	~~0866 79 310~~	~~Cooler, Car~~	~~1~~	
●	0866 79 320	Cooler, Car	1	From Car No
●	3507 61 410	Cooler, Car (With Heater)	1	Car No. 16062
	1557 61 390	Cooler, Car-Heater Less	1	
●	3503 61 410	Cooler, Car	1	Car No. 16062
1	0877 15 250	Fan & Fan Drive (Fig. No. 2~4 Included)	1	
	0871 15 250	Fan & Fan Drive (Fig. No. 2~4 Included)	1	Car No. 14907
2	0877 15 200	Fan, Cooling	1	
	0871 15 200	Fan, Cooling	1	Car No. 14970
3	2090 15 210	Fan Drive	1	
	0871 15 210	Fan Drive	1	Car No. 14970
4	99806 0612	Bolt, Fan & Fan Drive	6	
	99971 0600	Washer, Spring	6	Car No. 160623
5	99852 0635	Stud, Fan & Fan Drive	4	
6	99907 0600	Nut, Fan & Fan Drive	4	
	99952 0600	Washer, Plain	4	
	99971 0600	Washer, Spring	4	
7	0866 15 906	Belt, "V"	1	
	1881 15 906	Belt, "V"	1	Car No. 160623
●	1881 15 906A	Belt, "V"	1	Car No. 73½-

CAR COOLER (R.H.D.)

No.	Part Number	Description	Q'ty	Remarks
8	0866 15 920B	Bracket, Compressor (Fig. No. 9 ~ 13 Included)	1	
● 8-1	1881 15 920	Bracket	1	Car No. 160623 73/10~ ×
9	0866 15 923A	Shaft	1	
● 9-1	1881 15 967	Shaft	1	Car No. 160623 73/10~ Added Anew
10	0866 15 932	Bolt, Idle Pulley	1	
11	0866 15 940A	Pulley, Idle	2	
● 11-1	1881 15 940	Pulley, Idle	1	Car No. 160623 73/10~ ×
12	0839 61 966A	Bolt, Adjust	1	
● 12-1	1757 15 966	Bolt, Adjust	1	Car No. 160623 73/10~ ×
13	0317 78 034	Collar	2	
14	99859 1025	Stud, Compressor Bracket	2	
15	99859 1050	Stud, Compressor Bracket	2	
●	99859 1032A	Stud, Compressor Bracket	2	Car No. 160623 73/10~ ×
16	99859 1225	Stud, Compressor Bracket	1	
17	99921 1000	Nut, Compressor Bracket	4	
	99971 1000	Washer, Spring	4	
18	99921 1200	Nut, Compressor Bracket	1	
	99971 1200	Washer, Spring	1	
19	99295 1508	Clip	1	
20	99801 0840	Bolt, Compressor Bracket	2	

No.	Part Number	Description	Q'ty	Remar
	99971 0800	Washer, Spring	2	
21	99801 0825	Bolt, Compressor Bracket	4	
	99971 0800	Washer, Spring	4	
22	0866 61 450	Compressor	1	
23	0839 61 975C	Pulley, "V" Belt	1	
●	1881 15 911B	Pulley, "V" Belt	1	Car No. 16062
●	1757 15 911B	Pulley, "V" Belt	1	Car No.
●	1757 15 912	Stiffener, Pulley	1	Car No. 160623
24	0866 61 461	Hose, Flexible	1	
25	0866 61 462	Hose, Flexible	1	
26	0866 61 463	Pipe No. 1	1	
27	0866 61 464A	Pipe No. 2	1	
●	0866 61 466	Pipe No. 2	4	
28	0370 61 467	Clip	1	
29	0866 61 467	Clip	1	
30	0866 61 474	Elbow	2	
31	0259 76 857	Clip	2	
32	0259 78 858	Packing, Rubber	1	
33	0259 78 868	Clip	13	
34	99868 0512	Screw, Clip	13	

No.	Part Number	Description	Q'ty	Remarks
	99952 0500	Washer, Plain	13	
	99971 0500	Washer, Spring	13	
35	99797 0512	Screw	1	
	99952 0500	Washer, Plain	1	
36	99906 0500	Nut	1	
	99952 0500	Washer, Plain	1	
	99971 0500	W asher, Spring	1	
37	0866 61 472	Clip	1	
38	99806 0814	Bolt, Clip	1	
	99971 0800	Washer, Spring	1	
39	0866 61 475	Grommet	1	
40	0866 61 476	Protector	1	
41	0317, 61 612	Cushion	1	
42	0208 78 875	Grommet	1	
43	0866 61 480	Condenser	1	
	0866 61 490	Condenser	1	Car No. 146346 ⁷⁄₅～△
44	99906 0600	Nut, Condenser	4	
	99952 0618	Washer, Plain	4	
	99971 0600	Washer, Spring	4	
45	0866 61 500	Tank, Receiver	1	

No.	Part Number	Description	Q'ty	Rema
46	99801 0612	Bolt, Receiver Tank	3	
	99952 0618	Washer, Plain	3	
	99971 0600	Washer, Spring	3	
47	99906 0600	Nut, Receiver Tank	1	
	99952 0600	Washer, Plain	1	
48	0866 61 520	Cooler Unit (With Heater)	1	
	1557 61 520	Cooler Unit (W/O Heater)	1	~~Car No. 1528~~
49	0866 61 525A	Hose, Drain	1	
50	0866 61 527	Clip, Drain Hose	1	
51	99868 0512	Screw, Clip	1	
	99952 0500	Washer, Plain	1	
	99971 0500	Washer, Spring	1	
52	0866 61 526A	Duct, Rubber	1	Car No. 152816
53	0866 61 531	Bracket No. 1, Cooler Unit	1	
54	0866 61 532	Bracket No. 2, Cooler Unit	1	
55	0866 61 533	Bracket No. 3, Cooler Unit	1	
56	0866 61 534	Bracket No. 4, Cooler Unit	1	
57	0866 61 535	Bracket No. 5, Cooler Unit	1	
58	0866 61 536	Bracket No. 6, Cooler Unit	1	
59	99797 0616	Bolt, Bracket	14	

No.	Part Number	Description	Q'ty	Remarks
	99952 0600	Washer, Plain	12	
	99952 0618	Washer, Plain	2	
	99971 0600	Washer, Spring	14	
60	99906 0600	Nut, Bracket	2	
	99952 0618	Washer, Plain	2	
61	99906 0800	Nut, Bracket	2	
	99952 0800	Washer, Plain	2	
	99971 0800	Washer, Spring	2	
●62	0824 61 236A	Valve, Magnet	1	Car No. 152816 7/9~Discarded (W/O Heater)
●63	0866 61 541	Valve, Check	1	
●64	0866 61 542	Connector, Vacuum Hose	1	
●65	99564 1000	Gasket, Connector	1	
●66	0866 61 549	Spacer	1	
●67	0866 61 543A	Hose, Vacuum	1	
68	0866 61 545	Stabilizer, Amplifier	1	
●	1622 61 545	Stabilizer, Amplifier	1	7/6~○
69	0866 61 548	Bracket, Stabilizer	1	
	0866 61 548A	Bracket, Stabilizer	1	Car No. 152377 7/8~△
●	1622 61 548	Bracket, Stabilizer	1	7/6~○
70	99833 0512	Screw, Bracket	2	

No.	Part Number	Description		Q'ty	Remar
	99952 0500	Washer, Plain		2	
	99971 0500	Washer, Spring		2	
71	0866 61 546	Harness		1	
72	0866 61 551	Grille		1	
73	0866 61 552	Holder, Grille		2	
74	99968 0308	Screw		4	
75	0820 78 883	Grommet		2	
76	1518 61 140	Blower		1	
77	1566 61 190A	Control		1	
●	~~1588 61 190B~~	~~Control~~		~~1~~	~~Car No. 14192~~
●	1568 61 190C	Control		1	Car No. 14192
●78	~~0868 61 195A~~	~~Panel, Control~~		~~1~~	
●	0866 61 195B	Panel, Control		1	Car No. 14192
79	1531 61 411	Cover, Cooler		1	Car No. 152816
80	99905 0830	Bolt, Blower	(W/O Heater)	2	
	99952 0800	Washer, Plain		2	
	99971 0800	Washer, Spring		2	
81	99833 0512	Screw, Control		3	
	99971 0500	Washer, Spring		3	
82	99906 0800	Nut, Blower		1	

CAR COOLER (R.H.D.)

No.	Part Number	Description	Q'ty	Remarks
	99952 0822	Washer, Plain	1	
	99971 0800	Washer, Spring	1	
83	0866 61 911	Packing No. 1	1	
●	1128 61 911	Packing No. 1	1	Car No. 160623 $^{73}/_{10}$~×
84	0866 61 912	Packing No. 2	1	
●	1128 61 912	Packing No. 2	1	Car No. 160623 $^{73}/_{10}$~×
85	0866 61 913	Packing No. 3	1	
●	1128 61 913	Packing No. 3	1	Car No. 160623 $^{73}/_{10}$~×
86	0866 61 914	Packing No. 4	1	
● 87	1620 61 920	Sealer	1	Car No. 160623 $^{73}/_{10}$

CAR COOLER (L.H.D.)

(USED UP TO CAR NO. 167747 73/4)

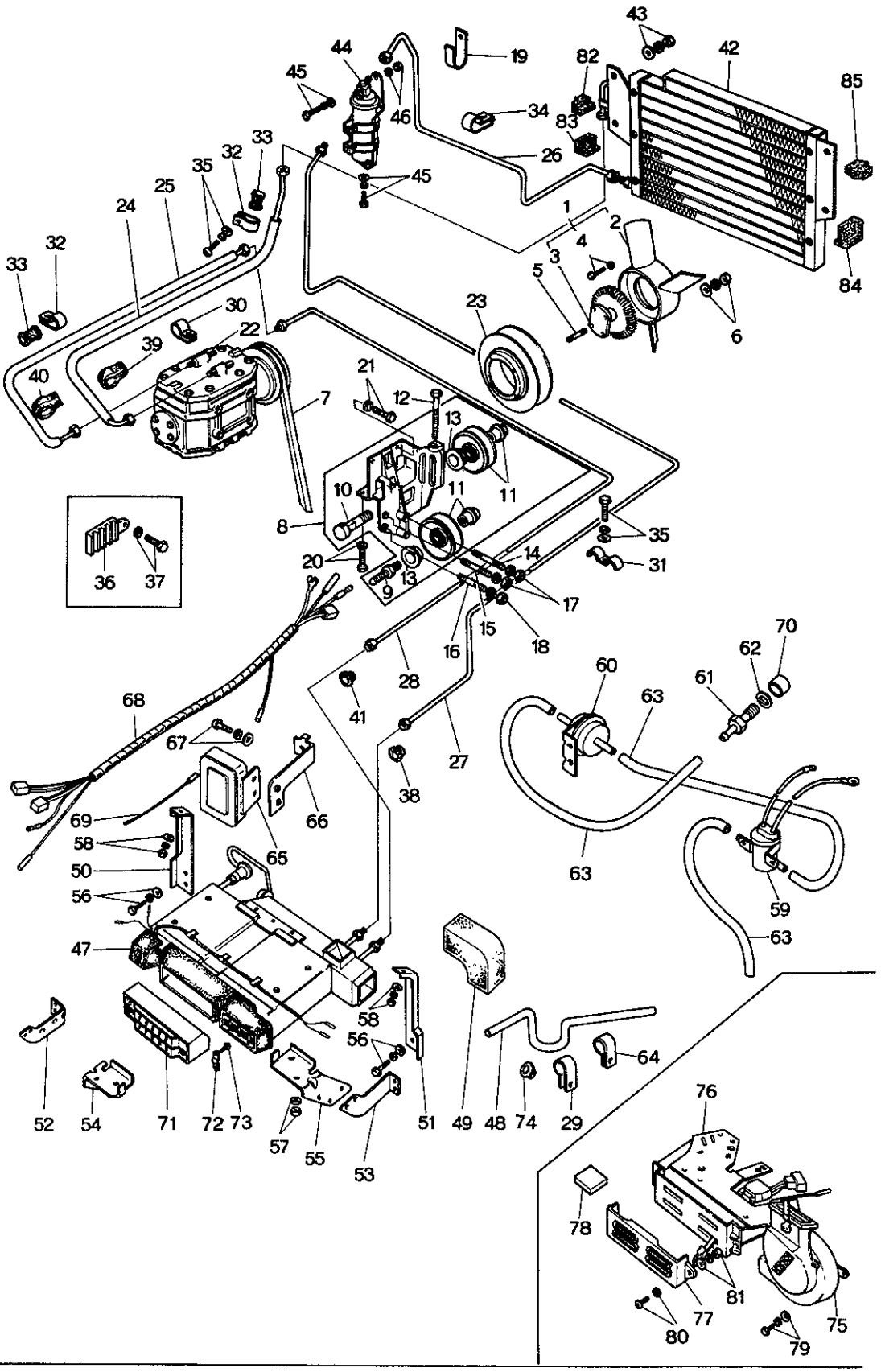

CAR COOLER (L.H.D
(USED UP TO CAR NO. 167

No.	Part Number	Description	Q'ty	Rema
	1562 61 400	Cooler, Car	1	
	1568 61 390	Cooler, Car-W/O Heater	1	
√ 1	0877 15 250	Fan & Fan Drive (Fig. No. 2~4 included)	1	
√	0871 15 250	Fan & Fan Drive (Fig. No. 2~4 included)	1	Car No. 1497
√ 2	0877 15 200	Fan	1	
√	0871 15 200	Fan	1	Car No. 1497
√3	2090 15 210	Fan Drive	1	
√	0871 15 210	Fan Drive	1	Car No. 1497
4	99806 0612	Bolt	6	
	99971 0600	Washer, Spring	6	
5	99852 0635	Stud, Fan & Fan Drive	4	
6	99907 0600	Nut, Fan & Fan Drive	4	
	99952 0600	Washer, Spring	4	
	99971 0600	Washer, Plain	4	
√ 7	0866 15 906	Belt, "V"	1	
√8	0866 15 920B	Bracket, Compressor (Fig. No. 9~13 included)	1	
√ 9	0866 15 923A	Shaft	1	
√10	0866 15 932	Bolt, Idle Pulley	1	
√ 11	0866 15 940A	Pulley, Idle	2	
12	0839 61 966A	Bolt, Adjust	1	
13	0317 78 034 √	Collar	2	
14	99859 1025	Stud, Compressor Bracket	2	
15	99859 1050	Stud, Compressor Bracket	2	
	99859 1032A	Stud, Compressor Bracket	2	Car No. 16062
16	99859 1225	Stud, Compressor Bracket	1	
17	99921 1000	Nut, Compressor Bracket	4	
	99971 1000	Washer, Spring	4	
18	99921 1200	Nut, Compressor Bracket	1	
	99971 1200	Washer, Spring	1	
19	99295 1508	Clip	1	

61 CAR COOLER (L.H.D.)
(USED UP TO CAR NO. 167747 73/4)

No.	Part Number	Description	Q'ty	Remarks
20	99801 0840	Bolt, Compressor Bracket	2	
	99971 0800	Washer, Spring	2	
21	99801 0825	Bolt, Compressor Bracket	4	
	99971 0800	Washer, Spring	4	
22	0866 61 450	Compressor	1	
23	0839 61 975C	Pulley, "V" Belt	1	
24	1562 61 461	Hose, Flexible	1	
25	1562 61 462	Hose, Flexible	1	
26	0866 61 463	Pipe, No. 1	1	
27	1524 61 464A	Pipe, No. 2	1	
28	1562 61 465	Pipe, No. 3	1	
29	0370 61 467	Clip	4	
30	1562 61 467	Clip	1	
31	0370 61 471	Clip	4	
32	0259 78 857 V	Clip	2	
33	0259 78 858 V	Packing, Rubber	2	
34	0259 78 868 V	Clip	1	
35	99868 0512	Screw, Clip	16	
	99952 0500	Washer, Plain	16	
	99971 0500	Washer, Spring	16	
36	0866 61 472	Clip	1	
37	99806 0814	Bolt, Clip	1	
	99971 0800	Washer, Spring	1	
38	0866 61 475	Grommet	1	
39	0866 61 476	Protector	1	
40	0317 61 612	Cushion	1	

No.	Part Number	Description	Q'ty	Remar
41	~~0208 78 788~~	~~Grommet~~	~~1~~	
	0208 78 875 V	Grommet	1	From Car No.
42	0866 61 490	Condenser	1	
	1562 61 490	Condenser	1	Cor No. 146346
43	99906 0800	Nut, Condenser	4	
	99952 0618	Washer, Plain	4	
	99971 0600	Washer, Spring	4	
44	0866 61 500	Tank, Receiver	1	
45	99801 0612	Bolt, Receiver Tank	3	
	99952 0618	Washer, Plain	3	
	99971 0600	Washer, Spring	3	
46	99906 0600	Nut	1	
	99952 0600	Washer, Plain	1	
47	1562 61 520	Cooler Unit	1	
	1568 61 520	Cooler Unit	1	Car No. 152816
48	0866 61 525A	Hose, Drain	2	
49	1524 61 526	Duct, Rubber	1	Car No. 152816
50	0866 61 531	Bracket No. 1, Cooler Unit	1	
51	0866 61 532	Bracket No. 2, Cooler Unit	1	
52	0866 61 533	Bracket No. 3, Cooler Unit	1	
53	0866 61 534	Bracket No. 4, Cooler Unit	1	
54	0866 61 535	Bracket No. 5, Cooler Unit	1	
55	0866 61 536	Bracket No. 6, Cooler	1	
56	99797 0616	Bolt, Bracket	14	
	99952 0600	Washer, Plain	12	
	99971 0600	Washer, Spring	14	
57	99906 0609	Nut	2	
	99951 0618	Washer, Plain	4	
58	99906 0800	Nut, Bracket	2	

61 CAR COOLER (L.H.D.)
(USED UP TO CAR NO. 167747 73/4)

No.	Part Number	Description	Q'ty	Remarks
	99952 0800	Washer, Plain	2	
	99971 0800	Washer, Spring	2	
59	0824 61 236A	Valve, Magnet	1	Car No. 152816 73/9 ~Discarded (W/O Heater)
60	0866 61 541	Valve, Check	1	
61	0866 61 542	Connector	1	
62	99564 1000	Gasket	1	
63	0866 61 543A	Hose No. 1, Vacuum	1	
64	0866 61 527	Clip	1	
65	0866 61 545	Stabilizer, Amplifier	1	
	1622 61 545	Stabilizer, Amplifier	1	Car No. 73/6 ~○
66	1524 61 548	Bracket, Stabilizer	1	
	1622 61 545	Bracket, Stabilizer	1	Car No. 73/6 ~○
67	99833 0512	Screw, Bracket	2	
	99952 0500	Washer, Plain	2	
	99971 0500	Washer, Spring	2	
68	1562 61 546	Harness	1	
69	1524 61 547	Wire	1	
70	0866 61 549	Spacer	1	Car No. 152816 73/9 ~Discarded (W/O Heater)
71	0866 61 551	Grille	1	
72	0866 61 552	Holder, Grille	2	

CAR COOLER (L.H.D.
(USED UP TO CAR NO. 167

No.	Part Number	Description		Q'ty	Remar
73	99868 0308	Screw		4	
74	0820 78 883	Grommet		2	
75	1531 61 140	Blower		1	
76	1568 61 190A	Control (Fig. No. 77 included)		1	
	~~1568 61 190B~~	~~Control~~		~~1~~	~~Car No. 1419~~
	1568 61 190C	Control		1	Car No. 1419
77	0866 61 195A	Panel, Control		1	
	0866 61 195B	Panel, Control		1	Car No. 1419
78	1531 61 411	Cover, Cooler		1	Car No. 1528
79	99805 0830	Bolt, Control Panel	W/O Heater	2	
	99952 0800	Washer, Plain		2	
	99971 0800	Washer, Spring		2	
80	99833 0512	Screw, Control		3	
	99971 0500	Washer, Spring		3	
81	99906 0800	Nut, Control Panel		1	
	99952 0822	Washer, Plain		1	
	99971 0800	Washer, Spring		1	
82	0866 61 911	Packing No. 1		1	
83	0866 61 912	Packing No. 2		1	
84	0866 61 913	Packing No. 3		1	
85	0866 61 914	Packing No. 4		1	

CAR COOLER (L.H.D.)

(USED FROM CAR NO. 167748 73/4 TO CAR NO. 179250 73/9)

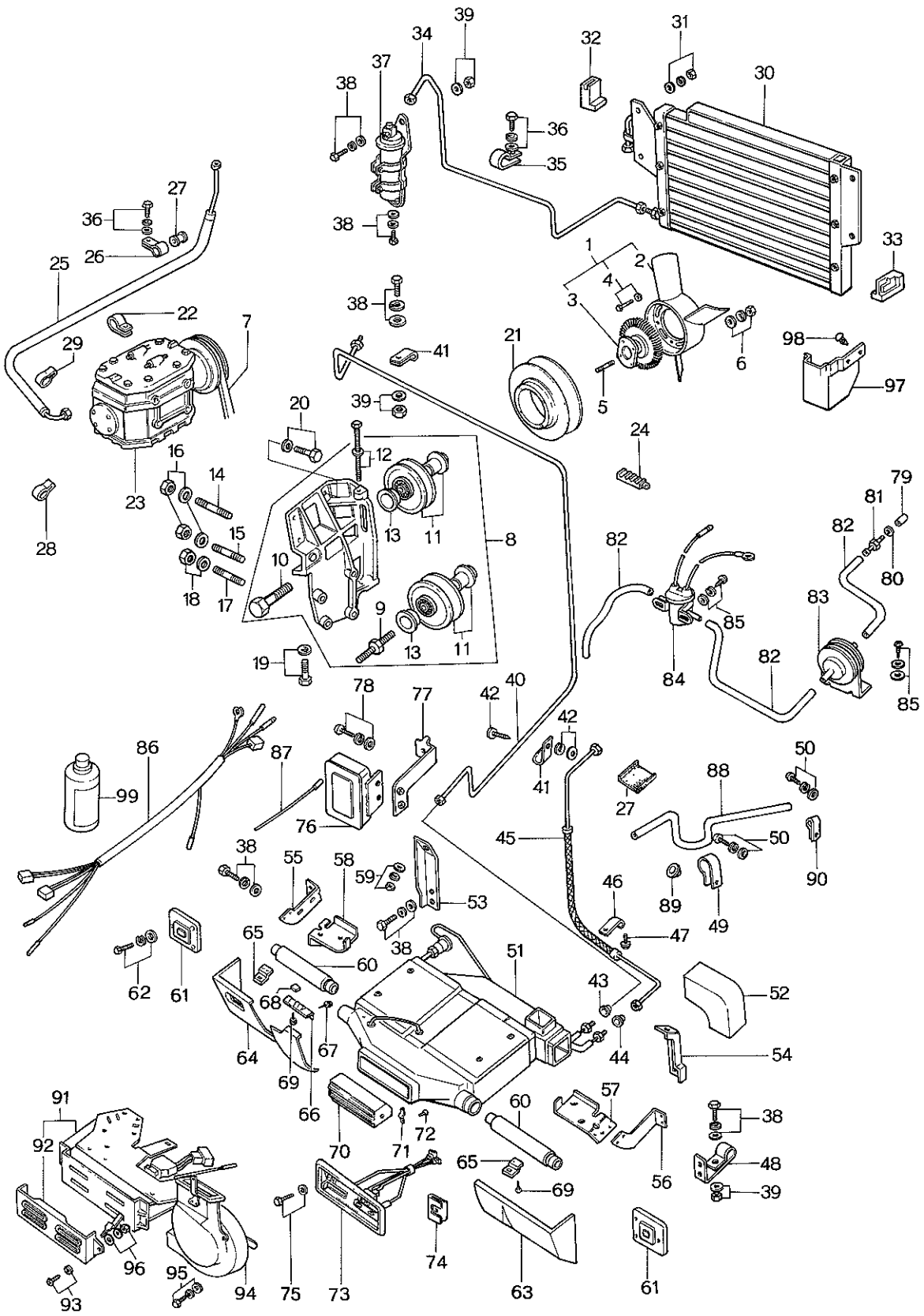

CAR COOLER (L.H.D.)

(USED FROM CAR NO. 167748 3/4 TO CAR NO. 179

No.	Part Number	Description	Q'ty	Remar
	1565 61 390	Cooler, Car-Heater Less	1	
	1566 61 400	Cooler, Car	1	
1	0871 15 250	Fan & Fan Drive (7 Blade Fan) (Selective use) (Fig. No. 2~4 included)	1	
	0872 15 250	Fan & Fan Drive (5 Blade Fan)	1	
2	0871 15 200	Fan (0871 15 250 use)	1	
	0872 15 200	Fan (0872 15 250 use)	1	
3	0871 15 210	Fan Drive (0871 15 250 use)	1	
	2090 15 210	Fan Drive (0872 15 250 use)	1	
4	99906 0600	Nut (0871 15 250 use)	4	
	99971 0600	Washer, Spring (0871 15 250 use)	4	
	99806 0612	Bolt (0872 15 250 use)	6	
	99971 0600	Washer, Spring (0872 15 250 use)	6	
5	99852 0635	Stud, Fan & Fan Drive	4	
6	99907 0600	Nut, Fan & Fan Drive	4	
	99952 0600	Washer, Plain	4	
	99971 0600	Washer, Spring	4	
7	0866 15 906	Belt, "V"	1	
8	0866 15 920B	Bracket, Compressor (Fig. No. 9~13 included)	1	
9	0866 15 923A	Shaft	1	
10	0866 15 932	Bolt, Idle Pulley	1	

61 CAR COOLER (L.H.D.)
(USED FROM CAR NO. 167748 73/4 TO CAR NO. 179250 73/9)

No.	Part Number	Description	Q'ty	Remarks
11	0866 15 940A	Pulley, Idle	2	
12	0839 61 966A	Bolt, Adjuster	1	
13	0317 78 034	Collar "A"	2	
14	99859 1025	Stud, Compressor Bracket	2	
15	99859 1050	Stud, Compressor Bracket	2	
16	99921 1000	Nut, Compressor Bracket	4	
	99971 1000	Washer, Spring	4	
17	99859 1225	Stud, Compressor Bracket	1	
18	99921 1200	Nut, Compressor Bracket	1	
	99971 1200	Washer, Spring	1	
19	99801 0840	Bolt, Compressor Bracket	2	
	99971 0800	Washer, Spring	2	
20	99801 0825	Bolt, Compressor Bracket	4	
	99971 0800	Washer, Spring	4	
21	0839 61 975C	Pulley, "V" Belt	1	
22	99295 1508	Clip	1	
23	0866 61 450	Compressor	1	
24	0866 61 472	Clamp	1	
25	1562 61 461	Hose, Flexible	1	
26	0820 78 857	Clip	1	

CAR COOLER (L.H.D.)

(USED FROM CAR NO. 167748 3/4 TO CAR NO. 175

No.	Part Number	Description	Q'ty	Rema
27	0259 78 858	Packing, Rubber	1	
28	0317 61 612	Protector, Rubber	1	
29	0866 61 476	Protector, Rubber	1	
30	1562 61 490	Condenser	1	
31	99906 0600	Nut, Condenser	4	
	99952 0618	Washer, Plain	4	
	99971 0600	Washer, Spring	4	
32	0866 61 912	Packing No. 2	1	
33	0866 61 913	Packing No. 3	1	
34	0866 61 463	Pipe No. I	1	
35	0259 78 868	Clip	2	
36	99868 0520	Screw, Tapping	3	
	99952 0500	Washer, Plain	3	
	99971 0500	Washer, Spring	3	
37	0866 61 500	Tank, Receiver	1	
38	99806 0612	Bolt, Receiver Tank	19	
	99952 0600	Washer, Plain	19	
	99971 0600	Washer, Spring	19	
39	99906 0600	Nut, Receiver Tank	4	
	99952 0600	Washer, Plain	4	

61 CAR COOLER (L.H.D.)
(USED FROM CAR NO. 167748 73/4 TO CAR NO. 179250 73/9)

No.	Part Number	Description	Q'ty	Remarks
40	1562 61 464A	Pipe No. 2	1	
41	1562 61 473	Clip	3	
42	99868 0520	Screw, Tapping	1	
	99952 0618	Washer, Plain	1	
	99971 0500	Washer, Spring	1	
43	0208 78 875	Grommet	1	
44	0866 61 475	Protector, Rubber	1	
45	1562 61 462A	Hose, Flexible	1	
46	1562 61 474	Clip	1	
47	99806 0628	Bolt, Flexible Hose	1	
	99952 0600	Washer, Plain	1	
	99971 0600	Washer, Spring	1	
48	1562 61 469	Clip	1	
49	0370 61 467	Clip	4	
50	99868 0520	Screw, Tapping	5	
	99952 0500	Washer, Plain	5	
	99971 0500	Washer, Spring	5	
51	1608 61 520	Unit, Cooler (1565 61 390 use)	1	
	1622 61 520	Unit, Cooler (1566 61 400 use)	1	
52	1524 61 526	Duct (1566 61 400 use)	1	

CAR COOLER (L.H.D.)
(USED FROM CAR NO. 167748 73/4 TO CAR NO. 17

No.	Part Number	Description	Q'ty	Rema
53	0866 61 531	Bracket No. 1	1	
54	0866 61 532	Bracket No. 2	1	
55	0866 61 533	Bracket No. 3	1	
56	0866 61 534	Bracket No. 4	1	
57	0866 61 535	Bracket No. 5	1	
58	0866 61 536	Bracket No. 6	1	
59	99906 0800	Nut, Bracket	2	
	99952 0800	Washer, Plain	2	
	99971 0800	Washer, Spring	2	
60	1622 61 561	Duct, Air	2	
61	1622 61 568	Cover (R), Ventilator	1	
	1622 61 578	Cover (L), Ventilator	1	
62	99806 0620	Bolt, Ventilator Cover	6	
	99952 0618	Washer, Plain	6	
	99971 0600	Washer, Spring	6	
63	1622 61 575	Cover, Duct	1	
64	1622 61 565	Cover, Duct	1	
65	1622 61 566	Bracket, Cover	4	
66	1622 61 567	Bracket	1	
67	99868 0410	Screw, Tapping-Bracket	10	

CAR COOLER (L.H.D.)

(USED FROM CAR NO. 167748 73/4 TO CAR NO. 179250 73/9)

No.	Part Number	Description	Q'ty	Remarks
68	1622 61 569	Spacer	2	
69	99833 0525	Screw, Spacer	2	
	99952 0500	Washer, Plain	2	
	99971 0500	Washer, Spring	2	
70	0866 61 551	Grille	1	
71	0866 61 552	Holder, Grille	2	
72	99868 0408	Screw, Tapping	4	
73	1622 61 580	Panel, Control	1	
74	1622 61 572	Bracket, Control Panel	2	
75	1622 61 571	Screw, Control Panel	2	
76	0866 61 545	Amp., Stabilizer	1	
77	1524 61 548A	Bracket, Amp.	1	
78	99833 0512B	Screw, Amp.	2	
	99952 0500	Washer, Plain	2	
	99971 0500	Washer, Spring	2	
79	0866 61 549	Spacer	1	
80	99564 1000	Gasket	1	
81	0866 61 542	Connector	1	
82	0866 61 543A	Hose, Vacuum	1	
83	0866 61 541	Valve, Check	1	

CAR COOLER (L.H.D.)

(USED FROM CAR NO. 167748 73/4 TO CAR NO. 175

No.	Part Number	Description	Q'ty	Rema
84	0824 61 236A	Valve, Magnet	1	
85	99863 0620	Screw, Tapping-Valve	4	
	99952 0600	Washer, Plain	4	
	99971 0600	Washer, Spring	4	
86	1622 61 546	Harness, Wire	1	
87	1524 61 547	Wire	1	
88	0866 61 525A	Hose, Drain	2	
89	0820 78 883	Grommet	2	
90	0866 61 527	Clip	1	
91	1568 61 190C	Control (Heater Less)	1	
92	0866 61 195B	Panel, Control (Heater Less)	1	
93	99833 0512	Screw	3	
	99971 0500	Washer, Spring	3	
94	1531 61 140	Blower (Heater Less)	1	
95	99805 0830	Bolt	2	
	99952 0822	Washer, Plain	2	
	99971 0800	Washer, Spring	2	
96	99906 0800	Nut	1	
	99952 0822	Washer, Plain	1	
	99971 0800	Washer, Spring	1	

CAR COOLER (L.H.D.)
(USED FROM CAR NO. 167748 73/4 TO CAR NO. 179250 73/9)

No.	Part Number	Description	Q'ty	Remarks
97	1620 61 925	Sealer (R)	1	
	1620 61 926	Sealer (L)	1	
98	99264 0531B	Rivet	4	
99	0208 78 834A	Gas, Freon	3	

CAR COOLER (L.H.D.)

(USED FROM CAR NO. 160623 73/10)

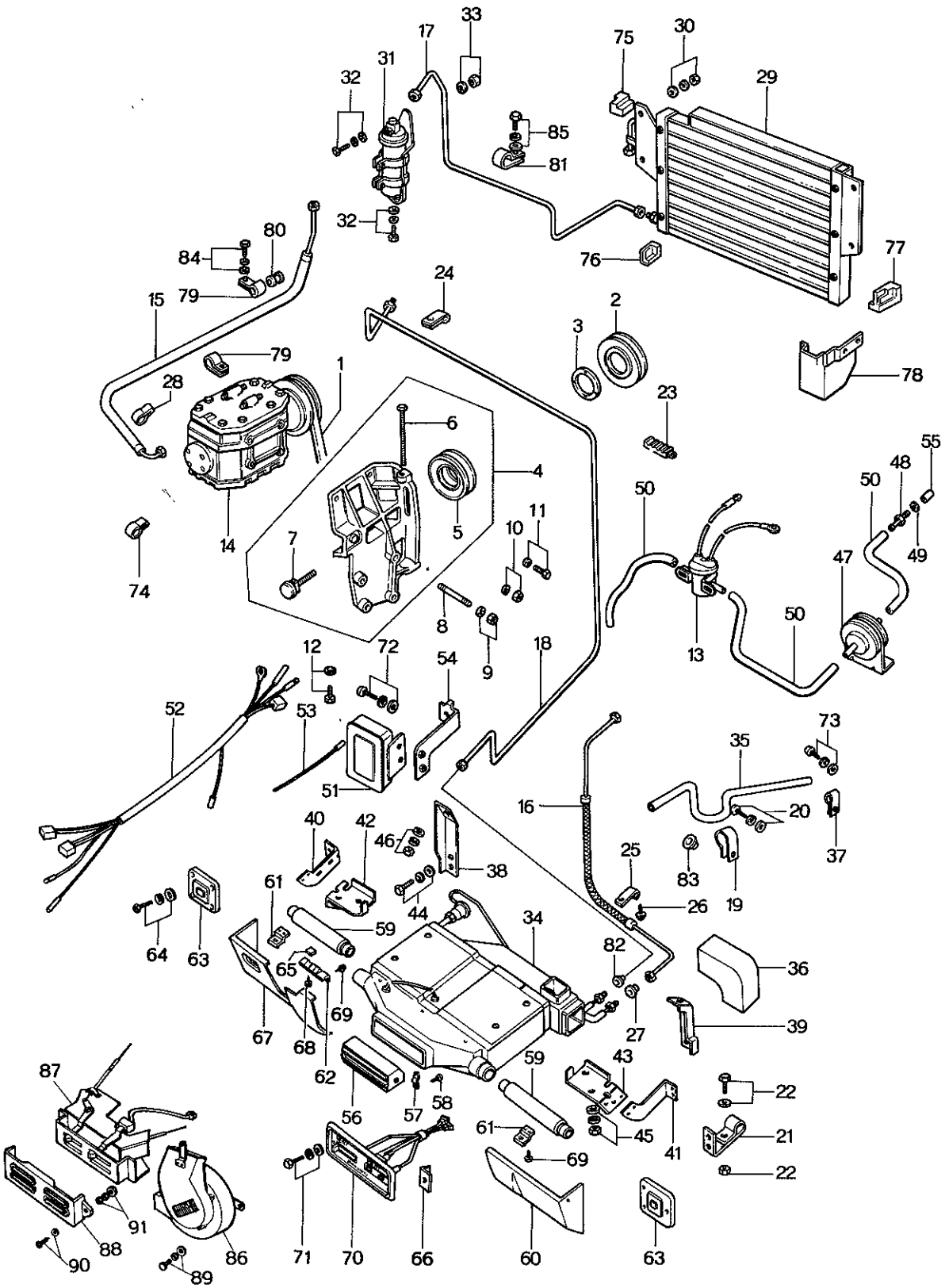

CAR COOLER (L.H.
(USED FROM CAR NO. 160

No.	Part Number	Description	Q'ty	Remarl
	1883 61 410	Air-Conditioner, Heater Less	1	
	1881 61 410	Air-Conditioner	1	
1	1881 15 906	Belt, "V"	1	
2	1881 15 911 A	Pulley, "V" Belt	1	
3	1757 15 912	Stiffener, Pulley	1	
4	1881 15 920	Bracket, Compressor (Fig. No. 5 ~ 7 included)	1	
5	1881 15 940	Pulley, Idle	1	
6	1757 15 966	Bolt, Adjust	1	
7	1757 15 967	Shaft, Adjust	1	
8	99859 1028	Stud	2	
	99859 1050	Stud	2	
9	99921 1000	Nut, Compressor Bracket	4	
	99971 1000	Washer, Spring	4	
10	99921 1200	Nut, Compressor Bracket	1	
	99971 1200	Washer, Spring	1	
11	99801 0825	Bolt, Compressor	4	
	99971 0800	Washer, Spring	4	
12	99801 0840	Bolt, Compressor	2	
	99971 0800	Washer, Spring	2	
13	0824 61 236 A	Valve, Magnet	2	

61 CAR COOLER (L.H.D.)
(USED FROM CAR NO. 160623 73/10)

No.	Part Number	Description	Q'ty	Remarks
14	1881 61 450	Compressor	1	
15	1562 61 461	Hose, Flexible	1	
16	1562 61 462A	Hose, Flexible	1	
17	1128 61 463	Pipe No. 1	1	
18	1562 61 464A	Pipe No. 2	1	
19	0370 61 467	Clip	4	
20	99868 0520	Bolt	4	
	99952 0500	Washer, Plain	4	
	99971 0500	Washer, Spring	4	
21	1562 61 469	Clip	1	
22	99806 0612	Bolt	7	
	99906 0600	Nut	7	
	99952 0600	Washer, Plain	7	
	99971 0600	Washer, Spring	7	
23	0866 61 472	Clip	1	
24	1562 61 473	Clip	4	
25	1562 61 474	Clip	1	
●	1622 61 474	Clip	1	73/11~○
26	99806 0628	Bolt	1	
	99952 0600	Washer, Plain	1	

No.	Part Number	Description	Q'ty	Rema
	99971 0690	Washer, Spring	1	
27	0866 61 475	Grommet	1	
28	0866 61 476	Protector	1	
29	1562 61 490	Condenser	1	
30	99906 0690	Nut	4	
	99952 0618	Washer, Plain	4	
	99971 0800	Washer, Spring	4	
31	0866 61 500	Tank, Receiver	1	
32	99806 0612	Bolt, Receiver Tank	3	
	99952 0600	Washer, Plain	3	
	99971 0600	Washer, Spring	3	
33	99906 0600	Nut	1	
	99952 0600	Washer, Plain	1	
34	1622 61 520	Cooler Unit	1	
35	0866 61 525A	Hose, Drain	2	
36	1524 61 526	Duct, Rubber	1	
37	0866 61 527	Clip	1	
38	0866 61 531	Bracket No. 1	1	
39	0866 61 532	Bracket No. 2	1	
40	0866 61 533	Bracket No. 3	1	

CAR COOLER (L.H.D.)
(USED FROM CAR NO. 160623 73/10)

No.	Part Number	Description	Q'ty	Remarks
41	0866 61 534	Bracket No. 4	1	
42	0866 61 535	Bracket No. 5	1	
43	0866 61 536	Bracket No. 6	1	
44	99808 0612	Bolt	12	
	99952 0600	Washer, Plain	12	
	99971 0600	Washer, Spring	12	
45	99906 0600	Nut	2	
	99951 0618	Washer, Plain	2	
	99971 0600	Washer, Spring	2	
46	99906 0800	Nut	2	
	99952 0800	Washer, Plain	2	
	99971 0800	Washer, Spring	2	
47	0866 61 541	Valve, Check	1	
48	0866 61 542	Connector	1	
49	99564 1000	Gasket	1	
50	0866 61 543A	Hose No. 1, Vacuum	1	
51	1622 61 545	Stabilizer Amplifier	1	
52	1622 61 546	Harness	1	
53	1524 61 547	Wire	1	
54	1622 61 548	Bracket	1	

No.	Part Number	Description	Q'ty	Remar
55	0866 61 549	Spacer	1	
56	0866 61 551	Grille	1	
57	0866 61 552	Holder	2	
58	99868 0408	Screw, Tapping	4	
59	1622 61 561	Duct, Air	2	
60	1622 61 565	Cover (R), Duct	1	
61	1622 61 566	Bracket, Cover	4	
62	1622 61 567	Bracket	1	
63	1622 61 568	Cover (R), Ventilator	1	
	1622 61 578	Cover (L), Ventilator	1	
64	99806 0620	Bolt, Cover	6	
	99952 0600	Washer, Plain	6	
	99971 0600	Washer, Spring	6	
65	1622 61 569	Spacer	2	
66	1622 61 572	Bracket	2	
67	1622 61 575	Cover (L), Duct	1	
68	99833 0525	Screw, Cover	2	
	99952 0500	Washer, Plain	2	
	99971 0500	Washer, Spring	2	
69	99868 0410	Screw, Cover	10	

CAR COOLER (L.H.D.)
(USED FROM CAR NO. 160623 73/10)

No.	Part Number	Description	Q'ty	Remarks
70	1622 61 580	Panel, Control	1	
71	99833 0310B	Screw	2	
	99952 0300	Washer, Plain	2	
	99971 0300	Washer, Spring	2	
72	99833 0512B	Screw	2	
	99952 0500	Washer, Plain	2	
	99971 0500	Washer, Spring	2	
73	99868 0520	Bolt	5	
	99952 0500	Washer, Plain	5	
	99971 0500	Washer, Spring	5	
74	0317 61 612	Cushion	1	
75	1128 61 911	Packing No. 1	1	
76	1128 61 912	Packing No. 2	1	
77	1128 61 913	Packing No. 3	1	
78	1620 61 920	Seal	1	
79	0820 78 857	Clip	2	
V	0259 78 857	Clip	2	73/11~○
80	0259 78 858	Packing	3	
81	0259 78 868	Clip	1	
82	0208 78 875	Grommet	1	
83	0820 78 883	Grommet	2	

No.	Part Number	Description	Q'ty	Rema
84	99863 0620	Bolt	4	
	99952 0600	Washer, Plain	4	
	99971 0600	Washer, Spring	4	
85	99806 0618	Bolt	1	
	99952 0600	Washer, Plain	1	
	99971 0600	Washer, Spring	1	
86	1531 61 140	Blower	1	
87	1588 61 190C	Control	1	
88	0866 61 195B	Panel, Control	1	
89	99805 0830	Bolt, Control Case	4	
	99952 0800	Washer, Plain	4	
	99971 0800	Washer, Spring	4	Heater Less
90	99833 0512	Screw, Control	3	
	99971 0500	Washer, Spring	3	
91	99806 0800	Nut	1	
	99952 0822	Washer, Plain	1	
	99971 0800	Washer, Spring	1	

COOLER UNIT

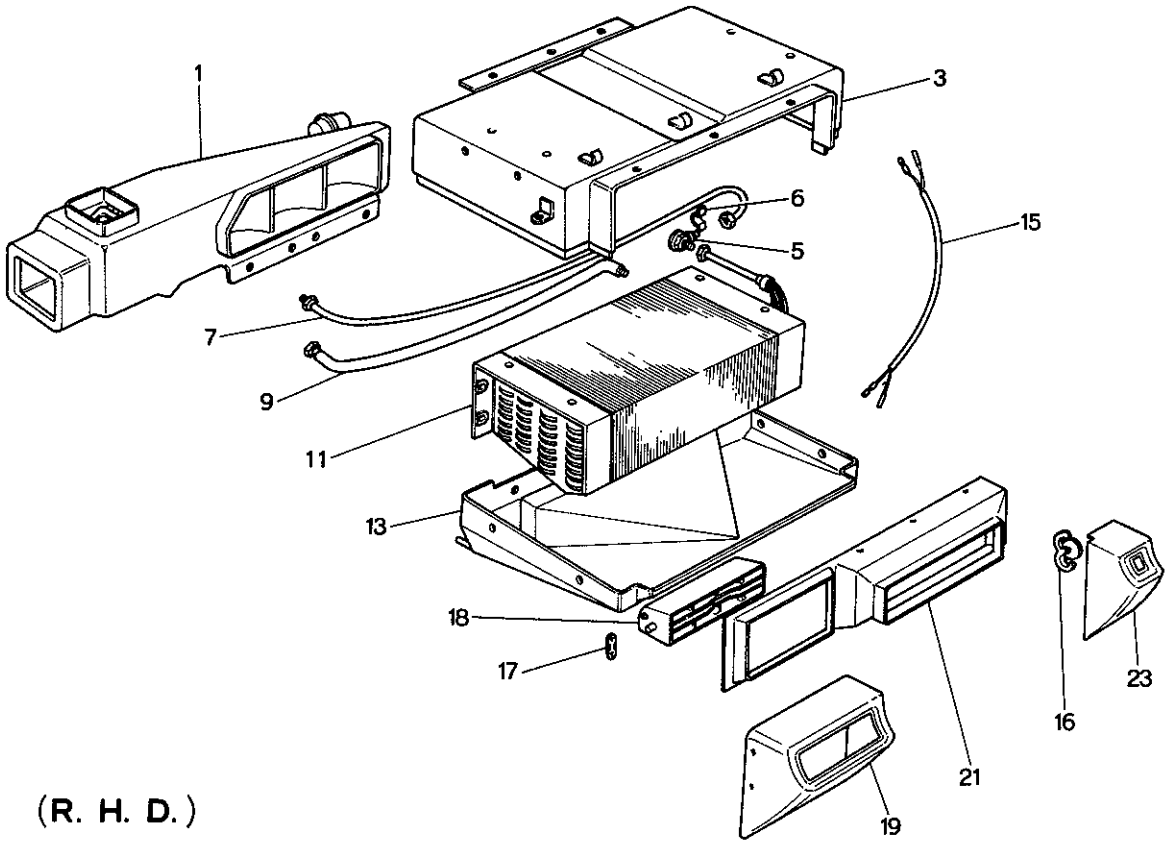

(R. H. D.)

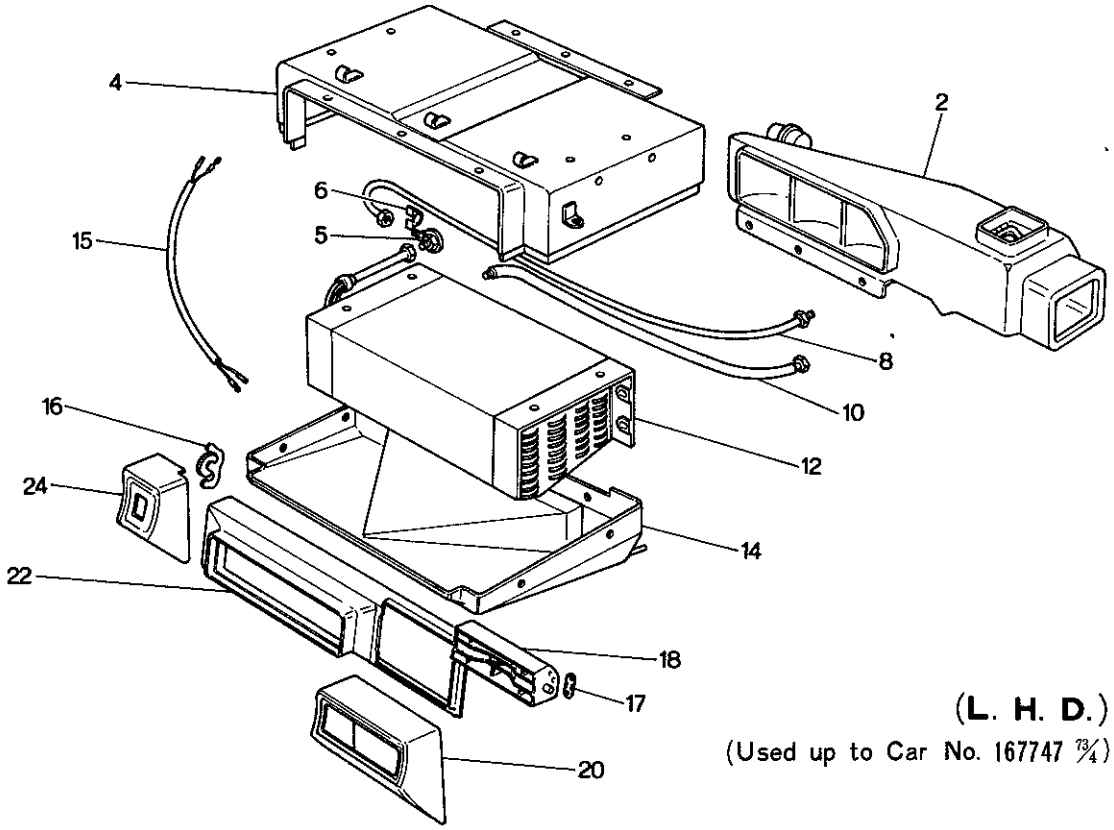

(L. H. D.)

(Used up to Car No. 167747 73/4)

No.	Part Number	Description	Q'ty	Remark
● Caution : Parts for L.H.D. models listed in this page with "※" mark at t apply up to car no. 167747 73/4, for parts from car no. 167748 (203-N-2～203-N-3)				
	0866 61 520	Unit, Cooler (R.H.D.) With Heater	1	
	1557 61 520	Unit, Cooler (R.H.D.) W/O Heater	1	Car No. 152816
※	1562 61 520	Unit, Cooler (L.H.D.) With Heater	1	
※	1568 61 520	Unit, Cooler (L.H.D.) W/O Heater	1	Car No. 152816
1	0370 76 701	Duct, Air (R.H.D.) With Heater	1	
	1518 76 701	Duct, Air (R.H.D.) W/O Heater	1	Car No. 152816
※ 2	1524 76 701	Duct, Air (L.H.D.) With Heater	1	
※	1531 76 701	Duct, Air (L.H.D.) W/O Heater	1	Car No. 152816
3	0370 76 702	Case, Main (R.H.D.)	1	
※ 4	1524 76 702	Case, Main (L.H.D.)	1	
5	0370 76 703	Valve, Expansion	1	
6	0370 76 704	Holder, Valve	1	
7	0370 76 705	Pipe No. 1 (R.H.D.)	1	
※ 8	1524 76 705	Pipe No. 1 (L.H.D.)	1	
9	0370 76 706	Pipe No. 2 (R.H.D.)	1	
※ 10	1524 76 706	Pipe No. 2 (L.H.D.)	1	
11	0370 76 708	Evaporator (R.H.D.)	1	

61 76 COOLER UNIT

	No.	Part Number	Description	Q'ty	Remarks
※	12	1524 76 708	Evaporator (L.H.D.)	1	
※		1622 76 708	Evaporator (L.H.D.)	1	Car No. 73/3~○
	13	0370 76 709	Case, Main (R.H.D.)	1	
※	14	1524 76 709	Case, Main (L.H.D.)	1	
	15	0370 76 707	Thermistor	1	
	16	0866 76 711	Resistor	1	
	17	0866 61 552	Holder, Grille	2	
	18	0866 76 715	Grille	1	
	19	0866 76 716	Body, Grille (R.H.D.)	1	
※	20	1562 76 716	Body, Grille (L.H.D.)	1	
	21	0866 76 717	Duct, Air (R.H.D.)	1	
※	22	1562 76 717	Duct, Air (L.H.D.)	1	
	23	0866 76 718	Base, Grille (R.H.D.)	1	
※	24	1562 76 718	Base, Grille (L.H.D.)	1	

COOLER UNIT & CONTROL PANEL

(L.H.D.) (USED FROM CAR NO. 167748 73/4)

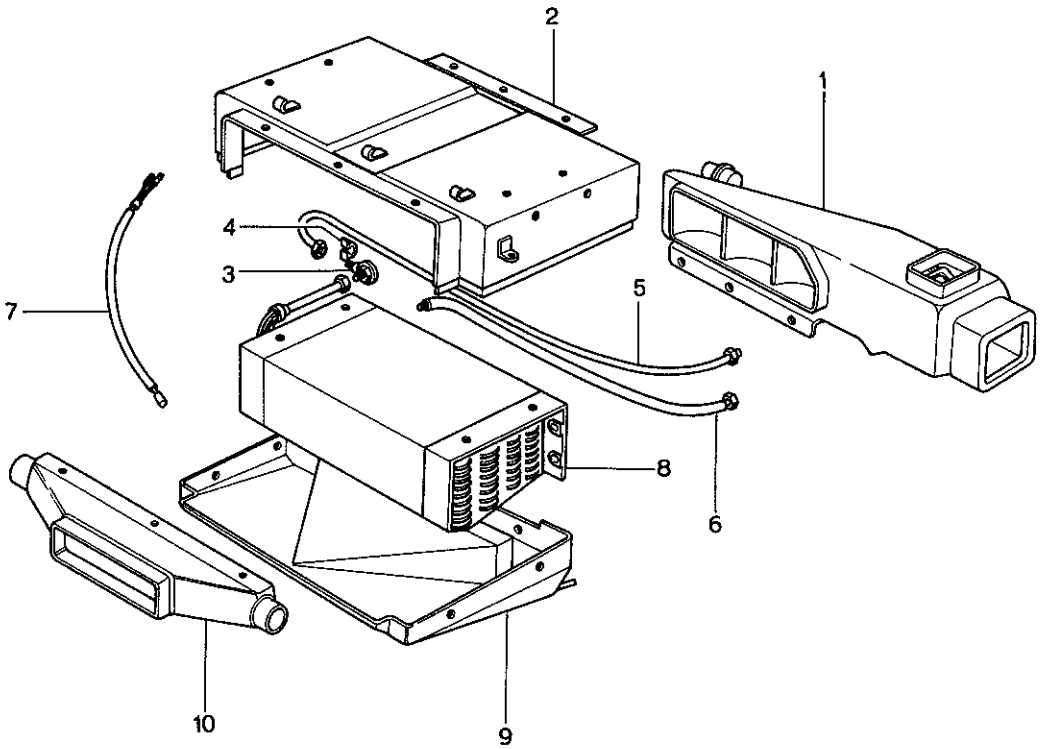

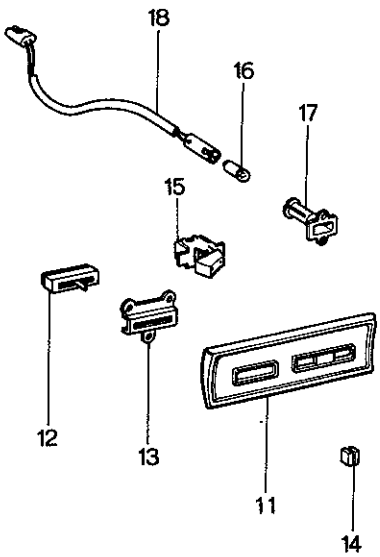

COOLER UNIT & CONTROL PANEL

(L.H.D.) (USED FROM CAR NO. 167748 73/4)

No.	Part Number	Description	Q'ty	Remar
●	1608 61 520	Cooler Unit	1	
	1622 61 520	Cooler Unit	1	
● 1	1531 76 701	Duct, Air (1608 61 520 Use)	1	
	1524 76 701	Duct, Air (1622 61 520 Use)	1	
2	1622 76 702	Case, Main	1	
3	0370 76 703	Valve, Expansion	1	
4	0370 76 704	Holder, Valve	1	
5	1524 76 705	Pipe No. 1	1	
6	1524 76 706	Pipe No. 2	1	
7	0370 76 707	Thermister	1	
8	1622 76 708	Evaporator	1	
9	1622 76 709	Case, Main	1	
10	1622 76 717	Duct, Air	1	
	1622 61 580	Panel Ass'y, Control	1	
11	1622 76 901	Panel, Control	1	
12	1622 76 902	Resistor, Variable	1	
13	1622 76 903	Bracket, Switch	1	
14	1622 76 904	Knob, Control	1	
15	1622 76 905	Switch, Snap	1	
16	1622 76 906	Valve	1	
17	1622 76 907	Socket, Valve	1	
18	1622 76 908	Holder, Valve	1	

COMPRESSOR (CAR COOLER)

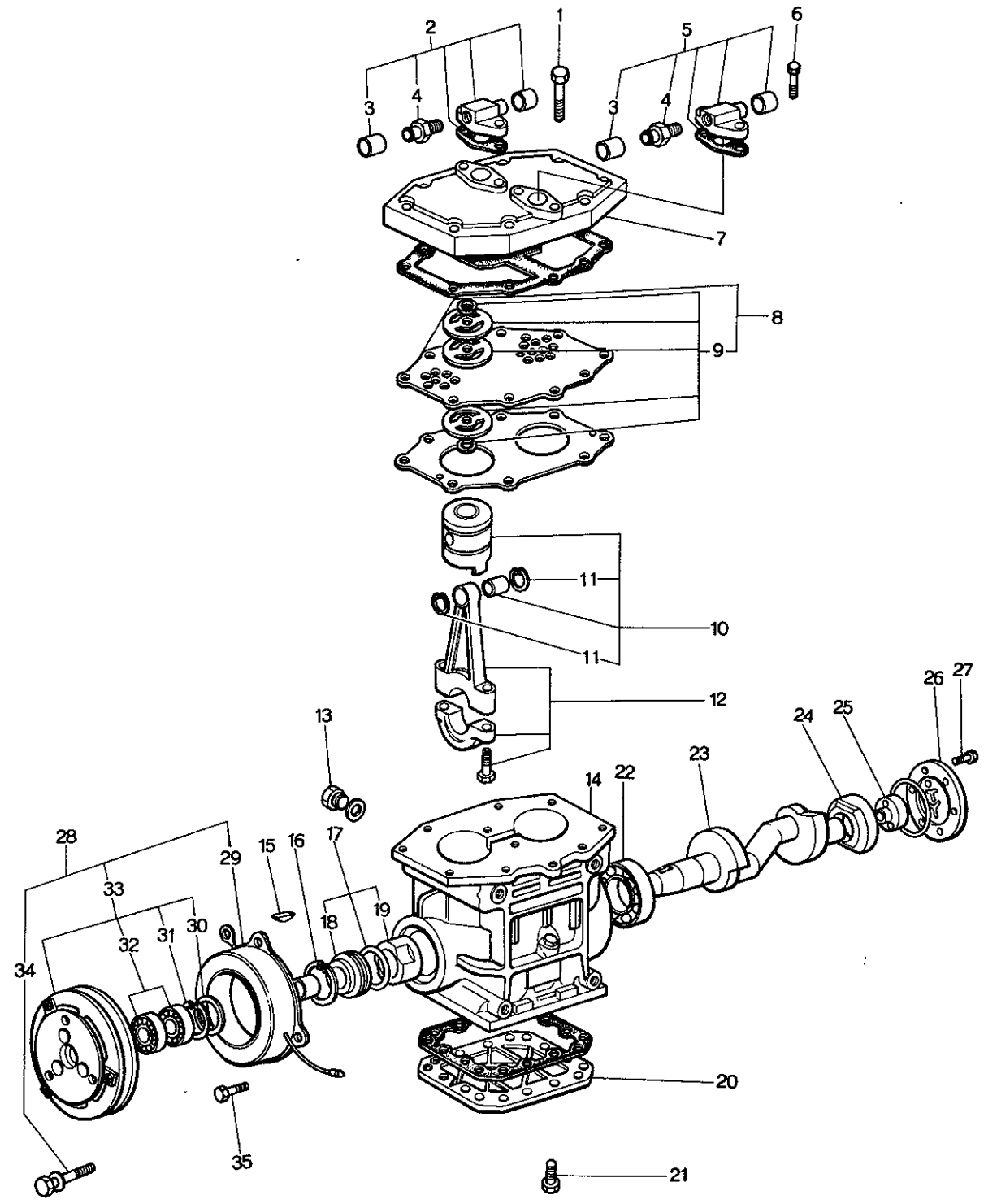

COMPRESSOR (CAR COOLER)

No.	Part Number	Description	Q'ty	Remark
	0866 61 450	Compressor	1	
●	1881 61 450	Compressor (L.H.D.)	1	Car No. 160623
	0866 76 710	Compressor Cpt., Fig. No. 1 ~27 Included	1	
1	0866 76 701	Bolt	4	
2	0866 76 810	Valve Kit, Service	1	
3	0866 76 755	Cap, Service Valve	2	
4	0866 76 754	Valve, Service	2	
5	0866 76 820	Valve Kit	1	
6	0866 76 702	Bolt	8	
7	0866 76 752	Head, Cylinder	1	
8	0866 76 760	Valve Ass'y	1	
9	0866 76 703	Valve Kit, Lead	2	
10	0866 76 830	Piston Ass'y	2	
11	0866 76 739	Ring, Snap	4	
12	0866 76 750	Connecting Rod Ass'y	2	
13	0866 76 704	Plug, Oil	1	
14	0866 76 721	Block, Cylinder	1	
	0866 76 721A	Block, Cylinder	1	Car No. 161019
15	0866 76 723	Key, Woodruff	1	
16	0866 76 734	Clip	1	

COMPRESSOR (CAR COOLER)

No.	Part Number	Description	Q'ty	Remarks
17	0866 76 730	Seal Cpt., Shaft	1	
18	0866 76 733	Plate, Seal	1	
19	0866 76 731	Seal Cpt.	1	
20	0866 76 743	Plate, Bottom	1	
	0866 76 743A	Plate, Bottom	1	Car No. 161019 $\frac{73}{12}$~×
21	0866 76 705	Bolt	16	
22	0866 76 722	Bearing	1	
23	0866 76 724	Shaft, Crank	1	
24	0866 76 725	Bearing	1	
25	0866 76 726	Pump Ass'y	1	
26	0866 76 729	Plate, Cover	1	
27	0866 76 706	Bolt	6	
28	0866 76 720	Clutch Ass'y, Fig. No. 29~34 Included	1	
●	1881 76 720	Clutch Ass'y, Fig. No. 29~34 Included (L.H.D.)	1	Car No. 160623 $\frac{73}{10}$~×
29	0866 76 763	Stator	1	
●	1881 76 763	Stator (L.H.D.)	1	Car No. 160623 $\frac{73}{10}$~×
30	0866 76 764	Cover, Dust	1	
31	0866 76 765	Ring "E"	1	
●	1881 76 765	Ring "E" (L.H.D.)	1	Car No. 160623 $\frac{73}{10}$~×
32	0866 76 766	Bearing, Ball	2	

No.	Part Number	Description	Q'ty	Remark
33	0866 76 790	Magnet Clutch	1	
●	1881 76 790	Magnet Clutch (L.H.D.)	1	Car No. 160623
34	0866 76 707	Bolt	1	
●	1881 76 707	Bolt (L.H.D.)	1	Car No. 160623
35	0866 76 708	Screw	3	
	0866 76 709	Gasket Kit	1	
	0866 76 709A	Gasket Kit	1	Car No. 161019

BACK DOOR (STATION WAGON)

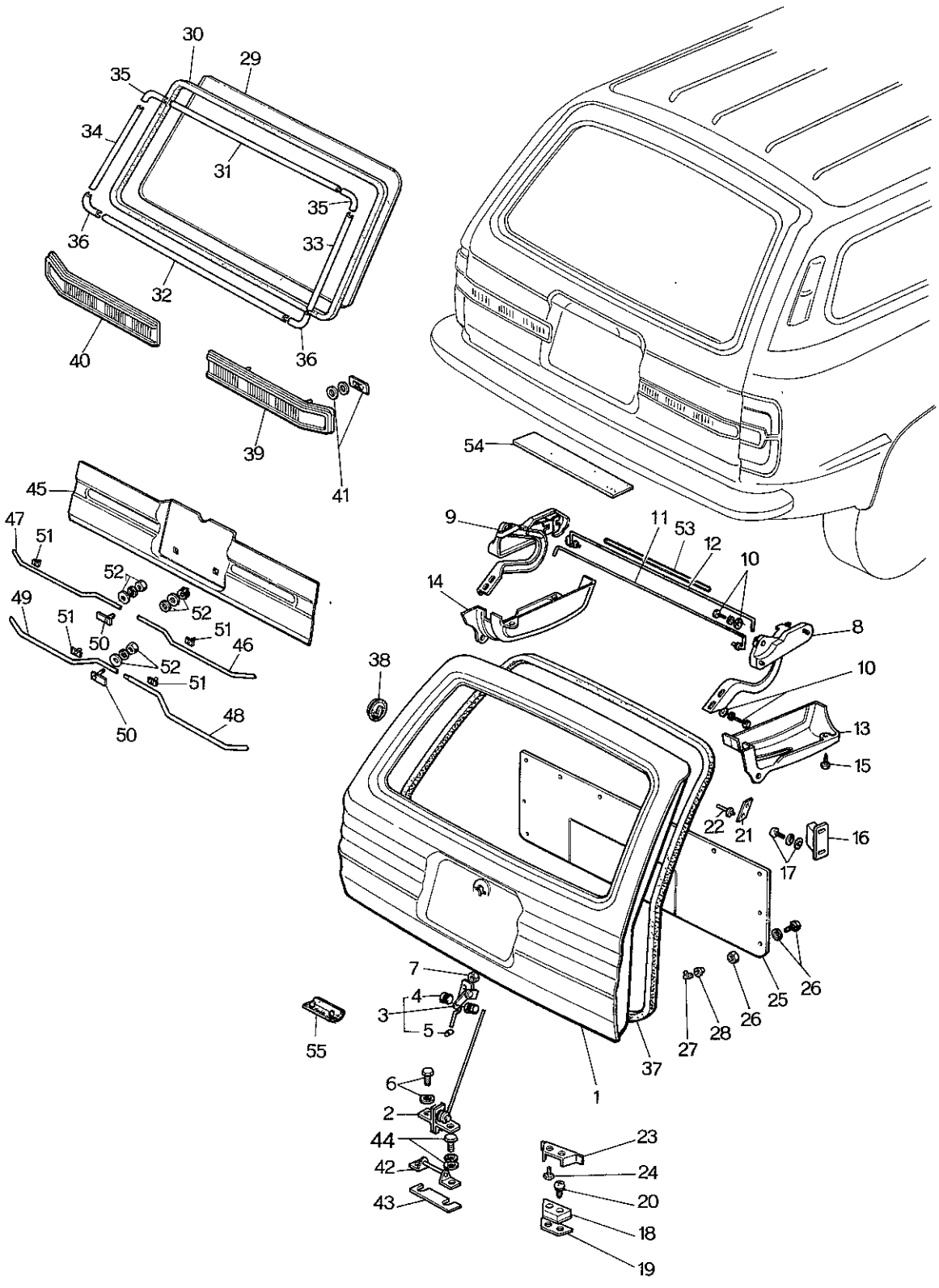

No.	Part Number	Description	Q'ty	Rema
1	1571 62 510A	Door, Back	1	
2	0585 62 710B	Lock, Back Door	1	
3	0585 62 720D	Control, Remote	1	
4	0824 58 546A	Bush	1	
5	0866 58 313	Joint	1	
6	99806 0818	Bolt, Back Door Lock	2	
	99971 0600	Washer, Spring	2	
	99952 0618	Washer, Plain	2	
7	99940 0602	Nut, Flange	2	
8	0585 62 610	Hinge (R)	1	
9	0585 63 610	Hinge (L)	1	
10	99781 0820	Bolt, Hinge	8	
	99951 0818	Washer, Plain	8	
	99971 0800	Washer, Spring	8	
11	0585 62 650C	Spring (R), Balance	1	
12	0585 63 650C	Spring (L), Balance	1	
13	0585 62 871C	Cover (R), Hinge	1	
14	0585 63 871C	Cover (L), Hinge	1	

BACK DOOR (STATION WAGON)

No.	Part Number	Description	Q'ty	Remarks
15	99864 0516C	Screw, Hinge Cover	6	
16	0585 62 671A	Wedge, Upper	2	
17	99765 0616	Screw	4	
	99952 0600	Washer, Plain	4	
	99971 0600	Washer, Spring	4	
18	0621 62 640A	Wedge	2	
19	0621 62 641	Shim, Adjust-Wedge	—	Selective use
	0621 62 642	Shim, Adjust-Wedge		
20	99836 0620	Screw, Wedge	4	
	99974 0600	Washer, Toothed	4	
	99975 0600	Washer, Toothed	4	
21	0585 62 672A	Protector	2	
22	0223 69 032	Rivet, Blind-Protector	4	
23	0585 62 695	Wedge	2	
24	99833 0614	Screw, Wedge	4	
	99974 0600	Washer, Toothed	4	
	99975 0600	Washer, Toothed	4	
25	0899 62 851C	Trim, Back Door	1	
26	99862 0416B	Screw, Back Door Trim	6	Selective use
	99862 0416C	Screw, Back Door Trim	6	

No.	Part Number	Description	Q'ty	Rem
	99987 0400A	Washer, Plain (Selective use)	6	
	99987 0400B	Washer, Plain (Selective use)	6	
	99910 0401	Nut	6	
27	0208 58 921	Fastener	2	
28	0187 58 922	Fastener, Seal	2	
29	1528 62 801	Glass, Back Window (Transparent)	1	
	1529 62 801	Glass, Back Window (Transparent)	1	(Heatable Gl
30	0585 62 802	Weatherstrip	1	
31	0585 62 821A	Mould, Upper	1	
32	0585 62 822A	Mould, Lower	1	
33	0585 62 823A	Mould (R)	1	
34	0585 63 823A	Mould (L)	1	
35	0585 62 824B	Mould, Corner-Upper	2	
36	0585 62 825B	Mould, Corner-Lower	2	
37	0585 62 831A	Weatherstrip	1	
38	0136 58 112	Hole Cover, Switch	2	
39	0585 62 940A	Finisher (R), Tail	1	
40	0585 63 940A	Finisher (L), Tail	1	
41	0305 68 951	Gasket	4	
	0305 68 952	Washer	4	

BACK DOOR (STATION WAGON)

No.	Part Number	Description	Q'ty	Remarks
	99579 4000	Nut, Speed	4	
42	0585 62 750	Striker	1	
43	0585 62 741	Plate "A", Adjust (t=2.0) } Selective use	1	
	0585 62 742	Plate "B", Adjust (t=1.0) } Selective use	1	
44	99806 0618	Bolt, Striker	2	
	99951 0618	Washer, Plain	2	
	99971 0600	Washer, Spring	2	
45	0899 62 955A	Film, Decoration	1	
46	0899 62 961	Moulding (R), Upper	1	
47	0899 62 962A	Moulding (L), Upper	1	
48	0899 62 963	Moulding (R), Lower	1	
49	0899 62 964	Moulding (L), Lower	1	
50	0899 62 970	Bolt, Moulding	3	
51	0899 62 975A	Clip	10	
52	99906 0300	Nut, Decoration Film	3	
	99952 0300	Washer, Plain	3	
	99971 0300	Washer, Spring	1	
53	0621 62 792	Pipe	1	
54	0603 69 323A	Cushion	1	
55	0305 58 872	Valve, Drain	2	

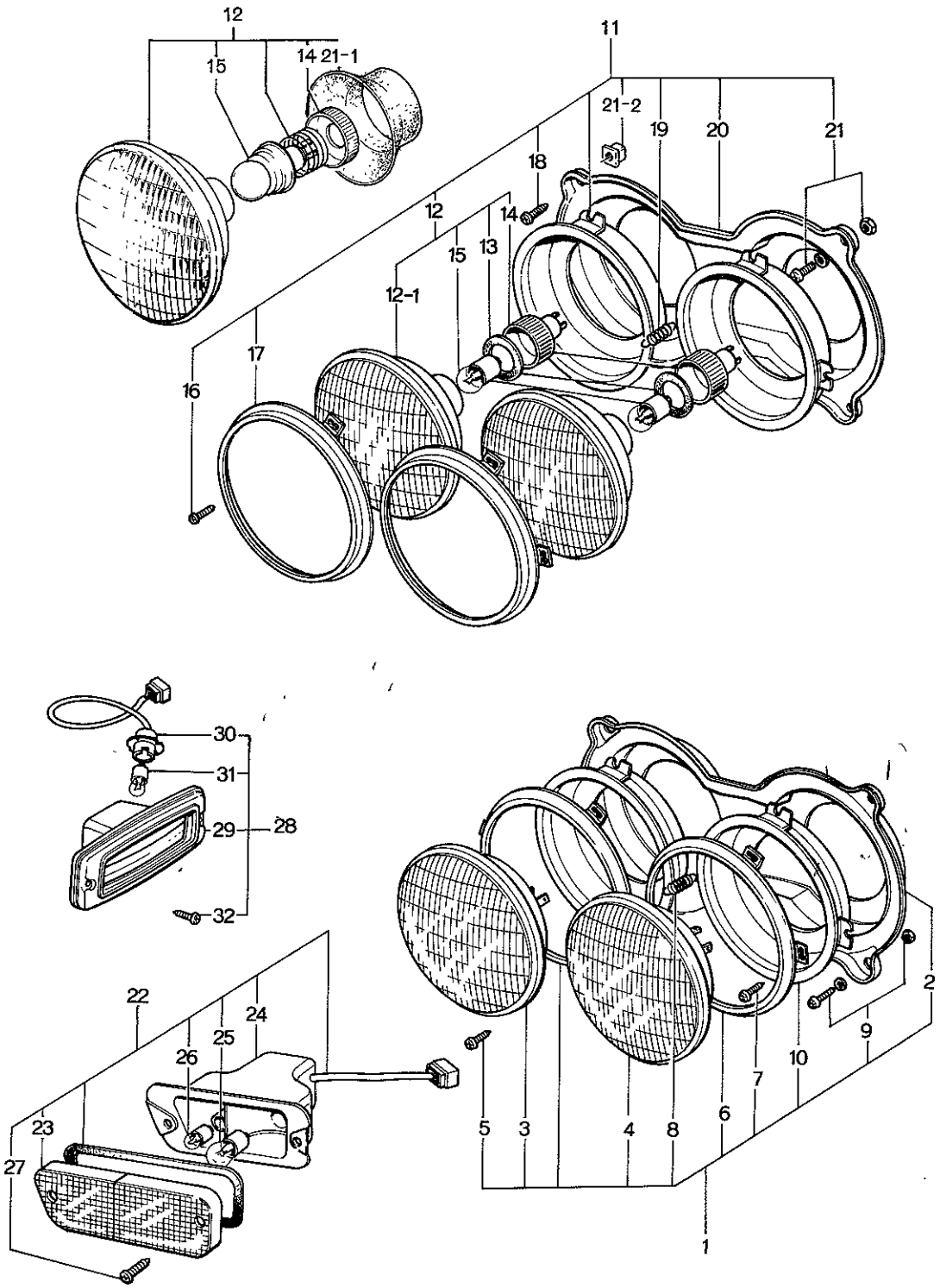
12
15
14
21-1
11
21-2
19
20
21
18
12
14
15
13
12-1
17
16
30
31
29
28
32
22
24
25
26
23
27
5
3
4
8
6
7
10
9
2
1

No.	Part Number	Description		Q'ty	Remark
1	~~0865 88 661~~	~~Lamp (R), Head~~	~~(Toshiba Make)~~	~~1~~	
	~~0865 89 666~~	~~Lamp (L), Head~~		~~1~~	
	0866 89 661	Lamp (R), Head	(Koito Make) (R.H.D.)	1	
	0866 89 666	Lamp (L), Head		1	
●	1128 89 661	Lamp (R), Head	(Toshiba Make)	1	Car No. 16062
●	1128 89 666	Lamp (L), Head		1	Car No. 16062
	1540 89 661	Lamp (R), Head	(L.H.D.) Sealed Beam Type	1	
	1540 89 666	Lamp (L), Head		1	
●	3517 89 661	Lamp (R), Head		1	Car No. 160623
●	3517 89 666	Lamp (L), Head		1	Car No. 160623
2	~~0865 66 001~~	~~Housing (R)~~	~~(Toshiba Make)~~	~~1~~	
	~~0865 66 011~~	~~Housing (L)~~		~~1~~	
●	0866 66 031	Housing (R)	(Koito Make)	1	Car No. 160623 ※
●	0866 66 061	Housing (L)		1	Car No. 160623 ※
3	~~0865 87 008~~	~~Beam Unit, Sealed No. 1 (Toshiba Make)~~		~~2~~	
	0183 66 021	Beam Unit, Sealed No. 1 (Koito Make)		2	
●	0865 87 008	Beam Unit, Sealed No. 1 (Toshiba Make)		2	Car No. 16062
4	~~0865 87 009~~	~~Beam Unit, Sealed No. 2 (Toshiba Make)~~		~~2~~	
	0183 66 022	Beam Unit, Sealed No. 2 (L.H.D.) (Koito Make)		2	
●	0865 87 009	Beam Unit, Sealed No. 2 (R.H.D.) (Toshiba Make)		2	Car No. 160623

No.	Part Number	Description	Q'ty	Remarks
	2801 66 022	Beam Unit, Sealed No. 2 (L.H.D.) (Koito Make)	2	
5	0275 87 007	Screw	12	
6	0727 87 014	Holder, Lamp	4	
7	0727 87 016	Screw	8	
8	2850 87 012	Spring	4	
9	99860 0616	Screw, Tapping	8	
	99910 0616	Nut	8	
●	99910 0601	Nut	8	73/10~○
	99952 0601	Washer, Plain	8	
●	99952 0816	Washer, Plain	8	Car No. 160623 73/10~△
10	0727 87 012	Holder (R) } (R) Side	1	
	0727 87 013	Holder (L) } (R) Side	1	
	0727 87 022	Holder (R) } (L) Side	1	
	0727 87 023	Holder (L) } (L) Side	1	
11	1562 89 661	Lamp (R), Head } White Bulb	1	
●	1562 89 661A	Lamp (R), Head } White Bulb	1	72/11~○
	1562 89 666	Lamp (L), Head } White Bulb	1	
●	1562 89 666A	Lamp (L), Head } White Bulb	1	72/11~○
●	3513 89 661	Lamp (R), Head	1 (L.H.D.) Semi Sealed Beam	Car No. 160623 73/10~×

No.	Part Number	Description		Q'ty	Rema
●	3513 89 666	Lamp (L), Head		1	Car No. 1606
	1568 89 661	Lamp (R), Head	Yellow Bulb (For France)	1	
●	1568 89 661 A	Lamp (R), Head		1	
	1568 89 666	Lamp (L), Head		1	
●	1568 89 666 A	Lamp (L), Head		1	
●	3514 89 661	Lamp (R), Head	(For France)	1	Car No. 1606
●	3514 89 666	Lamp (L), Head		1	Car No. 1606
12	2288 66 040	Lamp Unit Type E 1		2	
●	1562 66 041	Lamp Unit Type E 1		2	
●	1562 66 040 A	Beam, Semi-Sealed		2	
	2288 66 070	Lamp Unit Type E 2	(White Bulb)	2	
●	1562 66 071	Lamp Unit Type E 2		2	
●	1562 66 070 A	Beam, Semi-Sealed		2	
	2212 66 040	Lamp Unit Type E 1		2	
●	1562 66 041	Lamp Unit Type E 1		2	
●	1568 66 040 A	Beam, Semi-Sealed		2	Car No. 16062
	2212 66 070	Lamp Unit Type E 2	(Yellow Bulb)	2	
●	1562 66 071	Lamp Unit Type E 2		2	
●	1568 66 070 A	Beam, Semi-Sealed		2	Car No. 16062
12-1	2288 87 041	Lens & Body E 1		2	

No.	Part Number	Description	Q'ty	Remarks
	2288 87 071	Lens & Body E 2	2	
13	2276 66 042	Gasket	4	Car No. 160623 73/10~Discarded
14	2276 66 044	Ring Set	4	
●	2369 66 075	Holder, Bulb	4	Car No. 160623 73/10~×
15	2288 66 045	Bulb-White Color	4	
	2360 66 045	Bulb-Yellow Color	4	
16	0275 87 007	Screw	12	
17	0727 87 014	Holder, Lamp	4	
18	0727 87 016	Screw	8	
19	2850 87 012	Spring	4	
20	0727 87 012	Holder (R) } (R) Side	1	
	0727 87 013	Holder (L) } (R) Side	1	
	0727 87 022	Holder (R) } (L) Side	1	
	0727 87 023	Holder (L) } (L) Side	1	
21	99860 0616	Screw, Tapping	8	
	99910 0601	Nut	8	
	99952 0816	Washer, Plain	8	
●21-1	2369 66 071	Cover	4	Car No. 160623 73/10~Added Anew
●21-2	2850 87 003	Nut, Self Lock	8	Car No. 160623 73/10~Added Anew

No.	Part Number	Description	Q'ty	Remar
22	1524 89 662A	Lamp (R), Front Turn Signal	1	
●	1524 89 662B	Lamp (R), Front Turn Signal	1	Car No. 16062
	1524 89 667A	Lamp (L), Front Turn Signal	1	
●	1524 89 667B	Lamp (L), Front Turn Signal	1	Car No. 1606
23	1524 66 112A	Lens (R)	1	
	1524 66 142A	Lens (L)	1	
●24	1524 66 111	Housing (R)	1	Car No. 1606
●	1524 66 141	Housing (L)	1	Car No. 1606
25	99701 2050	Bulb	2	
26	99701 3210	Bulb	2	
27	99835 0625C	Screw	4	
28	0866 89 663	Lamp (R), Side Turn Signal	1 (For General & England)	
	0866 89 668	Lamp (L), Side Turn Signal	1 (For General & England)	
	0866 89 663	Lamp (R), Side Turn Signal	1	
	1531 89 663A	Lamp (R), Side Turn Signal	(For Denmark) 1	Car No. 13321
	1531 89 663A	Lamp (R), Side Turn Signal	(Except Denmark) 1 (For Europe)	Car No. 14192
	0866 89 668	Lamp (L), Side Turn Signal	1	
	1531 89 668A	Lamp (L), Side Turn Signal	(For Denmark) 1	Car No. 13321
	1531 89 668A	Lamp (L), Side Turn Signal	(Except Denmark) 1	Car No. 14192

LAMPS (FRONT SIDE)

No.	Part Number	Description	Q'ty	Remarks
29	0866 66 481 A	Lens & Body (R)	1	(For General & England)
	0866 66 491 A	Lens & Body (L)	1	(For General & England)
	0866 66 481 A	Lens & Body (R)	1	(For Europe)
	1531 66 481	Lens & Body (R)	1	(For Europe) Car No. 133210 72/1～× (For Denmark) Car No. 141828 72/3～× (Except Denmark)
	0866 66 491 A	Lens & Body (L)	1	(For Europe)
	1531 66 491	Lens & Body (L)	1	(For Europe) Car No. 133210 72/1～× (For Denmark) Car No. 141920 72/3～× (Except Denmark)
30	0865 66 482	Socket	2	
31	99701 6030	Bulb (For General & England)	2	
	99701 6030	Bulb (For Europe)	2	
	99701 2050	Bulb (For Europe)	2	Car No. 133210 72/1～×
32	99864 0416 B	Screw, Lamp (For General & England)	4	
●	99796 0414	Screw, Lamp (For General & England)	4	Car No. 160623 73/10～×
	99864 0416 B	Screw, Lamp	4	(For Europe)
	99769 0416	Screw, Lamp	4	(For Europe) Car No. 141928 72/3～○
●	99769 0414	Screw, Lamp	4	Car No. 160623 73/10～×

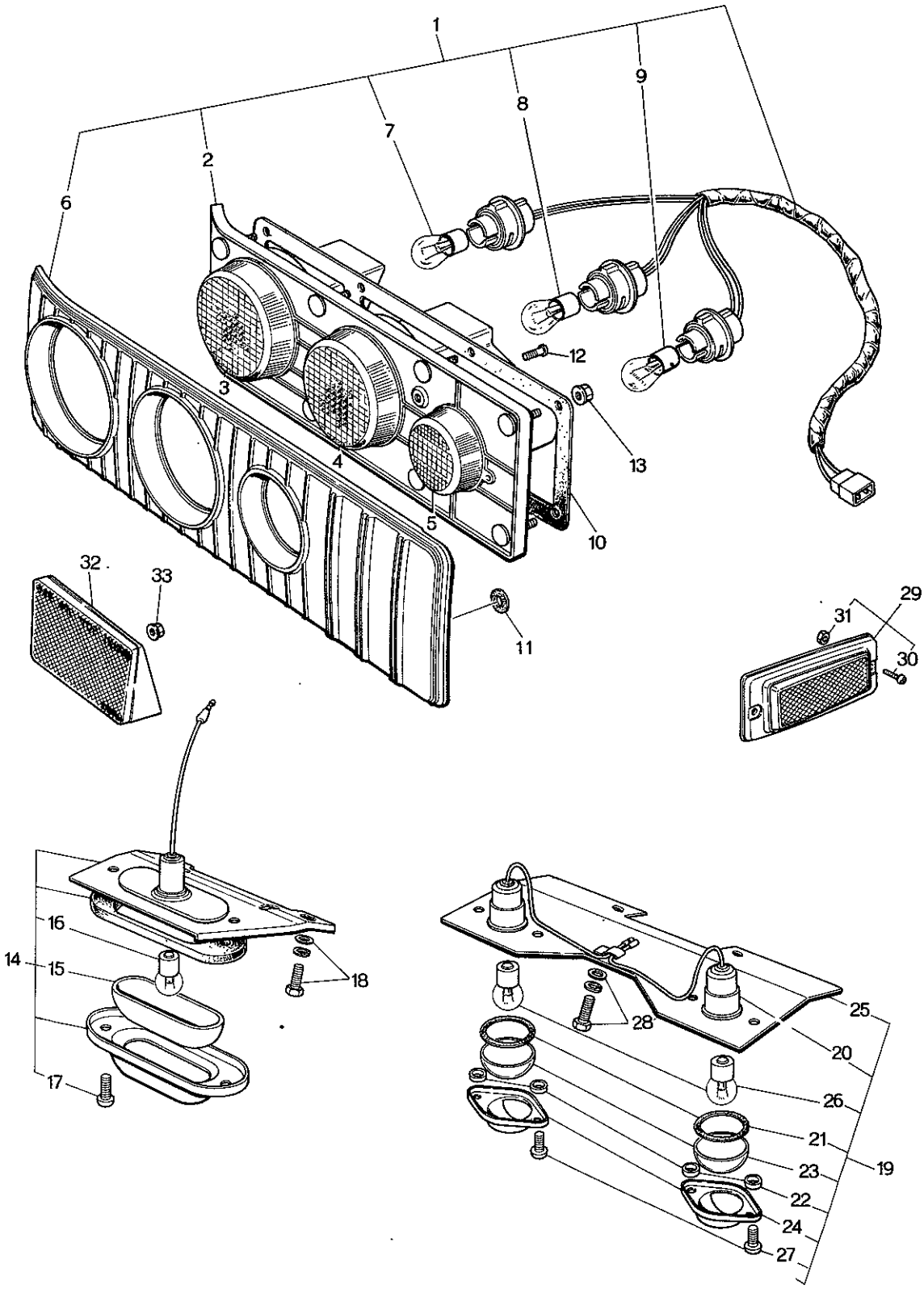
1
2
3
4
5
6
7
8
9
10
11
12
13
14
15
16
17
18
19
20
21
22
23
24
25
26
27
28
29
30
31
32
33

No.	Part Number	Description	Q'ty	Remar
1	1554 89 664	Lamp (R), Rear Combination	1	
●	1554 89 664 - 15	Lamp (R), Rear Combination	1	Car No. 16734
	1554 89 669	Lamp (L), Rear Combination RED/GRY	1	
●	1554 89 669 - 15	Lamp (L), Rear Combination (BLK)	1	Car No. 16734
	1562 89 664A	Lamp (R), Rear Combination	1	
●	1562 89 664A 15	Lamp (R), Rear Combination	1	Car No. 16734
	1562 89 669A	Lamp (L), Rear Combination	1	
●	1562 89 669A 15	Lamp (L), Rear Combination	1	Car No. 16734
	1568 89 664A	Lamp (R), Rear Combination (~~BLK~~ RED & ~~BLK~~ P. GRY)	1	
●	1568 89 664A 15	Lamp (R), Rear Combination (BLK)	1	Car No. 16734
	1568 89 669A	Lamp (L), Rear Combination	1	
●	1568 89 669A 15	Lamp (L), Rear Combination	1	Car No. 16734
2	1562 66 211A	Unit (R) (For Australia & General)	1	Fig. No. 3 ~ 5 i
	1562 66 231A	Unit (L) (For Australia & General)	1	
	1568 66 211A	Unit (R) (For France)	1	
	1568 66 231A	Unit (L) (For France)	1	
3	1562 66 219	Lens (R), Turn Signal Lamp	1	
	1562 66 239	Lens (L), Turn Signal Lamp	1	
4	0865 66 218	Lens (R), Tail & Stop Lamp	1	
	0865 66 238	Lens (L), Tail & Stop Lamp	1	

No.	Part Number	Description	Q'ty	Remarks
5	0865 66 217	Lens, Back Up Lamp (For Australia & General)	2	
	1568 66 217	Lens, Back Up Lamp (For France)	2	
6	0866 66 212	Rim (R)	1	
●	0866 66 212 - 15	Rim (R)	1	Car No. 167343 73/4~×
	0866 66 232	Rim (L)	1	
●	0866 66 232 - 15	Rim (L)	1	Car No. 167343 73/4~×
7	99701 3210	Bulb, Turn Signal Lamp	2	
8	99701 4215	Bulb, Tail & Stop Lamp	2	
9	99701 8100	Bulb, Back Up Lamp	2	
	99701 3230	Bulb, Back Up Lamp (For Australia)	2	
10	0866 66 213	Packing	2	
11	0866 66 214	Packing	2	
12	99868 0414	Screw	6	
13	99906 0500	Nut, Rear Combination Lamp	18	
	99952 0516	Washer, Plain	18	
14	0866 89 665	Lamp, Licence (For General)	1	
	1524 89 665	Lamp, Licence (For All ECE Spec. Models, Except France & Italy)	1	
15	0866 66 372	Lens	1	

No.	Part Number	Description	Q'ty	Remark
16	99701 2050	Bulb (12V, 5W) (For All ECE Territory, Except France & Italy)	1	
	99701 2080	Bulb (12V, 8W) (For General)	1	
17	0305 87 032	Screw	2	
18	99797 0612	Bolt, Licence Lamp	2	
	99952 0600	Washer, Plain	2	
	99971 0600	Washer, Spring	2	
19	1531 89 665	Lamp, Licence (For France & Italy)	2	
20	1531 66 371	Body	2	
21	1531 66 372	Gasket	2	
22	1531 66 373	Spacer	4	
23	1531 66 374	Lens	2	
24	1531 66 375A	Rim	2	
25	1531 66 376	Bracket	1	
26	99701 2050	Bulb	2	
27	99773 0412	Screw	4	
28	99797 0612	Bolt, Licence Lamp	2	
	99952 0600	Washer, Plain	2	
	99971 0600	Washer, Spring	2	

No.	Part Number	Description	Q'ty	Remarks
29	1511 89 673	Ornament - Side (R)	1	For Australia
	1511 89 678	Ornament - Side (L)	1	For Australia
	1524 89 673	Ornament - Side (R)	1	For General (England included)
	1524 89 678	Ornament - Side (L)	1	For General (England included)
30	99974 0416	Screw, Ornament	4	
31	99940 0400	Nut	4	
32	0866 66 700A	Reflector, Reflex - Rear	2	
33	99940 0500	Nut	2	

LAMPS (REAR SIDE, STATION WAGON)

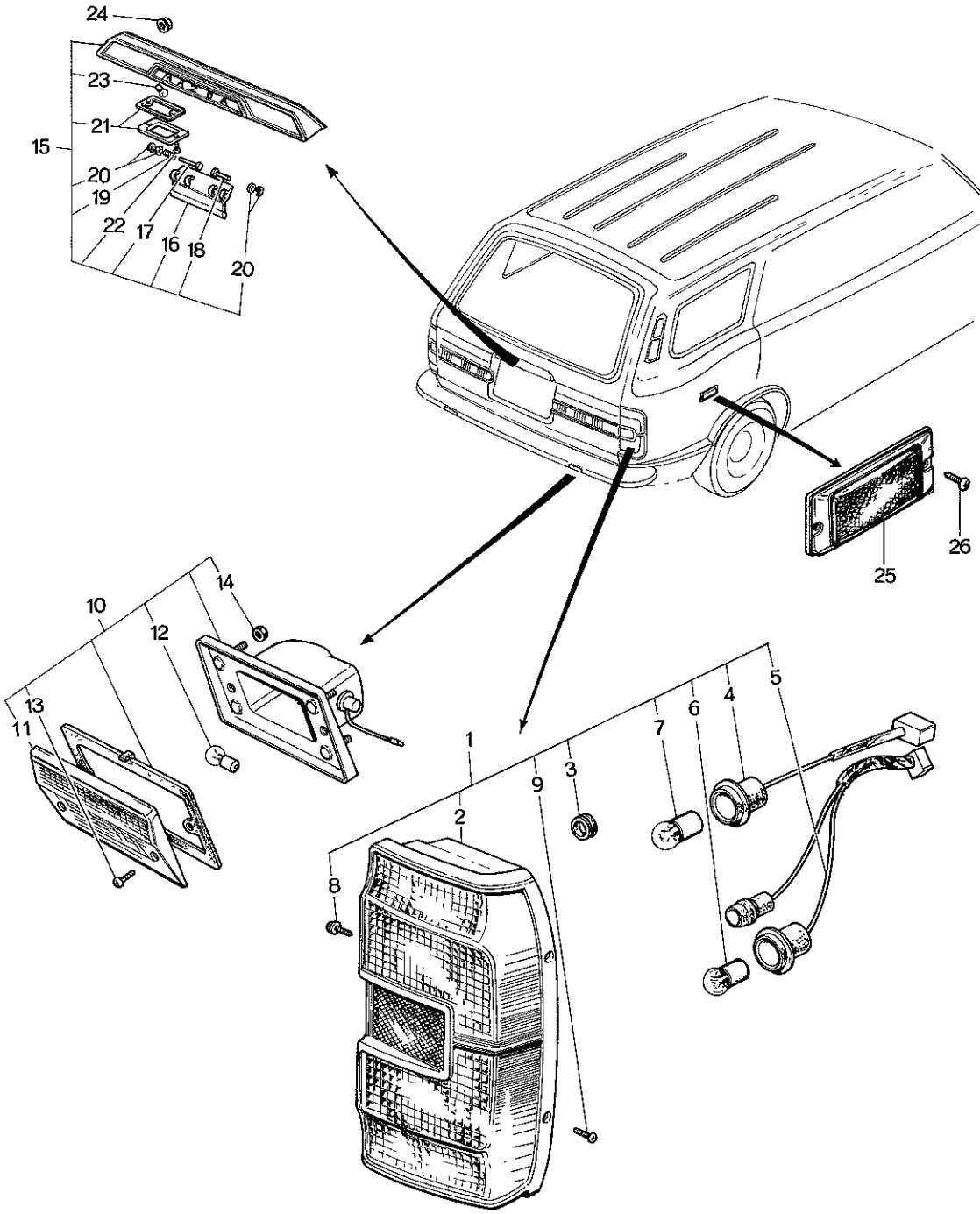

LAMPS (REAR SIDE, STATION

No.	Part Number	Description	Q'ty	Re
1	1529 89 664E	Lamp (R), Rear Combination	1	
	1529 89 669E	Lamp (L), Rear Combination	1	
2	1529 66 211A	Lens & Body (R)	1	
	1529 66 219	Lens (Amber & Red)	1	
	1529 66 231A	Lens & Body (L)	1	
	1529 66 239	Lens (Amber & Red)	1	
3	1529 66 212	Grommet	2	
4	1529 66 213	Cord & Socket No. 1	2	
5	1529 66 214	Cord & Socket No. 2	2	
6	99701 3210	Bulb (12 V 21 W)	2	
7	99701 4215	Bulb (12 V 21 / 5 W)	2	
8	99833 0616	Screw, Rear Combination Lamp	4	
	99971 0600	Washer, Spring	4	
	99952 0600	Washer, Plain	4	
9	99767 0525	Screw, Tapping-Rear Combination Lamp	4	
10	1529 89 654	Lamp, Reverse	2	
11	0585 66 333	Lens	2	
12	99701 8100	Bulb (12 V 10 W)	2	
13	99773 0416	Screw	4	

LAMPS (REAR SIDE, STATION WAGON)

No.	Part Number	Description	Q'ty	Remarks
14	99940 0502	Nut	4	
15	1529 89 665B	Lamp & Handle	1	
16	0585 66 373	Handle	1	
17	0585 66 374	Pin No. 1, Hinge	1	
18	0585 66 375	Pin No. 2, Hinge	1	
19	0585 66 376	Spring, Return	1	
20	0111 58 443	Washer	2	
	99575 0400	Ring, Snap	2	
21	0585 66 377	Lens	2	
	0585 66 378	Packing	2	
22	99773 0410	Screw	4	
23	99701 2050	Bulb (12 V, 5 W)	2	
24	99940 0602	Nut, Lamp & Handle	4	
25	1524 89 673	Ornament (R), Rear Side	1	
	1524 89 678	Ornament (L), Rear Side	1	
26	99769 0416	Screw, Rear Side Ornament	4	

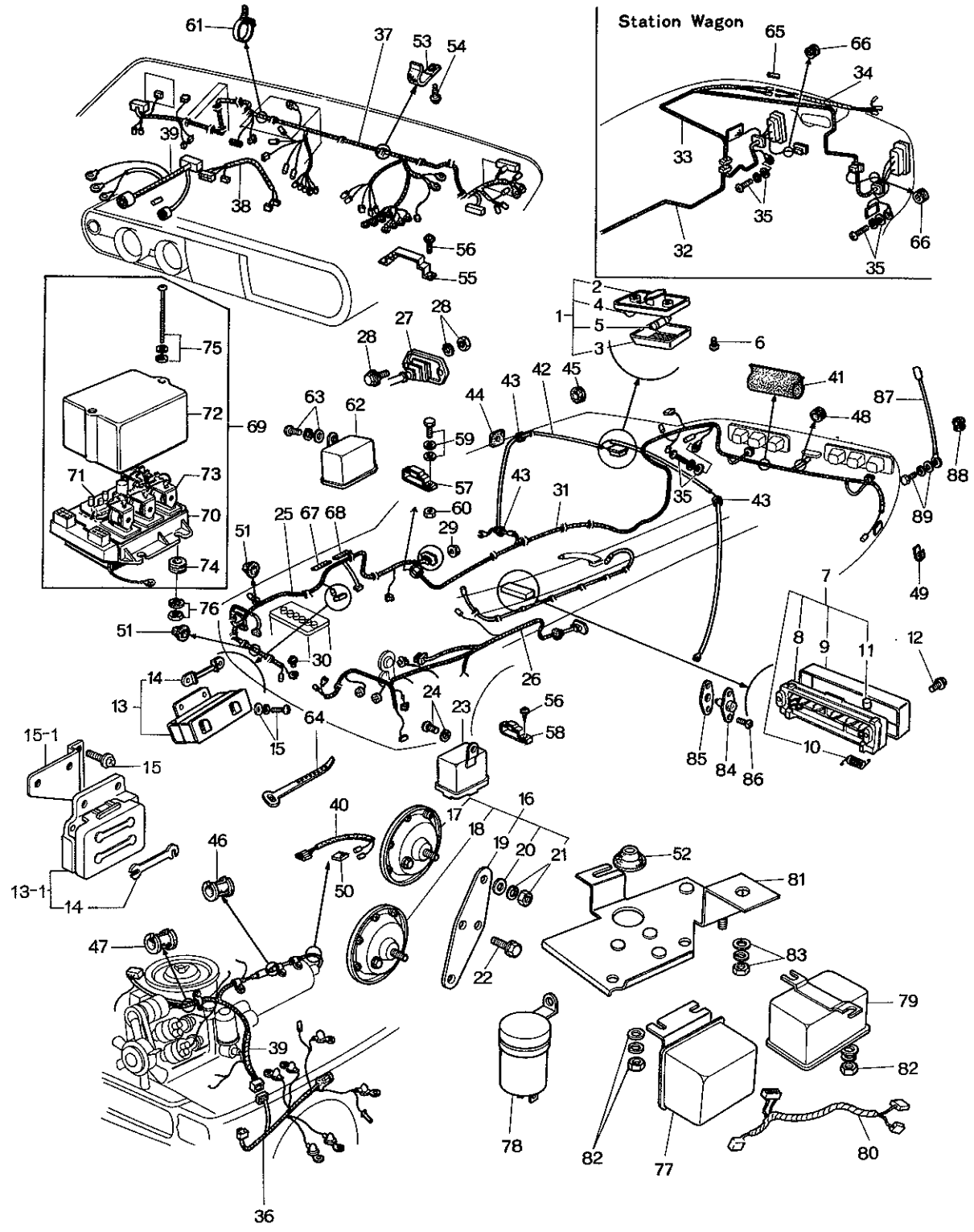
Station Wagon

No.	Part Number	Description	Q'ty	Remar
1	0390 66 410	Lamp, Interior	1	
2	0390 66 411	Body	1	
3	0398 66 412	Lens	1	
4	0398 66 413	Knob	1	
5	99701 5050	Bulb	1	
6	99838 0514	Screw, Interior Lamp	2	
7	0866 66 730B	Block, Fuse	1	
	0862 66 730			M.L. APR. 2
	~~0862 66 730B~~	Block, Fuse	1	Car No. 15052
●	1175 66 730	Block, Fuse	1	Car No. 16062
8	0866 66 731	Body	1	
	0862 66 731	Body	1	Car No. 15052
9	0866 66 732	Cover	1	
	0862 66 732	Cover	1	Car No. 15052
●	1175 66 732	Cover	1	Car No. 16062
10	0866 66 733	Spring, Return	1	
11	99706 0105	Fuse, 5 A	1	Car No. 15052
	99706 0115	Fuse, 15A	1	Car No. 150526 7/8
	99706 0110	Fuse, 10A-Spare Fuse Included	7	

No.	Part Number	Description	Q'ty	Remarks
	99706 0115	Fuse, 15A	2	
	99706 0120	Fuse, 20A-Spare Fuse Included	3	
12	99863 0625	Screw, Fuse Block	2	
	99971 0600	Washer, Spring	2	
13	0865 66 760	Block, Main Fuse	1	
●13-1	1708 66 760	Block, Main Fuse	1	Car No. 160623 73/10~×
14	2852 66 763	Fuse, 50A	2	
●	1708 66 765	Fuse, 5A	1	Car No. 160623 73/10~Added Anew
15	99743 0620	Screw, Main Fuse Block	2	
●	99786 0612	Screw, Main Fuse Block	2	Car No. 160623 73/10~×
	99786 0620	Bolt	2	Car No. 141928 73/3~○
	99952 0600	Washer, Plain	2	Car No. 141928 73/3~Discarded
	99971 0600	Washer, Spring	2	
●15-1	1128 66 750	Bracket, Main Fuse	1	Car No. 160623 73/10~Added Anew
16	0865 66 780	Horn, Electric	1	
	1531 66 780	Horn, Electric (For Europe) (England Excluded)	1	

No.	Part Number	Description	Q'ty	Rema
17	0865 66 790	Horn (High Tone)	1	
	1531 66 790	Horn (High Tone) (For Europe) (England Excluded)	1	
18	0865 66 800	Horn (Low Tone)	1	
	1531 66 800	Horn (Low Tone) (For Europe) (England Excluded)	1	
19	0865 66 805	Holder	1	
20	0865 66 809	Washer, Holder	2	
21	99906 0600	Nut	2	
	99971 0600	Washer, Spring	2	
22	~~99801 0816~~	~~Bolt, Electric Horn~~	~~2~~	
	99801 0820	Bolt	2	From Car No
	99971 0800	Washer, Spring	2	
23	~~1524 68 810~~	~~Relay, Horn~~	~~1~~	
	1524 66 810	Relay, Horn	1	
24	99806 0612	Bolt, Horn Relay (Station Wagon Excluded)	1	
	99952 0600	Washer, Plain	1	
	99971 0600	Washer, Spring	1	
25	0866 67 010A	Harness, Wire (Frt., R)	1	
	0866 67 010C	Harness, Wire (Frt., R)	1	Car No. 140779
	0862 67 010A	Harness, Wire (Frt., R)	1	Car No. 150461
	0862 67 010B	Harness, Wire (Frt., R)	1	Car No. 161189

No.	Part Number	Description		Q'ty	Remarks
●	3511 67 010	Harness, Wire (Frt., R)		1	Car No. 160623 7/10~×
	1504 67 010	Harness, Wire (Frt., R)	1558,1559	1	
	1504 67 010B	Harness, Wire (Frt., R)		1	Car No. 140779 7/2~○
	1504 67 010D	Harness, Wire (Frt., R)		1	Car No. 150526 7/8~×
26	0866 67 020B	Harness, Wire (Frt., L)	(R.H.D.)	1	
	0866 67 020C	Harness, Wire (Frt., L)		1	Car No. 136920 7/2~○
	0866 67 020E	Harness, Wire (Frt., L)		1	Car No. 140779 7/2~○
	0862 67 020C	Harness, Wire (Frt., L)		1	Car No. 150526 7/8~×
●	3503 67 020	Harness, Wire (Frt., L)		1	Car No. 160623 7/10~×
	1524 67 020B	Harness, Wire (Frt., L)	(L.H.D.)	1	
	1524 67 020C	Harness, Wire (Frt., L)		1	Car No. 130590 7/12~○
	1524 67 020F	Harness, Wire (Frt., L)		1	Car No. 140779 7/2~○
	1524 67 020I	Harness, Wire (Frt., L)		1	Car No. 150526 7/8~×
●	3511 67 020	Harness, Wire (Frt., L)		1	Car No. 160623 7/10~×
	1504 67 020	Harness, Wire (Frt., L)	1558,1559	1	
	1504 67 020F	Harness, Wire (Frt., L)		1	Car No. 142350 7/3~○
	1524 67 020I	Harness, Wire (Frt., L)		1	Car No. 150526 7/8~×
27	0866 67 151	Protector, Wire Harness Front		1	Car No. 150461 7/1~Discarded
28	99806 0625	Bolt		4	Car No. 152815 Discarded
	99952 0600	Washer, Plain		4	

No.	Part Number	Description	Q'ty	Remarks
	99906 0600	Nut	4	Car No. 1528
	99971 0600	Washer, Spring	4	Car No. 1528
29	99940 0600	Nut	4	Car No. 152816
30	99833 0812	Screw, Wire Harness Front Earth	1	
	99952 0800	Washer, Plain	1	
	99971 0800	Washer, Spring	1	
31	0866 67 030	Harness, Wire (Rr.)	1	
	0866 67 030B	Harness, Wire (Rr.) (Sedan & Coupe)	1	Car No. 14238
●	0866 67 030C	Harness, Wire (Rr.) (Sedan & Coupe)	1	Car No. 17758
●	0866 67 030D	Harness, Wire (Rr.) (Sedan & Coupe)	1	Car No. 16062
32	0585 67 030A	Harness, Wire (Rr.) No. 1	1	
●	0585 67 030C	Harness, Wire (Rr.) No. 1	1	Car No. 17758
33	0585 67 035D	Harness, Wire (Rr.) No. 2	1	
●	0585 67 035E	Harness, Wire (Rr.) No. 2 (Station & Wagon)	1	Car No. 17758
●	0585 67 035F	Harness, Wire (Rr.) No. 2 (Station & Wagon)	1	Car No.
34	0585 67 036	Wire, Licence Lamp	1	
●	0585 67 036A	Wire, Licence Lamp	1	Car No. 177587
35	99833 0612	Screw (Station Wagon)	2	
	99952 0600	Washer, Plain (Station Wagon)	2	
	99971 0600	Washer, Spring (Station Wagon)	2	

No.	Part Number	Description		Q'ty	Remarks
36	0866 67 040E	Harness, Wire-Ignition Coil Relay~Coil		1	
	0862 67 040	Harness, Wire		1	Car No. 150526 7/8~×
●	0862 67 040A	Harness, Wire		1	Car No. 160623 7/10~×
37	0866 67 050H	Harness, Wire-Meter Panel	(R.H.D.)	1	
	0866 67 050I	Harness, Wire-Meter Panel	(R.H.D.)	1	Car No. 133210 7/1~○
	0865 67 050	Harness, Wire-Meter Panel	(R.H.D.)	1	Car No. 136920 7/2~○
	1511 67 050	Harness, Wire-Meter Panel	(R.H.D.)	1	Car No. 150526 7/8~×
●	3503 67 050	Harness, Wire-Meter Panel	(R.H.D.)	1	Car No. 160623 7/10~×
	1524 67 050C	Harness, Wire-Meter Panel	(L.H.D.)	1	
	1524 67 050F	Harness, Wire-Meter Panel	(L.H.D.)	1	Car No. 150526 7/8~×
	1524 67 050G	Harness, Wire-Meter Panel	(L.H.D.)	1	Car No. 152880 7/9~△
●	3511 67 050	Harness, Wire-Meter Panel	(L.H.D.)	1	Car No. 160623 7/10~×
	1504 67 050B	Harness, Wire-Meter Panel (L.H.D.) (1558,1559)		1	
	~~1504 67 050D~~	~~Harness, Wire-Meter Panel (L.H.D.) (1558,1559)~~		~~1~~	
	1504 67 050E	Harness, Wire-Meter Panel (L.H.D.) (1558,1559)		1	Car No. 150526 7/8~×
38	0866 67 070B	Harness, Wire-Meter		1	
	0866 67 070C	Harness, Wire-Meter		1	Car No. 150306 7/8~△
●	1881 67 070	Harness, Wire-Meter		1	Car No. 160623 7/10~×
	1558 67 070	Harness, Wire-Meter (1558,1559)		1	
	1558 67 070A	Harness, Wire-Meter (1558,1559)		1	Car No. 150526 7/8~×

No.	Part Number	Description	Q'ty	Rema
39	0866 67 060C	Harness, Wire-Engine (Manual)	1	
	0866 67 060E	Harness, Wire-Engine	1	Car No. 1305
	0866 67 060F	Harness, Wire-Engine	1	Car No. 1338
	0862 67 060A	Harness, Wire-Engine (Manual)	1	Car No. 1505
	0862 67 060B	Harness, Wire-Engine	1	Car No. 1775
	3511 67 060A	Harness, Wire-Engine	1	Car No. 1606
	0871 67 060C	Harness, Wire-Engine	1	
	0871 67 060F	Harness, Wire-Engine	1	Car No. 13321
	0871 67 060G	Harness, Wire-Engine	1	Car No. 13692
	0871 67 060H	Harness, Wire-Engine (Automatic)	1	Car No. 14118
	0872 67 060A	Harness, Wire-Engine	1	Car No. 15052
	0872 67 060B	Harness, Wire-Engine	1	Car No. 16613
	0872 67 060C	Harness, Wire-Engine	1	Car No. 17758
●	3511 67 060A	Harness, Wire-Engine	1	
	1560 67 060	Harness, Wire-Engine (1558, 1559)	1	Car No. 15052
● 40	0866 67 065	Harness, Wire-Reverse Lamp	1	
●	0862 67 065A	Harness, Wire-Reverse Lamp (Manual)	1	Car No. 15052
●	3514 67 065A	Harness, Wire-Reverse Lamp	1	Car No. 16062
41	0866 67 155	Protector, Wire Harness (Sedan & Coupe)	1	
42	0866 67 080	Cord, Room Lamp	1	
43	0114 43 625	Protector, Room Lamp Cord	2	

No.	Part Number	Description	Q'ty	Remarks
44	0866 67 153A	Pad, Protector	1	
45	0820 67 151	Protector (Coupe)	1	
46	99686 1000	Protector	5	
47	99686 1600	Protector, Cord } (Sedan & Coupe)	1	
48	0866 67 156	Protector, Cord } (Sedan & Coupe)	1	
49	99295 0406	Clip, Rear Combination Lamp	1	
50	0208 66 949	Pad, Protector	5 16	(Sedan & Coupe) (Station Wagon)
51	0866 67 152	Protector, Cord-Side Turn Signal Lamp	6	
52	1524 67 155	Protector, Cord-Relay (L.H.D. & Station Wagon)	2	
53	0866 67 059	Clip, Wiring Harness (Panel)	4	
54	99863 0512	Screw, Clip	4	
	99952 0500	Washer, Plain	4	
55	0866 67 905A	Clip, Wiring Harness (Meter)	1	
56	99869 0512	Screw, Clip	3	
	99952 0500	Washer, Plain	3	
57	0866 67 906	Clip, Dash Panel Upper	3	
58	0866 67 908	Clip, Ignition Coil Harness	1	
59	99833 0612	Screw, Clip	1	
	99952 0600	Washer, Plain	1	
	99971 0600	Washer, Spring	1	

No.	Part Number	Description	Q'ty	Remark
60	99940 0600	Nut, Clip	1	
61	0305 67 993A	Clip	1	
62	0839 67 880	Relay, Ignition Coil	1	
	0862 67 880	Relay, Ignition Coil	1	Car No. 150526
63	99806 0612	Bolt	2	
	99952 0600	Washer, Plain	2	
	99971 0600	Washer, Spring	2	
64	99709 2185	Band, Wiring Harness Panel	3	
65	0585 67 151	Protector, Licence Lamp	1	(Station Wag
66	0585 67 154	Protector, Licence & Reverse Lamp	1	
67	0823 18 111	Supporter, Wiring Harness Engine	3	
68	0305 67 994	Supporter, Wiring Harness Engine	1	
69	0866 67 710D	Control Unit, Center	1	
	0866 67 710E	Control Unit, Center	1	Car No. 160378
70	0866 67 711	Socket	1	
71	0866 67 712C	Flasher & Hazard Unit (R.H.D.)	1	
72	0866 67 716	Cover	1	
73	0866 67 719	Relay, Wiper Switch	1	
74	0866 67 717	Bush	4	

No.	Part Number	Description		Q'ty	Remarks
75	0866 67 718	Screw	(R.H.D.)	2	
	99952 0500	Washer, Plain	(R.H.D.)	2	
	99971 0500	Washer, Spring	(R.H.D.)	2	
76	99906 0600	Nut, Center Control Unit		3	
	99952 0618	Washer, Plain		3	
77	0820 60 870A	Relay, Wiper Switch		1	
78	0820 66 470A	Flasher Unit (For France)		1	
79	0848 66 830	Flasher & Hazard Unit		1	
80	1524 67 715	Cord, Relay Unit		1	
81	1524 67 720B	Bracket, Relay	(L.H.D.)	1	
82	99906 0600	Nut	(L.H.D.)	4	
	99952 0600	Washer, Plain	(L.H.D.)	4	
	99971 0600	Washer, Spring	(L.H.D.)	4	
	99952 0618	Washer, Plain	(L.H.D.)	1	
83	99906 0600	Nut	(L.H.D.)	2	
	99952 0600	Washer, Plain	(L.H.D.)	2	
	99971 0600	Washer, Spring	(L.H.D.)	2	
84	0209 66 820	Switch, Door		4	
85	0209 66 821	Washer, Adjust-Door Switch		8	

No.	Part Number	Description	Q'ty	Remar
86	99864 0412	Screw, Door Switch	8	
87	0866 67 133	Cord, Back Window-Heating Wire use	1	(Sedan & C
	0899 67 133	Cord, Back Window-Heating Wire use	1	(Station Wag
88	99684 0600	Protector	1	
89	99806 0616	Bolt, Back Window Cord	1	
	99952 0600	Washer, Plain	1	(Sedan & C
	99971 0600	Washer, Spring	1	

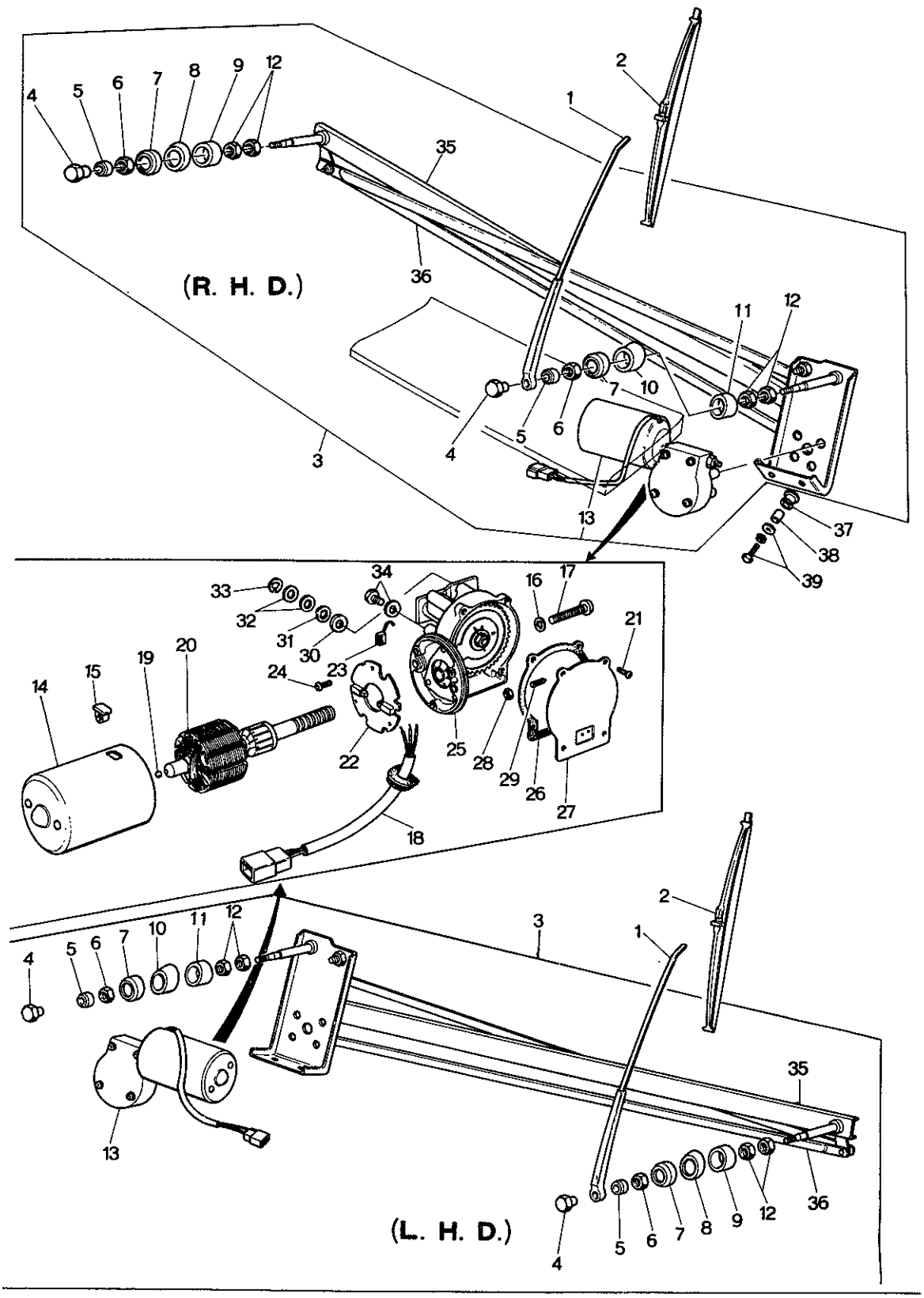
(R. H. D.)
(L. H. D.)

No.	Part Number	Description	Q'ty	Remar
1	0866 67 321	Arm, Wiper (R.H.D.)	2	
	0866 67 321 A	Arm, Wiper (R.H.D.)	2	Car No. 1595
	1524 67 321	Arm, Wiper (L.H.D.)	2	
	1524 67 321 A	Arm, Wiper (L.H.D.)	2	Car No. 1595
2	0305 67 330 A	Blade, Wiper (R.H.D.)	2	
	2835 67 330	Blade, Wiper (L.H.D.)	2	
3	0866 67 340 C	Motor & Link (R.H.D.)	1	
●	0866 67 340 D	Motor & Link (R.H.D.)	1	Car No. 16062
	1524 67 340 B	Motor & Link (L.H.D.)	1	
●	1524 67 340 C	Motor & Link (L.H.D.)	1	Car No. 16062
4	0223 66 371	Nut, Cap	2	
5	0212 66 371	Cap, Seal	2	
6	0212 66 372	Nut	2	
7	0305 87 906	Washer	2	
8	0866 76 604	Bush, Outer (R.H.D.)	1	
	1524 76 604	Bush, Outer (L.H.D.)	1	
9	0866 76 603	Bush, Inner (R.H.D.)	1	
	1524 76 603	Bush, Inner (L.H.D.)	1	
10	1823 67 352	Bush, Outer	1	

WINDSHIELD WIPER

No.	Part Number	Description	Q'ty	Remarks
11	0866 76 605	Bush, Inner	1	
12	0259 87 134	Nut	4	
13	0866 67 350	Motor (R.H.D.)	1	Fig. No. 14~33 included
●	0866 67 350A	Motor (R.H.D.)	1	Car No. 160623 73/10~△
	1524 67 350	Motor (L.H.D.)	1	Fig. No. 14~33 included
●	1524 67 350A	Motor (L.H.D.)	1	Car No. 160623 73/10~△
14	0259 87 109A	Yoke	1	
15	0257 87 108	Nut	2	
16	99971 0500	Washer, Spring	6	
17	0257 87 107	Screw	2	
18	0868 76 607	Wire, Lead (R.H.D.)	1	
●	0866 76 607A	Wire, Lead (R.H.D.)	1	Car No. 160623 73/10~×
	1524 76 607	Wire, Lead (L.H.D.)	1	
19	0259 87 107	Ball	2	
20	0259 87 108A	Rotor	1	
21	0259 87 105	Screw	7	
22	0259 87 101A	Plate, Brush Holder	1	
●	1011 76 612A	Plate	1	Car No. 160623 73/10~×
23	0259 87 106	Brush	3	
24	99806 0510	Bolt	4	

No.	Part Number	Description	Q'ty	Remar
25	0866 76 608	Box, Gear (R.H.D.)	1	
	1524 76 608	Box, Gear (L.H.D.)	1	
26	0259 87 103	Gasket	1	
27	2158 87 104	Plate, End (R.H.D.)	1	
	0259 87 104 A	Plate, End (L.H.D.)	1	
28	0259 87 119	Nut	1	
29	0259 87 120	Screw	1	
30	0738 87 803	Felt	1	
31	0702 87 135	Washer, Wave	1	
32	0738 87 804	Washer	2	
33	0702 87 138	Ring, Retaining	1	
34	99806 0510	Bolt, Motor	4	
	99971 0500	Washer, Spring	4	
35	0866 76 602	Frame, Wiper (R.H.D.)	1	
	1524 76 602	Frame, Wiper (L.H.D.)	1	
36	0866 76 601	Link, Wiper (R.H.D.)	1	
	1524 76 601	Link, Wiper (L.H.D.)	1	
37	0866 67 301 A	Washer, Rubber	2	
38	0866 67 302	Spacer	2	
39	99783 0625	Bolt	3	
●	99806 0616	Bolt	3	Car No. 16062
	99952 0618	Washer, Plain	3	
	99971 0600	Washer, Spring	3	

SCREEN WASHER

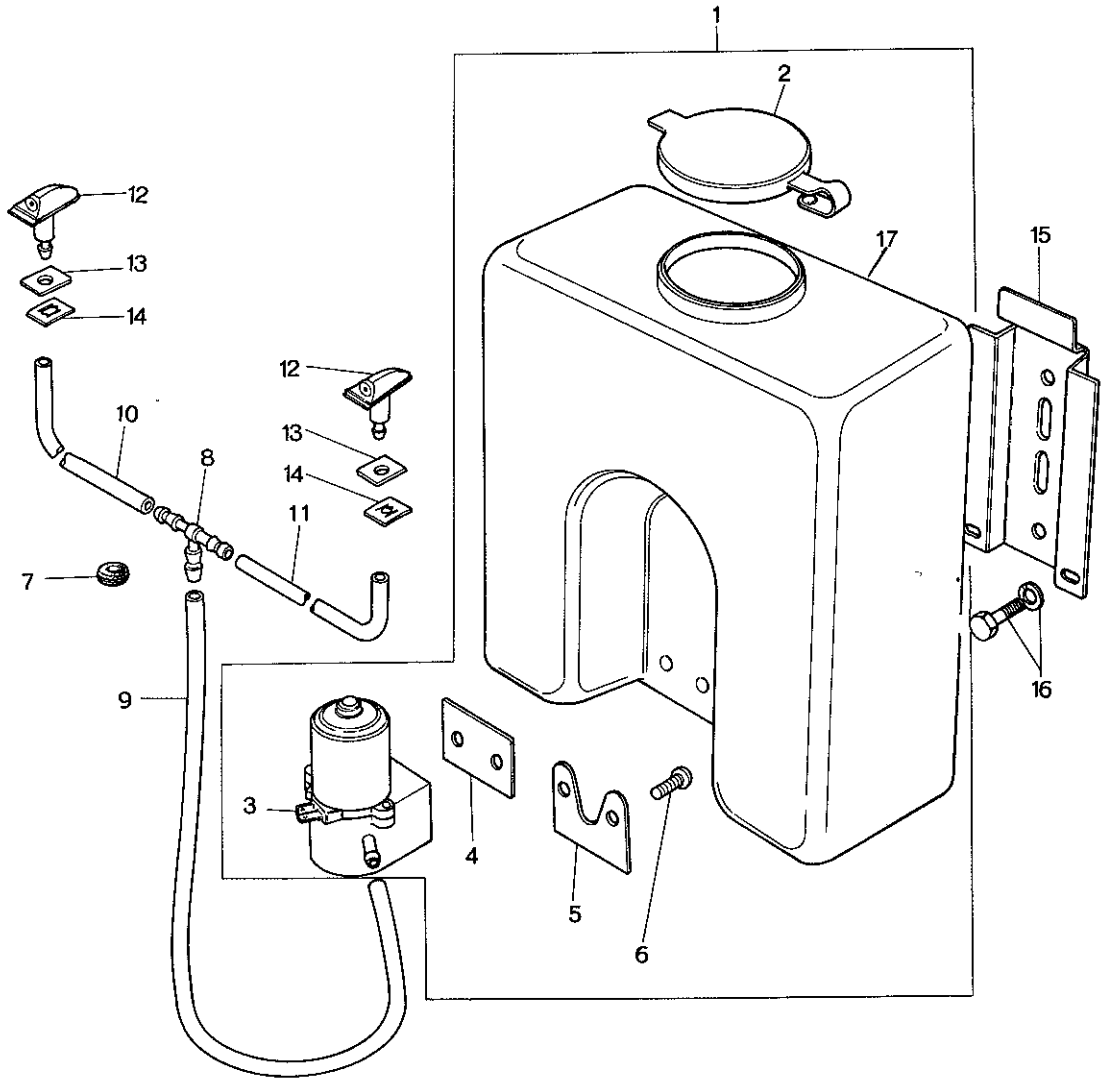

No.	Part Number	Description	Q'ty	Rema
	~~0866 67 470~~	~~Washer Set, Screen (R.H.D.)~~	~~1~~	
	~~1524 67 470~~	~~Washer Set, Screen (L.H.D.)~~	~~1~~	
1	0317 67 480	Tank & Motor	1	
2	0727 87 992	Cap	1	
3	0305 87 993	Pump	1	
4	0727 87 994	Gasket	1	
5	0727 87 995	Plate	1	
6	0727 87 996	Screw, Pump	2	
7	0111 41 692	Grommet	1	
8	0813 66 879	Joint, Pipe	1	
9	99335 04015	Pipe	1	
10	~~99335 04065~~	~~Pipe~~	~~1~~	
	99335 04066	Pipe	2	
11	~~99335 04070~~	~~Pipe~~	~~1~~	
12	0866 67 510A	Nozzle	2	
13	0866 67 511A	Washer, Nozzle	2	
14	0866 67 512	Nut, Speed-Nozzle	2	
15	0866 67 521	Bracket, Tank	1	
16	99781 0612	Bolt, Bracket	2	
	99971 0600	Washer, Spring	2	
17	0317 67 511	Tank	1	

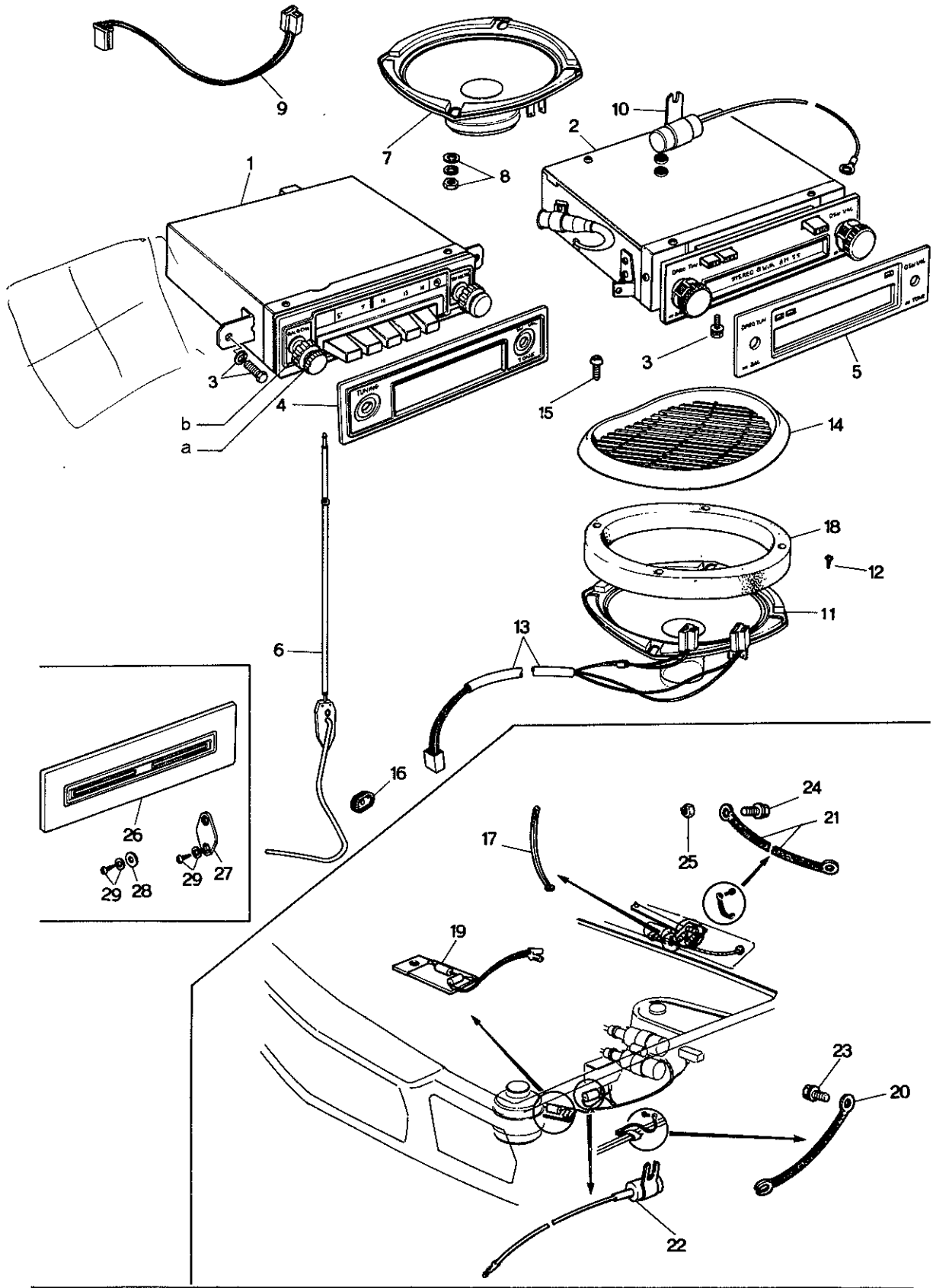
9
7
8
10
2
1
3
4
b
a
15
5
14
18
12
11
13
6
16
24
21
17
25
19
23
20
22
26
29
28
29
27

No.	Part Number	Description		Q'ty	Rema
	0865 66 860B	Auto Radio Cpt. AM	(R.H.D.)	1	
	1550 66 860B	Auto Radio Cpt. AM/SW		1	
	1551 66 860A	Auto Radio Cpt. AM/FM		1	
	0870 66 860B	Auto Radio & Stereo Cpt.		1	
	1560 66 860B	Auto Radio Cpt. AM	(L.H.D.)	1	
	1561 66 860B	Auto Radio Cpt. AM/SW		1	
	1562 66 860B	Auto Radio Cpt. AM/FM		1	
●	1558 66 860	Auto Radio Cpt. AM/FM (E.C.E. Arctic Spec)		1	Car No. 16333
	1584 66 860B	Auto Radio & Stereo		1	
	~~0865 66 870A~~	~~Auto Radio AM~~	(R.H.D.)	~~1~~	
	~~1550 66 870~~	~~Auto Radio AM/SW~~		~~1~~	
	~~1551 66 870~~	~~Auto Radio AM/FM~~		~~1~~	
	~~0870 66 870A~~	~~Auto Radio & Stereo~~		~~1~~	
	~~1560 66 870~~	~~Auto Radio AM~~	(L.H.D.)	~~1~~	
	~~1561 66 870~~	~~Auto Radio AM/SW~~		~~1~~	
	~~1562 66 870~~	~~Auto Radio AM/FM~~		~~1~~	
	~~1564 66 870~~	~~Auto Radio & Stereo~~		~~1~~	
● a	0866 66 911	Knob S.	(E.C.E. Arctic Spec.)	1	Car No. 163339 ⅞
● b	0866 66 912	Knob L.		1	
1	0866 66 900	Tuner, AM		1	

No.	Part Number	Description	Q'ty	Remarks
	1561 66 900	Tuner, AM/SW	1	
	1562 66 900	Tuner, AM/FM	1	
●	1558 66 900	Tuner, AM/FM (E.C.E. Arctic Spec.)	1	Car No. 163339 73/2~△
2	0870 66 900A	Tuner & Player	1	
3	99797 0512	Bolt, Tuner	2	
	99806 0516	Bolt, Tuner	2	Car No. 150526 72/8~○
	99952 0500	Washer, Plain	2	
	99971 0500	Washer, Spring	2	
4	0866 66 905	Plate, Decoration-Radio	1	
5	0670 66 905	Plate, Decoration-Radio & Stereo	1	
6	0370 66 930B	Antenna (R.H.D.)	1	
	1524 66 930A	Antenna (L.H.D.)	1	
7	0866 66 960	Loud Speaker	1	
	0275 68 088	Spacer	8	
8	~~99906 0500~~	~~Nut, Loud Speaker~~	~~8~~	
	99940 0500	Nut, Flange	4	
	~~99952 0500~~	~~Washer, Plain~~	~~4~~	
	99971 0500	Washer, Spring	4	
9	0866 66 965	Cord, Loud Speaker	1	
10	0839 66 992	Condenser	1	

No.	Part Number	Description	Q'ty	Rema
	0820 66 992	Condenser	1	Car No. 1505
11	0870 66 970	Loud Speaker, Stereo	2	
	0870 66 970A	Loud Speaker, Stereo	2	Car No. 1599
12	99864 0410	Screw, Loud Speaker-Stereo	8	
13	0870 66 975	Cord, Stereo Loud Speaker	1	
●	0870 66 975A	Cord, Stereo Loud Speaker	1	Car No. 1660
14	0870 66 980	Grille, Loud Speaker-Stereo use	1	
15	99748 0410	Screw, Grille	8	
16	0866 67 153A	Protector, Antenna Cord	1	
17	0305 67 993A	Clip, Wire Harness (Excluded 0870 66 860B use)	1	Car No. 16377
18	0317 66 862	Partition, Loud Speaker	1	
19	0866 66 865	Suppresser, Ignition	1	
20	0866 66 871	Wire, Earth	2	
21	~~0866 66 872~~	~~Wire, Earth~~	~~1~~	
22	0839 66 992	Condenser	1	
	0820 66 992	Condenser	1	Car No. 150526
23	99833 0512	Screw	1	
	99952 0500	Washer, Plain	1	
24	99860 0512	Screw	1	
	99953 0500	Washer, Plain	1	

No.	Part Number	Description		Q'ty	Remarks
	99971 0500	Washer, Spring		1	
25	99940 0502	Nut, Flange		1	
26	0316 66 865A	Ornament	Without Auto Radio	1	
27	0727 66 991A	Cover, Hole - Antenna		1	
28	0727 66 992	Cover, Hole - Antenna		1	
29	99863 0410B	Screw, Hole Cover		3	
	99953 0400B	Washer, Plain		3	

CRUSH PAD, GLOVE POCKET & CONSOLE BOX

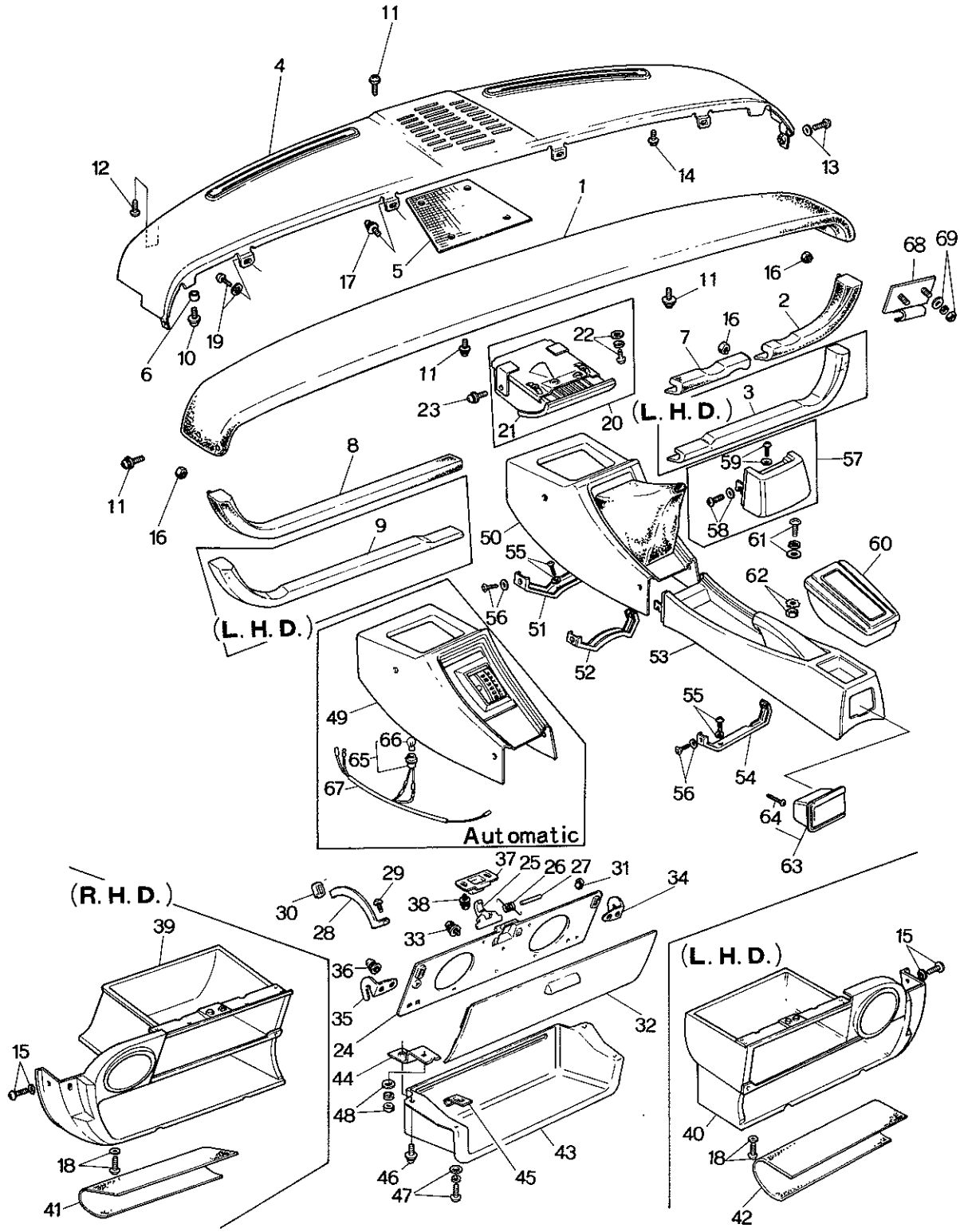

CRUSH PAD, GLOVE POCKET CONSOLE BOX

No.	Part Number	Description	Q'ty	Remar
1	0865 68 020B	Pad, Crush	1	
2	0865 68 040C	Pad (R), Lower (R.H.D.)	1	
3	1562 68 040A	Pad (R), Lower (L.H.D.)	1	
4	0866 68 090B	Garnish	1	
5	0866 68 095	Cloth, Cover	1	
6	~~0275 68 088~~	~~Spacer~~	~~2~~	
7	0865 68 060C	Pad (R), Lower (R.H.D.)	1	
8	0865 68 140C	Pad (L), Lower (R.H.D.)	1	
9	1562 68 140B	Pad (L), Lower (L.H.D.)	1	
10	99805 0822	Bolt, Crush Pad	2	
	99786 0822	Bolt, Crush Pad	2	Car No. 14192
	99952 0818	Washer, Plain	2	
	99952 0822	Washer, Plain	2	Car No. 14192
	99971 0800	Washer, Spring	2	Car No. 14192
11	99834 0512B	Screw	4	
	99952 0500B	Washer, Plain	4	
	99971 0500	Washer, Spring	4	
12	99833 0516B	Screw	2	
	99952 0500B	Washer, Plain	2	
	99971 0500	Washer, Spring	2	

CRUSH PAD, GLOVE POCKET & CONSOLE BOX

No.	Part Number	Description	Q'ty	Remarks
13	99833 0512B	Screw	1	
	99952 0516B	Washer, Plain	1	
14	99833 0616B	Screw, Crush Pad & Garnish	4	
	99952 0600B	Washer, Plain	4	
	99971 0600	Washer, Spring	4	
15	99836 0516B	Screw, Garnish	1	
	99967 0500B	Washer, Plain	1	
16	99940 0501	Nut, Pad Lower	7	
17	99833 0512	Screw, Garnish	2	
	99952 0500	Washer, Plain	2	
	99971 0500	Washer, Spring	2	
18	99834 0616B	Screw, Garnish	2	
	99952 0618B	Washer, Plain	2	
	99971 0600	Washer, Spring	2	
19	99863 0512	Screw, Garnish	2	
	99952 0500	Washer, Plain	2	
	99971 0500	Washer, Spring	2	
20	0866 68 180A	Tray, Ash (Frt.)	1	
21	0866 68 201	Case, Inner	1	
	0866 68 201A	Case, Inner	1	Car No. 152461 $^{72}/_{8}$～△

CRUSH PAD, GLOVE POCKET CONSOLE BOX

No.	Part Number	Description	Q'ty	Remark
	0866 64 630	Case, Inner	1	Car No. 15392
Ⓝ	0866 68 175	Plate Set	1	
22	99833 0512	Screw, Ash Tray	2	
	99952 0500	Washer, Plain	2	
	99971 0500	Washer, Spring	2	
23	99833 0512	Screw, Ash Tray	2	
	99952 0500	Washer, Plain	2	
	99971 0500	Washer, Spring	2	
● 24	0866 68 331 - 00	Lid, Glove - Inner (BLK.)	1	
25	0866 68 332	Hook	1	
26	0866 68 333	Spring	1	
27	0866 68 334	Pin	1	
28	0866 68 335A	Stopper	1	
●	0866 68 335B	Stopper	1	Car No. 155881
29	99831 0408B	Screw, Stopper	1	
30	0275 55 195	Cushion, Rubber	1	
●	0275 55 195A	Cushion, Rubber	1	Car No. 155881
31	0317 70 269	Cushion	2	
32	0865 68 340	Lid, Glove - Outer (Without Painting)	1	
	0866 68 340	Lid, Glove - Outer (With Painting)	1	

CRUSH PAD, GLOVE POCKET & CONSOLE BOX

No.	Part Number	Description	Q'ty	Remarks
33	99262 1806B	Screw, Glove Lid	8	
34	0866 68 351A	Hinge (R), Glove Lid	1	
35	0866 68 352A	Hinge (L), Glove Lid	1	
36	99834 0412B	Screw, Hinge	4	
	99952 0412B	Washer, Plain	4	
	99971 0400	Washer, Spring	4	
37	0866 68 361	Striker	1	
38	99833 0514B	Screw, Striker	2	
	99952 0500B	Washer, Plain	2	
	99971 0500	Washer, Spring	2	
39	~~0866 68 380C~~	~~Pocket, Glove-Outer (R.H.D.)~~	~~1~~	
●	0865 68 380	Pocket, Glove-Outer (R.H.D.)	1	From Car No. 1 ⓒ
40	1524 68 380A	Pocket, Glove-Outer (L.H.D.)	1	
41	0866 68 011	Sheet, Glove Pocket (R.H.D.)	1	
42	1524 68 011	Sheet, Glove Pocket (L.H.D.)	1	
43	0866 69 811	Shelf, Parcel	1	
44	0866 69 820	Bracket, Parcel Shelf	1	
	0866 69 821A	Bracket, Parcel Shelf	1	Car No. 150526 ⁷⁄₈~○
45	0820 56 905	Nut, Spring-Parcel Shelf	2	
Ⓝ	99896 0500	Nut, Spring-Parcel Shelf	1	Car No. 150526 ⁷⁄₈~Added Anew

CRUSH PAD, GLOVE POCKET CONSOLE BOX

No.	Part Number	Description	Q'ty	Remark
46	99806 0616	Bolt, Parcel Shelf	3	
	99806 0616	Bolt, Parcel Shelf	1	Car No. 15052
	99952 0618	Washer, Plain	3	
	99952 0618	Washer, Plain	1	Car No. 15052
	99971 0600	Washer, Spring	3	
	99971 0600	Washer, Spring	1	Car No. 15052
47	99863 0520B	Screw, Parcel Shelf	2	
	99863 0520B	Screw, Parcel Shelf	3	Car No. 15052
	99952 0500B	Washer, Plain	2	
	99952 0500B	Washer, Plain	3	Car No. 15052
	99971 0500	Washer, Spring	2	
	99971 0500	Washer, Spring	3	Car No. 15052
48	99906 0600	Nut, Bracket	1	
	99952 0618	Washer, Plain	1	
	99971 0600	Washer, Spring	1	
49	0378 68 890A	Console, Front (Automatic) (R.H.D.)	1	1552
50	0376 68 890A	Console, Front (Manual)	1	~~1567, 1568~~
	~~0376 68 890B~~	~~Console, Front (Manual)~~	1	~~1567, 1568 Car No. 127396~~
●	0376 68 890B	Console, Front (Manual)	1	Car No. 167343
	1524 68 890	Console, Front (Manual)	1	1558, 1559, ~~1567,~~

CRUSH PAD, GLOVE POCKET & CONSOLE BOX

No.	Part Number	Description	Q'ty	Remarks	
51	0376 68 900	Bracket No. 1, Console (Manual)	1		
	0378 68 900	Bracket No. 1, Console (Automatic)	1		
52	0376 68 910	Bracket No. 2	1		
53	0376 68 940	Console, Rear	1		©
	0870 68 940	Console, Rear - With Arm Rest	1	1566, 1554, 1557, 1562	©
54	0376 68 950	Bracket, Rear Console	1		
55	99804 0616	Screw, Console	5		
	99971 0600	Washer, Spring	5		
56	99832 0516B	Screw, Console	6		
	99967 0500B	Washer	6		
57	0370 68 920	Console, End	1		©
58	99804 0616	Bolt	4		
	99971 0600	Washer, Spring	4	Without Rear Console	
59	99832 0516B	Screw, Console End	4		
	99967 0600B	Washer	4		
60	0870 68 960	Rest, Center Arm	1	1566, 1554, 1557, 1562	©
61	99836 0420B	Screw, Center Arm Rest	4		
	99952 0400B	Washer, Plain	4		
	99971 0400	Washer, Spring	4		
62	99906 0400	Nut, Center Arm Rest	4		

CRUSH PAD, GLOVE POCKET CONSOLE BOX

No.	Part Number	Description	Q'ty	Remar
	99975 0400	Washer, Toothed	4	
63	0866 68 250 - 00	Tray, Ash-Rear	1	
	0866 68 250 - 01	Tray, Ash-Rear	1	Car No. 16037
64	99839 0416	Screw, Ash Tray	2	
65	0305 66 580A	Bulb & Socket (Automatic)	1	
66	99701 6030	Bulb (Automatic)	1	
67	0378 67 131A	Cord	1	
●	0378 67 131B	Cord	1	Car No.
Ⓝ	~~0367 68 832A~~	~~Seat, Boot~~	~~1~~	
Ⓝ	~~99864 0512~~	~~Screw-Tapping, Seat Boot~~	~~6~~	
Ⓝ	99834 0612B	Screw, Glove Pocket Outer	2	
Ⓝ	99264 0732B	Rivet-Console, Front	4	
● 68	0866 68 920	Bracket, Hood	1	Car No. 160623 ↗
● 69	99906 0500	Nut, Bracket	2	Car No. 160623 ↗
●	99952 0500	Washer, Plain	2	Car No. 160623 ↗
●	99971 0500	Washer, Spring	2	Car No. 160623 ↗

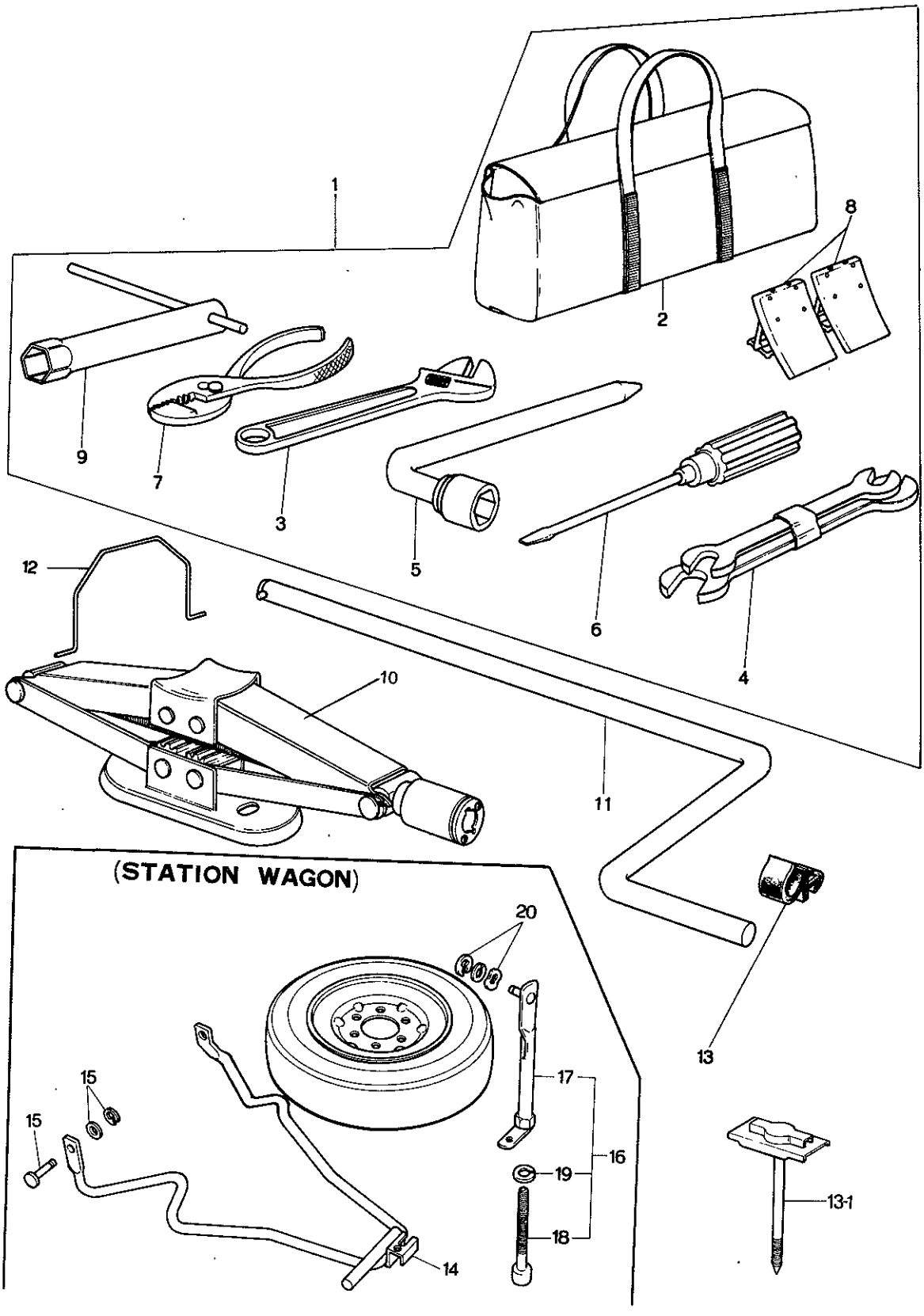
1
2
3
4
5
6
7
8
9
10
11
12
13
13-1
14
15
15
16
17
18
19
20
(STATION WAGON)

No.	Part Number	Description	Q'ty	Remar
1	0839 68 660	Tool Set	1	
●	1128 68 660	Tool Set	1	
2	0839 68 670A	Bag, Tool	1	
	0839 68 670B	Bag, Tool	1	Car No. 1332
●	1128 68 670	Bag, Tool	1	
3	0110 68 050A	Wrench, Monkey	1	
	0866 68 680	Wrench, Monkey	1	Car No. 14430
4	0249 68 060A	Spanner Set	1	
●	0672 68 060A	Spanner Set	1	
5	0810 68 070	Wrench, Hub Nut	1	
	0810 68 070A	Wrench, Hub Nut	1	Car No. 15559
6	0187 68 110A	Driver Set	1	
7	0118 68 180A	Plier	1	
8	0208 68 230	Stopper	1	
9	0839 68 720	Wrench, Plug	1	
10	0305 68 800E	Jack	1	
	0305 68 800F			M·L. APR. 2
	~~0307 68 800F~~	Jack	1	Car No. 159630
11	0305 68 810A	Handle, Jack	1	
12	0866 56 991	Wire, Jack (Sedan & Coupe)	1	

No.	Part Number	Description		Q'ty	Remarks
13	99715 1101	Holder, Rod-Jack Handle	(Sedan & Coupe)	1	
●13-1	1011 56 210	Clamp, Spare Wheel		1	Car No. 170670 73/5~Added Anew
●	1128 56 960	Clamp, Spare Wheel		1	73/8~○
14	0585 70 710	Frame, Hanger		1	
15	99230 0820	Pin, Joint		2	
	99576 0500	Ring, Snap		2	
	99953 0500	Washer, Plain		2	
			(Station Wagon)	2	
16	0585 70 720	Lock, Spare Tire		1	
17	0585 70 730	Clamp		1	
18	0585 70 733	Bolt		1	
19	99951 0822	Washer, Plain		1	
20	99576 0700	Ring, Retaining		1	
	99952 1000	Washer, Plain	(Station Wagon)	1	
	99972 1000	Washer, Wave		1	
				1	

ATTACHMENT (SEDAN & COUPE)

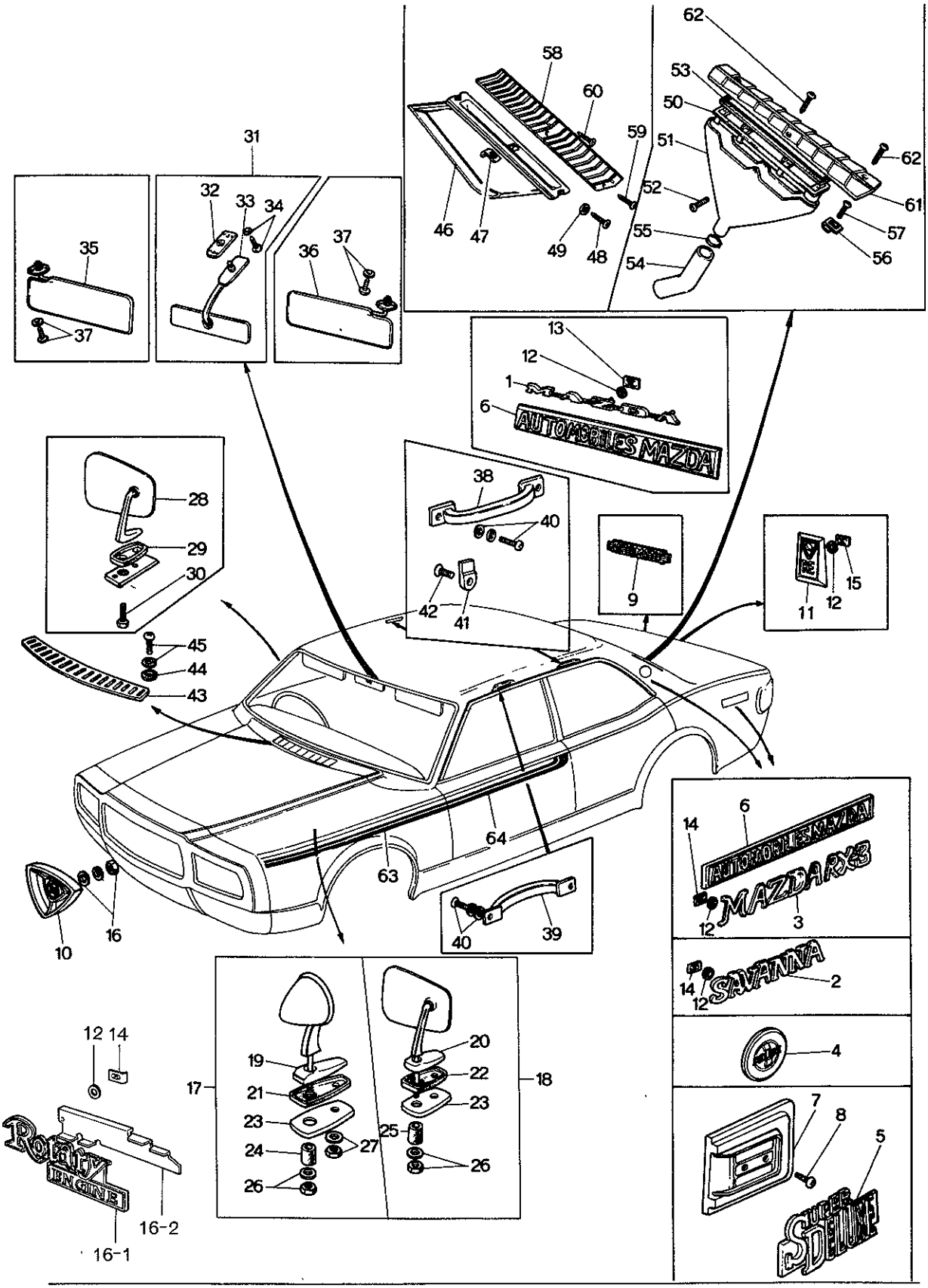

ATTACHMENT (SEDAN & COUPE)

No.	Part Number	Description	Q'ty	Rema
1	0866 69 052	Ornament (MAZDA)	1	
2	0866 69 053A	Name, SAVANNA } Selective use	2	
3	1562 69 053	Name, RX-3 } Selective use	2	
4	0368 69 055A	Ornament (DX), For Sedan	2	
	0374 69 055	Ornament (DX), For Coupe	2	
	0374 69 055A	Ornament (DX), For Coupe	2	Car No. 1273
5	1562 69 055	Ornament Super Deluxe (Side···2, Rear···1)	3	
	1562 69 055A	Ornament Super Deluxe (Side···2, Rear···1)	3	Car No. 1273
●	1562 69 055A00	Ornament Super Deluxe (Side···2, Rear···1)	3	Car No. 1273
6	2835 69 059	Plate, Automobiles-For France	3	
7	0376 69 061C	Base (R), Ornament	1	
	0376 69 061D	Base (R), Ornament	1	Car No. 12739
●	0862 69 061	Base (R), Ornament	1	Car No. 16062
	0376 69 065C	Base (L), Ornament	1	
	0376 69 065D	Base (L), Ornament	1	Car No. 12739
●	0862 69 065	Base (L), Ornament	1	Car No. 16062
8	99863 0414C	Screw, Base	4	
9	0378 69 066	Ornament, Automatic	1	
	0378 69 066A	Ornament, Automatic	1	Car No. 14634
	0397 69 066B	Ornament, Automatic (1552)	1	Car No. 15281

No.	Part Number	Description	Q'ty	Remarks
10	0866 69 071A	Emblem, Front	1	
●	0866 69 071A00	Emblem, Front Gray (Dull Finish)	1	
●	0866 69 071A02	Emblem, Front Gray (Semi Dull Finish)	1	Car No. 73/3~×
●	1128 89 601	Emblem Set, Front	1	Car No. 160623 73/10~×
● 11	0866 69 081B	Emblem, Rear	1	Car No. 160623 73/10~Discarded
12	0730 69 057A	Gasket; Ornament	6	
13	0187 69 049A	Nut, Speed-Ornament	3	
14	99579 3000	Nut, Speed-Ornament	6	
15	~~99579 4000~~	~~Nut, Speed-Emblem~~	~~3~~	
16	99906 0500	Nut, Front Emblem	2	
	99952 0500	Washer, Plain	2	
	99971 0500	Washer, Spring	2	
● 16-1	1881 69 076	Mark, Front (Rotary Engine)	1	Car No. 160623 73/10~Added Anew
● 16-2	1128 69 077	Plate Set	1	Car No. 160623 73/10~Added Anew
			1	
17	0376 69 110A	Mirror (R), Rear View	1	
	0376 69 110B	Mirror (R), Rear View	1	Car No. 127396 71/12~○
	0376 69 110C	Mirror (R), Rear View	1	(Coupe) Car No. 148407 72/6~○
●	0376 69 110D00	Mirror (R), Rear View (GRY. S. DULL.)	1	Car No. 73/2~×
●	0376 69 110D01	Mirror (R), Rear View (GRY. DULL)	1	

ATTACHMENT (SEDAN & COUPE)

No.	Part Number	Description		Q'ty	Remark
	0376 69 130A	Mirror (L), Rear View	(Coupe)	1	
	0376 69 130B	Mirror (L), Rear View		1	Car No. 12739
	0376 69 130C	Mirror (L), Rear View		1	Car No. 14840
●	0376 69 130D00	Mirror (L), Rear View (GRY.S.DULL)		1	Car No.
●	0376 69 130D01	Mirror (L), Rear View (GRY.DULL)		1	
18	0866 69 110	Mirror (R), Rear View	(Sedan)	1	
	0866 69 110A	Mirror (R), Rear View		1	Car No. 13321
	0866 69 130	Mirror (L), Rear View		1	
	0866 69 130A	Mirror (L), Rear View		1	Car No. 13321
19	0376 69 111	Base (R)	(Coupe)	1	
	0376 69 111A	Base (R)		1	Car No. 14840
	0376 69 131	Base (L)		1	
	0376 69 131A	Base (L)		1	Car No. 14840
20	0866 69 111A	Base (Sedan)		2	
21	0376 69 112	Gasket (Coupe)		2	
22	0866 69 112	Gasket (Sedan)		2	
23	0866 69 113A	Reinforcement		2	
	0376 69 113	Reinforcement		2	Car No. 148407
24	0376 69 114	Spring (Coupe)		2	Used up to Car
25	0223 69 102	Spring (Sedan)		2	

No.	Part Number	Description		Q'ty	Remarks
26	0223 69 103	Washer		2	
	0223 69 103	Washer (Coupe)		2	Used up to Car No. 148407 7/6~
	0866 88 737	Nut		2	
27	99906 0600	Nut	(Coupe)	4	
	99940 0600	Nut	(Coupe)	4	Car No. 148407 7/6~○
	99971 0600	Washer, Spring	(Coupe)	2	
	99579 6000	Nut, Speed		2	
28	1511 69 110A	Mirror, Door		1	
	1511 69 110B	Mirror, Door		1	Car No. 132360 7/12~○
29	1540 69 101	Gasket, Door Mirror	For Australia	1	
30	99772 0516	Screw, Door Mirror	For Australia	1	
	99772 0525	Screw, Door Mirror	For Australia	1	
31	0305 69 170	Mirror, Interior		1	
	2835 69 170A	Mirror, Interior		1	For France
32	0305 69 171	Base		1	
	0839 69 171	Base		1	For France
33	0305 69 180	Mirror		1	
	2835 69 180	Mirror		1	For France

No.	Part Number	Description		Q'ty	Remark
34	99761 0516	Screw, Interior Mirro		2	
	99831 0516	Screw		2	Car No. 12739
	99974 0500	Spring		2	
	99975 0500	Washer, Toothed		2	
35	0866 69 210 -13	Sun Visor (R) For General	(BLK.)	1	
	0866 69 210 -14	Sun Visor (R) For General	(GRY.)	1	
	1511 69 210 13	Sun Visor (R) For Australia	(BLK.)	1	
	1511 69 210 14	Sun Visor (R) For Australia	(GRY.)	1	
	1504 69 210 -13	Sun Visor (R) For Arctic Spec.	(BLK.)	1	Car No. 141928
	1504 69 210A-13	Sun Visor (R) For Arctic Spec.	(BLK.)	1	Car No. 159525
	1504 69 210 -14	Sun Visor (R) For Arctic Spec.	(GRY.)	1	Car No. 141928
	1504 69 210A14	Sun Visor (R) For Arctic Spec.	(GRY.)	1	Car No. 159525
36	0866 69 240 -13	Sun Visor (L) For General	(BLK.)	1	
	0866 69 240 -14	Sun Visor (L) For General	(GRY.)	1	
	1511 69 240 -13	Sun Visor (L) For Australia	(BLK.)	1	
	1511 69 240 -14	Sun Visor (L) For Australia	(GRY.)	1	
	1504 69 240 -13	Sun Visor (L) For Arctic Spec.	(BLK.)	1	Car No. 141928
	1504 69 240A13	Sun Visor (L) For Arctic Spec.	(BLK.)	1	Car No. 159525
	1504 69 240 -14	Sun Visor (L) For Arctic Spec.	(GRY.)	1	Car No. 141928
	1504 69 240A14	Sun Visor (L) For Arctic Spec.	(GRY.)	1	Car No. 159525

No.	Part Number	Description		Q'ty	Remarks
37	99837 0516C	Screw, Sun Visor		4	
	99975 0500	Washer, Toothed		2	
38	0866 69 910	Handle, Assist-Rear		2	
39	0866 69 920	Handle, Assist-Front		1	
40	99838 0620	Screw, Assist Handle		6	
	99952 0600	Washer, Plain		6	
	99971 0600	Washer, Spring		6	
41	0376 69 941	Hanger, Coat		1	
42	99776 0620	Screw, Coat Hanger		1	
43	0866 70 401A	Grille (R.H.D.)		1	
	1524 70 401A	Grille (L.H.D.)		1	
44	0866 56 405	Rubber, Cushion		4	
45	99864 0412B	Screw, Grille		4	
	99952 0412B	Washer, Plain		4	
46	0866 70 420	Extractor (R)	(Sedan)	1	
	0866 71 420	Extractor (L)		1	
47	0866 70 412	Nut, Spring-Extractor		6	
48	99864 0414	Screw, Extractor		4	
49	~~0223 59 445~~	~~Seat, Extractor~~		~~4~~	
50	0376 70 421	Frame (R), Extractor	(Coupe)	1	

ATTACHMENT (SEDAN & COUPE)

No.	Part Number	Description		Q'ty	Remark
	0376 71 421	Frame (L), Extractor	(Coupe)	1	
51	0376 70 422	Chamber (R)		1	
	0376 71 422	Chamber (L)		1	
52	99864 0410	Screw, Frame & Chamber		4	
53	0376 70 426	Gasket		2	
54	0376 70 427	Pipe		2	
55	0376 70 428	Clip		2	
56	~~0820 56 905~~	~~Nut, Spring-Extractor~~		~~8~~	
●	0866 70 412	Nut, Spring-Extractor		8	From Car No
57	99864 0414	Screw, Extractor		8	
58	0370 70 431C	Grille (R), Extractor	(Painted)	1	
	0370 71 431C	Grille (L), Extractor	(Painted)	1	
	0866 70 431C	Grille (R), Extractor	(DX.) (Chrome Platad) (Sedan)	1	
	0866 70 431D	Grille (R), Extractor	(DX.) (Chrome Platad) (Sedan)	1	Car No. 13876
●	0866 70 431E	Grille (R), Extractor	(DX.) (Chrome Platad) (Sedan)	1	
	0866 71 431C	Grille (L), Extractor	(DX.) (Chrome Platad) (Sedan)	1	
	0866 71 431D	Grille (L), Extractor	(DX.) (Chrome Platad) (Sedan)	1	Car No. 13876
59	99863 0412B	Screw, Tapping-Grille		2	
60	99863 0425B	Screw, Tapping-Grille		2	
61	0376 70 431A	Grille, Extractor		1	

No.	Part Number	Description	Q'ty	Remarks	
●	0376 70 431A00	Grille, Extractor Gray (Dull Finish)	1		
●	0376 70 431A02	Grille, Extractor Gray (Semi Dull Finish)	1	Car No. 165313 73/3~×	
	0376 71 431A	Grille, Extractor Gray	1 (Coupe)		
●	0376 71 431A00	Grille, Extractor Gray (Dull Finish)	1		
●	0376 71 431A02	Grille, Extractor Gray (Semi Dull Finish)	1	Car No. 165313 73/3~×	
62	99864 0416B	Screw, Tapping-Grille	6		
63	0376 70 891-00	Stripe (R), Front Fender	1		©BLUE
	0376 70 891-01	Stripe (R), Front Fender	1		©WHITE
	0376 71 891-00	Stripe (L), Front Fender	1		©BLUE
	0376 71 891-01	Stripe (L), Front Fender	1		©WHITE
64	0376 70 892A00	Stripe (R), Front Side Door	1		©BLUE
	0376 70 892A01	Stripe (R), Front Side Door	1		©WHITE
	0376 71 892A00	Stripe (L), Front Side Door	1		©BLUE
	0376 71 892A01	Stripe (L), Front Side Door	1		©WHITE

ATTACHMENT (STATION WAGON)

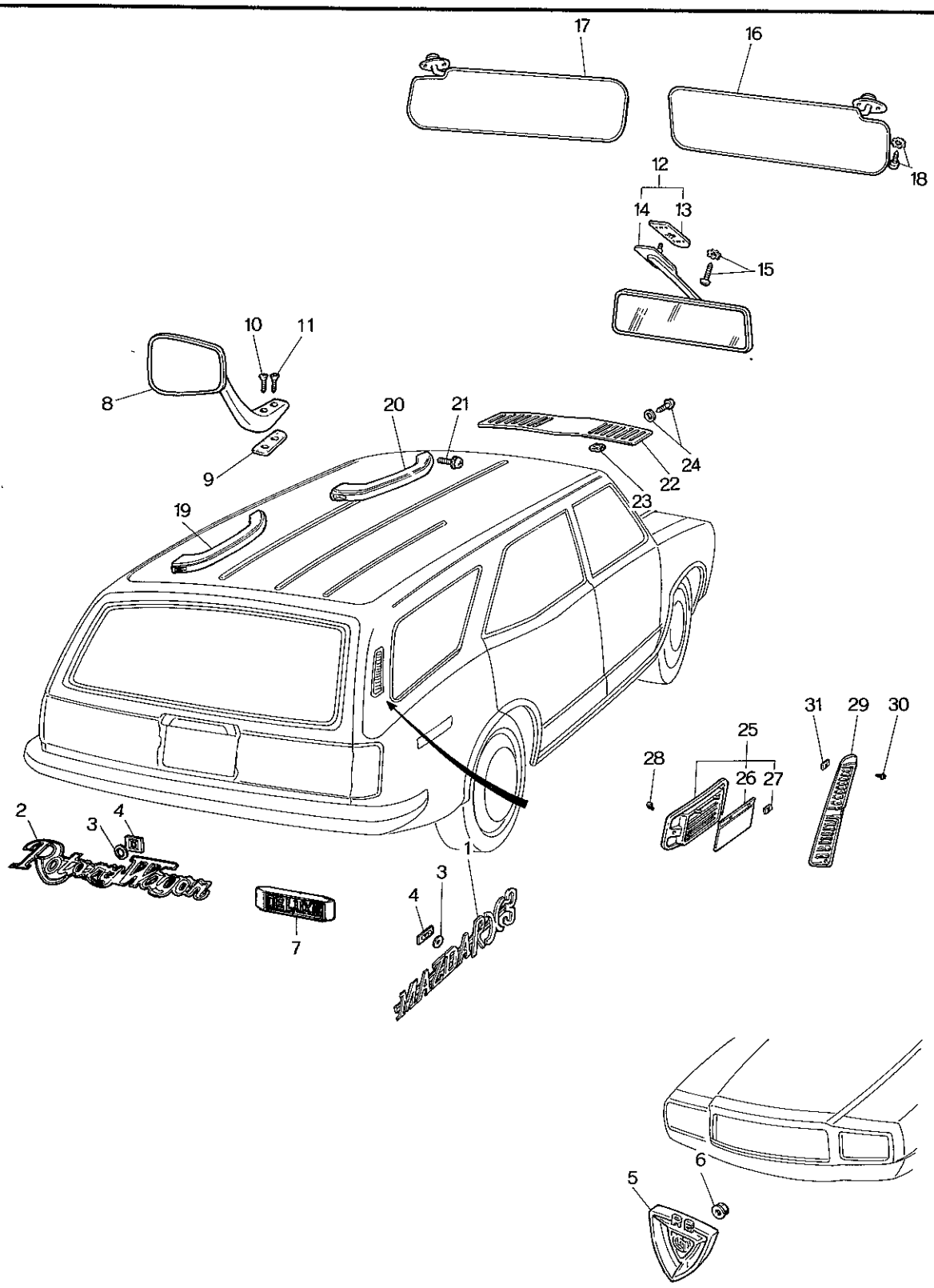

ATTACHMENT (STATION WAGON

No.	Part Number	Description	Q'ty	Rem
1	1562 69 053	Name, MAZDA RX-3	2	
2	0899 69 058	Mark, Rotary Wagon	1	
3	0730 69 057A	Packing	9	
4	99579 3000	Nut, Speed	9	
5	0866 69 071A	Emblem, Front	1	
6	99940 0500	Nut	1	
7	0583 69 055	Ornament, DX	1	
8	1511 69 110B	Mirror (R), Rear View	1	
9	1540 69 101	Gasket	1	
10	99772 0516	Screw, Mirror	1	
11	99772 0525	Screw, Mirror	1	
12	0305 69 170	Mirror, Interior	1	
13	0305 69 171	Base	1	
14	0305 69 180	Mirror	1	
15	99831 0516	Screw, Interior Mirror	2	
	99974 0500	Washer, Toothed	2	
	99975 0500	Washer, Toothed	2	

No.	Part Number	Description	Q'ty	Remarks
16	0866 69 2100-13	Visor (R), Sun	1	© Black
	0866 69 2100-14	Visor (R), Sun	1	© Grey
17	0866 69 2400-13	Visor (L), Sun	1	© Black
	0866 69 2400-14	Visor (L), Sun	1	© Grey
18	99837 0516C	Screw, Sun Visor	4	
	99975 0500	Washer, Toothed	4	
19	0866 69 910	Handle, Assist (Rear Side)	2	
20	0866 69 920	Handle, Assist (Front Side)	1	
21	99838 0620	Screw, Assist Handle	6	
	99952 0600	Washer, Plain	6	
	99971 0600	Washer, Spring	6	
22	0866 70 401A	Grille	1	
23	0866 56 405	Cushion, Rubber	4	
24	99864 0412B	Screw, Grille	4	
	99952 0412B	Washer, Plain	4	
25	0585 70 420A	Extractor (R)	1	
	0585 71 420A	Extractor (L)	1	
26	0585 70 423A	Valve	2	
27	99579 2000	Nut, Speed-Valve	4	

ATTACHMENT (STATION WAGON)

No.	Part Number	Description	Q'ty	Rema
28	√99864 0410B	Screw, Tapping - Extractor	4	
29	√0899 70 431	Grille (R)	1	
	√0899 71 431	Grille (L)	1	
30	√99863 0420B	Screw, Tapping - Grille	4	
31	√99896 0400	Nut, Spring - Grille	2	

TOP CEILING & TRIM (SEDAN & COUPE)

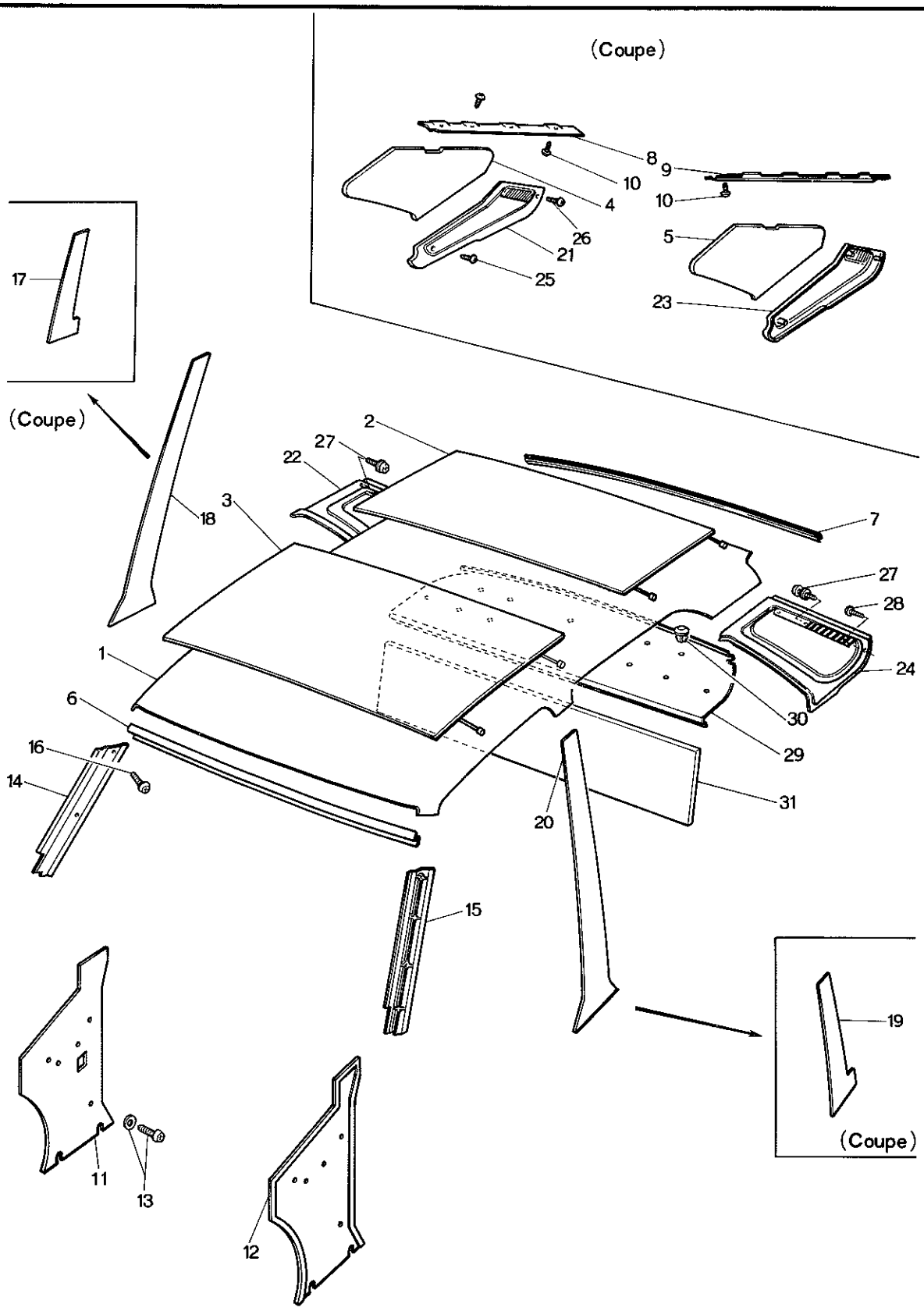

TOP CEILING & TRIM (SEDAN &

No.	Part Number	Description	Q'ty	Rema
1	0376 69 290A	Ceiling, Top (Coupe)	1	
	0866 69 290	Ceiling, Top (Sedan)	1	
2	0259 69 311	Insulator No. 1	1	
3	0866 69 311	Lining, Head	1	
4	0376 69 314	Pad, Rear Pillar (Coupe)	2	
	0376 69 314A	Pad, Rear Pillar (Coupe)	2	Car No. 150526
5	0866 69 314	Pad, Rear Pillar (Sedan)	2	
	0866 69 314A	Pad, Rear Pillar (Sedan)	2	Car No. 150526
6	0376 69 321	Plate, Fixing-Front (Coupe)	1	
	0866 69 321	Plate, Fixing-Front (Sedan)	1	
7	0376 69 341	Plate, Fixing-Rear (Coupe)	1	
	0866 69 341	Plate, Fixing-Rear (Sedan)	1	
8	0376 69 342	Plate No. 2, Fixing-Rear	1	
9	0376 69 343	Plate No. 3, Fixing-Rear	1	
10	99864 0412	Screw, Fixing Plate (Coupe)	8	
	~~99852 0408~~	~~Washer, Plain~~	~~8~~	
	~~99871 0408~~	~~Washer, Spring~~	~~8~~	
11	0866 69 360A	Trim (R), Front Side (R.H.D.)	1	
	1524 69 360A	Trim (R), Front Side (L.H.D.)	1	
12	0866 69 380B	Trim (L), Front Side (R.H.D.)	1	
	1524 69 380A	Trim (L), Front Side (L.H.D.)	1	
13	99862 0512B	Screw, Front Side	4	
	99967 05008	Washer	4	
14	0376 69 411	Trim (R), Front Pillar (Coupe)	1	
	0866 69 411	Trim (R), Front Pillar (Sedan)	1	
15	0376 69 431	Trim (L), Front Pillar (Coupe)	1	
	0866 69 431	Trim (L), Front Pillar (Sedan)	1	
16	99862 0412B	Screw, Front Pillar Trim	4	

TOP CEILING & TRIM (SEDAN & COUPE)

No.	Part Number	Description	Q'ty	Remarks	
	99974 0400	Washer, Toothed	4		
17	0376 69 462	Trim (R), Center Pillar (Coupe)	2	Car No. 142300 ~Q'ty	©
	0376 69 462A	Trim (R), Center Pillar (Coupe)	2	Car No. 150526 ~	©
18	0866 69 461 A	Trim (R), Center Pillar (Sedan)	2		©
	0866 69 461B	Trim (R), Center Piller (Sedan)	2	Car No. 150526 ~	©
19	0376 69 482	Trim (L), Center Pillar (Coupe)	1	Car No. 142300 ~	©
				Discarded	
20	~~0866 69 481~~	~~Trim (L), Center Piller (Sedan)~~	~~1~~		©
21	0376 69 511	Trim (R), Rear Pillar (Coupe)	1		©
22	0866 69 511	Trim (R), Rear Pillar (Sedan)	1		©
23	0376 69 521	Trim (L), Rear Pillar (Coupe)	1		©
24	0866 69 521	Trim (L), Rear Pillar (Sedan)	1		©
25	99864 05168	Screw, Rear Pillar Trim (Coupe)	4		
26	99864 05208	Screw, Rear Pillar Trim (Coupe)	2		
27	99864 0412	Screw, Rear Pillar Trim (Sedan)	2		
	~~99862 04086~~	~~Washer, Plain~~ (Sedan)	~~4~~		
	~~99871 0408~~	~~Washer, Spring~~ (Sedan)	~~4~~		
28	99864 0416	Screw, Rear Pillar Trim (Sedan)	4		
	~~99867 04084~~	~~Washer~~ (Sedan)	~~2~~		
29	0376 69 870B-00	Trim, Package Tray (Coupe)	1		©
	0870 69 870B-00	Trim, Package Tray-With Car Stereo Hole (Coupe)	1		©
	0866 69 870C-00	Trim, Package Tray (Sedan)	1		©
	1524 69 870C-00	Trim, Package Tray-With Car Stereo Hole (Sedan)	1		©
30	0866 69 885	Fastener, Package Tray Trim	2		
31	0866 69 894	Pad, Package Tray	1		

TOP CEILING & TRIM (STATION WAGON)

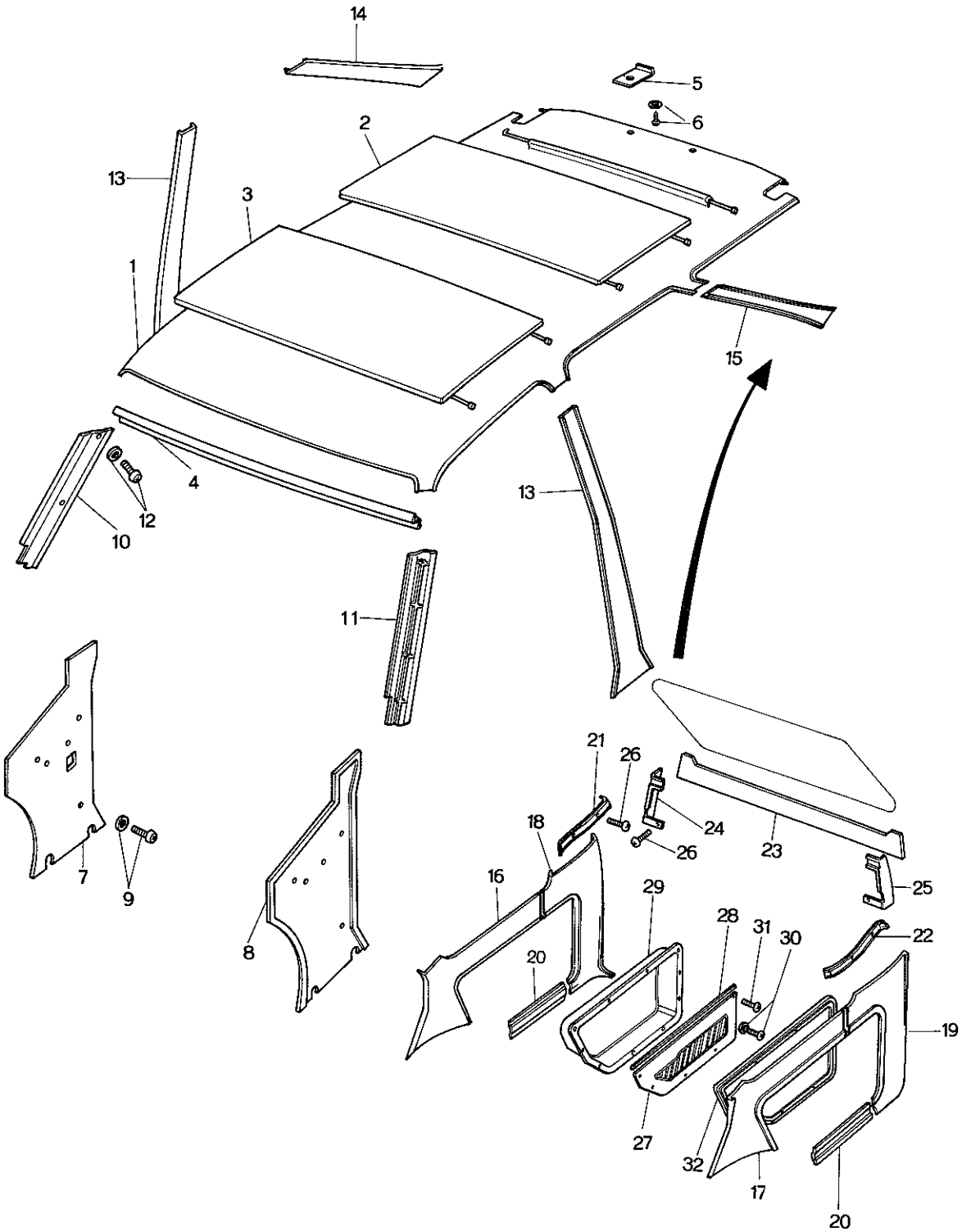

TOP CEILING & TRIM (STATION W

No.	Part Number	Description	Q'ty	Rem
1	0585 69 2900-14	Ceiling, Top	1	
2	0585 69 311	Lining, Head	1	
3	0866 69 311	Lining, Head	1	
4	0866 69 321	Plate, Fixing-Front	1	
5	0585 69 341B	Plate, Fixing-Rear	2	
6 √	99862 0512C	Screw, Tapping-Rear Fixing Plate	2	
√	99967 0500A	Washer	2	
7	0866 69 360A	Trim (R), Front Side	1	
8	0866 69 380B	Trim (L), Front Side	1	
9 √	99862 0512B	Screw, Tapping-Trim	4	
√	99967 0500B	Washer	4	
10	0866 69 411-00	Trim (R), Front Pillar	1	©
11	0866 69 431-00	Trim (L), Front Pillar	1	©
12 √	99862 0412B	Screw, Tapping-Trim	4	
13	0866 69 461B-03	Trim, Center	2	©
	0866 69 461B-12	Trim, Center	2	©
	0866 69 461B-13	Trim, Center	2	©
14	0899 69 561C-14	Trim (R), Quarter	1	©
15	0899 69 571C-14	Trim (L), Quarter	1	©
16	0899 69 711B-03	Trim No. 1 (R), Rear Side	1	©

TOP CEILING & TRIM (STATION WAGON)

No.	Part Number	Description	Q'ty	Remarks
	0899 69 711B-12	Trim No. 1 (R), Rear Side	1	© Brown
	0899 69 711B-13	Trim No. 1 (R), Rear Side	1	© Grey / Yellow
17	0899 69 712B-03	Trim No. 1 (L), Rear Side	1	© Black
	0899 69 712B-12	Trim No. 1 (L), Rear Side	1	© Brown
	0899 69 712B-13	Trim No. 1 (L), Rear Side	1	© Grey / Yellow
18	0899 69 713A-03	Trim No. 2 (R), Rear Side	1	© Black
	0899 69 713A-12	Trim No. 2 (R), Rear Side	1	© Brown
	0899 69 713A-13	Trim No. 2 (R), Rear Side	1	© Grey / Yellow
19	0899 69 714A-03	Trim No. 2 (L), Rear Side	1	© Black
	0899 69 714A-12	Trim No. 2 (L), Rear Side	1	© Brown
	0899 69 714A-13	Trim No. 2 (L), Rear Side	1	© Grey / Yellow
20	0899 69 715A-03	Trim, Rear Side-Lower	2	© Black
	0899 69 715A-12	Trim, Rear Side-Lower	2	© Brown
	0899 69 715A-13	Trim, Rear Side-Lower	2	© Grey / Yellow
21	0899 69 717A	Garnish (R), Rear Side Trim	1	
22	0899 69 718A	Garnish (L), Rear Side Trim	1	
23	0899 69 721B-03	Trim, Back Door-Upper	1	© Black
	0899 69 721B-12	Trim, Back Door-Upper	1	© Brown
	0899 69 721B-13	Trim, Back Door-Upper	1	© Grey / Yellow
24	0899 69 723B	Garnish (R), Back Door Trim	1	

TOP CEILING & TRIM (STATION W

No.	Part Number	Description	Q'ty	Rema
25	0899 69 724B	Garnish (L), Back Door Trim	1	
26	99864 0410C	Screw, Tapping-Garnish	6	
27	0899 70 911C-03	Trim (R), Side	1	©
	0899 70 911C-12	Trim (R), Side	1	©
	0899 70 911C-13	Trim (R), Side	1	©
28	0585 70 912B	Moulding, Side Pocket	1	
29	0585 70 921B	Pocket, Side	1	
30	99862 0416B	Screw, Tapping-Side Pocket } Selective use	17	
	99862 0416C	Screw, Tapping-Side Pocket }		
	99967 0400A	Washer } Selective use	17	
	99967 0400B	Washer }		
31	99864 0420C	Screw, Tapping-Side Pocket (R)	2	
32	0899 71 911C-03	Trim (L), Side	1	©
	0899 71 911C-12	Trim (L), Side	1	©
	0899 71 911C-13	Trim (L), Side	1	©

L/m 7.2.75.

18.	0899	69	710	03 side trim		BLK	1		
	0899	69	710A	03	—	—	1	~	Δ
	0899	69	710	13	—	gr/ylw	1		
	0899	69	710A	13	—	—	1	~	Δ
	0899	69	710	35	—	BRN	1		
	0899	69	710A	35	—	—	1	—	Δ
19.	0899	69	730	03	—	BLK	1		
	0899	69	730A	03	—	—	1	~	Δ
	0899	69	730	13	—	gr/ylw	1		
	0899	69	730A	13	—	—	1	—	Δ

Supplementary Page 0899 69 730 35 — BRN 1 Δ

FLOOR MAT & TRIM

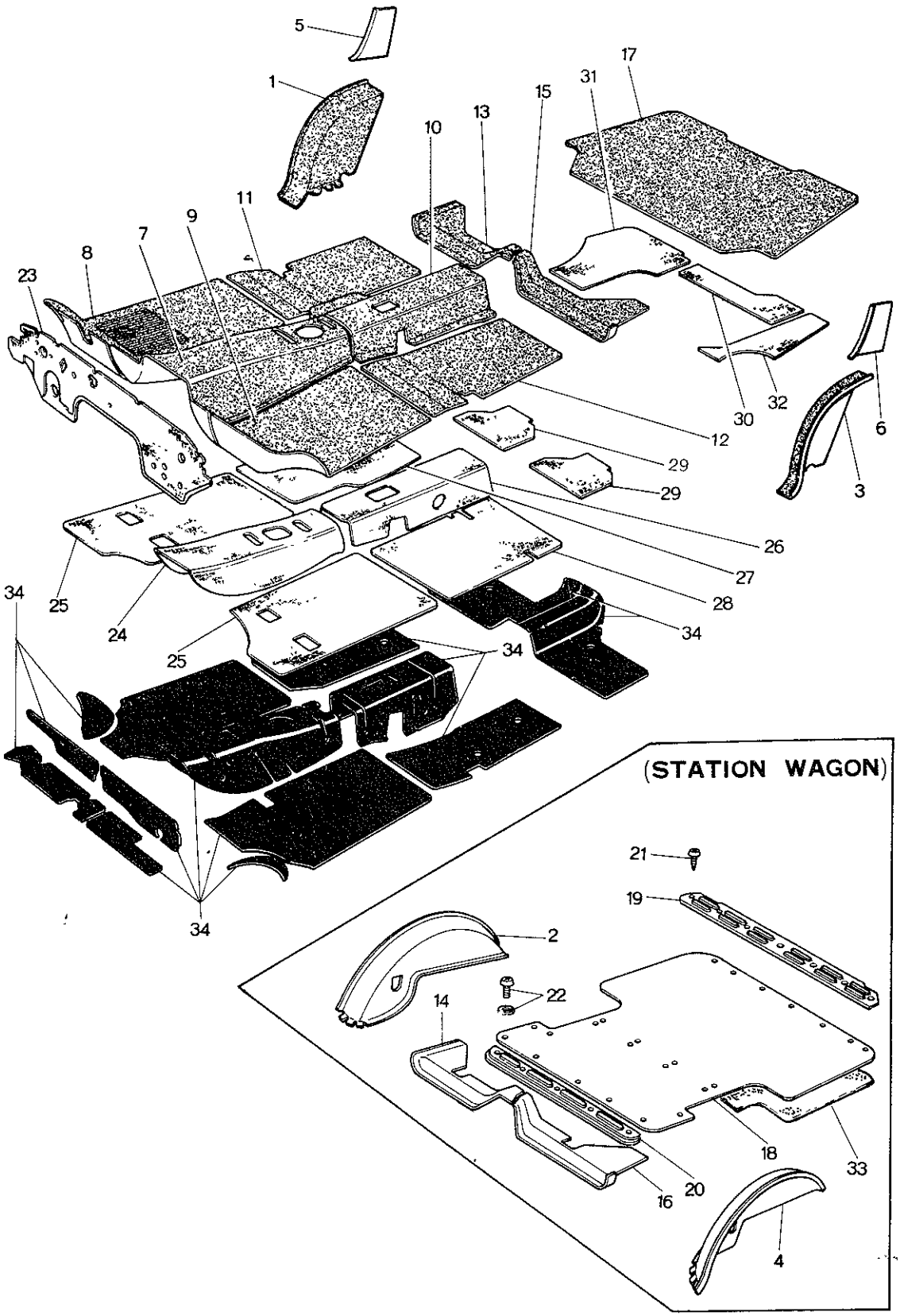

No.	Part Number	Description	Q'ty	Rem
		When ordering the following trims Add color code nos. given below after parts number -03 (Black) -12 (Brown) -13 (Greyish Yellow)		
1	0866 69 541	Trim (R), Tire House (Sedan & Coupe)	1	
● 2	0899 69 541A	Trim (R), Tire House (Station Wagon)	1	
3	0866 69 542	Trim (L), Tire House (Sedan & Coupe)	1	
● 4	0899 69 543A	Trim (L), Tire House (Station Wagon)	1	
5	0866 69 543	Trim (R), Rear Seat Side (Sedan)	1	
	0866 69 543A	Trim (R), Rear Seat Side (Sedan)	1	Car No. 14963
6	0866 69 544	Trim (L), Rear Seat Side (Sedan)	1	
	0866 69 544A	Trim (L), Rear Seat Side (Sedan)	1	Car No. 14963
		When ordering the following mat (Carpet) Add color code nos. given below after parts number -32 (Yellowish Green) -34 (Black)		
7	0378 69 611	Mat (Frt., C) (Automatic) (R.H.D.)	1	
●	~~0378 69 611A~~	~~Mat (Frt., C)~~ (Automatic) (R.H.D.)	~~1~~	~~Car No.~~
●	0378 69 611B	Mat (Frt., C) (Automatic) (R.H.D.)	1	Car No. 15281
	0866 69 611	Mat (Frt., C) (Manual) (R.H.D.)	1	
	0866 69 611A	Mat (Frt., C) (Manual) (R.H.D.)	1	Car No. 15281
	0585 69 611-05	Mat (Frt., C) Vinyl (Manual) (R.H.D.)	1	

No.	Part Number	Description	Q'ty	Remarks	
	1524 69 611	Mat (Frt., C) (L.H.D.)	1		©
8	0378 69 612A	Mat (Frt., R) (Automatic) } (R.H.D.)	1		©
	0866 69 612A	Mat (Frt., R) } (Manual) } (R.H.D.)	1		©
	0585 69 612-05	Mat (Frt., R) Vinyl } (Manual) } (R.H.D.)	1		©
	1524 69 612	Mat (Frt., R) (L.H.D.)	1		©
9	0378 69 613A	Mat (Frt., L) (Automatic) } (R.H.D.)	1		©
	0866 69 613A	Mat (Frt., L) } (Manual) } (R.H.D.)	1		©
	0585 69 613-05	Mat (Frt., L) Vinyl } (Manual) } (R.H.D.)	1		©
	1524 69 613	Mat (Frt., L) (L.H.D.)	1		©
10	0866 69 616A	Mat (Rr., C)	1		©
	0585 69 616A-05	Mat (Rr., C) Vinyl	1		©
11	0866 69 617	Mat (Rr., R)	1		©
	0585 69 617-05	Mat (Rr., R) Vinyl	1		©
12	0866 69 618	Mat (Rr., L)	1		©
	0585 69 618-05	Mat (Rr., L) Vinyl	1		©
13	0866 69 625-05	Mat (R), End } (Sedan & Coupe)	1		©
	0866 69 625A-05	Mat (R), End } (Sedan & Coupe)	1	Car No. 127396 7/12~○	©
● 14	0585 69 625C-05	Mat (R), End (Station Wagon)	1		©
15	0866 69 626-05	Mat (L), End } (Sedan & Coupe)	1		©
	0866 69 626A-05	Mat (L), End } (Sedan & Coupe)	1	Car No. 127396 7/12~○	©

No.	Part Number	Description	Q'ty	Rema
16	0585 69 626C05	Mat (L), End (Station Wagon)	1	
17	0866 69 627-10	Mat, Trunk Room (Sedan & Coupe)	1	
	1881 69 627-10	Mat, Trunk Room (Sedan & Coupe) (L.H.D.)	1	Car No. 1792
18	0899 69 627C	Mat, Trunk Room (Station Wagon)	1	
19	0585 69 628E	Plate No. 1, Seat-Mat Rear	1	
	0585 69 628F	Plate No. 1, Seat-Mat Rear	1	Car No. 1706
20	0585 69 629B	Plate No. 2, Seat-Mat Front	1	
21	99861 0410	Screw, Tapping-Trunk Room Mat	5	
	99864 0410	Screw	8	(Station Wag
	99864 0412C	Screw	7	
22	99861 0410B	Screw, Tapping-Trunk Room Mat	4	
	99967 0400B	Washer	4	
23	0866 69 660C	Insulator (R.H.D.)	1	
	0866 69 660D	Insulator (R.H.D.)	1	Car No. 15052
	1562 69 660A	Insulator (L.H.D.)	1	
	1562 69 660B	Insulator (L.H.D.)	1	Car No. 13573
	1562 69 660C	Insulator (L.H.D.)	1	Car No. 14077
	1562 69 660D	Insulator (L.H.D.)	1	Car No. 15052
	1562 69 660F	Insulator	1	Car No. 17925
24	0378 69 683	Pad (Frt., C) (Automatic)	1	

No.	Part Number	Description	Q'ty	Remarks
	~~0378 69 683B~~	~~Pad (Frt., C) (Automatic)~~	~~1~~	~~Car No. 72/9 ~○~~
	0378 69 683C	Pad (Frt., C) (Automatic)	1	Car No. 152816 72/9 ~○
	0866 69 683	Pad (Frt., C) (Manual)	1	
	0866 69 683B	Pad (Frt., C) (Manual)	1	Car No. 152816 72/9 ~○
25	0866 69 684	Pad (Frt.) (Manual)	2	
	0866 69 684A	Pad (Frt.) (Manual)	2	Car No. 176736 73/7 ~△
●	0866 69 684B	Pad (Frt.) (Manual)	2	74/4 ~○
	~~0870 69 684~~	~~Pad (Frt., R)~~ (Automatic)	~~1~~	
	0871 69 684	Pad (Frt., R) (Automatic)	1	From Car No. 1
●	0871 69 684A	Pad (Frt., R) (Automatic)	1	74/4 ~○
	0871 69 685	Pad (Frt., L) (Automatic)	1	
●	0871 69 685A	Pad (Frt., L) (Automatic)	1	74/4 ~○
26	0866 69 687A	Pad (Rr., C)	1	
	~~0866 69 687B~~	~~Pad (Rr., C)~~	~~1~~	~~Car No. 72/9 ~○~~
27	0866 69 688	Pad (Rr., R)	1	
28	0866 69 689	Pad (Rr., L)	1	
29	0866 69 692	Pad, End (Sedan & Coupe)	2	
30	0866 69 696	Pad (C), Trunk Room (Sedan & Coupe)	1	
31	0866 69 697	Pad (R), Trunk Room (Sedan & Coupe)	1	
32	0866 69 698	Pad (L), Trunk Room (Sedan & Coupe)	1	
33	0899 69 696A	Pad, Trunk (Station Wagon)	1	
34	0208 76 071	Silencer, Floor (Revised Piece)	1	

A 30cm square object in sheet form is supplied under part no. **0208 76 071** (Floor Silencer Revised Piece).



VENTILATOR

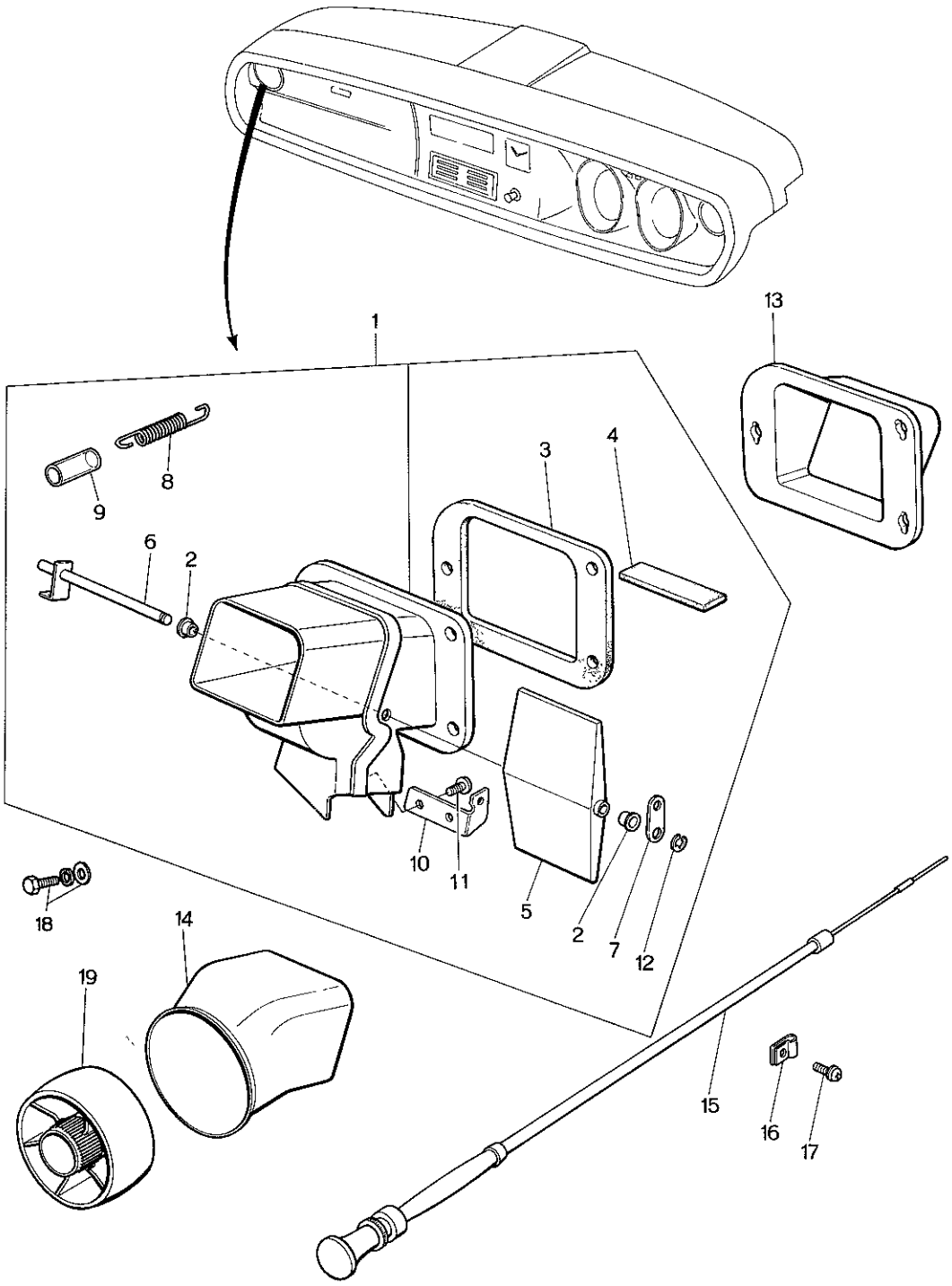

No.	Part Number	Description	Q'ty	Rem
1	0866 70 310A	Ventilator (R)	1	
✓●	0866 70 310B	Ventilator (R)	1	Car No. 15952
	0866 71 310A	Ventilator (L)	1	
✓●	0866 71 310B	Ventilator (L)	1	Car No. 15952
2	0317 70 307	Bush	4	
3	0866 70 313	Gasket	2	
4	0866 70 314	Cushion	2	Car No. 14670
5	0866 70 320	Flap	2	
6	0866 70 330	Lever	2	
	0866 70 330A	Lever	2	Car No. 14670
7	0866 70 341	Lever	2	
	0866 70 341A	Lever	2	Car No. 14670
8	0866 70 342	Spring	2	
9	99335 08003	Pipe	2	
10	0866 70 343	Bracket (R)	1	
	0866 71 343	Bracket (L)	1	
11	99864 0410	Screw, Tapping	4	
12	99576 0400	Ring, Snap	2	
Ⓝ	0866 70 365	Holder, Spring	2	
Ⓝ	0866 70 366	Roller	2	Car No. 14670
Ⓝ	0866 70 367	Spring	2	
13	0866 70 351	Gasket (R)	1	
	0866 71 351	Gasket (L)	1	
14	0866 70 352	Duct (R), Ventilator	1	
	0866 71 352	Duct (L), Ventilator	1	
15	0866 70 360A	Wire, Ventilator Control	2	
	0866 70 360B	Wire, Ventilator Control	2	Car No. 146702
✓●	0866 70 360C	Wire, Ventilator Control	2	Car No. 159525
16	0305 70 395B	Clamp, Wire	2	
	0866 70 395	Clamp, Wire	2	Car No. 146702
17	908332 4 10	Screw Set, Control Knob	2	
18	99785 0620	Bolt, Ventilator & Gasket	3	
	99952 0600	Washer, Plain	3	
	99971 0600	Washer, Spring	3	
19	0866 70 371	Louver	2	

WINDOW GLASS & MOULDING

(SEDAN & COUPE)

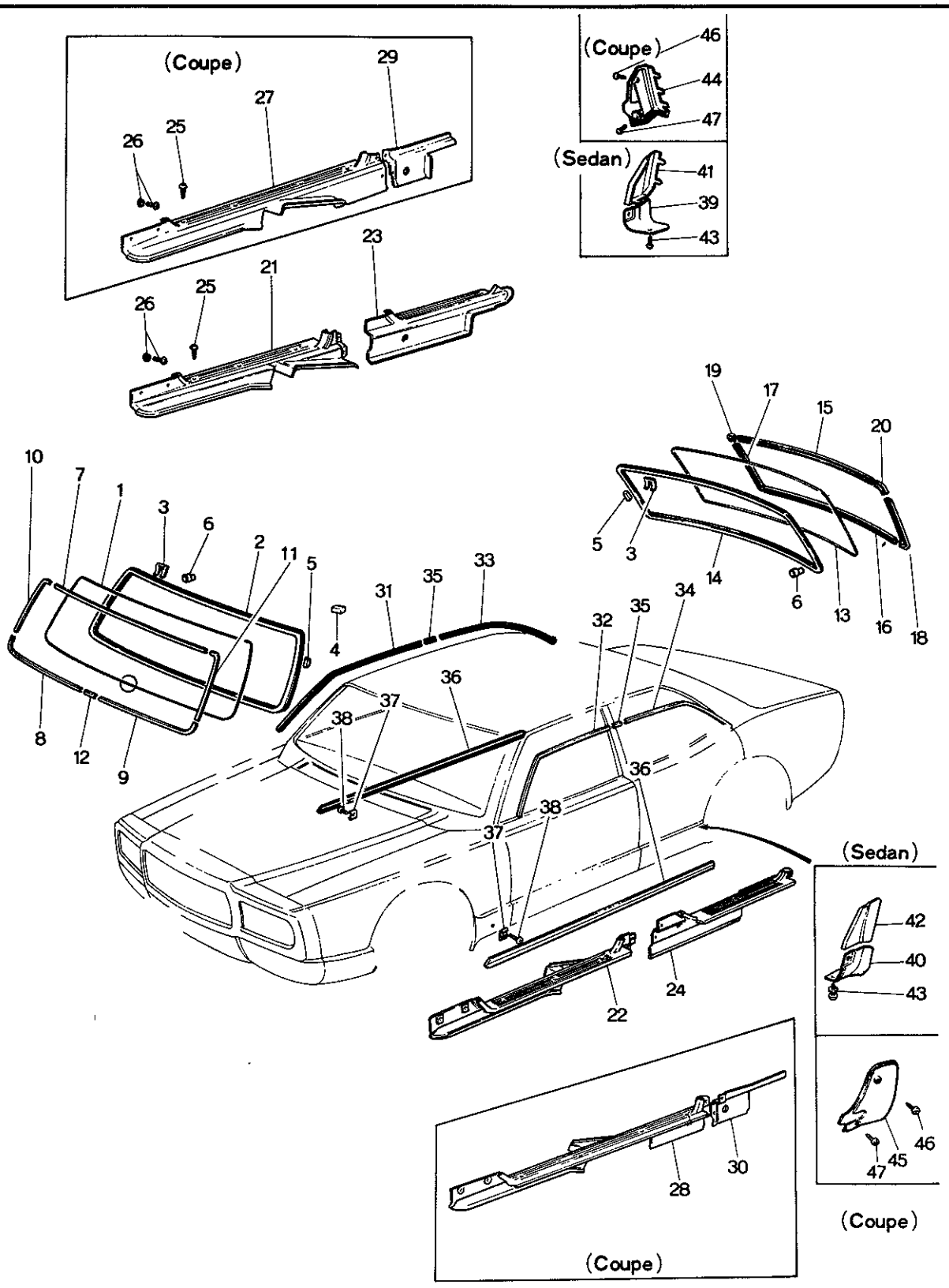

WINDOW GLASS & MOULDING
(SEDAN & COUPE)

No.	Part Number	Description	Q'ty	Rema
1	0368 70 441	Glass, Front Window (Transparent)	1	
	0370 70 441	Glass, Front Window (Blue Pane) (Sedan)	1	
	1531 70 441	Glass, Front Window (Transparent) H.P.R.)	1	
	0374 70 441	Glass, Front Window (Transparent)	1	
	0376 70 441	Glass, Front Window (Blue Pane) (Coupe)	1	
	1568 70 441	Glass, Front Window (Transparent H.P.R.)	1	
2	0305 70 443B	Dam, Front Window Glass	1	
3	0305 70 445B	Clip, Front Window···19, Back Window···17 36		
●	1011 60 506A	Clip, Front Window···19, Back Window···17 36		
4	0305 70 447B	Spacer "A"	4	
5	0305 70 448A	Spacer "B"	4	
● Ⓝ	0839 70 449	Spacer "C"	4	Car No. 160623
6	0305 53 999	Stud, Front Window···19, Back Window···17 36		
7	0376 70 451	Mould, Upper-Front (Coupe)	1	
	0376 70 451A	Mould, Upper-Front (Coupe)	1	Car No. 13200
●	0376 99 741	Mould, Upper Set (Coupe)	1	
	0866 70 451	Mould, Upper-Front (Sedan)	1	
	0866 70 451A	Mould, Upper-Front (Sedan)	1	Car No. 13399
●	0866 99 741	Mould, Upper Set (Sedan)	1	
8	0866 70 452	Mould, Lower (R)-Front	1	

WINDOW GLASS & MOULDING
(SEDAN & COUPE)

	No.	Part Number	Description	Q'ty	Remarks
		0866 70 452A	Mould, Lower (R)-Front	1	Car No. 133994 $^{73}/_{1}$~△
●		0866 99 742	Mould, Lower Set	1	$^{73}/_{2}$~○
	9	0866 71 452	Mould, Lower (L)-Front	1	
		0866 71 452A	Mould, Lower (L)-Front	1	Car No. 133994 $^{72}/_{1}$~△
●		0866 99 745	Mould, Lower Set	1	$^{73}/_{2}$~○
	10	0376 70 453	Mould (R), Front (Coupe)	1	
		0376 70 453A	Mould (R), Front (Coupe)	1	Car No. 132009 $^{71}/_{12}$~△
●		0376 99 743	Mould Set (Coupe)	1	$^{73}/_{2}$~○
		0866 70 453	Mould (R), Front (Sedan)	1	
		0866 70 453A	Mould (R), Front (Sedan)	1	Car No. 133994 $^{72}/_{1}$~△
●		0866 99 743	Mould Set (Sedan)	1	$^{73}/_{2}$~○
	11	0376 71 453	Mould (L), Front (Coupe)	1	
		0376 71 453A	Mould (L), Front (Coupe)	1	Car No. 132009 $^{71}/_{12}$~△
●		0376 99 744	Mould Set (Coupe)	1	$^{73}/_{2}$~○
		0866 71 453	Mould (L), Front (Sedan)	1	
		0866 71 453A	Mould (L), Front (Sedan)	1	Car No. 133994 $^{72}/_{1}$~△
●		0866 99 744	Mould Set (Sedan)	1	$^{73}/_{2}$~○
	12	0866 70 454	Joint, Front Mould	1	
	13	1510 70 471	Glass, Back Window (Transparent 5 m/m)	1 (Sedan)	
		1511 70 471	Glass, Back Window (Transparent 5 m/m) (With Heating Wire)	1 (Sedan)	

WINDOW GLASS & MOULDING
(SEDAN & COUPE)

No.	Part Number	Description	Q'ty	Remar
	1523 70 471	Glass, Back Window (Transparent 4 m/m)	1	
●	1523 70 471 A	Glass, Back Window (Transparent 4 m/m)	1	
	1524 70 471	Glass, Back Window (Transparent 4 m/m) (With Heating Wire)	1	
●	1524 70 471 A	Glass, Back Window (Transparent 4 m/m) (With Heating Wire)	1 (Sedan)	
	1534 70 471	Glass, Back Window (Blue Pane 4 m/m) (With Heating Wire)	1	
●	1534 70 471 A	Glass, Back Window (Blue Pane 4 m/m) (With Heating Wire)	1	
	1535 70 471	Glass, Back Window (Blue Pane 4 m/m)	1	
●	1535 70 471 A	Glass, Back Window (Blue Pane 4 m/m)	1	
	0374 70 471	Glass, Back Window (Transparent 4 m/m)	1	
●	0374 70 471 A	Glass, Back Window (Transparent 4 m/m)	1	
	0375 70 471	Glass, Back Window (Blue Pane 4 m/m)	1	
●	0375 70 471 A	Glass, Back Window (Blue Pane 4 m/m)	1	
	0376 70 471	Glass, Back Window (Blue Pane 4 m/m) (With Heating Wire)	1 (Coupe)	
●	0376 70 471 A	Glass, Back Window (Blue Pane 4 m/m) (With Heating Wire)	1	
	1514 70 471	Glass, Back Window (Transparent 5 m/m)	1	
	1554 70 471	Glass, Back Window (Transparent 5 m/m) (With Heating Wire)	1	
	1562 70 471	Glass, Back Window (Transparent 4 m/m) (With Heating Wire)	1	
●	1562 70 471 A	Glass, Back Window (Transparent 4 m/m) (With Heating Wire)	1	
14	0866 70 473	Dam, Back Window Glass	1	
15	0376 70 481	Mould, Upper-Rear (Coupe)	1	

WINDOW GLASS & MOULDING
(SEDAN & COUPE)

	No.	Part Number	Description	Q'ty	Remarks
		0376 70 481 A	Mould, Upper - Rear (Coupe)	1	Car No. 132009 71/12~△
●		0376 99 746	Mould, Upper Set (Coupe)	1	73/2~○
		0866 70 481	Mould, Upper - Rear (Sedan)	1	
		0866 70 481 A	Mould, Upper - Rear (Sedan)	1	Car No. 133994 72/1~△
●		0866 99 746	Mould, Upper Set (Sedan)	1	73/2~○
	16	0376 70 482	Mould, Lower - Rear (Coupe)	1	
		0376 70 482 A	Mould, Lower - Rear (Coupe)	1	Car No. 132009 71/12~△
●		0376 99 747	Mould, Lower Set (Coupe)	1	73/2~○
		0866 70 482	Mould, Lower - Rear (Sedan)	1	
		0866 70 482 A	Mould, Lower - Rear (Sedan)	1	Car No. 133994 72/1~△
●		0866 99 747	Mould, Lower Set (Sedan)	1	73/2~○
	17	0376 70 483	Mould (R), Rear (Coupe)	1	
		0376 70 483 A	Mould (R), Rear (Coupe)	1	Car No. 132009 71/12~△
●		0376 99 748	Mould Set (R), Rear (Coupe)	1	73/2~○
		0866 70 483	Mould (R), Rear (Sedan)	1	
		0866 70 483 A	Mould (R), Rear (Sedan)	1	Car No. 133994 72/1~△
●		0866 99 748	Mould Set (R), Rear (Sedan)	1	73/2~○
	18	0376 71 483	Mould (L), Rear (Coupe)	1	
		0376 71 483 A	Mould (L), Rear (Coupe)	1	Car No. 132009 71/12~△
●		0376 99 749	Mould Set (R), Rear (Coupe)	1	73/2~○

WINDOW GLASS & MOULDING
(SEDAN & COUPE)

No.	Part Number	Description		Q'ty	Remar
	0866 71 483	Mould (L), Rear	(Sedan)	1	
	0866 71 483A	Mould (L), Rear	(Sedan)	1	Car No. 1339
●	0866 99 749	Mould Set (L), Rea	(Sedan)	1	
19	0376 70 484	Joint (R)	(Coupe)	1	
	0376 70 484A	Joint (R)	(Coupe)	1	Car No. 1320
	0866 70 484	Joint (R)	(Sedan)	1	
	0866 70 484A	Joint (R)	(Sedan)	1	Car No. 1339
20	0376 71 484	Joint (L)	(Coupe)	1	
	0376 71 484A	Joint (L)	(Coupe)	1	Car No. 1320
	0866 71 484	Joint (L)	(Sedan)	1	
	0866 71 484A	Joint (L)	(Sedan)	1	Car No. 1339
21	0866 70 801A00	Plate (R), Scarf-Front		1	
●	0866 70 801B00	Plate (R), Scarf-Front		1	
22	0866 71 801A00	Plate (L), Scarf-Front		1	
●	0866 71 801D00	Plate (L), Scarf-Front		1	
23	0866 70 802B00	Plate (R), Scarf-Rear	(Sedan)	1	
●	0866 70 802C00	Plate (R), Scarf-Rear		1	
24	0866 71 802B00	Plate (L), Scarf-Rear		1	
●	0866 71 802C00	Plate (L), Scarf-Rear		1	
25	99862 0425B	Screw, Scarf Plate		8	

WINDOW GLASS & MOULDING
(SEDAN & COUPE)

No.	Part Number	Description	Q'ty	Remarks	
26	99864 0414B	Screw, Scarf Plate	14		
	99952 0516B	Washer, Plain	14		
27	0376 70 801A00	Plate (R), Scarf-Front (Coupe)	1		©
●	0376 70 801B00	Plate (R), Scarf-Front (Coupe)	1	73/8 ~○	
28	0376 71 801A00	Plate (L), Scarf-Front	1		©
●	0376 71 801B00	Plate (L), Scarf-Front	1	73/8 ~○	
29	0376 70 802A00	Plate (R), Scarf-Rear (Coupe)	1		©
30	0376 71 802A00	Plate (L), Scarf-Rear	1		©
31	0376 70 821A	Mould (R), Drip-Front (Coupe)	1		
	0376 70 821B	Mould (R), Drip-Front (Coupe)	1	Car No. 155593 73/10 ~○	
	0866 70 821A	Mould (R), Drip-Front (Sedan)	1		
	0866 70 821B	Mould (R), Drip-Front (Sedan)	1	Car No. 155593 73/10 ~○	
32	0376 71 821A	Mould (L), Drip-Front (Coupe)	1		
	0376 71 821B	Mould (L), Drip-Front (Coupe)	1	Car No. 155593 73/10 ~○	
	0866 71 821A	Mould (L), Drip-Front (Sedan)	1		
	0866 71 821B	Mould (L), Drip-Front (Sedan)	1	Car No. 155593 73/10 ~○	
33	0376 70 822A	Mould (R), Drip-Rear (Coupe)	1		
	0376 70 822B	Mould (R), Drip-Rear (Coupe)	1	Car No. 155593 73/10 ~○	
	0866 70 822B	Mould (R), Drip-Rear (Sedan)	1		
	0866 70 822C	Mould (R), Drip-Rear (Sedan)	1	Car No. 155593 73/10 ~○	

WINDOW GLASS & MOULDING
(SEDAN & COUPE)

No.	Part Number	Description		Q'ty	Remark
●	0866 70 822D	Mould (R), Drip-Rear	(Sedan)	1	
34	0376 71 822A	Mould (L), Drip-Rear	(Coupe)	1	
	0376 71 822B	Mould (L), Drip-Rear	(Coupe)	1	Car No. 15559
	0866 71 822B	Mould (L), Drip-Rear	(Sedan)	1	
	0866 71 822C	Mould (L), Drip-Rear	(Sedan)	1	Car No. 15559
●	0866 71 822D	Mould (L), Drip-Rear	(Sedan)	1	
35	0866 70 823A	Joint, Drip Mould		2	
36	0866 70 851	Mould, Step		2	
●	0866 99 721	Mould Set, Step		2	
37	0305 70 861C	Clip, Step Mould		10	
38	99863 0512	Screw, Step Mould		10	
39	0866 70 852	Guard "A" (R), Stone		1	
40	0866 71 852	Guard "A" (L), Stone		1	
41	0866 70 853A	Guard "B" (R), Stone		1	
	0866 70 853C	Guard "B" (R), Stone		1	Car No. 144308
42	0866 71 853A	Guard "B" (L), Stone	(Sedan)	1	
	0866 71 853C	Guard "B" (L), Stone		1	Car No. 144308
43	908631 5 12	Screw Set, Stone Guard		4	
	0870 70 875	Screw		2	Car No. 144308 ⅞
●	99739 0410	Screw		2	Car No. 160623

WINDOW GLASS & MOULDING
(SEDAN & COUPE)

No.	Part Number	Description		Q'ty	Remarks
44	0376 70 855	Guard (R), Stone		1	
●	0376 70 855C	Guard (R), Stone		1	Car No. 167343 73/3 ~△
45	0376 71 855	Guard (L), Stone		1	
●	0376 71 855C	Guard (L), Stone	(Coupe)	1	Car No. 167343 73/3 ~△
46	99767 0410	Screw, Stone Guard		2	
47	99769 0408	Screw, Stone Guard		2	
●	99769 0410	Screw, Stone Guard		2	73/10 ~○

WINDOW GLASS & MOULDING
(STATION WAGON)

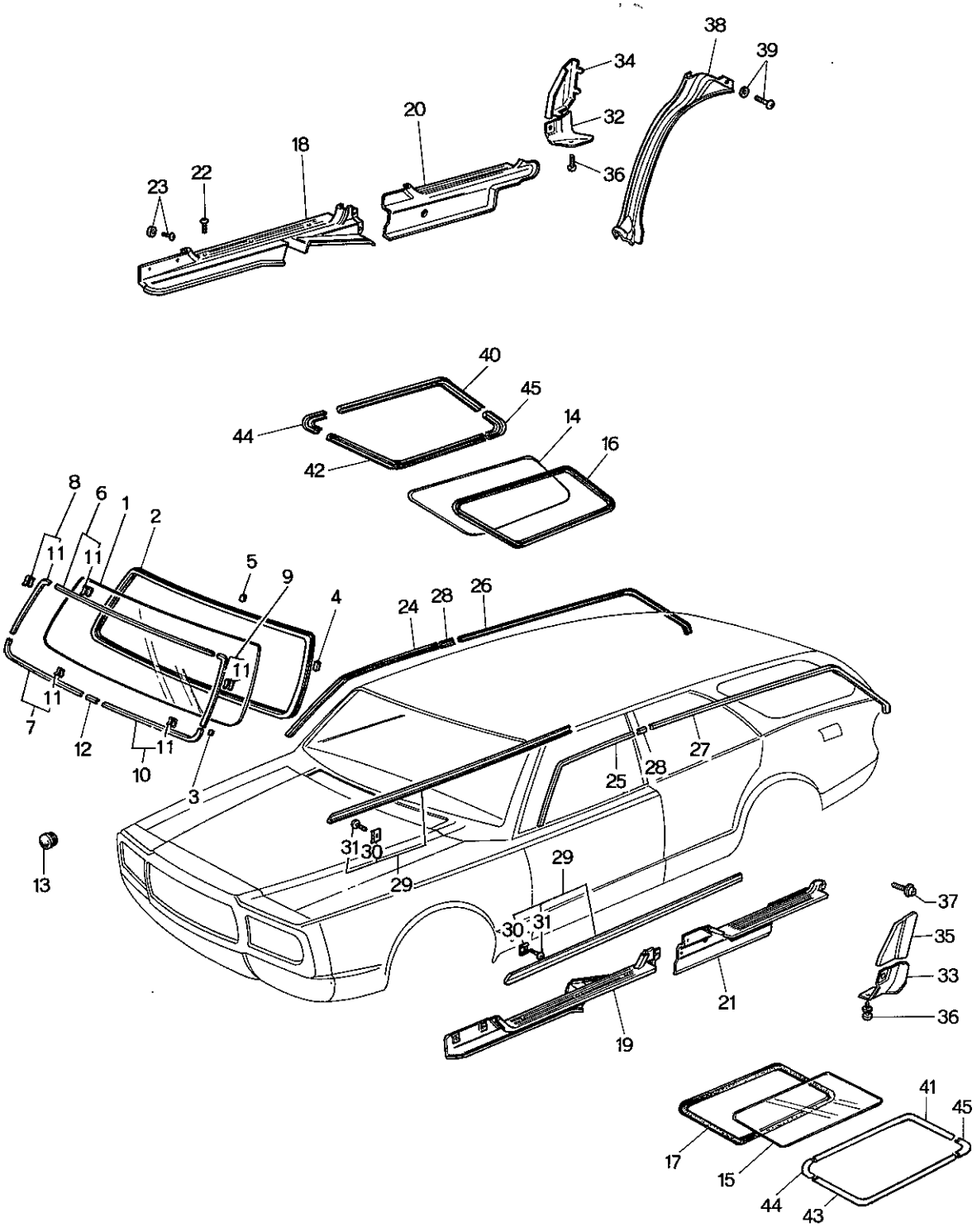

WINDOW GLASS & MOULDING
(STATION WAGON)

No.	Part Number	Description	Q'ty	Rema
1	1531 70 441	Glass, Front Window	1	
2	0305 70 443B	Dam, Front Window Glass	1	
3	0305 70 447B	Spacer "A"	3	
4	0305 70 448A	Spacer "B"	2	
5	0839 70 449	Spacer "C"	2	
6	0866 99 741	Mould Set, Upper	1	
7	0866 99 742	Mould Set (R), Front Lower	1	
8	0866 99 743	Mould Set (R), Front	1	
9	0866 99 744	Mould Set (L), Front	1	
10	0866 99 745	Mould Set (L), Front Lower	1	
11	1011 70 506	Clip	19	
12	0866 70 454	Joint, Front Mould	1	
13	0118 56 241	Plug, Drain	1	
14	1529 70 551	Glass, Rear Side (R)	1	
15	1529 71 551	Glass, Rear Side (L)	1	
16	0585 70 521A	Weatherstrip (R)	1	
17	0585 71 521A	Weatherstrip (L)	1	
18	0866 70 801A-00	Plate (R), Scarf-Front	1	
19	0866 71 801A-00	Plate (L), Scarf-Front	1	
20	0866 70 802B-00	Plate (R), Scarf-Front	1	

WINDOW GLASS & MOULDING
(STATION WAGON)

No.	Part Number	Description	Q'ty	Remarks
21	0866 71 802B-00	Plate (L), Scarf-Front	1	©
22	99862 0425B	Screw, Scarf Plate	10	
23	99864 0414B	Screw, Scarf Plate	14	
	99952 0412B	Washer, Plain	12	
	99952 0516B	Washer, Plain	2	
24	0866 70 821B	Mould (R), Drip-Front	1	
25	0866 71 821B	Mould (L), Drip-Front	1	
26	0585 70 822B	Mould (R), Drip-Rear	1	
27	0585 71 822B	Mould (L), Drip-Rear	1	
28	0866 70 823A	Joint, Drip Mould	2	
29	0866 99 721	Mould, Step	2	
30	0305 70 861C	Clip	10	
31	99863 0512	Screw, Step Mould	10	
32	0866 70 852	Guard "A" (R), Stone	1	
33	0866 71 852	Guard "A" (L), Stone	1	
34	0866 70 853C	Guard "B" (R), Stone	1	
35	0866 71 853C	Guard "B" (L), Stone	1	
36	99863 0512	Screw, Stone Guard	4	
	99952 0500	Washer, Plain	4	
37	0870 70 875	Screw, Tapping-Stone Guard	2	

WINDOW GLASS & MOULDING
(STATION WAGON)

No.	Part Number	Description	Q'ty	Rem
38	0585 70 811C	Plate (Rr.), Scarf	1	
39	99864 0414B	Screw, Scarf Plate (Rr.)	2	
	99952 0412B	Washer, Plain	2	
40	0585 70 531	Mould, Upper (R)	1	
41	0585 71 531	Mould, Upper (L)	1	
42	0585 70 532	Mould, Lower (R)	1	
43	0585 71 532	Mould, Lower (L)	1	
44	0585 70 533	Mould (Frt.)	2	
45	0585 70 534	Mould (Rr.)	2	

REAR SIDE WINDOW (COUPE)

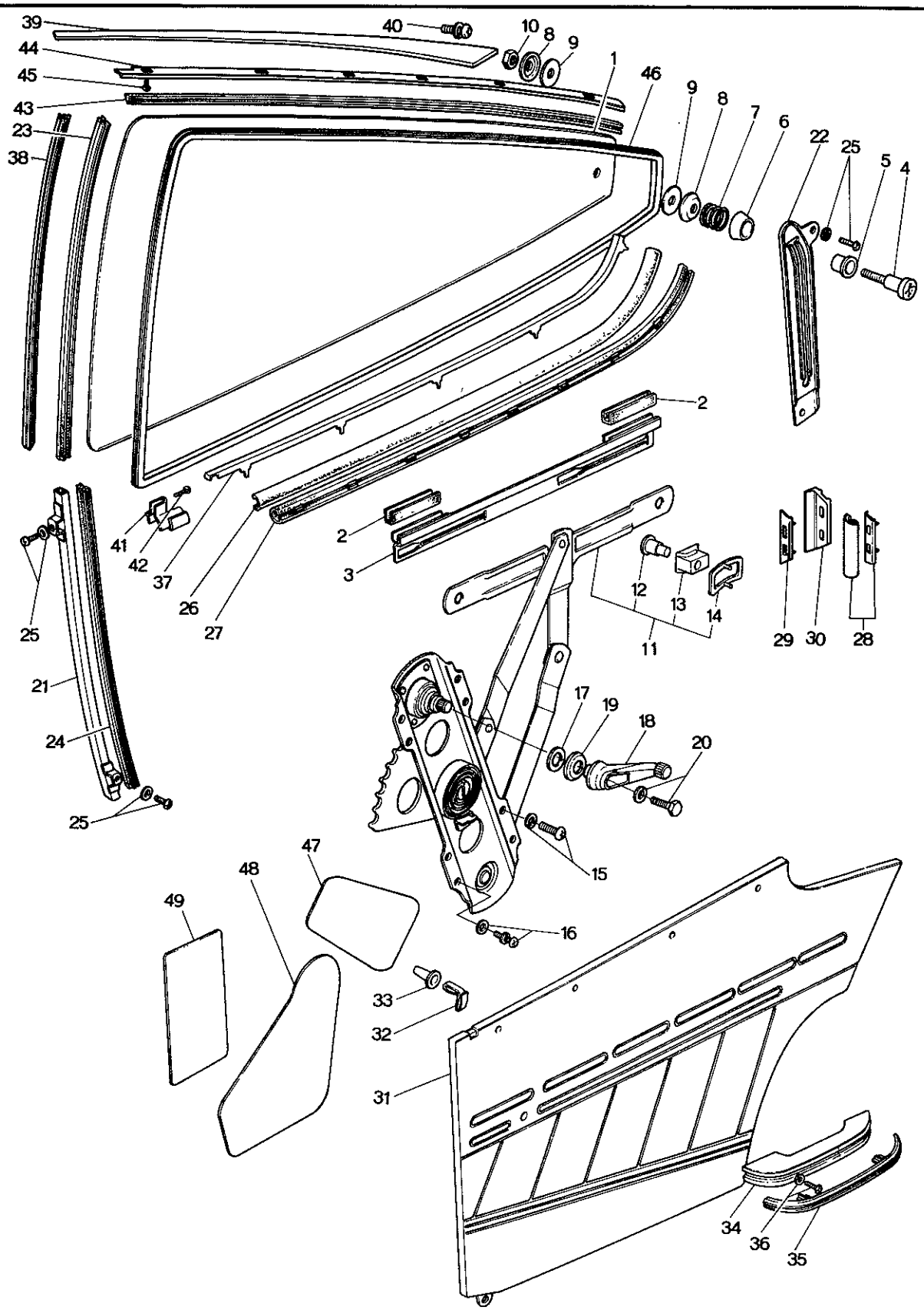

REAR SIDE WINDOW (COUPE)

No.	Part Number	Description		Q'ty	Rema
1	0374 72 501	Glass (R), Window	Transparent	1	
●	0374 72 501A	Glass (R), Window		1	
	0374 73 501	Glass (L), Window		1	
●	0374 73 501A	Glass (L), Window		1	
	0376 72 501	Glass (R), Window	Blue Pane	1	
●	0376 72 501A	Glass (R), Window		1	
	0376 73 501	Glass (L), Window		1	
●	0376 73 501A	Glass (L), Window		1	
2	2292 58 232	Strip, Rubber		4	
3	0376 72 505	Bracket, Lift		4	
4	0839 70 521	Pin		2	
5	0839 70 522	Roller		2	
6	0839 70 523A	Seat, Spring		2	
7	0839 70 524	Spring		2	
8	0839 70 525	Washer		4	
9	0839 70 526	Seat		4	
10	99906 0500	Nut		2	
11	0376 72 560	Regulator (R), Window		1	
	0376 73 560	Regulator (L), Window		1	

REAR SIDE WINDOW (COUPE)

No.	Part Number	Description	Q'ty	Remarks
12	0223 58 303A	Pin	4	
13	0223 58 304A	Guide	4	
14	0223 58 311	Spring, Guide	4	
15	99805 0616	Bolt, Regulator	4	
	99952 0600	Washer, Plain	4	
	99971 0600	Washer, Spring	4	
16	99806 0612	Bolt, Regulator	8	
	99971 0600	Washer, Spring	8	
	99951 0618	Washer, Plain	8	
17	~~0259 72 305~~	~~Gasket, Regulator~~	~~2~~	
	0259 58 305	Gasket, Regulator	2	From Car No. 1
●	0259 58 305B	Gasket, Regulator	2	Car No. 160623 73/10~△
18	0824 58 370A	Handle, Regulator	2	
	0824 58 370B	Handle, Regulator	2	Car No. 157510 73/10~△
●	0223 58 370D	Handle, Regulator	2	Car No. 160623 73/10~×
19	0223 58 375A	Escutcheon	2	
20	99806 0516	Bolt, Regulator Handle	2	
	99971 0500	Washer, Spring	2	
21	0376 72 602	Guide "A" (R), Glass	1	

REAR SIDE WINDOW (COUPE)

No.	Part Number	Description	Q'ty	Remar
	0376 73 602	Guide "A" (L), Glass	1	
22	0376 72 603	Guide "B" (R), Glass	1	
	0376 73 603	Guide "B" (L), Glass	1	
23	0376 72 605	Channel "A", Glass Run	2	
24	0376 72 606	Channel "B", Glass Run	2	
25	99806 0612	Bolt, Glass Guide	8	
	99971 0600	Washer, Spring	8	
	99951 0618	Washer, Plain	8	
26	0376 72 781C	Weatherstrip, Outer "A" (R)	1	
	~~0376 73 781C~~	~~Weatherstrip, Outer "A" (L)~~	~~1~~	
	0376 72 781C	Weatherstrip, Outer "A" (L)	1	From Car No.
27	0376 72 790	Weatherstrip, Inner "A" (R)	1	
	0376 73 790	Weatherstrip, Inner "A" (L)	1	
28	0376 72 890	Weatherstrip, Inner "B" (R)	1	Rear Pillar Trim
	0376 73 890	Weatherstrip, Inner "B" (L)	1	Rear Pillar Trim
29	0376 72 901C	Weatherstrip, Outer "B"	2	
30	0376 72 902B	Plate Set	2	

When ordering the following trims
Add color code nos. given below after parts number
-03 (BLK.) -12 (BRN.) -13 (GRY./YLW.)

REAR SIDE WINDOW (COUPE)

No.	Part Number	Description	Q'ty	Remarks	
31	0376 72 810A	Trim (R), Quarter	1		©
	0376 73 810A	Trim (L), Quarter	1		©
32	0208 58 921	Fastener, Quarter Trim	4		
33	0187 58 922	Cap, Fastener-Quarter Trim	4		
34	0398 58 821A	Rest, Arm	2		
35	0398 58 822	Garnish, Arm Rest	2		
	0398 58 822A	Garnish, Arm Rest	2	Car No. 130590 ′72~○	
36	99833 0520	Screw, Arm Rest	4		
	99952 0500	Washer, Plain	4		
37	0376 72 831A	Mould (R), Beltline	1		
	0376 72 831B	Mould (R), Beltline	1	Car No. 144578 ′74~△	
	0376 73 831A	Mould (L), Beltline	1		
	0376 73 831B	Mould (L), Beltline	1	Car No. 144578 ′74~△	
38	0376 72 851A	Garnish (R)	1		
	0376 72 851B	Garnish (R)	1	Car No. 130590 ′72~○	
	0376 73 851A	Garnish (L)	1		
	0376 73 851B	Garnish (L)	1	Car No. 130590 ′72~○	
39	0376 72 855	Mould (R), Quarter Line	1		
	0376 73 855	Mould (L), Quarter Line	1		
40	99863 0410	Screw, Quarter Line Mould	2		

REAR SIDE WINDOW (COUPE)

No.	Part Number	Description	Q'ty	Remar
	99971 0400	Washer, Spring	2	
	99952 0412	Washer, Plain	2	
41	0376 72 881	Cover (R)	1	
	0376 73 881	Cover (L)	1	
42	99864 0410B	Screw, Cover	2	
43	0376 72 761	Weatherstrip (R)	1	
	0376 73 761	Weatherstrip (L)	1	
44	0376 72 771	Retainer (R)	1	
	0376 73 771	Retainer (L)	1	
45	99864 0408	Screw, Weatherstrip	8	
46	0376 72 755A	Welt, Seaming	2	
47	0376 72 861A	Screen, Door "A"	2	
48	0376 72 862	Screen, Door "B" ~~(R)~~	2	
●	0376 72 862A	Screen, Door "B"	2	Car No. 176736
	~~0376 73 862~~	~~Screen, Door "B" (L)~~	~~1~~	
49	0376 72 863	Screen "C"	2	

REAR SIDE DOOR (GLASS)
(SEDAN & STATION WAGON)

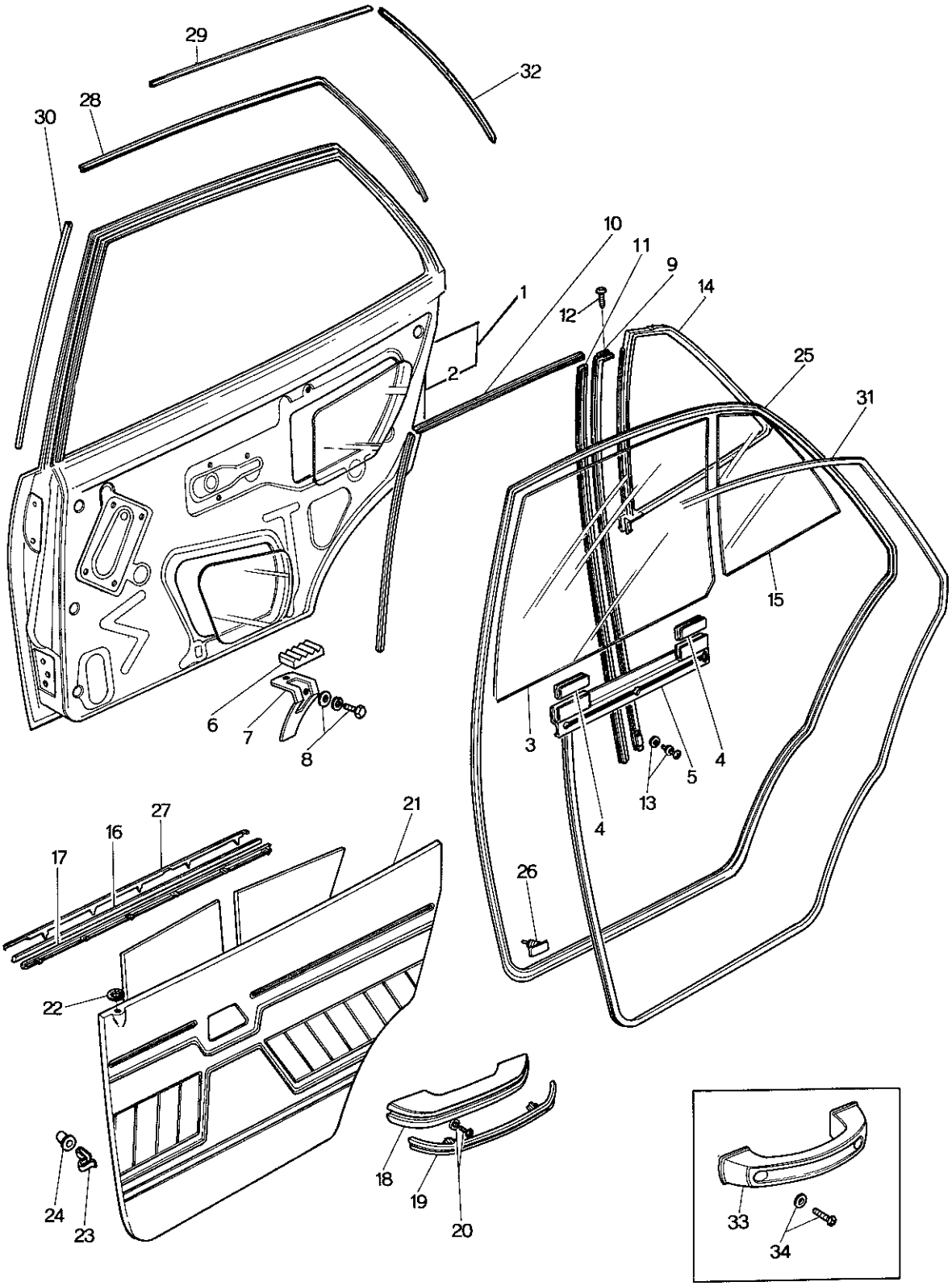

REAR SIDE DOOR (GLASS)
(SEDAN & STATION WAGON)

No.	Part Number	Description	Q'ty	Remar
1	0866 72 010B	Body (R), Door (Sedan)	1	
	0866 72 010C	Body (R), Door (Sedan)	1	Car No. 1443
	0866 72 010D	Body (R), Door (Sedan)	1	Car No. 1575
	0585 72 010B	Body (R), Door (Station Wagon)	1	
	0866 73 010B	Body (L), Door (Sedan)	1	
	0866 73 010C	Body (L), Door (Sedan)	1	Car No. 1443
	0866 73 010D	Body (L), Door (Sedan)	1	Car No. 1575
	0585 73 010B	Body (L), Door (Station Wagon)	1	
2	0866 72 020A	Panel (R), Outer	1	
	0866 73 020A	Panel (L), Outer	1	
3	0368 72 501	Glass (R), Door (Sedan)	1	
●	0368 72 501A	Glass (R), Door (Sedan)	1	
	0583 72 501	Glass (R), Door (Station Wagon)	1	Transparent
	0368 73 501	Glass (L), Door (Sedan)	1	
●	0368 73 501A	Glass (L), Door (Sedan)	1	
	0583 73 501	Glass (L), Door (Station Wagon)	1	
	0866 72 501	Glass (R), Door (Sedan)	1	
●	0866 72 501A	Glass (R), Door (Sedan)	1	Blue Pane
	0866 73 501	Glass (L), Door (Sedan)	1	
●	0866 73 501A	Glass (L), Door (Sedan)	1	

REAR SIDE DOOR (GLASS)
(SEDAN & STATION WAGON)

No.	Part Number	Description	Q'ty	Remarks
4	0866 72 502	Strip, Rubber - Door Glass	2	
5	0259 72 210	Bracket, Lift - Door Glass	2	
6	0187 56 235	Rubber, Support	2	
7	0259 72 080	Stop, Glass	2	
8	99806 0612	Bolt, Glass Stop	2	
	99971 0600	Washer, Spring	2	
	99952 0618	Washer, Plain	2	
●	99951 0618	Washer, Plain	2	73/10~○
9	0866 72 602A	Channel (R), Center (Sedan)	1	
	0585 72 602C	Channel (R), Center (Station Wagon)	1	
	0866 73 602A	Channel (L), Center (Sedan)	1	
	0585 73 602C	Channel (L), Center (Station Wagon)	1	
10	0866 72 605	Channel "A", Glass Run (Sedan)	2	
	0585 72 605	Channel "A", Glass Run (Station Wagon)	2	
11	0866 72 606	Channel "B", Glass Run (Sedan)	2	
	0585 72 606	Channel "B", Glass Run (Station Wagon)	2	
12	99831 0408	Screw, Center Channel	4	
●	99831 0410	Screw, Center Channel	4	Car No. 160623 73/10~△
13	99806 0608	Bolt, Glass Run Channel	2	
	99806 0610	Bolt, Glass Run Channel	2	Car No. 127396 73/12~○

REAR SIDE DOOR (GLASS)
(SEDAN & STATION WAGON)

No.	Part Number	Description	Q'ty	Remar
	99971 0600	Washer, Spring	2	
●	99796 0608	Bolt, Glass Run Channel	2	
	99952 0618	Washer, Plain	2	
14	0866 72 651A	Weatherstrip (Sedan)	2	
	0866 72 651B	Weatherstrip (Sedan)	2	Car No. 12976
	0585 72 651A	Weatherstrip (Station Wagon)	2	
15	1511 72 661A	Glass (R), Quarter Window (Sedan)	1	Transparent
	1511 73 661A	Glass (L), Quarter Window (Sedan)	1	Transparent
	1524 72 661B	Glass (R), Quarter Window (Sedan)	1	Transparent
●	1524 72 661C	Glass (R), Quarter Window (Sedan)	1	Transparent
	1529 72 661	Glass (R), Quarter Window (Station Wagon)	1	Transparent
	1524 73 661B	Glass (L), Quarter Window (Sedan)	1	Transparent
●	1524 73 661C	Glass (L), Quarter Window (Sedan)	1	Transparent
	1529 73 661	Glass (L), Quarter Window (Station Wagon)	1	Transparent
	1540 72 661A	Glass (R), Quarter Window (Sedan)	1	Blue Pane
●	1540 72 661B	Glass (R), Quarter Window (Sedan)	1	Blue Pane
	1540 73 661A	Glass (L), Quarter Window (Sedan)	1	Blue Pane
●	1540 73 661B	Glass (L), Quarter Window (Sedan)	1	Blue Pane
16	0866 72 781C	Weatherstrip, Outer	2	
17	0866 72 791	Weatherstrip, Inner	2	

REAR SIDE DOOR (GLASS)
(SEDAN & STATION WAGON)

No.	Part Number	Description		Q'ty	Remarks
18	0398 58 821A	Rest, Arm		2	
19	0398 58 822	Garnish, Arm Rest		2	
	0398 58 822A	Garnish, Arm Rest	(Sedan)	2	Car No. 130590 '71/12~○
20	99833 0520	Screw, Arm Rest		4	
	99952 0500	Washer, Plain		4	

When ordering the following trims,
Add color code nos. given below after parts number
-03 (BLK.) -12 (BRN.) -13 (GRY. / YLW.)

21	0866 72 810B	Trim (R), Door		1	©
	0866 73 810B	Trim (L), Door		1	©
22	0223 58 692A	Grommet		2	
23	0208 58 921	Fastener		12	
24	0187 58 922	Cap, Fastener		12	
25	0866 72 760	Weatherstrip (R)	(Sedan)	1	
	0866 72 760A	Weatherstrip (R)	(Sedan)	1	Car No. 139297 '72/2~○
	0585 72 760A	Weatherstrip (R)	(Station Wagon)	1	
	0866 73 760	Weatherstrip (L)	(Sedan)	1	
	0866 73 760A	Weatherstrip (L)	(Sedan)	1	Car No. 139297 '72/2~○

REAR SIDE DOOR (GLASS)
(SEDAN & STATION WAGON)

No.	Part Number	Description	Q'ty	Rema
	0585 73 760A	Weatherstrip (L) (Station Wagon)	1	
26	0305 58 762	Fastener, Weatherstrip	50	
27	0866 72 831A	Mould (R), Beltline	1	
	0866 72 831C	Mould (R), Beltline	1	Car No. 1273
	0866 72 831D	Mould (R), Beltline	1	Car No. 1443
	0866 73 831A	Mould (L), Beltline	1	
	0866 73 831C	Mould (L), Beltline	1	Car No. 1273
	0866 73 831D	Mould (L), Beltline	1	Car No. 1443
28	0866 72 841A	Mould (R), Sash } (Sedan)	1	
	0866 73 841A	Mould (L), Sash } (Sedan)	1	
29	0899 72 841B	Mould (R), Sash } (Station Wagon)	1	
	0899 73 841B	Mould (L), Sash } (Station Wagon)	1	
30	0866 72 842A	Mould (R), Sash	1	
	0866 59 842A	Mould (R), Sash	1	Car No. 1369
	0866 73 842A	Mould (L), Sash	1	
	0866 58 842A	Mould (L), Sash	1	Car No. 1369
31	0398 58 755 - 00	Welt, Seaming (Sedan)	2	
	0585 72 755 - 00	Welt, Seaming (R) } (Station Wagon)	1	
	0398 58 755 - 00	Welt, Seaming (L) } (Station Wagon)	1	

REAR SIDE DOOR (GLASS)
(SEDAN & STATION WAGON)

No.	Part Number	Description		Q'ty	Remarks
32	0899 72 843A	Mould (R), Sash		1	
	0839 73 843A	Mould (L), Sash		1	
33	0585 72 821	Handle, Pull	(Station Wagon)	2	
34	99833 0520	Screw, Pull Handle		4	
	99952 0500	Washer, Plain		4	

REAR SIDE DOOR (LOCK)
(SEDAN & STATION WAGON)

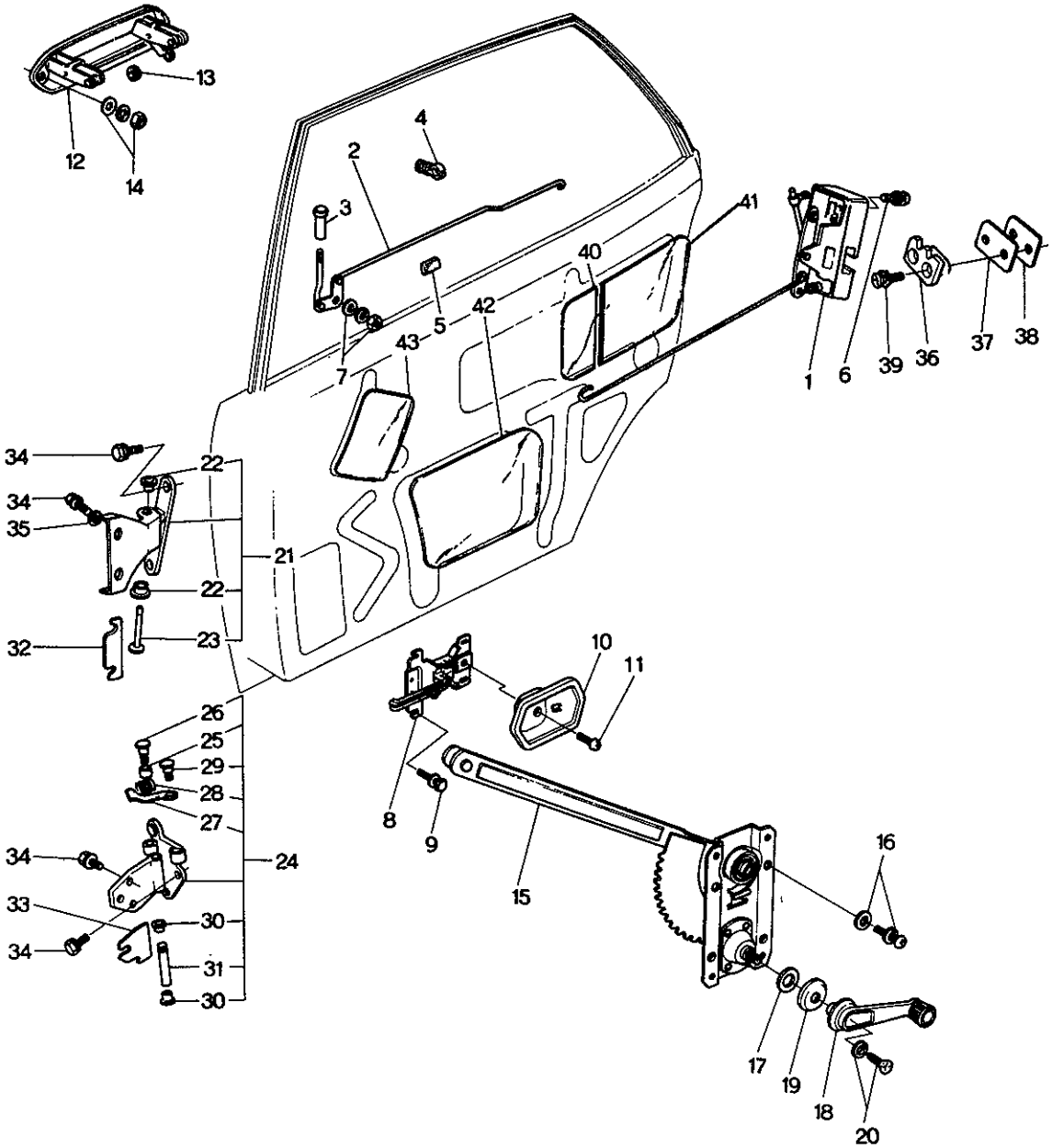

REAR SIDE DOOR (LOCK)
(SEDAN & STATION WAGON)

No.	Part Number	Description		Q'ty	Remar
● 1	~~0866 72 310B~~	~~Lock (R), Door~~		~~1~~	
●	~~0866 72 310E~~	~~Lock (R), Door~~		~~1~~	~~Car No. 1505~~
●	~~0866 73 310B~~	~~Lock (L), Door~~		~~1~~	
●	~~0866 73 310E~~	~~Lock (L), Door~~		~~1~~	~~Car No. 1505~~
	1524 72 310B	Lock (R), Door	Arctic Spec.	1	
	1524 72 310E	Lock (R), Door	Arctic Spec.	1	Car No. 15052
	1524 72 310G	Lock (R), Door	All Models	1	Car No. 15351
	1524 73 310B	Lock (L), Door	Arctic Spec.	1	
	1524 73 310E	Lock (L), Door	Arctic Spec.	1	Car No. 15052
	1524 73 310G	Lock (L), Door	All Models	1	Car No. 15351
2	0866 72 330A	Rod (R)		1	Order Under No. ~~0866~~ 1524
	0866 73 330A	Rod (L)		1	Order Under No. ~~0866~~ 1524
3	0259 58 691	Knob		2	
4	0305 58 309	Holder, Rod		4	
5	0259 72 509	Pad, Door Lock		2	
6	99833 0630	Screw, Door Lock		6	
	99974 0600	Washer, Toothed		6	
7	99907 0600	Nut, Door Lock		2	

REAR SIDE DOOR (LOCK)
(SEDAN & STATION WAGON)

	No.	Part Number	Description	Q'ty	Remarks
●		99940 0600	Nut, Door Lock	2	73/10~○
		99952 0600	Washer, Plain	2	
		99971 0600	Washer, Spring	2	
	8	0866 58 321B	Handle, Inner	2	
	9	99806 0510	Bolt, Inner Handle	6	
●		99796 0508	Bolt, Inner Handle	6	73/10~○
		99952 0500	Washer, Plain	6	
		99971 0500	Washer, Spring	6	
	10	0866 58 303B00	Cover (R)	1	©
		0866 59 303B00	Cover (L)	1	©
	11	99832 0408B	Screw, Cover	2	
	12	0866 72 410	Handle (R), Outer Side	1	
		0866 72 410A	Handle (R), Outer Side	1	Car No. 153515 73/9~○
		0866 73 410	Handle (L), Outer Side	1	
		0866 73 410A	Handle (L), Outer Side	1	Car No. 153515 73/9~○
	13	0305 58 411	Bush, Outer Handle	2	
●		0305 58 411A	Bush, Outer Handle	2	Car No. 153515 73/9~△
	14	99906 0500	Nut, Outer Side Handle	4	

REAR SIDE DOOR (LOCK)
(SEDAN & STATION WAGON)

No.	Part Number	Description	Q'ty	Remar
	99951 0618	Washer, Plain	4	
	99971 0500	Washer, Spring	4	
15	0866 72 560	Regulator (R), Window	1	
	0866 73 560	Regulator (L), Window	1	
16	99806 0612	Bolt, Window Regulator	8	
	99952 0600	Washer, Plain	8	
	99971 0600	Washer, Spring	8	
●	99796 0610	Bolt, Window Regulator	8	
17	0259 58 305	Gasket, Window Regulator	2	
	1011 58 552	Packing, Window Regulator	2	
18	~~0223 58 370C~~	~~Handle, Regulator (Std.)~~	~~2~~	
	0824 58 370A	Handle, Regulator ~~(Std. Excluded)~~	2	
	0824 58 370B	Handle, Regulator (Aluminum Cap)	2	Car No. 15751
●	0223 58 370D	Handle, Regulator	2	Car No. 16062
19	0223 58 375A	Escutcheon	2	
20	99806 0516	Bolt, Regulator Handle	2	
	99971 0500	Washer, Spring	2	
21	0866 72 210B	Hinge "A" (R)	1	
	0866 73 210B	Hinge "A" (L)	1	

REAR SIDE DOOR (LOCK)
(SEDAN & STATION WAGON)

No.	Part Number	Description	Q'ty	Remarks
22	0223 58 721	Bush	4	
23	0866 72 212A	Pin, Hinge	2	
24	0866 72 240	Hinge "B" (R)	1	
	0866 72 240B	Hinge "B" (R)	1	Car No. 159789 $^{72}/_{11}$~○
	0866 73 240	Hinge "B" (L)	1	
	0866 73 240B	Hinge "B" (L)	1	Car No. 159789 $^{72}/_{11}$~○
25	0866 58 281	Roller	2	
	0866 58 281A	Roller	2	Car No. 159789 $^{72}/_{11}$~○
	0866 58 281B	Roller	2	Car No. 160822 $^{72}/_{12}$~○
26	0866 58 282	Pin "A"	2	
	~~0865 58 282A~~	~~Pin "A"~~	~~2~~	~~Car No. 160822 $^{72}/_{12}$~○~~
●	0866 53 282A	Pin "A"	2	$^{72}/_{12}$~○
27	0866 58 291A	Lever, Check	2	
28	~~0866 58 282A~~	~~Spring, Check~~	~~2~~	
	~~0866 72 929~~	~~Spring, Check~~	~~2~~	~~From Car No. 1~~
●	0866 72 292	Spring, Check	2	From Car No. 1
29	0866 58 293	Pin "B"	2	
30	0223 58 721	Bush	4	
31	0187 58 731	Pin, Hinge	2	

REAR SIDE DOOR (LOCK)
(SEDAN & STATION WAGON)

No.	Part Number	Description	Q'ty	Remark
32	0866 72 201	Shim, Hinge "A" - Selective use	4	
33	0866 58 231	Shim, Hinge "B" - Selective use	4	
	1011 58 231	Shim, Hinge "B" - Selective use	4	Car No. 15281
34	99783 0828	Bolt, Hinge	20	
	99971 0800	Washer, Spring	20	
35	99951 0822	Washer, Plain - Hinge "A"	4	
36	0866 58 361	Rack (R)	1	
	1540 58 361	Rack (R)	1	Car No. 13434
	0866 58 361 B	Rack (R)	1	Car No. 15052
●	0866 58 361 C	Rack (R)	1	Car No. 17067
	0866 59 361	Rack (L)	1	
	1540 59 361	Rack (L)	1	Car No. 13434
	0866 59 361 B	Rack (L)	1	Car No. 15052
●	0866 59 361 C	Rack (L)	1	Car No. 17067
37	0866 58 363	Seat, Striker	2	Used up to Car No. 15052
38	0866 58 364 A	Plate, Base	2	
	0866 58 364 B	Plate, Base	2	Car No. 15052
39	99761 0640	Screw, Rack	4	
	1540 58 371	Screw, Rack	4	Car No. 13434
	99975 0600	Washer, Toothed	4	

REAR SIDE DOOR (LOCK)
(SEDAN & STATION WAGON)

No.	Part Number	Description	Q'ty	Remarks
40	0223 72 921 A	Screen "A"	2	
41	0866 72 862 A	Screen "B"	2	(Sedan)
	0866 72 862 A	Screen "B" (R)	1	(Station Wagon)
	0866 73 862 A	Screen "B" (L)	1	(Station Wagon)
42	0866 72 863	Screen "C"	2	(Sedan)
	0866 73 863	Screen "C" (R)	1	(Station Wagon)
	0866 73 863	Screen "C" (L)	1	(Station Wagon)
43	0305 72 864	Screen "D"	2	

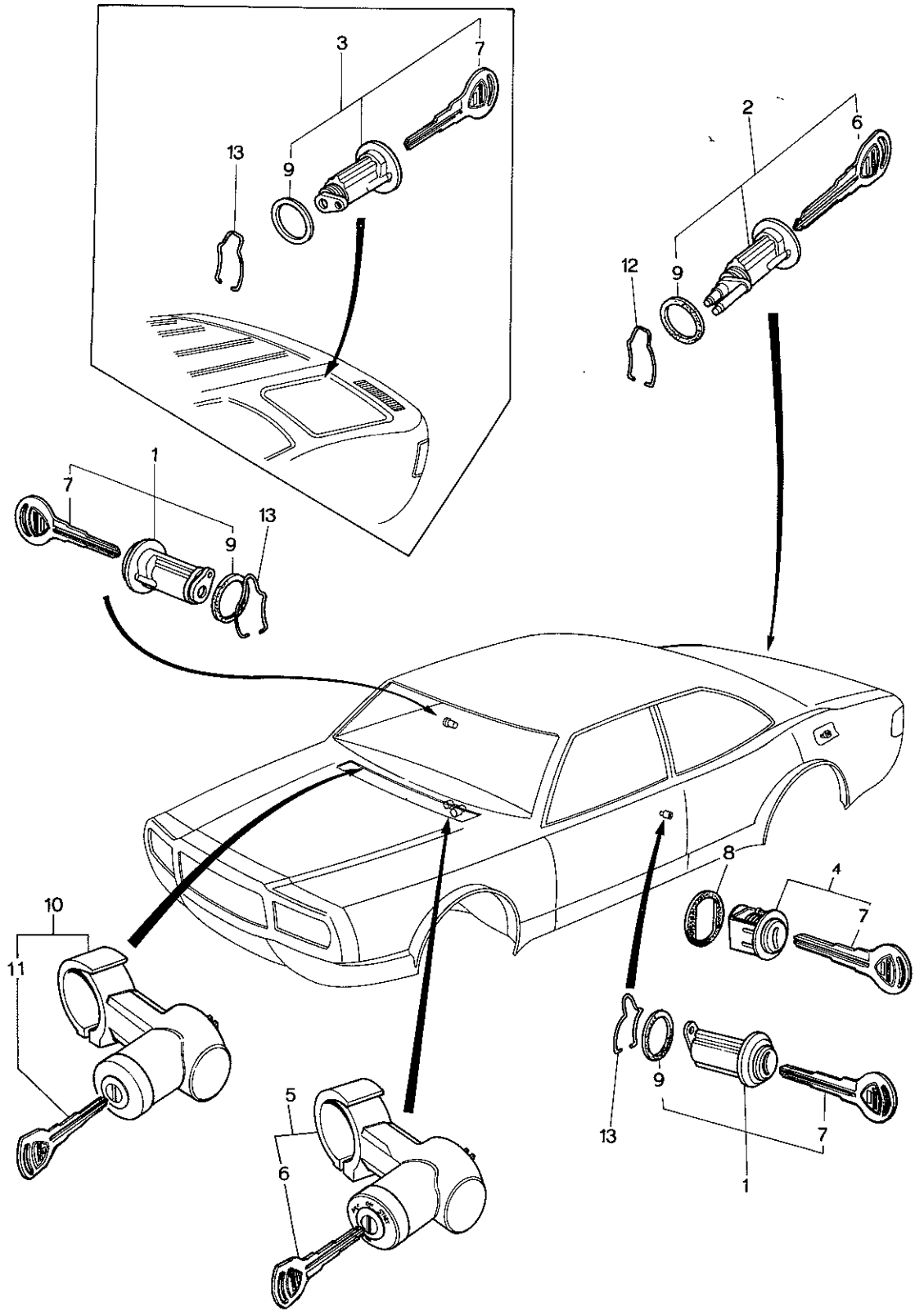
3
7
13
9
2
6
12
9
1
7
13
9
10
11
8
4
7
5
6
9
13
7
1

No.	Part Number	Description	Q'ty	Rem
	1554 09 010	Key Set, Steering Lock Included	1	
	1554 09 010A	Key Set, Steering Lock Included	1	Car No. 1273
	1562 09 010	Key Set	1	
	1562 09 010A	Key Set	1	Car No. 1273
	0866 09 010	Key Set (1555, 1556, 1557 Steering Lock Excluded)	1	
	0866 09 010A	Key Set (1555, 1556, 1557 Steering Lock Excluded)	1	Car No. 1273
	1568 09 010	Key Set (For France)	1	
	1568 09 010A	Key Set (For France)	1	Car No. 1273
●	1569 09 010	Key Set, Steering Lock Included (Station Wagon)	1	
1	0839 74 910	Key Sub Set, Door	1	
	0839 74 910A	Key Sub Set, Door	1	Car No. 1273
	2080 74 910	Key Sub Set, Door (For France)	1	
	2080 74 910A	Key Sub Set, Door (For France)	1	Car No. 1273
2	0866 75 930	Key Sub Set, Trunk Lid	1	
	1568 75 930	Key Sub Set, Trunk Lid (For France)	1	
● 3	0899 75 960	Key Sub Set, Back Door (Station Wagon)	1	
4	0866 75 940	Key Sub Set, Filler Lid	1	
	1568 75 940	Key Sub Set, Filler Lid (For France)	1	
5	1554 75 990	Key Sub Set, Steering Lock (For Australia & England)	1	
	0866 75 990	Key Sub Set, Steering Lock (R.H.D. General)	1	

No.	Part Number	Description	Q'ty	Remarks
6	0839 58 492A	Key, Primary	2	
	2080 58 492	Key, Primary (For France)	2	
7	0839 58 493A	Key, Secondary	1	
8	0621 42 455	Seat, Filler Lid Lock	1	
9	0223 58 962	Gasket, Door & Trunk Lid	3	

Steering lock switch P.B. 171.

10	2370 60 430A	Steering Lock (L.H.D.)	1	
11	2835 60 439	Key (L.H.D.)	2	
12	0305 52 802	Retainer, Trunk Lid	1	
13	0223 58 961	Fastener, Door	2	
	0839 74 158	Blank Key, Primary Key No. 2500~2999	—	
	0839 74 168	Blank Key, Primary Key No. 3000~3499	—	
	0839 74 159	Blank Key, Secondary Key No. 2500~2999	—	
	0839 74 169	Blank Key, Secondary Key No. 3000~3499	—	
	2080 74 158	Blank Key, Key No. 2500~2999 (For France)	—	
	2080 74 168	Blank Key, Key No. 3000~3499 (For France)	—	
	2280 75 641A	Blank Key, Steering Lock	—	

Parts Number	Fig. Page	Parts Composition List Page	Fig. No.
0014 17 411	42	43	12
0103 17 244A	38	39	10
0103 17 411	42	43	11
0106 40 861	116	117	21
0107 17 121	35	36	17
0107 18 201	45	48	50
0107 18 212	45	47	32
0107 18 216A	45	48	42
0107 18 221A	45	48	46
0107 18 224	45	48	44
0107 18 225	45	48	45
0107 18 226A	45	48	43
0107 18 231	45	48	37
0107 18 266	45	48	47
0107 18 406B	53	54	16
0107 18 417A	53	54	11
0107 18 424	50	51	6
	53	54	4
	57	58	3
0110 18 515	27	28	4
0110 41 470	133	134	5
0110 68 050A	232	233	3
0111 17 323	42	43	18
0111 17 354	65	67	42
0111 41 692	210	213	40
	220	221	7
0111 43 432	133	134	8
0111 43 433	133	134	9
0111 57 111	149	150	17
0114 17 351	42	43	9
0114 18 422A	53	54	5
0114 27 262	89	90	20
0114 42 046A	118	119	2
0114 43 625	210	213	36
0118 10 320	27	30	37
0118 15 114	27	28	10
0118 15 118	27	28	14
0118 15 121	27	28	9
0118 17 313	42	43	4
0118 17 316	42	43	8
0118 23 636	53	54	8
0118 23 637	53	54	7
0118 23 689	53	54	17
	57	59	27
0118 23 691	53	54	18
	57	59	29
0118 26 342	85	86	7
0118 26 672	85	87	23
0118 26 832	85	87	31
0118 26 834	85	87	32
0118 26 897	85	88	35
0118 41 342	133	134	20
0118 41 375	143	144	17
0118 41 681	125	126	10

Parts Number	Fig. Page
0118 41 681	127
0118 41 682	125
	127
0118 43 028A	129
0118 43 505	143
0118 56 241	165
0118 56 242B	162
	165
	200
0118 68 180A	232
0136 43 635	133
	143
0164 23 664	53
0180 17 353	35
0180 32 165A	95
	100
0180 32 171A	95
	100
0180 32 172A	95
	100
0180 32 173A	95
	100
0180 32 174A	95
	100
0183 17 346	35
0183 17 351	35
0183 17 491	42
0183 17 493	42
0183 34 731	110
0183 41 043	129
0183 41 081	129
0183 41 308	133
	140
0183 53 074	152
0183 66 021	204
0183 66 022	204
0187 17 232	38
0187 17 242	38
0187 17 243	38
0187 17 272	38
	38
0187 17 323	38
0187 17 333	35
0187 17 346B	65
0187 17 351A	65
0187 17 352	65
0187 17 404	42
0187 17 441A	42
0187 17 492	42
0187 24 566	50
0187 24 577A	50
0187 24 579A	50
0187 26 154	82
0187 26 341	85

INDEX. 0187 26 821 ~0223 58 311

0187 26 821	85	87	34
0187 26 921	85	87	34
0187 34 536	110	112	29
0187 34 776	92	94	27
0187 41 341	133	134	18
0187 42 371	118	119	15
0187 43 029	129	130	19
0187 46 683	129	130	11
0187 52 141	152	153	8
0187 56 235	256	257	6
0187 58 731	195	198	25
	195	198	33
	260	263	31
0187 58 922	190	193	20
	251	254	33
	256	258	24
0187 62 973	152	154	24
0187 68 110A	232	233	6
0187 69 049A	234	235	13
0191 41 331	133	134	17
0200 23 531	50	51	9
	53	54	22
0208 13 458	116	117	15
0208 24 523	50	51	14
0208 24 563A	50	51	20
0208 26 651	85	87	21
0208 26 671	85	87	22
02 8 32 059	95	97	31
	100	102	22
0208 32 188	95	98	48
	100	103	42
	104	106	21
0208 32 278	110	112	27
0208 56 615	165	168	39
0208 58 921	190	193	19
	251	254	32
	256	258	23
0208 66 949	210	213	42
0208 68 230	232	233	8
0208 76 071	242	244	25
0209 66 820	210	215	70
0209 66 821	210	215	71
0212 66 371	216	217	5
0212 66 372	216	217	6
0221 10 309	5	6	12
0221 14 117	1	3	32
0221 17 441	42	43	14
0221 17 473	42	44	23
0221 17 475A	42	44	26
0221 17 551A	42	44	36
0221 17 552	42	44	37
0221 27 141	89	90	7
0221 27 255	89	90	18
0221 27 305	89	91	24
0221 33 035	107	108	11
0221 33 698	107	108	8
0221 43 431	133	134	7
0221 43 694	133	135	28
0221 43 694	143	144	18
0221 44 033	140	141	4
0221 44 044	140	141	7
0222 13 363	27	31	62
	122	123	3
0222 13 470A	122	123	7
0222 13 481	122	123	8
0222 13 493	5	8	45
	122	123	13
0222 15 205	27	30	36
0222 15 255	27	30	41
0222 17 301B	38	40	29
0222 18 375	50	52	33
0222 18 376	50	52	33
0222 18 377	50	52	33
0222 18 391C	45	49	62
0222 24 517	53	54	21
0222 24 568	50	51	22
0222 24 714	53	54	3
0222 24 725	53	54	10
0222 24 741	53	54	20
0222 24 750	53	54	13
0222 24 752A	53	54	15
0222 24 753	53	54	14
0222 24 756	53	54	23
0222 24 760A	53	54	6
0222 66 511A	210	211	12
0223 25 024	80	81	6
0223 26 345A	85	86	8
0223 27 012	89	90	1
0223 27 018	89	90	2
0223 27 020B	89	90	3
0223 27 030	89	90	4
0223 27 401	89	91	25
0223 27 402	89	91	25
0223 27 403	89	91	25
0223 27 404	89	91	25
0223 27 405	89	91	25
0223 27 406	89	91	25
0223 27 407	89	91	25
0223 27 408	89	91	25
0223 27 409	89	91	25
0223 27 411	89	91	25
0223 27 412	89	91	25
0223 27 413	89	91	25
0223 27 414	89	91	25
0223 27 415	89	91	25
0223 41 131A	129	131	23
0223 46 683	129	131	24
0223 50 275	149	150	5
0223 52 007	165	167	36
0223 52 302	152	154	18
0223 58 303A	195	197	15
	251	252	12
0223 58 304A	195	197	16
	251	252	13
0223 58 311	195	197	17
	251	252	14

0223 58 370C	260	262	18
0223 58 375A	195	198	21
	251	253	19
	260	262	19
0223 58 445	234	237	49
0223 58 472	95	96	14
	100	101	3
0223 58 692A	190	193	18
	256	258	22
0223 58 721	195	198	24
	195	198	32
	260	262	22
	260	263	30
0223 58 939	190	194	27
0223 58 961	265	266	12
0223 58 962	265	266	8
0223 66 371	216	217	4
0223 69 102	234	236	25
0223 69 103	234	236	26
0223 69 105	234	236	26
0225 43 092	129	132	39
0233 49 656	136	138	25
0233 49 660	136	137	22
0233 49 665	136	137	21
0233 49 670	136	138	23
0233 66 790	129	132	41
0243 34 565	110	112	28
0243 56 231	53	55	40
	57	60	50
0243 66 773	118	120	31
0249 24 731	57	58	8
	57	58	22
	57	59	37
0249 41 671	125	126	6
	127	128	16
0249 68 060A	232	233	4
0257 61 051	200	202	25
0257 87 107	216	217	17
0257 87 108	216	217	15
0259 18 510	27	28	3
0259 25 021B	80	81	2
0259 25 060	80	81	3
0259 25 071A	80	81	4
0259 25 072A	80	81	4
0259 25 073A	80	81	4
0259 25 074A	80	81	4
0259 25 075A	80	81	4
0259 25 076A	80	81	4
0259 25 077A	80	81	4
0259 25 078A	80	81	4
0259 25 079A	80	81	4
0259 26 041	82	83	7
0259 26 051	82	83	8
0259 26 129	82	83	15
0259 26 132	82	83	18
0259 26 141	82	83	16
0259 26 142	82	83	16
0259 26 152	82	83	12

0259 26 155	82
0259 28 182	92
0259 32 071	95
	100
0259 32 154	95
	100
0259 32 155	95
	100
0259 32 156	95
	100
0259 32 157	95
	100
0259 32 160	95
	100
0259 32 163	95
	100
0259 32 182	95
	100
0259 32 289	95
	100
	104
0259 33 047	107
0259 33 071	107
0259 33 165	82
	107
0259 33 691	85
	133
0259 33 693	85
	133
0259 34 155	110
0259 34 156	110
0259 34 705	110
0259 34 708	110
0259 34 712	110
0259 34 719A	110
0259 34 767	110
0259 34 768	110
0259 34 769B	110
0259 39 340	114
0259 41 613	127
0259 41 619	127
0259 41 644	125
	127
	129
0259 42 022	146
0259 42 364	118
0259 42 390	118
0259 43 022	129
0259 43 028	129
0259 43 088	95
	100
	129
0259 43 140	129
0259 46 691	146
0259 52 257	152
0259 52 301	152
0259 53 455	159
	162

INDEX. 0259 55 261 ~0305 57 909

0259 55 261	176	177	10
	176	178	23
0259 55 556	95	98	38
	100	102	32
0259 55 951	169	175	93
0259 57 105	179	181	28
	184	187	34
0259 58 305	195	198	19
	260	262	17
0259 58 691	195	196	3
	260	261	3
0259 58 906	195	199	41
0259 61 405	200	202	24
0259 66 685	210	213	35
0259 68 250	179	181	30
	184	187	36
0259 69 311	239	240	2
0259 72 080	256	257	7
0259 72 210	256	257	5
0259 72 305	251	253	17
0259 72 509	195	196	5
	260	261	5
0259 87 101A	216	218	22
0259 87 103	216	218	26
0259 87 104A	216	218	27
0259 87 105	216	218	21
0259 87 106	216	218	23
0259 87 107	216	218	19
0259 87 108A	216	218	20
0259 87 109A	216	217	14
0259 87 119	216	218	28
0259 87 120	216	218	29
0259 87 134	216	217	12
0259 88 123	179	181	22
	184	187	28
0259 88 229	179	182	40
	184	188	48
0259 88 259	179	180	9
	184	185	13
0268 43 028	129	130	17
0271 17 478	42	44	27
0275 55 195	226	228	30
	234	237	44
0275 68 088	226	227	6
0275 75 140	176	178	24
0275 87 007	204	205	4
	204	206	13
0290 17 261B	38	39	19
0290 17 402	42	43	1
0290 24 501A	50	51	15
0290 24 505A	50	51	13
0290 24 510A	50	51	7
0290 24 511A	50	51	10
0290 24 513	50	51	24
0290 24 515	50	51	12
0290 24 517	50	51	5
0290 24 520A	50	51	16
0290 24 521A	50	52	28
0290 24 524	50	51	11
0290 24 541A	50	51	25
0290 24 542A	50	51	26
0290 24 556	50	52	27
0290 24 563	50	51	19
0290 24 581	50	52	29
0290 27 231	89	90	13
0290 27 252	89	90	17
0290 27 253	89	90	17
0290 27 254	89	90	17
0290 27 301	89	90	21
0290 27 302	89	90	22
0290 41 710	127	128	2
0302 44 132	140	142	24
0303 17 470	42	43	21
0303 17 474	42	44	25
0303 17 481	42	44	29
0303 17 482	42	44	30
0303 17 561	42	44	39
0303 44 032	140	141	3
0303 44 053	140	141	11
0305 17 341	72	74	32
0305 17 345	65	67	36
0305 26 255	85	86	2
0305 26 465	85	86	13
0305 26 500	85	86	10
0305 26 800A	85	87	30
0305 26 810A	85	87	30
0305 27 171	89	90	11
0305 27 261	89	90	19
0305 32 119	95	98	46
	100	103	40
	104	106	22
0305 32 365	104	105	7
0305 34 701A	110	113	37
0305 34 707	110	113	39
0305 34 709	110	113	52
0305 34 713	110	113	42
0305 34 714	110	113	43
0305 34 720	110	113	52
0305 40 061	116	117	3
0305 41 440	133	134	2
0305 41 451	133	134	3
0305 41 461	133	134	4
0305 41 641	127	128	7
0305 43 140	129	131	27
0305 43 635	143	144	8
0305 44 471	140	142	22
0305 50 231	149	151	36
0305 52 312B	152	153	6
0305 52 313	152	153	5
0305 52 322A	152	153	7
0305 52 330A	152	153	9
0305 52 331	152	153	10
0305 52 628	152	155	33
0305 52 802	265	266	11
0305 53 999	247	248	6
0305 57 909	179	183	46

0305 57 909	184	189	54
0305 58 309	195	196	4
	260	261	4
0305 58 411	260	262	13
0305 58 505	190	191	5
0305 58 762	190	193	22
	256	258	26
0305 59 505	190	191	5
0305 60 053	169	173	54
0305 60 715	169	175	92
0305 66 580	226	231	65
0305 67 330A	216	217	2
0305 67 993A	210	214	52
	222	224	17
0305 68 800C	232	233	10
0305 68 810A	232	233	11
0305 69 170 ✓	234	236 ✓	31
0305 69 171	234	236	32
0305 69 180	234	236	33
0305 70 395B	245	246	16
0305 70 443B ✓	247	248 ✓	2
0305 70 445B	247	248	3
0305 70 448A	247	248	5
0305 70 449B	247	248	4
0305 70 861B	247	250	37
0305 72 864	260	264	43
0305 87 032 ✓	207	209 ✓	13
0305 87 065	226	231	66
0305 87 906	216	217	7
0305 87 993	220	221	3
0305 99 431	133	134	—
0308 46 030	146	147	5
0308 46 054	146	147	9
0308 46 056	146	147	11
0308 46 057	146	147	12
0308 46 083	146	147	18
0316 66 865A	222	225	26
0317 17 225	38	39	14
0317 17 335	35	37	22
	65	66	22
0317 26 121	82	83	13
0317 26 151A	82	83	10
0317 32 129	95	98	45
	100	103	39
0317 33 043	107	108	5
0317 33 049	107	108	3
0317 33 075	107	108	6
0317 33 673	85	87	24
0317 43 421	133	134	6
0317 43 428	133	134	10
0317 43 551	133	134	12
0317 57 015	179	183	42
	184	189	50
0317 60 252	169	174	72
0317 60 253	169	174	73
0317 60 254	169	174	74
0317 60 255	169	174	75
0317 60 256	169	174	76

0317 60 257	169
0317 60 258	169
0317 60 259	169
0317 60 261	169
0317 60 262	169
0317 60 266	169
0317 66 862	222
0317 67 480	220
0317 70 269	226
0317 70 307	245
0324 10 250	5
0324 10 252	5
0329 17 520	42
0329 32 013A	95
	100
0329 32 014	95
0329 32 015	95
	100
0329 32 016	95
	100
0329 32 019	95
	100
0329 32 031A	95
	100
0329 32 033	95
	100
0329 32 034	95
	100
0338 10 667	72
0338 19 100A	61
0338 19 215	61
0338 19 216	61
0338 19 220	61
0338 19 223	61
0338 19 230	61
0338 19 234	61
0338 19 235	61
0338 19 236	61
0338 19 237	61
0338 19 238	61
0338 19 239	61
0338 19 240	61
0338 19 245	61
	75
0338 19 255	61
0338 19 256	61
0338 19 257	61
0338 19 258	61
0338 19 310	65
0338 19 331	65
0338 19 335	65
0338 19 336	65
0338 19 337	65
0338 19 338	65
0338 19 360	68
0338 19 361	65
0338 19 363	65
0338 19 381A	65

INDEX. 0338 19 384～0338 19 664

0338 19 384	65	66	12
0338 19 385A	65	66	13
0338 19 386	65	66	14
0338 19 388	65	66	15
0338 19 389	65	66	16
0338 19 391A	65	66	17
0338 19 393	65	66	18
0338 19 395	65	66	18
	65	66	19
0338 19 397	65	66	20
	72	74	23
0338 19 431	75	76	1
0338 19 432	75	76	2
0338 19 433	75	76	8
0338 19 440	75	76	9
0338 19 443	75	76	10
0338 19 444	75	76	5
0338 19 445	75	76	3
0338 19 446	75	76	4
0338 19 448	75	76	11
0338 19 449	75	76	12
0338 19 450	75	76	13
0338 19 460	68	69	2
0338 19 470	68	69	3
0338 19 475	68	69	4
	68	69	17
0338 19 476	68	69	5
	68	70	18
0338 19 480	68	69	6
	68	70	19
0338 19 486	68	69	8
	68	70	21
0338 19 487	68	69	9
	68	70	22
0338 19 488	68	69	10
	68	70	23
0338 19 493	68	69	7
	68	70	20
0338 19 498	68	69	11
	68	70	24
0338 19 499	68	69	12
	68	70	25
0338 19 500	68	69	13
	68	70	26
0338 19 503	68	69	14
0338 19 504	68	69	14
0338 19 505	68	69	14
0338 19 506	68	69	14
0338 19 507	68	69	14
0338 19 508	68	69	14
0338 19 509	68	69	15
	68	70	27
0338 19 510	68	69	16
0338 19 511	68	70	28
0338 19 515	68	70	29
0338 19 530	68	70	30
0338 19 531	68	70	31
0338 19 533	68	70	32

0338 19 534	68	70	33
0338 19 540	68	70	34
0338 19 550	68	70	35
0338 19 560	68	70	36
0338 19 565	68	70	37
0338 19 566	68	71	38
0338 19 567	68	71	39
0338 19 570	68	71	40
0338 19 580	72	73	1
0338 19 581	72	73	2
0338 19 590	72	73	3
0338 19 591	72	73	4
0338 19 593	72	73	5
0338 19 594	72	73	6
0338 19 595	72	73	7
0338 19 596	72	73	8
0338 19 598	68	71	41
0338 19 601	72	73	9
0338 19 603	72	73	10
0338 19 604	72	73	11
0338 19 605	72	73	12
	72	73	12
0338 19 606	72	73	13
0338 19 607	72	73	14
0338 19 608	72	73	15
0338 19 609	72	73	16
0338 19 610	72	73	17
0338 19 613A	72	73	18
0338 19 614A	72	73	18
0338 19 615A	72	73	18
0338 19 616A	72	73	18
0338 19 617A	72	73	18
0338 19 618A	72	74	18
0338 19 621	68	71	42
0338 19 622	68	71	43
	72	74	19
0338 19 623	68	71	44
0338 19 631	68	71	45
0338 19 632	68	71	45
0338 19 633	68	71	45
0338 19 634	68	71	45
0338 19 635	68	71	45
0338 19 636	68	71	45
0338 19 638	68	71	46
0338 19 639	68	71	47
0338 19 641	68	71	48
0338 19 642	68	71	48
0338 19 643	68	71	48
0338 19 644	68	71	48
0338 19 645	68	71	48
0338 19 646	68	71	48
0338 19 647	68	71	48
0338 19 651	72	74	21
0338 19 655	72	74	22
0338 19 656	72	74	23
0338 19 661	72	74	25
0338 19 663	72	74	26
0338 19 664	72	74	27

0338 19 670A	72	74	30
0338 19 676	72	74	31
0338 19 678	61	63	23
0338 19 701	75	76	15
0338 19 702	75	76	16
0338 19 703	75	76	17
0338 19 704	75	76	18
0338 19 706	75	76	19
0338 19 710A	65	66	21
0338 19 731	75	76	20
0338 19 732	75	76	21
0338 19 733	75	76	22
0338 19 734	75	76	23
0338 19 735	65	67	23
0338 19 737	65	67	24
0338 19 739	65	67	24
0338 19 760	77	78	1
0338 19 768	77	78	3
0338 19 771	77	78	4
0338 19 772	77	78	5
0338 19 773	77	78	6
0338 19 777	77	78	9
0338 19 778	77	78	10
0338 19 781	77	78	11
0338 19 782	77	78	12
0338 19 783	77	78	13
0338 19 784	77	78	14
0338 19 785	77	78	15
0338 19 786	77	78	16
0338 19 787	77	78	17
0338 19 788	77	78	18
0338 19 789	77	78	19
0338 19 791	77	78	20
0338 19 792	77	78	21
0338 19 793	77	78	22
0338 19 795	77	78	23
0338 19 797	77	78	24
0338 19 798	77	78	25
0338 19 801	77	79	26
0338 19 802	77	79	27
0338 19 803	77	79	28
0338 19 805	77	79	29
0338 19 807	77	79	30
0338 19 808	77	79	31
0338 19 811	77	79	32
0338 19 815	77	79	33
0338 19 816	77	79	34
0338 19 817	77	79	35
0338 19 818	77	79	36
0338 19 819	77	79	37
0338 19 821	65	67	25
0338 19 822	65	67	26
0338 19 823	65	67	27
0338 19 825	65	67	28
0338 19 826	65	67	28
0338 19 827	65	67	28
0338 19 828	65	67	28
0338 19 829	65	67	28

0338 19 831	77
0338 19 832	77
0338 19 833	77
0338 19 835	65
0338 19 836	65
0338 19 837	65
0338 19 880	65
0338 19 904	61
0366 53 451	162
0366 53 600	162
0366 54 451	162
0366 54 600	162
0366 61 070	200
0368 57 120	179
0368 57 170	179
0368 58 303	195
0368 58 501	190
0368 59 303	195
0368 59 501	190
0368 69 055A	234
0368 70 441	247
0368 72 501	256
0368 73 501	256
0368 88 010	179
0368 88 100	179
0368 88 200	179
0368 88 280	179
0370 32 030	95
0370 32 037	95
0370 32 039	95
0370 32 080	95
	100
0370 32 130	95
0370 32 412	95
	100
0370 32 820	95
0370 32 980	95
0370 41 619	125
0370 52 110	152
0370 53 410	162
0370 55 331A	169
0370 57 100A	184
0370 57 110A	184
0370 57 120	184
0370 57 150A	184
0370 57 160A	184
0370 57 170	184
0370 57 200A	184
0370 57 250	184
0370 60 071	169
0370 60 073A	169
0370 66 930B	222
0370 68 920	226
0370 70 431D	234
0370 70 441	247
0370 70 980	53
	57
0370 70 985A	53

0370 70 985A	57	60	46
0370 71 431D	234	238	58
0370 75 010	176	177	2
0370 75 011	176	177	4
0370 75 013	176	177	5
0370 75 018	176	177	12
0370 88 010	184	185	14
0370 88 100	184	186	23
0370 88 200	184	186	15
0370 88 250	179	182	38
0370 88 280	184	186	24
0370 88 370	184	188	44
0370 88 420	179	182	41
	184	188	49
0374 58 501	190	191	4
0374 59 501	190	191	4
0374 69 055	234	235	4
0374 70 441	247	248	1
0374 70 471	247	249	13
0374 72 501	251	252	1
0374 73 501	251	252	1
0375 57 200	179	182	34
0375 70 471	247	249	13
0375 88 370	179	182	37
0376 17 640	42	44	38
0376 28 010	92	93	1
0376 28 011	92	93	1
0376 28 012	92	93	1
0376 28 013	92	93	1
0376 28 014	92	93	1
0376 32 110A	95	97	—
0376 42 410	118	120	21
0376 52 510	152	154	25
0376 52 901	152	155	39
0376 53 330	159	160	3
0376 53 340	159	160	5
0376 53 350B	159	160	7
0376 53 391	159	160	9
0376 53 410	159	160	11
0376 53 430	159	160	13
0376 53 500A	159	160	17
0376 53 591	159	160	19
0376 53 600C	159	160	21
0376 53 810B	159	161	23
0376 53 901	159	161	27
0376 53 920	159	161	28
0376 53 941	159	161	29
0376 53 950	159	161	30
0376 53 991	159	161	31
0376 54 330	159	160	4
0376 54 340	159	160	6
0376 54 350C	159	160	8
0376 54 391	159	160	10
0376 54 410	159	160	12
0376 54 430	159	160	14
0376 54 500A	159	160	18
0376 54 591	159	160	20
0376 54 600B	159	160	22
0376 56 080A	165	166	4
0376 56 381	165	167	22
0376 56 580A	165	166	5
0376 56 881	165	167	23
0376 57 180	179	181	25
0376 57 200	179	182	35
0376 58 010B	190	191	1
0376 58 310	195	196	1
0376 58 330	195	196	2
0376 58 501	190	191	4
0376 58 604	190	191	7
0376 58 605	190	192	8
0376 58 755	190	193	26
0376 58 760A	190	193	21
0376 58 781A	190	192	12
0376 58 791	190	192	13
0376 58 810C	190	193	17
0376 58 831	190	193	23
0376 59 010B	190	191	1
0376 59 020A	190	191	2
0376 59 310	195	196	1
0376 59 330	195	196	2
0376 59 501	190	191	4
0376 59 604	190	192	7
0376 59 760A	190	193	21
0376 59 781A	190	192	12
0376 59 791	190	192	13
0376 59 810B	190	193	17
0376 59 831	190	193	23
0376 68 890A	226	230	50
0376 68 900	226	230	51
0376 68 910	226	230	52
0376 68 940	226	230	53
0376 68 950	226	230	54
0376 69 061A	234	235	7
0376 69 065A	234	235	7
0376 69 110A	234	235	17
0376 69 111	234	236	19
0376 69 112	234	236	21
0376 69 114	234	236	24
0376 69 130A	234	235	17
0376 69 131	234	236	19
0376 69 290	239	240	1
0376 69 314	239	240	4
0376 69 318	239	240	5
0376 69 321	239	240	6
0376 69 341	239	240	7
0376 69 342	239	240	8
0376 69 343	239	240	9
0376 69 411	239	240	14
0376 69 431	239	240	15
0376 69 462	239	241	17
0376 69 482	239	241	19
0376 69 511	239	241	21
0376 69 521	239	241	23
0376 69 870	239	241	29
0376 69 941	234	237	41
0376 70 421	234	237	50

0376 70 422	234 237	51
0376 70 426	234 238	53
0376 70 427	234 238	54
0376 70 428	234 238	55
0376 70 431A	234 238	61
0376 70 441	247 248	1
0376 70 451	247 248	7
0376 70 453	247 248	10
0376 70 471	247 249	13
0376 70 481	247 249	15
0376 70 482	247 249	16
0376 70 483	247 249	17
0376 70 484	247 249	19
0376 70 801	247 250	27
0376 70 802	247 250	29
0376 70 821	247 250	31
0376 70 822	247 250	33
0376 70 855	247 250	44
0376 70 891	234 238	63
0376 70 892A	234 238	64
0376 71 421	234 237	50
0376 71 422	234 237	51
0376 71 431A	234 238	61
0376 71 453	247 248	11
0376 71 483	247 249	18
0376 71 484	247 249	20
0376 71 801	247 250	28
0376 71 802	247 250	30
0376 71 821	247 250	32
0376 71 822	247 250	34
0376 71 855	247 250	45
0376 71 891	234 238	63
0376 71 892A	234 238	64
0376 72 501	251 252	1
0376 72 505	251 252	3
0376 72 560	251 252	11
0376 72 602	251 253	21
0376 72 603	251 253	22
0376 72 605	251 253	23
0376 72 606	251 253	24
0376 72 755	251 254	46
0376 72 761	251 254	43
0376 72 771	251 254	44
0376 72 781A	251 253	26
0376 72 790	251 253	27
0376 72 810A	251 254	31
0376 72 831	251 254	37
0376 72 851A	251 254	38
0376 72 855	251 254	39
0376 72 861A	251 255	47
0376 72 862	251 255	48
0376 72 863	251 255	49
0376 72 881	251 254	41
0376 72 890	251 253	28
0376 72 900B	251 253	29
0376 72 902B	251 253	30
0376 73 501	251 252	1
0376 73 560	251 252	11

0376 73 602	251	
0376 73 603	251	
0376 73 761	251	
0376 73 771	251	
0376 73 781A	251	
0376 73 790	251	
0376 73 801A	251	
0376 73 831	251	
0376 73 851A	251	
0376 73 855	251	
0376 73 862	251	
0376 73 881	251	
0376 73 890	251	
0376 88 370	179	
0378 19 344	65	
0378 41 610	125	
0378 43 030	129	
0378 46 150	146	
0378 53 100A	156	
0378 67 131	226	
0378 68 890	226	
0378 68 900	226	
0378 69 066	234	
0378 69 611	242	
0378 69 612A	242	
0378 69 613A	242	
0378 69 683	242	
0380 53 451	159	
0380 54 451	159	
0390 66 410	210	
0397 19 750	77	
0397 19 774	77	
0397 19 775	77	
0398 17 461A	42	
0398 17 462A	42	
0398 33 065A	107	
0398 58 755	190	
	256	
0398 58 821A	190	
	251	
	256	
0398 58 822	190	
	251	
	256	
0398 66 412	210	
0398 66 413	210	
0500 16 104	32	
0504 18 520A	53	
0559 41 710A	125	
0559 67 151A	210	
	222	
0585 69 611	242	
0585 69 612	242	
0585 69 613	242	
0585 69 616A	242	
0585 69 617	242	
0585 69 618	242	
0600 17 324	38	

INDEX. 0603 16 102B～0820 10 605

0603 16 102B	32	33	4
0603 16 103	32	33	2
0603 17 104	35	36	3
0603 17 105	35	36	15
0603 17 131	35	36	18
0603 17 210	38	39	4
0603 17 230A	38	39	15
0603 17 262	38	39	8
0603 17 302	38	40	30
0603 17 303	38	40	32
0603 17 305	38	40	33
0603 17 310	38	40	35
0603 17 312	38	40	36
0603 17 321	38	41	37
0603 17 361	35	37	31
0603 34 153	92	94	26
0603 41 322B	133	135	22
0604 46 684	146	148	24
0613 26 610A	85	87	18
0613 26 922	85	87	19
0613 33 681	85	87	25
0613 41 308	129	130	20
0613 43 820A	143	144	10
0621 42 455	265	266	7
0636 24 562A	50	51	23
0636 24 568B	50	51	8
0652 28 161	92	93	8
0662 33 042	107	108	4
0702 78 200B	179	183	45
	184	189	53
0702 87 135	216	218	31
0702 87 138	216	218	33
0710 26 352	85	86	11
0710 26 461	85	86	12
0710 33 288	85	88	36
0710 55 436	176	177	11
0727 24 712	57	59	33
0727 41 023	129	131	25
0727 41 442	133	134	11
0727 43 552	133	134	13
	136	138	35
0727 66 991A	222	225	27
0727 66 992	222	225	28
0727 72 943	190	192	11
0727 87 014	204	205	5
	204	206	14
0727 87 016	204	205	6
	204	206	15
0727 87 992	220	221	2
0727 87 994	220	221	4
0727 87 995	220	221	5
0727 87 996	220	221	6
0730 23 837	24	25	5
0730 23 839	24	25	7
0730 23 842	24	25	9
0730 23 843	24	25	10
0730 23 845	24	25	12
0730 23 846	24	25	13
0730 23 854	24	25	19
0730 24 732	53	54	12
0730 32 279	95	99	50
	100	103	44
	104	105	4
0730 69 057A	234	235	12
0738 87 803	216	218	30
0738 87 804	216	218	32
0755 27 141	89	90	6
0810 10 171	1	2	6
	5	6	7
0810 11 403	9	11	27
0810 11 404	9	11	28
0810 11 711	9	12	52
0810 14 113	21	22	5
0810 14 171	21	22	17
0810 14 611	24	26	27
0810 15 119	27	28	15
0810 18 276	21	23	31
0810 18 277	21	23	31
0810 56 639	165	168	40
0810 56 863A	53	55	34
	57	59	44
0810 68 070	232	233	5
0813 10 111	1	2	5
	5	6	6
0813 10 173	1	2	8
	5	6	9
0813 10 174	1	2	9
0813 10 555	9	11	24
0813 11 405	9	11	29
0813 11 505B	9	11	35
0813 11 541	9	12	42
0813 14 623	21	23	29
0813 14 641	21	23	34
0813 14 716	27	31	60
0813 15 111	27	28	7
0813 15 117	27	28	13
0813 15 173	27	29	22
0813 16 112	32	33	6
0813 18 288	45	49	56
0813 23 803	21	23	23
0813 24 303	45	47	28
0813 24 306	45	48	38
0813 24 309	45	48	36
0813 24 312	45	47	31
0813 24 316	45	48	33
0813 24 717	53	54	9
0813 44 031	140	141	2
0813 44 034	140	141	5
0813 44 035	140	141	6
0813 66 879	220	221	8
0820 10 203	5	6	11
0820 10 305	5	7	23
0820 10 502B	9	11	21
0820 10 550B	9	11	20
0820 10 556A	9	11	23
0820 10 605	1	3	27

0820 10 631A	1	3	26
0820 10 711	5	8	36
0820 10 721	5	8	37
0820 10 722	5	8	38
0820 10 723	5	8	39
0820 11 105	45	49	52
0820 11 111F	9	10	3
0820 11 301C	9	10	5
0820 11 304A	9	10	6
0820 11 317	9	10	11
0820 11 321C	9	10	12
0820 11 341	9	10	15
0820 11 343	9	10	16
0820 11 400G	9	11	26
0820 11 503	9	11	33
0820 11 507	9	12	37
0820 11 512A	9	12	39
0820 11 542	9	12	43
0820 11 611B	9	12	46
0820 11 703	9	12	50
	9	13	55
0820 11 705	9	12	51
0820 11 712	9	12	53
0820 13 201A	19	20	2
0820 14 118C	21	22	7
	21	22	7
0820 14 250C	21	23	26
0820 14 620	21	23	27
0820 14 625	21	23	28
0820 14 643	21	23	35
0820 14 647	21	23	36
0820 15 106	27	29	25
0820 15 112	27	28	8
0820 15 115	27	28	11
0820 15 120	27	28	16
0820 15 151	27	29	27
0820 15 152	27	28	17
0820 15 312	27	30	38
0820 15 330	200	202	20
0820 16 230	32	33	13
0820 16 510	32	33	11
0820 16 515	32	33	12
0820 17 241B	38	39	6
0820 17 341	38	41	39
0820 17 345	35	37	25
0820 18 111B	45	46	12
0820 18 114	45	47	18
0820 18 270E	45	49	51
0820 18 271D	45	49	53
0820 18 273A	45	49	55
0820 18 279A	45	49	58
0820 18 381	50	52	30
0820 18 520A	53	55	33
	57	59	43
0820 23 103A	9	10	1
0820 23 113A	9	10	2
0820 23 175A	9	10	12
0820 23 176A	9	10	12
0820 23 180	9		
0820 23 221	19		
0820 23 222	19		
0820 23 436	19		
0820 23 832B	24		
0820 23 833B	24		
0820 23 834B	24		
0820 23 835A	24		
0820 23 836	24		
0820 23 840	24		
0820 23 842	24		
0820 23 843	24		
0820 23 845A	24		
0820 23 847A	24		
0820 23 848A	24		
0820 23 882A	21		
0820 24 301	45		
0820 24 312	45		
0820 24 315	45		
0820 24 319	45		
0820 24 322	45		
0820 24 405	45		
0820 24 511	50		
0820 24 519	50		
0820 24 712	57		
0820 24 713	57		
0820 24 714	57		
0820 24 717	57		
0820 24 741	57		
0820 24 747	57		
0820 24 748	57		
0820 24 754	57		
0820 24 755	57		
0820 26 570A	85		
0820 27 251	89		
0820 33 091A	107		
0820 33 165	82		
	107		
0820 33 180A	85		
	107		
0820 33 192A	85		
	107		
0820 40 161	116		
0820 40 165	116		
0820 40 166	116		
0820 40 170	116		
0820 56 905	149		
	165		
	169		
	200		
	226		
	234		
0820 56 906	165		
0820 57 900B	179		
	184		
0820 58 999	190		
0820 60 870A	210		
0820 66 470A	210		

INDEX. 0820 66 840～0839 70 524

0820 66 840	140	142	25
0820 66 992	222	224	10
0820 99 150	27	28	—
0822 10 451C	5	7	31
0822 10 452D	5	7	31
0822 15 105	27	29	24
0823 14 130	21	22	11
0823 14 131	21	22	12
0823 15 171	27	28	20
0823 18 100	45	46	1
0823 18 107	45	46	6
0823 18 291	45	49	61
0823 23 802A	21	23	22
0823 24 305	45	48	40
0823 24 311	45	48	35
0824 17 524	42	44	35
0824 40 401	116	117	4
0824 41 040	129	130	7
0824 41 051	129	130	15
0824 41 084	129	130	12
0824 44 140	140	142	23
0824 49 781	136	139	48
0824 56 999	159	161	34
0824 58 370A	195	198	20
	251	253	18
	260	262	18
0824 61 192	200	202	23
0824 66 375V	207	208	11
0839 10 105	1	2	3
	5	6	5
0839 10 203	1	2	11
0839 10 205	1	2	14
	5	6	17
0839 10 206	1	2	13
0839 10 455	5	7	31
0839 10 500B	9	11	19
0839 10 504	9	11	22
0839 10 641	1	3	34
0839 11 323	9	10	13
0839 11 351	9	10	17
0839 11 353	9	10	18
0839 11 501	9	11	31
0839 11 502	9	11	36
0839 11 504B	9	11	34
0839 11 506	9	12	36
0839 11 508	9	12	36
0839 11 509	9	12	36
0839 11 515	9	11	32
0839 11 531	9	12	41
0839 11 551	9	12	40
0839 11 601B	9	12	44
0839 13 338	14	15	2
0839 13 613	14	16	15
0839 13 614	14	16	15
0839 14 101B	21	22	1
0839 14 112B	21	22	4
0839 14 115	1	3	30
0839 14 117	21	22	6
0839 14 119B	21	22	8
0839 14 132	21	22	13
0839 14 133	21	22	14
0839 14 141A	21	22	10
0839 14 142	21	22	15
0839 14 273	1	3	31
0839 14 300	21	23	20
0839 14 730B	27	31	55
0839 14 745	27	31	59
0839 15 171	27	28	20
0839 15 172	27	29	21
0839 15 200	27	29	31
0839 15 210B	27	29	32
0839 15 250	27	29	30
0839 16 432	32	33	9
0839 17 245	38	39	13
0839 17 285	38	41	42
0839 18 272	45	49	54
0839 18 300	50	51	1
0839 18 311B	50	52	31
0839 23 672	17	18	5
0839 23 675	17	18	6
0839 23 684	17	18	10
0839 23 686	17	18	9
0839 23 801	21	23	21
0839 24 312	45	47	30
0839 24 530	50	51	4
0839 24 703	57	59	34
0839 24 705	57	58	25
0839 24 706	57	58	20
0839 24 709	57	58	12
0839 24 710	57	58	7
0839 24 715	57	58	21
0839 24 716	57	58	13
0839 24 719	57	58	23
0839 24 721	57	58	19
0839 24 723	57	59	30
0839 24 724	57	59	31
0839 24 736B	57	58	26
0839 24 758	57	58	2
0839 24 761	57	58	4
0839 24 762	57	58	5
0839 24 763	57	58	6
0839 24 764	57	59	38
0839 43 550	136	138	34
0839 43 553A	133	134	14
	136	138	36
0839 58 492A	265	266	5
0839 58 493A	265	266	6
0839 66 992	222	224	22
0839 67 880	210	214	54
0839 68 660	232	233	1
0839 68 670A	232	233	2
0839 68 720	232	233	9
0839 70 521	251	252	4
0839 70 522	251	252	5
0839 70 523A	251	252	6
0839 70 524	251	252	7

0839 70 525	251	252	8
0839 70 526	251	252	9
0839 74 158	265	266	12
0839 74 159	265	266	12
0839 74 168	265	266	12
0839 74 169	265	266	12
0839 74 910	265	266	1
0840 18 600	45	47	23
0842 19 025	61	62	3
0842 19 027A	61	62	5
0842 19 031	75	76	6
0842 19 211B	61	62	8
0842 19 650	72	74	20
0842 19 660	72	74	24
0842 19 665	72	74	28
0842 19 910	61	63	30
0842 19 915A	61	63	32
0842 46 081	146	147	17
0842 46 110A	146	147	19
0845 18 101	45	46	4
0845 24 720	53	54	19
0848 18 600	45	47	23
0848 66 830	210	215	66
0864 61 061A	200	203	31
0865 32 800	95	96	1
0865 55 401D	169	170	11
0865 55 402B	169	171	16
0865 55 403B	169	171	17
0865 55 404B	169	171	18
0865 55 430D	176	177	1
0865 61 130A	200	201	1
0865 61 140A	200	201	2
0865 61 151A	200	201	3
0865 61 190B	200	201	4
0865 66 780	210	212	14
0865 66 790	210	212	15
0865 66 800	210	212	16
0865 66 805	210	212	17
0865 66 809	210	212	18
0865 66 860B	222	223	—
0865 66 870A	222	223	—
0865 68 020A	226	227	1
0865 68 040C	226	227	2
0865 68 060C	226	227	7
0865 68 140C	226	227	8
0865 68 340	226	228	32
0865 87 008	204	205	2
0865 87 009	204	205	3
0865 89 661	204	205	1
0865 89 666	204	205	1
0866 10 100B	1	2	1
	5	6	1
0866 10 172A	1	2	7
	5	6	8
0866 10 200E	1	2	10
0866 10 300E	5	6	10
0866 10 320A	5	6	14
0866 10 400B	5	7	25

0866 10 411	5
0866 10 600	1
0866 10 830	5
0866 10 871	5
0866 11 511A	9
0866 11 700A	9
0866 11 702	9
0866 13 100E	14
0866 13 111	14
0866 13 200D	19
0866 13 230A	19
0866 13 235	19
0866 13 240B	17
0866 13 241C	17
0866 13 300C	17
0866 13 311	17
0866 13 330B	14
0866 13 341B	17
0866 13 351A	17
0866 13 400D	122
0866 13 401A	122
0866 13 402A	122
0866 13 600A	14
0866 13 603	14
0866 13 611B	14
0866 13 621	116
0866 14 160A	21
0866 14 630	21
0866 14 640	21
0866 14 651A	21
0866 14 700B	27
0866 14 720	27
0866 14 740	27
0866 15 010B	27
0866 15 100B	27
0866 15 130	27
0866 15 211C	200
0866 15 212B	200
0866 15 310C	27
0866 15 350A	27
0866 15 351	27
0866 15 401	27
0866 15 511	27
0866 15 521A	27
0866 16 210	32
0866 17 100A	35
	35
0866 17 107	35
0866 17 201	38
0866 17 221	38
0866 17 250	38
0866 17 270	38
0866 17 275	38
0866 17 276	38
0866 17 279	38
0866 17 281	38
0866 17 285	38
0866 17 288	38

INDEX. 0866 17 289～0866 34 153A

0866 17 289	38	40	28
0866 17 291	38	40	28
0866 17 292	38	40	28
0866 17 330A	35	37	20
0866 17 450	42	43	17
0866 17 510	42	44	33
0866 17 524	35	37	34
0866 17 530	35	37	33
0866 17 540	35	37	23
0866 18 100	45	46	2
0866 18 101	45	46	5
0866 18 110	45	46	11
0866 18 115	45	46	13
0866 18 120	45	47	15
0866 18 130	45	47	19
0866 18 140	45	47	20
0866 18 150	45	47	17
0866 18 155	45	46	14
0866 18 160	45	47	16
0866 18 170	45	47	21
0866 18 190A	45	46	3
0866 18 200	45	47	24
0866 18 400A	53	54	1
0866 18 496	5	7	19
	27	31	66
0866 18 501A	5	6	13
0866 18 600	45	47	23
0866 18 700	45	47	25
0866 18 810	45	46	7
0866 18 999	17	18	19
0866 23 040	1	2	9
	5	6	9
0866 23 676	17	18	7
0866 23 694	17	18	8
0866 24 308	45	48	39
0866 24 323	45	48	48
0866 24 408	45	48	39
0866 24 411	45	48	35
0866 24 423	45	48	48
0866 24 701	53	55	28
0866 24 704	53	55	29
0866 24 705	53	55	27
0866 24 709	53	54	25
0866 24 710	53	54	24
0866 24 716	53	55	26
0866 25 100	80	81	1
0866 25 130	80	81	5
0866 26 010A	82	83	1
0866 26 060	82	83	4
0866 26 062	82	83	5
0866 26 063	82	83	6
0866 26 251	85	86	1
0866 26 280A	85	86	4
0866 26 290A	85	86	4
0866 26 310	85	86	5
0866 26 391	85	86	9
0866 27 100	89	90	—
0866 27 110	89	90	5
0866 27 150	89	90	8
0866 27 172	89	90	12
0866 28 010	92	93	1
0866 28 011	92	93	1
0866 28 012	92	93	1
0866 28 013	92	93	1
0866 28 014	92	93	1
0866 28 110	92	93	2
0866 28 140	92	93	5
0866 28 143	92	93	6
0866 28 151	92	93	7
0866 28 180A	92	93	10
0866 28 183A	92	94	13
0866 28 322	92	94	14
0866 28 333B	92	94	15
0866 28 343B	92	94	16
0866 28 350	92	94	17
0866 28 353B	92	94	18
0866 28 591	92	94	19
0866 28 700	92	94	20
0866 28 774	92	94	21
0866 28 778A	92	94	22
0866 28 779	92	94	23
0866 28 799	92	94	24
0866 32 014	100	101	10
0866 32 100	95	97	30
0866 32 110A	95	97	—
0866 32 121	95	98	44
0866 32 141	95	98	43
	100	103	37
0866 32 227A	104	106	18
0866 32 228	95	99	52
0866 32 230	95	99	53
0866 32 261	104	105	1
0866 32 279	104	105	12
0866 32 301	110	112	23
0866 32 311	110	112	23
0866 32 320	104	105	10
0866 32 329A	104	105	13
0866 32 330A	104	105	14
0866 32 341	104	105	16
0866 32 411	95	99	62
	100	103	48
0866 32 420	95	99	59
	100	101	19
0866 32 425	95	99	57
	100	101	17
0866 32 811	95	96	2
0866 33 251	107	108	12
0866 33 260	107	108	13
0866 33 270	107	108	13
0866 34 011	110	111	1
0866 34 013A	110	111	2
0866 34 015	110	111	3
0866 34 019	110	111	4
0866 34 111	110	111	11
0866 34 151A	110	111	12
0866 34 153A	110	111	13

0866	34	157	110	111	17
0866	34	158	110	111	18
0866	34	310	110	112	22
0866	34	311	110	112	24
0866	34	313	110	112	33
0866	34	320	110	112	22
0866	34	340	110	111	5
0866	34	381	110	111	6
0866	34	382	110	111	7
0866	34	390	110	111	8
0866	34	460	110	112	25
0866	34	710	110	113	36
0866	34	730	110	113	45
0866	34	732	110	113	47
0866	34	735	110	113	48
0866	34	738	110	113	53
0866	34	760	110	113	48
0866	34	800B	110	111	20
0866	34	910A	110	113	35
0866	34	960A	110	113	35
0866	37	170B	85	88	40
			107	109	21
0866	39	020	114	115	1
0866	39	040A	114	115	3
0866	39	060B	114	115	4
0866	39	381A	114	115	8
0866	40	060	116	117	2
0866	40	081	116	117	14
0866	40	100	116	117	1
0866	40	300	116	117	11
0866	41	030A	129	130	1
0866	41	320	133	134	21
0866	41	370	133	135	30
0866	41	380	133	135	27
0866	41	400	133	134	1
0866	41	610	125	126	1
0866	41	660	125	126	5
0866	41	920	133	134	16
0866	42	310C	118	119	1
0866	42	350	118	119	4
0866	42	366	118	119	7
0866	42	382	118	119	10
0866	42	410	118	120	21
0866	42	440	265	266	3
0866	42	521	118	119	13
0866	42	522	118	119	14
0866	42	523	118	119	12
0866	42	530	118	119	9
0866	42	541	118	120	20
0866	42	542A	118	120	18
0866	42	544	118	120	19
0866	42	551	118	120	26
0866	42	552	118	120	25
0866	42	555	118	120	27
0866	42	561	118	120	28
0866	43	030	129	130	2
0866	43	061	129	130	4
0866	43	062	129	130	6
0866	43	063	129		
0866	43	070A	129		
0866	43	093	129		
0866	43	650B	143		
0866	43	660B	143		
0866	43	810	143		
0866	43	820	143		
0866	43	900	143		
0866	44	010	140		
0866	44	051	140		
0866	44	150	140		
0866	44	187	140		
0866	44	189	140		
0866	44	410	140		
0866	44	439	140		
0866	45	061A	122		
0866	45	452	143		
0866	45	510	143		
0866	45	611B	122		
0866	45	806	122		
0866	45	903A	122		
			143		
0866	50	102	149		
0866	50	110A	149		
0866	50	141	149		
0866	50	151	149		
0866	50	181A	149		
0866	50	320A	149		
0866	50	330A	149		
0866	50	340	149		
0866	50	350	149		
0866	50	511A	149		
0866	50	521A	149		
0866	50	531	149		
0866	50	541	149		
0866	52	210	152		
0866	52	390	152		
0866	52	398	152		
0866	52	410	152		
0866	52	451	152		
0866	52	480	152		
0866	52	490	152		
0866	52	510	152		
0866	52	610	152		
0866	52	620	152		
0866	52	631	152		
0866	52	661A	152		
0866	52	671A	152		
0866	52	750A	152		
0866	52	850A	152		
0866	52	901	152		
0866	53	020F	156		
0866	53	029	156		
0866	53	100A	156		
0866	53	220D	156		
0866	53	281A	156		
0866	53	320	159		
			162		

INDEX. 0866 53 330～0866 58 281

0866 53 330	162	163	3
0866 53 340	162	163	5
0866 53 350A	162	163	7
0866 53 381	162	163	9
0866 53 430	162	163	13
0866 53 452	162	163	17
0866 53 500	162	163	19
0866 53 591	162	163	21
0866 53 720	156	157	16
0866 53 750	156	158	18
0866 53 780A	156	158	19
0866 53 810B	162	164	25
0866 53 830A	159	161	24
	162	164	26
0866 53 845	159	161	26
	162	164	28
0866 53 901	162	164	29
0866 53 920	162	164	30
0866 53 941	162	164	31
0866 53 950	162	164	32
0866 53 970A	156	157	6
0866 53 979	156	157	7
0866 53 981	156	157	9
0866 53 991	162	164	33
0866 54 220B	156	157	13
0866 54 281A	156	157	15
0866 54 320	159	160	2
	162	163	2
0866 54 330	162	163	4
0866 54 340	162	163	6
0866 54 350A	162	163	8
0866 54 381	162	163	10
0866 54 410	162	163	12
0866 54 430	162	163	14
0866 54 452	162	163	18
0866 54 500	162	163	20
0866 54 591	162	163	22
0866 54 720	156	158	17
0866 54 830A	159	161	25
	162	164	27
0866 55 100E	169	170	1
0866 55 210B	169	172	33
0866 55 215A	169	172	36
0866 55 216	169	172	38
0866 55 217	169	172	38
0866 55 218	169	172	38
0866 55 230D	169	172	42
0866 55 360C	169	170	5
0866 55 365B	169	170	7
0866 55 401D	169	170	11
0866 55 402A	169	171	16
0866 55 403B	169	171	17
0866 55 404B	169	171	18
0866 55 405C	169	171	19
0866 55 406A	169	171	22
0866 55 412A	169	171	26
0866 55 460B	176	178	15
0866 55 710	169	171	28
0866 55 720	169	172	32
0866 56 010D	165	166	1
0866 56 080B	165	166	4
0866 56 171	165	166	8
0866 56 181	165	166	9
0866 56 210C	165	166	14
0866 56 215	165	166	15
0866 56 310	165	166	16
0866 56 330	165	166	18
0866 56 350	165	167	20
0866 56 381	165	167	22
0866 56 400	165	167	24
0866 56 450A	165	167	25
0866 56 470A	165	167	26
0866 56 481A	165	167	27
0866 56 580A	165	166	5
0866 56 610B	165	166	7
0866 56 701	165	167	28
0866 56 702	165	167	29
0866 56 810A	165	166	17
0866 56 830	165	166	19
0866 56 850	165	167	21
0866 56 881	165	167	23
0866 56 901A	165	167	31
0866 56 971	165	168	41
0866 56 981	165	166	3
0866 56 991	232	233	12
0866 57 100A	184	185	2
	184	185	5
0866 57 105	179	181	27
	184	187	33
0866 57 110A	184	185	8
0866 57 120	179	180	13
	184	186	17
0866 57 130	179	181	24
	184	187	30
0866 57 160A	184	185	11
0866 57 170	179	181	15
	184	186	20
0866 57 180	179	181	25
	184	187	31
0866 57 200A	184	188	41
0866 57 250	184	188	46
0866 57 300A	184	185	3
0866 57 310A	184	185	9
0866 57 320	184	186	18
0866 57 350A	184	185	6
0866 57 360A	184	185	12
0866 57 370	184	186	21
0866 57 400A	184	188	42
0866 57 450	184	188	47
0866 58 010C	190	191	1
0866 58 201	195	199	34
0866 58 210	195	198	23
0866 58 231	195	199	35
	260	263	33
0866 58 240A	195	198	26
0866 58 281	195	198	27

0866 58 281	260	25
0866 58 282	195	28
	260	26
0866 58 291A	195	29
	260	27
0866 58 292A	195	30
	260	28
0866 58 293	195	31
	260	29
0866 58 303A	195	10
	260	10
0866 58 310	195	1
0866 58 321A	195	8
	260	8
0866 58 330	195	2
0866 58 361	195	37
	260	36
0866 58 363	195	38
	260	37
0866 58 364	195	39
	260	38
0866 58 410	195	12
0866 58 501	190	4
0866 58 560	195	14
0866 58 590	169	24
0866 58 603	190	6
0866 58 604	190	7
0866 58 605	190	8
0866 58 620	190	9
0866 58 760A	190	21
0866 58 781A	190	12
0866 58 791	190	13
0866 58 810C	190	17
0866 58 831	190	23
0866 58 841A	190	24
0866 58 842A	190	25
0866 58 861	195	42
0866 58 862	195	43
0866 58 863	195	44
0866 58 864	195	45
0866 59 010C	190	1
0866 59 020A	190	2
0866 59 240A	195	26
0866 59 303A	195	10
	260	10
0866 59 310	195	1
0866 59 330	195	2
0866 59 361	195	37
	260	36
0866 59 410	195	12
0866 59 501	190	4
0866 59 560	195	14
0866 59 603	190	6
0866 59 604	190	7
0866 59 760A	190	21
0866 59 781A	190	12
0866 59 791	190	13
0866 59 810B	190	17

0866 59 831	190
0866 59 841A	190
0866 59 842A	190
0866 59 862	195
0866 60 050	169
0866 60 070	169
0866 60 071	169
0866 60 073	169
0866 60 101	169
0866 60 102	169
0866 60 120	169
0866 60 130	169
0866 60 250B	169
0866 60 251	169
0866 60 263	169
0866 60 264	169
0866 60 265A	169
0866 60 267	169
0866 60 335A	169
0866 60 345A	169
0866 60 720	169
0866 61 070	200
0866 61 080	200
0866 61 130B	200
0866 61 140C	200
0866 61 151A	200
0866 61 195	200
	200
0866 61 213	200
0866 61 214A	200
0866 61 217	200
0866 61 251	200
0866 66 190B	200
0866 66 212	207
0866 66 232	207
0866 66 372	207
0866 66 481A	204
0866 66 491A	204
0866 66 700A	207
0866 66 730B	210
0866 66 732	210
0866 66 733	210
0866 66 760	210
0866 66 865	222
0866 66 871	222
0866 66 872	222
0866 66 900	222
0866 66 905	222
0866 66 960	222
0866 66 965	222
0866 67 010A	210
0866 67 020B	210
0866 67 030	210
0866 67 040C	210
0866 67 050H	210
0866 67 059	210
0866 67 060C	210
0866 67 065	210

INDEX. 0866 67 070B～0866 70 343

0866 67 070B	210	213	31
0866 67 080	210	213	34
0866 67 100	53	56	43
0866 67 110	53	56	44
	57	60	54
0866 67 131	140	142	27
0866 67 132	122	124	24
0866 67 133	210	215	73
0866 67 151	210	213	25
0866 67 152	210	213	43
0866 67 170	118	120	30
0866 67 175	118	121	33
0866 67 301A	216	219	37
0866 67 302	216	219	38
0866 67 321	216	217	1
0866 67 340C	216	217	3
0866 67 350	216	217	13
0866 67 470	220	221	—
0866 67 510A	220	221	12
0866 67 511A	220	221	13
0866 67 512	220	221	14
0866 67 521	220	221	15
0866 67 710A	210	214	56
0866 67 711	210	214	57
0866 67 712A	210	214	58
0866 67 716	210	214	59
0866 67 717	210	214	61
0866 67 718	210	215	62
0866 67 719	210	214	60
0866 67 905A	210	214	47
0866 67 906	210	214	48
0866 67 908	210	214	49
0866 68 011	226	229	41
0866 68 090B	226	227	4
0866 68 095	226	227	5
0866 68 180A	226	228	20
0866 68 201	226	228	21
0866 68 250	226	231	63
0866 68 331	226	228	24
0866 68 332	226	228	25
0866 68 333	226	228	26
0866 68 334	226	228	27
0866 68 335A	226	228	28
0866 68 340	226	229	32
0866 68 351A	226	229	34
0866 68 352A	226	229	35
0866 68 361	226	229	37
0866 68 380	226	229	39
0866 68 890A	226	230	50
0866 69 052	234	235	1
0866 69 053A	234	235	2
0866 69 071A	234	235	10
0866 69 081B	234	235	11
0866 69 110	234	235	18
0866 69 111	234	236	20
0866 69 112	234	236	22
0866 69 113	234	236	23
0866 69 130	234	235	18
0866 69 210	234	237	35
0866 69 240	234	237	36
0866 69 290	239	240	1
0866 69 311	239	240	3
0866 69 321	239	240	6
0866 69 341	239	240	7
0866 69 360	239	240	11
0866 69 380	239	240	12
0866 69 411	239	240	14
0866 69 431	239	240	15
0866 69 460	239	241	18
0866 69 480	239	241	20
0866 69 511	239	241	22
0866 69 521	239	241	24
0866 69 541	242	243	1
0866 69 542	242	243	2
0866 69 543	242	243	3
0866 69 544	242	243	4
0866 69 611	242	243	5
0866 69 612A	242	243	6
0866 69 613A	242	243	7
0866 69 616A	242	243	8
0866 69 617	242	243	9
0866 69 618	242	243	10
0866 69 625	242	243	11
0866 69 626	242	243	12
0866 69 627	242	243	13
0866 69 660	242	243	14
0866 69 683	242	244	15
0866 69 684	242	244	16
0866 69 685	242	244	17
0866 69 687A	242	244	18
0866 69 688	242	244	19
0866 69 689	242	244	20
0866 69 692	242	244	21
0866 69 694	239	241	31
0866 69 696	242	244	22
0866 69 697	242	244	23
0866 69 698	242	244	24
0866 69 811	226	229	43
0866 69 820	226	229	44
0866 69 870	239	241	29
0866 69 885	239	241	30
0866 69 910	234	237	38
0866 69 920	234	237	39
0866 70 120	156	158	23
0866 70 122	156	158	24
0866 70 131A	156	158	26
0866 70 160B	156	158	21
0866 70 180	156	158	28
0866 70 310	245	246	1
0866 70 313	245	246	3
0866 70 314	245	246	4
0866 70 320	245	246	5
0866 70 330	245	246	6
0866 70 341	245	246	7
0866 70 342	245	246	8
0866 70 343	245	246	10

0866 70 351	245	246	13
0866 70 352	245	246	14
0866 70 360	245	246	15
0866 70 371	245	246	19
0866 70 401	234	237	43
0866 70 412	234	237	47
0866 70 420	234	237	46
0866 70 431D	234	238	58
0866 70 451	247	248	7
0866 70 452	247	248	8
0866 70 453	247	248	10
0866 70 454	247	248	12
0866 70 473	247	249	14
0866 70 481	247	249	15
0866 70 482	247	249	16
0866 70 483	247	249	17
0866 70 484	247	249	19
0866 70 801	247	249	21
0866 70 802A	247	249	23
0866 70 821	247	250	31
0866 70 822A	247	250	33
0866 70 823	247	250	35
0866 70 851	247	250	36
0866 70 852	247	250	39
0866 70 853	247	250	41
0866 71 180	156	158	29
0866 71 310	245	246	1
0866 71 343	245	246	10
0866 71 351	245	246	13
0866 71 352	245	246	14
0866 71 420	234	237	46
0866 71 431D	234	238	58
0866 71 452	247	248	9
0866 71 453	247	248	11
0866 71 483	247	249	18
0866 71 484	247	249	20
0866 71 801	247	249	22
0866 71 802A	247	249	24
0866 71 821	247	250	32
0866 71 822A	247	250	34
0866 71 852	247	250	40
0866 71 853	247	250	42
0866 72 010B	256	257	1
0866 72 020A	256	257	2
0866 72 201	260	263	32
0866 72 210B	260	262	21
0866 72 212A	260	262	23
0866 72 240	260	263	24
0866 72 310	260	261	1
0866 72 330	260	261	2
0866 72 410	260	262	12
0866 72 501	256	257	3
0866 72 502	256	257	4
0866 72 560	260	262	15
0866 72 602	256	257	9
0866 72 605	256	257	10
0866 72 606	256	257	11
0866 72 651A	256	257	14
0866 72 760	256		
0866 72 781A	256		
0866 72 791	256		
0866 72 810B	256		
0866 72 831A	256		
0866 72 841A	256		
0866 72 861	260		
0866 72 862	260		
0866 72 863	260		
0866 73 010B	256		
0866 73 020A	256		
0866 73 210B	260		
0866 73 240	260		
0866 73 310	260		
0866 73 330	260		
0866 73 410	260		
0866 73 501	256		
0866 73 560	260		
0866 73 602	256		
0866 73 755	256		
0866 73 760	256		
0866 73 810B	256		
0866 73 831A	256		
0866 73 841	256		
0866 73 842A	256		
0866 73 862	260		
0866 73 863	260		
0866 75 014	176		
0866 75 021	176		
0866 75 026	176		
0866 75 122	176		
0866 75 123	176		
0866 75 124	176		
0866 75 125	176		
0866 75 200	176		
0866 75 930	265		
0866 76 601	216		
0866 76 602	216		
0866 76 603	216		
0866 76 604	216		
0866 76 605	216		
0866 76 606	216		
0866 76 607	216		
0866 76 608	216		
0866 78 541	165		
0866 78 701A	149		
0866 78 702	149		
	149		
0866 78 710	149		
0866 78 750	149		
0866 78 801A	149		
0866 78 810	149		
0866 88 010	179		
	184		
0866 88 060	179		
	184		
0866 88 070	179		
	184		

INDEX. 0866 88 100～1524 51 020A

0866 88 100	179	181	17
	184	186	23
0866 88 105	179	181	16
	184	186	22
0866 88 200	179	180	11
	184	186	15
0866 88 250	179	181	21
	179	182	39
	184	187	27
0866 88 280	179	181	18
	184	186	24
0866 88 370	184	188	44
0866 88 375	179	182	36
	184	188	43
0866 88 420	179	182	41
	184	188	49
0866 88 490	184	185	14
0866 88 500	184	186	23
0866 88 530	184	186	15
0866 88 540	184	186	24
0866 88 570	184	188	44
0866 88 580	184	188	49
0866 89 661	204	205	1
0866 89 663	204	206	23
0866 89 665	207	208	9
0866 89 666	204	205	1
0866 89 668	204	206	23
0866 99 100	1	4	—
0866 99 356	110	112	26
0866 99 801	149	151	26
	149	151	27
0866 99 806	149	151	28
0870 26 111	82	83	9
0870 26 115	82	83	9
0870 33 625	107	108	16
0870 33 980	107	108	15
0870 33 990	107	108	15
0870 43 422	136	138	31
0870 43 570	136	138	37
0870 43 580	136	138	38
0870 43 800B	136	139	41
0870 43 830	143	144	21
0870 43 842	143	144	24
0870 43 990	136	137	1
0870 45 280A	143	144	11
0870 45 320B	143	144	13
0870 45 350B	143	144	15
0870 49 710	136	139	52
0870 49 720	136	139	53
0870 49 745	136	139	42
0870 49 750	136	139	45
0870 49 760	136	139	46
0870 49 770	136	139	47
0870 49 785	136	139	51
0870 58 810C	190	193	17
0870 59 810B	190	193	17
0870 66 900A	222	223	2
0870 66 905	222	223	5
0870 66 970	222	224	11
0870 66 975	222	224	13
0870 66 980	222	224	14
0870 68 940	226	230	53
0870 68 960	226	230	60
0870 69 684	242	244	16
0870 69 870	239	241	29
0871 10 300C	5	6	10
0871 11 400	9	11	26
0871 11 511	9	12	38
0871 11 750A	9	13	54
0871 13 200	19	20	1
0871 15 310B	27	30	35
0871 18 520	53	55	37
0871 19 910	61	63	27
0871 19 920	61	64	34
0871 19 930	61	64	35
0871 19 940	61	64	37
0871 19 951	61	64	38
0871 19 961	61	64	36
0871 19 962	61	64	39
0871 19 963	61	64	43
0871 19 964A	61	64	47
0871 25 100	80	81	1
0871 46 571	146	148	23
0871 56 010E	165	166	2
0871 56 701	165	167	28
0871 67 060B	210	213	32
0871 67 100	57	60	53
0871 69 685	242	244	17
0872 67 100	57	60	53
0872 67 110	53	56	44
	57	60	54
0877 18 520	57	60	47
0881 37 191	85	88	42
	107	109	19
1510 70 471	247	248	13
1511 56 110A	165	166	6
1511 58 010	190	191	1
1511 58 020	190	191	2
1511 69 110	234	236	28
1511 70 471	247	248	13
1511 72 661	256	258	15
1511 73 661	256	258	15
1514 70 471	247	249	13
1523 70 471	247	248	13
1524 32 110	100	102	—
1524 32 121A	100	103	38
1524 32 130	100	102	26
1524 32 220	100	103	43
1524 32 261	104	105	1
1524 41 400	133	134	1
1524 41 620	127	128	1
1524 41 678	127	128	20
1524 43 030	129	130	2
1524 43 070A	129	131	31
1524 43 140	129	131	27
1524 51 020A	156	157	1

1524	51	120A	156	157	2
1524	52	390	152	153	12
1524	52	410	152	154	16
1524	53	020B	156	157	4
1524	53	100B	156	157	11
1524	53	220C	156	157	12
1524	53	320	159	160	1
			162	163	1
1524	53	970A	156	157	6
1524	54	220B	156	157	13
1524	54	320	159	160	2
			162	163	2
1524	54	410	162	163	12
1524	55	210A	169	173	45
1524	55	230B	169	172	39
1524	55	330	169	173	50
1524	56	110D	165	166	6
1524	56	610B	165	166	7
1524	57	100A	184	185	1
1524	57	110	184	185	7
1524	57	120	184	186	16
1524	57	150	184	185	4
1524	57	160	184	185	10
1524	57	170	184	186	19
1524	57	200	184	188	40
1524	57	250	184	188	45
1524	58	310	195	196	1
1524	59	310	195	196	1
1524	60	250A	169	174	70
1524	60	335A	169	175	87
1524	60	345A	169	175	88
1524	61	130A	200	201	1
1524	61	140B	200	201	2
1524	61	151A	200	201	3
1524	66	110A	204	206	18
1524	66	111	204	206	19
1524	66	140A	204	206	18
1524	66	141	204	206	19
1524	66	810	210	212	21
1524	66	930A	222	224	6
1524	67	020	210	212	24
1524	67	050A	210	213	30
1524	67	155	210	214	44
1524	67	321	216	217	1
1524	67	340B	216	217	3
1524	67	350	216	217	13
1524	67	470	220	221	—
1524	67	720A	210	215	67
1524	68	011	226	229	42
1524	68	380A	226	229	40
1524	68	890	226	230	50
1524	69	360	239	240	11
1524	69	380	239	240	12
1524	69	611	242	243	5
1524	69	612	242	243	6
1524	69	613	242	243	7
1524	69	870	239	241	29
1524	70	050	162	164	34
1524	70	401	234		
1524	70	471	247		
1524	70	980	53		
			57		
1524	72	310	260		
1524	72	661A	256		
1524	73	310	260		
1524	73	661A	256		
1524	75	010	176		
1524	76	601	216		
1524	76	602	216		
1524	76	603	216		
1524	76	604	216		
1524	76	607	216		
1524	76	608	216		
1524	88	010	184		
1524	88	100	184		
1524	88	200	184		
1524	88	280	184		
1524	88	370	184		
1524	88	420	184		
1524	99	322	104		
1524	99	324	104		
1531	53	350B	162		
1531	54	350B	162		
1531	56	117	165		
1531	56	617	165		
1531	60	250A	169		
1531	66	370	207		
1531	66	371	207		
1531	66	372	207		
1531	66	373	207		
1531	66	374	207		
1531	66	375	207		
1531	66	376	207		
1531	66	780	210		
1531	66	790	210		
1531	66	800	210		
1531	70	441	247		
1532	57	110	179		
1532	57	160	179		
1534	58	310	195		
1534	59	310	195		
1534	70	471	247		
1535	70	471	247		
1540	66	030	204		
1540	69	101	234		
1540	72	661	256		
1540	73	661	256		
1550	66	860A	222		
1550	66	870	222		
1551	66	860A	222		
1551	66	870	222		
1552	66	860A	222		
1552	66	870	222		
1553	57	100	179		
1553	57	150	179		
1554	09	010	265		

1554 32 220	95	99	49
1554 55 530B	176	177	1
1554 57 100	179	180	2
1554 57 150	179	180	4
1554 58 010	190	191	1
1554 58 020	190	191	2
1554 66 210	207	208	1
1554 66 230	207	208	1
1554 70 471	247	249	13
1554 75 021	176	177	6
1554 75 990	265	266	4
1560 57 100	184	185	2
1560 57 110	184	185	8
1560 57 150	184	185	5
1560 57 160	184	185	11
1560 57 200	184	188	41
1560 66 060	204	205	1
1560 66 860B	222	223	—
1560 66 870	222	223	—
1560 88 370	184	188	44
1561 55 720A	169	172	32
1561 66 860	222	223	—
1561 66 870	222	223	—
1561 66 900	222	223	1
1562 00 471	247	249	13
1562 09 010	265	266	—
1562 10 700	5	8	32
1562 13 200	19	20	1
1562 15 212A	200	202	14
1562 18 400	53	54	1
1562 32 049	95	97	24
	100	101	13
1562 32 100	100	102	24
1562 32 110	100	102	—
1562 32 320	104	105	11
1562 32 330A	104	105	15
1562 32 800	95	96	12
	100	101	1
1562 32 811	95	96	13
	100	101	2
1562 32 980	95	97	16
	100	101	5
1562 41 030A	129	130	1
1562 41 660	127	128	15
1562 43 660	143	144	7
1562 43 800	136	139	41
1562 43 830	143	145	25
1562 43 836	143	145	26
1562 43 990	136	137	1
1562 45 280B	143	144	12
1562 45 320A	143	144	14
1562 45 350B	143	144	16
1562 45 510	143	145	28
1562 49 760	136	139	46
1562 50 311	149	150	12
1562 52 110	152	153	1
1562 53 410	159	160	11
1562 54 410	159	160	12

1562 55 405	169	171	20
1562 55 412	169	171	27
1562 55 430B	176	177	1
1562 55 460A	176	178	15
1562 55 710	169	171	29
1562 56 010C	165	166	1
1562 57 100	179	180	2
1562 57 110	179	180	6
1562 57 120	179	180	13
	184	186	17
1562 57 130	179	181	24
1562 57 150	179	180	4
1562 57 160	179	180	8
1562 57 170	179	180	15
	184	186	20
1562 57 200	179	182	35
1562 57 250	179	182	39
	184	188	46
1562 57 420	179	182	41
1562 58 310	195	196	1
1562 59 310	195	196	1
1562 60 050	169	173	53
1562 60 070	169	173	56
1562 61 080	200	201	—
1562 61 190A	200	201	4
1562 61 211B	200	202	12
1562 61 214A	200	202	17
1562 66 030	204	205	9
1562 66 042	204	205	10
1562 66 060	204	205	9
1562 66 210A	207	208	1
1562 66 211A	207	208	2
1562 66 230A	207	208	1
1562 66 231A	207	208	2
1562 66 860B	222	223	—
1562 66 870	222	223	—
1562 66 900	222	223	1
1562 67 100	53	56	43
1562 68 040A	226	227	3
1562 68 140A	226	227	9
1562 69 053	234	235	3
1562 69 055	234	235	5
1562 69 660A	242	244	15
1562 70 050	159	161	32
1562 75 021	176	177	6
1562 75 122	176	178	16
	176	178	17
1562 75 124	176	178	18
1562 75 200	176	178	21
1562 88 010	179	180	10
	184	185	14
1562 88 100	179	181	17
	184	186	23
1562 88 200	179	180	11
	184	186	15
1562 88 280	179	181	18
	184	186	24
1562 88 370	179	182	37

1562 88 420	184	188	49
1566 58 310	195	196	1
1566 59 310	195	196	1
1568 09 010	265	266	—
1568 13 440	122	123	11
1568 55 530B	176	177	1
1568 57 100	179	180	2
1568 57 110	179	180	6
1568 57 150	179	180	4
1568 57 160	179	180	8
1568 66 030	204	205	9
1568 66 060	204	205	9
1568 66 210A	207	208	1
1568 66 211A	207	208	2
1568 66 230A	207	208	1
1568 66 231A	207	208	2
1568 66 860A	222	223	—
1568 66 870	222	223	—
1568 70 441	247	248	1
1568 75 021	176	177	6
1568 75 930	265	266	2
2046 43 694	143	144	22
2046 43 839	143	144	23
2046 49 620C	136	137	2
2046 49 622	136	137	7
2046 49 625A	136	137	3
2046 49 626A	136	137	4
2046 49 627B	136	137	5
2046 49 629A	136	137	6
2046 49 635A	136	137	9
2046 49 638	136	137	20
2046 49 666	136	137	19
2046 49 667	136	137	19
2046 49 668	136	137	19
2046 49 669	136	137	19
2046 49 676	136	138	26
2046 49 696	136	138	27
2046 49 746	136	139	43
2046 49 747	136	139	44
2046 49 782	136	139	49
2046 49 783	136	139	50
2046 49 784	136	139	50
2070 19 020	61	62	1
2070 19 870	65	67	32
2070 60 430A	265	266	9
2080 58 492	265	266	5
2080 74 158	265	267	12
2080 74 168	265	267	12
2080 74 910	265	266	1
2090 10 730B	5	8	34
2090 10 862A	5	8	42
2090 14 600	24	25	1
2090 15 104	27	28	5
2090 18 361	50	52	32
2090 23 673	17	18	2
2090 23 837	24	25	14
2090 23 838	24	25	15
2090 23 841	24	25	18
2090 23 844	24		
2090 23 853	24		
2112 11 301	9		
2113 11 301	9		
2113 23 674	17		
2113 23 675	17		
2113 23 679	17		
2113 54 295	53		
	57		
2125 23 151	9		
2125 23 152	9		
2125 23 154	9		
2125 23 155	9		
2155 57 109	179		
	184		
2158 40 355	116		
2158 87 104	216		
2244 32 423	95		
	100		
2276 66 044	204		
2280 42 460	118		
2280 42 462	118		
2280 75 641A	265		
2288 66 045	204		
2292 58 232	190		
	251		
2329 10 204	1		
2329 10 864	1		
2329 11 301D	9		
2329 13 882	14		
2329 15 132A	27		
2360 66 045	204		
2375 46 021	146		
2375 46 022	146		
2375 46 051	146		
2375 46 052	146		
2375 46 053	146		
2375 46 055	146		
2375 46 061	146		
2375 46 062	146		
2545 23 496	45		
2587 24 335	45		
2587 24 336	45		
2691 18 660	125		
2801 66 022	204		
2820 87 012	204		
2835 49 623	136		
2835 49 628A	136		
2835 49 630A	136		
2835 49 640	136		
2835 49 641A	136		
2835 49 642A	136		
2835 49 645A	136		
2835 49 646A	136		
2835 49 647A	136		
2835 49 648	136		
2835 49 652	136		
2835 49 682A	136		
2835 49 685	136		

INDEX. 2835 49 686A ~ 99562 1400

2835 49 686A	136	138	29
2835 49 687	136	138	30
2835 52 330	152	153	9
2835 60 439	265	266	10
2835 67 330	216	217	2
2835 69 059	234	235	6
2840 46 010	146	147	2
2850 87 012	204	205	7
2869 10 860	1	4	38
2869 18 400	57	58	1
2869 24 701	57	59	32
2869 24 702	57	59	35
2869 24 720	57	59	36
2869 24 749	57	58	24
2981 17 406	42	43	3
2981 17 410	42	43	5
2981 17 420	42	43	6
2981 17 431	42	43	7
2981 69 623	179	183	48
	184	189	56
4069 17 245	38	39	12
4077 16 410	32	33	7
4077 16 460B	32	33	8
907614 6 40	195	199	40
907832 8 28	195	199	36
908062 6 14	65	67	35
	65	67	43
908066 6 18	27	29	34
908332 4 10	245	246	17
908631 5 12	247	250	43
99221 1212	21	23	38
99221 2012	127	128	6
99221 2015	104	105	6
	104	106	20
99221 2020	95	99	55
	100	103	46
	104	105	6
	129	131	29
	146	148	26
99221 3015	179	181	29
	184	187	35
99221 3020	104	105	17
	110	112	30
99221 4030	107	108	2
99222 0520	146	148	27
99225 0320	146	147	13
99230 0511	125	126	8
	127	128	17
99230 0815	140	141	8
99231 0818	129	131	28
99231 0820	129	131	28
99233 0816	35	36	2
99234 1208	5	7	21
99236 0525	9	12	45
99262 1806B	226	229	33
99264 0531B	156	157	8
99264 0702B	17	18	18
99275 2008	21	23	40
99282 1301	122	124	22
99282 1600	122	123	12
99282 1700	61	64	40
99282 2200	200	202	22
99282 2600	200	202	21
	200	203	32
99282 4900	27	31	52
99282 5500	118	119	6
99285 0800	27	30	45
99295 0800	27	30	44
99295 1508	21	23	40
	53	56	47
	57	60	57
99295 1510	32	33	14
	61	63	26
99295 2008	53	56	48
	57	60	58
99301 1100	179	183	49
	184	189	57
99302 1100	179	183	49
	184	189	57
99305 2800	5	7	27
99306 3000	1	2	15
	5	6	18
99307 0600	1	3	24
99307 1800	14	15	3
99335 04015	220	221	9
99335 04065	220	221	10
99335 0407	220	221	11
99335 08003	245	246	9
99336 12038	118	119	16
99340 05063	61	63	29
99340 0618	122	123	14
99340 0632	122	123	18
99340 0634	122	123	10
99340 0665	122	123	15
99381 1000	61	64	41
99381 1400	27	31	56
99384 1200	1	3	28
	27	31	64
99502 2000	95	98	37
	100	102	31
99502 4000	35	36	19
99510 0800	14	15	4
99510 1000	5	7	28
	42	43	16
99511 1000	14	15	5
99511 1400	5	8	33
99541 01101	9	11	30
99541 01601	21	23	24
	65	67	34
99541 02101	35	37	29
	65	67	40
99562 1000	133	135	29
	143	144	3
99562 1400	5	8	33
	42	43	15
	42	44	40

FIN

99562 1600	1	3	29
	5	6	15
99562 1800	27	31	57
99564 0800	14	15	4
	38	41	38
	61	63	31
99564 1000	5	7	28
	14	15	5
	42	43	16
99564 1200	118	119	3
99564 1400	61	64	42
99564 1600	27	31	65
99564 2800	9	12	47
99573 2200	38	40	34
99573 2500	38	41	40
	72	74	33
99573 3000	38	39	3
99574 3500	27	28	12
99575 0300	125	126	9
	127	128	18
99575 0500	140	141	9
99575 0600	85	87	33
	125	126	4
	127	128	11
	129	130	14
	146	148	28
99576 0400	245	246	12
99576 0800	21	23	30
99579 3000	95	96	15
	95	99	54
	100	101	4
	234	235	14
99579 4000	234	235	15
99586 10207	35	37	27
	65	67	41
99606 3306	38	40	24
99606 6306	38	39	2
99606 6344	38	40	31
99611 1500	38	41	41
	72	74	34
	85	87	28
	133	135	23
99611 2000	61	63	22
	65	66	8
	77	79	38
99611 2500	42	43	10
	77	78	2
9962 04 1553	85	88	38
	107	109	23
9962 07 1553	85	88	38
	107	109	23
9963 01 1553	85	88	38
	107	109	23
9965 05 453	85	88	38
	107	109	23
9965 06 453	85	88	38
	107	109	23
99655 30010	85	88	39

99655 30015	85	
99655 30020	85	
99655 30025	85	
99655 30030	85	
99655 30035	85	
99655 30040	85	
99655 30045	85	
99655 30050	85	
99655 30060	85	
99681 1001	19	
99684 0600	210	
99686 0800	61	
99686 1000	210	
99686 1200	122	
	210	
99686 1600	210	
99701 2050	204	
	207	
99701 2080	207	
99701 3210	204	
	207	
99701 3230	207	
99701 4215	207	
99701 5050	210	
99701 6030	176	
	176	
	204	
99701 8100	207	
99706 0105	210	
99706 0110	210	
99706 0115	210	
99706 0120	210	
99715 1101	232	
99737 0514	149	
99743 0616	210	
99743 0650	169	
99748 0410	222	
99750 11018	107	
99753 41022	89	
99753 78118	32	
99753 81022	89	
99761 0516	234	
99761 0640	260	
99765 0516	127	
99765 0616	125	
	127	
99767 0410	247	
99769 0408	247	
99772 0516	234	
99772 0525	234	
99773 0412	207	
99776 0620	234	
99781 0612	220	
99781 1012	61	
99781 1018	61	
99781 1028	165	
99781 1080	104	
99781 1085	95	

FINI

INDEX. 99781 1085～99806 0616

99781 1085	100	103	40
99781 1225	110	112	31
99781 1235	110	112	32
99783 0625	216	219	39
99783 0825	152	153	3
99783 0828	260	263	34
99783 1028	92	94	11
99783 1035	110	111	16
99785 0612	136	138	40
99785 0614	122	124	23
	143	145	30
99785 0616	146	147	20
99785 0618	140	141	15
99785 0620	125	126	7
	127	128	19
	140	142	21
	165	167	32
99785 0820	149	150	4
99785 0825	179	182	32
	179	183	42
	184	187	38
	184	188	50
99785 1620	245	246	18
99790 0620	149	151	37
99795 1032	129	130	18
99797 0512	222	223	3
99797 0612	207	209	14
	207	209	24
99797 0614	169	172	40
99797 0616	45	46	9
	169	173	46
99797 0618	169	170	15
99797 0630	176	177	14
99799 0832	95	99	61
	100	101	21
99801 0812	27	31	49
99801 0814	85	86	15
99801 0816	95	98	35
	100	102	29
	152	153	4
	156	158	20
	179	181	23
	184	187	29
99801 0818	5	8	43
	9	11	25
	114	115	7
99801 0820	50	52	34
	92	93	3
	116	117	16
99801 0822	50	52	35
99801 0825	27	28	19
	42	43	22
99801 0828	57	59	40
	116	117	20
99801 0832	27	29	29
	116	117	17
99801 0835	42	43	22
99801 0840	1	3	35

99801 0845	35	36	9
99801 0850	45	46	8
99801 0865	1	3	36
99801 0875	1	3	37
99801 1035	53	55	30
99803 1011	53	55	31
99804 0516	118	119	8
	118	120	24
99804 0614	165	167	30
99804 0616	27	30	46
	226	230	55
	226	230	58
99804 0820	53	56	45
	57	60	55
99804 0825	118	120	29
99805 0616	251	252	15
99805 0622	149	150	8
99805 0640	143	144	5
99805 0816	169	170	3
	226	227	10
99805 0825	129	131	34
99805 0830	200	201	8
99805 0865	129	131	32
99806 0510	195	197	9
	216	218	24
	216	218	34
	260	261	9
99806 0516	195	198	22
	251	253	20
	260	262	20
99806 0608	256	257	13
99806 0610	5	7	24
	27	29	28
	27	31	61
	35	37	35
	61	62	6
99806 0612	27	29	33
	122	123	6
	122	123	9
	149	150	10
	190	192	11
	195	198	18
	210	212	22
	210	214	55
	251	253	25
	256	257	8
	260	262	16
99806 0614	21	22	19
	42	44	24
	61	63	33
	61	64	45
	156	157	3
	156	158	25
	169	172	43
99806 0616	5	8	40
	152	153	11
	152	153	13
	152	155	38

FINI

99806 0616	156	157	10
	226	229	46
99806 0618	21	22	2
	24	26	28
	27	30	48
	152	154	28
99806 0620	53	55	41
	57	60	51
99806 0625	210	213	26
99806 0630	24	26	28
99806 0816	210	212	20
99806 0818	169	170	2
99811 0812	89	91	23
99811 1010	5	6	16
99811 1018	107	108	14
99811 1032	32	33	15
	61	63	24
99811 1045	61	63	25
99811 1050	32	33	16
	61	63	24
	61	63	25
	89	90	9
99811 1055	32	33	17
	61	63	25
99811 1075	61	63	25
99813 1011	129	131	35
99813 10125	50	52	36
99813 10155	129	131	35
99831 0408	190	192	10
	256	257	12
99831 04088	226	228	29
99831 0416B	169	171	30
99831 0640	152	154	20
99832 0408B	169	175	89
	260	261	11
	195	197	11
99832 0516B	226	230	56
	226	230	59
99832 0630	195	196	6
99833 0408	24	25	11
	85	86	14
	95	96	5
	104	106	19
	118	121	32
99833 0410	118	121	32
99833 0412	140	142	26
99833 0418	5	8	35
99833 0510	35	37	24
99833 0512	136	138	39
	200	201	9
	222	224	23
	226	228	17
99833 0512B	226	227	13
99833 0514B	226	229	38
99833 0516B	226	227	12
99833 0520	190	192	16
	251	254	36
	256	258	20

99833 0612	45	176	210
99833 0616	169		
99833 0616B	226		
99833 0625	210		
99833 0630	260		
99833 0810	5		
99833 0812	85	85	210
99834 0412B	226		
99834 0510	226		
99834 0512	226		
99834 0512B	226		
99834 0535	169		
99834 0616B	226		
99835 0625C	204		
99836 0414B	226		
99836 0516	226		
99837 0516C	234		
99837 0525B	169		
99838 0412	169	—	169
99838 0514	210		
99838 0616	169		
99838 0620	234		
99839 0416	226		
99839 0520B	169		
99851 0618A	45		
99851 0812A	14		
99851 0814	65		
99851 0814A	1	5	
99851 0818A	1		
99851 0820	32		
99851 0826A	14		
99851 0850A	1	5	
99851 0860	35		
99852 0612	85		
99852 0655	1		
99852 0820	82		
99852 0822A	1	5	
99852 0830A	5		
99852 0848	133		
99852 0865A	1		
99852 0878A	1		
99852 0880	82		
99852 1016	1		
99855 1020A	1		
99855 1025	35		
99855 1035	35		
99855 1040	35		
99855 1055	35		
99855 1078	35		
99855 1085	35		

FINI

INDEX. 99855 1232～99906 0600

99855 1232	35	36	13
99859 1220A	1	2	19
99859 1225A	1	2	20
99860 0512	222	224	24
99860 0616	204	205	8
	204	206	17
99861 0412	179	183	47
	184	189	55
99861 0414B	169	170	9
99862 0412B	239	240	16
99862 0420E	239	241	28
99862 0425B	247	249	25
99862 0512B	239	240	13
99862 0516B	149	151	25
99862 0525B	169	170	12
99863 0410	251	254	40
99863 0410B	222	225	29
99863 0412	118	119	11
	239	240	10
99863 0412B	234	238	59
99863 0412E	239	241	27
99863 0414C	234	235	8
99863 0425B	234	238	60
99863 0510	169	171	21
99863 0512	176	178	25
	210	214	46
	226	228	19
	247	250	38
99863 0516	165	167	34
	169	174	63
	200	202	27
	200	203	30
99863 0520B	226	229	47
99863 0612	27	30	43
99864 0406	179	181	31
	184	187	37
99864 0408	251	254	45
99864 0410	222	224	12
	234	237	52
	245	246	11
99864 0410B	251	254	42
99864 0412	210	215	72
99864 0412B	234	237	45
99864 0414	234	237	48
99864 0416B	204	206	26
	234	238	62
99864 0516B	239	241	25
99864 0520B	239	241	26
99864 0616	156	158	22
99866 0420	95	97	26
	100	101	15
99868 0308	95	96	11
99868 0410	95	96	6
	200	201	7
99868 0414	207	208	7
99868 0420	95	96	7
99868 0508	140	141	16
99868 0512	61	64	46
99868 0512	200	202	19
99869 0400	169	170	10
99869 0412	169	174	68
99869 0508	210	214	50
99869 0512	95	99	64
	100	103	50
99884 0414	234	238	57
99885 0406	9	10	4
99887 0412	146	147	14
99896 0500	169	174	64
99896 0600	156	158	22
99901 0800	1	4	40
	14	15	9
	14	15	11
	17	18	14
	19	20	3
	21	23	25
	27	29	26
	27	30	39
	35	36	11
	45	49	59
	57	59	39
	57	59	41
	82	83	19
	82	84	20
	92	93	3
	92	93	4
	110	111	9
	116	117	10
	116	117	18
	129	130	10
	129	131	33
	129	132	40
	133	135	33
	136	138	33
	136	139	54
	140	141	12
	179	182	33
	179	183	43
	184	187	39
	184	189	51
99902 0800	61	64	48
	146	148	29
99905 0500	53	55	32
99906 0400	226	230	62
99906 0500	169	171	31
	195	197	13
	207	208	8
	207	209	26
	222	224	8
	234	235	16
	251	252	10
	260	262	14
99906 0600	21	22	18
	27	31	63
	45	49	60
	53	56	42
	57	60	52

FINI

99906 0600	85	87 29
	122	123 4
	133	135 32
	149	150 6
	149	150 11
	152	154 29
	152	154 30
	156	158 27
	156	158 30
	169	172 41
	169	173 47
	210	212 19
	210	213 26
	210	215 63
	210	215 68
	210	215 69
	226	229 48
	234	236 27
99906 0800	169	172 35
	200	202 10
99907 0500	45	46 10
	57	59 42
99907 0600	24	25 25
	125	126 12
	127	128 14
	152	154 21
	195	197 7
	260	261 7
99907 0800	27	29 23
	53	56 46
	57	60 56
99910 0601	204	205 8
	204	206 17
99921 1000	32	34 18
	35	36 10
	35	37 32
	50	52 37
	61	63 25
	92	93 9
	92	94 28
	110	111 21
	110	112 34
	114	115 2
	114	115 5
	114	115 9
	129	131 36
	149	150 18
99921 1200	27	31 67
	32	34 19
	92	94 25
99921 1800	95	99 56
	100	103 47
99922 0800	129	131 22
	133	134 19
99922 1000	92	94 28
	95	98 36
	100	102 30
	129	130 —

99922 1000	146
99922 1200	21
99922 1400	75
	104
99924 1000	95
	100
	104
	104
99924 1200	104
	110
99940 0400	152
	176
99940 0501	169
	226
99940 0502	222
99940 0600	210
99940 0602	169
	169
99940 0802	169
99941 0801	17
99942 1000	95
	100
	104
99942 1400	110
99944 1400	104
99945 0500B	169
99947 1200	100
99947 1400	110
99948 1200	95
99949 0800	116
99950 0618	256
99951 0618	149
	149
99952 0618 ???	152
Cat. page 257.	152
	169
	169
	190
	195
	195
	251
	251
	260
99951 0818	50
	116
	149
99951 0822	17
	27
	116
	260
99951 1022	95
	100
	165
99951 1030	110
	114
	114
	149
99952 0400	169

FINI

INDEX. 99952 0400～99952 0800

99952 0400	239	240	10
99952 0400B	226	230	61
99952 0400E	239	241	27
99952 0412	118	119	11
	251	254	40
99952 0412B	226	229	36
	234	237	45
	247	249	26
99952 0500	45	46	10
	53	55	32
	57	59	42
	118	120	24
	165	167	34
	176	178	25
	190	192	16
	200	202	27
	200	203	30
	207	209	26
	210	214	46
	210	215	62
	222	223	3
	222	224	8
	222	224	23
	226	228	17
	226	228	19
	226	228	22
	226	228	23
	234	235	16
	251	254	36
	256	258	20
	260	261	9
99952 0500B	169	173	51
	169	175	90
	226	227	11
	226	227	12
	226	229	38
	226	229	47
99952 0516	169	171	31
	169	174	65
	200	202	19
	207	208	8
	226	227	13
99952 0518	169	174	63
	195	197	9
99952 0600	21	22	2
	27	30	43
	27	30	46
	27	31	48
	27	31	63
	45	46	9
	45	49	60
	45	49	63
	125	126	14
	152	154	30
	156	157	3
	156	157	10
	156	158	25
	156	158	27

99952 0600	165	167	30
	169	170	14
	169	171	21
	169	172	40
	169	172	41
	195	197	7
	207	209	14
	207	209	24
	210	212	13
	210	212	22
	210	213	26
	210	214	53
	210	214	55
	210	215	68
	210	215	69
	234	237	40
	245	246	18
	251	252	15
	260	262	7
	260	262	16
99952 0600B	226	227	14
99952 0616	122	123	6
	122	123	9
99952 0618	53	55	41
	53	56	42
	57	60	51
	57	60	52
	125	126	7
	127	128	19
	146	147	20
	149	151	37
	152	153	11
	152	154	28
	156	158	22
	156	158	30
	165	167	32
	169	170	6
	169	171	15
	169	172	37
	169	172	43
	176	177	13
	176	177	14
	210	215	63
	210	215	68
	216	219	39
	226	229	46
	226	229	48
	256	257	8
99952 0618B	226	228	18
99952 0800	1	3	35
	1	3	36
	1	3	37
	27	28	19
	27	31	49
	45	46	8
	95	99	61
	100	101	21
	110	111	9

99952 0800	118	120	29
	152	153	13
	156	158	20
	169	170	3
	169	172	35
	184	189	51
	200	202	10
	210	213	27
99952 0816	129	130	16
	129	131	34
	146	148	30
	152	153	3
	152	153	4
	179	181	23
	184	187	29
	204	205	8
	204	206	17
99952 0818	200	201	8
	226	227	10
99952 0822	129	131	32
	129	131	33
	152	154	32
	169	170	2
	179	182	32
	179	182	33
	179	183	43
	184	187	38
	184	187	39
	200	201	8
99952 1000	32	34	18
	50	52	37
	53	55	31
	92	94	11
	129	131	36
99952 1400	110	111	10
99953 0400	21	23	39
99953 0400B	222	225	29
99953 0500	222	224	24
99953 0600	24	26	28
99953 0800	14	15	9
	14	15	11
	21	23	25
	27	29	23
	27	29	26
	27	29	29
	35	36	11
	45	49	59
	57	59	39
	57	59	40
	127	128	5
	146	148	31
99953 1000	32	33	4
	32	33	16
	32	34	18
	35	36	10
	35	37	32
	53	55	30
99953 1200	32	34	19

99958 1018	89
99963 3310	42
99963 3330	42
99963 6310	38
99963 6330	38
99967 0400A	239
99967 0500	169
99967 0500B	169
	226
	226
	239
99967 0600B	226
99971 0300	95
99971 0400	5
	24
	85
	95
	95
	95
	104
	140
	169
	169
	226
	226
	239
	239
	251
99971 0500	35
	45
	53
	57
	61
	118
	118
	136
	140
	169
	169
	169
	169
	195
	195
	195
	200
	200
	200
	207
	210
	210
	216
	216
	222
	222
	222
	226
	226
	226

INDEX. 99971 0500～99971 0800

99971 0500 √	226	228	19
	226	228	22
	226	228	23
	226	229	38
	226	229	47
	234	235	16
	251	253	20
	260	261	9
	260	262	14
	260	262	20
99971 0600 √	5	7	24
	5	8	40
	21	22	2
	21	22	18
	21	22	19
	24	26	25
	24	26	28
	27	29	28
	27	29	33
	27	30	46
	27	31	48
	27	31	61
	27	31	63
	35	37	35
	42	43	4
	42	44	24
	45	46	9
	45	49	60
	45	49	63
	53	56	41
	53	56	42
	57	60	51
	57	60	52
	61	62	6
	61	63	33
	61	64	45
	85	87	29
	122	123	4
	122	123	6
	122	123	9
	122	124	23
	125	126	7
	125	126	14
	127	128	9
	127	128	19
	133	135	32
	136	139	40
	140	141	15
	140	141	21
	143	144	5
	143	145	30
	146	147	20
	149	150	6
	149	150	11
	149	151	37
	152	153	11
	152	154	28
	152	154	30

99971 0600 √	152	155	38
	156	157	3
	156	157	10
	156	158	25
	156	158	27
	156	158	30
	165	167	30
	169	170	6
	169	170	14
	169	171	15
	169	172	37
	169	172	40
	169	172	41
	169	172	43
	169	173	46
	169	173	47
	176	177	13
	176	177	14
	190	192	11
	195	197	7
	195	198	18
	207	209	14
	207	209	24
	210	211	10
	210	212	13
	210	212	19
	210	212	22
	210	213	26
	210	214	53
	210	214	55
	210	215	68
	210	215	69
	216	219	39
	220	221	16
	226	227	14
	226	228	18
	226	229	46
	226	230	48
	226	230	55
	226	230	58
	234	236	27
	234	237	40
	245	246	18
	251	252	15
	251	253	16
	251	253	25
	256	257	8
	256	257	13
	260	261	7
	260	262	16
99971 0800 √	1	3	35
	1	3	36
	1	3	37
	1	4	40
	5	8	43
	9	11	25
	14	15	9
	14	15	11

FINI

99971 0800 √	17	18	14
	19	20	3
	21	23	25
	27	28	19
	27	29	23
	27	29	26
	27	29	29
	27	30	39
	27	31	49
	32	33	9
	32	33	10
	35	36	11
	42	43	22
	42	44	31
	45	46	8
	45	49	59
	50	52	34
	50	52	35
	53	56	45
	53	56	46
	57	59	39
	57	59	40
	57	59	41
	57	60	55
	57	60	56
	61	64	48
	80	81	7
	82	84	19
	82	84	20
	85	86	15
	85	86	17
	89	91	23
	92	93	3
	92	93	4
	95	98	35
	95	99	61
	100	102	21
	100	102	29
	110	111	9
	114	115	7
	116	117	10
	116	117	16
	116	117	18
	118	120	29
	129	131	33
	129	131	34
	129	132	40
	133	135	33
	136	138	33
	136	139	54
	140	141	12
	146	148	32
	149	150	4
	152	153	3
	152	153	4
	152	153	13
	169	170	2
	169	170	3

99971 0800 √	169
	179
	179
	179
	179
	179
	184
	184
	184
	184
	184
	200
	200
	210
	210
	226
	260
99971 1000 √	5
	32
	32
	32
	32
	35
	35
	50
	53
	53
	61
	61
	61
	61
	89
	92
	92
	107
	107
	107
	110
	110
	110
	114
	114
	114
	116
	129
	146
	149
	165
99971 1200 √	27
	32
	92
	110
	110
99971 1400 √	75
99971 1800 √	95
	100
99972 0800 √	129
	146

FINI

INDEX. 99972 1400～99979 1200

99972 1400	0	146	148	22
99974 0400	√	239	241	16
99974 0600	0	195	196	6
		260	261	6
		260	263	39
99975 0400	0	226	230	62
99975 0500	√	234	236	34
		234	237	37
99975 0600	√	195	196	6
99979 1200	√	21	22	9

FINI