MAZDA RX-3 SEDAN, COUPE & ROTARY WAGON PARTS CATALOG

Vol.-2



© 1972 by

TOYO KOGYO CO.,LTD.

Rotary Engine : Licensed by NSU/Wankel

Revised Edition June, 1974

HOW TO USE THIS PARTS CATALOG

This parts catalog is compiled for the following models
Model:

- RX-3 Rotary Wagon 1972 Model (From Car No. 100097 72/3~)
- RX-3 Sedan and Coupe 1972 Model (From Car No. 100008 72/3~)
- RX-3 Rotary Wagon 1973 Model (From Car No. 106357 72/8~)
- RX-3 Sedan & Coupe 1973 Model (From Car No. 108671 72/8~)

Model No	Model / Type	Description
1570	S124A	RX-3 Sedan, 4 Door, Floor Shift, Reclining Seats General U S A Spec 1972 Model
1571	S124W	RX-3 Rotary Wagon, 4 Door, Floor Shift General U S A Spec 1972 Model
1572	S124A-CA	RX-3 Coupe, 2 Door, Floor Shift, Reclining Seats General U S A Spec 1972 Model
1608	S124A-CAP	RX-3 Coupe With 5-Speed T/mission General U S A Spec 1973 Model
1609	S124A-CAP	RX-3 Coupe With 5-Speed T/mission Canadian Spec 1973 Model
1620	S124A	RX-3 Sedan, 4 Door, Floor Sbift Geveral U S A Spec 1973 Model
1621	S124A-T	RX-3 Sedan With Automatic T/mission, 4 Door, Floor Shift General U S A Spec 1973 Model
1622	S124A-CA	RX-3 Coupe, Floor Shift General U S A Spec 1973 Model
1623	S124A-CAT	RX-3 Coupe With Automatic T/mission, Floor Shift General U S A Spec 1973 Model
1624	S124W	RX-3 Rotary Wagon, 4 Door, Floor Shift General U S A Spec 1973 Model
1625	S124W-T	RX-3 Rotary Wagon With Automatic T/mission, 4 Door, Floor Shift General U S A Spec 1973 Model
1626	S124A	RX-3 Sedan, 4 Door, Floor Shift Canadian Spec 1973 Model
1627	S124A-T	RX-3 Sedan With Automatic T/mission, 4 Door, Floor Shift Canadian Spec 1973 Model
1628	S124A-CA	RX-3 Coupe, 2 Door, Floor Shift Canadian Spec 1973 Model
1629	S124A-CAT	RX-3 Coupe With Automatic T/mission, Floor Shift Canadian Spec 1973 Model
1630	S124W	RX-3 Rotary Wagon, 4 Door, Floor Shift Canadian Spec 1973 Model
1631	S124W-T	RX-3 Rotary Wagon With Automatic T/mission, 4 Door, Floor Shift Canadian Spec 1973 Model
1693	S124A	RX-3 Sedan, 4 Door, Floor Shift Northern U S A Spec 1973 Model
1694	S124A-CA	RX-3 Coupe, Floor Shift Northern U S A Spec 1973 Model
1695	S124A-CAP	RX-3 Coupe With 5-Speed T/mission Northern U S A Spec 1973 Model
1696	S124W	RX-3 Rotary Wagon, 4 Door, Floor Shift Northern U S A Spec 1973 Model
1697	S124A-T	RX-3 Sedan With Automatic T/mission, 4 Door, Floor Shift Northern U S A Spec 1973 Model
1698	S124A-CAT	RX-3 Coupe With Automatic T/mission, Floor Shift Northern U S A Spec 1973 Model
1699	S124W-T	RX-3 Rotary Wagon With Automatic T/mission, 4 Door, Floor Shift Northern U S A Spec 1973 Model

INSTRUCTIONS FOR USE OF THIS PARTS CATALOG

1) Layout of Parts Catalog

The srares relevent to each assembly are printed inset to the right, and parts that constitute a sub-assembly are indicated by illustrations and classified according to each assembly. Therefore, if a spare part is not printed inset to the right, this shows that the part does not constitute a part of the assembly.
Moreover, to aid identification of spares, "exploded" illustrations are incorporated in this catalog.

(Ⅱ) How to locate Parts

1) When part number is not known.

A. Refer to index of groups and locate the group to which to which the part belong.

⇩

B. Open to group illustration and locate part wanted.

⇩

C. See the number given for the part in the illustration and find corresponding number in the parts composition lists.

⇩

D. Then, you will find the name and the part number of the part on the right side of this number.

(a) ····· **Includes** (b) to (c)
(b) ····· Includes (c)
(d) ····· Is not included in any ass'y nor sub ass'y

2) **On parts Number**

A. Exclusive parts

Example :

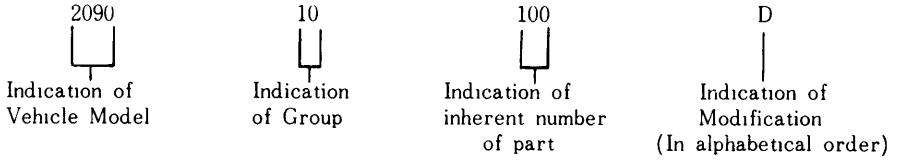

B. Standardized parts (General parts)

Example :

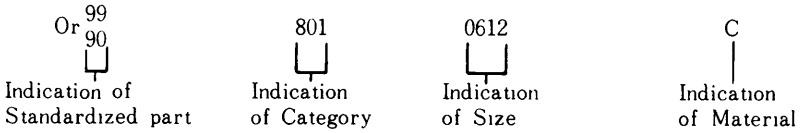

C. Standardized parts (Tires, Tubes, Disc Wheels, etc.)

Example :

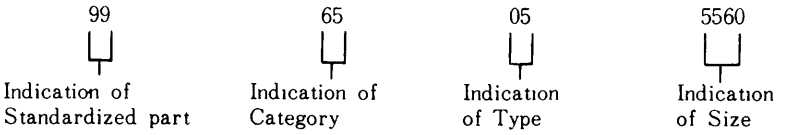

3) On Quantity

The quantity given in the parts composition list shows number of parts used per vehicle and does not indicate selling unit.

4) Other Precautions

☆ Mark····· Parts marked thus are not available as replacement parts, therfore, when these parts are required, order in the form of assemblies (or sets) including these parts or in the form of parts interchangeable with these parts.

5) Abbreviations

(R)	Right	O.S	Over Size
(L)	Left	U.S.	Under Size
(C)	Center	EX.	Exhaust
(Frt.)	Front	IN	Inlet
(Rr.)	Rear	T/mission	Transmission
Cpt.	Complete	©	Parts with Different Colours (Indicate Colour when Ordering)
Ass'y	Assembly	10	Indication of Group
Std.	Standard	Manual	Manual Transmission
		Automatic	Automatic Transmission
		STA WGN.	Station Wagon

2) When part number is known but shape and name of part is unknown.

A. See index given at back of the parts catalog and find pages where illustation, part number and figure number is listed.

⇩

B. Open to page indicated and locate the part number in parts composition list, and after this locate the part in the illustrtion by referring to figure number given at front of the part number.

⇩

C. The corresponding figure number in the illutration is for the part required.

3) Moreover as an alphabetical index is incorporated after the index of groups, utilize for locating principal parts.

(Ⅲ) On Groups

1) The figure enclosed by a triangle the top of each page (Example 10) indicates group number.

2) Group numbers are determined according to structure and function of parts.

3) The group number given in the index of groups coincide with the numerals (Example 10) of the illustration and parts composition pages.

(Ⅳ) Explanation of Parts Composition Lists

1) Indication of composition of assembly.

(a) Only the description of the parts that comprise the assembly that are available as spares, are inset to the right and given after the assembly part number and description. In this instance a wide space is taken in between for other spare parts.

(b) For parts of sub-assemblies that are included in an assemby and are available as spares, designation is made in the "Remarks" column, (Example : Fig No 8 included).

(c) When a parts description is not inset to the right, this signifies that the part is not included in any assembly or sub-assembly.

Example :

	No	Part Number	Description	Q'ty	Remarks	
(a)	16	1570 41 920	Cylinder, Clutch Release	1		
(b)	17	0191 41 331	Boot	1		
	21	0866 41 320	Piston	1	Fig. No. 22 include	
(b)(c)	22	0603 41 322B	Cup, Piston	1		
(d)	28	0613 41 308	Spring, Retum-Clutch Release Cylinder	1		

(V) Precautions to be taken when placing orders for parts

1) Always specify part nembers, names of parts and quantity required.

2) Be sure to list the parts in order of part number, when filling in order sheet,

3) As processing of orders received by is done by electronic computers, importance is attached to the part number. Therefore, in case the part and name of part do not coincide with each other, the part will be sent to you in accordance with the part number.

(VI) Replacement Page and purport

Page replacements are supplied in monthly frequncy as a rule, listing parts modified or newly added and month and year date will be printed in lower of each replacement page. Therefore it is essential that care be taken to check on these dates to confirm if the parts listed conform to the car imported, before ordering.

1) Explanation on designation given in remarks column

a. Car No. ····· Chassis no. of car that modificatiation becomes effective from.

When there are two car numbers given for one modification, the number above is for the Rotoy Wagon models and the number below applies the "Sedan"& "Coupe".

b. $\frac{69}{7}$ ····· 69 designates year of modification and numerals 1 ~12 shows month of year.

c. ○ mark ····· Indicates that modified part and former part are interchangeable.

d. ※ mark ····· Indicates that former part has been superseded by new part and is no longer available.

e. X mark ····· Indicates that modified part and old part are not interchangeable.

f. △ mark ····· Indicates that new part is interchangeable with old part but that old part is not interchangeable as a replacement for cars utilizing the new part.

2) ● Mark ····· This dot at front of figure number of replacement pages show the parts that have been subject to modification.

Engine Parts

Group No.	Description	Fig.	Page	Part No.
10	Rotor Housing (Front)	1		2~4
10	Rotor Housing (Rear)	5		6~9
10, 11	Rotor	10		11~14
13	IN. & EX. System	15		16~18
13	Emission Control System (1972 Model)	19		20~21
● 13	Emission Control System (1973 Model)	21-1		21-2~21-3
13	Starting Assist System (1972 Model)	21-A		21-B
● 13	Starting Assist System (1973 Model)	21-C		21-C
23	Air Cleaner	22		23
23	Carburettor (1972 Model)	24		25~26
● 23	Carburettor (1973 Model)	26-A		26-B~26-D
14	Oil Pump	27		28~30
23	Metering Oil Pump	31		32
14, 15	Cooling System	33		34~37
16	Clutch Control System (Manual, 1972 Model)	38		39~40
● 16	Clutch Control System (Manual, 1973 Model)	40-A		40-B
17	Manual T/mission (Case), Four-Forward Speed (1972 Model)	41		42~43
● 17	Manual T/mission (Case), Four-Forward Speed (1973 Model)	43-A		43-B~43-C
● 17	Manual T/mission (Case, Five-Forward Speed)	43-D		43-E~43-F
17	Manual T/mission (Gear, Four-Forward Speed, 1972 Model)	44		45~46
● 17	Manual T/mission (Gear, Four-Forward Speed, 1973 Model)	46-A		46-B~46-C
● 17	Manual T/mission (Gear, Five-Forward Speed)	46-D		46-E~46-G
17	Manual T/mission (Gear Controls, Four-Forward Speed)	47		48~49
● 17	Manual T/mission (Gear Controls, Five-Forward Speed)	49-A		49-B~49-C
18, 24	Distributor (1972 Model)	50		51~55
● 18, 24	Distributor (1973 Model)	55-A		55-B~55-F
18, 24	Alternator	56		57~58
18, 24	Starter & Battery (1972 Model)	59		60~62
● 18, 24	Starter & Battery (1973 Manual, For U.S.A.)	62-1		62-2~62-3
● 18, 24	Starter & Battery (1973 Manual, For Canada)	62-4		62-5~62-7
● 18, 24	Starter & Battery (Automatic)	62-8		62-9~62-11
● 19	Automatic T/mission (Converter, Oil Pump & Piping)	62-12		62-13~62-15

INDEX.

Group No.	Description	Fig. Page • Part No.
• 19	Automatic T / mission (Case)	62–1662–17~62–18
• 19	Automatic T / mission (Clutch & Planetary Gear)	62–1962–20~62–22
• 19	Automatic T / mission (Low, Reverse & Governor)	62–2362–24~62–25
• 19	Automatic T / mission (Manual Linkage)	62–2662–27
• 19	Automatic T / mission (Main Control)	62–2862–29~62–30

Chassis Parts

25	Propeller Shaft	63	64
26	Rear Axle	65	66~67
26	Rear Brake	68	69~71
27	Driving	72	73~74
28	Rear Suspension (Sedan & Coupe)	75	76~77
28	Rear Suspension (Rotary Wagon)	78	79~80
32	Steering System (Wheel & Gear)	81	82~85
32	Steering System (Rod)	86	87~88
33	Front Axle	89	90~92
34	Front Suspension	93	94~96
39	Engine & T / mission Bracket	97	98
40	Exhaust System	99	100~102
42	Fuel Tank (Sedan & Coupe)	103	104~106
42	Fuel Tank (Rotary Wagon)	107	108~109–1
13.45	Fuel Piping (Sedan & Coupe)	110	111~112
13.45	Fuel Piping (Rotary Wagon)	113	114~115
41	Accelerator Control System	116	117
41.43	Clutch & Brake Pedal	118	119~120
41	Clutch Release & Master Cylinder	121	122~123
43.49	Tandem Master Cylinder & Master Vac	124	125~127
44	Parking Brake System	128	129~130
43.45	Piping (Clutch & Brake)	131	132~133
• 46	Change Controls (Automatic)	133–A	133–B~133–C

Body Parts

Group No.	Description	Fig. Page	Part No.
50	Bumper & Grille	134	135~137-A
52	Bonnet & Trunk Lid	138	139~141
51~70	Body Panels (Front)	142	143~144
53.54	Body Panels (Side, Coupe)	145	146~147
53.54	Body Panels (Side, Sedan)	148	149~150
53.54	Body Panels (Side, Rotary Wagon)	151	152~153
56	Body Panels (Floor, Sedan & Coupe)	154	155~157
56	Body Panels (Floor, Rotary Wagon)	158	159~161
55.60	Dashboard	162	163~167
55.75	Meter	168	169~170
57	Seat	171	172~175-1
58.59	Front Side Door (Glass)	176	177~179-1
58.59	Front Side Door (Lock)	180	181~184
61	Car Heater	185	186~187
61.76	Heater Unit & Blower	187-A	187-B~187-C
61	Car Cooler	188	189~192
61.76	Cooler Unit	192-A	192-B
61.76	Compressor (Car Cooler)	192-C	192-D~192-E
62.63	Back Door (Rotary Wagon)	193	194~197
66.89	Lamps (Front Side)	198	199~200
66.89	Lamps (Rear Side, Sedan & Coupe)	201	202~203
66.89	Lamps (Rear Side, Rotary Wagon)	204	205~206
66.67	Electric Equipment (Body)	207	208~212
66.87	Windshield Wiper	213	214~215
66.87	Screen Washer	216	217
66	Auto Radio & Stereo	218	219~220
68	Crush Pad, Glove Pocket & Console Box	221	222~225
68	Service Tools	226	227~228
69~71	Attachment (Sedan & Coupe)	229	230~232
69~71	Attachment (Rotary Wagon)	233	234~235
69	Top Ceiling & Trim (Sedan & Coupe)	236	237~238
69	Top Ceiling & Trim (Rotary Wagon)	239	240~241-1
69	Floor Mat & Trim	242	243~244-1
70.71	Ventilator	245	246

INDEX.

Group No.	Description	Fig. Page	Part No.
70.71	Window Glass & Moulding (Sedan & Coupe)	247	248~250
70.71	Window Glass & Moulding (Rotary Wagon)	251	252~253
72.73	Rear Window (Coupe)	254	255~258
72.73	Rear Side Door (Glass, Sedan & Rotary Wagon)	259	260~263
72.73	Rear Side Door (Lock, Sedan & Rotary Wagon)	264	265~267
09	Key Set	268	269
	INDEX.		270~302

ALPHABETICAL INDEX

Description	Page
ENGINE	
Bearing Set, Rotor	11
Bearing, Needle	12
Belt, "V"-Air Pump	20
Bolt, Tension	8
Bracket, Alternator	3
Bracket, Engine Mounting	98
Cap, Evaporation-Air Cleaner	17
Cap, Oil Filler	8
Carburettor	17, 25
Cleaner, Air	17, 23
Cover, Dust	7
Cover, Front	3
Duct, Hot Air	17
Element, Air Cleaner	23
Filter, Charcoal	21
Gasket Set, Engine	4
Gasket Set, Manifold	16
Gauge, Oil Level	8
Gear, Distributor Drive	13
Gear, Stationary (Frt)	11
Gear, Stationary (Rr)	12
Hanger, Engine	8
Hanger, Engine-Sub	4
Hose, Air	20
Hose, Hot Air	17
Housing, Front	2
Housing, Intermediate	7
Housing, Rear	6
Housing, Rotor (Frt)	2
Housing, Rotor (Rr)	6
Insulator, Carburettor	17
Key, Fly Wheel	14
Manifold, Inlet	16
Member, Engine Mounting	98
Nozzle, Air	2, 6
Oil Seal Set, Rotor	11
Pan, Oil	8
Pin, Top Indicator	3
Plate, Oil Baffle	13
Plunger, Pressure Control	3
Pulley	13
Pump, Air	20
Reactor	12
Ring Set, "O"	2, 6
Rotor	11
Rubber, Engine Mounting	98
Seal, Apex	11
Seal, Corner	11
Seal, Side-Outer	11
Senser, Thermo	7
Shaft, Eccentric	12
Spring, Oil Seal	11
Sprocket, Drive	13
Strap, Air Pump	20
Supporter, Air Cleaner	17
Tray, Carburettor	17
Tube, Vacuum	20
Valve, Air Control	20
Valve, Air Supply	21
Valve, Anti-Afterburn	21
Valve, Check	20
Valve, Coasting	20
Weight, Balance	13
Wheel, Fly	13
EXHAUST SYSTEM	
Band, Protector	102
Bracket	101
Gasket, Flange	100
Gasket, Reactor & EX Pipe	101
Hanger, Silencer	100
Hook	100
Pipe, EX.-Front	100
Pipe, Silencer Hanger	100
Protector	102
Rubber, Joint	102
Silencer, Main	100
LUBRICATION	
Adjuster, Chain	28
Body, Oil Pump	28

ALPHABETICAL INDEX

Description	Page
Cartridge, Oil Filter	29
Chain	28
Filter, Oil	29
Gear, Drive-Oil Pump	28
Gear, Driven	30
Plate, Middle Oil Pump	28
Pump, Metering Oil	30, 32
Regulator, Pressure	29
Rod, Connecting	30
Rotor Set, Oil Pump	28
Shaft, Driven Gear	30
Shaft, Oil Pump	28
Strainer, Oil	28
Tube, Metering Oil	30

COOLING

Cooler, Oil	36
Fan & Fan Drive	35
Hose, Oil	36
Hose, Water	36
Joint, Hose	6
Pulley, Water Pump	35
Pump, Water	34
Radiator	36
Repair Kit, Water Pump	34
Shroud, Radiator	36
Tank, Sub	36
Thermostat, Water	34

CLUTCH

Collar, Release-Clutch	39
Cover, Clutch	39
Cylinder, Clutch Master	122
Cylinder, Clutch Release	122
Disc, Clutch	40
End, Fork	119
Fork, Release	40
Holder, Flexible Hose	123
Hose, Flexible	123
Housing, Clutch	39
Pad, Pedal	119
Pedal, Clutch	119
Pin, Pivot	39
Pipe, Clutch	123, 132
Repair Kit, Clutch Master Cylinder	122
Rod, Clutch	119
Rod, Push	119
Seat, Spring	119
Spring, Clutch Release Collar	39

TRANSMISSION

Boot, Dust	49
Case, Change Control	48
Case, T/mission	42
Cover, Blind-T/mission Case	43
Cover, Blind-Extension Housing	43
Cover, Under	43
Fork, Shift	48
Gear, Drive-Speedometer	46
Gear, Driven-Speedometer	42
Gear, Low	45
Gear, Main Drive	45
Gear, Reverse	46
Gear, Reverse Idle	46
Gear, Reverse-Counter	46
Gear, Second	45
Gear, Third	45
Housing, Extension	42
Hub, Clutch	45
Joint, Speedometer Cable	42
Knob, Change Lever	49
Lever, Change	49
Lever, Control	48
Member, T/mission Mount	98
Pass, Oil	43
Piece, Friction	49
Plug, Magnet	43
Ring, Synchronizer	45
Rod, Shift	48
Rubber, T/mission Mounting	98
Shaft, Counter Gear	46
Shaft, Main	45

ALPHABETICAL INDEX

Description	Page
Shaft, Reverse Idle Gear	46
Sleeve, Clutch Hub	45
Spindle, Select Lock	49
Stopper, Bearing	46
Switch, Neutral	43
PROPELLER SHAFT & DRIVING	
Carrier, Differential	73
Case, Differential Gear	73
Driving & Differential	73
Flange, Companion	73
Gear Set, Final	73
Gear, Differential Side	73
Joint Set, Universal	64
Piece, Distance	73
Pinion, Differential	73
Shaft, Pinion	73
Shaft, Propeller	64
Yoke, Sliding	64
FRT. & RR. AXLE	
Adapter, Mounting	69, 90
Anchor Block	69
Brake, Disc	90
Breather	66
Cap, Center	71, 91
Cap, Hub	90
Cap, Wheel	71, 91
Casing, Rear Axle	66
Cylinder, Wheel	70
Drum, Rear Brake	69
Hub, Front Wheel	90
Lever, Operating	70
Pad Set, Disc Brake	90
Plate, Back-Brake	69
Plate, Disc	90
Plug, Magnet Drain	66
Plug, Oil Level	66
Ring, Dust	90
Ring, Wheel-Center Cap	71, 91
Rubber, Set-Center Cap	91
Seal Kit, Disc Brake	90

Description	Page
Shaft, Rear Axle	66
Shoe, Brake	69
Strut, Operating	70
SUSPENSION	
Arm	95
Arm, Knuckle	95
Ball Joint Set	95
Bracket, Damper	80
Bracket, Shackle	76
Bumper, Bound	77, 80, 94
Clamp, Spring	76, 79
Damper, Front	96
Damper, Rear	77, 80
Holder, Rubber Pad	77, 79
Member, Cross	94
Pin, Spring	79
Plate, Adjusting	94
Plate, Shackle	76, 79
Rubber, Mounting	94
Rubber, Stopper	77, 79
Spring, Coil	94
Spring, Rear	76, 79
Stabilizer	94
STEERING	
Arm, Pitman	84
Boss, Steering Wheel	82, 83
Bracket, Shaft Jacket	85
Button, Horn	82
Cap, Horn	82
Cover, Column	167
Cover, Dust	85
Cover, Side	84
Cover, Wheel Core	83
Emblem, Horn Cap	82
Gear, Steering	83
Idler	87
Link, Center	87
Rod, Tie	87
Shaft, Energy Absorbing	83
Shaft, Sector	84

ALPHABETICAL INDEX

Description	Page
Socket Set	87

ACCELERATION CONTROLS

Description	Page
Pedal, Accelerator	41
Retainer, Accelerator Rod	41
Rod, Accelerator Control	41
Wire, Accel.	41

FOOT BRAKE

Description	Page
Bracket, Brake Fail Indicator	133
Bracket, Master Cylinder	120
Connector, Pipe	132
Cylinder, Tandem Master	125
End, Fork	120
Holder, Reserve Tank	126
Holder, Vacuum Pipe	133
Hose, Flexible	132
Hose, Vacuum	133
Indicator, Brake Fail	132
Joint, Pipe-Rear	132
Pad, Pedal	119
Pedal, Brake	119
Pipe, Brake	132
Pipe, Vacuum	133
Repair Kit, Master Vac	127
Tank, Reserve	126
Vac, Master	126

PARKING BRAKE

Description	Page
Boot	129
Button	129
Cable, Front	129
Cable, Rear	129
Lever, Hand Brake	129
Ratchet	129
Rod, Release	129

FUEL SYSTEM

Description	Page
Board, Partition	104
Bracket, Fuel Pump	111, 114
Cap, Filler	105, 108
Clamp, Fuel Filter	111, 114
Clamp, Hose	108
Cord, Earth-Fuel Pump	111, 114
Filter, Fuel	111, 114
Hose, Joint	104, 108
Lid, Filler	104, 109
Lock, Filler Lid	269
Pipe, Evaporation	111, 114
Pipe, Filler	104, 108
Pipe, Fuel	111, 114
Pipe, Fuel Main	111, 114
Pipe, Fuel Return	111, 114
Plate, Back Up	105
Pump, Fuel	111, 114
Tank, Condense	105, 109
Tank, Fuel	104, 108
Tube, Vent	105, 109

ELECTRICAL EQUIPMENT

Description	Page
Alternator	57
Ammeter	170
Antenna	219
Arm, Wiper	214
Auto Radio & Stereo	219
Battery	61
Belt, "V"-Alternator	58
Blade, Wiper	214
Block, Fuse	208
Block, Main Fuse	209
Box No. 2, Control	55
Box, Control	55
Bracket, Alternator	57
Bracket, Ignition Coil	51
Buzzer, Door	212
Buzzer, Seat Switch	212
Cable, Battery Positive	61
Cable, Choke	165
Cable, Speedometer	165
Clamp, Battery	61
Clock, Auto	164
Coil, Ignition	51
Cord, Earth	106
Cord, High Tension	51, 52
Cord, Parking Lamp Switch	129

ALPHABETICAL INDEX

Description	Page
Distributor	52
Flasher Unit	212
Gauge Unit, Water Heat	34
Gauge, Fuel Tank	106, 109
Harness, Wiring (Front & Rear)	210
Harness, Wiring - Engine	210
Harness, Wiring - Meter	210
Hazard Unit	212
Horn, Electric	209
Lamp & Handle	205
Lamp, Front Side Marker	199
Lamp, Front Turn Signal	199
Lamp, Head	199
Lamp, Licence	202
Lamp, Rear Combination	202, 205
Lamp, Rear Side Marker	202
Lamp, Reverse	205
Lamp, Room	208
Lamp, Side Marker	206
Lamp, Throttle Wire	165
Lamp, Warning - Seat	208
Lens, Illumination	164
Lighter, Cigar	167
Loud Speaker, Stereo	219
Meter Set	169
Meter, Combination	170
Meter, Fuel	170
Motor & Link	214
Plug, Sparking	52
Reflector, Reflex - Rear	203
Regulator	55
Relay, Horn	209
Relay, Idle	212
Relay, Ignition Coil	211
Relay, Turn Signal	167
Relay, Wiper Switch	212
Senser No. 2, Thermo	9
Socket, Distributor	54
Starter	60
Strap, Alternator	58

Description	Page
Switch, Back Up Lamp	43
Switch, Combination	166
Switch, Oil Level Warning	8
Switch, Oil Pressure	6
Switch, Parking Lamp	129
Switch, Stop	120
Tachometer	169
Tank, Washer	217
Thermo Detector	55
Thermometer	170
Tray, Battery	61
Tube, Vacuum	54
Wire, Earth	61
Wire, Throttle	165
Wiring, Valve - Emission	21

CHASSIS, BODY & FITTINGS

Bar, Front Bumper	135
Bar, Rear Bumper	135
Belt, Front Seat	175
Bezel, Lamp	136
Body, Door - Front	177
Body, Door - Rear	260
Bonnet	139
Bracket, Lift - Front Door Glass	255
Bracket, Lift - Rear Door Glass	260
Bracket, Lock - Bonnet	143
Bracket, Nose Panel	144
Carrier, Battery	143
Channel, Center - Rear Door	260
Channel, Glass Run	255
Control, Remote - Back Door	194
Cushion, Rear Seat	173
Dam, Window Glass	248, 252
Door, Back - Station Wagon	194
Duct, Ventilator	246
Film, Decoration	196
Finisher, Tail	196
Floor, Rear	159
Frame, Front	155, 159
Garnish, Side Window	257

ALPHABETICAL INDEX

Description	Page
Glass, Back Door	195
Glass, Back Window	248
Glass, Rear Side Door	260
Glass, Front Side Door	177
Glass, Front Window	248,252
Glass, Quarter Window	260
Glass, Rear Side	252
Glass, Window	255
Grille, Radiator	136
Guard Set, Bumper	136
Guard, Stone	250,253
Guide, Glass	255
Handle, Inner	265
Handle, Outer Side	182,265
Handle, Pull	262
Handle, Regulator	182,255,266
Hinge, Bonnet	139
Hinge, Door	183,266
Hinge, Trunk Lid	140
Holder, Number Plate	135
Hook, Bonnet	139
Hook, Front	155,160
Housing, Lamp	153
Insulator, Silencer	156
Knuckle, Seat	172
Lever, Check-Door	267
Lid, Trunk	140
Lock, Rear Door	265
Lock, Bonnet	139
Lock, Door-Front Side	181
Louver, Ventilator	246
Mould, Beltline	179,257,262
Mould, Drip	249,253
Mould, Front Window	248,252
Mould, Front-Radiator Grille	136
Mould, Quarter Line	257
Mould, Rear Window	249
Mould, Sash-Rear Door	262
Mould, Step	250,253
Panel Cap, Nose	144
Panel, Cowl	143,152
Panel, Cowl Side	146,149
Panel, Front Fender	143
Panel, Front Skirt	144
Panel, Rear Deck	147,150
Panel, Rear End (Coupe)	147,150
Panel, Rear Fender (Coupe)	146,149,152
Panel, Roof (Coupe)	147,150
Panel, Wheel Apron	143
Panel, Wheel House	156
Pan, Front Floor	155,159
Pan, Rear Floor	155
Pillar, Center-Outer (Coupe)	146,149,152
Plate, Scarf	249,252
Plate, Scarf-Rear	253
Rack, Door Lock	183,267
Regulator, Door Window	182,255,266
Rest, Arm	178,257,260
Rod, Front Door Lock	181
Rod, Rear Door Lock	265
Screen, Door	258,267
Seat, Front	172
Seat, Rear Back	174
Spring, Balance	140
Spring, Balance-Back Door	194
Stop, Glass	260
Strip, Rubber	255,260
Trim, Back Door	195
Trim, Front Door	178
Trim, Rear Door	260
Trim, Quarter Window	257
Ventilator	246
Weatherstrip, Outer	255,260
Weatherstrip, Quarter Window	260
Weatherstrip, Rear Door	262
Weatherstrip, Rear Side Glass	252
Welt, Seaming	257,262
Wire, Release	139
Wire, Ventilator Control	246
KITS, ACCESSORIES & OPTIONAL PARTS	

ALPHABETICAL INDEX

Description	Page
Belt, "V"-Car Cooler	189
Blank Key, Primary	269
Blank Key, Steering Lock	269
Box, Glove-Outer	224
Box, Hood Center	164
Ceiling, Top	237, 240
Compressor	190
Console, Front	224
Cooler, Car	189
Emblem, Front	230
Emblem, Rear	230
Extractor	231, 235
Garnish, Back Door Trim	240
Grille, Extractor	232
Guide, Ventilator	166
Handle, Assist	231, 235
Handle, Jack	227
Hanger, Coat	231
Heater Set	186, 187
Hood No. 1	163
Insulator	243
Jack	227
Key Set	269
Key Sub Set, Back Door	269
Key Sub Set, Side Door	269
Key Sub Set, Trunk Lid	269
Key, Primary	269
Lid, Glove-Inner	223
Lid, Glove-Outer	224
Lock, Spare Tire	227
Lock, Steering	269
Mark, Rotary Wagon	234
Mat, Floor	243
Mirror, Door	230, 234
Mirror, Room	230, 234
Name, MAZDA RX-3	230
Nozzle, Defroster	165
Ornament	230
Pad, Crush	222
Pad, Floor	243

Description	Page
Plate, Set-Mat Rear	243
Shelf, Parcel	224
Silencer, Floor	243
Sub Key	269
Sun Visor	231, 234
Tools	227
Tray, Ash	223
Trim, Back Door-Upper	240
Trim, Center Pillar	237, 240
Trim, Front Pillar	237, 240
Trim, Front Side	237, 240
Trim, Package Tray	238
Trim, Quarter	240
Trim, Rear Pillar	238
Trim, Rear Seat Side	243
Trim, Tire House	243

ROTOR HOUSING (FRONT)

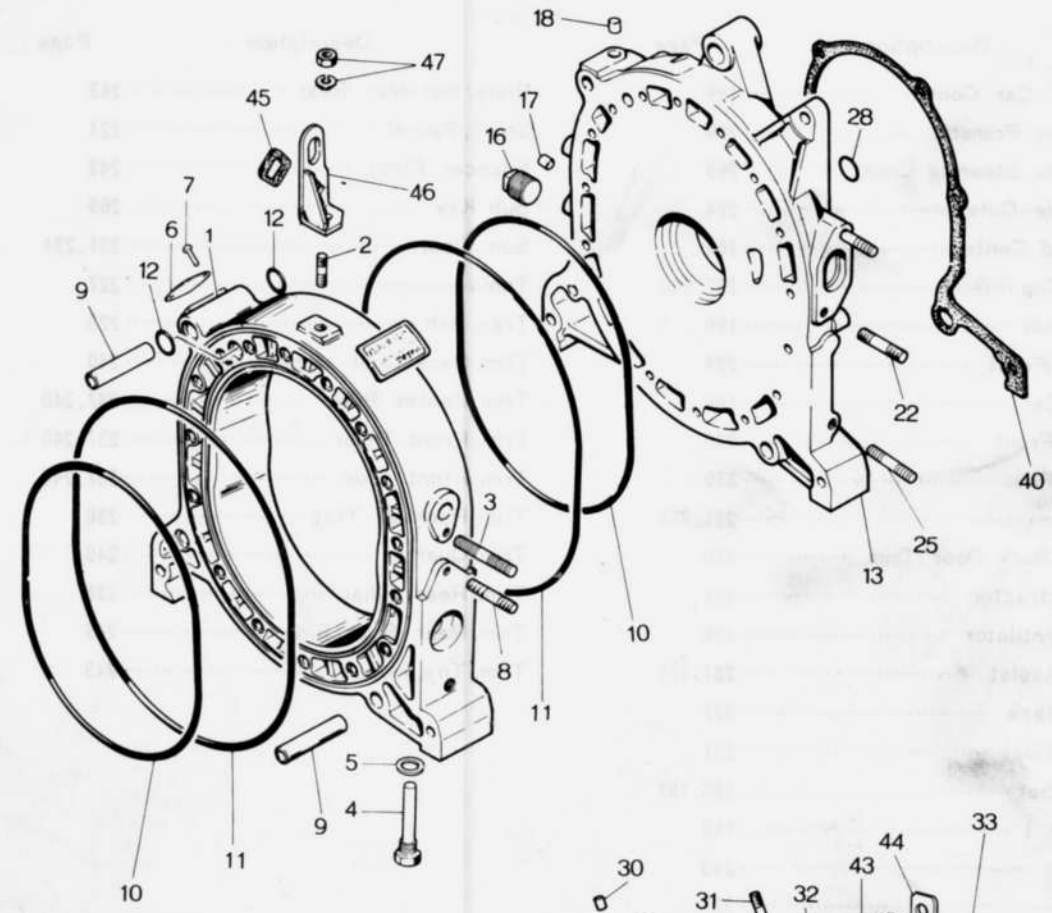

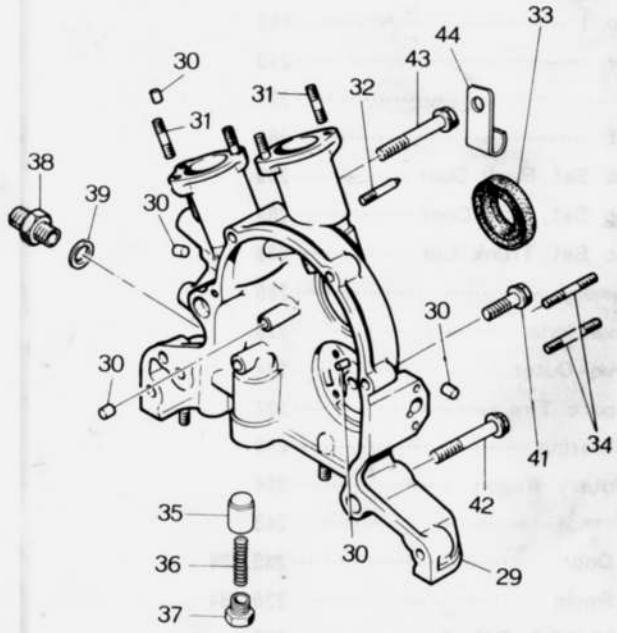

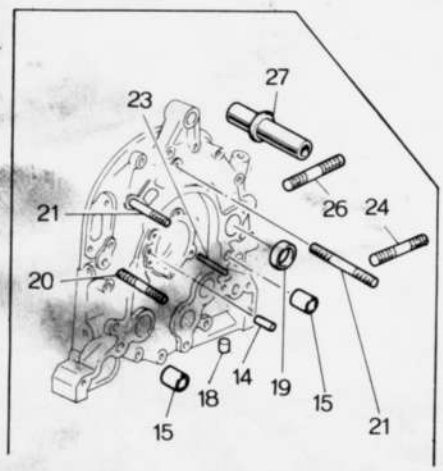

No.	Part Number	Description	Q'ty	Remarks
● 1	2090 10 100D	Housing Ass'y, Rotor (Front) ~~(Manual)~~	1	1972 Model
●	2090 10 100E	Housing Ass'y, Rotor (Front) ~~(Manual)~~	1	Car No. 105746 / 108472 72/8 ~ ○
●	1669 10 100A	Housing Ass'y, Rotor (Front) ~~(Automatic)~~	1	1973 Model
●	1669 10 100B	Housing Ass'y, Rotor (Front)	1	Car No. 144053 / 144008 73/7 ~ Δ
2	99851 0814A	Stud, Engine Hanger	1	
	0866 10 105	Stud, Engine Hanger	1	Car No. 103115 / 106593 72/5 ~ ×
3	99851 0822A	Stud, Inlet Manifold	1	
● 4	2329 10 103B	Nozzle, Air ~~(Manual)~~	2	1972 Model
●	~~2329 10 120~~	~~Nozzle, Air~~	2	1973 Model
●	1617 10 120	Nozzle, Air ~~(Automatic)~~	2	
5	99564 1200	Gasket, Air Nozzle	2	
6	2329 10 104	Label, Caution	1	
7	99262 2503	Nail, Caution Label	2	
8	2329 10 105	Stud, Reactor	2	
9	0839 10 111B	Dowel, Tubular	2	
10	0810 10 171	Ring, "O"-Inner	2	
●	1668 10 171	Ring, Square	2	Car No. 113366 / 115841 72/10 ~ ○
11	0813 10 172	Ring, "O" - Outer	2	
12	0813 10 173	Ring, "O" - Tubular Dowel	4	
● Ⓝ	0866 23 025	Protector	2	Car No. 135696 / 139448 73/5 ~ Added Anew
	0845 23 040	Ring Set, "O" (Fig. No. 10 ~ 12 included)	1	Set
●	0845 23 040A	Ring Set, "O" (Fig. No. 10 ~ 12 included)	1	Set Car No. 113366 / 115841 72/10 ~ ○

(1665 10 200A) and {1665 10 200C / 99852 0865A} are interchangeable when exchanged together as a set.

13	1665 10 200	Housing Ass'y, Front	1	
	1665 10 200A	Housing Ass'y, Front	1	Car No. 100097 / 100128 72/2 ~ ○
●	1665 10 200C	Housing Ass'y, Front	1	Car No. 106357 / 108671 72/8 ~ ×
●	1665 10 200D	Housing Ass'y, Front	1	Car No. 107151 / 109301 72/9 ~ ○
14	0839 10 203	Pin, Dowel	1	
15	2329 10 204	Dowel, Tubular	2	
16	2113 10 206	Plug	1	
17	0839 10 206	Plug, Blind	1	
18	0839 10 205	Plug, Blind	1	
19	99306 3000	Plug, Blind - Water	4	
20	99852 0865A	Stud, Water Pump	1	
●	99852 0878A	Stud, Water Pump	1	Car No. 106357 / 108671 72/8 ~ ×
21	99852 0878A	Stud, Water Pump	1	

10 ROTOR HOUSING (FRONT)

No.	Part Number	Description	Q'ty	Remarks
22	99852 0822A	Stud, Inlet Manifold	2	
23	99852 0655	Stud	2	
24	99859 1220A	Stud	1	
25	99852 1016	Stud	1	
26	99859 1225A	Stud	1	
27	0839 18 311B	Bracket, Alternator	1	
28	0813 10 174	Ring, "O"	1	
29	2329 10 600D	Cover Ass'y, Front	1	
●	2329 10 600E	Cover Ass'y, Front	1	Car No. 115327 117725 72/11 ~ △
●	2329 10 600G	Cover Ass'y, Front	1	Car No 73/7 ~ O
30	99307 0600	Plug, Blind	5	
31	99851 0818A	Stud, Distributor	4	
32	0820 10 631A	Pin, Top Indicator	1	
●	0820 10 631B	Pin, Top Indicator	1	Car No. 73/4 ~ O
33	0820 10 605	Oil Seal	1	
34	99855 1020A	Stud	4	
35	0839 14 115	Plunger, Pressure Control	1	
36	0839 14 273	Spring, Return - Plunger	1	
●	0839 14 273A	Spring, Return-Plunger	1	Car No. 115327 117725 72/11 ~ △
37	0221 14 117	Plug, Plunger	1	
●	0839 14 274	Plug, Plunger	1	Car No. 115327 117725 72/11 ~ △
38	99384 1200	Joint, Union	1	
●	99384 1200F	Joint, Union	1	Car No 73/7 ~ O
39	99562 1600	Gasket, Union Joint	1	
●	99564 1600	Gasket, Union Joint	1	Car No. 123972 124434 73/1 ~ O
40	0839 10 641	Gasket, Front Cover	1	
41	99801 0840	Bolt, Front Cover	4	

No.	Part Number	Description	Q'ty	Remarks
	99952 0800	Washer, Plain	4	
	99971 0800	Washer, Spring	4	
42	99801 0865	Bolt, Front Cover	1	
	99952 0800	Washer, Plain	1	
	99971 0800	Washer, Spring	1	
43	99801 0875	Bolt, Front Cover	2	
	99952 0800	Washer, Plain	2	
	99971 0800	Washer, Spring	2	
44	~~2090 18 999~~	~~Clip, Wire Harness~~	~~1~~	
45	2329 10 864	Protector	1	
46	2869 10 860	Hanger, Engine - Sub	1	
●	0871 10 862A	Hanger, Engine - Sub	1 Car No. 142759 147745	73/6~X
● 47	99901 0800	Nut, Engine Hanger	1 Car No. 142759 147745	73/6~Discarded
●	99971 0800	Washer, Spring	1 Car No. 142759 147745	73/6~A. A new
● Ⓝ	1011 18 319	Clip		
●	~~2090 99 100A~~	~~Gasket Set, Engine~~	~~1~~	
●	1027 99 100	Gasket Set, Engine	1	From Car No. 1
●	1027 99 100A	Gasket Set Engine	1 Car No. 135696 139448	73/5~A
Ⓝ	1665 14 200	Oil Pellet	1	
	1665 14 200D	Oil Pellet	1	Car No. 100097 100128 73/2~
Ⓝ	99564 1000	Packing	1	
	99564 1200	Packing	1	Car No. 100097 100128 73/2~
Ⓝ	99503 1000	Plug, Blind	1	

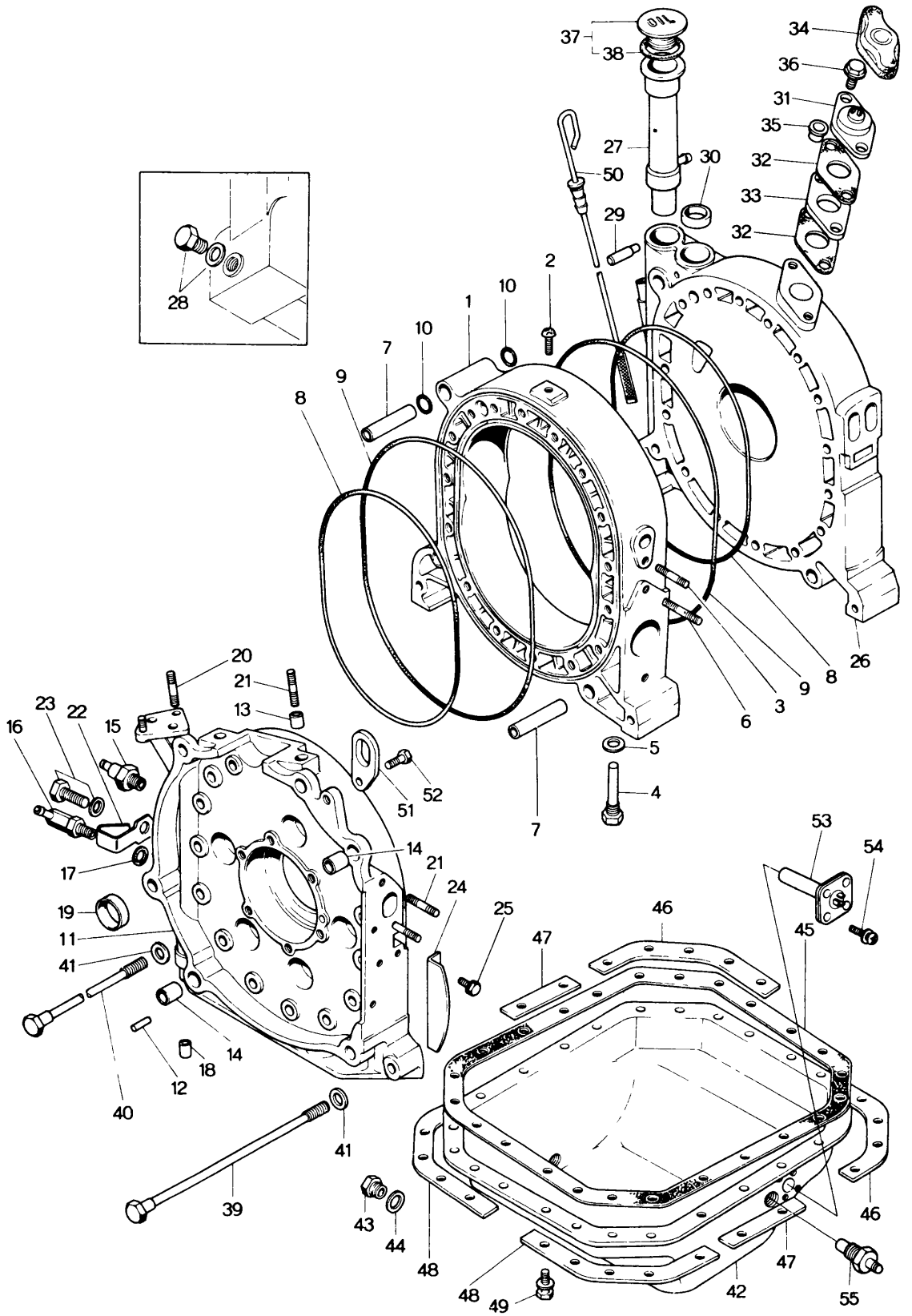
OIL
37
38
34
36
31
35
27
30
32
50
33
29
32
28
2
10
1
10
7
9
8
20
21
13
23
22
15
16
17
19
11
41
40
12
18
14
14
21
24
25
51
52
7
5
4
3
6
9
8
26
53
54
45
46
47
46
47
42
55
48
49
48
43
44
41
39

No.	Part Number	Description	Q'ty	Remarks
1	2090 10 150D	Housing Ass'y, Rotor (Rr.) (1972 Model (Manual))	1	Order by 2090 10 100E
	2090 10 150E	Housing Ass'y, Rotor (Rr.) (1972 Model (Manual))	1	Car No. 72/8 ~ ○ Order by 2090 10 100E
	~~1620 10 150A~~	~~Housing Ass'y, Rotor (Rr.)~~ (1972 Model (Manual))	~~1~~	~~Car No. 72/8 ~ ○~~
	1620 10 150B	Housing Ass'y, Rotor (Rr.) (1973 Model (Manual))	4	Order by 1669 10 100A
•	1620 10 150C	Housing Ass'y, Rotor (Rr.) (1973 Model (Manual))	4	Car No. 144053 73/7 ~ 149008 Δ
	1669 10 150A	Housing Ass'y, Rotor (Rr.) (1973 Model (Automatic))	1	Order by 1669 10 100A
•	1669 10 150B OR 2090-23-0550	Housing Ass'y, Rotor (Rr.) (1973 Model (Automatic))	1	Car No. 144053 73/7 ~ 149008 Δ
2	99833 0810	Screw (Manual)	1	
	0866 10 105	Screw (Manual)	1	Car No. 105746 72/8 ~ 108472 X
	998330810	Screw (Automatic)	1	
	99801 0812	Screw (Automatic)	1	Car No. 117397 72/11 ~ 118868 ○
3	99851 0822A	Stud, Inlet Manifold	1	
4	2329 10 103B	Nozzle, Air	2	1972 Model
	~~2329 10 120~~	~~Nozzle, Air~~	~~2~~	
	1617 10 120	Nozzle, Air	2	1973 Model
5	99564 1200	Gasket	2	
6	2329 10 105	Stud, Reactor	2	
	0839 10 105	Stud, Reactor	2	Car No. 144053 73/7 ~ 149008 Δ
7	0839 10 111B	Dowel, Tubular	2	
8	0810 10 171	Ring, "O" - Inner	2	
	1668 10 171	Ring, Square Inner	2	Car No. 113366 72/10 ~ 115841 ○
9	0813 10 172	Ring, "O" - Outer	2	
10	0813 10 173	Ring, "O" - Tubular Dowel	4	
	0845 23 040	Ring Set, "O" (Fig. No. 8 ~ 10 included)	1	
	0845 23 040A	Ring Set, "O" (Fig. No. 8 ~ 10 included)	1	Set Car No. 113366 72/10 ~ 115841 ○
	0866 23 025	Protector	2	Car No. 135696 73/5 ~ 139448 Added Anew
11	0871 10 300D	Housing Ass'y, Rear (1972 Model)	1	Order Under No. 0872 10 300B
	0871 10 300E	Housing Ass'y, Rear (Automatic) (1973 Model)	1	
	0872 10 300B	Housing Ass'y, Rear (Automatic) (1973 Model)	1	Car No. 107151 72/9 ~ 109301 ○
	0866 10 300G	Housing Ass'y, Rear (Manual) (1973 Model)	1	
	0870 10 300B	Housing Ass'y, Rear (Manual) (1973 Model)	1	Car No. 107151 72/9 ~ 109301 ○

No	Part Number	Description	Q'ty	Remarks
12	0820 10 203	Pin, Knock-Gear	1	
13	99234 1208	Pin, Tubular - Starter (Automatic)	2	
14	0221 10 309	Pin, Tubular	2	
15	0866 18 501A	Switch, Oil Pressure	1	
16	0866 10 320A	Joint, Hose - With Car Heater	1	
17	99562 1600	Gasket	1	
	99564 1600	Gasket	1	Car No. 123972 $^{73}/_{1}$ ~ ○ 124434
18	0839 10 205	Plug, Blind	1	
19	99306 3000	Plug, Blind - Water	5	
20	99852 0822A	Stud	4	
21	99852 0830A	Stud, Starter (Automatic)	2	
22	0866 19 496	Clip	1	
23	99811 1010	Bolt	1	
	99971 1000	Washer, Spring	1	
24	0820 10 305	Cover, Dust	1	
25	99806 0610	Bolt, Dust Cover	2	
	99971 0600	Washer, Spring	2	
26	1663 10 400A	Housing Ass'y, Intermediate	1	
	1663 10 400B	Housing Ass'y, Intermediate	1	Car No. 107151 $^{72}/_{9}$ ~ ○ 109301
27	~~0866 10 411~~ 5/5	Pipe, Oil Filler 1011 · 10 · 410	1	
28	99510 1000	Plug	1	
	99564 1000	Gasket	1	
29	2329 10 417	Pipe	1	
30	99305 2800	Plug, Expansion	1	
31	1663 18 920	Senser, Thermo	1	
32	2329 18 921	Gasket, Thermo Senser	2	
33	2329 18 922	Insulator	1	
34	2329 18 923	Cover	1	
35	2329 18 924	Washer	2	
36	99801 0825	Bolt, Thermo Senser	2	
	99952 0800	Washer, Plain	2	
	99971 0800	Washer, Spring	2	

No.	Part Number	Description	Q'ty	Remarks
37	0324 10 250	Cap, Oil Filler	1	
38	0324 10 252	Gasket	1	
39	0839 10 451A	Bolt, Tension	18	
●	1011 10 451	Bolt, Tension	18	Car No. 111422 72/10 ~ 113912 ○
●	1015 10 451	Bolt, Tension	18	Car No. 127040 73/2 ~ 128211 ○
40	0839 10 452B	Bolt, Tension	1	
●	1011 10 452	Bolt, Tension	1	Car No. 111422 72/10 ~ 113912 ○
●	1015 10 452	Bolt, Tension	1	Car No. 127040 73/2 ~ 128211 ○
41	0839 10 455	Washer, Plain-Tension Bolt	19	
42	1570 10 700	Pan Ass'y, Oil (1972 Model)	1	
●	1572 10 700	Pan Ass'y, Oil (1972 Model)	1	Car No. 105638 72/8 ~ 108463 X
	1620 10 700	Pan Ass'y, Oil (Manual) (1973 Model)	1	
	1621 10 700A	Pan Ass'y, Oil (Automatic) (1973 Model)	1	
43	99511 1400	Plug, Drain	1	
44	99562 1400	Gasket	1	
45	0839 10 711	Gasket, Oil Pan	1	
46	0839 10 721	Stiffener, Oil Pan	2	
47	0839 10 722	Stiffener, Oil Pan	2	
48	0839 10 723	Stiffener, Oil Pan	2	
49	99806 0616	Bolt, Oil Pan	22	
	99971 0600	Washer, Spring	22	
50	0866 10 830	Gauge, Oil Level	1	
51	2090 10 862A	Hanger, Engine (Manual)	1	
	0871 10 862A	Hanger, Engine (Automatic)	1	
52	99801 0818	Bolt, Engine Hanger (Manual)	1	
	99971 0800	Washer, Spring (Manual)	1	
	908016 8 20	Bolt Set, Engine Hanger (Automatic)	1	
●53	2090 10 730B	Switch, Oil Level Warning	1	Car No. 105638 72/8 ~ 108463 Discarded
●54	99833 0418	Screw, Switch	4	Car No. 105638 72/8 ~ 108463 Discarded

10 ROTOR HOUSING (REAR)

No.	Part Number	Description	Q'ty	Remarks
●	99971 0400	Washer, Spring	4	Car No. 105638 108463 72/8 ~ Discarded
55	1617 18 950	Senser No. 2, Thermo	1	1972 Model
	1668 18 950	Senser No. 2, Thermo	1	1973 Model
● Ⓝ	1570 23 200	Short, Engine	1	1972 Model
● Ⓝ	1621 23 200	Short, Engine (Automatic)	1	1973 Model
● Ⓝ	1620 23 200	Short, Engine (Manual)	1	1973 Model

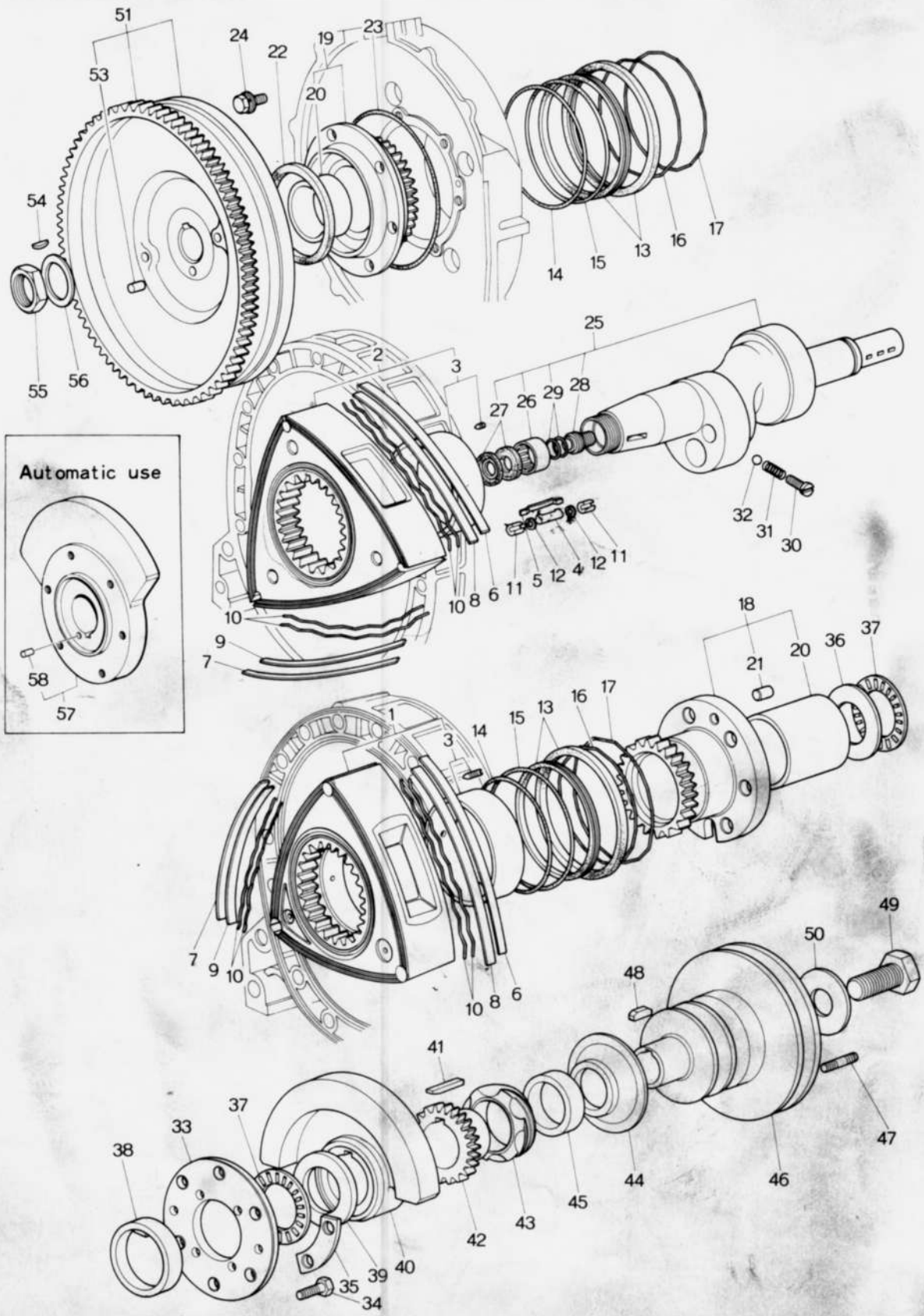
Automatic use

No.	Part Number	Description	Q'ty	Remarks
1	2090 23 103A	Rotor (Frt)	1	
2	2090 23 113A	Rotor (Rr)	1	
3	0839 99 118	Bearing Set, Rotor	2	
●	1011 11 111	Bearing Set, Rotor	2	Car NO. 138781 143348 73/6~X
● 4	0839 11 301B	Seal, Apex (TR 230)		Car No. 131825 134069 73/3~ Discarded
	2080 11 301	Seal, Apex (TMC 15 T) (For General U S A)	6	
	2090 11 301	Seal, Apex (TMC 115)		
	1665 11 301	Seal, Apex (TR 260) (For Canada & Northern U.S.A.)	6	
5	0839 11 304	Spring, Apex Seal	6	
6	2125 23 154	Seal (Rr.), Side-Outer	6	Car No. 104798 108406 72/7~Discarded
7	2125 23 151	Seal (Frt.), Side-Outer	12	Car No. 104798 108406 72/7~Q'ty
	1011 23 151	Seal (Frt.),	12	Car No. 125121 125835 73/1~○
●	1011 23 151A	Seal (Frt.).	12	73/4~○
8	2125 23 155	Seal (Rr.), Side-Inner	6	Car No. 104798 108406 72/7~Discarded
9	2125 23 152	Seal (Frt.), Side-Inner	12	Car No. 104798 108406 72/7~Q'ty
	1011 23 151	Seal (Frt.)	12	Car No. 125121 125835 73/1~○
●	1011 23 151A	Seal (Frt.)	12	73/4~○
10	0820 11 317	Spring, Side Seal	24	
11	0820 11 321C	Seal, Corner		
	0820 23 175A	Seal, Corner (O S 0.2)		
	0820 23 175B	Seal, Corner (O S 0.2)		
	0820 23 176	Seal, Corner (O S 0.03)	Selective use	12 Car No 103115 106593 72/5~○
	0820 23 176A	Seal, Corner (O S 0.03)		Car No. 100097 101005 73/3~○
	0820 23 176B	Seal, Corner (O S 0.03)		Car No. 103115 106593 72/5~○
12	0839 11 323	Spring, Corner Seal ~~(1972 Model)~~		4
	0839 11 323A	Spring, Corner Seal ~~(1973 General U.S.A.)~~ For General U.S.A.		4 Car No. 100097 100128 72/2~○
	1665 11 323	Spring, Corner Seal (1973 Canada & Northern U.S.A.)		4
	0839 11 323A	Spring, Corner Seal (1973 Canada & Northern U.S.A.)		4 Car No. 127800 128944 73/2~○
13	~~0820 23 180 Oil Seal Set~~			~~2~~
	0820 23 180A	Oil Seal Set		2 From Car No. 1

10 11 ROTOR

No.	Part Number	Description	Q'ty	Remarks
●	0820 23 180C	Oil Seal Set	2	Car No. 104234 72/6 ~ △ 108176
14	0820 11 341	Ring, "O" - Inner	4	
●	~~0820 11 341A~~	~~Ring, "O" - Inner~~	~~4~~	~~Car No. 104889 72/7 ~ ○ 108421~~
● 15	0820 11 343	Ring, "O" - Outer ~~(1972 Models & 1973 General U.S.A.)~~	4	
●	~~0820 11 343A~~	~~Ring, "O" - Outer~~	~~4~~	~~Car No. 104889 72/7 ~ ○ 108421~~
●	~~1885 11 343~~	~~Ring, "O" - Outer (1973 Canada & Northern U.S.A.)~~	4	
16	0839 11 351	Spring, Oil Seal - Inner	4	
	0839 11 351A	Spring, Oil Seal - Inner (Frt.)	2	Car No. 100097 100128 72/3 ~ ×
	0839 11 351B	Spring, Oil Seal - Inner (Frt.)	2	Car No. 103115 106593 72/5 ~ ○
●	1011 11 351	Spring, Oil Seal - Inner (Frt.)	2	73/4 ~ O
	0839 11 361	Spring, Oil Seal - Inner (Rr.)	2	Car No. 100097 100128 72/3 ~ Added Anew
	0839 11 361A	Spring, Oil Seal - Inner (Rr.)	2	Car No. 103115 106593 72/5 ~ ○
●	1011 11 361	Spring, Oil Seal - Inner (Rr.)	2	73/4 ~ O
17	0839 11 353	Spring, Oil Seal - Outer	4	
	0839 11 353A	Spring, Oil Seal - Outer (Frt.)	2	Car No. 104199 108147 72/6 ~ ×
●	1011 11 353	Spring, Oil Seal - Outer (Frt.)	2	73/4 ~ O
	0839 11 363	Spring, Oil Seal - Outer (Rr.)	2	Car No. 104199 108147 72/6 ~ Added Anew
●	1011 11 363	Spring, Oil Seal - Outer (Rr.)	2	73/4 ~ O
18	0839 10 500B	Gear, Stationary (Frt.)	1	
19	0820 10 550B	Gear, Stationary (Rr.) (Fig. No. 22 included)	1	
●	1668 10 550	Gear, Stationary (Rr.) (Fig. No. 22 included)	1	Car No. 131107 73/3 ~ △ 132971
20	0820 10 502B	Bearing, Main	2	
21	0839 10 504	Pin, Knock (Frt.)	1	
22	0820 10 556A	Oil Seal, Stationary Gear (Rr.)	1	
●	1668 10 556	Oil Seal, Stationary Gear (Rr.)	1	Car No. 131107 73/3 ~ △ 132971
23	0813 10 555	Ring, "O" - Stationary Gear (Rr.)	1	
24	908012 8 18	Bolt Set, Stationary Gear (Rr.)	6	

No.	Part Number	Description	Q'ty	Remarks
25	0839 11 400I	Shaft, Eccentric (Manual)	1	
●	0879 11 400	Shaft, Eccentric (Manual)	1	Car No. 120143 72/12 ~ Δ 120913
	0842 11 400A	Shaft, Eccentric (Automatic)	1	
●	0842 11 400B	Shaft, Eccentric (Automatic)	1	Car No. 120143 72/12 ~ Δ 120913
26	0810 11 403	Bearing, Needle (Manual)	1	
27	0810 11 404	Oil Seal (Manual)	2	
28	0813 11 405	Plug, Blind	1	
29	99541 01101	Ring, "O"	2	
30	0839 11 411A	Plug, Oil Jet	2	
31	0839 11 412	Spring	2	
32	99611 2000	Ball, Steel	2	
33	0839 11 501	Plate	1	
34	0839 11 515	Bolt, Stationary Gear	6	
35	0820 11 503	Washer, Lock	3	
36	0839 11 504B	Plate, Thrust	1	
37	0813 11 505B	Bearing, Needle	2	
38	0839 11 502	Spacer ($\ell = 8.02$) (Selective use)	1	
	0839 11 506	Spacer ($\ell = 8.08$)		
	0839 11 508	Spacer ($\ell = 8.04$)		
	0839 11 509	Spacer ($\ell = 8.00$)		
39	0820 11 507	Washer, Thrust	1	
40	2090 11 511A	Weight, Balance (Manual)	1	
●	~~0839 11 511A~~ 0839 11 511D	Weight, Balance (Manual)	1	Car No. 123972 73/1 ~ ○ 124434
	0842 11 511A	Weight, Balance (Automatic)	1	
41	0820 11 512A	Key	1	
42	0839 11 551	Sprocket, Drive	1	
●	0839 11 551A	Sprocket, Drive	1	Car No. 123972 73/1 ~ ○ 124434
43	0839 11 531	Gear, Distributor Drive	1	

No.	Part Number	Description	Q'ty	Remarks
44	0813 11 541	Plate, Oil Baffle	1	
45	0820 11 542	Spacer	1	
46	2090 11 601A	Pulley	1	
47	99852 0616A	Stud	4	
48	99236 0525	Key	1	
49	0820 11 611B	Bolt, Pulley	1	
50	99564 2800	Washer, Pulley	1	
51	2090 11 700A	Wheel, Fly (Manual)	1	1972 Model
	1620 11 700	Wheel, Fly (Manual)	1	1973 Model
53	0820 11 703	Pin (Manual)	1	
54	0820 11 705	Key, Fly Wheel	1	
55	0810 11 711	Nut, Fly Wheel	1	
56	0820 11 712	Washer, Lock-Fly Wheel	1	
57	0842 11 750C	Weight, Counter (Automatic)	1	
●	0842 11 750E	Weight, Counter (Automatic)	1	Car No. 108969 72/9 ~ 110816 Δ
58	0820 11 703	Pin (Automatic)	1	

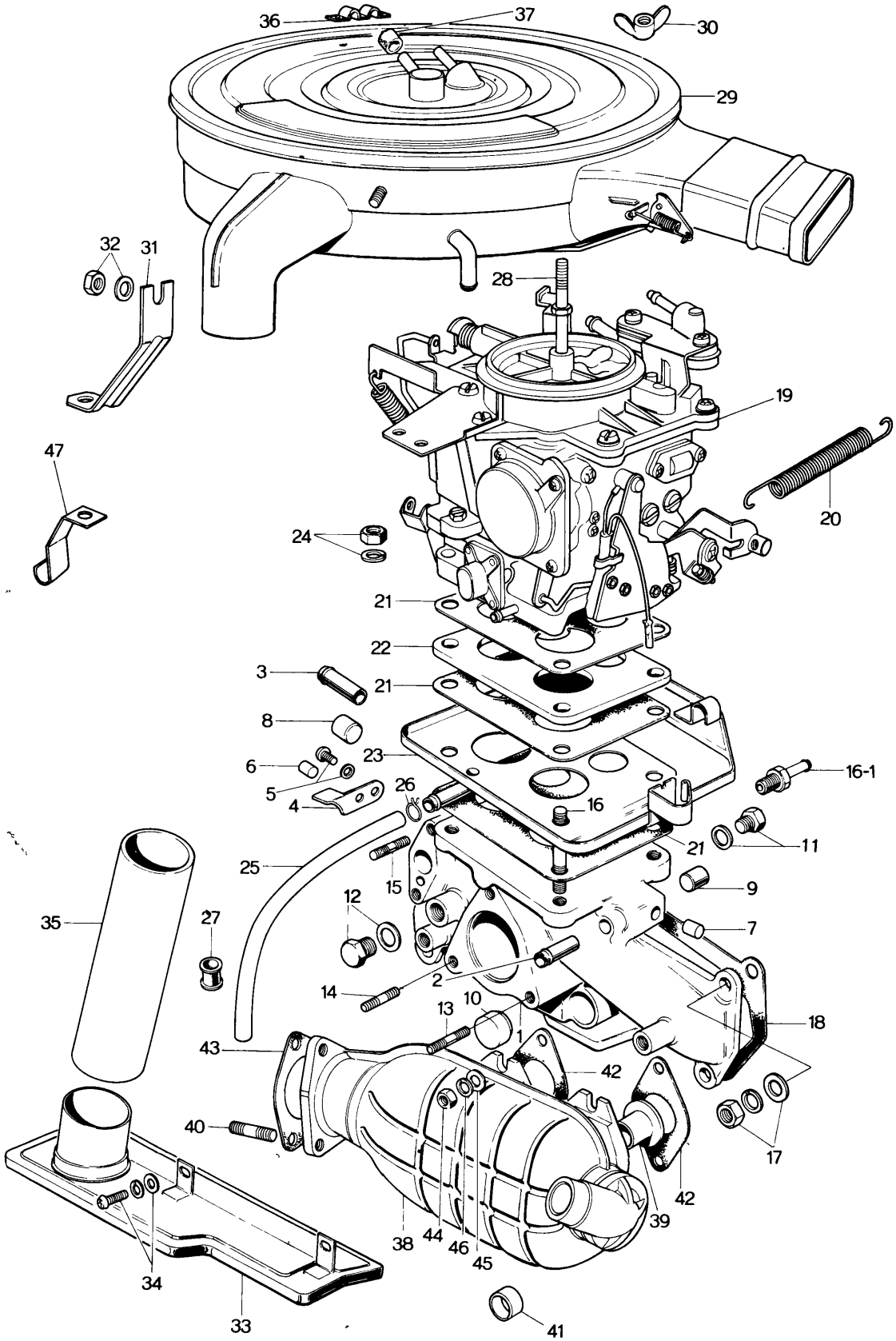
36
37
30
29
32
31
28
19
47
20
24
21
22
3
21
8
6
23
16-1
5
4
26
16
21
11
25
15
9
12
27
7
35
2
14
10
13
1
18
43
42
40
17
42
39
38
44
46
45
34
33
41

No.	Part Number	Description	Q'ty	Remarks
1	2090 13 100B	Manifold Inlet	1	1972 Model
●	~~1668 13 100~~	~~Manifold Inlet~~ (Manual)	~~1~~	
●	1668 13 100A	Manifold Inlet	1	1973 Model
●	~~1669 13 100A~~	~~Manifold, Inlet (Automatic)~~	~~1~~	
●	1669 13 100B	Manifold, Inlet (Automatic)	1	
2	2090 13 105	Pipe	1	
3	2090 13 107A	Pipe	1	
4	2090 13 109	Retainer	1	
5	99833 0510	Screw, Retainer	2	
	99971 0500	Washer, Spring	2	
6	99307 0600	Plug, Blind	1	
7	99307 0800	Plug, Blind	1	
8	99307 1200	Plug, Blind	1	
9	99307 1400	Plug, Blind	1	
10	99307 1600	Plug, Blind	1	
	99503 3000	Plug, Blind	1	Car No. 100097 72/3 ~ 101516 ×
11	99510 0800	Plug (Manual)	1	
	99564 0800	Gasket	1	
12	99511 1000	Plug	1	
	99564 1000	Gasket	1	
13	99851 0622A	Stud, Air Control Valve	2	
14	99851 0632A	Stud, Air Control Valve	1	
15	99851 0624A	Stud, Valve-Anti After Burn	2	
16	99851 0828A	Stud, Carburettor	3	
	99852 0828A	Stud, Carburettor	1	
16-1	0842 19 910	Joint, Union (Automatic)	1	
17	99901 0800	Nut, Inlet Manifold	6	
	99953 0800	Washer, Plain	5	
	99971 0800	Washer, Spring	6	
18	2090 13 111A	Gasket, Inlet Manifold	1	
	2090 13 111B	Gasket, Inlet Manifold	1	Car No. 100097 72/3 ~ 101516 ○

No.	Part Number	Description	Q'ty	Remarks	Price
19	1570 13 200	Carburettor	1	1972 Model	
	1570 13 200A	Carburettor	1	Car No. 100097 ~ 100128 $^{72}/_{2}$ ~○	
	1570 13 200B	Carburettor	1	Car No. 103314 ~ 107055 $^{72}/_{5}$ ~○	
	1668 13 200D	Carburettor (Manual) (General U. S. A.)	1		
●	~~1668 13 200E~~ 1668 13 200E	Carburettor (Manual) (General U. S. A.)	1	Car No. 109805 ~ 111779 $^{72}/_{9}$ ~△	
●	~~1668 13 200G~~ 1668 13 200G	Carburettor (Manual) (General U. S. A.)	1	Car No. 120254 ~ 120913 $^{72}/_{12}$ ~△	
	1672 13 200C	Carburettor (Manual) (Canada & Northern U. S. A.)	1	1973 Model	
●	1672 13 200D	Carburettor (Manual) (Canada & Northern U. S. A.)	1	Car No. 109805 ~ 111779 $^{72}/_{9}$ ~△	
●	1672 13 200F	Carburettor (Manual) (Canada & Northern U. S. A.)	1	Car No. 119373 ~ 120142 $^{72}/_{11}$ ~△	
	1669 13 200B	Carburettor (Automatic)	1		
●	1669 13 200C	Carburettor (Automatic)	1	Car No. 118054 ~ 119210 $^{72}/_{11}$ ~△	
20	2090 13 208A	Spring, Throttle	1		
	1663 13 208	Spring, Throttle	1	Car No. 100097 ~ 101005 $^{72}/_{3}$ ~○	
●	1663 13 208A	Spring, Throttle	1	Car No. 107151 ~ 109301 $^{72}/_{9}$ ~○	
21	0823 13 221A	Gasket, Carburettor	3		
22	1570 13 222	Insulator, Carburettor	1		
23	2090 13 230A	Tray, Carburettor	1		
24	99901 0800	Nut, Carburettor	4		
	99971 0800	Washer, Spring	4		
25	0866 13 235	Pipe, Drain	1		
26	0710 45 191	Clip, Drain Pipe	1		
27	99681 1001	Protector, Drain Pipe	1		
28	0839 13 201	Bolt, Air Cleaner Pipe	1		
29	1665 13 300	Cleaner, Air (1972 Model)	1		
	1665 13 300A	Cleaner, Air (1972 Model)	1	Car No. 102164 ~ 104947 $^{72}/_{4}$ ~○	
	1668 13 300	Cleaner, Air (1973 Model)	1		
●	1668 13 300A	Cleaner, Air (1973 Model)	1	Car No. 134679 ~ 138073 $^{73}/_{4}$ ~△	

No.	Part Number	Description	Q'ty	Remarks	Price
30	99941 0800	Nut, Wing-Air Cleaner	1		
	99941 0801	Nut, Wing-Air Cleaner	1	Car No. 104518 72/7 ~ 108368 ○	
31	1570 13 311	Supporter, Air Cleaner (1972 Manual, 1973 Automatic)	1		
●	~~1620 13 311~~	~~Supporter, Air Cleaner (1973 Manual)~~	~~1~~		
●	1620 13 311A	Supporter, Air Cleaner (1973 Manual)	1	From Car No. 1	
●	1620 13 311B	Supporter, Air Cleaner (1973 Manual)	1	Car No. 115327 72/11 ~ 117925 △	
32	99901 0800	Nut, Air Cleaner	2		
	99940 0802	Nut	2	Car No. 100097 72/3 ~ 102307 ○	
	99953 0800	Washer, Plain	2		
33	1570 13 330	Duct, Hot Air	1		
	1570 13 330C	Duct, Hot Air	1	Car No. 100527 72/3 ~ 102951 △	
	1570 13 330D	Duct, Hot Air	1	Car No. 101712 72/3 ~ 104169 ○	
34	99801 0816	Bolt, Hot Air Duct	2		
	99952 0800	Washer, Plain	2		
	99971 0800	Washer, Spring	2		
35	2090 13 341A	Hose, Hot Air	2		
36	1617 13 305A	Clip	1		
37	2306 10 481	Cap, Evaporation-Air Cleaner	1		
38	1570 13 800	Reactor	1		
	1570 13 800B	Reactor	1	Car No. 100097 72/2 ~ 100444 ○	
	1570 13 800C	Reactor	1	Car No. 103115 72/5 ~ 106593 ○	
39	2090 13 870A	Pipe, Inlet	2		
●	~~4663 13 871~~	~~Pipe, Inlet~~	~~2~~	~~1973 Model~~	
40	2329 13 876	Stud	3		
41	2090 13 742A	Insert, Air Hose	1		

No.	Part Number	Description	Q'ty	Remarks	Price
42	2090 13 889	Gasket, Reactor	2		
43	1570 13 891	Gasket, Reactor + EX. Pipe	1		
●	1114 13 891	Gasket. Reactor + Ex. Pipe	1	Car No. 134891 138364 73¾~Δ	
44	2158 40 355	Nut, Reactor	4		
45	0839 13 614	Washer, Plain	4		
46	2329 13 882	Washer, Spring	4		
47	0866 18 999A	Clip, Air Cleaner Supporter	1		
●	0370 13 441	Clip. Air Cleaner Supporter	1	Car No. 143250 148270 73/7~Δ	

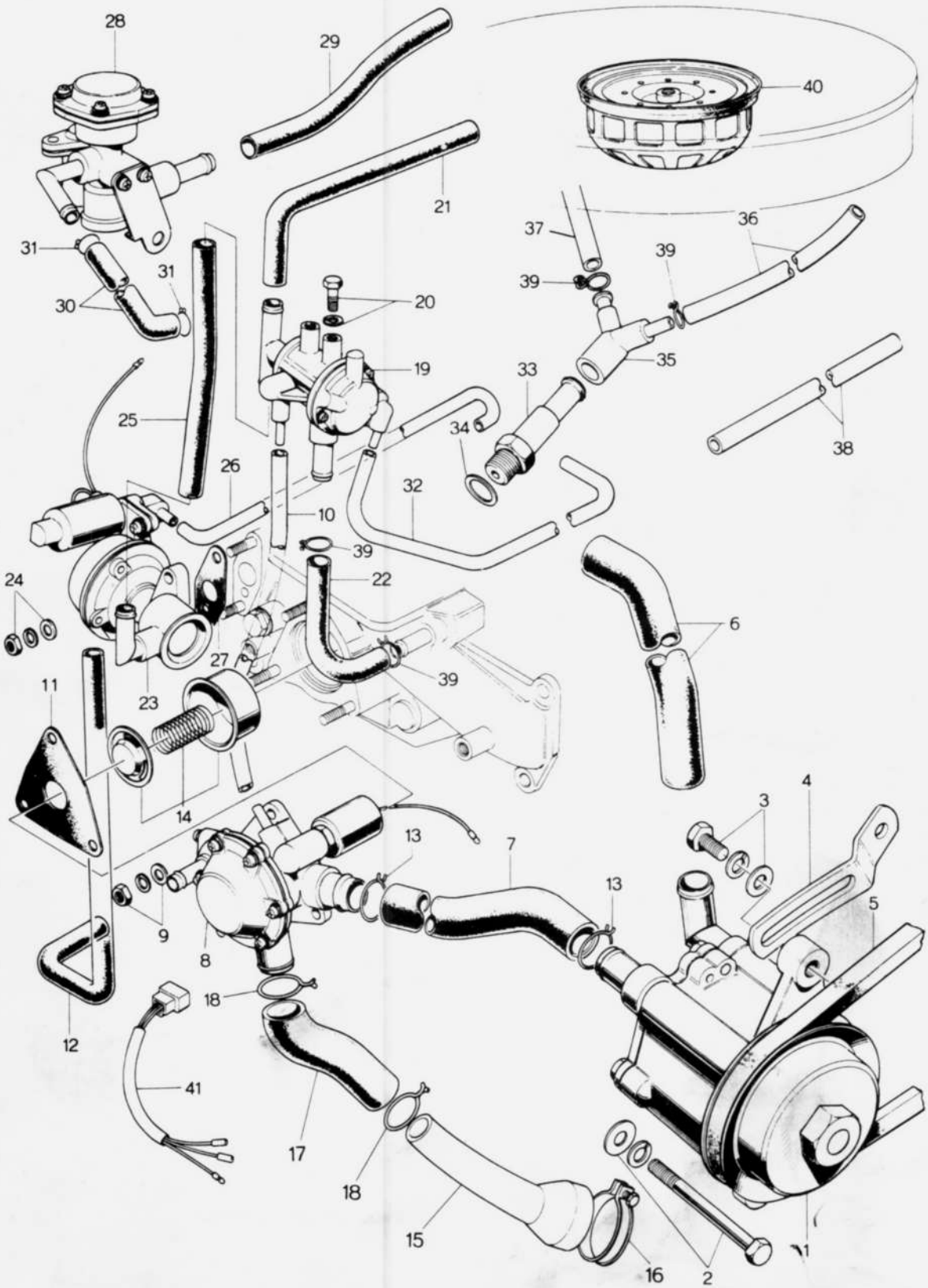
28
29
40
21
37
36
39
39
31
31
30
20
19
35
33
25
34
38
26
32
10
39
24
22
6
27
39
11
23
4
3
14
13
7
13
5
9
8
18
12
41
17
18
15
16
2
1

No.	Part Number	Description	Q'ty	Remarks
1	1617 13 710A	Pump, Air	1	
2	99803 08100	Bolt, Air Pump	1	
	99951 0818	Washer, Plain	1	
	99971 0800	Washer, Spring	1	
3	99801 0822	Bolt, Air Pump Strap	1	
	99953 0800	Washer, Plain	1	
	99971 0800	Washer, Spring	1	
4	2090 13 714A	Strap, Air Pump	1	
5	2329 13 715	Belt, "V"-Air Pump	1	
6	2090 13 717B	Hose, Air-Air Pump~Air Cleaner	1	
7	2090 13 718	Hose, Air-Air Control Valve~Air Pump	1	
8	1663 13 720A	Valve, Air Control	1	
9	99906 0600	Nut, Air Control Valve	3	
	99953 0600	Washer, Plain	3	
	99971 0600	Washer, Spring	3	
10	2329 13 754A	Tube, Balance	1	
	1663 13 756B	Tube, Balance	1	Car No. 102518 72/4 ~ 105513 Added Anew
11	2090 13 724	Gasket, Air Control Valve	1	
12	2090 13 725A	Hose, Air-Air Control Valve~Air Cleaner	1	
13	2329 13 726	Clip, Air Hose	2	
14	1663 13 730	Valve, Check	1	
15	1663 13 740	Pipe, Air-Air Control Valve~Reactor	1	
16	99282 4300	Band, Hose	1	
●	99282 4309	Band, Hose	1	Car No. 130341 73/3 ~ 131803 Δ
17	1663 13 744	Hose, Air-Air Control Valve~Reactor	1	
18	2090 13 746	Clip, Air Hose	2	
19	1617 13 750A	Valve, Coasting	1	
20	99806 0612	Bolt, Coasting Valve	2	

No.	Part Number	Description	Q'ty	Remarks
	99971 0600	Washer, Spring	2	
21	1663 13 752	Hose, Air-Coasting Valve~Air Cleaner	1	
22	1663 13 753	Hose, Air-Coasting Valve~IN Manifold	1	
23	2090 13 760B	Valve, Anti-Afterburn	1	
24	99906 0600	Nut, Anti-Afterburn Valve	2	
	99953 0600	Washer, Plain	2	
	99971 0600	Washer, Spring	2	
25	2090 13 762	Hose, Air-Anti Afterburn Valve~Coasting Valve	1	
26	2090 13 763A	Tube, Vacuum-Anti Afterburn Valve~Carburettor	1	
27	2090 13 764	Gasket, Anti Afterburn Valve	1	
28	2090 13 770A	Valve, Air Supply	1	
29	2090 13 772	Hose, Air-Air Supply Valve~Air Cleaner	1	
30	1570 13 773	Hose, Air-Air Supply Valve~IN Manifold	1	
31	2329 13 775	Clip, Air Hose	2	
32	1663 13 756B	Tube, Vacuum-Coasting Valve~Carburettor	1	
33	2329 13 780	Valve, Ventilation	1	
34	99564 1600	Gasket, Ventilation Valve	1	
35	2090 13 781	Pipe, Joint-Ventilation Valve	1	
36	2090 13 785	Pipe, Ventilation-Joint Pipe~Oil Separator	1	
37	99340 06350	Hose, Evaporation-Joint Pipe~Fuel Tank	1	
38	1617 13 786A	Hose, Ventilation-Intermediate Housing~Air Cleaner	1	
39	0222 13 493	Clip, Hose	6	
40	1617 13 790C	Filter, Charcoal	1	
41	1663 18 860	Wiring, Valve	1	
● Ⓝ	1624 13 795	Insert (For Wagon)	2	Car No. 104889 $^{72}/_{7}$ ~ Added Anew

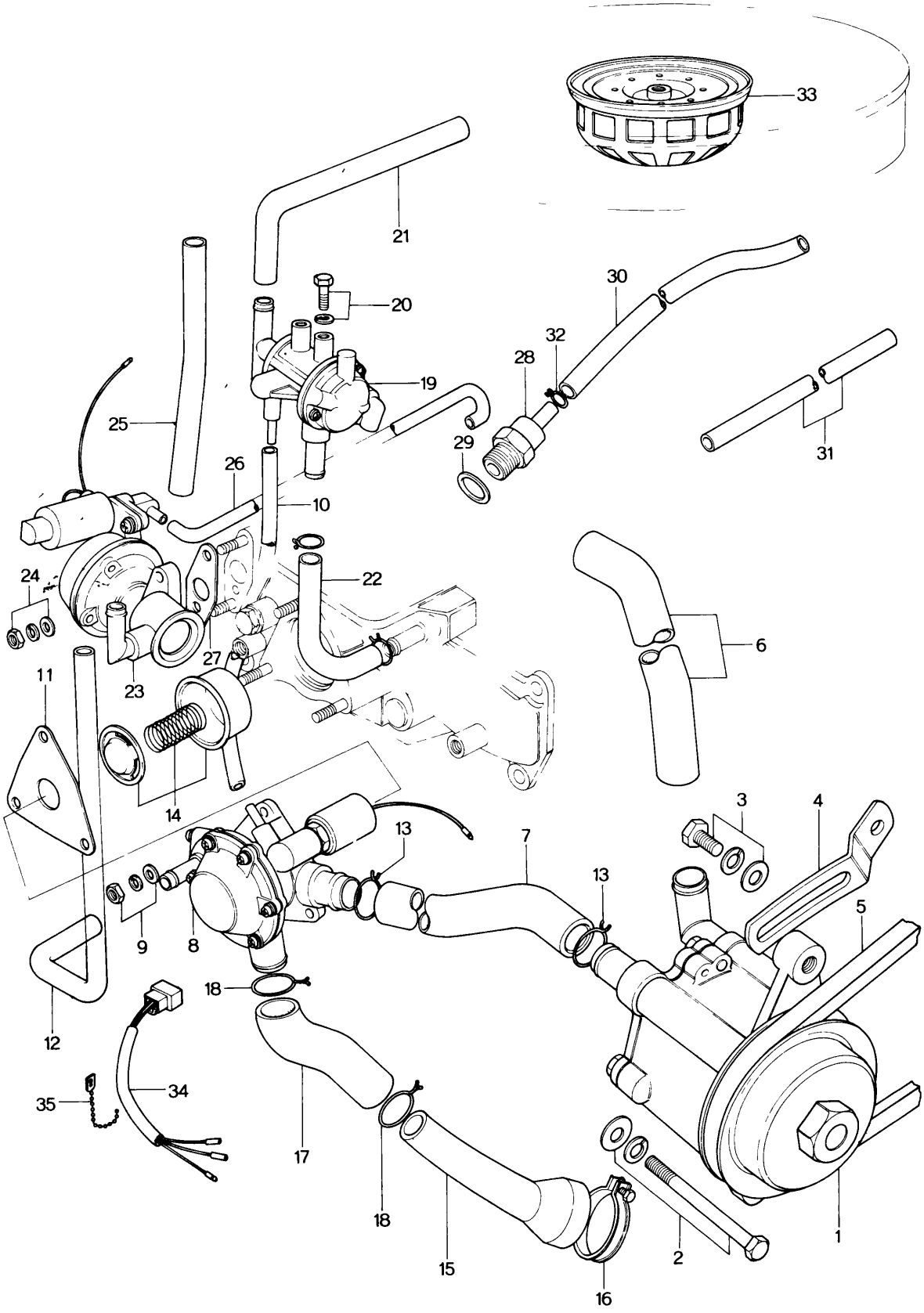
33
21
20
30
32
28
19
25
29
31
26
10
24
22
6
27
23
11
14
3
4
13
7
13
5
9
8
18
12
34
35
17
18
15
2
1
16

No.	Part Number	Description	Q'ty	Remarks
● 1	~~1617 13 710A~~	~~Pump, Air~~	~~1~~	
●	1617 13 710B	Pump, Air	1	From Car No. 1
2	99803 0810O	Bolt, Air Pump	1	
	99951 0818	Washer, Plain	1	
3	99801 0822	Bolt, Air Pump	1	
	99971 0800	Washer, Spring	1	
4	1668 13 714	Strap	1	
● 5	~~1672 13 715~~	~~Belt, "V" - Air Pump (For Canada & Northern U.S.A.)~~		
●	1562 18 381	Belt, "V" - Air Pump (For Canada & Northern U.S.A.)	1	From Car No. 1
●	~~8828 18 381~~	~~Belt, "V" - Air Pump (For General U.S.A.)~~	~~1~~	
●	2329 13 715	Belt, "V" - Air Pump (For General U.S.A.)	1	From Car No. 1
6	2090 13 717B	Hose, Air - Air Pump~Air Cleaner	1	
7	2090 13 718	Hose, Air - Air Control Valve~Air Pump	1	
8	1663 13 720A	Valve, Air Control (Manual)	1	
	1669 13 720	Valve, Air Control (Automatic)	1	
9	99906 0600	Nut, Air Control Valve	3	
	99953 0600	Washer, Plain	3	
	99971 0600	Washer, Spring	3	
10	1668 13 755	Tube, Balance	1	
11	2090 13 724	Gasket, Air Control Valve	1	
12	2090 13 725A	Hose, Air - Air Control Valve~Air Cleaner	1	
13	2329 13 726	Clip, Air Hose	2	
14	1663 13 730	Valve, Check (Manual)	1	
	1669 13 730	Valve, Check (Automatic)	1	
15	1663 13 740	Pipe, Air - Air Control Valve~Reactor	1	
16	99282 4300	Band, Hose - Air Pipe	1	
17	1663 13 744	Hose, Air - Air Control Valve - Reactor	1	
18	2090 13 746	Clip, Air Hose	2	
19	1668 13 750	Valve, Coasting	1	

No.	Part Number	Description	Q'ty	Remarks
20	99806 0610	Bolt, Coasting Valve	2	
	99971 0600	Washer, Spring	2	
21	1668 13 752	Hose, Air - Coasting Valve ~ Air Cleaner	1	
22	1668 13 753	Hose, Air - Coasting Valve ~ Air	1	
23	2090 13 760B	Valve, Anti - Afterburn	1	
24	99906 0600	Nut, Anti - Afterburn Valve	2	
	99953 0600	Washer, Plain	2	
	99971 0600	Washer, Spring	2	
25	1668 13 762	Hose, Air - Anti Afterburn Valve ~ Coasting Valve	1	
26	2090 13 763A	Tube, Vacuum - Anti Afterburn Valve ~ Carburettor	1	
27	2090 13 764	Gasket, Anti - Afterburn Valve	1	
28	1668 13 780	Valve, Ventilation	1	
29	99564 1600	Gasket, Ventilation Valve	1	
30	1668 13 785	Pipe, Ventilation - Joint Pipe ~ Oil Separator	1	
31	1617 13 786A	Hose, Ventilation - Intermediate Housing ~ Air Cleaner	1	
32	0222 13 493	Clip, Hose	6	
● 33	1617 13 790C	Filter, Charcoal	1	Car No. 134679 ~ 138073 '73/4 ~ Discarded
34	1668 18 860B	Wiring, Valve	1	
35	99709 0108	Band, Valve Wiring	1	

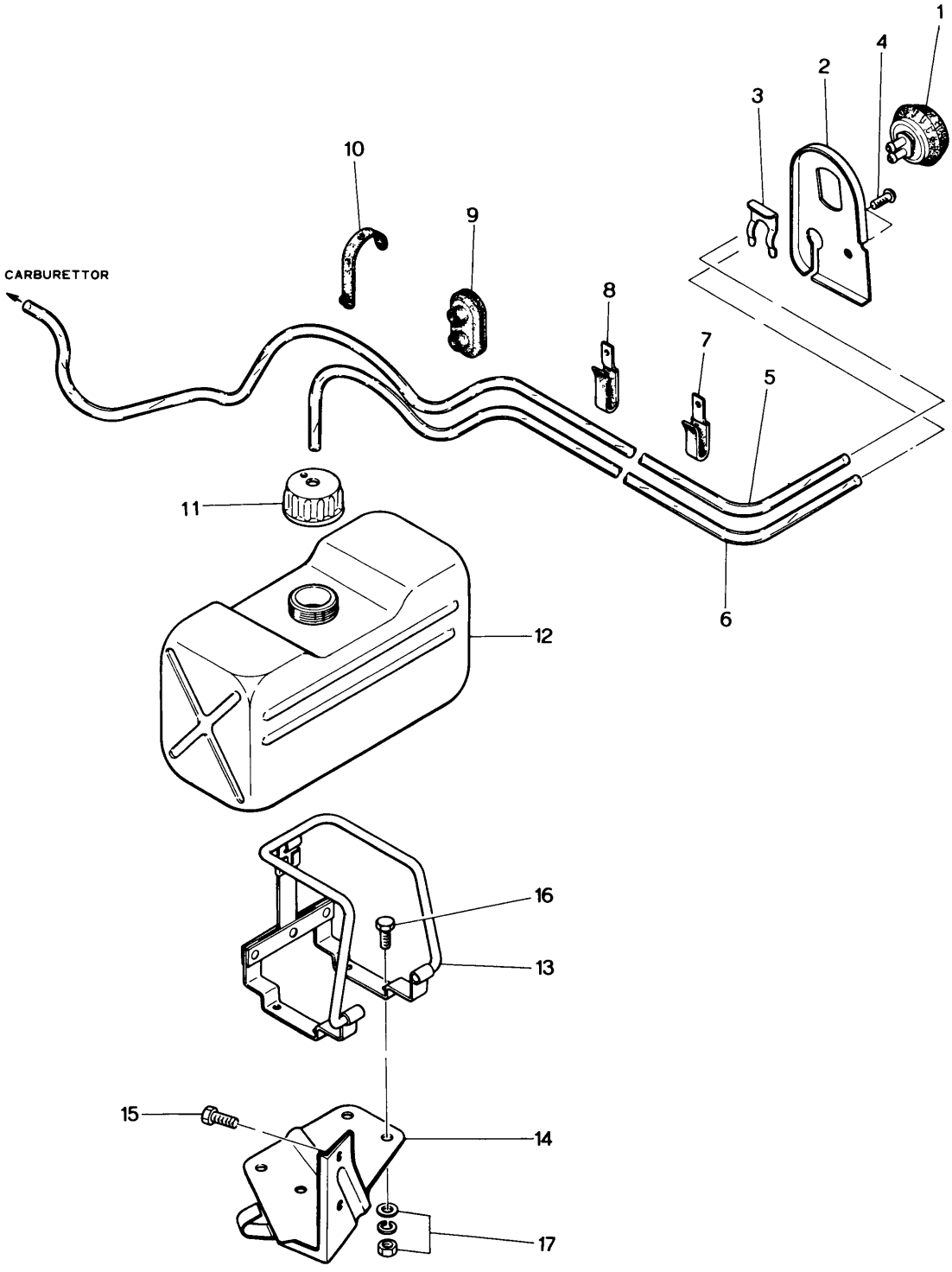
1
4
2
3
10
9
CARBURETTOR
8
7
5
11
6
12
16
13
15
14
17

STARTING ASSIST SYSTEM (1972 MODEL)

No	Part Number	Description	Q'ty	Remarks
1	1665 13 520	Pump, Starting Fluid	1	
2	1559 13 525	Bracket, Pump	1	
3	0136 43 635	Clip, Flexible Hose	1	
4	99765 0610	Screw, Tapping	1	
5	1559 13 527	Hose	1	
6	99336 06100	Pipe, Vinyl	1	
7	99276 1408	Clip	1	
8	99276 2208	Clip	1	
9	1559 13 528	Grommet	1	
10	0187 66 991	Clip, Rubber	1	
11	1665 13 512	Cap, Tank	1	
12	1665 13 511	Tank, Starting Fluid	1	
13	0119 66 870	Holder, Tank	1	
14	1559 13 510	Bracket, Tank	1	
15	99786 0612	Screw, Tapping	2	
16	99834 0408	Screw	4	
17	99906 0400	Nut	4	
	99952 0400	Washer, Plain	4	
	99971 0400	Washer, Spring	4	

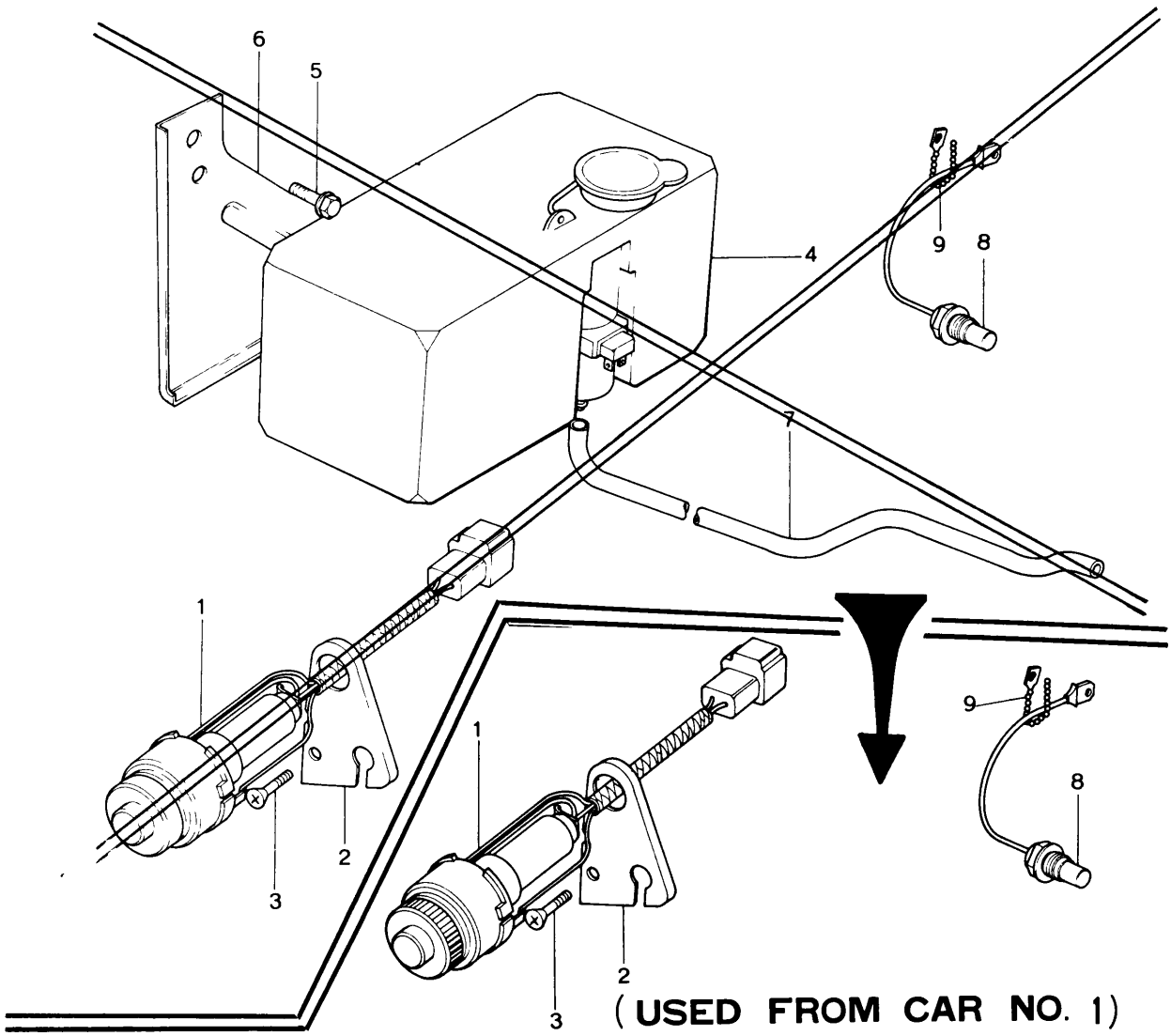

(USED FROM CAR NO. 1)

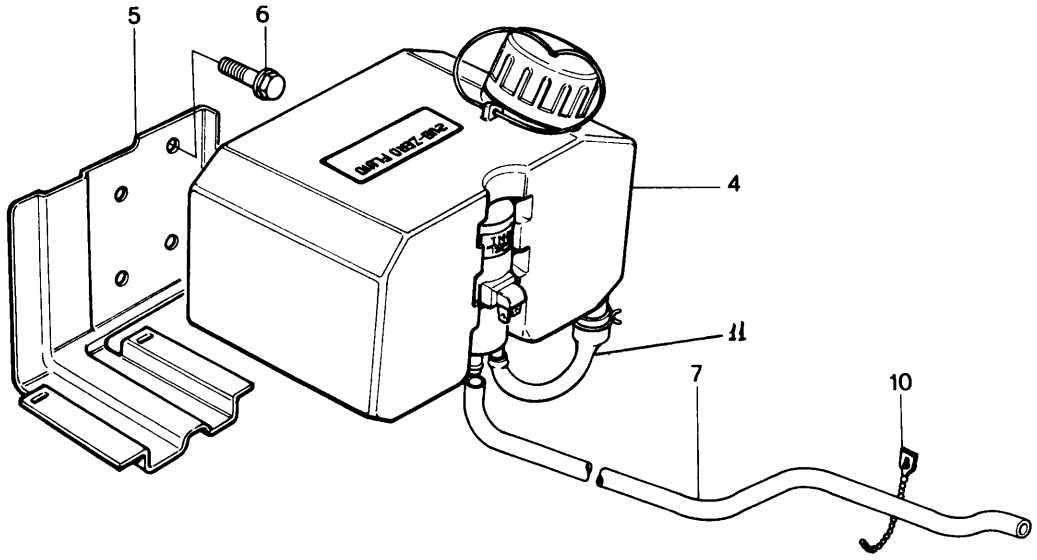

No.	Part Number	Description	Q'ty	Remarks	Price
1	~~1668 13 520~~	~~Switch~~	~~1~~		
	1668 13 520A	Switch	1	From Car No. 1	
2	~~1620 13 525~~	~~Bracket, Switch~~	~~1~~		
	1620 13 525A	Bracket, Switch	1	From Car No. 1	
3	99765 0610B	Screw, Bracket	1		
4	1668 13 510	Tank	1		
5	~~1668 13 515~~	~~Bracket, Tank~~	~~1~~		
	1668 13 515A	Bracket, Tank	1	From Car No. 1	
6	~~99786 0612~~	~~Screw, Tapping-Bracket~~	~~2~~		
	99743 0614B	Screw, Tapping-Bracket	2	From Car No. 1	
	99952 0618	Washer, Plain	2	From Car No. 1	
	99971 0600	Washer, Spring	2	From Car No. 1	
7	1668 13 527	Hose	1		
8	~~1668 13 531~~	~~Unit, Thermo~~	~~1~~		
	1668 13 531A	Unit, Thermo	1	From Car No. 1	
9	~~99709 2185~~	~~Band~~	~~1~~		
	99709 0108	Band	1	From Car No. 1	
● 10	99709 0225	Band	1	From Car No. 1	
● 11	1668 13 513	Hose-Section	1	From Car No. 1	

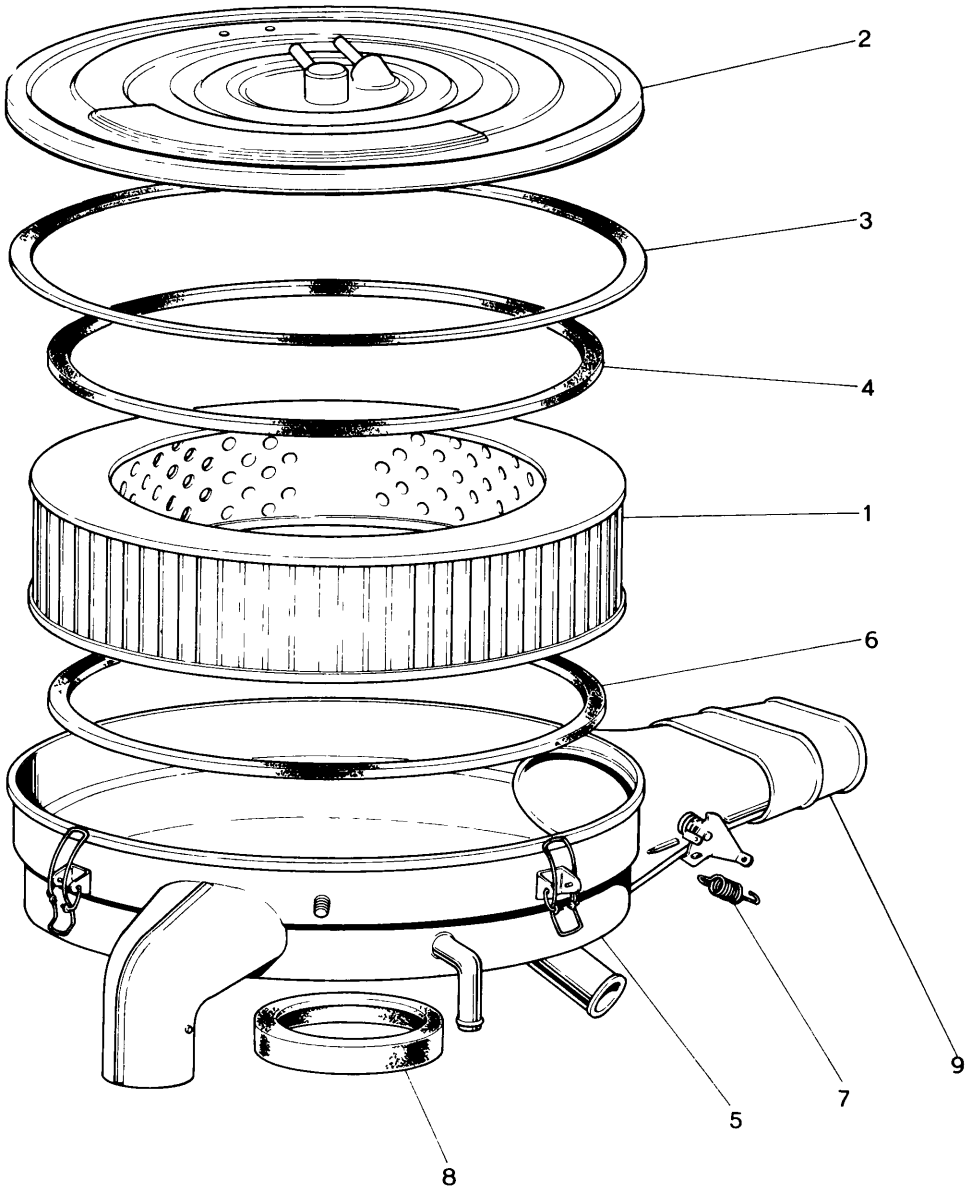
2
3
4
1
6
9
7
5
8

No.	Part Number	Description	Q'ty	Remarks
	1665 13 300	Cleaner Ass'y, Air (1972 Model)	1	
	1665 13 300A	Cleaner Ass'y, Air (1972 Model)	1	Car No. 102164 104947 72/4 ~ ○
	1668 13 300	Cleaner Ass'y, Air (1973 Model)	1	
●	1668 13 300A	Cleaner Ass'y. Air (1973 Model)	1	Car No. 134679 138073 73/4 ~ △
1	1665 23 672	Element (1972 Model)	1	
	0839 23 672	Element (1973 Model)	1	
2	1617 23 673	Cover Ass'y	1	
●	1663 23 673A	" "	1	Car No. 134679 138073 73/4 ~ △
●	1668 23 673	" "	1	
3	2113 23 674	Gasket, Cover	1	Car No. 143250 148270 73/7 ~ △
4	2113 23 675	Gasket, Element	1	
5	1663 23 671A	Body Ass'y	1	
6	0839 23 675	Gasket, Element No. 2	1	
7	0820 23 678	Spring	2	
8	0839 23 679	Seal, Dust	1	
	1665 23 679	Seal, Dust	1	Car No. 102164 104947 72/4 ~ ○
● 9	2090 23 698	Hose ~~Pipe~~, Inlet	2	
Ⓝ	2329 23 685	Protector	1	
● Ⓝ	1668 23 680	Gasket Set (Fig. No. 3, 4, 5, 6, 8 included)	1	Car No. 107262 109363 72/9 ~ Added Anew

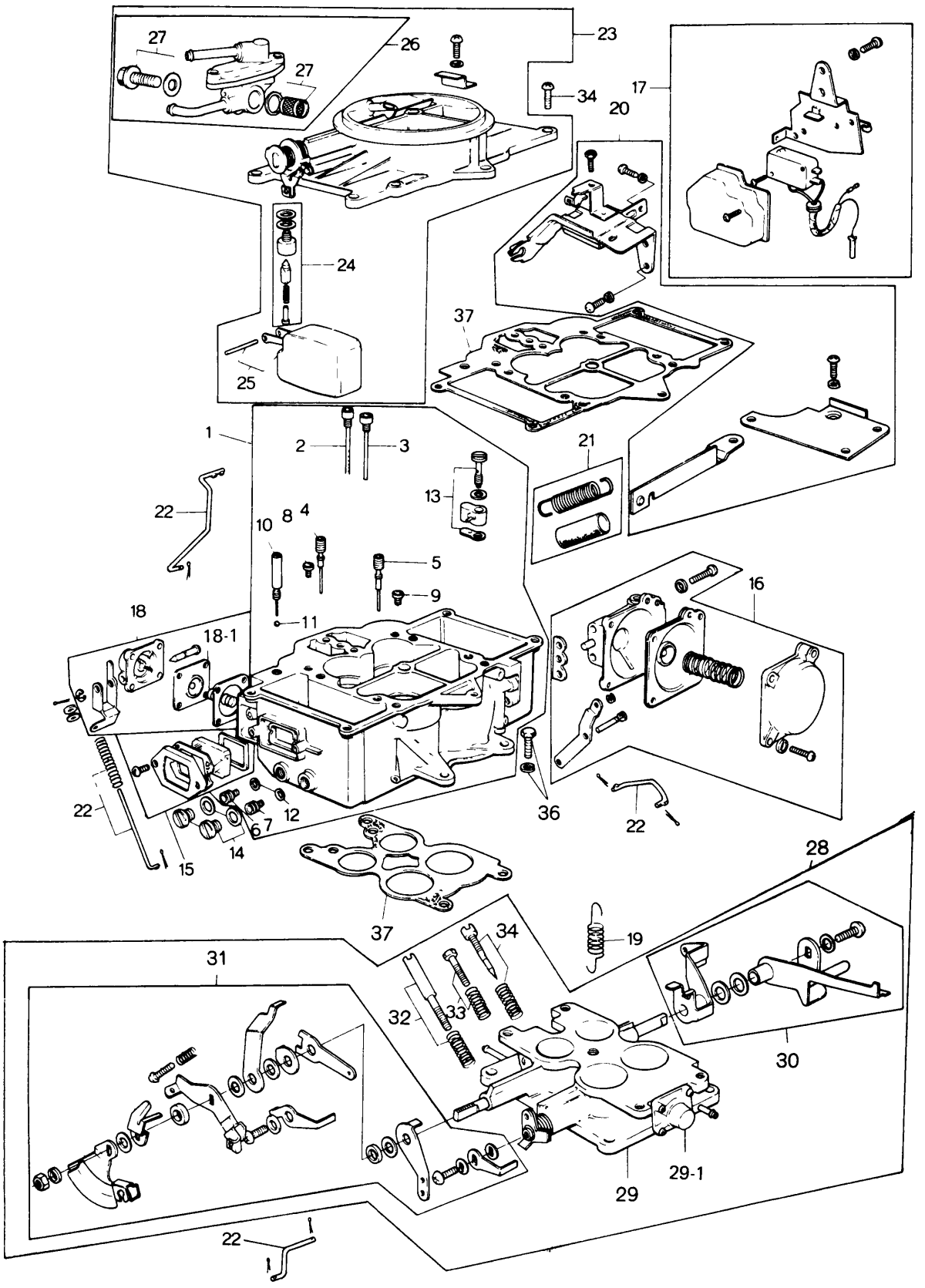
27
27
26
23
34
17
20
24
25
37
1
2
3
21
22
13
10
8
4
5
9
18
11
18-1
16
22
6
7
12
36
22
15
14
37
28
19
34
31
32
33
30
29
29-1
22

No.	Part Number	Description	Q'ty	Remarks
	1570 13 200	Carburettor	1	
	1570 13 200A	Carburettor	1	Car No. 100097 72/2 ~ 100128
	1570 13 200B	Carburettor	1	Car No 103314 72/5 ~ 107055
● 1	~~1663 23 320A~~	~~Body Set~~ Fig. No. 2 ~13 Included	~~1~~	Not used from Car No. 1
●	1570 23 320	Body Set	1	~~Car No. 103632 107711 72/6 ~ X~~
2	0839 23 423	Jet, Main Air Bleed - 1 st	2	
3	2090 23 424	Jet, Main Air Bleed - 2 nd	2	
4	0839 23 425	Jet, Slow	2	
5	0839 23 426A	Jet, Slow	2	
6	1663 23 421	Jet, Main - 1st	2	
●	1669 23 421A	Jet, Main - 1st	2	Car No. 119373 72/11 ~ 120142 △
7	0839 23 422	Jet, Main - 2nd	2	
8	0288 23 336	Jet, Slow Air Bleed	2	
9	2090 23 428	Jet, Step Air Bleed	2	
10	0823 23 338	Plug, Inlet Check Ball	1	
11	0107 13 781	Ball, Steel - 1/8	1	
12	0193 23 383	Gasket	4	
● 13	~~1663 23 490A~~	~~Accel Nozzle Set~~	~~1~~	Not used from Car No. 1
●	1570 23 490	Accel Nozzle Set	1	~~Car No. 103632 107711 72/6 ~ X~~
14	1663 23 354	Main Passage Plug Set	1	
15	1663 23 340A	Level Gauge Cover Set	1	
● 16	~~1663 23 350A~~	~~Throttle Operating Diaphragm Set~~	~~1~~	Not used from Car No. 1
●	1570 23 350A	Throttle Operating Diaphragm Set	1	~~Car No. 103632 107711 72/6 ~ X~~
17	1663 23 450B	Idle Switch Set	1	
18	1663 23 360B	Accel Pump Set	1	
●	~~1663 23 360C~~	~~Accel Pump Set~~	~~1~~	~~Car No. 103632 107711 72/6 ~ X~~
18-1	1663 23 361	Diaphragm - Accel	1	
19	1663 23 455	Spring, Idle Switch Lever	1	
● 20	~~1663 23 370A~~	~~Bracket Set~~	~~1~~	Not used from Car No. 1
●	1570 23 370	Bracket Set	1	~~Car No. 103632 107711 72/6 ~ X~~
21	1663 23 380	Throttle Return Spring Set	1	
● ~~22~~	~~1663 23 480A~~	~~Rod & Link Set~~	~~1~~	Not used from Car No 1
●	1570 23 480	Rod & Link Set	1	~~Car No 103632 107711 72/6 ~ X~~
● ~~23~~	~~1663 23 310~~	~~Air Horn Set~~ Fig No 24~27 Included	~~1~~	Not used from Car No. 1
●	1570 23 310	Air Horn Set	1	~~Car No 103632 107711 72/6 ~ X~~
	1570 23 520	Horn Semi Cpt Air	1	
24	1663 23 390	Float Valve Seat Set	1	
25	1663 23 326B	Float Set	1	

No.	Part Number	Description	Q'ty	Remarks
26	1663 23 319	Fuel Return Valve Set Fig No 27 Included	1	
27	1663 23 409	Strainer Set	1	
● 28	~~1663 23 330~~	~~Flange Cpt~~	~~1~~	Not used from Car No. 1
●	1570 23 330	Flange Cpt	1	~~Car No. 103632 ～ 107711~~
● 29	~~1663 23 410A~~	~~Flange Set~~	~~1~~	Not used from Car No. 1
●	1570 23 410A	Flange Set	1	~~Car No. 103632 ～ 107711~~
29-1	1663 23 411A	Diaphragm, Sub Semi	1	
30	1663 23 420A	Front Lever Set	1	
● 31	~~1663 23 430A~~	~~Rear Lever Set~~	~~1~~	Not used from Car No. 1
●	1570 23 430	Rear Lever Set	1	~~Car No. 103632 ～ 107711~~
32	1663 23 440A	Throttle Lever Adjust Screw Set	1	
33	1663 23 460A	Main Idle Adjust Screw Set	1	
34	1663 23 470A	Sub Idle Adjust Screw Set	1	
35	0750 23 652	Screw, Air Horn	7	
36	0839 23 484A	Bolt, Flange Set	4	
● 37	~~1663 23 510~~	~~Gasket Set~~	~~1~~	Not used from Car No. 1
●	1570 23 510	Gasket Set	1	~~Car No. 103632 ～ 107711~~
●	~~1663 23 530A~~	~~Pin & Washer Set~~	~~1~~	Not used from Car No. 1
● Ⓝ	1570 23 530	Pin & Washer Set	1	~~Car No. 103632 ～ 107711~~
● Ⓝ	1570 23 540	Carburettor Repair Kit	1	
● Ⓝ	1570 23 500	Choke Set, Semi Auto	1	
● Ⓝ	1570 23 501	Holder Set, Bimetal	1	
● Ⓝ	1570 23 502	Bimetal Cpt	1	
Ⓝ	0842 23 509	Pipe Ass'y-Vacuum	1	
● Ⓝ	1570 23 505A	Connector Guide Set	1	
● Ⓝ	1570 23 507	Valve Set, Choke	1	

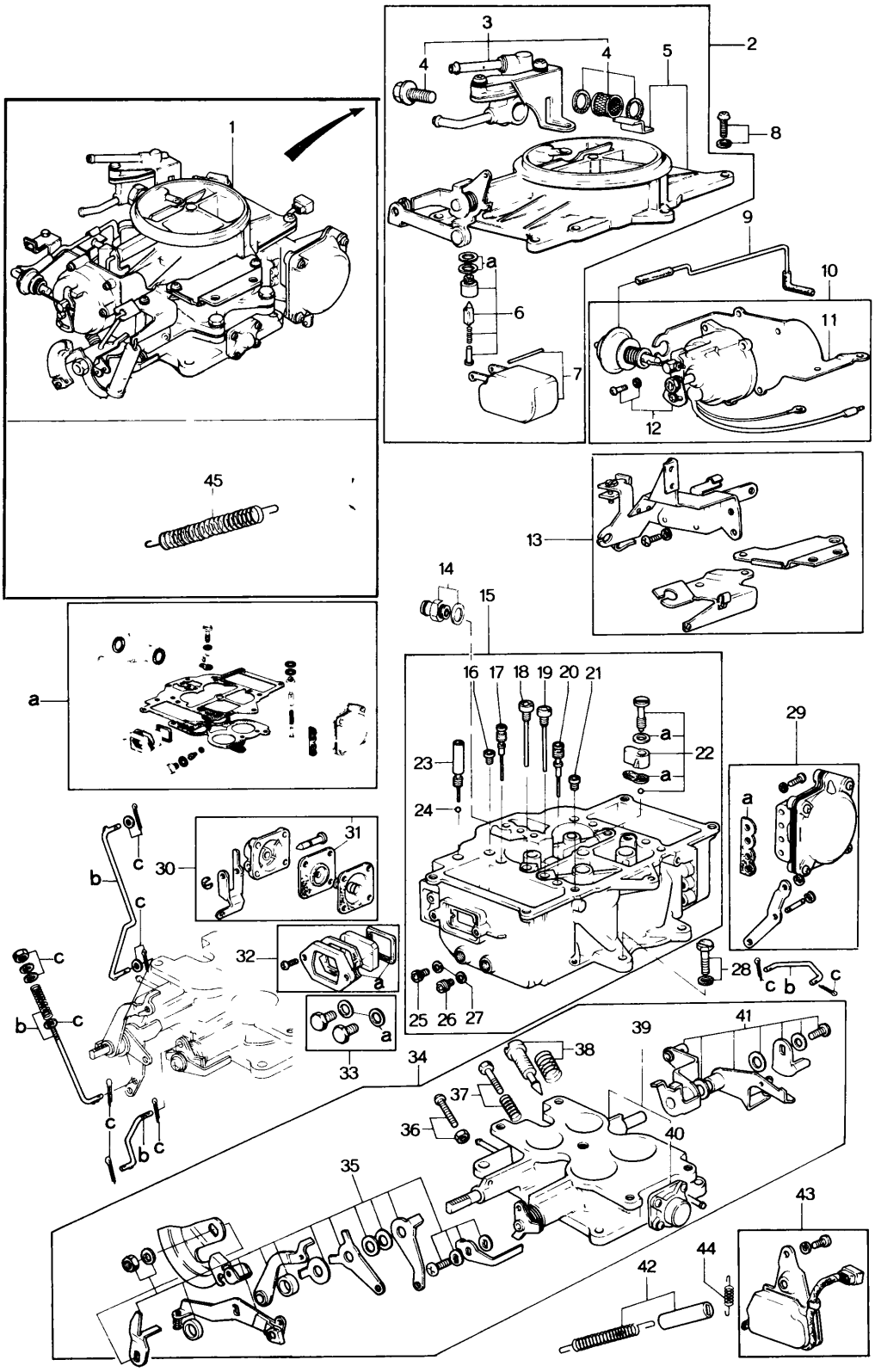
1
2
3
4
4
5
8
9
10
11
12
a
6
7
45
13
14
15
a
16
17
18
19
20
21
23
24
a
22
a
29
a
25
26
27
28
c
b
c
31
30
b
c
c
32
a
c
c
b
c
33
34
38
39
41
37
36
40
35
43
44
42

No.	Part Number	Description	Q'ty	Remarks
1	1668 13 200D	Carburettor	1	
	1668 13 200E	Carburettor (Manual) (For General U. S. A.)	1	Car No. 109805 '72/9 ~ 111779 ○
	1668 13 200G	Carburettor	1	Car No. 120254 '72/12 ~ 121050 △
	1669 13 200B	Carburettor	1	
	1669 13 200C	Carburettor (Automatic)	1	Car No. 118054 '72/11 ~ 119210 △
	1672 13 200C	Carburettor	1	
	1672 13 200D	Carburettor (Manual) (For Canada & Northern U.S A)	1	Car No. 109805 '72/9 ~ 111779 ○
	1672 13 200F	Carburettor	1	Car No. 119373 '72/11 ~ 120142 △
2	1668 23 310	Horn Set, Air (Manual) (Fig. No. 3 ~ 7 Included)	1	
	1669 23 310	Horn Set, Air (Automatic) (Fig. No. 3 ~ 7 Included)	1	
3	1663 23 319	Valve Set, Fuel Return (Fig. No. 4 Included)	1	
4	1663 23 409	Strainer Set	1	
5	1668 23 520	Horn Sub Set, Air (Manual)	1	
	1669 23 520	Horn Sub Set, Air (Automatic)	1	
6	1663 23 390	Seat Set, Float Valve	1	
7	1663 23 326B	Float Set	1	
8	0750 23 652	Screw Set, Air Horn	7	
9	0842 23 509	Pipe, Vacuum	1	
10	1668 23 500	Semi Auto Choke Set (Manual) (For General U S.A.) (Fig No 11 , 12 Included)	1	
	1669 23 500	Semi Auto Choke Set (Automatic) (Fig No. 11 , 12 Included)	1	

No.	Part Number	Description	Q'ty	Remarks
	1672 23 500	Semi Auto Choke Set (Manual) (For Canada & Northern U.S.A.) (Fig No 11, 12 Included)	1	
11	1668 23 501	Holder, Bimetal (Manual) (For General U. S. A.)	1	
	1668 23 501	Holder, Bimetal (Automatic)	1	
	1672 23 501	Holder, Bimetal (Manual) (For Canada & Northern U. S. A.)	1	
12	1668 23 502	Case Set, Bimetal (Manual)	1	
	1669 23 502	Case Set, Bimetal (Automatic)	1	
13	1668 23 370	Bracket Set	1	
	1668 23 370A	Bracket Set	1	Car No. 109805 ~ 111779 ~△
14	1570 23 507	Valve Set, Check	1	
15	1668 23 320	Body Set (Manual) (Fig. No. 16 ~ 27 Included)	1	
	1668 23 320B	Body Set (Manual) (Fig. No. 16 ~ 27 Included)	1	Car No. 119373 ~ 120142 ~△
●	1669 23 320	Body Set (Automatic) (Fig. No. 16 ~ 27 included)	1	
●	1669 23 320A	Body Set (Automatic) (Fig. No. 16 ~ 27 included)	1	
16	0288 23 336	Jet, Slow Air Bleed	2	
17	0839 23 425	Jet, Slow (Manual)	2	
	1669 23 425	Jet, Slow (Automatic)	2	
18	0839 23 423	Jet, Main Air Bleed- 1 st (Manual)	2	
	1669 23 423A	Jet, Main Air Bleed- 1 st (Manual)	2	Car No. 119373 ~ 120142 ~×
	1669 23 423	Jet, Main Air Bleed- 1 st (Automatic)	2	
	1669 23 423A	Jet, Main Air Bleed- 1 st (Automatic)	2	Car No. 118054 ~ 119210 ~×

No.	Part Number	Description	Q'ty	Remarks
19	1668 23 424	Jet, Main Air Bleed- 2nd (Manual)	2	
	1668 23 424A	Jet, Main Air Bleed- 2nd (Manual)	2	Car No 119373 72/11 ~ X 120142
	1669 23 424	Jet, Main Air Bleed- 2nd (Automatic)	2	
	1669 23 424A	Jet, Main Air Bleed- 2nd (Automatic)	2	Car No. 118054 72/11 ~ X 119210
20	0839 23 426A	Jet, Step	2	
21	2090 23 428	Jet, Step Air Bleed (Manual)	2	
	0823 23 428	Jet, Step Air Bleed (Automatic)	2	
22	1668 23 490	Nozzle Set, Accel (Manual)	1	
	1669 23 490	Nozzle Set, Accel. (Automatic)	1	
23	0823 23 338	Plug, Inlet Check Valve	2	
24	0107 13 781	Ball, Steel	1	
25	1663 23 421	Jet, Main- 1st (Manual)	2	
	1669 23 421A	Jet, Main- 1st (Manual)	2	Car No. 119373 72/11 ~ O 120142
●	0222 23 353A	Jet, Main- 1st (Manual)	2	Car No. 127040 73/2 ~ O 128211
	1669 23 421	Jet, Main- 1st (Automatic)	2	
	1669 23 421A	Jet, Main- 1st (Automatic)	2	Car No. 118054 72/11 ~ X 119210
●	0222 23 353A	Jet, Main- 1st	2	Car No. 127040 73/2 ~ O 128211
26	0839 23 422	Jet, Main- 2nd (Manual)	2	
	0222 23 355A	Jet, Main- 2nd (Automatic)	2	
27	0193 23 383	Gasket, Main Jet	4	
28	0839 23 484A	Bolt, Flange Set	4	
29	1668 22 350	Chamber Set, Diaphragm (Manual) (For General U.S.A)	1	
●	1668 23 350A	Chamber Set, Diaphragm (Manual) (For General U.S.A.)	1	Car No. 127040 73/2 ~ X 128211

No.	Part Number	Description	Q'ty	Remarks
	1669 23 350	Chamber Set, Diaphragm (Automatic)	1	
●	1669 23 350A	Chamber Set, Diaphragm (Automatic)	1	Car No. 127040 73½ ~ △ 128211
	1672 23 350	Chamber Set, Diaphragm (Manual) (For Canada & Northern U.S.A.)	1	
●	1672 23 350A	Chamber Set, Diaphragm (Manual) (For Canada & Northern U.S.A.)	1	Car No. 127040 73½ ~ △ 128211
30	1663 23 360C	Pump Set, Accel. (Fig. No. 31 included)	1	
31	1663 23 361A	Diaphragm, Accel. Pump	1	
32	1663 23 340A	Cover Set, Level Gauge	1	
33	1668 23 354	Plug Set, Main Passage	1	
34	1668 23 330	Flange Set (Manual) (Fig No. 35~41 Included)	1	
	1669 23 330	Flange Set (Automatic) (Fig. No. 35~39, 41 Included)	1	
35	1663 23 420A	Lever Set, Front	1	
36	1668 23 440	Screw Set, Throttle Adjust	1	
37	1668 23 460	Screw Set, Idle Adjust	1	
38	1668 23 470	Screw Set, Air Adjust	1	
39	1668 23 410	Flange Sub Set (Manual) (Fig No. 40 Included)	1	
	1669 23 410	Flange Sub Set (Automatic)	1	
40	1663 23 411A	Diaphragm, Sub Slow (Manual)	1	
41	1570 23 430	Lever Set, Rear (Manual)	1	
	1570 23 430A	Lever Set, Rear (Manual)	1	Car No. 109805 73⅘ ~ △ 111779
	1669 23 430	Lever Set, Rear (Automatic)	1	
42	1663 23 380	Spring Set, Throttle Return	1	
● 43	~~1663 23 460~~	~~Switch Set, Idle~~	~~1~~	
●	1668 23 450	Switch Set, Idle	1	From Car No. 1

No.	Part Number	Description	Q'ty	Remarks
44	1663 23 455	Spring, Idle Switch	1	
45	1669 23 439	Spring, Choke Return	1	Car No. 111779 109805 7/9 ~Added Anew
a	1668 23 510	Gasket Set	1	
b	1668 23 480	Rod & Link Set	1	
c	1668 23 530	Pin & Washer Set	1	
	1668 23 540	Repair Kit (Manual) (Fig. No. 4, 6, 31, ~~35, 36~~ 37 38, 40, a, c, Included)	1	
	1669 23 540	Repair Kit (Automatic) (Fig. No. 4, 6, 31, ~~35, 36~~ 37 38, a, c, Included)	1	

14 OIL PUMP

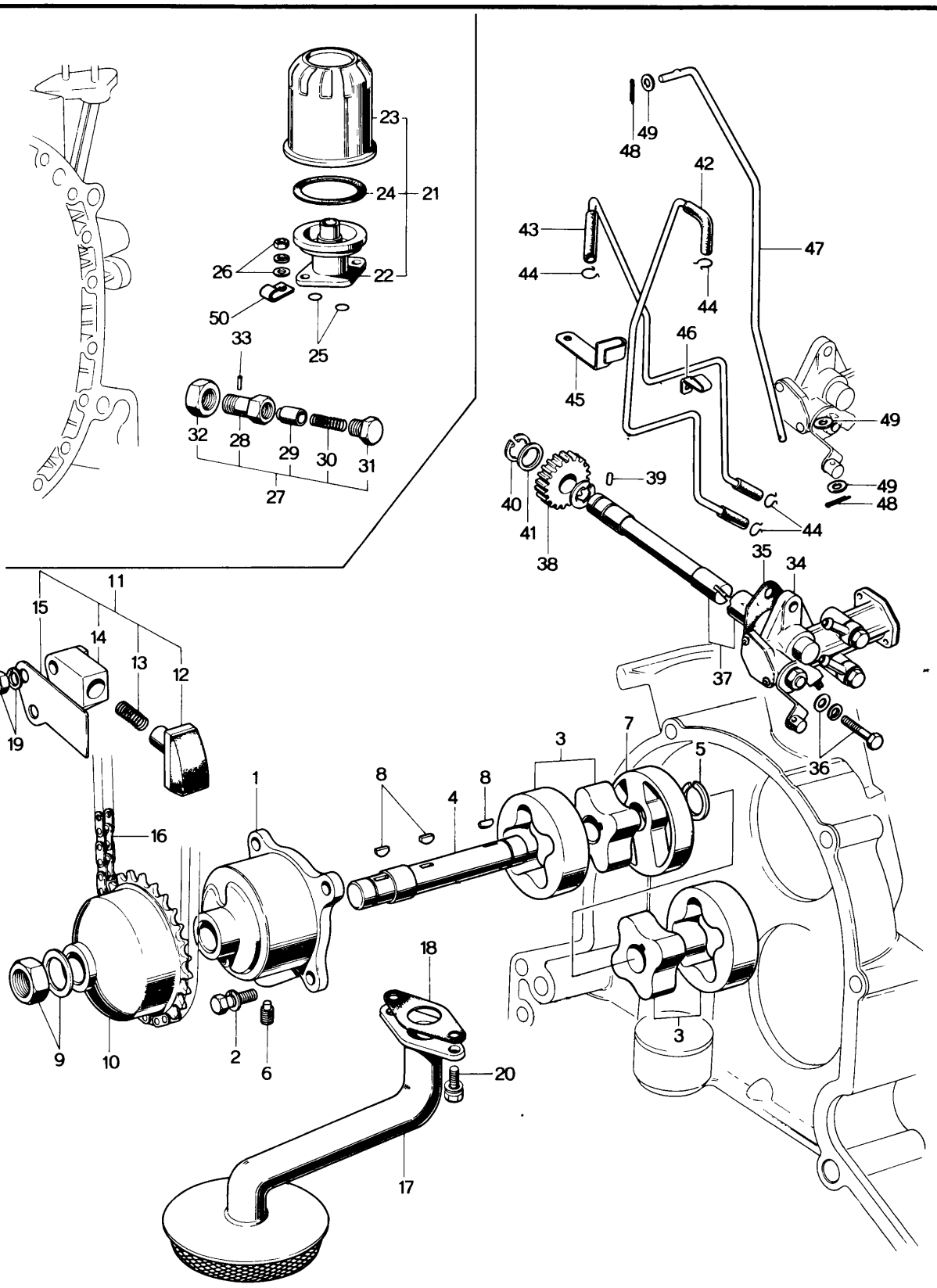
23
24
21
22
26
50
25
33
32
28
29
30
31
27
48
49
42
43
47
44
44
46
45
49
49
48
44
40
41
39
38
35
34
37
36
11
15
14
13
12
19
7
3
5
8
8
4
1
16
18
9
10
2
6
20
3
17

No.	Part Number	Description	Q'ty	Remarks
1	0839 14 101B	Body, Oil Pump	1	
2	99806 0618	Bolt, Oil Pump Body	4	
	99952 0600	Washer, Plain	4	
	99971 0600	Washer, Spring	4	
3	0820 23 882A	Rotor Set, Oil Pump	2	
4	0839 14 112B	Shaft, Oil Pump	1	
5	0810 14 113	Ring, Snap	1	
6	0839 14 117	Bolt, Lock-Oil Pump	1	
7	0820 14 118C	Plate, Middle Oil Pump	1	
8	0839 14 119B	Key	3	
9	99922 1200	Nut	1	
	99979 1200	Washer, Tab	1	
10	0839 14 141A	Gear, Drive-Oil Pump	1	
11	0839 14 020	Adjuster Ass'y, Chain	1	
12	0823 14 130	Adjuster, Chain	1	
13	0823 14 131	Spring	1	
14	0839 14 132	Body	1	
15	0839 14 133	Plate, Guide	1	
16	0839 14 142	Chain	1	
17	0866 14 160C	Strainer, Oil	1	
●	0866 14 160D	Strainer, Oil	1	Car No. 104199 72/6 ~ Δ 108147
●	0866 14 160E	Strainer, Oil	1	Car No. 105352 72/7 ~ ○ 108457
18	0810 14 171	Gasket, Oil Strainer	1	
19	99906 0600	Nut, Chain Adjust	2	

No.	Part Number	Description	Q'ty	Remarks
	99971 0600	Washer, Spring	2	
20	99806 0614	Bolt Set, Oil Strainer	2	
	99971 0600	Washer, Spring	2	
21	0839 14 300	Filter, Oil	1	
22	0839 23 801	Cover	1	
● 23	0813 23 802A	Cartridge, Oil Filter (Fig. No. 24 included)	1	
●	0813 23 802B ~~0813 23 820B~~	Cartridge, Oil Filter (Fig. No. 24 included)	1	Car No. 123972 73/1 ~ 124434 ○
24	0813 23 803	Gasket	1	
25	99541 01601	Ring, "O"-Oil Filter	2	
26	99901 0800	Nut, Oil Filter	2	
	99971 0800	Washer, Spring	2	
	99953 0800	Washer, Plain	2	
27	0820 14 250C	Regulator Ass'y, Pressure	1	
●	0820 14 250D	Regulator Ass'y, Pressure	1	Car No. 134547 73/4 ~ 137886 △
28	0820 14 251C	Body, Pressure Regulator	1	
29	0221 14 115	Plunger, Pressure Control	1	
30	0221 14 116	Spring, Pressure Control	1	
31	0221 14 117	Plug	1	
32	0820 14 252	Nut	1	
33	99267 0422	Pin	1	

No.	Part Number	Description	Q'ty	Remarks
34	2090 14 600	Pump Cpt., Metering Oil	1	
35	0810 14 611	Gasket, Metering Oil Pump	1	
36	99806 0630	Bolt, Metering Oil Pump	1	
	99806 0618	Bolt	1	
	99971 0600	Washer, Spring	2	
	99953 0600	Washer, Plain	2	
37	0820 14 620	Shaft, Driven Gear	1	
38	0820 14 625	Gear, Driven	1	
39	0813 14 623	Pin	1	
40	99576 0800	Ring, Snap	2	
41	0810 18 276	Shim, Adjust (t=0.6) } Selective use	2	
	0810 18 277	Shim, Adjust (t=0.3) } Selective use	2	
42	0839 14 630	Tube, Metering Oil	1	
43	0839 14 640	Tube, Metering Oil	1	
44	0813 14 641	Clip	4	
45	0839 14 643	Clip	1	
46	0820 14 647	Clip	1	
47	0839 14 651D	Rod, Connecting	1	
48	99221 1212	Pin, Split	2	
49	99953 0400	Washer, Plain	3	
50	99276 1608	Clip	1	

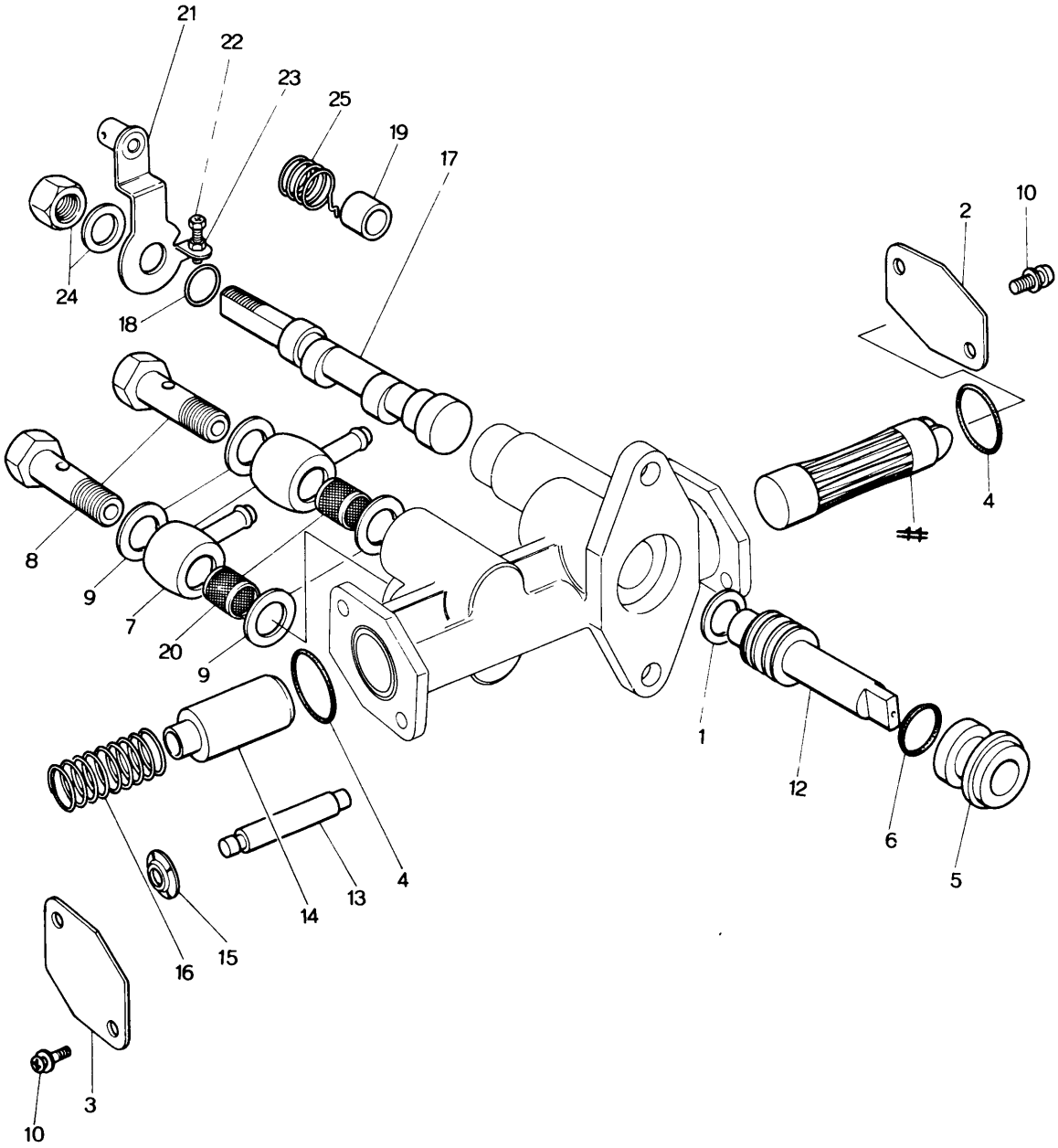
21
22
23
25
19
17
24
18
2
10
8
9
7
20
9
4
1
12
6
5
14
13
4
16
15
3
10

No.	Part Number	Description	Q'ty	Remarks
	2090 14 600	Pump Ass'y, Metering Oil Pump	1	
1	0820 23 832B	Washer, Thrust	1	
2	0820 23 833B	Plate	1	
3	0820 23 834B	Plate	1	
4	0730 23 837	Ring, "O"	2	
5	0820 23 835A	Bearing, Worm	1	
6	0730 23 839	Ring, "O"	1	
7	0820 23 836	Connector	2	
8	0730 23 842	Bolt, Connector	2	
9	0730 23 843	Washer, Connector	4	
10	908332 4 08	Screw Set, Plate	4	
~~11~~	~~0730 23 845~~	~~Plunger~~	~~1~~	
12	0730 23 846	Worm, Driving	1	
13	2090 23 837	Plunger, Sub	1	
14	2090 23 838	Plunger, Differential	1	
15	2090 23 853	Nut, Push	1	
16	0820 23 840	Spring, Plunger	1	
17	2090 23 841	Pin, Control	1	
18	0730 23 854	Ring, "V"	1	
19	0820 23 842	Cap	1	
20	0820 23 843	Strainer	2	
21	2090 23 844	Lever, Control	1	
22	0820 23 845A	Screw, Adjust	1	
23	0820 23 847A	Nut, Adjust Screw	1	
24	99907 0600	Nut, Control Lever	1	
	99971 0600	Washer, Spring	1	
25	0820 23 848A	Spring, Return	1	

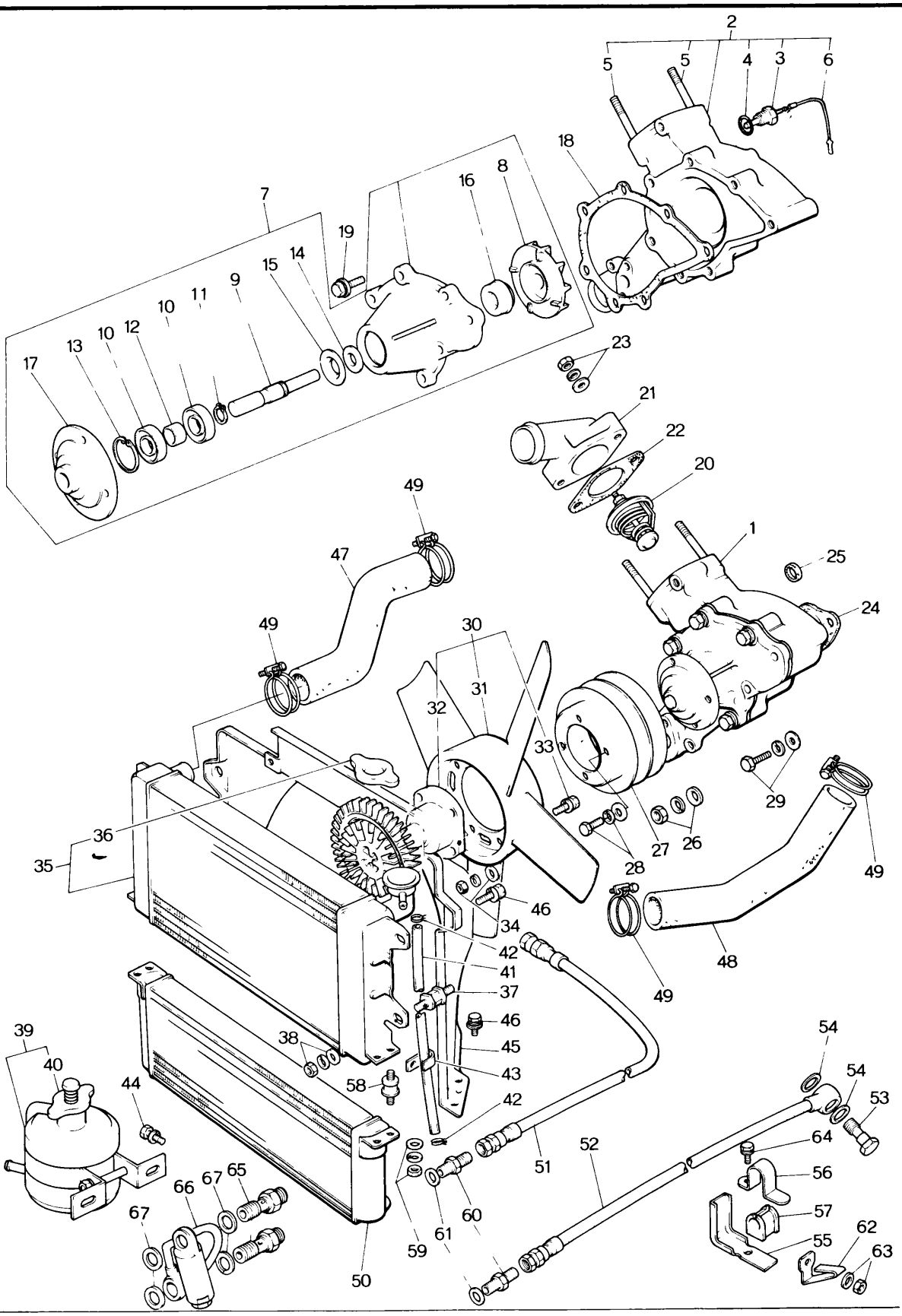
2
5
5
4
3
6
18
8
16
7
19
15
14
9
11
10
10
12
13
17
23
21
22
20
49
47
1
25
24
49
30
31
32
33
29
27
26
28
36
35
46
34
42
41
37
46
45
43
58
38
39
40
44
42
51
52
54
54
53
64
56
57
55
62
63
67
66
67
65
59
61
60
50
49
48
49

No.	Part Number	Description	Q'ty	Remarks
1	1570 15 010A	Pump, Water (1972 Model)	1	
	1570 15 010B	Pump, Water (1972 Model)	1	Car No. 103115 72/5 ~ ○ 106593
	~~1620 15 010~~	~~Pump, Water~~	~~1~~	~~1973 Model~~
	1620 15 010A	Pump, Water (1973 Model)	1	From Car No. 1
	1620 15 010B	Pump, Water (1973 Model)	1	Car No. 127040 73/2 ~ ○ 128211 T3/6 ~ O
● 2	1620 15 010C	Pump, Water	1	
	0866 15 100C	Casing	1	☆
	1570 15 100	Casing	1	Car No. 103115 72/5 ~ △ 106593 ☆
	1620 15 100	Casing	1	1973 Model ☆
3	0259 18 510	Gauge Unit, Water Heat	1	
4	011C 18 515	Ring, "O" - Heat Gauge Unit	1	
5	2090 15 104	Stud, Thermostat Cover	2	
6	0866 18 511	Cord, Heat Gauge Unit	1	
7	2329 15 130A	Cover, Pump 1972 Model	1	
	1620 15 130	Cover, Pump (1973 Model)	1	1973 Model
●	1620 15 130A	Cover, Pump (1973 Model)	1	Car No. T3/2 ~ X
8	0813 15 111	Impeller (1973 Model)	1	1972 Model
	1620 15 111	Impeller	1	1973 Model
9	0820 15 112	Shaft	1	
10	0118 15 121	Bearing, Ball	2	
11	0118 15 114	Ring, Snap	1	
12	0820 15 115	Spacer	1	
13	99574 3500	Ring, Snap	1	
14	0813 15 117	Plate, Baffle	1	
	0118 15 125	Plate, Baffle	1	1973 Model
15	0118 15 118	Plate, Dust Seal	1	
16	0820 15 120	Washer, Seal	1	
17	2329 15 152	Boss, Pulley	1	
	1011 15 152	Boss, Pulley	1	1973 Model
18	2329 15 132A	Gasket, Pump Cover 1972 Model	1	
	1620 15 132	Gasket, Pump Cover (1973 Model)	1	
	1620 15 132A	Gasket, Pump Cover (1973 Model)	1	Car No. 127040 73/2 ~ ○ 128211
19	908016 8 25	Bolt Set	5	1972 Model
			3	1973 Model
	~~0820 99 150~~	~~Repair Kit, Water Pump~~	~~1~~	~~Set 1972 Model~~
Ⓝ	2090 99 150	Repair Kit, Water Pump (Fig. No. 8 ~ 11, 13, 15 & 16 included)	1	From Car No. 1
	1668 99 150	Repair Kit, Water Pump (-do-)	1	Car No. 106357 72/9 ~ X 108671
	0862 99 150	Repair Kit, Water Pump (Fig. No. 8 ~ 16 & 18 included)	1	Car No. 103903 72/10 ~ ○ 133733
	0862 99 150A	Repair Kit, Water Pump (-do-)	1	Car No. 127040 73/2 ~ ○ 128211
20	0823 15 171	Thermostat, Water (~~Selective use~~)	1	
	~~0839 15 171A~~	~~Thermostat, Water~~		
21	0839 15 172	Cover, Thermostat	1	
●	1114 15 170	Cover, Thermostat	1	T3/6 ~ O
22	0813 15 173	Gasket, Thermostat Cover	1	

No.	Part Number	Description	Q'ty	Remarks
23	99907 0800	Nut, Thermostat Cover	2	
	99901 0800	Nut	2	Car No. 101269 ~○ 103738
	99953 0800	Washer, Plain	2	
	99971 0800	Washer, Spring	2	
24	0822 15 105	Gasket, Water Pump	1	
25	0820 15 106	Gasket, Water Pump	2	
26	99901 0800	Nut, Water Pump	3	
	99953 0800	Washer, Plain	3	
	99971 0800	Washer, Spring	3	
27	2329 15 151A	Pulley, Water Pump	1	1972 Model
	1570 15 151	Pulley, Water Pump	1	1973 Model
28	908062 6 14	Bolt, Pulley	1	
	99806 0610	Bolt, Pulley	4	1973 Model
	99952 0600	Washer, Plain	4	
	99971 0600	Washer, Spring	4 8	1973 Model
29	99801 0832	Bolt, Water Pump	1	
	99953 0800	Washer, Plain	1	
	99971 0800	Washer, Spring	1	
30	0877 15 250	Fan & Fan Drive	1	
	0872 15 250	Fan & Fan Drive	1	1973 Model
31	0877 15 200	Fan, Cooling	1	
	0872 15 200	Fan, Cooling	1	1973 Model
32	2090 15 210	Fan Drive	1	
33	99806 0612	Bolt	6	
	99952 0600	Washer, Plain	6	
	99971 0600	Washer, Spring	6	
34	99906 0600	Nut, Fan & Fan Drive	4	

No.	Part Number	Description	Q'ty	Remarks
	99971 0800	Washer, Spring	4	
	99952 0800	Washer, Plain	4	
35	1570 15 310	Radiator (Manual)	1	
	1621 15 310	Radiator (Automatic)	1	
● 36	~~0223 15 205~~	~~Cap~~	~~1~~	
●	0222 15 205	Cap	1	From Car No. 1
● Ⓝ	2228 15 207	Cock, Water Plain	1	Car No. 127040 73/2 ~ Added Anew 128211
● Ⓝ	2228 15 208	Gasket	1	
37	0820 15 312A	Rubber, Insulation	4	
38	99801 0800	Nut, Radiator	4	
●	99940 0802	Nut	4	Car No. 111422 72/10 ~ ○ 113912
	99851 0822	Washer, Plain	4	Car No. 111422 72/10 ~ Discarded 113912
	99971 0800	Washer, Spring	4	
39	0866 15 350B	Tank, Sub	1	
●	0866 15 350C	Tank, Sub	1	Car No. 122917 72/12 ~ ○ 124162
40	~~0222 15 255~~ →	Cap 2981-15-205C		
41	0866 15 351A	Hose, Water-Reserve Tank	1	
42	99289 0701	Clip, Water Hose	2	
43	99285 0800	Clip, Water Hose	2	
44	99804 0620	Bolt, Reserve Tank	2	
	99786 0620	Bolt, Reserve Tank	2	Car No. 100097 72/3 ~ ○ 102307
	99852 0800	Washer, Plain	2	Car No. 100097 72/3 ~ Discarded 102307
	99971 0800	Washer, Spring	2	
45	1570 15 401	Shroud, Radiator	1	
46	99801 0812	Bolt Radiator Shroud	2	
●	99796 0812	Bolt	2	Car No. 105638 72/8 ~ ○ 108463

No.	Part Number	Description	Q'ty	Remarks
	99952 0800	Washer, Plain	2	Car No. 105634 108463 7/8 ~ Discarded
	99971 0800	Washer, Spring	2	
47	0866 15 511	Hose, Water - Thermostat ~ Radiator	1	
48	0866 15 521A	Hose, Washer - Radiator ~ Water Pump	1	
	1620 15 521	Hose, Water - Radiator ~ Water Pump	1	1973 Model
49	99282 4900	Band, Hose - Water	3	Car No. 105634 108463 7/8 ~ Q'ty
	99282 5300	Band, Hose	1	1973 Model
50	0865 14 700	Cooler, Oil (Manual)	1	
●	0865 14 700A	Cooler, Oil (Manual)	1	Car No. 105385 108457 72/7 ~ X
●	1621 14 700A	Cooler, Oil (Automatic)	1	
	1621 14 700B	Cooler, Oil (Automatic)	1	Car No. 113113 115546 72/10 ~ Δ
51	0866 14 720A	Hose, Oil	1	
● 52	1570 14 730A	Hose, Oil (1972 Manual & 1973 Automatic)	1	From Car No. 1
	0839 14 730C	Hose, Oil (Manual)	1	Car No. 100308 102635 73/3 ~ ○
	~~0881 14 730~~	~~Hose, Oil~~ ~~Selective use~~	1	~~Car No. 100308 102635 73/3 ~ Added Anew~~
53	99381 1400	Bolt, Connector ~ Oil Hose	1	
54	99562 1800	Gasket	2	
55	0866 14 740A	Bracket, Oil Hose	1	
56	0839 14 745	Clip, Oil Hose	1	
57	0813 14 716	Protector, Oil Hose	1	
58	0820 15 312A	Rubber, Insulation - Oil Cooler	4	
	0222 13 363	Rubber, Insulation - Oil Cooler	4	1973 Model
59	99906 0600	Nut, Oil Cooler	8	
	99952 0600	Washer, Plain	8	
	99971 0600	Washer, Spring	8	
60	~~99904 1200~~	~~Joint, Union~~	~~2~~	
61	~~99564 1000~~	~~Gasket~~	~~2~~	
62	0866 18 496	Clip	1	
63	99921 1200	Nut	1	
	99971 1200	Washer, Plain	1	
64	99806 0610	Bolt, Clip	1	
	99971 0600	Washer, Spring	1	
65	1665 14 771	Bolt, Connector	2	
66	1570 14 780	Valve Ass'y, Bypass (Manual)	1	
67	99562 1600	Packing	4	

CLUTCH CONTROL SYSTEM
(MANUAL 1972 MODEL)

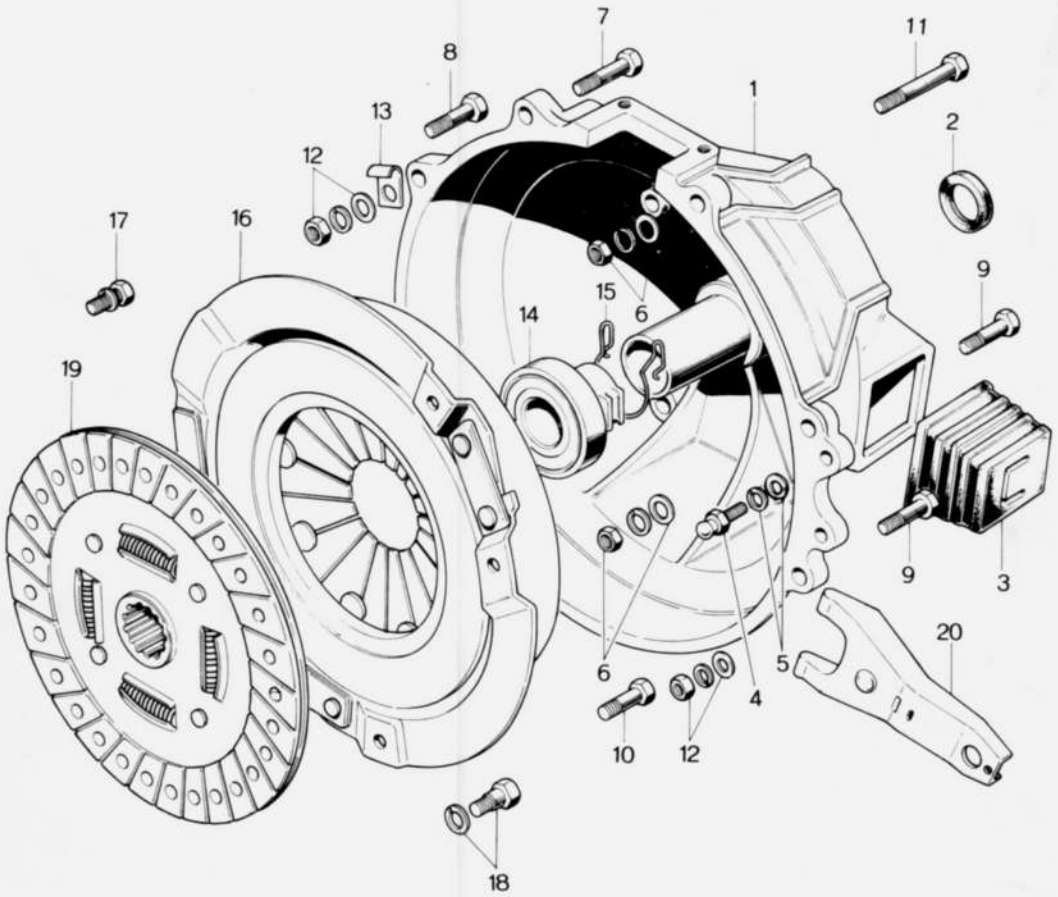

No.	Part Number	Description	Q'ty	Remarks
1	0839 16 210A	Housing Ass'y, Clutch	1	
2	0603 16 103	Oil Seal	1	
3	0500 16 104	Cover, Dust	1	
	0370 16 214	Cover, Dust	1	Car No. 104518 $^{72}/_{7}$ ~○ 108368
●	0370 16 214A	Cover, Dust	1	Car No. 125641 $^{73}/_{1}$ ~○ 126470
4	0603 16 102B	Pin, Pivot	1	
5	99953 1000	Washer, Plain	1	
	99971 1000	Washer, Spring	1	
6	99921 1000	Nut, Clutch Housing+T/mission Case	8	
	99953 1000	Washer, Plain	8	
	99971 1000	Washer, Spring	8	
7	99811 1075	Bolt, Clutch Housing	1	
8	99811 1055	Bolt	1	
9	99811 1050	Bolt	2	
10	99811 1045	Bolt	1	
11	99811 1032	Bolt	1	
12	99921 1000	Nut	4	
	99953 1000	Washer, Plain	5	
	99971 1000	Washer, Spring	6	
13	99295 1510	Clip	1	
14	0820 16 510	Collar, Release-Clutch	1	
15	0820 16 515	Spring, Clutch Release Collar	1	
16	0839 16 410B	Cover, Clutch	1	
17	99753 78118	Bolt, Clutch Cover	4	
	99971 0800	Washer, Spring	4	
18	0839 16 432	Bolt, Reamer-Clutch Cover	2	

CLUTCH CONTROL SYSTEM
(MANUAL 1972 MODEL)

No.	Part Number	Description	Q'ty	Remarks
	99971 0800	Washer, Spring	2	
19	0839 16 4600	Disc, Clutch	1	
20	0305 16 520	Fork, Release	1	

CLUTCH CONTROL SYSTEM
(MANUAL 1973 MODEL)

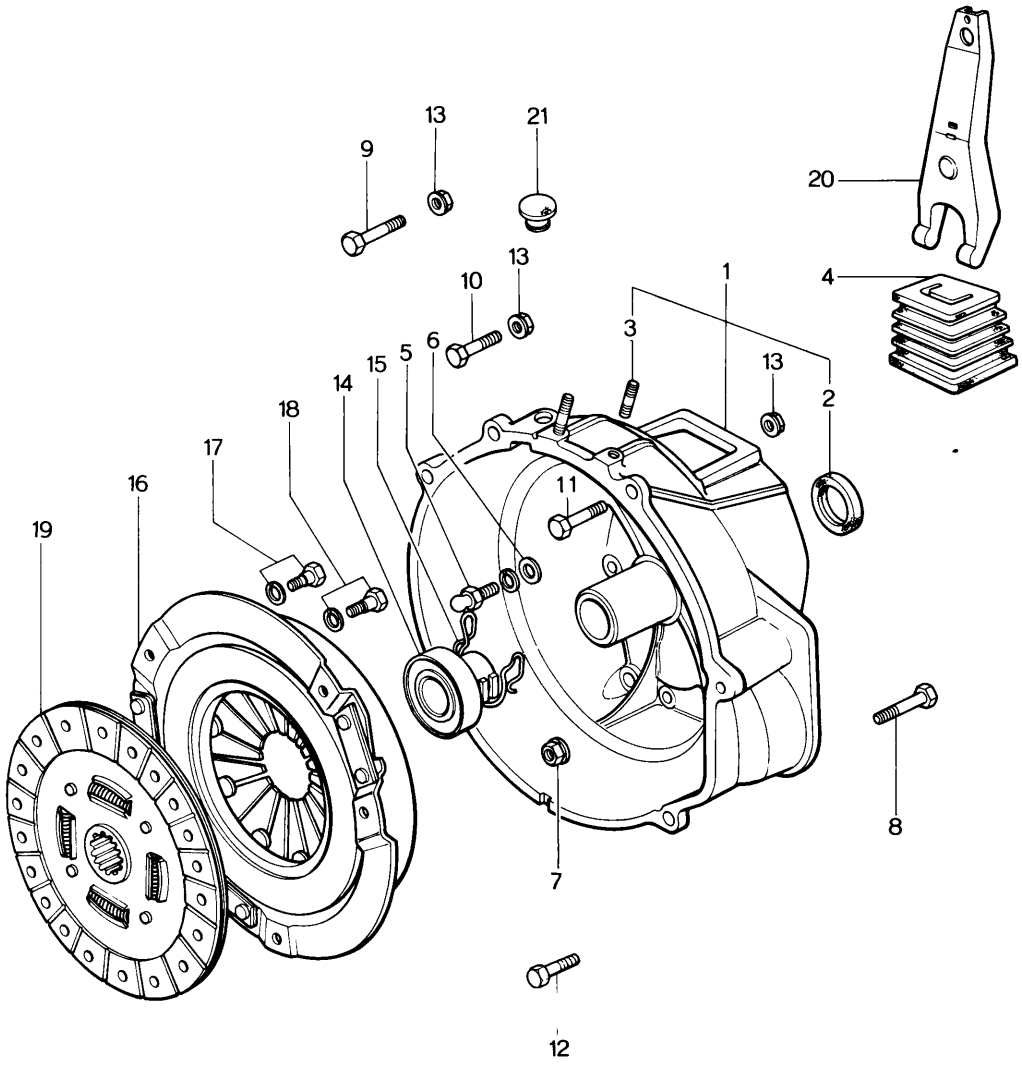

CLUTCH CONTROL SYSTEM
(MANUAL 1973 MODEL)

16

No.	Part Number	Description	Q'ty	Remarks
1	0862 16 210A	Housing, Clutch	1	
2	0603 16 103	Oil Seal	1	
3	99851 0820	Stud	2	
4	0866 16 214A	Cover, Dust	1	
5	0603 16 102B	Pin, Pivot	1	
6	99953 1000	Washer, Plain	1	
	99971 1000	Washer, Spring	1	
7	99940 1001	Nut, Clutch Housing	8	
8	99796 1095	Bolt, Clutch Housing	1	
9	99811 1055	Bolt	1	
10	99811 1050	Bolt	1	
11	99811 1080	Bolt	1	
12	99796 1035	Bolt	1	
13	99940 1001	Nut	3	
14	0820 16 510	Collar, Release - Clutch	1	
15	0820 16 515	Spring, Clutch Release Collar	1	
16	0839 16 410B	Cover, Clutch	1	
17	99753 78118	Bolt, Reamer - Clutch Cover	4	
	99971 0800	Washer, Spring	4	
18	0839 16 432	Bolt, Reamer - Clutch Cover	2	
	99971 0800	Washer, Spring	2	
19	0839 16 460E	Disc, Clutch	1	
●	0862 16 460	Disc, Clutch	1	Car No 131107 $^{73}/_{3}$ ~ 132971 ○
20	0862 16 520	Fork, Release	1	
21	0813 16 112	Cover, Top Hole	1	

MANUAL T /MISSION
(CASE, FOUR- FORWARD SPEED, 1972 MODEL)

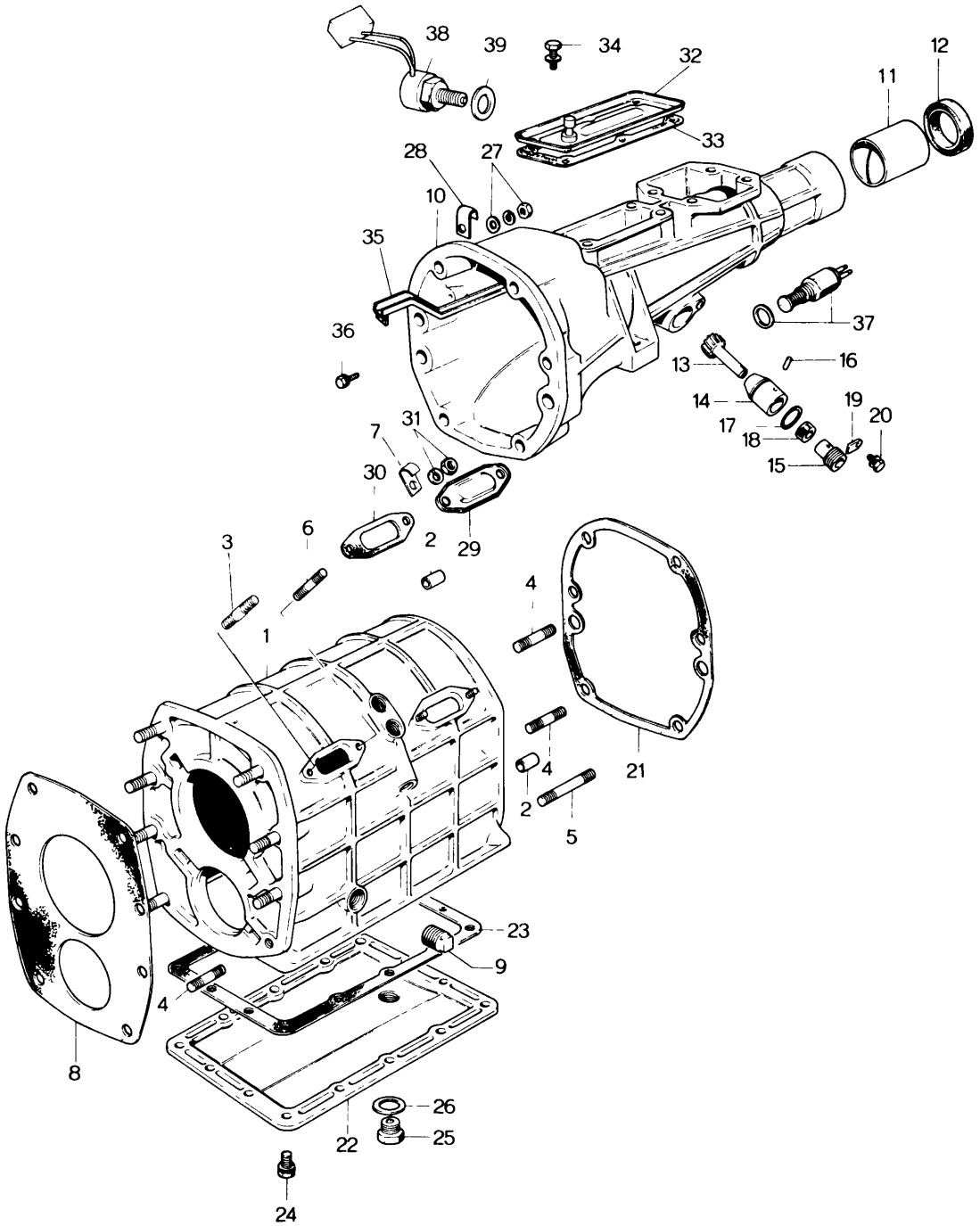

MANUAL T/MISSION
(CASE, FOUR-FORWARD SPEED, 1973 MODEL)

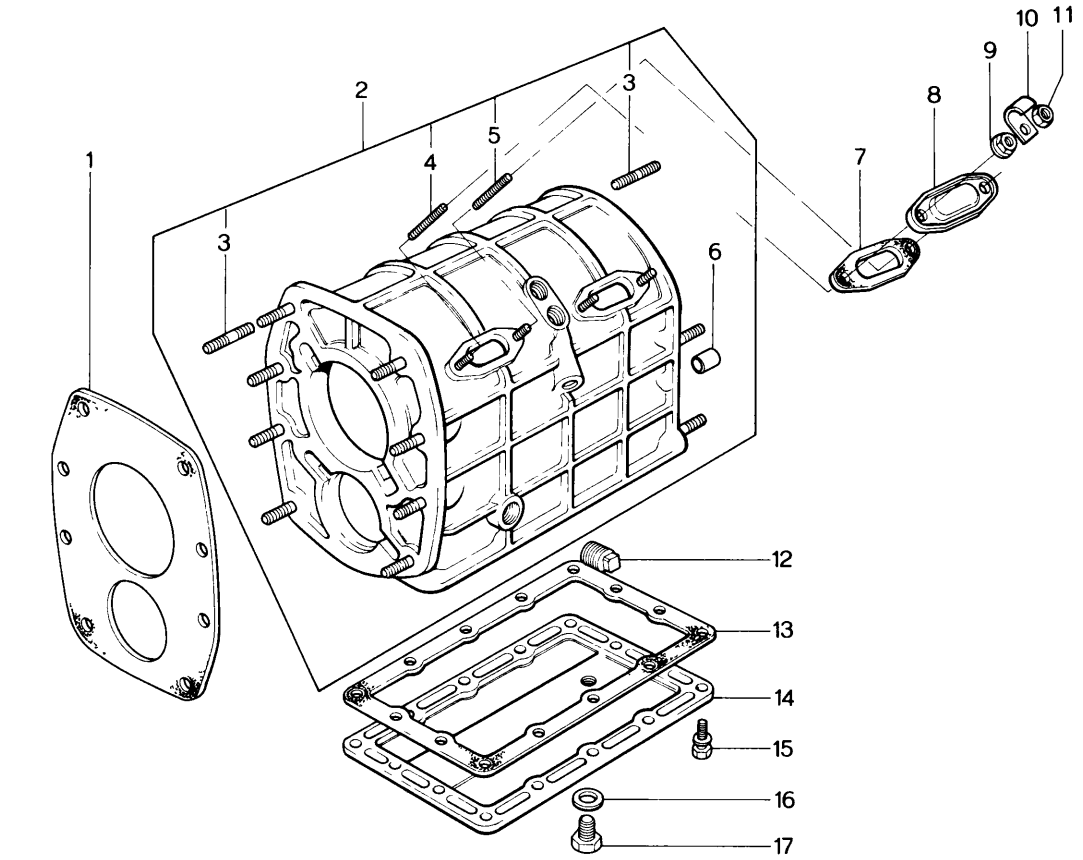

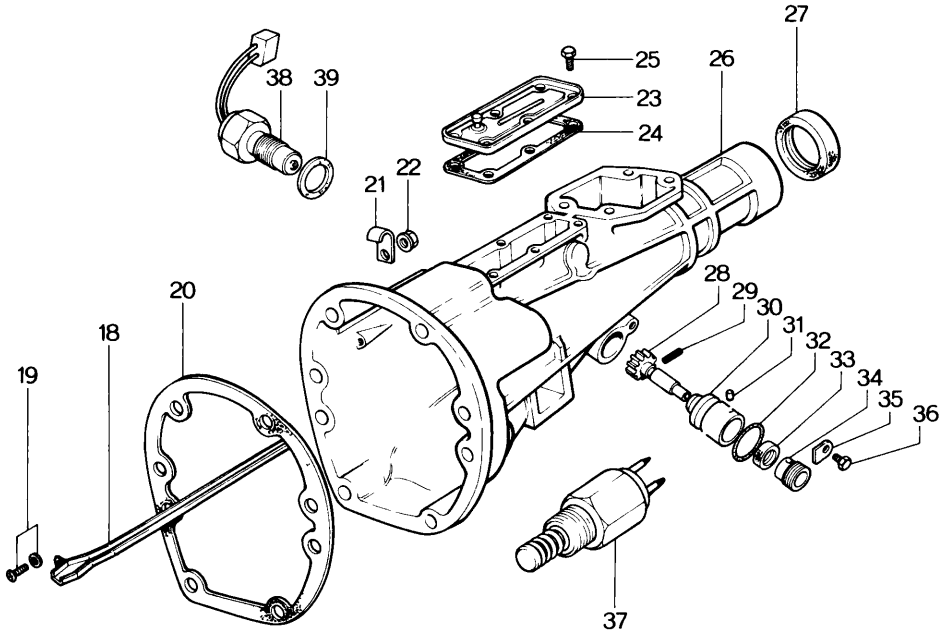

No.	Part Number	Description	Q'ty	Remarks
1	0839 17 111	Gasket, Front	1	
2	~~1011 17 100 Case, T/mission~~		~~1~~	
	1011 17 100A	Case, T/mission	1	From Car No. 1
	1011 17 100B	Case, T/mission	1	Car No. 120143 72/12 ~ 120913 Δ
3	99855 1025	Stud	14	
4	99852 0610	Stud, Blind Cover	3	
●	0839 17 105	Stud, Blind Cover	3	Car No. 120143 72/12 ~ 120913 X
5	0839 17 105	Stud, "B"	1	
6	99233 1225	Pin, Knock	2	
7	0810 17 385	Gasket, Blind Cover	2	
8	0810 17 381	Cover, Blind	2	
9	99940 0601	Nut, Blind Cover	4	
	99906 0600	Nut,	4	Car No. 73/3 ~ O
10	99276 0506	Clip, Wire Harness	1	
Ⓝ	99971 0600	Washer, Spring	4	Car No. 130723 132386 73/3 ~ Added Anew
11	99906 0600	Nut, Clip	1	
12	99502 4000	Plug, Oil	1	
13	0862 17 375	Gasket, Under Cover	1	
14	0862 17 371	Cover, Under	1	
15	99796 0620	Bolt, Under Cover	14	
16	99564 1800	Gasket, Magnet Plug	1	
17	0810 17 121	Plug, Magnet	1	
18	1011 17 540A	Pass, Oil	1	
19	99833 0510	Screw, Oil Pass	1	
	99971 0500	Washer, Spring	1	
20	0839 17 361	Gasket, Extension Housing+T/mission Case	1	
21	99276 0510	Clip, Wire Harness	1	

MANUAL T/MISSION

(CASE, FOUR - FORWARD SPEED, 1973 MODEL)

No.	Part Number	Description	Q'ty	Remarks
22	99940 1001	Nut, Extension Housing+T/mission Case	6	
23	1011 17 530	Cover, Blind	1	
24	1011 17 535	Gasket, Blind Cover	1	
25	99276 0608	Bolt, Blind Cover	4	
26	1620 17 330A	Extension Housing	1	
27	0317 17 335	Oil Seal	1	
28	0862 17 441	Gear, Driven - Speedometer	1	
29	99222 0216	Pin, Spring	1	
30	0862 17 442	Sleeve, Speedometer	1	
31	0187 17 352	Pin, Dowel - Speedometer Sleeve	1	
32	99541 02211	Ring, "O" - Speedometer Sleeve	1	
33	99586 10207	Oil Seal	1	
34	0862 17 351	Joint, Cable - Speedometer	1	
35	0111 17 354	Plate, Lock - Cable Joint	1	
36	99796 0614	Bolt, Lock Plate	1	
37	0376 17 640	Switch, Back Up	1	
	0376 17 640A	Switch, Back Up	1	T3/4~O
38	1663 17 630	Switch, Neutral	1	
	1114 17 630	Switch, Neutral	1	T3/4~O
39	99564 1800	Gasket, Neutral Switch	1	
	1011 89 175	Gasket, Set - T/mission	1 Set	

MANUAL T/MISSION
(CASE, FIVE-FORWARD SPEED)

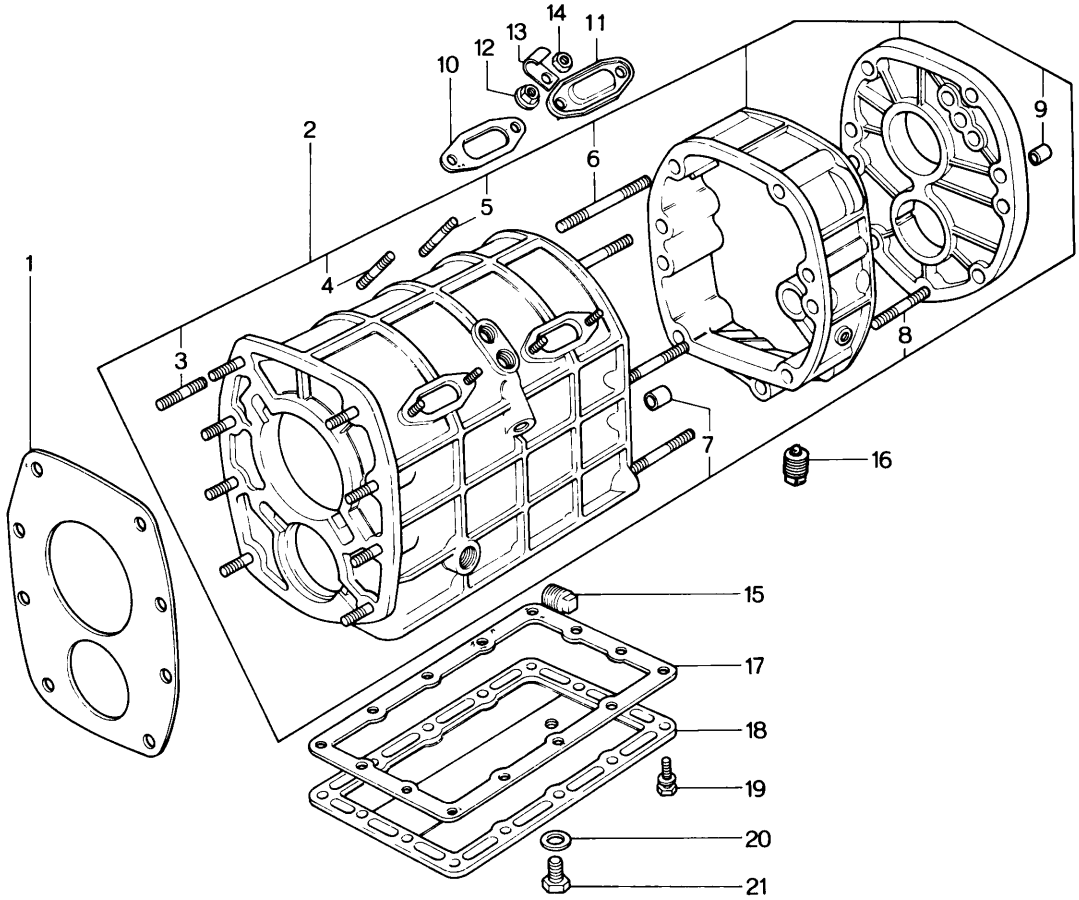

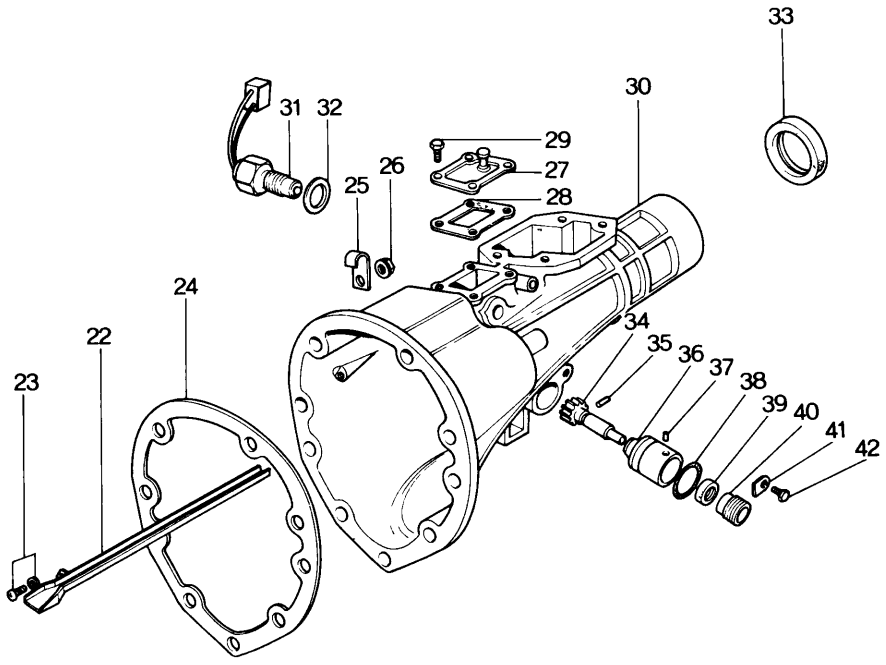

No.	Part Number	Description	Q'ty	Remarks
1	0839 17 111	Gasket, Front	1	
● 2	~~0862 17 200A~~	~~Case Set, T/mission~~	~~1~~	
●	0862 17 200B	Case Set, T/mission	1	From Car No. 1
●	0862 17 200C	Case Set, T/mission	1	Car No. 116415 72/11 ~Δ 118270
●	0862 17 200D	Case Set, T/mission	1	Car No. 126614 73/1 ~Δ 127704
3	99855 1025	Stud	8	
4	99852 0610	Stud, Blind Cover	3	
5	0839 17 105	Stud, Blind Cover	1	
6	99857 10135	Stud	6	
7	99233 1225	Pin, Knock	2	
8	99855 1045	Stud, Center Housing	1	
9	99246 1230	Pin, Dowel-Bearing Housing	1	
10	0810 17 385	Gasket, Blind Cover	2	
11	0810 17 381	Cover, Blind	2	
12	99940 0601	Nut, Blind Cover	4	
	99906 0600	Nut, Blind Cover	4	73/3~O
13	99276 0506	Clip	1	
Ⓝ	99971 0600	Washer, Spring	4 Car No.	73/3~Added Anew
14	99906 0600	Nut, Clip	1	
15	99502 4000	Plug, Oil	1	
16	0107 17 121	Plug, Magnet	1	
17	0862 17 375	Gasket, Under Cover	1	
18	0862 17 371	Cover, Under	1	
19	99796 0620	Bolt, Under Cover	14	
20	99564 1800	Gasket, Magnet Plug	1	
21	0810 17 121	Plug, Magnet	1	
22	0862 17 540	Pass, Oil	1	

MANUAL T/MISSION
(CASE, FIVE-FORWARD SPEED)

No.	Part Number	Description	Q'ty	Remarks
23	99833 0510	Screw, Oil Pass	1	
	99971 0500	Washer, Spring	1	
24	0862 17 393	Gasket, Rear	1	
25	99276 0510	Clip, Wire Harness	1	
26	99940 1001	Nut, Extension Housing+T/mission Case	7	
27	0862 17 530	Cover, Blind	1	
●	0862 17 530A	Cover, Blind	1	Car No. 107151 72/9 ~ 109301 Δ
28	0862 17 535	Gasket, Blind Cover	1	
29	99796 0608	Bolt, Blind Cover	4	
30	1608 17 330A	Housing, Extension	1	
31	1663 17 630	Switch, Neutral	1	
32	99564 1800	Packing, Neutral Switch	1	
33	0317 17 335	Oil Seal	1	
34	0862 17 441	Gear, Driven-Speedometer	1	
35	99222 0216	Pin, Spring	1	
36	0862 17 442	Sleeve, Speedometer	1	
37	0187 17 352	Pin, Dowel	1	
38	99541 02211	Ring, "O"	1	
39	99586 10207	Oil Seal	1	
40	0862 17 351	Joint, Cable	1	
41	0111 17 354	Plate, Lock	1	
42	99796 0614	Bolt, Lock Plate	1	
	0862 89 175	Gasket Set, T/mission	1	Set

MANUAL T/MISSION
(GEAR, FOUR-FORWARD SPEED, 1972 MODEL)

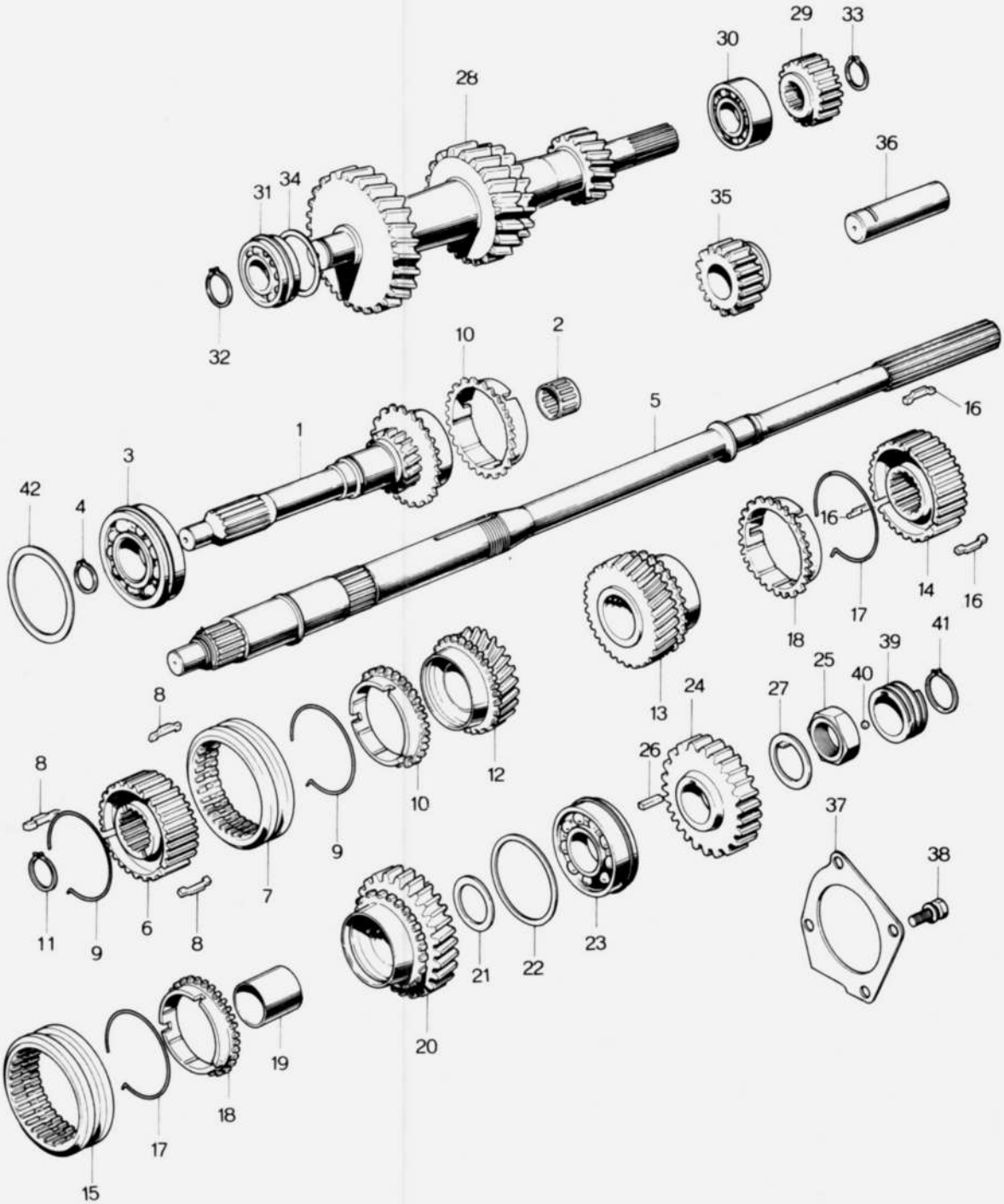

No.	Part Number	Description	Q'ty	Remarks
1	0839 17 201B	Gear, Main Drive	1	
2	0810 17 205	Bearing, Needle Roller	1	
3	99606 33070	Bearing, Ball	1	
4	99573 3500	Ring, Snap	1	
5	1570 17 221	Shaft, Main	1	
6	0290 17 241B	Hub, Clutch (3.4)	1	
7	0603 17 262	Sleeve, Clutch Hub (3.4)	1	
8	0187 17 243	Key, Synchronizer	3	
9	0600 17 324	Spring, Sychronizer	2	
10	0839 17 245	Ring, Synchronizer	2	
●	0881 17 245	Ring, Synchronizer	2	Car No. 104518 72/7 ~ 108368 ○
●	0881 17 245A	Ring, Synchronizer	2	Car No. 107151 72/9 ~ 109301 ○
11	0317 17 225	Ring, Snap	1	
12	0839 16 230A	Gear, Third	1	
13	0839 17 250A	Gear, Second	1	
14	0290 17 261B	Hub, Clutch (1.2)	1	
15	0603 17 262	Sleeve, Clutch Hub (1.2)	1	
16	0187 17 243	Key, Synchronizer	3	
17	0600 17 324	Spring, Synchronizer	2	
18	0839 17 245	Ring, Synchronizer	2	
●	0881 17 245	Ring, Synchronizer	2	Car No. 104518 72/7 ~ 108368 ○
●	0881 17 245A	Ring, Synchronizer	2	Car No. 107151 72/9 ~ 109301 ○
19	0839 17 275	Sleeve, Gear	1	
20	0839 17 270A	Gear, Low	1	
21	0839 17 276	Washer, Thrust		
	0839 17 277	Washer, Thrust	Selective use 1	
	0839 17 278	Washer, Thrust		
22	0839 17 287	Shim, Adjust		
	0839 17 288	Shim, Adjust	Selective use 1	
23	0810 17 204	Bearing, Ball	1	

MANUAL T/MISSION
(GEAR, FOUR-FORWARD SPEED, 1972 MODEL)

No.	Part Number	Description	Q'ty	Remarks
24	0839 17 281	Gear, Reverse	1	
25	0839 17 284	Nut, Lock	1	
26	0839 17 285	Key	1	
27	99978 3200	Washer, Lock	1	
28	0839 17 301	Shaft, Counter Gear	1	
29	0839 17 302	Gear, Reverse-Counter	1	
30	0821 17 303	Bearing, Needle	1	
31	0821 17 297	Bearing, Ball	1	
32	0839 17 305	Ring, Snap	1	
33	99573 2500	Ring, Snap	1	
34	0305 17 327	Shim, Adjust } Selective use	2	
	0305 17 328	Shim, Adjust } Selective use	1	
35	0839 17 310	Gear, Reverse Idle	1	
36	0839 17 313	Shaft, Reverse Idle Gear	1	
37	0839 17 321	Stopper, Bearing	1	
●	0839 17 321A	Stopper, Bearing	1	Car No. 111422 72/10 ~ 113912 X
38	99781 0616A	Bolt, Bearing Stopper	4	
●	99801 0820	Bolt, Bearing Stopper	4	Car No. 111422 72/10 ~ 113912 X
	99971 0600	Washer, Spring	4	
●	99971 0800	Washer, Spring	4	Car No. 111422 72/10 ~ 113912 X
39	0820 17 341	Gear, Drive-Speedometer	1	
40	99611 1500	Ball, Steel	1	
41	99573 2500	Ring, Snap	1	
42	99963 6910	Shim, Adjust } Selective use	2	
	99963 6930	Shim, Adjust } Selective use	1	

MANUAL T/MISSION
(GEAR, FOUR-FORWARD SPEED, 1973 MODEL)

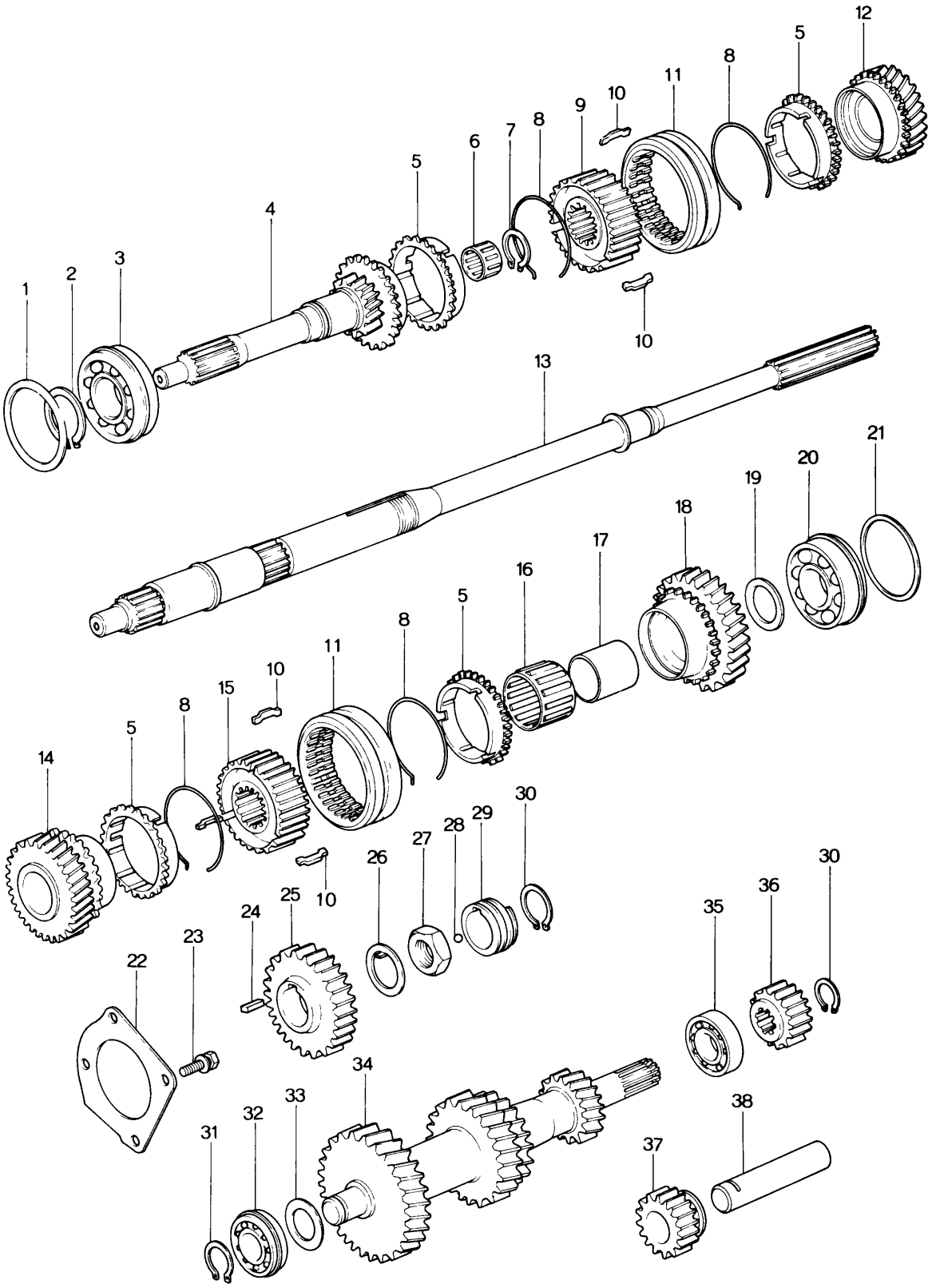

No.	Part Number	Description	Q'ty	Remarks
1	99963 6910	Shim, Adjust (t=0.1)	2	Selective use
	99963 6930	Shim, Adjust (t=0.3)	1	Selective use
2	99573 3500	Ring, Snap	1	
3	99606 33070	Bearing, Ball	1	
4	0862 17 201	Gear, Main Drive	1	
5	0881 17 245A	Ring, Synchronizer	4	
6	0810 17 205	Bearing, Needle Roller	1	
7	0317 17 225	Ring, Snap	1	
8	0600 17 324	Spring, Synchronizer	4	
9	0862 17 241	Hub, Clutch (3 rd & 4 th)	1	
10	0187 17 243	Key, Synchronizer	6	
11	0862 17 262	Sleeve, Clutch Hub	2	
12	0862 17 230	Gear (3 rd)	1	
13	1011 17 221	Shaft, Main	1	
14	0862 17 250	Gear (2 nd)	1	
15	0862 17 261	Hub, Clutch (1 st & 2 nd)	1	
16	0884 17 274	Bearing, Needle	1	
17	0884 17 275A	Race, Inner	1	
18	0862 17 271	Gear (1 st)	1	
19	0839 17 276	Washer, Thrust (ℓ=2.5)	1	Selective use
	0839 17 277	Washer, Thrust (ℓ=3.0)		
	0839 17 278	Washer, Thrust (ℓ=3.5)		
20	0810 17 204	Bearing, Ball	1	
21	0839 17 287	Shim, Adjust (t=0.1)	2	Selective use
	0839 17 288	Shim, Adjust (t=0.3)		Selective use
22	0839 17 321A	Stopper, Bearing	1	

MANUAL T /MISSION

(GEAR, FOUR-FORWARD SPEED, 1973 MODEL)

No.	Part Number	Description	Q'ty	Remarks
23	908012 8 20	Bolt Set, Bearing Stopper	4	
24	0839 17 285	Key	1	
25	0839 17 281	Gear, Reverse	1	
26	99978 3200	Washer, Lock	1	
27	0839 17 284	Nut, Lock	1	
28	99611 1500	Ball, Steel	1	
29	0862 17 341	Gear, Drive - Speedometer	1	
30	99573 2500	Ring, Snap	2	
31	0839 17 305	Ring, Snap	1	
32	0821 17 297	Bearing, Ball	1	
33	0305 17 327	Shim, Adjust (t=0.1)	2	Selective use
	0305 17 328	Shim, Adjust (t=0.3)	1	Selective use
34	1011 17 301	Gear, Counter Shaft	1	
35	0821 17 303	Bearing, Needle	1	
36	0839 17 302	Gear, Reverse - Counter	1	
37	0839 17 310	Gear, Reverse Idle	1	
38	0839 17 313	Shaft, Reverse Idle Gear	1	

MANUAL T/MISSION
(GEAR, FIVE-FORWARD SPEED)

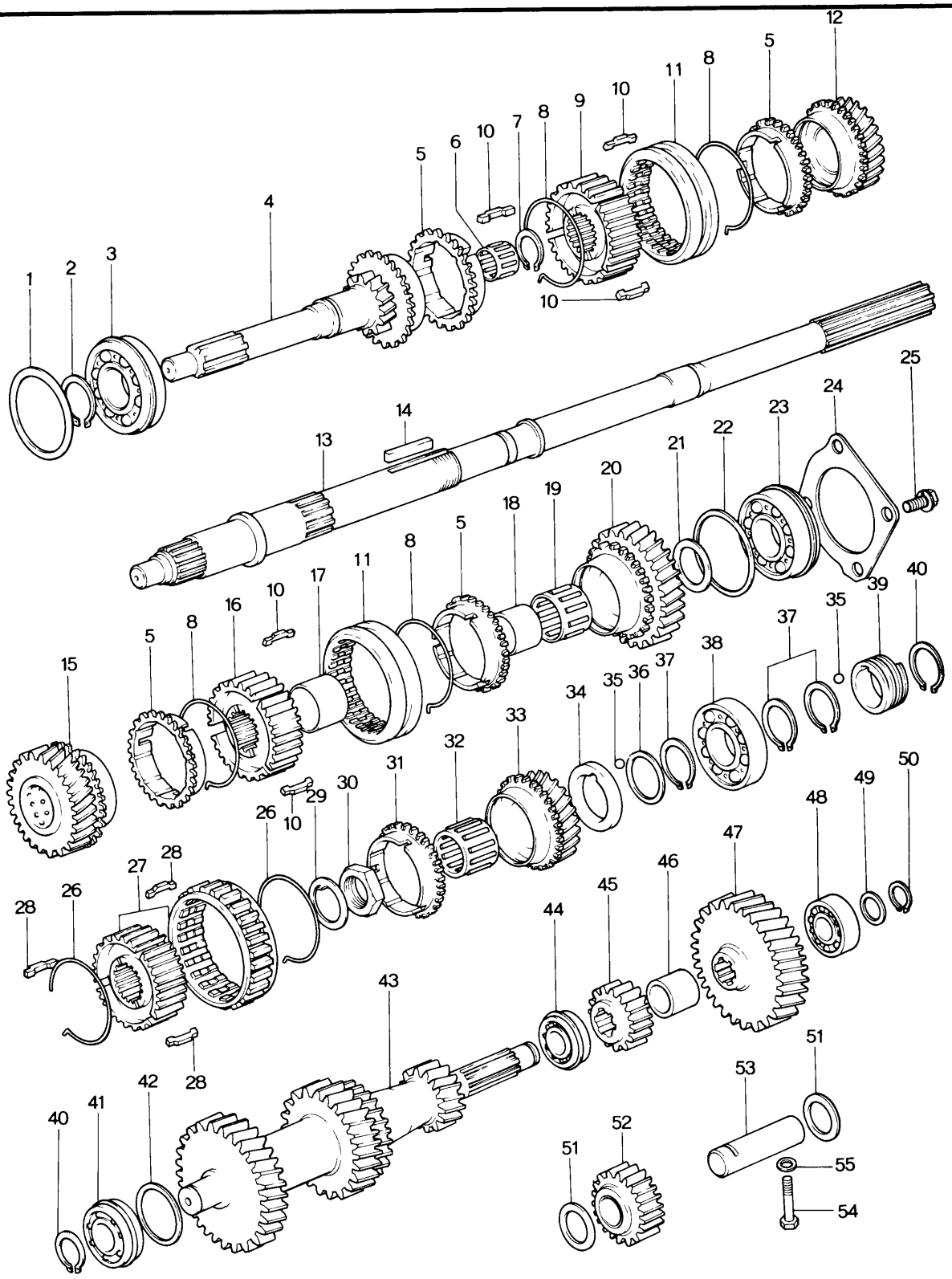

No.	Part Number	Description	Q'ty	Remarks
1	99963 6810	Shim, Adjust (t=0.1) } Selective use	2	
	99963 6830	Shim, Adjust (t=0.3) } Selective use	1	
2	99573 3500	Ring, Snap	1	
3	99606 33070	Bearing, Ball	1	
4	0862 17 201	Gear, Main Drive	1	
5	0881 17 245A	Ring, Synchronizer	4	
6	0810 17 205	Bearing, Needle Roller	1	
7	0317 17 225	Ring, Snap	1	
8	0600 17 324	Spring, Synchronizer Key	4	
9	0862 17 241	Hub, Clutch (3 rd & 4 th)	1	
10	0187 17 243	Key, Synchronizer	6	
11	0862 17 262	Sleeve, Clutch Hub	2	
12	0862 17 230	Gear (3 rd)	1	
13	0862 17 221	Shaft, Main	1	
14	0821 17 627	Key	1	
15	0862 17 250	Gear (2 nd)	1	
16	0862 17 261	Hub, Clutch (1 st & 2 nd)	1	
17	0821 17 615	Spacer	1	
18	0884 17 275A	Race, Inner	1	
19	0884 17 274	Bearing, Needle	1	
20	0862 17 271	Gear (1 st)	1	
21	0839 17 276	Washer, Thrust (ℓ=2.5) } Selective use	1	
	0839 17 277	Washer, Thrust (ℓ=3.0) } Selective use	1	
	0839 17 278	Washer, Thrust (ℓ=3.5) } Selective use	1	
22	0839 17 287	Shim, Adjust (t=0.1) } Selective use	2	
	0839 17 288	Shim, Adjust (t=0.3) } Selective use	2	

No.	Part Number	Description	Q'ty	Remarks
23	0810 17 204	Bearing, Ball	1	
24	0884 17 325A	Stopper, Bearing	1	
25	908012 8 20	Bolt Set, Bearing Stopper	4	
26	0103 17 244A	Spring Synchronizer Key	2	
27	0884 17 620	Gear Set, Reverse	1	
28	0613 17 223	Key, Synchronizer	3	
29	0821 17 628	Washer, Lock	1	
30	0821 17 629	Nut, Lock	1	
31	0862 17 245	Ring, Synchronizer	1	
●	0862 17 245A	Ring, Synchronizer	1	Car No. 123972 73/1 ~ 124434 ○
32	0884 17 612	Bearing, Needle	1	
33	0862 17 611	Gear, Over Top	1	
34	0884 17 631A	Washer, Thrust Lock (t=6.0)		
	0884 17 632A	Washer, Thrust Lock (t=6.2)		
	0884 17 633A	Washer, Thrust Lock (t=6.4)		
	0884 17 634A	Washer, Thrust Lock (t=6.5)		
	0884 17 635A	Washer, Thrust Lock (t=6.6)	Selective use 1	
	0884 17 636A	Washer, Thrust Lock (t=6.7)		
	0884 17 637A	Washer, Thrust Lock (t=6.8)		
	0884 17 638A	Washer, Thrust Lock (t=7.0)		
	0884 17 639	Washer, Thrust Lock (t=7.2)		
35	99611 1500	Ball, Steel	2	
36	0862 17 641	Washer, Adjust (t=1.9)		
	0862 17 642	Washer, Adjust (t=2.0)		
	0862 17 643	Washer, Adjust (t=2.1)	Selective use 1	
	0862 17 644	Washer, Adjust (t=2.2)		
37	0839 17 305	Ring, Snap	3	

No.	Part Number	Description	Q'ty	Remarks
38	99606 63050	Bearing, Ball	1	
39	0862 17 341	Gear, Drive-Speedometer	1	
40	99573 2500	Ring, Snap	2	
41	0821 17 297	Bearing, Ball	1	
42	0305 17 327	Shim, Adjust (t=0.1) } Selective use	2	
	0305 17 328	Shim, Adjust (t=0.3) } Selective use	1	
43	0862 17 301	Gear, Counter Shaft	1	
44	0821 17 303	Bearing, Needle	1	
45	0821 17 302	Gear, Reverse-Counter	1	
46	0884 17 304	Spacer	1	
47	0884 17 308	Gear, Counter	1	
48	99606 63440	Bearing, Ball	1	
49	0884 17 316	Washer, Adjust (t=2.00)		
	0884 17 317	Washer, Adjust (t=2.15) } Selective use	1	
	0884 17 318	Washer, Adjust (t=2.30)		
50	99573 2200	Ring, Snap	1	
51	0821 17 313	Washer, Thrust	2	
52	0821 17 310	Gear, Reverse Idle	1	
53	0884 17 315	Shaft, Reverse Idle Gear	1	
54	4069 17 323	Bolt Set	1	
55	99564 0800	Gasket	1	

MANUAL T/MISSION
(GEAR CONTROLS, FOUR-FORWARD SPEED)

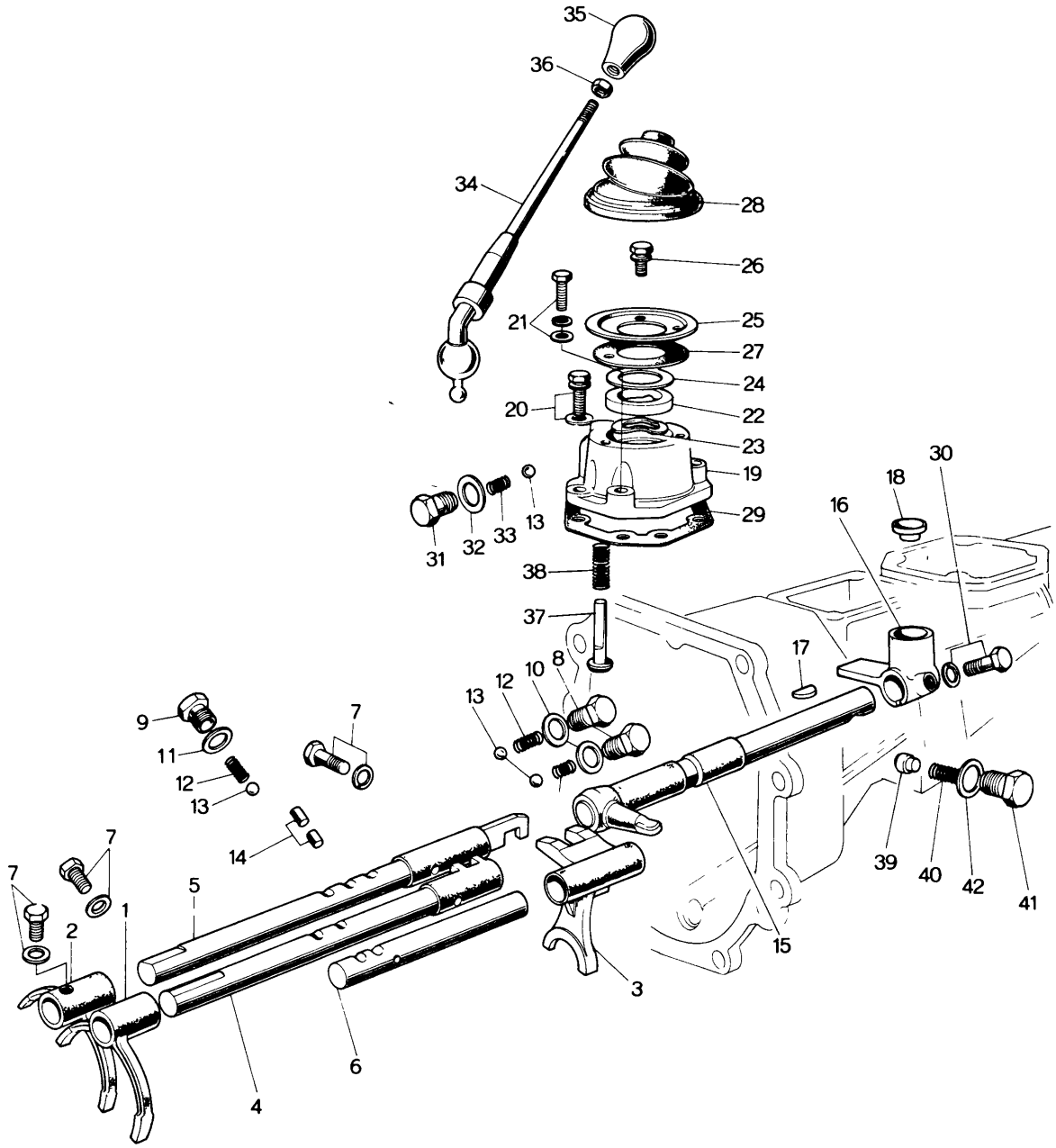

No.	Part Number	Description	Q'ty	Remarks
1	0810 17 402	Fork, Shift (1.2)	1	
2	0810 17 404	Fork, Shift (3.4)	1	
3	0839 17 406	Fork, Shift-Reverse	1	1972 Model
	1011 17 406	Fork, Shift-Reverse	1	1973 Model
4	0839 17 410	Rod, Shift (1.2)	1	1972 Model
	1011 17 410	Rod, Shift (1.2)	1	1973 Model
5	0839 17 420	Rod, Shift (3.4)	1	1972 Model
	1011 17 420	Rod, Shift (3.4)	1	1973 Model
6	0839 17 431	Rod, Shift-Reverse	1	
7	0118 17 313	Screw, Shift Fork	3	
	99971 0601	Washer, Spring	3	
8	0221 17 441	Cap, Spring	2	
9	0259 17 441	Cap, Spring	1	
10	99562 1400	Gasket, Spring Cap	2	
11	99564 1000	Gasket, Spring Cap	1	
12	0103 17 411	Spring	3	
13	99611 2500	Ball, Steel	4	
14	0114 17 351	Pin, Interlock	2	
15	1570 17 450	Lever, Control	1	1972 Model
	1620 17 450	Lever, Control	1	1973 Model
16	0398 17 461A	Lever End, Control	1	
17	0111 17 323	Key, Control Gate	1	
18	0398 17 462A	Seat, Change	1	
19	0303 17 470	Case, Change Control	1	
20	99801 0825	Bolt, Control Case	2	1972 Model
	99796 0822	Bolt, Control Case	2	1973 Model
	99971 0800	Washer, Plain	2	1972 Model
	99953 0800	Washer, Spring	2	1972 Model
21	99801 0835	Bolt, Control Case	2	1972 Model
	99796 0832	Bolt, Control Case	2	1973 Model
	99971 0800	Washer, Spring	2	1972 Model
	99953 0800	Washer, Plain	2	1972 Model

MANUAL T/MISSION
(GEAR CONTROLS, FOUR-FORWARD SPEED)

No.	Part Number	Description	Q'ty	Remarks
22	0303 17 481	Bush	1	
23	0303 17 482	Washer, Wave	1	
24	99963 3310	Shim } Selective use	3	
	99963 3330	Shim } Selective use	1	
25	0221 17 473	Plate, Cover	1	
26	99806 0614	Bolt, Cover Plate	3	
	99971 0600	Washer, Spring	3	
27	0303 17 474	Gasket, Cover Plate	3	
28	0221 17 475B	Boot, Dust	1	
29	0271 17 478	Gasket	1	
30	0187 17 492	Bolt, Reamer	1	
	99971 0800	Washer, Spring	1	
31	0183 17 491	Cap, Spring	1	
32	99562 1400	Gasket, Spring Cap	1	
33	0103 17 411	Spring	1	
34	0866 17 510	Lever, Change	1	
35	0329 17 520	Knob, Change Lever (Coupe)	1	
●	0881 17 520	Knob, Change Lever (Coupe)	1	Car No. 139448 $^{73}/_{5}$ ~○
	0371 17 520	Knob, Change Lever (Sedan & Station Wagon)	1	
36	0824 17 524	Nut, Knob (Coupe)	1	
37	0221 17 551A	Spindle, Select Lock	1	
38	0221 17 552	Spring	1	
39	0303 17 561	Piece, Friction	1	
40	0103 17 411	Spring	1	
41	99510 1000	Plug	1	1972 Model
	0259 17 441	Plug	1	1973 Model
42	99562 1000	Gasket	1	1972 Model
	99564 1000	Gasket	1	1973 Model

MANUAL T/MISSION
(GEAR CONTROLS, FIVE-FORWARD SPEED)

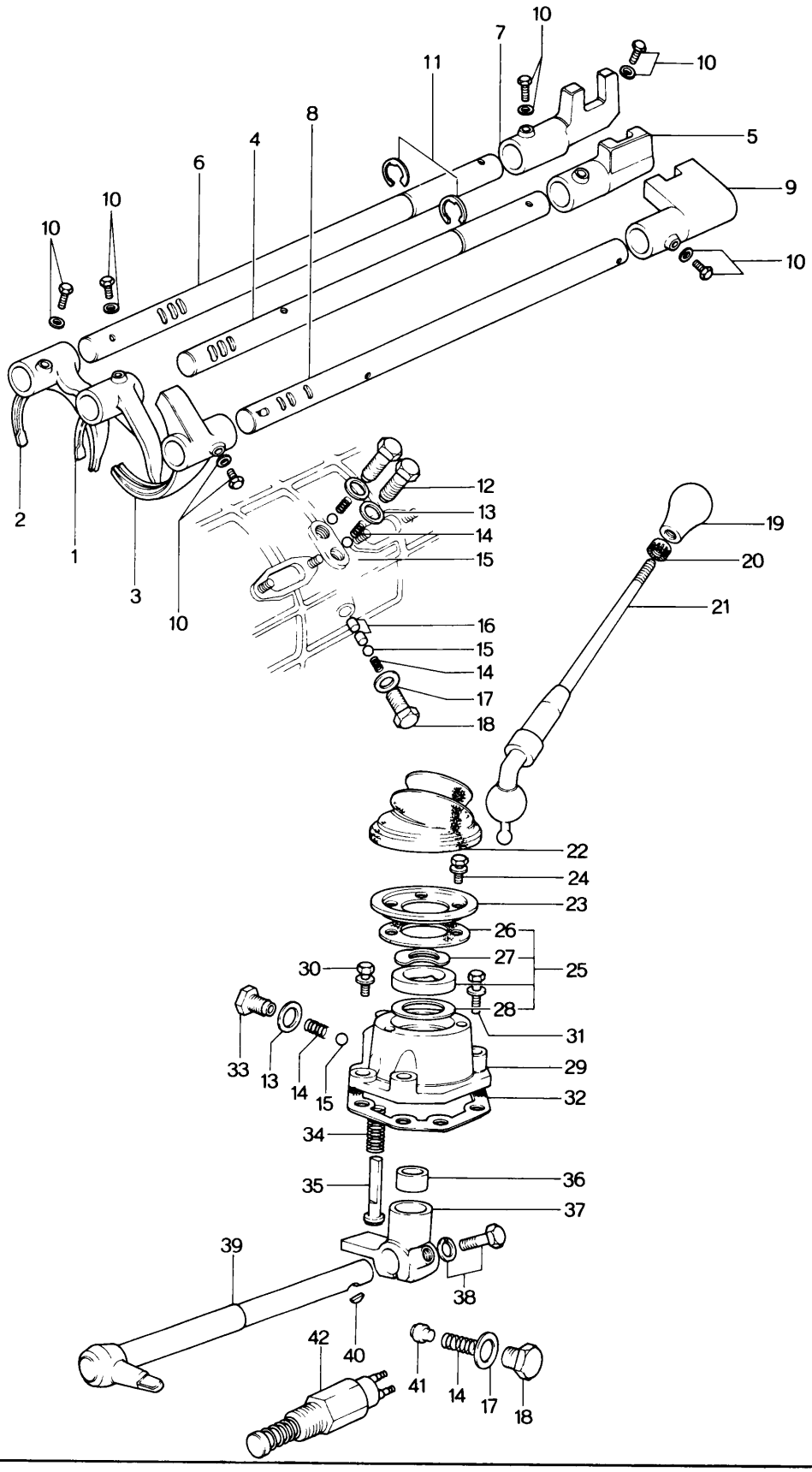

No.	Part Number	Description	Q'ty	Remarks
1	0810 17 402	Fork, Shift (1 st & 2 nd)	1	
2	0810 17 404	Fork, Shift (3 rd & 4 th)	1	
3	0862 17 406A	Fork, Shift (Over Top & Reverse)	1	
4	0862 17 411	Rod, Shift (1 st & 2 nd)	1	
5	0862 17 412	Gate, Shift (1 st & 2 nd)	1	
6	0862 17 421	Rod, Shift (3 rd & 4 th)	1	
7	0862 17 422	Gate, Shift (3 rd & 4 th)	1	
8	0862 17 431	Rod, Shift (Over Top & Reverse)	1	
9	0862 17 432	Gate, Shift (Over Top & Reverse)	1	
10	0118 17 313	Screw Set, Shift Fork & Rod	6	
	99971 0601	Washer, Spring	6	
11	0821 17 435	Ring, Snap-Shift Rod	2	
12	0221 17 441	Plug, Cap-Spring	2	
13	99562 1400	Gasket, Cap Plug	3	
14	0103 17 411	Spring	5	
15	99611 2500	Ball, Steel	4	
16	0114 17 351	Pin, Interlock	2	
17	99564 1000	Gasket	2	
18	0259 17 441	Plug, Cap-Spring	2	
19	1608 17 520	Knob, Change Lever	1	
●	0884 17 520	Knob, Change Lever	1	Car No. 139448 $^{73}/_{5}$ ~○
20	0824 17 524	Nut, Change Lever Knob	1	
21	0866 17 510	Lever, Change	1	
22	0221 17 475B	Boot, Dust	1	
23	0221 17 473	Plate, Cover	1	
24	99808 0614	Bolt, Cover Plate	4	
	99971 0600	Washer, Spring	4	

No.	Part Number	Description	Q'ty	Remarks
25	0305 99 178	Change Fuse Set	1	
26	0303 17 474	Gasket, Cover Plate	1	
27	0303 17 482	Washer, Wave	1	
28	99963 3310	Shim } Selective use	3	
	99963 3330	Shim } Selective use	1	
29	0303 17 470	Case, Change Control	1	
30	99796 0822	Bolt, Change Control Case	2	
31	99796 0832	Bolt, Change Control Case	2	
32	0271 17 478	Gasket, Change Control Case	1	
33	0183 17 491	Plug, Cap-Spring	1	
34	0221 17 552	Spring, Select Lock Spindle	1	
35	0221 17 551A	Spindle, Select Lock	1	
36	0398 17 462A	Seat, Spring	1	
37	0398 17 461A	End, Control Rod	1	
38	0187 17 492	Bolt, Reamer-Control Rod End	1	
	99971 0800	Washer, Spring	1	
39	1608 17 450	Lever, Control	1	
40	0111 17 323	Key, Control Lever	1	
41	0303 17 561	Piece, Friction	1	
42	0821 17 505	Switch, Back Up Lamp	1	
●	0821 17 505A	Switch, Back Up Lamp	1	Car No. 132416 73/3 ~ 134959 ○

DISTRIBUTOR (1972 MODEL)

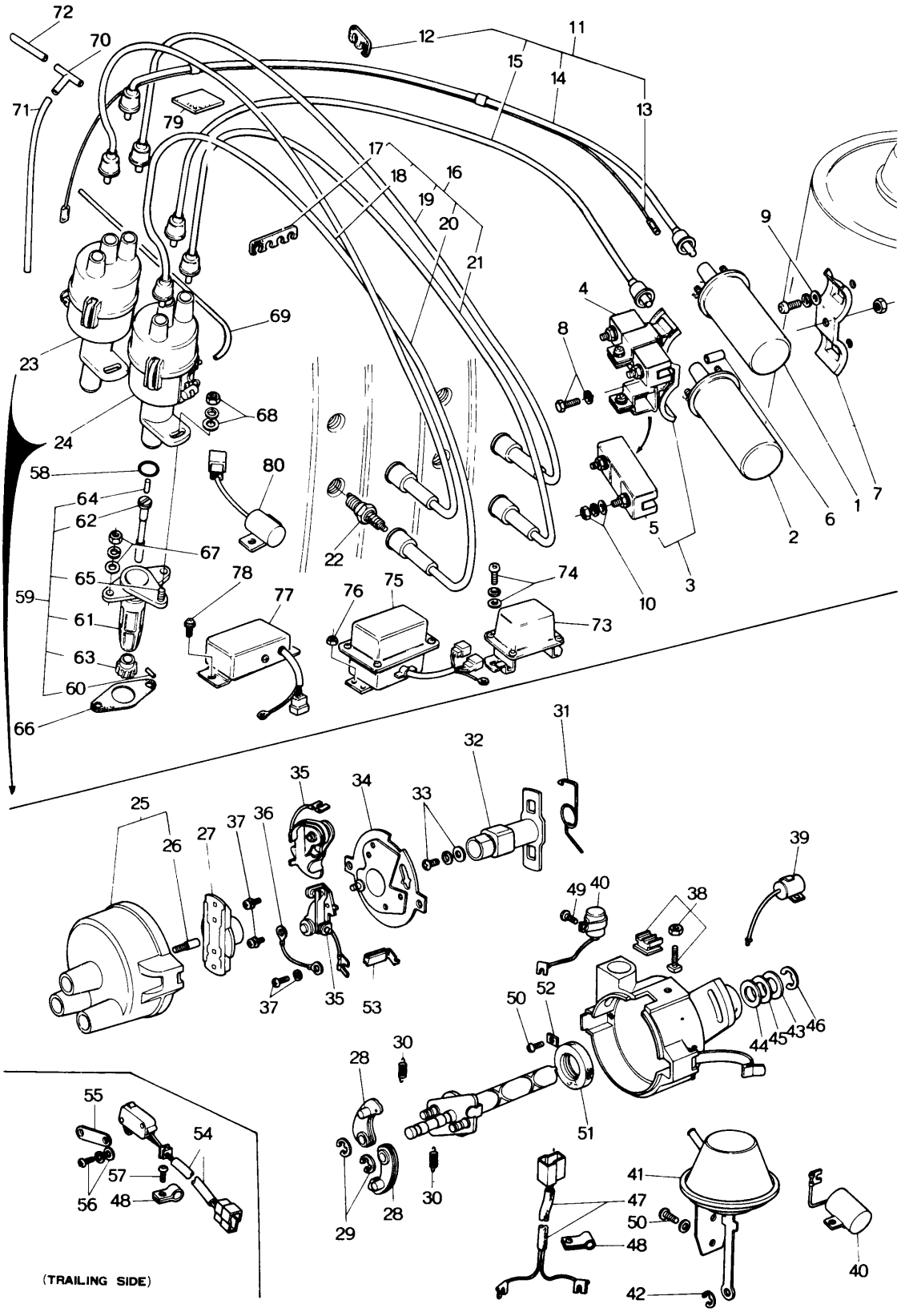

No.	Part Number	Description	Q'ty	Remarks
1	0823 18 100	Coil, Ignition	1	
2	0866 18 100A	Coil, Ignition	1	
		1672 18 100A		
3	0866 18 190A	Bracket, Ignition Coil	1	
4	0845 18 101	Resister	1	
5	0866 18 101	Resister	1	
6	0866 18 107	Pipe, Ignition Coil Bracket	1	
7	0866 18 810	Bracket, Ignition Coil	1	
8	99801 0845	Bolt, Ignition Coil Bracket	1	
	99971 0800	Washer, Spring	1	
9	99833 0612	Bolt, Ignition Coil Bracket	2	
	99952 0600	Washer, Plain	2	
	99971 0600	Washer, Spring	2	
10	99907 0500	Nut, Resister	6	
	99952 0500	Washer, Plain	6	
	99971 0500	Washer, Spring	6	
11	1570 18 110	Cord, High Tension - Coil ~ Distributor	1	
12	0820 18 111B	Supporter, High Tension Cord	1	
13	0866 18 115	Cord, Trailing - Coil ~ Distributor	1	
14	0866 18 120	Cord, High Tension - Trailing	1	
15	0866 18 160A	Cord, High Tension - Leading	1	

DISTRIBUTOR (1972 MODEL)

No.	Part Number	Description	Q'ty	Remarks
16	2359 18 150	Cord, High Tension	1	
17	0820 18 114	Supporter, Cord	1	
18	2359 18 130	Cord (T-1), High Tension	1	
19	0839 18 140	Cord (T-2), High Tension	1	
20	2359 18 170	Cord (L-1), High Tension	1	
21	0839 18 180	Cord (L-2), High Tension	1	
● 22	~~0868 18 600~~	Plug, Sparking (NGK B-7EM / DENSO W22EG-2) Standard	4	Order under No. 2328 18 600
●	~~0840 18 600~~	Plug, Sparking (NGK B-8EJ / DENSO W25EG 2) High Speed	4	
	~~0848 18 600~~	~~Plug, Sparking (NGK B-6EJ / DENSO W20EG 2) Low Speed~~	~~4~~	
●	2328 18 600	Plug, Sparking	4	
● 23	1663 18 200C	Distributor, Trailing Side	1	
24	1663 18 700A	Distributor, Leading Side	1	
25	0820 24 301	Cap	2	Fig. No. 26 Included
26	2545 23 486	Carbon, Contact	2	
27	0813 24 303	Rotor	2	
28	2587 24 335	Weight, Governor (Trailing)	2	
	0813 24 306	Weight, Governor (Leading)	2	
29	0107 18 231	Washer, Lock	4	
30	2090 24 308	Spring, Governor (Trailing)	2	
	2329 24 408	Spring, Governor (Leading)	2	
31	2587 24 336	Spring, Hair Pin (Trailing)	1	
	0813 24 309	Spring, Hair Pin (Leading)	1	

No.	Part Number	Description		Q'ty	Remarks
32	1617 24 311	Cam (Trailing)		1	
	1663 24 411	Cam (Leading)		1	
33	0839 24 312	Screw, Small		1	
34	1617 24 315	Base, Breaker (Trailing)		1	
	1617 24 415	Base, Breaker (Leading)		1	
35	1617 24 316	Support, Arm	(Trailing)	1	
			(Leading)	2	
36	0107 18 212	Cord, Earth		1	
37	0324 24 316	Screw		3	
● 38	1663 24 319	Terminal (Trailing)		1	
	1617 24 419	Terminal (Leading)		1	
39	0839 24 334	Condenser (Trailing)		1	
40	0820 24 322	Condenser	(Trailing)	1	
			(Leading)	2	
41	1663 24 323	Control Vacuum (Trailing)		1	
	1617 24 423	Control Vacuum (Leading)		1	
42	0107 18 266	Washer Lock		1	
43	0107 18 226A	Washer (12.7×20×1.0)		1	
44	0107 18 225	Washer (12.7×20×0.1)		1	
45	0107 18 224	Washer (12.7×20×0.2)		1	
46	0107 18 221A	Washer, Lock		1	
47	1617 24 437	Wire, Lead (Leading)		1	
48	1617 24 435	Clamp, Lead Wire & Switch (Leading)		1	
	2329 24 435	Clamp, Lead Wire & Switch (Trailing)		1	
49	0813 24 312	Screw, (Leading)		1	
50	0571 24 312	Screw	(Trailing)	5	
			(Leading)	4	
51	0107 18 216A	Oil Seal		1	
52	1617 24 414	Washer (Leading)		2	

No.	Part Number	Description	Q'ty	Remarks
53	2430 24 315	Felt	1	
54	1817 24 334	Switch	1	
55	1817 24 338	Holder	1	
56	1817 24 312	Screw (Trailing)	2	
57	0571 24 316	Screw	1	
58	0107 18 201	Ring, "O" - Distributor	2	
59	0839 18 270C	Socket, Distributor	2	
60	0820 11 105	Pin, Spring	2	
61	0820 18 271D	Socket	2	
62	0839 18 272A	Shaft	2	
63	0839 18 273A	Gear	2	
64	0813 18 288	Insert	2	
65	99851 0618A	Stud	2	
● Ⓝ	1823 24 498	Grommet Set	1	
66	0820 18 279A	Gasket, Distributor Socket	2	
67	99901 0800	Nut, Distributor Socket	4	
	99953 0800	Washer, Plain	4	
	99971 0800	Washer, Spring	4	
68	99906 0600	Nut, Distributor & Socket	2	
	99952 0600	Washer, Plain	2	
	99971 0600	Washer, Spring	2	
69	2329 13 754A	Tube, Vacuum	1	

No.	Part Number	Description	Q'ty	Remarks
70	2359 13 930	Joint, "T"	1	
●	1700 13 945	Joint, "T"	1	73/3~○
71	0118 18 294	Tube, Vacuum	1	
	0636 13 682	Tube, Vacuum	1	Car No 102518 72/4~○ 105513
72	0813 18 791A	Tube, Vacuum	1	
●	0839 13 297	Tube, Vacuum	1	Car No. 123972 73/1~○ 124434
73	0222 18 391C	Regulator	1	
●	0259 18 391B	Regulator	1	Car No 105638 72/8~× 108463
74	99797 0612	Screw, Regulator	2	
	99952 0600	Washer, Plain	2	
	99971 0600	Washer, Spring	2	
75	1663 18 940	Box, No 1 Control	1	
●	1663 24 940	Box, No 1 Control	1	Car No. 105638 72/8~ 108463
76	99940 0600	Nut, Flange-Control Box	5	
	99769 0614	Screw Tapping	2	
	99896 0600	Nut Spring	2	
77	1617 18 980	Box No 2, Control	1	
●	1617 24 940	Box No 2, Control	1	Car No. 105638 72/8~× 108463
78	99797 0612	Bolt, Control Box No 2	2	
	99952 0600	Washer, Plain	2	
	99971 0600	Washer, Spring	2	
79	0208 66 949	Pad, Protector	2	
80	2329 18 930A	Thermo Detector	1	
● Ⓝ	1620 18 390	Bracket Ass'y, Regulator	1	Car No. 105638 72/8~Added Anew 108463
● Ⓝ	99796 0610	Bolt	1	

DISTRIBUTOR (1973 MODEL)

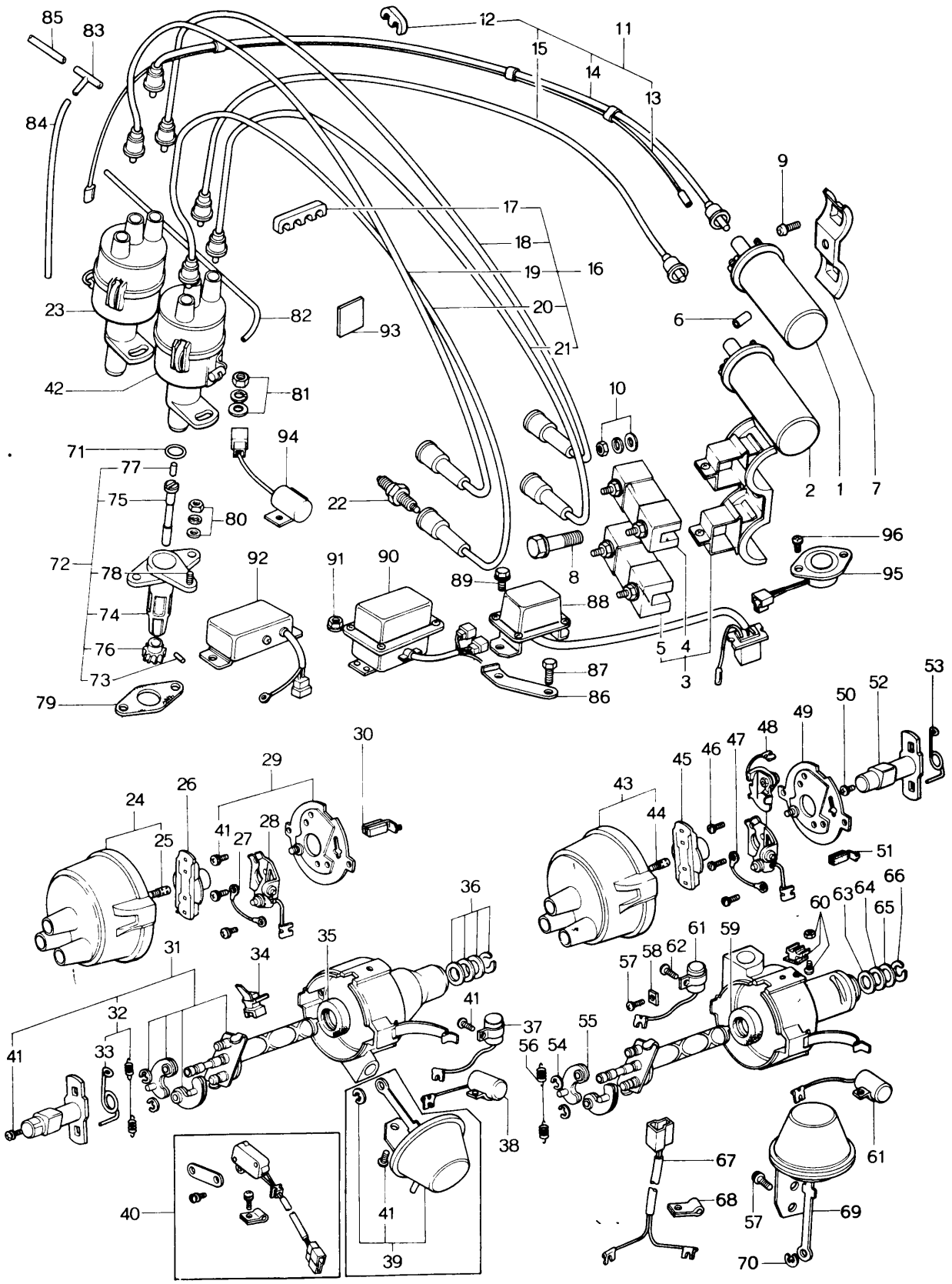

No.	Part Number	Description	Q'ty	Remarks
1	~~0823 18 100~~	~~Coil, Ignition~~	~~1~~	
●	1562 18 100	Coil, Ignition (Northern U. S. A. & Canada)	1	From Car No. 1
2	~~0866 18 100A~~	~~Coil, Ignition~~	~~1~~	
●	1672 18 100	Coil, Ignition (Northern U.S.A. & Canada)	1	From Car No. 1
3	0866 18 190A	Bracket, Ignition Coil	1	
	1011 18 190	Bracket, Ignition Coil	1	Car No. 147110 151908 T3/T~Δ
4	0845 18 101	Resistor	1	
5	0866 18 101	Resistor	1	
6	0866 18 107	Pipe, Ignition Coil Bracket	1	
7	0866 18 810	Bracket, Ignition Coil	1	
8	99794 0845	Bolt, Ignition Coil Bracket	1	
9	99786 0612	Bolt, Ignition Coil Bracket	2	
10	99906 0500	Nut, Resistor	6	
	99952 0500	Washer, Plain	6	
	99971 0500	Washer, Spring	6	
11	1570 18 110	Cord, High Tension - Coil ~ Distributor	1	
12	0820 18 111B	Supporter, High Tension Cord	1	
13	0866 18 115	Cord, Trailing - Coil ~ Distributor	1	
14	0866 18 120	Cord, High Tension - Trailing	1	
15	0866 18 160A	Cord, High Tension~Leading	1	
16	23 59 18 150	Cord, High Tension	1	

DISTRIBUTOR (1973 MODEL)

No.	Part Number	Description	Q'ty	Remarks
17	0820 18 114	Supporter, Cord	1	
18	2359 18 130	Cord (T- 1), High Tension	1	
19	0839 18 140	Cord (T- 2), High Tension	1	
20	2359 18 170	Cord (L- 1), High Tension	1	
21	0839 18 180	Cord (L- 2), High Tension	1	
22	~~0808 18 808~~	~~Plug, Sparking (B- 7 EM) Standard~~	~~4~~	Order under No. 2328 18 600
	~~0840 18 608~~	~~Plug, Sparking (B- 8 EJ) High Speed~~	~~4~~	
	2328 18 600	Plug, Sparking	4	
23	1668 18 200	Distributor, Trailing Side (Manual)	1	
	1669 18 200	Distributor, Trailing Side (Automatic)	1	
24	0820 24 301	Cap, Fig No. 25 Included	1	
25	2545 23 496	Carbon, Contact	1	
26	0813 24 303	Rotor	1	
27	0107 18 212	Cord, Earth (Manual)	1	
28	1617 24 316	Support, Arm (Manual)	1	
	0813 24 316	Support, Arm (Automatic)	1	
29	1668 24 313	Base, Breaker (Manual)	1	
	1669 24 313	Base, Breaker (Automatic)	1	
30	2430 24 315	Felt (Manual)	1	
31	1668 24 330	Governor Set (Manual)	1	
	1669 24 330	Governor Set (Automatic)	1	
32	1668 24 308	Spring Set	1	
33	2587 24 336	Spring, Hain Pin	1	

No.	Part Number	Description	Q'ty	Remarks
34	1663 24 319	Terminal	1	
35	0107 18 216A	Oil Seal	1	
36	0884 24 325	Washer Set	1	
37	0820 24 322	Condenser	1	
38	0839 24 334	Condenser	1	
39	1668 24 350	Vacuum Set (Manual)	1	
40	1668 24 334	Switch Set (Manual)	1	
41	1668 24 360	Screw Set (Manual)	1	
	0884 24 360	Screw Set (Automatic)	1	
42	1663 18 700A	Distributor (Leading Side)	1	
43	0820 24 301	Cap, Fig No. 44 included	1	
44	2545 23 496	Carbon, Contact	1	
45	0813 24 303	Rotor	1	
46	0324 24 316	Screw	3	
47	0107 18 212	Cord, Earth	1	
48	1617 24 316	Support, Arm	2	
49	1617 24 415	Base, Breaker	1	
50	0839 24 312	Screw	1	
51	2430 24 315	Felt	1	
52	1663 24 411	Cam	1	
53	0813 24 309	Spring, Hair Pin	1	
54	0107 18 231	Washer, Lock	2	
55	0813 24 306	Weight, Governor	2	
56	2329 24 408	Spring, Governor	2	

No.	Part Number	Description	Q'ty	Remarks
57	0571 24 312	Screw	4	
58	1617 24 414	Washer	2	
59	0107 18 216A	Oil Seal	1	
60	1617 24 419	Terminal	1	
61	0820 24 322	Condenser	2	
62	0813 24 312	Screw	1	
63	0107 18 225	Washer (12.7×20×0.1)	1	
64	0107 18 224	Washer (12.7×20×0.2)	1	
65	0107 18 226A	Washer (12.7×20×1.0)	1	
66	0107 18 221A	Washer, Lock	1	
67	1617 24 437	Wire, Lead	1	
68	2329 24 435	Clamp, Lead Wire	1	
69	1617 24 423	Vacuum, Control	1	
70	0107 18 268	Washer, Lock	1	
71	0107 18 201	Ring, "O" - Distributor	2	
72	0839 18 270C	Socket, Distributor	2	
73	0820 11 105	Pin, Spring	2	
74	0820 10 271D	Socket	2	
75	0839 18 272A	Shaft	2	
76	0839 18 273A	Gear	2	
77	0813 18 288	Insert	2	
78	99851 0618A	Stud	2	

No.	Part Number	Description	Q'ty	Remarks
79	0820 18 279A	Gasket, Distributor Socket	2	
80	99901 0800	Nut, Distributor Socket	4	
	99953 0800	Washer, Plain	4	
	99971 0800	Washer, Spring	4	
81	99906 0600	Nut, Distributor	2	
	99952 0600	Washer, Plain	2	
	99971 0600	Washer, Spring	2	
82	1663 13 756B	Tube, Vacuum	1	
83	2359 13 930	Joint, "T" - Vacuum Tube	1	
84	0636 13 682	Tube, Vacuum (Manual)	1	
85	0813 18 791A	Tube, Vacuum	1	
	0839 13 297	Tube, Vacuum	1	Car No. 123972 73/1 ~ 124434 ○
	0823 18 291	Tube, Vacuum (Automatic)	1	
86	1620 18 390	Bracket, Regulator	1	
87	99796 0610	Bolt, Regulator Bracket	1	
88	0259 18 391B	Regulator	1	
89	99786 0612	Bolt, Regulator	2	
90	1668 18 940A	Box, Control (Manual)	1	
	1669 18 940A	Box, Control (Automatic)	1	
91	99940 0600	Nut, Control Box	4	
92	1617 18 980	Box No. 2, Control (Manual)	1	
	1669 18 980	Box No. 2, Control (Automatic)	1	
93	0208 66 949	Pad, Protector	2	
94	2329 18 930B	Detector, Thermo	1	
95	1668 18 890	Switch, Thermo	1	
96	99786 0612	Screw, Thermo Switch	2	

ALTERNATOR (USED UP TO CAR NO. 135695 139447 73/5)

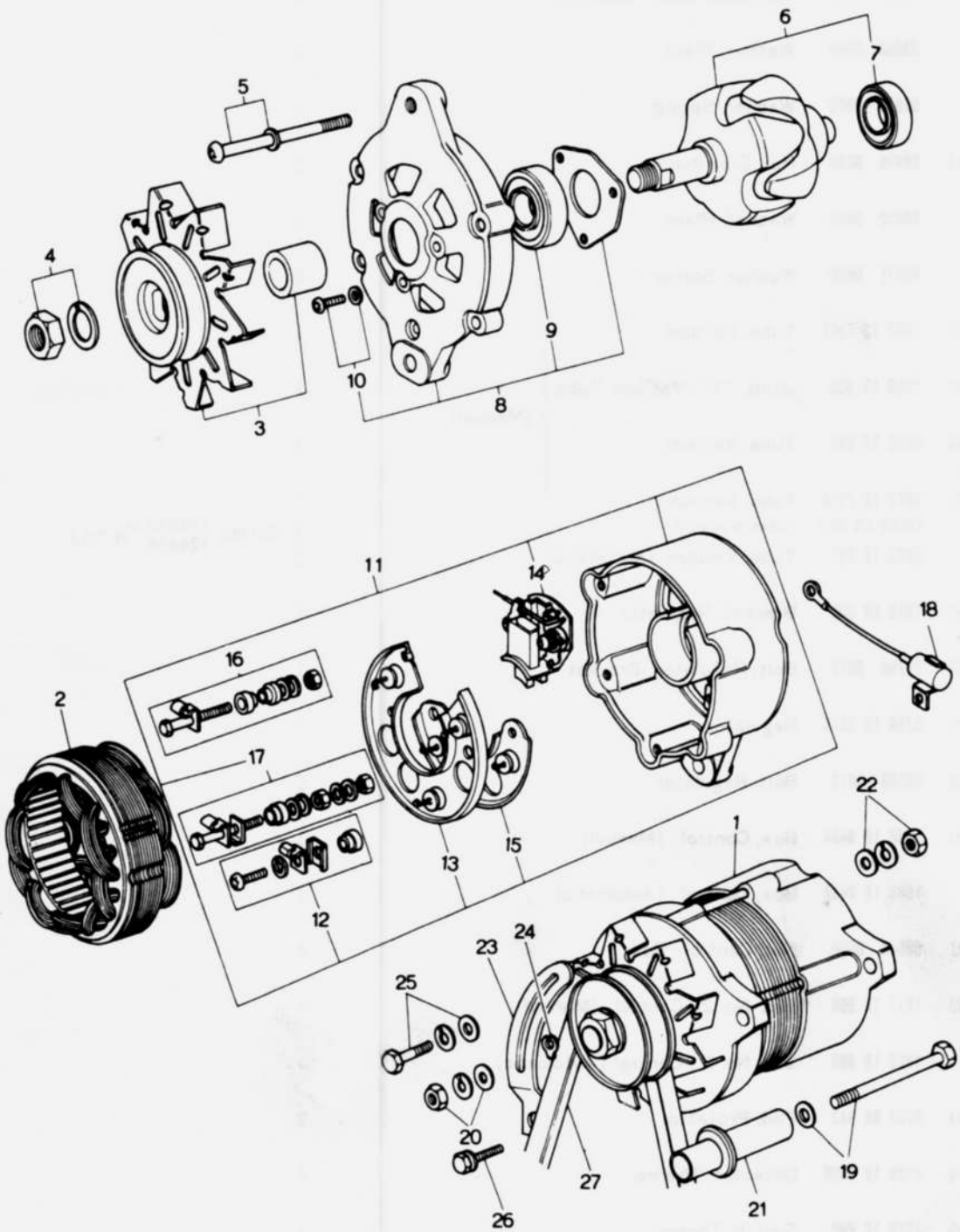

ALTERNATOR (USED UP TO CAR NO. 135695 139447 73/5)

No.	Part Number	Description	Q'ty	Remarks
1	0866 18 300	Alternator (50A)	1	
2	0866 24 501	Stator	1	
3	0866 24 530	Pulley	1	
4	0866 24 533	Nut Set	1	
5	0866 24 535	Screw Set	1	
6	0866 24 540	Rotor Fig. No. 7 included	1	
7	0820 24 503	Bearing, Ball	1	
8	0866 24 550	Bracket, Front Fig. No. 9～10 included	1	
9	0208 24 514	Bearing, Ball	1	
10	0866 24 526	Screw Set	3	
11	0866 24 560	Bracket, Rear Fig. No. 12～13 included	1	
12	0866 24 534	Screw Set	1	
13	0290 24 541A	Holder, Rectifier	1	
14	0866 24 541	Holder, Brush	1	
15	0290 24 542A	Holder, Rectifier	1	
16	0866 24 548	Terminal Set	1	
17	0866 24 549	Terminal Set	1	
18	0290 24 581	Condenser	1	
			1	
19	99813 10125	Bolt, Alternator	1	
	99952 1000	Washer, Plain	1	
20	99821 1000	Nut, Alternator	1	
	99952 1000	Washer, Plain	1	
	99971 1000	Washer, Spring	1	
21	0839 18 311B	Bracket, Alternator	1	

18 24 ALTERNATOR (USED UP TO CAR NO. 135695 139447 73/5)

No.	Part Number	Description	Q'ty	Remarks
22	99806 0500	Nut, Alternator Terminal "B"	1	
	99952 0500	Washer, Plain	1	
	99971 0500	Washer, Spring	1	
23	2090 18 361	Strap, Alternator	1	
24	0222 18 375	Shim, Alternator (t=0.3)		
	0222 18 376	Shim, Alternator (t=0.5) Selctiveuse	1	
	0222 18 377	Shim, Alternator (t=0.15)		
25	99801 0822	Bolt, Strap	1	
	99951 0818	Washer, Plain	1	
	99971 0800	Washer, Spring	1	
26	99801 0818	Bolt, Strap	1	
	99971 0800	Washer, Spring	1	
27	2090 18 381	Belt, "V" (For General U.S.A.) (1972 Model)	1	
	~~1560 18 381~~ 1672 18 381A	Belt, "V" (For General U.S.A.) (1973 Model)	1	
	~~1672 18 381~~	~~Belt, "V" (For Canada & Northern U.S.A.)~~	~~1~~	
	1672 18 381A	Belt, "V" (For Canada & Northern U.S.A.) (1973 Model)	1	From Car No. 1

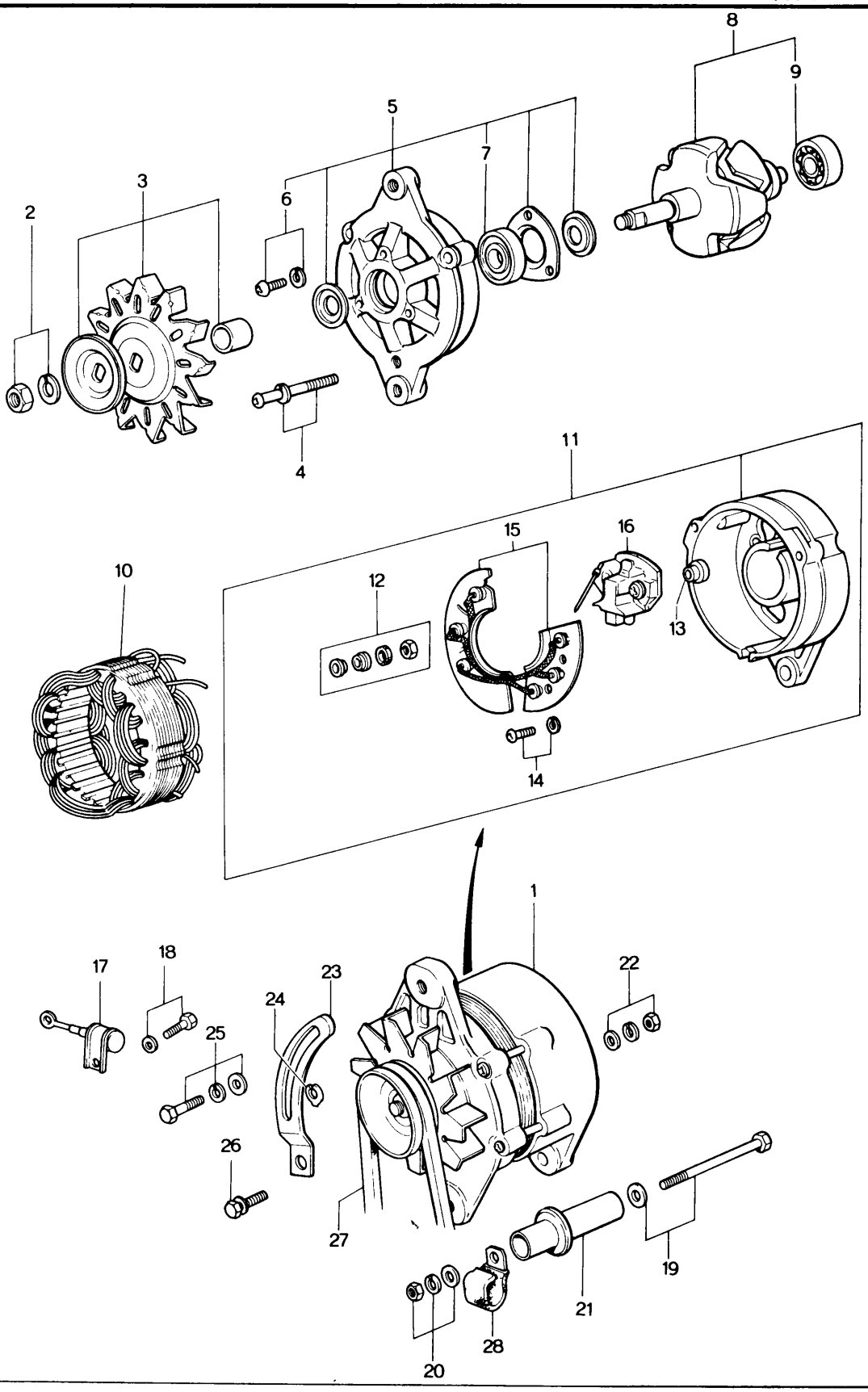
1
2
3
4
5
6
7
8
9
10
11
12
13
14
15
16
17
18
19
20
21
22
23
24
25
26
27
28

ALTERNATOR (USED FROM CAR NO. 135696 139448 73/5 ~)

18 24

No.	Part Number	Description	Q'ty	Remarks
1	1011 18 300	Alternator	1	
2	0866 24 533	Nut Set	1	
3	0866 24 530	Pulley	1	
4	0866 24 535	Screw Set	1	
5	0866 24 550	Bracket, Front	1	
6	0866 24 526	Screw Set	3	
7	0208 24 514	Bearing, Ball	1	
8	0866 24 540	Rotor	1	
9	0820 24 503	Bearing, Ball	1	
10	1011 24 501	Starter	1	
11	1011 24 560	Bracket, Rear	1	
12	1011 24 533	Nut Set	1	
13	1011 24 563	Mould	1	
14	1011 24 534	Screw Set	1	
15	1011 24 510	Rectifier	1	
16	1011 24 541	Brush & Holder	1	
17	0290 24 581	Condenser	1	
18	1011 24 527	Screw, Condenser	1	
19	99813 10125	Bolt, Alternator	1	

18 24 ALTERNATOR (USED FROM CAR NO. 135696 139448 73/5~)

No.	Part Number	Description	Q'ty	Remarks
	99952 1000	Washer, Plain	1	
20	99921 1000	Nut, Alternator	1	
	99952 1000	Washer, Plain	1	
	99971 1000	Washer, Spring	1	
21	0839 18 311 B	Bracket, Alternator	1	
22	99906 0600	Nut, Alternator Terminal "B"	1	
	99952 0500	Washer, Plain	1	
	99971 0500	Washer, Spring	1	
23	2090 18 361	Strap, Alternator	1	
24	0222 18 375	Shim (t=0.3)		
	0222 18 376	Shim (t=0.5) } Selective use	1	
	0222 18 377	Shim (t=0.15)		
25	99801 0822	Bolt, Strap	1	
	99951 0818	Washer, Plain	1	
	99971 0800	Washer, Spring	1	
	99796 0825	Bolt, Strap	1	
26	908012 8 16	Bolt Set, Strap	1	
	99971 0800	Washer, Spring	1	
	99796 0820	Bolt, Alternator	1	
27	~~1608~~ 1672 18 381A	Belt, "V" (For General U.S.A.) (1973 Model)	1	
	1672 18 381 A	Belt, "V" (For Canada & Northern U.S.A.) (1973 Model)	1	
28	1011 18 319	Clip	1	

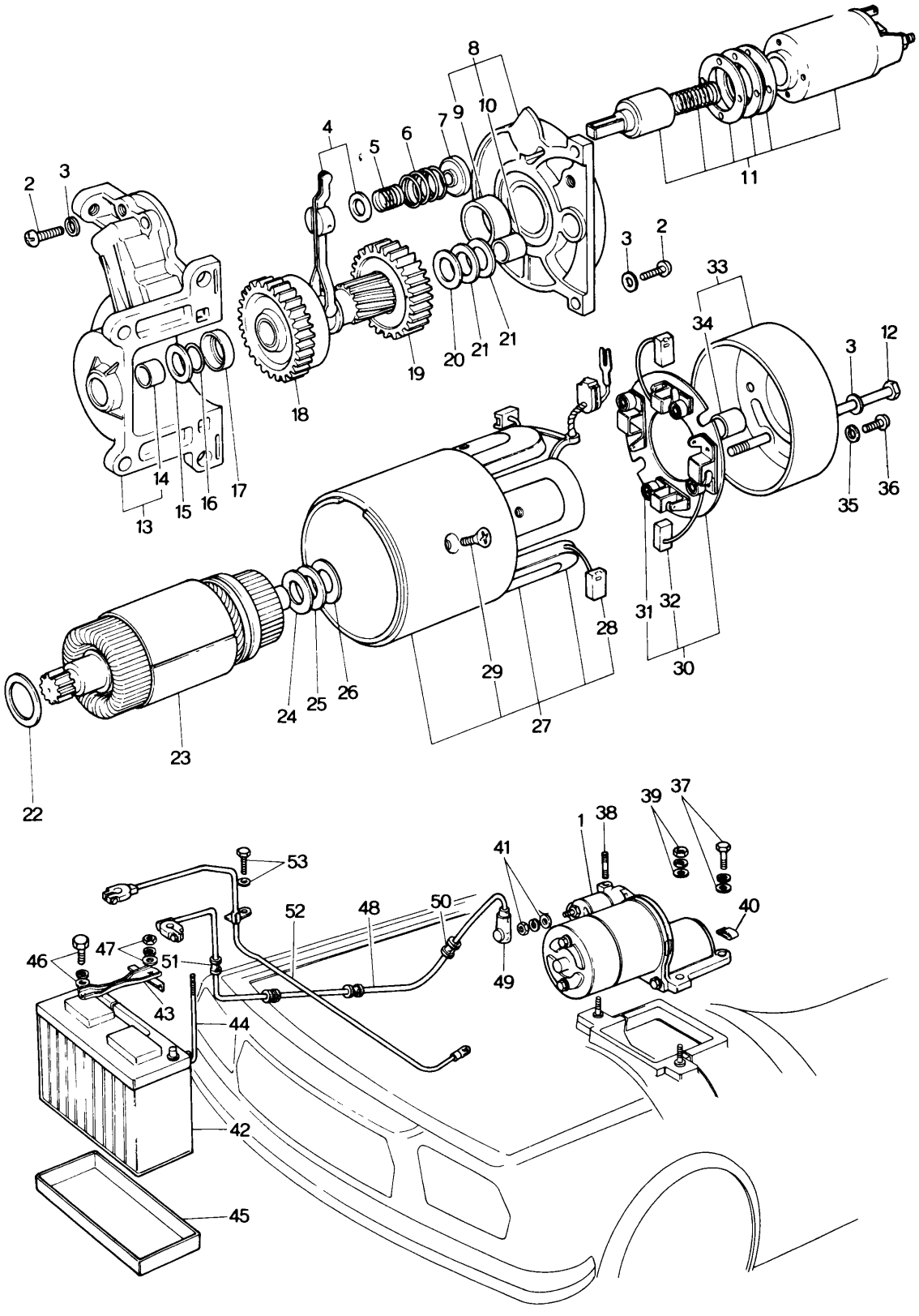
1
2
3
4
5
6
7
8
9
10
11
12
13
14
15
16
17
18
19
20
21
22
23
24
25
26
27
28
29
30
31
32
33
34
35
36
37
38
39
40
41
42
43
44
45
46
47
48
49
50
51
52
53

No.	Part Number	Description	Q'ty	Remarks
1	0845 18 400	Starter	1	
2	0164 23 664	Screw (6×25)	6	Order under No. 0845 24 725 (Fig. No. 35, 36 Included)
3	0107 18 424	Washer, Spring (6.1×12.2×1.5)	8	
4	0845 24 716	Lever	1	
5	0118 23 636	Spring, Lever	1	Order under No. 0845 24 754
6	0118 23 637	Spring, Lever	1	
7	0845 24 717	Holder	1	
8	0845 24 706	Bracket, Center	1	
9	0820 24 707	Bearing, Sleeve (C)	1	
10	0222 24 741	Bearing, Sleeve (R)	1	
11	0222 24 760A	Switch	1	
12	0222 24 756	Bolt (6×134)	2	Order under No. 0426 24 731
13	0845 24 710	Bracket, Front	1	
14	0222 24 741	Bearing, Sleeve (R)	1	
15	0820 24 714	Washer (4.4×26×1.6)	1	Order under No. 0845 24 712A
16	0820 24 713	Ring	1	
17	0845 24 712	Stopper	1	
18	0845 24 709	Clutch, Over Running	1	
19	0845 24 721	Shaft, Gear	1	
20	0820 24 747	Washer (14.4×26×0.8)	1	Order under No. 0845 24 748
21	0820 24 748	Washer (14.4×26×0.2)	2	
22	0845 24 749	Washer (24.5×34×1.6)	1	
23	0845 24 705	Armature	1	
24	0107 18 406B	Washer (14.5×30×1.2)	1	Order under No. 0426 24 726
25	0118 23 689	Washer (14.5×30×0.25)	2	
26	0118 23 691	Washer, Insulation (14.4×30×0.8)	1	

No.	Part Number	Description	Q'ty	Remarks
27	0845 24 701	Yoke	1	
28	0222 24 753	Brush	2	
29	0866 24 704	Screw	4	
30	0222 24 750	Holder, Brush	1	
31	0222 24 752A	Spring, Brush	1	
32	0222 24 753	Brush	2 ~~1~~	
	~~0426 24 753~~	Brush	2	Car No
33	0845 24 720	Bracket, Rear	1	
34	0222 24 741	Bearing, Sleeve (R)	1	
35	0200 23 531	Washer, Spring (5.9×9.2×1.3)	2	Order under No. 0845 24 725 (Fig. No. 1, 2, Included)
36	0222 24 517	Screw (5×10)	2	
37	99801 0830	Bolt, Starter	2	
	99971 0800	Washer, Spring	2	
38	99851 0814A	Stud, Starter & Air Cleaner Supporter	1	
39	99901 0800	Nut, Starter	2	
	99952 0800	Washer, Plain	1	
	99971 0800	Washer, Spring	2	
40	99295 1008	Clip, Harness	2	
41	99901 0800	Nut, Starter Terminal "B"	1	
	99952 0800	Washer, Plain	1	
	99971 0800	Washer, Spring	1	
42	0504 18 520A	Battery (N50Z)	1	
43	1524 70 980	Clamp, Battery	1	
44	0243 56 231	Bolt, Clamp	1	
45	2113 54 295	Tray, Battery	1	

No.	Part Number	Description	Q'ty	Remarks
46	99806 0620	Bolt, Clamp	1	
	99952 0618	Washer, Plain	1	
	99971 0600	Washer, Spring		
47	99906 0600	Nut, Clamp Bolt		
	99952 0618	Washer, Plain	1	
	99971 0600	Washer, Spring	1	
48	0872 67 100A	Cable, Battery Positive	1	
49	~~0868 67 105~~	~~Cap~~	~~1~~	
50	99685 1000	Protector	6	
51	99685 1400	Protector	1	
52	0872 67 110	Wire, Earth	1	
53	99804 0820	Bolt, Earth Wire	1	
	99971 0800	Washer, Spring	1	

STARTER & BATTERY
(1973 MANUAL, FOR U.S.A.)

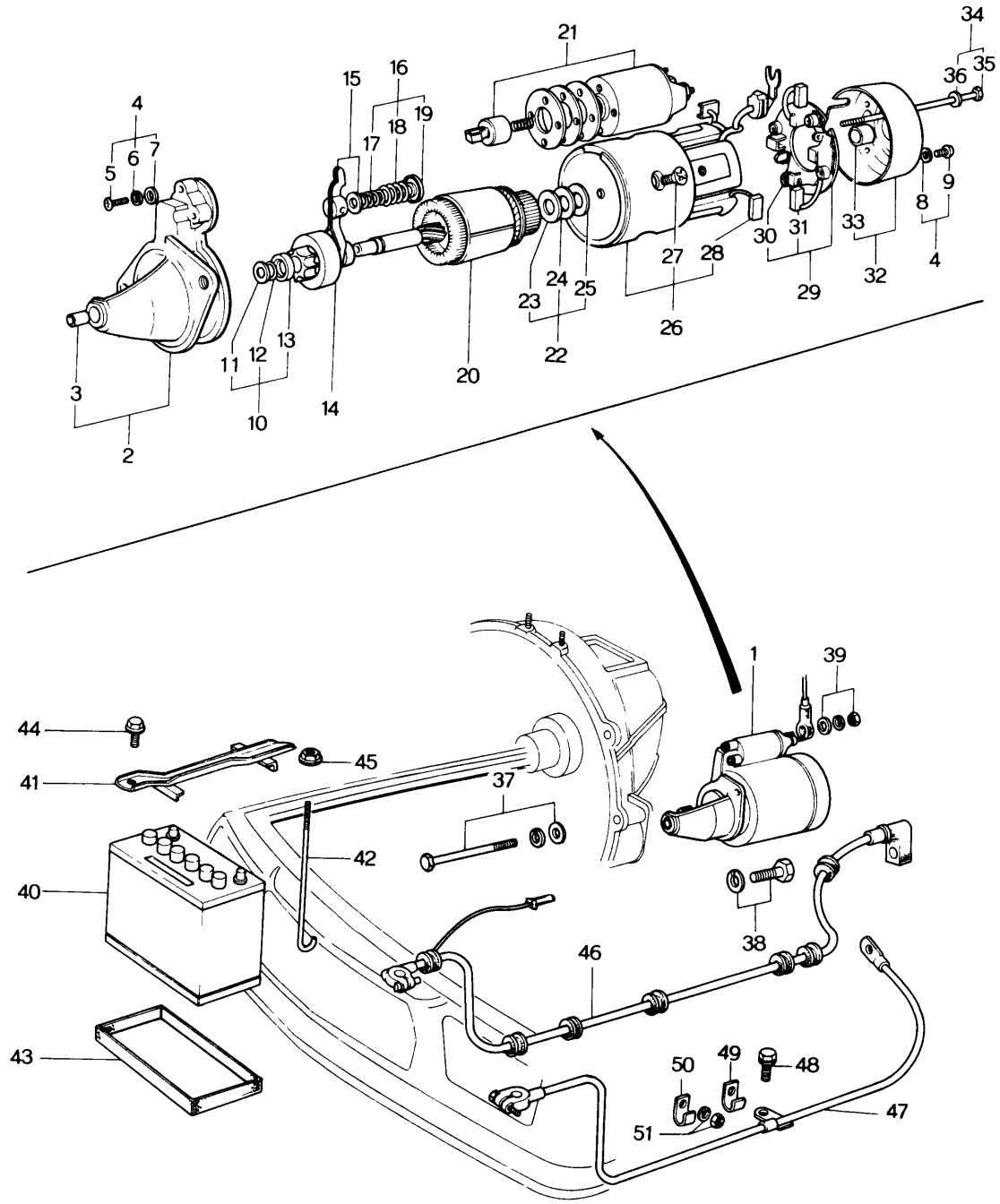

	No.	Part Number	Description	Q'ty	Remarks
	1	0866 18 400A	Starter (Manual For U.S.A.)	1	
	2	0866 24 710	Bracket, Front	1	
	3	0114 18 422A	Metal, Front Bracket	1	
●		0426 24 715	Sleeve	1	Car No. 137204 73/4~
●	4	0426 24 725	Screw Set (Fig. No. 5~9 included)	1	Car No. 137204 73/4~
	5	0164 23 664	Screw	3	Order Under No. 0426 24 725
	6	0107 18 424	Washer, Spring	3	
	7	0222 24 714	Washer (6.1×12×1)	3	
	8	0200 23 531	Washer, Spring	2	
	9	0222 24 517	Screw	2	
●	10	0426 24 712	Stopper Set (Fig. No. 11~13 included)	1	Car No. 137204 73/4~
	11	0222 14 725	Washer	1	Order Under No. 0426 24 712
	12	0107 18 417A	Ring	1	
	13	0730 24 732	Ring, Stop	1	
	14	0866 24 709	Clutch, Over Running	1	
	15	0866 24 716	Lever	1	
●	16	0426 24 754	Spring Set (Fig. No. 17~19 included)	1	Car No. 137204 73/4~
	17	0118 23 636	Spring, Lever	1	Order Under No. 0426 24 754
	18	0118 23 637	Spring, Lever	1	
	19	0813 24 717	Seat, Spring	1	

No.	Part Number	Description	Q'ty	Remarks
20	0866 24 705	Armature	1	
21	0222 24 760A	Switch	1	
● 22	0426 24 726	Washer Set (Fig. No. 23~25 included)	1	Car No. 137204 73/4~
23	0107 18 406B	Washer (14.4×30×1.6)	1	Order Under No. 0426 24 726
24	0118 23 689	Washer (14.5×30×0.25)	1	
25	0118 23 691	Washer, Insulation (14.4×30×0.8)	1	
26	0866 24 701	Yoke	1	
27	0866 24 704	Screw	4	
28	0222 24 753	Brush	2	
29	0222 24 750	Holder, Brush	1	
30	0222 24 752A	Spring, Brush	4	
● 31	0426 24 753	Brush	2	Car No. 137204 73/4~
32	0845 24 720	Bracket, Rear	1	
33	0222 24 741	Metal, Rear Bracket	1	
● 34	0426 24 731	Bolt Set (Fig No. 35,36 included)	1	Car No. 137204 73/4~
35	0222 24 756	Bolt, Through	2	Order Under No. 0426 24 731
36	0107 18 424	Washer, Spring	2	
37	99803 10120	Bolt, Starter	1	
	99952 1000	Washer, Plain	1	

No.	Part Number	Description	Q'ty	Remarks
	99971 1000	Washer, Spring	1	
38	99801 1035	Bolt, Starter	1	
	99953 1000	Washer, Plain	1	
	99971 1000	Washer, Spring	1	
39	99901 0800	Nut, Starter	1	
	99952 0800	Washer, Plain	1	
	99971 0800	Washer, Spring	1	
40	1672 18 520	Battery (N70Z)	1	
41	1524 70 980	Clamp, Battery	1	
42	0243 56 231	Bolt, Clamp	1	
43	2981 54 222	Tray, Battery	1	
44	907860 6 16	Bolt Set, Battery Clamp	1	
45	99940 0602	Nut, Clamp Bolt	1	
46	1620 67 100	Cable, Battery Positive	1	
47	0872 67 110	Wire, Earth	1	
48	908042 8 20	Bolt Set, Earth Wire	1	
49	99295 1508	Clip, Earth Wire	1	
50	99295 2008	Clip, Earth Wire	2	
51	99907 0800	Nut, Earth Wire	2	
	99971 0800	Washer, Spring	2	

STARTER & BATTERY
(1973 MANUAL, FOR CANADA)

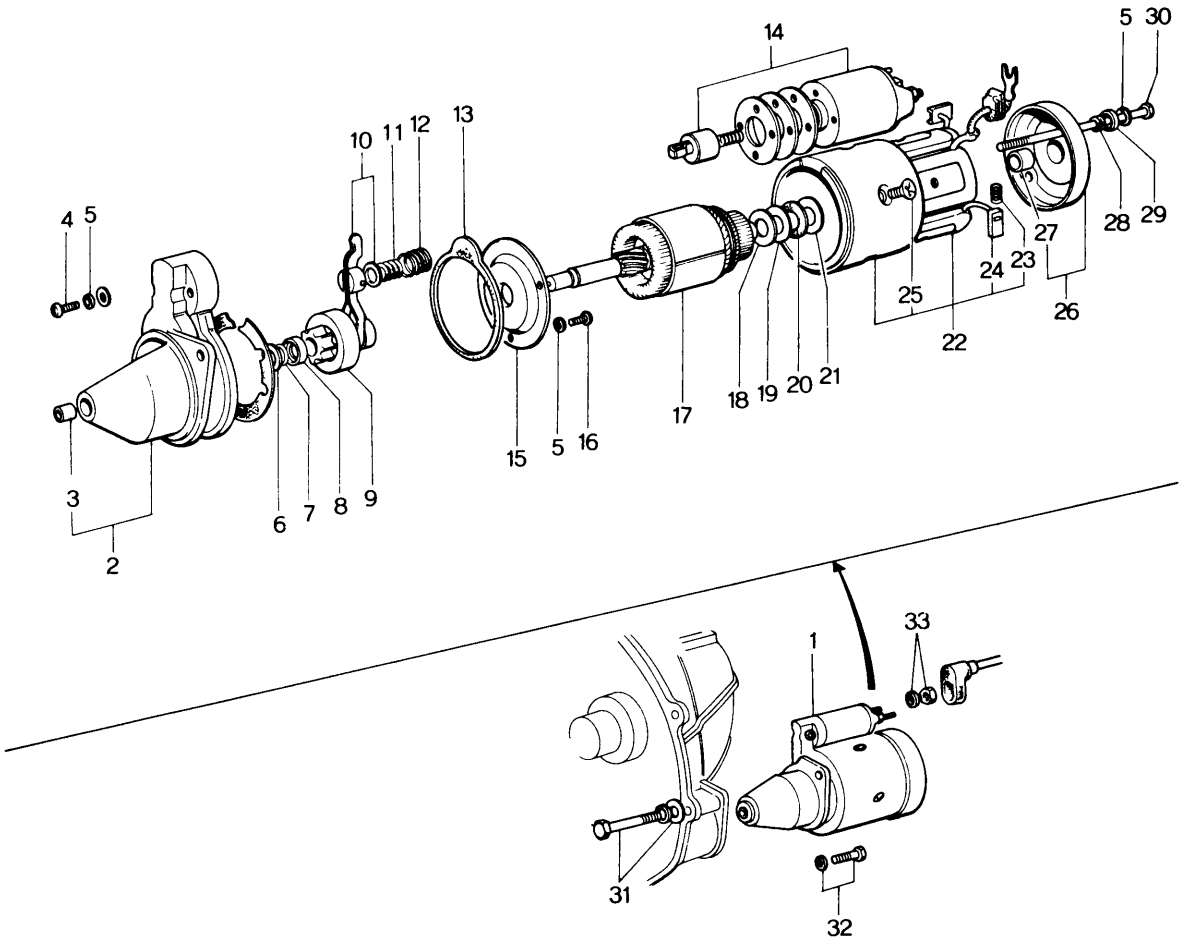

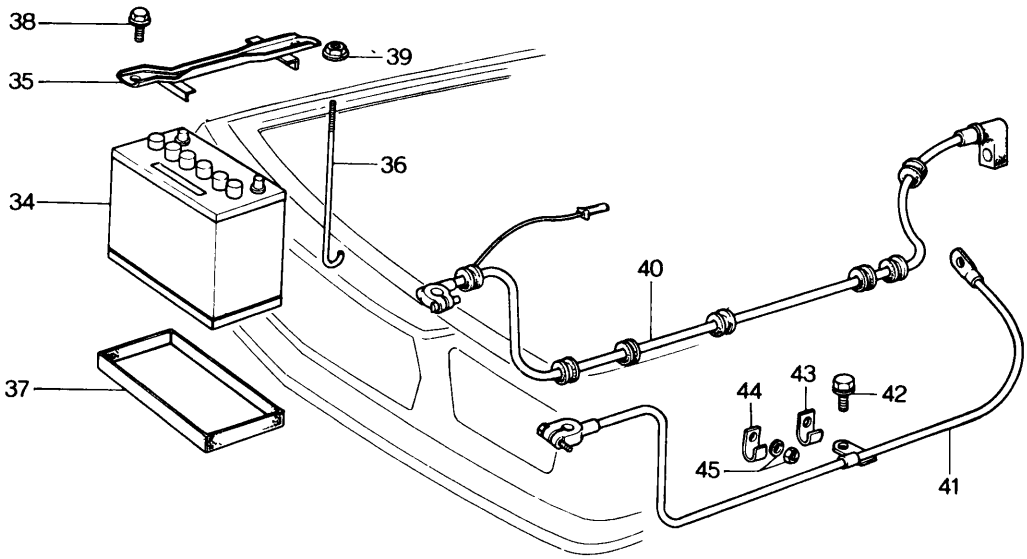

STARTER & BATTERY

(1973 MANUAL, FOR CANADA)

18 24

No.	Part Number	Description	Q'ty	Remarks
1	1562 18 400	Starter (Manual, For Canada)	1	
2	1562 24 710	Bracket, Front	1	
3	0114 18 422A	Sleeve, Bearing	1	
4	1562 24 758	Screw	2	
5	0107 18 424	Washer, Spring	7	
6	1562 24 714	Washer	1	
7	0636 24 753	Ring	1	
8	1562 24 712	Stopper	1	
9	1562 24 709	Clutch, Over Running	1	
10	1562 24 716	Lever	1	
11	0820 24 754	Spring, Lever	1	
12	0820 24 755	Spring, Lever	1	
13	1562 24 719	Gasket	1	
14	0839 24 736B	Switch	1	
15	1562 24 706	Bracket, Center	1	
16	1562 24 725	Screw, Center Bracket	3	
17	1562 24 705	Armature	1	
18	0118 23 689	Washer (14.5×30×0.25)	1	
19	1562 24 741	Washer (14.5×30×0.1)	1	
20	0118 23 691	Washer, Insulation (14.4×30×0.8)	1	
21	0107 18 406A	Washer (14.4×30×1.6)	1	
22	1562 24 701	Yoke	1	
23	0839 24 724	Spring, Brush	4	
24	0839 24 723	Brush	4	
25	0727 24 712	Screw	4	
26	2869 24 720	Bracket, Rear	1	

STARTER & BATTERY

(1973 MANUAL, FOR CANADA)

No.	Part Number	Description	Q'ty	Remarks
27	0249 24 731	Sleeve, Bearing	1	
28	0839 24 762	Gasket	2	
29	0839 24 761	Cap	2	
30	1562 24 731	Bolt, Through	2	
31	99803 10120	Bolt, Starter	1	
	99952 1000	Washer, Plain	1	
	99971 1000	Washer, Spring	1	
32	99801 1035	Bolt, Starter	1	
	99953 1000	Washer, Spring	1	
	99971 1000	Washer, Spring	1	
33	99901 0800	Nut, Starter	1	
	99952 0800	Washer, Plain	1	
	99971 0800	Washer, Spring	1	
34	1672 18 520	Battery	1	
35	1524 70 980	Clamp, Battery	1	
36	0243 56 231	Bolt, Clamp	1	
37	2981 54 222	Tray, Battery	1	
38	907860 6 16	Bolt Set, Battery Clamp	1	
39	99940 0602	Nut, Clamp Bolt	1	
40	1620 67 100	Cable, Battery Positive	1	
41	0872 67 110	Wire, Earth	1	
42	908042 8 20	Bolt Set, Earth Wire	1	
43	99295 1508	Clip, Earth Wire	1	
44	99295 2008	Clip, Earth Wire	1	

No.	Part Number	Description	Q'ty	Remarks
45	99907 0800	Nut, Earth Wire	2	
	99971 0800	Washer, Spring	2	

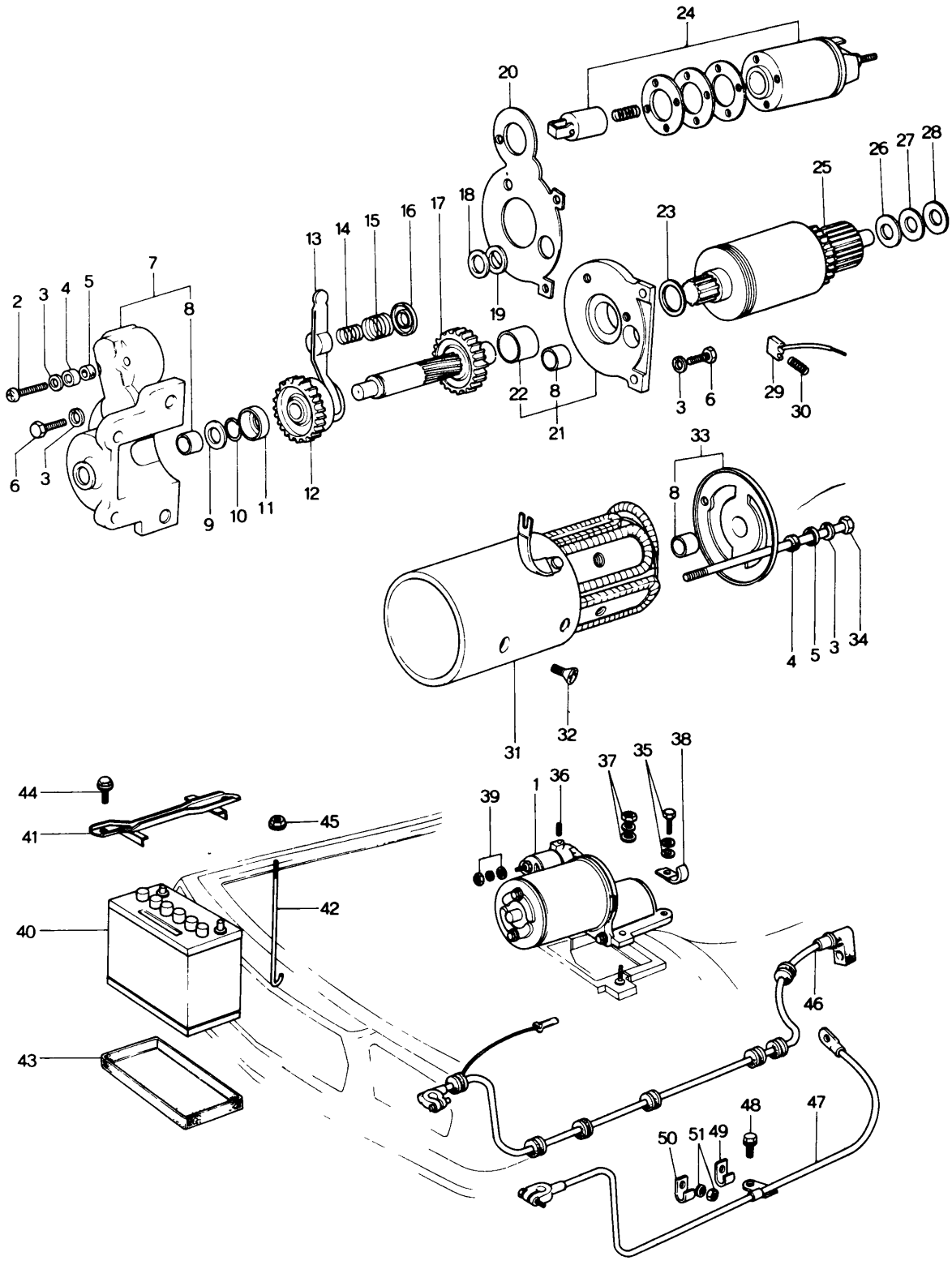
24
20
25
26
27
28
23
18
16
17
15
14
13
7
2
3
4
5
8
19
22
8
21
3
6
29
30
6
3
9
10
11
12
33
8
4
5
3
34
31
32
44
41
45
42
40
43
39
1
36
37
35
38
46
48
47
50
51
49

No.	Part Number	Description	Q'ty	Remarks
1	2869 18 400	Starter (Automatic)	1	
●	2869 18 400A	Starter (Automatic)	1	Car No. 111422 72/10 ~ 113912 Δ
2	0839 24 758	Screw (6 × 45)	2	
3	0107 18 424	Washer, Spring	8	
● 4	0839 24 761	Cap	4	Order Under No. 0559 24 760
● 5	0839 24 762	Gasket	4	Order Under No. 0559 24 760
6	0839 24 763	Bolt	4	
7	0839 24 710	Bracket, Front, Fig No 8 included	1	
●	2869 24 710	Bracket, Front	1	Car No. 111422 72/10 ~ 113912 ○
8	0249 24 731	Sleeve, Bearing	3	
● 9	0820 24 714	Washer	1	Order Under No. 2869 24 712
● 10	0820 24 713	Ring	1	Order Under No. 2869 24 712
● 11	0820 24 712	Stopper	1	Order Under No. 2869 24 712
12	0839 24 709	Clutch, Over Running	1	
13	0839 24 716	Lever	1	
14	0820 24 754	Spring, Lever	1	
● 15	0820 24 755	Spring, Lever	1	Order Under No. 2869 24 754
● 16	0820 24 717	Holder	1	Order Under No. 2869 24 754
17	0839 24 721	Shaft, Pinion	1	
18	0820 24 747	Washer (14.4 × 26 × 0.8)	1	
19	0820 24 748	Washer (14.4 × 26 × 0.2)	1	
20	0839 24 719	Plate, Water Proof	1	
21	0839 24 706	Bracket, Center, Fig No 8, 21 included	1	
22	0839 24 715	Sleeve, Bearing	1	
23	2869 24 749	Washer	1	
24	0839 24 736B	Switch	1	
●	2869 24 736	Switch	1	Car No. 111422 72/10 ~ 113912 X
25	0839 24 705	Armature	1	
26	0118 23 689	Washer (14.5 × 30 × 0.25)	2	

STARTER & BATTERY (AUTOMATIC)

	No.	Part Number	Description	Q'ty	Remarks
●	27	0820 24 741	Washer (14.5×30×0.8)	1	Order Under No. 2869 24 726
●	28	0118 23 691	Washer, Insulation (14.4×30×0.8)	1	
	29	0839 24 723	Brush	4	
	30	0839 24 724	Spring, Brush	4	
	31	2869 24 701	Yoke, Fig No 30 Included	1	
	32	0727 24 712	Screw	4	
	33	2869 24 720	Bracket, Rear Fig No 8 Included	1	
	34	0839 24 764	Bolt, Through	2	
●	Ⓝ	2869 24 725	Screw Set	1	Fig. No. 2,3,6 included
●	Ⓝ	2869 24 730	Yoke	1	Fig. No. 31,32,29,30 included
●	Ⓝ	2869 24 748	Washer Set	1	Fig. No. 18,19 included
●	Ⓝ	0559 24 731	Bolt Set	1	Fig. No.3,34 included
	35	99801 0830	Bolt, Starter	2	
		99971 0800	Washer, Spring	2	
	36	99851 0814A	Stud, Starter & Air Cleaner Supporter	1	
	37	99901 0800	Nut, Starter	2	
		99952 0800	Washer, Plain	1	
		99971 0800	Washer, Spring	2	
	38	99295 1008	Clip, Harness	1	
	39	99901 0800	Nut, Starter-Terminal "B"	1	
		99953 0800	Washer, Plain	1	
		99971 0800	Washer, Spring	1	
	40	1672 18 520	Battery (For General U S A.)	1	
		1689 18 520	Battery (For Northern U S A & Canada)	1	
	41	1524 70 980	Clamp, Battery	1	
	42	0243 56 231	Bolt, Clamp	1	
	43	2113 54 295	Tray, Battery (For Northern U S A & Canada)	1	
		2981 54 222	Tray, Battery (For General U S A)	1	

No.	Part Number	Description	Q'ty	Remarks
44	907860 6 16	Bolt Set, Battery Clamp	1	
45	99940 0602	Nut, Clamp Bolt	1	
46	0872 67 100A	Cable, Battery Positive	1	
47	0872 67 110	Wire, Earth	1	
48	908042 8 20	Bolt Set, Earth Wire	1	
49	99295 1508	Clip, Earth Wire	1	
50	99295 2008	Clip, Earth Wire	1	
51	99907 0800	Nut, Earth Wire	2	
	99971 0800	Washer, Spring	2	

AUTOMATIC T/MISSION
(CONVERTER, OIL PUMP & PIPING)

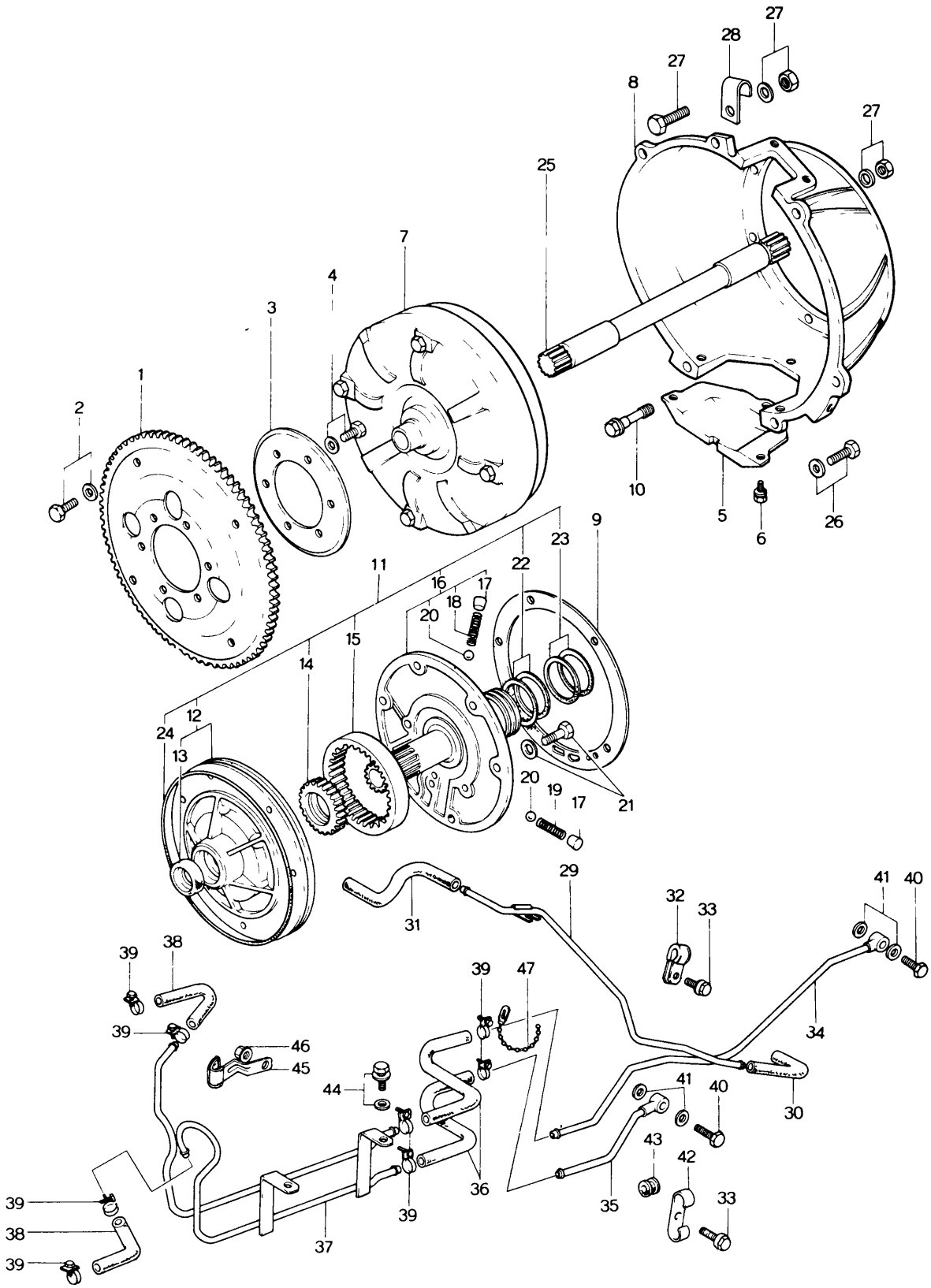

No.	Part Number	Description	Q'ty	Remarks
1	2070 19 020	Plate, Drive	1	
2	99781 1012	Bolt, Drive Plate	4	
	99971 1000	Washer, Spring	4	
3	0842 19 025	Plate, Backing	1	
4	99781 1018	Bolt, Backing Plate	6	
	99971 1000	Washer, Spring	6	
5	0842 19 027A	Cover, Under	1	
6	908062 6 10	Screw Set, Under Cover	3	
7	0338 19 100A	Converter, Torque	1	
8	0842 19 211B	Housing, Converter	1	
9	0338 19 215	Gasket, Oil Pump	1	
10	0338 19 216	Bolt, Housing	6	
11	0338 19 220	Pump, Oil	1	
12	0338 19 230	Housing, Fig. No 13 Included	1	
13	0338 19 223	Oil Seal	1	
14	0338 19 234	Gear, Inner		
	0338 19 235	Gear, Inner } Selective use	1	
	0338 19 236	Gear, Inner	1	
15	0338 19 237	Gear, Outer		
	0338 19 238	Gear, Outer } Selective use	1	
	0338 19 239	Gear, Outer	1	
16	0338 19 240	Cover	1	
17	0338 19 245	Plug, Taped	1	
18	0338 19 247	Spring, Relief	1	

AUTOMATIC T/MISSION

(CONVERTER, OIL PUMP & PIPING)

No.	Part Number	Description	Q'ty	Remarks
19	0338 19 248	Spring, Back Up	1	
20	99611 2000	Ball, Steel	2	
21	0338 19 255	Bolt, Cover	5	
22	0338 19 256	Ring, Seal	2	
23	0338 19 257	Ring, Seal	2	
24	0338 19 258	Seal, Lathe Cut Ring	1	
●	99953 0300	Washer, Plain	1	Car No 135696 139448 73/5~Added Anew
●	99971 0300	Washer, Spring	1	
25	0338 19 678	Shaft, Input	1	
26	99811 1032	Bolt, Housing	1	
●	99761 0309	Bolt, Housing	1	73/5~O
	99811 1050	Bolt	1	
●	99796 1050	Bolt	1	73/5~O
	99971 1000	Washer, Spring	2	
27	99811 1045	Bolt, Housing	1	
●	99796 1045	Bolt, Housing	1	73/5~O
	99811 1050	Bolt	1	
●	99796 1050	Bolt	1	73/5~O
	99811 1055	Bolt	1	
●	99796 1045	Bolt	1	Car No. 135696 139448 73/5~X
	99811 1075	Bolt	1	
●	99796 1080	Bolt	1	73/5~O
	99971 1000	Washer, Spring	4	Car No. 135696 139448 73/5~Discarded
	99921 1000	Nut	4	
●	99940 1001	Nut, Flange	4	73/5~O
28	99295 1510	Clip	1	
29	2070 19 910	Pipe, Vacuum	1	
30	0338 19 904	Hose, Vacuum (Rr)	1	
31	99340 05224	Hose, Vacuum (Frt)	1	
32	0842 19 915A	Clip, Vacuum Pipe	1	
33	908062 6 14	Bolt Set, Clip	2	
34	0871 19 920	Pipe, Oil	1	
35	0871 19 930	Pipe, Oil	1	

No.	Part Number	Description	Q'ty	Remarks
36	0871 19 961	Hose, Oil	2	
37	0871 19 970	Pipe, Oil	1	
38	0871 19 962	Hose, Oil	2	
39	99282 1700	Band, Hose	8	
40	99381 1000	Bolt, Connector - Oil Pipe	2	
41	99564 1400	Gasket, Connector Bolt	4	
42	0871 19 963	Clip, Oil Pipe	1	
43	99686 0800	Protector	2	
44	908602 5 12	Screw Set, Clip	2	
	99952 0500	Washer, Plain	2	
45	~~0871 19 964A~~	~~Clip, Oil Pipe~~	~~1~~	
●	0871 19 964A	Clip, Oil Pipe	1	From Car No. 1
●	0871 19 964B	Clip, Oil Pipe	1	Car No. 116955 / 118635 $^{72}/_{11}$ ~○
46	99940 0800	Nut, Clip	1	
47	99709 0108	Band	4	
	1669 19 090	T/mission Unit	1	

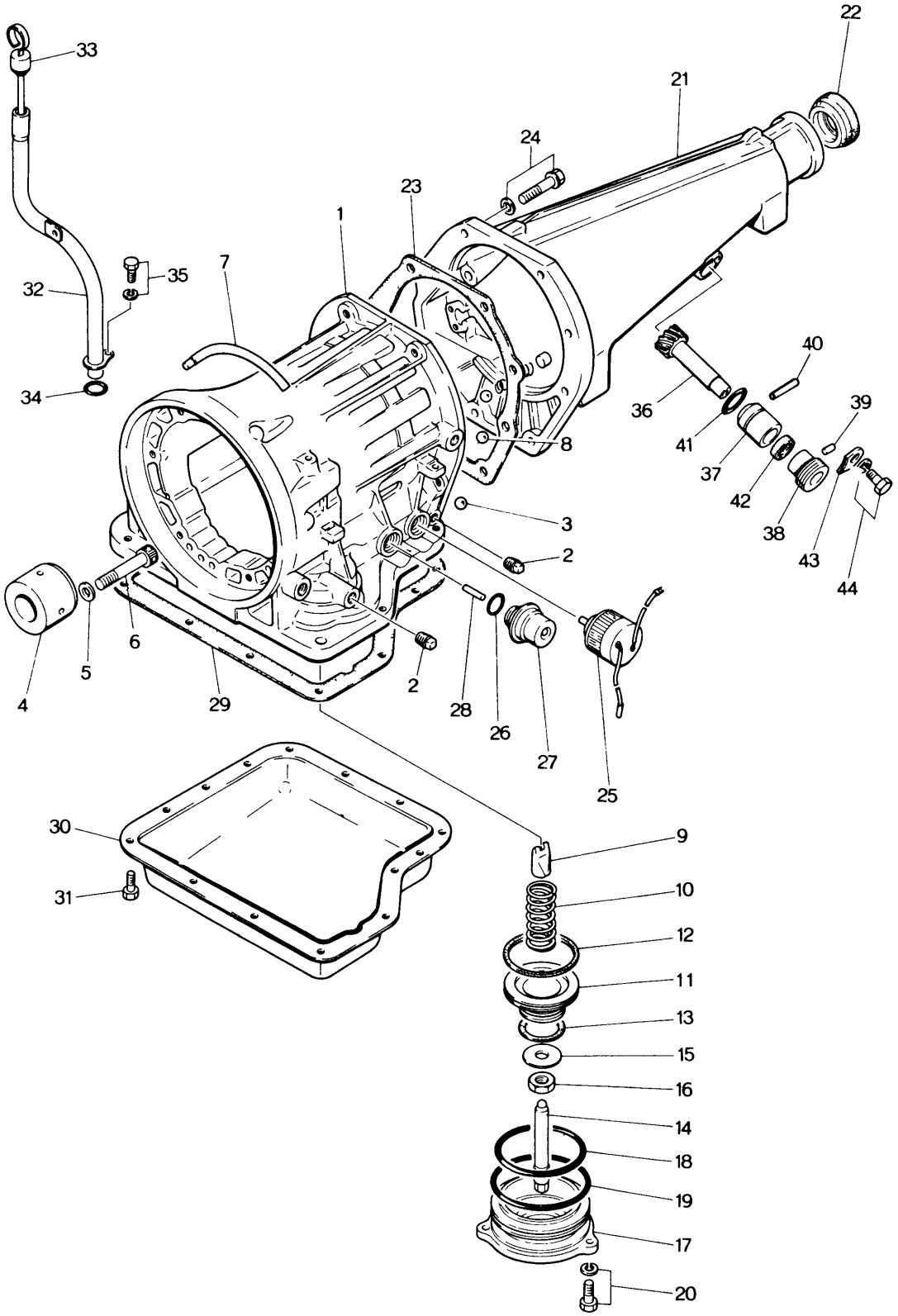
22
33
21
24
23
1
7
35
32
40
36
39
41
37
42
38
43
44
34
8
3
2
6
5
4
29
2
28
26
27
25
30
9
31
10
12
11
13
15
16
14
18
19
17
20

No.	Part Number	Description	Q'ty	Remarks
1	0338 19 310	Case, T / mission	1	
2	0338 19 331	Plug, Square Head	3	
●	0338 19 331A	Plug, square Head	3	Car No. 116415 72/11 ~ 117270 ○
3	0338 19 335	Ball, Steel	3	
●	99611 1750	Ball, Steel	3	Car No. 118271 72/11 ~ 119331 ○
4	0338 19 336	Race, Inner	1	
5	0338 19 337	Washer, Plain	8	
6	0338 19 338	Bolt	8	
7	0397 19 340	Breather, Air	1	
8	99611 2000	Ball, Steel	2	
9	0338 19 361	Strut, Band	1	
10	0338 19 363	Spring, Return-Piston	1	
11	0842 19 381	Piston, Band Servo	1	
12	0338 19 384	Seal, Piston	1	
13	0842 19 385	Seal, Piston	1	
14	0338 19 386A	Stem, Piston	1	
15	0338 19 388A	Washer, Plain	1	
16	0338 19 389	Nut, Band Adjust	1	
17	0842 19 391	Retainer, Servo	1	
18	0842 19 394	Seal, Lathe Cut Ring	1	
19	0338 19 395	Seal, "O" Ring	1	
20	0338 19 397	Bolt	5	
21	1675 19 710	Housing, Extension	1	
●	1840 19 710	Housing, Extension	1	Car No. 127282 73/2 ~ 128448 ○
22	0317 17 335	Oil Seal	1	

No.	Part Number	Description	Q'ty	Remarks
23	0338 19 735	Gasket, Extension	1	
24	0338 19 737	Bolt	8	
	0338 19 739	Washer, Plain	8	
25	1675 19 821	Solenoid, Down Shift	1	
26	0338 19 822	Seal, "O" Ring	2	
27	0338 19 823	Diaphragm, Vacuum	1	
28	0338 19 825	Rod, Diaphragm (ℓ = 30.0)		
	0338 19 826	Rod (ℓ = 31.0)		
	0338 19 827	Rod (ℓ = 30.5) Selective use	1	
	0338 19 828	Rod (ℓ = 29.0)		
	0338 19 829	Rod (ℓ = 29.5)		
29	0338 19 835	Gasket, Oil Pan	1	
●	0338 19 835A	Gasket, Oil Pan	1	Car No. 131107 $^{73}/_{3}$ ~ 132971 ○
30	0338 19 836	Pan, Oil	1	
31	0338 19 837	Bolt	14	
32	2070 19 870	Tube, Oil	1	
33	0338 19 880	Gauge	1	
34	99541 01601	Ring, "O"	1	
35	908062 6 14	Bolt Set	1	
36	0862 17 441	Gear, Driven	1	
37	0862 17 442	Sleeve, Speedometer	1	
38	0862 17 351	Joint, Cable	1	
39	0187 17 352	Pin, Dowel	1	
40	99222 0216	Pin, Spring	1	
41	99541 02211	Ring, "O"	1	
42	99586 10207	Oil Seal	1	
43	0111 17 354	Plate, Lock	1	
44	908062 6 14	Bolt Set, Lock Plate	1	

AUTOMATIC T/MISSION
(CLUTCH & PLANETARY GEAR)

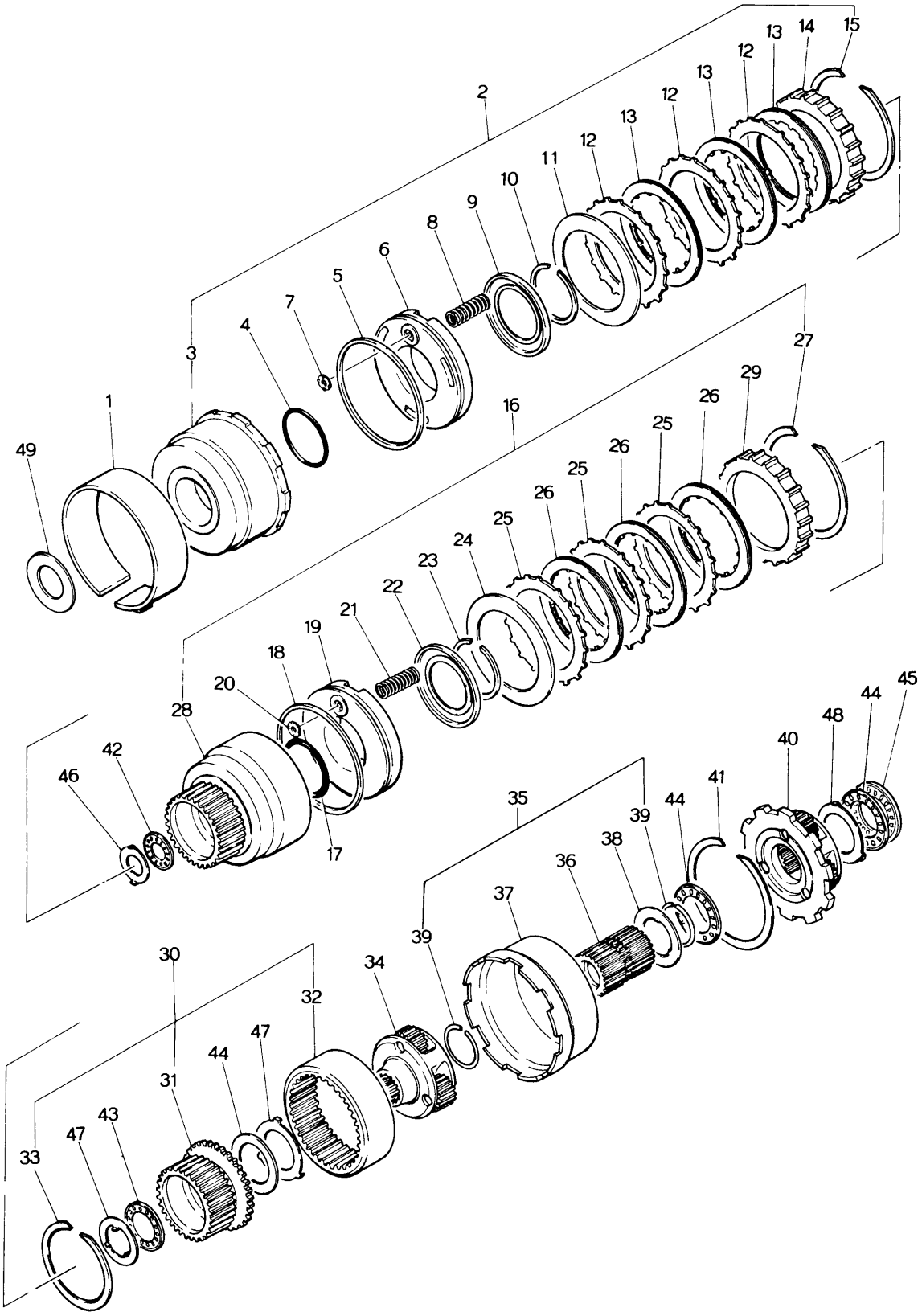

No.	Part Number	Description	Q'ty	Remarks
1	0338 19 360	Band, Brake	1	
2	0338 19 460	Clutch, Front	1	
3	0338 19 470	Drum, Clutch	1	
4	0338 19 475	Seal, "O" Ring	1	
5	0338 19 476	Seal, Lathe Cut	1	
6	0338 19 480	Piston, Clutch	1	
7	0338 19 493	Retainer, Ball	1	
8	0338 19 486	Spring, Piston Return	10	
9	0338 19 487	Retainer, Spring	1	
10	0338 19 488	Ring, Snap	1	
11	0338 19 498	Plate, Dished	1	
12	0338 19 499	Plate, Driven	3	
13	0338 19 500	Plate, Drive	3	
14	0338 19 503	Plate, Retaining	Selective use	1
	0338 19 504	Plate, Retaining		
	0338 19 505	Plate, Retaining		
	0338 19 506	Plate, Retaining		
	0338 19 507	Plate, Retaining		
	0338 19 508	Plate, Retaining		
15	0338 19 509	Ring, Snap	1	
16	0338 19 510	Clutch, Rear	1	
17	0338 19 475	Seal, "O" Ring	1	

No.	Part Number	Description	Q'ty	Remarks
18	0338 19 476	Seal, Lathe Cut	1	
19	0338 19 480	Piston, Clutch	1	
20	0338 19 493	Retainer, Ball	1	
21	0338 19 486	Spring, Piston Return	10	
22	0338 19 487	Retainer, Spring	1	
23	0338 19 488	Ring, Snap	1	
24	0338 19 498	Plate, Dished	1	
25	0338 19 499	Plate, Driven	4	
26	0338 19 500	Plate, Driven	4	
27	0338 19 509	Ring, Snap	1	
28	0338 19 511	Drum, Rear Clutch	1	
29	0338 19 515	Plate, Retaining	1	
30	0338 19 530	Hub, Rear Clutch	1	
31	0338 19 531	Hub, Rear Clutch	1	
32	0338 19 533	Gear, Internal	1	
33	0338 19 534	Ring, Snap	1	
34	0338 19 540	Carrier, Front	1	
35	0338 19 550	Shell, Sun Gear	1	
36	0338 19 560	Gear, Sun	1	
37	0338 19 565	Shell, Connecting	1	

No.	Part Number	Description	Q'ty	Remarks
38	0338 19 566	Race, Bearing Seal	1	
39	0338 19 567	Ring, Snap	2	
40	0338 19 570	Carrier, Rear	1	
41	0338 19 598	Ring, Snap	1	
42	0338 19 621	Bearing, Needle	1	
43	0338 19 622	Bearing, Needle	1	
44	0338 19 623	Bearing, Needle	1	
45	0338 19 624	Bearing, Needle	1	
46	0338 19 631	Race, Bearing (t=1.2)	Selective use	1
	0338 19 632	Race, Bearing (t=1.4)		
	0338 19 633	Race, Bearing (t=1.6)		
	0338 19 634	Race, Bearing (t=1.8)		
	0338 19 635	Race, Bearing (t=2.0)		
	0338 19 636	Race, Bearing (t=2.2)		
47	0338 19 638	Race, Bearing-Rear Clutch	1	
48	0338 19 639	Race, Bearing	2	
49	0338 19 641	Washer, Front Clutch (t=1.90)	Selective use	1
	0338 19 642	Washer (t=2.10)		
	0338 19 643	Washer (t=2.30)		
	0338 19 644	Washer (t=2.50)		
	0338 19 645	Washer (t=2.70)		
	0338 19 646	Washer (t=1.50)		
	0338 19 647	Washer (t=1.70)		

AUTOMATIC T/MISSION
(LOW, REVERSE & GOVERNOR)

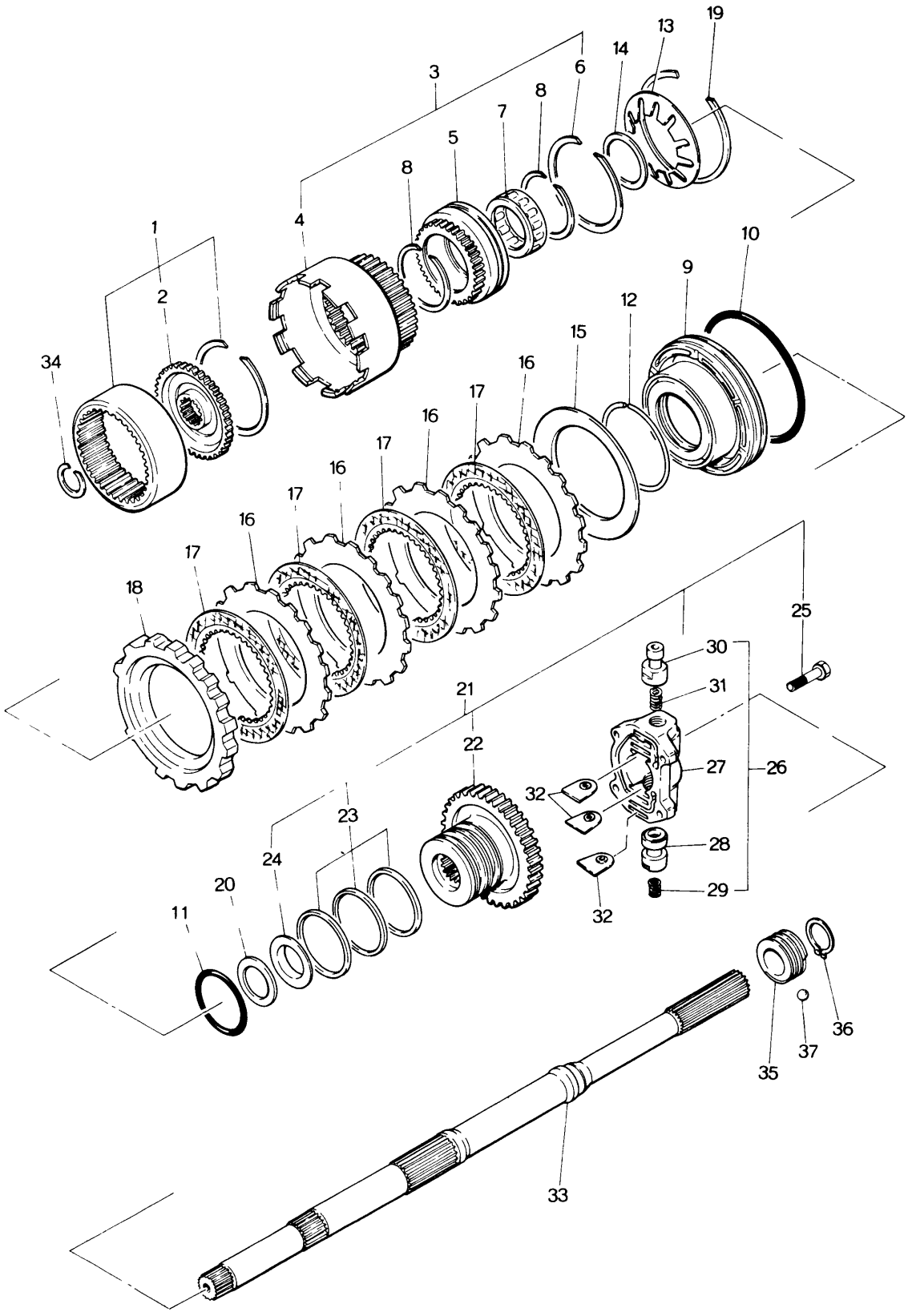

No.	Part Number	Description	Q'ty	Remarks
1	0338 19 580	Flange	1	
2	0338 19 581	Flange, Drive	1	
3	0338 19 590	Drum, Connecting	1	
4	0338 19 591	Drum, Connecting	1	
5	0338 19 593	Race, Outer	1	
6	0338 19 594	Ring, Snap	1	
7	0338 19 595	Clutch, One Way	1	
8	0338 19 596	Ring, Snap	2	
9	0338 19 601	Piston, Low & Reverse	1	
10	0338 19 603	Seal, Piston	1	
11	0338 19 604	Seal, "O" Ring	1	
12	0338 19 605	Ring, Thrust Spring	1	
13	0338 19 606	Spring, Piston	1	
14	0338 19 607	Ring, Snap	1	
15	0338 19 608	Plate, Dished	1	
16	0338 19 609	Plate, Driven	4	
17	0338 19 610	Plate, Drive	4	
18	0338 19 613A	Plate, Retaining (t=15.8)		
	0338 19 614A	Plate (t=16.0)		
	0338 19 615A	Plate (t=16.2)	Selective use	1
	0338 19 616A	Plate (t=16.4)		
	0338 19 617A	Plate (t=16.6)		

AUTOMATIC T/MISSION
(LOW, REVERSE & GOVERNOR)

No.	Part Number	Description	Q'ty	Remarks
	0338 19 618A	Plate (t=16.8)		
19	0338 19 619	Ring, Snap	1	
20	0338 19 622	Bearing, Needle	1	
21	0842 19 650	Distributor, Oil	1	
22	0338 19 651	Distributor	1	
23	0338 19 655	Ring, Seal	3	
24	0338 19 656	Race, Bearing	1	
25	0338 19 397	Bolt	4	
26	0842 19 660	Governor, Fig. No. 27~30 Included	1	
27	0338 19 661	Body	1	
28	0338 19 663	Valve	1	
29	0338 19 664	Spring	1	
30	0842 19 665	Valve	1	
31	0338 19 666	Spring, Governor	1	
32	0338 19 667	Plate, Retainer	3	
33	0338 19 670A	Shaft	1	
34	0338 19 676	Ring, Snap	1	
35	0862 17 341	Gear, Drive-Speedometor	1	
36	99573 2500	Ring, Snap	1	
37	99611 1500	Ball, Steel	1	

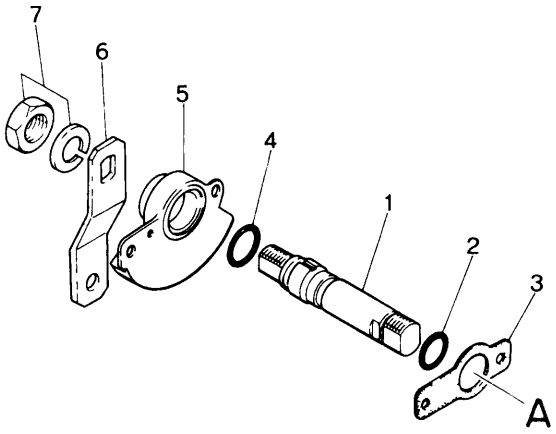
7
6
5
4
1
2
3
A

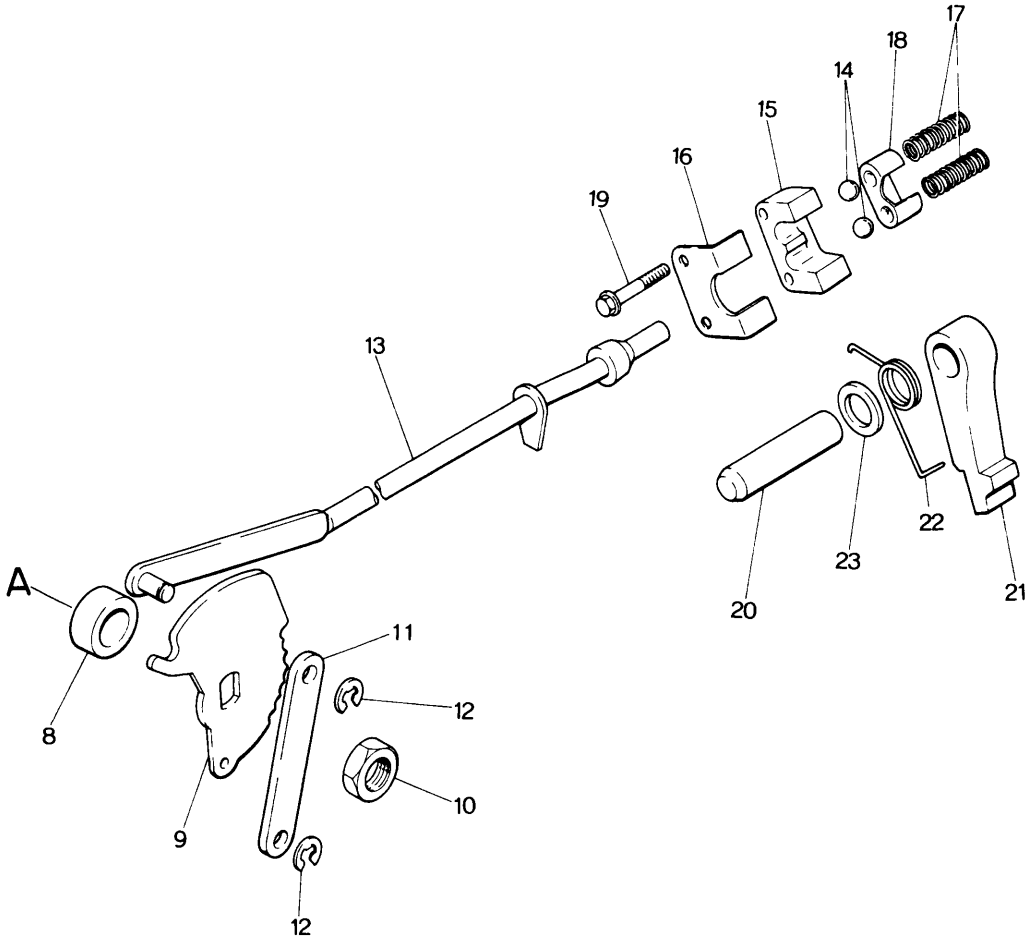
17
18
14
15
16
19
13
A
11
12
8
10
9
12
22
23
21
20

No.	Part Number	Description	Q'ty	Remarks
1	0338 19 431	Shaft, Manual	1	
2	0338 19 432	Seal, "O" Ring	1	
● 3	0338 19 445	Gasket, Switch	1	Car No. 114066 72/10 ~ 116525 Discarded
4	0338 19 446	Seal, "O" Ring	1	
5	1675 19 444	Switch, Inhibitor	1	
●	1675 19 444A	Switch, Inhibitor	1	Car No. 114066 72/10 ~ 116525 △
6	0842 19 031	Lever, Select	1	
7	99922 1400	Nut, Lever	1	
	99971 1400	Washer, Spring	1	
8	0338 19 433	Washer, Manual	1	
9	0338 19 440	Plate, Manual	1	
10	0338 19 443	Nut, Shaft	1	
11	0338 19 448	Lever, Parking	1	
12	0338 19 449	Ring, Snap	2	
13	0338 19 450	Rod, Parking	1	
14	0397 19 705	Ball, Steel	2	
●	99611 2750	Ball, Steel	2	Car No. 118271 72/11 ~ 119331 ○
15	0338 19 701	Support, Actuator	1	
16	0338 19 702	Plate, Retaining	1	
17	0338 19 703	Spring, Ball Park	2	
18	0338 19 704	Retainer	1	
19	0338 19 706	Bolt	2	
20	0338 19 731	Shaft, Parking Pawl	1	
21	0338 19 732	Pawl, Parking	1	
22	0338 19 733B	Spring, Pawl Return	1	
●	0338 19 733C	Spring, Pawl Return	1	Car No. 111339 72/9 ~ 113817 ○
23	0338 19 734A	Spacer, Pawl	1	

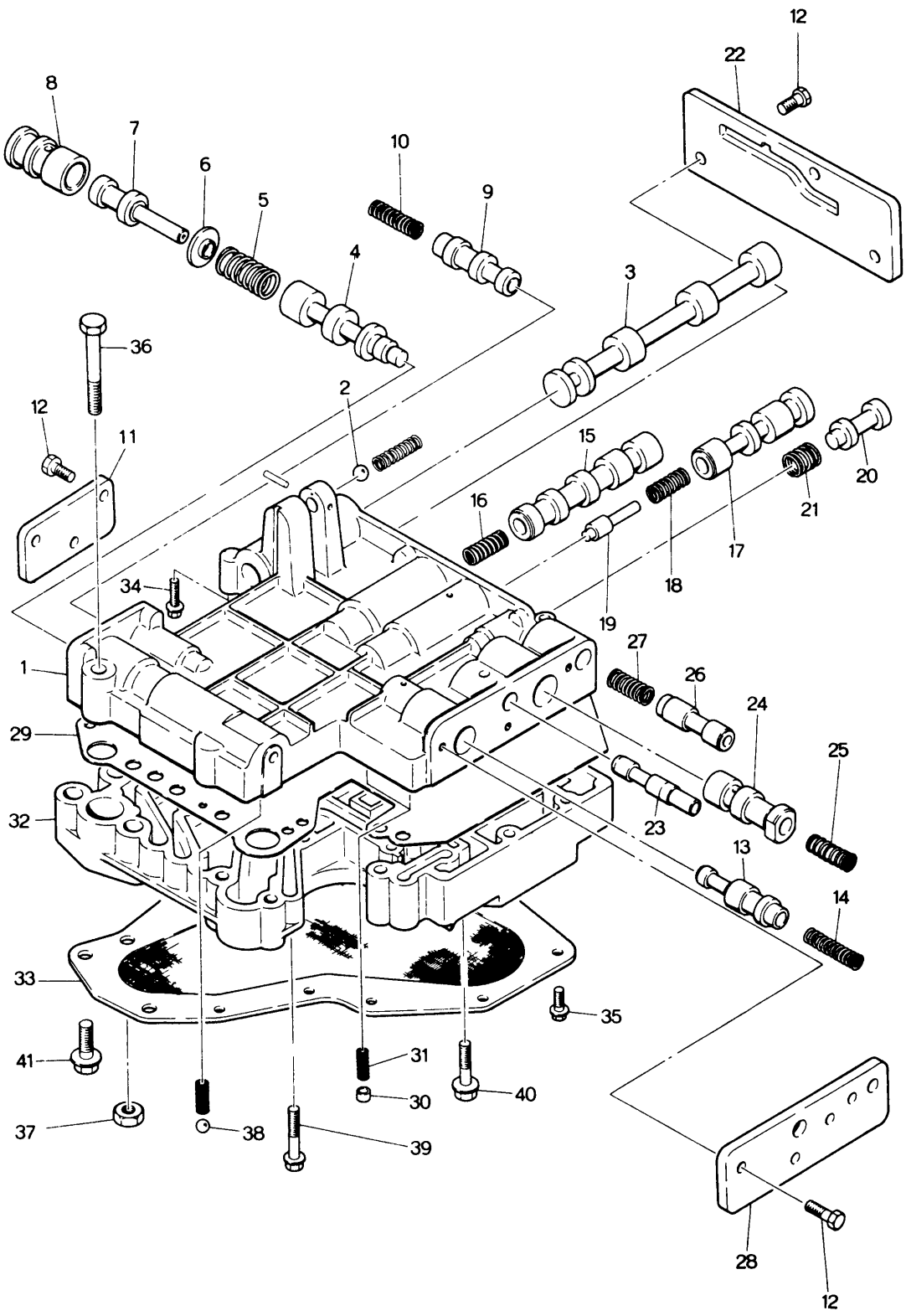
12
22
8
7
6
5
10
9
4
3
36
2
12
11
15
20
16
21
17
18
34
19
1
27
26
24
29
25
32
23
13
14
33
35
41
31
30
40
37
38
39
28
12

No.	Part Number	Description	Q'ty	Remarks
	0397 19 750	Valve, Control	1	
1	0338 19 760	Body, Fig. No. 2 Included	1	
2	99611 2500	Ball, Steel	1	
3	0338 19 768	Valve, Manual	1	
4	0338 19 771	Valve, Regulator Pressure	1	
5	0338 19 772	Spring, Regulator Pressure	1	
6	0338 19 773	Seat, Spring	1	
7	0397 19 774	Plug, Regulator Pressure	1	
8	0397 19 775	Sleeve, Plug	1	
9	0338 19 777	Valve, Second Lock	1	
10	0338 19 778	Spring, Second Lock	1	
11	0338 19 781	Plate, Side "D"	1	
12	0338 19 782	Screw	9	
13	0338 19 783	Valve, 2 ~ 3 Timing	1	
14	0338 19 784	Spring	1	
15	0338 19 785	Valve, 1 ~ 2 Shift	1	
16	0338 19 786	Spring	1	
17	0338 19 787	Valve, 2 ~ 3 Shift	1	
18	0338 19 788	Spring	1	
19	0338 19 789	Plug, 2 ~ 3 Shift	1	
20	0338 19 791	Valve, Modifier	1	
21	0338 19 792	Spring, Modifier	1	
22	0338 19 793	Plate, Side "A"	1	
23	0338 19 795	Valve, Vacuum Throttle	1	
24	0338 19 797	Valve, Throttle Back Up	1	
25	0338 19 798	Spring, Throttle Back Up	1	

No.	Part Number	Description	Q'ty	Remarks
26	0338 19 801	Valve, Down Shift	1	
27	0338 19 802	Spring, Down Shift	1	
28	0338 19 803	Plate, Side "B"	1	
29	0338 19 805	Plate, Separator	1	
30	0338 19 807	Valve, Orifice Check	2	
31	0338 19 808	Spring, Orifice Check	2	
32	0338 19 811	Body, Lower	1	
33	0338 19 815	Strainer, Oil	1	
34	0338 19 816	Screw	7	
35	0338 19 817	Screw	10	
36	0338 19 818	Bolt	2	
37	0338 19 819	Nut	2	
38	99611 2000	Ball, Steel	1	
39	0338 19 831	Bolt	3	
40	0338 19 832	Bolt	2	
41	0338 19 833	Bolt	2	

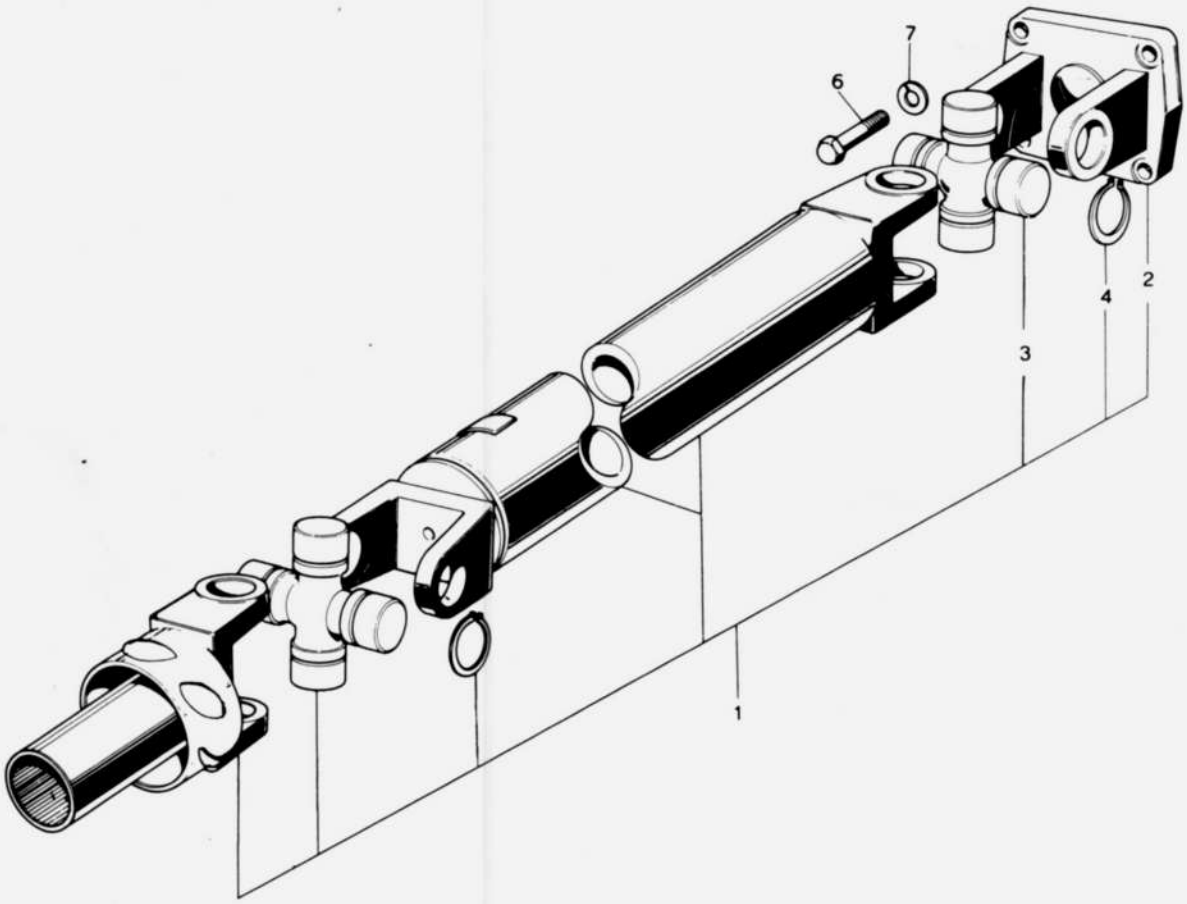
7
6
2
4
3
1

No.	Part Number	Description	Q'ty	Remarks
1	0866 25 100	Shaft, Propeller } 1972 Model	1	
	0866 25 100A	Shaft, Propeller } 1972 Model	1	Car No. 104518 72/7 ~ 108368
●	~~0862 24 100A~~	~~Shaft, Propeller~~	~~1~~	~~1973 Model~~
●	0862 25 100A	Shaft, Propeller 1973 Model	1	
2	0259 25 021B	Yoke	1	
3	0259 89 251	Joint Set, Universal	1	
4	0259 25 071A	Ring, Snap (t=1.22)		
	0259 25 072A	Ring, Snap (t=1.24)		
	0259 25 073A	Ring, Snap (t=1.26)		
	0259 25 074A	Ring, Snap (t=1.28)		
	0259 25 075A	Ring, Snap (t=1.30) Selective use	8	
	0259 25 076A	Ring, Snap (t=1.32)		
	0259 25 077A	Ring, Snap (t=1.34)		
	0259 25 078A	Ring, Snap (t=1.36)		
	0259 25 079A	Ring, Snap (t=1.38)		
5	~~0866 25 130~~	~~Yoke, Sliding~~	~~1~~	
6	0223 25 024	Bolt	4	
●	997523 0818	Bolt	4	Car No. 114131 72/10 ~ 116584
7	99971 0800	Washer, Spring	4	

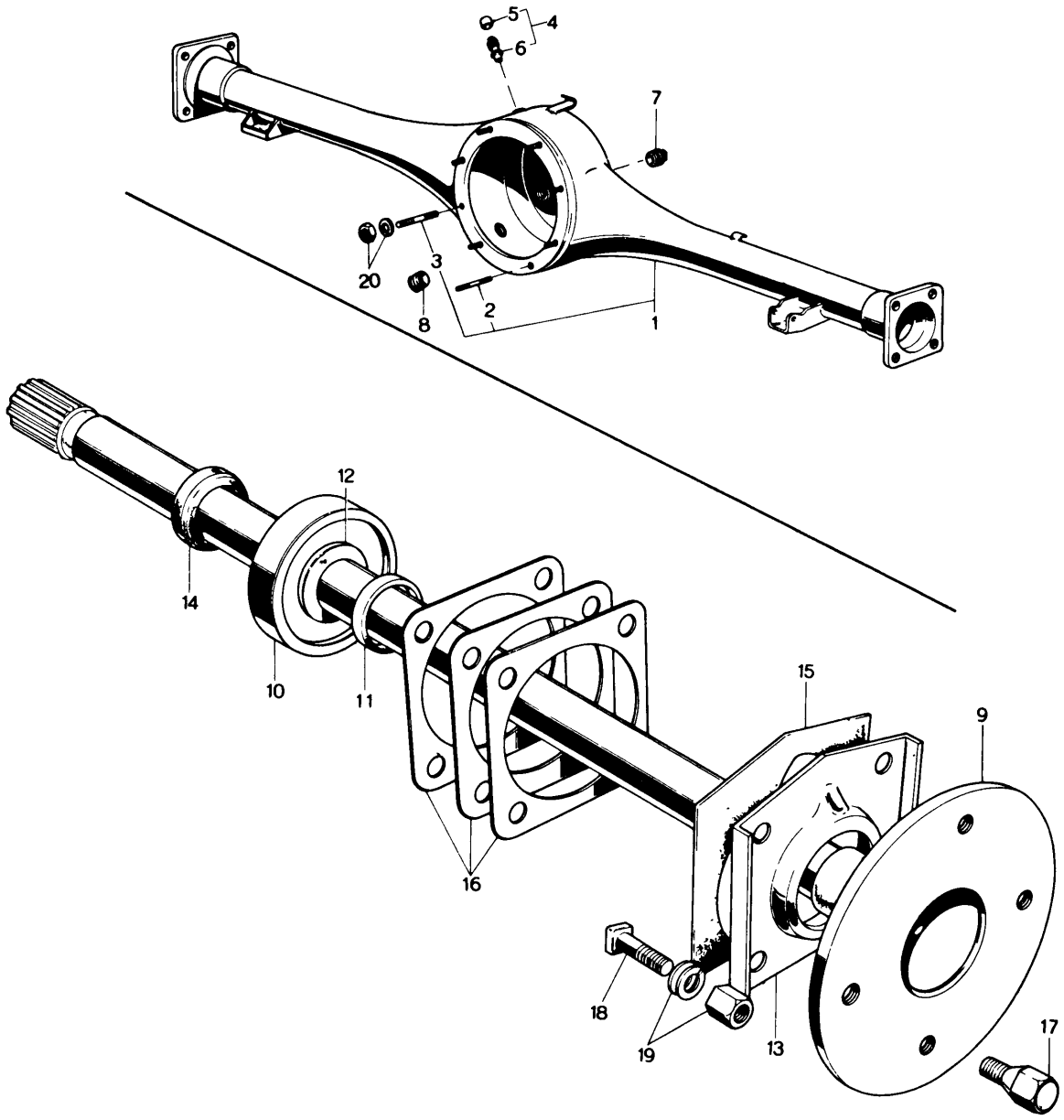
5
4
6
7
20
3
8
2
1
12
14
10
11
15
9
16
18
19
13
17

No.	Part Number	Description	Q'ty	Remarks
1	1540 26 010A	Casing, Rear Axle	1	
	0899 26 010D	Casing, Rear Axle (Rotary Wagon)	1	
2	99852 0820	Stud	7	
3	99852 0880	Stud	1	
4	0866 26 060	Breather	1	
5	~~0866 26 062~~	~~Cap, Breather~~	~~1~~	
6	~~0866 26 063~~	~~Body, Breather~~	~~1~~	
7	0259 26 041	Plug, Oil Level	1	
8	0259 26 051	Plug, Magnet Drain	1	
9	0870 26 111A	Shaft (R), Rear Axle	1	
	0870 26 115A	Shaft (L), Rear Axle	1	
10	0317 26 151A	Bearing, Rear Wheel	2	
11	0259 26 155	Spacer, Bearing	2	
12	0259 26 152	Collar, Bearing	2	
13	0317 26 121	Retainer, Bearing	2	
14	0187 26 154	Oil Seal	2	
15	0259 26 129	Gasket	2	
16	0259 26 141	Shim, Adjust (t=0.1) } Selective use	4	
	0259 26 142	Shim, Adjust (t=0.4) } Selective use		
17	0259 33 165	Bolt, Wheel Set	8	
	0820 33 165	Bolt, Wheel Set (With Center Cap)	8	
	0820 33 165A	Bolt, Wheel Set (With Center Cap)	8	Car No. 105806 72/8 ~ 108472 Δ
18	0259 26 132	Bolt, Retainer	8	
19	99901 0800	Nut, Retainer	8	

No.	Part Number	Description	Q'ty	Remarks
	99971 0800	Washer, Spring	8	
20	99901 0800	Nut, Differential	8	
	99971 0800	Washer, Spring	8	

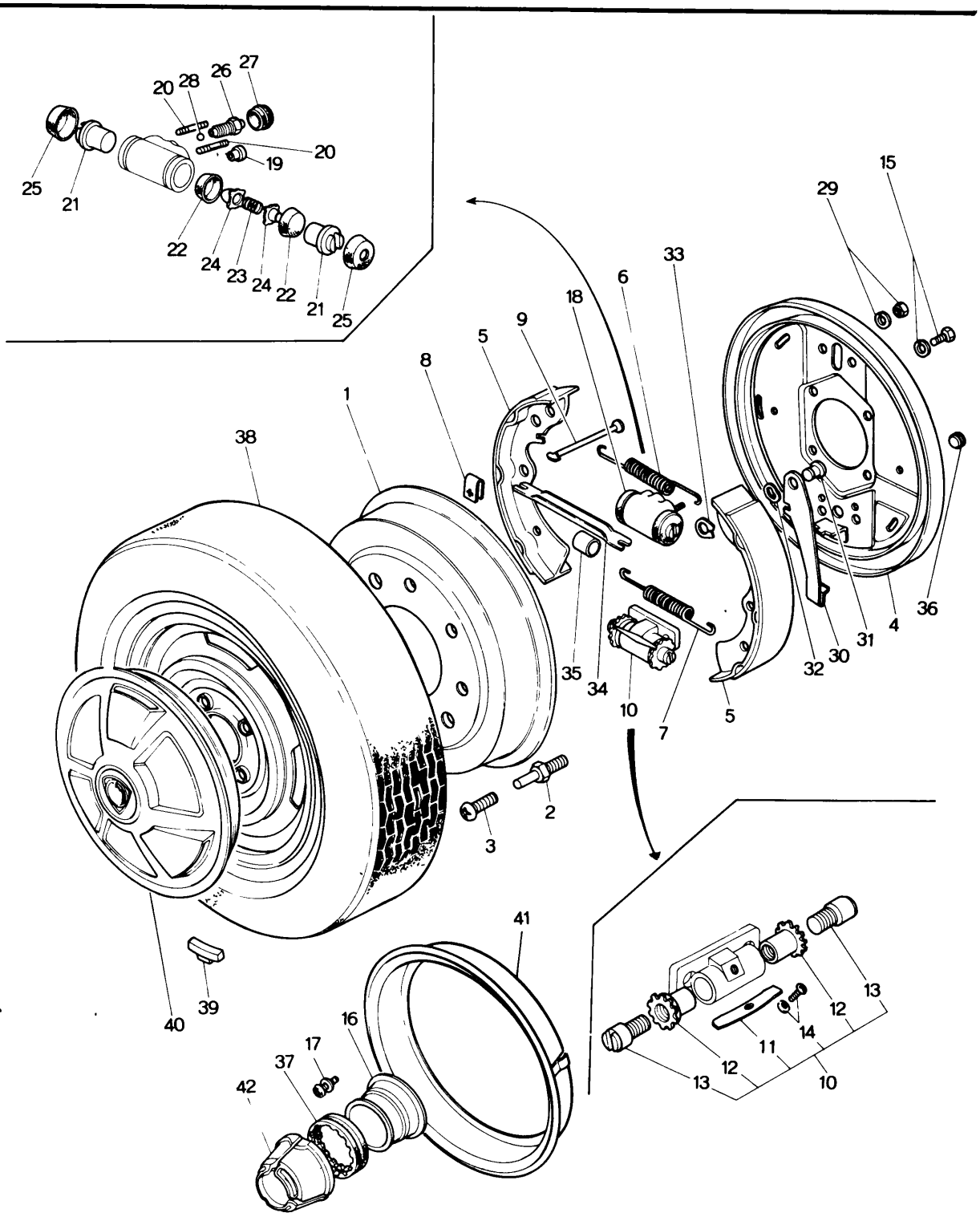
20
28
26
27
25
21
19
20
22
24
23
24
22
21
25
15
29
33
6
18
9
5
8
1
38
4
36
31
30
32
35
34
10
7
5
2
3
41
40
39
16
17
37
42
12
13
14
11
12
13
10

No.	Part Number	Description	Q'ty	Remarks
1	0866 26 251	Drum, Rear Brake	2	
●	0305 26 251	Drum, Rear Brake	2	Car No. 107151 72/9 ~ 109301 ○
●	0305 26 251A	Drum, Rear Brake	2	Car No. 111422 72/10 ~ 113912 ○
2	0305 26 255	Bolt	4	
3	99833 0812	Screw, Center Cap	4	
4	0866 26 280B	Plate (R), Brake Back	1	
	0866 26 280B	Plate (L), Brake Back	1	
5	0866 26 310	Shoe, Brake (Front Disc Brake use)	4	
●	0866 26 310A	Shoe, Brake (Front Disc Brake use)	4	Car No. 111422 72/10 ~ 113912 ○
6	0187 26 341	Spring, Return - Wheel Cylinder Side	2	
7	0118 26 342	Spring, Return - Wheel Cylinder Side	2	
8	0223 26 345A	Spring, Shoe Hold	4	
9	0866 26 391	Pin, Shoe Hold Down	4	
10	0305 26 500A	Anchor Block	2	
11	0710 26 352	Spring	2	
12	0710 26 461	Adjuster	4	
13	0305 26 465	Screw, Adjust	4	
14	99833 0408	Screw	2	
	99971 0400	Washer, Spring	2	
15	99801 0814	Bolt, Anchor Block	4	
	99971 0800	Washer, Spring	4	
16	0820 26 570A	Adapter	2	
17	99833 0812	Screw, Adapter (Center Cap use)	4	
	99971 0800	Washer, Spring (Center Cap use)	4	

No.	Part Number	Description	Q'ty	Remarks
18	0233 26 610A	Cylinder, Wheel	2	
19	0613 26 922	Tube Seat	2	
20	99852 0612	Stud	4	
21	0221 26 651	Piston	4	
22	0221 26 671	Cup, Piston	4	
23	0221 26 672	Spring	2	
24	0221 26 673	Block, Filling	4	
25	0613 33 681	Cover, Dust	4	
26	0259 33 691	Screw, Bleeder	2	
27	0259 33 693	Cap	2	
28	99611 1500	Ball, Steel	2	
29	99906 0600	Nut, Wheel Cylinder	4	
	99971 0600	Washer, Spring	4	
30	0305 26 800A	Lever (R), Operating	1	
	0305 26 810A	Lever (L), Operating	1	
31	0118 26 832	Pin	2	
32	0118 26 834	Washer, Wave	2	
33	99575 0600	Ring, Retaining	2	
34	0187 26 821	Strut (R), Operating	1	
	0187 26 921	Strut (L), Operating	1	

No.	Part Number	Description	Q'ty	Remarks
35	0118 26 897	Holder	2	
36	0710 33 288	Plug	4	
37	0820 33 192A	Rubber, Set (Center Cap Use)	2	
38	9962 06 6113	Tire, Tubeless 6.15—13— 4 PR (White Ring)	2	
	9962 09 1553	Tire, Radial Tubeless 155 SR 13 (Black)	2	
	9963 60 4140	Air Valve	2	
	9965 05 4530	Wheel, 4½ — J × 13 WDC Disc	2	©
	9965 06 4530	Wheel, 4½ — J × 13 WDC Disc (Center Cap use)	2	©
39	99655 30010	Weight, Balance	Selective use	2
	99655 30015	Weight, Balance		
	99655 30020	Weight, Balance		
	99655 30025	Weight, Balance		
	99655 30030	Weight, Balance		
	99655 30035	Weight, Balance		
	99655 30040	Weight, Balance		
	99655 30045	Weight, Balance		
	99655 30050	Weight, Balance		
	99655 30060	Weight, Balance		
40	0866 37 170B	Cap, Wheel	2	
41	0820 33 180A	Ring, Wheel	2	
42	0881 37 191	Cap, Center	2	

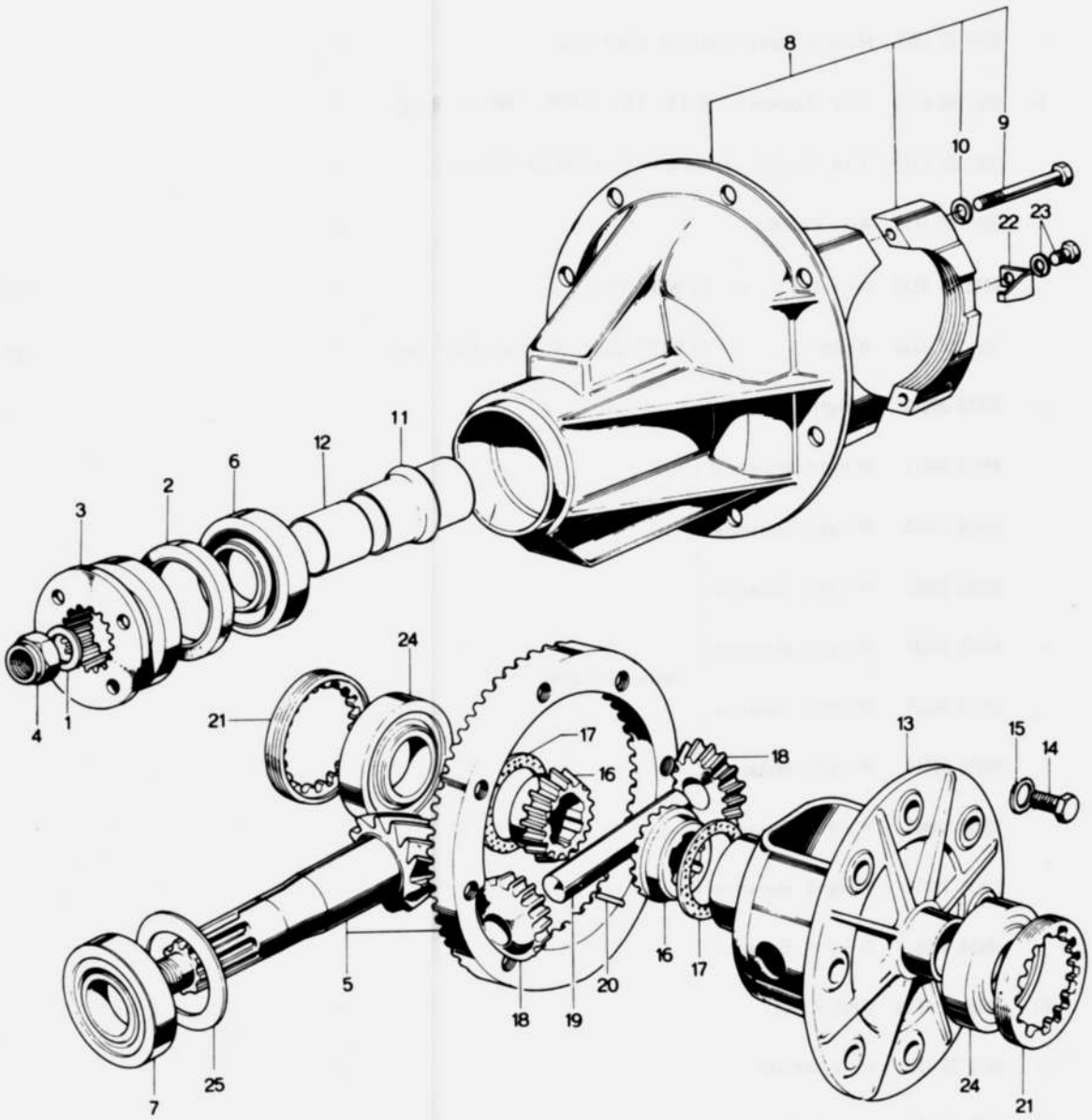
8
10
9
22
23
11
12
6
2
3
4
1
24
21
17
16
18
13
15
14
5
20
16
17
18
19
7
25
24
21

No.	Part Number	Description	Q'ty	Remarks
	1562 27 100	Driving & Differential	1	
1	0223 27 012	Washer, Drive Pinion	1	
● 2	2112 27 018	Oil Seal	1	
3	0223 27 020B	Flange, Companion	1	
4	0223 27 030	Nut, Lock	1	
5	0866 27 110	Gear Set, Final	1	
6	0755 27 141	Bearing	1	
7	0221 27 141	Bearing	1	
8	0866 27 150	Carrier, Differential	1	
9	99811 1050	Bolt	4	
10	99971 1000	Washer, Spring	4	
11	0305 27 171	Piece, Distance	1	
12	0866 27 172	Collar, Long	1	
13	0290 27 231	Case, Differential Gear	1	
14	99753 41022	Bolt, Ring Gear } Selective use	10	
	99753 81022	Bolt, Ring Gear }		
15	99958 1018	Washer	10	
16	0820 27 251	Gear, Differential Side	2	
17	0290 27 252	Washer, Thrust (t=1.6) }		
	0290 27 253	Washer, Thrust (t=1.7) } Selective use	2	
	0290 27 254	Washer, Thrust (t=1.8) }		
18	0221 27 255	Pinion, Differential	2	
19	0305 27 261	Shaft, Pinion	1	
20	0114 27 262	Pin, Pinion Shaft	1	
21	0290 27 301	Screw, Adjust	2	
22	0290 27 302	Plate, Lock	2	

No.	Part Number	Description	Q'ty	Remarks
23	99811 0812	Bolt, Lock Plate	2	
	99971 0800	Washer, Spring	2	
24	0221 27 305	Bearing	2	
25	0223 27 401	Spacer (t=3.08)		
	0223 27 402	Spacer (t=3.11)		
	0223 27 403	Spacer (t=3.14)		
	0223 27 404	Spacer (t=3.17)		
	0223 27 405	Spacer (t=3.20)		
	0223 27 406	Spacer (t=3.23)		
	0223 27 407	Spacer (t=3.26)		
	0223 27 408	Spacer (t=3.29)	Selective use	1
	0223 27 409	Spacer (t=3.32)		
	0223 27 411	Spacer (t=3.35)		
	0223 27 412	Spacer (t=3.38)		
	0223 27 413	Spacer (t=3.41)		
	0223 27 414	Spacer (t=3.44)		
	0223 27 415	Spacer (t=3.47)		

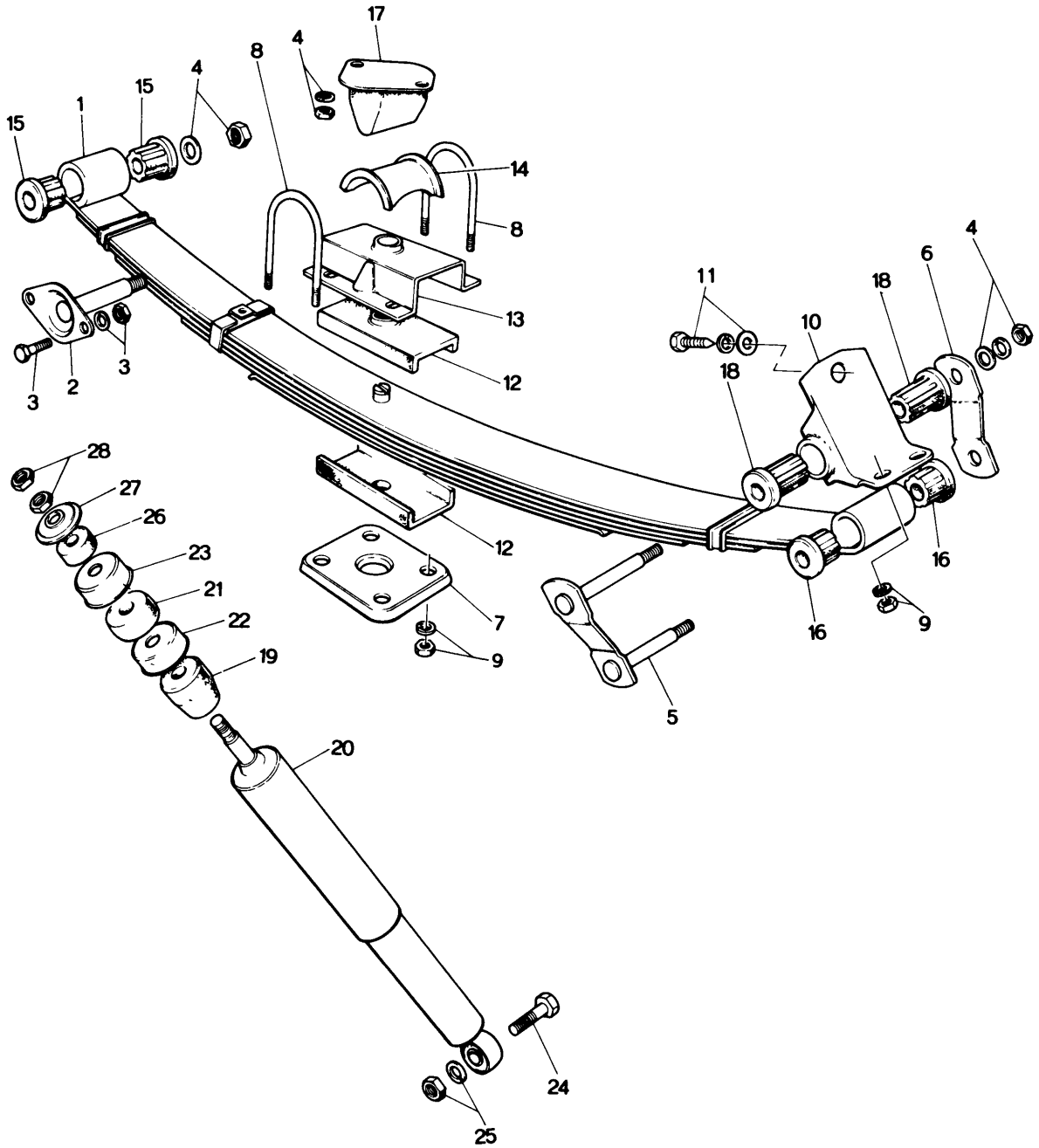
17
4
8
4
15
1
15
14
8
13
12
3
2
3
11
10
18
18
6
4
12
7
9
16
16
9
5
28
27
26
23
21
22
19
20
24
25

No.	Part Number	Description	Q'ty	Remarks
1	0376 28 010	Spring, Rear	2	
	0376 28 011	Spring No. 1, Leaf (Coupe use)	2	
	0376 28 012	Spring No. 2, Leaf (Coupe use)	2	
	0376 28 013	Spring No. 3, Leaf (Coupe use)	2	
	0866 28 010	Spring, Rear	2	
	0866 28 011	Spring No. 1, Leaf (Sedan use)	2	
	0866 28 012	Spring No. 2, Leaf (Sedan use)	2	
	0866 28 013	Spring No. 3, Leaf (Sedan use)	2	
2	0866 28 110	Pin, Spring	2	
●	0866 28 110A	Pin, Spring	2	Car No. 116584 $^{72}/_{10}$ ~ △
3	99801 0822	Bolt, Spring Pin	4	
	99901 0800	Nut	4	
	99971 0800	Washer, Spring	4	
4	99901 0800	Nut	6	Car No. ~~100097~~ 101005 $^{72}/_{3}$ ~ Q'ty
	99971 0800	Washer, Spring	6	Car No. ~~100097~~ 101005 $^{72}/_{3}$ ~ Q'ty
	99940 0800	Nut, Stopper Rubber	2	Car No. ~~100097~~ 101005 $^{72}/_{3}$ ~ Added Anew
5	0866 28 140A	Plate No. 1, Shackle	2	
●	0866 28 140B	Plate No. 1, Shackle	2	Car No. 116584 $^{72}/_{10}$ ~ △
6	0866 28 143	Plate No. 2, Shackle	2	
7	0866 28 151	Clamp, Spring	2	
8	0652 28 161	Bolt, Lock	4	
9	99921 1000	Nut	12	
	99971 1000	Washer, Spring	12	
10	0866 28 180A	Bracket, Shackle	2	
11	99783 1028	Bolt, Shackle Bracket	2	

No.	Part Number	Description	Q'ty	Remarks
	99952 1000	Washer, Plain	2	
	99971 1000	Washer, Spring	2	
12	0259 28 182	Pad, Rubber	4	
13	0866 28 183A	Holder, Rubber Pad	2	
14	0866 28 322	Seat, Lock Bolt	2	
15	0866 28 333B	Bush (Frt)	4	
16	0866 28 343B	Bush No. 1 (Rr.)	4	
17	0866 28 350	Rubber, Stopper	1	
18	0866 28 353B	Bush No. 2 (Rr.)	4	
19	0866 28 591	Bumper, Bound	2	
20	0866 28 700	Damper, Rear	2	
●	0866 28 700A	Damper, Rear	2	Car No. 108472 $^{72}/_{8}$ ~ ○
●	0866 99 281A	Damper,Set, Rear (Fig. No. 21, 23 ~ 28 included)	2	Car No. 124434 $^{73}/_{1}$ ~ ○
21	0866 28 774	Bush, Rubber	2	
22	0866 28 778A	Casing, Stopper	2	
23	0866 28 779	Holder	2	
24	0866 28 799	Bolt, Rear Damper	2	
25	99921 1200	Nut, Rear Damper	2	
	99971 1200	Washer, Spring	2	
26	0603 34 153	Bush, Rubber	2	
27	0187 34 776	Retainer	2	
28	99921 1000	Nut, Rear Damper	2	
	99922 1000	Nut	2	

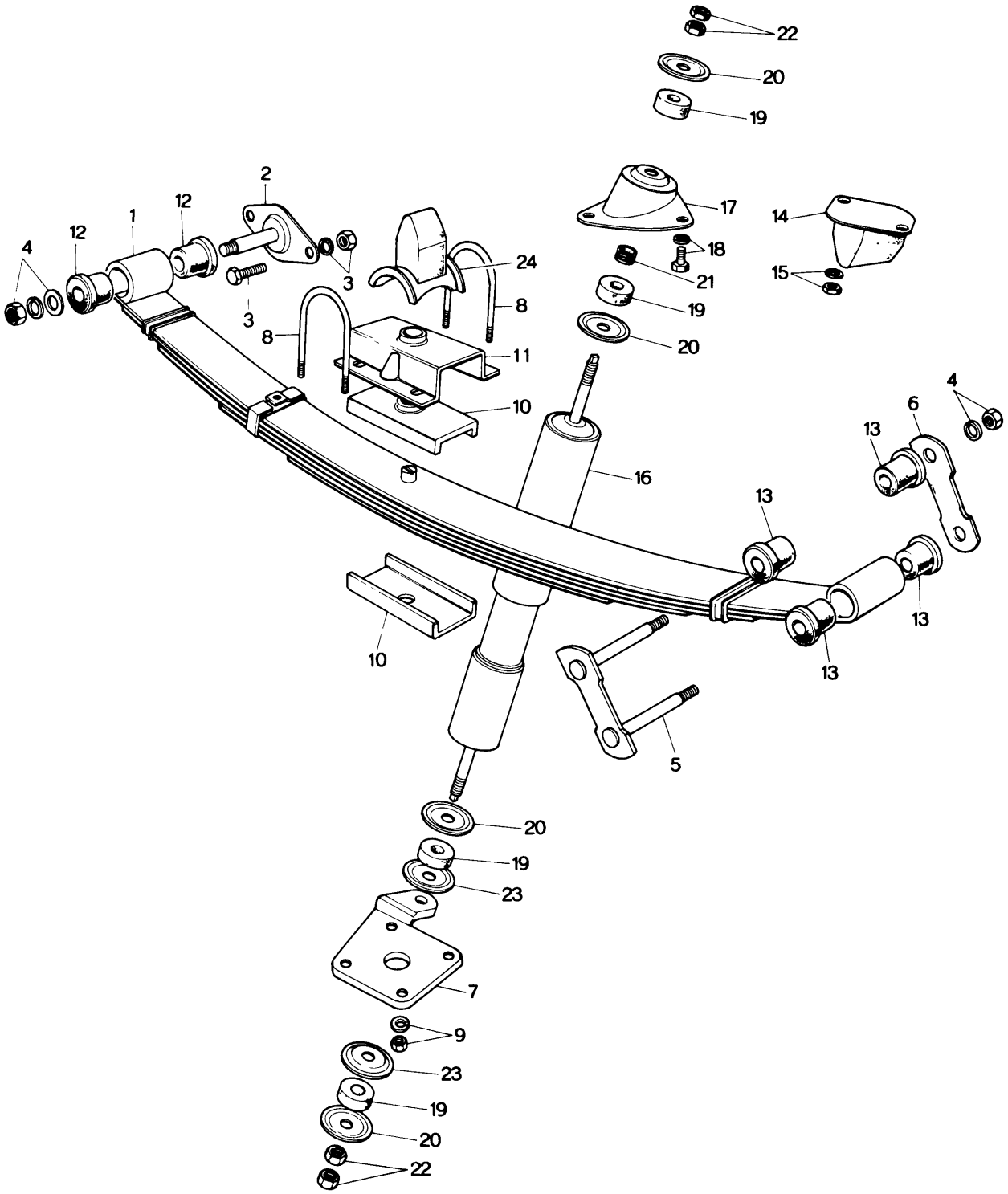
22
20
19
2
12
1
12
4
17
14
18
21
15
19
20
24
3
3
8
8
11
10
16
4
6
13
13
13
13
10
5
20
19
23
7
9
23
19
20
22

No.	Part Number	Description	Q'ty	Remarks
1	2160 28 010	Spring, Rear	2	
	2160 28 011	Spring No. 1, Leaf	2	
	2160 28 012	Spring No. 2, Leaf	2	
	2160 28 013	Spring No. 3, Leaf	2	
2	0259 28 110	Pin, Spring	2	
3	99801 0822	Bolt	4	
	99901 0800	Nut	4	
	99971 0800	Washer, Spring	4	
4	99921 1000	Nut	6	
	99952 1000	Washer, Plain	2	
	99971 1000	Washer, Spring	6	
5	0259 28 140	Plate No. 1, Shackle	2	
●	0899 28 140	Plate No. 1, Shackle Notic: 0899 28 140 and	2	Car No. 135696 T3/5 ~ X
6	0259 28 143	Plate No. 2, Shackle (0259 28 140 / 0259 28 143) are inter-	2	
●	0899 28 143	Plate No. 2, Shackle changable when exchange	2	Car No. 135696 T3/5 ~ X
7	0899 28 150	Clamp (R), Spring together with	1	
	0899 28 150A	Clamp (R), Spring	1	Car No. 104518 72/7 ~ Δ ~~108368~~
	0899 28 170	Clamp (L), Spring	1	
	0899 28 170A	Clamp (L), Spring	1	Car No. 104518 72/7 ~ Δ ~~108368~~
8	0193 28 161	Bolt, Lock	4	
9	99921 1000	Nut, Lock Bolt	8	
	99971 1000	Washer, Spring	8	
10	0259 28 182	Pad, Rubber	4	
11	0259 28 183	Holder, Rubber Pad	2	
12	0259 28 333	Bush (Frt)	4	
13	0259 28 343	Bush (Rr.)	8	
14	0866 28 350	Rubber, Stopper	1	
15	99901 0800	Nut	2	

No.	Part Number	Description	Q'ty	Remarks
	99971 0800	Washer, Spring	2	
16	0585 28 700B	Damper, Rear	2	
●	0585 28 700C	Damper, Rear	2	Car No. 106718 $^{72}/_{8}$ ~ ○
●	0585 99 281A	Damper Set, Rear (Fig. No. 19 ~ 23 included)	2	Car No. 123972 $^{73}/_{1}$ ~ ○
17	0585 28 180A	Bracket (R), Damper	1	
	0585 28 190A	Bracket (L), Damper	1	
18	99785 0825	Bolt, Damper Bracket	6	
	99971 0800	Washer, Spring	6	
19	0223 28 775	Bush, Rubber	8	
20	0223 28 776	Retainer	8	
21	0259 28 778	Grommet	2	
22	99921 1000	Nut, Rear Damper	4	
	99922 1000	Nut	4	
23	0223 28 777	Washer, Centering	4	
24	0899 28 320	Bumper, Bound	2	

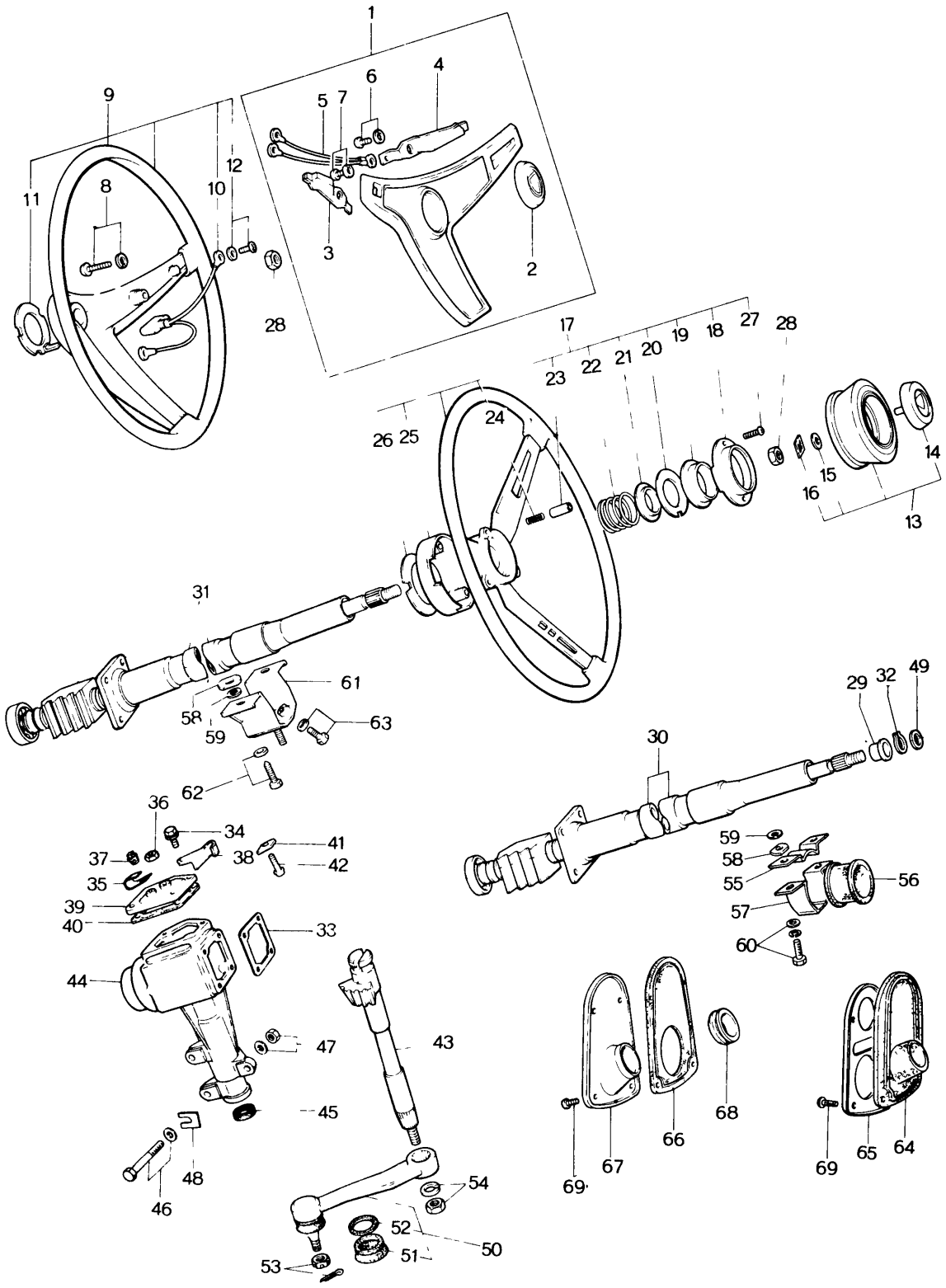
1
2
3
4
5
6
7
8
9
10
11
12
13
14
15
16
17
18
19
20
21
22
23
24
25
26
27
28
29
30
31
32
33
34
35
36
37
38
39
40
41
42
43
44
45
46
47
48
49
50
51
52
53
54
55
56
57
58
59
60
61
62
63
64
65
66
67
68
69

No	Part Number	Description		Q'ty	Remarks
1	0865 32 800-00	Cap, Horn (BLK.)		1	
	1570 32 800-00	Cap, Horn (BLK.)		1	Car No. 100097 $^{72}/_{3}$ ~ O 101005
2	1570 32 811	Emblem		1	
3	0370 32 030	Button, Horn		2	
	0370 32 030A	Button (L), Horn		1	Car No. 101834 $^{72}/_{4}$ ~ X 104336
4	0370 32 090	Button (R), Horn	(Sedan & Station Wagon)	1	Car No. 101834 $^{72}/_{4}$ ~ Added Anew 104336
5	0370 32 037	Cord		1	
6	99833 0408	Screw, Cap		2	
	99971 0400	Washer, Spring		2	
7	99868 0410	Screw, Tapping		2	
	99971 0400	Washer, Spring		2	
8	99868 0420	Screw, Horn Cap		3	
	99971 0400	Washer, Spring		3	
9	0370 32 980-00	Boss, Steering Wheel (BLK.)		1	
10	0370 32 039	Cord		1	
~~11~~	~~0370 32 820~~	~~Terminal~~	(Sedan & Station Wagon)	~~1~~	
12	99868 0308	Screw, Cord		2	
	99971 0300	Washer, Spring		2	

No	Part Number	Description		Q'ty	Remarks
13	1562 32 800-00	Cap, Horn (BLK.)	(Coupe)	1	
14	1562 32 811	Emblem		1	
15	0223 58 472	Washer, Emblem		1	
16	99579 3000	Nut, Speed - Emblem		1	
17	1652 32 980	Boss, Steering Wheel	(Coupe)	1	
	1562 32 980A	Boss, Steering Wheel		1	Car No. 122652 $^{72}/_{12}$ ~ O
18	0329 32 031A	Retainer, Sub		1	
19	0329 32 013A	Retainer, Cap		1	
20	0329 32 016	Plate, Contact		1	
21	0329 32 015	Insulator		1	
22	0329 32 014	Spring		1	
23	0329 32 033	Pipe		1	
24	0329 32 019	Spring		1	
25	1562 32 049	Cover, Wheel Core		1	
26	0329 32 034	Terminal		1	
27	99866 0420	Screw		3	
28	99947 1200	Nut, Self Lock - Wheel & Shaft		1	
•	99948 1200	Nut, Self Lock - Wheel & Shaft		1	$^{73}/_{8}$ ~ O

	No	Part Number	Description		Q'ty	Remarks
•		1540 32 110B	Gear, Steering		1	Used up till 147868 ~ 73/8 152370
		1632 32 110	Gear, Steering		1	Non-serviced Part ☆
	29	0259 32 071	Bush, Support		1	
	30	1540 32 100A	Shaft, Energy Absorbing		1	
•	31	1632 32 100	Shaft, Energy Absorbing		1	Car No. 147868 73/8 ~ X 152370
	32	0208 32 059	Ring, Stop - Shaft		1	
•	33	0259 32 154	Shim, End Cover (t = 0.05)	Selective use	1	
		0259 32 155	Shim (t = 0.075)			
		0259 32 156	Shim (t = 0.1)			
		0259 32 157	Shim (t = 0.2)			
	34	99801 0816	Bolt, End Cover & Side Cover		8	
		99971 0800	Washer, Spring		8	
	35	99295 0808	Clip		1	
•		99295 1508	Clip		1	Car No. 147868 73/8 ~ X 152370
	36	99922 1000	Nut, Sector Adjuster Screw		1	
	37	99502 2000	Plug, Oil		1	
	38	~~0249 55 556~~	~~Clip~~		~~1~~	
•		0259 55 556	Clip		1	From Car No. 1
	39	0259 32 160	Cover, Side		1	
	40	0259 32 163	Gasket, Side Cover		1	

No	Part Number	Description		Q'ty	Remarks
41	0180 32 171A	Shim, Adjust (t = 1.95)			
	0180 32 172A	Shim, Adjust (t = 2.00)	Selective use	1	
	0180 32 173A	Shim, Adjust (t = 2.05)			
	0180 32 174A	Shim, Adjust (t = 2.10)			
42	0180 32 165A	Screw, Sector Adjust		1	
43	0866 32 141	Shaft, Sector		1	
● 44	1524 32 121A	Housing, Gear		1	
45	0317 32 129	Seal, Oil		1	
●	1128 32 129	Seal, Oil		1	$^{73}/_{8}$ ~ ○
46	99781 1085	Bolt, Gear Housing		3	
	0305 32 119	Washer, Plain		3	
47	99942 1000	Nut, Gear Housing		3	
	99942 1001	Nut, Gear Housing		3	Car No. 103018 $^{72}/_{4}$ ~ ○ 106415
	99951 1022	Washer, Plain		2	
48	0208 32 188	Shim, Adjust - Steering Gear Housing		–	
49	0820 32 058	Washer, Stop - Selective use		–	
50	1524 32 220	Arm, Pitman		1	
51	0730 32 279	Seal, Dust		1	

No	Part Number	Description	Q'ty	Remarks
52	0259 32 289	Ring, Set	1	
	~~0189 32 289~~	~~Ring, Set~~	~~1~~	~~Car No. 122166 72/12 ~ O 122652~~
●	0187 32 289	Ring, Set	1	Car No. 122166 72/12 ~ O 122652
53	99924 1000	Nut, Pitman Arm & Center Link	1	
	99221 2020	Pin, Split	1	
54	99921 1800	Nut, Pitman Arm & Sector Shaft	1	
	99971 1800	Washer, Spring	1	
● 55	0866 32 425	Bracket, Upper - Shaft Jacket	1	Car No. 147865 73/8 ~ Discarded 152369
● 56	2244 32 423	Rubber, Fixing - Shaft Jacket	1	
● 57	0866 32 420	Bracket, Lower - Shaft Jacket	1	
58	0259 43 088	Sheet, Fixing Bracket	2	
59	99952 0800	Washer, Plain - Selective use	–	
● 60	99799 0835	Bolt, Fixing Bracket	2	Car No. 100097 102307 72/3 ~ O / Car No. 147865 152369 73/8 ~ Discarded
●	99786 0825	Bolt, Fixing Bracket	2	
●	99952 0800	Washer, Plain	2	
●	99971 0800	Washer, Spring	2	
● 61	1632 32 420	Bracket	1	Car No. 147866 73/8 ~ Added Anew 152370
● 62	99786 0835	Bolt, Bracket	2	
●	99952 0800	Washer, Plain	2	

No	Part Number	Description	Q'ty	Remarks
• 63	99801 0810	Bolt, Bracket	4	Car No. 147866 73/8 ~ 152370 Added Anew
•	99971 0800	Washer, Spring	4	
• 64	0866 32 411	Cover, Dust	1	Car No. 147865 73/8 ~ 152369 Discarded
• 65	0370 32 412	Plate, Set	1	
• 66	1632 32 411	Rubber, Seal	1	Car No. 147866 73/8 ~ 152370 Added Anew
• 67	1632 32 412	Plate, Set	1	
• 68	1097 32 413	Cover, Dust	1	
69	99869 0512	Screw, Set Plate	4	
•	~~0820 32 058~~	~~Washer, Stop - Selective use~~		~~Car No. 103115 72/5 ~ 106593 Added Anew~~

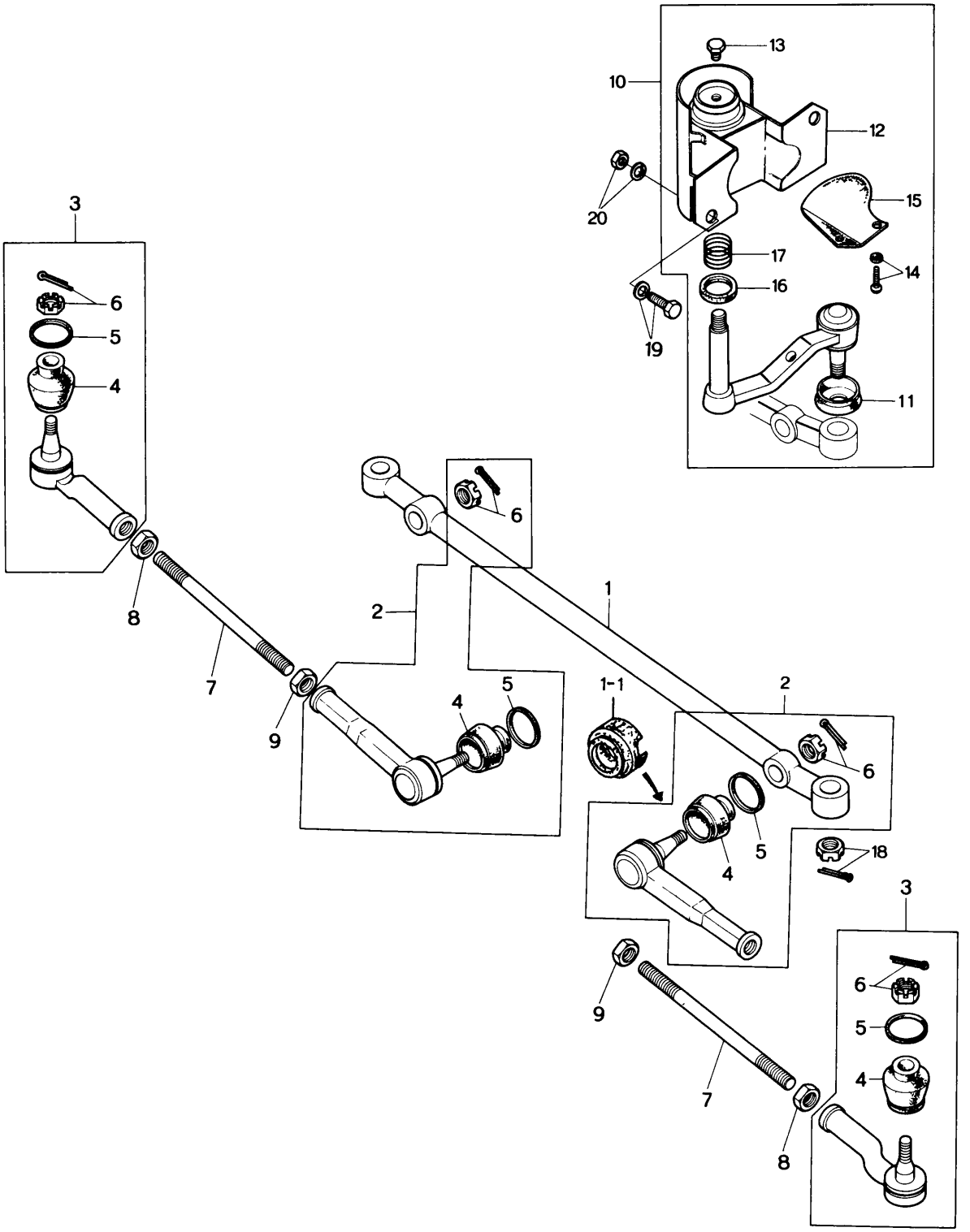
13
10
12
20
15
17
14
16
19
11
3
6
5
4
8
7
9
6
2
1
5
4
1-1
2
6
5
4
18
3
6
5
4
9
7
8

No.	Part Number	Description	Q'ty	Remarks
1	1524 32 261	Link, Center	1	
1 - 1	1562 32 269	Protector	1	From Car No. 1
2	1524 99 322	Socket Set	2	
3	1524 99 324	Socket Set	2	
4	0730 32 279	Seal, Dust	4	
5	0259 32 289	Ring, Set	4	
6	99924 1000	Nut	4	
	99221 2020	Pin, Split	2	
	99221 2015	Pin, Split	2	
7	0305 32 365	Rod, Tie	2	
8	99922 1400	Nut	2	
9	99944 1400	Nut	2	
10	1562 32 320B	Idler	1	
●	1562 32 320C	Idler	1	Car No. 124401 73/1 ~ 124922 ○
●	~~1562 32 320D Idler~~		~~1~~	~~Car No. 130341 73/3 ~ 131803 △~~
11	0866 32 279	Seal, Dust	1	
12	1562 32 330C	Bracket	1	
13	0208 32 278	Plug	1	
14	99833 0408	Screw	2	
	99971 0400	Spring, Washer	2	
15	0866 32 230	Insulator	1	
16	2113 32 356	Oil Seal	1	
17	0111 32 173	Spring	1	

No.	Part Number	Description	Q'ty	Remarks
18	99824 1000	Nut, Idler & Center Link	1	
	99221 2015	Pin, Split	1	
19	99781 1080	Bolt, Idler	2	
	0305 32 119	Washer, Plain	4	
20	99921 1000	Nut	2	
	99971 1000	Washer, Spring	2	

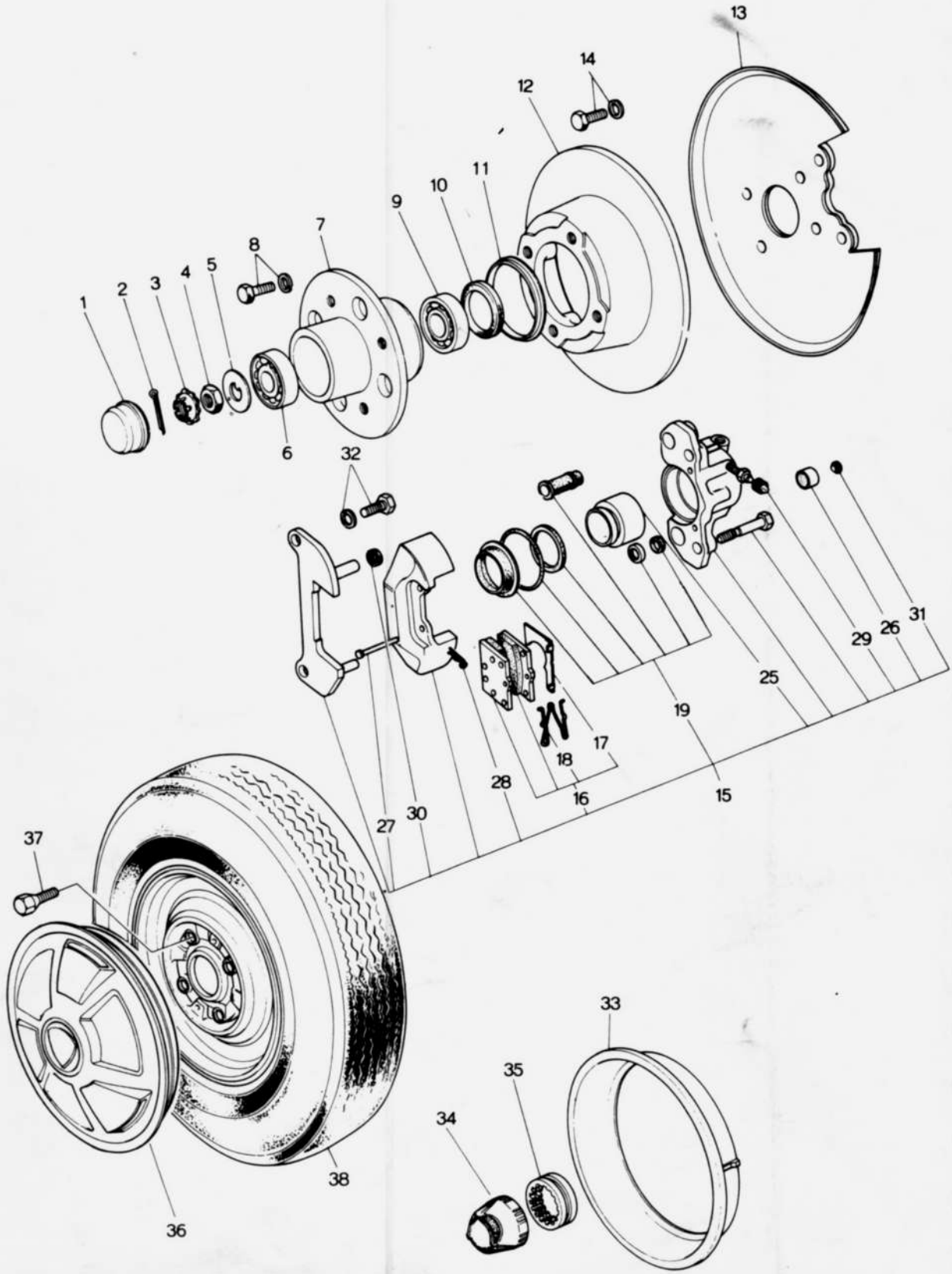
1
2
3
4
5
6
7
8
9
10
11
12
13
14
15
16
17
18
19
25
26
27
28
29
30
31
32
33
34
35
36
37
38

No.	Part Number	Description	Q'ty	Remarks
1	0259 33 071	Cap, Hub	2	
◀2	99221 4030	Pin, Split	2	
3	0317 33 049	Cover, Set	2	
4	0662 33 042	Nut	2	
5	0317 33 043	Washer	2	
●	1011 33 043	Washer	2	Car No. 127040 73/2 ~ ○ 128211
6	0317 33 075	Bearing, Wheel ·Outer	2	
7	0820 33 091A	Hub, Front	2	
8	0221 33 698	Bolt, Hub	8	
	99971 1000	Washer, Spring	8	
9	0259 33 047	Bearing, Wheel Inner	2	
10	0398 33 065	Oil Seal	2	
11	0221 33 035	Ring, Dust	2	
12	0866 33 251	Plate, Disc	2	
●	0866 33 251A	Plate, Disc	2	Car No 131699 73/3 ~ ○ 133873
13	0866 33 260	Adapter (R), Mounting	1	
	0866 33 270	Adapter (L), Mounting	1	
14	99811 1018	Bolt, Mounting Adapter	8	
●	99811 1020	Bolt, Mounting Adapter	8	Car No. 106225 72/8 ~ ○ 108577
	99971 1000	Washer, Spring	8	
15	0870 33 980A	Brake (R), Disc	1	
	0870 33 990A	Brake (L), Disc	1	
16	0870 49 230A	Pad Set	1	
17	0866 49 231	Shim (R)	1	
	0866 49 232	Shim (L)	1	
18	0866 49 235	Spring	2	
19	0866 49 240	Seal Kit	1	

No.	Part Number	Description	Q'ty	Remarks
20	~~0866 49 242~~	~~Seal, Dust~~	~~2~~	
21	~~0866 49 243~~	~~Ring, Retaining~~	~~2~~	
22	~~0866 49 244~~	~~Bush~~	~~2~~	
23	~~0866 49 245~~	~~Seal, Wiper~~	~~2~~	
24	~~0866 49 246~~	~~Retainer, Seal~~	~~2~~	
	~~0866 49 247~~	~~Grease~~		
	~~0866 49 248~~	~~Grease~~		
25	0866 49 111	Piston	2	
26	0866 49 112	Cap, Piston	2	
27	0866 49 114	Pin	4	
28	0866 49 115	Clip	4	
29	0820 33 893	Cap, Bleeder	2	
30	0866 49 116	Spacer	2	
31	0866 49 117	Plug, Cup	2	
32	997501 1018	Bolt, Disc Brake	4	
	99971 1000	Washer, Spring	4	
33	0820 33 180A	Ring, Wheel-Center Cap use (Coupe)	2	
34	0881 37 181	Cap, Center (Coupe)	2	
35	0820 33 182A	Rubber, Set-Center Cap (Coupe)	2	
36	0866 37 170B	Cap, Wheel (Sedan & Station Wagon)	2	
●	0866 37 170C	Cap, Wheel (Sedan & Station Wagon)	2	Car No. 127040 $^{73}/_{2}$ ~ 128211 Δ
37	0259 33 165	Bolt, Wheel Set (Sedan & Station Wagon)	8	
	0820 33 165	Bolt, Wheel Set-Center Cap use (Coupe)	8	
●	0820 33 165A	Bolt, Wheel Set-Center Cap use (Coupe)	8	Car No. 108472 $^{72}/_{8}$ ~ Δ
38	9962 06 6113	Tire, 6.15—13—4 PR Tubeless	3	
	9962 09 1553	Tire, 155 SR—13 Radial Tubeless	3	

No.	Part Number	Description	Q'ty	Remarks	
	9963 60 4140	Valve, Air	3		
	9965 05 4530	Wheel, 4½—J×13 WDC Disc (Sedan & Station Wagon)	3		©
	9965 06 4530	Wheel, 4½—J×13 WDC, Disc (Coupe)	3		©

FRONT SUSPENSION

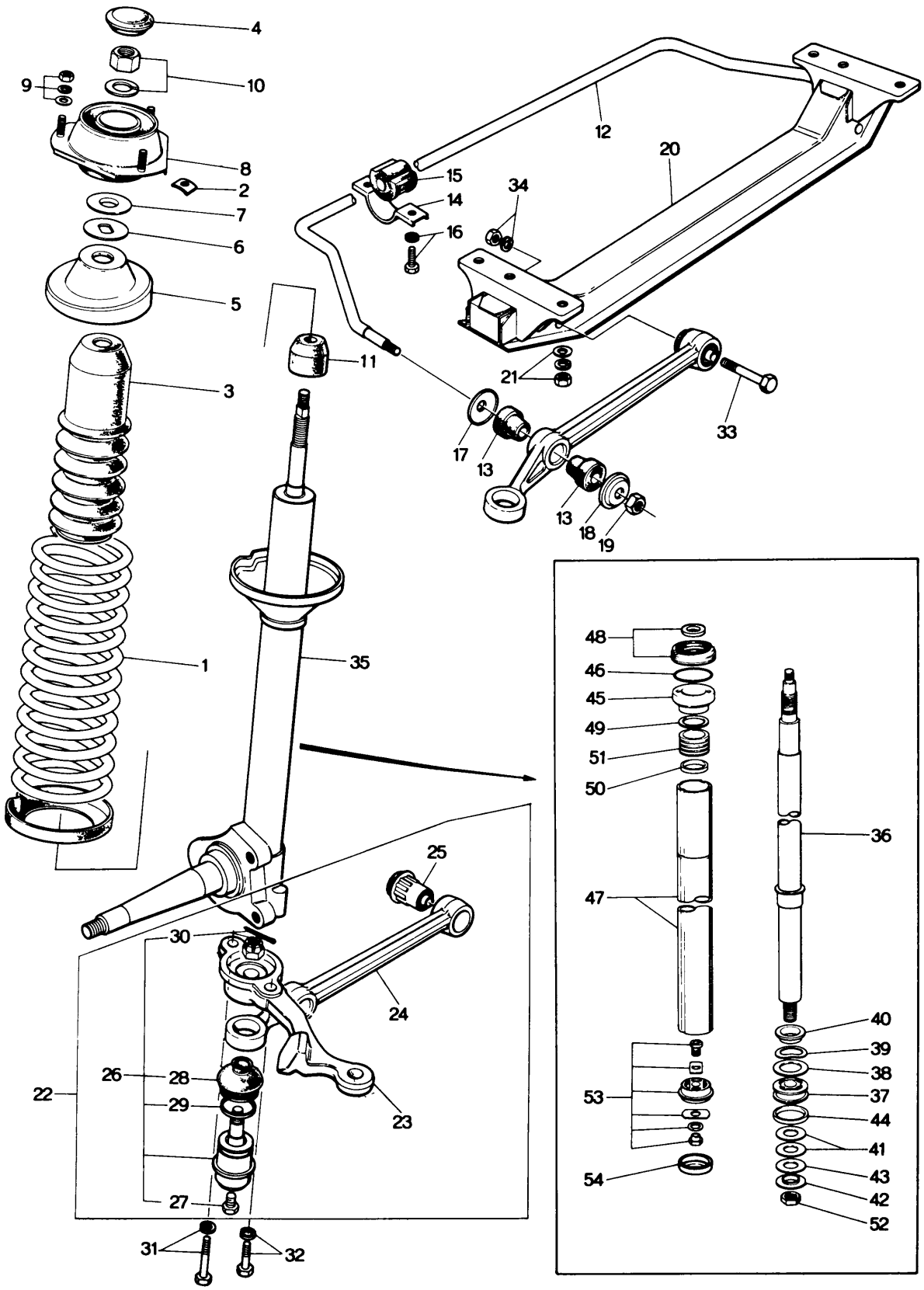

No.	Part Number	Description	Q'ty	Remarks
1	1570 34 011	Spring, Coil	2	
2	0866 34 013A	Plate, Adjusting	2	
3	0866 34 015	Cover, Dust	2	
4	0866 34 019	Cap	2	
5	0866 34 340	Seat, Spring	2	
6	0866 34 381	Bearing	2	
7	0866 34 382	Seat, Bearing	2	
8	0866 34 390	Rubber, Mounting	2	
9	99901 0800	Nut	6	
	99952 0800	Washer, Plain	6	
	99971 0800	Washer, Spring	6	
●	99940 0800	Nut	6	1973 Model
10	99942 1400	Nut	2	
	99952 1400	Washer, Spring	2	
11	0866 34 111	Bumper, Bound	2	
12	0866 34 151A	Stabilizer	1	
13	0866 34 153A	Bush, Rubber - Stabilizer	4	
14	0259 34 155	Plate	2	
15	0259 34 156	Bush, Rubber	2	
16	99783 1035	Bolt, Stabilizer & Frame	4	
	99971 1000	Washer, Spring	4	
17	0866 34 157	Washer, Stabilizer	2	
18	0866 34 158	Washer	2	
19	99947 1400	Nut	2	
20	0866 34 800B	Member, Cross	1	
21	99942 1000	Nut, Cross Member & Frame	4	
	99951 1030	Washer, Plain	4	

No.	Part Number	Description	Q'ty	Remarks
	99971 1000	Washer, Spring	4	
● Ⓝ	1011 34 159	Stopper, Steering	2	Car No. 115991 117996 72/11 ~ Added Anew
22	0866 34 310	Arm (R)	1	
●	0866 34 310A	Arm (R)	1	Car No. 111422 113912 72/10 ~ Δ
	0866 34 320	Arm (L)	1	
●	0866 34 320A	Arm (L)	1	Car No. 111422 113912 72/10 ~ Δ
23	0866 32 301	Arm (R), Knuckle	1	
	0866 32 301A	Arm (R), Knuckle	1	Car No. 100097 102307 72/3 ~ ○
	0866 32 311	Arm (L), Knuckle	1	
	0866 32 311A	Arm (L), Knuckle	1	Car No. 100097 102307 72/3 ~ ○
24	0866 34 311	Arm	2	
●	1011 34 311	Arm	2	Car No. 115775 117901 72/11 ~ ○
25	0866 34 460	Bush	2	
26	0866 99 356	Ball Joint	2	
27	0208 32 278	Plug	2	
28	0243 34 565	Seal, Dust	2	
●	0866 34 565	Seal, Dust	2	Car No. 111422 113912 72/10 ~ Δ
29	0187 34 536	Ring, Dust Seal	2	
30	99221 3020	Pin, Split	2	
	99924 1200	Nut	2	
31	99781 1225	Bolt, Arm & Damper	2	
	99971 1200	Washer, Spring	2	
32	99781 1235	Bolt, Arm & Damper	2	
	99971 1200	Washer, Spring	2	
33	0866 34 313A	Bolt, Arm & Cross Member	2	
34	99921 1000	Nut, Arm	2	
	99971 1000	Washer, Spring	2	

No.	Part Number	Description	Q'ty	Remarks
35	0866 34 910A	Damper, Front (R)	1	
●	0866 34 910C	Damper, Front (R)	1	Car No. 115327 72/11 ~ 117725 ○
	0866 34 960A	Damper, Front (L)	1	
●	0866 34 960C	Damper, Front (L)	1	Car No. 115327 72/11 ~ 117725 ○
36	0866 34 710	Rod, Piston	2	
37	0305 34 701A	Piston	2	
38	0259 34 705	Valve, Check	2	
39	0305 34 707	Spring, Check Valve	2	
40	0259 34 708	Washer	2	
41	0259 34 712	Valve	12	
42	0305 34 713	Washer	2	
43	0305 34 714	Valve	2	
44	0259 34 719A	Ring, Piston	2	
45	0866 34 730	Guide, Piston Rod	2	
46	0183 34 731	Ring, "O"	2	
47	0866 34 732	Tube, Pressure	2	
48	0866 34 760	Oil Seal	2	
	0866 34 735	Oil Seal	2	
49	0259 34 767	Ring	2	
50	0259 34 768	Guide, Stopper	2	
51	0259 34 769B	Stopper	2	
52	0305 34 709	Nut	2	
53	0305 34 720	Valve Base	2	
54	0866 34 738	Cap	2	
	0259 99 361	Piston Set, Fig. No. 45,46,48~51 Included		
	0317 99 362	Seal Set, Fig. No 37~44,52 Included		

ENGINE & T/MISSION BRACKET

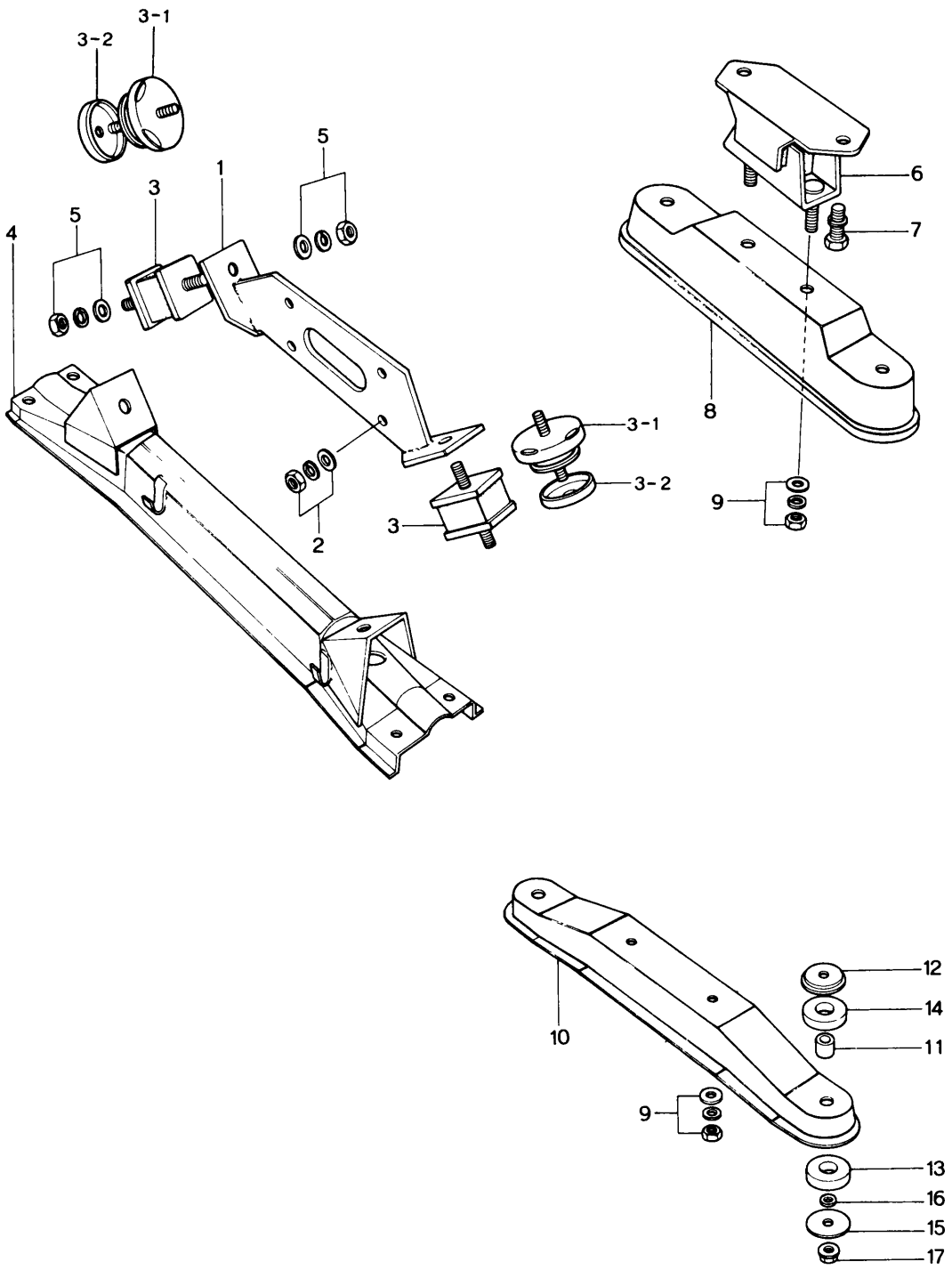

ENGINE & T/MISSION BRACKET

No.	Part Number	Description	Q'ty	Remarks	Price
1	0866 39 020	Bracket, Engine Mounting	1		
●	1622 39 020	Bracket, Engine Mounting	1	Car No. 106225 72/8 ~ 108577 Δ	
2	99921 1000	Nut, Bracket & Engine	4		
	99971 1000	Washer, Spring	4		
3	0866 39 040A	Rubber, Engine Mounting	2		
	0866 39 040B	Rubber, Engine Mounting	2	Car No. 102578 72/4 ~ 105619 X	
● 3-1	1668 39 040	Rubber, Engine Mounting	2	Car No. 106225 72/8 ~ 108577 Δ	
●	1668 39 040C	Rubber, Engine Mounting	2	Car No. 128662 73/2 ~ 129860 O	
● 3-2	1668 39 045	Casing-Stopper	2	Car No. 106225 72/8 ~ 108577 Added Anew	
●	1668 39 045A	Casing-Stopper	2	Car No. 128662 73/2 ~ 129860 O	
4	0866 39 060B	Member, Engine Mounting	1		
5	99921 1000	Nut, Member & Rubber	4		
	99951 1030	Washer, Plain	4		
	99971 1000	Washer, Spring	4		
6	0259 39 340	Rubber, T/mission Mounting	1		
●	1011 99 340A	Rubber, T/mission Mounting	1	Car No. 133022 73/4 ~ 135861 O	
●	0259 39 340	Rubber, T/Mission Mounting	1	Car No. 133570 73/4 ~ 136580 X	
7	99801 0818	Bolt, Rubber & T/mission	2	1972 Model	
	99971 0800	Washer, Spring	2	1972 Model	
	908012 8 18	Bolt	2	1973 Model	

ENGINE & T/MISSION BRACKET

No.	Part Number	Description	Q'ty	Remarks	Price
8	1570 39 380	Member, T/mission Mount (4 Speed)	1		
	1621 39 380	Member, T/mission Mount (Automatic)	1		
9	99921 1000	Nut, Member & Rubber	4		
	99951 1030	Washer, Plain	4		
	99971 1000	Washer, Spring	4		
10	1608 39 381	Member, T/mission Mount	1	(5 Speed)	
11	0884 39 382A	Spacer	2		
12	0884 38 383A	Washer	2		
13	0884 39 384	Insulator-Lower	2		
14	0884 39 385A	Insulator-Upper	2		
15	0884 39 386	Washer	2		
16	0884 39 387	Washer	2		
17	99940 1002	Nut, Member	2		

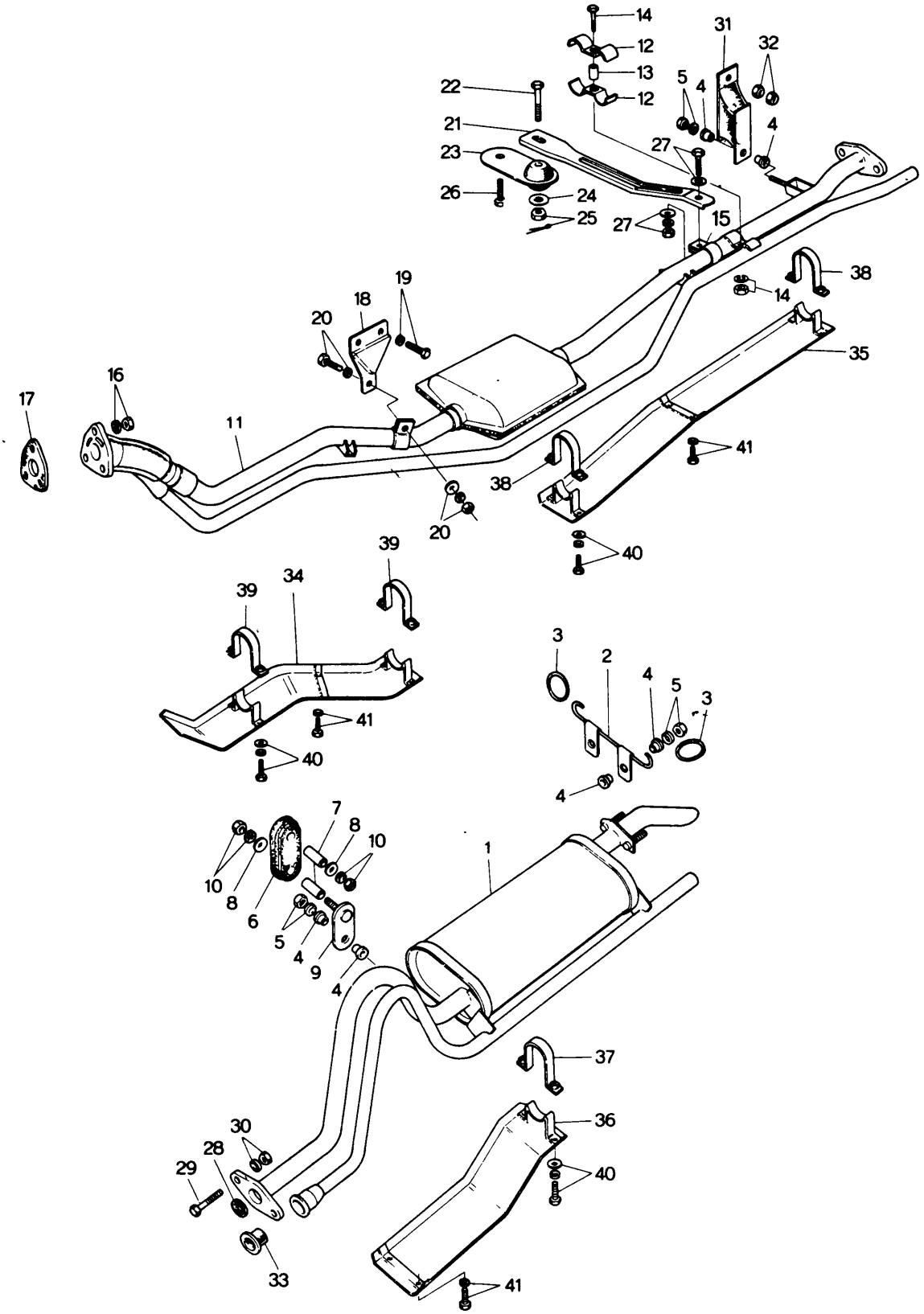
14
12
13
12
22
21
23
26
24
25
27
31
32
5
4
4
27
15
38
14
35
41
19
18
20
16
17
11
20
38
40
39
39
34
41
40
3
2
4
5
3
4
7
8
10
10
8
6
5
4
9
4
1
37
36
40
30
28
29
33
41

No.	Part Number	Description	Q'ty	Remarks
1	1570 40 500	Silencer, Main (Sedan & Coupe)	1	1972 Model
●	1620 40 500	Silencer, Main (Sedan & Coupe)	1	1973 Model
	1571 40 500	Silencer, Main (Station Wagon)	1	1972 Model
●	1624 40 500	Silencer, Main (Station Wagon)	1	1973 Model
2	0839 40 060B	Hook (Sedan & Coupe)	1	
	0866 40 060	Hook (Station Wagon)	1	
3	0305 40 061	Hanger, Silencer	2	
4	0824 40 401	Insulator	8	
5	99949 0800	Nut, Silencer Hanger	4	
	99951 0822	Washer, Plain	4	
6	0820 40 161	Hanger, Silencer	1	
7	0820 40 165	Pipe, Silencer Hanger	2	
8	0820 40 166	Washer, Silencer Hanger	2	
9	0820 40 170	Plate, Silencer Hanger	1	
10	99901 0800	Nut, Silencer Hanger	2	
●	99940 0800	Nut, Flange-Silencer Hanger	2	Car No. 103632 7/6 ~ 107711
	99971 0800	Washer, Spring	2	Car No. 103632 7/6 ~ 107711 Discarded
11	1570 40 600A	Pipe, EX.-Front (1972 Model)	1	
	1570 40 600B	Pipe, EX-Front (1972 Model)	1	Car No. 101489 7/3 ~ 103956
●	1620 40 600	Pipe, EX.-Front 1973 Model	1	
12	1570 40 307	Clamp	2	
13	1570 40 308	Pipe	1	
14	99806 0640	Bolt	1	
	99971 0600	Washer, Spring	1	
	99906 0600	Nut	1	
15	~~0838 40 352A~~	~~Joint~~	~~1~~	
16	2158 40 355	Nut, Reactor & EX. Pipe	3	

No.	Part Number	Description	Q'ty	Remarks
	99971 1000	Washer, Spring	3	
17	1570 13, 891	Gasket, Reactor & EX. Pipe	1	
18	0866 40 081A	Bracket	1	
●	1620 40 080	Bracket	1	1973 Model
19	99801 0820	Bolt, Bracket	2	
	99971 0800	Washer, Spring	2	
●	908012 8 18	Bolt, Set-Bracket	2	1973 Model
20	99801 0832	Bolt, EX. Pipe & Bracket	1	
	99951 0818	Washer, Plain	1	1973 Model
	99901 0800	Nut	1	1972 Model
	99971 0800	Washer, Spring	1	
● 21	~~1570 40 071~~	~~Bracket~~	~~1~~	
● 22	~~99802 0835~~	~~Bolt, Bracket & Silencer Hanger~~	~~1~~	
● 23	~~0111 40 080~~	~~Hanger, Silencer~~	~~1~~	
● 24	~~0884 38 384~~	~~Washer, Silencer Hanger~~	~~1~~	
● 25	~~00000 0000~~	~~Nut, Silencer Hanger~~	~~1~~	
●	~~99221 2015~~	~~Pin, Split~~	~~1~~	
26	99786 0816	Bolt, Silencer Hanger	1	
● 27	~~99801 0820~~	~~Bolt, Bracket & EX. Pipe~~	~~1~~	
●	~~99951 0818~~	~~Washer, Plain~~	~~2~~	
●	~~99971 0800~~	~~Washer, Spring~~	~~1~~	
●	~~99901 0800~~	~~Nut~~	~~1~~	
28	0810 40 356	Gasket, Flange	1	
29	99801 1045	Bolt, EX. Pipe & Main Silencer	2	
30	2158 40 355	Nut, EX. Pipe & Main Silencer	2	
	99971 1000	Washer, Spring	2	
31	0820 40 180	Hanger, Silencer	1	
32	99901 0800	Nut, Silencer Hanger	1	

No.	Part Number	Description	Q'ty	Remarks
	99902 0800	Nut	1	
33	2090 40 508A	Rubber, Joint	1	
34	1570 40 810	Protector No. 1	1	
	1620 40 810	Protector No. 1	1	1973 Model
35	1570 40 820A	Protector No. 2	1	
	1570 40 820B	Protector No. 2	1	Car No. 102427 ~ 105349
36	~~1570 40 830~~	~~Protector No. 3~~	~~1~~	
37	~~2020 40 500~~	~~Band, Protector~~	~~1~~	
38	1570 40 850	Band, Protector	2	
39	2090 40 850	Band, Protector	2	
	1669 40 850	Band, Protector	1	1973 Model
40	99805 0520	Bolt, Protector	8	
	99952 0516	Washer, Plain	8	
	99971 0500	Washer, Spring	8	
41	99860 0520	Bolt, Protector	4	
	99952 0516	Washer, Plain	4	

FUEL TANK (SEDAN & COUPE)

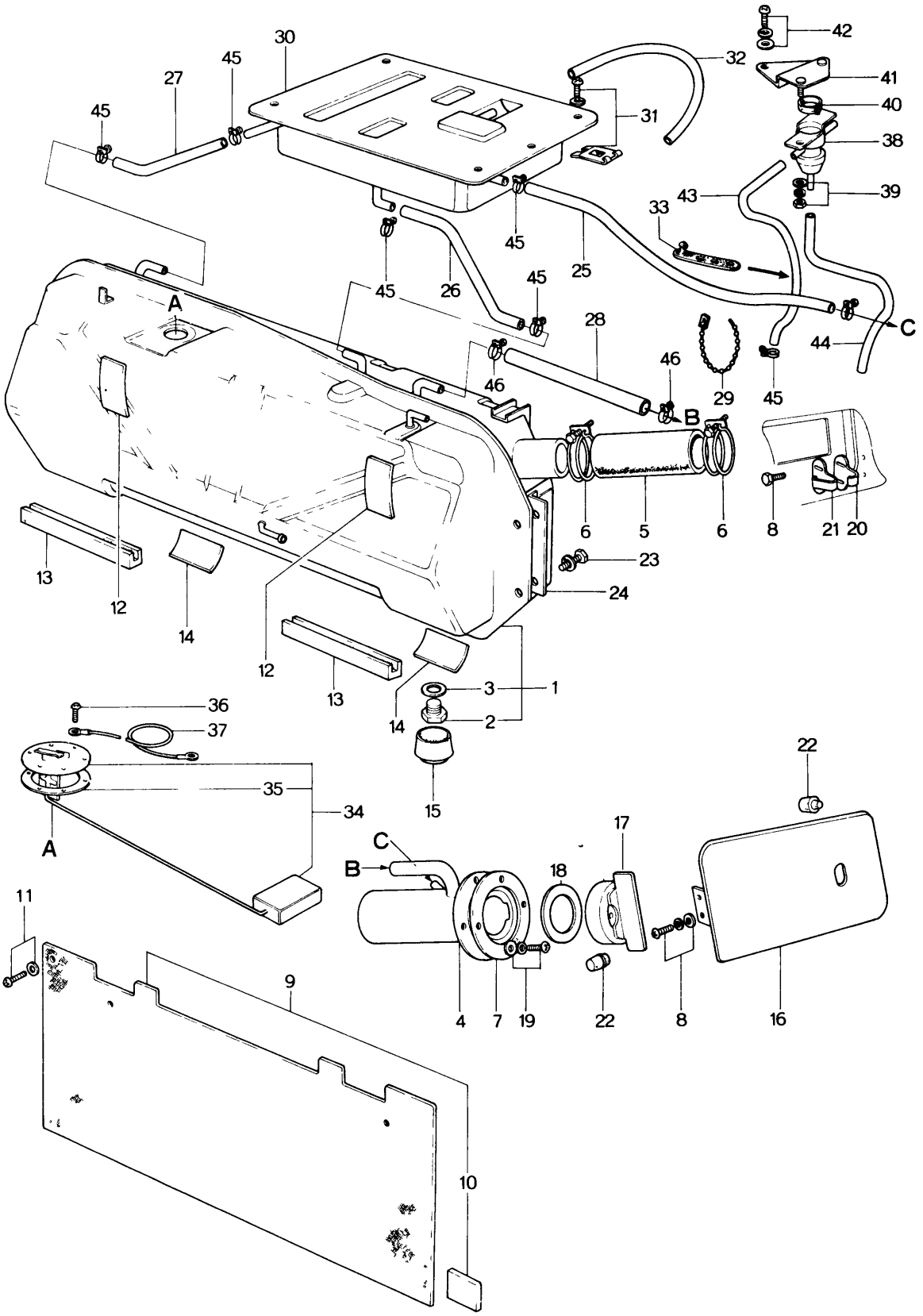

No.	Part Number	Description	Q'ty	Remarks
1	1570 42 310	Tank, Fuel	1	
	1570 42 310A	Tank, Fuel	1	Car No. ~~100097~~ 101005 $^{72}/_{3}$~○
●	1570 42 310B	Tank, Fuel	1	Car No. 124434 $^{73}/_{1}$~△
2	0114 42 046A	Plug, Drain	1	
3	99564 1200	Packing	1	
4	0866 42 350	Pipe, Filler	1	
	0866 42 350A	Pipe, Filler	1	Car No. ~~100097~~ 101005 $^{73}/_{3}$~○
●	0866 42 350B	Pipe, Filler	1	Car No. 124434 $^{73}/_{1}$~△
5	0259 42 364	Hose, Joint	1	
6	99282 5500	Clamp	2	
7	0866 42 366	Packing, Inlet Pipe	1	
8	99804 0516	Screw	4	
●	99786 0516	Screw	4	Car No. 102307 $^{72}/_{3}$~(
●	99971 0500	Washer, Spring	4	Car No. 102307 $^{72}/_{3}$~Discarded
● 9	~~1570 42 380~~	~~Board, Partition~~	~~1~~	~~From Car No. 1~~
●	1570 42 380	Board, Partition	1	From Car No. 1
10	0866 42 382	Spacer	4	
11	99863 0412	Screw, Tapping	2	
12	0866 42 523	Pad, Fuel Tank "C"	2	
13	0866 42 521	Pad, Fuel Tank "A"	2	
14	0866 42 522	Pad, Fuel Tank "B"	2	
15	0187 42 371	Rubber, Dust Seal	1	
16	0376 42 410	Lid, Filler (Coupe)	1	
	0866 42 410	Lid, Filler (Sedan)	1	

42 FUEL TANK (SEDAN & COUPE)

No.	Part Number	Description	Q'ty	Remarks
17	2280 42 460	Cap, Filler	1	
●	2280 42 460A	Cap, Filler	1	Car No. 124434 $^{73}/_{1}$ ~○
18	2280 42 462	Gasket	1	
●	2280 42 462A	Gasket	1	Car No. 117725 $^{72}/_{11}$ ~○
19	99804 0516	Screw, Filler Pipe	4	
	99786 0516	Screw, Filler Pipe	4	Car No. 102307 $^{72}/_{3}$~○
	99971 0500	Washer, Spring	4	Car No. 102307 $^{72}/_{3}$~Discarded
	99952 0500	Washer, Plain	4	Car No. 102307 $^{72}/_{3}$~Discarded
20	0866 42 552	Plate, Back Up	1	
21	0866 42 551	Plate, Lock	1	
22	0110 52 265	Rubber, Cushion	2	
23	99804 0825	Bolt, Tank	4	
	99971 0800	Washer, Spring	4	
	99952 0822	Washer, Plain	4	
24	0866 42 561	Washer	2	
25	1540 42 542	Tube, Vent	1	
26	2691 42 398	Tube, Vent	1	
●	99340 60160	Tube, Vent	1	Car No. 120913 $^{72}/_{12}$ ~○
27	1540 42 541	Tube, Vent	1	
	2691 42 396	Tube, Vent	1	1973 Model
28	99336 12040	Pipe, Vinyl	1	
29	99709 0108	Band	2	
	99709 0255	Band	1	1973 Model
30	1540 42 610A	Tank, Condense	1	
●	1540 42 610B	Tank, Condense	1	Car No. 124434 $^{73}/_{1}$ ~△
31	99863 0512	Screw, Tank	4	
	99952 0500	Washer, Plain	4	
	99896 0500	Nut, Spring	4	
32	2850 42 348A	Tube, Vent	1	
	2691 42 397	Tube, Vent	1	1973 Model
33	0187 66 991	Clip, Rubber	1	

No.	Part Number	Description	Q'ty	Remarks
34	0866 67 170	Gauge, Fuel Tank	1	
35	0243 66 773	Gasket	1	
36	99833 0410	Screw, Fuel Tank Gauge	1	
	99833 0408	Screw	5	
● 37	~~0866 67 175~~	~~Cord, Earth~~	~~1~~	
●	0866 67 176	Cord, Earth	1	From Car No. 1
38	2691 42 710A	Valve, Check	1	1973 Model
39	99906 0500	Nut, Check Valve	2	
	99952 0500	Washer, Plain	2	
	99971 0500	Washer, Spring	2	
40	2691 42 716	Element	1	
41	2691 42 750	Bracket	1	
42	908336 5 12	Screw, Set-Bracket	1	
43	2694 42 394	Tube, Vent	1	
44	1540 42 570	Tube, Vent	1	
45	99282 1201	Clamp, Hose	7	
46	99282 2001	Clamp, Hose	2	

FUEL TANK (STATION WAGON)

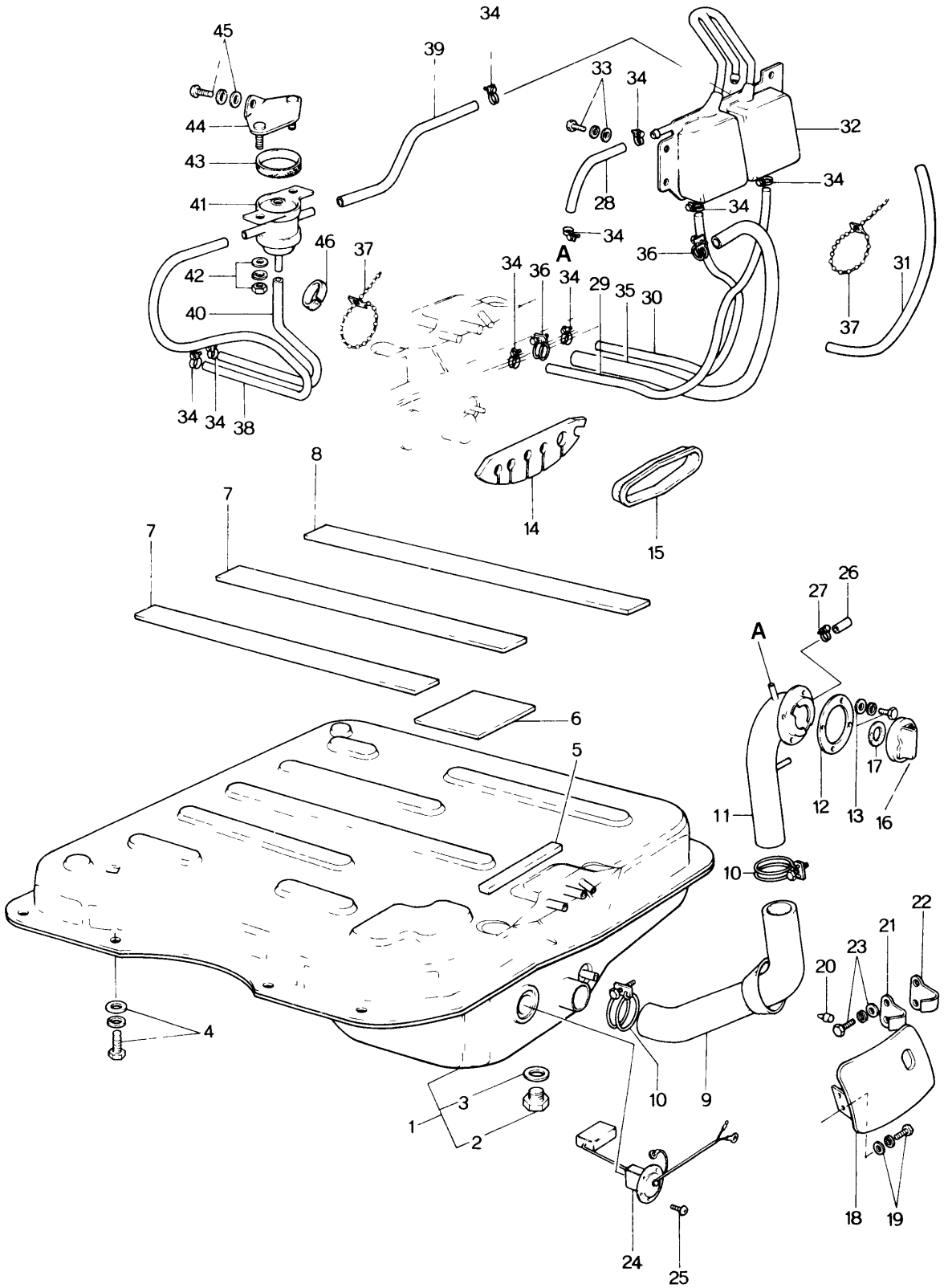

No.	Part Number	Description	Q'ty	Remarks
1	0899 42 310C	Tank, Fuel	1	
●	0899 42 310D	Tank, Fuel	1	Car No. 127040 $^{73}/_{2}$ ~ ○
2	0114 42 046A	Plug, Drain	1	
3	99564 1200	Gasket	1	
4	99795 1020	Bolt, Fuel Tank	8	
	99952 1000	Washer, Plain	8	
	99971 1000	Washer, Spring	8	
5	0585 42 303	Spacer	1	
6	0652 42 304	Pad	4	
7	0585 42 305	Pad	2	
8	0621 42 374	Spacer	1	
●	0585 42 305	Pad	1	Car No. 123972 $^{73}/_{1}$ ~ ○
9	0585 42 307	Hose, Joint	1	
10	99282 6000	Clamp, Hose	2	
11	0585 42 350	Pipe, Filler	1	
12	0866 42 366	Gasket	1	
13	99804 0516	Bolt, Filler Pipe	4	
	99786 0616	Screw, Tapping-Filler Pipe	4	Car No 104518 $^{73}/_{1}$ ~ ○
	99952 0500	Washer, Plain	4	Car No. 104518 $^{73}/_{1}$ ~ Discarded
	99971 0500	Washer, Spring	4	
14	0899 42 302	Protector	1	
	1544 42 302A	Protector	1	1973 Model
15	0585 42 306	Protector	1	
16	2280 42 460	Cap, Filler	1	
●	2280 42 460A	Cap, Filler	1	Car No. 123972 $^{73}/_{1}$ ~ ○
17	2280 42 462	Gasket, Filler Pipe	1	
●	2280 42 462A	Gasket, Filler Pipe	1	Car No. 115327 $^{72}/_{11}$ ~ ○

42 FUEL TANK (STATION WAGON)

No.	Part Number	Description	Q'ty	Remarks
18	0585 42 410	Lid, Filler	1	
19	99804 0516	Bolt, Filler Lid	2	
	99786 0516	Screw, Tapping-Filler Lid	2	Car No. 100097 ~~101005~~ ~○
	99952 0500	Washer, Plain	2	Car No. 100097 ~~101005~~ ~Discarded
	99971 0500	Washer, Spring	2	
20	0110 52 285	Rubber, Cushion	2	
21	0866 42 551	Plate, Lock	1	
22	0866 42 552	Plate, Back Up	1	
23	99804 0516	Bolt, Plate	2	
	99786 0516	Screw, Tapping-Plate	2	Car No. 100097 ~~101005~~ ~○
	99952 0500	Washer, Plain	2	Car No. 100097 ~~101005~~ ~Discarded
	99971 0500	Washer, Spring	2	
24	0899 67 170B	Gauge, Fuel Tank	1	
25	99833 0408	Screw, Fuel Tank Gauge	5	
	99833 0410	Screw	1	
26	0223 42 307	Cap	2	
27	99282 1401	Clip, Wire-Cap	2	
28	2432 42 391A	Tube, Vent-Condense Tank ~ Filler Pipe	1	
29	1544 42 613	Tube, Vent-Condense Tank ~ Fuel Tank	1	
30	1544 42 614	Tube, Vent-Condense Tank ~ Fuel Tank	1	
31	2434 42 394	Tube, Vent-Condense Tank ~ Evaporation Pipe	1	1972 Model
	2435 42 392B	Tube, Vent-Condense Tank ~ Evaporation Pipe	1	Car No. 103115 ~~106593~~ ~○
32	1544 42 610A	Tank, Condense	1	
	1544 42 610B	Tank, Condense	1	Car No. 104518 ~~108388~~ ~△
33	99781 0616	Bolt, Condense Tank	2	
	99952 0600	Washer, Plain	2	
	99971 0600	Washer, Spring	2	
	907860 6 16	Bolt, Set-Condense Tank	2	1973 Model
34	99285 0600	Clip, Wire-Vent Tube	4	
	99282 1201	Band, Hose-Vent Tube	4	Car No. 101834 ~~104336~~ ~○
35	99336 10070	Tube, Fuel Tank ~ Filler Pipe	1	
36	99282 1801	Clamp, Tube	2	
37	99709 0255	Band, Vent Tube	2	

No.	Part Number	Description	Q'ty	Remarks
38	2435 42 3928	Tube, Vent	1	
39	2691 42 397	Tube, Vent	1	
40	1540 42 570	Tube, Vent	1	
41	2691 42 710A	Valve, Check	1	
42	99906 0500	Nut, Check Valve	2	
	99952 0500	Washer, Plain	2	1973 Model
	99971 0500	Washer, Spring	2	
43	2691 42 716	Element	1	
● 44	~~2694 42 760~~	~~Bracket, Check Valve~~	~~1~~	
●	2694 42 750	Bracket, Check Valve	1	From Car No. 1
45	908336 5 12	Screw, Set - Bracket	1	
46	0187 66 991	Clip, Rubber	1	

FUEL PIPING (SEDAN & COUPE)

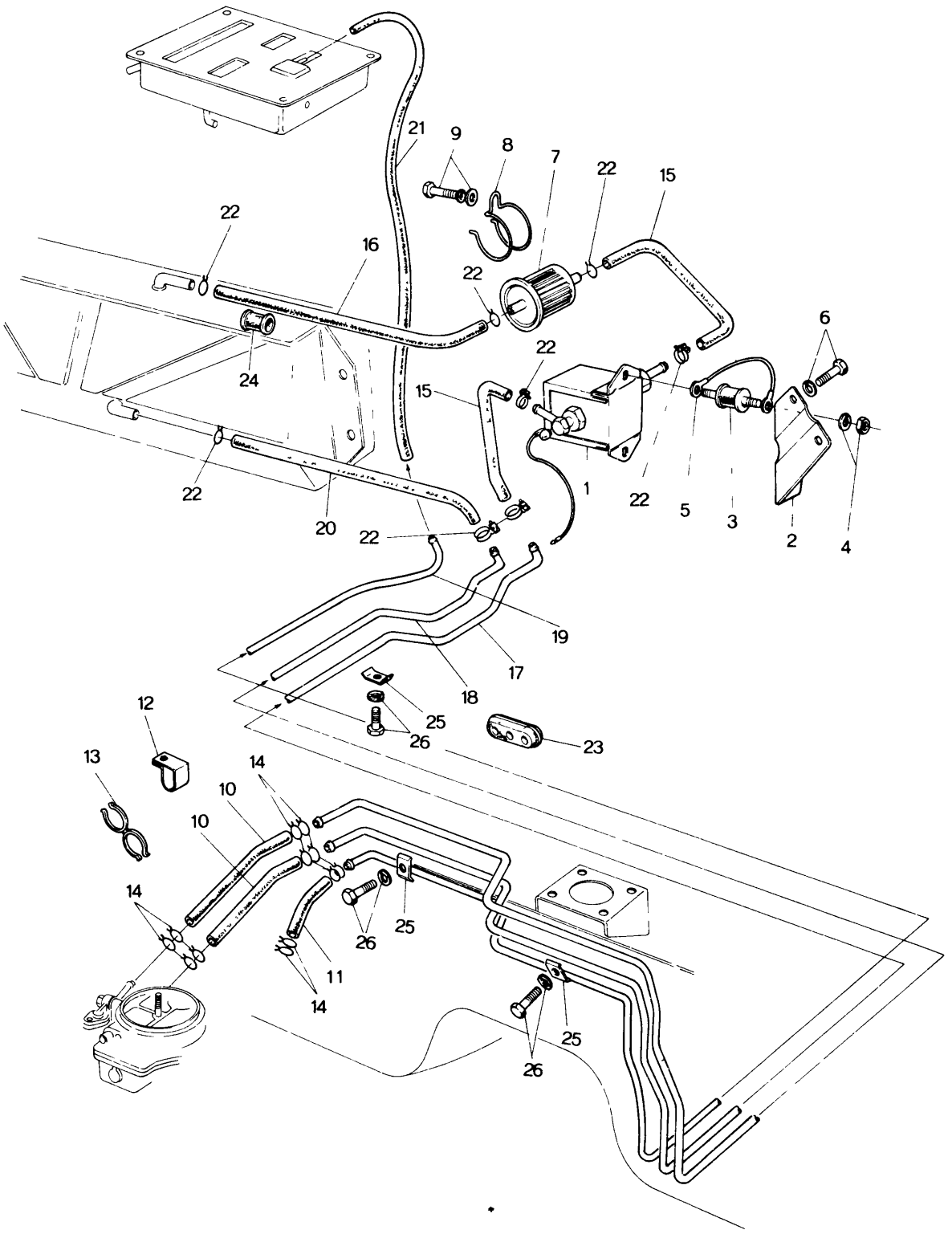

FUEL PIPING (SEDAN & COUPE)

No.	Part Number	Description	Q'ty	Remarks
1	1570 13 400A	Pump, Fuel	1	
2	0866 13 401A	Bracket, Fuel Pump	1	
3	0223 13 363	Rubber, Insulation-Fuel Pump	2	
4	99906 0600	Nut, Insulation Rubber+Fuel Pump	4	
	99940 0600	Nut, Insulation Rubber + Fuel Pump	4	Car No. 102307 $^{72}/_{3}$~○
	99971 0600	Washer, Spring	4	Car No. 102307 $^{72}/_{3}$~Discarded
5	0866 13 402A	Cord, Earth-Fuel Pump	1	
6	99806 0610	Bolt, Fuel Pump Bracket	2	
	99786 0616	Bolt, Fuel Pump Bracket	2	Car No. 102307 $^{72}/_{3}$~○
	99971 0600	Washer, Spring	2	Car No. 102307 $^{72}/_{3}$~Discarded
7	0222 13 470A	Filter, Fuel	1	
●	0222 13 470B	Filter, Fuel	1	Car No. 128211 $^{73}/_{2}$~○
8	0381 13 481	Clamp, Fuel Filter	1	
9	99806 0612	Bolt, Fuel Filter	1	
	99952 0618	Washer, Plain	1	
	99971 0600	Washer, Spring	1	
10	99340 06460	Pipe, Fuel- Carburettor Side	2	
	99340 06480	Pipe, Fuel- Carburettor Side	2	Car No. ~~102578~~ $^{72}/_{4}$~○ 105619
11	1570 13 442	Pipe, Evaporation	1	
12	1570 13 446A	Clip, Fuel Pipe	1	
Ⓝ	99940 0802	Nut, Fuel Pipe	1	Car No. 102307 $^{72}/_{3}$~Added Anew
13	1570 13 447	Clip, Fuel Pipe	1	
● Ⓝ	1620 13 448	Protector	1	Car No. 128211 $^{73}/_{2}$~Added Anew
14	0222 13 493	Clip, Wire Pipe	20	1972 Model
●	99283 1300	Clip, Wire Pipe	16	1973 Model
15	99340 06180	Pipe, Fuel-Fuel Pump	16	Car No. 128211 $^{73}/_{2}$~○
			2	
16	99340 06670	Pipe, Fuel-Tank~Filter	1	
17	0866 45 061A	Pipe, Fuel Main	1	
18	0866 45 611B	Pipe, Fuel Return	1	
19	1570 45 711	Pipe, Evaporation	1	
20	99340 06320	Pipe, Fuel Return~Tank	1	
21	2850 42 348A	Pipe, Evaporation	1	1972 Model
22	99282 1301	Clamp, Hose	4	1972 Model
	99282 1401	Clamp, Hose	8	1973 Model

FUEL PIPING (SEDAN & COUPE)

No.	Part Number	Description	Q'ty	Remarks
23	0868 45 808A	Grommet	1	
24	99886 1200	Protector, Fuel Pipe	3	
25	0868 45 903A	Clip, Fuel Pipe	10	
26	99785 0814	Bolt, Clip	10	
	99786 0812	Screw-Tapping	10	Car No. 102307 ~~73~~ 3 ~ ○
	99871 0800	Washer, Spring	10	
Ⓝ	99686 1400	Protector, Evaporation Pipe (Automatic)	1	
Ⓝ	99295 2008	Clip, Evaporation Pipe (Automatic)	1	

FUEL PIPING (STATION WAGON)

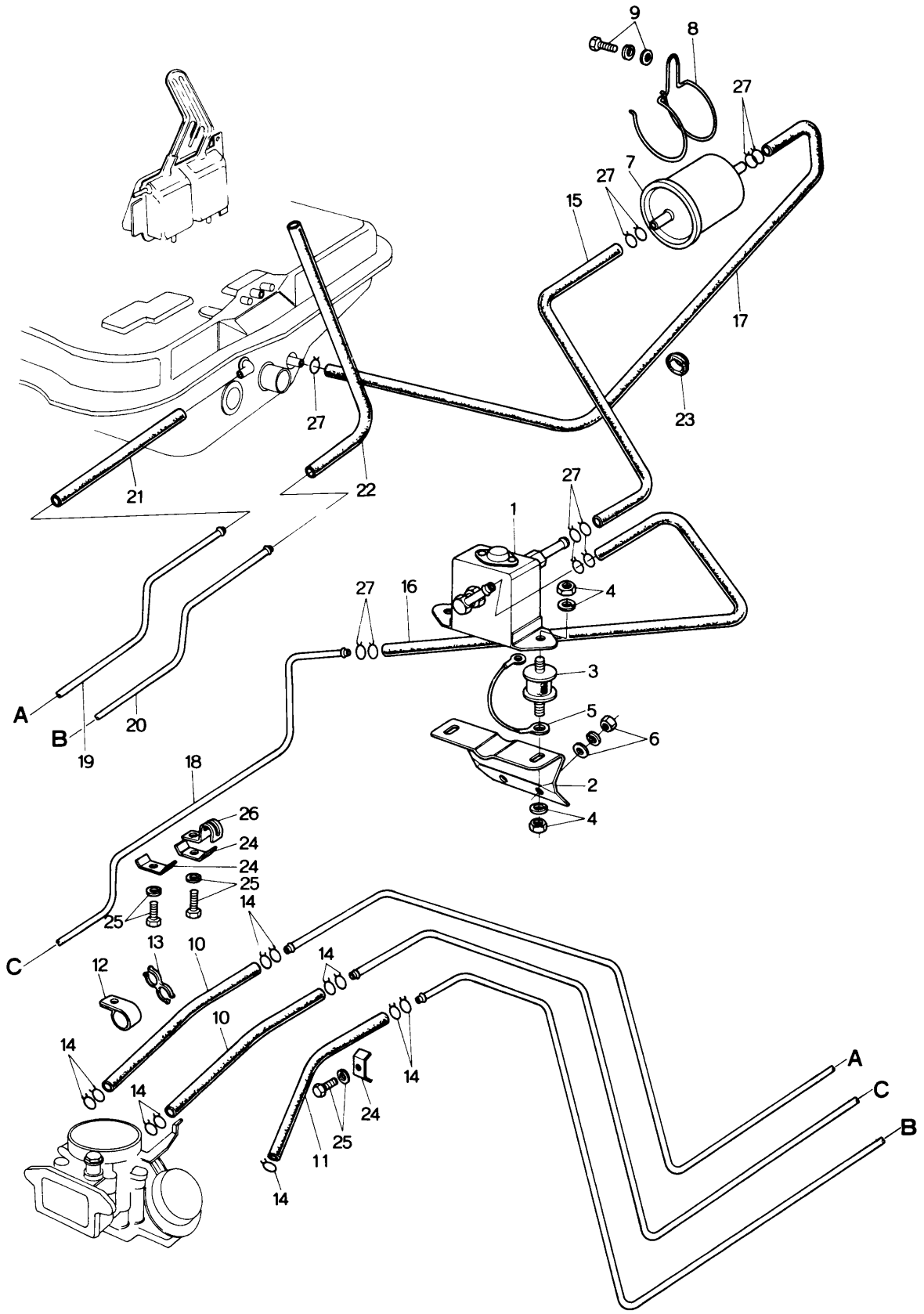

No.	Part Number	Description	Q'ty	Remarks
1	1570 13 400A	Pump, Fuel	1	
2	0899 13 401	Bracket, Fuel Pump	1	
●	1624 13 401	Bracket, Fuel Pump	1	Car No. 133022 $^{73}/_{4}$ ~ ○
3	0223 13 363	Rubber, Insulation - Fuel Pump	2	
4	99906 0600	Nut, Insulation Rubber	4	
	99971 0600	Washer, Spring	4	
5	0866 13 402A	Cord, Earth - Fuel Pump	1	
6	99906 0600	Nut, Fuel Pump Bracket	2	
	99953 0600	Washer, Plain	2	
	99971 0600	Washer, Spring	2	
7	0222 13 470A	Filter, Fuel	1	
●	0222 13 470B	Filter, Fuel	1	Car No. 120143 $^{72}/_{12}$ ~ ○
8	0381 13 481	Clamp, Fuel Filter	1	
9	99906 0612	Bolt, Fuel Filter	1	
	99952 0600	Washer, Plain	1	
	99971 0600	Washer, Spring	1	
10	99340 06460	Pipe, Fuel - Carburettor Side	2	
11	1570 13 442	Pipe, Evaporation	1	
12	1570 13 446 A	Clip, Fuel Pipe	1	
Ⓝ	99940 0802	Nut, Fuel Pipe Clip	1	Car No 100097 $^{72}/_{3}$ ~ Added Anew
13	1570 13 447	Clip, Fuel Pipe	1	
14	0222 13 493	Clip, Wire - Pipe	24	1972 Model
			16	1973 Model
●	99283 1300	Clip, Wire-Pipe	16	Car No. 127040 $^{73}/_{2}$ ~ ○
15	99340 06224	Pipe, Fuel-Filter ~ Pump	1	
16	0899 45 091	Pipe, Pump ~ Main Pipe	1	
17	99340 06500	Pipe, Tank ~ Filter	1	
18	~~0899 45 071B~~	~~Pipe, Fuel Main~~	∓	
●	0899 45 071C	Pipe, Fuel Main	1	From Car No. 1
19	089945 611B	Pipe, Fuel Return	1	
20	1571 45 711	Pipe, Evaporation	1	
21	99340 06140	Pipe, Fuel Return Pipe ~ Tank	1	

FUEL PIPING (STATION WAGON)

No.	Part Number	Description	Q'ty	Remarks
22	2434 42 394	Pipe, Evaporation Pipe~Fuel Tank	1	1972 Model
23	0866 45 805	Protector	1	
24	0866 45 903A	Clip, Fuel Pipe	10 14	1972 Model 1973 Model
25	99785 0614	Bolt, Clip	10 14	1972 Model 1973 Model
	99971 0600	Washer, Spring	10 14	1972 Model 1973 Model
26	0899 45 905	Clip, Fuel Pipe	1	
Ⓝ	99686 1400	Protector, Evaporation Pipe (Automatic)	1	
Ⓝ	99295 2008	Clip, Evaporation Pipe (Automatic)	1	
27	99282 1401	Clamp, Hose	6	1973 Model

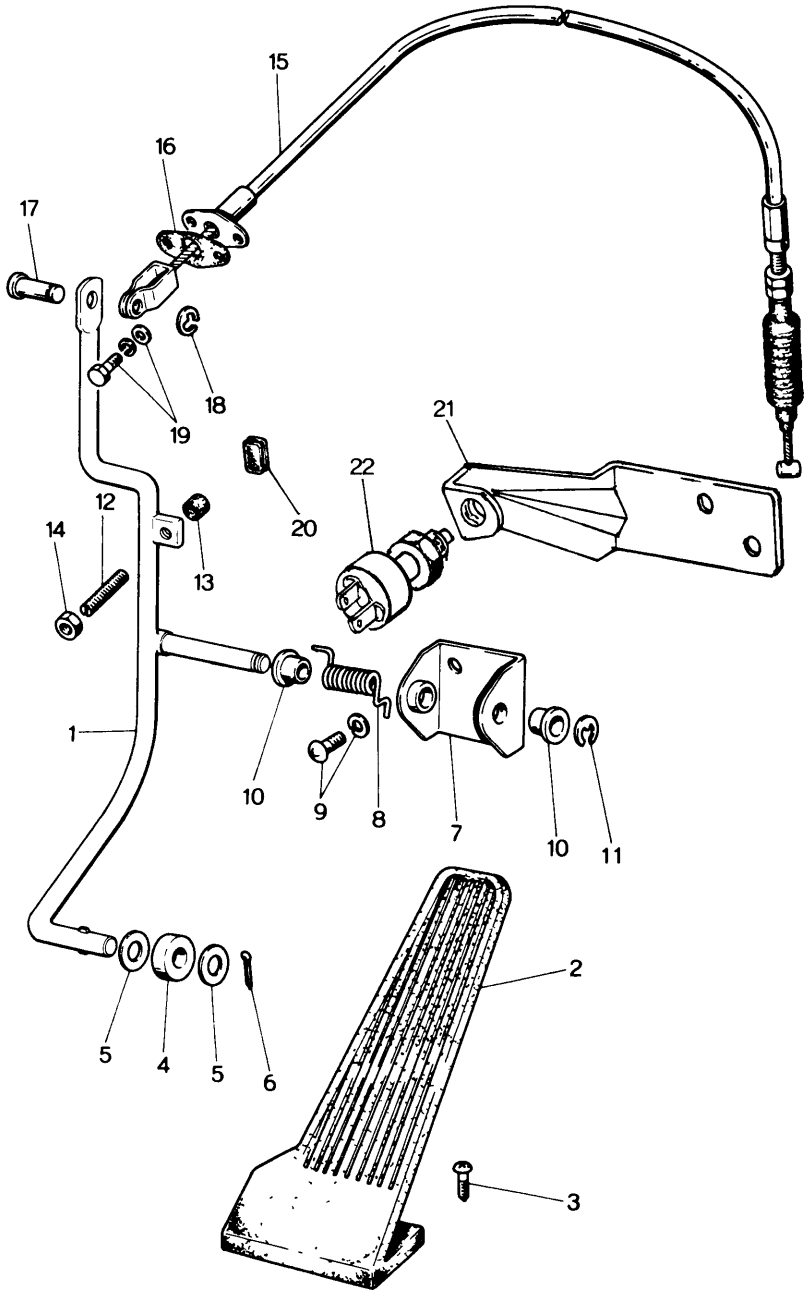
15
16
17
18
19
21
22
20
12
14
13
1
10
9
8
7
10
11
2
5
4
5
6
3

No.	Part Number	Description	Q'ty	Remarks
1	~~1524 41 620~~	~~Rod, Accelerator Control~~	~~1~~	
●	1524 41 620	Rod, Accelerator Control (Manual)	1	From Car No. 1
	1524 41 620A	Rod, Accelerator Control (Manual)	1	Car No 103632 ※/※ 107711 ~○
	1525 41 620	Rod, Accelerator Control (Automatic)	1	
2	0290 41 710	Pedal, Accelerator	1	
3	99765 0516	Screw, Accelerator Pedal	2	
4	0259 41 613	Roller, Pedal	1	
5	99953 0800	Washer, Plain - Pedal Roller	2	
6	99221 2012	Pin, Split - Pedal Roller	1	
7	0305 41 641	Retainer, Accelerator Rod	1	
8	0259 41 619	Spring, Return	1	
9	99765 0616	Screw, Retainer	2	
	99971 0600	Washer, Spring	2	
10	0259 41 644	Bush, Retainer	2	
11	99575 0600	Ring, Snap - Retainer	1	
12	0118 41 681	Stopper	1	
13	0118 41 682	Rubber, Stopper	1	
14	99907 0600	Nut, Stopper	1	
15	1570 41 660	Wire, Accel	1	
16	0249 41 671	Seat	1	
17	99230 0511	Pin, Accel Wire	1	
18	99575 0300	Ring, Stop	1	
19	99785 0620	Bolt, Accel Wire	2	
	99952 0618	Washer, Plain	2	1972 Model
	99971 0600	Washer, Spring	2	
	907860 6 20	Bolt, Set - Accel Wire	2	1973 Model
● 20	1524 41 678	Seat	1	
21	1525 41 650A	Bracket (Automatic)	1	
22	2691 18 660	Switch, Kick Down (Automatic)	1	

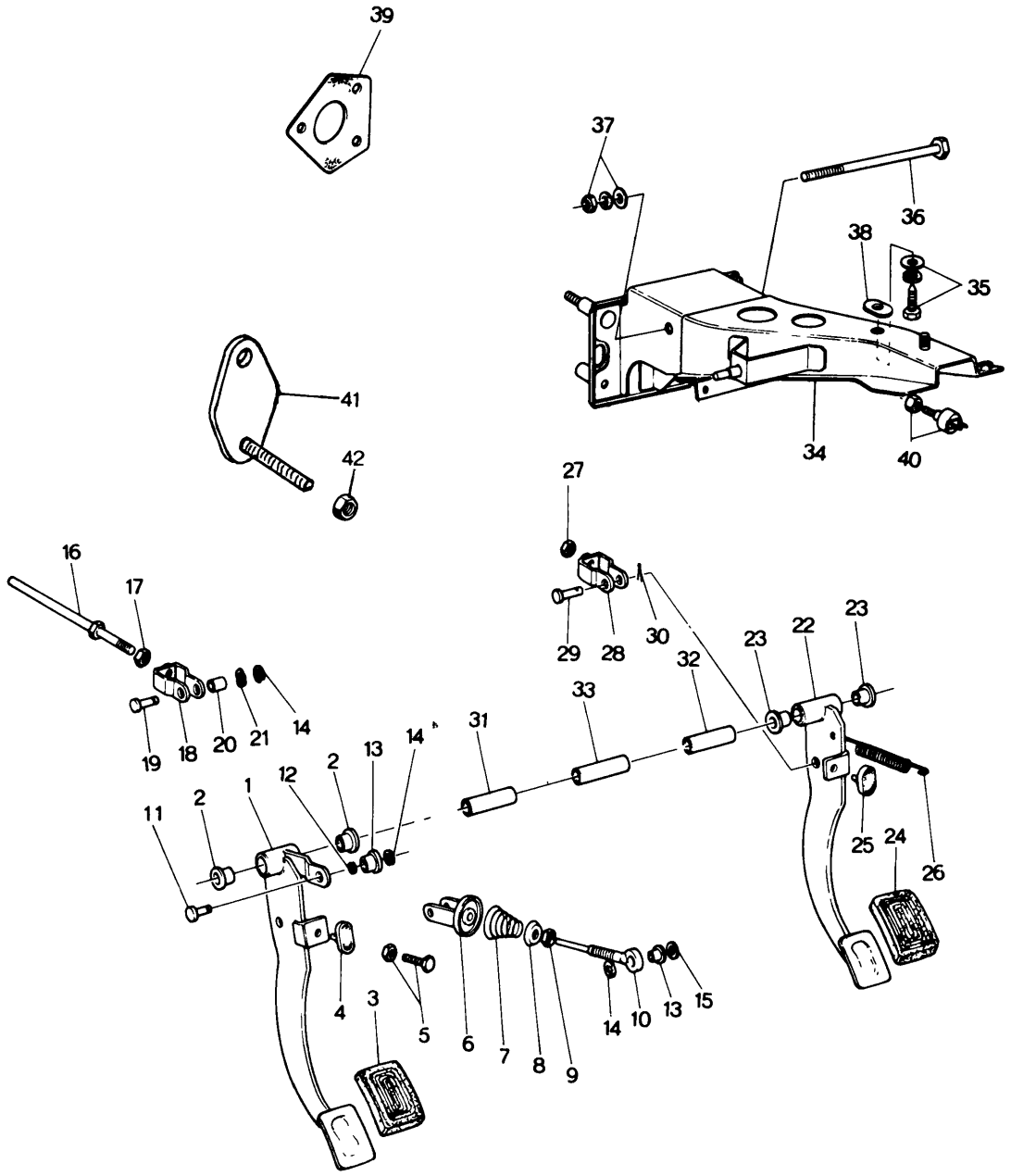
39
37
36
38
35
41
42
34
40
27
16
17
29
28
30
32
23
22
23
33
31
19
18
20
21
14
2
13
14
12
2
1
11
25
24
26
4
3
5
6
7
8
9
14
10
13
15

CLUTCH & BRAKE PEDAL 41 43

No.	Part Number	Description	Q'ty	Remarks
1	1562 41 030A	Pedal, Clutch	1	
2	0259 43 022	Bush	2	
3	0118 43 028A	Pad, Pedal	1	
4	0187 43 029	Rubber, Stopper	1	
5	99795 1032	Bolt, Stopper	1	
	99922 1000	Nut	1	
6	0824 41 040	Seat, Spring	1	
●	0559 41 040C	Seat, Spring	1	Car No. 104518 ~ 108368 ~×
7	0559 41 081	Spring, Return	1	
●	0559 41 081A	Spring, Return	1	Car No. 104518 ~ 108368 ~○
8	0183 41 043	Seat, Spring	1	
9	99901 0800	Nut	1	
●	99922 0800	Nut	1	Car No. 104518 ~ 108368 ~○
10	0824 41 051	Rod	1	
●	0824 41 051A	Rod (Manual)	1	Car No. 104518 ~ 108368 ~×
11	0187 46 683	Pin	1	
●	0604 46 785	Pin	1	Car No. 104518 ~ 108368 ~×
12	0824 41 084	Spacer	1	
13	0259 41 644	Bush	2	
14	99575 0600	Ring, Snap	3	
15	99952 0816	Washer, Plain	1	
16	0223 41 131A	Rod, Clutch Push	1	
17	99922 0800	Nut	1	
18	0259 43 140	End, Fork	1	
19	0223 46 683	Pin	1	
20	0727 41 023	Bush	1	
21	99972 0800	Washer, Wave	1	
22	1524 43 030	Pedal, Brake (Manual)	1	
●	1525 43 030	Pedal, Brake (Automatic)	1	
23	0259 43 022	Bush	2	
24	0118 43 028A	Pad, Pedal (Manual)	1	
●	0268 43 028	Pad, Pedal (Automatic)	1	

CLUTCH & BRAKE PEDAL

No.	Part Number	Description	Q'ty	Remarks
25	0187 43 029	Rubber, Stopper	1	
26	0613 41 308	Spring, Return	1	
27	99922 1000	Nut	1	
28	1524 43 140	End, Fork	1	
29	99231 0820	Pin, Joint	1	
30	99221 2020	Pin, Split	1	
31	0866 43 061	Pipe (Manual)	1	
32	0866 43 062	Pipe	1	
33	0866 43 063	Pipe	1	
34	1524 43 070B	Bracket, Master Cylinder	1	
35	99805 0825	Bolt, Bracket	1	
	99952 0822	Washer, Plain	1	
	99971 0800	Washer, Spring	1	
36	99813 10155	Bolt, Pedal (Manual)	1	
●	99813 10110	Bolt, Pedal (Automatic)	1	
37	99921 1000	Nut, Bracket	1	
	99952 1000	Washer, Plain	1	
	99971 1000	Washer, Spring	1	
38	0259 43 088	Seat, Bracket	1	
39	0866 43 093	Gasket	1	
40	0233 66 790	Switch, Stop	1	
41	1525 43 090	Plate } (Automatic)	1	
42	99940 0800	Nut } (Automatic)	2	

CLUTCH RELEASE & MASTER CYLINDER

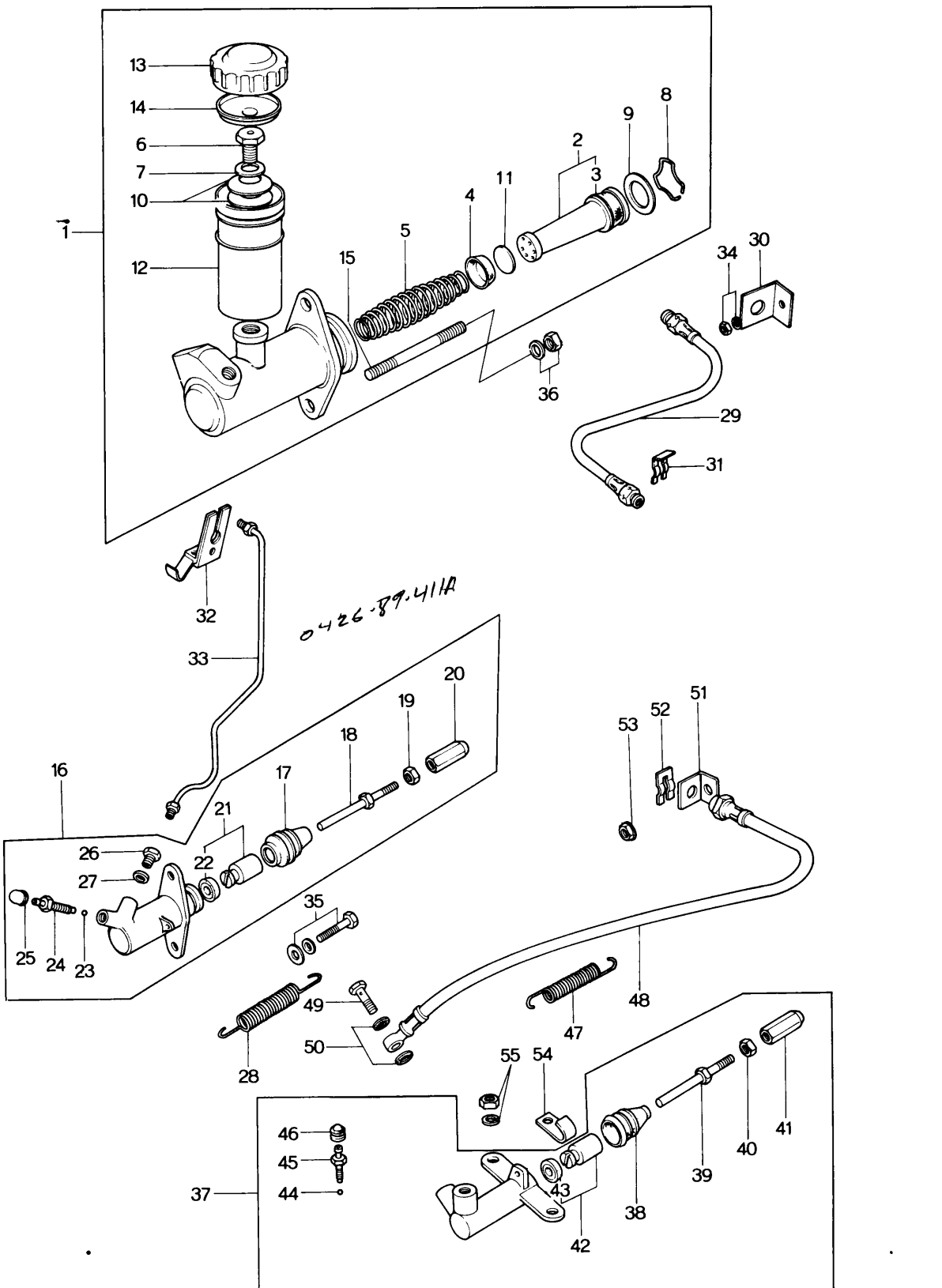

CLUTCH RELEASE & MASTER CYLINDER

No.	Part Number	Description	Q'ty	Remarks
1	1524 41 400	Cylinder, Clutch Master	1	
2	0839 41 440	Piston	1	Fig. No. 3 included
3	0305 41 451	Cup, Secondary	1	
4	0839 41 461	Cup, Primary	1	
5	0110 41 470	Spring Return	1	
	0110 41 470A	Spring, Return	1	Car No. 104518 ~~ 108368 ~~
6	0317 43 421	Plug	1	
7	0221 43 431	Washer	1	
8	0111 43 432	Wire, Stop	1	
9	0111 43 433	Washer, Stop	1	
10	0317 43 428	Spring, Cone	2	
11	0727 41 442	Spacer	1	
12	0317 43 551	Tank, Reserve	1	
13	0727 43 552	Cap, Reserve Tank	1	
14	0839 43 553A	Baffle	1	
15	99852 0848	Stud	1	
	0839 89 431	Repair Kit, Clutch Cylinder	1	(Fig. No. 2 ~ 5, 8, 9, 11 included)
	0839 89 431A	Repair Kit, Clutch Cylinder	1	Car No. 104518 ~~ 108368 ~~
16	1570 41 920	Cylinder, Clutch Release	1	1972 Model
17	0191 41 331	Boot	1	
18	0839 41 341	Rod	1	
19	99922 0800	Nut	1	
20	0118 41 342	Screw, Adjust	1	
21	0866 41 320	Piston	1	Fig. No. 22 included
22	0603 41 322B	Cup, Piston	1	

CLUTCH RELEASE & MASTER CYLINDER

No.	Part Number	Description	Q'ty	Remarks
23	99611 1500	Ball, Steel	1	
24	0259 33 691	Screw, Bleeder	1	
25	0259 33 693	Cap	1	1972 Model
26	2541 41 372	Joint, Pipe	1	
27	99562 1000	Gasket	1	
28	0613 41 308	Spring, Return - Clutch Release Cylinder	1	
29	2541 41 380	Hose, Flexible	1	
30	0866 41 370	Holder, Flexible Hose	1	
31	0136 43 635	Clip, Flexible Hose	1	
32	1570 41 360	Holder	1	1972 Model
33	1570 41 350A	Pipe, Clutch	1	
34	99906 0600	Nut, Holder	1	
	99940 0600	Nut, Holder	1	Car No 100097 72/3~C 102307
	99971 0600	Washer, Spring	1	
35	99801 0828	Bolt, Clutch Release Cylinder	2	
	99971 0800	Washer, Spring	2	
	99952 0800	Washer, Plain	2	
36	99901 0800	Nut, Clutch Master Cylinder	2	
	99940 0800	Nut, Clutch Master Cylinder	2	Car No. 100097 72/3~C 102307
	99971 0800	Washer, Spring	2	
●	0866 89 411	Repair Kit - Clutch Cylinder (Fig No. 17, 21 Included)	1	

CLUTCH RELEASE & MASTER CYLINDER

No.	Part Number	Description	Q'ty	Remarks
37	0866 41 920	Cylinder, Clutch Release	1	1973 Model
38	0191 41 331	Boot	1	
39	0187 41 341	Rod, Push	1	
40	99922 0800	Nut	1	
41	0118 41 342	Screw, Adjust	1	
42	0866 41 320	Piston	1	
43	0603 41 322B	Cup, Piston	1	
44	99611 1500	Ball, Steel	1	
45	0259 33 691	Screw, Bleeder	1	
46	0259 33 693	Cap	1	
	0866 89 411	Repair Kit, Clutch Release Cylinder	1	Set
47	0183 41 308	Spring, Return	1	1973 Model
48	0866 41 380	Hose, Flexible	1	
49	0221 43 694	Bolt, Hose & Release Cylinder	1	
50	99562 1000	Gasket	2	
51	0866 41 370	Holder, Flexible Hose	1	
52	0136 43 635	Clip, Flexible Hose	1	
53	99940 0600	Nut, Holder	1	
54	99295 1008	Clip, Reverse Lamp Switch Cord	1	
55	99901 0800	Nut, Release Cylinder	2	
	99971 0800	Washer, Spring	2	

43 49 TANDEM MASTER CYLINDER & MASTER VAC

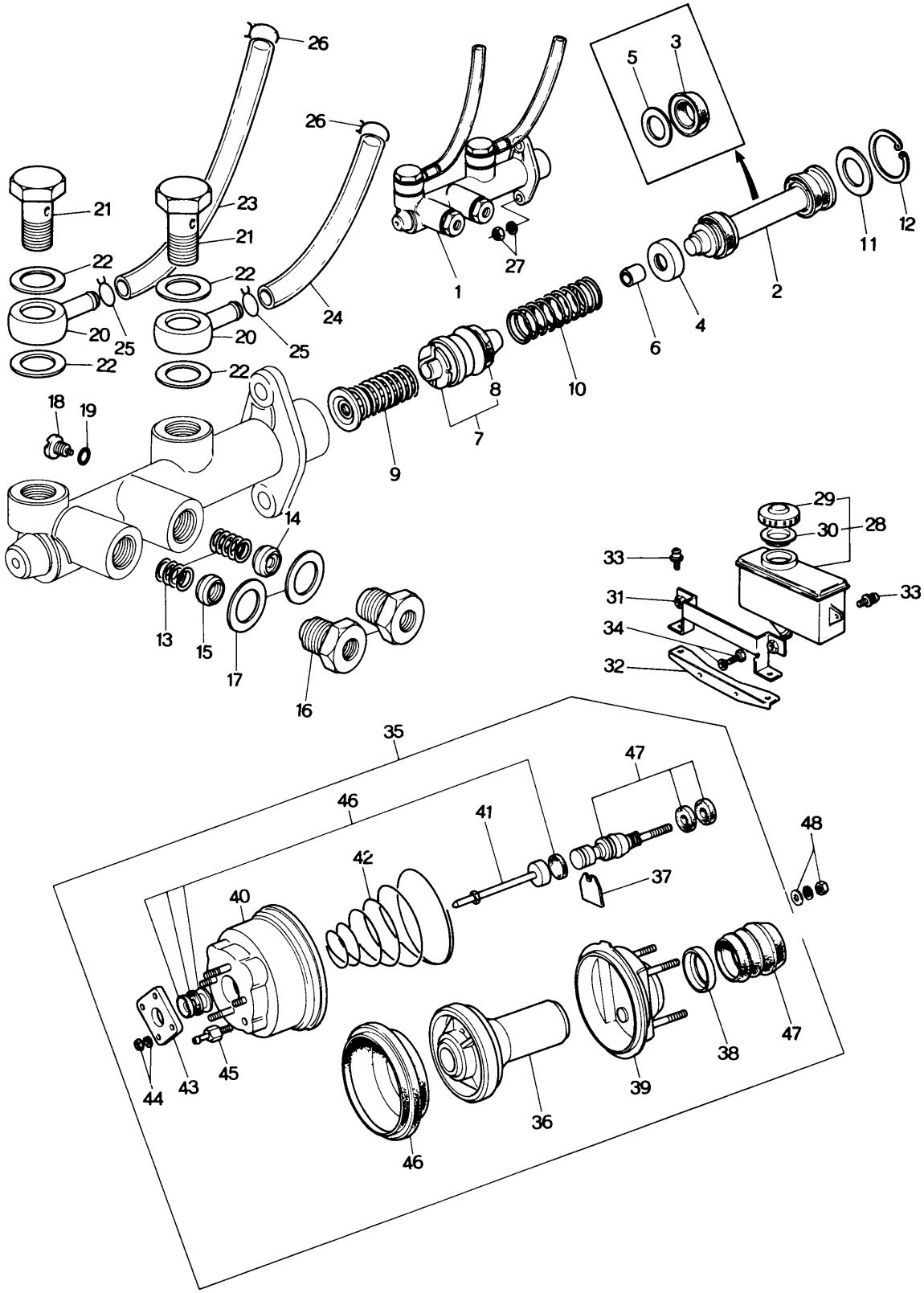

TANDEM MASTER CYLINDER & MASTER VAC

43 49

No.	Part Number	Description	Q'ty	Remarks
1	1562 43 990A	Cylinder, Tandem Master	1	
2	2046 49 620C	Piston, Primary	1	
3	2046 49 626A	Cup, Primary	1	
4	2046 49 627B	Seat, Spring	1	
5	2046 49 629A	Spacer, Piston Cup	1	
6	2046 49 622	Ring, Stop	1	
7	2835 49 630A	Piston, Floating	1	
8	2046 49 635A	Cup, Secondary	2	
9	2835 49 640	Valve, Floating	1	
10	2835 49 641A	Spring, Primary Piston	1	
11	2046 49 666	Washer (1), Piston	1	Selective use
	2046 49 667	Washer (2), Piston		
	2046 49 668	Washer (3), Piston		
	2046 49 669	Washer (4), Piston		
12	2046 49 638	Ring, Retaining	1	
13	0233 49 665	Spring, Check Valve	2	
14	0233 49 660	Valve, Check	1	
15	0233 49 670	Valve, Check	1	
16	2835 49 652	Bolt, Joint	2	
17	0233 49 656	Gasket, Joint Bolt	2	
18	2046 49 676	Bolt Set	1	
19	2046 49 696	Gasket, Joint Bolt	1	
20	2835 49 682A	Union	2	
21	2835 49 686A	Bolt, Connector	2	
22	2835 49 687	Gasket	4	
23	0870 43 422A	Pipe, Oil	1	

43 49 TANDEM MASTER CYLINDER & MASTER VAC

No.	Part Number	Description	Q'ty	Remarks
24	1562 43 422	Pipe, Oil	1	
25	2835 49 685	~~Clip~~ Clamp, Hose	1	
26	99285 0800	Clip, Wire-Oil Pipe	2	
27	99906 0800	Nut, Tandem Master Cylinder	2	
	99971 0800	Washer, Spring	2	
28	0839 43 550	Tank, Reserve	1	
29	0727 43 552	Cap	1	
30	0839 43 553A	Baffle, Oil	1	
	0391 40 684	Packing	1	Car No. 135696 139448 '73/5 Added Anew
31	0870 43 570	Holder, Reserve Tank	1	
32	0870 43 580	Holder, Reserve Tank	1	
33	99833 0512	Screw, Holder & Tank	4	
	99971 0500	Washer, Spring	4	
34	99785 0612	Screw, Holder	2	
	99971 0600	Washer, Spring	2	
35	1562 43 800	~~Vac, Master~~ Assist, Vacuum Power	1	
36	0870 49 745	Plate, Diaphragm	1	
37	2046 49 746	Key	1	
38	2046 49 747	Retainer, Silencer	1	

TANDEM MASTER CYLINDER & MASTER VAC

43 49

No.	Part Number	Description	Q'ty	Remarks
39	0870 49 750	Shell & Stud, Rear	1	
40	1562 49 760	Shell & Stud, Front	1	
41	0870 49 770	Rod, Push	1	
42	0824 49 781	Spring	1	
43	2046 49 782	Flange	1	
44	2046 49 783	Washer, Spring	1	
	2046 49 784	Nut	1	
45	0870 49 785	Valve, Check	1	
46	0870 49 710	Repair Kit "A"	1	
47	0870 49 720	Repair Kit "B"("A" Kit & Fig. No. 45 included) (Parts not listed here are supplied under these kits)	1	
48	99901 0800	~~Nut, Master Vac.~~ Nut, Vacuum Power Assist	3	
	99940 0800	~~Nut, Master Vac.~~ Nut, Vacuum Power Assist	3	Car No 100097 ⅞~ 102307
	99952 0816	Washer, Plain	3	Car No 100097 ⅞~Discarded 102307
	99971 0800	Washer, Spring	3	
●Ⓝ	2835 89 439	Repair Kit, Tandem Master Cylinder (Fig No 2~7, 9, 10, 12 included)	1	From Car No. 1

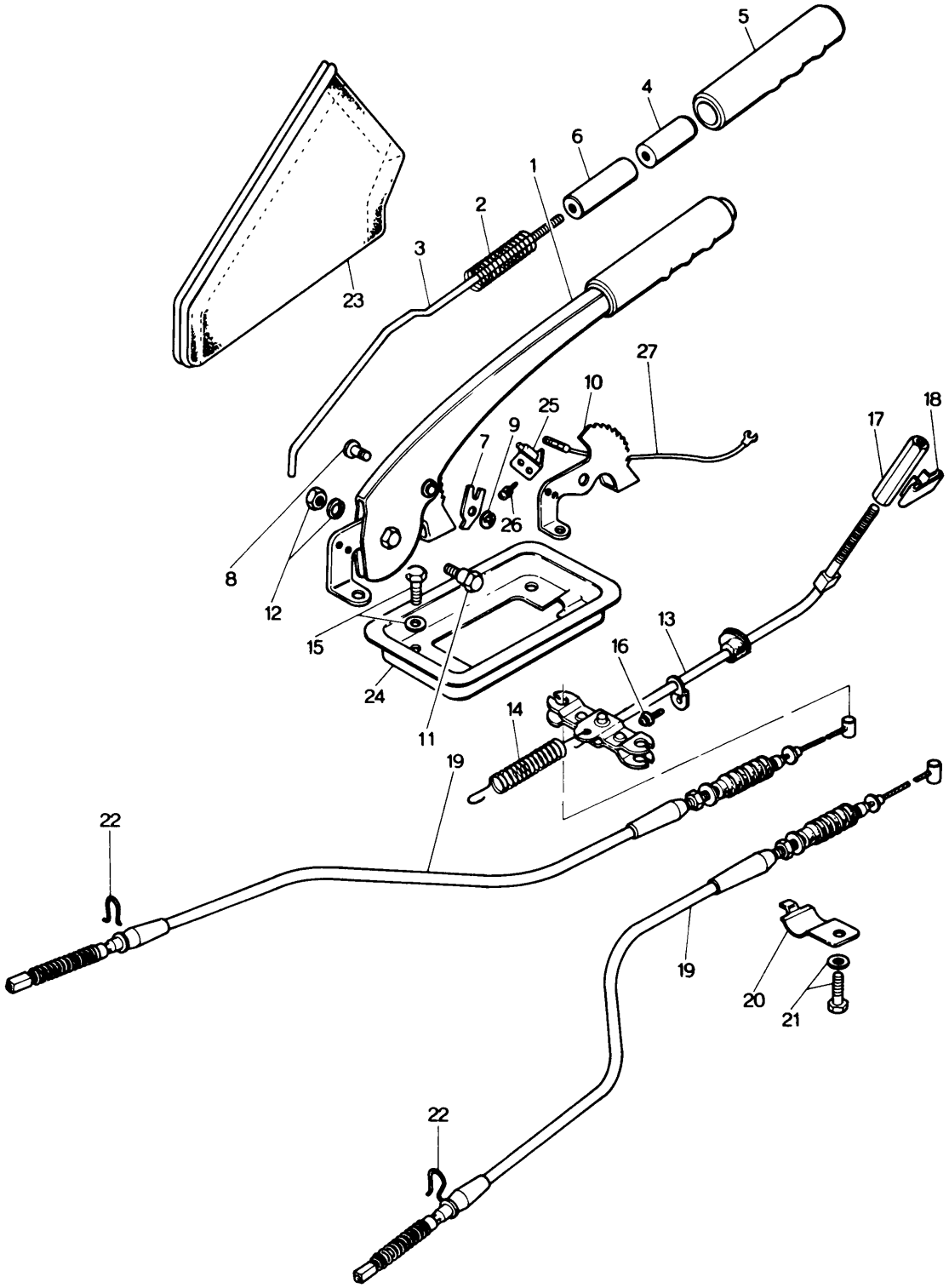
5
4
6
1
2
3
23
27
10
25
9
7
26
18
17
8
12
15
24
11
13
16
14
19
22
19
20
21
22

No.	Part Number	Description	Q'ty	Remarks
1	0866 44 010	Lever, Hand Brake	1	
2	0813 44 031	Spring	1	
3	0303 44 032	Rod, Release	1	
4	0221 44 033	Button	1	
5	0813 44 034	Cap	1	
6	0813 44 035	Spacer	1	
7	0221 44 044	Ratchet	1	
8	99230 0815B	Pin	1	
9	99575 0500	Ring, Stop	1	
10	0866 44 051	Sector	1	
11	0303 44 053	Bolt, Hand Brake Lever	1	
12	99901 0800B	Nut	1	
	99971 0800	Washer, Spring	1	
13	0866 44 150A	Cable, Front	1	
14	0183 41 308	Spring, Return	1	
15	99785 0618	Bolt, Front Cable	4	
	99786 0616	Bolt, Front Cable	4	Car No. 100097 72/3 ~ C 102307
	99971 0800	Washer, Spring	4	
16	99868 0508	Screw, Tapping	1	
	99971 0500	Washer, Spring	1	
17	0866 44 187	Screw, Adjust	1	
●	0866 44 187A	Screw, Adjust	1	Car No. 111940 72/10 ~ O 114430
18	0866 44 189	Clip	1	
19	0866 44 410	Cable, Rear (L.H.) 0866 44 410A C.R(L) 1 72/10~O	1	
	1570 44 410A	Cable, Rear (R.H.) 0866 44 410B C R(L) 1 C/No 134371 73/4~X 137643	1	
	1570 44 410B	Cable, Rear (R.H.)	1	Car No. 106978 72/8 ~ Δ 109174
●	1570 44 410C	Cable, Rear (R.H.)	1	Car No. 111940 72/10 ~ O 114430
20	0866 44 439	Clip, Cable	2	
21	99785 0620	Bolt	2	
	99786 0616	Bolt	2	Car No. 100097 72/3 ~ O 102307

PARKING BRAKE SYSTEM

No.	Part Number	Description	Q'ty	Remarks
	99971 0600	Washer, Spring	2	
22	0305 44 471	Clip	2	
23	0824 44 140	Boot	1	Without Console Box
24	0302 44 132	Plate	1	Without Console Box
25	0820 66 840	Switch, Parking Lamp	1	
26	99833 0412	Screw, Switch	2	
	99952 0400	Screw, Switch	2	
	99971 0400	Washer, Spring	2	
27	1540 67 131A	Cord, Parking Lamp Switch	1	

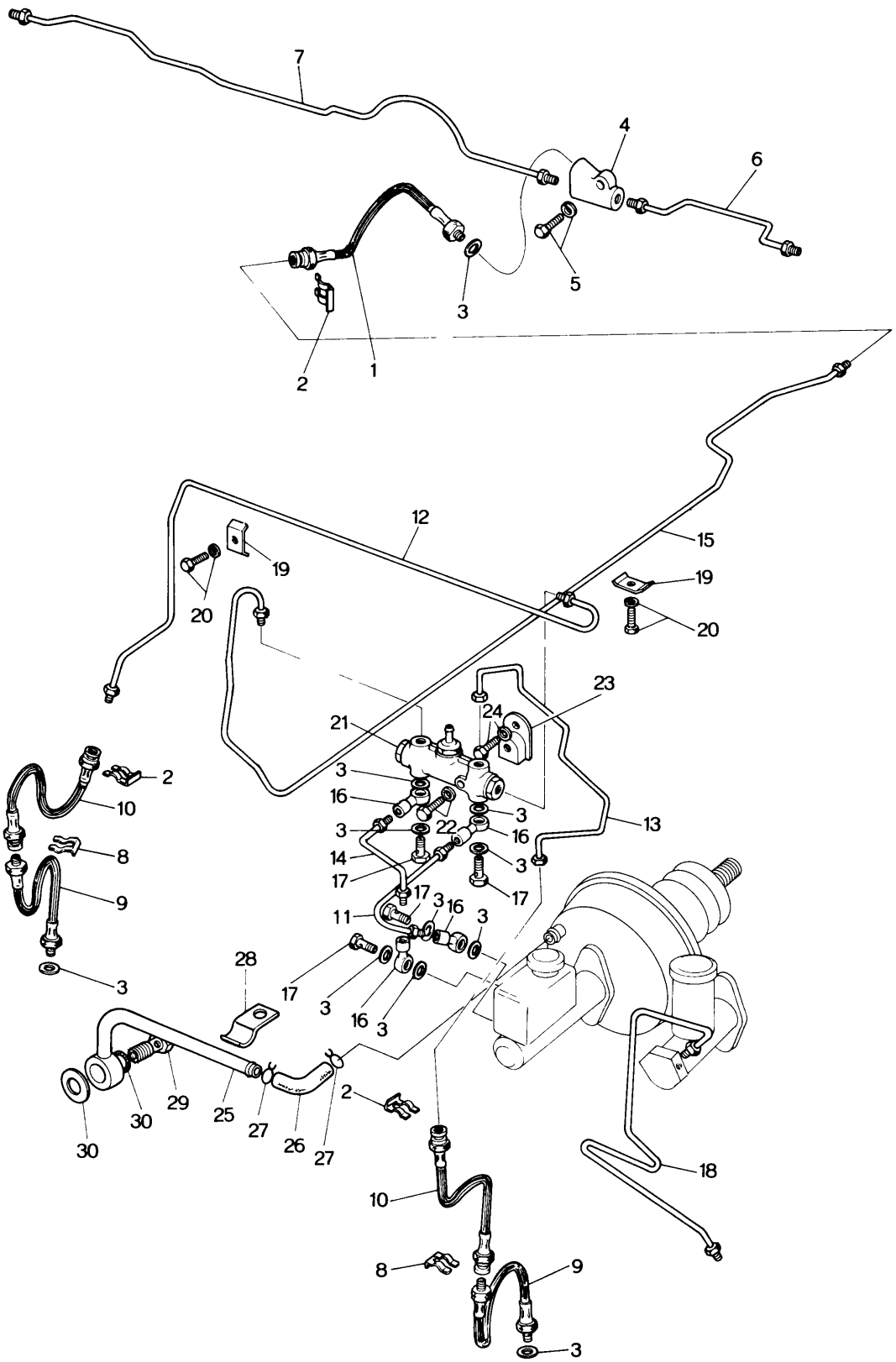
7
4
6
5
3
2
1
12
15
19
20
19
20
23
24
21
3
16
3
22
16
13
14
3
17
17
17
11
3
16
3
28
17
3
16
3
2
30
29
25
27
26
27
30
18
10
8
9
3
2
10
8
9
3

No.	Part Number	Description	Q'ty	Remarks
1	1540 43 820	Hose, Flexible - Rear	1	
2	0136 43 635	Clip, Flexible	3	
3	99562 1000	Gasket, Front & Rear	9	
4	0118 43 853	Joint, Pipe - Rear	1	
5	99806 0625	Bolt, Pipe Joint	1	
	99971 0600	Washer, Spring	1	
6	1524 43 650	Pipe No. 1, Rear (Sedan & Coupe)	1	
●	0370 43 650A	Pipe No. 1, Rear (Sedan & Coupe)	1	Car No. 117725 $^{72}/_{11}$ ~○
	1529 43 650A	Pipe No. 1, Rear (Station Wagon)	1	
●	0585 43 650A	Pipe No. 1, Rear (Station Wagon)	1	Car No. 115327 $^{72}/_{11}$ ~○
7	1540 43 660	Pipe No. 2, Rear (Sedan & Coupe)	1	
●	~~1540 43 660A~~	~~Pipe No.2 , Rear (Sedan & Coupe)~~	~~1~~	~~Car No. 103632 $^{72}/_{6}$ ~△~~
●	1524 43 660A	Pipe No. 2, Rear (Sedan & Coupe)	1	Car No. 103632 $^{72}/_{6}$ ~△
●	0370 43 660B	Pipe No. 2, Rear (Sedan & Coupe)	1	Car No. 117725 $^{72}/_{11}$ ~○
	1544 43 660	Pipe No. 2, Rear (Station Wagon)	1	
●	0899 43 660	Pipe No.2 , Rear (Station Wagon)	1	Car No. 115327 $^{72}/_{11}$ ~○
8	0305 43 635	Clip, Flexible Hose-Front	2	
9	1540 43 810	Hose, Flexible - Front	2	
10	1541 43 820	Hose, Flexible - Front	2	
11	1559 45 250	Pipe, Brake (Frt) - Main	1	
12	1540 45 280A	Pipe, Brake (Frt , R)	1	
13	1540 45 320	Pipe, Brake (Frt , L)	1	
14	1559 45 350	Pipe, Brake (Rr) - Main	1	
	1559 45 350A	Pipe, Brake (Rr) - Main	1	Car No 105638 $^{72}/_{8}$ ~ 108463
15	1504 45 360	Pipe, Brake (Rr) (Sedan & Coupe)	1	
	1508 45 360	Pipe, Brake (Rr) (Station Wagon)	1	
16	0118 41 375	Connector, Pipe	4	
17	0221 43 694	Bolt, Connector	4	
18	1562 45 510A	Pipe, Clutch (Manual)	1	
	1562 45 510B	Pipe, Clutch (Manual)	1	
19	0866 45 903A	Clip, Pipe	7	
20	99785 0814	Bolt, Clip	7	
	99786 0612	Bolt, Clip	7	Car No 100097 $^{72}/_{3}$ ~ 102307
	99971 0600	Washer, Spring	7	
21	1540 43 890	Indicator, Brake Fail	1	

No.	Part Number	Description	Q'ty	Remarks
22	99806 0635	Bolt, Brake Fail Indicator	1	
	99786 0635	Bolt, Brake Fail Indicator	1	Car No. 100097 72/3 ~ ○ 102307
	99971 0600	Washer, Spring	1	Car No. 100097 72/3 ~ Discarded 102307
23	1540 45 920A	Bracket, Brake Fail Indicator	1	
24	99806 0616	Bolt, Bracket	1	
	99786 0616	Bolt, Bracket	1	Car No. 100097 72/3 ~ ○ 102307
	99952 0600	Washer, Spring	1	
	99971 0600	Washer, Plain	1	
25	1570 43 830A	Pipe, Vacuum (Manual)	1	1972 Model
	1620 43 830	Pipe, Vacuum (Manual)	1	1973 Model
	1621 43 830	Pipe, Vacuum (Automatic)	1	
26	1570 43 842A	Hose, Vacuum	2	
●	1570 43 842B	Hose, Vacuum	2	Car No. 106225 72/8 ~ △ 108472
27	2046 43 839	Clamp, Hose	1	
●	99282 2001	Clamp, Hose	1	Car No. 120143 72/12 ~ ○ 120913
●	99282 1901	Clamp, Hose	1	Car No. 133022 73/4 ~ ○ 135861
28	1570 43 848	Holder, Vacuum Pipe (Manual)	1	
	1621 43 848	Holder, Vacuum Pipe (Automatic)	1	
29	1570 43 694A	Bolt, Connector	2	
30	99562 1200	Gasket, Connector Bolt	1	
Ⓝ	0118 56 241	Plug, Drain - Rear Floor	1	
Ⓝ	99288 0808	Clip, Release Wire		

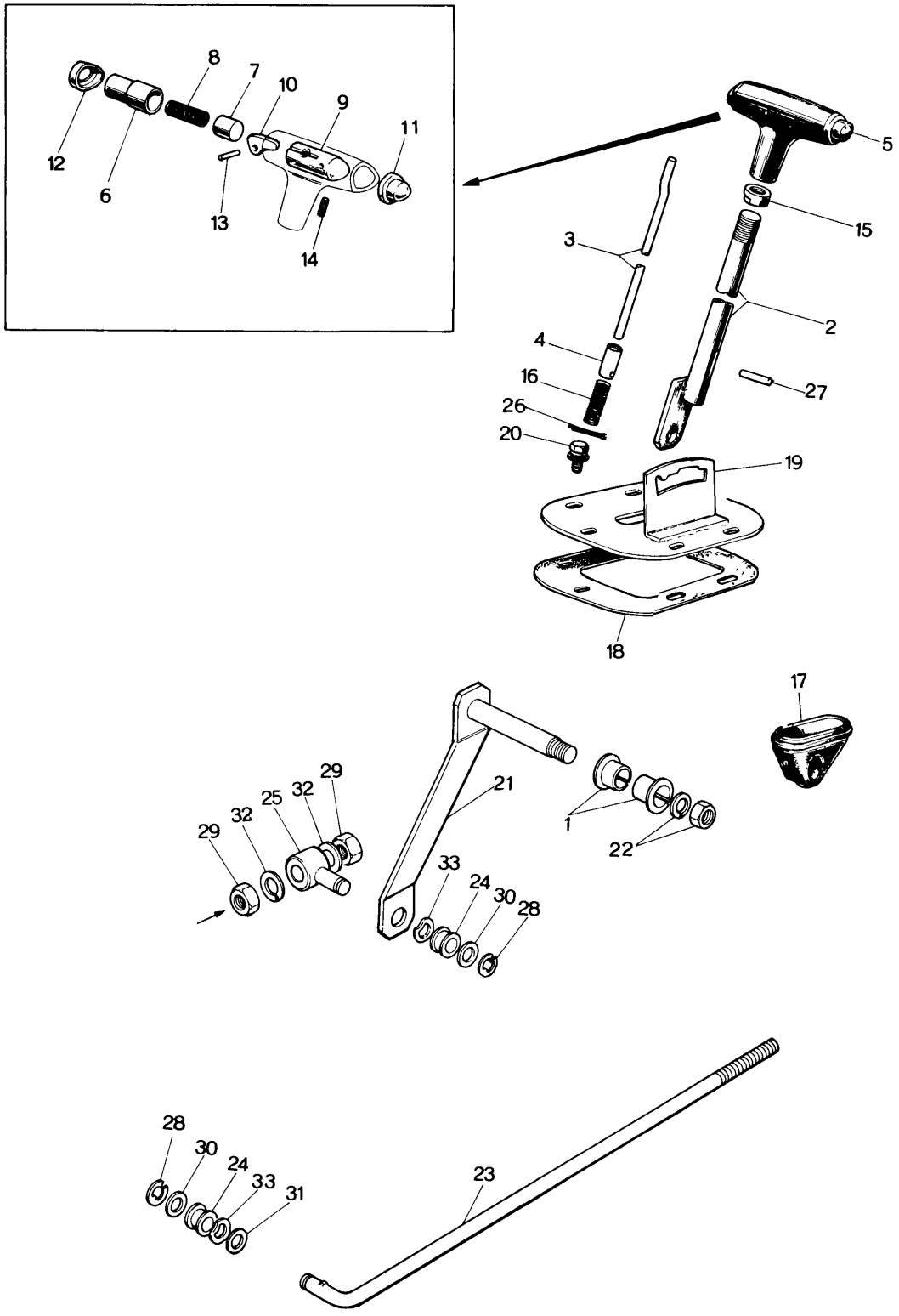
8
7
10
9
11
12
6
13
14
5
15
3
2
4
16
27
26
20
19
18
17
29
32
25
32
29
21
1
22
33
24
30
28
28
30
24
33
31
23

No.	Part Number	Description	Q'ty	Remarks
1	0259 43 022	Bush	2	
2	2375 46 010	Lever, Selector	1	
3	2375 46 021	Rod	1	
4	2375 46 022	Guide	1	
5	2375 46 030A	Knob	1	
●	2375 46 030B	Knob	1	Car No. 120143 72/12 ~ ○ 120913
	2375 46 030C	Knob		
6	2375 46 051	Knob	1	
●	2375 46 051A	Knob	1	Car No. 120143 72/12 ~ X 120913
7	2375 46 052	Piston	1	
8	2375 46 053	Spring	1	
9	2375 46 054	Supporter	1	
10	2375 46 055	Lever	1	
11	2375 46 056	Plug	1	
●	2375 46 056A	Plug	1	Car No. 120143 72/12 ~ X 120913
12	2375 46 057	Cap	1	
●	0308 46 057A	Cap	1	Car No. 120143 72/12 ~ X 120913
13	98225 0320	Pin	1	
14	99887 0412	Screw Set	1	
15	2375 46 061	Nut	1	
16	2375 46 062	Spring	1	
17	0842 46 081	Boot	1	
18	0308 46 083	Seal	1	
19	2070 46 110A	Bracket	1	
20	99806 0616	Bolt	6	
	99952 0622	Washer, Plain	6	
	99971 0600	Washer, Spring	6	

Q'ty	Remarks
1	Car No. 148427 73/8 ~ Δ 152560

No.	Part Number	Description	Q'ty	Remarks
21	0378 46 150	Lever	1	
22	99922 1000	Nut	1	
	99971 1000	Washer, Spring	1	
	99972 1400	Washer, Wave	1	
23	1621 46 571	Rod	1	
24	0604 46 684	Bush	2	
●	1015 46 684	Bush	2	Car No. 133022 '73/4 ~ 135861 ○
25	0259 46 691	Joint, "T"	1	
26	99221 2020	Pin, Split	1	
27	99222 0520	Pin	1	
28	99575 0600	Ring, Retaining	2	
29	99902 0800	Nut	2	
30	99952 0816	Washer, Plain	1	
31	99953 0800	Washer, Plain	2	
32	99971 0800	Washer, Spring	1	
33	99972 0800	Washer, Wave	2	

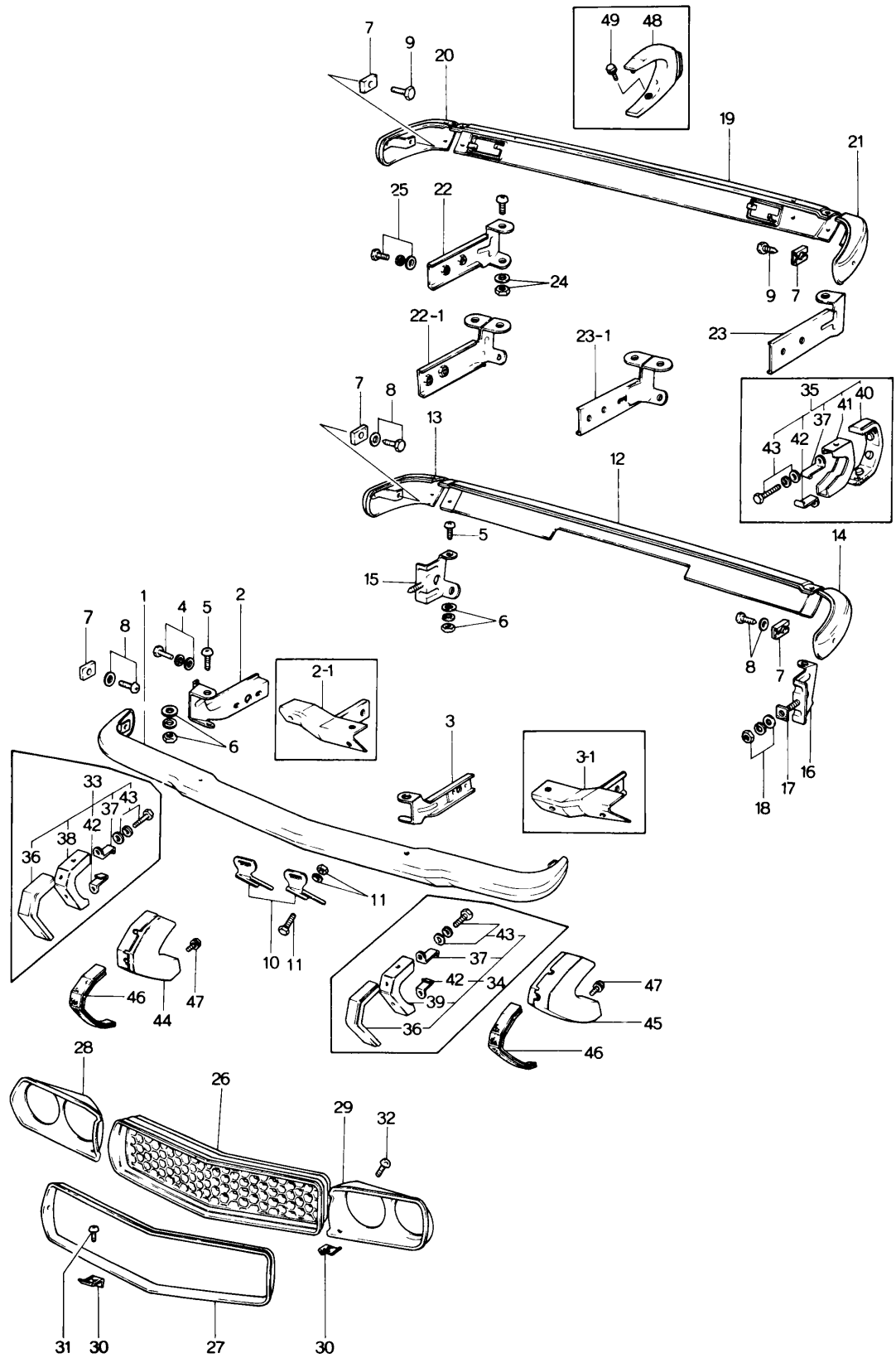
7
9
20
49
48
19
21
25
22
24
9
7
22-1
23-1
23
7
8
13
35
40
41
37
43
42
12
5
14
15
6
1
4
5
2
7
8
2-1
6
3
3-1
8
7
16
17
18
33
37
43
42
38
36
11
10
11
46
44
47
43
37
42
34
39
36
47
45
46
28
26
29
32
31
30
27
30

No.	Part Number	Description	Q'ty	Remarks
1	0866 50 110A-66	Bar, Front Bumper (1972 Model)	1	
	1620 50 110	Bar, Front Bumper (1973 Model)	1	
2	0866 50 141	Stay (R), Front Bumper (1972 Model)	1	
2-1	1620 50 140	Stay (R), Front Bumper (1973 Model)	1	
3	0866 50 151	Stay (L), Front Bumper (1972 Model)	1	
3-1	1620 50 150	Stay (L), Front Bumper (1973 Model)	1	
4	99785 0820	Screw, Stay & Front Frame	4	
	99781 1028	Screw, Stay & Front Frame	4	Car No 103632 107711 ~ △
	99951 0818	Washer, Plain	4	
	99951 1022	Washer, Plain	4	Car No 103632 107711 ~ △
	99971 0800	Washer, Spring	4	
	99971 1000	Washer, Spring	4	Car No. 103632 107711 ~ △
5	0223 50 275	Screw, Bumper & Stay	(1972 Model) 12 (1973 Model) 10	
6	99906 0600	Nut, Bumper & Stay	(1972 Model) 12 (1973 Model) 8	
	99951 0618	Washer, Plain	(1972 Model) 12 (1973 Model) 8	
	99971 0600	Washer, Spring	(1972 Model) 12 (1973 Model) 8	
	99940 0600	Nut	2	
	99951 0618	Washer, Plain	(1973 Model) 2	
7	0866 50 102A	Spacer, Bumper	4	
8	99805 0622	Bolt, Spacer	4	
	99951 0618	Washer, Plain	4	
9	99786 0620	Bolt, Spacer-Rear Bumper (Station Wagon)	2	
10	0866 50 181A	Holder, Number Plate	2	
11	99806 0612	Bolt, Holder	2	
	99906 0600	Nut, Holder	2	

No.	Part Number	Description		Q'ty	Remarks
	99971 0600	Washer, Spring		2	
12	0370 50 311	Bar (C), Rear Bumper	Sedan & Coupe	1	
13	0866 50 320B	Bar (R), Rear Bumper	Sedan & Coupe	1	
14	0866 50 330B	Bar (L), Rear Bumper	Sedan & Coupe	1	
15	0866 50 340	Stay (R), Rear Bumper	Sedan & Coupe	1	
16	0866 50 350	Stay (L), Rear Bumper	Sedan & Coupe	1	
17	0111 57 111	Rubber Set	Sedan & Coupe	2	
18	99921 1000	Nut, Stay & Rear Bumper	Sedan & Coupe	2	
	99951 1030	Washer, Plain	Sedan & Coupe	2	
	99971 1000	Washer, Spring	Sedan & Coupe	2	
19	0585 50 310A-66	Bar (C), Rear Bumper (1972 Model)		1	
	1624 50 310	Bar (C), Rear Bumper (1973 Model)		1	
20	0585 50 320C-66	Bar (R), Rear Bumper		1	
	0585 50 320D-66	Bar (R), Rear Bumper		1	From Car No. 1 ~ ○
21	0585 50 330C-66	Bar (L), Rear Bumper		1	
	0585 50 330D-66	Bar (L), Rear Bumper		1	From Car No. 1 ~ ○
22	0585 50 360	Stay (R), Rear Bumper (1972 Model)		1	
22-1	1624 50 360	Stay (R), Rear Bumper (1973 Model)	(Station Wagon)	1	
23	0585 50 370	Stay (L), Rear Bumper (1972 Model)		1	
23-1	1624 50 370	Stay (L), Rear Bumper (1973 Model)		1	
24	99940 0600	Nut, Bumper & Stay	(1972 Model)	8	
			(1973 Model)	10	
	99951 0618	Washer, Plain	(1972 Model)	8	
			(1973 Model)	10	
25	99805 1032	Bolt, Stay & Frame		4	
	99951 1022	Washer, Plain		4	
	99971 1000	Washer, Spring		4	
26	0866 50 511A-02	Grille, Radiator		1	
●	0866 50 511A-06	Grille, Radiator		1	Car No. 123972 73/1 ~ ○ 124434

No.	Part Number	Description	Q'ty	Remarks
27	0866 50 521A-01	Mould, Front	1	
28	0866 50 531	Bezel (R), Lamp	1	
●	0866 50 531-00	Bezel (R), Lamp	1	} Car No. 73/3~X ⓒ
●	0866 50 531-02	Bezel (R), Lamp	1	} ⓓ
29	0866 50 541	Bezel (L), Lamp	1	
●	0866 50 541-00	Bezel (L), Lamp	1	} Car No. 73/3~X ⓒ
●	0866 50 541-02	Bezel (L), Lamp	1	} ⓓ
30	99896 0500	Nut, Speed-Grille	14	
31	99737 0514	Screw, Grille	8	
32	99862 0516B	Screw, Bezel	6	
33	0866 99 801	Guard Set (R), Front Bumper	1	} (1972 Model)
34	0866 99 802	Guard Set (L), Front Bumper	1	}
35	0866 99 806	Guard Set, Rear Bumper (Sedan & Coupe)	1	
36	0866 78 701A	Rubber, Cushion (Frt)	2	(1972 Model)
37	0866 78 702	Plate, Clamp	4	
38	0866 78 710	Guard (R), Front Bumper	1	} (1972 Model)
39	0866 78 750	Guard (L), Front Bumper	1	}
40	0866 78 801A	Rubber, Cushion (Rr.)	2	
41	0866 78 810	Guard, Rear Bumper	2	
42	0305 50 231	Plate	4	
43	99797 0620	Bolt, Bumper Guard	8	
	99952 0600	Washer, Plain	8	
	99971 0600	Washer, Spring	8	
● 44	~~1620 50 210 Guard (R), Front Bumper~~		~~1~~	
●	1620 50 210A	Guard (R), Front Bumper	1	From Car No. 1
●	1620 50 210B	Guard (R), Front Bumper	1	Car No. 110019 72/9 ~ ○ 111927
● 45	~~1620 50 250 Guard (L), Front Bumper~~		~~1~~	
●	1620 50 250A	Guard (L), Front Bumper (1973 Model)	1	From Car No. 1
●	1620 50 250B	Guard (L), Front Bumper	1	Car No. 110019 72/9 ~ ○ 111927
46	0866 78 701A	Rubber, Cushion	2	

No.	Part Number	Description		Q'ty	Remarks
47	99786 0620	Bolt, Front Bumper Guard	(1973 Model)	4	
	99971 0600	Washer, Spring		4	
	99953 0600	Washer, Plain		4	
48	1624 50 410	Guard, Rear Bumper		2	(Station Wagon)
49	99786 0616	Bolt, Rear Bumper Guard		2	
	99971 0600	Washer, Spring		2	
	99953 0600	Washer, Plain		2	
● Ⓝ	1620 99 801	Guard Set (R), Front Bumper (Fig. No. 44, 46, 47 included)		1	
●	1620 99 801A	Guard Set (R), Front Bumper (Fig. No. 44, 46, 47 included)		1	Car No. 110019 72/9 ~ 111927 ○
● Ⓝ	1620 99 802	Guard Set (L), Front Bumper (Fig. No. 45 ~ 47 included)		1	
●	1620 99 802A	Guard Set (L), Front Bumper (Fig. No. 45 ~ 47 included)		1	Car No. 110019 72/9 ~ 111927 ○

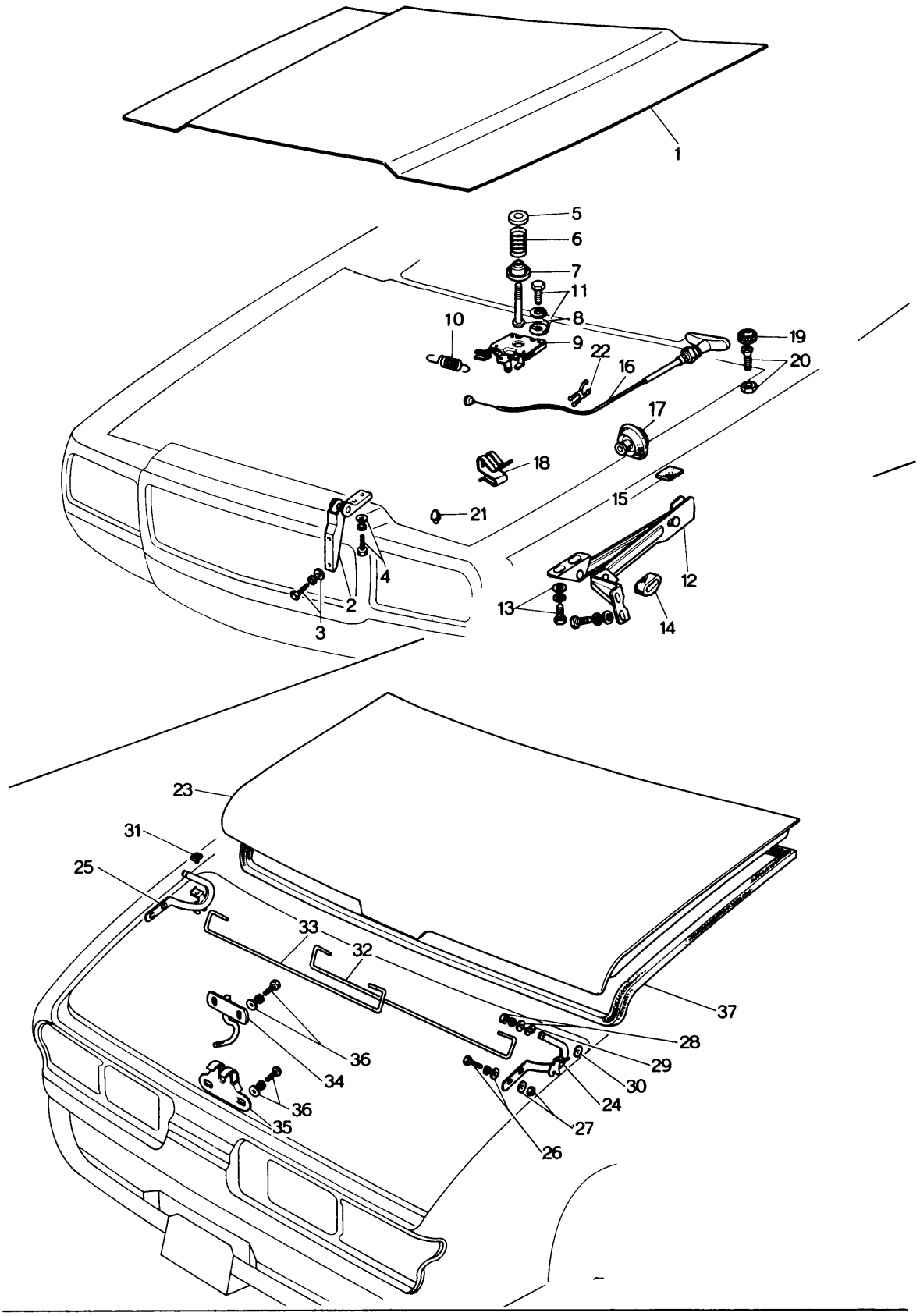
1
5
6
7
11
8
10
9
22
16
19
20
17
18
15
21
4
2
3
12
13
14
23
31
25
33
32
37
28
29
30
24
27
26
36
34
36
35

No.	Part Number	Description	Q'ty	Remarks
1	1524 52 110	Bonnet	1	
●	~~0866 74 250~~	~~Bonnet~~	~~1~~	~~Used from Car No. 100051 72½ ~ 100057~~
●	0866 74 250	Bonnet	1	Used from Car No. 100051 72½ ~ 100057
2	0866 52 210	Hinge, Bonnet	2	
3	99783 0825	Bolt, Hinge & Shroud Panel	4	
	99952 0816	Washer, Plain	4	
	99971 0800	Washer, Spring	4	Order Under No. 0866 99 522
4	99801 0818	Bolt, Bonnet & Hinge	4	
	99952 0816	Washer, Plain	4	
	99971 0800	Washer, Spring	4	
5	0305 52 313	Seat, Spring Upper	1	
6	0305 52 312B	Spring, Lift	1	Order Under No. ~~0305 99 522~~ 0305 99 521
7	0305 52 322A	Seat, Spring Lower	1	
8	0187 52 141	Hook, Bonnet	1	
9	~~2835 52 330A~~	~~Lock, Bonnet~~	~~1~~	
●	2835 52 330	Lock, Bonnet	1	From Car No. 1
10	0305 52 331	Spring, Lock	1	
11	99806 0618	Bolt, Bonnet Lock	4	
	99952 0618	Washer, Plain	4	
	99971 0600	Washer, Spring	4	
12	1524 52 390	Stopper, Bonnet	1	
13	99806 0616	Bolt, Stopper	4	
	99952 0600	Washer, Plain	4	
	99971 0600	Washer, Spring	4	
14	0223 58 306	Pad, Stopper	1	
●15	0866 52 397A	Pad, Stopper	1	
16	1524 52 410	Wire, Release	1	
17	0259 52 301	Grommet, Release Wire	1	
18	0223 52 302	Clamp, Release Wire	1	

No.	Part Number	Description	Q'ty	Remarks
19	0888 52 451	Cushion, Bonnet	2	
20	99831 0840	Bolt, Cushion	2	
	99907 0800	Nut	2	
21	0111 53 771	Cushion	2	
22	99288 0808	Clamp	1	
23	0378 52 510	Lid, Trunk (Coupe)	1	
	0888 52 510	Lid, Trunk (Sedan)	1	
24	0888 52 810	Hinge (R), Trunk Lid	1	
25	0888 52 820	Hinge (L), Trunk Lid	1	
26	99808 0818	Bolt, Bonnet & Hinge	4	
	99852 0818	Washer, Plain	4	
	99971 0800	Washer, Spring	4	
27	99908 0800	Nut, Trunk Lid & Hinge	4	
	99951 0818	Washer, Plain	4	
28	99906 0800	Nut, Hinge	2	
	99952 0800	Washer, Plain	(Sedan & Coupe use) 2	
	99971 0800	Washer, Spring	2	
29	0888 52 831	Washer, Wave-Hinge	2	
30	99952 0822	Washer, Plain-Hinge	2	
31	0305 52 828	Rubber, Cushion	2	
32	0888 52 861A	Spring (R), Balance	1	
33	0888 52 871A	Spring (L), Balance	1	
34	0888 52 750A	Striker	1	
35	0305 52 850A	Lock, Lid	1	
36	99808 0818	Bolt, Lid Lock & Striker	4	
	99851 0818	Washer, Plain	4	

No.	Part Number	Description	Q'ty	Remarks
	99971 0800	**Washer, Spring**	4	
37	**0376 52 901**	**Weatherstrip (Coupe)**	1	
●	0376 52 901A	Weatherstrip (Coupe)	1	Car No. 111422 $^{72}/_{10}$ ~ 113912 ○
	0866 52 901	**Weatherstrip (Sedan)**	1	
●	0866 52 901A	Weatherstrip (Sedan)	1	Car No. 111422 $^{72}/_{10}$ ~ 113912 ○

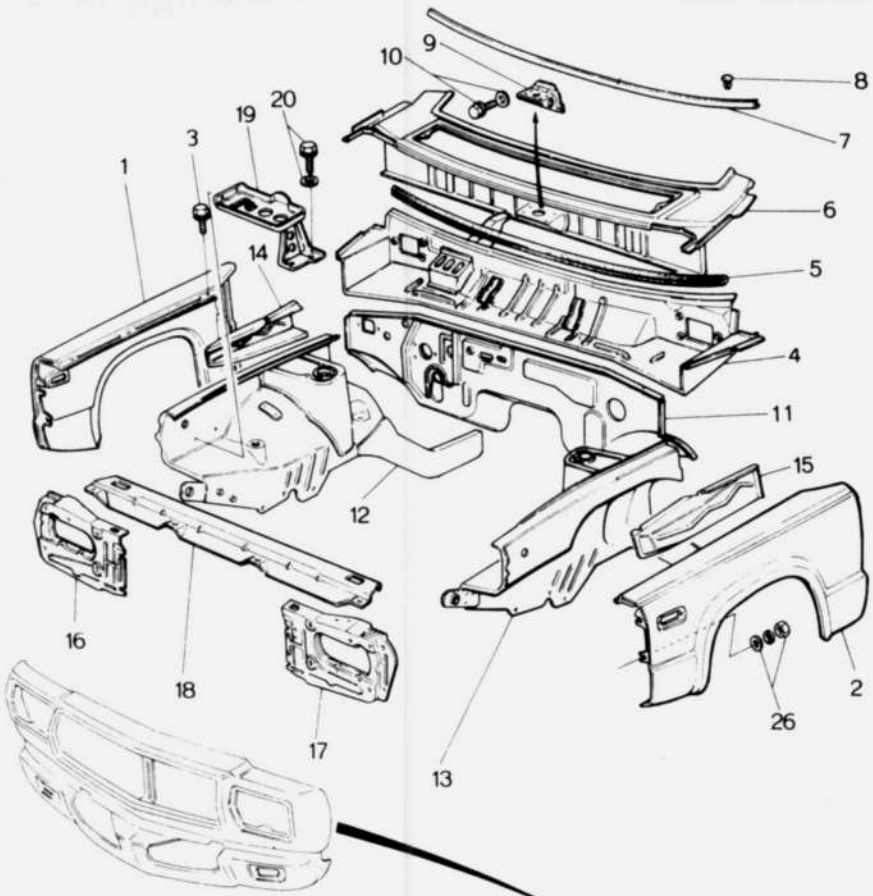
1
2
3
4
5
6
7
8
9
10
11
12
13
14
15
16
17
18
19
20
26

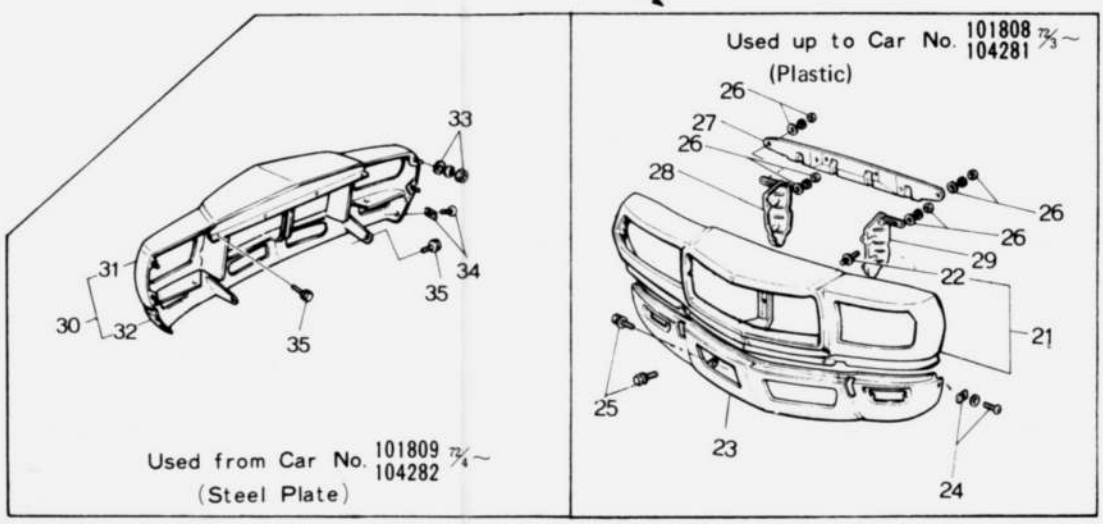
Used from Car No. 101809 72/4~ 104282
(Steel Plate)
30
31
32
33
34
35
35
Used up to Car No. 101808 72/3~ 104281
(Plastic)
21
22
23
24
25
26
26
26
26
27
28
29

No.	Part Number	Description	Q'ty	Remarks
1	1524 51 020A	Panel (R), Front Fender	1	
2	1524 51 120A	Panel (L), Front Fender	1	
3	99606 0614	Bolt, Front Fender	12	
	99952 0618	Washer, Plain	12	
	99971 0600	Washer, Spring	12	
4	1524 53 020D	Panel, Dashboard-Upper	1	
	1524 53 020E	Panel, Dashboard-Upper	1	Car No 105768 72/8 ~ △ 108472
5	0866 53 029A	Rubber Edge-Dashboard Panel & Cowl Panel	1	
6	1524 74 040	Panel, Cowl	1	
7	0866 53 979A	Rubber, Seal-Cowl Panel	1	
8	99264 0531B	Fastener, Cowl Panel & Seal Rubber	8	
9	0866 53 981	Bracket, Lock-Bonnet	1	
10	99806 0616	Bolt, Lock Bracket & Cowl Panel	4	
	99952 0600	Washer, Plain	4	
	99971 0600	Washer, Spring	4	
11	1524 53 100C	Panel, Dashboard-Lower	1	
	1524 53 100D	Panel, Dashboard-Lower	1	Car No. 103632 72/6 ~ ○ 107711
	1524 53 100E	Panel, Dashboard-Lower (Manual) (General U.S.A)	1	Car No 105768 72/8 ~ ○ 108472 1973 Model
	1525 53 100F	Panel, Dashboard-Lower (Automatic)	1	
	1628 53 100B	Panel, Dashboard-Lower(Manual) (Canada & Northern U.S.A.)	1	
12	1524 53 220D	Panel (R), Wheel Apron	1	
	1524 53 220E	Panel (R), Wheel Apron	1	Car No. 103632 72/6 ~ △ 107711
●	1524 53 220F	Panel (R), Wheel Apron	1	Car No. 107151 72/9 ~ △ 109301
13	1524 54 220C	Panel (L), Wheel Apron	1	
	1524 54 220D	Panel (L), Wheel Apron	1	Car No. 103632 72/6 ~ △ 107711
●	1524 54 220E	Panel (L), Wheel Apron	1	Car No. 107151 72/9 ~ △ 109301
14	0866 53 281A	Reinforcement (R), Wheel Apron Panel	1	
15	0866 54 281A	Reinforcement (L), Wheel Apron Panel	1	
● 16	~~0866 53 720~~	~~Panel (R), Shroud~~	~~1~~	
●	0866 53 720A	Panel (R), Shroud	1	From Car No. 1
17	0866 54 720	Panel (L), Shroud	1	
18	0866 53 750	Panel, Shroud-Upper	1	
19	0866 53 780A	Carrier, Battery	1	
20	99801 0816	Bolt, Battery Carrier	1	
	99952 0816	Washer, Plain	4	
	99971 0800	Washer, Spring	4	

BODY PANELS (FRONT)

No.	Part Number	Description	Q'ty	Remarks
21	0866 70 120	Panel Cpt., Nose	1	
22	0866 70 122	Stud	12	
23	0866 70 160B	Panel, Front Skirt	1	
24	99864 0616	Screw, Nose Panel	2	
	99952 0618	Washer, Plain	2	
	99896 0600	Nut, Spring	2	
25	99806 0614	Bolt, Nose Panel	11	
	99952 0618	Washer, Plain	11	
	99971 0600	Washer, Spring	11	
26	99906 0600	Nut, Nose Panel & Skirt	12	
	99952 0600	Washer, Plain- Nose Panel & Bracket		
	99952 0618	Washer, Plain - Nose Panel & Fender	8	
	99971 0600	Washer, Spring	12	
27	0866 70 131A	Bracket, Nose Panel	1	
28	0866 70 180	Plate (R), Guide	1	
29	0866 71 180	Plate (L), Guide	1	
30	~~0866 70 120A~~	~~Panel Cpt, Nose~~	~~1~~	
31	0866 74 200	Panel Nose	1	
	0866 74 200A	Panel Nose	1	Car No. 103632 72/6 ~ 107711 Δ
32	0866 70 160C	Skirt (1972 Model)	1	
	0866 70 160D	Skirt (1973 Model)	1	
33	99906 0600	Nut	4	
	99952 0618	Washer, Plain	4	
	99971 0600	Washer, Spring	4	
34	99864 0616	Screw	2	
	99896 0600	Nut, Spring	2	
35	90806 7614	Bolt, Set	6	

BODY PANELS (SIDE, COUPE)

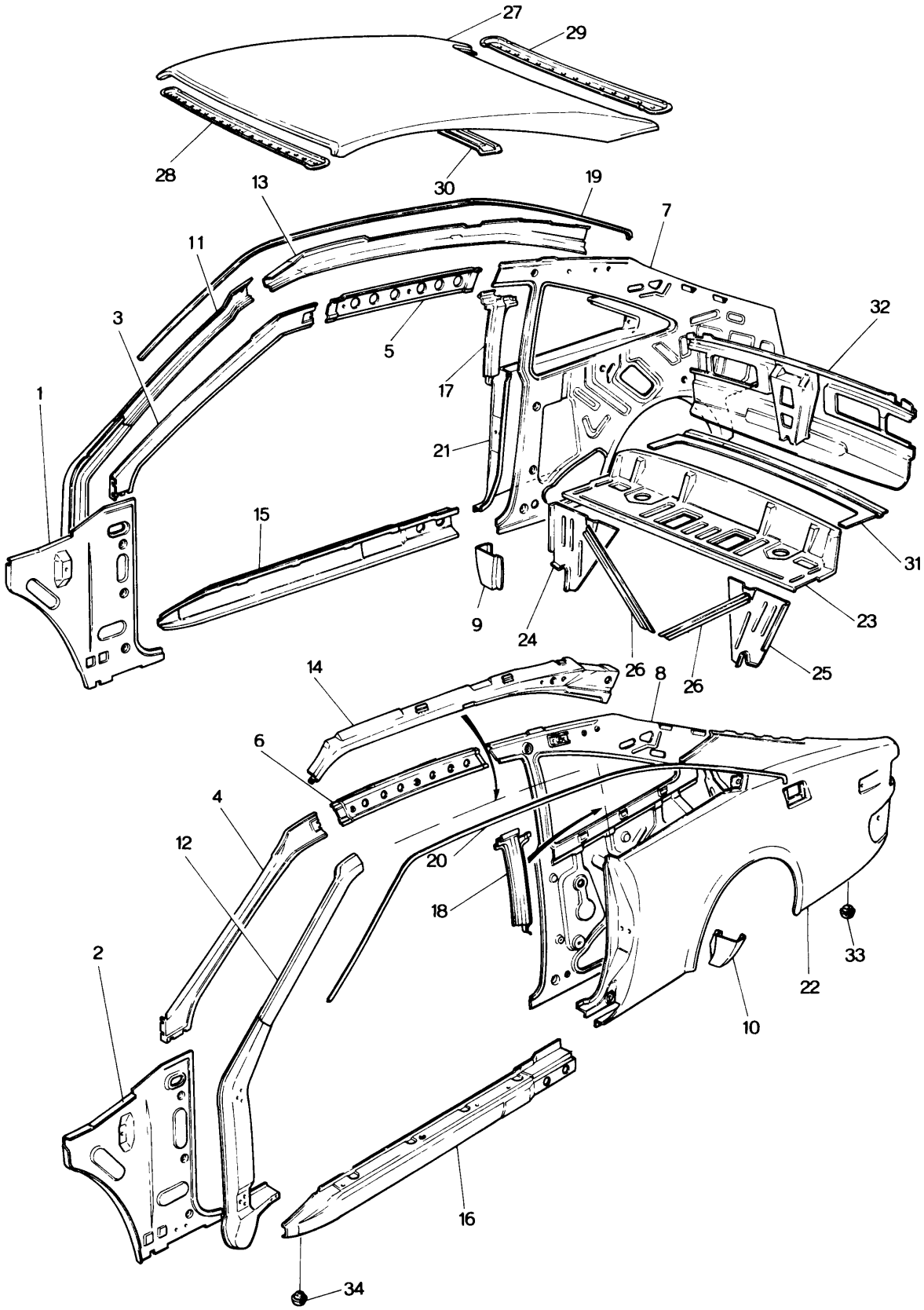

No.	Part Number	Description	Q'ty	Remarks
1	1524 53 320A	Panel (R), Cowl Side	1	
2	1524 54 320B	Panel (L), Cowl Side	1	
3	0376 53 330	Pillar (R), Front Inner	1	
4	0376 54 330	Pillar (L), Front Inner	1	
5	0376 53 340	Rail (R), Roof Inner	1	
6	0376 54 340	Rail (L), Roof Inner	1	
7	1572 53 350	Panel (R), Quarter Inner	1	
	1572 53 350A	Panel (R), Quarter Inner	1	Car No. 132633 73/3 ~ △ 135305
•	1572 53 350B	Panel (R), Quarter Inner	1	73/7 ~ ○
8	0376 54 350C	Panel (L), Quarter Inner	1	
	0376 54 350D	Panel (L), Quarter Inner	1	Car No. 132633 73/3 ~ △ 135305
•	0376 54 350E	Panel (L), Quarter Inner	1	73/7 ~ ○
9	0376 53 391	Plate (R), End-Inner	1	
	0376 53 391A	Plate (R), End-Inner	1	Car No. 132633 73/3 ~ △ 135305
10	0376 54 391	Plate (L), End-Inner	1	
	0376 54 391A	Plate (L), End-Inner	1	Car No. 132633 73/3 ~ △ 135305
11	1562 74 090	Pillar (R), Hinge Outer	1	
12	1562 74 120	Pillar (L), Hinge Outer	1	
13	0376 53 430	Rail (R), Roof Outer	1	
14	0376 54 430	Rail (L), Roof Outer	1	
15	0376 53 451	Sill (R), Side Outer	1	
16	0376 54 451	Sill (L), Side Outer	1	
17	0376 53 500A	Pillar (R), Center-Outer	1	
18	0376 54 500A	Pillar (L), Center-Outer	1	
19	0376 53 591	Rail (R), Rain	1	
20	0376 54 591	Rail (L), Rain	1	
21	1542 53 800	Panel (R), Rear Fender	1	
	0376 74 100	Panel (R), Rear Fender	1	From Car No. 1
22	1542 54 800	Panel (L), Rear Fender	1	
	0376 74 130	Panel (L), Rear Fender	1	From Car No. 1
23	1542 53 810B	Tray, Package	1	
24	0886 53 830A	Brace (R), Side	1	
25	0886 54 830A	Brace (L), Side	1	
26	0886 53 845	Brace, Diagonal	2	

BODY PANELS (SIDE, COUPE)

No.	Part Number	Description	Q'ty	Remarks
27	0376 74 030	Panel, Roof	1	
28	0376 53 920	Header, Front	1	
29	0376 53 941	Header, Rear	1	
30	0376 53 950	Reinforcement, Roof	1	
31	0376 74 050	Panel, Rear Deck	1	
32	1527 70 050	Panel, Rear End	1	
33	0259 53 455	Plug, Drain	6	
34	0824 56 999	Valve, Check - Side Sill	2	

BODY PANELS (SIDE, SEDAN)

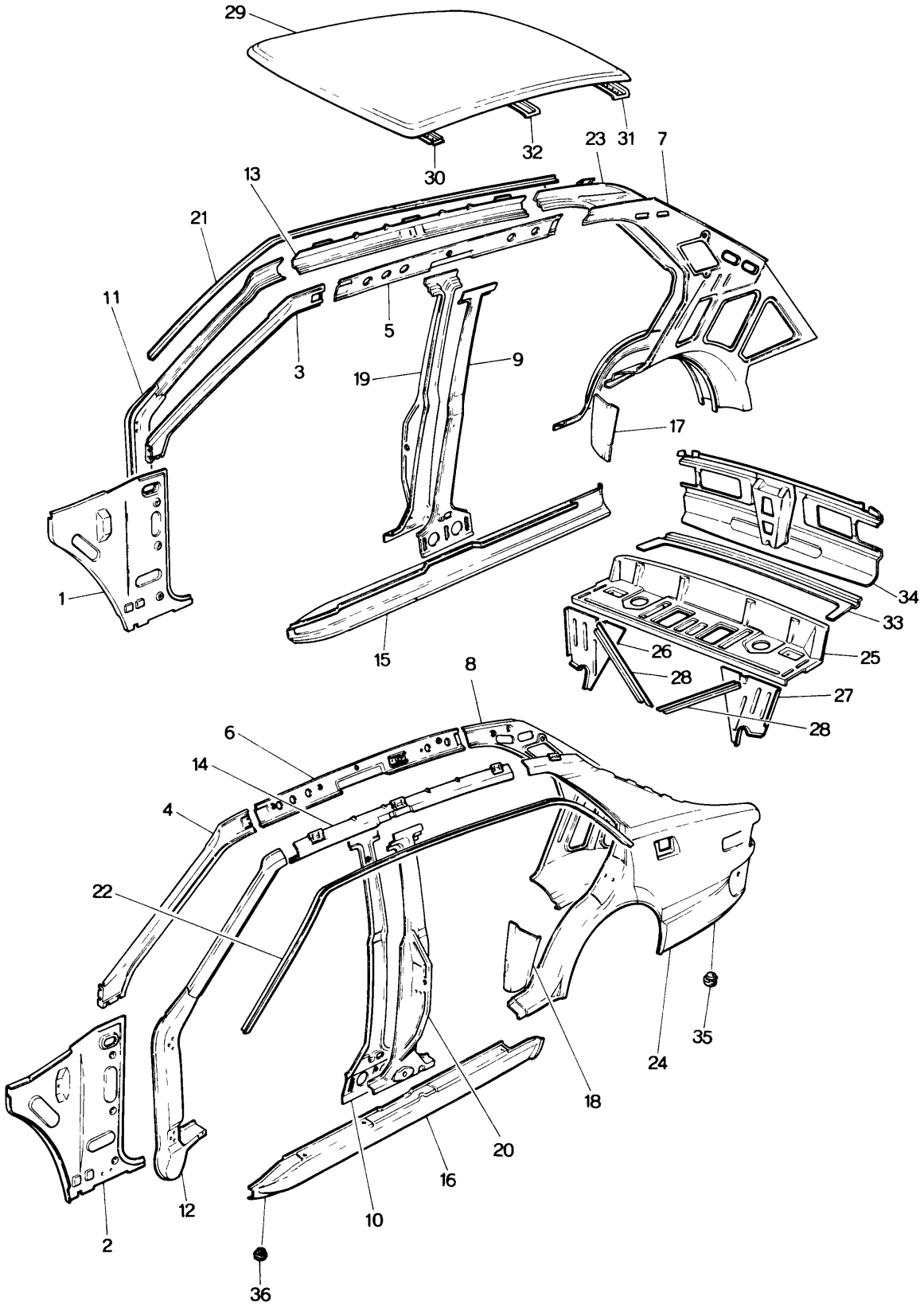

No.	Part Number	Description	Q'ty	Remarks
1	1524 53 320A	Panel (R), Cowl Side	1	
2	1524 54 320B	Panel (L), Cowl Side	1	
3	0866 53 330	Pillar (R), Front Inner	1	
4	0866 54 330	Pillar (L), Front Inner	1	
5	0866 53 340A	Rail (R), Roof Inner	1	
6	0866 54 340	Rail (L), Roof Inner	1	
7	1570 53 350	Pillar (R), Rear Inner	1	
8	1531 54 350C	Rillar (L), Rear Inner	1	
9	0866 53 381	Pillar (R), Center- Inner	1	
10	0866 54 381	Pillar (L), , Center- Inner	1	
11	0866 74 090	Pillar (R), Hinge Outer	1	
12	0866 74 120	Pillar (L), Hinge Outer	1	
13	0866 53 430	Rail (R), Roof Outer	1	
14	0866 54 430	Rail (L), Roof Outer	1	
15	0866 53 451	Sill (R), Side Outer	1	
16	0866 54 451	Sill (L), Side Outer	1	
17	0866 53 452	Plate (R), Filler	1	
18	0866 54 452	Plate (L), Filler	1	
19	0866 53 500	Pillar (R), Center- Outer	1	
●	0866 53 500A	Pillar (R), Center-Outer	1	Car No. 114131 $^{72}/_{10}$ ~ 116584 △
20	0866 54 500	Pillar (L), Center- Outer	1	
●	0866 54 500A	Pillar (L), Center-Outer	1	Car No 114131 $^{72}/_{10}$ ~ 116584 △
21	0866 53 591	Rail (R), Rain	1	
22	0866 54 591	Rail (L), Rain	1	
23	1540 53 600	Panel (R), Rear Fender	1	Order Under No 0866 74 100
●	0866 74 100	Panel (R), Rear Fender	1	From Car No. 1
24	1540 54 600	Panel (R), Rear Fender	1	Order under No. 0866 74 130
●	0866 74 130	Panel (R), Rear Fender	1	From Car No. 1
● 25	1540 53 810C	Tray, Package	1	~~Order Under No. 0866 74 130~~
●	1540 53 810D	Tray, Package	1	Car No. 120143 $^{72}/_{12}$ ~ 120913 △
26	0866 53 830A	Brace (R)	1	

BODY PANELS (SIDE, SEDAN)

No.	Part Number	Description	Q'ty	Remarks
27	0866 54 830A	Brace (L), Side	1	
28	0866 53 845	Brace, Diagonal	2	
29	0866 74 030	Panel, Roof	1	
30	0866 53 920	Header, Front	1	
31	0866 53 941	Header, Rear	1	
32	0866 53 950	Reinforcement, Roof	1	
33	0866 74 050	Panel, Rear Deck	1	
34	1524 70 050	Panel, Rear End	1	
35	0259 53 455	Plug, Drain (Side Seal Outer····6, Rear Fender····2)	8	
36	0118 56 2428	Plug, Drain	2	

BODY PANELS (SIDE, STATION WAGON)

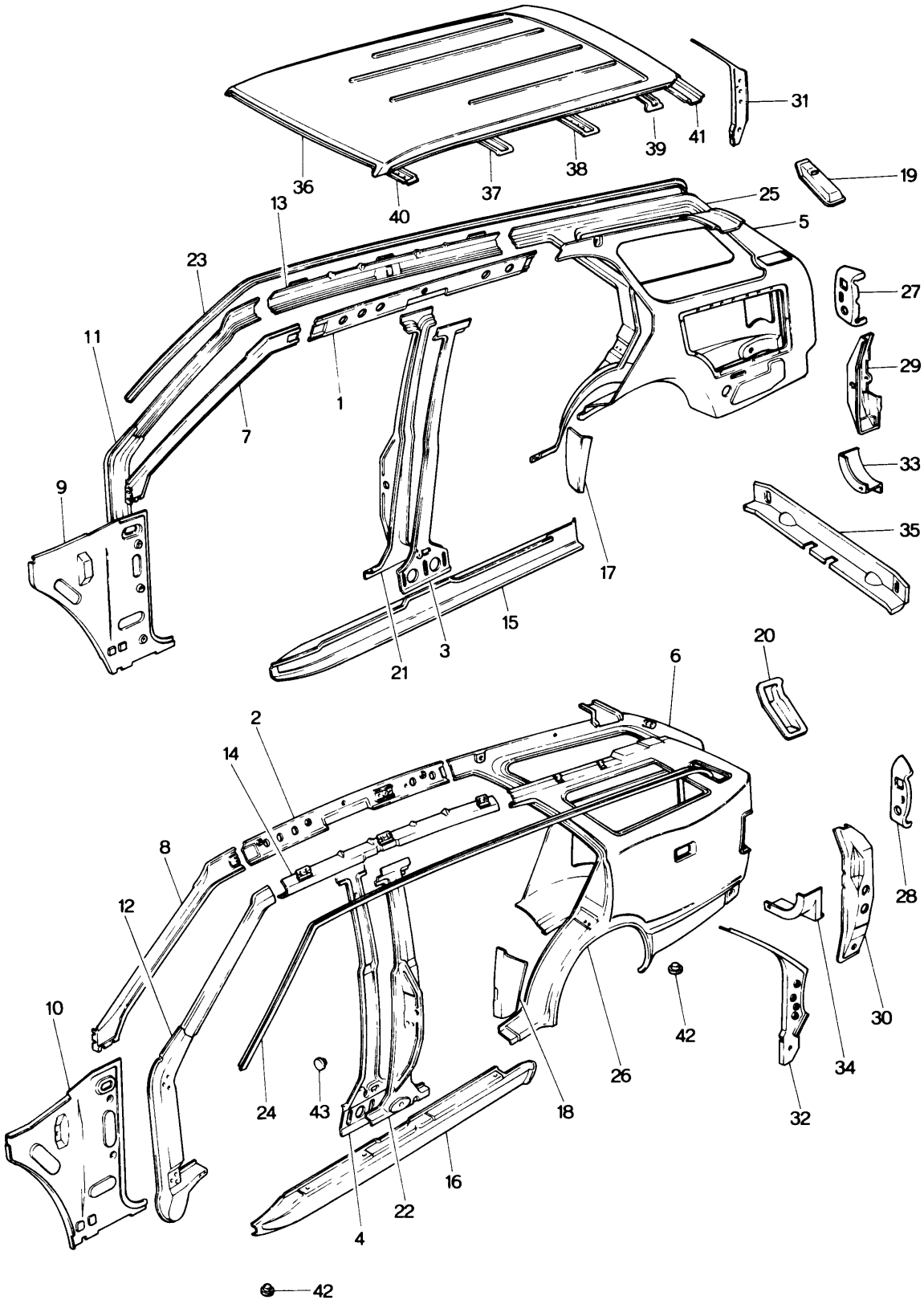

No.	Part Number	Description	Q'ty	Remarks
1	0585 53 340	Rail (R), Roof Inner	1	
2	0585 54 340	Rail (L), Roof Inner	1	
3	0866 53 381	Pillar (R), Center- Inner	1	
4	0866 54 381	Pillar (L), Center- Inner	1	
5	1571 53 310	Panel (R), Inside	1	
6	1544 54 310A	Panel (L), Inside	1	
	0585 54 310A	Panel (L), Inside	1	Car No. 105638 $^{72}/_{8}$ ~○
7	0866 53 330	Pillar (R), Front Inner	1	
8	0866 54 330	Pillar (L), Front Inner	1	
9	1524 53 320A	Panel (R), Cowl Side	1	
10	1524 54 320B	Paned (L), Cowl Side	1	
11	0866 74 090	Pillar (R), Hinge Outer	1	
12	0866 74 120	Pillar (L), Hinge Outer	1	
13	0585 53 430	Rail (R), Roof Outer	1	
14	0585 54 430	Rail (L), Roof Outer	1	
15	0866 53 451	Sill (R), Side Outer	1	
16	0866 54 451	Sill (L), Side Outer	1	
17	0866 53 452	Plate (R), Filler	1	
18	0866 54 452	Plate (L), Filler	1	
19	0585 53 480B	Chamber (R)	1	
20	0585 54 480B	Chamber (L)	1	
21	0866 53 500	Pillar (R), Center- Outer	1	
22	0866 54 500	Pillar (L), Center- Outer	1	
23	0585 53 591	Rail (R), Rain	1	
24	0585 54 591	Rail (L), Rain	1	
25	1544 53 600	Panel (R), Rear Fender	1	
26	1544 54 600	Panel (L), Rear Fender	1	

BODY PANELS (SIDE, STATION WAGON)

No.	Part Number	Description	Q'ty	Remarks
27	0585 53 651	Housing (R), Lamp	1	
28	0585 54 651	Housing (L), Lamp	1	
29	0585 53 660	Reinforcement (R)	1	
	0585 53 660A	Reinforcement (R)	1	Car No. 104518 72/7 ~ △
30	0585 54 660	Reinforcemnnt (L)	1	
	0585 54 660A	Reinforcement (L)	1	Car No. 104518 72/7 ~ △
31	0585 53 670A	Pillar (R), Rear- Outer	1	
32	0585 54 670A	Pillar (L), Rear- Outer	1	
33	0585 53 691	Junction (R), Corner	1	
34	0585 54 691	Junction (L), Corner	1	
35	0585 53 701A	Crossmember, Rear- Outer	1	
36	0585 74 030	Panel, Roof	1	
37	0868 53 950	Reinforcement, Roof	1	
38	0868 53 951	Reinforcement, Roof	1	
39	0585 53 970A	Reinforcement, Roof	1	
40	0868 53 920	Header, Front	1	
41	0585 53 941	Header, Rear	1	
42	0259 53 455	Plug, Drain (Side Sill····6, Rear Fender·· 2)	8	
43	0118 56 242B	Plug, Drain- Center Pillar	2	

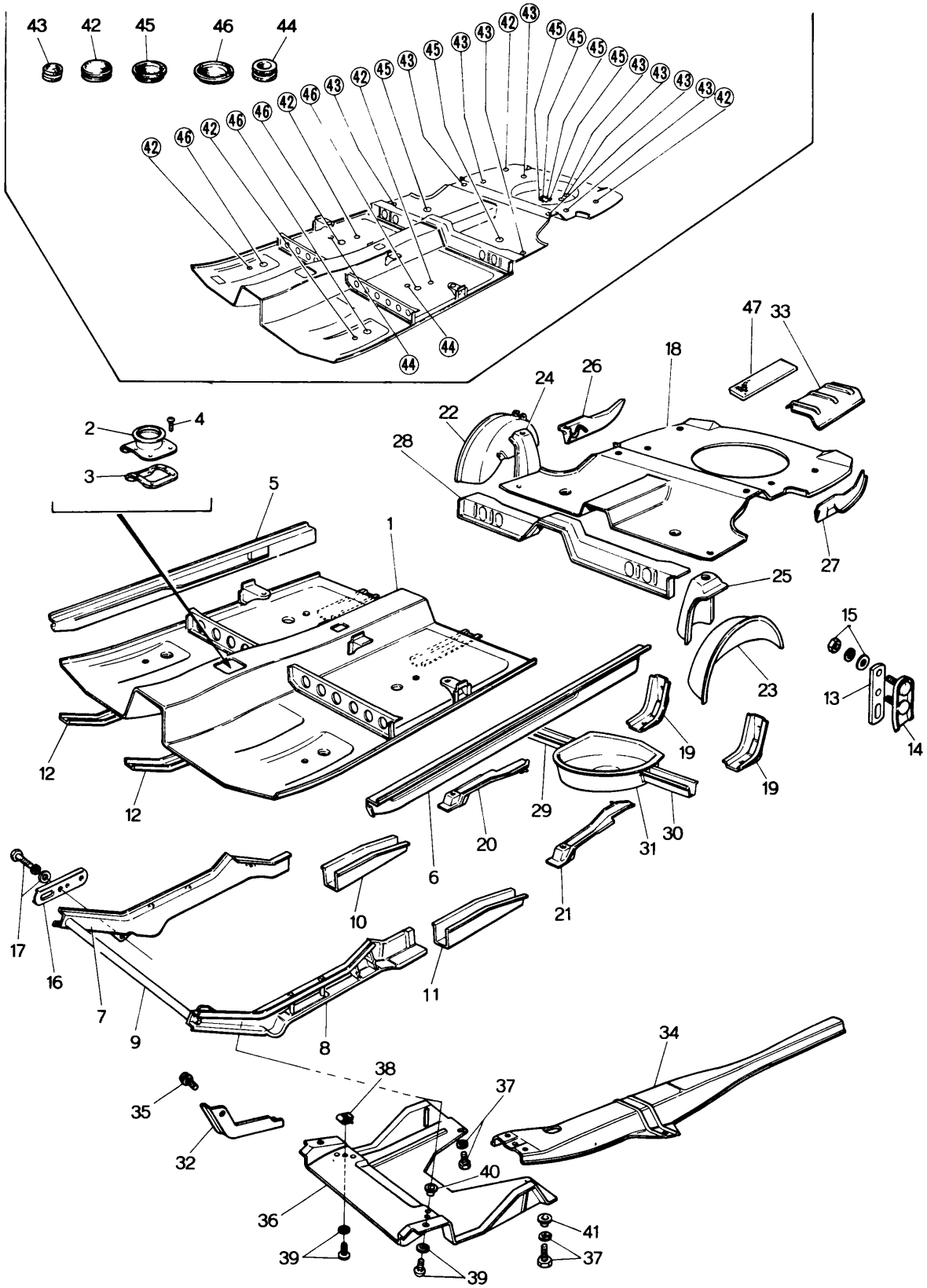
43
42
45
46
44
47
33
18
24
26
22
28
2
4
3
5
1
27
25
15
23
13
14
12
19
29
20
31
30
6
10
21
17
16
7
9
8
11
34
38
37
35
32
40
36
41
39

No.	Part Number	Description	Q'ty	Remarks	Price
1	1570 56 010	Pan, Front Floor (1972 Model)	1		
	1570 56 010B	Pan, Front Floor-General U.S.A.-Manual 4 Speed	1		
•	1570 56 010C	Pan, Front Floor-General U.S.A.-Manual 4 Speed	1	'73/5~O	
	1608 56 010B	Pan, Front Floor-General U.S.A.-Manual 5 Speed	1		
	1608 56 010C	Pan, Front Floor-General U.S.A.-Manual 5 Speed	1	Car No. 109301 '72/9~X	
	1608 56 010D	Pan, Front Floor-General U.S.A.-Manual 5 Speed	1	Car No. 109301 '72/9~Δ	
•	1608 56 010E	Pan, Front Floor-General U.S.A.-Manual 5 Speed	1	'73/5~O	
	1609 56 010 B	Pan, Front Floor-Canada & Northern U.S.A.-Manual 5 Speed	1	(1973 Model)	
	1609 56 010C	Pan, Front Floor-Canada & Northern U.S.A.-Manual 5 Speed	1	Car No. 109301 '72/9~X	
	1609 56 010D	Pan, Front Floor-Canada & Northern U.S.A.-Manual 5 Speed	1	Car No. 109301 '72/9~Δ	
•	1609 56 010E	Pan, Front Floor-Canada & Northern U.S.A.-Manual 5-Speed	1	'73/5~O	
	1621 56 010	Pan, Front Floor-Automatic	1		
•	1621 56 010A	Pan, Front Floor-Automatic	1	'73/5~O	
	1628 56 010B	Pan, Front Floor-Canada & Northern U.S.A.-Manual 4 Speed	1		
•	1628 56 010C	Pan, Front Floor-Canada & Northern U.S.A.-Manual 4 Speed	1	'73/5~O	
2	0866 56 981	Insulator	1		
• 3	~~0367 68 832A Seat, Boot~~ 0367 68 832A Seat, Boot	(Manual)	1	From Car No. 1	
4	99864 0512	Screw, Boot Seat	4		
5	~~0376 56 080B Panel (R), Sill-Inner (Coupe)~~		~~1~~		
	0376 56 080C	Panel (R), Sill-Inner (Coupe)	1	From Car No. 1 ○	
	~~0376 56 080B Panel (R), Sill-Inner (Coupe)~~		~~1~~		
	0866 56 080C	Panel (R), Sill-Inner (Sedan)	1	From Car No. 1 ○	
6	0376 56 580A	Panel (L), Sill-Inner (Coupe)	1		
	0866 56 580A	Panel (L), Sill-Inner (Sedan)	1		
7	1524 56 110G	Frame (R), Front	1		
	1524 56 110H	Frame (R), Front	1	Car No. 107711 '72/6~O	

No.	Part Number	Description	Q'ty	Remarks	Price
8	1524 56 610D	Frame (L), Front	1		
9	0866 56 171	Member No. 1, Cross	1		
10	0866 56 180	Frame (R), "B"-Front	1		
11	0866 56 181A	Frame (L), "B" Front	1		
12	1524 56 117	Reinforcement "A"	2		
	1524 56 118	Reinforcement "B"	2		
13	0866 78 521	Hook, Rear	1		
14	0866 78 530	Reinforcement, Rear Hook	1		
15	99921 1000	Nut, Rear Hook	2		
	99951 1022	Washer, Plain	2		
	99971 1000	Washer, Spring	2		
16	0866 78 541	Hook, Front	1		
17	99781 1028	Bolt, Front Hook	2		
	99951 1022	Washer, Plain	2		
	99971 1000	Washer, Spring	2		
18	1570 56 210B	Pan, Rear Floor (1972 Model)	1		
	1620 56 210	Pan, Rear Floor (1973 Model)	1		
19	0866 56 215	Bracket, Bumper	2		
20	0866 56 310A	Frame (R), Rear	1		

No.	Part Number	Description	Q'ty	Remarks	Price
21	0866 56 810A	Frame (L), Rear	1		
22	0866 56 330	Panel (R), Wheel House	1		
23	0866 56 830	Panel (L), Wheel House	1		
24	0866 56 350	Bracket (R), Damper	1		
25	0866 56 850	Bracket (L), Damper	1		
26	0376 56 381	Panel (R), Rear Floor Side (Coupe)	1		
	0866 56 381	Panel (R), Rear Floor Side (Sedan)	1		
27	0376 56 881	Panel (L), Rear Floor Side (Coupe)	1		
	0866 56 881	Panel (L), Rear Floor Side (Sedan)	1		
28	1570 56 400	Member No. 3, Cross	1		
29	1570 56 450	Member No. 4 (R), Cross	1		
30	0866 56 470A	Member No. 4 (L), Cross	1		
31	0866 56 481A	Pan, Spare Tire	1		
32	0866 56 701	Insulator No. 1 } Manual	1		
●	0866 56 701A	Insulator No. 1 } Manual	1	Car No. 108472 $^{72}/_{8}$ ~○	
●	0871 56 701A	Insulator No. 1 Automatic	1		
33	0866 56 702	Insulator No. 2	1		
34	1570 56 711B	Insulator No. 3	1		
●	1570 56 711C	Insulator No. 3	1	Car No. 108472 $^{72}/_{8}$ ~○	
Ⓝ	1570 56 720A	Insulator No. 4	1		
	1570 56 720B	Insulator No. 4	1	Car No. 106415 $^{72}/_{4}$ ~○	

No.	Part Number	Description		Q'ty	Remarks	Price
35	99804 0614	Bolt, Insulator		{16 / 14}	Car No. 106415 $^{72}/_{4}$ ~Q'ty	
	99952 0618	Washer, Plain		{16 / 14}	Car No. 106415 $^{72}/_{4}$ ~Q'ty	
	99971 0600	Washer, Spring		{16 / 14}	Car No. 106415 $^{72}/_{4}$ ~Q'ty	
36	0866 56 901B	Cover, Under		1		
	0866 56 901C	Cover, Under		1	Car No. 108368 $^{72}/_{7}$ ~O	
37	99785 0620	Bolt, Under Cover		4		
	99952 0618	Washer, Plain		4		
38	0820 56 905	Nut, Spring		4		
39	99863 0516	Screw, Under Cover		4		
	99952 0500	Washer, Plain		4		
40	0820 56 906	Spacer, Under Cover		2		
41	0223 52 007	Spacer, Under Cover		2		
42	0118 56 241	Plug, Drain		6		
43	0118 56 242B	Plug, Drain	Sedan Coupe	10 11		
44	0208 56 615	Plug, Drain (Sedan)		2		
45	0810 56 639	Cover, Service Hole		6		
46	0866 56 971	Cover, Hole		4		
● 47	0866 56 489	Pad		4		

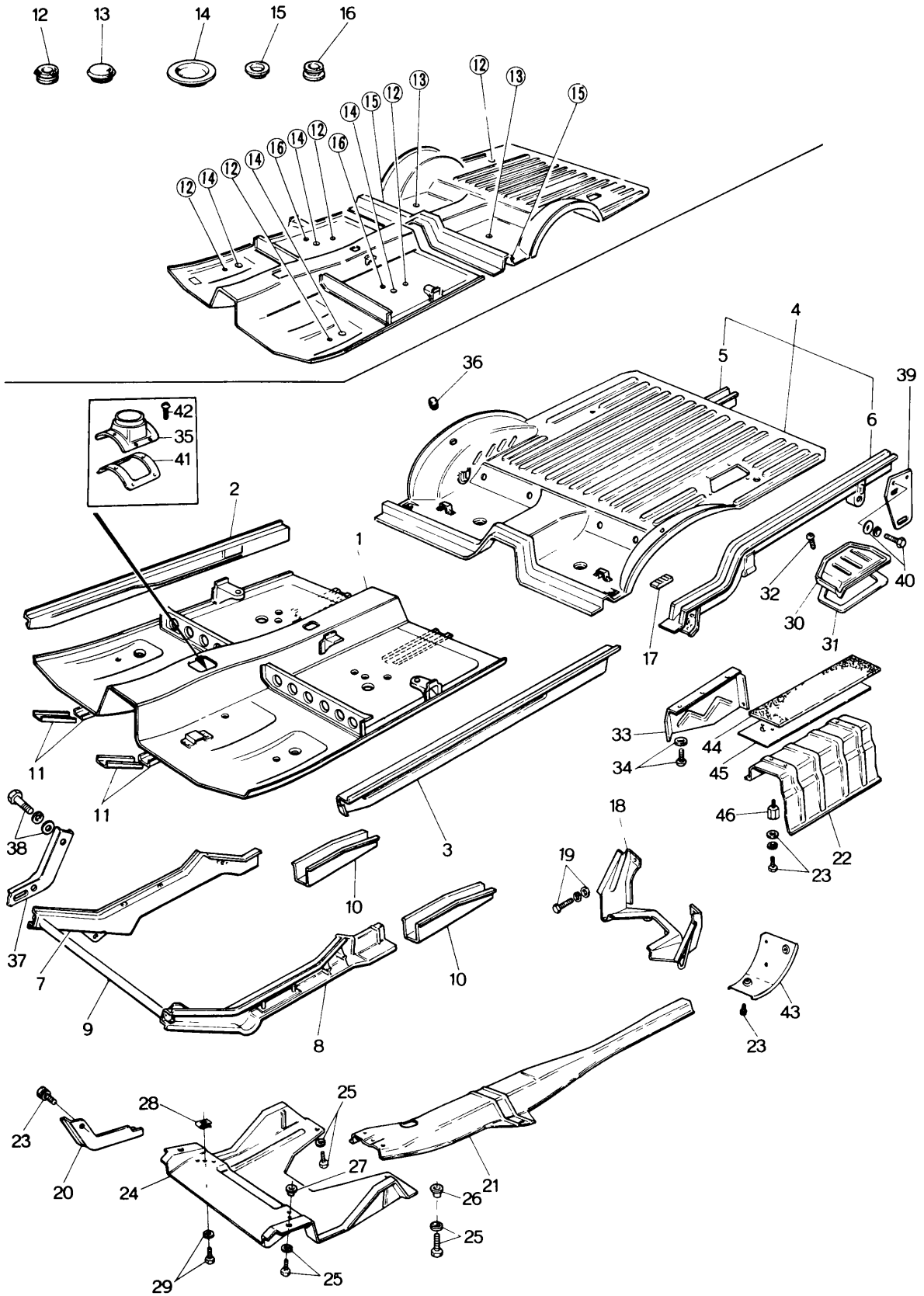
12
13
14
15
16
42
35
41
36
4
5
39
6
2
1
40
32
30
31
17
33
44
34
45
46
22
23
11
11
38
3
18
19
10
10
37
7
9
8
43
23
23
20
28
25
24
27
26
21
25
29
25

No.	Part Number	Description	Q'ty	Remarks
1	1570 56 010	Pan, Front Floor (1972 Model)	1	
	1570 56 010B	Pan, Front Floor (General U.S.A.) - Manual	1	1973 Model '73/5~O
●	1570 56 010C	" " " " " "	1	
	1621 56 010	Pan, Front Floor (Automatic)	1	1973 Model '73/5~O
●	1621 56 010A	" " " " "	1	
	1628 56 010B	Pan, Front Floor (Canada & Northern U.S.A.)	1	1973 Model '73/5~O
●	1628 56 010C	" " " " " "	1	
2	0866 56 080C	Sill (R), Side - Inner	1	
3	0866 56 580A	Sill (L), Side - Inner	1	
4	0899 56 300D	Floor, Rear (1972 Model)	1	
	0899 56 300E	Floor, Rear (1972 Model)	1	Car No. 103632 '72/6~○
	1624 56 300	Floor, Rear (1973 Model)	1	
5	0585 56 330B	Member (R), Rear	1	
6	0585 56 830D	Member (L), Rear	1	
7	1524 56 110G	Frame (R), Front	1	
●	~~1524 56 110I~~	~~Frame (R), Front~~	~~1~~	~~Car No. 103632 '72/6~○~~
●	1524 56 110H	Frame (R), Front	1	Car No. 103632 '72/6~○
8	1524 56 610D	Frame (L), Front	1	
	1524 56 610E	Frame (L), Front	1	Car No. 103632 '72/6~○
9	0866 56 171	Member No. 1	1	
10	0866 56 181A	Frame "B", Front	2	
11	1524 56 117	Reinforcement "A"	2	
	1524 56 118	Reinforcement "B"	2	
12	0118 56 241	Plug, Drain	5	
13	0810 56 639	Cover, Hole	2	
14	0868 56 971	Cover, Hole	4	
15	0118 56 242B	Plug, Drain	3	
16	0208 56 815	Plug, Drain	2	
17	0187 56 235	Supporter, Seat	2	
18	0585 56 540	Hanger, Silencer	1	
●	0585 56 540A	Hanger, Silencer	1	Car No. 106225 '72/8~X
19	99804 0820	Bolt, Silencer Hanger	4	
	99952 0822	Washer, Plain	4	
	99971 0800	Washer, Spring	4	

No.	Part Number	Description	Q'ty	Remarks
20	0866 56 701	Insulator No. 1 } (Manual)	1	
	0866 56 701A	Insulator No. 1 } (Manual)	1	Car No. 106225 7/8 ~ ○
	0871 56 701A	Insulator No. 1 (Automatic)	1	Car No. 106225 7/8 ~ Added Anew
21	1570 56 711B	Insulator No. 3	1	
	1570 56 711C	Insulator No. 3	1	Car No. 106225 7/8 ~ ○
22	0899 56 921	Insulator No. 2	1	
	0899 56 921A	Insulator No 2	1	Car No. 102380 7/4 ~ ○
23	99804 0614	Bolt, Insulator	14	
	99952 0618	Washer, Plain	14	
	99971 0600	Washer, Spring	14	
24	0866 56 901B	Cover, Under	1	
	0866 56 901C	Cover, Under	1	Car No. 104518 7/7 ~ ○
25	99785 0620	Bolt, Under Cover	4	
	99952 0618	Washer, Plain	4	
26	0223 52 007	Spacer	2	
27	0820 56 906	Spacer	2	
28	0820 56 905	Nut, Spring	4	
29	99863 0516	Screw, Under Cover	4	
	99952 0500	Washer, Plain	4	
30	0585 56 901A	Cover, Service Hole	1	
31	0585 56 902	Tape	1	
32	99868 0408	Screw, Tapping-Service Hole Cover	4	
33	0585 56 911A	Protector	1	
34	99860 0510	Screw, Tapping-Protector	4	
	99952 0600	Washer, Plain	4	
35	0866 56 981	Insulator (Manual)	1	
36	~~0614 73 981~~	~~Rubber, Cushion-Rear Tire House~~	~~2~~	
37	~~0888 78 541~~	~~Hook, Front~~	~~1~~	
38	~~99781 1028~~	~~Bolt, Front Hook~~	~~2~~	
	~~99851 1022~~	~~Washer, Plain~~	~~2~~	
	~~99871 1008~~	~~Washer, Spring~~	~~2~~	

No.	Part Number	Description	Q'ty	Remarks
39	0585 78 521	Hook, Rear	1	
40	99805 1032	Bolt, Rear Hook	1	
	99951 1022	Washer, Plain	1	
	99971 1000	Washer, Spring	1	
41	0367 68 832A	Seat, Boot (Manual)	1	
42	99864 0512	Screw, Boot Seat	4	
43	1571 56 712	Insulator No. 4	1	
	1571 56 712A	Insulator No. 4	1	Car No. 106225 $^{72}/_{8}$ ~ X
	1571 56 712B	Insulator No. 4	1	Car No. 130341 $^{73}/_{3}$ ~ △
44	1571 56 751	Insulator	1	
45	1571 56 760	Insulator No. 5	1	
46	1571 56 755	Bolt	4	

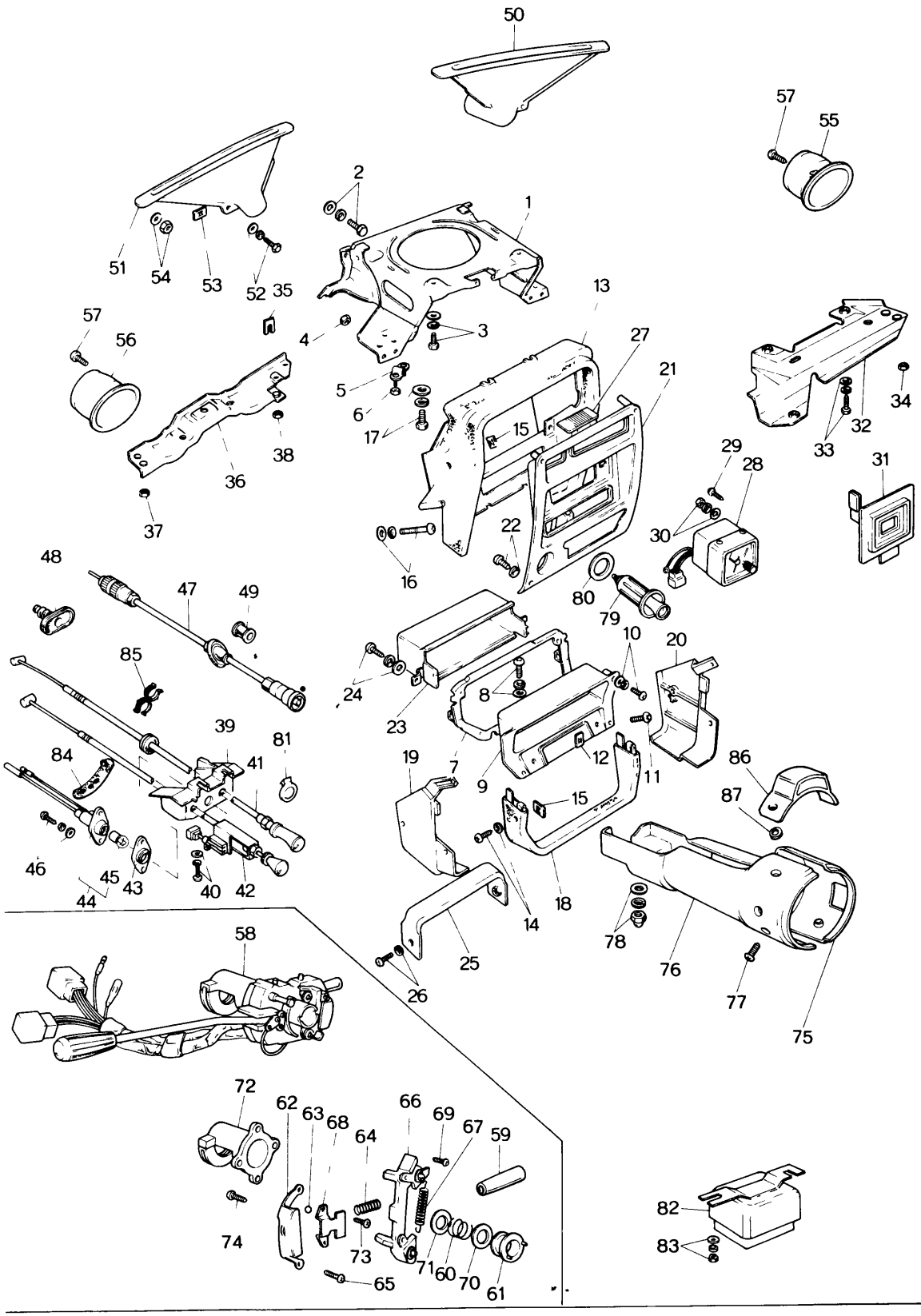
50
57
55
2
1
51
54
53
52
35
13
57
56
4
3
27
21
5
6
17
15
34
32
33
29
28
31
38
36
37
22
30
16
80
79
48
47
49
10
20
85
24
8
23
39
81
84
41
12
19
7
9
11
86
87
15
46
45
43
40
42
44
18
14
78
25
26
76
77
75
58
72
62
63
68
64
66
69
67
59
74
73
71
60
70
61
65
82
83

No.	Part Number	Description	Q'ty	Remarks
1	0886 55 100F	Bracket, Center Panel	1	
2	99804 0820	Bolt, Center Panel Bracket	2	
	99952 0822	Washer, Plain	2	
	99971 0800	Washer, Spring	2	
3	99805 0816	Bolt, Center Panel Bracket	2	
	99952 0800	Washer, Plain	2	
	99971 0800	Washer, Plain	2	
4	99940 0802	Nut, Center Panel Bracket	2	
5	0370 55 150	Bracket, Cooler	1	
6	99940 0602	Nut, Cooler Bracket	2	
7	0866 55 360C	Holder, Grille	1	
8	99838 0618	Screw, Grille Holder	1	
	99952 0618	Washer, Plain	1	
	99971 0600	Washer, Spring	1	
9	0866 55 365B	Body, Grille	1	
	0866 55 365C	Body, Grille	1	Car No. 100097 ⁷⁄₃～102069 ⁷⁄₃～○
Ⓝ	0866 55 368	Ornament- Turner	1	Car No. 100097 ⁷⁄₃～102069 ⁷⁄₃～ Added Anew
10	99838 0412B	Screw, Grille Body	2	
	99952 0400B	Washer, Plain	2	
	99971 0400	Washer, Spring	2	
11	99861 0414B	Screw, Grille Body	2	
12	99869 0400	Nut, Spring-Grille Body	2	
13	0865 55 401D	Hood No. 1	1	©
14	99862 0525B	Screw, Hood No. 1	4	
	99967 0500B	Washer	4	
15	0820 56 905	Nut, Spring-Hood No. 1 & No. 2	4	
16	99743 0650	Screw, Hood No. 1	2	
	99952 0600	Washer, Plain	2	

No.	Part Number	Description	Q'ty	Remarks	
	99971 0600	Washer, Spring	2		
17	99833 0618	Screw, Hood No. 1	2		
	99952 0618	Washer, Plain	2		
	99971 0600	Washer, Spring	2		
18	0865 55 402B	Hood No. 2	1		©
19	0865 55 403B	Hood No. 3 (R)	1		©
20	0865 55 404B	Hood No. 3 (L)	1		©
21	1562 55 405	Plate, Center	1		
22	99863 0510	Screw, Center Panel	4		
	99952 0500	Washer, Plain	4		
23	0866 55 406B	Box, Hood Center	1		©
24	99838 0412	Screw, Hood Box	2		
	99952 0400	Washer, Plain	2		
	99971 0400	Washer, Spring	2		
25	0866 55 590	Stiffener	1		
26	99837 0525B	Screw, Stiffener	2		
	99967 0500B	Washer	2		
27	~~0866 55 412~~	~~Lens, Illumination~~	~~1~~		
●	0866 55 412A	Lens, Illumination	1	Car No. 1 ~	
28	1562 55 710	Clock, Auto	1		
29	99836 0416B	Screw, Auto Clock	4		
30	99906 0500	Nut, Auto Clock	1		
	99952 0516	Washer, Plain	1		
	99971 0500	Washer, Spring	1		
31	1561 55 720A	Ornament, Without Auto Clock	1		
32	~~1524 55 230B~~	~~Member (R), Lower~~	~~1~~		
	1524 55 230B	Member (R), Lower	1	From Car No. 1	
33	90797 0614	Bolt, Member	1		

No.	Part Number	Description	Q'ty	Remarks
	99952 0618	Washer, Plain	1	
	99971 0600	Washer, Spring	1	
34	99940 0602	Nut, Member	2	
35	0866 55 216	Shim (t=1.0)		
	0866 55 217	Shim (t=2.0) } Selective use	1	
	0866 55 218	Shim (t=3.2)		
36	1524 55 210B	Member (L), Lower	1	
37	99940 0602	Nut, Member	4	
38	99940 0800	Nut, Member	1	
39	1570 55 330A	Bracket, Choke	1	
•	1570 55 330B	Bracket, Choke	1	Car No 147864 152370 T3/8~X
40	99939 0520B	Screw, Choke Bracket	2	
	99952 0500B	Washer, Plain	2	
	99971 0500	Washer, Spring	2	
41	1570 60 040	Wire, Throttle	1	
42	1570 60 050A	Cable, Choke (1972 Model)	1	
	1620 60 050A	Cable, Choke (Manual) } (1973 Model)	1	
	1621 60 050	Cable, Choke (Automatic) } (1973 Model)	1	
43	1570 55 340	Cover, Lamp	1	
44	1570 55 410	Lamp, Throttle Wire	1	
45	99701 6030	Bulb, Throttle Wire Lamp	1	
46	99863 0412	Screw, Lamp Cover	2	
	99952 0412	Washer, Plain	2	
	99971 0400	Washer, Spring	2	
47	1562 60 070	Cable, Speedometer	1	
48	0370 60 073B	Grommet, Speedometer	1	
49	99686 0800	Protector, Speedometer Cable	1	
50	0866 60 101	Nozzle (R), Defroster	1	
51	0866 60 102	Nozzle (L), Defroster	1	

No.	Part Number	Description	Q'ty	Remarks
52	99863 0516	Bolt, Defroster Nozzle	2	
	99952 0618	Washer, Plain	2	
	99971 0600	Washer, Spring	2	
53	99896 0500	Nut, Spring-Defroster Nozzle	2	
54	99940 0501	Nut, Defroster Nozzle	4	
	99952 0516	Washer, Plain	4	
55	0866 60 120	Guide (R), Ventilator	1	
56	0866 60 130	Guide (L), Ventilator	1	
57	99869 0412	Screw, Ventilator Guide	4	
● 58	~~1640 60 250A~~	~~Switch, Combination~~		
●	1540 60 250	Switch, Combination	1	From Car No. 1
●	1634 60 250	Switch, Combination	1	Car No. 119373 72/11 ~ 120142 ○
59	0866 60 251	Knob	1	
60	0317 60 252	Spring, Cancel Cam	1	
61	0317 60 253	Cam, Cancel	1	
62	0317 60 254	Bracket, Fixing	1	
●	1634 60 254	Bracket, Fixing	1	Car No. 119373 72/11 ~ 120142 ○
63	0317 60 255	Ball	1	
64	0317 60 256	Spring, Arm Set	1	
65	0317 60 257	Screw, Bracket	2	
66	0317 60 258	Arm	1	
67	0317 60 259	Spring, Ratchet	1	
68	0317 60 261	Plate, Set	1	
69	0317 60 262	Screw Set, Plate	2	
70	0866 60 263	Washer "A"	1	
71	0866 60 264	Washer "B"	1	
72	0866 60 265A	Band	1	

No.	Part Number	Description	Q'ty	Remarks	
73	0317 60 266	Screw	2		
74	0866 60 267	Screw, Light Switch	2		
75	1524 60 335A	Cover (R), Column	1		
●	1620 60 335	Cover (R), Column	1	Car No. 147866 152370	T3/8~X
76	1524 60 345A	Cover (L), Column	1		
●	1620 60 345	Cover (L), Column	1	Car No. 147866 152370	T3/8~X
77	99832 04088	Screw, Column Cover	4		
78	99945 05008	Nut, Cap-Column Cover	1		
	99952 05008	Washer, Plain	1		
	99971 0500	Washer, Spring	1		
79	0866 60 720	Lighter, Cigar	1		
80	0305 60 715	Shield, Heat-Cigar Lighter	1		
81	0259 55 951	Cover, Hole-Fog Lamp Switch	1		
82	1540 60 930	Relay, Turn Signal	1		
83	99906 0600	Nut, Turn Signal Relay	2		
	99952 0600	Washer, Plain	2		
	99971 0600	Washer, Spring	2		
● 84	0187 66 991	Clip, Rubber	1		
● 85	99288 1608	Clip	1		
● 86	1611 60 311	Plate, Name	1		
● 87	1611 60 312	Spacer	2		

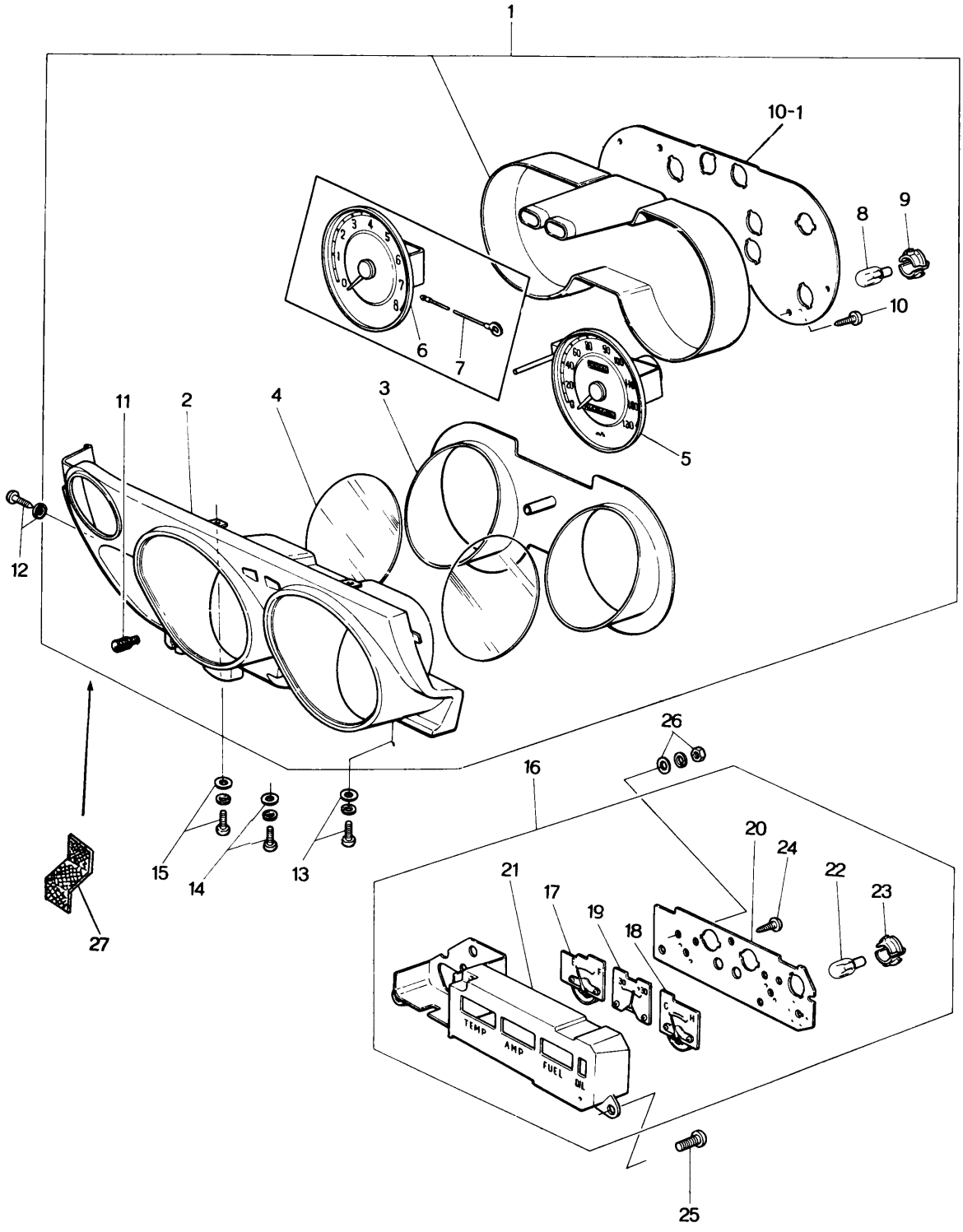
1
10-1
8
9
10
6
7
5
11
2
4
3
12
26
16
20
24
22
23
21
17
19
18
15
14
13
27
25
TEMP
AMP
FUEL

	No.	Part Number	Description	Q'ty	Remarks	
	1	1568 55 530C	Meter Set	1		©
		1568 55 530D	Meter Set	1	Car No. 120143 $^{72}/_{12}$ ~ Δ 120913	©
•		1568 55 530E	Meter Set	1	Car No. 147866 $^{73}/_{8}$ ~ X 152370	
	2	1524 75 010	Hood	1		©
•		1524 75 010A	Hood	1	Car No. 147866 $^{73}/_{8}$ ~ X 152370	
	3	0866 75 011	Plate, Window	1		
	4	0866 75 013	Glass, Window	2		
	5	1514 75 021	Meter	1		
	6	0866 75 026	Tachometer	1		
		1568 75 026	Tachometer	1	Car No. 120143 $^{72}/_{12}$ ~ Δ 120913	
	7	0866 75 028	Wire, Lead - Tachometer	1		
	8	99701 6030	Bulb	9		
	9	0259 55 261	Socket	9		
	10	0710 55 436	Screw, Tapping	3		
	10-1	0866 75 025	Circuit, Print	1	From Car No. 1	©
•		1128 75 025A	Circuit, Print	1	Car No. 135696 $^{73}/_{5}$ ~ X 139448	
	11	0370 75 018	Knob, Trip	1		
	12	99836 0516B	Screw	1		
		99967 0500B	Washer	1		
	13	99833 0612	Screw	1		
		99952 0618	Washer, Plain	1		
		99971 0600	Washer, Spring	1		
	14	99833 0616	Screw	1		
		99952 0618	Washer, Plain	1		
		99971 0600	Washer, Spring	1		
	15	99838 0630	Bolt, Meter	2		
		99952 0618	Washer, Plain	2		
		99971 0600	Washer, Spring	2		

No.	Part Number	Description	Q'ty	Remarks
16	1562 55 460B	Meter, Combination	1	
17	1562 75 122A	Meter, Fuel	1	
18	1562 75 123A	Thermometer	1	
19	1562 75 124A	Ammeter	1	
20	1562 75 125	Plate, Print	1	
21	1562 75 200A	Case	1	
22	99701 6030	Bulb	3	
23	0259 55 261	Socket	3	
24	0275 75 140	Screw, Tapping	4	
25	99863 0512	Screw, Tapping- Combination Meter	3	
	99952 0500	Washer, Plain	3	
26	99906 0400	Nut, Combination Meter	3	
	99952 0400	Washer, Plain	3	
	99971 0400	Washer, Spring	3	
27	1524 55 351	Sheet, Meter	1	Car No. $\frac{100697}{101005}$ $\frac{72}{3}$ ~Added Anew

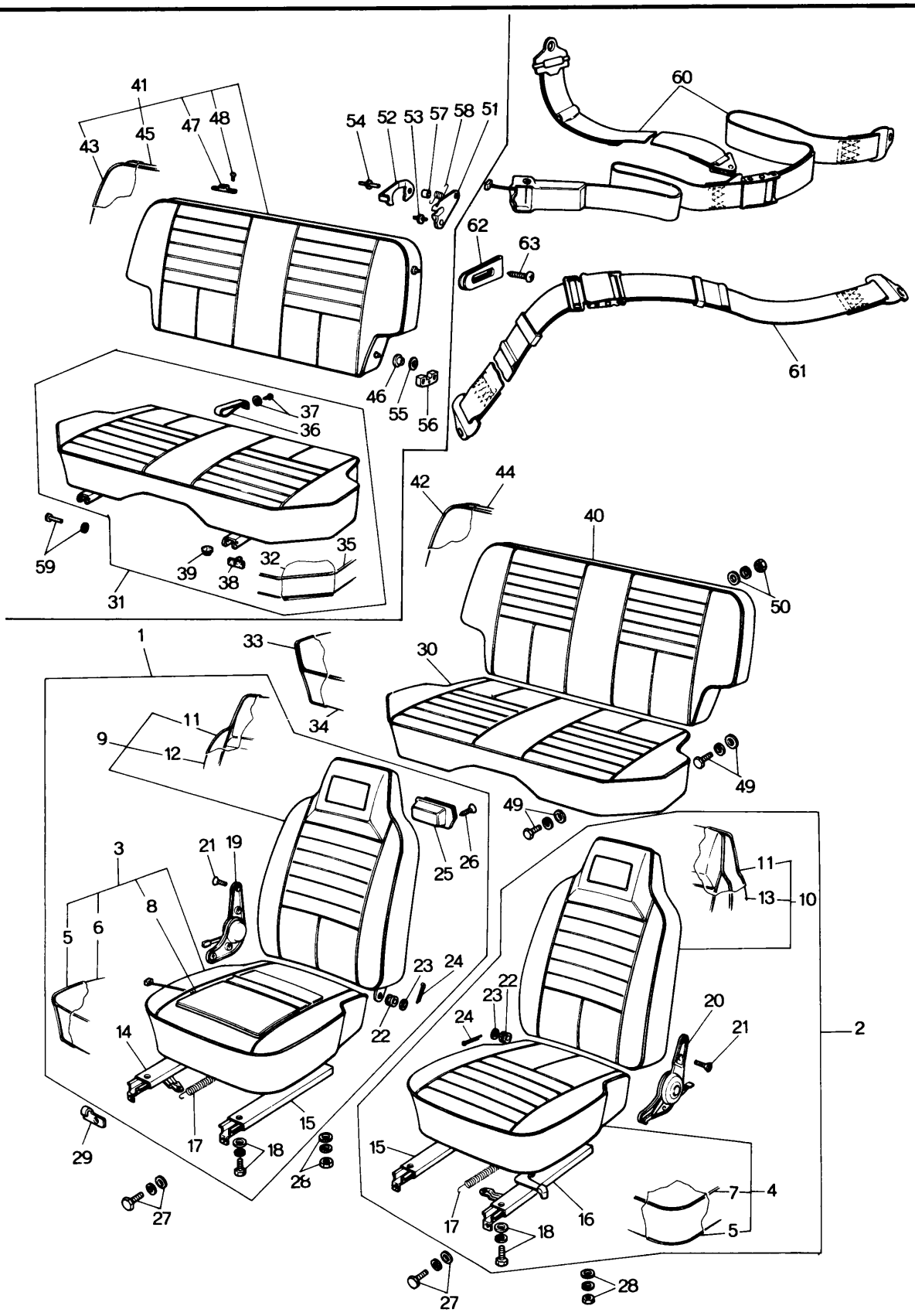
41
43
45
47
48
54
52
53
57
58
51
60
62
63
61
46
55
56
37
36
59
39
38
32
35
31
42
44
40
50
1
33
34
30
49
11
9
12
25
26
3
21
19
5
6
8
14
23
24
22
15
17
18
29
27
26
2
20
13
10
7
4
16
28

No.	Part Number	Description	Q'ty	Remarks	
	When ordering the following Seat & Trim Note : 1 Add -03 (Black) -12 (Brown) -13 (Greyish Yellow) after the parts number as Colour Codes nos.				
1	1570 57 100	Seat (R), Front (Sedan & Station Wagon)	1	(1972 Model)	©
	1693 57 100	Seat (R), Front (Sedan & Station Wagon)	1	(1973 Model)	©
●	1693 57 100A	Seat (R), Front (Sedan & Station Wagon)	1	Car No. 120143 $^{72}/_{12}$ ~ 120913 ○	©
	1572 57 100	Seat (R), Front (Coupe)	1	(1972 Model)	©
●	~~1694 57 100~~	~~Seat (R), Front (Coupe)~~	~~1~~	~~(1973 Model)~~	©
●	1694 57 100	Seat (R), Front (Coupe)	1	From Car No. 1 (1973 Model)	©
●	1694 57 100A	Seat (R), Front (Coupe)	1	Car No. 120913 $^{72}/_{12}$ ~ ○	©
2	0866 57 150A	Seat (L), Front (Sedan & Station Wagon)	1	(1972 Model)	©
	1693 57 150	Seat (L), Front (Sedan & Station Wagon)	1	(1973 Model)	©
●	1693 57 150A	Sear (L), Front (Sedan & Station Wagon)	1	Car No. 120143 $^{72}/_{12}$ ~ 120913 ○	©
	1568 57 150	Seat (L), Front (Coupe)	1	(1972 Model)	©
	1694 57 150	Seat (L), Front (Coupe)	1	(1973 Model)	©
●	1694 57 150A	Seat (L), Front (Coupe)	1	Car No. 120913 $^{72}/_{12}$ ~ ○	©
3	1570 88 110	Cushion (R), Seat (Sedan & Station Wagon)	1	(1972 Model)	©
	1693 88 110	Cushion (R), Seat (Sedan & Station Wagon)	1	(1973 Model)	©
	1572 88 110	Cushion (R), Seat (Coupe)	1	(1972 Model)	©
	1694 88 110	Cushion (R), Seat (Coupe)	1	(1973 Model)	©
4	0866 88 160	Cushion (L), Seat (Sedan & Station Wagon)	1	(1972 Model)	©
	1693 88 160	Cushion (L), Seat (Sedan & Station Wagon)	1	(1973 Model)	©
	1568 88 160	Cushion (L), Seat (Coupe)	1	(1972 Model)	©
	1694 88 160	Cushion (L), Seat (Coupe)	1	(1973 Model)	©
5	0820 57 114	Cover, Top-Seat Cushion	2		
6	0866 88 111	Trim (R)	1	(1972 Model)	©
●	~~1844 88 111~~	~~Trim (R)~~	~~1~~	~~(1973 Model)~~	©
●	1694 88 111	Trim (R)	1	(1973 Model)	©
7	0866 88 161	Trim (L)	1	(1972 Model)	©
●	~~1844 88 161~~	~~Trim (L)~~	~~1~~	~~(1973 Model)~~	©
●	1694 88 161	Trim (L)	1	(1973 Model)	©
8	1540 88 035	Switch, Seat (R)-Seat use	1		

No.	Part Number	Description	Q'ty	Remarks	
	1674 88 120	Switch, Seat (R) - Seat use	1		
●	1674 88 120A	Switch, Seat (R) - Seat use	1	Car No. 114066 72/10 ~ O 116525	
9	0866 88 130	Seat (R), Back - Front (1972 Model)	1		©
	1694 88 130	Seat (R), Back - Front (1973 Model)	1		©
● 10	~~0866 88 180~~ 0866 88 180	Seat (L), Back - Front (1972 Model)	1		©
	1694 88 180	Seat (L), Back - Front (1973 Model)	1		©
11	0866 88 135	Cover, Top - Back Seat	2		
12	0866 88 131	Trim (R), Back Seat (1972 Model)	1		©
●	~~1644 88 131~~	~~Trim (R), Back Seat (1973 Model)~~	~~1~~		©
●	1694 88 131	Trim (R), Back Seat (1973 Model)	1	From Car No. 1	©
13	0866 88 181	Trim (L), Back Seat (1972 Model)	1		©
●	~~1644 88 181~~	~~Trim (L), Back Seat (1973 Model)~~	~~1~~		©
●	1694 88 181	Trim (L), Back Seat (1973 Model)	1	From Car No. 1	©
14	0866 88 102	Adjuster No 1	1		
15	0866 88 103	Adjuster No 2	2		
16	0866 88 152	Adjuster No 3	1		
17	0259 88 123	Spring, Return - Adjust	2		
18	99801 0820	Bolt, Adjuster	8		
	99952 0816	Washer, Plain	8		
	99971 0800	Washer, Spring	8		
19	0866 88 101	Knuckle (R)	1		
	1562 88 101	Knuckle (R), With Foot Pedal (Coupe)	1		
20	0866 88 151	Knuckle (L)	1		
21	2155 57 109	Screw, Knuckle	8		
22	0866 88 105	Bush, Hinge	2		
23	0866 88 106	Washer, Hinge	2		
24	99221 3020	Pin, Split	2		
25	0259 88 250	Tray, Ash	1		
26	99864 0406	Screw, Ash Tray	2		

No.	Part Number	Description	Q'ty	Remarks	
27	99785 0820	Bolt, Front Seat	4		
	99952 0822	Washer, Plain	4		
	99971 0800	Washer, Spring	4		
28	99901 0800	Nut, Front Seat	4		
	99952 0822	Washer, Plain	4		
	99971 0800	Washer, Spring	4		
29	1611 57 016	Clip, Seat Switch Cord	1		
30	0376 57 200	Cushion, Rear Seat (Coupe)	1	(1972 Model)	©
	1694 57 200	Cushion, Rear Seat (Coupe)	1	(1973 Model)	©
●	1694 57 200A	Cushion, Rear Seat (Coupe)	1	Car No 120913 $^{72}/_{12}$ ~ ○	©
	0866 57 200A	Cushion, Rear Seat (Sedan)	1	(1972 Model)	©
	1693 57 200	Cushion, Rear Seat (Sedan)	1	(1973 Model)	©
●	1693 57 200A	Cushion, Rear Seat (Sedan)	1	Car No. 120913 $^{72}/_{12}$ ~ ○	©
31	1571 57 200	Cushion, Rear Seat (1972 Model) (Station Wagon)	1		©
	1696 57 200	Cushion, Rear Seat (1973 Model) (Station Wagon)	1		©
●	1696 57 200A	Cushion, Rear Seat (1973 Model) (Station Wagon)	1	Car No. 120143 $^{72}/_{12}$ ~ ○	©
32	0652 88 209	Cover, Top (Station Wagon)	1		
33	0866 88 205	Cover, Top (Sedan & Coupe)	1		
34	0376 88 201	Trim (Coupe)	1	(1972 Model)	©
●	1694 88 201	Trim (Coupe)	1	(1973 Model)	©
	0866 88 201	Trim (Sedan)	1	(1972 Model)	©
●	1693 88 201	Trim (Sedan)	1	(1973 Model)	©
35	0899 88 201	Trim (Station Wagon)	1	(1972 Model)	©
	1696 88 201	Trim (Station Wagon)	1	(1973 Model)	©
● 36	~~0652 88 218~~	~~Band~~ (Station Wagon)	~~1~~		©
●	2405 88 217	Band Ass'y (Station Wagon)	1	From Car No. 1	
● 37	~~0700 88 218~~	~~Rivet, Band~~ (Station Wagon)	~~1~~		
●	~~99953 0400~~	~~Washer, Plain~~ (Station Wagon)	~~1~~		
●	99951 0618	Plain Washer (Station Wagon)	1	From Car No. 1	
●	99971 0600	Spring, Washer (Station Wagon)	1	From Car No. 1	
●	99834 0612	Screw (Station Wagon)	1	From Car No. 1	
●	2405 88 215	Plate, Lock (Station Wagon)	1	From Car No. 1	
●	2405 88 216	Stopper (Station Wagon)	1	From Car No. 1	
38	0621 57 701A	Stopper (Station Wagon)	2		
39	0603 53 436	Grommet (Station Wagon)	1		

No.	Part Number	Description	Q'ty	Remarks	
40	0866 57 250	Seat, Rear Back (Sedan & Coupe)	1	(1972 Model)	©
	1694 57 250	Seat, Rear Back (Sedan & Coupe)	1	(1973 Model)	©
●	1694 57 250A	Seat, Rear Back (Sedan & Coupe)	1	Car No. 120913 $^{72}/_{12}$ ~○	©
41	1571 57 250	Seat, Rear Back (Station Wagon)	1	(1972 Model)	©
	1696 57 250	Seat, Rear Back (Station Wagon)	1	(1973 Model)	©
●	1696 57 250A	Seat, Rear Back (Station Wagon)	1	Car No. 120143 $^{72}/_{12}$ ~○	©
42	0866 88 205	Cover, Top (Sedan & Coupe)	1		
43	0852 88 229	Cover, Top (Station Wagon)	1		
44	0866 88 251	Trim (Sedan & Coupe)	1	(1972 Model)	©
	1694 88 251	Trim (Sedan & Coupe)	1	(1973 Model)	©
45	0899 88 251	Trim (Station Wagon)	1	(1972 Model)	©
	1696 88 251	Trim (Station Wagon)	1	(1973 Model)	©
46	0187 57 751	Tube (Station Wagon)	2		
47	0621 57 753	Stopper (Station Wagon)	2		
48	99832 0625	Screw, Stopper (Station Wagon)	4		
49	99785 0825	Bolt, Rear Seat (Sedan & Coupe)	4		
	99871 0800	Washer, Spring (Sedan & Coupe)	4		
	0317 57 015	Washer (Sedan & Coupe)	4		
50	99901 0800	Nut, Rear Back Seat (Sedan & Coupe)	2		
	99952 0822	Washer, Plain (Sedan & Coupe)	2		
	99971 0800	Washer, Spring (Sedan & Coupe)	2		
51	0585 57 012	Stopper (R) (Station Wagon)	1		
	0585 57 013	Stopper (L) (Station Wagon)	1		
52	0585 57 015	Plate, Lock (Station Wagon)	1		
Ⓝ	0585 57 016	Washer (R), Stopper (Station Wagon)	1	Car No. 103632 $^{73}/_{6}$ ~Added Anew	
Ⓝ	0585 57 017	Washer (L), Stopper (Station Wagon)	1	Car No. 103632 $^{73}/_{6}$ ~Added Anew	
53	0710 57 022	Rivet, Stopper (Station Wagon)	3		
54	0710 57 023	Rivet, Stopper (Station Wagon)	3		
55	0187 57 052	Washer, Adjust (Station Wagon)	2		
56	0621 57 054	Retainer (Station Wagon)	2		

No.	Part Number	Description	Q'ty	Remarks	
57	0710 57 088	Bush	1		
	0585 57 019	Bush	1	Car No. 103632 ~ X	
58	0187 57 087	Spring, Return	1		
	0585 57 018	Spring, Return (Station Wagon)	1	Car No. 103632 ~ X	
59	99230 0852	Pin, Rear Seat Cushion	2		
	99576 0500	Ring, Snap	2		
	~~99576 0500~~	~~Ring, Snap~~	~~2~~		
● 60	1540 57 900	Belt, Front Seat	2		©
● 61	1540 57 950	Belt, Rear Seat	2		©
62	0305 57 909	Holder, Bolt	4		
63	99881 0412	Screw, Bolt Holder	4		
● Ⓝ	1540 57 908	Under cover (1972, Model Canada)	2		

FRONT SIDE DOOR (GLASS)

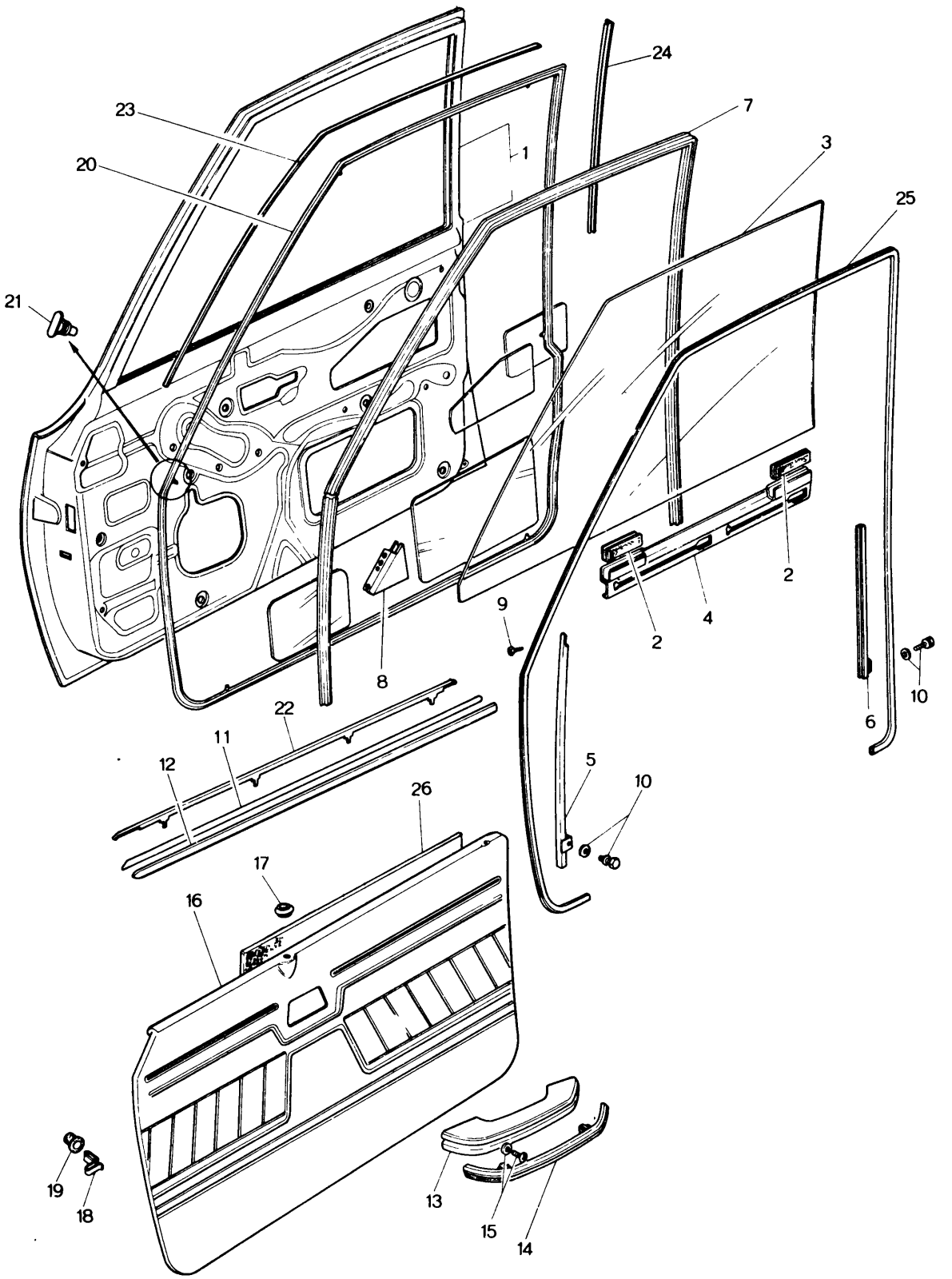

FRONT SIDE DOOR (GLASS)

No.	Part Number	Description	Q'ty	Remarks
1	0376 58 010C	Body (R), Door — (Coupe)	1	
●	0376 58 010D	Body (R), Door — (Coupe)	1	Car No. 113912 $^{72}/_{10}$ ~○
●	1622 58 010B	Body (R), Door — (Coupe)	1	Car No. 124434 $^{73}/_{1}$ ~△
	1542 59 010A	Body (L), Door — (Coupe)	1	
●	1542 59 010B	Body (L), Door — (Coupe)	1	Car No. 113912 $^{72}/_{10}$ ~○
●	1622 59 010B	Body (L), Door — (Coupe)	1	Car No. 124434 $^{73}/_{1}$ ~△
	0866 58 010D	Body (R), Door — (Sedan & Station Wagon)	1	
●	0866 58 010E	Body (R), Door — (Sedan & Station Wagon)	1	Car No. 111422 $^{72}/_{10}$ ~○ 113912
●	1620 58 010B	Body (R), Door — (Sedan & Station Wagon)	1	Car No. 123972 $^{73}/_{1}$ ~△ 124434
	1540 59 010B	Body (L), Door — (Sedan & Station Wagon)	1	
●	1540 59 010C	Body (L), Door — (Sedan & Station Wagon)	1	Car No. 111422 $^{72}/_{10}$ ~○ 113912
●	1620 59 010B	Body (L), Door — (Sedan & Station Wagon)	1	Car No. 123972 $^{73}/_{1}$ ~△ 124434
2	2292 58 232	Rubber, Strip - Door Glass	4	
3	0368 58 501	Glass (R) — Transparent — (Sedan & Station Wagon)	1	
	0368 59 501	Glass (L) — Transparent — (Sedan & Station Wagon)	1	
	0866 58 501	Glass (R) — Blue Pane — (Sedan & Station Wagon)	1	
	0866 59 501	Glass (L) — Blue Pane — (Sedan & Station Wagon)	1	
	0374 58 501	Glass (R) — Transparent — (Coupe)	1	
	0374 59 501	Glass (L) — Transparent — (Coupe)	1	
	0376 58 501	Glass (R) — Blue Pane — (Coupe)	1	
	0376 59 501	Glass (L) — Blue Pane — (Coupe)	1	
4	0305 58 505	Bracket (R), Lift	1	
	0305 59 505	Bracket (L), Lift	1	
5	0866 58 603	Guide "A" (R), Glass	1	
	0866 59 603	Guide "A" (L), Glass	1	
6	0376 58 604	Guide "B" (R), Glass — (Coupe)	1	
	0376 59 604	Guide "B" (L), Glass — (Coupe)	1	
	0866 58 604	Guide "B" (R), Glass — (Station Wagon)	1	
	0866 59 604	Guide "B" (L), Glass — (Station Wagon)	1	
7	0376 58 605	Channel, Glass Run (Coupe)	2	
	0866 58 605	Channel, Glass Run (Station Wagon)	2	
8	0866 58 620	Bracket, Corner	2	
9	99831 0408	Screw. Glass Guide	4	
10	99806 0612	Bolt, Glass Guide	4	

FRONT SIDE DOOR (GLASS)

No.	Part Number	Description	Q'ty	Remarks
	99971 0600	Washer, Spring	4	
	99951 0618	Washer, Plain	2	
	0727 70 943	Washer, Plain	2	
11	0376 58 781B	Weatherstrip, Outer (Coupe)	2	
	0376 58 781D	Weatherstrip, Outer (Coupe)	2	Car No. 1 ~ ○
	0866 58 781D	Weatherstrip, Outer (Sedan)	2	
12	0376 58 791	Weatherstrip, Inner (R) (Coupe)	1	
	0376 59 791	Weatherstrip, Inner (L) (Coupe)	1	
	0866 58 791	Weatherstrip, Inner (R) (Station Wagon)	1	
	0866 59 791	Weatherstrip, Inner (L) (Station Wagon)	1	
13	0398 58 821A	Rest, Arm	2	
14	0398 58 822A	Garnish, Arm Rest	2	
15	99833 0520	Screw, Tapping - Arm Rest	4	
	99952 0500	Washer, Plain	4	

When ordering the following Trims
Add. Coloor Code nos. given below after parts number
- 03 (Black) - 12 (Brown) - 13 (Greyish Yellow)

	No.	Part Number	Description		Q'ty	Remarks	
	16	1560 58 810A	Trim (R), Door	(Sedan & Station Wagon)	1	1972 Model	©
		1620 58 810	Trim (R), Door		1	1973 Model	©
●		1620 58 810A	Trim (R), Door		1	Car No. 122166 72/12 ~ 122652 ○	©
		0866 59 810B	Trim (L), Door		1	1972 Model	©
		1620 59 810	Trim (L), Door		1	1973 Model	©
●		1620 59 810A	Trim (L), Door		1	Car No. 122166 72/12 ~ 122652 ○	©

No.	Part Number	Description	Q'ty	Remarks
	When ordering the following Trims Add Colour Code nos. given below after Parts number ~~-14 (Black) -17 (Brown) -18 (Greyish Yellow)~~ [-14 (Black) -17 { Brown (Upper) / Olive (Lower) -18 { Greyish Yellow (Upper) / Olive (Lower)] Used up to Car No. 108390 72/7 [-14 (Black) -25 { Brown (Upper) / Black (Lower) -26 { Greyish Yellow (Upper) / Black (Lower)] Used from Car No. 108391 72/7 ~ X			
	1582 58 810D	Trim (R), Door (Coupe)	1	1972 Model ©
	1622 58 810	Trim (R), Door (Coupe)	1	1973 Model ©
●	1622 58 810A	Trim (R), Door (Coupe)	1	Car No 122652 72/12 ~ ○ ©
	0870 59 810F	Trim (L), Door (Coupe)	1	1972 Model ©
	1622 58 810	Trim (L), Door (Coupe)	1	1973 Model ©
●	~~1622 59 810A~~ 1622 59 810A	Trim (L), Door (Coupe)	1	Car No. 122652 72/12 ~ ○ ©
17	0223 58 692A	Grommet	2	
18	0208 58 921	Fastener, Door Trim	22	
19	0187 58 922	Seal, Fastener - Door Trim	22	
20	0376 58 760A	Weatherstrip (R) (Coupe)	1	
	0376 59 760A	Weatherstrip (L) (Coupe)	1	
	0866 58 760A	Weatherstrip (R) (Sedan & Station Wagon)	1	
	0866 59 760A	Weatherstrip (L) (Sedan & Station Wagon)	1	
21	0305 58 762	Fastener	54	
22	0866 58 831B	Mould (R), Beltline (Sedan & Station Wagon)	1	
	0866 58 831C	Mould (R), Beltline (Sedan & Station Wagon)	1	Car No. 102250 / 105055 73/4 ~ △
	0866 59 831B	Mould (L), Beltline (Sedan & Station Wagon)	1	
	0866 59 831C	Mould (L), Beltline (Sedan & Station Wagon)	1	Car No. 102250 / 105055 73/4 ~ △
	0376 58 831B	Mould (R), Beltline (Coupe)	1	
	0376 58 831C	Mould (R), Beltline (Coupe)	1	Car No. 105055 73/4 ~ △
	0376 59 831B	Mould (L), Beltline (Coupe)	1	
	0376 59 831C	Mould (L), Beltline (Coupe)	1	Car No. 105055 73/4 ~ △

No.	Part Number	Description	Q'ty	Remarks
23	0866 58 841A	Mould "A" (R), Sash (Sedan & Station Wagon)	1	
	0866 59 841A	Mould "A" (L), Sash (Sedan & Station Wagon)	1	
24	~~0378 58 842A~~	~~Mould "B" (R), Sash~~ (Coupe)	~~1~~	Not used from Car No. 1
	~~0378 58 842A~~	~~Mould "B" (L), Sash~~ (Coupe)	~~1~~	Not used from Car No. 1
	0866 58 842A	Mould "B" (R), Sash (Sedan & Station Wagon)	1	
	0866 59 842A	Mould "B" (L), Sash (Sedan & Station Wagon)	1	
25	0398 58 755	Welt, Seaming	2	
26	0866 58 851	Insulation (Sedan & Station Wagon)	4	
	0376 58 851	Insulation (Coupe)	4	

FRONT SIDE DOOR (LOCK)

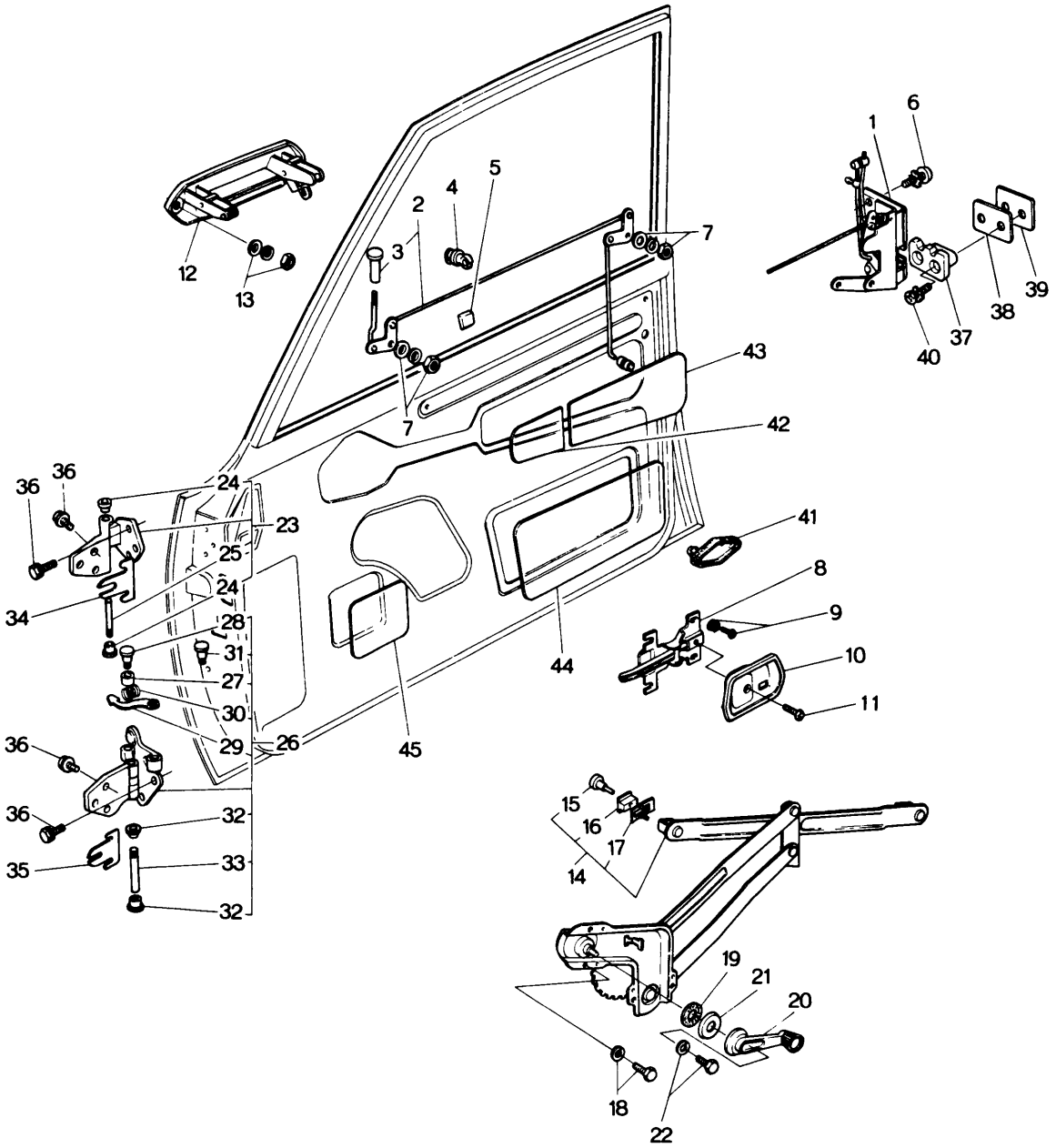

No.	Part Number	Description	Q'ty	Remarks
1	1562 58 310D	Lock (R), Door	1	
	1562 58 310F	Lock (R), Door	1	Car No. 108463 72/8 ~ X
	1562 58 310G	Lock (R), Door	1	Car No 111075 72/9 ~ ○
•	1562 58 310H	" " "	1	Car NO. 139770 73/5 ~ Δ
	1562 59 310D	Lock (L), Door (Coupe)	1	
	1562 59 310F	Lock (L), Door	1	Car No. 108463 72/8 ~ X
	1562 59 310G	Lock (L), Door	1	Car No 111075 72/9 ~ ○
•	1562 59 310H	" " "	1	Car NO 139770 73/5 ~ Δ
	1524 58 310D	Lock (R), Door	1	
	1524 58 310F	Lock (R), Door	1	Car No 105638 108463 72/8 ~ X
	1524 58 310G	Lock (R), Door	1	Car No 109350 111075 72/9 ~ ○
•	1524 58 310H	" " "	1	Car NO. 135971 139770 73/5 ~ Δ
	1524 59 310D	Lock (L), Door (Sedan & Station Wagon)	1	
	1524 59 310F	Lock (L), Door	1	Car No. 105638 108463 72/8 ~ X
	1524 59 310G	Lock (L), Door	1	Car No 109350 111075 72/9 ~ ○
•	1524 59 310H	" " "	1	Car No. 135971 139770 73/5 ~ Δ
2	0376 58 330B	Rod (R)	1	
	0370 58 330C	Rod (R) (Coupe)	1	Car No 111075 72/9 ~ ○
	0376 59 330B	Rod (L)	1	
	0376 59 330C	Rod (L)	1	Car No. 111075 72/9 ~ ○
	0866 58 330B	Rod (R)	1	
	0866 58 330C	Rod (R) (Sedan & Station Wagon)	1	Car No 109350 111075 72/9 ~ ○
	0866 59 330B	Rod (L)	1	
	0866 59 330C	Rod (L)	1	Car No. 109350 111075 72/9 ~ ○
3	0259 58 691	Knob	2	
• Ⓝ	0866 58 313	Joint-Key Cylinder	2	Car No. 134371 137643 73/4 ~ A. Anew
4	0305 58 309	Holder, Rod	4	
5	0259 72 509	Pad, Door Lock	4	
6	99832 0630	Screw, Door Lock	6	
	99974 0600	Washer, Toothed	6	
	99975 0600	Washer, Toothed	6	
7	99907 0600	Nut, Door Lock	4	
	99952 0600	Washer, Plain	4	
	99971 0600	Washer, Spring	4	
8	0866 58 321B	Handle, Inner	2	
9	99806 0510	Bolt, Inner Handle	6	
	99952 0518	Washer, Plain	6	
	99971 0500	Washer, Spring	6	
10	0866 58 303B	Cover (R), Inner Handle (Black)	1	

FRONT SIDE DOOR (LOCK)

No.	Part Number	Description	Q'ty	Remarks
	0866 59 303B	Cover (L)	1	
11	99832 04088	Screw, Cover	2	
12	0866 58 410	Handle (R), Outer Side	1	
●	0866 58 410A	Handle (R), Outer Side	1	Car No. 109350 72/9 ~ 111075 ○
	0866 59 410	Handle (L), Outer Side	1	
●	0866 59 410A	Handle (L), Outer Side	1	Car No. 109350 72/9 ~ 111075 ○
	0305 58 411	Bush	2	
13	99906 0500	Nut, Outer	4	
	99951 0618	Washer Plain	4	
	99971 0500	Washer Spring	4	
14	0866 58 530	Regulator (R)	1	
	0866 59 560	Regulator (L)	1	
15	0223 58 303A	Pin	4	
16	0223 58 304A	Guide	4	
17	0223 58 311	Spring	4	
18	99806 0612	Bolt Window Regulator	8	
	99971 0600	Washer, Spring	8	
	99951 0618	Washer, Plain	8	
19	0259 58 305	Gasket, Window Regulator	2	
20	0824 58 370A	Handle, Regulator	2	
●	0824 58 370B	Handle, Regulator (Aluminum Cap)	2	Car No. 114066 72/10 ~ 116525 △

No.	Part Number	Description	Q'ty	Remarks
21	0223 58 375A	Escutcheon	2	
22	99806 0516	Bolt, Regulator Handle	2	
	99971 0500	Washer, Spring	2	
23	0866 58 210	Hinge "A"	2	
24	0223 58 721	Bush	4	
25	0187 58 731	Pin, Hinge	2	
26	0866 58 240A	Hinge "B" (R)	1	
●	0866 58 240C	Hinge "B" (R)	1	Car No 122166 72/12 ~ 122652 ○
	0866 59 240A	Hinge "B" (L)	1	
●	0866 59 240C	Hinge "B" (L)	1	Car No. 122166 72/12 ~ 122652 ○
27	0866 58 281	Roller	2	
●	0866 58 281A	Roller	2	Car No. 116955 72/11 ~ 118635 ○
28	0866 58 282	Pin "A"	2	
29	0866 58 291A	Lever, Check	2	
30	0866 58 292A	Spring, Check	2	
31	0866 58 293	Pin "B"	2	
32	0223 58 721	Bush	4	
33	0187 58 731	Pin, Hinge	2	
34	0866 58 201	Shim, Hinge "A" - Selective use	1	
35	0866 58 231	Shim, Hinge "B" - Selective use	1	
●	1011 58 231	Shim, Hinge "B" - Selective use	2	Car No. 107151 72/9 ~ 109301 ○
36	99783 0828	Bolt, Hinge	24	
	99971 0800	Washer, Spring	24	
37	1540 58 361	Rack (R)	1	
	0866 58 361B	Rack (R)	1	Car No 105638 72/8 ~ 108463 X

FRONT SIDE DOOR (LOCK)

No.	Part Number	Description	Q'ty	Remarks
	1540 59 361	Rack (L)	1	
	0866 59 361B	Rack (L)	1	Car No. 105638 72/8 ~ X 108463
●	0866 59 361C	Rack (L)	1	Car No 135971 139770 73/5 ~ Δ
38	0866 58 363	Seat, Striker	2	Used up to Car No. 105638 72/8 108463
39	0866 58 364A	Plate, Base	2	
	0866 58 364B	Plate, Base	2	Car No. 105638 72/8 ~ ○ 108463
40	1540 58 371	Screw	4	
	99975 0600	Washer	4	
41	0259 58 906	Cushion	2	
42	0866 58 861A	Screen "A"	2	
43	0866 58 862A	Screen "B" (Sedan & Station Wagon)	2	
	0376 58 862A	Screen "B" (Coupe)	2	
44	0866 58 863	Screen "C" (Sedan & Station Wagon)	2	
	0376 58 863	Screen "C" (Coupe)	2	
45	0866 58 864	Screen "D"	2	
●	0305 58 864	Screen "D" (Sedan & Station Wagon)	2	Car No. 105638 72/8 ~ ○ 108463

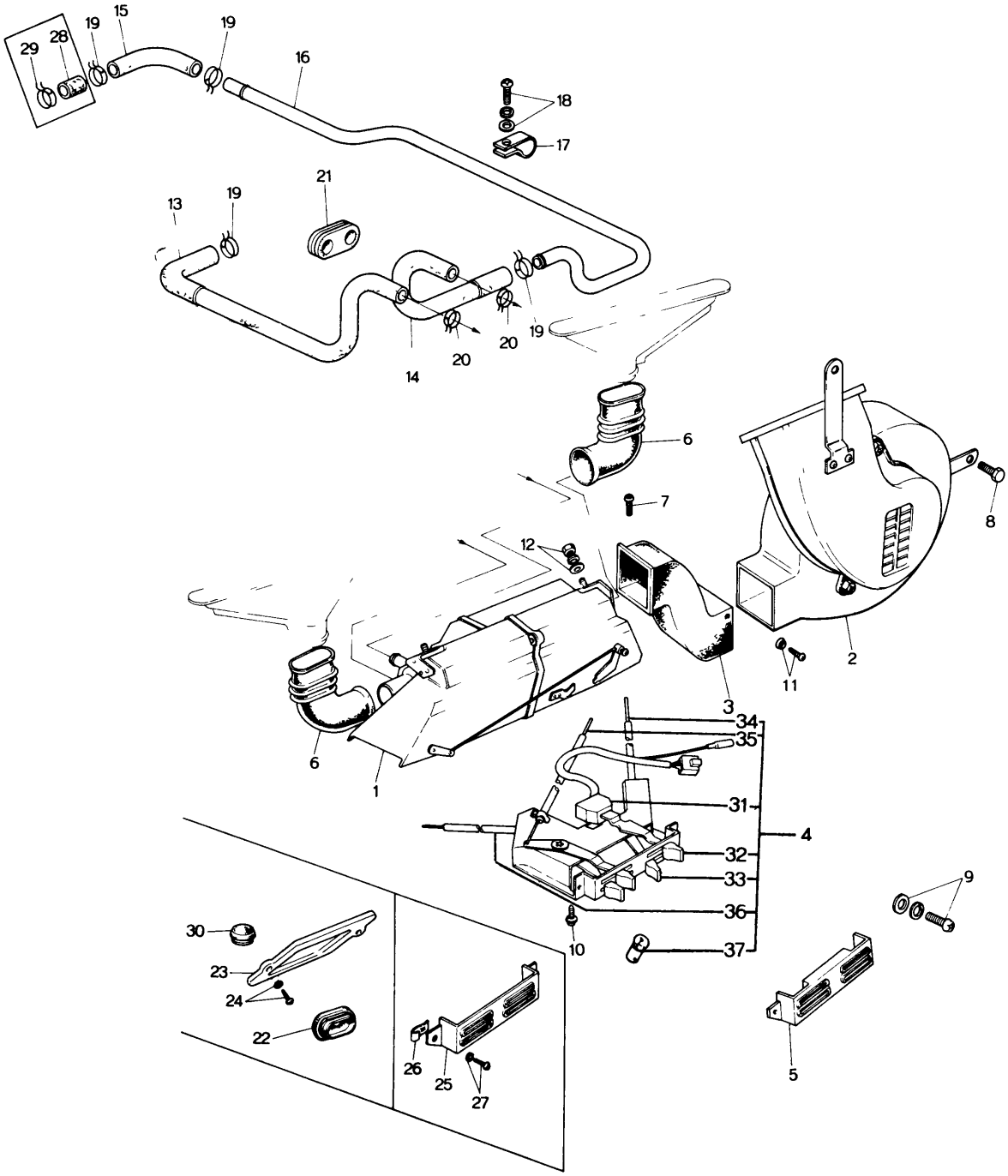
29
28
19
15
19
16
18
17
21
13
19
20
20
19
14
6
7
8
12
2
11
3
6
1
34
35
31
4
32
33
36
37
10
9
30
23
24
22
26
25
27
5

No.	Part Number	Description	Q'ty	Remarks
	1562 61 080	Heater Set (1972 Model)	1	
	1620 61 080	Heater Set (1973 Model)	1	
●	1620 61 080B	Heater Set (1973 Model)	1	Car No. 110311 72/9 ~ ○ 112109
1	1524 61 130A	Heater Unit	1	
	1524 61 130B	Heater Unit	1	Car No. 100097 72/3 ~ × 100815
2	1524 61 140B	Blower	1	
3	1524 61 151A	Duct	1	
4	1562 61 190C	Control (1972 Model)	1	
	1620 61 190	Control (1973 Model)	1	
●	1620 61 190B	Control (1973 Model)	1	Car No. 110311 72/9 ~ ○ 112109
● 5	~~0866 61 195~~	~~Panel, Control (1972 Model)~~	~~1~~	
	0866 61 195B	Panel, Control (1972 Model)	1	From Car No. 1
	1620 76 422	Panel, Control (1973 Model)	1	
6	0866 61 251	Hose, Defroster	2	
7	99868 0410	Screw, Duct & Heater Unit	6	
8	99786 0830	Bolt, Blower	3	
9	99833 0512	Screw, Control	2	
	99952 0500	Washer, Plain	2	
	99971 0500	Washer, Spring	2	
● Ⓝ	0820 56 905	Clip	2	From Car No. 1
10	99833 0512	Screw, Control	1	
	99952 0516	Washer, Plain	1	
	99971 0500	Washer, Spring	1	
11	99863 0512B	Screw, Duct	2	
	99952 0516B	Washer, Plain	2	
12	99906 0800	Nut, Unit	3	
	99952 0800	Washer, Plain	2	
	99952 0822	Washer, Plain	1	
	99971 0800	Washer, Spring	3	
Ⓝ	1620 61 225	Clip (1973 Model)	1	
13	1562 61 211B	Hose No. 1	1	
	1562 61 211C	Hose No. 1	1	Car No 100097 72/3 ~ × 100815
14	1562 61 212A	Hose No. 2 (1972 Model)	1	
	1562 61 212B	Hose No. 2 (1972 Model)	1	Car No 100097 72/3 ~ × 100815
	1620 61 212	Hose No. 2 (1973 Model)	1	
15	0866 61 213	Hose No. 3	1	

No.	Part Number	Description	Q'ty	Remarks
16	1562 61 214A	Pipe, Heater (1972 Model)	1	
●	1620 61 214	Pipe, Heater (1973 Model)	1	
17	0824 61 192	Clip, Heater Pipe	2	
18	99868 0512	Screw, Clip	2	
	99952 0500	Washer, Plain	2	
	99971 0500	Washer, Spring	2	
19	99282 2600	Band, Hose	4	
20	99282 2200	Band, Hose	2	
	99282 2600	Band, Hose	2	Car No 100097 72/3 ~ × 100815
21	0866 61 235	Grommet	1	
22	0257 61 051	Grommet	1	
● 23	~~0366 61 070~~	~~Cover, Dash Panel Upper~~	~~1~~	
●	0366 61 071	Cover	1	From Car No. 1
●	0366 61 072	Packing	1	From Car No. 1
24	99863 0516	Screw, Cover	2	
	99952 0516	Washer, Plain	2	
	99971 0500	Washer, Spring	2	
25	0866 61 195B	Panel, Control	1	Without Car Heater
26	0820 56 905	Clip	2	Without Car Heater
27	99863 0516	Screw, Control Panel	2	Without Car Heater
	99952 0500	Washer, Plain	2	Without Car Heater
28	0864 61 061A	Cover	2	Without Car Heater
29	99282 2600	Band, Hose	2	Without Car Heater
30	0118 56 242B	Plug, Hole	2	Without Car Heater
31	0370 76 403	Control Switch (OFF ~ FAN) 1972 Model	1	
	0862 76 403	Control Switch (OFF ~ FAN) 1973 Model	1	
●	0862 76 403A	Control Switch (OFF ~ FAN) 1973 Model	1	Car No. 115110 72/11 ~ ○ 117679
32	0370 76 409	Knob (Upper) 1972 Model	1	
	0862 76 409	Knob (Upper) 1973 Model	1	
33	0370 76 411	Knob (Lower) 1972 Model	1	
	0862 76 411	Knob (Lower) 1973 Model	1	
34	1562 76 406A	Control Wire No. 1 (COLD ~ HOT)	1	
35	1562 76 407A	Control Wire No. 2 (DEF ~ HEAT) 1972 Model	1	
	0862 76 407	Control Wire No. 2 (DEF ~ HEAT) 1973 Model	1	
●	0866 76 407A	Control Wire No. 2 (DEF ~ HEAT) 1973 Model	1	Car No. 110311 72/9 ~ ○ 112109
36	1562 76 408A	Control Wire No. 3 (REC ~ FRESH)	1	
37	0862 76 423	Bulb, Illumination-1973 Model	2	
●	0370 76 416	Clip, Heater Control Knob	4	From Car No. 1

HEATER UNIT & BLOWER

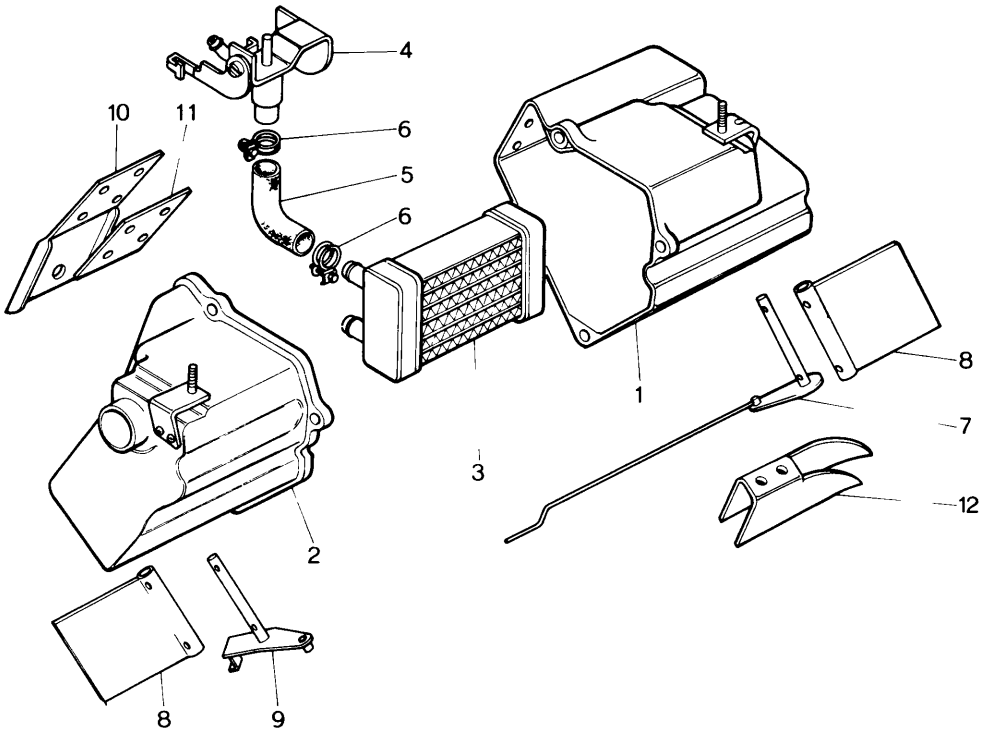

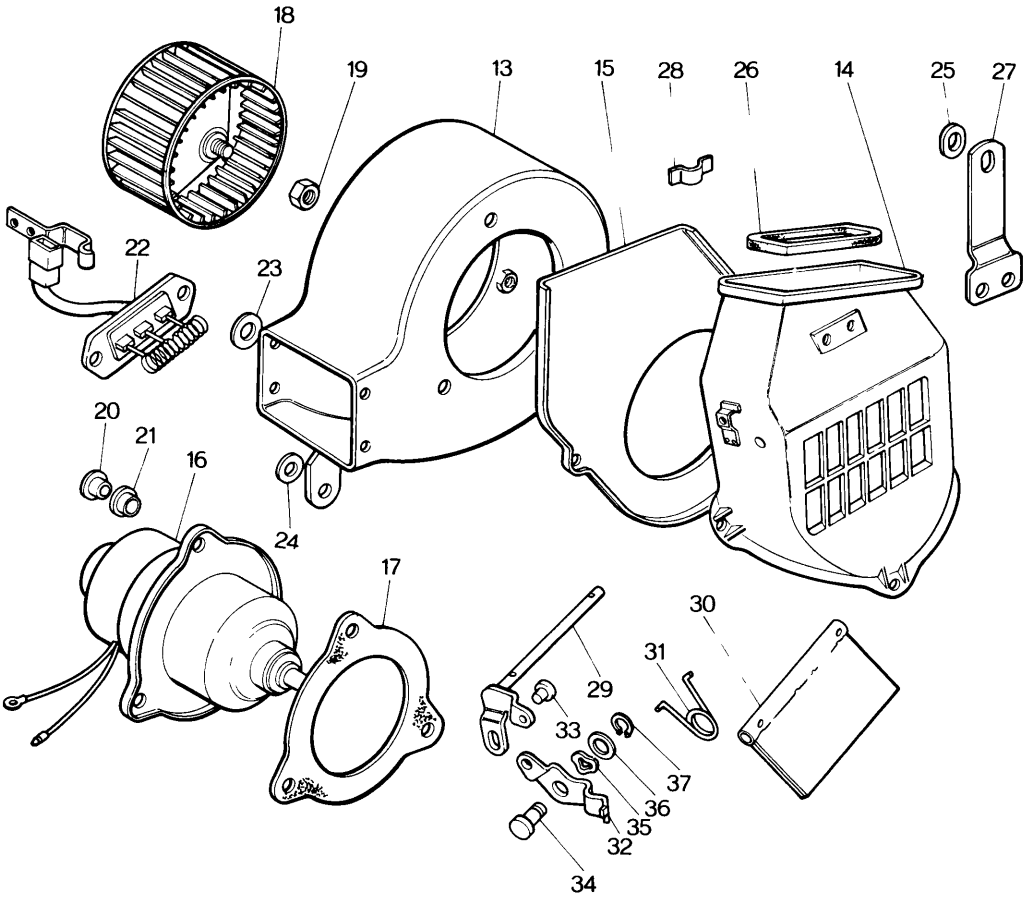

No.	Part Number	Description	Q'ty	Remarks
	1524 61 130A	Unit, Heater	1	
	1524 61 130B	Unit, Heater	1	Car No. 100097 101105 72/3 ~ X
1	1524 76 501	Case, Unit	1	
	1524 76 501A	Case, Unit	1	Car No. 100097 101105 72/3 ~ X
2	1524 76 502	Case, Unit	1	
	1524 76 502A	Case, Unit	1	Car No. 100097 101105 72/3 ~ X
3	1524 76 503	Radiator, Unit	1	
	1524 76 503A	Radiator, Unit	1	Car No. 100097 101105 72/3 ~ X
4	1524 76 504	Valve, Water	1	
	1524 76 504A	Valve, Water	1	Car No. 100097 101105 72/3 ~ X
5	1524 76 505	Hose, Water	1	
	1524 76 505A	Hose, Water	1	Car No. 100097 101105 72/3 ~ X
6	99282 2600	Band, Hose	2	
7	0866 76 506	Shaft	1	
8	0866 76 507	Damper	2	
9	0866 76 508	Shaft	1	
10	0866 76 509	Bracket	1	
11	0866 76 511	Plate	1	
12	1524 76 512	Guide, Air	1	
	~~1524 61 140B~~	~~Blower~~	~~1~~	
	1524 61 140B	Blower	1	From Car No. 1
13	1524 76 451	Case, Blower	1	
14	1524 76 452	Duct, Air	1	
15	1524 76 453	Flange	1	
16	1524 76 454	Motor	1	
●	1524 76 454A	Motor	1	Car No. 154335 73/8 ~ X
17	~~1524 76 455~~	~~Gasket~~	~~1~~	
	0866 76 455	Gasket	1	From Car No. 1
●	0866 76 455A	Gasket	1	Car No. 154335 73/8 ~ X
18	1524 76 456	Blower	1	
●	1524 76 456A	Blower	1	Car No. 154335 73/8 ~ X
19	0866 76 472	Nut	1	
●	0866 76 472A	Nut	1	Car No. 154335 73/8 ~ X
20	0866 76 457	Insert	3	
21	0866 76 458	Gasket	3	
22	0866 76 459	Resistance	1	

HEATER UNIT & BLOWER

No.	Part Number	Description	Q'ty	Remarks
23	0866 76 461	Clamp "B"	1	
24	0866 76 462	Gasket "A"	1	
25	0866 76 463	Gasket	1	
26	0866 76 464	Gasket "B"	1	
27	1524 76 465	Bracket	1	
28	0866 76 466	Bracket "C"	1	
29	1524 76 467	Shaft	1	
30	0866 76 468	Damper	1	
31	1524 76 469	Spring	1	
32	1524 76 471	Lever, Control	1	
33	1524 76 472	Cooler	1	
34	1524 76 473	Pin	1	
35	99972 0500	Washer, Wave	1	
36	0315 76 022	Washer	1	
37	99576 0300	Ring, Retaining	1	

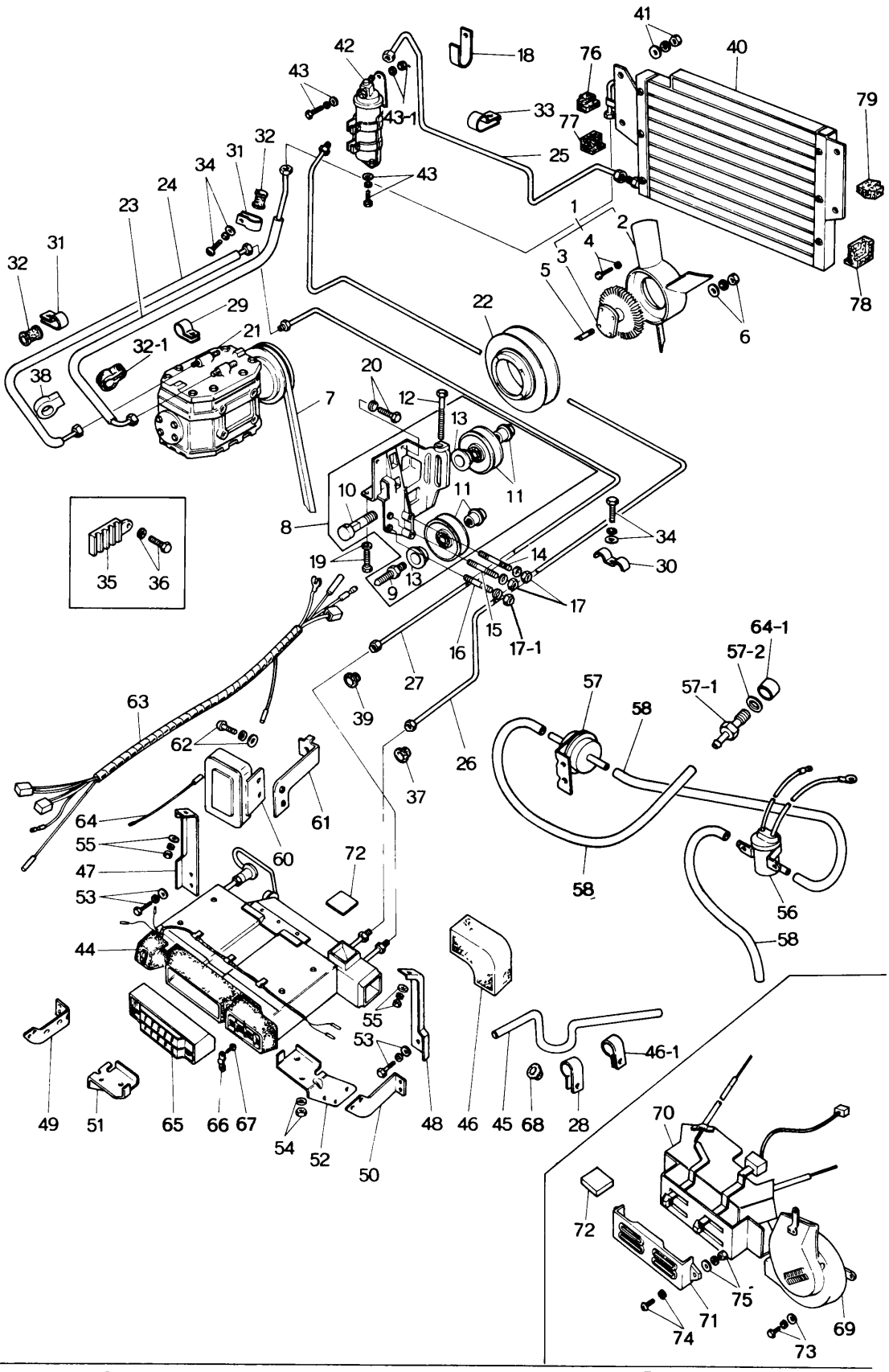
41
42
18
76
40
43
43-1
33
77
79
25
34
31
32
43
24
23
1
2
4
3
5
31
32
29
22
6
78
21
32-1
38
20
12
7
13
10
11
11
8
34
19
14
30
9
13
17
35
36
16
15
17-1
64-1
57-2
27
57
57-1
63
39
58
62
26
37
64
61
60
72
55
47
53
44
58
56
58
55
53
46-1
49
51
65
66
67
54
52
50
48
46
45
68
28
70
72
75
71
74
69
73

No.	Part Number	Description	Q'ty	Remarks
	1562 61 400	Cooler, Car	1	
	1568 61 390	Cooler, Car-Heater Less	1	
1	0877 15 250	Fan & Fan Drive (Fig. No 2 ~ 4 included)	1	
●	0871 15 250	Fan & Fan Drive	1	Car No. 104199 ~ 108147 △
2	0877 15 200	Fan	1	
●	0871 15 200	Fan	1	Car No. 104199 ~ 108147 △
3	2090 15 210	Fan Drive	1	
●	0871 15 210	Fan Drive	1	Car No. 104199 ~ 108147 △
4	99806 0612	Bolt	6	
	99971 0600	Washer, Spring	6	
5	99852 0635	Stud, Fan & Fan Drive	4	
6	99907 0600	Nut, Fan & Fan Drive	4	
	99952 0600	Washer, Spring	4	
	99971 0600	Washer, Plain	4	
7	0866 15 906	Belt, "V"	1	
8	0866 15 920B	Bracket, Compressor(Fig No 9 ~ 13 included)	1	
9	0866 15 923A	Shaft	1	
10	0866 15 932	Bolt, Idle Pulley	1	
11	0866 15 940A	Pulley, Idle	2	
12	0839 61 966A	Bolt, Adjust	1	
13	0317 78 034	Collar	2	
14	99859 1025	Stud, Compressor Bracket	2	
15	99859 1050	Stud, Compressor Bracket	2	
16	99859 1225	Stud, Compressor Bracket	1	
17	99921 1000	Nut, Compressor Bracket	5	
	99971 1000	Washer, Spring	5	
17-1	99921 1200	Nut, Compressor	1	
	99971 1200	Washer, Spring	1	
18	99295 1508	Clip	1	
19	99801 0840	Bolt, Compressor Bracket	2	
	99971 0800	Washer, Spring	2	

No.	Part Number	Description	Q'ty	Remarks
20	99801 0825	Bolt, Compressor Bracket	4	
	99971 0800	Washer, Spring	4	
21	0866 61 450	Compressor	1	
22	0839 61 975C	Pulley, "V" Belt	1	
23	1562 61 461	Hose, Flexible	1	
24	1562 61 462	Hose, Flexible	1	
25	0866 61 463	Pipe, No. 1	1	
26	1524 61 464A	Pipe, No. 2	1	
27	1562 61 465	Pipe, No. 3	1	
28	0370 61 467	Clip	4	
29	1562 61 467	Clip	1	
30	0370 61 471	Clip	4	
31	0259 78 857	Clip	2	
32	0259 78 858	Packing, Rubber	2	
● 32-1	0866 61 476	Protector	1	
33	0259 78 868	Clip	1	
34	99868 0512	Screw, Clip	16	
	99952 0500	Washer, Plain	16	
	99971 0500	Washer, Spring	16	
35	0866 61 472	Clip	1	
36	99806 0814	Bolt, Clip	1	
	99971 0800	Washer, Spring	1	
37	0866 61 475	Grommet	1	
38	0317 61 612	Cushion	1	
39	0208 78 875	Grommet	1	
40	0866 61 480	Condenser	1	
●	1562 61 490	Condenser	1	Car No. 103115 ~ 106593 ~△
41	99906 0600	Nut, Condenser	4	

No.	Part Number	Description	Q'ty	Remarks
	99952 0618	Washer, Plain	4	
	99971 0600	Washer, Spring	4	
42	0866 61 500	Tank, Receiver	1	
43	99801 0612	Bolt, Receiver Tank	3	
	99952 0618	Washer, Plain	3	
	99971 0600	Washer, Spring	3	
43-1	99906 0600	Nut	1	
	99952 0600	Washer, Plain	1	
44	1562 61 520	Cooler Unit	1	
45	0866 61 525A	Hose, Drain	2	
●46	1524 61 526	Duct, Rubber	1	Car No. 107151 72/9 ~ 109301 Discarded
46-1	0866 61 527	Clip	1	
47	0866 61 531	Bracket No 1, Cooler Unit	1	
48	0866 61 532	Bracket No 2, Cooler Unit	1	
49	0866 61 533	Bracket No. 3, Cooler Unit	1	
50	0866 61 534	Bracket No 4, Cooler Unit	1	
51	0866 61 535	Bracket No 5, Cooler Unit	1	
52	0866 61 536	Bracket No 6, Cooler Unit	1	
53	99797 0616	Bolt, Bracket	14	
	99952 0600	Washer, Plain	12	
	99971 0600	Washer, Spring	14	
54	99906 0600	Nut	2	
	99951 0618	Washer, Plain	4	
55	99906 0800	Nut, Bracket	2	
	99952 0800	Washer, Plain	2	
	99971 0800	Washer, Spring	2	
●56	0824 61 236A	Valve, Magnet	1	Car No. 107151 72/9 ~ 109301 Discarded
●57	0866 61 541	Valve, Check	1	
●57-1	0866 61 542	Connector	1	
●57-2	99564 1000	Gasket	1	
●58	0866 61 543A	Hose No 1, Vacuum	1	

	No.	Part Number	Description	Q'ty	Remarks
	59	~~1524 61 544~~	~~Hose No. 2, Vacuum~~	~~1~~	
	60	0866 61 545	Stabilizer, Amplifier	1	
●		1622 61 545	Stabilizer, Amplifier	1	73/6~O
	61	1524 61 548	Bracket, Stabilizer (1972 Model)	1	
		1524 61 548A	Bracket, Stabilizer (1973 Model)	1	
●		1622 61 548	Bracket, Stabilizer (1973 Model)	1	73/6~O
	62	99833 0512	Screw, Bracket	2	
		99952 0500	Washer, Plain	2	
		99971 0500	Washer, Spring	2	
	63	1562 61 546	Harness	1	
	64	1524 61 547	Wire	1	
●	64-1	0866 61 549	Spacer	1	Car No. 107151 72/9 ~ 109301 Discarded
	65	0866 61 551	Grille	1	
	66	0866 61 552	Holder, Grille	2	
	67	99868 0308	Screw	4	
	68	0820 78 883	Grommet	2	
	69	1531 61 140	Blower	1	
	70	1568 61 190A	Control	1	
		1568 61 190C	Control	1	Car No. 100097 72/3 ~ 100815 ×
	71	0866 61 195	Panel, Control	1	
		0866 61 195B	Panel, Control	1	Car No. 100097 72/3 ~ 100815 ×
●	72	1531 61 411	Cover, Cooler	1	Car No. 107151 72/9 ~ 109301 Discarded
	73	99805 0830	Bolt, Control Panel	4	
		99952 0800	Washer, Plain	4	
		99971 0800	Washer, Spring	4	
	74	99833 0512	Screw, Control	3	
		99971 0500	Washer, Spring	3	
	75	99906 0800	Nut, Control Panel	1	
		99952 0822	Washer, Plain	1	
		99971 0800	Washer, Spring	1	
	76	0866 61 911	Packing No. 1	1	
	77	0866 61 912	Packing No. 2	1	
	78	0866 61 913	Packing No. 3	1	
	79	0866 61 914	Packing No. 4	1	

COOLER UNIT

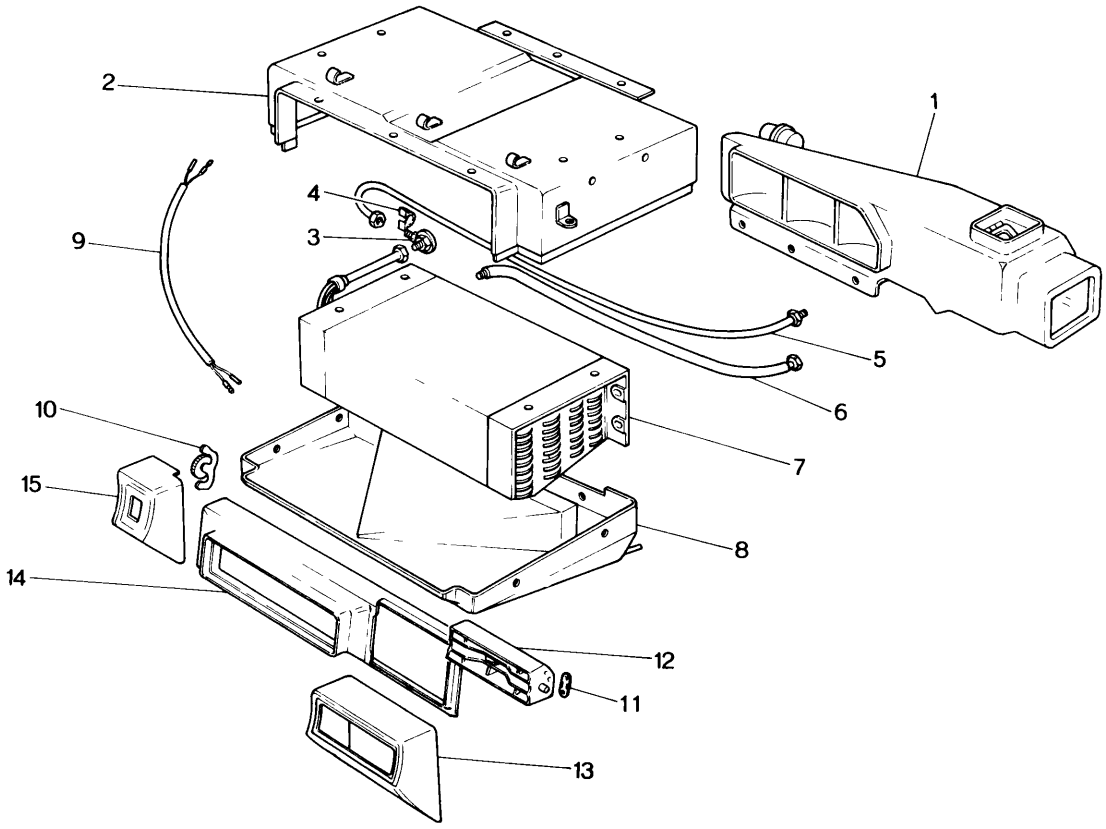

No.	Part Number	Description	Q'ty	Remarks
	1562 61 520	Unit, Cooler	1	
●	1568 61 520	Unit, Cooler	1	Car No. 107151 72/9 ~ ○ 109301
1	**1524 76 701**	Duct, Air	1	
●	1531 76 701	Duct, Air	1	Car No. 107151 72/9 ~ ○ 109301
2	**1524 76 702**	Case, Main	1	
3	**0370 76 703**	Valve, Expansion	1	
4	**0370 76 704**	Holder, Valve	1	
5	**1524 76 705**	Pipe No 1	1	
6	**1524 76 706**	Pipe No 2	1	
7	**1524 76 708**	Evaporator	1	
8	**1524 76 709**	Case, Main	1	
9	**0370 76 707**	Thermister	1	
10	**0866 76 711**	Resister	1	
11	**0866 61 552**	Holder, Grille	2	
12	**0866 76 715**	Grille	1	
13	**1562 76 716**	Body, Grille	1	
14	**1562 76 717**	Duct, Air	1	
15	**1562 76 718**	Base, Grille	1	

COMPRESSOR (CAR COOLER)

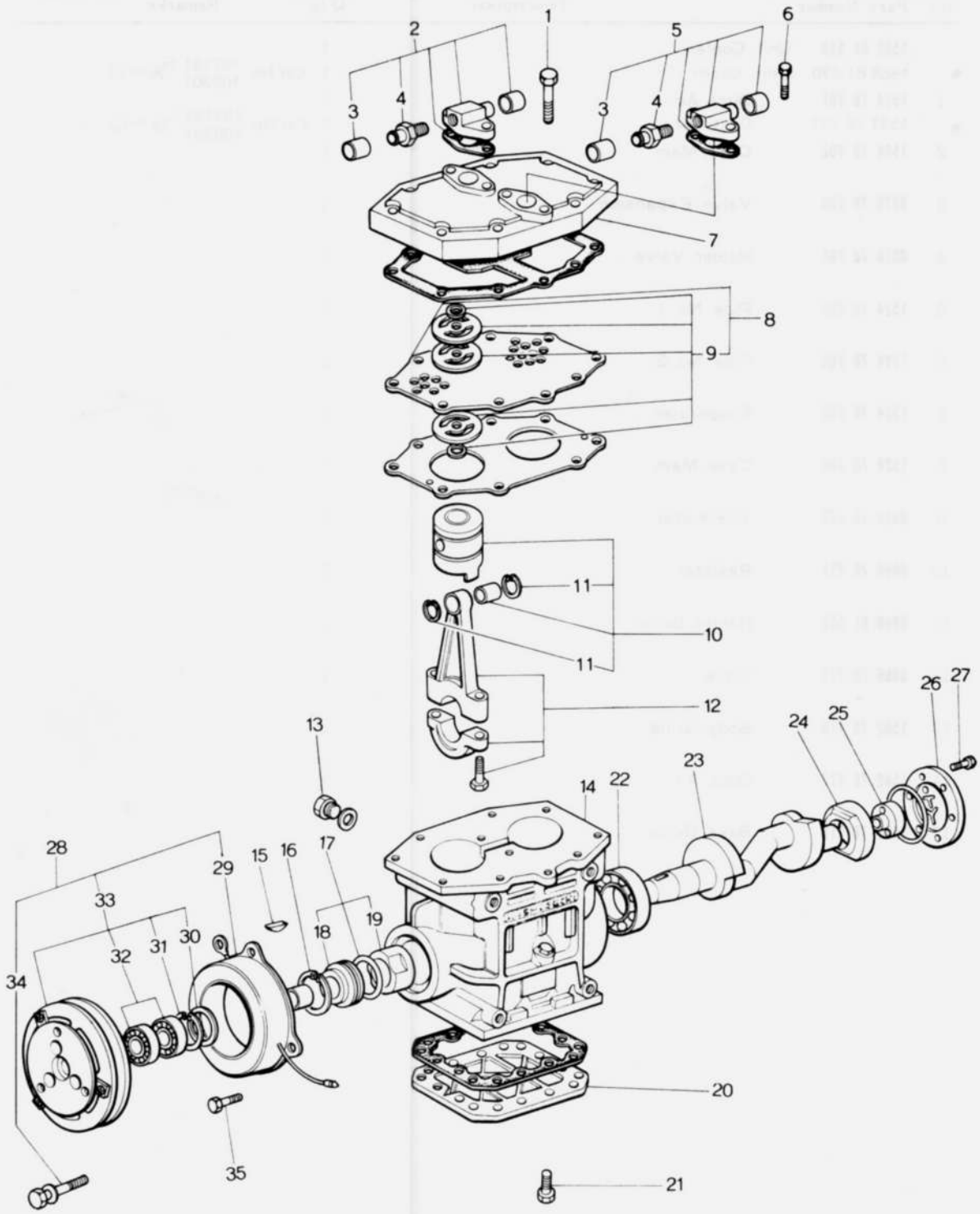

No.	Part Number	Description	Q'ty	Remarks
	0866 61 450	Compressor	1	
	0866 76 710	Compressor Cpt., Fig No 1 ~ 27 Included	1	
1	0866 76 701	Bolt	4	
2	0866 76 810	Valve Kit, Service	1	
3	0866 76 755	Cap, Service Valve	2	
4	0866 76 754	Valve, Service	2	
5	0866 76 820	Valve Kit	1	
6	0866 76 702	Bolt	8	
7	0866 76 752	Head, Cylinder	1	
8	0866 76 760	Valve Ass'y	1	
9	0866 76 703	Valve Kit, Lead	2	
10	0866 76 830	Piston Ass'y	2	
11	0866 76 739	Ring, Snap	4	
12	0866 76 750	Connecting Rod Ass'y	2	
13	0866 76 704	Plug, Oil	1	
14	0866 76 721	Block, Cylinder	1	
●	0866 76 721A	Block, Cylinder	1	Car No. 122873 72/12 ~ 124434 X
15	0866 76 723	Key, Woodruff	1	
16	0866 76 734	Clip	1	
17	0866 76 730	Seal Cpt, Shaft	1	
18	0866 76 733	Plate, Seal	1	
19	0866 76 731	Seal Cpt	1	
20	0866 76 743	Plate, Bottom	1	
●	0866 76 743A	Plate, Bottom	1	Car No. 122873 72/12 ~ 124434 X
21	0866 76 705	Bolt	16	
22	0866 76 722	Bearing	1	
23	0866 76 724	Shaft, Crank	1	
24	0866 76 725	Bearing	1	

COMPRESSOR (CAR COOLER)

No.	Part Number	Description	Q'ty	Remarks
25	0866 76 726	Pump Ass'y	1	
26	0866 76 729	Plate, Cover	1	
27	0866 76 706	Bolt	6	
28	0866 76 720	Clutch Ass'y, Fig No 29 ~ 34 Included	1	
29	0866 76 763	Stator	1	
30	0866 76 764	Cover, Dust	1	
31	0866 76 765	Ring "E"	1	
32	0866 76 766	Bearing, Ball	2	
33	0866 76 790	Magnet Clutch	1	
34	0866 76 707	Bolt	1	
35	0866 76 708	Screw	3	
	0866 76 709	Gasket Kit	1	
●	0866 76 709A	Gasket Kit	1	Car No. 122873 72/12 ~ 124434 X

CAR COOLER
(USED FROM CAR NO. 138185 73/4 134768)

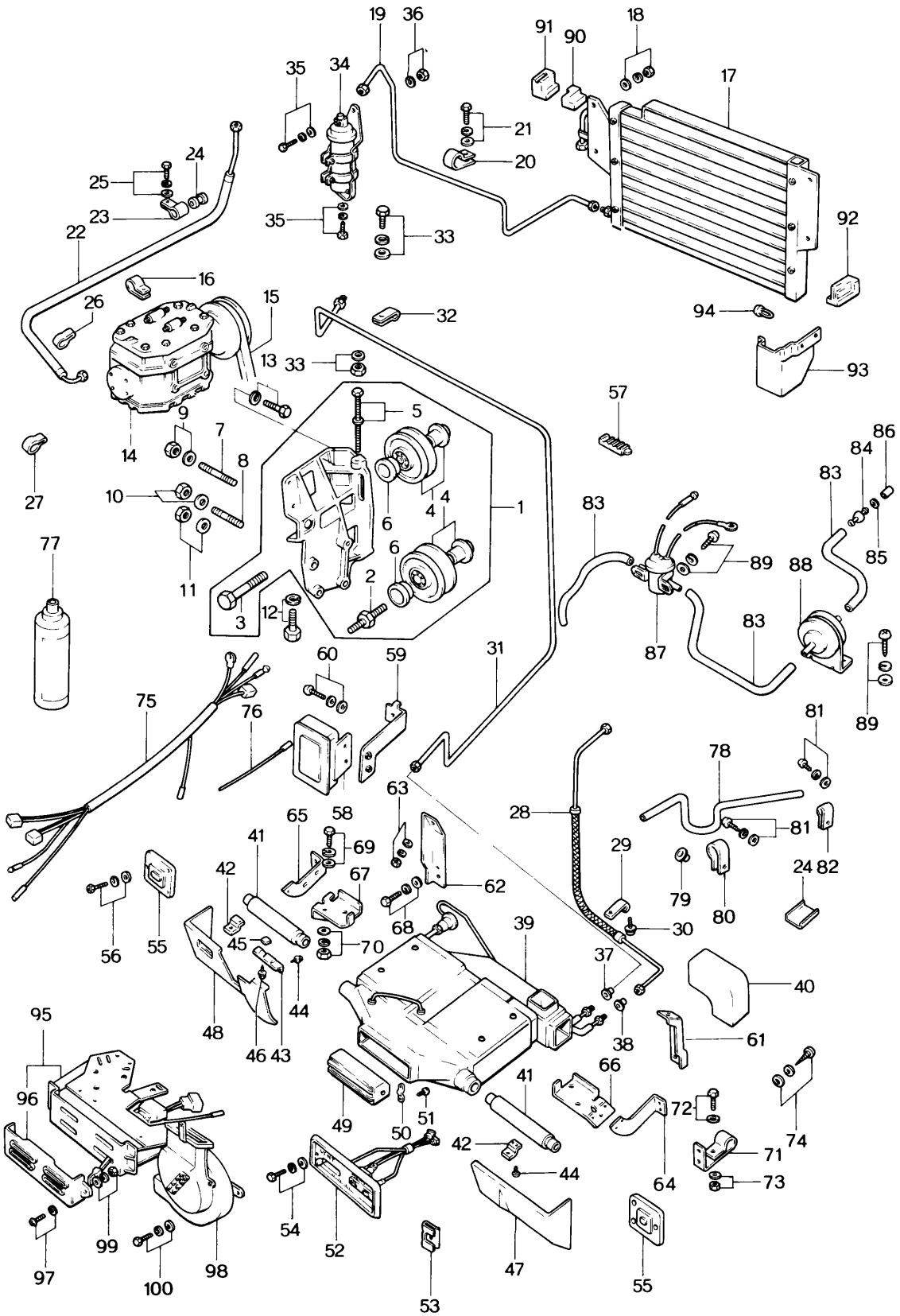

CAR COOLER
(USED FROM CAR NO. 138185 73/4) 134768

No.	Part Number	Description	Q'ty	Remarks
	1608 61 390	Air-Conditioner (Heater Less)	1	
	1622 61 400	Air-Conditioner	1	
1	0866 15 920B	Bracket, Compressor (Fig. No. 2 ~ 6 included)	1	
2	0866 15 923A	Shaft	1	
3	0866 15 932	Bolt, Idle Pulley	1	
4	0866 15 940A	Pulley, Idle	2	
5	0839 61 966A	Bolt, Adjuster	1	
	99971 0800	Washer, Spring	1	
6	0866 15 922	Collar	2	
7	99859 1028	Stud	2	
8	99859 1050	Stud	2	
9	99921 1000	Nut	2	
	99971 1000	Washer, Spring	2	
10	99921 1000	Nut	2	
	99971 1000	Washer, Spring	2	
11	99921 1200	Nut	1	
	99971 1200	Washer, Spring	1	
12	99801 0840	Bolt	2	
	99952 0800	Washer, Plain	2	
	99971 0800	Washer, Spring	2	

61 CAR COOLER
(USED FROM CAR NO. 138185 / 134768 73/4)

No.	Part Number	Description	Q'ty	Remarks
39	1608 61 520	Unit, Cooler (1608 61 390 use)	1	
	1622 61 520	Unit, Cooler (1622 61 400 use)	1	
40	1524 61 526	Duct (1622 61 400 use)	1	
41	1622 61 561	Duct, Air	2	
42	1622 61 566	Bracket, Cover	4	
43	1622 61 567	Bracket	1	
44	99868 0410	Screw, Tapping	10	
45	1622 61 569	Spacer	2	
46	99833 0525	Screw	2	
	99952 0500	Washer, Plain	2	
	99971 0500	Washer, Spring	2	
47	1622 61 575	Cover, Duct	1	
48	1622 61 565	Cover, Duct	1	
49	0866 61 551	Grille, Center	1	
50	0866 61 552	Holder, Grille	2	
51	99868 0408	Screw, Tapping	4	
52	1622 61 580	Panel, Control	1	
53	1622 61 567	Bracket	2	
	1622 61 572	Bracket	2	Car No. 144255 / 139626 73/6 ~ ×
54	99833 0310B	Screw	2	

No.	Part Number	Description	Q'ty	Remarks
	99952 0300	Washer, Plain	2	
55	1622 61 568	Cover (R), Ventilator	1	
	1622 61 578	Cover (L), Ventilator	1	
56	99806 0620	Bolt	6	
	99952 0618	Washer, Plain	6	
	99971 0600	Washer, Spring	6	
57	0866 61 472	Clamp	1	
58	0866 61 545	Amp., Stabilizer	1	
	1622 61 545	Amp., Stabilizer	1	73/6 ~ ○
59	1524 61 548A	Bracket, Amp.	1	
	1622 61 548	Bracket, Amp.	1	73/6 ~ ○
60	99833 0512	Screw	2	
	99952 0500	Washer, Plain	2	
	99971 0500	Washer, Spring	2	
61	0866 61 532	Bracket No. 2	1	
62	0866 61 531	Bracket No. 1	1	
63	99906 0800	Nut	2	
	99952 0800	Washer, Plain	2	
	99971 0800	Washer, Spring	2	
64	0866 61 534	Bracket No. 4	1	

CAR COOLER
(USED FROM CAR NO. 138185 73/4 134768)

No.	Part Number	Description	Q'ty	Remarks
90	0866 61 911	Packing	1	
91	0866 61 912	Packing No. 2	1	
92	0866 61 913	Packing No. 3	1	
93	1620 61 925	Sealer (R)	1	
	1620 61 926	Sealer (L)	1	
94	99264 0531B	Rivet	4	
95	1568 61 190C	Control (Heater Less)	1	
96	0866 61 195B	Panel, Control (Heater Less)	1	
97	99833 0512	Screw	3	
	99971 0500	Washer, Spring	3	
98	1531 61 140	Blower (Heater Less)	1	
99	99906 0800	Nut	1	
	99952 0822	Washer, Plain	1	
	99971 0800	Washer, Spring	1	
100	99805 0830	Bolt	2	
	99952 0822	Washer, Plain	2	
	99971 0800	Washer, Spring	2	

COOLER UNIT & CONTROL PANEL

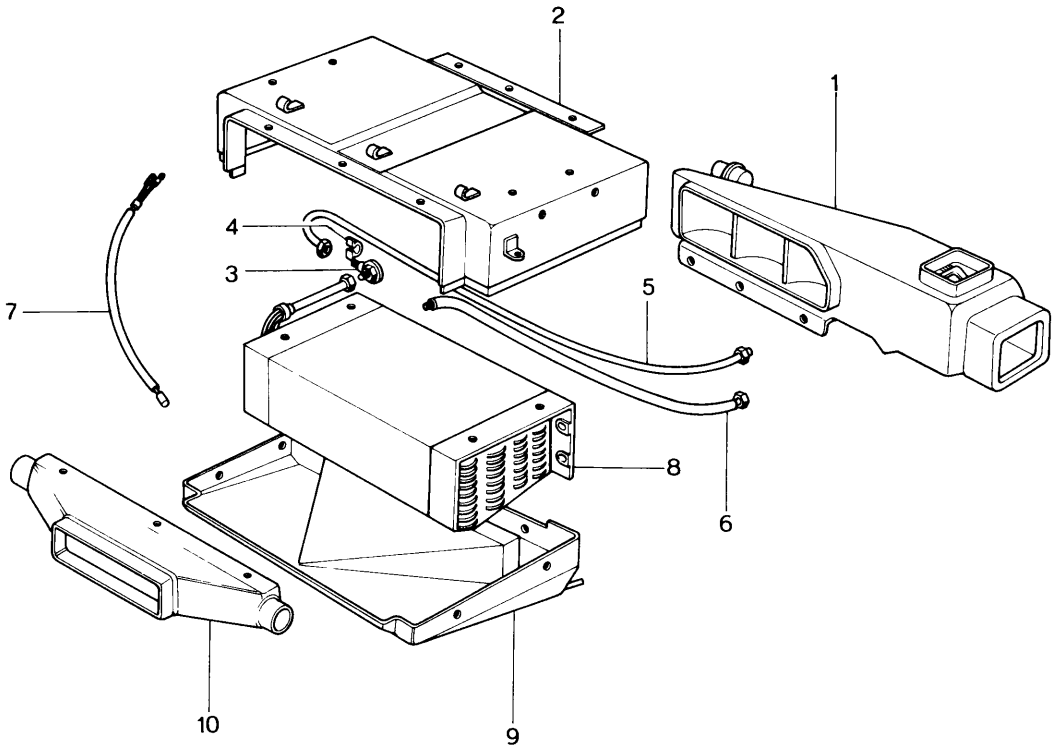

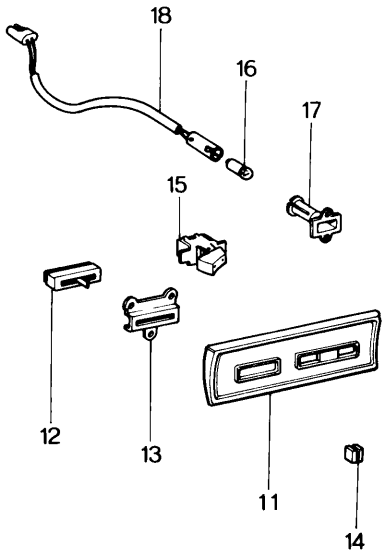

COOLER UNIT & CONTROL PANEL 61 76

No.	Part Number	Description	Q'ty	Remarks
	1608 61 520	Cooler Unit (1608 61 390 use)	1	
	1622 61 520	Cooler Unit (1622 61 400 use)	1	
1	1531 76 701	Duct, Air (1608 61 520 use)	1	
	1524 76 701	Duct, Air (1622 61 520 use)	1	
2	1622 76 702	Case, Main	1	
3	0370 76 703	Valve, Expansion	1	
4	0370 76 704	Holder, Valve	1	
5	1524 76 705	Pipe No. 1	1	
6	1524 76 706	Pipe No. 2	1	
7	0370 76 707	Thermister	1	
8	1622 76 708	Evaporator	1	
9	1622 76 709	Case, Main	1	
10	1622 76 717	Duct, Air	1	
	1622 61 580	Panel Ass'y, Control	1	
11	1622 76 901	Panel, Control	1	
12	1622 76 902	Resistor, Variable	1	
13	1622 76 903	Bracket, Switch	1	
14	1622 76 904	Knob, Control	1	
15	1622 76 905	Switch, Snap	1	

COOLER UNIT & CONTROL PANEL

No.	Part Number	Description	Q'ty	Remarks
16	1622 76 906	Valve	1	
17	1622 76 907	Socket, Valve	1	
18	1622 76 908	Holder, Valve	1	

BACK DOOR (STATION WAGON)

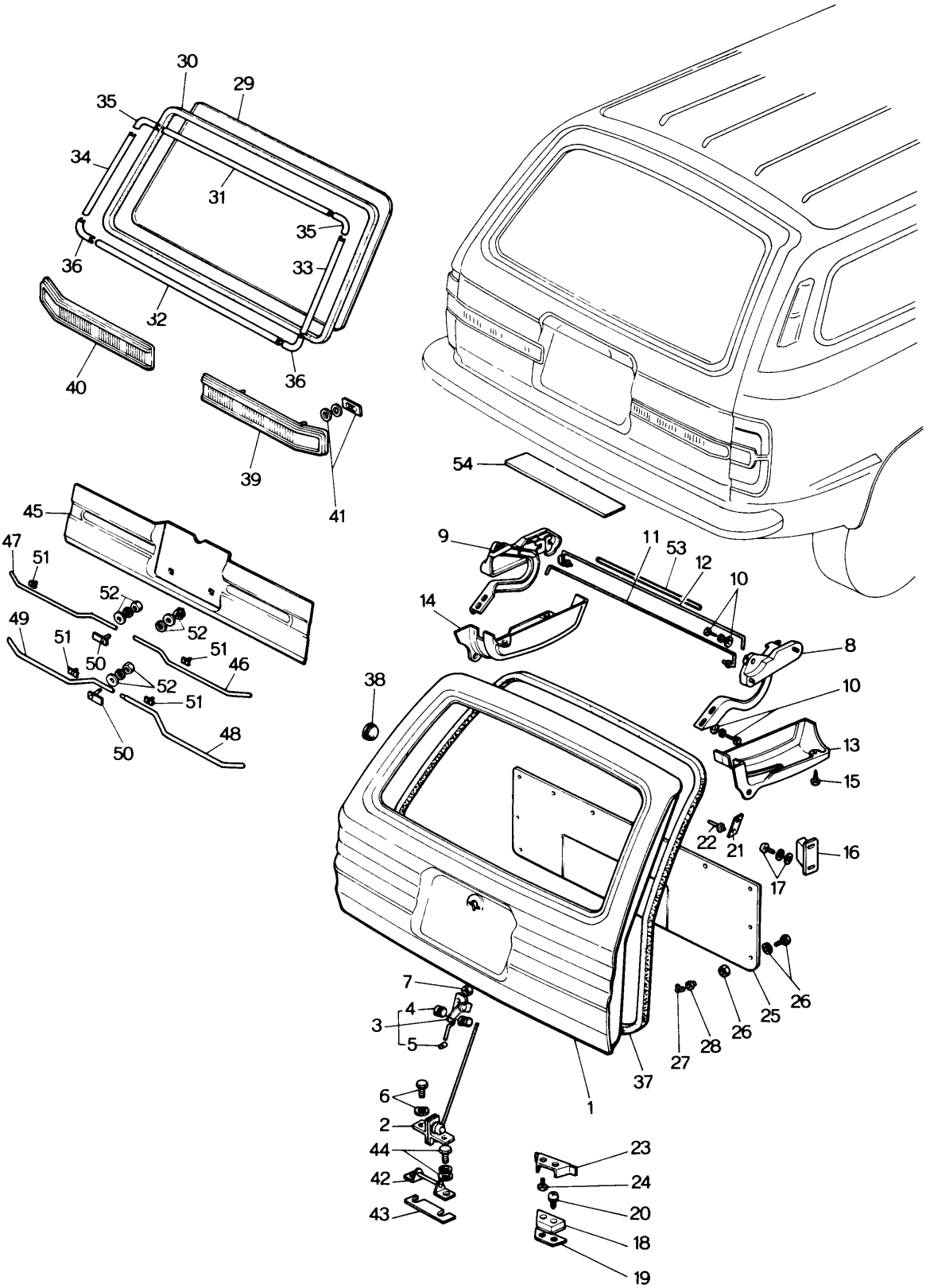

No.	Part Number	Description	Q'ty	Remarks
1	~~1571 62 310A~~	Door, Back 1528-62-510G	1	
2	0585 62 710A	Lock, Back Door	1	
●	0585 62 710B	Lock, Back Door	1	Car No. 109350 $^{72}/_{9}$ ~○
3	0585 62 720A	Control, Remote	1	
●	0585 62 720B	Control, Remote	1	Car No. 103632 $^{72}/_{6}$ ~○
●	0585 62 720C	Control, Remote	1	Car No. 109350 $^{72}/_{9}$ ~○
●	0585 62 720D	Control, Remote	1	Car No. 119373 $^{72}/_{11}$ ~○
		Fig. No. 4, 5 included		
4	0824 58 546	Bush	1	
● 5	~~0223 58 548B~~	~~Joint~~	~~1~~	
●	0866 58 313	Joint	1	From Car No. 1
6	99806 0618	Bolt, Back Door Lock	2	
	99971 0600	Washer, Spring	2	
7	99940 0602	Nut, Flange	1	
8	0585 62 610	Hinge (R)	1	
9	0585 63 610	Hinge (L)	1	
10	99701 0820	Bolt, Hinge	4	
	99951 0818	Washer, Plain	4	
	99971 0800	Washer, Spring	4	
11	0585 62 650C	Spring (R), Balance	1	
12	0585 63 650C	Spring (L), Balance	1	
13	0585 62 671C	Cover (R), Hinge	1	
14	0585 63 671C	Cover (L), Hinge	1	
15	99864 0512C	Screw, Hinge Cover	6	
16	0585 62 671A	Wedge, Upper	2	
17	99765 0616	Screw	4	
	99952 0600	Washer, Plain	4	
	99971 0600	Washer, Spring	4	

BACK DOOR (STATION WAGON)

No.	Part Number	Description	Q'ty	Remarks
18	0621 62 640	Wedge	2	
	0621 62 640A	Wedge	2	Car No. 101136 73/3 ~ ○ 103599
19	0621 62 641	Shim, Adjust- Wedge } Selective use	–	
	0621 62 642	Shim, Adjust- Wedge		
20	99836 0620	Screw, Wedge	4	
	99974 0600	Washer, Toothed	4	
	99975 0600	Washer, Toothed	4	
21	0585 62 672A	Protector	2	
22	0223 69 032	Rivet, Blind- Protector	4	
23	0585 62 695	Wedge	2	
24	99833 0614	Screw, Wedge	4	
	99974 0600	Washer, Toothed	4	
	99975 0600	Washer, Toothed	4	
25	0899 62 851C	Trim, Back Door	1	
26	99862 0416B	Screw, Back Door Trim } Selective use	6	
	99862 0416C	Screw, Back Door Trim	6	
	99967 0400A	Washer, Plain } Selective use	6	
	99967 0400B	Washer, Plain	6	
	99910 0401	Nut	6	
27	0208 58 921	Fastener	2	
28	0187 58 922	Fastener, Seal	2	
29	1528 62 801	Glass, Back Window } Transparent	1	
	1529 62 801	Glass, Back Window	1	With Heatable Wire
●	1529 62 801A	Glass, Back Window	1	73/9 ~ ○
	1544 62 801	Glass, Back Window } Blue Pane	1	
	1545 62 801	Glass, Back Window	1	With Heatable Wire
30	0585 62 802	Weatherstrip	1	
31	0585 62 821A	Mould, Upper	1	

No.	Part Number	Description		Q'ty	Remarks
32	0585 62 822A	Mould, Lower		1	
33	0585 62 823A	Mould (R)		1	
34	0585 63 823A	Mould (L)		1	
35	0585 62 824B	Mould, Corner- Upper		2	
36	0585 62 825B	Mould, Corner- Lower		2	
37	0585 62 831A	Weatherstrip		1	
38	0259 55 951	Hole Cover, Switch		2	
	0136 56 112	Hole Cover, Switch		2	Car No. 101834 7/4 ~ 104336 ○
39	0585 62 940A	Finisher (R), Tail		1	
40	0585 63 940A	Finisher (L), Tail		1	
41	0305 68 951	Gasket		4	
	0305 68 952	Washer		4	
	99579 4000	Nut, Speed		4	
42	0585 62 750	Striker		1	
43	0585 62 741	Plate"A", Adjust (t=2.0)	Selective use	1	
	0585 62 742	Plate"B", Adjust (t=1.0)		1	
44	99806 0618	Bolt, Striker		2	
	99951 0618	Washer, Plain		2	
	99971 0600	Washer, Spring		2	
45	0899 62 955A	Film, Decoration		1	
46	0899 62 961	Moulding (R), Upper		1	
47	0899 62 962A	Moulding (L), Upper		1	
48	0899 62 963	Moulding (R), Lower		1	
49	0899 62 964	Moulding (L), Lower		1	
50	0899 62 970	Bolt, Moulding		3	
51	0899 62 975A	Clip		10	

BACK DOOR (STATION WAGON)

No.	Part Number	Description	Q'ty	Remarks
52	99908 0300	Nut, Decoration Film	3	
	99952 0300	Washer, Plain	3	
	99971 0300	Washer, Spring	3	
53	0621 62 792	Pipe	1	
54	0603 69 323	Cushion	1	
●	0603 69 323A	Cushion	1	Car No. 104518 ~○ 108368

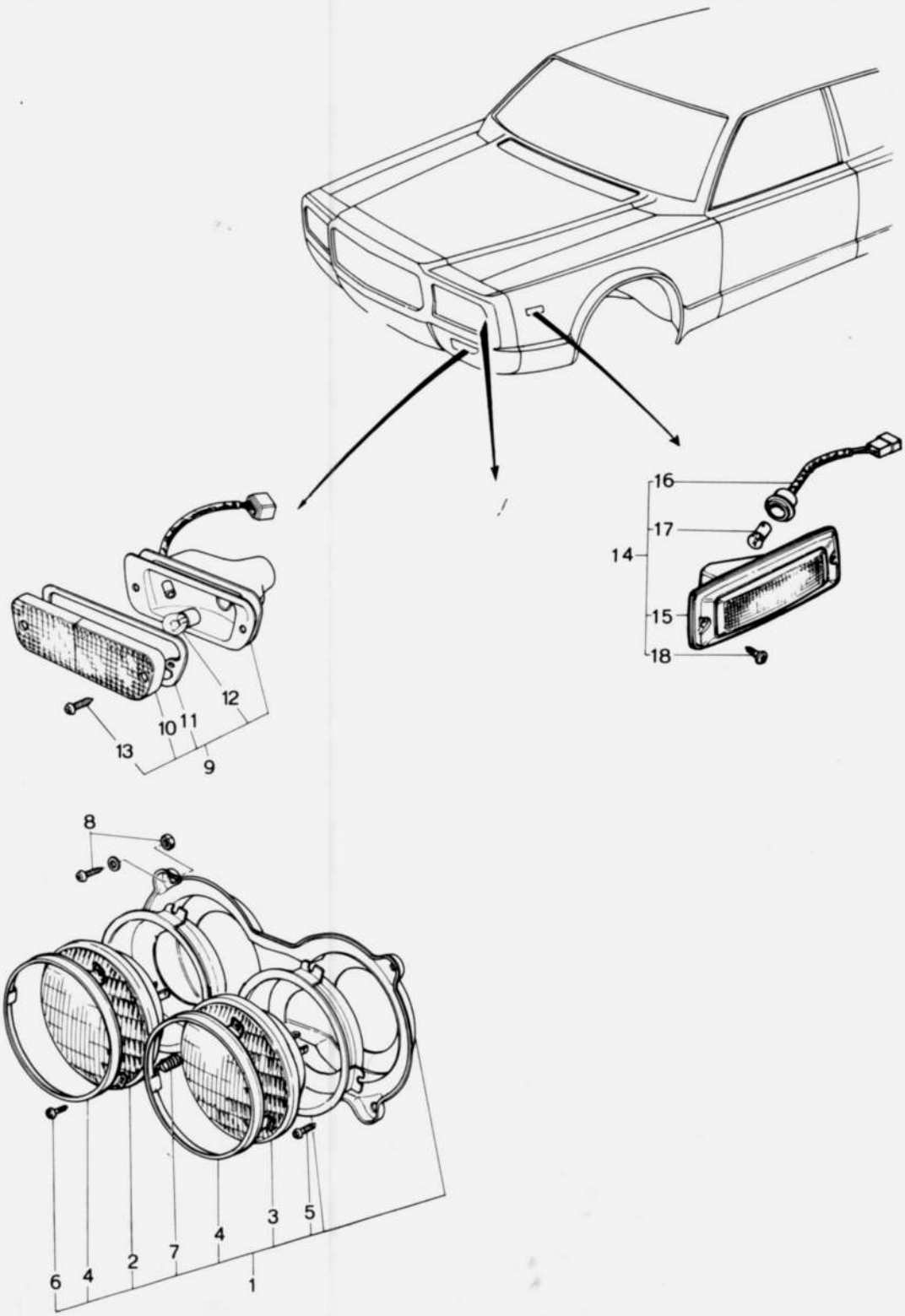
16
17
14
15
18
12
10
11
13
9
8
6
4
2
7
4
3
5
1

No.	Part Number	Description	Q'ty	Remarks
●1	1540 89 661	Lamp (R), Head (Fig. No. 8 included)	1	
●	1540 89 666	Lamp (L), Head (Fig. No. 8 included)	1	
2	0183 66 021	Beam, Sealed-Inner	2	
3	2801 66 022	Beam, Sealed-Outer	2	
4	0727 87 014	Holder, Lamp	4	
5	0727 87 016	Screw, Adjust	8	
6	0275 87 007	Screw	12	
7	2850 87 012	Spring	4	
Ⓝ	0727 87 012	Holder (R)	1	
Ⓝ	0727 87 013	Holder (L)	1	
Ⓝ	0727 87 022	Holder (R)	1	
Ⓝ	0727 87 023	Holder (L)	1	
● 8	~~99888 0818~~	~~Screw, Head Lamp~~	~~8~~	
●	99833 0616	Screw, Head Lamp	8	From Car No. 1
●	~~99818 0881~~	~~Nut~~	~~8~~	
●	99906 0600	Nut	8	From Car No. 1
	99952 0600	Washer, Plain	8	
9	1540 89 662A	Lamp (R), Front Turn Signal	1	
●	1540 89 662B	Lamp (R), Front Turn Signal	1	T3/6~O
	1540 89 667A	Lamp (L), Front Turn Signal	1	
●	1540 89 667B	Lamp (L), Front Turn Signal	1	T3/6~O
10	0866 66 112	Lens (R)	1	
	0866 66 142	Lens (L)	1	
11	0866 66 113	Gasket (R)	1	
	0866 66 143	Gasket (L)	1	
12	99701 4237	Bulb	2	
13	99835 0625C	Screw	4	
Ⓝ	1540 66 111	Housing (R)	1	
Ⓝ	1540 66 141	Housing (L)	1	
14	1540 89 663	Lamp (R), Front Side Marker (Fig. No. 18 included)	1	

LAMPS (FRONT)

No.	Part Number	Description	Q'ty	Remarks
●	1540 89 668	Lamp (L), Front Side Marker (Fig. No. 18 included)	1	
15	1540 66 481	Lamp Unit (R)	1	
	1540 66 491	Lamp Unit (L)	1	
16	1540 66 482	Socket	2	
17	99701 2080	Bulb	2	
18	99864 04168	Screw, Tapping-Front Side Marker Lamp	4	

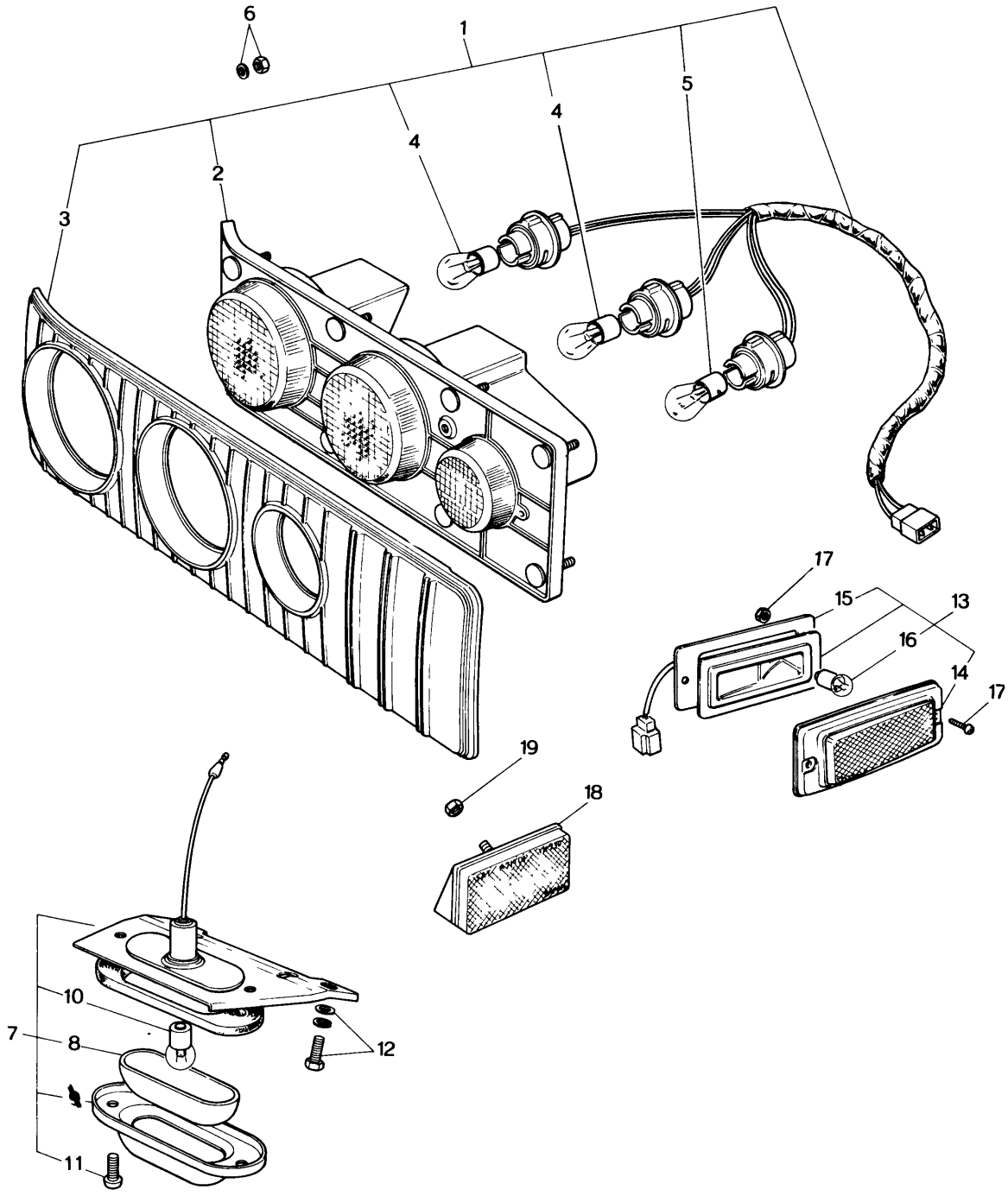
6
1
5
4
4
2
3
17
15
13
16
14
17
19
18
10
7
8
12
11

LAMPS (REAR SIDE, SEDAN & COUPE)

No.	Part Number	Description		Q'ty	Remarks	Price
1	1570 89 664	Lamp (R), Rear Combination	(Fig. No. 6 included)	1		
●	1570 89 664-15	Lamp (R), R. Comb. (GRY.)		1	Car No. 133022 135861	~73/4~X
	1570 89 669	Lamp (L), Rear Combination		1		
●	1570 89 669-15	Lamp (L), R. Comb. (GRY.)		1	Car No. 133022 135861	~73/4~X
2	1570 66 211	Unit (R)		1		
Ⓝ	0865 66 217	Lens (White), Backup	Included in 1570 66 211	1		
Ⓝ	0865 66 218	Lens (Red), Stop		1		
Ⓝ	0865 66 219	Lens (Red), Turn		1		
	1570 66 231	Unit (L)		1		
Ⓝ	0865 66 217	Lens (White), Backup	Included in 1570 66 231	1		
Ⓝ	0865 66 238	Lens (Red), Stop		1		
Ⓝ	0865 66 239	Lens (Red), Turn		1		
3	0866 66 212	Rim (R)		1		
●	0866 66 212-15	Rim (R)		1	Car No. 133022 135861	~73/4~X
	0866 66 232	Rim (L)		1		
●	0866 66 232-15	Rim (L)		1	Car No. 133022 135861	~73/4~X
4	99701 4237	Bulb		4		
5	99701 3230	Bulb		2		
	0866 66 213	Packing		2		
	0866 66 214	Packing		2		
6	~~99906 0500~~	~~Nut, Rear Combination Lamp~~		~~18~~		
	~~99952 0516~~	~~Washer, Plain~~		~~18~~		
	99940 0502	Flange Nut		18	From Car No. 1	
▲ 7	0866 89 665	Lamp, Licence (Fig. No. 12 included)		1		
8	0866 66 372	Lens		1		
9	~~0866 66 374~~	~~Rim~~		~~1~~		
10	99701 2080	Bulb		1		
11	0305 87 032	Screw		2		
12	99797 0612	Bolt, Licence Lamp		2		
	99952 0600	Washer, Plain		2		
	99971 0600	Washer, Spring		2		
● 13	1540 89 673	Lamp (R), Rear Side Marker	(Fig. No. 17 included)	1		
●	1540 89 678	Lamp (L), Rear Side Marker		1		

No.	Part Number	Description	Q'ty	Remarks
14	1540 66 501	Lens & Body (R)	1	
	1540 66 511	Lens & Body (L)	1	
15	1540 66 482	Socket	2	
16	99701 2080	Bulb	2	
17	99774 0416	Screw, Rear Side Marker	4	
	99940 0400	Nut	4	
18	1570 66 700	Reflector (R), Reflex- Rear	1	
	1570 66 710	Reflector (L), Reflex- Rear	1	
19	99940 0500	Nut, Reflex Reflector	4	

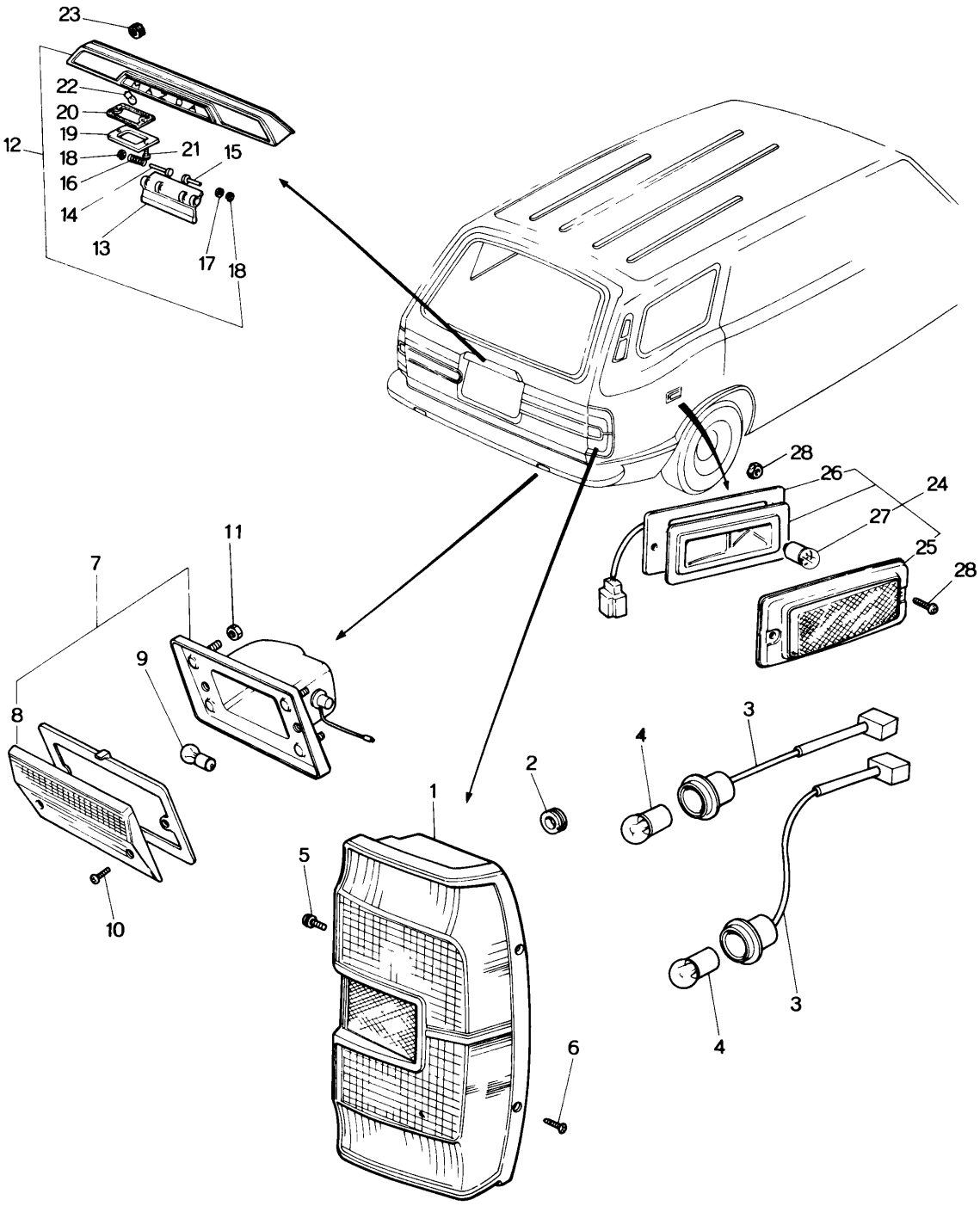
23
22
20
19
12
18
21
15
16
14
13
17
18
28
26
24
27
25
28
11
7
9
8
10
2
1
5
6
4
3
4
3

No.	Part Number	Description	Q'ty	Remarks
●	1544 66 210A	Lamp (R), Rear Combination (Fig. No. 5, 6 included)	1	Order under No. 1544 89 664B
●	1544 89 664B	Lamp (R), Rear Combination (Fig. No. 5, 6 included)	1	From Car No. 1
●	1544 66 230A	Lamp (L), Rear Combination (Fig. No. 5, 6 included)	1	Order under No. 1544 89 669B
●	1544 89 669B	Lamp (L), Rear Combination (Fig. No. 5, 6 included)	1	From Car No. 1
1	0585 66 211	Lens & Body (R)	1	
● Ⓝ	0585 66 219	Lens Only (R)	1	Included in 0585 66 211
	0585 66 231	Lens & Body (L)	1	
● Ⓝ	0585 66 239	Lens Only (L)	1	Included in 0585 66 231
2	1529 66 212	Grommet	2	
3	0585 66 213	Cord & Socket No. 1	4	
4	99701 4237	Bulb (12V 23/8W)	4	
5	99833 0616	Screw, Rear Combination Lamp	4	
	99952 0600	Washer, Plain	4	
	99971 0600	Washer, Spring	4	
6	99767 0525	Screw, Tapping-Rear Combination Lamp	4	
● 7	0585 89 654	Lamp, Reverse (Fig. No. 11 included)	2	
8	0585 66 333	Lens	2	
9	99701 3230	Bulb (12V 23W)	2	
10	99773 0416	Screw		
11	99940 0502	Nut, Flange-Reverse Lamp	4	
● 12	0585 89 665	Lamp & Handle (Fig No. 23 included)	1	
13	0585 66 373	Handle	1	

No.	Part Number	Description	Q'ty	Remarks
14	0585 66 374	Pin No 1, Hinge	1	
15	0585 66 375	Pin No 2, Hinge	1	
16	0585 66 376	Spring, Return	1	
17	0111 58 443	Washer	2	
18	99575 0400	Snap, Ring	2	
19	0585 66 377	Lens	2	
20	0585 66 378	Packing	2	
21	99773 0410	Screw	4	
22	99701 2080	Bulb (12V 5W)	2	
23	99940 0602	Nut, Flange-Lamp & Handle	4	
● 24	1540 89 673	Lamp (R), Side Marker (Fig. No. 28 included)	1	
●	1540 89 678	Lamp (L), Side Marker (Fig. No. 28 included)	1	
25	1540 66 501	Unit (R), Lamp	1	
	1540 66 511	Unit (L), Lamp	1	
26	1540 66 482	Socket	2	
27	99701 2080	Bulb (12V 8W)	2	
● 28	~~99994 04188~~	~~Screw, Tapping-Side Marker Lamp~~	~~4~~	
●	99774 0416	Screw, Tapping-Side Marker Lamp	4	From Car. No. 1
	99940 0400	Nut	4	

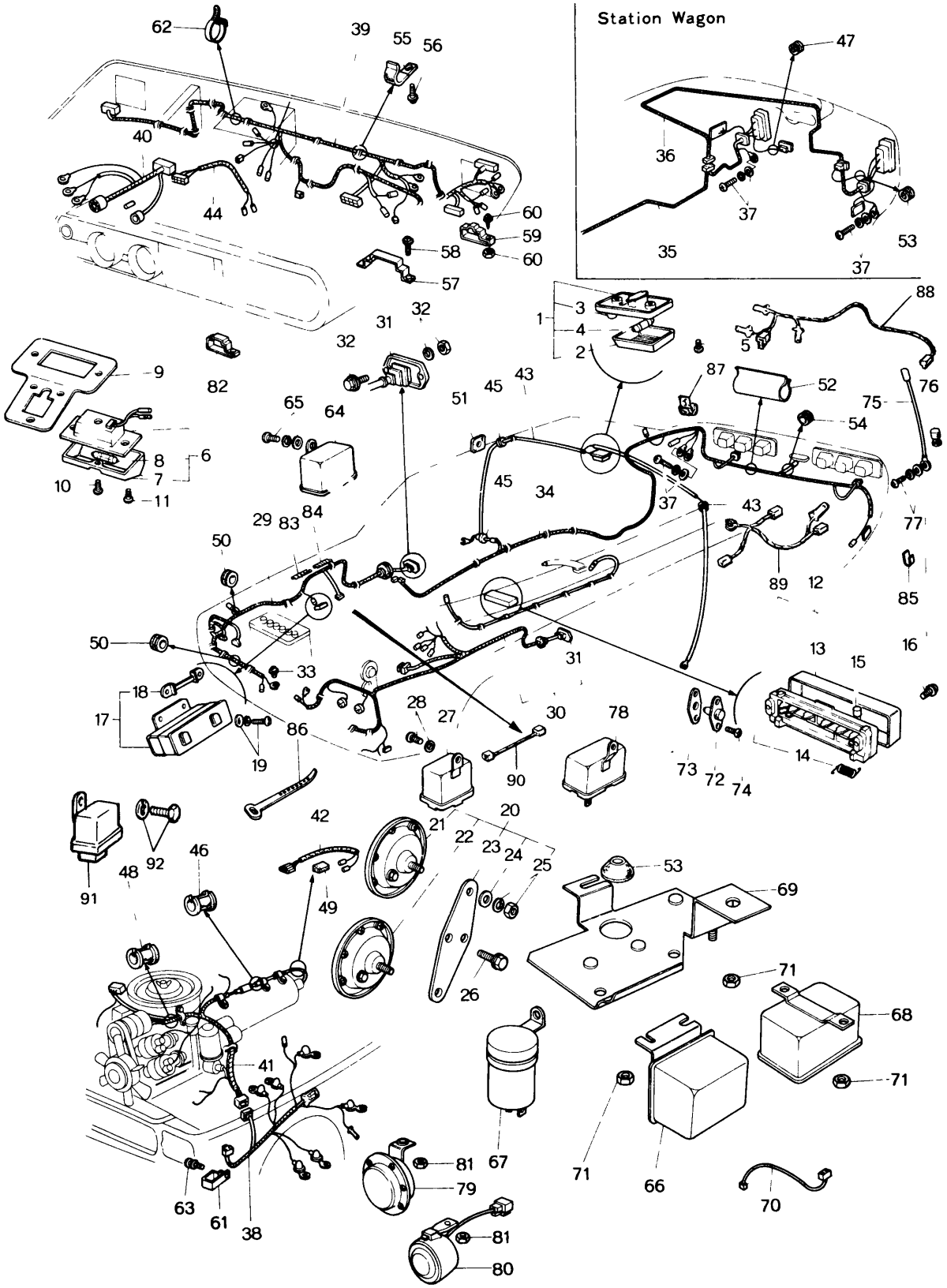
Station Wagon
62
39
55
56
40
44
60
59
58
60
57
32
31
32
1
3
4
2
88
5
9
82
65
64
51
45
43
87
52
76
75
54
8
6
7
10
11
29
83
84
45
34
37
43
77
50
89
12
85
50
33
31
13
15
16
18
17
28
27
30
78
86
19
90
73
72
74
14
42
20
21
22
23
24
25
91
92
48
46
49
53
69
71
68
26
41
67
71
66
70
63
61
38
81
79
81
80

No.	Part Number	Description	Q'ty	Remarks
1	0390 66 410	Lamp, Interior	1	
2	0398 66 412	Lens	1	
3	99701 5050	Bulb	1	
4	0398 66 413	Knob	1	
Ⓝ	0390 66 411	Body	1	
5	99838 0514	Screw, Interior Lamp	2	
			2	
6	1650 66 620	Lamp, Warning - Seat	1	
7	1650 66 621	Lens	1	
8	99701 5050	Bulb	1	
			1	
9	1540 66 631	Bracket, Warning Lamp	1	
10	99868 03088	Screw, Lens	1	
11	99869 0412	Screw, Tapping	2	
12	0866 66 730B	Block, Fuse	1	
	0862 66 730	Block, Fuse	1	Car No. 106225 72/8 ~ X 108472
	0866 66 731	Body	1	
	0862 66 731	Body	1	Car No. 106225 72/8 ~ ○ 108472
13	0866 66 732	Cover	1	
	0862 66 732	Cover	1	Car No. 106225 72/8 ~ X 108472
14	0866 66 733	Spring, Return	1	
15	99706 0105	Fuse (5A)	1	Car No. 106225 72/8 ~ Discarded 108472
●	99706 0103	Fuse (3.15A)	1	Car No. 120143 72/12 ~ Added Anew 120913
	99706 0115	Fuse (15A)	1	Car No. 106225 72/8 ~ Added Anew 108472
	99706 0110	Fuse (10A)	7	
	99706 0115	Fuse (15A)	2	
	99706 0120	Fuse (20A)	3	

No.	Part Number	Description	Q'ty	Remarks
16	99833 0625	Screw, Fuse Block	2	
	99971 0600	Washer, Spring	2	
17	0865 66 760	Block, Main Fuse	1	
18	2852 66 763	Fuse (50A)	2	
19	99743 0620	Screw, Main Fuse Block	2	
	99952 0600	Washer, Plain	2	
	99971 0600	Washer, Spring	2	
20	0865 66 780	Horn, Electric (High Tone & Low Tone)	1	
21	0865 66 790	Horn (High Tone)	1	
22	0865 66 800	Horn (Low Tone)	1	
23	0865 66 805	Holder	1	
24	0865 66 809	Washer, Holder	2	
25	99906 0600	Nut	2	
	99971 0600	Washer, Spring	2	
26	99801 0820	Bolt, Electric Horn	2	
	99971 0800	Washer, Spring	2	
27	1524 66 810	Relay, Horn	1	
28	99797 0612	Bolt, Horn Relay	1	

No.	Part Number	Description	Q'ty	Remarks	Price
	99971 0600	Washer, Spring	1		
29	0866 67 010A	Harness, Wiring (Frt., R)	1		
	0866 67 010C	Harness, Wiring (Frt., R)	1	Car No. 100033 72/2 ~ 100128 ○	
	0862 67 010A	Harness, Wiring (Frt., R)	1	Car No. 106225 72/8 ~ 108472 X	
●	0862 67 010B	Harness, Wiring (Frt., R)	1	Car No. 120143 72/12 ~ 120913 △	
30	1524 67 020C	Harness, Wiring (Frt., L)	1		
	1524 67 020F	Harness, Wiring (Frt., L)	1	Car No. 100033 72/2 ~ 100128 ○	
	1634 67 020D	Harness, Wiring (Frt., L)	1	Car No. 106225 72/8 ~ 108472 X	
31	0866 67 151	Protector, Wire Harness Front	2		
32	99806 0625	Bolt	4		
	99952 0600	Washer, Plain	4		
	99906 0600	Nut	4		
	99971 0600	Washer, Spring	4		
33	99833 0812	Screw, Wire Harness Front Earth	1		
	99952 0800	Washer, Plain	1		
	99971 0800	Washer, Spring	1		
34	1570 67 030	Harness, Wire (Rr.)	1		
	1570 67 030A	Harness, Wire (Rr.) (Sedan & Coupe)	1	Car No. 101711 72/3 ~ △	
	1620 67 030A	Harness, Wire (Rr.)	1	Car No. 108472 72/8 ~ X	
●	1620 67 030B	Harness, Wire (Rr.)	1	Car No. 114430 72/10 ~ △	

No.	Part Number	Description	Q'ty	Remarks	Price
35	1571 67 030	Harness No. 1, Wire (Rr.)	1		
	1624 67 030A	Harness No. 1, Wire (Rr.)	1	Car No. 106225 72/8 ~ X 108472	
●	1624 67 030B	Harness No. 1, Wire (Rr.)	1	Car No. 111940 72/10 ~ Δ 114430	
		(STA. WGN.)			
36	1544 67 035A	Harness No. 2, Wire (Rr.)	1		
	1544 67 035B	Harness No. 2, Wire (Rr.)	1	Car No. 103632 72/6 ~ X	
	0585 67 036	Wire, Licence Lamp	1	Car No. 103632 72/6 ~ Added Anew	
●	0585 67 036A	Wire, Licence Lamp	1	Car No. 145250 73/7 ~ Δ 150172	
	* (1544 67 035B / 0585 67 036) and (1544 67 035A) are interchangeable when exchanged as a set.				
●	0585 67 036A	Wire, Licence Lamp	1	Car 145250 73/7 ~ Δ 150172	
37	99833 0616	Screw	1		
	99952 0600	Washer, Plain	1		
	99971 0600	Washer, Spring	1		
38	1570 67 040	Harness, Wiring-Ignition Coil Relay ~ Coil	1		
	1620 67 040A	Harness, Wiring-Ignition Coil Relay ~ Coil	1	Car No. 106225 72/8 ~ X 108472	
39	1540 67 050D	Harness, Wiring-Meter Panel	1		
●	~~1634 67 050D~~	~~Harness, Wiring-Meter Panel~~	~~1~~	~~Car No. 72/8 ~ X~~	
●	1634 67 050F	Harness, Wiring-Meter Panel	1	Car No. 106225 72/8 ~ X 108472	
●	1634 67 050G	Harness, Wiring-Meter Panel	1	Car No. 107630 72/9 ~ Δ 109638	
●	1634 67 050H	Harness, Wiring-Meter Panel	1	Car No. 120143 72/12 ~ X 120913	
40	0866 67 070B	Harness, Wiring-Meter	1		
	0866 67 070C	Harness, Wiring-Meter	1	Car No. 106225 72/8 ~ X 108472	
41	1570 67 060C	Harness, Wiring-Engine (all models)	1		

No.	Part Number	Description	Q'ty	Remarks	Price
●	~~1620 67 060C Harness, Wiring-Engine~~		~~1~~	~~Car No. 72/8 ~ X~~	
●	1620 67 060D Harness, Wiring-Engine	(Manual)	1	Car No. 106225 72/8 ~ X 108472	
●	1620 67 060E Harness, Wiring-Engine		1	Car No. 120143 72/12 ~ X 120913	
●	~~1621 67 060B Harness, Wiring-Engine~~		~~1~~	~~Car No. 72/8 ~ X~~	
●	1621 67 060C Harness, Wiring-Engine	(Automatic)	1	Car No. 106225 72/8 ~ X 108472	
●	1621 67 060D Harness, Wiring-Engine		1	Car No. 120143 72/12 ~ X 120913	
42	1570 67 065 Harness, Wiring-Reverse Lamp		1		
	1674 67 070A Harness, Wiring-T/mission		1	Car No. 106225 72/8 ~ X 108472	
●	1674 67 070A Harness, Wiring-T/mission		1	Car No. 107151 72/9 ~ Discarded 109301	
43	1540 67 080A Cord, Interior Lamp		1		
	1540 67 080B Cord, Interior Lamp		1	Car No. 101834 72/4 ~ Δ 104336	
44	1570 67 120 Harness, Wiring-Emission		1		
	1620 67 120C Harness, Wiring-Emission		1	Car No. 106225 72/8 ~ X 108472	
45	0114 43 625 Protector, Interior Lamp Cord		2		
46	99686 1000 Protector, Cord		5		
47	99684 0300 Protector (Station Wagon)		5		
48	99686 1600 Protector, Cord-Engine		1		
49	0208 66 949 Pad, Protector-Reverse Lamp		5 16	Sedan & Coupe Station Wagon	
50	0866 67 152 Protector, Cord-Side Turn Signal Lamp		6		
51	0866 67 153A Pad, Protector		1		

No.	Part Number	Description	Q'ty	Remarks	Price
52	0866 67 155	Protector, Wire (Sedan & Coupe)	2		
53	1524 67 155	Protector, Cord-Relay	3		
54	0866 67 156	Protector, Cord (Sedan & Coupe)	1		
55	0866 67 059	Clip, Wiring Harness (Panel)	4		
56	99863 0512	Screw, Clip	4		
	99971 0500	Washer, Spring	4		
57	0866 67 905A	Clip, Wiring Harness (Meter)	1		
58	99869 0512	Screw, Clip	2		
	99952 0500	Washer, Plain	2		
59	0866 67 906	Clip, Dash Panel Upper	1		
60	99869 0512	Screw, Clip	1		
	99952 0500	Washer, Plain	1		
	99940 0600	Nut, Flange	1		
61	0866 67 908	Clip, Ignition Coil Relay Harness	2		
62	0305 67 993A	Clip	6		
	99709 2185	Band	6		
63	99833 0612	Screw, Clip	1		
	99952 0600	Washer, Plain	1		
	99971 0600	Washer, Spring	1		
64	0839 67 880	Relay, Ignition Coil (1972 Model)	2		

No.	Part Number	Description	Q'ty	Remarks	Price
	0862 67 880	Relay, Ignition Coil (1973 Model)	1		
65	99797 0612	Bolt, Relay	2		
	99971 0600	Washer, Spring	2		
66	0820 60 870A	Relay, Wiper Switch	1		
67	2113 66 470	Flasher Unit	1		
68	0223 66 580A	Hazard Unit	1		
69	1524 67 720B	Bracket, Relay	1		
70	1540 67 715	Cord, Relay Unit (Manual)	1		
	1621 67 715	Coil, Relay Unit (Automatic)	1		
71	99940 0602	Nut, Flange	7		
72	0209 66 820	Switch, Door	2		
73	0209 66 821	Washer, Adjust-Door Switch	4		
74	99864 0412	Screw, Door Switch	4		
75	0866 67 133	Cord, Back Window-Heating Wire use	1	Sedan & Coupe	
76	99684 0600	Protector, Cord	1		
77	99806 0616	Screw, Back Window Cord	1		
	99952 0600	Washer, Plain	1		
	99971 0600	Washer, Spring	1		
78	~~1570 67 830~~	~~Relay, Idle~~	~~1~~		
79	0750 66 840	Buzzer, Door	1		

No.	Part Number	Description	Q'ty	Remarks	Price
80	0735 67 730A	Buzzer, Seat Switch	1		
81	99940 0600	Nut, Flange-Buzzer	2		
82	1540 67 907	Clip, Wiring-Harness	1		
83	0823 18 111	Supporter, Engine Harness & Battery, Earth Wire Cable	2	Car No. 100033 72/2 ~ 100128 Q'ty	
84	0305 67 994	Supporter, Engine Harness & Battery Positive Cable	1		
85	99295 0406	Clip, Rear Side Marker Lamp	1		
86	99709 1206	Band, Unit & Relay Bracket Cord + Harness Panel	1		
87	~~99296 1808~~	~~Clip~~	~~1~~		
	99276 1808	Clip	1	From Car No. 1	
88	1634 67 135	Cord, Retractor Switch	1		
89	1540 67 131	Cord, Parcking Lamp (Manual) (1973 Model)	1		
	1541 67 131	Cord, Indicator Lamp (Automatic)	1		
90	1621 67 134	Cord, Kick Down Switch (Automatic)	1	Car No. 129673 73/2 ~ 131022 Added Anew	
91	1664 67 740	Relay, Choke	1	Car No. 107151 72/9 ~ 109301 Added Anew	
92	99797 0740	Bolt, Choke Relay	1		
	99971 0700	Washer, Spring	1		

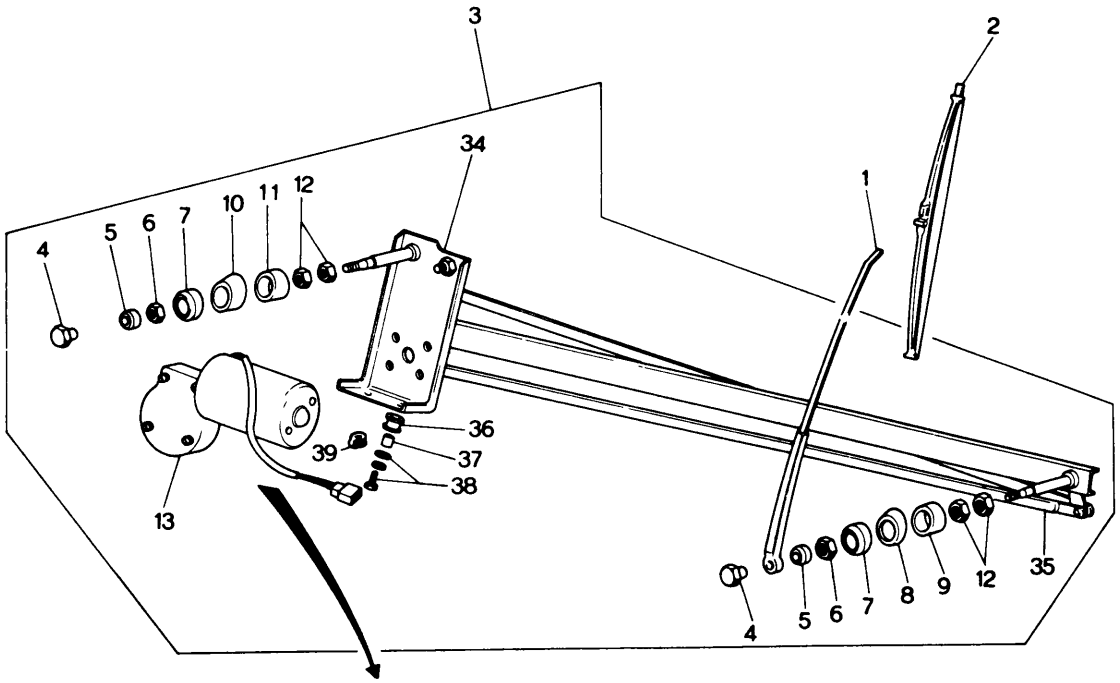
3
2
34
1
12
11
10
7
6
5
4
36
39
37
38
13
4
5
6
7
8
9
12
35

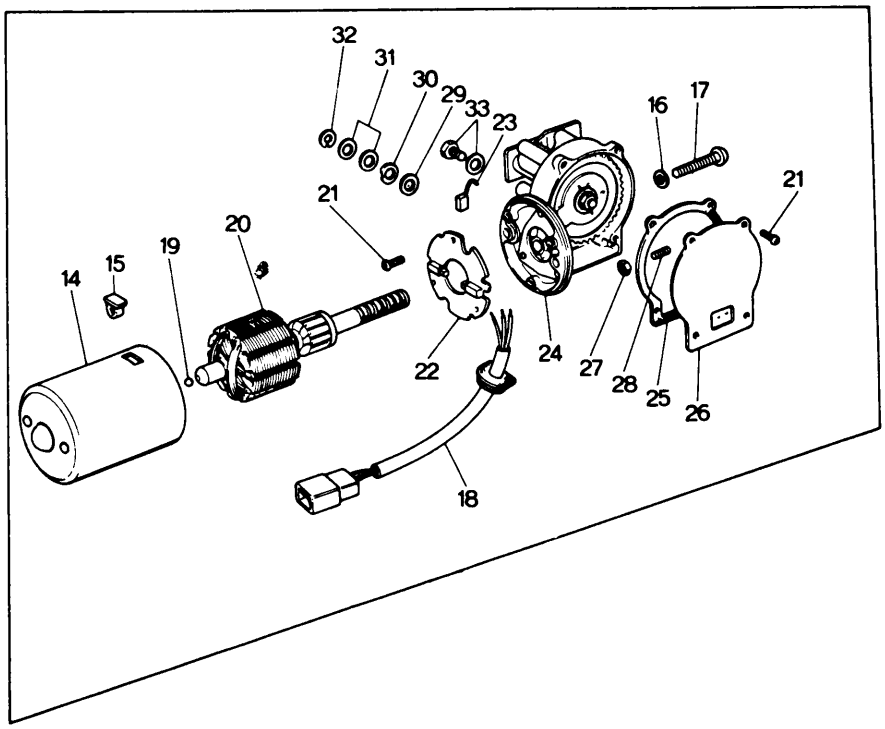
32
31
30
29
33
23
16
17
21
21
20
19
15
14
22
24
27
28
25
26
18

No.	Part Number	Description	Q'ty	Remarks
1	1524 67 321	Arm, Wiper	2	
●	1524 67 321A	Arm, Wiper	2	Car No. 115327 72/11 ~ △ 117725
2	2835 67 330	Blade, Wiper	2	
	0839-67-330	※		
3	1524 67 340B	Motor & Link	1	
4	0223 66 371	Nut, Cap	2	
5	0212 66 371	Cap, Seal	2	
6	0212 66 372	Nut	2	
7	0305 67 906	Washer	2	
8	1524 76 604	Bush, Outer	1	
● 9	1524 76 603	Bush, Inner	1	
10	1823 67 352	Bush, Outer	1	
● 11	0866 76 605	Bush, Inner	1	
● 12	0259 67 134	Nut	4	
● 13	1524 67 350	Motor	1	Fig No 14 ~ 33 included
14	0259 67 109A	Yoke	1	
15	0257 67 108	Nut	2	
16	99971 0500	Washer, Spring	6	
17	0257 67 107	Screw	2	
● 18	1524 76 607	Wire, Lead	1	
● 19	0259 67 107	Ball	2	
20	0259 67 108A	Rotor	1	
● 21	0259 67 105	Screw	7	
22	0259 67 101A	Plate, Bush Holder	1	
23	0259 67 106	Brush	3	
24	1524 76 608	Box, Gear	1	

No.	Part Number	Description	Q'ty	Remarks
25	0259 87 103	Gasket	1	
26	0259 87 104A	Plate, End	1	
27	0259 87 119	Nut	1	
28	0259 87 120	Screw	1	
29	0738 87 803	Felt	1	
30	0702 87 135	Washer, Wave	1	
31	0738 87 804	Washer	2	
32	0702 87 138	Ring, Retaining	1	
33	99806 0510	Bolt, Motor	4	
	99971 0500	Washer, Spring	4	
34	1524 76 602	Frame, Wiper	1	
35	1524 76 601	Link, Wiper	1	
36	0866 67 301A	Washer, Rubber	2	
37	0866 67 302	Spacer	2	
38	99806 0616	Bolt, Frame	3	
	99952 0618	Washer, Plain	3	
	99971 0600	Washer, Spring	3	
39	0118 13 432	Clip, Earth	1	

SCREEN WASHER

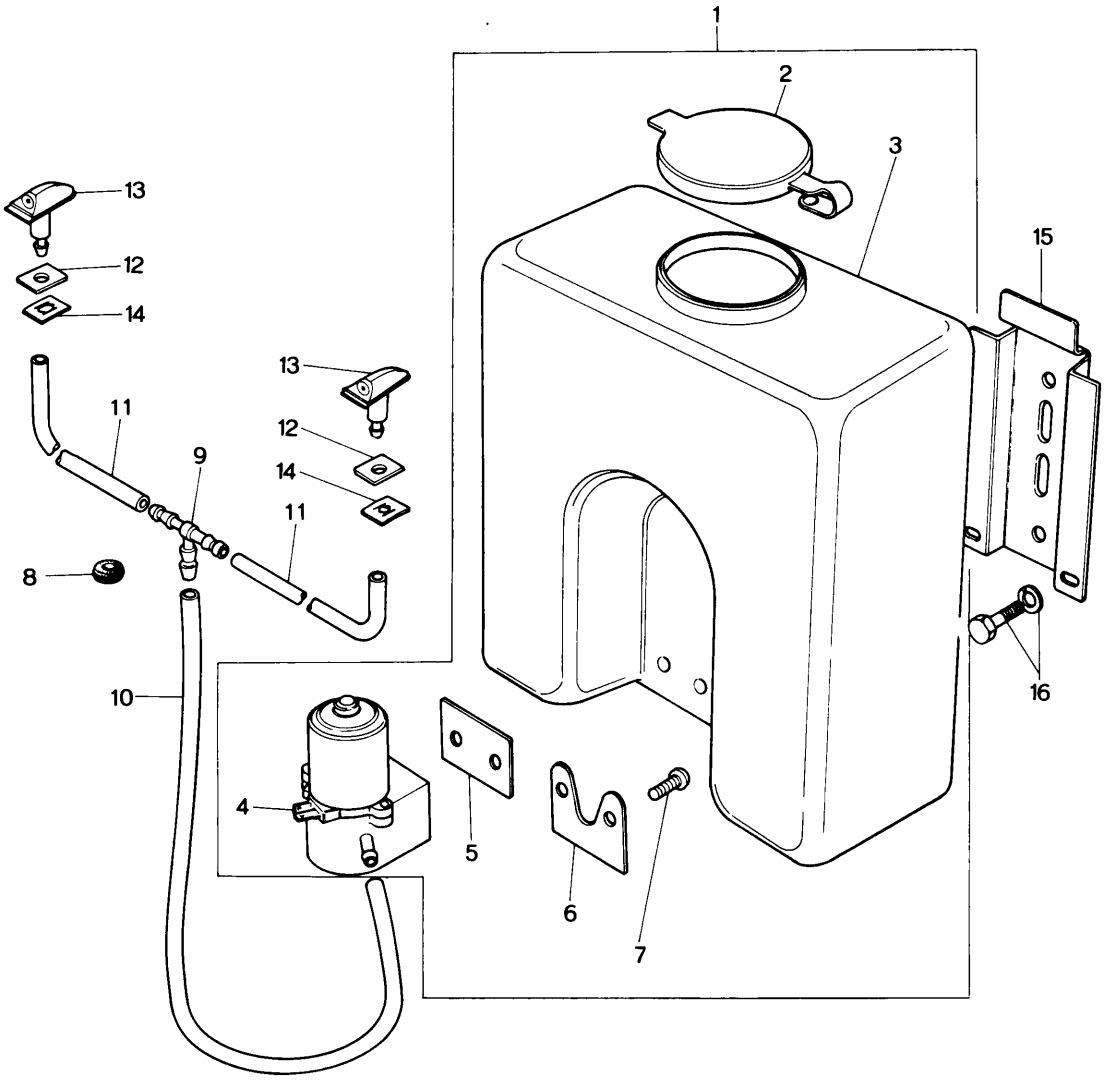

No.	Part Number	Description	Q'ty	Remarks
1	0317 67 480	Tank, Washer	1	
2	0727 87 992	Cap	1	
3	0317 67 511	Tank	1	
4	0305 87 993	Pump	1	
5	0727 87 994	Gasket	1	
6	0727 87 995	Plate	1	
7	0727 87 996	Screw	2	
8	0111 41 692	Protector, Pipe	1	
9	0813 66 879	Joint, Pipe	1	
10	99335 04015	Pipe	1	
11	99335 04066	Pipe	2	
12	0866 67 511A	Washer, Nozzle	2	
13	0866 67 510A	Nozzle	2	
14	0866 67 512	Nut, Speed	2	
15	0866 67 521	Bracket, Tank	1	
16	99781 0612	Bolt, Tank Bracket	2	
	99971 0600	Washer, Spring	2	

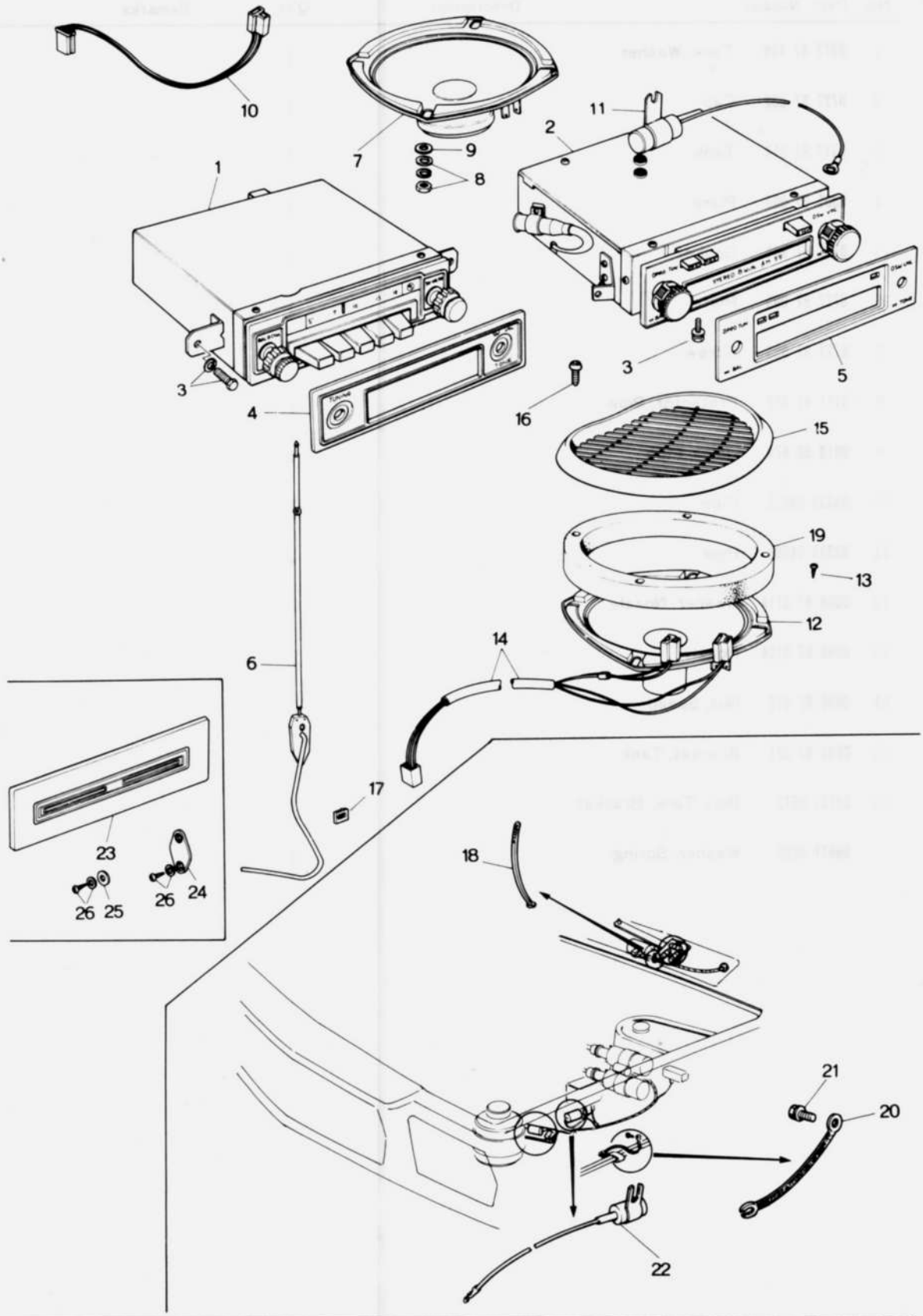
10
7
9
8
11
2
1
3
3
5
4
16
15
19
13
12
14
6
17
23
26
25
26
24
18
21
20
22

No.	Part Number	Description	Q'ty	Remarks
	1560 66 860B	Auto Radio Cpt., AM	1	
	1561 66 860B	Auto Radio Cpt., AM/SW	1	
	1562 66 860B	Auto Radio Cpt., AM/FM	1	
	1564 66 860B	Auto Radio & Stereo	1	
	~~1560 66 870~~	~~Auto Radio, AM~~	~~1~~	
	~~1561 66 870~~	~~Auto Radio, AM/SW~~	~~1~~	
	~~1562 66 870~~	~~Auto Radio, AM/FM~~	~~1~~	
	~~1564 66 870~~	~~Auto Radio & Stereo~~	~~1~~	
1	0866 66 900	Tuner, AM	1	
	1561 66 900	Tuner, AM/SW	1	
	1562 66 900	Tuner, AM/FM	1	
2	0870 66 900A	Tuner & Player	1	
3	99797 0512	Bolt, Tuner	2	
	99952 0500	Washer, Plain	2	
	99971 0500	Washer, Spring	2	
4	0866 66 905	Plate, Decoration-Radio	1	
5	0870 66 905	Plate, Decoration-Radio & Stereo	1	
6	1524 66 930A	Antenna	1	
7	0866 66 960	Loud Speaker	1	
8	99940 0500	Nut, Flange-Loud Speaker	4	
9	0275 68 088	Spacer	8	
10	0866 66 965	Cord, Loud Speaker	1	
11	0820 66 992	Condenser	1	
12	0870 66 970	Loud Speaker, Stereo	2	
●	0870 66 970A	Loud Speaker, Stereo (Sedan, Coupe)	2	Car No. 120913 $^{72}/_{12}$ ~△
13	99864 0410	Screw, Loud Speaker - Stereo	8	
14	0870 66 975	Cord, Stereo Loud Speaker	1	
	0870 66 975A	Cord, Stereo Loud Speaker	1	Car No. 133805 $^{73}/_{3}$ ~△

No.	Part Number	Description		Q'ty	Remarks
15	0870 66 980	Grille, Loud Speaker - Stereo use		1	
16	99748 0410	Screw, Grille		8	
17	0866 67 153A	Pad, Protector		1	
● 18	0305 67 993A	Clip, Wire Harness		1	Car No. 130245 73/2~Discarded 131637
19	0317 66 862	Partition		1	
20	0866 66 871	Wire, Earth		1	
21	99806 0512	Bolt		1	
	99952 0500	Washer, Plain		1	
	99971 0500	Washer, Spring		1	
22	0839 66 992	Condenser		1	
	0820 66 992	Condenser		1	Car No. 105638 72/8 ~X 108463
23	0316 66 865A	Ornament		1	
24	0727 66 991A	Cover, Hole - Antenna		1	
25	0727 66 992	Cover, Hole - Antenna	Without Auto Radio	1	
26	99863 0410B	Screw, Hole Cover		3	
	99953 0400B	Washer, Plain		3	

CRUSH PAD, GLOVE POCKET & CONSOLE BOX

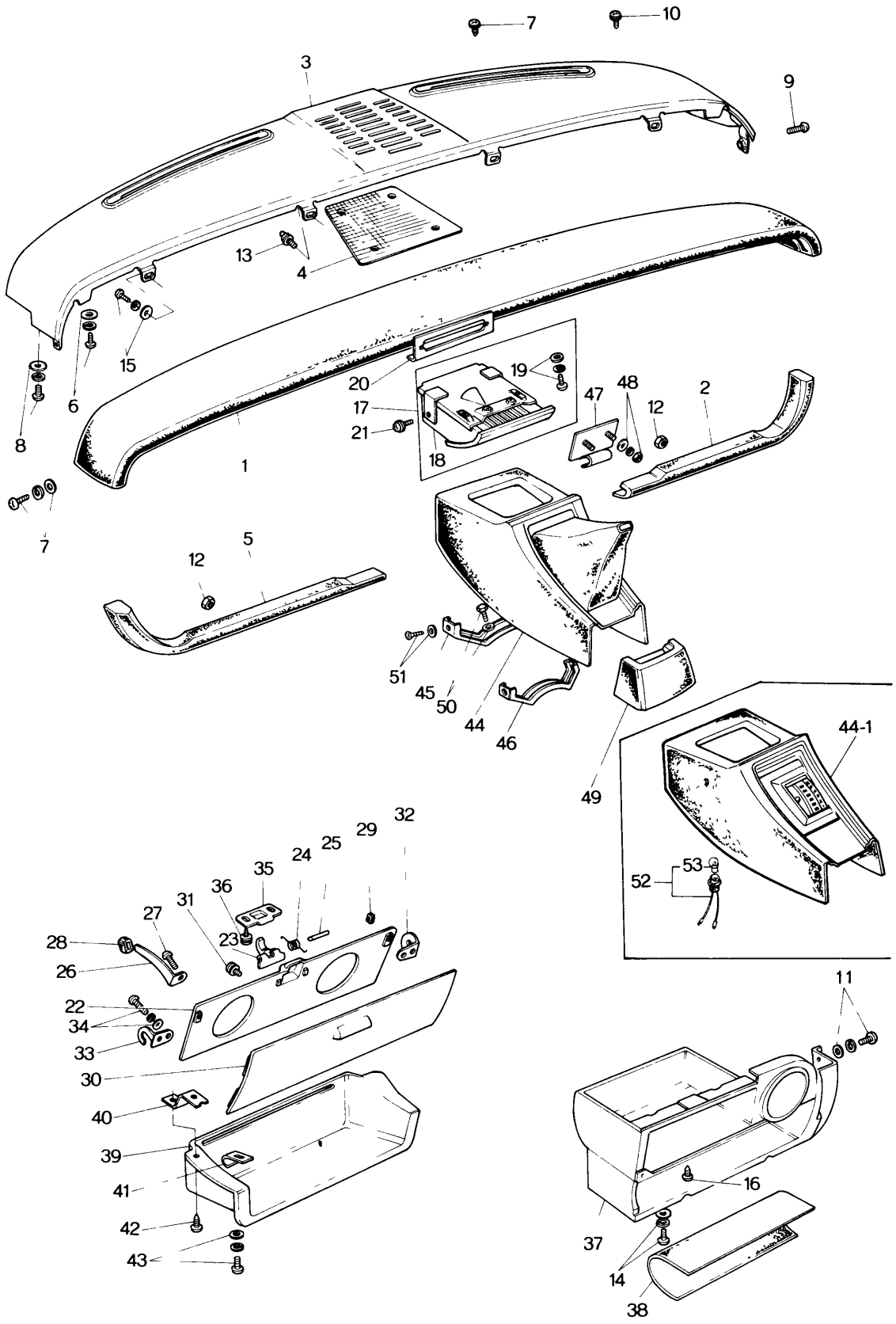

CRUSH PAD, GLOVE POCKET & CONSOLE BOX

No.	Part Number	Description	Q'ty	Remarks	
1	0865 68 020B-00	Pad Crush	1		©
2	1562 68 040A	Pad, (R), Lower	1		
● 3	0866 68 090B-00	Garnish (Black)	1		©
4	0866 68 095	Cloth, Cover	1		
5	1562 68 140B-00	Pad (L), Lower	1		©
6	99805 0822	Bolt, Crush Pad	2		
	99952 0818	Washer, Plain	2		
	99971 0800	Washer, Spring	2		
7	99834 0512B	Screw	6		
	99952 0500B	Washer, Plain	6		
	99971 0500	Washer, Spring	6		
8	99833 0516B	Screw	2		
	99952 0500B	Washer, Plain	2		
	99971 0500	Washer, Spring	2		
9	99833 0512B	Screw	1		
10	99833 0616B	Screw, Crush Pad & Garnish	4		
	99952 0600B	Washer, Plain	4		
	99971 0600	Washer, Spring	4		
11	99836 0516B	Screw, Garnish	1		
	99967 0500B	Washer, Plain	1		
12	99940 0501	Nut, Flange- Pad Lower	5		
13	99833 0512	Screw, Garnish	2		
	99952 0500	Washer, Plain	2		
	99971 0500	Washer, Spring	2		
14	99834 0616B	Screw, Garnish	2		
	99952 0618B	Washer, Plain	2		

68 CRUSH PAD, GLOVE POCKET & CONSOLE BOX

No.	Part Number	Description	Q'ty	Remarks
	99971 0600	Washer, Spring	5	
15	99863 0512	Screw, Garnish	5	
	99952 0500	Washer, Plain	2	
	99971 0500	Washer, Spring	2	
16	99834 0612B	Screw, Tapping	2	
17	0866 68 180A	Tray, Ash (Frt)	1	
18	0866 68 201	Case, Inner	1	
●	0866 68 201A	Case, Inner	1	Car No. 106225 108472 $^{72}/_{8}$ ~ △
●	0866 64 630	Case, Inner	1	Car No. 110473 112228 $^{72}/_{9}$ ~ ○
19	99833 0512	Screw	2	
	99952 0500	Washer, Plain	2	
	99971 0500	Washer, Spring	2	
20	0866 68 175	Plate, Set-Ash Tray	1	
21	99833 0512	Screw, Ash Tray	2	
	99952 0500	Washer, Plain	2	
	99971 0500	Washer, Spring	2	
22	0866 68 331	Lid, Glove-Inner	1	
23	0866 68 332	Hook	1	
24	0866 68 333	Spring	1	
25	0866 68 334	Pin	1	
26	0866 68 335A	Stopper	1	
27	99831 04088	Screw, Stopper	1	
28	0275 55 195	Cushion, Rubber	1	
29	0317 70 269	Cushion	2	

CRUSH PAD, GLOVE POCKET & CONSOLE BOX

No.	Part Number	Description	Q'ty	Remarks	
30	0865 68 340	Lid, Glove-Outer	1		©
31	99262 1806B	Screw, Glove Lid	8		
32	0866 68 351A	Hinge (R), Glove Lid	1		
33	0866 68 352A	Hinge (L), Glove Lid	1		
34	99834 0412B	Screw, Hinge	4		
	99952 0412B	Washer, Plain	4		
	99971 0400B	Washer, Spring	4		
35	0866 68 361	Striker	1		
36	99839 0518B	Screw, Striker	2		
	99952 0500B	Washer, Plain	2		
	99971 0500B	Washer, Spring	2		
37	1524 68 380A	Box, Glove-Outer	1		
38	1524 68 011	Sheet, Glove Tray	1		
39	0866 69 811	Shelf, Parcel	1		
40	0866 69 820	Bracket, Parcel Shelf	1		
	0866 69 821A	Bracket, Parcel Shelf	1	Car No. 105638 108463 72/8 ~ ○	
41	0820 56 905	Nut, Spring-Parcel Shelf	2		
Ⓝ	99896 0616	Nut, Spring-Parcel Shelf	1	Car No. 105638 108463 72/8 ~ Added Anew	
42	99833 0616	Bolt, Parcel Shelf	1		
	99952 0618	Washer, Plain	1	Car No. 105638 108463 72/8 ~ Q'ty	
	99971 0600	Washer, Spring	1		
43	99863 0520B	Screw, Parcel Shelf	3		
	99952 0500B	Washer, Plain	3	Car No. 105638 103463 72/8 ~ Q'ty	
	99971 0500B	Washer, Spring	3		
● 44	~~0378 68 880A Console, Front (1972 & 1973 General U.S.A.)~~		~~1~~		©
●	0376 68 890A-00 Console, Front (1972 & 1973 General U.S.A.)		1	From Car No. 1	©
●	0376 68 890B-00 Console, Front (1972 & 1973 General U.S.A.)	Manual	1	Car No. 133022 135861 73/4 ~ ○	©
●	1524 68 890 Console, Front (1973 Canada & Northern U.S.A.)		1		
●44-1	1525 68 890 Console, Front (Automatic)		1		
45	0376 69 900 Bracket No. 1, Console (Manual)		1		
●	0378 68 900 Bracket No. 1, Console (Automatic)		1		
46	0376 68 910 Bracket No 2		1		
47	0866 68 920 Bracket		1		

CRUSH PAD, GLOVE POCKET & CONSOLE BOX

No.	Part Number	Description	Q'ty	Remarks
48	99906 0500	Nut, Bracket	2	
	99952 0500	Washer, Plain	2	
	99971 0500	Washer, Spring	2	
49	0370 68 920	Console, End	1	©
50	99804 0616	Bolt	4	
	99971 0600	Washer, Spring	4	
51	99832 05168	Screw, Console	4	
	99967 0500B	Washer	4	
52	0305 66 580A	Bulb & Socket (Automatic 1973 Model)	1	
● 53	99701 6030	Bulb (Automatic 1973 Model)	1	

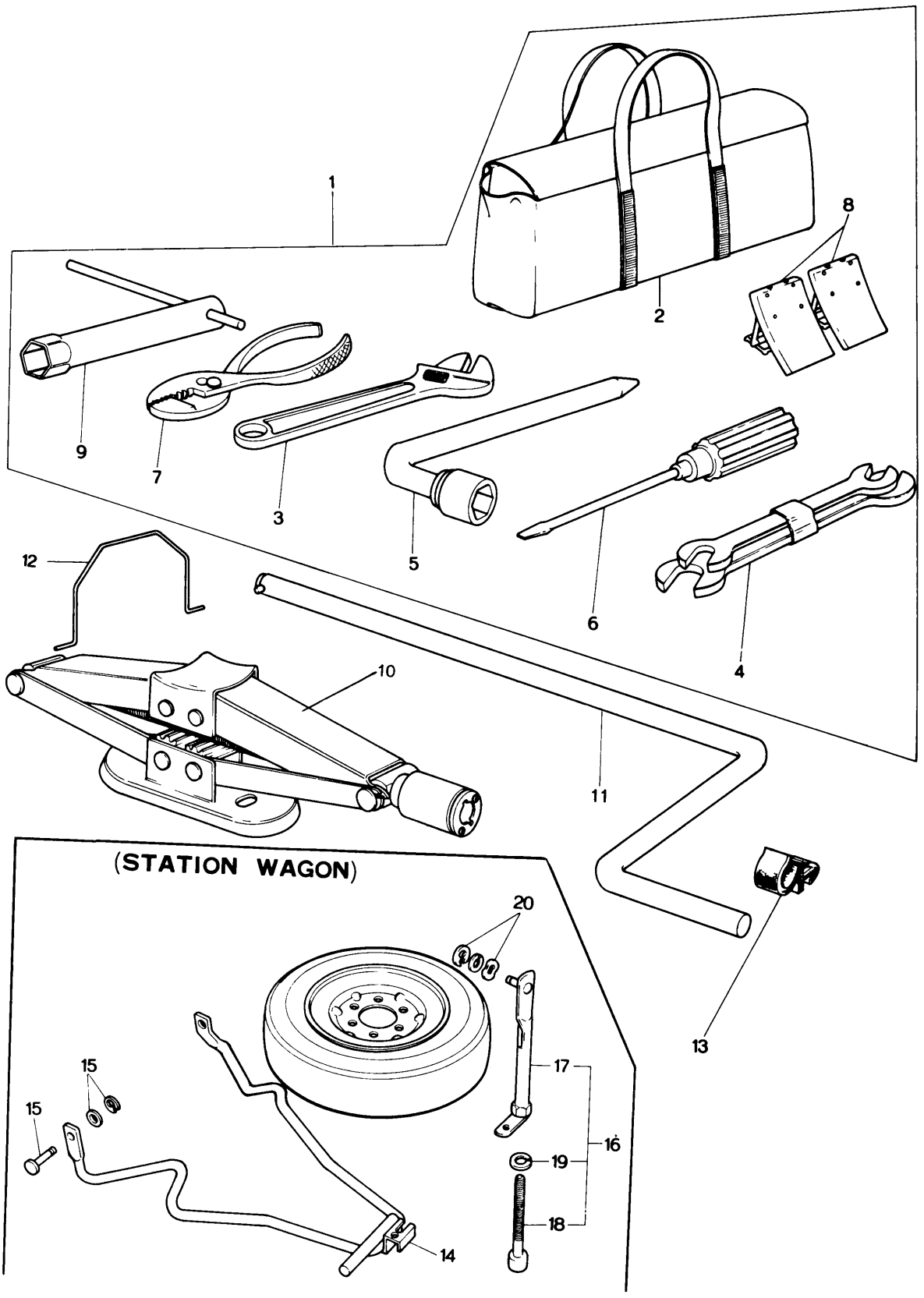
1
2
3
4
5
6
7
8
9
10
11
12
13
(STATION WAGON)
14
15
15
16
17
18
19
20

No.	Part Number	Description	Q'ty	Remarks
1	0839 68 660	Tools	1	
2	0839 68 670B	Bag, Tool	1	
3	0110 68 050A	Wrench, Monkey	1	
	0866 68 680	Wrench, Monkey	1	Car No. 101834 72/4 ~○ 104336
4	0249 68 060A	Spanner Set	1	
5	0810 68 070	Wrench, Hub Set	1	
●	0810 68 070A	Wrench, Hub Set	1	Car No. 112100 72/10 ~○ 114587
6	0187 68 110A	Driver Set	1	
7	0118 68 180A	Plier	1	
8	0208 68 230	Stopper	1	
9	0839 68 720	Wrench, Plug	1	
10	0305 68 800E	Jack	1	
●	0305 68 800F	Jack	1	Car No. 115991 72/11 ~○ 117996
11	0305 68 810A	Handle, Jack	1	
12	0866 56 991	Wire, Jack (Sedan & Coupe)	1	
13	99715 1101	Holder, Rod-Jack Handle (Sedan & Coupe)	1	
14	0585 70 710	Frame, Hanger-Spare Tire (Station Wagon)	1	
●	0585 70 710A	Frame, Hanger-Spare Tire (Station Wagon)	1	73/7~○
15	99230 0820	Pin, Joint (Station Wagon)	2	
	99576 0500	Ring, Snap (Station Wagon)	2	
	99953 0800	Washer, Plain (Station Wagon)	2	
16	0585 70 720	Lock, Spare Tire (Station Wagon)	1	
●	0585 70 720A	Lock, Spare Tire (Station Wagon)	1	73/7~○
17	0585 70 730	Clamp (Station Wagon)	1	
18	0585 70 733	Bolt (Station Wagon)	1	
19	99951 0822	Washer, Plain (Station Wagon)	1	

No.	Part Number	Description	Q'ty	Remarks
20	99576 0700	Ring, Retaining-Spare Tire Lock	1	
	99952 1000	Washer, Plain (Station Wagon)	1	
	99972 1000	Washer, Wave	1	
Ⓝ	1011 56210	Clamp. Spare Wheel	1	Car No. 135696 139448 '73/5~A. Anew
Ⓝ	1128 56960	Clamp, Spare Wheel	1	car No '73/8~O

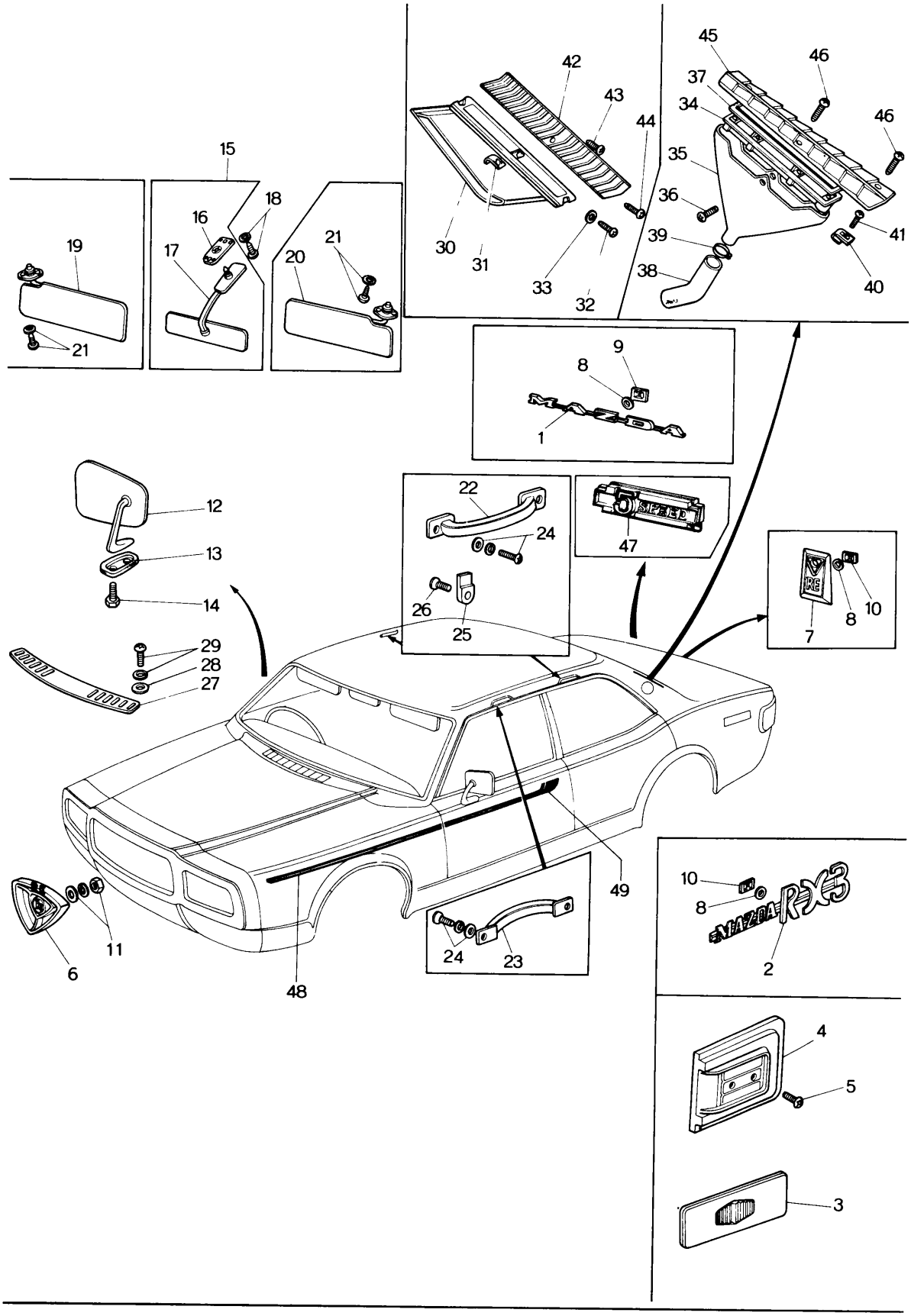
1
2
3
4
5
6
7
8
9
10
11
12
13
14
15
16
17
18
19
20
21
22
23
24
25
26
27
28
29
30
31
32
33
34
35
36
37
38
39
40
41
42
43
44
45
46
47
48
49
MAZDA RX3

No.	Part Number	Description	Q'ty	Remarks
1	0866 69 052	Ornament (MAZDA)	1	
2	1562 69 053	Name, MAZDA RX-3	2	
3	0380 69 055A	Ornament (Coupe)	2	
4	0376 69 061D	Base (R), Ornament	1	
	0376 69 065D	Base (L), Ornament (Coupe)	1	
5	99863 0414	Screw, Base	4	
6	0866 69 071A	Emblem, Front	1	
	0866 69 071A-00	Emblem, Front	1	
	0866 69 071A-02	Emblem, Front	1	Car No 130341 131803 73/3~X
7	0866 69 081B	Emblem, Rear	1	
8	0730 69 057A	Gasket, Ornament	6	
9	0187 69 049A	Nut, Speed-Ornament	3	
10	99578 3000	Nut, Speed-Ornament	6	
11	99906 0500	Nut, Front Emblem	1	
	99852 0500	Washer, Plain	1	
	99971 0500	Washer, Spring	1	
12	1540 69 130B	Mirror, Door	1	
13	1540 69 101	Gasket, Door Mirror	1	
14	99772 0516	Screw, Door Mirror	1	
	99772 0525	Screw, Door Mirror	1	
15	0305 69 170	Mirror, Room	1	
16	0305 69 171	Base	1	
17	0305 69 180	Mirror	1	
18	99831 0516	Screw, Room Mirror	2	

No.	Part Number	Description	Q'ty	Remarks
	99975 0500	Washer, Toothed	2	
19	0866 69 210 -13	Sun Visor (R) } 1972 Model	1	©Black
	0866 69 210 -14	Sun Visor (R) } 1972 Model	1	©Grey
	1632 69 210 -13	Sun Visor (R) } 1973 Model	1	©Black
●	1632 69 210A-13	Sun Visor (R) } 1973 Model	1	Car No. 120143 120913 72/12 ~ ○ ©Black
	1632 69 210 -14	Sun Visor (R) } 1973 Model	1	©Grey
●	1632 69 210A-14	Sun Visor (R) } 1973 Model	1	Car No. 120143 120913 72/12 ~ ○ ©Grey
20	0866 69 240 -13	Sun Visor (L) } 1972 Model	1	©Black
	0866 69 240 -14	Sun Visor (L) } 1972 Model	1	©Grey
	1632 69 240 -13	Sun Visor (L) } 1973 Model	1	©Black
●	1632 69 240A-13	Sun Visor (L) } 1973 Model	1	Car No. 120143 120913 72/12 ~ ○ ©Black
	1632 69 240 -14	Sun Visor (L) } 1973 Model	1	©Grey
●	1632 69 240A-14	Sun Visor (L) } 1973 Model	1	Car No. 120143 120913 72/12 ~ ○ ©Grey
21	99837 0516C	Screw, Sun Visor	4	
	99975 0500	Washer, Toothed	4	
22	0866 69 910	Handle, Assist-Rear (Sedan)	2	©
23	0866 69 920 -02	Handle, Assist-Front	1	©
24	99838 0620	Screw, Assist Handle	6	
	99952 0600	Washer, Plain	6	
	99971 0600	Washer, Spring	6	
25	0376 69 941	Hanger, Coat } (Coupe)	1	
26	99776 0620	Screw, Coat Hanger } (Coupe)	1	
27	1524 70 401A	Grille	1	
28	0866 56 405	Rubber, Cushion	4	
29	99864 0412B	Screw, Grille	4	
	99952 0412B	Washer, Plain	4	
30	0866 70 420	Extractor (R)	1	
	0866 71 420	Extractor (L)	1	
31	0866 70 412	Nut, Spring-Extractor } (Sedan)	6	
32	99864 0414	Screw, Extractor } (Sedan)	4	
33	~~9223 58 445~~	~~Seat, Extractor~~ } (Sedan)	~~4~~	
34	0376 70 421	Frame (R), Extractor	1	
	0376 71 421	Frame (L), Extractor	1	
35	0376 70 422	Chamber (R) } (Coupe)	1	
	0376 71 422	Chamber (L) } (Coupe)	1	
36	99864 0410	Screw, Frame & Chamber } (Coupe)	8	

No.	Part Number	Description		Q'ty	Remarks	
37	0376 70 426	Gasket		2		
38	0376 70 427	Pipe		2		
39	0376 70 428	Clip	(Coupe)	2		
40	0866 70 412	Nut, Spring-Extractor		8		
41	99864 0414	Screw, Extractor		8		
42	0866 70 431C	Grille (R), Extractor		1		
	0866 70 431D	Grille (R), Extractor	(Grey Metallic)	1	From Car No. 1	△
	0866 71 431C	Grille (L), Extractor		1		
	0866 71 431D	Grille (L), Entractor	(Sedan)	1	From Car No. 1	△
43	99863 0412B	Screw, Tapping-Grille		2		
44	99863 0425B	Screw, Tapping-Grille		2		
45	0376 70 431A	Grille, Extractor (R)		1		
●	0376 70 431A-00	Grille, Extractor (R) (〃)		1		
●	0376 70 431A-02	〃 〃 (〃)		1	Car No. 130341 131803	73/3~X
	0376 71 431A	Grille, Extractor (L)	(Coupe)	1		
●	0376 71 431A-00	〃 〃 (〃)		1		
●	0376 71 431A-02	〃 〃 (〃)		1	Car No. 130341 131803	73/3~X
46	99864 0416B	Screw, Tapping-Grille		6		
47	0884 69 068B	Ornament (5 Speed)		1		
● 48	0376 70 891 -00	Stripe (R), Fender		1		Blue © ~~Brown~~
	0376 70 891 -01	Stripe (R), Fender		1		© White
●	0376 71 891 -00	Stripe (L), Fender		1		Blue © ~~Brown~~
	0376 71 891 -01	Stripe (L), Fender		1		© White
● 49	0376 70 892A-00	Stripe (R), Door		1		Blue © ~~Brown~~
	0376 70 892A-01	Stripe (R), Door		1		© White
●	0376 71 892A-00	Stripe (L), Door		1		Blue © ~~Brown~~
	0376 71 892A-01	Stripe (L), Door		1		© White

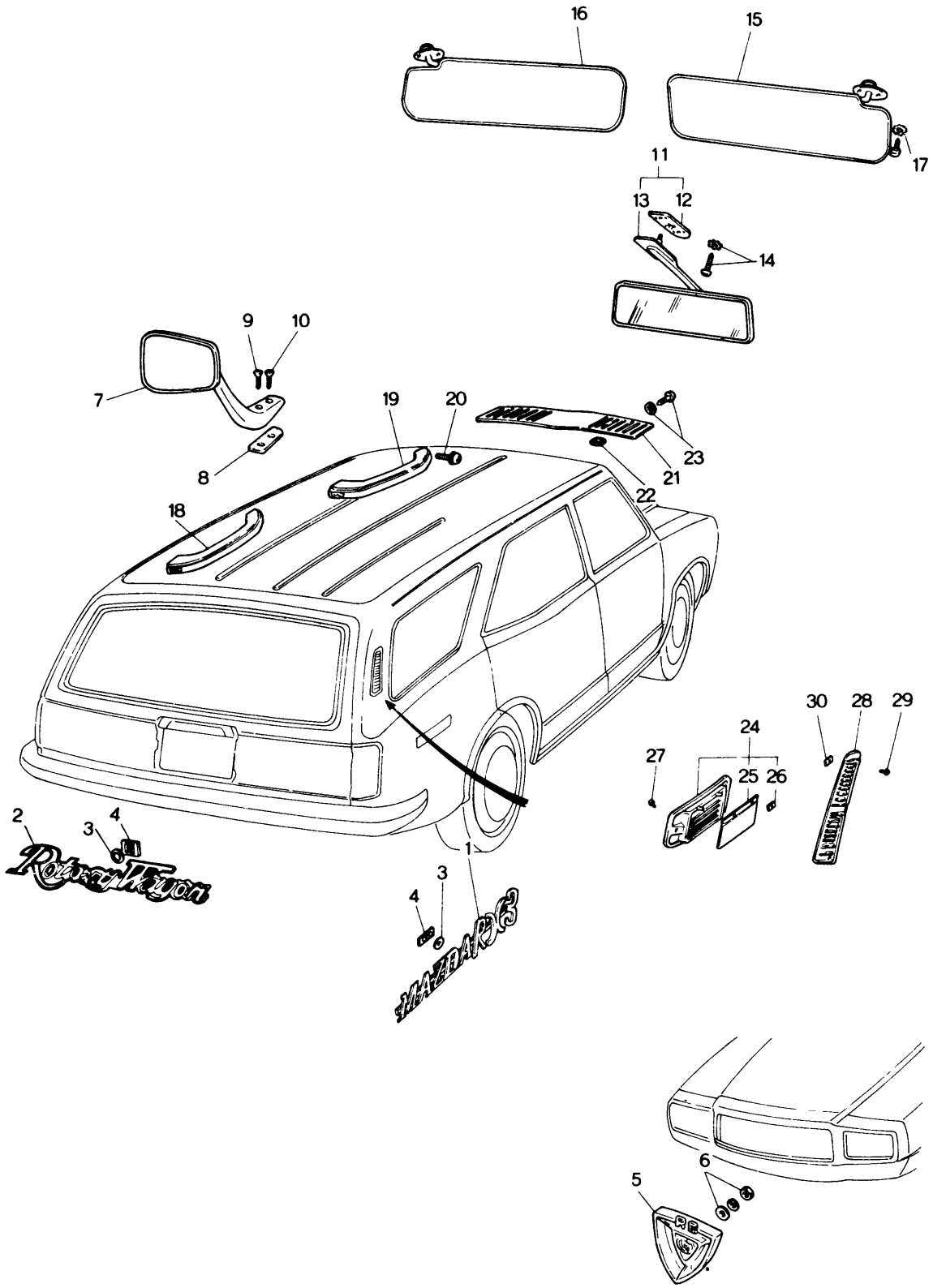
16
15
17
11
13
12
14
9
10
7
8
19
20
23
21
22
18
30
28
29
24
27
25
26
2
3
4
1
3
4
6
5

No.	Part Number	Description	Q'ty	Remarks	
1	1562 69 053	Name, MAZDA RX-3	2		
2	0899 69 058	Mark, Rotary Wagon	1		
3	0730 69 057A	Packing	9		
4	99579 3000	Nut, Speed	9		
5	0866 69 071A	Emblem, Front	1		
•	0866 69 071A-00	Emblem, Front.	1		
•	0866 69 071A-02	Emblem, Front	1	Car No. 130341 131803	73/3~X
6	99906 0500	Nut, Front Emblem	1		
	99952 0500	Washer, Plain	1		
	99971 0500	Washer, Spring	1		
7	1540 69 130B	Mirror (L), Rear View	1		
8	1540 69 101	Gasket	1		
9	99772 0516	Screw, Mirror	1		
10	99772 0525	Screw, Mirror	1		
11	0305 69 170	Mirror, Interior	1		
12	0305 69 171	Base	1		
13	0305 69 180	Mirror	1		
14	99831 0516	Screw, Interior Mirror	2		
	99974 0500	Washer, Toothed	2		
	99975 0500	Washer, Toothed	2		
15	0866 69 210 -13	Visor (R), Sun (1972 Model)	1		©Black
	0866 69 210 -14	Visor (R), Sun (1972 Model)	1		©Grey
	1632 69 210 -13	Visor (R), Sun (1973 Model)	1		©Black
	1632 69 210 -14	Visor (R), Sun (1973 Model)	1		©Grey
16	0866 69 240 -13	Visor (L), Sun (1972 Model)	1		©Black
	0866 69 240 -14	Visor (L), Sun (1972 Model)	1		©Grey
	1632 69 240 -13	Visor (L), Sun (1973 Model)	1		©Black
	1632 69 240 -14	Visor (L), Sun (1973 Model)	1		©Grey

No.	Part Number	Description	Q'ty	Remarks	
17	99837 0516C	Screw, Sun Visor	4		
	99975 0500	Washer, Toothed	4		
18	0866 68 910	Handle, Assist (Rear Side)	2		©
19	0866 68 920	Handle, Assist (Front Side)	1		©
20	99838 0620	Screw, Assist Handle	6		
	99952 0600	Washer, Plain	6		
	99971 0600	Washer, Spring	6		
21	1524 70 401A	Grille	1		
22	0866 56 405	Cushion, Rubber	4		
23	99864 0412B	Screw, Grille	4		
	99952 0412B	Washer, Plain	4		
24	0585 70 420A	Extractor (R)	1		
	0585 71 420A	Extractor (L)	1		
25	0585 70 423A	Valve (R)	1		
	0585 71 423A	Valve (L)	1		
●	0585 70 423A	Valve	1	Car No. 104518 108368 72/7~○	
26	99579 2000	Nut, Speed-Valve	4		
27	99864 0410B	Screw, Tapping-Extractor	4		
28	0585 70 431	Grille (R)	1		
●	0899 70 431-00	Grille (R) ——— 1	1	Car No. 130341 131803 73/3~X	1 Car No. 106225 108472 72/8~X
●	0899 70 431-02	" (*)			
	0585 71 431	Grille (L)	1		
●	0899 71 431-00	Grille (L) ——— 1	1	Car No. 130341 131803 73/3~X	1 Car No. 106225 108472 72/8~X
●	0899 71 431-02	" (*)			
29	99863 0416B	Screw, Tapping-Grille	4		
●	99863 0420B	Screw, Tapping-Grille	4	Car No. 106225 108472 72/8~X	
30	99896 0400	Nut, Spring-Grille	2		

TOP CEILING & TRIM (SEDAN & COUPE)

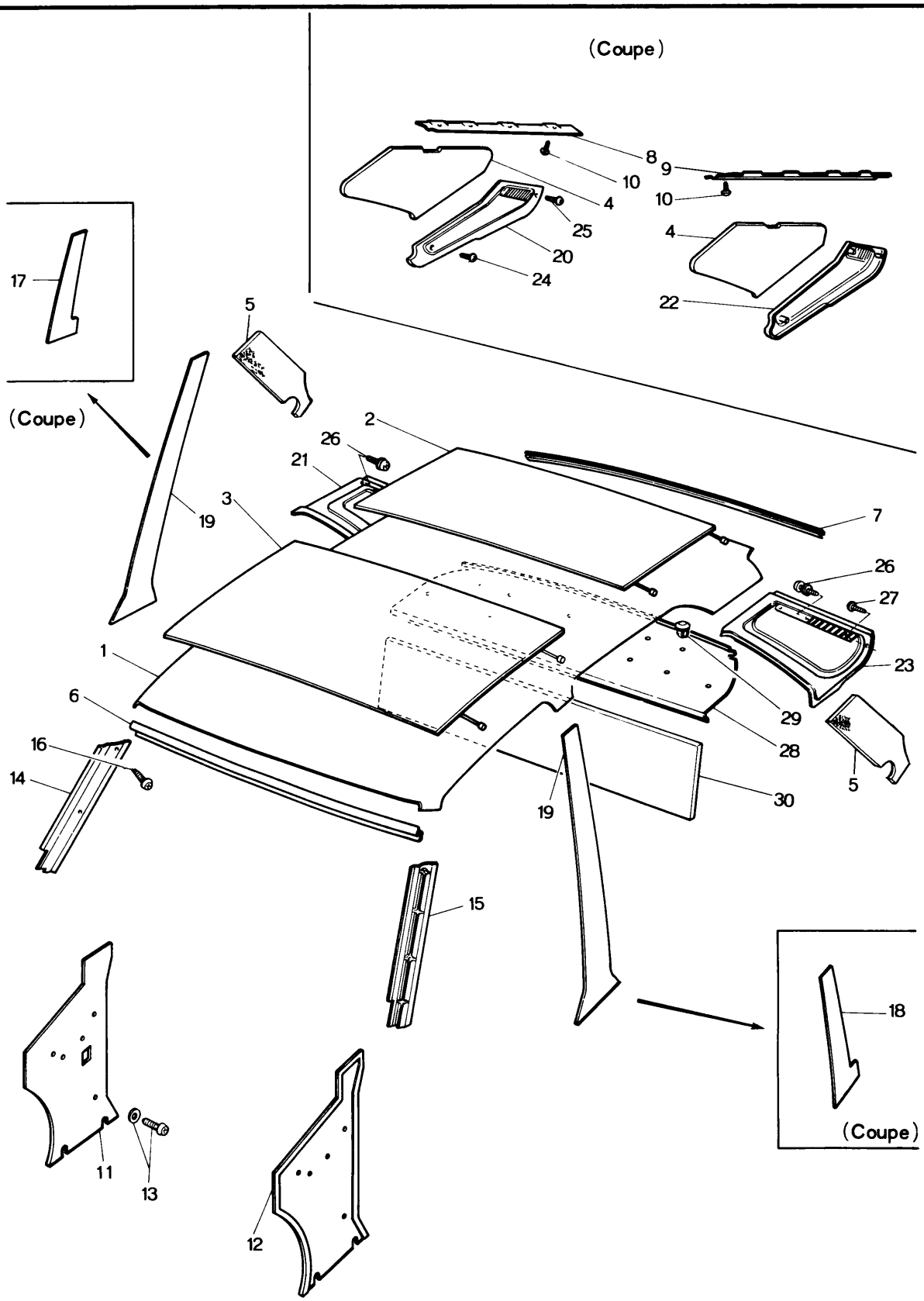

TOP CEILING & TRIM (SEDAN & COUPE)

No.	Part Number	Description	Q'ty	Remarks	
1	0376 69 290A-13	Ceiling, Top (Coupe) } 1972 Model	1		©Black
	0376 69 290A-14	Ceiling, Top (Coupe) } 1972 Model	1		©Grey
	1634 69 290-13	Ceiling, Top (Coupe) } 1973 Model	1		©Black
	1634 69 290-14	Ceiling, Top (Coupe) } 1973 Model	1		©Grey
	0866 69 290-14	Ceiling, Top (Sedan) - 1972 Model	1		©Grey
	1632 69 290-14	Ceiling, Top (Sedan) - 1973 Model	1		©Grey
2	0259 69 311	Insulator No. I	1		
3	0866 69 311	Lining, Head	1		
4	0376 69 314	Pad, Rear Pillar (Coupe)	2		
	0376 69 314A	Pad, Rear Pillar (Coupe)	2	Car No. 106225 108472 $^{72}/_{8}\sim\Delta$	
5	0866 69 314	Pad, Rear Pillar (Sedan)	2		
	0866 69 314A	Pad, Rear Pillar (Sedan)	2	Car No. 106225 108472 $^{72}/_{8}\sim\Delta$	
6	0376 69 321	Plate, Fixing-Front (Coupe)	1		
	0866 69 321	Plate, Fixing-Front (Sedan)	1		
7	0376 69 341	Plate, Fixing-Rear (Coupe)	1		
	0866 69 341	Plate, Fixing-Rear (Sedan)	1		
8	0376 69 342	Plate No. 2, Fixing-Rear } (Coupe)	1		
9	0376 69 343	Plate No. 3, Fixing-Rear } (Coupe)	1		
10	99863 0412	Screw, Fixing Plate	8		
11	1524 69 360A-00	Trim (R), Front Side	1		©Black
12	1524 69 380A-00	Trim (L), Front Side	1		©Black
13	99862 0512B	Screw, Front Side	6		
	99967 0500B	Washer	6		
14	0376 69 411-00	Trim (R), Front Pillar (Coupe)	1		©Black
	0866 69 411-00	Trim (R), Front Pillar (Sedan)	1		©Black
15	0376 69 431-00	Trim (L), Front Pillar (Coupe)	1		©Black
	0866 69 431-00	Trim (L), Front Pillar (Sedan)	1		©Black
16	99862 0412B	Screw, Front Pillar Trim	4		

No.	Part Number	Description		Q'ty	Remarks
17	0376 69 462-13	Trim (R), Center Pillar	(Coupe)	2	Car No. 100033 72/3 ~ 100711 Q'ty Ⓒ Black
	0376 69 462A-13	Trim (R), Center Pillar		2	Car No. 106225 72/8 ~ 108472 △ Ⓒ Black
	0376 69 462-14	Trim (R), Center Pillar		2	Car No. 100033 72/3 ~ 101711 Q'ty Ⓒ Grey
	0376 69 462A-14	Trim (R), Center Pillar		2	Car No. 106225 72/8 ~ 108472 △ Ⓒ Grey
18	0376 69 482-13	Trim (L), Center Pillar		1	Ⓒ Black
					Car No. 100033 72/3 ~ 101711 Discarded
	0376 69 482-14	Trim (L), Center Pillar		1	Ⓒ Grey
19	0866 69 461A-03	Trim, Center Pillar	(Sedan)	2	Ⓒ Black
	0866 69 461B-03	Trim, Center Pillar		2	Car No. 106225 72/8 ~ 108472 △ Ⓒ Black
	0866 69 461A-12	Trim, Center Pillar		2	Ⓒ Brown
	0866 69 461B-12	Trim, Center Pillar		2	Car No. 106225 72/8 ~ 108472 △ Ⓒ Brown
	0866 69 461A-13	Trim, Center Pillar		2	Ⓒ GRY/YLW
	0866 69 461B-13	Trim, Center Pillar		2	Car No. 106225 72/8 ~ 108472 △ Ⓒ GRY/YLW
20	0376 69 511-00	Trim (R), Rear Pillar (Coupe)		1	Ⓒ Black
21	0866 69 511-01	Trim (R), Rear Pillar (Sedan)		1	Ⓒ Grey
22	~~0376 69 251-00~~	~~Trim (L), Rear Pillar (Coupe)~~		~~1~~	
	0376 69 521-00	Trim (L), Rear Pillar (Coupe)		1	From Car No. 1 Ⓒ Black
23	0866 69 521-01	Trim (L), Rear Pillar (Sedan)		1	Ⓒ Grey
24	99864 05168	Screw, Rear Pillar Trim	(Coupe)	4	
25	99864 05258	Screw, Rear Pillar Trim		2	
26	99864 0416	Screw, Rear Pillar Trim	(Sedan)	4	
27	99864 0412	Screw, Rear Pillar Trim		2	
28	0376 69 870B-00	Trim, Package Tray	(Coupe)	1	Ⓒ Black
	0870 69 870B-00	Trim, Package Tray With Car Stereo Hole		1	Ⓒ Black
	0866 69 870C-00	Trim, Package Tray With Car Stereo Hole	(Sedan)	1	Ⓒ Black
	1524 69 870C-00	Trim, Package Tray		1	Ⓒ Black
29	0866 69 885	Fastener, Package Tray Trim		2	
30	0866 69 694	Pad, Package Tray		1	

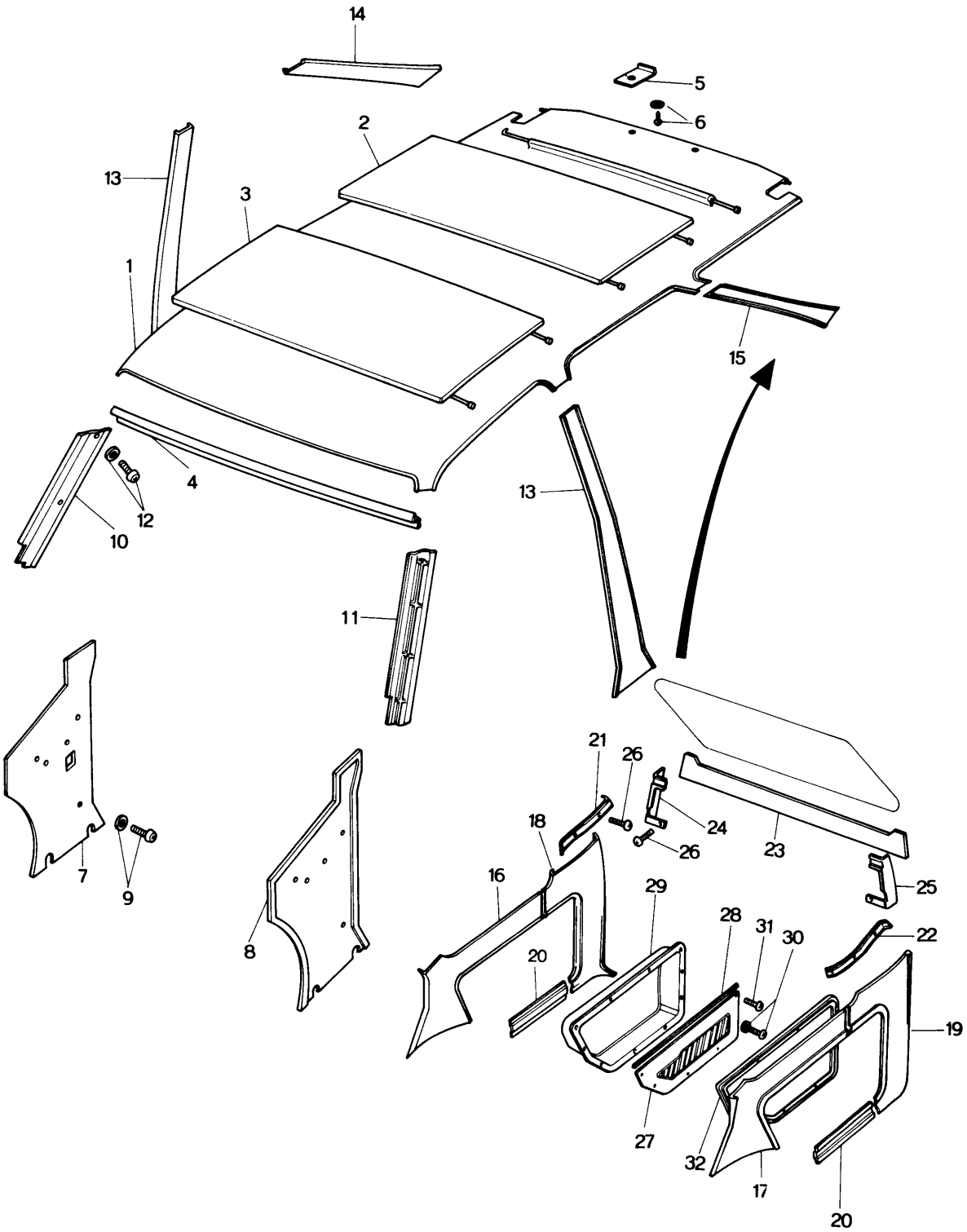
14
5
6
2
13
3
1
15
4
12
10
13
11
21
26
24
26
23
18
25
16
29
28
31
30
22
20
19
27
32
17
20
7
9
8

No.	Part Number	Description	Q'ty	Remarks	
1	0585 69 290 -14	Ceiling, Top	1		©Grey
	1636 69 290 -14	Ceiling, Top	1	1624,1625,1630	©Grey
2	0585 69 311	Lining, Head	1		
3	0866 69 311	Lining, Head	1		
4	0866 69 321	Plate, Fixing-Front	1		
5	0585 69 341B	Plate, Fixing-Rear	2		
6	99862 0512C	Screw, Tapping-Rear Fixing Plate	2		
	99967 0500A	Washer	2		
7	1524 69 360A-00	Trim (R), Front Side	1		©Black
8	1524 69 380A-00	Trim (L), Front Side	1		©Black
9	99862 0512B	Screw, Tapping-Trim	4		
	99967 0500B	Washer	4		
10	0866 69 411 -00	Trim (R), Front Pillar	1		©Black
11	0866 69 431 -00	Trim (L), Front Pillar	1		©Black
12	99862 0412B	Screw, Tapping-Trim	4		
13	0866 69 461A-03	Trim, Center	2		©Black
●	0866 69 461B-03	Trim, Center	2	Car No. 106225 $^{72}/_{8}$ ~△	©Black
	0866 69 461A-12	Trim, Center	2		©Brown
●	0866 69 461B-12	Trim, Center	2	Car No. 106225 $^{72}/_{8}$ ~△	©Brown
	0866 69 461A-13	Trim, Center	2		©Grey /Yellow
●	0866 69 461B-13	Trim, Center	2	Car No. 106225 $^{72}/_{8}$ ~△	©Grey /Yellow
14	0899 69 561B-14	Trim (R), Quarter	1		©Grey
●	0899 69 561C-14	Trim (R), Quarter	1	Car No. 106225 $^{72}/_{8}$ ~△	©Grey
15	0899 69 571B-14	Trim (L), Quarter	1		©Grey
●	0899 69 571C-14	Trim (L), Quarter	1	Car No. 106225 $^{72}/_{8}$ ~△	©Grey
16	0899 69 711A-03	Trim No. I (R), Rear Side	1		©Black
●	0899 69 711B-03	Trim No I (R), Rear Side	1	Car No. 106225 $^{72}/_{8}$ ~△	©Black
	0899 69 711A-12	Trim No I (R), Rear Side	1		©Brown
●	0899 69 711B-12	Trim No I (R), Rear Side	1	Car No. 106225 $^{72}/_{8}$ ~△	©Brown
	0899 69 711A-13	Trim No. I (R), Rear Side	1		©Grey /Yellow
●	0899 69 711B-13	Trim No I (R), Rear Side	1	Car No. 106225 $^{72}/_{8}$ ~△	©Grey /Yellow
17	0899 69 712A-03	Trim No. I (L), Rear Side	1		©Black
●	0899 69 712B-03	Trim No I (L), Rear Side	1	Car No. 106225 $^{72}/_{8}$ ~△	©Black
	0899 69 712A-12	Trim No. I (L), Rear Side	1		©Brown
●	0899 69 712B-12	Trim No. I (L), Rear Side	1	Car No. 106225 $^{72}/_{8}$ ~△	©Brown
	0899 69 712A-13	Trim No I (L), Rear Side	1		©Grey /Yellow
●	0899 69 712B-13	Trim No. I (L), Rear Side	1	Car No. 106225 $^{72}/_{8}$ ~△	©Grey /Yellow

TOP CEILING & TRIM (STATION WAGON)

No.	Part Number	Description	Q'ty	Remarks	Price
18	0899 69 713-03	Trim No. 2 (R), Rear Side	1		Ⓒ Black
	0899 69 713A-03	Trim No. 2 (R), Rear Side	1	Car No. 106225 72/8 ~ Δ 108472	Ⓒ Black
	0899 69 713 -12	Trim No. 2 (R), Rear Side	1		Ⓒ Brown
	0899 69 713A-12	Trim No. 2 (R), Rear Side	1	Car No. 106225 72/8 ~ Δ 108472	Ⓒ Brown
	0899 69 713 -13	Trim No. 2 (R), Rear Side	1		Ⓒ Grey/Yellow
	0899 69 713A-13	Trim No. 2 (R), Rear Side	1	Car No. 106225 72/8 ~ Δ 108472	Ⓒ Grey/Yellow
● 19	~~0899 69 7140-13~~	~~Trim No. 2 (L), Rear Side~~	~~1~~		~~Ⓒ Black~~
●	0899 69 714-03	Trim No. 2 (L) Rear Side	1	From Car No. 1	Ⓒ Black
	0899 69 714A-03	Trim No. 2 (L), Rear Side	1	Car No. 106225 72/8 ~ Δ 108472	Ⓒ Black
	0899 69 714 -12	Timr No. 2 (L), Rear Side	1		Ⓒ Brown
	0899 69 714A-12	Trim No. 2 (L), Rear Side	1	Car No. 106225 72/8 ~ Δ 108472	Ⓒ Brown
	0899 69 714 13	Trim No. 2 (L), Rear Side	1		Ⓒ Grey/Yellow
	0899 69 714A-13	Trim No. 2 (L), Rear Side	1	Car No. 106225 72/8 ~ Δ 108472	Ⓒ Grey/Yellow
● 20	~~0899 69 7150-13~~	~~Trim, Rear Side-Lower~~	~~2~~		~~Ⓒ Black~~
●	0899 69 715-03	Trim, Rear Side-Lower	2	From Car No. 1	Ⓒ Black
	0899 69 715A-03	Trim, Rear Side-Lower	2	Car No. 106225 72/8 ~ Δ 108472	Ⓒ Black
	0899 69 715 -12	Trim, Rear Side-Lower	2		Ⓒ Brown
	0899 69 715A-12	Trim, Rear Side-Lower	2	Car No. 106225 72/8 ~ Δ 108472	Ⓒ Brown
●	~~0899 69 7150-B~~	~~Trim, Rear Side-Lower~~	~~2~~		~~Ⓒ Grey/Yellow~~
●	0899 69 715-13	Trim, Rear Side-Lower	2	From Car No. 1	Ⓒ Grey/Yellow
	0899 69 715A-13	Trim, Rear Side-Lower	2	Car No. 106225 72/8 ~ Δ 108472	Ⓒ Grey/Yellow
21	0899 69 717A	Garnish (R), Rear Side Trim	1		
● 22	~~0899 69 718A~~	~~Garnish (L), Rear Side Trim~~	~~1~~		
●	0899 69 718A	Garnish (L), Rear Sied Trim	1	From Car No. 1	
23	0899 69 721A-03	Trim, Back Door-Upper	1		Ⓒ Black
	0899 69 721B-03	Trim, Bakc Door-Upper	1	Car No. 106225 72/8 ~ Δ 108472	Ⓒ Black
	0899 69 721A-12	Trim, Back Door-Upper	1		Ⓒ Brown
	0899 69 721B-12	Trim, Back Door-Upper	1	Car No. 106225 72/8 ~ Δ 108472	Ⓒ Brown
	0899 69 721A-13	Trim, Bakc Door-Upper	1		Ⓒ Grey/Yellow
	0899 69 721B-13	Trim, Back Door-Upper	1	Car No. 106225 72/8 ~ Δ 108472	Ⓒ Grey/ Yellow
24	0899 69 723B	Garnish (R), Back Door Trim	1		
25	0899 69 724B	Garnish (L), Back Door Trim	1		
26	99864 0410C	Screw, Tapping-Garnish	6		
27	0899 70 911C-03	Trim (R), Side	1		Ⓒ Black
	1624 70 911 -03	Trim (R), Side	1	Car No. 106225 72/8 ~ Δ 108472	Ⓒ Black
	0899 70 911C-12	Trim (R), Side	1		Ⓒ Brown
	1624 70 911 -12	Trim (R), Side	1	Car No. 106225 72/8 ~ Δ 108472	Ⓒ Brown
	0899 70 911C-13	Trim (R), Side	1		Ⓒ Grey/Yellow
	1624 70 911 -13	Trim (R), Side	1	Car No. 106255 72/8 ~ Δ 108472	Ⓒ Grey/Yellow
28	0585 70 912B	Moulding, Side Pocket	1		
29	0585 70 9218	Pocket, Side	1		
30	99862 0416B	Screw, Tapping-Side Pocket	17		
	99862 0416C	Screw, Tapping-Side Pocket			
	99967 0400A	Washer	17		
	99967 0400B	Washer			
31	99864 0420C	Screw, Tapping-Side Pocket (R)	2		

(R)

Selective use

Selective use

No.	Part Number	Description	Q'ty	Remarks
32	0899 71 911C-03	Trim (L), Side	1	©Black
	1624 71 911 -03	Trim (L), Side	1	Car No. 106225 108472 72/8 ~ △ ©Black
	0899 71 911C-12	Trim (L), Side	1	©Brown
	1624 71 911 -12	Trim (L), Side	1	Car No. 106225 108472 72/8 ~ △ ©Brown
	0899 71 911C-13	Trim (L), Side	1	©Greyish Yellow
	1624 71 911 -13	Trim (L), Side	1	Car No. 106225 108472 72/8 ~ △ ©Grey/Yellow

FLOOR MAT & TRIM

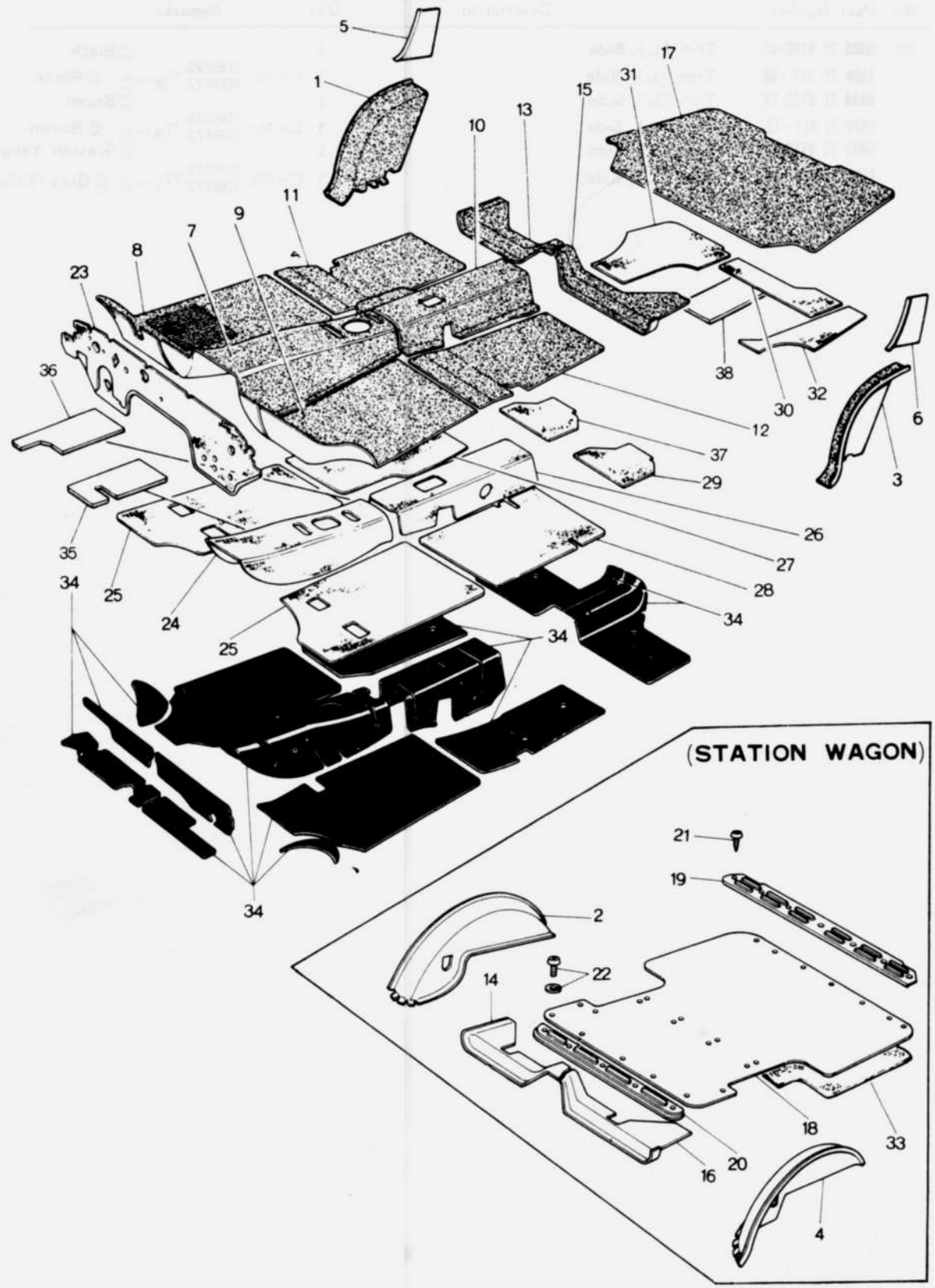

No.	Part Number	Description	Q'ty	Remarks	
		When ordering the following Trims Add Colour Code nos given below after parts number -03 (Black) -12 (Brown) -13 (Greyish Yellow)			
1	0866 69 541	Trim (R), Tire House (Sedan & Coupe) - 1972 Model	1		©
	1632 69 541	Trim (R), Tire House (Sedan & Coupe) - 1973 Model	1		©
2	0899 69 541A	Trim (R), Tire House (Station Wagon) - 1972 Model	1		©
	1636 69 541	Trim (R), Tire House (Station Wagon) - 1973 Model	1		©
3	0866 69 542	Trim (L), Tire House (Sedan & Coupe) - 1972 Model	1		©
	1632 69 542	Trim (L), Tire House (Sedan & Coupe) - 1973 Model	1		©
4	0899 69 543A	Trim (L), Tire House (Station Wagon) - 1972 Model	1		©
	1636 69 543	Trim (L), Tire House (Station Wogon) - 1973 Model	1		©
5	0866 69 543	Trim (R), Rear Seat Side (Sedan)	1		©
	0866 69 543A	Trim (R), Rear Seat Side (Sedan)	1	Car No. 106225 108472 72/8 ~ △	©
6	0866 69 544	Trim (L), Rear Seat Side (Sedan)	1		©
	0866 69 544A	Trim (L), Rear Seat Side (Sedan)	1	Car No. 106225 108472 72/8 ~ △	©
		When ordering the following Mats (Carpes) Add Colour Code nos given below after parts number -34 (Black) -32 (Yellow Green)			
7	1524 69 611	Mat (Frt., C), Carpet (Manual)	1		©
	1525 69 611	Mat (Frt, C), Carpet (Automatic)	1		©
8	1524 69 612	Mat (Frt., R), Carpet (Manual)	1		©
	1525 69 612	Mat (Frt, R), Carpet (Automatic)	1		©
9	1524 69 613	Mat (Frt, L), Carpet (Manual)	1		©
	1525 69 613	Mat (Frt., L), Carpet (Automatic)	1		©
10	0866 69 616A	Mat (Rr., C), Carpet	1		©
11	0866 69 617	Mat (Rr., R), Carpet	1		©
12	0866 69 618	Mat (Rr., L), Carpet	1		©

No.	Part Number	Description	Q'ty	Remarks	
13	0866 69 625A-05	Mat (R), End (Sedan & Coupe)	1		©Black
14	0585 69 625C-05	Mat (R), End (Station Wagon)	1		©Black
15	0866 69 626A-05	Mat (L), End (Sedan & Coupe)	1		©Black
16	0585 69 626C-05	Mat (L), End (Station Wagon)	1		©Black
17	0866 69 627 -10	Mat, Trunk Room (Sedan & Coupe)	1		©Black
● 18	0899 69 627C-34	Mat, Trunk Room (Station Wagon)	1		© Black
19	0585 69 628D	Plate No. 1, Seat-Mat Rear	1		
	0585 69 628E	Plate No. 1, Seat-Mat Rear	1	Car No. 104518 72/7 ~ ○	73/5 ~ ○
●	0585 69 628F		1		
● 20	0585 69 629A	Plate No. 2, Seat-Mat Front	1		
	0585 69 629B	Plate No. 2, Seat-Mat Front	1	Car No. 104518 72/7 ~ ○	
21	99861 0410	Screw, Tapping-Trunk Room Mat (Station Wagon)	20		
22	99861 04108	Screw, Tapping-Trunk Room Mat	4		
	99967 04008	Washer	4		
23	1562 69 660C	Insulator	1		
24	0866 69 683	Pad (Frt., C) (Manual)	1		
●	0866 69 683B	Pad (Frt., C) (Manual)	1	Car No. 105638 72/9 ~ ○ 108463	
●	~~0378 69 683B~~	~~Pad (Frt., C) (Automatic)~~	~~1~~		
●	0378 69 683C	Pad (Frt., C) (Automatic)	1	From Car No. 1	
● 25	0866 69 684	Pad (Frt.) (Manual)	2		
	0871 69 684	Pad (Frt., R) Automatic	1		
	0871 69 685	Pad (Frt, L) Automatic	1		
26	0866 69 687A	Pad (Rr., C)	1		
●	~~0866 69 687B~~	~~Pad (Frt., C)~~	~~1~~	~~Car No. 73/5 ~ ○~~	Typographical Error
27	0866 69 688	Pad (Rr., R)	1		
28	0866 69 689	Pad (Rr., L)	1		
29	0866 69 692	Pad, End	1		
30	0866 69 696	Pad (C), Trunk Room	1		
31	0866 69 697	Pad (R), Trunk Room Sedan & Coupe	1		
32	0866 69 698	Pad (L), Trunk Room	1		
33	1571 69 696	Pad, Trunk-Station Wagon	1		
34	0208 76 071	Silencer	1		

No.	Part Number	Description	Q'ty	Remarks
		A30cm square object in sheet form is supplied under parts no. 0208 78 071 (Floor Silencer Revised Piece)		
35	1570 69 688	Pad, Trunk Side (Frt.)	1	
36	1570 69 691	Pad, Trunk Side (Rr.)	1	
37	1570 69 692	Pad-End (R.H.D.) (Sedan & Coupe)	1	
38	1570 69 699A	Pad, Heat Insulator (Sedan & Coupe)	1	
●	1570 69 695	Pad, Heat Insulator (Sedan & Coupe)	1	

VENTILATOR

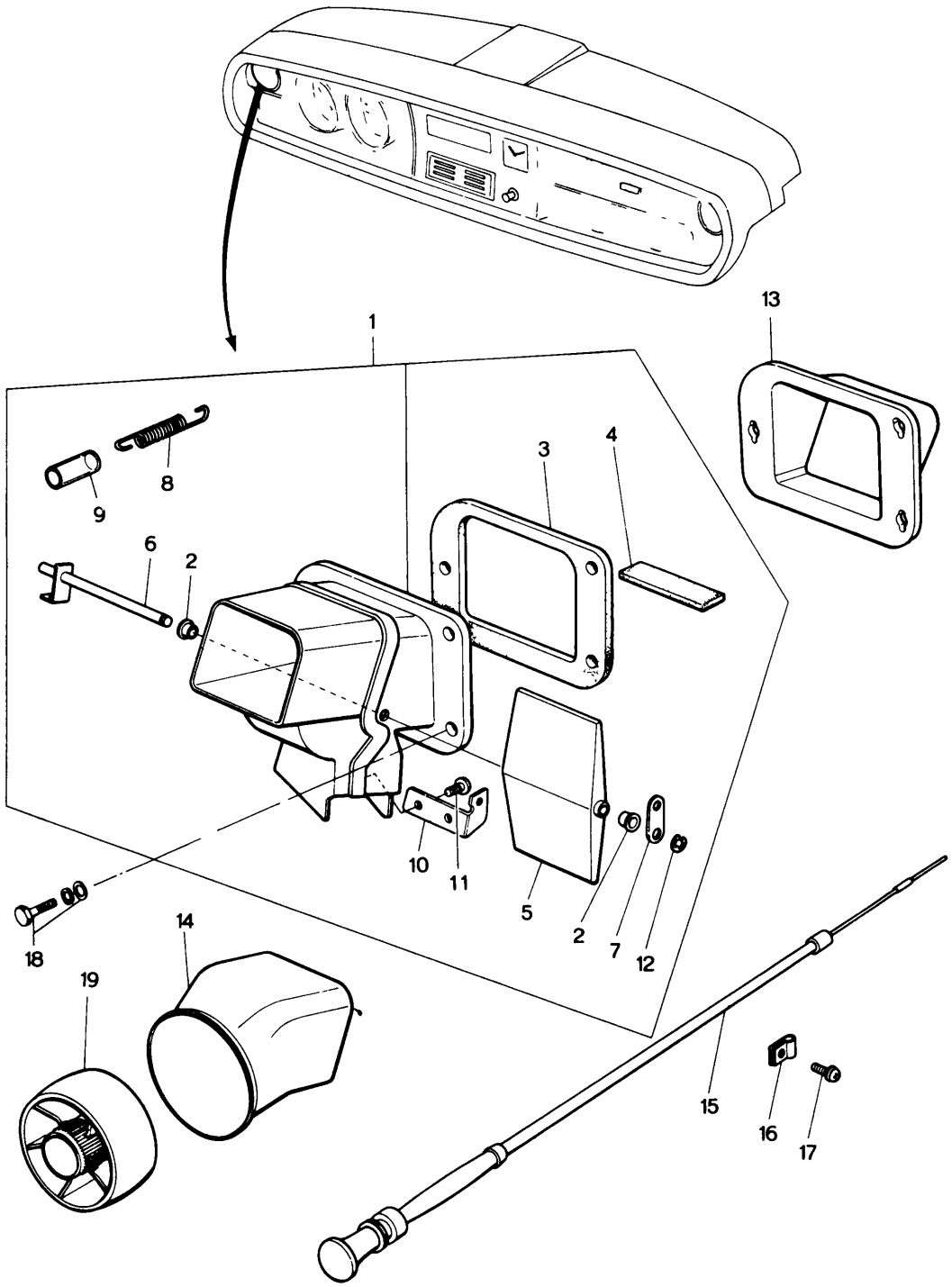

No.	Part Number	Description	Q'ty	Remarks
1	0866 70 310A	Ventilator (R)	1	
●	0866 70 310B	Ventilator (R)	1	Car No. 115327 117725 72/11 ~ ○
	0866 71 310A	Ventilator (L)	1	
●	0866 71 310B	Ventilator (L)	1	Car No. 115327 117725 72/11 ~ ○
2	0317 70 307	Bush	4	
3	0866 70 313	Gasket	2	
4	0866 70 314	Cushion	2	Car No. 103228 106837 72/5 ~ Discarded
5	0866 70 320	Flap	2	
6	0866 70 330	Lever	2	
	0866 70 330A	Lever	2	Car No. 103228 106837 72/5 ~ ×
7	0866 70 341	Lever	2	
	0866 70 341A	Lever	2	Car No. 103228 106837 72/5 ~ ×
8	0866 70 342	Spring	2	
9	99335 08003	Pipe	2	
10	0866 70 343	Bracket (R)	1	
	0866 71 343	Bracket (L)	1	
11	99864 0410	Screw, Tapping	4	
12	99576 0400	Ring, Snap	2	
Ⓝ	0866 70 365	Holder, Spring	2	Car No 103228 106837 72/5 ~ Added Anew
Ⓝ	0866 70 366	Roller	2	
Ⓝ	0866 70 367	Spring	2	
13	0866 70 351	Gasket (R)	1	
	0866 71 351	Gasket (L)	1	
14	0866 70 352	Duct (R), Ventilator	1	
	0866 71 352	Duct (L), Ventilator	1	
15	0866 70 360A	Wire, Ventilator Control	2	
	0866 70 360B	Wire, Ventilator Control	2	Car No. 103228 106837 72/5 ~ ×
●	0866 70 360C	Wire, Ventilator Control	2	Car No. 115327 117725 72/11 ~ ○
16	0305 70 395B	Clamp, Wire	2	
	0866 70 395	Clamp, Wire	2	Car No 103228 106837 72/5 ~ △
17	908332 4 10	Screw Set, Control Knob	2	
18	99785 0620	Bolt, Ventilator & Gasket	6	
	99952 0600	Washer, Plain	6	
	99971 0600	Washer, Spring	6	
19	0866 70 371	Louver	2	

WINDOW GLASS & MOULDING
(SEDAN & COUPE)

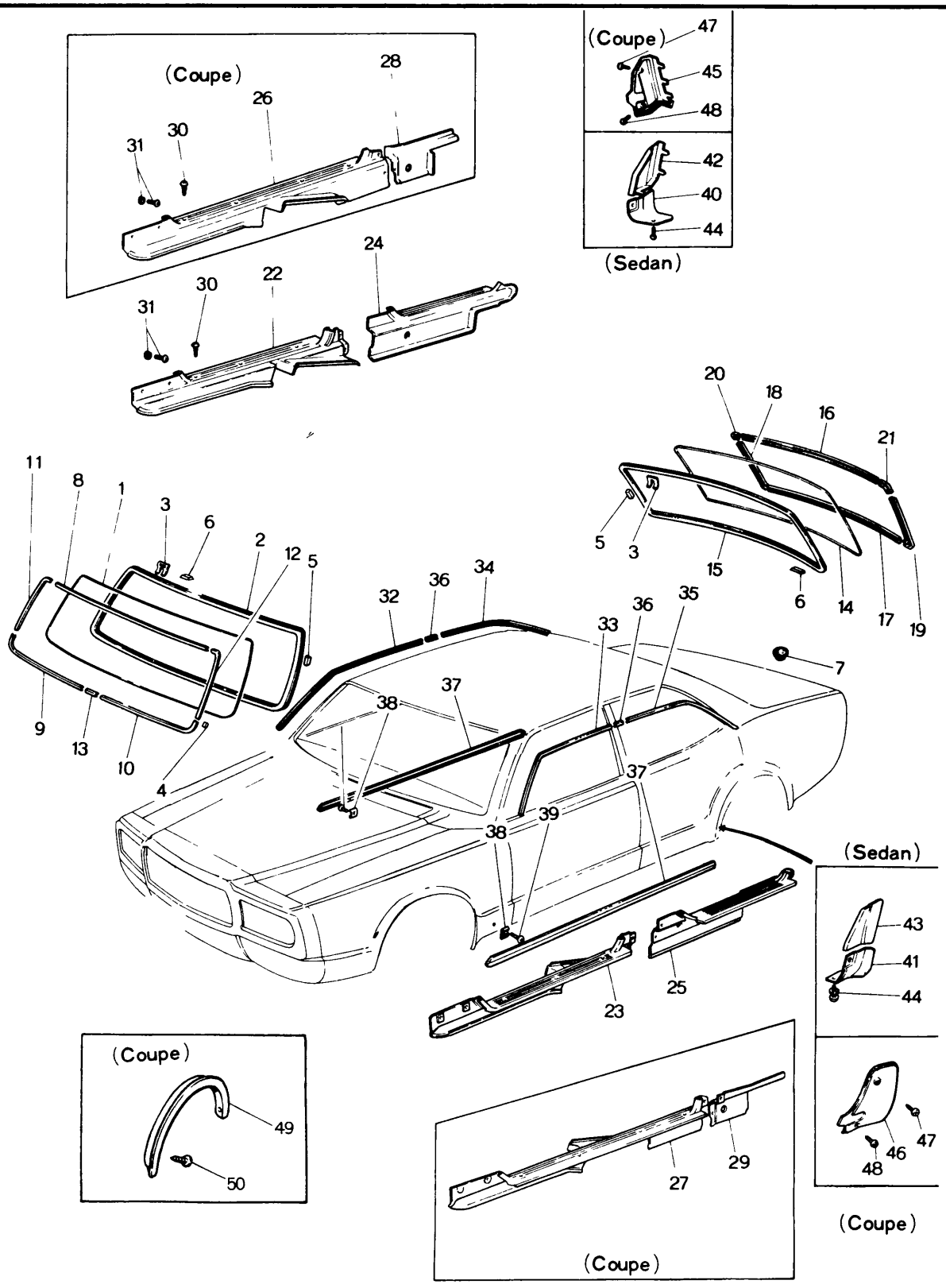

WINDOW GLASS & MOULDING
(SEDAN & COUPE)

70 71

No.	Part Number	Description		Q'ty	Remarks
1	1531 70 441	Glass, Front Window (Transparent)	(Sedan)	1	
	1540 70 441	Glass, Front Window (Blue Pane)		1	
	1542 70 441	Glass, Front Window (Blue Pane)	(Coupe)	1	
	1568 70 441	Glass, Front Window (Transparent)		1	
2	0305 70 443B	Dam, Front Window Glass		1	
3	0305 70 445B	Clip, Front Window···19, Back Window···17		36	
4	0305 70 447B	Spacer "A"		4	
5	0305 70 448A	Spacer "B"		4	
6	0839 70 449	Spacer "C"		4	
7	0118 56 241	Plug, Drain		1	
● 8	0376 70 451A	Mould, Upper-Front (Coupe)		1	
●	0376 99 741	Mould Set, Upper-Front (Coupe)		1	Car No. 124434 $^{73}/_{1}$ ~○
●	0866 70 451A	Mould, Upper-Front (Sedan)		1	
●	0866 99 741	Mould Set, Upper-Front (Sedan)		1	Car No. 124434 $^{73}/_{1}$ ~○
● 9	0866 70 452A	Mould (R), Lower-Front		1	
●	0866 99 742	Mould Set (R), Lower-Front		1	Car No. 124434 $^{73}/_{1}$ ~○
● 10	0866 71 452A	Mould Set (L), Lower-Front		1	
●	0866 99 745	Mould Set (L), Lower-Front		1	Car No. 124434 $^{73}/_{1}$ ~○
● 11	0376 70 453A	Mould (R), Side-Front (Coupe)		1	
●	0376 99 743	Mould Set (R), Side-Front (Coupe)		1	Car No. 124434 $^{73}/_{1}$ ~○
●	0866 70 453A	Mould (R), Side-Front (Sedan)		1	
●	0866 99 743	Mould Set (R), Side-Front (Sedan)		1	Car No. 124434 $^{73}/_{1}$ ~○
● 12	0376 71 453A	Mould (L), Side-Front (Coupe)		1	
●	0376 99 744	Mould Set (L), Side-Front (Coupe)		1	Car No. 124434 $^{73}/_{1}$ ~○
●	0866 71 453A	Mould (L), Side-Front (Sedan)		1	
●	0866 99 744	Mould Set (L), Side-Front (Sedan)		1	Car No. 124434 $^{73}/_{1}$ ~○
13	0866 70 454	Joint, Mould-Front		1	
14	1523 70 471	Glass, Back Window (Transparent)	(Sedan)	1	
	1524 70 471	Glass, Back Window (Transparent) (With Heating Wire)		1	
	1534 70 471	Glass, Back Window (Blue Pane) (With Heating Wire)		1	
	1535 70 471	Glass, Back Window (Blue Pane)		1	
	0374 70 471	Glass, Back Window (Transparent)	(Coupe)	1	
	0375 70 471	Glass, Back Window (Blue Pane)		1	
	0376 70 471	Glass, Back Window (Blue Pane) (With Heating Wire)		1	

WINDOW GLASS & MOULDING
(SEDAN & COUPE)

No.	Part Number	Description		Q'ty	Remarks
	1562 70 471	Glass, Back Window (Transparent) (With Heating Wire)		1	
15	0866 70 473	Dam, Back Window Glass		1	
● 16	0376 70 481A	Mould, Upper-Rear (Coupe)		1	
●	0376 99 746	Mould Set, Upper-Rear (Coupe)		1	Car No. 124434 $^{73}/_{1}$ ~○
●	0866 70 481A	Mould, Upper-Rear (Sedan)		1	
●	0866 99 746	Mould Set, Upper-Rear (Sedan)		1	Car No. 124434 $^{73}/_{1}$ ~○
● 17	0376 70 482A	Mould, Lower-Rear (Coupe)		1	
●	0376 99 747	Mould Set-Lower-Rear (Sedan)		1	Car No. 124434 $^{73}/_{1}$ ~○
●	0866 70 482A	Mould, Lower-Rear (Sedan)		1	
●	0866 99 747	Mould Set, Lower-Rear (Sedan)		1	Car No. 124434 $^{73}/_{1}$ ~○
● 18	0376 70 483A	Mould (R), Rear (Coupe)		1	
●	0376 99 748	Mould Set (R), Rear (Coupe)		1	Car No. 124434 $^{73}/_{1}$ ~○
●	0866 70 483A	Mould (R), Rear (Sedan)		1	
●	0866 99 748	Mould Set (R), Rear (Sedan)		1	Car No. 124434 $^{73}/_{1}$ ~○
● 19	0376 71 483A	Mould (L), Rear (Coupe)		1	
●	0376 99 749	Mould Set (L), Rear (Coupe)		1	Car No. 124434 $^{73}/_{1}$ ~○
●	0866 71 483A	Mould (L), Rear (Sedan)		1	
●	0866 99 749	Mould Set (L), Rear (Sedan)		1	Car No. 124434 $^{73}/_{1}$ ~○
20	0376 70 484A	Joint (R), Mould (Coupe)		1	
	0866 70 484A	Joint (R), Mould (Sedan)		1	
21	0376 71 484A	Joint (L), Mould (Coupe)		1	
	0866 71 484A	Joint (L), Mould (Sedan)		1	
22	0866 70 801A	Plate (R), Scarf-Front	(Sedan)	1	
23	0866 71 801A	Plate (L), Scarf-Front	(Sedan)	1	
24	0866 70 802B	Plate (R), Scarf-Rear	(Sedan)	1	
25	0866 71 802B	Plate (L), Scarf-Rear	(Sedan)	1	
26	0376 70 801A	Plate (R), Scarf-Front	(Coupe)	1	
27	0376 71 801A	Plate (L), Scarf-Front	(Coupe)	1	
28	0376 70 802A	Plate (R), Scarf-Rear	(Coupe)	1	
29	0376 71 802A	Plate (L), Scarf-Rear	(Coupe)	1	
30	99862 0425B	Screw, Scarf Plate	(Sedan) (Coupe)	10 8	
31	99863 0414B	Screw, Scarf Plate		14	
	99952 0516B	Washer, Plain		14	
32	0376 70 821A	Mould (R), Drip-Front (Coupe)		1	
●	0376 70 821B	Mould (R), Drip-Front (Coupe)		1	Car No. 113912 $^{72}/_{10}$ ~○

WINDOW GLASS & MOULDING
(SEDAN & COUPE)

70 71

No.	Part Number	Description	Q'ty	Remarks	Price
	0866 70 821A	Mould (R), Drip-Front (Sedan)	1		
●	0866 70 821B	Mould (R), Drip-Front (Sedan)	1	Car No. 116525 $^{72}/_{10}$ ~○	
33	0376 71 821A	Mould (L), Drip-Front (Coupe)	1		
●	0376 71 821B	Mould (L), Drip-Front (Coupe)	1	Car No. 116525 $^{72}/_{10}$ ~○	
	0866 71 821A	Mould (L), Drip-Front (Sedan)	1		
●	0866 71 821B	Mould (L), Drip-Front (Sedan)	1	Car No. 116525 $^{72}/_{10}$ ~○	
34	0376 70 822A	Mould (R), Drip-Rear (Coupe)	1		
●	0376 70 822B	Mould (R), Drip-Rear (Coupe)	1	Car No. 116526 $^{72}/_{10}$ ~○	
	0866 70 822B	Mould (R), Drip-Rear (Sedan)	1		
●	0866 70 822D	Mould (R), Drip-Rear (Sedan)	1	Car No. 116525 $^{72}/_{10}$ ~○	
35	0378 71 822A	Mould (L), Drip-Rear (Coupe)	1		
●	0376 71 822B	Mould (L), Drip-Rear (Coupe)	1	Car No. 116525 $^{72}/_{10}$ ~○	
	0866 71 822B	Mould (L), Drip-Rear (Sedan)	1		
●	0866 71 822D	Mould (L), Drip-Rear (Sedan)	1	Car No. 116525 $^{72}/_{10}$ ~○	
36	0866 70 823A	Joint, Drip Mould	2		
37	0866 70 851	Mould, Step	1		
●	0866 99 721	Mould, Step	1	Car No. 124434 $^{73}/_{1}$ ~○	
38	0305 70 861C	Clip, Step Mould	10		
39	99863 0512	Screw, Step Mould	10		

WINDOW GLASS & MOULDING
(SEDAN & COUPE)

No.	Part Number	Description		Q'ty	Remarks	Price
40	0866 70 852	Guard "A" (R), Stone		1		
41	0866 71 852	Guard "A" (L), Stone		1		
42	0866 70 853A	Guard "B" (R), Stone		1		
	0866 70 853C	Guard "B" (R), Stone	(Sedan)	1	Car No. 101834 $^{72}/_{4}$ ~○ 104336	
43	0866 71 853A	Guard "B" (L), Stone		1		
	0866 71 853C	Guard "B" (L), Stone		1	Car No. 101834 $^{72}/_{4}$ ~○ 104336	
44	99863 0512	Screw, Stone Guard		4		
	99952 0500	Washer, Plain		4		
●	~~0870 70 853~~	~~Screw~~		~~2~~	~~Car No. 101834 $^{72}/_{4}$ ~ 104336 Added Anew~~	
45	0376 70 855	Guard (R), Stone		1		
●	0376 70 855C	Guard (R), Stone		1	Car No. 135305 $^{73}/_{3}$ ~△	
46	0376 71 855	Guard (L), Stone		1		
●	0376 71 855C	Guard (L), Stone	(Coupe)	1	Car No. 135305 $^{73}/_{3}$ ~△	
47	99767 0410	Screw, Stone Guard		2		
	99769 0408	Scrwe, Stone Guard		2		
48	0870 70 875	Screw, Stone Guard		2		
49	0870 70 871C	Mould (Frt., R), Wheel Arch		1		
●	0870 99 731	Mould Set		1	Car No. 124434 $^{73}/_{1}$ ~○	
	0870 71 871C	Mould (Frt., L), Wheel Arch		1		
●	0870 99 736	Mould Set		1	Car No. 124434 $^{73}/_{1}$ ~○	
●	0870 70 881A	Mould (Rr., R), Wheel Arch		1		
●	0870 70 881C	Mould (Rr., R), Wheel Arch		1	Car No. 135305 $^{73}/_{3}$ ~△	
●	0870 99 734A	Mould Set	(Coupe)	1	Car No. 124434 $^{73}/_{1}$ ~○	
	0870 71 881A	Mould (Rr., L), Wheel Arch		1		
●	0870 71 881C	Mould (Rr., L), Wheel Arch		1	Car No 135305 $^{73}/_{3}$ ~△	
●	0870 99 739A	Mould Set		1	Car No. 135305 $^{73}/_{3}$ ~△	
●	~~0870 70 875~~	~~Screw, Tapping~~		~~18~~		
●	99769 0408	Screw		18	From Car No. 1	

WINDOW GLASS & MOULDING
(STATION WAGON)

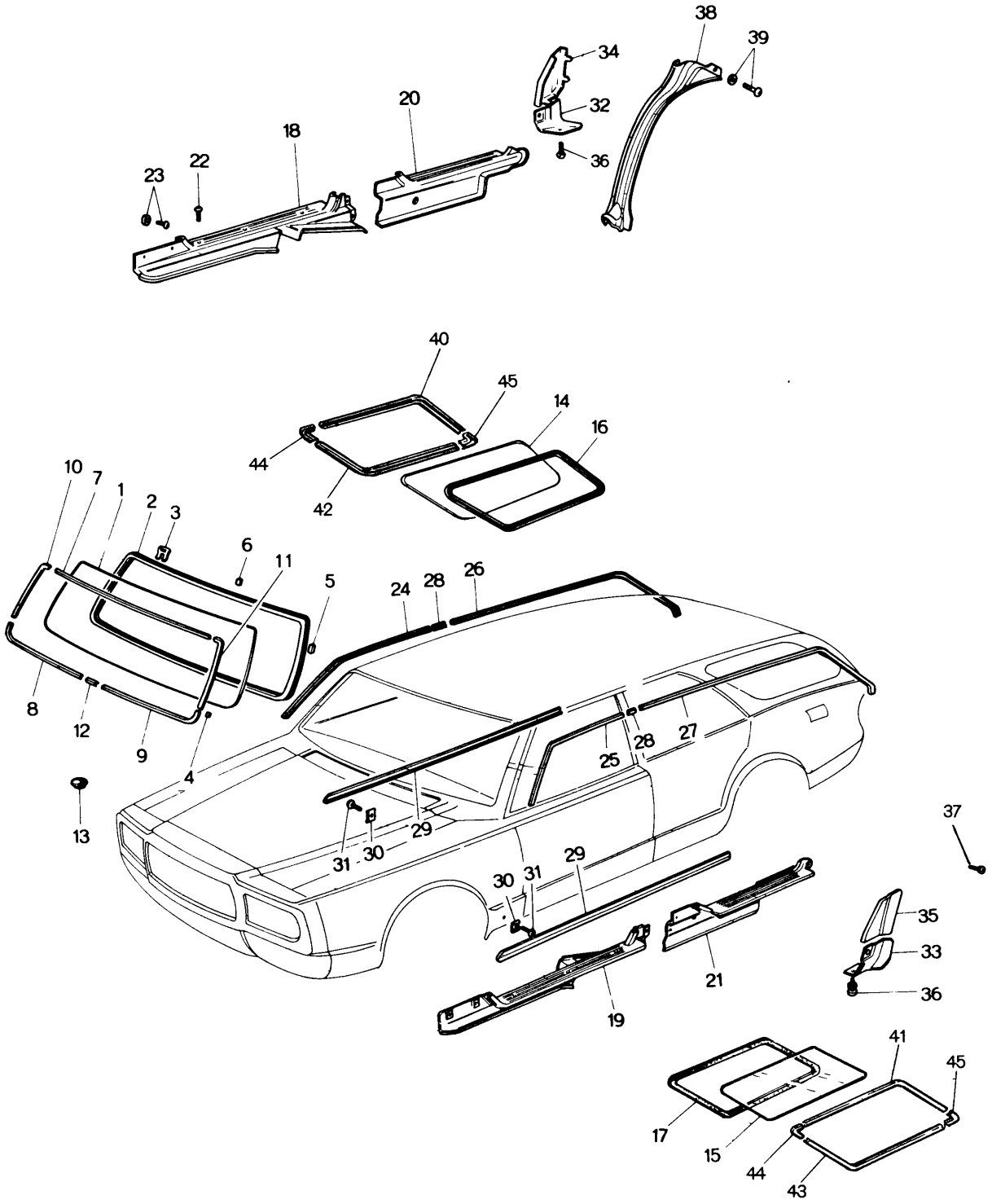

WINDOW GLASS & MOULDING
(STATION WAGON)

70 71

No.	Part Number	Description	Q'ty	Remarks	
1	1531 70 441	Glass, Front Window (Transparent)	1		
	1540 70 441	Glass, Front Window (Blue Pane)	1		
2	0305 70 443B	Dam, Front Window Glass	1		
3	0305 70 445B	Clip, Front Window	19		
4	0305 70 447B	Spacer "A"	3		
5	0305 70 448A	Spacer "B"	2		
6	0839 70 449	Spacer "C"	2		
● 7	0866 70 451A	Mould, Upper	1		
●	0866 99 741	Mould Set	1	Car No. 123972 $^{72}/_{1}$ ~ ○	
● 8	0866 70 452A	Mould, Lower (R)- Front	1		
●	0866 99 742	Mould Set	1	Car No. 123972 $^{73}/_{1}$ ~ ○	
● 9	0866 71 452A	Mould, Lower (L)- Front	1		
●	0866 99 745	Mould Set	1	Car No. 123972 $^{73}/_{1}$ ~ ○	
● 10	0866 70 453A	Mould (R), Front	1		
●	0866 99 743	Mould Set	1	Car No. 123972 $^{73}/_{1}$ ~ ○	
● 11	0866 71 453A	Mould (L), Front	1		
●	0866 99 744	Mould Set	1	Car No. 123972 $^{73}/_{1}$ ~ ○	
12	0866 70 454	Joint, Front Mould	1		
13	0118 56 241	Plug, Drain	1		
14	1529 70 551	Glass, Rear Side (R) (Transparent)	1		
	1544 70 551	Glass, Rear Side (R) (Blue Pane)	1		
15	1529 71 551	Glass, Rear Side (L) (Transparent)	1		
	1544 71 551	Glass, Rear Side (L) (Blue Pane)	1		
16	0585 70 521A	Weatherstrip (R)	1		
17	0585 71 521A	Weatherstrip (L)	1		
18	0866 70 801A-00	Plate (R), Scarf-Front	1		©
19	0866 71 801A-00	Plate (L), Scarf-Front	1		©
20	0866 70 802B-00	Plate (R), Scarf-Rear	1		©
21	0866 71 802B-00	Plate (L), Scarf-Rear	1		©
22	99862 0425B	Screw, Scarf Plate	10		
23	99864 0414B	Screw, Scarf Plate	14		

WINDOW GLASS & MOULDING
(STATION WAGON)

No.	Part Number	Description	Q'ty	Remarks
	99952 0515B	Washer, Plain	14	
24	0866 70 821A	Mould (R), Drip-Front	1	
●	0866 70 821B	Mould (R), Drip-Front	1	Car No. 111422 $^{72}/_{10}$ ~ ○
25	0866 71 821A	Mould (L), Drip-Front	1	
●	0866 71 821B	Mould (L), Drip-Front	1	Car No. 111422 $^{72}/_{10}$ ~ ○
26	0585 70 822B	Mould (R), Drip-Rear	1	
27	0585 71 822B	Mould (L), Drip-Rear	1	
28	0866 70 823A	Joint, Drip Mould	2	
29	0866 70 851	Mould, Step	2	
●	0866 99 721	Mould Set	2	Car No. 123972 $^{73}/_{1}$ ~ ○
30	0305 70 861C	Clip, Step Mould	10	
31	99863 0512	Screw, Step Mould	10	
32	0866 70 852	Guard "A" (R), Stone	1	
33	0866 71 852	Guard "A" (L), Stone	1	
34	0866 70 853A	Guard "B" (R), Stone	1	
	0866 70 853C	Guard "B" (R), Stone	1	Car No 101834 104336 $^{73}/_{4}$ ~ ○
35	0866 71 853A	Guard "B" (L), Stone	1	
	0866 71 853C	Guard "B" (L), Stone	1	Car No. 101834 104336 $^{73}/_{4}$ ~ ○
36	99863 0512	Screw, Stone Guard	4	
	99952 0500	Washer, Plain	4	
●	~~0870 70 863~~	~~Screw~~	~~2~~	~~Car No. 101834 104336 $^{73}/_{4}$ ~ Added Anew~~
37	0870 70 875	Screw, Tapping-Stone Guard	2	
38	0585 70 811C	Plate (Rr), Scarf	1	
39	99864 0414B	Screw, Scarf Plate (Rr)	2	
	99952 0412B	Washer, Plain	2	
40	0585 70 531	Mould, Upper (R)	1	
41	0585 71 531	Mould, Upper (L)	1	
42	0585 70 532	Mould, Lower (R)	1	
43	0585 71 532	Mould, Lower (L)	1	
44	0585 70 533	Mould (Frt.)	2	
45	0585 70 534	Mould (Rr)	2	

REAR SIDE WINDOW (COUPE)

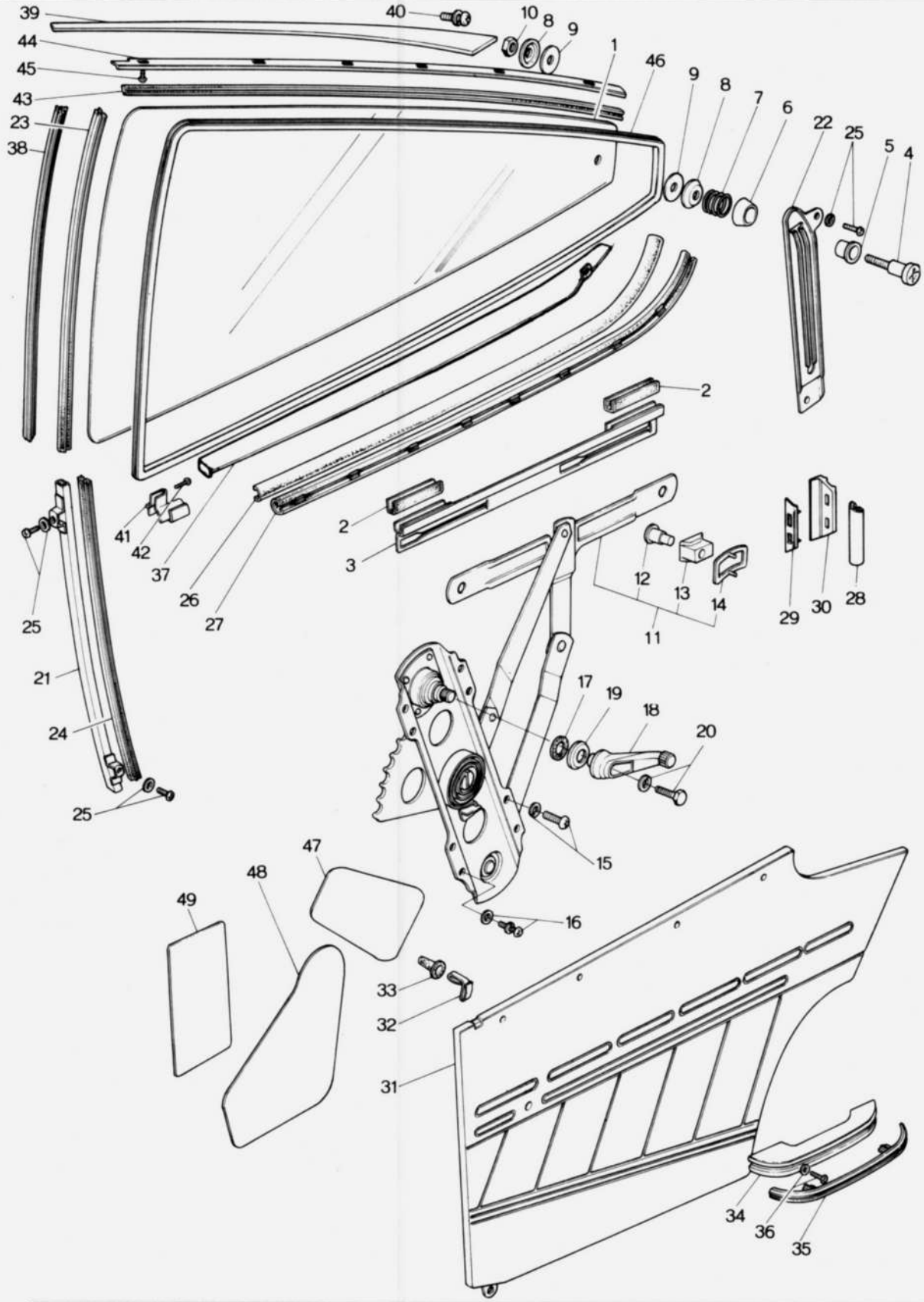

REAR SIDE WINDOW (COUPE) 72 73

No.	Part Number	Description		Q'ty	Remarks
1	0374 72 501	Glass (R), Window	Transparent	1	
	0374 73 501	Glass (L), Window		1	
	0376 72 501	Glass (R), Window	Blue Pane	1	
	0376 73 501	Glass (L), Window		1	
2	2292 58 232	Strip, Rubber		4	
3	0376 72 505	Bracket, Lift		4	
4	0839 70 521	Pin		2	
5	0839 70 522	Roller		2	
6	0839 70 523A	Seat, Spring		2	
7	0839 70 524	Spring		2	
8	0839 70 525	Washer		4	
9	0839 70 526	Seat		4	
10	99906 0500	Nut		2	
11	0376 72 560	Regulator (R), Window		1	
	0376 73 560	Regulator (L), Window		1	
12	0223 58 303A	Pin		4	
13	0223 58 304A	Guide		4	
14	0223 58 311	Spring, Guide		4	
15	99805 0616	Bolt, Regulator		4	
	99952 0600	Washer, Plain		4	
	99971 0600	Washer, Spring		4	
16	99806 0612	Bolt, Regulator		8	

REAR SIDE WINDOW (COUPE)

No.	Part Number	Description	Q'ty	Remarks
	99971 0600	Washer, Spring	8	
	99951 0618	Washer, Plain	8	
17	~~0258 72 305~~	~~Gasket, Regulator~~	~~2~~	
●	0259 58 305	Gasket, Regulator	2	From Car No. 1
● 18	0824 58 370A	Handle, Regulator	2	
●	0824 58 370B	Handle, Regulator	2	Car No. 116525 $^{72}/_{10}$ ~ △
19	0223 58 375A	Escutcheon	2	
20	99806 0516	Bolt, Regulator Handle	2	
	99971 0500	Washer, Spring	2	
21	0376 72 602	Guide "A" (R), Glass	1	
	0376 73 602	Guide "A" (L), Glass	1	
22	0376 72 603	Guide "B" (R), Glass	1	
	0376 73 603	Guide "B" (L), Glass	1	
23	0376 72 605	Channel "A", Glass Run	2	
24	0376 72 606	Channel "B", Glass Run	2	
25	99806 0612	Bolt, Glass Guide	8	
	99971 0600	Washer, Spring	8	
	99951 0618	Washer, Plain	8	
26	0376 72 701C	Weatherstrip, Outer "A" (R)	1	
	~~0376 73 701C~~	~~Weatherstrip, Outer "A" (L)~~	~~1~~	
	0376 72 701C	Weatherstrip, Outer "A" (L)	1	From Car No. 1
27	0376 72 790	Weatherstrip, Inner "A" (R)	1	
	0376 73 790	Weatherstrip, Inner "A" (L)	1	
28	0376 72 890	Weatherstrip, Inner "B" (R)	1	Rear Pillar Trim
	0376 73 890	Weatherstrip, Inner "B" (L)	1	Rear Pillar Trim
29	0376 72 901C	Weatherstrip, Outer "B"	2	
30	0376 72 902B	Plate, Set	2	

No.	Part Number	Description	Q'ty	Remarks	
	When ordering the following Quarter Trim Note : 1 Add -03 (Black) -12 (Brown) -13 (Greyish Yellow) after the parts number as Colour Code nos				
31	0376 72 810A	Trim (R), Quarter	1	1972 Model	©
●	1622 72 810	Trim (R), Quarter	1	1973 Model	©
	0376 73 810A	Trim (L), Quarter	1	1972 Model	©
●	1622 73 810	Trim (L), Quarter	1	1973 Model	©
32	0208 58 921	Fastener, Quarter Trim	4		
33	0187 58 922	Cap, Fastener-Quarter Trim	4		
34	0398 58 821A	Rest, Arm	2		
35	0398 58 822A	Garnish, Arm Rest	2		
36	99833 0520	Screw, Arm Rest	4		
	99952 0500	Washer, Plain	4		
37	0376 72 831A	Mould (R), Beltline	1		
●	0376 72 831B	Mould (R), Beltline	1	Car No 103228 72/4 ~ △ 106837	
	0376 73 831A	Mould, (L), Beltline	1		
●	0376 73 831B	Mould (L), Beltline	1	Car No 103228 72/4 ~ △ 106837	
● 38	0376 72 851B	Garnish (R)	1		
●	0376 73 851B	Garnish (L)	1		
39	0376 72 855	Mould (R), Quarter Line	1		
	0376 73 855	Mould (L), Quarter Line	1		
40	99863 0410	Screw, Quarter Line Mould	2		
	99971 0400	Washer, Spring	2		
	99952 0400	Washer, Plain	2		
41	0376 72 881	Cover (R)	1		

REAR SIDE WINDOW (COUPE)

No.	Part Number	Description	Q'ty	Remarks
	0376 73 881	Cover (L)	1	
42	99864 0410B	Screw, Cover	2	
43	0376 72 761	Weatherstrip (R)	1	
	0376 73 761	Weatherstrip (L)	1	
44	0376 72 771	Retainer	1	
	0376 73 771	Retainer	1	
45	99864 0408	Screw, Weatherstrip	8	
46	0376 72 755A	Welt, Seaming	2	
47	0376 72 861A	Screen, Door "A"	2	
48	0376 72 862	Screen, Door "B"	2	
●	0376 72 862A	Screen, Door "B"	2	Car No. 143250 ~ 148270 73/7~△
49	0376 72 863	Screen "C"	2	

REAR SIDE DOOR
(GLASS, SEDAN & STATION WAGON)

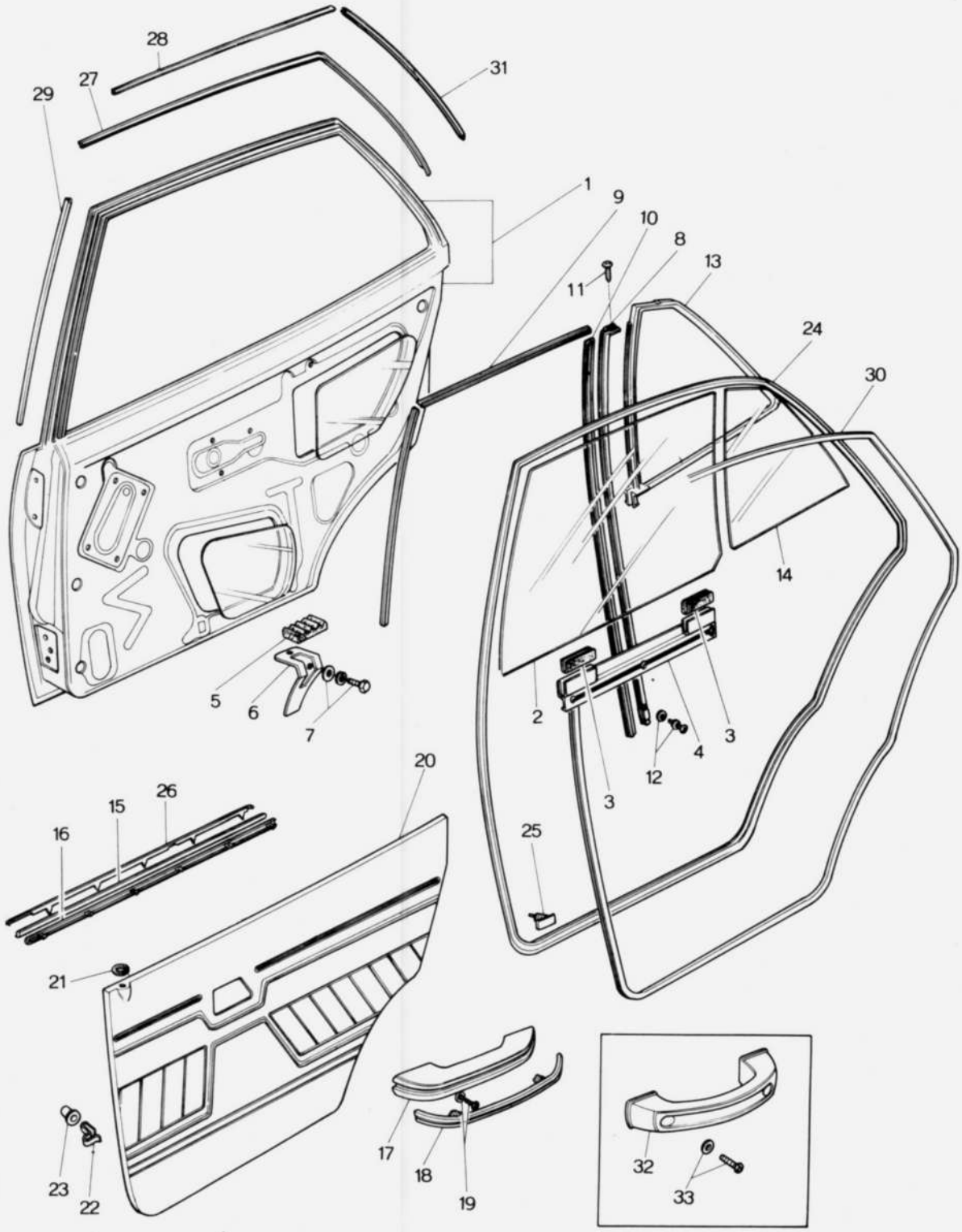

REAR SIDE DOOR
(GLASS SEDAN & STATION WAGON)

72 73

	No.	Part Number	Description		Q'ty	Remarks
	1	0585 72 010	Body (R), Door (Station Wagon)		1	
		0585 72 010A	Body (R), Door (Station Wagon)		1	Car No. 101834 $^{72}/_{4}$ ~○
●		0585 72 010B	Body (R), Door (Station Wagon)		1	Car No. 113551 $^{72}/_{10}$ ~○
●		1636 72 010	Body (R), Door (Station Wagon)		1	Car No. 123972 $^{73}/_{1}$ ~△
		0866 72 010B	Body (R), Door (Sedan)		1	
		0866 72 010C	Body (R), Door (Sedan)		1	Car No. 104336 $^{72}/_{4}$ ~○
●		0866 72 010D	Body (R), Door (Sedan)		1	Car No. 116023 $^{72}/_{10}$ ~○
●		1620 72 010	Body (R), Door (Sedan)		1	Car No. 124434 $^{73}/_{1}$ ~△
		0585 73 010	Body (L), Door (Station Wagon)		1	
		0585 73 010A	Body (L), Door (Station Wagon)		1	Car No. 101834 $^{72}/_{4}$ ~○
●		0585 73 010B	Body (L), Door (Station Wagon)		1	Car No. 113551 $^{72}/_{10}$ ~○
●		1636 73 010	Body (L), Door (Station Wagon)		1	Car No. 123972 $^{73}/_{1}$ ~△
		0866 73 010B	Body (L), Door (Sedan)		1	
		0866 73 010C	Body (L), Door (Sedan)		1	Car No. 104336 $^{72}/_{4}$ ~○
●		0866 73 010D	Body (L), Door (Sedan)		1	Car No. 116023 $^{72}/_{10}$ ~○
●		1620 73 010	Body (L), Door (Sedan)		1	Car No. 124434 $^{73}/_{1}$ ~△
	2	0368 72 501	Glass (R), Door (Sedan)	Transparent	1	
		0583 72 501	Glass (R), Door (Station Wagon)	Transparent	1	
		0368 73 501	Glass (L), Door (Sedan)	Transparent	1	
		0583 73 501	Glass (L), Door (Station Wagon)	Transparent	1	
		0585 72 501	Glass (R), Door (Station Wagon)		1	
		0866 72 501	Glass (R), Door (Sedan)		1	
		0585 73 501	Glass (L), Door (Station Wagon)		1	
		0866 73 501	Glass (L), Door (Sedan)		1	
	3	0866 72 502	Strip, Rubber - Door Glass		2	
	4	0259 72 210	Bracket, Lift - Door Glass		2	
	5	0187 56 235	Rubber, Support		2	
	6	0259 72 080	Stop, Glass		2	
	7	99806 0612	Bolt, Glass Stop		2	
		99951 0618	Washer, Plain		2	
		99971 0600	Washer, Spring		2	
●	8	0585 72 602C-00	Channel (R), Center (Station Wagon) (Black)		1	
●		0866 72 602A-00	Channel (R), Center (Sedan) (Black)		1	
●		0585 73 602C-00	Channel (L), Center (Station Wagon) (Black)		1	

72 73 REAR SIDE DOOR
(GLASS SEDAN & STATION WAGON)

No.	Part Number	Description	Q'ty	Remarks
	0866 73 602A	Channel (L), Center (Sedan)	1	
9	0585 72 605	Channel "A", Glass Run (Station Wagon)	2	
	0866 72 605	Channel "A", Glass Run (Sedan)	2	
10	0585 72 606	Channel "B", Glass Run (Station Wagon)	2	
	0866 72 606	Channel "B", Glass Run (Sedan)	2	
11	99831 0408	Screw, Center Channel	4	
12	99806 0610	Bolt, Glass Run Channel	2	
	99951 0618	Washer, Plain	2	
	99971 0600	Washer, Spring	2	
13	0585 72 651A	Weatherstrip (Station Wagon)	2	
	0866 72 651B	Weatherstrip (Sedan)	2	
14	1524 72 661B	Glass (R), Quarter Window (Sedan)	1	Transparent
	1529 72 661	Glass (R), Quarter Window (Station Wagon)	1	Transparent
	1524 73 661B	Glass (L), Quarter Window (Sedan)	1	Transparent
	1529 73 661	Glass (L), Quarter Window (Station Wagon)	1	Transparent
	1540 72 661A	Glass (R), Quarter Window (Sedan)	1	Blue Pane
	1544 72 661	Glass (R), Quarter Window (Station Wagon)	1	Blue Pane
	1540 73 661A	Glass (L), Quarter Window (Sedan)	1	Blue Pane
	1544 73 661	Glass (L), Quarter Window (Station Wagon)	1	Blue Pane
15	0866 72 781C	Weatherstrip, Outer	2	
16	0866 72 791	Weatherstrip, Inner	2	
17	0398 58 821A	Rest, Arm	2	(Sedan)
18	0398 58 822A	Garnish, Arm Rest	2	(Sedan)
19	99833 0520	Screw, Arm Rest	4	(Sedan)
	99952 0500	Washer, Plain	4	(Sedan)

No.	Part Number	Description	Q'ty	Remarks	
	When ordering the following Trims Add Colour Code nos. given below after parts number -03 (Black) -12 (Brown) -13 (Greyish Yellow)				
20	0866 72 810B	Trim (R), Door	1	(1972 Model)	©
	1620 72 810	Trim (R), Door	1	(1973 Model)	©
	0866 73 810B	Trim (L), Door	1	(1972 Model)	©
	1620 73 810	Trim (L), Door	1	(1973 Model)	©
21	0223 58 692A	Grommet	2		
22	0208 58 921	Fastener	10 12	Sedan Station Wagon	
23	0187 59 922	Cap, Fastener	10 12	Sedan Station Wagon	
24	0585 72 760A	Weatherstrip (R) (Station Wagon)	1		
	0866 72 760A	Weatherstrip (R) (Sedan)	1		
	0585 73 760A	Weatherstrip (L) (Station Wagon)	1		
	0866 73 760A	Weatherstrip (L) (Sedan)	1		
25	0305 58 762	Fastener, Weatherstrip	48		
26	0866 72 831C	Mould (R), Beltline	1		
	0866 72 831D	Mould (R), Beltline	1	Car No. 101834 72/4 ~ △ 104336	
	0866 73 831C	Mould (L), Beltline	1		
	0866 73 831D	Mould (L), Beltline	1	Car No. 101834 72/4 ~ △ 104336	
27	0866 72 841A	Mould "A" (R), Sash } (Sedan)	1		
	0866 73 841A	Mould "A" (L), Sash } (Sedan)	1		
28	0899 72 841B	Mould "A" (R), Sash } (Station Wagon)	1		
	0899 73 841B	Mould "A" (L), Sash } (Station Wagon)	1		
29	0866 59 842A	Mould "B" (R), Sash } (Sedan & Station Wagon)	1		
	0866 58 842A	Mould "B" (L), Sash } (Sedan & Station Wagon)	1		

REAR SIDE DOOR
(GLASS, SEDAN & STATION WAGON)

No.	Part Number	Description	Q'ty	Remarks
30	0398 58 755	Welt, Seaming (Sedan)	1	
	0585 72 755	Welt, Seaming (Station Wagon)	1	
31	0899 72 843A	Mould (R), Sash	1	
	0899 73 843A	Mould (L), Sash	1	
32	0585 72 821	Handle, Pull	2	(Station Wagon)
33	99833 0520	Screw, Pull Handle	4	
	99952 0500	Washer, Plain	4	

REAR SIDE DOOR
(LOCK, SEDAN & STATION WAGON)

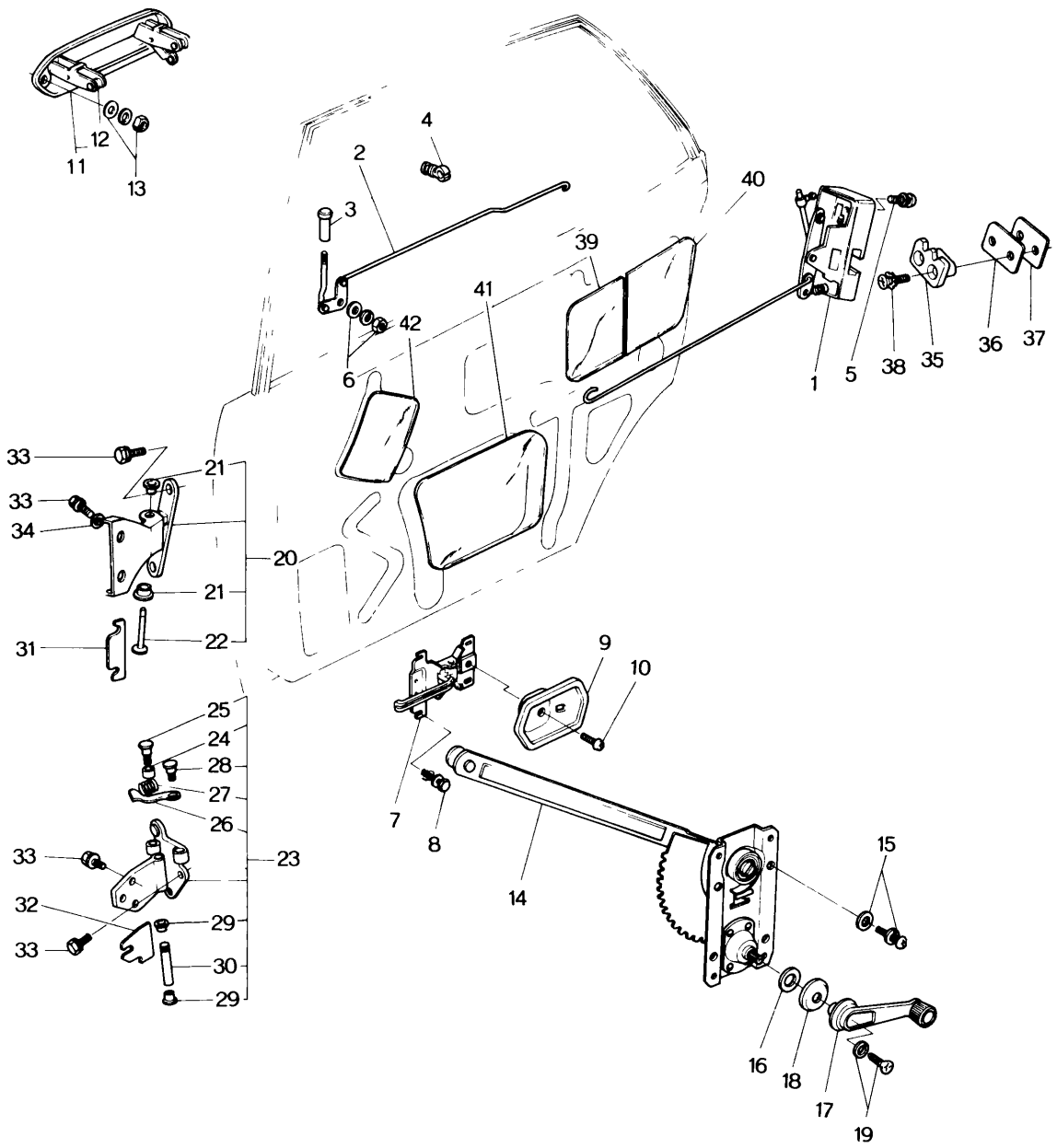

REAR SIDE DOOR
(LOCK, SEDAN & STATION WAGON)

72 73

No.	Part Number	Description	Q'ty	Remarks	
1	1524 72 310B	Lock (R), Door	1		
	1524 72 310E	Lock (R), Door	1	Car No. 105638 72/8 ~ X 108463	
●	1524 72 310F	Lock (R), Door	1	Car No. 109350 72/9 ~ O 111075	
	1524 73 310B	Lock (L), Door	1		
	1524 73 310E	Lock (L), Door	1	Car No. 105638 72/8 ~ X 108463	
●	1524 73 310F	Lock (L), Door	1	Car No. 109350 72/9 ~ O 111075	
● 2	0866 72 330A	Rod (R) Order Under No. 1524 72 310B	1		☆
●	0866 73 330A	Rod (L) Order Under No. 1524 73 310B	1		☆
3	0259 58 691	Knob	2		
4	0305 58 309	Holder, Rod	4		
5	99832 0630	Screw, Door Lock	6		
	99974 0600	Washer, Toothed	6		
6	99907 0600	Nut, Door Lock	2		
	99952 0600	Washer, Plain	2		
	99971 0600	Washer, Spring	2		
7	0866 58 321B	Handle, Inner	2		
8	99806 0510	Bolt, Inner Handle	6		
	99952 0500	Washer, Plain	6		
	99971 0500	Washer, Spring	6		
● 9	0866 58 303B-01	Cover (R) (Black)	1		
●	0866 59 303B-01	Cover (L) (Black)	1		
10	99832 0408B	Screw, Cover	2		
11	0866 72 410	Handle (R), Outer Side	1		
●	0866 72 410A	Handle (R), Outer Side	1	Car No. 109350 72/9 ~ O 111075	
	0866 73 410	Handle (L), Outer Side	1		
●	0866 73 410A	Handle (L), Outer Side	1	Car No. 109350 72/9 ~ O 111075	

REAR SIDE DOOR
(LOCK, SEDAN & STATION WAGON)

No.	Part Number	Description	Q'ty	Remarks
12	0305 58 411	Bush, Outer Handle	2	
13	99806 0500	Nut, Outer Handle	4	
	99851 0618	Washer, Plain	4	
	99871 0500	Washer, Spring	4	
14	0866 72 560	Regulator (R), Window	1	
	0866 73 560	Regulator (L), Window	1	
15	99806 0612	Bolt, Window Regulator	8	
	99852 0600	Washer, Plain	8	
	99871 0600	Washer, Spring	8	
16	0223 58 305	Gasket, Window Regulator	2	
17	0824 58 370A	Handle, Regulator	2	
●	0824 58 370B	Handle, Regulator (Aluminum Cap)	2	Car No. 114066 72/10 ~ △ 116525
18	0223 58 375A	Escutcheon	2	
19	99806 0516	Bolt, Regulator Handle	2	
	99871 0500	Washer, Spring	2	
20	0866 72 210B	Hinge "A" (R)	1	
	0866 73 210B	Hinge "A" (L)	1	
21	0223 58 721	Bush	4	
22	0866 72 212A	Pin, Hinge	2	
23	0866 72 240	Hinge "B" (R)	1	
●	0866 72 240B	Hinge "B" (R)	1	Car No. 116955 72/11 ~ ○ 118635
	0866 73 240	Hinge "B" (L)	1	
●	0866 73 240B	Hinge "B" (L)	1	Car No. 116955 72/11 ~ ○ 118635

No.	Part Number	Description	Q'ty	Remarks
24	0866 58 281	Roller	2	
●	0866 58 281A	Poller	2	Car No. 116955 72/11 ~ ○ 118635
25	0866 58 282	Pin "A"	2	
26	0866 58 291A	Lever, Check	2	
● 27	~~0866 72 292A~~	~~Spring, Check~~	~~2~~	
●	0866 72 292	Spring, Check	2	From Car. No. 1
28	0866 58 293	Pin "B"	2	
29	0223 58 721	Bush	4	
30	0187 58 731	Pin, Hinge	2	
31	0866 72 201	Shim, Hinge "A" - Selective use	—	
32	0866 58 231	Shim, Hinge "B" - Selective use	—	
●	1011 58 231	Shim, Hinge "B"-Selective use		Car No. 107151 72/9 ~ ○ 109301
33	99783 0828	Bolt, Hinge	20	
	99971 0800	Washer, Spring	20	
34	99951 0822	Washer, Plain - Hinge "A"	4	
35	1540 58 361	Rack (R)	1	
	0866 58 361B	Rack (R)	1	Car No. 105638 72/8 ~ X 108463
	1540 59 361	Rack (L)	1	
	0866 59 361B	Rack (L)	1	Car No. 105638 72/8 ~ X 108463
36	0866 58 363	Seat, Striker	2	Used up to Car No 105638 72/8 ~ 108463
37	0866 58 364A	Plate, Base	2	
	0866 58 364B	Plate, Base	2	Car No 105638 72/8 ~ X 108463
38	1540 58 371	Screw, Rack	4	
	99975 0600	Washer, Toothed	4	
39	0866 72 862A	Screen "B"	2	
40	0866 72 863	Screen "C"	2	
41	0305 72 864	Screen "D"	2	
42	0223 72 921A	Screen	2	

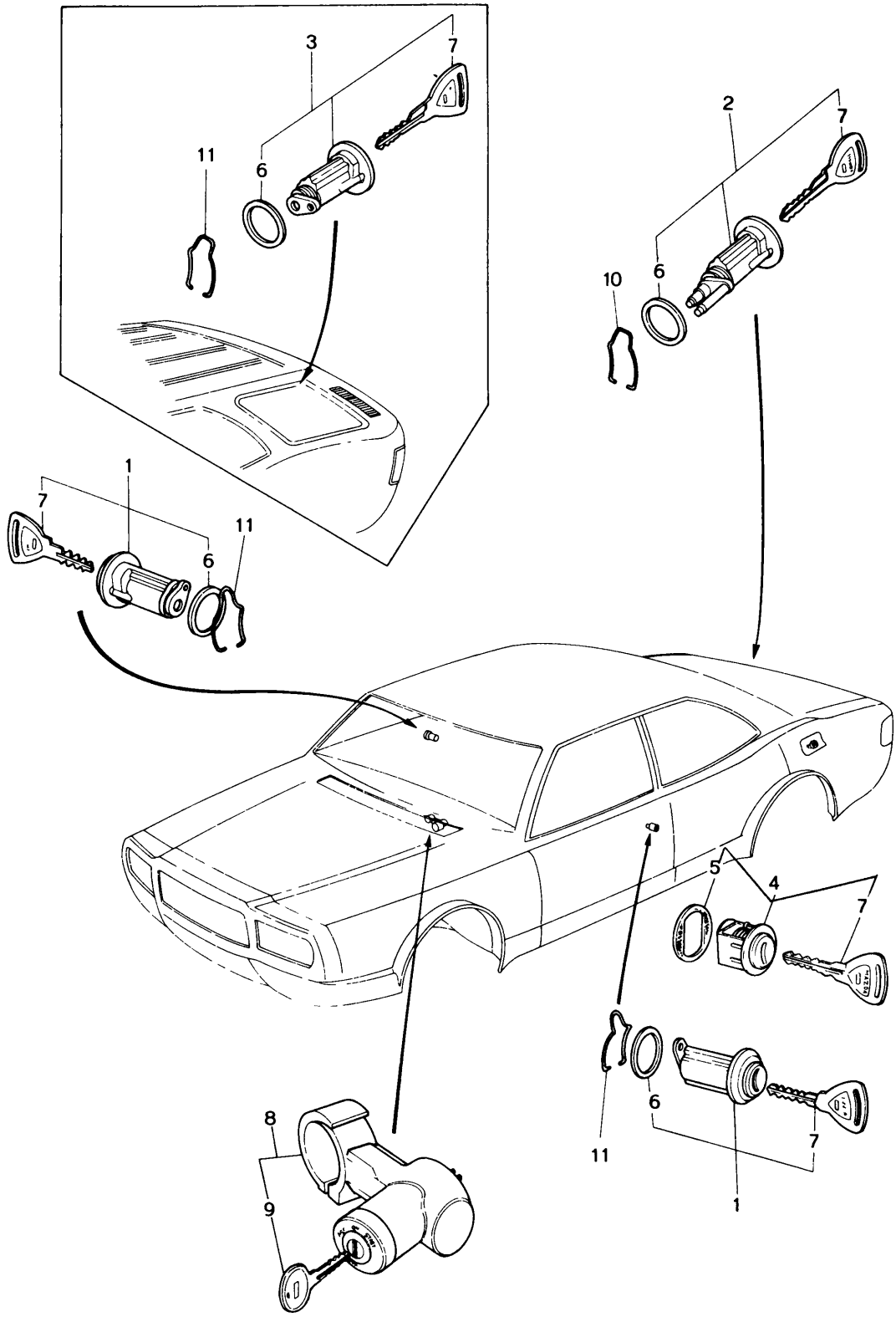
3
7
11
6
2
7
10
6
1
7
6
11
5
4
7
8
9
6
11
7
1

No.	Part Number	Description	Q'ty	Remarks
	1562 09 010A	Key Set (Sedan & Coupe)	1	
	1571 09 010	Key Set (Station Wagon)	1	
● 1	~~0838 74 810~~	~~Key Sub Set, Door~~	~~2~~	
	0839 74 910A	Key Sub Set, Door	2	From Car No. 1
2	0866 75 930	Key Sub Set, Trunk Lid	1	
3	0899 75 960	Key Sub Set, Back Door	1	
4	0370 75 940	Key Sub Set, Filler Lid	1	
5	0621 42 455	Seat, Filler Lid Lock	1	
6	0223 58 962	Gasket, Door	3	
7	0839 58 492A	Key, Primary	2	
	0839 74 158	Blank Key, Primary Key No 2500~2999	–	
	0839 74 168	Blank Key, Primary Key No 3000~3499	–	
	2280-60-435A	ELEC. IGN. SWITCH		
8	2280 60 430B	Lock, Steering	1	
9	2835 60 439	Key	2	
	2280 75 641A	Blank Key, Steering Lock	–	
10	0305 52 802	Retainer, Trunk Lid	1	
11	0223 58 961	Fastener, Door Key Cylinder	3	

INDEX.

PARTS NUMBER	PARTS COMP. LIST PAGE	FIG. NO.
1562 09 010A	269	
1571 09 010	269	
1669 10 100A	2	1
1669 10 100B	2	1
2090 10 100D	2	1
2090 10 100E	2	1
2329 10 103B	2	4
2329 10 103B	6	4
2329 10 104	2	6
0839 10 105	6	6
0866 10 105	2	2
0866 10 105	6	2
2329 10 105	2	8
2329 10 105	6	6
0839 10 111B	2	9
0839 10 111B	6	7
1617 10 120	2	4
1617 10 120	6	4
1620 10 150B	6	1
1620 10 150C	6	1
1669 10 150A	6	1
1669 10 150B	6	1
2090 10 150D	6	1
2090 10 150E	6	1
0810 10 171	2	10
0810 10 171	6	8
1668 10 171	2	10
1668 10 171	6	8
0813 10 172	2	11
0813 10 172	6	9
0813 10 173	2	12
0813 10 173	6	10
0813 10 174	3	28
1665 10 200	2	13
1665 10 200A	2	12
1665 10 200A	2	13
1665 10 200C	2	12
1665 10 200C	2	13
1665 10 200D	2	13
0820 10 203	7	12
0839 10 203	2	14
2329 10 204	2	15
0839 10 205	2	18
0839 10 205	7	18
0839 10 206	2	17
2113 10 206	2	16
0324 10 250	8	37
0324 10 252	8	38
0820 10 271D	55- E	74
0866 10 300G	6	11
0870 10 300B	6	11
0871 10 300D	6	11
0871 10 300E	6	11
0872 10 300B	6	11
0820 10 305	7	24
0221 10 309	7	14
0866 10 320A	7	16
1663 10 400A	7	26
1663 10 400B	7	26
0866 10 411	7	27
2329 10 417	7	29
0839 10 451A	8	39
1011 10 451	8	39
1015 10 451	8	39
0839 10 452B	8	40
1011 10 452	8	40
1015 10 452	8	40
0839 10 455	8	41
2306 10 481	18	37
0839 10 500B	12	18
0820 10 502B	12	20
0839 10 504	12	21
0820 10 550B	12	19
1668 10 550	12	19
0813 10 555	12	23
0820 10 556A	12	22
1668 10 556	12	22
2329 10 600D	3	29
2329 10 600E	3	29
2329 10 600G	3	29
0820 10 605	3	33
0820 10 631A	3	32
0820 10 631B	3	32
0839 10 641	3	40
1570 10 700	8	42
1572 10 700	8	42
1620 10 700	8	42
1621 10 700A	8	42
0839 10 711	8	45
0839 10 721	8	46
0839 10 722	8	47
0839 10 723	8	48
2090 10 730B	8	53
0866 10 830	8	50
2869 10 860	4	46
0871 10 862A	4	46
0871 10 862A	8	51
2090 10 862A	8	51
2329 10 864	4	45
0820 11 105	54	60
0820 11 105	55- E	73
1011 11 111	11	3

INDEX.

PARTS NUMBER	PARTS COMP. LIST PAGE	FIG. NO.
0839 11 301B	11	4
1665 11 301	11	4
2080 11 301	11	4
2090 11 301	11	4
0839 11 304	11	5
0820 11 317	11	10
0820 11 321C	11	11
0839 11 323	11	12
0839 11 323A	11	12
0839 11 323A	11	12
1665 11 323	11	12
0820 11 341	12	14
0820 11 343	12	15
0839 11 351	12	16
0839 11 351A	12	16
0839 11 351B	12	16
1011 11 351	12	16
0839 11 353	12	17
0839 11 353A	12	17
1011 11 353	12	17
0839 11 361	12	16
0839 11 361A	12	16
1011 11 361	12	16
0839 11 363	12	17
1011 11 363	12	17
0839 11 400I	13	25
0842 11 400A	13	25
0842 11 400B	13	25
0879 11 400	13	25
0810 11 403	13	26
0810 11 404	13	27
0813 11 405	13	28
0839 11 411A	13	30
0839 11 412	13	31
0839 11 501	13	33
0839 11 502	13	38
0820 11 503	13	35
0839 11 504B	13	36
0813 11 505B	13	37
0839 11 506	13	38
0820 11 507	13	39
0839 11 508	13	38
0839 11 509	13	38
0839 11 511D	13	40
0842 11 511A	13	40
2090 11 511A	13	40
0820 11 512A	13	41
0839 11 515	13	34
0839 11 531	13	43
0813 11 541	14	44
0820 11 542	14	45
0839 11 551	13	42
0839 11 551A	13	42
2090 11 601A	14	46
0820 11 611B	14	49
1620 11 700	14	51
2090 11 700A	14	51
0820 11 703	14	53
0820 11 703	14	58
0820 11 705	14	54
0810 11 711	14	55
0820 11 712	14	56
0842 11 750C	14	57
0842 11 750E	14	57
1668 13 100A	16	1
1669 13 100B	16	1
2090 13 100B	16	1
2090 13 105	16	2
2090 13 107A	16	3
2090 13 109	16	4
2090 13 111A	16	18
2090 13 111B	16	18
1570 13 200	17	19
1570 13 200	25	
1570 13 200A	17	19
1570 13 200A	25	
1570 13 200B	17	19
1570 13 200B	25	
1668 13 200D	17	19
1668 13 200D	26- 3	1
1668 13 200E	17	19
1668 13 200E	26- 8	1
1668 13 200G	17	19
1668 13 200G	26- 3	1
1669 13 200B	17	19
1669 13 200B	26- 8	1
1669 13 200C	17	19
1669 13 200C	26- 8	1
1672 13 200C	17	19
1672 13 200C	26- 8	1
1672 13 200D	17	19
1672 13 200D	26- 3	1
1672 13 200F	17	19
1672 13 200F	26- 8	1
0839 13 201	17	28
1663 13 208	17	20
1663 13 208A	17	20
2090 13 208A	17	20
0823 13 221A	17	21
1570 13 222	17	22
2090 13 230A	17	23
0866 13 235	17	25

INDEX.

PARTS NUMBER	PARTS COMP. LIST PAGE	FIG. NO.	PARTS NUMBER	PARTS COMP. LIST PAGE	FIG. NO.	PARTS NUMBER	PARTS COMP. LIST PAGE	FIG. NO.
0839 13 297	55	72	1570 13 447	111	13	2329 13 715	20	5
0839 13 297	55- F	85	1570 13 447	114	13	2329 13 715	21- 2	5
1665 13 300	17	29	1620 13 448	111	13	2090 13 717B	20	6
1665 13 300	23		0222 13 470A	111	7	2090 13 717B	21- 2	6
1665 13 300A	17	29	0222 13 470A	114	7	2090 13 718	20	7
1665 13 300A	23		0222 13 470B	111	7	2090 13 718	21- 2	7
1668 13 300	17	29	0222 13 470B	114	7	1663 13 720A	20	8
1668 13 300	23		0381 13 481	111	8	1663 13 720A	21- 2	8
1668 13 300A	17	29	0381 13 481	114	8	1669 13 720	21- 2	8
1668 13 300A	23		0222 13 493	21	39	2090 13 724	20	11
1617 13 305A	18	36	0222 13 493	21- 3	32	2090 13 724	21- 2	11
1570 13 311	18	31	0222 13 493	111	14	2090 13 725A	20	12
1620 13 311A	18	31	0222 13 493	114	14	2090 13 725A	21- 2	12
1620 13 311B	18	31	1559 13 510	21- B	14	2329 13 726	20	13
1570 13 330	18	33	1668 13 510	21- D	4	2329 13 726	21- 2	13
1570 13 330C	18	33	1665 13 511	21- B	12	1663 13 730	20	14
1570 13 330D	18	33	1665 13 512	21- B	11	1663 13 730	21- 2	14
2090 13 341A	18	35	1668 13 513	21- D	11	1669 13 730	21- 2	14
0222 13 363	37	58	1668 13 515A	21- D	5	1663 13 740	20	15
0223 13 363	111	3	1665 13 520	21- B	1	1663 13 740	21- 2	15
0223 13 363	114	3	1668 13 520A	21- D	1	2090 13 742A	18	41
1570 13 400A	111	1	1559 13 525	21- B	2	1663 13 744	20	17
1570 13 400A	114	1	1620 13 525A	21- D	2	1663 13 744	21- 2	17
0866 13 401A	111	2	1559 13 527	21- B	5	2090 13 746	20	18
0899 13 401	114	2	1668 13 527	21- D	7	2090 13 746	21- 2	18
1624 13 401	114	2	1559 13 528	21- B	9	1617 13 750A	20	19
0866 13 402A	111	5	1668 13 531A	21- D	8	1668 13 750	21- 2	19
0866 13 402A	114	5	0839 13 614	18- 1	45	1663 13 752	21	21
0118 13 432	215	39	0636 13 682	55	71	1668 13 752	21- 3	21
0370 13 441	18- 1	47	0636 13 682	55- F	84	1663 13 753	21	22
1570 13 442	111	11	1617 13 710A	20	1	1668 13 753	21- 3	22
1570 13 442	114	11	1617 13 710B	21- 2	1	2329 13 754A	20	10
1570 13 446A	111	12	1668 13 714	21- 2	4	2329 13 754A	54	69
1570 13 446A	114	12	2090 13 714A	20	4	1668 13 755	21- 2	10

PARTS NUMBER	PARTS COMP. LIST PAGE	FIG. NO.
1663 13 756B	20	10
1663 13 756B	21	32
1663 13 756B	55- F	82
2090 13 760B	21	23
2090 13 760B	21- 3	23
1668 13 762	21- 3	25
2090 13 762	21	25
2090 13 763A	21	26
2090 13 763A	21- 3	26
2090 13 764	21	27
2090 13 764	21- 3	27
2090 13 770A	21	28
2090 13 772	21	29
1570 13 773	21	30
2329 13 775	21	31
1668 13 780	21- 3	28
2329 13 780	21	33
0107 13 781	25	11
0107 13 781	26- D	24
2090 13 781	21	35
1668 13 785	21- 3	30
2090 13 785	21	36
1617 13 786A	21	38
1617 13 786A	21- 3	31
1617 13 790C	21	40
1617 13 790C	21- 3	33
1624 13 795	21	41
1570 13 800	18	38
1570 13 800B	18	38
1570 13 800C	18	38
2090 13 870A	18	39
2329 13 876	18	40
2329 13 882	18- 1	46
2090 13 889	18- 1	42
1114 13 891	18- 1	43
1570 13 891	18- 1	43
1570 13 891	101	17
2359 13 930	55	70
2359 13 930	55- F	83
1700 13 945	55	70
0839 14 020	28	11
0839 14 101B	28	1
0839 14 112B	28	4
0810 14 113	28	5
0221 14 115	29	29
0839 14 115	3	35
0221 14 116	29	30
0221 14 117	3	37
0221 14 117	29	31
0839 14 117	28	6
0820 14 118C	28	7
0839 14 119B	28	8
0823 14 130	28	12
0823 14 131	28	13
0839 14 132	28	14
0839 14 133	28	15
0839 14 141A	28	10
0839 14 142	28	16
0866 14 160C	28	17
0866 14 160D	28	17
0866 14 160E	28	17
0810 14 171	28	18
1665 14 200	4	
1665 14 200D	4	
0820 14 250C	29	27
0820 14 250D	29	27
0820 14 251C	29	28
0820 14 252	29	32
0839 14 273	3	36
0839 14 273A	3	36
0839 14 274	3	37
0839 14 300	29	21
2090 14 600	30	34
2090 14 600	32	
0810 14 611	30	35
0820 14 620	30	37
0813 14 623	30	39
0820 14 625	30	38
0839 14 630	30	42
0839 14 640	30	43
0813 14 641	30	44
0839 14 643	30	45
0820 14 647	30	46
0839 14 651D	30	47
0865 14 700	37	50
0865 14 700A	37	50
1621 14 700A	37	50
1621 14 700B	37	50
0813 14 716	37	57
0866 14 720A	37	51
0222 14 725	62- 2	11
0839 14 730C	37	52
1570 14 730A	37	52
0866 14 740A	37	55
0839 14 745	37	56
1665 14 771	37	65
1570 14 780	37	66
1570 15 010A	34	1
1570 15 010B	34	1
1620 15 010A	34	1
1620 15 010B	34	1
1620 15 010C	34	1

INDEX.

PARTS NUMBER	PARTS COMP. LIST PAGE	FIG. NO.	PARTS NUMBER	PARTS COMP. LIST PAGE	FIG. NO.	PARTS NUMBER	PARTS COMP. LIST PAGE	FIG. NO.
0866 15 100C	34	2	0222 15 205	36	36	0603 16 102B	40- B	5
1570 15 100	34	2	2228 15 207	36	36	0603 16 103	39	2
162C 15 100	34	2	2228 15 208	36	36	0603 16 103	40- B	2
2090 15 104	34	5	0871 15 210	189	3	0500 16 104	39	3
0822 15 105	35	24	2090 15 210	35	32	0813 16 112	40- B	21
0820 15 106	35	25	2090 15 210	189	3	0839 16 210A	39	1
0813 15 111	34	8	0871 15 250	189	1	0862 16 210A	40- B	1
1620 15 111	34	8	0872 15 250	35	30	0370 16 214	39	3
0820 15 112	34	9	0877 15 250	35	30	0370 16 214A	39	3
0118 15 114	34	11	0877 15 250	189	1	0866 16 214A	40- B	4
0820 15 115	34	12	0222 15 255	36	40	0839 16 230A	45	12
0813 15 117	34	14	1570 15 310	36	35	0839 16 410B	39	16
0118 15 118	34	15	1621 15 310	36	35	0839 16 410B	40- B	16
0820 15 120	34	16	0820 15 312A	36	37	0839 16 432	39	18
0118 15 121	34	10	0820 15 312A	37	58	0839 16 432	40- B	18
0118 15 125	34	14	0866 15 350B	36	39	0839 16 460D	40	19
162C 15 130	34	7	0866 15 350C	36	39	0839 16 460E	40- B	19
1620 15 130A	34	7	0866 15 351A	36	41	0862 16 460	40- B	19
2329 15 130A	34	7	1570 15 401	36	45	0820 16 510	39	14
1620 15 132	34	18	0866 15 511	37	47	0820 16 510	40- B	14
1620 15 132A	34	18	0866 15 521A	37	48	0820 16 515	39	15
2329 15 132A	34	18	1620 15 521	37	48	0820 16 515	40- B	15
1570 15 151	35	27	0866 15 906	189	7	0305 16 520	40	20
2329 15 151A	35	27	0866 15 906	192- H	15	0862 16 520	40- B	20
1011 15 152	34	17	0866 15 920B	189	8	0839 17 100B	42	1
2329 15 152	34	17	0866 15 920B	192- G	1	0839 17 100C	42	1
1114 15 170	34	21	0866 15 922	192- G	6	1011 17 100A	43- B	2
0823 15 171	34	20	0866 15 923A	189	9	1011 17 100B	43- B	2
0839 15 172	34	21	0866 15 923A	192- G	2	0839 17 105	42	6
0813 15 173	34	22	0866 15 932	189	10	0839 17 105	43- B	4
0871 15 200	189	2	0866 15 932	192- G	3	0839 17 105	43- B	5
0872 15 200	35	31	0866 15 940A	189	11	0839 17 105	43- E	5
0877 15 200	35	31	0866 15 940A	192- G	4	0839 17 111	42	8
0877 15 200	189	2	0603 16 102B	39	4	0839 17 111	43- B	1

INDEX.

PARTS NUMBER	PARTS COMP. LIST PAGE	FIG. NO.
0839 17 111	43- E	1
0107 17 121	43- E	16
0810 17 121	43	25
0810 17 121	43- B	17
0810 17 121	43- E	21
0862 17 200B	43- E	2
0862 17 200C	43- E	2
0862 17 200D	43- E	2
0839 17 201 E	45	1
0862 17 201	46- B	4
0862 17 201	46- E	4
0810 17 204	45	23
0810 17 204	46- B	20
0810 17 204	46- F	23
0810 17 205	45	2
0810 17 205	46- B	6
0810 17 205	46- E	6
0862 17 221	46- E	13
1011 17 221	46- B	13
157C 17 221	45	5
0613 17 223	46- F	28
0317 17 225	45	11
0317 17 225	46- B	7
0317 17 225	46- E	7
0862 17 230	46- B	12
0862 17 230	46- E	12
0290 17 241 E	45	6
0862 17 241	46- B	9
0862 17 241	46- E	9
0187 17 243	45	8
0187 17 243	45	16
0187 17 243	46- B	10
0187 17 243	46- E	10
0103 17 244 A	46- F	26
0839 17 245	45	10
0839 17 245	45	18
0862 17 245	46- F	31
0862 17 245A	46- F	31
0881 17 245	45	10
0881 17 245	45	18
0881 17 245A	45	10
0881 17 245A	45	18
0881 17 245A	46- B	5
0881 17 245A	46- E	5
0839 17 250A	45	13
0862 17 250	46- B	14
0862 17 250	46- E	15
0290 17 261 B	45	14
0862 17 261	46- B	15
0862 17 261	46- E	16
0603 17 262	45	7
0603 17 262	45	15
0862 17 262	46- B	11
0862 17 262	46- E	11
0839 17 270A	45	20
0862 17 271	46- B	18
0862 17 271	46- E	20
0884 17 274	46- B	16
0884 17 274	46- E	19
0839 17 275	45	19
0884 17 275A	46- B	17
0884 17 275A	46- E	18
0839 17 276	45	21
0839 17 276	46- B	19
0839 17 276	46- E	21
0839 17 277	45	21
0839 17 277	46- B	19
0839 17 277	46- E	21
0839 17 278	45	21
0839 17 278	46- B	19
0839 17 278	46- E	21
0839 17 281	46	24
0839 17 281	46- C	25
0839 17 284	46	25
0839 17 284	46- C	27
0839 17 285	46	26
0839 17 285	46- C	24
0839 17 287	45	22
0839 17 287	46- B	21
0839 17 287	46- E	22
0839 17 288	45	22
0839 17 288	46- B	21
0839 17 288	46- E	22
0821 17 297	46	31
0821 17 297	46- C	32
0821 17 297	46- G	41
0839 17 301	46	28
0862 17 301	46- G	43
1011 17 301	46- C	34
0821 17 302	46- G	45
0839 17 302	46	29
0839 17 302	46- C	36
0821 17 303	46	30
0821 17 303	46- C	35
0821 17 303	46- G	44
0884 17 304	46- G	46
0839 17 305	46	32
0839 17 305	46- C	31
0839 17 305	46- F	37
0884 17 308	46- G	47
0821 17 310	46- G	52
0839 17 310	46	35

INDEX.

PARTS NUMBER	PARTS COMP. LIST PAGE	FIG. NO.	PARTS NUMBER	PARTS COMP. LIST PAGE	FIG. NO.	PARTS NUMBER	PARTS COMP. LIST PAGE	FIG. NO.
0839 17 310	46- C	37	0376 17 335	42	12	0810 17 385	43- E	10
0118 17 313	48	7	0820 17 341	46	39	0862 17 393	43- F	24
0118 17 313	49- B	10	0862 17 341	46- C	29	0810 17 402	48	1
0821 17 313	46- G	51	0862 17 341	46- G	39	0810 17 402	49- B	1
0839 17 313	46	36	0862 17 341	62-26	35	0810 17 404	48	2
0839 17 313	46- C	38	0820 17 345	42	13	0810 17 404	49- B	2
0884 17 315	46- G	53	0187 17 346B	42	14	0839 17 406	48	3
0884 17 316	46- G	49	0114 17 351	48	14	0862 17 406A	49- B	3
0884 17 317	46- G	49	0114 17 351	49- B	16	1011 17 406	48	3
0884 17 318	46- G	49	0187 17 351A	42	15	0839 17 410	48	4
0839 17 321	46	37	0862 17 351	43- C	34	1011 17 410	48	4
0839 17 321A	46	37	0862 17 351	43- F	40	0103 17 411	48	12
0839 17 321A	46- B	22	0862 17 351	62-19	38	0103 17 411	49	33
0111 17 323	48	17	0187 17 352	42	16	0103 17 411	49	40
0111 17 323	49- C	40	0187 17 352	43- C	31	0103 17 411	49- B	14
4069 17 323	46- G	54	0187 17 352	43- F	37	0862 17 411	49- B	4
0600 17 324	45	9	0187 17 352	62-19	39	0862 17 412	49- B	5
0600 17 324	45	17	0111 17 354	42	19	0839 17 420	48	5
0600 17 324	46- B	8	0111 17 354	43- C	35	1011 17 420	48	5
0600 17 324	46- E	8	0111 17 354	43- F	41	0862 17 421	49- B	6
0884 17 325A	46- F	24	0111 17 354	62-19	43	0862 17 422	49- B	7
0305 17 327	46	34	0839 17 361	43	21	0839 17 431	48	6
0305 17 327	46- C	33	0839 17 361	43- B	20	0862 17 431	49- B	8
0305 17 327	46- G	42	0839 17 371	43	22	0862 17 432	49- B	9
0305 17 328	46	34	0862 17 371	43- B	14	0821 17 435	49- B	11
0305 17 328	46- C	33	0862 17 371	43- E	18	0221 17 441	48	8
0305 17 328	46- G	42	0839 17 375	43	23	0221 17 441	49- B	12
1570 17 330	42	10	0862 17 375	43- B	13	0259 17 441	48	9
1608 17 330A	43- F	30	0862 17 375	43- E	17	0259 17 441	49	41
1620 17 330A	43- C	26	0810 17 381	43	29	0259 17 441	49- B	18
0317 17 335	42	12	0810 17 381	43- B	8	0862 17 441	43- C	28
0317 17 335	43- C	27	0810 17 381	43- E	11	0862 17 441	43- F	34
0317 17 335	43- F	33	0810 17 385	43	30	0862 17 441	62-19	36
0317 17 335	62-18	22	0810 17 385	43- B	7	0862 17 442	43- C	30

PARTS NUMBER	PARTS COMP. LIST PAGE	FIG. NO.	PARTS NUMBER	PARTS COMP. LIST PAGE	FIG. NO.	PARTS NUMBER	PARTS COMP. LIST PAGE	FIG. NO.
0862 17 442	43- F	36	1608 17 520	49- B	19	0884 17 635A	46- F	34
0862 17 442	62-19	37	0824 17 524	49	36	0884 17 636A	46- F	34
1570 17 450	48	15	0824 17 524	49- B	20	0884 17 637A	46- F	34
1608 17 450	49- C	39	0862 17 530	43- F	27	0884 17 638A	46- F	34
1620 17 450	48	15	0862 17 530A	43- F	27	0884 17 639	46- F	34
0398 17 461A	48	16	1011 17 530	43- C	23	0376 17 640	43	37
0398 17 461A	49- C	37	1570 17 530	43	32	0376 17 640	43- C	37
0398 17 462A	48	18	0862 17 535	43- F	28	0376 17 640A	43- C	37
0398 17 462A	49- C	36	1011 17 535	43- C	24	0862 17 641	46- F	36
0303 17 470	48	19	1570 17 535	43	33	0862 17 642	46- F	36
0303 17 470	49- C	29	0862 17 540	43- E	22	0862 17 643	46- F	36
0221 17 473	49	25	1011 17 540A	43- B	18	0862 17 644	46- F	36
0221 17 473	49- B	23	1570 17 540	43	35	0823 18 100	51	1
0303 17 474	49	27	0221 17 551A	49	37	0866 18 100A	51	2
0303 17 474	49- C	26	0221 17 551A	49- C	35	1562 18 100	55- B	1
0221 17 475E	49	28	0221 17 552	49	38	1672 18 100	55- B	2
0221 17 475B	49- B	22	0221 17 552	49- C	34	0845 18 101	51	4
0271 17 478	49	29	0303 17 561	49	39	0845 18 101	55- B	4
0271 17 478	49- C	32	0303 17 561	49- C	41	0866 18 101	51	5
0303 17 481	49	22	0862 17 611	46- F	33	0866 18 101	55- B	5
0303 17 482	49	23	0884 17 612	46- F	32	0866 18 107	51	6
0303 17 482	49- C	27	0821 17 615	46- E	17	0866 18 107	55- B	6
0183 17 491	49	31	0884 17 620	46- F	27	1570 18 110	51	11
0183 17 491	49- C	33	0821 17 627	46- E	14	1570 18 110	55- B	11
0187 17 492	49	30	0821 17 628	46- F	29	0820 18 111B	51	12
0187 17 492	49- C	38	0821 17 629	46- F	30	0820 18 111B	55- B	12
0821 17 505	49- C	42	1114 17 630	43- C	38	0823 18 111	212- 3	83
0821 17 505A	49- C	42	1663 17 630	43	38	0820 18 114	52	17
0866 17 510	49	34	1663 17 630	43- C	38	0820 18 114	55- C	17
0866 17 510	49- B	21	1663 17 630	43- F	31	0866 18 115	51	13
0329 17 520	49	35	0884 17 631A	46- F	34	0866 18 115	55- B	13
0371 17 520	49	35	0884 17 632A	46- F	34	0866 18 120	51	14
0881 17 520	49	35	0884 17 633A	46- F	34	0866 18 120	55- B	14
0884 17 520	49- B	19	0884 17 634A	46- F	34	2359 18 130	52	18

INDEX.

PARTS NUMBER	PARTS COMP. LIST PAGE	FIG. NO.	PARTS NUMBER	PARTS COMP. LIST PAGE	FIG. NO.	PARTS NUMBER	PARTS COMP. LIST PAGE	FIG. NO.
2359 18 130	55- C	18	0107 18 231	55- D	54	1668 18 381	58	27
0839 18 140	52	19	0107 18 266	53	42	1668 18 381	58- C	27
0839 18 140	55- C	19	0107 18 266	55- E	70	1672 18 381A	58	27
2359 18 150	52	16	0839 18 270C	54	59	1672 18 381A	58- C	27
2359 18 150	55- B	16	0839 18 270C	55- E	72	2090 18 381	58	27
0866 18 160A	51	15	0820 18 271D	54	61	1620 18 390	55	80
0866 18 160A	55- B	15	0839 18 272A	54	62	1620 18 390	55- F	86
2359 18 170	52	20	0839 18 272A	55- E	75	0222 18 391C	55	73
2359 18 170	55- C	20	0839 18 273A	54	63	0259 18 391B	55	73
0839 18 180	52	21	0839 18 273A	55- E	76	0259 18 391B	55- F	88
0839 18 180	55- C	21	0810 18 276	30	41	0845 18 400	60	1
0866 18 190A	51	3	0810 18 277	30	41	0866 18 400A	62- 2	1
0866 18 190A	55- B	3	0820 18 279A	54	66	1562 18 400	62- 6	1
1011 18 190	55- B	3	0820 18 279A	55- F	79	2869 18 400	62-10	1
1663 18 200C	52	23	0813 18 288	54	64	2869 18 400A	62-10	1
1668 18 200	55- C	23	0813 18 288	55- E	77	0107 18 406A	62- 6	21
1669 18 200	55- C	23	0823 18 291	55- F	85	0107 18 406B	60	24
0107 18 201	54	58	0118 18 294	55	71	0107 18 406B	62- 3	23
0107 18 201	55- E	71	0866 18 300	57	1	0107 18 417A	62- 2	12
0107 18 212	53	36	1011 18 300	58- B	1	0114 18 422A	62- 2	3
0107 18 212	55- C	27	0839 18 311B	3	27	0114 18 422A	62- 6	3
0107 18 212	55- D	47	0839 18 311B	57	21	0107 18 424	60	3
0107 18 216A	53	51	0839 18 311B	58- C	21	0107 18 424	62- 2	6
0107 18 216A	55- D	35	1011 18 319	4		0107 18 424	62- 3	36
0107 18 216A	55- E	59	1011 18 319	58- C	28	0107 18 424	62- 6	5
0107 18 221A	53	46	2090 18 361	58	23	0107 18 424	62-10	3
0107 18 221A	55- E	66	2090 18 361	58- C	23	0866 18 496	37	62
0107 18 224	53	45	0222 18 375	58	24	0866 18 501A	7	15
0107 18 224	55- E	64	0222 18 375	58- C	24	0259 18 510	34	3
0107 18 225	53	44	0222 18 376	58	24	0866 18 511	34	6
0107 18 225	55- E	63	0222 18 376	58- C	24	0110 18 515	34	4
0107 18 226A	53	43	0222 18 377	58	24	0504 18 520A	61	42
0107 18 226A	55- E	65	0222 18 377	58- C	24	1672 18 520	62- 4	40
0107 18 231	52	29	1562 18 381	21- 2	5	1672 18 520	62- 7	34

PARTS NUMBER	PARTS COMP. LIST PAGE	FIG. NO.	PARTS NUMBER	PARTS COMP. LIST PAGE	FIG. NO.	PARTS NUMBER	PARTS COMP. LIST PAGE	FIG. NO.
1672 18 520	62-11	40	1669 19 090	62-16	47	0338 19 384	62-18	12
1689 18 520	62-11	40	0338 19 100A	62-14	7	0842 19 385	62-18	13
2328 18 600	52	22	0842 19 211B	62-14	8	0338 19 386A	62-18	14
2328 18 600	55- C	22	0338 19 215	62-14	9	0338 19 388A	62-18	15
2691 18 660	117	22	0338 19 216	62-14	10	0338 19 389	62-18	16
1663 18 700A	52	24	0338 19 220	62-14	11	0842 19 391	62-18	17
1663 18 700A	55- D	42	0338 19 223	62-14	13	0842 19 394	62-18	18
0813 18 791A	55	72	0338 19 230	62-14	12	0338 19 395	62-18	19
0813 18 791A	55- F	85	0338 19 234	62-14	14	0338 19 397	62-18	20
0866 18 810	51	7	0338 19 235	62-14	14	0338 19 397	62-26	25
0866 18 810	55- B	7	0338 19 236	62-14	14	0338 19 431	62-28	1
1663 18 860	21	41	0338 19 237	62-14	15	0338 19 432	62-28	2
1668 18 860B	21- 3	34	0338 19 238	62-14	15	0338 19 433	62-28	8
1668 18 890	55- F	95	0338 19 239	62-14	15	0338 19 440	62-28	9
1663 18 920	7	31	0338 19 240	62-14	16	0338 19 443	62-28	10
2329 18 921	7	32	0338 19 245	62-14	17	1675 19 444	62-28	5
2329 18 922	7	33	0338 19 247	62-14	18	1675 19 444A	62-28	5
2329 18 923	7	34	0338 19 248	62-15	19	0338 19 445	62-28	3
2329 18 924	7	35	0338 19 255	62-15	21	0338 19 446	62-28	4
2329 18 930A	55	80	0338 19 256	62-15	22	0338 19 448	62-28	11
2329 18 930B	55- F	94	0338 19 257	62-15	23	0338 19 449	62-28	12
1663 18 940	55	75	0338 19 258	62-15	24	0338 19 450	62-28	13
1668 18 940A	55- F	90	0338 19 310	62-18	1	0338 19 460	62-21	2
1669 18 940A	55- F	90	0338 19 331	62-18	2	0338 19 470	62-21	3
1617 18 950	9	55	0338 19 331A	62-18	2	0338 19 475	62-21	4
1668 18 950	9	55	0338 19 335	62-18	3	0338 19 475	62-21	17
1617 18 980	55	77	0338 19 336	62-18	4	0338 19 476	62-21	5
1617 18 980	55- F	92	0338 19 337	62-18	5	0338 19 476	62-22	18
1669 18 980	55- F	92	0338 19 338	62-18	6	0338 19 480	62-21	6
0866 18 999A	18- 1	47	0397 19 340	62-18	7	0338 19 480	62-22	19
2070 19 020	62-14	1	0338 19 360	62-21	1	0338 19 486	62-21	8
0842 19 025	62-14	3	0338 19 361	62-18	9	0338 19 486	62-22	21
0842 19 027A	62-14	5	0338 19 363	62-18	10	0338 19 487	62-21	9
0842 19 031	62-28	6	0842 19 381	62-18	11	0338 19 487	62-22	22

INDEX.

PARTS NUMBER	PARTS COMP. LIST PAGE	FIG. NO.	PARTS NUMBER	PARTS COMP. LIST PAGE	FIG. NO.	PARTS NUMBER	PARTS COMP. LIST PAGE	FIG. NO.
0338 19 488	62-21	10	0338 19 581	62-25	2	0338 19 636	62-23	46
0338 19 488	62-22	23	0338 19 590	62-25	3	0338 19 638	62-23	47
0338 19 493	62-21	7	0338 19 591	62-25	4	0338 19 639	62-23	48
0338 19 493	62-22	20	0338 19 593	62-25	5	0338 19 641	62-23	49
0866 19 496	7	22	0338 19 594	62-25	6	0338 19 642	62-23	49
0338 19 498	62-21	11	0338 19 595	62-25	7	0338 19 643	62-23	49
0338 19 498	62-22	24	0338 19 596	62-25	8	0338 19 644	62-23	49
0338 19 499	62-21	12	0338 19 598	62-23	41	0338 19 645	62-23	49
0338 19 499	62-22	25	0338 19 601	62-25	9	0338 19 646	62-23	49
0338 19 500	62-21	13	0338 19 603	62-25	10	0338 19 647	62-23	49
0338 19 500	62-22	26	0338 19 604	62-25	11	0842 19 650	62-26	21
0338 19 503	62-21	14	0338 19 605	62-25	12	0338 19 651	62-26	22
0338 19 504	62-21	14	0338 19 606	62-25	13	0338 19 655	62-26	23
0338 19 505	62-21	14	0338 19 607	62-25	14	0338 19 656	62-26	24
0338 19 506	62-21	14	0338 19 608	62-25	15	0842 19 660	62-26	26
0338 19 507	62-21	14	0338 19 609	62-25	16	0338 19 661	62-26	27
0338 19 508	62-21	14	0338 19 610	62-25	17	0338 19 663	62-26	28
0338 19 509	62-21	15	0338 19 613A	62-25	18	0338 19 664	62-26	29
0338 19 509	62-22	27	0338 19 614A	62-25	18	0842 19 665	62-26	30
0338 19 510	62-21	16	0338 19 615A	62-25	18	0338 19 666	62-26	31
0338 19 511	62-22	28	0338 19 616A	62-25	18	0338 19 667	62-26	32
0338 19 515	62-22	29	0338 19 617A	62-25	18	0338 19 670A	62-26	33
0338 19 530	62-22	30	0338 19 618A	62-26	18	0338 19 676	62-26	34
0338 19 531	62-22	31	0338 19 619	62-26	19	0338 19 678	62-15	25
0338 19 533	62-22	32	0338 19 621	62-23	42	0338 19 701	62-28	15
0338 19 534	62-22	33	0338 19 622	62-23	43	0338 19 702	62-28	16
0338 19 540	62-22	34	0338 19 622	62-26	20	0338 19 703	62-28	17
0338 19 550	62-22	35	0338 19 623	62-23	44	0338 19 704	62-28	18
0338 19 560	62-22	36	0338 19 624	62-23	45	0397 19 705	62-28	14
0338 19 565	62-22	37	0338 19 631	62-23	46	0338 19 706	62-28	19
0338 19 566	62-23	38	0338 19 632	62-23	46	1675 19 710	62-18	21
0338 19 567	62-23	39	0338 19 633	62-23	46	1840 19 710	62-18	21
0338 19 570	62-23	40	0338 19 634	62-23	46	0338 19 731	62-28	20
0338 19 580	62-25	1	0338 19 635	62-23	46	0338 19 732	62-28	21

PARTS NUMBER	PARTS COMP. LIST PAGE	FIG. NO.	PARTS NUMBER	PARTS COMP. LIST PAGE	FIG. NO.	PARTS NUMBER	PARTS COMP. LIST PAGE	FIG. NO.
0338 19 733B	62-28	22	0338 19 805	62-31	29	0871 19 963	62-16	42
0338 19 733C	62-28	22	0338 19 807	62-31	30	0871 19 964A	62-16	45
0338 19 734A	62-28	23	0338 19 808	62-31	31	0871 19 964B	62-16	45
0338 19 735	62-19	23	0338 19 811	62-31	32	0871 19 970	62-16	37
0338 19 737	62-19	24	0338 19 815	62-31	33	1820 22 333	42	11
0338 19 739	62-19	24	0338 19 816	62-31	34	0866 23 025	2	12
0397 19 750	62-30		0338 19 817	62-31	35	0866 23 025	6	
0338 19 760	62-30	1	0338 19 818	62-31	36	0845 23 040	2	12
0338 19 768	62-30	3	0338 19 819	62-31	37	0845 23 040	6	10
0338 19 771	62-30	4	1675 19 821	62-19	25	0845 23 040A	2	12
0338 19 772	62-30	5	0338 19 822	62-19	26	0845 23 040A	6	10
0338 19 773	62-30	6	0338 19 823	62-19	27	2090 23 103A	11	1
0397 19 774	62-30	7	0338 19 825	62-19	28	2090 23 113A	11	2
0397 19 775	62-30	8	0338 19 826	62-19	28	1011 23 151	11	7
0338 19 777	62-30	9	0338 19 827	62-19	28	1011 23 151	11	9
0338 19 778	62-30	10	0338 19 828	62-19	28	1011 23 151A	11	7
0338 19 781	62-30	11	0338 19 829	62-19	28	1011 23 151A	11	9
0338 19 782	62-30	12	0338 19 831	62-31	39	2125 23 151	11	7
0338 19 783	62-30	13	0338 19 832	62-31	40	2125 23 152	11	9
0338 19 784	62-30	14	0338 19 833	62-31	41	2125 23 154	11	6
0338 19 785	62-30	15	0338 19 835	62-19	29	2125 23 155	11	8
0338 19 786	62-30	16	0338 19 835A	62-19	29	0820 23 175A	11	11
0338 19 787	62-30	17	0338 19 836	62-19	30	0820 23 175B	11	11
0338 19 788	62-30	18	0338 19 837	62-19	31	0820 23 176	11	11
0338 19 789	62-30	19	2070 19 870	62-19	32	0820 23 176A	11	11
0338 19 791	62-30	20	0338 19 880	62-19	33	0820 23 176B	11	11
0338 19 792	62-30	21	0338 19 904	62-15	30	0820 23 180A	11	13
0338 19 793	62-30	22	0842 19 910	16	16	0820 23 180C	12	13
0338 19 795	62-30	23	2070 19 910	62-15	29	1570 23 200	9	
0338 19 797	62-30	24	0842 19 915A	62-15	32	1620 23 200	9	
0338 19 798	62-30	25	0871 19 920	62-15	34	1621 23 200	9	
0338 19 801	62-31	26	0871 19 930	62-15	35	1570 23 310	25	23
0338 19 802	62-31	27	0871 19 961	62-16	36	1668 23 310	26- B	2
0338 19 803	62-31	28	0871 19 962	62-16	38	1669 23 310	26- B	2

INDEX.

PARTS NUMBER	PARTS COMP. LIST PAGE	FIG. NO.	PARTS NUMBER	PARTS COMP. LIST PAGE	FIG. NO.	PARTS NUMBER	PARTS COMP. LIST PAGE	FIG. NO.
1663 23 319	26	26	1570 23 370	25	20	1669 23 424A	26- D	19
1663 23 319	26- B	3	1668 23 370	26- C	13	2090 23 424	25	3
157C 23 320	25	1	1668 23 370A	26- C	13	0839 23 425	25	4
1668 23 320	26- C	15	1663 23 380	25	21	0839 23 425	26- C	17
1668 23 320B	26- C	15	1663 23 380	26- E	42	1669 23 425	26- C	17
1669 23 320	26- C	15	0193 23 383	25	12	0839 23 426A	25	5
1669 23 320A	26- C	15	0193 23 383	26- D	27	0839 23 426A	26- D	20
1663 23 326B	25	25	1663 23 390	25	24	0823 23 428	26- D	21
1663 23 326B	26- B	7	1663 23 390	26- B	6	2090 23 428	25	9
157C 23 330	26	28	1663 23 409	26	27	2090 23 428	26- D	21
1668 23 330	26- E	34	1663 23 409	26- B	4	1570 23 430	26	31
1669 23 330	26- E	34	1570 23 410A	26	29	157C 23 430	26- E	41
0288 23 336	25	8	1668 23 410	26- E	39	1570 23 430A	26- E	41
0288 23 336	26- C	16	1669 23 410	26- E	39	1669 23 430	26- E	41
0823 23 338	25	10	1663 23 411A	26	29	1668 23 439	26- F	45
0823 23 338	26- D	23	1663 23 411A	26- E	40	1663 23 440A	26	32
1663 23 340A	25	15	1663 23 420A	26	30	1668 23 440	26- E	36
1663 23 340A	26- E	32	1663 23 420A	26- E	35	1663 23 450B	25	17
1570 23 350A	25	16	1663 23 421	25	6	1668 23 450	26- E	43
1668 23 350	26- D	29	1663 23 421	26- D	25	1663 23 455	25	19
1668 23 350A	26- D	29	1669 23 421	26- D	25	1663 23 455	26- F	44
1669 23 350	26- E	29	1669 23 421A	25	6	1663 23 460A	26	33
1669 23 350A	26- E	29	1669 23 421A	26- D	25	1668 23 460	26- E	37
1672 23 350	26- E	29	1669 23 421A	26- D	25	1663 23 470A	26	34
1672 23 350A	26- E	29	0839 23 422	25	7	1668 23 470	26- E	38
0222 23 353A	26- D	25	0839 23 422	26- D	26	1570 23 480	25	22
0222 23 353A	26- C	25	0839 23 423	25	2	1668 23 480	26- F	45
1663 23 354	25	14	0839 23 423	26- C	18	0839 23 484A	26	36
1668 23 354	26- E	33	1669 23 423	26- C	18	0839 23 484A	26- D	28
0222 23 355A	26- D	26	1669 23 423A	26- C	18	1570 23 490	25	13
1663 23 360B	25	18	1669 23 423A	26- C	18	1668 23 490	26- D	22
1663 23 360C	26- E	30	1668 23 424	26- D	19	1669 23 490	26- D	22
1663 23 361	25	18	1668 23 424A	26- D	19	2545 23 496	52	26
1663 23 361A	26- E	31	1669 23 424	26- D	19	2545 23 496	55- C	25

PARTS NUMBER	PARTS COMP. LIST PAGE	FIG. NO.
2545 23 496	55- D	44
1570 23 500	26	37
1668 23 500	26- B	10
1669 23 500	26- B	10
1672 23 500	26- C	10
1570 23 501	26	37
1668 23 501	26- C	11
1669 23 501	26- C	11
1672 23 501	26- C	11
1570 23 502	26	37
1668 23 502	26- C	12
1669 23 502	26- C	12
1570 23 505A	26	37
1570 23 507	26	37
1570 23 507	26- C	14
0842 23 509	26	37
0842 23 509	26- B	9
1570 23 510	26	37
1668 23 510	26- F	45
1570 23 520	25	23
1668 23 520	26- B	5
1669 23 520	26- B	5
1570 23 530	26	37
1668 23 530	26- F	45
0200 23 531	61	35
0200 23 531	62- 2	8
1570 23 540	26	37
1668 23 540	26- F	45
1669 23 540	26- F	45
0118 23 636	60	5
0118 23 636	62- 2	17
0118 23 637	60	6
0118 23 637	62- 2	18
0750 23 652	26	35
0750 23 652	26- B	8
0164 23 664	60	2
0164 23 664	62- 2	5
1663 23 671A	23	5
0839 23 672	23	1
1665 23 672	23	1
1617 23 673	23	2
1663 23 673A	23	2
1668 23 673	23	2
2113 23 674	23	3
0839 23 675	23	6
2113 23 675	23	4
0820 23 678	23	7
0839 23 679	23	8
1665 23 679	23	8
1668 23 680	23	9
2329 23 685	23	9
0118 23 689	60	25
0118 23 689	62- 3	24
0118 23 689	62- 6	18
0118 23 689	62-10	26
0118 23 691	60	26
0118 23 691	62- 3	25
0118 23 691	62- 6	20
0118 23 691	62-11	28
2090 23 698	23	9
0839 23 801	29	22
0813 23 802A	29	23
0813 23 802B	29	23
0813 23 803	29	24
0820 23 832B	32	1
0820 23 833B	32	2
0820 23 834B	32	3
0820 23 835A	32	5
0820 23 836	32	7
0730 23 837	32	4
2090 23 837	32	13
2090 23 838	32	14
0730 23 839	32	6
0820 23 840	32	16
2090 23 841	32	17
0730 23 842	32	8
0820 23 842	32	19
0730 23 843	32	9
0820 23 843	32	20
2090 23 844	32	21
0820 23 845A	32	22
0730 23 846	32	12
0820 23 847A	32	23
0820 23 848A	32	25
2090 23 853	32	15
0730 23 854	32	18
0820 23 882A	28	3
0820 24 301	52	25
0820 24 301	55- C	24
0820 24 301	55- D	43
0813 24 303	52	27
0813 24 303	55- C	26
0813 24 303	55- D	45
0813 24 306	52	28
0813 24 306	55- D	55
1668 24 308	55- C	32
2090 24 308	52	30
0813 24 309	52	31
0813 24 309	55- D	53
1617 24 311	53	32
0571 24 312	53	50
0571 24 312	55- E	57

INDEX.

PARTS NUMBER	PARTS COMP. LIST PAGE	FIG. NO.	PARTS NUMBER	PARTS COMP. LIST PAGE	FIG. NO.	PARTS NUMBER	PARTS COMP. LIST PAGE	FIG. NO.
0813 24 312	53	49	1617 24 338	54	55	0866 24 530	57	3
0813 24 312	55- E	62	1668 24 350	55- D	39	0866 24 530	58- B	3
0839 24 312	53	33	0884 24 360	55- D	41	0866 24 533	57	4
0839 24 312	55- D	50	1668 24 360	55- D	41	0866 24 533	58- B	2
1617 24 312	54	56	2329 24 408	52	30	1011 24 533	58- B	12
1668 24 313	55- C	29	2329 24 408	55- D	56	0866 24 534	57	12
1669 24 313	55- C	29	1663 24 411	53	32	1011 24 534	58- B	14
1617 24 315	53	34	1663 24 411	55- D	52	0866 24 535	57	5
2430 24 315	54	53	1617 24 414	53	52	0866 24 535	58- B	4
2430 24 315	55- C	30	1617 24 414	55- E	58	0866 24 540	57	6
2430 24 315	55- D	51	1617 24 415	53	34	0866 24 540	58- B	8
0324 24 316	53	37	1617 24 415	55- D	49	0290 24 541A	57	13
0324 24 316	55- D	46	1617 24 419	53	38	0866 24 541	57	14
0571 24 316	54	57	1617 24 419	55- E	60	1011 24 541	58- B	16
0813 24 316	55- C	28	1617 24 423	53	41	0290 24 542A	57	15
1617 24 316	53	35	1617 24 423	55- E	69	0866 24 548	57	16
1617 24 316	55- C	28	1617 24 435	53	48	0866 24 549	57	17
1617 24 316	55- D	48	2329 24 435	53	48	0866 24 550	57	8
1663 24 319	53	38	2329 24 435	55- E	68	0866 24 550	58- B	5
1663 24 319	55- D	34	1617 24 437	53	47	0866 24 560	57	11
0820 24 322	53	40	1617 24 437	55- E	67	1011 24 560	58- B	11
0820 24 322	55- D	37	1623 24 498	54	65	1011 24 563	58- B	13
0820 24 322	55- E	61	0866 24 501	57	2	0290 24 581	57	18
1663 24 323	53	41	1011 24 501	58- B	10	0290 24 581	58- B	17
0884 24 325	55- D	36	0820 24 503	57	7	0845 24 701	61	27
1668 24 330	55- C	31	0820 24 503	58- B	9	0866 24 701	62- 3	26
1669 24 330	55- C	31	1011 24 510	58- B	15	1562 24 701	62- 6	22
0839 24 334	53	39	0208 24 514	57	9	2869 24 701	62-11	31
0839 24 334	55- D	38	0208 24 514	58- B	7	0866 24 704	61	29
1617 24 334	54	54	0222 24 517	61	36	0866 24 704	62- 3	27
1668 24 334	55- D	40	0222 24 517	62- 2	9	0839 24 705	62-10	25
2587 24 335	52	28	0866 24 526	57	10	0845 24 705	60	23
2587 24 336	52	31	0866 24 526	58- B	6	0866 24 705	62- 3	20
2587 24 336	55- C	33	1011 24 527	58- B	18	1562 24 705	62- 6	17

PARTS NUMBER	PARTS COMP. LIST PAGE	FIG. NO.	PARTS NUMBER	PARTS COMP. LIST PAGE	FIG. NO.	PARTS NUMBER	PARTS COMP. LIST PAGE	FIG. NO.
0839 24 706	62-10	21	0839 24 719	62-10	20	0820 24 748	60	21
0845 24 706	60	8	1562 24 719	62- 6	13	0820 24 748	62-10	19
1562 24 706	62- 6	15	0845 24 720	61	33	2869 24 748	62-11	34
0820 24 707	60	9	0845 24 720	62- 3	32	0845 24 749	60	22
0839 24 709	62-10	12	2869 24 720	62- 6	26	2869 24 749	62-10	23
0845 24 709	60	18	2869 24 720	62-11	33	0222 24 750	61	30
0866 24 709	62- 2	14	0839 24 721	62-10	17	0222 24 750	62- 3	29
1562 24 709	62- 6	9	0845 24 721	60	19	0222 24 752A	61	31
0839 24 710	62-10	7	0839 24 723	62- 6	24	0222 24 752A	62- 3	30
0845 24 710	60	13	0839 24 723	62-11	29	0222 24 753	61	28
0866 24 710	62- 2	2	0839 24 724	62- 6	23	0222 24 753	61	32
1562 24 710	62- 6	2	0839 24 724	62-11	30	0222 24 753	62- 3	28
2869 24 710	62-10	7	0426 24 725	62- 2	4	0426 24 753	61	32
0426 24 712	62- 2	10	1562 24 725	62- 6	16	0426 24 753	62- 3	31
0727 24 712	62- 6	25	2869 24 725	62-11	34	0636 24 753	62- 6	7
0727 24 712	62-11	32	0426 24 726	62- 3	22	0426 24 754	62- 2	16
0820 24 712	62-10	11	2869 24 730	62-11	34	0820 24 754	62- 6	11
0845 24 712	60	17	0249 24 731	62- 7	27	0820 24 754	62-10	14
1562 24 712	62- 6	8	0249 24 731	62-10	8	0820 24 755	62- 6	12
0820 24 713	60	16	0426 24 731	62- 3	34	0820 24 755	62-10	15
0820 24 713	62-10	10	0559 24 731	62-11	34	0222 24 756	60	12
0222 24 714	62- 2	7	1562 24 731	62- 7	30	0222 24 756	62- 3	35
0820 24 714	60	15	0730 24 732	62- 2	13	0839 24 758	62-10	2
0820 24 714	62-10	9	0839 24 736B	62- 6	14	1562 24 758	62- 6	4
1562 24 714	62- 6	6	0839 24 736B	62-10	24	0222 24 760A	60	11
0426 24 715	62- 2	3	2869 24 736	62-10	24	0222 24 760A	62- 3	21
0839 24 715	62-10	22	0222 24 741	60	10	0839 24 761	62- 7	29
0839 24 716	62-10	13	0222 24 741	60	14	0839 24 761	62-10	4
0845 24 716	60	4	0222 24 741	61	34	0839 24 762	62- 7	28
0866 24 716	62- 2	15	0222 24 741	62- 3	33	0839 24 762	62-10	5
1562 24 716	62- 6	10	0820 24 741	62-11	27	0839 24 763	62-10	6
0813 24 717	62- 2	19	1562 24 741	62- 6	19	0839 24 764	62-11	34
0820 24 717	62-10	16	0820 24 747	60	20	1617 24 940	55	77
0845 24 717	60	7	0820 24 747	62-10	18	1663 24 940	55	75

INDEX.

PARTS NUMBER	PARTS COMP. LIST PAGE	FIG. NO.	PARTS NUMBER	PARTS COMP. LIST PAGE	FIG. NO.	PARTS NUMBER	PARTS COMP. LIST PAGE	FIG. NO.
0259 25 C21E	64	2	0866 26 280B	69	4	0866 27 150	73	8
0223 25 024	64	6	0866 26 290B	69	4	0305 27 171	73	11
0259 25 C71A	64	4	0866 26 310	69	5	0866 27 172	73	12
0259 25 072A	64	4	0866 26 310A	69	5	0290 27 231	73	13
0259 25 C73A	64	4	0187 26 341	69	6	0820 27 251	73	16
0259 25 074A	64	4	0118 26 342	69	7	0290 27 252	73	17
0259 25 075A	64	4	0223 26 345A	69	8	0290 27 253	73	17
0259 25 076A	64	4	0710 26 352	69	11	0290 27 254	73	17
0259 25 077A	64	4	0866 26 391	69	9	0221 27 255	73	18
0259 25 078A	64	4	0710 26 461	69	12	0305 27 261	73	19
0259 25 079A	64	4	0305 26 465	69	13	0114 27 262	73	20
0862 25 100A	64	1	0305 26 500A	69	10	0290 27 301	73	21
0866 25 100	64	1	0820 26 570A	69	16	0290 27 302	73	22
0866 25 100A	64	1	0233 26 610A	70	18	0221 27 305	74	24
0899 26 010D	66	1	0221 26 651	70	21	0223 27 401	74	25
1540 26 010A	66	1	0221 26 671	70	22	0223 27 402	74	25
0259 26 C41	66	7	0221 26 672	70	23	0223 27 403	74	25
0259 26 051	66	8	0221 26 673	70	24	0223 27 404	74	25
0866 26 C60	66	4	0305 26 800A	70	30	0223 27 405	74	25
0870 26 111A	66	9	0305 26 810A	70	30	0223 27 406	74	25
0870 26 115A	66	9	0187 26 821	70	34	0223 27 407	74	25
C317 26 121	66	13	0118 26 832	70	31	0223 27 408	74	25
0259 26 129	66	15	0118 26 834	70	32	0223 27 409	74	25
C259 26 132	66	18	0118 26 897	71	35	0223 27 411	74	25
0259 26 141	66	16	0187 26 921	70	34	0223 27 412	74	25
C259 26 142	66	16	0613 26 922	70	19	0223 27 413	74	25
0317 26 151A	66	10	0223 27 012	73	1	0223 27 414	74	25
C259 26 152	66	12	2112 27 018	73	2	0223 27 415	74	25
0187 26 154	66	14	0223 27 020B	73	3	0376 28 010	76	1
C259 26 155	66	11	0223 27 030	73	4	0866 28 010	76	1
0305 26 251	69	1	1562 27 100	73		2160 28 010	79	1
0305 26 251A	69	1	0866 27 110	73	5	0376 28 011	76	1
0866 26 251	69	1	0221 27 141	73	7	0866 28 011	76	1
0305 26 255	69	2	0755 27 141	73	6	2160 28 011	79	1

INDEX.

PARTS NUMBER	PARTS COMP. LIST PAGE	FIG. NO.	PARTS NUMBER	PARTS COMP. LIST PAGE	FIG. NO.	PARTS NUMBER	PARTS COMP. LIST PAGE	FIG. NO.
0376 28 012	76	1	0259 28 343	79	13	0370 32 090	82	4
0866 28 012	76	1	0866 28 343B	77	16	1540 32 100A	84	30
2160 28 012	79	1	0866 28 350	77	17	1632 32 100	84	31
0376 28 013	76	1	0866 28 350	79	14	1540 32 110B	84	28
0866 28 013	76	1	0866 28 353B	77	18	1632 32 110	84	28
2160 28 013	79	1	0866 28 591	77	19	0305 32 119	85	46
0259 28 110	79	2	0585 28 700B	80	16	0305 32 119	88	19
0866 28 110	76	2	0585 28 700C	80	16	1524 32 121A	85	44
0866 28 110A	76	2	0866 28 700	77	20	0317 32 129	85	45
0259 28 140	79	5	0866 28 700A	77	20	1128 32 129	85	45
0866 28 140A	76	5	0866 28 774	77	21	0866 32 141	85	43
0866 28 140B	76	5	0223 28 775	80	19	0259 32 154	84	33
0899 28 140	79	5	0223 28 776	80	20	0259 32 155	84	33
0259 28 143	79	6	0223 28 777	80	23	0259 32 156	84	33
0866 28 143	76	6	0259 28 778	80	21	0259 32 157	84	33
0899 28 143	79	6	0866 28 778A	77	22	0259 32 160	84	39
0899 28 150	79	7	0866 28 779	77	23	0259 32 163	84	40
0899 28 150A	79	7	0866 28 799	77	24	0180 32 165A	85	42
0866 28 151	76	7	0329 32 013A	83	19	0180 32 171A	85	41
0193 28 161	79	8	0329 32 014	83	22	0180 32 172A	85	41
0652 28 161	76	8	0329 32 015	83	21	0111 32 173	87	17
0899 28 170	79	7	0329 32 016	83	20	0180 32 173A	85	41
0899 28 170A	79	7	0329 32 019	83	24	0180 32 174A	85	41
0585 28 180A	80	17	0370 32 030	82	3	0208 32 188	85	48
0866 28 180A	76	10	0370 32 030A	82	3	1524 32 220	85	50
0259 28 182	77	12	0329 32 031A	83	18	0866 32 230	87	15
0259 28 182	79	10	0329 32 033	83	23	1524 32 261	87	1
0259 28 183	79	11	0329 32 034	83	26	1562 32 269	87	1
0866 28 183A	77	13	0370 32 037	82	5	0208 32 278	87	13
0585 28 190A	80	17	0370 32 039	82	10	0208 32 278	95	27
0899 28 320	80	24	1562 32 049	83	25	0730 32 279	85	51
0866 28 322	77	14	0820 32 058	85	49	0730 32 279	87	4
0259 28 333	79	12	0208 32 059	84	32	0866 32 279	87	11
0866 28 333B	77	15	0259 32 071	84	29	0187 32 289	85- 1	52

INDEX.

PARTS NUMBER	PARTS COMP. LIST PAGE	FIG. NO.	PARTS NUMBER	PARTS COMP. LIST PAGE	FIG. NO.	PARTS NUMBER	PARTS COMP. LIST PAGE	FIG. NO.
0259 32 289	85- 1	52	0398 33 065	90	10	0866 34 111	94	11
0259 32 289	87	5	0259 33 071	90	1	0866 34 151A	94	12
0866 32 301	95	23	0317 33 075	90	6	0603 34 153	77	26
0866 32 301A	95	23	0820 33 091A	90	7	0866 34 153A	94	13
0866 32 311	95	23	0259 33 165	66	17	0259 34 155	94	14
0866 32 311A	95	23	0259 33 165	91	37	0259 34 156	94	15
1562 32 320E	87	10	0820 33 165	66	17	0866 34 157	94	17
1562 32 320C	87	10	0820 33 165	91	37	0866 34 158	94	18
1562 32 330C	87	12	0820 33 165A	66	17	1011 34 159	95	21
2113 32 356	87	16	0820 33 165A	91	37	0866 34 310	95	22
0305 32 365	87	7	0820 33 180A	71	41	0866 34 310A	95	22
0866 32 411	85- 2	64	0820 33 180A	91	33	0866 34 311	95	24
1632 32 411	85- 2	66	0820 33 192A	71	37	1011 34 311	95	24
0370 32 412	85- 2	65	0820 33 192A	91	35	0866 34 313A	95	33
1632 32 412	85- 2	67	0866 33 251	90	12	0866 34 320	95	22
1097 32 413	85- 2	68	0866 33 251A	90	12	0866 34 320A	95	22
0866 32 420	85- 1	57	0866 33 260	90	13	0866 34 340	94	5
1632 32 420	85- 1	61	0866 33 270	90	13	0866 34 381	94	6
2244 32 423	85- 1	56	0710 33 288	71	36	0866 34 382	94	7
0866 32 425	85- 1	55	0613 33 681	70	25	0866 34 390	94	8
0865 32 800 00	82	1	0259 33 691	70	26	0866 34 460	95	25
1562 32 800 00	83	13	0259 33 691	123	24	0187 34 536	95	29
1570 32 800 00	82	1	0259 33 691	123- 1	45	0243 34 565	95	28
1562 32 811	83	14	0259 33 693	70	27	0866 34 565	95	28
1570 32 811	82	2	0259 33 693	123	25	0305 34 701A	96	37
0370 32 980 00	82	9	0259 33 693	123- 1	46	0259 34 705	96	38
1562 32 980A	83	17	0820 33 693	91	29	0305 34 707	96	39
1652 32 980	83	17	0221 33 698	90	8	0259 34 708	96	40
0221 33 035	90	11	0870 33 980A	90	15	0305 34 709	96	52
0662 33 042	90	4	0870 33 990A	90	15	0866 34 710	96	36
0317 33 043	90	5	1570 34 011	94	1	0259 34 712	96	41
1011 33 043	90	5	0866 34 013A	94	2	0305 34 713	96	42
0259 33 047	90	9	0866 34 015	94	3	0305 34 714	96	43
0317 33 049	90	3	0866 34 019	94	4	0259 34 719A	96	44

INDEX.

PARTS NUMBER	PARTS COMP. LIST PAGE	FIG. NO.
0305 34 720	96	53
0866 34 730	96	45
0183 34 731	96	46
0866 34 732	96	47
0866 34 735	96	48
0866 34 738	96	54
0866 34 760	96	48
0259 34 767	96	49
0259 34 768	96	50
0259 34 769B	96	51
0187 34 776	77	27
0866 34 800B	94	20
0866 34 910A	96	35
0866 34 910C	96	35
0866 34 960A	96	35
0866 34 960C	96	35
0866 37 170E	71	40
0866 37 170B	91	36
0866 37 170C	91	36
0881 37 191	71	42
0881 37 191	91	34
0884 38 383A	98- 1	12
0866 39 020	98	1
1622 39 020	98	1
0866 39 040A	98	3
0866 39 040B	98	3
1668 39 040	98	3
1668 39 040C	98	3
1668 39 045	98	3
1668 39 045A	98	3
0866 39 060E	98	4
0259 39 340	98	6
0259 39 340	98	6
1570 39 380	98- 1	8
1621 39 380	98- 1	8
1608 39 381	98- 1	10
0884 39 382A	98- 1	11
0884 39 384	98- 1	13
0884 39 385A	98- 1	14
0884 39 386	98- 1	15
0884 39 387	98- 1	16
0839 40 060B	100	2
0866 40 060	100	2
0305 40 061	100	3
1620 40 080	101	18
0866 40 081A	101	18
0820 40 161	100	6
0820 40 165	100	7
0820 40 166	100	8
0820 40 170	100	9
0820 40 180	101	31
1570 40 307	100	12
1570 40 308	100	13
2158 40 355	18- 1	44
2158 40 355	100	16
2158 40 355	101	30
0810 40 356	101	28
0824 40 401	100	4
1570 40 500	100	1
1571 40 500	100	1
1620 40 500	100	1
1624 40 500	100	1
2090 40 508A	102	33
1570 40 600A	100	11
1570 40 600B	100	11
1620 40 600	100	11
1570 40 810	102	34
1620 40 810	102	34
1570 40 820A	102	35
1570 40 820B	102	35
1570 40 850	102	38
1669 40 850	102	39
2090 40 850	102	39
0727 41 023	119	20
1562 41 030A	119	1
0559 41 040C	119	6
0824 41 040	119	6
0183 41 043	119	8
0824 41 051	119	10
0824 41 051A	119	10
0559 41 081	119	7
0559 41 081A	119	7
0824 41 084	119	12
0223 41 131A	119	16
0183 41 308	123- 1	47
0183 41 308	129	14
0613 41 308	120	26
0613 41 308	123	28
0866 41 320	122	21
0866 41 320	123- 1	42
0603 41 322B	122	22
0603 41 322B	123- 1	43
0191 41 331	122	17
0191 41 331	123- 1	38
0187 41 341	123- 1	39
0839 41 341	122	18
0118 41 342	122	20
0118 41 342	123- 1	41
1570 41 350A	123	33
1570 41 360	123	32
0866 41 370	123	30
0866 41 370	123- 1	51

INDEX.

PARTS NUMBER	PARTS COMP. LIST PAGE	FIG. NO.	PARTS NUMBER	PARTS COMP. LIST PAGE	FIG. NO.	PARTS NUMBER	PARTS COMP. LIST PAGE	FIG. NO.
2541 41 372	123	26	0652 42 304	108	6	0376 42 410	104	16
0118 41 375	132	16	0585 42 305	108	7	0585 42 410	109	18
C866 41 380	123- 1	48	0585 42 305	108	8	0866 42 410	104	16
2541 41 380	123	29	0585 42 306	108	15	0621 42 455	269	5
1524 41 400	122	1	0223 42 307	109	26	2280 42 460	105	17
0839 41 440	122	2	0585 42 307	108	9	2280 42 460	108	16
0727 41 442	122	11	0899 42 310C	108	1	2280 42 460A	105	17
0305 41 451	122	3	0899 42 310D	108	1	2280 42 460A	108	16
C839 41 461	122	4	1570 42 310	104	1	2280 42 462	105	18
0110 41 470	122	5	1570 42 310A	104	1	2280 42 462	108	17
C110 41 470A	122	5	1570 42 310B	104	1	2280 42 462A	105	18
0259 41 613	117	4	2850 42 348A	105	32	2280 42 462A	108	17
0259 41 619	117	8	2850 42 348A	111	21	0866 42 521	104	13
1524 41 620	117	1	0585 42 350	108	11	0866 42 522	104	14
1524 41 620A	117	1	0866 42 350	104	4	0866 42 523	104	12
1525 41 620	117	1	0866 42 350A	104	4	1540 42 541	105	27
0305 41 641	117	7	0866 42 350B	104	4	1540 42 542	105	25
0259 41 644	117	10	0259 42 364	104	5	0866 42 551	105	21
C259 41 644	119	13	0866 42 366	104	7	0866 42 551	109	21
1525 41 650A	117	21	0866 42 366	108	12	0866 42 552	105	20
1570 41 660	117	15	0187 42 371	104	15	0866 42 552	109	22
0249 41 671	117	16	0621 42 374	108	8	0866 42 561	105	24
1524 41 678	117	20	1570 42 380	104	9	1540 42 570	106	44
0118 41 681	117	12	0866 42 382	104	10	1540 42 570	109- 1	40
C118 41 682	117	13	2432 42 391A	109	28	1540 42 610A	105	30
0111 41 692	217	8	2435 42 392B	109	31	1540 42 610B	105	30
0290 41 710	117	2	2435 42 392B	109- 1	38	1544 42 610A	109	32
0866 41 920	123- 1	37	2434 42 394	109	31	1544 42 610B	109	32
1570 41 920	122	16	2434 42 394	115	22	1544 42 613	109	29
0114 42 046A	104	2	2694 42 394	106	43	1544 42 614	109	30
C114 42 C46A	108	2	2691 42 396	105	26	2691 42 710A	106	38
0899 42 302	108	14	2691 42 396	105	27	2691 42 710A	109- 1	41
1544 42 302A	108	14	2691 42 397	105	32	2691 42 716	106	40
0585 42 303	108	5	2691 42 397	109- 1	39	2691 42 716	109- 1	43

PARTS NUMBER	PARTS COMP. LIST PAGE	FIG. NO.	PARTS NUMBER	PARTS COMP. LIST PAGE	FIG. NO.	PARTS NUMBER	PARTS COMP. LIST PAGE	FIG. NO.
2691 42 750	106	41	0839 43 553A	126	30	1540 43 890	132	21
2694 42 750	109- 1	44	0870 43 570	126	31	1562 43 990A	125	1
0259 43 022	119	2	0870 43 580	126	32	0866 44 010	129	1
C259 43 C22	119	23	0114 43 625	212	45	0813 44 031	129	2
0259 43 022	133- 8	1	0136 43 635	21- 8	3	0303 44 032	129	3
0118 43 C28A	119	3	0136 43 635	123	31	0221 44 033	129	4
0118 43 028A	119	24	0136 43 635	123- 1	52	0813 44 034	129	5
C268 43 C28	119	24	0136 43 635	132	2	0813 44 035	129	6
0187 43 C29	119	4	0305 43 635	132	8	0221 44 044	129	7
C187 43 C29	120	25	0370 43 650A	132	6	0866 44 051	129	10
1524 43 030	119	22	0585 43 650A	132	6	0303 44 053	129	11
1525 43 030	119	22	1524 43 650	132	6	0302 44 132	130	24
0866 43 061	120	31	1529 43 650A	132	6	0824 44 140	130	23
C866 43 062	120	32	0370 43 660B	132	7	0866 44 150A	129	13
0866 43 063	120	33	0899 43 660	132	7	0866 44 187	129	17
1524 43 070E	120	34	1524 43 660A	132	7	0866 44 187A	129	17
0259 43 088	85- 1	58	1540 43 660	132	7	0866 44 189	129	18
C259 43 C88	120	38	1544 43 660	132	7	0866 44 410	129	19
1525 43 090	120	41	0221 43 694	123- 1	49	1570 44 410A	129	19
0866 43 093	120	39	0221 43 694	132	17	1570 44 410B	129	19
0259 43 140	119	18	1570 43 694A	133	29	1570 44 410C	129	19
1524 43 140	120	28	1562 43 800	126	35	0866 44 439	129	20
0317 43 421	122	6	1540 43 810	132	9	0305 44 471	130	22
C87C 43 422A	125	23	1540 43 820	132	1	0866 45 061A	111	17
1562 43 422	126	24	1541 43 820	132	10	0899 45 071C	114	18
C317 43 428	122	10	1570 43 830A	133	25	0899 45 091	114	16
0221 43 431	122	7	1620 43 830	133	25	0710 45 191	17	26
C111 43 432	122	8	1621 43 830	133	25	1559 45 250	132	11
0111 43 433	122	9	2046 43 839	133	27	1540 45 280A	132	12
C839 43 550	126	28	1570 43 842A	133	26	1540 45 320	132	13
0317 43 551	122	12	1570 43 842B	133	26	1559 45 350	132	14
0727 43 552	122	13	1570 43 848	133	28	1559 45 350A	132	14
0727 43 552	126	29	1621 43 848	133	28	1504 45 360	132	15
C839 43 553A	122	14	0118 43 853	132	4	1508 45 360	132	15

INDEX.

PARTS NUMBER	PARTS COMP. LIST PAGE	FIG. NO.	PARTS NUMBER	PARTS COMP. LIST PAGE	FIG. NO.	PARTS NUMBER	PARTS COMP. LIST PAGE	FIG. NO.
1562 45 510A	132	18	0378 46 150	133- C	21	2046 49 667	125	11
1562 45 510B	132	18	1621 46 571	133- C	23	2046 49 668	125	11
0866 45 611B	111	18	0187 46 683	119	11	2046 49 669	125	11
C899 45 611E	114	19	0223 46 683	119	19	0233 49 670	125	15
1570 45 711	111	19	0604 46 684	133- C	24	2046 49 676	125	18
1571 45 711	114	20	1015 46 684	133- C	24	2835 49 682A	125	20
0866 45 805	115	23	0259 46 691	133- C	25	0391 49 684	126	30
C866 45 806A	112	23	0604 46 785	119	11	2835 49 685	126	25
0866 45 903A	112	25	0866 49 111	91	25	2835 49 686A	125	21
C866 45 903A	115	24	0866 49 112	91	26	2835 49 687	125	22
0866 45 903A	132	19	0866 49 114	91	27	2046 49 696	125	19
C899 45 905	115	26	0866 49 115	91	28	0870 49 710	127	46
1540 45 920A	133	23	0866 49 116	91	30	0870 49 720	127	47
2375 46 C10	133- B	2	0866 49 117	91	31	C870 49 745	126	36
2375 46 C21	133- B	3	0870 49 230A	90	16	2046 49 746	126	37
2375 46 C22	133- B	4	0866 49 231	90	17	2046 49 747	126	38
2375 46 030A	133- B	5	0866 49 232	90	17	0870 49 750	127	39
2375 46 C30E	133- B	5	0866 49 235	90	18	1562 49 760	127	40
2375 46 C30C	133- B	5	0866 49 240	90	19	0870 49 770	127	41
2375 46 051	133- B	6	2046 49 620C	125	2	0824 49 781	127	42
2375 46 051A	133- B	6	2046 49 622	125	6	2046 49 782	127	43
2375 46 C52	133- B	7	2046 49 626A	125	3	2046 49 783	127	44
2375 46 053	133- B	8	2046 49 627B	125	4	2046 49 784	127	44
2375 46 C54	133- B	9	2046 49 629A	125	5	0870 49 785	127	45
2375 46 055	133- B	10	2835 49 630A	125	7	0866 50 102A	135	7
2375 46 056	133- B	11	2046 49 635A	125	8	0866 50 110A 66	135	1
2375 46 056A	133- B	11	2046 49 638	125	12	1620 50 110	135	1
C308 46 057A	133- B	12	2835 49 640	125	9	1620 50 140	135	2
2375 46 057	133- B	12	2835 49 641A	125	10	0866 50 141	135	2
2375 46 061	133- B	15	2835 49 652	125	16	1620 50 150	135	3
2375 46 062	133- B	16	0233 49 656	125	17	0866 50 151	135	3
C842 46 C81	133- B	17	0233 49 660	125	14	0866 50 181A	135	10
0308 46 083	133- B	18	0233 49 665	125	13	1620 50 210A	137	44
2070 46 110A	133- B	19	2046 49 666	125	11	1620 50 210B	137	44

PARTS NUMBER	PARTS COMP. LIST PAGE	FIG. NO.
0305 50 231	137	42
1620 50 250A	137	45
1620 50 250B	137	45
0223 50 275	135	5
0585 50 310A 66	136	19
1624 50 310	136	19
0370 50 311	136	12
0585 50 320C 66	136	20
0585 50 320D 66	136	20
0866 50 320B	136	13
0585 50 330C 66	136	21
0585 50 330D 66	136	21
0866 50 330B	136	14
0866 50 340	136	15
0866 50 350	136	16
0585 50 360	136	22
1624 50 360	136	22
0585 50 370	136	23
1624 50 370	136	23
1624 50 410	137- A	48
0866 50 511A 02	136	26
0866 50 511A 06	136	26
0866 50 521A 01	137	27
0866 50 531	137	28
0866 50 531 00	137	28
0866 50 531 02	137	28
0866 50 541	137	29
0866 50 541 00	137	29
0866 50 541 02	137	29
1524 51 020A	143	1
1524 51 120A	143	2
0223 52 007	157- 1	41
0223 52 007	160	26
1524 52 110	139	1
0187 52 141	139	8
0866 52 210	139	2
0110 52 265	105	22
0110 52 265	109	20
0259 52 301	139	17
0223 52 302	139	18
0305 52 312B	139	6
0305 52 313	139	5
0305 52 322A	139	7
2835 52 330	139	9
0305 52 331	139	10
1524 52 390	139	12
0866 52 397A	139	15
1524 52 410	139	16
0866 52 451	140	19
0376 52 510	140	23
0866 52 510	140	23
0866 52 610	140	24
0866 52 620	140	25
0305 52 628	140	31
0866 52 631	140	29
0866 52 661A	140	32
0866 52 671A	140	33
0866 52 750A	140	34
0305 52 802	269	10
0305 52 850A	140	35
0376 52 901	141	37
0376 52 901A	141	37
0866 52 901	141	37
0866 52 901A	141	37
1524 53 020D	143	4
1524 53 020E	143	4
0866 53 029A	143	5
1524 53 100C	143	11
1524 53 100D	143	11
1524 53 100E	143	11
1525 53 100F	143	11
1628 53 100B	143	11
1524 53 220D	143	12
1524 53 220E	143	12
1524 53 220F	143	12
0866 53 281A	143	14
1571 53 310	152	5
1524 53 320A	146	1
1524 53 320A	149	1
1524 53 320A	152	9
0376 53 330	146	3
0866 53 330	149	3
0866 53 330	152	7
0376 53 340	146	5
0585 53 340	152	1
0866 53 340A	149	5
1570 53 350	149	7
1572 53 350	146	7
1572 53 350A	146	7
1572 53 350B	146	7
0866 53 381	149	9
0866 53 381	152	3
0376 53 391	146	9
0376 53 391A	146	9
0376 53 430	146	13
0585 53 430	152	13
0866 53 430	149	13
0603 53 436	174	39
0376 53 451	146	15
0866 53 451	149	15
0866 53 451	152	15
0866 53 452	149	17

INDEX.

PARTS NUMBER	PARTS COMP. LIST PAGE	FIG. NO.	PARTS NUMBER	PARTS COMP. LIST PAGE	FIG. NO.	PARTS NUMBER	PARTS COMP. LIST PAGE	FIG. NO.
0866 53 452	152	17	0866 53 920	153	40	1531 54 350C	149	8
0259 53 455	147	33	0376 53 941	147	29	0866 54 381	149	10
0259 53 455	150	35	0585 53 941	153	41	0866 54 381	152	4
0259 53 455	153	42	0866 53 941	150	31	0376 54 391	146	10
0585 53 480E	152	19	0376 53 950	147	30	0376 54 391A	146	10
0376 53 500A	146	17	0866 53 950	150	32	0376 54 430	146	14
0866 53 500	149	19	0866 53 950	153	37	0585 54 430	152	14
0866 53 500	152	21	0866 53 951	153	38	0866 54 430	149	14
0866 53 500A	149	19	0585 53 970A	153	39	0376 54 451	146	16
0376 53 591	146	19	0866 53 979A	143	7	0866 54 451	149	16
0585 53 591	152	23	0866 53 981	143	9	0866 54 451	152	16
0866 53 591	149	21	1524 54 220C	143	13	0866 54 452	149	18
1540 53 600	149	23	1524 54 220D	143	13	0866 54 452	152	18
1542 53 600	146	21	1524 54 220E	143	13	0585 54 480B	152	20
1544 53 600	152	25	2981 54 222	62- 4	43	0376 54 500A	146	18
0585 53 651	153	27	2981 54 222	62- 7	37	0866 54 500	149	20
0585 53 660	153	29	2981 54 222	62-11	43	0866 54 500	152	22
0585 53 660A	153	29	0866 54 281A	143	15	0866 54 500A	149	20
0585 53 670A	153	31	2113 54 295	61	45	0376 54 591	146	20
0585 53 691	153	33	2113 54 295	62-11	43	0585 54 591	152	24
0585 53 701A	153	35	0585 54 310A	152	6	0866 54 591	149	22
0866 53 720A	143	16	1544 54 310A	152	6	1540 54 600	149	24
0866 53 750	143	18	1524 54 320B	146	2	1542 54 600	146	22
0111 53 771	140	21	1524 54 320B	149	2	1544 54 600	152	26
0866 53 780A	143	19	1524 54 320B	152	10	0585 54 651	153	28
1540 53 810C	149	25	0376 54 330	146	4	0585 54 660	153	30
1540 53 810D	149	25	0866 54 330	149	4	0585 54 660A	153	30
1542 53 810B	146	23	0866 54 330	152	8	0585 54 670A	153	32
0866 53 830A	146	24	0376 54 340	146	6	0585 54 691	153	34
0866 53 830A	149	26	0585 54 340	152	2	0866 54 720	143	17
0866 53 845	146	26	0866 54 340	149	6	0866 54 830A	146	25
0866 53 845	150	28	0376 54 350C	146	8	0866 54 830A	150	27
0376 53 920	147	28	0376 54 350D	146	8	0866 55 100F	163	1
0866 53 920	150	30	0376 54 350E	146	8	0370 55 150	163	5

PARTS NUMBER	PARTS COMP. LIST PAGE	FIG. NO.	PARTS NUMBER	PARTS COMP. LIST PAGE	FIG. NO.	PARTS NUMBER	PARTS COMP. LIST PAGE	FIG. NO.
0275 55 195	223	28	0259 55 951	196	38	1524 56 118	159	11
1524 55 210B	165	36	1570 56 010	155	1	0866 56 171	156	9
0866 55 216	165	35	1570 56 010	159	1	0866 56 171	159	9
0866 55 217	165	35	1570 56 010B	155	1	0866 56 180	156	10
0866 55 218	165	35	1570 56 010B	159	1	0866 56 181A	156	11
1524 55 230B	164	32	1570 56 010C	155	1	0866 56 181A	159	10
0259 55 261	169	9	1570 56 010C	159	1	1011 56 210	228	20
0259 55 261	170	23	1608 56 010B	155	1	1570 56 210B	156	18
1570 55 330A	165	39	1608 56 010C	155	1	1620 56 210	156	18
1570 55 330B	165	39	1608 56 010D	155	1	0866 56 215	156	19
1570 55 340	165	43	1608 56 010E	155	1	0243 56 231	61	44
1524 55 351	170	27	1609 56 010B	155	1	0243 56 231	62- 4	42
0866 55 360C	163	7	1609 56 010C	155	1	0243 56 231	62- 7	36
0866 55 365B	163	9	1609 56 010D	155	1	0243 56 231	62-11	42
0866 55 365C	163	9	1609 56 010E	155	1	0187 56 235	159	17
0866 55 368	163	9	1621 56 010	155	1	0187 56 235	260	5
0865 55 401C	163	13	1621 56 010	159	1	0118 56 241	133	30
0865 55 402B	164	18	1621 56 010A	155	1	0118 56 241	157- 1	42
0865 55 403R	164	19	1621 56 010A	159	1	0118 56 241	159	12
0865 55 404B	164	20	1628 56 010B	155	1	0118 56 241	248	7
1562 55 405	164	21	1628 56 010B	159	1	0118 56 241	252	13
0866 55 406B	164	23	1628 56 010C	155	1	0118 56 242B	150	36
1570 55 410	165	44	1628 56 010C	159	1	0118 56 242B	153	43
0866 55 412A	164	27	0376 56 080C	155	5	0118 56 242B	157- 1	43
0710 55 436	169	10	0866 56 080C	155	5	0118 56 242B	159	15
1562 55 460B	170	16	0866 56 080C	159	2	0118 56 242B	187	30
1568 55 530C	169	1	1524 56 110G	155	7	0899 56 300D	159	4
1568 55 530D	169	1	1524 56 110G	159	7	0899 56 300E	159	4
1568 55 530E	169	1	1524 56 110H	155	7	1624 56 300	159	4
0259 55 556	84	38	1524 56 110H	159	7	0866 56 310A	156	20
0866 55 590	164	25	0136 56 112	196	38	0585 56 330B	159	5
1562 55 710	164	28	1524 56 117	156	12	0866 56 330	157	22
1561 55 720A	164	31	1524 56 117	159	11	0866 56 350	157	24
0259 55 951	167	81	1524 56 118	156	12	0376 56 381	157	26

INDEX.

PARTS NUMBER	PARTS COMP. LIST PAGE	FIG. NO.	PARTS NUMBER	PARTS COMP. LIST PAGE	FIG. NO.	PARTS NUMBER	PARTS COMP. LIST PAGE	FIG. NO.
0866 56 381	157	26	1570 56 720A	157	34	0824 56 999	147	34
157C 56 4C0	157	28	1570 56 720B	157	34	0585 57 012	175	51
0866 56 405	231	28	1571 56 751	161	44	0585 57 013	175	51
0866 56 405	235	22	1571 56 755	161	46	C317 57 015	175	49
1570 56 450	157	29	1571 56 760	161	45	0585 57 015	175	52
CE66 56 470A	157	30	0866 56 810A	157	21	0585 57 016	175	52
0866 56 481A	157	31	0585 56 830D	159	6	1611 57 016	174	29
CE66 56 489	157- 1	47	0866 56 830	157	23	0585 57 017	175	52
0585 56 540	159	18	0866 56 850	157	25	0585 57 018	175- 1	58
0585 56 540A	159	18	0376 56 881	157	27	0585 57 019	175- 1	57
0376 56 580A	155	6	0866 56 881	157	27	C71C 57 022	175	53
0866 56 580A	155	6	0585 56 901A	160	30	0710 57 023	175	54
0866 56 580A	159	3	0866 56 901B	157- 1	36	C187 57 052	175	55
1524 56 610D	156	8	0866 56 901B	160	24	0621 57 054	175	56
1524 56 61CD	159	8	0866 56 901C	157- 1	36	C71C 57 066	175- 1	57
1524 56 610E	159	8	0866 56 901C	160	24	0187 57 067	175- 1	58
C2CE 56 615	157- 1	44	0585 56 902	160	31	1570 57 100	172	1
0208 56 615	159	16	0820 56 905	157- 1	38	1572 57 100	172	1
0E10 56 639	157- 1	45	0820 56 905	160	28	1693 57 100	172	1
0810 56 639	159	13	0820 56 905	163	15	1693 57 100A	172	1
CE66 56 701	157	32	0820 56 905	186	9	1694 57 100	172	1
0866 56 701	160	20	0E20 56 905	187	26	1694 57 100A	172	1
0866 56 701A	157	32	0820 56 905	224	41	2155 57 109	173	21
0866 56 701A	160	20	0E20 56 906	157- 1	40	0111 57 111	136	17
CE71 56 7C1A	157	32	0820 56 906	160	27	0820 57 114	172	5
0871 56 701A	160	20	0585 56 911A	160	33	0866 57 150A	172	2
C866 56 7C2	157	33	0899 56 921	160	22	1568 57 150	172	2
1570 56 711B	157	34	0899 56 921A	160	22	1693 57 150	172	2
1570 56 711E	160	21	1128 56 960	228	20	1693 57 150A	172	2
1570 56 711C	157	34	0866 56 971	157- 1	46	1694 57 150	172	2
1570 56 711C	160	21	0866 56 971	159	14	1694 57 150A	172	2
1571 56 712	161	43	0866 56 981	155	2	0376 57 200	174	30
1571 56 712A	161	43	0866 56 981	160	35	0866 57 200A	174	30
1571 56 712B	161	43	0866 56 99I	227	12	1571 57 200	174	31

PARTS NUMBER	PARTS COMP. LIST PAGE	FIG. NO.
1693 57 200	174	30
1693 57 200A	174	30
1694 57 200	174	30
1694 57 200A	174	30
1696 57 200	174	31
1696 57 200A	174	31
0866 57 250	175	40
1571 57 250	175	41
1694 57 250	175	40
1694 57 250A	175	40
1696 57 250	175	41
1696 57 250A	175	41
0621 57 701A	174	38
0187 57 751	175	46
0621 57 753	175	47
1540 57 900	175- 1	60
1540 57 908	175- 1	63
0305 57 909	175- 1	62
1540 57 950	175- 1	61
0376 58 010C	177	1
0376 58 010E	177	1
0866 58 010D	177	1
0866 58 010E	177	1
1620 58 010B	177	1
1622 58 010E	177	1
0866 58 201	183	34
0866 58 210	183	23
0866 58 231	183	35
0866 58 231	267	32
1011 58 231	183	35
1011 58 231	267	32
2292 58 232	177	2
2292 58 232	255	2
0866 58 240A	183	26
0866 58 240C	183	26
0866 58 281	183	27
0866 58 281	267	24
0866 58 281A	183	27
0866 58 281A	267	24
0866 58 282	183	28
0866 58 282	267	25
0866 58 291A	183	29
0866 58 291A	267	26
0866 58 292A	183	30
0866 58 293	183	31
0866 58 293	267	28
0223 58 303A	182	15
0223 58 303A	255	12
0866 58 303B	181	10
0866 58 303B 01	265	9
0223 58 304A	182	16
0223 58 304A	255	13
0223 58 305	266	16
0259 58 305	182	19
0259 58 305	256	17
0223 58 306	139	14
0305 58 309	181	4
0305 58 309	265	4
1524 58 310D	181	1
1524 58 310F	181	1
1524 58 310G	181	1
1524 58 310H	181	1
1562 58 310D	181	1
1562 58 310F	181	1
1562 58 310G	181	1
1562 58 310H	181	1
0223 58 311	182	17
0223 58 311	255	14
0866 58 313	181	3
0866 58 313	194	5
0866 58 321B	181	8
0866 58 321B	265	7
0370 58 330C	181	2
0376 58 330B	181	2
0866 58 330B	181	2
0866 58 330C	181	2
0866 58 361B	183	37
0866 58 361B	267	35
1540 58 361	183	37
1540 58 361	267	35
0866 58 363	184	38
0866 58 363	267	36
0866 58 364A	184	39
0866 58 364A	267	37
0866 58 364B	184	39
0866 58 364B	267	37
0824 58 370A	182	20
0824 58 370A	256	18
0824 58 370A	266	17
0824 58 370B	182	20
0824 58 370B	256	18
0824 58 370B	266	17
1540 58 371	184	40
1540 58 371	267	38
0223 58 375A	183	21
0223 58 375A	256	19
0223 58 375A	266	18
0866 58 410	182	12
0866 58 410A	182	12
0305 58 411	182	12
0305 58 411	266	12
0111 58 443	206	17

INDEX.

PARTS NUMBER	PARTS COMP. LIST PAGE	FIG. NO.
0223 58 472	83	15
0839 58 492A	269	7
0368 58 5C1	177	3
0374 58 501	177	3
0376 58 5C1	177	3
0866 58 501	177	3
0305 58 5C5	177	4
0824 58 546	194	4
0866 58 560	182	14
0866 58 603	177	5
0376 58 604	177	6
0866 58 604	177	6
0376 58 6C5	177	7
0866 58 605	177	7
0866 58 620	177	8
0259 58 691	181	3
0259 58 691	265	3
0223 58 692A	179	17
0223 58 692A	262	21
0223 58 721	183	24
0223 58 721	183	32
0223 58 721	266	21
0223 58 721	267	29
0187 58 731	183	25
0187 58 731	183	33
0187 58 731	267	30
0398 58 755	179- 1	25
0398 58 755	263	30
0376 58 760A	179	20
0866 58 760A	179	20
03C5 58 762	179	21
0305 58 762	262	25
0376 58 781E	178	11
0376 58 781D	178	11
0866 58 781D	178	11
0376 58 791	178	12
0866 58 791	178	12
1560 58 810A	178	16
1562 58 810D	179	16
1620 58 810	178	16
1620 58 81CA	178	16
1622 58 810	179	16
1622 58 810A	179	16
0398 58 821A	178	13
0398 58 821A	257	34
0398 58 821A	261	17
0398 58 822A	178	14
0398 58 822A	257	35
0398 58 822A	261	18
0376 58 831B	179	22
0376 58 831C	179	22
0866 58 831B	179	22
0866 58 831C	179	22
0866 58 841A	179- 1	23
0866 58 842A	179- 1	24
0866 58 842A	262	29
0376 58 851	179- 1	26
0866 58 851	179- 1	26
0866 58 861A	184	42
0376 58 862A	184	43
0866 58 862A	184	43
0376 58 863	184	44
0866 58 863	184	44
0305 58 864	184	45
0866 58 864	184	45
0259 58 906	184	41
0208 58 921	179	18
0208 58 921	195	27
0208 58 921	257	32
0208 58 921	262	22
0187 58 922	179	19
0187 58 922	195	28
0187 58 922	257	33
0223 58 961	269	11
0223 58 962	269	6
1540 59 010B	177	1
1540 59 010C	177	1
1542 59 010A	177	1
1542 59 010B	177	1
1620 59 010B	177	1
1622 59 010B	177	1
0866 59 240A	183	26
0866 59 240C	183	26
0866 59 303B	182	10
0866 59 303B C1	265	9
1524 59 310F	181	1
1524 59 310F	181	1
1524 59 310G	181	1
1524 59 310H	181	1
1562 59 310D	181	1
1562 59 310F	181	1
1562 59 310G	181	1
1562 59 310H	181	1
0376 59 330B	181	2
0376 59 330C	181	2
0866 59 330B	181	2
0866 59 330C	181	2
0866 59 361B	184	37
0866 59 361B	267	35
0866 59 361C	184	37
1540 59 361	184	37
1540 59 361	267	35

PARTS NUMBER	PARTS COMP. LIST PAGE	FIG. NO.	PARTS NUMBER	PARTS COMP. LIST PAGE	FIG. NO.	PARTS NUMBER	PARTS COMP. LIST PAGE	FIG. NO.
0866 59 410	182	12	0370 60 073B	165	48	0820 60 870A	212- 2	66
0866 59 410A	182	12	0866 60 101	165	50	1540 60 930	167	82
0368 59 501	177	3	0866 60 102	165	51	0257 61 051	187	22
0374 59 501	177	3	0866 60 120	166	55	0864 61 061A	187	28
0376 59 501	177	3	0866 60 130	166	56	0366 61 071	187	23
0866 59 501	177	3	1540 60 250	166	58	0366 61 072	187	23
0305 59 505	177	4	1634 60 250	166	58	1562 61 080	186	
0866 59 560	182	14	0866 60 251	166	59	1620 61 080	186	
0866 59 603	177	5	0317 60 252	166	60	1620 61 080B	186	
0376 59 604	177	6	0317 60 253	166	61	1524 61 130A	186	1
0866 59 604	177	6	0317 60 254	166	62	1524 61 130A	187- B	
0376 59 760A	179	20	1634 60 254	166	62	1524 61 130B	186	1
0866 59 760A	179	20	0317 60 255	166	63	1524 61 130B	187- B	
0376 59 791	178	12	0317 60 256	166	64	1524 61 140B	186	2
0866 59 791	178	12	0317 60 257	166	65	1524 61 140B	187- B	12
0866 59 810B	178	16	0317 60 258	166	66	1531 61 140	192	69
0870 59 810F	179	16	0317 60 259	166	67	1531 61 140	192- N	98
1620 59 810	178	16	0317 60 261	166	68	1524 61 151A	186	3
1620 59 810A	178	16	0317 60 262	166	69	1562 61 190C	186	4
1622 59 810	179	16	0866 60 263	166	70	1568 61 190A	192	70
1622 59 810A	179	16	0866 60 264	166	71	1568 61 190C	192	70
0376 59 831B	179	22	0866 60 265A	166	72	1568 61 190C	192- N	95
0376 59 831C	179	22	0317 60 266	167	73	1620 61 190	186	4
0866 59 831B	179	22	0866 60 267	167	74	1620 61 190B	186	4
0866 59 831C	179	22	1611 60 311	167	86	0824 61 192	187	17
0866 59 841A	179- 1	23	1611 60 312	167	87	0866 61 195	192	71
0866 59 842A	179- 1	24	1524 60 335A	167	75	0866 61 195B	186	5
0866 59 842A	262	29	1620 60 335	167	75	0866 61 195B	187	25
0187 59 922	262	23	1524 60 345A	167	76	0866 61 195B	192	71
1570 60 040	165	41	1620 60 345	167	76	0866 61 195B	192- N	96
1570 60 050A	165	42	2280 60 430B	269	8	1562 61 211B	186	13
1620 60 050A	165	42	2835 60 439	269	9	1562 61 211C	186	13
1621 60 050	165	42	0305 60 715	167	80	1562 61 212A	186	14
1562 60 070	165	47	0866 60 720	167	79	1562 61 212B	186	14

INDEX.

PARTS NUMBER	PARTS COMP. LIST PAGE	FIG. NO.	PARTS NUMBER	PARTS COMP. LIST PAGE	FIG. NO.	PARTS NUMBER	PARTS COMP. LIST PAGE	FIG. NO.
1620 61 212	186	14	1562 61 474	192- I	29	0866 61 536	191	52
0866 61 213	186	15	0866 61 475	190	37	0866 61 536	192- L	66
1562 61 214A	187	16	0866 61 475	192- I	38	0866 61 541	191	57
1620 61 214	187	16	0866 61 476	190	32	0866 61 541	192- M	88
1620 61 225	186	12	0866 61 476	192- I	27	0866 61 542	191	57
0866 61 235	187	21	1540 61 476	192- H	26	0866 61 542	192- M	84
0824 61 236A	191	56	0866 61 480	190	40	0866 61 543A	191	58
0824 61 236A	192- M	87	1562 61 490	190	40	0866 61 543A	192- M	83
0866 61 251	186	6	1562 61 490	192- H	17	0866 61 545	192	60
1568 61 390	189		0866 61 500	191	42	0866 61 545	192- K	58
1608 61 390	192- G		0866 61 500	192- I	34	1622 61 545	192	60
1562 61 400	189		1562 61 520	191	44	1622 61 545	192- K	58
1622 61 400	192- G		1562 61 520	192- B		1562 61 546	192	63
1531 61 411	192	72	1568 61 520	192- B		1622 61 546	192- M	75
0866 61 450	190	21	1608 61 520	192- J	39	1524 61 547	192	64
0866 61 450	192- D		1608 61 520	192- P		1524 61 547	192- M	76
0866 61 450	192- H	14	1622 61 520	192- J	39	1524 61 548	192	61
0866 61 461	192- H	22	1622 61 520	192- P		1524 61 548A	192	61
1562 61 461	190	23	0866 61 525A	191	45	1524 61 548A	192- K	59
1562 61 462	190	24	0866 61 525A	192- M	78	1622 61 548	192- K	59
1562 61 462A	192- I	28	1524 61 526	191	46	1662 61 548	192	61
0866 61 463	190	25	1524 61 526	192- J	40	0866 61 549	192	64
0866 61 463	192- H	19	0866 61 527	191	46	0866 61 549	192- M	86
1524 61 464A	190	26	0866 61 527	192- M	82	0866 61 551	192	65
1562 61 464A	192- I	31	0866 61 531	191	47	0866 61 551	192- J	49
1562 61 465	190	27	0866 61 531	192- K	62	0866 61 552	192	66
0370 61 467	190	28	0866 61 532	191	48	0866 61 552	192- B	11
0370 61 467	192- M	80	0866 61 532	192- K	61	0866 61 552	192- J	50
1562 61 467	190	29	0866 61 533	191	49	1622 61 561	192- J	41
1562 61 469	192- L	71	0866 61 533	192- L	65	1622 61 565	192- J	48
0370 61 471	190	30	0866 61 534	191	50	1622 61 566	192- J	42
0866 61 472	190	35	0866 61 534	192- K	64	1622 61 567	192- J	43
0866 61 472	192- K	57	0866 61 535	191	51	1622 61 567	192- J	53
1562 61 473	192- I	32	0866 61 535	192- L	67	1622 61 568	192- K	55

PARTS NUMBER	PARTS COMP. LIST PAGE	FIG. NO.
1622 61 569	192- J	45
1622 61 572	192- J	53
1622 61 575	192- J	47
1622 61 578	192- K	55
1622 61 580	192- J	52
1622 61 580	192- P	10
0317 61 612	190	38
0866 61 911	192	76
0866 61 911	192- N	90
0866 61 912	192	77
0866 61 912	192- N	91
0866 61 913	192	78
0866 61 913	192- N	92
0866 61 914	192	79
1620 61 925	192- N	93
1620 61 926	192- N	93
0839 61 966A	189	12
0839 61 966A	192- C	5
0839 61 975C	190	22
1571 62 510A	194	1
0585 62 610	194	8
0621 62 640	195	18
0621 62 640A	195	18
0621 62 641	195	19
0621 62 642	195	19
0585 62 650C	194	11
0585 62 671A	194	16
0585 62 672A	195	21
0585 62 695	195	23
0585 62 710A	194	2
0585 62 710B	194	2
0585 62 720A	194	3
0585 62 720B	194	3
0585 62 720C	194	3
0585 62 720D	194	3
0585 62 741	196	43
0585 62 742	196	43
0585 62 750	196	42
0621 62 792	197	53
1528 62 801	195	29
1529 62 801	195	29
1529 62 801A	195	29
1544 62 801	195	29
1545 62 801	195	29
0585 62 802	195	30
0585 62 821A	195	31
0585 62 822A	196	32
0585 62 823A	196	33
0585 62 824B	196	35
0585 62 825B	196	36
0585 62 831A	196	37
0899 62 851C	195	25
0585 62 871C	194	13
0585 62 940A	196	39
0899 62 955A	196	45
0899 62 961	196	46
0899 62 962A	196	47
0899 62 963	196	48
0899 62 964	196	49
0899 62 970	196	50
0899 62 975A	196	51
0585 63 610	194	9
0585 63 650C	194	12
0585 63 823A	196	34
0585 63 871C	194	14
0585 63 940A	196	40
0866 64 630	223	18
0183 66 021	199	2
2801 66 022	199	3
1540 66 111	199	13
0866 66 112	199	10
0866 66 113	199	11
1540 66 141	199	13
0866 66 142	199	10
0866 66 143	199	11
1544 66 210A	205	
0585 66 211	205	1
1570 66 211	202	2
0866 66 212	202	3
0866 66 212 15	202	3
1529 66 212	205	2
0585 66 213	205	3
0866 66 213	202	5
0866 66 214	202	5
0865 66 217	202	2
0865 66 217	202	2
0865 66 218	202	2
0585 66 219	205	1
0865 66 219	202	2
1544 66 230A	205	
0585 66 231	205	1
1570 66 231	202	2
0866 66 232	202	3
0866 66 232 15	202	3
0865 66 238	202	2
0585 66 239	205	1
0865 66 239	202	2
0585 66 333	205	8
0212 66 371	214	5
0223 66 371	214	4
0212 66 372	214	6
0866 66 372	202	8

INDEX.

PARTS NUMBER	PARTS COMP. LIST PAGE	FIG. NO.	PARTS NUMBER	PARTS COMP. LIST PAGE	FIG. NO.	PARTS NUMBER	PARTS COMP. LIST PAGE	FIG. NO.
0585 66 373	205	13	0865 66 760	209	17	0866 66 965	219	10
0585 66 374	206	14	2852 66 763	209	18	0870 66 970	219	12
0585 66 375	206	15	0243 66 773	106	35	0870 66 970A	219	12
0585 66 376	206	16	0865 66 780	209	20	0870 66 975	219	14
0585 66 377	206	19	0233 66 790	120	40	0870 66 975A	219	14
0585 66 378	206	20	0865 66 790	209	21	0870 66 980	220	15
0390 66 410	208	1	0865 66 800	209	22	0187 66 991	21- B	10
0390 66 411	208	4	0865 66 805	209	23	0187 66 991	105	33
0398 66 412	208	2	0865 66 809	209	24	0187 66 991	109- 1	46
0398 66 413	208	4	1524 66 810	209	27	0187 66 991	167	84
2113 66 470	212- 2	67	0209 66 820	212- 2	72	0727 66 991A	220	24
1540 66 481	200	15	0209 66 821	212- 2	73	0727 66 992	220	25
1540 66 482	200	16	0750 66 840	212- 2	79	0820 66 992	219	11
154C 66 482	203	15	0820 66 840	130	25	0820 66 992	220	22
1540 66 482	206	26	1560 66 860B	219		0839 66 992	220	22
154C 66 491	200	15	1561 66 860B	219		0862 67 010A	210	29
1540 66 501	203	14	1562 66 860B	219		0862 67 010B	210	29
154C 66 501	206	25	1564 66 860B	219		0866 67 010A	210	29
1540 66 511	203	14	0317 66 862	220	19	0866 67 010C	210	29
154C 66 511	206	25	0316 66 865A	220	23	1524 67 020C	210	30
0223 66 580A	212- 2	68	0119 66 870	21- B	13	1524 67 020F	210	30
C3C5 66 580A	225	52	0866 66 871	220	20	1634 67 020D	210	30
1650 66 620	208	6	0813 66 879	217	9	1570 67 030	210	34
165C 66 621	208	7	0866 66 900	219	1	1570 67 030A	210	34
1540 66 631	208	9	0870 66 900A	219	2	1571 67 030	211	35
157C 66 700	203	18	1561 66 900	219	1	1620 67 030A	210	34
1570 66 71C	203	18	1562 66 900	219	1	1620 67 030B	210	34
0862 66 730	208	12	0866 66 905	219	4	1624 67 030A	211	35
0866 66 730B	208	12	0870 66 905	219	5	1624 67 030B	211	35
0862 66 731	208	12	1524 66 930A	219	6	1544 67 035A	211	36
0866 66 731	208	12	0208 66 949	55	79	1544 67 035A	211	36
0862 66 732	208	13	0208 66 949	55- F	93	1544 67 035B	211	36
0866 66 732	208	13	0208 66 949	212	49	1544 67 035B	211	36
0866 66 733	208	14	0866 66 960	219	7	0585 67 036	211	36

PARTS NUMBER	PARTS COMP. LIST PAGE	FIG. NO.
0585 67 036	211	36
0585 67 036A	211	36
0585 67 036A	211	36
1570 67 040	211	38
1620 67 040A	211	38
154C 67 050D	211	39
1634 67 050F	211	39
1634 67 C50G	211	39
1634 67 050H	211	39
0866 67 059	212- 1	55
1570 67 060C	211	41
1620 67 060D	212	41
1620 67 060E	212	41
1621 67 060C	212	41
1621 67 06CD	212	41
157C 67 C65	212	42
0866 67 C70B	211	40
0866 67 070C	211	40
1674 67 070A	212	42
1674 67 070A	212	42
1540 67 080A	212	43
1540 67 080E	212	43
0872 67 100A	62	48
0872 67 100A	62-12	46
1620 67 100	62- 4	46
162C 67 100	62- 7	40
0872 67 110	62	52
0872 67 110	62- 4	47
0872 67 110	62- 7	41
0872 67 110	62-12	47
1570 67 120	212	44
1620 67 120C	212	44
1540 67 131	212- 3	89
154C 67 131A	130	27
1541 67 131	212- 3	89
0866 67 133	212- 2	75
1621 67 134	212- 3	90
1634 67 135	212- 3	88
0866 67 151	210	31
0866 67 152	212	50
0866 67 153A	212	51
0866 67 153A	220	17
0866 67 155	212- 1	52
1524 67 155	212- 1	53
0866 67 156	212- 1	54
0866 67 170	106	34
0899 67 170B	109	24
0866 67 176	106	37
0866 67 301A	215	36
0866 67 302	215	37
1524 67 321	214	1
2835 67 330	214	2
1524 67 340B	214	3
1524 67 350	214	13
1823 67 352	214	10
0317 67 480	217	1
0866 67 510A	217	13
0317 67 511	217	3
0866 67 511A	217	12
0866 67 512	217	14
0866 67 521	217	15
1540 67 715	212- 2	70
1621 67 715	212- 2	70
1524 67 720B	212- 2	69
0735 67 730A	212- 3	80
1664 67 740	212- 3	91
0839 67 880	212- 1	64
0862 67 880	212- 2	64
0866 67 905A	212- 1	57
0866 67 906	212- 1	59
1540 67 907	212- 3	82
0866 67 908	212- 1	61
0305 67 993A	212- 1	62
0305 67 993A	220	18
0305 67 994	212- 3	84
1524 68 011	224	38
0865 68 020B 00	222	1
1562 68 040A	222	2
0110 68 050A	227	3
0249 68 060A	227	4
0810 68 070	227	5
0810 68 070A	227	5
0275 68 088	219	9
0866 68 090B 00	222	3
0866 68 095	222	4
0187 68 110A	227	6
1562 68 140B 00	222	5
0866 68 175	223	20
0118 68 180A	227	7
0866 68 180A	223	17
0866 68 201	223	18
0866 68 201A	223	18
0208 68 230	227	8
0259 68 250	173	25
0866 68 331	223	22
0866 68 332	223	23
0866 68 333	223	24
0866 68 334	223	25
0866 68 335A	223	26
0865 68 340	224	30
0866 68 351A	224	32
0866 68 352A	224	33

INDEX.

PARTS NUMBER	PARTS COMP. LIST PAGE	FIG. NO.
0866 68 361	224	35
1524 68 380A	224	37
0839 68 660	227	1
0839 68 670B	227	2
0866 68 680	227	3
0839 68 720	227	9
0305 68 800E	227	10
0305 68 800F	227	10
0305 68 810A	227	11
0367 68 832A	155	3
0367 68 832A	161	41
0376 68 890A 00	224	44
0376 68 890B 00	224	44
1524 68 890	224	44
1525 68 890	224	44
0378 68 900	224	45
0376 68 910	224	46
0370 68 920	225	49
0866 68 920	224	47
0305 68 951	196	41
0305 68 952	196	41
0223 69 032	195	22
0187 69 049A	230	9
0866 69 052	230	1
1562 69 053	230	2
1562 69 053	234	1
0380 69 055A	230	3
0730 69 057A	230	8
0730 69 057A	234	3
0899 69 058	234	2
0376 69 061E	230	4
0376 69 065D	230	4
0884 69 068E	232	47
0866 69 071A	230	6
0866 69 071A	234	5
0866 69 071A 00	230	6
0866 69 071A 00	234	5
0866 69 071A 02	230	6
0866 69 071A 02	234	5
0866 69 081B	230	7
1540 69 101	230	13
1540 69 101	234	8
1540 69 130B	230	12
1540 69 130B	234	7
0305 69 170	230	15
0305 69 170	234	11
0305 69 171	230	16
0305 69 171	234	12
0305 69 180	230	17
0305 69 180	234	13
0866 69 210 13	231	19
0866 69 210 13	234	15
0866 69 210 14	231	19
0866 69 210 14	234	15
1632 69 210 13	231	19
1632 69 210 13	234	15
1632 69 210 14	231	19
1632 69 210 14	234	15
1632 69 210A 13	231	19
1632 69 210A 14	231	19
0866 69 240 13	231	20
0866 69 240 13	234	16
0866 69 240 14	231	20
0866 69 240 14	234	16
1632 69 240 13	231	20
1632 69 240 13	234	16
1632 69 240 14	231	20
1632 69 240 14	234	16
1632 69 240A 13	231	20
1632 69 240A 14	231	20
0376 69 290A 13	237	1
0376 69 290A 14	237	1
0585 69 290 14	240	1
0866 69 290 14	237	1
1632 69 290 14	237	1
1634 69 290 13	237	1
1634 69 290 14	237	1
1636 69 290 14	240	1
0259 69 311	237	2
0585 69 311	240	2
0866 69 311	237	3
0866 69 311	240	3
0376 69 314	237	4
0376 69 314A	237	4
0866 69 314	237	5
0866 69 314A	237	5
0376 69 321	237	6
0866 69 321	237	6
0866 69 321	240	4
0603 69 323	197	54
0603 69 323A	197	54
0376 69 341	237	7
0585 69 341B	240	5
0866 69 341	237	7
0376 69 342	237	8
0376 69 343	237	9
1524 69 360A 00	237	11
1524 69 360A 00	240	7
1524 69 380A 00	237	12
1524 69 380A 00	240	8
0376 69 411 00	237	14
0866 69 411 00	237	14

PARTS NUMBER	PARTS COMP. LIST PAGE	FIG. NO.
0866 69 411 00	240	10
0376 69 431 00	237	15
0866 69 431 00	237	15
0866 69 431 00	240	11
0866 69 461A 03	238	19
0866 69 461A 03	240	13
0866 69 461A 12	238	19
0866 69 461A 12	240	13
0866 69 461A 13	238	19
0866 69 461A 13	240	13
0866 69 461B 03	238	19
0866 69 461B 03	240	13
0866 69 461B 12	238	19
0866 69 461B 12	240	13
0866 69 461B 13	238	19
0866 69 461B 13	240	13
0376 69 462 13	238	17
0376 69 462 14	238	17
0376 69 462A 13	238	17
0376 69 462A 14	238	17
0376 69 482 13	238	18
0376 69 482 14	238	18
0376 69 511 00	238	20
0866 69 511 01	238	21
0376 69 521 00	238	22
0866 69 521 01	238	23
0866 69 541	243	1
0899 69 541A	243	2
1632 69 541	243	1
1636 69 541	243	2
0866 69 542	243	3
1632 69 542	243	3
0866 69 543	243	5
0866 69 543A	243	5
0899 69 543A	243	4
1636 69 543	243	4
0866 69 544	243	6
0866 69 544A	243	6
0899 69 561B 14	240	14
0899 69 561C 14	240	14
0899 69 571B 14	240	15
0899 69 571C 14	240	15
1524 69 611	243	7
1525 69 611	243	7
1524 69 612	243	8
1525 69 612	243	8
1524 69 613	243	9
1525 69 613	243	9
0866 69 616A	243	10
0866 69 617	243	11
0866 69 618	243	12
0585 69 625C 05	244	14
0866 69 625A 05	244	13
0585 69 626C 05	244	16
0866 69 626A 05	244	15
0866 69 627 10	244	17
0899 69 627C 34	244	18
0585 69 628D	244	19
0585 69 628E	244	19
0585 69 628F	244	19
0585 69 629A	244	20
0585 69 629B	244	20
1562 69 660C	244	23
0378 69 683C	244	24
0866 69 683	244	24
0866 69 683B	244	24
0866 69 684	244	25
0871 69 684	244	25
0871 69 685	244	25
1570 69 686	244- 1	35
0866 69 687A	244	26
0866 69 688	244	27
0866 69 689	244	28
1570 69 691	244- 1	36
0866 69 692	244	29
1570 69 692	244- 1	37
0866 69 694	238	30
1570 69 695	244- 1	38
0866 69 696	244	30
1571 69 696	244	33
0866 69 697	244	31
0866 69 698	244	32
1570 69 699A	244- 1	38
0899 69 711A 03	240	16
0899 69 711A 12	240	16
0899 69 711A 13	240	16
0899 69 711B 03	240	16
0899 69 711B 12	240	16
0899 69 711B 13	240	16
0899 69 712A 03	240	17
0899 69 712A 12	240	17
0899 69 712A 13	240	17
0899 69 712B 03	240	17
0899 69 712B 12	240	17
0899 69 712B 13	240	17
0899 69 713 03	241	18
0899 69 713 12	241	18
0899 69 713 13	241	18
0899 69 713A 03	241	18
0899 69 713A 12	241	18
0899 69 713A 13	241	18
0899 69 714 03	241	19

INDEX.

PARTS NUMBER	PARTS COMP. LIST PAGE	FIG. NO.
0899 69 714 12	241	19
0899 69 714 13	241	19
0899 69 714A 03	241	19
0899 69 714A 12	241	19
0899 69 714A 13	241	19
0899 69 715 03	241	20
0899 69 715 12	241	20
0899 69 715 13	241	20
0899 69 715A 03	241	20
0899 69 715A 12	241	20
0899 69 715A 13	241	20
0899 69 717A	241	21
0899 69 718A	241	22
0899 69 721A 03	241	23
0899 69 721A 12	241	23
0899 69 721A 13	241	23
0899 69 721B 03	241	23
0899 69 721B 12	241	23
0899 69 721B 13	241	23
0899 69 723B	241	24
0899 69 724B	241	25
0866 69 811	224	39
0866 69 820	224	40
0866 69 821A	224	40
0376 69 870B 00	238	28
0866 69 870C 00	238	28
0870 69 870B 00	238	28
1524 69 870C 00	238	28
0866 69 885	238	29
0376 69 900	224	45
0866 69 910	231	22
0866 69 910	235	18
0866 69 920	235	19
0866 69 920 02	231	23
0376 69 941	231	25
1524 70 050	150	34
1527 70 050	147	32
0866 70 120	144	21
0866 70 122	144	22
0866 70 131A	144	27
0866 70 160B	144	23
0866 70 160C	144	32
0866 70 160D	144	32
0866 70 180	144	28
0317 70 269	223	29
0317 70 307	246	2
0866 70 310A	246	1
0866 70 310B	246	1
0866 70 313	246	3
0866 70 314	246	4
0866 70 320	246	5
0866 70 330	246	6
0866 70 330A	246	6
0866 70 341	246	7
0866 70 341A	246	7
0866 70 342	246	8
0866 70 343	246	10
0866 70 351	246	13
0866 70 352	246	14
0866 70 360A	246	15
0866 70 360B	246	15
0866 70 360C	246	15
0866 70 365	246	12
0866 70 366	246	12
0866 70 367	246	12
0866 70 371	246	19
0305 70 395B	246	16
0866 70 395	246	16
1524 70 401A	231	27
1524 70 401A	235	21
0866 70 412	231	31
0866 70 412	232	40
0585 70 420A	235	24
0866 70 420	231	30
0376 70 421	231	34
0376 70 422	231	35
0585 70 423A	235	25
0585 70 423A	235	25
0376 70 426	232	37
0376 70 427	232	38
0376 70 428	232	39
0376 70 431A	232	45
0376 70 431A 00	232	45
0376 70 431A 02	232	45
0585 70 431	235	28
0866 70 431C	232	42
0866 70 431D	232	42
0899 70 431 00	235	28
0899 70 431 02	235	28
1531 70 441	248	1
1531 70 441	252	1
1540 70 441	248	1
1540 70 441	252	1
1542 70 441	248	1
1568 70 441	248	1
0305 70 443B	248	2
0305 70 443B	252	2
0305 70 445B	248	3
0305 70 445B	252	3
0305 70 447B	248	4
0305 70 447B	252	4
0305 70 448A	248	5

PARTS NUMBER	PARTS COMP. LIST PAGE	FIG. NO.
0305 70 448A	252	5
0839 70 449	248	6
0839 70 449	252	6
0376 70 451A	248	8
0866 70 451A	248	8
C866 70 451A	252	7
0866 70 452A	248	9
C866 70 452A	252	8
0376 70 453A	248	11
C866 70 453A	248	11
0866 70 453A	252	10
C866 70 454	248	13
0866 70 454	252	12
0374 70 471	248	14
0375 70 471	248	14
C376 70 471	248	14
1523 70 471	248	14
1524 70 471	248	14
1534 70 471	248	14
1535 70 471	248	14
1562 70 471	249	14
0866 70 473	249	15
0376 70 481A	249	16
0866 70 481A	249	16
0376 70 482A	249	17
0866 70 482A	249	17
0376 70 483A	249	18
0866 70 483A	249	18
0376 70 484A	249	20
0866 70 484A	249	20
0585 70 521A	252	16
0839 70 521	255	4
0839 70 522	255	5
0839 70 523A	255	6
0839 70 524	255	7
0839 70 525	255	8
0839 70 526	255	9
0585 70 531	253	40
0585 70 532	253	42
0585 70 533	253	44
0585 70 534	253	45
1529 70 551	252	14
1544 70 551	252	14
0585 70 710	227	14
0585 70 710A	227	14
0585 70 720	227	16
0585 70 720A	227	16
0585 70 730	227	17
0585 70 733	227	18
0376 70 801A	249	26
C866 70 801A	249	22
0866 70 801A 00	252	18
0376 70 802A	249	28
0866 70 802B	249	24
0866 70 802B 00	252	20
0585 70 811C	253	38
0376 70 821A	249	32
0376 70 821B	249	32
0866 70 821A	250	32
0866 70 821A	253	24
0866 70 821B	250	32
0866 70 821B	253	24
0376 70 822A	250	34
0376 70 822B	250	34
0585 70 822B	253	26
0866 70 822B	250	34
0866 70 822D	250	34
0866 70 823A	250	36
0866 70 823A	253	28
0866 70 851	250	37
0866 70 851	253	29
0866 70 852	250- 1	40
0866 70 852	253	32
C866 70 853A	250- 1	42
0866 70 853A	253	34
C866 70 853C	250- 1	42
0866 70 853C	253	34
0376 70 855	250- 1	45
0376 70 855C	250- 1	45
0305 70 861C	250	38
0305 70 861C	253	30
C870 70 871C	250- 1	49
0870 70 875	250- 1	48
C870 70 875	253	37
0870 70 881A	250- 1	49
C870 70 881C	250- 1	49
0376 70 891 00	232	48
C376 70 891 01	232	48
0376 70 892A 00	232	49
0376 70 892A 01	232	49
0899 70 911C 03	241	27
C899 70 911C 12	241	27
0899 70 911C 13	241	27
1624 70 911 03	241	27
1624 70 911 12	241	27
1624 70 911 13	241	27
0585 70 9128	241	28
0585 70 9218	241	29
0727 70 943	178	10
1524 70 980	61	43
1524 70 980	62- 4	41
1524 70 980	62- 7	35

INDEX.

PARTS NUMBER	PARTS COMP. LIST PAGE	FIG. NO.
1524 70 980	62-11	41
0866 71 180	144	29
0866 71 310A	246	1
0866 71 310E	246	1
0866 71 343	246	10
0866 71 351	246	13
0866 71 352	246	14
0585 71 420A	235	24
0866 71 420	231	30
0376 71 421	231	34
0376 71 422	231	35
0585 71 423A	235	25
0376 71 431A	232	45
0376 71 431A 00	232	45
0376 71 431A 02	232	45
0585 71 431	235	28
0866 71 431C	232	42
0866 71 431D	232	42
0899 71 431 00	235	28
0899 71 431 02	235	28
0866 71 452A	248	10
0866 71 452A	252	9
0376 71 453A	248	12
0866 71 453A	248	12
0866 71 453A	252	11
0376 71 483A	249	19
0866 71 483A	249	19
0376 71 484A	249	21
0866 71 484A	249	21
0585 71 521A	252	17
0585 71 531	253	41
0585 71 532	253	43
1529 71 551	252	15
1544 71 551	252	15
0376 71 801A	249	27
0866 71 801A	249	23
0866 71 801A 00	252	19
0376 71 802A	249	29
0866 71 802B	249	25
0866 71 802B 00	252	21
0376 71 821A	250	33
0376 71 821B	250	33
0866 71 821A	250	33
0866 71 821A	253	25
0866 71 821B	250	33
0866 71 821B	253	25
0376 71 822B	250	35
0378 71 822A	250	35
0585 71 822B	253	27
0866 71 822B	250	35
0866 71 822D	250	35
0866 71 852	250-1	41
0866 71 852	253	33
0866 71 853A	250-1	43
0866 71 853A	253	35
0866 71 853C	250-1	43
0866 71 853C	253	35
0376 71 855	250-1	46
0376 71 855C	250-1	46
0870 71 871C	250-1	49
0870 71 881A	250-1	49
0870 71 881C	250-1	49
0376 71 891 00	232	48
0376 71 891 01	232	48
0376 71 892A 00	232	49
0376 71 892A 01	232	49
0899 71 911C 03	241-1	32
0899 71 911C 12	241-1	32
0899 71 911C 13	241-1	32
1624 71 911 03	241-1	32
1624 71 911 12	241-1	32
1624 71 911 13	241-1	32
0585 72 010	260	1
0585 72 010A	260	1
0585 72 010B	260	1
0866 72 010B	260	1
0866 72 010C	260	1
0866 72 010D	260	1
1620 72 010	260	1
1636 72 010	260	1
0259 72 080	260	6
0866 72 201	267	31
0259 72 210	260	4
0866 72 210B	266	20
0866 72 212A	266	22
0866 72 240	266	23
0866 72 240B	266	23
0866 72 292	267	27
1524 72 310B	265	1
1524 72 310E	265	1
1524 72 310F	265	1
0866 72 330A	265	2
0866 72 410	265	11
0866 72 410A	265	11
0368 72 501	260	2
0374 72 501	255	1
0376 72 501	255	1
0583 72 501	260	2
0585 72 501	260	2
0866 72 501	260	2
0866 72 502	260	3
0376 72 505	255	3

PARTS NUMBER	PARTS COMP. LIST PAGE	FIG. NO.
0259 72 509	181	5
0376 72 560	255	11
0866 72 560	266	14
0376 72 602	256	21
0585 72 602C 00	260	8
0866 72 602A 0C	260	8
0376 72 603	256	22
0376 72 605	256	23
0585 72 605	261	9
0866 72 605	261	9
0376 72 606	256	24
0585 72 606	261	10
0866 72 606	261	10
0585 72 651A	261	13
0866 72 651E	261	13
1524 72 661B	261	14
1529 72 661	261	14
1540 72 661A	261	14
1544 72 661	261	14
0376 72 755A	258	46
0585 72 755	263	30
0585 72 760A	262	24
0866 72 760A	262	24
0376 72 761	258	43
0376 72 771	258	44
0376 72 781C	256	26
0376 72 781C	256	26
0866 72 781C	261	15
0376 72 790	256	27
0866 72 791	261	16
0376 72 810A	257	31
0866 72 810B	262	20
1620 72 810	262	20
1622 72 810	257	31
0585 72 821	263	32
0376 72 831A	257	37
0376 72 831B	257	37
0866 72 831C	262	26
0866 72 831D	262	26
0866 72 841A	262	27
0899 72 841B	262	28
0899 72 843A	263	31
0376 72 851B	257	38
0376 72 855	257	39
0376 72 861A	258	47
0376 72 862	258	48
0376 72 862A	258	48
0866 72 862A	267	39
0376 72 863	258	49
0866 72 863	267	40
0305 72 864	267	41
0376 72 881	257	41
0376 72 890	256	28
0376 72 901C	256	29
0376 72 902B	256	30
0223 72 921A	267	42
0585 73 010	260	1
0585 73 010A	260	1
0585 73 010B	260	1
0866 73 010B	260	1
0866 73 010C	260	1
0866 73 010D	260	1
1620 73 010	260	1
1636 73 010	260	1
0866 73 210B	266	20
0866 73 240	266	23
0866 73 240B	266	23
1524 73 310B	265	1
1524 73 310E	265	1
1524 73 310F	265	1
0866 73 330A	265	2
0866 73 410	265	11
0866 73 410A	265	11
0368 73 501	260	2
0374 73 501	255	1
0376 73 501	255	1
0583 73 501	260	2
0585 73 501	260	2
0866 73 501	260	2
0376 73 560	255	11
0866 73 560	266	14
0376 73 602	256	21
0585 73 602C 00	260	8
0866 73 602A	261	8
0376 73 603	256	22
1524 73 661B	261	14
1529 73 661	261	14
1540 73 661A	261	14
1544 73 661	261	14
0585 73 760A	262	24
0866 73 760A	262	24
0376 73 761	258	43
0376 73 771	258	44
0376 73 79C	256	27
0376 73 810A	257	31
0866 73 810B	262	20
1620 73 810	262	20
1622 73 810	257	31
0376 73 831A	257	37
0376 73 831B	257	37
0866 73 831C	262	26
0866 73 831D	262	26

INDEX.

PARTS NUMBER	PARTS COMP. LIST PAGE	FIG. NO.
C666 73 841A	262	27
0899 73 841B	262	28
0899 73 843A	263	31
0376 73 851E	257	38
0376 73 855	257	39
0376 73 881	258	41
0376 73 890	256	28
0376 74 C30	147	27
0585 74 03C	153	36
0666 74 C30	150	29
1524 74 040	143	6
C376 74 050	147	31
0866 74 050	150	33
C866 74 090	149	11
0866 74 090	152	11
1562 74 C90	146	11
0376 74 100	146	21
0666 74 1C0	149	23
0866 74 120	149	12
0666 74 120	152	12
1562 74 120	146	12
C376 74 130	146	22
0866 74 130	149	24
0635 74 158	269	
0839 74 168	269	
C666 74 200	144	31
0866 74 200A	144	31
C666 74 250	139	1
0839 74 910A	269	1
1524 75 010	169	2
1524 75 010A	169	2
C666 75 011	169	3
0866 75 013	169	4
0370 75 018	169	11
1514 75 021	169	5
0866 75 025	169	10
1128 75 025A	169	10
0866 75 026	169	6
1568 75 026	169	6
0866 75 028	169	7
1562 75 122A	170	17
1562 75 123A	170	18
1562 75 124A	170	19
1562 75 125	170	20
0275 75 140	170	24
1562 75 200A	170	21
1128 75 625A	169	10
2280 75 641A	269	
0866 75 930	269	2
0370 75 940	269	4
0899 75 960	269	3
0315 76 022	187- C	36
0208 76 071	244	34
0370 76 403	187	31
0862 76 403	187	31
0862 76 403A	187	31
1562 76 406A	187	34
0862 76 407	187	35
0866 76 407A	187	35
1562 76 407A	187	35
1562 76 408A	187	36
0370 76 409	187	32
0862 76 409	187	32
0370 76 411	187	33
0862 76 411	187	33
0370 76 416	187	37
1620 76 422	186	5
0862 76 423	187	37
1524 76 451	187- B	13
1524 76 452	187- B	14
1524 76 453	187- B	15
1524 76 454	187- B	16
1524 76 454A	187- B	16
0866 76 455	187- B	17
0866 76 455A	187- B	17
1524 76 456	187- B	18
1524 76 456A	187- B	18
0866 76 457	187- B	20
0866 76 458	187- B	21
0866 76 459	187- B	22
0866 76 461	187- C	23
0866 76 462	187- C	24
0866 76 463	187- C	25
0866 76 464	187- C	26
1524 76 465	187- C	27
C866 76 466	187- C	28
1524 76 467	187- C	29
0866 76 468	187- C	30
1524 76 469	187- C	31
1524 76 471	187- C	32
0866 76 472	187- B	19
0866 76 472A	187- B	19
1524 76 472	187- C	33
1524 76 473	187- C	34
1524 76 501	187- B	1
1524 76 501A	187- B	1
1524 76 502	187- B	2
1524 76 502A	187- B	2
1524 76 503	187- B	3
1524 76 503A	187- B	3
1524 76 504	187- B	4
1524 76 504A	187- B	4

PARTS NUMBER	PARTS COMP. LIST PAGE	FIG. NO.	PARTS NUMBER	PARTS COMP. LIST PAGE	FIG. NO.	PARTS NUMBER	PARTS COMP. LIST PAGE	FIG. NO.
1524 76 505	187- B	5	1524 76 706	192- P	6	0866 76 750	192- D	12
1524 76 505A	187- B	5	0370 76 707	192- B	9	0866 76 752	192- D	7
0866 76 506	187- B	7	0370 76 707	192- P	7	0866 76 754	192- D	4
0866 76 507	187- B	8	0866 76 707	192- E	34	0866 76 755	192- D	3
0866 76 508	187- B	9	0866 76 708	192- E	35	0866 76 760	192- D	8
0866 76 509	187- B	10	1524 76 708	192- B	7	0866 76 763	192- E	29
0866 76 511	187- B	11	1622 76 708	192- P	8	0866 76 764	192- E	30
1524 76 512	187- B	12	0866 76 709	192- E	35	0866 76 765	192- E	31
1524 76 601	215	35	0866 76 709A	192- E	35	0866 76 766	192- E	32
1524 76 602	215	34	1524 76 709	192- B	8	0866 76 790	192- E	33
1524 76 603	214	9	1622 76 709	192- P	9	0866 76 810	192- D	2
1524 76 604	214	8	0866 76 710	192- D		0866 76 820	192- D	5
0866 76 605	214	11	0866 76 711	192- B	10	0866 76 830	192- D	10
1524 76 607	214	18	0866 76 715	192- B	12	1622 76 901	192- P	11
1524 76 608	214	24	1562 76 716	192- B	13	1622 76 902	192- P	12
0866 76 701	192- D	1	1562 76 717	192- B	14	1622 76 903	192- P	13
1524 76 701	192- B	1	1622 76 717	192- P	10	1622 76 904	192- P	14
1524 76 701	192- P	1	1562 76 718	192- B	15	1622 76 905	192- P	15
1531 76 701	192- B	1	0866 76 720	192- E	28	1622 76 906	192- Q	16
1531 76 701	192- P	1	0866 76 721	192- D	14	1622 76 907	192- Q	17
0866 76 702	192- D	6	0866 76 721A	192- D	14	1622 76 908	192- Q	18
1524 76 702	192- B	2	0866 76 722	192- D	22	0317 78 034	189	13
1622 76 702	192- P	2	0866 76 723	192- D	15	0585 78 521	161	39
0370 76 703	192- B	3	0866 76 724	192- D	23	0866 78 521	156	13
0370 76 703	192- P	3	0866 76 725	192- D	24	0866 78 530	156	14
0866 76 703	192- D	9	0866 76 726	192- E	25	0866 78 541	156	16
0370 76 704	192- B	4	0866 76 729	192- E	26	0866 78 701A	137	36
0370 76 704	192- P	4	0866 76 730	192- D	17	0866 78 701A	137	46
0866 76 704	192- D	13	0866 76 731	192- D	19	0866 78 702	137	37
0866 76 705	192- D	21	0866 76 733	192- D	18	0866 78 710	137	38
1524 76 705	192- B	5	0866 76 734	192- D	16	0866 78 750	137	39
1524 76 705	192- P	5	0866 76 739	192- D	11	0866 78 801A	137	40
0866 76 706	192- E	27	0866 76 743	192- D	20	0866 78 810	137	41
1524 76 706	192- B	6	0866 76 743A	192- D	20	0208 78 834A	192- M	77

INDEX.

PARTS NUMBER	PARTS COMP. LIST PAGE	FIG. NO.	PARTS NUMBER	PARTS COMP. LIST PAGE	FIG. NO.	PARTS NUMBER	PARTS COMP. LIST PAGE	FIG. NO.
0259 78 857	190	31	0738 87 803	215	29	1694 88 160	172	4
0259 78 857	192- H	23	0738 87 804	215	31	0866 88 161	172	7
0259 78 858	190	32	0305 87 906	214	7	1694 88 161	172	7
0259 78 858	192- H	24	0727 87 992	217	2	0866 88 180	173	9
0259 78 868	190	33	0305 87 993	217	4	1694 88 180	173	10
0259 78 868	192- H	20	0727 87 994	217	5	0866 88 181	173	13
0208 78 875	190	39	0727 87 995	217	6	1694 88 181	173	13
0208 78 875	192- I	37	0727 87 996	217	7	0376 88 201	174	34
0820 78 883	192	68	1540 88 035	172	8	0866 88 201	174	34
0820 78 883	192- M	79	0866 88 101	173	19	0899 88 201	174	35
0275 87 007	199	6	1562 88 101	173	19	1693 88 201	174	34
0727 87 012	199	7	0866 88 102	173	14	1694 88 201	174	34
2850 87 012	199	7	0866 88 103	173	15	1696 88 201	174	35
0727 87 013	199	7	0866 88 105	173	22	0866 88 205	174	33
0727 87 014	199	4	0866 88 106	173	23	0866 88 205	175	42
0727 87 016	199	5	1570 88 110	172	3	0652 88 209	174	32
0727 87 022	199	7	1572 88 110	172	3	2405 88 215	174	37
0727 87 023	199	7	1693 88 110	172	3	2405 88 216	174	37
0305 87 032	202	11	1694 88 110	172	3	2405 88 217	174	36
0259 87 101A	214	22	0866 88 111	172	6	0652 88 229	175	43
0259 87 103	215	25	1694 88 111	172	6	0866 88 251	175	44
0259 87 104A	215	26	1674 88 120	173	8	0899 88 251	175	45
0259 87 105	214	21	1674 88 120A	173	8	1694 88 251	175	44
0259 87 106	214	23	0259 88 123	173	17	1696 88 251	175	45
0257 87 107	214	17	0866 88 130	173	9	0862 89 175	43- F	42
0259 87 107	214	19	1694 88 130	173	9	1011 89 175	43- C	39
0257 87 108	214	15	0866 88 131	173	12	0259 89 251	64	3
0259 87 108A	214	20	1694 88 131	173	12	0866 89 411	123	36
0259 87 109A	214	14	0866 88 135	173	11	0866 89 411	123- 1	46
0259 87 119	215	27	0866 88 151	173	20	0839 89 431	122	15
0259 87 120	215	28	0866 88 152	173	16	0839 89 431A	122	15
0259 87 134	214	12	0866 88 160	172	4	2835 89 439	127	48
0702 87 135	215	30	1568 88 160	172	4	0585 89 654	205	7
0702 87 138	215	32	1693 88 160	172	4	1540 89 661	199	1

PARTS NUMBER	PARTS COMP. LIST PAGE	FIG. NO.
1540 89 662A	199	9
1540 89 662E	199	9
1540 89 663	199	14
1544 89 664B	205	
1570 89 664	202	1
1570 89 664 15	202	1
C585 89 665	205	12
0866 89 665	202	7
1540 89 666	199	1
1540 89 667A	199	9
1540 89 667E	199	9
1540 89 668	200	14
1544 89 669E	205	
1570 89 669	202	1
1570 89 669 15	202	1
1540 89 673	202	13
1540 89 673	206	24
1540 89 678	202	13
1540 89 678	206	24
1027 99 100	4	
1027 99 100A	4	
0839 99 118	11	3
0862 99 150	34	19
0862 99 150A	34	19
1668 99 150	34	19
2090 99 150	34	19
0305 99 178	49- C	25
0585 99 281A	80	16
0866 99 281A	77	20
1524 99 322	87	2
1524 99 324	87	3
1011 99 340A	98	6
0866 99 356	95	26
0259 99 361	96	54
0317 99 362	96	54
0866 99 721	250	37
0866 99 721	253	29
0870 99 731	250- 1	49
0870 99 734A	250- 1	49
0870 99 736	250- 1	49
0870 99 739A	250- 1	49
0376 99 741	248	8
0866 99 741	248	8
0866 99 741	252	7
0866 99 742	248	9
0866 99 742	252	8
0376 99 743	248	11
0866 99 743	248	11
0866 99 743	252	10
0376 99 744	248	12
0866 99 744	248	12
0866 99 744	252	11
0866 99 745	248	10
0866 99 745	252	9
0376 99 746	249	16
0866 99 746	249	16
0376 99 747	249	17
0866 99 747	249	17
0376 99 748	249	18
0866 99 748	249	18
0376 99 749	249	19
0866 99 749	249	19
0866 99 801	137	33
1620 99 801	137- A	49
1620 99 801A	137- A	49
0866 99 802	137	34
1620 99 802	137- A	49
1620 99 802A	137- A	49
0866 99 806	137	35
9078 60 616	62- 4	44
9078 60 616	62- 7	38
9078 60 616	62-12	44
9078 60 616	109	33
9078 60 620	117	19
9079 70 614	164	33
9080 12 816	58- C	26
9080 12 818	12	24
9080 12 818	98	7
9080 12 818	101	19
9080 12 820	46- C	23
9080 12 820	46- F	25
9080 16 820	8	52
9080 16 825	34	19
9080 42 820	62- 4	48
9080 42 820	62- 7	42
9080 42 820	62-12	48
9080 62 610	62-14	6
9080 62 614	35	28
9080 62 614	62-15	33
9080 62 614	62-19	35
9080 62 614	62-19	44
9080 67 614	144	35
9083 32 408	32	10
9083 32 410	246	17
9083 36 512	106	42
9083 36 512	109- 1	45
9086 02 512	62-16	44
9922 11 212	30	48
9922 12 012	117	6
9922 12 015	87	6
9922 12 015	88	18
9922 12 020	85- 1	53

INDEX.

PARTS NUMBER	PARTS COMP. LIST PAGE	FIG. NO.	PARTS NUMBER	PARTS COMP. LIST PAGE	FIG. NO.	PARTS NUMBER	PARTS COMP. LIST PAGE	FIG. NO.
9922 12 020	87	6	9927 61 808	212- 3	87	9929 50 406	212- 3	85
9922 12 020	120	30	9927 62 208	21- B	8	9929 50 606	42	7
9922 12 020	133- C	26	9928 21 201	106	45	9929 50 610	43	28
9922 13 020	95	30	9928 21 201	109	34	9929 50 808	84	35
9922 13 020	173	24	9928 21 301	111	22	9929 51 008	61	40
9922 14 030	90	2	9928 21 401	109	27	9929 51 008	62-11	38
9922 20 216	43- C	29	9928 21 401	111	22	9929 51 008	123- 1	54
9922 20 216	43- F	35	9928 21 401	115	27	9929 51 506	192- H	16
9922 20 216	62-19	40	9928 21 700	62-16	39	9929 51 508	62- 4	49
9922 20 520	133- C	27	9928 21 801	109	36	9929 51 508	62- 7	43
9922 50 320	133- B	13	9928 21 901	133	27	9929 51 508	62-12	49
9923 00 511	117	17	9928 22 001	106	46	9929 51 508	84	35
9923 00 815B	129	8	9928 22 001	133	27	9929 51 508	189	18
9923 00 820	227	15	9928 22 200	187	20	9929 51 510	39	13
9923 00 852	175- 1	59	9928 22 600	187	19	9929 51 510	62-15	28
9923 10 820	120	29	9928 22 600	187	20	9929 52 008	62- 4	50
9923 31 225	42	2	9928 22 600	187	29	9929 52 008	62- 7	44
9923 31 225	43- B	6	9928 22 600	187- B	6	9929 52 008	62-12	50
9923 31 225	43- E	7	9928 24 300	20	16	9929 52 008	112	26
9923 41 208	7	13	9928 24 300	21- 2	16	9929 52 008	115	26
9923 60 525	14	48	9928 24 309	20	16	9930 52 800	7	30
9924 61 230	43- E	9	9928 24 900	37	49	9930 63 000	2	19
9926 21 806B	224	31	9928 25 300	37	49	9930 63 000	7	19
9926 22 503	2	7	9928 25 500	104	6	9930 70 600	3	30
9926 40 531B	143	8	9928 26 000	108	10	9930 70 600	16	6
9926 40 531E	192- N	94	9928 31 300	111	14	9930 70 800	16	7
9926 70 422	29	33	9928 31 300	114	14	9930 71 200	16	8
9927 60 506	43- B	10	9928 50 600	109	34	9930 71 400	16	9
9927 60 506	43- E	13	9928 50 800	36	43	9930 71 600	16	10
9927 60 510	43- B	21	9928 50 800	126	26	9933 50 4015	217	10
9927 60 510	43- F	25	9928 80 808	133	30	9933 50 4066	217	11
9927 60 608	43- C	25	9928 80 808	140	22	9933 50 8003	246	9
9927 61 408	21- B	7	9928 81 608	167	85	9933 60 6100	21- B	6
9927 61 608	30	50	9928 90 701	36	42	9933 61 0070	109	35

PARTS NUMBER	PARTS COMP. LIST PAGE	FIG. NO.	PARTS NUMBER	PARTS COMP. LIST PAGE	FIG. NO.	PARTS NUMBER	PARTS COMP. LIST PAGE	FIG. NO.
9933 61 2040	105	28	9954 1C 2211	62-19	41	9956 41 800	43	26
9934 00 5224	62-15	31	9956 21 000	49	42	9956 41 800	43	39
9934 00 6140	114	21	9956 21 000	123	27	9956 41 800	43- B	16
9934 00 6180	111	15	9956 21 000	123- 1	50	9956 41 800	43- C	39
9934 C0 6224	114	15	9956 21 000	132	3	9956 41 800	43- E	20
9934 00 6320	111	20	9956 21 200	133	30	9956 41 800	43- F	32
9934 C0 6350	21	37	9956 21 400	8	44	9956 42 800	14	50
9934 00 6460	111	10	9956 21 400	48	10	9957 32 200	46- G	50
9934 C0 6460	114	10	9956 21 400	49	32	9957 32 500	46	33
9934 00 6480	111	10	9956 21 400	49- B	13	9957 32 500	46	41
9934 C0 6500	114	17	9956 21 600	3	39	9957 32 500	46- C	30
9934 00 6670	111	16	9956 21 600	7	17	9957 32 500	46- G	40
9934 C6 C160	105	26	9956 21 600	37	67	9957 32 500	62-26	36
9938 11 00C	62-16	40	9956 21 800	37	54	9957 33 500	45	4
9938 11 400	37	53	9956 40 800	16	11	9957 33 500	46- B	2
9938 41 200	3	38	9956 40 800	46- G	55	9957 33 500	46- E	2
9938 41 200F	3	38	9956 41 000	4		9957 43 500	34	13
9950 22 00C	84	37	9956 41 000	7	28	9957 50 300	117	18
9950 24 000	42	9	9956 41 000	16	12	9957 50 400	206	18
9950 24 000	43- B	12	9956 41 000	48	11	9957 50 500	129	9
9950 24 000	43- E	15	9956 41 000	49	42	9957 50 600	70	33
9950 31 000	4		9956 41 000	49- B	17	9957 50 600	117	11
9950 33 000	16	10	9956 41 000	191	57	9957 50 600	119	14
9951 00 800	16	11	9956 41 060	192- M	85	9957 50 600	133- C	28
9951 C1 CC0	7	28	9956 41 200	2	5	9957 60 300	187- C	37
9951 01 C00	49	41	9956 41 200	4		9957 60 400	246	12
9951 11 C00	16	12	9956 41 200	6	5	9957 60 500	175- 1	59
9951 11 400	8	43	9956 41 200	104	3	9957 60 500	227	15
9954 1C 1101	13	29	9956 41 200	108	3	9957 60 700	228	20
9954 10 1601	29	25	9956 41 400	62-16	41	9957 60 800	30	40
9954 1C 1601	62-19	34	9956 41 600	3	39	9957 92 000	235	26
9954 10 2101	42	17	9956 41 600	7	17	9957 93 000	83	16
9954 1C 2211	43- C	32	9956 41 600	21	34	9957 93 000	230	10
9954 10 2211	43- F	38	9956 41 600	21- 3	29	9957 93 000	234	4

INDEX.

PARTS NUMBER	PARTS COMP. LIST PAGE	FIG. NO.	PARTS NUMBER	PARTS COMP. LIST PAGE	FIG. NO.	PARTS NUMBER	PARTS COMP. LIST PAGE	FIG. NO.
9957 94 000	196	41	9965 05 4530	92	38	9970 14 237	205	4
9958 61 0207	42	18	9965 06 4530	71	38	9970 15 050	208	3
9958 61 0207	43- C	33	9965 06 4530	92	38	9970 15 050	208	8
9958 61 0207	43- F	39	9965 53 0010	71	39	9970 16 030	165	45
9958 61 0207	62-19	42	9965 53 0015	71	39	9970 16 030	169	8
9960 60 614	143	3	9965 53 0020	71	39	9970 16 030	170	22
9960 63 3070	45	3	9965 53 0025	71	39	9970 16 030	225	53
9960 63 3070	46- B	3	9965 53 0030	71	39	9970 60 103	208	15
9960 63 3070	46- E	3	9965 53 0035	71	39	9970 60 105	208	15
9960 66 3050	46- G	38	9965 53 0040	71	39	9970 60 110	208	15
9960 66 3440	46- C	48	9965 53 0045	71	39	9970 60 115	208	15
9961 11 500	46	40	9965 53 0050	71	39	9970 60 115	208	15
9961 11 500	46- C	28	9965 53 0060	71	39	9970 60 120	208	15
9961 11 500	46- F	35	9968 11 001	17	27	9970 90 108	21- D	9
9961 11 500	62-26	37	9968 40 300	212	47	9970 90 108	21- 3	35
9961 11 500	70	28	9968 40 600	212- 2	76	9970 90 108	62-16	47
9961 11 500	123	23	9968 51 000	62	50	9970 90 108	105	29
9961 11 500	123- 1	44	9968 51 400	62	51	9970 90 225	21- D	10
9961 11 750	62-18	3	9968 60 800	62-16	43	9970 90 255	105	29
9961 12 000	13	32	9968 60 800	165	49	9970 90 255	109	37
9961 12 000	62-15	20	9968 61 000	212	46	9970 91 206	212- 3	86
9961 12 000	62-18	8	9968 61 200	112	24	9970 92 185	212- 1	62
9961 12 000	62-31	38	9968 61 400	112	26	9971 51 101	227	13
9961 12 500	48	13	9968 61 400	115	26	9973 70 514	137	31
9961 12 500	49- B	15	9968 61 600	212	48	9974 30 614B	21- D	6
9961 12 500	62-30	2	9970 12 080	200	17	9974 30 620	209	19
9961 12 750	62-28	14	9970 12 080	202	10	9974 30 650	163	16
9962 06 6113	71	38	9970 12 080	203	16	9974 80 410	220	16
9962 06 6113	91	38	9970 12 080	206	22	9975 01 1018	91	32
9962 09 1553	71	38	9970 12 080	206	27	9975 23 0818	64	6
9962 09 1553	91	38	9970 13 230	202	5	9975 34 1022	73	14
9963 60 4140	71	38	9970 13 230	205	9	9975 37 8118	39	17
9963 60 4140	92	38	9970 14 237	199	12	9975 37 8118	40- B	17
9965 05 4530	71	38	9970 14 237	202	4	9975 38 1022	73	14

PARTS NUMBER	PARTS COMP. LIST PAGE	FIG. NO.	PARTS NUMBER	PARTS COMP. LIST PAGE	FIG. NO.	PARTS NUMBER	PARTS COMP. LIST PAGE	FIG. NO.
9976 10 309	62-15	26	9978 30 828	267	33	9978 60 620	137- A	47
9976 50 516	117	3	9978 31 028	76	11	9978 60 635	133	22
9976 50 610	21- B	4	9978 31 035	94	16	9978 60 816	101	26
9976 50 610B	21- D	3	9978 50 612	126	34	9978 60 825	85- 1	60
9976 50 616	117	9	9978 50 614	112	26	9978 60 830	186	8
9976 50 616	194	17	9978 50 614	115	25	9978 60 835	85- 1	62
9976 70 410	250- 1	47	9978 50 618	129	15	9979 40 845	55- B	8
9976 70 525	205	6	9978 50 620	117	19	9979 51 020	108	4
9976 90 408	250- 1	47	9978 50 620	129	21	9979 51 032	119	5
9976 90 408	250- 1	49	9978 50 620	157- 1	37	9979 60 608	43- F	29
9976 90 614	55	76	9978 50 620	160	25	9979 60 610	55	80
9977 20 516	230	14	9978 50 620	246	18	9979 60 610	55- F	87
9977 20 516	234	9	9978 50 814	132	20	9979 60 614	43- C	36
9977 20 525	230	14	9978 50 820	135	4	9979 60 614	43- F	42
9977 20 525	234	10	9978 50 820	174	27	9979 60 620	43- B	15
9977 30 410	206	21	9978 50 825	80	18	9979 60 620	43- E	19
9977 30 416	205	10	9978 50 825	175	49	9979 60 812	36	46
9977 40 416	203	17	9978 60 516	104	8	9979 60 820	58- C	26
9977 40 416	206	28	9978 60 516	105	19	9979 60 822	48	20
9977 60 620	231	26	9978 60 516	109	19	9979 60 822	49- C	30
9978 10 612	217	16	9978 60 516	109	23	9979 60 825	58- C	25
9978 10 616	109	33	9978 60 612	21- B	15	9979 60 832	48	21
9978 10 616A	46	38	9978 60 612	55- F	89	9979 60 832	49- C	31
9978 10 820	194	10	9978 60 612	55- F	96	9979 61 035	40- B	12
9978 11 012	62-14	2	9978 60 612	112	26	9979 61 045	62-15	27
9978 11 018	62-14	4	9978 60 612	132	20	9979 61 045	62-15	27
9978 11 028	135	4	9978 60 616	108	13	9979 61 050	62-15	26
9978 11 028	156	17	9978 60 616	111	6	9979 61 050	62-15	27
9978 11 080	88	19	9978 60 616	129	15	9979 61 080	62-15	27
9978 11 085	85	46	9978 60 616	129	21	9979 61 095	40- B	8
9978 11 225	95	31	9978 60 616	133	24	9979 70 512	219	3
9978 11 235	95	32	9978 60 616	137- A	49	9979 70 612	55	74
9978 30 825	139	3	9978 60 620	36	44	9979 70 612	55	78
9978 30 828	183	36	9978 60 620	135	9	9979 70 612	202	12

INDEX.

PARTS NUMBER	PARTS COMP. LIST PAGE	FIG. NO.	PARTS NUMBER	PARTS COMP. LIST PAGE	FIG. NO.	PARTS NUMBER	PARTS COMP. LIST PAGE	FIG. NO.
9979 70 612	209	28	9980 10 832	35	29	9980 50 822	222	6
9979 70 612	212- 2	65	9980 10 832	101	20	9980 50 825	120	35
9979 70 616	191	53	9980 10 835	48	21	9980 50 830	192	73
9979 70 620	137	43	9980 10 840	3	41	9980 50 830	192- N	100
9979 70 740	212- 3	92	9980 10 840	189	19	9980 51 032	136	25
9979 90 835	85- 1	60	9980 10 840	192- G	12	9980 51 032	161	40
9980 10 612	191	43	9980 10 845	51	8	9980 60 510	181	9
9980 10 810	85- 2	63	9980 10 865	4	42	9980 60 510	215	33
9980 10 812	6	2	9980 10 875	4	43	9980 60 510	265	8
9980 10 812	36	46	9980 11 035	62- 4	38	9980 60 512	220	21
9980 10 814	69	15	9980 11 035	62- 7	32	9980 60 516	183	22
9980 10 816	18	34	9980 11 045	101	29	9980 60 516	256	20
9980 10 816	58	26	9980 12 825	192- H	13	9980 60 516	266	19
9980 10 816	84	34	9980 30 8100	20	2	9980 60 610	7	25
9980 10 816	139	4	9980 30 8100	21- 2	2	9980 60 610	21- 3	20
9980 10 816	143	20	9980 31 0120	62- 3	37	9980 60 610	35	28
9980 10 818	8	52	9980 31 0120	62- 7	31	9980 60 610	37	64
9980 10 818	98	7	9980 40 516	104	8	9980 60 610	43	34
9980 10 820	46	38	9980 40 516	105	19	9980 60 610	43	36
9980 10 820	101	19	9980 40 516	108	13	9980 60 610	111	6
9980 10 820	173	18	9980 40 516	109	19	9980 60 610	261	12
9980 10 820	209	26	9980 40 516	109	23	9980 60 612	20	20
9980 10 822	20	3	9980 40 614	157- 1	35	9980 60 612	35	33
9980 10 822	21- 2	3	9980 40 614	160	23	9980 60 612	111	9
9980 10 822	58	25	9980 40 616	225	50	9980 60 612	114	9
9980 10 822	58- C	25	9980 40 620	36	44	9980 60 612	135	11
9980 10 822	76	3	9980 40 820	62	53	9980 60 612	177	10
9980 10 822	79	3	9980 40 820	159	19	9980 60 612	182	18
9980 10 825	7	36	9980 40 820	163	2	9980 60 612	189	4
9980 10 825	48	20	9980 40 825	105	23	9980 60 612	192- I	33
9980 10 825	190	20	9980 50 520	102	40	9980 60 612	192- I	35
9980 10 828	123	35	9980 50 616	255	15	9980 60 612	192- L	68
9980 10 830	61	37	9980 50 622	135	8	9980 60 612	192- L	72
9980 10 830	62-11	35	9980 50 816	163	3	9980 60 612	255	16

INDEX.

PARTS NUMBER	PARTS COMP. LIST PAGE	FIG. NO.	PARTS NUMBER	PARTS COMP. LIST PAGE	FIG. NO.	PARTS NUMBER	PARTS COMP. LIST PAGE	FIG. NO.
9980 60 612	256	25	9981 11 010	7	23	9983 20 630	265	5
9980 60 612	260	7	9981 11 018	90	14	9983 30 310B	192- J	54
9980 60 612	266	15	9981 11 020	90	14	9983 30 408	69	14
9980 60 614	29	20	9981 11 032	39	11	9983 30 408	82	6
9980 60 614	42	20	9981 11 032	62-15	26	9983 30 408	87	14
9980 60 614	49	26	9981 11 045	39	10	9983 30 408	106	36
9980 60 614	49- B	24	9981 11 045	62-15	27	9983 30 408	109	25
9980 60 614	144	25	9981 11 050	39	9	9983 30 410	106	36
9980 60 616	8	49	9981 11 050	40- B	10	9983 30 410	109	25
9980 60 616	133	24	9981 11 050	62-15	26	9983 30 412	130	26
9980 60 616	133- B	20	9981 11 050	62-15	27	9983 30 418	8	54
9980 60 616	139	11	9981 11 050	73	9	9983 30 510	16	5
9980 60 616	139	13	9981 11 055	39	8	9983 30 510	43- B	19
9980 60 616	140	36	9981 11 055	40- B	9	9983 30 510	43- F	23
9980 60 616	143	10	9981 11 055	62-15	27	9983 30 512	126	33
9980 60 616	192- L	69	9981 11 075	39	7	9983 30 512	186	9
9980 60 616	212- 2	77	9981 11 075	62-15	27	9983 30 512	186	10
9980 60 616	215	38	9981 11 080	40- B	11	9983 30 512	192	62
9980 60 618	28	2	9981 31 0110	120	36	9983 30 512	192	74
9980 60 618	30	36	9981 31 0125	57	19	9983 30 512	192- K	60
9980 60 618	140	26	9981 31 0125	58- B	19	9983 30 512	192- N	97
9980 60 618	194	6	9981 31 0155	120	36	9983 30 512	222	13
9980 60 618	196	44	9983 10 408	177	9	9983 30 512	223	19
9980 60 620	62	46	9983 10 408	261	11	9983 30 512	223	21
9980 60 620	192- K	56	9983 10 408B	223	27	9983 30 512B	222	9
9980 60 622	43	24	9983 10 516	230	18	9983 30 516B	222	8
9980 60 625	132	5	9983 10 516	234	14	9983 30 520	178	15
9980 60 625	210	32	9983 10 640	140	20	9983 30 520	257	36
9980 60 628	192- I	30	9983 20 408B	167	77	9983 30 520	261	19
9980 60 630	30	36	9983 20 408B	182	11	9983 30 520	263	33
9980 60 635	133	22	9983 20 408B	265	10	9983 30 525	192- J	46
9980 60 640	100	14	9983 20 516B	225	51	9983 30 612	51	9
9980 60 814	190	36	9983 20 625	175	48	9983 30 612	169	13
9981 10 812	74	23	9983 20 630	181	6	9983 30 612	212- 1	63

INDEX.

PARTS NUMBER	PARTS COMP. LIST PAGE	FIG. NO.	PARTS NUMBER	PARTS COMP. LIST PAGE	FIG. NO.	PARTS NUMBER	PARTS COMP. LIST PAGE	FIG. NO.
9983 30 614	195	24	9983 80 630	169	15	9985 21 016	3	25
9983 3C 616	169	14	9983 90 518B	224	36	9985 51 020A	3	34
9983 30 616	199	8	9983 90 520B	165	40	9985 51 025	42	4
9983 3C 616	205	5	9985 10 618A	54	65	9985 51 025	43- B	3
9983 30 616	211	37	9985 1C 618A	55- E	78	9985 51 025	43- E	3
9983 30 616	224	42	9985 10 622A	16	13	9985 51 045	43- E	8
9983 30 616B	222	10	9985 10 624A	16	15	9985 51 060	42	5
9983 3C 618	164	17	9985 10 632A	16	14	9985 71 0135	43- E	6
9983 30 625	209	16	9985 10 814A	2	2	9985 91 025	189	14
9983 3C 810	6	2	9985 10 814A	61	38	9985 91 028	192- G	7
9983 30 810	6	2	9985 10 814A	62-11	36	9985 91 050	189	15
9983 3C 812	69	3	9985 10 818A	3	31	9985 91 050	192- G	8
9983 30 812	69	17	9985 1C 820	40- B	3	9985 91 220A	3	24
9983 30 812	210	33	9985 10 822A	2	3	9985 91 225	189	16
9983 40 408	21- B	16	9985 10 822A	6	3	9985 91 225A	3	26
9983 4C 412E	224	34	9985 10 828A	16	16	9986 00 510	160	34
9983 40 512B	222	7	9985 20 610	42	3	9986 00 520	102	41
9983 4C 612	174	37	9985 20 610	43- B	4	9986 10 410	244	21
9983 40 612B	223	16	9985 2C 610	43- E	4	9986 10 410B	244	22
9983 4C 616E	222	14	9985 20 612	70	20	9986 10 412	175- 1	63
9983 50 625C	199	13	9985 2C 616A	14	47	9986 10 414B	163	11
9983 6C 416E	164	29	9985 20 635	189	5	9986 20 412B	237	16
9983 60 516B	169	12	9985 2C 655	3	23	9986 20 412B	240	12
9983 6C 516E	222	11	9985 20 820	66	2	9986 20 416B	195	26
9983 60 620	195	20	9985 2C 822A	3	22	9986 20 416B	241	30
9983 70 516C	231	21	9985 20 822A	7	20	9986 20 416C	195	26
9983 70 516C	235	17	9985 2C 828A	16	16	9986 20 416C	241	30
9983 70 525B	164	26	9985 20 830A	7	21	9986 20 425B	249	30
9983 80 412	164	24	9985 2C 848	122	15	9986 20 425B	252	22
9983 8C 412E	163	10	9985 20 865A	2	12	9986 20 512B	237	13
9983 80 514	208	5	9985 2C 865A	2	20	9986 20 512B	240	9
9983 8C 618	163	8	9985 20 878A	2	20	9986 20 512C	240	6
9983 80 620	231	24	9985 20 878A	2	21	9986 20 516B	137	32
9983 8C 620	235	20	9985 20 880	66	3	9986 20 525B	163	14

PARTS NUMBER	PARTS COMP. LIST PAGE	FIG. NO.	PARTS NUMBER	PARTS COMP. LIST PAGE	FIG. NO.	PARTS NUMBER	PARTS COMP. LIST PAGE	FIG. NO.
9986 30 410	257	40	9986 40 410C	241	26	9986 80 520	192- H	25
9986 30 410B	220	26	9986 40 412	212- 2	74	9986 80 520	192- M	81
9986 30 412	104	11	9986 40 412	238	27	9986 80 62C	192- L	74
9986 30 412	165	46	9986 40 412B	231	29	9986 80 620	192- M	89
9986 30 412	237	10	9986 40 412B	235	23	9986 90 400	163	12
9986 30 412B	232	43	9986 40 414	231	32	9986 90 412	166	57
9986 30 414	230	5	9986 40 414	232	41	9986 90 412	208	11
9986 30 414E	249	31	9986 40 414B	252	23	9986 90 512	85- 2	69
9986 30 416B	235	29	9986 40 414B	253	39	9986 90 512	212- 1	58
9986 30 420B	235	29	9986 40 416	238	26	9986 90 512	212- 1	60
9986 30 425B	232	44	9986 40 416B	200	18	9988 70 412	133- B	14
9986 30 510	164	22	9986 40 416B	232	46	9989 60 400	235	30
9986 30 512	105	31	9986 40 420C	241	31	9989 60 500	105	31
9986 30 512	170	25	9986 40 512	155	4	9989 60 500	137	30
9986 30 512	212- 1	56	9986 40 512	161	42	9989 60 500	166	53
9986 30 512	223	15	9986 40 512C	194	15	9989 60 600	55	76
9986 30 512	250	39	9986 40 516B	238	24	9989 60 600	144	24
9986 30 512	250- 1	44	9986 40 525B	238	25	9989 60 600	144	34
9986 30 512	253	31	9986 40 616	144	24	9989 60 616	224	41
9986 30 512	253	36	9986 40 616	144	34	9990 10 800	4	47
9986 30 512B	186	11	9986 60 420	83	27	9990 10 800	16	17
9986 30 516	157- 1	39	9986 80 308	82	12	9990 10 800	17	24
9986 30 516	160	29	9986 80 308	192	67	9990 10 800	18	32
9986 30 516	166	52	9986 80 308B	208	10	9990 10 800	29	26
9986 30 516	187	24	9986 80 408	160	32	9990 10 800	35	23
9986 30 516	187	27	9986 80 408	192- J	51	9990 10 800	35	26
9986 30 520B	224	43	9986 80 410	82	7	9990 10 800	36	38
9986 40 406	173	26	9986 80 410	186	7	9990 10 800	54	67
9986 40 408	258	45	9986 80 410	192- J	44	9990 10 800	55- F	80
9986 40 410	219	13	9986 80 420	82	8	9990 10 800	61	39
9986 40 410	231	36	9986 80 508	129	16	9990 10 800	61	41
9986 40 410	246	11	9986 80 512	187	18	9990 10 800	62- 4	39
9986 40 410E	235	27	9986 80 512	190	34	9990 10 800	62- 7	33
9986 40 410B	258	42	9986 80 520	192- H	21	9990 10 800	62-11	37

INDEX.

PARTS NUMBER	PARTS COMP. LIST PAGE	FIG. NO.
9990 10 800	62-11	39
9990 10 800	66	19
9990 10 800	67	20
9990 10 800	76	3
9990 10 800	76	4
9990 10 800	79	3
9990 10 800	79	15
9990 10 800	94	9
9990 10 800	100	10
9990 10 800	101	20
9990 10 800	101	32
9990 10 800	119	9
9990 10 800	123	36
9990 10 800	123- 1	55
9990 10 800	127	48
9990 10 800	174	28
9990 10 800	175	50
9990 10 800B	129	12
9990 20 800	102	32
9990 20 800	133- C	29
9990 60 300	197	52
9990 60 400	21- B	17
9990 60 400	170	26
9990 60 500	55- B	10
9990 60 500	58	22
9990 60 500	106	39
9990 60 500	109- 1	42
9990 60 500	164	30
9990 60 500	182	13
9990 60 500	225	48
9990 60 500	230	11
9990 60 500	234	6
9990 60 500	255	10
9990 60 500	266	13
9990 60 600	20	9
9990 60 600	21	24
9990 60 600	21- 2	9
9990 60 600	21- 3	24
9990 60 600	28	19
9990 60 600	35	34
9990 60 600	37	59
9990 60 600	43	31
9990 60 600	43- B	9
9990 60 600	43- B	11
9990 60 600	43- E	12
9990 60 600	43- E	14
9990 60 600	55- F	81
9990 60 600	58- C	22
9990 60 600	62	47
9990 60 600	70	29
9990 60 600	100	14
9990 60 600	111	4
9990 60 600	114	4
9990 60 600	114	6
9990 60 600	123	34
9990 60 600	135	6
9990 60 600	135	11
9990 60 600	140	27
9990 60 600	140	28
9990 60 600	144	26
9990 60 600	144	33
9990 60 600	167	83
9990 60 600	190	41
9990 60 600	191	43
9990 60 600	191	54
9990 60 600	192- H	18
9990 60 600	192- I	33
9990 60 600	192- I	36
9990 60 600	192- L	70
9990 60 600	192- L	73
9990 60 600	199	8
9990 60 600	209	25
9990 60 600	210	32
9990 60 800	126	27
9990 60 800	186	12
9990 60 800	191	55
9990 60 800	192	75
9990 60 800	192- K	63
9990 60 800	192- N	99
9990 70 500	51	10
9990 70 600	32	24
9990 70 600	117	14
9990 70 600	140	20
9990 70 600	181	7
9990 70 600	189	6
9990 70 600	265	6
9990 70 800	35	23
9990 70 800	62- 4	51
9990 70 800	62- 8	45
9990 70 800	62-12	51
9991 00 401	195	26
9992 11 000	39	6
9992 11 000	39	12
9992 11 000	43	27
9992 11 000	57	20
9992 11 000	58- C	20
9992 11 000	62-15	27
9992 11 000	76	9
9992 11 000	77	28
9992 11 000	79	4
9992 11 000	79	9
9992 11 000	80	22

INDEX.

PARTS NUMBER	PARTS COMP. LIST PAGE	FIG. NO.	PARTS NUMBER	PARTS COMP. LIST PAGE	FIG. NO.	PARTS NUMBER	PARTS COMP. LIST PAGE	FIG. NO.
9992 11 000	88	20	9994 00 400	206	28	9994 00 800	165	38
9992 11 000	95	34	9994 00 500	203	19	9994 00 802	18	32
9992 11 000	98	2	9994 00 500	219	8	9994 00 802	36	38
9992 11 000	98	5	9994 00 501	166	54	9994 00 802	111	12
9992 11 000	98- 1	9	9994 00 501	222	12	9994 00 802	114	12
9992 11 000	120	37	9994 00 502	202	6	9994 00 802	163	4
9992 11 000	136	18	9994 00 502	205	11	9994 01 001	40- B	7
9992 11 000	156	15	9994 00 600	55	76	9994 01 001	40- B	13
9992 11 000	189	17	9994 00 600	55- F	91	9994 01 001	43- C	22
9992 11 000	192- G	9	9994 00 600	111	4	9994 01 001	43- F	26
9992 11 000	192- C	10	9994 00 600	123	34	9994 01 001	62-15	27
9992 11 200	37	63	9994 00 600	123- 1	53	9994 01 002	98- 1	17
9992 11 200	77	25	9994 00 600	135	6	9994 10 800	18	30
9992 11 200	189	17	9994 00 600	136	24	9994 10 801	18	30
9992 11 200	192- C	11	9994 00 600	212- 1	60	9994 21 000	85	47
9992 11 800	85- 1	54	9994 00 600	212- 3	81	9994 21 000	94	21
9992 20 800	119	9	9994 00 601	43- B	9	9994 21 001	85	47
9992 20 800	119	17	9994 00 601	43- E	12	9994 21 400	94	10
9992 20 800	122	19	9994 00 602	62- 4	45	9994 41 400	87	9
9992 20 800	123- 1	40	9994 00 602	62- 7	39	9994 50 500B	167	78
9992 21 000	77	28	9994 00 602	62-12	45	9994 71 200	83	28
9992 21 000	80	22	9994 00 602	163	6	9994 71 400	94	19
9992 21 000	84	36	9994 00 602	165	34	9994 81 200	83	28
9992 21 000	119	5	9994 00 602	165	37	9994 90 800	100	5
9992 21 000	120	27	9994 00 602	194	7	9995 10 618	135	6
9992 21 000	133- C	22	9994 00 602	206	23	9995 10 618	135	6
9992 21 200	28	9	9994 00 602	212- 2	71	9995 10 618	135	8
9992 21 400	62-28	7	9994 00 800	62-16	46	9995 10 618	136	24
9992 21 400	87	8	9994 00 800	76	4	9995 10 618	140	27
9992 41 000	85- 1	53	9994 00 800	94	9	9995 10 618	140	36
9992 41 000	87	6	9994 00 800	100	10	9995 10 618	174	37
9992 41 000	88	18	9994 00 800	120	42	9995 10 618	178	10
9992 41 200	95	30	9994 00 800	123	36	9995 10 618	182	13
9994 00 400	203	17	9994 00 800	127	48	9995 10 618	182	18

INDEX.

PARTS NUMBER	PARTS COMP. LIST PAGE	FIG. NO.	PARTS NUMBER	PARTS COMP. LIST PAGE	FIG. NO.	PARTS NUMBER	PARTS COMP. LIST PAGE	FIG. NO.
9995 1C 618	191	54	9995 20 400	257	40	9995 20 500	212- 1	58
9995 10 618	196	44	9995 20 400B	163	10	9995 20 500	212- 1	60
9995 1C 618	256	16	9995 20 412	165	46	9995 20 500	219	3
9995 10 618	256	25	9995 20 412B	224	34	9995 20 500	220	21
9995 1C 618	260	7	9995 20 412B	231	29	9995 20 500	222	13
9995 10 618	261	12	9995 20 412B	235	23	9995 20 500	223	15
9995 1C 618	266	13	9995 20 412B	253	39	9995 20 500	223	19
9995 10 818	20	2	9995 20 500	51	10	9995 20 500	223	21
9995 10 818	21- 2	2	9995 20 500	55- B	10	9995 20 500	225	48
9995 10 818	58	25	9995 20 500	58	22	9995 20 500	230	11
9995 1C 818	58- C	25	9995 20 500	58- C	22	9995 20 500	234	6
9995 10 818	101	20	9995 20 500	62-16	44	9995 20 500	250- 1	44
9995 10 818	135	4	9995 20 500	105	19	9995 20 500	253	36
9995 10 818	194	10	9995 20 500	105	31	9995 20 500	257	36
9995 1C 822	36	38	9995 20 500	106	39	9995 20 500	261	19
9995 10 822	100	5	9995 20 500	108	13	9995 20 500	263	33
9995 1C 822	227	19	9995 20 500	109	19	9995 20 500	265	8
9995 10 822	267	34	9995 20 500	109	23	9995 20 500B	165	40
9995 11 022	85	47	9995 20 500	109- 1	42	9995 20 500B	167	78
9995 11 022	135	4	9995 20 500	157- 1	39	9995 20 500B	222	7
9995 11 022	136	25	9995 20 500	160	29	9995 20 500B	222	8
9995 11 022	156	15	9995 20 500	164	22	9995 20 500B	224	36
9995 11 022	156	17	9995 20 500	170	25	9995 20 500B	224	43
9995 11 022	161	40	9995 20 500	178	15	9995 20 515B	253	23
9995 11 030	94	21	9995 20 500	186	9	9995 20 516	102	40
9995 11 030	98	5	9995 20 500	187	18	9995 20 516	102	41
9995 11 030	98- 1	9	9995 20 500	187	27	9995 20 516	164	30
9995 11 030	136	18	9995 20 500	190	34	9995 20 516	166	54
9995 20 300	192- K	54	9995 20 500	192	62	9995 20 516	186	10
9995 20 300	197	52	9995 20 500	192- H	21	9995 20 516	187	24
9995 20 400	21- B	17	9995 20 500	192- H	25	9995 20 516B	186	11
9995 20 400	130	26	9995 20 500	192- J	46	9995 20 516B	249	31
9995 20 400	164	24	9995 20 500	192- K	60	9995 20 518	181	9
9995 20 400	170	26	9995 20 500	192- M	81	9995 20 600	28	2

PARTS NUMBER	PARTS COMP. LIST PAGE	FIG. NO.
9995 20 600	35	28
9995 20 600	35	33
9995 20 600	36	34
9995 20 600	36	44
9995 20 600	37	59
9995 20 600	43	24
9995 20 600	51	9
9995 20 600	54	68
9995 20 600	55	74
9995 20 600	55	78
9995 20 600	55- F	81
9995 20 600	109	33
9995 20 600	114	9
9995 20 600	133	24
9995 20 600	137	43
9995 20 600	139	13
9995 20 600	140	28
9995 20 600	143	10
9995 20 600	144	26
9995 20 600	160	34
9995 20 600	163	16
9995 20 600	167	83
9995 20 600	181	7
9995 20 600	189	6
9995 20 600	191	43
9995 20 600	191	53
9995 20 600	192- I	30
9995 20 600	192- I	35
9995 20 600	192- I	36
9995 20 600	192- L	68
9995 20 600	192- L	69
9995 20 600	192- L	72
9995 20 600	192- L	73
9995 20 600	192- L	74
9995 20 600	192- M	89
9995 20 600	194	17
9995 20 600	199	8
9995 20 600	202	12
9995 20 600	205	5
9995 20 600	209	19
9995 20 600	210	32
9995 20 600	211	37
9995 20 600	212- 1	63
9995 20 600	212- 2	77
9995 20 600	231	24
9995 20 600	235	20
9995 20 600	246	18
9995 20 600	255	15
9995 20 600	265	6
9995 20 600	266	15
9995 20 600B	222	10
9995 20 618	21- D	6
9995 20 618	62	46
9995 20 618	62	47
9995 20 618	111	9
9995 20 618	117	19
9995 20 618	139	11
9995 20 618	140	26
9995 20 618	143	3
9995 20 618	144	24
9995 20 618	144	25
9995 20 618	144	26
9995 20 618	144	33
9995 20 618	157- 1	35
9995 20 618	157- 1	37
9995 20 618	160	23
9995 20 618	160	25
9995 20 618	163	8
9995 20 618	164	17
9995 20 618	165	33
9995 20 618	166	52
9995 20 618	169	13
9995 20 618	169	14
9995 20 618	169	15
9995 20 618	191	41
9995 20 618	191	43
9995 20 618	192- H	18
9995 20 618	192- I	33
9995 20 618	192- K	56
9995 20 618	192- L	70
9995 20 618	215	38
9995 20 618	224	42
9995 20 618B	222	14
9995 20 622	133- B	20
9995 20 800	4	41
9995 20 800	4	42
9995 20 800	4	43
9995 20 800	7	36
9995 20 800	18	34
9995 20 800	37	46
9995 20 800	61	39
9995 20 800	61	41
9995 20 800	62- 4	39
9995 20 800	62- 7	33
9995 20 800	62-11	37
9995 20 800	85- 1	59
9995 20 800	85- 1	60
9995 20 800	85- 1	62
9995 20 800	94	9
9995 20 800	123	35
9995 20 800	163	3
9995 20 800	186	12

INDEX.

PARTS NUMBER	PARTS COMP. LIST PAGE	FIG. NO.	PARTS NUMBER	PARTS COMP. LIST PAGE	FIG. NO.	PARTS NUMBER	PARTS COMP. LIST PAGE	FIG. NO.
9995 20 800	191	55	9995 21 000	120	37	9995 31 000	62- 4	38
9995 20 800	192	73	9995 21 000	228	20	9995 31 000	62- 7	32
9995 20 800	192- G	12	9995 21 400	94	10	9995 81 018	73	15
9995 20 800	192- K	63	9995 30 300	62-15	24	9996 33 310	49	24
9995 20 800	210	33	9995 30 400	30	49	9996 33 310	49- C	28
9995 20 816	119	15	9995 30 400B	220	26	9996 33 330	49	24
9995 20 816	127	48	9995 30 600	20	9	9996 33 330	49- C	28
9995 20 816	133- C	30	9995 30 600	21	24	9996 36 910	46	42
9995 20 816	139	3	9995 30 600	21- 2	9	9996 36 910	46- B	1
9995 20 816	139	4	9995 30 600	21- 3	24	9996 36 910	46- E	1
9995 20 816	143	20	9995 30 600	30	36	9996 36 930	46	42
9995 20 816	173	18	9995 30 600	114	6	9996 36 930	46- B	1
9995 20 818	222	6	9995 30 600	137- A	47	9996 36 930	46- E	1
9995 20 822	105	23	9995 30 600	137- A	49	9996 70 400A	195	26
9995 20 822	120	35	9995 30 800	16	17	9996 70 400A	241	30
9995 20 822	140	30	9995 30 800	18	32	9996 70 400B	195	26
9995 20 822	159	19	9995 30 800	20	3	9996 70 400B	241	30
9995 20 822	163	2	9995 30 800	29	26	9996 70 400B	244	22
9995 20 822	174	27	9995 30 800	35	23	9996 70 500A	240	6
9995 20 822	174	28	9995 30 800	35	26	9996 70 500B	163	14
9995 20 822	175	50	9995 30 800	35	29	9996 70 500B	164	26
9995 20 822	186	12	9995 30 800	48	20	9996 70 500B	169	12
9995 20 822	192	75	9995 30 800	48	21	9996 70 500B	222	11
9995 20 822	192- N	99	9995 30 800	54	67	9996 70 500B	225	51
9995 20 822	192- N	100	9995 30 800	55- F	80	9996 70 500B	237	13
9995 21 000	57	19	9995 30 800	62-11	39	9996 70 500B	240	9
9995 21 000	57	20	9995 30 800	117	5	9997 10 300	62-15	24
9995 21 000	58- C	19	9995 30 800	133- C	31	9997 10 300	82	12
9995 21 000	58- C	20	9995 30 800	227	15	9997 10 300	197	52
9995 21 000	62- 3	37	9995 31 000	39	5	9997 10 400	9	54
9995 21 000	62- 7	31	9995 31 000	39	6	9997 10 400	21- B	17
9995 21 000	77	11	9995 31 000	39	12	9997 10 400	69	14
9995 21 000	79	4	9995 31 000	40- B	6	9997 10 400	82	6
9995 21 000	108	4	9995 31 000	43	27	9997 10 400	82	7

PARTS NUMBER	PARTS COMP. LIST PAGE	FIG. NO.	PARTS NUMBER	PARTS COMP. LIST PAGE	FIG. NO.	PARTS NUMBER	PARTS COMP. LIST PAGE	FIG. NO.
9997 10 400	82	8	9997 10 500	187	18	9997 10 600	21	20
9997 10 400	87	14	9997 10 500	187	24	9997 10 600	21	24
9997 10 400	130	26	9997 10 500	190	34	9997 10 600	21- D	6
9997 10 400	163	10	9997 10 500	192	62	9997 10 600	21- 2	9
9997 10 400	164	24	9997 10 500	192	74	9997 10 600	21- 3	20
9997 10 400	165	46	9997 10 500	192- H	21	9997 10 600	21- 3	24
9997 10 400	170	26	9997 10 500	192- H	25	9997 10 600	28	2
9997 10 400	257	40	9997 10 500	192- J	46	9997 10 600	29	19
9997 10 400E	224	34	9997 10 500	192- K	60	9997 10 600	29	20
9997 10 500	16	5	9997 10 500	192- M	81	9997 10 600	30	36
9997 10 500	43- B	19	9997 10 500	192- N	97	9997 10 600	32	24
9997 10 500	43- F	23	9997 10 500	212- 1	56	9997 10 600	35	28
9997 10 500	51	10	9997 10 500	214	16	9997 10 600	35	33
9997 10 500	55- B	10	9997 10 500	215	33	9997 10 600	36	34
9997 10 500	58	22	9997 10 500	219	3	9997 10 600	36	44
9997 10 500	58- C	22	9997 10 500	220	21	9997 10 600	37	59
9997 10 500	102	40	9997 10 500	222	7	9997 10 600	37	64
9997 10 500	104	8	9997 10 500	222	8	9997 10 600	43	20
9997 10 500	105	19	9997 10 500	222	13	9997 10 600	43	24
9997 10 500	106	39	9997 10 500	223	15	9997 10 600	43	31
9997 10 500	108	13	9997 10 500	223	19	9997 10 600	43	34
9997 10 500	109	19	9997 10 500	223	21	9997 10 600	43	36
9997 10 500	109	23	9997 10 500	225	48	9997 10 600	43- B	10
9997 10 500	109- 1	42	9997 10 500	230	11	9997 10 600	43- E	13
9997 10 500	126	33	9997 10 500	234	6	9997 10 600	46	38
9997 10 500	129	16	9997 10 500	256	20	9997 10 600	49	26
9997 10 500	164	30	9997 10 500	265	8	9997 10 600	49- B	24
9997 10 500	165	40	9997 10 500	266	13	9997 10 600	51	9
9997 10 500	167	78	9997 10 500	266	19	9997 10 600	54	68
9997 10 500	181	9	9997 10 500B	224	36	9997 10 600	55	74
9997 10 500	182	13	9997 10 500B	224	43	9997 10 600	55	78
9997 10 500	183	22	9997 10 600	7	25	9997 10 600	55- F	81
9997 10 500	186	9	9997 10 600	8	49	9997 10 600	62	46
9997 10 500	186	10	9997 10 600	20	9	9997 10 600	62	47

INDEX.

PARTS NUMBER	PARTS COMP. LIST PAGE	FIG. NO.	PARTS NUMBER	PARTS COMP. LIST PAGE	FIG. NO.	PARTS NUMBER	PARTS COMP. LIST PAGE	FIG. NO.
9997 10 600	70	29	9997 10 600	144	25	9997 10 600	194	6
9997 10 600	100	14	9997 10 600	144	26	9997 10 600	194	17
9997 10 600	109	33	9997 10 600	144	33	9997 10 600	196	44
9997 10 600	111	4	9997 10 600	157- 1	35	9997 10 600	202	12
9997 10 600	111	6	9997 10 600	160	23	9997 10 600	205	5
9997 10 600	111	9	9997 10 600	163	8	9997 10 600	209	16
9997 10 600	112	26	9997 10 600	164	16	9997 10 600	209	19
9997 10 600	114	4	9997 10 600	164	17	9997 10 600	209	25
9997 10 600	114	6	9997 10 600	165	33	9997 10 600	210	28
9997 10 600	114	9	9997 10 600	166	52	9997 10 600	210	32
9997 10 600	115	25	9997 10 600	167	83	9997 10 600	211	37
9997 10 600	117	9	9997 10 600	169	13	9997 10 600	212- 1	63
9997 10 600	117	19	9997 10 600	169	14	9997 10 600	212- 2	65
9997 10 600	123	34	9997 10 600	169	15	9997 10 600	212- 2	77
9997 10 600	126	34	9997 10 600	174	37	9997 10 600	215	38
9997 10 600	129	15	9997 10 600	178	10	9997 10 600	217	16
9997 10 600	130	21	9997 10 600	181	7	9997 10 600	222	10
9997 10 600	132	5	9997 10 600	182	18	9997 10 600	223	14
9997 10 600	132	20	9997 10 600	189	4	9997 10 600	224	42
9997 10 600	133	22	9997 10 600	189	6	9997 10 600	225	50
9997 10 600	133	24	9997 10 600	191	41	9997 10 600	231	24
9997 10 600	133- B	20	9997 10 600	191	43	9997 10 600	235	20
9997 10 600	135	6	9997 10 600	191	53	9997 10 600	246	18
9997 10 600	136	11	9997 10 600	192- H	18	9997 10 600	255	15
9997 10 600	137	43	9997 10 600	192- I	30	9997 10 600	256	16
9997 10 600	137- A	47	9997 10 600	192- I	33	9997 10 600	256	25
9997 10 600	137- A	49	9997 10 600	192- I	35	9997 10 600	260	7
9997 10 600	139	11	9997 10 600	192- K	56	9997 10 600	261	12
9997 10 600	139	13	9997 10 600	192- L	68	9997 10 600	265	6
9997 10 600	140	26	9997 10 600	192- L	69	9997 10 600	266	15
9997 10 600	140	28	9997 10 600	192- L	70	9997 10 601	48	7
9997 10 600	141	36	9997 10 600	192- L	72	9997 10 601	49- B	10
9997 10 600	143	3	9997 10 600	192- M	74	9997 10 700	212- 3	92
9997 10 600	143	10	9997 10 600	192- M	89	9997 10 800	4	41

INDEX.

PARTS NUMBER	PARTS COMP. LIST PAGE	FIG. NO.
9997 10 800	4	42
9997 10 800	4	43
9997 10 800	4	47
9997 10 800	7	36
9997 10 800	8	52
9997 10 800	16	17
9997 10 800	17	24
9997 10 800	18	34
9997 10 800	20	2
9997 10 800	20	3
9997 10 800	21- 2	3
9997 10 800	29	26
9997 10 800	35	23
9997 10 800	35	26
9997 10 800	35	29
9997 10 800	36	38
9997 10 800	37	46
9997 10 800	39	17
9997 10 800	40	18
9997 10 800	40- B	17
9997 10 800	40- B	18
9997 10 800	46	38
9997 10 800	48	20
9997 10 800	48	21
9997 10 800	49	30
9997 10 800	49- C	38
9997 10 800	51	8
9997 10 800	54	67
9997 10 800	55- F	80
9997 10 800	58	25
9997 10 800	58	26
9997 10 800	58- C	25
9997 10 800	58- C	26
9997 10 800	61	39
9997 10 800	61	41
9997 10 800	61	37
9997 10 800	62	53
9997 10 800	62- 4	39
9997 10 800	62- 4	51
9997 10 800	62- 7	33
9997 10 800	62- 8	45
9997 10 800	62-11	35
9997 10 800	62-11	37
9997 10 800	62-11	39
9997 10 800	62-12	51
9997 10 800	64	7
9997 10 800	67	19
9997 10 800	67	20
9997 10 800	69	15
9997 10 800	69	17
9997 10 800	74	23
9997 10 800	76	3
9997 10 800	76	4
9997 10 800	79	3
9997 10 800	80	15
9997 10 800	80	18
9997 10 800	84	34
9997 10 800	85- 1	60
9997 10 800	85- 2	63
9997 10 800	94	9
9997 10 800	98	7
9997 10 800	100	10
9997 10 800	101	19
9997 10 800	101	20
9997 10 800	105	23
9997 10 800	120	35
9997 10 800	123	35
9997 10 800	123	36
9997 10 800	123- 1	55
9997 10 800	126	27
9997 10 800	127	48
9997 10 800	129	12
9997 10 800	133- C	32
9997 10 800	135	4
9997 10 800	139	3
9997 10 800	139	4
9997 10 800	143	20
9997 10 800	159	19
9997 10 800	163	2
9997 10 800	163	3
9997 10 800	173	18
9997 10 800	174	27
9997 10 800	174	28
9997 10 800	175	49
9997 10 800	175	50
9997 10 800	183	36
9997 10 800	186	12
9997 10 800	189	19
9997 10 800	190	20
9997 10 800	190	36
9997 10 800	191	55
9997 10 800	192	73
9997 10 800	192	75
9997 10 800	192- G	5
9997 10 800	192- G	12
9997 10 800	192- K	63
9997 10 800	192- N	99
9997 10 800	192- N	100
9997 10 800	194	10
9997 10 800	209	26
9997 10 800	210	33
9997 10 800	222	6

INDEX.

PARTS NUMBER	PARTS COMP. LIST PAGE	FIG. NO.
9997 10 800	267	33
9997 11 000	7	23
9997 11 000	39	5
9997 11 000	39	6
9997 11 000	39	12
9997 11 000	40- B	6
9997 11 000	43	27
9997 11 000	57	20
9997 11 000	58- C	20
9997 11 000	62- 4	37
9997 11 000	62- 4	38
9997 11 000	62- 7	31
9997 11 000	62- 7	32
9997 11 000	62-14	2
9997 11 000	62-14	4
9997 11 000	62-15	26
9997 11 000	62-15	27
9997 11 000	73	10
9997 11 000	76	9
9997 11 000	77	11
9997 11 000	79	4
9997 11 000	79	9
9997 11 000	88	20
9997 11 000	90	8
9997 11 000	90	14
9997 11 000	91	32
9997 11 000	94	16
9997 11 000	95	21
9997 11 000	95	34
9997 11 000	98	2
9997 11 000	98	5
9997 11 000	98- 1	9
9997 11 000	101	16
9997 11 000	101	30
9997 11 000	108	4
9997 11 000	120	37
9997 11 000	133- C	22
9997 11 000	135	4
9997 11 000	136	18
9997 11 000	136	25
9997 11 000	156	15
9997 11 000	156	17
9997 11 000	161	40
9997 11 000	189	17
9997 11 000	192- G	9
9997 11 000	192- G	10
9997 11 200	37	63
9997 11 200	77	25
9997 11 200	95	31
9997 11 200	95	32
9997 11 200	189	17
9997 11 200	192- G	11
9997 11 400	62-28	7
9997 11 800	85- 1	54
9997 20 500	187- C	35
9997 20 800	119	21
9997 20 800	133- C	33
9997 21 000	228	20
9997 21 400	133- C	22
9997 40 500	234	14
9997 40 600	181	6
9997 40 600	195	20
9997 40 600	195	24
9997 40 600	265	5
9997 50 500	231	18
9997 50 500	231	21
9997 50 500	234	14
9997 50 500	235	17
9997 50 600	181	6
9997 50 600	184	40
9997 50 600	195	20
9997 50 600	195	24
9997 50 600	267	38
9997 83 200	46	27
9997 83 200	46- C	26
9997 91 200	28	9

TOYO KOGYO CO.,LTD.

Printed in Japan