RX-3
SEDAN & COUPE
PARTS CATALOG



THIS BOOK IS THE PROPERTY
OF MAZDA MOTORS PTY. LTD.
AND MUST BE RETURNED
ON REQUEST.

© 1972 by

TOYO KOGYO CO.,LTD.
Rotary Engine-Licence NSU. Wankel

Nov. 1972

HOW TO USE THIS PARTS CATALOG

This parts catalog is compiled for the following models

Model : RX-3 Sedan & Coupé (Emission controlled models for Europe) (Manuf. up to Car No. 179250 7/9)

RX-3 Sedan & Coupé (Models manufactured from Car No. 160623 7/10)

● RX-3 Sedan Deluxe with Automatic T/mission (Manuf. from April, 1974)

Model No.	Model / Type	Description
1563	S124A-DXP	RX- 3 Sedan Deluxe with 5-Speed T/mission ECE Spec Model (LHD)
1564	S124A-DCAP	RX- 3 Coupe Deluxe with 5-Speed T/mission ECE Spec Model (LHD)
1692	S124A-DCAP	RX- 3 Coupe Deluxe with 5-Speed T/mission For West Germany (LHD)
1599	S124A-DCAP	RX- 3 Coupe Deluxe with 5-Speed T/mission For Sweden (LHD)
3504	S124A-DX	RX- 3 Sedan Deluxe British and Australian Spec, Manuf from Oct, 1973 (RHD)
3505	S124A-DXP	RX- 3 Sedan Deluxe with 5-Speed T/mission British and Australian Spec, Manuf from Oct, 1973 (RHD)
● 3506	S124A-DXT	RX- 3 Sedan Deluxe with Automatic T/mission British and Australian Spec, Manuf from April, 1974 (RHD)
3507	S124A-SCA	RX- 3 Coupe Super Deluxe British and Australian Spec, Manuf from Oct, 1973 (RHD)
3508	S124A-SCAP	RX- 3 Coupe Super Deluxe with 5-Speed T/mission British and Australian Spec Manuf from Oct, 1973 (RHD)
3509	S124A-DCAP	RX- 3 Coupe Deluxe with 5-Speed T/mission ECE Cold Proof Spec, Manuf from Oct, 1973 (LHD)
3513	S124A-DXP	RX- 3 Sedan Deluxe with 5-Speed T/mission ECE Emission Controlled Spec, Manuf from Oct, 1973 (LHD)
3514	S124A-DCAP	RX- 3 Coupe Deluxe with 5-Speed T/mission ECE Emission Controlled Spec, Manuf from Oct, 1973 (LHD)
3515	S124A-DCAP	RX- 3 Coupe Deluxe with 5-Speed T/mission West Germany Spec, Manuf from Oct, 1973 (LHD)
3518	S124W-DXP	RX- 3 Rotary Wagon Deluxe with 5-Speed T/mission British and Australian Spec, Manuf from Oct, 1973 (RHD)

Caution : There is a repetition of Car No. for obsolete and new models from Car No. 160623 to Car No. 179250, caused from a new car numbering system adopted from Oct. 1973.

(Ⅰ) Layout of Parts Catalog

The spares relevent to each assembly are printed inset to the right, and parts that constitute a sub-assembly are indicated by illustrations and classified according to each assembly. Therefore, if a spare part is not printed inset to the right, this shows that the part does not constitute a part of the assembly.
Moreover, to aid identification of spares, "exploded" illustrations are incorporated in this catalog.

(Ⅱ) How to locate parts

1) When part number is not known.

A. Refer to index of groups and locate the group to which the part belongs.
⇩
B. Open to group illustration page and locate part wanted.
⇩
C. See the number given for the part in the illustration and find corresponding number in the parts composition lists.

D. Then, you will find the name and the part number of the part on the right side of this number.

2) When part number is known but shape and name of part is unknown.

A. See index given at back of the parts catalog and find pages where illustration, part number and figure number is listed.
⇩
B. Open to page indicated and locate the part number in the parts composition list, and after this locate the part in the illustration by referring to figure number given at front of the part number.
⇩
C. The corresponding figure number in the illustration is for the part required.

3) Moreover as an alphabetical index is incorporated after the index of groups, utilize for locating principal parts.

(Ⅲ) On Groups

1) The figure enclosed by a triangle at the top of each page (Example 

) indicates group number.

2) Group numbers are determined according to structure and function of parts.

3) The group number given in the index of groups coincide with the numerals (Example 

) of the illustration and parts composition pages.

(Ⅳ) Explanation of Parts Composition Lists

1) Indication of composition of assembly.

(a) Only the description of the parts that comprise the assembly and are available as spares are inset to the right and given after the assembly part number and description. In this instance a wide space is taken in between for other spare parts.

(b) For parts of sub-assemblies that are included in an assembly and are available as spares, designation is made in the "Remarks" column, (Example: Fig. No. 8 included).

(c) When a parts description is not inset to the right, this signifies that the part is not included in any assembly or sub-assembly.

Example:

No.	Part Number	Description	Q'ty	Remarks
(a) 16	1570 41 920	Cylinder, Clutch Release	1	
(b) 17	0191 41 331	Boot	1	
⋮	⋮	⋮	⋮	
21	0866 41 320	Piston	1	Fig. No. 22 included
(b)-(c)-22	0803 41 322B	Cup, Piston	1	
(d) 28	0813 41 308	Spring, Return-Clutch Release Cylinder	1	

(a) ····· Includes (b) to (c)
(b) ····· Includes (c)
(d) ····· Is not included in any ass'y nor sub ass'y

2) On parts number

A. Exclusive parts

Example:

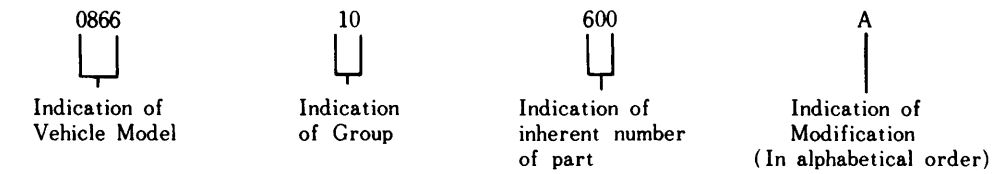

B. Standardized parts (General parts)

Example:

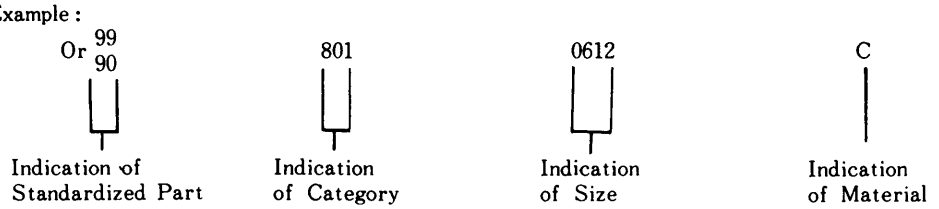

C. Standardized parts (Tires, Tubes, Disc Wheels, etc.)

Example:

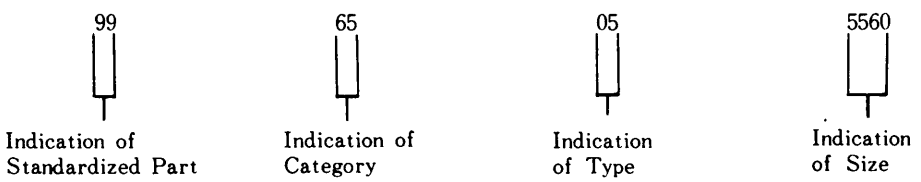

3) On Quantity

The quantity given in the parts composition list shows number of parts used per vehicle and does not indicate selling unit.

4) Other Precautions

☆ Mark····· Parts marked thus are not available as replacement parts, therefore, when these parts are required, order in the form of assemblies (or sets) including these parts or in the form of parts interchangeable with these parts.

5) Abbreviations

(R)	Right	EX.	Exhaust
(L)	Left	IN.	Inlet
(C)	Center	T/mission	Transmission
(Frt.)	Front	©	Parts with Different Colours (Indicate Colour when Ordering)
(Rr.)	Rear	10	Indication of Group
Cpt.	Complete		
Ass'y	Assembly		
Std.	Standard	Manual	Manual Transmission
O.S.	Over Size	Automatic	Automatic Transmission
U.S.	Under Size		

(V) Precautions to be taken when placing orders for parts

1) Always specify part numbers, names of parts and quantity required.

2) Be sure to list the parts in order of part number, when filling in order sheet.

3) As processing of orders received by us is done by electronic computers, importance is attached to the part number. Therefore, in case the part number and name of part do not coincide with each other, the part will be sent to you in accordance with the part number.

(VI) Replacement pages and purport

Page replacements are supplied once every 6 months as a rule, listing parts modified or newly added and month and year date will be printed in lower corner of each replacement page. Therefore, it is essential that care be taken to check on these dates to confirm if the parts listed conform to the car imported, before ordering.

1) Explanation on designation given in remarks column.

a. Car No. ····· Chassis no. of car that modification becomes effective from. However, for cars produced from January 1974, refer to "List of chassis numbers" given below. (for car numbers)

b. 69/7 ····· 69 designates year of modification and numerals 1~12 shows month of year.

c. ○ mark ····· Indicates that modified part and former part are interchangeable.

d. ※ mark ····· Indicates that former part has been superseded by new part and is no longer available.

e. × mark ····· Indicates that modified part and old part are not interchangeable.

f. △ mark ····· Indicates that new part is interchangeable with old part but that old part is not interchangeable as a replacement for cars utilizing the new part.

2) ● mark ····· This dot at front of figure number of replacement pages show the parts that have been subject to modification.

List of chassis numbers

year / month / Model	1974											
	JAN.	FEB.	MAR.	APR.	MAY	JUN.	JUL.	AUG.	SEP.	OCT.	NOV.	DEC.
RX-3 Sedan & Coupe	165673	166888	169214	171719								
RX-3 Rotary Wagon	159642	160488	161716	163045								

Group No.	Description	Fig.	Page	Part No.
	Engine Parts			
10	Rotor Housing (Used up to Car No. 179250 73/9)	1		2~7-1
10	Rotor Housing (Used from Car No. 160623 73/10)	7-A		7-B~7-H
10.11	Rotor (Used up to Car No. 179250 73/9)	8		9~12
10.11	Rotor (Used from Car No. 160623 73/10)	12-A		12-B~12-E
13	IN. Manifold & Thermal Reactor (Used up to Car No. 179250 73/9)	13		14~15
13	IN. Manifold & Thermal Reactor (Used from Car No. 160623 73/10)	15-A		15-B~15-C
13.23	Carburettor (Used up to Car No. 179250 73/9)	16		17~19
● 13.23	Carburettor (Manual used From Car No. 160623 73/10 / Automatic used From Car No. 74/3)	19-A		19-B~19-E
13.23	Air Cleaner (Used up to Car No. 179250 73/9)	20		21
13.23	Air Cleaner (Used from Car No. 160623 73/10)	21-A		21-B
13	Emission Control System (Used up to Car No. 179250 73/9)	22		23~25
13	Emission Control System (Used from Car No. 160623 73/10)	25-1		25-2~25-3
13	Starting Assist System (For Sweden)	25-A		25-B
13	Starting Assist System (For Cold Proof)	25-C		25-D
14	Oil Pump (Used up to Car No. 179250 73/9)	26		27~31
14	Oil Pump (Used from Car No. 160623 73/10)	31-A		31-B~31-F
14.15	Cooling System (Used up to Car No. 179250 73/9)	32		33~36
14.15	Cooling System (Used from Car No. 160623 73/10)	36-A		36-B~36-F

INDEX.

Group No.	Description	Fig. Page	Part No.
16	Clutch	37	38~39
17	T/mission (Case, Five-Forward Speed)	40	41~43
17	T/mission (Case, Four-Forward Speed)	43-A	43-B~43-C
17	T/mission (Gear, Five-Forward Speed)	44	45~48
17	T/mission (Gear, Four-Forward Speed)	48-A	48-B~48-D
17	T/mission (Gear Controls, Five-Forward Speed)	49	50~52
17	T/mission (Gear Controls, Four-Forward Speed)	52-A	52-B~52-D
18.24	Distributor (Used up to Car No 179250 73/9)	53	54~58
18.24	Distributor (Used from Car No 160623 73/10)	58-A	58-B~58-D
18.24	Alternator	59	60~61
18.24	Alternator (Used from Car No 171046 73/5~)	61-A	61-B~61-C
18.24	Starter & Battery	62	63~65
18.24	Starter & Battery (For Sweden)	65-A	65-B~65-D
18.24	Starter & Battery (Used from Car No 160623 73/10)	65-E	65-F~65-G
● 19	Automatic T/mission (Convertor, Oil Pump & Piping)	65-H	65-H-1~65-H-3
● 19	Automatic T/mission (Case & Main Control)	65-H-4	65-H-5~65-H-8
● 19	Automatic T/mission (Clutch & Planetary Gear)	65-H-9	65-H-10~65-H-14
● 19	Automatic T/mission (Low, Reverse & Governor)	65-H-15	65-H-16~65-H-18
● 19	Automatic T/mission (Manual Linkage)	65-H-19	65-H-20~65-H-21

Chassis Parts

25	Propeller Shaft	66	67
26	Rear Axle (L.H.D - Used up to Car No 179250 73/9 / R.H.D. - Used from Car No 1)	68	69~70
26	Rear Axle (L.H.D - Used from Car No 160623 73/10)	70-A	70-B~70-C

Group No.	Description	Fig.	Page	Part No.
26	Rear Brake (L.H.D.-Used up to Car No. 179250 73/9) (R.H.D.-Used from Car No. 1)	71		72~74-1
26	Rear Brake (L.H.D.-Used from Car No. 160623 73/10)	74-A		74-B~74-E
27	Driving	75		76~78
28	Rear Suspension (Sedan & Coupe)	79		80~81-1
28	Rear Suspension (Station Wagon)	81-A		81-B~81-C
32	Steering System (Wheel & Gear)	82		83~86-1
32	Steering System (Rod)	87		88~89-1
33	Front Axle	90		91~93
34	Front Suspension	94		95~97
39	Engine & T/mission Bracket	98		99~100
40	Exhaust System (Used up to Car No. 179250 73/9)	101		102~103
40	Exhaust System (Used from Car No. 160623 73/10)	103-A		103-B~103-D
42	Fuel Tank (Sedan & Coupe)	104		105~107
42	Fuel Tank (Station Wagon)	107-A		107-B~107-D
13.45	Fuel Piping (Used up to Car No. 179250 73/9)	108		109~110
13.45	Fuel Piping (Used up to 74/4) (Used from Car No. 160623 73/10)	110-A		110-B~110-D
● 13.45	Fuel Piping (Used from 74/4)	110-E		110-F~110-I
41	Accelerator Control System (Used up to Car No. 179250 73/9)	111		112
41	Accelerator Control System (L.H.D.) (Used from Car No. 160623 73/10)	112-A		112-B
41	Accelerator Control System (R.H.D.)	112-C		112-D
41.43	Clutch & Brake Pedal	113		114~115-1

Group No.	Description	Fig.	Page	Part No.
41	Clutch Master Cylinder & Release Cylinder (Used up to Car No. 179250 73/9)	116		117~118
41	Clutch Master Cylinder & Release Cylinder (Used from Car No. 160623 73/10)	118-A		118-B~118-C
43.49	Brake Master Cylinder & Vacuum Power Assist (Used up to Car No. 179250 73/9)	119		120~122
43.49	Brake Master Cylinder & Vacuum Power Assist (Used from Car No. 160623 73/10)	122-A		122-B~122-D
43.45	Piping (Clutch & Brake)	123		124~125-2
44	Parking Brake System	126		127~128
46	Change Control (Automatic)	128-A		128-B~128-C

Body Parts

Group No.	Description	Fig.	Page	Part No.
50	Bumper & Grille (Used up to Car No. 179250 73/9)	129		130~131
50	Bumper & Grille (Used from Car No. 160623 73/10)	131-A		131-B~131-D
52	Bonnet & Trunk Lid	132		133~135
51~70	Body Panels (Front) (Used up to Car No. 179250 73/9)	136		137~138
51~70	Body Panels (Front) (Used from Car No. 160623 73/10)	138-A		138-B~138-C
53.54	Body Panels (Side, Coupe)	139		140~141-1
53.54	Body Panels (Side, Sedan)	142		143~144-1
53.54	Body Panels (Side, Station Wagon)	144-A		144-B~144-D
56	Body Panels (Floor) (Used up to Car No. 179250 73/9)	145		146~148
56	Body Panels (Floor) (Used from Car No. 160623 73/10)	148-A		148-B~148-D
56	Body Panels (Floor Attachment) (Used from Car No. 160623 73/10)	148-E		148-F

Group No.	Description	Fig.	Page	Part No.
● 55.60	Dashboard	149	150~155-1	
● 55.75	Meter	156	157~158-2	
● 57	Seat	159	160~162-2	
58.59	Front Side Door (Glass)	163	164~167	
● 58.59	Front Side Door (Lock)	168	169~172-1	
● 61	Car Heater	173	174~176-1	
● 61.76	Heater Unit & Blower (L.H.D.)	177	178~179	
● 61.76	Heater Unit & Blower (R.H.D.)	179-1	179-2~179-3	
● 61	Car Cooler (L.H.D.) (Used up to Car No. 179250 73/9)	179-A	179-B~179-F	
● 61	Car Cooler (L.H.D.) (Used from Car No. 160623 73/10)	179-F-1	179-F-2~179-F-8	
● 61	Car Cooler (R.H.D.)	179-F-9	179-F-10~179-F-14	
● 61.76	Cooler Unit (L.H.D.) (Used up to Car No. 179250 73/9)	179-G	179-H	
● 61.76	Cooler Unit & Control Panel (L.H.D.) (Used from Car No. 160623 73/10)	179-H-1	179-H-2	
● 61.76	Cooler Unit (R.H.D.)	179-H-3	179-H-4	
● 61.76	Compressor (Car Cooler)	179-I	179-J~179-L	
● 62.63	Back Door (Station Wagon)	179-M	179-N~179-Q	
● 66.89	Lamps (Front Side, L.H.D.)	180	181~182-1	
● 66.89	Lamps (Front Side, R.H.D.)	182-A	182-B~182-C	
● 66.89	Lamps (Rear Side, Sedan & Coupe)	183	184~186-1	
● 66.89	Lamps (Rear Side, Station Wagon)	186-A	186-B~186-D	

INDEX.

Group No.	Description	Fig.	Page	Part No.
● 66, 67	Electric Equipment (Body)	187	188~192	3
67, 87	Windshield Wiper	193	194~196	
66, 67	Screen Washer	197	198	
● 66	Auto Radio	199	200~201	1
68	Crush Pad, Glove Pocket & Console Box	202	203~206	
68	Service Tools	207	208	
● 69~71	Attachment	209	210~213	2
● 69	Top Ceiling & Trim (Sedan & Coupe)	214	215~217	
● 69	Top Ceiling & Trim (Station Wagon)	217-A	217-B~217-D	
● 69	Floor Mat & Trim	218	219~220	2
70, 71	Ventilator	221	222~223	
● 70, 71	Window Glass & Moulding (Sedan & Coupe)	224	225~228	
● 70, 71	Window Glass & Moulding (Station Wagon)	228-A	228-B~228-D	
72, 73	Rear Side Window (Coupe)	229	230~233	
● 72, 73	Rear Side Door (Glass, Sedan & Station Wagon)	234	235~237	
● 72, 73	Rear Side Door (Lock, Sedan & Station Wagon)	238	239~241	
09	Key Set	242	243~244	
	INDEX.		245~268	

ROTOR HOUSING
(USED UP TO CAR NO. 179250 73/9)

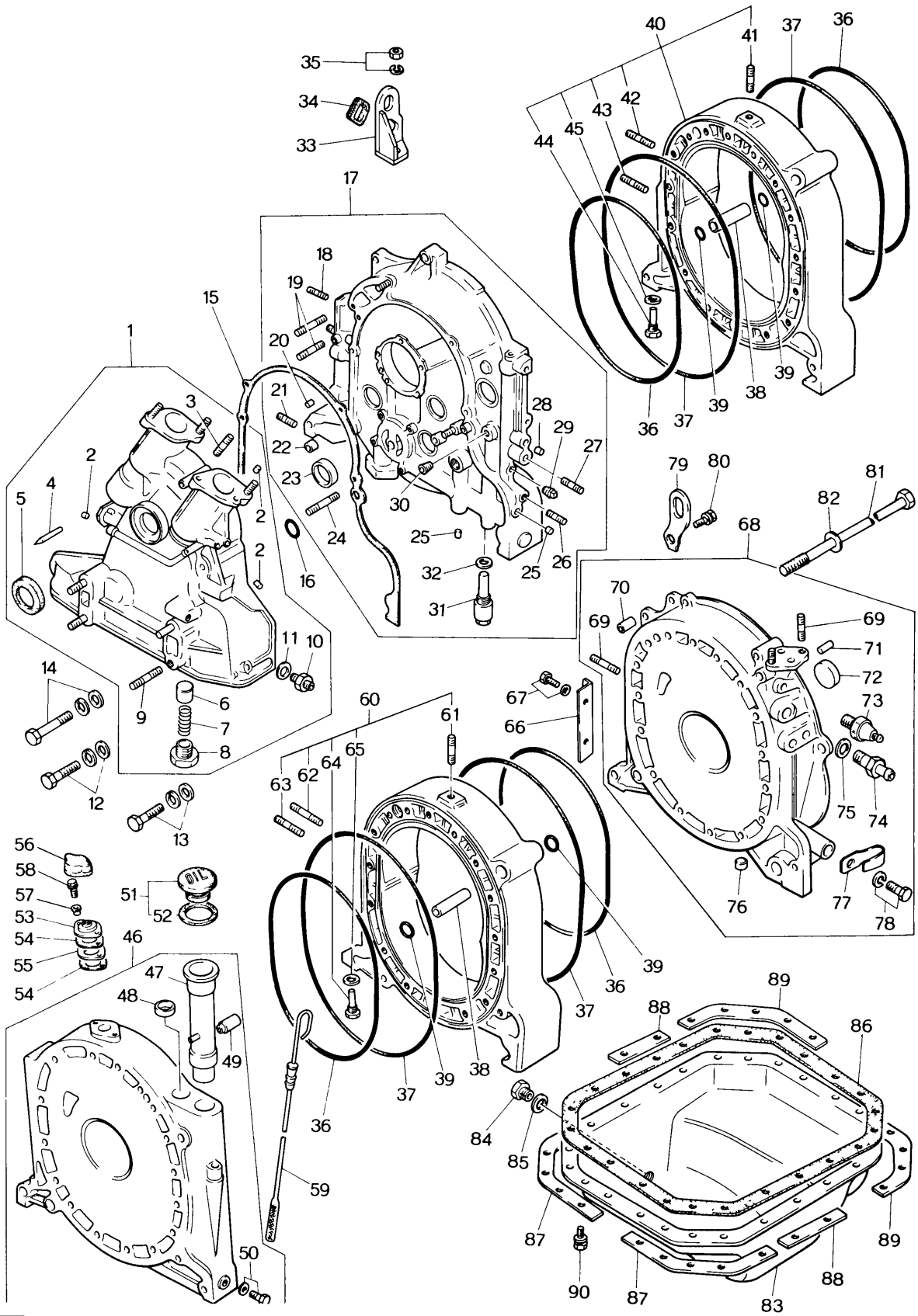

ROTOR HOUSING
(USED UP TO CAR NO. 179250 73/9)

10

No.	Part Number	Description	Q'ty	Remarks
1	2329 10 600D	Cover, Front	1	
	2329 10 600E	Cover, Front	1	From Car No. 1
●	2329 10 600G	Cover, Front	1	73/7 ~○
2	99307 0600	Plug, Blind	5	
3	99851 0818A	Stud, Distributor	4	
4	0820 10 631A	Pin, Top Indicator	1	
5	0820 10 605	Oil Seal	1	
6	0839 14 115	Plunger, Press	1	
7	~~0839 14 273~~	~~Spring, Press Plunger~~	~~1~~	
	0839 14 273A	Spring, Press Plunger	1	From Car No. 1
8	~~0221 14 117~~	~~Plug~~	~~1~~	
	0839 14 274	Plug	1	From Car No. 1
9	99855 1020A	Stud	4	
10	99384 1200	Joint, Union	1	
●	99384 1200F	Joint, Union	1	73/7 ~○
●	99384 1200	Joint, Union	1	73/11 ~○
11	99562 1600	Gasket, Union Joint	1	
	99564 1600	Gasket, Union Joint	1	73/1 ~○
Ⓝ	0866 23 205	Protector	4	Car No. 73/5 ~Added Anew

10 ROTOR HOUSING
(USED UP TO CAR NO. 179250 73/9)

No.	Part Number	Description	Q'ty	Remarks
12	99801 0840	Bolt, Front Cover	4	
	99952 0800	Washer, Plain	4	
	99971 0800	Washer, Spring	4	
13	99801 0865	Bolt, Front Cover	1	
	99952 0800	Washer, Plain	1	
	99971 0800	Washer, Spring	1	
14	99801 0875	Bolt, Front Cover	2	
	99952 0800	Washer, Plain	2	
	99971 0800	Washer, Spring	2	
15	0839 10 641	Gasket, Front Cover	1	
16	0813 10 174	Ring, "O"	1	
17	1665 10 200D	Housing, Front	1	
18	99852 0822A	Stud, IN. Manifold	2	
19	99852 0878A	Stud, Water Pump	3	
20	0839 10 203	Pin, Dowel	1	
21	99852 1016	Stud	1	
22	2329 10 204	Dowel, Tubular	2	
23	99306 3000	Plug, Blind	4	
24	99852 0655	Stud	2	

ROTOR HOUSING
(USED UP TO CAR NO. 179250 73/9)

10

No.	Part Number	Description	Q'ty	Remarks
25	0839 10 205	Plug, Blind	3	
26	99859 1220A	Stud, Mounting	1	
27	99859 1225A	Stud	1	
28	0839 10 206	Plug, Blind	1	
29	2113 10 206	Plug, Blind	1	
30	99503 1000	Plug	1	
31	1665 14 200D	Pellet, Oil	1	
32	99564 1200	Gasket	1	
33	2869 10 860	Hanger, Engine	1	
●	0870 10 862A	Hanger, Engine	1	Car No. 173321 73/6 ~ ×
●	1011 18 319	Clip	1	Car No. 173321 73/6 ~ Added Anew
34	2329 10 864	Protector	1	
35	99901 0800	Nut, Engine Hanger	1	Car No. 173321 73/6 ~ Discarded
	99971 0800	Washer, Spring	1	
36	~~1668 10 171A~~	~~Ring, Square~~	~~4~~	
	1668 10 171	Ring, Square	4	From Car No. 1
37	0813 10 172	Ring, "O" - Outer	4	
38	0839 10 111B	Dowel, Tubular	4	
39	0813 10 173	Ring, "O" - Tubular Dowel	8	

10 ROTOR HOUSING
(USED UP TO CAR NO. 179250 73/9)

No.	Part Number	Description	Q'ty	Remarks
	0845 23 040A	Ring Set (Fig. No. 36,37,39 included)	1	Set
40	1669 10 100A	Housing, Rotor (Frt.)	1	
●	1669 10 100B	Housing, Rotor (Frt.)	1	Car No. 176737 73/7 ~△
41	0866 10 105	Stud	1	
42	99851 0822A	Stud, IN. Manifold	1	
43	2329 10 105	Stud, Reactor	2	
44	1617 10 120	Nozzle, Air	2	
45	99564 1200	Gasket, Air Nozzle	2	
46	1663 10 400B	Housing, Intermediate	1	
47	0866 10 411	Pipe, Oil Filler	1	
48	99305 2800	Plug, Expansion	1	
49	2329 10 417	Joint, Pipe	1	
50	99510 1000	Plug	1	
	99564 1000	Gasket	1	
51	0324 10 250	Cap, Oil Filler	1	
52	0324 10 252	Gasket	1	

No.	Part Number	Description	Q'ty	Remarks
53	1663 18 920	Senser, Thermo	1	
54	2329 18 921	Gasket	2	
55	2329 18 922	Insulator	1	
56	2329 18 923	Cover	1	
57	2329 18 924	Washer, Insulator	2	
58	908016 8 25	Bolt Set, Thermo Senser	2	
59	0866 10 830	Gauge, Oil Level	1	
60	1620 10 150B	Housing, Rotor (Rr.)	1	
●	1620 10 150C	Housing, Rotor (Rr.)	1	Car No. 176737 73/7 ~△
61	0866 10 105	Stud	1	
62	99851 0822A	Stud, IN. Manifold	1	
63	2329 10 105	Stud, Reactor	2	
●	0839 10 105	Stud, Reactor	2	Car No. 176737 73/7 ~△
64	1617 10 120	Nozzle, Air	2	
65	99564 1200	Gasket, Air Nozzle	2	
66	0820 10 305	Cover, Dust	1	
67	99806 0610	Bolt, Dust Cover	2	
	99971 0600	Washer, Spring	2	

10 ROTOR HOUSING
(USED UP TO CAR NO. 179250 73/9)

No.	Part Number	Description	Q'ty	Remarks
68	0870 10 300B	Housing, Rear	1	
69	99852 0822	Stud	4	
70	0221 10 309	Pin, Tubular	2	
71	0820 10 203	Pin, Knock-Gear	1	
72	99306 3000	Plug, Blind-Water	5	
73	0866 18 501A	Switch, Oil Pressure	1	
74	0866 10 320A	Joint, Hose	1	
75	99562 1600	Gasket, Hose Joint	1	
	99564 1600	Gasket, Hose Joint	1	73/1 ~○
76	0839 10 205	Plug, Blind	1	
77	0866 18 496	Clip	1	
78	99811 1010	Bolt, Clip	1	
	99971 1000	Washer, Spring	1	
79	2090 10 862A	Hanger, Engine	1	
80	908012 8 18	Bolt Set, Engine Hanger	1	
81	1011 10 451	Bolt, Tension	18	
	1015 10 451	Bolt, Tension	18	73/2 ~○
	1011 10 452	Bolt, Tension	1	
	1015 10 452	Bolt, Tension	1	73/2 ~○

No.	Part Number	Description	Q'ty	Remarks
82	0839 10 455	Washer, Plain	19	
83	0862 10 700	Pan, Oil	1	
	1621 10 700A	Pan, Oil (For Sweden)	1	
84	99511 1400	Plug, Drain	1	
85	99562 1400	Gasket, Drain Plug	1	
86	0839 10 711	Gasket, Oil Pan	1	
87	0839 10 721	Plate, Seat	2	
88	0839 10 722	Plate, Seat	2	
89	0839 10 723	Plate, Seat	2	
90	908062 6 16	Bolt Set, Oil Pan	22	
	1027 99 100	Gasket Set, Engine	1 Set	
	1027 99 100A	Gasket Set, Engine (All gaskets relative to engine included)	1	Car No. 167748 73/5 ~△
	1563 23 200	Short Engine Cpt.	1	Car No. 163339 73/2 ~Added Anew
	1599 23 200	Short Engine Cpt.	1	Car No. 175279 73/7 ~Added Anew

ROTOR HOUSING
(USED FROM CAR NO. 160623 73/10)

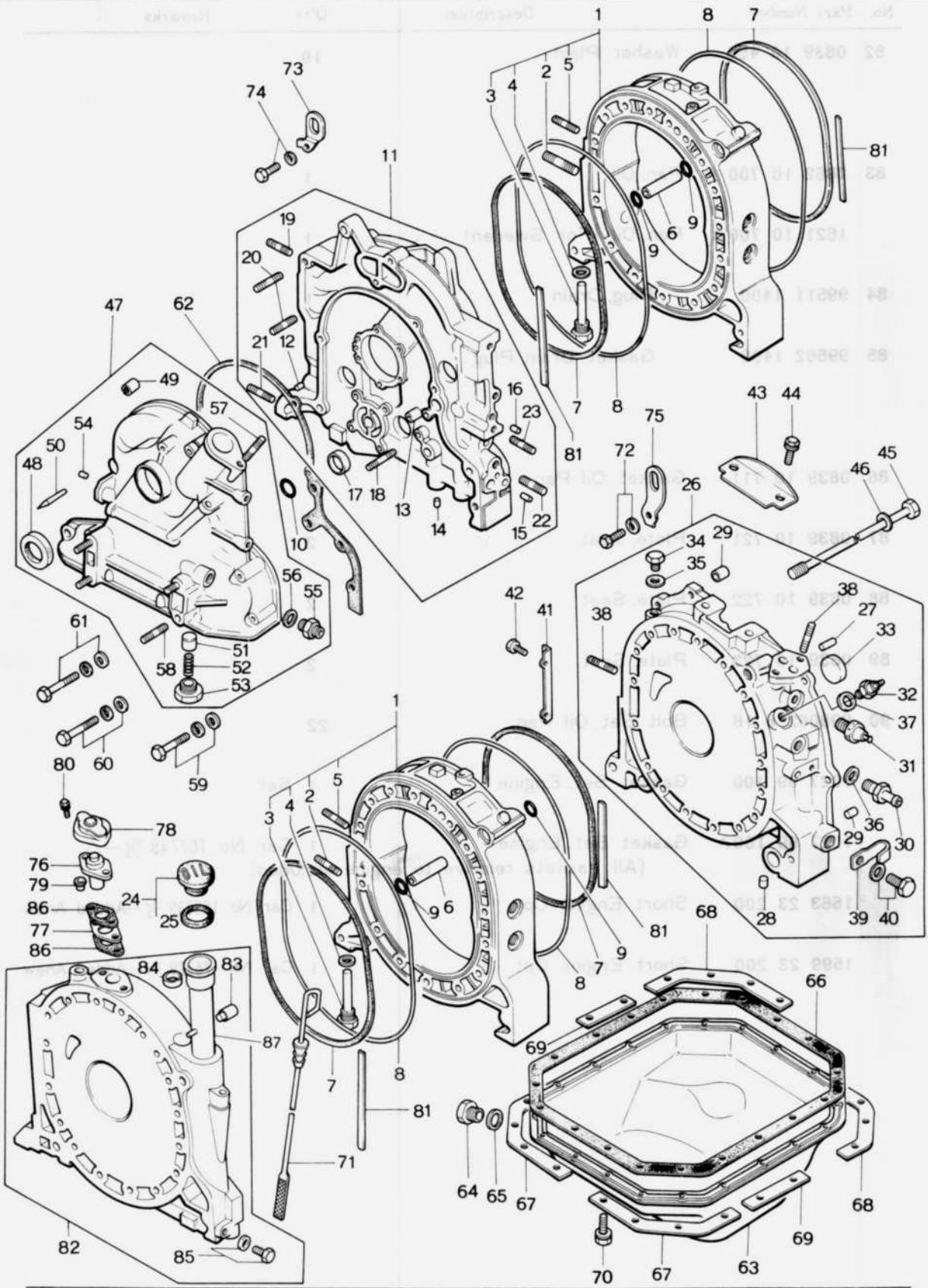

ROTOR HOUSING
(USED FROM CAR NO. 160623 73/10)

10

No.	Part Number	Description	Q'ty	Remarks
1	1881 10 100A	Housing, Rotor	2	
2	0839 10 105	Stud	4	
3	1617 10 120	Nozzle, Air	4	
4	99564 1200	Gasket	4	
5	99851 0822A	Stud	2	
6	0839 10 111B	Dowel, Tubular	4	
7	1757 10 171A	Ring, Square	4	
8	0813 10 172	Ring, "O" - Outer	4	
9	0813 10 173	Ring, "O" - Tubular Dowel	8	
10	0813 10 174	Ring, "O" - Front Cover	1	
11	1757 10 200C	Housing, Front	1	
12	0839 10 203	Pin, Dowel	1	
13	2329 10 204	Dowel, Tubular	2	
14	0839 10 205	Plug, Blind	3	
15	1757 10 206	Plug, Blind	1	
	1757 10 206A	Plug, Blind	1	Car No. 163369 73/11~△
16	1757 10 207	Plug, Blind	1	
17	99306 3000	Plug, Blind Water	3	

10 ROTOR HOUSING
(USED FROM CAR NO. 160623 73/10)

No.	Part Number	Description	Q'ty	Remarks
18	99852 0660	Stud	2	
19	99852 0822A	Stud, IN. Manifold	2	
20	1757 10 208	Stud, Water Pump	4	
21	99852 1016	Stud	1	
22	99859 1220A	Stud, Mounting	1	
23	99859 1225A	Stud	1	
24	0324 10 250	Cap, Oil Filler	1	
25	0324 10 252	Gasket	1	
26	1881 10 300A	Housing, Rear	1	
27	0820 10 203	Pin, Knock - Gear	1	
28	0839 10 205	Plug, Blind	1	
29	1757 10 309	Pin, Tubular	2	
30	0866 10 320A	Joint, Hose	1	
31	0866 18 501A	Switch, Oil Pressure	1	
32	1757 18 510	Gauge Unit, Heat	1	
●	1757 18 510A	Gauge Unit, Heat	1	7/3 ~ △
33	99306 3000	Plug, Blind - Water	5	
34	99511 1200	Plug	1	
35	99562 1200	Gasket, Plug	1	

ROTOR HOUSING
(USED FROM CAR NO. 160623 73/10)

No.	Part Number	Description	Q'ty	Remarks
36	99562 1600	Gasket, Hose Joint	1	
37	99564 0800	Gasket, Heat Gauge Unit	1	
38	99852 0822A	Stud, IN. Manifold & Oil Filter	4	
39	99276 1210	Clip	1	
40	99811 1010	Bolt, Clip	1	
	99971 1000	Washer, Spring	1	
● 41	1757 10 305	Cover, Dust	1	(Manual)
● 42	99796 0610	Bolt, Dust Cover	2	(Manual)
● 43	1757 10 351	Cover, Dust	1	(Manual)
● 44	99796 0816	Bolt, Dust Cover	2	(Manual)
45	1015 10 451	Bolt, Tension	18	
	1015 10 452	Bolt, Tension	1	
46	0839 10 455	Washer, Seal	19	
47	1757 10 600B	Cover, Front	1	
48	0820 10 605	Oil Seal	1	
49	1757 10 609	Pin Spring	1	
50	0820 10 631B	Pin, Top Indicator	1	
51	0839 14 115	Plunger, Press	1	

10 ROTOR HOUSING
(USED FROM CAR NO. 160623 73/10)

No.	Part Number	Description	Q'ty	Remarks
52	0839 14 273A	Spring, Press Plunger	1	
53	0839 14 274	Plug, Press Plunger	1	
54	99307 0600	Plug, Blind	2	
55	99384 1200	Joint, Union	1	
56	99562 1600	Gasket, Union Joint	1	
57	99851 0612A	Stud	1	
58	99855 1020	Stud	4	
59	99801 0840	Bolt, Front Cover	3	
	99952 0800	Washer, Plain	3	
	99971 0800	Washer, Spring	3	
60	99801 0865	Bolt, Front Cover	2	
	99952 0800	Washer, Plain	2	
	99971 0800	Washer, Spring	2	
61	99801 0875	Bolt, Front Cover	1	
	99952 0800	Washer, Plain	1	
	99971 0800	Washer, Spring	1	
62	1757 10 641	Gasket, Front Cover	1	
63	0862 10 700	Pan, Oil	1	

No.	Part Number	Description	Q'ty	Remarks
	1881 10 700A	Pan, Oil (For Cold Proof Spec.)	1	
64	99511 1400	Plug, Drain	1	
65	99562 1400	Gasket	1	
66	0839 10 711	Gasket, Oil Pan	1	
67	0839 10 721	Plate, Seat	2	
68	0839 10 722	Plate, Seat	2	
69	0839 10 723	Plate, Seat	2	
70	99806 0616	Bolt, Oil Pan	22	
	99971 0600	Washer, Spring	22	
71	0866 10 830	Gauge, Oil Level	1	
72	1757 10 845	Bolt, Rear Housing+Engine Hanger	1	
	99971 1000	Washer, Spring	1	
73	1757 10 861	Hanger, Engine	1	
74	~~99801 0818~~	~~Bolt, Engine Hanger~~	~~1~~	
●	99801 0816	Bolt, Engine Hanger	1	From Car No. 1
	99971 0800	Washer, Spring	1	
75	1757 10 862	Hanger, Engine	1	
76	1663 18 920	Senser, Thermo	1	
77	2329 18 922	Insulator, Thermo Senser	1	
78	2329 18 923	Cover, Thermo Senser	1	
79	2329 18 924	Washer, Insulation	2	

10 ROTOR HOUSING
(USED FROM CAR NO. 160623 73/10)

No.	Part Number	Description	Q'ty	Remarks
80	99801 0825	Bolt, Thermo Senser	2	
	99952 0800	Washer, Plain	2	
	99971 0800	Washer, Spring	2	
81	0866 23 025	Protector, "O" Ring	4	
82	~~1757 99 105~~	~~Housing, Intermediate~~	~~1~~	
●	1757 23 070	Housing, Intermediate	1	From Car No. 1
83	2329 10 417	Joint, Pipe	1	
84	99305 2800	Plug, Expansion	1	
85	99510 1000	Plug	1	
	99564 1000	Gasket	1	
86	2329 18 921	Gasket	2	
● 87	1011 10410	Pipe, Oil Filler	1	From Car No. 1
	1757 99 100	Engine Gasket Set	1	
●	1757 99 100 A	Engine Gasket Set	1	74/1 ~ △
	1757 23 040	Ring Set, "O"	1	
	1757 10 171 A	Ring, "O" - Inner	4	
	0813 10 172	Ring, "O" - Outer	4	
	0813 10 173	Ring, "O"	4	
	0813 10 174	Ring, "O"	1	Included in 1757 23 040
	0813 10 455	Ring, "O"	19	
	0813 10 555	Ring, "O"	1	

ROTOR HOUSING
(USED FROM CAR NO. 160623 73/10)

No.	Part Number	Description	Q'ty	Remarks
	99541 01601	Ring, "O"	2	
	99541 0240	Ring, "O"	2	
	99541 0350	Ring, "O"	1	
	1757 10 641	Gasket	1	
	0839 10 711	Gasket	1	
●	0820 11 341	"O" Ring	4	74/1~ Added Anew
●	0820 11 343	"O" Ring	4	74/1~ Added Anew
	1881 13 111	Gasket	1	
	0823 13 221A	Gasket	2	
	1757 13 724	Gasket	1	
	1757 13 889	Gasket	2	
	1757 15 105	Gasket	1	
●	1757 15 105A	Gasket	1	74/1~△
	0820 15 106	Gasket	2	
●	1757 15 106	Shim	2	74/1~△
●	0866 23 025	Protector	4	74/1~ Added Anew
●	1757 13 891	Gasket	1	74/1~ Added Anew
	1881 23 200	Short Engine (For Cold Proof Spec.)	1	
	3514 23 200	Short Engine	1	

ROTOR (USED UP TO CAR NO. 179250 73/9)

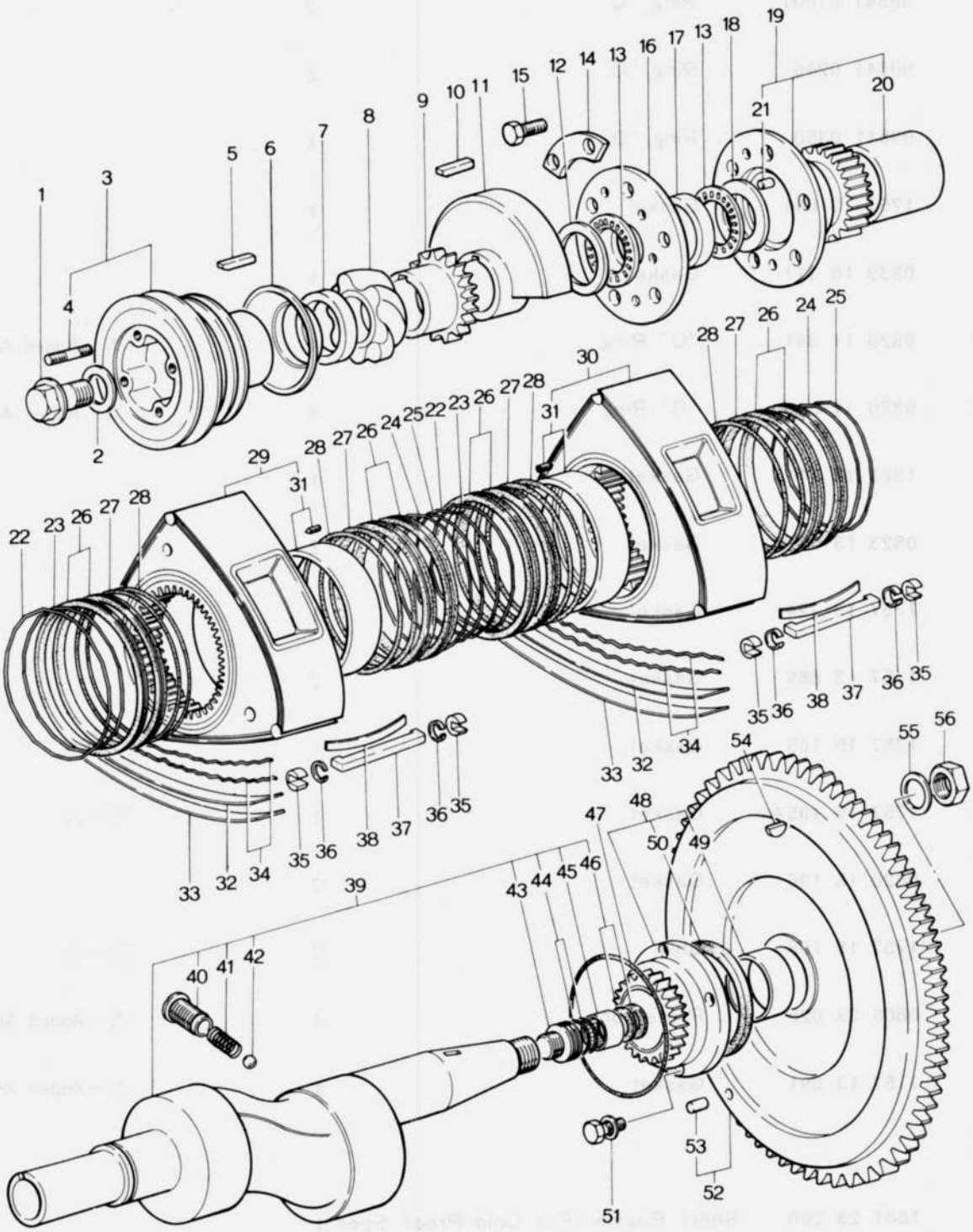

ROTOR (USED UP TO CAR NO. 179250 73/9)

No.	Part Number	Description	Q'ty	Remarks
1	0820 11 611B	Bolt, Pulley	1	
2	99564 2800	Gasket, Pulley	1	
3	2090 11 600B	Pulley	1	
4	99852 0616A	Stud	4	
5	99236 0525	Key	1	
6	0813 11 541	Plate, Oil Baffle	1	
7	0820 11 542	Spacer	1	
8	0839 11 531	Gear, Drive - Distributor	1	
9	0839 11 551A	Gear, Drive - Oil Pump	1	
10	0820 11 512A	Key	1	
11	2090 11 511A	Weight, Balance	1	
	0839 11 511D	Weight, Balance	1	73/1~○
12	0820 11 507	Washer, Thrust	1	
13	0813 11 505B	Bearing, Needle	2	
14	0820 11 503	Washer, Lock	3	
15	0839 11 515	Bolt, Stationary Gear	6	
16	0839 11 501	Plate	1	
17	0839 11 502	Spacer (L=8.02)		
	0839 11 506	Spacer (L=8.08)	Selective use 1	

10 11 ROTOR (USED UP TO CAR NO. 179250 73/9)

No.	Part Number	Description	Q'ty	Remarks
	0839 11 508	Spacer (L=8.04)	1	
	0839 11 509	Spacer (L=8.00)		
18	0839 11 504B	Plate, Thrust	1	
19	0839 10 500B	Gear (Frt.), Stationary	1	
20	0820 10 502B	Bearing, Main	1	
21	0839 10 504	Pin, Knock	1	
22	0839 11 353A	Spring, Oil Seal Outer (Frt.)	2	
	1011 11 353	Spring, Oil Seal Outer (Frt.)	2	73/4~○
23	0839 11 351B	Spring, Oil Seal Inner (Frt.)	2	
	1011 11 351	Spring, Oil Seal Inner (Frt.)	2	73/4~○
24	0839 11 361A	Spring, Oil Seal Inner (Rr.)	2	
	1011 11 361	Spring, Oil Seal Inner (Rr.)	2	73/4~○
25	0839 11 363	Spring, Oil Seal Outer (Rr.)	2	
	1011 11 363	Spring, Oil Seal Outer (Rr.)	2	73/4~○
26	0820 23 180C	Oil Seal Set	4	
27	0820 11 343	Ring, "O" - Outer	4	
28	0820 11 341	Ring, "O" - Inner	4	
29	2090 23 103A	Rotor (Frt.)	1	
30	2090 23 113A	Rotor (Rr.)	1	
31	0839 99 118	Bearing Set	2	
●	1011 11 111	Bearing Set	2	Car No. 172856 73/6~×

ROTOR (USED UP TO CAR NO. 179250 73/9)

No.	Part Number	Description	Q'ty	Remarks
32	~~0820 23 151~~	~~Seal, Side Outer~~	~~12~~	
	2125 23 151	Seal, Side-Outer	12	From Car No. 1
	1011 23 151	Seal, Side	12	Car No. 161186 73/1~○
	1011 23 151A	Seal, Side	12	73/10~○
33	~~0820 23 152~~	~~Seal, Side-Inner~~	~~12~~	
	2125 23 152	Seal, Side-Inner	12	From Car No. 1
	1011 23 151	Seal, Side	12	Car No. 161186 73/1~○
	1011 23 151A	Seal, Side	12	73/10~○
34	0820 11 317	Spring, Side Seal	24	
35	0820 11 321C	Seal, Corner (STD)	12	
●	0820 23 176B	Seal, Corner (O.S. 0.03)	12	
36	0839 11 323A	Spring, Corner Seal	12	
37	0839 11 301B	Seal, Apex (TR-230)	Selective use 6	From Car No. 1 Car No. 165371 73/3~Discarded
	2080 11 301	Seal, Apex (TMC-15T)		
	2090 11 301	Seal, Apex (TMC-115)		
38	0839 11 304	Spring, Apex Seal	6	
39	0839 11 400 I	Shaft, Eccentric	1	
	0879 11 400	Shaft, Eccentric	1	Car No. 159525 72/12~△
40	0839 11 411A	Plug, Oil Jet	2	
41	0839 11 412	Spring	2	
42	99611 2000	Ball, Steel	2	
43	0813 11 405	Plug, Blind	1	
44	99541 01101	Ring, "O"	2	
45	0810 11 403	Bearing, Needle	1	
46	0810 11 404	Oil Seal	2	
47	0813 10 555	Ring, "O"	1	

ROTOR (USED UP TO CAR NO. 179250 73/9)

No.	Part Number	Description	Q'ty	Remarks
48	0820 10 550B	Gear (Rr.), Stationary	1	
	1668 10 550	Gear (Rr.), Stationary	1	Car No. 161694 73/3~△
49	0820 10 502B	Bearing, Main	1	
50	0820 10 556A	Oil Seal	1	
	1668 10 556	Oil Seal	1	Car No. 161694 73/3~△
51	908012 8 18	Bolt Set, Stationary Gear	6	
52	1620 11 700	Wheel, Fly	1	
53	0820 11 703	Pin	1	
54	0820 11 705	Key, Fly Wheel	1	
55	0820 11 712	Washer, Lock	1	
56	0810 11 711	Nut, Lock	1	

ROTOR (USED FROM CAR NO. 160623 73/10)

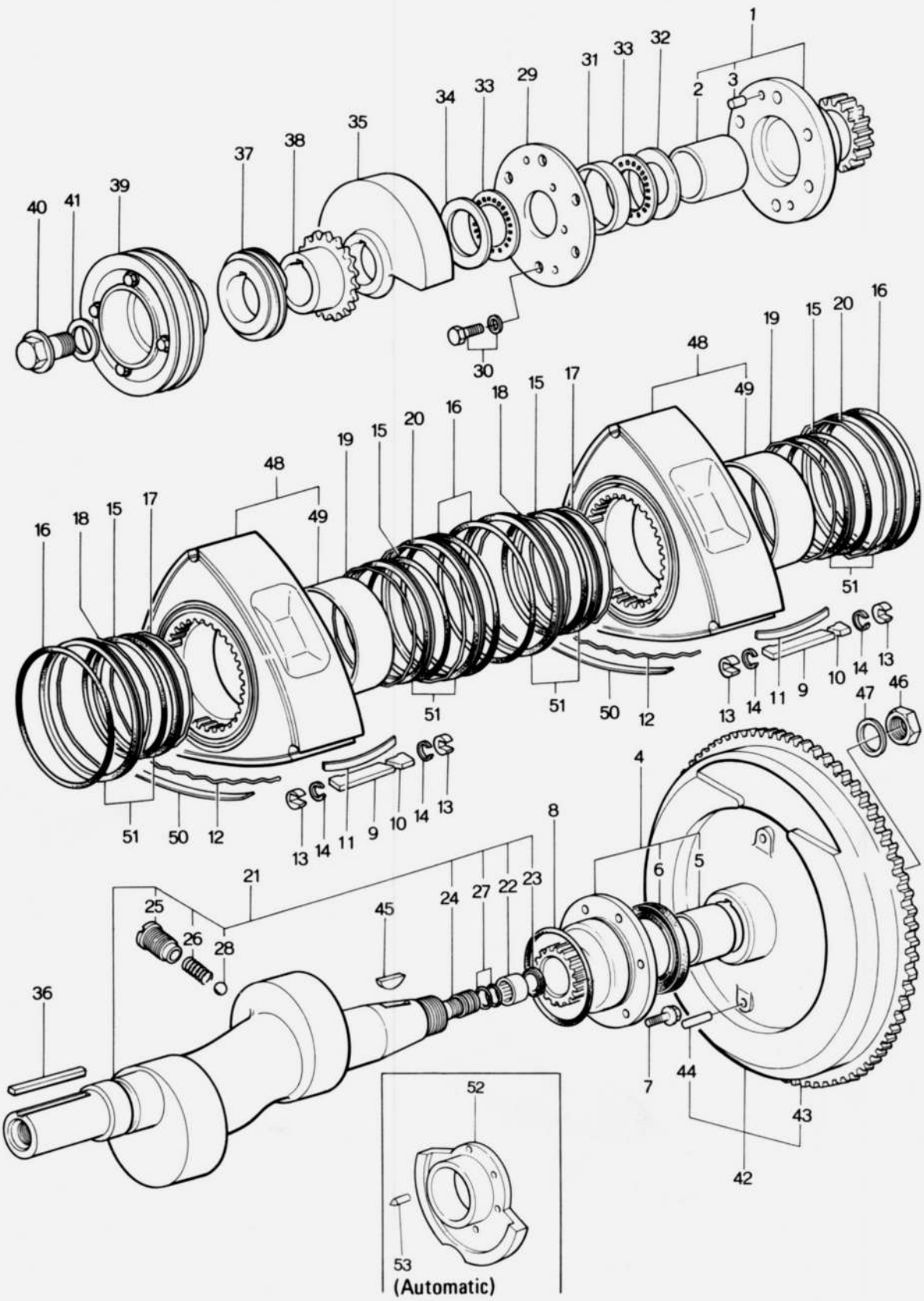

ROTOR (USED FROM CAR NO. 160623 73/10)

No.	Part Number	Description	Q'ty	Remarks
1	0839 10 500B	Gear (Frt.), Stationary	1	
2	0820 10 502B	Bearing, Main	1	
3	0839 10 504	Pin, Knock	1	
4	1668 10 550	Gear (Rr.), Stationary	1	
5	0820 10 502B	Bearing, Main	1	
6	1668 10 556	Oil Seal	1	
7	99801 0818	Bolt, Stationary Gear	6	
	99971 0800	Washer, Spring	6	
8	0813 10 555	Ring, "O" - Stationary Gear	1	
9	1881 11 301A	Seal, Apex	6	
10	1011 11 302C	Piece, Side	6	
11	1011 11 304A	Spring, Apex Seal	6	
12	0820 11 317	Spring, Side Seal	12	
13	1011 11 321	Seal, Corner (Std.)	12	
	1011 23 176	Seal, Corner (O.S. 0.03)	12	
14	0839 11 323A	Spring, Corner Seal	12	
15	0820 11 341	Ring, "O" - Inner	4	
16	0820 11 343	Ring, "O" - Outer	4	

10 11 ROTOR (USED FROM CAR NO. 160623 73/10)

No.	Part Number	Description	Q'ty	Remarks
17	1011 11 351	Spring, Oil Seal Inner (Frt.)	2	
18	1011 11 353	Spring, Oil Seal Outer (Frt.)	2	
19	1011 11 361	Spring, Oil Seal Inner (Rr.)	2	
20	1011 11 363	Spring, Oil Seal Outer (Rr.)	2	
● 21	1881 11 400A	Shaft, Eccentric (Manual)	1	
●	1883 11 400A	Shaft, Eccentric (Automatic)	1	
● 22	1881 11 403	Bearing, Needle (Manual)	1	
● 23	1881 11 404	Oil Seal (Manual)	1	
24	0813 11 405	Plug, Blind	1	
25	0839 11 411A	Plug, Oil Jet	2	
26	0839 11 412	Spring	2	
27	99541 01101	Ring, "O"	2	
28	99611 2000	Ball, Steel	2	
29	1011 11 501	Plate	1	
30	99801 0822	Bolt, Plate & Stationary Gear	6	
	99971 0800	Washer, Spring	6	
31	0839 11 502	Spacer (L=8.02) (Selective use)	1	
	0839 11 506	Spacer (L=8.08) (Selective use)	1	
	0839 11 508	Spacer (L=8.04) (Selective use)	1	

No.	Part Number	Description	Q'ty	Remarks
	0839 11 509	Spacer (L=8.00), Selective use	1	
32	1011 11 504	Plate, Thrust	1	
33	0813 11 505B	Bearing, Needle	2	
34	1011 11 507	Washer, Thrust	1	
35	1881 11 511	Weight, Balance	1	
36	1757 11 512	Key	1	
37	0839 11 531	Gear, Drive-Distributor	1	
38	1757 11 551	Gear, Drive-Oil Pump	1	
39	1757 11 600C	Pulley	1	
●	1757 11 600D	Pulley	1	73/11～
●	1881 11 600	Pulley	1	74/3～×
40	0820 11 611B	Bolt, Pulley	1	
41	99564 2800	Gasket, Bolt	1	
● 42	1881 11 700	Wheel, Fly	1	
● 43	0866 11 702	Gear, Ring (Manual)	1	
● 44	99222 0610	Pin, Spring	1	
45	0820 11 705	Key, Fly Wheel	1	
46	0810 11 711	Nut, Lock	1	
47	0820 11 712	Washer, Lock	1	

10 11 ROTOR (USED FROM CAR NO. 160623 73/10)

No.	Part Number	Description	Q'ty	Remarks
48	1011 23 103B	Rotor "C"	2	
49	1011 11 111	Bearing, Rotor	2	
50	1011 23 151A	Seal, Side	12	
51	0820 23 180C	Oil Seal Set	1	
● 52	1883 11 750	Weight, Counter (Automatic)	1	
● 53	99222 0610	Pin (Automatic)	1	

IN. MANIFOLD & THERMAL REACTOR
(USED FROM CAR NO. 160623 73/10)

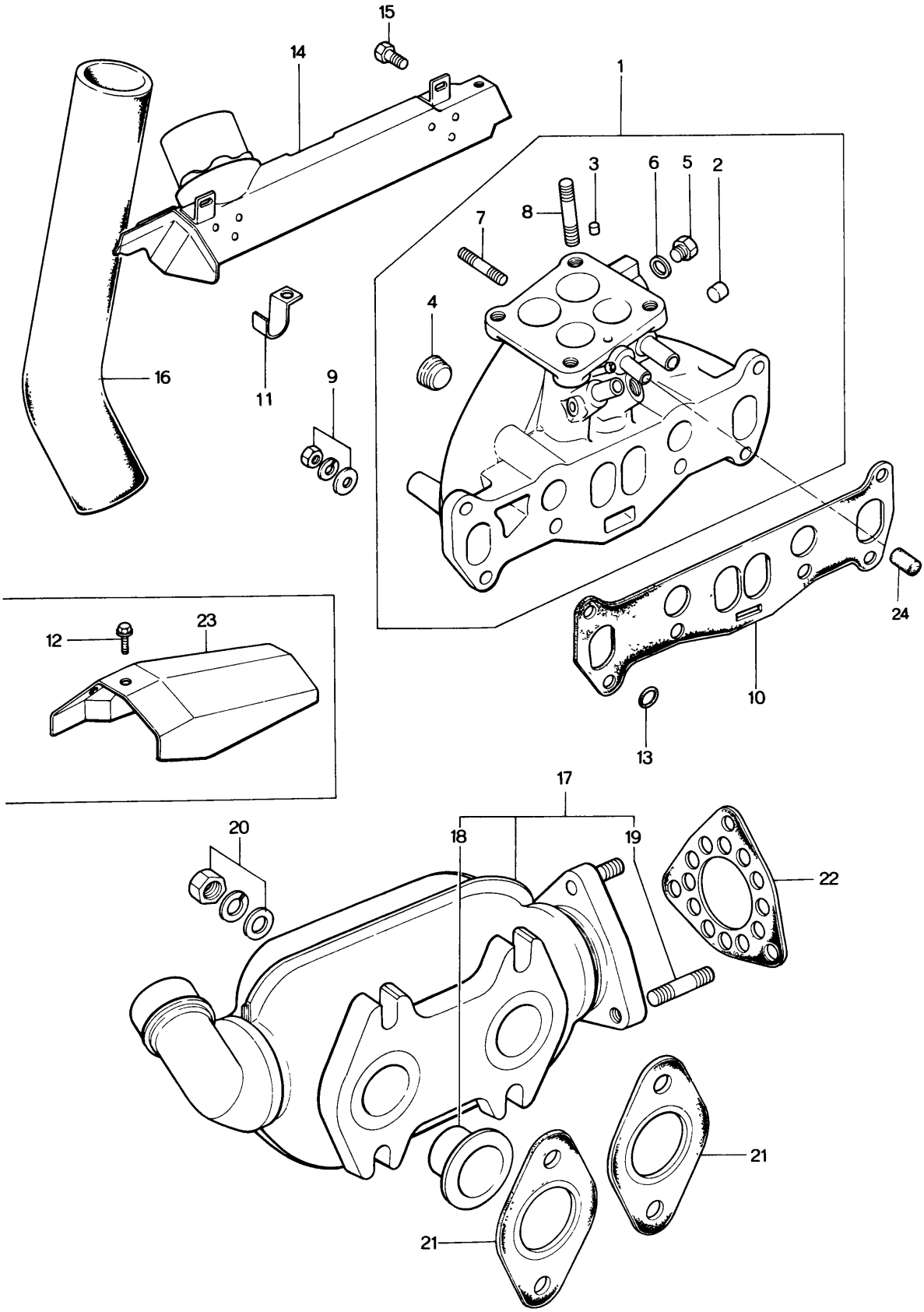

IN. MANIFOLD & THERMAL REACTOR

(USED FROM CAR NO. 160623 73/10)

No.	Part Number	Description	Q'ty	Remarks
1	1881 13 100	Manifold, IN.	1	
2	99307 0800	Plug, Blind	1	
3	99307 1200	Plug, Blind	1	
4	99503 3000	Plug	3	
5	99511 1000	Plug	1	
6	99564 1000	Gasket	1	
7	99851 0622A	Stud	3	
8	99851 0828A	Stud	4	
9	99901 0800	Nut, IN. Manifold	6	
	99952 0800	Washer, Plain	6	
	99971 0800	Washer, Spring	6	
10	1881 13 111	Gasket, IN. Manifold	1	
11	1757 13 251A	Clip, Valve Wiring	2	
12	~~90786 0612~~	~~Bolt, Heat Insulation~~	~~2~~	
●	90796 0610	Bolt, Heat Insulation	2	From Car No. 1
●	90796 0625	Bolt, Heat Insulation (Australia)	2	Car No. 164105 73/12~×
●	90786 0612	Bolt, Heat Insulation (All Models)	2	74/2~×
13	99541 0240	Ring, "O" - IN. Manifold	2	
14	1881 13 330A	Duct, Hot Air	1	
●	1952 13 330	Duct, Hot Air (Australia)	1	Car No. 164105 73/12~×
●	1881 13 330B	Duct, Hot Air (All Models)	1	74/2~×
15	99796 0812	Bolt, Hot Air Duct	2	
16	0866 13 341B	Hose, Hot Air	1	
	1052 13 341A	Hose, Hot Air	1	Car No. 164070 73/11~△

IN. MANIFOLD & THERMAL REACTOR
(USED FROM CAR NO. 160623 73/10)

No.	Part Number	Description	Q'ty	Remarks
17	1881 13 800	Reactor, Thermal	1	
18	2090 13 742A	Insert	1	
19	2329 13 876	Stud	3	
20	2158 40 355	Nut, Thermal Reactor	4	
	0839 13 614	Washer, Plain	4	
	2329 13 882	Washer, Spring	4	
21	1757 13 889	Gasket, Thermal Reactor	2	
22	1757 13 891	Gasket, Thermal Reactor	1	
23	1757 13 371	Heat Insulation	1	
●	1757 13 371A	Heat Insulation	1	73/11～○
●	1952 13 370	Heat Insulation (Australia)	1	Car No. 164105 73/12～×
●	1757 13 371B	Heat Insulation (All Models)	1	74/2～×
● 24	2306 10 481	Cap, Blind	1	From Car No. 1

CARBURETTOR
(USED UP TO CAR NO. 179250 73/9)

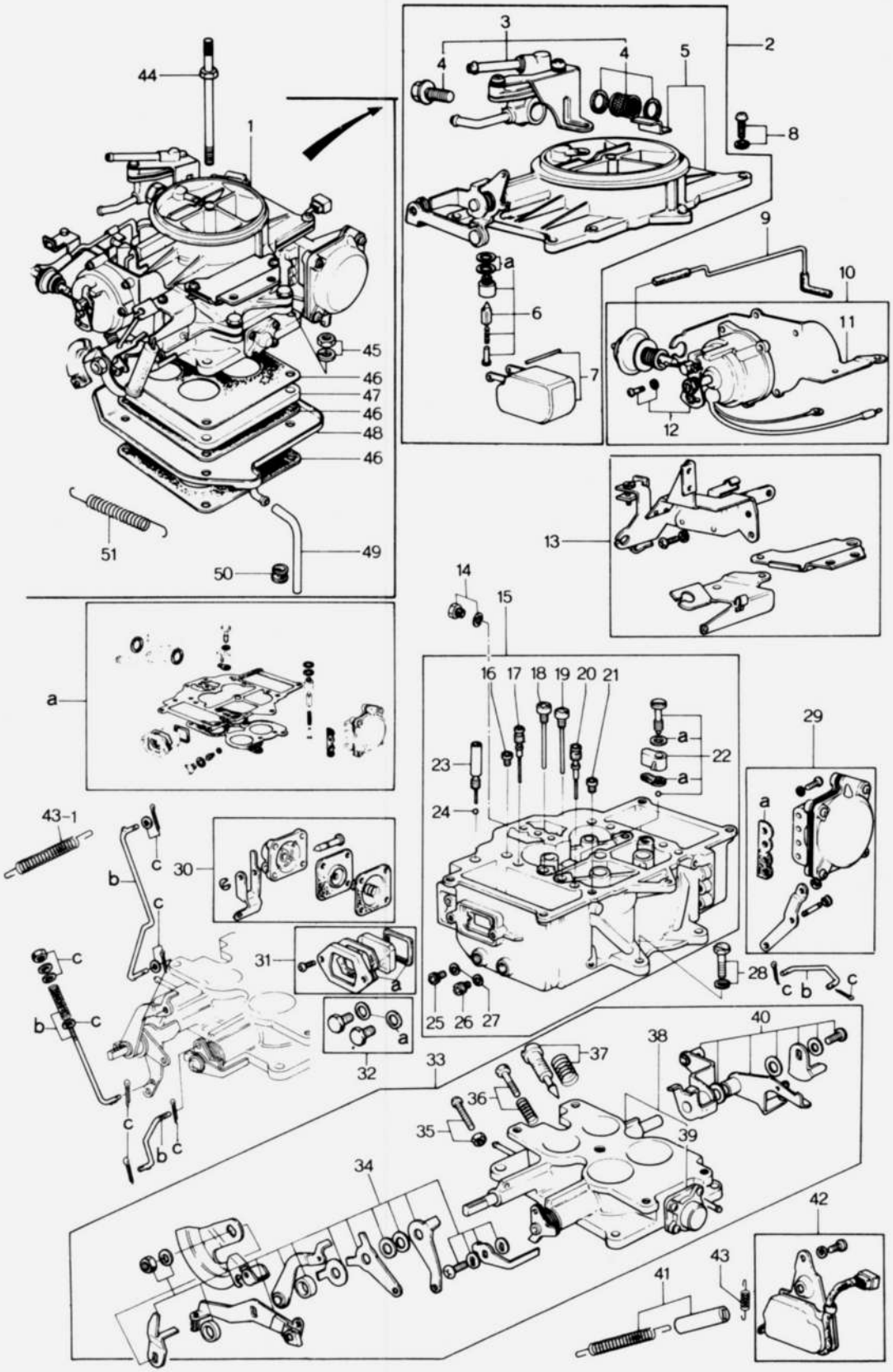

CARBURETTOR
(USED UP TO CAR NO. 179250 73/9)

No.	Part Number	Description	Q'ty	Remarks
1	~~2183 13 200A~~	~~Carburettor~~	~~1~~	
	2183 13 200C	Carburettor	1	From Car No. 1
	1672 13 200F	Carburettor (For Sweden)	1	
2	1668 23 310	Horn Set, Air (Fig. No. 3～7 Included)	1	
3	1663 23 319	Valve Set, Fuel Return (Fig. No. 4 Included)	1	
4	1663 23 409	Strainer Set	1	
5	1668 23 520	Horn Sub Set, Air	1	
6	1663 23 390	Seat Set, Float Valve	1	
7	1663 23 326B	Float Set	1	
8	0750 23 652	Screw Set, Air Horn	7	
9	0842 23 509	Pipe, Vacuum	1	
10	1668 23 500	Semi Auto Choke Set (Fig. No. 11,12 Included)	1	
	1672 23 500	Semi Auto Choke Set (Fig. No. 11,12 Included)	1	(For Sweden)
11	1668 23 501	Holder, Bimetal	1	
	1672 23 501	Holder, Bimetal (For Sweden)	1	
12	1668 23 502	Case Set, Bimetal	1	
	1669 23 502	Case Set, Bimetal (For Sweden)	1	
13	1668 23 370	Bracket Set	1	
	1668 23 370A	Bracket Set	1	Car No. 153691 7/9～△
14	~~2183 23 508~~	~~Plug Set~~	~~1~~	
	2183 23 508	Plug Set	1	From Car No. 1
	1570 23 507	Valve Set, Check (For Sweden)	1	
15	~~1668 23 320~~	~~Body Set (Fig. No. 16～27 Included)~~	~~1~~	
	2183 23 320	Body Set (Fig. No. 16～27 Included)	1	From Car No. 1
	1668 23 320B	Body Set (Fig. No. 16～27 Included) (For Sweden)	1	
16	0288 23 336	Jet, Slow Air Bleed	2	
17	0839 23 425	Jet, Slow	2	
18	0839 23 423	Jet, Main Air Bleed- 1st	2	
	1669 23 423A	Jet, Main Air Bleed- 1st (For Sweden)	2	
19	~~1668 23 424~~	~~Jet, Main Air Bleed- 2nd~~	~~2~~	
	1668 23 424A	Jet, Main Air Bleed- 2nd	2	From Car No. 1
20	0839 23 426A	Jet, Step	2	

CARBURETTOR
(USED UP TO CAR NO. 179250 73/9)

No.	Part Number	Description	Q'ty	Remarks
21	2090 23 428	Jet, Step Bleed	2	
22	1868 23 490	Nozzle Set, Accel.	1	
23	0823 23 338	Plug, Inlet Check Valve	2	
24	0107 13 781	Ball, Steel	1	
25	1863 23 421	Jet, Main - 1st	2	
	1869 23 421A	Jet, Main - 1st	2	Car No. 160206 73/11~△
	0222 23 353A	Jet, Main - 1st (For Sweden)	2	
26	0839 23 422	Jet, Main - 2nd	2	
27	0193 23 383	Gasket, Main Jet	4	
28	0839 23 484A	Bolt, Flange Set	4	
29	1868 23 350	Chamber Set, Diaphragm	1	
	1868 23 350A	Chamber Set, Diaphragm	1	Car No. 163339 73/2~×
	1872 23 350A	Chamber Set, Diaphragm (For Sweden)	1	
30	1863 23 360C	Pump Set, Accel.	1	
31	1863 23 340A	Cover Set, Level Gauge	1	
32	1868 23 354	Plug Set, Passage	1	
33	1868 23 330	Flange Set (Fig. No. 34~40 Included)	1	
34	1863 23 420A	Lever Set, Front	1	
35	1868 23 440	Screw Set, Throttle Adjust	1	
36	1868 23 460	Screw Set, Idle Adjust	1	
37	1868 23 470	Screw Set, Air Adjust	1	
38	1868 23 410	Flange Sub Set (Fig. No. 39 Included)	1	
39	1863 23 411A	Diaphragm	1	
40	1570 23 430	Lever Set, Rear	1	
	1570 23 430A	Lever Set, Rear	1	Car No. 153691 73/9~△

No.	Part Number	Description	Q'ty	Remarks
41	1663 23 380	Spring Set, Throttle Return	1	
42	1668 23 450	Switch Set, Idle	1	
43	1663 23 455	Spring, Idle Switch	1	
Ⓝ43-1	1668 23 439	Spring, Choke - Return	1	Car No. 153691 73/9~Added Anew
a	1668 23 510	Gasket Set	1	
b	1668 23 480	Rod & Link Set	1	
c	1668 23 530	Pin & Washer Set	1	
	1668 23 540	Repair Kit	1	
44	0839 13 201	Bolt, Air Cleaner Set	1	
45	99901 0800	Nut, Carburettor	4	
	99971 0800	Washer, Spring	4	
46	0823 13 221A	Gasket, Carburettor	3	
47	1570 13 222	Insulator, Carburettor	1	
48	2090 13 230A	Tray, Carburettor	1	
49	0866 13 235	Pipe, Drain	1	
50	99681 1001	Protector, Drain Pipe	1	
51	1663 13 208	Spring, Throttle	1	
	1663 13 208A	Spring, Throttle	1	From Car No. 1

CARBURETTOR

(MANUAL USED FROM CAR NO. 160623 73/10
AUTOMATIC USED FROM CAR NO. 74/3)

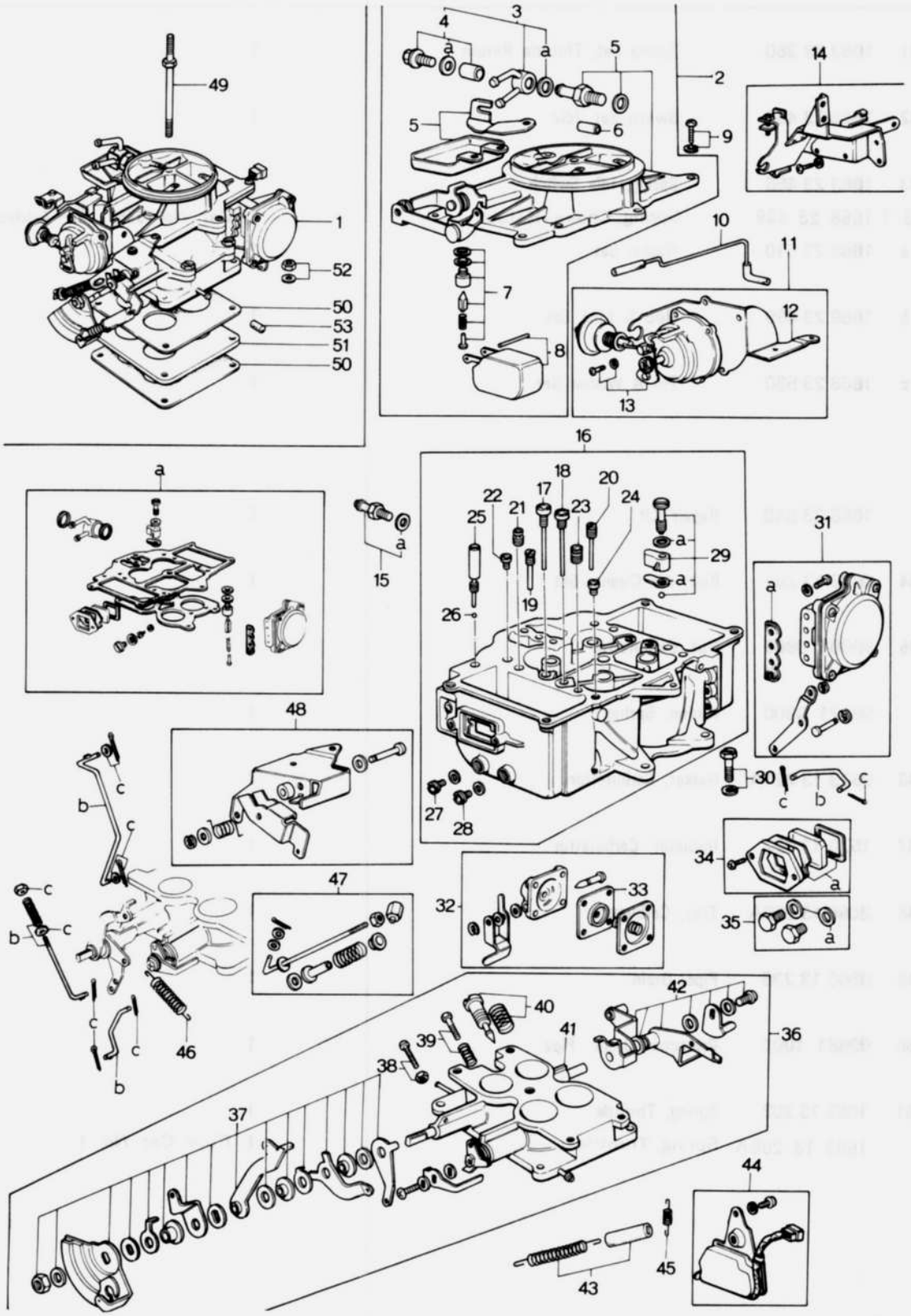

CARBURETTOR

(MANUAL USED FROM CAR NO. 160623 73/10
AUTOMATIC USED FROM CAR NO. 74/3)

13 23

No.	Part Number	Description	Q'ty	Remarks
1	1881 13 200A	Carburettor (L.H.D.) (Manual)	1	
	1951 13 200A	Carburettor (R.H.D.) (Automatic)	1	
	3507 13 200A	Carburettor (R.H.D.) (Manual)	1	
2	1952 23 310	Horn Set, Air (Manual) (Fig. No. 3 ~ 8 Included)	1	
	1951 23 310	Horn Set, Air (Automatic) (Fig. No. 3 ~ 8 Included)	1	
3	1881 23 319	Connector, Fuel Return	1	
4	1663 23 409	Strainer Set	1	
5	1952 23 520	Horn Sub Set, Air (Manual)	1	
	1951 23 520	Horn Sub Set, Air (Automatic)	1	
6	1010 13 104	Cap, Blind (R.H.D.)	2	
7	1663 23 390	Seat Set, Float Valve	1	
8	1663 23 326B	Float Set	1	
9	0750 23 652	Screw Set, Air Horn	7	
10	1027 23 509	Pipe, Vacuum	1	
11	1881 23 500	Semi Auto Choke Set (Manual) (Fig. No. 12,13 Included)	1	
	1883 23 500	Semi Auto Choke Set (Automatic) (Fig. No. 12,13 Included)	1	
12	1881 23 501	Holder Set, Bimetal (Manual)	1	
	1883 23 501	Holder Set, Bimetal (Automatic)	1	
13	1881 23 502	Case Set, Bimetal	1	
14	1881 23 370	Bracket Set (L.H.D.)	1	

CARBURETTOR

(MANUAL USED FROM CAR NO. 160623 73/10
AUTOMATIC USED FROM CAR NO. 74/3)

No.	Part Number	Description	Q'ty	Remarks
	1951 23 370	Bracket Set (R.H.D.)	1	
15	1570 23 507	Valve Set, Check (L.H.D.)	1	
	2183 23 508	Valve Set, Check (R.H.D.)	1	
16	1881 23 320	Body Set (Manual) (Fig. No. 17～29 included)	1	
	1883 23 320	Body Set (Automatic) (Fig. No. 17～29 Included)	1	
17	1669 23 423A	Jet, Main Air Bleed- 1st	2	
18	1669 23 424A	Jet, Main Air Bleed- 2nd	2	
19	1881 23 431	Jet, Slow (Manual)	2	
	1883 23 431	Jet, Slow (Automatic)	2	
20	1881 23 432	Jet, Step (Manual)	2	
	1883 23 432	Jet, Step (Automatic)	2	
21	1881 23 427	Jet, Slow Air Bleed- 1st (Manual)	2	
	1883 23 427	Jet, Slow Air Bleed- 1st (Automatic)	2	
22	1881 23 433	Jet, Slow Air Bleed- 2nd	2	
23	2090 23 428	Jet, Step Air Bleed- 1st	2	
24	1881 23 434	Jet, Step Air Bleed- 2nd (Manual)	2	
	1883 23 434	Jet, Step Air Bleed- 2nd (Automatic)	2	
25	0823 23 338	Plug, Inlet Check Valve	1	
26	0107 13 781	Ball, Steel	1	
27	1881 23 421	Jet, Main- 1st	2	

CARBURETTOR

(MANUAL USED FROM CAR NO. 160623 73/10
AUTOMATIC USED FROM CAR NO. 74/3)

No.	Part Number	Description	Q'ty	Remarks
28	0453 23 402	Jet, Main - 2nd	2	
29	1881 23 490	Nozzle Set, Accel.	1	
30	0839 23 484A	Bolt, Flange Set	4	
31	1881 23 350	Chamber Set, Diaphragm	1	
32	1663 23 360C	Pump Set, Accel. (Fig. No. 33 included)	1	
33	1663 23 361A	Diaphragm, Accel. Pump	1	
34	1663 23 340A	Cover Set, Level Gauge	1	
35	1668 23 354	Plug Set, Main Passage	1	
36	1881 23 330	Flange Set (L.H.D.) (Manual) (Fig. No. 37~42 Included)	1	
	1951 23 330	Flange Set (R.H.D.) (Automatic) (Fig. No. 37~42 Included)	1	
	3507 23 330	Flange Set (R.H.D.) (Manual) (Fig. No. 37~42 Included)	1	
37	1881 23 420	Lever Set, Front	1	
38	1668 23 440	Screw Set, Throttle Lever Adjust	1	
39	1668 23 460	Screw Set, Idle Adjust	1	
40	1668 23 470	Screw Set, Air Adjust	1	
41	1881 23 410	Flange Sub Set (Manual)	1	
	1883 23 410	Flange Sub Set (Automatic)	1	
42	1881 23 430	Lever Set, Rear (L.H.D.) (Manual)	1	
	1951 23 430	Lever Set, Rear (R.H.D.) (Automatic)	1	
	3507 23 430	Lever Set, Rear (R.H.D.) (Manual)	1	

CARBURETTOR

(MANUAL USED FROM CAR NO. 160623 73/10
AUTOMATIC USED FROM CAR NO. 74/3)

No.	Part Number	Description	Q'ty	Remarks
43	1881 23 380	Spring Set, Throttle Return (L.H.D.)	1	
	1663 23 380	Spring Set, Throttle Return (R.H.D.)	1	
44	1668 23 450	Switch Set, Idle	1	
45	1663 23 455	Spring, Idle Switch Lever	1	
46	1668 23 439	Spring, Choke Sub Return (Manual)	1	
	1121 23 439	Spring, Choke Sub Return (Automatic)	1	
47	1881 23 371	Holder Set, Return (L.H.D.) (Fig. No. 48 Included)	1	
48	1881 23 372	Holder Set, Sub Return (L.H.D.)	1	
a	1668 23 510	Gasket Set	1	
b	1881 23 480	Rod & Link Set (Manual)	1	
	1883 23 480	Rod & Link Set (Automatic)	1	
c	1668 23 530	Pin & Washer Set	1	
49	0839 13 201	Bolt, Cleaner Set	1	
50	0823 13 221A	Gasket, Carburettor	2	
51	1570 13 222	Insulator, Carburettor	1	
52	99901 0800	Nut, Carburettor	4	
	99971 0800	Washer, Spring	4	
53	2306 10 481	Cap, Evaporation	3	
	1881 23 540	Repair Kit, Carburettor	1	

AIR CLEANER
(USED UP TO CAR NO. 179250 73/9)

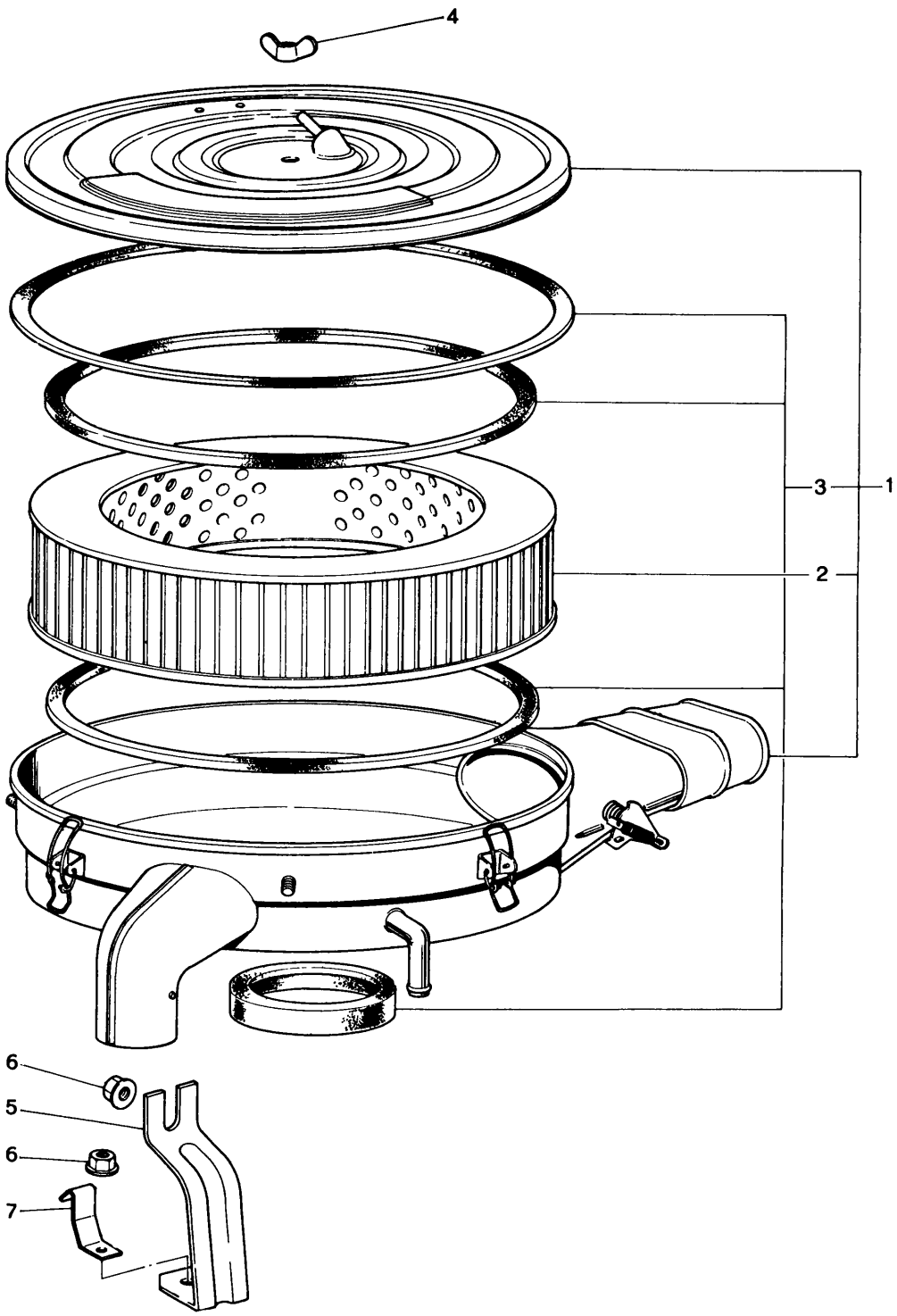

No.	Part Number	Description	Q'ty	Remarks
1	2183 13 300	Cleaner, Air	1	
•	2183 13 300A	Cleaner, Air	1	73/1~○
2	1665 23 672	Element	1	
3	~~0862 23 680~~	~~Gasket Set~~	~~1~~	
•	1668 23 680	Gasket Set	1	From Car No. 1
4	99941 0801	Nut, Wing - Air Cleaner	1	
5	1620 13 311A	Supporter, Air Cleaner	1	
•	1620 13 311B	Supporter, Air Cleaner	1	From Car No. 1
6	99940 0802	Nut, Air Cleaner Supporter	3	
7	0866 18 999A	Clip	1	

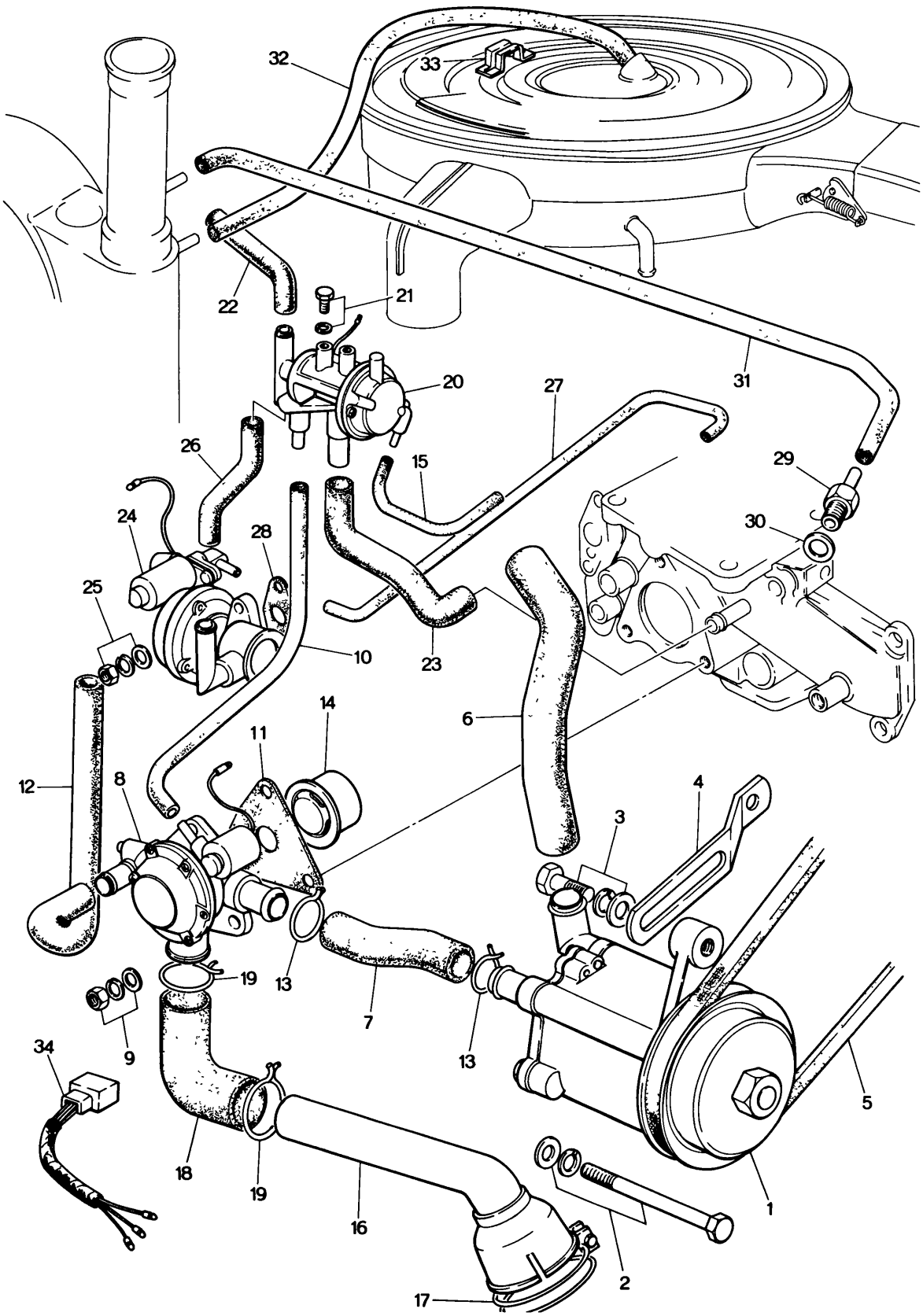
32
33
22
21
20
27
31
26
15
29
24
28
30
25
10
23
14
6
11
12
8
4
3
19
13
7
13
9
34
5
18
19
16
1
2
17

EMISSION CONTROL SYSTEM
(USED UP TO CAR NO. 179250 73/9)

13

No.	Part Number	Description	Q'ty	Remarks
1	1617 13 710B	Pump, Air	1	
2	99803 08100	Bolt, Air Pump	1	
	99951 0818	Washer, Plain	1	
	99971 0800	Washer, Spring	1	
3	99801 0822	Bolt, Air Pump	1	
	99953 0800	Washer, Plain	1	
	99971 0800	Washer, Spring	1	
4	1668 13 714	Strap, Air Pump	1	
5	2329 13 715	Belt, "V"-Air Pump	1	
6	2090 13 717B	Hose, Air-Air Pump ~ Air Cleaner	1	
7	2090 13 718	Hose, Air-Air Control Valve ~ Air Pump	1	
8	1663 13 720A	Valve, Air Control	1	
9	99906 0600	Nut, Air Control Valve	3	
	99953 0600	Washer, Plain	3	
	99971 0600	Washer, Spring	3	
10	2329 13 754A	Tube, Vacuum-Air Control Valve ~ Coasting Valve	1	
11	2090 13 724	Gasket, Air Control Valve	1	
12	2090 13 725A	Hose, Air-Air Control Valve ~ Air Cleaner	1	
13	2329 13 726	Clip, Air Hose	2	
14	1663 13 730	Valve, Check	1	

13 EMISSION CONTROL SYSTEM
(USED UP TO CAR NO. 179250 73/9)

No.	Part Number	Description	Q'ty	Remarks
15	1668 13 755	Tube, Vacuum - Coasting Valve~Carburettor	1	
16	1663 13 740	Pipe, Air - Reactor Side	1	
17	99282 4300	Band, Hose - Air Pipe	1	
	99282 4309	Band, Hose - Air Pipe	1	Car No. 165313 73/3~△
18	1663 13 744	Hose, Air - Air Pipe~Control Valve	1	
19	2090 13 746	Clip, Air Hose	2	
20	1668 13 750	Valve, Coasting	1	
21	99806 0610	Screw, Coasting Valve	2	
	99971 0600	Washer, Spring	2	
22	1668 13 752	Hose, Air - Coasting Valve~Air Cleaner	1	
23	1668 13 753	Hose, Air - Coasting Valve~IN. Manifold	1	
24	2090 13 760B	Valve, Anti - Afterburn	1	
	1668 13 760	Valve, Anti - Afterburn	1	Car No. 73/12~○
25	99806 0600	Nut, Anti - Afterburn Valve	2	
	99953 0600	Washer, Plain	2	
	99971 0600	Washer, Spring	2	
26	1668 13 762	Hose, Air - Afterburn Valve~Coasting Valve	1	
27	2090 13 763A	Tube, Vacuum - Anti - Afterburn Valve~Carburettor	1	
28	2090 13 764	Gasket, Anti - Afterburn Valve	1	
29	1668 13 780C	Valve, Ventilation	1	
	1668 13 780	Valve, Ventilation	1	From Car No. 1
	0862 13 780	Valve, Ventilation	1	73/12~○
30	99564 1600	Gasket, Ventilation Valve	1	
31	1668 13 785	Hose, Ventilation - Ventilation Valve~Oil Filler Pipe	1	

No.	Part Number	Description	Q'ty	Remarks
32	1617 13 786A	Hose, Ventilation-Air Cleaner ~ Intermediate Housing	1	
33	1617 13 305A	Clip, Hose	1	
34	1668 18 860B	Wiring, Valve	1	

EMISSION CONTROL SYSTEM
(USED FROM CAR NO. 160623 73/10)

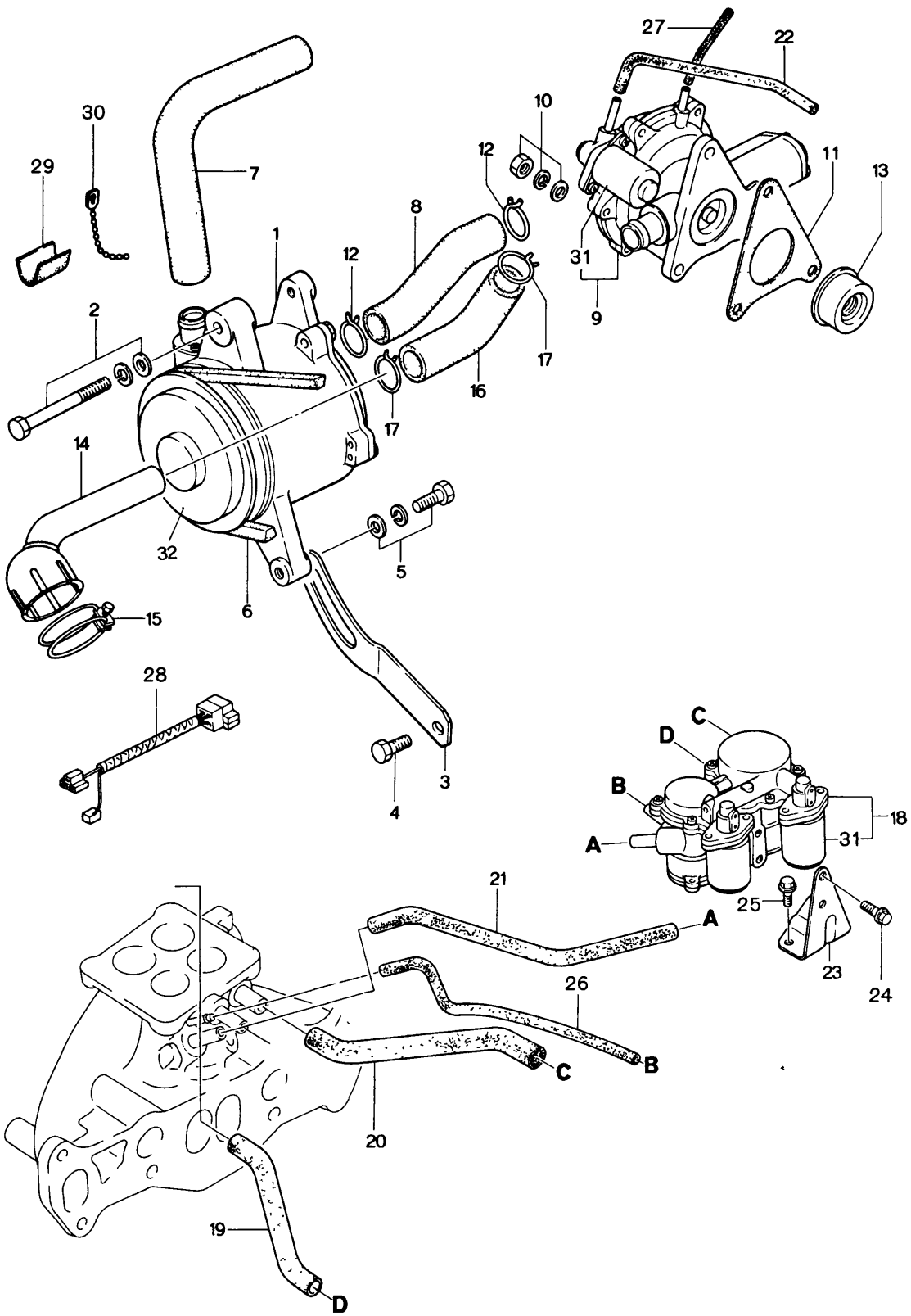

	No.	Part Number	Description	Q'ty	Remarks
	1	1757 13 710	Pump, Air (Fig. No. 32 included)	1	
	2	99803 08100	Bolt, Air Pump	1	
		99952 0800	Washer, Plain	1	
		99971 0800	Washer, Spring	1	
	3	1757 13 714	Strap, Air Pump	1	
	4	99796 0814	Bolt, Strap	1	
●	5	99796 0820	Bolt, Strap	1	
●		99952 0822	Washer, Plain	1	
	6	1757 13 715	Belt, "V" - Air Pump	1	
	7	1757 13 717	Hose, Air - Air Pump ~ Air Cleaner	1	
	8	1757 13 718	Hose, Air - A. C. Valve ~ Air Pump	1	
	9	1757 13 720	Valve, Air Control (Manual) (Fig. No. 31 included)	1	
●		1881 13 720	Valve, Air Control (Manual) (Fig. No. 31 included)	1	74/2 ~ △
●		1883 13 720	Valve, Air Control (Automatic) (Fig. No. 31 included)	1	
	10	99940 0601	Nut, Air Control Valve	3	
	11	1757 13 724	Gasket, Air Control Valve	1	
	12	2329 13 726	Clip, Air Hose	2	
	13	1758 13 730	Valve, Check	1	
●		1881 13 730	Valve, Check	1	74/1 ~ △
	14	1757 13 740	Pipe, Air - Reactor Side	1	
	15	99282 4309	Band, Hose - Air Pipe (ECE & West Germany)	1	
		99282 4300	Band, Hose - Air Pipe (Except ECE & West Germany)	1	
●		99282 4309	Band, Hose - Air Pipe (Except ECE & West Germany)	1	74/1 ~ △
	16	1757 13 744	Hose, Air - Reactor ~ A. C. Valve	1	
	17	2090 13 746	Clip, Air Hose	2	

EMISSION CONTROL SYSTEM
(USED FROM CAR NO. 160623 73/10)

No.	Part Number	Description	Q'ty	Remarks
18	1757 13 750	Valve, Deceleration Control (Fig. No. 31 included)	1	
19	1757 13 752	Hose, Air-D.C. Valve~Air Cleaner	1	
20	1757 13 753	Hose, Air-D.C. Valve~IN. Manifold	1	
21	1757 13 754 A	Hose, Air-D.C. Valve~IN. Manifold	1	
●	1757 13 754 B	Hose, Air-D.C. Valve~IN. Manifold	1	74/4~△
22	2329 13 754 A	Tube, Balance-A.C. Valve~Carburettor	1	
23	1757 13 757	Supporter, D.C. Valve	1	
24	99796 0610	Bolt, Supporter+D.C. Valve	2	
25	99796 0812	Bolt, D.C. Valve Supporter	2	
26	1757 13 778	Tube, Vacuum-D.C. Valve~IN. Manifold	1	
27	99340 04200	Hose, Air-A.C. Valve~Air Cleaner	1	
28	1757 18 860	Wiring, Valve	1	
29	0208 66 949	Pad, Protector-Valve Wiring	1	
30	99709 0108	Band, Valve Wiring	1	
31	1757 23 725	Valve, Solenoid (Included in Fig. No. 9 & 18)	3	
●	1757 23 713	Pulley, Air Pump (Included in Fig. No. 1)	1	

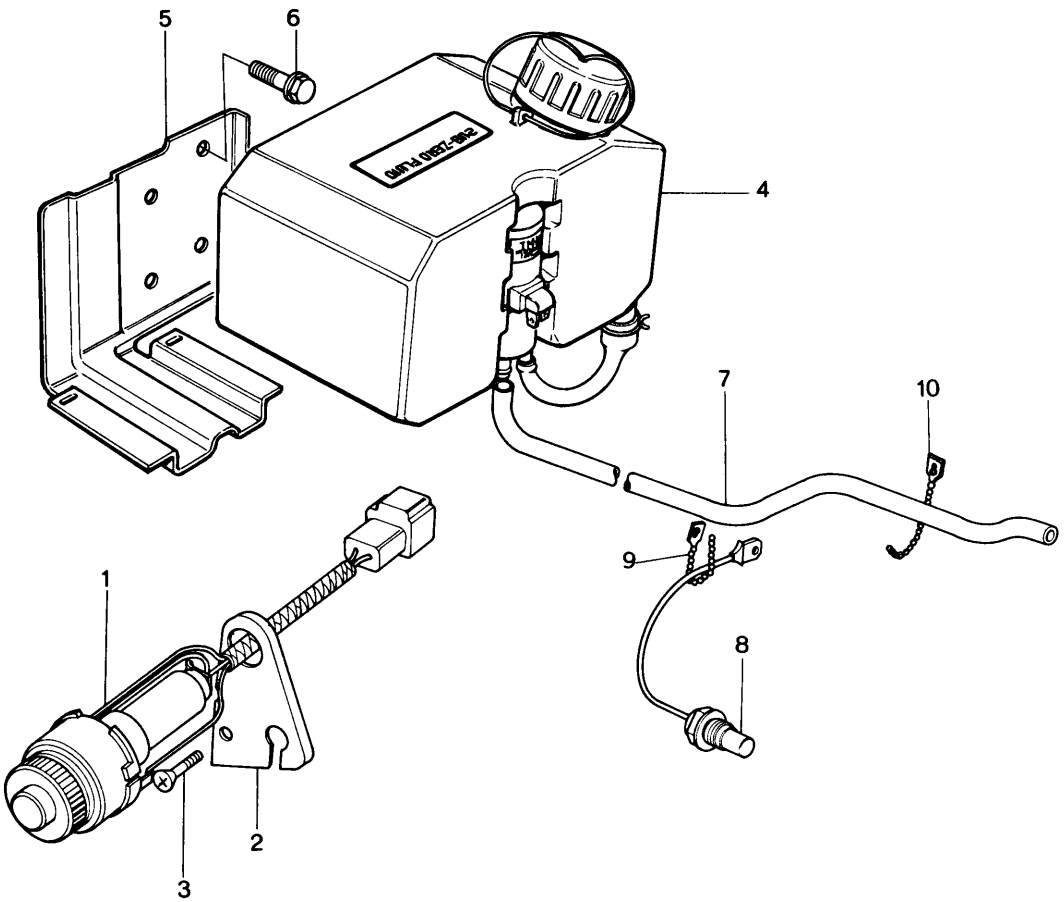
5
6
4
7
10
9
8
1
2
3

STARTING ASSIST SYSTEM (FOR SWEDEN) 13

No.	Part Number	Description	Q'ty	Remarks
1	1668 13 520A	Switch	1	
2	1620 13 525A	Bracket, Switch	1	
3	99765 0610B	Screw, Bracket	1	
4	1668 13 510	Tank	1	
5	1668 13 515A	Bracket, Tank	1	
6	99786 0612	Screw, Tapping-Bracket	2	
7	1668 13 527	Hose	1	
8	1668 13 531A	Unit, Thermo	1	
9	99709 0108	Band	1	
10	99709 0225	Band	1	
●	1881 13 510A	Tank	1	From Car No. 1
●	1881 13 510E	Tank	1	72/9 ~ ○

STARTING ASSIST SYSTEM
(COLD PROOF SPEC.)

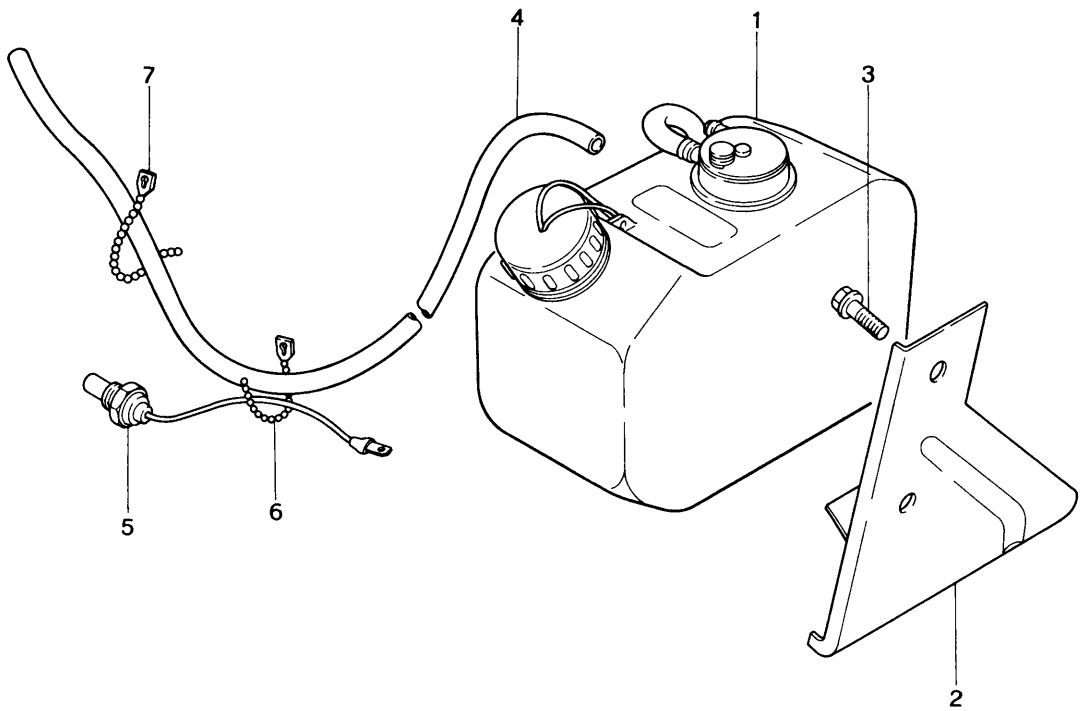

STARTING ASSIST SYSTEM
(COLD PROOF SPEC.)

13

No.	Part Number	Description	Q'ty	Remarks
1	1881 13 510E	Tank, Starting Fluid	1	
2	1881 13 515A	Bracket, Tank	1	
3	99786 0612	Screw, Tank Bracket	2	
4	1668 13 527	Hose	1	
5	1668 13 531A	Unit, Thermo	1	
6	99709 0108	Band	1	
7	99709 0225	Band	1	

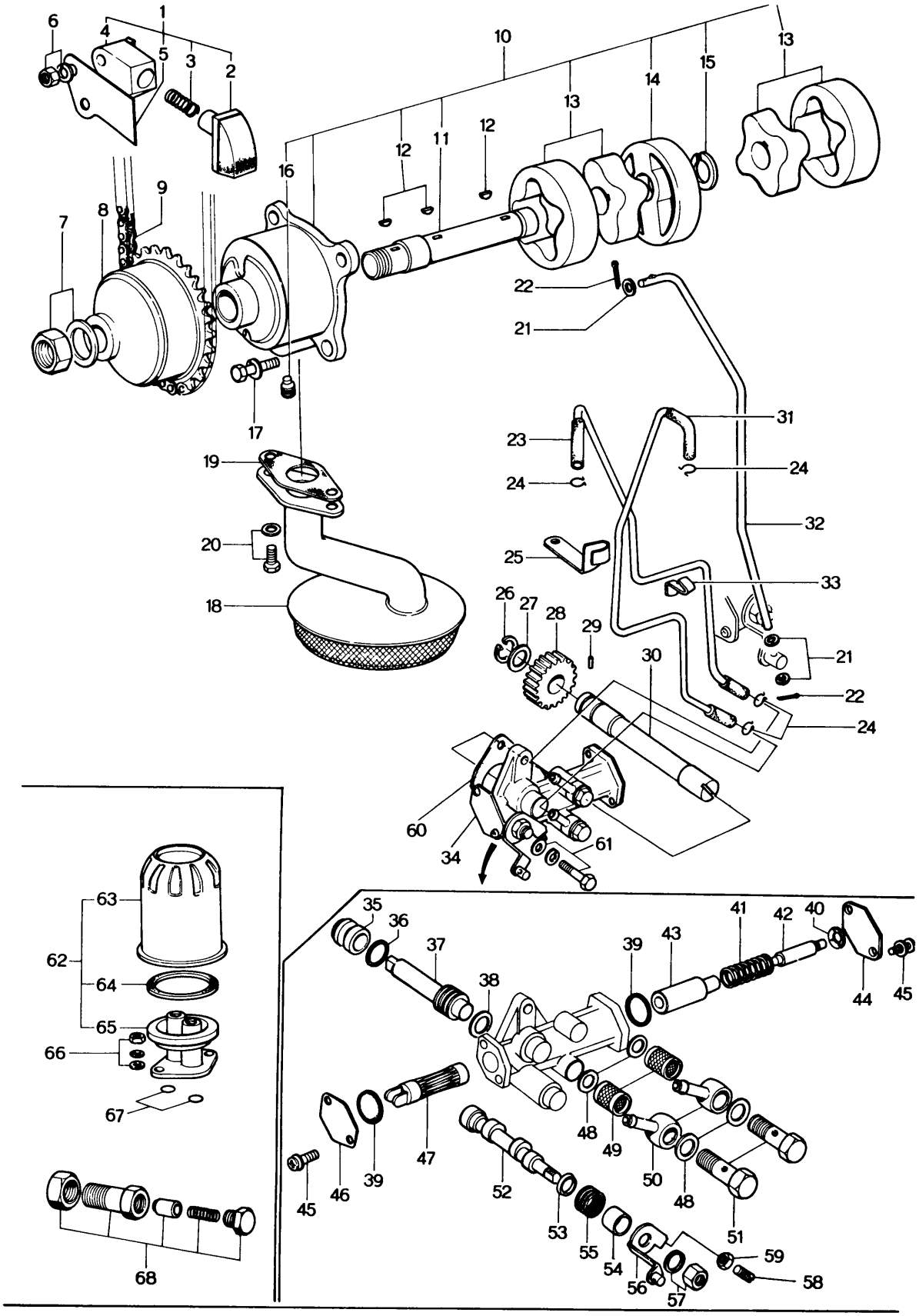
1
2
3
4
5
6
7
8
9
10
11
12
13
14
15
16
17
18
19
20
21
22
23
24
25
26
27
28
29
30
31
32
33
34
35
36
37
38
39
40
41
42
43
44
45
46
47
48
49
50
51
52
53
54
55
56
57
58
59
60
61
62
63
64
65
66
67
68

OIL PUMP (USED UP TO CAR NO. 179250 73/9)

No.	Part Number	Description	Q'ty	Remarks
1	0839 14 020	Adjuster, Chain	1	
2	0823 14 130	Adjuster, Chain	1	
3	0823 14 131	Spring	1	
4	0839 14 132	Body	1	
5	0839 14 133	Plate, Guide	1	
6	99906 0600	Nut, Chain Adjuster	2	
	99971 0600	Washer, Spring	2	
7	99922 1200	Nut, Drive Gear	1	
	99979 1200	Washer, Tab	1	
8	0839 14 141A	Gear, Drive-Oil Pump	1	
9	0839 14 142	Chain	1	
10	0866 14 100	Pump, Oil	1	
11	0839 14 112B	Shaft, Oil Pump	1	
12	0839 14 119B	Key	3	
13	0820 23 882A	Rotor Set, Oil Pump	2	
14	0820 14 118C	Plate, Middle-Oil Pump	1	
15	0810 14 113	Ring, Snap	1	
16	0839 14 117	Bolt, Lock-Oil Pump	1	

14 OIL PUMP (USED UP TO CAR NO. 179250 73/9)

No.	Part Number	Description	Q'ty	Remarks
17	908066 6 18	Bolt Set, Oil Pump	4	
18	0866 14 160E	Strainer, Oil	1	
19	0810 14 171	Gasket, Oil Strainer	1	
20	908062 6 14	Bolt Set, Oil Strainer	2	
21	99953 0400	Washer, Plain-Connecting Rod	3	
22	99221 1212	Pin, Split-Connecting Rod	2	
23	0839 14 640	Tube, Metering Oil	1	
24	0813 14 641	Clip, Metering Oil Tube	4	
25	0839 14 643	Clip, Metering Oil Tube	1	
26	99576 0800	Ring, Snap-Driven Gear Shaft	2	
27	0810 18 276	Shim, Adjust (t=0.6)-Driven Gear Shaft	2	
	0810 18 277	Shim, Adjust (t=0.3)	2	
28	0820 14 625	Gear, Driven	1	
	0820 14 625A	Gear, Driven	1	73/4~○
29	0813 14 623	Pin, Driven Gear	1	
30	0820 14 620	Shaft, Driven Gear	1	
31	0839 14 630	Tube, Metering Oil	1	
32	0839 14 651D	Rod, Connecting	1	
33	0820 14 647	Clip, Metering Oil Tube	1	
34	2090 14 600A	Pump, Metering Oil	1	

No.	Part Number	Description	Q'ty	Remarks
35	0820 23 835A	Bearing, Worm	1	
36	0730 23 839	Ring, "O"	1	
37	0730 23 846	Worm, Driving	1	
38	0820 23 832B	Washer, Thrust	1	
39	0730 23 837	Ring, "O"	2	
40	2090 23 853	Nut, Push	1	
41	0820 23 840	Spring, Plunger	1	
42	2090 23 837	Plunger, Sub	1	
43	2090 23 838	Plunger, Differential	1	
44	0820 23 834B	Plate, Cam Casing	1	
45	908332 4 08	Screw Set, Plate	4	
46	0820 23 833B	Plate, Cam Casing	1	
47	0730 23 845	Plunger	1	
48	0730 23 843	Washer, Connector	4	
49	0820 23 843	Strainer	2	
50	0820 23 836	Connector	2	
51	0730 23 842	Bolt, Connector	2	
52	2090 23 841	Pin, Control	1	
53	0730 23 854	Ring, "V"	1	
54	0820 23 842	Cap	1	

14 OIL PUMP (USED UP TO CAR NO. 179250 73/9)

No.	Part Number	Description	Q'ty	Remarks
55	0820 23 848A	Spring, Return	1	
56	2090 23 844	Lever, Control	1	
57	99907 0600	Nut, Control Lever	1	
	99971 0600	Washer, Spring	1	
58	0820 23 845A	Screw, Adjust	1	
59	0820 23 847A	Nut, Adjust Screw	1	
60	0810 14 611	Gasket, Metering Oil Pump	1	
61	99806 0630	Bolt, Metering Oil Pump	1	
	99806 0618	Bolt	1	
	99953 0600	Washer, Plain	2	
	99971 0600	Washer, Spring	2	
62	0839 14 300	Filter, Oil	1	
63	0813 23 802A	Cartridge, Oil Filter	1	
	0813 23 802B	Cartridge, Oil Filter	1	73/1~○
64	0813 23 803	Gasket	1	
65	0839 23 801	Cover	1	
66	99901 0800	Nut, Oil Filter	2	
	99953 0800	Washer, Plain	2	

OIL PUMP (USED UP TO CAR NO. 179250 73/9)

No.	Part Number	Description	Q'ty	Remarks
	99971 0800	Washer, Spring	2	
67	99541 01601	Ring, "O"- Oil Filter	2	
68	0820 14 250C	Regulator, Pressure	1	
	0820 14 250D	Regulator, Pressure	1	Car No. 73/4~△

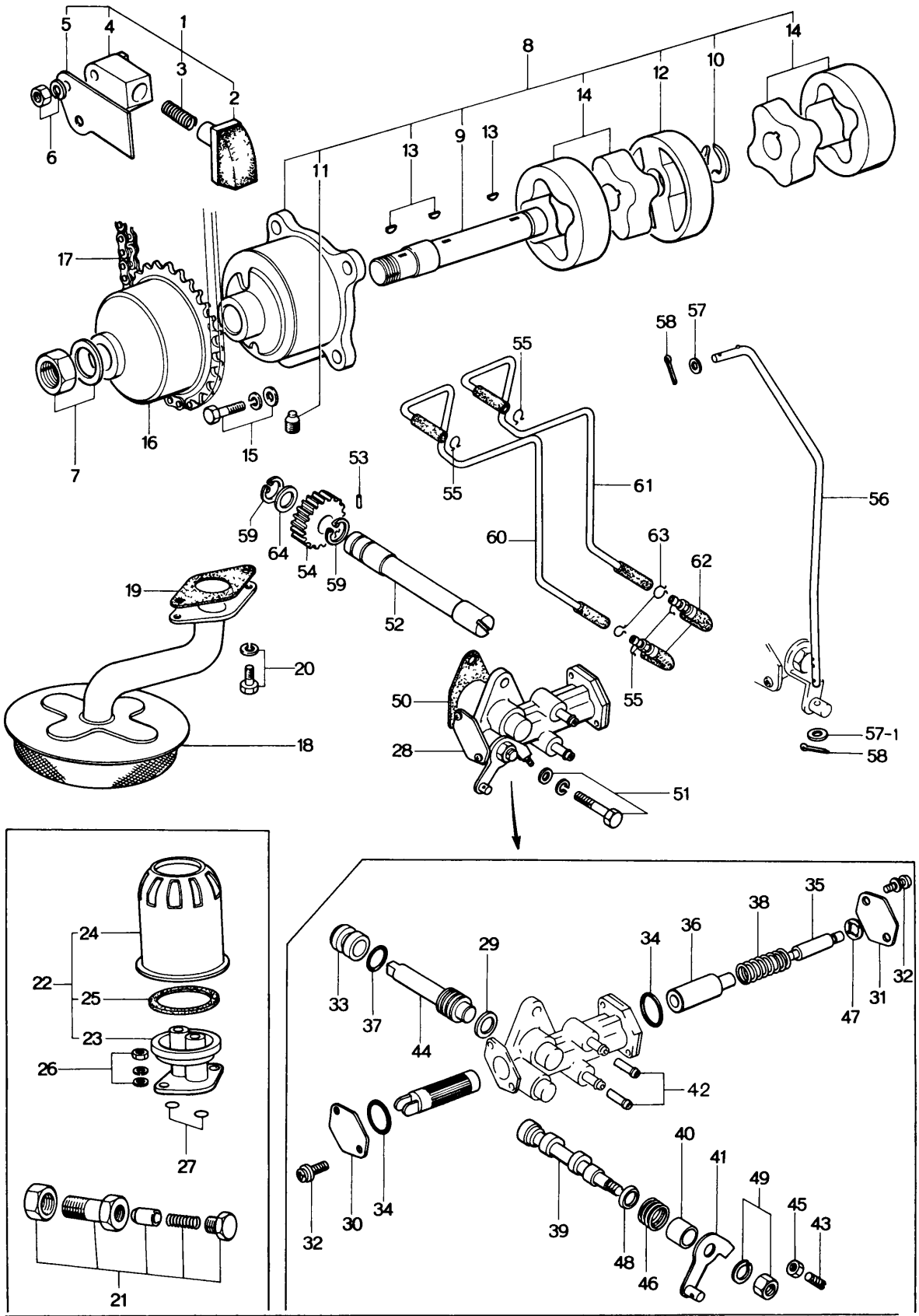
1
2
3
4
5
6
7
8
9
10
11
12
13
14
15
16
17
18
19
20
21
22
23
24
25
26
27
28
29
30
31
32
33
34
35
36
37
38
39
40
41
42
43
44
45
46
47
48
49
50
51
52
53
54
55
56
57
57-1
58
59
60
61
62
63
64

OIL PUMP (USED FROM CAR NO. 160623 73/10)

No.	Part Number	Description	Q'ty	Remarks
1	1757 14 020	Adjuster, Chain	1	
2	0823 14 130	Adjuster	1	
3	0823 14 131	Spring	1	
4	1757 14 132	Body	1	
5	0839 14 133	Plate, Guide	1	
6	99906 0600	Nut, Chain Adjuster	2	
	99971 0600	Washer, Spring	2	
7	99922 1200	Nut, Oil Pump Drive Gear	1	
	99979 1200	Washer, Tab	1	
8	1757 14 100	Pump, Oil	1	
9	1757 14 112	Shaft, Oil Pump	1	
10	0810 14 113	Ring, Snap	1	
11	0839 14 117	Bolt, Lock	1	
12	0820 14 118C	Plate, Middle-Oil Pump	1	
13	0839 14 119B	Key	3	
14	0820 23 882A	Rotor Set, Oil Pump	2	
15	99806 0618	Bolt, Oil Pump	4	

14 OIL PUMP (USED FROM CAR NO. 160623 73/10)

No.	Part Number	Description	Q'ty	Remarks
	99952 0600	Washer, Plain	4	
	99971 0600	Washer, Spring	4	
16	0839 14 141A	Gear, Drive-Oil Pump	1	
17	0839 14 142	Chain	1	
18	0866 14 160E	Strainer, Oil	1	
19	0810 14 171	Gasket, Oil Strainer	1	
20	99806 0614	Bolt, Oil Strainer	2	
	99971 0600	Washer, Spring	2	
21	0820 14 250D	Regulator, Pressure	1	
22	0839 14 300	Filter, Oil	1	
23	0839 23 801	Cover	1	
24	0813 23 802B	Cartridge, Oil Filter	1	
25	0813 23 803	Gasket	1	
26	99901 0800	Nut, Oil Filter	2	
	99953 0800	Washer, Plain	2	
	99971 0800	Washer, Spring	2	
27	99541 01601	Ring, "O"-Oil Filter	2	

OIL PUMP (USED FROM CAR NO. 160623 73/10)

No.	Part Number	Description	Q'ty	Remarks
28	1757 14 600	Pump, Metering Oil	1	
29	0820 23 832B	Washer, Thrust	1	
30	0820 23 833B	Plate, Cam Casing	1	
31	0820 23 834B	Plate, Cam Casing	1	
32	99833 0408	Screw, Cam Casing Plate	4	
	99971 0400	Washer, Plain	4	
33	0820 23 835A	Bearing, Worm	1	
34	0730 23 837	Ring, "O"	2	
35	1011 23 837	Plunger, Sub	1	
36	1011 23 838	Plunger, Differential	1	
37	0730 23 839	Ring, "O"	1	
38	0820 23 840	Spring, Plunger	1	
39	1011 23 841	Pin, Control	1	
40	0820 23 842	Cap	1	
41	1757 23 844	Lever, Control	1	
42	1757 23 836	Pipe	2	
43	0820 23 845A	Screw, Adjust	1	
44	0730 23 846	Bearing, Worm	1	
45	0820 23 847A	Nut, Adjust Screw	1	
46	0820 23 848A	Spring, Return	1	

14 OIL PUMP (USED FROM CAR NO. 160623 73/10)

No.	Part Number	Description	Q'ty	Remarks
47	2090 23 853	Nut, Push	1	
48	0730 23 854	Ring, "U"	1	
49	99907 0600	Nut, Control Lever	1	
	99971 0600	Washer, Spring	1	
50	1757 14 611	Gasket, Metering Oil Pump	1	
51	99806 0618	Bolt	2	
	99953 0600	Washer, Plain	2	
	99971 0600	Washer, Spring	2	
52	0820 14 620A	Shaft, Driven Gear	1	
53	0813 14 623	Pin, Driven Gear	1	
54	0820 14 625A	Gear, Driven	1	
55	0813 14 641	Clip, Metering Oil Tube	4	
56	1757 14 651	Rod, Connecting	1	
57	99953 0400	Washer, Plain	1	
●57-1	1757 14 652	Shim (t=1)	1	
	1757 14 653	Shim (t=2) Selective use	1	
	1757 14 654	Shim (t=3)	1	
58	99221 1212	Pin, Split	2	
59	99576 0800	Ring, Snap-Driven Gear Shaft	2	

OIL PUMP (USED FROM CAR NO. 160623 73/10)

No.	Part Number	Description	Q'ty	Remarks
60	1757 14 660	Tube, Metering Oil	1	
61	1757 14 670	Tube, Metering Oil	1	
62	1757 14 680	Valve, Check	2	
63	1011 14 683	Clip, Metering Oil Tube+Check Valve	2	
64	0810 18 276	Shim, Adjust (t=0.6)	2	Selective use
	0810 18 277	Shim, Adjust (t=0.3)	2	Selective use

COOLING SYSTEM
(USED UP TO CAR NO. 179250 73/9)

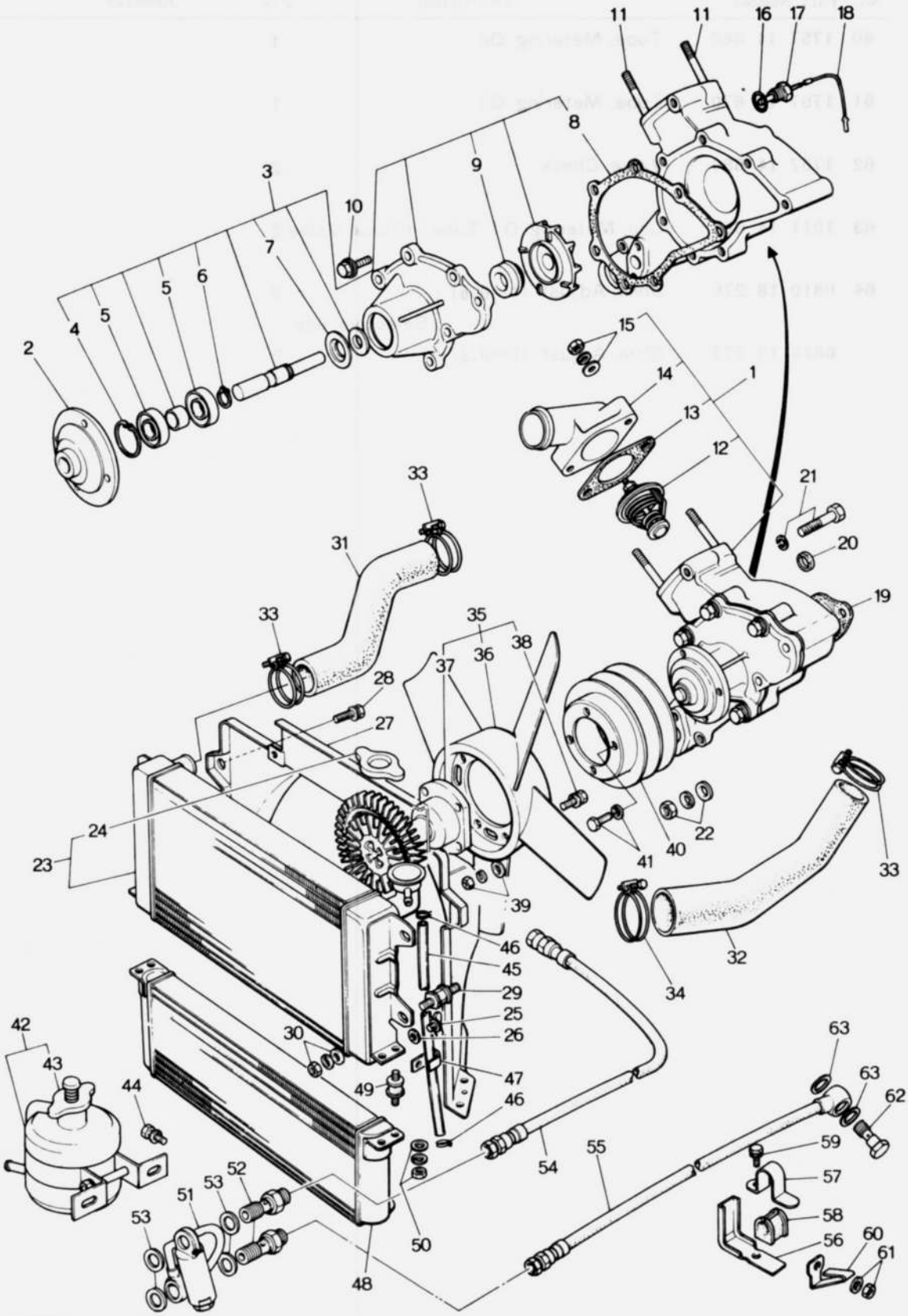

COOLING SYSTEM

(USED UP TO CAR NO. 179250 73/9)

14 15

No.	Part Number	Description	Q'ty	Remarks
1	1620 15 010A	Pump, Water	1	
	1620 15 010B	Pump, Water	1	73/2~○
●	1620 15 510C	Pump, Water	1	73/6~○
2	1011 15 152	Boss, Pulley	1	
3	0862 99 150	Parts Set, Water Pump Inner	1	Set
	0862 99 150A	Parts Set, Water Pump Inner	1	Set From Car No. 1
4	99574 3500	Ring, Retaining	1	
5	0118 15 121	Bearing, Ball	2	
6	0118 15 114	Ring, Stop	1	
7	0118 15 118	Plate, Dust Seal	1	
8	1620 15 132A	Gasket, Pump Cover	1	
9	0820 15 120	Seal, Water	1	
10	908016 8 25	Bolt Set, Pump Cover	3	
11	2090 15 104	Stud, Thermostat Cover	2	
12	0823 15 171	Thermostat	1	
13	0813 15 173	Gasket, Thermostat Cover	1	
14	0839 15 172	Cover, Thermostat	1	
●	1114 15 170	Cover, Thermostat	1	73/6~○
15	99901 0800	Nut, Thermostat Cover	2	
	99953 0800	Waher, Plain	2	
	99971 0800	Washer, Spring	2	
16	0110 18 515	Ring, "O"-Heat Gauge Unit	1	
17	0259 18 510	Gauge Unit, Water Heat	1	
18	0866 18 511	Wire, Lead-Water Heat Gauge Unit	1	

COOLING SYSTEM
(USED UP TO CAR NO. 179250 73/9)

No.	Part Number	Description	Q'ty	Remarks
19	0822 15 105	Gasket, Water Pump	1	
20	0820 15 106	Gasket, Water Pump	2	
21	99801 0832	Bolt, Water Pump	1	
	99971 0800	Washer, Spring	1	
22	99901 0800	Nut, Water Pump	3	
	99971 0800	Washer, Spring	3	
	99953 0800	Washer, Plain	3	
23	1570 15 310	Radiator	1	
24	0222 15 205	Cap	1	
25	2228 15 207	Cock, Water Drain	1	
26	2228 15 208	Gasket, Drain Cock	1	
27	1570 15 401	Shroud, Radiator	1	
28	99796 0812	Bolt, Radiator Shroud	2	
29	0820 15 312A	Rubber, Insulation	4	
30	99940 0800	Nut, Radiator	4	
31	0866 15 511	Hose, Water-Thermostat ~ Radiator	1	
32	1620 15 521	Hose, Water-Radiator ~ Water Pump	1	
33	99282 4900	Band, Hose	3	

No.	Part Number	Description	Q'ty	Remarks
34	99282 5300	Band, Hose	1	
35	0872 15 250	Fan & Fan Drive	1	
36	0872 15 200	Fan, Cooling	1	
37	2090 15 210	Fan Drive	1	
38	908062 6 12	Bolt Set, Fan & Fan Drive	6	
39	99906 0600	Nut, Fan & Fan Drive	4	
	99952 0600	Washer, Plain	4	
	99971 0600	Washer, Spring	4	
40	1570 15 151	Pulley, Water Pump	1	
41	99806 0610	Bolt, Water Pump Pulley	4	
	99971 0600	Washer, Spring	4	
42	0866 15 350B	Tank, Sub	1	
	0866 15 350C	Tank, Sub	1	73/12~○
43	0222 15 255	Cap	1	
44	99786 0620	Bolt, Sub Tank	2	
45	0866 15 351A	Hose, Water-Sub Tank	1	
46	99289 0701	Clip, Water Hose	2	

COOLING SYSTEM
(USED UP TO CAR NO. 179250 73/9)

No.	Part Number	Description	Q'ty	Remarks
47	99285 0800	Clip, Water Hose	2	
48	1620 14 700	Cooler, Oil	1	
49	0222 13 363	Rubber, Insulation	4	
50	99906 0600	Nut, Oil Cooler ~ Radiator	8	
	99952 0600	Washer, Plain	8	
	99971 0600	Washer, Spring	8	
51	1570 14 780	Valve, Bypass	1	
52	1665 14 771	Bolt, Connector	2	
53	99562 1600	Gasket, Connector Bolt	4	
	99564 1600	Gasket, Connector Bolt	4	73/1~○
54	0865 14 720	Hose, Oil	1	
55	0881 14 730	Hose, Oil	1	
56	0866 14 740A	Bracket, Oil Hose	1	
57	0839 14 745	Clip, Oil Hose	1	
58	0813 14 716	Protector, Oil Hose	1	
59	908062 6 16	Bolt Set, Clip	1	
60	0866 18 496	Clip	1	
61	99921 1200	Nut, Clip	1	
	99971 1200	Washer, Spring	1	
62	99381 1400	Bolt, Connector-Oil Hose	1	
63	99562 1800	Gasket, Connector Bolt	2	

COOLING SYSTEM
(USED FROM CAR NO. 160623 73/10)

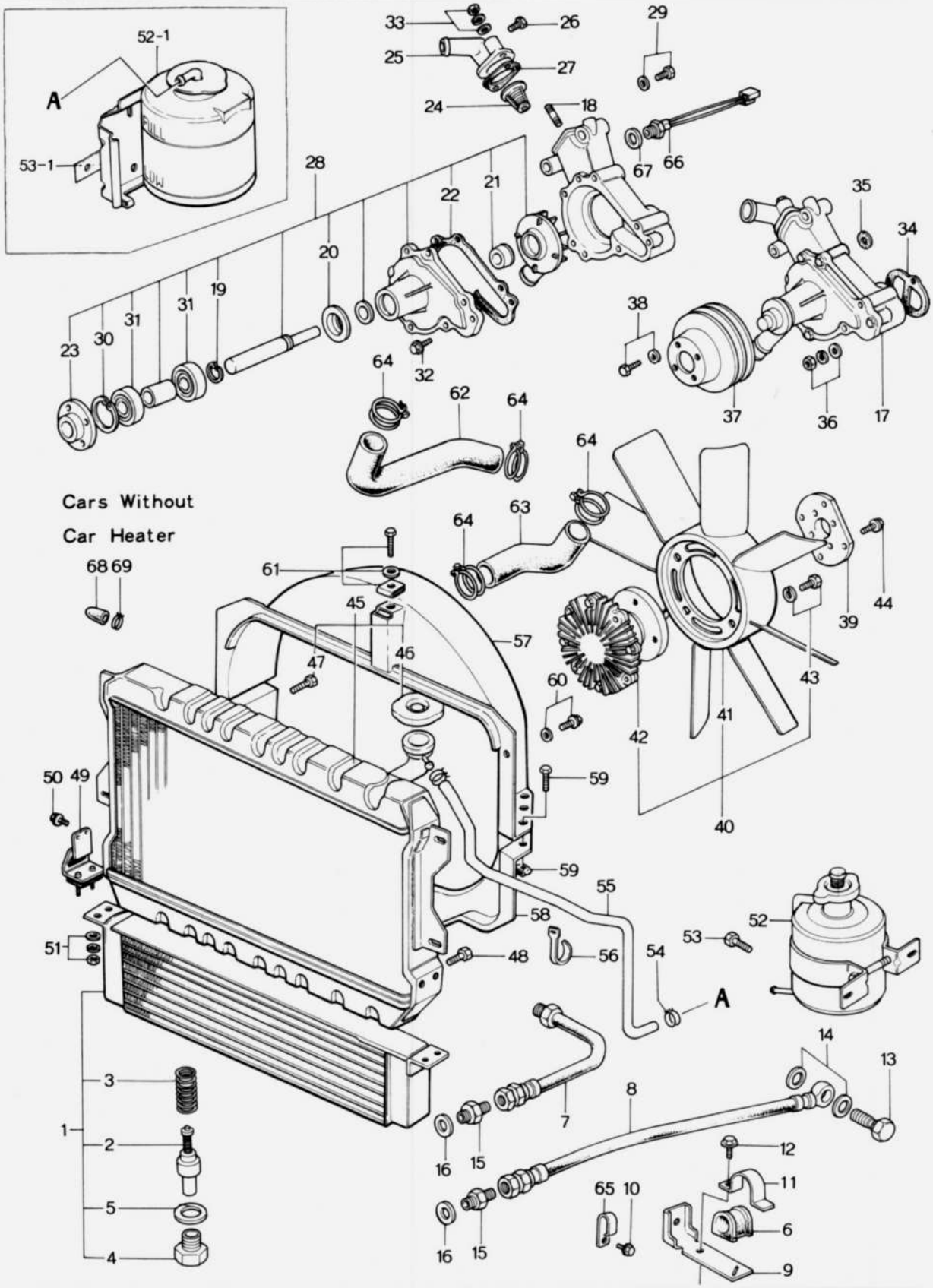

No.	Part Number	Description	Q'ty	Remarks
1	1128 14 700	Cooler, Oil	1	
	1881 14 700	Cooler, Oil	1	
2	1757 14 810	Pellet, Thermo	1	
3	1757 14 821	Spring, Pellet (Cold Proof Spec.)	1	
4	1757 14 822	Nut, Stopper	1	
5	1757 14 823	Gasket	1	
6	0813 14 716	Protector, Oil Hose	1	
7	0865 14 720	Hose, Oil	1	
8	0881 14 730	Hose, Oil	1	
9	1757 14 740	Bracket, Oil Hose	1	
10	99796 0810	Bolt, Bracket	1	
11	0839 14 745	Clip, Oil Hose	1	
12	99806 0616	Bolt, Clip	1	
	99971 0600	Washer, Spring	1	
13	99381 1400	Bolt, Connector-Oil Hose	1	
14	99562 1800	Gasket	2	
15	99384 1200F	Joint, Union	2	
16	99564 1600	Gasket	2	

14 15 COOLING SYSTEM
(USED FROM CAR NO. 160623 73/10)

No.	Part Number	Description	Q'ty	Remarks
17	1907 15 010C	Pump, Water	1	
●	1052 15 010	Pump, Water	1	74/3～○
18	2090 15 104	Stud	2	
19	1757 15 114	Ring, Snap	1	
20	1757 15 118	Plate, Dust Seal	1	
21	1757 15 120	Seal, Water	1	
22	1757 15 132	Gasket, Pump Cover	1	
23	1757 15 152A	Boss, Pulley	1	
24	0823 15 171	Thermostat	1	
25	1757 15 170	Cover, Thermostat	1	
●	1052 15 170	Cover, Thermostat	1	74/3～○
26	99502 3000	Plug, Thermostat Cover	1	
27	0813 15 173	Gasket, Thermostat	1	
●	1757 15 173	Gasket, Thermostat	1	74/3～○
28	1907 99 150A	Repair Kit, Water Pump	1	
●	1907 99 150B	Repair Kit, Water Pump	1	74/3～△
29	99511 1200	Plug	1	74/3～Discarded
	99562 1200	Gasket	1	74/3～Discarded
30	99574 4000	Ring, Retaining	1	
31	99606 72030	Bearing, Ball	2	
32	99796 0820	Bolt, Pump Cover	2	
33	99901 0800	Nut, Thermostat Cover	2	
	99953 0800	Washer, Plain	2	
	99971 0800	Washer, Spring	2	

COOLING SYSTEM
(USED FROM CAR NO. 160623 73/10)

14 15

	No.	Part Number	Description	Q'ty	Remarks
	34	1757 15 105	Gasket, Water Pump	1	
●		1757 15 105A	Gasket, Water Pump	1	74/1 ~ △
	35	0820 15 106	Gasket, Water Pump	2	
●		1757 15 106	Shim, Water Pump	2	74/1 ~ △
	36	99901 0800	Nut, Water Pump	4	
		99971 0800	Washer, Spring	4	
	37	1757 15 151A	Pulley, Water Pump	1	
	38	99796 0620	Bolt	4	
	39	1907 15 211	Spacer, Fan Drive	1	
	40	1907 15 250	Fan & Fan Drive	1	
	41	1097 15 200	Fan, Cooling	1	
	42	1907 15 210	Fan Drive	1	
	43	99806 0620	Bolt, Fan & Fan Drive	4	
		99971 0600	Washer, Spring	4	
	44	99796 0620	Bolt, Fan Drive	4	
	45	1128 15 310B	Radiator (Manual)	1	
●		1128 15 310D	Radiator (Manual)	1	74/4 ~ ×
●		1129 15 310D	Radiator (Automatic)	1	
	46	0222 15 205	Cap	1	
●		0488 15 205	Cap	1	74/4 ~ ×
	47	1128 15 317	Cock, Water Drain	1	

COOLING SYSTEM
(USED FROM CAR NO. 160623 73/10)

	No.	Part Number	Description	Q'ty	Remarks
	48	~~90786 0816~~	~~Bolt, Radiator~~	~~4~~	
●		99786 0818	Bolt, Radiator	4	From Car No. 1
	49	1128 15 312 A	Rubber, Insulation	2	
	50	99786 0610	Bolt, Radiator	4	
	51	99906 0600	Nut, Radiator & Oil Cooler	4	
		99952 0600	Washer, Plain	4	
		99971 0600	Washer, Spring	4	
	52	0866 15 350 C	Tank, Sub	1	
●	52-1	0806 15 350	Tank, Sub	1	74/4 ~ ×
		2981 15 205	Cap	1	74/4 ~ Discarded
	53	99786 0620	Bolt, Sub Tank	2	
●	53-1	0494 15 251	Bracket, Sub Tank	1	74/4 ~ Added Anew
	54	99285 0800	Clip, Water Hose	2	
●		99283 1300	Clip, Water Hose	2	74/4 ~ ×
	55	0866 15 351 A	Hose, Water - Sub Tank	1	
●		1881 15 351 A	Hose, Water - Sub Tank	1	74/4 ~ ×
	56	99289 0701	Clip	2	
	57	1881 15 411 C	Shroud, Radiator - Upper	1	
	58	1881 15 421 B	Shroud, Radiator - Lower	1	
	59	99863 0516	Screw, Tapping	4	
		99952 0500	Washer, Plain	4	
		~~0820 56 906~~	~~Nut, Spring~~	~~4~~	
●		0820 56 905	Nut, Spring	4	From Car No. 1
	60	90796 0812	Bolt, Radiator Shroud	4	
	61	99806 0514	Screw, Radiator Shroud	1	

No.	Part Number	Description	Q'ty	Remarks
	99952 0500	Washer, Plain	1	
	0820 56 906	Nut, Spring	1	
62	1881 15 511	Hose, Water - Thermostat ~ Radiator	1	
63	1881 15 521	Hose, Water - Radiator ~ Water Pump	1	
64	99282 4900	Band, Hose - Water Hose	4	
65	0866 18 496	Clip	1	
●	2090 18 999	Clip	1	74/3 ~ ×
66	1881 18 880	Switch, Temperature	1	
67	99564 1600	Gasket	1	
68	0864 61 061 A	Cover	2	(Cars Without Car Heater)
69	99282 2600	Band, Hose	2	(Cars Without Car Heater)

No.	Part Number	Description	Q'ty	Remarks
1	0839 16 460E	Disc, Clutch	1	
	0862 16 460	Disc, Clutch	1	73/3～○
2	0839 16 410B	Cover, Clutch	1	
3	99753 78118	Bolt, Clutch Cover	4	
	99971 0800	Washer, Spring	4	
4	0839 16 432	Bolt, Reamer-Clutch Cover	2	
	99971 0800	Washer, Spring	2	
5	0820 16 510	Collar, Clutch Release	1	
6	0820 16 515	Spring, Clutch Release Collar	1	
7	0603 16 102B	Pin, Pivot	1	
8	99953 1000	Washer, Plain	1	
	99971 1000	Washer, Spring	1	
9	0813 16 112	Cover, Top Hole	1	
10	0862 16 210A	Housing, Clutch	1	
●	1881 16 210A	Housing, Clutch	1	Car No. 160623 73/10～×
11	99851 0820	Stud	2	
●	0222 16 105	Stud	2	Car No. 160623 73/10～×
12	0603 16 103	Oil Seal	1	

	No.	Part Number	Description	Q'ty	Remarks
	13	0866 16 214A	Cover, Dust	1	
	14	0862 16 520	Fork, Clutch Release	1	
●		0454 16 520	Fork, Clutch Release	1	Car No. 160623 73/10~×
	15	99796 1050	Bolt, Clutch Housing	1	Car No. 160623 73/10~Discarded
	16	99796 1055	Bolt, Clutch Housing	1	Car No. 160623 73/10~Discarded
●		99796 1045	Bolt, Clutch Housing	2	Car No. 160623 73/10~
	17	99796 1035	Bolt	1	
●		99796 1035	Bolt	2	Car No. 160623 73/10~Q'ty
	18	99796 1095	Bolt	1	Car No. 160623 73/10~Discarded
	19	99796 1080	Bolt	1	
●		99796 1090	Bolt, Clutch Housing	1	Car No. 160623 73/10~△
	20	99940 0800	Nut, Clutch Housing	11	
●		99940 1001	Nut, Clutch Housing	8	Car No. 160623 73/10~Added Anew

No.	Part Number	Description	Q'ty	Remarks
1	0839 17 111	Gasket, Front	1	
2	0862 17 200B	Case Set, T/mission	1	
	0862 17 200C	Case Set, T/mission	1	Car No. 161694 72/11~△
	0862 17 200D	Case Set, T/mission	1	Car No. 163322 73/1~△
●	0862 17 200F	Case Set, T/mission	1	Car No. 160623 73/10~×
3	99855 1025	Stud, Front	8	
4	99852 0610F	Stud, Blind Cover	2	
5	0839 17 105	Stud, Blind Cover	2	
6	99857 10135	Stud, Rear	6	
●	99857 10135	Stud, Rear	4	Car No. 160623 73/10~Q'ty
●	90857 10135	Stud, Rear	2	Car No. 160623 73/10~Added Anew
7	99233 1225	Pin, Knock	2	
8	99855 1045	Stud, Center Housing	1	
9	99246 1230	Pin, Dowel-Bearing Housing	2	
10	0810 17 385	Gasket, Blind Cover	2	
11	0810 17 381	Cover, Blind	2	
12	99940 0601	Nut, Blind Cover	4	
●	99906 0600	Nut	4	73/3~○

No.	Part Number	Description	Q'ty	Remarks
●	99971 0600	Washer, Spring	4	Car No. 164116 73/3~Added Anew
13	99276 0506	Clip, Back up Lamp Cord	2	
14	99906 0600	Nut, Clip	2	
15	99502 4000	Plug, Oil	1	
16	0107 17 121	Plug, Magnet	1	
17	0862 17 375	Gasket, Under Cover	1	
18	0862 17 371	Cover, Under	1	
19	99796 0620	Bolt, Under Cover	14	
20	99564 1800	Gasket, Magnet Plug	1	
21	0810 17 121	Plug, Magnet	1	
22	0862 17 540	Pass, Oil	1	
●	0862 17 540B	Pass, Oil	1	Car No. 160623 73/10~×
23	99806 0614	Bolt, Oil Pass	1	
	99971 0600	Washer, Spring	1	
24	0862 17 393	Gasket, Rear	1	
25	99940 1001	Nut, T/mission Case+Extension Housing	7	
26	0862 17 530A	Cover, Blind	1	
27	0862 17 535	Gasket, Blind Cover	1	
28	99796 0608	Bolt, Blind Cover	4	
29	0862 17 330A	Housing, Extension	1	

No.	Part Number	Description	Q'ty	Remarks
30	0376 17 335	Oil Seal	1	
●31	0862 17 441	Gear, Driven - Speedometer	1	1563, 1564, 1599, 3505 3508, 3518, 3509
●	1669 17 441	Gear, Driven - Speedometer	1	1692, 3513, 3514, 3515
32	99222 0216	Pin, Spring	1	
33	0862 17 442	Sleeve, Speedometer	1	
34	0187 17 352	Pin, Dowel	1	
35	99541 02211	Ring, "O"	1	
36	99586 10207	Oil Seal	1	
37	0862 17 351	Joint, Cable	1	
38	0111 17 354	Plate, Lock	1	
39	99796 0614	Bolt, Lock Plate	1	
	0862 29 175	Gasket Set, T/mission (All Gaskets relative to T/mission included)	1 Set	

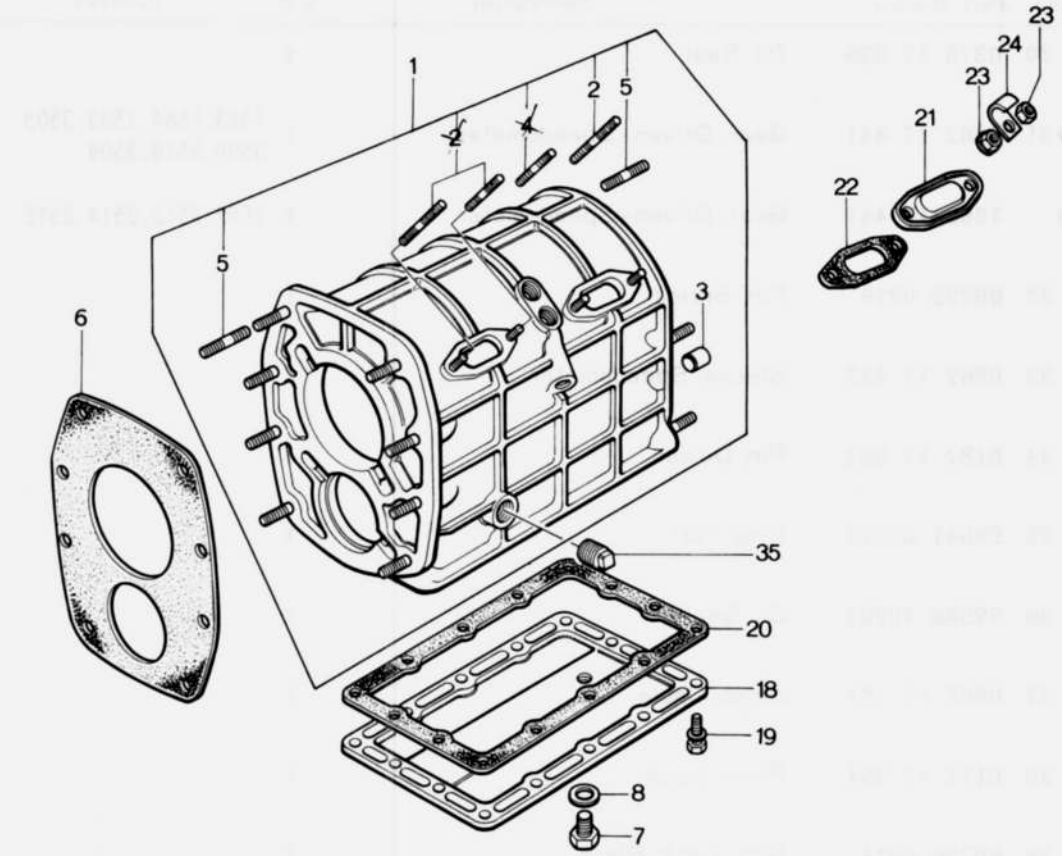
1
2
5
2
5
3
6
35
20
18
19
8
7
23
24
23
21
22

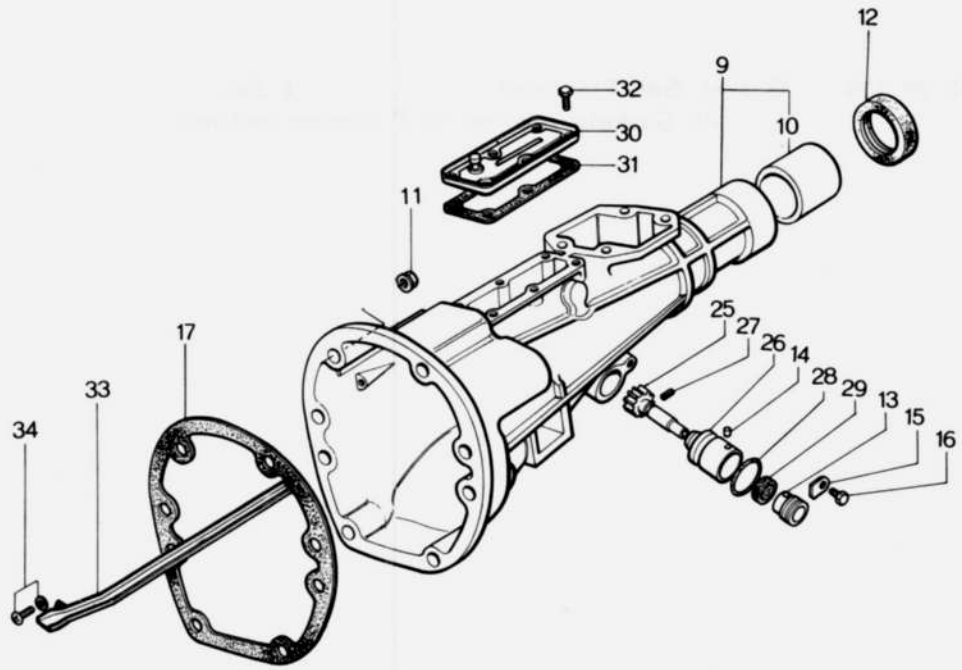
12
9
32
10
30
31
11
25
27
26
14
28
29
13
15
16
17
33
34

No.	Part Number	Description	Q'ty	Remarks
1	1011 17 100B	Case, T/mission	1	
2	0839 17 105	Stud, Blind Cover	2	
3	99233 1225	Pin, Knock	2	
4	99852 0610F	Stud, Blind Cover	2	
5	99855 1025	Stud, Front & Rear	12	
	99855 1025F	Stud, Front	2	
6	0839 17 111	Gasket, T/mission Case Front	1	
7	0810 17 121	Plug, Magnet	1	
8	99564 1800	Gasket, Magnet Plug	1	
9	1011 17 330A	Housing, Extension	1	
10	0398 22 333	Bush, Extension Housing	1	
11	99940 1001	Nut, Extension Housing+T/mission Case	6	
12	0376 17 335	Oil Set, Extension Housing	1	
13	0862 17 351	Joint, Cable-Speedometer	1	
17	0187 17 352	Pin, Dowel-Speedometer Driven Gear	1	
15	0111 17 354	Plate, Lock-Cable Joint	1	
16	99796 0614	Bolt, Lock Plate	1	
17	0839 17 361	Gasket, Extension Housing & T/mission Case	1	

No.	Part Number	Description	Q'ty	Remarks
18	0862 17 371	Cover, Under	1	
19	99796 0620	Bolt, Under Cover	14	
20	0862 17 375	Gasket, Under Cover	1	
21	0810 17 381	Cover, Blind	2	
22	0810 17 385	Gasket, Blind Cover	2	
23	99906 0600	Nut, Blind & Clip	6	
	99971 0600	Washer	4	
24	99276 0506	Clip, Wire Harness	2	
25	0862 17 441	Gear, Driven-Speedometer	1	
26	0862 17 442	Sleeve, Driven Gear	1	
27	99222 0216	Pin, Spring-Driven Gear	1	
28	99541 02211	Ring, "O"-Driven Gear	1	
29	99586 10207	Oil Seal, Driven Gear	1	
30	1011 17 530	Cover, Blind	1	
31	1011 17 535	Gasket, Blind Cover	1	
32	99796 0608	Bolt, Blind Cover	6	
33	1011 17 540A	Pass, Oil	1	
34	99806 0614	Bolt, Oil Pass	1	
	99971 0600	Washer, Spring	1	
35	99502 4000	Plug	1	
	1011 89 175	Gasket Set, T/mission (All Gaskets Relative to T/mission Included)	1 Set	

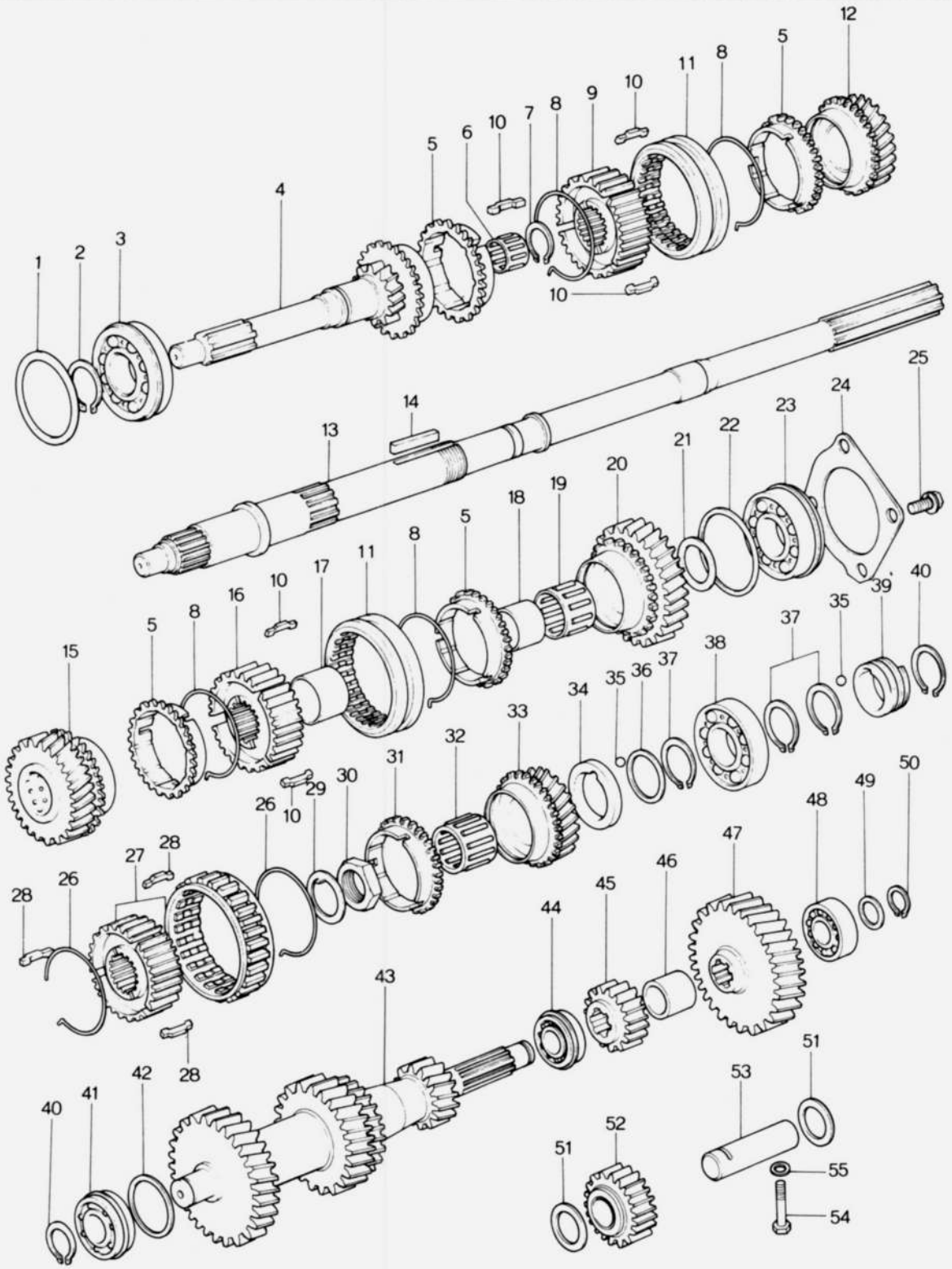
1
2
3
4
5
6
10
7
8
9
10
11
8
5
12
10
13
14
25
24
23
22
21
20
19
18
5
8
11
17
10
16
8
5
15
40
39
35
37
38
37
36
35
34
33
32
31
30
29
10
26
27
28
28
26
28
28
42
41
40
43
44
45
46
47
48
49
50
51
53
55
54
52
51

No.	Part Number	Description	Q'ty	Remarks
1	99963 6910	Shim, Adjust (t=0.1) } Selective use	2	
	99963 6930	Shim, Adjust (t=0.3) } Selective use	1	
2	99573 3500	Ring, Snap	1	
3	99606 33070	Bearing, Ball	1	
4	0862 17 201	Gear, Main Drive	1	
5	0881 17 245A	Ring, Synchronizer	4	
●	0881 17 245B	Ring, Synchronizer	4	Car No. 160623 73/10 ~ ×
6	0810 17 205	Bearing, Needle Roller	1	
7	0317 17 225	Ring, Snap	1	
8	0600 17 324	Spring, Synchronizer	4	
9	0862 17 241	Hub, Clutch (3rd & 4th)	1	
10	0187 17 243	Key, Synchronizer	6	
11	0862 17 262	Sleeve, Clutch Hub	2	
●	0862 17 262A	Sleeve, Clutch Hub	2	Car No. 160623 73/10 ~ ×
12	0862 17 230	Gear (3rd)	1	
13	0862 17 221	Shaft, Main	1	
14	0821 17 627	Key	1	
15	0862 17 250	Gear (2nd)	1	
16	0862 17 261	Hub, Clutch (1st & 2nd)	1	
17	0821 17 615	Spacer	1	

No.	Part Number	Description		Q'ty	Remarks
18	0884 17 275A	Race, Inner		1	
19	0884 17 274	Bearing, Needle		1	
20	0862 17 271	Gear (1st)		1	
21	0839 17 276	Washer, Thrust (ℓ =2.5)	Selective use		
	0839 17 277	Washer, Thrust (ℓ =3.0)		1	
	0839 17 278	Washer, Thrust (ℓ =3.5)			
22	0839 17 287	Shim, Adjust (t=0.1)	Selective use	2	
	0839 17 288	Shim, Adjust (t=0.1)		1	
23	0810 17 204	Bearing, Ball		1	
24	0884 17 325A	Stopper, Bearing		1	
●	0884 17 325B	Stopper, Bearing		1	Car No. 160623 $\frac{73}{10}$~×
25	99801 0820	Bolt		4	
	99971 0800	Washer, Spring		4	
26	0103 17 244A	Spring, Synchronizer Key		2	
27	0884 17 620	Gear Set, Reverse		1	
28	0613 17 223	Key, Synchronizer		3	
29	0821 17 628	Washer, Lock		1	
30	0821 17 629	Nut, Lock		1	
31	0862 17 245	Ring, Synchronizer		1	
	0862 17 245A	Ring, Synchronizer		1	$\frac{73}{1}$~○

No.	Part Number	Description	Q'ty	Remarks
32	0884 17 612	Bearing, Needle	1	
33	0862 17 611	Gear, Over Top	1	
34	0884 17 631 A	Washer, Thrust Lock (t=6.0)		
	0884 17 632 A	Washer, Thrust Lock (t=6.2)		
	0884 17 633 A	Washer, Thrust Lock (t=6.4)		
	0884 17 634 A	Washer, Thrust Lock (t=6.5)		
	0884 17 635 A	Washer, Thrust Lock (t=6.6)	Selective use 1	
	0884 17 636 A	Washer, Thrust Lock (t=6.7)		
	0884 17 637 A	Washer, Thrust Lock (t=6.8)		
	0884 17 638 A	Washer, Thrust Lock (t=7.0)		
	0884 17 639	Washer, Thrust Lock (t=7.2)		
35	99611 1500	Ball, Steel	2	
36	0862 17 641	Washer, Adjust (t=1.9)		
	0862 17 642	Washer, Adjust (t=2.0)	Selective use 1	
	0862 17 643	Washer, Adjust (t=2.1)		
	0862 17 644	Washer, Adjust (t=2.2)		
37	0839 17 305	Ring, Snap	3	
38	99606 63050	Bearing, Ball	1	
39	0862 17 341	Gear, Drive - Speedometer	1	
40	99573 2500	Ring, Snap	2	

No.	Part Number	Description	Q'ty	Remarks
41	0821 17 297	Bearing, Ball	1	
42	0305 17 327	Shim, Adjust (t=0.5)	2	Selective use
	0305 17 328	Shim, Adjust (t=0.3)	1	Selective use
48	0862 17 301	Gear, Counter Shaft	1	
44	0821 17 303	Bearing, Needle	1	
45	0821 17 302	Gear, Reverse-Counter	1	
46	0884 17 304	Spacer	1	
47	0884 17 308	Gear, Counter	1	
48	99606 63440	Bearing, Ball	1	
43	0884 17 316	Washer, Adjust (t=2.00)	1	Selective use
	0884 17 317	Washer, Adjust (t=2.15)	1	Selective use
	0884 17 318	Washer, Adjust (t=2.30)	1	Selective use
50	99573 2200	Ring, Snap	1	
51	0821 17 313	Washer, Thrust	2	
52	0821 17 310	Gear, Reverse Idle	1	
53	0884 17 315	Shift, Reverse Idle Gear	1	
54	4069 17 323	Bolt Set	1	
55	99564 0800	Gasket	1	

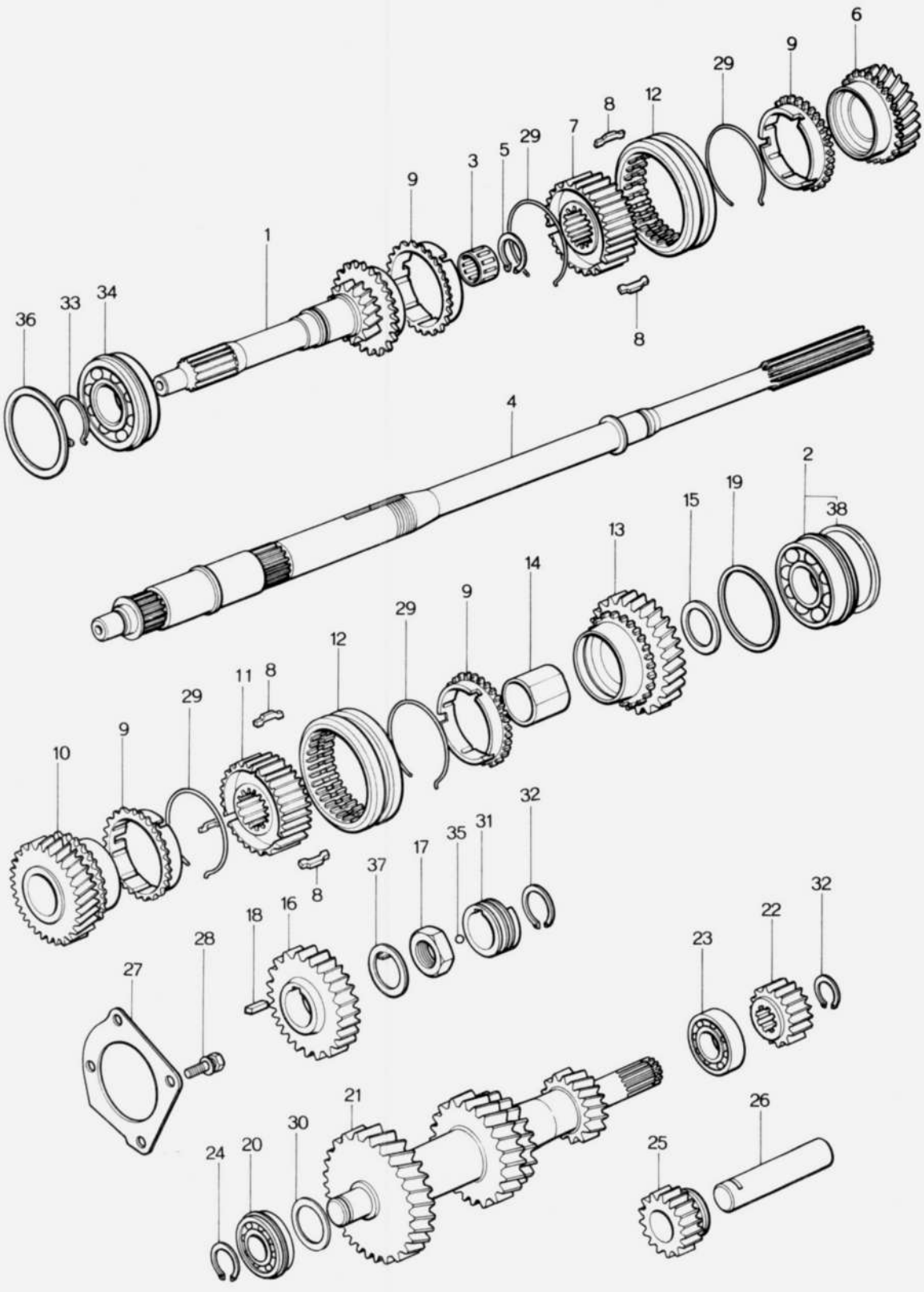
6
9
29
12
8
7
29
5
3
9
1
36
33
34
8
4
2
38
19
15
13
14
9
29
12
11
8
29
9
10
32
31
35
17
37
8
32
22
18
16
28
27
23
21
30
26
24
20
25

No.	Part Number	Description	Q'ty	Remarks
1	0862 17 201	Gear, Main Drive	1	
2	0810 17 204	Bearing, Ball (Fig. No. 38 included)	1	
3	0810 17 205	Bearing, Needle Roller	1	
4	1011 17 221A	Shaft, Main	1	
5	0317 17 225	Ring, Snap	1	
6	0862 17 230	Gear (3rd)	1	
7	0862 17 241	Hub, Clutch (3rd & 4th)	1	
8	0187 17 243	Key, Synchronizer	6	
9	0881 17 245B	Ring, Synchronizer	4	
10	0862 17 250	Gear (2nd)	1	
11	0867 17 261	Hub, Clutch (1st & 2nd)	1	
12	0862 17 262A	Sleeve, Clutch Hub	2	
13	1011 17 270	Gear (1st)	1	
14	0839 17 275	Sleeve, Gear	1	
15	0839 17 276	Washer, Thrust (ℓ =2.5)	Selective use 1	
	0839 17 277	Washer, Thrust (ℓ =3.0)		
	0839 17 278	Washer, Thrust (ℓ =3.5)		
16	0839 17 281	Gear, Reverse	1	
17	0839 17 284	Nut, Lock	1	
18	0839 17 285	Key	1	

No.	Part Number	Description	Q'ty	Remarks
19	0839 17 287	Shim, Adjust (t=0.1)	2	Selective use
	0839 17 288	Shim, Adjust (t=0.3)	1	Selective use
20	0821 17 297	Bearing, Ball (Fig. No. 38 included)	1	
21	1011 17 301	Gear, Counter Shaft	1	
22	0839 17 302	Gear, Reverse-Counter	1	
23	0821 17 303	Bearing, Needle	1	
24	0839 17 305	Ring, Snap	1	
25	0839 17 310	Gear, Idle-Reverse	1	
26	0839 17 313	Shaft, Reverse Idle Gear	1	
27	0839 17 321 A	Stopper, Bearing	1	
28	99801 0820	Bolt, Bearing Stopper	4	
	99971 0800	Washer, Spring	4	
29	0600 17 324	Spring, Synchronizer	4	
30	0305 17 327	Shim, Adjust (t=0.1)	2	Selective use
	0305 17 328	Shim, Adjust (t=0.3)	1	Selective use
31	0862 17 341	Gear, Drive-Speedometer	1	
32	99573 2500	Ring, Snap	2	
33	99573 3500	Ring, Snap	1	
34	99606 33070	Bearing, Ball	1	
35	99611 1500	Ball, Steel	1	

No.	Part Number	Description	Q'ty	Remarks
36	99963 6910	Shim, Adjust (t=0.1)	2	Selective use
	99963 6930	Shim, Adjust (t=0.3)	1	Selective use
37	99978 3200	Washer, Lock	1	
38	0881 22 297	Clip, Ball Bearing (Included in Fig. No. 20)	1	

No.	Part Number	Description	Q'ty	Remarks
1	0810 17 402	Fork, Shift (1st & 2nd)	1	
2	0810 17 404	Fork, Shift (3rd & 4th)	1	
3	0862 17 406A	Fork, Shift (Over Top & Reverse)	1	
4	0862 17 411	Rod, Shift (1st & 2nd)	1	
5	0862 17 412	Gate, Shift (1st & 2nd)	1	
6	0862 17 421	Rod, Shift (3rd & 4th)	1	
7	0862 17 422	Gate, Shift (3rd & 4th)	1	
8	0862 17 431	Rod, Shift (Over Top & Reverse)	1	
9	0862 17 432	Gate, Shift (Over Top & Reverse)	1	
10	0118 17 313	Screw Set, Shift Fork & Rod	6	
	99971 0601	Washer, Spring	6	
11	0821 17 435	Ring, Snap-Shift Rod	2	
12	0221 17 441	Plug, Cap-Spring	2	
13	99562 1400	Gasket, Cap Plug	3	
14	0103 17 411	Spring	5	
15	99611 1500	Ball, Steel	4	
●	99611 2500	Ball, Steel	4	Car No. 160623 $\frac{73}{10}$～×
16	0114 17 351	Pin, Interlock	2	
17	99564 1000	Gasket, Cap Plug	2	
18	0259 17 441	Plug, Cap-Spring	2	

No.	Part Number	Description	Q'ty	Remarks
19	~~0884 17 520~~	~~Knob, Change Lever~~	~~1~~	~~1563, 1564~~
	0884 17 520A	Knob, Change Lever	1	1563, 1564 From Car No. 1
●	3511 17 520	Knob, Change Lever (All Models)	1	Car No. 160623 73/10 ~ ×
	1608 17 520	Knob, Change Lever	1	1692, 1599
● 20	0824 17 524	Nut, Change Lever Knob	1	Car No. 160623 73/10 ~ Discarded
21	0866 17 510	Lever, Change	1	
●	1011 17 510B	Lever, Change	1	Car No. 160623 73/10 ~ ×
22	0221 17 475B	Boot, Dust	1	
23	0221 17 473	Plate, Cover	1	
24	99806 0614	Bolt, Cover Plate	3	
	99971 0600	Washer, Spring	3	
25	0305 99 178	Change Bush Set	1	Set
26	0303 17 474	Gasket, Cover Plate	1	
27	0303 17 482	Washer, Wave	1	
28	99963 3310	Shim } Selective use	3	
	99963 3330	Shim }		
29	0303 17 470	Case, Change Control	1	
30	99796 0822	Bolt, Change Control Case	2	

No.	Part Number	Description	Q'ty	Remarks
31	99796 0832	Bolt, Change Control Case	2	
32	0271 17 478	Gasket, Change Control Case	1	
33	0183 17 491	Plug, Cap-Spring	1	
34	0221 17 552	Spring, Select Lock Spindle	1	
35	0221 17 551A	Spindle, Select Lock	1	
36	0398 17 462A	Seat, Spring	1	
37	0398 17 461A	End, Control Rod	1	
38	0187 17 492	Bolt, Reamer-Control Rod End	1	
	99971 0800	Washer, Spring	1	
39	0862 17 450	Lever, Control	1	
40	0111 17 323	Key, Control Lever	1	
41	0303 17 561	Piece, Friction	1	
42	0821 17 505	Switch, Back up Lamp	1	
	0821 17 505A	Switch, Back up Lamp	1	$^{73}/_{3}$ ~○

T / MISSION
(GEAR CONTROLS, FOUR FORWARD SPEED)

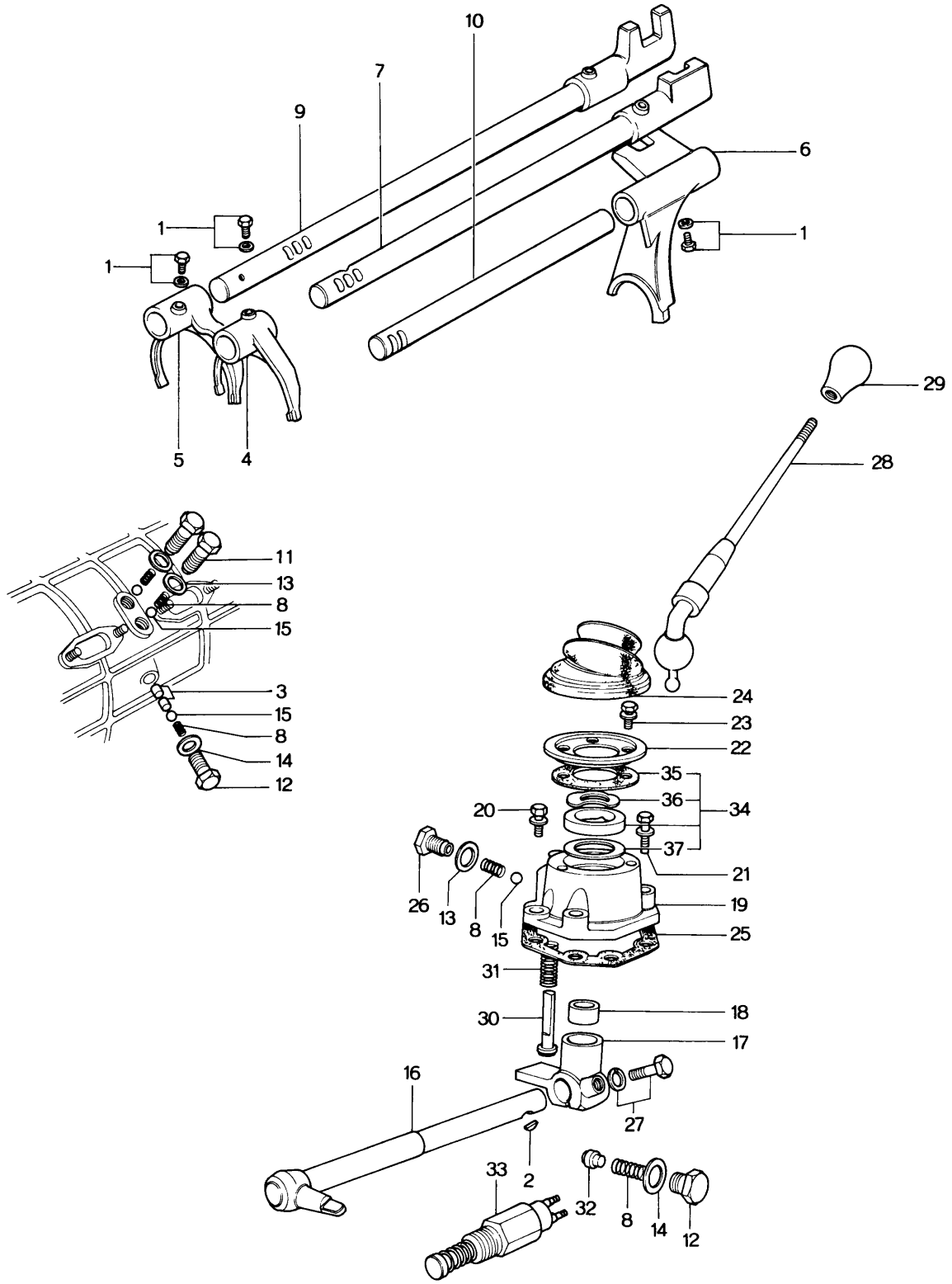

No.	Part Number	Description	Q'ty	Remarks
1	0118 17 313	Screw, Shift Fork & Rod	3	
	99971 0601	Washer, Spring	3	
2	0111 17 323	Key, Control Lever	1	
3	0114 17 351	Pin, Interlock	2	
4	0810 17 402	Fork, Shift (1st & 2nd)	1	
5	0810 17 404	Fork, Shift (3rd & 4th)	1	
6	1011 17 406	Fork, Shift (Reverse)	1	
7	1011 17 410	Rod, Shift (1st & 2nd)	1	
	1011 17 410A	Rod, Shift (1st & 2nd)	1	Car No. 164070 $^{73}/_{11}$ ~ △
8	0103 17 411	Spring, Cap	5	
9	1011 17 420	Rod, Shift (3rd & 4th)	1	
10	0839 17 431	Rod, Shift (Reverse)	1	
11	0221 17 441	Plug, Cap-Spring	2	
12	0259 17 441	Plug, Cap-Spring	2	
13	99562 1400	Gasket, Cap Plug	3	
14	99564 1000	Gasket, Cap Plug	2	
15	99611 2500	Ball, Steel	4	
16	1011 17 450	Lever, Control	1	
17	0398 17 461A	End, Control Rod	1	
18	0398 17 462A	Seat, Spring	1	

T / MISSION
(GEAR CONTROLS, FOUR FORWARD SPEED)

No.	Part Number	Description	Q'ty	Remarks
19	0303 17 470	Case, Change Control	1	
20	99796 0822	Bolt, Change Control Case	2	
21	99796 0832	Bolt, Change Control Case	2	
22	0221 17 473	Plate, Cover	1	
23	99806 0614	Bolt, Cover Plate	3	
	99971 0600	Washer, Spring	3	
24	0221 17 475B	Boot, Dust	1	
25	0271 17 478	Gasket, Change Control Case	1	
26	0183 17 491	Plug, Cap-Spring	1	
27	0187 17 492	Bolt, Reamer-Control Rod End	1	
	99971 0800	Washer, Spring	1	
28	0866 17 510	Lever, Change	1	
	1011 17 510B	Lever, Change	1	Car No. 162808 $^{73}/_{11}$ ~ ×
29	0881 17 520	Knob, Change Lever	1	
	1882 17 520	Knob, Change Lever	1	Car No. 162808 $^{73}/_{11}$ ~ ×
30	0221 17 551A	Spindle, Select Lock	1	
31	0221 17 552	Spring, Select Lock Spindle	1	
32	0303 17 561	Piece, Friction	1	
33	0376 17 640A	Switch, Reverse Lamp	1	
34	0305 99 178	Change Bush Set	1	Set

No.	Part Number	Description	Q'ty	Remarks
35	0303 17 474	Gasket, Cover Plate	1	
36	0303 17 482	Washer, Wave	1	
37	99963 3310	Shim } Selective use	3	
	99963 3330	Shim } Selective use	1	

DISTRIBUTOR
(USED UP TO CAR NO. 179250 73/9)

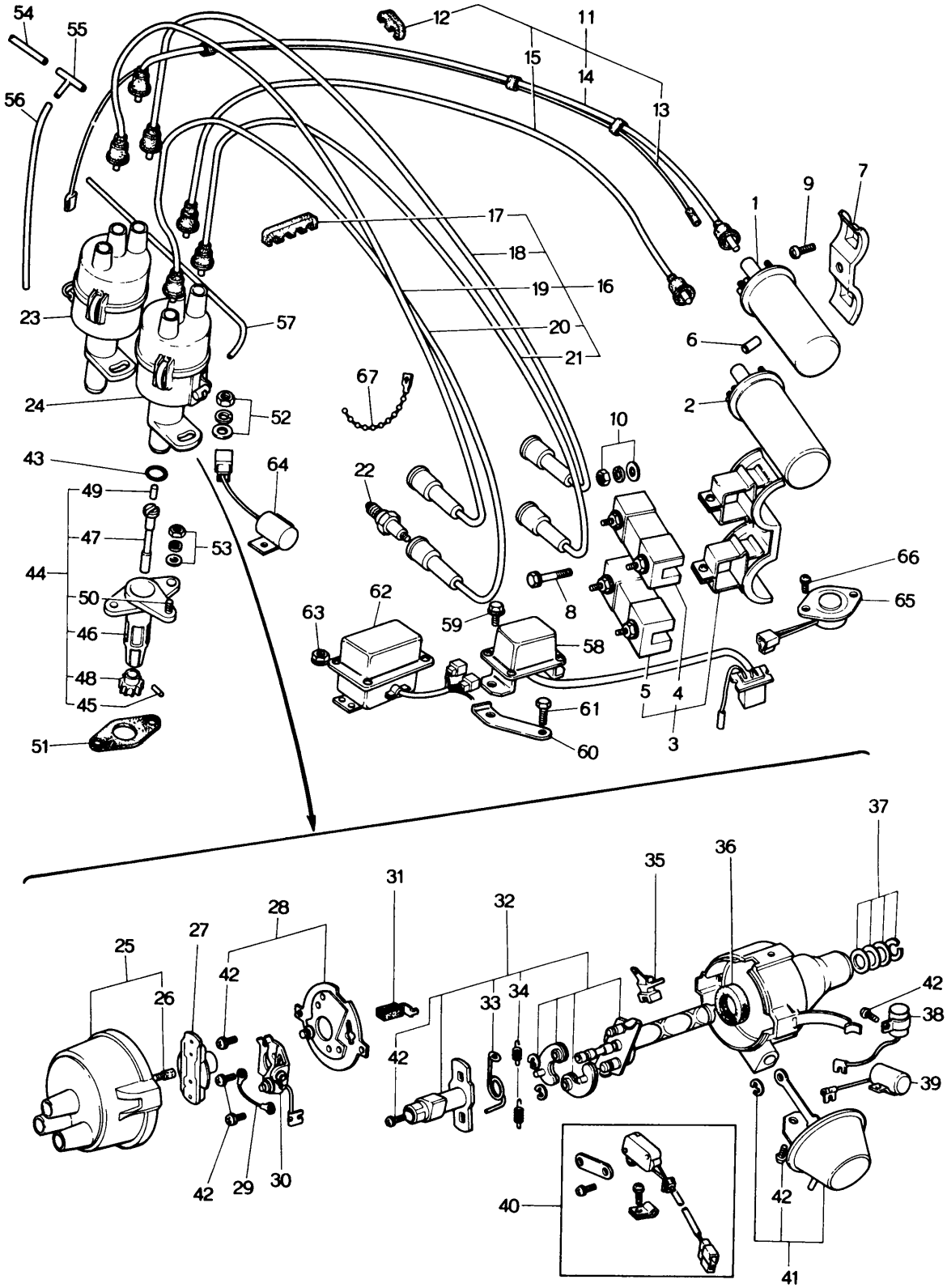

DISTRIBUTOR

(USED UP TO CAR NO. 179250 73/9)

18 24

No.	Part Number	Description	Q'ty	Remarks
1	0823 18 100	Coil, Ignition (Trailing)	1	
	1562 18 100	Coil, Ignition (Trailing) (For Sweden)	1	
2	0866 18 100A	Coil, Ignition (Leading)	1	
	1672 18 100	Coil, Ignition (Leading) (Sweden)	1	
3	0866 18 190A	Bracket, Ignition Coil	1	
●	1011 18 190	Bracket, Ignition Coil	1	Car No. 177587 73/7~△
4	0845 18 101	Resistor	1	
5	0866 18 101	Resistor	1	
6	0866 18 107	Pipe, Ignition Coil Bracket	1	
7	0866 18 810	Bracket, Ignition Coil	1	
8	99794 0845	Bolt, Ignition Coil Bracket	1	
9	99786 0612	Bolt, Ignition Coil Bracket	1	
10	99906 0500	Nut, Resistor	6	
	99952 0500	Washer, Plain	6	
	99971 0500	Washer, Spring	6	
11	1570 18 110	Cord, High Tension-Coil~Distributor	1	
	0866 18 110A	Cord, High Tension-Coil~Distributor	1	Car No. 160025 72/11~△

18 24 DISTRIBUTOR
(USED UP TO CAR NO. 179250 73/9)

No.	Part Number	Description	Q'ty	Remarks
12	0820 18 111B	Supporter, High Tension Cord	1	
13	0866 18 115	Cord, Trailing-Coil~Distributor	1	
14	0866 18 120	Cord, High Tension-Trailing	1	
15	0866 18 160A	Cord, High Tension-Leading	1	
16	2359 18 150	Cord, High Tension	1	
17	0820 18 114	Supporter, High Tension Cord	1	
18	2359 18 130	Cord (T-1), High Tension	1	
19	0839 18 140	Cord (T-2), High Tension	1	
20	2359 18 170	Cord (L-1), High Tension	1	
21	0839 18 180	Cord (L-2), High Tension	1	
22	2182 18 600	Plug, Sparking (BR 7EM)	4	
23	1668 18 200	Distributor, Trailing Side	1	
24	2183 18 700	Distributor, Leading Side	1	
25	0820 24 301	Cap, (Fig. No. 26 Included)	2	
26	2545 23 496	Carbon, Contact	2	
27	0813 14 303	Rotor	2	
28	1668 24 313	Base, Breaker-Trailing Side	1	

DISTRIBUTOR
(USED UP TO CAR NO. 179250 73/9)

18 24

No.	Part Number	Description	Q'ty	Remarks
	0884 24 313	Base, Breaker-Leading Side	1	
29	0107 18 212	Wire, Lead	2	
30	1617 24 316	Support, Arm-Trailing Side	1	
	0813 24 316	Support, Arm-Leading Side	1	
31	2430 24 315	Felt, Cam-Trailing Side	1	
32	1668 24 330	Governor Set, Trailing Side	1	
	~~2090 24 330~~	~~Governor Set, Leading Side~~	~~1~~	
	2094 24 430	Governor Set, Leading Side	1	From Car No. 1
33	2587 24 336	Spring, Hair Pin-Trailing Side	1	
	0813 24 309	Spring, Hair Pin-Leading Side	1	
34	1668 24 308	Spring Set, Trailing Side	1	
	2090 24 408	Spring Set, Leading Side	1	
35	1663 24 319	Terminal, Trailing Side	1	
	0820 24 319	Terminal, Leading Side	1	
36	0107 18 216A	Oil Seal	2	
37	0884 24 325	Washer Set	2	
38	0639 24 334	Condenser, Trailing Side	1	
39	0820 24 322	Condenser	2	
40	1668 24 334	Switch Set, Trailing Side	1	
41	1668 24 350	Vacuum Control Set, Trailing Side	1	

DISTRIBUTOR
(USED UP TO CAR NO. 179250 73/9)

No.	Part Number	Description	Q'ty	Remarks
~~—~~	~~0884 24 350~~	~~Vacuum Control Set, Leading Side~~	~~1~~	
	0884 24 450	Vacuum Control Set, Leading Side	1	From Car No. 1
42	1668 24 360	Screw Set, Trailing Side	1	
	0884 24 360	Screw Set, Leading Side	1	
43	0107 18 201	Ring, "O" - Distributor	2	
44	0839 18 270C	Socket, Distributor	2	
45	0820 11 105	Pin, Spring	2	
46	0820 18 271D	Socket	2	
47	0839 18 272A	Shaft	2	
48	0839 18 273A	Gear	2	
49	0813 18 288	Insert	2	
50	99851 0618A	Stud	2	
51	0820 18 279A	Gasket, Distributor Socket	2	
52	99901 0800	Nut, Distributor	4	
	99953 0800	Washer, Plain	4	
	99971 0800	Washer, Spring	4	
53	99906 0600	Nut, Distributor & Socket	2	

DISTRIBUTOR
(USED UP TO CAR NO. 179250 73/9)

18 24

No.	Part Number	Description	Q'ty	Remarks
	99952 0600	Washer, Plain	2	
	99971 0600	Washer, Spring	2	
54	0839 13 307	Tube, Vacuum-Carburettor Side	1	
55	2359 13 930	Joint, "T"-Vacuum Tube	1	
●	1700 13 945	Joint, "T"-Vacuum Tube	1	73/3～○ 73/9
56	0636 13 682	Tube, Vacuum-Trailing Side	1	
57	1663 13 756B	Tube, Vacuum-Leading Side	1	
58	0259 18 391B	Regulator	1	
59	99786 0612	Screw, Regulator	2	
60	1620 18 390	Bracket, Regulator	1	
61	99796 0610	Bolt, Regulator Bracket	1	
62	1663 18 940A	Box, Control	1	
Ⓝ	99706 0103	Fuse, Control Box	1	From Car No. 1
63	99940 0600	Nut, Control Box	1	
64	2329 18 930A	Detector, Thermo	1	
65	1668 18 890A	Switch, Thermo	1	
66	99786 0612	Screw, Thermo Switch	2	
67	99709 0108	Band	1	

DISTRIBUTOR
(USED FROM CAR NO. 160623 73/10)

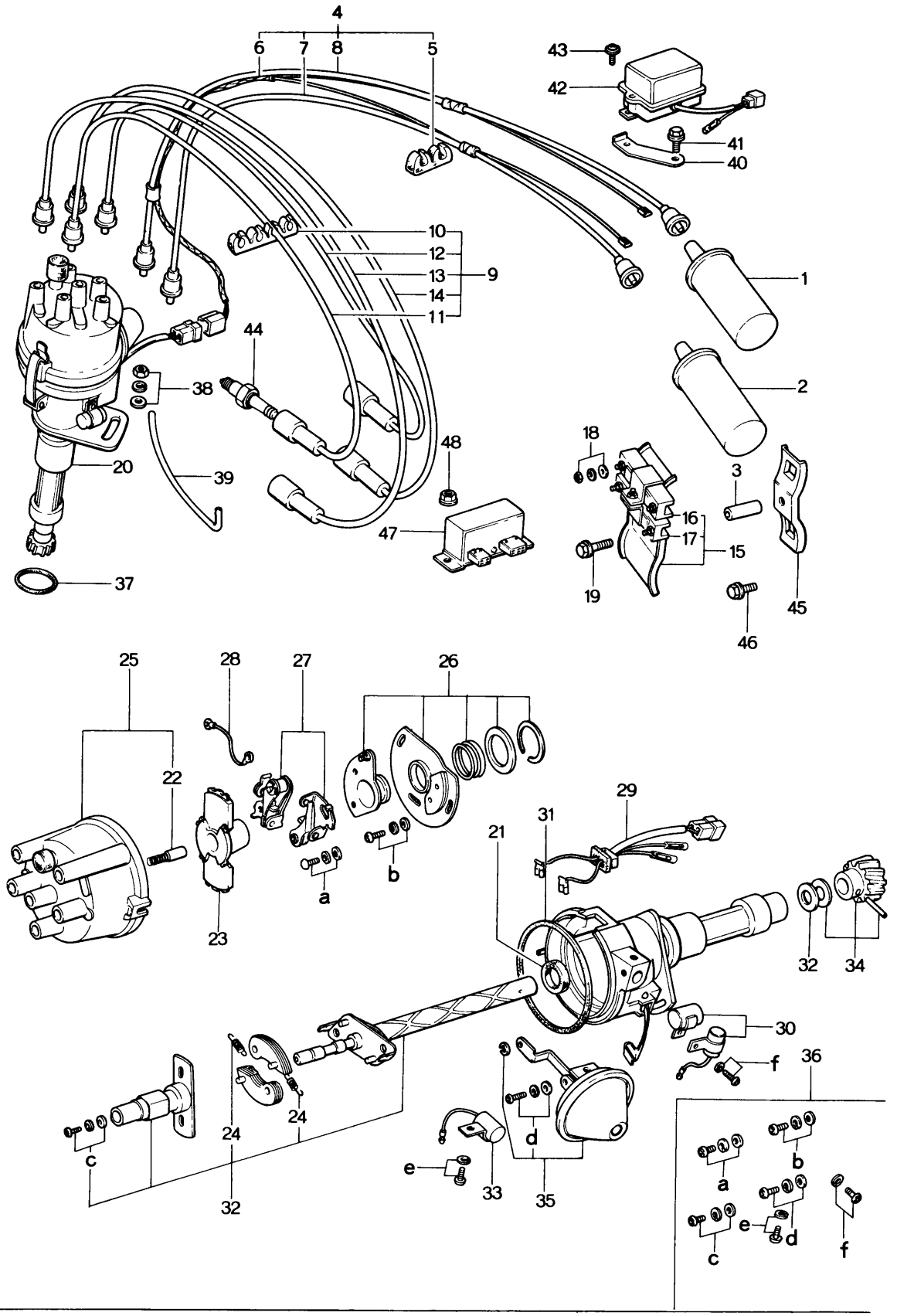

DISTRIBUTOR
(USED FROM CAR NO. 160623 73/10)

18 24

No.	Part Number	Description	Q'ty	Remarks	
1	0823 18 100	Coil, Ignition (HP5—13E)	1		
	1562 18 100	Coil, Ignition (HP5—13E) (Cold Proof Spec.)	1		
2	0866 18 100A	Coil, Ignition (HP5—13J)	1		
	1672 18 100	Coil, Ignition (HP5—13J) (Cold Proof Spec.)	1		
3	0866 18 107	Pipe	1		
4	1757 18 110	Cord, High Tension	1		
	1757 18 110A	Cord, High Tension	1	Car No.	74/1~△
5	0820 18 111B	Supporter, High Tension	1		
6	1757 18 115	Cord	1		
	1757 18 115A	Cord	1	Car No.	74/1~△
7	1757 18 120	Cord, High Tension (Trailing)	1		
8	1757 18 160	Cord, High Tension (Leading)	1		
9	1757 18 150B	Cord, High Tension	1		
	1757 18 150C	Cord, High Tension	1		74/1~○
10	0820 18 114	Supporter, High Tension	1		
11	1757 18 130	Cord, High Tension (T—1)	1		
	1757 18 130A	Cord, High Tension (T—1)	1		74/1~○
12	1757 18 140	Cord, High Tension (T—2)	1		

18 24 DISTRIBUTOR
(USED FROM CAR NO. 160623 73/10)

No.	Part Number	Description	Q'ty	Remarks
	1757 18 140A	Cord, High Tension (T— 2)	1	74/1~○
13	1757 18 170	Cord, High Tension (L— 1)	1	
	1757 18 170A	Cord, High Tension (L— 1)	1	74/1~○
14	1757 18 180	Cord, High Tension (L— 2)	1	
	1757 18 180A	Cord, High Tension (L— 2)	1	74/1~○
15	1011 18 190	Bracket, Ignition Coil	1	
16	0845 18 101	Resistor	1	
17	0866 18 101	Resistor	1	
18	99906 0500	Nut, Ignition Coil & Resistor Terminal	6	
	99952 0500	Washer, Plain	6	
	99971 0500	Washer, Spring	6	
19	~~99784 0845~~	~~Bolt, Ignition Coil Bracket~~	~~1~~	
●	99786 0845	Bolt, Ignition Coil Bracket	1	From Car No. 1
20	1881 18 200A	Distributor	1	
21	0107 18 216A	Oil Seal	1	
22	1757 24 302	Contact	1	
23	1757 24 303	Rotor	1	
24	1881 24 308	Spring Set	1	

DISTRIBUTOR
(USED FROM CAR NO. 160623 73/10)

18 24

No.	Part Number	Description	Q'ty	Remarks
25	1757 24 310	Cap	1	
26	1757 24 313	Base, Breaker	1	
27	1757 24 314	Support, Arm	2	
28	1757 24 317	Wire (E), Lead	1	
29	1757 24 319	Wire, Lead	1	
30	1757 24 322	Condenser	2	
31	1757 24 328	Gasket	1	
32	1881 24 330	Governor Set	1	
33	1757 24 334	Condenser	1	
34	1757 24 340	Coupling Set	1	
35	1881 24 350	Vacuum Set	1	
36	1757 24 360	Screw Set	1	
37	99541 0350	Ring, "O" - Distributor	1	
38	99940 0603	Nut, Distributor	1	
39	99340 04350	Tube, Vacuum Control	1	
40	1620 18 390	Bracket, Regulator	1	
41	99796 0610	Bolt, Regulator Bracket	1	
42	0453 18 391	Regulator	1	
43	99786 0612	Screw, Regulator	2	

DISTRIBUTOR
(USED FROM CAR NO. 160623 73/10)

No.	Part Number	Description	Q'ty	Remarks
44	0866 18 600	Plug, Spark	4	
	2182 18 600	Plug, Spark (Europe)	4	
45	0866 18 810	Bracket	1	
46	99786 0612	Screw	2	
● 47	1757 18 940 A	Control Unit (Manual)	1	
●	1758 18 940 A	Control Unit (Automatic)	1	
● 48	99940 0600	Nut	3	

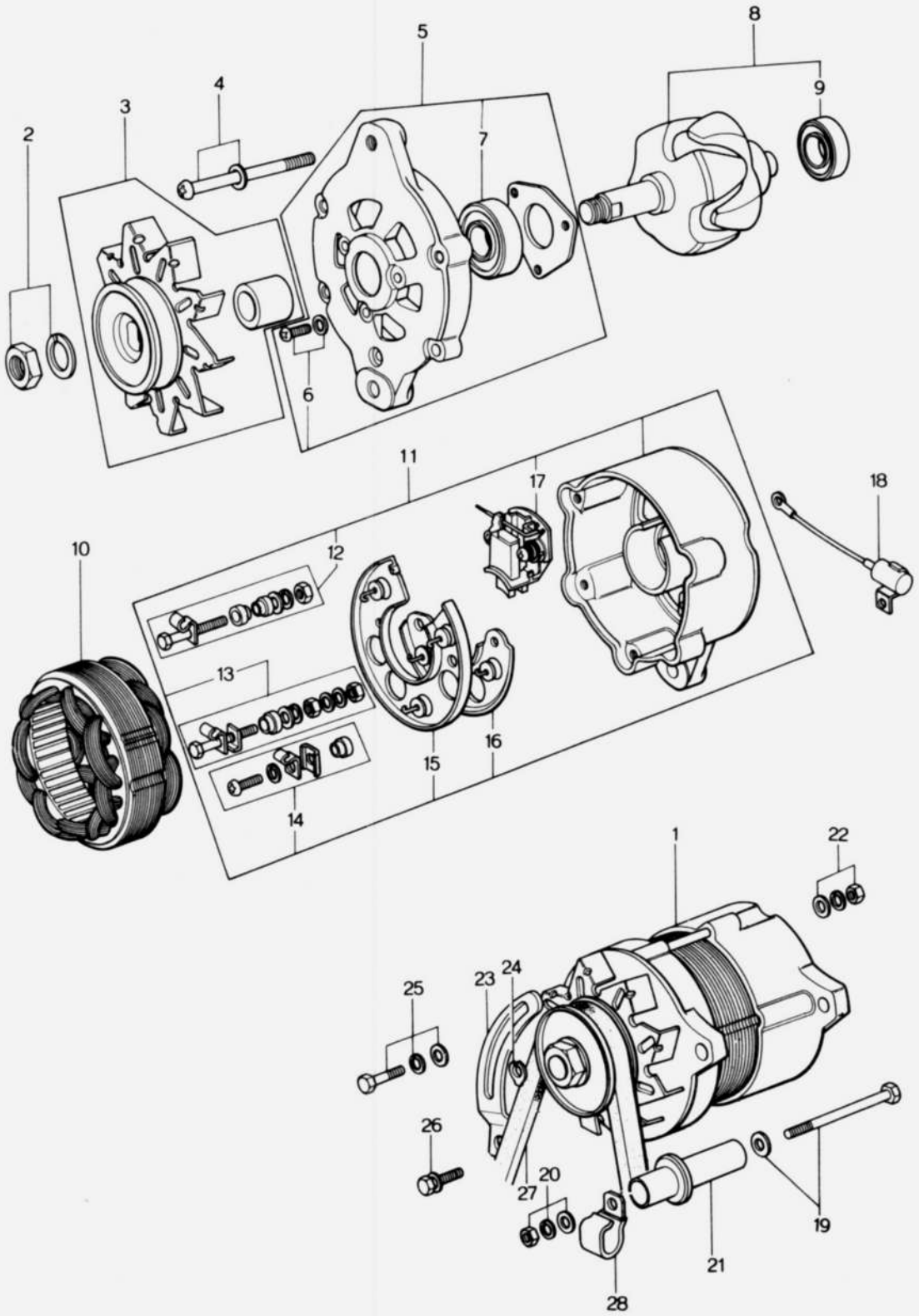
1
2
3
4
5
6
7
8
9
10
11
12
13
14
15
16
17
18
19
20
21
22
23
24
25
26
27
28

ALTERNATOR (USED FROM CAR NO. 171046 73/5~)

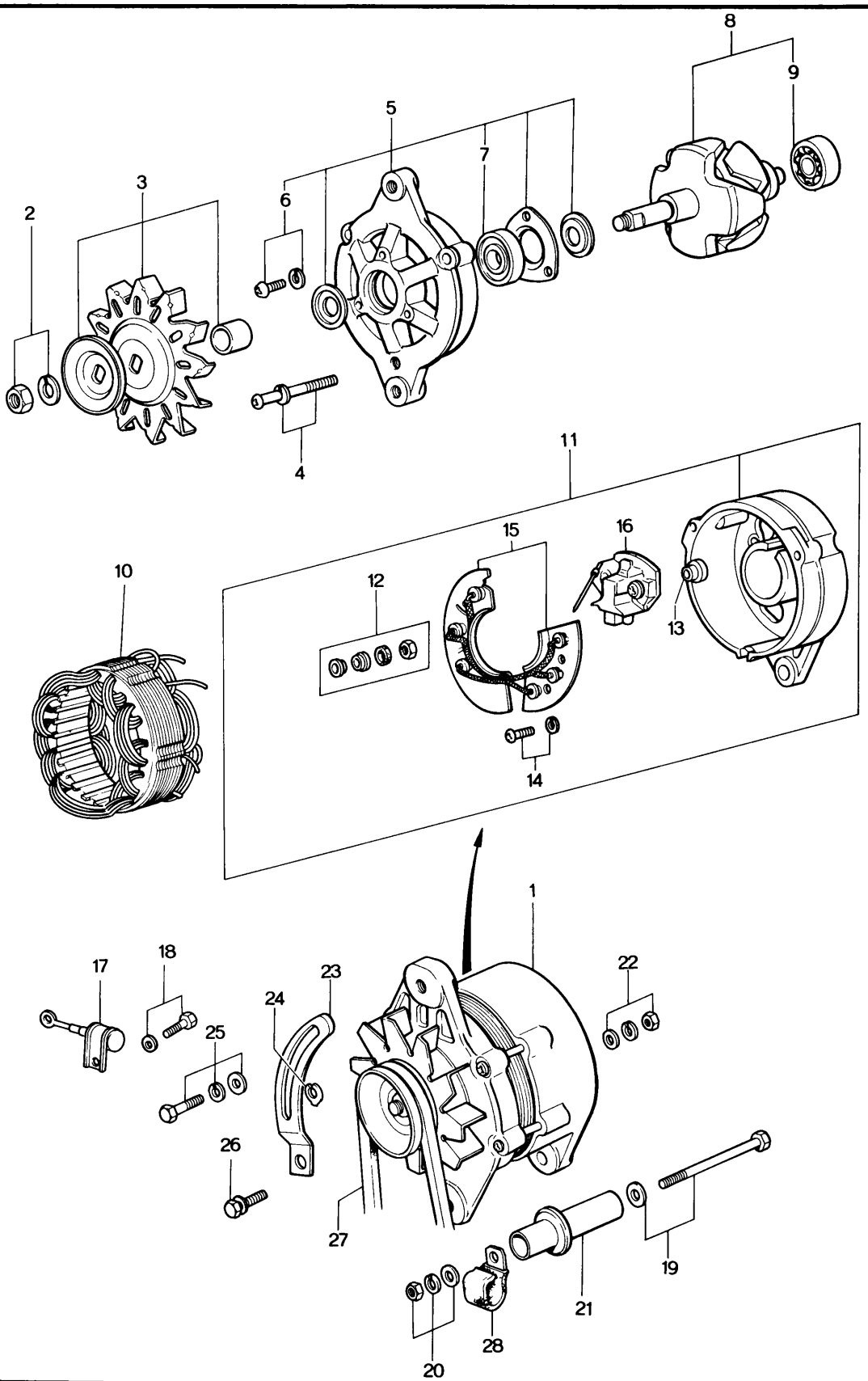

ALTERNATOR (USED FROM CAR NO. 171046 73/5 ~)

18 24

No.	Part Number	Description	Q'ty	Remarks
1	1011 18 300	Alternator	1	
2	0866 24 533	Nut Set	1	
3	0866 24 530	Pulley	1	
4	0866 24 535	Screw Set	1	
5	0866 24 550	Bracket, Front	1	
6	0866 24 526	Screw Set	3	
7	0208 24 514	Bearing, Ball	1	
8	0866 24 540	Rotor	1	
9	0820 24 503	Bearing, Ball	1	
10	1011 24 501	Starter	1	
11	1011 24 560	Bracket, Rear	1	
12	1011 24 533	Nut Set	1	
13	1011 24 563	Mould	1	
14	1011 24 534	Screw Set	1	
15	1011 24 510	Rectifier	1	
16	1011 24 541	Brush & Holder	1	
17	0290 24 581	Condenser	1	
18	1011 24 527	Screw, Condenser	1	
19	99813 10125	Bolt, Alternator	1	
	99800 10115	Bolt, Alternator	1	Car No. 160623 73/10 ~ ×

18 24 ALTERNATOR (USED FROM CAR NO. 171046 73/5 ~)

No.	Part Number	Description	Q'ty	Remarks
	99952 1000	Washer, Plain	1	
20	99921 1000	Nut, Alternator	1	
	99952 1000	Washer, Plain	1	Car No. 160623 73/9 ~ Discarded
	99971 1000	Washer, Spring	1	
	99940 1001	Nut, Alternator	1	Car No. 160623 73/10 ~ ○
21	0839 18 311B	Bracket, Alternator	1	
	1757 18 311	Spacer, Alternator	1	Car No. 160623 73/10 ~ ×
22	99906 0600	Nut, Alternator Terminal "B"	1	
	99906 0500	Nut, Alternator Terminal "B"	1	Car No. 160623 73/10 ~ ×
	99952 0500	Washer, Plain	1	
	99971 0500	Washer, Spring	1	
23	2090 18 361	Strap, Alternator	1	
	1881 18 361	Strap, Alternator	1	Car No. 160623 73/10 ~ ×
24	0222 18 375	Shim (t=0.3)		
	0222 18 376	Shim (t=0.5) Selective use	1	
	0222 18 377	Shim (t=0.15)		
25	99801 0822	Bolt, Strap	1	
	99951 0818	Washer, Plain	1	Car No. 160623 73/10 ~ Discarded
	99971 0800	Washer, Spring	1	
	99796 0825	Bolt, Strap	1	Car No. 160623 73/10 ~ Added Anew
26	908012 8 16	Bolt Set, Strap	1	
	99796 0820	Bolt, Alternator	1	
●	99952 0818	Washer, Plain	1	Car No. 160623 73/10 ~ ×
27	1668 18 381	Belt, "V" (For E.C.E. & Germany)	1	
	1672 18 381A	Belt, "V" (For Sweden)	1	
28	99276 1608	Clip	2	
●	99276 2008	Clip	2	Car No. 162808 73/11 ~ △

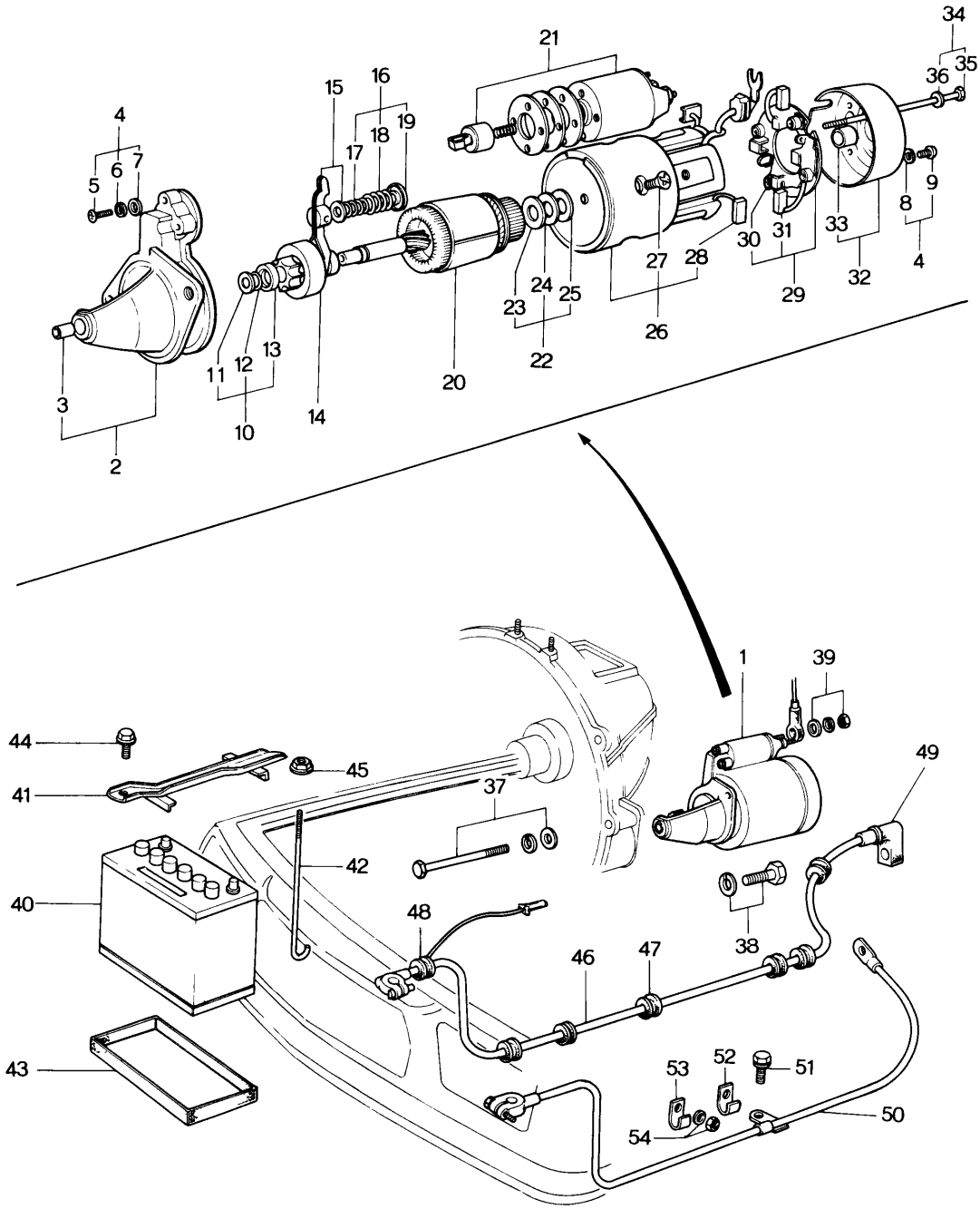
1
2
3
4
5
6
7
8
9
10
11
12
13
14
15
16
17
18
19
20
21
22
23
24
25
26
27
28
29
30
31
32
33
34
35
36
37
38
39
40
41
42
43
44
45
46
47
48
49
50
51
52
53
54

No.	Part Number	Description	Q'ty	Remarks
1	0866 18 400A	Starter	1	
2	0866 24 710	Bracket, Front	1	
3	0114 18 422A	Metal, Front Bracket	1	
●	0426 24 715	Sleeve	1	Car No. 170670 73/4~○
● 4	0426 24 725	Screw Set (Fig No. 5~9 included)	1	Car No. 170670 73/4~○
5	0164 23 664	Screw	3	Order Under No. 0426 24 725
6	0107 18 424	Washer, Spring	3	
7	0222 24 714	Washer	3	
8	0200 23 531	Washer, Spring	2	
9	0222 24 517	Screw	2	
● 10	0426 24 712	Stopper Set (Fig. No. 11~13 included)	1	Car No. 170670 73/4~○
11	0222 14 725	Washer	1	Order Under No. 0426 24 712
12	0107 18 417A	Ring	1	
13	0730 24 732	Ring, Stop	1	
14	0866 24 709	Clutch, Over Running	1	
15	0866 24 716	Lever	1	
● 16	0426 24 754	Spring Set (Fig. No. 17~19 included)	1	Car No. 170670 73/4~○
17	0118 23 636	Spring, Lever	1	Order Under No. 0426 24 754
18	0118 23 637	Spring, Lever	1	
19	0813 24 717	Seat, Spring	1	

No.	Part Number	Description	Q'ty	Remarks
20	0866 24 705	Armature	1	
21	0222 24 760A	Switch	1	
● 22	0426 24 726	Washer Set (Fig. No. 23~25 included)	1	Car No. 170670 73/4~○
23	0820 24 741	Washer	1	Order Under No. 0426 24 726
24	0118 23 689	Washer	1	
25	0118 23 691	Washer, Insulation	1	
26	0866 24 701	Yoke	1	
27	0866 24 704	Screw	4	
28	0222 24 753	Brush	2	
29	0222 24 750	Holder, Brush	1	
30	0222 24 752A	Spring, Brush	4	
● 31	0426 24 753	Brush	2	Car No. 170670 73/4~○
32	0845 24 720	Bracket, Rear	1	
33	0222 24 741	Metal, Rear Bracket	1	
● 34	0426 24 731	Bolt Set (Fig. No. 35,36 included)	1	Car No. 170670 73/4~○
35	0222 24 756	Bolt, Through	2	Order Under No. 0426 24 731
36	0107 18 424	Washer, Spring	2	
37	99801 10120	Bolt, Starter	1	
	99953 1000	Washer, Plain	1	

No.	Part Number	Description	Q'ty	Remarks
	99971 1000	Washer, Spring	1	
38	99801 1035	Bolt, Starter	1	
	99971 1000	Washer, Spring	1	
39	99901 0800	Nut, Starter Terminal "B"	1	
	99952 0800	Washer, Plain	1	
	99971 0800	Washer, Spring	1	
40	0504 18 520A	Battery (N50Z)	1	
41	1524 70 980	Clamp, Battery	1	
42	0243 56 231	Bolt, Clamp	1	
43	2113 54 295	Tray, Battery	1	
44	907860 6 16	Bolt Set, Clamp	1	
45	99940 0602	Nut, Clamp Bolt	1	
46	1620 67 100	Cable, Battery Positive	1	
47	99685 1000	Protector	6	
48	99685 1400	Protector	1	
49	0866 67 105	Cap	1	
50	0872 67 110	Wire, Earth-Battery	1	
51	908042 8 20	Bolt Set, Battery Earth Wire	1	

No.	Part Number	Description	Q'ty	Remarks
52	99295 1508	Clip, Battery Earth Wire	1	
53	99295 2008	Clip, Battery Earth Wire	1	
54	99907 0800	Nut, Clip	2	
	99971 0800	Washer, Spring	2	

STARTER & BATTERY (FOR SWEDEN)

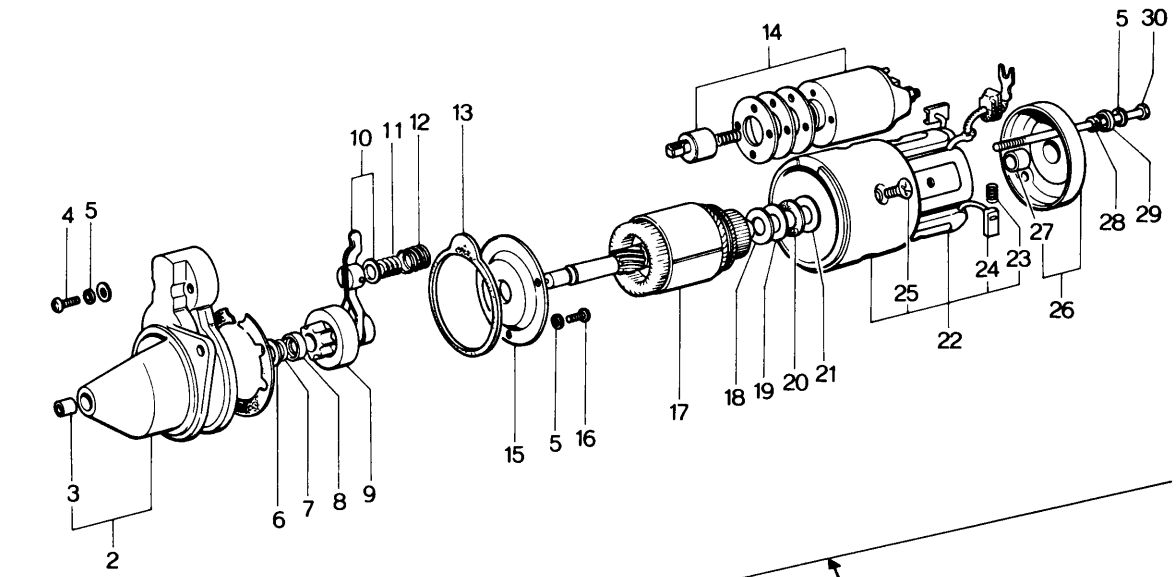

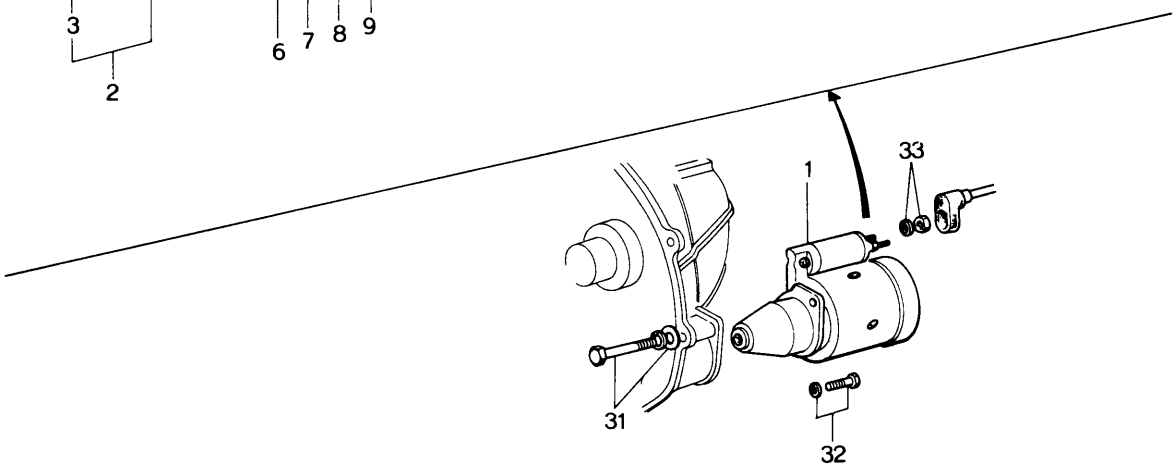

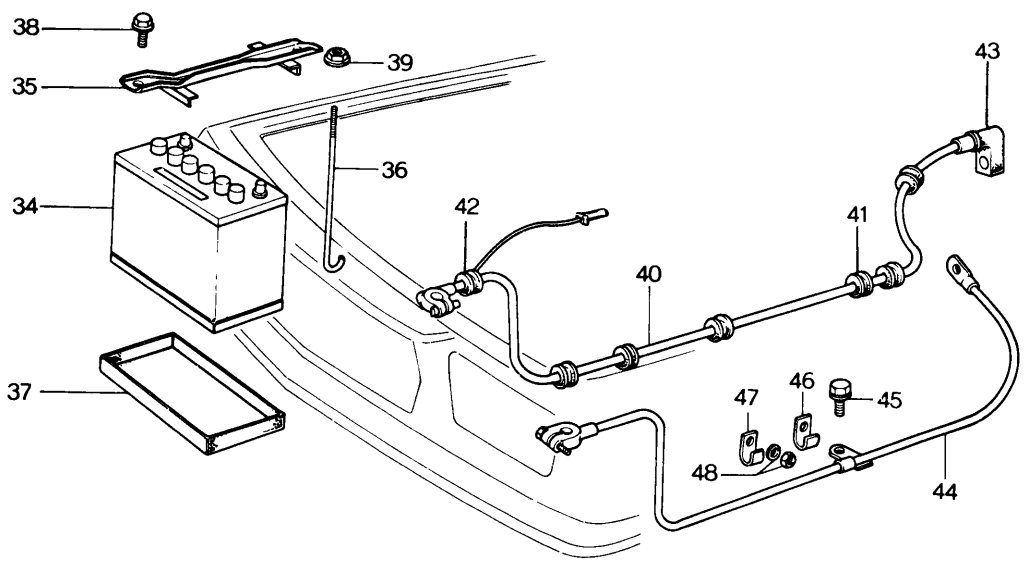

STARTER & BATTERY (FOR SWEDEN) 18 24

No.	Part Number	Description	Q'ty	Remarks
1	1562 18 400	Starter	1	
2	1562 24 710	Bracket, Front	1	
3	0114 18 422A	Sleeve, Bearing	1	
4	1562 24 758	Screw	2	
5	0187 18 424	Washer, Spring	7	
6	1562 24 714	Washer	1	
7	0636 24 753	Ring	1	
8	1562 24 712	Stopper	1	
9	1562 24 709	Clutch, Over Running	1	
10	1562 24 716	Lever	1	
11	0820 24 754	Spring, Lever	1	
12	0820 24 755	Spring, Lever	1	
13	1562 24 719	Gasket	1	
14	0839 24 736B	Switch	1	
15	1562 24 706	Bracket, Center	1	
16	1562 24 725	Screw, Center Bracket	3	
17	1562 24 705	Armature	1	
18	0118 23 689	Washer (14.5×30×0.25)	1	
19	1562 24 741	Washer (14.5×30×0.1)	1	
20	0118 23 691	Washer, Insulation (14.4×30×0.8)	1	

STARTER & BATTERY (FOR SWEDEN)

No.	Part Number	Description	Q'ty	Remarks
21	0107 18 406A	Washer (14.4×30×1.6)	1	
22	1562 24 701	Yoke	1	
23	0839 24 724	Spring, Brush	4	
24	0839 24 723	Brush	4	
25	0727 24 712	Screw	4	
26	2869 24 720	Bracket, Rear	1	
27	0249 24 731	Sleeve, Bearing	1	
28	0839 24 762	Gasket	2	
29	0839 24 761	Cap	2	
30	1562 24 731	Bolt, Through	2	
31	99801 10120	Bolt, Starter	1	
	99953 1000	Washer, Plain	1	
	99971 1000	Washer, Spring	1	
32	99801 1035	Bolt, Starter	1	
	99971 1000	Washer, Spring	1	
33	99901 0800	Nut, Starter Terminal "B"	1	
	99952 0800	Washer, Plain	1	
	99971 0800	Washer, Spring	1	
34	1672 18 520	Battery (N70Z)	1	

STARTER & BATTERY
(USED FROM CAR NO. 160623 73/10)

18 24

No.	Part Number	Description	Q'ty	Remarks
● 1	1757 18 400A	Starter (Manual)	1	
●	1030 18 400A	Starter (Automatic)	1	
2	0866 24 704	Screw	4	
3	1757 24 705	Armature	1	
4	1757 24 709	Clutch, Over Running	1	
● 5	1757 24 710	Bracket, Front (Manual)	1	
●	1030 24 710	Bracket, Front (Automatic)	1	
6	0426 24 712	Stopper Set, Piston	1	
7	0426 24 715	Sleeve	1	
8	0866 24 716	Lever	1	
9	0845 24 720	Bracket, Rear	1	
10	0426 24 725	Screw Set	1	
11	0426 24 726	Washer Set	1	
12	1757 24 730	Yoke	1	
● 13	0426 24 731	Bolt Set (Manual)	1	
●	1030 24 731	Bolt Set (Automatic)	1	
14	0222 24 741	Sleeve	1	
15	0222 24 750	Holder	1	
16	0222 24 752A	Spring, Brush	4	
17	0222 24 753	Brush	2	
18	0426 24 753	Brush	2	
19	0426 24 754	Spring Set	1	
● 20	0324 24 760	Switch, Starter (Manual)	1	
●	0222 24 760A	Switch, Starter (Automatic)	1	

18 24 STARTER & BATTERY
(USED FROM CAR NO. 160623 73/10)

	No.	Part Number	Description	Q'ty	Remarks
●	21	99801 1035	Bolt, Starter (Manual)	1	
●		99801 1032	Bolt, Starter (Automatic)	1	
		99971 1000	Washer, Spring	1	
●	22	99803 10120	Bolt, Starter (Manual)	1	
●		99801 1075	Bolt, Starter (Automatic)	1	
		99953 1000	Washer, Plain	1	
		99971 1000	Washer, Spring	1	
	23	99901 0800	Nut, Starter Terminal	1	
		99952 0800	Washer, Plain	1	
		99971 0800	Washer, Spring	1	
	24	0504 18 520A	Battery (GS N50Z)	1	
		1620 18 520	Battery (GS N70Z)(Cold Proof Spec.)	1	
	25	2113 54 295	Tray, Battery	1	
		2981 54 222	Tray, Battery (Cold Proof Spec.)	1	
	26	90786 0616	Bolt, Battery Clamp	1	
	27	0243 56 231	Bolt, Clamp	1	
	28	99940 0602	Nut	1	
	29	1881 67 100	Cable, Battery Positive	1	
●		1881 67 100A	Cable, Battery Positive	1	74/2～△
	30	0872 67 110	Wire, Battery Earth	1	
	31	99804 0820	Bolt, Earth Wire	1	
		99971 0800	Washer, Spring	1	
	32	99276 1208	Clip	1	
	33	99940 0800	Nut, Earth Wire	2	
	34	1524 70 980	Clamp, Battery	1	

AUTOMATIC T/MISSION
(CONVERTER, OIL PUMP & PIPING)

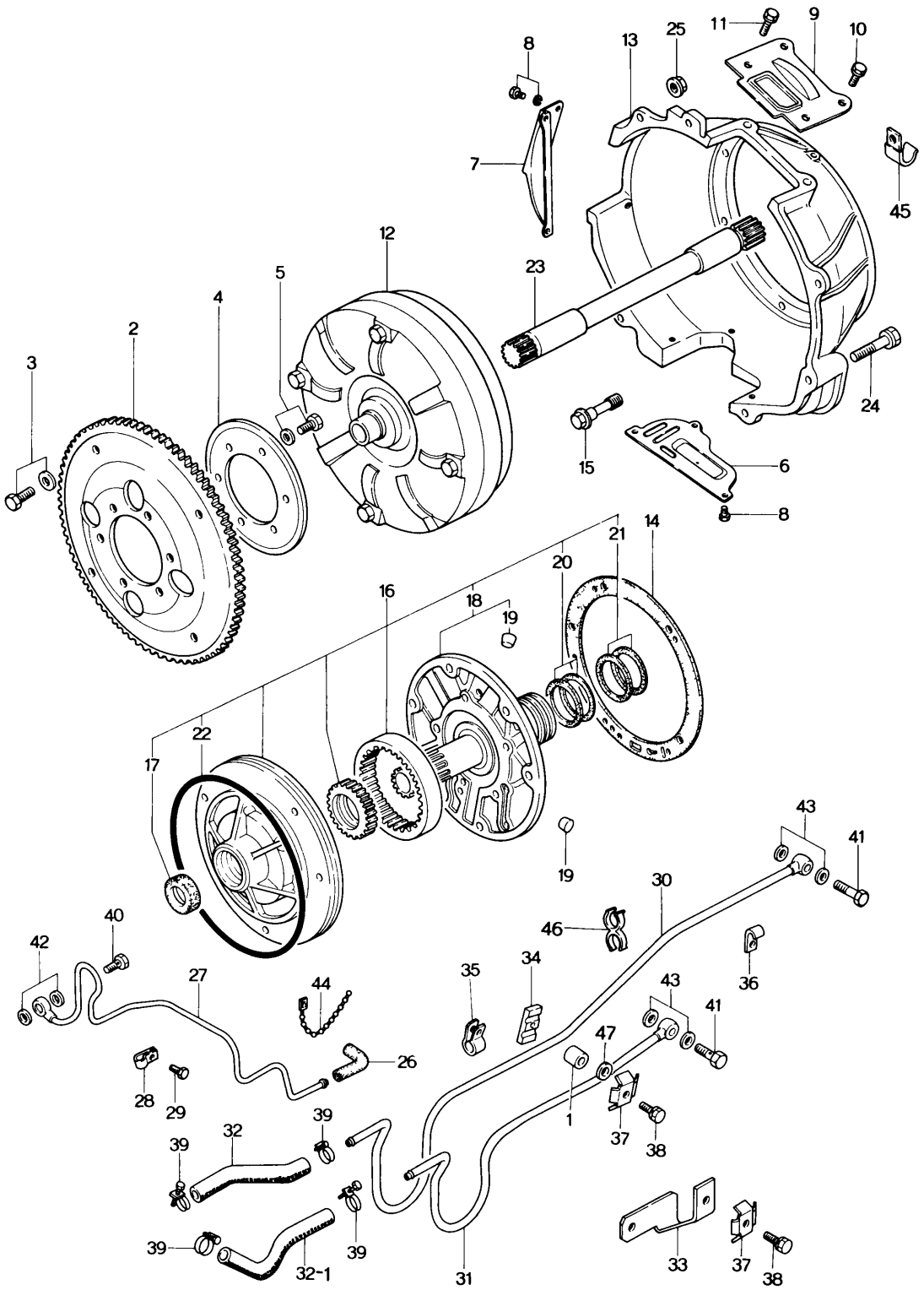

No	Part Number	Description	Q'ty	Remarks
1	2850 13 331	Spacer, Oil Pipe	1	
2	1758 19 020	Plate, Drive	1	
3	99781 1012	Bolt, Drive Plate	4	
	99971 1000	Washer, Spring	4	
4	0842 19 025	Plate, Backing	1	
5	99781 1018	Bolt, Backing Plate	6	
	99971 1000	Washer, Spring	6	
6	1908 19 027	Cover, Under	1	
7	0454 19 028	Cover, Side	1	
8	99796 0610	Bolt, Under & Side Cover	7	
9	1758 19 028	Cover, Top	1	
10	99796 0610	Bolt, Top Cover	1	
11	99796 0816	Bolt, Top Cover	2	
12	0338 19 100A	Converter, Torque	1	
13	1758 19 211A	Housing, Converter	1	
14	1758 19 215	Gasket, Oil Pump	1	
15	0338 19 216	Bolt, Housing	6	
16	1758 19 220	Pump, Oil	1	
17	0338 19 223	Oil Seal	1	

AUTOMATIC T/MISSION
(CONVERTER, OIL PUMP & PIPING)

No.	Part Number	Description	Q'ty	Remarks
18	1758 19 240	Cover	1	
19	0338 19 245A	Ball	2	
20	0338 19 256	Ring, Seal	2	
21	0338 19 257	Ring, Seal	2	
22	0338 19 258	Seal, Lathe Cut Ring	1	
23	0338 19 678	Shaft, Input	1	
24	99796 1035	Bolt, Housing	2	
	99796 1040	Bolt	1	
	99796 1045	Bolt	1	
25	99940 1001	Nut, Housing	1	
26	0338 19 904A	Hose, Vacuum (Rr.)	1	
27	0808 19 910	Pipe, Vacuum	1	
28	0842 19 915A	Clip, Vacuum Pipe	1	
29	99796 0610	Bolt, Clip	3	
30	1053 19 920A	Pipe, Oil	1	
31	1053 19 930A	Pipe, Oil	1	
32	1129 19 933	Hose, Oil	1	
● 32-1	1129 19 934	Hose, Oil	1	
33	1758 19 940	Bracket, Pipe	1	
34	1015 19 945A	Plate, Spacer	1	

No.	Part Number	Description	Q'ty	Remarks
35	2579 19 989	Clip, Pipe	1	
36	99276 1006	Clip, Pipe	1	
37	0866 45 903A	Clip, Pipe	2	
38	99796 0620	Bolt, Clip	2	
39	99282 1700	Band, Hose	4	
40	99381 0600	Bolt, Connector - Vacuum Pipe	1	
41	99381 0800	Bolt, Connector - Oil Pipe	2	
42	99564 1000	Gasket, Connector Bolt	2	
43	99564 1200	Gasket, Connector Bolt	4	
44	99709 0108	Band, Oil Pipe	1	
45	99276 0806	Clip, Wire Harness	1	
46	99288 0808	Clip, Oil Pipe	1	
47	99952 0600	Washer, Plain	1	
	0808 19 090	Shipping T/mission	1	

AUTOMATIC T/MISSION
(CASE & MAIN CONTROL)

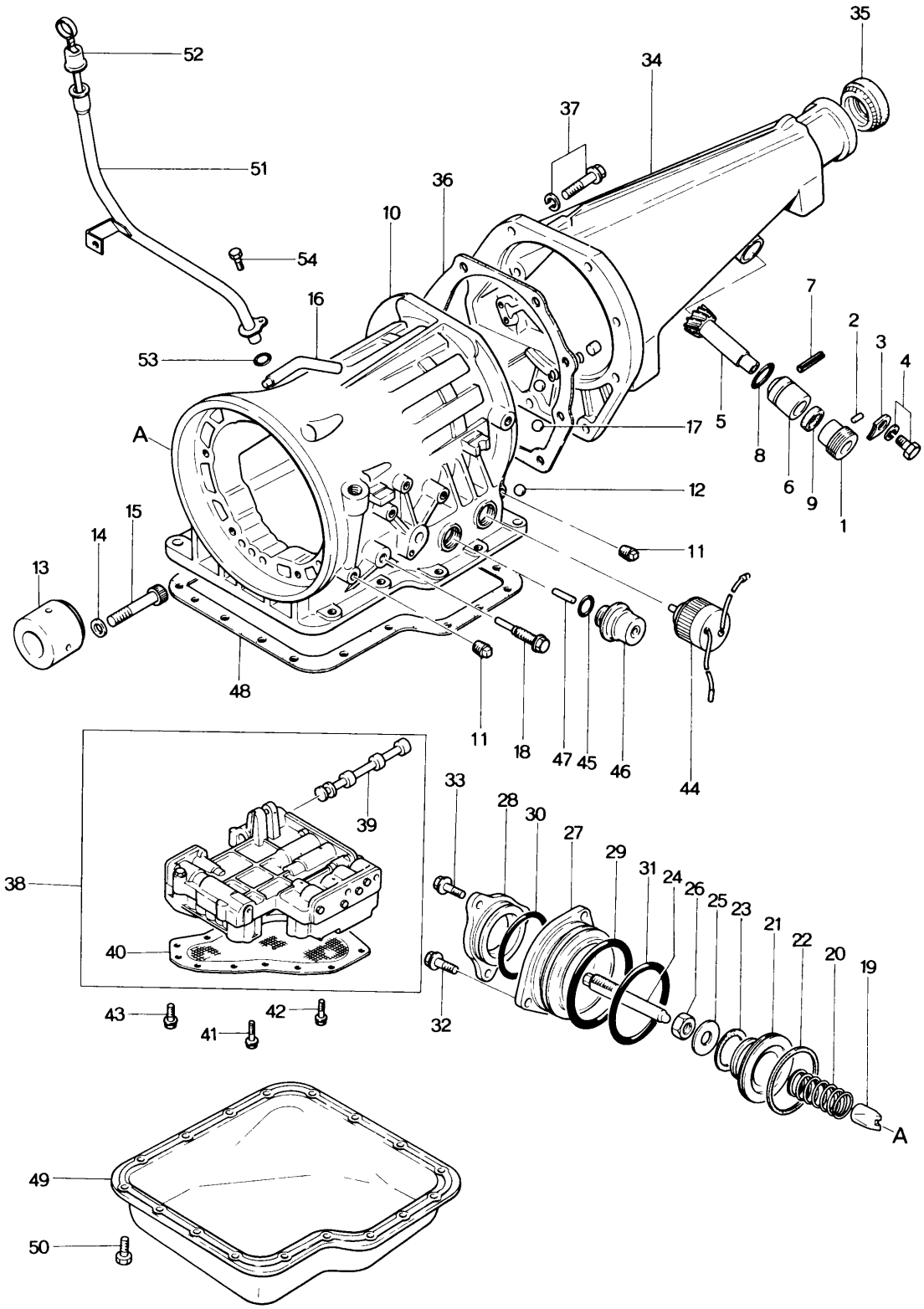

No	Part Number	Description	Q'ty	Remarks
1	0862 17 351	Joint, Cable - Speedometer	1	
2	0187 17 352	Pin, Dowel - Driven Gear	1	
3	0111 17 354	Plate, Lock - Cable Joint	1	
4	99806 0614	Bolt, Lock Plate	1	
	99971 0600	Washer, Spring	1	
5	0862 17 441	Gear, Driven - Speedometer	1	
6	0862 17 442	Sleeve, Speedometer Driven Gear	1	
7	99222 0216	Pin, Spring	1	
8	99541 02211	Ring, "O" - Driven Gear	1	
9	99586 10207	Oil Seal, Driven Gear	1	
10	1758 19 310	Case, T/mission	1	
11	0338 19 331A	Plug, Square Head	3	
12	99611 1750	Ball, Steel	3	
13	0338 19 336	Race, Inner	1	
14	0338 19 337	Washer, Plain	8	
15	0338 19 338	Bolt	8	
16	0378 19 344	Breather, Air	1	
17	99611 2000	Ball, Steel	2	

AUTOMATIC T/MISSION
(CASE & MAIN CONTROL)

No.	Part Number	Description	Q'ty	Remarks
18	1758 19 341	Bolt, Anchor End	1	
19	0338 19 361	Strut, Band	1	
20	0338 19 363	Spring, Return - Piston	1	
21	0842 19 381	Piston, Band Servo	1	
22	0338 19 384	Seal, Piston	1	
23	0842 19 385	Seal, Piston	1	
24	1758 19 386	Stem, Piston	1	
25	0338 19 388A	Washer, Plain	1	
26	0338 19 389	Nut, Band Adjust	1	
27	1758 19 391	Retainer, Servo	1	
28	1758 19 392	Cover, Servo	1	
29	0842 19 394	Seal, Lathe Cut Ring	1	
30	1758 19 394	Ring, "O"	1	
31	0338 19 395	Seal, "O" Ring	1	
32	0338 19 397	Bolt	3	
33	1758 19 397	Bolt, Servo	3	
34	1840 19 710	Housing, Extension	1	
35	0376 17 335	Oil Seal	1	

No	Part Number	Description	Q'ty	Remarks
36	0338 19 735	Gasket, Extension Housing	1	
37	0338 19 737	Bolt, Extension Housing	8	
	0338 19 739	Washer, Plain	8	
38	1758 19 750	Valve, Control	1	
39	0338 19 768	Valve, Manual	1	
40	1758 19 815	Strainer, Oil	1	
41	0338 19 831	Bolt, Control Valve	3	
42	0338 19 832	Bolt, Control Valve	2	
43	0338 19 833	Bolt, Control Valve	2	
44	1675 19 821	Solenoid, Down Shift	1	
45	0338 19 822	Seal, "O" Ring	2	
46	1758 19 823	Diaphragm, Vacuum	1	
47	0338 19 825	Rod, Diaphragm (ℓ = 30.0)		
	0338 19 826	Rod (ℓ = 31.0)		
	0338 19 827	Rod (ℓ = 30.5)	Selective use 1	
	0338 19 828	Rod (ℓ = 29.0)		
	0338 19 829	Rod (ℓ = 29.5)		

AUTOMATIC T/MISSION
(CASE & MAIN CONTROL)

No	Part Number	Description	Q'ty	Remarks
48	1758 19 835	Gasket, Oil Pan	1	
49	1758 19 836	Pan, Oil	1	
50	0338 19 837	Bolt, Oil Pan	17	
51	0808 19 870	Tube, Oil Level	1	
52	1758 19 880	Gauge, Oil Level	1	
53	99541 01601	Ring, "O" - Oil Level Tube	1	
54	99796 0610	Bolt, Oil Level Tube	1	

AUTOMATIC T/MISSION
(CLUTCH & PLANETARY GEAR)

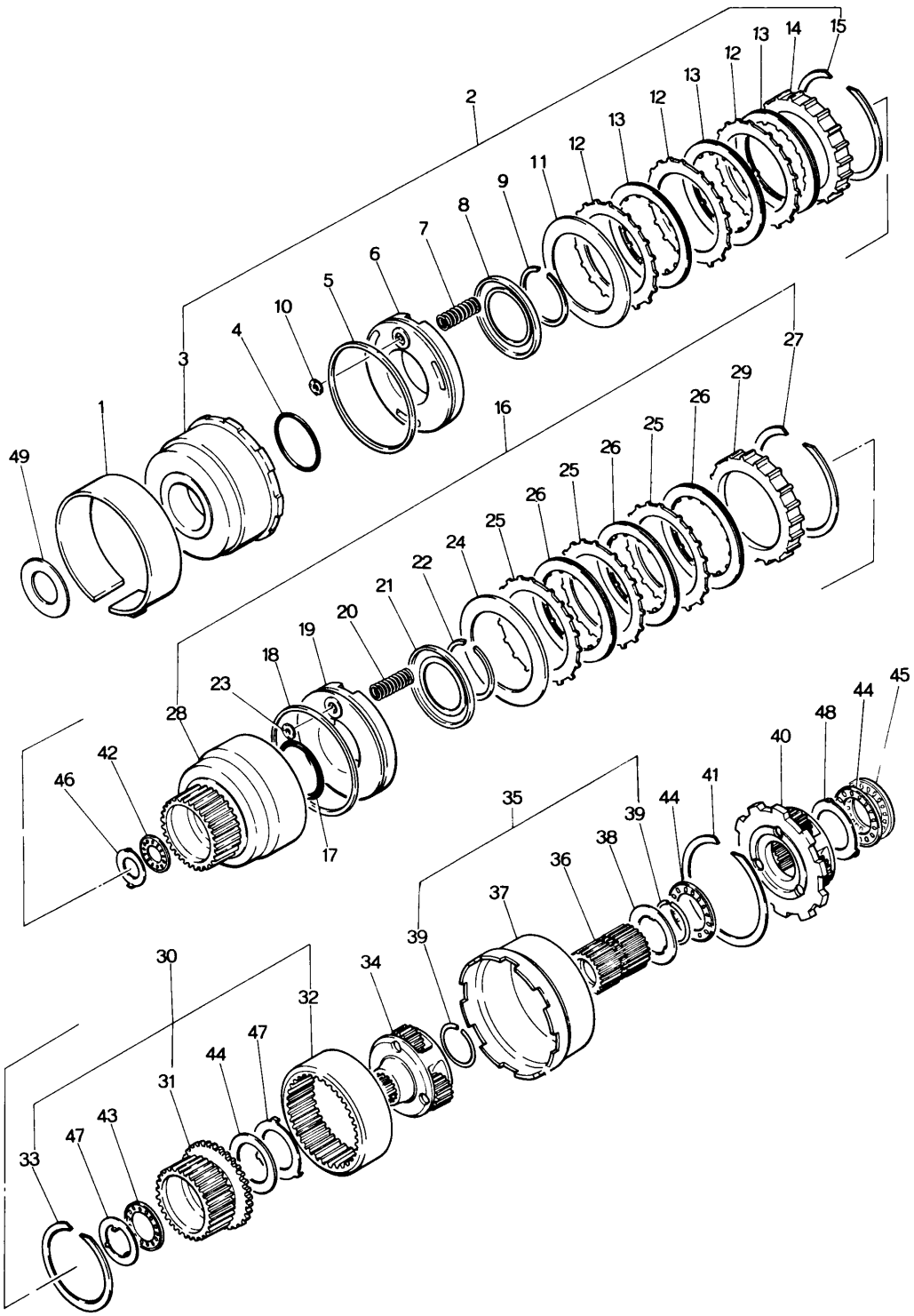

No	Part Number	Description	Q'ty	Remarks
1	0338 19 360	Band, Brake	1	
2	0338 19 460	Clutch, Front	1	
3	0338 19 470	Drum, Clutch	1	
4	0338 19 475	Seal, "O" Ring	1	
5	0338 19 476	Seal, Lathe Cut	1	
6	0338 19 480	Piston, Clutch	1	
7	0338 19 486	Spring, Piston Return	10	
8	0338 19 487	Retainer, Spring	1	
9	0338 19 488	Ring, Snap	1	
10	0338 19 493	Retainer, Ball	1	
11	0338 19 498	Plate, Dished	1	
12	0338 19 499	Plate, Driven	4	
13	0338 19 500	Plate, Drive	4	
14	0338 19 503	Plate, Retaining		
	0338 19 504	Plate, Retaining		
	0338 19 505	Plate, Retaining		
	0338 19 506	Plate, Retaining	Selective use	1
	0338 19 507	Plate, Retaining		
	0338 19 508	Plate, Retaining		

AUTOMATIC T/MISSION
(CLUTCH & PLANETARY GEAR)

No.	Part Number	Description	Q'ty	Remarks
15	0338 19 509	Ring, Snap	1	
16	0338 19 510	Clutch, Rear	1	
17	0338 19 475	Seal, "O" Ring	1	
18	0338 19 476	Seal, Lathe Cut	1	
19	0338 19 480	Piston, Clutch	1	
20	0338 19 486	Spring, Piston Return	10	
21	0338 19 487	Retainer, Spring	1	
22	0338 19 488	Ring, Snap	1	
23	0338 19 493	Retainer, Ball	1	
24	0338 19 498	Plate, Dished	1	
25	0338 19 499	Plate, Driven	5	
26	0338 19 500	Plate, Drive	5	
27	0338 19 509	Ring, Snap	1	
28	0338 19 511	Drum, Rear Clutch	1	
29	0338 19 515	Plate, Retaining	1	
30	0338 19 530	Hub, Rear Clutch	1	
31	0338 19 531	Hub, Rear Clutch	1	
32	0338 19 533	Gear, Internal	1	

No	Part Number	Description	Q'ty	Remarks
33	0338 19 534	Ring, Snap	1	
34	0338 19 540	Carrier, Front	1	
35	0338 19 550	Shell & Sun Gear	1	
36	0338 19 560	Gear, Sun	1	
37	0338 19 565	Shell, Connecting	1	
38	0338 19 566	Race, Bearing - Shell	1	
39	0338 19 567	Ring, Snap	2	
40	0338 19 570	Carrier, Rear	1	
41	0338 19 598	Ring, Snap	1	
42	0338 19 621	Bearing, Needle	1	
43	0338 19 622	Bearing, Needle	1	
44	0338 19 623	Bearing, Needle	3	
45	0338 19 624	Bearing, Needle	1	
46	0338 19 631	Race, Bearing (t = 1.2)	Selective use	1
	0338 19 632	Race, Bearing (t = 1.4)		
	0338 19 633	Race, Bearing (t = 1.6)		
	0338 19 634	Race, Bearing (t = 1.8)		

No.	Part Number	Description		Q'ty	Remarks
	0338 19 635	Race, Bearing (t = 2.0)			
	0338 19 636	Race, Bearing (t = 2.2)			
47	0338 19 638	Race, Bearing - Rear Clutch		1	
48	0338 19 639	Race, Bearing		2	
49	0338 19 641	Washer, Front Clutch (t = 1.90)			
	0338 19 642	Washer (t = 2.10)			
	0338 19 643	Washer (t = 2.30)			
	0338 19 644	Washer (t = 2.50)	Selective use	1	
	0338 19 645	Washer (t = 2.70)			
	0338 19 646	Washer (t = 1.50)			
	0338 19 647	Washer (t = 1.70)			
	0397 22 200	Clutch Repair Kit		1 Set	
	0338 19 475	Seal, "O" Ring		2	
	0338 19 476	Seal, Lathe Cut		2	
	0338 19 486	Spring, Piston Return		20	
	0338 19 487	Retainer, Spring		2	
	0338 19 488	Ring, Snap		2	
	0338 19 498	Plate, Dished		2	
	0338 19 499	Plate, Driven		7	

No	Part Number	Description	Q'ty	Remarks
	0338 19 500	Plate, Drive	7	
	0338 19 509	Ring, Snap	2	
	0338 19 621	Bearing, Needle	1	
	0338 19 638	Race, Bearing - Rear Clutch	1	

AUTOMATIC T/MISSION
(LOW, REVERSE & GOVERNOR)

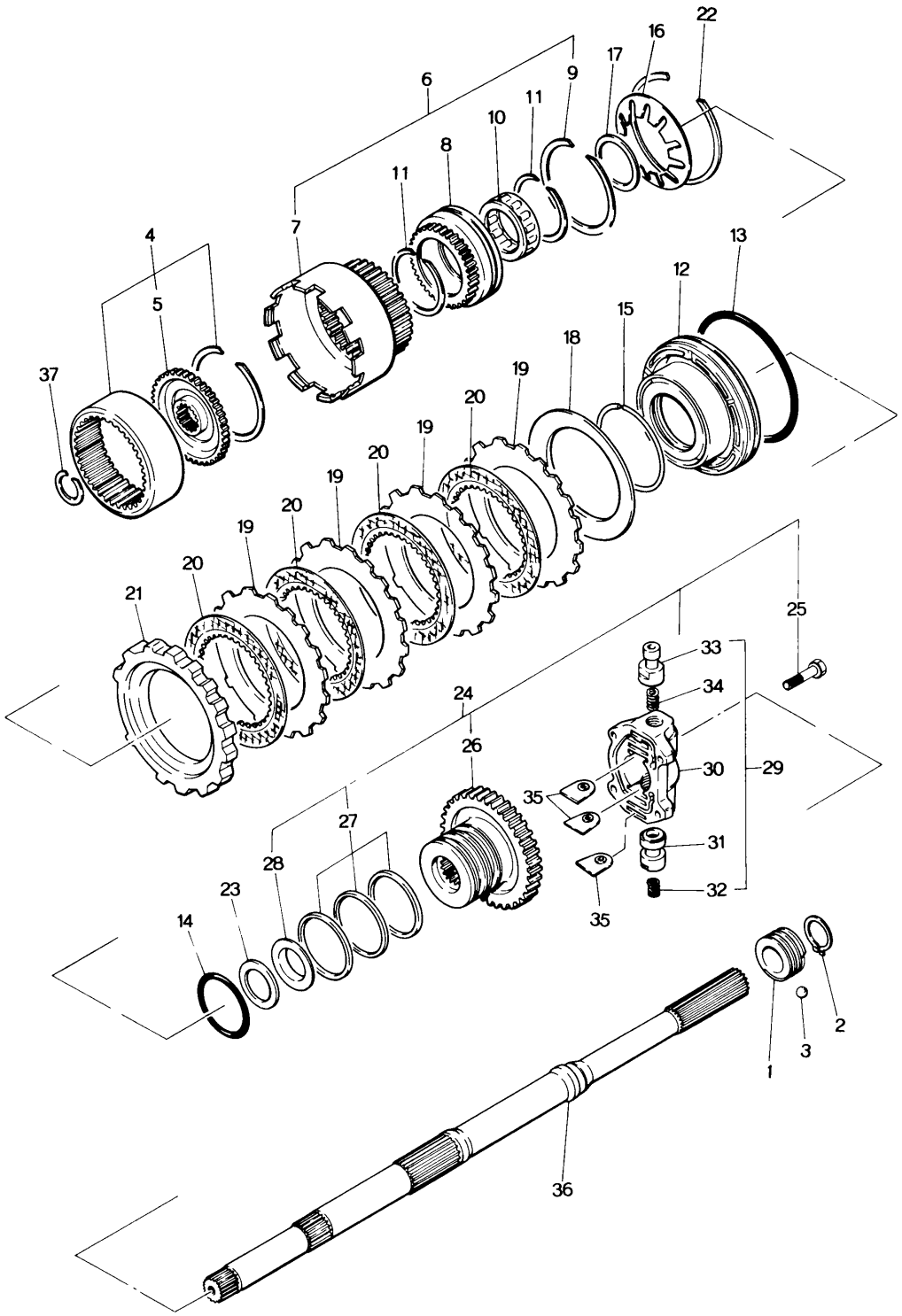

No	Part Number	Description	Q'ty	Remarks
1	0862 17 341	Gear, Drive - Speedometer	1	
2	99573 2500	Ring, Snap - Drive Gear	1	
3	99611 1500	Ball, Steel	1	
4	0338 19 580	Flange	1	
5	0338 19 581	Flange, Drive	1	
6	0338 19 590	Drum, Connecting	1	
7	0338 19 591	Drum, Connecting	1	
8	0338 19 593	Race, Outer	1	
9	0338 19 594	Ring, Snap	1	
10	0338 19 595	Clutch, One Way	1	
11	0338 19 596	Ring, Snap	2	
12	0338 19 601	Piston, Low & Reverse	1	
13	0338 19 603	Seal, Piston	1	
14	0338 19 604	Seal, "O" Ring	1	
15	0338 19 605	Ring, Thrust Spring	1	
16	0338 19 606	Spring, Piston	1	
17	0338 19 607	Ring, Snap	1	

AUTOMATIC T/MISSION
(LOW, REVERSE & GOVERNOR)

No	Part Number	Description	Q'ty	Remarks
18	0338 19 608	Plate, Dished	1	
19	0338 19 609	Plate, Driven	4	
20	0338 19 610	Plate, Drive	4	
21	0338 19 613A	Plate, Retaining (t = 15.8)	1	Selective use
	0338 19 614A	Plate (t = 16.0)		
	0338 19 615A	Plate (t = 16.2)		
	0338 19 616A	Plate (t = 16.4)		
	0338 19 617A	Plate (t = 16.6)		
	0338 19 618A	Plate (t = 16.8)		
22	0338 19 619	Ring, Snap	1	
23	0338 19 622	Bearing, Needle	1	
24	0842 19 650	Distributor, Oil	1	
25	0338 19 397	Bolt	4	
26	0338 19 651	Distributor	1	
27	0338 19 655	Ring, Seal	3	
28	0338 19 656	Race, Bearing	1	
29	0842 19 660	Governor, Fig. No. 30 ~ 33 included	1	
30	0338 19 661	Body	1	
31	0338 19 663	Valve	1	

No	Part Number	Description	Q'ty	Remarks
32	0338 19 664	Spring	1	
33	0842 19 665	Valve	1	
34	0338 19 666	Spring, Governor	1	
35	0338 19 667	Plate, Retainer	3	
36	0338 19 670A	Shaft	1	
37	0338 19 676	Ring	1	

AUTOMATIC T/MISSION
(MANUAL LINKAGE)

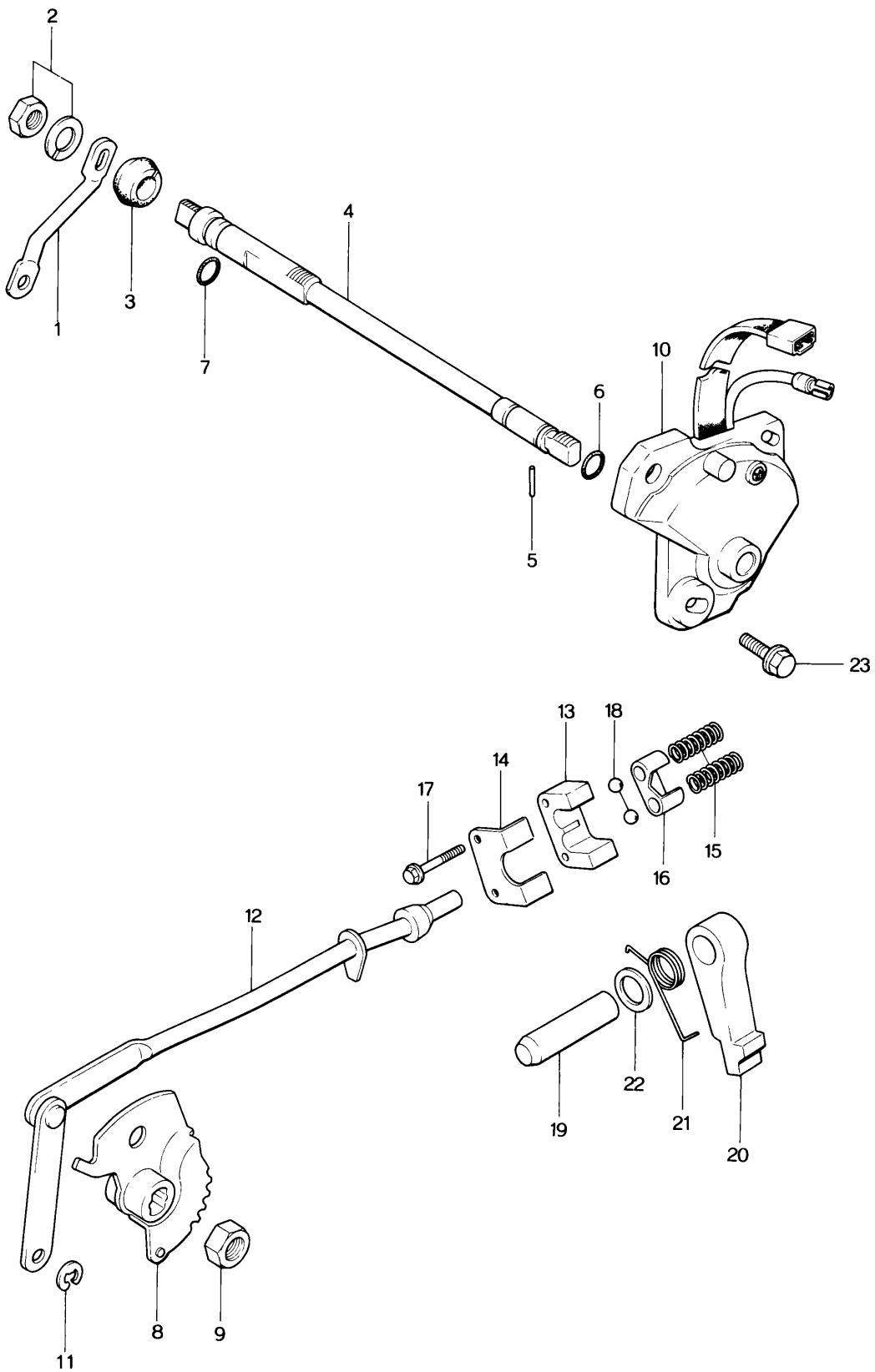

No.	Part Number	Description	Q'ty	Remarks
1	1015 19 031	Lever, Select	1	
2	99922 1400	Nut, Select Lever	1	
	99971 1400	Washer, Spring	1	
3	1758 19 036	Seal, Dust	1	
4	1758 19 431	Shaft, Manual	1	
5	1758 19 434	Pin, Manual Shaft	1	
6	99541 00901	Ring, "O" - Manual Shaft	1	
7	99541 01201	Ring, "O"	1	
8	1758 19 440	Plate, Manual	1	
9	1758 19 443	Nut, Manual Shaft	1	
10	1758 19 444	Switch, Inhibitor	1	
11	0338 19 449	Ring, Snap	2	
12	1758 19 450	Rod, Parking	1	
13	0338 19 701	Support, Actuator	1	
14	0338 19 702	Plate, Retaining	1	
15	0338 19 703	Spring, Ball Park	2	
16	0338 19 704	Retainer, Actuator Support	1	
17	0338 19 706	Bolt, Actuator Support	2	
18	99611 2750	Ball, Steel	2	
19	0338 19 731	Shaft, Parking Pawl	1	

No.	Part Number	Description	Q'ty	Remarks
20	0338 19 732	Pawl, Parking	1	
21	0338 19 733C	Spring, Pawl Return	1	
22	0338 19 734A	Spacer, Dowel	1	
23	0397 19 838	Bolt, Inhibitor Switch	3	

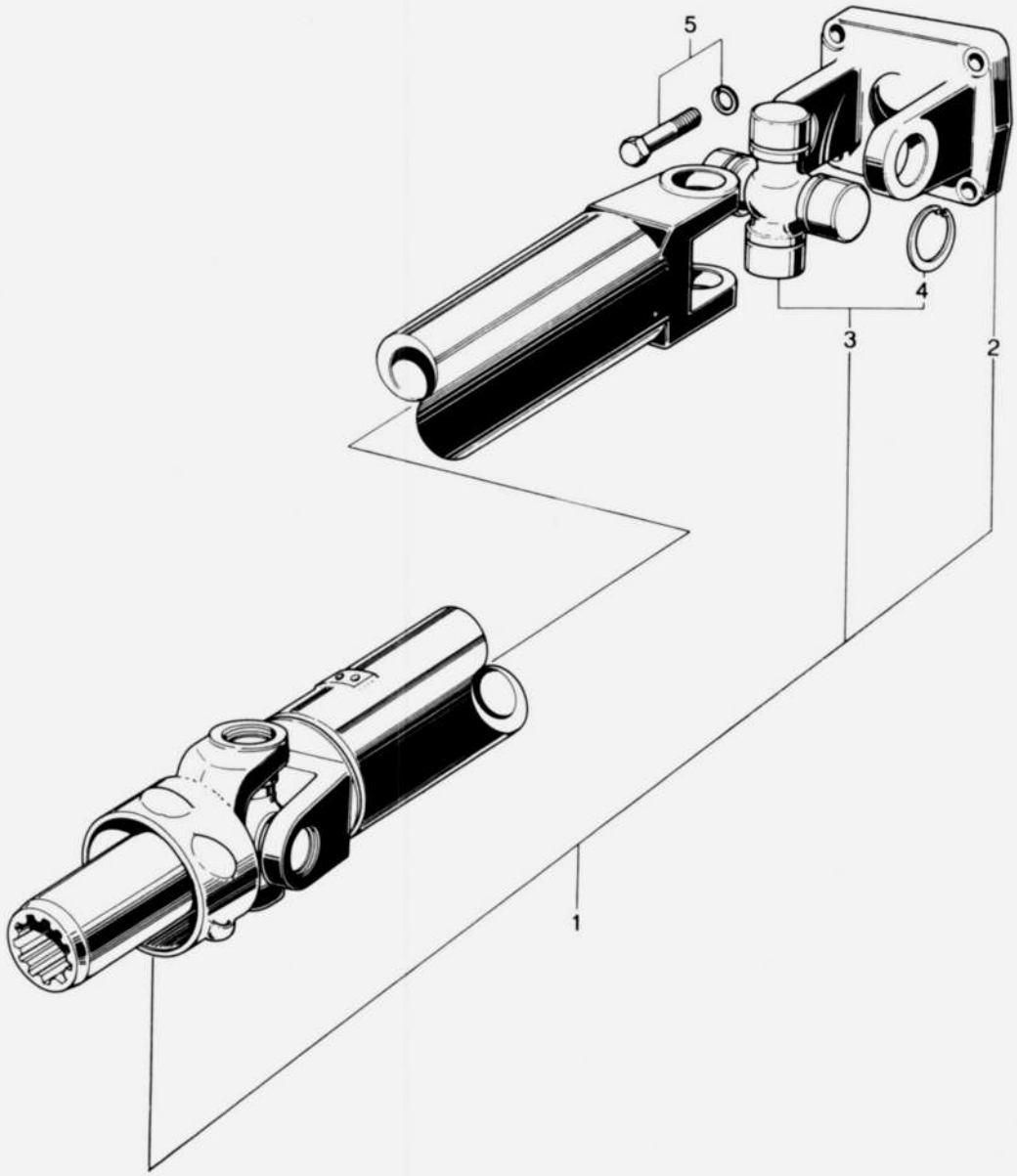
5
4
3
2
1

No.	Part Number	Description		Q'ty	Remarks
1	0862 25 100A	Shaft, Propeller		1	
2	0259 25 021B	Yoke		1	
3	0259 89 251	Joint Set, Universal		1	
4	0259 25 071A	Ring, Snap (t=1.22)	Selective use	4	
	0259 25 072A	Ring, Snap (t=1.24)			
	0259 25 073A	Ring, Snap (t=1.26)			
	0259 25 074A	Ring, Snap (t=1.28)			
	0259 25 075A	Ring, Snap (t=1.30)			
	0259 25 076A	Ring, Snap (t=1.32)			
	0259 25 077A	Ring, Snap (t=1.34)			
	0259 25 078A	Ring, Snap (t=1.36)			
	0259 25 079A	Ring, Snap (t=1.38)			
5	99752 30818	Bolt		4	
	99971 0800	Washer, Spring		4	

REAR AXLE

(L.H.D. - USED UP TO CAR NO. 179250 73/9)
(R.H.D. - USED FROM CAR NO. 1

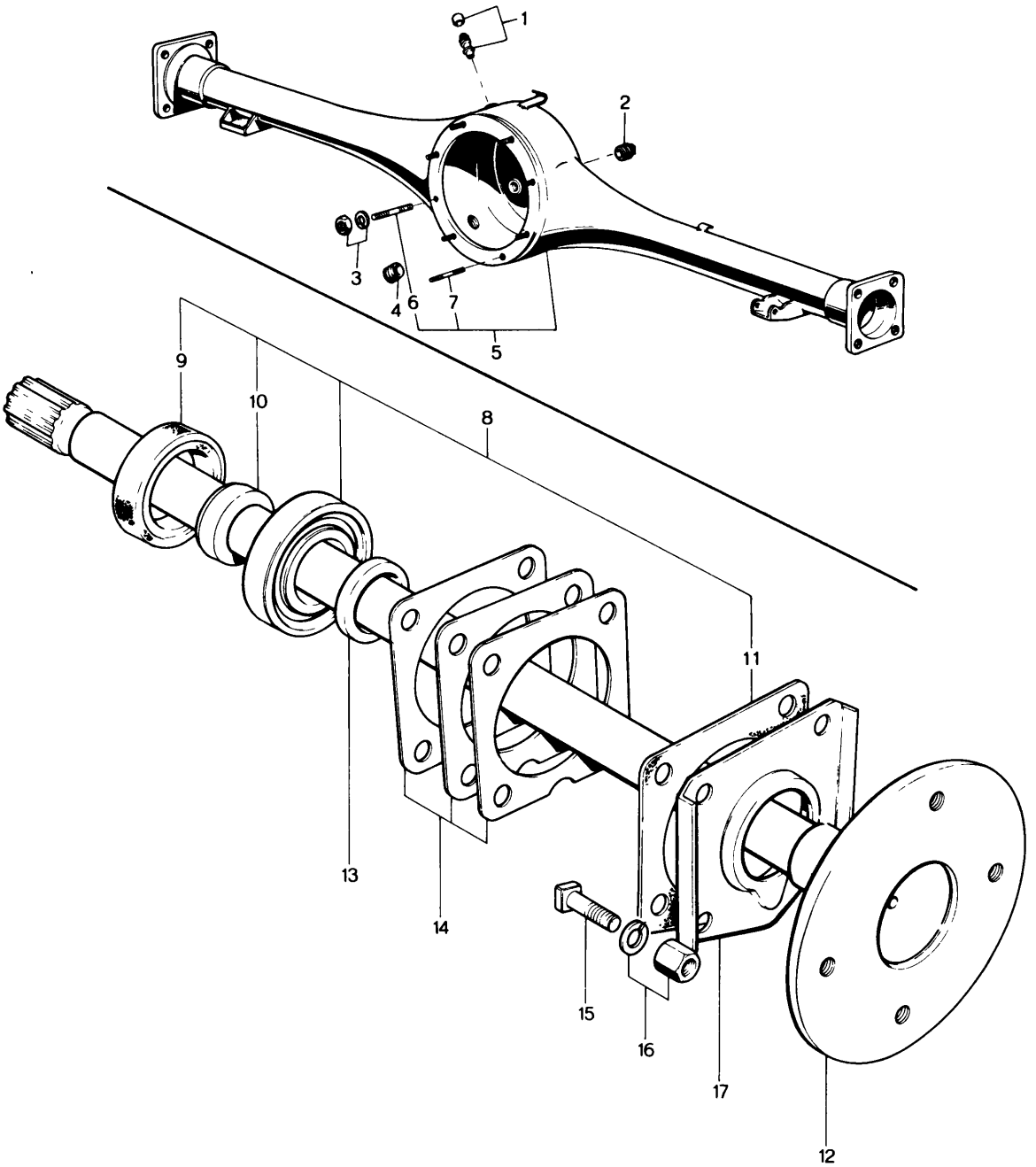

No.	Part Number	Description	Q'ty	Remarks
1	0866 26 060	Breather	1	
2	0259 26 041	Plug, Oil Level	1	
3	99901 0800	Nut, Retainer & Differential	8	
	99971 0800	Washer, Spring	8	
4	0259 26 051	Plug, Magnet Drain	1	
● 5	0866 26 010B	Casing, Rear Axle (Model 3508)	1	
●	1128 26 010	Casing, Rear Axle (Sedan & Coupe)	1	Car No. 160623 73/10~×
●	1137 26 010	Casing, Rear Axle (Wagon)	1	
6	99852 0880	Stud	1	
●	99789 0820F	Stud	7	Car No. 160623 73/10~×
7	99852 0820	Stud	7	
●	99789 0820F	Stud	1	Car No. 160623 73/10~×
8	0317 99 265A	Bearing Set, Wheel	2	
●	0317 99 265B	Bearing Set, Wheel	2	Car No. 160623 73/10~△
9	0187 26 154	Oil Seal	2	
10	0259 26 152	Collar, Bearing	2	
11	0259 26 129	Gasket	2	

REAR AXLE

(L.H.D. - USED UP TO CAR NO. 179250 73/9
R.H.D. - USED FROM CAR NO. 1)

No.	Part Number	Description	Q'ty	Remarks
12	0870 26 111A	Shaft (R), Rear Axle	1	
	0870 26 115A	Shaft (L), Rear Axle	1	
13	0259 26 155	Spacer, Bearing	2	
14	0259 26 141	Shim, Adjust (t=0.1) } Selective use	2	
	0259 26 142	Shim, Adjust (t=0.4) } Selective use		
15	0259 26 132	Bolt, Retainer	8	
16	99901 0800	Nut	8	
	99971 0800	Washer, Spring	8	
17	0317 26 121	Retainer, Bearing	2	

REAR AXLE
(L.H.D.-USED FROM CAR NO. 160623 73/10)

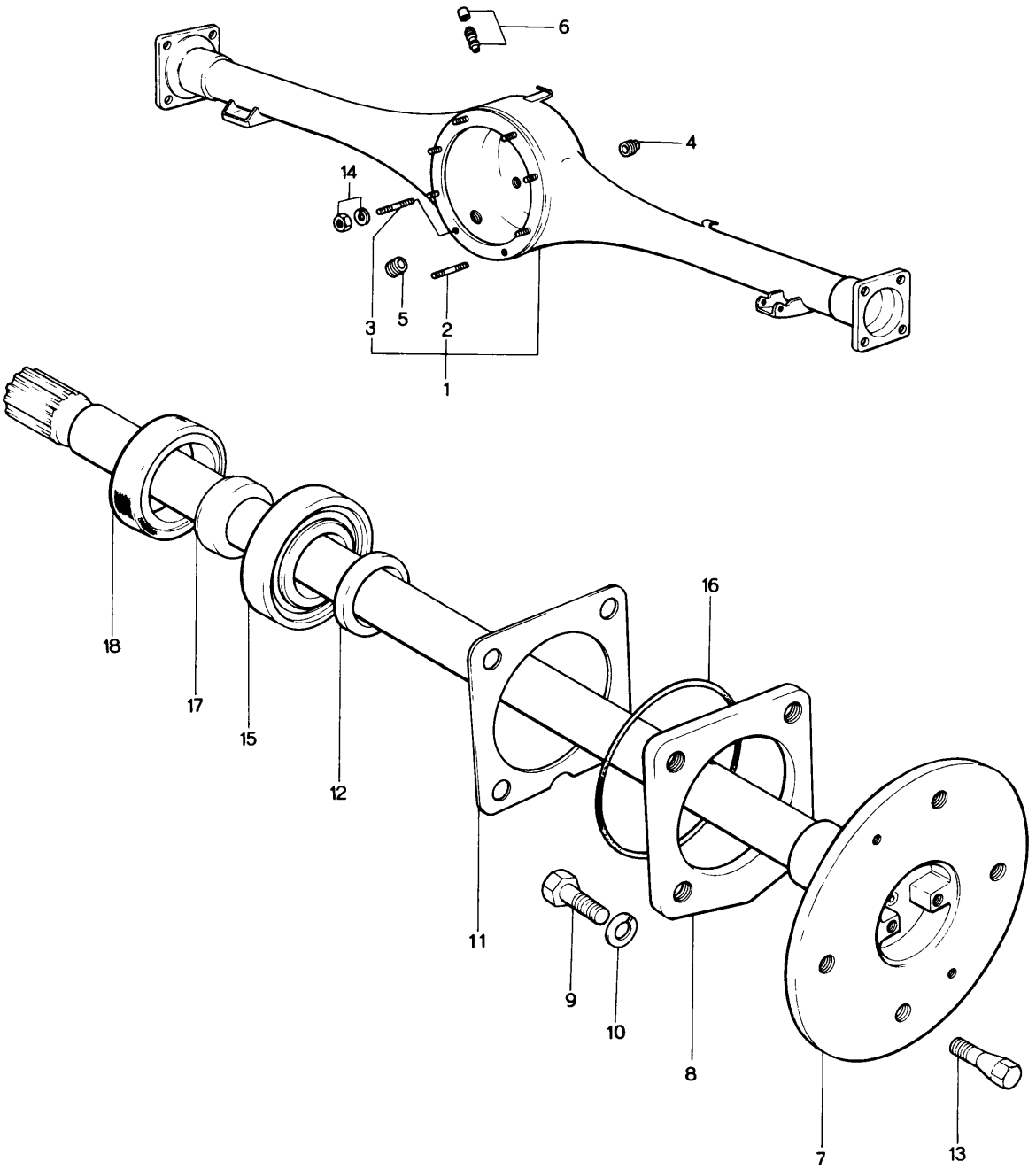

REAR AXLE
(L.H.D.-USED FROM CAR NO. 160623 73/10)

No.	Part Number	Description	Q'ty	Remarks
1	1128 26 010	Casing, Rear Axle	1	
2	99789 0820F	Stud	7	
3	99789 0880F	Stud	1	
4	0259 26 041	Plug, Oil Level	1	
5	0259 26 051	Plug, Magnet Drain	1	
6	0866 26 060	Breather	1	
7	3514 26 111	Shaft (R), Rear Axle	1	
	3514 26 115	Shaft (L), Rear Axle	1	
8	3514 26 130	Retainer, Bearing	2	
9	3514 26 132	Bolt, Retainer	8	
10	99971 0800	Washer, Spring	8	
11	0259 26 141	Shim, Adjust (t=0.1) } Selective use	4	
	0259 26 142	Shim, Adjust (t=0.4) } Selective use		
12	0259 26 155	Spacer, Bearing	2	
13	0259 33 165	Bolt, Wheel Set (Wheel Cap use)	8	
	0820 33 165	Bolt, Wheel Set (Center Cap use)	8	
14	99901 0800	Nut, Differential	8	
	99971 0800	Washer, Spring	8	
15	0317 26 151A	Wheel, Bearing	2	

REAR AXLE
(L.H.D.-USED FROM CAR NO. 160623 73/10)

No.	Part Number	Description	Q'ty	Remarks
16	99542 07001	"O" Ring	2	
17	0259 26 152	Collar, Bearing	2	
18	0187 26 154	Oil Seal	2	

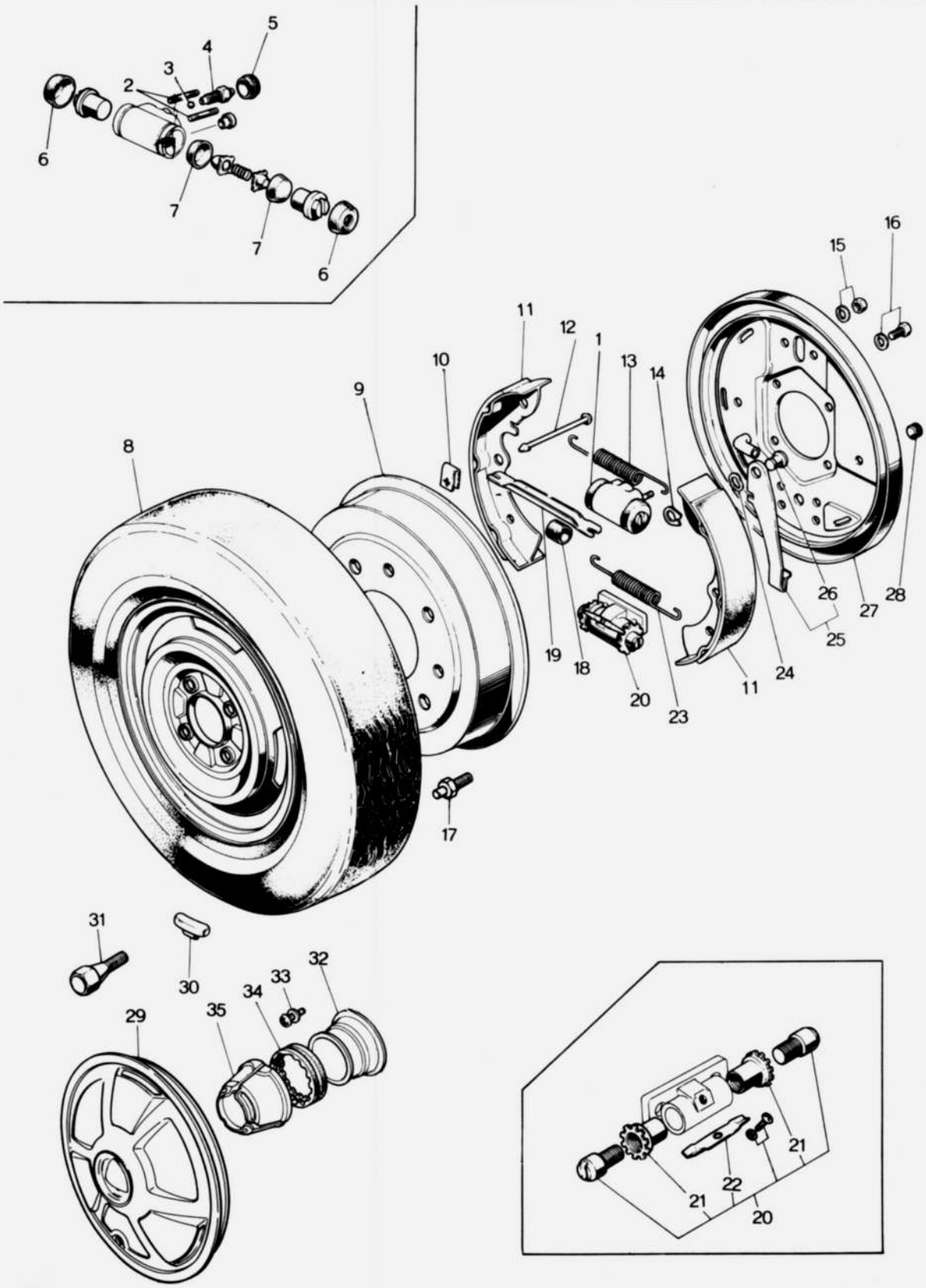
1
2
3
4
5
6
7
8
9
10
11
12
13
14
15
16
17
18
19
20
21
22
23
24
25
26
27
28
29
30
31
32
33
34
35

REAR BRAKE

(L.H.D. - USED UP TO CAR NO. 179250 73/9)
(R.H.D. - USED FROM CAR NO. 1

No.	Part Number	Description	Q'ty	Remarks
1	0613 26 610A	Cylinder, Wheel	2	
	0813 26 610A	Cylinder, Wheel (For Sweden)	2	Car No. 179250 73/9~Discarded
●	0233 26 610A	Cylinder, Wheel (Station Wagon)	2	
2	99852 0612	Stud	4	
3	99611 1500	Ball, Steel	2	
4	0259 33 691	Screw, Bleeder	2	
5	0259 33 693	Cap	2	
6	0613 33 681	Cover, Dust	4	
7	0208 26 671	Cup, Piston	4	
	0810 26 671	Cup, Piston (For Sweden)	4	
●	0221 26 671	Cup, Piston (Station Wagon)	4	
8	9962 04 1553	Tire, Radial - 155SR	2	
	9962 10 1553	Tire, Radial - 155SR	2	73/4~○
●	9962 13 1553	Tire, Radial - 155SR (Wagon)	2	
	9962 07 1553	Tire, Radial - 155HR	2	
	9962 11 1553	Tire, Radial - 155HR	2	73/4~○
●	9962 14 1553	Tire, Radial - 155HR (Wagon)	2	
●	9962 12 1553	Tire, Radial - 155SR13 Tubeless (Sedan & Coupe)	2	Car No. 160623 73/10~×
	9963 01 1553	Tube, 155R13	2	

REAR BRAKE

(L.H.D. - USED UP TO CAR NO. 179250 73/9)
(R.H.D. - USED FROM CAR NO. 1)

No.	Part Number	Description	Q'ty	Remarks
	9965 05 4530-00	Wheel, 4 1/2-JX13WDC Disc (SIL. M)	2	1563, 1564
	9965 06 4530-06	Wheel, 4 1/2-JX13WDC Disc (GRY.)	2	1599
	9965 10 4530	Wheel, 4 1/2-JX13WDC Disc	2	1692
				Car No. 179250 73/9 ~ Discarded
●	9965 19 4530	Wheel, 4 1/2-13WDC Disc	2	
● 8-1	99636 04130	Valve, Air (Tubeless Tire use)	2	Car No. 160623 73/10 ~ Added Anew
9	0305 26 251A	Drum, Rear Brake	2	
	1504 26 251A	Drum, Rear Brake (For Sweden)	2	
10	0223 26 345A	Spring, Shoe Holder	4	
●	0110 26 345	Spring, Shoe Holder (For Australia)	4	Car No. 162808 73/11 ~ ×
11	0866 26 310A	Shoe, Brake	4	
12	0866 26 391	Pin, Shoe Hold Down	4	
●	0187 26 391A	Pin, Shoe Hold Down (For Australia)	4	Car No. 162808 73/11 ~ ×
13	0187 26 341	Spring, Return-Wheel Cylinder Side	2	
14	99575 0600	Ring, Retaining	2	
15	99906 0600	Nut, Wheel Cylinder	4	
	99971 0600	Washer, Spring	4	
16	99801 0814	Bolt, Anchor Block	4	
	99971 0800	Washer, Spring	4	
17	0305 26 255	Bolt	4	
	99833 0812	Bolt (For Sweden)	4	

No.	Part Number	Description	Q'ty	Remarks
18	0118 26 897	Holder	2	
19	0187 26 821	Strut (R), Operating	1	
	0187 26 921	Strut (L), Operating	1	
20	0305 26 500A	Block, Anchor	2	
21	0710 26 461	Adjuster	4	
22	0710 26 352	Spring	2	
23	0118 26 342	Spring, Return - Wheel Cylinder Side	2	
24	0118 26 834	Washer, Wave	2	
25	0305 26 800A	Lever (R), Operating	1	
	0305 26 810A	Lever (L), Operating	1	
26	0118 26 832	Pin	2	
27	0866 26 280B	Plate (R), Brake Back	1	
	0866 26 290B	Plate (L), Brake Back	1	
28	0710 33 288	Plug	4	
29	0866 37 170B	Cap, Wheel	2	
	0866 37 170C	Cap, Wheel	2	Car No. 165313 73/3 ~ △

REAR BRAKE

(L.H.D. - USED UP TO CAR NO. 179250 '73/9
R.H.D. - USED FROM CAR NO. 1)

No.	Part Number	Description	Q'ty	Remarks
30	99655 30010	Weight, Balance	Selective use	—
	99655 30015	Weight, Balance		
	99655 30020	Weight, Balance		
	99655 30025	Weight, Balance		
	99655 30030	Weight, Balance		
	99655 30035	Weight, Balance		
	99655 30040	Weight, Balance		
	99655 30045	Weight, Balance		
	99655 30050	Weight, Balance		
	99655 30060	Weight, Balance		
31	0259 33 165	Bolt, Wheel Set (Wheel Cap use)	8	
	0820 33 165A	Bolt, Wheel Set (Center Cap use)	8	
● 32	0820 26 570A	Adapter	2	
● 33	99833 0812	Screw, Adjust	4	
●	99971 0800	Washer, Spring	4	
● 34	0820 33 192A	Set, Rubber	2	
●	1011 37 192	Set, Rubber	2	Car No. 164105 '73/12~△
● 35	0881 37 191	Cap, Center	2	
36	0820 33 180A	Ring, Wheel-Center Cap use	2	

(Center Cap use)

REAR BRAKE
(L.H.D.-USED FROM CAR NO. 160623 73/10)

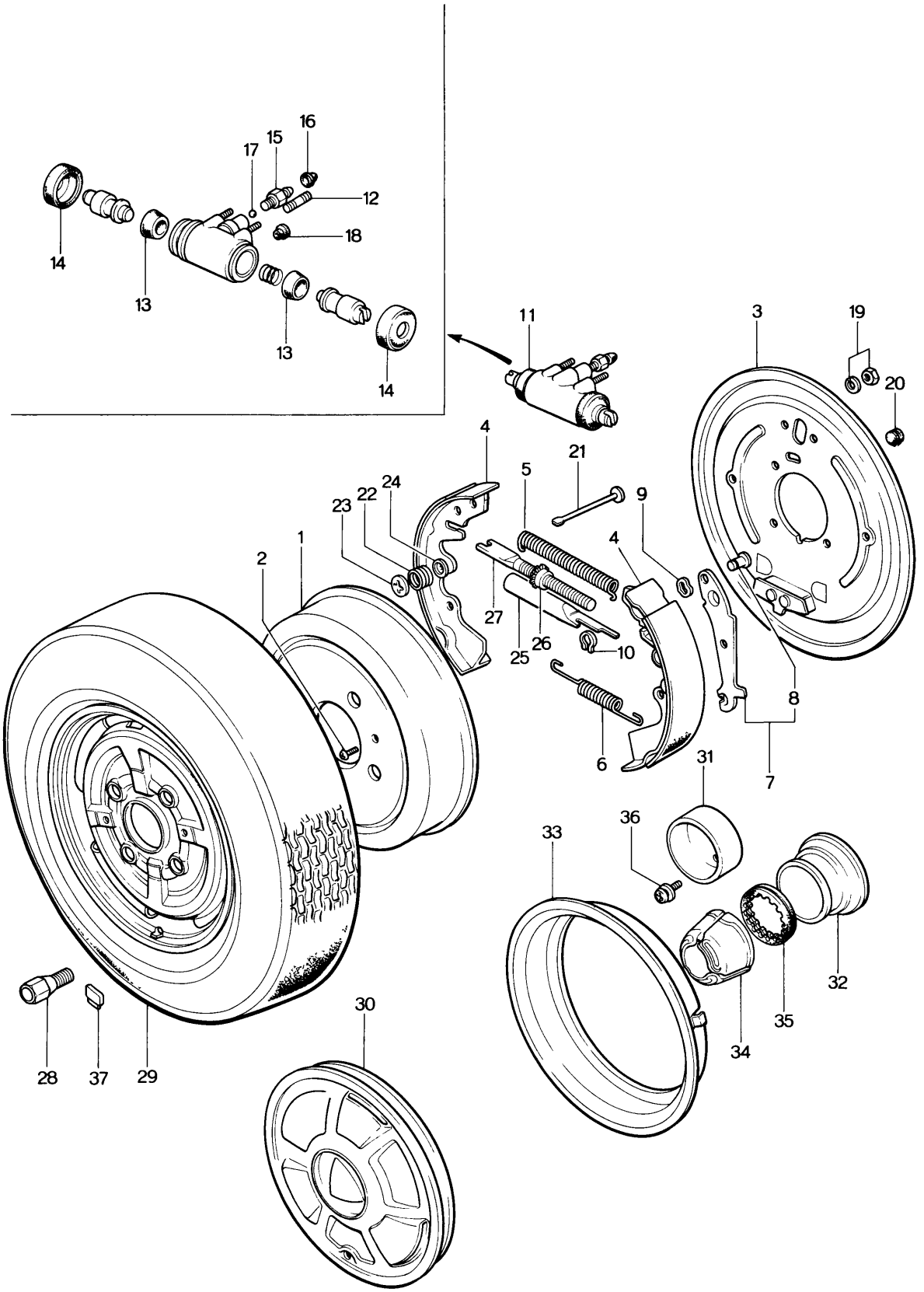

REAR BRAKE
(L.H.D.-USED FROM CAR NO. 160623 73/10)

26

No.	Part Number	Description	Q'ty	Remarks
1	1011 26 751A	Drum, Brake	2	
2	99833 0812	Screw	4	
3	3514 26 280	Plate (R), Brake Back	1	
	3514 26 290	Plate (L), Brake Back	1	
4	3514 26 310	Shoe, Brake	4	
5	1011 26 341	Spring, Return-Upper	2	
6	1011 26 342	Spring, Return-Lower	2	
7	1011 26 800	Lever (R), Operating	1	
	1011 26 810	Lever (L), Operating	1	
8	1011 26 832	Pin	2	
9	99972 0800	Washer, Wave	2	
10	99575 0600	Ring, Retaining	2	
11	1011 26 610A	Cylinder, Wheel	2	
12	99852 0612	Stud	4	
13	1011 26 671	Cup, Piston	4	
14	1011 26 681	Boot	4	
15	0259 33 691	Screw, Bleeder (R) Side	1	

REAR BRAKE
(L.H.D.-USED FROM CAR NO. 160623 73/10)

No.	Part Number	Description	Q'ty	Remarks
16	0259 33 693	Cap, Bleeder Screw } (R) Side	1	
17	99611 1500	Ball, Steel } (R) Side	1	
18	0613 26 922	Seat, Tube	1 2	(R) (L)
19	99906 0600	Nut, Wheel	4	
	99971 0600	Washer, Spring	4	
20	0603 26 288	Plug, Back Plate	2	
21	0223 26 391	Pin, Hold-Brake Shoe	4	
22	1011 26 345	Spring, Hold-Brake Shoe	4	
23	1011 26 346	Washer, Cup	4	
24	1011 26 392	Cup, Brake Shoe Hold Spring	4	
25	1011 26 831	Push Rod, Female	2	
26	3514 26 835	Nut, Adjust	2	
27	1011 28 821	Push Rod, Male	2	
28	0259 33 165	Bolt, Wheel Set (Wheel Cap use)	8	
	0820 33 165	Bolt, Wheel Set (Center Cap use)	8	
29	9962 13 1553	Tire, Radial-155SR13	2	
	9962 14 1553	Tire, Radial-155HR13	2	
	9963 01 1553	Tube, 155R13	2	
	9965 10 4530	Wheel, Disc-4½-JX13WDC (For West Germany)	2	

No.	Part Number	Description	Q'ty	Remarks
	9965 18 4530	Wheel, Disc-4½ -JX13WDC	2	
	9965 19 4530	Wheel, Disc-4½ -JX13WDC (Center Cap use)	2	
30	0866 37 170C	Cap, Wheel	2	
31	1004 26 571	Adapter	2	
32	0820 26 570A	Adapter	2	(Center Cap use)
33	0820 33 180A	Ring, Wheel	2	(Center Cap use)
34	0881 37 191	Cap, Center	2	(Center Cap use)
35	1011 37 192	Rubber, Set	2	(Center Cap use)
36	99833 0812	Screw	4	
	99971 0800	Washer, Spring	4	
37	99655 30010	Weight, Balancing		Selective use
	99655 30015	Weight, Balancing		Selective use
	99655 30020	Weight, Balancing		Selective use
	99655 30025	Weight, Balancing		Selective use
	99655 30030	Weight, Balancing		Selective use
	99655 30035	Weight, Balancing		Selective use
	99655 30040	Weight, Balancing		Selective use
	99655 30045	Weight, Balancing		Selective use
	99655 30050	Weight, Balancing		Selective use
	99655 30060	Weight, Balancing		Selective use

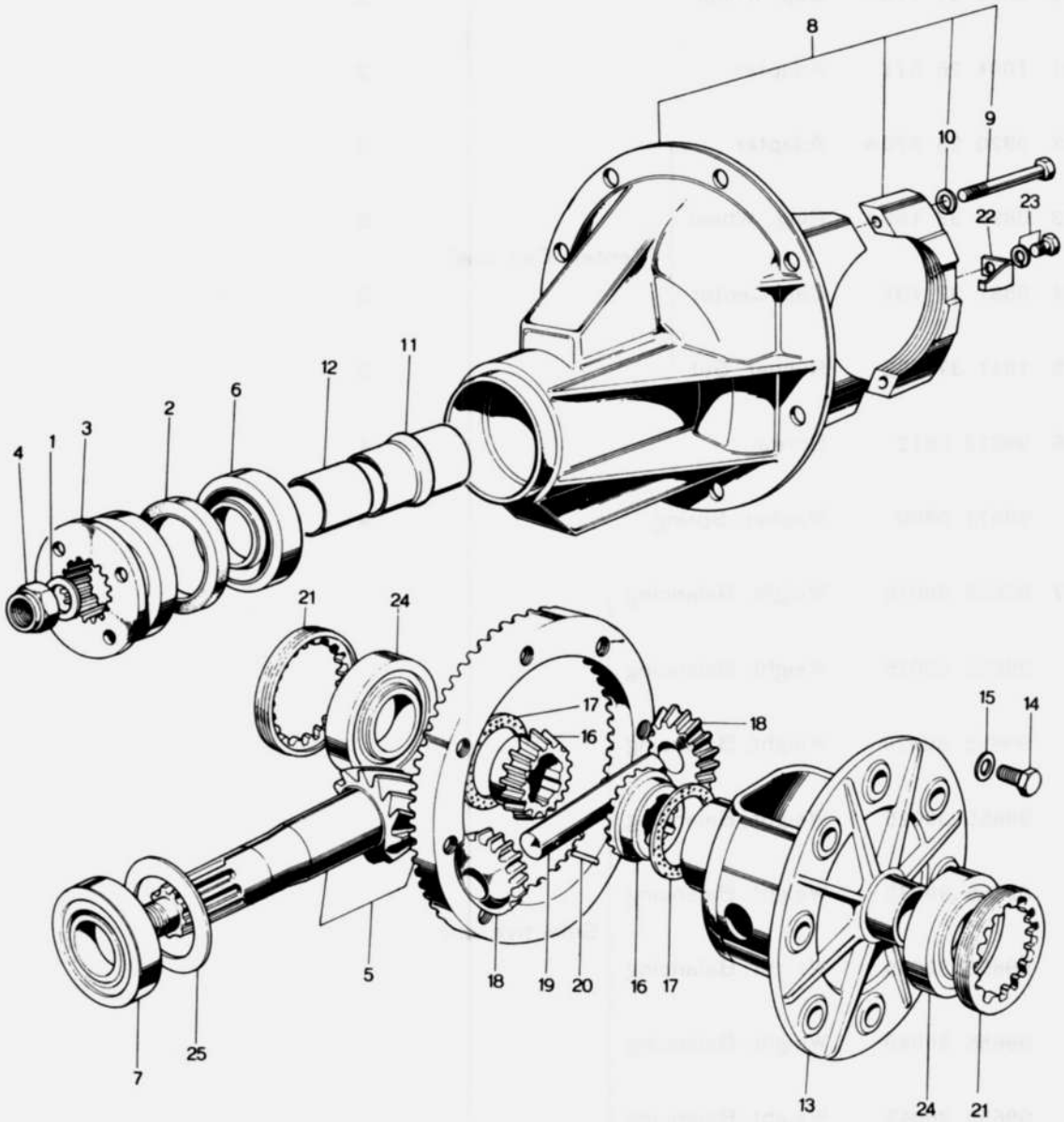
8
9
10
22
23
11
12
6
2
3
1
4
21
24
17
16
18
15
14
5
18
19
20
16
17
7
25
13
24
21

No.	Part Number	Description	Q'ty	Remarks
	0223 27 413	Spacer (t=3.41)		
	0223 27 414	Spacer (t=3.44)		
	0223 27 415	Spacer (t=3.47)		

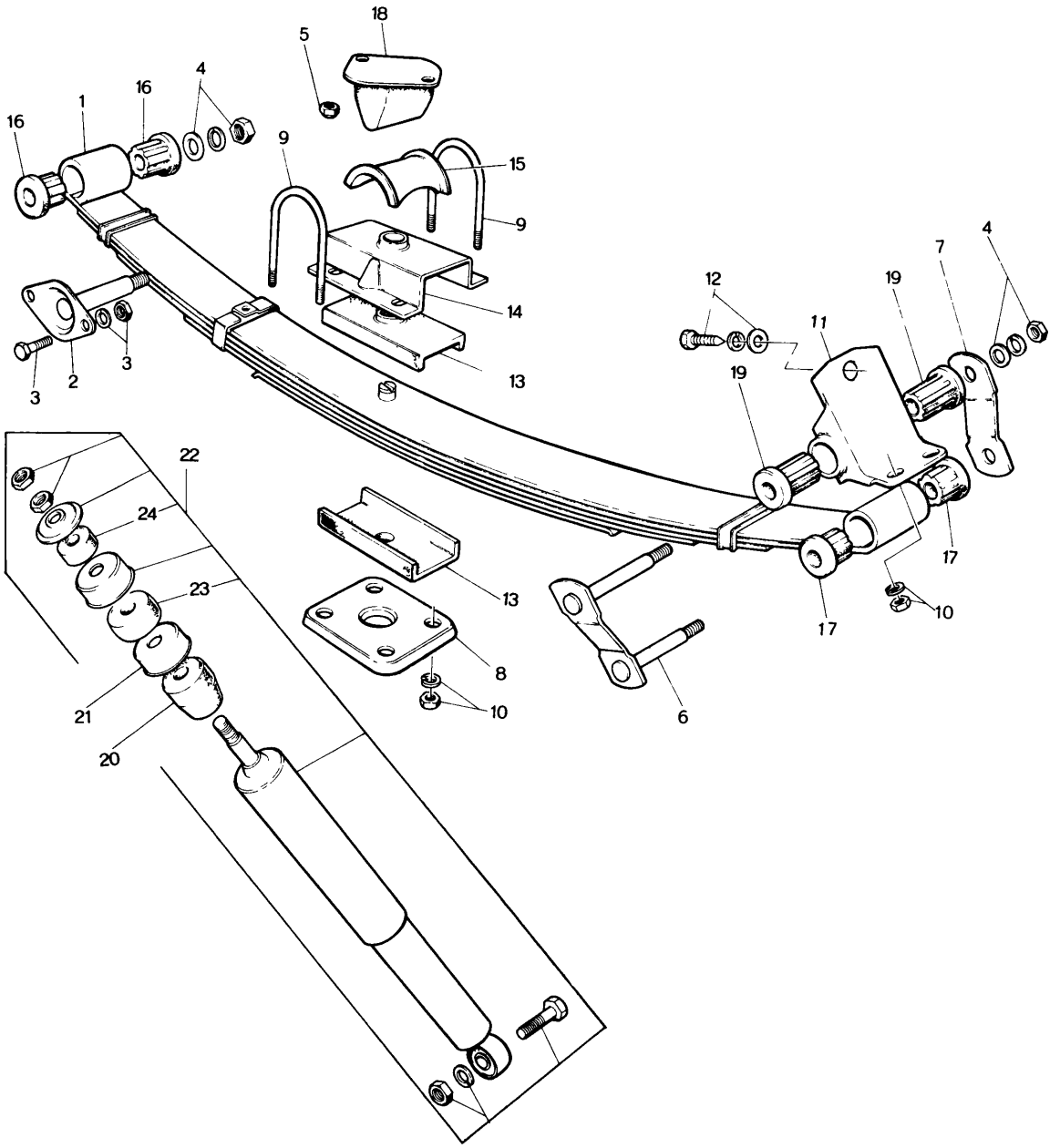
18
5
4
16
1
16
9
15
9
14
13
3
2
3
12
11
19
19
7
4
17
10
17
22
24
23
21
20
13
8
10
6

No.	Part Number	Description		Q'ty	Remarks
1	0376 28 010	Spring, Rear	Coupe use	2	
●	0376 28 010A	Spring, Rear		2	Car No. 160623 73/10~×
	0376 28 011	Spring No. 1, Leaf		2	
●	0376 28 011A	Spring No. 1, Leaf		2	Car No. 160623 73/10~×
	0376 28 012	Spring No. 2, Leaf		2	
●	0376 28 012A	Spring No. 2, Leaf		2	Car No. 160623 73/10~×
	0376 28 013	Spring No. 3, Leaf		2	
●	0376 28 013A	Spring No. 3, Leaf		2	Car No. 160623 73/10~×
●	0376 28 014A	Spring No. 4, Leaf		2	Car No. 160623 73/10~ Added Anew
●	0866 28 019	Inter Leaf		2	Car No. 160623 73/10~ Added Anew
	0866 28 010	Spring, Rear	Sedan use	2	
●	0866 28 010A	Spring, Rear		2	Car No. 160623 73/10~×
	0866 28 011	Spring No. 1, Leaf		2	
●	0866 28 011A	Spring No. 1, Leaf		2	Car No. 160623 73/10~×
	0866 28 012	Spring No. 2, Leaf		2	
●	0866 28 012A	Spring No. 2, Leaf		2	Car No. 160623 73/10~×
	0866 28 013	Spring No. 3, Leaf		2	
●	0866 28 013	Spring No. 3, Leaf		2	Car No. 160623 73/10~×
●	0866 28 014	Spring No. 4, Leaf		2	Car No. 160623 73/10~ Added Anew

REAR SUSPENSION (SEDAN & COUPE)

No.	Part Number	Description	Q'ty	Remarks
●	0866 28 019	Inter Leaf	2	Car No. 160623 73/10~Added Anew
2	0866 28 110A	Pin, Spring	2	
●	1881 28 110	Pin, Spring	2	Car No. 160623 73/10~×
3	99801 0822	Bolt, Spring Pin	4	
	99901 0800	Nut	4	
	99971 0800	Washer, Spring	4	
4	99901 0800	Nut	6	
	99971 0800	Washer, Spring	6	
5	99940 0800	Nut	4	
6	0866 28 140B	Plate No. 1, Shackle	2	
7	0866 28 143	Plate No. 2, Shackle	2	
8	0866 28 151	Clamp, Spring	2	
9	0652 28 161	Bolt, Lock	4	
10	99921 1000	Nut	12	
	99971 1000	Washer, Spring	12	
11	0866 28 180A	Bracket, Shackle	2	
12	99783 1028	Bolt, Shackle Bracket	2	
	99952 1000	Washer, Plain	2	
	99971 1000	Washer, Spring	2	

No.	Part Number	Description	Q'ty	Remarks
13	0259 28 182	Pad, Rubber	4	
14	0866 28 183A	Holder, Rubber Pad	2	
15	0866 28 322	Seat, Lock Bolt	2	
16	0866 28 333B	Bush (Frt.)	4	
●	0866 28 333C	Bush (Frt.)	4	Car No. 160623 $^{73}/_{10}$~ ×
17	0866 28 343B	Bush No. 1 (Rr.)	4	
18	0866 28 350	Rubber, Stopper	1	
19	0866 28 353B	Bush No. 2 (Rr.)	4	
20	0866 28 591	Bumper, Bound	2	
21	0866 28 778A	Casing, Stopper	2	
22	0866 99 281A	Damper Set, Rear	2	
23	0866 28 774	Bush, Rubber	2	
24	0603 34 153	Bush, Rubber	2	

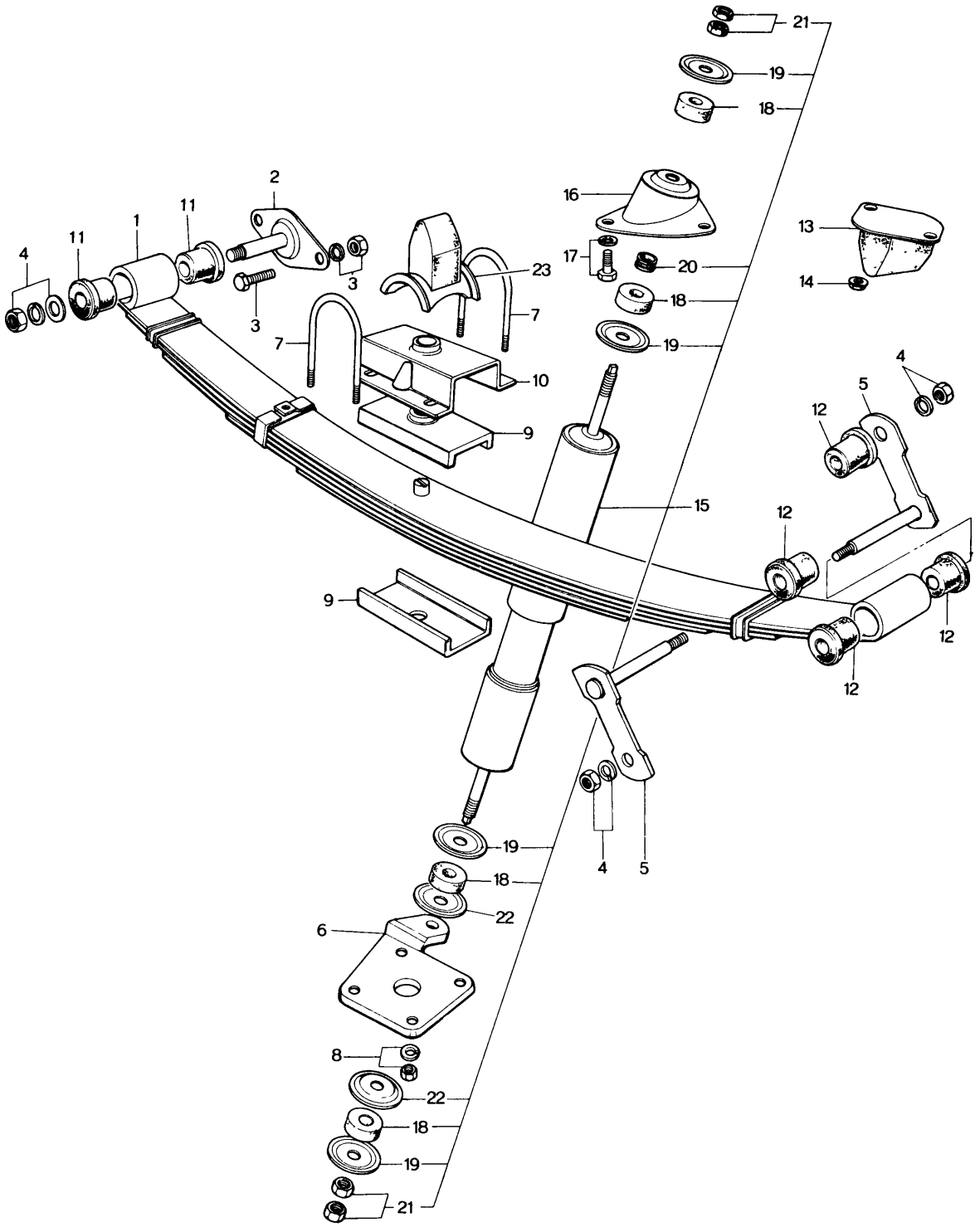
21
19
18
2
16
11
1
11
13
4
17
20
23
14
3
18
3
7
7
19
10
4
5
9
12
15
12
9
12
12
19
4
5
18
22
6
8
22
18
19
21

No.	Part Number	Description	Q'ty	Remarks
1	1137 28 010	Spring, Rear	2	
	1137 28 011	Spring No. 1, Leaf	2	
	1137 28 012	Spring No. 2, Leaf	2	
	1137 28 013	Spring No. 3, Leaf	2	
	1137 28 014	Spring No. 4, Leaf	2	
	1137 28 019	Leaf - Inner	2	
2	0259 28 110	Pin, Spring	2	
3	99801 0822	Bolt	4	
	99901 0800	Nut	4	
	99971 0800	Washer, Spring	4	
4	99921 1000	Nut	6	
	99952 1000	Washer, Plain	2	
	99971 1000	Washer, Spring	6	
5	0899 28 140	Plate No. 1, Shackle	4	
6	0899 28 150A	Clamp (R), Spring	1	
	0899 28 170A	Clamp (L), Spring	1	
7	0652 28 161	Bolt, Lock	4	
8	99921 1000	Nut, Lock Bolt	8	
	99971 1000	Washer, Spring	8	

REAR SUSPENSION (STATION WAGON)

No.	Part Number	Description	Q'ty	Remarks
9	0259 28 182	Pad, Rubber	4	
10	0652 28 183	Holder, Rubber Pad	2	
11	0483 28 333	Bush (Frt.)	4	
12	0259 28 343	Bush (Rr.)	8	
13	0866 28 350	Rubber, Stopper	1	
14	99940 0800	Nut	2	
15	0585 99 281B	Damper Set, Rear (Fig. No. 18~22 included)	2	
16	0585 28 180A	Bracket (R), Damper	1	
	0585 28 190A	Bracket (L), Damper	1	
17	99785 0825	Bolt, Damper Bracket	6	
	99971 0800	Washer, Spring	6	
18	0223 28 775	Bush, Rubber	8	
19	0223 28 776	Retainer	8	
20	0259 28 778	Grommet	2	
21	99921 1000	Nut, Rear Damper	4	
	99922 1000	Nut	4	
22	0223 28 777	Washer, Centering	4	
23	0899 28 320	Bumper, Bound	2	

No.	Part Number	Description	Q'ty	Remarks
1	1562 32 800	Cap, Horn	1	
2	1562 32 811	Emblem	1	
3	0223 58 472	Washer, Emblem	1	
4	99579 3000	Nut, Speed-Emblem	1	
5	1562 32 980	Boss, Steering Wheel	1	
●	1562 32 980A	Boss, Steering Wheel	1	72/12~○
6	0329 32 031A	Retainer, Sub	1	
7	0329 32 013A	Retainer, Cap	1	
8	0329 32 016	Plate, Contact	1	
9	0329 32 015	Insulator	1	
10	0329 32 014	Spring	1	
11	0329 32 033	Pipe	1	
12	0329 32 019	Spring	1	
13	1562 32 049	Cover, Wheel Core	1	
14	0329 32 034	Terminal	1	
15	99866 0420	Screw	3	
16	99948 1200	Nut, Self Lock-Wheel & Shaft	1	

No.	Part Number	Description	Q'ty	Remarks
●	~~1524 32 110A~~	~~Gear, Steering (Without Energy Absorbing Shaft)~~	~~1~~	
●	1524 32 110B	Gear, Steering (Without Energy Absorbing Shaft)	1	Car No. 73/5 ~ △
●	1524 32 110C	Gear, Steering (Without Energy Absorbing Shaft)	1	Car No. 170670 73/5 ~ △ (L.H.D.)
●	1524 32 110D	Gear, Steering (Without Energy Absorbing Shaft)	1	Car No. 178813 73/8 ~ △
●	1562 32 110B	Gear, Steering (With Energy Absorbing Shaft)	1	
●	1562 32 110C	Gear, Steering (With Energy Absorbing Shaft)	1	Car No. 172960 73/6 ~ △
●	0866 32 110C	Gear, Steering (With Energy Absorbing Shaft) (R.H.D.)	1	
17	1524 32 130A	Ball Nut, Worm (L.H.D.)	1	
●	0866 32 130A	Ball Nut, Worm (R H.D.)	1	
18	0370 32 080A	Jacket, Shaft (L.H.D.)	1	(Without Energy Absorbing Shaft use)
●	1524 32 080	Jacket, Shaft (L.H.D.)	1	Car No. 170670 73/5 ~ △
●	1524 32 080A	Jacket, Shaft (L.H.D.)	1	Car No. 172960 73/6 ~ △
●	0866 32 080A	Jacket, Shaft (R.H.D.)	1	
19	1562 32 100A	Shaft, Energy Absorbing	1	(L.H.D.)
●	1562 32 100B	Shaft, Energy Absorbing	1	Car No. 172960 73/6 ~ △
●	0866 32 100A	Shaft, Energy Absorbing (R.H.D.)	1	
20	0259 32 071	Bush, Support	1	
21	0208 32 059	Ring, Stop-Shaft	1	
22	0259 32 154	Shim, End Cover (t=0.05)	1	Selective use
	0259 32 155	Shim (t=0.075)		

No.	Part Number	Description	Q'ty	Remarks
	0259 32 156	Shim (t=0.1) } Selective use	1	
	0259 32 157	Shim (t=0.2) }		
23	908012 8 16	Bolt Set, Side Cover	8	
24	99922 1000	Nut, Sector Adjust Screw	1	
25	99502 2000	Plug, Oil	1	
26	0259 55 556	Clip	1	
27	0259 32 160	Cover, Side	1	
28	0259 32 163	Gasket, Side Cover	1	
29	0180 32 171A	Shim, Adjust (t=1.95) } Selective use	1	
	0810 32 172A	Shim, Adjust (t=2.00)		
	0180 32 173A	Shim, Adjust (t=2.05)		
	0180 32 174A	Shim, Adjust (t=2.10)		
30	0180 32 165A	Screw, Sector Adjust	1	
31	0866 32 141	Shaft, Sector	1	
32	0317 32 129	Oil Seal, Sector (L.H.D.)	1	
●	1128 32 129	Oil Seal, Sector (R.H.D.)	1	
33	99781 1085	Bolt, Gear Housing	3	
	0305 32 119	Washer, Plain	3	
34	99942 1001	Nut, Gear Housing	3	

No.	Part Number	Description	Q'ty	Remarks
	99951 1022	Washer, Plain	2	
35	0208 32 188	Shim, Adjust-Steering Gear Housing	2	
36	0820 32 058	Washer, Selective use	3	
37	1524 32 220	Arm, Pitman (L.H.D.)	1	
●	0866 32 220C	Arm, Pitman (R.H.D.)	1	
38	0830 32 279	Seal, Dust (L.H.D.)	1	
●	1027 32 279	Seal, Dust (R.H.D.)	1	
39	0259 32 289	Ring, Set (L.H.D.)	1	
●	1823 32 289	Ring, Set (R.H.D.)	1	
40	99924 1000	Nut, Pitman Arm & Center Link	1	
	99221 2020	Pin, Split	1	
41	99921 1800	Nut, Pitman Arm & Sector Shaft	1	
	99971 1800	Washer, Spring	1	
42	0866 32 425	Bracket, Upper-Shaft Jacket	1	
43	2244 32 423	Rubber, Fixing-Shaft Jacket	1	
44	0866 32 420	Bracket, Lower-Shaft Jacket	1	
45	0259 43 088	Seat, Fixing Bracket	2	
46	99952 0800	Washer, Plain-Selective use	—	

No.	Part Number	Description	Q'ty	Remarks
47	99786 0825	Bolt, Fixing	2	
48	0866 32 411	Cover, Dust	1	
49	0370 32 412	Plate, Set	1	
50	99869 0512	Screw, Plate	4	
Ⓝ	1128 32 290	Insulator (For Australia)	1	Car No. 158542 73/10~Added Anew

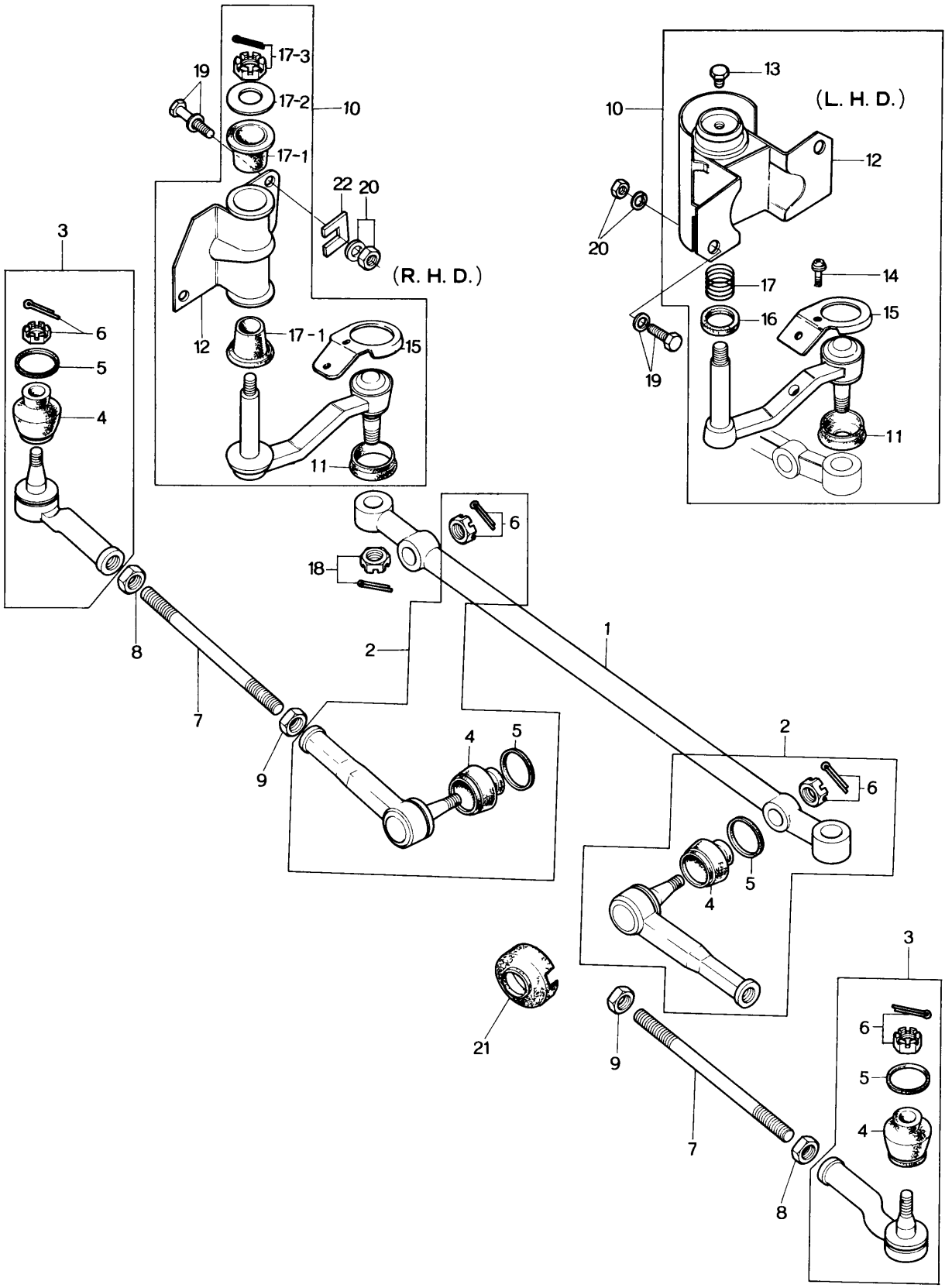
17-3
19
17-2
10
17-1
22
20
(R. H. D.)
12
17-1
15
11
3
6
5
4
8
7
9
18
6
2
1
4
5
21
10
13
(L. H. D.)
12
20
17
14
16
15
19
11
2
6
5
4
3
6
5
4
9
7
8

No.	Part Number	Description	Q'ty	Remarks
1	1524 32 261	Link, Center (L.H.D.)	1	
●	0866 32 261	Link, Center (R.H.D.)	1	
2	0866 99 322	Socket Set	2	
3	0866 99 324	Socket Set	2	
4	0730 32 279	Seal, Dust	(L.H.D.) 4 (R.H.D.) 2	
●	1027 32 279	Seal, Dust	(R.H.D.)	
5	0187 32 289	Ring, Set	(L.H.D.) 4 (R.H.D.) 2	
●	1823 32 289	Ring, Set	(R.H.D.) 2	
6	99924 1000	Nut	4	
	99221 2020	Pin, Split	2	
	99221 2015	Pin, Split	2	
7	0305 32 365	Rod, Tie	2	
8	99922 1400	Nut	2	
9	99944 1400	Nut	2	
● 10	1562 32 320B	Idler (L.H.D.)	1	
●	1562 32 320C	Idler (L.H.D.)	1	Car No. 161694 $\frac{73}{1}$~○
●	1562 32 320D	Idler (L.H.D.)	1	Car No. 165313 $\frac{73}{10}$~△

No.	Part Number	Description	Q'ty	Remarks
●	0866 32 320B	Idler (R.H.D.)	1	
●	1562 32 320F	Idler (L.H.D.)	1	Car No. 160623 73/10～△
11	0866 32 279	Seal, Dust	1	
● 12	1562 32 330C	Bracket (L.H.D.)	1	
●	0866 32 330A	Bracket (R.H.D.)	1	
● 13	0208 32 278	Plug	1	
● 14	908332 4 08	Screw Set (L.H.D.)	1	
● 15	0866 32 230	Insulator	1	
●	1128 32 227D	Insulator (R.H.D.)	1	
● 16	2113 32 356	Oil Seal (L.H.D.)	1	
● 17	0111 32 173	Spring	1	
● 17-1	0866 32 329A	Bush, Tapered	2	
● 17-2	0866 32 341	Washer (R.H.D.)	1	
● 17-3	99221 3020	Pin, Split	1	
	99924 1200	Nut	1	
18	99924 1000	Nut, Idler & Center Link	1	
	99221 2015	Pin, Split	1	
19	99781 1080	Bolt, Idler	2	
	0305 32 119	Washer, Plain	4	

No.	Part Number	Description	Q'ty	Remarks
● 20	99921 1000	Nut	2	
●	99971 1000	Washer, Spring	2	
21	1562 32 269	Protector	1	
●22	0866 32 323	Shim		
●	1011 32 324	Shim (R.H.D.)	1	
●	0866 32 325	Shim		

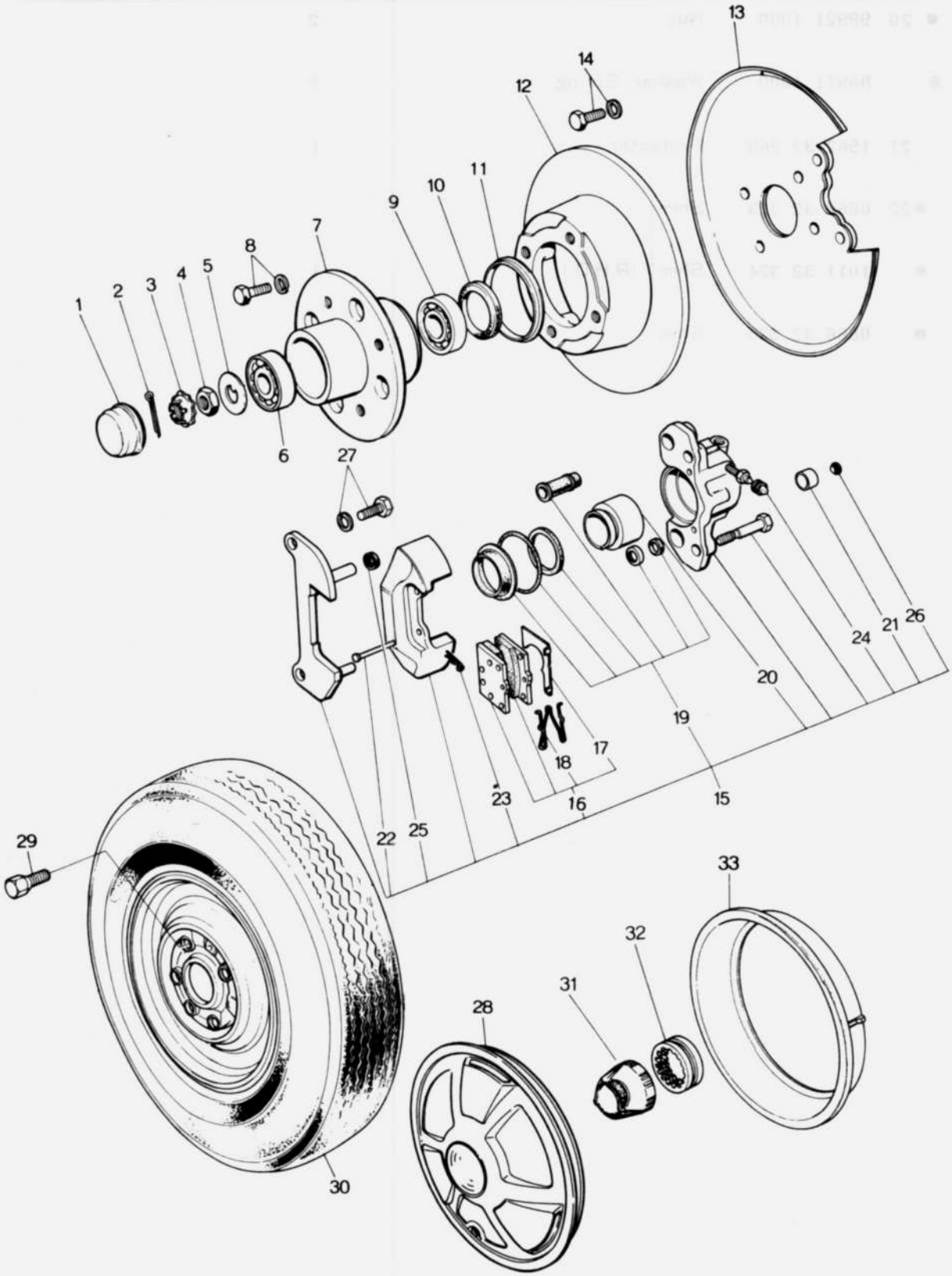
1
2
3
4
5
6
7
8
9
10
11
12
13
14
15
16
17
18
19
20
21
22
23
24
25
26
27
28
29
30
31
32
33

No.	Part Number	Description	Q'ty	Remarks
1	0259 33 071	Cab, Hub	2	
2	99221 4030	Pin, Split	2	
3	0317 33 049	Cover, Set	2	
4	0662 33 042	Nut	2	
5	0317 33 043	Washer	2	
	1011 33 043	Washer	2	73/2 ~ ○
6	0317 33 075	Bearing, Wheel Outer	2	
7	0820 33 091 A	Hub, Front	2	
8	0221 33 698	Bolt, Hub	8	
	99971 1000	Washer, Spring	8	
9	0259 33 047	Bearing, Wheel Inner	2	
10	0398 33 065	Oil Seal	2	
11	0221 33 035	Ring, Dust	2	
12	0866 33 251	Plate, Disc	2	
●	0866 33 251 A	Plate, Disc	2	Car No. 165313 73/3 ~ △
13	0866 33 260	Adapter (R), Mounting	1	
●	0866 33 260 A	Adapter (R), Mounting	1	Car No. 160623 73/10 ~ △
	0866 33 270	Adapter (L), Mounting	1	
●	0866 33 270 A	Adapter (L), Mounting	1	Car No. 160623 73/10 ~ △
14	99811 1020	Bolt, Mounting Adapter	8	
	99971 1000	Washer, Spring	8	

No.	Part Number	Description	Q'ty	Remarks
15	0870 33 980A	Brake (R), Disc	1	
●	0870 33 980B	Brake (R), Disc	1	Car No. 160623 73/10~△
	0870 33 990A	Brake (L), Disc	1	
●	0870 33 990B	Brake (L), Disc	1	Car No. 160623 73/10~△
16	0870 49 230A	Pad Set	1	
●	0870 49 230B	Pad Set	1	Car No. 160623 73/10~△
17	0866 49 231	Shim (R)	2	
	0866 49 232	Shim (L)	2	
18	0866 49 235	Spring	2	
19	0866 49 240	Seal Kit	1	
20	0866 49 111	Piston	2	
21	0866 49 112	Cup, Piston	2	
22	0866 49 114	Pin	4	
23	0866 49 115	Clip	4	
24	0820 33 693	Cap, Bleeder	2	
● 25	0866 49 116	Spacer	2	Car No. 164105 73/12~Discarded
26	0866 49 117	Plug, Cap	2	
27	99750 11018	Bolt, Disc Brake	4	
	99971 1000	Washer, Spring	4	
28	0866 37 170B	Cap, Wheel	2	
	0866 37 170C	Cap, Wheel	2	Car No. 165313 73/3~△

No.	Part Number	Description	Q'ty	Remarks
29	0259 33 165	Bolt, Wheel Set (Wheel Cap use)	8	
	0820 33 165A	Bolt, Wheel Set (Center Cap use)	8	
30	9962 07 1553	Tire, Radial-155 HR 13	2	
	9962 04 1553	Tire, Radial-155 SR 13	2	
	9962 10 1553	Tire, Radial-155 SR 13	2	
●	9962 13 1553	Tire, Radial-155 SR	2	Car No. 73/4 ~ ○
	9962 11 1553	Tire, Radial-155 HR 13	2	
●	9962 14 1553	Tire, Radial-155 HR	2	73/10 ~ △
●	9962 12 1553	Tire, Radial-155 HP 13 Tubeless (Sedan & Coupe)	2	Car No. 73/10 ~ ~ △
	9963 01 1553	Tube, 155 R 13	2	
	9965 05 4530-00	Wheel, Disc-4½ — J × BWDC (SIL. Ⓜ)	2	1563, 1564 Car No. 160623 73/10 ~ Discarded
	9965 06 4530-06	Wheel, Disc-4½ — J × 13WDC (GRY.)	2	1599 Car No. 160623 73/10 ~ Discarded
●	9965 10 4530	Wheel, Disc-4½ — J × 13WDC (For West Germany)	2	
●	9965 18 4530	Wheel, Disc-4½ — J × 13WDC	2	
●	9965 19 4530	Wheel, Disc-4½ — J × 13WDC (Center Cap use)	2	
● 30-1	99636 04130	Valve, Air (Tubeless Tire use)	2	
31	0881 37 191	Cap, Center (Center Cap use)	2	
32	0820 33 192A	Set, Rubber (Center Cap use)	2	
●	1011 37 192	Set, Rubber	2	Car No. 160623 73/10 ~ △
● 33	0820 33 180A	Ring, Wheel-Center Cap use	2	

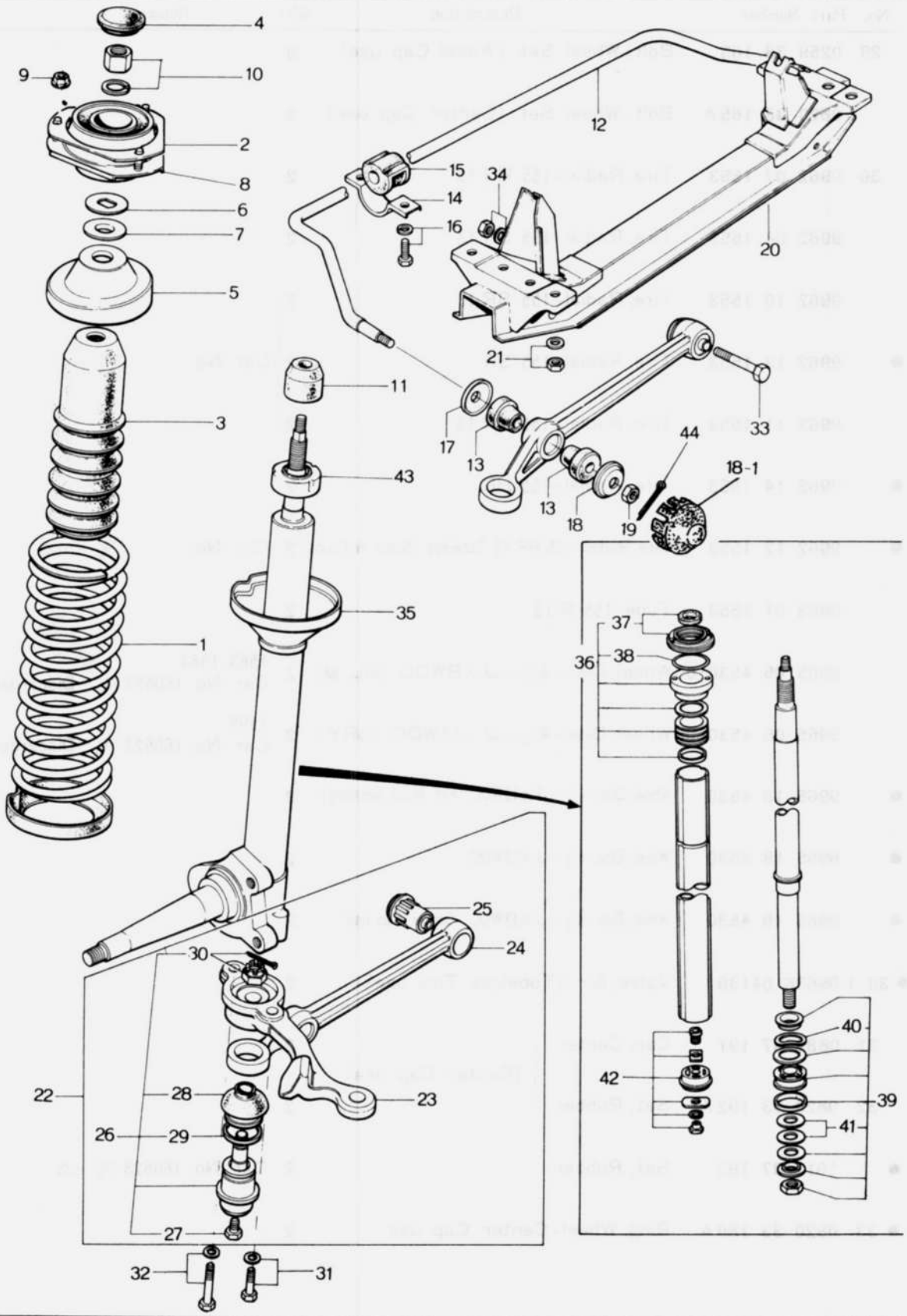
4
9
10
2
8
6
7
5
3
1
11
43
35
12
15
34
14
16
20
21
17
13
33
44
18-1
18
19
25
24
30
22
28
23
26
29
27
32
31
37
36
38
40
42
39
41

No.	Part Number	Description	Q'ty	Remarks
1	1570 34 011	Spring, Coil	2	
2	0866 34 013A	Plate, Adjusting	2	
3	0866 34 015	Cover, Dust	2	
4	0866 34 019	Cap	2	
5	0866 34 340	Seat, Spring	2	
6	0866 34 381	Bearing	2	
7	0866 34 382	Seat, Bearing	2	
8	0866 34 390	Rubber, Mounting	2	
9	99940 0802	Nut	6	
10	99942 1400	Nut	2	
	99952 1400	Washer, Spring	2	
●	99951 1430	Washer, Spring	2	73/10～○
11	0866 34 111	Bumper, Bound	2	
12	0866 34 151A	Stabilizer	1	
●	0866 34 151B	Stabilizer	1	Car No. 178812 73/8～△
13	0866 34 153A	Bush, Rubber - Stabilizer	4	
●	1004 34 153	Bush, Rubber - Stabilizer	4	Car No. 160623 73/10～×
14	0259 34 155	Plate	2	
15	0259 34 156	Bush, Rubber	2	
16	99783 1035	Bolt, Stabilizer & Frame	4	

No.	Part Number	Description	Q'ty	Remarks
	99971 1000	Washer, Spring	4	
17	0866 34 157	Washer, Stabilizer	2	
18	0866 34 158	Washer	2	
18-1	1011 34 159	Stopper, Steering	2	From Car No. 1
19	99947 1400	Nut	2	
20	0866 34 800B	Member, Cross	1	
21	99942 1000	Nut, Cross Member & Frame	4	
	99951 1030	Washer, Plain	4	
22	0866 34 310A	Arm (R)	1	
	0866 34 320A	Arm (L)	1	
23	0866 32 301A	Arm (R), Knuckle	1	
	0866 32 311A	Arm (L), Knuckle	1	
24	~~0866 34 311~~	~~Arm~~	~~2~~	
	1011 34 311	Arm	2	From Car No. 1
25	0866 34 460	Bush	2	
26	0866 99 356	Joint, Ball	2	
	0866 99 356A	Joint, Ball	2	Car No. 160623 $^{73}/_{10}$~△
27	0208 32 278	Plug	2	
28	0866 34 565	Seal, Dust	2	

No.	Part Number	Description	Q'ty	Remarks
29	0187 34 536	Ring, Dust Seal	2	
30	99221 3020	Pin, Split	2	
	99924 1200	Nut	2	
31	99781 1225	Bolt, Arm & Damper	2	
	99971 1200	Washer, Spring	2	
32	99781 1235	Bolt, Arm & Damper	2	
	99971 1200	Washer, Spring	2	
33	0866 34 313A	Bolt, Arm & Cross Member	2	
34	99921 1000	Nut, Arm	2	
	99971 1000	Washer, Spring	2	
35	0866 34 910B	Damper (R), Front	1	
	0866 34 910C	Damper (R), Front	1	From Car No. 1
	0866 34 960B	Damper (L), Front	1	
	0866 34 960C	Damper (L), Front	1	From Car No. 1
36	0259 99 361	Seal Set	2	
37	0866 34 760	Oil Seal	2	
	0866 34 735	Oil Seal	2	
38	0866 34 730	Guide, Piston Rod	2	

No.	Part Number	Description	Q'ty	Remarks
39	0881 99 362	Piston Set	2	
40	0305 34 707	Spring, Check Valve	2	
41	0259 34 719A	Ring, Piston	2	
42	0305 34 720	Valve, Base	2	
43	0866 34 738	Cap	2	
● 44	99221 3035	Pin, Split	2	Car No. 160623 73/10~Added Anew

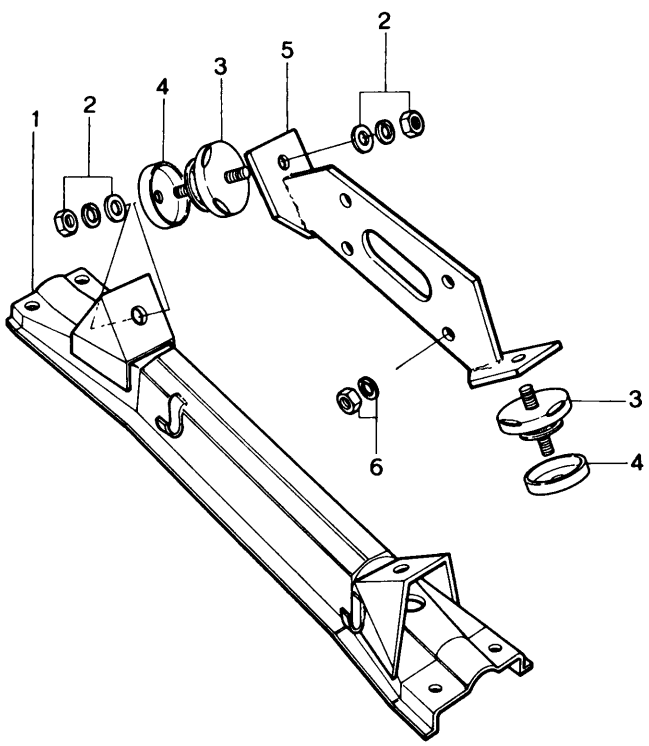
1
2
4
3
5
2
6
3
4

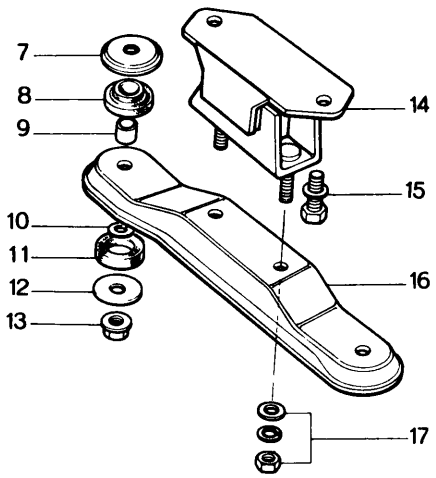
7
8
9
10
11
12
13
14
15
16
17

ENGINE & T/MISSION BRACKET 39

No.	Part Number	Description		Q'ty	Remarks
1	0866 39 060B	Member, Engine Mounting		1	
2	99921 1000	Nut, Member & Rubber		4	
	99951 1030	Washer, Plain		4	
	99971 1000	Washer, Spring		4	
3	~~1663 39 040B~~	~~Rubber, Engine Mounting~~		~~2~~	
	1668 39 040C	Rubber, Engine Mounting		2	From Car No. 1
4	1668 39 045	Casing, Stopper		2	
	1668 39 045A	Casing, Stopper		2	73/2~○
5	1622 39 020	Bracket, Engine Mounting		1	
6	99921 1000	Nut, Bracket & Engine		4	
	99971 1000	Washer, Spring		4	
7	0884 39 383A	Washer	Five Forward Speed	2	
8	0884 39 385A	Insulator, Upper		2	
9	0884 39 382A	Spacer		2	
10	0884 39 387	Washer		2	
11	0884 39 384	Insulator, Lower		2	
12	0884 39 386	Washer		2	
13	99940 1002	Nut, Flange		2	
14	0259 39 340	Rubber, T/mission Mounting		1	
	1011 39 340A	Rubber, T/mission Mounting		1	73/4~○

39 ENGINE & T/MISSION BRACKET

No.	Part Number	Description	Q'ty	Remarks
	0259 39 340	Rubber, T/mission Mounting	1	Car No. 167343 ⁷³⁄₄～△
15	99801 0818	Bolt, Rubber & T/mission	2	
	99971 0800	Washer, Spring	3	
16	1608 39 381	Member, T/mission Mount (Five Forward Speed) (Manual)	1	
	1570 39 380	Member, T/mission Mount (Four Forward Speed)	1	
●	1621 39 380	Member, T/mission Mount (Automatic)	1	
17	99921 1000	Nut, Member & Rubber	4	
	99951 1030	Washer, Plain	4	
	99971 1000	Washer, Spring	4	

EXHAUST SYSTEM
(USED UP TO CAR NO. 179250 73/9)

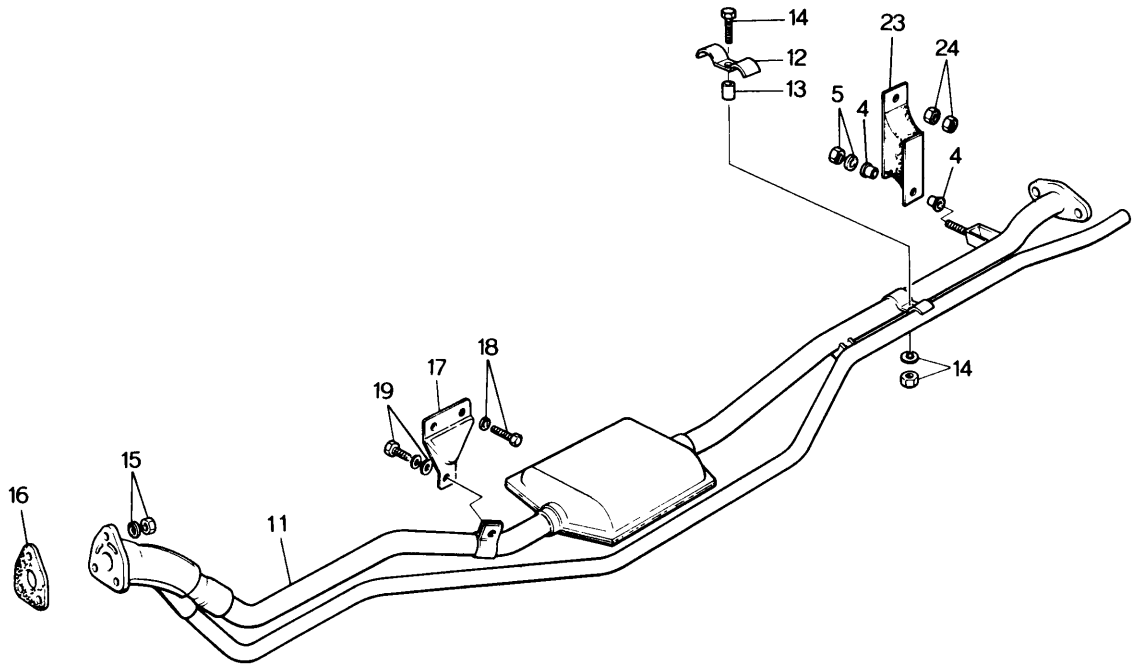

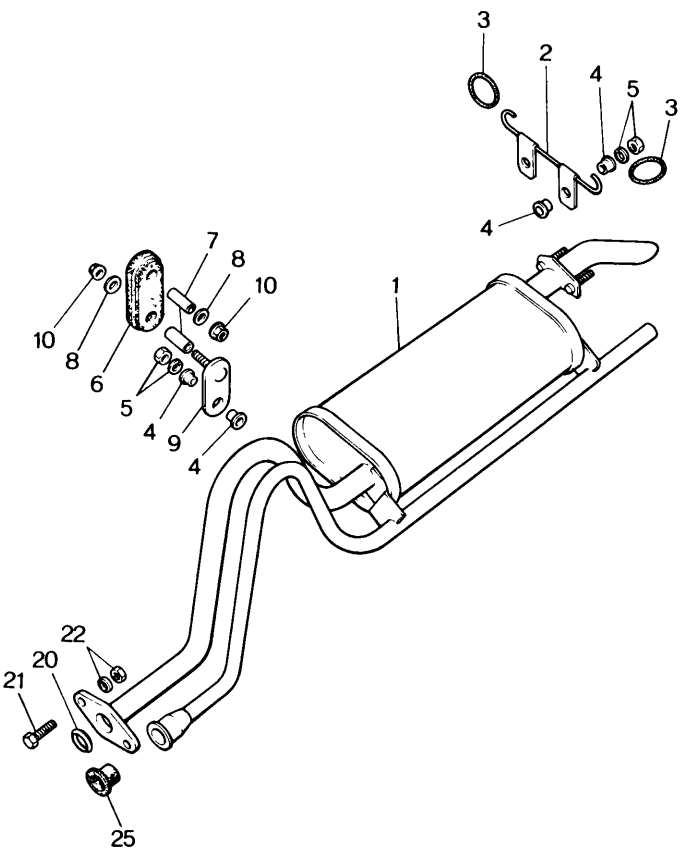

No	Part Number	Description	Q'ty	Remarks
1	1620 40 500	Silencer, Main	1	
2	0839 40 060B	Hook	1	
3	0305 40 061	Hanger, Silencer	2	
4	0824 40 401	Insulator	8	
5	99949 0800	Nut, Silencer Hanger	4	
	99951 0822	Washer, Plain	4	
6	0820 40 161	Hanger, Silencer	1	
7	0820 40 165	Pipe, Silencer Hanger	2	
8	0820 40 166	Washer, Silencer Hanger	2	
9	0820 40 170	Plate, Silencer Hanger	1	
10	99940 0800	Nut, Silencer Hanger	2	
11	1563 40 600	Pipe, Ex.-Front	1	
12	1570 40 307	Clamp	1	
13	1570 40 308	Pipe	1	
14	99806 0640	Bolt	1	
	99971 0600	Washer, Spring	1	
	99906 0600	Nut	1	
15	2158 40 355	Nut, Reactor & Ex. Pipe	3	

EXHAUST SYSTEM
(USED UP TO CAR NO. 179250 73/9)

No.	Part Number	Description	Q'ty	Remarks
	99971 1000	Washer, Spring	3	
16	1570 13 891	Gasket, Reactor & Ex. Pipe	1	
17	1620 40 080	Bracket	1	
18	908012 8 20	Bolt Set, Bracket	2	
19	99801 0832	Bolt, Ex. Pipe & Bracket	1	
	99951 0818	Washer, Plain	1	
	99971 0800	Washer, Spring	1	
20	0810 40 356	Gasket, Flange	1	
21	99801 1045	Bolt, Ex. Pipe & Main Silencer	2	
22	2158 40 355	Nut, Ex. Pipe & Main Silencer	2	
	99971 1000	Washer, Spring	2	
23	0820 40 180	Hanger, Silencer	1	
24	99901 0800	Nut, Silencer Hanger	1	
	99902 0800	Nut	1	
25	2090 40 508	Rubber, Joint	1	

EXHAUST SYSTEM
(USED FROM CAR NO. 160623 73/10)

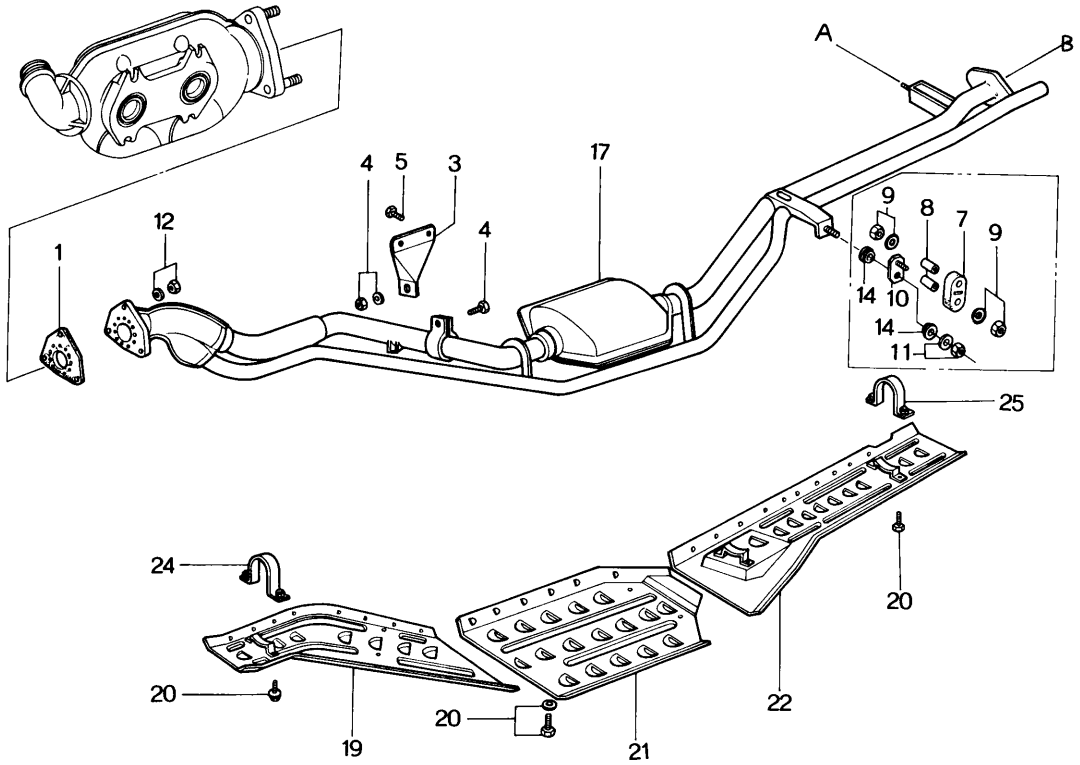

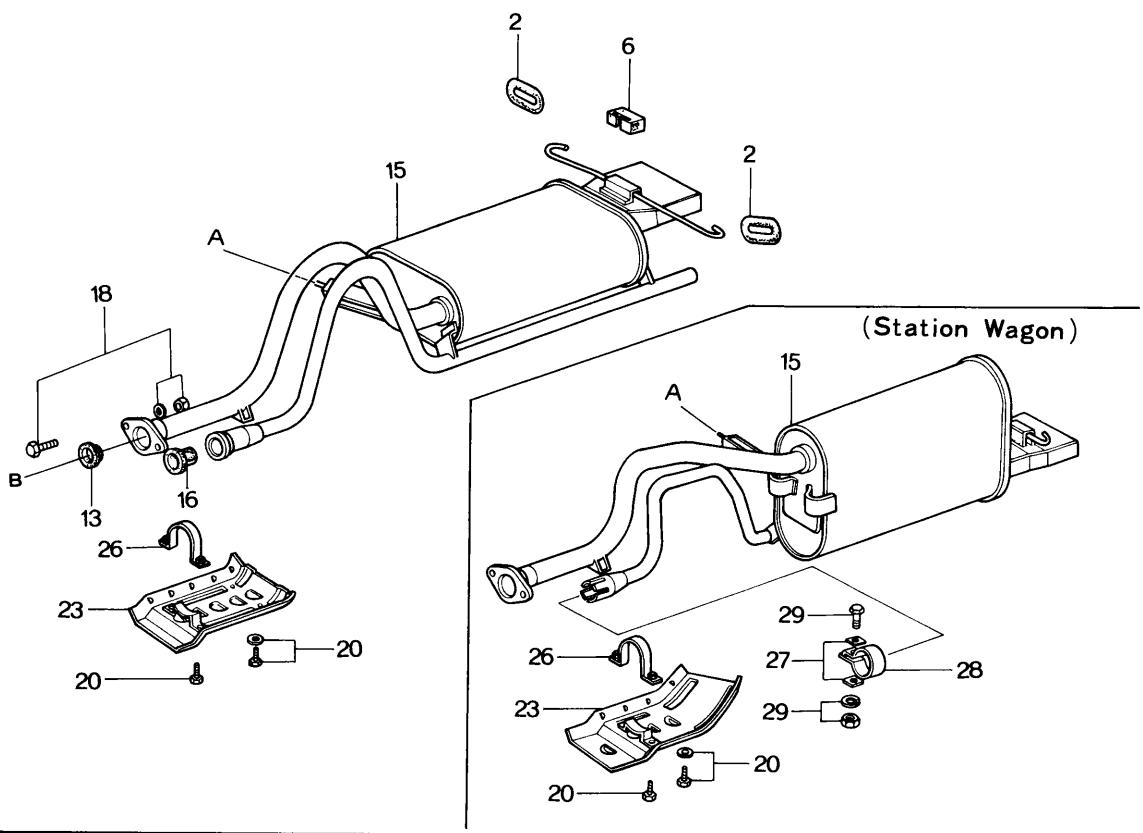

No.	Part Number	Description	Q'ty	Remarks
1	1757 13 891	Gasket	1	
2	1114 40 061	Hanger, Silencer	2	
3	1620 40 080	Bracket, Pre-Silencer	2	
4	99801 0832	Bolt, Bracket	1	
	99951 0818	Washer, Plain	1	
	99971 0800	Washer, Spring	1	
5	99801 0818	Bolt, Bracket	2	
	99971 0800	Washer, Spring	2	
6	1114 40 108B	Rubber, Stop	1	
7	1114 40 161	Hanger, Silencer	3	
●	1114 60 160	Hanger, Silencer (Fig. No. 8 Included)	3	From Car No. 1
8	0820 40 165	Pipe	6	
9	99940 0800	Nut	6	
	0820 40 166	Washer	6	
10	1114 40 170	Plate	3	
11	99949 0800	Nut	3	
	99951 0822	Washer, Plain	3	
12	2158 40 355	Nut, Pre-Silencer	3	
	99971 1000	Washer, Spring	3	
13	0810 40 356	Gasket, Flange	1	
14	0824 40 401	Insulator	6	

40 EXHAUST SYSTEM
(USED FROM CAR NO. 160623 73/10)

	No.	Part Number	Description	Q'ty	Remarks
	15	1883 40 500	Silencer, Main (Sedan & Coupe)	1	
		1883 40 500A	Silencer, Main (Sedan & Coupe)	1	73/12~○
		1883 40 500B	Silencer, Main (Sedan & Coupe)	1	74/2~△
		1890 40 500	Silencer, Main (Station Wagon)	1	
		1890 40 500A	Silencer, Main (Station Wagon)	1	Car No. 162808 73/11~△
		1890 40 500B	Silencer, Main (Station Wagon)	1	74/2~△
	16	2090 40 508A	Rubber, Joint	1	
	17	1883 40 600A	Pre-Silencer	1	
		1883 40 600C	Pre-Silencer	1	73/12~△
●		1882 40 600	Pre-Silencer	1	74/2~×
	18	99801 1045	Bolt, Pre-Silencer	2	
		2158 40 355	Nut	2	
		99971 1000	Washer, Spring	2	
	19	1128 40 810B	Protector No. 1	1	
	20	907960 6 16	Bolt, Protector	16	
		907960 6 12	Bolt, Protector	2	
	21	1114 40 821A	Protector No. 2	1	
●		1114 40 821B	Protector No. 2	1	74/3~○
	22	1128 40 830B	Protector No. 3	1	
●		1883 40 830	Protector No. 3	1	74/2~×
	23	1128 40 840A	Protector No. 4 (Sedan & Coupe)	1	
●		1883 40 840	Protector No. 4 (Sedan & Coupe)	1	74/2~×
		1137 40 840A	Protector No. 4 (Station Wagon)	1	
		1890 40 840	Protector No. 4 (Station Wagon)	1	74/2~×
	24	1128 40 850A	Band	1	
	25	1128 40 870A	Band	2 1	74/2~Q'ty
		1128 40 850B	Band	1	74/2~×
	26	1114 40 850B	Band	1	
		1128 40 880	Band	1	From Car No. 1
		1128 40 870A	Band	1	74/2~×
	27	0208 13 458	Clamp (Station Wagon)	2	Car No. 162808 73/11~ Added Anew
	28	0136 40 357	Joint (Station Wagon)	1	Car No. 162808 73/11~ Added Anew

No.	Part Number	Description		Q'ty	Remarks
29	99801 0828	Bolt, Joint		1	
	99901 0800	Nut, Joint	(Station Wagon)	1	
	99971 0800	Washer		1	

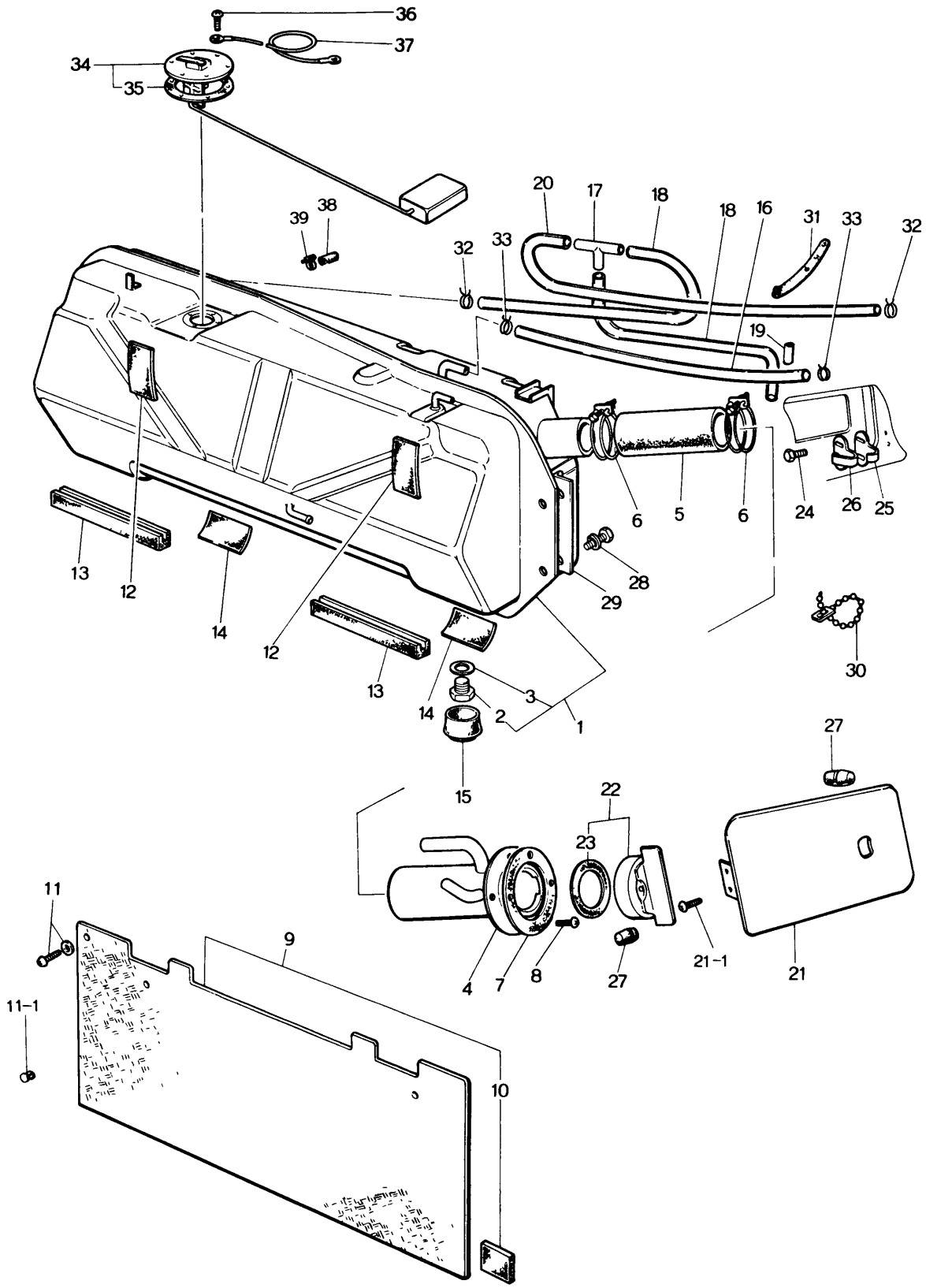
36
37
34
35
20
17
18
18
16
31
33
32
39
38
32
33
19
6
5
6
24
26
25
13
12
14
12
28
29
30
13
14
3
2
1
15
27
22
23
11
9
4
7
8
27
21-1
21
11-1
10

No.	Part Number	Description	Q'ty	Remarks
1	0866 42 310E	Tank, Fuel	1	
	0866 42 310F	Tank, Fuel	1	Car No. 160623 73/10~△
●	0866 42 310G	Tank, Fuel	1	73/12~○
2	0114 42 046A	Plug, Drain	1	
●	99796 1012	Bolt	1	Car No. 164105 73/12~×
3	99564 1200	Gasket	1	
●	99564 1000	Gasket	1	Car No. 164105 73/12~×
4	0866 42 350	Pipe, Filler	1	
	0866 42 350B	Pipe, Filler	1	Car No. 161186 73/1~△
5	0259 42 364	Hose, Joint	1	
●	0259 42 364B	Hose, Joint	1	73/12~○
6	99282 5500	Clamp	2	
7	0866 32 366	Gasket, Inlet Pipe	1	
8	99786 0516	Screw, Filler Pipe	4	
9	0866 42 380	Board, Partition	1	
	~~1570 42 530~~	~~Board, Partition~~	~~1~~	~~Car No. 160623 73/10~△~~
●	1570 42 381A	Board, Partition	1	Car No. 160623 73/10~△
10	0866 42 382	Spacer	4	Car No. 160622 73/9~Discarded
11	99863 0412	Screw, Tapping	2	Car No. 160622 73/9~Discarded
	99952 0412	Washer, Plain	2	
● 11-1	1011 69 885	Fastener, Partition Board	2	Car No. 160623 73/10~Added Anew
12	0866 42 523	Pad, Fuel Tank "C"	2	
13	0866 42 521	Pad, Fuel Tank "A"	2	
14	0866 42 522	Pad, Fuel Tank "B"	2	

42 FUEL TANK (SEDAN & COUPE)

	No.	Part Number	Description	Q'ty	Remarks
	15	0187 42 371	Rubber, Dust Seal	1	
	16	99336 12040	Pipe, Soft Vinyl-Body Side	1	
●		99346 12400	Pipe, Soft Vinyl-Body Side (400m/m)	1	Order Under No. 99349 12750 (1.75m)
		~~1540 42 543~~	~~Pipe, Soft Vinyl-Body Side (For Sweden)~~	~~1~~	
		1504 42 543	Pipe, Soft Vinyl-Body Side (For Sweden)	1	From Car No. 1
	17	0259 42 390	Joint, "T"	1	
	18	~~0866 42 540~~	~~Tube, Vent~~	~~2~~	
●		0866 42 542A	Tube, Vent	2	From Car No. 1
●		99346 06850	Tube, Vent-"T" Joint~Floor (850m/m)	1	Order Under No. 99343 06035 (3.5m) 73/12~○
●		99346 06880	Tube, Vent-"T" Joint~Fuel Tank (880m/m)	1	Order Under No. 99343 06035 (3.5m) 73/12~◠
		1504 42 542	Tube, Vent (For Sweden)	2	
	19	0866 42 544	Elbow	1	
	20	0866 42 541	Tube, Vent	1	
●		99347 06450	Tube, Vent, "T" Joint~Filler Pipe (1450m/m)	1	Order Under No. 99343 06035 (3.5m) 73/12~○
		1504 42 541	Tube, Vent (For Sweden)	1	
	21	0376 42 410	Lid, Filler (Coupe)	1	
		0866 42 410	Lid, Filler (Sedan)	1	
●	21-1	99786 0516	Screw, Filler Lid	2	From Car No. 1
	22	2280 42 460	Cap, Filler	1	
		~~2280 42 460A~~	~~Cap, Filler~~	~~1~~	
●		1011 42 250	Cap, Filler	1	73/1~○
	23	2280 42 462A	Gasket	1	
		2280 42 462B	Gasket	1	73/12~○
	24	99786 0512	Screw	2	
	25	0866 42 552	Plate, Back up	1	
	26	0866 42 551	Plate, Lock	1	

No.	Part Number	Description	Q'ty	Remarks
27	0110 52 265	Rubber, Cushion	4	
● 28	99786 0820	Bolt, Fuel Tank	4	
●	99952 0818	Washer, Plain	4	
29	0866 42 561	Washer	2	
30	99709 0108	Band	1	
31	0187 66 991	Clip, Rubber	1	
32	99282 1201	Clip	5	
●	99283 1100	Clip	2	
●	99283 1200	Clip	3	
	99282 1301	Clip (For Sweden)	5	
33	99282 2001	Clip	2	
	99282 2000	Clip (For Sweden)	2	
34	0866 67 170	Gauge, Fuel Tank	1	
35	0243 66 773	Gasket	1	
36	99833 0410	Screw, Fuel Tank Gauge	6	
37	0866 67 176	Cord, Earth	1	
● 38	0223 42 307	Cap	1	From Car No. 1
● 39	99283 1300	Clip, Cap	1	From Car No. 1

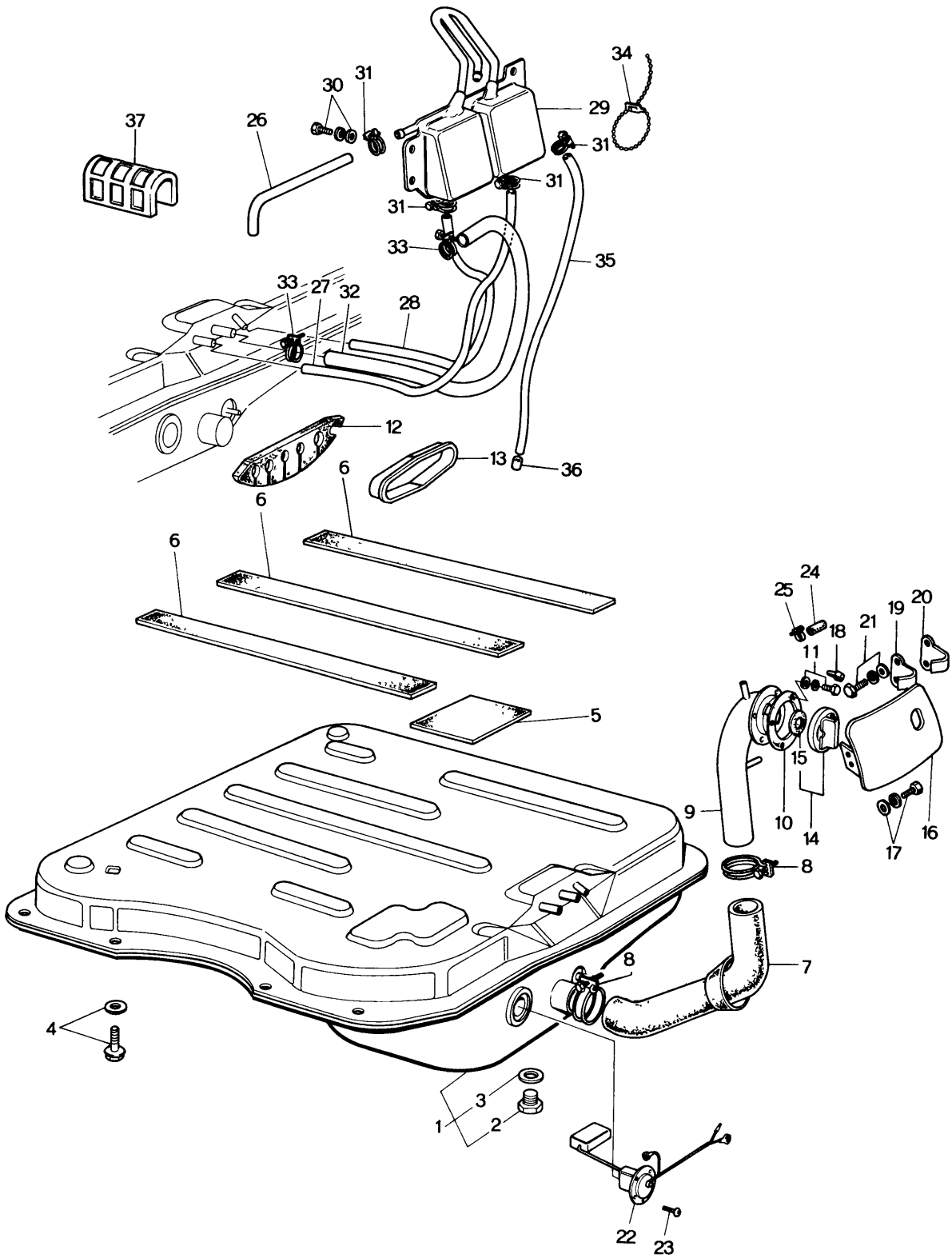
34
30
31
29
37
26
31
31
31
33
35
33
27
32
28
12
13
36
6
6
6
5
24
25
19
20
18
21
11
15
9
10
14
16
17
8
8
7
4
3
1
2
22
23

No.	Part Number	Description	Q'ty	Remarks
1	0899 42 310E	Tank, Fuel	1	
2	0114 42 046A	Plug, Drain	1	
3	99564 1200	Packing	1	
4	90796 1020	Bolt, Fuel Tank	8	
	99951 1030	Washer, Plain	8	
5	0652 42 304	Pad	4	
6	0585 42 305	Pad	3	
7	0585 42 307	Hose, Joint	1	
8	99282 6000	Clamp, Hose	2	
9	0585 42 350	Pipe, Filler	1	
10	0866 42 366	Packing	1	
11	99786 0516	Screw, Tapping	4	
12	0899 42 302	Protector	1	
13	0585 42 306	Protector	1	
14	1011 42 250	Cap, Filler	1	
15	2280 42 462B	Gasket, Filler Pipe	1	
16	0585 42 410	Lid, Filler	1	

FUEL TANK (STATION WAGON)

No.	Part Number	Description	Q'ty	Remarks
17	99786 0516	Screw, Tapping-Filler Lid	2	
18	0110 52 265	Rubber, Cushion	2	
19	0866 42 551	Plate, Lock	1	
20	0866 42 552	Plate, Back Up	1	
21	99786 0512	Screw, Tapping-Plate	2	
22	0899 67 170B	Gauge, Fuel Tank	1	
23	99833 0408	Screw, Fuel Tank	6	
24	0223 42 307	Cap	2	
25	99282 1401	Clip, Wire-Cap	2	
	99283 1300	Clip, Wire-Cap	2	Car No. 164105 $^{73}/_{12}$~×
26	2432 42 391A	Tube, Vent-Condense Tank~Filler Pipe	1	
	99346 06220	Tube, Vent-Condense Tank~Filler Pipe	2	Car No. 164105 $^{73}/_{12}$~△ Order Under No. 99343 06150
27	1544 42 613	Tube, Vent-Condense Tank~Fuel Tank	1	
	1544 42 613A	Tube, Vent-Condense Tank~Fuel Tank	1	Car No. 164105 $^{73}/_{12}$~△
28	1544 42 614	Tube, Vent-Condense Tank~Fuel Tank	1	
	1544 42 614A	Tube, Vent-Condense Tank~Fuel Tank	1	Car No. 164105 $^{73}/_{12}$~△
29	1544 42 610B	Tank, Condense	1	
30	99786 0616	Bolt, Condense Tank	2	
	90786 0616	Bolt, Condense Tank	2	$^{73}/_{12}$~○
	99952 0618	Washer, Plain	2	

No.	Part Number	Description	Q'ty	Remarks
31	99282 1201	Band, Hose-Vent Tube	7	
	99283 1100	Band, Hose-Vent Tube	7	Car No. 164105 73/12~×
32	99336 10070	Tube, Fuel Tank~Filler Pipe	1	
	99346 10700	Tube, Fuel Tank~Filler Pipe	1	73/12~○
33	99282 1801	Clamp, Tube	2	
	99282 1601	Clamp, Tube	2	Car No. 164105 73/12~×
34	99709 0255	Band, Vent Tube	2	
35	99346 06750	Tube, Vent	1	Car No. 164105 73/12~Added Anew Order Under No. 99343 06150
36	0866 42 544	Elbow	1	Car No. 164105 73/12~Added Anew
37	0585 42 308	Spacer	1	Car No. 164105 73/12~Added Anew

FUEL PIPING
(USED UP TO CAR NO. 179250 73/9)

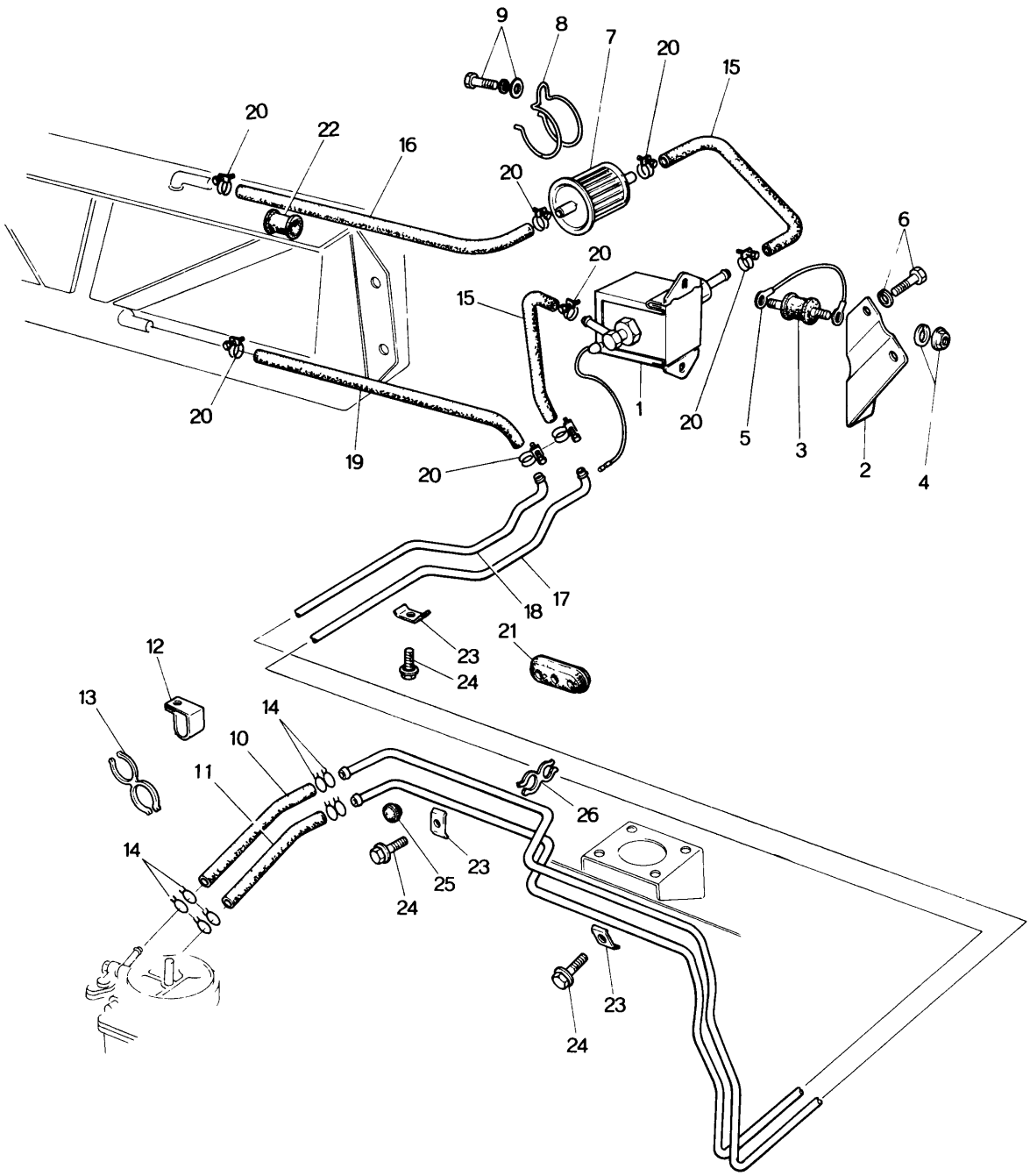

FUEL PIPING
(USED UP TO CAR NO. 179250 73/9)

13 45

No.	Part Number	Description	Q'ty	Remarks
1	1570 13 400A	Pump, Fuel	1	
2	0866 13 401A	Bracket, Fuel Pump	1	
3	0223 13 363	Rubber, Insulator-Fuel Pump	2	
4	99940 0600	Nut, Insulator Rubber+Fuel Pump	4	
	99952 0600	Washer, Spring	2	
5	0866 13 402A	Cord, Earth-Fuel Pump	1	
6	99786 0616	Bolt, Fuel Pump Bracket	2	
7	0222 13 470A	Filter, Fuel	1	
	0222 13 470B	Filter, Fuel	1	73/2~○
8	0381 13 481	Clamp, Fuel Filter	1	
9	908067 6 12	Bolt Set, Fuel Filter	1	
10	99340 06480	Pipe, Fuel	1	
11	1570 13 442	Pipe	1	
12	1570 13 446A	Clip, Fuel Pipe	1	
13	1570 13 447	Clip, Fuel Pipe	1	
14	0222 13 493	Clip, Wire Pipe	14	
	99283 1900	Clip, Wire Pipe	14	73/2~○
15	99340 06180	Pipe, Fuel-Fuel Pump	2	
16	99340 06670	Pipe, Fuel-Tank ~ Filter	1	
17	0866 45 061A	Pipe, Fuel Main	1	
18	0866 45 611B	Pipe, Fuel Return	1	
19	99340 06320	Pipe, Fuel Return ~ Tank	1	

FUEL PIPING
(USED UP TO CAR NO. 179250 73/9)

No.	Part Number	Description	Q'ty	Remarks
20	99282 1301	Clamp, Hose	8	
21	0866 45 806A	Grommet	1	
22	99686 1200	Protector, Fuel Pipe	3	
23	0866 45 903A	Clip, Fuel Pipe	10	
24	99786 0612	Bolt Set, Clip	10	
25	0118 56 241	Plug, Hole	1	
26	99288 0808B	Clip	1	

FUEL PIPING

(USED FROM CAR NO. 160623 73/10
USED UP TO 74/4)

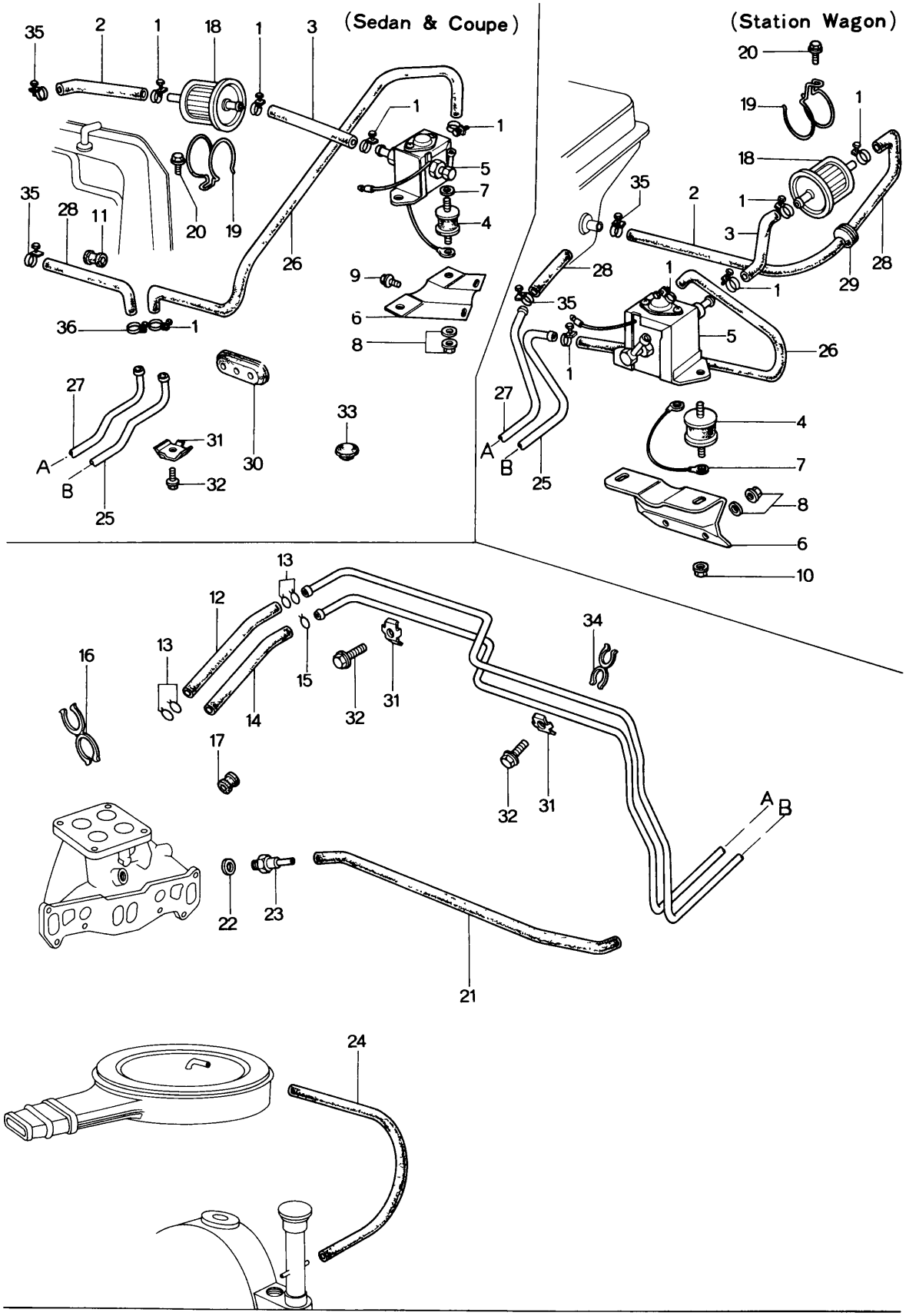

FUEL PIPING

(USED FROM CAR NO. 160623 73/10
USED UP TO 74/4)

13 45

No.	Part Number	Description	Q'ty	Remarks
1	99283 1200	Clamp, Hose	5	
2	99348 08180	Pipe, Fuel (Tank~Filter) (Sedan & Coupe)	1	Order Under No. 99343 08150
	99348 08500	Pipe, Fuel (Tank~Filter) (Station Wagon)	1	
3	99348 08180	Pipe, Fuel (Filter~Pump) (Sedan & Coupe)	1	
	99348 08230	Pipe, Fuel (Filter~Pump) (Station Wagon)	1	
4	0222 13 363	Rubber, Insulation	2	
5	1881 13 400	Pump, Fuel	1	
6	0866 13 401A	Bracket, Fuel Pump (Sedan & Coupe)	1	
	1624 13 401	Bracket, Fuel Pump (Station Wagon)	1	
7	0866 13 402A	Earth	1	
8	99940 0600	Nut	4	
	99952 0600	Washer, Plain	2	
9	99786 0616	Bolt, Fuel Pump (Sedan & Coupe)	2	
10	99940 0600	Nut, Fuel Pump (Station Wagon)	2	
11	99686 1200	Protector (Sedan & Coupe)	1	
12	99348 06430	Pipe, Fuel-Main	1	Order Under No. 99343 08150
13	99283 1200	Clip, Fuel Pipe-Main	2	
14	99348 06430	Pipe, Fuel-Return	1	Order Under No. 99343 08150
15	99283 1100	Clip, Fuel Pipe	1	
16	1570 13 447	Clip	1	

13 45 FUEL PIPING
(USED FROM CAR NO. 160623 73/10
USED UP TO 74/4)

No.	Part Number	Description	Q'ty	Remarks
17	99681 1503	Protector	1	
18	0222 13 470B	Filter, Fuel	1	
19	0381 13 481	Clamp	1	
20	99796 0612	Bolt, Fuel Filter	1	
	99952 0618	Washer, Plain	1	
21	1757 13 785	Hose, Ventilation-Oil Filler Pipe	1	
22	99564 1600	Gasket	1	
23	1757 13 780	Valve, Ventilation	1	
24	1757 13 786A	Hose, Ventilation (Air Cleaner~Intermediate Housing)	1	
25	1881 45 061	Pipe, Fuel Main (Sedan & Coupe)	1	
	1889 45 071	Pipe, Fuel Main (Station Wagon)	1	
26	99348 08680	Pipe, Fuel-Pump~Main Pipe (Sedan & Coupe)	1	Order Under No. 99343 08150
	0899 45 091A	Pipe, Fuel-Pump~Main Pipe (Station Wagon)	1	
27	1881 45 611	Pipe, Fuel Return (Sedan & Coupe)	1	
	1889 45 611	Pipe, Fuel Return (Station Wagon)	1	
28	99348 06330	Pipe, Fuel-Return Pipe~Tank (Sedan & Coupe)	1	Order Under No. 99343 06150
	99348 06140	Pipe, Fuel-Return Pipe~Tank (Station Wagon)	1	
29	0866 45 805	Protector (Station Wagon)	1	
30	0866 45 806A	Grommet (Sedan & Coupe)	1	
31	0866 45 903A	Clip	(Sedan & Coupe) 8 (Station Wagon) 10	

FUEL PIPING

(USED FROM CAR NO. 160623 73/10
USED UP TO 74/5)

No.	Part Number	Description	Q'ty	Remarks
32	99786 0612	Bolt (Sedan & Coupe) (Station Wagon)	8 10	
33	0118 56 241	Plug, Drain (Sedan & Coupe)	1	
34	99282 1608	Clip (L.H.D.)	1	
35	99283 1100	Clip	2	
36	99283 1000	Clip	1	

FUEL PIPING (USED FROM 74/5)

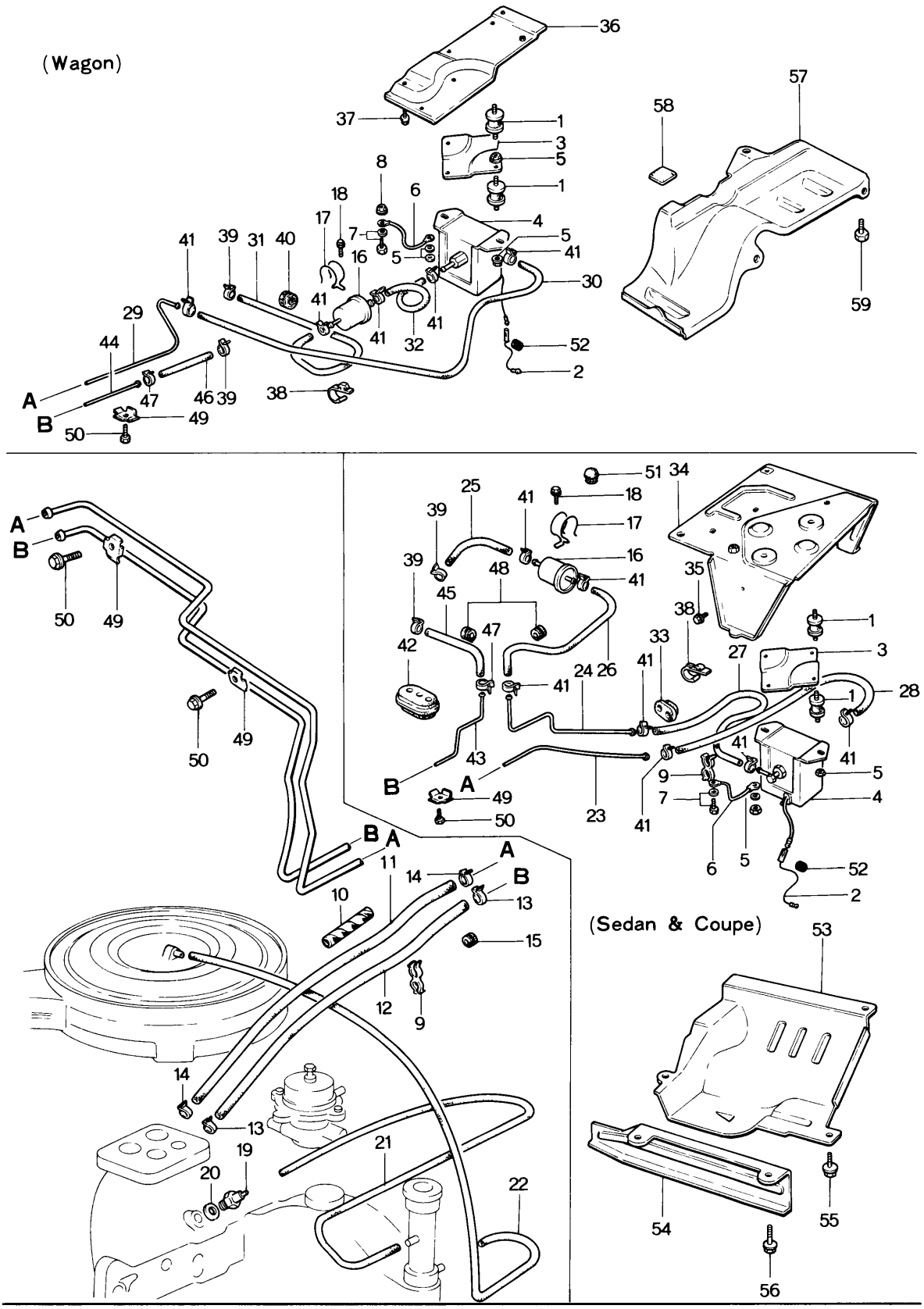

FUEL PIPING (USED FROM 74/5)

No.	Part Number	Description	Q'ty	Remarks
1	0223 13 363	Rubber, Insulation-Fuel Pump	4	
2	1690 13 359	Cord, Fuel Pump	1	
3	1690 13 361	Bracket, Fuel Pump	1	
4	1173 13 400A	Pump, Fuel	1	
5	99940 0600	Nut, Fuel Pump	8	
	99952 0600	Washer, Plain	1	
6	0866 13 402A	Wire, Earth-Fuel Pump	1	
7	99796 0610	Bolt, Earth Wire	1	
	99952 0600	Washer, Plain	1	
8	99940 0603	Nut, Earth Wire (Station Wagon)	1	
9	1570 13 447	Clip, Fuel Hose	2	
10	1883 13 448	Protector, Fuel Hose (Automatic)	2	
11	99348 08430	Hose, Fuel Main (430m/m)	1	Order Under No. 99343 08035 (15m)
12	99348 06430	Hose, Fuel Return (43m/m)	1	Order Under No. 99343 06035 (15m)
13	99283 1000	Clip, Fuel Hose-Fuel Return Hose	2	
14	99283 1200	Clip, Fuel Hose-Fuel Main Hose	2	
15	99681 1503	Protector, Fuel Hose	2	
16	0222 13 470B	Filter, Fuel	1	
17	0381 13 481	Clamp, Fuel Filter	1	
18	99786 0612	Bolt, Filter Clamp	1	

FUEL PIPING (USED FROM 74/5)

No.	Part Number	Description	Q'ty	Remarks
	99952 0618	Washer, Plain	1	
19	1757 13 780	Valve, Ventilation	1	
20	99564 1600	Gasket, Ventilation Valve	1	
21	1757 13 785	Hose, Ventilation-Ventilation Valve~Oil Filler Pipe	1	
22	1757 13 786 A	Hose, Ventilation-Air Cleaner~Intermediate Housing	1	
23	1881 45 061 A	Pipe, Fuel Main-Carburettor Side	1	
24	0866 45 062	Pipe, Fuel Main-Fuel Tank Side	1	
25	99348 08180	Hose, Fuel-Tank~Filter (180m/m)	1 (Sedan & Coupe)	Order Under No. 99343 08035 (3.5m)
26	99348 08640	Hose, Fuel-Filter~Fuel Pipe (640m/m)	1	Order Under No. 99343 08035 (3.5m)
27	0866 45 801	Hose, Fuel-Fuel Pipe~Pump, Tank Side	1	
28	0866 45 802	Hose, Fuel-Pump~Fuel Pipe, Carburettor Side	1	
29	1889 45 071	Pipe, Fuel Main	1	
30	0899 45 091B	Hose, Fuel-Pump~Fuel Pipe	1	
31	0899 45 801	Hose, Fuel-Tank~Filter	1 (Station Wagon)	
32	0899 45 802	Hose, Fuel-Filter~Pump	1	
33	0866 45 807	Protector, Pipe	1	
34	0866 45 810 A	Cover, Fuel Pump	1 (Sedan & Coupe)	
35	99786 0612	Bolt, Fuel Pump Cover	2	
36	0899 45 810 A	Bracket, Fuel Pump	1	
37	99786 0612	Bolt, Fuel Pump Bracket	3 (Station Wagon)	

No.	Part Number	Description	Q'ty	Remarks
38	99278 1201	Clip, Fuel Hose	2	
39	99283 1100	Clip, Fuel Hose	2	
40	0866 45 805	Protector, Fuel Hose (Station Wagon)	1	
41	99283 1200	Clip, Fuel Hose (Station Wagon) (Sedan & Coupe)	4 7	
42	0866 45 806A	Grommet, Fuel Pipe (Sedan & Coupe)	1	
43	1881 45 611	Pipe, Fuel Return (Sedan & Coupe)	1	
44	1889 45 611	Pipe, Fuel Return (Station Wagon)	1	
45	99348 06330	Hose, Fuel Return (330m/m) (Sedan & Coupe)	1	Order Under No. 99343 06035 (3.5m)
46	99348 06140	Hose, Fuel Return (140m/m) (Station Wagon)	1	Order Under No. 99343 06035 (3.5m)
47	99283 1000	Clip, Fuel Hose	1	
48	99686 1200	Protector, Fuel Hose (Sedan & Coupe)	3	
49	0866 45 903A	Clip, Pipe	10	
50	99786 0612	Bolt, Clip	10	
51	0118 56 241	Plug, Drain (Sedan & Coupe)	1	
52	0208 66 683	Protector, Pump Cord	1	
53	0866 56 781	Cover, Fuel Pump	1	
54	0866 56 782	Protector, Fuel Pump Cover	1	
55	99786 0616	Screw, Fuel Pump Cover (Sedan & Coupe)	4	
	99952 0618	Washer, Plain	4	
56	99786 0612	Screw, Fuel Pump Protector	2	

FUEL PIPING (USED FROM 74/5)

No.	Part Number	Description		Q'ty	Remarks
57	0899 55 780	Cover, Fuel Pump		1	
58	0208 66 949	Pad, Protector	(Station Wagon)	1	
59	99786 0616	Bolt, Fuel Pump Cover		4	
	99952 0618	Washer, Plain		4	

ACCELERATOR CONTROL SYSTEM

(USED UP TO CAR NO. 179250 73/9)

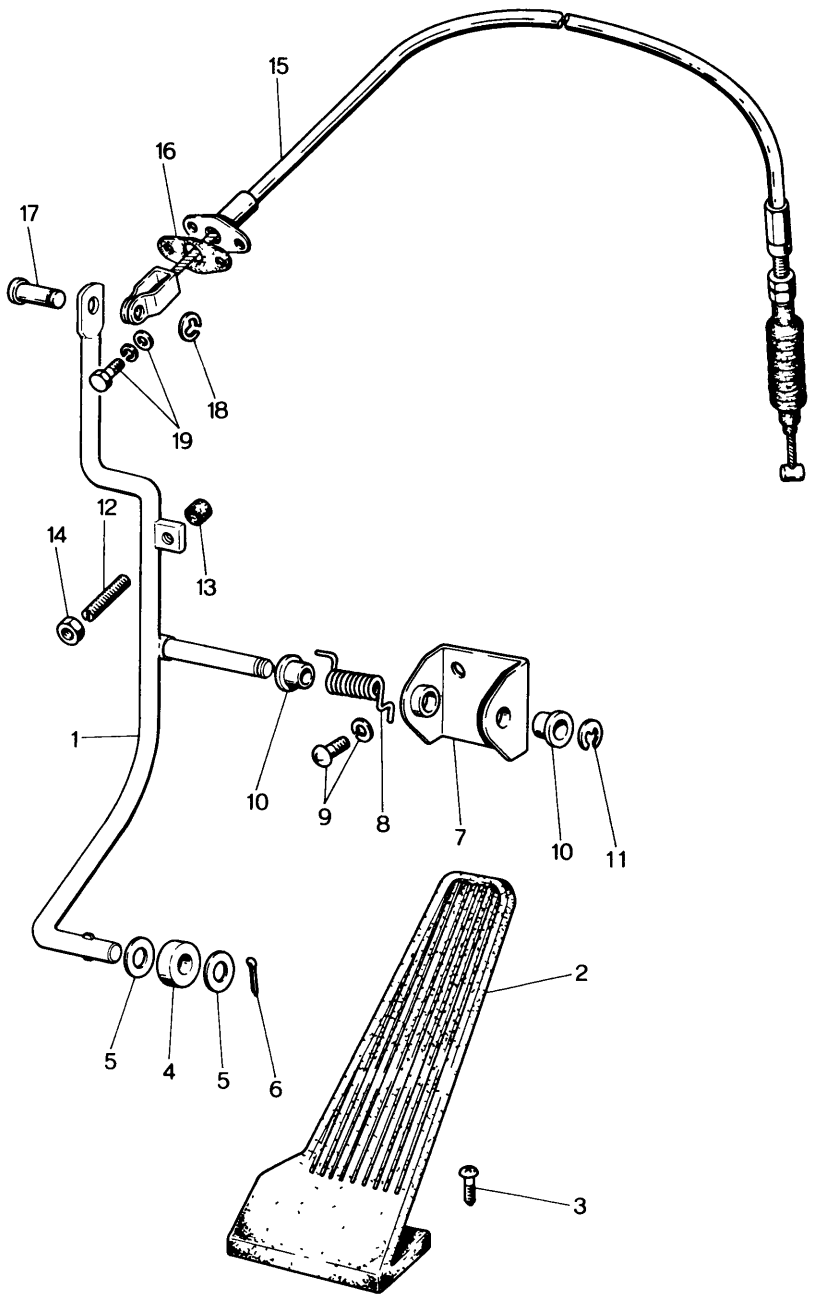

ACCELERATOR CONTROL SYSTEM
(USED UP TO CAR NO. 179250 73/9)

41

No.	Part Number	Description	Q'ty	Remarks
1	1524 41 620A	Rod, Accelerator Control	1	
2	0290 41 710	Pedal, Accelerator	1	
3	99765 0516	Screw, Accelerator Pedal	2	
4	0259 41 613	Roller, Pedal	1	
5	99953 0800	Washer, Plain-Pedal Roller	2	
6	99221 2012	Pin, Split-Pedal Roller	1	
7	0305 41 641	Retainer, Accelerator Rod	1	
8	0259 41 619	Spring, Return	1	
9	99765 0616	Screw, Retainer	2	
	99971 0600	Washer, Spring	2	
10	0259 41 644	Bush, Retainer	2	
11	99575 0600	Ring, Snap-Retainer	1	
12	0118 41 681	Stopper	1	
13	0118 41 682	Rubber, Stopper	1	
14	99907 0600	Nut, Stopper	1	
15	1570 41 660	Wire, Accel.	1	
16	0249 41 671	Seat	1	
17	99230 0511	Pin, Accel. Wire	1	
18	99575 0300	Ring, Stop	1	
19	90786 0620	Bolt Set, Accel. Wire	2	

ACCELERATOR CONTROL SYSTEM

(L.H.D.) (USED FROM CAR NO. 160623 73/10)

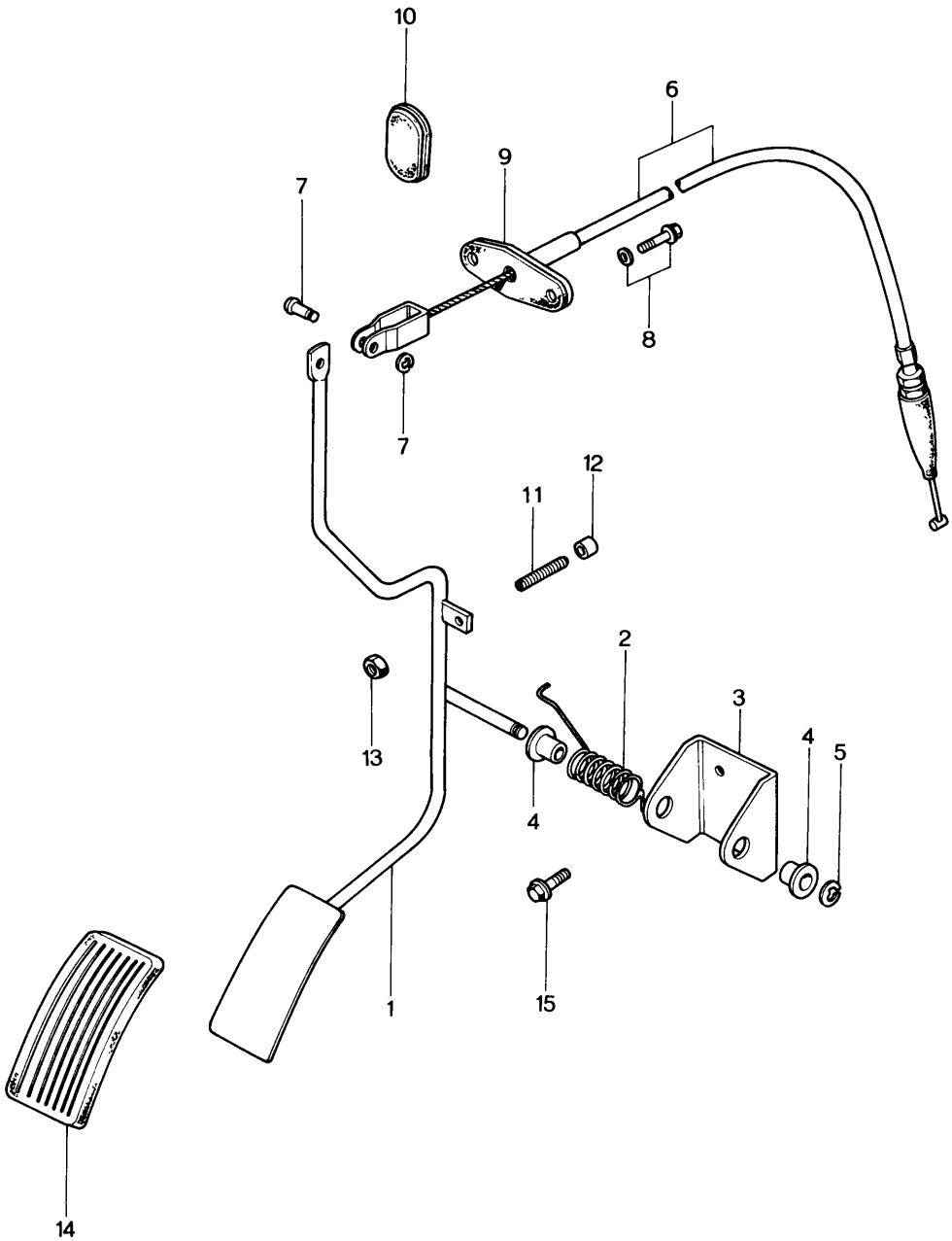

ACCELERATOR CONTROL SYSTEM
(L.H.D.) (USED FROM CAR NO. 160623 73/10)

No.	Part Number	Description	Q'ty	Remarks
1	1881 41 610A	Pedal, Accelerator	1	
2	0370 41 619	Spring, Return	1	
3	0305 41 641	Retainer	1	
4	0259 41 644	Bush	2	
5	99575 0600	Ring, Retaining	1	
6	1881 41 660A	Wire, Accelerator	1	
7	99230 0511	Pin, Joint - Accelerator Wire	1	
	99575 0300	Ring, Snap	1	
8	99786 0620	Bolt, Accelerator Wire	2	
	99952 0618	Washer, Plain	2	
9	0249 41 671	Seat	1	
10	1524 41 678	Seal	1	
11	0118 41 681	Stopper	1	
12	0118 41 682	Rubber, Stopper	1	
13	99940 0600	Nut	1	
14	1708 41 711	Pad, Pedal	1	
15	99786 0616	Bolt	2	

ACCELERATOR CONTOROL SYSTEM

(R.H.D.) (USED FROM CAR NO. 1 $^{73}/_{10}$)

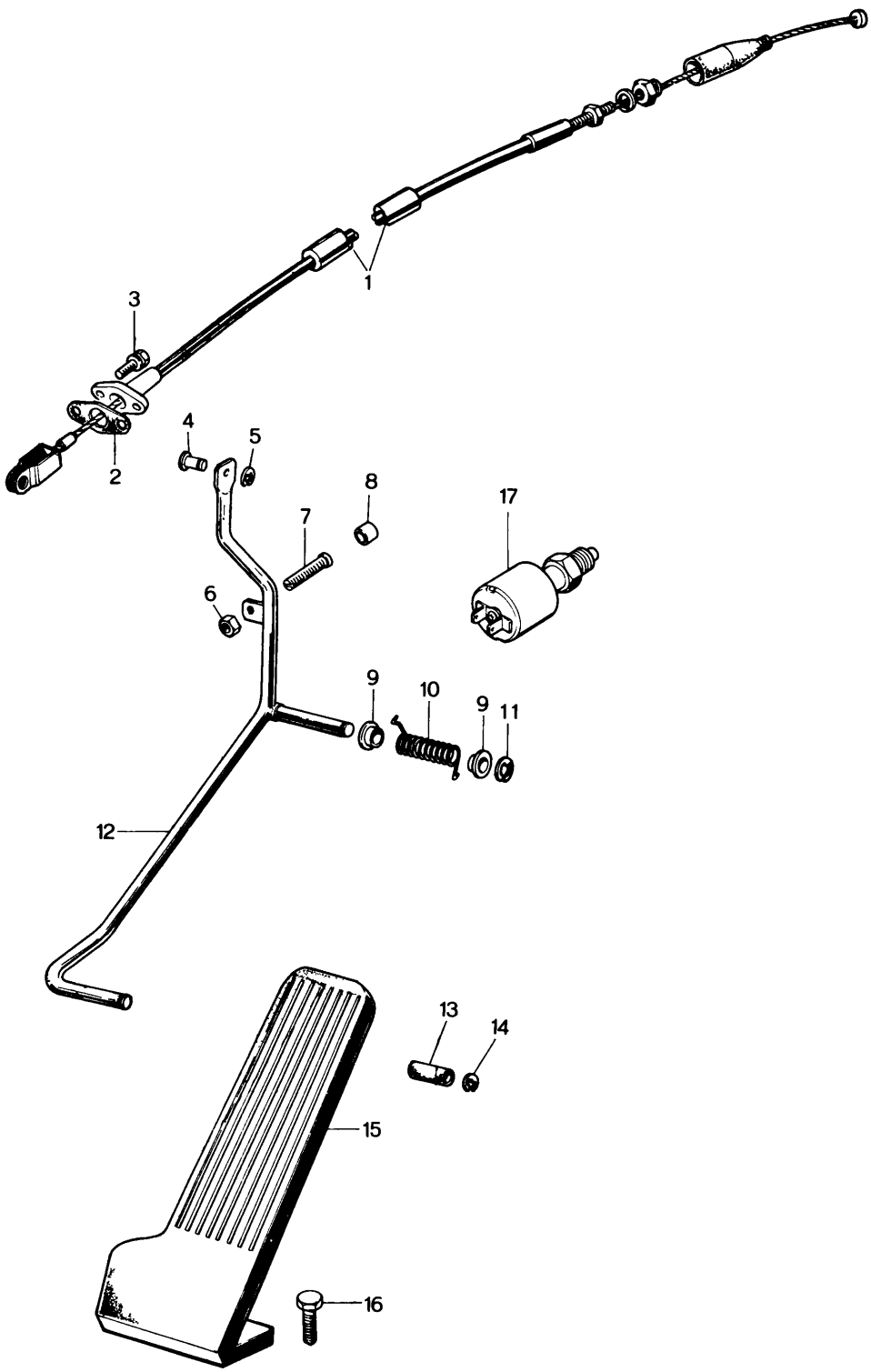

ACCELERATOR CONTROL SYSTEM
(R.H.D.) (USED FROM CAR NO. 1 73/10)

41

No.	Part Number	Description	Q'ty	Remarks
1	~~0862 41 600B~~	~~Wire, Accelerator~~	~~1~~	
●	0862 41 660B	Wire, Accelerator	1	From Car No. 1
2	0249 41 671	Seat, Rubber	1	
3	99786 0620	Bolt	2	
	99952 0618	Washer, Plain	2	
4	99230 0511	Pin	1	
5	99575 0300	Ring, Stop	1	
6	99907 0600	Nut, Lock	1	
7	0118 41 681	Stopper	1	
8	0118 41 682	Rubber, Stopper	1	
9	0259 41 644	Bush	2	
10	~~0730 41 619~~	~~Spring, Return~~	~~1~~	
●	0370 41 619	Spring, Return	1	From Car No. 1
11	99575 0600	Ring, Retaining	1	
12	0866 41 610	Rod, Accelerator Control (Manual)	1	
●	0378 41 610	Rod, Accelerator Control (Automatic)	1	
13	0866 41 617	Protector	1	
14	99576 0600	Ring, Snap	1	
15	0559 41 710B	Pedal, Accelerator	1	
16	99786 0616	Screw, Accelerator Pedal	2	
● 17	2691 18 660	Switch, Kick Down (Automatic)	1	

CLUTCH & BRAKE PEDAL

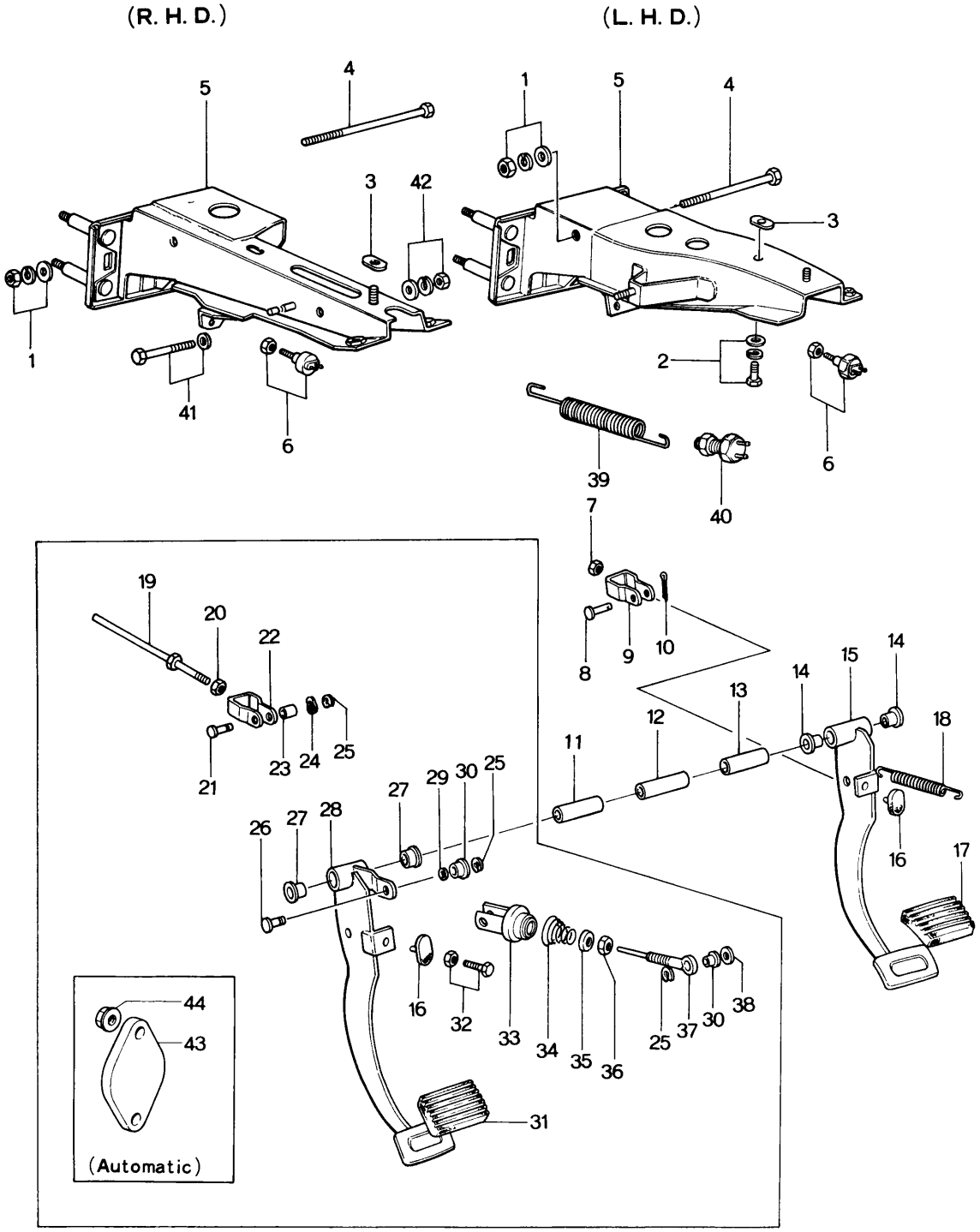

No.	Part Number	Description		Q'ty	Remarks
1	99921 1000	Nut, Bracket		1	
●	99952 1000	Washer, Plain (Manual)		1	
	99971 1000	Washer, Spring		1	
2	908057 8 25	Bolt Set, Master Cylinder Bracket		1	
	99786 0820	Bolt, Bracket	(L.H.D.)	1	Car No. 160623 73/10~×
	99952 0822	Washer, Plain		1	Car No. 160623 73/10~×
3	0259 43 088	Seat Bracket		1	
4	99813 10155	Bolt, Bracket (Manual)		1	
●	99813 10110	Bolt, Bracket (Automatic)		1	
5	1524 43 070B	Bracket, Master Cylinder (L.H.D.)		1	
	1504 43 070A	Bracket, Master Cylinder (For Sweden)		1	
	0866 43 070B	Bracket, Master Cylinder (R.H.D.)		1	
6	0233 66 790	Switch, Stop		1	
7	99922 1000	Nut		1	
8	99231 0820	Pin, Joint		1	
9	1524 43 140	End, Fork (L.H.D.)		1	
	0305 43 140	End, Fork (R.H.D.)		1	
10	99221 2020	Pin, Split		1	
11	0866 43 061	Pipe (Manual)		1	
12	0866 43 062	Pipe		1	
13	0866 43 063	Pipe		1	

CLUTCH & BRAKE PEDAL

No.	Part Number	Description	Q'ty	Remarks
14	0259 43 022	Bush	2	
	1015 46 085	Bush	2	Car No. 160623 73/10 ~ ×
● 15	1524 43 030	Pedal, Brake (L.H.D.) (Manual)	1	
●	0866 43 030	Pedal, Brake (R.H.D.) (Manual)	1	
●	0378 43 030	Pedal, Brake (R.H.D.) (Automatic)	1	
16	0187 43 029	Rubber, Stopper (Manual)	2	
		(Automatic)	1	
● 17	0118 43 028 A	Pad, Pedal (L.H.D.) (Manual)	1	
●	0259 43 028	Pad, Pedal (R.H.D.) (Manual)	1	
●	0268 43 028	Pad, Pedal (R.H.D.) (Automatic)	1	
18	0613 41 308	Spring, Return	1	
● 19	0223 41 131 A	Rod, Push-Clutch	1	
● 20	99922 0800	Nut	1	
●	1872 41 142	Nut	1	Car No. 160623 73/10 ~ ×
● 21	0223 46 683	Pin	1	
● 22	0259 43 140	End, Fork	1	
●	1872 41 140	Fork	1	Car No. 160623 73/10 ~ ×
● 23	0727 41 023	Bush	1	(Manual)
● 24	99972 0800	Washer, Wave	1	
● 25	99575 0600	Ring, Snap	3	
● 26	0604 46 785	Pin	1	
● 27	0259 43 022	Bush	2	
●	1015 46 085	Bush	2	Car No. 160623 73/10 ~ ×

No.	Part Number	Description		Q'ty	Remarks
● 28	1562 41 030A	Pedal, Clutch (L.H.D.)		1	
●	0866 41 030B	Pedal, Clutch (R.H.D.)		1	
● 29	0824 41 084	Spacer		1	
● 30	0259 41 644	Bush		2	
● 31	0118 43 028A	Pad, Pedal (L.H.D.)		1	
●	0259 43 028	Pad, Pedal (R.H.D.)		1	
● 32	99795 1032	Bolt, Stopper		1	
●	99922 1000	Nut	(Manual)	1	
● 33	0559 41 040C	Seat, Spring		1	
● 34	0559 41 081A	Spring, Return		1	
● 35	0183 41 043	Seat, Spring		1	
● 36	99922 0800	Nut		1	
● 37	0824 41 051A	Rod		1	
● 38	99952 0816	Washer, Plain		1	
Ⓝ 39	1504 43 081	Spring		1	
Ⓝ 40	1504 60 490	Switch, Brake Lining	(For Sweden)	1	
41	99801 0860	Bolt, Bracket		1	
	99952 0822	Washer, Plain		1	
42	99901 0800	Nut, Bracket	(R.H.D.)	1	
	99952 0822	Washer, Plain		1	
	99971 0800	Washer, Spring		1	
● 43	0225 43 092	Plate		1	
● 44	99940 0800	Nut, Plate	(Automatic)	2	

CLUTCH MASTER CYLINDER & RELEASE CYLINDER (MANUAL)

(USED UP TO CAR NO. 179250 '73)

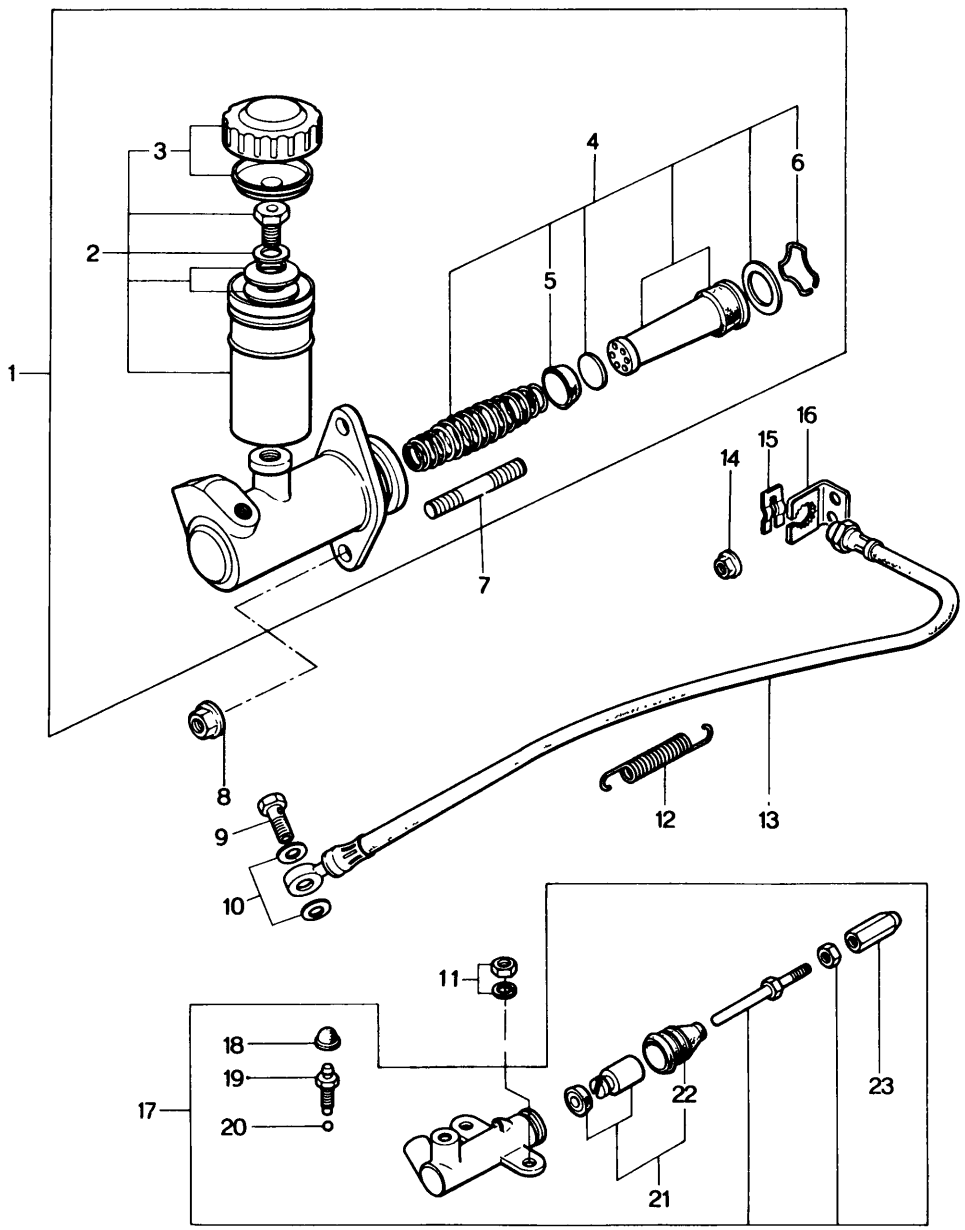

CLUTCH MASTER CYLINDER & RELEASE CYLINDER (MANUAL)

(USED UP TO CAR NO. 179250 73/9)

No.	Part Number	Description	Q'ty	Remarks
1	1524 41 400	Cylinder, Master-Clutch	1	
2	0317 89 435	Tank Set, Reserve	1	
3	0317 89 436	Cap Set	1	
4	0839 89 431A	Repair Kit Clutch Master Cylinder	1	
5	0839 41 461	Cap, Primary	1	
6	0111 43 432	Wire, Stop	1	
7	99852 0848	Stud	1	
8	99940 0800	Nut, Clutch Master Cylinder	2	
9	0221 43 694	Bolt Connector, Hose & Release Cylinder	1	
10	99562 1000	Gasket, Connector Bolt	2	
11	99901 0800	Nut, Clutch Release Cylinder	2	
	99971 0800	Washer, Spring	2	
12	0183 41 308	Spring, Return-Clutch Release Cylinder	1	
13	0866 41 380	Hose, Flexible	1	
14	99940 0600	Nut, Flange	1	
15	0136 43 635	Clip, Flexible Hose	1	
16	0866 41 370	Holder, Flexible Hose	1	
17	0866 41 920	Cylinder, Release-Clutch	1	

41 CLUTCH MASTER CYLINDER & RELEASE CYLINDER (MANUAL)
(USED UP TO CAR NO. 179250 73/9)

No.	Part Number	Description	Q'ty	Remarks
18	0259 33 693	Cap	1	
19	0259 33 691	Screw, Bleeder	1	
20	99611 1500	Ball, Steel	1	
21	0866 89 411	Repair Kit Clutch Release Cylinder	1	
22	0191 41 331	Boot	1	
23	0118 41 342	Screw, Adjust	1	

CLUTCH MASTER CYLINDER & RELEASE CYLINDER (MANUAL)

(USED FROM CAR NO. 160623 73/10)

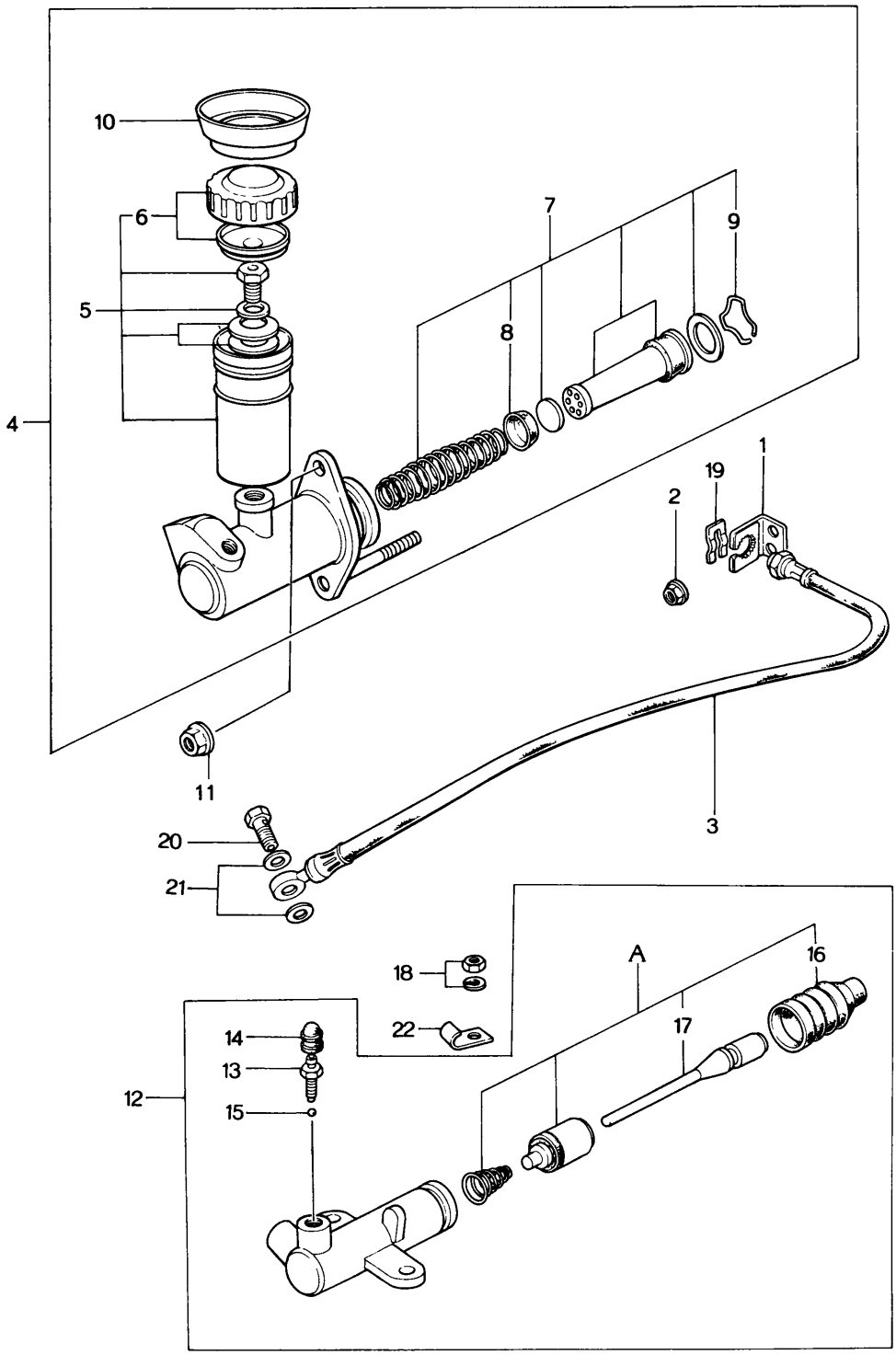

CLUTCH MASTER CYLINDER & RELEASE CYLINDER (MANUAL)

(USED FROM CAR NO. 160623 73/10)

No.	Part Number	Description	Q'ty	Remarks
1	0866 41 370	Holder, Flexible Hose	1	
2	99940 0600	Nut, Holder	1	
3	0866 41 380	Hose, Flexible	1	
4	1524 41 400A	Cylinder, Clutch Master (L.H.D.)	1	
	0866 41 400A	Cylinder, Clutch Master (R.H.D.)	1	
5	0317 89 435A	Tank Set	1	
6	0317 89 436	Cap Set	1	
7	0839 89 431A	Cylinder Set, Clutch Master	1	
8	0839 41 461	Cup, Primary	1	
9	0111 43 432	Wire, Stop	1	
10	1114 41 559	Bowl, Brake Fluid (R.H.D.)	1	
11	99940 0800	Nut, Clutch Master Cylinder	1	
12	1881 41 920A	Cylinder, Clutch Release	1	
13	0259 33 691	Screw, Bleeder	1	
14	0259 33 693	Cap	1	
15	99611 1500	Ball, Steel	1	
16	0603 41 331	Boot	1	

CLUTCH MASTER CYLINDER & RELEASE CYLINDER (MANUAL)

(USED FROM CAR NO. 160623 73/10)

No.	Part Number	Description	Q'ty	Remarks
17	1881 41 341	Rod, Push	1	
a	1052 89 411	Repair Kit, Clutch Release	1	
18	99940 0800	Nut, Release Cylinder	2	
19	0136 43 635	Clip, Flexible Hose	1	
20	0221 43 694	Bolt, Hose & Release Cylinder	1	
21	99562 1000	Gasket	2	
22	99276 0808	Clip (R.H.D.)	1	

BRAKE MASTER CYLINDER & VACUUM POWER ASSIST

(USED UP TO CAR NO. 179250 73/9)

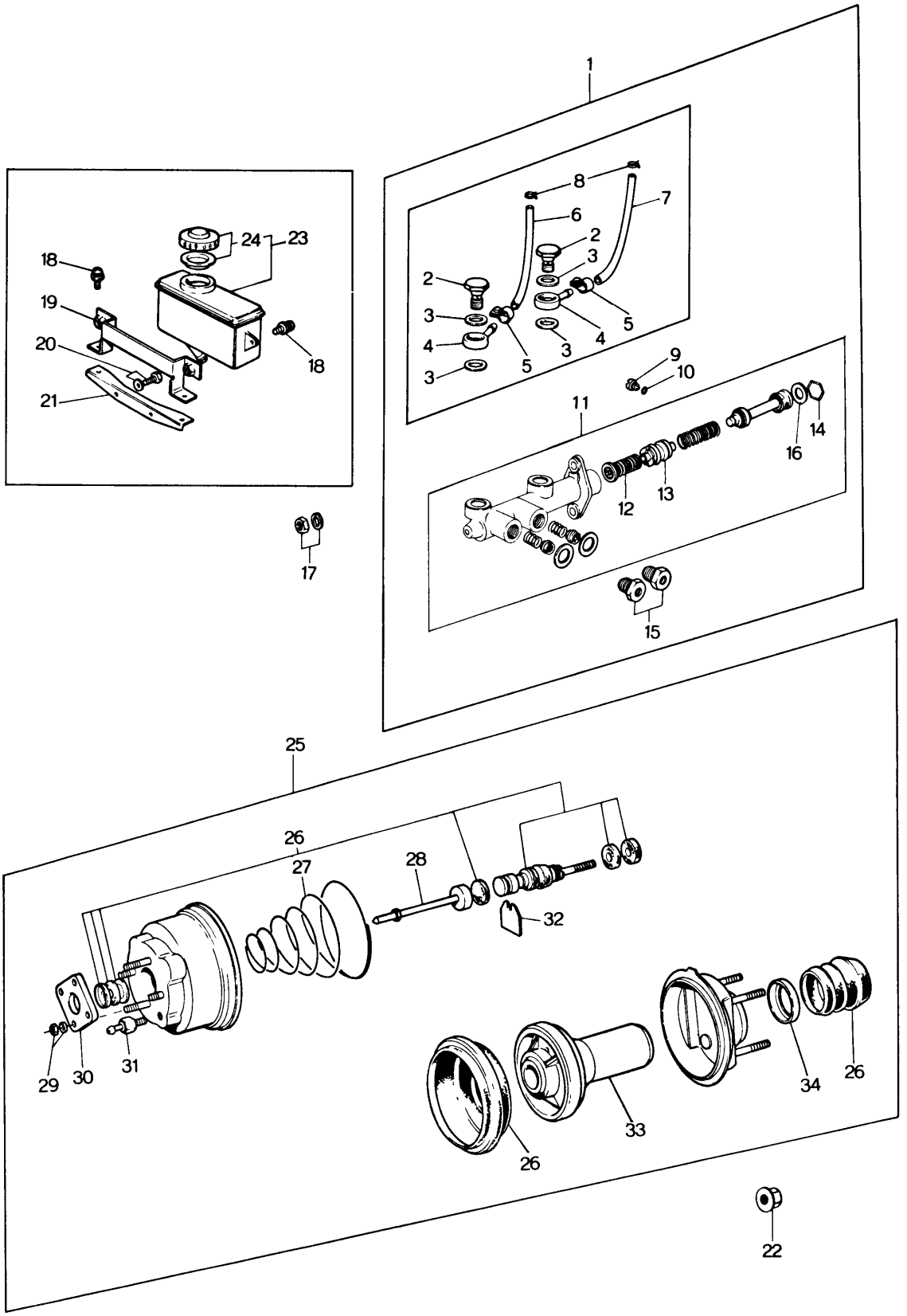

BRAKE MASTER CYLINDER & VACUUM POWER ASSIST

(USED UP TO CAR NO. 179250 73/9)

43 49

No.	Part Number	Description	Q'ty	Remarks
1	1562 43 990A	Cylinder, Tandem Master	1	
2	2835 49 686A	Bolt, Connector	2	
3	2835 49 687	Gasket	4	
4	2835 49 682A	Union	2	
5	2835 49 685	Clamp, Hose	2	
6	0870 43 422A	Hose, Reserve	1	
7	1562 43 422	Hose, Reserve	1	
8	99285 0800	Clip	2	
9	2046 49 676	Bolt Set	1	
10	2046 49 696	Gasket	1	
11	2835 89 439	Repair Kit, For Tandem Master Cylinder	1	
12	2835 49 640	Spring, Floating	1	
13	2835 49 630A	Piston, Floating	1	
14	2046 49 638	Ring, Retaining	1	
15	2835 49 652	Bolt, Joint	2	
16	2046 49 666	Washer, Piston	1	Selective use
	2046 49 667	Washer, Piston		
	2046 49 668	Washer, Piston		
	2046 49 669	Washer, Piston		

BRAKE MASTER CYLINDER & VACUUM POWER ASSIST

(USED UP TO CAR NO. 179250 73/9)

No.	Part Number	Description	Q'ty	Remarks
17	99906 0800	Nut, Master Cylinder	2	
	99971 0800	Washer, Spring	2	
18	908332 5 12	Bolt, Holder & Reserve Tank	4	
19	0870 43 570	Holder, Reserve Tank	1	
20	99785 0612	Bolt, Holder	2	
	99971 0600	Washer, Spring	2	
21	0870 43 580	Holder, Reserve Tank	1	
22	99940 0800	Nut	3	
23	0839 43 550	Tank, Reserve	1	
	1559 43 550	Tank, Reserve (For Sweden)	1	
24	0317 89 436	Cap Set	1	
● Ⓝ	0391 49 684	Packing	1	Car No. 170670 73/5~Added Anew
25	~~1562 43 800B~~	~~Brake, Power~~	~~1~~	
●	1562 43 800	Vacuum Power Assist	1	From Car No. 1
26	~~0870 49 720~~	~~Repair Kit~~	~~1~~	
●	0870 49 720A	Repair Kit	1	From Car No. 1
27	0824 49 781	Spring	1	

BRAKE MASTER CYLINDER & VACUUM POWER ASSIST
(USED UP TO CAR NO. 179250 73/9)

43 49

No.	Part Number	Description	Q'ty	Remarks
28	0870 49 770	Rod, Push	1	
29	~~2046 49 783~~	~~Washer, Spring~~	~~1~~	
●	99971 0800	Washer, Spring	2	From Car No. 1
	~~2046 49 784~~	~~Nut~~	~~1~~	
●	99906 0600	Nut	2	From Car No. 1
30	2046 49 782	Flange	1	
31	0870 49 785	Valve, Check	1	
32	2046 49 746	Key	1	
33	0870 49 745	Plate, Diaphragm	1	
34	2046 49 747	Retainer, Silencer	1	

BRAKE MASTER CYLINDER & VACUUM POWER ASSIST

(USED FROM CAR NO. 160623 73/10)

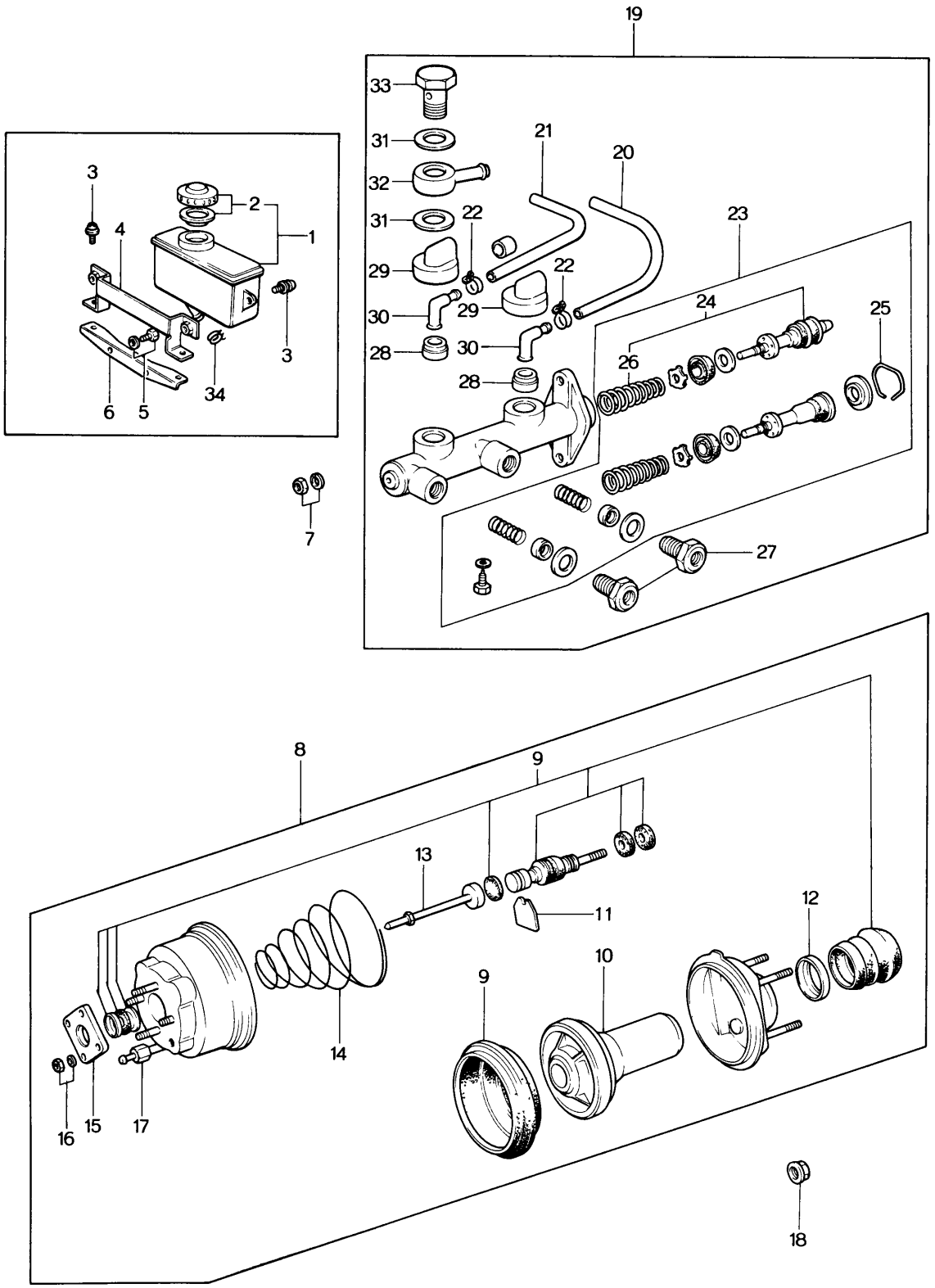

BRAKE MASTER CYLINDER & VACUUM POWER ASSIST
(USED FROM CAR NO. 160623 73/10)

43 49

No.	Part Number	Description	Q'ty	Remarks
1	0839 43 550	Tank, Reserve	1	
	1559 43 550	Tank, Reserve (Cold Proof use)	1	
2	0727 89 436A	Cap Set	1	
3	99833 0512	Screw, Holder & Tank	4	
4	0870 43 570	Holder, Reserve Tank	1	
5	99785 0612	Screw, Holder	2	
	99971 0600	Washer, Spring	2	
6	0870 43 580	Holder, Reserve Tank	1	
7	99901 0800	Nut, Tandem Master Cylinder	2	
	99971 0800	Washer, Spring	2	
8	1562 43 800	Assist, Vacuum Power (L.H.D.)	1	
	0870 43 800B	Assist, Vacuum Power (R.H.D.)	1	
9	0870 49 720A	Repair Kit "B"	1	
10	0870 49 745	Plate, Diaphragm	1	
11	2046 49 746	Key	1	
12	2046 49 747	Retaining, Silencer	1	
13	0824 49 770	Rod, Push (L.H.D.)	1	
	0870 49 770	Rod, Push (R.H.D.)	1	

BRAKE MASTER CYLINDER & VACUUM POWER ASSIST

(USED FROM CAR NO. 160623 73/10)

No.	Part Number	Description	Q'ty	Remarks
14	0824 49 781	Spring	1	
15	2046 49 782	Flange	1	
16	99971 0800	Washer, Spring	2	
	99906 0600	Nut	2	
17	0870 49 785	Valve, Check	1	
18	99940 0800	Nut, Vacuum Power Assist	3	
19	1620 43 990	Cylinder, Tandem Master (L.H.D.)	1	
	1620 43 990 A	Cylinder, Tandem Master (L.H.D.)	1	74/1~○
	1128 43 990 A	Cylinder, Tandem Master (R.H.D.)	1	
20	0870 43 422 A	Hose, Reserve (R.H.D.)	1	
21	1562 43 422	Hose, Reserve (R.H.D.)	1	
	1562 43 422	Hose, Reserve (L.H.D.)	2	
	1881 43 422	Hose, Reserve (L.H.D.)	2	74/1~○
22	99282 1401	Clamp, Hose	2	
23	1128 49 610	Parts Kit, Inner	1	
24	1128 49 630	Piston, Float	1	
25	0305 49 638	Wire, Piston Stop	1	
26	0512 49 642	Spring, Floating	1	
27	0512 49 651	Bolt, Joint (R.H.D.)	2	

BRAKE MASTER CYLINDER & VACUUM POWER ASSIST
(USED FROM CAR NO. 160623 73/10)

No.	Part Number	Description		Q'ty	Remarks
	0512 49 651	Bolt, Joint (L.H.D.)		1	
	1620 49 651	Bolt, Joint (L.H.D.)		1	
28	0839 49 686 A	Bush, Elbow Joint		2	
29	0839 49 698	Cover, Elbow Joint	(R.H.D.)	2	
30	0839 49 699 A	Joint, Elbow		2	
31	0305 49 656	Gasket, Joint Bolt		4	
32	0512 49 682 A	Joint, Union	(L.H.D.)	2	
33	0512 49 686	Bolt, Connector		2	
34	99285 0800	Clip, Wire-Oil Pipe		2	

PIPING (CLUTCH & BRAKE)

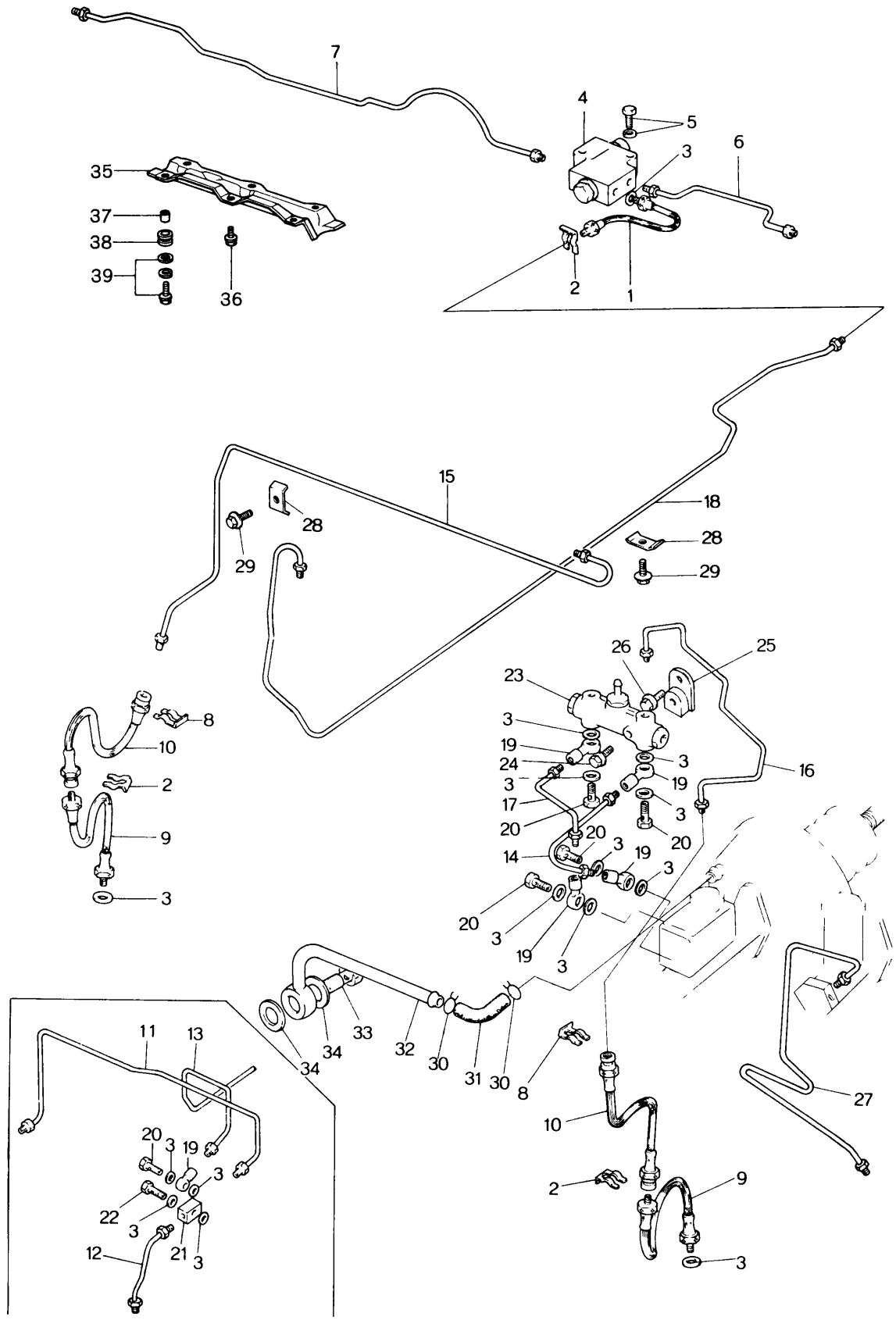

No.	Part Number	Description	Q'ty	Remarks
1	0864 43 820	Hose, Flexible (Sedan & Coupe)	1	
●	0370 43 820	Hose, Flexible (Station Wagon)	1	
2	0136 43 635	Clip, Flexible Hose	3	
3	99562 1000	Gasket (Without Brake Fail Indicator)	6	
		(With Brake Fail Indicator)	10	
4	0866 43 900	Valve, Double Proportioning (Sedan & Coupe)	1	
●	1559 43 900	Valve, Double Proportioning (E.C.E. Cold Proof)	1	Car No. 160623 $^{73}/_{10}$~ ×
●	0118 43 853	Joint, Pipe (Station Wagon)	1	
5	99805 0640	Bolt, D.P. Valve	2	
	99971 0600	Washer, Spring	2	
6	0866 43 650B	Pipe No. 1, Brake (Sedan & Coupe)	1	
●	0585 43 650A	Pipe No. 1, Brake (Station Wagon)	1	
7	0886 43 660B	Pipe No. 2, Brake	1	
●	1128 43 660	Pipe No. 2, Brake (Sedan & Coupe)	1	Car No. 160623 $^{73}/_{10}$~ ×
●	1137 43 660	Pipe No. 2, Brake (Station Wagon)	1	
8	0305 43 635	Clip	2	
9	0866 43 810	Hose, Flexible	2	
10	0613 43 820A	Hose, Flexible	2	
●11	1562 45 280C	Pipe, Brake (Frt., R) (L.H.D.)	1	
●	1597 45 280	Pipe, Brake (Frt., R) (L.H.D.)	1	Car No. 160623 $^{73}/_{10}$~ ×
●	1128 45 280A	Pipe, Brake (Frt., R) (R.H.D.)	1	

No.	Part Number	Description	Q'ty	Remarks
12	1562 45 320B	Pipe, Brake (Frt., L) (L.H.D.) (Without Brake Fail Indicator)	1	
●	1597 45 320	Pipe, Brake (Frt., L) (L.H.D.) (Without Brake Fail Indicator)	1	Car No. 160623 73/10～×
●	0870 45 320B	Pipe, Brake (Frt., L) (R.H.D.) (Without Brake Fail Indicator)	1	
13	1562 45 350C	Pipe, Brake (Rr.) (L.H.D.)	1	
●	0870 45 350B	Pipe, Brake (Rr.) (R.H.D.)	1	
●	1137 45 350	Pipe, Brake (Rr.) (Station Wagon)	1	
14	1559 45 250	Pipe, Brake (Frt., Main) (With Brake Fail Indicator)	1	
●	1598 45 250A	Pipe, Brake (Frt., Main) (With Brake Fail Indicator)	1	Car No. 160623 73/10～×
15	1540 45 280A	Pipe, Brake (Frt., R) (With Brake Fail Indicator)	1	
16	1540 45 320	Pipe, Brake (Frt., L) (With Brake Fail Indicator)	1	
17	1559 45 350A	Pipe, Brake (Rr., Main) (With Brake Fail Indicator)	1	
18	1504 45 360	Pipe, Brake (Rr.) (With Brake Fail Indicator)	1	
19	0118 41 375	Connector	(Without Brake Fail Indicator) 1 (With Brake Fail Indicator) 4	
20	0221 43 694	Bolt, Connector	(Without Brake Fail Indicator) 1 (With Brake Fail Indicator) 4	
21	0866 45 452	Joint, Pipe-Brake Pipe (Without Brake Fail Indicator)	1	
●	1128 45 452	Joint, Pipe-Brake Pipe (Without Brake Fail Indicator)	1	Car No. 160623 73/10～×
22	0118 43 505A	Bolt, Connector (Without Brake Fail Indicator)	1	
●	0221 43 694	Bolt, Connector (Without Brake Fail Indicator)	1	Car No. 160623 73/10～△
23	1540 43 890	Indicator, Fail	1	
24	99786 0635	Bolt, Fail Indicator	1	

No.	Part Number	Description	Q'ty	Remarks
25	1540 45 920A	Bracket, Fail Indicator (With Brake Fail Indicator)	1	
26	99786 0616	Bolt, Bracket (With Brake Fail Indicator)	1	
● 27	1562 45 510B	Pipe, Clutch (L.H.D.)	1	
●	0866 45 510	Pipe, Clutch (R.H.D.)	1	
● 28	0866 45 903A	Clip	(R.H.D.) 7 (L.H.D.) 8	
● 29	99786 0612	Bolt, Clip	(R.H.D.) 7 (L.H.D.) 8	
30	99282 2001	Clamp, Hose	2	
	99282 1901	Clamp, Hose	2	73/4 ~ ○
● 31	1570 43 842B	Hose, Vacuum (L.H.D.)	1	
	1559 43 836C	Hose, Vacuum (For Sweden)	1	
●	3507 43 842	Hose, Vacuum (R.H.D.)	1	
● 32	1620 43 830	Pipe, Connector (L.H.D.)	1	
●	1881 43 830	Pipe, Connector (L.H.D.)	1	Car No. 160623 73/10 ~ ×
●	3507 43 830A	Pipe, Connector (R.H.D.)	1	Car No. 160623 73/10 ~ ×
33	1570 43 694A	Connector	1	
34	99562 1200	Gasket	2	
● 35	1128 43 605	Protector, Brake Pipe	1	
● 36	99781 0818	Bolt, Protector	2	
●	99952 0800	Washer, Plain	2	
● 37	1114 43 608B	Spacer	4	

No.	Part Number	Description	Q'ty	Remarks
● 38	1114 43 609A	Rubber, Cushion	4	
● 39	99781 0822	Bolt, Protector	4	
●	99951 0822	Washer, Plain	4	
●	99971 0800	Washer, Spring	4	

No.	Part Number	Description	Q'ty	Remarks
1	0866 44 010	Lever, Parking Brake	1	
2	0303 44 032	Rod, Release	1	
3	0813 44 031	Spring	1	
4	0813 44 035	Spacer	1	
5	0221 44 033	Button, Release	1	
6	0813 44 034	Cap	1	
7	99230 0815B	Pin	1	
8	0221 44 044	Ratchet	1	
9	99575 0500	Ring, Stop	1	
10	0866 44 051	Sector	1	
11	99901 0800B	Nut	1	
	99971 0800	Washer, Spring	1	
12	0303 44 053	Bolt	1	
13	99786 0616	Bolt, Plate & Clip	6	
14	908336 4 12	Screw Set, Parking Lamp Switch	2	
15	0820 66 840	Switch, Parking Lamp	1	
● 16	0866 67 131	Cord (L.H.D.)	1	
●	1881 67 135	Cord (R.H.D.)	1	
17	0305 44 471	Clip	2	

No.	Part Number	Description	Q'ty	Remarks
18	0866 44 410A	Cable, Rear (L)	1	
●	0866 44 410B	Cable, Rear (L)	1	Car No. 167343 73/4～△
●	3514 44 420A	Cable, Rear (L) (L.H.D.)	1	Car No. 160623 73/10～×
●	1570 44 410C	Cable, Rear (R)	1	
●	3514 44 410A	Cable, Rear (R)	1	Car No. 160623 73/10～×
●	0866 44 410B	Cable, Rear (L) (R.H.D.)	1	
●	1570 44 410C	Cable, Rear (R)	1	
●	0866 44 410B	Cable Rear (Model 3508)	2	
19	0183 41 308	Spring, Return	1	
20	99868 0508	Screw	1	
	99971 0500	Washer, Spring	1	
21	0866 44 150A	Cable, Front	1	
22	0866 44 187A	Screw	1	
23	0866 44 189	Clip, Cable	1	
24	0866 44 439	Clip, Cable	2	

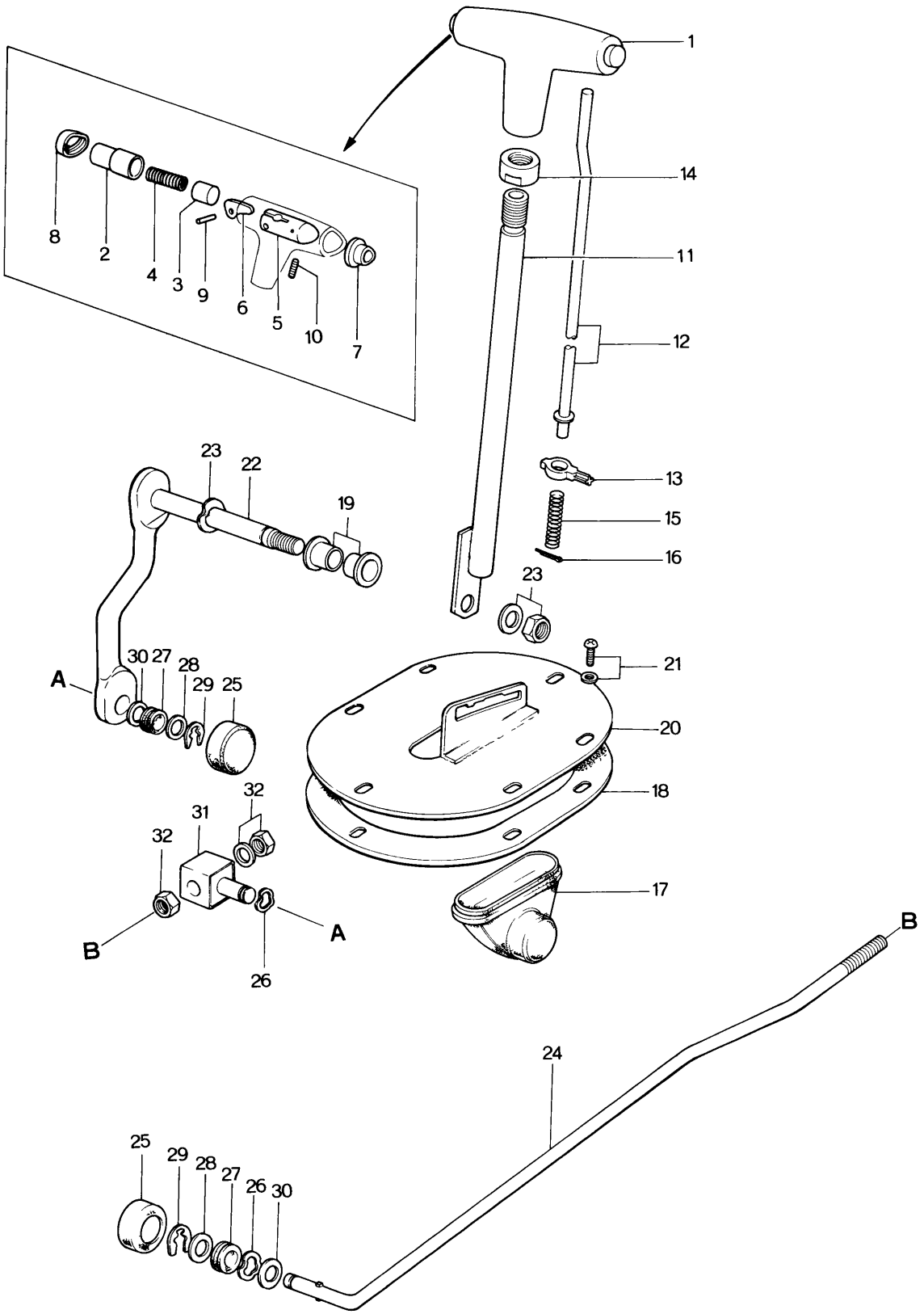
1
14
11
12
13
15
16
23
21
20
18
17
8
2
4
3
9
6
5
10
7
23
22
19
A
30
27
28
29
25
32
31
32
B
A
26
B
24
25
29
28
27
26
30

No.	Part Number	Description	Q'ty	Remarks
1	0308 46 030C	Knob	1	
2	0308 46 051	Knob	1	
3	2375 46 052	Piston	1	
4	2375 46 053	Spring	1	
5	0308 46 054	Supporter	1	
6	2375 46 055	Lever	1	
7	0308 46 056A	Plug	1	
8	0308 46 057A	Cap	1	
9	99225 0320	Pin	1	
10	99887 0412	Screw	1	
11	1932 46 010	Lever, Selecter	1	
12	1840 46 021	Rod	1	
13	1840 46 022	Pin, Guide	1	
14	2375 46 061	Nut	1	
15	2375 46 062	Spring	1	
16	99221 2020	Pin, Split	1	
17	0842 46 081	Boot	1	
18	0308 46 083	Seal	1	
19	1015 46 085	Bush	1	

No.	Part Number	Description	Q'ty	Remarks
20	0842 46 110A	Bracket, Lever	1	
21	99786 0616	Bolt, Bracket	6	
	99952 0618	Washer, Plain	6	
22	1053 46 150	Lever	1	
23	99922 1000	Nut, Lever	1	
	99971 1000	Washer, Spring	1	
	99972 1400	Washer, Wave - Selective use	2	
24	1856 46 571	Rod	1	
25	1015 46 648	Cover, Dust	2	
26	99972 0800	Washer, Wave	2	
27	1015 46 684	Bush	2	
28	99953 0800	Washer, Plain	2	
29	99575 0600	Ring, Retaining	2	
30	99952 0816	Washer, Plain	2	
31	1015 46 691	Joint, "T"	1	
32	99902 0800	Nut	2	
	99971 0800	Washer, Spring	1	

BUMPER & GRILLE
(USED UP TO CAR NO. 179250 73/9)

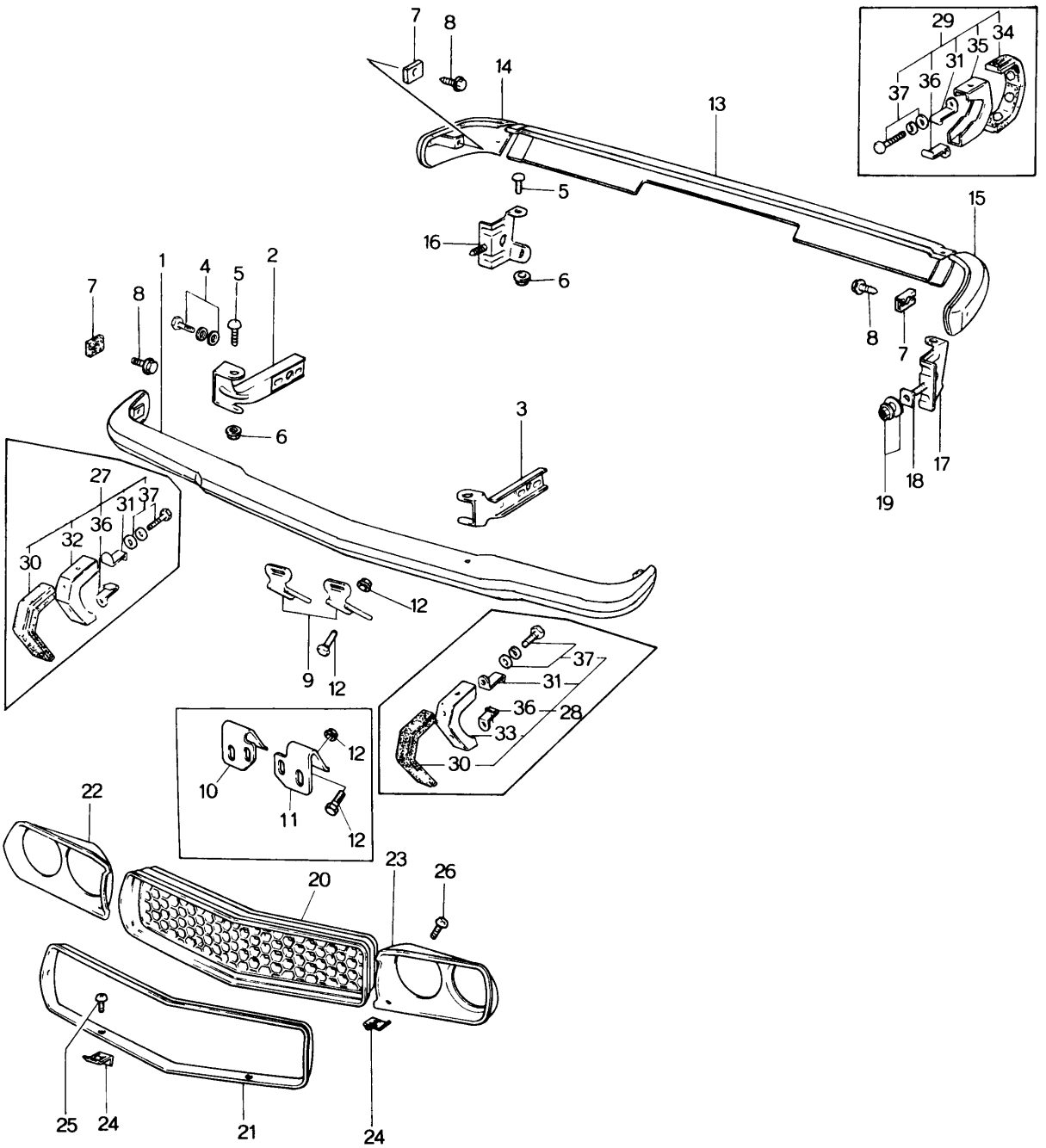

BUMPER & GRILLE
(USED UP TO CAR NO. 179250 73/9)

No.	Part Number	Description	Q'ty	Remarks
1	0866 50 110A	Bar, Front Bumper	1	
2	0866 50 141	Stay (R), Front Bumper	1	
3	0866 50 151	Stay (L), Front Bumper	1	
4	90794 10259	Bolt Set, Stay & Front Frame	4	
5	0223 50 275	Screw, Bumper & Stay	12	
6	99940 0602	Nut, Bumper & Stay	12	
7	0866 50 102A	Spacer, Bumper	4	
8	907860 6 22	Bolt Set, Spacer	4	
9	0866 50 181A	Holder, Number Plate-Germany Excluded	2	
10	0370 50 181	Holder (R), Number Plate	1	For Germany
11	0370 50 182	Holder (L), Number Plate	1	For Germany
12	99806 0612	Bolt, Holder	2	
	99940 0602	Nut	2	
13	1562 50 311	Bar (C), Rear Bumper	1	
14	0866 50 320B	Bar (R), Rear Bumper	1	
15	0866 50 330B	Bar (L), Rear Bumper	1	
16	0866 50 340	Stay (R), Rear Bumper	1	
17	0866 50 350	Stay (L), Rear Bumper	1	
18	0111 57 111	Set Rubber	2	
19	99940 1002	Nut, Stay & Rear Bumper	2	

50 BUMPER & GRILLE
(USED UP TO CAR NO. 179250 73/9)

No.	Part Number	Description	Q'ty	Remarks	
	99951 1030	Washer, Plain	2		
20	0866 50 511 A02	Grille, Radiator	1		©
●	0866 50 511 A06	Grille, Radiator	1	73/1～○	©
21	0866 50 521 A	Mould, Front	1		
22	0866 50 531-00	Bezel (R), Lamp (GRY.) (DUL.)	1		
	0866 50 531-02	Bezel (R), Lamp (GRY.) (S.DUL.)	1	Car No. 165313 73/3～×	
23	0866 50 541-00	Bezel (L), Lamp (GRY.) (DUL.)	1		
	0866 50 541-02	Bezel (L), Lamp (GRY.) (Semi Dull Finish)	1	Car No. 165313 73/3～×	
24	99896 0500	Nut, Speed (Grille····8, Bezel····6)	14		
25	99737 0514	Screw, Grille	8		
26	99862 0516 B	Screw, Bezel	8		
27	0866 99 801	Guard Set (R), Front Bumper	1		
28	0866 99 802	Guard Set (L), Front Bumper	1		
29	0866 99 806	Guard Set, Rear Bumper	2		
30	0866 78 701 A	Rubber, Cushion (Frt.)	2		
31	0866 78 702	Plate, Clamp	4		
32	0866 78 710	Guard (R), Front Bumper	1		
33	0866 78 750	Guard (L), Front Bumper	1		
34	0866 78 801 A	Rubber, Cushion (Rr.)	2		
35	0866 78 810	Guard, Rear Bumper	2		
36	0305 50 231	Plate, Clamp	4		
37	907076 6 20	Bolt Set, Bumper Guard	8		

BUMPER & GRILLE
(USED FROM CAR NO. 160623 73/10)

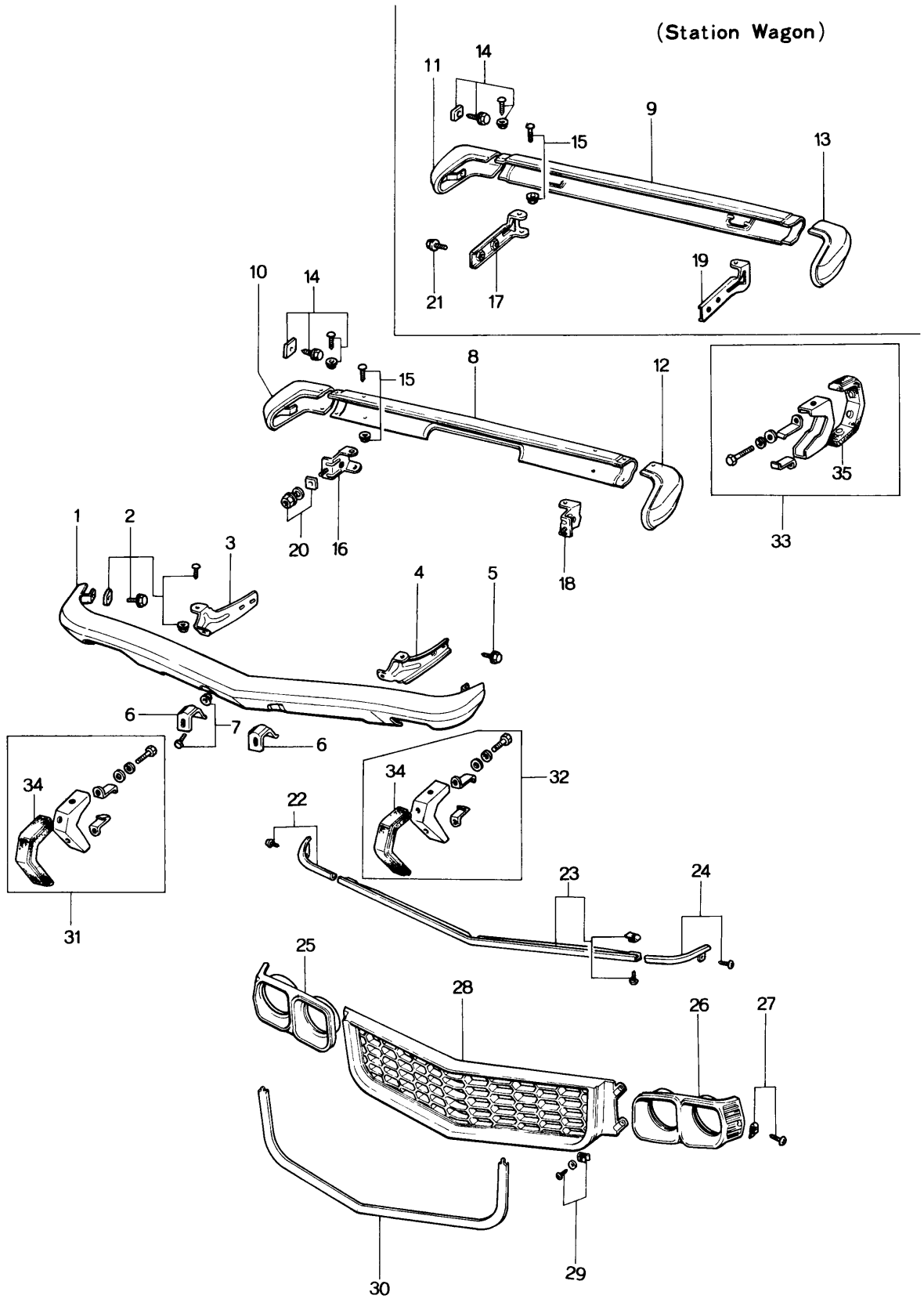

BUMPER & GRILLE
(USED FROM CAR NO. 160623 73/10)

50

No.	Part Number	Description	Q'ty	Remarks
1	1128 50 110B	Bar, Front Bumper	1	
2	0370 99 916	Fixing Set, Bumper-Front	2	
3	1128 50 141	Stay (R), Front Bumper	1	
4	1128 50 151	Stay (L), Front Bumper	1	
5	90794 10259	Bolt, Stay	4	
6	1128 50 181	Holder, Number Plate	2	
7	99806 0612	Bolt, Number Plate Holder	2	
	99940 0602	Nut	2	
8	1562 50 311	Bar (C), Rear Bumper (Sedan & Coupe)	1	
9	0585 50 310A	Bar (C), Rear Bumper (Station Wagon)	1	
10	0866 50 320B	Bar (R), Rear Bumper (Sedan & Coupe)	1	
11	0585 50 320D	Bar (R), Rear Bumper (Station Wagon)	1	
12	0866 50 330B	Bar (L), Rear Bumper (Sedan & Coupe)	1	
13	0585 50 330D	Bar (L), Rear Bumper (Station Wagon)	1	
14	0379 99 916	Fixing Set, Rear Bumper (R) & (L)	2	
15	0243 99 916	Fixing Set, Rear Bumper (C)	2	
16	0866 50 340	Stay (R), Rear Bumper (Sedan & Coupe)	1	
17	0585 50 360	Stay (R), Rear Bumper (Station Wagon)	1	
18	0866 50 350	Stay (L), Rear Bumper (Sedan & Coupe)	1	
19	0585 50 370	Stay (L), Rear Bumper (Station Wagon)	1	

50 BUMPER & GRILLE
(USED FROM CAR NO. 160623 73/10)

No.	Part Number	Description	Q'ty	Remarks
20	99940 1002	Nut, Stay	2	
	99951 1030	Washer, Plain	2	
	0111 57 111	Rubber, Set	2	
21	90794 10259	Bolt Set (Station Wagon)	4	
22	1128 99 712	Mould Set (R), Nose	1	
23	1128 99 711	Mould Set (C), Nose	1	
24	1128 99 713	Mould Set (L), Nose	1	
25	1128 50 531 A	Bezel (R), Lamp	1	
26	1128 50 541 A	Bezel (L), Lamp	1	
27	99769 0420 B	Screw, Tapping	6	
	99869 0400	Nut, Spring	6	
28	1128 50 511 A01	Grille, Radiator (SILV. M.)	1	
29	99769 0420 B	Screw, Tapping	6	
	99952 0512	Washer, Plain	6	
	99896 0400	Washer, Spring	6	
30	1128 50 521	Mould, Grille	1	
31	1128 99 801	Guard Set (R), Front Bumper	1	
32	1128 99 802	Guard Set (L), Front Bumper	1	
33	0866 99 806	Guard Set, Rear Bumper (Sedan & Coupe)	2	

No.	Part Number	Description	Q'ty	Remarks
34	0866 78 701 A	Rubber, Cushion (Frt.)	2	
35	0866 78 801 A	Rubber, Cushion (Rr.) (Sedan & Coupe)	2	

No.	Part Number	Description	Q'ty	Remarks
	99971 0600	Washer, Spring	4	
36	0376 52 901A	Weatherstrip (Coupe)	1	
	0866 52 901A	Weatherstrip (Sedan)	1	
● Ⓝ	1691 53 978	Rubber, Edge (1692) (3515)	1	Car No. 175279 73/7～Added Anew

BODY PANELS (FRONT)
(USED UP TO CAR NO. 179250 73/9)

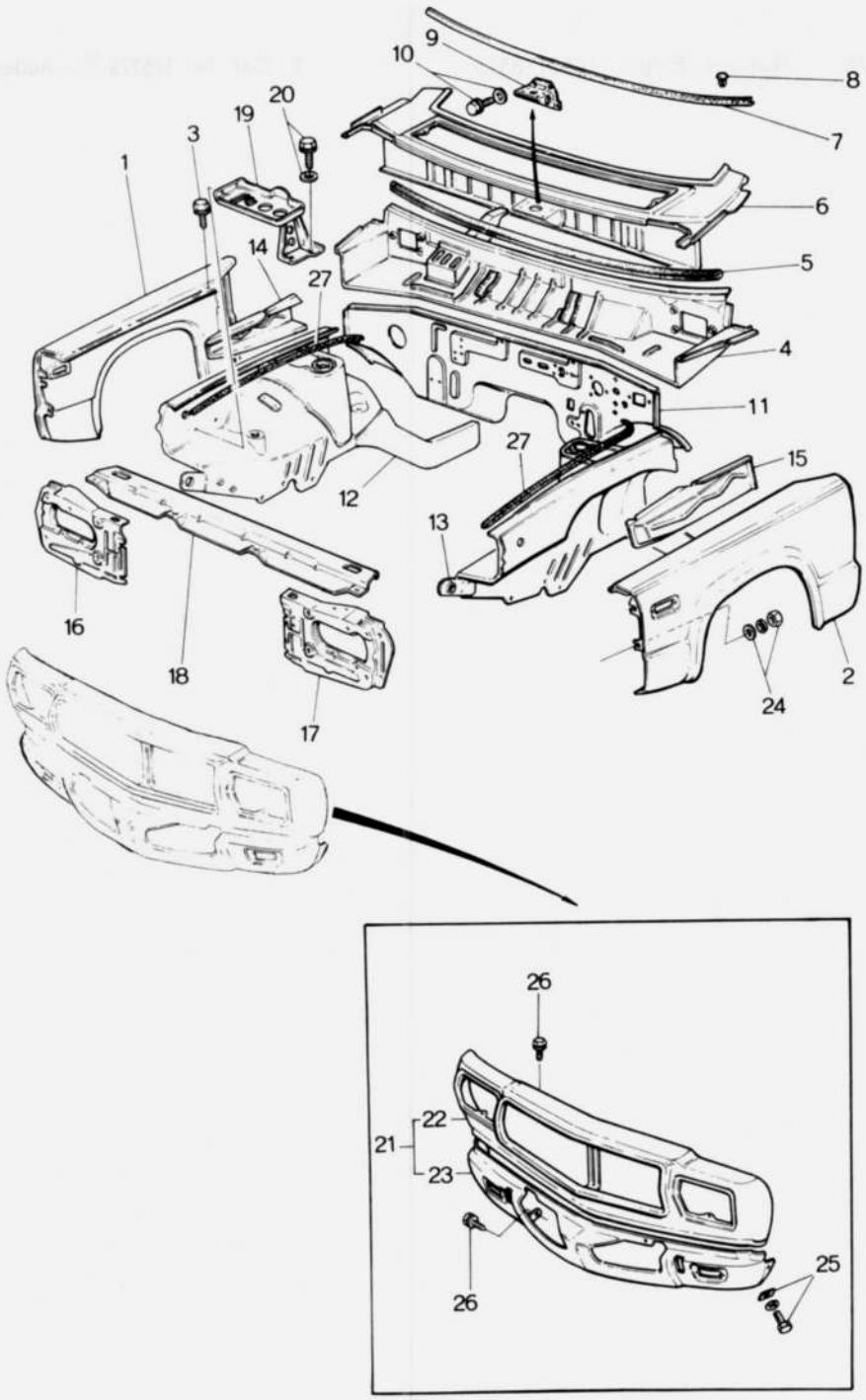

BODY PANELS (FRONT)
(USED UP TO CAR NO. 179250 73/9)

51 ~ 70

No.	Part Number	Description	Q'ty	Remarks
1	1524 51 020A	Panel (R), Front Fender	1	
2	1524 51 120A	Panel (L), Front Fender	1	
3	908067 6 14	Bolt Set, Front Fender	12	
4	1524 53 020E	Panel, Dashboard-Upper	1	
●	1524 53 020G	Panel, Dashboard-Upper	1	73/9~○
5	0866 53 029A	Rubber, Edge-Dashboard Panel & Cowl Panel	1	
6	1524 74 040	Panel, Cowl	1	
7	0866 53 979A	Rubber, Seal-Cowl Panel	1	
8	99264 0531B	Fastener, Cowl Panel & Seal Rubber	8	
9	0866 53 981	Bracket, Lock-Bonnet	1	
10	908066 6 16	Bolt Set, Lock Bracket & Cowl Panel	4	
11	1524 53 100E	Panel, Dashboard-Lower	1	
●	1524 53 100G	Panel, Dashboard-Lower	1	73/9~○
	1620 53 100	Panel, Dashboard-Lower (With Car Cooler)	1	
	1628 53 100B	Panel, Dashboard-Lower (For Sweden)	1	
12	1524 53 220F	Panel (R), Wheel Apron	1	
13	1524 54 220E	Panel (L), Wheel Apron	1	
●	1524 54 220F	Panel (L), Wheel Apron	1	73/9~○
●	1524 54 220G	Panel (L), Wheel Apron	1	73/9~○
14	0866 53 281A	Reinforcement (R), Wheel Apron Panel	1	
15	0866 54 281A	Reinforcement (L), Wheel Apron Panel	1	
16	0866 53 720A	Panel (R), Shroud	1	
●	0866 53 720B	Panel (R), Shroud	1	73/11~○
17	0866 54 720	Panel (L), Shroud	1	
18	0866 53 750	Panel, Shroud-Upper	1	
19	0866 53 780A	Carrier, Battery	1	
●	0866 53 780B	Carrier, Battery	1	73/11~○

BODY PANELS (FRONT)
(USED UP TO CAR NO. 179250 73/9)

No.	Part Number	Description	Q'ty	Remarks
20	908017 8 16	Bolt Set, Battery Carrier	4	
21	0866 70 120B	Panel Cpt., Nose	1	
22	0866 74 200A	Panel, Nose	1	
23	0866 70 160D	Skirt	1	
24	99906 0600	Nut, Nose Panel	4	
	99952 0618	Washer, Plain	4	
	99971 0600	Washer, Spring	4	
25	99864 0616	Screw, Skirt	2	
	99952 0618	Washer, Plain	2	
	99896 0600	Nut, Spring	2	
26	99806 0614	Bolt, Nose & Skirt Panel	6	
	99952 0618	Washer, Plain	6	
	99971 0600	Washer, Spring	6	
27	1690 53 977	Rubber, Edge-For Germany	2	

BODY PANELS (FRONT)

(USED FROM CAR NO. 160623 73/10)

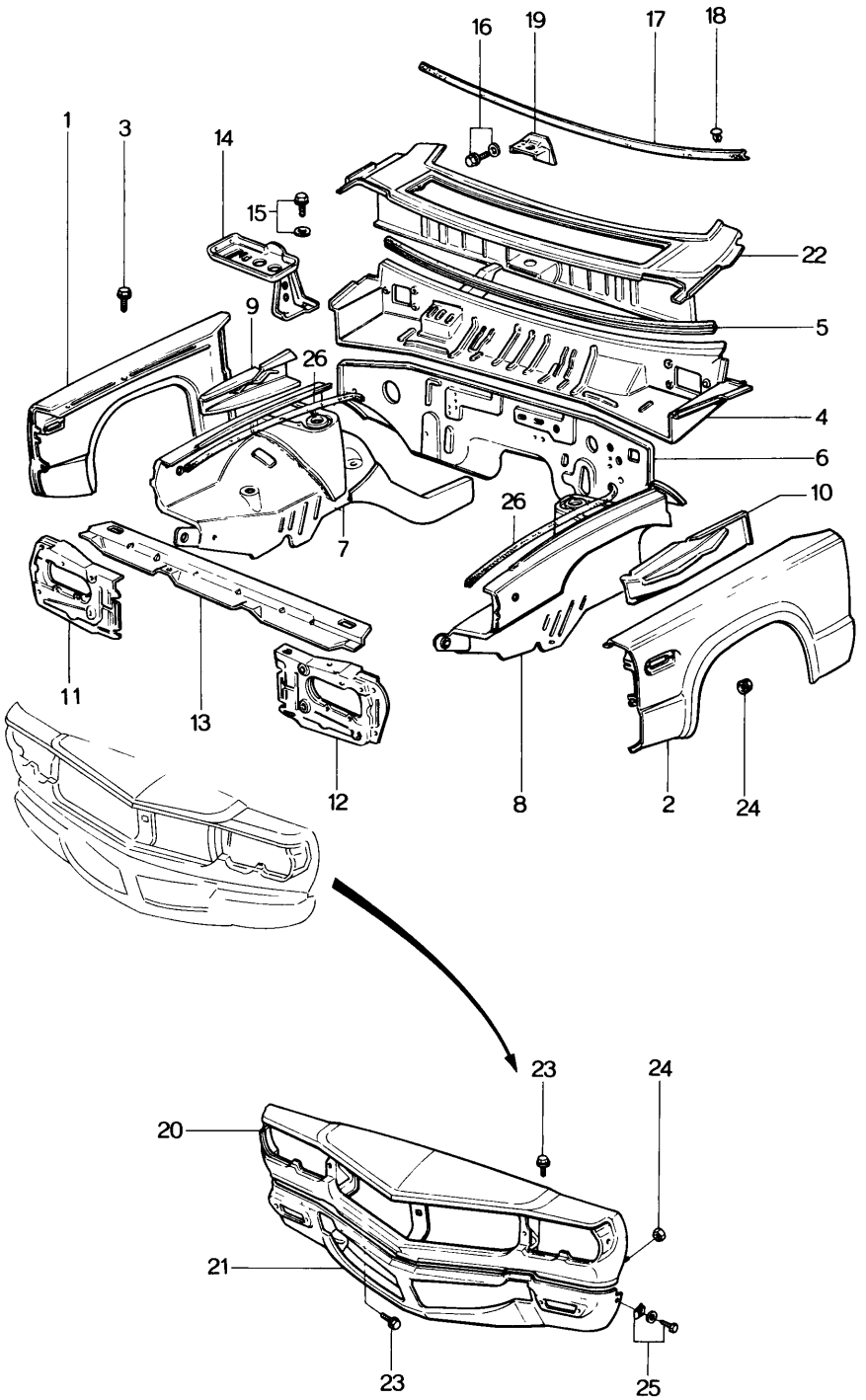

BODY PANELS (FRONT)
(USED FROM CAR NO. 160623 73/10)

51 ~ 70

No.	Part Number	Description	Q'ty	Remarks
1	1524 51 020A	Panel (R), Front Fender	1	
2	1524 51 120A	Panel (L), Front Fender	1	
3	99806 0614	Bolt, Fender	12	
	99952 0600	Washer, Plain	12	
	99971 0600	Washer, Spring	12	
4	0866 53 020G	Panel, Dashboard-Upper (R.H.D.)	1	
	1524 53 020G	Panel, Dashboard-Upper (L.H.D.)	1	
5	0866 53 029A	Rubber, Edge	1	
● 6	0866 53 100 I	Panel, Dashboard-Lower (R.H.D.) (Manual)	1	
●	0378 53 100 I	Panel, Dashboard-Lower (R.H.D.) (Automatic)	1	
●	1524 53 100G	Panel, Dashboard-Lower (W/O Cooler) (L.H.D.) (Manual)	1	
●	1620 53 100B	Panel, Dashboard-Lower (With Cooler) (L.H.D.) (Manual)	1	
7	0866 53 220F	Panel (R), Wheel Apron (R.H.D.)	1	
	1524 53 220G	Panel (R), Wheel Apron (L.H.D.)	1	73/9~○
8	0866 54 220F	Panel (L), Wheel Apron (R.H.D.)	1	
	0866 54 220G	Panel (L), Wheel Apron (R.H.D.)	1	74/1~○
	1524 54 220G	Panel (L), Wheel Apron (L.H.D.)	1	
	1524 54 220H	Panel (L), Wheel Apron (L.H.D.)	1	74/1~○
9	0866 53 281A	Reinforcement (R)	1	
10	0866 54 281A	Reinforcement (L)	1	
11	0866 53 720A	Panel (R), Shroud	1	
	0866 53 720B	Panel (R), Shroud	1	73/11~○
●	0866 53 720C	Panel (R), Shroud	1	73/11~○
12	0866 54 720	Panel (L), Shroud	1	
13	0866 53 750	Panel, Shroud-Upper	1	
14	0866 53 780A	Carrier Battery	1	

BODY PANELS (FRONT)
(USED FROM CAR NO. 160623 73/10)

No.	Part Number	Description	Q'ty	Remarks
	0866 53 780B	Carrier, Battery	1	73/11~○
● 15	99801 0816	Bolt, Battery Carrier	4	
●	99796 0816	Bolt, Battery Carrier	4	74/4~○
●	99952 0822	Washer, Plain	4	From Car No. 1
●	99971 0800	Washer, Spring	4	From Car No. 1
16	99806 0616	Bolt, Lock Bracket	1	
	99952 0600	Washer, Plain	1	
	99971 0600	Washer, Spring	1	
17	0866 53 979A	Rubber, Seal	1	
18	99264 0531B	Clip, Seal Rubber	8	
19	0866 53 981	Bracket, Lock	1	
20	1128 70 120	Panel Ass'y, Nose	1	
21	1128 70 160	Skirt, Front	1	
22	0866 74 040	Panel, Cowl (R.H.D.)	1	
	1524 74 040	Panel, Cowl (L.H.D.)	1	
23	99796 0614	Bolt (Nose & Shroud ···4, Skirt & Frame···2)	6	
	99952 0618	Washer, Plain	6	
24	99940 0602	Nut, Nose & Skirt	4	
25	99864 0616	Screw, Skirt & Fender	2	
	99952 0618	Washer, Plain	2	
	99896 0600	Nut, Spring	2	
26	1690 53 977	Rubber, Edge	2	

	No.	Part Number	Description	Q'ty	Remarks
●	1	0866 53 320	Panel (R), Cowl Side (R.H.D.)	1	
●		1524 53 320A	Panel (R), Cowl Side (L.H.D.)	1	
●	2	0866 54 320	Panel (L), Cowl Side (R.H.D.)	1	
●		1524 54 320B	Panel (L), Cowl Side (L.H.D.)	1	
	3	0376 53 330	Pillar (R), Front Inner	1	
	4	0376 54 330	Pillar (L), Front Inner	1	
	5	0376 53 340	Rail (R), Roof Inner	1	
	6	0376 54 340	Rail (L), Roof Inner	1	
	7	0376 53 350B	Panel (R), Quarter Inner	1	
		0376 53 350C	Panel (R), Quarter Inner	1	Car No. 166069 $^{73}/_{3}$～△
●		1559 53 350C	Panel (R), Quarter Inner	1	Car No. 160623 $^{73}/_{10}$～△
		1559 53 350B	Panel (R), Quarter Inner (For Sweden)	1	
●		1559 53 350C	Panel (R), Quarter Inner (For Sweden)	1	Car No. 160623 $^{73}/_{10}$～△
	8	0376 54 350C	Panel (L), Quarter Inner	1	
		0376 54 350D	Panel (L), Quarter Inner	1	Car No. 160669 $^{73}/_{3}$～△
●		0376 54 350E	Panel (L), Quarter Inner	1	Car No. 177587 $^{73}/_{7}$～△
●		1559 54 350C	Panel (L), Quarter Inner	1	Car No. 160623 $^{73}/_{10}$～△
		1559 54 350B	Panel (L), Quarter Inner (For Sweden)	1	
●		1559 54 350C	Panel (L), Quarter Inner (For Sweden)	1	Car No. 160623 $^{73}/_{10}$～△
	9	0376 53 391	Plate (R), End-Inner	1	

No.	Part Number	Description	Q'ty	Remarks
	0376 53 391 A	Plate (R), End-Inner	1	Car No. 166069 73/3～△
10	0376 54 391	Plate (L), End-Inner	1	
	0376 54 391 A	Plate (L), End-Inner	1	Car No. 166069 73/3～△
11	1562 74 090	Pillar (R), Hinge Outer	1	
12	1562 74 120	Pillar (L), Hinge Outer	1	
13	0376 53 430	Rail (R), Roof Outer	1	
14	0376 54 430	Rail (L), Roof Outer	1	
15	0376 53 451	Sill (R), Side Outer	1	
16	0376 54 451	Sill (L), Side Outer	1	
17	0376 53 500 A	Pillar (R), Center-Outer	1	
18	0376 54 500 A	Pillar (L), Center-Outer	1	
19	0376 53 591	Rail (R), Rain	1	
20	0376 54 591	Rail (L), Rain	1	
21	0376 74 100	Panel (R), Rear Fender	1	
22	0376 74 130	Panel (L), Rear Fender	1	
23	0376 53 810 B	Tray, Package	1	
24	0866 53 830 A	Brace (R), Side	1	
25	0866 54 830 A	Brace (L), Side	1	
26	0866 54 845	Brace, Diagoal	2	
27	0376 74 030	Panel, Roof	1	

No.	Part Number	Description	Q'ty	Remarks
28	0376 53 920	Header, Front	1	
29	0376 53 941	Header, Rear	1	
30	0376 53 950	Reinforcement, Roof	1	
31	0376 74 050	Panel, Rear Deck	1	
32	1527 70 050	Panel, Rear End	1	
33	0259 53 455	Plug, Drain	6	

	No.	Part Number	Description	Q'ty	Remarks
●	1	0866 53 320	Panel (R), Cowl Side (R.H.D.)	1	
●		1524 53 320A	Panel (R), Cowl Side (L.H.D.)	1	
●	2	0866 54 320	Panel (L), Cowl Side (R.H.D.)	1	
●		1524 54 320B	Panel (L), Cowl Side (L.H.D.)	1	
	3	0866 53 330	Pillar (R), Front Inner	1	
	4	0866 54 330	Pillar (L), Front Inner	1	
	5	0866 53 340A	Rail (R), Roof Inner	1	
●		0866 53 340B	Rail (R), Roof Inner	1	74/1~○
	6	0866 54 340	Rail (L), Roof Inner	1	
●		0866 54 340A	Rail (L), Roof Inner	1	74/1~○
	7	1531 53 350C	Pillar (R), Rear Inner	1	
	8	1531 54 350C	Pillar (L), Rear Inner	1	
	9	0866 53 381	Pillar (R), Center-Inner	1	
●		0866 53 381A	Pillar (R), Center-Inner	1	73/6~○
	10	0866 54 381	Pillar (L), Center-Inner	1	
●		0866 54 381A	Pillar (L), Center-Inner	1	73/6~○
	11	0866 74 090	Pillar (R), Hinge Outer	1	
	12	0866 74 120	Pillar (L), Hinge Outer	1	
	13	0866 53 430	Rail (R), Roof Outer	1	
	14	0866 54 430	Rail (L), Roof Outer	1	

BODY PANELS (SIDE, SEDAN)

No.	Part Number	Description	Q'ty	Remarks
15	0866 53 451	Sill (R), Side Outer	1	
16	0866 54 451	Sill (L), Side Outer	1	
17	0866 53 452	Plate (R), Filler	1	
18	0866 54 452	Plate (L), Filler	1	
19	0866 53 500A	Pillar (R), Center-Outer	1	
20	0866 54 500A	Pillar (L), Center-Outer	1	
21	0866 53 591	Rail (R), Rain	1	
22	0866 54 591	Rail (L), Rain	1	
23	0866 74 100	Panel (R), Rear Fender	1	
24	0866 74 130	Panel (L), Rear Fender	1	
25	0866 53 810B	Tray, Package	1	
●	0866 53 810C	Tray, Package	1	Car No. 160378 $\frac{72}{12}$~△
26	0866 53 830A	Brace (R), Side	1	
27	0866 54 830A	Brace (L), Side	1	
28	0866 53 845	Brace, Diagonal	2	
29	0866 74 030	Panel, Roof	1	
30	0866 53 920	Header, Front	1	
31	0866 53 941	Header, Rear	1	
32	0866 53 950	Reinforcement, Roof	1	
33	0866 74 050	Panel, Rear Deck	1	

No.	Part Number	Description	Q'ty	Remarks
34	1524 70 050	Panel, Rear End	1	
35	0259 53 455	Plug, Drain (Side Sill Outer···6, Rear Fender···2)	6	
36	0118 56 242B	Plug, Drain	2	

BODY PANELS (SIDE, STATION WAGON)

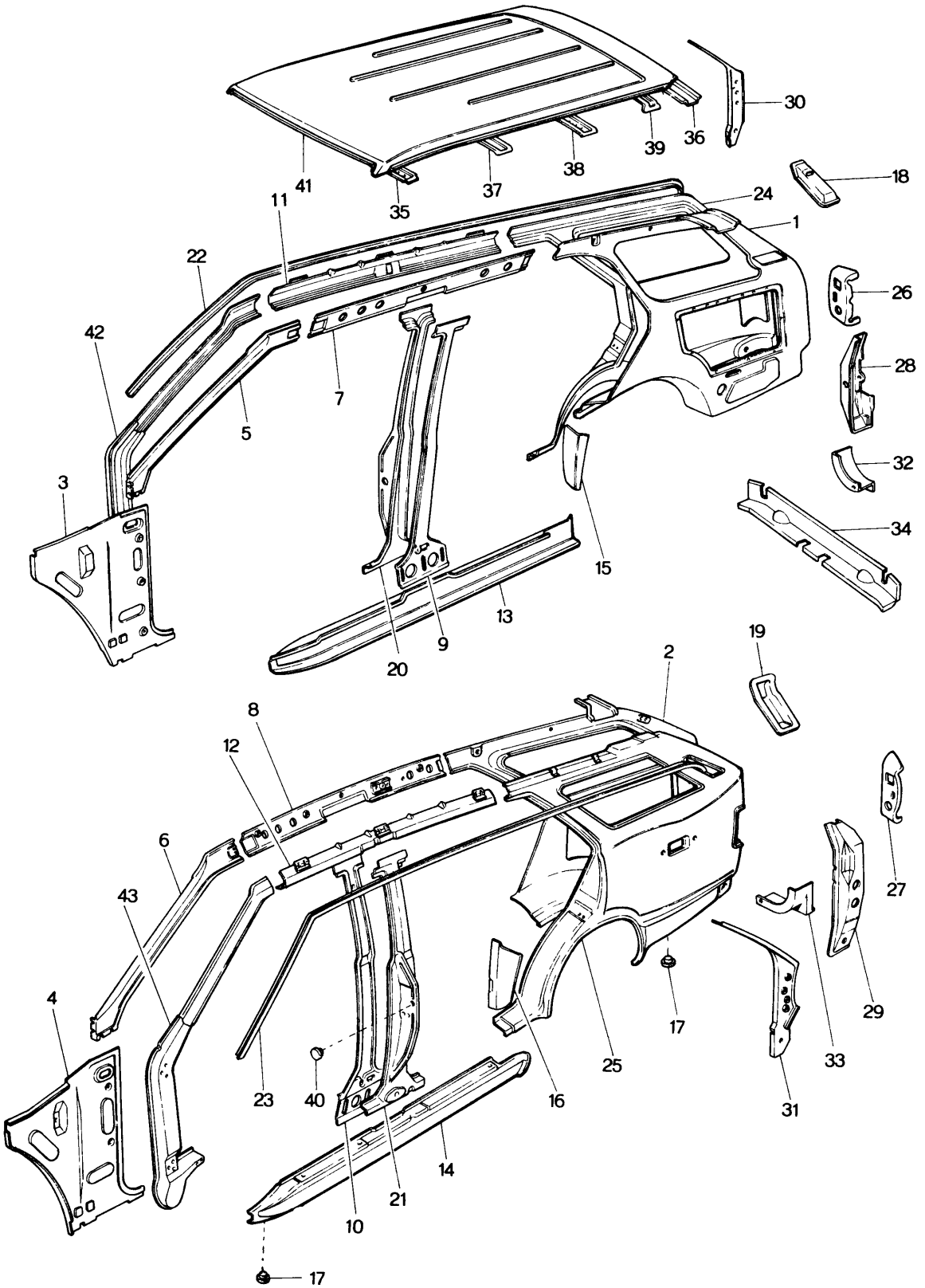

BODY PANELS (SIDE, STATION WAGON) 53 54

No.	Part Number	Description	Q'ty	Remarks
1	0585 53 310	Panel (R), Inside	1	
2	0585 54 310A	Panel (L), Inside	1	
3	0866 53 320	Panel (R), Cowl Side	1	
4	0866 54 320	Panel (L), Cowl Side	1	
5	0866 53 330	Pillar (R), Front Inner	1	
6	0866 54 330	Pillar (L), Front Inner	1	
7	0585 53 340	Rail (R), Roof Inner	1	
	0585 53 340A	Rail (R), Roof Inner	1	$\frac{74}{1}$~○
8	0585 54 340	Rail (L), Roof Inner	1	
	0585 54 340A	Rail (L), Roof Inner	1	$\frac{74}{1}$~○
9	0866 53 381A	Pillar (R), Center-Inner	1	
10	0866 54 381A	Pillar (L), Center-Inner	1	
11	0585 53 430	Rail (R), Roof Outer	1	
12	0585 54 430	Rail (L), Roof Outer	1	
13	0866 53 451	Sill (R), Side Outer	1	
14	0866 54 451	Sill (L), Side Outer	1	
15	0866 53 452	Plate (R), Filler	1	
16	0866 54 452	Plate (L), Filler	1	
17	0259 53 455	Plug, Drain (Side Sill ···6, Rear Fender ··· 2)	8	
18	0585 53 480B	Chamber (R)	1	

No.	Part Number	Description	Q'ty	Remarks
19	0585 54 480B	Chamber (L)	1	
20	0866 53 500A	Pillar (R), Center-Outer	1	
21	0866 54 500A	Pillar (L), Center-Outer	1	
22	0585 53 591	Rail (R), Rain	1	
23	0585 54 591	Rail (L), Rain	1	
24	1529 53 600A	Panel (R), Rear Fender	1	
25	1529 54 600A	Panel (L), Rear Fender	1	
26	0585 53 651	Housing (R), Lamp	1	
27	0585 54 651	Housing (L), Lamp	1	
28	0585 53 660A	Reinforcement (R)	1	
29	0585 54 660A	Reinforcement (L)	1	
30	0585 53 670A	Pillar (R), Rear-Outer	1	
31	0585 54 670A	Pillar (L), Rear-Outer	1	
32	0585 53 691	Junction (R), Corner	1	
33	0585 54 691	Junction (L), Corner	1	
34	0585 53 701A	Crossmember, Rear-Outer	1	
35	0866 53 920	Header, Front	1	
36	0585 53 941	Header, Rear	1	
37	0866 53 950	Reinforcement, Roof	1	
38	0866 53 951	Reinforcement, Roof	1	

No.	Part Number	Description	Q'ty	Remarks
39	0585 53 970A	Reinforcement, Roof	1	
40	0118 56 242B	Plug, Drain-Center Pillar	2	
41	0585 74 030	Panel, Roof	1	
42	0866 74 090	Pillar (R), Hinge Outer	1	
43	0866 74 120	Pillar (L), Hinge Outer	1	

BODY PANELS (FLOOR)
(USED UP TO CAR NO. 179250 73/9)

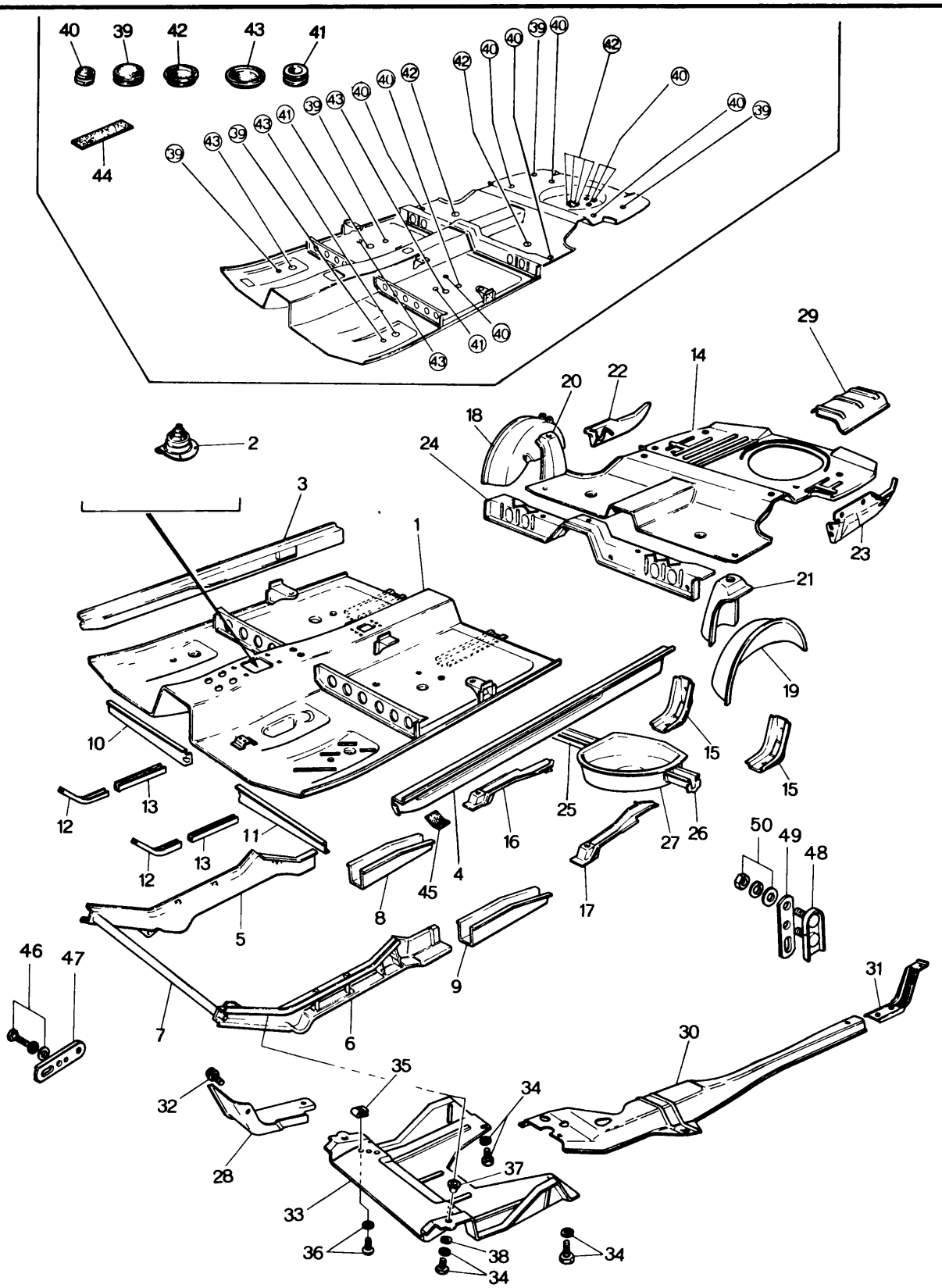

BODY PANELS (FLOOR)
(USED UP TO CAR NO. 179250 73/9)

	No.	Part Number	Description	Q'ty	Remarks
	1	1608 56 010D	Pan, Front Floor	1	
●		1608 56 010E	Pan, Front Floor	1	73/5~○
●		1609 56 010D	Pan, Front Floor (For Sweden)	1	
●		1609 56 010E	Pan, Front Floor (For Sweden)	1	73/5~○
	2	0866 56 981	Insulator	1	
	3	0376 56 080C	Panel (R), Sill-Inner (Coupe)	1	
		0866 56 080C	Panel (R), Sill-Inner (Sedan)	1	
●		0866 56 080D	Panel (R), Sill-Inner (Sedan)	1	73/10~○
	4	0376 56 580A	Panel (L), Sill-Inner (Coupe)	1	
		0866 56 580A	Panel (L), Sill-Inner (Sedan)	1	
●		0866 56 580B	Panel (L), Sill-Inner (Sedan)	1	73/10~○
	5	1524 56 110H	Frame (R), Front	1	
	6	1524 56 610E	Frame (L), Front	1	
	7	0866 56 171	Member No. 1, Cross	1	
	8	0866 56 180	Frame (R), "B"-Front	1	
	9	0866 56 181A	Frame (L), "B"-Front	1	
	10	0866 56 019	Reinforcement (R)	1	
	11	0866 56 519	Reinforcement (L)	1	
	12	1524 56 117	Reinforcement "A"	2	
	13	1524 56 118	Reinforcement "B"	2	
	14	1620 56 210	Pan, Rear Floor	1	
	15	0866 56 215	Bracket, Bumper	2	
	16	0866 56 310A	Frame (R), Rear	1	
	17	0866 56 810A	Frame (L), Rear	1	
	18	0866 56 330	Panel (R), Wheel House	1	

BODY PANELS (FLOOR)
(USED UP TO CAR NO. 179250 73/9)

No.	Part Number	Description	Q'ty	Remarks
19	0866 56 830	Panel (L), Wheel House	1	
20	0866 56 350	Bracket (R), Damper	1	
21	0866 56 850	Bracket (L), Damper	1	
22	0376 56 381	Panel (R), Rear Floor Side (Coupe)	1	
	0866 56 381	Panel (R), Rear Floor Side (Sedan)	1	
23	0376 56 881	Panel (L), Rear Floor Side (Coupe)	1	
	0866 56 881	Panel (L), Rear Floor Side (Sedan)	1	
24	1570 56 400	Member No. 3, Cross	1	
25	1570 56 450	Member No. 4 (R), Cross	1	
26	0866 56 470 A	Member No. 4 (L), Cross	1	
27	0866 56 481 A	Pan, Spare Tire	1	
28	0866 56 701 A	Insulator No. 1	1	
●	0866 56 701 B	Insulator No. 1	1	73/10~○
29	0866 56 702	Insulator No. 2	1	
30	1570 56 711 B	Insulator No. 3	1	
31	1570 56 720 B	Insulator No. 4	1	
32	907860 6 12	Bolt Set, Insulator	14	
33	0866 56 901 C	Cover, Under	1	
34	907860 6 16	Bolt Set, Under Cover	4	
35	0820 56 905	Nut, Spring	4	
36	908631 5 16	Screw Set, Under Cover	4	

No.	Part Number	Description	Q'ty	Remarks
37	0820 56 906	Spacer, Under Cover	2	
38	0223 52 007	Spacer, Under Cover	2	
39	0118 56 241	Plug, Drain	6	
40	0118 56 242B	Plug, Drain	10	
41	0208 56 615	Plug, Drain (Sedan)	2	
42	0810 56 639	Cover, Service Hole	6	
43	0866 56 971	Cover, Hole	4	
44	0866 56 489	Pad	4	
45	0824 56 999	Valve, Check (Coupe)	2	
46	0866 78 541	Hook, Front	1	(For Sweden)
47	99781 1028	Bolt, Front Hook	2	
	99541 1022	Washer, Plain	2	
	99971 1000	Washer, Spring	2	
48	0866 78 530	Reinforcement	1	
49	0866 78 521	Hook, Rear	1	
50	99921 1000	Nut, Rear Hook	2	
	99951 1020	Washer, Plain	2	
	99952 1022	Washer, Plain	2	
	99971 1000	Washer, Spring	2	

BODY PANELS (FLOOR)
(USED FROM CAR NO. 160623 73/10)

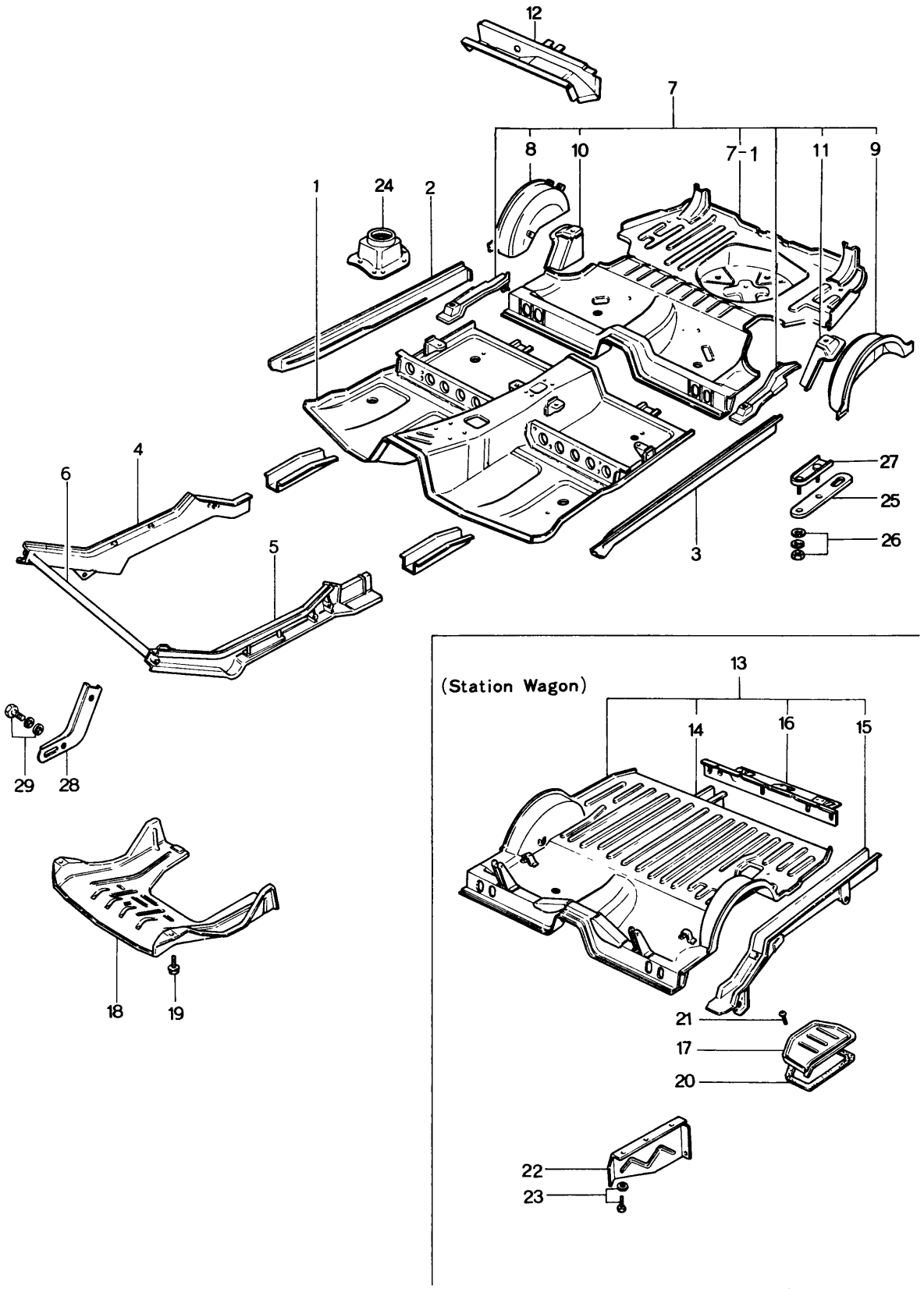

No.	Part Number	Description	Q'ty	Remarks	
1	~~1126 56 010A~~	~~Pan, Front Floor (4-Speed)~~	~~1~~		
●	1129 56 010A	Pan, Front Floor (4-Speed)	1	From Car No. 1	
	1134 56 010A	Pan, Front Floor (5-Speed)	1		
2	0376 56 080C	Sill (R), Side-Inner (Coupe)	1		
	0866 56 080D	Sill (R), Side-Inner (Sedan & Station Wagon)	1		
3	0376 56 580A	Sill (L), Side-Inner (Coupe)	1		
	0866 56 580B	Sill (L), Side-Inner (Sedan & Station Wagon)	1		
4	1511 56 110F	Frame (R), Front (R.H.D.)	1		
	1524 56 110H	Frame (R), Front (L.H.D.)	1		
5	1511 56 610B	Frame (L), Front (R.H.D.)	1		
	1524 56 610E	Frame (L), Front (L.H.D.)	1		
6	0866 56 171A	Member No. 1, Cross	1		
● 7	1128 56 200A	Pan, Rear Floor (Sedan)	1		☆
●	1133 56 200A	Pan, Rear Floor (Coupe)	1		☆
● 7-1	1620 56 210B	Pan, Rear Floor	1		
8	0866 56 330	Panel (R), Wheel House	1		
9	0866 56 830	Panel (L), Wheel House	1		
10	1128 56 350	Bracket (R), Damper	1		
11	0866 56 850	Bracket (L), Damper	1		
12	1128 56 450C	Member No. 4 (R) Cross	1		

BODY PANELS (FLOOR)

(USED FROM CAR NO. 160623 73/10)

No.	Part Number	Description		Q'ty	Remarks
13	1137 56 300	Pan, Rear Floor (Station Wagon)		1	
14	1137 56 330	Member (R), Rear	(Station Wagon)	1	
15	0585 56 830 D	Member (L), Rear		1	
16	0585 56 500 B	Member, Rear Cross		1	
17	0585 56 901 B	Cover, Service Hole (Station Wagon)		1	
18	1128 56 901 A	Cover, Under		1	
19	99786 0616	Bolt, Under Cover		4	
●	99952 0618	Washer, Plain		4	
20	0585 56 902	Tape	(Station Wagon)	1	
21	99868 0408	Screw, Tapping		4	
22	0585 56 911 A	Protector		1	
23	99860 0510	Screw, Tapping-Protector		4	
	99952 0600	Washer, Plain		4	
● 24	0866 56 981	Insulator (Manual)		1	
25	0866 78 521	Hook, Rear (Sedan & Coupe)	(ECE Cold Proof)	1	
26	99921 1000	Nut, Rear Hook (Sedan & Coupe)		2	
	99951 1022	Washer, Plain	(For ECE Cold Proof)	2	
	99951 1020	Washer, Plain		2	
	99971 1000	Washer, Spring		2	

No.	Part Number	Description	Q'ty	Remarks
27	0866 78 530	Reinforcement (Sedan & Coupe)	1	
28	0866 78 541	Hook, Front	1	(For ECE Cold Proof)
29	99781 102B	Bolt, Front Hook	2	
	99951 1022	Washer, Plain	2	
	99971 1000	Washer, Spring	2	

BODY PANELS (FLOOR ATTACHMENT)
(USED FROM CAR NO. 160623 73/10)

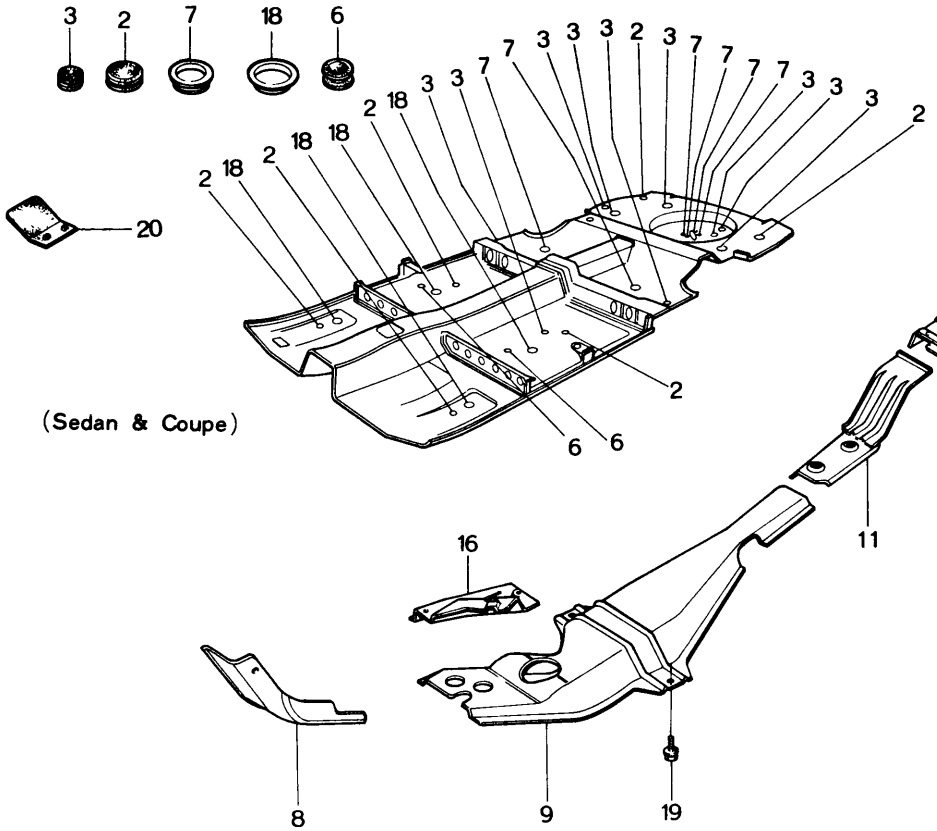

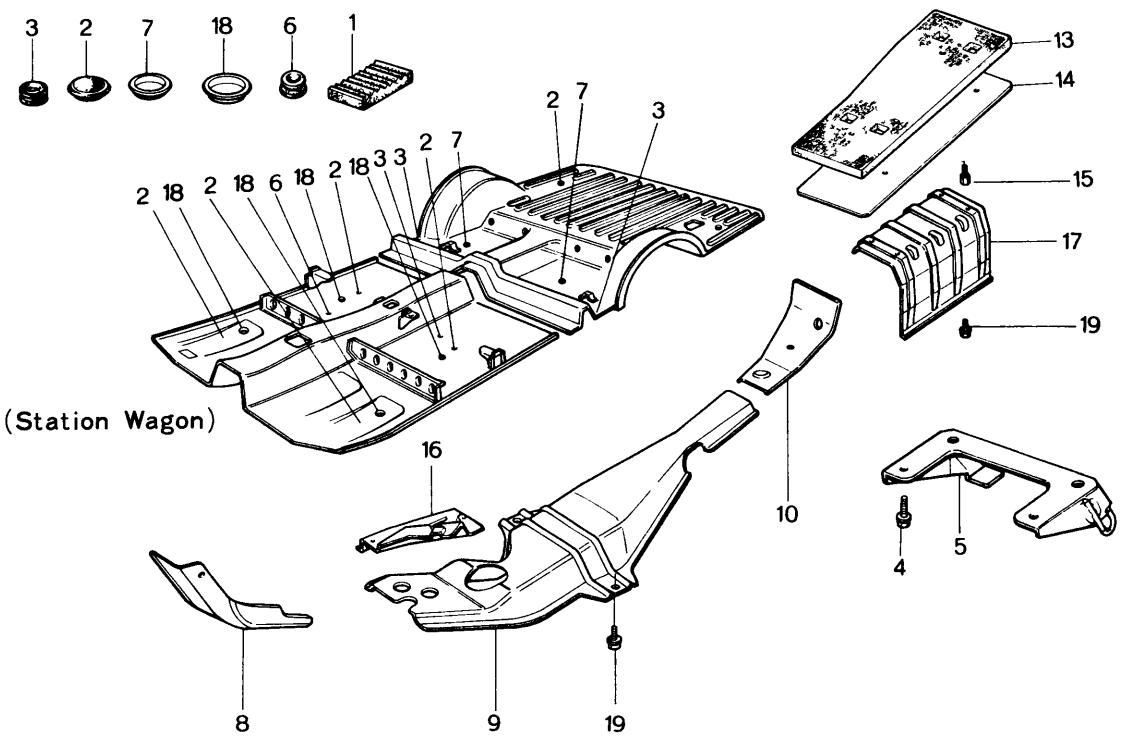

BODY PANELS (FLOOR ATTACHMENT)
(USED FROM CAR NO. 160623 73/10)

No.	Part Number	Description	Q'ty	Remarks
1	0187 56 235	Supporter, Seat (Station Wagon)	2	
2	0118 56 241	Plug, Drain (20φ use) (Sedan & Coupe)	6	
		(Station Wagon)	5	
3	0118 56 242B	Plug, Drain (12φ use) (Sedan & Coupe)	9	
		(Station Wagon)	3	
4	0585 56 540A	Hanger, Silencer	1	
5	99786 0816	Bolt, Silencer Hanger (Station Wagon)	4	
	99952 0822	Washer, Plain	4	
6	0208 56 615	Plug, Drain (30φ use)	2	
7	0810 56 639	Cover, Service Hole (40φ use) (Sedan & Coupe)	6	
		(Station Wagon)	2	
8	0866 56 701A	Insulator No. 1 (Manual)	1	
●	0871 56 701B	Insulator No. 1 (Automatic)	1	
9	1570 56 710A	Insulator No. 3	1	
10	1571 56 712C	Insulator No. 4 (Station Wagon)	1	
11	1570 56 720B	Insulator No. 4 (Sedan & Coupe)	1	
12	1128 56 730	Insulator No. 2 (Sedan & Coupe)	1	
13	1571 56 751	Insulator (Station Wagon)	1	
14	1571 56 760	Insulator No. 5 (Station Wagon)	1	
15	1571 56 755	Bolt (Station Wagon)	4	
16	1128 56 771D	Insulator No. 3, Sub	1	
17	1137 56 920	Insulator No. 2 (Station Wagon)	1	
18	0866 56 971	Cover, Hole (50φ use)	4	
19	99786 0612	Bolt	18	
	99952 0618	Washer, Plain	18	
20	0824 56 999	Valve, Check-Side Sill (Coupe)	2	

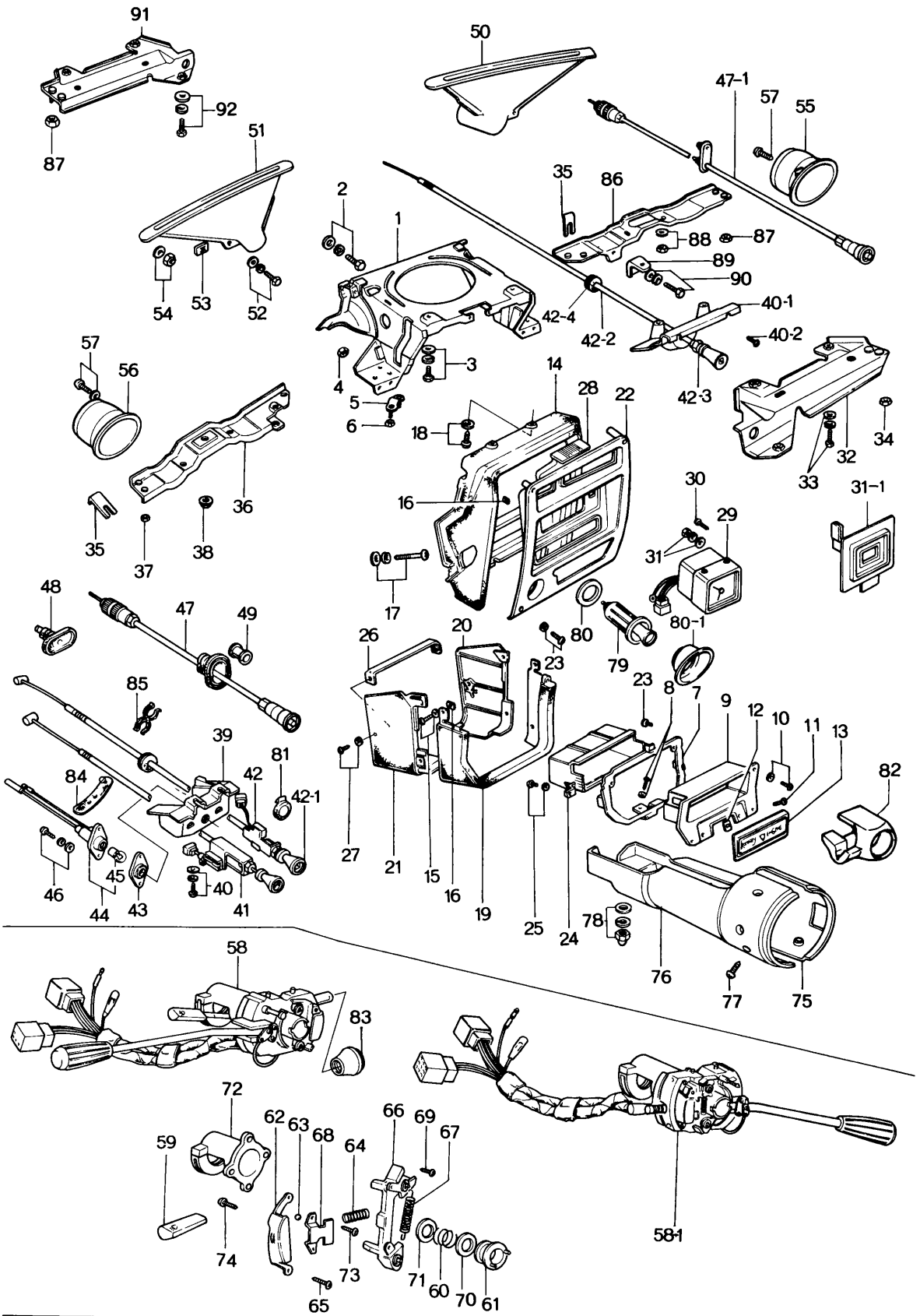
91
92
87
51
54
53
52
50
47-1
57
55
35
86
2
1
88
87
89
90
40-1
42-4
42-2
40-2
42-3
57
56
4
3
5
6
18
14
28
22
34
32
33
36
35
37
38
16
30
29
31
31-1
17
48
47
49
80
80-1
79
26
20
23
85
39
81
42
42-1
84
8
7
9
12
10
11
13
82
46
45
44
43
40
41
27
21
15
16
19
25
24
78
76
77
75
58
83
72
62
63
68
64
66
69
67
59
74
73
71
60
70
61
65
58-1

No.	Part Number	Description	Q'ty	Remarks
1	0866 55 100F	Bracket, Center Panel	1	
2	907860 8 20	Bolt Set, Center Panel Bracket	2	
3	99786 0816	Bolt, Center Panel Bracket	2	
4	99940 0802	Nut, Center Panel Bracket	2	
5	0370 55 150	Bracket, Cooler	1	
6	99940 0602	Nut, Cooler Bracket	2	
7	0866 55 360C	Holder, Grille	1	
8	908387 6 18	Screw Set, Grille Holder	1	
9	0866 55 365C	Body, Grille	1	
10	908382 4 12B	Screw Set, Grille Body	2	
11	99861 0414B	Screw, Grille Body	2	
12	99869 0400	Nut, Spring-Grille Body	2	
13	~~0865 55 368~~	~~Ornament, Tuner~~	~~1~~	
●	0866 55 368	Ornament, Tuner	1	From Car No. 1
14	0865 55 401D00	Hood No. 1 (BLK.)	1	©
15	99862 0525B	Screw, Hood No. 1	4	
	99967 0500B	Washer	4	
16	0820 56 905	Nut, Spring-Hood No. 1 & No. 2	4	
17	99743 0650	Screw, Hood No. 1	2	
	99952 0600	Washer, Plain	2	
	99971 0600	Washer, Spring	2	

No.	Part Number	Description	Q'ty	Remarks	
18	908337 6 18	Screw Set, Hood No. 1	2		
19	0865 55 402B00	Hood No. 2 (BLK.)	1		©
20	0865 55 403B00	Hood No. 3 (R) (BLK.)	1		©
21	0865 55 404B00	Hood No. 3 (L) (BLK.)	1		©
22	1562 55 405	Plate, Center (L.H.D.)	1		
	0866 55 405C	Plate, Center (R.H.D.)	1		
23	908631 5 10	Screw Set, Center Panel	4		
24	0866 55 406B00	Box, Hood Center (BLK.)	1		©
25	908386 4 12	Screw Set, Hood Box	2		
26	0866 55 590	Stiffener	1		
27	99837 0525B	Screw, Stiffener	2		
	99967 0500B	Washer	2		
28	0866 55 412A	Lens, Illumination	1		
29	1562 55 710	Clock, Auto	1		
●	0488 55 710	Clock, Auto (Automatic)	1		
30	99836 0416B	Screw, Auto Clock	4		
31	99906 0500	Nut, Auto Clock	1		
	99952 0516	Washer, Plain	1		
	99971 0500	Washer, Spring	1		
31-1	0866 55 720A	Ornament, Without Auto Clock (R.H.D.)	1		
	1561 55 720A	Ornament, Without Auto Clock (L.H.D.)	1		

No.	Part Number	Description		Q'ty	Remarks
32	1524 55 230B	Member (R), Lower	(L.H.D.)	1	
33	907860 6 16	Bolt, Member (R)		1	
34	99940 0602	Nut, Member (R)		2	
35	0866 55 216	Shim (t=1.0)	Selective use		
	0866 55 217	Shim (t=2.0)		1	
	0866 55 218	Shim (t=3.2)			
36	1524 55 210B	Member (L), Lower	(L.H.D.)	1	
37	99940 0602	Nut, Member (L)		4	
38	99940 0800	Nut, Member (L)		1	
39	1570 55 330A	Bracket, Choke	(L.H.D.)	1	
	1570 55 330B	Bracket, Choke		1	Car No. 177588 $^{73}/_{8}$~×
	1881 55 330	Bracket, Choke		1	Car No. 160623 $^{73}/_{10}$~×
40	99839 0520B	Screw, Choke Bracket		2	
	99952 0500B	Washer, Plain		2	
	99971 0500	Washer, Spring		2	
40-1	1128 55 331	Bracket, Choke	(R.H.D.)	1	
40-2	99834 0535	Screw, Choke Bracket		2	
41	1563 60 040	Wire, Throttle		1	Car No. 172856 $^{73}/_{6}$~Disiarded
	0259 55 951	Hole Cover-Switch		1	Car No. 172856 $^{73}/_{6}$~Added Anew
	2183 67 985	Connector-Short		1	Car No. 172856 $^{73}/_{6}$~Added Anew

	No.	Part Number	Description		Q'ty	Remarks
	42	1563 60 050	Cable, Choke		1	
		3514 60 050 A	Cable, Choke	(L.H.D.)	1	Car No. 160623 $^{73}/_{10}$ ~ ×
		3515 60 050 A	Cable, Choke (For West Germany)		1	
	42-1	1027 60 053	Knob		1	
		3515 60 053	Knob (For West Germany)		1	
	42-2	3507 60 050	Cable, Choke (R.H.D.) (Manual)		1	
●		3506 60 050	Cable, Choke (R.H.D.) (Automatic)		1	
	42-3	1027 60 053	Knob		1	
●	42-4	0305 60 053	Grommet, Choke Cable		1	
	43	1570 55 340	Cover, Lamp		1	
	44	1570 55 410	Lamp, Throttle Wire		1	
	45	99701 1030	Bulb, Throttle Wire Lamp	(L.H.D.)	1	
	46	908636 4 12	Screw Set, Lamp Cover		2	
	47	1562 60 070	Cable, Speedometer (L.H.D.)		1	
	47-1	0866 60 070 A	Cable, Speedometer (R.H.D.)		1	
	48	0370 60 073 B	Grommet, Throttle Wire (L.H.D.)		1	
		0866 60 073	Grommet (R.H.D.)		1	
	49	99686 0800	Protector, Speedometer Cable		1	
	50	0866 60 101	Nozzle (R), Defroster		1	
	51	0866 60 102	Nozzle (L), Defroster		1	
	52	908637 5 16	Bolt Set, Defroster Nozzle		2	
●		99865 0516	Bolt, Defroster Nozzle		2	From Car No. 1
●		99952 0516	Washer, Plain		2	From Car No. 1
	53	99896 0500	Nut, Spring-Defroster Nozzle		2	

No.	Part Number	Description	Q'ty	Remarks
54	99940 0501	Nut, Defroster Nozzle	4	
	99952 0516	Washer, Plain	4	
55	0866 60 120	Guide (R), Ventilator	1	
56	0866 60 130	Guide (L), Ventilator	1	
57	99869 0412	Screw, Ventilator Guide	4	
	99952 0412	Washer, Plain	4	
● 58	1524 60 250B	Switch, Combination	1	(L.H.D.)
●	3514 66 120	Switch, Combination (3509,3513,3514,3515)	1	Car No. 164070 73/11~×
●	1531 60 250A	Switch, Combination - Without Hazard & Parking Switch	1	
● 58-1	1511 60 250	Switch, Combination (R.H.D.)	1	
59	0866 60 251	Knob	1	
●	1011 66 121	Knob (3509,3513,3514,3515)	1	Car No. 164070 73/11~×
60	0317 60 252	Spring, Cancel Cam	1	
61	0317 60 253	Cam, Cancel	1	
62	0317 60 254	Bracket, Fixing	1	
●	1634 60 254	Bracket, Fixing (3509,3513,3514,3515)	1	Car No. 164070 73/11~×
63	0317 60 255	Ball	1	
64	0317 60 256	Spring, Arm Set	1	
65	0317 60 257	Screw, Bracket	2	

No.	Part Number	Description	Q'ty	Remarks
66	0317 60 258	Arm	1	
67	0317 60 259	Spring, Ratchet	1	
68	0317 60 261	Plate, Set	1	
69	0317 60 262	Screw Set, Plate	2	
70	0866 60 263	Washer "A"	1	
71	0866 60 264	Washer "B"	1	
72	0866 60 265A	Band	1	
●	1611 66 125	Band (3509,3513,3514,3515)	1	Car No. 164070 73/11～×
73	0317 60 266	Screw	2	
74	0866 60 267	Screw, Light Switch	2	
			1	
● Ⓝ	99709 0255	Clip	1	Car No. 164070 73/11～Added Anew
● 75	1524 60 335A	Cover (R), Column	1 (L.H.D.)	
●	1531 60 335	Cover (R), Column - Without Hazard Switch Hole	1 (L.H.D.)	
●	0866 60 335A	Cover (R), Column (R.H.D.)	1	
● 76	1524 60 345A	Cover (L), Column (L.H.D.)	1	
●	0866 60 345A	Cover (L), Column (R.H.D.)	1	
77	99832 0408B	Screw, Column Cover	4	
78	99945 0500B	Nut, Cap - Column Cover	1	
	99952 0500B	Washer, Plain	1	

No.	Part Number	Description	Q'ty	Remarks
	99971 0500	Washer, Spring	1	
79	0866 60 720	Lighter, Cigar	1	
	0866 60 720A	Lighter, Cigar	1	Car No. 74/11~△
80	0305 60 715	Shield, Heat-Cigar Lighter	1	
● 80-1	0866 60 721	Protector, Cigar Lighter	1	74/1~Added Anew
81	0259 55 951	Cover, Hole-Fog Lamp Switch	1	
82	1690 55 441	Protector, Steering Block } For Germany	1	
83	1690 60 245	Knob, Hazard Switch } For Germany	1	
84	0187 66 991	Clip, Rubber-Wire & Cable	1	Car No. 164070 73/11~Discarded
85	99288 1608	Clip, Wire & Cable	1	
86	0866 55 210B	Member (R), Lower	1	
87	99940 0602	Nut, Member	6	
88	99940 0800	Nut, Member	1	
89	0866 55 215A	Bracket, Meter	1	
90	99833 0616	Screw } (R.H.D.)	2	
	99952 0618	Washer, Plain } (R.H.D.)	2	
	99971 0600	Washer, Spring } (R.H.D.)	2	
91	0866 55 230D	Member (L), Lower } (R.H.D.)	1	
92	99786 0616	Bolt, Member } (R.H.D.)	2	
	99952 0618	Washer, Plain } (R.H.D.)	2	

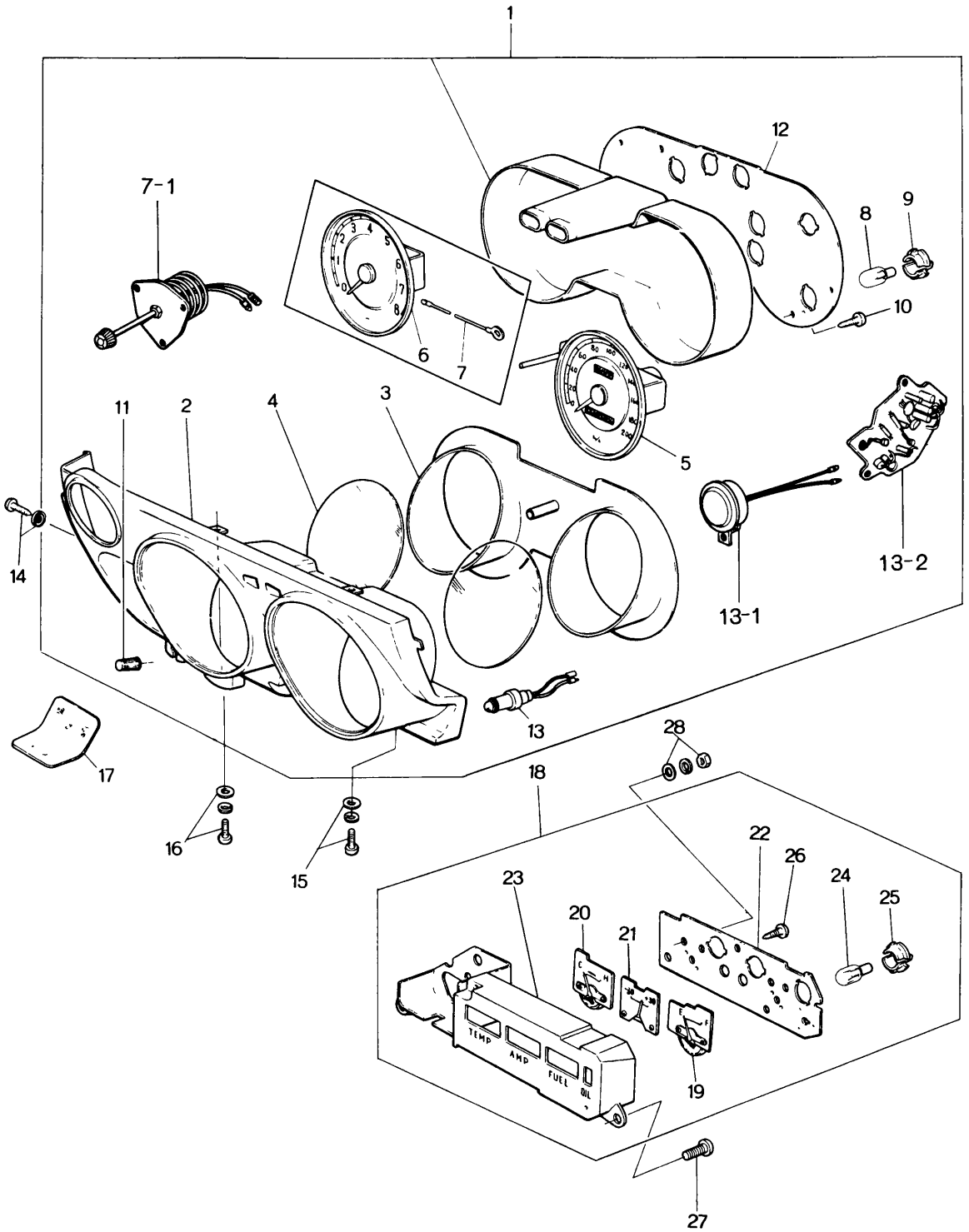
1
12
7-1
8
9
10
6
7
5
11
2
4
3
14
13-2
13-1
13
17
28
18
16
15
22
26
24
25
23
20
21
19
27
TEMP
AMP
FUEL
OIL

No.	Part Number	Description	Q'ty	Remarks
1	1562 55 430C	Meter Set (L.H.D.)	1	
	1562 55 430E	Meter Set (L.H.D.)	1	Car No. 167748 73/5 ~ △
	1562 55 430F	Meter Set (L.H.D.)	1	Car No. 160623 73/10 ~ △
	1692 55 430	Meter Set, With Throttle Warning Lamp (L.H.D.)	1	
	1692 55 430B	Meter Set, With Throttle Warning Lamp (L.H.D.)	1	Car No. 167748 73/5 ~ △
	1692 55 430C	Meter Set, With Throttle Warning Lamp (L.H.D.)	1	Car No. 160623 73/10 ~ △
	1692 55 430D	Meter Set, With Throttle Warning Lamp (L.H.D.)	1	Car No. 74/1 ~ ×
●	3506 60 430	Meter Set (Automatic) (Km) (R.H.D.)	1	
●	3506 60 530	Meter Set (Automatic) (Km / Mile) (R.H.D.)	1	
●	3507 60 530B	Meter Set (Manual) (Km & Mile) (R.H.D.)	1	
●	3504 55 430	Meter Set (Manual) (Km) (R.H.D.)	1	74/4 ~ Added Anew
2	1524 75 010	Hood (L.H.D.)	1	
	1524 75 010A	Hood (L.H.D.)	1	Car No. 160623 73/10 ~ ×
	1692 75 010	Hood, With Throttle Warning Lamp Hole (L.H.D.)	1	
	1510 75 010	Hood (R.H.D.)	1	
3	0866 75 011	Plate, Window	1	
4	0866 75 013	Glass, Window	2	
5	1562 75 021	Speedometer (L.H.D.)	1	1563, 1564, 1880, 3509
	1692 75 021	Speedometer (L.H.D.)	1	1692, 3513, 3514, 3515 Car No. 160378 72/12 ~ Added Anew
●	1513 75 021	Speedometer (Km / Mile) (R.H.D.)	1	
●	0866 75 021	Speedometer (Km) (R.H.D.)	1	74/4 ~ Added Anew
● 6	0866 75 026	Tachometer (Manual)	1	
●	1053 75 026	Tachometer (Automatic)	1	
● 7	0866 75 028	Wire, Lead - Tachometer	1	
7-1	1511 75 040	Resistor (R.H.D.)	1	

No.	Part Number	Description	Q'ty	Remarks
8	99701 6030	Bulb	9	
9	0259 55 261	Socket	9	
10	0710 55 436	Screw, Tapping	3	
11	0370 75 018	Knob, Trip Meter	1	
12	0866 75 025	Plate, Print	1	
	1128 75 025A	Plate, Print	1	Car No. 167748 73/5 ~△
	1562 75 025	Plate, Print	1	Car No. 160623 73/10 ~△
●	1881 75 025	Plate, Print (Automatic)	1	
13	2090 60 080	Lamp, Throttle Warning	1	(For Germany & R.H.D.)
	99701 1030	Bulb (12V, 3W)	1	(For Germany & R.H.D.)
	3514 64 910	Lamp, Warning (3513,3514,3515)	1	Car No. 74/1 ~×
13-1	~~1568 25 029~~	~~Buzzer~~	~~1~~	From Car No. 1
	1568 75 029	Buzzer (L.H.D.)	1	Car No. 167748 73/5 ~Added Anew
13-2	1114 55 465	Relay	1	Car No. 167748 73/5 ~Added Anew
14	99836 0516B	Screw, Meter Side	1	
	99967 0500B	Washer	1	
15	908337 6 16	Screw Set, Meter Lower	3	
16	99838 0630	Bolt, Meter Upper	2	
	99952 0618	Washer, Plain	2	
	99971 0600	Washer, Spring	2	
17	1524 55 351	Sheet	1	

No.	Part Number	Description	Q'ty	Remarks
● 18	1562 55 460 B	Meter, Combination } (L.H.D.)	1	
●	1881 55 460	Meter, Combination } (L.H.D.)	1	Car No. 160623 73/10 ~ ×
●	3507 55 460	Meter, Combination (R.H.D.)	1	
● 19	1562 75 122 A	Meter, Fuel (L.H.D.)	1	
●	0866 75 122 A	Meter, Fuel (R.H.D.)	1	
● 20	1562 75 123 A	Thermometer (L.H.D.)	1	
●	0866 75 123 A	Thermometer (R.H.D.)	1	
● 21	1562 75 124 A	Ammeter } (L.H.D.)	1	
●	1881 75 124	Ammeter } (L.H.D.)	1	Car No. 160623 73/10 ~ ×
●	3507 75 124	Ammeter (R.H.D.)	1	
● 22	1527 75 125	Plate, Print } (L.H.D.)	1	
●	1881 75 125	Plate, Print } (L.H.D.)	1	Car No. 160623 73/10 ~ ×
●	3507 75 125	Plate, Print (R.H.D.)	1	
● 23	1562 75 200 A	Case (L.H.D.)	1	
●	0866 75 200 A	Case (R.H.D.)	1	
24	99701 6030	Bulb	3	
25	0259 55 261	Socket	3	
26	0275 75 140	Screw, Tapping	4	
27	908631 5 12	Screw Set, Combination Meter	3	

No.	Part Number	Description	Q'ty	Remarks
28	99906 0400	Nut, Combination Meter	3	
	99952 0400	Washer, Plain	3	
	99971 0400	Washer, Spring	3	

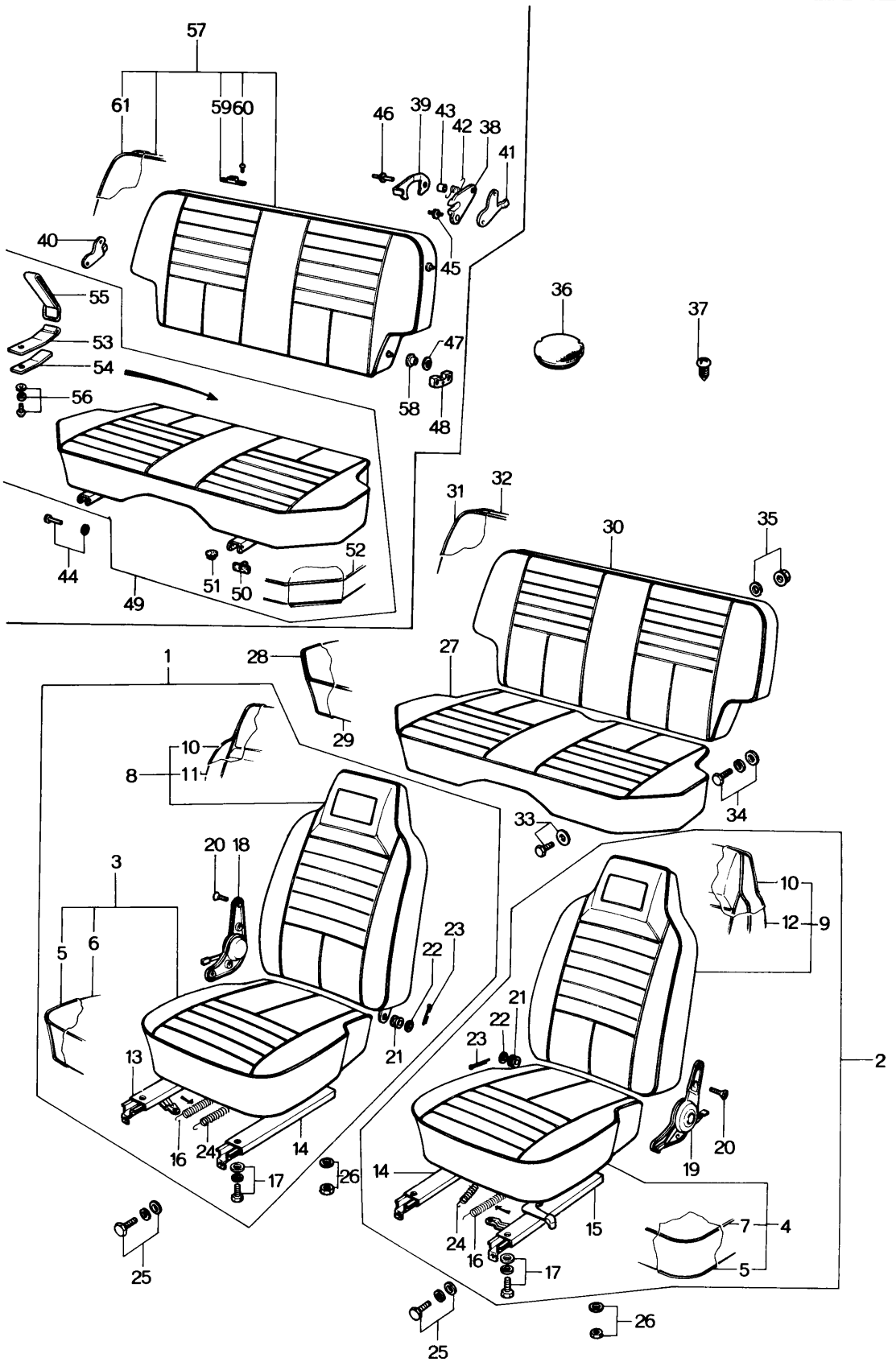
57
61
59
60
46
39
43
42
38
41
40
45
55
53
54
56
36
37
47
58
48
44
49
51
50
52
31
32
30
35
1
28
29
27
10
8
11
34
33
20
18
3
5
6
23
22
21
13
16
24
14
17
26
25
10
12
9
2
21
22
23
19
20
15
7
4
5

No.	Part Number		Description	Q'ty	Remarks

When ordering the following Seat & trims

Add colour code nos. given below after parts number.

-03 (BLK.) -12 (BRN.) -13 (GRY. / YLW.)

●	1	0866 57 100B	©	Seat (R), Front (Sedan & Wagon)	1	
		1568 57 100A	©	Seat (R), Front (Coupe)	1	
		1562 57 100A	©	Seat (R), Front (Coupe) (For Sweden)	1	
●	2	0866 57 150B	©	Seat (L), Front (Sedan & Wagon)	1	
		1568 57 150A	©	Seat (L), Front (Coupe)	1	
		1562 57 150A	©	Seat (L), Front (Coupe) (For Sweden)	1	
●	3	0866 88 110	©	Cushion (R) (Sedan & Wagon)	1	
		1568 88 110	©	Cushion (R) (Coupe)	1	
		1562 88 110	©	Cushion (R) (Coupe) (For Sweden)	1	
●	4	0866 88 160	©	Cushion (L) (Sedan & Wagon)	1	
		1568 88 160	©	Cushion (L) (Coupe)	1	
		1562 88 160	©	Cushion (L) (Coupe) (For Sweden)	1	
	5	0820 57 114		Cover, Top-Seat Cushion	2	☆
	6	0866 88 111	©	Trim (R), Cushion	1	
		1562 88 111	©	Trim (R), Cushion (For Sweden)	1	
	7	0866 88 161	©	Trim (L), Cushion	1	

No.	Part Number	Description	Q'ty	Remarks
	1562 88 161 ©	Trim (L), Cushion (For Sweden)	1	
8	0866 88 130A ©	Seat (R), Back-Front	1	
	1562 88 130A ©	Seat (R), Back-Front (For Sweden)	1	
9	0866 88 180A ©	Seat (L), Back-Front	1	
	1562 88 180A ©	Seat (L), Back-Front (For Sweden)	1	
10	0866 88 135	Cover, Top-Back Seat	2	☆
11	0866 88 131 ©	Trim (R), Back Seat	1	
	1562 88 131A ©	Trim (R), Back Seat (For Sweden)	1	
12	0866 88 181A ©	Trim (L), Back Seat	1	
	1562 88 181A ©	Trim (L), Back Seat (For Sweden)	1	
13	0866 88 102	Adjuster No. 1	1	
14	0866 88 103	Adjuster No. 2	2	
15	0866 88 152	Adjuster No. 3	1	
16	0259 88 123	Spring, Return-Adjuster	2	
17	99801 0820	Bolt, Adjuster	8	
	99952 0816	Washer, Plain	4	
	99971 0800	Washer, Spring	8	
18	0866 88 101	Knuckle (R)	1	
	1562 88 101	Knuckle (R), With Foot Pedal (Coupe)	1	
19	0866 88 151	Knuckle (L)	1	

No.	Part Number	Description	Q'ty	Remarks
20	2155 57 109	Screw, Knuckle	8	
21	0866 88 105	Bush, Hinge	2	
22	0866 88 106	Washer, Hinge	2	
23	99221 3020	Pin, Split	2	
24	3450 88 107	Spring, Return-Seat	2	
25	907860 8 20B	Bolt, Front Seat	4	
26	99940 0800	Nut, Front Seat	4	
	99952 0800	Washer, Plain	4	
27	0866 57 200A	©Cushion, Rear Seat (Sedan)	1	
	0376 57 200	©Cushion, Rear Seat (Coupe)	1	
	1562 57 200	©Cushion, Rear Seat (Coupe) (For Sweden)	1	
28	0866 88 205	Cover, Top	1	☆
29	0866 88 201	© Trim (Sedan)	1	
	0376 88 201	© Trim (Coupe)	1	
	1562 88 201	© Trim (Coupe) (For Sweden)	1	
● 30	0866 57 250	©Seat, Rear Back	1	
●	1562 57 250	©Seat, Rear Back (For Sweden)	1	

No.	Part Number		Description		Q'ty	Remarks
● 31	0866 88 205		Cover, Top	(Sedan & Coupe)	1	
● 32	0866 88 251	©	Trim		1	
●	1562 88 251	©	Trim (For Sweden)		1	
● 33	99786 0825B		Bolt, Rear Seat Cushion	(Sedan & Coupe)	2	
	0315 57 015		Washer		2	
● 34	907860 8 20B		Bolt, Rear Seat Back		2	
● 35	99940 0800		Nut, Front Seat		2	
	99952 0822		Washer, Plain		2	
36	2981 69 623		Cap		2	
37	99301 1100		Cap		6	
38	0585 57 012		Stopper (R)	(Station Wagon)	1	
	0585 57 013		Stopper (L)		1	
39	0585 57 015		Plate, Lock		1	
40	0585 57 016		Washer (R), Stopper		1	
41	0585 57 017		Washer (L), Stopper		1	
42	0585 57 018		Spring, Return		1	
43	0585 57 019		Bush		1	
44	99230 0852		Pin, Rear Seat Cushion		2	
	99576 0500		Ring, Snap		2	

No.	Part Number	Description	Q'ty	Remarks
45	0710 57 022	Rivet, Stopper	3	
46	0710 57 023	Rivet, Stopper	3	
47	0187 57 052	Washer, Adjust	2	
48	0621 57 054	Retainer	2	
49	1571 57 200	©Cushion, Rear Seat	1	
50	0585 57 012	Stopper	2	
51	0603 53 436	Grommet	1	
52	0899 88 201 ©	Trim	1	
53	2405 88 215	Plate, Lock	1	
54	2405 88 216	Stopper	1	
55	2405 88 217-03	Band	(Station Wagon) 1	
	2405 88 217-12	Band	1	
	2405 88 217-13	Band	1	
56	99834 0612	Screw	1	
	99951 0618	Washer, Plain	1	
	99971 0600	Washer, Spring	1	
57	1571 57 250	©Seat, Rear Back	1	
58	0187 57 751	Tube	2	
59	0621 57 753	Stopper	2	
60	99832 0625B	Screw, Stopper	4	
61	0899 88 251 ©	Trim	1	

FRONT SIDE DOOR (GLASS)

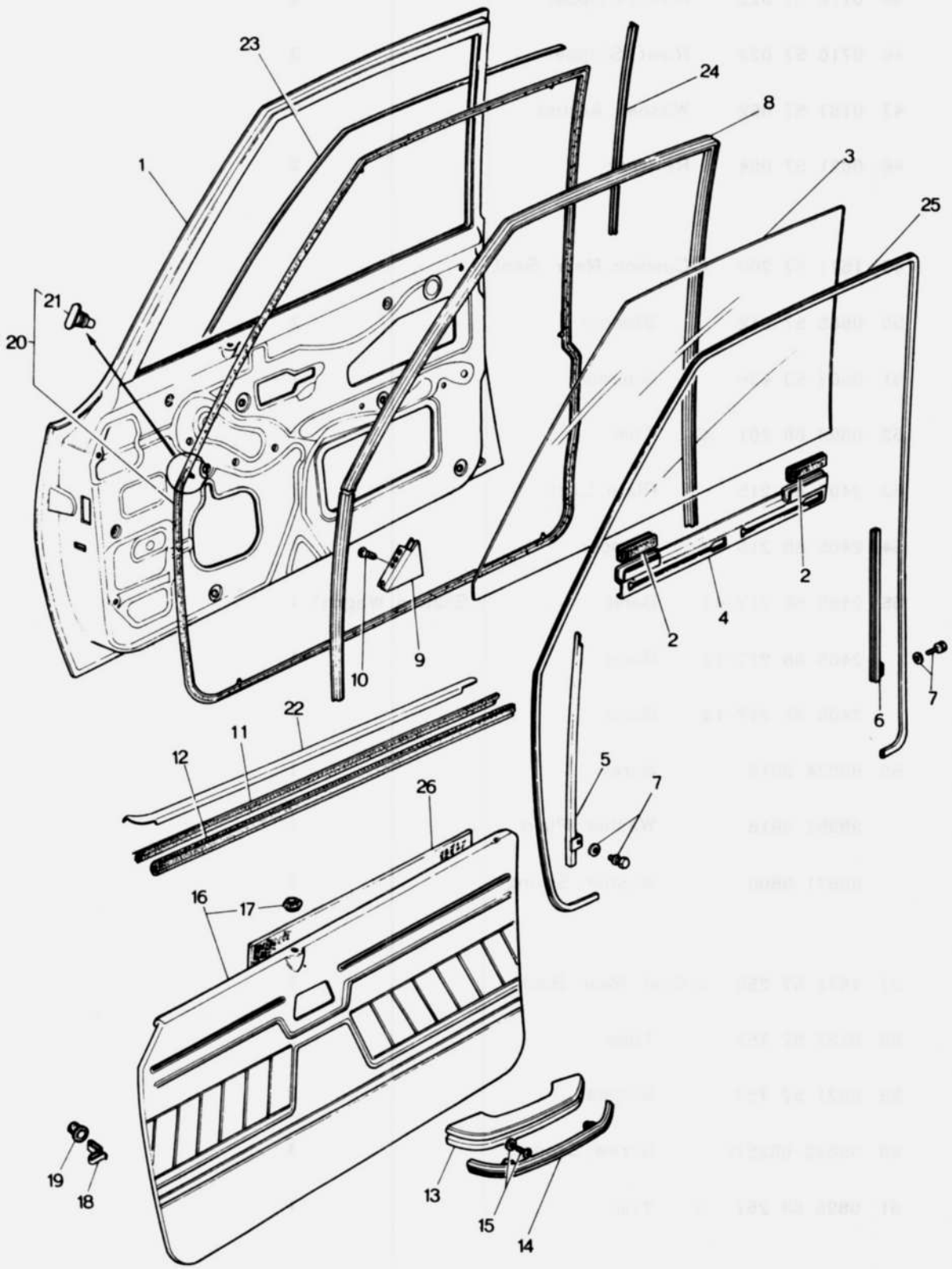

FRONT SIDE DOOR (GLASS)

No.	Part Number	Description		Q'ty	Remarks
1	0376 58 010D	Body (R), Door		1	
●	0376 58 010E	Body (R), Door (L.H.D.)		1	72/12~○
●	1554 58 010C	Body (R), Door (R.H.D.)	(Coupe)	1	
	0376 59 010D	Body (L), Door		1	
●	0376 59 010E	Body (L), Door		1	72/12~○
●	0866 58 010E	Body (R), Door		1	
●	0866 58 010F	Body (R), Door (L.H.D.)		1	72/12~○
●	1511 58 010D	Body (R), Door (R.H.D.)	(Sedan & Station Wagon)	1	
●	0866 59 010E	Body (L), Door		1	
●	0866 59 010F	Body (L), Door		1	72/12~○
2	2292 58 232	Rubber, Strip-Door Glass		4	
3	0374 58 501	Glass (R)		1	
●	0374 58 501A	Glass (R)	Transparent (Coupe)	1	73/10~○
	0374 59 501	Glass (L)		1	
●	0374 59 501A	Glass (L)		1	73/10~○
●	0368 58 501	Glass (R)		1	
●	0368 58 501A	Glass (R)	Transparent (Sedan & Station Wagon)	1	73/10~○
●	0368 59 501	Glass (L)		1	
●	0368 59 501A	Glass (L)		1	73/10~○
●	0866 58 501A	Glass (R), Blue Pane	(Station Wagon)	1	

FRONT SIDE DOOR (GLASS)

No.	Part Number	Description	Q'ty	Remarks
●	0866 59 501 A	Glass (L), Blue Pane (Station Wagon)	1	
4	0305 58 505	Bracket (R), Lift	1	
	0305 59 505	Bracket (L), Lift	1	
5	0866 58 603	Guide "A" (R), Glass	1	
	0866 59 603	Guide "A" (L), Glass	1	
6	0376 58 604	Guide "B" (R), Glass (Coupe)	1	
	0376 59 604	Guide "B" (L), Glass (Coupe)	1	
●	0866 58 604	Guide "B" (R), Glass (Sedan & Station Wagon)	1	
●	0866 59 604	Guide "B" (L), Glass (Sedan & Station Wagon)	1	
7	99806 0612	Bolt, Glass Guide	4	
	99971 0600	Washer, Spring	4	
	99951 0618	Washer, Plain	2	
	0727 70 943	Washer, Plain	2	
●	2850 13 332	Washer, Plain	2	$\frac{74}{1}$~○
8	0376 58 605	Channel, Glass Run (Coupe)	2	
	0866 58 605	Channel, Glass Run (Sedan)	2	
9	0866 58 620	Bracket, Corner	2	
10	99831 0408	Screw, Glass Guide	4	
11	0376 58 781 D	Weatherstrip, Outer (Coupe)	2	
●	0866 58 781 D	Weatherstrip, Outer (Sedan)	2	

No.	Part Number	Description		Q'ty	Remarks
12	0376 58 791	Weatherstrip (R)	(Coupe)	1	
	0376 59 791	Weatherstrip (L)		1	
●	0866 58 791	Weatherstrip (R)	(Sedan & Station Wagon)	1	
●	0866 59 791	Weatherstrip (L)		1	
13	0398 58 821A	Rest, Arm		2	
14	0398 58 822A	Garnish, Arm Rest		2	
15	908331 5 20	Screw Set, Arm Rest		4	

When ordering the following Trims

Add colour code nos. given below after parts number.

-03 (BLK.) -12 (BRN.) -13 (GRY. / YLW.)

16	1561 58 810D	Trim (R), Door	(Coupe)	1	©
●	1561 58 810E	Trim (R), Door		1	72/12~○ ©
	0376 59 810E	Trim (L), Door		1	©
●	0376 59 810F	Trim (L), Door		1	72/12~○ ©
●	1560 58 810A	Trim (R), Door	(Sedan & Station Wagon)	1	©
●	1560 58 810B	Trim (R), Door		1	72/12~○ ©
●	0866 59 810B	Trim (L), Door		1	©
●	0866 59 810C	Trim (L), Door		1	72/12~○ ©
17	0223 58 692	Grommet		2	

FRONT SIDE DOOR (GLASS)

No.	Part Number	Description	Q'ty	Remarks
18	0208 58 921	Fastener, Door Trim	18 14	Coupe Sedan & Station Wagon
19	0187 58 922	Seal, Fastener-Door Trim	18 14	Coupe Sedan & Station Wagon
20	0376 58 760A	Weatherstrip (R) (Coupe)	1	
	0376 59 760A	Weatherstrip (L) (Coupe)	1	
●	0866 58 760A	Weatherstrip (R) (Sedan & Station Wagon)	1	
●	0866 59 760A	Weatherstrip (L) (Sedan & Station Wagon)	1	
21	0305 58 762	Fastener	54 50	Coupe Sedan & Station Wagon
22	0376 58 831C	Mould (R), Beltline (Coupe)	1	
	0376 59 831C	Mould (L), Beltline (Coupe)	1	
●	0866 58 831C	Mould (R), Beltline (Sedan & Station Wagon)	1	
●	0866 59 831C	Mould (L), Beltline (Sedan & Station Wagon)	1	
● 23	0866 58 841A	Mould "A" (R), Sash (Sedan & Station Wagon)	1	
●	0866 59 841A	Mould "A" (L), Sash (Sedan & Station Wagon)	1	
● 24	0866 58 842A	Mould "B" (R), Sash (Sedan & Station Wagon)	1	
●	0866 59 842A	Mould "B" (L), Sash (Sedan & Station Wagon)	1	
25	0398 58 755	Welt, Seaming	2	
26	0376 58 851	Insulation (Coupe)	4	
	0866 58 851	Insulation (Sedan)	2	

No.	Part Number	Description		Q'ty	Remarks
1	1562 58 310G	Lock (R), Door		1	
●	1562 58 310H	Lock (R), Door (L.H.D.)		1	3509 Car No. 167748 73/5～△
●	1566 58 310H	Lock (R), Door (L.H.D.)		1	3514,3515 Car No. 160623 73/10～×
●	0376 58 310H	Lock (R), Door (R.H.D.)	(Coupe)	1	
	1562 59 310G	Lock (L), Door		1	
●	1562 59 310H	Lock (L), Door (L.H.D.)		1	3509 Car No. 167748 73/5～△
●	1566 59 310H	Lock (L), Door (L.H.D.)		1	3514,3515 Car No. 160623 73/10～×
●	0376 59 310H	Lock (L), Door (R.H.D.)		1	
	1524 58 310G	Lock (R), Door		1	
●	1524 58 310H	Lock (R), Door		1	Car No. 167748 73/5～△
●	1534 58 310H	Lock (R), Door (L.H.D.)		1	Car No. 160623 73/10～×
●	0866 58 310H	Lock (R), Door (R.H.D.)	(Sedan & Station Wagon)	1	
	1524 59 310G	Lock (L), Door		1	
●	1524 59 310H	Lock (L), Door		1	Car No. 167748 73/5～△
●	1534 59 310H	Lock (L), Door (L.H.D.)		1	Car No. 160623 73/10～×
●	0866 59 310H	Lock (L), Door (R.H.D.)		1	
2	0376 58 330C	Rod (R)	(Coupe)	1	
	0376 59 330C	Rod (L)		1	
	0866 53 330C	Rod (R)	(Sedan & Station Wagon)	1	
	0866 59 330C	Rod (L)		1	

FRONT SIDE DOOR (LOCK)

No.	Part Number	Description	Q'ty	Remarks
3	0259 58 691	Knob	2	
4	0305 58 309	Holder, Rod	4	
5	0259 72 509	Pad, Door Lock	2	
6	908324 6 30	Screw Set, Door Lock	6	
7	99940 0600	Nut, Door Lock	4	
8	0866 58 321 B	Handle, Inner	2	
9	908067 5 10	Bolt Set, Inner Handle	6	
●	99796 0508	Bolt, Inner Handle	6	
10	0866 58 303 B	Cover (R), Inner Handle	1	
	0866 59 303 B	Cover (L), Inner Handle	1	
11	99832 0408 B	Screw, Cover	2	
12	0866 58 410 A	Handle (R), Outer Side	1	
	0866 59 410 A	Handle (L), Outer Side	1	
	0305 58 411 A	Bush	2	
13	99906 0500	Nut, Outer Handle	4	
	99951 0618	Washer, Plain	4	
	99971 0500	Washer, Spring	4	

No.	Part Number	Description	Q'ty	Remarks
14	0866 58 560	Regulator (R)	1	
	0866 59 560	Regulator (L)	1	
15	0223 58 303 A	Pin	4	
16	0223 58 304 A	Guide	4	
17	0223 58 311	Spring	4	
18	908062 6 12	Bolt Set, Window Regulator	8	
	99951 0618	Washer, Plain	8	
19	0259 58 305 A	Gasket, Window Regulator	2	
●	0259 58 305 B	Gasket, Window Regulator	2	Car No. $^{74}/_{1}$～△
20	0824 58 370 B	Handle, Regulator	2	
●	0223 58 370 D	Handle, Regulator	2	Car No. 160623 $^{73}/_{10}$～×
21	0223 58 375 A	Escutcheon	2	
22	908062 5 16	Bolt Set, Regulator Handle	2	
23	0866 58 210	Hinge "A"	2	
24	0223 58 721	Bush	4	
25	0187 58 731	Pin, Hinge	2	
26	0866 58 240 A	Hinge "B" (R)	1	

FRONT SIDE DOOR (LOCK)

	No.	Part Number	Description	Q'ty	Remarks
●		0866 58 240C	Hinge "B" (R)	1	
		0866 59 240A	Hinge "B" (L)	1	
●		0866 59 240C	Hinge "B" (L)	1	
	27	0866 58 281A	Roller	2	
	28	0866 58 282	Pin "A"	2	
	29	0866 58 291A	Lever, Check	2	
	30	0866 58 292A	Spring, Check	2	
	31	0866 58 293	Pin "B"	2	
	32	0223 58 721	Bush	4	
	33	0187 58 731	Pin, Hinge	2	
	34	0866 58 201	Shim, Hinge "A" - Selective use	2	
	35	1011 58 231	Shim, Hinge "B" - Selective use	2	
	36	907832 8 28	Bolt Set, Hinge	24	
	37	0866 58 361B	Rack (R)	1	
●		0866 58 361C	Rack (R)	1	Car No. 167748 73/5 ~ △
		0866 59 361B	Rack (L)	1	
●		0866 59 361C	Rack (L)	1	Car No. 167748 73/5 ~ △
	38	1540 58 371	Screw, Rack	4	
		99975 0600	Washer	4	

No.	Part Number	Description	Q'ty	Remarks	
39	0259 58 906	Cushion	2		
● 40	0866 58 861 A	Screen "A"	2		☆
● 41	0376 58 862 A	Screen "B" (Coupe)	2		☆
●	0866 58 862 A	Screen "B" (Sedan)	2		☆
● 42	0376 58 863	Screen "C" (Coupe)	2		☆
●	0866 58 863	Screen "C" (Sedan)	2		☆
● 43	0305 58 864	Screen "D"	2		☆

No.	Part Number	Description	Q'ty	Remarks
●	1562 61 080	Heater Set	1	
●	1692 61 080	Heater Set, For Germany (L.H.D.)	1	
●	1692 61 080A	Heater Set, For Germany	1	Car No. 177588 73/8 ~△
●	0866 61 080	Heater Set (R.H.D.)	1	
● 1	1524 61 130B	Heater Unit (L.H.D.)	1	
●	0862 61 130	Heater Unit (R.H.D.)	1	
● 2	1524 61 140B	Blower	1	
●	1692 61 140	Blower (For Germany) (L.H.D.)	1	Car No. 177588 73/3 ~△
●	0866 61 140C	Blower (R.H.D.)	1	
● 3	1524 61 151A	Duct (L.H.D.)	1	
●	0866 61 151A	Duct (R.H.D.)	1	
● 4	1562 61 190C	Control	1	
●	1692 61 190	Control, For Germany (L.H.D.) Fig. No. 5 ~11 included	1	
●	0866 61 190D	Control (R.H.D.)	1	
5	0866 61 195B	Panel, Control	1	
6	0370 76 403	Switch, Control (OFF~FAN)	1	
7	0370 76 409	Knob (Upper) (For ECE)	2	
	0862 76 409	Knob (Upper) (For ECE & Sweden)	2	73/3 ~○
	1690 76 409	Knob (Upper), For Germany	2	
●	0370 76 416	Clip-Heater Control Knob	4	From Car No. 1

	No.	Part Number	Description	Q'ty	Remarks
●		0862 76 409	Knob (Upper) (R.H.D.)	2	
	8	0370 76 411	Knob (Lower) (For ECE)	2	
		0862 76 411	Knob (Lower) (For ECE & Sweden)	2	73/3 ~ ○
		1690 76 411	Knob (Lower), For Germany	2	
●		0862 76 411	Knob (Lower) (R.H.D.)	2	
●	9	1562 76 406A	Wire No. 1, Control (Cold-Hot) (L.H.D.)	1	
●		0866 76 406A	Wire No. 1, Control (Cold-Hot) (R.H.D.)	1	
●	10	1562 76 407A	Wire No. 2, Control (Def-Heat) (L.H.D.)	1	
●		0866 76 407A	Wire No. 2, Control (Def-Heat) (R.H.D.)	1	
●	11	1562 76 408A	Wire No. 3, Control (Rec-Fresh) (L.H.D.)	1	
●		0866 76 408A	Wire No. 3, Control (Rec-Fresh) (R.H.D.)	1	
	12	0866 61 251	Hose, Defroster	2	
	13	99868 0410	Screw, Duct & Heater Unit	6	
	14	99786 0830	Bolt, Blower	3	
	15	908336 5 16	Screw Set, Control	2	
	16	908337 5 12	Screw Set, Control	2	
	17	99863 0512B	Screw, Duct	2	
		99952 0516B	Washer, Plain	2	
	18	99940 0802	Nut, Unit	3	
		99952 0822	Washer, Plain	1	

No.	Part Number	Description		Q'ty	Remarks
● 19	1620 61 225	Clip (L.H.D.)	(Sweden Excluded)	1	
●	0866 61 217	Clip (R.H.D.)		1	
20	0866 61 476	Protector		1	
21	99709 0108	Band		1	
● 22	1562 61 211C	Hose No. 1 (L.H.D.)		1	
●	0866 61 211C	Hose No. 1 (R.H.D.)		1	
● 23	1620 61 212	Hose No. 2	(L.H.D.)	1	
●	1562 61 212B	Hose No. 2 (For Sweden)		1	
●	0866 61 212B	Hose No. 2 (R.H.D.)		1	
24	0866 61 213	Hose No. 3		1	
● 25	1620 61 214	Pipe, Heater		1	
●	1881 61 214A	Pipe, Heater	(L.H.D.)	1	Car No. 160623 73/10～×
●	1562 61 214A	Pipe, Heater (For Sweden)		1	
●	0862 61 214B	Pipe, Heater (R.H.D.)		1	
26	0824 61 192	Clip, Heater Pipe		2	
27	908686 5 12	Screw, Clip		2	
28	99282 2600	Band, Hose		6	
29	0866 61 235	Grommet		1	
● Ⓝ	1692 76 481	Cover (For Germany)		1	Car No. 177588 73/3～Added Anew

No.	Part Number	Description	Q'ty	Remarks
30	0257 61 051	Grommet	1	
31	0366 61 070	Cover, Dash Panel Upper	1	
32	908637 5 16	Screw Set, Cover	2	
33	0866 61 195B	Panel, Control	1	
34	0820 56 905	Nut, Spring	2	Without Car Heater
35	999863 0516	Screw, Control Panel	2	
	99952 0500	Washer, Plain	2	
36	0864 61 061A	Cover	2	
37	99282 2600	Band, Hose	2	
38	0118 56 242B	Plug, Hole	2	

HEATER UNIT & BLOWER (L.H.D.)

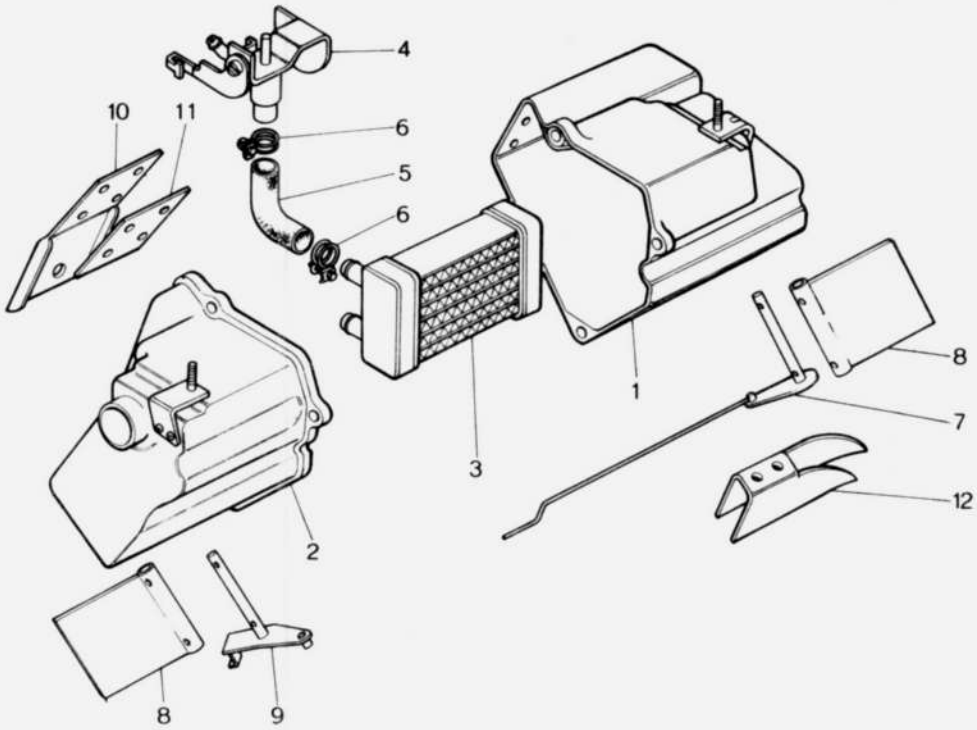

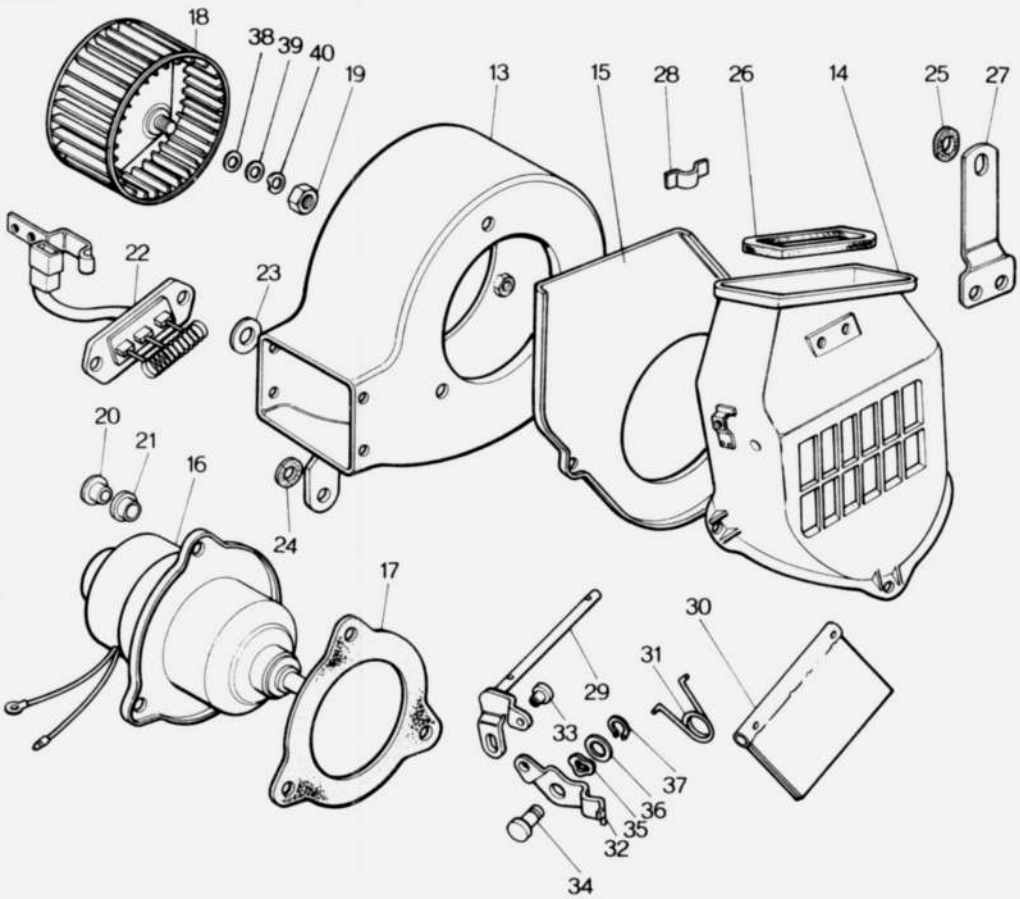

HEATER UNIT & BLOWER (L.H.D.)

No	Part Number	Description	Q'ty	Remarks
	1524 61 130B	Unit, Heater	1	
1	1524 76 501A	Case, Unit	1	
2	1524 76 502A	Case, Unit	1	
3	1524 76 503A	Radiator, Unit	1	
4	1524 76 504A	Valve, Water	1	
5	1524 76 505A	Hose, Water	1	
6	99282 2600	Band, Hose	2	
7	0866 76 506	Shaft	1	
8	0866 76 507	Damper	2	
9	0866 76 508	Shaft	1	
10	0866 76 509	Bracket	1	
11	0866 76 511	Plate	1	
12	1524 76 512	Guide, Air	1	
	1524 61 140B	Blower	1	
13	1524 76 451	Case, Blower	1	
14	1524 76 452	Duct, Air	1	
15	1524 76 453	Flange	1	
16	1524 76 454A	Motor	1	
17	0866 76 455A	Gasket	1	

HEATER UNIT & BLOWER (L.H.D.)

No.	Part Number	Description	Q'ty	Remarks
18	1524 76 456A	Blower	1	
19	0866 76 472A	Nut	1	
20	0866 76 457	Insert	3	
21	0866 76 458	Gasket	1	
22	0866 76 459	Resistance	1	
23	0866 76 461	Clamp "B"	1	
24	0866 76 462	Gasket "A"	1	
25	0866 76 463	Gasket	1	
26	0866 76 464	Gasket "B"	1	
27	1524 76 465	Bracket	1	
28	0866 76 466	Bracket "C"	1	
29	1524 76 467	Shaft	1	
30	0866 76 468	Damper	1	
31	1524 76 469	Spring	1	
32	1524 76 471	Lever, Control	1	
33	1524 76 472	Cooler	1	
34	1524 76 473	Pin	1	
35	99972 0500	Washer, Wave	1	
36	0315 76 022	Washer	1	
37	99576 0300	Ring, Retaining	1	

No.	Part Number	Description	Q'ty	Remarks
38	0866 76 474	Washer	1	
39	0866 76 475	Washer	1	
40	0866 76 476	Washer	1	

HEATER UNIT & BLOWER (R.H.D.)

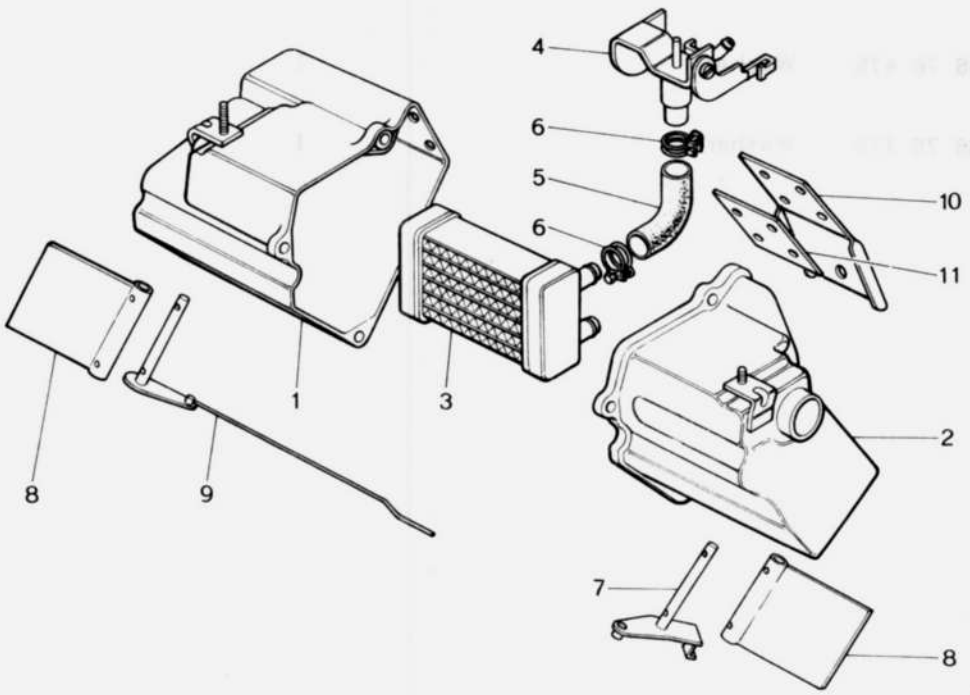

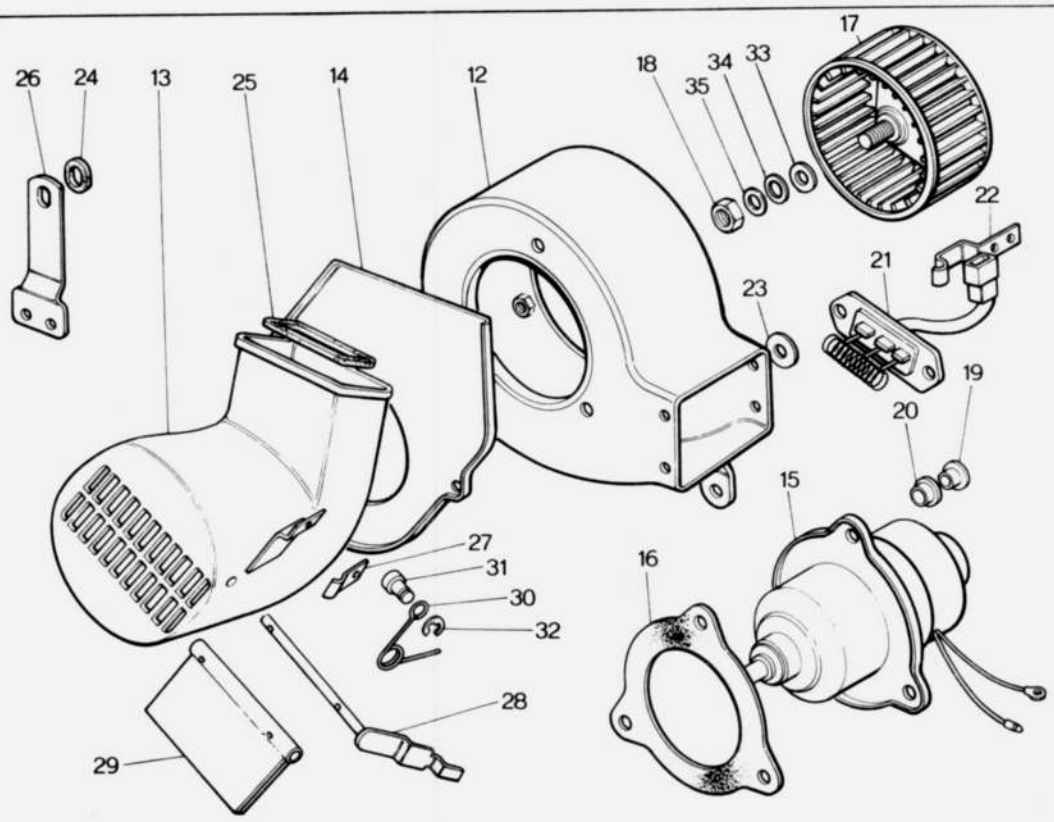

HEATER UNIT & BLOWER (R.H.D.) 61 76

No.	Part Number	Description	Q'ty	Remarks
	0862 61 130	Unit, Heater	1	
1	0866 76 501	Case, Unit	1	
2	0862 76 502	Case, Unit	1	
3	0866 76 503	Radiator, Unit	1	
4	0866 76 504	Valve, Water	1	
5	0866 76 505	Hose, Water	1	
6	99282 2200	Band, Hose	2	
7	0866 76 506	Shaft	1	
8	0866 76 507	Damper	2	
9	0866 76 508	Shaft	1	
10	0866 76 509	Bracket	1	
11	0866 76 511	Plate	1	
	0866 61 140C	Blower, Heater	1	
12	0866 76 451	Case, Blower	1	
13	0866 76 452	Duct, Air	1	
14	0866 76 453	Flange	1	
15	0866 76 454A	Motor	1	
16	0866 76 455A	Gasket	1	
17	0866 76 456A	Blower	1	

HEATER UNIT & BLOWER (R.H.D.)

No.	Part Number	Description	Q'ty	Remarks
18	0866 76 472A	Nut	1	
19	0866 76 457	Insert	3	
20	0866 76 458	Gasket	3	
21	0866 76 459	Resistance	1	
22	0866 76 461	Clamp "B"	1	
23	0866 76 462	Gasket "A"	1	
24	0866 76 463	Gasket	1	
25	0866 76 464	Gasket "B"	1	
26	0866 76 465	Bracket	1	
27	0866 76 466	Bracket "C"	1	
28	0866 76 467	Shaft	1	
29	0866 76 468	Damper	1	
30	0866 76 469	Spring	1	
31	0866 76 471	Piece Set	1	
32	99576 0400	Ring, Retaining	1	
33	0866 76 474	Washer	1	
34	0866 76 475	Washer	1	
35	0866 76 476	Washer	1	

CAR COOLER (L.H.D.)
(USED UP TO CAR NO. 138184 73/4)

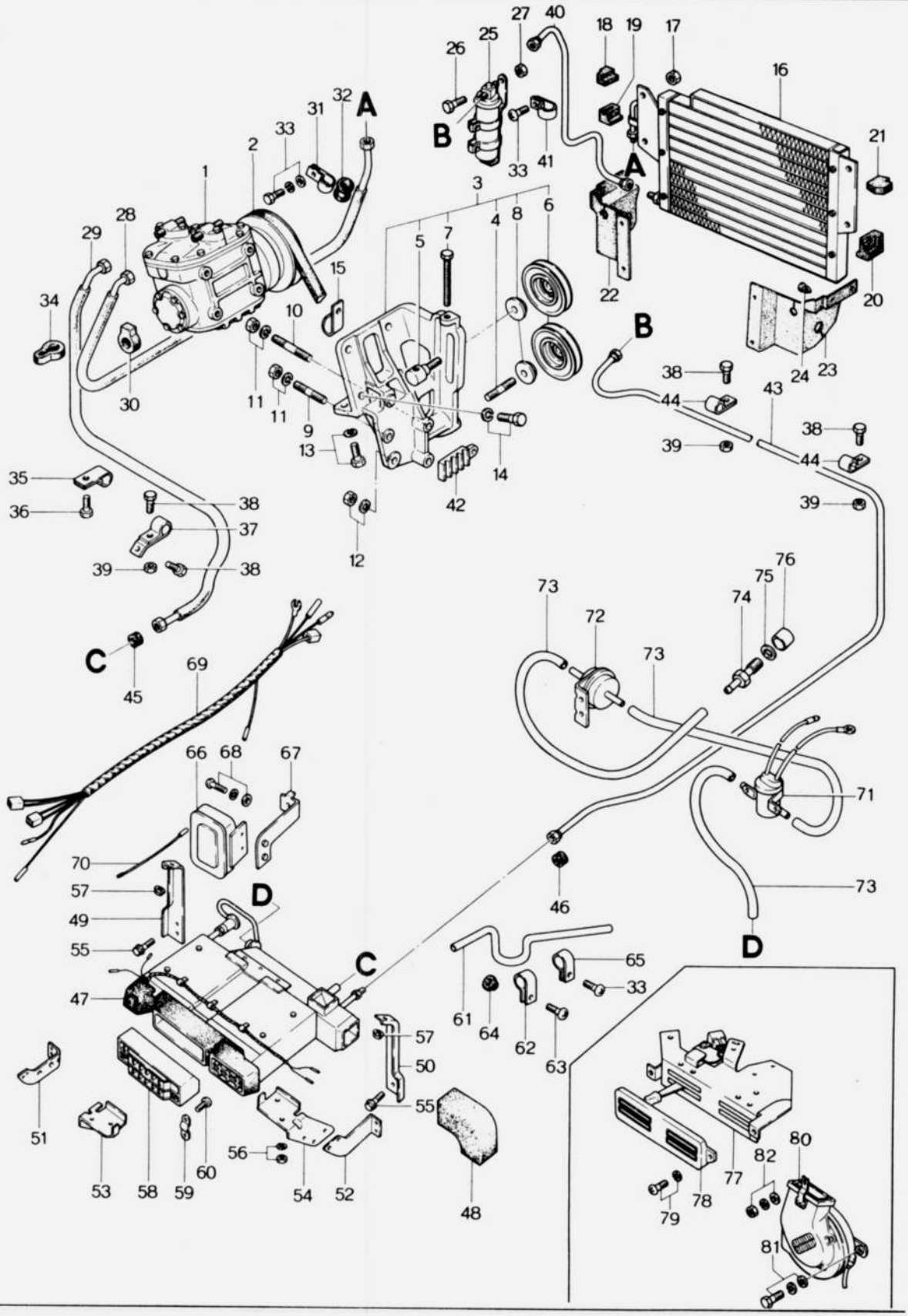

No	Part Number	Description	Q'ty	Remarks
	1620 61 400	Cooler, Car (With Car Heater)	1	
	1620 61 390	Cooler, Car (Without Car Heater)	1	
1	0866 61 450	Compressor	1	
2	0866 15 906	Belt, "V"	1	
3	0866 15 920B	Bracket, Compressor (Fig. No. 4 ~ 8 Included)	1	
4	0866 15 923A	Shaft	1	
5	0866 15 932	Bolt, Idle Pulley	1	
6	0866 15 940A	Pulley, Idle	2	
7	0839 61 966A	Bolt, Adjust	1	
8	0317 78 034	Collar	2	
9	99859 1025	Stud, Compressor Bracket	2	
10	99859 1050	Stud, Compressor Bracket	2	
11	99921 1000	Nut, Compressor Bracket	4	
	99971 1000	Washer, Spring	4	
12	99921 1200	Nut, Compressor Bracket	1	
	99971 1200	Washer, Spring	1	
13	99801 0840	Bolt, Compressor Bracket	2	
	99971 0800	Washer, Spring	2	
14	99801 0825	Bolt, Compressor	4	
	99971 0800	Washer, Spring	4	

CAR COOLER (L.H.D.)
(USED UP TO CAR NO. 138184 73/4)

No.	Part Number	Description	Q'ty	Remarks
15	99295 1508	Clip	1	
16	1562 61 490	Condenser	1	
17	99940 0602B	Nut, Condenser	4	
18	0866 61 911	Packing No. 1	1	
19	0866 61 912	Packing No. 2	1	
20	0866 61 913	Packing No. 3	1	
21	0866 61 914	Packing No. 4	1	
22	1620 61 925	Rubber (R), Seal	1	
23	1620 61 926	Rubber (L), Seal	1	
24	99264 0531B	Rivet	4	
25	0866 61 500	Tank, Receiver	1	
26	99794 0612	Bolt, Receiver Tank	3	
27	99940 0602	Nut	2	
28	0866 61 461	Hose, Flexible	1	
29	1562 61 462A	Hose, Flexible	1	
30	0317 61 612	Cushion, Flexible Hose	1	
31	0820 78 857	Clip, Flexible Hose	2	
32	0259 78 858	Protector, Flexible Hose	2	
33	99865 0512	Screw, Clip	12	
34	0866 61 476	Protector, Flexible Hose	1	

No.	Part Number	Description	Q'ty	Remarks
35	1562 61 474	Clip, Flexible Hose	1	
36	99794 0630	Bolt, Clip	1	
37	1562 61 469	Clip, Flexible Hose	1	
38	99794 0616	Bolt, Clip	5	
39	99940 0602	Nut	3	
40	0866 61 463	Pipe No. 1	1	
41	0259 78 868	Clip, Pipe No. 1	2	
42	0866 61 472	Clip	1	
43	1562 61 464	Pipe No. 2	1	
44	1562 61 473	Clip	3	
45	0866 61 475	Grommet	1	
46	0208 78 875	Grommet	1	
47	1568 61 520	Unit, Cooler	1	
48	1524 61 526	Duct, Rubber	1	Car No. 152816 7/9 ~Discarded
49	0866 61 531	Bracket No. 1, Cooler Unit	1	
50	0866 61 532	Bracket No. 2, Cooler Unit	1	
51	0866 61 533	Bracket No. 3, Cooler Unit	1	
52	0866 61 534	Bracket No. 4, Cooler Unit	1	
53	0866 61 535	Bracket No. 5, Cooler Unit	1	
54	0866 61 536	Bracket No. 5, Cooler Unit	1	

61 CAR COOLER (L.H.D.)
(USED UP TO CAR NO. 138184 73/4)

No.	Part Number	Description	Q'ty	Remarks
55	99794 0616	Bolt, Bracket	14	
56	99940 0602	Nut, Bracket	2	
57	99940 0800	Nut, Bracket	2	
58	0866 61 551	Grille	1	
59	0866 61 552	Holder, Grille	2	
60	99868 0308	Screw, Grille Holder	4	
61	0866 61 525A	Hose, Drain	2	
62	0866 61 527	Clip	1	
63	99868 0512	Screw, Clip	1	
	99952 0500	Washer, Plain	1	
	99971 0500	Washer, Spring	1	
64	0820 78 883	Grommet, Drain Hose	2	
65	0370 61 467	Clip, Drain Hose	4	
66	0866 61 545	Stabilizer, Amplifier	1	
67	1524 61 548A	Bracket, Stabilizer	1	
68	99740 0512	Screw, Bracket	2	
69	1562 61 546	Harness	1	
70	1524 61 547	Cord	1	
71	0824 61 236A	Valve, Magnet	1	Car No. 152816 73/9~Discarded
72	0866 61 541	Valve, Check	1	Car No. 152816 73/9~Discarded

No.	Part Number	Description		Q'ty	Remarks
73	0866 61 543A	Hose, Vacuum		1	Car No. 152816 7⅝~Discarded
74	0866 61 542	Connector		1	Car No. 152816 7⅝~Discarded
75	99564 1000	Gasket, Connector		1	Car No. 152816 7⅝~Discarded
76	0866 61 549	Spacer		1	Car No. 152816 7⅝~Discarded
77	1566 61 190C	Control	Without Car Heater	1	
78	0866 61 195B	Panel, Control		1	
79	99833 0512	Screw, Control Panel		3	
	99971 0500	Washer, Spring		3	
80	1531 61 140	Blower		1	
81	99805 0830	Bolt, Blower		2	
	99952 0800	Washer, Plain		2	
	99971 0800	Washer, Spring		2	
82	99906 0800	Nut, Blower		1	
	99952 0822	Washer, Plain		1	
	99971 0800	Washer, Spring		1	

CAR COOLER

(USED FROM CAR NO. 138185 73/4 TO CAR NO. 179250 73/9)

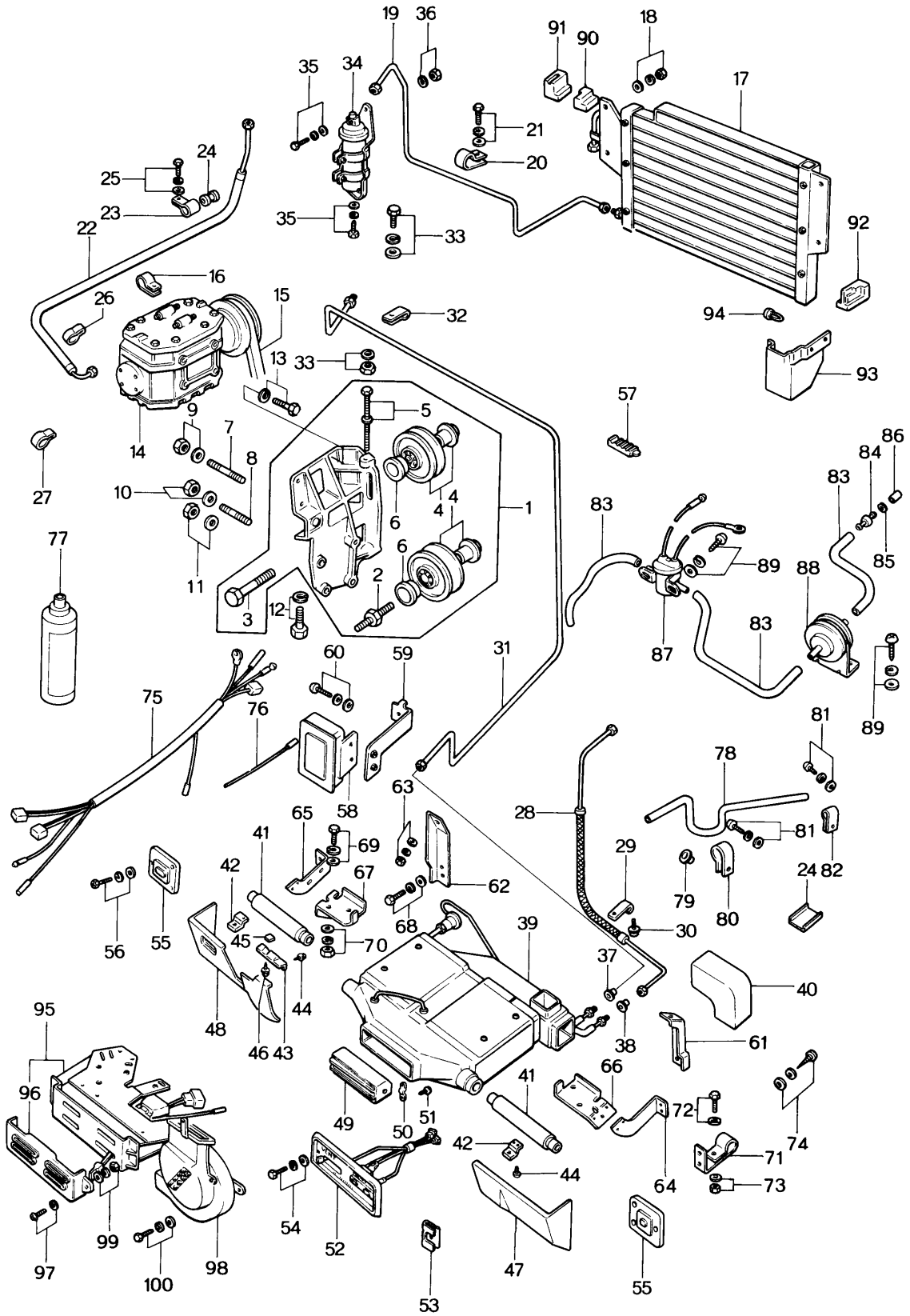

CAR COOLER
(USED FROM CAR NO. 138185 73/4 TO CAR NO. 179250 73/9)

No.	Part Number	Description	Q'ty	Remarks
	1608 61 390	Air-Conditioner (Heater Less)	1	
	1622 61 400	Air-Conditioner	1	
1	0866 15 920B	Bracket, Compressor (Fig. No. 2~6 included)	1	
2	0866 15 923A	Shaft	1	
3	0866 15 932	Bolt, Idle Pulley	1	
4	0866 15 940A	Pulley, Idle	2	
5	0839 61 966A	Bolt, Adjuster	1	
	99971 0800	Washer, Spring	1	
6	0866 15 922	Collar	2	
7	99859 1028	Stud	2	
8	99859 1050	Stud	2	
9	99921 1000	Nut	2	
	99971 1000	Washer, Spring	2	
10	99921 1000	Nut	2	
	99971 1000	Washer, Spring	2	
11	99921 1200	Nut	1	
	99971 1200	Washer, Spring	1	
12	99801 0840	Bolt	2	
	99952 0800	Washer, Plain	2	
	99971 0800	Washer, Spring	2	

61 CAR COOLER
(USED FROM CAR NO. 138185 73/4 TO CAR NO. 179250 73/9)

No.	Part Number	Description	Q'ty	Remarks
13	99801 2825	Bolt	4	
14	0866 61 450	Compressor	1	
15	0866 15 906	Belt, "V"	1	
16	99295 1506	Clip	1	
17	1562 61 490	Condenser	1	
18	99906 0600	Nut, Condenser	4	
	99952 0618	Washer, Plain	4	
	99971 0600	Washer, Spring	4	
19	0866 61 463	Pipe No. I	1	
20	0259 78 868	Clip	1	
21	99868 0520	Screw, Tapping	1	
	99952 0500	Washer, Plain	1	
	99971 0500	Washer, Spring	1	
22	0866 61 461	Hose, Flexible	1	
23	0259 78 857	Clip	2	
24	0259 78 858	Packing, Rubber	3	
25	99868 0520	Screw, Tapping	2	
	99952 0500	Washer, Plain	2	
	99971 0500	Washer, Spring	2	
26	1540 61 476	Protector, Rubber	1	

CAR COOLER
(USED FROM CAR NO. 138185 73/4 TO CAR NO. 179250 73/9)

No.	Part Number	Description	Q'ty	Remarks
27	0866 61 476	Protector, Rubber	1	
28	1562 61 462A	Hose, Flexible	1	
29	1562 61 474	Clip	1	
30	99806 0628	Bolt	1	
	99952 0600	Washer	1	
	99971 0600	Washer, Spring	1	
31	1562 61 464A	Pipe No. 2	1	
32	1562 61 473	Clip	4	
33	99806 0612	Bolt	3	
	99906 0600	Nut	3	
	99952 0618	Washer, Plain	6	
	99971 0600	Washer, Spring	3	
34	0866 61 500	Tank, Receiver	1	
35	99806 0612	Bolt	3	
	99952 0600	Washer, Plain	3	
	99971 0600	Washer, Spring	3	
36	99906 0600	Nut	1	
	99952 0600	Washer, Plain	1	
37	0208 78 875	Grommet	1	
38	0866 61 475	Protector, Rubber	1	

61 CAR COOLER
(USED FROM CAR NO. 138185 73/4 TO CAR NO. 179250 73/9)

No.	Part Number	Description	Q'ty	Remarks
39	1608 61 520	Unit, Cooler (1608 61 390 use)	1	
	1622 61 520	Unit, Cooler (1622 61 400 use)	1	
40	1524 61 526	Duct (1622 61 400 use)	1	
41	1622 61 561	Duct, Air	2	
42	1622 61 566	Bracket, Cover	4	
43	1622 61 567	Bracket	1	
44	99868 0410	Screw, Tapping	10	
45	1622 61 569	Spacer	2	
46	99833 0525	Screw	2	
	99952 0500	Washer, Plain	2	
	99971 0500	Washer, Spring	2	
47	1622 61 575	Cover, Duct	1	
48	1622 61 565	Cover, Duct	1	
49	0866 61 551	Grille, Center	1	
50	0866 61 552	Holder, Grille	2	
51	99868 0408	Screw, Tapping	4	
52	1622 61 580	Panel, Control	1	
53	1622 61 567	Bracket	2	
	1622 61 572	Bracket	2	Car No. 144255 73/6 ~ X
54	99833 0310B	Screw	2	

CAR COOLER
(USED FROM CAR NO. 138185 73/4 TO CAR NO. 179250 73/9)

No.	Part Number	Description	Q'ty	Remarks
	99952 0300	Washer, Plain	2	
55	1622 61 568	Cover (R), Ventilator	1	
	1622 61 578	Cover (L), Ventilator	1	
56	99806 0620	Bolt	6	
	99952 0618	Washer, Plain	6	
	99971 0600	Washer, Spring	6	
57	0866 61 472	Clamp	1	
58	0866 61 545	Amp., Stabilizer	1	
	1622 61 545	Amp., Stabilizer	1	73/6~○
59	1524 61 548A	Bracket, Amp.	1	
	1622 61 548	Bracket, Amp.	1	73/6~○
60	99833 0512	Screw	2	
	99952 0500	Washer, Plain	2	
	99971 0500	Washer, Spring	2	
61	0866 61 532	Bracket No. 2	1	
62	0866 61 531	Bracket No. 1	1	
63	99906 0800	Nut	2	
	99952 0800	Washer, Plain	2	
	99971 0800	Washer, Spring	2	
64	0866 61 534	Bracket No. 4	1	

CAR COOLER
(USED FROM CAR NO. 138185 73/4 TO CAR NO. 179250 73/9)

No.	Part Number	Description	Q'ty	Remarks
65	0866 61 533	Bracket No. 3	1	
66	0866 61 536	Bracket No. 6	1	
67	0866 61 535	Bracket No. 5	1	
68	99806 0612	Bolt	12	
	99952 0600	Washer, Plain	12	
	99971 0600	Washer, Spring	12	
69	99806 0616	Bolt	2	
	99952 0600	Washer, Plain	2	
	99971 0600	Washer, Spring	2	
70	99906 0600	Nut	2	
	99952 0618	Washer, Plain	2	
	99971 0600	Washer, Spring	2	
71	1562 61 469	Clip	1	
72	99806 0612	Bolt	1	
	99952 0600	Washer, Plain	1	
	99971 0600	Washer, Spring	1	
73	99906 0600	Nut	1	
	99952 0600	Washer, Plain	1	
74	99868 0620	Screw, Tapping	2	
	99952 0600	Washer, Plain	2	

CAR COOLER
(USED FROM CAR NO. 138185 73/4 TO CAR NO. 179250 73/9)

No.	Part Number	Description	Q'ty	Remarks
	99971 0600	Washer, Spring	2	
75	1622 61 546	Harness, Wire	1	
76	1524 61 547	Wire	1	
77	0208 78 834 A	Gas, Freon	3	
78	0866 61 525 A	Hose, Drain	2	
79	0820 78 883	Grommet	2	
80	0370 61 467	Clip	4	
81	99868 0520	Screw, Tapping	5	
	99952 0500	Washer, Plain	5	
	99971 0500	Washer, Spring	5	
82	0866 61 527	Clip	1	
83	0866 61 543 A	Hose, Vacuum	1	
84	0866 61 542	Connector	1	
85	99564 1000	Packing	1	
86	0866 61 549	Spacer	1	
87	0824 61 236 A	Valve, Magnet	1	
88	0866 61 541	Valve, Check	1	
89	99868 0620	Screw, Tapping	4	
	99952 0600	Washer, Plain	4	
	99971 0600	Washer, Spring	4	

CAR COOLER
(USED FROM CAR NO. 138185 73/4 TO CAR NO. 179250 73/9)

No.	Part Number	Description	Q'ty	Remarks
90	0866 61 911	Packing	1	
91	0866 61 912	Packing No. 2	1	
92	0866 61 913	Packing No. 3	1	
93	1620 61 925	Sealer (R)	1	
	1620 61 926	Sealer (L)	1	
94	99264 0531B	Rivet	4	
95	1568 61 190C	Control (Heater Less)	1	
96	0866 61 195B	Panel, Control (Heater Less)	1	
97	99833 0512	Screw	3	
	99971 0500	Washer, Spring	3	
98	1531 61 140	Blower (Heater Less)	1	
99	99906 0800	Nut	1	
	99952 0822	Washer, Plain	1	
	99971 0800	Washer, Spring	1	
100	99805 0830	Bolt	2	
	99952 0822	Washer, Plain	2	
	99971 0800	Washer, Spring	2	

No.	Part Number	Description		Q'ty	Remarks
● 73	0866 61 543A	Hose, Vacuum		1	Car No. 152816 73/9 ~Discarded
● 74	0866 61 542	Connector		1	Car No. 152816 73/9 ~Discarded
● 75	99564 1000	Gasket, Connector		1	Car No. 152816 73/9 ~Discarded
● 76	0866 61 549	Spacer		1	Car No. 152816 73/9 ~Discarded
77	1568 61 190C	Control	Without Car Heater	1	
78	0866 61 195B	Panel, Control		1	
79	99833 0512	Screw, Control Panel		3	
	99971 0500	Washer, Spring		3	
80	1531 61 140	Blower		1	
81	99805 0830	Bolt, Blower		2	
	99952 0800	Washer, Plain		2	
	99971 0800	Washer, Spring		2	
82	99908 0800	Nut, Blower		1	
	99952 0822	Washer, Plain		1	
	99971 0800	Washer, Spring		1	

CAR COOLER (L.H.D.)
(USED FROM CAR NO. 160623 73/10)

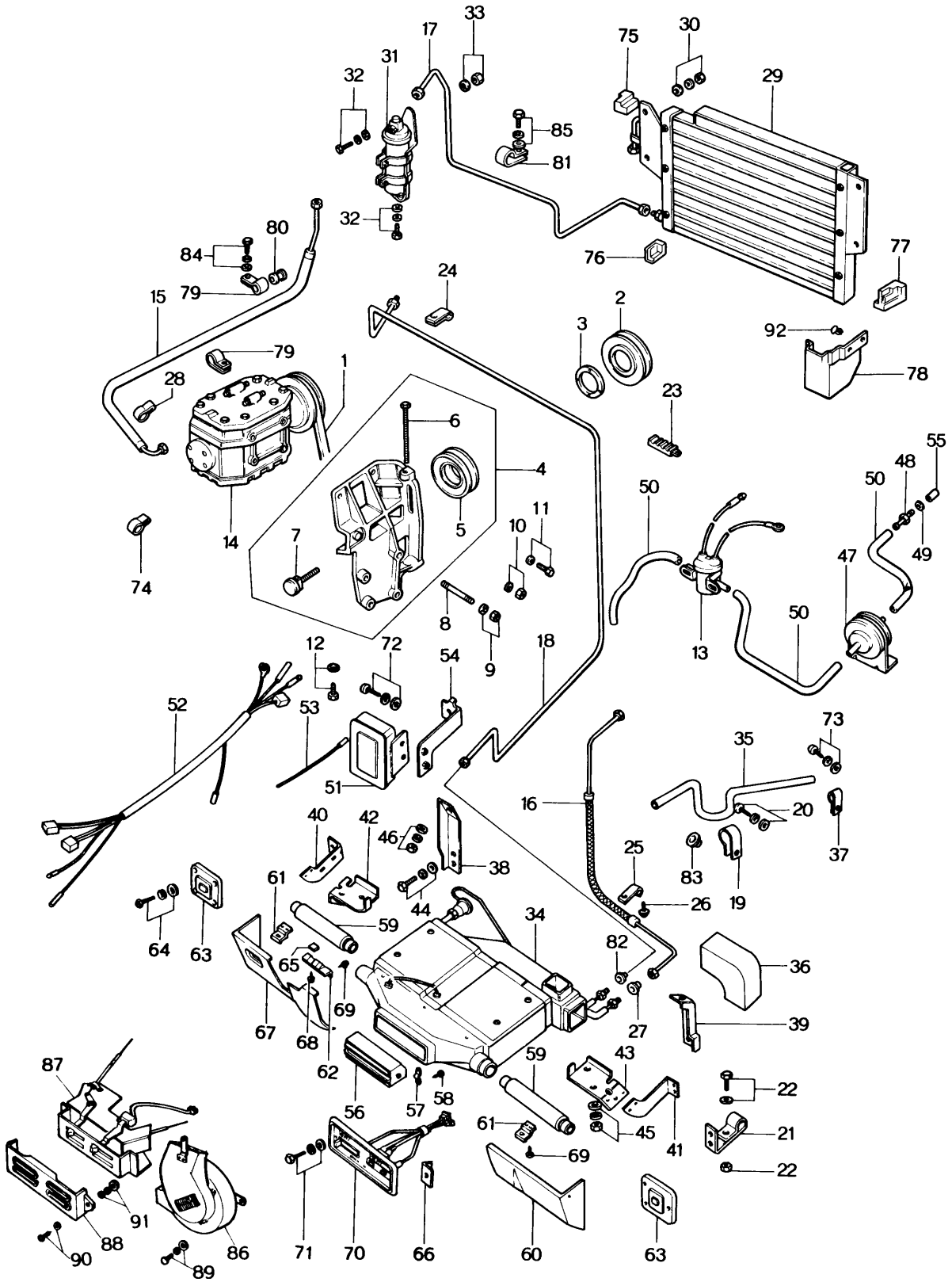

CAR COOLER (L,H.D.)
(USED FROM CAR NO. 160623 73/10)

No.	Part Number	Description	Q'ty	Remarks
	1883 61 410	Air-Conditioner, Heater-Less	1	—
	1881 61 410	Air-Conditioner	1	
1	1881 15 906	Belt, "V"	1	
	1881 15 906A	Belt, "V"	1	Car No. 164105 73/12~×
2	1881 15 911B	Pulley, "V" Belt	1	
	1757 15 911A	Pulley, "V" Belt	1	Car No. 164105 73/12~×
3	1757 15 912	Stiffener, Pulley	1	
4	1881 15 920	Bracket, Compressor (Fig. No 5~7 included)	1	
5	1881 15 940	Pulley, Idle	1	
6	1757 15 966	Bolt, Adjust	1	
7	1881 15 967	Shaft, Adjust	1	
8	99859 1028A	Stud	2	
	99859 1035A	Stud	2	
9	99921 1000	Nut, Compressor Bracket	3	
	99971 1000	Washer, Spring	3	
10	99921 1200	Nut, Compressor Bracket	1	
	99971 1200	Washer, Spring	1	
11	99811 1022	Bolt, Compressor	1	
	99971 1000	Washer, Spring	1	
12	99801 0840	Bolt, Compressor	2	

61 CAR COOLER (L.H.D.)
(USED FROM CAR NO. 160623 73/10)

No.	Part Number	Description	Q'ty	Remarks
	99971 0800	Washer, Spring	2	
13	0824 61 236A	Valve, Magnet	2	
14	1881 61 450	Compressor	1	
15	1562 61 461	Hose, Flexible	1	
16	1562 61 462A	Hose, Flexible	1	
17	1128 61 463	Pipe No. 1	1	
18	1562 61 464	Pipe No. 2	1	
19	0370 61 467	Clip	8	
20	998668 0520	Bolt	4	
	99952 0500	Washer, Plain	4	
	99971 0500	Washer, Spring	4	
21	1562 61 469	Clip	1	
22	99806 0612	Bolt	7	
	99906 0600	Nut	7	
	99952 0600	Washer, Plain	7	
	99971 0600	Washer, Spring	7	
23	0866 61 472	Clip	1	
24	1562 61 473	Clip	4	
25	1562 61 474	Clip	1	
26	99806 0628	Bolt	1	

No.	Part Number	Description	Q'ty	Remarks
	99952 0600	Washer, Plain	1	
	99971 0600	Washer, Spring	1	
27	0866 61 475	Grommet	1	
28	0866 61 476	Protector	1	
29	1562 61 490	Condenser	1	
30	99906 0600	Nut	4	
	99952 0618	Washer, Plain	4	
	99971 0600	Washer, Spring	4	
31	0866 61 500	Tank, Receiver	1	
32	99806 0612	Bolt, Receiver Tank	3	
	99952 0600	Washer, Plain	3	
	99971 0600	Washer, Spring	3	
33	99906 0600	Nut	1	
	99952 0600	Washer, Plain	1	
34	1622 61 520	Cooler Unit	1	
35	0866 61 525A	Hose, Drain	2	
36	1524 61 526	Duct, Rubber	1	
37	0866 61 527	Clip	1	
38	0866 61 531	Bracket No. I	1	
39	0866 61 532	Bracket No. 2	1	

61 CAR COOLER (L.H.D.)
(USED FROM CAR NO. 160623 73/10)

No.	Part Number	Description	Q'ty	Remarks
40	0866 61 533	Bracket No. 3	1	
41	0866 61 534	Bracket No. 4	1	
42	0866 61 535	Bracket No. 5	1	
43	0866 61 536	Bracket No. 6	1	
44	99806 0612	Bolt	12	
	99952 0600	Washer, Plain	12	
	99971 0600	Washer, Spring	12	
45	99906 0600	Nut	2	
	99951 0618	Washer, Plain	2	
	99971 0600	Washer, Spring	2	
46	99906 0800	Nut	2	
	99952 0800	Washer, Plain	2	
	99971 0800	Washer, Spring	2	
47	0866 61 541	Valve, Check	1	
48	0866 61 542	Connector	1	
49	99564 1000	Gasket	1	
50	0866 61 543A	Hose No. 1, Vacuum	1	
51	1622 61 545	Stabilizer, Amplifier	1	
52	1622 61 546	Harness	1	
53	1524 61 547	Wire	1	

No.	Part Number	Description	Q'ty	Remarks
54	1622 61 548	Bracket	1	
55	0866 61 549	Spacer	1	
56	0866 61 551	Grille	1	
57	0866 61 552	Holder	2	
58	99868 0408	Screw, Tapping	4	
59	1622 61 561	Duct, Air	2	
60	1622 61 565	Cover (R), Duct	1	
61	1622 61 566	Bracket, Cover	4	
62	1622 61 567	Bracket	1	
63	1622 61 568	Cover (R), Ventilator	1	
	1622 61 578	Cover (L), Ventilator	1	
64	99806 0620	Bolt, Cover	6	
	99952 0600	Washer, Plain	6	
	99971 0600	Washer, Spring	6	
65	1622 61 569	Spacer	2	
66	1622 61 572	Bracket	2	
67	1622 61 575	Cover (L), Duct	1	
68	99833 0525	Screw, Cover	2	
	99952 0500	Washer, Plain	2	
	99971 0500	Washer, Spring	2	

CAR COOLER (L.H.D.)
(USED FROM CAR NO. 160623 73/10)

No.	Part Number	Description	Q'ty	Remarks
69	99868 0410	Screw, Cover	10	
70	1622 61 580	Panel, Control	1	
71	99833 0310B	Screw	2	
	99952 0300	Washer, Plain	2	
	99971 0300	Washer, Spring	2	
72	99833 0512B	Screw	2	
	99952 0500	Washer, Plain	2	
	99971 0500	Washer, Spring	2	
73	99868 0520	Bolt	5	
	99952 0500	Washer, Plain	5	
	99971 0500	Washer, Spring	5	
74	0317 61 612	Cushion	1	
75	1128 61 911	Packing No. 1	1	
76	1128 61 912	Packing No. 2	1	
77	1128 61 913	Packing No. 3	1	
78	1620 61 925	Rubber, Seal (R)	1	
	1620 61 926	Rubber, Seal (L)	1	
79	0820 78 857	Clip	2	
80	0259 78 858	Packing	2	
81	0259 78 868	Clip	1	

No.	Part Number	Description	Q'ty	Remarks
82	0208 78 875	Grommet	1	
83	0820 78 883	Grommet	1	
84	99863 0620	Bolt	4	
	99952 0600	Washer, Plain	4	
	99971 0600	Washer, Spring	4	
85	99806 0616	Bolt	1	
	99952 0600	Washer, Plain	1	
	99971 0600	Washer, Spring	1	
86	1531 61 140	Blower	1	
87	1568 61 190C	Control	1	
88	0866 61 195B	Panel, Control	1	
89	99805 0830	Bolt, Control Case	4	
	99952 0800	Washer, Plain	4	Heater-Less
	99971 0800	Washer, Spring	4	
90	99833 0512	Screw, Control	3	
	99971 0500	Washer, Spring	3	
91	99906 0800	Nut	1	
	99952 0822	Washer, Plain	1	
	99971 0800	Washer, Spring	1	
92	99264 0531B	Rivet	4	

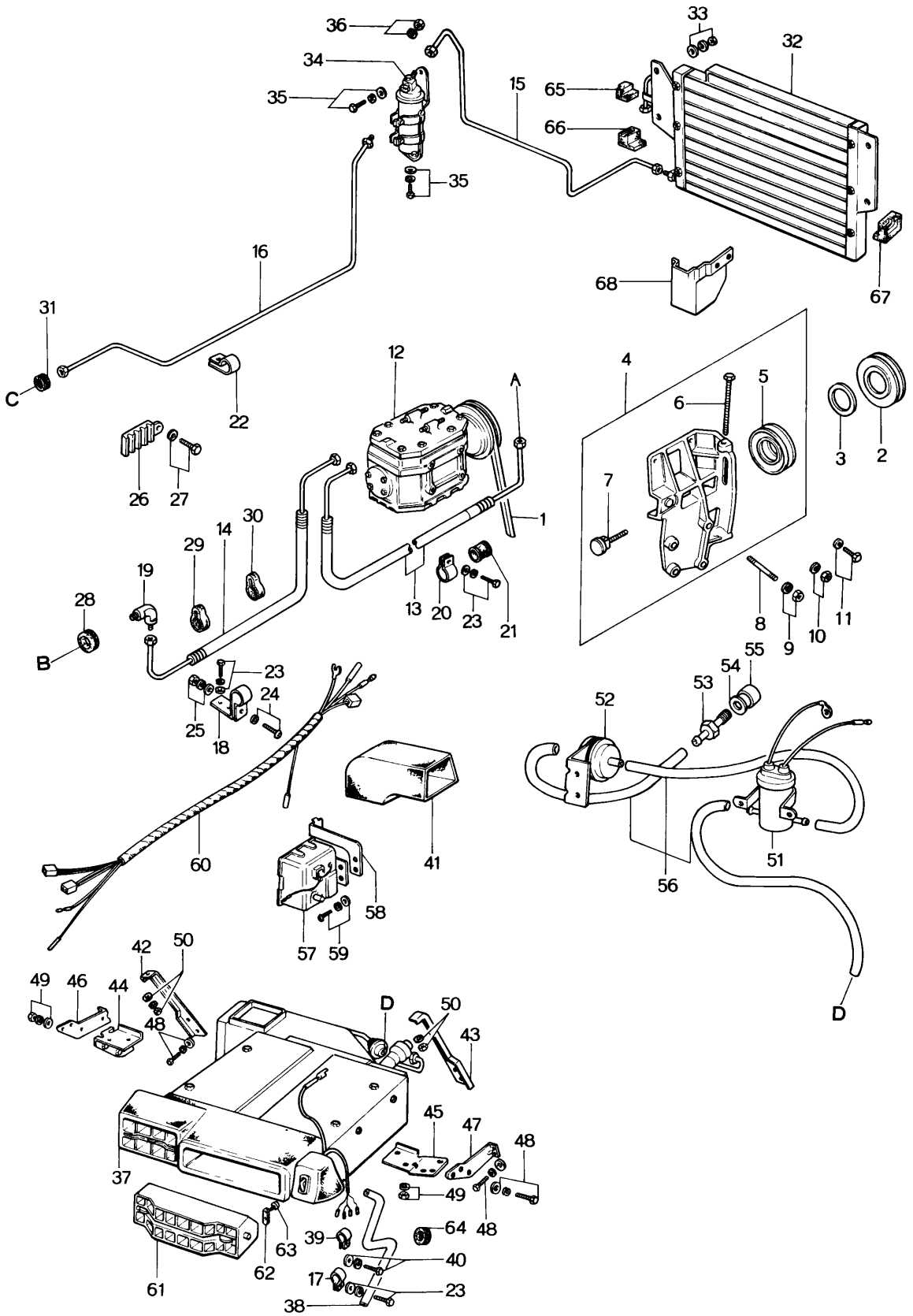
36
34
35
35
33
32
15
65
66
67
68
16
31
C
22
12
A
1
26
27
30
14
29
19
28
B
13
20
23
21
4
5
6
7
3
2
8
9
10
11
23
24
25
18
60
41
58
57
59
55
54
53
52
56
51
D
42
50
49
46
44
48
D
50
43
45
47
48
37
49
64
48
39
40
63
62
17
23
61
38

No.	Part Number	Description	Q'ty	Remarks
	3507 61 410	Cooler, Car	1	
1	1881 15 906	Belt, "V"	1	
	1881 15 906 A	Belt, "V"	1	Car No. 73/12~ ×
2	1757 15 911 A	Pulley, "V" Belt	1	
	1757 15 911 B	Pulley, "V" Belt	1	Car No. 73/12~ ×
3	1757 15 912	Stiffener, Pulley	1	
4	1881 15 920	Bracket, Compressor	1	
5	1881 15 940	Pulley, Idle	1	
6	1757 15 966	Bolt, Adjust	1	
7	1881 15 967	Shaft, Adjust	1	
8	99859 1028 A	Stud	1	
	99859 1035 A	Stud	2	
9	99921 1000	Nut, Compressor Bracket	3	
	99971 1000	Washer, Spring	3	
10	99921 1200	Nut, Compressor Bracket	1	
	99971 1200	Washer, Spring	1	
11	99811 1022	Bolt, Compressor	1	
	99971 1000	Washer, Spring	1	
12	1881 61 450	Compressor	1	
13	0866 61 461	Hose, Flexible	1	

No.	Part Number	Description	Q'ty	Remarks
14	0866 61 462	Hose, Flexible	1	
15	1128 61 463	Pipe No. 1	1	
16	0866 61 466	Pipe No. 2	1	
17	0370 61 467	Clip	4	
18	0866 61 467	Clip	1	
19	0866 61 474	Elbow	1	
20	0259 78 857	Clip	2	
21	0259 78 858	Packing, Rubber	2	
22	0259 78 868	Clip	1	
23	99868 0512	Screw	13	
	99952 0500	Washer, Plain	13	
	99971 0500	Washer, Spring	13	
24	99797 0512	Screw	1	
	99952 0500	Washer, Plain	1	
25	99906 0500	Nut	1	
	99952 0500	Washer, Plain	1	
	99971 0500	Washer	1	
26	0866 61 472	Clip	1	
27	99806 0814	Bolt, Clip	1	
	99971 0800	Washer, Spring	1	

No.	Part Number	Description	Q'ty	Remarks
28	0866 61 475	Grommet	1	
29	0866 61 476	Protector	1	
	1540 61 476	Protector	1	
30	0317 61 612	Cushion	1	
31	0208 78 875	Grommet	1	
32	0866 61 490	Condenser	1	
33	99906 0600	Nut, Condenser	4	
	99952 0618	Washer, Plain	4	
	99971 0600	Washer, Spring	4	
34	0866 61 500	Tank, Receiver	1	
35	99801 0612	Bolt, Receiver Tank	3	
	99952 0618	Washer, Plain	3	
	99971 0600	Washer, Spring	3	
36	99906 0600	Nut, Receiver Tank	1	
	99952 0600	Washer, Plain	1	
37	0866 61 520	Cooler Unit	1	
38	0866 61 525 A	Hose, Drain	1	
39	0866 61 527	Clip, Drain Hose	1	
40	99868 0512	Screw	1	
	99952 0500	Washer, Plain	1	

No.	Part Number	Description	Q'ty	Remarks
	99971 0500	Washer, Spring	1	
41	0866 61 526A	Duct, Rubber	1	
42	0866 61 531	Bracket No. 1, Cooler Unit	1	
43	0866 61 532	Bracket No. 2, Cooler Unit	1	
44	0866 61 533	Bracket No. 3, Cooler Unit	1	
45	0866 61 534	Bracket No. 4, Cooler Unit	1	
46	0866 61 535	Bracket No. 5, Cooler Unit	1	
47	0866 61 536	Bracket No. 6, Cooler Unit	1	
48	99797 0616	Bolt, Bracket	14	
	99952 0600	Washer, Plain	12	
	99952 0618	Washer, Plain	2	
	99971 0600	Washer, Spring	14	
49	99906 0600	Nut, Bracket	2	
	99952 0618	Washer, Plain	2	
50	99906 0800	Nut, Bracket	2	
	99952 0800	Washer, Plain	2	
	99971 0800	Washer, Spring	2	
51	0824 61 236A	Valve, Magnet	1	
52	0866 61 541	Valve, Check	1	
53	0866 61 542	Connector, Vacuum Hose	1	

No.	Part Number	Description	Q'ty	Remarks
54	99564 1000	Gasket, Connector	1	
55	0866 61 549	Spacer	1	
56	0866 61 543A	Hose, Vacuum	1	
57	0866 61 545	Stabilizer, Amplifier	1	
58	0866 61 548A	Bracket, Stabilizer	1	
59	99833 0512	Screw, Bracket	2	
	99952 0500	Washer, Plain	2	
	99971 0500	Washer, Spring	2	
60	0866 61 546	Harness	1	
61	0866 61 551	Grille	1	
62	0866 61 552	Holder, Grille	2	
63	99868 0308	Screw	4	
64	0820 78 883	Grommet	2	
65	1128 61 911	Packing No. 1	1	
66	1128 61 912	Packing No. 2	1	
67	1128 61 913	Packing No. 3	1	
68	1620 61 925	Rubber, Seal (R)	1	
	1620 61 926	Rubber, Seal (L)	1	

COOLER UNIT (L.H.D.)
(USED UP TO CAR NO. 179250 73/9)

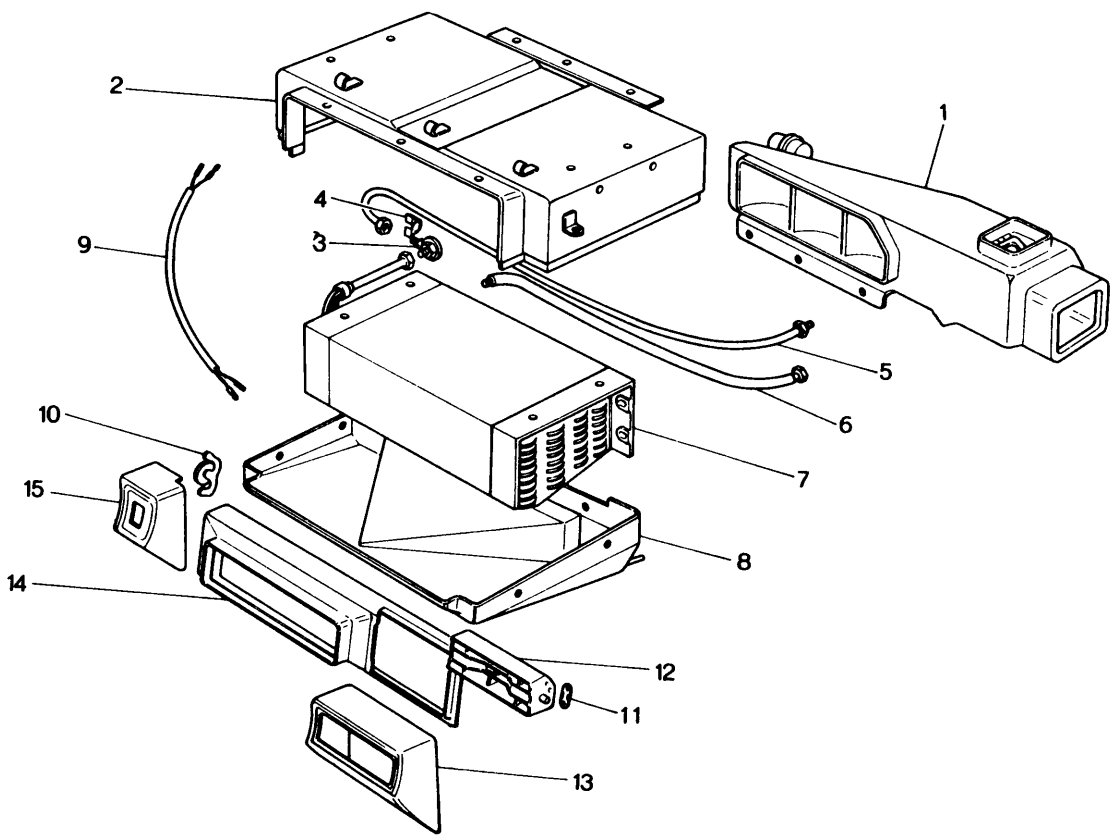

CAR COOLER (L.H.D.)
(USED FROM CAR NO. 160623 73/10)

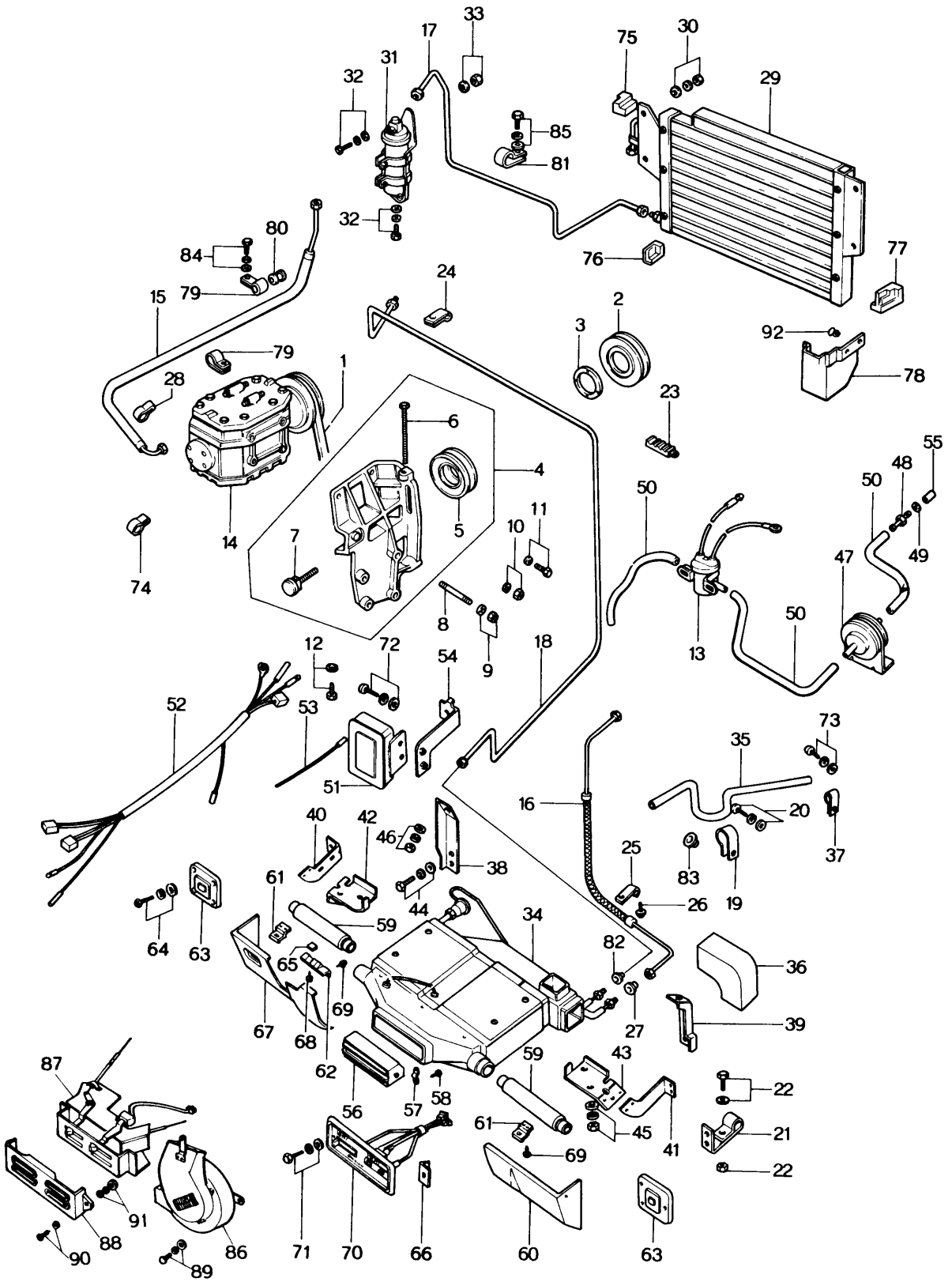

No.	Part Number	Description	Q'ty	Remarks
54	99564 1000	Gasket, Connector	1	
55	0866 61 549	Spacer	1	
56	0866 61 543A	Hose, Vacuum	1	
57	0866 61 545	Stabilizer, Amplifier	1	
58	0866 61 548A	Bracket, Stabilizer	1	
59	99833 0512	Screw, Bracket	2	
	99952 0500	Washer, Plain	2	
	99971 0500	Washer, Spring	2	
60	0866 61 546	Harness	1	
61	0866 61 551	Grille	1	
62	0866 61 552	Holder, Grille	2	
63	99868 0308	Screw	4	
64	0820 78 883	Grommet	2	
65	1128 61 911	Packing No. 1	1	
66	1128 61 912	Packing No. 2	1	
67	1128 61 913	Packing No. 3	1	
68	1620 61 925	Rubber, Seal (R)	1	
	1620 61 926	Rubber, Seal (L)	1	

COOLER UNIT (L.H.D.)
(USED UP TO CAR NO. 138184 73/4)

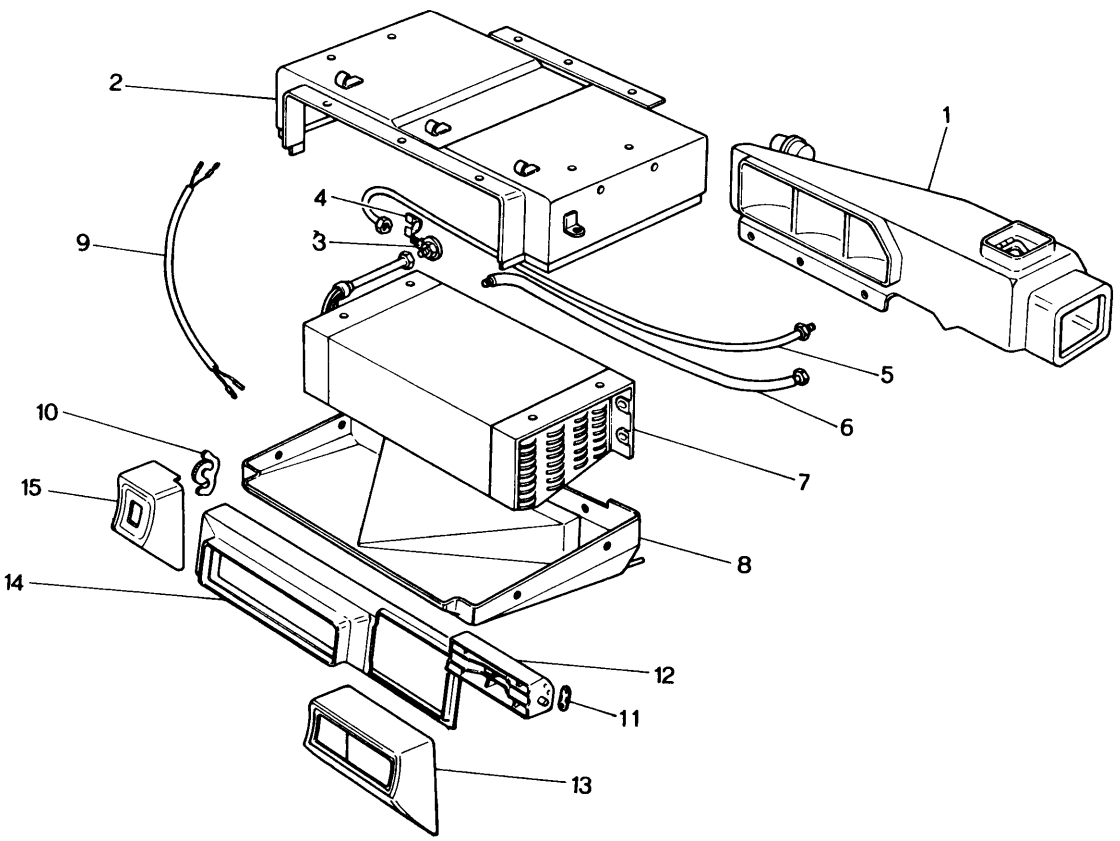

COOLER UNIT (L.H.D.)
(USED UP TO CAR NO. 138184 73/4)

61 76

No.	Part Number	Description	Q'ty	Remarks
	1568 61 520	Unit, Cooler	1	
1	1531 76 701	Duct, Air	1	
2	1524 76 702	Case, Main-Upper	1	
3	0370 76 703	Valve, Expansion	1	
4	0370 76 704	Holder, Valve	1	
5	1524 76 705	Pipe No. 1	1	
6	1524 76 706	Pipe No. 2	1	
7	1524 76 708	Evaporator	1	
	1622 76 708	Evaporator	1	73/4~○
8	1524 76 709	Case, Main-Lower	1	
9	0370 76 707	Thermister	1	
10	0866 76 711	Resistor	1	
11	0866 61 552	Holder, Grille	2	
12	0866 76 715	Grille	1	
13	1562 76 716	Body, Grille	1	
14	1562 76 717	Duct, Air	1	
15	1562 76 718	Base, Grille	1	

COOLER UNIT & CONTROL PANEL

(L.H.D.) (USED FROM CAR NO. 138185 73/4)

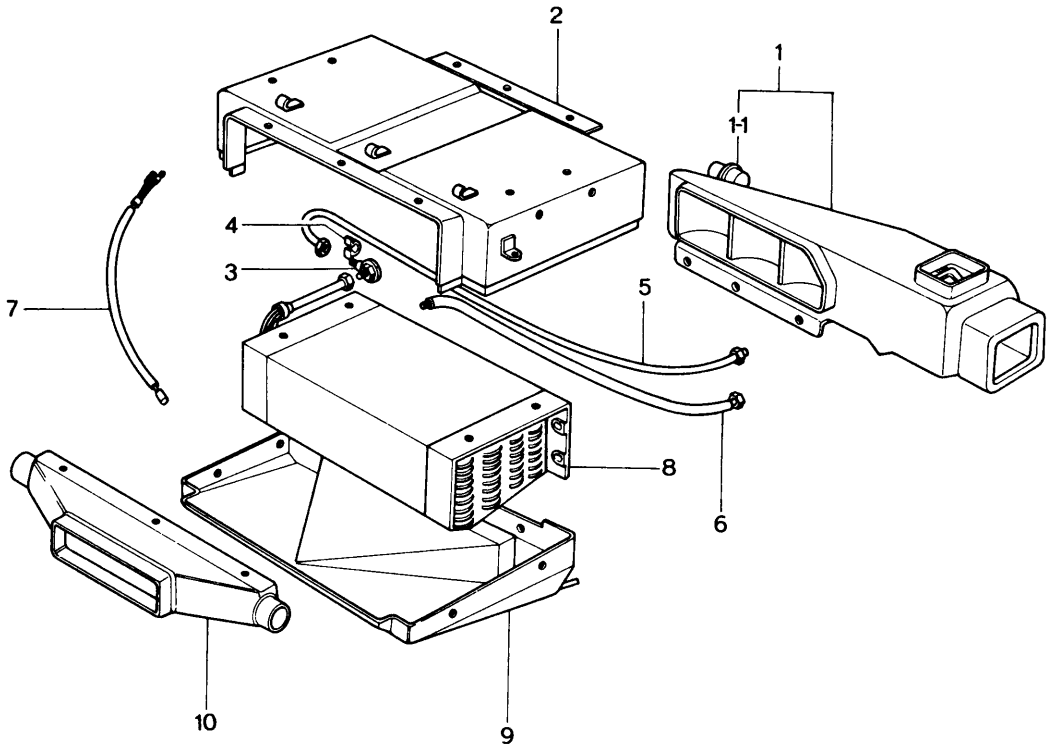

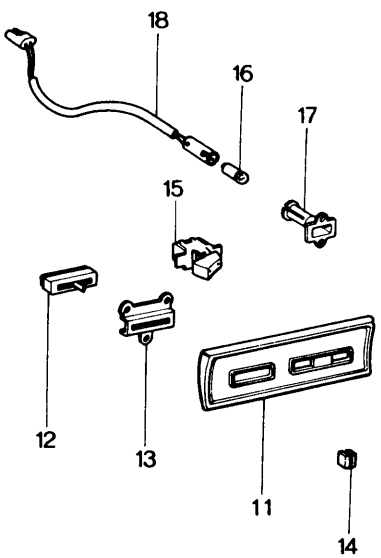

COOLER UNIT & CONTROL PANEL

(L.H.D.) (USED FROM CAR NO. 138185 73/4)

61 76

No.	Part Number	Description	Q'ty	Remarks
	1622 61 520	Cooler Unit (With Car Heater)	1	
●	1608 61 520	Cooler Unit (Without Car Heater)	1	
1	1524 76 701	Duct, Air	1	
●	1531 76 701	Duct, Air	1	
1-1	0866 76 719	Actuator	1	
2	1622 76 702	Case, Main	1	
3	0370 76 703	Valve, Expansion	1	
4	0370 76 704	Holder, Valve	1	
5	1524 76 705	Pipe No. 1	1	
6	1524 76 706	Pipe No. 2	1	
7	0370 76 707	Thermister	1	
8	1622 76 708	Evaporator	1	
9	1622 76 709	Case, Main	1	
10	1622 76 717	Duct, Air	1	
	1622 61 580	Panel Ass'y, Control	1	
11	1622 76 901	Panel, Control	1	
12	1622 76 902	Resistor, Variable	1	
13	1622 76 903	Bracket, Switch	1	
14	1622 76 904	Knob, Control	1	
15	1622 76 905	Switch, Snap	1	
16	1622 76 906	Valve	1	
17	1622 76 907	Socket, Valve	1	
18	1622 76 908	Holder, Valve	1	

COOLER UNIT (R.H.D.)

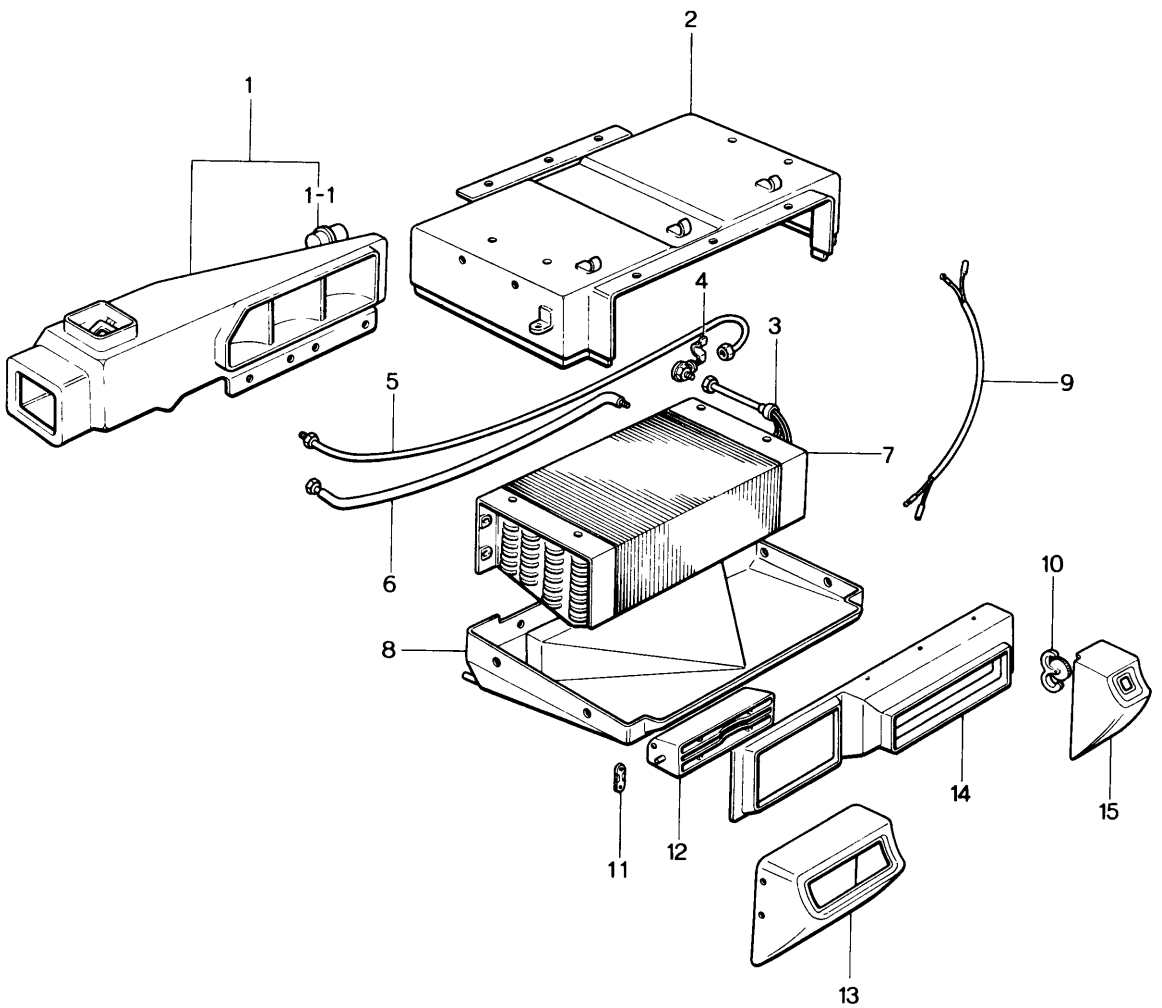

COOLER UNIT (R.H.D.)

61 76

No.	Part Number	Description	Q'ty	Remarks
	0866 61 520	Unit, Cooler	1	
1	0370 76 701	Duct, Air	1	
1-1	0866 76 719	Actuator	1	
2	0370 76 702	Case, Main	1	
3	0370 76 703	Valve, Expansion	1	
4	0370 76 704	Holder, Valve	1	
5	0370 76 705	Pipe No. 1	1	
6	0370 76 706	Pipe No. 2	1	
7	0370 76 708	Evaporator	1	
8	0370 76 709	Case, Main	1	
9	0370 76 707	Thermistor	1	
10	0866 76 711	Resistor	1	
11	0866 61 552	Holder, Grille	2	
12	0866 76 715	Grille	1	
13	0866 76 716	Body, Grille	1	
14	0866 76 717	Duct, Air	1	
15	0866 76 718	Base, Grille	1	

COMPRESSOR (CAR COOLER)

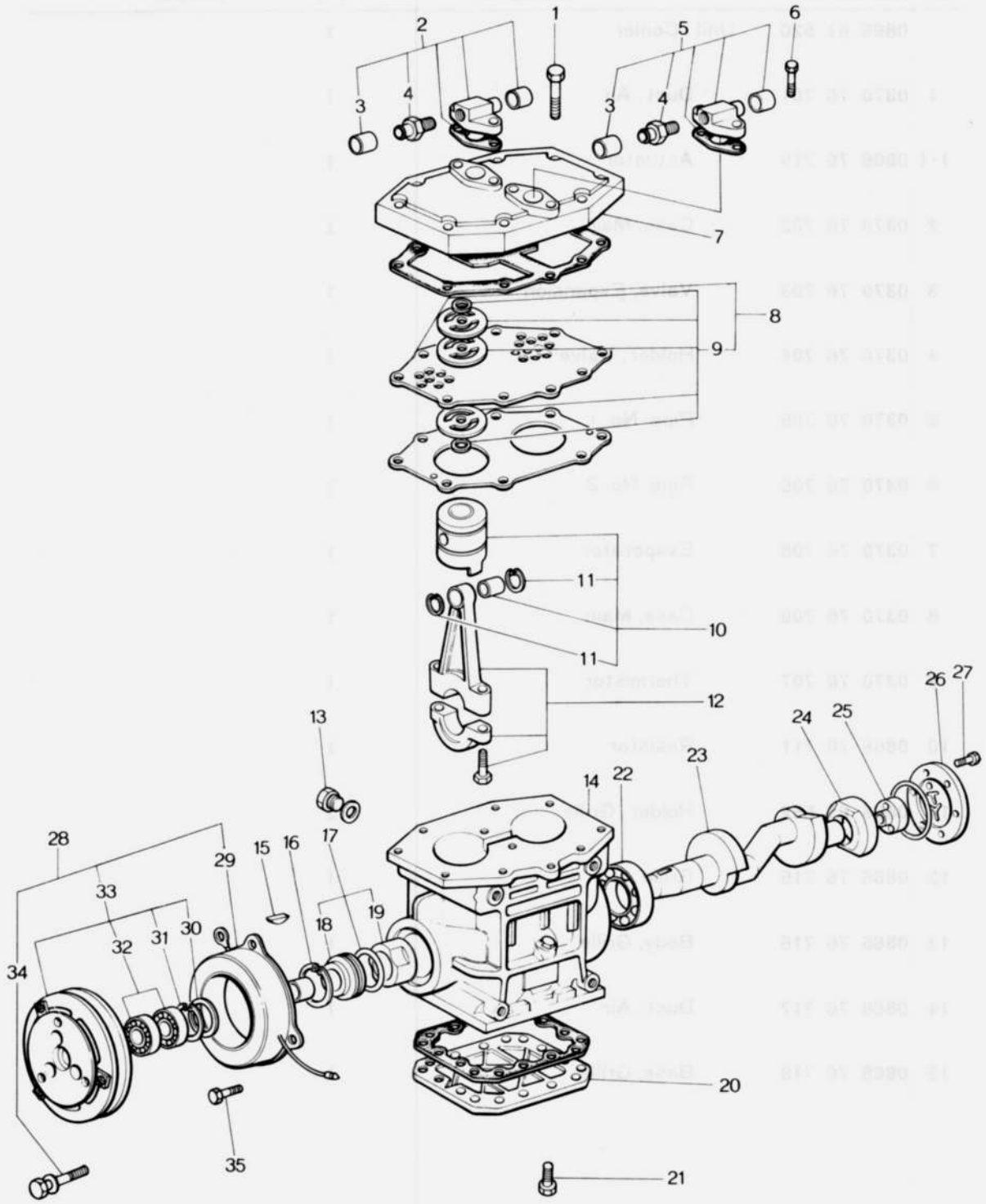

No.	Part Number	Description	Q'ty	Remarks
	0866 61 450	Compressor	1	
●	1881 61 450	Compressor	1	Car No. 160623 73/10～×
	0866 76 710	Compressor (Fig. No. 1～27 Included)	1	
1	0866 76 701	Bolt	4	
2	0866 76 810	Valve Kit, Service (Fig. No. 3,4 Included)	1	
3	0866 76 755	Cap, Service Valve	2	
4	0866 76 754	Valve, Service	2	
5	0866 76 820	Valve Kit (Fig. No. 3,4 Included)	1	
6	0866 76 702	Bolt, Cylinder Head	8	
7	0866 76 752	Head, Cylinder	1	
8	0866 76 760	Valve Set (Fig. No. 9 Included)	1	
9	0866 76 703	Valve Kit, Lead	2	
10	0866 76 830	Piston Set (Fig. No. 11 Included)	2	
11	0866 76 739	Ring, Snap	4	
12	0866 76 750	Rod, Connecting	2	
13	0866 76 704	Plug, Oil	1	
14	0866 76 721A	Block, Cylinder	1	
15	0866 76 723	Key, Woodruff	1	
16	0866 76 734	Clip	1	
17	0866 76 730	Seal Set, Shaft	1	

COMPRESSOR (CAR COOLER)

No.	Part Number	Description	Q'ty	Remarks
18	0866 76 733	Plate, Seal	1	
19	0866 76 731	Seal	1	
20	0866 76 743A	Plate, Bottom	1	
21	0866 76 705	Bolt	16	
	0866 76 705	Bolt	12	Car No. 161019 73/12~Q'ty
22	0866 76 722	Bearing	1	
23	0866 76 724	Crankshaft	1	
24	0866 76 725	Bearing	1	
25	0866 76 726	Pump	1	
26	0866 76 729	Plate, Cover	1	
27	0866 76 706	Bolt	6	
28	0866 76 720	Clutch (Fig. No. 29~34 Included)	1	
●	1881 76 720	Clutch	1	Car No. 160623 73/10~×
29	0866 76 763	Stator	1	
●	1881 76 763	Stator	1	Car No. 160623 73/10~×
30	0866 76 764	Cover, Dust	1	Car No. 160623 73/10~Discarded
31	0866 76 765	Ring, "E" Stop	1	
●	1881 76 765	Ring, Snap	1	Car No. 160623 73/10~×
32	0866 76 766	Bearing, Ball	2	
33	0866 76 790	Clutch, Magnet	1	

No.	Part Number	Description	Q'ty	Remarks
●	1881 76 790	Clutch, Magnet	1	Car No. 160623 73/10~×
34	0866 76 707	Bolt	1	
●	1881 76 707	Bolt	1	Car No. 160623 73/10~×
35	0866 76 708	Screw	3	
	0866 76 709A	Gasket Set	1	

BACK DOOR (STATION WAGON)

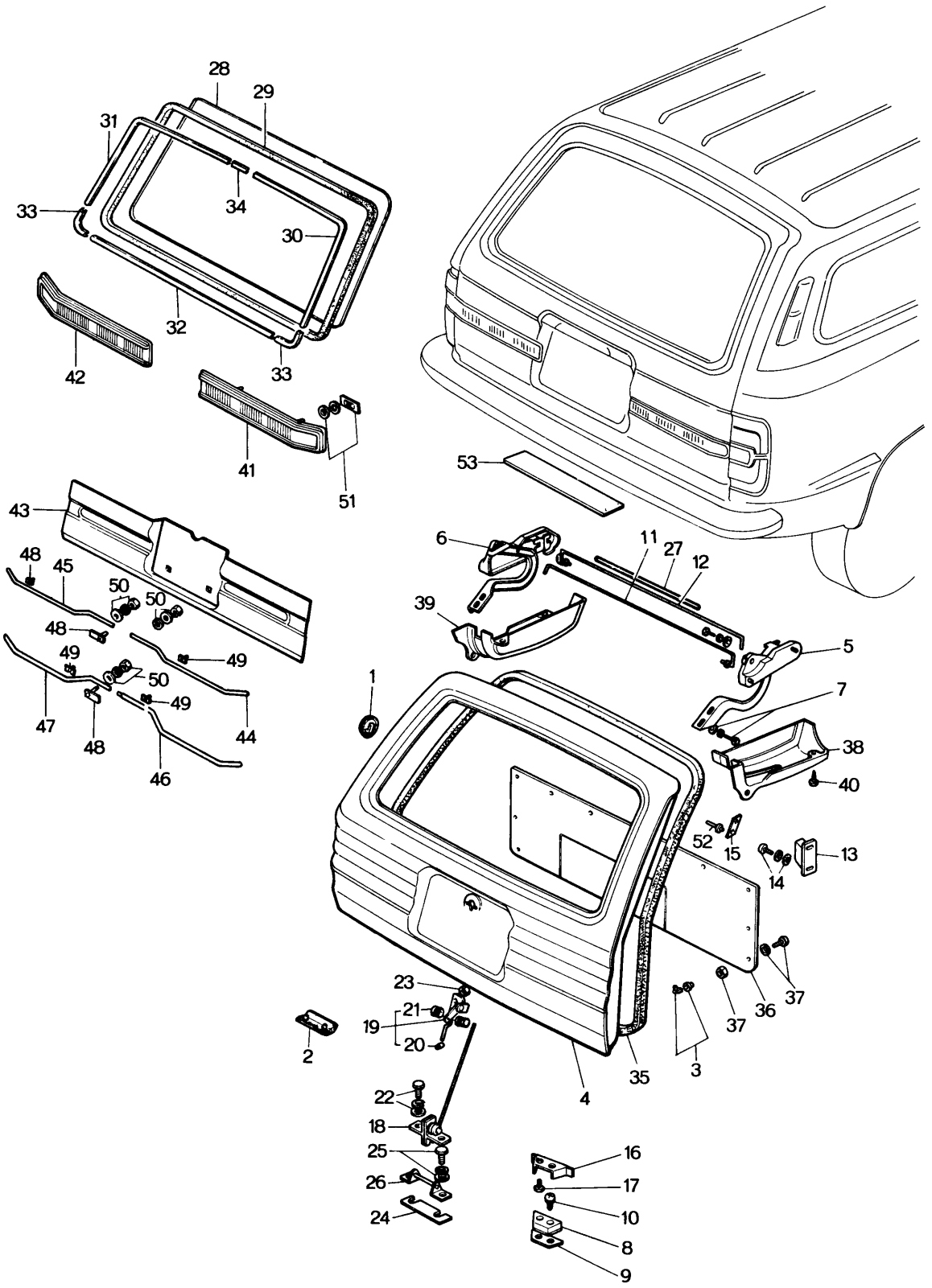

No.	Part Number	Description	Q'ty	Remarks
1	0136 56 112	Hole Cover, Switch	2	
2	0305 58 872	Valve, Check	2	
3	0208 58 921	Fastener	2	
	0187 58 922	Fastener, Seal	2	
4	1571 62 510A	Door, Back	1	
5	0585 62 610	Hinge (R)	1	
6	0585 63 610	Hinge (L)	1	
7	99781 0820	Bolt, Hinge	4	
	99951 0818	Washer, Plain	4	
	99971 0800	Washer, Spring	4	
8	0621 62 640A	Wedge	2	
9	0621 62 641	Shim, Adjust-Wedge	2	Selective use
	0621 62 642	Shim, Adjust-Wedge	4	
10	99836 0620	Screw	4	
	99974 0600	Washer, Toothed	4	
	99975 0600	Washer, Toothed	1	
11	0585 62 650C	Spring (R), Balance	1	
12	0585 63 650C	Spring (L), Balance	2	
13	0585 62 671A	Wedge, Upper	4	
14	99765 0616	Screw	4	

BACK DOOR (STATION WAGON)

No.	Part Number	Description	Q'ty	Remarks
	99952 0600	Washer, Plain	4	
	99971 0600	Washer, Spring	4	
15	0585 62 672A	Protector	2	
16	0585 62 695	Wedge	2	
17	99833 0614	Screw, Wedge	4	
	99974 0600	Washer, Toothed	4	
18	0585 62 710B	Lock, Back Door	1	
19	0585 62 720D	Control, Remote	1	
20	0866 58 313	Joint	1	
21	0824 58 546A	Bush	1	
22	99806 0618	Bolt, Back Door Lock	2	
	99971 0600	Washer, Spring	2	
	99952 0618	Washer, Plain	2	
23	99940 0602	Nut, Flange	2	
24	0585 62 741	Plate, "A" - Adjust (t=2.0)	1	Selective use
	0585 62 742	Plate, "B" - Adjust (t=1.0)	1	
25	99806 0618	Bolt, Striker	2	
	99951 0618	Washer, Plain	2	

No.	Part Number	Description	Q'ty	Remarks
	99971 0600	Washer, Spring	2	
26	0585 62 750	Striker	1	
27	0621 62 792	Pipe	1	
28	1528 62 801A	Glass, Back Window (Transparent)	1	
	1529 62 801A	Glass, Back Window (Transparent)	1	With Heatable Wire
	1544 62 801A	Glass, Back Window (Blue Pane)	1	
	1545 62 801A	Glass, Back Window (Blue Pane)	1	With Heatable Wire
29	0585 62 802A	Weatherstrip	1	
30	0585 62 823C	Mould (R)	1	
31	0585 63 823C	Mould (L)	1	
32	0585 62 826	Mould, Lower	1	
33	0585 62 828	Mould, Corner Lower	2	
34	0483 70 804	Junction	1	
35	0585 62 831B	Weatherstrip	1	
36	0899 62 851C	Trim, Back Door	1	
37	99862 0416B	Screw, Back Door Trim	6	Selective use
	99862 0416C	Screw, Back Door Trim	6	Selective use
	99967 0400A	Washer, Plain	6	Selective use
	99967 0400B	Washer, Plain	6	Selective use
	99910 0401	Nut	6	

BACK DOOR (STATION WAGON)

No.	Part Number	Description	Q'ty	Remarks
38	0585 62 871C	Cover (R), Hinge	1	
39	0585 63 871C	Cover (L), Hinge	1	
40	99864 0516C	Screw, Hinge Cover	6	
41	0585 62 940A	Finisher (R), Tail	1	
42	0585 63 940A	Finisher (L), Tail	1	
43	0899 62 955B	Film, Decoration	1	
44	0899 62 961	Moulding (R), Upper	1	
45	0899 62 962A	Moulding (L), Upper	1	
46	0899 62 963	Moulding (R), Lower	1	
47	0899 62 964	Moulding (L), Lower	1	
48	0899 62 970	Bolt, Moulding	3	
49	0899 62 975A	Clip	10	
50	99906 0300	Nut, Decoration Film	3	
	99952 0300	Washer, Plain	3	
	99971 0300	Washer, Spring	3	
51	0305 68 951	Packing	4	
	0305 68 952	Washer	4	
	99579 4000	Nut, Speed	4	
52	0223 69 032	Rivet, Blind-Protector	4	
53	0603 69 323A	Cushion	1	

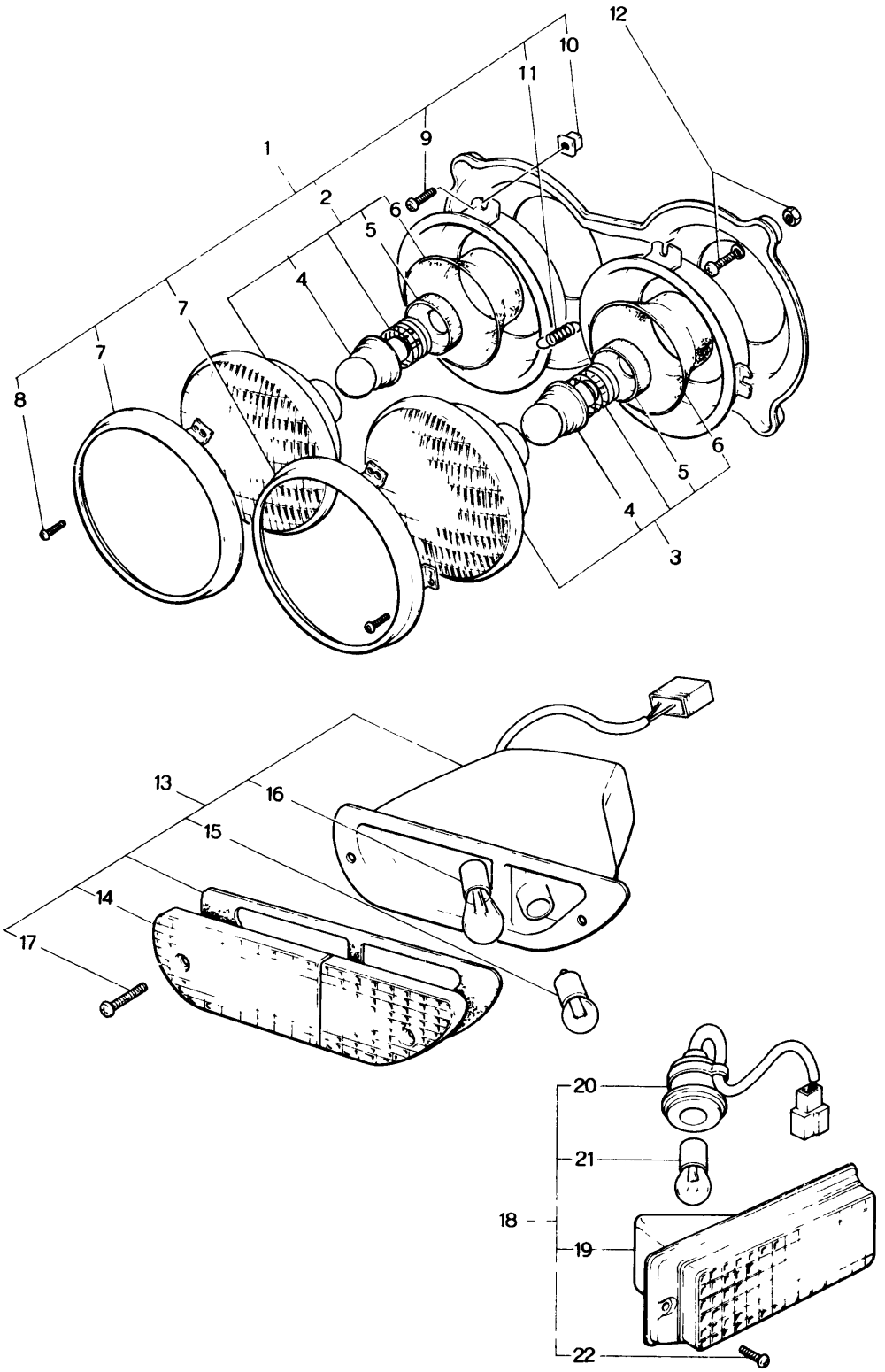
1
2
4
5
6
7
7
8
9
10
11
12
3
4
5
6
13
15
16
14
17
18
19
20
21
22

No.	Part Number	Description	Q'ty	Remarks
1	1562 66 030 A	Lamp (R), Head	1	
	1562 89 661 A	Lamp (R), Head	1	73/4~○
●	3513 89 661	Lamp (R), Head (Fig. No. 12 included) White Bulb	1	Car No. 160623 73/10~×
	1562 66 060 A	Lamp (L), Head	1	
	1562 89 666 A	Lamp (L), Head	1	
●	3513 59 666	Lamp (L), Head	1	Car No. 160623 73/10~×
	1568 66 030 A	Lamp (R), Head	1	
	1568 89 661 A	Lamp (R), Head	1	73/4~○
●	3514 89 661	Lamp (R), Head (Fig. No. 12 included) Yellow Bulb	1	Car No. 160623 73/10~×
	1568 66 060 A	Lamp (L), Head	1	
	1568 89 666 A	Lamp (L), Head	1	73/4~○
●	3514 89 666	Lamp (L), Head	1	Car No. 160623 73/10~×
2	1562 66 040 A	Beam, Semi-Sealed-Bulb, White	2	Inner Side
	1568 66 040 A	Beam, Semi-Sealed-Bulb, Yellow	2	Inner Side
3	1562 66 070 A	Beam, Semi-Sealed-Bulb, White	2	Outer Side
	1568 66 070 A	Beam, Semi-Sealed-Bulb, Yellow	2	Outer Side
4	2288 66 045	Bulb-White Colour	2	
	2360 66 045	Bulb-Yellow Colour	2	
5	2369 66 075	Holder, Bulb	4	
6	2369 66 071	Cover	4	

LAMPS (FRONT SIDE, L.H.D.)

No.	Part Number	Description	Q'ty	Remarks
7	0727 87 014	Holder, Lamp	4	
8	0275 87 007	Screw	12	
9	0727 87 016	Screw, Adjust	8	
10	2850 87 003	Nut, Self Lock	8	
11	2850 87 012	Spring	4	
12	~~908600 6 16~~	~~Screw Set, Head Lamp~~	~~8~~	
	998600 6 16	Screw, Tapping	8	From Car No. 1
	~~99901 0601~~	~~Nut~~	~~8~~	
	99910 0601	Nut	8	From Car No. 1
	99952 0816	Washer, Plain	8	
13	1524 89 662A	Lamp (R), Front Turn Signal	1	
●	1524 89 662B	Lamp (R), Front Turn Signal	1	Car No. 160623 $^{73}/_{10}$~△
	1524 89 667A	Lamp (L), Front Turn Signal	1	
●	1524 89 667B	Lamp (L), Front Turn Signal	1	Car No. 160623 $^{73}/_{10}$~△
14	1524 66 112A	Lens (R)	1	
	1524 66 142A	Lens (L)	1	
15	99701 2050	Bulb (12V, 5W)	2	
16	99701 3210	Bulb (12V, 21W)	2	
17	99835 0625C	Screw, Front Turn Signal Lamp	4	

No.	Part Number	Description	Q'ty	Remarks
18	1531 89 663A	Lamp (R), Side Turn Signal	1	
	1531 89 668A	Lamp (L), Side Turn Signal	1	
19	1531 66 481	Lens & Body (R)	1	
	1531 66 491	Lens & Body (L)	1	
20	1531 66 482	Harness	2	
21	99701 2050	Bulb	2	
22	99769 0414	Screw, Tapping-Side Turn Signal Lamp	4	

LAMPS (FRONT SIDE, R.H.D.)

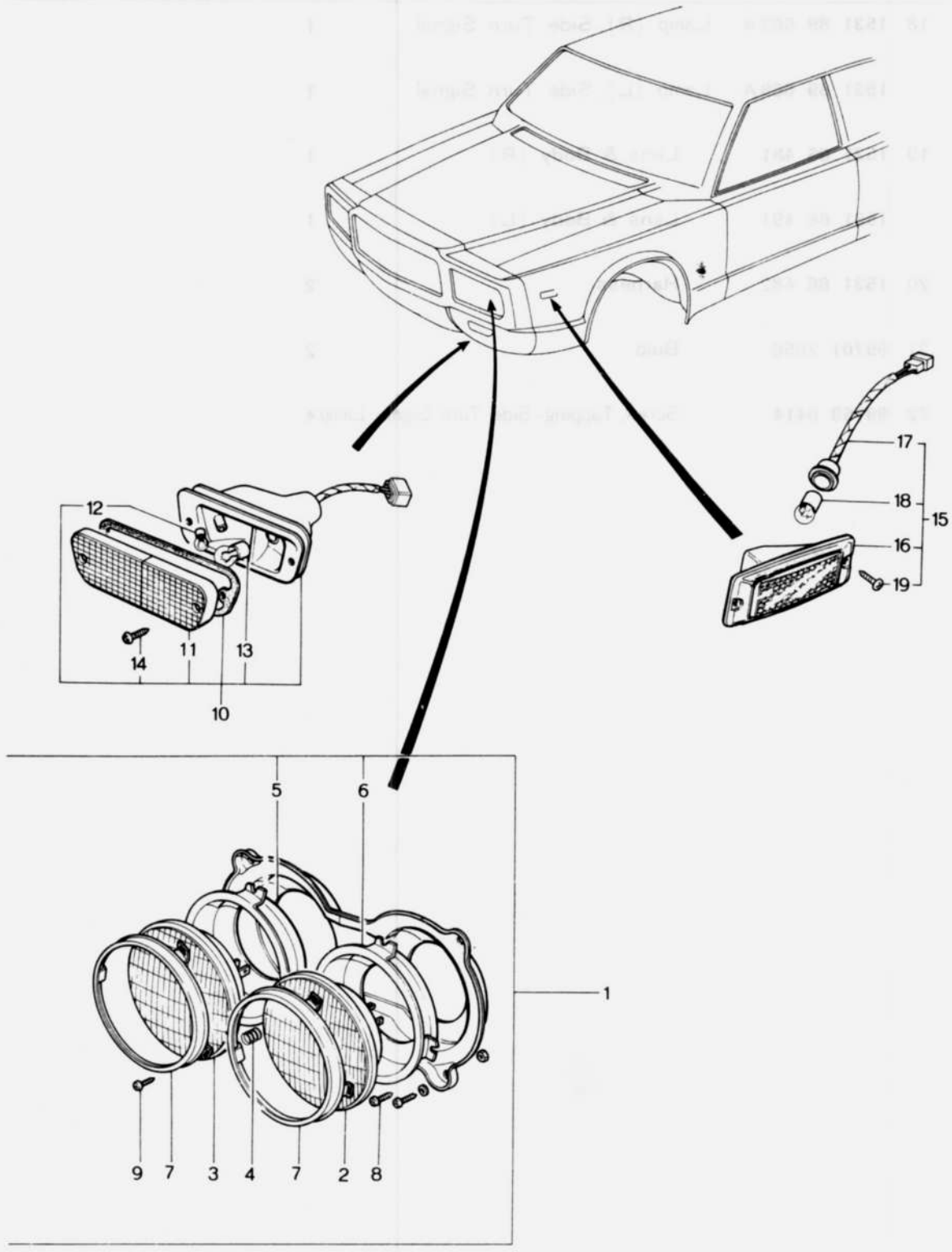

LAMPS (FRONT SIDE, R.H.D.)

No.	Part Number	Description	Q'ty	Remarks
1	1128 89 661	Lamp Set (R), Head	1	
	1128 89 666	Lamp Set (L), Head	1	
2	0865 87 008	Beam Unit, Sealed-No. 1	1	
3	0865 87 009	Beam Unit, Sealed-No. 2	1	
4	2850 87 012	Spring	4	
5	0727 87 012	Holder Type 2 (R), Head Lamp (R) use	1	
	0727 87 022	Holder Type 2 (R), Head Lamp (L) use	1	
6	0727 87 013	Holder Type 1 (L), Head Lamp (R) use	1	
	0727 87 023	Holder Type 1 (L), Head Lamp (L) use	1	
7	0727 87 014	Holder, Lamp	4	
8	0727 87 016	Screw, Adjust	8	
9	0275 87 007	Screw	12	
10	1524 89 662B	Lamp Set (R), Front Turn Signal	1	
	1524 89 667B	Lamp Set (L), Front Turn Signal	1	
11	1524 66 112A	Lens (R)	1	
	1524 66 142A	Lens (L)	1	
12	99701 2050	Bulb (12V, 5W)	2	
13	99701 3210	Bulb (12V, 2W)	2	
14	99835 0625C	Screw, Front Turn Signal Lamp	4	

LAMPS (FRONT SIDE, R.H.D.)

No.	Part Number	Description	Q'ty	Remarks
15	0866 89 663	Lamp Set (R), Side Turn Signal	1	
	0866 89 668	Lamp Set (L), Side Turn Signal	1	
16	0866 66 481A	Lens & Body (R)	1	
	0866 66 491A	Lens & Body (L)	1	
17	0865 66 482	Socket	2	
18	99701 6030	Bulb (12V, 3.4W)	2	
19	99769 0414	Screw, Tapping-Side Turn Signal Lamp	4	

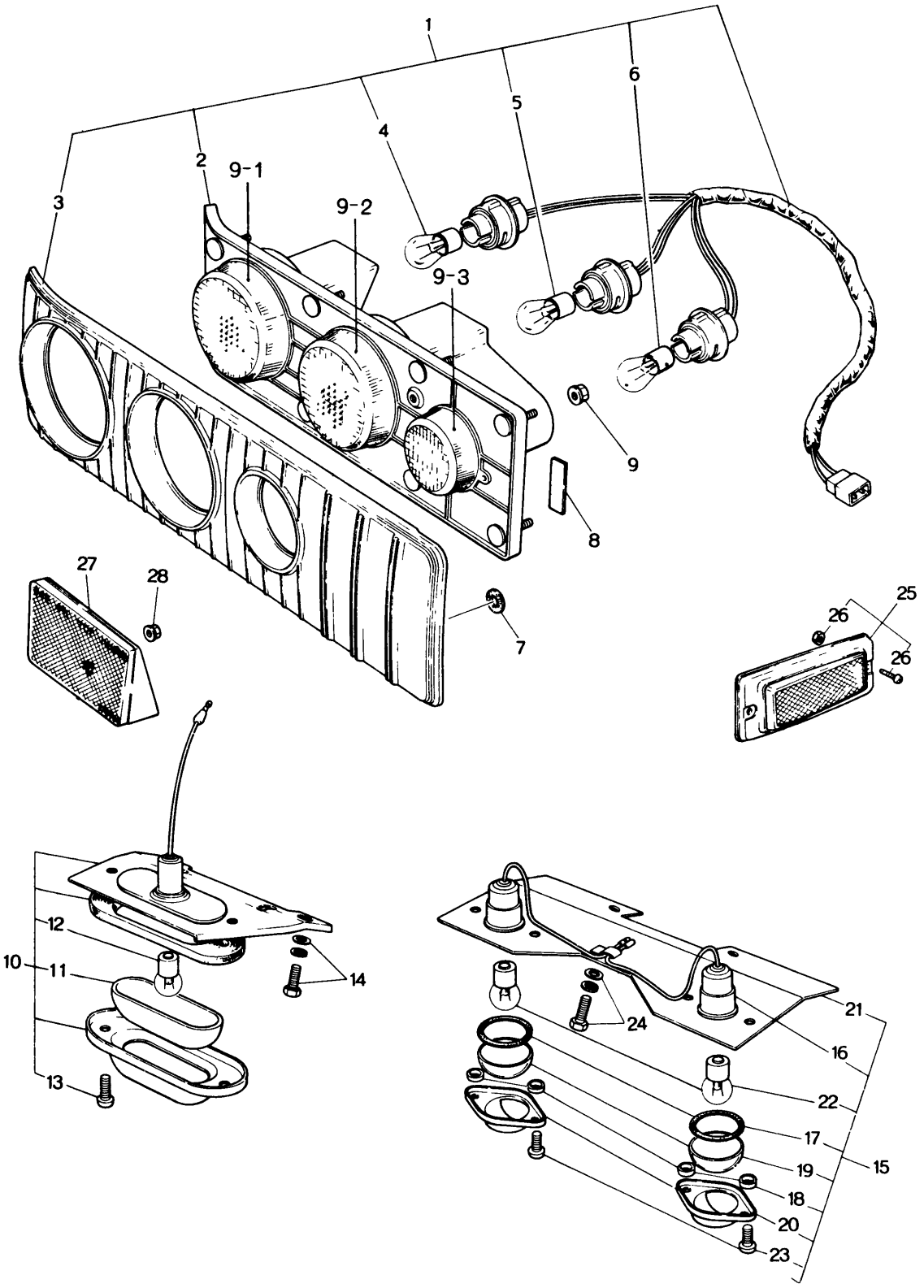
1
2
3
4
5
6
9-1
9-2
9-3
7
8
9
10
11
12
13
14
15
16
17
18
19
20
21
22
23
24
25
26
27
28

No.	Part Number	Description	Q'ty	Remarks
● 1	1554 89 664	Lamp (R), Rear Combination (For Australia England Excluded)	1	
●	1554 89 669	Lamp (L), Rear Combination (For Australia England Excluded)	1	
	1562 89 664A	Lamp (R), Rear Combination	1	
●	1562 89 664A 15	Lamp (R), Rear Combination	1	Car No. 167343 73/4~×
●	3515 89 664	Lamp (R), Rear Combination (GRY.) (Back Up Lamp, White)	1	Car No. 176736 73/7~△
	1562 89 669A	Lamp (L), Rear Combination	1	
●	1562 89 664A 15	Lamp (L), Rear Combination	1	Car No. 167343 73/4~△
●	3515 89 669	Lamp (L), Rear Combination	1	Car No. 176736 73/7~△
	1568 89 664A	Lamp (R), Rear Combination	1	
●	1568 89 664A 15	Lamp (R), Rear Combination (GRY.) (Back Up Lamp, Amber)	1	Car No. 167343 73/4~×
	1568 89 669A	Lamp (L), Rear Combination (Back Up Lamp, Amber)	1	
●	1568 89 669A 15	Lamp (L), Rear Combination (GRY.)	1	Car No. 167343 73/4~×
●	3515 89 664	Lamp (R), Rear Combination (3515)	1	
●	3515 89 669	Lamp (L), Rear Combination (3515)	1	
2	1562 66 211A	Unit (R) (Back Up Lamp, White)	1	
	1562 66 231A	Unit (L) (Back Up Lamp, White)	1	
	1568 66 211A	Unit (R) (Back Up Lamp, Amber)	1	
	1568 66 231A	Unit (L) (Back Up Lamp, Amber)	1	
3	0866 66 212	Rim (R)	1	
	0866 66 212-15	Rim (R)	1	Car No. 167343 73/4~×

No.	Part Number	Description	Q'ty	Remarks
	0866 66 232	Rim (L)	1	
●	0866 66 232-15	Rim (L)	1	Car No. 167343 73/4~×
4	99701 3210	Bulb	2	
5	99701 4215	Bulb	2	
6	99701 8100	Bulb	2	
●	99701 3230	Bulb (For Australia, England Excluded)	2	
7	0866 66 213	Gasket	2	
8	0866 66 214	Gasket	2	
9	99940 0502	Nut, Rear Combination Lamp	18	
● 9-1	1562 66 219	Lens (R), Turn Signal	1	
●	1562 66 239	Lens (L), Turn Signal	1	
● 9-2	0865 66 218	Lens (R), Tail & Stop	1	
●	0865 66 238	Lens (L), Tail & Stop	1	
● 9-3	0865 66 217	Lens, Back Up Lamp (White)	2	
●	1568 66 217	Lens, Back Up Lamp (Amber)	2	
10	1524 89 665	Lamp, Licence (France, Italy & Sweden Excluded)	1	Car No. 160623 73/10~Discarded
●	0866 89 665	Lamp, Licence (For Austrla, England Excluded)	1	
11	0866 66 372	Lens	1	
12	999701 2050	Bulb	1	

No.	Part Number	Description	Q'ty	Remarks
13	0305 87 032	Screw	2	
14	907976 6 12	Bolt Set, Licence Lamp	2	
● 15	1531 89 665	Lamp, Licence (For France, Italy & Sweden)	1	
●	1531 89 665	Lamp, Licence (For-Fance, Italy Sweden Germany England & ALL ECE)	1	Car No. 160623 73/10~
16	1531 66 371	Body	2	
17	1531 66 372	Gasket	2	
18	1531 66 373	Spacer	4	
19	1531 66 374	Lens	2	
20	1531 66 375A	Rim	2	
21	1531 66 376	Bracket	1	
22	99701 2050	Bulb	2	
23	99773 0412	Screw	4	
24	907976 6 12	Bolt Set, Licence Lamp	2	
● 25	1511 89 673	Ornament (R), Rear Side	1	Lens Red
●	1511 89 678	Ornament (L), Rear Side	1	
	1524 89 673	Ornament (R), Rear Side	1	Lens Amber
	1524 89 678	Ornament (L), Rear Side	1	
	1692 89 673	Ornament (R), Rear Side	1	Lens Orange
	1692 89 678	Ornament (L), Rear Side	1	

No.	Part Number	Description	Q'ty	Remarks
26	99774 0416	Screw, Rear Side Ornament	4	
	99940 0400	Nut	4	
			2	
27	0866 66 700A	Reflector, Reflex-Rear	2	
28	99940 0500	Nut, Reflex Reflector	4	

LAMPS (REAR SIDE, STATION WAGON)

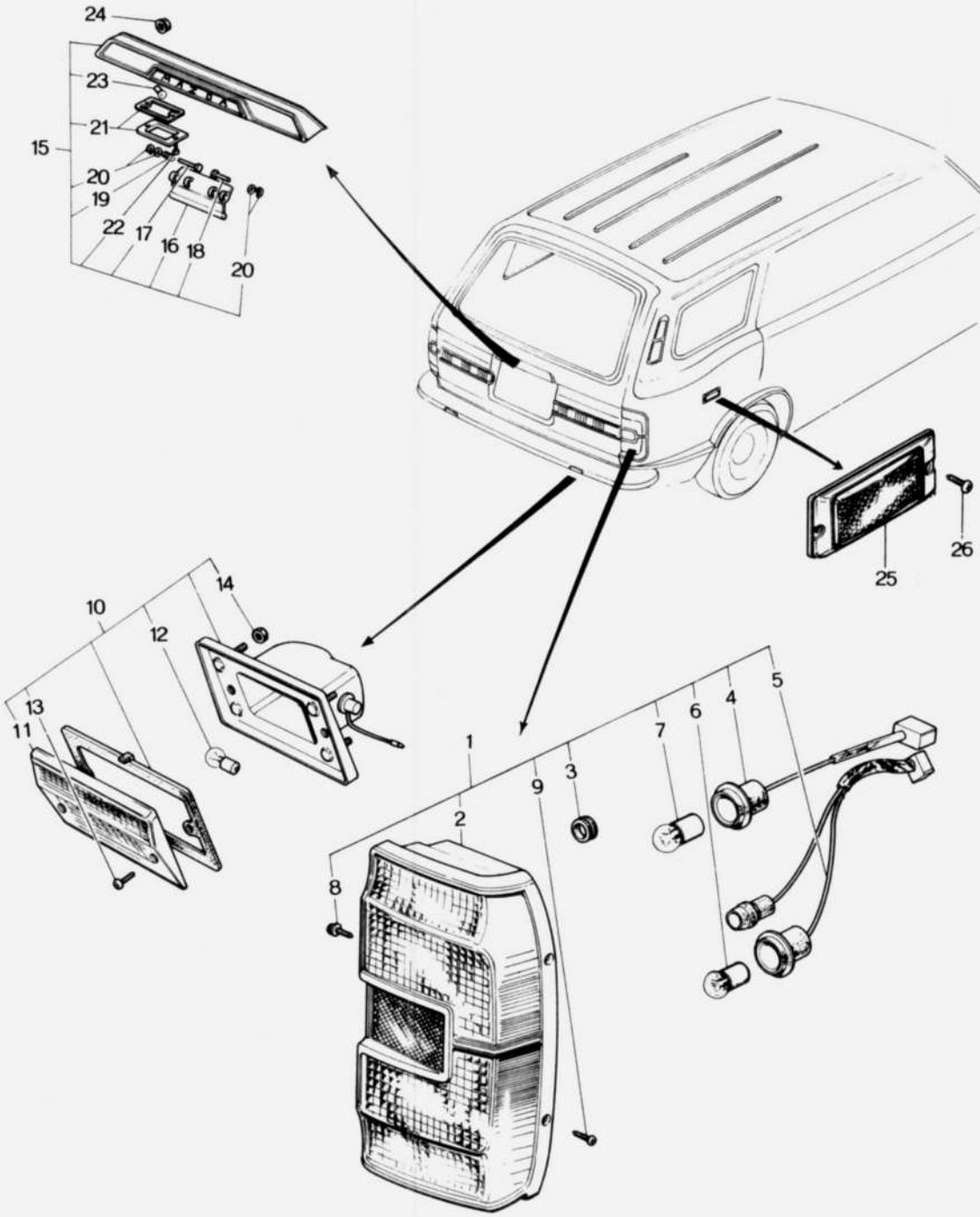

No.	Part Number	Description	Q'ty	Remarks
1	1529 89 664E	Lamp (R), Rear Combination	1	
	1529 89 669E	Lamp (L), Rear Combination	1	
2	1529 66 211A	Lens & Body (R)	1	
	1529 66 219	Lens (Amber & Red) (R)	1	
	1529 66 231A	Lens & Body (L)	1	
	1529 66 239	Lens (Amber & Red) (L)	1	
3	1529 66 212	Grommet	2	
4	1529 66 213	Cord & Socket No. 1	2	
5	1529 66 214	Cord & Socket No. 2	2	
6	99701 3210	Bulb (12V 21W)	2	
7	99701 4215	Bulb (12V 21 / 5 W)	2	
8	99833 0616	Screw, Rear Combination Lamp	4	
	99971 0600	Washer, Spring	4	
	99952 0600	Washer, Plain	4	
9	99767 0525	Screw, Tapping-Rear Combination Lamp	4	
10	1529 89 654	Lamp, Reverse (Bulb 12V 10W)	2	Selective use
	0585 89 654	Lamp, Reverse (Bulb 12V 23W)	2	Selective use
11	0585 66 333	Lens	2	
12	99701 8100	Bulb (12V 10W) (for 1529 89 654)	2	

LAMPS (REAR SIDE, STATION WAGON)

No.	Part Number	Description	Q'ty	Remarks
	99701 3330	Bulb (12V 10W) (for 0585 89 654)	2	
13	99773 0416	Screw	4	
14	99940 0502	Nut	4	
15	1529 89 665B	Lamp & Handle	1	
16	0585 66 373	Handle	1	
17	0585 66 374	Pin No. 1, Hinge	1	
18	0585 66 375	Pin No. 2, Hinge	1	
19	0585 66 376	Spring, Return	1	
20	0111 58 443	Washer	2	
	99575 0400	Ring, Snap	2	
21	0585 66 377	Lens	2	
	0585 66 378	Packing	2	
22	99773 0410	Screw	4	
23	99701 2050	Bulb (12V 5W)	2	
24	99940 0602	Nut, Lamp & Handle	4	
25	1511 89 673	Ornament (R), Rear Side	1	Lens Red
	1511 89 678	Ornament (L), Rear Side	1	Lens Red

No.	Part Number	Description	Q'ty	Remarks
	1524 89 673	Ornament (R), Rear Side	1	Lens Amber
	1524 89 678	Ornament (L), Rear Side	1	Lens Amber
26	99769 0416	Screw, Rear Side Ornament	4	

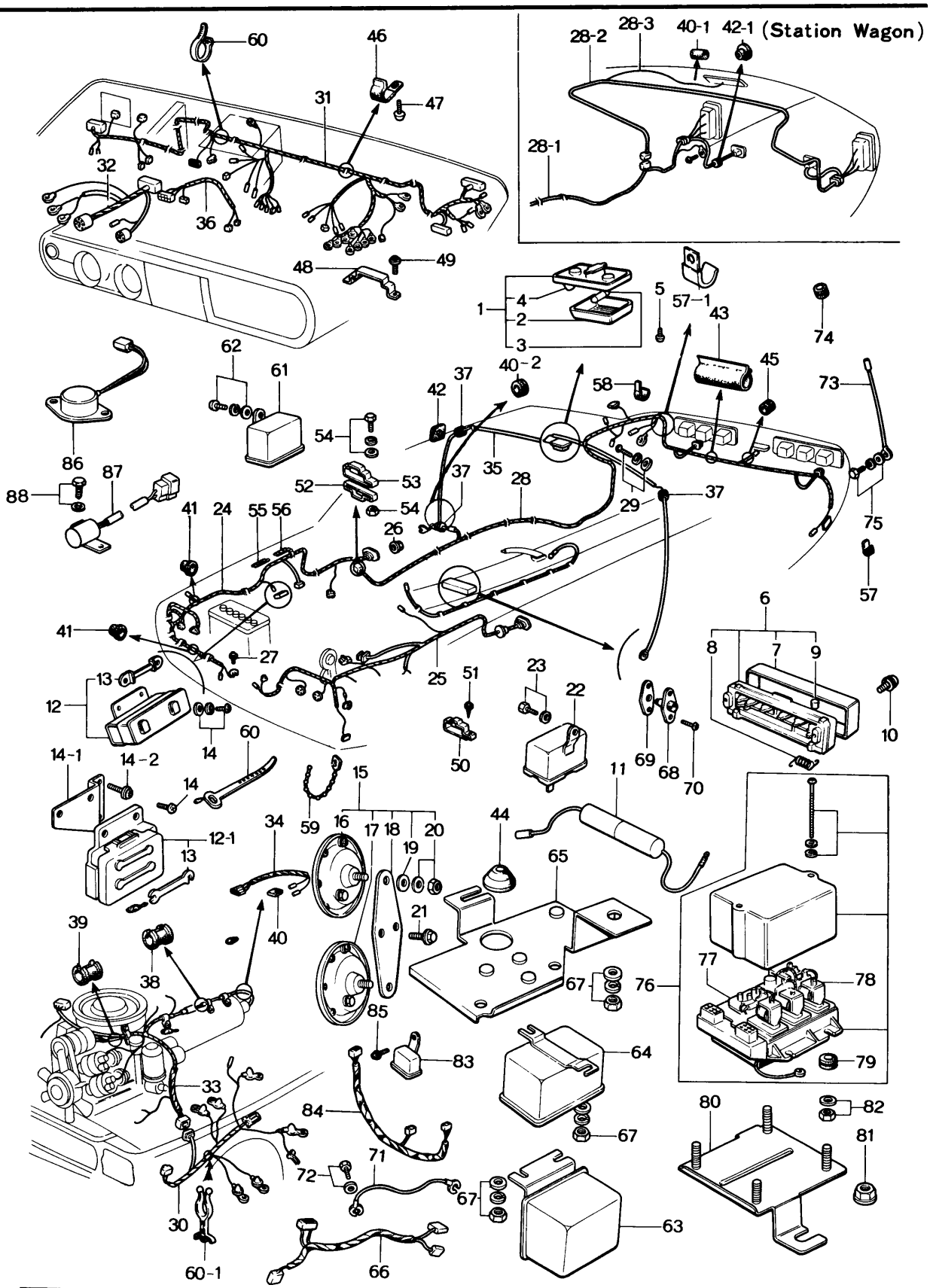
(Station Wagon)

No.	Part Number	Description	Q'ty	Remarks
1	0390 66 410	Lamp, Interior	1	
2	0398 66 412	Lens	1	
3	99701 5050	Bulb	1	
4	0398 66 413	Knob	1	
5	99838 0514	Screw, Interior Lamp	2	
6	1563 66 730	Block, Fuse (L.H.D.)	1	
	0862 66 730	Block, Fuse (R.H.D.)	1	
7	1563 66 732	Cover (L.H.D.)	1	
	0862 66 732	Cover (R.H.D.)	1	
8	0866 66 733	Spring, Return	1	
9	99706 0105	Fuse (5A)	1	
	99706 0110	Fuse (10A) (E.C.E.)	7	
		(Australia)	6	
		(Sweden)	2	
	99706 0115	Fuse (15A) (Australia & E.C.E.)	3	
		(Sweden)	2	
	99706 0120	Fuse (20A) (E.C.E. & Sweden)	2	
		(Australia)	3	
	99706 0103	Fuse (3.15A)	1	Car No. 160378 $^{72}/_{12}$~ Added Anew
10	908332 6 25	Screw Set, Fuse Block	2	
	1011 66 130	Spare, Fuse Set	1	$^{71}/_{3}$~ Added Anew

No.	Part Number	Description	Q'ty	Remarks
11	1563 66 740	Holder, Fuse (L.H.D.)	1	
	99706 0115	Fuse (15A) (L.H.D.)	1	
12	0865 66 760	Block, Main Fuse	1	
12-1	1708 66 760	Block, Main Fuse	1	Car No. 160623 73/10~×
13	2852 66 763	Fuse (50A)	2	
	1708 66 765	Fuse (5 A)	1	Car No. 160623 73/10~Added Anew
14	99786 0620	Screw, Tapping-Main Fuse Block	2	
14-1	1128 66 750	Bracket, Main Fuse Block	1	Car No. 160623 73/10~Added Anew
● 14-2	99786 0612	Screw, Tapping-Main Fuse Block	2	From Car No. 1
15	1531 66 780	Horn, Electric (High Tone & Low Tone) (L.H.D.)	1	
	0865 66 780	Horn, Electric (High Tone & Low Tone) (R.H.D.)	1	
16	1531 66 790	Horn (High Tone) (L.H.D.)	1	
	0865 66 790	Horn (High Tone) (R.H.D.)	1	
17	1531 66 800	Horn (Low Tone) (L.H.D.)	1	
	0865 66 800	Horn (Low Tone) (R.H.D.)	1	
18	0865 66 805	Holder	1	
19	0865 66 809	Washer, Holder	2	
20	99906 0600	Nut	2	

No.	Part Number	Description	Q'ty	Remarks
	99971 0600	Washer, Spring	2	
21	908062 8 16	Bolt Set, Electric Horn	2	
●	908012 8 20	Bolt Set, Electric Horn	2	From Car No. 1
22	1524 66 810	Relay, Horn	1	
23	907926 6 12	Bolt Set, Horn Relay	1	
24	0862 67 010A	Harness, Wiring (Frt., R)	1	
	0862 67 010B	Harness, Wiring (Frt., R)	1	Car No. 161189 73/12~△
	3514 67 010	Harness, Wiring (Frt., R)	1	Car No. 160623 73/10~×
	1504 67 010D	Harness, Wiring (Frt., R) (For Sweden)	1	
25	1563 67 020	Harness, Wiring (Frt., L)	1 (L.H.D.)	Car No. 160623 73/10~Discarded
	1599 67 020	Harness, Wiring (Frt., L) (For Sweden)	1 (L.H.D.)	Car No. 160623 73/10~Discarded
	3514 67 020	Harness, Wiring (Frt., L) (L.H.D.)	1	Car No. 160623 73/10~×
	3507 67 020	Harness, Wiring (Frt., L) (R.H.D.)	1	
26	99940 0600	Nut, Front Wiring Harness	4	
27	908336 8 12	Screw Set, Front Wiring Harness Earth	1	
28	1563 67 030A	Harness, Wiring (Rr.) (L.H.D.)	1 (Sedan & Coupe)	
	1128 67 030A	Harness, Wiring (Rr.) (R.H.D.)	1 (Sedan & Coupe)	
28-1	1137 67 030B	Harness No. 1, Wire	1	
28-2	0585 67 035F	Harness No. 2, Wire (Station Wagon)	1	
28-3	0585 67 036A	Wire, Licence Lamp	1	

No.	Part Number	Description	Q'ty	Remarks
29	908336 6 16	Screw Set, Rear Wiring Harness Earth (Sedan & Coupe)	1	
	908336 6 12	Screw Set, Rear Wiring Harness Earth (Station Wagon)	1	
30	1620 67 040A	Harness, Wiring-Ignition Coil Relay~Coil	1	
	3514 67 040A	Harness, Wiring-Ignition Coil Relay~Coil	1	Car No. 160623 73/10~×
31	1563 67 050D	Harness, Wiring-Meter Panel	1	
	1563 67 050E	Harness, Wiring-Meter Panel (L.H.D.)	1	Car No. 160588 70/12~△
	3514 67 050A	Harness, Wiring-Meter Panel	1	
	3515 67 050C	Harness, Wiring-Meter Panel (Germany)	1	Car No. 160623 73/10~×
	1599 67 050A	Harness, Wiring-Meter Panel (For Sweden)	1	
	3507 67 050A	Harness, Wiring-Meter Panel (R.H.D.)	1	
32	0866 67 070C	Harness, Wiring-Meter	1	
	1881 67 070	Harness, Wiring-Meter (L.H.D.)	1	Car No. 160623 73/10~×
	1558 67 070A	Harness, Wiring-Meter (For Sweden)	1	
	1881 67 070	Harness, Wiring-Meter (R.H.D.)	1	
33	1563 67 060	Harness, Wiring-Engine	1	
	1881 67 060A	Harness, Wiring-Engine (ECE Cold Proof) (L.H.D.)	1	Car No. 160623 73/10~×
	3514 67 060A	Harness, Wiring-Engine (ECE & Germany) (L.H.D.)	1	Car No. 160623 73/10~×
	1599 67 060	Harness, Wiring-Engine (For Sweden)	1	
	3514 67 060B	Harness, Wiring-Engine (R.H.D.)	1	
● 34	0862 67 065A	Harness, Wiring-T/mission (Manual)	1	

	No.	Part Number	Description	Q'ty	Remarks
●		3514 67 065A	Harness, Wiring-T/mission (Manual)	1	Car No. 160623 73/10~×
	35	0866 67 080	Cord, Room Lamp	1	
	36	1563 67 120A	Harness, Wiring-Emission (L.H.D.)	1	
		1881 67 120A	Harness, Wiring-Emission (L.H.D.)	1	Car No. 160623 73/10~×
	37	0114 43 625	Protector, Room Lamp Cord	3	
	38	99686 1000	Protector, Engine Wiring Harness	5	
	39	99686 1600	Protector, Engine Wiring Harness	1	
	40	0208 66 949	Pad, Cord	5	
	40-1	0585 67 151	Protector, Cord-Wire Harness~Licence Lamp (Station Wagon)	1	
●	40-2	0820 67 151	Protector, Cord-Room Lamp	1	From Car No. 1
	41	0866 67 152	Protector, Cord-Front & Side Turn Signal Lamp Cord	6	
	42	0866 67 153A	Pad, Protector-Room Lamp Cord	1	
	42-1	0585 67 154	Protector, Reverse Lamp Cord (Station Wagon)	1	
	43	0866 67 155	Protector, Rear Wiring Harness	2	
		0862 67 155	Protector (R.H.D.)	1	
	44	1524 67 155	Protector, Cord-Relay	1	
	45	0866 67 156	Protector, Cord-Licence Lamp Cord	1	
	46	0866 67 059	Clip, Wiring Harness (Panel)	4	
	47	908631 5 12	Screw Set, Clip	4	
	48	0866 67 905A	Clip, Wiring Harness (Meter)	1	~~Car No. 179250 73/9~ Discarded~~
	49	99869 0512	Screw, Clip	2	~~Car No. 179250 73/9~ Discarded~~

No.	Part Number	Description	Q'ty	Remarks
	99952 0500	Washer, Plain	2	
50	0866 67 906	Clip, Suspension Lower (L)	1	Car No. 179250 73/9~Discarded
51	99869 0512	Screw, Clip	1	
	99952 0500	Washer, Plain	1	
52	1540 67 907	Clip, Rear Wiring Harness (Dash Panel)	1	
53	0866 67 908	Clip, Ignition Coil Relay Harness (Wheel Apron)	1	
54	908336 6 12	Screw Set, Clip	1	
	99940 0600	Nut	1	
55	0823 18 111	Supporter, Engine Wire Harness	2	
56	0305 67 994	Supporter, Engine Wire Harness	1	
57	99276 0506	Clip, Fuel Pump Cord	1	
● 57-1	99276 1406	Clip, Wire Harness Rear	7	73/8~Added Anew
58	99276 1808	Clip, Thermo Switch Coupler (Trunk Room)	1	
59	99709 0108	Band, Fail Indicator Cord (L.H.D.)	1	
60	99709 2185	Band, Panel & Engine Harness	7	
● 60-1	99279 1105	Clip, Wire Harness Ignition	1	74/3~Added Anew
61	0862 67 880	Relay, Ignition Coil	2	
62	907972 6 12	Bolt Set, Ignition Coil Relay	2	
63	0820 60 870A	Relay, Wiper Switch	1	Car No. 179250 73/9~Discarded
64	0848 66 830	Unit, Flasher & Hazard	1	
	2522 66 830	Unit, Flasher & Hazard (For Germany)	1	Car No. 179250 73/9~Discarded
65	1524 67 720B	Bracket, Relay	1	

No.	Part Number	Description	Q'ty	Remarks
66	1524 67 715	Cord, Relay Unit	1	Car No. 179250 73/9~Discarded
67	99940 0602	Nut, Relay & Bracket	6	
68	0209 66 820	Switch, Door	2	
69	0209 66 821	Washer, Adjust-Door Switch	4	
70	99864 0412	Screw, Door Switch	4	
71	0866 66 871	Wire, Earth	1	
72	99860 0512	Screw, Tapping-Earth Wire	1	
	99971 0500	Washer, Spring	1	
73	0866 67 133	Cord, Back Window-Heating Wire use (Sedan & Coupe)	1	
	0899 67 133	Cord (Station Wagon)	1	
74	0114 43 625	Protector, Cord	2	
75	908066 6 16	Bolt Set, Back Window Cord	1	
76	0866 67 710E	Unit, Central Control (R.H.D.)	1	
	1722 67 560	Unit, Central Control (L.H.D.)	1	Car No. 160623 73/10~Added Anew
	3515 67 560	Unit, Central Control (L.H.D.) (For Germany)	1	Car No. 160623 73/10~Added Anew
77	0866 67 712C	Unit, Flasher	1	
	3515 67 562	Unit, Flasher (For Germany)	1	
78	0866 67 719	Relay	4	
79	0866 67 717	Bush	4	

No.	Part Number	Description	Q'ty	Remarks
● 80	3514 67 720	Bracket, Unit (L.H.D.)	1	Car No. 160623 73/10~Added Anew
● 81	99940 0602	Nut	2	
● 82	99906 0600	Nut	3	
●	99952 0618	Washer, Plain	3	
83	1664 67 740	Relay	1	
84	1881 67 925	Wire, Choke Relay	1	
85	907972 6 12	Bolt, Relay	1	
86	1114 18 890A	Switch, Thermo	1	
87	2329 18 930A	Detector, Thermo	1	
● 88	99868 0510	Screw, Thermo Detector	2	From Car No. 1
	99952 0500	Washer, Plain	2	

WINDSHIELD WIPER

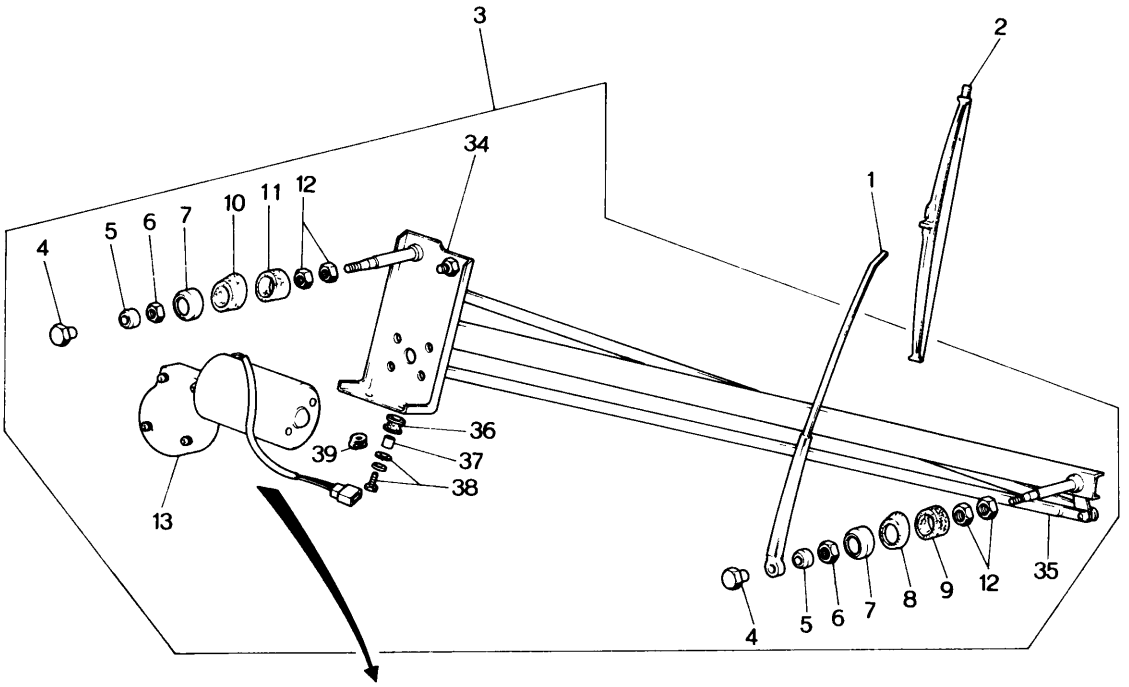

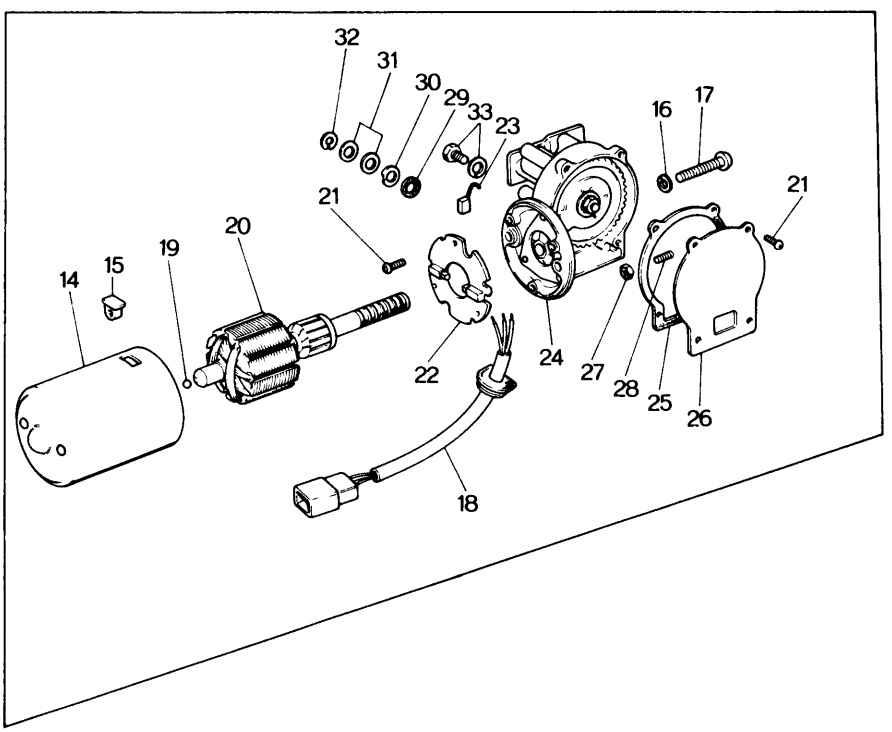

	No.	Part Number	Description	Q'ty	Remarks
●	1	1524 67 321 A	Arm, Wiper (L.H.D.)	2	
●		0866 67 321 A	Arm, Wiper (R.H.D.)	2	
●	2	2835 67 330	Blade, Wiper (L.H.D.)	2	
●		0305 67 330 A	Blade, Wiper (R.H.D.)	2	
●	3	1524 67 340 B	Motor & Link (L.H.D.)	1	
●		1524 67 340 C	Motor & Link (L.H.D.)	1	Car No. 160623 73/10~△
●		0866 67 340 D	Motor & Link (R.H.D.)	1	
	4	0223 66 371	Nut, Cap	2	
	5	0212 66 371	Cap, Seal	2	
	6	0212 66 372	Nut	2	
	7	0305 87 906	Washer	2	
●	8	1524 76 604	Bush, Outer (L.H.D.)	1	
●		0866 76 604	Bush, Outer (R.H.D.)	1	
●	9	1524 76 603	Bush, Inner (L.H.D.)	1	
●		0866 76 603	Bush, Inner (R.H.D.)	1	
	10	0866 76 606	Bush, Outer	1	
	11	0866 76 605	Bush, Inner	1	
	12	0259 87 134	Nut	4	
●	13	1524 67 350	Motor (Fig. No. 14~33 included) (L.H.D.)	1	

WINDSHIELD WIPER

	No.	Part Number	Description	Q'ty	Remarks
●		1524 67 350 A	Motor (Fig. No. 14~33 included) (L.H.D.)	1	Car No. 160623 73/10~△
●		0866 67 350 A	Motor (Fig. No. 14~33 included) (R.H.D.)	1	
	14	0259 87 109 A	Yoke	1	
	15	0257 87 108	Nut	2	
	16	99971 0500	Washer, Spring	2	
	17	0257 87 107	Screw	2	
●	18	1524 76 607	Wire, Lead (L.H.D.)	1	
●		1524 76 607 A	Wire, Lead (L.H.D.)	1	Car No. 160623 73/10~×
●		0866 76 607	Wire, Lead (R.H.D.)	1	
	19	0259 87 107	Ball	2	
	20	0259 87 108 A	Rotor	1	
	21	0259 87 105	Screw	7	
	22	0259 87 101 A	Plate, Brush Holder	1	
●		1011 76 612 A	Plate, Brush Holder	1	Car No. 160623 73/10~×
	23	0259 87 106	Brush	3	
●	24	1524 76 608	Box, Gear (L.H.D.)	1	
●		0866 76 608	Box, Gear (R.H.D.)	1	
	25	0259 87 103	Gasket	1	
●	26	0259 87 104 A	Plate, End (L.H.D.)	1	
●		2158 87 104	Plate, End (R.H.D.)	1	

	No.	Part Number	Description	Q'ty	Remarks
	27	0259 87 119	Nut	1	
	28	0259 87 120	Screw	1	
	29	0738 87 803	Felt	1	
	30	0702 87 135	Washer, Wave	1	
	31	0738 87 804	Washer	2	
	32	0702 87 138	Ring, Retaining	1	
	33	99806 0510	Bolt, Motor	4	
		99971 0500	Washer, Spring	4	
●	34	1524 76 602	Frame, Wiper (L.H.D.)	1	
●		0866 76 602	Frame, Wiper (R.H.D.)	1	
●	35	1524 76 601	Link, Wiper (L.H.D.)	1	
●		0866 76 601	Link, Wiper (R.H.D.)	1	
	36	0866 67 301 A	Washer, Rubber	2	
	37	0866 67 302	Spacer	2	
	38	907860 6 16	Bolt Set, Frame	3	
	39	0118 13 432	Clip, Earth	1	

SCREEN WASHER

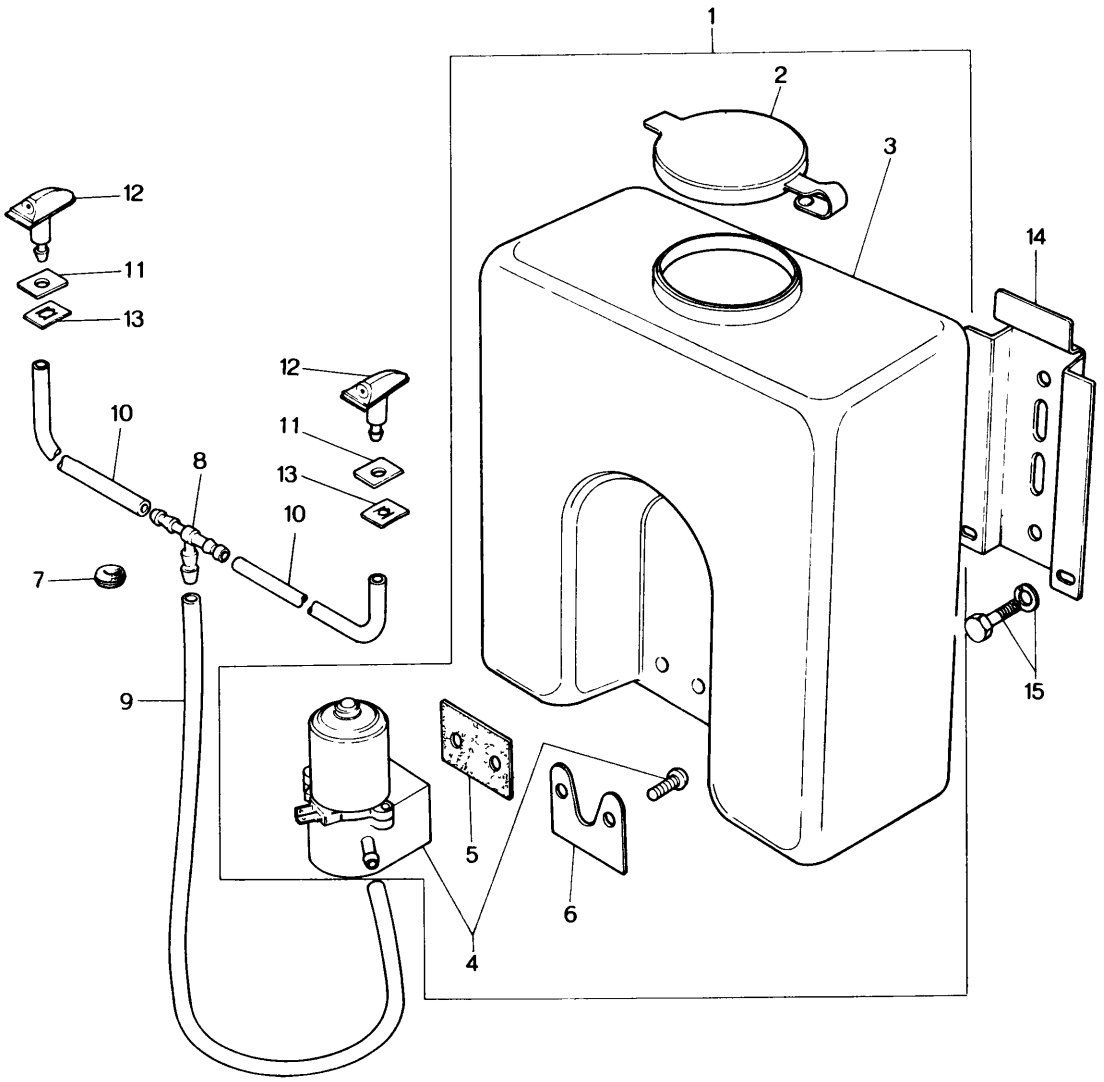

	No.	Part Number	Description	Q'ty	Remarks
●	1	0317 67 480	Tank, Washer (Capacity=1200cc) (Except Germany)	1	
		2522 67 480	Tank, Washer (Capacity=1500cc) (For Germany)	1	
●	2	0727 87 992	Cap (Except Germany)	1	
●		0512 67 512A	Cap (For Germany)	1	73/5～○
●	3	0317 67 511	Tank (Except Germany)	1	
		2522 67 511	Tank, For Germany	1	
	4	0305 87 993	Pump Kit	1	
	5	0727 87 994	Gasket	1	
	6	0727 87 995	Plate	1	
	7	0111 41 692	Protector, Pipe	1	
	8	0813 66 879	Joint, Pipe	1	
	9	99335 04015	Pipe	1	
	10	99335 04066	Pipe	2	
	11	0866 67 511A	Washer, Nozzle	2	
	12	0866 67 510A	Nozzle	2	
	13	0866 67 512	Nut, Speed	2	
	14	0866 67 521	Bracket, Tank	1	
	15	99781 0612	Bolt, Tank Bracket	2	
		99971 0600	Washer, Spring	2	

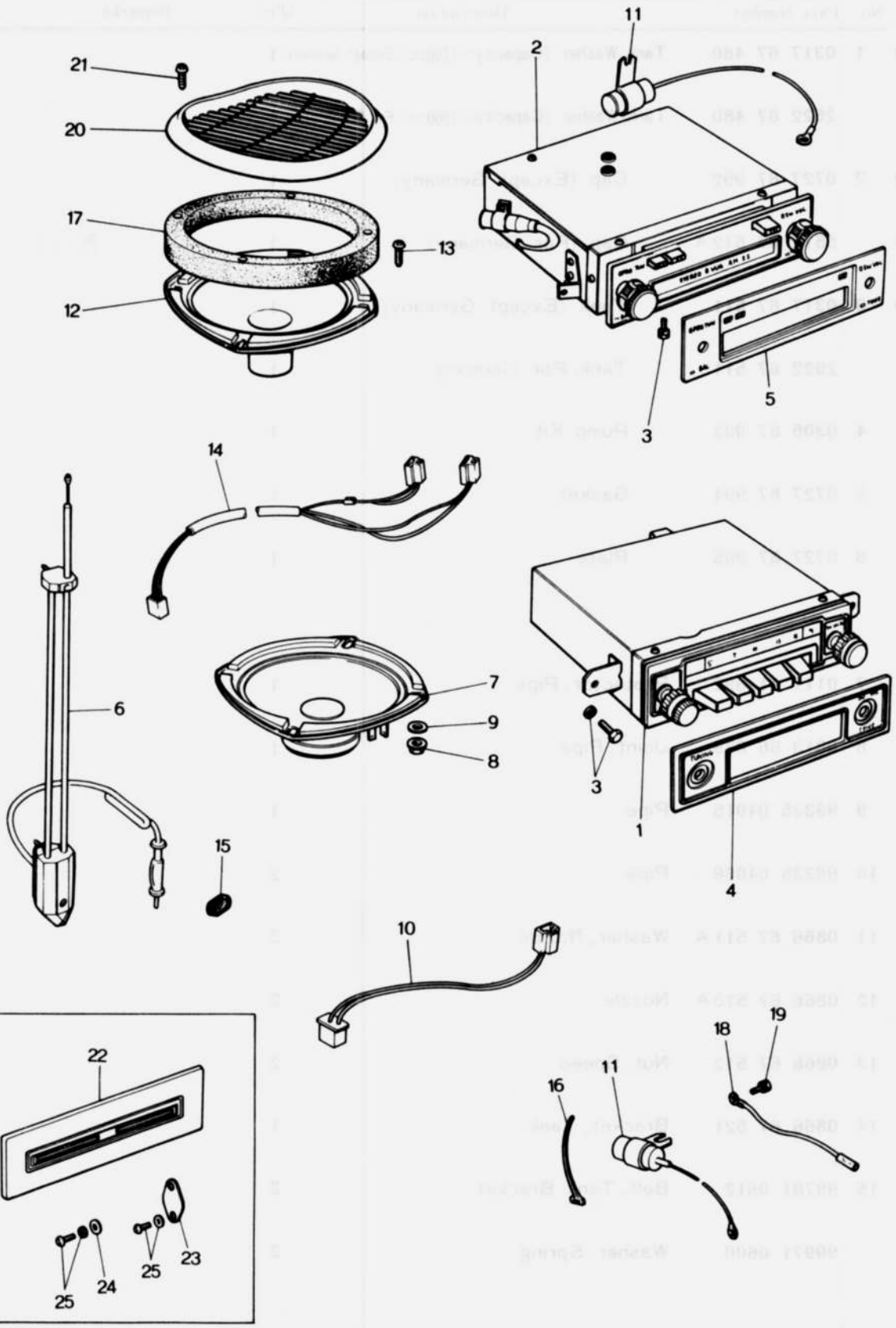
11
2
21
20
17
13
12
3
5
14
6
7
9
8
15
1
4
10
22
25
24
25
23
18
19
16
11

No.	Part Number	Description	Q'ty	Remarks
●	1560 66 860B	Auto Radio Cpt., AM	1	
●	1561 66 860B	Auto Radio Cpt., AM / SW	1	
●	1562 66 860B	Auto Radio Cpt., AM / FM	1 (L.H.D.)	
●	1558 66 860	Auto Radio Cpt., AM / FM	1	Car No. 160623 73/10 ~ △
●	1558 66 860	Auto Radio Cpt., AM / FM (For Sweden)	1	
●	1564 66 860B	Auto Radio & Stereo	1	
●	0865 66 860B	Auto Radio Cpt., AM	1	
●	0870 66 860B	Auto Radio & Stereo (Sedan & Coupe)	1 (R.H.D.)	
●	1550 66 860A	Auto Radio Cpt., AM / SW	1	
●	1551 66 860A	Auto Radio Cpt., AM / FM	1	
1	0866 66 900	Tuner, AM	1	
	1561 66 900	Tuner, AM /SW	1	
	1562 66 900	Tuner, AM /FM	1	
●	1558 66 900	Tuner, AM / FM	1	Car No. 160623 73/10 ~ △
	1558 66 900	Tuner, AM / FM (For Sweden)	1	
2	0870 66 900A	Tuner & Player	1	
3	908066 5 16	Bolt Set, Tuner	2	
4	0866 66 905	Plate, Decoration-Radio	1	
5	0870 66 905	Plate, Decoration & Stereo	1	
6	1524 66 930A	Antenna (L.H.D.)	1	

	No.	Part Number	Description	Q'ty	Remarks
●		0370 66 930 A	Antenna (R.H.D.)	1	
	7	0866 66 960	Loud Speaker	1	
	8	99940 0500	Nut, Loud Speaker	4	
	9	0275 68 088	Spacer	8	
	10	0866 66 965	Cord, Loud Speaker	1	
	11	0820 66 992	Condenser	2	
	12	0870 66 970	Loud Speaker, Stereo	2	
		0870 66 970 A	Loud Speaker, Stereo	2	Car No. 159937 $^{72}/_{11}$～△
	13	99864 0410	Screw, Loud Speaker-Stereo	8	
	14	0870 66 975	Cord, Stereo Loud Speaker	1	
		0870 66 975 A	Cord, Stero Loud Speaker	1	Car No. 160669 $^{73}/_{3}$～△
	15	0866 67 153 A	Pad, Protector	1	
●	16	0305 67 993 A	Clip, Wire Harness	1	Car No. 163773 $^{74}/_{2}$～Disearded
	17	0317 66 862	Partition	1	
	18	0866 66 871	Wire, Earth	1	
	19	908602 5 12	Screw Set, Earth Wire	1	
	21	0870 66 980	Grille, Loud Speaker-Stereo use	2	
	21	99748 0410	Screw, Grille	8	
	22	0316 66 865 A	Ornament	1	

No.	Part Number	Description		Q'ty	Remarks
23	0727 66 991 A	Cover, Hole-Antenna		1	
24	0727 66 992	Cover, Hole-Antenna	Without Auto Radio	1	
25	99863 0410 B	Screw, Hole Cover		3	
	99953 0400 B	Washer, Plain		3	

CRUSH PAD, GLOVE POCKET & CONSOLE BOX

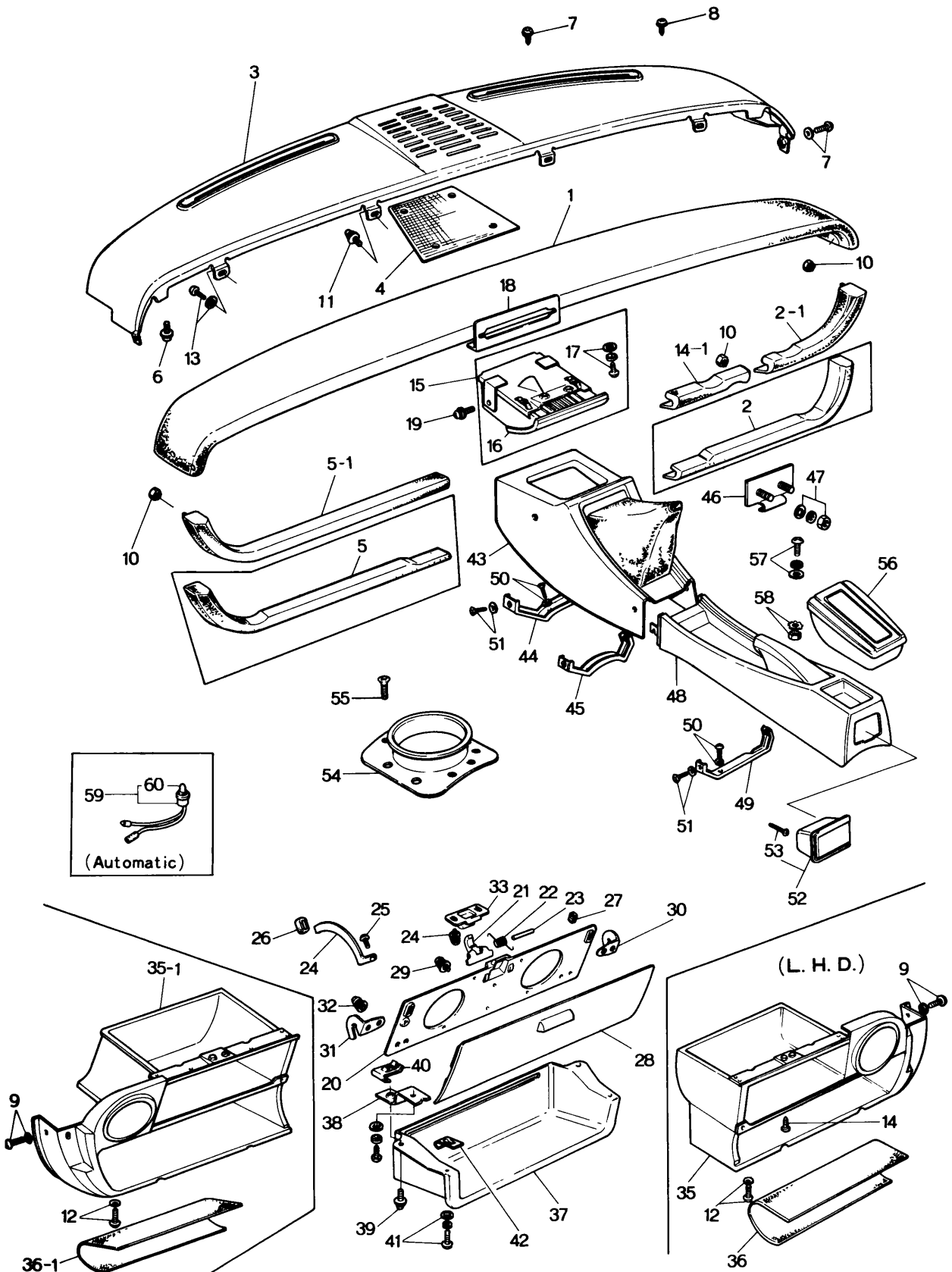

CRUSH PAD, GLOVE POCKET & CONSOLE BOX

No.	Part Number	Description	Q'ty	Remarks
1	0865 68 020B00	Pad, Crush (BLK.)	1	
2	1562 68 040A	Pad (R), Lower (BLK.) (L.H.D.)	1	
● 2-1	0865 68 040C	Pad (R), Lower (BLK.) (R.H.D.)	1	
3	0866 68 090B	Garnish	1	
4	0866 68 095	Cloth, Cover	1	
5	1562 68 140B	Pad (L), Lower (BLK.) (L.H.D.)	1	
● 5-1	0865 68 140C	Pad (L), Lower (BLK.) (R.H.D.)	1	
6	907860 8 20	Bolt Set, Crush Pad	2	
7	908347 5 12B	Screw Set, Garnish	2	
8	908337 5 16B	Screw Set, Garnish	4	
9	99836 0516B	Screw, Garnish	1	
	99967 0500B	Washer, Plain	1	
10	99940 0501	Nut, Pad Lower	5	
11	908336 5 12	Screw Set, Garnish	2	
12	908347 6 16B	Screw Set, Glove Box	2	
13	908636 5 12	Screw Set, Garnish	2	
14	99834 0616B	Screw, Glove Box	2	
● 14-1	0865 68 060C	Pad (R), Lower (R.H.D.)	1	
15	0866 68 180A	Tray, Ash (Frt.)	1	

CRUSH PAD, GLOVE POCKET & CONSOLE BOX

No.	Part Number	Description	Q'ty	Remarks
16	~~0866 68 201A~~	~~Case, Inner~~	~~1~~	
	0866 64 630	Case, Inner	1	From Car No. 1
17	99833 0512	Screw	2	
	99952 0500	Washer, Plain	2	
	99971 0500	Washer, Spring	2	
18	0866 68 175	Plate, Set-Ash Tray	1	
19	908337 5 12	Screw Set, Ash Tray	2	
20	0866 68 331	Lid, Glove-Inner	1	
21	0866 68 332	Hook	1	
22	0866 68 333	Spring	1	
23	0866 68 334	Pin	1	
24	0866 38 335B	Stopper	1	
25	99831 0408B	Screw, Stopper	1	
26	0275 55 195A	Cushion, Rubber	1	
27	0317 70 269	Cushion	2	
28	0865 68 340-00	Lid, Glove-Outer (BLK.)	1	
29	99262 1806B	Screw, Glove Lid	8	
30	0866 68 351A	Hinge (R), Glove Lid	1	
31	0866 68 352A	Hinge (L), Glove Lid	1	

No.	Part Number	Description	Q'ty	Remarks
32	908347 4 12B	Screw Set, Hinge	4	
33	0866 68 361	Striker	1	
34	908396 5 18B	Screw Set, Striker	2	
●	908336 5 12B	Screw Set, Striker	2	7/8～○
35	1524 68 380	Pocket, Glove-Outer (L.H.D.)	1	
35-1	0865 68 380	Pocket, Glove-Outer (R.H.D.)	1	
36	1524 68 011	Sheet, Glove Pocket (L.H.D.)	1	
36-1	0866 68 011	Sheet, Glove Pocket (R.H.D.)	1	
37	0866 69 811	Shelf, Parcel	1	
38	0866 69 821A	Bracket, Parcel Shelf	1	
39	99863 0520B	Screw, Parcel Shelf	3	
	99952 0500B	Washer, Plain	3	
	99971 0500	Washer, Spring	3	
40	99896 0500	Nut, Spring	1	
41	908337 6 16	Bolt, Parcel Shelf	1	
42	0820 56 905	Nut, Spring-Parcel Shelf	2	
● 43	0376 68 890A00	Console, Front (BLK.) (Manual)	1	
●	0376 68 890B00	Console, Front (BLK.) (Manual)	1	Car No. 167343 7/4～△
●	0378 68 890A00	Console, Front (BLK.) (Automatic)	1	
●	1524 68 890	Console, Front (BLK.) (Manual) (For Sweden)	1	
44	0376 68 900	Bracket No. 1, Console	1	
45	0376 68 910	Bracket No. 2, Console	1	

68 CRUSH PAD, GLOVE POCKET & CONSOLE BOX

No.	Part Number	Description	Q'ty	Remarks
46	0866 68 920	Bracket	1	
47	99906 0500	Nut, Bracket	2	
	99952 0500	Washer, Plain	2	
	99971 0500	Washer, Spring	2	
48	0376 68 940-00	Console, Rear (BLK.) (L.H.D.) & (R.H.D., Sedan)	1	
	0870 68 940	Console, Rear (BLK.) (R.H.D., Coupe)	1	
49	0376 68 950	Bracket, Rear Console	1	
50	999786 0616	Bolt, Bracket	6	
51	999832 0516B	Screw, Console	6	
	99967 0500B	Washer	6	
52	0866 68 250	Tray, Ash-Rear	1	
53	99839 0416	Screw, Ash Tray	2	
54	0367 68 832A	Seat, Boot	1	
55	99864 0512	Screw, Boot Seat	6	
56	0870 68 960	Rest, Center Arm	1	
57	99836 0420B	Screw, Center Arm Rest	4	R.H.D., Coupe)
58	99906 0400	Nut, Center Arm Rest	4	
	99975 0400	Washer, Toothed	4	
● 59	0305 66 580A	Lamp, Indicator	1	(Automatic)
● 60	99701 6030	Bulb	1	

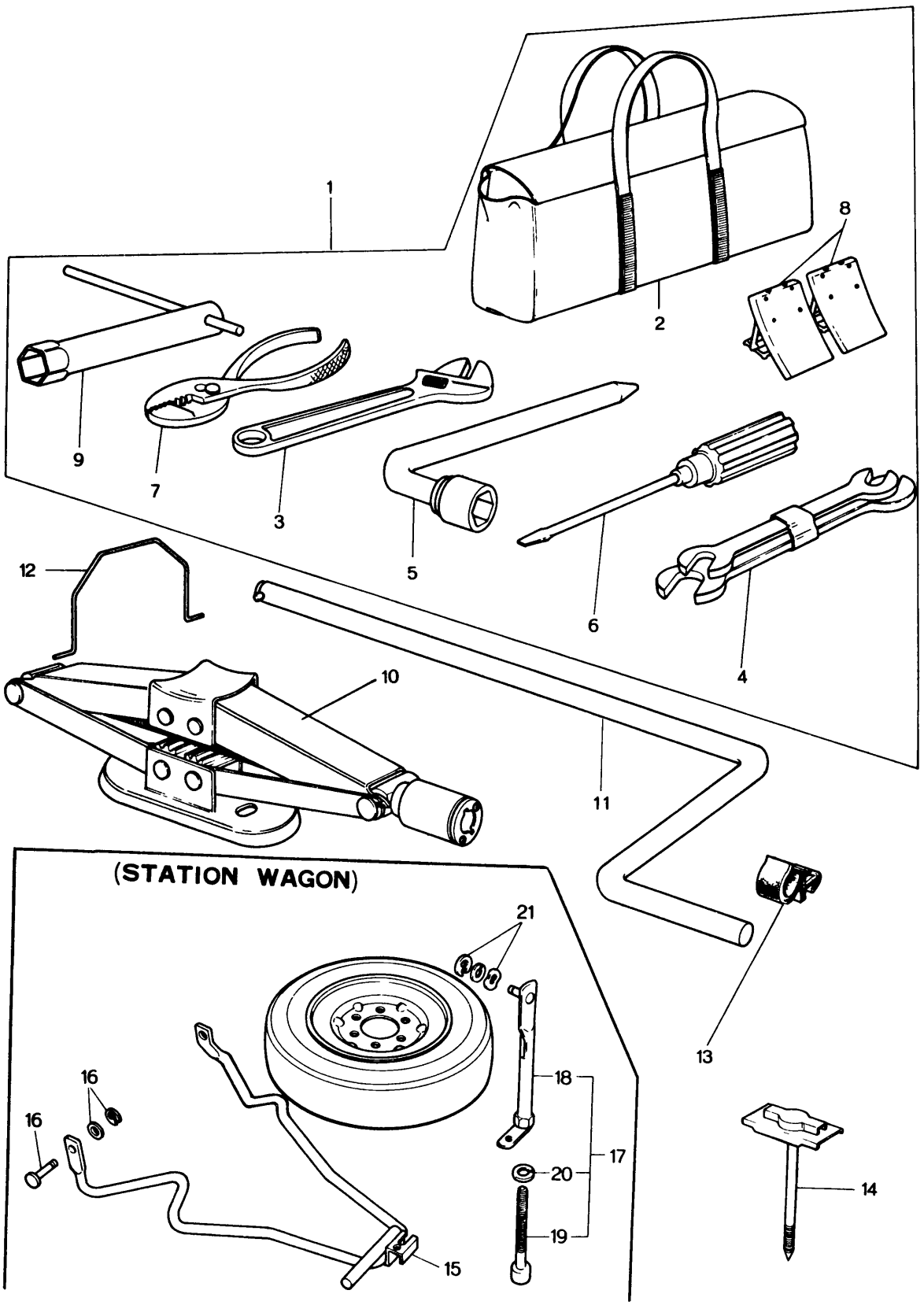
1
2
3
4
5
6
7
8
9
10
11
12
13
14
15
16
16
17
18
19
20
21
(STATION WAGON)

No.	Part Number	Description	Q'ty	Remarks
1	0839 68 660	Tools	1	
●	1128 68 660	Tools	1	73/10~○
2	0839 68 670B	Bag, Tool	1	
●	1128 68 670	Bag, Tool	1	73/10~○
3	0866 68 680	Wrench, Monkey	1	
4	0249 68 060A	Spanner Set	1	
●	0672 68 060A	Spanner Set	1	73/10~○
5	0810 68 070A	Wrench, Hub Nut	1	
6	0187 68 110A	Driver Set	1	
7	0118 68 180A	Plier	1	
8	0208 68 230	Stopper, Wheel	2	
9	0839 68 720	Wrench, Plug	1	
10	0305 68 800E	Jack	1	
	0305 68 800F	Jack	1	From Car No. 1 72/11~○
11	0305 68 810A	Handle, Jack	1	
● 12	0866 56 991	Wire, Jack (Sedan & Coupe)	1	
● 13	99715 1101	Holder, Rod-Jack Handle (Sedan & Coupe)	3	
● 14	1011 56 210	Clamp, Spare Wheel (Sedan & Coupe)	1	Car No. 170670 73/5~Added Anew
●	1128 56 960	Clamp, Spare Wheel (Sedan & Coupe)	1	73/8~○

No.	Part Number	Description	Q'ty	Remarks
● 15	0585 70 710A	Frame, Hanger - Spare Tire	1	
● 16	99230 0820	Pin, Joint	2	
●	99576 0500	Ring, Snap	2	
●	99953 0800	Washer, Plain	2	
● 17	0585 70 720A	Lock, Spare Tire	1	
● 18	0585 70 730A	Clamp	1	
● 19	0585 70 733A	Bolt	1	
● 20	99952 1224	Washer, Plain	1	(Station Wagon)
● 21	99576 0700	Ring, Retaining - Spare Tire Lock	1	
●	99952 1000	Washer, Plain	1	
●	99972 1000	Washer, Spring	1	

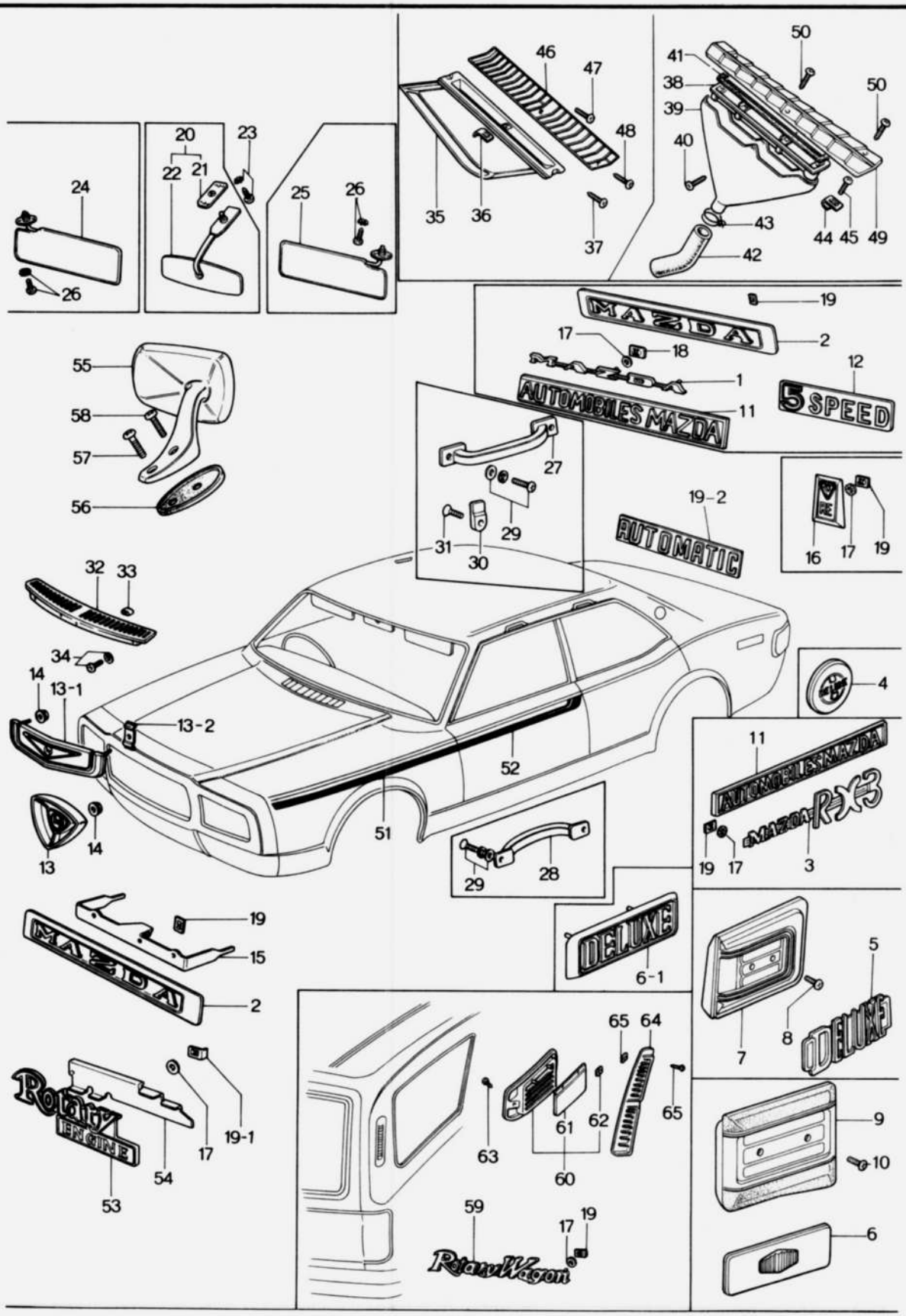
MAZDA
AUTOMOBILES MAZDA
5 SPEED
AUTOMATIC
DELUXE
ROTARY ENGINE
RotaryWagon
RX3

No.	Part Number	Description	Q'ty	Remarks
1	0866 69 052	Ornament (MAZDA), Rear	1	1563,1564,1599,3504,3505,3507 3508,3509,3513,3514,3515,3506
2	1690 69 052	Ornament (MAZDA)	2	1692,3515
3	1562 69 053	Name, MAZDA RX-3	2	
4	0368 69 055A	Ornament (Deluxe)- (Sedan)	2	1563,3504,3505,3513,3506
5	0374 69 055A	Ornament (Deluxe)- (Coupe)	2	1564,1599,3514,3509
	1562 69 055A	Ornament (Deluxe)- (Coupe)	2	3507,3508
6	0380 69 055B	Ornament	2	1692,3515
6-1	0583 69 055	Ornament (Station Wagon)	1	
7	0376 69 061D	Base (R), Ornament	1	1564,1599 Car No. 154335 73/9~Discarded
	0376 69 065D	Base (L), Ornament (Coupe)	1	
8	99863 0414	Screw, Base	4	
9	0862 69 061	Base (R), Ornament	1	1692,3507,3508, 3509,3514,3515
	0862 69 065	Base (L), Ornament (Coupe)	1	
10	99863 0414C	Screw, Base	4	
	99863 0414	Screw, Base	4	
11	2835 69 059	Plate, Automobiles MAZDA	3	1563,1564,3513,3514
12	0884 69 068B	Ornament, 5 Speed	1	
13	0866 69 071A00	Emblem, Front (GRY.-DUL. Finish)	1	
	0866 69 071A02	Emblem, Front (GRY.-S. DUL. Finish) (For Except Germany)	1	Car No. 165313 73/3~×
	1128 69 071	Emblem, Front	1	Car No. 160623 73/10~×

No.	Part Number	Description	Q'ty	Remarks
13-1	0498 69 071	Emblem, Front (For Germany)	1	Car No. 176736 73/7 ~Added Anew
	1893 69 071	Emblem, Front (For Germany)	1	Car No. 160623 73/10 ~×
13-2	1692 69 072	Plate, Set (For Germany)	1	Car No. 160623 73/7 ~Added Anew Car No. 160623 73/10 ~Discarded
14	99940 0500	Nut (For Except Germany) (For Germany)	1 2	
15	1692 69 077	Plate, Set-Ornament	1	1692
	1692 69 077A	Plate, Set-Ornament	1	1692,3515 Car No. 178812 73/8 ~△
16	0866 69 081B	Emblem, Rear	1	1563,1564,1599
17	0730 69 057A	Gasket, Ornament	6	Car No. 179250 73/9 ~Discarded
	0730 69 057A	Gasket, Ornament (Sedan & Coupe) (Station Wagon)	8 11	
18	0187 69 049A	Nut, Speed-Ornament	3	
● 19	99579 3000	Nut, Speed-Ornament	6 9 3	1563,1564,1599,3504,3505,3506,3507, 3508,3509,3513,3514,3518 1692,3515
19-1	99578 3000	Nut, Speed-Ornament	2	Car No. 160623 73/10 ~Added Anew
● 19-2	0397 69 066B	Ornament, Automatic (Automatic)	1	
20	0305 69 170	Mirror, Interior	1	
	2835 69 170	Mirror, Interior (For France)	1	
	2835 69 170A	Mirror, Interior (For France)	1	From Car No. 1
21	0305 69 171	Base (0305 69 170 use)	1	
	0839 69 171	Base (2835 69 170 use)	1	
22	0305 69 180	Mirror (0305 69 170 use)	1	
	2835 69 180	Mirror (2835 69 170 use)	1	

No.	Part Number	Description	Q'ty	Remarks
● 23	908314 5 16	Screw Set, Interior Mirror	2	
● 24	0866 69 210-13	Sun Visor (R)(BLK.)	1	1563,1564,3513,3514,3518
●	0866 69 210-14	Sun Visor (R)(GRY.)	1	
●	1504 69 210A13	Sun Visor (R)(BLK.)	1	1599,1692,3515,3508,3509
●	1504 69 210A14	Sun Visor (R)(GRY.)	1	
●	1511 69 210-13	Sun Visor (R)(BLK.)	1	3504,3505,3507
●	1511 69 210-14	Sun Visor (R)(GRY.)	1	
● 25	0866 69 240-13	Sun Visor (L)(BLK.)	1	1563,1564,3513,3514,3518
●	0866 69 240-14	Sun Visor (L)(GRY.)	1	
●	1504 69 240A13	Sun Visor (L)(BLK.)	1	1599,1692,3515,3508,3509
●	1504 69 240A14	Sun Visor (L)(GRY.)	1	
●	1511 69 240-13	Sun Visor (L)(BLK.)	1	3504,3505,3507
●	1511 69 240-14	Sun Visor (L)(GRY.)	1	
26	99837 0516C	Screw, Sun Visor	4	
	99975 0500	Washer, Toothed	4	
● 27	0866 69 910	Handle, Assist-Rear (Sedan)	2	Car No. 179250 73/9 ~Discarded
● 28	0866 69 920	Handle, Assist-Front (Sedan & Coupe) / (Station Wagon)	1 / 2	
● 29	908386 6 20	Screw Set, Assist Handle (Sedan & Coupe) / (Station Wagon)	6 / 4	
30	0376 69 941	Hanger, Coat (Coupe)	1	
31	99776 0620	Screw, Coat Hanger (Coupe)	1	

No.	Part Number	Description		Q'ty	Remarks
● 32	1524 70 401 A	Grille (L.H.D.)		1	
●	0866 70 401 A	Grille (R.H.D.)		1	
33	0866 56 405	Rubber, Cushion		4	
34	99864 0412 B	Screw, Grille		4	
	99952 0412 B	Washer, Plain		4	
35	0866 70 420	Extractor (R)	(Sedan)	1	
	0866 71 420	Extractor (L)	(Sedan)	1	
36	0866 70 412	Nut, Spring-Extractor	(Sedan)	6	
37	99864 0414	Screw, Extractor	(Sedan)	4	
38	0376 70 421	Frame (R), Extractor	(Coupe)	1	
	0376 71 421	Frame (L), Extractor	(Coupe)	1	
39	0376 70 422	Chamber (R)	(Coupe)	1	
	0376 71 422	Chamber (L)	(Coupe)	1	
40	99864 0410	Screw, Frame & Chamber	(Coupe)	8	
41	0376 70 426	Gasket	(Coupe)	2	
42	0376 70 427	Pipe	(Coupe)	2	
43	0376 70 428	Clip, Pipe	(Coupe)	2	
44	0866 70 412	Nut, Spring-Extractor	(Coupe)	8	
45	99864 0414	Screw, Extractor	(Coupe)	8	
46	0866 70 431 D	Grille (R), Extractor (Sedan)		1	

No.	Part Number	Description		Q'ty	Remarks
●	0866 70 431 E	Grille (R), Extractor		1	73/12~○
	0866 71 431 D	Grille (R), Extractor		1	
●	0866 71 431 E	Grille (R), Extractor	(Sedan)	1	Car No. 160623 73/12~○
47	99863 0412 B	Screw, Tapping-Grille		2	
48	99863 0425 B	Screw, Tapping-Grille		2	
● 49	0376 70 431 A00	Grille (R), Extractor	(GRY.-DUL. Finish)	1	1564, 1599, 3507
●	0376 70 431 A02	Grille (R), Extractor	(GRY.-S. DUL. Finish)	1	Car No. 165313 73/3~×
	1692 70 431	Grille (R), Extractor	(Coupe)	1	1692
●	0376 71 431 A00	Grille (L), Extractor	(GRY.-S. DUL. Finish)	1	1564, 1599, 3507
●	0376 71 431 A02	Grille (L), Extractor	(GRY.-S. DUL. Finish)	1	Car No. 165313 73/3~×
	1692 71 431	Grille (L), Extractor		1	1692
50	99864 0416 B	Screw, Tapping-Grille		6	
51	0376 70 891 - 00	Stripe (R), Front Fender	(BRN.)	1	
	0376 70 891 - 01	Stripe (R), Front Fender	(WHT.)	1	
	0376 71 891 - 00	Stripe (L), Front Fender	(BRN.)	1	
	0376 71 891 - 01	Stripe (L), Front Fender	(WHT.)	1	
52	0376 70 892 A00	Stripe (R), Door	(BRN.)	1	(Coupe)
	0376 70 892 A01	Stripe (R), Door	(WHT.)	1	
	0376 71 892 A00	Stripe (L), Door	(BRN.)	1	
	0376 71 892 A01	Stripe (L), Door	(WHT.)	1	

No.	Part Number	Description		Q'ty	Remarks
● 53	1881 69 076	Mark, Front (RE) (Except Germany)		1	Car No. 160623 73/10~Added Anew
● 54	1128 69 077	Plate, Set (Except Germany)		1	Car No. 160623 73/10~Added Anew
● 55	1511 69 110B	Mirror (R), Rear View	(R.H.D.)	1	
● 56	1540 69 101	Gasket		1	
● 57	99772 0516	Screw		1	
● 58	99772 0525	Screw		1	
● 59	0899 69 058	Mark (Rotary Wagon) (Station Wagon)		1	
● 60	0585 70 420A	Extractor (R)	(Station Wagon)	1	
	0585 71 420A	Extractor (L)		1	
● 61	0585 70 423A	Valve (R)		1	
	0585 71 423A	Valve (L)		1	
● 62	99579 2000	Nut, Speed-Valve		4	
● 63	99864 0410B	Screw, Tapping-Extractor		4	
● 64	0899 70 431-02	Grille (R) (GRY. S. DUL.)		1	
	0899 71 431-02	Grille (L) (GRY. S. DUL.)		1	
● 65	99864 0420B	Screw, Spring-Grille		4	
	99896 0400	Nut, Spring-Grille		2	

TOP CEILING & TRIM
(SEDAN & COUPE)

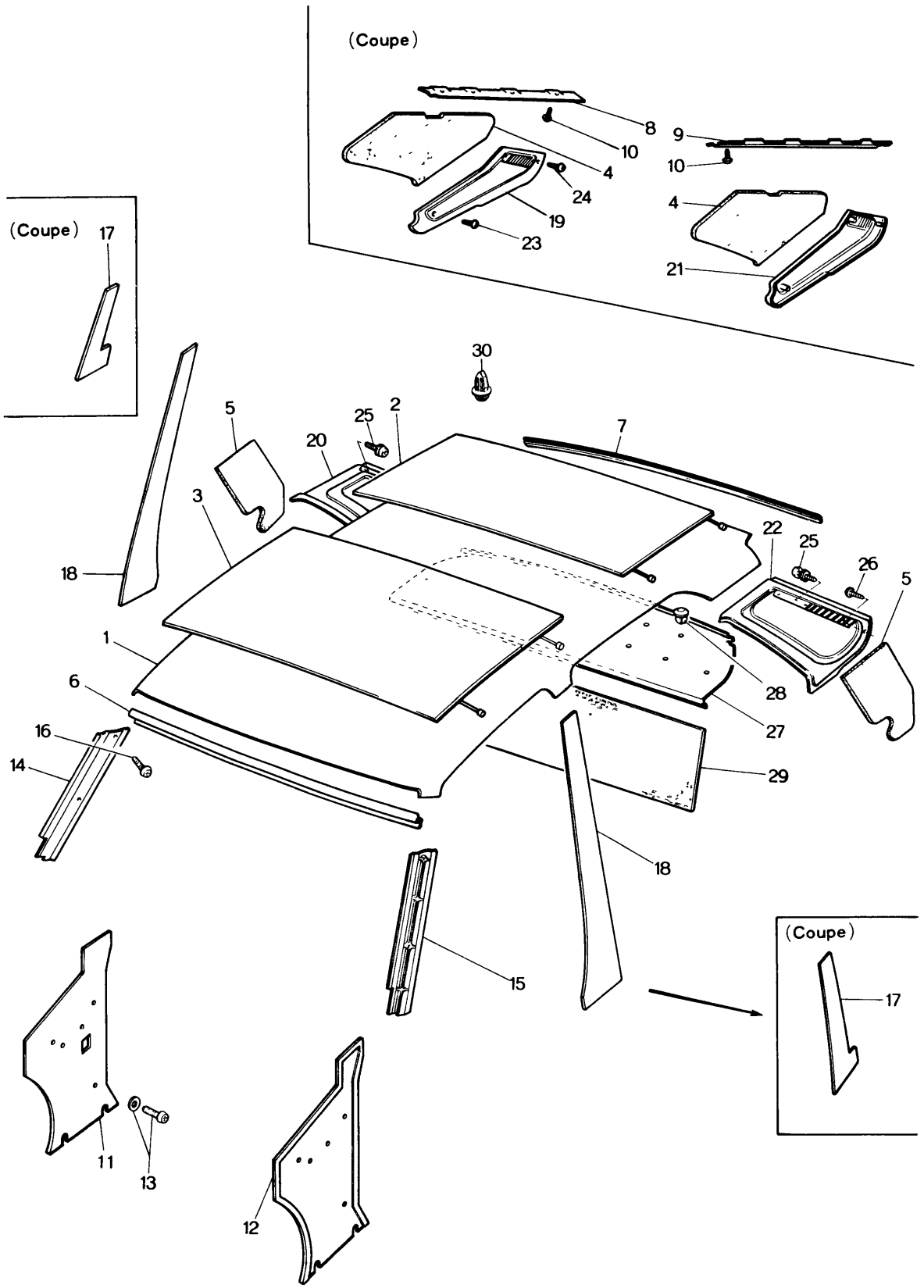

TOP CEILING & TRIM
(SEDAN & COUPE)

No.	Part Number	Description	Q'ty	Remarks
1	0376 69 290A13	Ceiling, Top (BLK.) (Coupe)	1	
	0376 69 290B13	Ceiling, Top (BLK.) (Coupe)	1	Car No. 160623 74/12~△ ©
	0376 69 290A14	Ceiling, Top (GRY.) (Coupe)	1	
	0376 69 290B14	Ceiling. Top (GRY.) (Coupe)	1	Car No. 160623 73/10~△ ©
	0866 69 290-14	Ceiling, Top (GRY.) (Sedan)	1	©
2	0259 69 311	Insulation No. I	1	
●	0259 69 311A	Insulation No. I	1	74/4~○
3	0866 69 311	Lining, Head	1	
●	0866 69 311A	Lining, Head	1	74/4~○
4	0376 69 314A	Pad, Rear Pillar (Coupe)	2	
	0376 69 314B	Pad, Rear Pillar (Coupe)	2	Car No. 160623 73/10~△
5	0866 69 314A	Pad, Rear Pillar (Sedan)	2	
6	0376 69 321	Plate, Fixing-Front (Coupe)	1	
	0866 69 321	Plate, Fixing-Front (Sedan)	1	
7	0376 69 341	Plate, Fixing-Rear (Coupe)	1	
	0866 69 341	Plate, Fixing-Rear (Sedan)	1	
8	0376 69 342	Plate No.2, Fixing-Rear (Coupe)	1	
9	0376 69 343	Plate No.3, Fixing-Rear (Coupe)	1	
10	99863 0412	Screw, Fixing Plate (Coupe)	8	
	99864 0412	Screw, Fixing Plate (Coupe)	8	73/10~○
11	1524 69 360A00	Trim (R), Front Side (L.H.D.)	1	©
	0866 69 360A00	Trim (R), Front Side (R.H.D.)	1	©

69 TOP CEILING & TRIM
(SEDAN & COUPE)

No.	Part Number	Description	Q'ty	Remarks	
12	1524 69 380A00	Trim (L), Front Side (L.H.D.)	1		©
	0866 69 390B00	Trim (L), Front Side (R.H.D.)	1		©
13	99862 0512B	Screw, Front Side Trim	4		
	99967 0500B	Washer	4		
14	0376 69 411-00	Trim (R), Front Pillar (BLK.) (Coupe)	1		©
	0866 69 411-00	Trim (R), Front Pillar (BLK.) (Sedan)	1		©
15	0376 69 431-00	Trim (L), Front Pillar (BLK.) (Coupe)	1		©
	0866 69 431-00	Trim (L), Front Pillar (BLK.) (Sedan)	1		©
16	99862 0412B	Screw, Front Pillar	4		
17	0376 69 462A13	Trim, Center Pillar (BLK.) (Coupe)	2		©
	0376 69 462A14	Trim, Center (GRY.) (Coupe)	2		©
18	0866 69 461B03	Trim, Center Pillar (BLK.) (Sedan)	2		©
	0866 69 461B12	Trim, Center Pillar (BRN.) (Sedan)	2		©
	0866 69 461B13	Trim, Center Pillar (GRY. / YLW.) (Sedan)	2		©
19	0376 69 511-00	Trim (R), Rear Pillar (BLK.) (Coupe)	1		©
20	0866 69 511-01	Trim (R), Rear Pillar (GRY.) (Sedan)	1		©
21	0376 69 521-00	Trim (L), Rear Pillar (BLK.) (Coupe)	1		©
22	0866 69 521-01	Trim (L), Rear Pillar (GRY.) (Sedan)	1		©
23	99864 0516B	Screw, Rear Pillar Trim (Coupe)	4		
24	99864 0525B	Screw, Rear Pillar Trim (Coupe)	2		

No.	Part Number	Description	Q'ty	Remarks
25	99864 0416	Screw, Rear Pillar Trim } (Sedan)	4	
26	99864 0412	Screw, Rear Pillar Trim } (Sedan)	2	
27	0376 69 870B00	Trim, Package Tray (BLK.) } (Coupe)	1	©
	0870 69 870B00	Trim, Package Tray (BLK.) With Car Stereo Hole } (Coupe)	1	©
	0866 69 870C00	Trim, Package Tray (BLK.) With Car Stereo Hole } (Sedan)	1	©
	1524 69 870C00	Trim, Package Tray (BLK.) } (Sedan)	1	©
28	0866 69 885	Fastener, Package Tray Trim	2	
29	0866 69 694	Pad, Package Tray	1	
● 30	99274 0821	Clip	2	Car No. 160623 73/10~ Added Anew

TOP CEILING & TRIM (STATION WAGON)

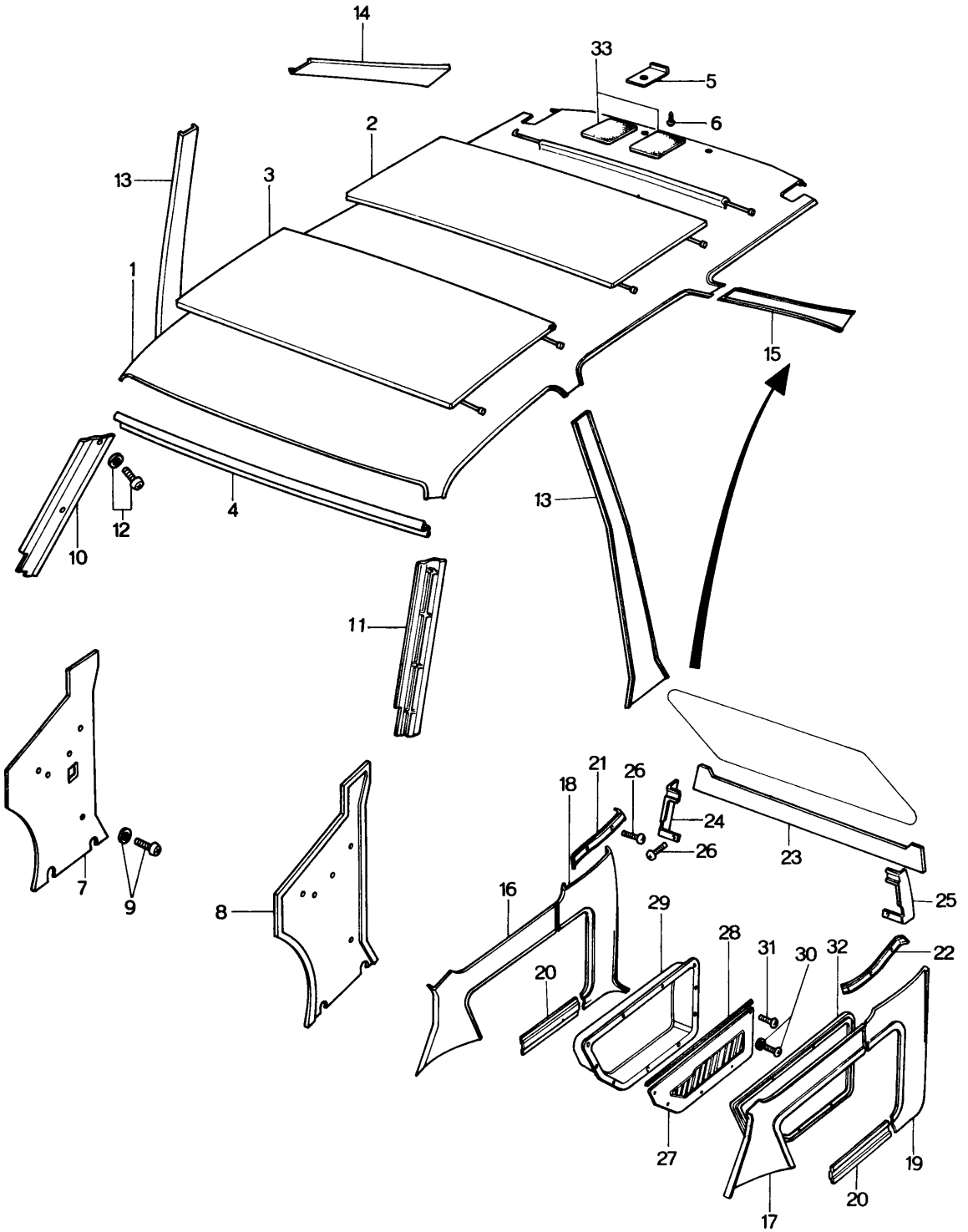

TOP CEILING & TRIM (STATION WAGON)

No.	Part Number	Description	Q'ty	Remarks
1	0585 69 290 - 14	Ceiling, Top (GRY.)	1	
2	0585 69 311	Lining, Head	1	
3	0866 69 311	Lining, Head	1	
4	0866 69 321	Plate, Fixing - Front	1	
5	0585 69 341B	Plate, Fixing - Rear	2	
6	99862 0512C	Screw, Tapping - Rear Fixing Plate	2	
	99967 0500A	Washer	2	
7	0866 69 360A00	Trim (R), Front Side (BLK.)	1	
8	0866 69 380B00	Trim (L), Front Side (BLK.)	1	
9	99862 0512B	Screw, Tapping - Trim	4	
	99967 0500B	Washer	4	
10	0866 69 411 - 00	Trim (R), Front Pillar (BLK.)	1	
11	0866 69 431 - 00	Trim (L), Front Pillar (BLK.)	1	
12	99862 0412B	Screw, Tapping - Trim	4	
13	0866 69 461B03	Trim, Center (BLK.)	2	
	0866 69 461B12	Trim, Center (BRN.)	2	
	0866 69 461B13	Trim, Center (GRY. / YLW.)	2	
14	0899 69 561C14	Trim (R), Quarter (GRY.)	1	
15	0899 69 571C14	Trim (L), Quarter (GRY.)	1	
16	0899 69 711B03	Trim No. I (R), Rear Side (BLK.)	1	

TOP CEILING & TRIM (STATION WAGON)

No.	Part Number	Description	Q'ty	Remarks
	0899 69 711B12	Trim No. 1 (R), Rear Side (BRN.)	1	
	0899 69 711B13	Trim No. 1 (R), Rear Side (GRY. / YLW.)	1	
17	0899 69 712B03	Trim No. 1 (L), Rear Side (BLK.)	1	
	0899 69 712B12	Trim No. 1 (L), Rear Side (BRN.)	1	
	0899 69 712B13	Trim No. 1 (L), Rear Side (GRY. / YLW.)	1	
18	0899 69 713A03	Trim No. 2 (R), Rear Side (BLK.)	1	
	0899 69 713A12	Trim No. 2 (R), Rear Side (BRN.)	1	
	0899 69 713A13	Trim No. 2 (R), Rear Side (GRY. / YLW.)	1	
19	0899 69 714A03	Trim No. 2 (L), Rear Side (BLK.)	1	
	0899 69 714A12	Trim No. 2 (L), Rear Side (BRN.)	1	
	0899 69 714A13	Trim No. 2 (L), Rear Side (GRY. / YLW.)	1	
20	0899 69 715A03	Trim, Rear Side-Lower (BLK.)	2	
	0899 69 715A12	Trim, Rear Side-Lower (BRN.)	2	
	0899 69 715A13	Trim, Rear Side-Lower (GRY. / YLW.)	2	
21	0899 69 717A	Garnish (R), Rear Side Trim	1	
22	0899 69 718A	Garnish (L), Rear Side Trim	1	
23	0899 69 721B03	Trim, Back Door-Upper (BLK.)	1	
	0899 69 721B12	Trim, Back Door-Upper (BRN.)	1	
	0899 69 721B13	Trim, Back Door-Upper (GRY. / YLW.)	1	
24	0899 69 723B	Garnish (R), Back Door Trim	1	

TOP CEILING & TRIM (STATION WAGON)

No.	Part Number	Description	Q'ty	Remarks
25	0899 69 724B	Garnish (L), Back Door Trim	1	
26	99864 0410C	Screw, Tapping-Garnish	6	
27	0899 70 911C03	Trim (R), Side (BLK.)	1	
	0899 70 911C12	Trim (R), Side (BRN.)	1	
	0899 70 911C13	Trim (R), Side (GRY. / YLW.)	1	
28	0585 70 912B	Moulding, Side Pocket	1	
29	0585 70 921B	Pocket, Side	1	
30	99862 0416B	Screw, Tapping-Side Pocket } Selective use	17	
	99862 0416C	Screw, Tapping-Side Pocket } Selective use		
	99967 0400A	Washer } Selective use	17	
	99967 0400B	Washer } Selective use		
31	99864 0420C	Screw, Tapping-Side Pocket (R)	2	
32	0899 71 911C03	Trim (L), Side (BLK.)	1	
	0899 71 911C12	Trim (L), Side (BRN.)	1	
	0899 71 911C13	Trim (L), Side (GRY. / YLW.)	1	
33	0419 68 021	Wire Cushion	2	

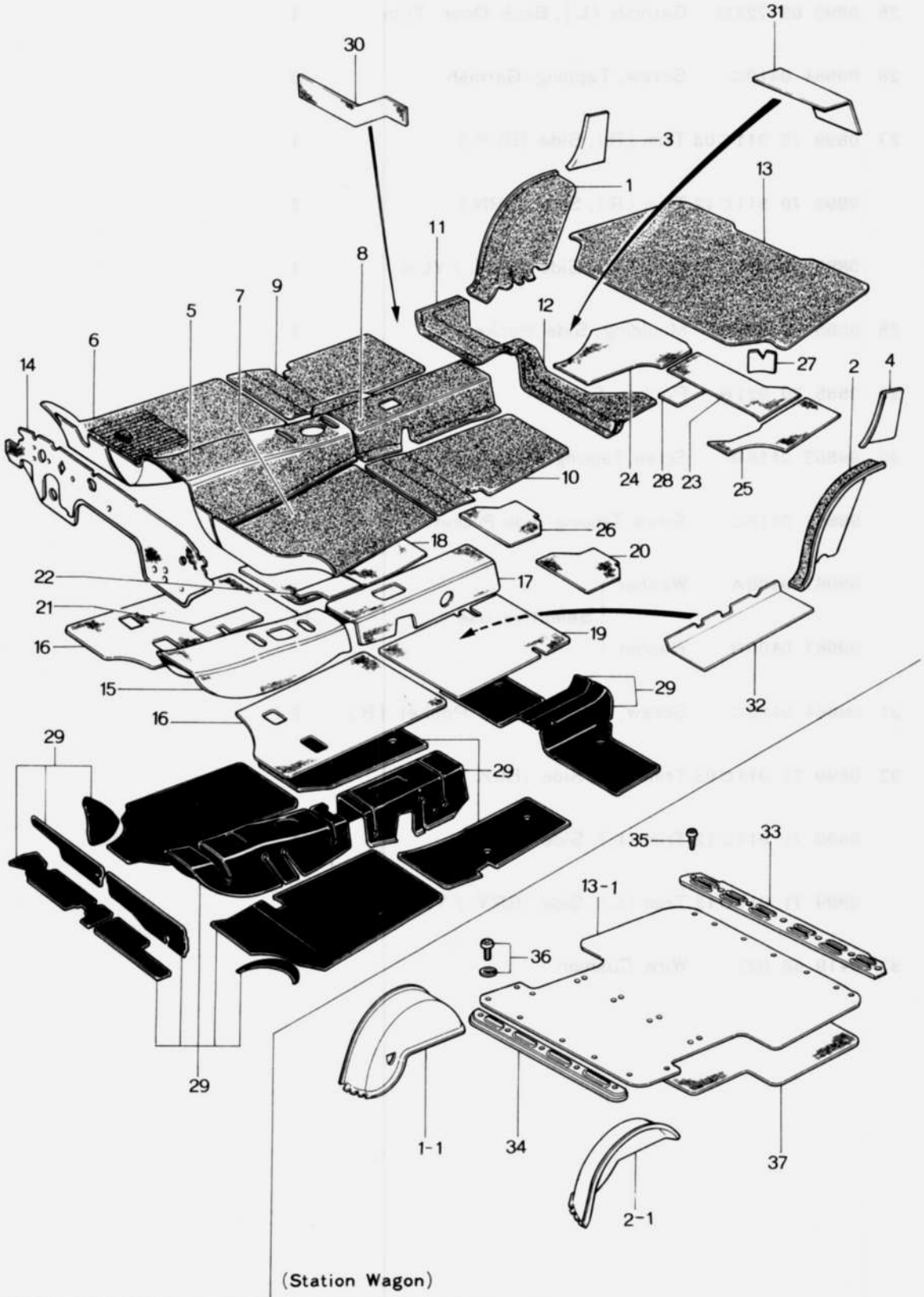
30
31
3
1
13
11
8
5
7
9
12
6
14
27
2
4
10
24
28
23
25
26
18
20
22
17
21
19
16
15
29
32
16
29
29
29
29
35
33
13-1
36
1-1
34
37
2-1
(Station Wagon)

No.	Part Number	Description	Q'ty	Remarks	
		When ordering the following trims, add colour code nos. given below after parts number -03 (BLK.) -12 (BRN.) -13 (GRY. / YLW.)			
1	0866 69 541	Trim (R), Tire House (Sedan & Coupe)	1		©
1-1	0899 69 541A	Trim (R), Tire House (Station Wagon)	1		©
2	0866 69 542	Trim (L), Tire House (Sedan & Coupe)	1		©
2-1	0899 69 543A	Trim (L), Tire House (Station Wagon)	1		©
3	0866 69 543A	Trim (R), Rear Seat Side (Sedan & Coupe)	1		©
4	0866 69 544A	Trim (L), Rear Seat Side (Sedan & Coupe)	1		©
		When ordering the following Mats (Carpet), add colour code nos. given below after parts number -34 (BLK.) -32 (YLW. / GRN.)			
5	1524 69 611	Mat (Frt., C), Carpet (L.H.D.)	1		©
●	0866 69 611A	Mat (Frt., C), Carpet (R.H.D.) (Manual)	1		©
●	0378 69 611B	Mat (Frt., C), Carpet (R.H.D) (Automatic)	1		©
6	1524 69 612	Mat (Frt., R), Carpet (L.H.D.)	1		©
●	0866 69 612A	Mat (Frt., R), Carpet (R.H.D.) (Manual)	1		©
●	0378 69 612A	Mat (Frt., R), Carpet (R.H.D.) (Automatic)	1		©
7	1524 69 613	Mat (Frt., L), Carpet (L.H.D.)	1		©
	1881 69 613	Mat (Frt., L), Carpet (L.H.D.)	1	Car No. 160623 $^{73}/_{10}$~×	©
●	0866 69 613A	Mat (Frt., L), Carpet (R.H.D.) (Manual)	1		©
●	0378 69 613A	Mat (Frt., L), Carpet (R.H.D.) (Automatic)	1		©

No.	Part Number	Description	Q'ty	Remarks	
8	0866 69 616A	Mat (Rr , C), Carpet	1		©
9	0866 69 617	Mat (Rr , R), Carpet	1		©
10	0866 69 618	Mat (Rr , L), Carpet	1		©
11	0866 69 625A05	Mat (R), End (BLK) (Sedan & Coupe)	1		©
	0585 69 625C05	Mat (R), End (BLK) (Station Wagon)	1		©
12	0866 69 626A05	Mat (L), End (BLK.) (Sedan & Coupe)	1		©
	0585 69 626C05	Mat (L), End (BLK) (Station Wagon)	1		©
13	0866 69 627-10	Mat, Trunk Room (BLK.) } (L.H.D.)	1		©
	1881 69 627	Mat, Trunk Room (BLK.) } (L.H.D.)	1	Car No. 160623 $^{73}/_{10}$～△	©
	0866 69 627-10	Mat, Trunk Room (BLK.) (R.H.D.)	1		©
13-1	0899 67 627-10	Mat, Trunk Room (BLK.) (Station Wagon)	1		©
14	1562 69 660D	Insulator	1		
	1562 69 660E	Insulator (L H.D.)	1		
	1562 69 660F	Insulator	1		
●	0866 69 660D	Insulator (R.H D.)	1		
15	0866 69 683B	Pad (Frt , C)	1		
●	1128 69 683A	Pad (Frt , C) (Manual)	1	Car No 160623 $^{73}/_{10}$～×	
●	1129 69 683A	Pad (Frt , C) (Automatic)	1		
16	0866 69 684	Pad (Frt.)	2		
	0866 69 684A	Pad (Frt) (Manual)	2	Car No. 160623 $^{73}/_{10}$～×	
●	0871 69 684A	Pad (Frt , R)	1		
●	0871 69 685A	Pad (Frt , L) (Automatic)	1		
17	0866 69 687A	Pad (Rr., C)	1		

No.	Part Number	Description	Q'ty	Remarks
●	1128 69 687A	Pad (Rr., C)	1	Car No. 160623 73/10～×
18	0866 69 688	Pad (Rr., R)	1	
19	0866 69 689	Pad (Rr., L)	1	
20	0866 69 692	Pad, End	1	
●	1128 69 692A	Pad, End	1	Car No. 160623 73/10～×
21	1570 69 686	Pad, Tunnel Side (Frt.)	1	
●	1128 69 686A	Pad, Tunnel Side (Frt.)	1	Car No. 160623 73/10～×
22	1570 69 691	Pad, Tunnel Side (Rr.)	1	
●	1128 69 691A	Pad, Tunnel Side (Rr.)	1	Car No. 160623 73/10～×
● 23	0866 69 696	Pad (C), Trunk Room	1	
● 24	0866 69 697	Pad (R), Trunk Room	1	
● 25	0866 69 698	Pad (L), Trunk Room	1	
● 26	1570 69 692	Pad, End	(Sedan & Coupe) 1	Car No. 179250 73/9～Discarded
● 27	1570 69 695	Pad, Heat Insulator	1	
● 28	1570 69 699A	Pad, Heat-Insulator	1	
●	1570 69 699D	Pad, Heat-Insulator	1	Car No. 160623 73/10～△
29	0208 76 071	Silencer	—	
		A 30 cm square object in sheet form is supplied under Part No. 0208 76 071 (Floor Silencer Revised Piece)		
● 30	1128 69 681A	Pad (Rr.), Member	1	73/10～Added Anew
● 31	1128 69 682A	Pad, Tank Lower	1	73/10～Added Anew

No.	Part Number	Description	Q'ty	Remarks
● 32	1128 69 693A	Pad (Rr.), Tunnel Side	1	73/10~Added Anew
● 33	0585 69 628F	Plate No. 1, Seat-Mat Rear	1	
● 34	0585 69 629B	Plate No. 2, Seat-Mat Front	1	
● 35	99861 0410	Screw, Tapping-Trunk Room Mat	5	
●	99864 0410	Screw, Tapping-Trunk Room Mat	(Station Wagon) 8	
●	99864 0412B	Screw, Tapping-Trunk Room Mat	7	
● 36	99861 0410B	Screw, Tapping-Trunk Room Mat	4	
●	99967 0400B	Washer, Plain	4	
● 37	1571 69 696B	Pad, Trunk	1	

WINDOW GLASS & MOULDING
(SEDAN & COUPE)

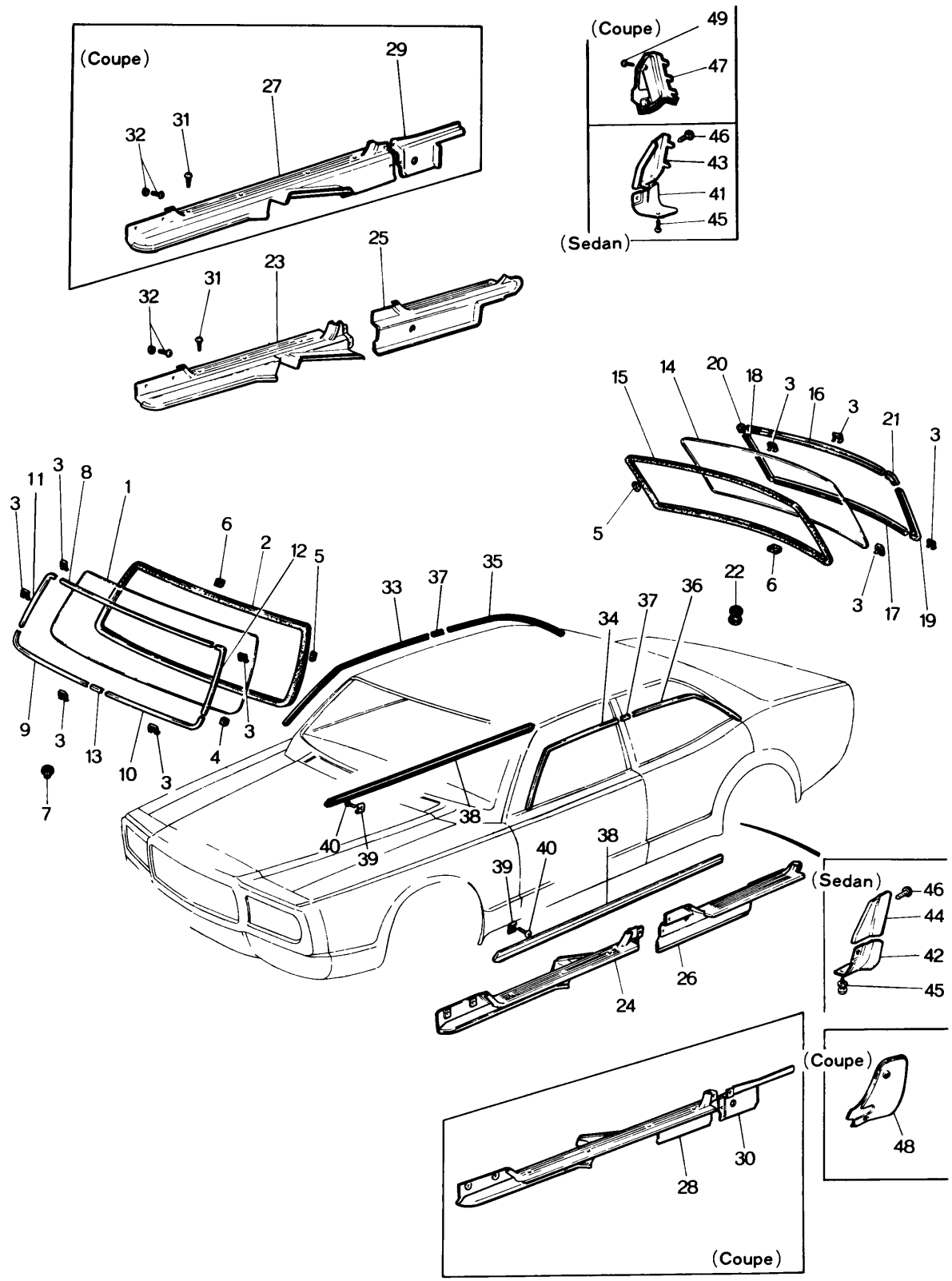

WINDOW GLASS & MOULDING
(SEDAN & COUPE)

70 71

No.	Part Number	Description		Q'ty	Remarks
1	0368 70 441	Glass, Front Window	(Sedan)	1	
	1531 70 441	Glass, Front Window (HPR)	(Sedan)	1	
	0374 70 441	Glass, Front Window	(Coupe)	1	
•	1568 70 441	Glass, Front Window (HPR)	(Coupe)	1	
		For Germany & Sweden			
2	0305 70 443B	Dam, Front Window Glass		1	
3	1011 50 506A	Clip, Front Window . . . 19, Back Window . . . 17		36	
4	0305 70 447B	Spacer "A"		5	
5	0305 70 448A	Spacer "B"		4	
6	0839 70 449	Spacer "C"		4	
7	0118 56 241	Plug, Drain		1	
8	0376 70 451A	Mould, Upper-Front (Coupe)		1	
	0866 70 451A	Mould, Upper-Front (Sedan)		1	
9	0866 70 452A	Mould (R), Lower-Front		1	
10	0866 71 452A	Mould (L), Lower-Front		1	
11	0376 70 453A	Mould (R), Side-Front (Coupe)		1	
	0866 70 453A	Mould (R), Side-Front (Sedan)		1	
12	0376 71 453A	Mould (L), Side-Front (Coupe)		1	
	0866 71 453A	Mould (L), Side-Front (Sedan)		1	
13	0866 70 454	Joint, Mould-Front		1	
14	1523 70 471	Glass, Back Window		1	

WINDOW GLASS & MOULDING
(SEDAN & COUPE)

No.	Part Number	Description	Q'ty	Remarks
	1524 70 471	Glass, Back Window (With Heating Wire) (Sedan)	1	
	0374 70 471	Glass, Back Window (Coupe)	1	
	1562 70 471	Glass, Back Window (With Heating Wire) (Coupe)	1	
15	0866 70 473	Dam, Back Window Glass	1	
16	0376 70 481 A	Mould, Upper-Rear (Coupe)	1	
	0866 70 481 A	Mould, Upper-Rear (Sedan)	1	
17	0376 70 482 A	Mould, Lower-Rear (Coupe)	1	
	0866 70 482 A	Mould, Lower-Rear (Sedan)	1	
18	0376 70 483 A	Mould (R), Rear (Coupe)	1	
	0866 70 483 A	Mould (R), Rear (Sedan)	1	
19	0376 71 483 A	Mould (L), Rear (Coupe)	1	
	0866 71 483 A	Mould (L), Rear (Sedan)	1	
20	0376 70 484 A	Joint (R), Mould (Coupe)	1	
	0866 70 484 A	Joint (R), Mould (Sedan)	1	
21	0376 71 484 A	Joint (L), Mould (Coupe)	1	
	0866 71 484 A	Joint (L), Mould (Sedan)	1	
22	0114 43 625	Protector, Heating Wire	1	
23	0866 70 801 A	Plate (R), Scarf-Front	1	
●	0866 70 801 B	Plate (R), Scarf-Front	1	73/8～○
24	0866 71 801 A	Plate (L), Scarf-Front	1	

WINDOW GLASS & MOULDING
(SEDAN & COUPE)

	No.	Part Number	Description		Q'ty	Remarks
●		0866 71 801B	Plate (L), Scarf-Front	(Sedan)	1	73/8~○
	25	0866 70 802B	Plate (R), Scarf-Rear		1	
●		0866 70 802C	Plate (R), Scarf-Rear		1	73/8~○
	26	0866 71 802B	Plate (L), Scarf-Rear		1	
●		0866 71 802C	Plate (L), Scarf-Rear		1	73/8~○
	27	0376 70 801A	Plate (R), Scarf-Front		1	
●		0376 70 801D	Plate (R), Scarf-Front		1	73/8~○
	28	0376 71 801A	Plate (L), Scarf-Front	(Coupe)	1	
●		0376 71 801B	Plate (L), Scarf-Front		1	73/8~○
	29	0376 70 802A	Plate (R), Scarf-Rear		1	
	30	0376 71 802A	Plate (L), Scarf-Rear		1	
	31	99862 0425B	Screw, Scarf Plate		1	
	32	99864 0414	Screw, Scarf Plate		10 8	(Sedan) (Coupe)
		99952 0412B	Washer, Plain		14	
		99952 0516B	Washer, Plain		12	
	33	0376 70 821B	Mould (R), Drip-Front	(Coupe)	2	
		0866 70 821B	Mould (R), Drip-Front	(Sedan)	1	
	34	0376 71 821B	Mould (L), Drip-Front	(Coupe)	1	
		0866 71 821B	Mould (L), Drip-Front	(Sedan)	1	
	35	0376 70 822B	Mould (R), Drip-Rear	(Coupe)	1	

WINDOW GLASS MOULDING
(SEDAN & COUPE)

No.	Part Number	Description	Q'ty	Remarks
	~~0866 70 822C~~	~~Mould (R), Drip-Rear (Sedan)~~	~~1~~	
	0866 70 822D	Mould (R), Drip-Rear (Sedan)	1	From Car No. 1
36	0376 71 822B	Mould (L), Drip-Rear (Coupe)	1	
	~~0866 71 822C~~	~~Mould (L), Drip-Rear (Sedan)~~	~~1~~	
	0866 71 822D	Mould (L), Drip-Rear (Sedan)	1	From Car No. 1
37	0866 70 823A	Joint, Drip Mould	2	
●	0866 70 823B	Joint, Drip Mould	2	73/10～○
38	0866 70 851	Mould, Step	2	
39	0305 70 861C	Clip, Step Mould	10	
40	99863 0512	Screw, Step Mould	10	
41	0866 70 852	Guard "A" (R), Stone	1	
42	0866 71 852	Guard "A" (L), Stone	1	
43	0866 70 853C	Guard "B" (R), Stone	1	
44	0866 71 853C	Guard "B" (L), Stone	1	(Sedan)
45	908631 5 12	Screw Set, Stone Guard	4	
46	0870 70 875	Screw, Stone Guard	2	
47	0376 70 855	Guard (R), Stone	1	
	0376 70 855C	Guard (R), Stone	1	Car No. 167343 73/3～△
48	0376 71 855	Guard (L), Stone	1	
	0376 71 855C	Guard (L), Stone	1	(Coupe) Car No. 167343 73/3～△

WINDOW GLASS & MOULDING
(SEDAN & COUPE)

70 71

No.	Part Number	Description	Q'ty	Remarks
49	99767 0410	Screw, Stone Guard	2	
	99769 0408	Screw, Stone Guard	2	

WINDOW GLASS & MOULDING
(STATION WAGON)

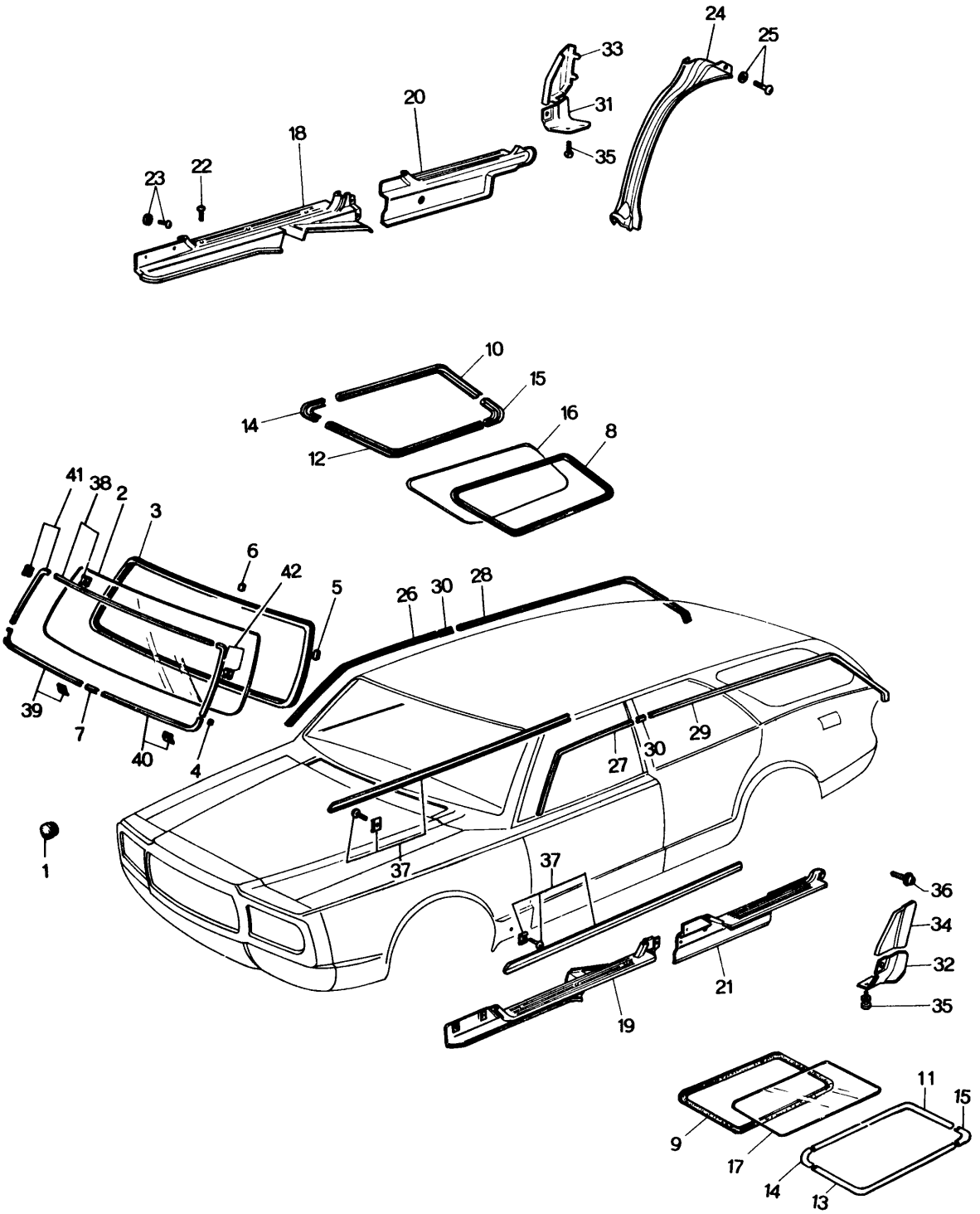

WINDOW GLASS & MOULDING
(STATION WAGON)

70 71

No.	Part Number	Description	Q'ty	Remarks
1	0118 56 241	Plug, Drain	1	
2	1531 70 441	Glass, Front Window (Transparent)	1	
	1540 70 441	Glass, Front Window (Blue Pane)	1	
3	0305 70 443B	Dam, Front Window Glass	1	
4	0305 70 447B	Spacer "A"	3	
5	0305 70 448A	Spacer "B"	2	
6	0839 70 449	Spacer "C"	2	
7	0866 70 454	Joint, Front Mould	1	
8	0585 70 521B	Weatherstrip (R)	1	
9	0585 71 521B	Weatherstrip (L)	1	
10	0585 70 531A	Mould, Upper (R)	1	
11	0585 71 531A	Mould, Upper (L)	1	
12	0585 70 532A	Mould, Lower (R)	1	
13	0585 71 532A	Mould, Lower (L)	1	
14	0585 70 533A	Mould (Frt.)	2	
15	0585 70 534A	Mould (Rr.)	2	
16	1529 70 551A	Glass, Rear Side (R) (Transparent)	1	
	1544 70 551A	Glass, Rear Side (R) (Blue Pane)	1	
17	1529 71 551A	Glass, Rear Side (L) (Transparent)	1	
	1544 71 551A	Glass, Rear Side (L) (Blue Pane)	1	

WINDOW GLASS & MOULDING
(STATION WAGON)

No.	Part Number	Description	Q'ty	Remarks
18	0866 70 801B00	Plate (R), Scarf-Front (BLK.)	1	
19	0866 71 801B00	Plate (L), Scarf-Front (BLK.)	1	
20	0866 70 802C00	Plate (R), Scarf-Rear (BLK.)	1	
21	0866 71 802C00	Plate (L), Scarf-Rear (BLK.)	1	
22	99862 0425B	Screw, Scarf Plate	10	
23	99864 0414B	Screw, Scarf Plate	14	
	99952 0412B	Washer, Plain	12	
	99952 0516B	Washer, Plain	2	
24	0585 70 811C	Plate (Rr.), Scarf	1	
25	99864 0414B	Screw, Scarf Plate (Rr.)	2	
	99952 0412B	Washer, Plain	2	
26	0866 70 821B	Mould (R), Drip-Front	1	
27	0866 71 821B	Mould (L), Drip-Front	1	
28	0585 70 822B	Mould (R), Drip-Rear	1	
29	0585 71 822B	Mould (L), Drip-Rear	1	
30	0866 70 823B	Joint, Drip Mould	2	
31	0866 70 852	Guard "A" (R), Stone	1	
32	0866 71 852	Guard "A" (L), Stone	1	
33	0866 70 853C	Guard "B" (R), Stone	1	
34	0866 71 853C	Guard "B" (L), Stone	1	

WINDOW GLASS & MOULDING
(STATION WAGON)

70 71

No.	Part Number	Description	Q'ty	Remarks
35	99863 0512	Screw, Stopper Guard	4	
	99952 0500	Washer, Plain	4	
36	99739 0410	Screw, Tapping-Stone Guard	2	
37	0866 99 721	Mould, Step	2	
38	0866 99 741	Mould, Upper	1	
39	0866 99 742	Mould, Lower (R)-Front	1	
40	0866 99 745	Mould, Lower (L)-Front	1	
41	0866 99 743	Mould (R), Front	1	
42	0866 99 744	Mould (L), Front	1	

REAR SIDE DOOR
(GLASS, SEDAN & STATION WAGON)

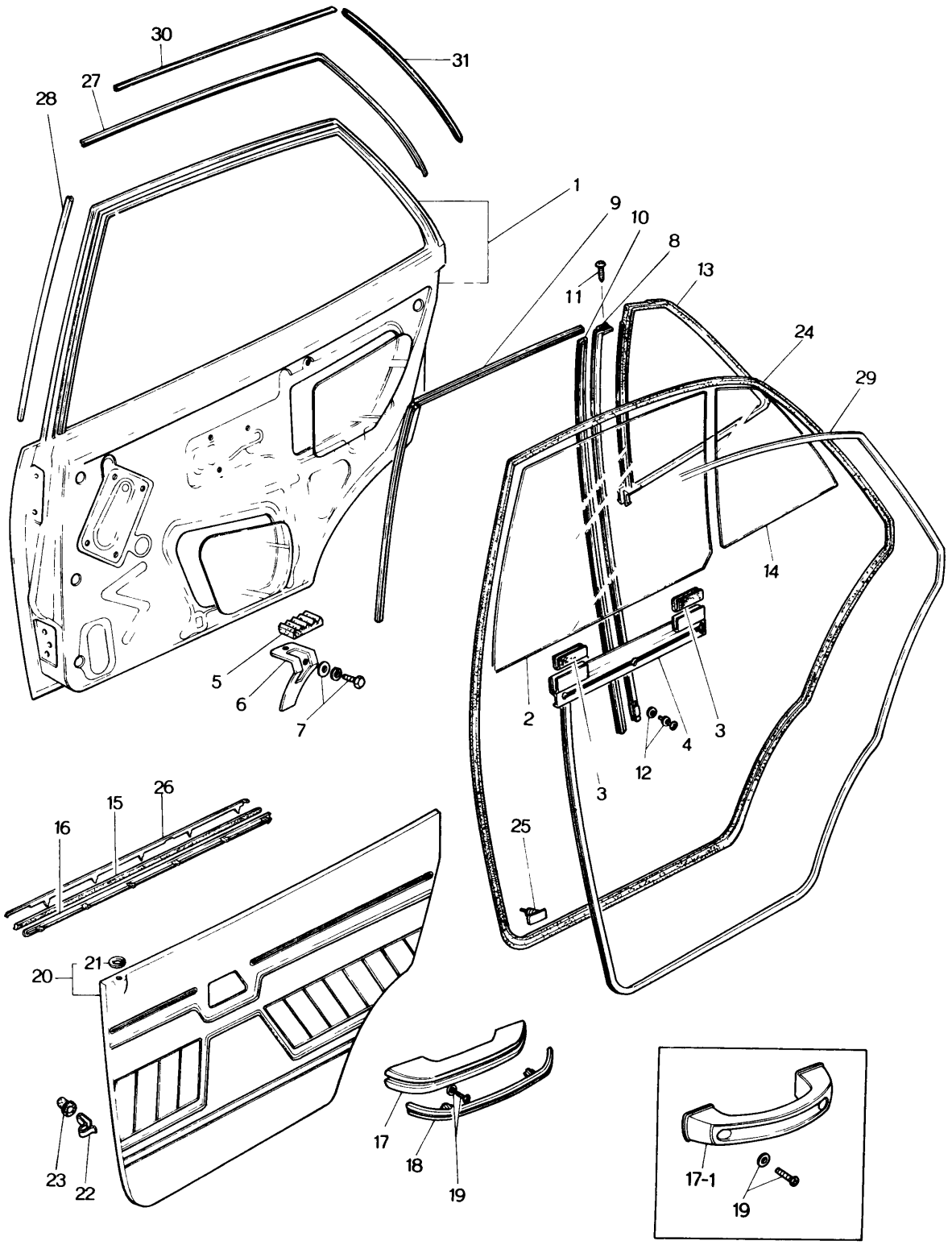

REAR SIDE DOOR
(GLASS, SEDAN & STATION WAGON)

72 73

No.	Part Number	Description		Q'ty	Remarks
1	0866 72 010D	Body (R), Door	(Sedan)	1	
	0866 73 010D	Body (L), Door	(Sedan)	1	
●	0585 72 010B	Body (R), Door	(Station Wagon)	1	
●	0585 73 010B	Body (L), Door	(Station Wagon)	1	
2	0368 72 501	Glass (R), Door	(Sedan)	1	
●	0368 72 501A	Glass (R), Door	(Sedan)	1	73/10～○
	0368 73 501	Glass (L), Door	(Sedan)	1	
●	0368 73 501A	Glass (L), Door	(Sedan)	1	73/10～○
●	0583 72 501A	Glass (R), Door	Transparent (Station Wagon)	1	
●	0583 73 501A	Glass (L), Door	Transparent (Station Wagon)	1	
●	0585 72 501A	Glass (R), Door	Blue Pane (Station Wagon)	1	
●	0585 73 501A	Glass (L), Door	Blue Pane (Station Wagon)	1	
3	0866 72 502	Strip, Rubber-Door Glass		2	
4	0259 72 210	Bracket, Left-Door Glass		2	
5	0187 56 235	Rubber, Support		2	
6	0259 72 080	Stop, Glass		2	
7	908062 6 12	Bolt Set, Glass Stop		2	
	99951 0618	Washer, Plain		2	
● 8	0866 72 602A	Channel (R), Center (Sedan)		1	
●	0585 72 602C	Channel (R), Center (Station Wagon)		1	

REAR SIDE DOOR
(GLASS, SEDAN & STATION WAGON)

	No.	Part Number	Description	Q'ty	Remarks
●		0866 73 602A	Channel (L), Center (Sedan)	1	
●		0585 73 602C	Channel (L), Center (Station Wagon)	1	
●	9	0866 72 605	Channel "A", Glass Run (Sedan)	2	
●		0585 72 605	Channel "A", Glass Run (Station Wagon)	2	
●	10	0866 72 606	Channel "B", Glass Run (Sedan)	2	
●		0585 72 606	Channel "B", Glass Run (Station Wagon)	2	
	11	99831 0410	Screw, Center Channel	4	
	12	908062 6 10	Bolt Set, Glass Run Channel	2	
●		99796 0608	Bolt, Glass Run Channel	2	73/10~○
		99951 0618	Washer, Plain	2	
●		99952 0618	Washer, Plain	2	73/10~○
	13	0866 72 651B	Weatherstrip (Sedan)	2	
●		0585 72 651A	Weatherstrip (Station Wagon)	2	
	14	1524 72 661B	Glass (R), Quarter Window	1	
●		1524 72 661C	Glass (R), Quarter Window	1	73/10~○
		1524 73 661B	Glass (L), Quarter Window	1	
●		1524 73 661C	Glass (L), Quarter Window	1	73/10~○
●		1511 72 661A	Glass (R), Quarter Window	1	
●		1511 73 661A	Glass (L), Quarter Window	1	
●		1516 72 661A	Glass (R), Quarter Window (Station Wagon Transparent)	1	

(Sedan) (L.H.D.)

(Sedan) (R.H.D.)

REAR SIDE DOOR
(GLASS, SEDAN & STATION WAGON)

72 73

	No.	Part Number	Description	Q'ty	Remarks
●		1516 73 661A	Glass (L), Quarter Window (Station Wagon Transparent)	1	
●		1544 72 661A	Glass (R), Quarter Window (Station Wagon Blue Pane)	1	
●		1544 73 661A	Glass (L), Quarter Window (Station Wagon Blue Pane)	1	
	15	0866 72 781C	Weatherstrip, Outer	2	
	16	0866 72 791	Weatherstrip, Inner	2	
●	17	0398 58 821A	Rest, Arm (Sedan)	2	
●	17-1	0585 72 821	Handle, Pull (Station Wagon)	2	
●	18	0398 58 822A	Garnish, Arm Rest (Sedan)	2	
	19	908331 5 20	Screw Set, Arm Rest	4	

When ordering the following Trims
Add colour code nos. given below after parts number
-03 (BLK.) -12 (BRN.) -13 (GRY. / YLW.)

	20	0866 72 810B	Trim (R), Door	1	©
		0866 73 810B	Trim (L), Door	1	©
	21	0223 58 692A	Grommet	2	
	22	0208 58 921	Fastener	12	
	23	0187 58 922	Cap, Fastener	12	

72 73 REAR SIDE DOOR
(GLASS, SEDAN & STATION WAGON)

No.	Part Number	Description	Q'ty	Remarks
● 24	0866 72 760A	Weatherstrip (R) (Sedan)	1	
●	0585 72 760A	Weatherstrip (R) (Station Wagon)	1	
●	0866 73 760A	Weatherstrip (L) (Sedan)	1	
●	0585 73 760A	Weatherstrip (L) (Station Wagon)	1	
25	0305 58 762	Fastener	48	
26	0866 72 831D	Mould (R), Beltline	1	
	0866 73 831D	Mould (L), Beltline	1	
● 27	0866 72 841A	Mould "A" (R), Sash	1	
●	0866 73 841A	Mould "A" (L), Sash	1	(Sedan)
● 28	0866 59 842A	Mould "B" (R), Sash	1	
●	0866 58 842A	Mould "B" (L), Sash	1	
● 29	0398 58 755	Welt, Seaming (Sedan)	2	
●	1004 68 911	Welt (R), Seaming	1	(Station Wagon)
●	0398 68 755	Welt (L), Seaming	1	
● 30	0899 72 841B	Mould "A" (R), Sash	1	
●	0899 73 841B	Mould "A" (L), Sash	1	(Station Wagon)
● 31	0899 72 843A	Mould "C" (R), Sash	1	
●	0899 73 843A	Mould "C" (L), Sash	1	

REAR SIDE DOOR
(LOCK, SEDAN & STATION WAGON)

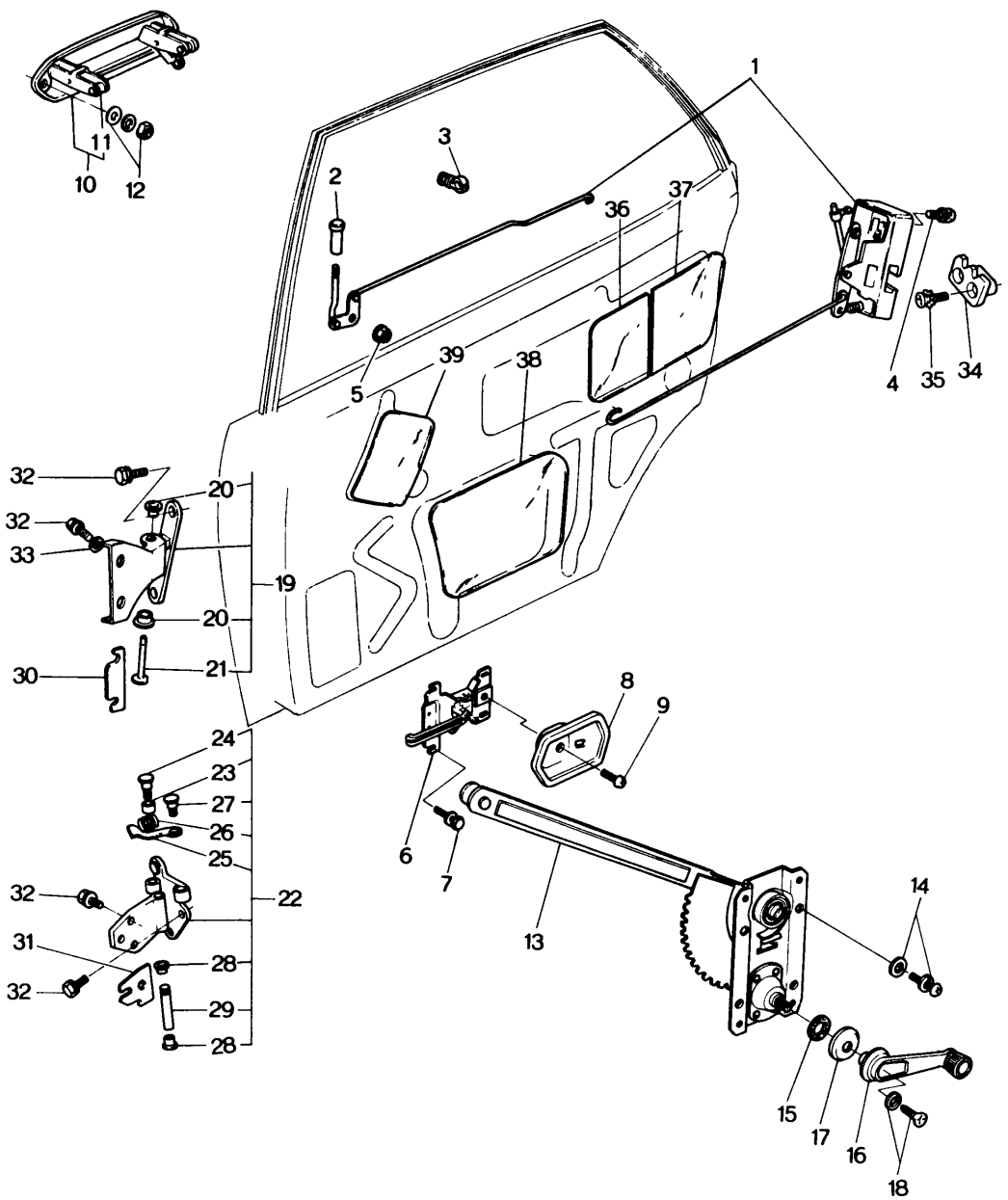

REAR SIDE DOOR
(LOCK, SEDAN & STATION WAGON)

72 73

No.	Part Number	Description	Q'ty	Remarks
1	1524 72 310F	Lock (R), Door	1	
	1524 73 310F	Lock (L), Door	1	
2	0259 58 691	Knob	2	
3	0305 58 309	Holder, Rod	4	
4	908324 6 30	Screw Set, Door Lock	6	
5	99940 0600	Nut, Door Lock	2	
6	0866 58 321B	Handle, Inner	2	
7	908067 5 10	Bolt Set, Inner Handle	6	
●	99796 0508	Bolt, Inner Handle	1	Car No. 160623 73/10～×
8	0866 58 303B	Cover (R)	1	
	0866 59 303B	Cover (L)	1	
9	99832 0408B	Screw, Cover	2	
10	0866 72 410A	Handle (R), Outer Side	1	
	0866 73 410A	Handle (L), Outer Side	2	
11	0305 58 411A	Bush, Outer Handle	2	
			4	
12	99906 0500	Nut, Outer Handle	4	
	99951 0618	Washer, Plain	4	
	99971 0500	Washer, Spring	4	

REAR SIDE DOOR
(LOCK, SEDAN & STATION WAGON)

No.	Part Number	Description	Q'ty	Remarks
13	0866 72 560	Regulator (R), Window	1	
	0866 73 560	Regulator (L), Window	1	
14	908066 6 12	Bolt Set, Window Regulator	8	
●	99796 0610	Bolt, Window Regulator	8	Car No. 160623 73/10~×
15	1011 58 552	Gasket, Window Regulator	2	
16	0824 58 370B	Handle, Regulator	2	
●	0223 58 370D	Handle, Regulator	2	Car No. 160623 73/10~×
17	0223 58 375A	Escutcheon	2	
18	908062 5 16	Bolt Set, Regulator Handle	2	
19	0866 72 210B	Hinge "A" (R)	1	
	0866 73 210B	Hinge "A" (L)	1	
20	0223 58 721	Bush	4	
21	0866 72 212A	Pin, Hinge	2	
22	0866 72 240	Hinge "B" (R)	1	
●	0866 72 240B	Hinge "B" (R)	1	72/11~○
	0866 73 240	Hinge "B" (L)	1	
●	0866 73 240B	Hinge "B" (L)	1	72/11~○
23	0866 58 281A	Roller	2	

REAR SIDE DOOR
(LOCK, SEDAN & STATION WAGON)

72 73

No.	Part Number	Description	Q'ty	Remarks
●	0866 58 281B	Roller	2	72/11~○
24	0866 58 282	Pin "A"	2	
●	0866 58 282A	Pin "A"	2	72/12~○
25	0866 58 291A	Lever, Check	2	
26	0866 72 292	Spring, Check	2	
27	0866 58 293	Pin "B"	2	
28	0223 58 721	Bush	4	
29	0187 58 731	Pin, Hinge	2	
30	0866 72 201	Shim, Hinge "A" - Selective use	—	
31	1011 58 231	Shim, Hinge "B" - Selective use	—	
32	907832 8 28	Bolt, Hinge	20	
33	99951 0822	Washer, Plain - Hinge "A"	4	
34	0866 58 361B	Rack (R)	1	
●	0866 58 361C	Rack (R)	1	Car No. 170670 73/5~△
	0866 59 361B	Rack (L)	1	
●	0866 59 361C	Rack (L)	1	Car No. 170670 73/5~△
35	1540 58 371	Screw, Rack	4	
	99975 0600	Washer, Toothed	4	
● 36	0866 72 862A	Screen "B" (R)	1	☆

REAR SIDE DOOR
(LOCK, SEDAN & STATION WAGON)

No.	Part Number	Description	Q'ty	Remarks	
●	0866 73 862A	Screen "B" (L)	1		☆
● 37	0866 72 863	Screen "C" (R)	1		☆
●	0866 73 863	Screen "C" (L)	1		☆
● 38	0305 72 864	Screen "D"	2		☆
● 39	0223 72 921A	Screen	2		☆

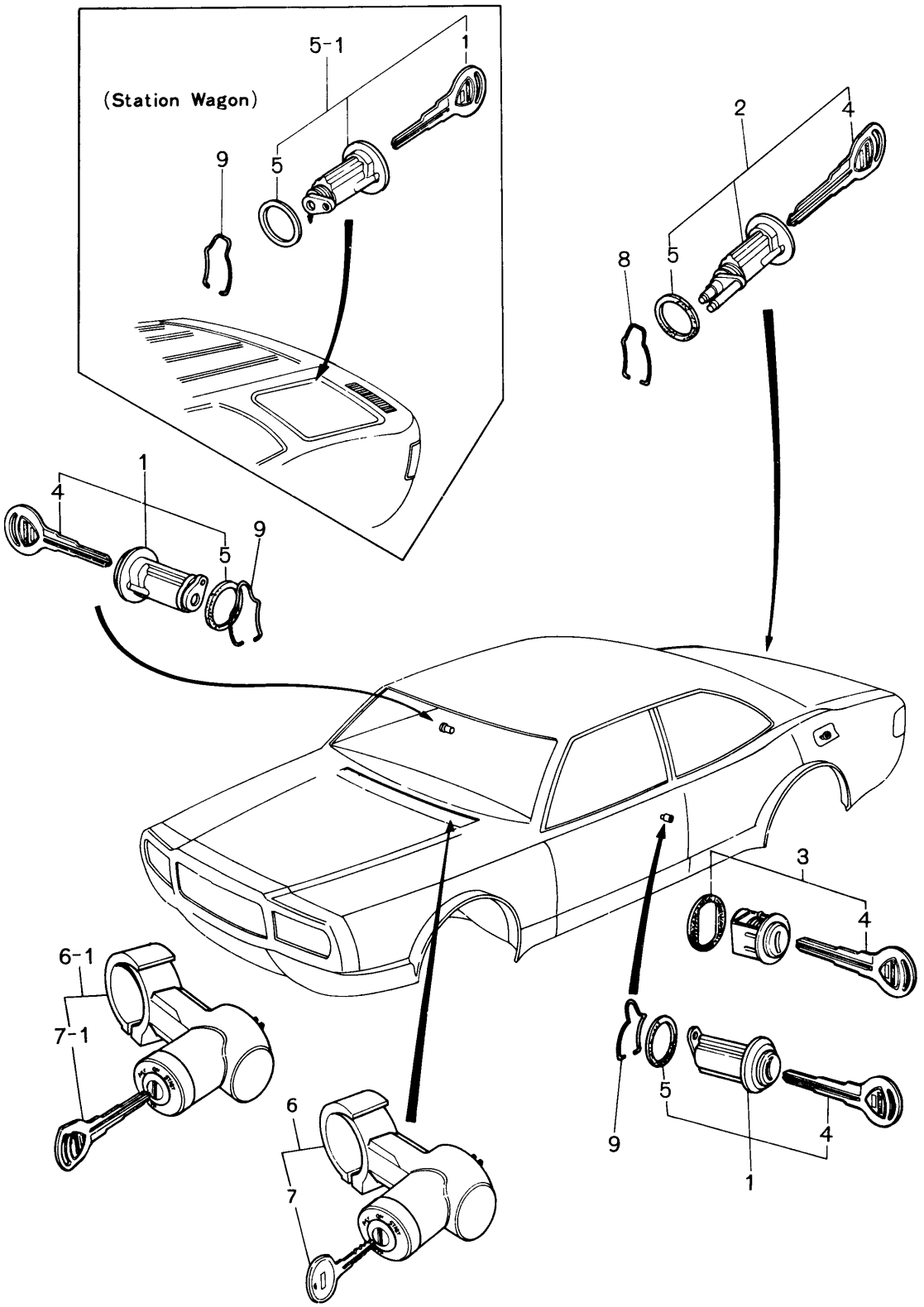
(Station Wagon)
5-1
1
9
5
2
4
8
5
1
4
5
9
3
4
6-1
7-1
6
7
5
9
4
1

No.	Part Number	Description	Q'ty	Remarks
●	1562 09 010A	Key Set	1	(L.H.D.)
●	1568 09 010A	Key Set, For France	1	(L.H.D.)
●	1554 09 010A	Key Set (R.H.D.)	1	
●	1569 09 010	Key Set (Station Wagon)	1	
1	0839 74 910A	Key Sub Set, Door	2	
	2080 74 910A	Key Sub Set, Door-For France	2	
● 2	0866 75 930	Key Sub Set, Trunk Lid	1	(Sedan & Coupe)
●	1568 75 930	Key Sub Set, Trunk Lid-For France	1	(Sedan & Coupe)
3	0866 75 940	Key Sub Set, Filler Lid	1	
	1568 75 940	Key Sub Set, Filler Lid-For France	1	
4	0839 58 492A	Key, Primary	2	
	2080 58 492	Key, Primary-For France	2	
● 5	0223 58 962	Gasket, Door (Sedan & Coupe)	2	
●	0223 58 962	Gasket, Door (Station Wagon)	1	
● 5-1	0899 75 960	Key Sub Set, Back Door (Station Wagon)	1	
	0839 74 158	Blank Key, Primary Key No. 2500~2999	—	
	0839 74 168	Blank Key, Primary Key No. 3000~3499	—	
	2080 74 158	Blank Key, Primary Key No. 2500~2999	—	For France
	2080 74 168	Blank Key, Primary Key No. 3000~3499	—	For France

No.	Part Number	Description	Q'ty	Remarks
● 6	2370 60 430A	Lock, Steering	1 (L.H.D.)	
●	1690 60 430	Lock, Steering-For Germany & Sweden	1	
● 6-1	1554 75 990	Lock, Steering (R.H.D.)	1	
● 7	2835 60 439	Key (L.H.D.)	2	
●	1690 60 439	Key-For Germany & Sweden (L.H.D.)	2	
● 7-1	0839 58 492A	Key (R.H.D.)	1	
	2280 75 641A	Blank Key, Steering Lock	—	
	1690 76 641	Blank Key, Steering Lock-For Germany & Sweden	—	
8	0305 52 802	Retainer, Trunk Lid	1	
9	0223 58 961	Fastener, Door Key Cylinder	2	

TOYO KOGYO CO.,LTD.

Printed in Japan