RX-3
SEDAN, COUPE &
ROTARY WAGON
PARTS CATALOG

© 1973 by

TOYO KOGYO CO., LTD.

ROTARY ENGINE: LICENSED BY NSU/WANKEL

JULY, 1973

HOW TO USE THIS PARTS CATALOGUE

This Parts Catalogue is compiled for the following models
Model : RX-3 Sedan, Coupe and Rotary Wagon 1974 Model
● RX-3 Sedan, Coupe and Rotary Wagon 1975 Model

Model No.	Model / Type	Description
1881	SI24A	RX-3 Sedan, U S.A Spec. 1974 Model Manuf. from Sept., 1973
1882	SI24A-CA	RX-3 Coupe', U S.A. Spec 1974 Model Manuf from Sept., 1973
1883	SI24A-T	RX-3 Sedan with Automatic T/mission, U S A. Spec. 1974 Model Manuf. from Sept , 1973
1884	SI24A-CAT	RX-3 Coupe with Automatic T/mission, U.S.A Spec. 1974 Model Manuf from Sept., 1973
1885	SI24A	RX-3 Sedan, Canadian Spec. 1974 Model Manuf from Sept., 1973
1886	SI24A-CA	RX-3 Coupe', Canadian Spec. 1974 Model Manuf. from Sept., 1973
1887	SI24A-T	RX-3 Sedan with Automatic T/mission, Canadian Spec. 1974 Model Manuf. from Sept., 1973
1888	SI24A-CAT	RX-3 Coupe' with Automatic T/mission, Canadian Spec. 1974 Model Manuf from Sept., 1973
1889	SI24W	RX-3 Rotary Wagon, U S.A. Spec. 1974 Model Manuf from Sept.,1973
1890	SI24W-T	RX-3 Rotary Wagon with Automatic T/mission, U.S.A. Spec. 1974 Model Manuf. from Sept., 1973
1891	SI24W	RX-3 Rotary Wagon, Canadian Spec. 1974 Model Manuf from Sept., 1973
1892	SI24W-T	RX-3 Rotary Wagon with Automatic T/mission, Canadian Spec. 1974 Model Manuf from Sept., 1973
● 3625	SI24A	Mazda RX-3 Sedan, U.S.A. Spec. 1975 Model Manuf. from Nov., 1974
● 3626	SI24A-T	Mazda RX-3 Sedan Automatic, U.S.A. Spec. 1975 Model Manuf. from Nov., 1974
● 3627	SI24A-CA	Mazda RX-3 Coupe, U.S.A. Spec. 1975 Model Manuf from Nov., 1974
● 3628	SI24A-CAT	Mazda RX-3 Coupe Automatic, U.S.A. Spec. 1975 Model Manuf. from Nov.,1974
● 3629	SI24W	Mazda RX-3 Rotary Wagon, U.S.A. Spec. 1975 Model Manuf. from Nov.,1974
● 3630	SI24W-T	Mazda RX-3 Rotary Wagon Automatic, U.S.A. Spec. 1975 Model Manuf. from Nov.,1974
● 3631	SI24A	Mazda RX-3 Sedan, Canadian Spec. 1975 Model Manuf. from Jan.,1975
● 3632	SI24A-T	Mazda RX-3 Sedan Automatic, Canadian Spec. 1975 Model Manuf. from Jan., 1975
● 3633	SI24A-CA	Mazda RX-3 Coupe, Canadian Spec. 1975 Model Manuf. from Jan., 1975
● 3634	SI24A-CAT	Mazda RX-3 Coupe Automatic, Canadian Spec. 1975 Model Manuf. from Jan., 1975
● 3635	SI24W	Mazda RX-3 Rotary Wagon, Canadian Spec. 1975 Model Manuf. from Jan., 1975
● 3636	SI24W-T	Mazda RX-3 Rotary Wagon Automatic, Canadian Spec. 1975 Model Manuf. from Jan., 1975

(Ⅰ) Layout of Parts Catalog

The spares relevent to each assembly are printed inset to the right, and parts that constitute a sub-assembly are indicated by illustrations and classified according to each assembly. Therefore, if a spare part is not printed inset to the right, this shows that the part does not constitute a part of the assembly.
Moreover, to aid identification of spares, "exploded" illustrations are incorporated in this catalog.

(Ⅱ) How to locate parts

1) When part number is not known.

A. Refer to index of groups and locate the group to which the part belongs.

⇩

B. Open to group illustration page and locate part wanted.

⇩

C. See the number given for the part in the illustration and find corresponding number in the parts composition lists.

D. Then, you will find the name and the part number of the part on the right side of this number.

2) When part number is known but shape and name of part is unknown.

A. See index given at back of the parts catalog and find pages where illustration, part number and figure number is listed.

⇩

B. Open to page indicated and locate the part number in the parts composition list, and after this locate the part in the illustration by referring to figure number given at front of the part number.

⇩

C. The corresponding figure number in the illustration is for the part required.

3) Moreover as an alphabetical index is incorporated after the index of groups, utilize for locating principal parts.

(Ⅲ) On Groups

1) The figure enclosed by a triangle at the top of each page (Example 

) indicates group number.

2) Group numbers are determined according to structure and function of parts.

3) The group number given in the index of groups coincide with the numerals (Example 

) of the illustration and parts composition pages.

(Ⅳ) Explanation of Parts Composition Lists

1) Indication of composition of assembly.

(a) Only the description of the parts that comprise the assembly and are available as spares are inset to the right and given after the assembly part number and description. In this instance a wide space is taken in between for other spare parts.

(b) For parts of sub-assemblies that are included in an assembly and are available as spares, designation is made in the "Remarks" column, (Example: Fig. No. 8 included).

(c) When a parts description is not inset to the right, this signifies that the part is not included in any assembly or sub-assembly.

Example:

	No.	Part Number	Description	Q'ty	Remarks
(a)	1	1011 18 300	Alternator	1	
(b)	2	1011 24 501	Stator	1	
	⋮	⋮	⋮	⋮	
(b)	7	0866 24 540	Rotor	1	Fig No. 8 included
(c)	8	0820 24 503	Bearing, Ball	1	
(d)	23	1881 18 361	Strap, Alternator	1	

(a) ····· Includes (b) to (c)
(b) ····· Includes (c)
(d) ····· Is not included in any ass'y nor sub ass'y

2) On parts number

A. Exclusive parts

Example:

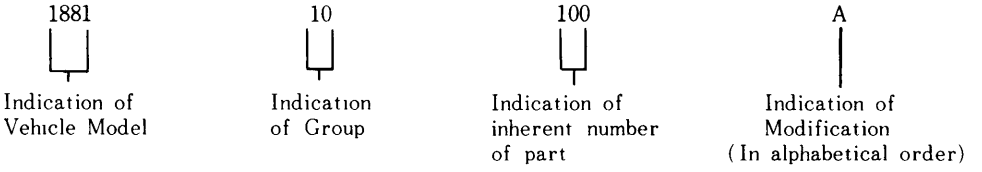

B. Standardized parts (General parts)

Example:

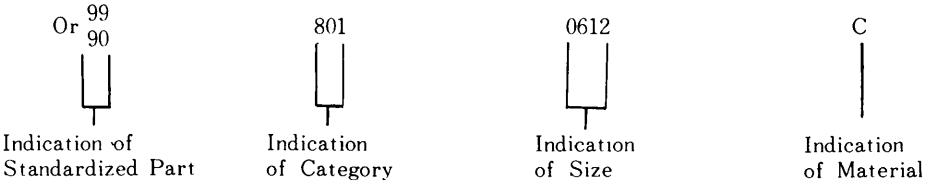

C. Standardized parts (Tires, Tubes, Disc Wheels, etc.)

Example:

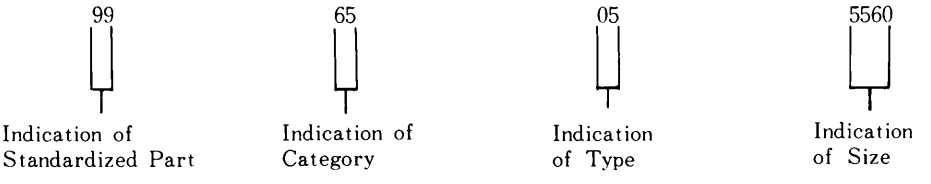

3) On Quantity

The quantity given in the parts composition list shows number of parts used per vehicle and does not indicate selling unit.

4) Other Precautions

☆ Mark····· Parts marked thus are not available as replacement parts, therefore, when these parts are required, order in the form of assemblies (or sets) including these parts or in the form of parts interchangeable with these parts.

5) Abbreviations

(R)	Right	EX.	Exhaust
(L)	Left	IN.	Inlet
(C)	Center	T / mission	Transmission
(Frt.)	Front	©	Parts with Different Colours (Indicate Colour when Ordering)
(Rr.)	Rear	10	Indication of Group
Cpt.	Complete		
Ass'y	Assembly		
Std.	Standard	Manual	Manual Transmission
O.S.	Over Size	Automatic	Automatic Transmission
U.S.	Under Size		
BEIG	Beige	IVRY	Ivory
BLK	Black	L.BLU	Light Blue
BLU	Blue	L.GRN	Light Green
BLU.M	Blue Metallic	L.GRY	Light Gray
BLU / GRY	Bluish Gray	MRN	Maroon
BRN	Brown	PRPL / BLU	Purplish Blue
D.BLU	Dark Blue	PRPL / WHT	Purplish White
D.BRN	Dark Brown	RED	Red
D.GRN	Dark Green	SILV.M	Silver Metallic
D.GRY	Dark Gray	WHT	White
D.YLW	Dark Yellow	YLW	Yellow
GLD.M	Gold Metallic	YLW / D.GRN	Yellowish Dark Green
GRN	Green	YLW / GRN	Yellowish Green
GRN.M	Green Metallic	YLW / WHT	Yellowish White
GRY	Gray	DUL	Dull Finish
GRY / GRN	Grayish Green	S.DUL	Semi Dull Finish
GRY / YLW	Grayish Yellow		

(V) Precautions to be taken when placing orders for parts

1) Always specify part numbers, names of parts and quantity required.

2) Be sure to list the parts in order of part number, when filling in order sheet.

3) As processing of orders received by us is done by electronic computers, importance is attached to the part number. Therefore, in case the part number and name of part do not coincide with each other, the part will be sent to you in accordance with the part number.

4) Distinction of colour of spare parts by code number is done with figures number 11 and 12 of the parts number. Therefore, add to the end of the applying part number and order.

Example:	Part Number	Colour Code No.	Description
	0866 69 543A (10 Figures)	03 (2 Figures)	
	0866 69 543A (10 Figures)	12 (2 Figures)	

(VI) Replacement pages and purport

Page replacements are supplied every six months as a rule, listing parts modified or newly added and month and year date will be printed in lower corner of each replacement page. Therefore, it is essential that care be taken to check on these dates to confirm if the parts listed conform to the car imported, before ordering.

1) Explanation on designation given in remarks column.

a. Car No. ····· Chassis no. of car that modification becomes effective from. There are two different car numbers for the RX-3 Sedan, Coupe and the RX-3 Rotary Wagon which are not given in the remarks column of the parts catalog. Therefore, when you wish to know car number of parts that have been modified, please refer to the list of chassis number given below (check chassis number that applies) and order.

b. 73/7 ····· 73 designates year of modification and numerals 1~12 shows month of year.

c. ○ mark ····· Indicates that modified part and former part are interchangeable.

d. × mark ····· Indicates that modified part and old part are not interchangeable.

e. △ mark ····· Indicates that new part is interchangeable with old part but that old part is not interchangeable as a replacement for cars utilizing the new part.

2) ● mark ····· This dot at front of figure number of replacement pages show the parts that have been subject to modification.

List of chassis number

Model \ Year / Month	1973 SEP.	OCT.	NOV.	DEC.	1974 JAN.	FEB.	MAR.	APR.	MAY	JUN.	JUL.	AUG.
RX-3 Sedan & Coupe	154820	158196	162719	164070	165673	166888	169214	171719	173263	173659	—	—
RX-3 Rotary Wagon	149807	153199	156387	158480	159642	160488	161716	163045	165138	165451	—	—

Note: In the past, only the number of the chassis number was being indicated, but numbering method has been changed to a new method.

Example:

'74 models	'75 models
S124A-12345	SS124A-12345

As shown above, there is an "S" engraved before the model code of the 1975 model to distinguish from the 1974 model so please discern by whether the "S" mark exists or not.

Model \ Month	NOV. 74/11	DEC. 74/12	JAN. 75/1	FEB. 75/2	MAR. 75/3	APR. 75/4	MAY 75/5	JUN. 75/6	JUL. 75/7	AUG. 75/8	SEP. 75/9	OCT. 75/10
RX-3 Sedan & Coupe	SS124A -166910											
RX-3 Rotary Wagon	SS124W -160674											

(Ⅶ) Colour Code Nos.

1) Whenever there is a part with only one colour, and there is an increase to two or more colours, colour codes will be established only for the colours added. Therefore, there will be parts with and without colour codes. (However, the colour will be described in the "Description" Column").
Therefore, care must be taken to attach the colour code after the part number if it is a colour code established afterwards, otherwise the part supplied will be the coloured part without the colour code.

Example :

1003 64 610	Tray (Black) ·····	Part without colour code
1003 64 610-05	Tray (Brown) ·····	Part with colour code

2) Location of © mark

As a precaution against dropping of the "Colour code No.", the "©" mark is located right after the part number.
Always attach the colour code when there is this "©" mark, moreover, be careful not to confuse it with the suffixes for part modifications.

Example :

Formerly ····· 1620 58 810A Trim (R), Door ©

Newly ····· 1620 58 810A © Trim (R), Door

Group No.	Description	Fig.	Page	Part No.
	Engine Parts			
● 10	Rotor Housing	1		2~7-1
10.11	Rotor	8		9~12
13	IN. Manifold & Thermal Reactor	13		14~15
● 13.23	Carburettor	16		17~17-3
13.23	Air Cleaner	18		19
13	Starting Assist System	20		21
13	Emission Control System	22		23~25-2
14	Oil Pump	26		27~31
● 14.15	Cooling System	32		33~37-3
16	Clutch (Manual)	38		39~40
17	Manual T/mission (Case)	41		42~43
17	Manual T/mission (Gear)	44		45~47
● 17	Manual T/mission (Change Controls)	48		49~51
● 18.24	Distributor	52		53~55~2
18.24	Alternator	56		57~58
18.24	Starter & Battery (Manual)	59		60~61
18.24	Starter & Battery (Automatic) (Used Up to 74/3)	62		63~65
18.24	Starter & Battery (Automatic) (Used From 74/4)	65-A		65-B~65-D
19	Automatic T/mission (Converter, Oil Pump & Piping) (Used Up to 74/3)	66		67~69
19	Automatic T/mission (Converter, Oil Pump & Piping) (Used From 74/4)	69-A		69-B~69-D
19	Automatic T/mission (Case & Main Control) (Used Up to 74/3)	70		71~74
19	Automatic T/mission (Case & Main Control) (Used From 74/4)	74-A		74-B~74-E
19	Automatic T/mission (Clutch & Planetary Gear)	75		76~80
19	Automatic T/mission (Low, Reverse & Governer)	81		82~84

INDEX.

Group No.	Description	Fig.	Page	Part No.
19	Automatic T/mission (Manual Linkage) (Used up to 74/3)		85	86~87
19	Automatic T/mission (Manual Linkage) (Used From 74/4)		87-A	87-B~87-C

Chassis Parts

	Group No.	Description	Fig.	Page	Part No.
	25	Propeller Shaft		88	89
	26	Rear Axle		90	91~92
	26	Rear Brake		93	94~97
	27	Driving		98	99~101
	28	Rear Suspension (Sedan & Coupe)		102	103~105
	28	Rear Suspension (Station Wagon)		106	107~108
	32	Steering System (Wheel & Gear)		109	110~114
	32	Steering System (Rod)		115	116~117
●	33	Front Axle		118	119~121-1
●	34	Front Suspension		122	123~125-1
	39	Engine & T/mission Bracket		126	127
●	40	EX. Pipe & Silencer		128	129~130-2
●	42	Fuel Tank (Sedan & Coupe)		131	132~134-2
●	42	Fuel Tank (Station Wagon)		135	136~138-1
	13.45	Fuel Piping (Used up to 74/4)		139	140~142
●	13.45	Fuel Piping (Used From 74/5)		142-A	142-B~142-F
	41	Accelerator Control System		143	144
	41.43	Clutch & Brake Pedal		145	146~148
	41	Clutch Release & Master Cylinder (Manual)		149	150~151
	43.49	Tandem Master Cylinder & Vacuum Power Assist		152	153~155
	44	Parking Brake System		156	157~158

Group No.	Description	Fig.	Page	Part No.
43.45	Piping (Clutch & Brake)	159		160~162
46	Change Controls (Automatic)	163		164~165

Body Parts

	Group No.	Description	Fig.	Page	Part No.
●	50	Bumper & Grille (1974 Model)	166		167~170-2
●	50	Bumper & Grille (1975 Model)	170-A		170-B~170-F
	52	Bonnet & Trunk Lid	171		172~174
●	51~70	Body Panels (Front)	175		176~178-1
	53.54	Body Panels (Side, Coupe)	179		180~181
●	53.54	Body Panels (Side, Sedan)	182		183~184-1
	53.54	Body Panels (Side, Station Wagon)	185		186~188
●	56	Body Panels (Floor)	189		190~192-1
	56	Body Panels (Floor Attachment)	193		194
	55.60	Dashboard	195		196~201
●	55.75	Meter	202		203~204-2
	57	Seat	205		206~210
●	57	Rear Seat (Station Wagon) (Used From 75/1~×) (Canada)	210-A		210-B~210-C
	58.59	Front Side Door (Glass)	211		212~215
	58.59	Front Side Door (Lock)	216		217~220
	61	Car Heater	221		222~224
	61.76	Heater Unit & Blower	225		226~227
	61	Car Cooler	228		229~235
●	61.76	Compressor (Car Cooler)	235-A		235-B~235-C
	61.76	Cooler Unit & Control Panel	236		237
●	62.63	Back Door (Station Wagon)	238		239~242-1

INDEX.

Group No.	Description	Fig.	Page	Part No.
● 66.89	Lamps (Front)	243	244~245-1	
66.89	Lamps (Rear, Sedan & Coupe)	246	247~248	
66.89	Lamps (Rear, Station Wagon)	249	250~252	
● 66.67	Electric Equipment (Body)	253	254~260-4	
66.87	Windshield Wiper	261	262~264	
66.87	Screen Washer	265	266	
66	Auto Radio & Stereo	267	268~269	
68	Crush Pad, Glove Pocket & Console Box	270	271~275	
68	Service Tools	276	277~278	
69~71	Attachment	279	280~284	
69	Top Ceiling & Trim (Sedan & Coupe)	285	286~288	
● 69	Top Ceiling & Trim (Station Wagon)	289	290~292-1	
● 69	Floor Mat & Trim	293	294~296-2	
70.71	Ventilator	297	298~299	
● 70.71	Window Glass & Moulding (Sedan & Coupe)	300	301~304-3	
● 70.71	Window Glass & Moulding (Station Wagon)	305	306~308-2	
72.73	Rear Side Window (Coupe)	309	310~313	
● 72.73	Rear Side Door (Glass, Sedan & Station Wagon)	314	315~318-1	
72.73	Rear Side Door (Lock, Sedan & Station Wagon)	319	320~322	
09	Key Set	323	324	
	INDEX.		325~376	

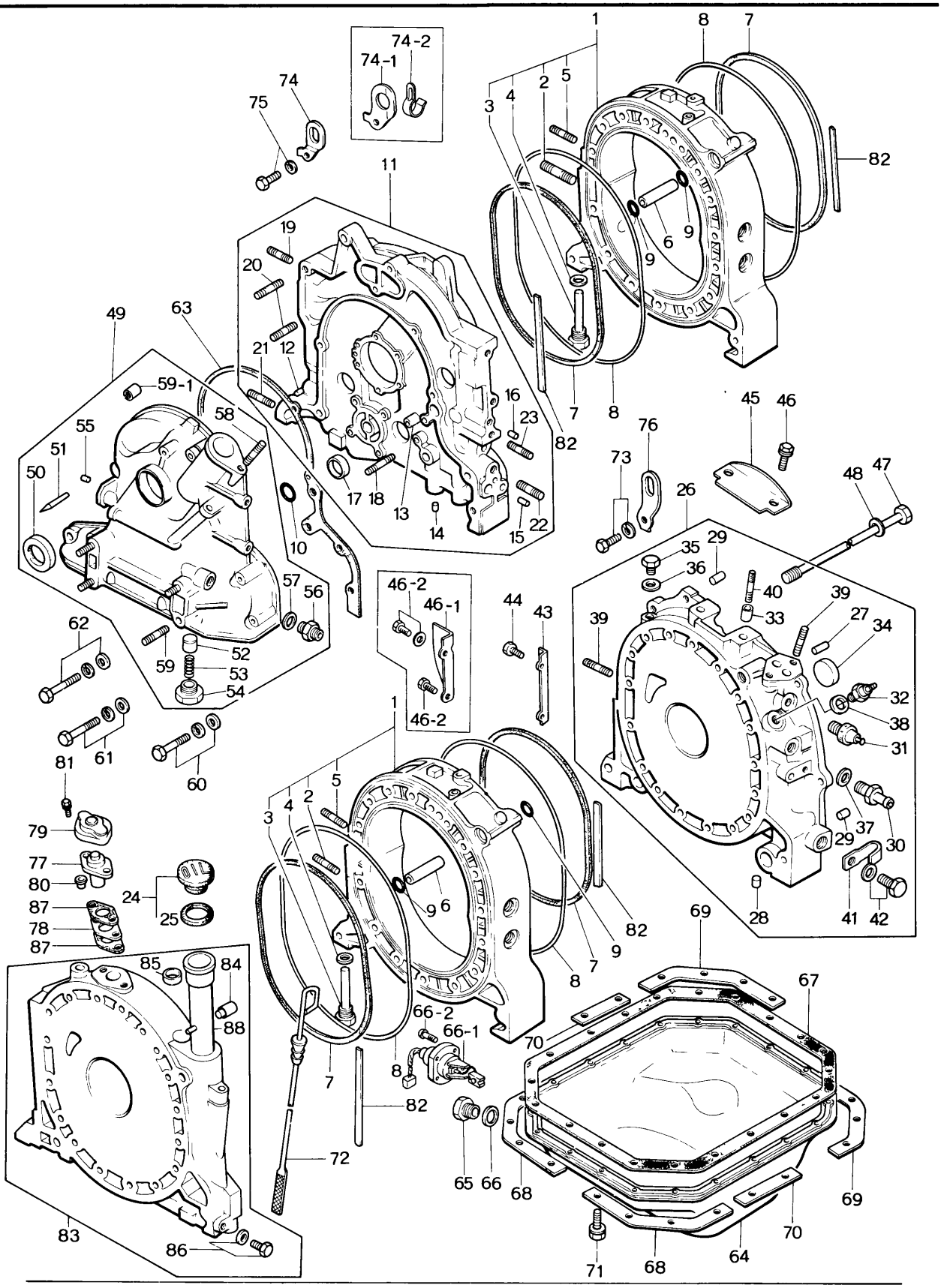
1
8
7
74-2
74-1
74
75
2
5
3
4
82
11
19
20
6
9
9
49
63
21
12
7
8
59-1
58
16
23
82
45
46
55
51
50
17
18
13
14
15
22
76
73
26
48
47
10
35
29
36
40
39
27
34
57
56
46-2
46-1
44
43
39
33
62
52
59
53
54
32
38
31
61
60
46-2
1
81
5
2
3
4
37
29
30
79
77
80
87
78
87
24
25
9
6
82
9
7
8
28
41
42
69
67
85
84
88
66-2
66-1
70
8
7
82
72
65
66
68
69
83
86
71
68
64
70

No.	Part Number	Description	Q'ty	Remarks
1	1881 10 100A	Housing, Rotor	2	
●	3625 10 100C	Housing, Rotor (Canada)	2	75/1~×
2	0839 10 105	Stud	4	
3	1617 10 120	Nozzle, Air	4	
4	99564 1200	Gasket	4	
5	99851 0822A	Stud	2	
6	0839 10 111B	Dowel, Tubular	4	
7	1757 10 171	Ring, Square	4	
	1757 10 171A	Ring, Square	4	73/10~△
8	0813 10 172	Ring, "O" - Outer	4	
●	1757 10 172	Ring, "O" - Outer	4	74/3~○
9	0813 10 173	Ring, "O" - Tubular Dowel	4	
10	0813 10 174	Ring, "O" - Front Cover	1	
11	1757 10 200B	Housing, Front	1	
	1757 10 200C	Housing, Front	1	73/9~△
12	0839 10 203	Pin, Dowel	1	
13	2329 10 204	Dowel, Tubular	2	
14	0839 10 205	Plug, Blind	3	
15	1757 10 206	Plug, Blind	1	
	1757 10 206A	Plug, Blind	1	73/11~△
16	1757 10 207	Plug, Blind	1	
17	99306 3000	Plug, Blind Water	3	
18	99852 0660	Stud	2	

10 ROTOR HOUSING

No.	Part Number	Description	Q'ty	Remarks
19	99852 0822A	Stud, IN. Manifold	2	
20	~~99852 0880A~~	~~Stud, Water Pump~~	~~4~~	
	1757 10 208	Stud, Water Pump	4	From Car No. 1
21	99852 1016	Stud	1	
22	99859 1220A	Stud, Mounting	1	
23	99859 1225A	Stud	1	
24	0324 10 250	Cap, Oil Filler	1	
25	0324 10 252	Gasket	1	
26	1881 10 300A	Housing, Rear (Manual)	1	
●	3625 10 300	Housing, Rear (Manual)	1	74/11～×
	1883 10 300A	Housing, Rear (Automatic)	1	
	1881 10 300A	Housing, Rear (Automatic)	1	74/3～×
●	3625 10 300	Housing, Rear (Automatic)	1	74/11～×
27	0820 10 203	Pin, Knock-Gear	1	
28	0839 10 205	Plug, Blind	1	
29	1757 10 309	Pin, Tubular	2	
30	0866 10 320A	Joint, Hose	1	
31	0866 18 501A	Switch, Oil Pressure	1	
●	99503 1000	Plug	1	74/11～×
32	1757 18 510	Gauge Unit, Heat	1	
↘	1757 18 510A	Gauge Unit, Heat	1	74/3～△
33	99234 1208	Pin, Tubular-Starter (Automatic)	2	74/3～Discarded
34	99306 3000	Plug, Blind-Water	5	
● 35	99511 1200	Plug	1	74/4～Discarded

	No.	Part Number	Description	Q'ty	Remarks
●	36	99562 1200	Gasket, Plug	1	74/6～Discarded
	37	99562 1600	Gasket, Hose Joint	1	
	38	99564 0800	Gasket, Heat Gauge Unit	1	
	39	99852 0822A	Stud, IN. Manifold & Oil Filter	4	
●	40	99852 0830A	Stud, Starter (Automatic)	2	74/3～Discarded
	41	99276 1210	Clip	1	
	42	99811 1010	Bolt, Clip	1	
		99971 1000	Washer, Spring	1	
	43	1757 10 305	Cover, Dust	1	
	44	99796 0610	Bolt, Dust Cover (Manual)	2	
	45	1757 10 351	Cover, Dust	1	
	46	99796 0816	Bolt, Dust Cover	2	
●	46-1	1029 10 305	Cover, Dust	1	
●	46-2	99796 0610	Bolt, Dust Cover	1	
●		99811 1010	Bolt, Dust Cover (Automatic)	1	74/4～Added Anew
●		99971 1000	Washer, Spring	1	
	47	1015 10 451	Bolt, Tension	18	
		1015 10 452	Bolt, Tension	1	
	48	0839 10 455	Washer, Seal	19	
	49	~~1757 10 600~~	~~Cover, Front~~	~~1~~	
		1757 10 600B	Cover, Front	1	From Car No. 1
	50	0820 10 605	Oil Seal	1	
	51	0820 10 631B	Pin, Top Indicator	1	

No.	Part Number	Description	Q'ty	Remarks
52	0839 14 115	Plunger, Press	1	
53	0839 14 273A	Spring, Press Plunger	1	
54	0839 14 274	Plug, Press Plunger	1	
55	99307 0600	Plug, Blind	2	
56	99384 1200F	Joint, Union	1	
	99384 1200	Joint, Union	1	73/11~○
57	99562 1600	Gasket, Union Joint	1	
58	99851 0612A	Stud	1	
59	99855 1020	Stud	4	
59-1	1757 10 609	Pin, Spring	1	From Car No. 1
60	99801 0840	Bolt, Front Cover	3	
	99952 0800	Washer, Plain	3	
	99971 0800	Washer, Spring	3	
61	99801 0865	Bolt, Front Cover	2	
	99952 0800	Washer, Plain	2	
	99971 0800	Washer, Spring	2	
62	99801 0875	Bolt, Front Cover	1	
	99952 0800	Washer, Plain	1	
	99971 0800	Washer, Spring	1	
63	1757 10 841	Gasket, Front Cover	1	

	No.	Part Number	Description	Q'ty	Remarks
	64	~~1821 10 700 A~~	~~Pan, Oil~~	~~1~~	
		1881 10 700 A	Pan, Oil	1	From Car No. 1
●		3625 10 700 A	Pan, Oil	1	74/11~×
	65	99511 1400	Plug, Drain	1	
	66	99562 1400	Gasket	1	
●	66-1	3565 10 730 A	Senser, Oil Level	1	74/11~Added Anew
●	66-2	99830 0610	Bolt	3	
	67	0839 10 711	Gasket, Oil Pan	1	
	68	0839 10 721	Plate, Seat	2	
	69	0839 10 722	Plate, Seat	2	
	70	0839 10 723	Plate, Seat	2	
	71	99806 0616	Bolt, Oil Pan	22	
		99971 0600	Washer, Spring	22	
	72	~~0838 10 830~~	~~Gauge, Oil Level~~	~~1~~	
		0866 10 830	Gauge, Oil Level	1	From Car No. 1
	73	1757 10 845	Bolt, Rear Housing+Engine Hanger	1	
		99971 1000	Washer, Spring	1	
	74	1757 10 881	Hanger, Engine	1	
●	74-1	3565 10 860 A	Hanger, Engine	1	75/1~△
●	74-2	3565 10 865 A	Clip	1	
	75	~~99801 0818~~	~~Bolt, Engine Hanger~~	~~1~~	
		99801 0816	Bolt, Engine Hanger	1	From Car No. 1
		99801 0820	Bolt, Engine Hanger	1	74/6~○
●		99801 0818	Bolt, Engine Hanger	1	74/10~○
		99971 0800	Washer, Spring	1	
	76	1757 10 862	Hanger, Engine	1	
●	77	1663 18 920	Senser, Thermo	1	74/11~Discarded
●	78	2329 18 922	Insulator, Thermo Senser	1	
●		1755 10 402	Plate, Blind	1	74/11~× 75/1~Discarded (Canada)
●	79	2329 18 923	Cover, Thermo Senser	1	74/11~Discarded

10 ROTOR HOUSING

	No.	Part Number	Description	Q'ty	Remarks
●	80	2329 18 924	Washer, Insulation	2	74/11~ Discarded
	81	99801 0825	Bolt, Thermo Senser	2	
●		99796 0816	Bolt, Blind Plate	2	74/11~ × 75/1~ Discarded (Canada)
●		99952 0800	Washer, Plain	2	74/11~ Discarded
●		99971 0800	Washer, Spring	2	
	82	0866 23 025	Protector, "O" Ring	4	
	83	~~1757 23 080~~	~~Housing, Intermediate~~	~~1~~	
		1757 23 070	Housing, Intermediate	1	From Car No. 1
●		1708 23 070	Housing, Intermediate	1	74/11~ ×
	84	2329 10 417	Joint, Pipe	1	
	85	99305 2800	Plug, Expansion	1	
	86	99510 1000	Plug	1	
		99564 1000	Gasket	1	
●	87	2329 18 921	Gasket	2 1	74/11~ Q'ty 75/1~ Discarded (Canada)
	88	1011 10 410	Pipe, Oil Filler	1	From Car No. 1
●		3565 10 410A	Pipe, Oil Filler (Canada)	1	75/1~ ×
		1757 23 040	"O" Ring Set	1	
		1881 23 200	Short Engine (Manual)	1	
●		3625 23 200	Short Engine (Manual)	1	74/11~ ×
		1883 23 200	Short Engine (Automatic)	1	
●		3626 23 200	Short Engine (Automatic)	1	74/11~ ×

No.	Part Number	Description	Q'ty	Remarks
	1757 99 100	Engine Gasket Set	1	
●	1757 99 100 A	Engine Gasket Set	1	74/1 ~ △
●	3625 99 100	Engine Gasket Set	1	74/11 ~ ×
	1757 10 641	Gasket	1	
	0839 10 711	Gasket	1	
	0823 13 221 A	Gasket	2	
	1757 13 724	Gasket	1	
	1757 15 105	Gasket	1	
	0820 15 106	Gasket	1	
	0820 11 341	"O" Ring	4	
	0820 11 343	"O" Ring	4	
	1881 13 111	Gasket	1	
	1757 13 889	Gasket	2	
●	1757 13 889 B	Gasket	2	74/11 ~ △
	1757 13 891	Gasket	1	
	1757 23 040	"O" Ring Set	1	
●	0866 23 025	Protector	4	74/1 ~ Added Anew
●	1757 13 221	Gasket	2	74/11 ~ Added Anew
●	3565 13 724	Gasket	1	

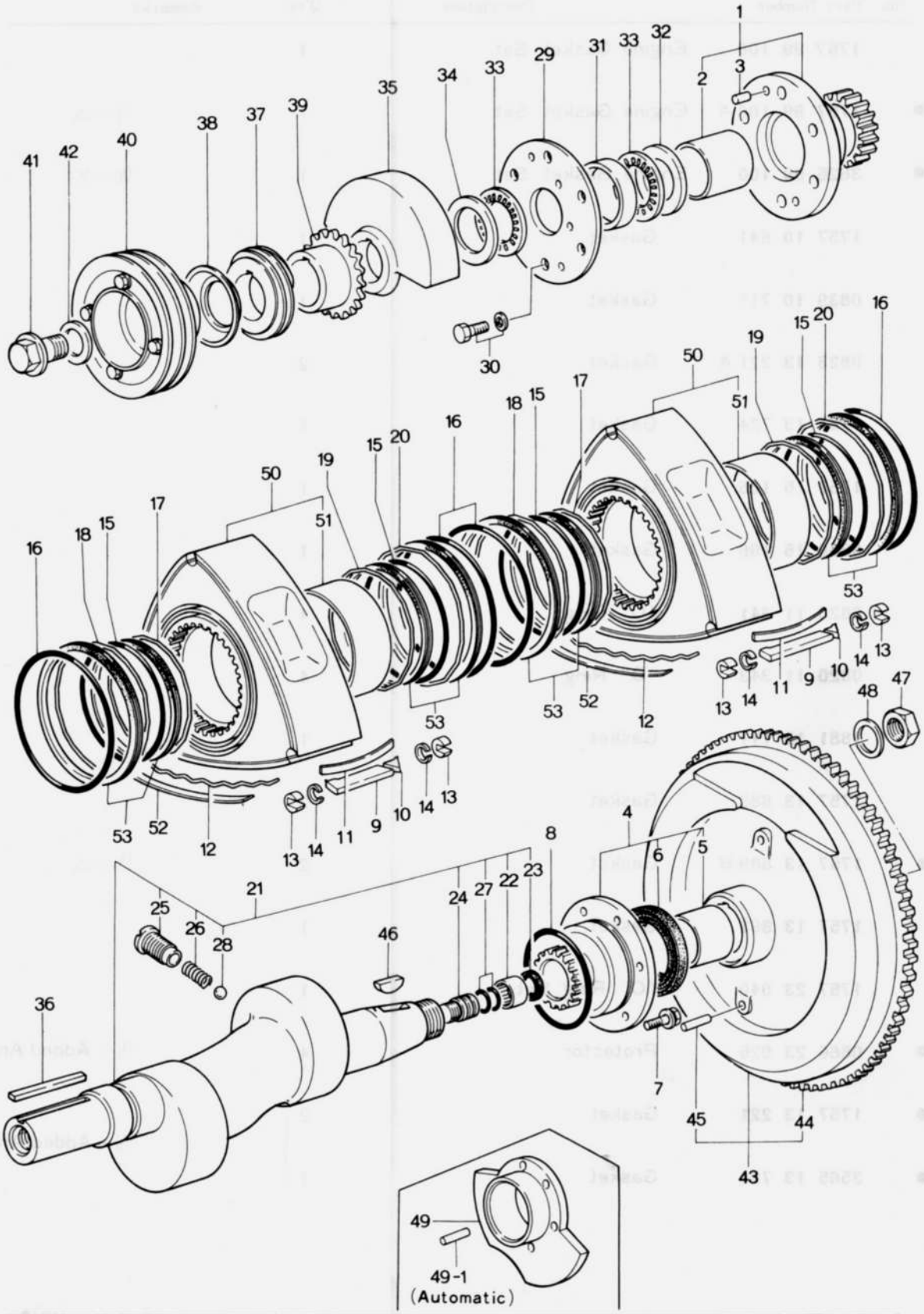
1
3
2
31
33
32
29
34
33
35
39
37
38
40
42
41
30
16
15
20
19
50
51
17
18
15
16
53
14
13
11
9
10
12
52
53
48
47
4
6
5
8
21
24
27
22
23
25
26
28
46
36
7
45
44
43
49
49-1
(Automatic)

No.	Part Number	Description	Q'ty	Remarks
1	0839 10 500B	Gear (Frt.), Stationary	1	
2	0820 10 502B	Bearing, Main	1	
3	0839 10 504	Pin, Knock	1	
4	1668 10 550	Gear (Rr.), Stationary	1	
5	0820 10 502B	Bearing, Main	1	
6	1668 10 556	Oil Seal	1	
7	99801 0818	Bolt, Stationary Gear	6	
	99971 0800	Washer, Spring	6	
8	0813 10 555	Ring, "O"-Stationary Gear	1	
9	1881 11 301A	Seal, Apex	6	
●	1052 11 301	Seal, Apex	6	74/11~×
10	1011 11 302C	Piece, Side	6	
11	1011 11 304A	Spring, Apex Seal	6	
12	0820 11 317	Spring, Side Seal	12	
13	1011 11 321	Seal, Corner (Std.)	12	
	1011 23 175	Seal, Corner (O.S. 0.2)	12	
	1011 23 176	Seal, Corner (O.S. 0.03)	12	
14	0839 11 323A	Spring, Corner Seal	12	
15	0820 11 341	Ring, "O"-Inner	4	

No.	Part Number	Description	Q'ty	Remarks
16	0820 11 343	Ring, "O"-Outer	4	
17	1011 11 351	Spring, Oil Seal Inner (Frt.)	2	
18	1011 11 353	Spring, Oil Seal Outer (Frt.)	2	
19	1011 11 361	Spring, Oil Seal Inner (Rr.)	2	
20	1011 11 363	Spring, Oil Seal Outer (Rr.)	2	
21	~~1881 11 400~~	~~Shaft, Eccentric (Manual)~~	~~1~~	
	1881 11 400A	Shaft, Eccentric (Manual)	1	From Car No. 1
	~~1883 11 400~~	~~Shaft, Eccentric (Automatic)~~	~~1~~	
	1883 11 400A	Shaft, Eccentric (Automatic)	1	From Car No. 1
22	1881 11 403	Bearing, Needle (Manual)	1	
23	1881 11 404	Oil Seal (Manual)	2	
24	0813 11 405	Plug, Blind	1	
25	0839 11 411A	Plug, Oil Jet	2	
26	0839 11 412	Spring	2	
27	99541 01101	Ring, "O"	2	
28	99611 2000	Ball, Steel	2	
29	1011 11 501	Plate	1	
30	99801 0822	Bolt, Plate & Stationary Gear	6	
	99971 0800	Washer, Spring	6	
31	0839 11 502	Spacer (L=8.02), Selective use	1	

No.	Part Number	Description	Q'ty	Remarks
	0839 11 506	Spacer (L=8.08)		
	0839 11 508	Spacer (L=8.04) } Selective use	1	
	0839 11 509	Spacer (L=8.00)		
32	1011 11 504	Plate, Thrust	1	
33	0813 11 505B	Bearing, Needle	2	
34	1011 11 507	Washer, Thrust	1	
35	1881 11 511	Weight, Balance	1	
36	1757 11 512	Key	1	
37	0839 11 531	Gear, Drive-Distributor	1	
38	1757 11 541	Plate, Oil Baffle	1	73/10~ Discarded
39	1757 11 551	Gear, Drive-Oil Pump	1	
40	~~1757 11 600~~	~~Pulley~~	~~1~~	
	1757 11 600B	Pulley	1	From Car No. 1
	1757 11 600C	Pulley	1	73/10~ ×
	1757 11 600D	Pulley	1	73/11~ ○
	1881 11 600	Pulley	1	74/3~ ×
●	3625 11 600	Pulley } (U.S.A.)	1	74/11~ ×
●	3625 11 600A	Pulley } (U.S.A.)	1	75/1~ ○
●	3631 11 600	Pulley } (Canada)	1	75/1~ ×
●	3631 11 600A	Pulley } (Canada)	1	75/1~ ○
41	0820 11 611B	Bolt, Pulley	1	
42	99564 2800	Gasket, Bolt	1	
43	1881 11 700	Wheel, Fly	1	
44	0866 11 702	Gear, Ring } (Manual)	1	
45	0820 11 703	Pin } (Manual)	1	
	99922 0610	Pin, Spring } (Manual)	1	73/11~ ×
46	0820 11 705	Key, Fly Wheel	1	

No.	Part Number	Description	Q'ty	Remarks
47	0810 11 711	Nut, Lock	1	
48	0820 11 712	Washer, Lock	1	
49	1883 11 750	Weight, Control (Automatic)	1	
49-1	99222 0810	Pin (Automatic)	1	From Car No. 1
50	1011 23 103B	Rotor "C"	2	
51	1011 11 111	Bearing, Rotor	2	
52	1011 23 151A	Seal, Side	12	
53	1011 23 180	Oil Seal Set	4	Order Under No. 0820 23 180C

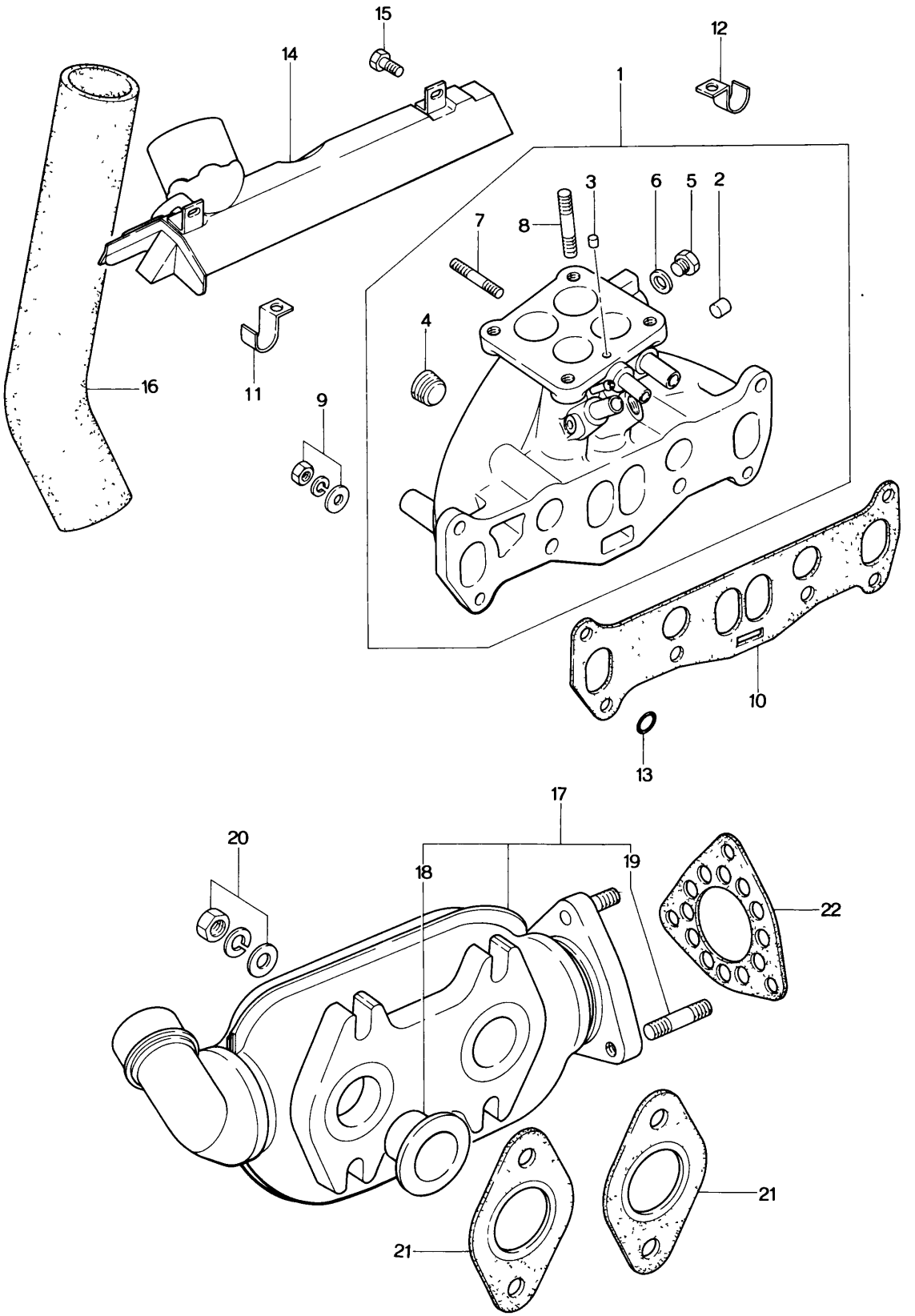
15
14
12
1
3
6
5
2
7
8
4
16
11
9
10
13
17
20
18
19
22
21
21

No.	Part Number	Description	Q'ty	Remarks	
1	1881 13 100	Manifold, IN.	1		
●	1881 13 100A	Manifold, IN.	1		74/5~△
●	1881 13 100B	Manifold, IN. (Canada)	1		74/12~△
●	3625 13 100C	Manifold, IN. (U.S.A.)	1		74/11~×
2	99307 0800	Plug, Blind	1		
● 3	99307 1200	Plug, Blind	1		74/11~Discarded
4	99503 3000	Plug	3		
5	99511 1000	Plug	1		
6	99564 1000	Gasket	1		
7	99851 0622A	Stud	3		
8	99851 0828A	Stud	4		
●	1881 13 102	Stud	4		74/5~△
●	1881 13 102A	Stud (Canada)	4		74/12~△
●	99851 0830A	Stud (U.S.A.)	4		74/11~×
9	99901 0800	Nut, IN. Manifold	6		
●	99940 0801	Nut, IN. Manifold	6		75/1~○
●	~~99953 0800~~	~~Washer, Plain~~	~~6~~		
●	99952 0800	Washer, Plain	6	From Car No. 1	75/1~Discarded (Canada)
●	99971 0800	Washer, Spring	6		
10	1881 13 111	Gasket, IN. Manifold	1		
11	~~1757 13 251~~	~~Clip, Valve Wiring~~	~~2~~		
	1757 13 251A	Clip, Valve Wiring	2	From Car No. 1	
12	~~1883 13 255~~	~~Clip, Air Hose (Automatic)~~	~~2~~		
	1883 13 255A	Clip, Air Hose (Automatic)	2	From Car No. 1	
			2		74/3~Discarded
13	99541 0240	Ring, "O"-IN. Manifold	2		
14	1881 13 330	Duct, Hot Air	1		
	1881 13 330A	Duct, Hot Air	1	From Car No. 1	
	1881 13 330B	Duct, Hot Air	1		74/2~×
●	3625 13 330	Duct, Hot Air	1		74/12~○
15	99796 0812	Bolt, Hot Air Duct	2		
16	0866 13 341B	Hose, Hot Air	1		
	1052 13 341A	Hose, Hot Air	1		73/11~△
16-1	1883 13 256	Clip	1	From Car No. 1	
			1		74/3~Discarded
16-2	99796 0508	Bolt, Flange	1	From Car No. 1	
			1		74/3~Discarded

IN. MANIFOLD & THERMAL REACTOR

No.	Part Number	Description	Q'ty	Remarks
17	1881 13 800	Reactor, Thermal	1	
●	3625 13 800A	Reactor, Thermal (Manual) (U.S.A.)	1	74/11~×
18	2090 13 742A	Insert	1	
19	2329 13 876	Stud	3	
20	2158 40 355	Nut, Thermal Reactor	4	
	0839 13 614	Washer, Plain	4	
	2329 13 882	Washer, Spring	4	
21	1757 13 889	Gasket, Thermal Reactor	2	
●	1757 13 889B	Gasket, Thermal Reactor	2	74/11~△
22	1757 13 891	Gasket, Thermal Reactor	1	
23	1757 13 371	Insulator, Heat	1	From Car No. 1
	1757 13 371A	Insulator, Heat	1	73/11~○
	1757 13 371B	Insulator, Heat	1	74/2~×
24	90796 0610	Bolt, Heat Insulator	2	From Car No. 1
	90786 0612	Bolt, Heat Insulator	2	74/2~×

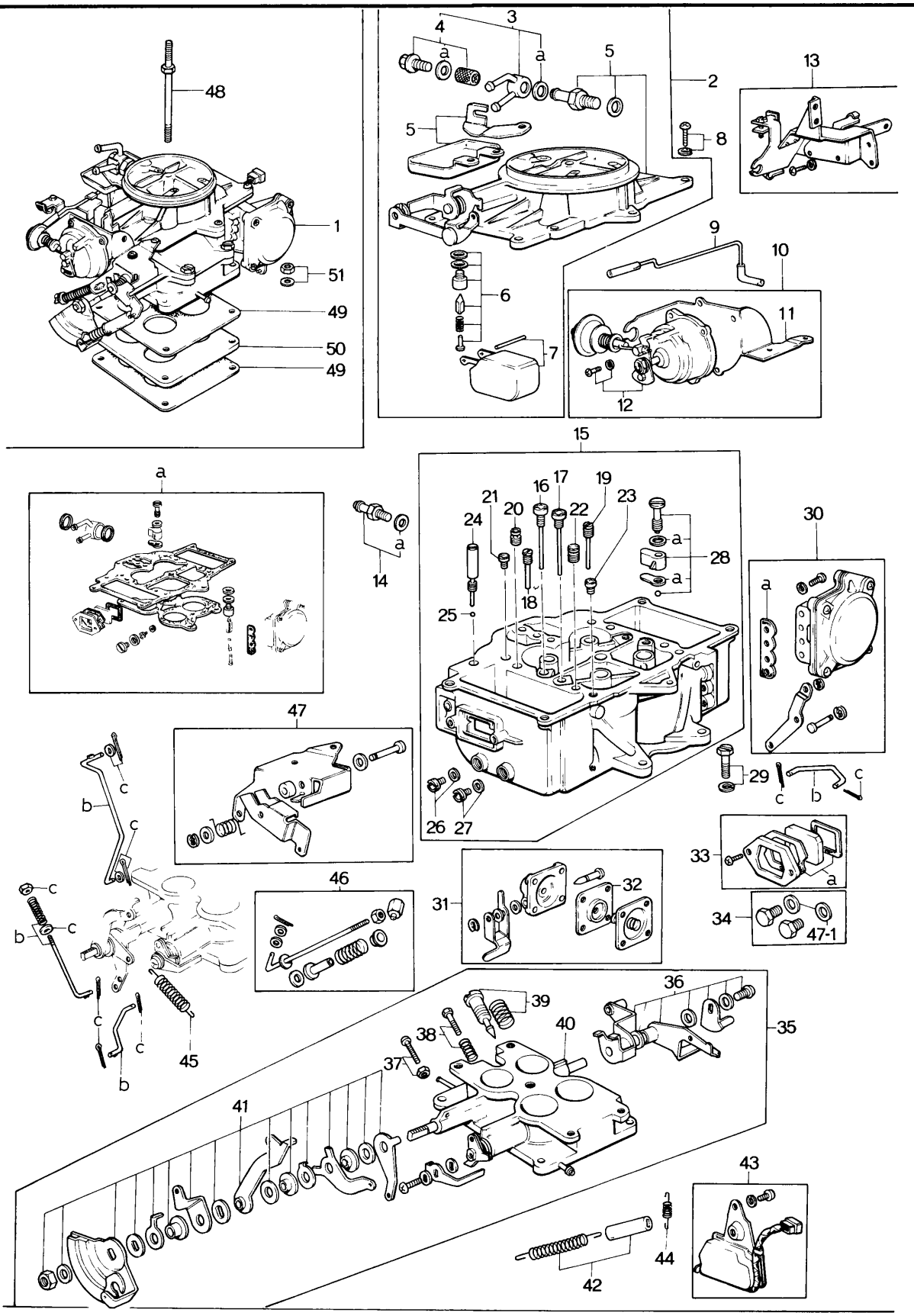
48
1
51
49
50
49
3
4
a
a
5
2
5
8
13
6
7
9
10
11
12
15
a
14
a
16
17
19
21
20
22
23
24
18
25
a
28
a
26
27
30
a
29
c
b
c
47
b
c
c
33
a
46
31
32
34
47-1
c
b
c
c
c
c
45
b
39
36
35
38
40
37
41
43
44
42

No.	Part Number	Description	Q'ty	Remarks
1	~~1881 13 200~~	~~Carburettor~~	~~1~~	
	1881 13 200A	Carburettor (Manual)	1	From Car No. 1
●	3625 13 200A	Carburettor (U.S.A.) (Manual)	1	(Components not available yet) 74/11～×
●	3631 13 200	Carburettor (Canada) (Manual)	1	(Components not available yet) 75/1～×
	~~1883 13 200~~	~~Carburettor~~	~~1~~	
	1883 13 200A	Carburettor (Automatic)	1	From Car No. 1
●	3626 13 200A	Carburettor (U.S.A.) (Automatic)	1	(Components not available yet) 74/11～×
●	3632 13 200A	Carburettor (Canada) (Automatic)	1	(Components not available yet) 75/1～×
2	1952 23 310	Horn Set, Air (Manual) (Fig. No. 3～7 included)	1	
●	1881 23 310	Horn Set, Air (Manual) (Fig. No. 3～7 included)	1	74/4～△
	1951 23 310	Horn Set, Air (Automatic) (Fig. No. 3～7 included)	1	
●	1883 23 310	Horn Set, Air (Automatic) (Fig. No. 3～7 included)	1	74/3～△
3	1881 23 319	Connector, Fuel Return	1	
4	1663 23 409	Strainer Set	1	
● 5	1952 23 520	Horn Sub Set, Air (Manual)	1	From Car No. 1
●	1881 23 520	Horn Sub Set, Air (Manual)	1	74/4～△
●	1951 23 520	Horn Sub Set, Air (Automatic)	1	From Car No. 1
●	1883 23 520	Horn Sub Set, Air (Automatic)	1	74/3～△
6	1663 23 390	Seat Set, Float Valve	1	
7	1663 23 326B	Float Set	1	
8	0750 23 652	Screw Set, Air Horn	7	
9	1027 23 509	Pipe, Vacuum	1	
10	1881 23 500	Semi Auto Choke Set (Manual) (Fig. No. 11,12 included)	1	
	1883 23 500	Semi Auto Choke Set (Automatic) (Fig. No. 11,12 included)	1	
11	1881 23 501	Holder Set, Bimetal (Manual)	1	
	1883 23 501	Holder Set, Bimetal (Automatic)	1	
12	1881 23 502	Case Set, Bimetal	1	
13	1881 23 370	Bracket Set	1	

No.	Part Number	Description	Q'ty	Remarks
14	1570 23 507	Valve Set, Check	1	
15	1881 23 320	Body Set (Manual) (Fig. No. 16~28 included)	1	
	1883 23 320	Body Set (Automatic) (Fig. No. 16~28 included)	1	
16	1669 23 423A	Jet, Main Air Bleed-1st	2	
17	1669 23 424A	Jet, Main Air Bleed-2nd	2	
18	1881 23 431	Jet, Slow (Manual)	2	
	1883 23 431	Jet, Slow (Automatic)	2	
19	1881 23 432	Jet, Step (Manual)	2	
	1883 23 432	Jet, Step (Automatic)	2	
20	1881 23 427	Jet, Slow Air Bleed-1st (Manual)	2	
	1883 23 427	Jet, Slow Air Bleed-1st (Automatic)	2	
21	1881 23 433	Jet, Slow Air Bleed-2nd	2	
22	2090 23 428	Jet, Step Air Bleed-1st	2	
23	1881 23 434	Jet, Step Air Bleed-2nd (Manual)	2	
	1883 23 434	Jet, Step Air Bleed-2nd (Automatic)	2	
24	0823 23 338	Plug, Inlet Check Valve	1	
25	0107 13 781	Ball, Steel	1	
26	1881 23 421	Jet, Main-1st	2	
27	0453 23 402	Jet, Main-2nd	2	
28	1881 23 490	Nozzle Set, Accel.	1	

No.	Part Number	Description	Q'ty	Remarks
29	0839 23 484A	Bolt, Flange Set	4	
30	1881 23 350	Chamber Set, Diaphragm	1	
31	1663 23 360C	Pump Set, Accel. (Fig. No. 32 included)	1	
32	1663 23 361A	Diaphragm, Accel. Pump	1	
33	1663 23 340A	Cover Set, Level Gauge	1	
34	1668 23 354	Plug Set, Main Passage	1	
35	1881 23 330	Flange Set (Manual) (Fig. No. 36~41 included)	1	
	1883 23 330	Flange Set (Automatic) (Fig. No. 36~41 included)	1	
36	1881 23 420	Lever Set, Front	1	
37	1668 23 440	Screw Set, Throttle Lever Adjust	1	
38	1668 23 460	Screw Set, Idle Adjust	1	
39	1668 23 470	Screw Set, Air Adjust	1	
40	1881 23 410	Flange Sub Set (Manual)	1	
	1883 23 410	Flange Sub Set (Automatic)	1	
41	1881 23 430	Lever Set, Rear (Manual)	1	
	1883 23 430	Lever Set, Rear (Automatic)	1	
42	1881 23 380	Spring Set, Throttle Return	1	
43	1668 23 450	Switch Set, Idle	1	
44	1663 23 455	Spring, Idle Switch Lever	1	
45	1668 23 439	Spring, Choke Sub Return (Manual)	1	

No.	Part Number	Description	Q'ty	Remarks
	1121 26 439	Spring, Choke Sub Return (Automatic)	1	
46	1881 23 371	Holder Set, Return (Fig. No. 47 included)	1	
47	1881 23 372	Holder Set, Sub Return	1	
● 47-1	1668 23 654	Gasket, Main Plug	4	From Car No. 1
a	1668 23 510	Gasket Set	1	
b	1881 23 480	Rod & Link Set (Manual)	1	
	1883 23 480	Rod & Link Set (Automatic)	1	
c	1668 23 530	Pin & Washer Set	1	
48	0839 13 201	Bolt, Cleaner Set	1	
●	1757 13 201 A	Bolt, Cleaner Set (U.S.A.)	1	74/11~×
49	0823 13 221 A	Gasket, Carburettor	2	
●	1757 13 221	Gasket, Carburettor (U.S.A.)	2	74/11~×
50	1570 13 222	Insulator, Carburettor	1	
●	3625 13 222	Insulator, Carburettor (U.S.A.)	1	74/11~×
51	99901 0800	Nut, Carburettor	4	
	99971 0800	Washer, Spring	4	
	1881 23 540	Repair Kit, Carburettor (Manual)	1	
	~~1883 23 540~~	~~Repair Kit, Carburettor (Automatic)~~	~~1~~	
	1881 23 540	Repair Kit, Carburettor (Automatic)	1	From Car No. 1
●	3565 23 540	Repair Kit, Carburettor (U.S.A.)	1	74/11~×
●	Repair kit not established yet for Canada '75 Model			

No.	Part Number	Description	Q'ty	Remarks
1	1881 13 200	Carburettor (Manual)	1	
	1883 13 200	Carburettor (Automatic)	1	
2	0839 13 201	Bolt, Cleaner Set	1	
3	0823 13 221A	Gasket, Carburettor	2	
4	1570 13 222	Insulator, Carburettor	1	
5	99901 0800	Nut, Carburettor	4	
	99971 0800	Washer, Spring	4	
	1881 23 540	Repair Kit, Carburettor (Manual)		
	1883 23 540	Repair Kit, Carburettor (Automatic)		

13 23 AIR CLEANER

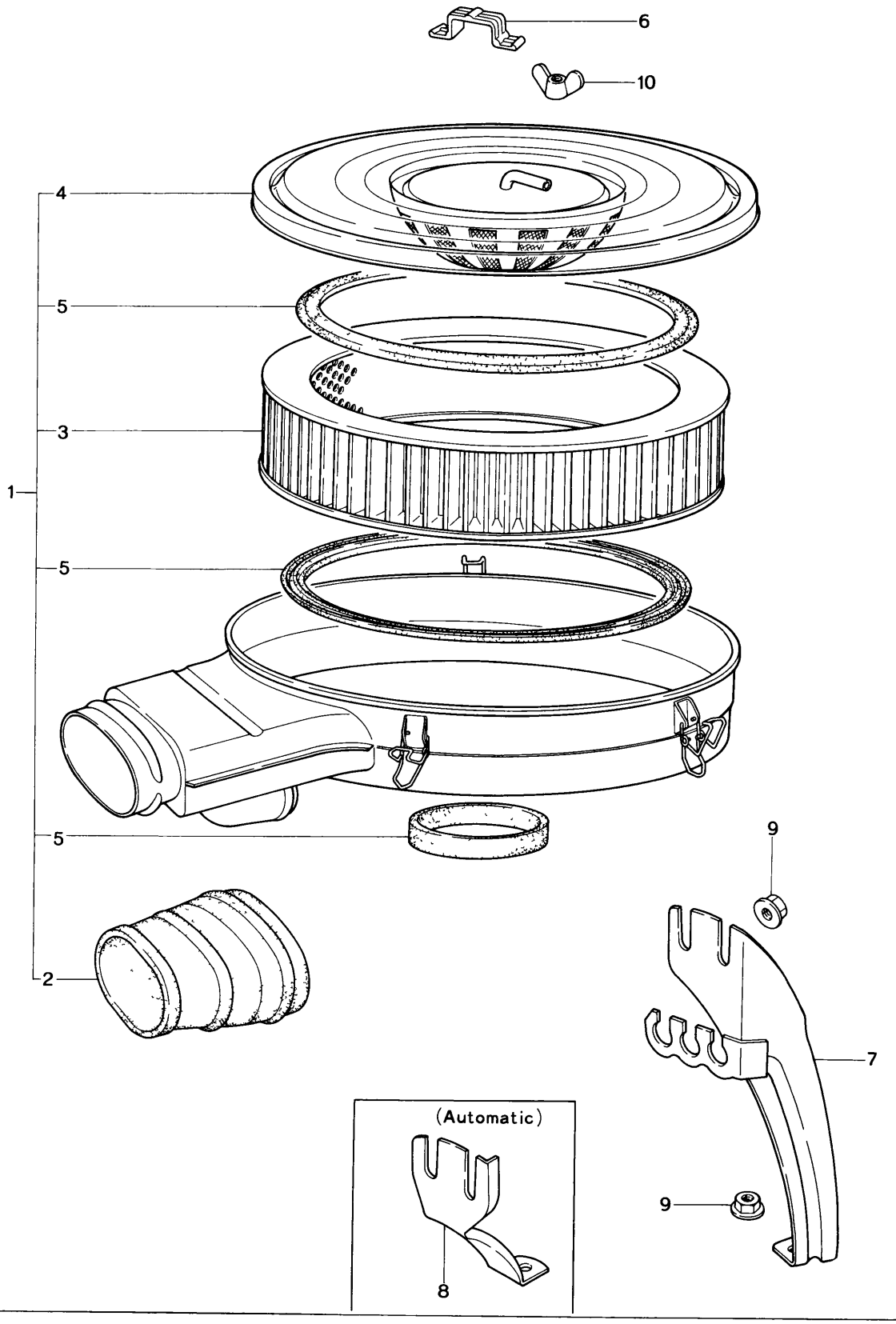

No.	Part Number	Description	Q'ty	Remarks
1	1881 13 300 B	Cleaner, Air	1	
●	3625 13 300 A	Cleaner, Air	1	74/11~×
2	1881 13 351	Hose, Air	1	
3	1757 23 672	Element	1	
44	1113 23 673	Cover, With Charcoal Filter (BLU.)	1	
	1757 23 673	Cover, With Charcoal Filter (BLU.)	1	74/3~○
●	3565 23 673	Cover, With Charcoal Filter (BLU.)	1	74/11~△
5	1757 23 680	Gasket Set	1	
6	1617 13 305 A	Clip	1	
7	1881 13 310	Support, Air Cleaner (Manual)	1	
	1881 13 311 A	Support, Air Cleaner (Manual)	1	73/10~△
●	1881 13 311 B	Support, Air Cleaner (Manual)	1	74/11~×
8	1883 13 311	Support, Air Cleaner (Automatic)	1	
	1883 13 311 A	Support, Air Cleaner (Automatic)	1	73/10~△
	1881 13 311 A	Support, Air Cleaner (Automatic)	1	74/3~×
●	1881 13 311 B	Support, Air Cleaner (Automatic)	1	74/11~×
9	99940 0802	Nut, Air Cleaner (Manual) / (Automatic)	2 / 3	
10	99941 0801	Nut, Wing-Air Cleaner	1	
11	2850 13 331	Spacer, Air Cleaner	1	From Car No. 1

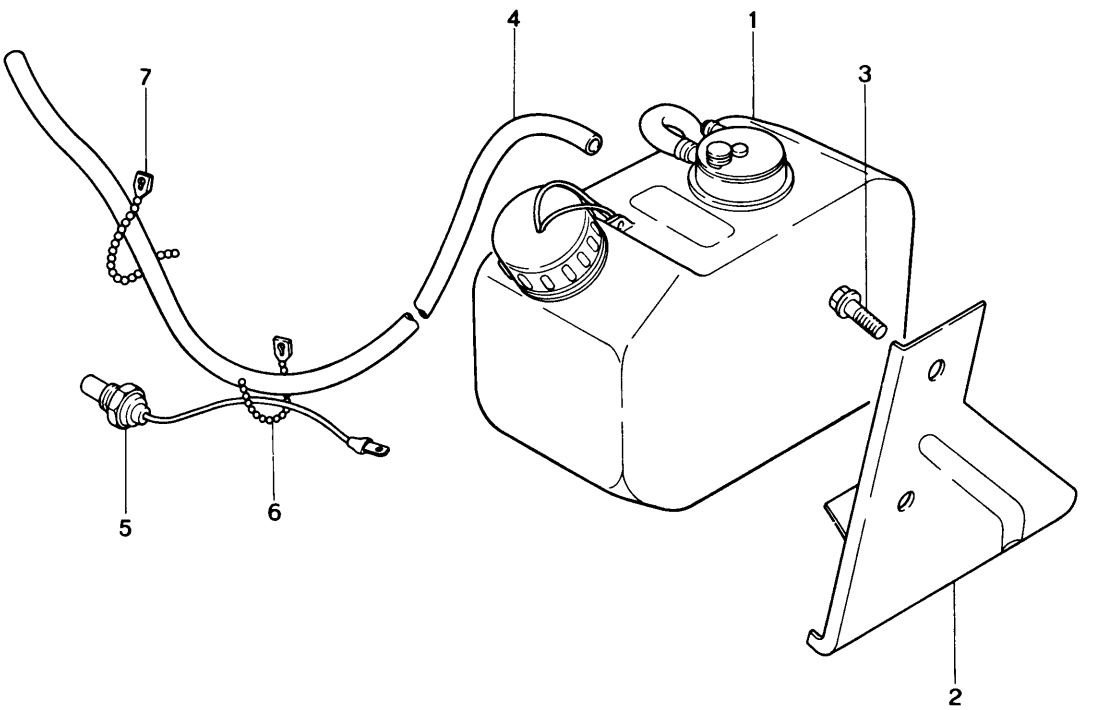
4
1
7
3
5
6
2

No.	Part Number	Description	Q'ty	Remarks
1	1881 13 510A	Tank, Starting Fluid	1	
	1881 13 510E	Tank, Starting Fluid	1	73/9 ~ ○
2	1881 13 515	Bracket, Tank	1	
	1881 13 515A	Bracket, Tank	1	73/9 ~ ○
3	99786 0612	Screw, Tank Bracket	2	
4	1668 13 527	Hose	1	
5	1668 13 531A	Unit, Thermo	1	
6	99709 0108	Band	1	
7	99709 0225	Band	1	

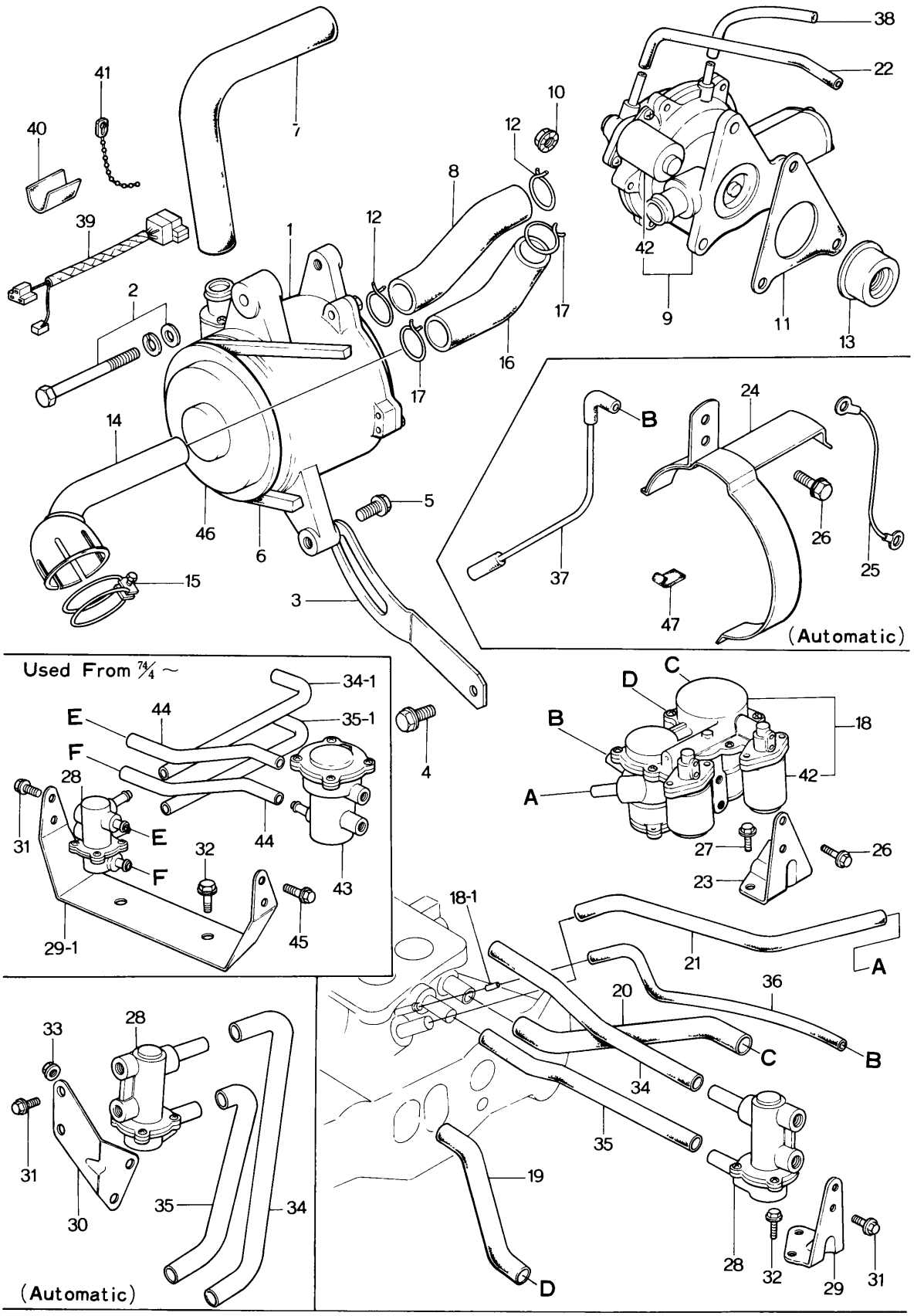
Used From 74/4 ~
(Automatic)
(Automatic)

	No.	Part Number	Description	Q'ty	Remarks
	1	1757 13 710	Pump, Air (Fig. No. 46 included)	1	
●		1757 13 710 A	Pump, Air (Fig. No. 46 included)	1	74/11~△
	2	99803 08100	Bolt, Air Pump	1	
		~~99951 0818~~	~~Washer, Plain~~	~~1~~	
		99952 0800	Washer, Plain	1	From Car No. 1
		99971 0800	Washer, Spring	1	
	3	1751 13 714	Strap, Air Pump	1	
	4	99796 0814	Bolt, Strap	1	
	5	99801 0822	Bolt, Strap	1	
		99796 0816	Bolt, Strap	1	73/10~○
		99796 0820	Bolt, Strap	1	74/1~○
		99953 0800	Washer, Plain	1	
		99952 0822	Washer, Plain	1	73/10~○
		99971 0800	Washer, Spring	1	73/10~Discaded
	6	1757 13 715	Belt, "V"-Air Pump	1	
	7	1757 13 717	Hose, Air-Air Pump~Air Cleaner	1	
	8	1757 13 718	Hose, Air-A.C. Valve~Air Pump	1	
●		3565 13 718	Hose, Air-A.C. Valve~Air Pump (U.S.A.)	1	74/11~△
	9	1758 13 720	Valve, Air Control (Manual) (Fig No. 42 included)	1	
●		1881 13 720	Valve, Air Control (Manual) (Fig. No. 42 included)	1	74/11~△
●		3625 13 720A	Valve, Air Control (Manual) (Fig. No. 42 included) (U S A.)	1	74/11~×
●		3587 13 720	Valve, Air Control (Manual) (Fig No 42 included) (Canada)	1	75/1~×

No.	Part Number	Description	Q'ty	Remarks
	1758 13 720	Valve, Air Control (Automatic) (Fig. No. 42 included)	1	
	1883 13 720	Valve, Air Control (Automatic) (Fig. No. 42 included)	1	74/2～△
●	3626 13 720 A	Valve, Air Control (Automatic) (Fig. No. 42 included) (U.S.A.)	1	74/11～×
●	3589 13 720	Valve, Air Control (Automatic) (Fig. No. 42 included) (Canada)	1	75/1～×
10	99906 0600	Nut, Air Control Valve	3	
	99940 0601	Nut, Air Control Valve	3	73/10～○
	99953 0600	Washer, Plain	3	73/10～Discarded
	99971 0600	Washer, Spring	3	73/10～Discarded
11	1757 13 724	Gasket, Air Control Valve	1	
●	3565 13 724	Gasket, Air Control Valve (U.S.A.)	1	74/11～×
12	2329 13 726	Clip, Air Hose	2	
13	1758 13 730	Valve, Check	1	
	1881 13 730	Valve, Check	1	74/2～△
●	3565 13 730	Valve, Check	1	74/11～×
14	1757 13 740	Pipe, Air-Reactor Side	1	
15	99282 4309	Band, Hose-Air Pipe	1	
16	1757 13 744	Hose, Air-Reactor～A.C. Valve	1	
17	2090 13 746	Clip, Air Hose	2	
18	1757 13 750	Valve, Deceleration Control (Fig. No. 42 included)	1	
● 18-1	3565 13 751	Insert (U.S.A.)	1	74/11～Added Anew
19	1757 13 752	Hose, Air-D.C. Valve～Air Cleaner (Manual)	1	
	1883 13 752	Hose, Air-D.C. Valve～Air Cleaner (Automatic)	1	
	1757 13 752	Hose, Air-D.C. Valve～Air Cleaner (Automatic)	1	74/4～×
20	1757 13 753	Hose, Air-D.C Valve～IN. Manifold (Manual)	1	
	1883 13 753	Hose, Air-D.C. Valve～IN. Manifold (Automatic)	1	

No.	Part Number	Description	Q'ty	Remarks
	1883 13 753 A	Hose, Air-D.C. Valve~IN. Manifold (Automatic)	1	73/9~×
	1757 13 753	Hose, Air-D.C. Valve~IN. Manifold (Automatic)	1	74/3~×
21	~~1757 13 754~~	~~Hose, Air-D.C. Valve~IN. Manifold (Manual)~~	~~1~~	
	1757 13 754 A	Hose, Air-D.C. Valve~IN. Manifold (Manual)	1	From Car No. 1
	1757 13 754 B	Hose, Air-D.C. Valve~IN. Manifold (Manual)	1	74/4~△
●	1757 13 754 C	Hose, Air-D.C. Valve~IN. Manifold (Manual)	1	74/11~×
	1883 13 754	Hose, Air-D.C. Valve~IN. Manifold (Automatic)	1	
	1883 13 754 A	Hose, Air-D.C. Valve~IN. Manifold (Automatic)	1	73/9~×
	1757 13 754 B	Hose, Air-D.C. Valve~IN. Manifold (Automatic)	1	74/4~×
●	1757 13 754 C	Hose, Air-D.C. Valve~IN. Manifold (Automatic)	1	74/11~×
● 22	2329 13 754 A	Tube, Balance-A.C. Valve~Carburettor	1	74/11~Discarded (U.S.A.)
23	1757 13 757	Supporter, D.C. Valve (Manual)	1	
24	1883 13 930	Supporter, D.C. Valve (Automatic)	1	
	1883 13 930 B	Supporter, D.C. Valve (Automatic)	1	73/9~×
	1883 13 930 C	Supporter, D.C. Valve (Automatic)	1	73/10~○
	1757 13 757	Supporter, D.C. Valve (Automatic)	1	74/4~×
25	1883 13 936	Wire, Earth-D.C. Valve Supporter (Automatic)	1	74/3~Discarded
26	99796 0610	Bolt, Supporter-D.C. Valve	2	
27	99796 0812	Bolt, D.C. Valve Supporter (Manual) (Automatic)	2 2	74/4~Added Anew
28	1757 13 770 A	Compensator, Altitude	1	
	1757 13 770 B	Compensator, Altitude	1	74/4~×

No.	Part Number	Description	Q'ty	Remarks
29	1757 13 772A	Bracket, Alt. Compensator (Manual)	1	
29-1	1757 13 772B	Bracket, Alt. Compensator (Manual)	1	74/4～×
●	1202 13 911	Bracket, Alt. Compensator (Manual)	1	74/11～×
●	1757 13 772B	Bracket, Alt. Compensator (Manual)	1 (Canada)	75/1～×
30	1883 13 772A	Bracket, Alt. Compensator (Automatic)	1	
	1883 13 772B	Bracket, Alt. Compensator (Automatic)	1	73/10～△
29-1	1757 13 772B	Bracket, Alt. Compensator (Automatic)	1	74/4～×
●	1202 13 911	Bracket, Alt. Compensator (Automatic)	1	74/11～×
●	1757 13 772B	Bracket, Alt. Compensator (Automatic)	1 (Canada)	75/1～×
31	99796 0610	Bolt, Alt. Compensator	2	
32	99796 0812	Bolt, Alt. Compensator (Manual)	2	
33	99940 0800	Nut, Alt. Compensator (Automatic)	2	
	99796 0812	Bolt, Alt. Compensator (Automatic)	2	74/4～×
34	1883 13 775	Hose, Air - Alt. Compensator～Carburettor (Automatic)	1	
	1883 13 775A	Hose, Air - Alt. Compensator～Carburettor (Automatic)	1	73/11～○
34-1	99346 08190	Hose, Air - Alt Compensator～Carburettor (190㎜) (Automatic)	1	Ord. By 99349 02750 (1.75m) 74/4～×
●	1757 13 775A	Hose, Air - Alt. Compensator～Carburettor (Automatic)	1	74/7～○
~~34~~	~~99340 06190~~	~~Hose, Air - Alt Compensator～Carburettor (190㎜) (Manual)~~	~~1~~	~~Order Under No. 99344 0615 (15m)~~
	99340 06200	Hose, Air - Alt Compensator～Carburettor (200㎜) (Manual)	1	Ord. By 99344 0615 (15m) From Car No. 1
	1757 13 775	Hose, Air - Alt. Compensator～Carburettor (Manual)	1	73/11～○
34-1	99346 08190	Hose, Air - Alt Compensator～Carburettor (190㎜) (Manual)	1	Ord. By 99349 08750 (1.75m) 74/4～○
●	1757 13 775A	Hose, Air - Alt Compensator～Carburettor (Manual)	1	74/7～○
~~35~~	~~1757 13 776~~	~~Hose, Air - Alt Compensator～IN Manifold (Manual)~~	~~1~~	
	99340 06240	Hose, Air - Alt Compensator～IN Manifold (240㎜) (Manual)	1	Ord. By 99344 06150 (15m) From Car No. 1

	No.	Part Number	Description	Q'ty	Remarks
		1757 13 776	Hose, Air - Alt. Compensator ~ IN. Manifold (Manual)	1	73/11 ~ ○
	35-1	99346 08190	Hose, Air - Alt Compensator ~ IN Manifold (190㎜) (Manual)	1	Ord. By 99349 08750 (1.75m) 74/4 ~ ×
●		1757 13 775A	Hose, Air - Alt. Compensator ~ IN. Manifold (Manual)	1	74/7 ~ ○
	35	1883 13 776	Hose, Air - Alt. Compensator ~ IN. Manifold (Automatic)	1	
		1883 13 776A	Hose, Air - Alt. Compensator ~ IN. Manifold (Automatic)	1	73/9 ~ ×
		1883 13 776B	Hose, Air - Alt. Compensator ~ IN. Manifold (Automatic)	1	73/11 ~ ○
	35-1	99346 08190	Hose, Air - Alt Compensator ~ IN Manifold (190㎜) (Automatic)	1	74/4 ~ ×
●		1757 13 775A	Hose, Air - Alt. Compensator ~ IN. Manifold (Automatic)	1	74/7 ~ ○
	36	1757 13 778	Tube, Vacuum - D.C. Valve ~ IN. Manifold (Manual)	1	
●		99340 04200	Tube, Vacuum - D.C. Valve ~ IN. Manifold (Manual)	1	75/1 ~ ○
	37	1883 13 910	Tube, Vacuum - D.C. Valve ~ IN. Manifold (Automatic)	1	
		1757 13 778	Tube, Vacuum - D.C. Valve ~ IN. Manifold (Automatic)	1	74/4 ~ ×
	38	99340 04200	Hose, Air - A.C. Valve ~ Air Cleaner	1	
	39	1757 18 860	Wiring, Valve	1	
●		3565 18 860	Wiring, Valve (U.S.A.)	1	74/11 ~ ×
●		3900 18 860	Wiring, Valve (Canada)	1	75/1 ~ ×
●	40	0208 66 949	Pad, Protector - Valve Wiring	1	74/4 ~ Discarded
	41	99709 0108	Band, Valve Wiring	1	
	42	1757 23 725	Valve, Solenoid (Included in Fig. No. 9 & 18)	3	
●		3565 23 725	Valve, Solenoid (Included in Fig. No. 9 & 18) (U.S.A.)	3	74/11 ~ ×
	43	1757 13 910	Valve, E.C.	1	74/4 ~ Added Anew
	44	1757 13 912	Hose, Air - Alt. Compensator ~ E.C. Valve	2	74/4 ~ Added Anew
●		1757 13 912A	Hose, Air - Alt. Compensator ~ E.C. Valve	2	74/7 ~ ○
	45	99796 0610	Bolt, E.C. Valve	2	74/4 ~ Added Anew
	46	1757 23 713	Pulley, Air Pump (Included in Fig. No. 1)	1	From Car No. 1
●	47	1883 13 935	Protector (Automatic)	1	73/9 ~ Added Anew 74/3 ~ Discarded

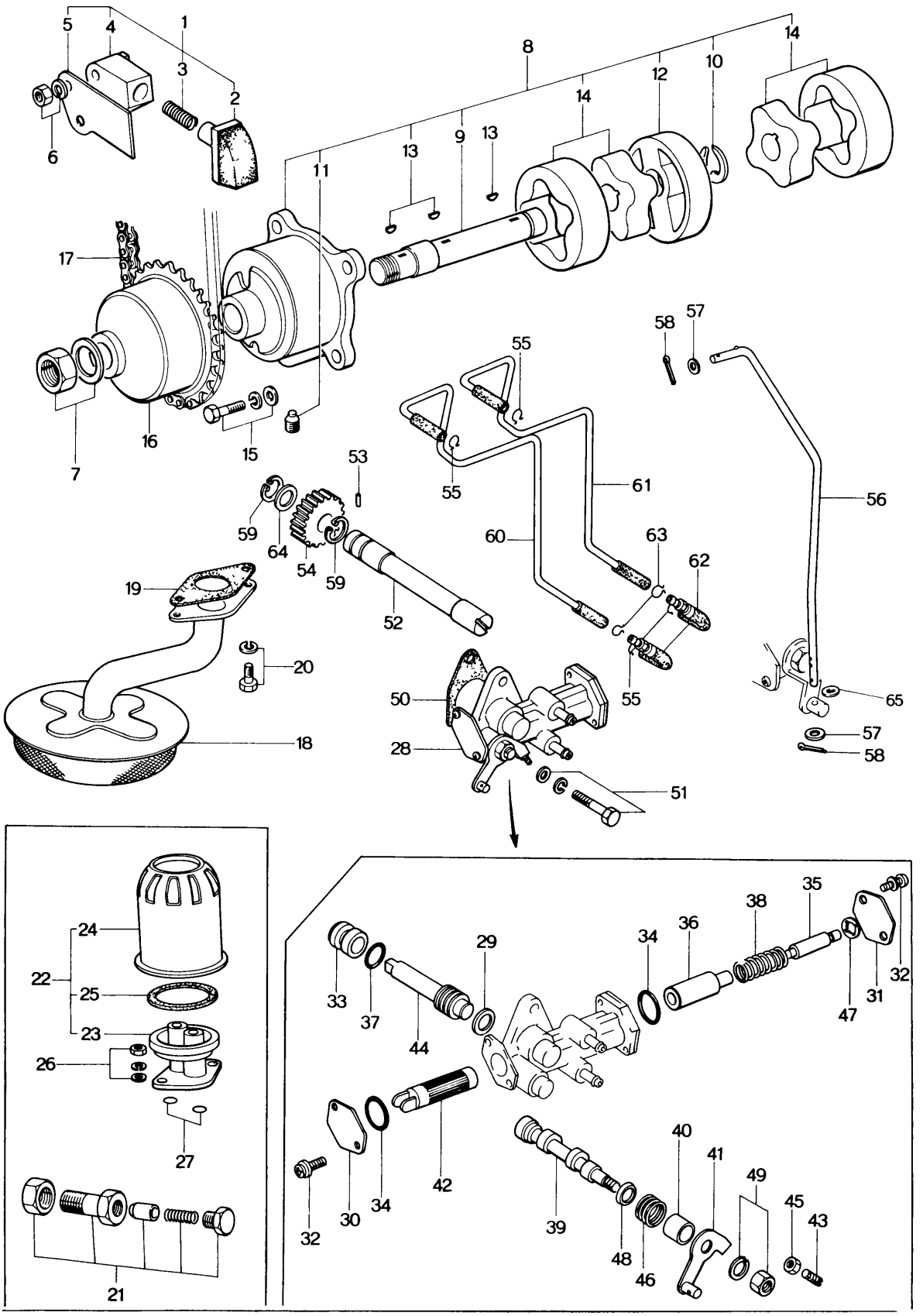
1
2
3
4
5
6
7
8
9
10
11
12
13
14
15
16
17
18
19
20
21
22
23
24
25
26
27
28
29
30
31
32
33
34
35
36
37
38
39
40
41
42
43
44
45
46
47
48
49
50
51
52
53
54
55
56
57
58
59
60
61
62
63
64
65

No.	Part Number	Description	Q'ty	Remarks
1	1757 14 020	Adjuster, Chain	1	
2	0823 14 130	Adjuster	1	
3	0823 14 131	Spring	1	
4	1757 14 132	Body	1	
5	0839 14 133	Plate, Guide	1	
6	99906 0600	Nut, Chain Adjuster	2	
	99971 0600	Washer, Spring	2	
7	99922 1200	Nut, Oil Pump Drive Gear	1	
	99979 1200	Washer, Tab	1	
8	1757 14 100	Pump, Oil	1	
9	1757 14 112	Shaft, Oil Pump	1	
10	0810 14 113	Ring, Snap	1	
11	0839 14 117	Bolt, Lock	1	
12	0820 14 118C	Plate, Middle-Oil Pump	1	
13	0839 14 119B	Key	3	
14	0820 23 882A	Rotor Set, Oil Pump	2	
15	99806 0618	Bolt, Oil Pump	4	

14 OIL PUMP

No.	Part Number	Description	Q'ty	Remarks
	99952 0600	Washer, Plain	4	
	99971 0600	Washer, Spring	4	
16	0839 14 141A	Gear, Drive-Oil Pump	1	
17	0839 14 142	Chain	1	
18	0866 14 160E	Strainer, Oil	1	
19	0810 14 171	Gasket, Oil Strainer	1	
20	99806 0614	Bolt, Oil Strainer	2	
	99971 0600	Washer, Spring	2	
21	0820 14 250D	Regulator, Pressure	1	
22	0839 14 300	Filter, Oil	1	
23	0839 23 801	Cover	1	
24	0813 23 802B	Cartridge, Oil Filter	1	
25	0813 23 803	Gasket	1	
26	99901 0800	Nut, Oil Filter	2	
	99953 0800	Washer, Plain	2	
	99971 0800	Washer, Spring	2	
27	99541 01601	Ring, "O"-Oil Filter	2	

No.	Part Number	Description	Q'ty	Remarks
28	1757 14 600	Pump, Metering Oil	1	
29	0820 23 832B	Washer, Thrust	1	
30	0820 23 833B	Plate, Cam Casing	1	
31	0820 23 834B	Plate, Cam Casing	1	
32	99833 0408	Screw, Cam Casing Plate	4	
	99971 0400	Washer, Plain	4	
33	0820 23 835A	Bearing, Worm	1	
34	0730 23 837	Ring, "O"	2	
● 35	1011 23 837	Plunger, Sub	1	☆
● 36	1011 23 838	Plunger, Differential	1	☆
37	0730 23 839	Ring, "O"	1	
● 38	0820 23 840	Spring, Plunger	1	☆
● 39	1011 23 841	Pin, Control	1	☆
● 40	0820 23 842	Cap	1	☆
● 41	1757 23 844	Lever, Control	1	☆
● 42	0730 23 845	Plunger	1	☆
● 43	0820 23 845A	Screw, Adjust	1	☆
● 44	0730 23 846	Bearing, Worm	1	☆
● 45	0820 23 847A	Nut, Adjust Screw	1	☆
46	0820 23 848A	Spring, Return	1	

No.	Part Number	Description	Q'ty	Remarks
● 47	2090 23 853	Nut, Push	1	☆
● 48	0730 23 854	Ring, "U"	1	☆
49	99907 0600	Nut, Control Lever	1	
	99971 0600	Washer, Spring	1	
50	1757 14 611	Gasket, Metering Oil Pump	1	
51	99806 0630	Bolt, Metering Oil Pump	1	
	99806 0618	Bolt	1	
	99953 0600	Washer, Plain	2	
	99971 0600	Washer, Spring	2	
52	~~0820 14 620~~	~~Shaft, Driven Gear~~	~~1~~	
	0820 14 620A	Shaft, Driven Gear	1	From Car No. 1
53	0813 14 623	Pin, Driven Gear	1	
54	0820 14 625A	Gear, Driven	1	
55	0813 14 641	Clip, Metering Oil Tube	4	
56	1757 14 651	Rod, Connecting	1	
57	99953 0400	Washer, Plain	2 1	 Q'ty
58	99221 1212	Pin, Split	2	
59	99576 0800	Ring, Snap-Driven Gear Shaft	2	
60	1757 14 660	Tube, Metering Oil	1	
●	3565 14 660A	Tube, Metering Oil	1	74/11~×
61	1757 14 670	Tube, Metering Oil	1	
●	3565 14 670A	Tube, Metering Oil	1	74/11~×

No.	Part Number	Description	Q'ty	Remarks
62	1757 14 680	Valve, Check	2	74/12~Discarded
63	1011 14 683	Clip, Metering Oil Tube+Check Valve	2	
64	0810 18 276	Shim, Adjust (t=0.6) } Selective use	2	
	0810 18 277	Shim, Adjust (t=0.3) } Selective use	2	
65	1757 14 652	Shim (t=1.0)		
	1757 14 653	Shim (t=2.0) } Selective use	1	73/11~Added Anew
	1757 14 653	Shim (t=3.0)		

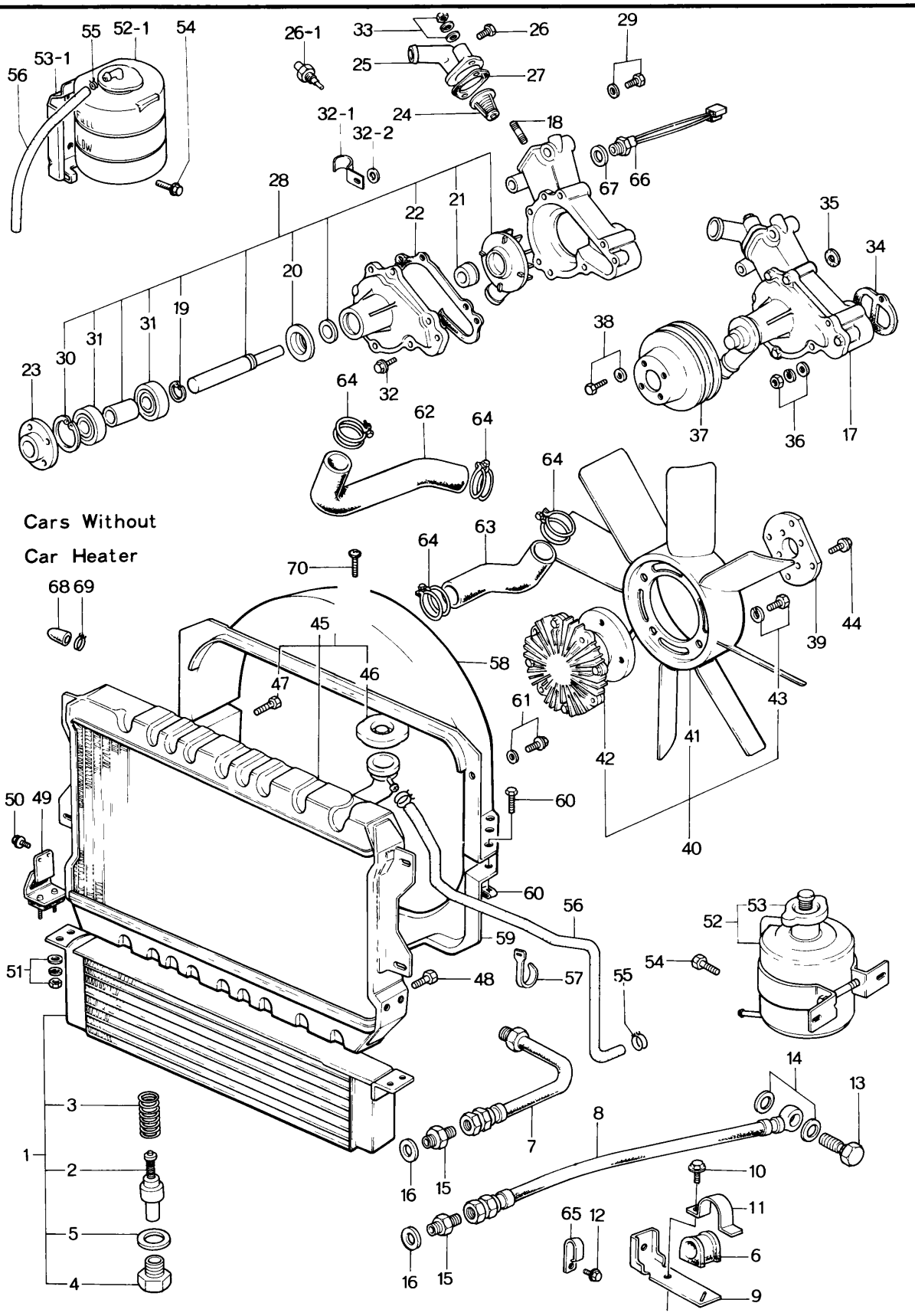
Cars Without
Car Heater

No.	Part Number	Description	Q'ty	Remarks
1	1881 14 700	Cooler, Oil	1	
2	1757 14 810	Pellet, Thermo	1	
3	1757 14 821	Spring, Pellet	1	
4	1757 14 822	Nut, Stopper	1	
5	99564 2200	Gasket	1	
	1757 14 823	Gasket	1	73/9 ~ ○
6	0813 14 716	Protector, Oil Hose	1	
7	0866 14 720A	Hose, Oil	1	
	0865 14 720	Hose, Oil	1	73/9 ~ ○
8	~~1570 14 730A~~	~~Hose, Oil~~	~~1~~	
	0881 14 730	Hose, Oil	1	From Car No. 1
9	1757 14 740	Bracket, Oil Hose (Manual)	1	
●	1758 14 740	Bracket, Oil Hose (Automatic)	1	74/6 ~ ×
10	~~99821 1200~~	~~Nut, Bracket~~	~~1~~	
	~~99871 1200~~	~~Washer, Spring~~	~~1~~	
	99796 0810	Bolt, Bracket	1	From Car No. 1
11	0839 14 745	Clip, Oil Hose	1	
12	99806 0616	Bolt, Clip	1	
	99971 0600	Washer, Spring	1	
13	99381 1400	Bolt, Connector-Oil Hose	1	
14	99562 1800	Gasket	2	
15	99384 1200F	Joint, Union	2	
16	99564 1600	Gasket	2	

	No.	Part Number	Description	Q'ty	Remarks
	17	~~1907 15 010~~	~~Pump, Water~~	~~1~~	
		1907 15 010 B	Pump, Water	1	From Car No. 1
		1757 15 010 B	Pump, Water	1	74/1 ~ △
●		1757 15 010 C	Pump, Water	1	74/5 ~ ×
●		1757 15 010 D	Pump, Water	1	74/11 ~ △
	18	2090 15 104	Stud	2	
	19	1757 15 114	Ring, Snap	1	
	20	1757 15 118	Plate, Dust Seal	1	
	21	~~0820 15 120~~	~~Seal, Water~~	~~1~~	
		1757 15 120	Seal, Water	1	From Car No. 1
	22	1757 15 132	Gasket, Pump Cover	1	
	23	~~1757 15 152~~	~~Boss, Pulley~~	~~1~~	
		1757 15 152 A	Boss, Pulley	1	From Car No. 1
	24	0823 15 171	Thermostat	1	
	25	1757 15 170	Cover, Thermostat	1	
		1758 15 170	Cover, Thermostat	1	74/1 ~ ×
●		1757 15 172	Cover, Thermostat	1	74/5 ~ ×
	26	99502 3000	Plug, Thermostat Cover	1	
	26-1	~~1757 18 190~~	~~Switch, Water Thermo~~	~~1~~	74/1 ~ ×
●		1757 15 190	Switch, Water Thermo	1	74/1 ~ ×

No.	Part Number	Description	Q'ty	Remarks
27	0813 15 173	Gasket, Thermostat	1	
	1757 15 173	Gasket, Thermostat	1	74/3~○
28	1907 99 150	Repair Kit, Water Pump	1	
	1907 99 150 A	Repair Kit, Water Pump	1	73/12~△
	1907 99 150 B	Repair Kit, Water Pump	1	74/3~△
●	1907 99 150 C	Repair, Kit, Water Pump	1	74/10~○
29	99511 1200	Plug	1	74/3~Discarded
	99562 1200	Gasket	1	74/3~Discarded
30	99574 4000	Ring, Retaining	1	
31	99606 72030	Bearing, Ball	2	
32	99801 0822	Bolt, Pump Cover	2	
	99796 0820	Bolt, Pump Cover	2	73/12~○
	99971 0800	Washer, Spring	2	73/12~Discarded
● 32-1	3565 14 662 A	Clip, Metering Oil Tube	1	74/11~Added Anew
● 32-2	99951 0816	Washer, Plain	1	74/11~Added Anew
33	99901 0800	Nut, Thermostat Cover	2	
	99953 0800	Washer, Plain	2	
	99971 0800	Washer, Spring	2	
34	1757 15 105	Gasket, Water Pump	1	

No.	Part Number	Description	Q'ty	Remarks
	1757 15 105 A	Gasket, Water Pump	1	74/1~△
35	0820 15 106	Gasket, Water Pump	2	
	1757 15 106	Shim, Water Pump	2	74/2~△
36	99901 0800	Nut, Water Pump	4	
	99971 0800	Washer, Spring	4	
37	~~1757 15 151~~	~~Pulley, Water Pump~~	~~1~~	
	1757 15 151 A	Pulley, Water Pump	1	From Car No. 1
●	1757 15 151 B	Pulley, Water Pump	1	75/1~○
38	99796 0620	Bolt	4	
39	~~1757 15 211~~	~~Spacer, Fan Drive~~	~~1~~	
	1907 15 211	Spacer, Fan Drive	1	From Car No. 1
40	1907 15 250	Fan & Fan Drive	1	
●	3900 15 250	Fan & Fan Drive	1	74/11~×
41	1097 15 200	Fan, Cooling	1	
●	3900 15 200	Fan, Cooling	1	74/11~×
42	1907 15 210	Fan Drive	1	
●	3900 15 210	Fan Drive	1	74/11~×
43	99806 0620	Bolt, Fan & Fan Drive	4	
●	99796 0610	Bolt, Fan & Fan Drive	4	74/11~×

No.	Part Number	Description	Q'ty	Remarks
●	99971 0600	Washer, spring	4	74/12~Discarded
44	99796 0620	Bolt, Fan Drive	4	
45	1128 15 310B	Radiator (Manual)	1	
	1128 15 310D	Radiator (Manual)	1	74/4~×
	3625 15 310A	Radiator (Manual)	1	74/11~×
	1129 15 310B	Radiator (Automatic)	1	
	1129 15 310D	Radiator (Automatic)	1	74/4~×
●	3626 15 310A	Radiator (Automatic)	1	74/11~×
46	0222 15 205	Cap	1	
	0488 15 205	Cap	1	74/4~×
47	1128 15 317	Cock, Water Drain	1	
48	90786 0816	Bolt, Radiator	4	
49	1128 15 312A	Rubber, Insulation	2	
50	99786 0610	Bolt, Radiator	4	
51	~~99901 0600~~	~~Nut, Radiator & Oil Cooler~~	~~4~~	
	99906 0600	Nut, Radiator & Oil Cooler	4	From Car No. 1
	99952 0600	Washer, Plain	4	

No.	Part Number	Description	Q'ty	Remarks
	99971 0600	Washer, Spring	4	
52	0866 15 350 C	Tank, Sub	1	
52-1	0806 15 350	Tank, Sub	1	74/4～×
●	1052 15 350	Tank, Sub	1	74/6～○
●	1052 15 350 A	Tank, Sub	1	74/11～×
53	2981 15 205	Cap	1	74/4～Discarded
53-1	0494 15 251	Bracket, Sub Tank	1	74/4～Added Anew
●	1883 15 356	Bracket, Sub Tank	1	74/9～○
54	~~99786 0612~~	~~Bolt, Sub Tank~~	~~2~~	
	99786 0620	Bolt, Sub Tank	2	From Car No. 1
55	99285 0800	Clip, Water Hose	2	
	99283 1300	Clip, Water Hose	2	74/4～×
56	0866 15 351 A	Hose, Water-Sub Tank～Radiator	1	
	1881 15 351 A	Hose, Water-Sub Tank～Radiator	1	74/4～×
●	3625 15 351	Hose, Water-Sub Tank～Radiator	1	74/11～×
57	99289 0701	Clip	2	
58	1881 15 411 A	Shroud, Radiator-Upper	1	
	1881 15 411 B	Shroud, Radiator-Upper	1	From Car No. 1

No.	Part Number	Description	Q'ty	Remarks
	1881 15 411 C	Shroud, Radiator-Upper	1	73/12~○
●	1811 15 411 D	Shroud, Radiator-Upper	1	74/4~○
●	1881 15 411 E	Shroud, Radiator-Upper	1	74/6~○
●	3625 15 411	Shroud, Radiator-Upper	1	74/11~×
59	~~1881 15 421 A~~	~~Shroud, Radiator-Lower~~	~~1~~	
	1881 15 421 B	Shroud, Radiator-Lower	1	From Car No. 1
●	3625 15 421 A	Shroud, Radiator-Lower	1	74/11~×
60	99863 0516	Screw, Tapping	4	
●	99865 0516	Screw, Tapping	4	74/12~○
	99952 0500	Washer, Plain	4	
	~~0820 56 906~~	~~Nut, Spring~~	~~4~~	
	0820 56 905	Nut, Spring	4 5	From Car No. 1 74/1~Q'ty
61	907960 8 12	Bolt, Radiator Shroud	4	
62	1881 15 511	Hose, Water-Thermostat~Radiator	1	
●	3625 15 511	Hose, Water-Thermostat~Radiator	1	74/11~×
63	1881 15 521	Hose, Water-Radiator~Water Pump	1	
●	3625 15 521	Hose, Water-Radiator~Water Pump	1	74/11~×
64	99282 4900	Band, Hose-Water Hose (Fig. No. 64-1 Included)	4	
	1011 23 911	Bolt (Included in Fig. No. 64)	4	74/2~Added Anew
65	0866 18 496	Clip	1	

No.	Part Number	Description	Q'ty	Remarks
	2090 18 999	Clip	1	74/3～×
66	1881 18 880	Switch, Temperature	1	
●	1757 18 880	Switch, Temperature (U.S.A. Automatic)	1	74/11～×
67	99564 1600	Gasket	1	
68	0864 61 061 A	Cover	2	(Cars Without Car Heater)
69	99282 2600	Band, Hose	2	(Cars Without Car Heater)
70	99860 0514	Screw, Radiator Shroud	1	74/1～Added Anew
●	99786 0812	Screw, Radiator Shroud	1	74/11～×
	99952 0500	Washer, Plain	1	74/1～Added Anew
●	99952 0822	Washer, Plain	1	74/11～×

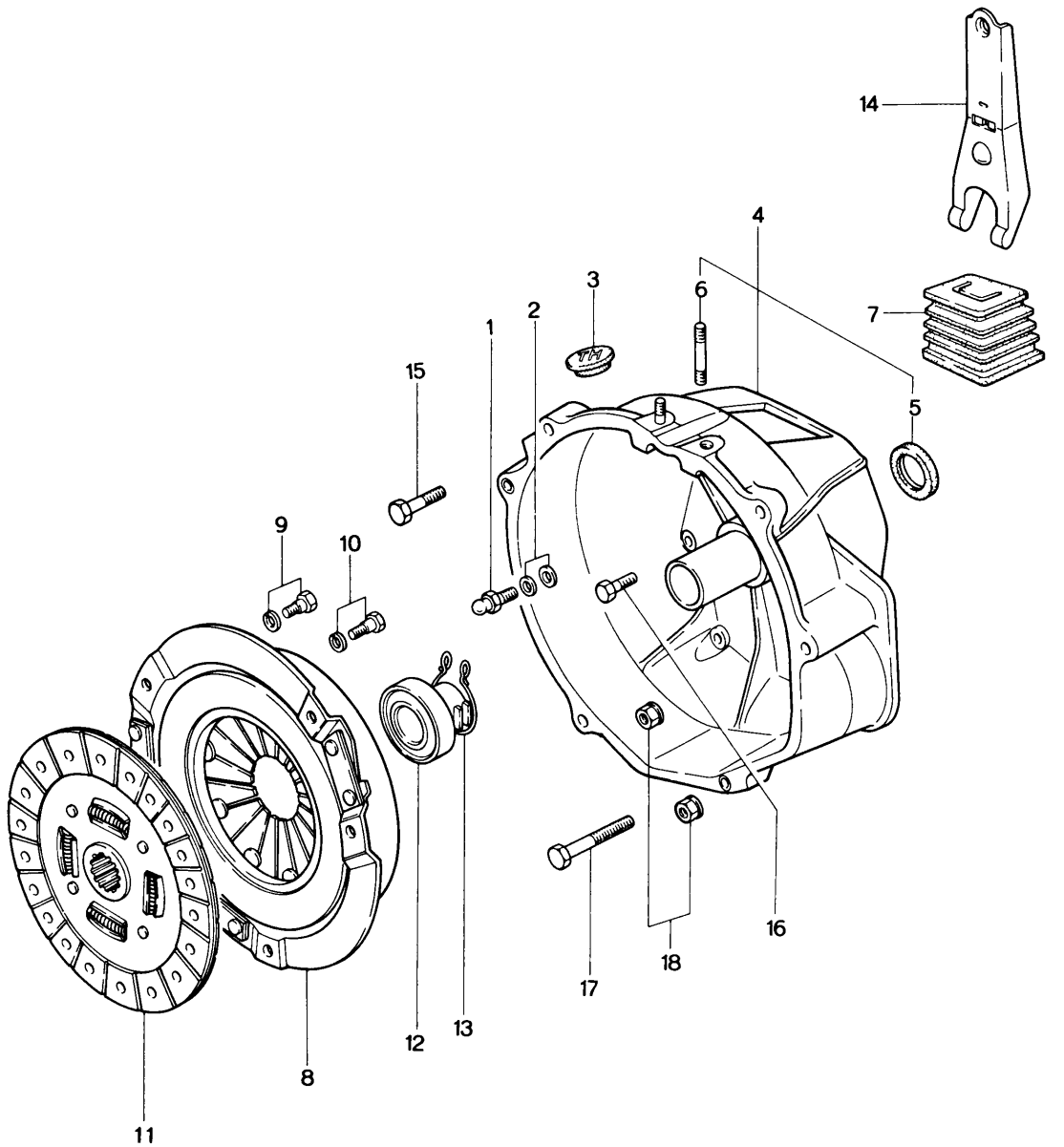
14
4
3
6
7
2
1
5
15
9
10
16
18
17
12
13
8
11

No.	Part Number	Description	Q'ty	Remarks
1	0603 16 102B	Pin, Pivot	1	
2	99953 1000	Washer, Plain	1	
	99971 1000	Washer, Spring	1	
3	0813 16 112	Cover, Top Hole	1	
4	1881 16 210A	Housing, Clutch	1	
5	0603 16 103	Oil Seal	1	
6	0222 16 105	Stud	2	
7	0866 16 214A	Cover, Dust	1	
8	0839 16 410B	Cover, Clutch	1	
9	0839 16 432	Bolt, Reamer-Clutch Cover	2	
	99971 0800	Washer, Spring	2	
10	99573 78118	Bolt, Clutch Cover	4	
	99971 0800	Washer, Spring	4	
11	0862 16 460	Disc, Clutch	1	
●	0862 16 460A	Disc, Clutch	1	74/11～△
12	0820 16 510	Collar, Clutch Release	1	
13	0820 16 515	Spring, Clutch Release Collar	1	
14	0454 16 520	Fork, Clutch Release	1	
15	99796 1045	Bolt, Clutch Housing	1	

No.	Part Number	Description	Q'ty	Remarks
16	99796 1035	Bolt, Clutch Housing	2	
17	99796 1090	Bolt, Clutch Housing	1	
18	99940 1001	Nut, Clutch Housing	8	

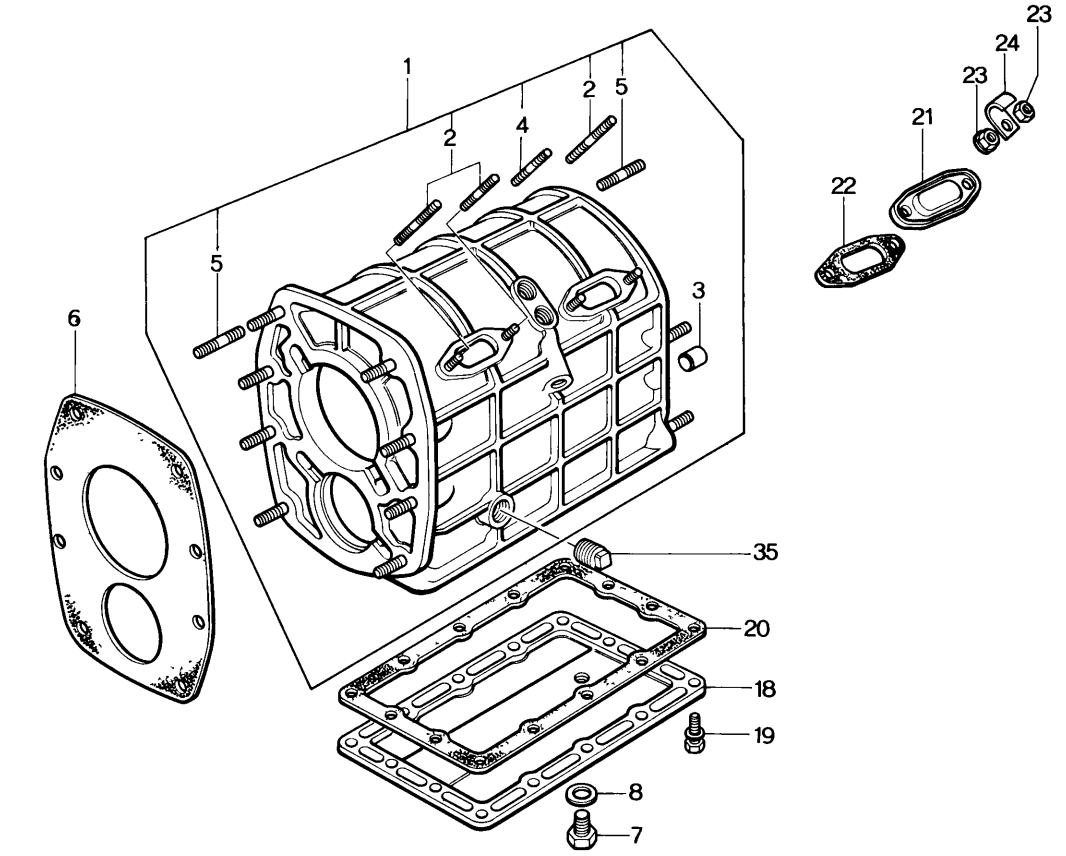
1
2
2
4
2
5
5
6
3
35
20
18
19
8
7
23
24
23
21
22

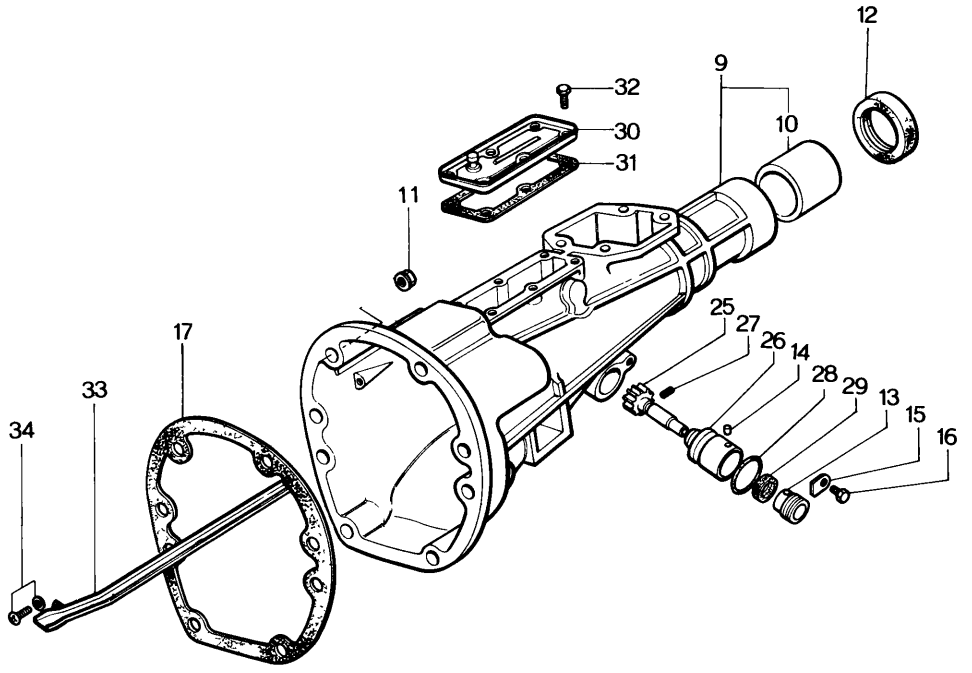
12
9
32
30
31
10
11
25
27
26
14
28
29
13
15
16
17
33
34

No.	Part Number	Description	Q'ty	Remarks
1	1011 17 100 B	Case, T/ mission	1	
2	0839 17 105	Stud, Blind Cover	3	
3	99233 1225	Pin, Knock	2	
● 4	~~99852 0610~~	~~Stud, Blind Cover~~	~~1~~	
●	99852 0610 F	Stud, Blind Cover	1	From Car No. 1
5	99855 1025	Stud, Front & Rear	12	
●	99855 1025 F	Stud, Front & Rear	2	From Car No. 1
6	0839 17 111	Gasket, T/ mission Case Front	1	
7	0810 17 121	Plug, Magnet	1	
8	99564 1800	Gasket, Magnet Plug	1	
9	1620 17 330 A	Housing, Extension	1	
10	0398 22 333	Bush, Extension Housing	1	
11	99940 1001	Nut, Extension Housing+ T/ mission Case	6	
12	0376 17 335	Oil Seal, Extension Housing	1	
●	0437 17 335	Oil Seal, Extension Housing	1	74/3 ~ ○
13	0662 17 351	Joint, Cable - Speedometer	1	
14	0187 17 352	Pin, Dowel - Speedometer Driven Gear	1	
15	0111 17 354	Plate, Lock - Cable Joint	1	
16	99796 0614	Bolt, Lock Plate	1	
17	0839 17 361	Gasket, Extension Housing & T/mission Case	1	

No.	Part Number	Description	Q'ty	Remarks
18	0862 17 371	Cover, Under	1	
19	99796 0620	Bolt, Under Cover	14	
20	0862 17 375	Gasket, Under Cover	1	
21	0810 17 381	Cover, Blind	2	
22	0810 17 385	Gasket, Blind Cover	2	
23	99906 0600	Nut, Blind Cover & Clip	6	
	99971 0600	Washer	4	
24	99276 0506	Clip, Wire Harness	2	
25	0862 17 441	Gear, Driven-Speedometer	1	
●	1668 17 441	Gear, Driven-Speedometer	1	7/11～×
26	0862 17 442	Sleeve, Driven Gear	1	
27	99222 0216	Pin, Spring-Driven Gear	1	
28	99541 02211	Ring, "O"-Driven Gear	1	
29	99586 10207	Oil Seal, Driven Gear	1	
30	1011 17 530	Cover, Blind	1	
31	1011 17 535	Gasket, Blind Cover	1	
32	99796 0608	Bolt, Blind Cover	6	
33	1011 17 540A	Pass, Oil	1	
34	99806 0614	Bolt, Oil Pass	1	
	99971 0600	Washer, Spring	1	
35	99502 4000	Plug	1	
	1011 89 175	Gasket Set, T/mission	1 Set	
		All Gaskets Relative to T/mission Included		

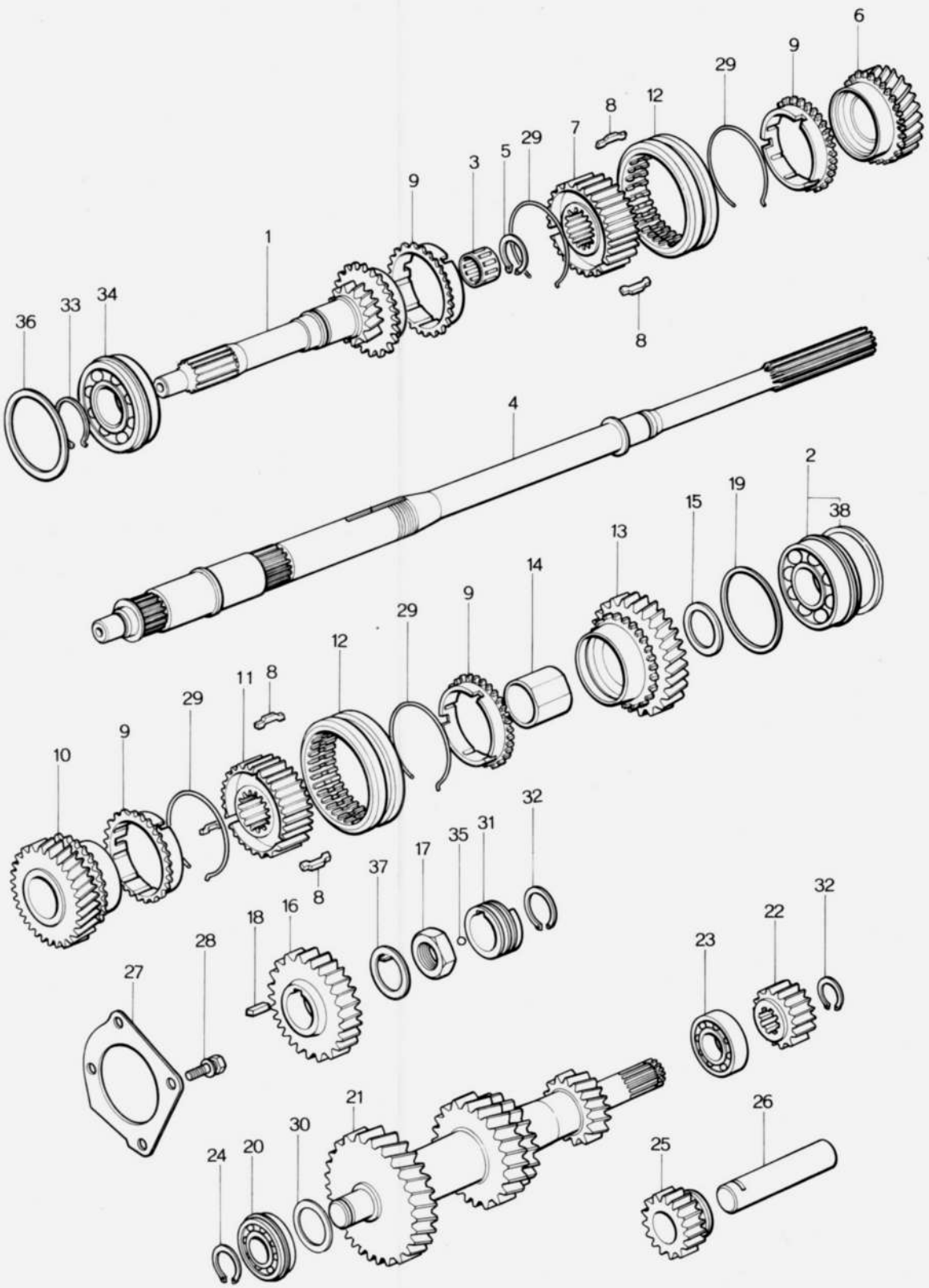
6
9
29
12
8
7
29
5
3
9
1
36
33
34
8
4
2
38
19
15
13
14
9
29
12
8
11
29
9
10
32
31
35
17
37
8
32
22
18
16
23
28
27
21
30
26
24
20
25

No.	Part Number	Description	Q'ty	Remarks
1	0862 17 201	Gear, Main Drive	1	
2	0810 17 204	Bearing, Ball (Fig. No. 38 Included)	1	
3	0810 17 205	Bearing, Needle Roller	1	
4	1011 17 221A	Shaft, Main	1	
5	0317 17 225	Ring, Snap	1	
6	0862 17 230	Gear (3rd)	1	
7	0862 17 241	Hub, Clutch (3rd & 4th)	1	
8	0187 17 243	Key, Synchronizer	6	
9	~~0881 17 245B~~	~~Ring, Synchronizer~~	~~4~~	
●	0881 17 245A	Ring, Synchronizer	4	From Car No. 1
●	0881 17 245B	Ring, Synchronizer	4	73/9～×
10	0862 17 250	Gear (2nd)	1	
11	0867 17 261	Hub, Clutch (1st & 2nd)	1	
12	~~0862 17 262A~~	~~Sleeve, Clutch Hub~~	~~2~~	
●	0862 17 262	Sleeve, Clutch Hub	2	From Car No. 1
●	0862 17 262A	Sleeve, Clutch Hub	2	73/9～×
●	0862 17 262B	Sleeve, Clutch Hub	2	75/2～○
13	1011 17 270	Gear (1st)	1	
14	0839 17 275	Sleeve, Gear	1	
15	0839 17 276	Washer, Thrust (ℓ =2.5)		
	0839 17 277	Washer, Thrust (ℓ =3.0)	Selective use 1	
	0839 17 278	Washer, Thrust (ℓ =3.5)		
16	0839 17 281	Gear, Reverse	1	
17	0839 17 284	Nut, Lock	1	
18	0839 17 285	Key	1	

No.	Part Number	Description	Q'ty	Remarks
19	0839 17 287	Shim, Adjust (t=0.1) } Selective use	2	
	0839 17 288	Shim, Adjust (t=0.3) } Selective use	1	
20	0821 17 297	Bearing, Ball (Fig. No. 38 included)	1	
21	1011 17 301	Gear, Counter Shaft	1	
22	0839 17 302	Gear, Reverse-Counter	1	
23	0821 17 303	Bearing, Needle	1	
24	0839 17 305	Ring, Snap	1	
25	0839 17 310	Gear, Idle-Reverse	1	
26	0839 17 313	Shaft, Reverse Idle Gear	1	
27	0839 17 321A	Stopper, Bearing	1	
28	99801 0820	Bolt, Bearing Stopper	4	
	99971 0800	Washer, Spring	4	
29	0600 17 324	Spring, Synchronizer	4	
30	0305 17 327	Shim, Adjust (t=0.1) } Selective use	2	
	0305 17 328	Shim, Adjust (t=0.3) } Selective use	1	
31	0862 17 341	Gear, Drive-Speedometer	1	
32	99573 2500	Ring, Snap	2	
33	99573 3500	Ring, Snap	1	
34	99606 33070	Bearing, Ball	1	
35	99611 1500	Ball, Steel	1	

No.	Part Number	Description	Q'ty	Remarks
36	99963 6910	Shim, Adjust (t=0.1)	2	Selective use
	99963 6930	Shim, Adjust (t=0.3)	1	
37	99978 3200	Washer, Lock	1	
38	0881 22 297	Clip, Ball Bearing (included in Fig. No. 2 & 20)	1	

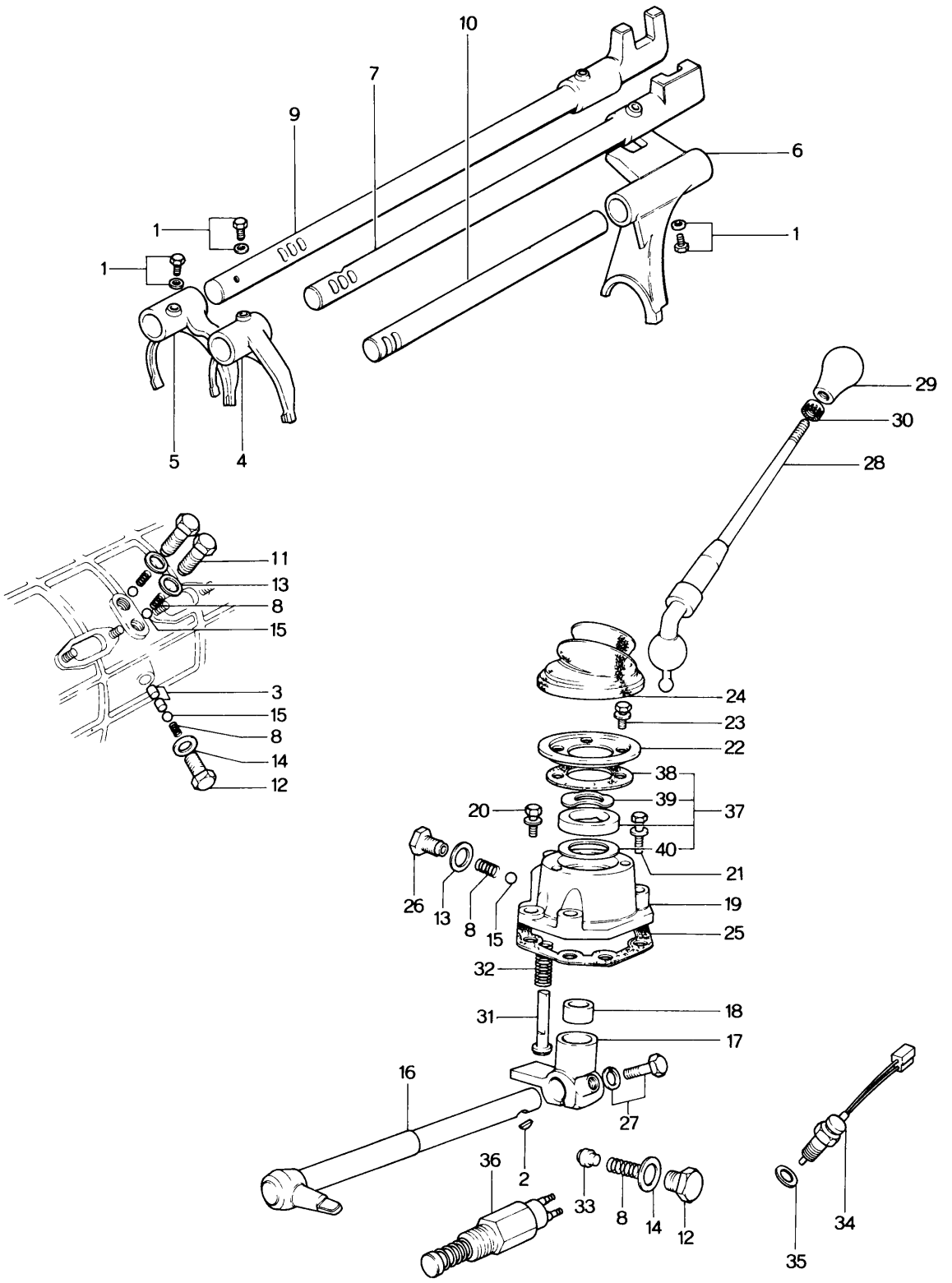
10
7
9
6
1
1
1
5
4
29
30
28
11
13
8
15
3
15
8
14
12
24
23
22
38
39
37
20
40
21
26
13
8
15
19
25
32
31
18
17
16
27
36
2
33
8
14
12
34
35

No.	Part Number	Description	Q'ty	Remarks
1	0118 17 313	Screw, Shift Fork & Rod	3	
	99971 0601	Washer, Spring	3	
2	0111 17 323	Key, Control Lever	1	
3	0114 17 351	Pin, Interlock	2	
4	0810 17 402	Fork, Shift (1st & 2nd)	1	
● 5	~~1010 17 404~~	~~Fork, Shift (3rd & 4th)~~	~~1~~	
●	0810 17 404	Fork, Shift (3rd & 4th)	1	From Car No. 1
6	1011 17 406	Fork, Shift (Reverse)	1	
7	1011 17 410	Rod, Shift (1st & 2nd)	1	
●	1011 17 410A	Rod, Shift (1st & 2nd)	1	73/11~△
8	0103 17 411	Spring, Cap	5	
● 9	~~1010 17 420~~	~~Rod, Shift (3rd & 4th)~~	~~1~~	
●	1011 17 420	Rod, Shift (3rd & 4th)	1	From Car No. 1
10	0839 17 431	Rod, Shift (Reverse)	1	
11	0221 17 441	Plug, Cap-Spring	2	
12	0259 17 441	Plug, Cap-Spring	2	
13	99562 1400	Gasket, Cap Plug	4	
14	99564 1000	Gasket, Cap Plug	2	
15	99611 2500	Ball, Steel	4	
16	1620 17 450	Lever, Control	1	
17	0398 17 461A	End, Control Rod	1	
18	0398 17 462A	Seat, Spring	1	
19	0303 17 470	Case, Change Control	1	

	No.	Part Number	Description	Q'ty	Remarks
	20	99796 0822	Bolt, Change Control Case	2	
	21	99796 0832	Bolt, Change Control Case	2	
	22	0221 17 473	Plate, Cover	1	
●		0647 17 473	Plate, Cover	1	74/7~○
	23	99806 0614	Bolt, Cover Plate	3	
●		99796 0612	Bolt, Cover Plate	3	74/7~○
●		99971 0600	Washer, Spring	3	74/7~Discarded
	24	0221 17 475B	Boot, Dust	1	
●		0862 17 475	Boot, Dust	1	74/7~○
	25	0271 17 478	Gasket, Change Control Case	1	
	26	0183 17 491	Plug, Cap-Spring	1	
	27	0187 17 492	Bolt, Reamer-Control Rod End	1	
		99971 0800	Washer, Spring	1	
	28	0866 17 510	Lever, Change	1	
●		1011 17 510B	Lever, Change	1	74/4~×
	29	0371 17 520	Knob, Change Lever (Sedan & Station Wagon)	1	
●		1934 17 520	Knob, Change Lever (Sedan & Station Wagon)	1	74/4~×
		0881 17 520	Knob, Change Lever (Coupe)	1	
●		1882 17 520	Knob, Change Lever (Coupe)	1	74/4~×
●		1931 17 520	Knob, Change Lever (Coupe)(Canada)	1	75/1~×
	30	0824 17 524	Nut, Knob (Coupe)	1	
	31	0221 17 551A	Spindle, Select Lock	1	
	32	0221 17 552	Spring, Select Lock Spindle	1	
	33	0303 17 561	Piece, Friction	1	
	34	1114 17 630	Switch, Neutral	1	
●		1769 17 630	Switch, Neutral (Canada)	1	75/1~×
	35	99564 1800	Gasket, Neutral Switch	1	
	36	0376 17 640A	Switch, Reverse Lamp	1	

No.	Part Number	Description	Q'ty	Remarks
37	0305 99 178	Change Bush Set	1	
38	0303 17 474	Gasket, Cover Plate	1	
39	0303 17 482	Washer, Wave	1	
40	99963 3310	Shim } Selective use	3	
	99963 3330	Shim } Selective use	1	

DISTRIBUTOR

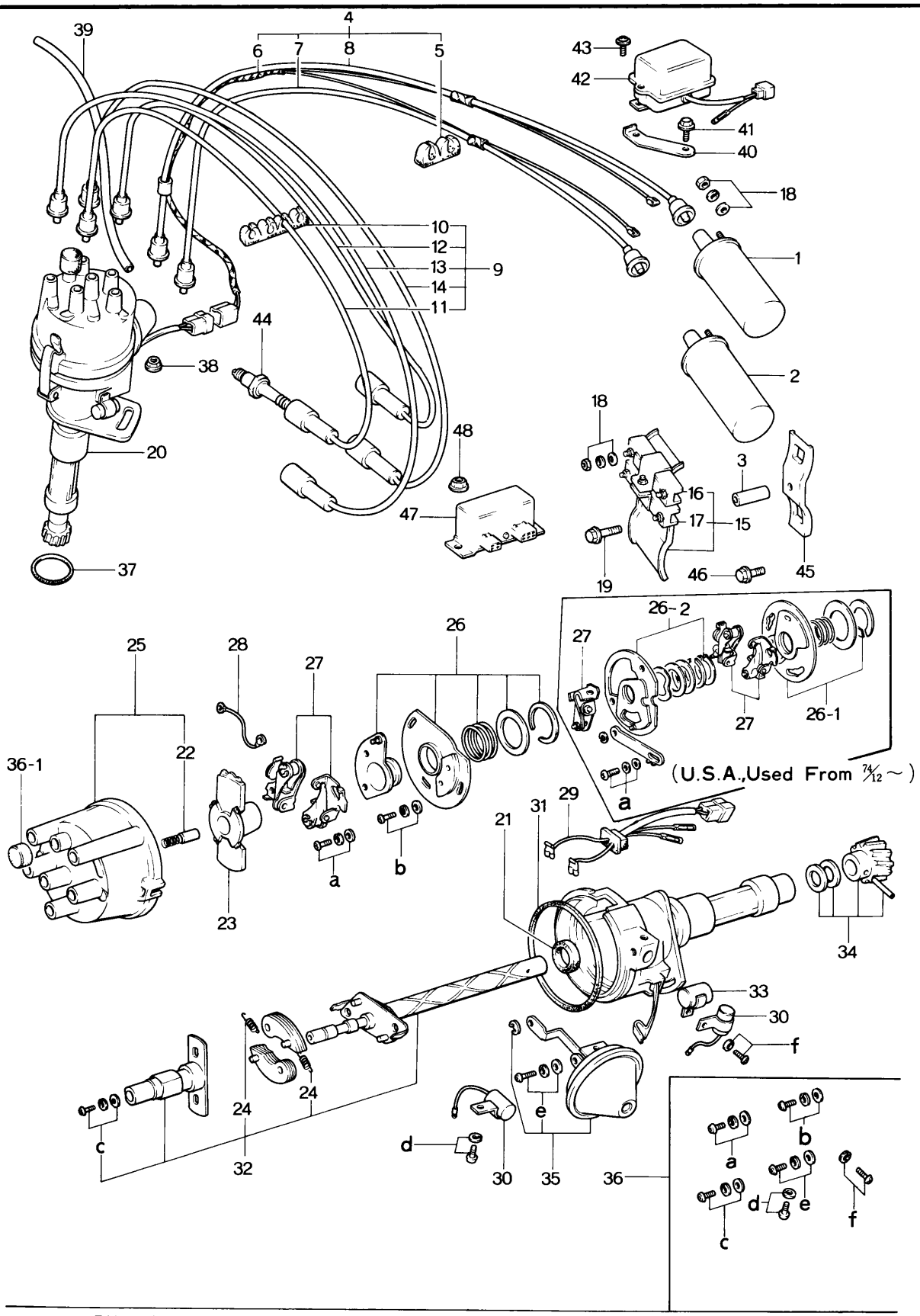

No.	Part Number	Description	Q'ty	Remarks
1	1562 18 100	Coil, Ignition (HP 5 — 13E)	1	
●	1562 18 100A	Coil, Ignition (HP 5 — 13E)	1	Ord. By 0370 18 100 74/12~○
2	1672 18 100	Coil, Ignition (HP 5 — 13J)	1	
3	0866 18 107	Pipe	1	
4	1757 18 110	Cord, High Tension	1	
	1757 18 110A	Cord, High Tension	1	74/1~△
●	3565 18 110	Cord, High Tension (U.S.A.)	1	74/11~×
●	3631 18 110	Cord, High Tension (Canada)	1	75/1~×
5	0820 18 111B	Supporter, High Tension Cord	1	
6	1757 18 115	Cord	1	
	1757 18 115A	Cord	1	74/1~△
●	3565 18 115	Cord (U.S.A.)	1	74/11~×
●	3631 18 115	Cord (Canada)	1	75/1~×
7	1757 18 120	Cord, High Tension (Trailing)	1	
8	1757 18 160	Cord, High Tension (Leading)	1	
9	1757 18 150	Cord, High Tension	1	
	1757 18 150A	Cord, High Tension	1	73/10~○

18 24 DISTRIBUTOR

No.	Part Number	Description	Q'ty	Remarks
	1757 18 150B	Cord, High Tension	1	73/12~○
	1757 18 150C	Cord, High Tension	1	74/1~△
10	0820 18 114	Supporter, High Tension Cord	1	
11	1757 18 130	Cord, High Tension (T—1)	1	
	1757 18 130A	Cord, High Tension (T—1)	1	74/1~△
12	1757 18 140	Cord, High Tension (T—2)	1	
	1757 18 140A	Cord, High Tension (T—2)	1	74/1~△
13	1757 18 170	Cord, High Tension (L—1)	1	
	1757 18 170A	Cord, High Tension (L—1)	1	74/1~△
14	1757 18 180	Cord, High Tension (L—2)	1	
	1757 18 180A	Cord, High Tension (L—2)	1	74/1~△
15	1011 18 190	Bracket, Ignition Coil	1	
●	1011 18 190A	Bracket, Ignition Coil	1	74/6~○
16	0845 18 101	Resistor	1	
17	0866 18 101	Resistor	1	
18	99906 0500	Nut, Ignition Coil & Resistor Terminal	6	
	99952 0500	Washer, Plain	6	
	99971 0500	Washer, Spring	6	

No.	Part Number	Description	Q'ty	Remarks
19	99786 0845	Bolt, Ignition Coil Bracket	1	
20	1881 18 200A	Distributor	1	
●	3625 18 200A	Distributor (U.S.A.)	1	74/11~×
●	3631 18 200A	Distributor (Canada)	1	75/1~×
21	0107 18 216A	Oil Seal	1	
22	1757 24 302	Contact	1	
23	1757 24 303	Rotor	1	
24	1881 24 308	Spring, Set	1	
●	3625 24 308	Spring, Set (U.S.A.)	1	74/11~×
25	1757 24 310	Cap	1	
26	1757 24 313	Base, Breaker	1	
● 26-1	1219 24 313	Base, Breaker (U.S.A.)	1	74/11~×
● 26-2	1219 24 323	Base, Breaker (U.S.A.)	1	74/11~ Added Anew
27	1757 24 314	Support, Arm	2 (U.S.A.) 3	74/11~Q'ty
28	1757 24 317	Wire (E), Lead	1	
29	1757 24 319	Wire, Lead	1	
●	1219 24 319	Wire, Lead (U.S.A.)	1	74/11~×
30	1757 24 322	Condenser	2 (U.S.A.) 3	74/11~Q'ty
31	1757 24 328	Gasket	1	

18 24 DISTRIBUTOR

	No.	Part Number	Description	Q'ty	Remarks
	32	1881 24 330	Governor Set	1	
●		3625 24 330	Governor Set (U.S.A.)	1	74/11～×
	33	1757 24 334	Condenser	1	
	34	1757 24 340	Coupling Set	1	
	35	1881 24 350	Vacuum Set	1	
●		3565 24 350	Vacuum Set (U.S.A.)	1	74/11～×
●		3900 24 350	Vacuum Set (Canada)	1	75/1～×
	36	1757 24 360	Screw Set	1	
●		3565 24 350	Screw Set (U.S.A.)	1	74/11～×
●		3900 24 360	Screw Set (Canada)	1	75/1～×
●	36-1	1757 24 311	Cap, Rubber	1	From Car No. 1
	37	99541 0350	Ring, "O" - Distributor	1	
	38	99940 0601	Nut, Distributor	1	
		99940 0603	Nut, Distributor	1	73/12～○
	39	0820 18 291B	Tube, Vacuum Control	1	
●		99340 04350	Tube, Vacuum Control	1	73/9～△ 74/11～Discarded
	40	1620 18 390	Bracket, Regulator	1	
	41	99796 0610	Bolt, Regulator Bracket	1	
	42	0259 18 391B	Regulator	1	

No.	Part Number	Description		Q'ty	Remarks
	0453 18 391	Regulator		1	73/10~△
43	99786 0612	Screw, Regulator		2	
44	2328 18 600	Plug, Spark (B7EM) (N.G.K. Make)		4	
	1757 18 600	Plug, Spark (B7EMV) (N.G.K. Make)	Selective use	4	
	1758 18 600	Plug, Spark (B8EMV) (N.G.K. Make)		4	
45	0866 18 810	Bracket		1	
46	99786 0612	Screw		2	
47	1757 18 940A	Control Unit		1	
●	3565 18 940	Control Unit (U.S.A.)	(Manual)	1	74/11~×
●	3631 18 940	Control Unit (Canada)		1	75/1~×
	1758 18 940A	Control Unit		1	
●	3567 18 940	Control Unit (U.S.A.)	(Automatic)	1	74/11~×
●	3632 18 940	Control Unit (Canada)		1	75/1~×
48	99940 0600	Nut		3	
●	99786 0612B	Screw, Tapping		3	74/11~×

ALTERNATOR

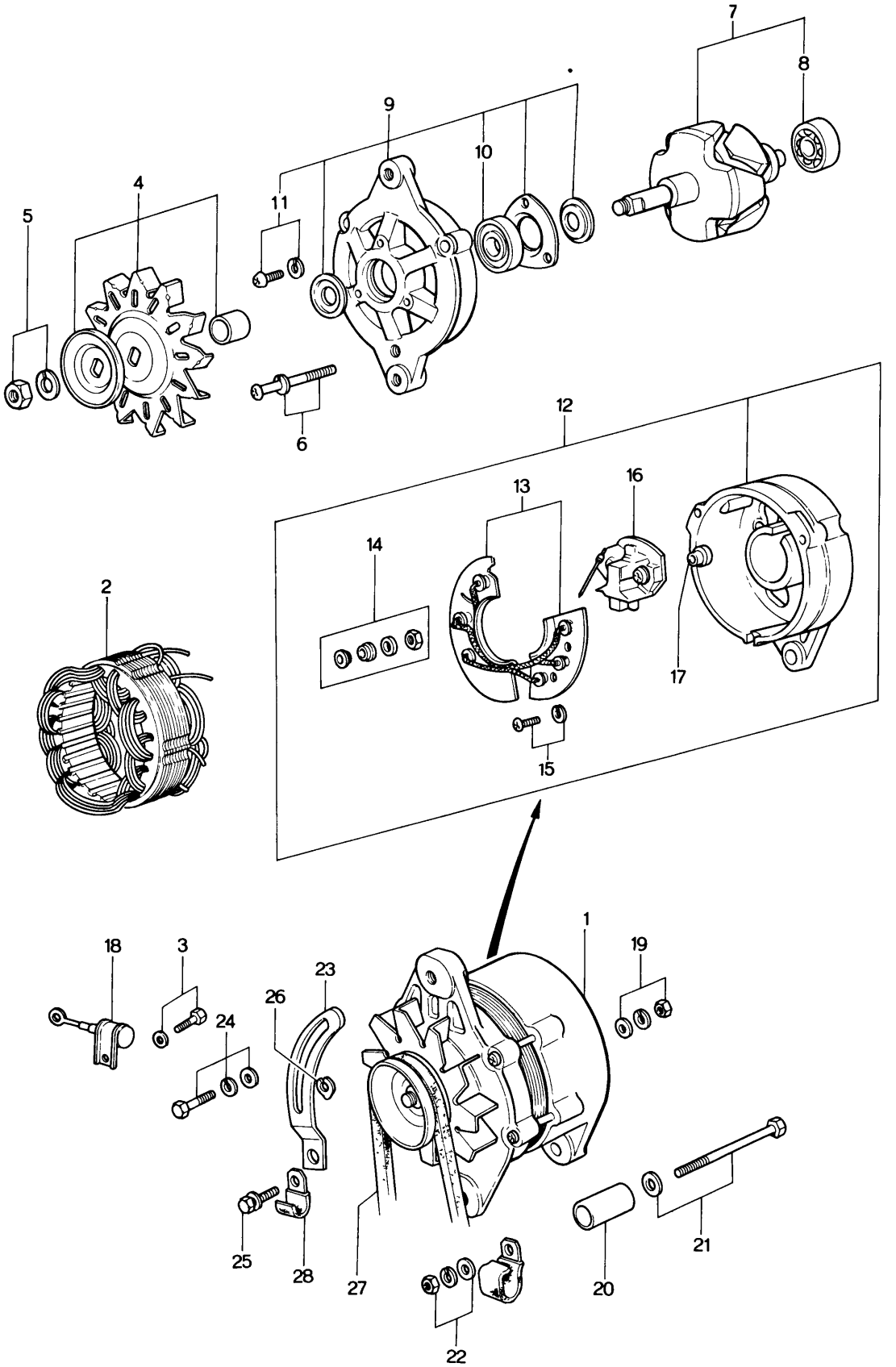

No.	Part Number	Description	Q'ty	Remarks
1	1011 18 300	Alternator	1	
2	1011 24 501	Starter	1	
3	1011 24 527	Screw	1	
4	0866 24 530	Pulley	1	
5	0866 24 533	Nut Set	1	
6	0866 24 535	Screw Set	1	
7	0866 24 540	Rotor (Fig. No. 8 included)	1	
8	0820 24 503	Bearing	1	
9	0866 24 550	Bracket, Front (Fig. No. 10&11 included)	1	
10	0208 24 514	Bearing	1	
11	0866 24 526	Screw	3	
12	1011 24 560	Bracket, Rear (Fig. No. 13~17 included)	1	
13	1011 24 510	Rectifier Ass'y	1	
14	1011 24 533	Nut Set	1	
15	1011 24 534	Screw	1	
16	1011 24 541	Holder, Brush	1	
17	1011 24 563	Mould	1	
18	0290 24 581	Condenser	1	
19	99906 0500	Nut, Alternator Terminal	1	

No.	Part Number	Description	Q'ty	Remarks
	99952 0500	Washer, Plain	1	
	99971 0500	Washer, Spring	1	
20	1757 18 311	Spacer, Alternator	1	
21	99800 10115	Bolt, Alternator	1	
22	99940 1001	Nut, Alternator	1	
23	1881 18 361	Strap, Alternator	1	
24	99796 0825	Bolt, Strap	1	
25	99796 0816	Bolt, Alternator	1	
	907960 8 20	Bolt, Alternator	1	73/12~○
26	0222 18 375	Shim (t=0.3)		
	0222 18 376	Shim (t=0.5) } Selective use	1	
	0222 18 377	Shim (t=0.7)		
27	1672 18 381A	Belt, "V"	1	
28	99276 1608	Clip, Wire Harness	1	
	99276 2008	Clip, Wire Harness	2	73/11~△

STARTER & BATTERY (MANUAL)

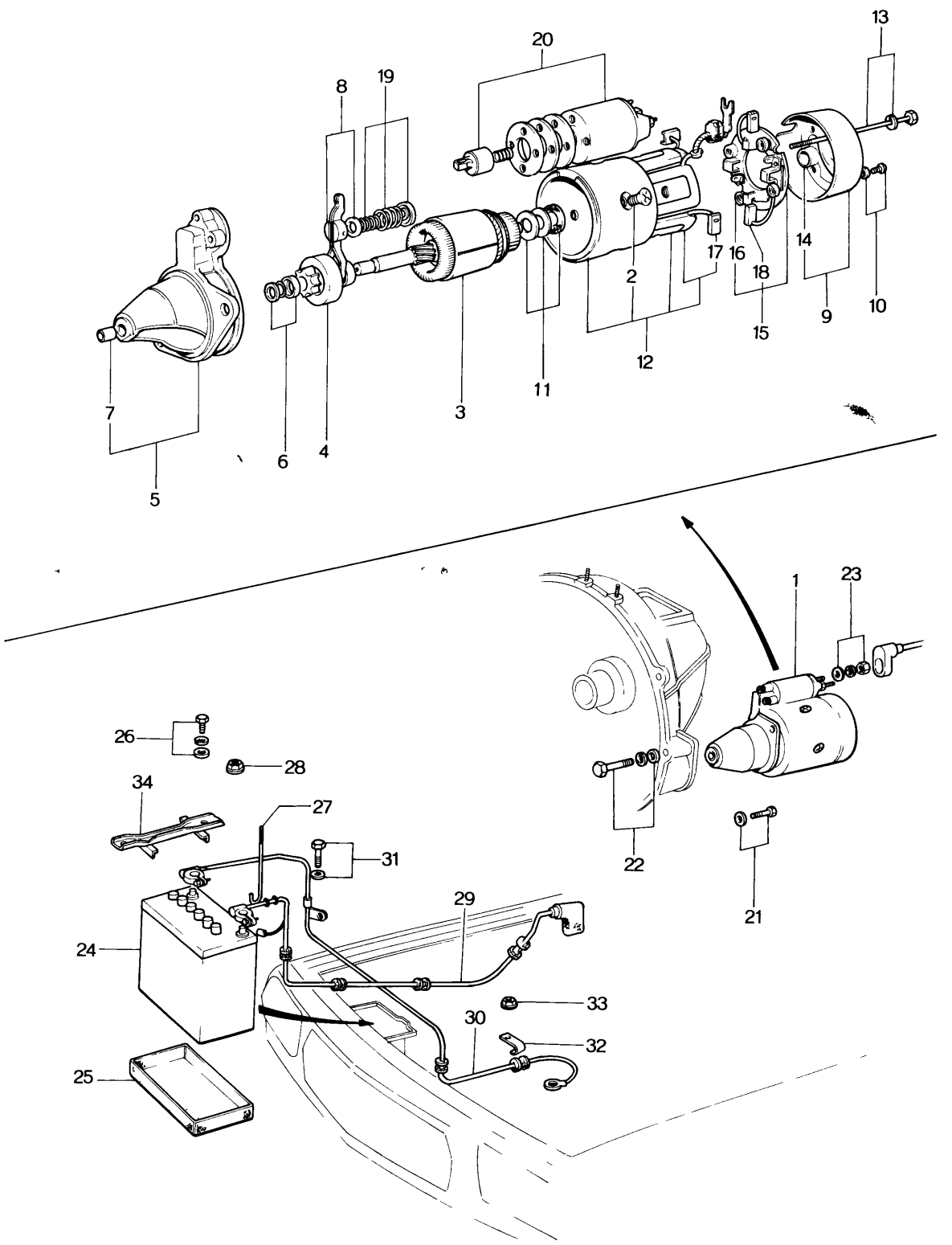

	No.	Part Number	Description	Q'ty	Remarks
	1	1757 18 400A	Starter	1	
●		1757 18 400B	Starter	1	74/11~×
	2	0866 24 704	Screw	4	
	3	1757 24 705	Armature	1	
	4	1757 24 709	Clutch, Over Running	1	
	5	1757 24 710	Bracket, Front	1	
●		1757 24 710A	Bracket, Front	1	74/11~×
	6	0426 24 712	Stopper Set, Piston	1	
	7	0426 24 715	Sleeve	1	
	8	0866 24 716	Lever	1	
	9	0845 24 720	Bracket, Rear	1	
	10	0426 24 725	Screw Set	1	
	11	0426 24 726	Washer Set	1	
	12	1757 24 730	Yoke	1	
	13	0426 24 731	Bolt Set	1	
	14	0222 24 741	Sleeve	1	
	15	0222 24 750	Holder	1	
	16	0222 24 752A	Spring, Brush	4	
	17	0222 24 753	Brush	2	
	18	0426 24 753	Brush	2	
	19	0426 24 754	Spring Set	1	
	20	0324 24 760	Switch, Starter	1	

STARTER & BATTERY (MANUAL)

No.	Part Number	Description	Q'ty	Remarks
21	99801 1035	Bolt, Starter	1	
	99971 1000	Washer, Spring	1	
22	99803 10120	Bolt, Starter	1	
	99953 1000	Washer, Plain	1	
	99971 1000	Washer, Spring	1	
23	99901 0800	Nut, Starter Terminal	1	
	99952 0800	Washer, Plain	1	
	99971 0800	Washer, Spring	1	
24	1672 18 520	Battery (National Make N70Z) } Selective use	1	
	1620 18 520	Battery (GS Make N70Z) } Selective use	1	
	1689 18 520	Battery (Yuasa Make Y110) (Canada)	1	
●	1689 18 520	Battery (Yuasa Make Y110) (U.S.A.)	1	$^{74}/_{11}$~×
25	2981 54 222	Tray, Battery	1	
●	2113 54 295	Tray, Battery	1	$^{74}/_{11}$~×
●	~~2113 54 222~~	~~Tray, Battery (Canada)~~	~~1~~	
26	907860 6 16	Bolt, Battery Clamp	1	
●	907860 6 18	Bolt, Battery Clamp	1	$^{74}/_{12}$~○
27	0243 56 231	Bolt, Clamp	1	
28	99940 0602	Nut	1	
29	1881 67 100	Cable, Battery Positive	1	
	1881 67 100 A	Cable, Battery Positive	1	$^{74}/_{2}$~△
30	0872 67 110	Wire, Battery Earth	1	
31	99804 0820	Bolt, Earth Wire	1	
	99971 0800	Washer, Spring	1	
32	99276 1208	Clip	1	
33	99940 0800	Nut, Earth Wire	1	
34	1524 70 980	Clamp, Battery	1	
●	3625 70 980	Clamp, Battery	1	$^{74}/_{11}$~×

STARTER & BATTERY (AUTOMATIC)

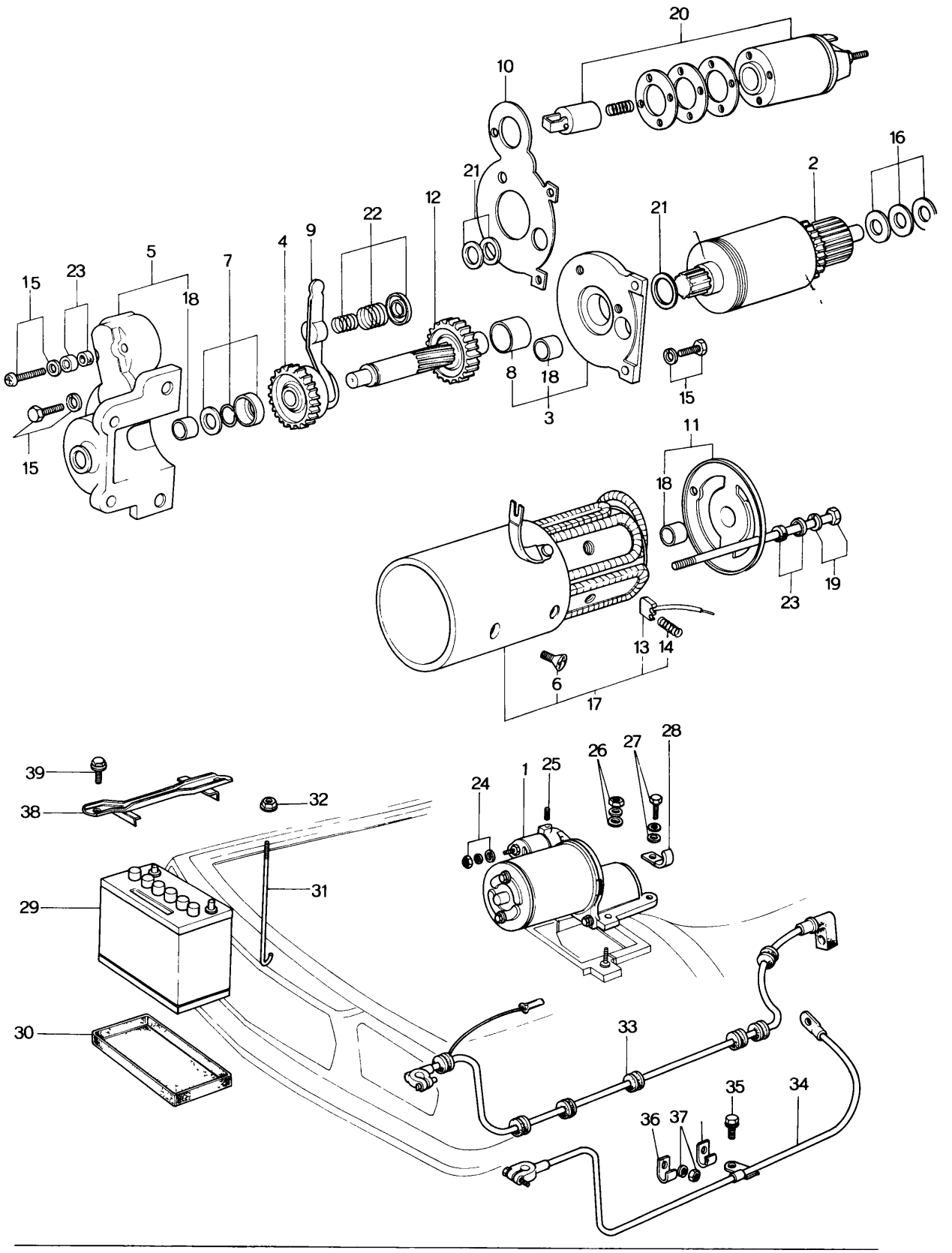

STARTER & BATTERY (AUTOMATIC) 18 24

No.	Part Number	Description	Q'ty	Remarks
1	2869 18 400A	Starter	1	
2	0839 24 705	Armature	1	
3	0839 24 706	Bracket, Inner	1	
4	0839 24 709	Clutch, Over Running	1	
5	2869 24 710	Bracket, Front	1	
6	0727 24 712	Screw	4	
7	2869 24 712	Stopper Set	1	
8	0839 24 715	Metal	1	
9	0839 24 716	Lever	1	
10	0839 24 719	Plate, Water Proof	1	
11	2869 24 720	Bracket, Rear	1	
12	0839 24 721	Shaft, Pinion	1	
13	0839 24 723	Brush	4	
14	0839 24 724	Spring, Brush	4	
15	2869 24 725	Screw Set	1	
16	2869 24 726	Washer Set	1	
17	2869 24 730	Yoke	1	
18	0249 24 731	Metal, Bracket	3	
19	0559 24 731	Bolt Set, Through	2	
20	2869 24 736	Switch	1	

STARTER & BATTERY (AUTOMATIC)

No.	Part Number	Description	Q'ty	Remarks
21	2869 24 748	Washer Set	1	
22	2869 24 754	Spring Set, Lever	1	
23	0559 24 760	Gasket Set	1	
24	99901 0800	Nut, Starter "B" Terminal	1	
	99952 0800	Washer, Plain	1	
	99971 0800	Washer, Spring	1	
25	99851 0814A	Stud, Starter	1	
26	99940 0800	Nut, Starter	2	
27	99796 0825	Bolt, Starter	2	
28	99276 0808	Clip	1	
29	1689 18 520	Battery (Y110— 5) (Yuasa Make)	1	
30	2113 54 295	Tray, Battery	1	
31	0243 56 231	Bolt, Clamp	1	
32	99940 0602	Nut	1	
33	0872 67 100A	Cable, Battery Positive	1	
34	0872 67 110	Wire, Battery Earth	1	
35	99804 0820	Bolt, Earth Wire	1	
	99971 0800	Washer, Spring	1	
36	99276 1208	Clip	1	

STARTER & BATTERY (AUTOMATIC)
(USED FROM 74/4)

18 24

No.	Part Number	Description	Q'ty	Remarks
● 1	~~1758 18 400A~~	~~Starter~~	~~1~~	
●	1758 18 400B	Starter	1	From Car No. 1
2	0866 24 704	Screw	4	
3	1758 24 705	Armature	1	
4	1757 24 709	Clutch, Over Running	1	
5	1758 24 710	Bracket Front	1	
6	0426 24 712	Stopper Set, Piston	1	
7	0426 24 715	Sleeve	1	
8	0866 24 716	Lever	1	
9	0845 24 720	Bracket, Rear	1	
10	0426 24 725	Screw Set	1	
11	1758 24 726	Washer Set	1	
12	1758 24 730	Yoke	1	
13	1758 24 731	Bolt Set	1	
14	0222 24 741	Sleeve	1	
15	1758 24 750	Holder	1	
16	0426 24 753	Brush	2	
17	0426 24 754	Spring Set	1	
18	1758 24 736	Switch Set	1	
19	1758 24 706	Bracket, Center	1	

18 24 STARTER & BATTERY (AUTOMATIC)
(USED FROM 74/4)

No.	Part Number	Description	Q'ty	Remarks
20	99801 1032	Bolt, Starter	1	
	99971 1000	Washer, Spring	1	
21	99801 1075	Bolt, Starter	1	
	99953 1000	Washer, Plain	1	
	99971 1000	Washer, Spring	1	
22	99901 0800	Nut, Starter Terminal	1	
	99952 0800	Washer, Plain	1	
	99971 0800	Washer, Spring	1	
● 23	1620 18 520	Battery (GS Make N70 Z)	1	(U.S.A.) Selective use
●	1672 18 520	Battery (National Make N70Z)	1	
●	1689 18 520	Battery (Yuasa Make Y110) (U.S.A.)	1	74/11~×
	1689 18 520	Battery (Yuasa Make Y110) (Canada)	1	
● 24	2981 54 222	Tray, Battery (U.S.A.)	1	
●	2113 54 295	Tray, Battery (U.S.A.)	1	74/11~×
	2113 54 295	Tray, Battery (Canada)	1	
25	99786 0616	Bolt, Battery Clamp	1	
●	99786 0618	Bolt, Battery Clamp	1	74/12~○
●	99971 0600	Washer, Spring	1	74/11~ Added Anew
●	99953 0600	Washer, Plain	1	
26	0243 56 231	Bolt, Clamp	1	
27	99940 0620	Nut	1	
28	1881 67 100 A	Cable, Battery Positive	1	
29	0872 67 110	Wire, Battery Earth	1	
30	99804 0820	Bolt, Earth Wire	1	
	99971 0800	Washer, Spring	1	

No.	Part Number	Description	Q'ty	Remarks
37	99940 0800	Nut, Earth Wire	2	
38	1524 70 980	Clamp, Battery	1	
39	90786 0616	Bolt, Battery Clamp	1	

AUTOMATIC T/MISSION
(CONVERTER, OIL PUMP & PIPING

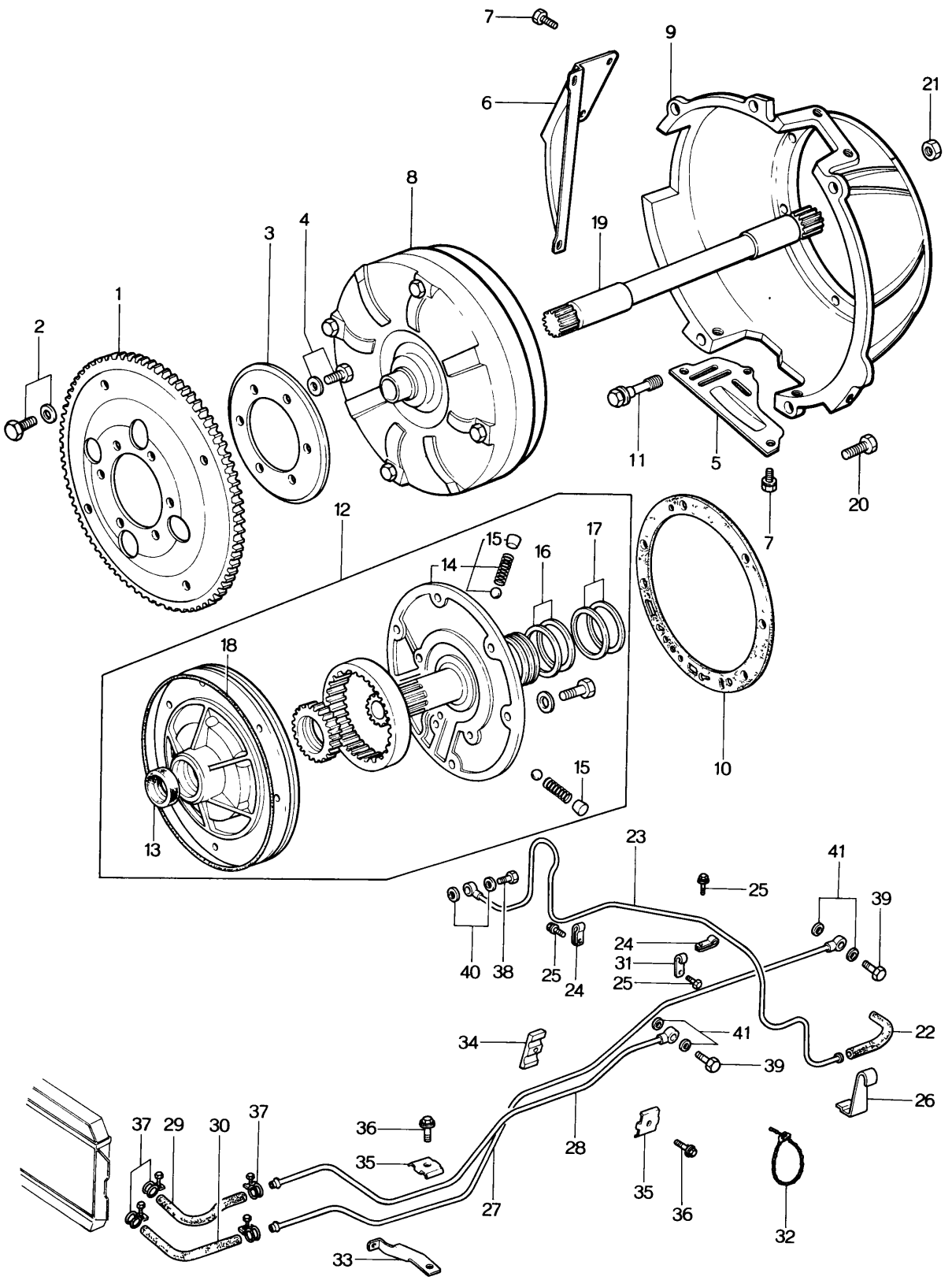

No.	Part Number	Description	Q'ty	Remarks
1	2070 19 020	Plate, Drive	1	
2	99781 1012	Bolt, Drive Plate	4	
	99971 1000	Washer, Spring	4	
3	0842 19 025	Plate, Backing	1	
4	99781 1018	Bolt, Backing Plate	6	
	99971 1000	Washer, Spring	6	
5	1908 19 027	Cover, Under	1	
6	0454 19 028	Cover, Side	1	
7	99806 0610	Bolt, Under Cover & Side Cover	7	
	99971 0600	Washer, Spring	7	
8	0338 19 100A	Converter, Torpue	1	
9	1908 19 211	Housing, Converter	1	
10	0338 19 215	Gasket, Oil Pump	1	
11	0338 19 216	Bolt, Housing	6	
12	0338 19 220	Pump, Oil	1	
13	0338 19 223	Oil Seal	1	
14	0338 19 240	Cover	1	
15	0338 19 245	Plug, Tapered	2	
16	0338 19 256	Ring, Seal	2	

AUTOMATIC T/MISSION
(CONVERTER, OIL PUMP & PIPING)

No.	Part Number	Description	Q'ty	Remarks
17	0338 19 257	Ring, Seal	2	
18	0338 19 258	Seal, Lathe Cut Ring	1	
19	0338 19 678	Shaft, Input	1	
20	99796 1035	Bolt, Housing	2	
	99796 1040	Bolt	1	
	99796 1045	Bolt	2	
21	99940 1001	Nut, Housing	2	
22	0338 19 904	Hose, Vacuum (Rr.)	1	
23	1908 19 910	Pipe, Vacuum	1	
24	0842 19 915A	Clip, Vacuum Pipe	2	
25	99796 0610	Bolt, Clip	3	
26	0436 19 917	Clip	1	
27	1015 19 920D	Pipe, Oil	1	
28	1015 19 930C	Pipe, Oil	1	
29	1129 19 933	Hose, Oil	1	
30	1129 19 934	Hose, Oil	1	
31	1633 19 938	Clip, Pipe	1	
32	99709 0108	Band, Oil Pipe	1	
33	1883 19 940	Bracket, Pipe	1	

AUTOMATIC T / MISSION
(CONVERTER, OIL PUMP & PIPING) (USED FROM 74/4)

No.	Part Number	Description	Q'ty	Remarks
1	2850 13 331	Spacer, Oil Pipe	1	
2	1758 19 020	Plate, Drive	1	
●	1758 19 020A	Plate, Drive	1	74/7~△
3	99781 1012	Bolt, Drive Plate	4	
	99971 1000	Washer, Spring	4	
4	0842 19 025	Plate, Backing	1	
5	99781 1018	Bolt, Backing Plate	6	
	99971 1000	Washer, Spring	6	
6	1908 19 027	Cover, Under	1	
7	0454 19 028	Cover, Side	1	
●	0454 19 028A	Cover, Side	1	74/11~×
8	99796 0610	Bolt, Under & Side Cover	7	
9	1758 19 028	Cover, Top	1	
10	99796 0610	Bolt, Top Cover	1	
11	99796 0816	Bolt, Top Cover	2	
12	0338 19 100A	Converter, Torque	1	
13	1758 19 211A	Housing, Converter	1	
14	1758 19 215	Gasket, Oil Pump	1	
15	0338 19 216	Bolt, Housing	6	
16	1758 19 220	Pump, Oil	1	
17	0338 19 223	Oil Seal	1	

AUTOMATIC T / MISSION

(CONVERTER, OIL PUMP & PIPING) (USED FROM 74/4)

No.	Part Number	Description	Q'ty	Remarks
18	1758 19 240	Cover	1	
19	0338 19 245A	Ball	2	
20	0338 19 256	Ring, Seal	2	
21	0338 19 257	Ring, Seal	2	
22	0338 19 258	Seal, Lathe Cut Ring	1	
23	0338 19 678	Shaft, Input	1	
24	99796 1035	Bolt, Housing	2	
	99796 1040	Bolt	1	
	99796 1045	Bolt	1	
25	99940 1001	Nut, Housing	1	
26	0338 19 904A	Hose, Vacuum (Rr.)	1	
27	0808 19 910	Pipe, Vacuum	1	
28	0842 19 915A	Clip, Vacuum Pipe	1	
29	99796 0610	Bolt, Clip	3	
30	1053 19 920A	Pipe, Oil	1	
●	1053 19 920B	Pipe, Oil	1	74/6～×
31	1053 19 930A	Pipe, Oil	1	
●	1053 19 930B	Pipe, Oil	1	74/6～×
32	1129 19 933	Hose, Oil	1	
32-1	1129 19 934	Hose, Oil	1	
33	1758 19 940	Bracket, Pipe	1	
34	1015 19 945A	Plate, Spacer	1	

No.	Part Number	Description	Q'ty	Remarks
35	2579 19 989	Clip, Pipe	1	
36	99276 1006	Clip, Pipe	1	
37	0866 45 903A	Clip, Pipe	2	
38	99796 0620	Bolt, Clip	2	
39	99282 1700	Band, Hose	4	
40	99381 0600	Bolt, Connector - Vacuum Pipe	1	
41	99381 0800	Bolt, Connector - Oil Pipe	2	
42	99564 1000	Gasket, Connector Bolt	2	
43	99564 1200	Gasket, Connector Bolt	4	
44	99709 0108	Band, Oil Pipe	1	
45	99276 0806	Clip, Wire Harness	1	
●	99276 1006	Clip, Wire Harness	1	74/4~○
46	99288 0808	Clip, Oil Pipe	1	
47	99952 0600	Washer, Plain	1	
	0808 19 090	Shipping T/mission	1	

AUTOMATIC T / MISSION

(CASE & MAIN CONTROL) (USED UP TO 71/3)

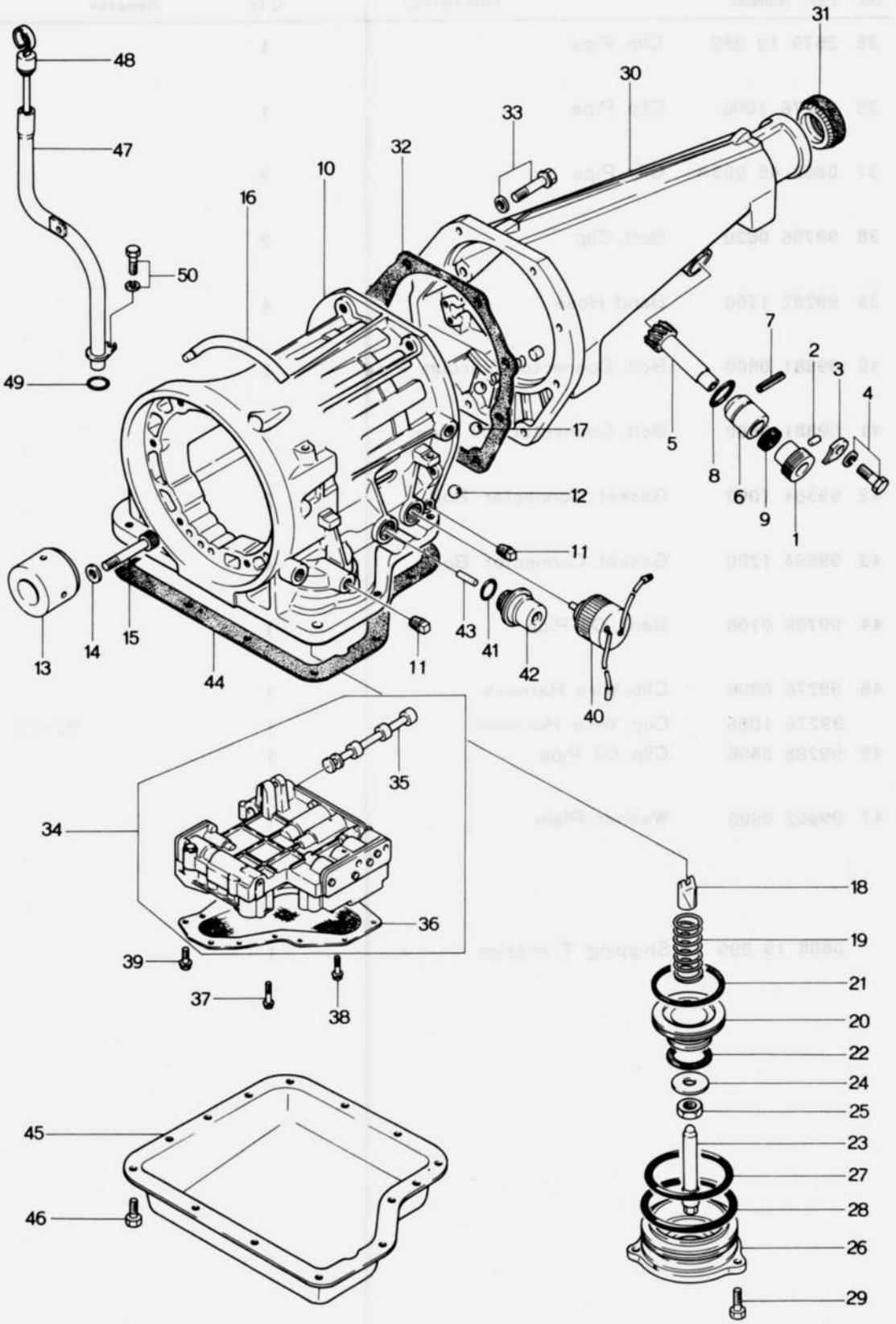

No.	Part Number	Description	Q'ty	Remarks
1	0862 17 351	Joint, Cable-Speedometer	1	
2	0187 17 352	Pin, Dowel-Driven Gear	1	
3	0111 17 354	Plate, Lock-Cable Joint	1	
4	99806 0614	Bolt, Lock Plate	1	
	99971 0600	Washer, Spring	1	
5	0862 17 441	Gear, Driven-Speedometer	1	
6	0862 17 442	Sleeve, Speedometer Driven Gear	1	
7	99222 0216	Pin, Spring-Driven Gear	1	
8	99541 02211	Ring, "O"-Driven Gear	1	
9	99586 10207	Oil Seal, Driven Gear	1	
10	0338 19 310	Case, T/mission	1	
11	0338 19 331A	Plug, Square Head	3	
12	99611 1750	Ball, Steel	3	
13	0338 19 336	Race, Inner	1	
14	0338 19 337	Washer, Plain	8	
15	0338 19 338	Bolt	8	
16	0397 19 340	Breather, Air	1	
17	99611 2000	Ball, Steel	2	

AUTOMATIC T / MISSION

(CASE & MAIN CONTROL)

No.	Part Number	Description	Q'ty	Remarks
18	0338 19 361	Strut, Band	1	
19	0338 19 363	Spring, Return-Piston	1	
20	0842 19 381	Piston, Band Servo	1	
21	0338 19 384	Seal, Piston	1	
22	0842 19 385	Seal, Piston	1	
23	0338 19 386A	Stem, Piston	1	
24	0338 19 388A	Washer, Plain	1	
25	0338 19 389	Nut, Band Adjust	1	
26	0842 19 391	Retainer, Servo	1	
27	0842 19 394	Seal, Lathe Cut Ring	1	
28	0338 19 395	Seal, "O" Ring	1	
29	0338 19 397	Bolt	3	
30	1840 19 710	Housing, Extension	1	
31	0376 17 335	Oil Seal	1	
32	0338 19 735	Gasket, Extension Housing	1	
33	0338 19 737	Bolt, Extension Housing	8	
	0338 19 739	Washer, Plain	8	

No.	Part Number	Description	Q'ty	Remarks
34	0397 19 750	Valve, Control	1	
35	0338 19 768	Valve, Manual	1	
36	0338 19 815	Strainer, Oil	1	
37	0338 19 831	Bolt, Control Valve	3	
38	0338 19 832	Bolt, Control Valve	2	
39	0338 19 833	Bolt, Control Valve	2	
40	1675 19 821	Solenoid, Down Shift	1	
41	0338 19 822	Seal, "O" Ring	2	
42	0338 19 823	Diaphragm, Vacuum	1	
43	0338 19 825	Rod, Diaphragm (ℓ=30.0)		
	0338 19 826	Rod (ℓ=31.0)		
	0338 19 827	Rod (ℓ=30.5) Selective use	1	
	0338 19 828	Rod (ℓ=29.0)		
	0338 19 829	Rod (ℓ=29.5)		
44	0338 19 835A	Gasket, Oil Pan	1	
45	0338 19 836	Pan, Oil	1	
46	0338 19 837	Bolt, Oil Pan	14	
47	2070 19 870	Tube, Oil Level	1	
48	0338 19 880	Gauge, Oil Level	1	

No.	Part Number	Description	Q'ty	Remarks
49	99541 01601	Ring, "O"-Oil Level Tube	1	
50	99806 0614	Bolt, Oil Level Tube	1	
	99971 0600	Washer, Spring	1	
	0397 22 100	Gasket & Seal Kit	1	Set
	0376 17 335	Oil Seal	1	
	0338 19 215	Gasket, Oil Pump	1	
	0338 19 223	Seal, Oil Pump Housing	1	
	0338 19 258	Seal, Lathe Cut Ring	1	
	0338 19 432	Seal, "O" Ring	1	
	0338 19 446	Seal, "O" Ring	1	
	0338 19 603	Seal, Piston	1	
	0338 19 604	Seal, "O" Ring	1	
	0338 19 735	Gasket, Extension Housing	1	
	0338 19 822	Seal, "O" Ring	2	
	0338 19 835A	Gasket, Oil Pan	1	

No.	Part Number	Description	Q'ty	Remarks
1	0862 17 351	Joint, Cable - Speedometer	1	
2	0187 17 352	Pin, Dowel - Driven Gear	1	
3	0111 17 354	Plate, Lock - Cable Joint	1	
4	99806 0614	Bolt, Lock Plate	1	
	99971 0600	Washer, Spring	1	
5	0862 17 441	Gear, Driven - Speedometer	1	
●	1669 17 441	Gear, Driven - Speedometer	1	74/11~×
6	0862 17 442	Sleeve, Speedometer Driven Gear	1	
7	99222 0216	Pin, Spring	1	
8	99541 02211	Ring, "O" - Driven Gear	1	
9	99586 10207	Oil Seal, Driven Gear	1	
10	1758 19 310	Case, T/mission	1	
11	0338 19 331A	Plug, Square Head	3	
● 12	99611 1750	Ball, Steel	3 1	 74/11~Q'ty
13	0338 19 336	Race, Inner	1	
14	0338 19 337	Washer, Plain	8	
15	0338 19 338	Bolt	8	
16	0378 19 344	Breather, Air	1	
● 17	99611 2000	Ball, Steel	2 3	 74/11~Q'ty

AUTOMATIC T / MISSION
(CASE & MAIN CONTROL) (USED FROM 74/4)

No.	Part Number	Description	Q'ty	Remarks
18	1758 19 341	Bolt, Anchor End	1	
19	0338 19 361	Strut, Band	1	
20	0338 19 363	Spring, Return - Piston	1	
21	0842 19 381	Piston, Band Servo	1	
22	0338 19 384	Seal, Piston	1	
23	0842 19 385	Seal, Piston	1	
24	1758 19 386	Stem, Piston	1	
25	0338 19 388A	Washer, Plain	1	
26	0338 19 389	Nut, Band Adjust	1	
27	1758 19 391	Retainer, Servo	1	
28	1758 19 392	Cover, Servo	1	
29	0842 19 394	Seal, Lathe Cut Ring	1	
30	1758 19 394	Ring, "O"	1	
31	0338 19 395	Seal, "O" Ring	1	
32	0338 19 397	Bolt	3	
33	1758 19 397	Bolt, Servo	3	
34	1840 19 710	Housing, Extension	1	
35	0376 17 335	Oil Seal	1	
●	0437 17 335	Oil Seal	1	74/12~○

No.	Part Number	Description	Q'ty	Remarks
36	0338 19 735	Gasket, Extension Housing	1	
37	0338 19 737	Bolt, Extension Housing	8	
	0338 19 739	Washer, Plain	8	
38	1758 19 750	Valve, Control	1	
39	0338 19 768	Valve, Manual	1	
40	1758 19 815	Strainer, Oil	1	
41	0338 19 831	Bolt, Control Valve	3	
42	0338 19 832	Bolt, Control Valve	2	
43	0338 19 833	Bolt, Control Valve	2	
44	1675 19 821	Solenoid, Down Shift	1	
45	0338 19 822	Seal, "O" Ring	2	
46	1758 19 823	Diaphragm, Vacuum	1	
47	0338 19 825	Rod, Diaphragm (ℓ = 30.0)		
	0338 19 826	Rod (ℓ = 31.0)		
	0338 19 827	Rod (ℓ = 30.5)	Selective use 1	
	0338 19 828	Rod (ℓ = 29.0)		
	0338 19 829	Rod (ℓ = 29.5)		

AUTOMATIC T / MISSION

(CASE & MAIN CONTROL) (USED FROM 74/4)

No.	Part Number	Description	Q'ty	Remarks
48	1758 19 835	Gasket, Oil Pan	1	
49	1758 19 836	Pan, Oil	1	
50	0338 19 837	Bolt, Oil Pan	17	
51	0808 19 870	Tube, Oil Level	1	
●	1758 19 870	Tube, Oil Level	1	74/1~△
52	1758 19 880	Gauge, Oil Level	1	
53	99541 01601	Ring, "O" - Oil Level Tube	1	
54	99796 0610	Bolt, Oil Level Tube	1	

AUTOMATIC T/MISSION
(CLUTCH & PLANETARY GEAR)

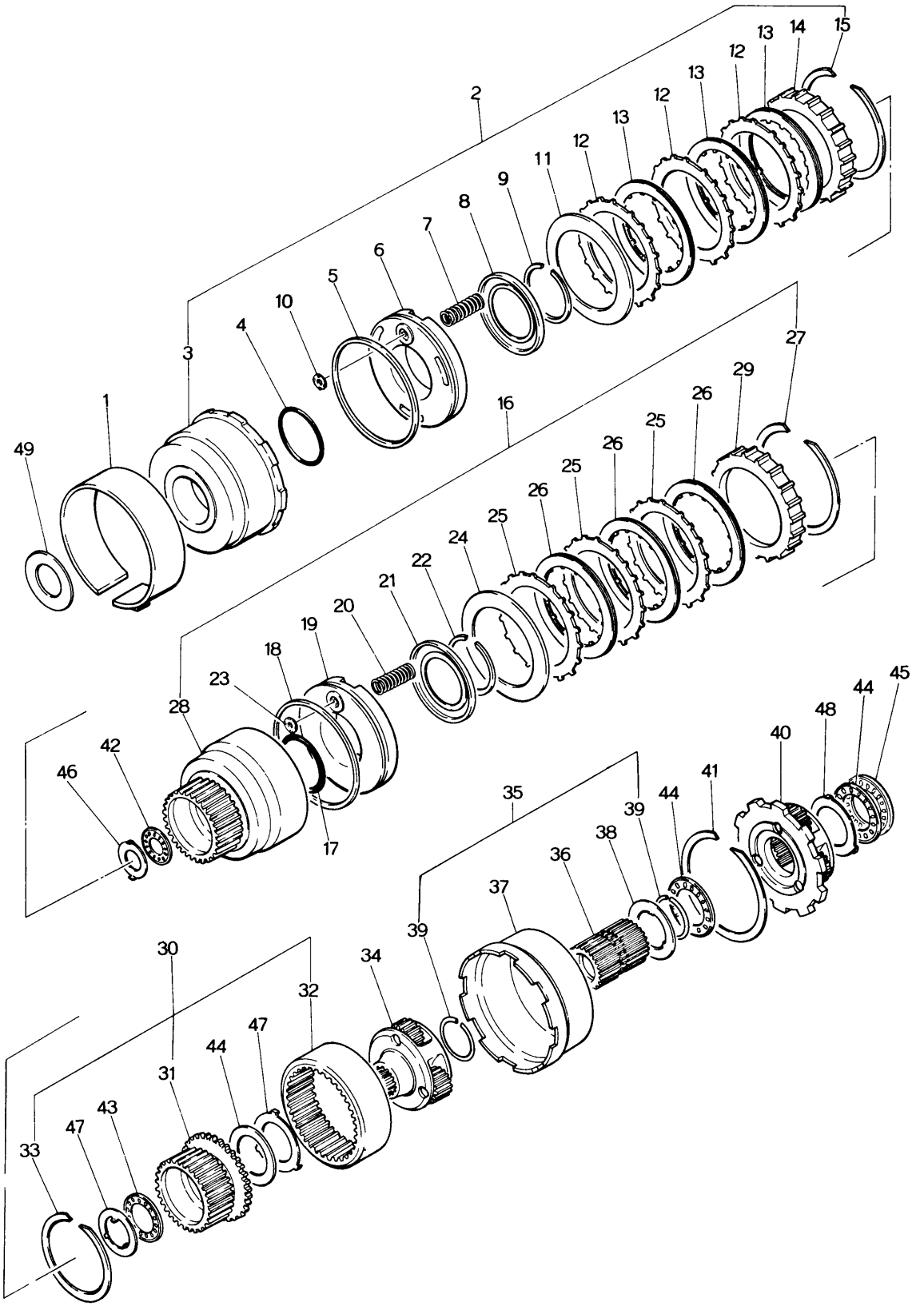

No.	Part Number	Description	Q'ty	Remarks
1	0338 19 360	Band, Brake	1	
2	0338 19 460	Clutch, Front	1	
3	0338 19 470	Drum, Clutch	1	
4	0338 19 475	Seal, "O" Ring	1	
5	0338 19 476	Seal, Lathe Cut	1	
6	0338 19 480	Piston, Clutch	1	
7	0338 19 486	Spring, Piston Return	10	
8	0338 19 487	Retainer, Spring	1	
9	0338 19 488	Ring, Snap	1	
● 10	0338 19 493	Retainer, Ball	1	74/8~Discarded
11	0338 19 498	Plate, Dished	1	
12	0338 19 499	Plate, Driven	3	
13	0338 19 500	Plate, Drive	3	
14	0338 19 503	Plate, Retaining	Selective use	1
	0338 19 504	Plate, Retaining		
	0338 19 505	Plate, Retaining		
	0338 19 506	Plate, Retaining		
	0338 19 507	Plate, Retaining		
	0338 19 508	Plate, Retaining		

No.	Part Number	Description	Q'ty	Remarks
15	0338 19 509	Ring, Snap	1	
16	0338 19 510	Clutch, Rear	1	
17	0338 19 475	Seal, "O" Ring	1	
18	0338 19 476	Seal, Lathe Cut	1	
19	0338 19 480	Piston, Clutch	1	
20	0338 19 486	Spring, Piston Return	10	
21	0338 19 487	Retainer, Spring	1	
22	0338 19 488	Ring, Snap	1	
● 23	0338 19 493	Retainer, Ball	1	7/8~Discarded
24	0338 19 498	Plate, Dished	1	
25	0338 19 499	Plate, Driven	4	
26	0338 19 500	Plate, Drive	4	
27	0338 19 509	Ring, Snap	1	
28	0338 19 511	Drum, Rear Clutch	1	
29	0338 19 515	Plate, Retaining	1	
30	0338 19 530	Hub, Rear Clutch	1	
31	0338 19 531	Hub, Rear Clutch	1	
32	0338 19 533	Gear, Internal	1	

No.	Part Number	Description	Q'ty	Remarks
33	0338 19 534	Ring, Snap	1	
34	0338 19 540	Carrier, Front	1	
35	0338 19 550	Shell & Sun Gear	1	
36	0338 19 560	Gear, Sun	1	
37	0338 19 565	Shell, Connecting	1	
38	0338 19 566	Race, Bearing - Shell	1	
39	0338 19 567	Ring, Snap	2	
40	0338 19 570	Carrier, Rear	1	
41	0338 19 598	Ring, Snap	1	
42	0338 19 621	Bearing, Needle	1	
43	0338 19 622	Bearing, Needle	1	
44	0338 19 623	Bearing, Needle	3	
45	0338 19 624	Bearing, Needle	1	
46	0338 19 631	Race, Bearing (t=1.2)		
	0338 19 632	Race, Bearing (t=1.4)		
	0338 19 633	Race, Bearing (t=1.6)	Selective use	1
	0338 19 634	Race, Bearing (t=1.8)		

AUTOMATIC T / MISSION
(CLUTCH & PLANETARY GEAR)

No.	Part Number	Description	Q'ty	Remarks
	0338 19 635	Race, Bearing (t=2.0)		
	0338 19 636	Race, Bearing (t=2.2)		
47	0338 19 638	Race, Bearing-Rear Clutch	1	
48	0338 19 639	Race, Bearing	2	
49	0338 19 641	Washer, Front Clutch (t=1.90)		
	0338 19 642	Washer (t=2.10)		
	0338 19 643	Washer (t=2.30)		
	0338 19 644	Washer (t=2.50)	Selective use 1	
	0338 19 645	Washer (t=2.70)		
	0338 19 646	Washer (t=1.50)		
	0338 19 647	Washer (t=1.70)		
	0397 22 200	Clutch Repair Kit	1 Set	
	0338 19 475	Seal, "O" Ring	2	
	0338 19 476	Seal, Lathe Cut	2	
	0338 19 486	Spring, Piston Return	20	
	0338 19 487	Retainer, Spring	2	
	0338 19 488	Ring, Snap	2	
	0338 19 498	Plate, Dished	2	
	0338 19 499	Plate, Driven	7	

No.	Part Number	Description	Q'ty	Remarks
	0338 19 500	Plate, Drive	1	
	0338 19 509	Ring, Snap	2	
	0338 19 621	Bearing, Needle	1	
	0338 19 638	Race, Bearing - Rear Clutch	1	

AUTOMATIC T/MISSION
(LOW, REVERSE & GOVERNOR)

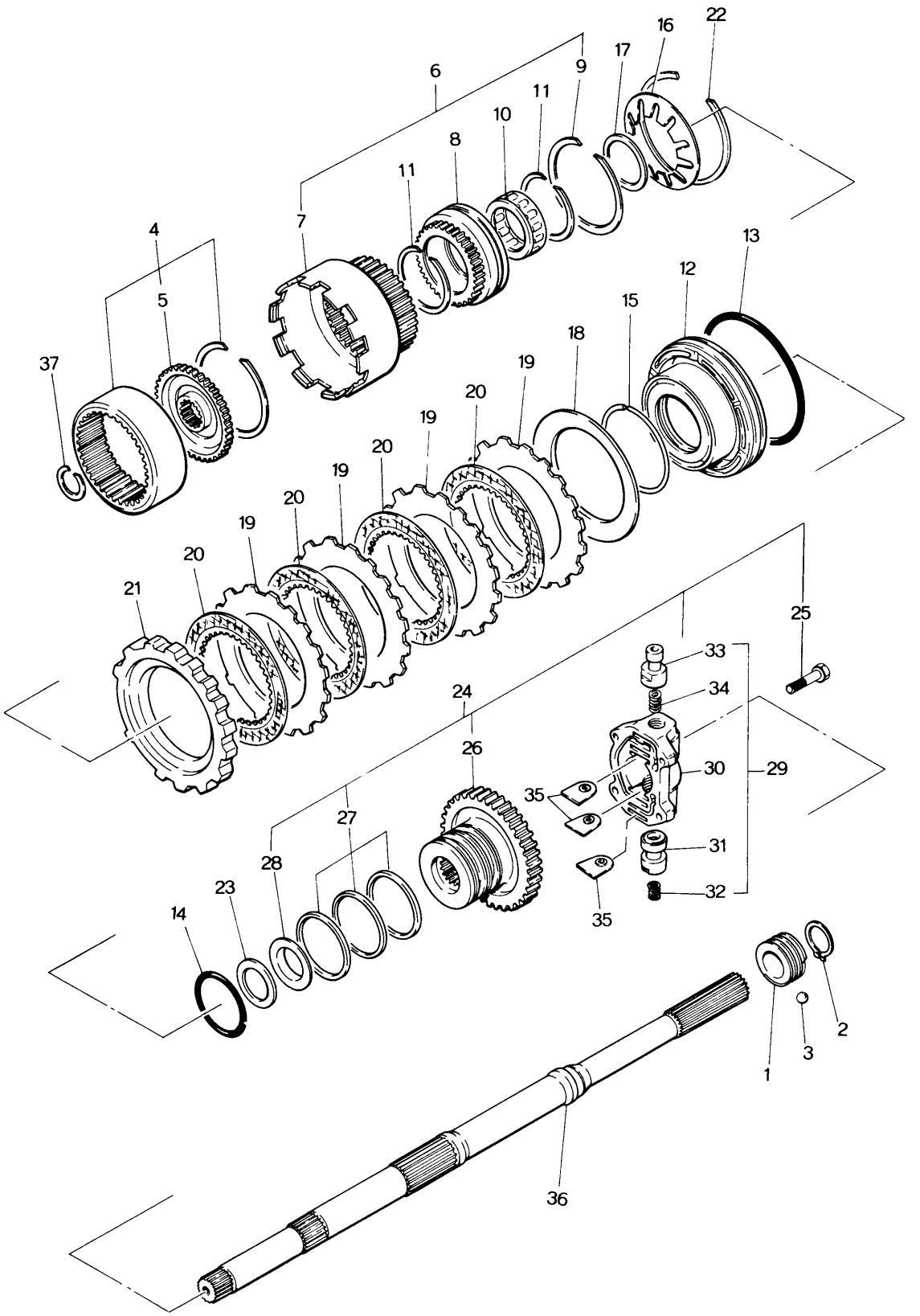

No.	Part Number	Description	Q'ty	Remarks
1	0862 17 341	Gear, Drive - Speedometer	1	
2	99573 2500	Ring, Snap - Drive Gear	1	
3	99611 1500	Ball, Steel	1	
4	0338 19 580	Flange	1	
5	0338 19 581	Flange, Drive	1	
6	0338 19 590	Drum, Connecting	1	
7	0338 19 591	Drum, Connecting	1	
8	0338 19 593	Race, Outer	1	
9	0338 19 594	Ring, Snap	1	
10	0338 19 595	Clutch, One Way	1	
11	0338 19 596	Ring, Snap	2	
12	0338 19 601	Piston, Low & Reverse	1	
13	0338 19 603	Seal, Piston	1	
14	0338 19 604	Seal, "O" Ring	1	
15	0338 19 605	Ring, Thrust Spring	1	
16	0338 19 606	Spring, Piston	1	
17	0338 19 607	Ring, Snap	1	

AUTOMATIC T/MISSION
(LOW, REVERSE & GOVERNOR)

No.	Part Number	Description		Q'ty	Remarks
18	0338 19 608	Plate, Dished		1	
19	0338 19 609	Plate, Driven		4	
20	0338 19 610	Plate, Drive		4	
21	0338 19 613A	Plate, Retaining	(t=15.8)	4	
	0338 19 614A	Plate	(t=16.0)		
	0338 19 615A	Plate	(t=16.2)		
	0338 19 616A	Plate	(t=16.4)	Selective use 1	
	0338 19 617A	Plate	(t=16.6)		
	0338 19 618A	Plate	(t=16.8)		
22	0338 19 619	Ring, Snap		1	
23	0338 19 622	Bearing, Needle		1	
24	0842 19 650	Distributor, Oil		1	
25	0338 19 397	Bolt		4	
26	0338 19 651	Distributor		1	
27	0338 19 655	Ring, Seal		3	
28	0338 19 656	Race, Bearing		1	
29	0842 19 660	Governor, Fig. No. 30~33 Included		1	
30	0338 19 661	Body		1	
31	0338 19 663	Valve		1	

No.	Part Number	Description	Q'ty	Remarks
32	0338 19 664	Spring	1	
33	0842 19 665	Valve	1	
34	0338 19 666	Spring, Governor	1	
35	0338 19 667	Plate, Retainer	3	
36	0338 19 670A	Shaft	1	
37	0338 19 676	Ring	1	

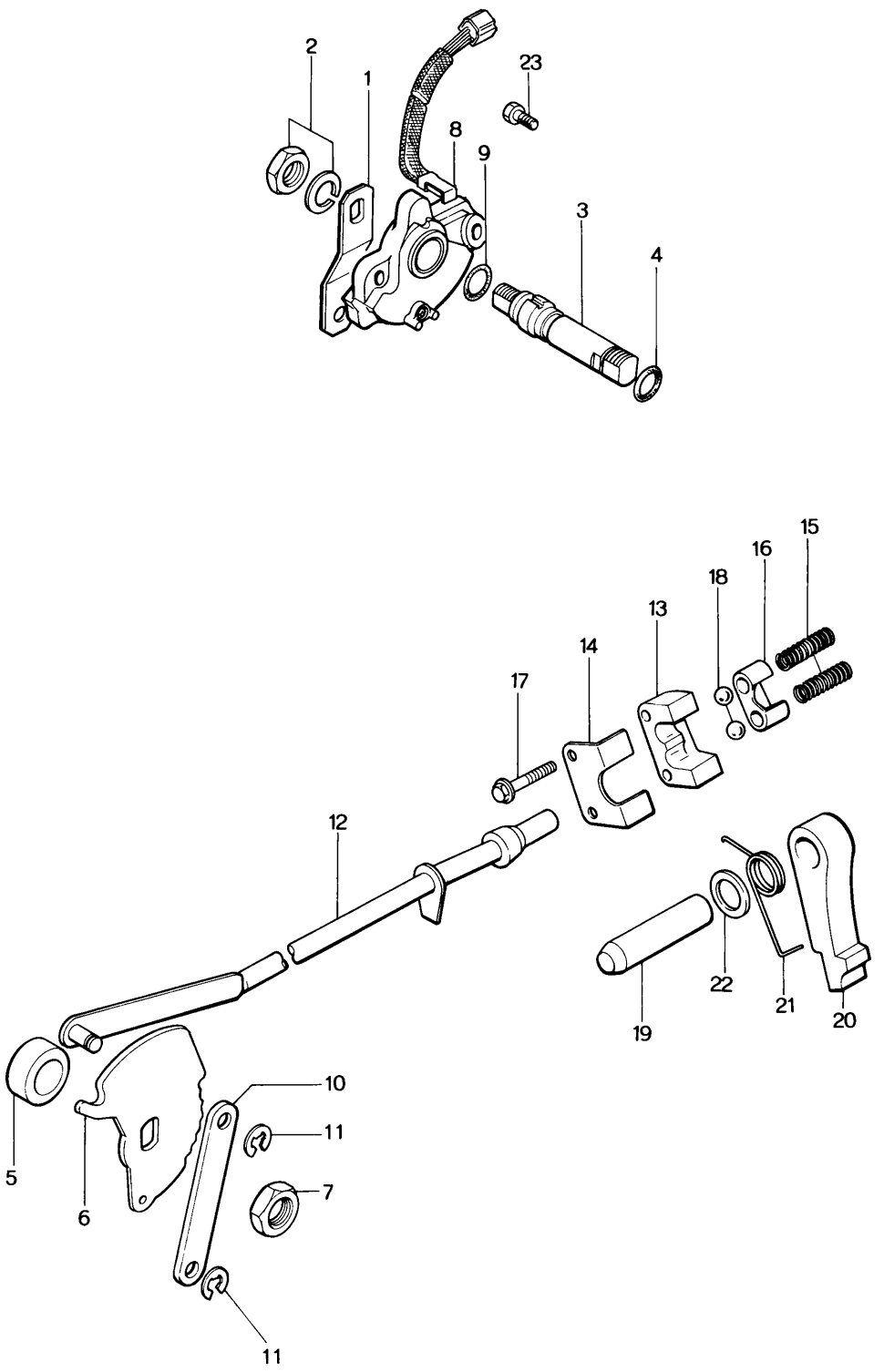
2
1
23
8
9
3
4
15
16
18
13
14
17
12
22
21
20
19
10
11
5
6
7
11

No.	Part Number	Description	Q'ty	Remarks
1	0842 19 031	Lever, Select	1	
2	99922 1400	Nut, Select Lever	1	
	99971 1400	Washer, Spring	1	
3	0338 19 431	Shaft, Manual	1	
4	0338 19 432	Seal, "O" Ring	1	
5	0338 19 433	Washer, Manual	1	
6	0338 19 440	Plate, Manual	1	
7	0338 19 443	Nut, Shaft	1	
8	1675 19 444A	Switch, Inhibitor	1	
9	0338 19 446	Ring, "O"	1	
10	0338 19 448	Lever, Parking	1	
11	0338 19 449	Ring, Snap	2	
12	0338 19 450	Rod, Parking	1	
13	0338 19 701	Support, Actuator	1	
14	0338 19 702	Plate, Retaining	1	
15	0338 19 703	Spring, Ball Park	2	
16	0338 19 704	Retainer	1	
17	0338 19 706	Bolt	2	
18	99611 2750	Ball, Steel	2	
19	0338 19 731	Shaft, Parking Pawl	1	

No.	Part Number	Description	Q'ty	Remarks
20	0338 19 732	Pawl, Parking	1	
21	0338 19 733C	Spring, Pawl Return	1	
22	0338 19 734A	Spacer, Dowel	1	
23	0397 19 838	Bolt, Inhibitor Switch	2	

	No.	Part Number	Description	Q'ty	Remarks
	1	1015 19 031	Lever, Select	1	
	2	99922 1400	Nut, Select Lever	1	
		99971 1400	Washer, Spring	1	
	3	1758 19 036	Seal, Dust	1	
●		1758 19 036 A	Seal, Dust	1	74/6 ~ △
	4	1758 19 431	Shaft, Manual	1	
	5	1758 19 434	Pin, Manual Shaft	1	
	6	99541 00901	Ring, "O" - Manual Shaft	1	
	7	99541 01201	Ring, "O"	1	
●	8	1758 19 440	Plate, Manual	1	
	9	1758 19 443	Nut, Manual Shaft	1	
	10	1758 19 444	Switch, Inhibitor	1	
●	11	0338 19 449	Ring, Snap	2 1	74/7 ~ Q'ty
	12	1758 19 450	Rod, Parking	1	
	13	0338 19 701	Support, Actuator	1	
●		0338 19 701 A	Suppot, Actuator	1	74/9 ~ ×
	14	0338 19 702	Plate, Retaining	1	
●		0338 19 702 A	Plate, Retaining	1	74/9 ~ ×
	15	0338 19 703	Spring, Ball Park	2	
	16	0338 19 704	Retainer, Actuator Support	1	
	17	0338 19 706	Bolt, Actuator Support	2	
	18	99611 2750	Ball, Steel	2	
	19	0338 19 731	Shaft, Parking Pawl	1	

AUTOMATIC T / MISSION

(MANUAL LINKAGE) (USED FROM 74)

No.	Part Number	Description	Q'ty	Remarks
20	0338 19 732	Pawl, Parking	1	
21	0338 19 733C	Spring, Pawl Return	1	
22	0338 19 734A	Spacer, Dowel	1	
23	0397 19 838	Bolt, Inhibitor Switch	3	

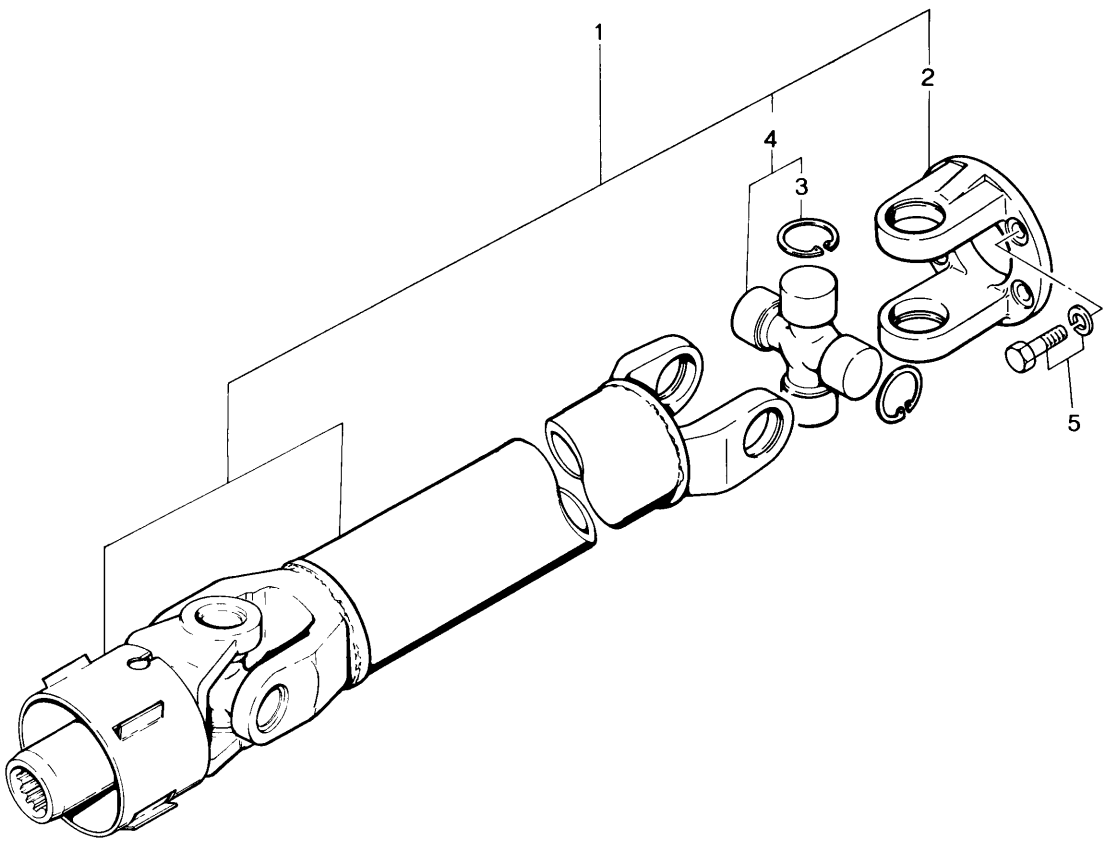
1
2
4
3
5

No.	Part Number	Description		Q'ty	Remarks
1	0862 25 100A	Shaft, Propeller		1	
2	0259 25 021B	Yoke		1	
3	0259 25 071A	Ring, Snap (t=1.22)	Selective use	4	
	0259 25 072A	Ring, Snap (t=1.24)			
	0259 25 073A	Ring, Snap (t=1.26)			
	0259 55 074A	Ring, Snap (t=1.28)			
	0259 25 075A	Ring, Snap (t=1.30)			
	0259 25 076A	Ring, Snap (t=1.32)			
	0259 25 077A	Ring, Snap (t=1.34)			
	0259 25 078A	Ring, Snap (t=1.36)			
	0259 25 079A	Ring, Snap (t=1.38)			
4	0259 89 251	Joint Set, Universal		1	
5	99752 30818	Bolt		4	
	99971 0800	Washer, Spring		4	

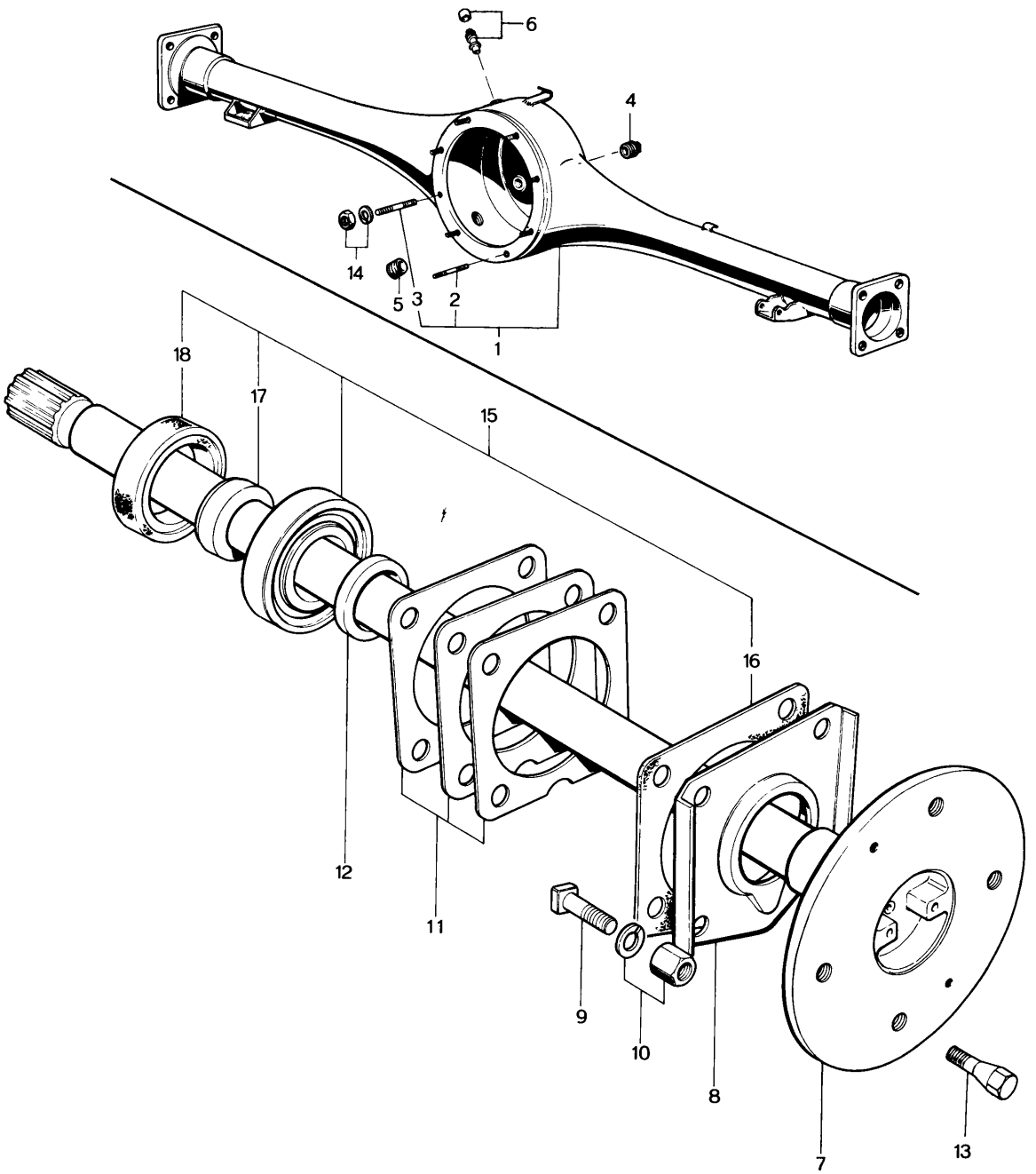
6
4
14
5
3
2
1
18
17
15
16
12
11
9
10
8
7
13

No.	Part Number	Description	Q'ty	Remarks
1	1881 26 010	Casing, Rear Axle (Sedan & Coupe)	1	
	1137 28 010	Casing, Rear Axle (Station Wagon)	1	
2	99852 0820	Stud	7	
●	99789 0820 F	Stud	7	74½~
3	99852 0880	Stud	1	
●	99789 0880 F	Stud	1	74½~
4	0259 26 041	Plug, Oil Level	1	
5	0258 26 051	Plug, Magnet Drain	1	
6	0866 26 060	Breather	1	
7	0870 26 111 A	Shaft (R), Rear Axle	1	
	0870 26 115 A	Shaft (L), Rear Axle	1	
8	0317 26 121	Retainer, Bearing	2	
9	0259 26 132	Bolt, Retainer	8	
10	99901 0800	Nut, Retainer	8	
	99971 0800	Washer, Spring	8	
11	0259 26 141	Shim, Adjust (t=0.1) } Selective use	4	
	0259 26 142	Shim, Adjust (t=0.4) }		
12	0259 26 155	Spacer, Bearing	2	
13	0259 33 165	Bolt, Wheel Set (Wheel Cap use)	8	
	0820 33 165 A	Bolt, Wheel Set (Center Cap use)	8	
●	1029 33 165	Bolt, Wheel Set (Center Cap use)	8	74½~
14	99901 0800	Differential Set	8	

No.	Part Number	Description	Q'ty	Remarks
	99971 0800	Washer, Spring	8	
15	0317 99 2658	Bearing Set, Wheel	2	
16	0258 26 129	Gasket	2	
17	0259 26 152	Collar, Bearing	2	
18	0187 26 154	Oil Seal	2	

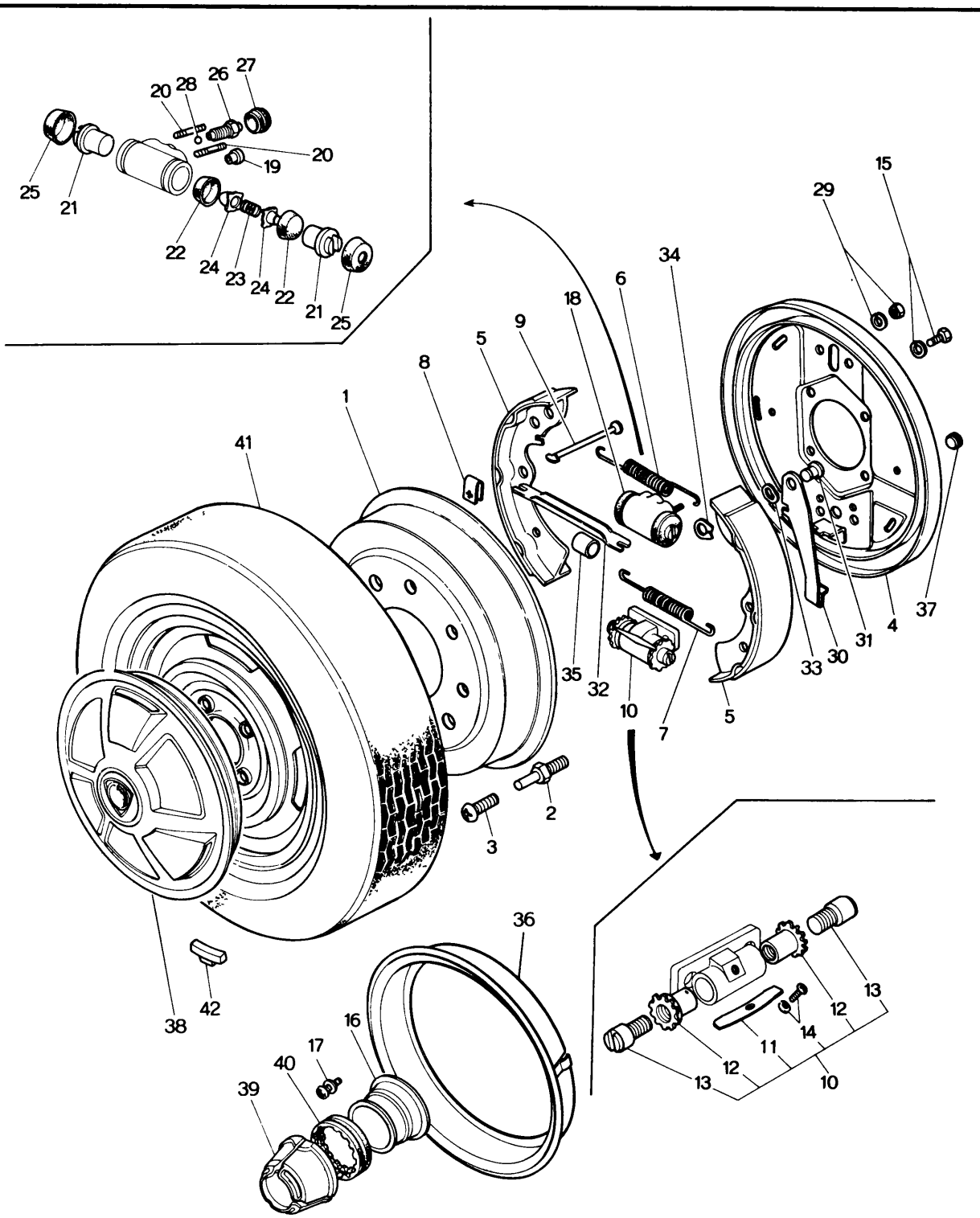
20
28
26
27
25
21
19
20
22
24
23
24
22
21
25
15
29
34
6
18
9
5
8
1
41
4
37
31
33
30
35
32
10
7
5
2
3
36
38
42
16
17
40
39
13
12
14
11
12
13
10

	No.	Part Number	Description	Q'ty	Remarks
	1	0305 26 251A	Drum, Rear Brake	2	
●		1504 26 251B	Drum, Rear Brake	2	74/11~△
	2	0305 26 255	Bolt	4	
	3	99833 0812	Screw, Center Cap	4	
	4	0866 26 280B	Plate (R), Brake Back	1	
		0866 26 290B	Plate (L), Brake Back	1	
	5	0866 26 310A	Shoe, Brake (Front Disc Brake use)	4	
	6	0187 26 341	Spring, Return - Wheel Cylinder Side	2	
	7	0118 26 342	Spring, Return - Anchor Block Side	2	
	8	0223 26 345A	Clip, Spring	4	
●		0110 26 345	Clip, Spring	4	73/11~×
	9	0866 26 391	Pin, Shoe Hold Down	4	
●		0187 33 391A	Pin, Shoe Hold Down	4	73/11~×
	10	0305 26 500A	Block, Anchor	2	
	11	0710 26 352	Spring	2	
	12	0710 26 461	Adjuster	4	
	13	0305 26 465	Screw, Adjust	4	
	14	99833 0408	Screw	2	
		99971 0400	Washer, Spring	2	
	15	99801 0814	Bolt, Anchor Block	4	
		99971 0800	Washer, Spring	4	

	No.	Part Number	Description	Q'ty	Remarks
●	16	0820 26 570A	Adapter (Center Cap use)	2	From Car No. 1
●		1004 26 571	Adapter (Wheel Cap use)	2	
	17	99833 0812	Screw, Adapter	4	
		99971 0800	Washer, Spring	4	
	18	0233 26 610A	Cylinder, Wheel	2	
	19	0221 26 651	Piston	4	
	20	0221 26 671	Cup, Piston	4	
	21	0221 26 672	Spring	2	
	22	0221 26 673	Block, Filling	4	
	23	0613 26 922	Seat, Tube	2	
	24	99852 0612	Stud	4	
	25	0613 33 681	Cover, Dust	4	
	26	0259 33 691	Screw, Bleeder	2	
	27	0259 33 693	Cap	2	
	28	99611 1500	Ball, Steel	2	
	29	99806 0600	Nut, Wheel Cylinder	4	
		99971 0800	Washer, Spring	4	
	30	0305 26 800A	Lever (R), Operating	1	

No.	Part Number	Description	Q'ty	Remarks
	0305 28 810 A	Lever (L), Operating	1	
31	0118 26 832	Pin	2	
32	0187 26 821	Strut (R), Operating	1	
	0187 26 921	Strut (L), Operating	1	
33	0118 26 834	Washer, Wave	2	
34	99575 0600	Ring, Retaining	2	
35	0118 26 897	Holder	2	
36	0820 33 180 A	Ring, Wheel (Center Cap use)	2	
●	1011 37 180 A	Ring, Wheel (Center Cap use) (Canada)	2	$^{75}/_{1}$~×
37	0710 33 288	Plug	4	
38	0866 37 170 C	Cap, Wheel	2	
●	0866 37 170 D	Cap, Wheel (Canada)	2	$^{75}/_{1}$~×
39	0881 37 191	Cap, Center	2	
●	0881 37 191 A	Cap, Center (Canada)	2	$^{75}/_{1}$~×
40	0820 33 192 A	Rubber, Set (Center Cap use)	2	
●	1011 37 192	Rubber, Set (Center Cap use)	2	$^{73}/_{12}$~△
41	9962 09 1553	Tire, Radial Tubeless 155SR13 (Black)	2	
●	9962 12 1553	Tire, Radial Tubeless 155SR13 (Black)	2	$^{73}/_{9}$~○
●	9962 15 1553	Tire, Radial Tubeless 155SR13 (Black)	2	$^{74}/_{11}$~×
	9963 60 4130	Valve, Air	2	

No.	Part Number	Description	Q'ty	Remarks
	9965 05 4530 00	Wheel, 4½–JX13WDC Disc (SIL. M) (Wheel Cap use)	2	
●	9965 13 4530 00	Wheel, 4½–JX13WDC Disc (SIL. M) (Wheel Cap use)	2	73/9～○
●	9965 18 4530 00	Wheel, 4½–JX13WDC Disc (SIL. M) (Wheel Cap use)	2	74/2～○
●	9965 25 4530 00	Wheel, 4½–JX13WDC Disc (SIL. M) (Wheel Cap use)	2	74/11～×
	9965 06 4530 06	Wheel, 4½–JX13WDC Disc (D. GRY) (Center Cap use)	2	
●	9965 14 4530 06	Wheel, 4½–JX13WDC Disc (D. GRY) (Center Cap use)	2	73/9～○
●	9965 19 4530 06	Wheel, 4½–JX13WDC Disc (D. GRY) (Center Cap use)	2	74/2～○
●	9965 29 4530 07	Wheel, 4½–JX13WDC Disc (D GRY) (Center Cap use)	2	74/11～×
42	99655 30010	Weight, Balance (10g)	Selective use —	
	99655 30015	Weight, Balance (15g)		
	99655 30020	Weight, Balance (20g)		
	99655 30025	Weight, Balance (25g)		
	99655 30030	Weight, Balance (30g)		
	99655 30035	Weight, Balance (35g)		
	99655 30040	Weight, Balance (40g)		
	99655 30045	Weight, Balance (45g)		
	99655 30050	Weight, Balance (50g)		
	99655 30060	Weight, Balance (60g)		

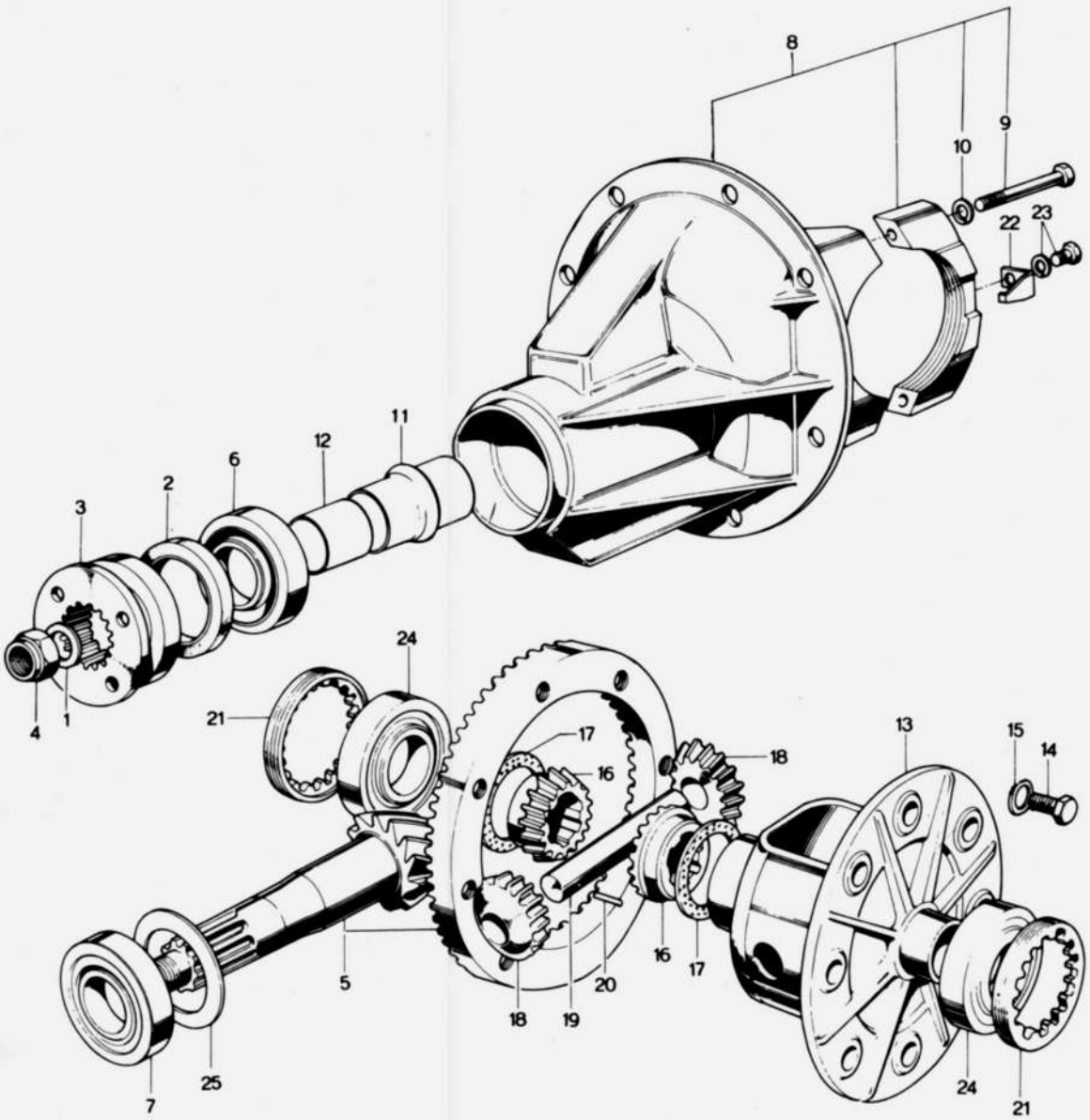
8
10
9
22
23
11
12
6
2
3
4
1
24
21
17
16
18
13
15
14
5
20
16
17
18
19
7
25
24
21

No.	Part Number	Description	Q'ty	Remarks
	1562 27 100	Driving & Differential	1	
●	3625 27 100	Driving & Differential	1	74/11~×
1	0223 27 012	Washer, Drive Pinion	1	
2	2112 27 018	Oil Seal	1	
	0223 27 020B	Flange, Companion	1	
4	0223 27 030	Nut, Lock	1	
5	0866 27 110	Gear Set, Final	1	
●	0437 27 110	Gear Set, Final	1	74/11~×
6	0755 27 141	Bearing	1	
7	0221 27 141	Bearing	1	
8	0866 27 150	Carrier, Differential	1	
9	99811 1050	Bolt	4	
10	99971 1000	Washer, Spring	4	
11	0305 27 171	Piece, Distance	1	
12	0866 27 172	Collar, Long	1	
13	0290 27 231	Case, Differential Gear	1	
●	0290 27 231A	Case, Differential Gear	1	74/2~△
●	0290 27 231B	Case, Differential Gear	1	74/7~△
14	99753 41022	Bolt, Ring Gear } Selective use	10	
●	99754 21022	Bolt, Ring Gear } Selective use	10	74/11~△
	99753 81022	Bolt, Ring Gear } Selective use	10	
●	99754 61022	Bolt, Ring Gear } Selective use	10	74/11~△
15	99958 1018	Washer	2	

No.	Part Number	Description	Q'ty	Remarks
16	0820 27 251	Gear, Differential Side	2	
●	0820 27 251A	Gear, Differential Side	2	74½～△
17	0290 27 252	Washer, Thrust (t=1.6)		
	0290 27 253	Washer, Thrust (t=1.7) Selective use	2	
	0290 27 254	Washer, Thrust (t=1.8)		
18	0221 27 255	Pinion, Differential	2	
19	0305 27 261	Shaft, Pinion	1	
20	0114 27 262	Pin, Pinion Shaft	1	
21	0290 27 301	Screw, Adjust	2	
22	0290 27 302	Plate, Lock	2	
23	99811 0812	Bolt, Lock Plate	2	
	99971 0800	Washer, Spring	2	
24	0221 27 305	Bearing	2	
25	0223 27 401	Spacer (t=3.08)		
●	0223 27 401A	Spacer (t=3.08)		74⅐～△
	0223 27 402	Spacer (t=3.11)		
●	0223 27 402A	Spacer (t=3.11)		74⅐～△
	0223 27 403	Spacer (t=3.14)		
●	0223 27 403A	Spacer (t=3.14)		74⅐～△
	0223 27 404	Spacer (t=3.17) Selective use	1	
●	0223 27 404A	Spacer (t=3.17)		74⅐～△
	0223 27 405	Spacer (t=3.20)		
●	0223 27 405A	Spacer (t=3.20)		74⅐～△
	0223 27 406	Spacer (t=3.23)		
●	0223 27 406A	Spacer (t=3.23)		74⅐～△

No.	Part Number	Description	Q'ty	Remarks
	0223 27 407	Spacer (t=3.26)	Selective use 1	71/7 ~ △
●	0223 27 407 A	Spacer (t=3.26)		71/7 ~ △
	0223 27 408	Spacer (t=3.29)		
●	0223 27 408 A	Spacer (t=3.29)		71/7 ~ △
	0223 27 409	Spacer (t=3.32)		
●	0223 27 409 A	Spacer (t=3.32)		71/7 ~ △
	0223 27 411	Spacer (t=3.35)		
	0223 27 411 A	Spacer (t=3.35)		71/7 ~ △
	0223 27 412	Spacer (t=3.38)		
●	0223 27 412 A	Spacer (t=3.38)		71/7 ~ △
	0223 27 413	Spacer (t=3.41)		
●	0223 27 413 A	Spacer (t=3.41)		74/7 ~ △
	0223 27 414	Spacer (t=3.44)		
●	0223 27 414 A	Spacer (t=3.44)		74/7 ~ △
	0223 27 415	Spacer (t=3.47)		
●	0223 27 415 A	Spacer (t=3.47)		74/7 ~ △

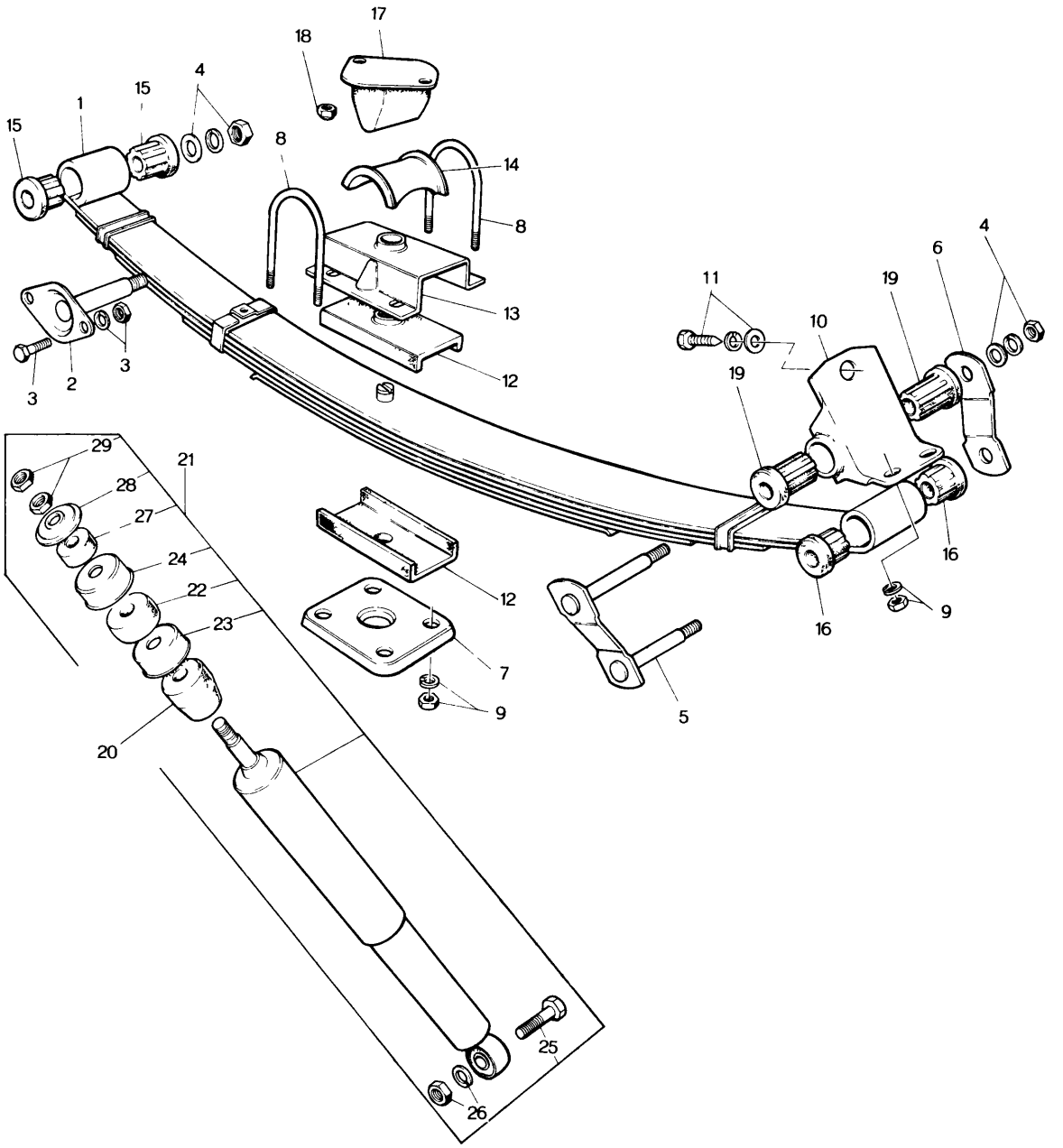
17
18
4
15
1
15
8
14
8
13
12
3
2
3
3
11
10
19
19
6
4
16
16
9
5
29
21
28
27
24
22
23
20
12
7
9
25
26

No.	Part Number	Description		Q'ty	Remarks
1	0866 28 010A	Spring, Rear		2	
	0866 28 011A	Spring No. 1, Leaf		2	
	0866 28 012A	Spring No. 2, Leaf	Coupe use	2	
	0866 28 013A	Spring No. 3, Leaf		2	
	0866 28 014A	Spring No. 4, Leaf		2	
●	0866 28 019	Interleaf		2	From Car No. 1
	1881 28 010A	Spring, Rear		2	
	1881 28 011A	Spring No. 1, Leaf		2	
	1881 28 012A	Spring No. 2, Leaf	Sedan use	2	
	1881 28 013A	Spring No. 3, Leaf		2	
	1881 28 014A	Spring No. 4, Leaf		2	
●	0866 28 019	Interleaf		2	From Car No. 1
2	1881 28 110	Pin, Spring		2	
3	99801 0822	Bolt, Spring Pin		4	
	99901 0800	Nut		4	
	99971 0800	Washer, Spring		4	
4	99901 0800	Nut		6	
	99971 0800	Washer, Spring		6	
5	0866 28 140B	Plate No 1, Shackle		2	
6	0866 28 143	Plate No 2, Shackle		2	

No.	Part Number	Description	Q'ty	Remarks
7	0866 28 151	Clamp, Spring	2	
8	0652 28 161	Bolt, Lock	4	
9	99921 1000	Nut	12	
	99971 1000	Washer, Spring	12	
10	0866 28 180A	Bracket, Shackle	2	
11	99783 1028	Bolt, Shackle Bracket	2	
	99952 1000	Washer, Plain	2	
	99971 1000	Washer, Spring	2	
12	0259 28 182	Pad, Rubber	4	
13	0866 28 183A	Holder, Rubber Pad	2	
14	0866 28 322	Seat, Lock Bolt	2	
15	0866 28 333C	Bush (Frt.)	4	
16	0866 28 343B	Bush No. 1 (Rr.)	4	
17	0866 28 350	Rubber, Stopper	1	
18	99940 0800	Nut, Stopper Rubber	2	
19	0866 28 353B	Bush No. 2 (Rr.)	4	
20	0866 28 591	Bumper, Bound	2	
21	0866 99 281A	Damper Set (Fig. No. 20,22~29 included)	2	
●	0866 99 281B	Damper Set (Fig. No. 20,22~29 Included)	2	73/9~△
●	0866 99 281C	Damper Set (Fig. No. 20,22~29 Included)	2	74/10~△
22	0866 28 774	Bush, Rubber	2	

No.	Part Number	Description	Q'ty	Remarks
23	0866 28 778A	Casing, Stopper	2	
24	0866 28 779	Holder	2	
25	0866 28 799	Bolt, Rear Damper	2	
26	99921 1200	Nut, Rear Damper	2	
	99971 1200	Washer, Spring	2	
27	0603 34 153	Bush, Rubber	2	
28	0187 34 776	Retainer	2	
29	99921 1000	Nut, Rear Damper	2	
	99922 1000	Nut	2	

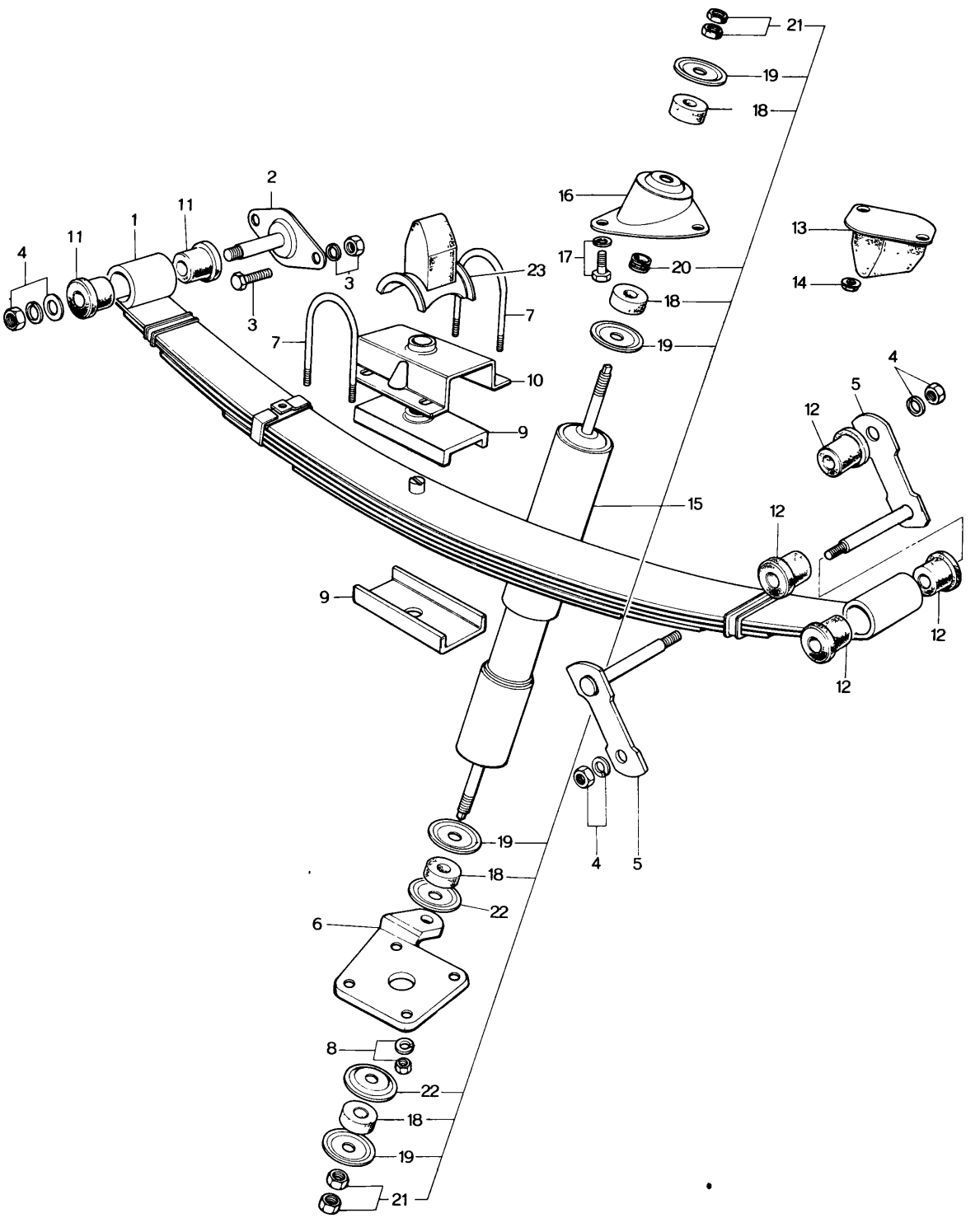
21
19
18
16
2
11
1
11
4
3
3
17
20
18
19
13
14
23
7
7
10
9
4
5
12
15
12
9
12
12
19
18
22
6
4
5
8
22
18
19
21

No.	Part Number	Description	Q'ty	Remarks
1	1889 28 010	Spring, Rear	2	
●	1889 28 010 A	Spring, Rear	2	73/10~△
	1889 28 011	Spring No. 1, Leaf	2	
	1889 28 012	Spring No. 2, Leaf	2	
	1889 28 013	Spring No. 3, Leaf	2	
	1889 28 014	Spring No. 4, Leaf	2	
●	1889 28 019	Leaf, Inter	2	73/10~ Added Anew
2	0259 28 110	Pin, Spring	2	
3	99801 0822	Bolt	4	
	99801 0800	Nut	4	
	99971 0800	Washer, Spring	4	
4	99921 1000	Nut	6	
	99952 1000	Washer, Plain	2	
	99971 1000	Washer, Spring	6	
5	0899 28 140	Plate No. 1, Shackle	4	
6	0899 28 150 A	Clamp (R), Spring	1	
	0899 28 170 A	Clamp (L), Spring	1	
7	0193 28 161	Bolt, Lock	4	
●	0652 28 161	Bolt, Lock	4	73/10~△
8	99921 1000	Nut, Lock Bolt	8	
	99971 1000	Washer, Spring	8	
9	0259 28 182	Pad, Rubber	4	
●	1889 28 182	Pad, Rubber (Canada)	4	75/1~×

REAR SUSPENSION (STATION WAGON)

	No.	Part Number	Description	Q'ty	Remarks
	10	0259 28 193	Holder, Rubber Pad	2	
●		0652 28 183	Holder, Rubber Pad	2	73/10～△
	11	0259 28 333	Bush (Frt.)	4	
●		0483 28 333	Bush (Frt.)	4	73/10～△
	12	0259 28 343	Bush (Rr.)	8	
●		0443 28 343	Bush (Rr.)(Canada)	8	75/1～×
	13	0866 28 350	Rubber, Stopper	1	
	14	99940 0800	Nut	2	
	15	0585 99 281 A	Damper Set, Rear (Fig. No. 18～22 included)	2	
●		0585 99 281 B	Damper Set, Rear (Fig. No. 18～22 Included)	2	73/10～△
	16	0585 28 180A	Bracket (R), Damper	1	
		0585 28 190 A	Bracket (L), Damper	1	
	17	99785 0825	Bolt, Damper Bracket	6	
		99971 0800	Washer, Spring	6	
	18	0223 28 775	Bush, Rubber	8	
	19	0223 28 776	Retainer	8	
	20	0259 28 778	Grommet	2	
	21	99921 1000	Nut, Rear Damper	4	
		99922 1000	Nut	4	
	22	0223 28 777	Washer, Centering	4	
	23	0899 28 320	Bumper, Bound	2	

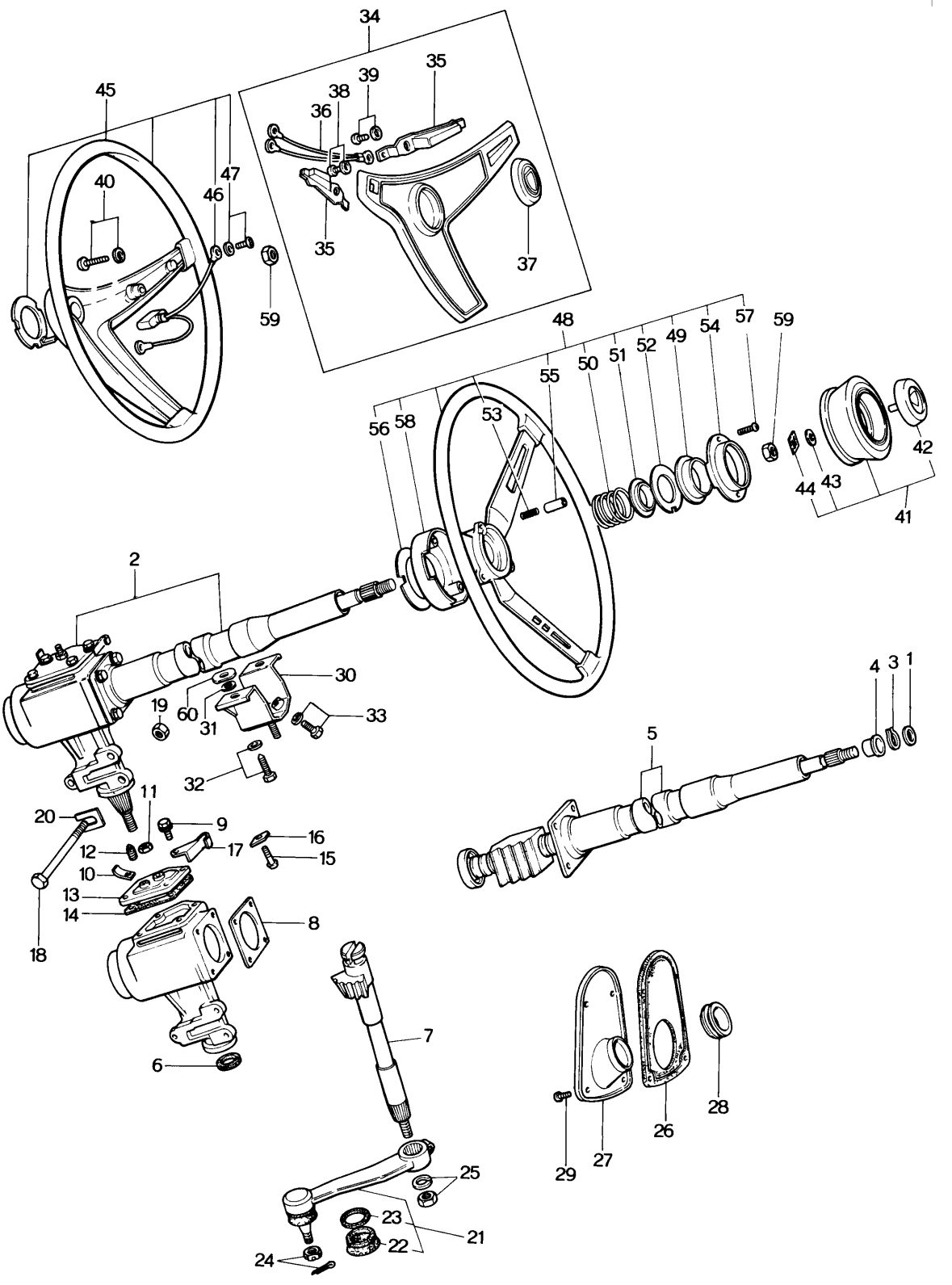
34
35
39
38
36
45
40
47
46
35
37
59
48
59
57
54
49
52
51
50
55
56
58
53
42
44
43
41
2
30
19
60
31
33
32
4
3
1
5
11
20
9
16
12
17
15
10
13
14
8
18
7
6
25
23
21
22
24
28
26
29
27

No.	Part Number	Description	Q'ty	Remarks
1	0820 32 058	Washer, Energy Absorbing Shaft	2	
●	0820 32 058A	Washer, Energy Absorbing Shaft	2	74/6~△
● 3	0208 32 059	Ring, Snap-Shaft	2	From Car No. 1
● 2	1632 32 110	Gear, Steering	1	☆
~~● 3~~	~~0208 32 059~~	~~Ring, Snap-Shaft~~	~~1~~	From Car No. 1
4	0259 32 071	Bush, Support	1	
5	1632 32 100	Shaft, Energy Absorbing	1	
	1632 32 100A	Shaft, Energy Absorbing	1	74/2~△
6	1128 32 129	Oil Seal, Sector	1	
7	0866 32 141	Shaft, Sector	1	
8	0259 32 154	Shim, End Cover (t=0.05)	Selective use 1	
	0259 32 155	Shim (t=0.075)		
	0259 32 156	Shim (t=0.1)		
	0259 32 157	Shim (t=0.2)		
9	99801 0816	Bolt, End	8	
	99971 0800	Washer, Spring	8	
10	99295 1508	Clip	1	
11	99922 1000	Nut, Sector Adjust Screw	1	
12	99502 2000	Plug, Oil	1	
13	0259 32 160	Cover, Side	1	
14	0259 32 163	Gasket, Side Cover	1	
15	0180 32 165A	Screw, Sector Adjust	1	

No.	Part Number	Description	Q'ty	Remarks
16	0180 32 171A	Shim, Adjust (t=1.95)		
	0180 32 172A	Shim, Adjust (t=2.00)		
		} Selective use	1	
	0180 32 173A	Shim, Adjust (t=2.05)		
	0180 32 174A	Shim, Adjust (t=2.10)		
17	0259 55 556	Clip	1	
18	99781 1085	Bolt, Gear Housing	3	
	0305 32 119	Washer, Plain	3	
19	99942 1001	Nut, Gear Housing	3	
●	99951 1022	Nut, Gear Housing	2	73/8～△
20	0208 32 188	Shim, Adjust-Steering Gear Housing	2	
21	1524 32 220	Arm, Pitman	1	
22	0730 32 279	Seal, Dust	1	
23	0259 32 289	Ring, Set	1	
●	0187 32 289	Ring, Set	1	73/12～○
24	99924 1000	Nut, Pitman Arm & Center Link	1	
	99221 2020	Pin, Split	1	
25	99921 1800	Nut, Pitman Arm & Sector Shaft	1	
	99971 1800	Washer, Spring	1	
26	1632 32 411	Cover, Dust	1	

No.	Part Number	Description	Q'ty	Remarks
27	1632 32 412	Plate, Set	1	
28	1097 32 413	Cover, Dust	1	
29	99869 0512	Screw, Set Plate	4	
30	1632 32 420	Bracket, Fixing - Shaft Jacket	1	
31	99952 0800	Washer, Plain - Selective use	—	
32	99786 0835	Bolt, Fixing Bracket	2	
●	99786 0830	Bolt, Fixing Bracket	2	73/11~○
	99951 0822	Washer, Plain	2	
● 33	99801 0810	Bolt, Fixing Bracket	2	
			4	73/9~Q'ty
●	99971 0800	Washer, Spring	2	
			4	73/9~Q'ty
34	1570 32 800 00	Cap, Horn (BLK)	1	
35	0370 32 030A	Button, Horn (R)	1	
	0370 32 090	Button, Horn (L)	1	
36	0370 32 037	Cord	1	
37	1570 32 811	Emblem (Sedan & Station Wagon)	1	
38	99833 0408	Screw, Cap Retainer	2	
	99971 0400	Washer, Spring	2	
39	99868 0410	Screw, Cap Retainer	2	
	99971 0400	Washer, Spring	2	

No.	Part Number	Description		Q'ty	Remarks
40	99868 0420	Screw, Horn Cap		3	
	99971 0400	Washer, Spring		3	
41	1562 32 800 00	Cap, Horn (BLK.)		1	
●	3627 32 800	Cap, Horn (BLK.) (Canada)		1	75/1~×
42	1562 32 811	Emblem	(Coupe)	1	
●	1570 32 811	Emblem (Canada)	(Coupe)	1	75/1~×
43	0223 58 472	Washer, Emblem	(Coupe)	1	
44	99579 3000	Nut, Speed-Emblem	(Coupe)	1	
45	0370 32 980	Boss, Steering Wheel	(Sedan & Station Wagon)	1	
46	0370 32 039	Cord	(Sedan & Station Wagon)	1	
47	99868 0308	Screw, Cord	(Sedan & Station Wagon)	2	
	99971 0300	Washer, Spring	(Sedan & Station Wagon)	2	
48	1562 32 980A	Boss, Steering Wheel		1	
●	0866 32 980	Boss, Steering Wheel (Canada)		1	75/1~×
49	0329 32 013A	Retainer, Cap		1	
50	0329 32 014	Spring		1	
●	0866 32 014	Spring (Canada)		1	75/1~×
51	0329 32 015	Insulator	(Coupe)	1	
52	0329 32 016	Plate, Contact		1	
53	0329 32 019	Spring		1	
●	0866 32 019	Spring (Canada)		1	75/1~×
54	0329 32 031A	Retainer, Sub		1	
●	0866 32 031	Retainer, Sub (Canada)		1	75/1~×

No.	Part Number	Description		Q'ty	Remarks
55	0329 32 033	Pipe		1	
●	0866 32 033	Pipe (Canada)		1	75/1~×
56	0329 32 034	Terminal		1	
●	0866 32 018	Terminal (Canada)		1	75/1~×
57	99866 0420	Screw	(Coupe)	3	
●	99868 0312	Screw (Canada)		3	75/1~×
●	99971 0300	Washer, Spring (Canada)		3	
58	1562 32 049	Cover, Wheel Core		1	
●	0866 32 049	Cover, Wheel Core (Canada)		1	75/1~×
59	99948 1200	Nut, Self Lock-Wheel & Shaft		1	
60	0259 43 088	Sheet, Fixing Bracket		2	

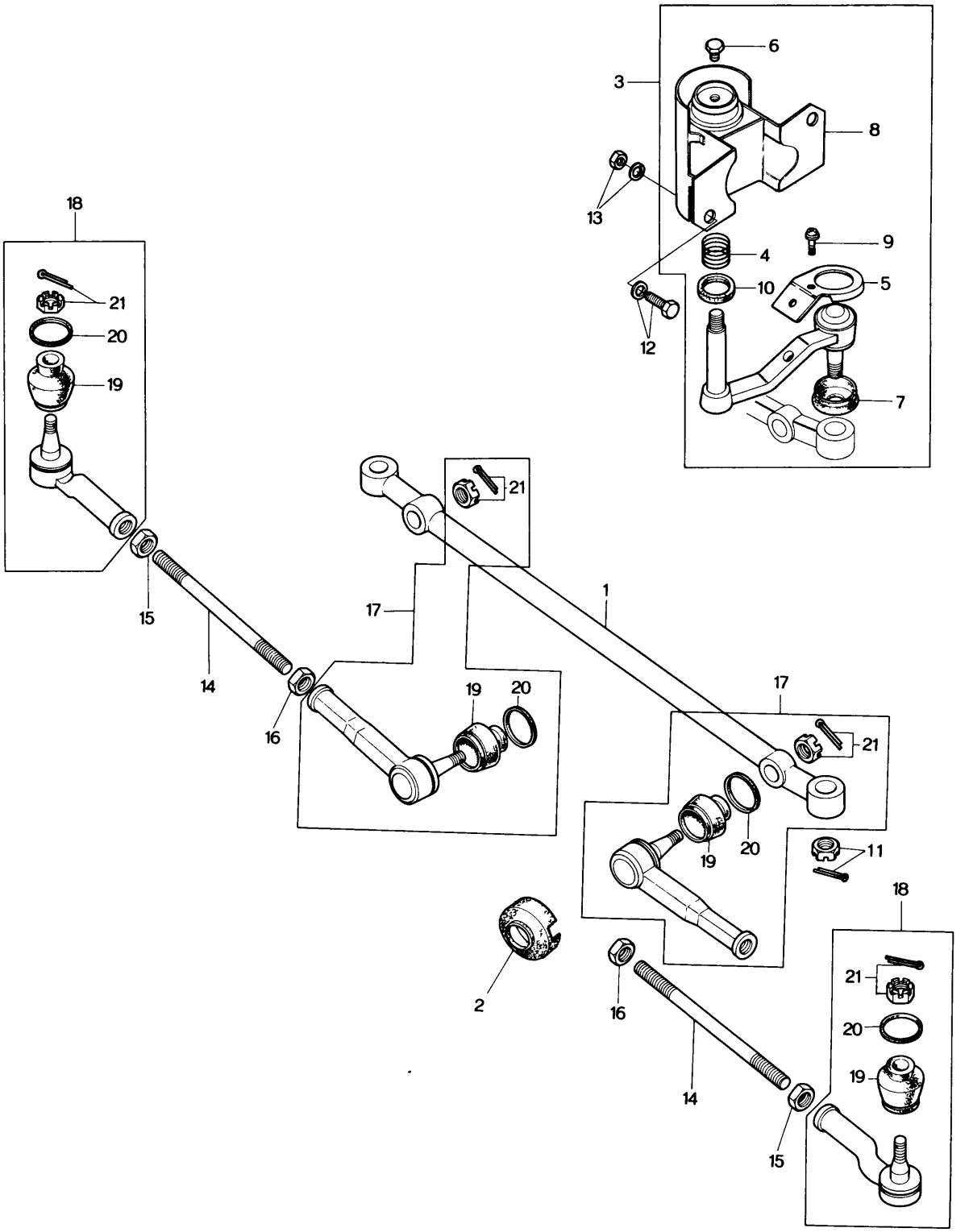
6
3
8
13
9
4
10
5
12
7
18
21
20
19
15
14
16
21
17
1
17
19
20
21
19
20
11
18
2
16
21
20
19
14
15

No.	Part Number	Description	Q'ty	Remarks
1	1524 32 261	Link, Center	1	
● 2	1562 32 269	Protector	1	73/10~ Discarded
● 3	~~1562 32 320E~~	~~Idler~~	~~1~~	
●	1562 32 320F	Idler	1	From Car No. 1
4	0111 32 173	Spring	1	
5	1128 32 227C	Insulator	1	
●	1128 32 227D	Insulator	1	73/11~ △
6	0208 32 278	Plug	1	
7	0866 32 279	Seal, Dust	1	
8	1562 32 330D	Bracket	1	
●	1562 32 330E	Bracket	1	74/12~ ○
9	99833 0408	Screw	2	
	99971 0400	Washer, Spring	2	
10	2113 32 356	Oil Seal	1	
11	99924 1000	Nut, Idler & Center Link	1	
	99221 2015	Pin, Split	1	
12	99781 1080	Bolt, Idler	2	
	0305 32 119	Washer, Plain	4	
13	99921 1000	Nut	2	
	99971 1000	Washer, Spring	2	
14	0305 32 365	Rod, Tie	2	

No.	Part Number	Description	Q'ty	Remarks
15	99922 1400	Nut	2	
16	99944 1400	Nut	2	
17	0866 99 322	Socket Set	2	
●	0866 99 322	Socket Set	1	74/11～Q'ty
●	3625 99 322	Socket Set	1	74/11～Added Anew
18	0866 99 324	Socket Set	2	
●	1177 99 324	Socket Set	2	74/2～△
19	0730 32 279	Seal, Dust (For Fig. No. 18)	2	
	1027 32 279	Seal, Dust (For Fig. No. 17)	2	
20	0187 32 289	Ring, Set (For Fig. No. 18)	2	
	1823 32 289	Ring, Set (For Fig. No. 17)	2	
21	99924 1000	Nut	4	
	99221 2015	Pin, Split	2	
	99221 2020	Pin, Split	2	

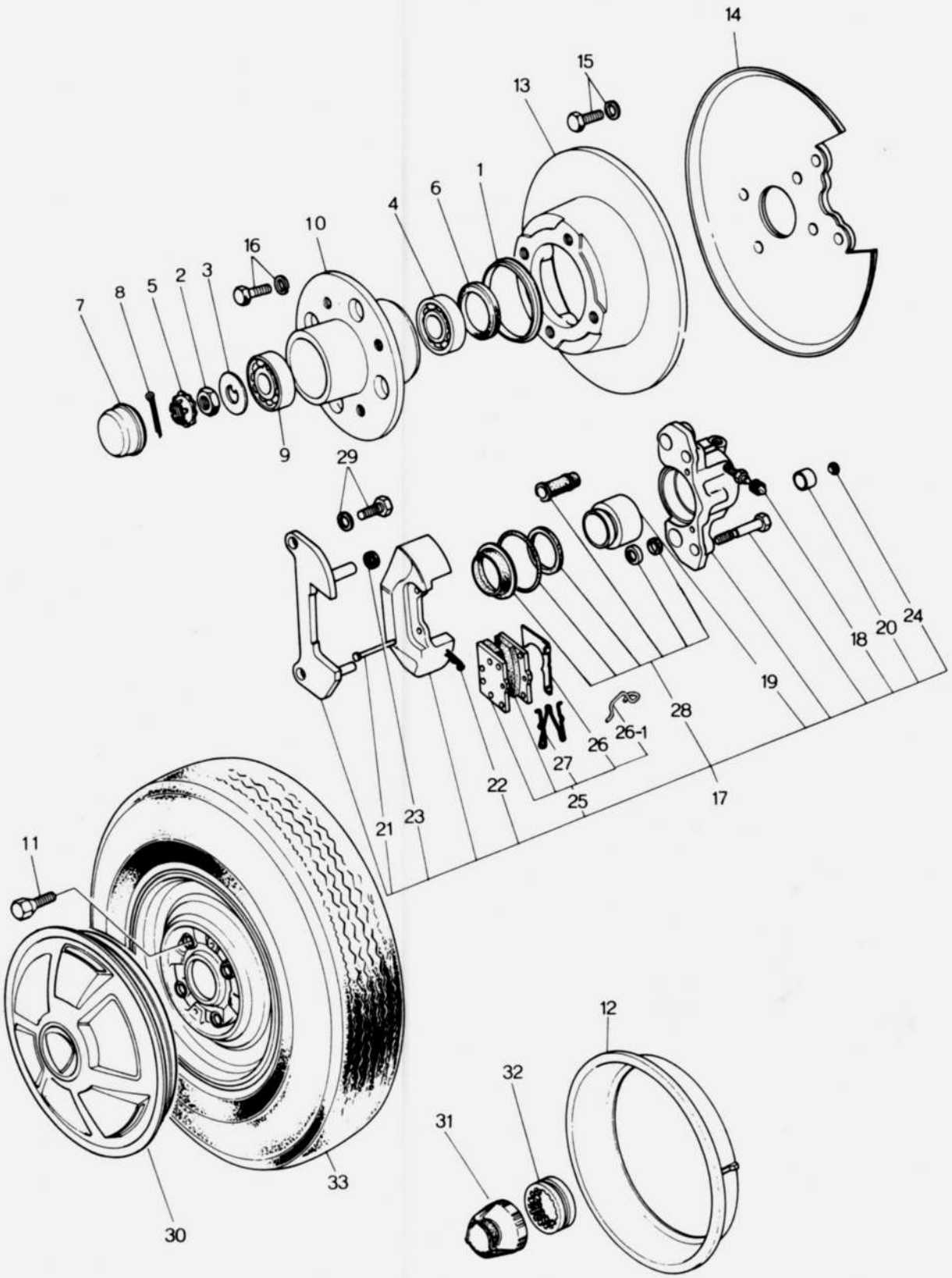
14
15
13
1
6
4
10
16
2
3
5
8
7
9
29
18
20
24
19
28
26-1
26
27
22
25
17
21
23
11
33
30
12
32
31

No.	Part Number	Description	Q'ty	Remarks
1	0221 33 035	Ring, Dust	2	
2	0662 33 042	Nut	2	
3	1011 33 043	Washer	2	
4	0259 33 047	Bearing, Wheel Inner	2	
5	0317 33 049	Cover Set	2	
6	0398 33 065	Oil Seal	2	
7	0259 33 071	Cap, Hub	2	
8	99221 4030	Pin, Split	2	
9	0317 33 075	Bearing, Wheel Outer	2	
10	0820 33 091 A	Hub, Front	2	
●	0820 33 091 B	Hub, Front	2	73/11~○
11	0259 33 165	Bolt, Wheel Set (Wheel Cap use)	8	
	0820 33 165 A	Bolt, Wheel Set } (Center Cap use)	8	
●	1029 33 165	Bolt, Wheel Set } (Center Cap use)	8	74/2~○
12	0820 33 180 A	Ring, Wheel } (Center Cap use)	2	
●	1011 37 180 A	Ring, Wheel } (Center Cap use)	2 (Canada)	75/1~×
13	0866 33 251 A	Plate, Disc	2	
14	0866 33 260	Adapter (R), Mounting	1	
●	0866 33 260 A	Adapter (R), Mounting	1	73/9~△
	0866 33 270	Adapter (L), Mounting	1	

	No.	Part Number	Description	Q'ty	Remarks
●		0866 33 270 A	Adapter (L), Mounting	1	73/9~△
	15	99811 1020	Bolt, Mounting Adapter	8	
	16	0221 33 698	Bolt, Hub	8	
		99971 1000	Washer, Spring	8	
	17	0870 33 980 A	Brake (R), Disc	1	
●		0870 33 980 B	Brake (R), Disc	1	73/9~△
●		0870 33 980 C	Brake (R), Disc	1	74/2~△
●		0870 33 990 A	Brake (L), Disc	1	From Car No. 1
●		0870 33 990 B	Brake (L), Disc	1	73/9~△
●		0870 33 990 C	Brake (L), Disc	1	74/2~△
	18	0820 33 693	Cap, Bleeder	2	
	19	0866 49 111	Piston	2	
	20	0866 49 112	Cup, Piston	2	
	21	0866 49 114	Pin	4	
	22	0866 49 115	Clip	4	
	23	0866 49 116	Spacer	2	73/12~Discarded
	24	0866 49 117	Plug, Cup	2	
	25	0870 49 230 A	Pad Set	1	
●		0870 49 230 B	Pad Set	1	73/9~△

	No.	Part Number	Description	Q'ty	Remarks
●		0870 49 230 C	Pad Set	1	74/11～△
	26	0866 49 231	Shim (R)	2	
●		0870 49 231	Shim	2	74/11～△
		0866 49 232	Shim (L)	2	
●		0870 49 231	Shim	2	74/11～△
●	26-1	0376 49 234	Spring (R) , Pad	1	73/12～Added Anew
●		0376 49 238	Spring (L) , Pad	1	
	27	0866 49 235	Spring	2	
	28	0866 49 240	Seal Kit	1	
	29	99750 11018	Bolt, Disc Brake	4	
		99971 1000	Washer, Spring	2	
	30	0866 37 170 C	Cap, Wheel	2	
●		0866 37 170 D	Cap, Wheel (Canada)	2	75/1～×
	31	0881 37 191	Cap, Center	2	
●		0881 37 191 A	Cap, Center (Canada)	2	75/1～×
	32	0820 33 192 A	Rubber, Set (Center Cap use)	2	
●		1011 37 192	Rubber, Set (Center Cap use)	2	73/12～△
	33	9962 09 1553	Tire, 155 SR—13 Radial (Tubeless)	3	
●		9962 12 1553	Tire, 155 SR—13 Radial (Tubeless)	3	73/9～

No.	Part Number	Description	Q'ty	Remarks
●	9962 15 1553	Tire, 155SR—13 Radial (Tubeless)	3	74/11～×
	9963 60 4130	Valve, Air	3	
	9965 05 4530 00	Wheel, 4½—J×13WDC Disc (SILV. M)	3	
●	9965 13 4530 00	Wheel, 4½—J×13WDC Disc (SILV. M)	3 (Wheel Cap use)	73/9～○
●	9965 18 4530 00	Wheel, 4½—J×13WDC Disc (SILV. M)	3	74/2～○
●	9965 25 4530 00	Wheel, 4½—J×13WDC Disc (SILV. M)	3	74/11～×
	9965 06 4530 06	Wheel, 4½—J×13WDC Disc (D. GRY)	3	
●	9965 14 4530 06	Wheel, 4½—J×13WDC Disc (D. GRY)	3 (Center Cap use)	73/9～○
●	9965 19 4530 06	Wheel, 4½—J×13WDC Disc (D. GRY)	3	74/2～○
●	9965 29 4530 06	Wheel, 4½—J×13WDC Disc (D. GRY.)	3	74/11～×

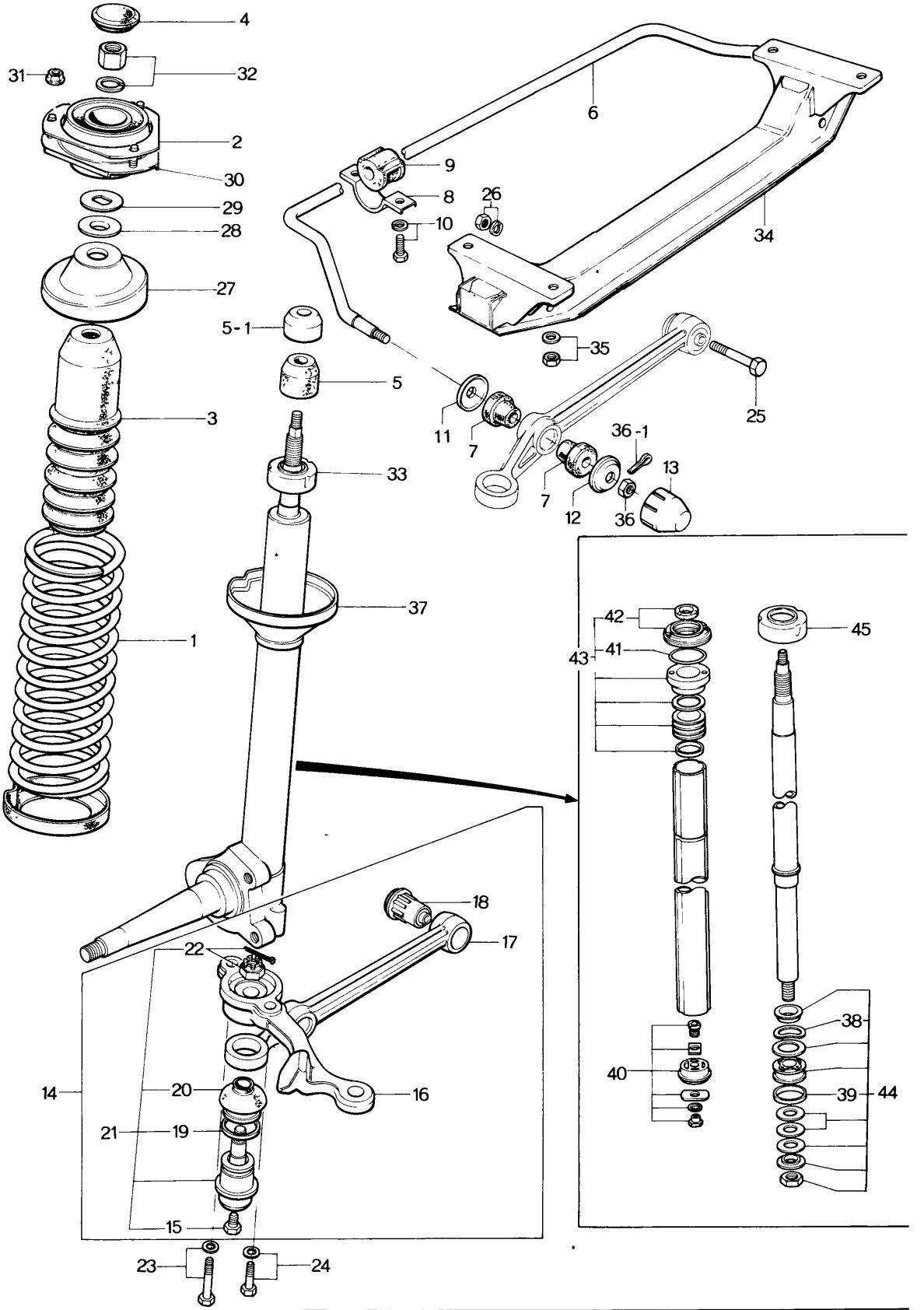
4
31
32
2
30
29
28
27
5-1
5
3
33
37
1
6
9
8
26
10
34
35
25
11
7
36-1
13
7
12
36
42
43
41
45
18
17
22
14
20
16
21
19
15
40
38
39
44
23
24

No.	Part Number	Description	Q'ty	Remarks
1	1881 34 011	Spring, Coil	2	
2	0866 34 013 A	Plate, Adjusting	2	
3	0866 34 015	Cover, Dust	2	
4	0866 34 019	Cap	2	
●	1011 34 019	Cap	2	74/2~○
5	0866 34 111	Bumper, Bound	2	
● 5-1	1881 34 112	Seat, Bumper	2	From Car No. 1
● 6	~~0866 34 151 A~~	~~Stabilizer~~	~~1~~	
●	0866 34 151 B	Stabilizer	1	From Car No. 1
●	0866 34 151 C	Stabilizer	1	74/3~△
● 7	0866 34 153 A	Bush, Rubber-Stabilizer	4	From Car No. 1
●	1004 34 153	Bush, Rubber-Stabilizer	4	74/3~△
●	1757 34 153	Bush, Rubber-Stabilizer	4	74/7~△
8	0259 34 155	Plate	2	
9	0259 34 156	Bush, Rubber	2	
●	1881 34 156	Bush, Rubber	2	74/7~△
10	99783 1035	Bolt, Stabilizer & Frame	4	
	99971 1000	Washer, Spring	4	
11	0866 34 157	Washer, Stabilizer	2	
12	0866 34 158	Washer	2	

No.	Part Number	Description	Q'ty	Remarks
13	1011 34 159	Stopper	2	
●	1011 34 159 A	Stopper	2	74/4～△
14	0866 34 310 A	Arm (R)	1	
	0866 34 320 A	Arm (L)	1	
15	0208 32 278	Plug	2	
16	0866 32 301 A	Arm (R), Knuckle	1	
	0866 32 311 A	Arm (L), Knuckle	1	
17	1011 34 311	Arm	2	
18	0866 34 460	Bush	2	
19	0187 34 536	Ring, Dust Seal	2	
20	0866 34 565	Seal, Dust	2	
● 21	~~0866 99 356~~	~~Joint, Ball~~	~~2~~	
●	0866 99 356 A	Joint, Ball	2	From Car No. 1
22	99221 3020	Pin, Split	2	
	99924 1200	Nut	2	
23	99781 1225	Bolt, Arm & Damper	2	
	99971 1200	Washer, Spring	2	
24	99781 1235	Bolt, Arm & Damper	2	

No.	Part Number	Description	Q'ty	Remarks
	99971 1200	Washer, Spring	2	
25	0866 34 313A	Bolt, Arm & Cross Member	2	
26	99921 1000	Nut, Arm	2	
	99971 1000	Washer, Spring	2	
27	0866 34 340	Seal, Spring	2	
28	0866 34 381	Bearing	2	
29	0866 34 382	Seal, Bearing	2	
30	0866 34 390	Rubber, Mounting	2	
31	99940 0802	Nut, Flange	6	
32	99942 1400	Nut	2	
	99952 1400	Washer, Plain	2	
●	99951 1430	Washer, Plain	2	74/2~○
● 33	0866 34 738	Cap	2	74/1~Discarded
34	0866 34 800B	Member, Cross	1	
35	99942 1000	Nut, Cross Member & Frame	4	
	99951 1030	Washer, Plain	4	
36	99947 1400	Nut	2	
●	99923 1400	Nut	2	74/3~○
● 36-1	99221 3030	Pin, Split	2	74/3~Added Anew
	99221 3035	Pin, Split	2	74/4~△

No.	Part Number	Description	Q'ty	Remarks
37	0866 34 910C	Damper (R), Front	1	
●	0866 34 910D	Damper (R), Front	1	74½～△
	0866 34 960C	Damper (L), Front	1	
●	0866 34 960D	Damper (L), Front	1	74½～△
38	0305 34 707	Spring, Check Valve	2	
39	0259 34 719A	Ring, Piston	2	
40	0305 34 720	Valve, Base	2	
41	0866 34 730	Guide, Piston Rod	2	
42	0866 34 735	Oil Seal	2	
	0866 34 760	Oil Seal	2	
43	0259 99 361	Seal Set	2	
44	0317 99 362	Piston Set	2	
●	0317 99 362A	Piston Set	2	74½～△
● 45	0866 34 738	Cap	2	74½～ Added Anew
●	0866 34 738A	Cap	2	74⅛～◠

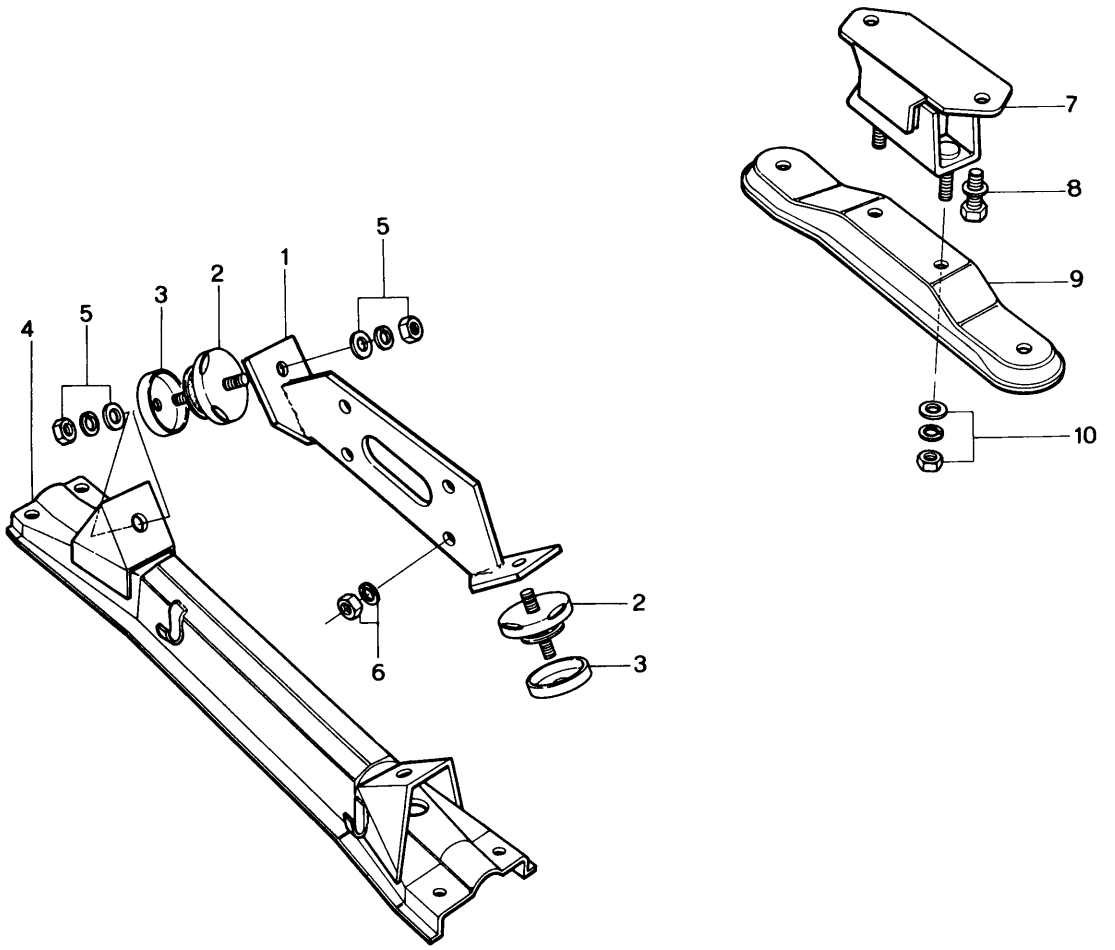
1
2
3
4
5
5
6
2
3
7
8
9
10

ENGINE & T / MISSION BRACKET

	No.	Part Number	Description	Q'ty	Remarks
	1	1622 39 020	Bracket, Engine Mounting	1	
	2	1668 39 040C	Rubber, Engine Mounting	2	
●		1175 39 040	Rubber, Engine Mounting (Canada)	2	$\frac{75}{1}$~×
●	3	1668 39 045A	Casing, Stopper	2	$\frac{74}{12}$~Discarded
●	4	~~0866 39 060~~	~~Member, Engine Mounting~~	~~1~~	
●		0866 39 060B	Member, Engine Mounting	1	From Car No. 1
	5	99921 1000	Nut, Member & Rubber	4	
		99951 1030	Washer, Plain	4	
		99971 1000	Washer, Spring	4	
	6	99921 1000	Nut, Bracket & Engine	4	
		99971 1000	Washer, Spring	4	
	7	0259 39 340	Rubber, T/mission Mounting	1	
	8	99801 0818	Bolt, Rubber & T/mission	2	
		99971 0800	Washer, Spring	2	
	9	1570 39 380	Member, T/mission Mount (Manual)	1	
		1621 39 380	Member, T/mission Mount (Automatic)	1	
	10	99921 1000	Nut, Member & Rubber	4	
		99951 1030	Washer, Plain	4	
		99971 1000	Washer, Spring	4	

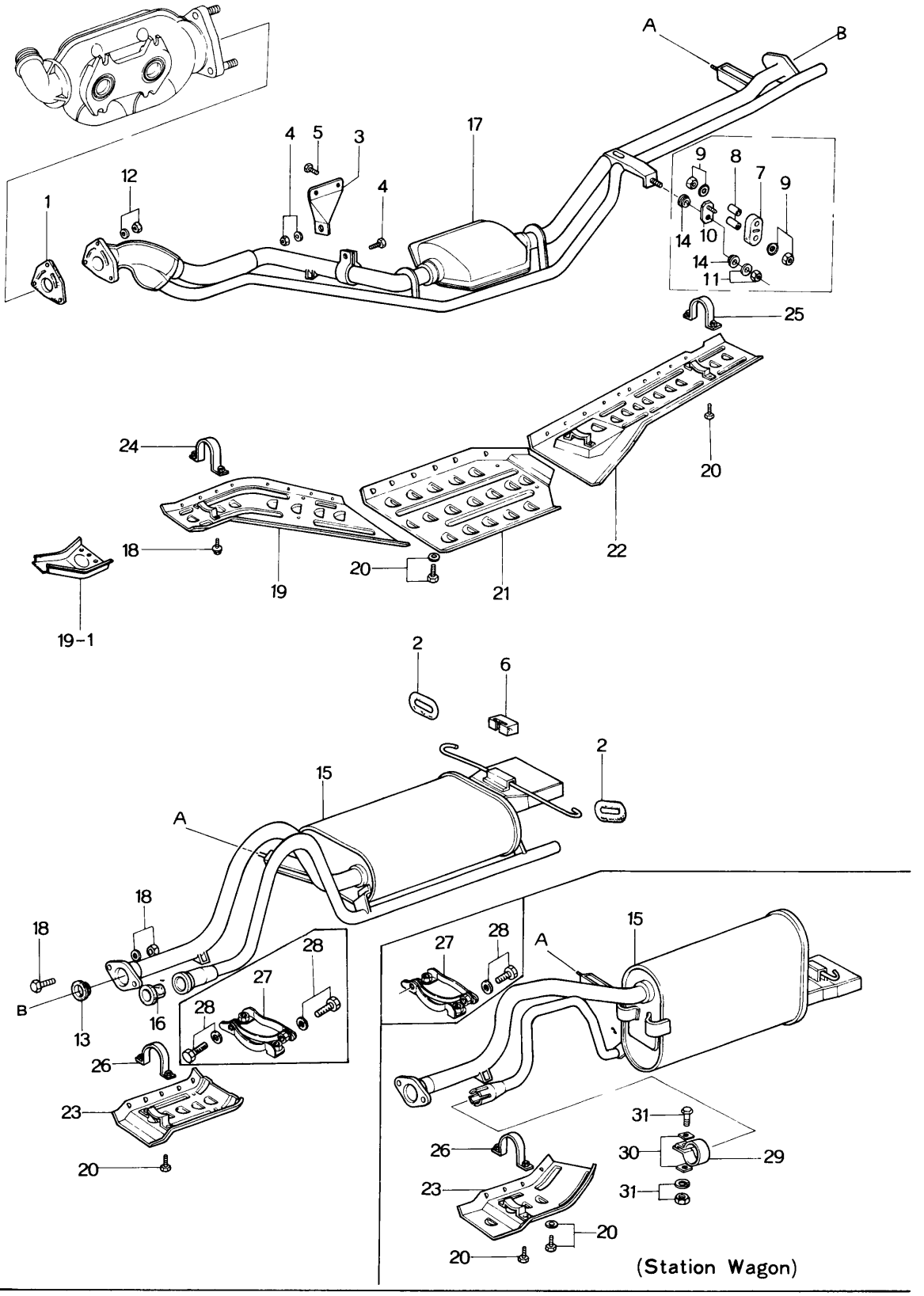
A
B
1
12
4
5
3
4
17
9
8
7
9
14
10
14
11
25
24
18
19
20
20
22
21
19-1
2
6
2
15
A
18
18
B
13
16
28
27
28
26
23
20
15
27
28
A
31
26
30
29
23
31
20
20
(Station Wagon)

No.	Part Number	Description	Q'ty	Remarks
1	1757 13 891	Gasket	1	
2	1114 40 061	Hanger, Silencer	2	
3	1620 40 080	Bracket, Pre-Silencer	2	
4	99801 0832	Bolt, Bracket	1	
	99951 0818	Washer, Plain	1	
	99971 0800	Washer, Spring	1	
5	99801 0818	Bolt, Bracket	2	
	99971 0800	Washer, Spring	2	
6	1114 40 108B	Rubber, Stop	1	
7	1114 40 161	Hanger, Silencer	3	
8	0820 40 165	Pipe	6	
9	99940 0800	Nut	6	
	0820 40 166	Washer	6	
10	1114 40 170	Plate	3	
11	99949 0800	Nut	3	
	99951 0822	Washer, Plain	3	
12	2158 40 355	Nut, Pre-Silencer	3	
	99971 1000	Washer, Spring	3	
13	0810 40 356	Gasket, Flange	1	
●	1757 40 356	Gasket, Flange	1	74/5～△
14	0824 40 401	Insulator	6	

EX. PIPE & SILENCER

No.	Part Number	Description	Q'ty	Remarks
15	1883 40 500	Silencer, Main	1	
●	1883 40 500 A	Silencer, Main (Sedan & Coupe)	1	73/12～○
●	1883 40 500 B	Silencer, Main (Sedan & Coupe)	1	74/2～△
●	3625 40 500 A	Silencer, Main (Sedan & Coupe)	1	74/11～×
	1890 40 500	Silencer, Main	1	
●	1890 40 500 A	Silencer, Main (Station Wagon)	1	73/11～△
●	1890 40 500 B	Silencer, Main (Station Wagon)	1	74/2～△
●	3629 40 500 B	Silencer, Main (Station Wagon)	1	74/11～×
16	2090 40 508 A	Rubber, Joint	1	
17	1883 40 600	Pre-Silencer	1	
●	1883 40 600 A	Pre-Silencer	1	73/9～△
●	1883 40 600 C	Pre-Silencer	1	73/12～△
●	1882 40 600	Pre-Silencer	1	74/2～×
●	1882 40 600 B	Pre-Silencer (Canada)	1	75/1～×
18	99801 1045	Bolt, Pre-Silencer	2	
	2158 40 355	Nut	2	
	99971 1000	Washer, Spring	2	
● 19	~~1128 40 810 A~~	~~Protector No. 1~~	~~1~~	
●	1128 40 810 B	Protector No. 1	1	From Car No. 1
●	1128 40 810 E	Protector No. 1	1	75/1～△

No.	Part Number	Description	Q'ty	Remarks
● 19-1	1883 40 812 A	Bracket, Protector No. 1	1	74/11~ Added Anew 75/1~ Discarded (Canada)
20	99796 0616	Bolt, Protector	18	
●	99796 0616	Bolt, Protector	16	73/12~Q'ty
●	99796 0612	Bolt, Protector	2	73/12~Added Anew
	99952 0618	Washer, Plain	18	
21	1114 40 821 A	Protector No. 2	1	
●	1114 40 821 B	Protector No. 2	1	74/3~○
●	1884 40 821	Protector No. 2	1	74/11~×
●	1757 40 821 A	Protector No. 2 (Canada)	1	75/1~×
22	1128 40 830 B	Protector No. 3	1	
●	1883 40 830	Protector No. 3	1	74/2~×
●	1884 40 830	Protector No. 3	1	74/11~×
●	1128 40 831 D	Protector No. 3 (Canada)	1	75/1~×
23	1128 40 840 A	Protector No. 4	1	
●	1883 40 840	Protector No. 4 (Sedan & Coupe)	1	74/2~×
●	1128 40 841 B	Protector No. 4	1	74/11~△
	1137 40 840 A	Protector No. 4	1	
●	1890 40 840	Protector No. 4 (Station Wagon)	1	74/2~×
●	1137 40 841 B	Protector No. 4	1	74/11~×
24	1128 40 850 A	Band	1	

EX. PIPE & SILENCER

No.	Part Number	Description	Q'ty	Remarks
25	1128 40 870 A	Band	2	
●	1128 40 870 A	Band	1	74½~Q'ty
●	1128 40 870 A	Band	1	75/1~Discarded (Canada)
●	1114 40 850 B	Band	1	74½~ Added Anew
26	1128 40 880	Band	1	
●	1128 40 870 A	Band	1	74½~×
●	1128 40 870 A	Band	1	74/11~Discarded
● 27	3565 40 850	Flexure	3	
● 28	99806 0612	Bolt, Flexure	6	75/1~ Added Anew (Canada)
●	99952 0618	Washer, Flexure	6	
● 29	0136 40 357	Joint	1	
● 30	0208 13 458	Clamp (Station Wagon)	1	
● 31	99801 0828	Bolt, Clamp	1	73/11~Added Anew
●	99971 0800	Washer, Spring	1	
●	99901 0800	Nut	1	

No.	Part Number	Description	Q'ty	Remarks
1	1011 42 250	Cap, Filler	1	
2	2280 42 462A	Gasket	1	
	2280 42 462B	Gasket	1	73/12~○
3	1570 42 310C	Tank, Fuel	1	
	0866 42 310G	Tank, Fuel	1	73/12~○
●	0866 42 310H	Tank, Fuel	1	74/11~△
4	0114 42 046A	Plug, Drain	1	
	99796 1012	Bolt	1	73/12~×
●	99796 1016	Bolt	1	74/11~△
	99564 1200	Gasket	1	
	99564 1000	Gasket	1	73/12~×
●	0866 42 046	Gasket	1	74/11~△
5	0866 42 350B	Pipe, Filler	1	
●	0866 42 350C	Pipe, Filler (Canada)	1	75/1~×
●	3625 42 350B	Pipe, Filler (U.S.A.)	1	74/11~×
6	0259 42 364	Hose, Joint	1	
	0259 42 364B	Hose, Joint	1	73/12~○
●	0259 42 364C	Hose, Joint	1	74/11~△

FUEL TANK (SEDAN & COUPE)

No.	Part Number	Description	Q'ty	Remarks
7	99282 5500	Clamp	2	
●	99282 6000	Clamp	2	74/11 ~ △
8	0866 42 366	Gasket, Inlet Pipe	1	
9	~~99786 0512~~	~~Screw~~	~~6~~	
	99786 0516	Screw	6	From Car No. 1
10	0187 42 371	Seal, Dust	1	
11	1570 42 381 A	Board, Partition	1	
12	2694 42 394	Tube, Vent	1	
	99346 06580	Tube, Vent-Check Valve~Evaporation Pipe (580 m/m)	1	Ord. By 99349 06750 (1.75m) 73/12 ~ ○
13	2694 42 397	Tube, Vent	1	
	99346 06310	Tube, Vent-Condense Tank~Check Valve (310 m/m)	1	Ord. By 99349 06750 (1.75m) 73/12 ~ ○
14	99283 1100	Clip, Vent Tube	1 9	73/12 ~ Q'ty
15	0866 42 410	Lid, Filler (Sedan)	1	
	0376 42 410	Lid, Filler (Coupe)	1	
16	0866 42 521	Pad "A", Fuel Tank	2	
17	0866 42 522	Pad "B", Fuel Tank	2	
●	1011 42 711	Pad "B", Fuel Tank	2	74/8 ~ ○
18	0866 42 523	Pad "C", Fuel Tank	2	
19	1540 42 542	Tube, Vent	1	
	99346 06530	Tube, Vent (530 m/m)	1	Ord. By 99349 06750 (1.75m) 73/12 ~ ○

No.	Part Number	Description	Q'ty	Remarks
●	99346 06520	Tube, Vent (520㎜)	1	Ord. By 99349 06750 (1.75m) 74/12~○
20	99282 1201	Band, Hose	6	
	99282 1000	Band, Hose	1	73/12~×
21	99344 60150	Pipe, Fuel (ℓ =Cut to 160mm and use)	2	
	99346 06160	Pipe, Fuel-Condense Tank~Fuel Tank (160㎜)	2	Ord. By 99349 06750 (1.75m) 73/12~○
22	99282 1401	Clip, Fuel Pipe	4	
	99283 1200	Clip, Fuel Pipe	1	73/12~×
23	99709 0255	Clip	1	
24	99336 12040	Pipe, Vinyl	1	
	99346 12400	Pipe, Fuel Tank~Filler Pipe (400㎜)	1	Ord. By 99349 12750 (1.75m) 73/12~△
●	99346 14420	Pipe, Fuel Tank~Filler Pipe (420㎜)	1	74/11~△
25	99282 2001	Band, Hose	2	
●	99282 2201	Band, Hose	2	74/11~△
26	0866 42 551	Plate, Lock	1	
27	0866 42 552	Plate, Back Up	1	
28	99786 0512	Screw, Lock Plate	2	
29	0866 42 561	Washer	2	
30	907860 8 20	Bolt, Washer & Fuel Tank	4	
31	~~1540 42 570~~	~~Tube, Vent~~	~~1~~	
	2694 42 394	Tube, Vent-Check Valve~Floor	1	From Car No. 1

	No.	Part Number	Description	Q'ty	Remarks
		99346 06580	Tube, Vent-Check Valve~Floor (580m/m)	1	Ord. By 99349 06750 (1.75m) 73/12~△
●	31-1	~~0866 42 554~~	~~Elbow~~	~~1~~	~~From Car No. 1~~
●		0866 42 544	Elbow	1	From Car No. 1
	32	1540 42 610B	Tank, Condense	1	
	33	99863 0512	Screw, Tapping-Condense Tank	4	
		99869 0512	Screw, Tapping-Condense Tank	4	73/11~○
		99952 0500	Washer, Plain	4	73/11~Discarded
		99896 0500	Nut, Spring	4	
	34	2691 42 710A	Valve, Check	1	
		1114 42 710A	Valve, Check	1	74/2~△
	35	99906 0500	Nut, Check Valve	2	
		99940 0501	Nut, Check Valve	2	74/4~△
		99952 0500	Washer, Plain	2	74/4~Discarded
		99971 0500	Washer, Spring	2	
	36	2691 42 716	Element	1	74/2~Discarded
	37	2691 42 750	Bracket, Check Valve	1	
	38	99833 0512	Screw, Check Valve Bracket	1	
		99952 0500	Washer, Plain	1	
		99971 0500	Washer, Spring	1	
	39	0110 52 265	Rubber, Cushion	2	

No.	Part Number	Description	Q'ty	Remarks
40	0187 66 991	Clip, Rubber	1	
41	0866 67 170	Gauge, Fuel Tank	1	
42	0243 66 773	Gasket	1	
43	99833 0408	Screw	6	
44	0866 67 176	Cord, Earth	1	
45	1011 68 815	Jacker, Partition Board	2	
	0866 69 885	Fastener, Partition Board	2	73/10~

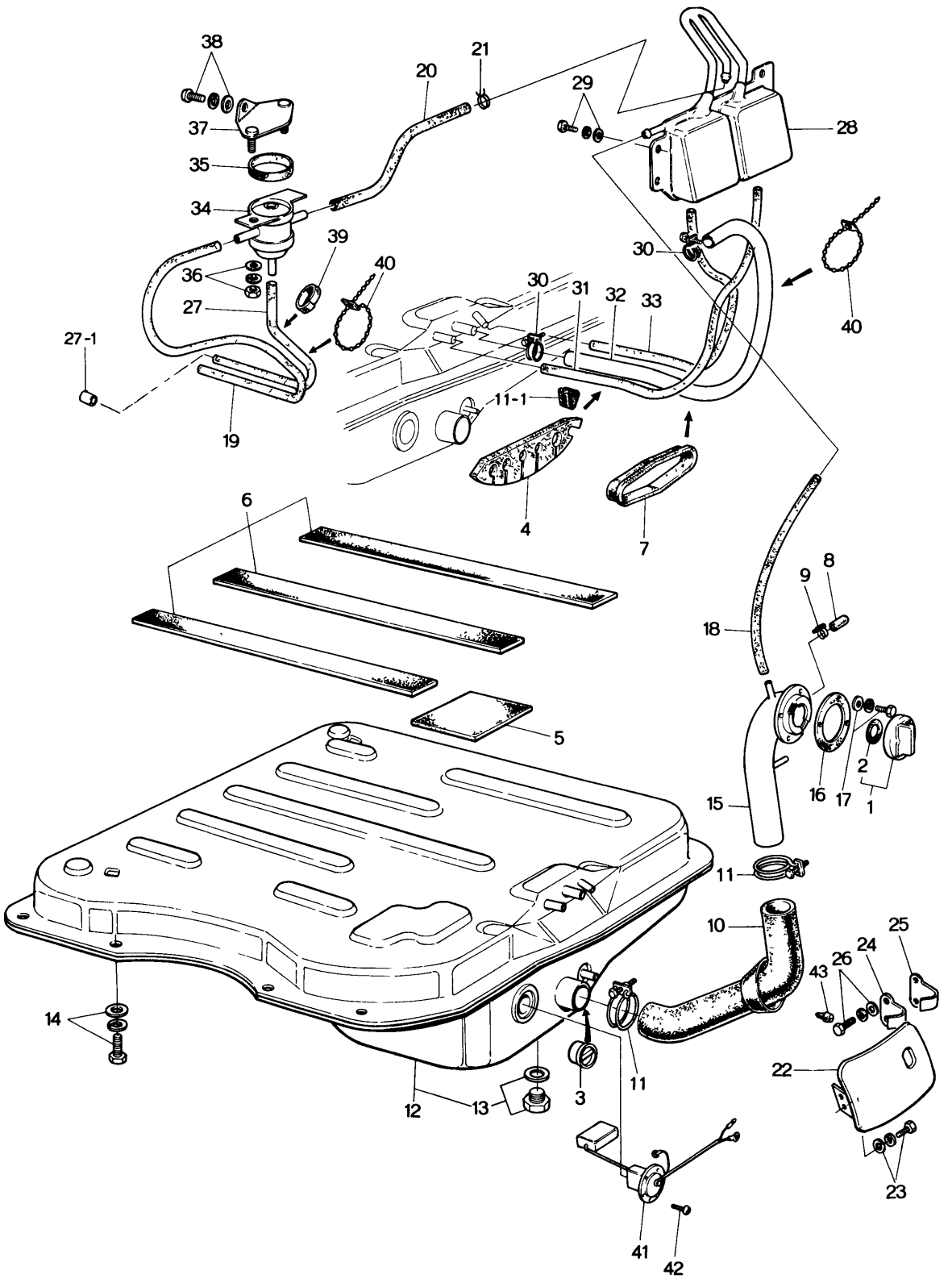
38
37
35
34
36
27
27-1
19
20
21
39
40
29
28
30
31
32
33
11-1
4
7
6
5
18
9
8
2
1
16
17
15
11
10
25
24
26
43
22
23
14
12
13
3
41
42

No.	Part Number	Description	Q'ty	Remarks
1	1011 42 250	Cap, Filler	1	
2	2280 42 462 A	Gasket	1	
	2280 42 462 B	Gasket	1	73/12~○
3	1624 42 280	Valve, Non Return	1	
4	1544 42 302 A	Protector	1	
5	0652 42 304	Pad	4	
6	0585 42 305	Pad	3	
7	0585 42 306	Protector	1	
8	0223 42 307	Cap	2	
9	99282 1401	Clip	2	
	99283 1300	Clip	2	73/12~×
10	0585 42 307	Joint, Hose	1	
	0585 42 307 A	Joint, Hose	1	73/12~○
●	3629 42 307	Joint, Hose (U.S.A.)	1	74/11~×
11	99282 6000	Clamp, Hose	2	
11-1	0585 42 308	Spacer	1	73/10~Added Anew
12	0899 42 310 E	Tank, Fuel	1	
●	0899 42 310 F	Tank, Fuel	1	74/11~△

FUEL TANK (STATION WAGON)

No.	Part Number	Description	Q'ty	Remarks
13	0114 42 046 A	Plug	1	
	99564 1200	Gasket	1	
14	99796 1020	Bolt, Fuel Tank	8	
	99952 1030	Washer, Plain	8	
15	0585 42 350	Pipe, Filler	1	
●	3568 42 350 B	Pipe, Filler	1	74/11~×
●	0585 42 350 B	Pipe, Filler (Canada)	1	75/1~×
●	3629 42 350 B	Pipe, Filler (Canada)	1	75/1~×
16	0866 42 366	Gasket	1	
17	99786 0516	Bolt, Filler Pipe	4	
18	2432 42 391 A	Tube, Vent	1	
	99346 06220	Tube, Vent-Condense Tank~Filler Pipe (220㎜)	1	Ord. By 99349 06750 (1.75m) 73/12~○
19	2435 42 392 B	Tube, Vent	1	
	99346 6800	Tube, Vent-Check Valve-Evaporation Pipe (800㎜)	1	Ord. By 99349 06750 (1.75m) 73/12~○
20	2691 42 397	Tube, Vent	1	
	99346 06400	Tube, Vent-Condense Tank~Check Valve (400㎜)	1	Ord. By 99349 06750 (1.75m) 73/12~△
	99282 1201	Band, Hose	11	
	99283 1100	Clip, Hose	10	73/12~×
	99283 1000	Clip, Hose	1	73/12~×

No.	Part Number	Description	Q'ty	Remarks
22	0585 42 410	Lid, Fuel Filler	1	
23	99786 0516	Bolt, Fuel Filler Lid	2	
24	0866 42 551	Plate, Lock	1	
25	0866 42 552	Plate, Back up	1	
26	99786 0512	Bolt, Lock Plate	2	
27	~~1540 42 570~~	~~Tube, Vent~~	~~1~~	
	2694 42 394	Tube, Vent-Check Valve~Floor	1	From Car No. 1
	99346 06580	Tube, Vent-Check Valve~Floor (580㎜)	1	Ord. By 99349 06750 (1.75m) 73/12~△
27-1	0866 42 544	Elbow	1	From Car No. 1
28	1544 42 610B	Tank, Condense	1	
● 29	~~99986 0616~~	~~Bolt, Condense Tank~~	~~2~~	
●	99786 0616	Bolt, Condense Tank	2	From Car No. 1
	99952 0618	Washer, Plain	2	
30	99282 1601	Clamp	2	
●	99282 2201	Clamp	2	74/11~△
31	1544 42 613	Tube, Vent	1	
	1544 42 613A	Tube, Vent-Condense Tank~Fuel Tank	1	73/12~○
32	99336 10070	Tube	1	
	99346 10700	Tube, Vent-Fuel Tank~Filler Pipe (700㎜)	1	Ord. By 99349 10750 (1.75m) 73/12~△
●	99346 14700	Tube, Vent-Fuel Tank~Filler Pipe (700㎜)	1	74/11~△

42 FUEL TANK (STATION WAGON)

No.	Part Number	Description	Q'ty	Remarks
33	1544 42 614	Tube, Vent	1	
	1544 42 614 A	Tube, Vent		73/12~○
34	2691 42 710 A	Valve, Check	1	
	1114 42 710 A	Valve, Check	1	74/2~△
35	2691 42 716	Element	1	74/2~Discarded
36	99906 0500	Nut, Check Valve	2	
	99940 0501	Nut, Check Valve	2	74/4~△
	99952 0500	Washer, Plain	2	74/4~Discarded
	99971 0500	Washer, Spring	2	
37	2694 42 750	Bracket, Check Valve	1	
38	99833 0512	Screw, Bracket	1	
	99952 0500	Washer, Plain	1	
	99971 0500	Washer, Spring	1	
39	0187 66 991	Clip, Rubber	1	
40	99709 0255	Band, Tube	2	
41	0899 67 170 B	Gauge, Fuel Tank	1	
42	99833 0408	Screw, Fuel Tank Gauge	6	
43	0110 52 265	Rubber, Cushion	2	From Car No. 1

FUEL PIPING (USED UP TO 74/4)

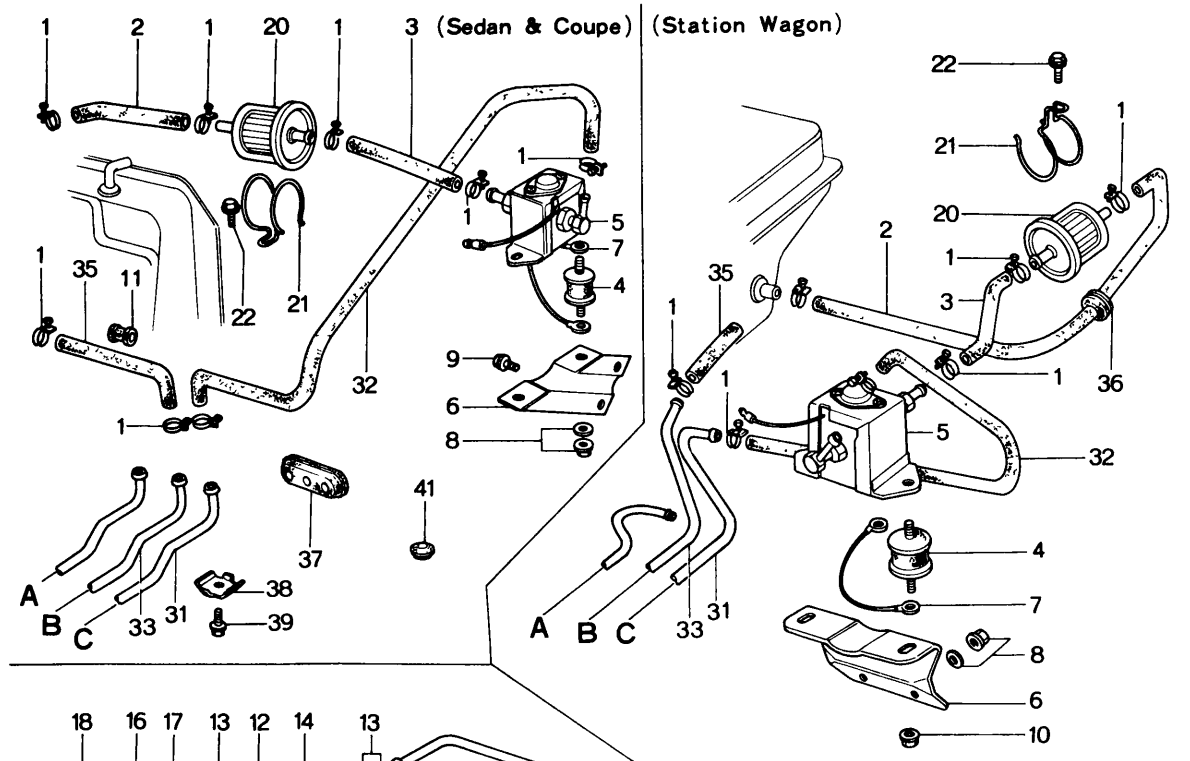

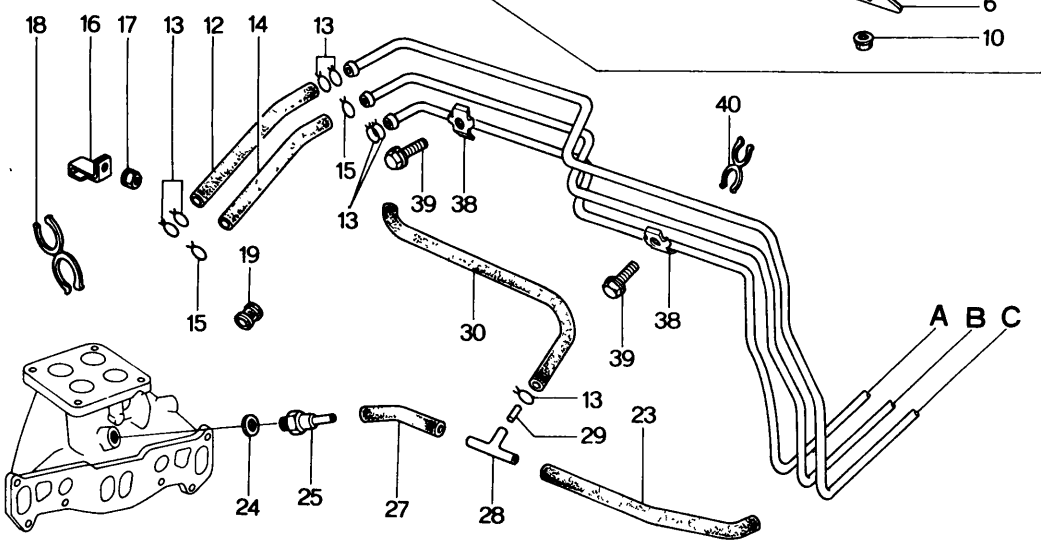

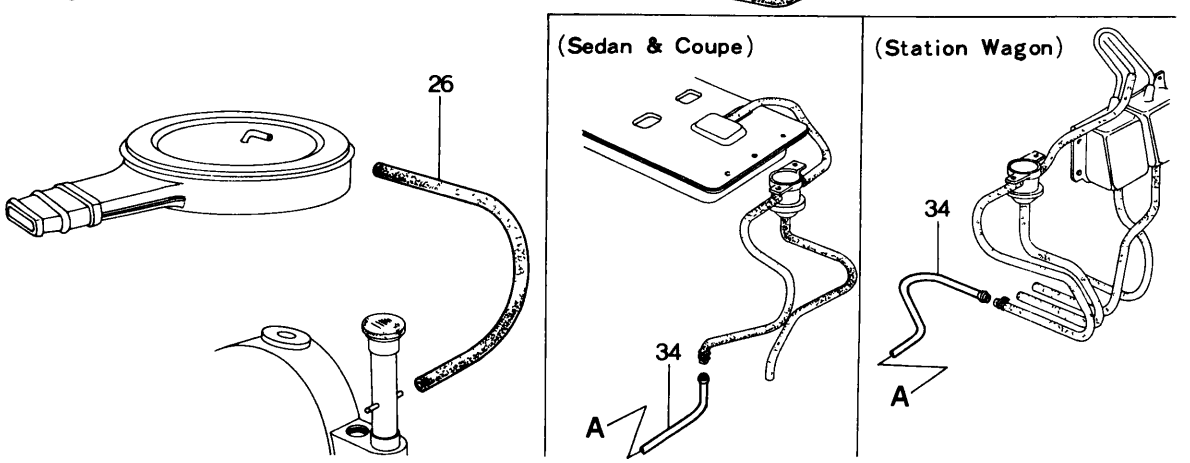

No.	Part Number	Description	Q'ty	Remarks
1	99282 1401	Clamp, Hose (Sedan & Coupe)	8	
		(Station Wagon)	7	
2	99340 06180	Pipe, Fuel (Tank~Filter) (Sedan & Coupe)	1	Order Under No. 99344 06150
	99340 06500	Pipe, Fuel (Tank~Filter) (Station Wagon)	1	
3	99340 06180	Pipe, Fuel (Filter~Pump) (Sedan & Coupe)	1	
	99340 06224	Pipe, Fuel (Filter~Pump) (Station Wagon)	1	
4	0222 13 363	Rubber, Insulation	2	
5	1881 13 400	Pump, Fuel	1	
6	0866 13 401A	Bracket, Fuel Pump (Sedan & Coupe)	1	
	1624 13 401	Bracket, Fuel Pump (Station Wagon)	1	
7	0866 13 402A	Earth	1	
8	99940 0600	Nut	4	
	99952 0600	Washer, Plain	2	
9	99786 0616	Bolt, Fuel Pump (Sedan & Coupe)	2	
10	99940 0600	Nut, Fuel Pump (Station Wagon)	2	
11	99686 1200	Protector (Sedan & Coupe)	3	
12	1570 13 442	Pipe, Fuel (Main)	1	
13	99283 1300	Clip, Fuel Pipe (Main)	4	
14	99340 60480	Pipe, Fuel (Return)	1	Order Under No. 99344 06150
15	99283 1100	Clip, Fuel Pipe (Return)	2	
16	1570 13 446A	Clip	1	

FUEL PIPING

No.	Part Number	Description	Q'ty	Remarks
17	99940 0802	Nut, Clip	1	
18	1570 13 447	Clip	1	
19	99681 1503	Protector (Manual)	3	
20	0222 13 470B	Filter, Fuel	1	
21	0381 13 481	Clamp	1	
22	99806 0612	Bolt, Fuel Filter	1	
	99952 0618	Washer, Plain	1	
	99971 0600	Washer, Spring	1	
23	1757 13 785	Hose, Ventilation-Oil Filler Pipe~"T" Joint	1	
24	99564 1600	Gasket	1	
25	1757 13 780	Valve, Ventilation	1	
26	1757 13 786	Hose, Ventilation (Air Cleaner~Intermediate Housing)	1 (Manual)	Order Under No. 1883 13 786
	1883 13 786	Hose, Ventilation (Air Cleaner~Intermediate Housing)	1 (Automatic)	
27	1757 13 788	Hose, Ventilation-Valve~"T" Joint	1	
28	0862 13 790	Joint, Pipe	1	
29	1624 13 795	Insert	1	
30	99340 60380	Pipe, Fuel-Joint~Evaporation	1	Order Under No. 99344 06150
31	0866 45 061A	Pipe, Fuel Main (Sedan & Coupe)	1	
	0899 45 071C	Pipe, Fuel Main (Station Wagon)	1	
32	99340 06670	Pipe, Fuel-Pump~Main Pipe (Sedan & Coupe)	1	Order Under No. 99344 06150

No.	Part Number	Description	Q'ty	Remarks
	0899 45 091	Pipe, Fuel-Pump~Main Pipe (Station Wagon)	1	
	0899 45 091A	Pipe, Fuel-Pump~Main Pipe (Station Wagon)	1	73/12~○
33	0866 45 611B	Pipe, Fuel Return (Sedan & Coupe)	1	
	1881 45 611	Pipe, Fuel Return (Sedan & Coupe)	1	73/10~△
	0899 45 611B	Pipe, Fuel Return (Station Wagon)	1	
	1889 45 611	Pipe, Fuel Return (Station Wagon)	1	73/10~△
34	1570 45 711	Pipe, Evaporation (Sedan & Coupe)	1	
	1571 45 711	Pipe, Evaporation (Station Wagon)	1	
35	99340 06320	Pipe, Fuel-Return Pipe~Tank (Sedan & Coupe)	1	Ord. By 99344 06150 (15m)
	99340 60320	Pipe, Fuel-Return Pipe~Tank (Sedan & Coupe)	1	Ord. By 99349 06750 (1.75m) 73/10~△
	99340 06140	Pipe, Fuel-Return Pipe~Tank (Station Wagon)	1	Ord. By 99344 06150 (15m)
	99340 60140	Pipe, Fuel-Return Pipe~Tank (Station Wagon)	1	Ord. By 99349 06750 (1.75m) 73/10~△
36	0866 45 805	Protector (Station Wagon)	1	
37	0866 45 806A	Grommet (Sedan & Coupe)	1	
38	0866 45 903A	Clip	(Sedan & Coupe) 10 (Station Wagon) 14	
39	99786 0612	Bolt	(Sedan & Coupe) 10 (Station Wagon) 14	
40	99288 0808B	Clip	1	
41	0118 56 241	Plug, Drain (Sedan & Coupe)	1	

FUEL PIPING (USED FROM 74/5)

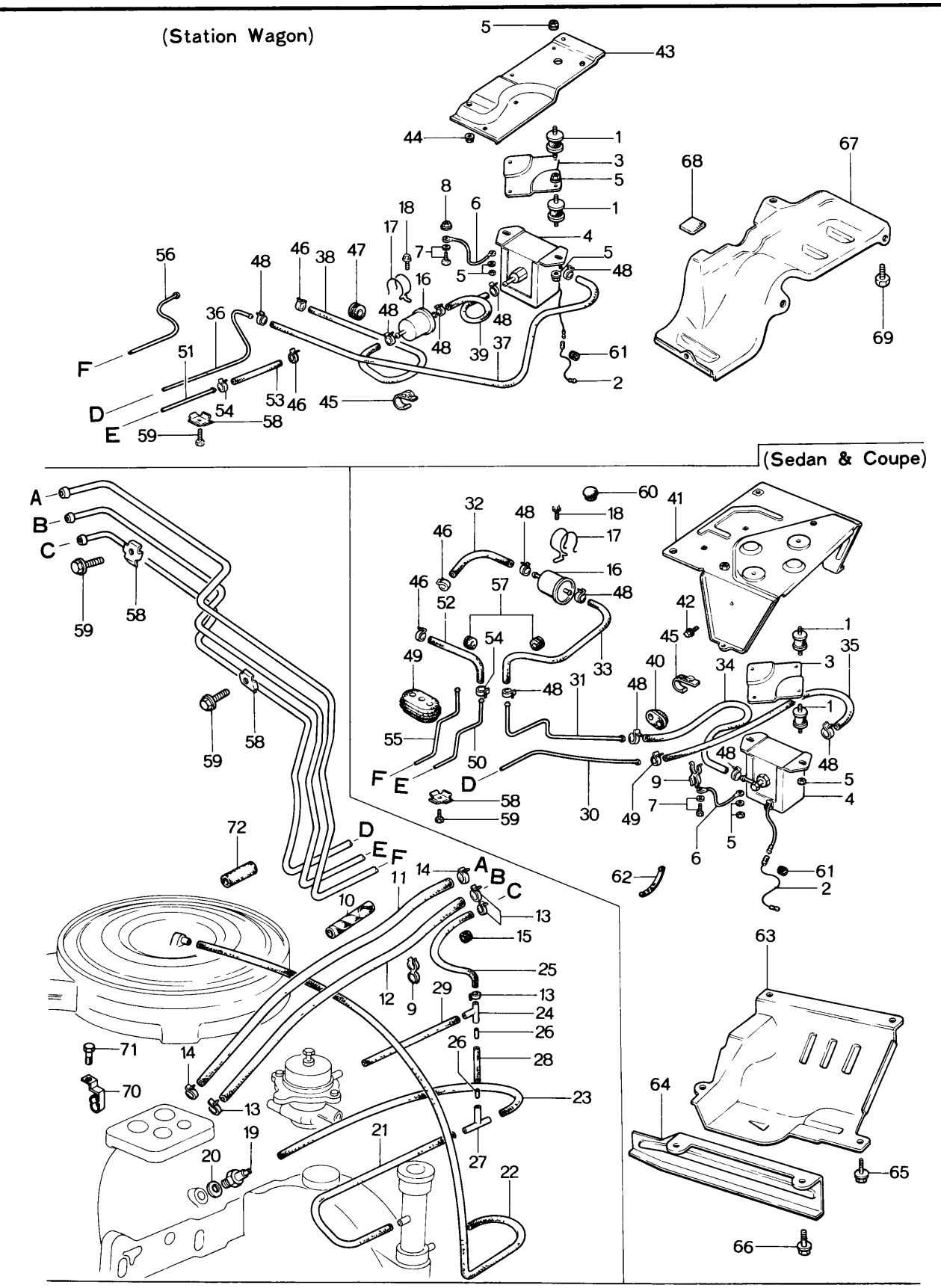

FUEL PIPING (USED FROM 74/5)

No.	Part Number	Description	Q'ty	Remarks
● 1	~~0222 13 363~~	~~Rubber Insulation-Fuel Pump~~	~~4~~	
●	0223 13 363	Rubber Insulation-Fuel Pump	4	From Car No. 1
2	1690 13 359	Cord, Fuel Pump	1	
3	1690 13 361	Bracket, Fuel Pump	1	
4	1173 13 400A	Pump, Fuel	1	
●	1757 13 400C	Pump, Fuel (U.S.A.)	1	74/11~×
5	99940 0600	Nut, Fuel Pump	8	
	99952 0600	Washer, Plain	1	
6	0866 13 402A	Wire, Earth-Fuel Pump	1	
7	99796 0610	Bolt, Earth Wire	1	
	99952 0600	Washer, Plain	1	
8	99940 0603	Nut, Earth Wire (Wagon)	1	
9	1570 13 447	Clip, Fuel Hose	2	
10	1883 13 448	Protector (Automatic)	1	
11	99348 08430	Hose, Fuel Main (430 m/m)	1	Ord. By 99349 08750 (1.75m)
●	99348 08570	Hose, Fuel Main (570 m/m)	1	Ord. By 99349 08750 (1.75m) 74/12~○
12	99348 06430	Hose, Fuel Return (430 m/m)	1	Ord. By 99349 06750 (1.75m)
●	99348 06570	Hose, Fuel Return (570 m/m)	1	Ord. By 99349 06750 (1.75m) 74/12~○
13	99283 1000	Clip, Hose	4	
14	99283 1200	Clip, Hose	2	

No.	Part Number	Description	Q'ty	Remarks
15	99681 1503	Protector, Hose	3	
16	0222 13 470B	Filter, Fuel	1	
17	0381 13 481	Clamp, Fuel Filter	1	
18	99876 0612	Bolt, Clamp	1	
	99952 0618	Washer, Plain	1	
19	1757 13 780	Valve, Ventilation	1	
20	99564 1600	Gasket, Ventilation Valve	1	
21	1757 13 785A	Hose, Ventilation-"T" Joint~Oil Filler Pipe	1	
●	1757 13 785B	Hose, Ventilation-"T" Joint~Oil Filler Pipe	1	74/7~○
●	3565 13 785	Hose, Ventilation-"T" Joint~Oil Filler Pipe	1	74/11~△
22	1757 13 786A	Hose, Ventilation-Air Cleaner~Intermediate Housing	1	
●	1757 13 786B	Hose, Ventilation-Air Cleaner~Intermediate Housing	1	74/7~○
23	1757 13 788A	Hose, Ventilation-"T" Joint~Ventilation Valve	1	
●	1757 13 788B	Hose, Ventilation-"T" Joint~Ventilation Valve	1	74/7~○
●	3565 13 788	Hose, Ventilation-"T" Joint~Ventilation Valve	1	74/11~△
24	1029 13 790	Joint, "T"	1	
25	99346 06360	Hose, Evaporation-"T" Joint~Evaporation Pipe (360㎜)	1	Ord. By 99349 06750 (1.75m)
●	1881 13 792B	Hose, Evaporation-"T" Joint~Evaporation Pipe	1	(Canada) 75/1~×
26	1029 13 795A	Insert, "T" Joint	2	
●	3565 13 795	Insert, "T" Joint	2	74/11~×

No.	Part Number	Description	Q'ty	Remarks
27	1757 13 790	Joint, "T"	1	
28	99346 06055	Hose, "T" Joint ~ "T" Joint (55m/m)	1	Ord. By 99349 06750 (1.75m)
●	1757 13 787	Hose, "T" Joint ~ "T" Joint	1	74/7 ~ ○
29	99340 04090	Hose, "T" Joint ~ E.C.V. Valve	1	
●	3565 13 915	Hose, "T" Joint ~ E.C.V. Valve	1	74/12 ~ ○
30	1881 45 061A	Pipe, Fuel Main-Carburettor Side	1	
31	0866 45 062	Pipe, Fuel Main-Fuel Tank Side	1	
32	99348 08180	Hose, Fuel-Tank ~ Filter (180m/m)	1	Ord. By 99349 08750 (1.75m)
33	99348 08640	Hose, Fuel-Filter ~ Fuel Pipe (640m/m)	1	Ord. By 99349 08750 (1.75m)
34	0866 45 801	Hose, Fuel-Tank ~ Pump	1	
35	0866 45 802	Hose, Fuel-Tank ~ Carburettor Side	1	
		(Sedan & Coupe)		
36	1889 45 071	Pipe, Fuel Main	1	
37	0899 45 091B	Hose, Fuel-Pump ~ Main Pipe	1	
38	0899 45 801	Hose, Fuel-Tank ~ Filter	1	
39	0899 45 802	Hose, Fuel-Filter ~ Pump	1	
		(Wagon)		
40	0866 45 807	Protector, Pipe	1	
41	0866 45 810A	Hanger, Fuel Pump	1	
42	99786 0612	Bolt, Hanger	2	
		(Sedan & Coupe)		
● 43	~~0899 45 810~~	~~Bracket, Fuel Pump~~	~~1~~	
●	0899 45 810A	Bracket, Fuel Pump	1	From Car No. 1
		(Wagon)		

No.	Part Number	Description	Q'ty	Remarks
44	99786 0612	Nut, Bracket (Wagon)	2	
45	99278 1201	Clip, Fuel Hose	2	
46	99283 1100	Clip, Fuel Hose	2	
47	0866 45 805	Protector, Fuel Hose (Wagon)	1	
48	99283 1200	Clip, Fuel Hose (Wagon) / (Sedan & Coupe)	4 / 7	
49	0866 45 806A	Grommet (Sedan & Coupe)	1	
50	1881 45 611	Pipe, Fuel Return (Sedan & Coupe)	1	
51	1889 45 611	Pipe, Fuel Return (Wagon)	1	
52	99348 06330	Hose, Fuel Return (330 m/m) (Sedan & Coupe)	1	Ord. By 99349 06750 (1.75m)
53	99348 06140	Hose, Fuel Return (140 m/m) (Wagon)	1	Ord. By 99349 06750 (1.75m)
54	99283 1000	Clip, Hose	1	
55	1570 45 711	Pipe, Evaporation (Sedan & Coupe)	1	
56	1571 45 711	Pipe, Evaporation (Wagon)	1	
●	1571 45 711A	Pipe, Evaporation (Wagon)	1	74/11～△
57	99686 1200	Protector, Fuel Hose (Sedan & Coupe)	3	
● 58	0866 45 903A	Clip, Pipe (Sedan & Coupe) ~~10~~ 11 / (Wagon) 13		From Car No. 1
● 59	99786 0612	Bolt, Clip (Sedan & Coupe) ~~10~~ 11 / (Wagon) 13		From Car No. 1
60	0118 56 241	Plug, Drain (Sedan & Coupe)	1	
61	0208 66 683	Protector, Pump Cord	1	
62	0187 66 991	Clip, Rubber	1	

FUEL PIPING (USED FROM 74/5)

No.	Part Number	Description		Q'ty	Remarks
63	0866 56 781	Cover, Fuel Pump	(Sedan & Coupe)	1	
64	0866 56 782	Protector, Fuel Pump		1	
65	99786 0616	Screw, Fuel Pump Cover		4	
	99952 0618	Washer, Plain		4	
66	99786 0612	Bolt, Fuel Pump Protector		2	
67	0899 56 780	Cover, Fuel Pump	(Wagon)	1	
68	0208 66 949	Pad, Protector		1	
69	99786 0616	Bolt, Fuel Pump Cover		4	
	99952 0618	Washer, Plain		4	
● 70	1757 13 446	Clip, Fuel Hose		2	
● 71	99796 0610	Bolt, Clip		2	74/11 ~ Added Anew
● 72	0899 45 803	Protector, Fuel Hose (Wagon)		1	

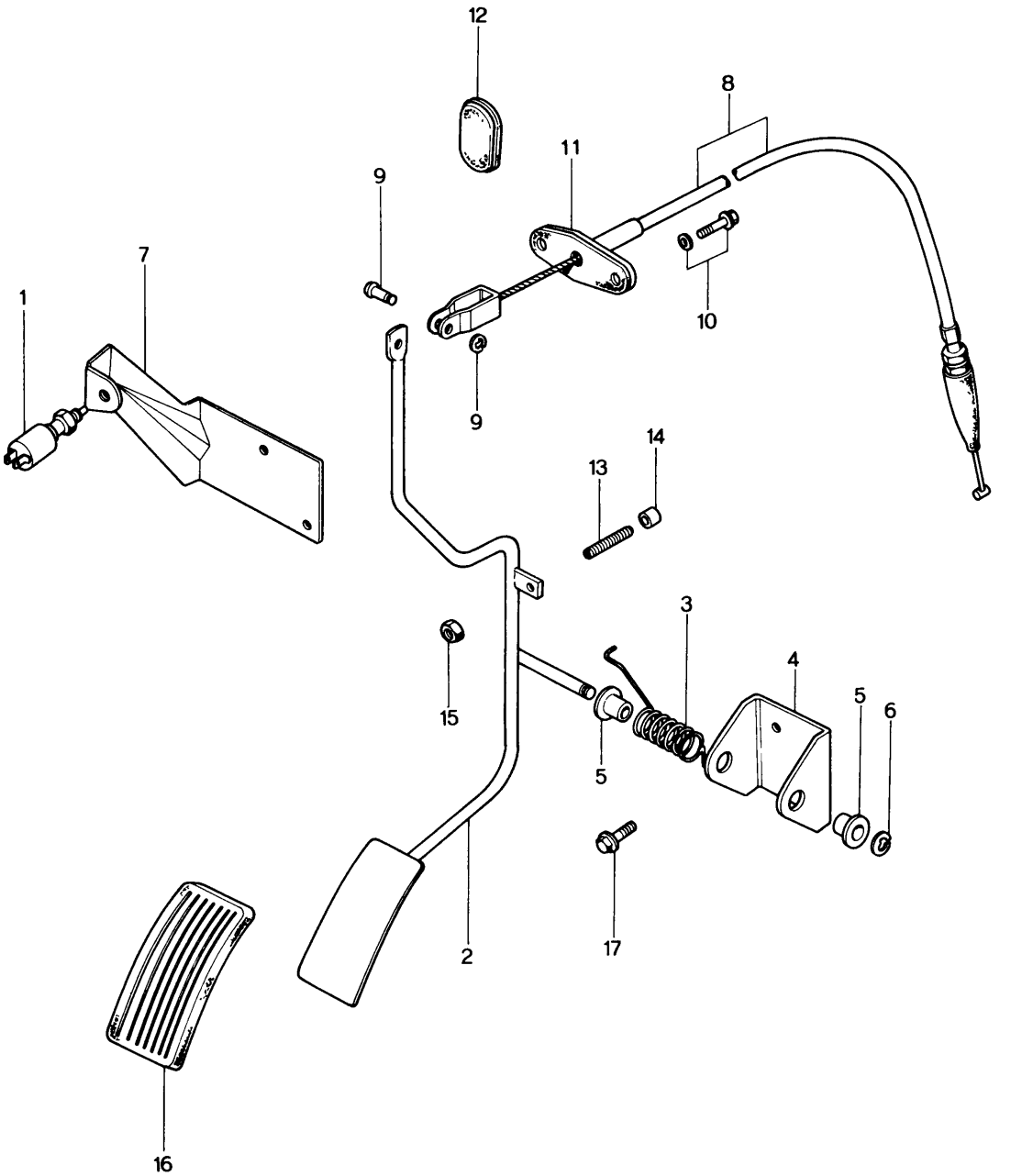
12
8
11
9
7
1
10
9
14
13
3
4
5
6
15
5
17
2
16

No.	Part Number	Description	Q'ty	Remarks
1	2691 18 660	Switch, Kick Down (Automatic)	1	
2	1881 41 610A	Pedal, Accelerator (Manual)	1	
	1883 41 610A	Pedal, Accelerator (Automatic)	1	
3	0370 41 619	Spring, Return	1	
4	0305 41 641	Retainer	1	
5	0259 41 644	Bush	2	
6	99575 0600	Ring, Retaining	1	
7	1637 41 650	Bracket, Kick Down Switch (Automatic)	1	
● 8	~~1881 41 660~~	~~Wire, Accelerator~~	~~1~~	
●	1881 41 660A	Wire, Accelerator	1	From Car No. 1
●	1881 41 660B	Wire, Accelerator	1	73/9 ~ △
9	99230 0511	Pin, Joint - Accelerator Wire	1	
	99575 0300	Ring, Snap	1	
10	99786 0620	Bolt, Accelerator Wire	2	
	99952 0618	Washer, Plain	2	
11	0249 41 671	Seat	1	
12	1524 41 678	Seal	1	
13	0118 41 681	Stopper	1	
14	0118 41 682	Rubber, Stopper	1	
15	99940 0600	Nut	1	
16	1708 41 711	Pad, Pedal	1	
17	99786 0616	Bolt	2	

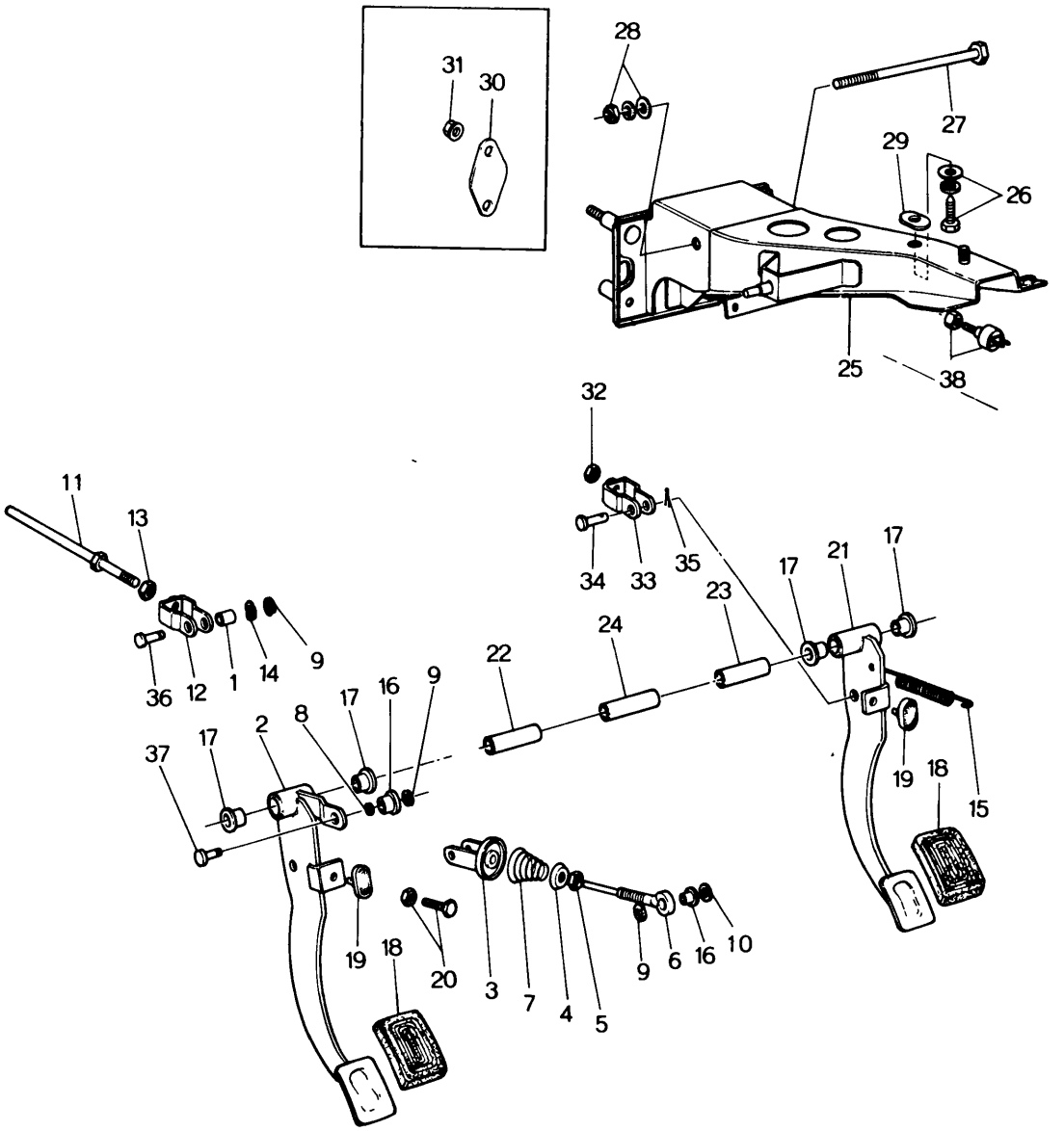
31
30
28
27
29
26
25
38
32
34
33
35
11
13
36
12
1
14
9
17
16
9
22
24
23
17
21
17
2
8
37
17
19
18
15
19
18
20
3
7
4
5
9
6
16
10

No.	Part Number	Description	Q'ty	Remarks
1	0727 41 023	Bush	1	
2	1562 41 030A	Pedal, Clutch	1	
3	0559 41 040C	Seat, Spring	1	
4	0183 41 043	Seat, Spring	1	
5	99922 0800	Nut	1	
6	0824 41 051A	Rod	1	
7	0559 41 081A	Spring, Return (Manual)	1	
8	0824 41 084	Spacer	1	
9	99575 0600	Ring, Snap	3	
10	99952 0816	Washer, Plain	1	
11	0223 41 131A	Rod, Clutch Push	1	
12	1872 41 140	Fork	1	
13	1872 41 142	Nut	1	
14	99972 0800	Washer, Wave	1	
15	0613 41 308	Spring, Return - Brake Pedal	1	
16	0259 41 644	Bush, Clutch (Manual)	2	
17	0259 43 022	Bush	(Automatic) 2 (Manual) 4	
●	1015 46 085	Bush	(Automatic) 2 (Manual) 4	74/3~○
18	0118 43 028A	Pad, Pedal - Clutch & Brake (Manual)	2	
	0268 43 028	Pad, Pedal (Automatic)	1	
19	0187 43 029	Rubber, Stopper	(Automatic) 1 (Manual) 2	

CLUTCH & BRAKE PEDAL

No.	Part Number	Description	Q'ty	Remarks
20	99795 1032	Bolt, Stopper (Manual)	1	
	99922 1000	Nut (Manual)	1	
21	1524 43 030	Pedal, Brake (Manual)	1	
	1525 43 030	Pedal, Brake (Automatic)	1	
22	0866 43 061	Pipe (Manual)	1	
23	0866 43 062	Pipe	1	
24	0866 43 063	Pipe	1	
25	1524 43 070B	Bracket, Master Cylinder	1	
26	99805 0825	Bolt, Bracket	1	
●	99786 0820	Bolt, Bracket	1	73/11~○
●	99952 0822	Washer, Plain	1	73/10~Discarded
●	99971 0800	Washer, Spring	1	73/10~Discarded
27	99813 10110	Bolt, Pedal (Automatic)	1	
	99813 10155	Bolt, Pedal (Manual)	1	
28	99921 1000	Nut, Bracket	1	
	99952 1000	Washer, Plain	1	
	99971 1000	Washer, Spring	1	
29	0259 43 088	Seat, Bracket	1	
30	1525 43 090	Plate (Automatic)	1	
31	99940 0800	Nut, Plate (Automatic)	2	
32	99922 1000	Nut	1	

No.	Part Number	Description	Q'ty	Remarks
33	1524 43 140	Fork	1	
34	99231 0820	Pin, Joint	1	
35	99221 2020	Pin, Split	1	
36	0223 46 683	Pin, Clutch (Manual)	1	
37	0604 46 785	Pin, Clutch (Manual)	1	
38	0233 66 790	Switch, Stop	1	

CLUTCH RELEASE & MASTER CYLINDER (MANUAL)

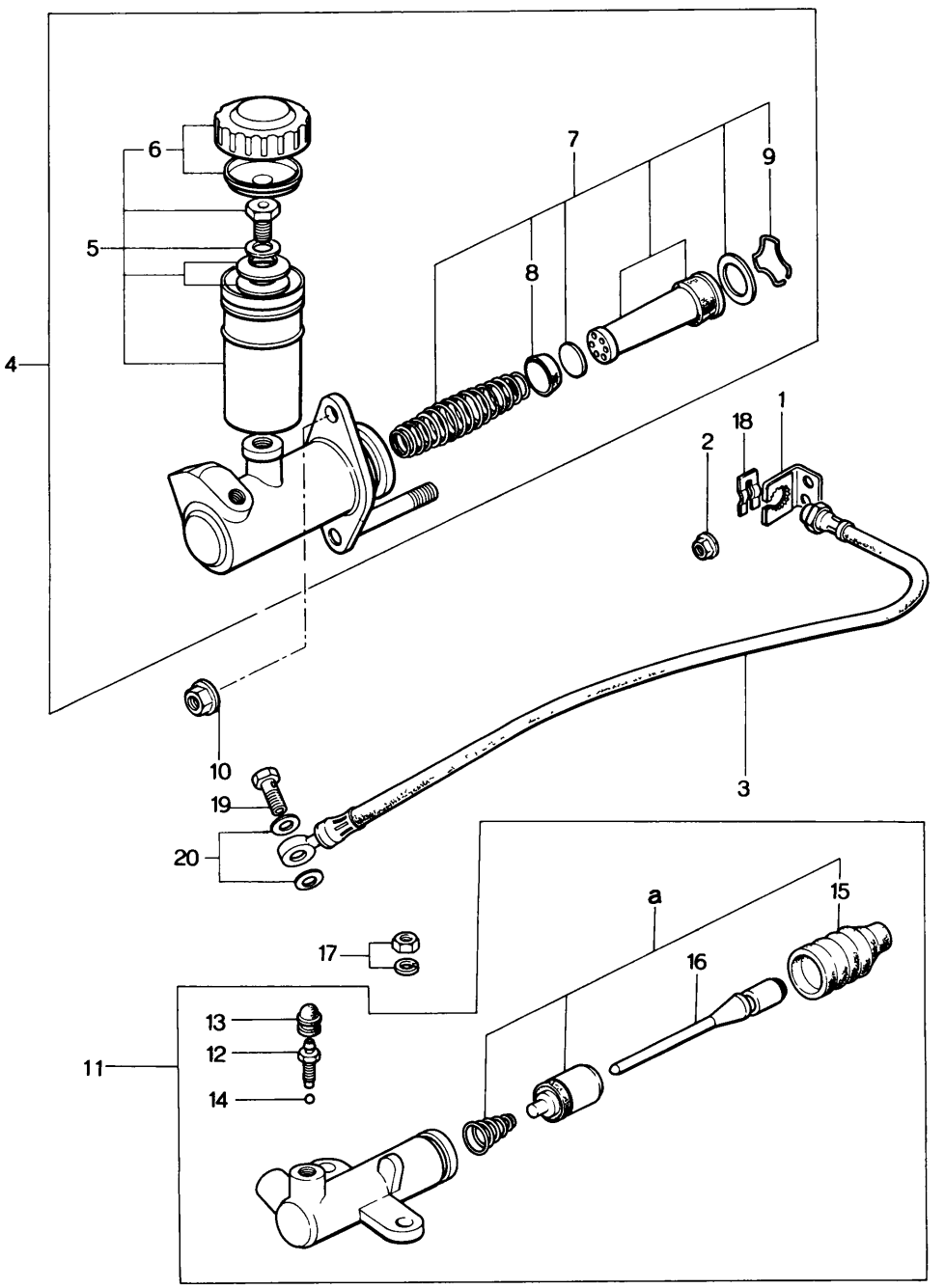

CLUTCH RELEASE & MASTER CYLINDER (MANUAL)

No.	Part Number	Description	Q'ty	Remarks
1	0866 41 370	Holder, Flexible Hose	1	
2	99940 0600	Nut, Holder	1	
3	0866 41 380	Hose, Flexible	1	
4	1524 41 400	Cylinder, Clutch Master	1	
●	1524 41 400A	Cylinder, Clutch Master	1	73/11~△
5	0317 89 435	Tank Set	1	
●	0317 89 435A	Tank Set	1	73/11~△
●	0317 89 435B	Tank Set	1	74/7~○
6	~~0317 89 436~~	~~Cap Set~~	~~1~~	
●	0317 89 436A	Cap Set	1	From Car No. 1
7	0839 89 431A	Cylinder Set, Clutch Master	1	
●	0839 89 431B	Cylinder Set, Clutch Master	1	75/2~○
8	~~0305 41 461~~	~~Cup, Primary~~	~~1~~	
●	0839 41 461	Cup, Primary	1	From Car No. 1
9	0111 43 432	Wire, Stop	1	
10	99940 0800	Nut, Clutch Master Cylinder	2	
11	1881 41 920	Cylinder, Clutch Release	1	
●	1881 41 920A	Cylinder, Clutch Release	1	73/9~△
12	0259 33 691	Screw, Bleeder	1	
13	0259 33 693	Cap	1	
14	99611 1500	Ball, Steel	1	
15	0603 41 331	Boot	1	
16	1881 41 341	Rod, Push	1	
a	~~1029 89 411~~	~~Repair Kit, Clutch Release~~	~~1~~	
●	1052 89 411	Repair Kit, Clutch Release	1	From Car No. 1

CLUTCH RELEASE & MASTER CYLINDER (MANUAL)

No.	Part Number	Description	Q'ty	Remarks
17	99940 0800	Nut, Release Cylinder	2	
18	0136 43 635	Clip, Flexible Hose	1	
19	0221 43 694	Bolt, Hose & Release Cylinder	1	
20	99562 1000	Gasket	2	

TANDEM MASTER CYLINDER & VACUUM POWER ASSIST

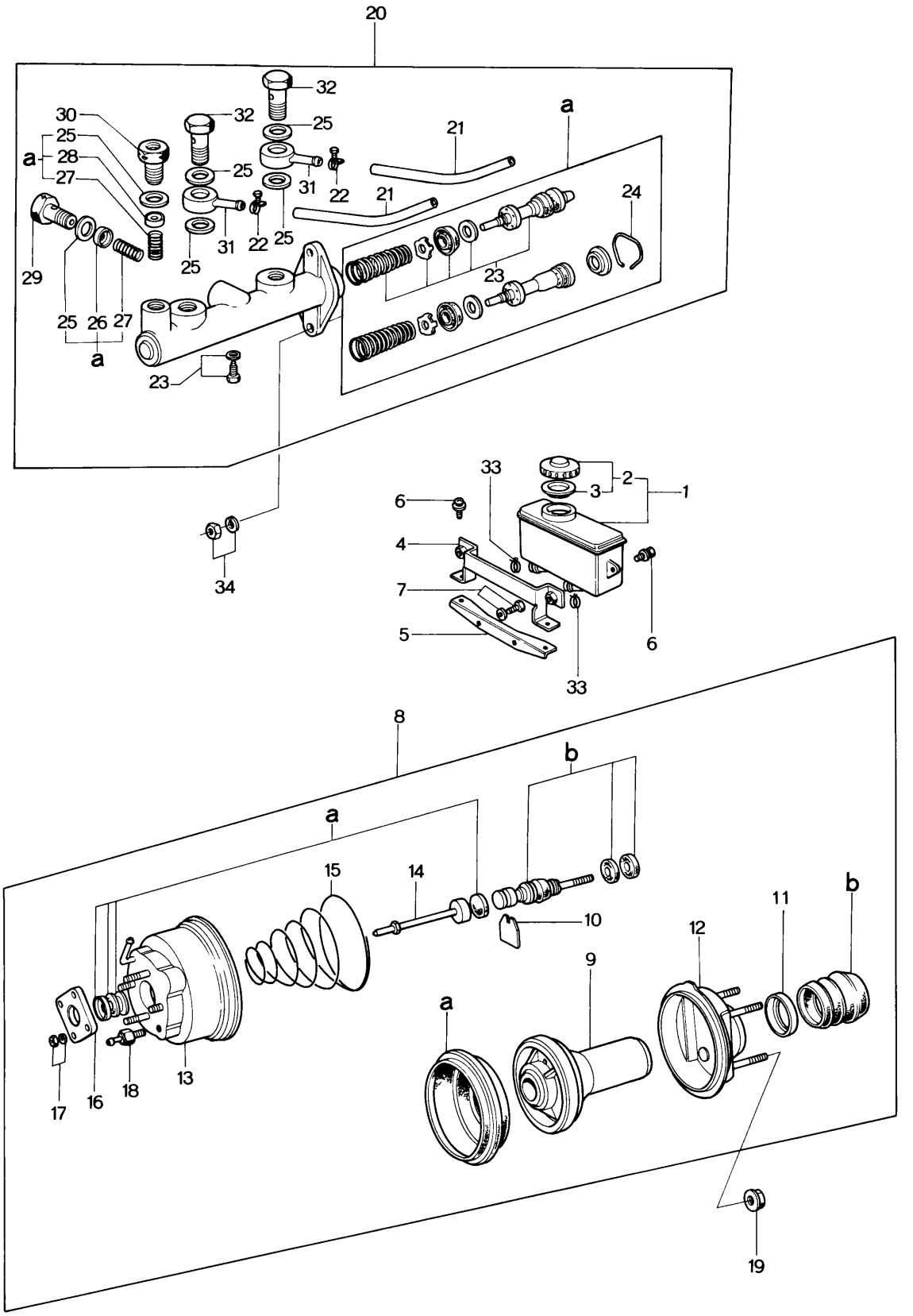

TANDEM MASTER CYLINDER & VACUUM POWER ASSIST

No.	Part Number	Description	Q'ty	Remarks
1	0839 43 550	Tank, Reserve	1	
●	0839 43 550A	Tank, Reserve	1	74½~○
● 2	0727 43 552	Cap	1	Ord. By 0317 89 436A
● 3	0839 43 553A	Baffle, Oil	1	
4	0870 43 570	Holder, Reserve Tank	1	
5	0870 43 580	Holder, Reserve Tank	1	
6	99833 0512	Screw, Holder & Tank	4	
	99971 0500	Washer, Spring	4	
7	99785 0612	Screw, Holder	2	
	99971 0600	Washer, Spring	2	
8	1562 43 800	Assist, Vacuum Power	1	
● a	0870 49 710	Repair Kit "A"	1	☆
● b	~~0870 49 720~~	~~Repair Kit "B" ("A" Kit & Fig. No. 18 included) 1~~ ~~(Parts not listed here are supplied under these kits)~~		
●	0870 49 720A	Repair Kit "B" (Fig. No. a & Fig. No. 18 included) (Parts not listed here are supplied under these kits)	From Car No. 1	
9	0870 49 745	Plate, Diaphragm	1	
10	2048 49 746	Key	1	
11	2046 49 747	Retainer, Silencer	1	
● 12	0870 49 750	Shell & Stud, Rear	1	☆
● 13	1562 49 760	Shell & Stud, Front	1	☆
● 14	~~0824 49 770~~	~~Rod, Push 1~~		
●	0870 49 770	Rod, Push	1	From Car No. 1

43 49 TANDEM MASTER CYLINDER & VACUUM POWER ASSIST

No.	Part Number	Description	Q'ty	Remarks	
15	0824 49 781	Spring	1		
16	2046 49 782	Flange	1		
● 17	~~2046 49 783~~	~~Washer, Spring~~	~~1~~		
●	99971 0800	Washer, Spring	1	From Car No. 1	
●	~~2046 49 784~~	~~Nut~~	~~1~~		
●	99906 0800	Nut	1	From Car No. 1	
18	0870 49 785	Valve, Check	1		
19	99940 0800	Nut, Vacuum Power Assist	3		
20	1620 43 990	Cylinder, Tandem Master	1		
●	1620 43 990A	Cylinder, Tandem Master	1		73/9~○
21	1562 43 422	Hose, Reserve	2		
●	1881 43 422	Hose, Reserve	2		73/9~○
22	99282 1401	Clamp, Hose	2		
● a	1128 49 610	Parts Kit, Inner (Fig. No. 23~28 included)	1		
23	1128 49 630	Piston, Float	1		
24	0305 49 638	Wire, Piston Stop	1		
25	0305 49 656	Gasket, Joint Bolt	1		
26	0559 49 660	Valve, Check	1		
● 27	0512 49 665	Spring, Check Valve	2		☆
28	1128 49 670	Valve, Outlet	1		
29	0512 49 651	Bolt, Joint	1		
30	1620 49 651	Bolt, Joint	1		
31	0512 49 682	Joint, Union	2		
●	0512 49 682A	Joint, Union	2		74/7~○

TANDEM MASTER CYLINDER & VACUUM POWER ASSIST

43 49

No.	Part Number	Description	Q'ty	Remarks
32	0512 49 686	Bolt, Connector	2	
33	99285 0800	Clip, Wire - Oil Pipe	2	
34	99901 0800	Nut, Tandem Master Cylinder	2	
	99971 0800	Washer, Spring	2	

PARKING BRAKE SYSTEM

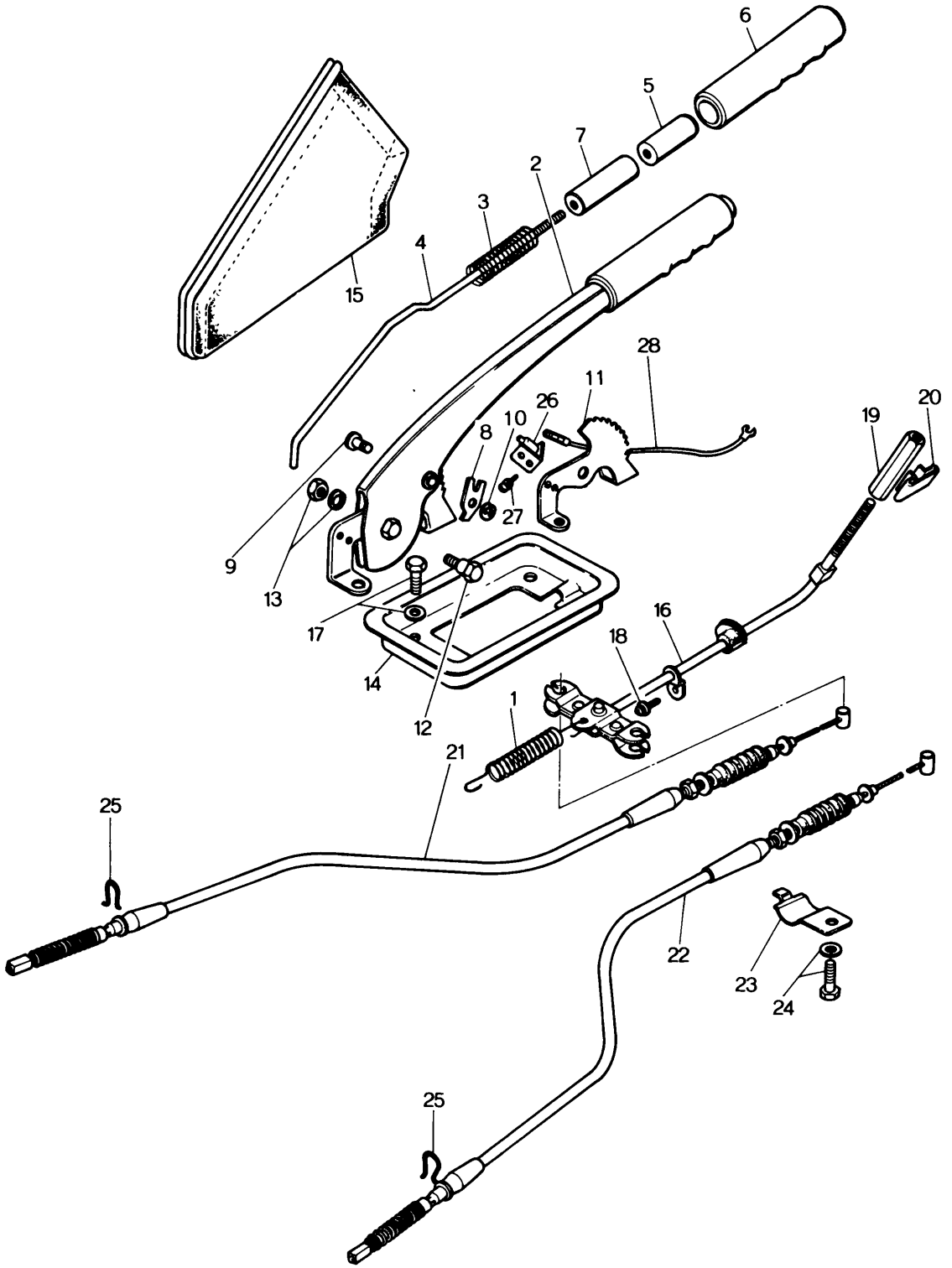

No.	Part Number	Description	Q'ty	Remarks
1	0183 41 308	Spring, Return	1	
2	0866 44 010	Lever, Hand Brake	1	
3	0813 44 031	Spring	1	
4	0303 44 032	Rod, Release	1	
5	0221 44 033	Button	1	
6	0813 44 034	Cap	1	
7	0813 44 035	Spacer	1	
8	0221 44 044	Ratchet	1	
9	99230 0815B	Pin	1	
10	99575 0500	Ring, Snap	1	
11	0866 44 051	Sector	1	
12	0303 44 053	Bolt, Hand Brake Lever	1	
13	99901 0800B	Nut	1	
	99971 0800	Washer, Spring	1	
14	0302 44 132	Plate	1	
●	1881 44 130	Plate (Without Console Box)	1	7½~○
15	0824 44 140	Boot	1	
16	0866 44 150A	Cable, Front	1	
17	99786 0616	Bolt, Front Cable	4	

	No.	Part Number	Description	Q'ty	Remarks
●	18	99868 0508	Screw, Tapping	1	74/10~Discarded
●		99971 0500	Washer, Plain	1	74/10~Discarded
●	19	~~0866 44 187~~	~~Screw, Adjust~~	~~1~~	
●		0866 44 187A	Screw, Adjust	1	From Car No. 1
	20	0866 44 189	Clip	1	
	21	0866 44 410B	Cable, Rear (L)	1	
	22	1570 44 410C	Cable, Rear (R)	1	
	23	0866 44 439	Clip, Cable	2	
	24	99786 0616	Bolt	2	
	25	0305 44 471	Clip	2	
	26	0820 66 840	Switch, Parking Lamp	1	
	27	99833 0412	Screw, Switch	2	
		99952 0400	Washer, Plain	2	
		99971 0400	Washer, Spring	2	
	28	1881 67 135	Cord, Parking Lamp Switch	1	
●		1881 67 135A	Cord, Parking Lamp Switch	1	74/7~△

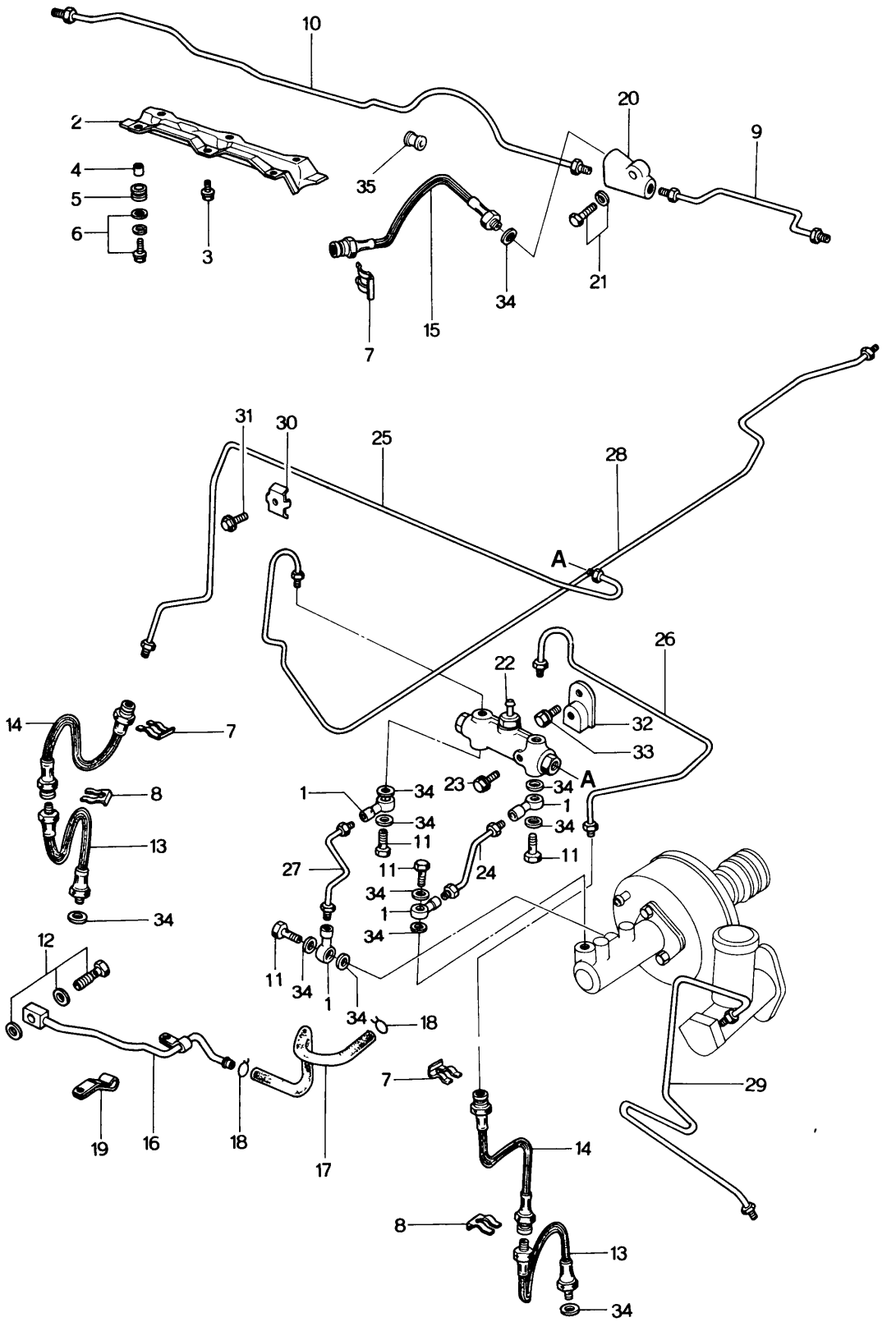
10
2
4
5
6
3
35
20
9
21
34
15
7
31
30
25
28
A
26
22
32
33
A
14
7
8
13
34
1
34
23
34
1
34
11
11
27
24
11
34
1
34
12
11
34
1
34
18
19
16
18
17
7
29
14
8
13
34

No.	Part Number	Description	Q'ty	Remarks
1	0118 41 375	Connector, Pipe	4	
2	1128 43 605B	Protector, Brake Pipe	1	
3	99781 0818	Bolt, Protector	2	
	99952 0800	Washer, Plain	2	
	99971 0800	Washer, Spring	2	
4	1114 43 608B	Spacer	4	
5	1114 43 609A	Rubber, Cushion	4	
6	99781 0822	Bolt, Protector	4	
	99951 0822	Washer, Plain	4	
	99971 0800	Washer, Spring	4	
7	0136 43 635	Clip, Flexible Hose	3	
8	0305 43 635	Clip, Flexible Hose - Front	2	
9	0370 43 650A	Pipe No. 1, Rear (Sedan & Coupe)	1	
	0585 43 650A	Pipe No. 1, Rear (Station Wagon)	1	
10	1881 43 660	Pipe No. 2, Rear (Sedan & Coupe)	1	
	1137 43 660	Pipe No. 2, Rear (Station Wagon)	1	
11	0221 43 694	Bolt, Connector	4	
12	1570 43 694A	Bolt, Connector - Vacuum Hose	1	
	99562 1200	Gasket	2	
13	1540 43 810	Hose, Flexible	2	
●	1881 43 810	Hose, Flexible	2	74/4～△

No.	Part Number	Description	Q'ty	Remarks
14	1541 43 820	Hose, Flexible - Front	2	
●	1757 43 820	Hose, Flexible - Front	2	74/4～△
15	1540 43 820	Hose, Flexible - Rear	1	
●	1881 43 820	Hose, Flexible - Rear	1	74/4～△
16	1881 43 830	Pipe, Vacuum (Manual)	1	
	1883 43 830	Pipe, Vacuum (Automatic)	1	
●	1881 43 830	Pipe, Vacuum (Automatic)	1	74/3～×
17	1559 43 836C	Hose, Vacuum	1	
18	99282 1901	Clamp, Hose	1	
● 19	1621 43 848	Holder, Vacuum Pipe (Automatic)	1	74/3～Discarded ☆
20	0118 43 853	Joint, Pipe - Rear	1	
21	99806 0625	Bolt, Pipe - Joint	1	
	99971 0600	Washer, Spring	1	
22	1540 43 890	Indicator, Brake Fail	1	
23	99786 0635	Bolt, Brake Fail Indicator	1	
24	1598 45 250A	Pipe, Brake (Frt.) - Main	1	
25	1540 45 280A	Pipe, Brake (Frt., R)	1	
26	1540 45 320	Pipe, Brake (Frt., L)	1	
27	1559 45 350A	Pipe, Brake (Rr.) - Main	1	
28	1504 45 360	Pipe, Brake (Rr.) (Sedan & Coupe)	1	
	1508 45 360	Pipe, Brake (Rr.) (Station Wagon)	1	
29	1562 45 510B	Pipe, Clutch (Manual)	1	
30	0866 45 903A	Clip, Pipe	7	

No.	Part Number	Description	Q'ty	Remarks
31	99786 0612	Bolt, Clip	7	
32	1540 45 920A	Bracket, Brake Fail Indicator	1	
33	99786 0616	Bolt, Bracket	1	
34	99562 1000	Gasket	11	
● '35	0578 45 995	Protector, Rear Pipe No. 2	1	7/12~Added Anew

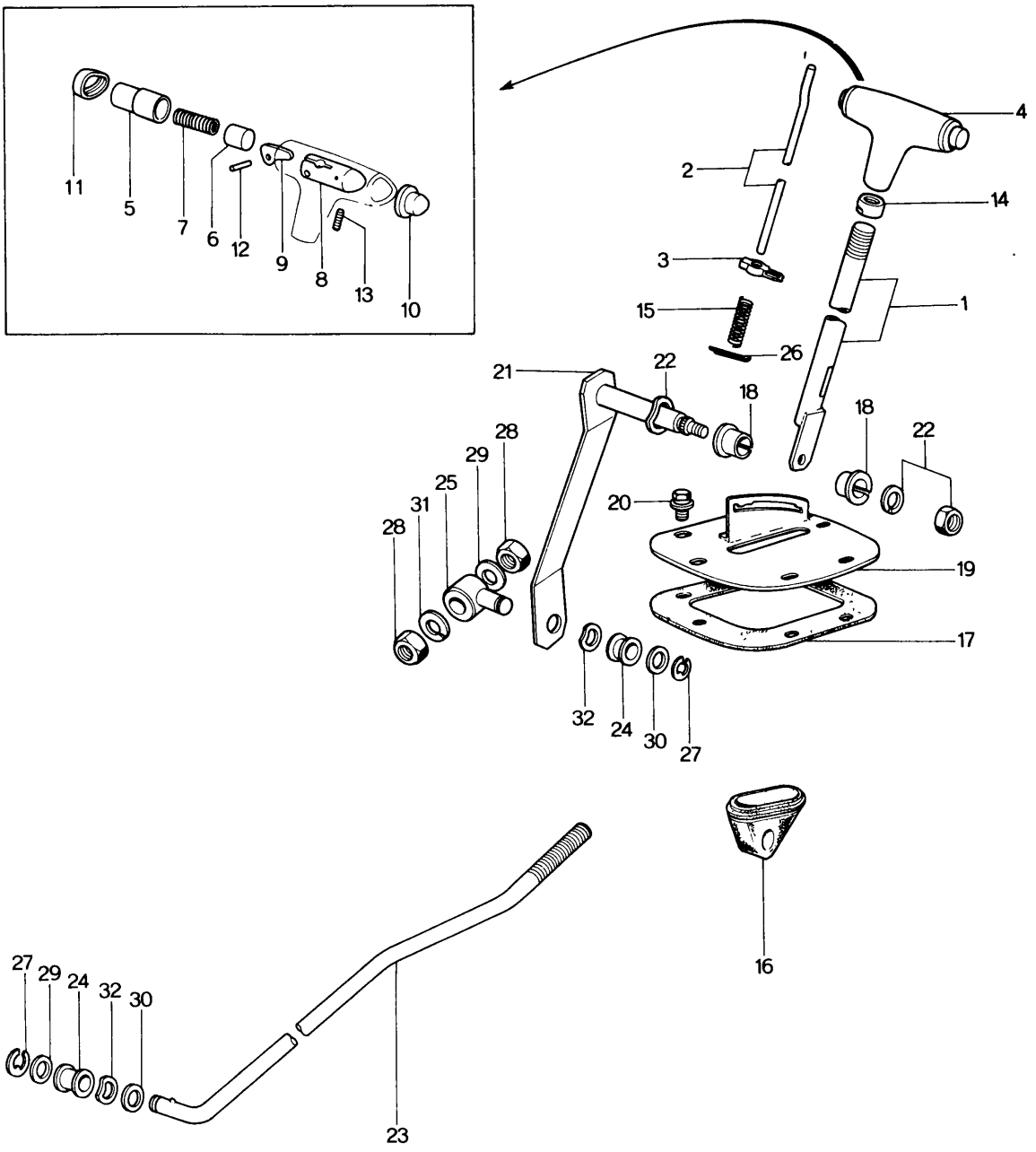
11
5
7
6
12
9
8
13
10
4
2
14
3
1
15
26
21
22
18
18
22
28
29
25
31
28
20
19
17
32
24
30
27
16
27
29
24
32
30
23

No.	Part Number	Description	Q'ty	Remarks
1	1840 46 010	Lever, Selector	1	
2	1840 46 021	Rod	1	
3	1840 46 022	Pin, Guide	1	
4	~~2375 46 030B~~	~~Knob~~	~~1~~	
	2375 46 030C	Knob	1	From Car No. 1
●	1736 46 030	Knob	1	74/11～×
5	2375 46 051A	Knob	1	
6	2375 46 052	Piston	1	
7	2375 46 053	Spring	1	
8	2375 46 054	Supporter	1	
9	2375 46 055	Lever	1	
10	2375 46 056A	Plug	1	
11	0308 46 057A	Cap	1	
12	99225 0320	Pin	1	
13	99887 0412	Screw Set	1	
14	2375 46 061	Nut	1	
15	2375 46 062	Spring	1	
16	0842 46 081	Boot	1	
17	0308 46 083	Seal	1	
18	1015 46 085	Bush	2	

No.	Part Number	Description	Q'ty	Remarks
19	2070 46 110A	Bracket	1	
20	~~00806 0616~~	~~Bolt~~	~~6~~	
	99786 0616	Bolt	6	From Car No. 1
	~~99952 0622~~	~~Washer, Plain~~	~~6~~	
	99952 0618	Washer, Plain	6	From Car No. 1
	~~00871 0800~~	~~Washer, Spring~~	~~6~~	
21	0378 46 150	Lever	1	
	1053 46 150	Lever	1	74⅓～×
22	99922 1000	Nut	1	
	99971 1000	Washer, Spring	1	
	99972 1400	Washer, Wave	1	
23	1621 46 571	Rod	1	
	1856 46 571	Rod	1	74⅓～×
24	1015 46 684	Bush	2	
25	0259 46 691	Joint, "T"	1	
	1015 46 691	Joint, "T"	1	74⅓～×
26	99221 2020	Pin, Split	1	
27	99575 0600	Ring, Retaining	2	
28	99902 0800	Nut	2	
29	99952 0816	Washer, Plain	1	
30	99953 0800	Washer, Plain	2	
31	99971 0800	Washer, Spring	1	
32	99972 0800	Washer, Wave	2	
	1015 46 648	Cover, Dust	2	74⅓～Added Anew

BUMPER & GRILLE (1974 MODEL)

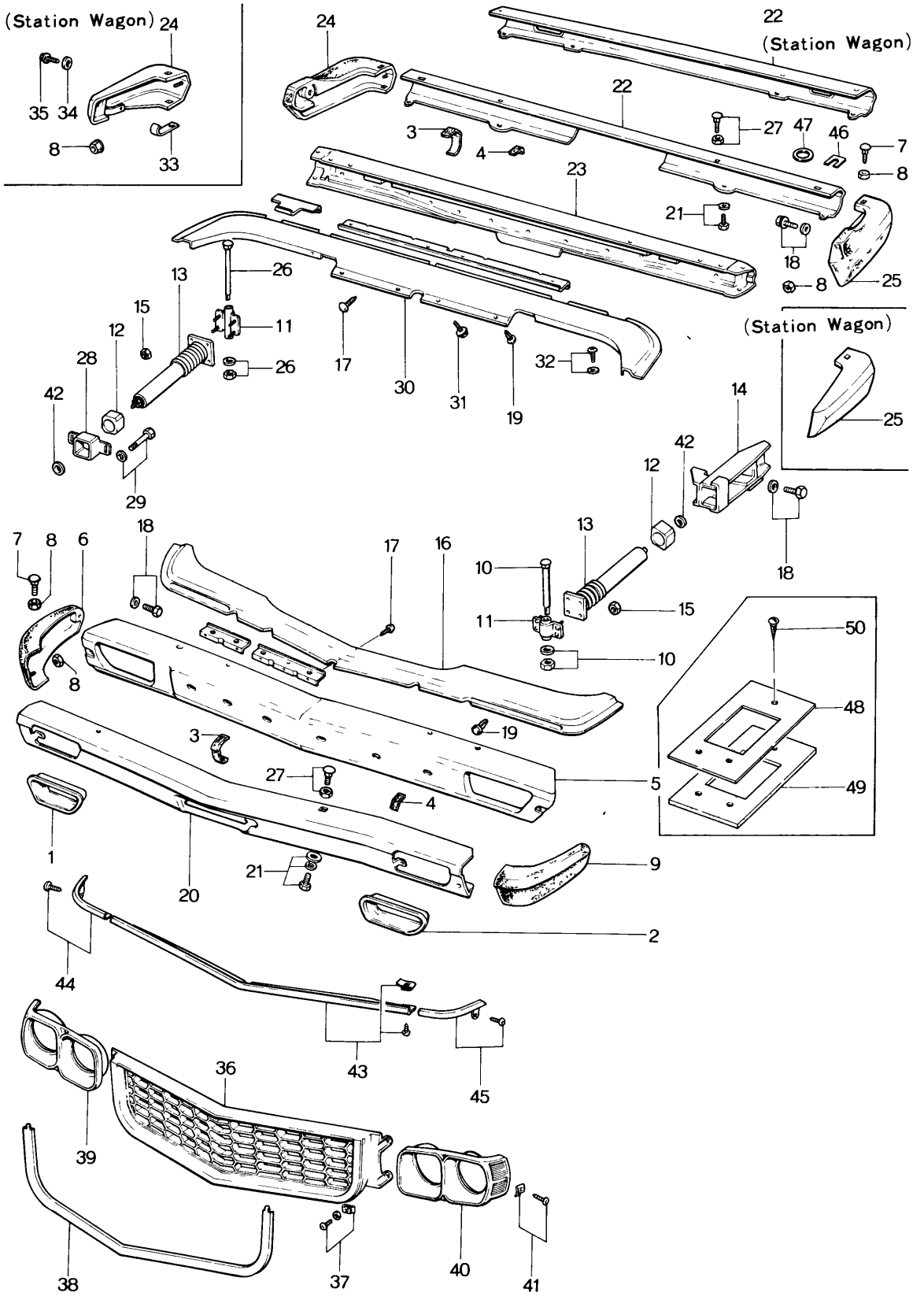

No.	Part Number	Description	Q'ty	Remarks
1	1881 50 025	Ring (R), Front Turn Signal Lamp	1	
2	1881 50 026	Ring (L), Front Turn Signal Lamp	1	
3	1755 50 036	Spacer "A"	14	
4	1755 50 037	Spacer "B" (Frt.···2, Rr.···4)	6	
● 5	~~1881 50 040~~	~~Bumper (Frt., C)~~	~~1~~	
●	1881 50 040 B	Bumper (Frt.,C)	1	From Car No. 1
● 6	~~1881 50 050~~	~~Bumper, Side (Frt., R)~~	~~1~~	
●	1881 50 050 A	Bumper, Side (Frt., R)	1	From Car No. 1
7	1755 50 055	Screw, Bumper Side & Bumper Center	8	
8	99940 0602	Nut	12	
● 9	~~1881 50 060~~	~~Bumper, Side (Frt., L)~~	~~12~~	
●	1881 50 060 A	Bumper, Side (Frt., L)	1	From Car No. 1
● 10	~~1755 50 071~~	~~Bolt, Bumper & Shock Absorber~~	~~1~~	
●	1755 50 071 A	Bolt, Bumper & Shock Absorber	2	From Car No. 1
	99945 1000	Nut	2	
	99971 1000	Washer, Spring	2	
● 11	~~1755 50 080~~	~~Plate, Hinge~~	~~4~~	
●	1755 50 080 A	Plate, Hinge	4	From Car No. 1
12	1755 50 091	Rubber, Mounting	4	
13	1755 50 100	Absorber, Shock	4	

BUMPER & GRILLE (1974 MODEL)

	No.	Part Number	Description	Q'ty	Remarks
●		1755 50 100 A	Absorber, Shock	4	73/10～△
●		1755 50 100 B	Absorber, Shock	4	74/3～○
	14	1881 50 110	Bracket (R), Shock Absorber	1	
●		0881 50 110 A	Bracket (R), Shock Absorber	1	73/9～○
		1881 50 130	Bracket (L), Shock Absorber	1	
●		1881 50 130 A	Bracket (L), Shock Absorber	1	73/9～○
	15	99940 0802	Nut, Hinge Plate & Shock Absorber	16	
	16	1881 50 150 00	Cover, Front Bumper (GRY)	1	
●		1881 50 150 A00	Cover, Front Bumper (GRY)	1	74/2～○
●		1881 50 150 A00	Cover, Front Bumper (GRY)	1	74/4～△
	17	99869 0414	Screw, Tapping-Cover	22	
	18	99786 0820	Bolt, Bumper Side (Sedan & Coupe)	12	
			(Station Wagon)	10	
		99952 0822	Washer, Plain (Sedan & Coupe)	12	
			(Station Wagon)	10	
	19	99264 0752	Rivet, Cover	10	
	20	1881 50 180	Bumper	1	
●		1881 50 180 A	Bumper, Outer (Frt.)	1	73/9～○
	21	99774 0616	Screw, Bumper Outer	4	
		99971 0600	Waher, Spring	4	
	22	1881 50 221	Bumper, Outer (Rr.) (Sedan & Coupe)	1	
●		1881 50 221 B	Bumper, Outer (Rr.) (Sedan & Coupe)	1	73/9～○

No.	Part Number	Description	Q'ty	Remarks
	1889 50 221	Bumper, Outer (Rr.) (Station Wagon)	1	
●	1889 50 221A	Bumper, Outer (Rr.) (Station Wagon)	1	73/9～○
● 23	~~1881 50 230~~	~~Bumper (Rr., C) (Sedan & Coupe)~~	~~1~~	
●	1881 50 230B	Bumper (Rr., C) (Sedan & Coupe)	1	From Car No. 1
●	1881 50 230C	Bumper (Rr., C) (Sedan & Coupe)	1	74/6～○
●	~~1889 50 230~~	~~Bumper (Rr., C) (Station Wagon)~~	~~1~~	
●	1889 50 230B	Bumper (Rr., C) (Station Wagon)	1	From Car No. 1
●	1889 50 230C	Bumper (Rr., C) (Station Wagon)	1	74/6～○
● 24	~~1881 50 250~~	~~Bumper, Rear (Side, R) (Sedan & Coupe)~~	~~1~~	
●	1881 50 250A	Bumper, Rear (Side, R) (Sedan & Coupe)	1	From Car No. 1
●	1881 50 250B	Bumper, Rear (Side, R) (Sedan & Coupe)	1	74/6～×
●	~~1889 50 250~~	~~Bumper, Rear (Side, R) (Station Wagon)~~	~~1~~	
●	1889 50 250A	Bumper, Rear (Side, R) (Station Wagon)	1	From Car No. 1
●	1889 50 250C	Bumper, Rear (Side, R) (Station Wagon)	1	74/5～△
● 25	~~1881 50 260~~	~~Bumper, Rear (Side, L) (Sedan & Coupe)~~	~~1~~	
●	1881 50 260A	Bumper, Rear (Side, L) (Sedan & Coupe)	1	From Car No. 1
●	1881 50 260B	Bumper, Rear (Side, L) (Sedan & Coupe)	1	74/6～×
●	~~1889 50 260~~	~~Bumper, Rear (Side, L) (Station Wagon)~~	~~1~~	
●	1889 50 260A	Bumper, Rear (Side, L) (Station Wagon)	1	From Car No. 1
●	1889 50 260C	Bumper, Rear (Side, L) (Station Wagon)	1	74/5～△

No.	Part Number	Description	Q'ty	Remarks
● 26	~~1755 50 271~~	~~Bolt, Bumper & Shock Absorber (Rr.)~~	~~2~~	
●	1755 50 271A	Bolt, Bumper & Shock Absorber (Rr.)	2	From Car No. 1
	99945 1000	Nut	2	
	99971 1000	Washer, Spring	2	
27	0223 50 275	Screw, Bumper Center	4	
	99940 0602	Nut	4	
	99971 0600	Washer, Spring	4	
28	1755 50 301	Bracket, Shock Absorber	2	
29	99794 10259	Bolt, Rear Shock Absorber Bracket	4	
	99952 1030	Washer, Plain	4	
30	1881 50 350 00	Cover, Rear Bumper (GRY) (Sedan & Coupe)	1	
●	1881 50 350B 00	Cover, Rear Bumper (GRY) (Sedan & Coupe)	1	74½~×
●	1881 50 350C 00	Cover, Rear Bumper (GRY) (Sedan & Coupe)	1	74¼~○
	1889 50 350 00	Cover, Rear Bumper (GRY) (Station Wagon)	1	
●	1889 50 350A 00	Cover, Rear Bumper (GRY) (Station Wagon)	1	73⅜~△
●	1889 50 350B 00	Cover, Rear Bumper (GRY) (Station Wagon)	1	73⅜~○
●	1889 50 350C 00	Cover, Rear Bumper (GRY) (Station Wagon)	1	74⅓~△
●	1889 50 350D 00	Cover, Rear Bumper (GRY) (Station Wagon)	1	74⅙~○
31	99786 0616	Screw, Tapping (Sedan & Coupe)	4	
32	99769 0414	Screw, Tapping (Station Wagon)	8	

No.	Part Number	Description	Q'ty	Remarks
	99952 0412	Washer, Plain - Station Wagon	2	
33	99276 0506	Clip	2	
34	0305 50 398	Spacer (Station Wagon)	2	
35	99786 0620	Screw, Tapping	2	
36	1128 50 511A01	Grille, Radiator (SIL. M / D. GRY)	1	
37	99796 0420B	Screw, Tapping	6	
	99952 0412B	Washer, Plain	6	
	99896 0400	Nut, Spring	6	
38	1128 50 521	Mould, Grille	1	
39	1128 50 531A	Bezel (R), Lamp	1	
40	1128 50 541A	Bezel (L), Lamp	1	
41	99796 0420B	Screw, Tapping - Lamp	6	
	99896 0400	Nut, Spring	6	
42	0111 57 111	Rubber Set, Shock Absorber	4	
43	1128 99 711	Mould Set (C), Nose	1	
44	1128 99 712	Mould Set (R), Nose	1	
45	1128 99 713	Mould Set (L), Nose	1	
● 46	0187 34 665	Shim, Adjust - No. 1 (Selective use (Station Wagon))	2	From Car No. 1
●	0187 34 666	Shim, Adjust - No. 2 (Selective use (Station Wagon))	2	From Car No. 1
● 47	99952 1000	Washer, Plain - Selective use (Station Wagon)	2	From Car No. 1

No.	Part Number	Description		Q'ty	Remarks
●	99953 1000	Washer, Plain-Selective use (Station Wagon)		2	From Car No. 1
● 48	1907 50 291	Cover, Hole	(Sedan & Coupe)	2	74/1~ Added Anew
● 49	1907 50 292	Packing		2	
● 50	99869 0410	Screw		2	

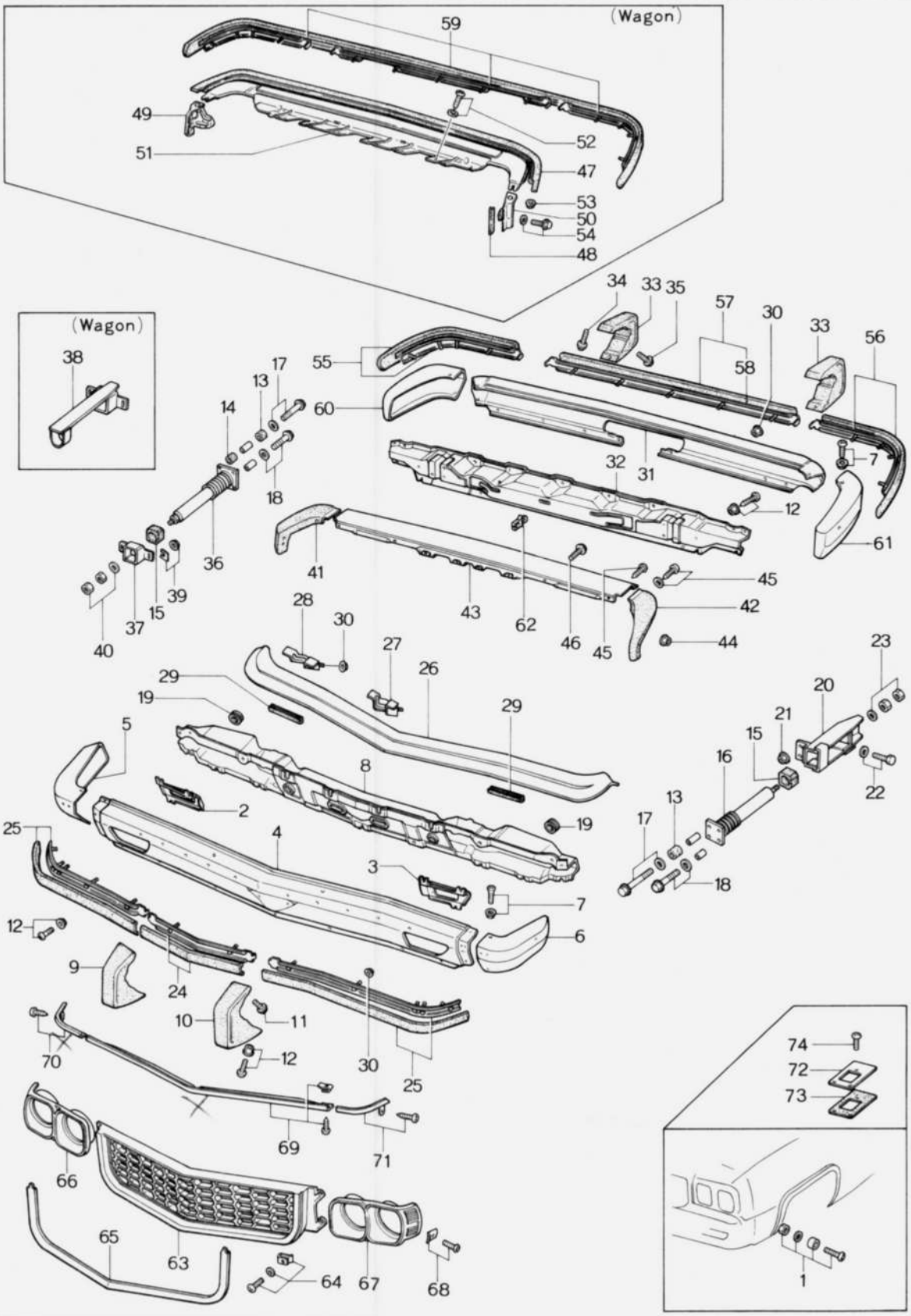
(Wagon)
59
49
51
52
47
53
50
54
48
(Wagon)
38
34
33
35
57
30
33
56
55
58
17
13
60
14
18
32
31
7
12
36
41
61
39
37
15
40
43
62
46
45
45
42
44
28
30
27
26
29
19
29
5
8
2
19
25
4
3
7
12
6
9
24
10
11
70
12
30
25
69
71
66
65
63
64
67
68
23
20
21
15
16
22
13
17
18
74
72
73
1

No.	Part Number	Description	Q'ty	Remarks
1	3625 50 011	Screw	2	
	3565 50 071 A	Rubber	2	
	99926 1000	Nut	2	
	99952 1030	Washer, Plain	2	
2	3625 50 025 A	Cover (R), Lamp	1	
3	3625 50 026 A	Cover (L), Lamp	1	
4	3625 50 031 A	Face (C), Front Bumper	1	
5	3625 50 032	Face (R), Front Bumper	1	
6	3625 50 033	Face (L), Front Bumper	1	
7	3625 50 034	Screw, Front Bumper	4	
	99940 0602	Nut	4	
8	3625 50 040 B	Reinforcement, Front Bumper	1	
9	3625 50 050	Guard (R), Front Bumper	1	
10	3625 50 060	Guard (L), Front Bumper	1	
11	99796 0612	Bolt	2	
12	0223 50 275	Screw	19	
	99940 0602	Nut	19	
13	3565 50 071 A	Rubber, Hinge	8	
14	3625 50 071	Rubber, Hinge (Rr.) (Wagon)	4	
15	1755 50 091	Rubber, Mounting (Sedan & Coupe)	4	
		(Wagon)	2	

BUMPER & GRILLE (1975 MODEL)

No.	Part Number	Description	Q'ty	Remarks
	1756 50 091	Rubber, Mounting (Wagon)	2	
16	3627 50 100	Absorber (Frt.), Shock	2	
17	99794 0830	Bolt, Shock Absorber	8	
	1845 40 357	Washer, Plain	8	
18	99794 0825	Bolt, Shock Absorber	4	
	99952 0822	Washer, Plain	4	
19	99682 2003	Protector, Lamp Cover	2	
20	1881 50 110 A	Bracket (R), Shock Absorber	1	
	1881 50 130 A	Bracket (L), Shock Absorber	1	
21	99940 0802	Nut, Bracket	4	
22	99786 0820	Bolt, Bracket	4	
	99952 0822	Washer, Plain	4	
23	99921 1000	Nut, Shock Absorber	4	
	99953 1000	Washer, Plain	2	
24	3625 50 120 A	Protector (Frt., C)	1	
25	3625 50 140 A	Protector (Frt., Side)	2	
26	3625 50 150 A	Cover, Front	1	
27	3625 50 160 A	Bracket "A"	2	
28	3625 50 170 A	Bracket "B"	4	
29	3629 50 325	Spacer, Front Bumper Cover (Wagon)	2	

No.	Part Number	Description	Q'ty	Remarks
30	99940 0602	Nut	31	
31	3625 50 221 A	Face (C), Rear Bumper (Sedan & Coupe)	1	
	3629 50 221 A	Face (C), Rear Bumper (Wagon)	1	
32	3625 50 230 A	Reinforcement (Sedan & Coupe)	1	
	3629 50 230 B	Reinforcement (Wagon)	1	
33	3625 50 270 A	Guard, Rear Bumper	2	(Sedan & Coupe)
34	99796 0612	Bolt, Rear Bumper Guard	2	(Sedan & Coupe)
35	99740 0625	Bolt, Rear Bumper Guard	2	(Sedan & Coupe)
36	3625 50 290 A	Absorber (Rr.), Shock (Sedan & Coupe)	2	
	3629 50 290 B	Absorber (Rr.), Shock (Wagon)	2	
37	3625 50 110	Bracket, Shock Absorber (Sedan & Coupe)	2	
38	3629 50 110	Bracket, Shock Absorber (Wagon)	2	
39	99940 1002	Nut, Shock Absorber	4	
	0187 34 668	Shim, Adjust (Wagon)	2	
40	99921 1000	Nut, Shock Absorber	2	
	99922 1000	Nut	2	
	99953 1000	Washer, Plain	2	
41	3625 50 320 AD6	Cover (R), Rear Side	1	(Sedan & Coupe)
42	3625 50 330 AD6	Cover (L), Rear Side	1	(Sedan & Coupe)
43	3625 50 360 A	Cover (C), Rear	1	(Sedan & Coupe)

No.	Part Number	Description	Q'ty	Remarks
44	99940 0502	Nut	4	
45	99865 0412	Screw, Tapping	6	
	99952 0516	Washer, Plain (Sedan & Coupe)	2	
46	99797 0612	Screw	4	
	99952 0618	Washer, Plain	4	
47	3629 50 311	Filler	1	
48	3629 50 325	Spacer	2	
49	3629 50 340 B	Cover (R), Rear Side	1	
50	3629 50 350 B	Cover (L), Rear Side	1	
51	3629 50 361 C	Cover (C), Rear	1	
52	99865 0512	Screw, Tapping (Wagon)	8	
	99952 0516	Washer, Plain	8	
53	99940 0502	Nut	2	
54	99786 0616	Screw, Tapping	2	
	0136 65 762	Gasket	2	
55	3625 50 370 A	Protector (R), Rear Bumper	1	
56	3625 50 390 B	Protector (L), Rear Bumper	1	
		(Sedan & Coupe)		
57	3625 50 380 A	Protector (C), Rear	1	
58	3565 50 381	Protector	1	

No.	Part Number	Description	Q'ty	Remarks
59	3629 50 380	Protector (Rr.) (Wagon)	1	
60	3565 50 930	Face (R), Rear Bumper (Sedan & Coupe)	1	
	3629 50 222	Face (R), Rear Bumper (Wagon)	1	
61	3565 50 940	Face (L), Rear Bumper (Sedan & Coupe)	1	
	3629 50 223	Face (L), Rear Bumper (Wagon)	1	
62	99279 0803	Clip (Sedan & Coupe)	1	
63	1128 50 511A 02	Grille, Radiator (SIL. M/D. GRY.)	1	
64	99769 0420 B	Screw, Tapping	6	
	99952 0412 B	Washer, Plain	6	
	99896 0400	Nut, Spring	6	
65	1128 50 521	Mould, Grille	1	
66	1128 50 531 A	Bezel (R), Lamp	1	
67	1128 50 541 A	Bezel (L), Lamp	1	
68	99769 0420 B	Screw, Tapping-Lamp Bezel	6	
	99896 0400	Nut, Spring	6	
69	1128 99 711	Mould Set (C), Nose	1	
70	1128 99 712	Mould Set (R), Nose	1	
71	1128 99 713	Mould Set (L), Nose	1	
72	1907 50 291	Cover, Hole-Rear Floor	2	
73	1907 50 292	Gasket, Hole Cover	(Sedan & Coupe) 2	
74	99869 0410	Screw, Hole Cover	6	

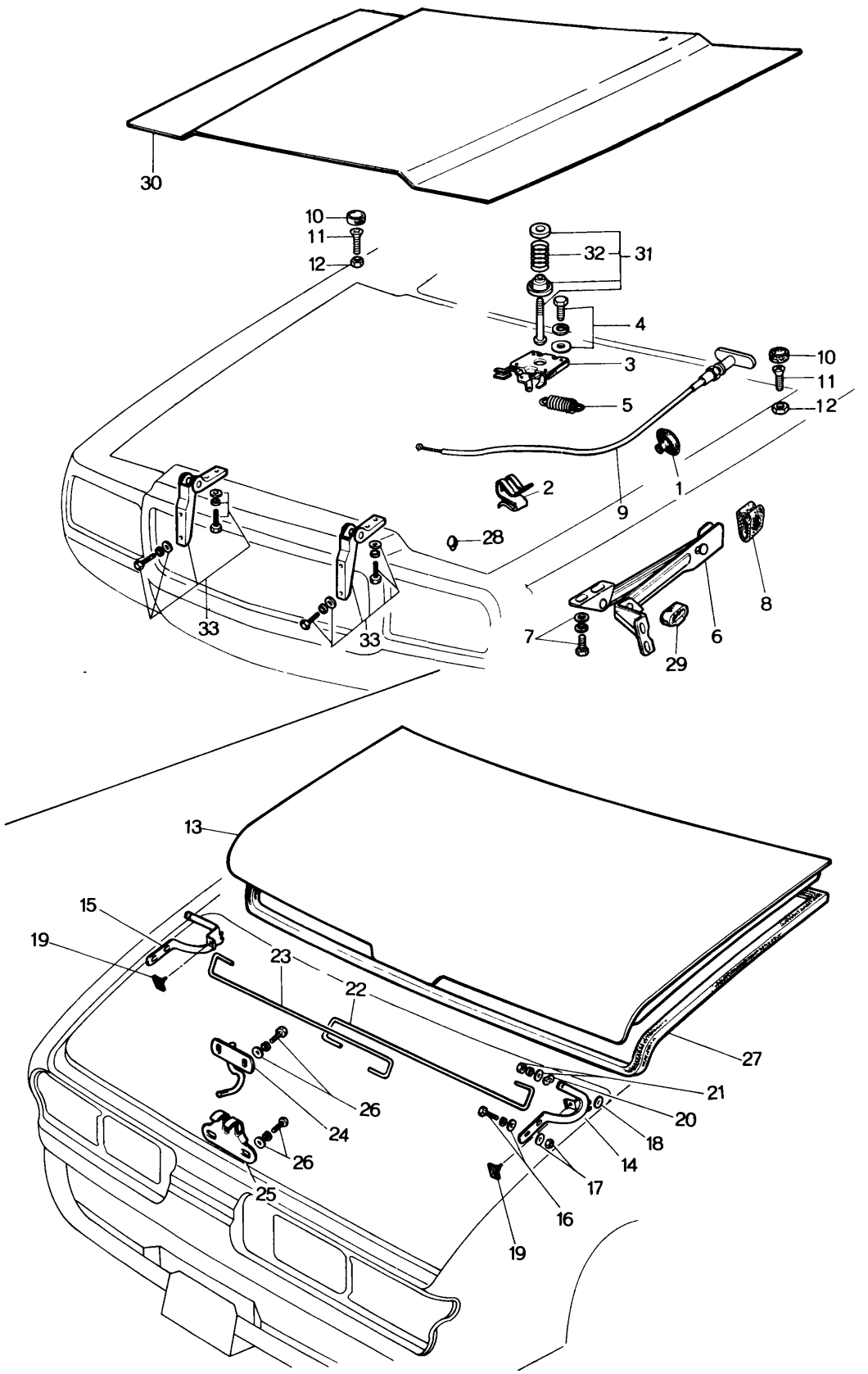
30
10
11
12
32
31
4
3
5
10
11
12
2
9
1
28
33
33
8
7
6
29
13
15
19
23
22
27
21
20
18
14
17
16
19
26
24
26
25

No.	Part Number	Description	Q'ty	Remarks
1	0259 52 301	Grommet, Release Wire	1	
2	0223 52 302	Clamp, Release Wire	1	
3	2835 52 330	Lock, Bonnet	1	
4	99806 0616	Bolt, Bonnet Lock	4	
	99952 0618	Washer, Plain	4	
5	0305 52 331	Spring	1	
6	1524 52 390	Stop	6	
7	99806 0616	Bolt, Stop	4	
	99952 0618	Washer, Plain	4	
8	0866 52 397A	Rubber, Cushion	1	
9	1524 52 410	Wire, Release	1	
10	0866 52 451	Cushion	2	
11	99831 0640	Screw, Cushion	2	
12	99907 0600	Nut	2	
13	0376 52 510	Lid, Trunk (Coupe)	1	
	0866 52 510	Lid, Trunk (Sedan)	1	
14	0866 52 610	Hinge (R)	1	(Sedan & Coupe use)
15	0866 52 620	Hinge (L)	1	
16	99806 0618	Bolt Set, Hinge	4	
●	99794 0616	Bolt Set, Hinge	4	~○
	99952 0618	Washer, Plain	4	

BONNET & TRUNK LID

No.	Part Number	Description	Q'ty	Remarks
17	99906 0600	Nut, Hinge	4	
●	99940 0602	Nut, Hinge	4	75/1~○
	99951 0618	Washer, Plain	4	
18	99952 0822	Washer, Plain	2	
● 19	~~0305 55 628~~	~~Rubber, Cushion~~	~~2~~	
●	0305 52 628	Rubber, Cushion	2	From Car No. 1
20	0866 52 631	Washer, Wave	2	
21	99906 0600	Nut, Hinge	2	
●	99940 0603	Nut, Hinge	2	75/1~○
	99952 0600	Washer, Plain	2	
	99971 0600	Washer, Spring	2	
22	0866 52 661A	Spring (R), Balance	1	(Sedan & Coupe use)
23	0866 52 671A	Spring (L), Balance	1	
24	0866 52 750A	Striker	1	
25	0305 52 850A	Lock, Lid	1	
26	99806 0616	Bolt, Lock & Striker	4	
●	99794 0616	Bolt, Lock & Striker	4	75/1~○
	99951 0618	Washer, Plain	4	
	99971 0600	Washer, Spring	4	
27	0376 52 901A	Weatherstrip (Coupe)	1	
	0866 52 901A	Weatherstrip (Sedan)	1	
28	0111 53 771	Cushion	2	
29	0223 58 306	Rubber, Cushion	1	
30	0866 74 250	Bonnet	1	

No.	Part Number	Description	Q'ty	Remarks
31	0305 99 521	Hook Set, Bonnet	1	
32	0305 52 312B	Spring	1	
33	0866 99 522	Hinge Set	2	

BODY PANELS (FRONT)

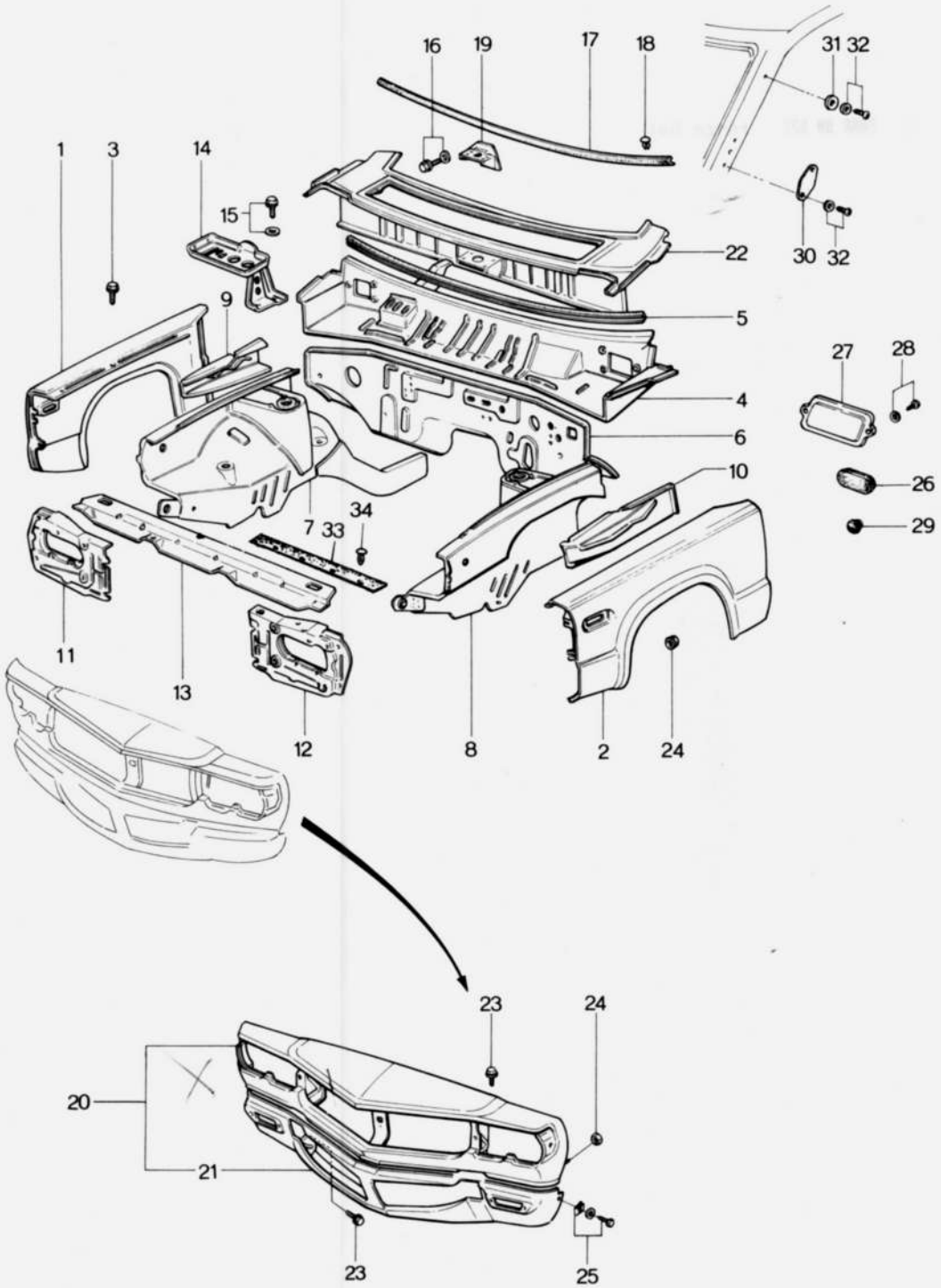

No.	Part Number	Description	Q'ty	Remarks
1	1524 51 020A	Panel (R), Front Fender	1	
●	1524 51 020B	Panel (R), Front Fender	1	75/1~△
2	1524 51 120A	Panel (L), Front Fender	1	
●	1524 51 120B	Panel (L), Front Fender	1	75/1~△
3	908067 6 14	Bolt Set, Fender	12	
4	1524 53 020E	Panel, Dashboard-Upper	1	
●	1524 53 020G	Panel, Dashboard-Upper	1	73/9~△
5	0866 53 029A	Rubber, Edge	1	
● 6	~~1524 53 100E~~	~~Panel, Dashboard-Lower (Manual)~~	~~1~~	
●	1524 53 100G	Panel, Dashboard-Lower (Manual)	1	From Car No. 1
●	~~1620 53 100F~~	~~Panel, Dashboard-Lower (Manual)~~	~~1~~	
●	1620 53 100B	Panel, Dashboard-Lower (Manual)	1	From Car No. 1
●	~~1525 53 100F~~	~~Panel, Dashboard-Lower (Automatic)~~	~~1~~	
●	1525 53 100G	Panel, Dashboard-Lower (Automatic)	1	From Car No. 1
●	~~1621 53 100~~	~~Panel, Dashboard-Lower (Automatic)~~	~~1~~	
●	1621 53 100A	Panel, Dashboard-Lower (Automatic)	1	From Car No. 1
7	1881 53 220	Panel (R), Wheel Apron	1	
●	1881 53 220B	Panel (R), Wheel Apron	1	74/1~○
●	1881 53 220A	Panel (R), Wheel Apron	1	74/2~×
●	1881 53 220C	Panel (R), Wheel Apron	1	74/7~△

BODY PANELS (FRONT)

No.	Part Number	Description	Q'ty	Remarks
● 8	~~1881 54 220~~	~~Panel (L), Wheel Apron~~	~~1~~	
●	1881 54 220A	Panel (L), Wheel Apron	1	From Car No. 1
●	1881 54 220D	Panel (L), Wheel Apron	1	74/1~○
●	1881 54 220B	Panel (L), Wheel Apron	1	74/2~×
●	1881 54 220E	Panel (L), Wheel Apron	1	74/7~△
9	0866 53 281A	Reinforcement (R)	1	
10	0866 54 281A	Reinforcement (L)	1	
11	0866 53 720A	Panel (R), Shroud	1	
●	0866 53 720C	Panel (R), Shroud	1	73/11~○
●	0866 53 720D	Panel (R), Shroud	1	74/7~○
12	0866 54 720	Panel (L), Shroud	1	
●	0866 54 720A	Panel (L), Shroud	1	74/7~△
13	0866 53 750	Panel, Shroud-Upper	1	
●	0866 53 750A	Panel, Shroud-Upper	1	74/11~△
14	0866 53 780A	Carrier, Battery	1	
●	0866 53 780B	Carrier, Battery	1	73/11~○
●	3625 53 780	Carrier, Battery	1	74/11~×
15	99801 0816	Bolt, Battery Carrier	4	
	99952 0822	Washer, Plain	4	
	99971 0800	Washer, Spring	4	

No.	Part Number	Description	Q'ty	Remarks
16	99806 0616	Bolt, Lock Bracket	4	
	99952 0600	Washer, Plain	4	
	99971 0600	Washer, Spring	4	
17	0866 53 979 A	Rubber, Seal	1	
18	99264 0531 A	Clip, Seal Rubber	8	
19	0866 53 980	Bracket, Lock	1	
● 20	~~1881 70 110~~	~~Panel Ass'y, Nose~~	~~1~~	
●	1128 70 120	Panel Ass'y, Nose	1	From Car No. 1
●	1128 70 120 A	Panel Ass'y, Nose	1	74/11~△
● 21	~~1881 70 160~~	~~Skirt, Front~~	~~1~~	
●	1128 70 160	Skirt, Front	1	From Car No. 1
●	1881 70 160 D	Skirt, Front	1	Ord. By 1128 70 160
22	1524 74 040	Panel, Cowl	1	
23	99796 0614	Bolt (Nose & Shroud···4, Skirt & Frame···2)	6	
	99952 0618	Washer, Plain	6	
24	99940 0602	Nut, Nose & Skirt	4	
25	99864 0616	Screw, Skirt & Fender	2	
	99952 0618	Washer, Plain	2	

BODY PANELS (FRONT)

No.	Part Number	Description	Q'ty	Remarks
	99896 0600	Nut, Spring	2	
26	0257 61 051	Grommet	1	
27	0366 61 070	Cover, Dash Panel Upper (Cars Without Car Heater)	1	
28	99863 0516	Screw, Cover	2	
	99952 0516	Washer, Plain	2	
	99971 0500	Washer, Spring (Cars Without Car Heater)	2	
29	0118 56 242 B	Plug, Hole	2	
30	0727 66 991 A	Cover, Hole-Antenna	1	
31	0727 66 992	Cover, Hole-Antenna	1	
32	99863 0410 B	Screw (Without Auto Radio)	3	
	99953 0400 B	Washer, Plain	3	
● 33	0459 56 751	Rubber, Seal	1	74/7~Added Anew
● 34	99264 0531 B	Clip	4	74/7~Added Anew

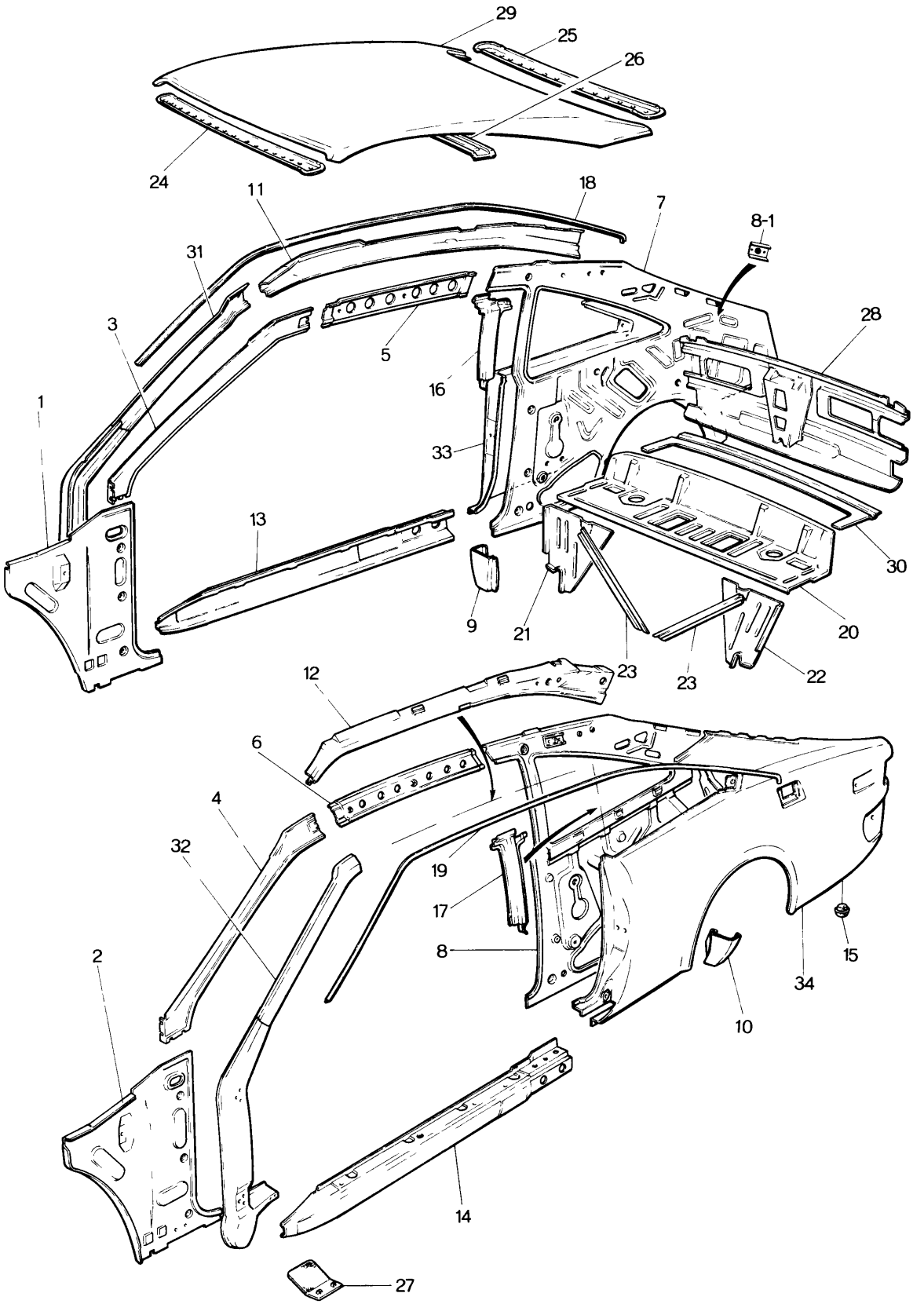
29
25
26
24
11
18
7
8-1
31
3
5
28
16
1
33
13
30
9
21
20
23
23
22
12
6
4
32
19
17
8
15
34
2
10
14
27

No.	Part Number	Description	Q'ty	Remarks
1	1524 53 320A	Panel (R), Cowl Side	1	
●	1524 53 320B	Panel (R), Cowl Side	1	74/7~○
2	1524 54 320B	Panel (L), Cowl Side	1	
3	0376 53 330	Pillar (R), Front-Inner	1	
4	0376 54 330	Pillar (L), Front-Inner	1	
5	0376 53 340	Rail (R), Roof-Inner	1	
6	0376 54 340	Rail (L), Roof-Inner	1	
7	1882 53 350	Panel (R), Quarter-Inner	1	
●	0376 53 350D	Panel (R), Quarter-Inner	1	74/1~○
8	1882 54 350	Panel (L), Quarter-Inner	1	
●	0376 54 350F	Panel (L), Quarter-Inner	1	74/1~○
● 8-1	0223 56 190A	Nut, Plate (Included in Fig. No. 7 & 8)	2	73/8~ Added Anew
9	0376 56 190A	Plate (R), End	1	
10	0376 54 391A	Plate (L), End	1	
11	0376 53 430	Rail (R), Roof-Outer	1	
12	0376 54 430	Rail (L), Roof-Outer	1	
13	0376 53 451	Sill (R), Side-Outer	1	
14	0376 54 451	Sill (L), Side-Outer	1	
15	0259 53 455	Plug, Drain	6	
16	0376 53 500A	Pillar (R), Center-Outer	1	
17	0376 54 500A	Pillar (L), Center-Outer	1	
18	0376 53 591	Rail (R), Rain	1	
19	0376 54 591	Rail (L), Rain	1	
20	1542 53 810C	Tray, Package	1	
●	0376 53 810C	Tray, Package	1	75/1~○

BODY PANELS (SIDE, COUPE)

No.	Part Number	Description	Q'ty	Remarks
21	0866 53 830A	Brace (R), Side	1	
22	0866 54 830A	Brace (L), Side	1	
23	0866 53 845	Brace, Diagonal	2	
24	0376 53 920	Header, Front	1	
25	0376 53 491	Header, Rear	1	
26	0376 53 950	Reinforcement, Roof	1	
27	0824 56 999	Valve, Check-Side Sill	2	
28	1882 70 050	Panel, Rear End	1	
●	1882 70 050A	Panel, Rear End	1	73/8~○
●	1882 70 050C	Panel, Rear End	1	74/5~○
●	1882 70 050D	Panel, Rear End	1	74/8~○
29	0376 74 030	Panel, Roof	1	
30	0376 74 050	Panel, Rear Deck	1	
31	1562 74 090	Pillar (R), Hinge-Outer	1	
32	1562 74 120	Pillar (L), Hinge-Outer	1	
33	0376 74 100	Panel (R), Rear Fender	1	
34	0376 74 130	Panel (L), Rear Fender	1	

BODY PANELS (SIDE, SEDAN)

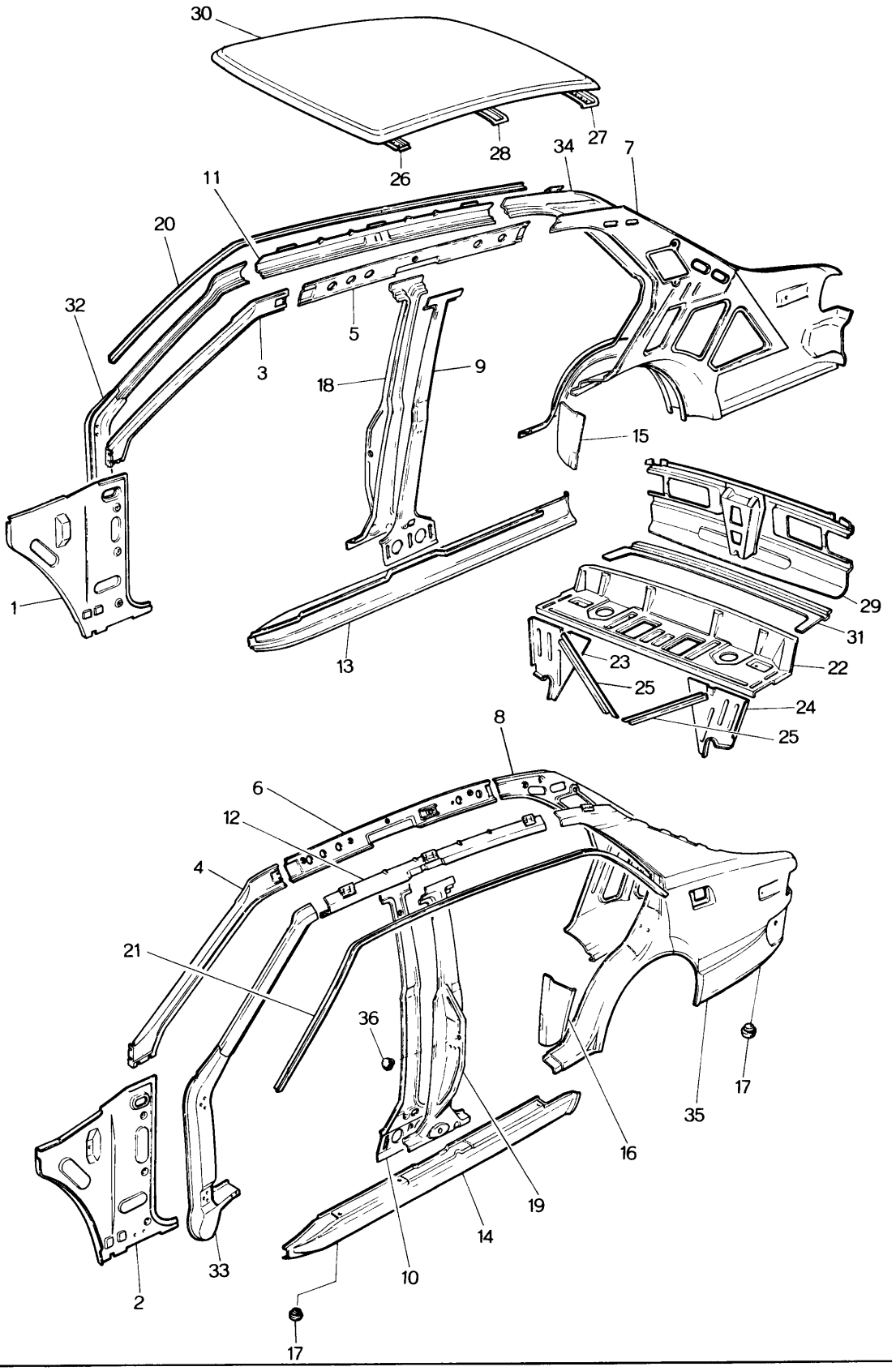

No.	Part Number	Description	Q'ty	Remarks
1	1524 53 320A	Panel (R), Cowl Side	1	
●	1524 53 320B	Panel (R), Cowl Side	1	74/7~○
2	1524 54 320B	Panel (L), Cowl Side	1	
3	0866 53 330	Pillar (R), Front-Inner	1	
4	0866 54 330	Pillar (L), Front-Inner	1	
5	1881 53 340	Rail (R), Roof-Inner	1	
●	0866 53 340B	Rail (R), Roof-Inner	1	74/1~○
6	1881 54 340	Rail (L), Roof-Inner	1	
●	0866 54 340A	Rail (L), Roof-Inner	1	74/1~○
7	1570 53 350	Pillar (R), Rear-Inner	1	
●	0866 53 350C	Pillar (R), Rear-Inner	1	74/8~○
8	1531 54 350C	Pillar (L), Rear-Inner	1	
●	0866 54 350C	Pillar (L), Rear-Inner	1	74/8~△
9	0866 53 380	Pillar (R), Center-Inner	1	
●	1881 53 380	Pillar (R), Center-Inner	1	73/11~△
●	1881 53 380A	Pillar (R), Center-Inner	1	74/12~○
10	0866 54 380	Pillar (L), Center-Inner	1	
●	1881 54 380	Pillar (L), Center-Inner	1	73/11~△
●	1881 54 380A	Pillar (L), Center-Inner	1	74/12~○
11	0866 53 430	Rail (R), Roof-Outer	1	

BODY PANELS (SIDE, SEDAN)

No.	Part Number	Description	Q'ty	Remarks
12	0866 54 430	Rail (L), Roof-Outer	1	
13	0866 53 451	Sill (R), Side	1	
14	0866 54 451	Sill (L), Side	1	
15	0866 53 452	Plate (R), Filler	1	
16	0866 54 452	Plate (L), Filler	1	
17	0259 53 455	Plug, Drain (Side Sill Outer···6, Rear Fender···2)	8	
18	0866 53 500A	Pillar (R), Center-Outer	1	
19	0866 54 500A	Pillar (L), Center-Outer	1	
20	0866 53 591	Rail (R), Rain	1	
21	0866 54 591	Rail (L), Rain	1	
22	1540 53 810D	Tray, Package	1	
●	0866 53 810D	Tray, Package	1	75/1~○
23	0866 53 830A	Brace (R), Side	1	
24	0866 54 830A	Brace (L), Side	1	
25	0866 53 845	Brace, Diagonal	2	
26	0866 53 920	Header, Front	1	
27	0866 53 941	Header, Rear	1	
28	0866 53 950	Reinforcement, Roof	1	
29	1881 70 050	Panel, Rear End	1	
●	1881 70 050A	Panel, Rear End	1	73/8~○

No.	Part Number	Description	Q'ty	Remarks
●	1881 70 050C	Panel, Rear End	1	74/5～○
●	1881 70 050D	Panel, Rear End	1	74/8～○
30	0866 74 030	Panel, Roof	1	
31	0866 74 050	Panel, Rear Back	1	
32	0866 74 090	Pillar (R), Hinge-Outer	1	
33	0866 74 120	Pillar (L), Hinge-Outer	1	
34	0866 74 100	Panel (R), Rear Fender	1	
35	0866 74 130	Panel (L), Rear Fender	1	
● 36	0118 56 242B	Plug, Drain-Center Pillar	2	From Car No. 1

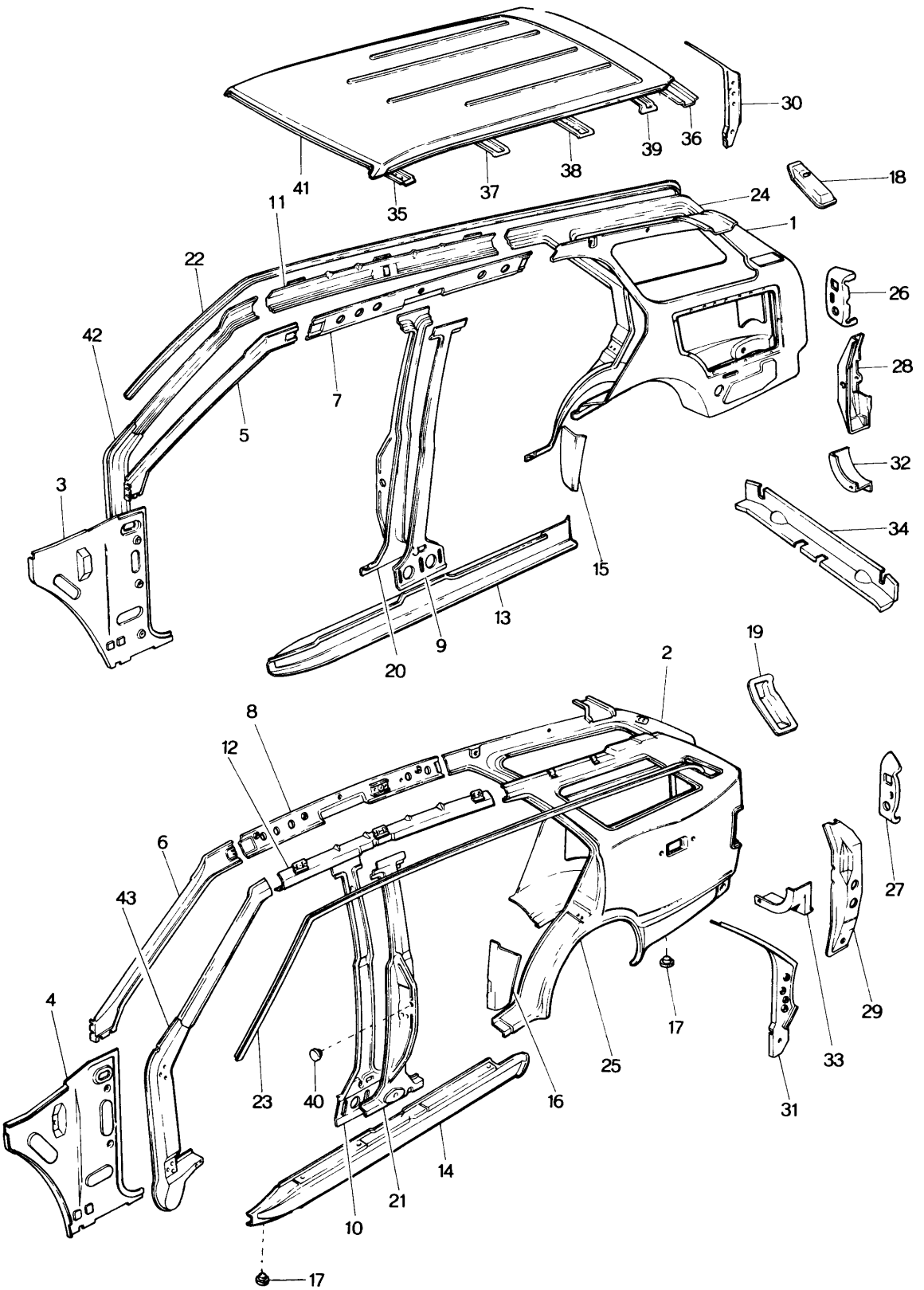
30
36
39
38
41
37
35
18
24
11
1
22
26
42
28
7
5
32
3
34
15
13
9
20
19
2
8
12
6
27
43
4
29
17
25
33
23
40
16
31
14
21
10
17

No.	Part Number	Description	Q'ty	Remarks
1	1571 53 310	Panel (R), Inside	1	
●	0585 53 310	Panel (R), Inside	1	74/3～×
●	3629 53 310	Panel (R), Inside (Canada)	1	75/1～×
2	0585 54 310A	Panel (L), Inside	1	
3	1524 53 320A	Panel (R), Cowl Side	1	
●	1524 53 320B	Panel (R), Cowl Side	1	74/7～○
4	1524 54 320B	Panel (L), Cowl Side	1	
5	0866 53 330	Pillar (R), Front Inner	1	
6	0866 54 330	Pillar (L), Front Inner	1	
7	1889 53 340	Rail (R), Roof Inner	1	
●	0585 53 340A	Rail (R), Roof Inner	1	74/1～○
8	1889 54 340	Rail (L), Roof Inner	1	
●	0585 54 340A	Rail (L), Roof Inner	1	74/1～○
9	0866 53 381	Pillar (R), Center-Inner	1	
●	1881 53 380	Pillar (R), Center-Inner	1	73/11～△
10	0866 54 381	Pillar (L), Center-Inner	1	
●	1881 54 380	Pillar (L), Center-Inner	1	73/11～△
11	0585 53 430	Rail (R), Roof Outer	1	
12	0585 54 430	Rail (L), Roof Outer	1	
13	0866 53 451	Sill (R), Side Outer	1	
14	0866 54 451	Sill (L), Side Outer	1	
15	0866 53 452	Plate (R), Filler	1	
16	0866 54 452	Plate (L), Filler	1	
17	0259 53 455	Plug, Drain (Side Sill ···6, Rear Fender ··· 2)	8	
18	0585 53 480B	Chamber (R)	1	
19	0585 54 480B	Chamber (L)	1	
20	0866 53 500A	Pillar (R), Center-Outer	1	

No.	Part Number	Description	Q'ty	Remarks
21	0866 54 500A	Pillar (L), Center-Outer	1	
22	0585 53 591	Rail (R), Rain	1	
23	0585 54 591	Rail (L), Rain	1	
24	1544 53 600A	Panel (R), Rear Fender	1	
25	1544 54 600A	Panel (L), Rear Fender	1	
26	0585 53 651	Housing (R), Lamp	1	
27	0585 54 651	Housing (L), Lamp	1	
28	0585 53 660A	Reinforcement (R)	1	
29	0585 54 660A	Reinforcement (L)	1	
30	0585 53 670A	Pillar (R), Rear-Outer	1	
31	0585 54 670A	Pillar (L), Rear-Outer	1	
32	0585 53 691	Junction (R), Corner	1	
33	0585 54 691	Junction (L), Corner	1	
34	1889 53 701	Crossmember, Rear-Outer	1	
35	0866 53 920	Header, Front	1	
36	0585 53 941	Header, Rear	1	
37	0866 53 950	Reinforcement, Roof	1	
38	0866 53 951	Reinforcement, Roof	1	
39	0585 53 970A	Reinforcement, Roof	1	
40	0118 56 242B	Plug, Drain-Center Pillar	2	

No.	Part Number	Description	Q'ty	Remarks
41	0585 74 030	Panel, Roof	1	
42	0866 74 090	Pillar (R), Hinge Outer	1	
43	0866 74 120	Pillar (L), Hinge Outer	1	

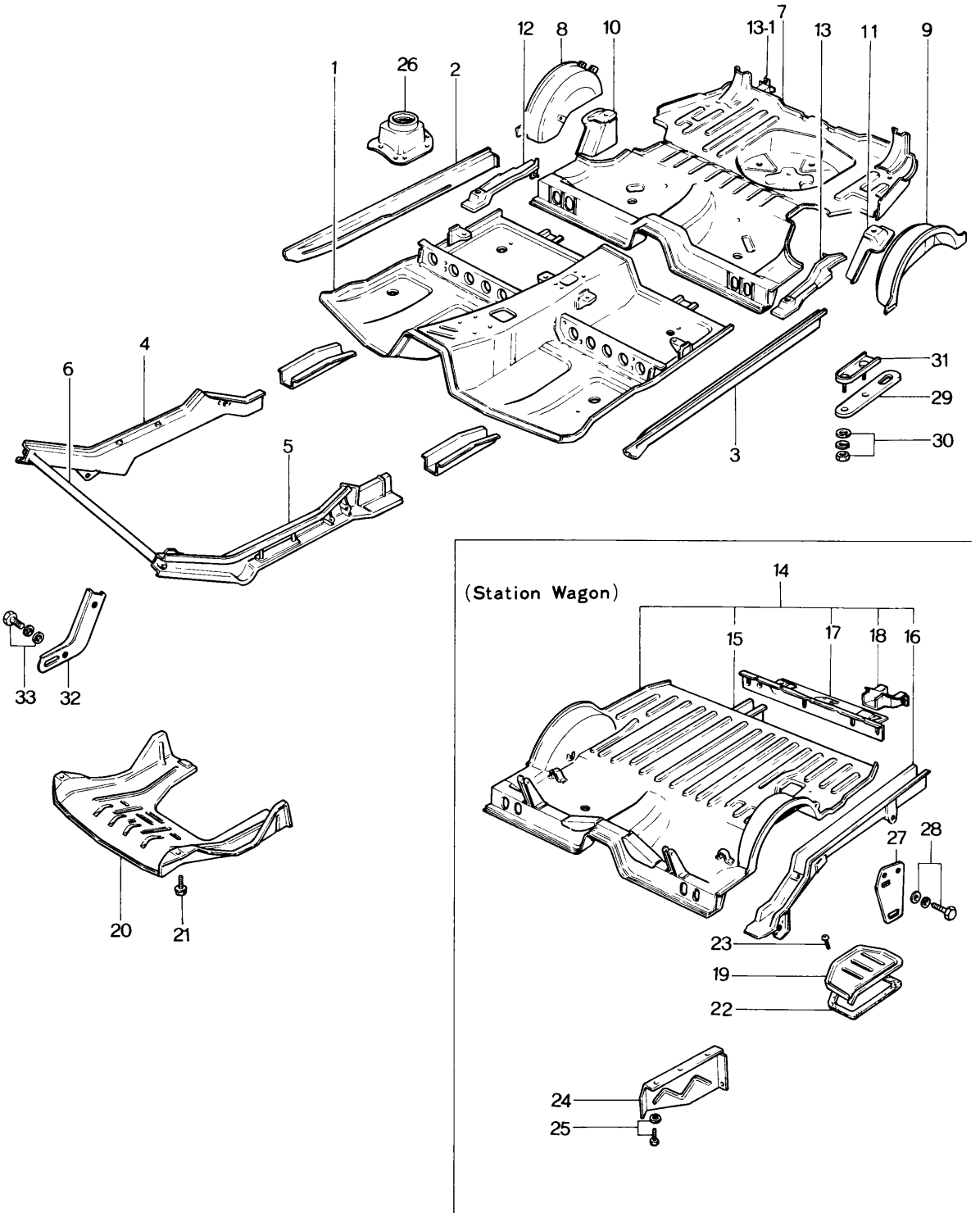
1
26
2
12
8
10
13-1
7
13
11
9
4
6
5
3
31
29
30
33
32
20
21
(Station Wagon)
14
15
17
18
16
27
28
23
19
22
24
25

No.	Part Number	Description	Q'ty	Remarks
1	1128 56 010 A	Pan, Front Floor (Manual)	1	
	1129 56 010 A	Pan, Front Floor (Automatic)	1	
2	0376 56 080 C	Sill (R), Side-Inner (Coupe)	1	
	0866 56 080 C	Sill (R), Side-Inner (Sedan & Station Wagon)	1	
●	0866 56 080 D	Sill (R), Side-Inner (Sedan & Station Wagon)	1	73/10~△
3	0376 56 580 A	Sill (L), Side-Inner (Coupe)	1	
	0866 56 580 A	Sill (L), Side-Inner (Sedan & Station Wagon)	1	
●	0866 56 580 B	Sill (L), Side-Inner (Sedan & Station Wagon)	1	73/10~△
4	1881 56 110	Frame (R), Front	1	
●	1881 56 110 A	Frame (R), Front	1	74/1~△
●	1881 56 110 B	Frame (R), Front	1	74/7~△
●	1881 56 110 C	Frame (R), Front	1	74/11~△
5	1881 56 610	Frame (L), Front	1	
●	1881 56 610 A	Frame (L), Front	1	74/1~△
●	1881 56 610 B	Frame (L), Front	1	74/7~△
●	1881 56 610 C	Frame (L), Front	1	74/7~△
●	1881 56 610 D	Frame (L), Front	1	74/11~△
6	0866 56 171 A	Member No. I Cross	1	
● 7	~~1881 56 200~~	~~Pan, Rear Floor (Sedan)~~	~~1~~	

	No.	Part Number	Description	Q'ty	Remarks
●		1881 56 210	Pan, Rear Floor (Sedan)	1	From Car No. 1
●		1881 56 210 A	Pan, Rear Floor (Sedan)	1	74/5～△
●		~~1882 56 200~~	~~Pan, Rear Floor (Coupe)~~	~~1~~	
●		1882 56 210	Pan, Rear Floor (Coupe)	1	From Car No. 1
●		1882 56 210 A	Pan, Rear Floor (Coupe)	1	74/5～△
	8	0866 56 330	Panel (R), Wheel House	1	
	9	0866 56 830	Panel (L), Wheel House	1	
	10	1128 56 350	Bracket (R), Damper	1	
●		0866 56 350 A	Bracket (R), Damper	1	74/7～○
	11	0866 56 850	Bracket (L), Damper	1	
	12	0866 56 310 A	Frame (R)	1	
●		0866 56 310 B	Frame (R)	1	73/12～△
	13	0866 56 810 A	Frame (L)	1	
●		0866 56 810 B	Frame (L)	1	73/12～△
●		0866 56 810 C	Frame (L)	1	74/5～○
●	13-1	1881 56 870	Frame (R), Side-Up	1	From Car No. 1
●		1881 56 870 A	Frame (R), Side-Up	1	74/4～○
●		1881 56 370	Frame (L), Side-Up	1	From Car No. 1
●		1881 56 370 A	Frame (L), Side-Up	1	74/4～○

No.	Part Number	Description		Q'ty	Remarks
14	1889 56 300	Pan, Rear Floor		1	
●	1889 56 300 A	Pan, Rear Floor		1	74/5～△
●	3629 56 300	Pan, Rear Floor (Canada)		1	75/1～×
15	1889 56 330	Member (R), Rear		1	
16	1889 56 830	Member (L), Rear	(Station Wagon)	1	
●	1889 56 830 A	Member (L), Rear		1	74/5～△
17	1889 56 500	Member, Rear Cross		1	
18	1889 56 580	Bracket		2	
●	1889 56 580 A	Bracket		2	74/12～△
19	0585 56 901 A	Cover, Service Hole	(Station Wagon)	1	
●	0585 56 901 B	Cover, Service Hole		1	73/9～○
20	1128 56 901 A	Cover, Under		1	
●	1128 56 901 B	Cover, Under		1	73/12～○
21	99786 0616	Bolt, Under Cover		4	
	99952 0618	Washer, Plain		4	
22	0585 56 902	Tape		1	
23	99868 0408	Screw, Tapping	(Station Wagon)	4	
24	0585 56 911 A	Protector		1	
25	99860 0510	Screw, Tapping-Protector		4	

No.	Part Number	Description	Q'ty	Remarks
	99952 0600	Washer, Plain (Station Wagon)	4	
26	0866 56 981	Insulator (Manual)	1	
27	0585 78 521 A	Hook, Rear	1	
●	0585 78 521 B	Hook, Rear	1	74/5~○
28	99794 10259	Bolt, Rear Hook (Station Wagon)	1	
	99952 1022	Washer, Plain	1	
29	0866 78 521	Hook, Rear	1	
●	1881 78 521	Hook, Rear	1	74/5~○
30	99921 1000	Nut, Rear Hook	2	
	99951 1022	Washer, Plain	2	
	99951 1020	Washer, Plain (Sedan & Coupe)	2	
	99971 1000	Washer, Spring	2	
31	0866 78 530	Reinforcement	1	
●	1881 78 530	Reinforcement	1	74/5~○
32	0866 78 541	Hook, Front	1	
●	0866 78 541 A	Hook, Front	1	74/5~○
33	99781 1028	Bolt, Front Hook	2	
	99951 1022	Washer, Plain	2	
	99971 1000	Washer, Spring	2	

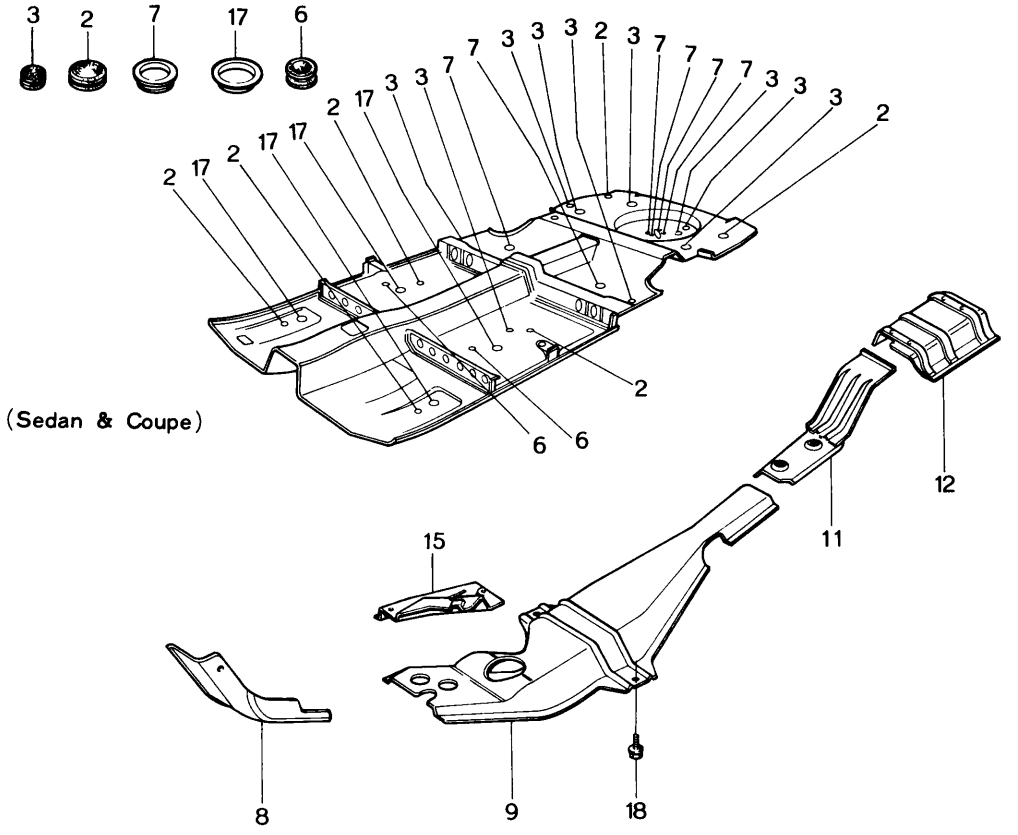
3
2
7
17
6
2
17
3
7
3
2
12
11
15
8
9
18
6
(Sedan & Coupe)

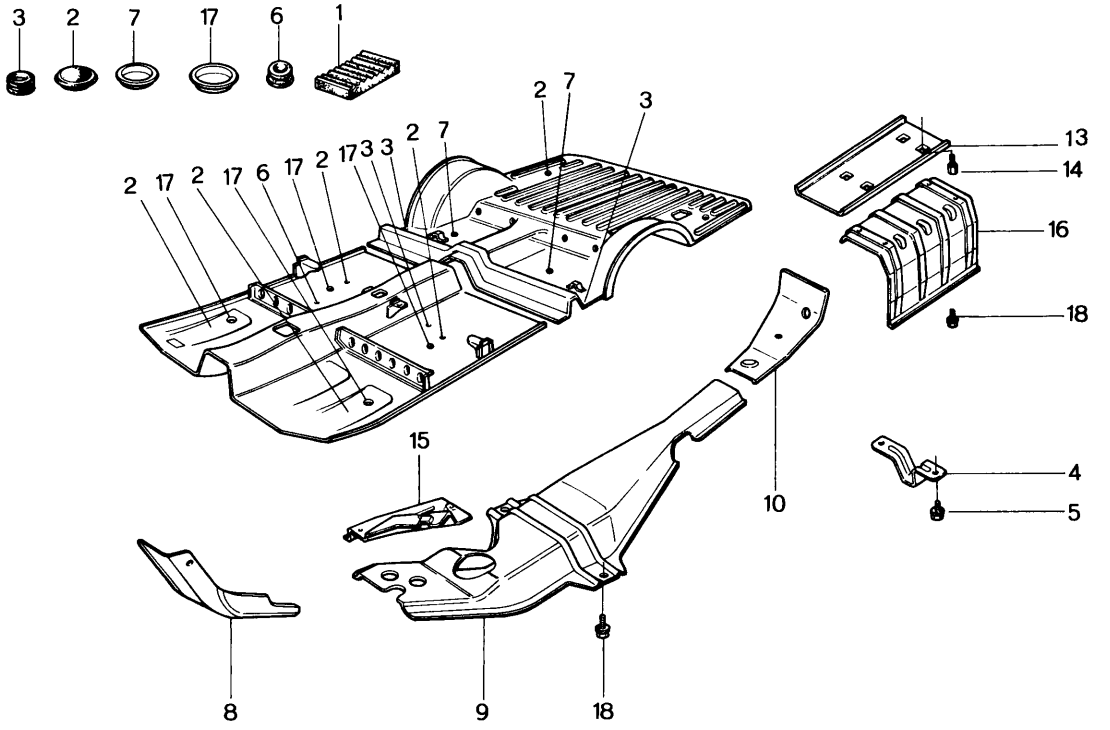
3
2
7
17
6
1
2
17
3
13
14
16
18
15
10
4
5
8
9
18

No.	Part Number	Description		Q'ty	Remarks
1	0187 56 235	Supporter, Seat (Station Wagon)		2	
2	0118 56 241	Plug, Drain (20φ use)	(Sedan & Coupe)	6	
			(Station Wagon)	5	
3	0118 56 242B	Plug, Drain (12φ use)	(Sedan & Coupe)	9	
			(Station Wagon)	3	
● 4	~~1137 56 541B~~	~~Hanger, Silencer~~		~~1~~	
●	1137 56 541	Hanger, Silencer	(Station Wagon)	1	From Car No. 1
5	99786 0816	Bolt, Silencer Hanger	(Station Wagon)	4	
	99952 0822	Washer, Plain	(Station Wagon)	4	
6	0208 56 615	Plug, Drain (30φ use)		2	
7	0810 56 639	Cover, Service Hole (40φ use)	(Sedan & Coupe)	6	
			(Station Wagon)	2	
● 8	~~0866 56 701A~~	~~Insulator No. 1 (Manual)~~		~~1~~	
●	0866 56 701B	Insulator No. 1 (Manual)		1	From Car No. 1
●	~~0871 56 701A~~	~~Insulator No. 1 (Automatic)~~		~~1~~	
●	0871 56 701B	Insulator No. 1 (Automatic)		1	From Car No. 1
●	0871 56 701C	Insulator No. 1 (Automatic)		1	74/7～△
9	1570 56 710A	Insulator No. 3		1	
10	1571 56 712C	Insulator No. 4 (Station Wagon)		1	
11	1570 56 720B	Insulator No. 4	(Sedan & Coupe)	1	
12	1128 56 730	Insulator No. 2	(Sedan & Coupe)	1	
13	1571 56 750	Insulator No. 5	(Station Wagon)	1	
14	1571 56 755	Bolt	(Station Wagon)	4	
15	~~1128 56 771B~~	~~Insulator No. 3, Sub~~		~~1~~	
●	1128 56 771D	Insulator No. 3, Sub		1	From Car No. 1
16	1137 56 920	Insulator No. 2 (Station Wagon)		1	
17	0866 56 971	Cover, Hole (50φ use)		4	
18	99786 0612	Bolt	(Manual)	17	
			(Automatic)	18	
	99952 0618	Washer, Plain	(Manual)	17	
			(Automatic)	18	

DASHBOARD

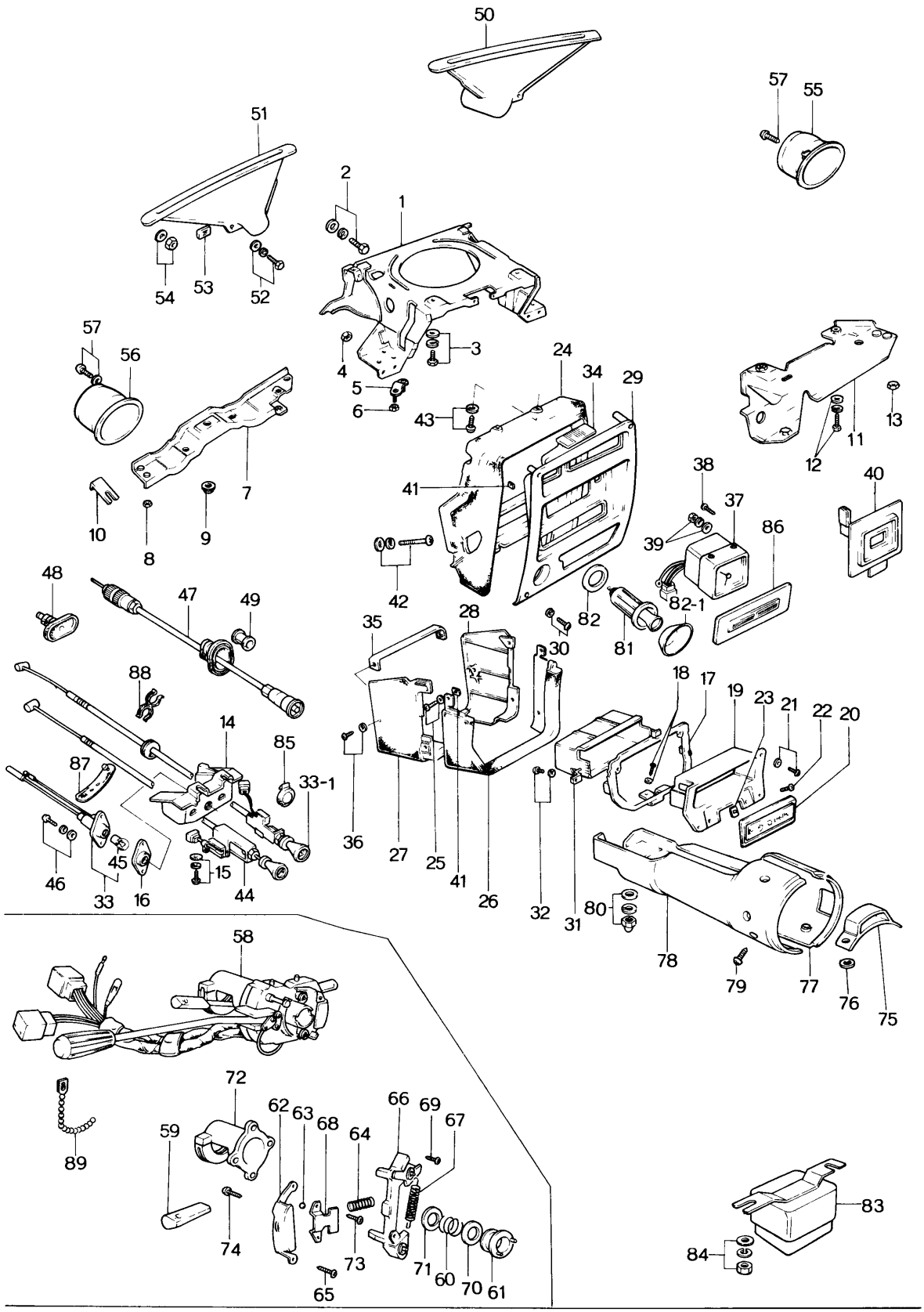
50
57
55
51
2
1
54
53
52
57
56
24
34
29
4
3
5
6
43
41
7
10
8
9
42
38
37
39
86
40
48
47
49
82
82-1
81
35
28
30
88
14
85
87
33-1
18
17
19
23
21
22
20
36
27
25
41
26
32
31
80
46
45
33
16
15
44
78
79
77
76
75
58
72
62
63
68
64
66
69
67
59
74
73
71
60
70
61
65
89
83
84

No.	Part Number	Description	Q'ty	Remarks
1	0866 55 100F	Bracket, Center Panel	1	
●	0866 55 100G	Bracket, Center Panel	1	74/8～△
2	99804 0820	Bolt, Center Panel Bracket	2	
	99952 0822	Washer, Plain	2	
	99971 0800	Washer, Spring	2	
3	99805 0816	Bolt, Center Panel Bracket	2	
	99952 0800	Washer, Plain	2	
	99971 0800	Washer, Plain	2	
4	99940 0802	Nut, Center Panel Bracket	2	
5	0370 55 150	Bracket, Cooler	1	
6	99940 0602	Nut, Cooler Bracket	2	
7	1524 55 210B	Member (L), Lower	1	
8	99940 0602	Nut, Member	4	
9	99940 0800	Nut, Member	1	
10	0866 55 216	Shim (t=1.0)		
	0866 55 217	Shim (t=2.0) } Selective use	1	
	0866 55 218	Shim (t=3.2)		
11	1524 55 230B	Member (R), Lower	1	
12	99797 0614	Bolt, Member	1	
	99952 0618	Washer, Plain	1	
	99971 0600	Washer, Spring	1	

No.	Part Number	Description	Q'ty	Remarks
13	99940 0602	Nut, Member	2	
14	1881 55 330A	Bracket, Choke	1	
●	3625 55 330A	Bracket, Choke (U.S.A.)	1	74/11~×
●	3631 55 330A	Bracket, Choke (Canada)	1	75/1~×
15	99839 0520B	Screw, Choke Bracket	2	
	99952 0500B	Washer, Plain	2	
	99971 0500	Washer, Spring	2	
● 16	1570 55 340	Cover, Lamp	1 (U.S.A.) 2	74/11~Q'ty
17	0866 55 360C	Holder, Grille	1	
18	99838 0618	Screw, Grille Holder	1	
	99952 0618	Washer, Plain	1	
	99971 0600	Washer, Spring	1	
● 19	~~0866 55 360C~~	~~Body, Grille~~	~~1~~	
●	0866 55 365C	Body, Grille	1	From Car No. 1
20	0866 55 368	Ornament - Tuner	1	
21	99838 0412B	Screw, Grille Body	2	
	99952 0400B	Washer, Plain	2	
	99971 0400	Washer, Spring	2	
22	99861 0414B	Screw, Grille Body	2	
● 23	99896 0400	Nut, Spring - Grille Body	2	
● 24	~~0865 55 410D 00~~	~~Hood No. 1 (BLK)~~	~~1~~	
●	0865 55 401D00	Hood No. 1 (BLK)	1	From Car No. 1
25	99862 0525B	Screw, Hood No. 1	4	
	99967 0500B	Washer	4	

No.	Part Number	Description	Q'ty	Remarks
26	0865 55 402B00	Hood No. 2 (BLK)	1	
27	0865 55 403B00	Hood No. 3 (R) (BLK)	1	
28	0865 55 404B00	Hood No. 3 (L) (BLK)	1	
29	1562 55 405	Plate, Center	1	
30	99863 0510	Screw, Center Panel	4	
	99952 0500	Washer, Plain	4	
31	0866 55 406B	Box, Hood Center	1	
32	99838 0412	Screw, Hood Box	2	
	99952 0400	Washer, Plain	2	
33	1570 55 410	Lamp, Throttle Wire	1	
● 33-1	3625 55 410	Lamp, Warning (U.S.A.)	1	74/11～Added Anew
34	0866 55 412A	Lens, Illumination	1	
35	0866 55 590	Stiffener	1	
36	99837 0525B	Screw, Stiffener	2	
	99967 0500B	Washer	2	
37	1562 55 710	Clock, Auto	1	
●	1872 55 710	Clock, Auto	1	74/7～×
38	99836 0416B	Screw, Auto Clock	4	
39	99906 0500B	Nut, Auto Clock	1	
	99952 0500	Washer, Plain	1	
	99971 0500	Washer, Spring	1	
●	99971 0516	Washer, Spring	1	74/7～○
40	1561 55 720A	Ornament, Without Auto Clock	1	

No.	Part Number	Description	Q'ty	Remarks
41	0820 56 905	Nut, Spring-Hood No. 1 & No. 2	4	
42	99743 0659	Screw, Hood No. 1	2	
	99952 0600	Washer, Plain	2	
43	99833 0618	Screw, Hood No. 1	2	
	99952 0618	Washer, Plain	2	
	99971 0600	Washer, Spring	2	
44	1881 60 050	Cable, Choke (Manual)	1	
↘	1883 60 050	Cable, Choke (Automatic)	1	
● ↘	3625 60 050	Cable, Choke (U.S.A.)	1	74/11～×
●	3632 60 050	Cable, Choke (Canada)	1	75/1～×
45	99701 6030	Bulb, Throttle Wire Lamp	1	
46	99863 0412	Screw, Lamp Cover	2	
●	99865 0410	Screw, Lamp Cover	2 (U.S.A.) 4	74/8～○ 74/11～Q'ty
●	99952 0412	Washer, Plain	2	74/7～Discarded
●	99971 0400	Washer, Spring	2	
47	1562 60 070	Cable, Speedometer	1	
48	0370 60 073B	Grommet, Speedometer	1	
49	99686 0800	Protector, Speedometer Cable	1	
50	0866 60 101	Nozzle (R), Defroster	1	
51	0866 60 102	Nozzle (L), Defroster	1	
52	99863 0516	Bolt, Defroster Nozzle	2	
●	99865 0516	Bolt, Defroster Nozzle	2	74/8～○
	99952 0618	Washer, Plain	2	
	99971 0600	Washer, Spring	2	

No.	Part Number	Description	Q'ty	Remarks
53	99896 0500	Nut, Spring-Defroster Nozzle	2	
54	99940 0501	Nut, Defroster Nozzle	4	
	99952 0516	Washer, Plain	4	
55	0866 60 120	Guide (R), Ventilator	1	
56	0866 60 130	Guide (L), Ventilator	1	
57	99869 0412	Screw, Ventilator Guide	4	
●	99952 0412	Washer, Plain	4	From Car No. 1
58	1634 60 250	Switch, Combination	1	
●	3514 66 120	Switch, Combination	1	74/11~×
59	0866 60 251	Knob	1	
●	1011 66 121	Knob	1	74/11~×
60	0317 60 252	Spring, Cancel Cam	1	
61	0317 60 253	Cam, Cancel	1	
62	1634 60 254	Bracket, Fixing	1	
63	0317 60 255	Ball	1	
64	0317 60 256	Spring, Arm Set	1	
65	0317 60 257	Screw, Bracket	2	
66	0317 60 258	Arm	1	
67	0317 60 259	Spring, Ratchet	1	
68	0317 60 261	Plate, Set	1	
69	0317 60 262	Screw Set, Plate	2	
70	0866 60 263	Washer, "A"	1	

No.	Part Number	Description	Q'ty	Remarks
71	0866 60 264	Washer, "B"	1	
72	0866 60 265 A	Band	1	
●	1011 66 125	Band	1	74/12～×
73	0317 60 266	Screw	2	
74	0866 60 267	Screw, Light Switch	2	
75	1611 60 311	Plate, Name	1	
76	1611 60 312	Spacer	2	
77	1620 60 335	Cover (R), Column	1	
78	1620 60 345	Cover (L), Column	1	
● 79	99832 0408 B	Screw, Column Cover	2	From Car No. 1
●	99832 0412 B	Screw, Column Cover	2	From Car No. 1
80	99945 0500 B	Nut, Cap-Column Cover	1	
	99952 0500 B	Washer, Plain	1	
	99971 0500	Washer, Spring	1	
81	0866 60 720	Light, Cigar	1	
●	0866 60 720 A	Light, Cigar	1	74/1～△
82	0305 60 715	Shield, Heat-Cigar Lighter	1	
● 82-1	0866 60 721	Protector	1	74/1～Added Anew
83	1540 60 930	Relay, Turn Signal	1	
84	99940 0602	Nut, Flange	2	
85	0259 55 951	Cover, Hold-Fog Lamp Switch	1	
86	0366 66 865 A	Ornament, Cars Without Auto Radio	1	
87	0187 66 991	Clip, Rubber	1	
88	99288 1608	Clip	1	
● 89	99709 0255	Clip	1	74/11～Added Anew

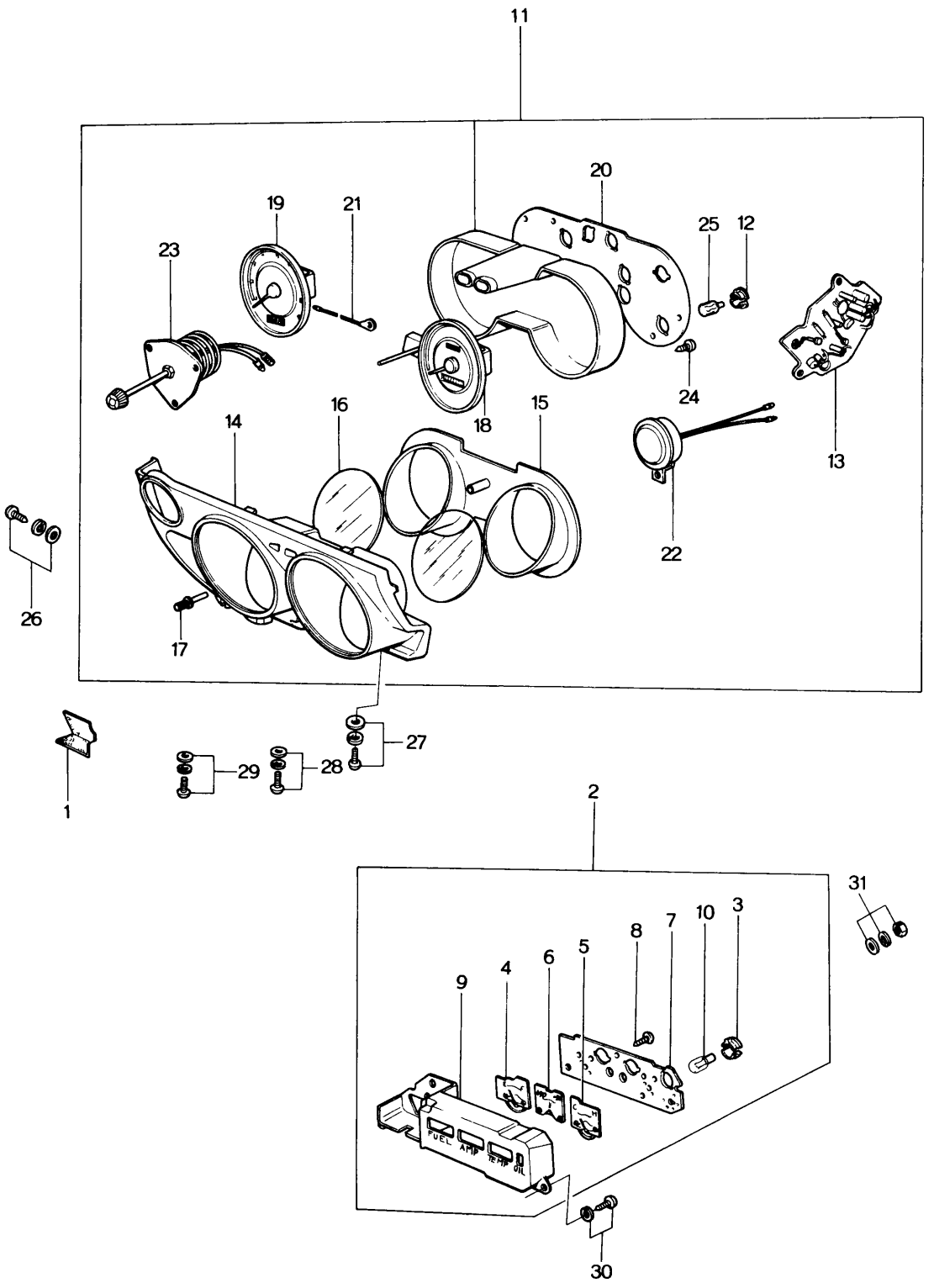
11
20
19
21
25
12
23
24
18
15
16
14
13
22
26
17
27
29
28
1
2
31
10
3
8
7
5
6
4
9
30

No.	Part Number	Description	Q'ty	Remarks
1	1524 55 351	Sheet, Meter	1	
2	1881 55 460	Meter, Combination	1	
●	3625 55 460A	Meter, Combination	1	74/11~×
● 3	0259 55 261	Socket	3 1	 74/11~Q'ty
●	3625 55 261	Socket	2	74/11~×
4	1562 75 122A	Meter, Fuel	1	
5	1562 75 123A	Thermometer	1	
6	1881 75 124	Ammeter	1	
7	1881 75 125	Plate, Print	1	
●	3625 75 125A	Plate, Print	1	74/11~×
8	0275 75 140	Screw, Tapping	4	
9	1562 75 200A	Case	1	
●	3625 75 200	Case	1	74/11~×
● 10	99701 6030	Bulb	3 1	 74/11~Q'ty
●	3625 75 139	Bulb	2	74/11~×
● 11	~~1881 55 530~~	~~Meter Set~~	~~1~~	
●	1881 55 530A	Meter Set	1	From Car No. 1
●	3631 55 530	Meter Set (Manual)	1	74/11~×

METER

No.	Part Number	Description	Q'ty	Remarks
●	3632 55 530	Meter Set (Automatic)	1	74/11~×
12	0259 55 261	Socket	9	
13	1114 55 465	Relay, Over Revolution	1	
●	1114 55 465	Relay, Over Revolution (Automatic)	1	74/4~Discarded
14	1881 75 010	Hood	1	
●	3631 75 010	Hood	1	74/11~×
15	0866 75 011	Plate, Window	1	
16	0866 75 013	Glass, Window	2	
17	0370 75 018	Knob, Trip	1	
18	1514 75 021	Meter	1	
19	1568 75 026	Tachometer	1	
●	0866 75 026A	Tachometer (Manual)	1	74/2~○
●	0866 75 026B	Tachometer (Manual)	1	74/9~△
●	1053 75 026	Tachometer (Automatic)	1	74/7~○
●	1053 75 026A	Tachometer (Automatic)	1	74/9~△
●	3625 75 026	Tachometer	1	74/11~×
● 20	~~1128 75 025A~~	~~Circuit, Print~~	~~1~~	
●	1562 75 025	Plate, Print	1	From Car No. 1
●	3625 75 025	Plate, Print	1	74/11~△
21	0866 75 028	Wire, Lead-Tachometer	1	

No.	Part Number	Description	Q'ty	Remarks
22	1568 75 029	Buzzer	1	
● 23	~~1151 75 040~~	~~Resistor~~	~~1~~	
●	1511 75 040	Resistor	1	From Car No. 1
●	1881 75 040	Resistor	1	73/9～△
24	0710 75 436	Screw, Tapping	3	
25	99701 6030	Bulb	9	
26	99836 0516B	Screw	1	
	99967 0500B	Washer	1	
● 27	~~99833 0612~~	~~Screw~~	~~1~~	
●	~~99952 0618~~	~~Washer, Plain~~	~~1~~	From Car No. 1
●	~~99971 0600~~	~~Washer, Spring~~	~~1~~	
28	99833 0616	Screw	3	
	99952 0618	Washer, Plain	3	
	99971 0600	Washer, Spring	3	
29	99838 0630	Bolt, Meter	2	
	99952 0618	Washer, Plain	2	
	99971 0600	Washer, Spring	2	
30	99863 0512	Screw, Tapping-Combination Meter	3	
●	99865 0512	Screw, Tapping-Combination Meter	3	74/4～○

No.	Part Number	Description	Q'ty	Remarks
	99952 0500	Washer, Plain	3	
● 31	99906 0400	Nut	1	
●	99952 0400	Washer, Plain	1	From Car No. 1
●	99971 0400	Washer, Spring	1	

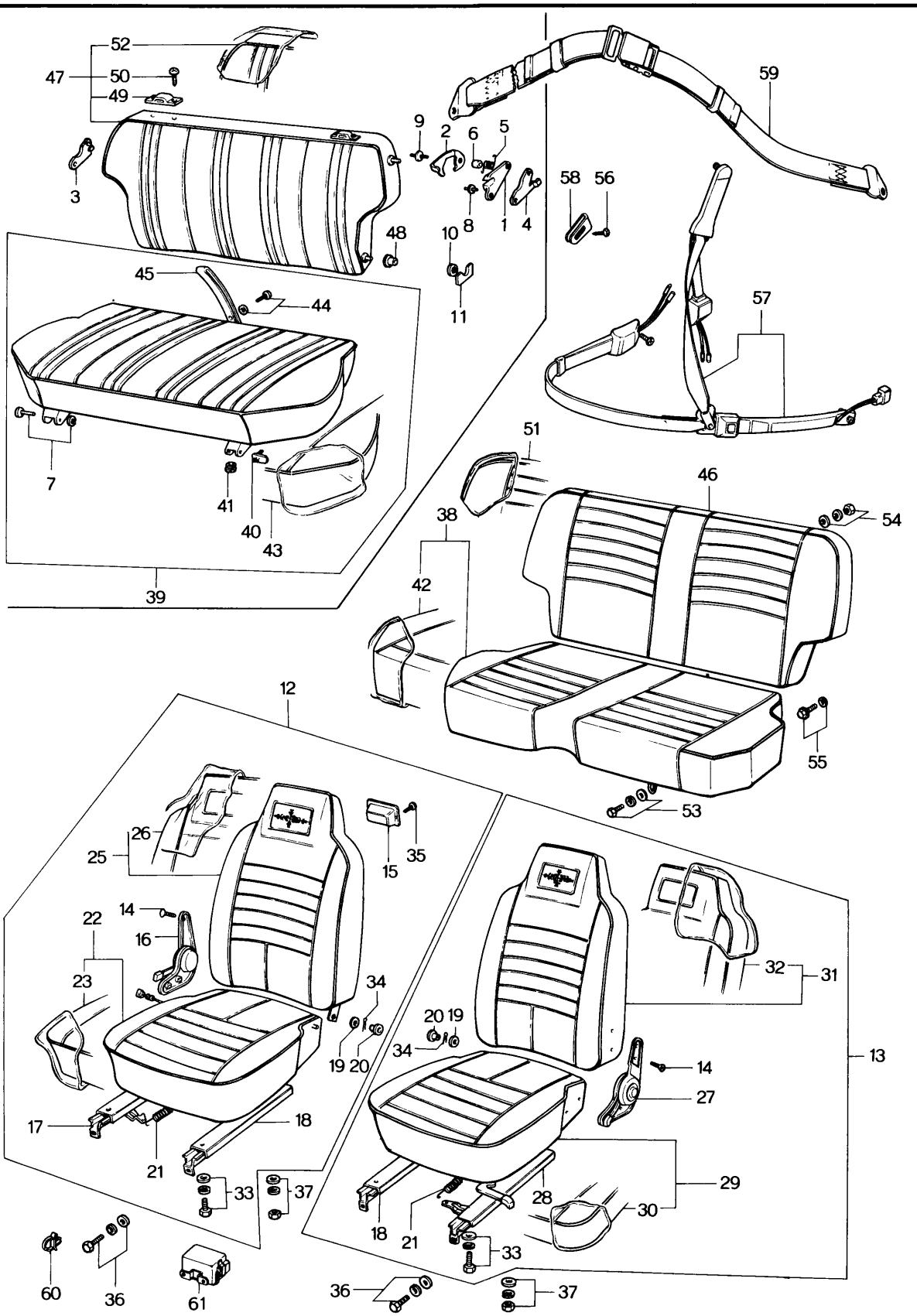
52
47
50
49
3
9
2
6
5
8
1
4
59
58
56
48
10
11
57
45
44
7
41
40
43
39
51
46
54
38
42
55
53
12
26
25
15
35
22
14
16
23
34
19
20
17
18
21
33
37
20
19
34
32
31
13
14
27
29
28
30
18
21
33
60
36
61
36
37

No.	Part Number	Description	Q'ty	Remarks
	When ordering the following Seat & Trim Note : 1, Add 03 (BLK) 12 (BRN) 13 (GRY/YLW) 26 (BRN) 75/1~× (Canada) after the parts number as colour codes nos.			
● 1	0585 57 012	Stopper (R)	1	
●	0585 57 013	Stopper (L)	1	
● 2	0585 57 015	Plate, Lock	1	
● 3	0585 57 016	Washer (R), Stopper	1	
● 4	0585 57 017	Washer (L), Stopper	1	
● 5	0585 57 018	Spring, Return	1	
● 6	0585 57 019	Bush (Station Wagon)	1	Refer to Page 210-B from after 75/1 (This applies to Canada only)
● 7	99230 0852	Pin, Rear Seat Cushion	2	
●	99576 0500	Ring, Snap	2	
● 8	0710 57 022	Rivet, Stopper	3	
● 9	0710 57 023	Rivet, Stopper	3	
● 10	0187 57 052	Washer, Adjust	2	
● 11	0621 57 054	Retainer	2	
● 12	~~1881 57 100 Ⓒ Seat (R), Front (Sedan & Station Wagon)~~		~~1~~	
●	1881 57 100A Ⓒ	Seat (R), Front (Sedan & Station Wagon)	1	From Car No. 1
●	~~1882 57 100 Ⓒ Seat (R), Front (Coupe)~~		~~1~~	
●	1882 57 100B Ⓒ	Seat (R), Front (Coupe)	1	From Car No. 1
● 13	~~1881 57 150 Ⓒ Seat (L), Front (Sedan & Station Wagon)~~		~~1~~	
●	1881 57 150A Ⓒ	Seat (L), Front (Sedan & Station Wagon)	1	From Car No. 1

No.	Part Number		Description	Q'ty	Remarks
●	~~1882 57 150~~	~~Ⓒ~~	~~Seat (L), Front (Coupe)~~	~~1~~	
●	1882 57 150A	Ⓒ	Seat (L), Front (Coupe)	1	From Car No. 1
14	2155 57 109		Screw, Knuckle	8	
15	0259 68 250		Tray, Ash	1	
16	0866 88 101		Knuckle (R) (Sedan & Station Wagon)	1	
●	~~1562 88 101~~		~~Knuckle (R), With Foot Pedal (Coupe)~~	~~1~~	
●	1882 88 101		Knuckle (R), With Foot Pedal (Coupe)	1	From Car No. 1
● 17	0866 88 102		Adjuster No. 1 (Sedan & Station Wagon)	1	
●	1882 88 102		Adjuster No. 1 (Coupe)	1	From Car No. 1
18	0866 88 103		Adjuster No. 2	2	
19	0866 88 105		Bush, Hinge	2	
20	0866 88 106		Washer, Hinge	2	
Ⓝ	1881 88 107		Protector	1	From Car No. 1
21	0259 88 123		Spring, Return-Adjust	2	
22	1881 88 110	Ⓒ	Cushion (R), Seat (Sedan & Station Wagon)	1	
	1882 88 110	Ⓒ	Cushion (R), Seat (Coupe)	1	
● 23	1694 99 111	Ⓒ	Trim (R)	1	73/10~ Discarded
● 24	1001 88 120		Switch, Seat (R)-Seat use	1	73/10~ Discarded
● 25	~~1882 88 130~~	~~Ⓒ~~	~~Seat (R), Back-Front~~	~~1~~	
●	1694 88 130	Ⓒ	Seat (R), Back-Front	1	From Car No. 1
26	1694 88 131	Ⓒ	Trim (R), Back Seat	1	
27	0866 88 151		Knuckle	1	
28	0866 88 152		Adjuster No. 3	1	
29	1881 88 160	Ⓒ	Cushion (L), Seat (Sedan & Station Wagon)	1	
	1882 88 160	Ⓒ	Cushion (L), Seat (Coupe)	1	

No.	Part Number	Description	Q'ty	Remarks
30	1694 88 161 ©	Trim (L)	1	
31	1694 88 180 ©	Seat (L), Back-Front	1	
32	1694 88 181 ©	Trim (L), Back Seat	1	
33	99801 0820	Bolt, Adjuster	8	
	99952 0816	Washer, Plain	8	
	99971 0800	Washer, Spring	8	
34	99221 3020	Pin, Split	2	
35	99864 0406	Screw, Ash Tray	2	
36	99785 0820	Belt, Front Seat	4	
	99952 0822	Washer, Plain	4	
	99971 0800	Washer, Spring	4	
● 37	99940 0800	Nut	4	From Car No. 1
	99952 0822	Washer, Plain	4	
38	1693 57 200A ©	Cushion, Rear Seat (Sedan)	1	
	1694 57 200A ©	Cushion, Rear Seat (Coupe)	1	
● 39	1696 57 200A ©	Cushion, Rear Seat (Station Wagon)	1	Refer to page 210-B from after 75/1 (This applies to Canada only)
● 40	0585 57 012	Stopper (Station Wagon)	2	
● 41	0603 53 436	Grommet (Station Wagon)	1	
42	1693 88 201 ©	Trim (Sedan)	1	

No.	Part Number	Description		Q'ty	Remarks
	1694 88 201 ©	Trim (Coupe)		1	
● 43	1696 88 201 ©	Trim (Station Wagon)		1	Refer to page 210-B from after 75/1 (This applies to Canada only)
● 44	0760 88 218	Rivet, Band (Station Wagon)		1	
●	99953 0400	Washer, Plain	(Station Wagon)	1	
● 45	0652 88 219	Band		1	
46	1694 57 250A ©	Seat, Rear Back (Sedan & Coupe)		1	
● 47	1696 57 250A ©	Seat, Rear Back (Station Wagon)		1	Refer to page 210-B from after 75/1 (This applies to Canada only)
● 48	0187 57 751	Tube	(Station Wagon)	2	
● 49	0621 57 753	Stopper		2	
● 50	99832 0625	Screw, Stopper		2	
51	1694 88 251 ©	Trim (Sedan & Coupe)		1	
● 52	1696 88 251 ©	Trim (Station Wagon)		1	Refer to page 210-B from after 75/1 (This applies to Canada only)
53	99786 0825B	Bolt, Rear Seat	(Sedan & Coupe)	2	
	0317 57 015	Washer		2	
54	99940 0800	Nut, Rear Back Seat		2	
	99952 0822	Washer, Plain		2	
55	99786 0820B	Screw, Tapping		2	
	99952 0822	Washer, Plain		2	

No.	Part Number	Description		Q'ty	Remarks
56	99794 0612	Screw, Bolt Holder		4	
● 57	1881 57 900 A	Belt, Front Seat	(Sedan & Station Wagon)	2	From Car No. 1
●	1881 57 900 C	Belt, Front Seat		2	74/1~○
●	1881 57 900 D00	Belt, Front Seat		2	74/12~△
●	1882 57 900 A	Belt, Front Seat	(Coupe)	2	From Car No. 1
●	1882 57 900 C	Belt, Front Seat		2	74/1~○
●	1882 57 900 D00	Belt, Front Seat		4	74/12~△
58	0305 57 909	Holder, Belt		4	
59	1540 57 950	Belt, Rear Seat		2	
●	3630 57 940	Belt, Rear Seat		2	74/12~×
60	1011 67 912	Clip, Seat Switch Cord		1	
● 61	~~1757 57 999~~	~~G. Sencer, Seat Belt~~		~~1~~	
●	1757 57 999 A	G. Sencer, Seat Belt		1	From Car No. 1

REAR SEAT (STATION WAGON)
(USED FROM '75/1) (CANADA)

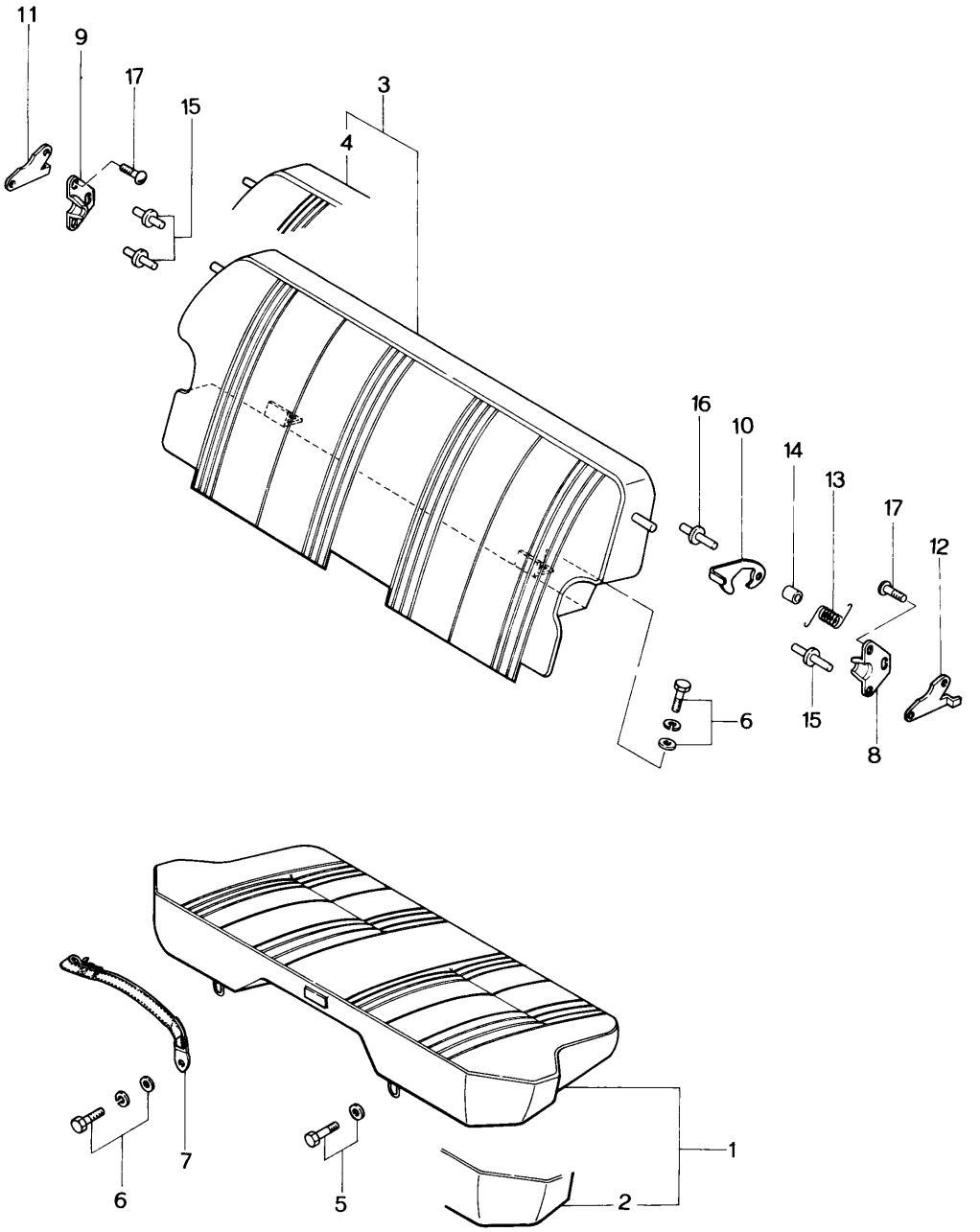

No.	Part Number	Description	Q'ty	Remarks
	When ordering the following Seat & Trim			
	Note : 1, Add			
	03 (BLK) 13 (GRY / YLW) 26 (BRN)			
	After the parts number as colour codes nos.			
1	3629 57 200A ©	Cushion, Rear Seat	1	
2	3629 88 201 ©	Trim, Rear Seat Cushion	1	
3	3629 57 250A ©	Seat, Rear Back	1	
4	3629 88 251 ©	Trim, Rear Back Seat	1	
5	99786 0825	Bolt, Rear Seat Cushion	2	
	0317 57 015	Washer	2	
6	99806 0620	Bolt, Rear Seat	5	
	99952 0600	Washer, Plain	5	
	99971 0600	Washer, Spring	5	
7	3629 57 080A	Band, Seat Set	1	
8	3629 57 012A	Stopper (R)	1	
9	3629 57 013A	Stopper (L)	1	
10	0585 57 015	Plate, Lock	1	
11	0585 57 016	Washer (R), Stopper	1	

REAR SEAT (STATION WAGON)
(USED FROM 75/1) (CANADA)

No.	Part Number	Description	Q'ty	Remarks
12	0585 57 017	Washer (L), Stopper	1	
13	0585 57 018	Spring, Return	1	
14	0585 57 019	Bush	1	
15	0710 57 022	Rivet, Stopper	3	
16	0710 57 023	Rivet, Stopper	3	
17	99864 0625	Bolt	2	
	99952 0600	Washer, Plain	2	

FRONT SIDE DOOR (GLASS)

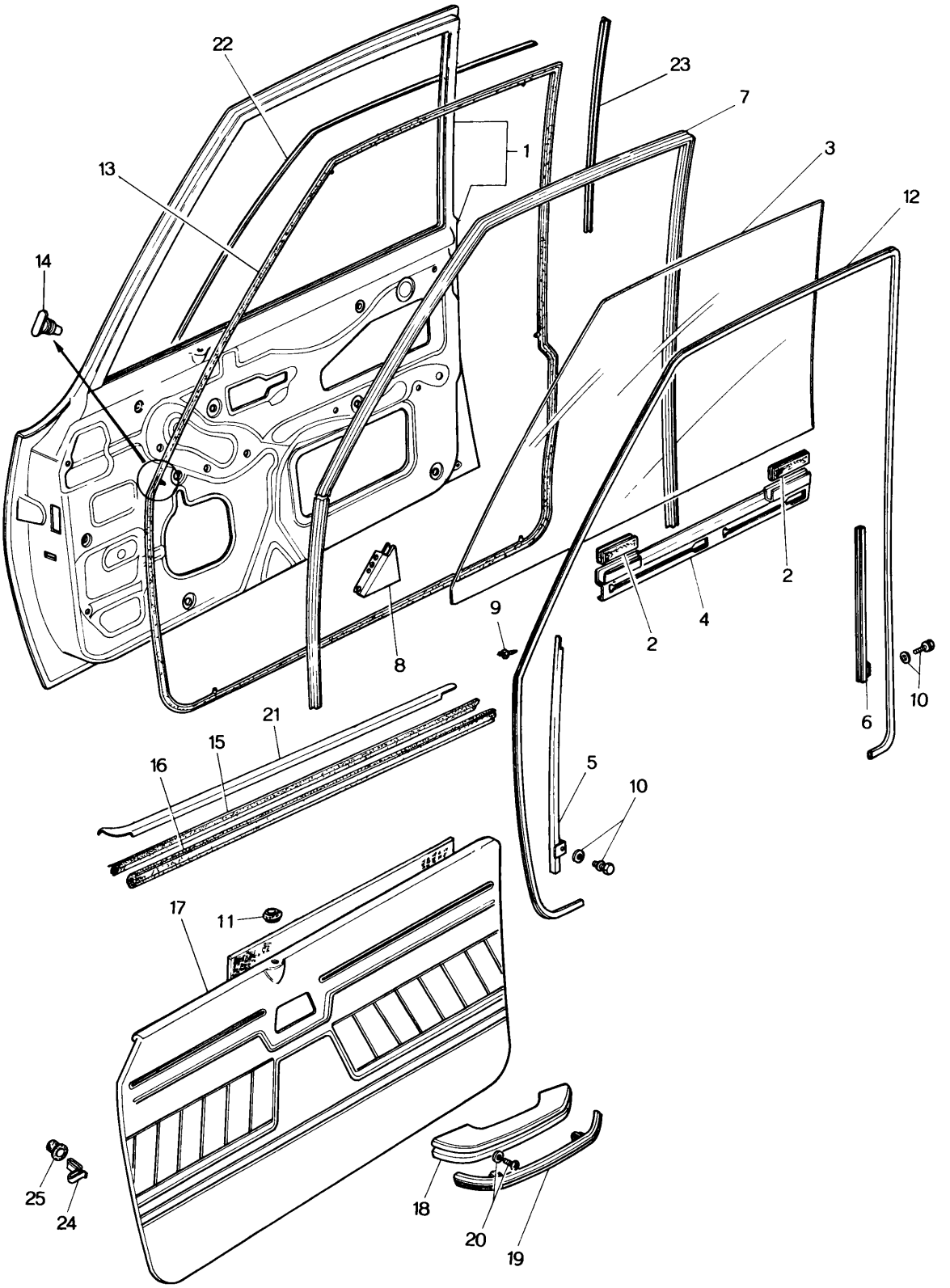

No.	Part Number	Description		Q'ty	Remarks
● 1	1620 58 010B	Body (R), Door	(Sedan & Station Wagon)	1	
●	1620 59 010B	Body (L), Door		1	
●	1622 58 010B	Body (R), Door	(Coupe)	1	
●	1622 59 010B	Body (L), Door		1	
●	~~1622 58 020A~~	~~Panel (R), Outer~~	(Coupe)	~~1~~	
●	1622 58 020	Panel (R), Outer		1	From Car No. 1
●	0376 58 020A	Panel (R), Outer		1	74½～△
	1622 59 020	Panel (L), Outer		1	
	0866 58 020A	Panel (R), Outer	(Sedan & Station Wagon)	1	
	1540 59 020	Panel (L), Outer		1	
2	2292 58 232	Rubber, Strip-Door Glass		4	
● 3	~~0866 58 501A~~	~~Glass (R), Door~~	(Sedan & Station Wagon)	~~1~~	
●	0866 58 501	Glass (R), Door		1	From Car No. 1
●	~~0866 58 501A~~	~~Glass (L), Door~~		~~1~~	
●	0866 59 501	Glass (L), Door		1	From Car No. 1
●	~~0376 58 501A~~	~~Glass (R), Door~~	(Coupe)	~~1~~	
●	0376 58 501	Glass (R), Door		1	From Car No. 1
●	~~0376 59 501A~~	~~Glass (L), Door~~		~~1~~	
●	0376 59 501	Glass (L), Door		1	From Car No. 1
4	0305 58 505	Bracket (R), Lift		1	
	0305 59 505	Bracket (L), Lift		1	
5	0866 58 603	Guide "A" (R), Glass		1	
	0866 59 603	Guide "A" (L), Glass		1	
6	0376 58 604	Guide "B" (R), Glass	(Coupe)	1	
	0376 59 604	Guide "B" (L), Glass		1	

FRONT SIDE DOOR (GLASS)

No.	Part Number	Description	Q'ty	Remarks
	0886 58 604	Guide "B" (R), Glass (Sedan & Station Wagon)	1	
	0886 58 604	Guide "B" (L), Glass (Sedan & Station Wagon)	1	
7	0376 58 605	Channel, Glass Run (Coupe)	2	
	0886 58 605	Channel, Glass Run (Sedan & Station Wagon)	2	
8	0886 58 620	Bracket, Corner	2	
9	99831 0408	Screw, Glass Guide	4	
10	99806 2612	Bolt Glass Guide	4	
	99971 0600	Washer, Spring	4	
	99957 0618	Washer, Pin	2	
	0727 70 943	Washer, Plain	2	
11	0223 58 692	Grommet	2	
12	0398 58 755-00	Welt, Seaming (BLK)	2	
13	0376 58 760A	Weatherstrip (R) (Coupe)	1	
	0376 58 760A	Weatherstrip (L) (Coupe)	1	
	0886 58 760A	Weatherstrip (R) (Sedan & Station Wagon)	1	
	0886 58 760A	Weatherstrip (L) (Sedan & Station Wagon)	1	
14	0305 58 762	Fastener	50	
15	0376 58 781D	Weatherstrip, Outer (Coupe)	2	

No.	Part Number	Description	Q'ty	Remarks
	0866 58 781D	Weatherstrip, Outer (Sedan & Station Wagon)	2	
16	0376 58 791	Weatherstrip, Inner (R)	1	(Coupe)
	0376 59 791	Weatherstrip, Inner (L)	1	(Coupe)
	0866 58 791	Weatherstrip, Inner (R)	1	(Sedan & Station Wagon)
	0866 59 791	Weatherstrip, Inner (L)	1	(Sedan & Station Wagon)

When ordering the following Trims
Add. colour code nos. given below after parts number

- 03 (BLK) 12 (BRN) 13 (GRY/YLW) (Sedan & Station Wagon)
- 35 (BRN) ··· 75/1 ~ × (Canada) (Sedan & Station Wagon)
- 14 (BLK) 25 (BRN) 26 (GRY/YLW) ··· From Car No. 1 (Coupe)
- 30 (BLK) 31 (BRN) 32 (GRY/YLW) ··· 74/7 ~ △ (Coupe)
- 34 (BRN) ··· 75/1 ~ × (Canada) (Coupe)

17	1620 58 810A©	Trim (R), Door	1	(Sedan & Station Wagon)	
	1620 59 810A©	Trim (L), Door	1	(Sedan & Station Wagon)	
	1622 58 810A©	Trim (R), Door	1	(Coupe)	
●	1622 58 810B©	Trim (R), Door	1	(Coupe)	
	1622 59 810A©	Trim (L), Door	1	(Coupe)	
●	1622 59 810B©	Trim (L), Door	1	(Coupe)	
18	0398 58 821A00	Rest, Arm (BLK)	2		
19	0398 58 822A00	Garnish, Arm Rest (BLK)	2		
20	99833 0520	Screw, Tapping-Arm Rest	4		
	99952 0500	Washer, Plain	4		
21	0376 58 831C	Mould (R), Beltline	1	(Coupe)	
	0376 59 831C	Mould (L), Beltline	1	(Coupe)	

FRONT SIDE DOOR (GLASS)

No.	Part Number	Description	Q'ty	Remarks
	0866 58 831C	Mould (R), Beltline (Sedan & Station Wagon)	1	
	0866 59 831C	Mould (L), Beltline (Sedan & Station Wagon)	1	
22	0866 58 841A	Mould "A" (R), Sash (Sedan & Station Wagon)	1	
	0866 59 841A	Mould "A" (L), Sash (Sedan & Station Wagon)	1	
23	0866 58 842A	Mould "B" (R), Sash (Sedan & Station Wagon)	1	
	0866 59 842A	Mould "B" (L), Sash (Sedan & Station Wagon)	1	
24	0208 58 921	Fastener, Door Trim	14	
25	0187 58 922	Seal, Fastener - Door Trim	14	

FRONT SIDE DOOR (LOCK)

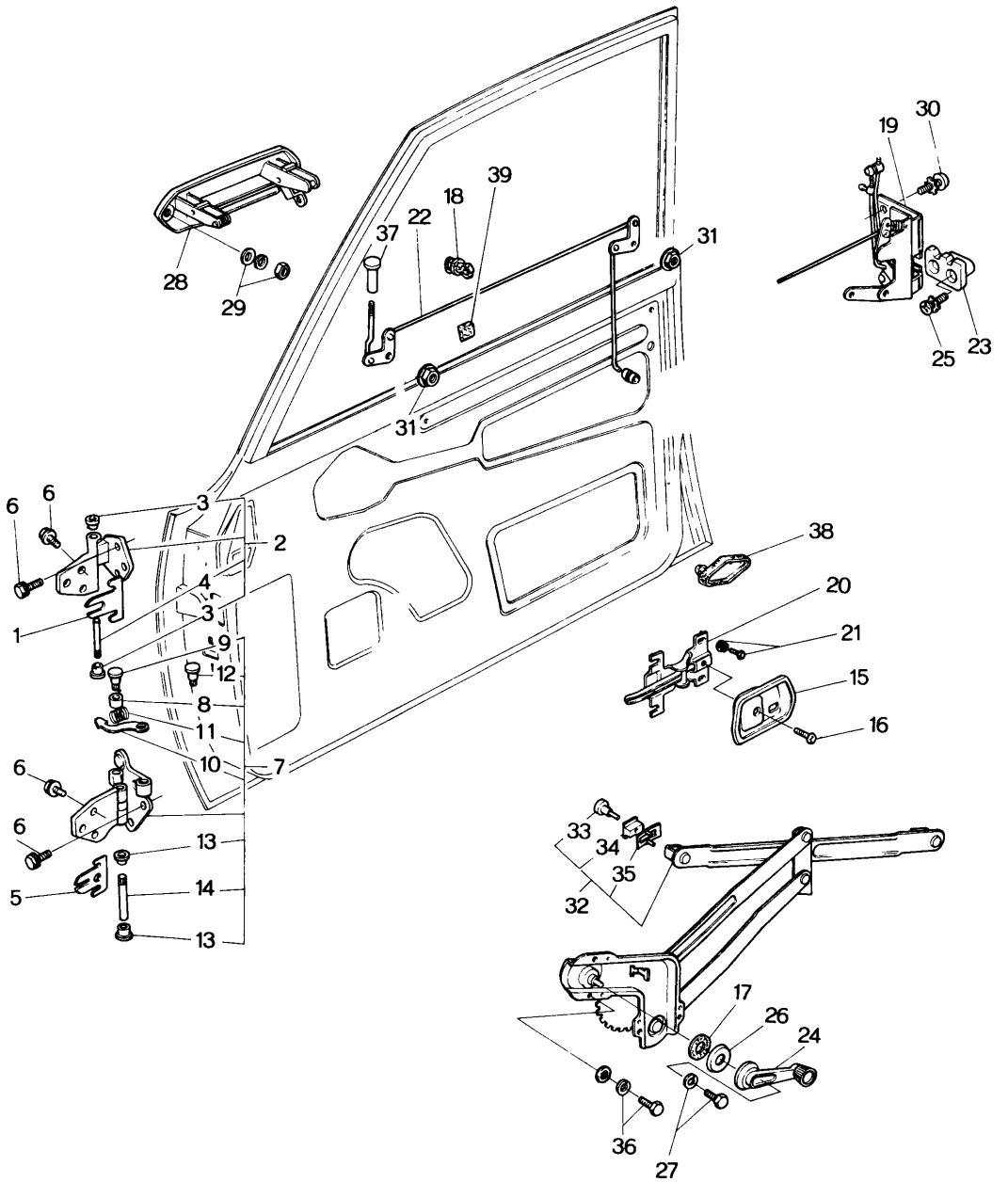

No.	Part Number	Description	Q'ty	Remarks
1	0866 58 201	Shim, Hinge "A" - Selective use	1	
2	0866 58 210	Hinge, "A"	2	
3	0223 58 721	Bush	4	
4	0187 58 731	Pin, Hinge	2	
5	1011 58 231	Shim, Hinge "B" - Selective use	1	
6	99783 0828	Bolt, Hinge	24	
	99971 0800	Washer, Spring	24	
7	0866 58 240C	Hinge, "B" (R)	1	
	0866 59 240C	Hinge, "B" (L)	1	
8	0866 58 281B	Roller	2	
9	0866 58 282	Pin, "A"	2	
10	0866 58 291A	Lever, Check	2	
11	0866 58 292A	Spring, Check	2	
12	0866 58 293	Pin, "B"	2	
13	0223 58 721	Bush	4	
14	0187 58 731	Pin, Hinge	2	

FRONT SIDE DOOR (LOCK)

No.	Part Number	Description	Q'ty	Remarks
15	0866 58 303B	Cover (R), Inner Handle	1	
	0866 59 303B	Cover (L), Inner Handle	1	
16	99832 0408B	Screw, Cover	2	
17	0259 58 305	Gasket, Window Regulator	2	
18	0305 58 309	Holder, Rod	4	
19	1562 58 310H	Look (R), Door (Coupe)	1	
	1562 59 310H	Look (L), Door (Coupe)	1	
	1524 58 310H	Look (R), Door (Sedan & Station Wagon)	1	
	1524 59 310H	Look (L), Door (Sedan & Station Wagon)	1	
20	0866 58 321B	Handle, Inner	2	
21	99806 0510	Bolt, Inner Handle	6	
	99952 0518	Washer, Plain	6	
	99971 0500	Washer, Spring	6	
22	0376 58 330C	Rod (R) (Coupe)	1	
	0376 59 330C	Rod (L) (Coupe)	1	
	0866 58 330C	Rod (R) (Sedan & Station Wagon)	1	
	0866 59 330C	Rod (L) (Sedan & Station Wagon)	1	
23	0866 58 361C	Rack (R)	1	
	0866 59 361C	Rack (L)	1	
24	223 58 370D	Handle, Regulator	2	

No.	Part Number	Description	Q'ty	Remarks
25	1540 58 371	Screw	4	
	99975 0600	Washer	4	
26	0223 58 375A	Escutcheon	2	
27	99806 0516	Bolt, Regulator	2	
	99971 0500	Washer, Spring	2	
28	0866 58 410A	Handle (R), Outer Side	1	
	0866 59 410A	Handle (L), Outer Side	1	
	0305 58 411	Bush	2	
29	99906 0500	Nut, Outer	4	
	99951 0618	Washer, Plain	4	
	99971 0500	Washer, Spring	4	
30	99832 0630	Screw, Door Lock	6	
	99974 0600	Washer, Toothed	6	
	99975 0600	Washer, Toothed	6	
31	99907 0600	Nut Door Lock	4	
	99952 0600	Washer, Plain	4	
	99971 0600	Washer, Spring	4	

FRONT SIDE DOOR (LOCK)

No.	Part Number	Description	Q'ty	Remarks
32	0866 58 560	Regulator (R)	1	
	0866 59 560	Regulator (L)	1	
33	0223 58 303A	Pin	4	
34	0223 58 304A	Guide	4	
35	0223 58 311	Spring	4	
36	99806 0612	Bolt, Window Regulator	8	
	99971 0600	Washer, Spring	8	
	99951 0618	Washer, Plain	8	
37	0259 58 691	Knob	2	
38	0259 58 906	Cushion	2	
39	0259 72 509	Pad, Door Lock	2	

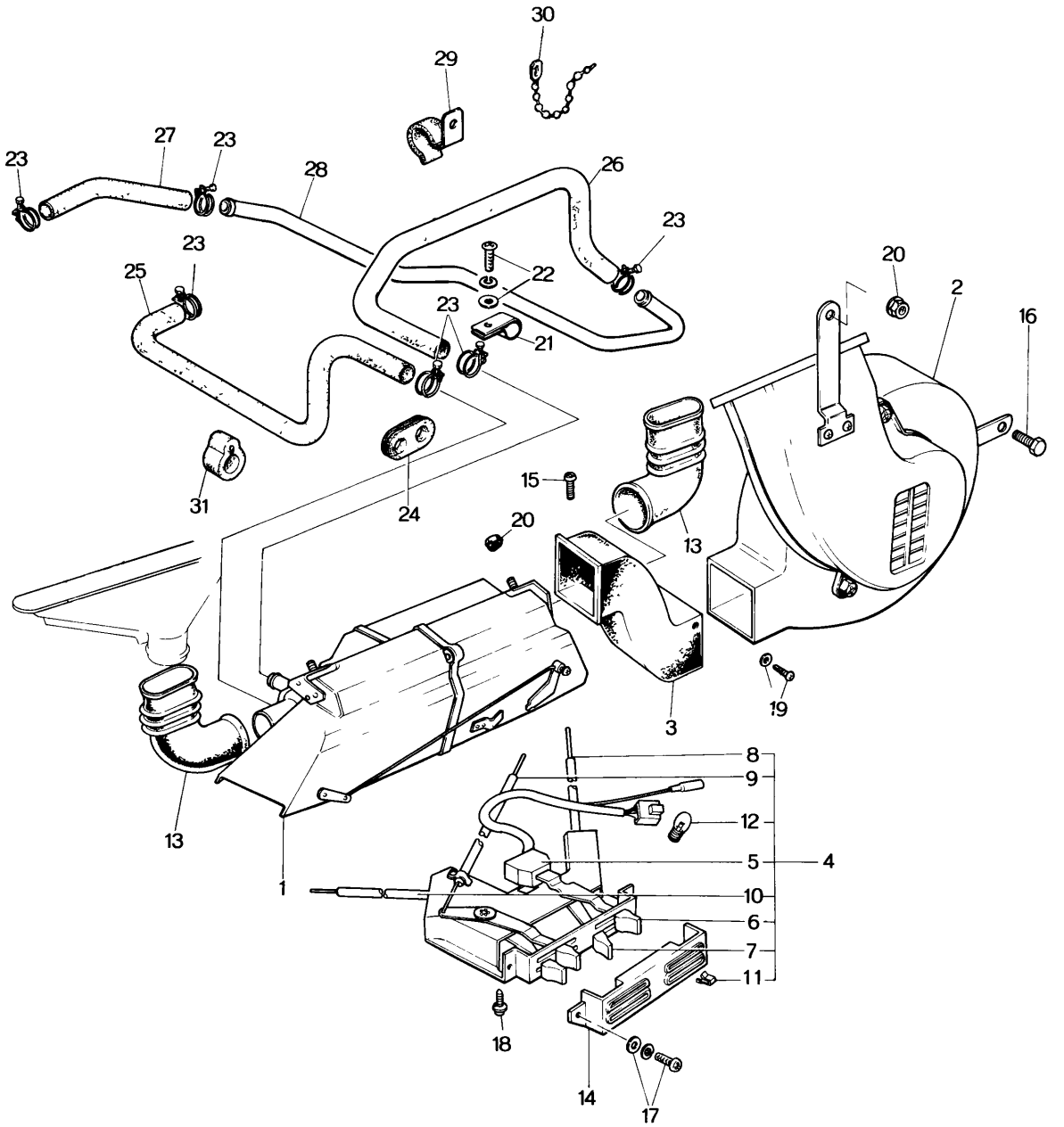
30
29
27
23
23
28
26
23
23
25
22
23
21
20
2
16
31
24
15
20
13
19
3
13
1
8
9
12
5
4
10
6
7
11
18
14
17

No.	Part Number	Description	Q'ty	Remarks
	1620 61 080B	Heater Set	1	
1	1524 61 130B	Heater Unit	1	
2	1524 61 140B	Blower	1	
3	1524 61 151A	Duct	1	
4	1620 61 190B	Control	1	
5	0862 76 403A	Control Switch (OFF~FAN)	1	
6	0862 76 409	Knob (Upper)	1	
7	0862 76 411	Knob (Lower)	1	
8	1562 76 406A	Control Wire No. 1 (Cold~Hot)	1	
9	0862 76 407A	Control Wire No. 2 (DEF~HEAT)	1	
10	1562 76 408A	Control Wire No. 3 (REC~FRESH)	1	
11	0370 76 416	Clip, Heater Control	4	
12	0862 76 423	Bulb, Illmination	2	
13	0866 61 251	Hose, Defroster	2	
14	1620 76 422	Panel, Control	1	
●	1620 70 422A	Panel, Control	1	73/11~×
15	99868 0410	Screw, Duct & Heater Unit	6	
16	99786 0830	Bolt Blower	3	
	99952 0822	Washer, Plain	3	
17	99833 0512	Screw, Control	2	
	99952 0500	Washer, Plain	2	

No.	Part Number	Description	Q'ty	Remarks
	99971 0500	Washer, Spring	2	
18	99833 0512	Screw, Control	1	
	99952 0516	Washer, Plain	1	
	99971 0500	Washer, Spring	1	
19	99863 0512B	Screw, Duct	2	
	99952 0516B	Washer, Plain	2	
20	99940 0802	Nut, Flange	3	
21	0824 61 192	Clip, Heater Pipe	2	
22	99868 0512	Screw, Clip	2	
	99952 0500	Washer, Plain	2	
	99971 0500	Washer, Spring	2	
23	99282 2600	Band, Hose	6	
24	0866 61 235	Grommet	1	
25	1562 61 211C	Hose No. 1	1	
26	1620 61 212	Hose No. 2	1	
● 27	~~0862 61 213~~	~~Hose No. 3~~	~~1~~	
●	0866 61 213	Hose No. 3	1	From Car No. 1
●	0862 61 215	Hose No. 3	1	74/4~○
● 28	~~1881 61 214~~	~~Pipe, Heater~~	~~1~~	
●	1881 61 214A	Pipe, Heater	1	From Car No. 1
29	1620 61 225	Clip	1	

No.	Part Number	Description	Q'ty	Remarks
30	99709 0108	Band	1	
31	0866 61 476	Protector	1	
●	1881 61 476	Protector	1	7/5～△

HEATER UNIT & BLOWER

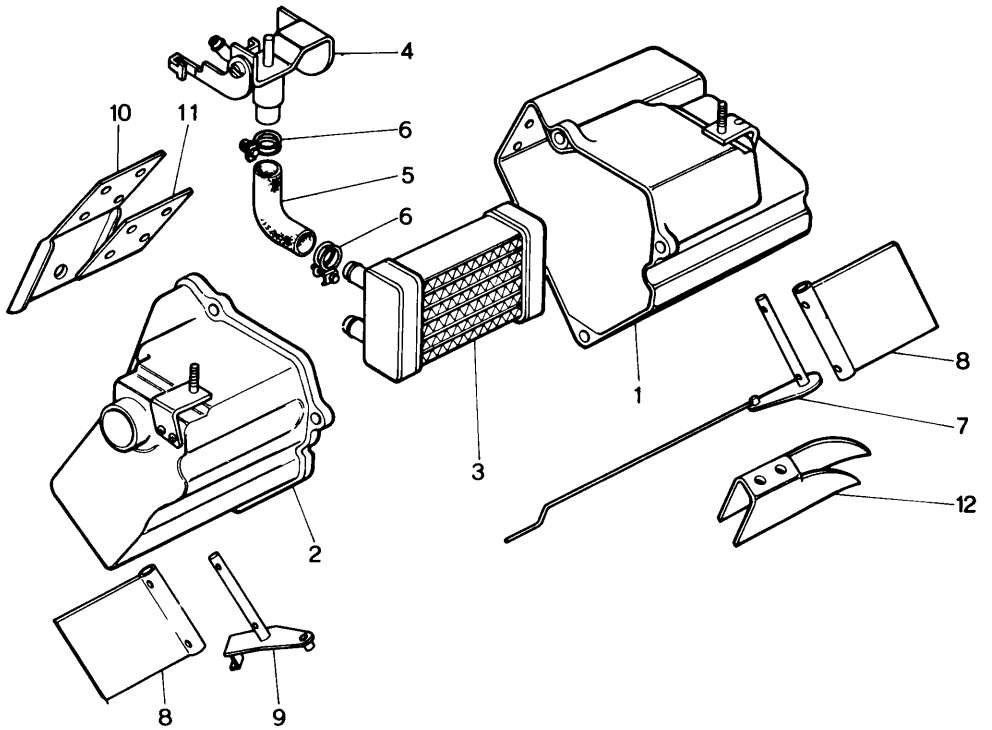

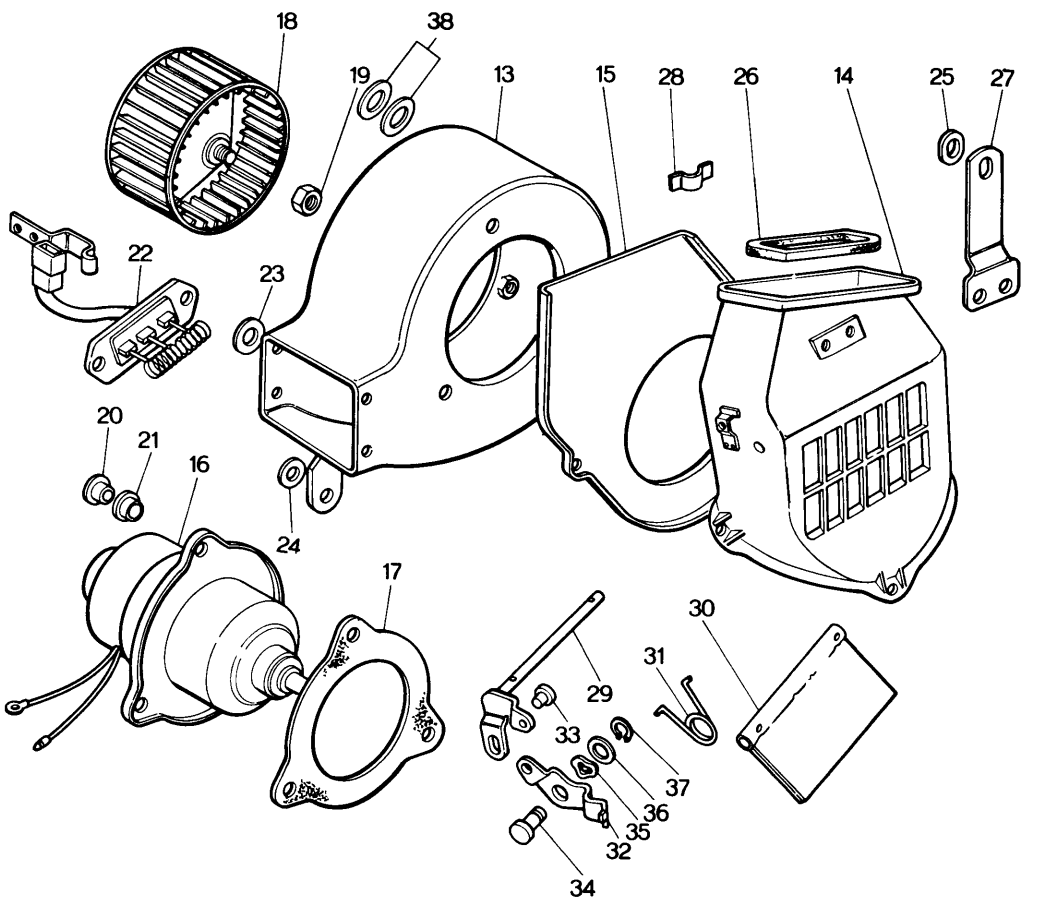

HEATER UNIT & BLOWER

No.	Part Number	Description	Q'ty	Remarks
	1524 61 130 B	Unit, Heater	1	
1	1524 76 501 A	Case, Unit	1	
2	1524 76 502 A	Case, Unit	1	
3	1524 76 503 A	Radiator Unit	1	
4	1524 76 504 A	Valve, Water	1	
5	1524 76 505 A	Hose, Water	1	
6	99282 2600	Band, Hose	2	
7	0866 76 506	Shaft	1	
8	0866 76 507	Damper	2	
9	0866 76 508	Shaft	1	
10	0866 76 509	Bracket	1	
11	0866 76 511	Plate	1	
12	1524 76 512	Guide, Air	1	
●	~~1524 67 140 B~~	~~Blower~~	~~1~~	
●	1524 61 140 B	Blower	1	From Car No. 1
13	1524 76 451	Case, Blower	1	
14	1524 76 452	Duct, Air	1	
15	1524 76 453	Flange	1	
● 16	~~1524 76 454~~	~~Motor~~	~~1~~	
●	1524 76 454 A	Motor	1	From Car No. 1
● 17	~~1524 76 455~~	~~Gasket~~	~~1~~	

HEATER UNIT & BLOWER

	No.	Part Number	Description	Q'ty	Remarks
●		0866 76 455 A	Gasket	1	From Car No. 1
●		~~1524 76 456~~	~~Blower~~	~~1~~	
●		1524 76 456 A	Blower	1	From Car No. 1
●	19	~~0866 76 472~~	~~Nut~~	~~1~~	
●		0866 76 472 A	Nut	1	From Car No. 1
	20	0866 76 457	Insert	3	
	21	0866 76 458	Gasket	3	
	22	0866 76 459	Resistance	1	
	23	0866 76 461	Clamp "B"	1	
	24	0866 76 462	Gasket "A"	1	
	25	0866 76 463	Gasket	1	
●		0866 76 473	Gasket	1	$\frac{74}{4}$~×
	26	0866 76 464	Gasket "B"	1	
	27	1524 76 465	Bracket	1	
	28	0866 76 466	Bracket "C"	1	
●		0862 76 512	Bracket "C"	1	$\frac{74}{4}$~○
	29	1524 76 467	Shaft	1	
	30	0866 76 468	Damper	1	
	31	1524 76 469	Spring	1	
	32	1524 76 471	Lever, Control	1	
	33	1524 76 472	Cooler	1	
	34	1524 76 473	Pin	1	
	35	99972 0500	Washer, Wave	1	
	36	0315 76 022	Washer	1	
	37	99576 0300	Ring, Retaining	1	
●	38	0866 76 475	Washer, Plain	1	From Car No. 1
●		0866 76 476	Washer, Plain	1	From Car No. 1

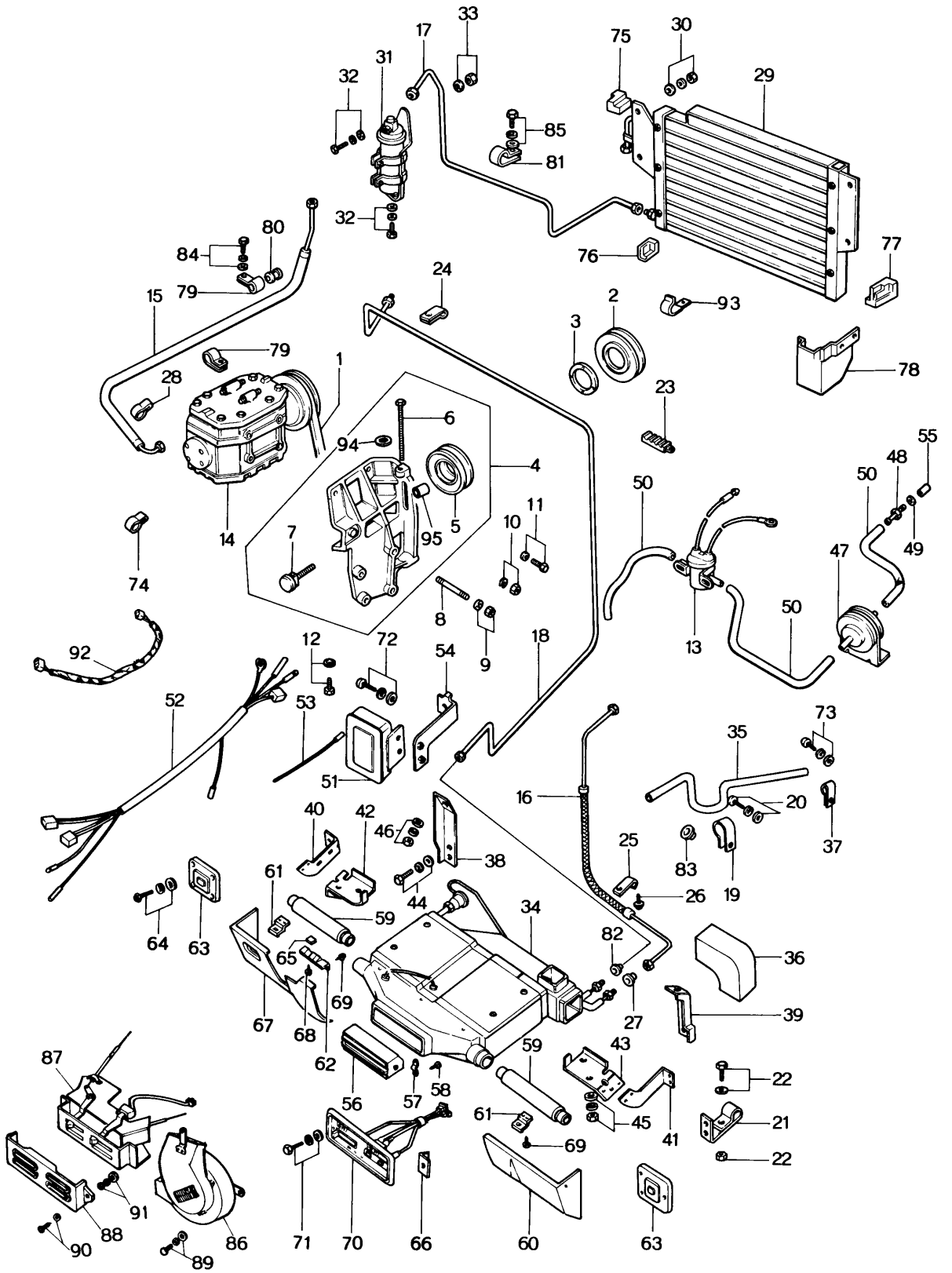
1
2
3
4
5
6
7
8
9
10
11
12
13
14
15
16
17
18
20
22
23
24
25
26
27
28
29
30
31
32
33
34
35
36
37
38
39
40
41
42
43
44
45
46
47
48
49
50
51
52
53
54
55
56
57
58
59
60
61
62
63
64
65
66
67
68
69
70
71
72
73
74
75
76
77
78
79
80
81
82
83
84
85
86
87
88
89
90
91
92
93
94
95

No.	Part Number	Description	Q'ty	Remarks	
		Ⓝ mark indicates Nipon Denso make			
●	~~1883 61 390~~	~~Air-Conditioner, Heater Less~~	~~1~~		Ⓝ
●	1883 61 410	Air-Conditioner, Heater Less	1	From Car No. 1	Ⓝ
●	1883 61 410B	Air-Conditioner, Heater Less	1	74/7～×	Ⓝ
	1881 61 410	Air-Conditioner	1		Ⓝ
●	1881 61 410B	Air-Conditioner	1	74/7～×	Ⓝ
● 1	1881 15 906	Belt, "V"	1		
●	1881 15 906A	Belt, "V"	1	73/12～×	Ⓝ
● 2	~~1881 15 911A~~	~~Pulley, "V" Belt~~	~~1~~		Ⓝ
●	1881 15 911B	Pulley, "V" Belt	1	From Car No. 1	Ⓝ
●	1757 15 911A	Pulley, "V" Belt	1	73/12～×	Ⓝ
●	1757 15 911B	Pulley, "V" Belt	1	74/1～△ 74/3～Discarded	Ⓝ
● 3	1757 15 912	Stiffener, Pulley	1	74/3～Discarded	Ⓝ
4	1881 15 920	Bracket, Compressor (Fig. No. 5～7 included)	1		
5	1881 15 940	Pulley, Idle	1		
6	1757 15 966	Bolt, Adjust	1		Ⓝ
7	1757 15 967	Shaft, Adjust	1		Ⓝ
●	1881 15 967	Shaft, Adjust	1	73/10～△	
● 8	99859 1028	Stud	2 1	73/9～Q'ty	
	99859 1050	Stud	2		
9	99921 1000	Nut, Compressor Bracket	4		
	99971 1000	Washer, Spring	4		
10	99921 1200	Nut, Compressor Bracket	1		
	99971 1200	Washer, Spring	1		
11	99801 0825	Bolt, Compressor	4		
	99971 0800	Washer, Spring	4		
12	99801 0840	Bolt, Compressor	2		
	99971 0800	Washer, Spring	2		

No.	Part Number	Description	Q'ty	Remarks
13	0824 61 236A	Valve, Magnet	2	
14	1881 61 450	Compressor	1	Ⓝ
15	1562 61 461	Hose, Flexible	1	Ⓝ
●	0866 61 461	Hose, Flexible	1	73/11～○ Ⓝ
16	1562 61 462A	Hose, Flexible	1	Ⓝ
17	1128 61 463	Pipe No. 1	1	Ⓝ
18	1562 61 464	Pipe No. 2	1	Ⓝ
●	1562 61 464A	Pipe No. 2	1	73/9～△ Ⓝ
●	1562 61 464B	Pipe No. 2	1	74/7～× Ⓝ
19	0370 61 467	Clip	8	Ⓝ
20	99868 0520	Bolt	4	
	99952 0500	Washer, Plain	4	
	99971 0500	Washer, Spring	4	
21	1562 61 469	Clip	1	Ⓝ
22	99806 0612	Bolt	7	
	99906 0600	Nut	7	
	99952 0600	Washer, Plain	7	
	99971 0600	Washer, Spring	7	
23	0866 61 472	Clip	1	Ⓝ
● 24	1562 61 473	Clip	4 2	74/4～Q'ty Ⓝ
25	1562 61 474	Clip	1	Ⓝ
26	99806 0628	Bolt	1	
	99952 0600	Washer, Plain	1	

No.	Part Number	Description	Q'ty	Remarks	
	99971 0600	Washer, Spring	1		
27	0866 61 475	Grommet	1		Ⓝ
28	0866 61 476	Protector	1		Ⓝ
29	1562 61 490	Condenser	1		Ⓝ
30	99906 0600	Nut	4		
	99952 0618	Washer, Plain	4		
	99971 0600	Washer, Spring	4		
31	0866 61 500	Tank, Receiver	1		
32	99806 0612	Bolt, Receiver Tank	3		
	99952 0600	Washer, Plain	3		
	99971 0600	Washer, Spring	3		
33	99906 0600	Nut	1		
	99952 0600	Washer, Plain	1		
34	1622 61 520	Cooler Unit	1		Ⓝ
●	1608 61 520	Cooler Unit (U.S.A.)	1	74/11~△	Ⓝ
35	0866 61 525A	Hose, Drain	2		Ⓝ
● 36	1524 61 526	Duct, Rubber	1	73/11~Discarded	Ⓝ
37	0866 61 527	Clip	1		Ⓝ
38	0866 61 531	Bracket No. 1	1		Ⓝ
39	0866 61 532	Bracket No. 2	1		Ⓝ
40	0866 61 533	Bracket No. 3	1		Ⓝ

No.	Part Number	Description	Q'ty	Remarks	
41	0866 61 534	Bracket No. 4	1		Ⓝ
42	0866 61 535	Bracket No. 5	1		Ⓝ
43	0866 61 536	Bracket No. 6	1		Ⓝ
44	99806 0812	Bolt	12		
	99952 0600	Washer, Plain	12		
	99971 0600	Washer, Spring	12		
45	99906 0600	Nut	2		
	99951 0618	Washer, Plain	2		
	99971 0600	Washer, Spring	2		
46	99906 0800	Nut	2		
	99952 0800	Washer, Plain	2		
	99971 0800	Washer, Spring	2		
47	0866 61 541	Valve, Check	1		Ⓝ
48	0866 61 542	Connector	1		Ⓝ
49	99564 1000	Gasket	1		
50	0866 61 543A	Hose No. 1, Vacuum	1		Ⓝ
51	1622 61 545	Stabilizer Amplifier	1		Ⓝ
52	1622 61 546	Harness	1		Ⓝ
53	1524 61 547	Wire	1		Ⓝ
54	1622 61 548	Bracket	1		Ⓝ

No.	Part Number	Description	Q'ty	Remarks
55	0866 61 549	Spacer	1	Ⓝ
56	0866 61 551	Grille	1	Ⓝ
57	0866 61 552	Holder	2	Ⓝ
58	99868 0408	Screw, Tapping	4	
59	1622 61 561	Duct, Air	2	Ⓝ
60	1622 61 565	Cover (R), Duct	1	Ⓝ
61	1622 61 566	Bracket, Cover	4	Ⓝ
62	1622 61 567	Bracket	1	Ⓝ
63	1622 61 568	Cover (R), Ventilator	1	Ⓝ
	1622 61 578	Cover (L), Ventilator	1	Ⓝ
64	99806 0620	Bolt, Cover	6	
	99952 0600	Washer, Plain	6	
	99971 0600	Washer, Spring	6	
65	1622 61 569	Spacer	2	Ⓝ
66	1622 61 572	Bracket	2	Ⓝ
67	1622 61 575	Cover (L), Duct	1	Ⓝ
68	99833 0525	Screw, Cover	2	
	99952 0500	Washer, Plain	2	
	99971 0500	Washer, Spring	2	
69	99868 0410	Screw, Cover	10	

	No.	Part Number	Description	Q'ty	Remarks	
●	70	~~1622 66 580~~	~~Panel, Control~~	~~1~~		Ⓝ
●		1622 61 580	Panel, Control	1	From Car No. 1	
	71	99833 0310 B	Screw	2		
		99952 0300	Washer, Plain	2		
		99971 0300	Washer, Spring	2		
	72	99833 0512 B	Screw	2		
		99952 0500	Washer, Plain	2		
		99971 0500	Washer, Spring	2		
	73	99868 0520	Bolt	5		
		99952 0500	Washer, Plain	5		
		99971 0500	Washer, Spring	5		
	74	0371 61 612	Cushion	1		Ⓝ
●		1540 61 476	Protector	1	73/11~○	Ⓝ
	75	1128 61 911	Packing No. 1	1		Ⓝ
	76	1128 61 912	Packing No. 2	1		Ⓝ
	77	1128 61 913	Packing No. 3	1		Ⓝ
	78	1620 61 920	Sealer	2		Ⓝ
●	79	~~0820 78 857~~	~~Clip~~	~~2~~		Ⓝ
●		0259 78 857	Clip	2	From Car No. 1	
●	80	0259 78 858	Packing	2 3	73/11~Q'ty	Ⓝ
●	81	0259 78 868	Clip	1 3	74/4~Q'ty	Ⓝ
	82	0208 76 875	Grommet	1		Ⓝ
	83	0820 78 883	Grommet	1		Ⓝ
	84	99863 0620	Bolt	4		
		99952 0600	Washer, Plain	4		

No.	Part Number	Description	Q'ty	Remarks
	99971 0600	Washer, Spring	4	
85	99806 0616	Bolt	1	
	99952 0600	Washer, Plain	1	
	99971 0600	Washer, Spring	1	
86	1531 61 140	Blower	1	
87	1568 61 190 C	Control	1	
88	0866 61 195B	Panel, Control	1	
89	99805 0830	Bolt, Control Case	4	
	99952 0800	Washer, Plain	4	Heater Less
	99971 0800	Washer, Spring	4	
90	99833 0512	Screw, Control	3	
	99971 0500	Washer, Spring	3	
91	99906 0800	Nut	1	
	99952 0822	Washer, Plain	1	
	99971 0800	Washer, Spring	1	
● 92	1114 61 582 A	Wire	1	74/7 ~ Added Anew
● 93	99295 1506	Clip	1	74/1 ~ Added Anew
● 94	99971 0600	Washer, Spring	1	
● 95	0317 78 034	Collar	1	73/10 ~ Added Anew

COMPRESSOR (CAR COOLER)

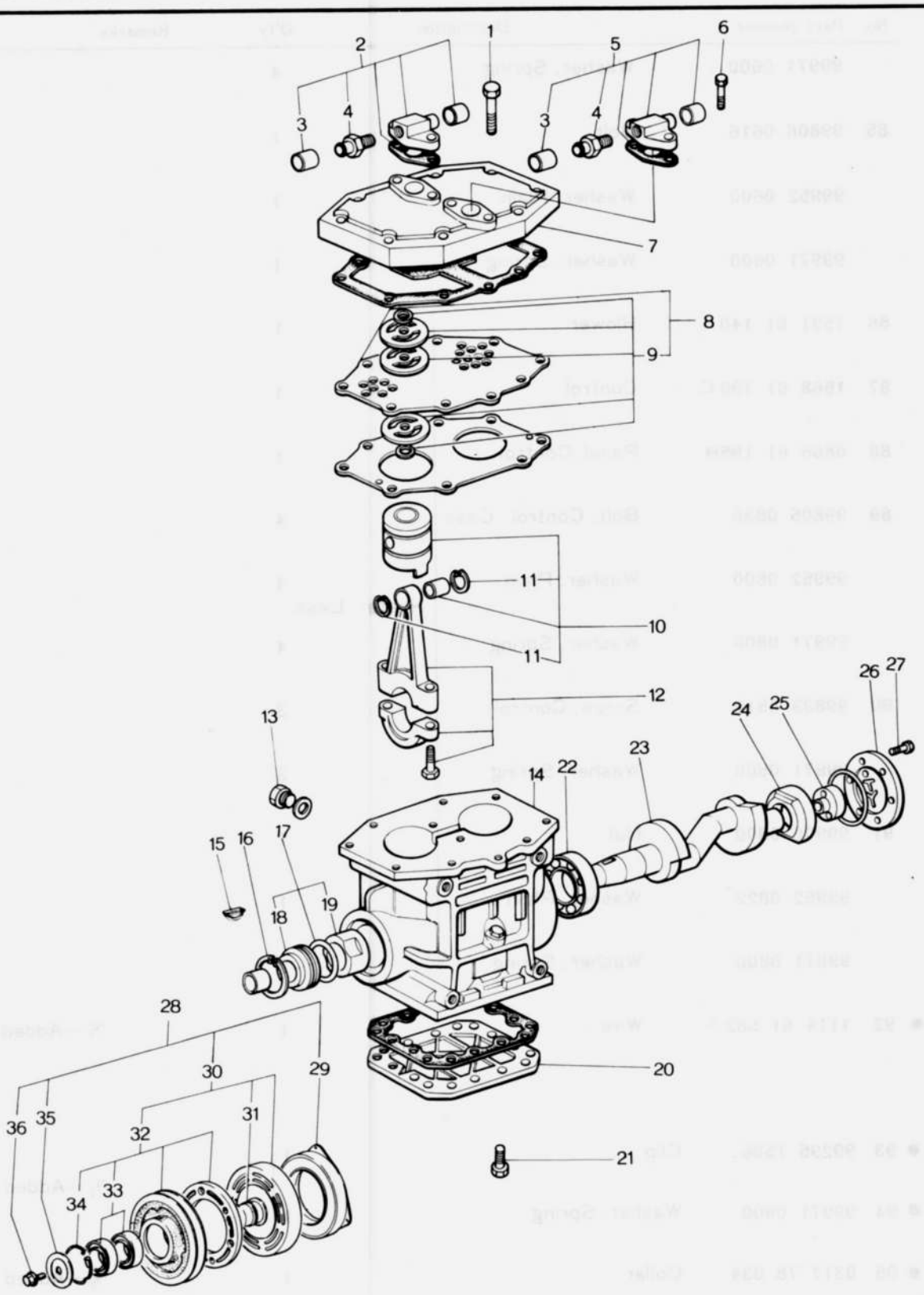

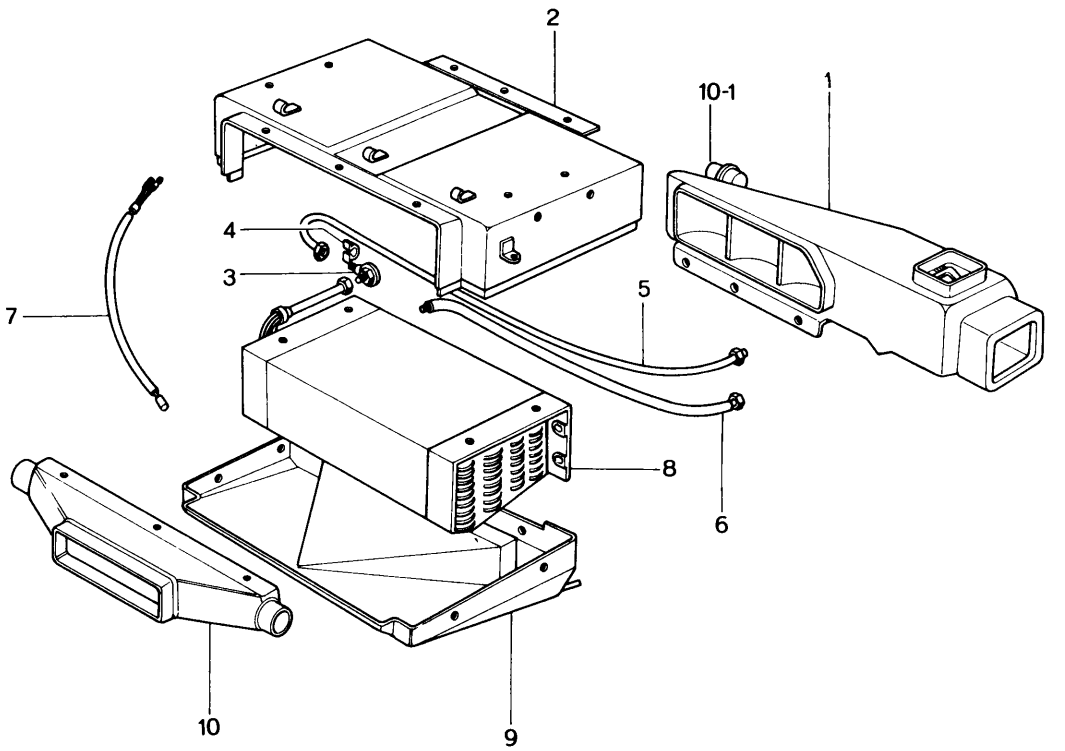
2
10-1
1
4
3
5
7
8
6
10
9

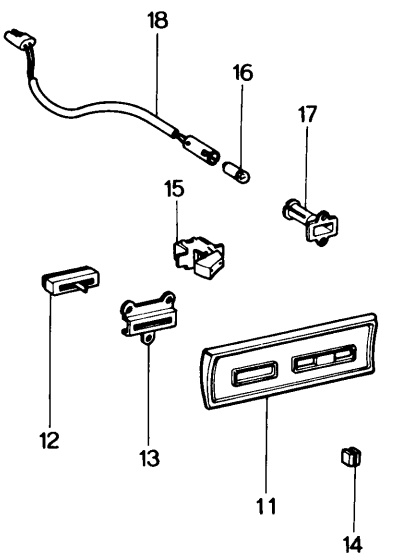
18
16
17
15
12
13
11
14

No.	Part Number	Description	Q'ty	Remarks	
		Ⓝ mark indicates Nipon Denso make			
	1622 61 520	Cooler Unit	1		Ⓝ
●	1608 61 520	Cooler Unit (U.S.A.)	1	74/11～△	Ⓝ
1	1524 76 701	Duct, Air	1		Ⓝ
2	1622 76 702	Case, Main	1		Ⓝ
3	0370 76 703	Valve, Expansion	1		Ⓝ
4	0370 76 704	Holder, Valve	1		Ⓝ
5	1524 76 705	Pipe No. 1	1		Ⓝ
6	1524 76 706	Pipe No. 2	1		Ⓝ
7	0370 76 707	Thermister	1		Ⓝ
8	1622 76 708	Evaporator	1		Ⓝ
9	1622 76 709	Case, Main	1		Ⓝ
10	1622 76 717	Duct, Air	1		Ⓝ
● 10-1	0866 76 719	Actuator	1	73/10～ Added Anew	Ⓝ
	1622 61 580	Panel Ass'y, Control	1		Ⓝ
11	1622 76 901	Panel, Control	1		Ⓝ
12	1622 76 902	Resistor, Variable	1		Ⓝ
13	1622 76 903	Bracket, Switch	1		Ⓝ
14	1622 76 904	Knob, Control	1		Ⓝ
15	1622 76 905	Switch, Snap	1		Ⓝ
16	1622 76 906	Valve	1		Ⓝ
17	1622 76 907	Socket, Valve	1		Ⓝ
18	1622 76 908	Holder, Valve	1		Ⓝ

BACK DOOR (STATION WAGON)

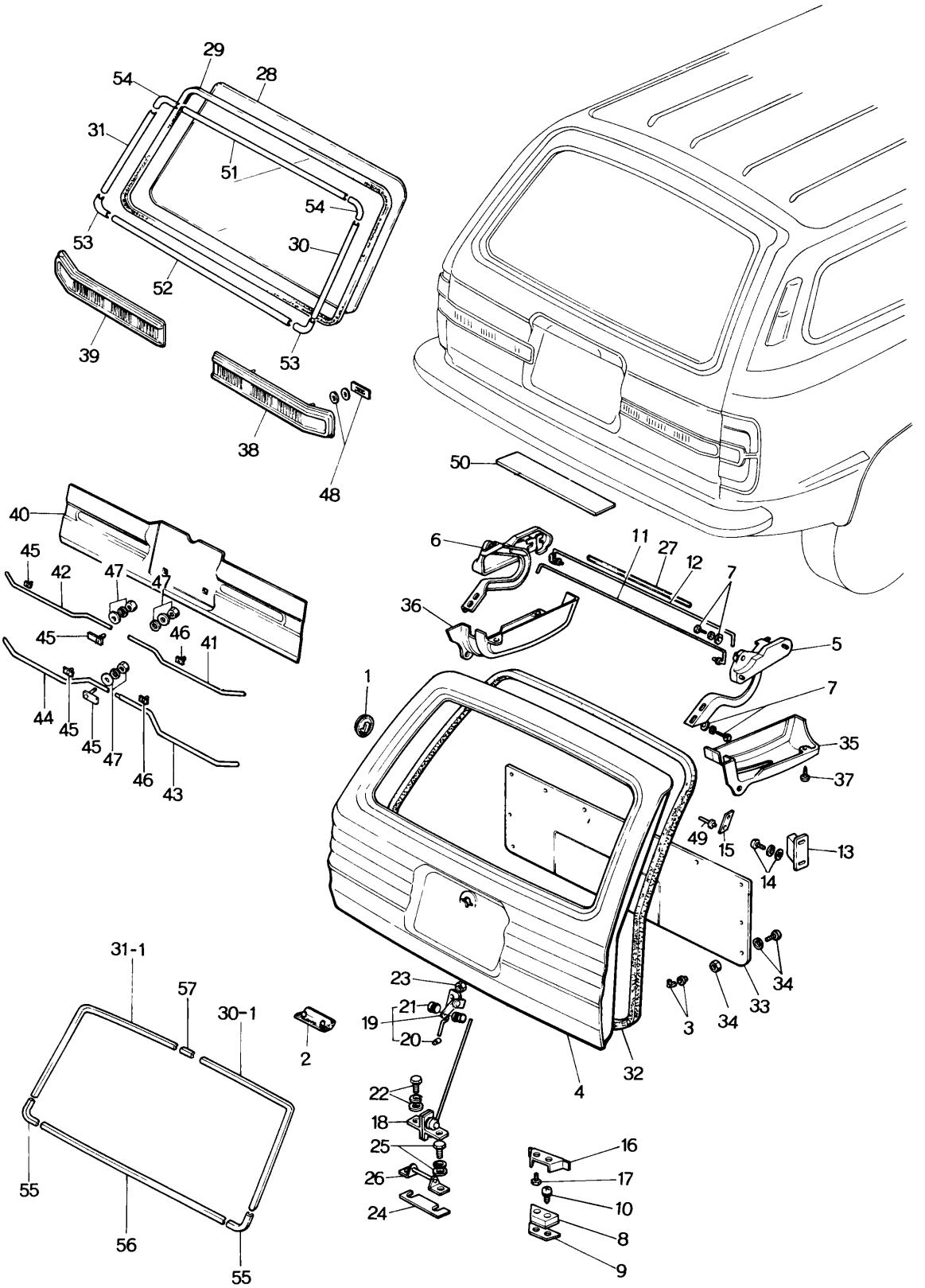

No.	Part Number	Description	Q'ty	Remarks
1	0136 58 112	Hole Cover, Switch	2	
2	0305 58 872	Valve, Check	2	
3	0208 58 921	Fastener	2	
	0187 58 922	Fastener, Seal	2	
● 4	1571 62 510A	Door, Back	1	Ord. By 1528 62 510F
●	1571 62 510B	Door, Back	1	Ord. By 1528 62 510G & 99940 0602 ⁷⁴/₁₁～△
5 ·	0585 62 610	Hinge (R)	1	
6	0585 63 610	Hinge (L)	1	
7	99781 0820	Bolt, Hinge	4	
	99951 0818	Washer, Plain	4	
	99971 0800	Washer, Spring	4	
8	0621 62 640A	Wedge	2	
9	0621 62 641	Shim, Adjust-Wedge	2	Selective use
	0621 62 642	Shim, Adjust-Wedge	4	Selective use
10	99836 0620	Screw	4	
	99974 0600	Washer, Toothed	4	
	99975 0600	Washer, Toothed	1	
11	0585 62 650C	Spring (R), Balance	1	
12	0585 63 650C	Spring (L), Balance	2	
13	0585 62 671A	Wedge, Upper	4	
14	99765 0616	Screw	4	

No.	Part Number	Description	Q'ty	Remarks
	99952 0600	Washer, Plain	4	
	99971 0600	Washer, Spring	4	
15	0585 62 672A	Protector	2	
16	0585 62 695	Wedge	2	
●	0585 62 690	Wedge	2	74/11~×
17	99833 0614	Screw, Wedge	4	
	99974 0600	Washer, Toothed	4	
	99975 0600	Washer, Toothed	4	
18	0585 62 710B	Lock, Back Door	1	
19	0585 62 720D	Control, Remote	1	
20	0866 58 313	Joint	1	
21	0824 58 546A	Bush	1	
22	99806 0618	Bolt, Back Door Lock	2	
	99971 0600	Washer, Spring	2	
23	99940 0602	Nut, Flange	2	
24	0585 62 741	Plate, "A" - Adjust (t=2.0)	1	Selective use
	0585 62 742	Plate, "B" - Adjust (t=1.0)	1	
25	99806 0618	Bolt, Striker	2	
	99951 0618	Washer, Plain	2	

No.	Part Number	Description	Q'ty	Remarks
	99971 0600	Washer, Spring	2	
26	0585 62 750	Striker	1	
27	0621 62 792	Pipe	1	
● 28	~~1528 62 801 A~~	~~Glass, Back Window (Transparent)~~	~~1~~	
●	1528 62 801	Glass, Back Window (Transparent)	1	From Car No. 1
●	~~1528 62 801 A~~	~~Glass, Back Window (Transparent)~~	~~1~~	With Heatable Wire
●	1529 62 801	Glass, Back Window (Transparent)	1	With Heatable Wire From Car No. 1
●	1901 62 801	Glass, Back Window (Transparent)	1	74/7~△
●	~~1544 62 801 A~~	~~Glass, Back Window~~	~~1~~	
●	1544 62 801	Glass, Back Window	1	From Car No. 1
●	~~1545 62 801 A~~	~~Glass, Back Window~~ (Blue Pane)	~~1~~	~~With Heatable Wire~~
●	1545 62 801	Glass, Back Window (Blue Pane)	1	With Heatable Wire From Car No. 1
●	1889 62 801	Glass, Back Window (Blue Pane)	1	74/7~×
● 29	~~0585 62 802 A~~	~~Weatherstrip~~	~~1~~	
●	0585 62 802	Weatherstrip	1	From Car No. 1
●	0585 62 802 A	Weatherstrip	1	73/12~×
● 30	0585 62 823 A	Mould (R)	1	
● 30-1	0585 62 823 C	Mould (R)	1	73/12~×
● 31	0585 63 823 A	Mould (L)	1	
● 31-1	0585 62 823 C	Mould (L)	1	73/12~×

BACK DOOR (STATION WAGON)

No.	Part Number	Description	Q'ty	Remarks
● 32	0585 62 831 A	Weatherstrip	1	
●	0585 62 831 B	Weatherstrip	1	74/1～○
● 33	1624 62 851 12	Trim, Back Door (BRN)	1	
●	1624 62 851 35	Trim, Back Door (BRN) (Canada)	1	75/1～×
●	1624 62 851 03	Trim, Back Door (BLK)	1	From Car No. 1
●	1624 62 851 13	Trim, Back Door (GRY/YLW)	1	From Car No. 1
34	99862 0416 B	Screw, Back Door Trim	6	Selective use
	99862 0416 C	Screw, Back Door Trim	6	Selective use
	99967 0400 A	Washer, Plain	6	Selective use
	99967 0400 B	Washer, Plain	6	Selective use
	99910 0401	Grommet	6	
35	0585 62 871 C	Cover (R), Hinge	1	
36	0585 63 871 C	Cover (L), Hinge	1	
37	99864 0516 C	Screw, Hinge Cover	6	
38	0585 62 940 A	Finisher (R), Tail	1	
39	0585 63 940 A	Finisher (L), Tail	1	
40	0899 62 955 B	Film, Decoration	1	
41	0899 62 961	Moulding (R), Upper	1	
42	0899 62 962 A	Moulding (L), Upper	1	
43	0899 62 963	Moulding (R), Lower	1	

No.	Part Number	Description	Q'ty	Remarks
44	0899 62 964	Moulding (L), Lower	1	
45	0899 62 970	Bolt, Moulding	3	
46	0899 62 975 A	Clip	10	
47	99906 0300	Nut, Decoration Film	3	
	99952 0300	Washer, Plain	3	
	99971 0300	Washer, Spring	3	
48	0305 68 951	Packing	4	
	0305 68 952	Washer	4	
	99579 4000	Nut, Speed	4	
49	0223 69 032	Rivet, Blind-Protector	4	
50	0603 69 323 A	Cushion	1	
51	0585 62 821 A	Mould, Upper	1	
52	0585 62 822 A	Mould, Lower	1	
53	0585 62 825 B	Mould, Corner-Lower	2	73/12~Discarded
54	0585 62 824 B	Junction	2	
55	0483 70 804	Junction	2	
56	0585 62 826	Mould	1	73/12~Added Anew
57	0585 62 828	Joint, Mould	1	

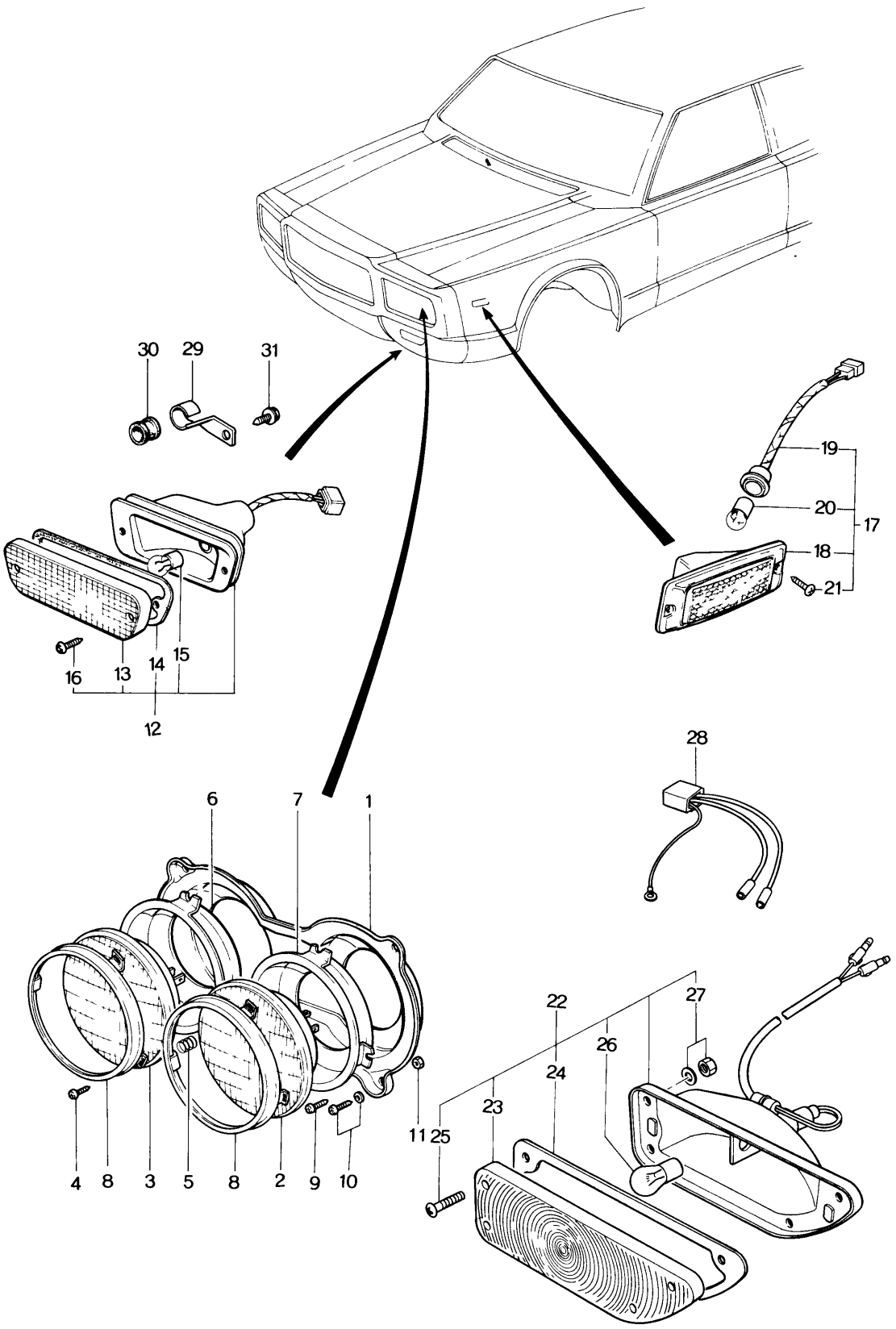
30
29
31
19
20
17
18
21
16
13
14
15
12
28
6
7
1
22
27
26
24
23
11
25
4
8
3
5
8
2
9
10

No.	Part Number	Description	Q'ty	Remarks
● 1	~~1893 66 031~~	~~Housing (R)~~	~~1~~	
●	1893 66 031 A	Housing (R)	1	From Car No. 1
●	~~1893 66 061~~	~~Housing (L)~~	~~1~~	
●	1893 66 061 A	Housing (L)	1	From Car No. 1
● 2	1668 66 032	Beam, Sealed ("Plus 25" Lower & Upper Beam 12 V 60 / 37.5 W)	2	
● 3	1668 66 031	Beam, Sealed (Upper Beam 12 V 37.5 W)	2	
4	0275 87 007	Screw	12	
5	2850 87 012	Spring	4	
6	0727 87 012	Holder Type 2	1	
	0727 87 022	Holder Type 2	1	
7	0727 87 013	Holder Type 1	1	
	0727 87 023	Holder Type 1	1	
8	0727 87 014	Holder, Lamp	4	
9	0727 87 016	Screw, Adjust	8	
10	99860 0616	Screw, Head Lamp	8	
●	~~99952 6000~~	~~Washer, Plain~~	~~8~~	
●	99952 0816	Washer, Plain	8	From Car No. 1
11	99910 0601	Nut	8	
● 12	1755 89 662	Lamp (R), Front Turn Signal	1	(1974 Model)
●	1755 89 667	Lamp (L), Front Turn Signal	1	(1974 Model)

LAMPS (FRONT)

No.	Part Number	Description		Q'ty	Remarks
● 13	1755 51 061	Lens (R)	(1974 Model)	1	
●	1755 51 071	Lens (L)		1	
● 14	1755 51 063	Gasket (R)		1	
●	1755 51 073	Gasket (L)		1	
● 15	99701 4278	Bulb		2	
● 16	99835 0625C	Screw		4	
17	1540 89 663	Lamp (R), Front Side Marker		1	
	1540 89 668	Lamp (L), Front Side Marker		1	
18	1540 66 481	Lamp Unit (R)		1	
	1540 66 491	Lamp Unit (L)		1	
19	1540 66 482	Socket		2	
20	99701 2080	Bulb		2	
21	99769 0414	Screw, Tapping		4	
● 22	1854 89 662	Lamp (R), Front Turn Signal	(1975 Model)	1	
●	1854 89 667	Lamp (L), Front Turn Signal		1	
● 23	2244 87 031	Globe (R)		1	
●	2244 87 032	Globe (L)		1	
● 24	0259 66 094A	Gasket (R)		1	

No.	Part Number	Description		Q'ty	Remarks
●	0259 66 114	Gasket (L)		1	
● 25	0259 66 095	Screw, Lamp Globe		8	
● 26	99701 4278	Bulb		2	
● 27	99906 0500	Nut, Front Turn Signal Lamp	(1975 Model)	4	
●	99952 0500	Washer, Plain		4	
● 28	3625 66 105	Harness, Joint		2	
● 29	4899 10 262	Clip, Front Turn Signal Lamp Cord		2	From Car No. 1
● 30	99686 0700	Protector		2	
● 31	99786 0616	Screw		2	

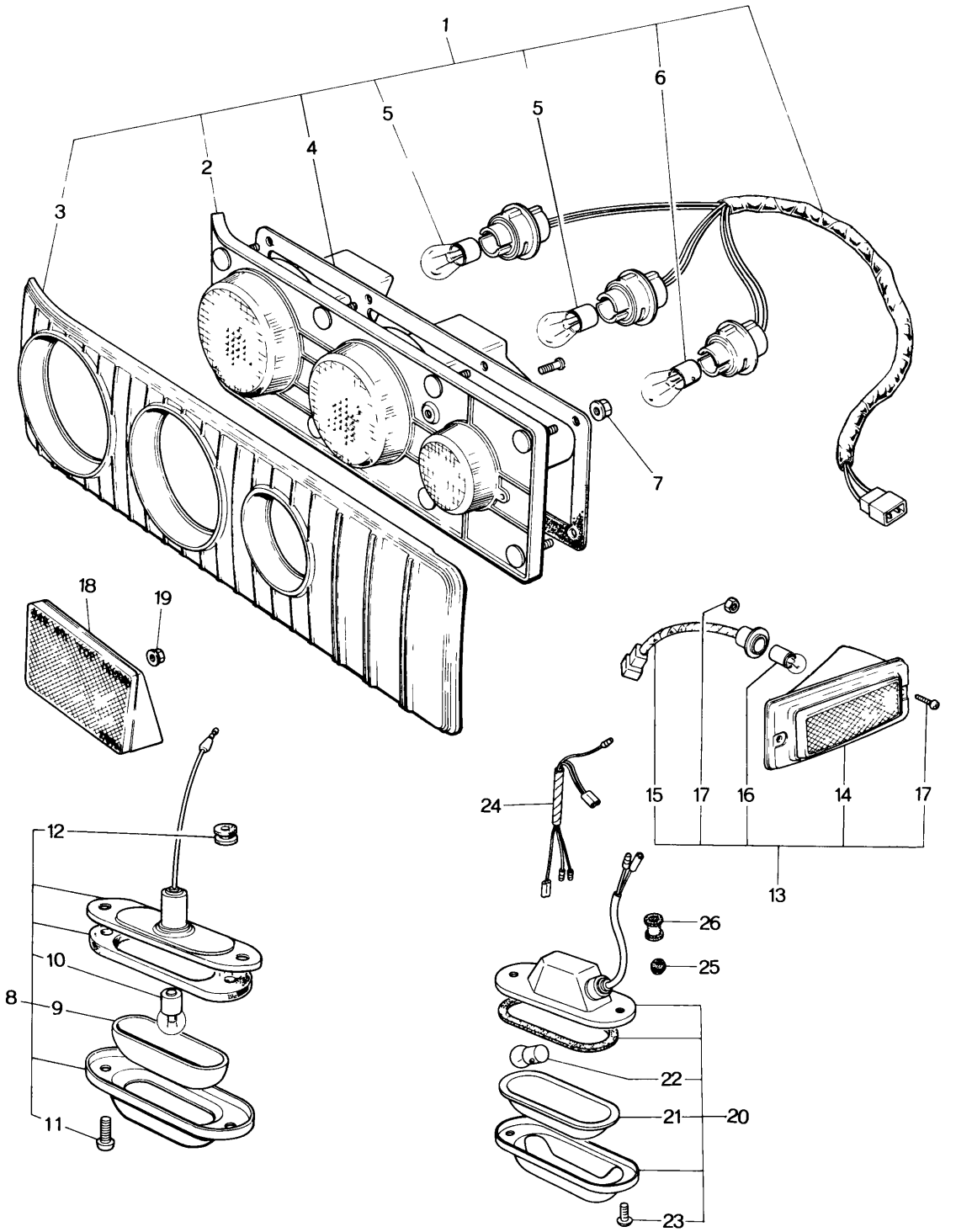
1
2
3
4
5
5
6
7
8
9
10
11
12
13
14
15
16
17
17
18
19
20
21
22
23
24
25
26

No.	Part Number	Description	Q'ty	Remarks
1	1881 89 664	Lamp (R), Rear Combination	1	
	1881 89 669	Lamp (L), Rear Combination	1	
2	1570 66 211	Unit (R)	1	
	1570 66 231	Unit (L)	1	
3	0866 66 212-15	Rim (R)	1	
	0866 66 232-15	Rim (L)	1	
4	0866 66 213	Packing	2	
	0866 66 214	Packing	2	
5	99701 4278	Bulb	4	
6	99701 3270	Bulb	2	
7	99940 0502	Nut	18	
● 8	1755 89 665	Lamp Set, Licence	1	(1974 Model)
● 9	0866 66 372	Lens	1	
● 10	99701 2070	Bulb	1	
● 11	0305 87 032	Screw	2	
● 12	99684 0600	Protector	1	
13	1540 89 673	Lamp (R), Rear Side Marker	1	
	1540 89 678	Lamp (L), Rear Side Marker	1	
14	1540 66 501	Lens & Body (R)	1	

No.	Part Number	Description	Q'ty	Remarks
	1540 66 511	Lens & Body (L)	1	
15	1540 66 482	Socket	2	
16	99701 2080	Bulb	2	
17	99774 0416	Screw, Rear Side Marker	4	
	99940 0400	Nut	4	
18	1570 66 700	Reflector (R), Reflex-Rear	1	
●	1881 66 700	Reflector (R), Reflex-Rear	1	74/3 ~ △
	1570 66 710	Reflector (R), Reflex-Rear	1	
●	1881 66 710	Reflector (L), Reflex-Rear	1	74/3 ~ △
19	99940 0500	Nut, Reflex Reflector	4	
● 20	3625 89 665	Lamp Set, Licence	2	
● 21	3625 66 373	Lens	2	
● 22	99701 2080	Bulb	2	
● 23	99864 0420 C	Screw	4	(1975 Model)
● 24	3625 66 355	Harness, Joint	1	
● 25	0111 41 692	Protector, Licence Lamp	2	
● 26	99681 1503	Protector, Licence Lamp Cord	2	

LAMPS (REAR, STATION WAGON)

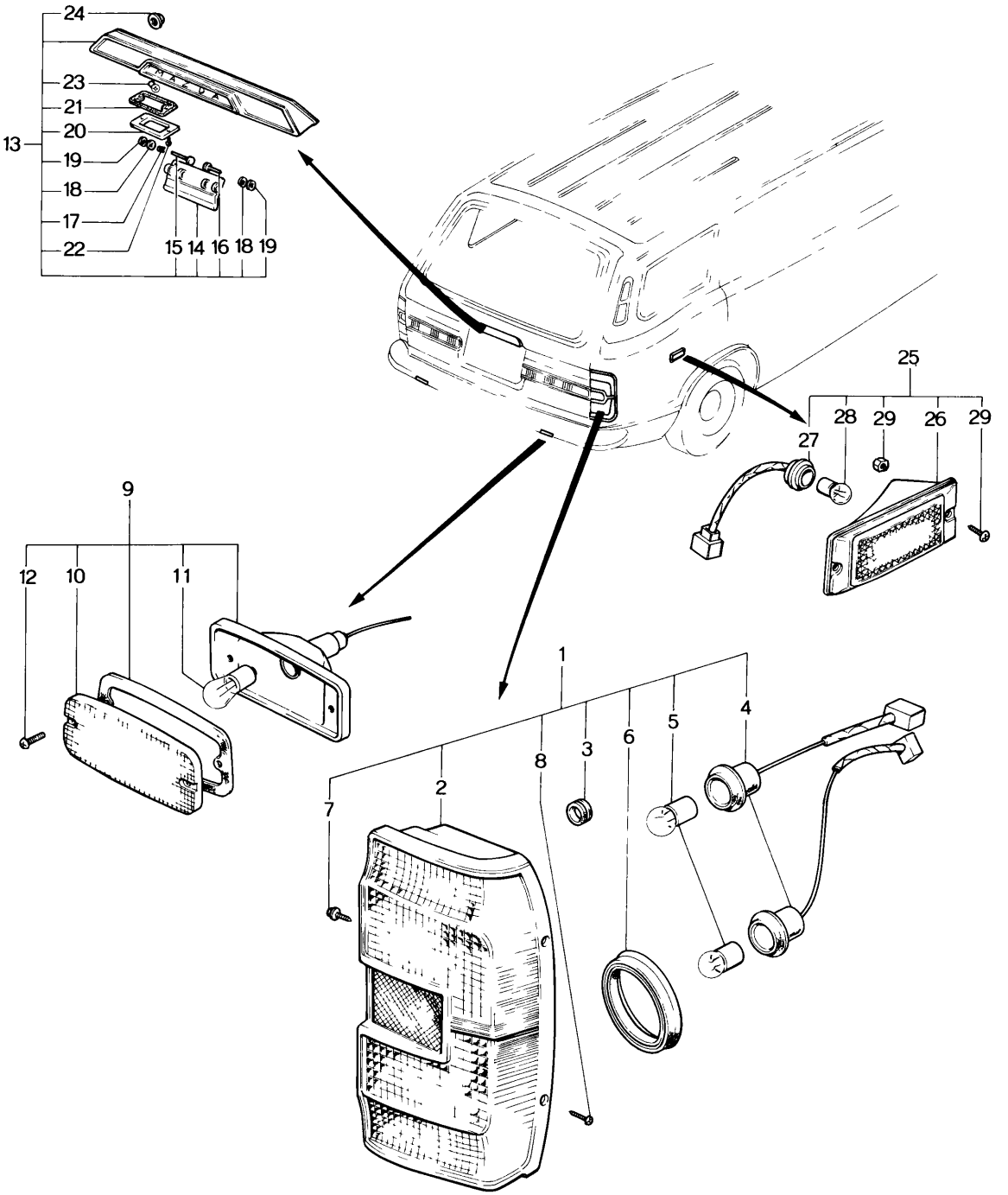

No.	Part Number	Description	Q'ty	Remarks
1	1889 89 664	Lamp (R), Rear Combination	1	
	1889 89 669	Lamp (L), Rear Combination	1	
2	0585 66 211	Lens & Body (R)	1	
	0585 66 231	Lens & Body (L)	1	
	0585 66 219	Lens Only (R) (Included in 0585 66 211)	1	
	0585 66 239	Lens Only (L) (Included in 0585 66 231)	1	
3	1529 66 212	Grommet	2	
4	0585 66 213	Cord & Socket No. 1	4	
5	99701 4278	Bulb (12V $^{23}/_{8}$W)	4	
● 6	~~0585 66 215~~	~~Gasket No. 1~~	~~2~~	From Car No. 1
●	~~0585 66 216~~	~~Gasket No. 2~~	~~2~~	From Car No. 1
7	99833 0616	Screw, Rear Combination Lamp	4	
	99952 0600	Washer, Plain	4	
	99971 0600	Washer, Spring	4	
8	99767 0525	Screw, Tapping-Rear Combination Lamp	4	
	99896 0500	Nut, Spring	2	
9	1889 89 654	Lamp, Reverse	2	
●	1889 89 654A	Lamp, Reverse	2	$^{73}/_{11}$~△
● 10	~~0710 81 103~~	~~Lens~~	~~2~~	
●	0710 87 103	Lens	2	From Car No. 1

LAMPS (REAR, STATION WAGON)

No.	Part Number	Description	Q'ty	Remarks
11	99700 8120	Bulb (12V 23W)	2	
12	99833 0416	Screw	4	
●	99768 0420	Screw, Tapping	4	74/12~○
● Ⓝ	99910 0401	Grommet	4	74/11~Added Anew
13	0585 89 665	Lamp & Handle	1	
14	0585 66 373	Handle	1	
15	0585 66 374	Pin No. 1, Hinge	1	
16	0585 66 375	Pin No. 2, Hinge	1	
17	0585 66 376	Spring, Return	1	
18	0111 58 443	Washer	2	
19	99575 0400	Snap, Ring	2	
20	0585 66 377	Lens	2	
21	0585 66 378	Packing	2	
22	99773 0410	Screw	4	
23	99701 2080	Bulb (12V 5W)	2	
24	99940 0602	Nut, Flange-Lamp & Handle	4	
25	1540 89 673	Lamp (R), Side Marker	1	
	1540 89 678	Lamp (L), Side Marker	1	
26	1540 66 501	Unit (R), Lamp	1	
	1540 66 511	Unit (L), Lamp	1	

No.	Part Number	Description	Q'ty	Remarks
27	1540 66 482	Socket	2	
28	99701 2080	Bulb (12 V 8 W)	2	
● 29	~~88774 0416~~	~~Screw, Tapping-Side Marker Lamp~~	~~4~~	
●	99769 0416	Screw, Tapping-Side Marker Lamp	4	From Car No. 1
	99940 0400	Nut	4	

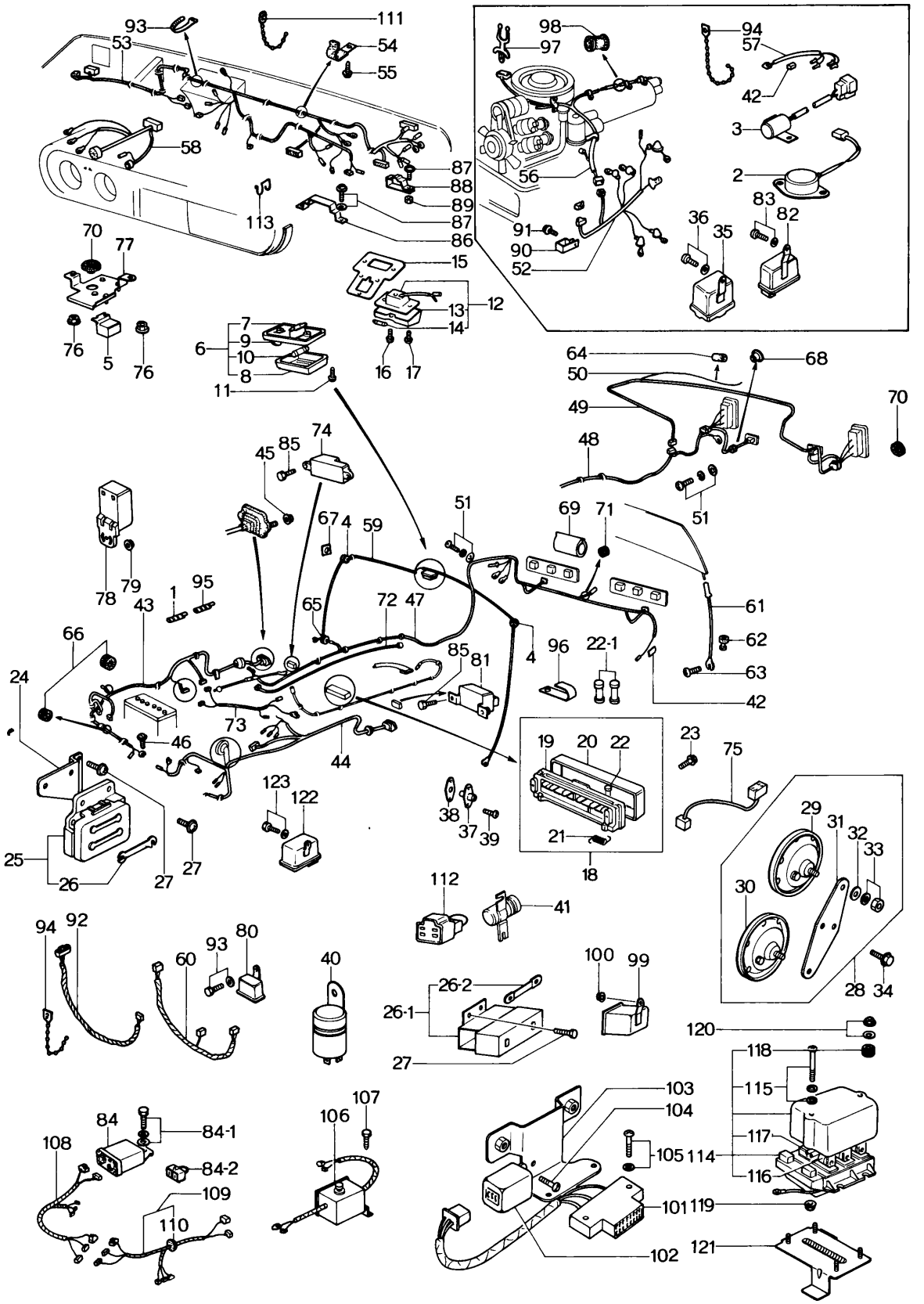
93
53
111
54
55
58
87
88
89
87
86
113
98
97
56
91
90
52
94
57
42
3
2
83
82
36
35
70
77
76
5
76
15
13
12
14
16
17
7
9
10
8
6
11
64
50
68
49
70
48
51
74
45
85
67
4
59
51
69
71
78
79
1
95
43
65
72
47
61
62
63
42
66
24
73
46
44
85
81
4
96
22-1
19
20
22
23
75
21
18
123
122
38
37
39
25
26
27
27
112
41
29
31
32
33
30
28
34
94
92
60
93
80
40
100
99
26-2
26-1
27
120
118
115
117
116
84
84-1
84-2
108
109
110
107
106
103
104
105
114
101
119
102
121

No.	Part Number	Description	Q'ty	Remarks
1	0823 18 111	Supporter, Engine Harness & Battery Earth Wire Cable	1	
2	1114 18 890A	Switch, Thermo	1	
3	2329 18 930B	Detector, Thermo	1	
4	0114 43 625	Protector, Interior Lamp Cord	2	
● 5	0820 60 870A	Relay, Wiper Switch	1	74/11~ Discarded
6	0390 66 410	Lamp, Interior	1	
7	0390 66 411	Body	1	
8	0398 66 412	Lens	1	
9	0398 66 413	Knob	1	
10	99701 5050	Bulb	1	
11	99838 0514	Screw, Interior Lamp	2	
●	99838 0510	Screw, Interior Lamp	2	74/5~△
12	1650 66 620	Lamp, Warning-Seat	1	
13	1650 66 621	Lens	1	
14	99701 5050	Bulb	1	
15	1540 66 630	Bracket, Warning Lamp	1	

No.	Part Number	Description	Q'ty	Remarks
16	99868 0308B	Screw, Lens	1	
●	99863 0310B	Screw, Lens	1	74/3～○
17	99869 0412	Screw, Tapping	2	
18	0862 66 730	Block, Fuse	1	
●	1175 66 730	Block, Fuse	1	74/7～△
19	0862 66 731	Body	1	
20	0862 66 732	Cover	1	
●	1175 66 732	Cover	1	74/7～△
21	0866 66 733	Spring, Return	1	
● 22	99706 0110	Fuse (10A)	7 6	 73/12～Q'ty
●	99706 0115	Fuse (15A)	3 2	 73/10～Q'ty
●	99706 0120	Fuse (20A)	3 2 3	73/12～Q'ty 74/7～Q'ty
● 22-1	1011 66 130	Fuse, Spare	1	73/12～ Added Anew
23	99833 0625	Screw, Fuse Block	2	
	99971 0600	Washer, Spring	2	
● 24	1128 66 750	Bracket, Main Fuse Block (1974 Model)	1	
● 25	1708 66 760	Block, Main Fuse (1974 Model)	1	

No.	Part Number	Description	Q'ty	Remarks
● 26	2852 66 763	Fuse (50A) } (1974 Model)	2	
●	1708 66 765	Fuse (2 A) } (1974 Model)	1	
● 26-1	0865 66 760	Block, Main Fuse	1	74/11 ~ Added Anew
● 26-2	2852 66 763	Fuse (50A)	2	74/11 ~ Added Anew
● 27	99786 0612	Screw, Tapping-Main Fuse Block (1974 Model)	2	
	99786 0620	Screw, Tapping	2	
28	0865 66 780	Horn, Electric (High Tone & Low Tone)	1	
29	0865 66 790	Horn (High Tone)	1	
30	0865 66 800	Horn (Low Tone)	1	
31	0865 66 805	Holder	1	
32	0865 66 809	Washer, Holder	2	
33	99906 0600	Nut	2	
	99971 0600	Washer, Spring	2	
34	99801 0820	Bolt, Electric Horn	2	
	99971 0800	Washer, Spring	2	
● 35	1524 66 810	Relay, Horn (1974 Model)	1	

No.	Part Number	Description	Q'ty	Remarks
● 36	99797 0612	Bolt, Horn Relay } (1974 Model)	1	
●	99971 0600	Washer, Spring } (1974 Model)	1	
37	0209 66 820	Switch, Door	2	
38	0209 66 821	Washer, Adjust-Door Switch	4	
39	99864 0412	Screw, Door Switch	4	
● 40	1881 66 830	Unit, Flasher } (1974 Model)	1	
● 41	1881 66 840	Unit, Hazard } (1974 Model)	1	
● 42	0208 66 949	Pad, Protector-T/mission Harness (Sedan & Coupe)	5	(1974 Model)
		Pad, Protector-T/mission Harness (Station Wagon)	12	(1974 Model)
		Pad, Protector-T/mission Harness (Station Wagon)	8	(1975 Model)
43	1881 67 010	Harness, Wiring (Frt., R)	1	
●	3625 67 010A	Harness, Wiring (Frt., R)	1	74/11～×
44	1881 67 020	Harness, Wiring (Frt., L)	1	
●	3625 67 020A	Harness, Wiring (Frt., L)	1	74/11～×
45	99940 0600	Nut, Wire Harness Front	4	
46	99833 0812	Screw, Wire Harness Front Earth	1	
	99952 0800	Washer, Plain	1	
	99971 0800	Washer, Spring	1	
47	1881 67 030A	Harness, Wire (Rr.) (Sedan & Coupe)	1	
●	1881 67 030B	Harness, Wire (Rr.) (Sedan & Coupe)	1	74/7～△
●	3625 67 030A	Harness, Wire (Rr.) (Sedan & Coupe)	1	74/11～×
48	1889 67 030A	Harness No. 1, Wire (Rr.) (Station Wagon)	1	

No.	Part Number	Description		Q'ty	Remarks
●	1889 67 030B	Harness No. 1, Wire (Rr.)		1	74/7～△
●	3629 67 030A	Harness No. 1, Wire (Rr.)		1	74/11～×
49	1889 67 035A	Harness No. 2, Wire (Rr.)		1	
●	1889 67 035B	Harness No. 2, Wire (Rr.)	(Station Wagon)	1	74/7～△
● 50	~~0585 67 036~~	~~Wire, Licence Lamp~~		~~1~~	
●	0585 67 036A	Wire, Licence Lamp		1	From Car No. 1
●	0585 67 030B	Wire, Licence Lamp		1	74/7～△
51	99833 0616	Screw		1	
●	99806 0616	Screw	(Sedan & Coupe)	1	74/9～○
	99952 0600	Washer, Plain		1	
	99971 0600	Washer, Spring		1	
	99833 0612	Screw		2	
	99952 0600	Washer, Plain	(Station Wagon)	2	
	99971 0600	Washer, Spring		2	
● 52	1881 67 040A	Harness, Wiring-Ignition Coil Relay (1974 Model)		1	
● 53	~~1881 67 050A~~	~~Harness, Wiring-Meter Panel~~		~~1~~	
●	1881 67 050C	Harness, Wiring-Meter Panel		1	From Car No. 1
●	1881 67 050G	Harness, Wiring-Meter Panel		1	74/2～△
●	3625 67 050B	Harness, Wiring-Meter Panel		1	74/11～×
54	0866 67 059	Clip, Wiring Harness (Panel)		4	

	No.	Part Number	Description	Q'ty	Remarks
	55	99863 0512	Screw, Clip	4	
●		99865 0512	Screw, Clip	4	74/3~○
		99952 0500	Washer, Spring	4	
●	56	~~1881 67 060~~	~~Harness, Wiring-Engine~~	~~1~~	
●		1881 67 060A	Harness, Wiring-Engine	1	From Car No. 1
●		1881 67 060B	Harness, Wiring-Engine	1	73/11~△
●		3625 67 060	Harness, Wiring-Engine	1	74/11~×
	57	1881 67 065	Harness, Wiring-T/mission (Manual)	1	
●		1881 67 065A	Harness, Wiring-T/mission (Manual)	1	74/7~×
	58	1881 67 070	Harness, Wiring-Meter	1	
●		1883 67 070	Harness, Wiring-Meter	1	74/7~△
●		3625 67 070A	Harness, Wiring-Meter	1	74/11~×
	59	1540 67 080B	Cord, Interior Lamp	1	
	60	1881 67 120A	Harness, Wiring-Emission	1	
●		3625 67 120	Harness, Wiring-Emission (U.S.A.)	1	74/11~×
●		3631 67 120	Harness, Wiring-Emission (Canada)	1	75/1~×
	61	0866 67 133	Cord, Back Window-Heating Wire use (Sedan & Coupe)	1	
●		1881 67 133	Cord, Back Window-Heating Wire use (Sedan & Coupe)	1	74/7~×
		0899 67 133	Cord, Back Window (Station Wagon)	1	
●		1889 67 133	Cord, Back Window (Station Wagon)	1	74/7~×

No.	Part Number	Description	Q'ty	Remarks
62	0114 43 625	Protector, Cord (Sedan & Coupe)	2	
63	99806 0616	Screw, Back Window Cord	1	
	99952 0600	Washer, Plain	1	
	99971 0600	Washer, Spring	1	
64	0585 67 151	Protector, Cord-Wire Harness~Licence Lamp	1	(Station Wagon)
65	0820 67 151	Protector, Cord-Interior Lamp (Sedan & Coupe)	1	
66	0866 67 152	Protector, Cord-Side Turn Signal Lamp	6	
67	0866 67 153A	Pad, Protector	1	
68	0585 67 154	Protector, Licence Lamp Cord & Reverse Lamp Cord	3	(Station Wagon)
● 69	0866 67 155	Protector, Wire (Sedan & Coupe)	~~2~~ 1	From Car No. 1
●	0862 67 155	Protector, Wire (Sedan & Coupe)	1	From Car No. 1
● 70	1524 67 155	Protector, Cord-Relay (Sedan & Coupe)	1	(1974 Model)
		(Station Wagon)	3	
		(Station Wagon)	2	$\frac{74}{11}$~Q'ty
71	0866 67 156	Protector, Cord (Sedan & Coupe)	1	
● 72	~~1757 67 220~~	~~Wiring No. 1, Engine Interlock System~~		
●	1757 67 220B	Wiring No. 1, Engine Interlock System	1	From Car No. 1
● 73	~~1757 67 230~~	~~Wiring No. 2, Engine Interlock System~~		
●	1757 67 230A	Wiring No. 2, Engine Interlock System	1	From Car No. 1
74	1757 67 700	Timer	1	
● 75	1540 67 715	Cord, Relay Unit (Manual)	1	(1974 Model)
●	1541 67 715	Cord, Relay Unit (Automatic)	1	From Car No. 1

	No.	Part Number	Description		Q'ty	Remarks
●		1621 67 715	Cord, Relay Unit (Automatic Canada)		1	74/2～×
●	76	99940 0602	Nut	(1974 Model)	6	
●	77	1524 67 720B	Bracket, Relay		1	
	78	1757 67 720	Buzzer		1	
●		1757 67 720A	Buzzer		1	73/11～△
●	79	99940 0602	Nut, Buzzer		1	74/7～Discarded
●		99940 0600	Nut, Buzzer		1	74/11～Added Anew
	80	1664 67 740	Relay, Choke		1	
●	81	~~1757 67 870~~	~~Unit, Engine Interlock System~~		~~1~~	
●		1907 67 870A	Unit, Engine Interlock System		1	From Car No. 1 73/11～Discarded (Canada)
	82	0839 67 880	Relay, Ingnition Coil		1	
	83	99797 0612	Bolt, Relay		1	
		99971 0600	Washer, Spring		1	
●	84	1757 67 880	Relay, Starter		1	73/11～Discarded (Canada) 74/11～Discarded (U.S.A.)
●	84-1	99833 0630	Screw, Starter Relay	(U.S.A.)	1	
●		99952 0600	Washer, Plain		1	74/7～Added Anew
●		99971 0600	Washer, Spring		1	
●	84-2	1720 67 132	Connector, Short (Canada)		1	73/11～Added Anew
●		1720 67 132	Connector, Short (U.S.A.)		1	74/11～Added Anew
	85	99794 0612	Bolt, Timer & Unit		4	

No.	Part Number	Description		Q'ty	Remarks
● 86	0866 67 905A	Clip, Wiring Harness (Meter) (1974 Model)		1	
87	99869 0512	Screw, Clip		2	
●	99868 0520	Screw, Wiring Harness		2	74/11~△
	99952 0500	Washer, Plain		2	
● 88	1540 67 907	Clip, Dash Panel Upper (1974 Model)		1	
89	99940 0600	Nut, Clip		1	
● 90	0866 67 908	Clip, Ignition Coil Relay Harness	(1974 Model)	1	
● 91	99833 0612	Screw, Clip		1	
●	99952 0600	Washer, Plain		1	
●	99971 0600	Washer, Spring		1	
92	1881 67 925	Harness, Wiring-Choke Relay		1	
● 93	99797 0612	Bolt, Choke Relay		1	
●	99971 0600	Washer, Spring		1	
● 94	99709 2185	Band		6 8	74/11~Q'ty
●	99709 0108	Band		1	From Car No. 1
95	0305 67 994	Supporter, Engine Harness & Battery Positive Cable		1	
96	99295 0406	Clip, Rear Side Marker Lamp		1	
●	99276 1406	Clip, Wire Harness (Rr.)		7 8	74/11~Q'ty
97	99279 1105	Clip, Ignition~Harness		1	
98	99686 1200	Protector, Cord-Engine (Selective use)		4	

No.	Part Number	Description		Q'ty	Remarks	
●	99686 2000	Protector, Cord-Engine (Selective use)		3		74/11～×
● 99	1541 67 730	Relay, Neutral (Automatic)		1	From Car No. 1	
●	1621 67 760	Relay, Neutral (Automatic Canada)		1		74/2～×
●	1701 67 710	Relay, Neutral (Automatic U.S.A.)		1		74/11～×
●	1675 67 760	Relay, Neutral (Automatic Canada)		1		75/1～×
● 100	99940 0602	Nut, Neutral Relay (Automatic)		1	From Car No. 1	
● 101	1911 67 230	Wiring, Belt Warning System	(Canada)	1		73/11～Added Anew
●	1911 67 230A	Wiring, Belt Warning System		1		74/11～△
● 102	1016 67 620	Relay		1		
● 103	1911 67 880	Bracket		1		
● 104	99868 0510	Screw, Tapping		1		73/11～Added Anew
● 105	99868 0525	Screw, Tapping		2		
●	99952 0500	Washer, Plain		2		
● 106	1907 66 210	Switch, Override	(1974 Model U.S.A.)	1		
● 107	99786 0612	Screw, Tapping		2		
● 108	1907 67 230	Wiring, Adapter No. 1		1		74/6～Added Anew
● 109	1881 67 240	Wiring, Adapter No. 2		1		
● 110	1907 67 241	Grommet		1		

No.	Part Number	Description	Q'ty	Remarks
● 111	99709 2185	Band, Wiring	1	74/6~ Added Anew
● 112	3586 67 023	Connector, Short (Manual Canada) (1975 Model)	1	
● 113	3625 67 909	Clip, Harness	1	
● 114	1757 67 560	Unit, Central Control	1	
● 115	0866 67 718	Screw	2	
●	99952 0500B	Washer, Plain	2	
●	99971 0500B	Washer, Spring	2	
● 116	0866 67 719	Relay	1	
● 117	1757 67 562	Unit, Flasher	1	
● 118	0866 67 717	Bush, Rubber	4	74/11~ Added Anew
● 119	99940 0602	Nut, Central Control Unit Cover	2	
● 120	99906 0600	Nut, Central Control Unit	4	
●	99952 0618	Washer, Plain	4	
● 121	3514 67 720	Bracket, Central Control Unit	1	
● 122	1220 67 740	Relay (Manual Canada)	2	
		Relay (Manual U.S.A. & Automatic Canada)	3	
		Relay (Automatic U.S.A.)	4	
● 123	99797 0612	Screw, Relay	5	
●	99952 0600	Washer, Plain	5	

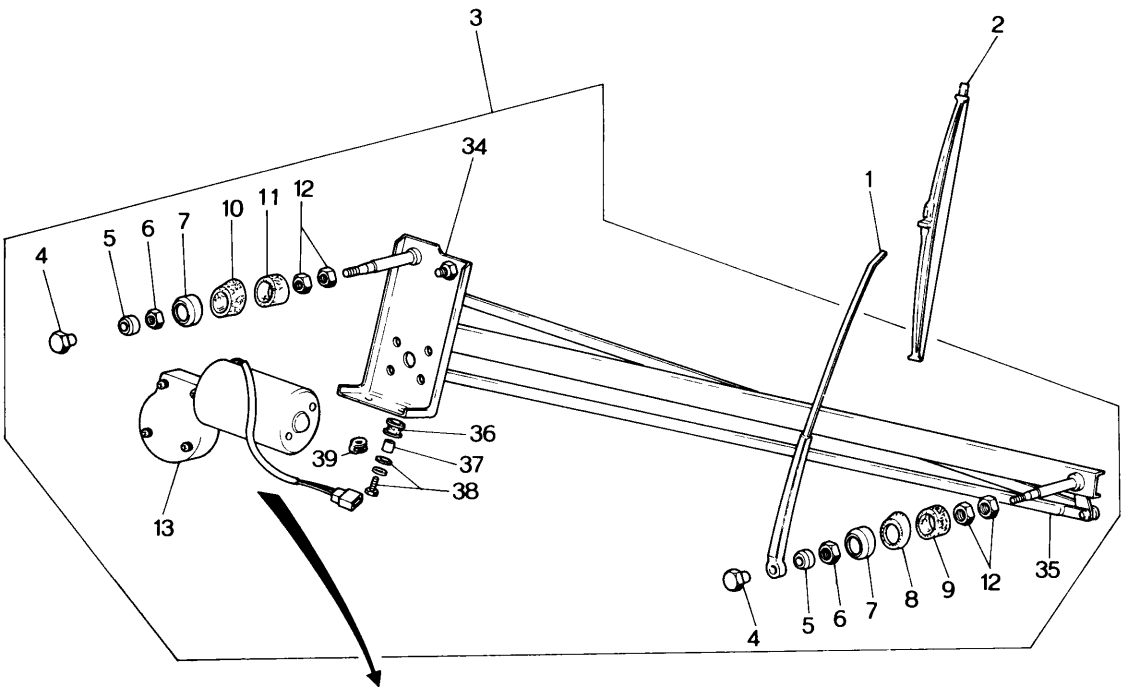
3
2
34
1
4
5
6
7
10
11
12
36
39
37
38
13
4
5
6
7
8
9
12
35

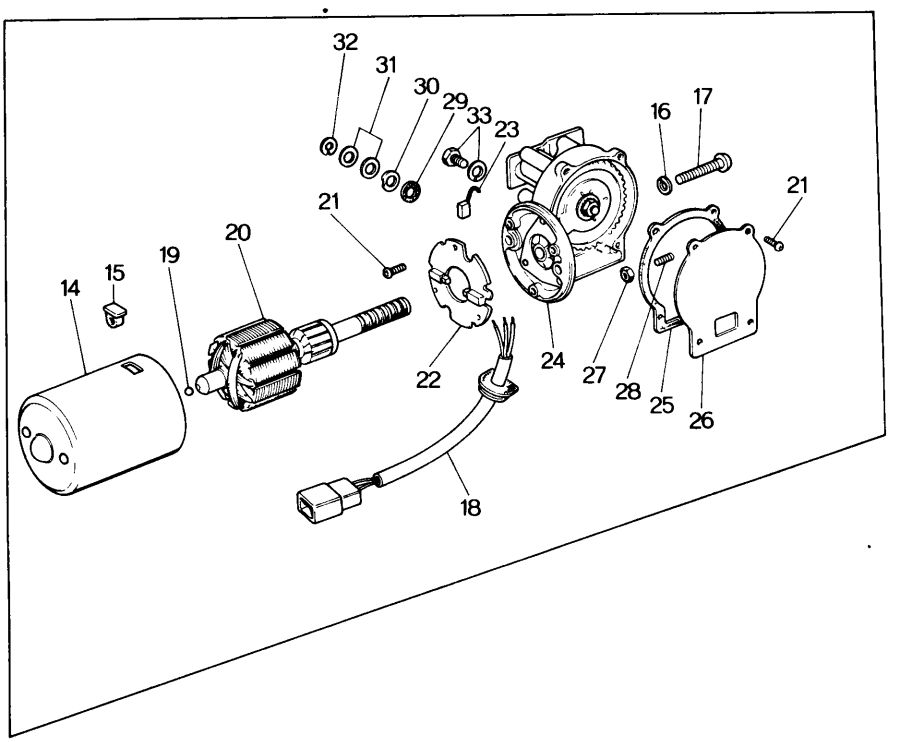
32
31
30
29
33
23
16
17
21
21
20
19
15
14
22
24
27
28
25
26
18

No.	Part Number	Description	Q'ty	Remarks
1	1524 67 321 A	Arm, Wiper	2	
2	2835 67 330	Blade, Wiper	2	
3	1524 67 340 B	Motor & Link	1	
●	1524 67 340 C	Motor & Link	1	73/10～△
4	0223 66 371	Nut, Cap	2	
5	0212 66 371	Cap, Seal	2	
6	0212 66 372	Nut	2	
7	0305 87 906	Washer	2	
8	1524 76 604	Bush, Outer	1	
9	1524 76 603	Bush, Inner	1	
10	1823 67 352	Bush, Outer	1	
11	0866 76 605	Bush, Inner	1	
12	0259 87 134	Nut	4	
13	1524 67 350	Motor	1	Fig. No. 14～33 included
●	1524 67 350 A	Motor	1	73/10～△
14	0259 87 109 A	Yoke	1	
15	0257 87 108	Nut	2	
16	99971 0500	Washer, Spring	2	
17	0257 87 107	Screw	2	
18	1524 76 607	Wire, Lead	1	
●	1524 76 607 A	Wire, Lead	1	73/10～×
19	0259 87 107	Ball	2	

WINDSHIELD WIPER

No.	Part Number	Description	Q'ty	Remarks
20	0259 87 108A	Rotor	1	
21	0259 87 105	Screw	7	
22	0259 87 101A	Plate, Bush Holder	1	
●	1011 76 612A	Plate, Bush Holder	1	73/10～×
23	0259 87 106	Brush	3	
24	1524 76 608	Box, Gear	1	
25	0259 87 103	Gasket	1	
26	0259 87 104A	Plate, End	1	
27	0259 87 119	Nut	1	
28	0259 87 120	Screw	1	
29	0738 87 803	Felt	1	
30	0702 87 135	Washer, Wave	1	
31	0738 87 804	Washer	2	
32	0702 87 138	Ring, Retaining	1	
33	99806 0510	Bolt, Motor	4	
	99971 0500	Washer, Spring	4	
34	1524 76 602	Frame, Wiper	1	
35	1524 76 601	Link, Wiper	1	
36	0866 67 301A	Washer, Rubber	2	
37	0866 67 302	Spacer	2	

No.	Part Number	Description	Q'ty	Remarks
38	99806 0616	Bolt, Frame	3	
	99952 0618	Washer, Plain	3	
	99971 0600	Washer, Spring	3	
39	0118 13 432	Clip, Earth	1	

SCREEN WASHER

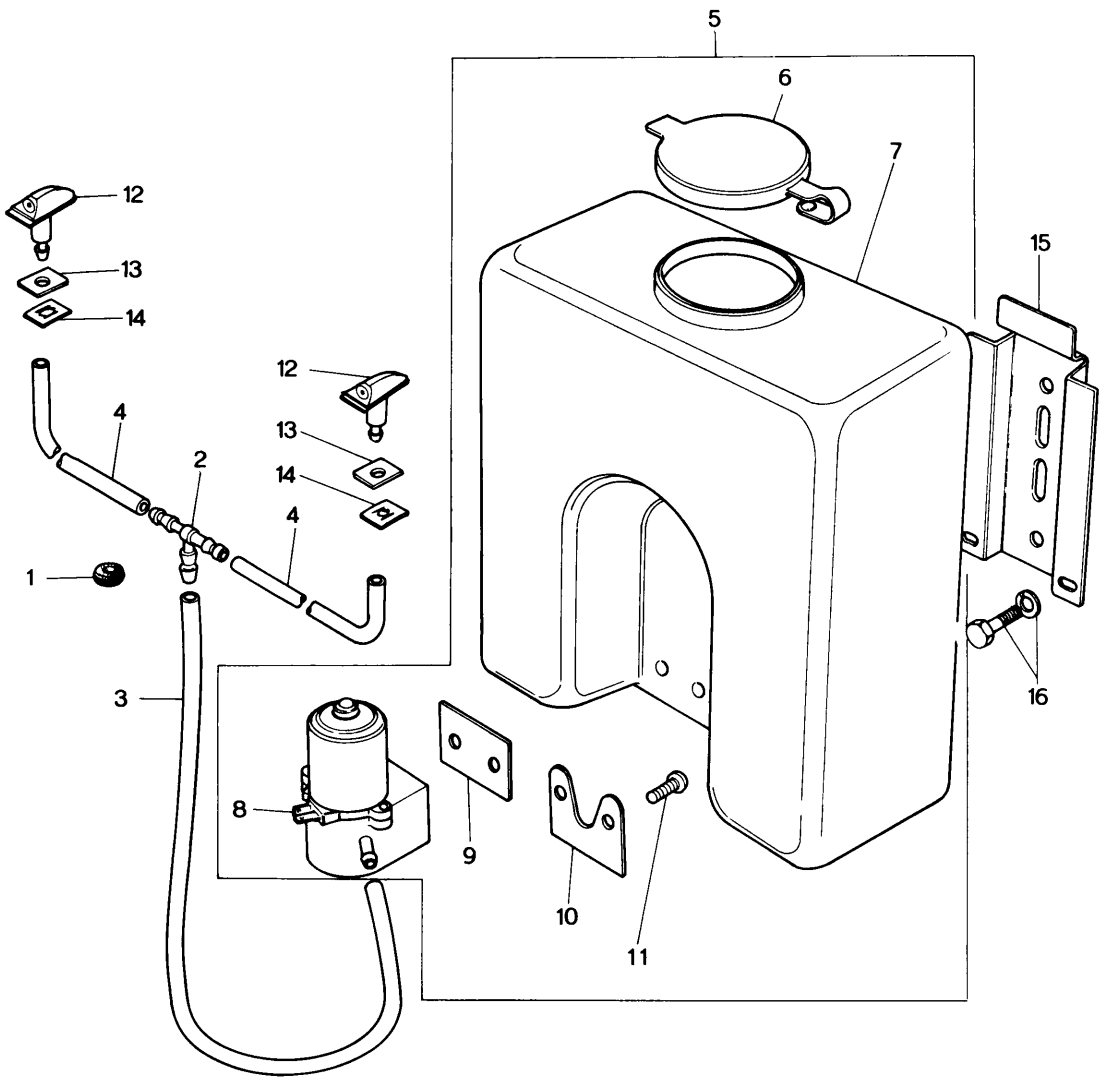

No.	Part Number	Description	Q'ty	Remarks
1	0111 41 692	Protector, Pipe	1	
2	0813 66 879	Joint, Pipe	1	
3	99335 04015	Pipe	1	
4	99335 04066	Pipe	2	
5	0317 67 480	Tank, Washer	1	
6	0727 87 992	Cap	1	
7	0317 67 511	Tank	1	
8	0305 87 993	Pump	1	
9	0727 87 994	Gasket	1	
10	0727 87 995	Plate	1	
11	0727 87 996	Screw	2	
12	0866 67 510A	Nozzle	2	
13	0866 67 511A	Washer, Nozzle	2	
14	0866 67 512	Nut, Speed	2	
15	0866 67 521	Bracket	1	
16	99781 0612	Bolt, Tank Bracket	2	
	99971 0600	Washer, Spring	2	

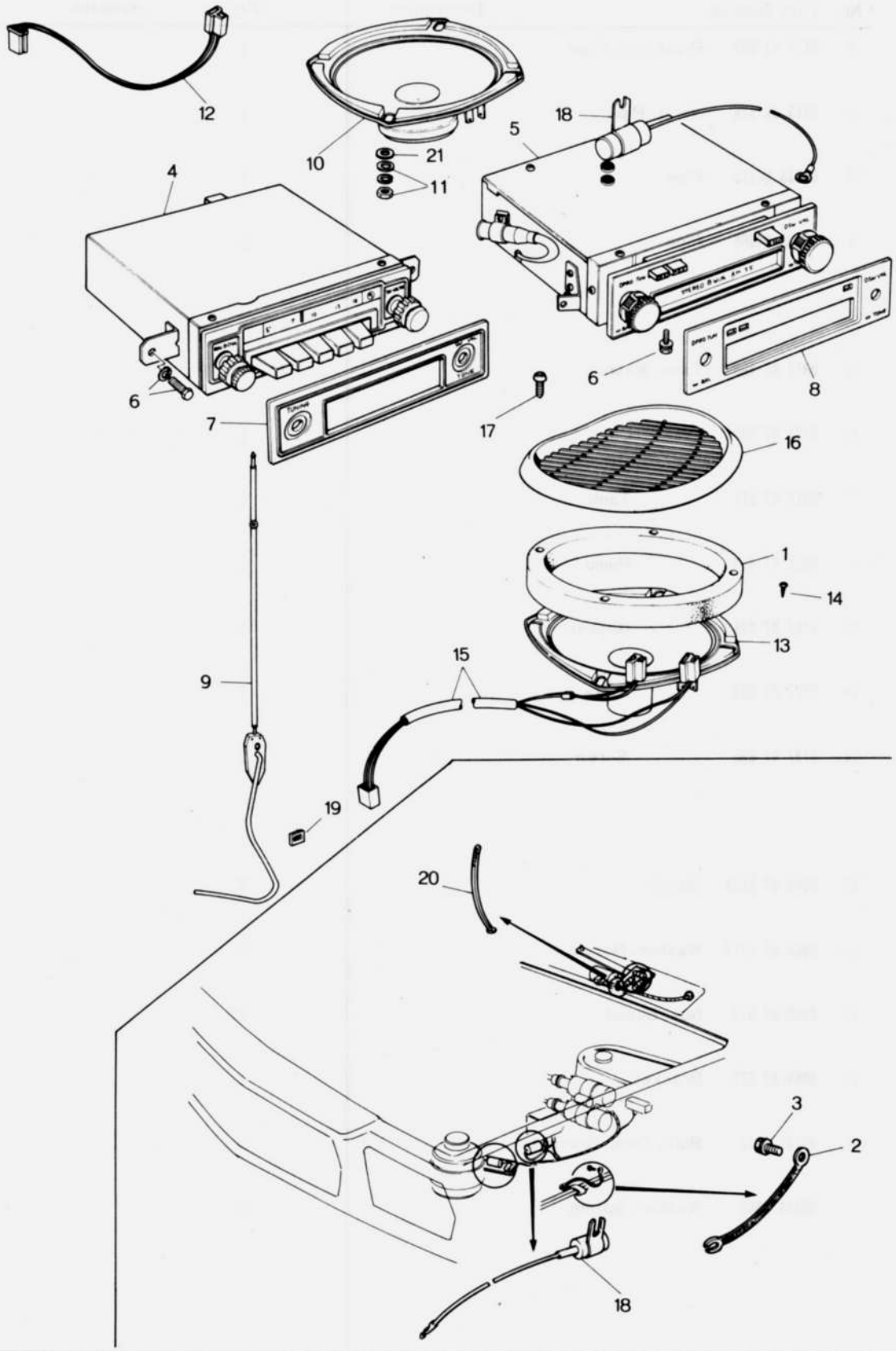
12
10
21
11
18
5
4
6
6
8
7
17
16
1
14
13
15
9
19
20
3
2
18

No.	Part Number	Description	Q'ty	Remarks
	1560 66 860B	Auto Radio Cpt., AM	1	
	1561 66 860B	Auto Radio Cpt., AM / SW	1	
	1562 66 860B	Auto Radio Cpt., AM / FM	1	
	1564 66 860B	Auto Radio & Stereo (Sedan & Coupe)	1	
1	0317 66 862	Partition	1	
2	0866 66 871	Wire, Earth	1	
3	99806 0512	Bolt	1	
●	99860 0512	Bolt	1	74/12~○
●	99952 0500	Washer, Plain	1	74/11~Discarded
	99971 0500	Washer, Spring	1	
4	0866 66 900	Tuner, AM	1	
	1561 66 900	Tuner, AM / SW	1	
	1562 66 900	Tuner, AM / FM	1	
5	0870 66 900A	Tuner & Player	1	
6	99797 0512	Bolt, Tuner	2	
	99952 0500	Washer, Plain	2	
	99971 0500	Washer, Spring	2	
7	0866 66 905	Plate, Decoration - Radio	1	
8	0870 66 905	Plate, Decoration - Radio & Stereo	1	
9	1524 66 930A	Antenna	1	
10	0866 66 960	Loud Speaker	1	

No.	Part Number	Description	Q'ty	Remarks
11	99940 0500	Nut, Flange - Loud Speaker	4	
12	0866 66 965	Cord, Loud Speaker	1	
13	0870 66 970A	Loud Speaker, Stereo	2	
14	99864 0410	Screw, Loud Speaker - Stereo	8	
15	0870 66 975A	Cord, Stereo Loud Speaker	1	
16	0870 66 980	Grille, Loud Speaker - Stereo use	1	
17	99748 0410	Screw, Grille	8	
● 18	~~0838 66 982~~	~~Condenser~~	~~2~~	
●	0820 66 992	Condenser	2	From Car No. 1
19	0866 67 153A	Pad, Protector	1	
20	0305 67 993A	Clip, Wire Harness	1	
21	0275 68 088	Spacer	8	

CRUSH PAD, GLOVE POCKET & CONSOLE BOX

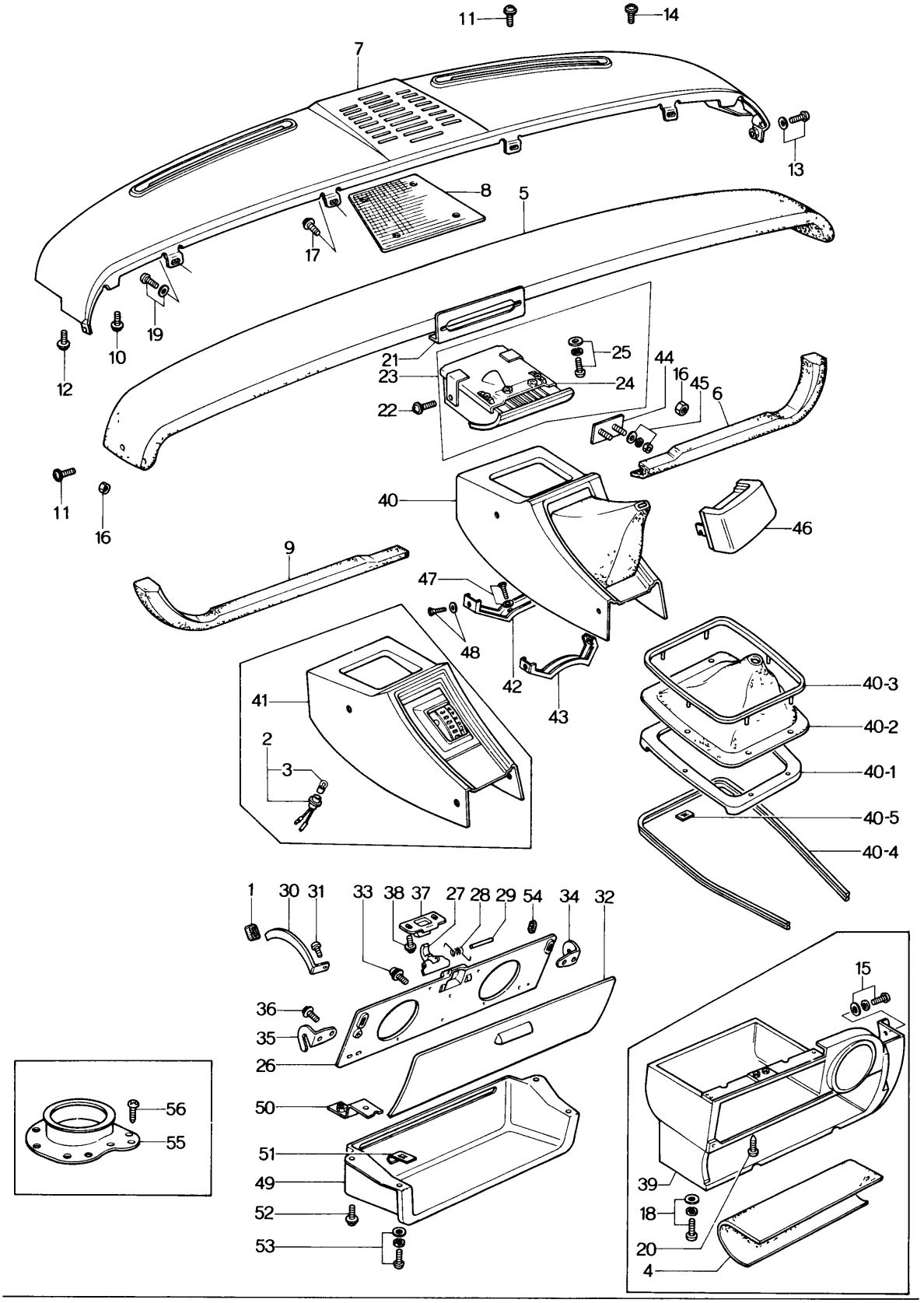

CRUSH PAD, GLOVE POCKET & CONSOLE BOX

No.	Part Number	Description	Q'ty	Remarks
● 1	~~0275 55 185~~	~~Cushion, Rubber~~	~~1~~	
●	0275 55 195A	Cushion, Rubber	1	From Car No. 1
2	0305 66 580A	Bulb & Socket (Automatic)	1	
3	99701 6030	Bulb	1	
4	1524 68 011	Sheet, Glove Tray	1	
5	0865 68 020B00	Pad, Crush (BLK)	1	
6	1562 68 040A00	Pad (R), Lower (BLK)	1	
7	0866 68 090B	Garnish	1	
8	0866 68 095	Cloth, Cover	1	
9	1562 68 140B00	Pad (L), Lower (BLK)	1	
10	99786 0820	Screw, Tapping	2	
	99952 0822	Washer, Plain	2	
11	99834 0512B	Screw	2	
	99952 0500B	Washer, Plain	2	
	99971 0500	Washer, Spring	2	
12	99833 0516B	Screw	2	
	99952 0500B	Washer, Plain	2	
	99971 0500	Washer, Spring	2	
13	99836 0516B	Screw	2	
	99967 0500B	Washer	2	
14	99833 0516B	Screw, Crush Pad & Garnish	2	

CRUSH PAD, GLOVE POCKET & CONSOLE BOX

No.	Part Number	Description	Q'ty	Remarks
	99952 0500 B	Washer, Plain	2	
	99971 0500 B	Washer, Spring	2	
15	99836 0516 B	Screw, Garnish	1	
	99967 0500 B	Washer, Plain	1	
16	99940 0501	Nut, Flange-Pad Lower	5	
17	99833 0512	Screw, Garnish	2	
●	99830 0512 B	Screw, Garnish	2	74/3 ~ ○
	99952 0500	Washer, Plain	2	
	99971 0500	Washer, Spring	2	
18	99834 0616 B	Screw, Garnish	2	
●	99830 0616 B	Screw, Garnish	2	74/3 ~ ○
	99952 0618 B	Washer, Plain	2	
	99971 0600	Washer, Spring	2	
19	99863 0512	Screw, Garnish	2	
●	99865 0512	Screw, Garnish	2	74/3 ~ ○
●	99952 0500	Washer, Plain	2	74/2 ~ Discarded
●	99971 0500	Washer, Spring	2	
20	99834 0616 B	Screw, Tapping	2	
21	0866 66 175	Plate, Set-Ash Tray	1	
22	99833 0512	Screw, Ash Tray	2	
	99952 0500	Washer, Plain	2	
	99971 0500	Washer, Spring	2	

CRUSH PAD, GLOVE POCKET & CONSOLE BOX

No.	Part Number	Description	Q'ty	Remarks
23	0866 68 180A	Tray, Ash (Frt.)	1	
● 24	0866 64 630	Case, Inner	1	
25	99833 0512	Screw	2	
	99952 0500	Washer, Plain	2	
	99971 0500	Washer, Spring	2	
26	0866 68 331	Lid, Glove - Inner	1	
27	0866 68 332	Hook	1	
28	0866 68 333	Spring	1	
29	0866 68 334	Pin	1	
30	0866 68 335B	Stopper	1	
● 31	99832 0408B	Screw, Stopper	1	
32	0865 68 340	Lid, Glove - Outer	1	
33	99262 1806B	Screw, Glove Lid	8	
34	0866 68 351A	Hinge (R), Glove Lid	1	
35	0866 68 352A	Hinge (L), Glove Lid	1	
36	99834 0412B	Screw, Hinge	4	
	99952 0412B	Washer, Plain	4	
	99971 0400B	Washer, Spring	4	
37	0866 68 361	Striker	1	

CRUSH PAD, GLOVE POCKET & CONSOLE BOX

No.	Part Number	Description	Q'ty	Remarks
38	99833 0512B	Screw, Striker	2	
	99952 0500B	Washer, Plain	2	
	99971 0500B	Washer, Spring	2	
39	1524 68 380A	Box, Glove-Outer	1	
● 40	0376 68 890B	Console, Front (U.S.A.) (Manual)	1	
●	1524 68 890	Console, Front (Canada) (Manual)	1	
● 40-1	0376 68 892	Plate Set (U.S.A.)	1	From Car No. 1
●	1524 68 896	Boot, Frame (Canada)	1	From Car No. 1
● 40-2	0376 68 893	Boot, Change (U.S.A.)	1	From Car No. 1
●	1524 68 893	Boot, Change (Canada)	1	From Car No. 1
● 40-3	0376 68 894	Mould, Change (U.S.A.)	1	From Car No. 1
● 40-4	0376 68 895	Mould (Frt.)	1	From Car No. 1
● 40-5	99579 3000	Nut, Speed (U.S.A.)	6	From Car No. 1
41	1525 68 890	Console, Front (Automatic)	1	
42	0376 68 900	Bracket No. 1, Console (Manual)	1	
	0378 68 900	Bracket No. 1, Console (Automatic)	1	
43	0376 68 910	Bracket No. 2	1	
44	0866 68 920	Bracket	1	
45	99906 0500	Nut, Bracket	2	
	99952 0500	Washer, Plain	2	

CRUSH PAD, GLOVE POCKET & CONSOLE BOX

No.	Part Number	Description	Q'ty	Remarks
	99971 0500	Washer, Spring	2	
46	0370 68 920	Console, End	1	
47	99786 0616	Screw, Tapping	4	
48	99832 0516B	Screw, Console	4	
	99967 0500B	Washer	4	
49	0866 69 811	Shelf, Parcel	1	
50	0866 69 821A	Bracket, Parcel Shelf	1	
51	0820 56 905	Nut, Spring-Parcel Shelf	2	
	~~99896 0616~~	~~Nut, Spring-Parcel Shelf~~	~~1~~	
●	99896 0500	Nut, Spring-Parcel Shelf	1	From Car No. 1
52	99833 0616	Bolt, Parcel Shelf	1	
	99952 0618	Washer, Plain	1	
	99971 0600	Washer, Spring	1	
53	99863 0520B	Screw, Parcel Shelf	3	
	99952 0500B	Washer, Plain	3	
	99971 0500B	Washer, Spring	3	
54	0317 70 269	Cushion	2	
● 55	0367 68 832A	Seat, Boot (Manual)	1	From Car No. 1
● 56	99864 0512	Screw, Tapping (Manual)	4	From Car No. 1

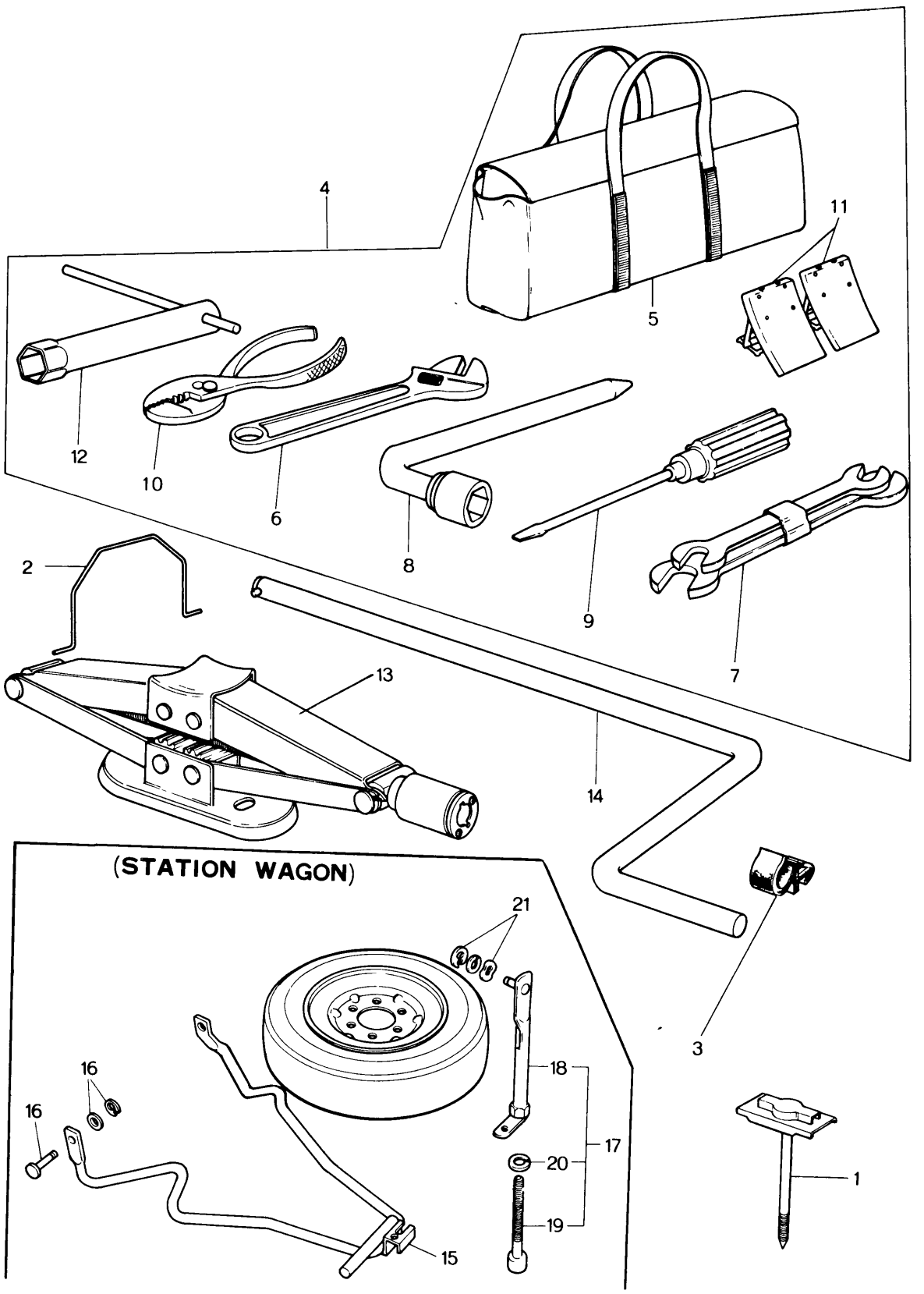
4
5
11
12
10
6
8
9
7
2
13
14
(STATION WAGON)
21
3
18
16
16
17
20
19
15
1

No.	Part Number	Description	Q'ty	Remarks
1	1128 56 960	Clamp, Spare Tire (Sedan & Coupe)	1	
2	0866 56 991	Wire, Jack	1 (Sedan & Coupe)	
3	99715 1101	Holder, Rod-Jack Handle	3 (Sedan & Coupe)	
● 4	~~0838 68 660~~	~~Tools~~	~~1~~	
●	1128 68 660	Tools	1	From Car No. 1
● 5	~~0838 68 670B~~	~~Bag, Tool~~	~~1~~	
●	1128 68 670	Bag, Tool	1	From Car No. 1
● 6	~~0866 68 680~~	~~Wrench, Monkey~~	~~1~~	
● 7	~~0249 68 060A~~	~~Spanner Set~~	~~1~~	
●	0672 68 060A	Spanner Set	1	From Car No. 1
8	0810 68 070A	Wrench, Hub Set	1	
9	0187 68 110A	Driver Set	1	
10	0118 68 180A	Plier	1	
11	0208 68 230	Stopper	1	
12	0839 68 720	Wrench, Plug	1	
13	0305 68 800F	Jack	1	
14	0305 68 810A	Handle	1	
15	0585 70 710A	Frame, Hanger-Spare Tire	1 (Station Wagon)	
16	99230 0820	Pin, Joint	2 (Station Wagon)	
	99576 0500	Ring, Snap	2 (Station Wagon)	
	99953 0800	Washer, Plain	2 (Station Wagon)	

No.	Part Number	Description		Q'ty	Remarks
17	0585 70 720A	Lock, Spare Tire		1	
18	0585 70 730A	Clamp	(Station Wagon)	1	
19	0585 70 733A	Bolt		1	
20	~~88851 0822~~	~~Washer, Plain~~		~~1~~	
●	99952 1224	Washer, Plain		1	From Car No. 1
21	99576 0700	Ring, Retaining - Spare Tire Lock		1	
	99952 1000	Washer, Plain	(Station Wagon)	1	
	99972 1000	Washer, Spring		1	

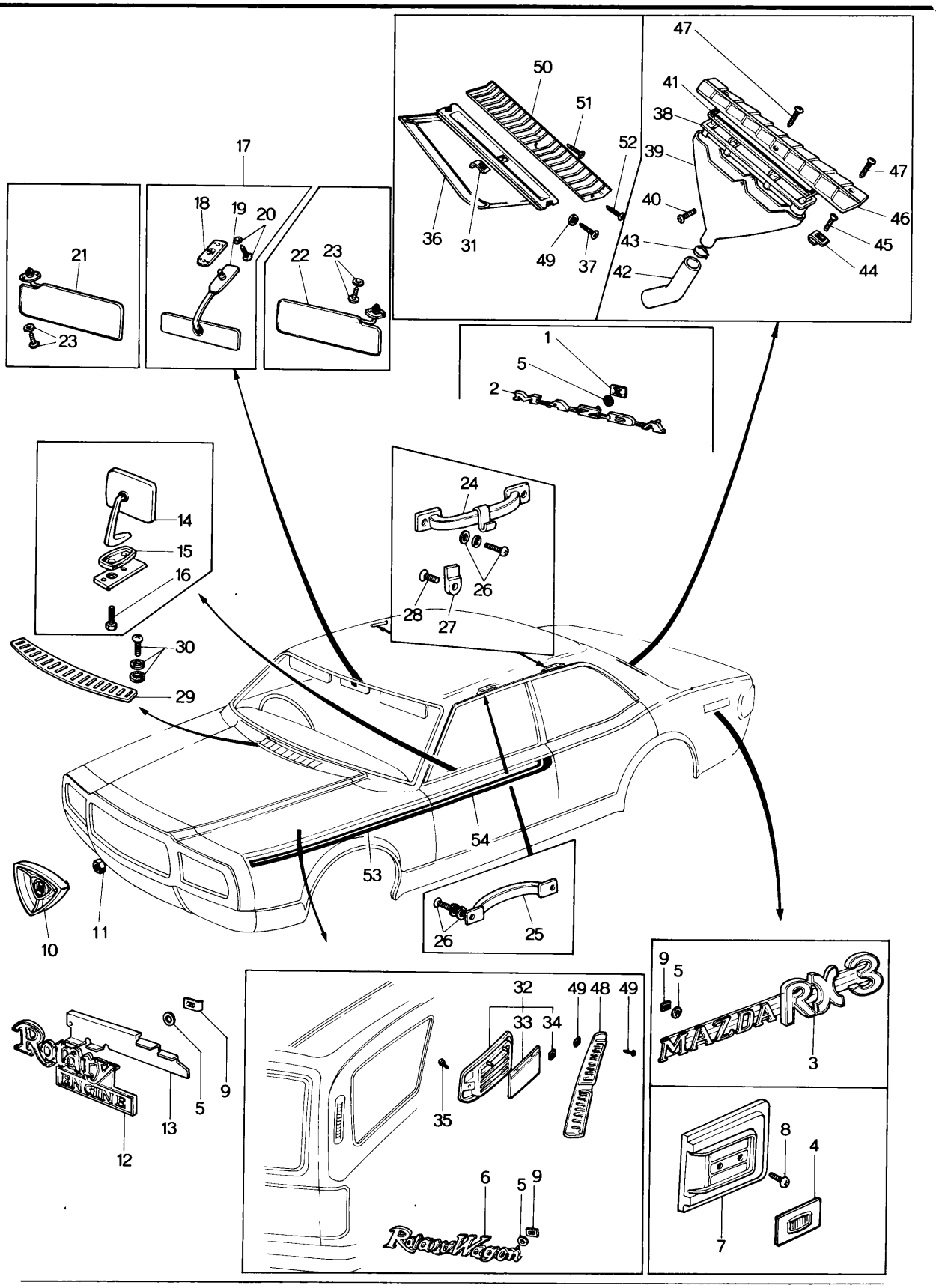
1
2
5
10
11
12
13
14
15
16
17
18
19
20
21
22
23
24
25
26
27
28
29
30
31
32
33
34
35
36
37
38
39
40
41
42
43
44
45
46
47
48
49
50
51
52
53
54
Rotary Engine
Rotary Wagon
MAZDA RX-3

No.	Part Number	Description	Q'ty	Remarks
1	0187 69 049A	Nut, Speed-Ornament (Sedan & Coupe)	3	
● 2	~~0866 69 502~~	~~Ornament, MAZDA (Sedan & Coupe)~~	~~1~~	
●	0866 69 052	Ornament, MAZDA (Sedan & Coupe)	1	From Car No. 1
● 3	~~1562 69 502~~	~~Name, MAZDA RX-3~~	~~2~~	
●	1562 69 053	Name, MAZDA RX-3	2	From Car No. 1
4	0380 69 055B	Ornament (Coupe)	2	
5	0730 69 057A	Gasket, Ornament	8 11	(Sedan & Coupe) (Station Wagon)
6	0899 69 058	Rotary Wagon	1	
7	0862 69 061	Base (R), Ornament	1	
	0862 69 065	Base (L), Ornament (Coupe)	1	
8	99863 0414	Screw, Base	4	
● 9	99579 3000	Nut, Speed-Ornament	6 9	(Sedan & Coupe) (Wagon)
●	99578 3000	Nut, Speed-Ornament	2	From Car No. 1
10	0866 69 071A 02	Emblem, Front (GRY)	1	
11	99940 0500	Nut	1	
12	1881 69 076	Mark, Front (RE)	1	
13	1128 69 077	Plate, Set	1	
14	1540 69 130B	Mirror, Door	1	
15	1540 69 101	Gasket, Door Mirror	1	
16	99772 0516	Screw, Door Mirror	1	
	99772 0525	Screw, Door Mirror	1	

No.	Part Number	Description	Q'ty	Remarks
17	0305 69 170	Mirror, Interior	1	
18	0305 69 171	Base	1	
19	0305 69 180	Mirror	1	
20	99831 0516	Screw, Interior Mirror	2	
	99975 0500	Washer, Toothed	2	
21	1632 69 210A 13	Sun Visor (R) (BLK)	1	
	1632 69 210A 14	Sun Visor (R) (GRY)	1	
●	1632 69 210A 25	Sun Visor (R) (BRN) (Canada)	1	75/1~ Added Anew
22	1632 69 240A 13	Sun Visor (L) (BLK)	1	
●	1881 69 240 13	Sun Visor (L) (BLK) (U.S.A.)	1	73/9~△
●	1881 69 240A 13	Sun Visor (L) (BLK) (U.S.A.)	1	74/6~×
●	1632 69 240A 13	Sun Visor (L) (BLK) (Canada)	1	75/1~×
	1632 69 240A 14	Sun Visor (L) (GRY)	1	
●	1881 69 240 14	Sun Visor (L) (GRY) (U.S.A.)	1	73/9~△
●	1881 69 240A 14	Sun Visor (L) (GRY) (U.S.A.)	1	74/6~×
●	1632 69 240A 14	Sun Visor (L) (GRY) (Canada)	1	75/1~×
●	1632 69 240A 25	Sun Visor (L) (BRN) (Canada)	1	75/1~ Added Anew
23	99837 0516C	Screw, Sun Visor	4	
	99975 0500	Washer, Toothed	4	
24	0866 69 910	Handle, Assist-Rear (Sedan)	2	
25	0866 69 920 -02	Handle, Assist-Front (BLK)	1	
26	99838 0620	Screw, Assist Handle	4	
	99952 0600	Washer, Plain	4	
	99971 0600	Washer, Spring	4	
27	0376 69 941	Hanger, Coat } (Coupe)	1	
28	99776 0620	Screw, Coat Hanger } (Coupe)	1	
●	99837 0620C	Screw, Coat Hanger	1	74/3~○
29	1524 70 401A	Grille	1	

No.	Part Number	Description		Q'ty	Remarks
30	0866 56 405	Rubber, Cushion		4	
	99864 0412B	Screw, Grille		4	
	99952 0412B	Washer, Plain		4	
31	0866 70 412	Nut, Spring-Extractor (Sedan)		6	
32	0585 70 420A	Extractor (R)	(Station Wagon)	1	
	0585 71 420A	Extractor (L)		1	
● 33	0585 70 423A	Valve ~~(R)~~		~~1~~ 2	From Car No. 1
●	~~0585 71 423A~~	~~Valve (L)~~		~~1~~	
34	99579 2000	Nut, Speed-Valve		4	
35	99864 0410B	Screw, Tapping-Extractor		4	
36	0866 70 420	Extractor (R)	(Sedan)	1	
	0866 71 420	Extractor (L)		1	
37	99864 0414	Screw, Extractor		4	
38	0376 70 421	Frame (R), Extractor	(Coupe)	1	
	0376 71 421	Frame (L), Extractor		1	
39	0376 70 422	Chamber (R)		1	
	0376 71 422	Chamber (L)		1	
40	99864 0410	Screw, Frame & Chamber		8	

No.	Part Number	Description		Q'ty	Remarks
41	0376 70 426	Gasket	(Coupe)	2	
42	0376 70 427	Pipe		2	
43	0376 70 428	Clip		2	
44	0866 70 412	Nut, Spring-Extractor		8	
45	99864 0414	Screw, Extractor		8	
46	0376 70 431 A02	Grille, Extractor (R) (GRY)	(Coupe)	1	
	0376 71 431 A02	Grille, Extractor (L) (GRY)		1	
47	99864 0416 B	Screw, Tapping-Grille		6	
● 48	~~0585 70 431~~	~~Grille (R)~~	(Station Wagon)	~~1~~	
●	0899 70 431-02	Grille (R) (GRY. M)		1	From Car No. 1
●	~~0585 71 431~~	~~Grille (L)~~		~~1~~	
●	0899 71 431-02	Grille (L) (GRY. M)		1	From Car No. 1
● 49	~~99863 0416 B~~	~~Screw, Tapping-Grille (L)~~		~~2~~	
●	99863 0420 B	Screw, Tapping-Grille (L)		2	From Car No. 1
●	~~99864 0420 B~~	~~Screw, Spring-Grille (R)~~		~~2~~	
●	99863 0420 B	Screw, Spring-Grille (R)		2	From Car No. 1
	99896 0400	Nut, Spring-Grille		2	
● 50	0866 70 431 D02	Grille (R), Extractor	(Sedan)	1	
●	0866 70 431 E02	Grille (R), Extractor		1	73/12~○
	0866 71 431 D02	Grille (L), Extractor		1	

No.	Part Number	Description		Q'ty	Remarks
●	0866 71 431 E02	Grille (L), Extractor		1	73/12~○
51	99863 0412 B	Screw, Tapping-Grille	(Sedan)	2	
52	99863 0425 B	Screw, Tapping-Grille		2	
53	0376 70 891 00	Stripe (R), Fender (BLU)		1	
●	0376 70 891 04	Stripe (R), Fender (BLK)		1	73/9~×
	0376 70 891 01	Stripe (R), Fender (WHT)		1	
	0376 71 891 00	Stripe (L), Fender (BLU)		1	
●	0376 71 891 04	Stripe (L), Fender (BLK)		1	73/9~×
	0376 71 891 01	Stripe (L), Fender (WHT)		1	
54	0376 70 892 A00	Stripe (R), Door (BLU)		1	
●	0376 70 892 A04	Stripe (R), Door (BLK)		1	73/9~×
	0376 70 892 A01	Stripe (R), Door (WHT)		1	
	0376 71 892 A00	Stripe (L), Door (BLU)		1	
●	0376 71 892 A04	Stripe (L), Door (BLK)		1	73/9~×
	0376 71 892 A01	Stripe (L), Door (WHT)		1	

TOP CEILING & TRIM (SEDAN & COUPE)

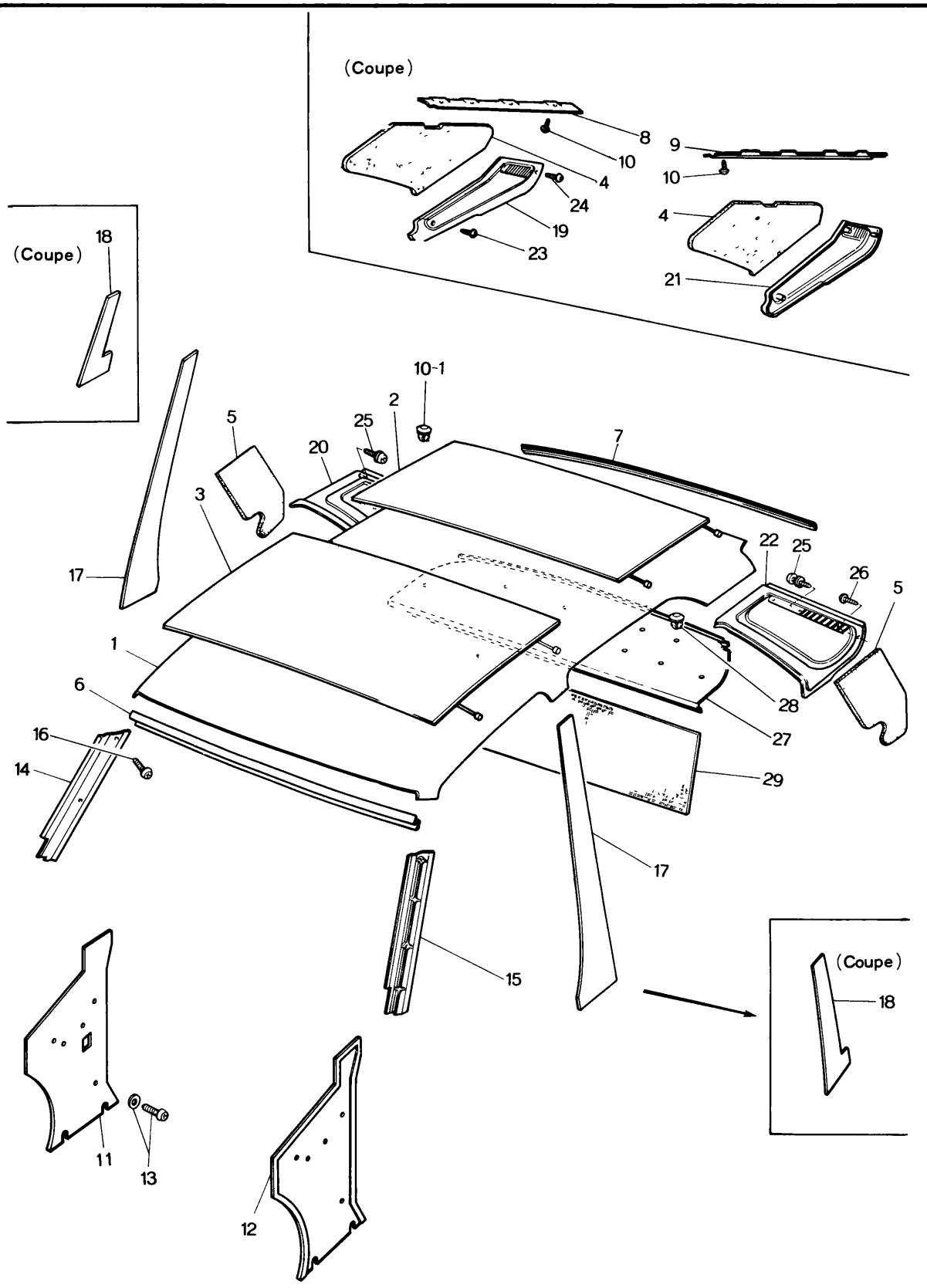

TOP CEILING & TRIM (SEDAN & COUPE)

No.	Part Number	Description	Q'ty	Remarks
1	1634 69 290 13	Ceiling, Top (BLK) (Coupe)	1	
●	1634 69 290A 13	Ceiling, Top (BLK) (Coupe)	1	73/10～△
●	1634 69 290B 13	Ceiling, Top (BLK) (Coupe)	1	75/2～○
	1634 69 290 14	Ceiling, Top (GRY) (Coupe)	1	
●	1634 69 290A 14	Ceiling, Top (GRY) (Coupe)	1	73/10～△
●	1634 69 290B 14	Ceiling, Top (GRY) (Coupe)	1	75/2～○
●	1634 69 290B 25	Ceiling, Top (BRN) (Coupe) (Canada)	1	75/1～ Added Anew
	1632 69 290 14	Ceiling, Top (GRY) (Sedan)	1	
2	0259 69 311	Insulator No. 1	1	
●	0259 69 311A	Insulator No. 1	1	74/4～○
3	0866 69 311	Lining, Head	1	
●	0866 69 311A	Lining, Head	1	74/4～○
4	0376 69 314A	Pad, Rear Pillar (Coupe)	2	
●	0376 69 314B	Pad, Rear Pillar (Coupe)	2	73/10～△
● 5	0866 69 314A	Pad, Rear Pillar (Sedan)	2	
6	0376 69 321	Plate, Fixing-Front (Coupe)	1	
	0866 69 321	Plate, Fixing-Front (Sedan)	1	
7	0376 69 341	Plate, Fixing-Rear (Coupe)	1	
	0866 69 341	Plate, Fixing-Rear (Sedan)	1	
8	0376 69 342	Plate, No. 2 Fixing-Rear (Coupe)	1	

TOP CEILING & TRIM (SEDAN & COUPE)

No.	Part Number	Description		Q'ty	Remarks
9	0376 69 343	Plate, No. 3 Fixing-Rear		1	
● 10	99864 0412	Screw, Fixing Plate	(Coupe)	8	
● 10-1	99274 0821	Fastener		2	73/10～ Added Anew
11	1524 69 360A 00	Trim (R), Front Side		1	
●	1524 69 360B 00	Trim (R), Front Side		1	74/11～△
12	1524 69 380A 00	Trim (L), Front Side		1	
13	99862 0512B	Screw, Front Side		6	
	99967 0500B	Washer		6	
14	0376 69 411 00	Trim (R), Front Pillar (BLK)	(Coupe)	1	
	0866 69 411 00	Trim (R), Front Pillar (BLK)	(Sedan)	1	
15	0376 69 431 00	Trim (L), Front Pillar (BLK)	(Coupe)	1	
	0866 69 431 00	Trim (L), Front Pillar (BLK)	(Sedan)	1	
16	99862 0412B	Screw, Front Pillar Trim		4	
17	0866 69 461B 03	Trim, Center Pillar (BLK)		2	
	0866 69 461B 12	Trim, Center Pillar (BRN)		2	
●	0866 69 461B 35	Trim, Center Pillar (BRN) (Canada)	(Sedan)	2	75/1～×
	0866 69 461B 13	Trim, Center Pillar (GRY/YLW)		2	
18	0376 69 462A 13	Trim, Center Pillar (BLK)		2	
	0376 69 462A 14	Trim, Center Pillar (GRY)	(Coupe)	2	
●	0376 69 462A 25	Trim, Center Pillar (BRN) (Canada)		2	75/1～ Added Anew

No.	Part Number	Description	Q'ty	Remarks	
19	0376 69 511 00	Trim (R), Rear Pillar (BLK) (Coupe)	1		
●	0376 69 511 04	Trim (R), Rear Pillar (BRN) (Coupe)	1	(Canada)	75/1~ Added Anew
20	0866 69 511 01	Trim (R), Rear Pillar (GRY) (Sedan)	1		
21	0376 69 521 00	Trim (L), Rear Pillar (BLK) (Coupe)	1		
●	0376 69 521 04	Trim (L), Rear Pillar (BRN) (Coupe)	1	(Canada)	75/1~ Added Anew
22	0866 69 521 01	Trim (L), Rear Pillar (GRY) (Sedan)	1		
23	99864 0516B	Screw, Rear Pillar Trim } (Coupe)	4		
24	99864 0525B	Screw, Rear Pillar Trim } (Coupe)	2		
25	99864 0416	Screw, Rear Pillar Trim } (Sedan)	4		
26	99864 0412	Screw, Rear Pillar Trim } (Sedan)	2		
27	0376 69 870B 00	Trim, Package Tray (BLK) } (Coupe)	1		
	0870 69 870B 00	Trim, Package Tray (BLK) With Car Stereo Hole } (Coupe)	1		
	0866 69 870C 00	Trim, Package Tray (BLK) With Car Stereo Hole } (Sedan)	1		
	1524 69 870C 00	Trim, Package Tray (BLK) } (Sedan)	1		
28	0866 69 885	Fastener, Package Tray Trim	2		
29	0866 69 694	Pad, Package Tray	1		

TOP CEILING & TRIM (STATION WAGON)

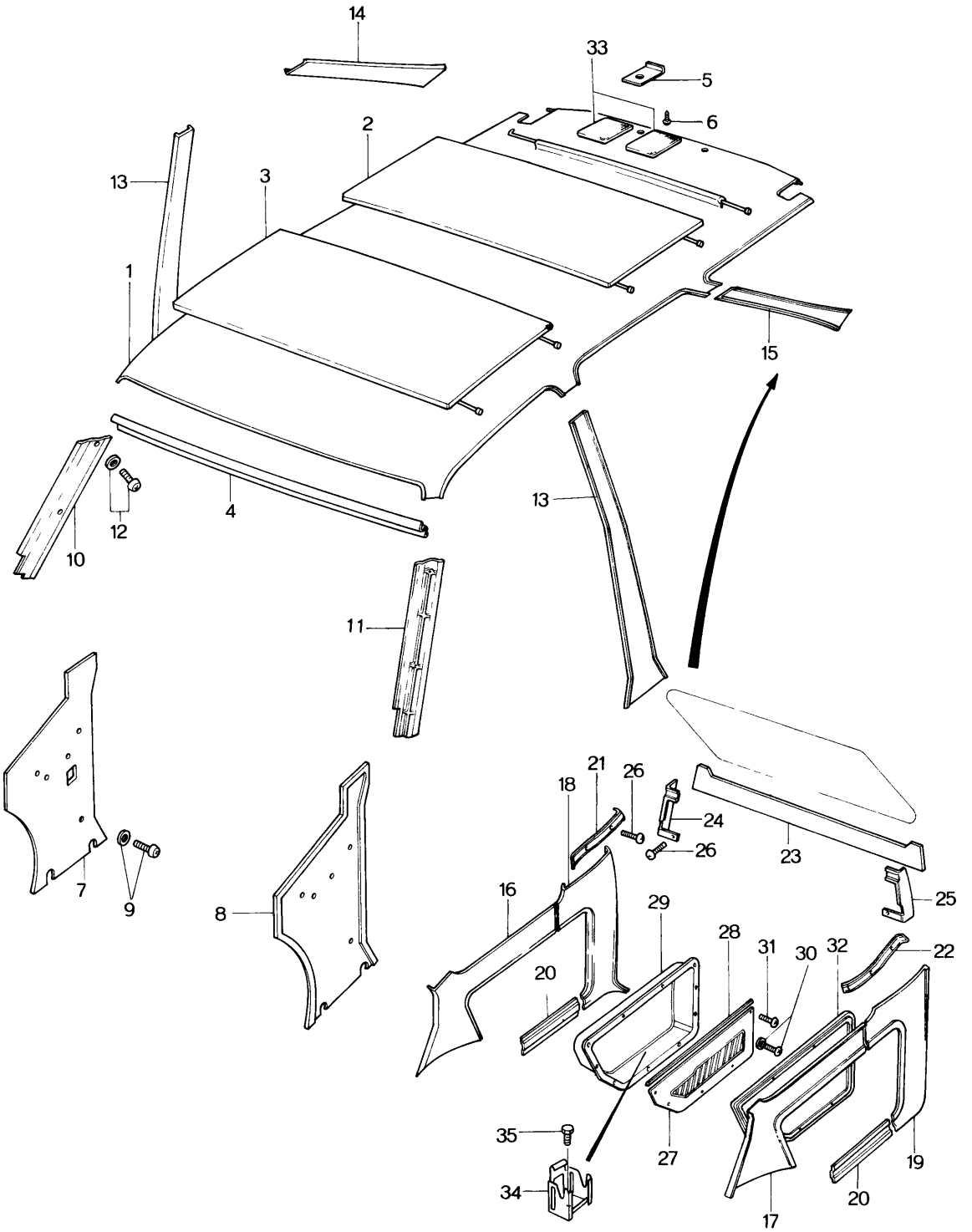

TOP CEILING & TRIM (STATION WAGON)

No.	Part Number	Description	Q'ty	Remarks
1	1636 69 290 14	Ceiling, Top (GRY)	1	
2	0585 69 311	Lining, Head	1	
●	0585 69 311 A	Lining, Head	1	74/4~○
3	0866 69 311	Lining, Head	1	
●	0866 69 311 A	Lining, Head	1	74/4~○
4	0866 69 321	Plate, Fixing-Front	1	
5	0585 69 341 B00	Plate, Fixing-Rear	2	
6	99862 0512C	Screw, Tapping-Rear Fixing Plate	2	
	99967 0500A	Washer	2	
7	1524 69 360A00	Trim (R), Front Side (BLK)	1	
●	1524 69 360B00	Trim (R), Front Side (BLK)	1	74/11~△
8	1524 69 380A00	Trim (L), Front Side (BLK)	1	
9	99862 0512B	Screw, Tapping-Trim	4	
	99967 0500B	Washer	4	
10	0866 69 411 00	Trim (R), Front Pillar (BLK)	1	
11	0866 69 431 00	Trim (L), Front Pillar (BLK)	1	
12	99862 0412B	Screw, Tapping-Trim	4	
13	0866 69 461B03	Trim, Center (BLK)	2	
	0866 69 461B12	Trim, Center (BRN)	2	
	0866 69 461B13	Trim, Center (GRY/YLW)	2	

No.	Part Number	Description	Q'ty	Remarks
14	0899 69 561C14	Trim (R), Quarter (GRY)	1	
15	0899 69 571C14	Trim (L), Quarter (GRY)	1	
16	0899 69 711B03	Trim No. 1 (R), Rear Side (BLK)	1	
	0899 69 711B12	Trim No. 1 (R), Rear Side (BRN)	1	
●	0899 69 711B35	Trim No. 1 (R), Rear Side (BRN)	1 (Canada)	75/1～×
	0899 69 711B13	Trim No. 1 (R), Rear Side (GRY/YLW)	1	
17	0899 69 712B03	Trim No. 1 (L), Rear Side (BLK)	1	
	0899 69 712B12	Trim No. 1 (L), Rear Side (BRN)	1	
●	0899 69 712B35	Trim No. 1 (L), Rear Side (BRN)	1 (Canada)	75/1～×
	0899 69 712B13	Trim No. 1 (L), Rear Side (GRY/YLW)	1	
18	0899 69 713A03	Trim No. 2 (R), Rear Side (BLK)	1	
●	0899 69 710 03	Trim No. 2 (R), Rear Side (BLK)	1	75/1～△
	0899 69 713A12	Trim No. 2 (R), Rear Side (BRN)	1	
●	0899 69 710 35	Trim No. 2 (R), Rear Side (BRN)	1 (Canada)	75/1～×
	0899 69 713A13	Trim No. 2 (R), Rear Side (GRY/YLW)	1	
●	0899 69 710 13	Trim No. 2 (R), Rear Side (GRY/YLW)	1	75/1～△
19	0899 69 714A03	Trim No. 2 (L), Rear Side (BLK)	1	
●	0899 69 730 03	Trim No. 2 (L), Rear Side (BLK)	1	75/1～△
	0899 69 714A12	Trim No. 2 (L), Rear Side (BRN)	1	
●	0899 69 730 35	Trim No. 2 (L), Rear Side (BRN)	1 (Canada)	75/1～×

No.	Part Number	Description	Q'ty	Remarks
●	0899 69 714A13	Trim No. 2 (L), Rear Side (GRY/YLW)	1	
●	0899 69 730 13	Trim No. 2 (L), Rear Side (GRY/YLW)	1	75/1～△
20	0899 69 715A03	Trim, Rear Side-Lower (BLK)	2	
	0899 69 715A12	Trim, Rear Side-Lower (BRN)	2	
●	0899 69 715A35	Trim, Rear Side-Lower (BRN)	2 (Canada)	75/1～×
	0899 69 715A13	Trim, Rear Side-Lower (GRY/YLW)	2	
21	0899 69 717A	Garnish (R), Rear Side Trim	1	
22	0899 69 718A	Garnish (L), Rear Side Trim	1	
23	0899 69 721B03	Trim, Back Door-Upper (BLK)	1	
	0899 69 721B12	Trim, Back Door-Upper (BRN)	1	
●	0899 69 721B35	Trim, Back Door-Upper (BRN)	1 (Canada)	75/1～×
	0899 69 721B13	Trim, Back Door-Upper (GRY/YLW)	1	
24	0899 69 723B	Garnish (R), Back Door Trim	1	
25	0899 69 724B	Garnish (L), Back Door Trim	1	
26	99864 0410C	Screw, Tapping-Garnish	6	
27	1624 70 911 03	Trim (R), Side (BLK)	1	
●	1529 70 911 01	Cover, Pocket (BLK)	1 (Canada)	75/1～Added Anew
	1624 70 911 12	Trim (R), Side (BRN)	1	
●	1529 70 911 16	Cover, Pocket (BRN)	1 (Canada)	75/1～Added Anew
	1624 70 911 13	Trim (R), Side (GRY/YLW)	1	

TOP CEILING & TRIM (STATION WAGON)

No.	Part Number	Description	Q'ty	Remarks
●	1529 70 911 15	Cover, Pocket (GRY/YLW)	1	(Canada) 75/1～Added Anew
● 28	0585 70 912B	Mould, Side Pocket	1	(Canada) 75/1～Discarded
● 29	0585 70 921B01	Pocket, Side (BLK)	1	
●	1529 70 920A01	Pocket, Side (BLK)	1	(Canada) 75/1～×
●	0585 70 921B14	Pocket, Side (BRN)	1	From Car No. 1
●	1529 70 920A16	Pocket, Side (BRN)	1	(Canada) 75/1～×
●	0585 70 921B15	Pocket, Side (GRY/YLW)	1	From Car No. 1
●	1529 70 920A15	Pocket, Side (GRY/YLW)	1	(Canada) 75/1～×
● 30	99862 0416B	Screw, Tapping-Side Pocket } Selective use	17	75/1～Q'ty
●	99862 0416C	Screw, Tapping-Side Pocket } Selective use	19	(Canada) 75/1～Q'ty
●	99967 0400A	Washer } Selective use	17	75/1～Q'ty
●	99967 0400B	Washer } Selective use	19	(Canada) 75/1～Q'ty
● 31	99864 0420C	Screw, Tapping-Side Pocket (R)	2	75/1～Discarded
32	1624 71 911 03	Trim (L), Side (BLK)	1	
	1624 71 911 12	Trim (L), Side (BRN)	1	
●	1624 71 911 35	Trim (L), Side (BRN)	1	(Canada) 75/1～×
	1624 71 911 13	Trim (L), Side (GRY/YLW)	1	
● 33	0419 68 021	Cushion, Wire	1	From Car No. 1
● 34	1529 70 930	Bracket, Jack	1	(Canada) 75/1～Added Anew
● 35	99780 0625	Bolt, Jack Bracket	1	(Canada) 75/1～Added Anew

FLOOR MAT & TRIM

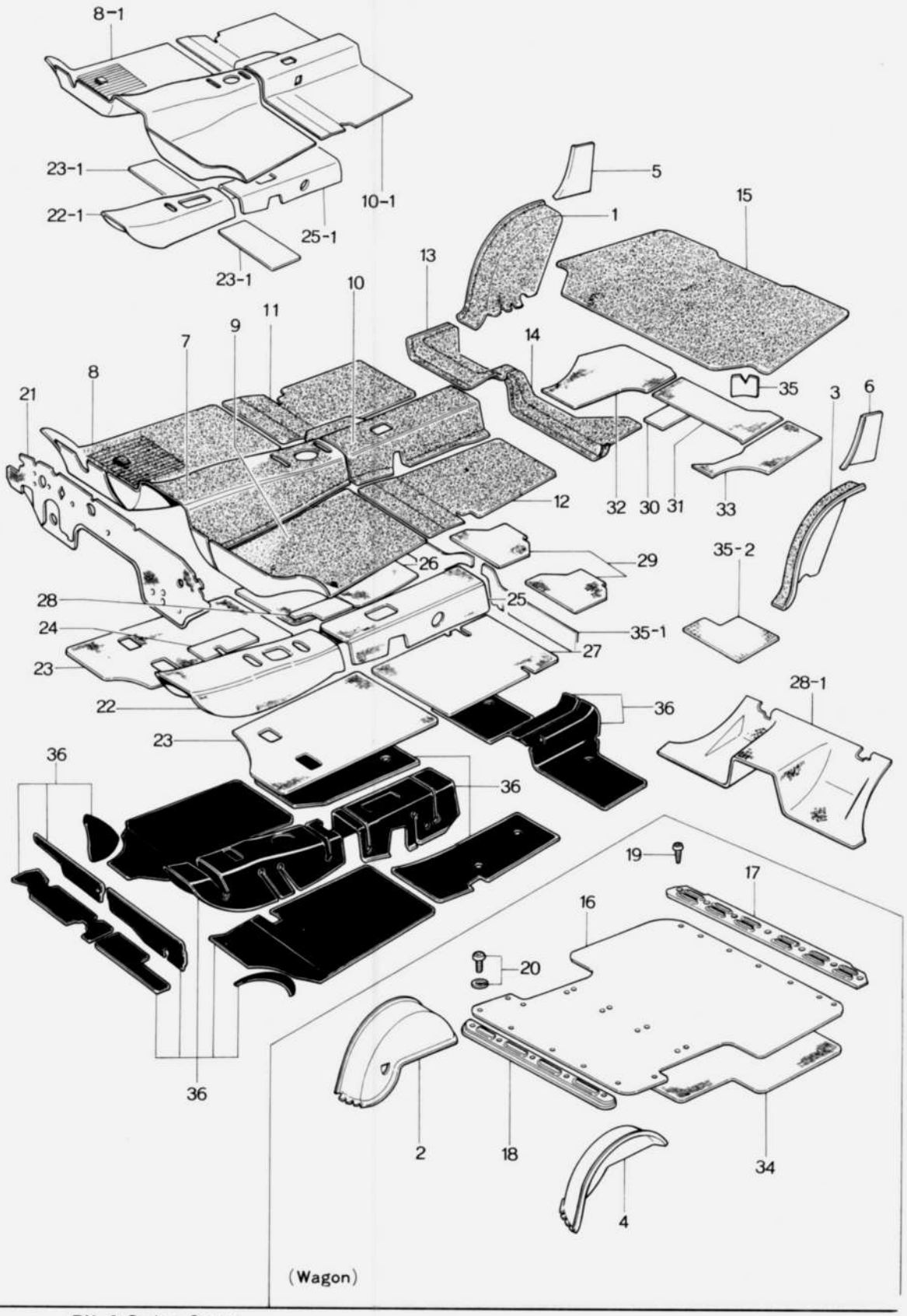

No.	Part Number	Description	Q'ty	Remarks

When ordering the following Trims
Add colour code nos. given below after parts number
03 (BLK) **12** (BRN) **13** (GRY / YLW)
35 (BRN) 75/1 ~ × (Canada)

1	1632 69 541	© Trim (R), Tire House (Sedan & Coupe)	1		
2	1636 69 541	© Trim (R), Tire House (Station Wagon)	1		
●	1636 69 541 A	© Trim (R), Tire House (Station Wagon)	1	(Canada)	75/1 ~ ×
3	1632 69 542	© Trim (L), Tire House (Sedan & Coupe)	1		
● 4	1636 69 543	© Trim (L), Tire House (Station Wagon)	1		
●	1636 69 543 A	© Trim (L), Tire House (Station Wagon)	1	(Canada)	75/1 ~ ×
5	0866 69 543 A	© Trim (R), Rear Seat Side	1	(Sedan)	
6	0866 69 544 A	© Trim (L), Rear Seat Side	1	(Sedan)	

When ordering the following Mats & Carpets
Add colour code nos. given below after parts number
● **34** (BLK) ~~**32 (GRY / YLW)**~~ From Car No. 1 **71** (BRN) 75/1 ~ Added Anew
● **70** (BLK) 74/7 ~ △ (Canada)

● 7	~~1524 69 611~~	~~© Mat (Frt., C), Carpet (Manual)~~	~~1~~	From Car No. 1
●	~~1525 69 611~~	~~© Mat (Frt., C), Carpet (Automatic)~~	~~1~~	From Car No. 1
● 8	~~1524 69 612~~	~~© Mat (Frt., C), Carpet (Manual)~~	~~1~~	
● 8-1	1881 69 612	© Mat (Frt.), Carpet (Manual)	1	From Car No. 1
●	1881 69 612 A	© Mat (Frt.), Carpet (Manual)	1	74/4 ~ △

No.	Part Number	Description	Q'ty	Remarks
●	1881 69 612B ©	Mat (Frt.), Carpet (Manual)	1	74/7 ~△
● 8	~~1525 69 612 © Mat (Frt., R), Carpet (Automatic)~~		~~1~~	
● 8-1	1883 69 613 ©	Mat (Frt.), Carpet (Automatic)	1	From Car No. 1
●	1883 69 613A ©	Mat (Frt.), Carpet (Automatic)	1	74/4 ~△
●	1883 69 613B ©	Mat (Frt.), Carpet (Automatic)	1	74/7 ~△
● 9	~~1881 69 613 © Mat (Frt., L), Carpet (Manual)~~		~~1~~	From Car No. 1
●	~~1883 69 613 © Mat (Frt., L), Carpet (Automatic)~~		~~1~~	
● 10	~~0866 69 616A © Mat (Rr., C), Carpet~~		~~1~~	
● 10-1	1881 69 617 ©	Mat (Rr.), Carpet	1	From Car No. 1
●	1881 69 617A ©	Mat (Rr.), Carpet	1	74/7 ~△
● 11	~~0866 69 617 © Mat (Rr., R), Carpet~~		~~1~~	From Car No. 1
● 12	~~0866 69 618 © Mat (Rr., L), Carpet~~		~~1~~	
13	0866 69 625A05	Mat (R), End (BLK) (Sedan & Coupe)	1	
	0585 69 625C05	Mat (R), End (BLK) (Station Wagon)	1	
●	0585 69 625D05	Mat (R), End (BLK) (Station Wagon)	1	74/4 ~○
●	1529 69 625 05	Mat (R), End (BLK) (Station Wagon)	1 (Canada)	75/1 ~×
14	0866 69 626A05	Mat (L), End (BLK) (Sedan & Coupe)	1	
	0585 69 626C05	Mat (L), End (BLK) (Station Wagon)	1	
●	0585 69 626D05	Mat (L), End (BLK) (Station Wagon)	1	74/4 ~○
●	1529 69 626 05	Mat (L), End (BLK) (Station Wagon)	1 (Canada)	75/1 ~×

No.	Part Number	Description	Q'ty		Remarks
15	~~0866 69 627 -10~~	~~Mat, Trunk Room (BLK) (Sedan & Coupe)~~	~~1~~		
●	1881 69 627	Mat, Trunk Room (BLK) (Sedan & Coupe)	1	From Car No. 1	
16	0899 69 627 C34	Mat, Trunk Room (BLK) (Station Wagon)	1		
●	1889 69 627 70	Mat, Trunk Room (BLK) (Station Wagon)	1		74/7 ~ △
●	3629 69 627 A70	Mat, Trunk Room (BLK) (Station Wagon)	1	(Canada)	75/1 ~ ×
●	3629 69 627 A71	Mat, Trunk Room (BLK) (Station Wagon)	1	(Canada)	75/1 ~ Added Anew
17	0585 69 628 F	Plate No. 1, Seat-Mat Rear	1		
18	0585 69 629 B00	Plate No. 2, Seat-Mat Front	1		
	1529 69 629	Plate No. 2, Seat-Mat Front	1	(Canada)	75/1 ~ ×
● 19	99861 0410	Screw, Tapping-Trunk Room Mat	5 (Station Wagon)		
●	99864 0410	Screw, Tapping	8	From Car No. 1	
●	99864 0412	Screw, Tapping	7		
20	99861 0410 B	Screw, Tapping-Trunk Room Mat	4		
	99967 0400 B	Washer	4		
21	1562 69 660 E	Insulator	1		
●	1562 69 660 F	Insulator	1		73/9 ~ ○
● 22	~~1128 69 683~~	~~Pad (Frt., C) (Manual)~~	~~1~~		
● 22-1	1881 69 683	Pad (Frt.) (Manual)	1	From Car No. 1	
● 22	~~1128 69 683~~	~~Pad (Frt., C) (Automatic)~~	~~1~~		
● 22-1	1883 69 683	Pad (Frt.) (Automatic)	1	From Car No. 1	

No.	Part Number	Description	Q'ty	Remarks
● 23	~~0866 69 684~~	~~Pad (Frt.) (Manual)~~	~~2~~	
●	~~0871 69 684~~	~~Pad (Frt., R)~~ (Automatic)	~~1~~	From Car No. 1
●	~~0871 69 685~~	~~Pad (Frt., L)~~ (Automatic)	~~1~~	From Car No. 1
● 23-1	1907 69 685	Pad, Seat Lower	2	From Car No. 1
● 24	~~1128 69 686~~	~~Pad, Trunk Side (Frt.)~~	~~1~~	From Car No. 1
● 25	~~1128 69 687~~	~~Pad (Rr., C)~~	~~1~~	
● 25-1	1881 69 687	Pad (Rr.)	1	From Car No. 1
● 26	~~0866 69 688~~	~~Pad (Rr., R)~~	~~1~~	
● 27	~~0866 69 689~~	~~Pad (Rr., L)~~	~~1~~	From Car No. 1
● 28	~~1128 69 691~~	~~Pad, Tunnel Side (Rr.)~~	~~1~~	
● 28-1	~~1128 69 692~~	~~Pad, End (Sedan & Coupe)~~	~~2~~	
●	1128 69 692 A	Pad, End (Sedan & Coupe)	1	From Car No. 1
29	1137 69 692	Pad, End (Station Wagon)	2	
●	1137 69 692 B	Pad, End (Station Wagon)	2	$\frac{74}{11}$~△
30	1570 69 695	Pad, Heat Insulator (Sedan & Coupe)	1	
31	0866 69 696	Pad (C), Trunk Room	1	
32	0866 69 697	Pad (R), Trunk Room	1	
● 33	~~0866 69 698~~	~~Pad (L), Trunk Room~~	~~1~~	From Car No. 1
● 34	~~1571 69 696 A~~	~~Pad, Trunk (Station Wagon)~~	~~1~~	
●	1571 69 696 B	Pad, Trunk (Station Wagon)	1	From Car No. 1

No.	Part Number	Description	Q'ty	Remarks
● 35	~~1570 69 699A~~	~~Pad~~	~~1~~	
●	1570 69 699C	Pad	1	From Car No. 1
●	1570 69 699D	Pad	1	73/11～
● 35-1	1128 69 681A	Pad, Rear Member (Sedan & Coupe)	1	
●	1137 69 681A	Pad, Rear Member (Station Wagon)	2	74/4～△
● 35-2	1128 69 682A	Pad, Tank (Sedan & Coupe)	1	
36	0208 76 071	Silencer	1	

A 30 cm square object in sheet form is supplied under part no. **0208 76 071**
(Floor Silencer Revised Piece)

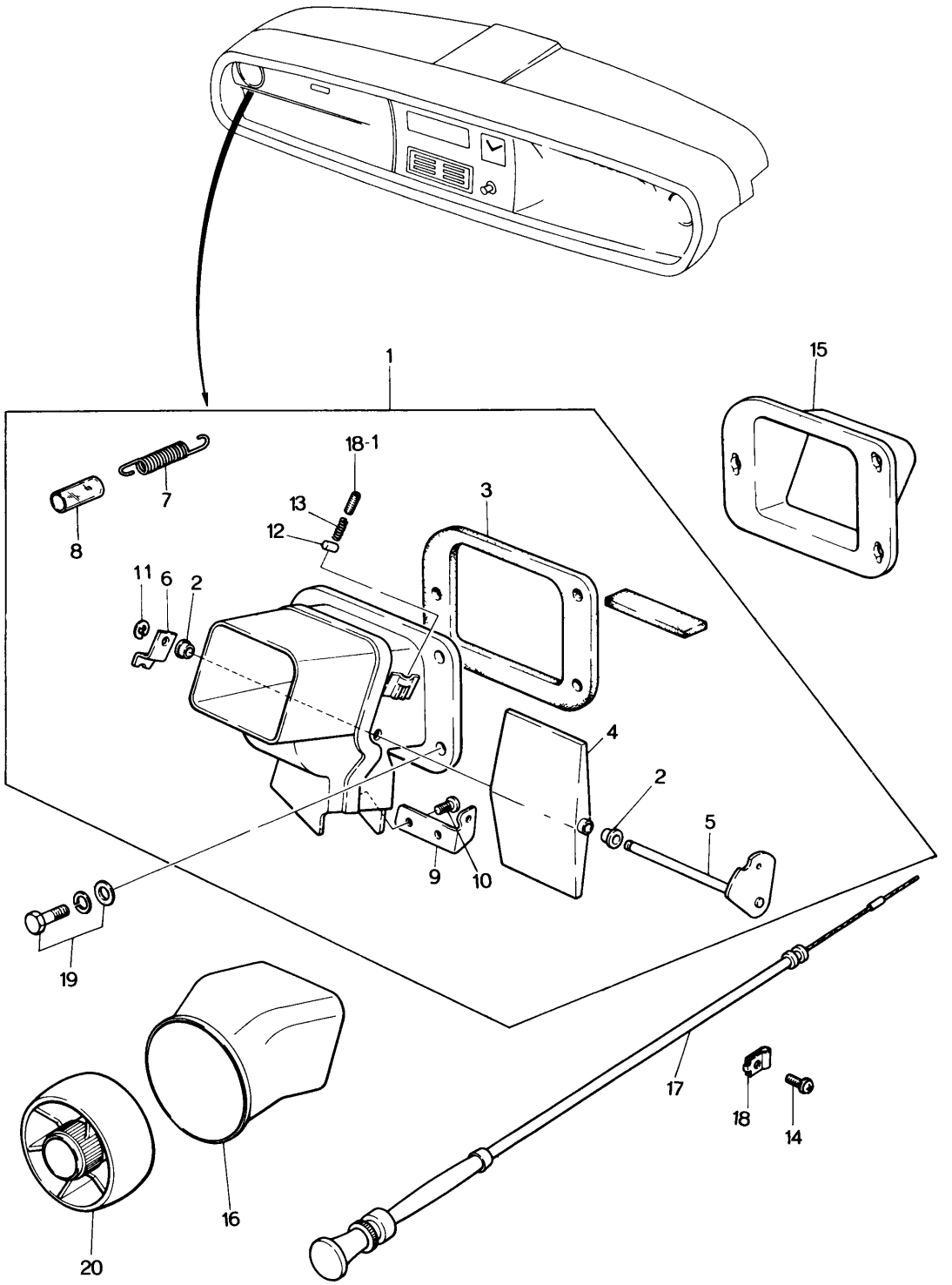
1
15
18-1
7
13
3
8
12
11
6
2
4
2
5
9
10
19
17
18
14
16
20

No.	Part Number	Description	Q'ty	Remarks
1	0866 70 310B	Ventilator (R)	1	Fig. No. 1~14,17~18-1 included
	0866 71 310B	Ventilator (L)	1	Fig. No. 1~14,17~18-1 included
2	0317 70 307	Bush	4	
3	0866 70 313	Gasket	2	
4	0866 70 320	Flap	2	
5	0866 70 330A	Lever	2	
6	0866 70 341A	Lever	2	
7	0866 70 342	Spring	2	
8	99335 0800B	Pipe	2	
9	0866 70 343	Bracket (R)	1	
	0866 71 343	Bracket (L)	1	
10	99864 0410	Screw, Tapping	4	
11	99576 0400	Ring, Snap	2	
12	0866 70 366	Roller	2	
13	0866 70 367	Spring	2	
14	99833 0410	Screw, Control Knob	2	
	99971 0400	Washer, Plain	2	
15	0866 70 351	Gasket (R)	1	
	0866 71 351	Gasket (L)	1	

70 71 VENTILATOR

No.	Part Number	Description	Q'ty	Remarks
16	0866 70 352	Duct (R), Ventilator	1	
	0866 71 352	Duct (L.), Ventilator	1	
17	0866 70 360C	Knob, Ventilator Control	2	
18	0866 70 395	Clamp, Wire	2	
● 18-1	0866 70 365	Spring Holder	2	From Car No. 1
19	99785 0620	Bolt, Ventilator & Gasket	6	
	99952 0600	Washer, Plain	6	
	99971 0600	Washer, Spring	6	
20	0866 70 371	Louver	2	

WINDOW GLASS & MOULDING
(SEDAN & COUPE)

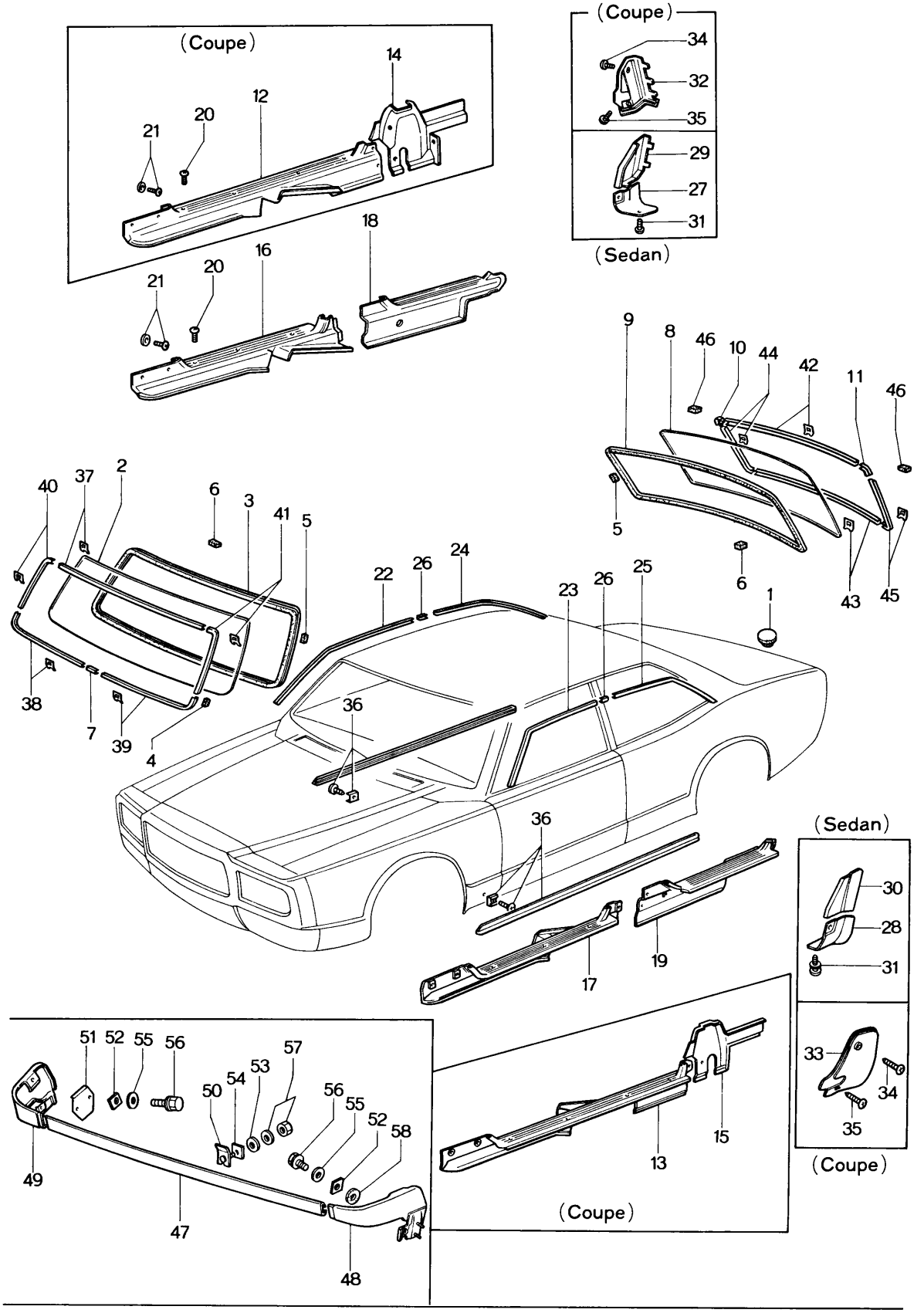

WINDOW GLASS & MOULDING
(SEDAN & COUPE)

70 71

No.	Part Number	Description	Q'ty		Remarks
1	0118 56 241	Plug, Drain	1		
2	1540 70 441	Glass, Front Window (Blue Pane)	1	(Sedan)	
	1531 70 441	Glass, Front Window (Transparent)	1		
	1542 70 441	Glass, Front Window (Blue Pane)	1	(Coupe)	
	1568 70 441	Glass, Front Window (Transparent)	1		
3	0305 70 443B	Dam, Front Window Glass	1		
● 4	~~0305 70 441B~~	~~Spacer "A"~~	~~6~~		
●	0305 70 447B	Spacer "A"	6		From Car No. 1
5	0305 70 448A	Spacer "B"	4		
6	0839 70 449	Spacer "C"	4		
7	0866 70 454	Joint, Mould-Front	1		
8	0374 70 471A	Glass, Back Window (Transparent)	1		
	0375 70 471A	Glass, Back Window (Blue Pane)	1		
	0376 70 471A	Glass, Back Window (Blue Pane) (With Heating Wire)	1	(Coupe)	
●	1882 70 471	Glass, Back Window (Blue Pane) (With Heating Wire)	1		74/7~×
	1562 70 471A	Glass, Back Window (Transparent) (With Heating Wire)	1		
●	1895 70 471	Glass, Back Window (Transparent) (With Heating Wire)	1		74/7~×
	1523 70 471A	Glass, Back Window (Transparent)	1		
	1524 70 471A	Glass, Back Window (Transparent) (With Heating Wire)	1	(Sedan)	
	1893 70 471	Glass, Back Window (Transparent) (With Heating Wire)	1		74/7~×

WINDOW GLASS & MOULDING
(SEDAN & COUPE)

No.	Part Number	Description		Q'ty	Remarks
	1534 70 471A	Glass, Back Window (Blue Pane) (With Heating Wire)		1	
●	1881 70 471	Glass, Back Window (Blue Pane) (With Heating Wire)	(Sedan)	1	74/7～×
	1535 70 471A	Glass, Back Window (Blue Pane)		1	
9	0866 70 473	Dam, Back Window Glass		1	
10	0376 70 484A	Joint (R), Mould (Coupe)		1	
	0866 70 484A	Joint (R), Mould (Sedan)		1	
11	0376 71 484A	Joint (L), Mould (Coupe)		1	
	0866 71 484A	Joint (L), Mould (Sedan)		1	
12	~~0376 70 801A~~	~~Plate (R), Scarf-Front~~		~~1~~	
●	0376 70 801B00	Plate (R), Scarf-Front		1	From Car No. 1
13	~~0376 71 801A~~	~~Plate (L), Scarf-Front~~		~~1~~	
●	0376 71 801B00	Plate (L), Scarf-Front	(Coupe)	1	From Car No. 1
14	1882 70 802	Plate (R), Scarf-Front		1	
15	1882 71 802	Plate (L), Scarf-Front		1	
16	~~0866 70 801A~~	~~Plate (R), Scarf-Front~~		~~1~~	
●	0866 70 801B00	Plate (R), Scarf-Front		1	From Car No. 1
17	0866 71 801A	Plate (L), Scarf-Front		1	
●	0866 71 801B00	Plate (L), Scarf-Front	(Sedan)	1	From Car No. 1
● 18	~~0866 70 802B~~	~~Plate (R), Scarf-Rear~~		~~1~~	
●	0866 70 802C00	Plate (R), Scarf-Rear (BLK)		1	From Car No. 1

WINDOW GLASS & MOULDING
(SEDAN & COUPE)

70 71

No.	Part Number	Description	Q'ty	Remarks
●	1881 70 802	Plate (R), Scarf-Rear (BLK)	1	74/1~△
● 19	~~0866 71 802B~~	~~Plate (L), Scarf-Rear~~	~~1~~ (Sedan)	
●	0866 71 802C 00	Plate (L), Scarf-Rear	1 From Car No. 1	
●	1881 71 802	Plate (L), Scarf-Rear	1	74/1~△
20	99862 0425B	Screw, Scarf Plate	(Sedan) 10 (Coupe) 8	
21	99864 0414B	Screw, Tapping-Scarf Plate	(Sedan) 14 (Coupe) 12	
	99952 0412B	Washer, Plain	(Sedan) 12 (Coupe) 8	
	99952 0516B	Washer, Plain	(Sedan) 2 (Coupe) 6	
	99864 0425B	Screw, Tapping	(Coupe) 2	
22	0376 70 821B	Mould (R), Drip-Front (Coupe)	1	
	0866 70 821B	Mould (R), Drip-Front (Sedan)	1	
23	0376 71 821B	Mould (L), Drip-Front (Coupe)	1	
	0866 71 821B	Mould (L), Drip-Front (Sedan)	1	
24	0376 70 822B	Mould (R), Drip-Rear (Coupe)	1	
	0866 70 822D	Mould (R), Drip-Rear (Sedan)	1	
25	0376 71 822B	Mould (L), Drip-Rear (Coupe)	1	
	0866 71 822D	Mould (L), Drip-Rear (Sedan)	1	
26	0866 70 823A	Joint, Drip Mould	2	
●	0866 70 823B	Joint, Drip Mould	2	73/10~△
27	0866 70 852	Guard "A" (R), Stone (Sedan)	1	

WINDOW GLASS & MOULDING
(SEDAN & COUPE)

No.	Part Number	Description		Q'ty	Remarks
●	1881 70 852	Guard "A" (R), Stone		1	74/8~○
28	0866 71 852	Guard "A" (L), Stone		1	
●	1881 71 852	Guard "A" (L), Stone		1	74/8~○
● 29	~~0866 10 853C~~	~~Guard "B" (R), Stone~~		⊣	
●	0866 70 853C	Guard "B" (R), Stone	(Sedan)	1	From Car No. 1
●	1881 70 853	Guard "B" (R), Stone	(Sedan)	1	74/8~○
30	0866 71 853C	Guard "B" (L), Stone	(Sedan)	1	
●	1881 71 853	Guard "B" (L), Stone	(Sedan)	1	74/8~○
31	99863 0512	Screw, Stone Guard	(Sedan)	4	
	99952 0500	Washer, Plain	(Sedan)	4	
● 32	~~0376 70 855B~~	~~Guard (R), Stone~~		⊣	
●	0376 70 855C	Guard (R), Stone	(Coupe)	1	From Car No. 1
●	1882 70 855	Guard (R), Stone	(Coupe)	1	74/8~○
● 33	~~0376 71 855B~~	~~Guard (L), Stone~~		⊣	
●	0376 71 855C	Guard (L), Stone	(Coupe)	1	From Car No. 1
●	1882 71 855	Guard (L), Stone	(Coupe)	1	74/8~○
34	99769 0410	Screw, Stone Guard	(Coupe)	4	
35	0870 70 875	Screw, Stone Guard	(Coupe)	2	
36	0866 99 721	Mould, Step		2	
●	1128 99 721	Mould, Step		2	74/2~△

WINDOW GLASS & MOULDING
(SEDAN & COUPE)

70 71

No.	Part Number	Description	Q'ty	Remarks
37	0376 99 741	Mould, Upper-Front (Coupe)	1	
	0866 99 741	Mould, Upper-Front (Sedan)	1	
38	0866 99 742	Mould (R), Lower-Front	1	
●	0866 99 742A	Mould (R), Lower-Front	1	74/12~△
39	0866 99 745	Mould (L), Lower-Front	1	
●	0866 99 745A	Mould (L), Lower-Front	1	74/12~△
40	0376 99 743	Mould (R), Side-Front (Coupe)	1	
●	0376 99 743A	Mould (R), Side-Front (Coupe)	1	74/12~△
	0866 99 743	Mould (R), Side-Front (Sedan)	1	
●	0866 99 743A	Mould (R), Side-Front (Sedan)	1	74/12~△
41	0376 99 744	Mould (L), Side-Front (Coupe)	1	
●	0376 99 744A	Mould (L), Side-Front (Coupe)	1	74/12~△
	0866 99 744	Mould (L), Side-Front (Sedan)	1	
●	0866 99 744A	Mould (L), Side-Front (Sedan)	1	74/12~△
42	0376 99 746	Mould, Upper-Rear (Coupe)	1	
	0866 99 746	Mould, Upper-Rear (Sedan)	1	
43	0376 99 747	Mould, Lower-Rear (Coupe)	1	
	0866 99 747	Mould, Lower-Rear (Sedan)	1	
44	0376 99 748	Mould (R), Rear (Coupe)	1	
●	0376 99 748A	Mould (R), Rear (Coupe)	1	74/12~△

70 71 WINDOW GLASS & MOULDING
(SEDAN & COUPE)

No.	Part Number	Description	Q'ty	Remarks
	0866 99 748	Mould (R), Rear (Sedan)	1	
●	0866 99 748A	Mould (R), Rear (Sedan)	1	74/12~△
45	0376 99 749	Mould (L), Rear (Coupe)	1	
●	0376 99 749A	Mould (L), Rear (Coupe)	1	74/12~△
	0866 99 749	Mould (L), Rear (Sedan)	1	
●	0866 99 749A	Mould (L), Rear (Sedan)	1	74/12~△
● 46	99688 1035	Protector, Joint	2	74/12~ Added Anew
● 47	1881 70 611	Garnish (R), Center	1	74/6~ Added Anew
● 48	1881 70 612	Garnish (Rr., R)	1	
●	1881 70 640A	Garnish (Rr., R)	1	74/11~ Added Anew
● 49	1881 70 613	Garnish (Rr., L)	1	74/6~ Added Anew
●	1881 70 650A	Garnish (Rr., L)	1	74/11~ Added Anew
● 50	1881 70 620	Bracket, Garnish	4	74/6~ Added Anew
● 51	1881 70 630	Bracket, Garnish	2	
● 52	0223 58 446	Sheet	2	
●	0111 57 111	Rubber, Set	4	
● 53	0223 58 446	Sheet	4	74/6~ Added Anew
● 54	0839 70 526	Sheet	4	74/6~ Added Anew
● 55	99952 0618	Washer, Plain	2	74/6~ Added Anew
●	0730 78 541	Washer, Plain	4	74/6~×

WINDOW GLASS & MOULDING
(SEDAN & COUPE)

70 71

No.	Part Number	Description	Q'ty	Remarks
● 56	99806 0612	Bolt, Bracket	2	74/6～ Added Anew
●	99796 0614	Bolt, Bracket	4	74/6～△
● 57	99906 0600	Nut, Bracket	4	74/6～ Added Anew
●	99940 0600	Nut, Bracket	4	74/6～ ⌒
●	99952 0618	Washer, Plain	4	74/6～ Added Anew
● 58	0866 50 102A	Spacer	2	74/11～ Added Anew

WINDOW GLASS & MOULDING
(STATION WAGON)

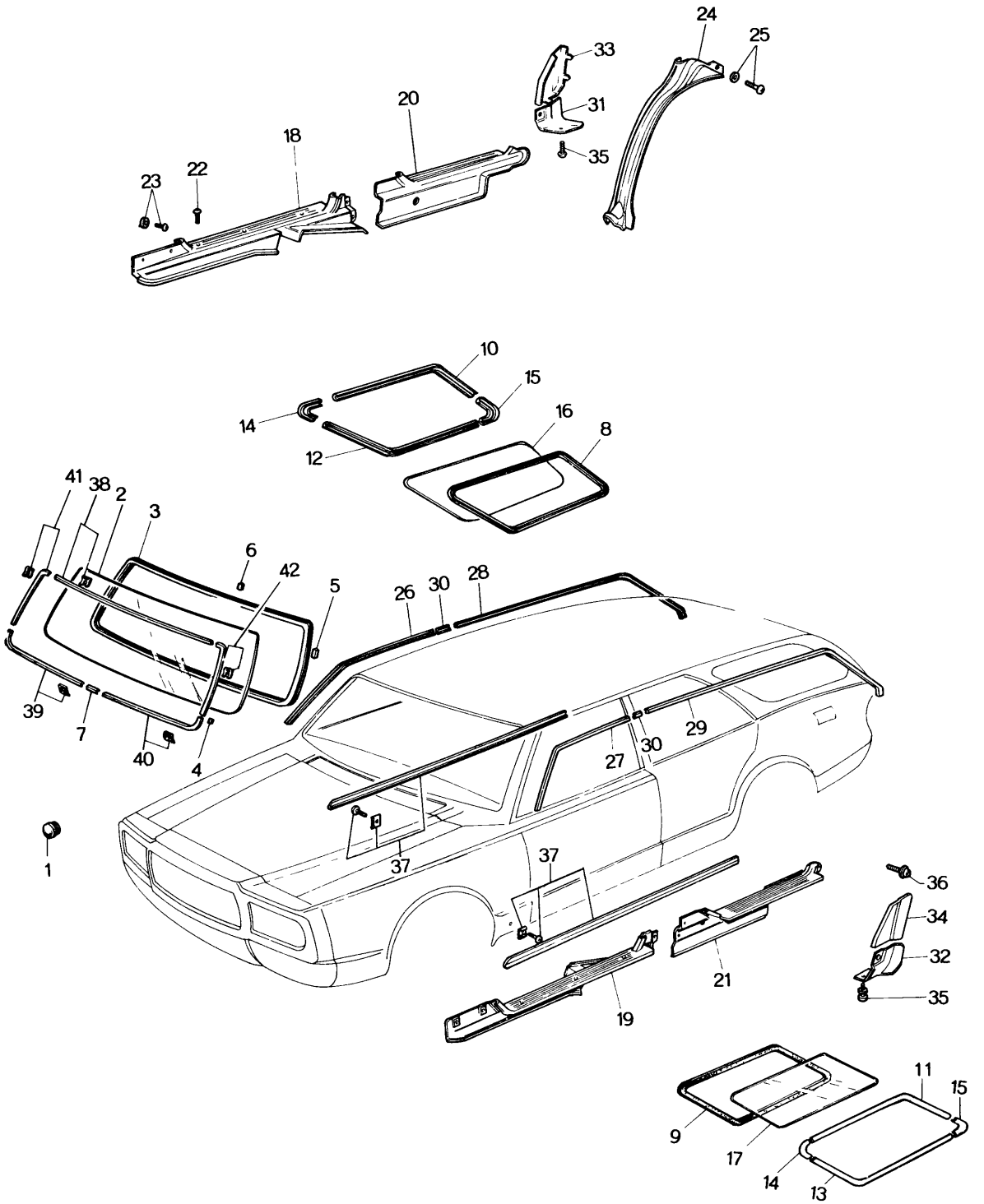

WINDOW GLASS & MOULDING
(STATION WAGON)

70 71

No.	Part Number	Description	Q'ty	Remarks
1	0118 56 241	Plug, Drain	1	
2	1531 70 441	Glass, Front Window (Transparent)	1	
	1540 70 441	Glass, Front Window (Blue Pane)	1	
3	0305 70 443 B	Dam, Front Window Glass	1	
4	0305 70 447 B	Spacer "A"	3	
● 5	~~0305 70 448~~	~~Spacer "B"~~	~~2~~	
●	0305 70 448 A	Spacer "B"	2	From Car No. 1
6	0839 70 449	Spacer "C"	2	
7	0866 70 454	Joint, Front Mould	1	
● 8	~~0585 70 521 B~~	~~Weatherstrip (R)~~	~~1~~	
●	0585 70 521 A	Weatherstrip (R)	1	From Car No. 1
●	0585 70 521 B	Weatherstrip (R)	1	73/12~×
●	0585 70 521 C	Weatherstrip (R)	1	74/2~○
● 9	~~0585 71 521 B~~	~~Weatherstrip (L)~~	~~1~~	
●	0585 71 521 A	Weatherstrip (L)	1	From Car No. 1
●	0585 71 521 B	Weatherstrip (L)	1	73/12~×
●	0585 71 521 C	Weatherstrip (L)	1	74/2~○
● 10	~~0585 70 531 A~~	~~Mould, Upper (R)~~	~~1~~	
●	0585 70 531	Mould, Upper (R)	1	From Car No. 1
●	0585 70 531 A	Mould, Upper (R)	1	73/12~×

WINDOW GLASS & MOULDING
(STATION WAGON)

No.	Part Number	Description	Q'ty	Remarks
● 11	~~0585 71 531 A~~	~~Mould, Upper (L)~~	~~1~~	
●	0585 71 531	Mould, Upper (L)	1	From Car No. 1
●	0585 71 531 A	Mould, Upper (L)	1	73/12～×
● 12	~~0585 70 532 A~~	~~Mould, Lower (R)~~	~~1~~	
●	0585 70 532	Mould, Lower (R)	1	From Car No. 1
●	0585 70 532 A	Mould, Lower (R)	1	73/12～×
● 13	~~0585 71 532 A~~	~~Mould, Lower (L)~~	~~1~~	
●	0585 71 532	Mould, Lower (L)	1	From Car No. 1
●	0585 71 532 A	Mould, Lower (L)	1	73/12～×
● 14	~~0585 70 533 A~~	~~Mould (Frt.)~~	~~2~~	
●	0585 70 533	Mould (Frt.)	2	From Car No. 1
●	0585 70 533 A	Mould (Frt.)	2	73/12～×
● 15	~~0585 70 534 A~~	~~Mould (Rr.)~~	~~2~~	
●	0585 70 534	Mould (Rr.)	2	From Car No. 1
●	0585 70 534 A	Mould (Rr.)	2	73/12～×
16	1529 70 551 A	Glass, Rear Side (R) (Transparent)	1	
	1544 70 551 A	Glass, Rear Side (R) (Blue Pane)	1	
17	1529 71 551 A	Glass, Rear Side (L) (Transparent)	1	
	1544 71 551 A	Glass, Rear Side (L) (Blue Pane)	1	
18	~~0866 70 801 A00~~	~~Plate (R), Scarf-Front (BLK.)~~	~~1~~	

WINDOW GLASS & MOULDING
(STATION WAGON)

70 71

No.	Part Number	Description	Q'ty	Remarks
●	0866 70 801 B00	Plate (R), Scarf-Front (BLK)	1	From Car No. 1
● 19	~~0866 71 801 A00~~	~~Plate (L), Scarf-Front (BLK)~~	~~1~~	
●	0866 71 801 B00	Plate (L), Scarf-Front (BLK)	1	From Car No. 1
● 20	~~0866 70 802 B00~~	~~Plate (R), Scarf-Rear (BLK)~~	~~1~~	
●	0866 70 802 C00	Plate (R), Scarf-Rear (BLK)	1	From Car No. 1
●	1881 70 802	Plate (R), Scarf-Rear (BLK)	1	74/1~△
● 21	~~0866 71 802 B00~~	~~Plate (L), Scarf-Rear (BLK)~~	~~1~~	
●	0866 71 802 C00	Plate (L), Scarf-Rear (BLK)	1	From Car No. 1
●	1881 71 802	Plate (L), Scarf-Rear (BLK)	1	74/1~△
22	99862 0425 B	Screw, Scarf Plate	10	
23	99864 0414 B	Screw, Scarf Plate	14	
●	99864 0416 B	Screw, Scarf Plate	14	74/3~○
	99952 0412 B	Washer, Plain	12	
	99952 0516 B	Washer, Plain	2	
24	0585 70 811 C	Plate (Rr.) Scarf	1	
25	99864 0414 B	Screw, Scarf Plate (Rr.)	2	
●	99864 0412 B	Screw, Scarf Plate (Rr.)	2	74/3~○
	99952 0400 B	Washer, Plain	2	
26	0866 70 821 B	Mould (R), Drip-Front	1	
27	0866 71 821 B	Mould (L), Drip-Front	1	

WINDOW GLASS & MOULDING
(STATION WAGON)

No.	Part Number	Description	Q'ty	Remarks
28	0585 70 822 B	Mould (R), Drip-Rear	1	
29	0585 71 822 B	Mould (L), Drip-Rear	1	
30	0866 70 823 A	Joint, Drip Mould	2	
●	0866 70 823 B	Joint, Drip Mould	2	73/10~△
31	0866 70 852	Guard "A" (R), Stone	1	
●	1881 70 852	Guard "A" (R), Stone	1	74/8~○
32	0866 71 852	Guard "A" (L), Stone	1	
●	1881 71 852	Guard "A" (L), Stone	1	74/8~○
33	0866 70 853 C	Guard "B" (R), Stone	1	
●	1881 70 853	Guard "B" (R), Stone	1	74/8~○
34	0866 71 853 C	Guard "B" (L), Stone	1	
●	1881 71 853	Guard "B" (L), Stone	1	74/8~○
35	99863 0512	Screw, Stopper Guard	4	
	99952 0500	Washer, Plain	4	
36	0870 70 875	Screw, Tapping-Stone Guard	2	
37	0866 99 721	Mould, Step	2	
●	1128 99 721	Mould, Step	2	74/2~△
● 38	~~0866 70 741~~	~~Mould, Upper~~	~~1~~	
●	0866 99 741	Mould, Upper-Front	1	From Car No. 1
● 39	~~0866 99 242~~	~~Mould, Lower (R) Front~~	~~1~~	

WINDOW GLASS & MOULDING
(STATION WAGON)

70 71

No.	Part Number	Description	Q'ty	Remarks
●	0866 99 742	Mould, Lower (R)-Front	1	From Car No. 1
●	0866 99 742 A	Mould, Lower (R)-Front	1	74/12~△
40	0866 99 745	Mould, Lower (L)-Front	1	
●	0866 99 745 A	Mould, Lower (L)-Front	1	74/12~△
41	0866 99 743	Mould (R), Front	1	
●	0866 99 743 A	Mould (R), Front	1	74/12~△
42	0866 99 744	Mould (L), Front	1	
●	0866 99 744 A	Mould (L), Front	1	74/12~△

REAR SIDE WINDOW (COUPE)

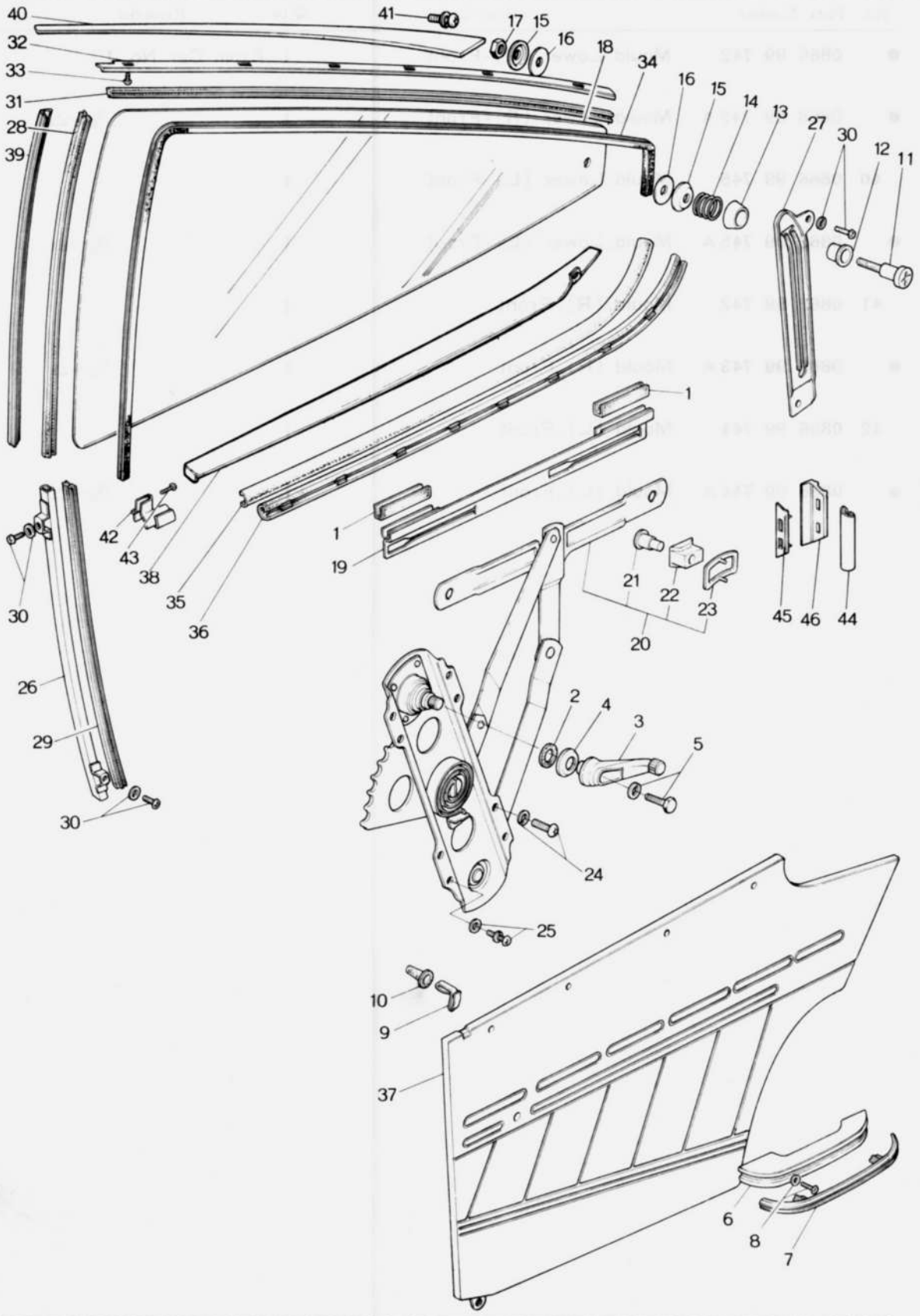

REAR SIDE WINDOW (COUPE) 72 73

No.	Part Number	Description	Q'ty	Remarks
1	2292 58 232	Strip, Rubber	4	
2	0259 58 305	Gasket, Regulator	2	
3	0824 58 370B	Handle, Regulator	1	
4	0223 58 375A	Escutcheon	2	
5	99806 0516	Bolt, Regulator Handle	2	
	99971 0500	Washer, Spring	2	
6	0398 58 821A00	Rest, Arm (BLK)	2	
7	0398 58 822A00	Garnish, Arm Rest (BLK)	2	
8	99833 0520	Screw, Arm Rest	4	
	99952 0500	Washer, Plain	4	
9	0208 58 921	Fastener, Quarter Trim	4	
10	0187 58 922	Cap, Fastener - Quarter Trim	4	
11	0839 70 521	Pin	2	
12	0839 70 522	Roller	2	
13	0839 70 523A	Seat, Spring	2	
14	0839 70 524	Spring	2	
15	0839 70 525	Washer	4	
16	0839 70 526	Seat	4	
17	99906 0500	Nut	2	
18	0374 72 501	Glass (R), Window (Transparent)	1	

72 73 REAR SIDE WINDOW (COUPE)

No.	Part Number	Description	Q'ty	Remarks
	0374 73 501	Glass (L), Window (Transparent)	1	
	0376 72 501	Glass (R), Window } Blue Pane	1	
	0376 73 501	Glass (L), Window } Blue Pane	1	
19	0376 72 505	Bracket, Lift	4	
20	0376 72 560	Regulator (R), Window	1	
	0376 73 560	Regulator (L), Window	1	
21	0223 58 303A	Pin	4	
22	0223 58 304A	Guide	4	
23	0223 58 311	Spring, Guide	4	
24	99805 0616	Bolt, Regulator	4	
	99952 0600	Washer, Plain	4	
	99971 0600	Washer, Spring	4	
25	99806 0612	Bolt, Regulator	8	
	99971 0600	Washer, Spring	8	
	99951 0618	Washer, Plain	8	
26	0376 72 602	Guide "A" (R), Glass	1	
	0376 73 602	Guide "A" (L), Glass	1	
27	0376 72 603	Guide "B" (R), Glass	1	

No.	Part Number	Description	Q'ty	Remarks
	0376 73 603	Guide "B" (L), Glass	1	
28	0376 72 605	Channel "A", Glass Run	2	
29	0376 72 606	Channel "B", Glass Run	2	
30	99806 0612	Bolt, Glass Guide	8	
	99971 0600	Washer, Spring	8	
	99951 0618	Washer, Plain	8	
31	0376 72 761	Weatherstrip (R)	1	
	0376 73 761	Weatherstrip (L)	1	
32	0376 72 771	Retainer	1	
	0376 73 771	Retainer	1	
33	99864 0408	Screw, Weatherstrip	8	
34	0376 72 755A00	Welt, Seaming (BLK)	2	
35	0376 72 781C	Weatherstrip, Outer "A" (R)	1	
	0376 72 781C	Weatherstrip, Outer "A" (L)	1	
36	0376 72 790	Weatherstrip, Inner "A" (R)	1	
	0376 73 790	Weatherstrip, Inner "A" (L)	1	
		When ordering the following quarter Trim Note : Add 03 (BLK) 12 (BRN) 13 (GRY/YLW) 35 (BRN) 75~× (Canada) after the parts number as colour code nos.		
37	1882 72 810 ©	Trim (R), Quarter	1	

REAR SIDE WINDOW (COUPE)

No.	Part Number	Description	Q'ty	Remarks
	1882 73 810 ©	Trim (L), Quarter	1	
38	0376 72 831B	Mould (R), Beltline	1	
	0376 73 831B	Mould (L), Beltline	1	
39	0376 72 851B	Garnish (R)	1	
	0376 73 851B	Garnish (L)	1	
40	0376 72 855	Mould (R), Quarter Line	1	
	0376 73 855	Mould (L), Quarter Line	1	
41	99863 0410	Screw, Quarter Line Mould	2	
	99971 0400	Washer, Spring	2	
	99952 0400	Washer, Plain	2	
42	0376 72 881	Cover (R)	1	
	0376 73 881	Cover (L)	1	
43	99864 041uB	Screw, Cover	2	
44	0376 72 890	Weatherstrip "B" (R) } Rear Pillar Trim	1	
	0376 73 890	Weatherstrip "B" (L) } Rear Pillar Trim	1	
45	0376 72 901C	Weatherstrip, Outer "B"	2	
46	0376 72 902B	Plate, Set	2	

REAR SIDE DOOR
(GLASS, SEDAN & STATION WAGON)

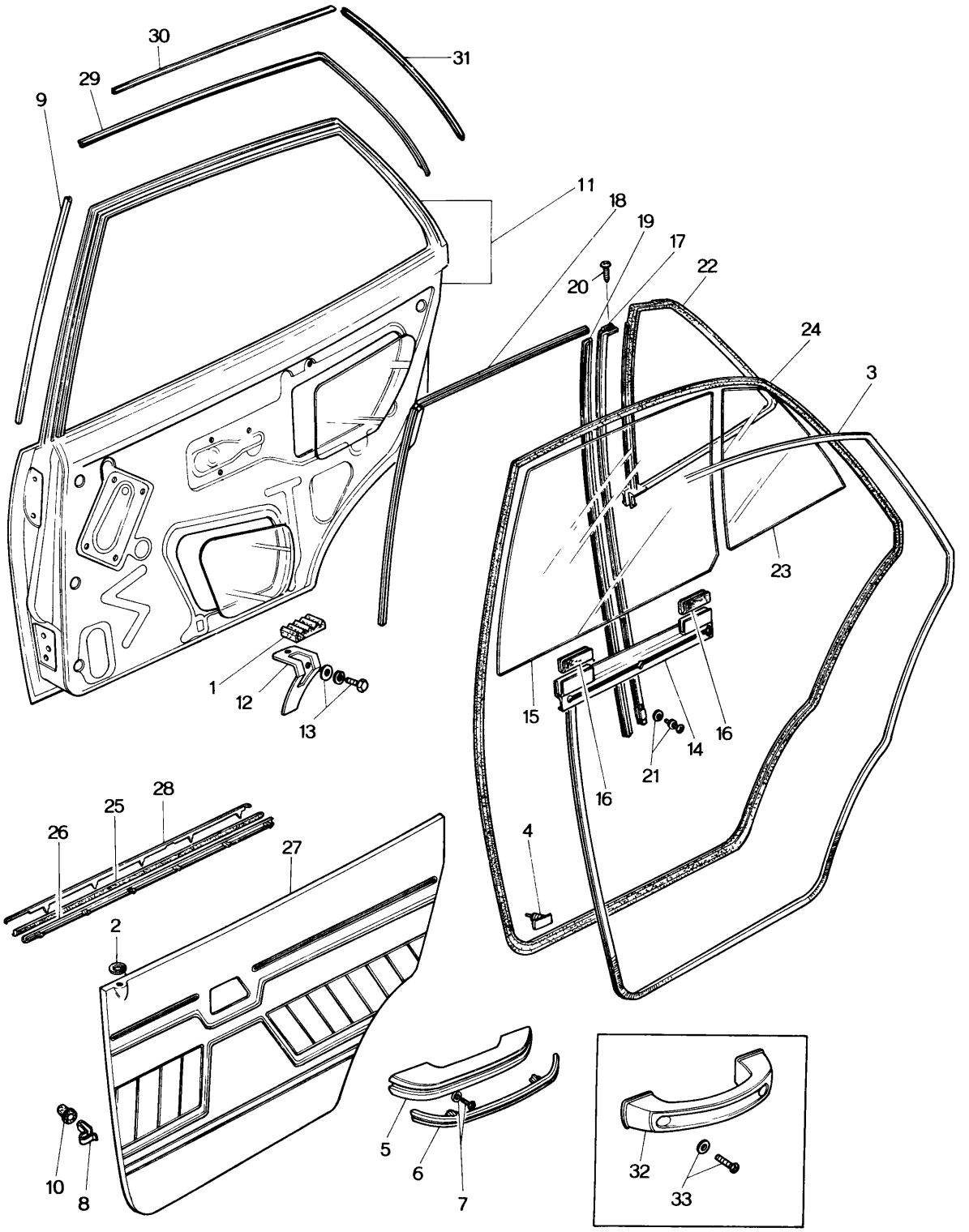

REAR SIDE DOOR
(GLASS, SEDAN & STATION WAGON)

72 73

No.	Part Number	Description	Q'ty	Remarks
1	0187 56 235	Rubber, Support	2	
2	0223 58 692A	Grommet	2	
3	0398 58 755-00	Welt, Seaming (BLK) (Sedan)	1	
	0585 72 755-00	Welt, Seaming (BLK) (Station Wagon)	1	
4	0305 58 762	Fastener, Weatherstrip	48	
5	0398 58 821A00	Garnish, Arm (BLK)	2	(Sedan)
6	0398 58 822A00	Garnish, Arm Rest (BLK)	2	(Sedan)
7	99833 0520	Screw, Arm Rest	4	(Sedan)
	99952 0500	Washer, Plain	4	(Sedan)
8	0208 58 921	Fastener	10 12	(Sedan) (Station Wagon)
9	0866 59 842A	Mould "B" (R), Sash	1	(Sedan & Station Wagon)
	0866 58 842A	Mould "B" (L), Sash	1	(Sedan & Station Wagon)
10	0187 58 922	Cap, Fastener	10 12	(Sedan) (Station Wagon)
11	1620 72 010	Body (R), Door	1	(Sedan)
	1620 73 010	Body (L), Door	1	(Sedan)
	1636 72 010	Body (R), Door	1	(Station Wagon)
	1636 73 010	Body (L), Door	1	(Station Wagon)
	0866 72 020A	Panel (R), Outer	1	
	0866 73 020A	Panel (L), Outer	1	

REAR SIDE DOOR
(GLASS, SEDAN & STATION WAGON)

No.	Part Number	Description	Q'ty	Remarks
12	0259 72 080	Stop, Glass	2	
13	99806 0612	Bolt, Glass Stop	2	
	99951 0618	Washer, Plain	2	
	99971 0600	Washer, Spring	2	
14	0259 72 210	Bracket, Lift-Door Glass	2	
● 15	~~0866 72 510A~~	~~Glass (R), Door~~ (Sedan)	~~1~~	
●	0866 72 501	Glass (R), Door (Sedan)	1	From Car No. 1
●	~~0866 73 501A~~	~~Glass (L), Door~~ (Sedan)	~~1~~	
●	0866 73 501	Glass (L), Door (Sedan)	1	From Car No. 1
●	~~0583 72 501A~~	~~Glass (R), Door~~ (Station Wagon)	~~1~~	
●	0583 72 501	Glass (R), Door (Station Wagon)	1	From Car No. 1
●	~~0583 73 501A~~	~~Glass (L), Door~~ (Station Wagon)	~~1~~	
●	0583 73 501	Glass (L), Door (Station Wagon)	1	From Car No. 1
16	0866 72 502	Strip, Rubber-Door Glass	2	
17	0866 72 602A 00	Channel (R), Center (BLK) (Sedan)	1	
	0866 73 602A 00	Channel (L), Center (BLK) (Sedan)	1	
	0585 72 602C 00	Channel (R), Center (BLK) (Station Wagon)	1	
	0585 73 602C 00	Channel (L), Center (BLK) (Station Wagon)	1	
18	0585 72 605	Channel "A", Glass Run (Station Wagon)	2	
	0866 72 605	Channel "A", Glass Run (Sedan)	2	
19	0585 72 606	Channel "B", Glass Run (Station Wagon)	2	
	0866 72 606	Channel "B", Glass Run (Sedan)	2	
20	99831 0408	Screw, Center Channel	4	
21	99806 0610	Bolt, Glass Run Channel	2	

No.	Part Number	Description	Q'ty	Remarks
	99951 0618	Washer, Plain	2	
	99971 0600	Washer, Spring	2	
22	0585 72 651 A	Weatherstrip (Station Wagon)	2	
	0866 72 651 B	Weatherstrip (Sedan)	2	
● 23	~~1524 72 661 C~~	~~Glass (R), Quarter Window (Sedan)~~	~~1~~	
●	1524 72 661 B	Glass (R), Quarter Window (Sedan)	1	From Car No. 1
●	~~1529 72 661 A~~	~~Glass (R), Quarter Window (Station Wagon)~~	~~1~~	
●	1529 72 661	Glass (R), Quarter Window (Station Wagon)	1	From Car No. 1
●	~~1524 73 661 C~~	~~Glass (L), Quarter Window (Sedan)~~	~~1~~	Transparent
●	1524 73 661 B	Glass (L), Quarter Window (Sedan)	1	From Car No. 1
●	~~1529 73 661 A~~	~~Glass (L), Quarter Window (Station Wagon)~~	~~1~~	
●	1529 73 661	Glass (L), Quarter Window (Station Wagon)	1	From Car No. 1
●	~~1540 72 661 B~~	~~Glass (R), Quarter Window (Sedan)~~	~~1~~	
●	1540 72 661 A	Glass (R), Quarter Window (Sedan)	1	From Car No. 1
●	~~1544 72 661 A~~	~~Glass (R), Quarter Window (Station Wagon)~~	~~1~~	
●	1544 72 661	Glass (R), Quarter Window (Station Wagon)	1	From Car No. 1
●	~~1540 73 661 B~~	~~Glass (L), Quarter Window (Sedan)~~	~~1~~	Blue Pane
●	1540 73 661 A	Glass (L), Quarter Window (Sedan)	1	From Car No. 1
●	~~1544 73 661 A~~	~~Glass (L), Quarter Window (Station Wagon)~~	~~1~~	
●	1544 73 661	Glass (L), Quarter Window (Station Wagon)	1	From Car No. 1

REAR SIDE DOOR
(GLASS, SEDAN & STATION WAGON)

No.	Part Number	Description	Q'ty	Remarks
24	0866 72 760A	Weatherstrip (R) } (Sedan)	1	
	0866 73 760A	Weatherstrip (L) } (Sedan)	1	
	0585 72 760A	Weatherstrip (R) } (Station Wagon)	1	
	0585 73 760A	Weatherstrip (L) } (Station Wagon)	1	
25	0866 72 781C	Weatherstrip, Outer	2	
26	0866 72 791	Weatherstrip, Inner	2	

When ordering following Door Trim, add following colour codes to designate colour

03 (BLK) **12** (BRN) **13** (GRY / YLW)

● **35** (BRN) $\frac{75}{1}\sim\times$ (Canada)

27	1620 72 810 ©	Trim (R), Door		1	
	1620 73 810 ©	Trim (L), Door		1	
28	0866 72 831D	Mould (R), Beltline		1	
●	~~0866 73 831~~	~~Mould (L), Beltline~~		~~1~~	
●	0866 73 831D	Mould (L), Beltline		1	From Car No. 1
29	0866 72 841A	Mould "A" (R), Sash		1	
●	~~0899 73 841B~~	~~Mould "A" (L), Sash~~	(Sedan)	~~1~~	
●	0866 73 841A	Mould "A" (L), Sash	(Sedan)	1	From Car No. 1
30	0899 72 841B	Mould "A" (R), Sash	(Station Wagon)	1	
	0899 73 841B	Mould "A" (L), Sash	(Station Wagon)	1	

REAR SIDE DOOR
(GLASS, SEDAN & STATION WAGON)

72 73

No.	Part Number	Description	Q'ty	Remarks
31	0899 72 843A	Mould (R), Sash	1	
	0899 73 843A	Mould (L), Sash	1	
32	0585 72 821	Handle, Pull	(Station Wagon)2	
33	99833 0520	Screw, Pull Handle	4	
	99952 0500	Washer, Plain	4	

REAR SIDE DOOR
(LOCK, SEDAN & STATION WAGON)

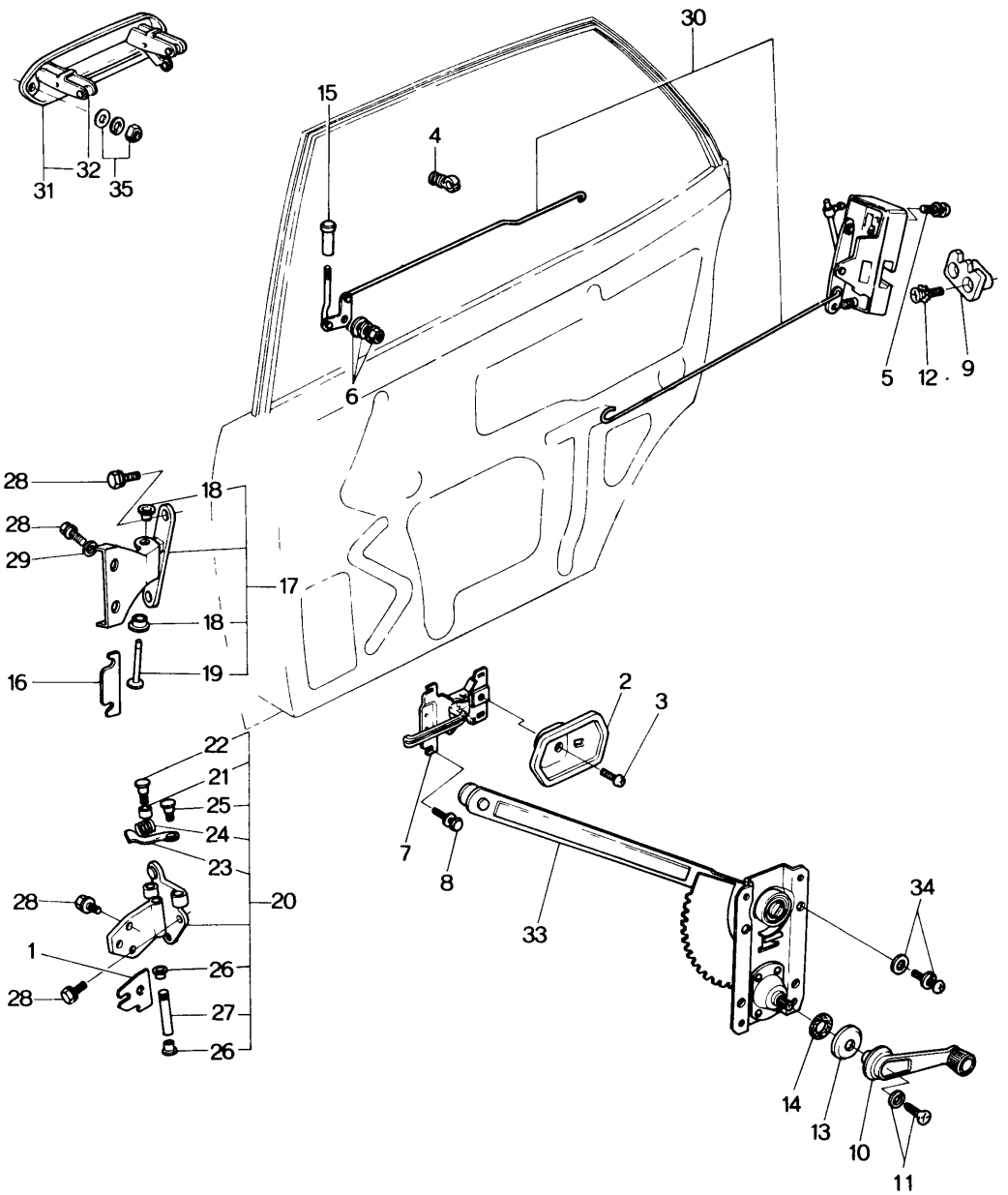

REAR, SIDE DOOR
(LOCK, SEDAN & STATION WAGON)

72 73

No.	Part Number	Description	Q'ty	Remarks
1	1011 58 231	Shim, Hinge - Selective use	—	
2	0866 58 303B01	Cover (R) (BLK)	1	
	0866 59 303B01	Cover (L) (BLK)	1	
3	99832 0408B	Screw, Cover	2	
4	0305 58 309	Holder, Rod	4	
5	99832 0630	Screw, Door Lock	6	
	99974 0600	Washer, Toothed	6	
6	99907 0600	Nut, Door Lock	2	
	99952 0600	Washer, Plain	2	
	99971 0500	Washer, Spring	2	
7	0866 58 321B	Handle, Inner	2	
8	99806 0510	Bolt, Inner Handle	6	
	99952 0500	Washer, Plain	6	
	99971 0500	Washer, Spring	6	
9	0866 58 361C	Rack (R)	1	
	0866 59 361C	Rack (L)	1	
10	0223 58 370D	Handle, Regulator	2	
11	99806 0516	Bolt, Regulator	2	
	99971 0500	Washer, Spring	2	
12	1540 58 371	Screw, Rack	4	

REAR SIDE DOOR
(LOCK, SEDAN & STATION WAGON)

No.	Part Number	Description	Q'ty	Remarks
	99975 0600	Washer, Toothed	4	
13	0223 58 375A	Escutcheon	2	
14	1011 58 552	Gasket, Window Regulator	2	
15	0259 58 091	Knob, Door Lock	2	
16	0866 72 201	Shim, Hinge - Selective use	—	
17	0866 72 210B	Hinge, "A" (R)	1	
	0866 73 2 10B	Hinge, "A" (L)	1	
18	0223 58 721	Bush	4	
19	0866 72 212A	Pin, Hinge	2	
20	0866 72 240	Hinge, "B" (R)	1	
	0866 73 240	Hinge, "B" (L)	1	
21	0866 58 281B	Roller	2	
22	0866 58 282A	Pin, "A"	2	
23	0866 58 291A	Lever, Check	2	
24	0866 72 292	Spring, Check	2	
25	0866 58 293	Pin, "B"	2	
26	0223 58 721	Bush	4	
27	0187 58 731	Pin, Hinge	2	

No.	Part Number	Description	Q'ty	Remarks
28	99783 0828	Bolt, Hinge	12	
	99971 0800	Washer, Spring	12	
29	99951 0822	Washer, Plain-Hinge "A"	4	
30	1524 72 310G	Lock (R) Door	1	
	1524 73 310G	Lock (L) Door	1	
31	0866 72 410A	Handle (R), Outer Side	1	
	0866 73 410A	Handle (L), Outer Side	1	
32	0305 58 411A	Bush, Outer Handle	2	
33	0866 72 560	Regulator (R), Window	1	
	0866 73 560	Regulator (L), Window	1	
34	99806 0612	Bolt, Window Regulator	8	
	99952 0600	Washer, Plain	8	
	99971 0600	Washer, Spring	8	
35	99906 0500	Nut, Outer Handle	4	
	99951 0618	Washer, Plain	4	
	99971 0500	Washer, Spring	4	

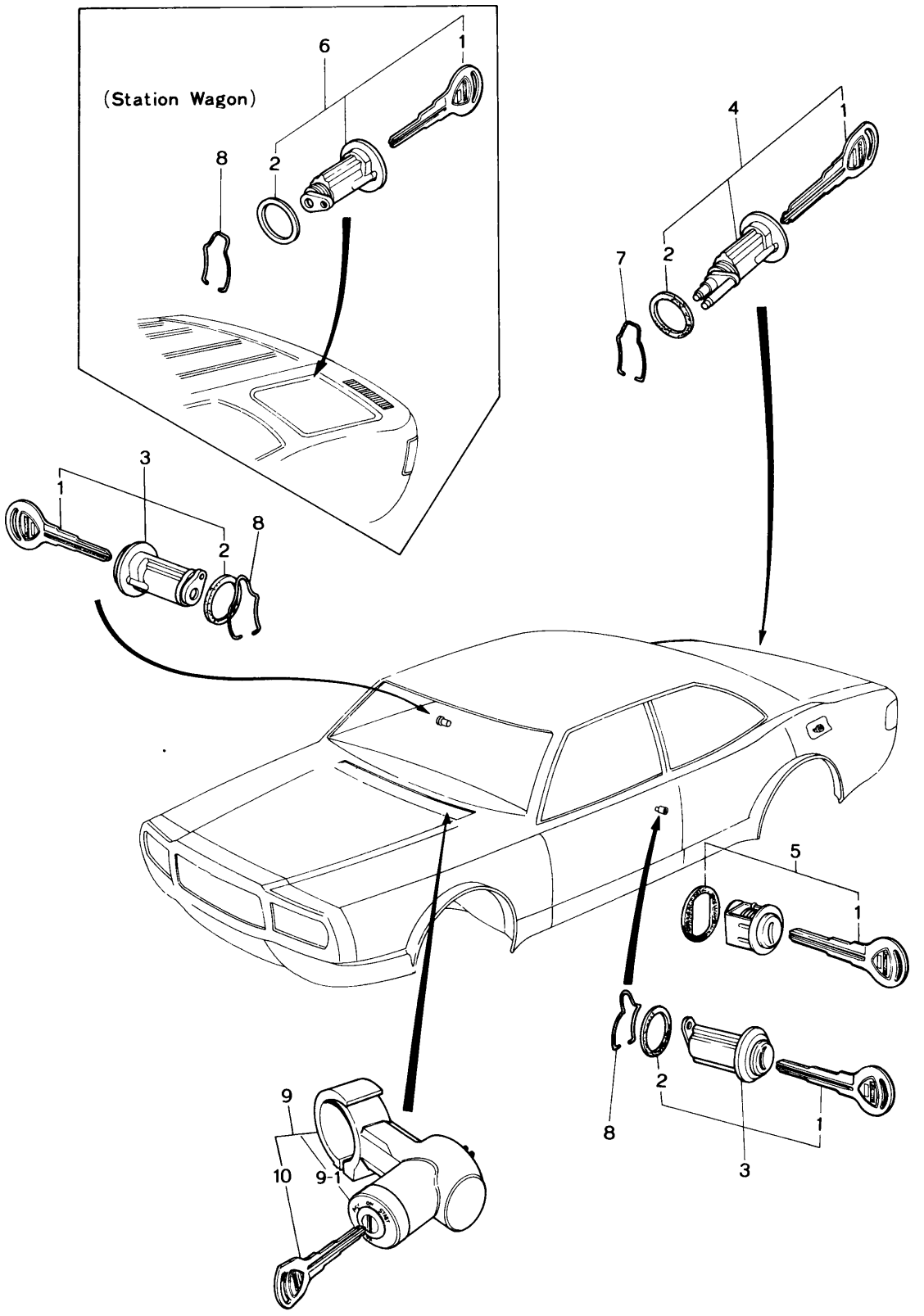
(Station Wagon)
6
1
8
2
4
1
7
2
3
1
2
8
5
1
2
8
1
3
9
10
9-1

No.	Part Number	Description	Q'ty	Remarks
	1562 09 010A	Key Set (Sedan & Coupe)	1	
	1571 09 010	Key Set (Station Wagon)	1	
1	0839 58 492A	Key, Primary	2	
2	0223 58 962	Gasket, Door (Sedan & Coupe)	2	
	0223 58 962	Gasket, Door (Station Wagon)	1	
3	0839 74 910A	Key Sub Set, Door	2	
4	0866 75 930	Key Sub Set, Trunk Lid (Sedan & Coupe)	1	
5	0370 75 940	Key Sub Set, Filler Lid	1	
6	0899 75 960	Key Sub Set, Back Door (Station Wagon)	1	
7	0305 52 802	Retainer, Trunk Lid	1	
8	0223 58 961	Fastener, Door Key Cylinder	2	
	0223 58 961	Fastener, Door Key Cylinder	1	
● 9	~~2280 60 430~~	~~Lock, Steering~~	~~1~~	
●	2280 60 430D	Lock, Steering	1	From Car No. 1
● 9-1	2280 60 435	Switch	1	From Car No. 1
10	2835 60 439	Key	2	
	0839 74 158	Blank Key, Primary Key No. 2500~2999	—	
	0839 74 168	Blank Key, Primary Key No. 3000~3499	—	
	2280 75 641	Blank Key, Steering Lock	—	

INDEX. 1562 09 010A~1883 11 400

Parts Number	Parts Composition List Page	Fig. No.
1562 09 010A	324	—
1571 09 010	324	—
1881 10 100A	2	1
0839 10 105	2	2
0839 10 111B	2	6
1617 10 120	2	3
1757 10 171	2	7
0813 10 172	2	8
0813 10 173	2	9
0813 10 174	2	10
1757 10 200A	2	11
0820 10 203	3	27
0839 10 203	2	12
2329 10 204	2	13
0839 10 205	2	14
	3	28
1757 10 206	2	15
1757 10 207	2	16
0324 10 250	3	24
0324 10 252	3	25
1881 10 300A	3	26
1883 10 300A	3	26
1757 10 305	4	43
1757 10 309	3	29
0866 10 320A	3	30
1757 10 351	4	45
2329 10 417	7	84
1015 10 451	4	47
1015 10 452	4	47
0839 10 455	4	48
0839 10 500B	9	1
0820 10 502B	9	2
	9	5
0839 10 504	9	3
1668 10 550	9	4
0813 10 555	9	8
1668 10 556	9	6
1757 10 600	4	49
0820 10 605	4	50
0820 10 631B	4	51
1757 10 641	5	63
1621 10 700A	6	61
0839 10 711	6	67
0839 10 721	6	68
0839 10 722	6	69
0839 10 723	6	70
0839 10 830	6	72
1757 10 845	6	73
1757 10 861	6	74
1757 10 862	6	76
1011 11 111	12	51
1011 11 301B	9	9
1011 11 302B	9	10
1011 11 304A	9	11
0820 11 317	9	12
1011 11 321	9	13
0839 11 323A	9	14
0820 11 341	9	15
0820 11 343	10	16
1011 11 351	10	17
1011 11 353	10	18
1011 11 361	10	19
1011 11 363	10	20
1881 11 400	10	21
1883 11 400	10	21

1881 11 403	10	22
1881 11 404	10	23
0813 11 405	10	24
0839 11 411A	10	25
0839 11 412	10	26
1011 11 501	10	29
0839 11 502	10	31
1011 11 504	11	32
0813 11 505B	11	33
0839 11 506	11	31
1011 11 507	11	34
0839 11 508	11	31
0839 11 509	11	31
1881 11 511	11	35
1757 11 512	11	36
0839 11 531	11	37
1757 11 541	11	38
1757 11 551	11	39
1757 11 600	11	40
0820 11 611B	11	41
1881 11 700	111	43
0866 11 702	11	44
0820 11 703	11	45
0820 11 705	11	46
0810 11 711	12	47
0820 11 712	12	48
1883 11 750	12	49
1881 13 100	14	1
1881 13 111	14	10
1881 13 200	17	1
1883 13 200	17	1
0839 13 201	17	2
0823 13 221A	17	3
1570 13 222	17	4
1757 13 251	14	11
1883 13 255	14	12
1881 13 300	19	1
1617 13 305A	19	6
1881 13 310	19	7
1883 13 311	19	8
1881 13 330	14	14
0866 13 341B	14	16
1881 13 351	19	2
0222 13 363	140	4
1881 13 400	140	5
0866 13 401A	140	6
1624 13 401	140	6
0866 13 402A	140	7
0118 13 432	264	39
1570 13 442	140	12
1570 13 446A	140	16
1570 13 447	141	18
0222 13 470B	141	20
0381 13 481	141	21
1881 13 510A	21	1
1881 13 515	21	2
1668 13 527	21	4
1668 13 531A	21	5
0839 13 614	15	20
1757 13 710	23	1
1758 13 710	23	1
1757 13 714	23	3
1757 13 715	23	6
1757 13 717	23	7
1757 13 718	23	8
1757 13 720	23	9
1758 13 720	23	9
1757 13 724	23	11
2329 13 726	23	12
1758 13 730	24	13
1757 13 740	24	14
2090 13 742A	15	18
1757 13 744	24	16
2090 13 746	24	17
1757 13 750	24	18

INDEX. 1757 13 752~0820 15 106

1757 13 752	24	19
1883 13 752	24	19
1757 13 753	24	20
1883 13 753	24	20
1757 13 754	24	21
1883 13 754	24	21
2329 13 754A	24	22
1757 13 757	24	23
1757 13 770	24	28
1757 13 772	24	29
1883 13 772	25	30
1883 13 775	25	34
1757 13 776	25	35
1883 13 776	25	35
1757 13 778	25	36
1757 13 780	141	25
1757 13 785	141	23
1757 13 786	141	26
1883 13 786	141	26
1757 13 788	141	27
0862 13 790	141	28
1624 13 795	141	29
1881 13 800	15	17
2329 13 876	15	19
2329 13 882	15	20
1757 13 889	15	21
1757 13 891	15	22
	129	1
1883 13 910	25	37
1883 13 930	24	24
1883 13 936	24	25
1757 14 020	27	1
1757 14 100	27	8
1757 14 112	27	9
0810 14 113	27	10
0839 14 115	5	52
0839 14 117	27	11
0820 14 118C	27	12
0839 14 119B	27	13
0823 14 130	27	2
0823 14 131	27	3
1757 14 132	27	4
0839 14 133	27	5
0839 14 141A	28	16
0839 14 142	28	17
0866 14 160E	28	18
0810 14 171	28	19
0820 14 250D	28	21
0839 14 273A	5	53
0839 14 274	5	54
0839 14 300	28	22
1757 14 600	29	28
1757 14 611	30	50
0820 14 620	30	52
0813 14 623	30	53
0820 14 625A	30	54
0813 14 641	30	55
1757 14 651	30	56
1757 14 660	30	60
1757 14 670	30	61
1757 14 680	31	62
1011 14 683	31	63
1881 14 700	33	1
0813 14 716	33	6
0866 14 720A	33	7
1570 14 730A	33	8
1757 14 740	33	9
0839 14 745	33	11
1757 14 810	33	2
1757 14 821	33	3
1757 14 822	33	4
1907 15 010	34	17
2090 15 104	34	18
1757 15 105	35	34
0820 15 106	35	35

1757 15 114	34	19
1757 15 118	34	20
0820 15 120	34	21
1757 15 132	34	22
1757 15 151	35	37
1757 15 152	34	23
1757 15 170	34	25
0823 15 171	34	24
0813 15 173	34	27
1097 15 200	35	41
0222 15 205	36	46
2981 15 205	36	53
1907 15 210	35	42
1757 15 211	35	39
1907 15 250	35	40
1128 15 310B	35	45
1129 15 310B	35	45
1128 15 312A	36	49
1128 15 317	36	47
0866 15 351A	36	56
0866 15 350C	36	52
1881 15 411A	36	58
1881 15 421A	36	59
1881 15 511	37	62
1881 15 521	37	63

1881 15 906	229	1
1881 15 911A	229	2
1757 15 912	229	3
1881 15 920	229	4
1881 15 940	229	5
1757 15 966	229	6
1757 15 967	229	7
0603 16 102B	39	1
0603 16 103	39	5
0222 16 105	39	6
0813 16 112	39	3
1881 16 210A	39	4
0866 16 214A	39	7
0839 16 410B	39	8
0839 16 432	39	9
0862 16 460	39	11
0820 16 510	39	12
0820 16 515	39	13
0454 16 520	39	14
1011 17 100B	42	1
0839 17 105	42	2
0839 17 111	42	6
0810 17 121	42	7
0862 17 201	45	1
0810 17 204	45	2

0810 17 205	45	3
1011 17 221A	45	4
0317 17 225	45	5
0862 17 230	45	6
0862 17 241	45	7
0187 17 243	45	8
0881 17 245B	45	9
0862 17 250	45	10
0867 17 261	45	11
0862 17 262A	45	12
1011 17 270	45	13
0839 17 275	45	14
0839 17 276	45	15
0839 17 277	45	15
0839 17 278	45	15
0839 17 281	45	16
0839 17 284	45	17
0839 17 285	45	18
0839 17 287	46	19
0839 17 288	46	19
0821 17 297	46	20
1011 17 301	46	21
0839 17 302	46	22
0821 17 303	46	23
0839 17 305	46	24

INDEX. 0839 17 310～1757 18 140

0839 17 310	46	25
0118 17 313	49	1
0839 17 313	46	26
0839 17 321 A	46	27
0111 17 323	49	2
0600 17 324	46	29
0305 17 327	46	30
0305 17 328	46	30
1620 17 330 A	42	9
0376 17 335	42	12
	72	31
	74	—
0862 17 341	46	31
	82	1
0114 17 351	49	3
0862 17 351	42	13
	71	1
0187 17 352	42	14
	71	2
0111 17 354	42	15
	71	3
0839 17 361	42	17
0862 17 371	43	18
0862 17 375	43	20
0810 17 381	43	21
0810 17 385	43	22
0810 17 402	49	4
1010 17 404	49	5
1011 17 406	49	6
1011 17 410	49	7
0103 17 411	49	8
1010 17 420	49	9
0839 17 431	49	10
0221 17 441	49	11
0259 17 441	49	12
0862 17 441	43	25
	71	5
0862 17 442	43	26
	71	6
1620 17 450	49	16
0398 17 461 A	49	17
0398 17 462 A	49	18
0303 17 470	49	19
0221 17 473	50	22
0303 17 474	51	38
0221 17 475 B	50	24
0271 17 478	50	25
0303 17 482	51	39
0183 17 491	50	26
0187 17 492	50	27
0866 17 510	50	28
0371 17 520	50	29
0881 17 520	50	29
0824 17 524	50	30
1011 17 530	43	30
1011 17 535	43	31
1011 17 540 A	43	33
0221 17 551 A	50	31
0221 17 552	50	32
0303 17 561	50	33
1114 17 630	50	34
0376 17 640 A	50	36
1562 18 100	53	1
1672 18 100	53	2
0845 18 101	53	16
0866 18 101	53	17
0866 18 107	53	3
1757 18 110	53	4
0820 18 111 B	53	5
0823 18 111	254	1
0820 18 114	53	10
1757 18 115	53	6
1757 18 120	53	7
1757 18 130	53	11
1757 18 140	53	12

1757 18 150	53	9
1757 18 160	53	8
1757 18 170	53	13
1757 18 180	53	14
1011 18 190	53	15
1881 18 200	54	20
0107 18 216 A	54	21
0810 18 276	31	64
0810 18 277	31	64
0820 18 291 B	55	39
1011 18 300	57	1
1757 18 311	58	20
1881 18 361	58	23
0222 18 375	58	26
0222 18 376	58	26
0222 18 377	58	26
1672 18 381 A	58	27
1620 18 390	55	40
0259 18 391 B	55	42
1757 18 400 A	60	1
2869 18 400 A	63	1
0866 18 496	37	65
0866 18 501 A	3	31
1757 18 510	3	32
1672 18 520	61	24
1689 18 520	64	29
2328 18 600	55	44
2691 18 660	144	1
0866 18 810	55	45
1757 18 860	25	39
1881 18 880	37	66
1114 18 890 A	254	2
1663 18 920	6	77
2329 18 921	7	87
2329 18 922	6	78
2329 18 923	6	79
2329 18 924	7	80
2329 18 930 B	254	3
1757 18 940 A	55	47
1758 18 940 A	55	47
2070 19 020	67	1
0842 19 025	67	3
1908 19 027	67	5
0454 19 028	67	6
0842 19 031	86	1
1908 19 090	69	—
0338 19 100 A	67	8
1908 19 211	67	9
0338 19 215	67	10
	74	—
0338 19 216	67	11
0338 19 220	67	12
0338 19 223	67	13
	74	—
0338 19 240	67	14
0338 19 245	67	15
0338 19 256	67	16
0338 19 257	68	17
0338 19 258	68	18
	74	—
0338 19 310	71	10
0338 19 331 A	71	11
0338 19 336	71	13
0338 19 337	71	14
0338 19 338	71	15
0397 19 340	71	16
0338 19 360	76	1
0338 19 361	72	18
0338 19 363	72	19
0842 19 381	72	20
0338 19 384	72	21
0842 19 385	72	22
0338 19 386 A	72	23
0338 19 388 A	72	24
0338 19 389	72	25

INDEX. 0842 19 391～0338 19 593

0842 19 391	72	26
0842 19 394	72	27
0338 19 395	72	28
0338 19 397	72	29
	83	25
0338 19 431	86	3
0338 19 432	74	—
	86	4
0338 19 433	86	5
0338 19 440	86	6
0338 19 443	86	7
1675 19 444A	86	8
0338 19 446	74	—
	86	9
0338 19 448	86	10
0338 19 449	86	11
0338 19 450	86	12
0338 19 460	76	2
0338 19 470	76	3
0338 19 475	76	4
	77	17
	79	—
0338 19 476	76	5
	77	18
	79	—
0338 19 480	76	6
	77	19
0338 19 486	76	7
	77	20
	79	—
0338 19 487	76	8
	77	21
	79	—
0338 19 488	76	9
	77	22
	79	—
0338 19 493	76	10
	77	23
0338 19 498	76	11
	77	24
	79	—
0338 19 499	76	12
	77	25
	79	—
0338 19 500	76	13
	77	26
	80	—
0338 19 503	76	14
0338 19 504	76	14
0338 19 505	76	14
0338 19 506	76	14
0338 19 507	76	14
0338 19 508	76	14
0338 19 509	77	15
	77	27
	80	—
0338 19 510	77	16
0338 19 511	77	28
0338 19 515	77	29
0338 19 530	77	30
0338 19 531	77	31
0338 19 533	77	32
0338 19 534	78	33
0338 19 540	78	34
0338 19 550	78	35
0338 19 560	78	36
0338 19 565	78	37
0338 19 566	78	38
0338 19 567	78	39
0338 19 570	78	40
0338 19 580	82	4
0338 19 581	82	5
0338 19 590	82	6
0338 19 591	82	7
0338 19 593	82	8

0338 19 594	82	9
0338 19 595	82	10
0338 19 596	82	11
0338 19 598	78	41
0338 19 601	82	12
0338 19 603	74	—
	82	13
0338 19 604	74	—
	82	14
0338 19 605	82	15
0338 19 606	82	16
0338 19 607	82	17
0338 19 608	83	18
0338 19 609	83	19
0338 19 610	83	20
0338 19 613A	83	21
0338 19 614A	83	21
0338 19 615A	83	21
0338 19 616A	83	21
0338 19 617A	83	21
0338 19 618A	83	21
0338 19 619	83	22
0338 19 621	78	42
	80	—
0338 19 622	78	43
0338 19 622	83	23
0338 19 623	78	44
0338 19 624	78	45
0338 19 631	78	46
0338 19 632	78	46
0338 19 633	78	46
0338 19 634	78	46
0338 19 635	79	46
0338 19 636	79	46
0338 19 638	79	47
	80	—
0338 19 639	79	48
0338 19 641	79	49
0338 19 642	79	49
0338 19 643	79	49
0338 19 644	79	49
0338 19 645	79	49
0338 19 646	79	49
0338 19 647	79	49
0842 19 650	83	24
0338 19 651	83	26
0338 19 655	83	27
0338 19 656	83	28
0842 19 660	83	29
0338 19 661	83	30
0338 19 663	83	31
0338 19 664	84	32
0842 19 665	84	33
0338 19 666	84	34
0338 19 667	84	35
0338 19 670A	84	36
0338 19 676	84	37
0338 19 678	68	19
0338 19 701	86	13
0338 19 702	86	14
0338 19 703	86	15
0338 19 704	86	16
0338 19 706	86	17
1840 19 710	72	30
0338 19 731	86	19
0338 19 732	87	20
0338 19 733C	87	21
0338 19 734A	87	22
0338 19 735	72	32
	74	—
0338 19 737	72	33
0338 19 739	72	33
0397 19 750	73	34
0338 19 768	73	35
0338 19 815	73	36

INDEX. 1675 19 821～1757 24 303

1675 19 821	73	40
0338 19 822	73	41
	74	—
0338 19 823	73	42
0338 19 825	73	43
0338 19 826	73	43
0338 19 827	73	43
0338 19 828	73	43
0338 19 829	73	43
0338 19 831	73	37
0338 19 832	73	38
0338 19 833	73	39
0338 19 835A	73	44
	74	—
0338 19 836	73	45
0338 19 837	73	46
0397 19 838	87	23
2070 19 870	73	47
0338 19 880	73	48
0338 19 904	68	22
1908 19 910	68	23
0842 19 915A	68	24
0436 19 917	68	26
1015 19 920D	68	27
1015 19 930C	68	28
1129 19 933	68	29
1129 19 934	68	30
1633 19 938	68	31
1883 19 940	68	33
1015 19 945A	69	34
0397 22 100	74	—
0397 22 200	79	—
0881 22 297	47	38
0398 22 333	42	10
0866 23 025	7	82
1757 23 040	7	—
1757 23 080	7	83
1011 23 103B	12	50
1011 23 151A	12	52
1011 23 175	9	13
1011 23 176	9	13
1011 23 180	12	53
1881 23 200	7	—
1883 23 200	7	—
1881 23 540	17	—
1883 23 540	17	—
1757 23 672	19	3
1113 23 673	19	4
1757 23 680	19	5
1757 23 725	25	42
0839 23 801	28	23
0813 23 802B	28	24
0813 23 803	28	25
0820 23 832B	29	29
0820 23 833B	29	30
0820 23 834B	29	31
0820 23 835A	29	33
0730 23 837	29	34
1011 23 837	29	35
1011 23 838	29	36
0730 23 839	29	37
0820 23 840	29	38
1011 23 841	29	39
0820 23 842	29	40
1757 23 844	29	41
0730 23 845	29	42
0820 23 845A	29	43
0730 23 846	29	44
0820 23 847A	29	45
0820 23 848A	29	46
2090 23 853	30	47
0730 23 854	30	48
0820 23 882A	27	14
1757 24 302	54	22
1757 24 303	54	23

1881 24 308	54	24
1757 24 310	54	25
1757 24 313	54	26
1757 24 314	54	27
1757 24 317	54	28
1757 24 319	54	29
1757 24 322	54	30
1757 24 328	54	31
1881 24 330	54	32
1757 24 334	54	33
1757 24 340	54	34
1881 24 350	55	35
1757 24 360	55	36
1011 24 501	57	2
0820 24 503	57	8
1011 24 510	57	13
0208 24 514	57	10
0866 24 526	57	11
1011 24 527	57	3
0866 24 530	57	4
0866 24 533	57	5
1011 24 533	57	14
1011 24 534	57	15
0866 24 535	57	6
0866 24 540	57	7
1011 24 541	57	16
0866 24 550	57	9
1011 24 560	57	12
1011 24 563	57	17
0290 24 581	57	18
0866 24 704	60	2
0839 24 705	63	2
1757 24 705	60	3
0839 24 706	63	3
0839 24 709	63	4
1757 24 709	60	4
1757 24 710	60	5
2869 24 710	63	5
0426 24 712	60	6
0727 24 712	63	6
2869 24 712	63	7
0426 24 715	60	7
0839 24 715	63	8
0839 24 716	63	9
0866 24 716	60	8
0839 24 719	63	10
0845 24 720	60	9
2869 24 720	63	11
0839 24 721	63	12
0839 24 723	63	13
0839 24 724	63	14
0426 24 725	60	10
2869 24 725	63	15
0426 24 726	60	11
2869 24 726	63	16
1757 24 730	60	12
2869 24 730	63	17
0249 24 731	63	18
0426 24 731	60	13
0559 24 731	63	19
2869 24 736	63	20
0222 24 741	60	14
2869 24 748	64	21
0222 24 750	60	15
0222 24 752A	60	16
0222 24 753	60	17
0426 24 753	60	18
0426 24 754	60	19
2869 24 754	64	22
0324 24 760	60	20
0559 24 760	64	23
0259 25 021B	89	2
0259 25 071A	89	3
0259 25 072A	89	3
0259 25 073A	89	3

INDEX. 0259 25 074A～0223 27 404

0259 25 074A	89	3
0259 25 075A	89	3
0259 25 076A	89	3
0259 25 077A	89	3
0259 25 078A	89	3
0259 25 079A	89	3
0862 25 100A	89	1
1137 26 010	91	1
1881 26 010	91	1
0259 26 041	91	4
0259 26 051	91	5
0866 26 060	91	6
0870 26 111A	91	7
0870 26 115A	91	7
0317 26 121	91	8
0259 26 129	92	16
0259 26 132	91	9
0259 26 141	91	11
0259 26 142	91	11
0259 26 152	92	17
0187 26 154	92	18
0259 26 155	91	12
0305 26 251A	94	1
0305 26 255	94	2
0866 26 280B	94	4
0866 26 290B	94	4
0866 26 310A	94	5
0187 26 341	94	6
0118 26 342	94	7
0223 26 345A	94	8
0710 26 352	94	11
0866 26 391	94	9
0710 26 461	94	12
0305 26 465	94	13
0305 26 500A	94	10
0820 26 570A	95	16
0233 26 610A	95	18
0221 26 651	95	19
0221 26 671	95	20
0221 26 672	95	21
0221 26 673	95	22
0305 26 800A	95	30
0305 26 810A	96	30
0187 26 821	96	32
0118 26 832	96	31
0118 26 834	96	33
0118 26 897	96	35
0187 26 921	96	32
0613 26 922	95	23
0223 27 012	99	1
2112 27 018	99	2
0223 27 020B	99	3
0223 27 030	99	4
1562 27 100	99	—
0866 27 110	99	5
0221 27 141	99	7
0755 27 141	99	6
0866 27 150	99	8
0305 27 171	99	11
0866 27 172	99	12
0290 27 231	99	13
0820 27 251	99	16
0290 27 252	99	17
0290 27 253	99	17
0290 27 254	100	17
0221 27 255	100	18
0305 27 261	100	19
0114 27 262	100	20
0290 27 301	100	21
0290 27 302	100	22
0221 27 305	100	24
0223 27 401	100	25
0223 27 402	100	25
0223 27 403	100	25
0223 27 404	100	25

0223 27 405	100	25
0223 27 406	100	25
0223 27 407	100	25
0223 27 408	100	25
0223 27 409	100	25
0223 27 411	100	25
0223 27 412	100	25
0223 27 413	101	25
0223 27 414	101	25
0223 27 415	101	25
0866 28 010A	103	1
1881 28 010A	103	1
1889 28 010	107	1
0866 28 011A	103	1
1881 28 011A	103	1
1889 28 011	107	1
0866 28 012A	103	1
1881 28 012A	103	1
1889 28 012	107	1
0866 28 013A	103	1
1881 28 013A	103	1
1889 28 013	107	1
0866 28 014A	103	1
1881 28 014A	103	1
1889 28 014	107	1
0259 28 110	107	2
1881 28 110	103	2
0866 28 140B	103	5
0899 28 140	107	5
0866 28 143	103	6
0899 28 150A	107	6
0866 28 151	104	7
0193 28 161	107	7
0652 28 161	104	8
0899 28 170A	107	6
0585 28 180A	108	16
0866 28 180A	104	10
0259 28 182	104	12
	107	9
0259 28 183	108	10
0866 28 183A	104	13
0585 28 190A	108	16
0899 28 320	108	23
0866 28 322	104	14
0259 28 333	108	11
0866 28 333C	104	15
0259 28 343	108	12
0866 28 343B	104	16
0866 28 350	104	17
	108	13
0866 28 353B	104	19
0866 28 591	104	20
0866 28 774	104	22
0223 28 775	108	18
0223 28 776	108	19
0223 28 777	108	22
0259 28 778	108	20
0866 28 778A	105	23
0866 28 779	105	24
0866 28 799	105	25
0329 32 013A	113	49
0329 32 014	113	50
0329 32 015	113	51
0329 32 016	113	52
0329 32 019	113	53
0370 32 030A	112	35
0329 32 031A	113	54
0329 32 033	114	55
0329 32 034	114	56
0370 32 037	112	36
0370 32 039	113	46
1562 32 049	114	58
0820 32 058	110	1
0208 32 059	110	3
0259 32 071	110	4

INDEX. 0370 32 090~0259 33 693

0370 32 090	112	35
1632 32 100	110	5
1632 32 110	110	2
0305 32 119	111	18
	116	12
1128 32 129	110	6
0866 32 141	110	7
0259 32 154	110	8
0259 32 155	110	8
0259 32 156	110	8
0259 32 157	110	8
0259 32 160	110	13
0259 32 163	110	14
0180 32 165A	110	15
0180 32 171A	111	16
0180 32 172A	111	16
0111 32 173	116	4
0180 32 173A	111	16
0180 32 174A	111	16
0208 32 188	111	20
1524 32 220	111	21
1128 32 227C	116	5
1524 32 261	116	1
1562 32 269	116	2
0208 32 278	116	6
0208 32 278	123	15
0730 32 279	111	22
	117	19
0866 32 279	116	7
1027 32 279	117	19
0187 32 289	117	20
0259 32 289	111	23
1823 32 289	117	20
0866 32 301A	123	16
0866 32 311A	123	16
1562 32 320E	116	3
1562 32 330D	116	8
2113 32 356	116	10
0305 32 365	116	14
1632 32 411	111	26
1632 32 412	112	27
1097 32 413	112	28
1632 32 420	112	30
1562 32 800 00	113	41
1570 32 800 00	112	34
1562 32 811	113	42
1570 32 811	112	37
0370 32 980	113	45
1562 32 980A	113	48
0221 33 035	119	1
0662 33 042	119	2
1011 33 043	119	3
0259 33 047	119	4
0317 33 049	119	5
0398 33 065	119	6
0259 33 071	119	7
0317 33 075	119	9
0820 33 091A	119	10
0259 33 165	91	13
	119	11
0820 33 165A	91	13
	119	11
0820 33 180A	96	36
	119	12
0820 33 192A	96	40
	120	32
0866 32 251A	119	13
0866 33 260	119	14
0866 33 270	119	14
0710 33 288	96	37
0613 33 681	95	25
0259 33 691	95	26
	150	12
0259 33 693	95	27
	150	13

0820 33 693	120	18
0221 33 698	119	16
0870 33 980A	120	17
1881 34 011	123	1
0866 34 013A	123	2
0866 34 015	123	3
0866 34 019	123	4
0866 34 111	123	5
0866 34 151A	123	6
0603 34 153	105	27
1004 34 153	123	7
0259 34 155	123	8
0259 34 156	123	9
0866 34 157	123	11
0866 34 158	123	12
1011 34 159	123	13
0866 34 310A	123	14
1011 34 311	124	17
0866 34 313A	124	25
0866 34 320A	123	14
0866 34 340	124	27
0866 34 381	124	28
0866 34 382	124	29
0866 34 390	124	30
0866 34 460	124	18
0187 34 536	124	19
0866 34 565	124	20
0305 34 707	125	38
0259 34 719A	125	39
0305 34 720	125	40
0866 34 730	125	41
0866 34 735	125	42
0866 34 738	125	33
0866 34 760	125	42
0187 34 776	105	28
0866 34 800B	125	34
0866 34 910C	125	37
0866 34 960C	125	37
0866 37 170C	96	38
	120	30
0881 37 191	96	39
	120	31
1622 39 020	127	1
1668 39 040C	127	2
1668 39 045A	127	3
0866 39 060	127	4
0259 39 340	127	7
1570 39 380	127	9
1621 39 380	127	
1114 40 061	129	2
1620 40 080	129	3
1114 40 108B	129	6
1114 40 161	129	7
0820 40 165	129	8
0820 40 166	129	9
1114 40 170	129	10
2158 40 355	15	20
	129	12
	130	18
0810 40 356	129	13
0824 40 401	129	14
1883 40 500	130	15
1890 40 500	130	15
2090 40 508A	130	16
1883 40 600	130	17
1128 40 810A	130	19
1114 40 821A	130	21
1128 40 830B	130	22
1128 40 840A	130	23
1137 40 840A	130	23
1128 40 850A	130	24
1128 40 870A	130	25
1128 40 880	130	26
0727 41 023	146	1
1562 41 030A	146	2

INDEX. 0559 41 040C～1544 42 610B

0559 41 040C	146	3
0183 41 043	146	4
0824 41 051A	146	6
0559 41 081A	146	7
0824 41 084	146	8
0223 41 131A	146	11
1872 41 140	146	12
1872 41 142	146	13
0183 41 308	157	1
0613 41 308	146	15
0603 41 331	150	15
1881 41 341	150	16
0866 41 370	150	1
0118 41 375	160	1
0866 41 380	150	3
1524 41 400	150	4
0305 41 461	150	8
1881 41 610A	144	2
1883 41 610A	144	2
0370 41 619	144	3
0305 41 641	144	4
0259 41 644	144	5
	146	16
1637 41 650	144	7
1881 41 660	144	8
0249 41 671	144	11
1524 41 678	144	12
0118 41 681	144	13
0118 41 682	144	14
0111 41 692	266	1
1708 41 711	144	16
1881 41 920	150	11
0114 42 046A	132	4
	136	13
1011 42 250	132	1
	136	1
1624 42 280	136	3
1544 42 302A	136	4
0652 42 304	136	5
0585 42 305	136	6
0585 42 306	136	7
0223 42 307	136	8
0585 42 307	136	10
0899 42 310E	136	12
1570 42 310B	132	3
0585 42 350	136	15
0866 42 350B	132	5
0259 42 364	132	6
0866 42 366	132	8
	137	16
0187 42 371	132	10
1570 42 381A	132	11
2432 42 391A	137	18
2435 42 392B	137	19
2694 42 394	132	12
2691 42 397	137	20
2694 42 397	132	13
0376 42 410	132	15
0585 42 410	137	22
0866 42 410	132	15
2280 42 462A	132	2
	136	2
0866 42 521	132	16
0866 42 522	133	17
0866 42 523	133	18
1540 42 542	133	19
0866 42 551	133	26
	137	27
0866 42 552	133	27
	137	25
0866 42 561	133	29
1540 42 570	133	31
	137	27
1540 42 610B	133	32
1544 42 610B	137	28

1544 42 613	137	31
1544 42 614	137	33
2691 42 710A	133	34
	137	34
2691 42 716	134	36
	138	35
2691 42 750	134	37
2694 42 750	138	37
0259 43 022	146	17
0118 43 028A	146	18
0268 43 028	146	18
0187 43 029	146	19
1524 43 030	147	21
1525 43 030	147	21
0866 43 061	147	22
0866 43 062	147	23
0866 43 063	147	24
1524 43 070B	147	25
0259 43 088	114	60
	147	29
1525 43 090	147	30
1524 43 140	148	33
1562 43 422	154	21
0111 43 432	150	9
0839 43 550	153	1
0727 43 552	153	2
0839 43 553A	153	3
0870 43 570	153	4
0870 43 580	153	5
1128 43 605B	160	2
1114 43 608B	160	4
1114 43 609A	160	5
0114 43 625	254	4
	258	62
0136 43 635	151	18
	160	7
0305 43 635	160	8
0370 43 650A	160	9
0585 43 650A	160	9
1137 43 660	160	10
1881 43 660	160	10
0221 43 694	151	19
	160	11
1570 43 694A	160	12
1562 43 800	153	8
1540 43 810	160	13
1540 43 820	161	15
1541 43 820	161	14
1881 43 830	161	16
1883 43 830	161	16
1559 43 836C	161	17
1621 43 848	161	19
0118 43 853	161	20
1540 43 890	161	22
1620 43 990	154	20
0866 44 010	157	2
0813 44 031	157	3
0303 44 032	157	4
0221 44 033	157	5
0813 44 034	157	6
0813 44 035	157	7
0221 44 044	157	8
0866 44 051	157	11
0303 44 053	157	12
0302 44 132	157	14
0824 44 140	157	15
0866 44 150A	157	16
0866 44 187	158	19
0866 44 189	158	20
0866 44 410B	158	21
1570 44 410C	158	22
0866 44 439	158	23
0305 44 471	158	25
0866 45 061A	141	31
0899 45 071C	141	31

INDEX. 0899 45 091～2046 49 784

0899 45 091	142	32
1598 45 250A	161	24
1540 45 280A	161	25
1540 45 320	161	26
1559 45 350A	161	27
1504 45 360	161	28
1508 45 360	161	28
1562 45 510B	161	29
0866 45 611B	142	33
0899 45 611B	142	33
1570 45 711	142	34
1571 45 711	142	34
0866 45 805	142	36
0866 45 806A	142	37
0866 45 903A	69	35
	142	38
	161	30
1540 45 920A	162	32
1840 46 010	164	1
1840 46 021	164	2
1840 46 022	164	3
2375 46 030B	164	4
2375 46 051A	164	5
2375 46 052	164	6
2375 46 053	164	7
2375 46 054	164	8
2375 46 055	164	9
2375 46 056A	164	10
0308 46 057A	164	11
2375 46 061	164	14
2375 46 062	164	15
0842 46 081	164	16
0308 46 083	164	17
1015 46 085	164	18
2070 46 110A	165	19
0378 46 150	165	21
1621 46 571	165	23
0223 46 683	148	36
1015 46 684	165	24
0259 46 691	165	25
0604 46 785	148	37
0866 49 111	120	19
0866 49 112	120	20
0866 49 114	120	21
0866 49 115	120	22
0866 49 116	120	23
0866 49 117	120	24
0870 49 230A	120	25
0866 49 231	120	26
0866 49 232	120	26
0866 49 235	120	27
0866 49 240	120	28
1128 49 610	154	A
1128 49 630	154	23
0305 49 638	154	24
0512 49 651	154	29
1620 49 651	154	30
0305 49 656	154	25
0559 49 660	154	26
0512 49 665	154	27
1128 49 670	154	28
0512 49 682	154	31
0512 49 686	155	32
0870 49 710	153	A
0870 49 720	153	B
0870 49 745	153	9
2046 49 746	153	10
2046 49 747	153	11
0870 49 750	153	12
1562 49 760	153	13
0824 49 770	153	14
0824 49 781	154	15
2046 49 782	154	16
2046 49 783	154	17
2046 49 784	154	17

0870 49 785	154	18
1881 50 025	167	1
1881 50 026	167	2
1755 50 036	167	3
1755 50 037	167	4
1881 50 040	167	5
1881 50 050	167	6
1755 50 055	167	7
1881 50 060	167	9
1755 50 071	167	10
1755 50 080	167	11
1755 50 091	167	12
1755 50 100	167	13
1881 50 110	167	14
1881 50 130	167	14
1881 50 150 00	167	16
1881 50 180	168	20
1881 50 221	168	22
1889 50 221	168	22
1881 50 230	168	23
1889 50 230	168	23
1881 50 250	168	24
1889 50 250	168	24
1881 50 260	168	25
1889 50 260	168	25
1755 50 271	168	26
0223 50 275	168	27
1755 50 301	169	28
1881 50 350 00	169	30
1889 50 350 00	169	30
0305 50 398	169	34
1128 50 511A01	169	36
1128 50 521	169	38
1128 50 531A	169	39
1128 50 541A	169	40
1524 51 020A	176	1
1755 51 061	245	13
1755 51 063	245	14
1755 51 071	245	13
1755 51 073	245	14
1524 51 120A	176	2
0110 52 265	134	39
0259 52 301	172	1
0223 52 302	172	2
0305 52 312B	174	32
2835 52 330	172	3
0305 52 331	172	5
1524 52 390	172	6
0866 52 397A	172	8
1524 52 410	172	9
0866 52 451	172	10
0376 52 510	172	13
0866 52 510	172	13
0866 52 610	172	14
0866 52 620	172	15
0866 52 631	173	20
0866 52 661A	173	22
0866 52 671A	173	23
0866 52 750A	173	24
0305 52 802	324	7
0305 52 850A	173	25
0376 52 901A	173	27
0866 52 901A	173	27
1524 53 020E	176	4
0866 53 029A	176	5
1524 53 100E	176	6
1525 53 100F	176	6
1620 53 100F	176	6
1621 53 100	176	6
1881 53 220	176	7
0866 53 281A	176	9
1571 53 310	186	1
1524 53 320A	180	1
	183	1
	186	3

INDEX. 0376 53 330~1882 54 350

0376 53 330	180	3
0866 53 330	183	3
	186	5
0376 53 340	180	5
1881 53 340	183	5
1889 53 340	186	7
1570 53 350	183	7
1882 53 350	180	7
0866 53 380	183	9
0866 53 381	186	9
0376 53 391 A	180	9
0376 53 430	180	11
0585 53 430	186	11
0866 53 430	183	11
0603 53 436	208	41
0376 53 451	180	13
0866 53 451	183	13
	186	13
0866 53 452	183	15
	186	15
0259 53 455	180	15
	183	17
	186	17
0585 53 480 B	186	18
0376 53 500 A	180	16
0866 53 500 A	183	18
	186	20
0376 53 591	180	18
0585 53 591	187	22
0866 53 591	183	20
1544 53 600 A	187	24
0585 53 651	187	26
0585 53 660 A	187	28
0585 53 670 A	187	30
0585 53 691	187	32
1889 53 701	187	34
0866 53 720 A	176	11
0866 53 750	176	13
0111 53 771	173	28
0866 53 780 A	176	14
1540 53 810 D	184	22
1542 53 810 C	180	20
0866 53 830 A	181	21
	184	23
0866 53 845	181	23
	184	25
0376 53 920	181	24
0866 53 920	184	26
	187	35
0376 53 941	181	25
0585 53 941	187	36
0866 53 941	184	27
0376 53 950	181	26
0866 53 950	184	28
	187	37
0866 53 951	187	38
0585 53 970 A	187	39
0866 53 979 A	177	17
0866 53 980	177	19
1881 54 220	176	8
2981 54 222	61	25
0866 54 281 A	176	10
2113 54 295	64	30
0585 54 310 A	186	2
1524 54 320 B	180	2
	183	2
	186	4
0376 54 330	180	4
0866 54 330	183	4
	186	6
0376 54 340	180	6
1881 54 340	183	6
1889 54 340	186	8
1531 54 350 C	183	8
1882 54 350	180	8

0866 54 380	183	10
0866 54 381	186	10
0376 54 391A	180	10
0376 54 430	180	12
0585 54 430	186	12
0866 54 430	183	12
0376 54 451	180	14
0866 54 451	183	14
	186	14
0866 54 452	183	16
	186	16
0585 54 480B	186	19
0376 54 500A	180	17
0866 54 500A	183	19
	187	21
0376 54 591	180	19
0585 54 591	187	23
0866 54 591	184	21
1544 54 600A	187	25
0585 54 651	187	27
0585 54 660A	187	29
0585 54 670A	187	31
0585 54 691	187	33
0866 54 720	176	12
0866 54 830A	181	22
0866 54 830A	184	24
0866 55 100F	196	1
0370 55 150	196	5
0275 55 195	271	1
1524 55 210B	196	7
0866 55 216	196	10
0866 55 217	196	10
0866 55 218	196	10
1524 55 230B	196	11
0259 55 261	203	3
	203	12
1881 55 330A	197	14
1570 55 340	197	16
1524 55 351	203	1
0866 55 360C	197	17
	197	19
0866 55 368	197	20
0865 55 402B00	198	26
0865 55 403B00	198	27
0865 55 404B00	198	28
1562 55 405	198	29
0866 55 406B	198	31
0865 55 410D00	197	24
1570 55 410	198	33
0866 55 412A	198	34
1881 55 460	203	2
1114 55 465	203	13
1881 55 530	203	11
0259 55 556	111	17
0866 55 590	198	35
0305 55 628	173	19
1562 55 710	198	37
1561 55 720A	198	40
0259 55 951	201	85
1128 56 010A	190	1
1129 56 010A	190	1
0376 56 080C	190	2
0866 56 080C	190	2
1881 56 110	190	4
0136 56 112	239	1
0866 56 171A	190	6
1881 56 200	190	7
1882 56 200	190	7
0243 56 231	61	27
	64	31
0187 56 235	194	1
	315	1
0118 56 241	142	41
	194	2
	301	1

INDEX. 0118 56 241~1620 58 010B

0118 56 241	306	1
0118 56 242B	178	29
	187	40
	194	3
1889 56 300	190	14
0866 56 310A	190	12
0866 56 330	190	8
1889 56 330	191	15
1128 56 350	190	10
0866 56 405	282	30
1889 56 500	191	17
1137 56 541B	194	4
0376 56 580A	190	3
0866 56 580A	190	3
1889 56 580	191	18
1881 56 610	190	5
0208 56 615	194	6
0810 56 639	194	7
0866 56 701A	194	8
0871 56 701A	194	8
1570 56 710A	194	9
1571 56 712C	194	10
1570 56 720B	194	11
1128 56 730	194	12
1571 56 750	194	13
1571 56 755	194	14
1128 56 771B	194	15
0866 56 810A	190	13
0866 56 830	190	9
1889 56 830	191	16
0866 56 850	190	11
0585 56 901A	191	19
1128 56 901A	191	20
0585 56 902	191	22
0820 56 905	199	41
	275	51
0850 56 906	37	60
0585 56 911A	191	24
1137 56 920	194	16
1128 56 960	277	1
0866 56 971	194	17
0866 56 981	191	26
0866 56 991	277	2
0824 56 999	181	27
0585 57 012	206	1
	208	40
0585 57 013	206	—
0317 57 015	209	53
0585 57 015	206	2
0585 57 016	206	3
0585 57 017	206	4
0585 57 018	206	5
0585 57 019	206	6
0710 57 022	206	8
0710 57 023	206	9
0187 57 052	206	10
0621 57 054	206	11
1881 57 100	206	12
1882 57 100	206	12
2155 57 109	207	14
0111 57 111	170	42
1881 57 150	206	13
1882 57 150	207	13
1693 57 200A	208	38
1694 57 200A	208	38
1696 57 200A	208	39
1694 57 250A	209	46
1696 57 250A	209	47
0187 57 751	209	48
0621 57 753	209	49
1881 57 900	210	57
0305 57 909	210	58
1540 57 950	210	59
1757 57 999	210	61
1620 58 010B	212	1

1622 58 010B	212	1
0866 58 020A	212	1
1622 58 020A	212	1
0259 58 091	321	15
0866 58 201	217	1
0866 58 210	217	2
1011 58 231	217	5
	320	1
2292 58 232	212	2
	310	1
0866 58 240C	217	7
0866 58 281B	217	8
	321	21
0866 58 282	217	9
0866 58 282A	321	22
0866 58 291A	217	10
	321	23
0866 58 292A	217	11
0866 58 293	217	12
	321	25
0223 58 303A	220	33
	311	21
0866 58 303B	218	15
0866 58 303B01	320	2
0223 58 304A	220	34
0223 58 304A	311	22
0259 58 305	218	17
	310	2
0223 58 306	173	29
0305 58 309	218	18
	320	4
1524 58 310H	218	19
1562 58 310H	218	19
0223 58 311	220	35
	311	23
0866 58 313	240	20
0866 58 321B	218	20
	320	7
0376 58 330C	218	22
0866 58 330C	218	22
0866 58 361C	218	23
	320	9
0223 58 370D	218	24
	320	10
0824 58 370B	310	3
1540 58 371	219	25
	320	12
0223 58 375A	219	26
	310	4
	321	13
0866 58 410A	219	28
0305 58 411	219	28
0305 58 411A	322	32
0111 58 443	251	18
0223 58 472	113	43
0839 58 492A	324	1
0376 58 501A	212	3
0866 58 501A	212	3
0305 58 505	212	4
0824 58 546A	240	21
1011 58 552	321	14
0866 58 560	220	32
0866 58 603	212	5
0376 58 604	212	6
0866 58 604	213	6
0376 58 605	213	7
0866 58 605	213	7
0866 58 620	213	8
0259 58 691	220	37
0223 58 692	213	11
0223 58 692A	315	2
0223 58 721	217	3
	217	13
	321	18
	321	26

INDEX. 0187 58 731~0370 60 073B

0187 58 731	217	4
	217	14
	321	27
0398 58 755 00	213	12
	315	3
0376 58 760A	213	13
0866 58 760A	213	13
0305 58 762	213	14
	315	4
0376 58 781D	213	15
0866 58 781D	214	15
0376 58 791	214	16
0866 58 791	214	16
1620 58 810A	214	17
1622 58 810A	214	17
0398 58 821A00	214	18
	310	6
	315	5
0398 58 822A00	214	19
	310	7
	315	6
0376 58 831C	214	21
0866 58 831C	215	21
0866 58 841A	215	22
0866 58 842A	215	23
0866 58 842A	315	9
0305 58 872	239	2
0259 58 906	220	38
0208 58 921	215	24
	239	3
	310	9
	315	8
0187 58 922	215	25
	239	3
	310	10
0223 58 961	324	8
	324	8
0223 58 962	324	2
	324	2
1620 59 010B	212	1
1622 59 010B	212	1
1540 59 020	212	1
1622 59 020	212	1
0866 59 240C	217	7
0866 59 303B	218	15
1524 59 310H	218	19
1562 59 310H	218	19
0376 59 330C	218	22
0866 59 330C	218	22
0866 59 361C	218	23
0866 59 361C	320	9
0866 59 410A	219	28
0376 59 501A	212	3
0866 59 501A	212	3
0305 59 505	212	4
0866 59 560	220	32
0866 59 603	212	5
0376 59 604	212	6
0866 59 604	213	6
0376 59 760A	213	13
0866 59 760A	213	13
0376 59 791	214	16
0866 59 791	214	16
1620 59 810A	214	17
1622 59 810A	214	17
0376 59 831C	214	21
0866 59 831C	215	21
0866 59 841A	215	22
0866 59 842A	215	23
	315	9
0187 59 922	315	10
1881 60 050	199	44
1883 60 050	199	44
1562 60 070	199	47
0370 60 073B	199	48

0866 60 101	199	50
0866 60 102	199	51
0866 60 120	200	55
0866 60 130	200	56
1634 60 250	200	58
0866 60 251	200	59
0317 60 252	200	60
0317 60 253	200	61
1634 60 254	200	62
0317 60 255	200	63
0317 60 256	200	64
0317 60 257	200	65
0317 60 258	200	66
0317 60 259	200	67
0317 60 261	200	68
0317 60 262	200	69
0866 60 263	200	70
0866 60 264	201	71
0866 60 265 A	201	72
0317 60 266	201	73
0866 60 267	201	74
1611 60 311	201	75
1611 60 312	201	76
1620 60 335	201	77
1620 60 345	201	78
2280 60 430	324	9
2835 60 439	324	10
0305 60 715	201	82
0866 60 720	201	81
0820 60 870 A	254	5
1540 60 930	201	83
0257 61 051	177	26
0864 61 061 A	37	68
0366 61 070	177	27
1620 61 080 B	222	—
1524 61 130 B	222	1
	226	1
1524 61 140 B	222	2
1531 61 140	235	86
1524 61 151 A	222	3
1568 61 190 C	235	87
1620 61 190 B	222	4
0824 61 192	223	21
0866 61 195 B	235	88
1562 61 211 C	223	25
1620 61 212	223	26
0862 61 213	223	27
1881 61 214	223	28
1620 61 225	223	29
0866 61 235	223	24
0824 61 236 A	230	13
0866 61 251	222	13
1883 61 390	229	—
1881 61 410	229	—
1881 61 450	230	14
1562 61 461	230	15
1562 61 462 A	230	16
1128 61 463	230	17
1562 61 464	230	18
0370 61 467	230	19
1562 61 469	230	21
0866 61 472	230	23
1562 61 473	230	24
1562 61 474	230	25
0866 61 475	231	27
0866 61 476	224	31
	231	28
1562 61 490	231	29
0866 61 500	231	31
1622 61 520	231	34
	237	—
0866 61 525 A	231	35
1524 61 526	231	36
0866 61 527	231	37
0866 61 531	231	38

INDEX. 0866 61 532~0585 66 213

0866 61 532	231	39
0866 61 533	231	40
0866 61 534	232	41
0866 61 535	232	42
0866 61 536	232	43
0866 61 541	232	47
0866 61 542	232	48
0866 61 543 A	232	50
1622 61 545	232	51
1622 61 546	232	52
1524 61 547	232	53
1622 61 548	232	54
0866 61 549	233	55
0866 61 551	233	56
0866 61 552	233	57
1622 61 561	233	59
1622 61 565	233	60
1622 61 566	233	61
1622 61 567	233	62
1622 61 568	233	63
1622 61 569	233	65
1622 61 572	233	66
1622 61 575	233	67
1622 61 578	233	63
1622 61 580	237	—
0317 61 612	234	74
1128 61 911	234	75
1128 61 912	234	76
1128 61 913	234	77
1620 61 920	234	78
1571 62 510 A	239	4
0585 62 610	239	5
0621 62 640 A	239	8
0621 62 641	239	9
0621 62 642	239	9
0585 62 650 C	239	11
0585 62 671 A	239	13
0585 62 672 A	240	15
0585 62 695	240	16
0585 62 710 B	240	18
0585 62 720 D	240	19
0585 62 741	240	24
0585 62 742	240	24
0585 62 750	241	26
0621 62 792	241	27
1528 62 801 A	241	28
1529 62 801 A	241	28
1544 62 801 A	241	28
1545 62 801 A	241	28
0585 62 802 A	241	29
0585 62 823 A	241	30
0585 62 831 A	241	32
1624 62 851	241	33
0585 62 871 C	241	35
0585 62 940 A	242	38
0899 62 955 B	242	40
0899 62 961	242	41
0899 62 962 A	242	42
0899 62 963	242	43
0899 62 964	242	44
0899 62 970	242	45
0899 62 975 A	242	46
0585 63 610	239	6
0585 63 650 C	239	12
0585 63 823 A	241	31
0585 63 871 C	241	36
0585 63 940 A	242	39
0866 64 630	273	24
1893 66 031	244	1
1893 66 061	244	1
0585 66 211	250	2
1570 66 211	247	2
0866 66 212 15	247	3
1529 66 212	250	3
0585 66 213	250	4

0866 66 213	247	4
0866 66 214	247	4
0585 66 215	250	6
0585 66 216	250	6
0585 66 219	250	2
0585 66 231	250	2
1570 66 231	247	2
0866 66 232 15	247	3
0585 66 239	250	2
0866 66 314 A	286	5
0212 66 371	262	5
0223 66 371	262	4
0212 66 372	262	6
0866 66 372	247	9
0585 66 373	251	14
0585 66 374	251	15
0585 66 375	251	16
0585 66 376	251	17
0585 66 377	251	20
0585 66 378	251	21
0390 66 410	254	6
0390 66 411	254	7
0398 66 412	254	8
0398 66 413	254	9
1540 66 481	245	18
1540 66 482	245	19
	248	15
	252	27
1540 66 491	245	18
1540 66 501	247	14
	251	26
1540 66 511	248	14
	251	26
0305 66 580 A	271	2
1650 66 620	254	12
1650 66 621	254	13
1540 66 630	254	15
1570 66 700	248	18
1570 66 710	248	18
0862 66 730	255	18
0862 66 731	255	19
0862 66 732	255	20
0862 66 733	255	21
1128 66 750	255	24
1708 66 760	255	25
2852 66 763	255	26
1708 66 765	255	26
0243 66 773	134	42
0865 66 780	256	28
0233 66 790	148	38
0865 66 790	256	29
0865 66 800	256	30
0865 66 805	256	31
0865 66 809	256	32
1524 66 810	256	35
0209 66 820	256	37
0209 66 821	256	38
1881 66 830	256	40
0820 66 840	158	26
1881 66 840	256	41
1560 66 860 B	268	—
1561 66 860 B	268	—
1562 66 860 B	268	—
1564 66 860 B	268	—
0317 66 862	268	1
0366 66 865 A	201	86
0866 66 871	268	2
0813 66 879	266	2
0866 66 900	268	4
0870 66 900 A	268	5
1561 66 900	268	4
1562 66 900	268	4
0866 66 905	268	7
0870 66 905	268	8
1524 66 930 A	268	9

INDEX. 0208 66 949～1881 67 925

0208 66 949	25	40
	256	42
0866 66 960	268	10
0866 66 965	269	12
0870 66 970A	269	13
0870 66 975A	269	15
0870 66 980	269	16
0187 66 991	134	40
	138	39
	201	87
0727 66 991A	178	30
0727 66 992	178	31
0839 66 992	269	18
1881 67 010	256	43
1881 67 020	257	44
1881 67 030A	257	47
1889 67 030A	257	48
1889 67 035A	257	49
0585 67 036	257	50
1881 67 040A	257	52
1881 67 050A	257	53
0866 67 059	257	54
1881 67 060	258	56
1881 67 065	258	57
1881 67 070	258	58
1540 67 080B	258	59
0872 67 100A	64	33
1881 67 100	61	29
0872 67 110	61	30
	64	34
1881 67 120A	258	60
0866 67 133	258	61
0899 67 133	258	61
1881 67 135	158	28
1524 67 140B	226	12
0585 67 151	258	64
0820 67 151	258	65
0866 67 152	258	66
0866 67 153A	258	67
	269	19
0585 67 154	258	68
0866 67 155	258	69
1524 67 155	258	70
0866 67 156	258	71
0866 67 170	134	41
0899 67 170B	138	41
0866 67 176	134	44
1757 67 220	258	72
1757 67 230	259	73
0866 67 301A	263	36
0866 67 302	263	37
1524 67 321A	262	1
2835 67 330	262	2
1524 67 340B	262	3
1524 67 350	262	13
1823 67 352	262	10
0317 67 480	266	5
0866 67 510A	266	12
0317 67 511	266	7
0866 67 511A	266	13
0866 67 512	266	14
0866 67 521	266	15
1757 67 700	259	74
1540 67 715	259	75
1524 67 720B	259	77
1757 67 720	259	78
1664 67 740	259	80
1757 67 870	259	81
0839 67 880	259	82
1757 67 880	259	84
0866 67 905A	259	86
1540 67 907	259	88
0866 67 908	259	90
1011 67 912	210	60
1881 67 925	260	92

0305 67 993A	269	20
0305 67 994	260	95
1524 68 011	271	4
0865 68 020B00	271	5
1562 68 040A00	271	6
0249 68 060A	277	7
0810 68 070A	277	8
0275 68 088	269	21
0866 68 090B	271	7
0866 68 095	271	8
0187 68 110A	277	9
1562 68 140B00	271	9
0866 68 175	272	21
0118 68 180A	277	10
0866 68 180A	273	23
0208 68 230	277	11
0259 68 250	207	15
0866 68 331	273	26
0866 68 332	273	27
0866 68 333	273	28
0866 68 334	273	29
0866 68 335B	273	30
0865 68 340	273	32
0866 68 351A	273	34
0866 68 352A	273	35
0866 68 361	273	37
1524 68 380A	274	39
1622 68 580	234	70
0839 68 660	277	4
0839 68 670B	277	5
0839 68 720	277	12
0305 68 800F	277	13
0305 68 810A	277	14
1011 68 815	134	45
0376 68 890B	274	40
1524 68 890	274	40
1525 68 890	274	41
0376 68 900	274	42
0378 68 900	274	42
0376 68 910	274	43
0370 68 920	274	46
0866 68 920	274	44
0305 68 951	242	48
0305 68 952	242	48
0223 69 032	242	49
0187 69 049A	280	1
0380 69 055B	280	4
0730 69 057A	280	5
0899 69 058	280	6
0862 69 061	280	7
0862 69 065	280	7
0866 69 071A02	280	10
1881 69 076	280	12
1128 69 077	280	13
1540 69 101	280	15
1540 69 130B	280	14
0305 69 170	281	17
0305 69 171	281	18
0305 69 180	281	19
1632 69 210A13	281	21
1632 69 210A14	281	21
1632 69 240A13	281	22
1632 69 240A14	281	22
1632 69 290 14	286	1
1634 69 290 13	286	1
1634 69 290 14	286	1
1636 69 290 14	290	1
0259 69 311	286	2
0585 69 311	290	2
0866 69 311	286	3
	290	3
0376 69 314A	286	4
0376 69 321	286	6
0866 69 321	286	6
	290	4

INDEX. 0603 69 323A~0866 69 698

0603 69 323A	242	50
0376 69 341	286	7
0585 69 341B	290	5
0866 69 341	286	7
0376 69 342	286	8
0376 69 343	286	9
1524 69 360A00	286	11
	290	7
1524 69 380A00	286	12
	290	8
0376 69 411 00	286	14
0866 69 411 00	286	14
	290	10
0376 69 431 00	287	15
0866 69 431 00	287	15
	290	11
0866 69 461B03	287	17
	290	13
0866 69 461B12	287	17
	290	13
0866 69 461B13	287	17
	290	13
0376 69 462A13	287	18
0376 69 462A14	287	18
0866 69 502	280	2
1562 69 502	280	3
0376 69 511 00	287	19
0866 69 511 01	287	20
0376 69 521 00	287	21
0866 69 521 01	287	22
1632 69 541	294	1
1636 69 541	294	2
1632 69 542	294	3
0866 69 543A	294	5
1632 69 543	294	4
0866 69 544A	294	6
0899 69 561C14	290	14
0899 69 571C14	290	15
1524 69 611	294	7
1525 69 611	294	7
1524 69 612	294	8
1525 69 612	294	8
1881 69 613	294	9
1883 69 613	294	9
0866 69 616A	294	10
0866 69 617	294	11
0866 69 618	294	12
0585 69 625C05	294	13
0866 69 625A05	294	13
0585 69 626C05	295	14
0866 69 626A05	294	14
0866 69 627 10	295	15
0899 69 627C34	295	16
0585 69 628F	295	17
0585 69 629B	295	18
1562 69 660E	295	21
0866 69 680	277	6
1128 69 683	295	22
1129 69 683	295	22
0866 69 684	295	23
0871 69 684	295	23
0871 69 685	295	23
1128 69 686	295	24
1128 69 687	295	25
0866 69 688	295	26
0866 69 689	295	27
1128 69 691	295	28
1128 69 692	295	29
1137 69 692	296	29
0866 69 694	288	29
1570 69 695	296	30
0866 69 696	296	31
1571 69 696A	296	34
0866 69 697	296	32
0866 69 698	296	33

1570 69 699A	296	35
0899 69 711B03	290	16
0899 69 711B12	291	16
0899 69 711B13	291	16
0899 69 711B03	291	17
0899 69 712B12	291	17
0899 69 712B13	291	17
0899 69 713A03	291	18
0899 69 713A12	291	18
0899 69 713A13	291	18
0899 69 714A03	291	19
0899 69 714A12	291	19
0899 69 714A13	291	19
0899 69 715A03	291	20
0899 69 715A12	291	20
0899 69 715A13	291	20
0899 69 717A	291	21
0899 69 718A	291	22
0899 69 721B03	291	23
0899 69 721B12	291	23
0899 69 721B13	291	23
0899 69 723B	291	24
0899 69 724B	292	25
0866 69 811	274	49
0866 69 821A	274	50
0376 69 870B00	287	27
0866 69 870C00	287	27
0870 69 870B00	287	27
1524 69 870C00	287	27
0866 69 885	288	28
0866 69 910	281	24
0866 69 920 02	281	25
0376 69 941	281	27
1881 70 050	184	29
1882 70 050	181	28
1881 70 110	177	20
1881 70 160	177	21
0317 70 269	275	54
0317 70 307	298	2
0866 70 310B	298	1
0866 70 313	298	3
0866 70 320	298	4
0866 70 330A	298	5
0866 70 341A	298	6
0866 70 342	298	7
0866 70 343	298	9
0866 70 351	298	15
0866 70 352	299	16
0866 70 360C	299	17
0866 70 366	298	12
0866 70 367	298	13
0866 70 371	299	20
0866 70 395	299	18
1524 70 401A	281	29
0866 70 412	282	31
	283	44
0585 70 420A	282	32
0866 70 420	282	36
0376 70 421	282	38
0376 70 422	282	39
0585 70 423A	282	33
0376 70 426	283	41
0376 70 427	283	42
0376 70 428	283	43
0376 70 431A02	283	46
0585 70 431	283	48
0866 70 431D	283	50
0305 70 441B	301	4
1531 70 441	301	2
	306	2
1540 70 441	301	2
	306	2
1542 70 441	301	2
1568 70 441	301	2
0305 70 443B	301	3

INDEX. 0305 70 443B~0585 71 420A

0305 70 443B	306	3
0305 70 447B	306	4
0305 70 448	306	5
0305 70 448A	301	5
0839 70 449	301	6
	306	6
0866 70 454	301	7
	306	7
0374 70 471A	301	8
0375 70 471A	301	8
0376 70 471A	301	8
1523 70 471A	301	8
1524 70 471A	301	8
1534 70 471A	301	8
1535 70 471A	301	8
1562 70 471A	301	8
0866 70 473	301	9
0376 70 484A	301	10
0866 70 484A	302	10
0585 70 521B	306	8
0839 70 521	310	11
0839 70 522	310	12
0839 70 523A	310	13
0839 70 524	310	14
0839 70 525	310	15
0839 70 526	310	16
0585 70 531A	306	10
0585 70 532A	306	12
0585 70 533A	306	14
0585 70 534A	306	15
1529 70 551A	306	16
1544 70 551A	306	16
0585 70 710A	277	15
0585 70 720A	278	17
0585 70 730A	278	18
0585 70 733A	278	19
0376 70 801	302	12
0866 70 801A00	302	16
	307	18
0866 70 802B00	302	18
	307	20
1882 70 802	302	14
0483 70 804	242	51
0585 70 811C	307	24
0376 70 821B	302	22
0866 70 821 B	302	22
	307	26
0376 70 822B	303	24
0585 70 822B	307	28
0866 70 822D	303	24
0866 70 823A	303	26
	307	30
0866 70 852	303	27
	307	31
0866 70 853C	307	33
0376 70 855B	303	32
0870 70 875	303	35
	308	36
0376 70 891 00	283	53
0376 70 891 01	283	53
0376 70 892A00	284	54
0376 70 892A01	284	54
1624 70 911 03	292	27
1624 70 911 12	292	27
1624 70 911 13	292	27
0585 70 912B	292	28
0585 70 921B	292	29
0727 70 943	213	10
1524 70 980	61	34
	65	38
0866 71 310B	298	1
0866 71 343	298	9
0866 71 351	299	15
0866 71 352	299	16
0585 71 420A	282	32

0866 71 420	282	36
0376 71 421	282	38
0376 71 422	282	38
0585 71 423A	282	33
0376 71 431A02	283	46
0585 71 431	283	48
0866 71 431D	283	50
0376 71 484A	302	11
0866 71 484A	302	11
0585 71 521B	306	9
0585 71 531A	306	11
0585 71 532A	306	13
1529 71 551A	306	17
1544 71 551A	306	17
0376 71 801A	302	13
0866 71 801A	302	17
0866 71 801A00	307	19
0866 71 802B	302	19
0866 71 802B00	307	21
1882 71 802	302	15
0376 71 821B	302	23
0866 71 821B	302	23
	307	27
0376 71 822B	303	25
0585 71 822B	307	29
0866 71 822D	303	25
0866 71 852	303	28
	307	32
0866 71 853C	303	30
	307	34
0376 71 855B	303	33
0376 71 891 00	283	53
0376 71 891 01	284	53
0376 71 892A00	284	54
0376 71 892A01	284	54
1624 71 911 03	292	32
1624 71 911 12	292	32
1624 71 911 13	292	32
1620 72 010	315	11
1636 72 010	315	11
0866 72 020A	315	11
0259 72 080	316	12
0866 72 201	321	16
0259 72 210	316	14
0866 72 210B	321	17
0866 72 212A	321	19
0866 72 240	321	20
0866 72 292	321	24
1524 72 310G	322	30
0866 72 410A	322	31
0374 72 501	310	18
0376 72 501	311	18
0583 72 501A	316	15
0866 72 502	316	16
0376 72 505	311	19
0259 72 509	220	39
0866 72 510A	316	15
0376 72 560	311	20
0866 72 560	322	33
0376 72 602	311	26
0585 72 602C00	316	17
0866 72 602A00	316	17
0376 72 603	311	27
0376 72 605	312	28
0585 72 605	316	18
0866 72 605	316	18
0376 72 606	312	29
0585 72 606	316	19
0866 72 606	316	19
0585 72 651A	317	22
0866 72 651B	317	22
1524 72 661C	317	23
1529 72 661A	317	23
1540 72 661B	317	23
1544 72 661A	317	23

INDEX. 0376 72 755A00～0866 74 120

0376 72 755A00	312	34
0585 72 755 00	315	3
0585 72 760A	317	24
0866 72 760A	317	24
0376 72 761	312	31
0376 72 771	312	32
0376 72 781C	312	35
	312	35
0866 72 781C	317	25
0376 72 790	312	36
0866 72 791	317	26
1620 72 810	318	27
1882 72 810	312	37
0585 72 821	318	32
0376 72 831B	313	38
0866 72 831D	318	28
0866 72 841A	318	29
0899 72 841B	318	30
0899 72 843A	318	31
0376 72 851B	313	39
0376 72 855	313	40
0376 72 881	313	42
0376 72 890	313	44
0376 72 901C	313	45
0376 72 902B	313	46
1620 73 010	315	11
1636 73 010	315	11
0866 73 020A	315	11
0866 73 210B	321	17
0866 73 240	321	20
1524 73 310G	322	30
0866 73 410A	322	31
0374 73 501	311	18
0376 73 501	311	18
0583 73 501A	316	15
0866 73 501A	316	15
0376 73 560	311	20
0866 73 560	322	33
0376 73 602	311	26
0585 73 602C00	316	17
0866 73 602A00	316	17
0376 73 603	312	27
1524 73 661C	317	23
1529 73 661A	317	23
1540 73 661B	317	23
1544 73 661A	317	23
0585 73 760A	317	24
0866 73 760A	317	24
0376 73 761	312	31
0376 73 771	312	32
0376 73 790	312	36
1620 73 810	318	27
1882 73 810	313	37
0376 73 831B	313	38
0866 73 831	318	28
0899 73 841B	318	29
	318	30
0899 73 843A	318	31
0376 73 851B	313	39
0376 73 855	313	40
0376 73 881	313	42
0376 73 890	313	44
0376 74 030	181	29
0585 74 030	188	41
0866 74 030	184	30
1524 74 040	177	22
0376 74 050	181	30
0866 74 050	184	31
0866 74 090	184	32
	188	42
1562 74 090	181	31
0376 74 100	181	33
0866 74 100	184	34
0866 74 120	184	33
	188	43

1562 74 120	181	32
0376 74 130	181	34
0866 74 130	184	35
0839 74 158	324	—
0839 74 168	324	—
0866 74 250	173	30
0839 74 910 A	324	3
1881 75 010	203	14
0866 75 011	203	15
0866 75 013	203	16
0370 75 018	203	17
1514 75 021	203	18
1128 75 025 A	204	20
1568 75 026	204	19
0866 75 028	204	21
1568 75 029	204	22
1151 75 040	204	23
1562 75 122 A	203	4
1562 75 123 A	203	5
1881 75 124	203	6
1881 75 125	203	7
0275 75 140	203	8
1562 75 200 A	203	9
0710 75 436	204	24
2280 75 641	324	—
0866 75 930	324	4
0370 75 940	324	5
0899 75 960	324	6
0315 76 022	227	36
0208 76 071	296	36
0862 76 403 A	222	5
1562 76 406 A	222	8
0862 76 407 A	222	9
1562 76 408 A	222	10
0862 76 409	222	6
0862 76 411	222	7
0370 76 416	222	11
1620 76 422	222	14
0862 76 423	222	12
1524 76 451	226	13
1524 76 452	226	14
1524 76 453	226	15
1524 76 454	226	16
1524 76 455	226	17
1524 76 456	227	18
0866 76 457	227	20
0866 76 458	227	21
0866 76 459	227	22
0866 76 461	227	23
0866 76 462	227	24
0866 76 463	227	25
0866 76 464	227	26
1524 76 465	227	27
0866 76 466	227	28
1524 76 467	227	29
0866 76 468	227	30
1524 76 469	227	31
1524 76 471	227	32
0866 76 472	227	19
1524 76 472	227	33
1524 76 473	227	34
1524 76 501 A	226	2
1524 76 502 A	226	3
1524 76 503 A	226	4
1524 76 504 A	226	5
1524 76 505 A	226	—
0866 76 506	226	7
0866 76 507	226	8
0866 76 508	226	9
0866 76 509	226	10
0866 76 511	226	11
1524 76 512	226	12
1524 76 601	263	35
1524 76 602	263	34
1524 76 603	262	9

INDEX. 1524 76 604～0259 88 123

1524 76 604	262	8	0866 78 541	192	32	0259 87 108 A	263	20
0866 76 605	262	11	0820 78 857	234	79	0259 87 109 A	262	14
1524 76 607	262	18	0259 78 858	234	80	0259 87 119	263	27
1524 76 608	263	24	0259 78 868	234	81	0259 87 120	263	28
1524 76 701	237	1	0208 78 875	234	82	0259 87 134	262	12
1622 76 702	237	2	0820 78 883	234	83	0702 87 135	263	30
0370 76 703	237	3	0866 79 741	308	38	0702 87 138	263	32
0370 76 704	237	4	0710 81 103	250	10	0738 87 803	263	29
1524 76 705	237	5	0275 87 007	244	4	0738 87 804	263	31
1524 76 706	237	6	0727 87 012	244	6	0305 87 906	262	7
0370 76 707	237	7	2850 87 012	244	5	0727 87 992	266	6
1622 76 708	237	8	0727 87 013	244	7	0305 87 993	266	8
1622 76 709	237	9	0727 87 014	244	8	0727 87 994	266	9
1622 76 717	237	10	0727 87 016	244	9	0727 87 995	266	10
1622 76 901	237	11	0727 87 022	244	6	0727 87 996	266	11
1622 76 902	237	12	0727 87 023	244	7	0866 88 101	207	16
1622 76 903	237	13	0305 87 032	247	11	1562 88 101	207	16
1622 76 904	237	14	0259 87 101 A	263	22	0866 88 102	207	17
1622 76 905	237	15	0259 87 103	263	25	0866 88 103	207	18
1622 76 906	237	16	0259 87 104 A	263	26	0866 88 105	207	19
1622 76 907	237	17	0259 87 105	263	21	0866 88 106	207	20
1622 76 908	237	18	0259 87 106	263	23	1881 88 110	207	22
0585 78 521 A	191	27	0257 87 107	262	17	1882 88 110	207	22
0866 78 521	191	29	0259 87 107	262	19	1694 88 111	207	23
0866 78 530	192	31	0257 87 108	262	15	0259 88 123	207	21

1882 88 130	207	25
1694 88 131	207	26
0866 88 151	207	27
0866 88 152	207	28
1881 88 160	207	29
1882 88 160	207	—
1694 88 161	208	30
1694 88 180	208	31
1694 88 181	208	32
1693 88 201	208	42
1694 88 201	209	42
1696 88 201	209	43
0760 88 218	209	44
0652 88 219	209	45
1694 88 251	209	51
1696 88 251	209	52
1011 89 175	43	35
0259 89 251	89	4
1029 89 411	150	A
0839 89 431 A	150	7
0317 89 435	150	5
0317 89 436	150	6
1889 89 654	250	9
1755 89 662	244	12
1540 89 663	245	17
1881 89 664	247	1
1889 89 664	250	1
0585 89 665	251	13
1755 89 665	247	8
1755 89 667	244	12
1540 89 668	245	17
1881 89 669	247	1
1889 89 669	250	1
1540 89 673	247	13
	251	25
1540 89 678	247	13
	251	25
1757 99 100	7	—
1907 99 150	34	28
0305 99 178	51	37
0866 99 242	308	39
0317 99 265 B	92	15
0585 99 281 A	108	15
0866 99 281 A	104	21
0866 99 322	117	17
0866 99 324	117	18
0866 99 356	124	21
0259 99 361	125	43
0317 99 362	125	44
0305 99 521	174	31
0866 99 522	174	33
1128 99 711	170	43
1128 99 712	170	44
1128 99 713	170	45
0866 99 721	303	36
	308	37
0376 99 741	303	37
0866 99 741	303	37
0866 99 742	303	38
0376 99 743	304	40
0866 99 743	304	40
	308	41
0376 99 744	304	41
0866 99 744	304	41
	308	42
0866 99 745	303	39
	308	40
0376 99 746	304	42
0866 99 746	304	42
0376 99 747	304	43
0866 99 747	304	43
0376 99 748	304	44
0866 99 748	304	44
0376 99 749	304	45
0866 99 749	304	45

INDEX. 907860 6 16～99336 1007

907860 6 16	61	26
	65	39
907860 8 16	36	48
907860 8 20	133	30
907960 8 12	37	61
908067 6 14	176	3
909860 6 16	137	29
99221 1212	30	58
99221 2015	116	11
	117	21
99221 2020	111	24
	117	21
	148	35
	165	26
99221 3020	124	22
	208	34
99221 4030	119	8
99222 0216	43	27
	71	7
99225 0320	164	12
99230 0511	144	9
99230 0815B	157	9
99230 0820	277	16
99230 0852	206	7
99231 0820	148	34
99233 1225	42	3
99234 1208	3	33
99262 1806B	273	33
99264 0531B	177	18
99264 0752	168	19
99276 0506	43	24
	169	33
99276 0808	64	28
99276 1208	61	32
	64	36
99276 1210	4	41
99276 1608	58	28
99279 1105	260	97
99282 1201	133	20
	137	21
99282 1401	133	22
	136	9
	140	1
	154	22
99282 1601	137	30
99282 1700	69	37
99282 1901	161	18
99282 2001	133	25
99282 2600	37	69
	223	23
99282 2600	226	6
99282 4309	24	15
99282 4900	37	64
99282 5500	132	7
99282 6000	136	11
99283 1100	132	14
	140	15
99283 1300	140	13
99285 0800	36	55
	155	33
99288 0808B	142	40
99288 1608	201	88
99289 0701	36	57
99295 0406	260	96
99295 1508	110	10
99305 2800	7	85
99306 3000	2	17
	3	34
99307 0600	5	55
99307 0800	14	2
99307 1200	14	3
99335 04015	266	3
99335 04066	266	4
99335 0800B	298	8
99336 1007	137	32

99336 1204	133	24
99340 0420	25	38
99340 06140	142	35
99340 06180	140	2
	140	3
99340 06190	25	34
99340 06224	140	3
99340 06320	142	35
99340 06500	140	2
99340 06670	141	32
99340 60380	141	30
99340 60480	140	14
99344 60150	133	21
99381 0600	69	38
99381 1000	69	39
99381 1400	33	13
99384 1200F	5	56
	33	15
99502 2000	110	12
99502 3000	34	26
99502 4000	43	35
99503 3000	14	4
99510 1000	7	86
99511 1000	14	5
99511 1200	3	35
99511 1200	34	29
99511 1400	6	65
99541 01101	10	27
99541 01601	28	27
	74	49
99541 02211	43	28
	71	8
99541 0240	14	13
99541 0350	55	37
99562 1000	151	20
	162	34
99562 1200	4	36
	34	29
	160	12
99562 1400	6	66
	49	13
99562 1600	4	37
	5	57
99562 1800	33	14
99564 0800	4	38
99564 1000	7	86
	14	6
	49	14
	69	40
	32	49
99564 1200	2	4
	132	4
	136	13
99564 1400	69	41
99564 1600	33	16
	37	67
	141	24
99564 1800	42	8
	50	35
99564 2200	33	5
99564 2800	11	42
99573 2500	46	32
	82	2
99573 3500	46	33
99573 78118	39	10
99574 4000	34	30
99575 0300	144	9
99575 0400	251	19
99575 0500	157	10
99575 0600	96	34
	144	6
	146	9
	165	27
99576 0300	277	37
99576 0400	298	11

INDEX. 99576 0500~99750 11018

99576 0500	206	7
	277	16
99576 0700	278	21
99576 0800	30	59
99579 2000	282	34
99579 3000	113	44
	280	9
99579 4000	242	48
99586 10207	43	29
	71	9
99606 3307	46	34
99606 7203	34	31
99611 1500	46	35
	82	3
	95	28
	150	14
99611 1750	71	12
99611 2000	10	28
	71	17
99611 2500	49	15
99611 2750	86	18
9962 09 1553	96	41
	120	33
9963 60 4130	96	41
	121	33
9965 05 4530 00	96	41
	121	33
9965 06 4530 06	96	41
	121	33
99655 30010	96	42
99655 30015	96	42
99655 30020	96	42
99655 30025	97	42
99655 30030	97	42
99655 30035	97	42
99655 30040	97	42
99655 30045	97	42
99655 30050	97	42
99655 30060	97	42
99681 1503	141	19
99684 0600	247	12
99686 0800	199	49
99686 1200	140	11
	260	98
99700 8120	251	11
99701 2070	247	10
99701 2080	245	20
	248	16
	251	23
	252	28
99701 3270	247	6
99701 4278	245	15
	247	5
	250	5
99701 5050	254	10
	254	14
99701 6030	199	45
	203	10
	204	25
	271	3
99706 0110	255	22
99706 0115	255	22
99706 0120	255	22
99709 0108	21	6
	25	41
	68	32
	224	30
99709 0225	21	7
99709 0255	133	23
	138	40
99709 2185	260	94
99715 1101	277	3
99743 0650	199	42
99748 0410	269	17
99750 11018	120	29

99752 30818	89	5
99753 41022	99	14
99753 81022	99	14
99765 0616	239	14
99767 0525	250	8
99769 0410	303	34
99769 0414	169	32
	245	21
99769 0420B	169	37
	169	41
99772 0516	280	16
99772 0525	280	16
99773 0410	251	22
99774 0416	248	17
	252	29
99774 0616	168	21
99776 0620	281	28
99781 0612	266	16
99781 0818	160	3
99781 0820	239	7
99781 0822	160	6
99781 1012	67	2
99781 1018	67	4
99781 1028	192	33
99781 1080	116	12
99781 1085	111	18
99781 1225	124	23
99781 1235	124	24
99783 0828	217	6
	322	28
99783 1028	104	11
99783 1035	123	10
99785 0612	153	7
99785 0620	299	19
99785 0820	208	36
99785 0825	108	17
99786 0512	132	9
	133	28
	137	26
99786 0516	137	17
	137	23
99786 0610	36	50
99786 0612	21	3
	36	54
	55	43
	55	46
	142	39
	162	31
	194	18
	255	27
99786 0615	144	17
99786 0616	140	9
	157	17
	158	24
	162	33
	169	31
	191	21
	274	47
99786 0620	144	10
	169	35
	255	27
99786 0635	161	23
99786 0816	194	5
99786 0820	168	18
	271	10
99786 0820B	209	55
99786 0825B	209	53
99786 0830	222	16
99786 0835	112	32
99786 0845	54	19
99794 0612	210	56
	259	85
99794 10259	169	29
	191	28
99795 1032	147	20

INDEX. 99796 0608~99806 0516

99796 0608	43	32
99796 0610	4	44
	24	26
	25	31
	55	41
	68	25
99796 0614	42	16
	177	23
99796 0616	130	20
99796 0620	35	38
	35	44
	43	19
	69	36
99796 0812	14	15
	24	27
	25	32
99796 0814	23	4
99796 0816	4	46
	58	25
99796 0822	50	20
99796 0825	58	24
	64	27
99796 0832	50	21
99796 1020	136	14
99796 1035	40	16
99796 1035	68	20
99796 1040	68	20
99796 1045	39	15
	68	20
99796 1090	40	17
99797 0512	268	6
99797 0612	256	36
	259	83
	260	93
99797 0614	196	12
99800 10115	58	21
99801 0810	112	33
99801 0814	94	15
99801 0816	110	9
	176	15
99801 0818	6	75
	9	7
	127	8
	129	5
99801 0820	46	28
	208	33
	256	34
99801 0822	10	30
	23	5
	34	32
99801 0822	103	3
	107	3
99801 0825	7	81
	229	11
99801 0832	129	4
99801 0840	5	60
	229	12
99801 0865	5	61
99801 0875	5	62
99801 1035	61	21
99801 1045	130	18
99803 0810	23	2
99803 1012	61	22
99804 0820	61	31
	64	35
	196	2
99805 0616	311	24
99805 0816	196	3
99805 0825	147	26
99805 0830	235	89
99806 0510	218	21
	263	33
	320	8
99806 0512	268	3
99806 0516	219	27

99806 0516	310	5
	320	11
99806 0610	67	7
	316	21
99806 0612	141	22
	220	36
	230	22
	231	32
	232	44
	311	25
	312	30
	316	13
	322	34
99806 0614	28	20
	43	34
	50	23
	71	4
	74	50
99806 0616	6	71
	33	12
	165	20
	172	4
	172	7
	173	26
	177	16

99806 0616	235	85
	258	63
	264	38
99806 0618	27	15
	30	51
	172	16
	240	22
	240	25
99806 0620	35	43
	233	64
99806 0625	161	21
99806 0628	230	26
99806 0630	30	51
99806 2612	213	10
99811 0812	100	23
99811 1010	4	42
99811 1020	119	15
99811 1050	99	9
99813 1011	147	27
99813 10115	147	27
99831 0408	213	9
	316	20
99831 0408B	273	31
99831 0516	281	20
99831 0640	172	11

99832 0408B	201	79
	218	16
	320	3
99832 0516B	274	48
99832 0625	209	50
99832 0630	219	30
	320	5
99833 0310B	234	71
99833 0408	29	32
	94	14
	112	38
	116	9
	134	43
	138	42
99833 0410	298	14
99833 0412	158	27
99833 0416	251	12
99833 0512	134	38
	138	38
	153	6
	222	17
	223	18
	235	90
	272	17
	272	22

INDEX. 99833 0512～99862 0425B

99833 0512	273	25
99833 0512B	234	72
	274	38
99833 0516B	271	12
	271	14
99833 0520	214	20
	310	8
	315	7
	318	33
99833 0525	233	68
99833 0612	204	27
	257	51
	260	91
99833 0614	240	17
99833 0616	204	28
	250	7
	257	51
	275	52
99833 0618	199	43
99833 0625	255	23
99833 0812	94	3
	95	17
	257	46
99834 0412B	273	36
99834 0512B	271	11
99834 0616B	272	18
	272	20
99835 0625C	245	16
99836 0416B	198	38
99836 0516B	204	26
	271	13
	272	15
99836 0620	239	10
99837 0516C	281	23
99837 0525B	198	36
99838 0412	198	32
99838 0412B	197	21
99838 0514	254	11
99838 0618	197	18
99838 0620	281	26
99838 0630	204	29
99839 0520B	197	15
99851 0612A	5	58
99851 0622A	14	7
99851 0814A	64	25
99851 0822A	2	5
99851 0828A	14	8
99852 0610	42	4
99852 0612	95	24
99852 0660	2	18
99852 0820	91	2
99852 0822A	3	19
	4	39
99852 0830A	4	40
99852 0880	91	3
99852 0880A	3	20
99852 1016	3	21
99855 1020	5	59
99855 1025	42	5
99859 1028	229	8
99859 1050	229	8
99859 1220A	3	22
99859 1225A	3	23
99860 0510	191	25
99860 0616	244	10
99861 0410	295	19
99861 0410B	295	20
99861 0414B	197	22
99862 0412B	287	16
	290	12
99862 0416B	241	34
	292	30
99862 0416C	241	34
	292	30
99862 0425B	302	20

99862 0425B	307	22
99862 0512B	286	13
	290	9
99862 0512C	290	6
99862 0525B	197	25
99863 0410	313	41
99863 0410B	178	32
99863 0412	199	46
	286	10
99863 0412B	283	51
99863 0414	280	8
99863 0416B	283	49
99863 0425B	283	52
99863 0510	198	30
99863 0512	133	33
	204	30
	257	55
	272	19
	303	31
	308	35
99863 0512B	223	19
99863 0516	36	60
	177	28
	199	52
99863 0520	275	53
99863 0620	235	84
99864 0406	208	35
99864 0408	312	33
99864 0410	269	14
	282	40
	298	10
99864 0410B	282	35
	313	43
99864 0410C	292	26
99864 0412	256	39
	287	26
99864 0412B	282	30
99864 0414	282	37
	283	45
99864 0414B	302	21
	307	23
	307	25
99864 0416	287	25
99864 0416B	283	47
99864 0420B	283	49
99864 0420C	292	31
99864 0425B	302	21
99864 0516B	287	23
99864 0516C	241	37
99864 0525B	287	24
99864 0616	177	25
99866 0420	114	57
99868 0308	113	47
99868 0308B	254	16
99868 0408	191	23
	233	58
99868 0410	112	39
	222	15
	233	69
99868 0420	113	40
99868 0508	158	18
99868 0512	223	22
99868 0520	230	20
	234	73
99869 0400	197	23
99869 0412	200	57
	255	17
99869 0414	167	17
99869 0512	112	29
	259	87
99887 0412	164	13
99896 0400	169	37
	169	41
	283	49
99896 0500	133	33

INDEX. 99896 0500～99922 1400

99896 0500	200	53
	250	8
99896 0600	177	25
99896 0616	275	51
99901 0600	36	51
99901 0800	14	9
	17	5
	28	26
	34	33
	35	36
	61	23
	64	24
	91	10
	91	14
	103	3
	103	4
	107	3
	155	34
99901 0800 B	157	13
99902 0800	165	28
99906 0300	242	47
99906 0500	54	18
	57	19
	134	35
	138	36
99906 0500	219	29
	274	45
	310	17
	322	35
99906 0500 B	198	39
99906 0600	23	10
	27	6
	43	23
	95	29
	173	17
	173	21
	230	22
	231	30
	231	33
	232	45
	256	33
99906 0800	232	46
	235	91
99907 0600	30	49
	172	12
	219	31
	320	6
99910 0401	241	34
99910 0601	244	11
99921 1000	104	9
99921 1000	105	29
	107	4
	107	8
	108	21
	116	13
	124	26
	127	5
	127	6
	127	10
	147	28
	191	30
	229	9
99921 1200	33	10
	105	26
	229	10
99921 1800	111	25
99922 0800	146	5
99922 1000	105	29
	108	21
	110	11
	147	20
	147	32
	165	22
99922 1200	27	7
99922 1400	86	2

99922 1400	117	15
99924 1000	111	24
	116	11
	117	21
99924 1200	124	22
99940 0400	248	17
	252	29
99940 0500	248	19
	269	11
	280	11
99940 0501	200	54
	272	16
99940 0502	247	7
99940 0600	55	48
	140	8
	140	10
	144	15
	150	2
	257	45
	259	89
99940 0601	55	38
99940 0602	61	28
	64	32
	167	8
	168	27
99940 0602	177	24
	196	6
	196	8
	197	13
	201	84
	240	23
	251	24
	259	76
	259	79
99940 0800	25	33
	61	33
	64	26
	65	37
	104	18
	108	14
	129	9
	147	31
	150	10
	151	17
	154	19
	196	9
	209	54
99940 0802	19	9
	124	31
	141	17
99940 0802	167	15
	196	4
	223	20
99940 1001	40	18
	42	11
	58	22
	68	21
99941 0801	19	10
99942 1000	125	35
99942 1001	111	19
99942 1400	125	32
99944 1400	117	16
99945 0500 B	201	80
99945 1000	167	10
	168	26
99947 1400	125	36
99948 1200	114	59
99949 0800	129	11
99951 0618	173	17
	173	26
	219	29
	220	36
	232	45
	240	25
	311	25

INDEX. 99951 0618～99952 0516B

99951 0618	312	30
	316	13
	317	21
	322	35
99951 0818	23	2
	239	7
99951 0822	112	32
	129	11
	160	6
	278	20
	322	29
99951 1020	192	30
99951 1022	192	30
	192	33
99951 1030	125	35
	127	5
	127	10
99952 0300	234	71
	242	47
99952 0400	158	27
	198	32
	313	41
99952 0400B	197	21
99952 0412	169	32
	199	46
99952 0412B	169	37
	273	36
	282	30
	302	21
	307	23
	307	25
99952 0500	37	60
	54	18
	58	19
	133	33
	134	35
	134	38
	138	36
	138	38
	198	30
	198	39
	204	30
	214	20
	222	17
	223	22
	230	20
	233	68
	234	72
	234	73
	257	55
99952 0500	259	87
	268	3
	268	6
	272	17
	272	19
	272	22
	273	25
	274	45
	303	31
	308	35
	310	8
	315	7
	318	33
	320	8
99952 0500B	197	15
	201	80
	271	11
	271	12
	272	14
	274	38
	275	53
99952 0516	178	28
	200	54
	223	18
99952 0516B	223	19

99952 0516B	302	21
	307	23
99952 0518	218	21
99952 0600	28	15
	36	51
	140	8
	173	21
	177	16
	191	25
	199	42
	219	31
	230	22
	230	26
	231	32
	231	33
	232	44
	233	64
	235	84
	235	85
	240	14
	250	7
	257	51
	257	51
	258	63
	260	91

99952 0600	281	26
	299	19
	311	24
	320	6
	322	34
99952 0618	130	20
	137	29
	141	22
	144	10
	172	4
	172	7
	172	16
	177	23
	177	25
	191	21
	194	18
	196	12
	197	18
	199	43
	199	52
	204	27
	204	28
	204	29
	231	30
	264	38

99952 0618	275	52
99952 0618B	272	18
99952 0622	165	20
99952 0800	5	60
	5	61
	5	62
	7	81
	61	23
	64	24
	112	31
	160	3
	196	3
	232	46
	235	89
	257	46
99952 0816	146	10
	165	29
	208	33
99952 0822	147	26
	168	18
	173	18
	176	15
	194	5
	196	2
	208	36

INDEX. 99952 0822～99971 0500

99952 0822	208	37
	209	54
	209	55
	222	16
	235	91
	271	10
99952 1000	104	11
	107	4
	147	28
	278	21
99952 1022	191	28
99952 1030	136	14
	169	29
99952 1400	125	32
99952 6000	244	10
99953 0400	30	57
	209	44
99953 0400B	178	32
99953 0600	23	10
	30	51
99953 0800	14	9
	23	5
	28	26
	34	33
	165	30
99953 0800	277	16
99953 1000	39	2
	61	22
99957 0618	213	10
99958 1018	99	15
99963 3310	51	40
99963 3330	51	40
99963 6910	47	36
99963 6930	47	36
99967 0400A	292	30
99967 0400B	241	34
	292	30
	295	20
99967 0500A	290	6
99967 0500B	197	25
	198	36
	204	26
	271	13
	272	15
	274	48
	286	13
	290	9
99967 0400A	241	34
99971 0300	113	47
	234	71
99971 0300	242	47
99971 0400	29	32
	94	14
	112	38
	112	39
	113	40
	116	9
	158	27
	197	21
	199	46
	298	14
	313	41
99971 0400B	273	36
99971 0500	54	18
	58	19
	134	35
	134	38
	138	36
	138	38
	153	6
	158	18
	178	28
	197	15
	198	39
	201	80

99971 0500	218	21
	219	27
	219	29
	223	17
	223	18
	223	22
	230	20
	233	68
	234	72
	234	73
	235	90
	262	16
	263	33
	268	3
	268	6
	271	11
	271	12
	272	17
	272	19
	272	22
	273	25
	274	45
	310	5
	320	6
	320	8

99971 0500	320	11
	322	35
99971 0500B	272	14
	274	38
	275	53
99971 0600	6	71
	23	10
	27	6
	28	15
	28	20
	30	—
	30	51
	33	12
	35	43
	36	51
	43	23
	43	34
	50	23
	67	7
	71	4
	74	50
	95	29
	141	22
	153	7
	161	21

99971 0600	165	20
	168	21
	168	27
	173	21
	173	26
	177	16
	196	12
	197	18
	199	43
	199	52
	204	27
	204	28
	204	29
	213	10
	219	31
	220	36
	230	22
	231	26
	231	30
	231	32
	232	44
	232	45
	233	64
	235	84
	235	85

INDEX. 99971 0600～99971 0800

99971 0600	240	14
	240	22
	241	25
	250	7
	255	23
	256	—
	256	—
	257	51
	257	51
	258	63
	259	83
	260	91
	260	93
	264	38
	266	16
	272	18
	275	52
	281	26
	299	19
	311	24
	311	25
	312	30
	316	13
	317	21
	322	34

99971 0601	49	1
99971 0800	5	60
	5	61
	5	62
	6	75
	7	81
	9	7
	10	30
	14	9
	17	5
	23	2
	23	5
	28	26
	34	32
	35	33
	35	36
	39	9
	39	10
	46	28
	50	27
	61	23
	61	31
	64	24
	64	35
	89	5

99971 0800	91	10
	92	14
	94	15
	95	17
	100	23
	103	3
	103	4
	107	3
	108	17
	110	9
	112	33
	127	8
	129	4
	129	5
	147	26
	155	34
	157	13
	160	3
	160	6
	165	31
	176	15
	196	2
	196	3
	208	33
	208	36

99971 0800	217	6
	229	11
	229	12
	232	46
	235	89
	235	91
	239	7
	256	—
	257	46
	322	28
99971 1000	4	42
	6	73
	39	2
	61	21
	61	22
	67	2
	67	4
	99	10
	104	9
	104	11
	107	4
	107	8
	116	13
	119	16
	120	29

99971 1000	123	10
	124	26
	127	5
	127	6
	127	10
	129	12
	130	18
	147	28
	165	22
	167	10
	168	26
	192	30
	192	33
	229	9
99971 1200	33	10
	105	26
	124	23
	124	24
	229	10
99971 1400	86	2
99971 1800	111	25
99972 0500	227	35
99972 0800	146	14
	165	32
99972 1000	278	21

99972 1400	165	22
99974 0600	219	30
	239	10
	240	17
	320	5
99975 0500	281	20
	281	23
99975 0600	219	25
	219	30
	239	10
	240	17
	321	12
99978 3200	47	37
99979 1200	27	7

TOYO KOGYO CO.,LTD.

Printed in Japan