Parts Catalog

Mazda RX-3
Sedan, Coupe & Rotary Wagon



MAZDA ROTARY ENGINE: LICENSE NSU-WANKEL

Toyo Kogyo Co.,Ltd.

© 1975 Toyo Kogyo Co., Ltd.
November 1975

HOW TO USE THIS PARTS CATALOGUE

This parts catalogue is compiled for the following models.
Model : Mazda RX-3 Sedan, Coupe and Rotary Wagon, 1976 models for the U.S.A. manufactured from : September, 1975

Model No.	Model /Type	Description
3704	S124A-CAP	MAZDA RX-3 Coupe 5-Speed U.S.A. Federal Spec.
3705	S124W-P	MAZDA RX-3 Rotary Wagon 5-Speed U.S.A. Federal Spec.
3706	S124A-CAP	MAZDA RX-3 Coupe 5-Speed U.S.A. Calif. Spec.
3707	S124W-P	MAZDA RX-3 Rotary Wagon 5-Speed U S.A. Calif. Spec
3737	S124A	MAZDA RX-3 Sedan U.S.A. Federal Spec.
3738	S124A-T	MAZDA RX-3 Sedan Automatic U.S.A. Federal Spec.
3739	S124A-CA	MAZDA RX-3 Coupe U.S.A. Federal Spec.
3740	S124A-CAT	MAZDA RX-3 Coupe Automatic U.S.A Federal Spec.
3741	S124W	MAZDA RX-3 Rotary Wagon U S A. Federal Spec
3742	S124W-T	MAZDA RX-3 Rotary Wagon Automatic U.S.A Federal Spec.
3743	S124A	MAZDA RX-3 Sedan U S A. Calif. Spec.
3744	S124A-T	MAZDA RX-3 Sedan Automatic U.S.A. Calif. Spec.
3745	S124A-CA	MAZDA RX-3 Coupe U.S.A. Calif. Spec.
3746	S124A-CAT	MAZDA RX-3 Coupe Automatic U.S A. Calif. Spec.
3747	S124W	MAZDA RX-3 Rotary Wagon U.S.A. Calif. Spec.
3748	S124W-T	MAZDA RX-3 Rotary Wagon Automatic U.S.A. Calif. Spec.

(Ⅰ) Layout of Parts Catalog

The spares relevent to each assembly are printed inset to the right, and parts that constitute a sub-assembly are indicated by illustrations and classified according to each assembly. Therefore, if a spare part is not printed inset to the right, this shows that the part does not constitute a part of the assembly.
Moreover, to aid identification of spares, "exploded" illustrations are incorporated in this catalog.

(Ⅱ) How to locate parts

1) When part number is not known.

A. Refer to index of groups and locate the group to which the part belongs.
⇩
B. Open to group illustration page and locate part wanted.
⇩
C. See the number given for the part in the illustration and find corresponding number in the parts composition lists.

D. Then, you will find the name and the part number of the part on the right side of this number.

2) When part number is known but shape and name of part is unknown.

A. See index given at back of the parts catalog and find pages where illustration, part number and figure number is listed.
⇩
B. Open to page indicated and locate the part number in the parts composition list, and after this locate the part in the illustration by referring to figure number given at front of the part number.
⇩
C. The corresponding figure number in the illustration is for the part required.

3) Moreover as an alphabetical index is incorporated after the index of groups, utilize for locating principal parts.

(Ⅲ) On Groups

1) The figure enclosed by a triangle at the top of each page (Example 

) indicates group number.

2) Group numbers are determined according to structure and function of parts.

3) The group number given in the index of groups coincide with the numerals (Example 

) of the illustration and parts composition pages.

(Ⅳ) Explanation of Parts Composition Lists

1) Indication of composition of assembly.

(a) Only the description of the parts that comprise the assembly and are available as spares are inset to the right and given after the assembly part number and description. In this instance a wide space is taken in between for other spare parts.

(b) For parts of sub-assemblies that are included in an assembly and are available as spares, designation is made in the "Remarks" column, (Example: Fig. No. 8 included).

(c) When a parts description is not inset to the right, this signifies that the part is not included in any assembly or sub-assembly.

Example:

	No.	Part Number	Description	Q'ty	Remarks
(a)	1	1011 18 300	Alternator	1	
(b)	2	1011 24 501	Stator	1	
	⋮	⋮	⋮	⋮	
(b)	7	0868 24 540	Rotor	1	Fig. No. 8 included
(c)	8	0820 24 503	Bearing, Ball	1	
(d)	23	1881 18 361	Strap, Alternator	1	

(a) ..... Includes (b) to (c)
(b) ..... Includes (c)
(d) ..... Is not included in any ass'y nor sub ass'y

2) On parts number

A. Exclusive parts

Example:

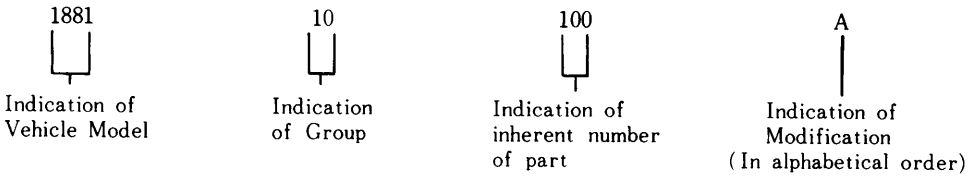

B. Standardized parts (General parts)

Example:

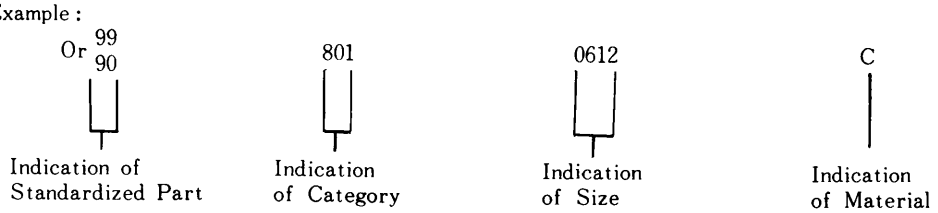

C. Standardized parts (Tires, Tubes, Disc Wheels, etc.)

Example:

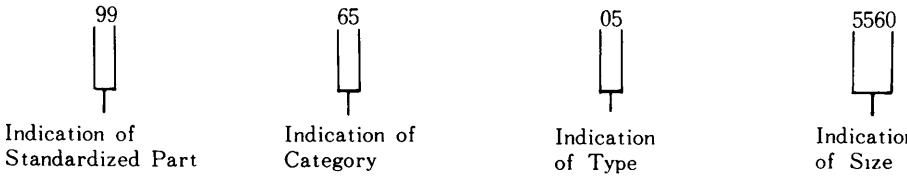

3) On Quantity

The quantity given in the parts composition list shows number of parts used per vehicle and does not indicate selling unit.

4) Other Precautions

☆ Mark····· Parts marked thus are not available as replacement parts, therefore, when these parts are required, order in the form of assemblies (or sets) including these parts or in the form of parts interchangeable with these parts.

5) Abbreviations

(R)	Right	EX.	Exhaust
(L)	Left	IN.	Inlet
(C)	Center	T/mission	Transmission
(Frt.)	Front	©	Parts with Different Colours (Indicate Colour when Ordering)
(Rr.)	Rear	▲10	Indication of Group
Cpt.	Complete		
Ass'y	Assembly		
Std.	Standard	Manual	Manual Transmission
O.S.	Over Size	Automatic	Automatic Transmission
U.S.	Under Size		
BEIG	Beige	IVRY	Ivory
BLK	Black	L.BLU	Light Blue
BLU	Blue	L.GRN	Light Green
BLU.M	Blue Metallic	L.GRY	Light Gray
BLU/GRY	Bluish Gray	MRN	Maroon
BRN	Brown	PRPL/BLU	Purplish Blue
D.BLU	Dark Blue	PRPL/WHT	Purplish White
D.BRN	Dark Brown	RED	Red
D.GRN	Dark Green	SILV.M	Silver Metallic
D.GRY	Dark Gray	WHT	White
D.YLW	Dark Yellow	YLW	Yellow
GLD.M	Gold Metallic	YLW/D.GRN	Yellowish Dark Green
GRN	Green	YLW/GRN	Yellowish Green
GRN.M	Green Metallic	YLW/WHT	Yellowish White
GRY	Gray	DUL	Dull Finish
GRY/GRN	Grayish Green	S.DUL	Semi Dull Finish
GRY/YLW	Grayish Yellow		

(V) Precautions to be taken when placing orders for parts

1) Always specify part numbers, names of parts and quantity required.

2) Be sure to list the parts in order of part number, when filling in order sheet.

3) As processing of orders received by us is done by electronic computers, importance is attached to the part number. Therefore, in case the part number and name of part do not coincide with each other, the part will be sent to you in accordance with the part number.

4) Distinction of colour of spare parts by code number is done with figures number 11 and 12 of the parts number. Therefore, add to the end of the applying part number and order.

Example:	Part Number	Colour Code No.	Description
	0866 69 543A (10 Figures)	03 (2 Figures)	
	0866 69 543A (10 Figures)	12 (2 Figures)	

(Ⅵ) Colour Code Nos.

1) Whenever there is a part with onlv one colour, and there is an increase to two or more colours, colour codes will be established only for the colours added. Therefore, there will be parts with and without colour codes. (However, the colour will be described in the "Description" Column").
Therefore, care must be taken to attach the colour code after the part number if it is a colour code established afterwards, otherwise the part supplied will be the coloured part without the colour code.

Example:

1003 64 610	Tray (Black) ·····	Part without colour code
1003 64 610-05	Tray (Brown) ·····	Part with colour code

2) Location of © mark

As a precaution against dropping of the "Colour code No.", the "©" mark is located right after the part number.
Alwavs attach the colour code when there is this "©" mark, moreover, be careful not to confuse it with the suffixes for part modifications.

Example:

Formerly ····· 1620 58 810A Trim (R), Door ©

Newly ····· 1620 58 810A © Trim (R), Door

INDEX.

Group No.	Description	Fig.	Page	Part No.
	Engine Parts			
10	Rotor Housing	1		2~8
10.11	Rotor	9		10~13
13	IN. Manifold & Thermal Reactor	14		15~16
13.23	Carburettor	17		18
13.23	Air Cleaner	19		20
13	Starting Assist System	21		22
13	Emission Control System	23		24~28
14	Oil Pump	29		30~33
14.15	Cooling System	34		35~39
16	Clutch (Manual)	40		41~42
17	Manual T/mission (Case, 4 Speed)	43		44~46
17	Manual T/mission (Case, 5 Speed)	47		48~50
17	Manual T/mission (Gear, 4 Speed)	51		52~54
17	Manual T/mission (Gear, 5 Speed)	55		56~59
17	Manual T/mission (Change Controls, 4 Speed)	60		61~62
17	Manual T/mission (Change Controls, 5 Speed)	63		64~66
18.24	Distributor	67		68~71
18.24	Alternator	72		73~74
18.24	Starter & Battery (Manual)	75		76~77
18.24	Starter & Battery (Automatic)	78		79~81
19	Automatic T/mission (Converter, Oil Pump & Piping)	82		83~85
19	Automatic T/mission (Case, Main Control)	86		87~90
19	Automatic T/mission (Clutch & Planetary Gear)	91		92~95
19	Automatic T/mission (Low, Reverse & Governor)	96		97~99

Group No.	Description	Fig.	Page	Part No.
19	Automatic T/mission (Manual Linkage)	100		101~102
	Chassis Parts			
25	Propeller Shaft	103		104
26	Rear Axle	105		106~107
26	Rear Brake	108		109~112
27	Driving	113		114~116
28	Rear Suspension (Sedan & Coupe)	117		118~120
28	Rear Suspension (Station Wagon)	121		122~123
32	Steering System (Wheel & Gear)	124		125~129
32	Steering System (Rod)	130		131~132
33	Front Axle	133		134~135
34	Front Suspension	136		137~139
39	Engine & T/mission Bracket	140		141~142
40	EX. Pipe & Silencer	143		144~147
42	Fuel Tank (Sedan & Coupe)	148		149~151
42	Fuel Tank (Station Wagon)	152		153~155
13.45	Fuel Piping	156		157~160
41	Accelerator Control System	161		162
41	Clutch Release & Master Cylinder (Manual)	163		164~165
41.43	Clutch & Brake Pedal	166		167~168
43.49	Tandem Master Cylinder & Vacuum Power Assist	169		170~171
44	Parking Brake System	172		173~174
43.45	Piping (Clutch & Brake)	175		176~178
46	Change Controls (Automatic)	179		180~181

INDEX.

Group No.	Description	Fig.	Page	Part No.
	Body Parts			
50	Bumper & Grille		182	183~188
52	Bonnet & Trunk Lid		189	190~191
51~70	Body Panels (Front)		192	193~195
53.54	Body Panels (Side, Coupe)		196	197~198
53.54	Body Panels (Side, Sedan)		199	200~201
53.54	Body Panels (Side, Station Wagon)		202	203~205
56	Body Panels (Floor)		206	207~209
56	Body Panels (Floor Attachment)		210	211
55.60	Dashboard		212	213~218
55.75	Meter		219	220~222
57	Seat		223	224~229
58.59	Front Side Door (Glass)		230	231~234
58.59	Front Side Door (Lock)		235	236~239
61	Car Heater		240	241~242
61.76	Heater Unit		243	244
61	Car Cooler		245	246~254
61.76	Compressor (Car Cooler)		255	256~257
61.76	Cooler Unit & Control Panel		258	259~260
62.63	Back Door (Station Wagon)		261	262~265
66.89	Lamps (Front)		266	267~268
66.89	Lamps (Rear, Sedan & Coupe)		269	270~271
66.89	Lamps (Rear, Station Wagon)		272	273~275
66.67	Electric Equipment (Body)		276	277~280
66.67	Electric Equipment (Body Wiring)		281	282~284

Group No.	Description	Fig. Page	Part No.
66.87	Windshield Wiper	285	286~288
66.87	Screen Washer	289	290
66	Auto Radio & Stereo	291	292~293
68	Crush Pad, Glove Pocket & Console Box	294	295~299
68	Service Tools	300	301~302
69~71	Attachment	303	304~308
69	Top Ceiling & Trim (Sedan & Coupe)	309	310~312
69	Top Ceiling & Trim (Station Wagon)	313	314~316
69	Floor Mat & Trim	317	318~320
70.71	Ventilator	321	322~323
70.71	Window Glass & Moulding (Sedan & Coupe)	324	325~328
70.71	Window Glass & Moulding (Station Wagon)	329	330~332
72.73	Rear Side Window (Coupe)	333	334~337
72.73	Rear Side Door (Glass, Sedan & Station Wagon)	338	339~343
72.73	Rear Side Door (Lock, Sedan & Station Wagon)	344	345~347
09	Key Set	348	349~350
	INDEX.		351~392

10 ROTOR HOUSING

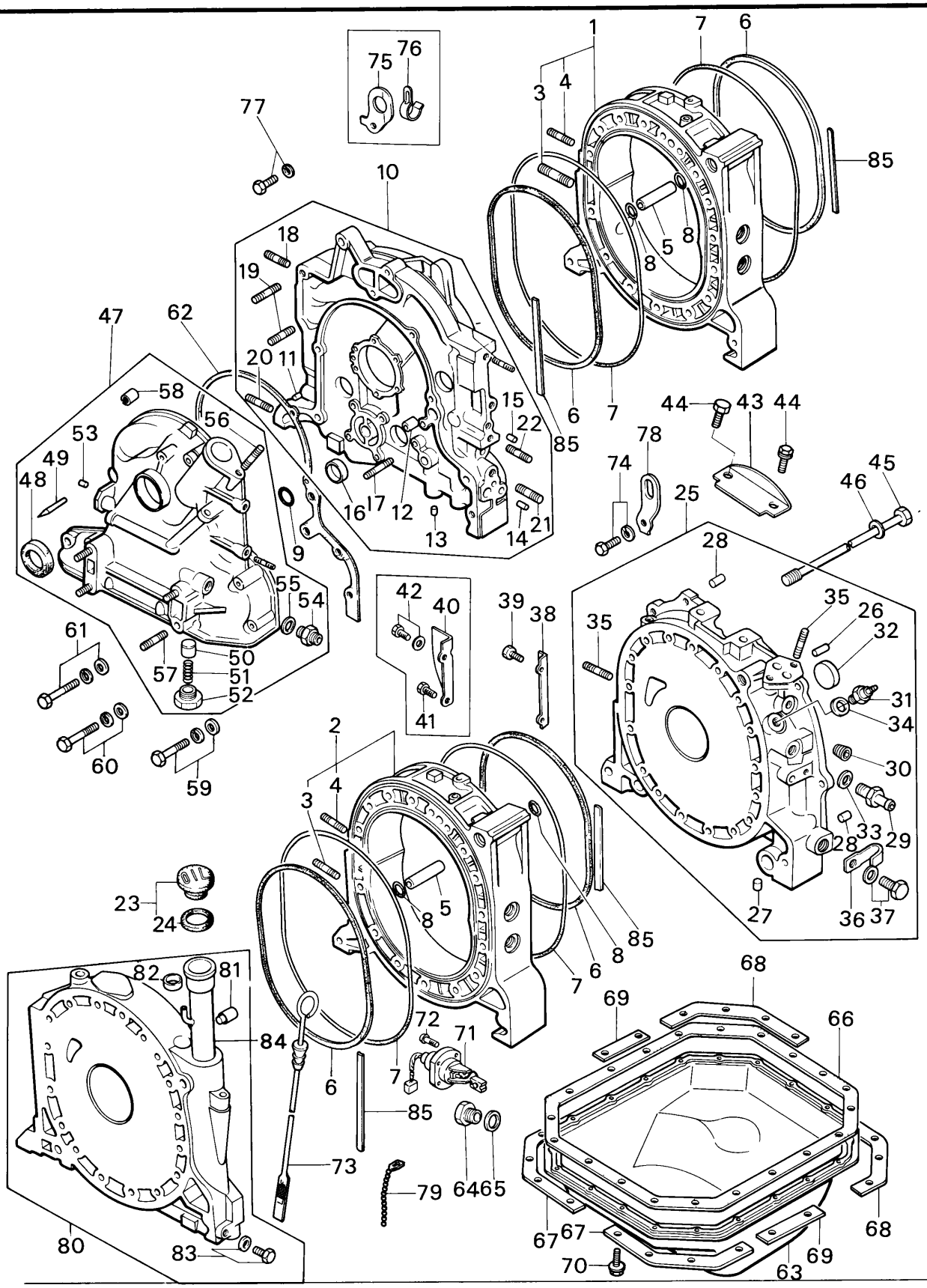

No.	Part Number	Description	Q'ty	Remarks
1	3743 10 100	Housing, Rotor (Frt.)	1	
2	3743 10 150	Housing, Rotor (Rr.)	1	
3	0839 10 105	Stud	4	
4	99851 0822A	Stud	2	
5	0839 10 111B	Dowel, Tubular	4	
6	1757 10 171A	Ring, Square	4	
7	1757 10 172	Ring, "O"-Outer	4	
8	0813 10 173	Ring, "O"-Tubular Dowel	4	
9	0813 10 174	Ring, "O"-Front Cover	1	
10	1258 10 200	Housing, Front	1	
11	0839 10 203	Pin, Dowel	1	
12	2329 10 204	Dowel, Tubular	2	
13	0839 10 205	Plug, Blind	3	
14	1757 10 206A	Plug, Blind	1	
15	1757 10 207	Plug, Blind	1	
16	99306 3000	Plug, Blind-Water	3	
17	99852 0660	Stud	2	
18	99852 0822A	Stud, IN. Manifold	2	

10 ROTOR HOUSING

No.	Part Number	Description	Q'ty	Remarks
19	1757 10 208	Stud, Water Pump	4	
20	99852 1016	Stud	1	
21	99859 1220A	Stud, Mounting	1	
22	99859 1225A	Stud	1	
23	0324 10 250	Cap, Oil Filler	1	
24	0324 10 252	Gasket	1	
25	3743 10 300	Housing, Rear	1	
26	0820 10 203	Pin, Knock - Gear	1	
27	0839 10 205	Plug, Blind	1	
28	1757 10 309	Pin, Tubular	2	
29	0866 10 320A	Hose, Joint	1	
30	99503 1000F	Plug, Blind	1	
31	1757 18 510A	Gauge Unit, Heat	1	
32	99306 3000	Plug, Blind - Water	5	
33	99562 1600	Gasket, Hose Joint	1	
34	99564 0800	Gasket, Heat Gauge Unit	1	
35	99852 0822A	Stud, IN. Manifold & Oil Filter	4	
36	99276 1210	Clip	1	

No.	Part Number	Description		Q'ty	Remarks
37	99796 1016	Bolt, Clip		1	
38	1757 10 305	Cover, Dust	(Manual)	1	
39	99796 0610	Bolt, Dust Cover		2	
40	1029 10 305	Cover, Dust	(Automatic)	1	
41	99796 0610	Bolt, Dust Cover		1	
42	99796 1016	Bolt, Dust Cover		1	
43	1757 10 351	Cover, Dust	(Manual)	1	
44	99796 0816	Bolt, Dust Cover		2	
45	1015 10 451	Bolt, Tension		18	
	1015 10 452	Bolt, Tension		1	
46	0839 10 455	Washer, Seal-Tension Bolt		19	
47	1757 10 600B	Cover, Front		1	
48	0820 10 605	Oil Seal		1	
49	0820 10 631B	Pin, Top Indicator		1	
50	0839 14 115	Plunger, Press		1	
51	0839 14 273A	Spring, Press Plunger		1	
52	0839 14 274	Plug, Press Plunger		1	
53	99307 0600	Plug, Blind		2	

No.	Part Number	Description	Q'ty	Remarks
54	99384 1200	Joint, Union	1	
55	99562 1600	Gasket, Union Joint	1	
56	99851 0612A	Stud	1	
57	99855 1020	Stud	4	
58	1757 10 609	Pin, Spring	1	
59	99801 0840	Bolt, Front Cover	3	
	99952 0800	Washer, Plain	3	
	99971 0800	Washer, Spring	3	
60	99801 0865	Bolt, Front Cover	2	
	99952 0800	Washer, Plain	2	
	99971 0800	Washer, Spring	2	
61	99801 0875	Bolt, Front Cover	1	
	99952 0800	Washer, Plain	1	
	99971 0800	Washer, Spring	1	
62	1757 10 641	Gasket, Front Cover	1	
63	3625 10 700A	Pan, Oil (Except Calif.)	1	
	3744 10 700	Pan, Oil (Calif.)	1	
64	99511 1400	Plug, Drain	1	

No.	Part Number	Description	Q'ty	Remarks
65	99562 1400	Gasket	1	
66	0839 10 711	Gasket, Oil Pan	1	
67	0839 10 721	Plate, Seat-Oil Pan	2	
68	0839 10 722	Plate, Seat-Oil Pan	2	
69	0839 10 723	Plate, Seat-Oil Pan	2	
70	99806 0616	Bolt, Oil Pan	22	
	99971 0600	Washer, Spring	22	
71	3565 10 730A	Senser, Oil Level	1	
72	99830 0610	Bolt, Oil Level Senser	3	
73	3565 10 830	Gauge, Oil Level	1	
74	1757 10 845	Bolt, Rear Housing+Engine Hanger	1	
	99971 1000	Washer, Spring	1	
75	3565 10 860A	Hanger, Engine	1	
76	3565 10 865A	Clip	1	
77	99801 0820	Bolt, Engine Hanger	1	
	99971 0800	Washer, Spring	1	
78	1757 10 862	Hanger, Engine	1	
79	99709 0108	Band (Calif.)	1	

10 ROTOR HOUSING

No.	Part Number	Description	Q'ty	Remarks
80	3648 23 070	Housing, Intermediate	1	
81	2329 10 417	Joint, Pipe	1	
82	99305 2800	Plug, Expansion	1	
83	99510 1000	Plug	1	
	99564 1000	Gasket	1	
84	3565 10 410A	Pipe, Oil Filler	1	
85	0866 23 025	Protecter, "O" Ring	4	
	3743 23 200	Short Engine (Manual)	1	
	3744 23 200	Short Engine (Automatic)	1	
	3743 99 100B	Engine Gasket Set	1	
	1757 10 641	Gasket	1	
	0839 10 711	Gasket, Oil Pan	1	
	3648 13 111	Gasket, IN. Manifold	1	
	3743 13 111	Gasket, IN. Manifold	1	
	3648 13 724	Gasket, Air Control Valve	1	
	3743 13 889A	Gasket	1	
	8501 13 891A	Gasket	1	

No.	Part Number	Description	Q'ty	Remarks
	1757 15 105A	Gasket	1	
	1757 15 106	Gasket	2	
	0866 23 025	Protector	4	
	1757 23 040	"O" Ring Set	1	

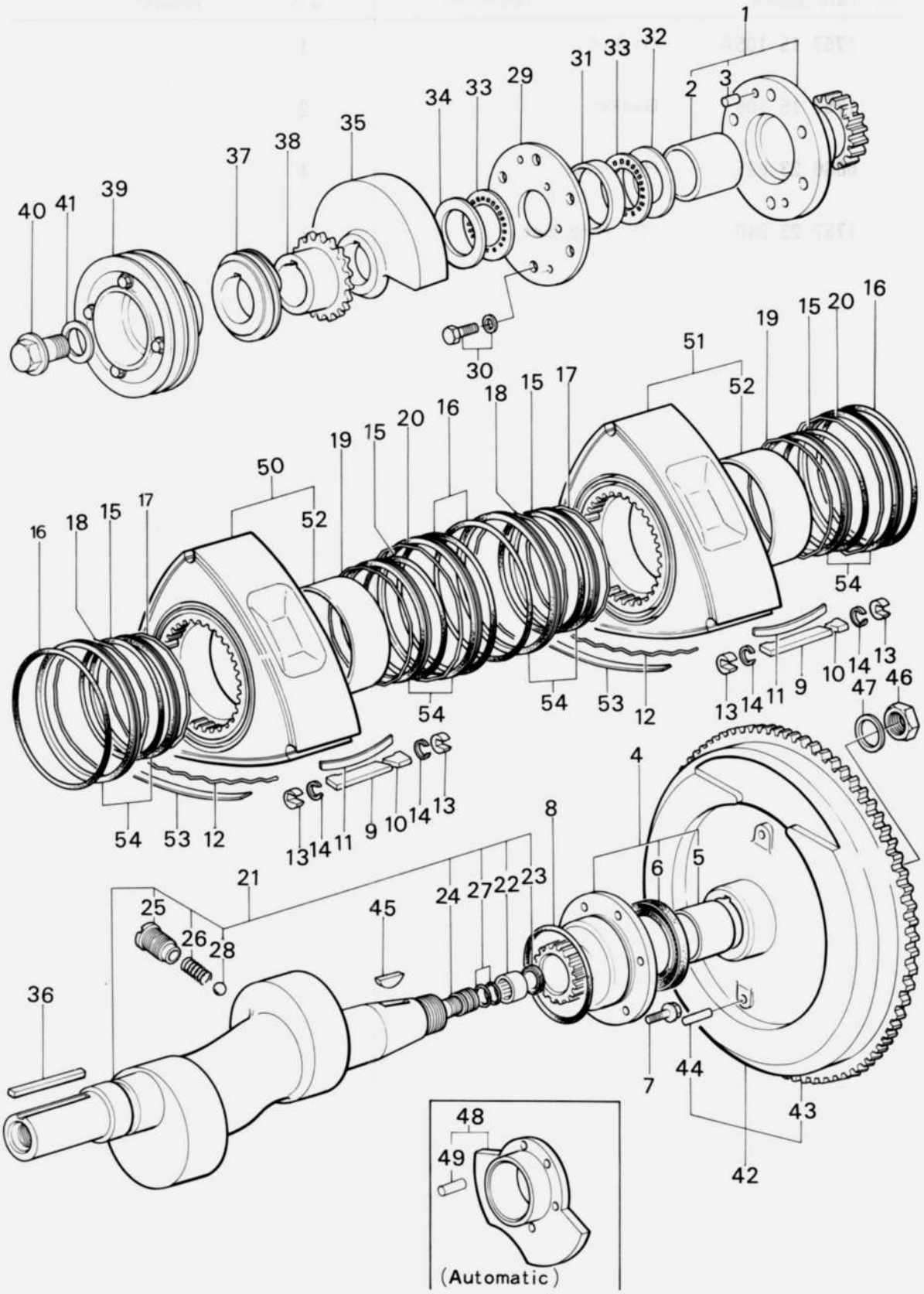
1
2
3
29
31
33
32
34
33
35
37
38
39
40
41
30
51
52
19
15
20
16
18
15
17
50
19
15
20
16
18
15
17
16
52
54
54
53
12
13
14
11
9
10
14
13
47
46
54
53
12
13
14
11
9
10
14
13
4
8
6
5
21
25
26
28
45
24
27
22
23
36
7
44
43
42
48
49
(Automatic)

No.	Part Number	Description	Q'ty	Remarks
1	3743 10 500	Gear (Frt.), Stationary	1	
2	0820 10 502B	Bearing, Main	1	
3	0839 10 504	Pin, Knock	1	
4	3743 10 550	Gear (Rr.), Stationary	1	
5	0820 10 502B	Bearing, Main	1	
6	1668 10 556	Oil Seal	1	
7	99801 0820	Bolt, Stationary Gear	6	
	99971 0800	Washer, Spring	6	
8	0813 10 555	Ring, "O" - Stationary Gear	1	
9	1056 11 300A	Seal, Apex	6	
10	1202 11 302	Piece, Side	6	
11	1011 11 304A	Spring, Apex Seal	6	
12	0820 11 317	Spring, Side Seal	12	
13	1202 11 321	Seal, Corner (Std.)	12	
14	1202 11 323	Spring, Corner Seal	12	
15	0820 11 341	Ring, "O" - Inner	4	
16	1202 11 343	Ring, "O" - Outer	4	
17	1011 11 351	Spring, Oil Seal Inner (Frt.)	2	

No.	Part Number	Description	Q'ty	Remarks
18	1011 11 353 A	Spring, Oil Seal Outer (Frt.)	2	
19	1011 11 361	Spring, Oil Seal Inner (Rr.)	2	
20	1011 11 363 A	Spring, Oil Seal Outer (Rr.)	2	
21	1881 11 400 A	Shaft, Eccentric (Manual)	1	
	1883 11 400 A	Shaft, Eccentric (Automatic)	1	
22	1881 11 403	Bearing, Needle (Manual)	1	
23	1881 11 404	Oil, Seal (Manual)	2	
24	0813 11 405	Plug, Blind	1	
25	0839 11 411 A	Plug, Oil Jet	2	
26	0839 11 412	Spring	2	
27	99541 01101	Ring, "O"	2	
28	99611 2000	Ball, Steel	2	
29	1011 11 501	Plate	1	
30	99801 0825	Bolt, Plate & Stationary Gear	6	
	99971 0800	Washer, Spring	6	
31	0839 11 502	Spacer (L=8.02)		
	0839 11 506	Spacer (L=8.08) Selective use	1	
	0839 11 508	Spacer (L=8.04)		

No.	Part Number	Description	Q'ty	Remarks
	0839 11 509	Spacer (L=8.00)		
32	1011 11 504	Plate, Thrust	1	
33	0813 11 505 B	Bearing, Needle	2	
34	1011 11 507	Washer, Thrust	1	
35	1881 11 511	Weight, Balance	1	
36	1757 11 512	Key	1	
37	0839 11 531	Gear, Drive-Distributor	1	
38	1757 11 551	Gear, Drive-Oil Pump	1	
39	3625 11 600 A	Pulley	1	
40	0820 11 611 B	Bolt, Pulley	1	
41	99562 2800	Gasket, Bolt	1	
42	1881 11 700	Wheel, Fly	1	
43	0866 11 702	Gear, Ring (Manual)	1	
44	99222 0610	Pin, Spring	1	
45	0820 11 705	Key, Fly Wheel	1	
46	0810 11 711	Nut, Lock	1	
47	0820 11 712	Washer, Lock	1	

No.	Part Number	Description	Q'ty	Remarks
48	1883 11 750	Weight, Control (Automatic)	1	
49	99222 0610	Pin, Spring (Automatic)	1	
50	3743 23 103	Rotor "C" (Frt.)	1	
51	3743 23 113	Rotor "C" (Rr.)	1	
52	1011 11 111	Bearing, Rotor	1	
53	1011 23 151 A	Seal, Side	12	
54	1202 23 180	Oil Seal Set	4	

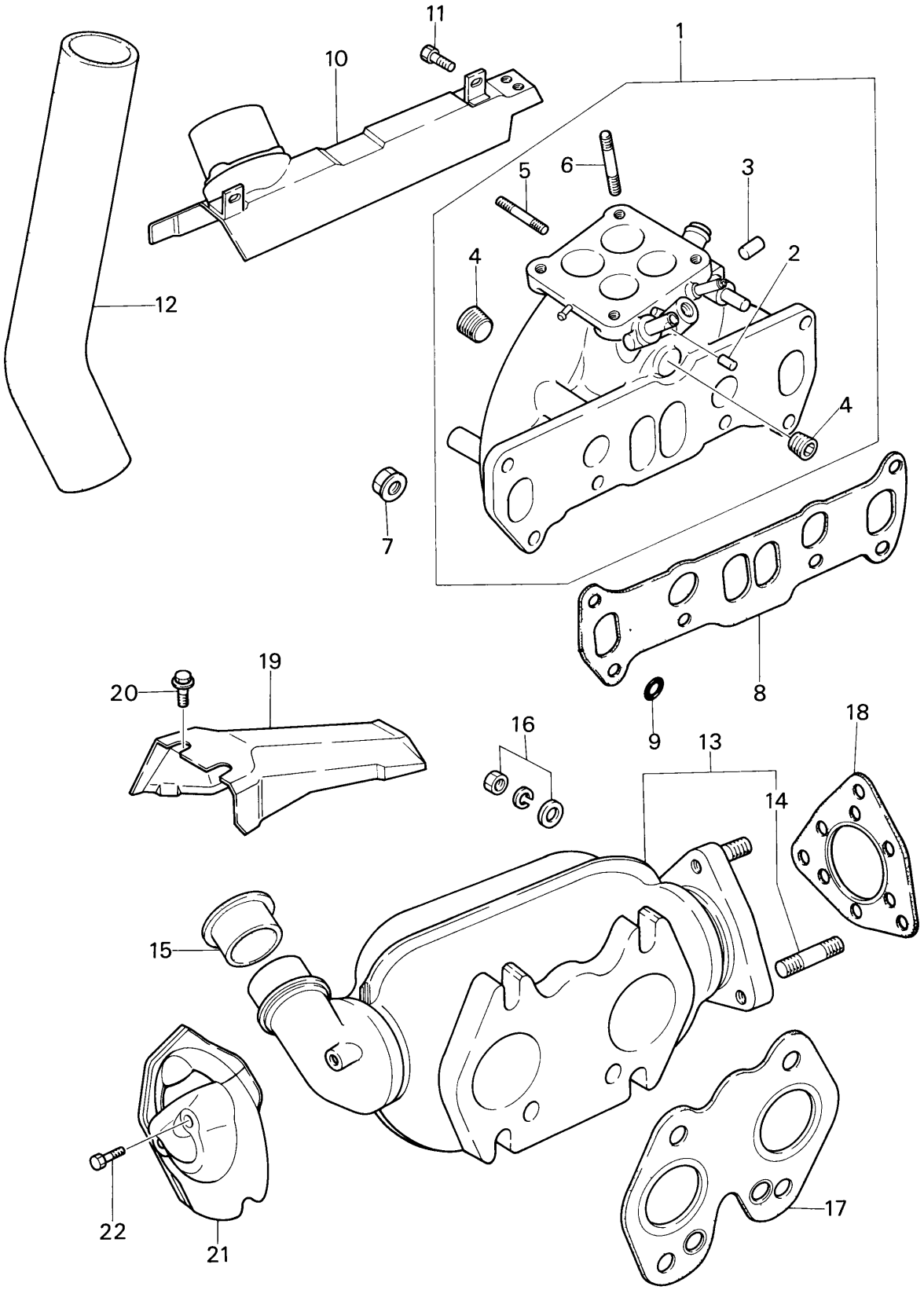
11
10
1
5
6
3
4
2
12
4
7
8
9
19
20
16
13
18
14
15
22
21
17

No.	Part Number	Description	Q'ty	Remarks
1	3743 13 100C	Manifold, IN.	1	
2	99307 0400	Plug, Blind	1	
3	99307 1000	Plug, Blind	1	
4	99503 3000	Plug, Blind	4	
5	99851 0622A	Stud, Air Control Valve	3	
6	99851 0830A	Stud, Carburettor	4	
7	99940 0801	Nut, IN. Manifold	6	
8	3743 13 111	Gasket, IN. Manifold	1	
9	99541 0240	Ring, "O" - IN. Manifold	2	
10	3743 13 330B	Duct, Hot Air	1	
11	99796 0812	Bolt, Hot Air Duct	2	
12	1052 73 341A	Hose, Hot Air	1	
13	3743 13 800B	Reactor, Thermal	1	
14	2329 13 876	Stud	1	
15	2090 13 742B	Insert	1	
16	2158 40 355	Nut, Thermal Reactor	4	
	0839 13 614	Washer, Plain	4	

No.	Part Number	Description	Q'ty	Remarks
	2329 13 882	Washer, Spring	4	
17	3743 13 889 A	Gasket, Thermal Reactor	1	
18	8501 13 891 A	Gasket, Thermal Reactor	1	
19	1259 13 371 C	Insulator, Heat	1	
20	99786 0616	Bolt, Heat Insulator	2	
	99952 0618	Washer, Plain	2	
21	3648 13 370 A	Cover, Insulation	1	
22	99796 0610	Bolt, Insulation Cover	2	

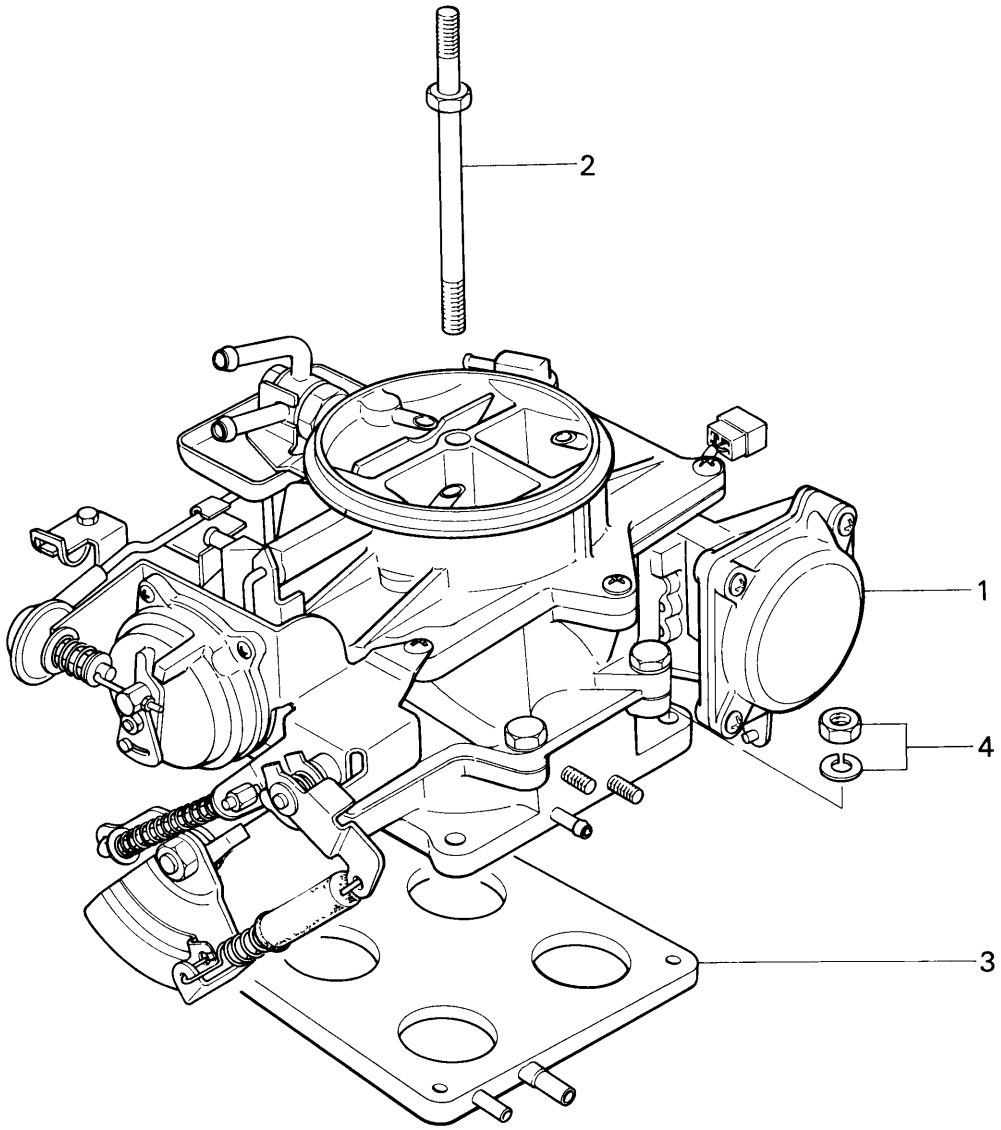
2
1
4
3

No.	Part Number	Description	Q'ty	Remarks
1	3743 13 200	Carburettor (Manual)	1	(Components not available yet)
	3738 13 200	Carburettor (Fed.) (Automatic)	1	(Components not available yet)
	3744 13 200	Carburettor (Calif.) (Automatic)	1	(Components not available yet)
	3743 23 540	Repair Kit, Carburettor	1	
2	0839 13 201	Bolt, Air Cleaner Set	1	
3	3743 13 220	Insulator, Carburettor	1	
4	99901 0800	Nut, Carburettor	4	
	99971 0800	Washer, Spring	4	

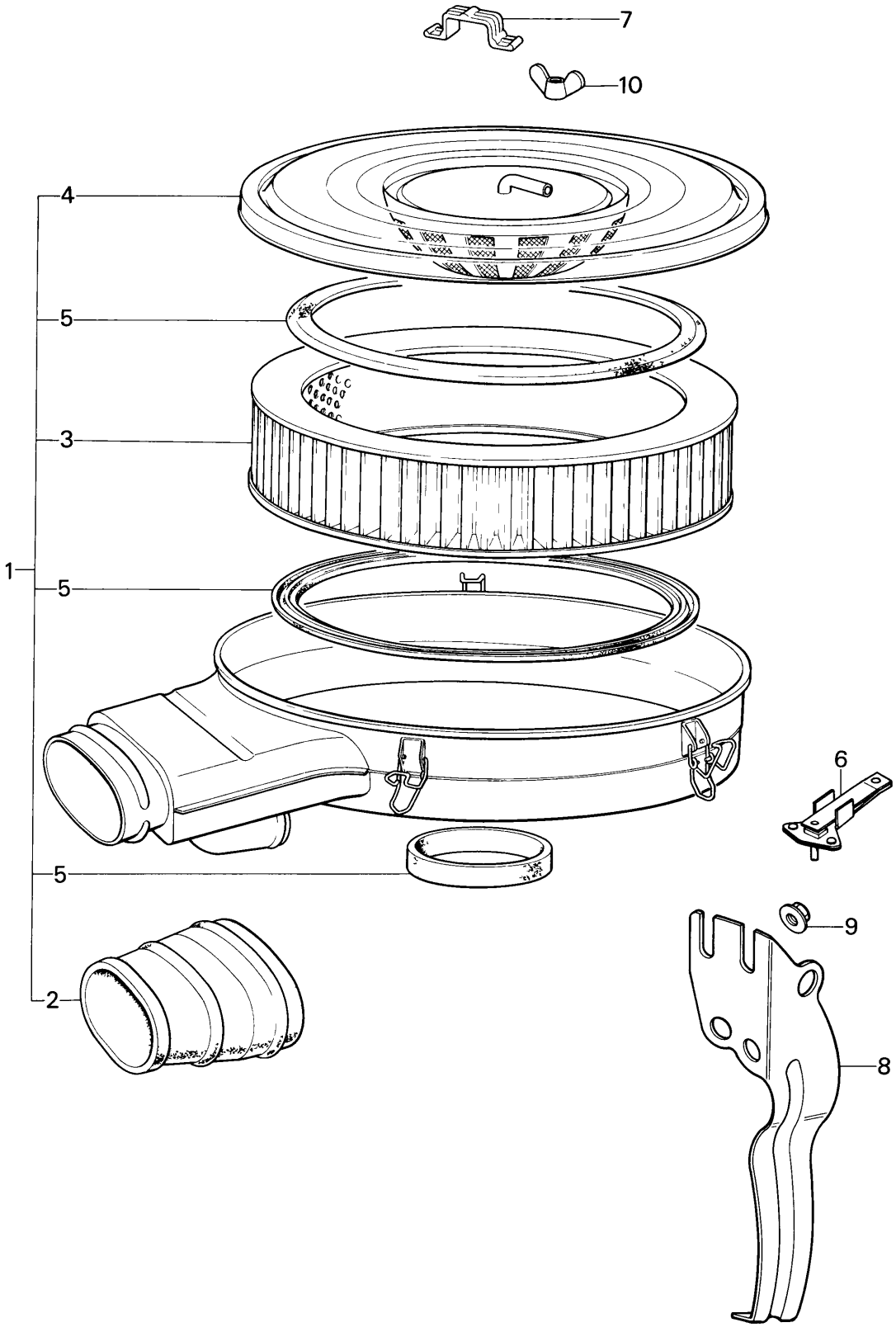
7
10
4
5
3
1
5
6
5
9
2
8

No.	Part Number	Description	Q'ty	Remarks
1	3743 13 300 B	Cleaner, Air	1	
2	1881 13 351	Hose, Air-Fresh	1	
3	1757 23 672	Element	1	
4	3648 23 673	Cover	1	
5	1757 23 680	Gasket Set	1	
6	3648 23 693 A	Compensator	1	
7	1617 13 305 A	Clip, Pipe	1	
8	3743 13 311	Supporter, Air Cleaner	1	
9	99940 0802	Nut, Air Cleaner Supporter	2	
10	99941 0801	Nut, Wing-Air Cleaner	1	

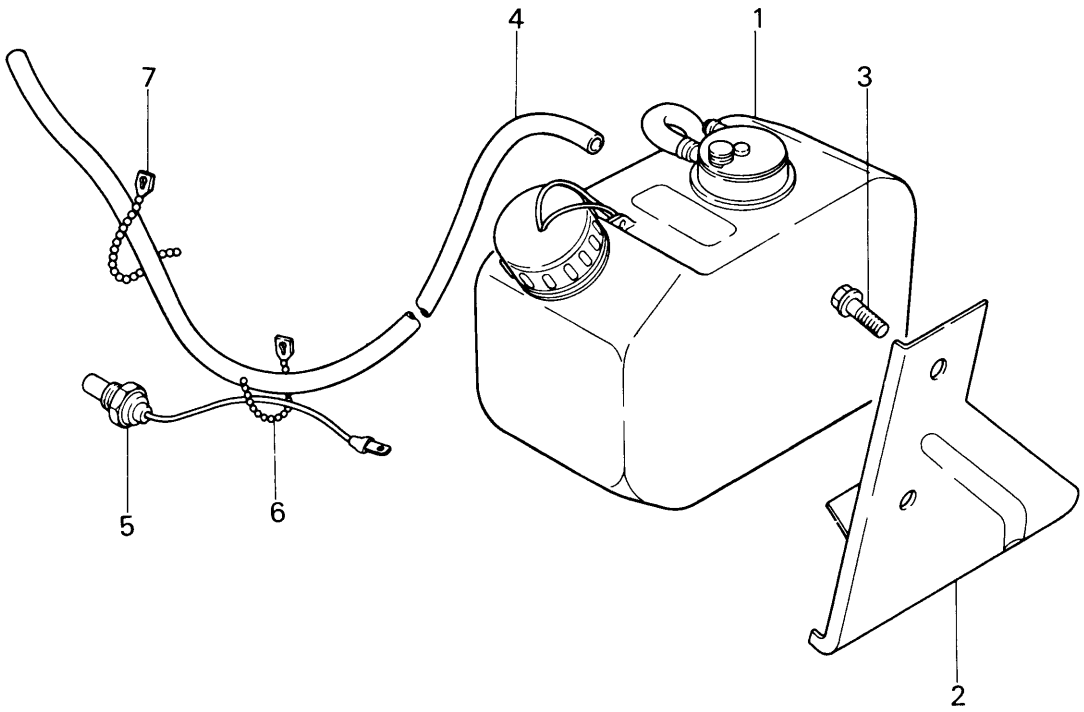
4
1
7
3
5
6
2

No.	Part Number	Description		Q'ty	Remarks
1	1881 13 510E	Tank, Starting Fluid		1	
2	1881 13 515A	Bracket, Tank		1	
3	99786 0612	Screw, Tank Bracket		1	
4	1668 13 527	Hose	(Fed.)	2	
5	1668 13 531A	Unit, Thermo		1	
6	99709 0108	Band		1	
7	99709 0225	Band		1	
				1	

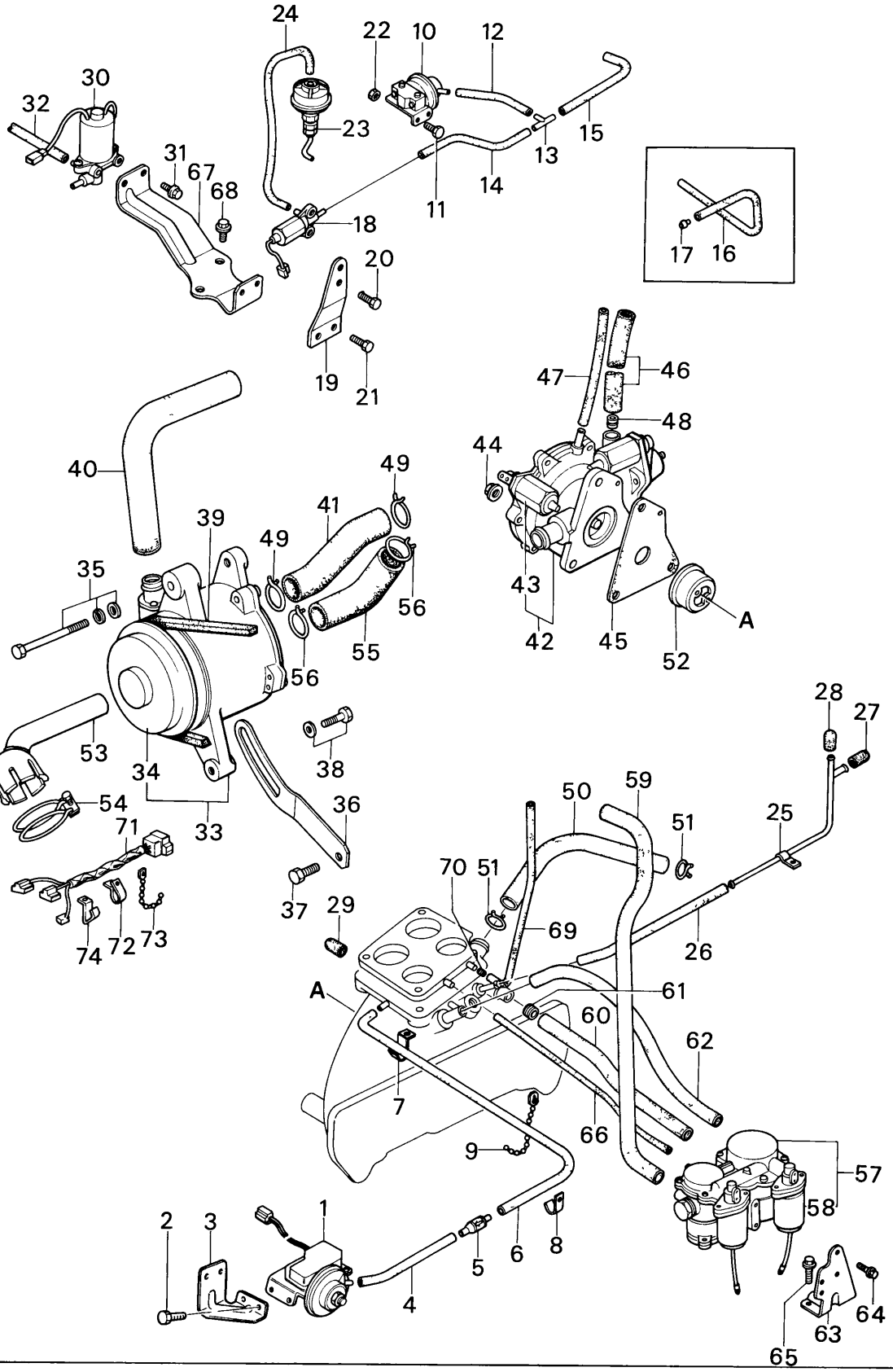
24
22
10
12
30
32
23
15
13
31
67
68
14
11
18
20
17
16
19
21
47
46
48
44
40
49
41
39
49
35
43
56
55
56
42
45
52
A
53
38
34
33
54
36
71
37
29
74
72
73
28
27
50
59
51
25
70
51
69
26
A
61
60
62
7
66
9
57
58
2
3
1
5
6
8
4
64
63
65

No.	Part Number	Description		Q'ty	Remarks
1	3648 13 150B	Switch, Vacuum (For Calif.)		1	
	3666 13 150B	Switch, Vacuum (Except Calif.)		1	
2	3743 13 153	Bracket, Vacuum Switch		1	
3	99796 0610	Bolt, Bracket		2	
4	99340 04050	Pipe, Vacuum (ℓ =50㎜)		1	Ord. By 99341 04750 (1.75m)
5	3648 13 980A	Valve, Delay (Manual)		1	
	3744 13 980	Valve, Delay (Automatic)		1	
6	99341 04000	Pipe, Vacuum (ℓ =1000㎜)		1	Ord. By 99341 04750 (1.75m)
7	1757 13 251A	Clip, Vacuum Pipe		1	
8	0730 55 302	Clip, Vacuum Pipe		1	
9	99709 0255	Clip, Vacuum Pipe		1	
10	8501 13 150	Vacuum Switch	(Calif. Automatic)	1	
11	99796 0610	Bolt, Vacuum Switch		2	
12	99340 04060	Tube, Vacuum (ℓ =60㎜)		1	Ord. By 99341 04750 (1.75m)
13	0822 78 450	Joint, "T"-Vacuum Hose		1	
14	99340 04120	Tube, Vacuum (ℓ =120㎜)		1	Ord. By 99341 04750 (1.75m)
15	99340 04160	Tube, Vacuum (ℓ =160㎜)		1	Ord. By 99341 04750 (1.75m)
16	99340 04290	Tube, Vacuum (ℓ =290㎜)	(Except Calif Automatic)	1	Ord. By 99341 04750 (1.75m)
17	99231 0513	Pin, Vacuum Stopper		1	
18	8501 13 240	Valve, 3 Way		1	

No.	Part Number	Description		Q'ty	Remarks
19	3666 13 241	Bracket, 3 Way Valve	(With Cooler)	1	
20	99796 0610	Bolt, 3 Way Valve		2	
21	99796 0616	Bolt, Bracket		2	
22	99940 0600	Nut		2	
23	8501 13 290	Actuator		1	
24	3666 13 296	Tube, Vacuum		1	
25	3648 13 120	Pipe, Joint		1	
26	99346 06160	Hose, Pipe Joint ~ IN. Manifold		1	Ord. By 99349 06750 (ℓ = 1.75m)
27	1010 13 104	Cap, Rubber (W/O Cooler)		1	
28	0223 42 307	Cap, Rubber (Manual)		1	
29	2306 10 481	Cap, Rubber - IN. Manifold		1	
30	3648 13 180	Valve, Vacuum Control		1	
31	99796 0610	Bolt, Vacuum Control Valve		2	
32	3743 13 186	Tube, Vacuum - Carburettor ~ Vacuum Cut Valve		1	
33	1757 13 710A	Pump, Air		1	
34	1757 23 713	Pulley		1	
35	99803 08100	Bolt, Air Pump		1	
	99952 0800	Washer, Plain		1	

No.	Part Number	Description	Q'ty	Remarks
	99971 0800	Washer, Spring	1	
36	1757 13 714	Strap, Air Pump	1	
37	99796 0816	Bolt, Strap	1	
38	99796 0820	Bolt, Strap	1	
	99952 0800	Washer, Spring	1	
39	1757 13 715	Belt, "V"-Air Pump	1	
40	1757 13 717	Hose, Air-Air Pump~Air Cleaner	1	
41	3565 13 718	Hose, Air-A.C. Valve~Air Pump	1	
42	3743 13 720	Valve, Air Control	1	
43	3565 23 725A	Valve, Solenoid	1	
44	99940 0601	Nut, Air Control Valve	3	
45	3648 13 724	Gasket, Air Control Valve	1	
46	3648 13 725	Hose, Air-A.C. Valve-Air Cleaner	1	
47	99340 04175	Tube, Balance (ℓ = 175㎜)	1	Ord. By 99341 04750 (1.75m)
48	3737 13 759	Insert, Air Hose	1	
49	2329 13 726	Clip, Air Hose	2	
50	3648 13 727A	Hose, Air-IN. Manifold~Heat EX.	1	
51	8501 13 636	Clip, Air Hose	2	

No.	Part Number	Description	Q'ty	Remarks
52	8501 13 730B	Valve, Check	1	
53	8501 13 740	Pipe, Air - Reactor Side	1	
54	99282 4309	Band, Hose - Air Pipe	1	
55	1757 13 744	Hose, Air - Reactor ~ A.C. Valve	1	
56	2090 13 746	Clip, Air Hose	2	
57	1757 13 750	Valve, Deceleration Control	1	
58	1757 23 725	Valve, Solenoid (D.C.V.)	2	
59	1757 13 752	Hose, Air - D.C. Valve ~ Air Cleaner	1	
60	1757 13 753A	Hose, Air - D.C. Valve ~ IN. Manifold	1	
61	3648 13 759	Insert, Air Hose (Automatic)	1	
62	3648 13 754	Hose, Air - D.C. Valve ~ IN. Manifold	1	
63	1259 13 757	Supporter, D.C. Valve	1	
64	99796 0610	Bolt, Supporter + D.C. Valve	2	
65	99796 0812	Bolt, D.C. Valve + IN. Manifold	4	
66	99340 04230	Tube, D.C. Valve ~ IN. Manifold (230㎜)	1	Ord. By 99341 04750 (1.75m)
67	3648 13 772	Bracket, Vacuum Control Valve	1	
68	99796 0812	Bolt, Bracket	2	
69	1029 13 776	Hose, Air - IN. Manifold ~ Idle Compensator	1	

No.	Part Number	Description	Q'ty	Remarks
70	1259 13 797	Insert, Air Hose	1	
71	3648 18 860	Wiring, Valve	1	
72	3648 18 861 A	Clip, Valve Wiring	1	
73	99709 0108	Band, Valve Wiring	1	
74	99276 1006	Clip, Valve Wiring	1	

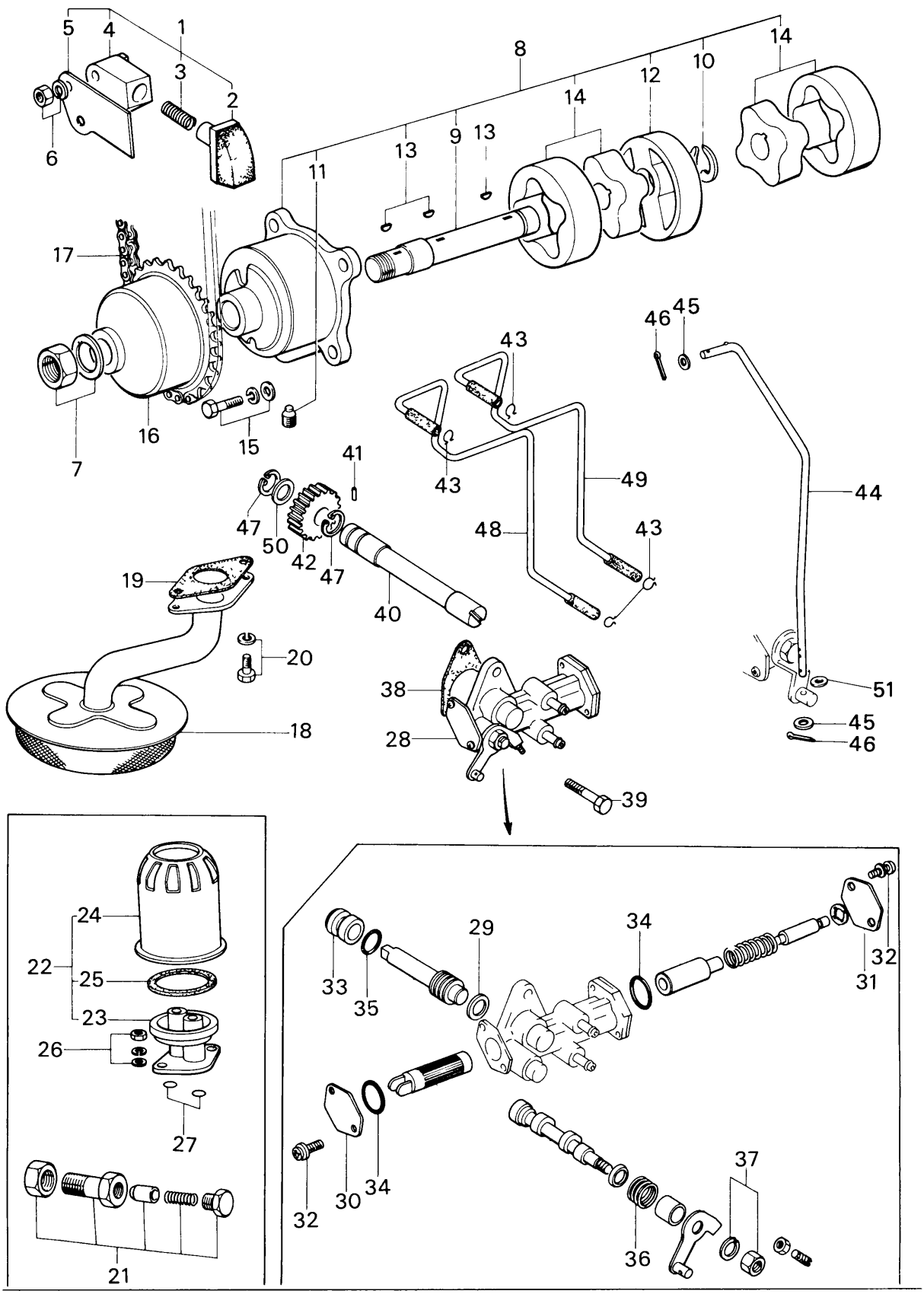
5
4
1
3
2
6
8
14
12
10
14
13
9
13
11
17
16
15
7
46
45
43
43
49
44
48
43
41
47
50
42
47
40
19
20
18
38
28
51
45
46
39
24
22
25
23
26
27
21
29
34
33
35
32
31
32
30
34
37
36

No.	Part Number	Description	Q'ty	Remarks
1	1757 14 020	Adjuster, Chain	1	
2	0823 14 130	Adjuster	1	
3	0823 14 131	Spring	1	
4	1757 14 132	Body	1	
5	0839 14 133	Plate, Guide	1	
6	99906 0600	Nut, Chain Adjuster	2	
	99971 0600	Washer, Spring	2	
7	99922 1200	Nut, Oil Pump Drive Gear	1	
	99979 1200	Washer, Tab	1	
8	8501 14 100	Pump, Oil	1	
9	1757 14 112	Shaft, Oil Pump	1	
10	0810 14 113	Ring, Snap	1	
11	0839 14 117	Bolt, Lock	1	
12	8501 14 118	Plate, Middle-Oil Pump	1	
13	0839 14 119B	Key	3	
14	8501 23 882	Rotor Set, Oil Pump	2	
15	99796 0616	Bolt, Oil Pump	4	

No.	Part Number	Description	Q'ty	Remarks
16	0839 14 141 A	Gear, Drive-Oil Pump	1	
17	0839 14 142	Chain	1	
18	0866 14 160 E	Strainer, Oil	1	
19	0810 14 171	Gasket, Oil Strainer	1	
20	99806 0616	Bolt, Oil Strainer	2	
	99971 0600	Washer, Spring	2	
21	3648 14 250	Regulator, Pressure	1	
22	0839 14 300	Filter, Oil	1	
23	0839 23 801	Cover	1	
24	0813 23 802 B	Cartridge, Oil Filter	1	
25	0813 23 803	Gasket	1	
26	99901 0800	Nut, Oil Filter	2	
	99953 0800	Washer, Plain	2	
	99971 0800	Washer, Spring	2	
27	99541 01601	Ring, "O"-Oil Filter	2	
			1	
28	1757 14 600	Pump, Metering Oil	1	
29	0820 23 832 B	Washer, Thrust	1	

No.	Part Number	Description	Q'ty	Remarks
30	0820 23 833 B	Plate, Cam Casing	1	Ord. By 1757 14 600
31	0820 23 834 B	Plate, Cam Casing	1	Ord. By 1757 14 600
32	99833 0408	Screw, Cam Casing Plate	4	
	99971 0400	Washer, Plain	4	
33	0820 23 835 A	Bearing, Worm	1	Ord. By 1757 14 600
34	0730 23 837	Ring, "O"	2	
35	0730 23 839	Ring, "O"	1	Ord. By 1757 14 600
36	0820 23 848 A	Spring, Return	1	
37	99907 0600	Nut, Control Lever	1	
	99971 0600	Washer, Spring	1	
38	1757 14 611	Gasket, Metering Oil Pump	1	
39	99796 0616	Bolt, Metering Oil Pump	1	
40	0820 14 620 A	Shaft, Driven Gear	1	
41	0813 14 623	Pin, Driven Gear	1	
42	0820 14 625 A	Gear, Driven	1	
43	0813 14 641	Clip, Metering Oil Tube	4	
44	1757 14 651	Rod, Connecting	1	
45	99953 0400	Washer, Plain	1	
46	99221 1212	Pin, Split	2	

No.	Part Number	Description	Q'ty	Remarks
47	99576 0800	Ring, Snap-Drive Gear Shaft	2	
48	3565 14 660 A	Tube, Metering Oil	1	
49	3565 14 670 A	Tube, Metering Oil	1	
50	0810 18 276	Shim, Adjust (t=0.6) } Selective use	2	
	0810 18 277	Shim, Adjust (t=0.3) } Selective use	2	
51	1757 14 652	Shim (t=1.0) } Selective use	1	
	1757 14 653	Shim (t=2.0) } Selective use		

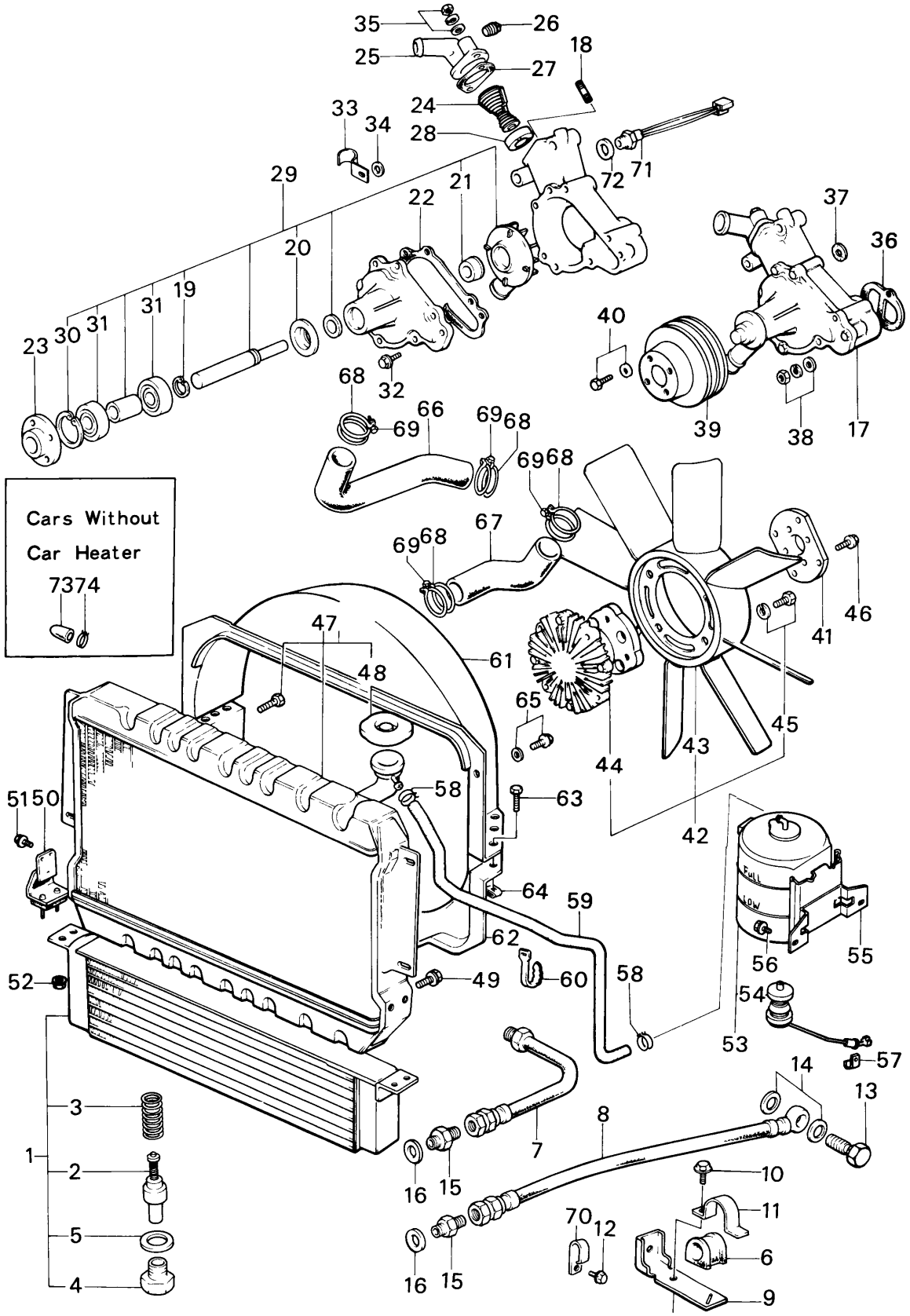
Cars Without
Car Heater
73
74
35
26
25
27
18
24
33
34
28
72
71
29
22
21
37
36
20
40
23
30
31
31
19
68
32
66
69
68
69
68
69
68
67
69
68
39
38
17
46
41
47
48
61
65
45
44
43
42
51
50
58
63
64
59
62
52
49
60
58
56
55
54
53
57
14
13
8
3
1
2
5
4
7
16
15
10
11
70
12
6
16
15
9

No.	Part Number	Description	Q'ty	Remarks
1	1881 14 700 A	Cooler, Oil	1	
2	1757 14 810	Pellet, Thermo	1	
3	1757 14 821	Spring, Pellet	1	
4	1757 14 822	Nut, Stopper	1	
5	1757 14 823	Gasket	1	
6	0813 14 716	Protector, Oil Hose	1	
7	0865 14 720	Hose, Oil	1	
8	0881 14 730	Hose, Oil	1	
9	1757 14 740	Bracket, Oil Hose (Manual)	1	
	1758 14 740	Bracket, Oil Hose (Automatic)	1	
10	99796 0812	Bolt, Bracket	1	
11	0839 14 745	Clip, Oil Hose	1	
12	99806 0616	Bolt, Clip	1	
	99971 0600	Washer, Spring	1	
13	99381 1400	Bolt, Connector - Oil Hose	1	
14	99562 1800	Gasket	2	
15	99384 1200 F	Joint, Union	2	
16	99564 1600	Gasket	2	

No.	Part Number	Description	Q'ty	Remarks
17	3648 15 010C	Pump, Water	1	
18	2090 15 104	Stud	2	
19	1757 15 114	Ring, Snap	1	
20	1757 15 118	Plate, Dust Seal	1	
21	1757 15 120	Seal, Water	1	
22	1757 15 132	Gasket, Pump Cover	1	
23	1757 15 152A	Boss, Pulley	1	
24	1259 15 171A	Thermostat	1	
25	1757 15 172	Cover, Thermostat	1	
26	99502 3000A	Plug	1	
27	1757 15 173	Gasket, Thermostat	1	
28	3648 15 180B	Valve, Control	1	
29	3648 15 130	Cover, Water Pump	1	
30	99574 4000	Ring, Retaining	1	
31	99606 72030	Bearing, Ball	2	
32	99796 0820	Bolt, Pump Cover	2	
33	3565 14 662A	Clip, Metering Oil Tube	1	
34	99951 0816	Washer, Plain	1	
35	99901 0800	Nut, Thermostat Cover	2	
	99953 0800	Washer, Plain	2	

No.	Part Number	Description	Q'ty	Remarks
	99971 0800	Washer, Spring	2	
36	1757 15 105A	Gasket, Water Pump	1	
37	1757 15 106	Shim, Water Pump	2	
38	99901 0800	Nut, Water Pump	4	
	99971 0800	Washer, Plain	4	
39	1757 15 151B	Pulley, Water Pump	1	
40	99796 0620	Bolt, Water Pump Pulley	4	
41	1907 15 211	Spacer, Fan Drive	1	
42	1202 15 250	Fan & Fan Drive	1	
43	1202 15 200	Fan, Cooling	1	
44	1202 15 210	Fan Drive	1	
45	99806 0614	Bolt, Fan & Fan Drive	4	
	99952 0600	Washer, Plain	4	
46	99796 0620	Bolt, Fan Drive	4	
47	3625 15 310B	Radiator (Manual)	1	
	3626 15 310B	Radiator (Automatic)	1	

No.	Part Number	Description	Q'ty	Remarks
48	0488 15 205	Cap	1	
49	99786 0816	Bolt, Radiator	4	
	99953 0800	Washer, Plain	4	
	99971 0800	Washer, Spring	4	
50	1128 15 312 A	Rubber, Insulation	2	
51	99786 0610	Bolt, Radiator	4	
52	99940 0600	Nut, Radiator	4	
53	3565 15 350 B	Tank, Sub	1	
54	3565 15 370	Switch, Lever	1	
55	1883 15 356	Bracket, Sub Tank	1	
56	99786 0620	Bolt, Sub Tank	2	
57	99276 1006	Clip, Sub Tank Hose	1	
58	99283 1300	Clip, Water Hose	2	
59	3625 15 351	Hose, Water - Sub Tank - Radiator	1	
60	99289 0701	Clip	2	
61	3625 15 411	Shroud, Radiator - Upper	1	
62	3625 15 421 A	Shroud, Radiator - Lower	1	

No.	Part Number	Description	Q'ty	Remarks
63	99865 0516	Screw, Tapping - Radiator Shroud	4	
64	0820 56 905	Nut, Spring	5	
65	99796 0812	Bolt, Radiator Shroud	5	
	99952 0822	Washer, Plain	5	
66	3625 15 511	Hose, Water - Thrmostat ~ Radiator	1	
67	3625 15 521	Hose, Water - Radiator ~ Water Pump	1	
68	99282 4900	Band, Hose - Water Hose (Fig. No. 69 Included)	4	
69	1011 23 911	Bolt (Included in Fig. No. 68)	4	
70	2090 18 999	Clip	1	
71	1881 18 880	Switch, Temperature	1	
72	99564 1600	Gasket	1	
73	0864 61 061 A	Cover	2	(Cars Without Car Heater)
74	99282 2600	Band, Hose	2	(Cars Without Car Heater)

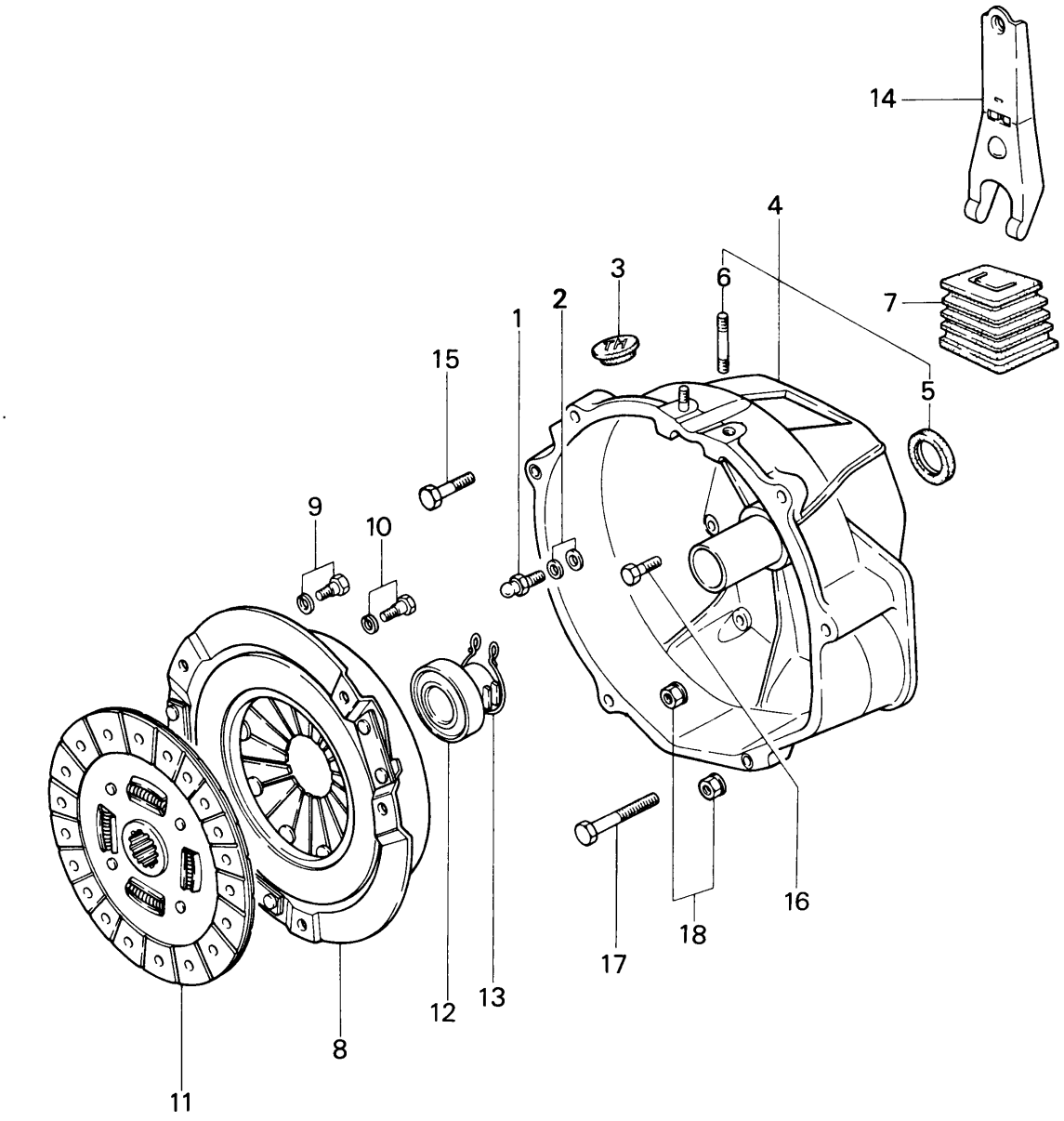
14
4
3
6
7
2
1
5
15
9
10
16
18
17
12
13
8
11

No.	Part Number	Description	Q'ty	Remarks
1	0603 16 102B	Pin, Pivot	1	
2	99953 1000	Washer, Plain	1	
	99971 1000	Washer, Spring	1	
3	0813 16 112	Cover, Top Hole	1	
4	1881 16 210A	Housing, Clutch	1	
5	0603 16 103	Oil Seal	1	
6	0222 16 105	Stud	2	
7	0866 16 214A	Cover, Dust	1	
8	0839 16 410B	Cover, Clutch	1	
9	0839 16 432	Bolt, Reamer-Clutch Cover	2	
	99971 0800	Washer, Spring	2	
10	99753 78118	Bolt, Clutch Cover	4	
	99971 0800	Washer, Spring	4	
11	0862 16 460A	Disc, Clutch	1	
12	0820 16 510	Collar, Clutch Release	1	
13	0820 16 515	Spring, Clutch Release Collar	1	
14	0454 16 520	Fork, Clutch Release	1	
15	99796 1045	Bolt, Clutch Housing	1	

No.	Part Number	Description	Q'ty	Remarks
16	99796 1035	Bolt, Clutch Housing	2	
17	99796 1090	Bolt, Clutch Housing	1	
18	99940 1001	Nut, Clutch Housing	9	

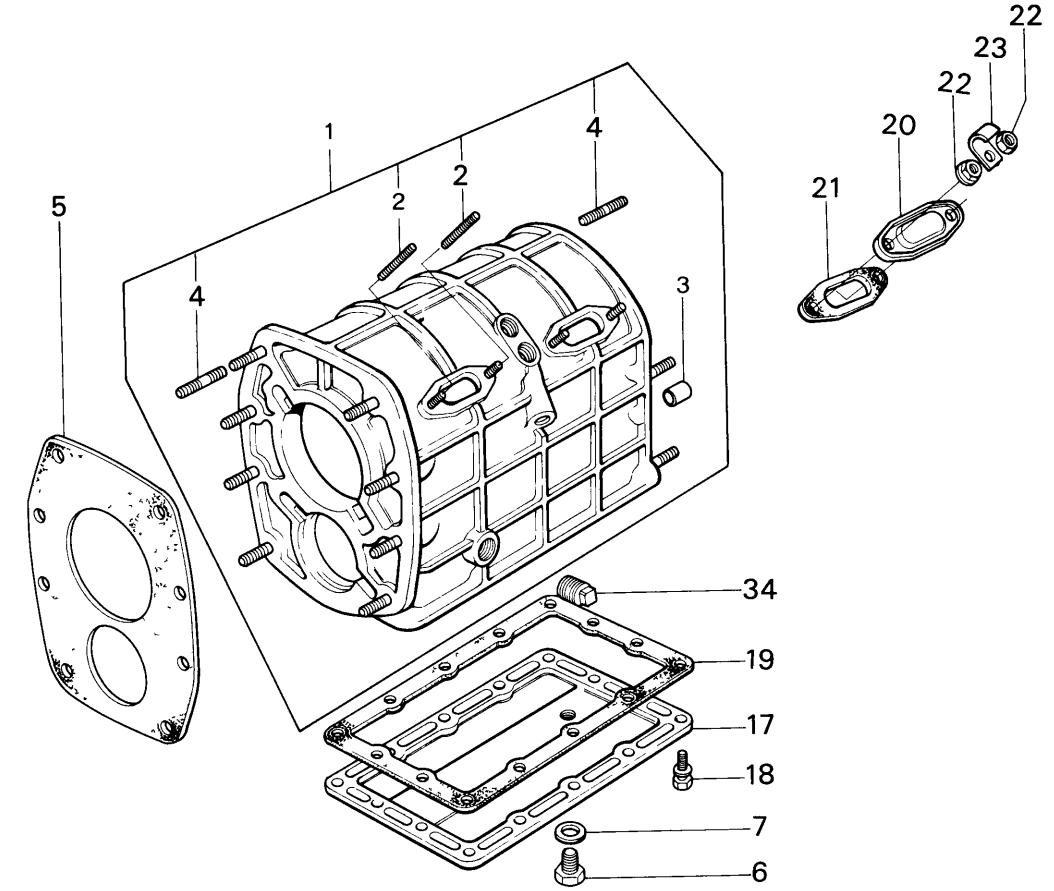
1
2
2
4
4
5
4
3
22
23
22
20
21
34
19
17
18
7
6

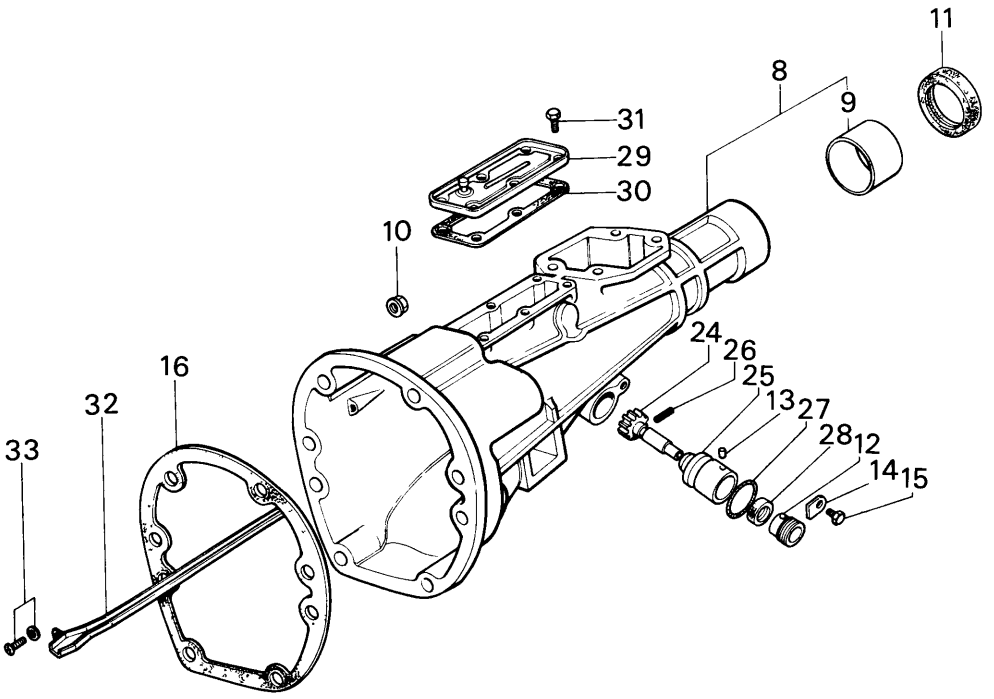
11
8
9
31
29
30
10
24
26
25
13
27
28
12
14
15
16
32
33

No.	Part Number	Description	Q'ty	Remarks
1	1011 17 100C	Case, T/mission	1	
2	0839 17 105	Stud, Blind Plug	4	
3	99233 1225	Pin, Knock	2	
4	99855 1025	Stud, Front & Rear	12	
	99855 1025F	Stud, Front & Rear	2	
5	0839 17 111	Gasket, T/mission Case Front	1	
6	0810 17 121	Plug, Magnet	1	
7	99564 1800	Gasket, Magnet Plug	1	
8	1011 17 330A	Housing, Extension	1	
9	0398 22 333	Bush, Extension Housing	1	
10	99940 1001	Nut, Extension Housing+T/mission Case	6	
11	0437 17 335	Oil Seal, Extension Housing	1	
12	0862 17 351	Joint, Cable-Speedometer	1	
13	0187 17 352	Pin, Dowel-Speedometer Driven Gear	1	
14	0111 17 354	Plate, Lock-Cable Joint	1	
15	99796 0612	Bolt, Lock Plate	1	
16	0839 17 361	Gasket, Extension Housing & T/mission Case	1	

No.	Part Number	Description	Q'ty	Remarks
17	0862 17 371	Cover, Under	1	
18	99796 0620	Bolt, Under Cover	14	
19	0862 17 375	Gasket, Under Cover	1	
20	0810 17 381	Cover, Blind	2	
21	0810 17 385	Gasket, Blind Cover	2	
22	99906 0600	Nut, Blind Cover & Clip	6	
	99971 0600	Washer	4	
23	99276 0506	Clip, Wire Harness	2	
24	1669 17 441	Gear, Driven-Speedometer	1	
25	0862 17 442	Sleeve, Driven Gear	1	
26	99222 0216	Pin, Spring-Driven Gear	1	
27	99541 02211	Ring, "O"-Driven Gear	1	
28	99586 10207	Oil Seal, Driven Gear	1	
29	1011 17 530	Cover, Blind	1	
30	1011 17 535	Gasket, Blind Cover	1	
31	99796 0608	Bolt, Blind Cover	6	
32	1011 17 540A	Pass, Oil	1	
33	99806 0612	Bolt, Oil Pass	1	
	99971 0600	Washer, Spring	1	
34	99502 4000	Plug	1	

No.	Part Number	Description	Q'ty	Remarks
	1011 89 175	Gasket Set, T/mission	1	
	0839 17 111	Gasket, Front Case	1	
	0839 17 361	Gasket, Extension	1	
	0862 17 375	Gasket, Under Cover	1	
	0810 17 385	Gasket, Blind Cover	1	
	0303 17 474	Gasket, Control Cover	1	
	0271 17 478	Gasket, Control Case	1	
	1011 17 535	Gasket, Blind Cover	1	
	99562 1400	Gasket, Spring Cap	3	
	99564 1000	Gasket, Spring Cap	2	
	99564 1800	Gasket, Magnet Plug	1	

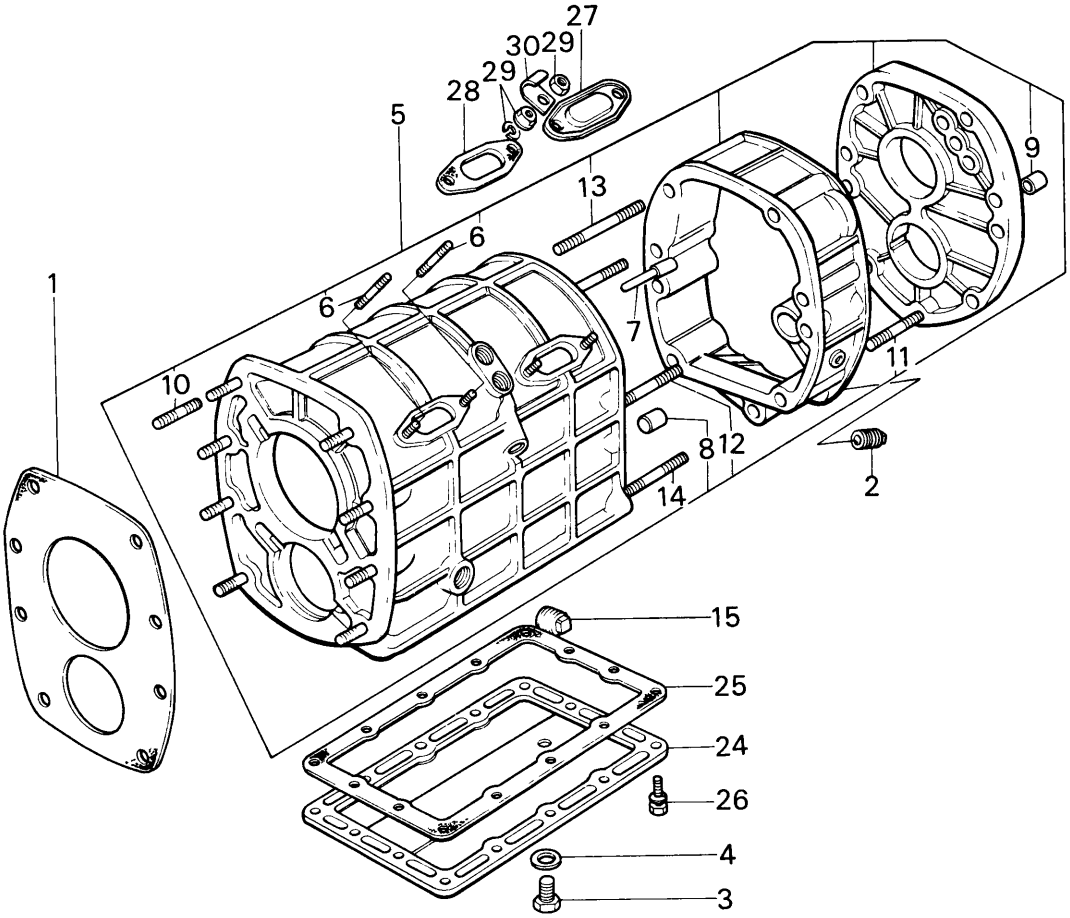
27
30
29
29
28
5
13
9
6
6
1
7
10
11
8
12
2
14
15
25
24
26
4
3

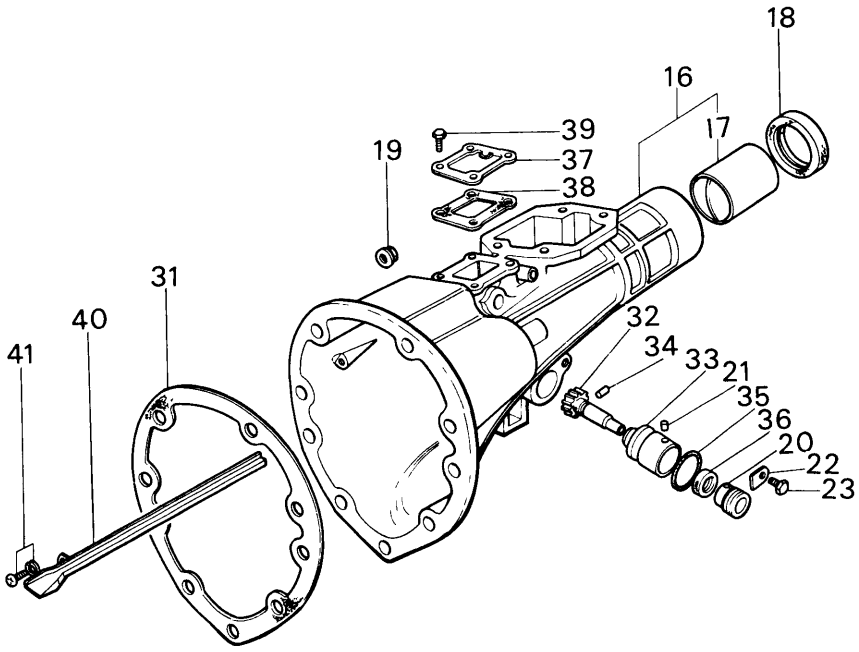
18
16
17
39
19
37
38
31
40
32
34
33
21
41
35
36
20
22
23

No.	Part Number	Description	Q'ty	Remarks
1	0839 17 111	Gasket, Front	1	
2	0107 17 121	Plug, Magnet-Center Housing	1	
3	0810 17 121	Plug, Magnet-Under Cover	1	
4	99564 1800	Gasket, Magnet Plug	1	
5	0862 17 200H	Case Set, T/mission	1	
6	0839 17 105	Stud, Blind Cover	4	
7	0862 17 660A	Pass, Oil	1	
8	99233 1225	Pin, Knock	2	
9	99246 1230	Pin, Dowel-Bearing Housing	2	
10	99855 1025	Stud	8	
11	99855 1048	Stud, Center Housing	1	
12	99857 10135	Stud	3	
13	99857 10160	Stud	1	
14	90857 10135	Stud	2	
15	99502 4000	Plug, Oil	1	
16	3648 17 330B	Housing, Extension	1	
17	0398 22 333	Bush	1	

No.	Part Number	Description	Q'ty	Remarks
18	0437 17 335	Oil Seal, Extension Housing	1	
19	99940 1001	Nut, Extension Housing+T/mission Case	1	
20	0862 17 351	Joint, Speedometer Cable	1	
21	0187 17 352	Pin, Dowel-Speedometer Sleeve	1	
22	0111 17 354	Plate, Lock-Speedometer Cable Joint	1	
23	99796 0612	Bolt, Lock Plate	1	
24	1281 17 371	Cover, Under	1	
25	0862 17 375	Gasket, Under Cover	1	
26	99796 0620	Bolt, Under Cover	14	
27	0810 17 381	Cover, Blind	2	
28	0810 17 385	Gasket, Blind Cover	2	
29	99906 0600	Nut, Blind Cover	6	
	99971 0600	Washer, Spring	4	
30	99276 0506	Clip, Wire Harness	2	
31	0862 17 393	Gasket, Rear	1	
32	1669 17 441	Gear, Driven-Speedometer	1	
33	0862 17 442	Sleeve, Gear-Speedometer	1	
34	99222 0216	Pin, Spring-Speedometer Sleeve	1	
35	99541 02211	Ring, "O"	1	
36	99586 10207	Oil Seal	1	

No.	Part Number	Description	Q'ty	Remarks
37	0862 17 530B	Cover, Blind	1	
38	0862 17 535	Gasket	1	
39	99796 0608	Bolt, Blind Cover	4	
40	0862 17 540B	Pass, Oil	1	
41	99806 0612	Bolt, Oil Pass	1	
	99971 0600	Washer, Spring	1	
	0862 89 175	Gasket Set, T/mission	1	
	0839 17 111	Gasket, Case Front	1	
	0862 17 375	Gasket, Under Cover	1	
	0810 17 385	Gasket, Blind Cover	2	
	0862 17 393	Gasket, Extension	1	
	0303 17 474	Gasket, Control Case Cover	1	
	0271 17 478	Gasket, Control Case	1	
	0862 17 535	Gasket, Blind Cover	1	
	99562 1400	Gasket, Spring Cap	3	
	99564 0800	Gasket, Gear Set	1	
	99564 1000	Gasket, Spring Cap	2	
	99564 1800	Gasket, Magnet Plug	1	

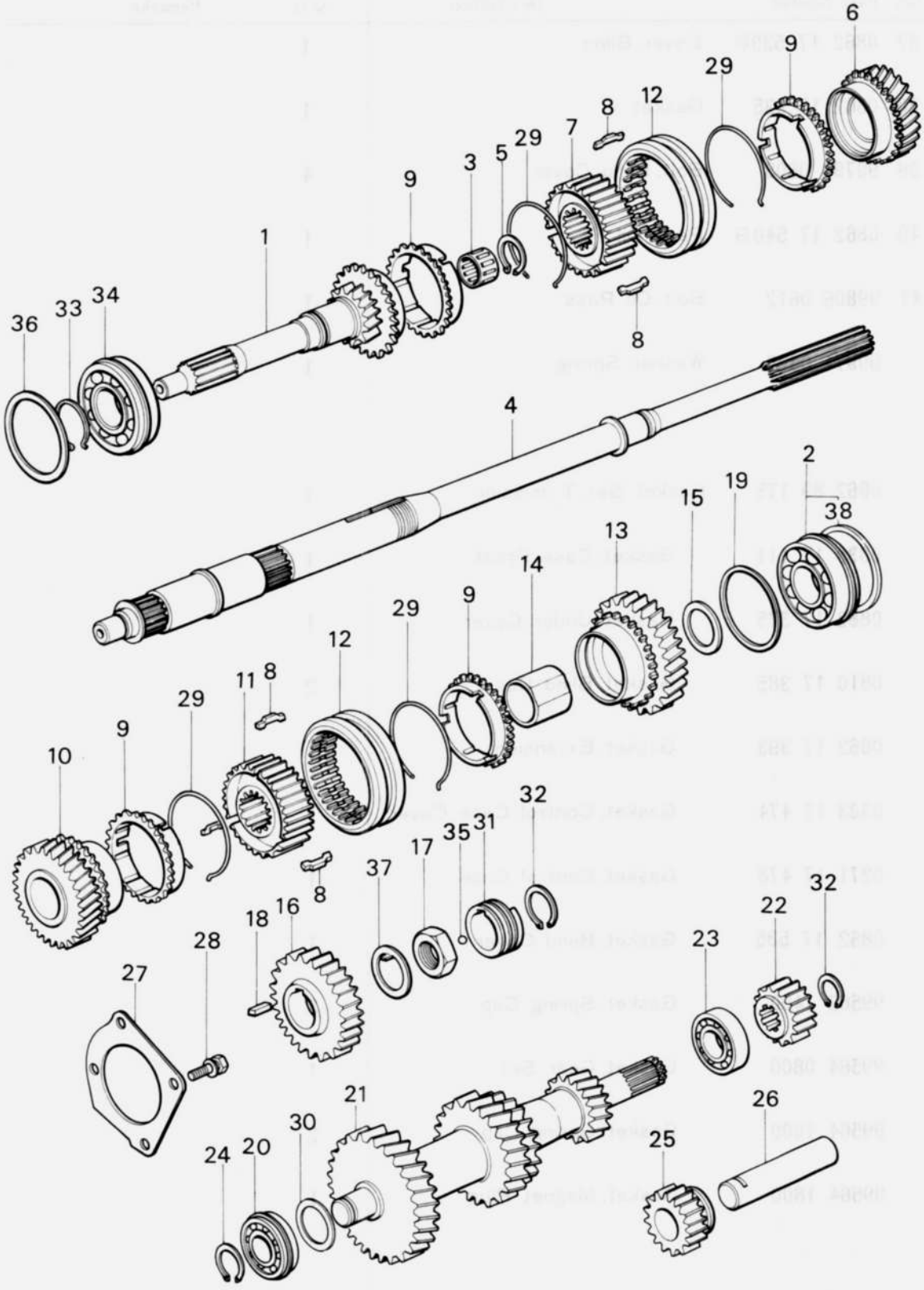
6
9
29
12
8
7
29
5
3
9
1
36
33
34
8
4
2
38
19
15
13
14
9
29
12
8
11
29
9
10
32
31
35
17
37
8
32
22
18
16
28
27
23
21
26
30
24
20
25

No.	Part Number	Description	Q'ty	Remarks
1	0862 17 201	Gear, Main Drive	1	
2	0810 17 204	Bearing, Ball (Fig. No. 38 Included)	1	
3	0810 17 205	Bearing, Needle Roller	1	
4	1011 17 221A	Shaft, Main	1	
5	0317 17 225	Ring, Snap	1	
6	0862 17 230	Gear (3rd)	1	
7	0862 17 241	Hub, Clutch (3rd & 4th)	1	
8	0187 17 243	Key, Synchronizer	6	
9	0881 17 245B	Ring, Synchronizer	4	
10	0862 17 250	Gear (2nd)	1	
11	0862 17 261	Hub, Clutch (1st & 2nd)	1	
12	0862 17 262B	Sleeve, Clutch Hub	2	
13	1011 17 270	Gear (1st)	1	
14	0839 17 275	Sleeve, Gear	1	
15	0839 17 276	Washer, Thrust (ℓ =2.5)	Selective use	
	0839 17 277	Washer, Thrust (ℓ =3.0)	1	
	0839 17 278	Washer, Thrust (ℓ =3.5)		
16	0839 17 281	Gear, Reverse	1	
17	0839 17 284	Nut, Lock	1	
18	0839 17 285	Key	1	

No.	Part Number	Description	Q'ty	Remarks
19	0839 17 287	Shim, Adjust (t=0.1) } Selective use	2	
	0839 17 288	Shim, Adjust (t=0.3) } Selective use	1	
20	0821 17 297	Bearing, Ball (Fig. No. 38 included)	1	
21	1853 17 301	Gear, Counter Shaft	1	
22	0839 17 302	Gear, Reverse-Counter	1	
23	0821 17 303	Bearing, Needle	1	
24	0839 17 305	Ring, Snap	1	
25	0839 17 310	Gear, Idle-Reverse	1	
26	0839 17 313	Shaft, Reverse Idle Gear	1	
27	0839 17 321A	Stopper, Bearing	1	
28	99781 0820	Bolt, Bearing Stopper	4	
	99971 0800	Washer, Spring	4	
29	0600 17 324	Spring, Synchronizer	4	
30	0305 17 327	Shim, Adjust (t=0.1) } Selective use	2	
	0305 17 328	Shim, Adjust (t=0.3) } Selective use	1	
31	0862 17 341	Gear, Drive-Speedometer	1	
32	99573 2500	Ring, Snap	2	
33	99573 3500	Ring, Snap	1	
34	99606 33070	Bearing, Ball	1	
35	99611 1500	Ball, Steel	1	

No.	Part Number	Description	Q'ty	Remarks
36	99963 6910	Shim, Adjust (t=0.1) } Selective use	2	
	99963 6930	Shim, Adjust (t=0.3) } Selective use	1	
37	99978 3200	Washer, Lock	1	
38	0881 22 297	Clip, Ball Bearing (included in Fig. No. 2 & 20)	1	

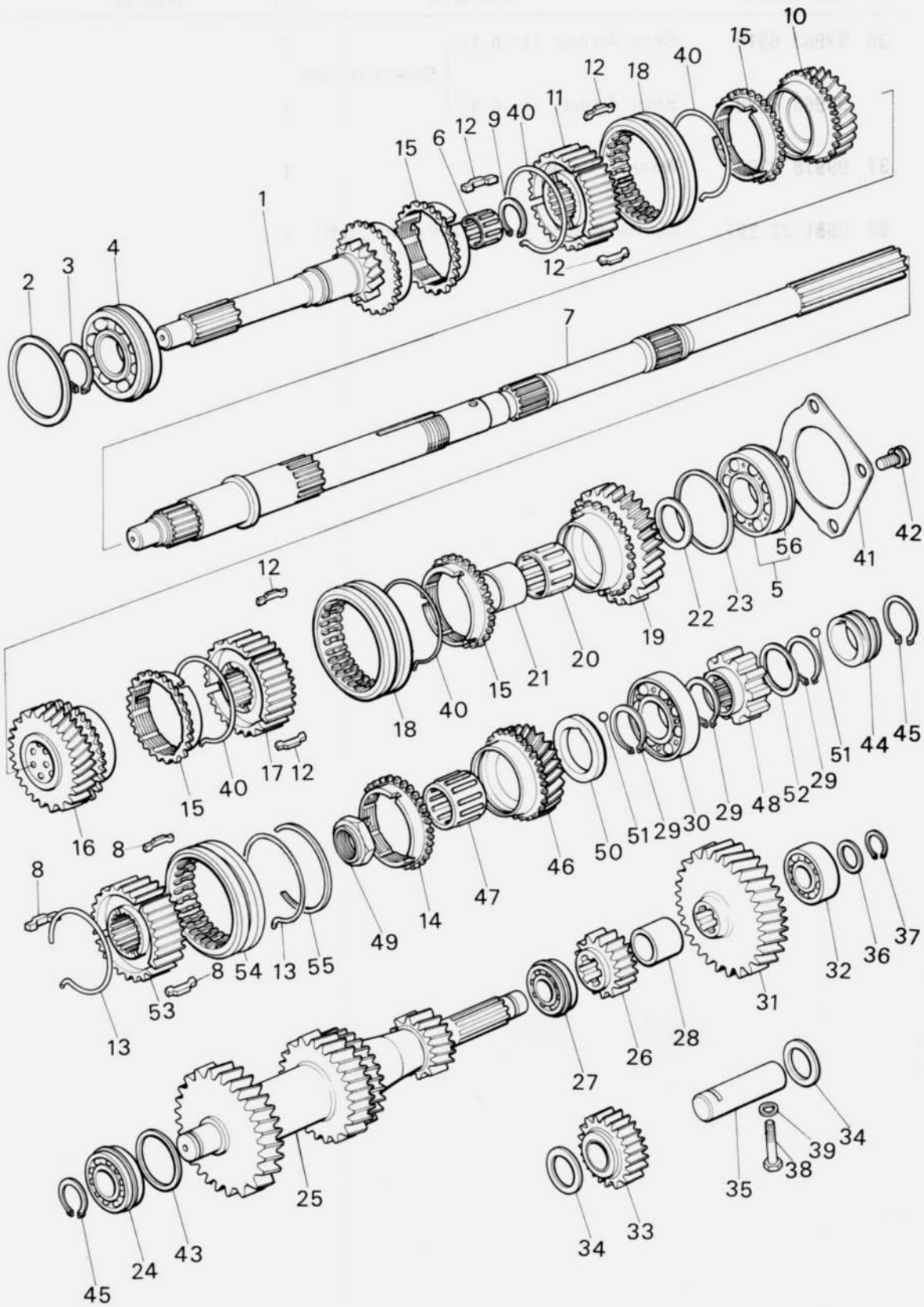
10
15
40
18
12
11
40
9
12
6
15
1
4
3
2
12
7
42
41
56
5
23
22
19
20
21
15
40
18
12
17
40
15
16
8
8
54
13
55
53
13
8
49
14
47
46
50
51
29
30
29
48
52
29
51
44
45
31
32
36
37
28
26
27
25
43
24
45
34
33
34
35
38
39
34

No.	Part Number	Description	Q'ty	Remarks
1	0862 17 201	Gear, Main Drive	1	
2	99963 6910	Shim, Adjust (t=0.1) } Selective use	2	
	99963 6930	Shim, Adjust (t=0.3) } Selective use	1	
3	99573 3500	Ring, Snap	1	
4	99606 33070	Bearing, Ball	1	
5	0810 17 204	Bearing, Ball (Fig. No. 56 included)	1	
6	0810 17 205	Bearing, Needle Roller	1	
7	3648 17 221	Shaft, Main	1	
8	0187 17 243	Key, Synchronizer	3	
9	0317 17 225	Ring, Snap	1	
10	1013 17 231	Gear (3 rd)	1	
11	0862 17 241	Hub, Clutch (3 rd & 4 th)	1	
12	0187 17 243	Key, Synchronizer	6	
13	0103 17 244 A	Spring, Synchronizer	2	
14	0862 17 245 A	Ring, Synchronizer	1	
15	0881 17 245 B	Ring, Synchronizer	4	
16	1013 17 251	Gear (2 nd)	1	
17	0862 17 261	Hub, Clutch (1 st & 2 nd)	1	
18	0862 17 262 B	Sleeve, Clutch Hub	2	
19	0862 17 271	Gear (1 st)	1	

No.	Part Number	Description	Q'ty	Remarks
20	0884 17 274	Bearing, Needle	4	
21	0884 17 275 A	Race, Inner	2	
22	0839 17 276	Washer, Thrust (L=2.5)	1	Selective use
	0839 17 277	Washer, Thrust (L=3.0)	2	
	0839 17 278	Washer, Thrust (L=3.5)	1	
23	0839 17 287	Shim, Adjust (t=0.1)	2	Selective use
	0839 17 288	Shim, Adjust (t=0.3)	1	
24	0821 17 297	Bearing, Ball	1	
25	0862 17 301 A	Gear, Counter Shaft	1	
26	3648 17 302	Gear, Counter Reverse	1	
27	0821 17 303	Bearing, Needle	1	
28	0884 17 304	Spacer	1	
29	0839 17 305	Ring, Retaining	3	
30	99606 63050	Bearing, Ball	1	
31	3648 17 308	Gear, Counter	1	
32	99606 63440	Bearing, Ball	1	
33	3648 17 310	Gear, Reverse Idle	1	
34	0821 17 313	Washer, Thrust	2	
35	0884 17 315	Shaft, Reverse Idle Gear	1	
36	0884 17 316	Washer, Adjust (t=2.00)		

No.	Part Number	Description	Q'ty	Remarks
	0884 17 317	Washer, Adjust (t=2.15)	Selective use 1	
	0884 17 318	Washer, Adjust (t=2.30)		
37	99573 2200	Ring, Snap	1	
38	4069 17 323	Bolt, Set	1	
39	99564 0800	Gasket, Set Bolt	1	
40	0600 17 324	Spring, Synchronizer Key	4	
41	0884 17 325B	Stopper, Bearing	1	
42	99781 0820	Bolt, Bearing Stopper	4	
	99952 0800	Washer, Plain	4	
43	0305 17 327	Shim, Adjust (t=0.1)	Selective use 1	
	0305 17 328	Shim, Adjust (t=0.3)	1	
44	0862 17 341	Gear, Drive-Speedometer	1	
45	99573 2500	Ring, Snap	2	
46	3648 17 611	Gear, Over Top	1	
47	0884 17 612	Bearing, Needle	1	
48	3648 17 281	Gear, Reverse	1	
49	3648 17 629	Nut, Lock	1	
50	0884 17 633A	Washer, Thrust Lock (t=6.4)	Selective use 1	
	0884 17 634A	Washer, Thrust Lock (t=6.5)		
	0884 17 635A	Washer, Thrust Lock (t=6.6)		

No.	Part Number	Description	Q'ty	Remarks
	0884 17 636A	Washer, Thrust Lock (t=6.7)		
51	99611 1500	Ball, Steel	2	
52	0862 17 641	Washer, Adjust (t=1.9)	1	Selective use
	0862 17 642	Washer, Adjust (t=2.0)		
	0862 17 643	Washer, Adjust (t=2.1)		
	0862 17 644	Washer, Adjust (t=2.2)		
53	3648 17 621	Hub, Clutch	1	
54	3648 17 622A	Sleeve, Clutch Hub	1	
55	3648 17 626	Ring, Retaining	1	
56	0881 22 297	Clip, Ball Bearing (included in Fig. No. 5)	1	

MANUAL T/MISSION (CHANGE CONTROLS, 4 SPEED)

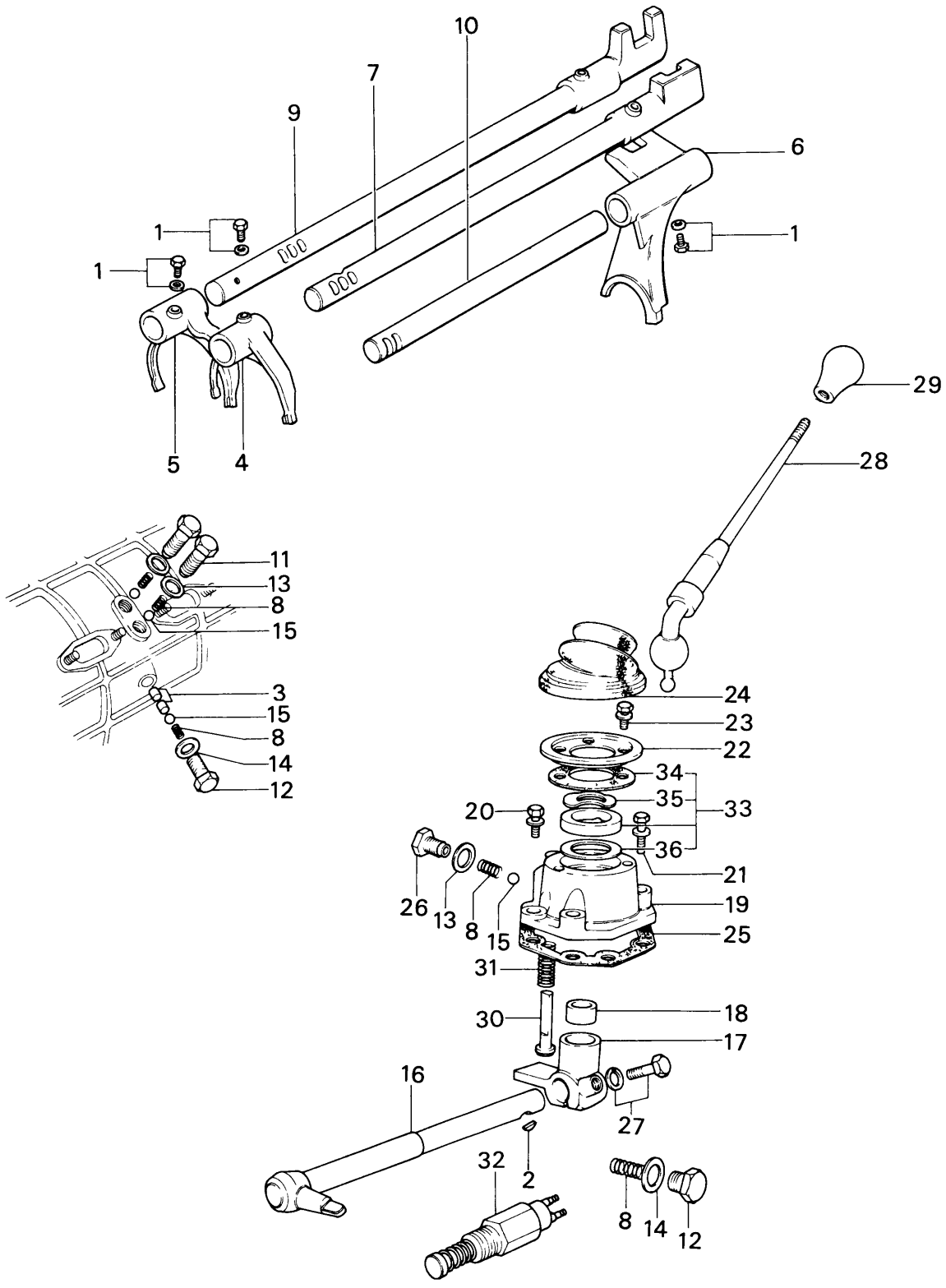

No.	Part Number	Description	Q'ty	Remarks
1	0118 17 313	Screw, Shift Fork & Rod	3	
	99971 0601	Washer, Spring	3	
2	0111 17 323	Key, Control Lever	1	
3	0114 17 351	Pin, Interlock	2	
4	0810 17 402	Fork, Shift (1st & 2nd)	1	
5	0810 17 404	Fork, Shift (3rd & 4th)	1	
6	1011 17 406	Fork, Shift (Reverse)	1	
7	1011 17 410A	Rod, Shift (1st & 2nd)	1	
8	0103 17 411	Spring, Cap (Sedan & Wagon) (Coupe)	4 5	
9	1011 17 420	Rod, Shift (3rd & 4th)	1	
10	0839 17 431	Rod, Shift (Reverse)	1	
11	0221 17 441	Plug, Cap-Spring (Sedan & Wagon) (Coupe)	1 2	
12	0259 17 441	Plug, Cap-Spring	2	
13	99562 1400	Gasket, Cap Plug	3	
14	99564 1000	Gasket, Cap Plug (Sedan & Wagon) (Coupe)	1 2	
15	99611 2500	Ball, Steel	4	
16	1011 17 450	Lever, Control	1	
17	0398 17 461A	End, Control Rod	1	
18	0398 17 462A	Seat, Spring	1	
19	0303 17 470	Case, Change Control	1	

No.	Part Number	Description	Q'ty	Remarks
20	99796 0822	Bolt, Change Control Case	2	
21	99796 0832	Bolt, Change Control Case	2	
22	0647 17 473	Plate, Cover	1	
23	99796 0612	Bolt, Cover Plate	3	
24	0862 17 475	Boot, Dust	1	
25	0271 17 478	Gasket, Change Control Case	1	
26	0183 17 491	Plug, Cap-Spring	1	
27	0187 17 492	Bolt, Reamer-Control Rod End	1	
	99971 0800	Washer, Spring	1	
28	1011 17 510B	Lever, Change	1	
29	1931 17 520	Knob, Change Lever (Coupe)	1	
	1934 17 520	Knob, Change Lever (Sedan & Wagon)	1	
30	0221 17 551A	Spindle, Select Lock	1	
31	0221 17 552	Spring, Select Lock Spindle	1	
32	0376 17 640A	Switch, Reverse Lamp	1	
33	0305 99 178	Change Bush Set	1	
34	0303 17 474	Gasket, Cover Plate	1	
35	0303 17 482	Washer, Wave	1	
36	99963 3310	Shim (t=0.1)	3	Selective use
	99963 3330	Shim (t=0.3)	1	Selective use

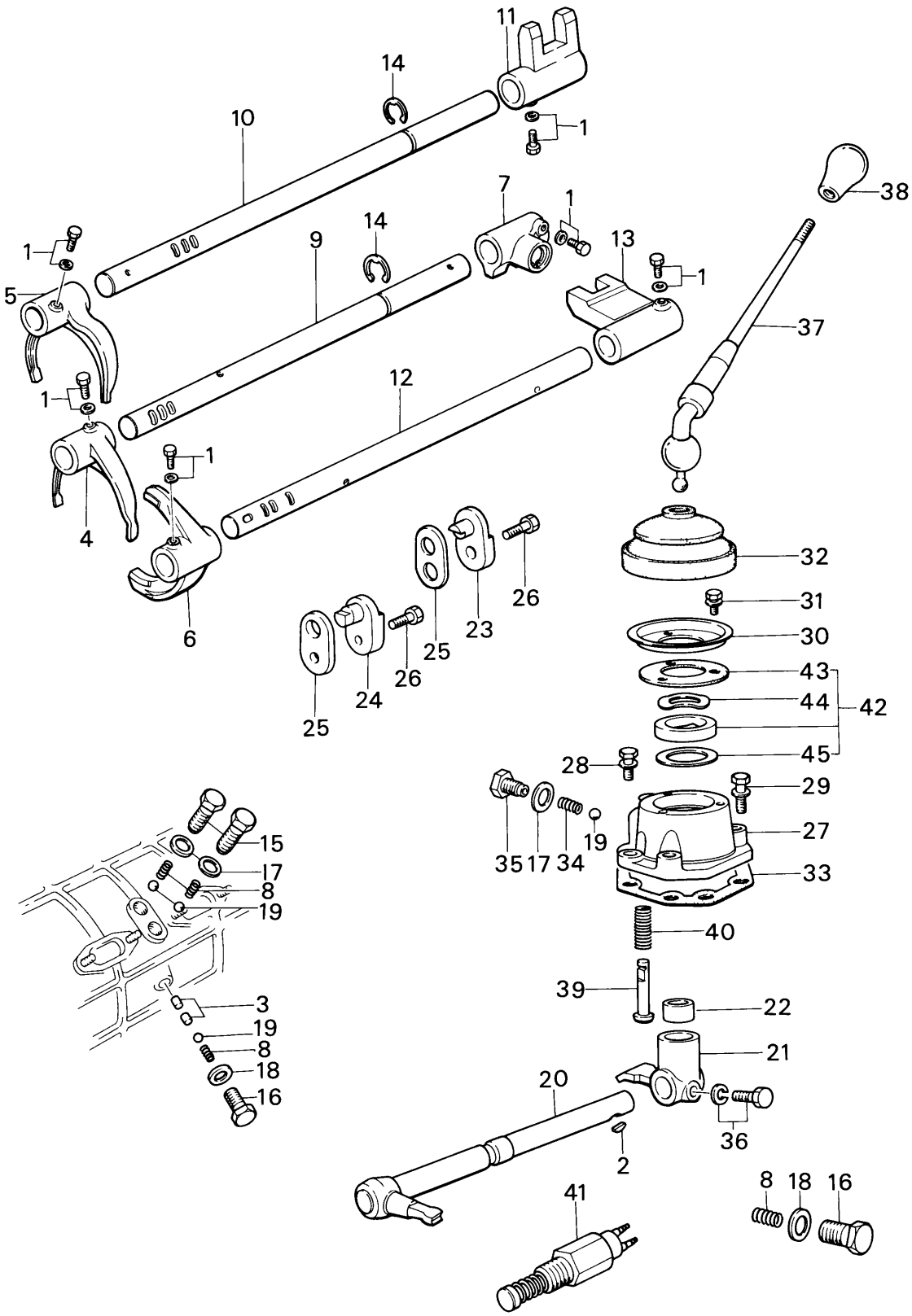
11
14
10
1
7
1
38
1
9
14
13
1
5
37
12
1
1
1
4
6
32
26
31
25
23
30
26
24
43
25
44
42
45
28
29
35
17
34
19
27
33
15
17
8
19
40
3
19
39
22
8
18
21
16
20
36
2
41
8
18
16

No.	Part Number	Description	Q'ty	Remarks
1	0118 17 313	Screw, Shift Fork & Rod	6	
	99971 0601	Washer, Spring	6	
2	0111 17 323	Key, Control Lever	1	
3	0114 17 351	Pin, Interlock	2	
4	0810 17 402	Fork, Shift (1st & 2nd)	1	
5	0810 17 404	Fork, Shift (3rd & 4th)	1	
6	3648 17 406	Fork, Shift (Over Top & Reverse)	1	
7	3648 17 410	Gate, Shift (1st & 2nd)	1	
8	0103 17 411	Spring, Cap	4	
9	0498 17 411A	Rod, Shift (1st & 2nd)	1	
10	0498 17 421B	Rod, Shift (3rd & 4th)	1	
11	0498 17 422	Gate, Shift (3rd & 4th)	1	
12	3648 17 431	Rod, Shift (Over Top & Reverse)	1	
13	3648 17 432	Gate, Shift (Over Top & Reverse)	1	
14	0821 17 435	Ring, Snap	2	
15	0221 17 441	Plug, Cap-Spring	2	
16	0259 17 441	Plug, Cap-Spring	(Wagon) 1 (Coupe) 2	
17	99562 1400	Gasket, Cap Plug	3	
18	99564 1000	Gasket, Cap Plug	(Wagon) 1 (Coupe) 2	
19	99611 2500	Ball, Steel	4	

No.	Part Number	Description	Q'ty	Remarks
20	3648 17 450	Lever, Control	1	
21	3648 17 461A	End, Control Rod	1	
22	0398 17 462A	Seat, Spring	1	
23	3648 17 463	Pin, Stopper	1	
24	3648 17 464	Pin, Stopper	1	
25	3648 17 465	Gasket, Stopper Pin	2	
26	99796 0816	Bolt, Stopper Pin	2	
27	0303 17 470	Case, Change Control	1	
28	99796 0822	Bolt, Change Control Case	2	
29	99796 0832	Bolt, Change Control Case	2	
30	0647 17 473	Plate, Cover	1	
31	99796 0612	Bolt, Cover Plate	3	
32	0862 17 475	Boot, Dust	1	
33	0271 17 478	Gasket, Change Control Case	1	
34	0824 17 483	Spring	1	
35	0191 17 491	Plug, Cap-Spring	1	
36	0187 17 492	Bolt, Reamer-Control Rod End	1	
	99971 0800	Washer, Spring	1	
37	1011 17 510B	Lever, Change	1	
38	1274 17 520	Knob, Change Lever (Wagon)	1	

No.	Part Number	Description	Q'ty	Remarks
	3648 17 520	Knob, Change Lever (Coupe)	1	
39	3648 17 551A	Spindle, Select Lock	1	
40	0221 17 552	Spring, Select Lock Spindle	1	
41	0821 17 505A	Switch, Reverse Lamp	1	
42	0305 99 178	Change Bush Set	1	
43	0303 17 474	Gasket, Cover Plate	1	
44	0303 17 482	Washer, Wave	1	
45	99963 3310	Shim (t=0.1)	3	Selective use
	99963 3330	Shim (t=0.3)	1	

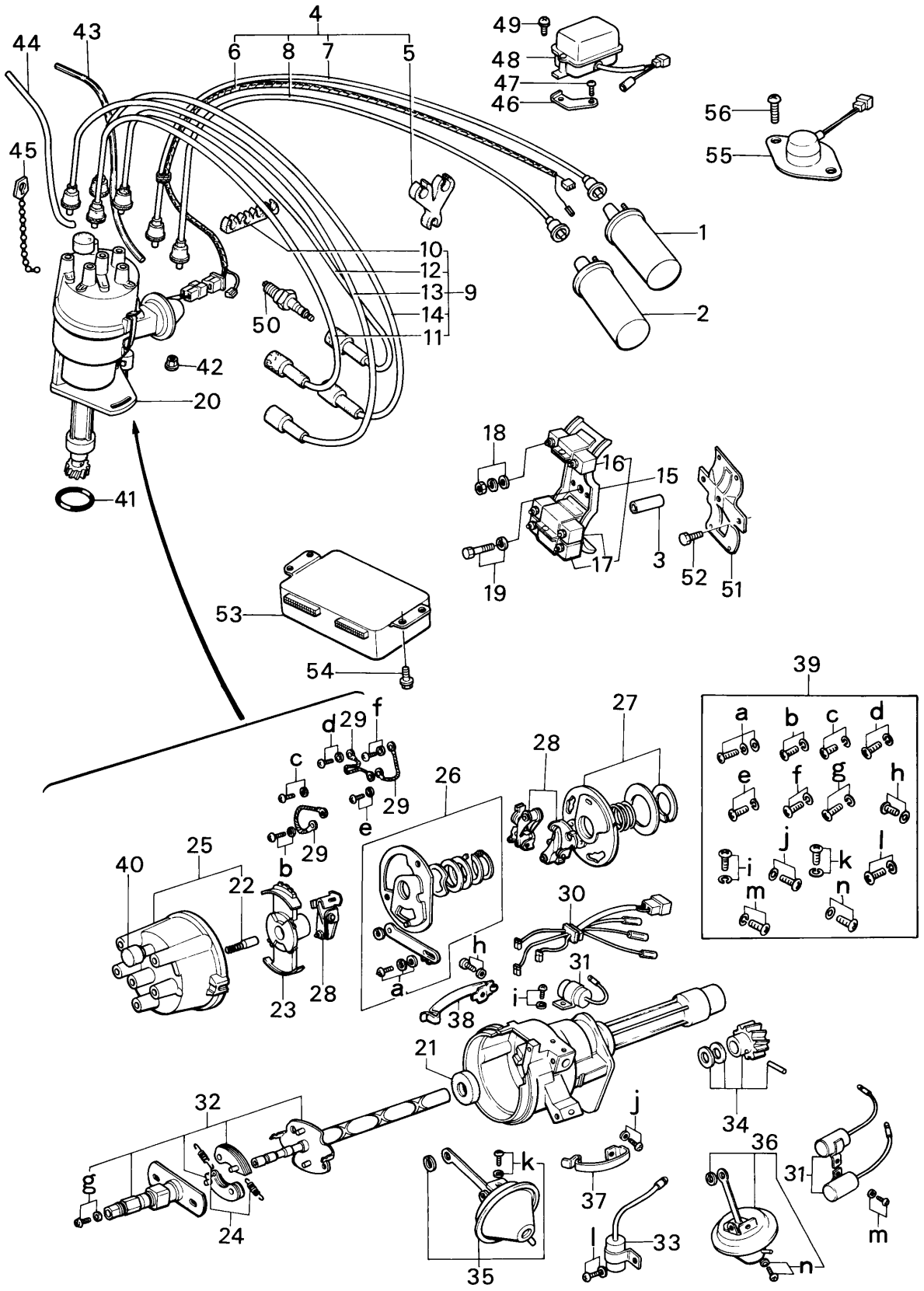
4
44
43
6
8
7
5
49
48
47
46
56
55
45
1
10
12
13
9
14
11
2
50
42
20
41
18
16
15
17
3
19
52
51
53
54
39
a
b
c
d
e
f
g
h
i
j
k
l
m
n
27
28
d
29
f
c
29
e
26
29
b
40
25
22
23
28
30
31
h
a
i
38
21
32
g
24
j
k
37
l
33
35
34
36
31
m
n

No.	Part Number	Description	Q'ty	Remarks
1	1562 18 100A	Coil, Ignition (HP5 —13E)	1	Ord. By 0370 18 100
2	1672 18 100	Coil, Ignition (HP5 —13J)	1	
3	0866 18 107	Pipe, Ignition Coil	1	
4	3648 18 110A	Cord, High Tension	1	
5	3648 18 111	Supporter, High Tension Cord	1	
6	3648 18 115A	Cord, Coil~Distributor	1	
7	1757 18 120A	Cord, High Tension (Trailing)	1	
8	8501 18 160	Cord, High Tension (Leading)	1	
9	1757 18 150C	Cord, High Tension	1	
10	0820 18 114	Supporter, High Tension Cord	1	
11	1757 18 130A	Cord, High Tension (T-1)	1	
12	1757 18 140A	Cord, High Tension (T-2)	1	
13	1757 18 170A	Cord, High Tension (L-1)	1	
14	1757 18 180A	Cord, High Tension (L-2)	1	
15	3648 18 190	Bracket, Ignition Coil	1	
16	0845 18 101	Resistor	1	
17	3648 18 101	Resistor	2	

18 24 DISTRIBUTOR

No.	Part Number	Description	Q'ty	Remarks
18	99906 0500	Nut, Ignition Coil	8	
	99952 0500	Washer, Plain	8	
	99971 0500	Washer, Spring	8	
19	99786 0845	Bolt, Ignition Coil Bracket	1	
	99952 0800	Washer, Plain	1	
	99971 0800	Washer, Spring	1	
20	3743 18 200	Distributor	1	
21	0107 18 216A	Oil Seal	1	
22	1757 24 302	Contact	1	
23	3648 24 303	Rotor	1	
24	3625 24 308	Spring Set	1	
25	1757 24 310	Cap	1	
26	1219 24 313	Base, Breaker	1	
27	3648 24 323	Base, Breaker	1	
28	1757 24 314	Support, Arm	3	
29	1757 24 317	Wire (E), Lead	3	
30	3648 23 319	Wire, Lead	1	
31	1757 24 322	Condenser	3	
32	3743 24 330	Governor Set	1	

No.	Part Number	Description	Q'ty	Remarks
33	1757 24 334	Condenser	1	
34	3648 24 340	Coupling Set	1	
35	3743 24 350	Vacuum Set	1	
36	3743 24 351	Vacuum Set	1	
37	3648 24 304	Clamp Ass'y	1	
38	3648 24 305	Clamp Ass'y	1	
39	3648 24 360	Screw Set	1	
40	1757 24 311	Cap, Rubber	1	
41	99541 0350	Ring, "O" - Distributor	1	
42	99940 0603	Nut, Distributor	1	
43	1202 18 291	Tube, Vacuum Control (Except Calif.)	1	
	3648 18 291	Tube, Vacuum Control (For Calif.)	1	
44	99340 04300	Tube, Vacuum Control (Except Calif.)	1	Ord. By 99341 04750 (1.75m)
	99340 04370	Tube, Vacuum Control (For Calif.)	1	
45	99709 0108	Band	1	
46	1620 18 390	Bracket, Regulator	1	
47	99796 0610	Bolt, Regulator Bracket	1	
48	0453 18 391	Regulator	1	
49	99786 0612	Bolt, Regulator		

No.	Part Number	Description	Q'ty	Remarks
50	3648 18 600	Plug, Spark (BR7 ET) (NGK Make) (With Resistor)	4	
	3743 18 600	Plug, Spark (B7 ET) (NGK Make) (Standard Type)	4	
	3744 18 600	Plug, Spark (B8 ET) (NGK Make) (Standard Type)	4	
51	0866 18 810	Bracket, Ignition Coil	1	
52	99786 0612	Screw, Ignition Coil Bracket	2	
53	3648 18 940A	Control Unit (For Calif.)	1	(Manual)
	3666 18 940A	Control Unit (Except Calif.)	1	(Manual)
	3738 18 940	Control Unit (Except Calif.)	1	(Automatic)
	3744 19 940	Control Unit (For Calif.)	1	(Automatic)
54	99786 0612B	Screw, Control Unit	3	
55	1259 18 890	Switch, Thermo	1	
56	99865 0510	Screw, Thermo Switch	2	

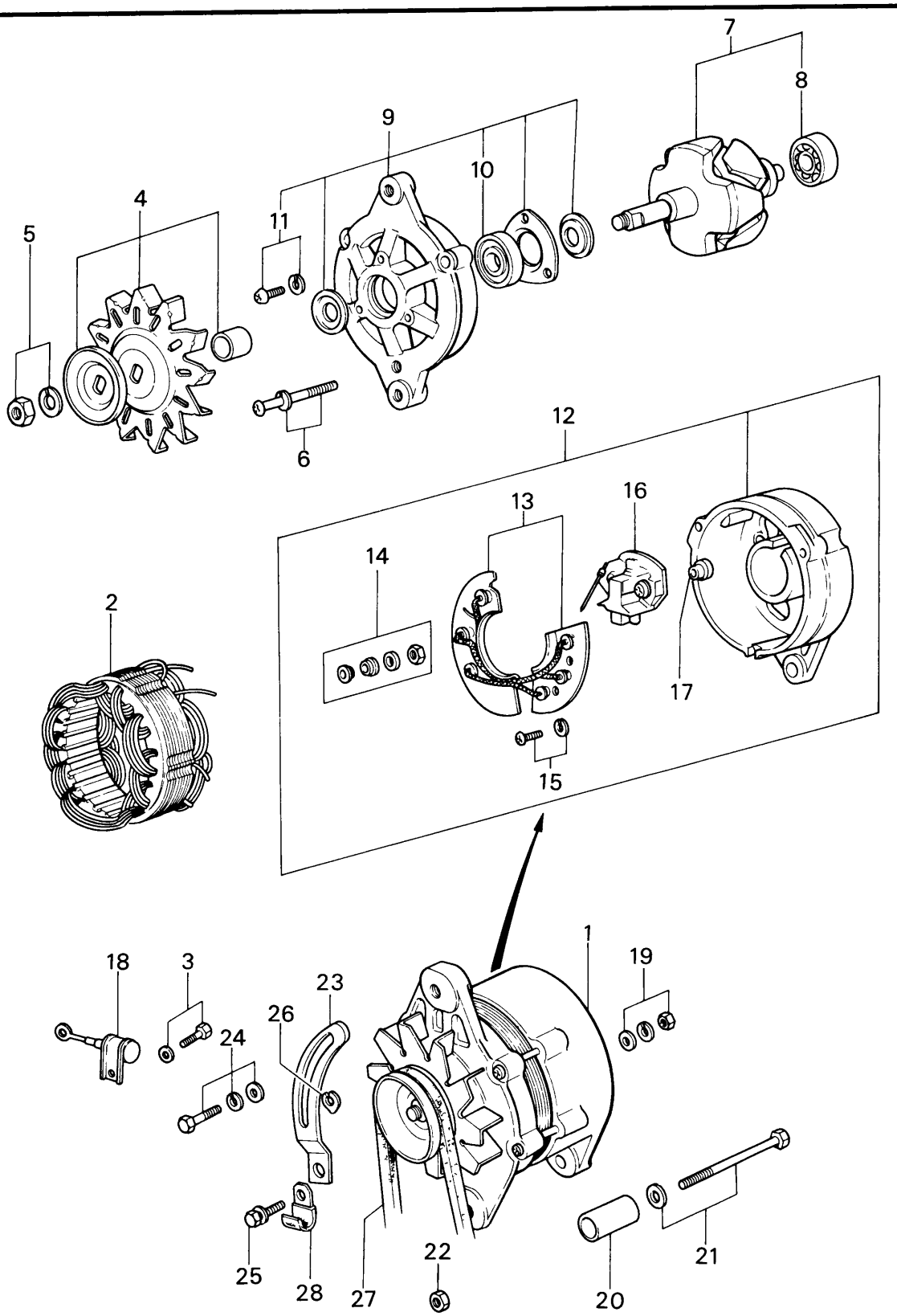
7
8
9
10
11
4
5
6
12
13
16
14
2
17
15
1
18
3
19
23
26
24
25
28
27
22
20
21

No.	Part Number	Description	Q'ty	Remarks
1	1011 18 300	Alternator	1	
2	1011 24 501	Stator	1	
3	1011 24 527	Screw	1	
4	0866 24 530	Pulley	1	
5	0866 24 533	Nut Set	1	
6	0866 24 535	Screw Set	1	
7	0866 24 540	Rotor (Fig. No. 8 included)	1	
8	0820 24 503	Bearing	1	
9	0866 24 550	Bracket, Front (Fig. No. 10&11 included)	1	
10	0208 24 514	Bearing	1	
11	0866 24 526	Screw	3	
12	1011 24 560	Bracket, Rear (Fig. No. 13~17 included)	1	
13	1011 24 510	Rectifier Ass'y	1	
14	1011 24 533	Nut Set	1	
15	1011 24 534	Screw	1	
16	1011 24 541	Holder, Brush	1	
17	1011 24 563	Mould	1	
18	0290 24 581	Condenser	1	
19	99906 0500	Nut, Alternator Terminal	1	

No.	Part Number	Description	Q'ty	Remarks
	99952 0500	Washer, Plain	1	
	99971 0500	Washer, Spring	1	
20	1757 18 311	Spacer, Alternator	1	
21	99800 10155	Bolt, Alternator	1	
22	99940 1001	Nut, Alternator	1	
23	1881 18 361	Strap, Alternator	1	
24	99796 0825	Bolt, Strap	1	
	99971 0800	Washer, Toothed	1	
	99953 0800	Washer, Plain	1	
25	99796 0820	Bolt, Alternator	1	
	99952 0822	Washer, Plain	1	
26	0222 18 375	Shim (t=0.3)		
	0222 18 376	Shim (t=0.5) Selective use	1	
	0222 18 377	Shim (t=0.7)		
27	1672 18 381A	Belt, "V"	1	
28	99276 2008	Clip, Wire Harness	2	

STARTER & BATTERY (MANUAL)

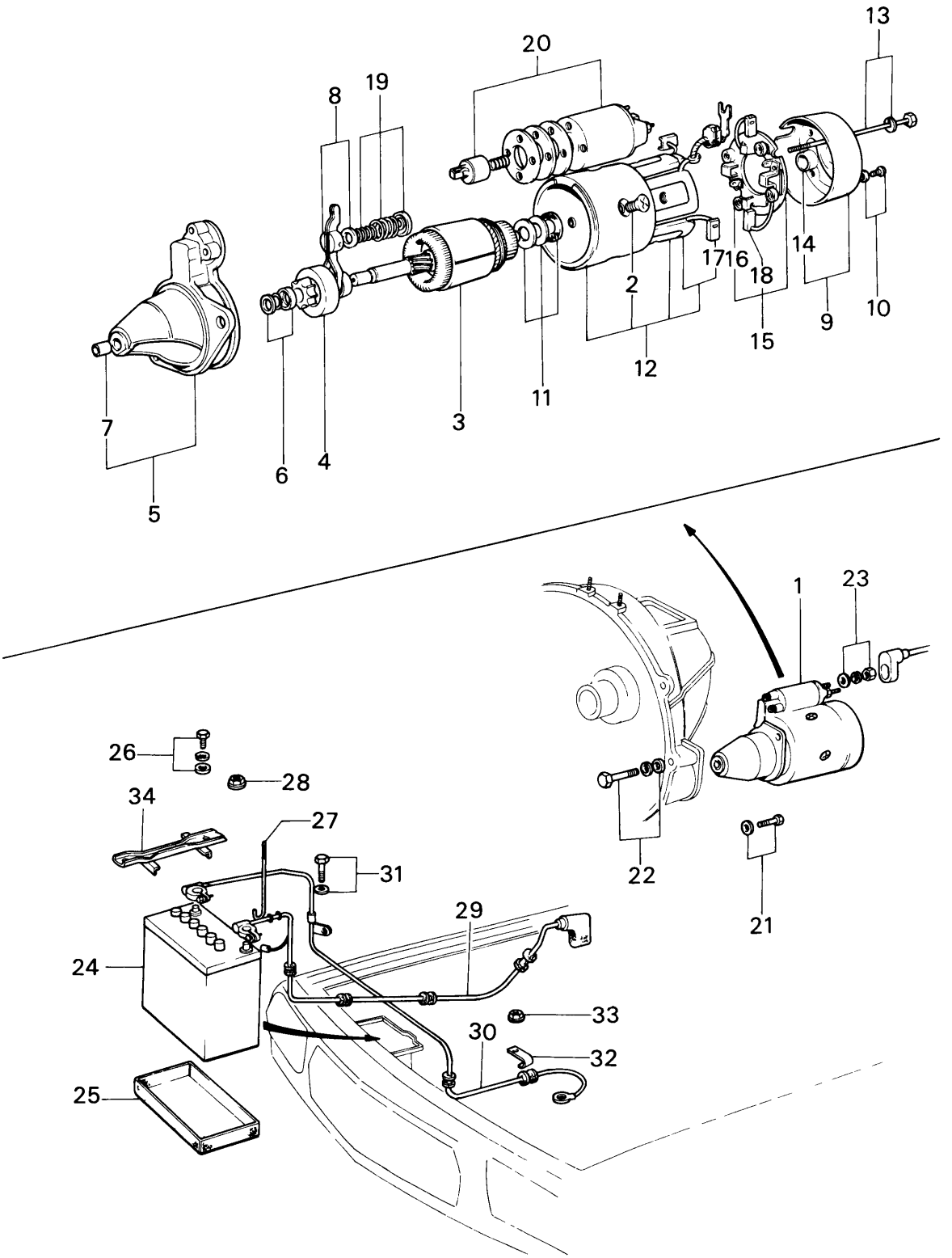

No.	Part Number	Description	Q'ty	Remarks
1	1757 18 400C	Starter	1	
2	0866 24 704	Screw	4	
3	1757 24 705	Armature	1	
4	1757 24 709	Clutch, Over Running	1	
5	1757 24 710B	Bracket, Front	1	
6	0426 24 712	Stopper Set, Piston	1	
7	0426 24 715A	Sleeve	1	
8	0866 24 716	Lever	1	
9	0845 24 720	Bracket, Rear	1	
10	0426 24 725	Screw Set	1	
11	0426 24 726	Washer Set	1	
12	1757 24 730A	Yoke	1	
13	0426 24 731	Bolt Set	1	
14	0222 24 741	Sleeve	1	
15	0222 24 750	Holder	1	
16	0222 24 752A	Spring, Brush	4	
17	0222 24 753	Brush	2	
18	0426 24 753	Brush	2	
19	0426 24 754	Spring Set	1	
20	0324 24 760	Switch, Starter	1	

STARTER & BATTERY (MANUAL)

No.	Part Number	Description	Q'ty	Remarks
21	99801 1032	Bolt, Starter	1	
	99971 1000	Washer, Spring	1	
22	99803 10120	Bolt, Starter	1	
	99953 1000	Washer, Plain	1	
	99971 1000	Washer, Spring	1	
23	99901 0800	Nut, Starter Terminal	1	
	99952 0800	Washer, Plain	1	
	99971 0800	Washer, Spring	1	
24	0504 18 520A	Battery (National Make N50Z)	1	
25	2113 54 295	Tray, Battery	1	
26	99786 0616	Bolt, Battery Clamp	1	
	99952 0618	Washer, Plain	1	
27	0243 56 231	Bolt, Clamp	1	
28	99940 0602	Nut	1	
29	1881 67 100A	Cable, Battery Positive	1	
30	0872 67 110	Wire, Battery Earth	1	
31	99796 0816	Bolt, Earth Wire	1	
32	99276 1208	Clip	1	
33	99940 0800	Nut, Earth Wire	1	
34	1524 70 980	Clamp, Battery	1	

STARTER & BATTERY (AUTOMATIC)

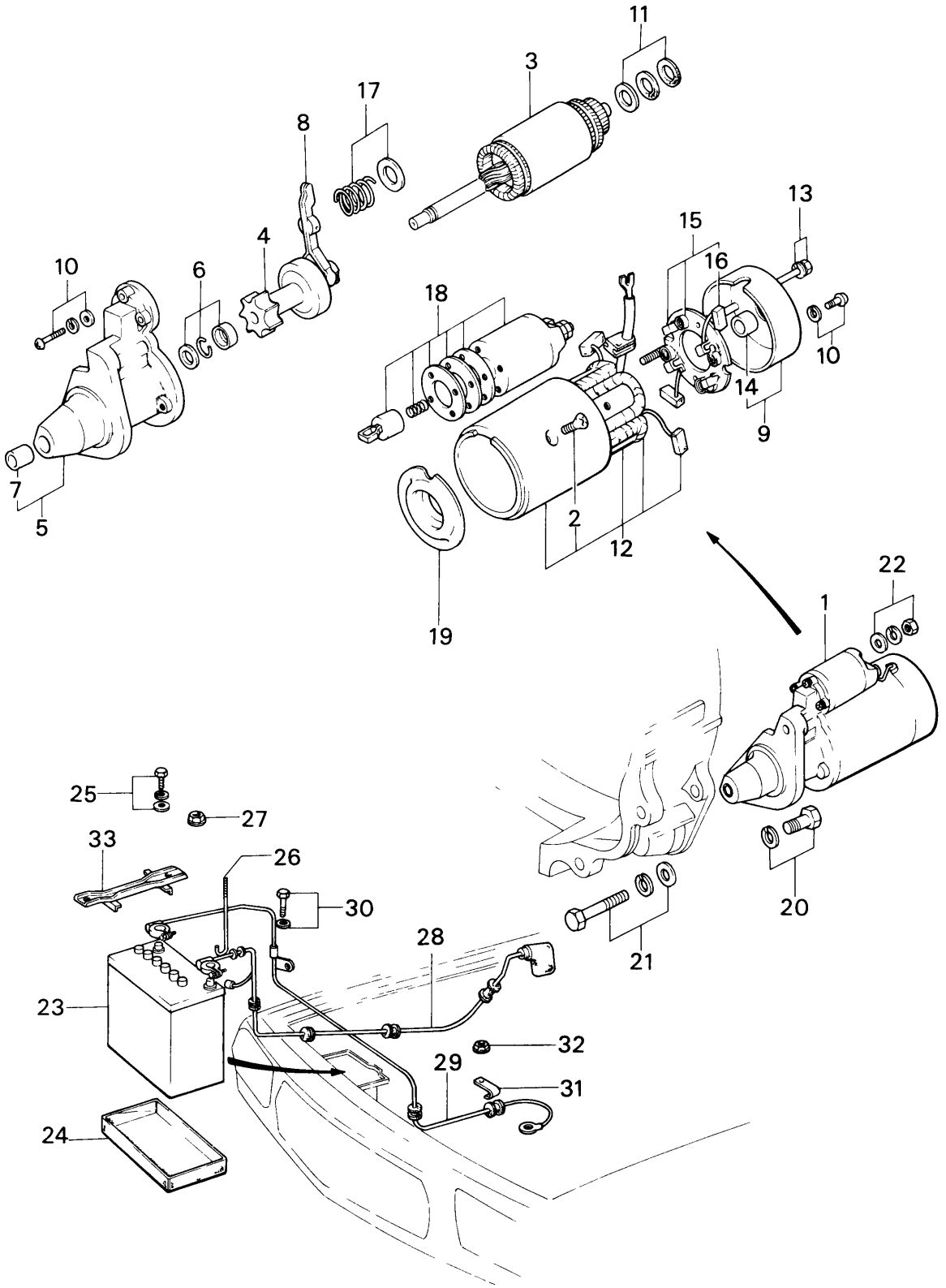

No.	Part Number	Description	Q'ty	Remarks
1	1883 18 400	Starter	1	
2	0866 24 704	Screw	4	
3	1758 24 705	Armature	1	
4	1757 24 709	Clutch, Over Running	1	
5	1758 24 710A	Bracket, Front	1	
6	0426 24 712	Stopper Set, Piston	1	
7	0426 24 715A	Sleeve	1	
8	0866 24 716	Lever	1	
9	0845 24 720	Bracket, Rear	1	
10	0426 24 725	Screw Set	1	
11	1758 24 726	Washer Set	1	
12	1883 24 730	Yoke	1	
13	1758 24 731A	Bolt Set	1	
14	0222 24 741	Sleeve	1	
15	1758 24 750	Holder	1	
16	0426 24 753	Brush	2	
17	0426 24 754	Spring Set	1	
18	1758 24 736	Switch Set	1	
19	1758 24 706	Bracket, Center	1	

No.	Part Number	Description	Q'ty	Remarks
20	99801 1032	Bolt, Starter	1	
	99971 1000	Washer, Spring	1	
21	99801 1075	Bolt, Starter	1	
	99953 1000	Washer, Plain	1	
	99971 1000	Washer, Spring	1	
22	99901 0800	Nut, Starter Terminal	1	
	99952 0800	Washer, Plain	1	
	99971 0800	Washer, Spring	1	
23	0504 18 520A	Battery (National N50Z) (Calif.)	1	
	1689 18 520	Battery (Yuasa Make Y110) (Fed.)	1	
24	2113 54 295	Tray, Battery	1	
25	99786 0616	Bolt, Battery Clamp	1	
	99971 0600	Washer, Spring	1	
	99953 0600	Washer, Plain	1	
26	0243 56 231	Bolt, Clamp	1	
27	99940 0602	Nut	1	
28	1881 67 100A	Cable, Battery Positive	1	
29	0872 67 110	Wire, Battery Earth	1	
30	99796 0816	Bolt, Earth Wire	1	
31	99276 1208	Clip	1	

No.	Part Number	Description	Q'ty	Remarks
32	99940 0800	Nut, Earth Wire	1	
33	1524 70 980	Clamp, Battery	1	

AUTOMATIC T /MISSION (CONVERTER, OIL PUMP & PIPING)

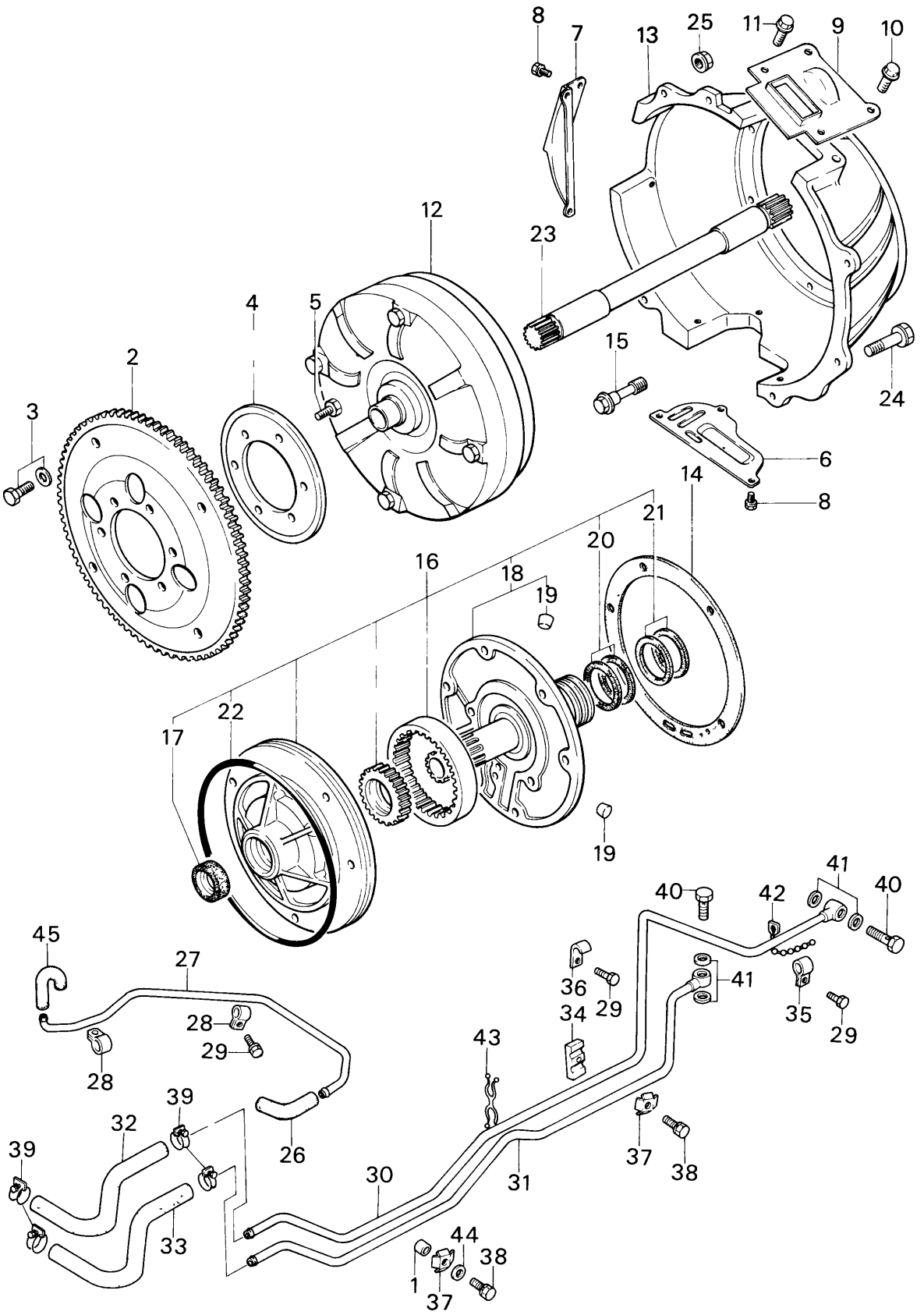

No.	Part Number	Description	Q'ty	Remarks
1	2850 13 331	Spacer, Oil Pipe	1	
2	1758 19 020	Plate, Drive	1	
3	99781 1012	Bolt, Drive Plate	4	
	99971 1000	Washer, Spring	4	
4	0842 19 025	Plate, Backing	1	
5	99784 1016	Bolt, Backing Plate	6	
6	1908 19 027	Cover, Under	1	
7	0454 19 028A	Cover, Side	1	
8	99796 0610	Bolt, Under & Side Cover	7	
9	1758 19 028	Cover, Top	1	
10	99796 0610	Bolt, Top Cover	1	
11	99796 0816	Bolt, Top Cover	2	
12	1758 19 100	Converter, Torque	1	
13	1758 19 211B	Housing, Converter	1	
14	1758 19 215	Gasket, Oil Pump	1	
15	0338 19 216	Bolt, Housing	6	
16	1758 19 220	Pump, Oil	1	
17	0338 19 223	Oil Seal	1	
18	1758 19 240	Cover	1	

AUTOMATIC T/MISSION (CONVERTER, OIL PUMP & PIPING)

No.	Part Number	Description	Q'ty	Remarks
19	0338 19 245A	Ball	2	
20	0338 19 256	Ring, Seal	2	
21	0338 19 257	Ring, Seal	2	
22	0338 19 258	Seal, Lathe Cut Ring	1	
23	0338 19 678	Shaft, Input	1	
24	99796 1035	Bolt, Housing	2	
	99796 1045	Bolt	1	
	99796 1050	Bolt	1	
25	99940 1001	Nut, Housing	1	
26	0338 19 904A	Hose, Vacuum (Rr.)	1	
27	1080 19 910A	Pipe, Vacuum	1	
28	0842 19 915A	Clip, Vacuum Pipe	2	
29	99796 0610	Bolt, Clip	3	
30	1053 19 920B	Pipe, Oil	1	
31	1053 19 930B	Pipe, Oil	1	
32	1129 19 933	Hose, Oil	1	
33	1129 19 934	Hose, Oil	1	
34	1015 19 945A	Plate, Spacer	1	
35	2579 19 989	Clip, Pipe	1	

No.	Part Number	Description	Q'ty	Remarks
36	99276 1006	Clip, Pipe	1	
37	0866 45 903A	Clip, Pipe	2	
38	99796 0620	Bolt, Clip	2	
39	99282 1700	Band, Hose	4	
40	99381 0800	Bolt, Connector-Oil Pipe	2	
41	99564 1200	Gasket, Connector Bolt	4	
42	99709 0108	Band, Oil Pipe	1	
43	99288 0808	Clip, Oil Pipe	1	
44	99952 0600	Washer, Plain	1	
45	99346 06150	Hose, Vacuum (150㎜)	1	Ord. By. 99349 06750 (1.75m)
	3744 19 090A	T/mission Cpt.	1	

AUTOMATIC T /MISSION (CASE & MAIN CONTROL)

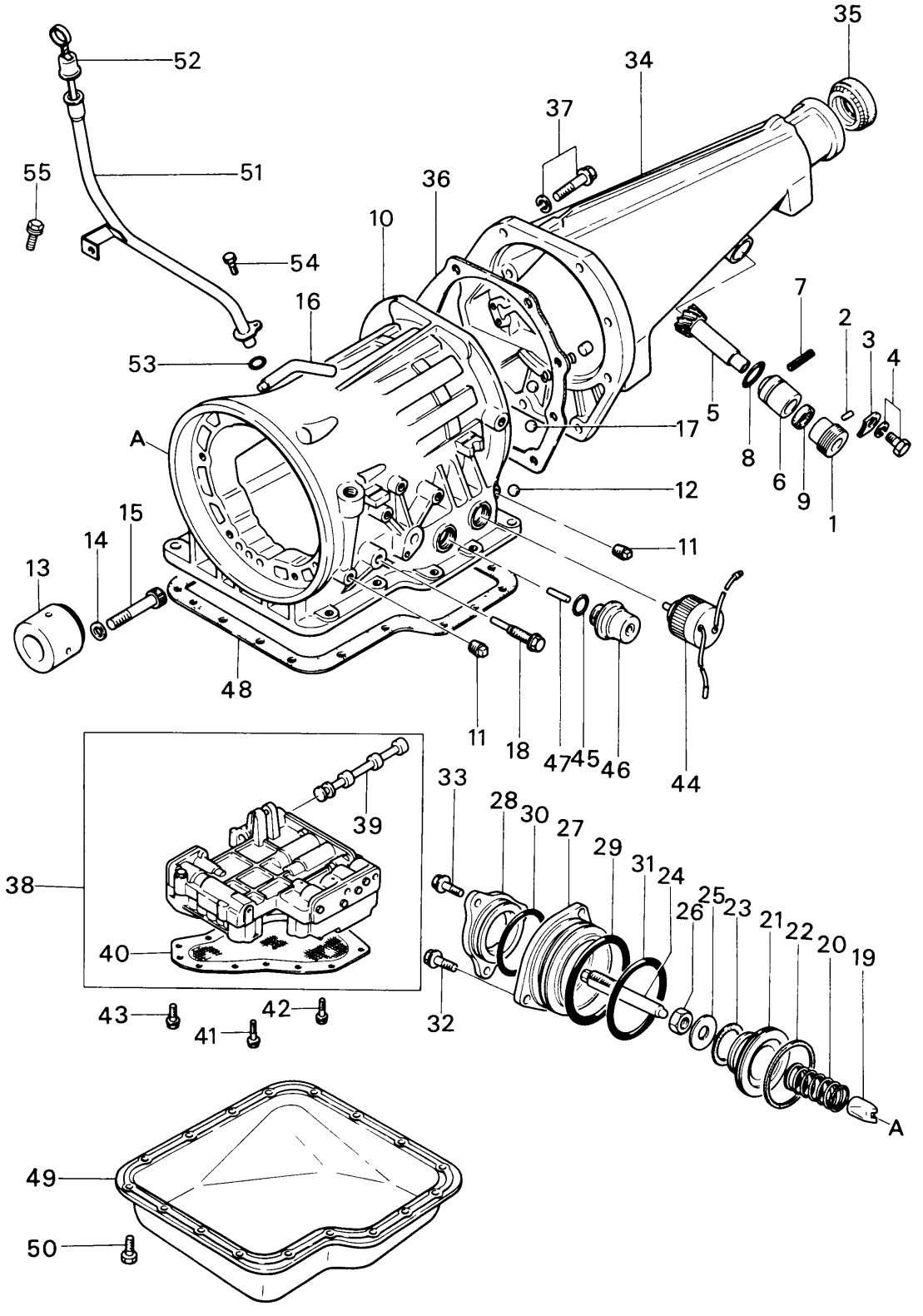

No.	Part Number	Description	Q'ty	Remarks
1	0862 17 351	Joint, Cable - Speedometer	1	
2	0187 17 352	Pin, Dowel - Driven Gear	1	
3	0111 17 354	Plate, Lock - Cable Joint	1	
4	99796 0612	Bolt, Lock Plate	1	
5	1669 17 441	Gear, Driven - Speedometer	1	
6	0862 17 442	Sleeve, Speedometer Driven Gear	1	
7	99222 0216	Pin, Spring	1	
8	99541 02211	Ring, "O" - Drive Gear	1	
9	99586 10207	Oil Seal, Driven Gear	1	
10	1758 19 310A	Case, T/mission	1	
11	0338 19 331A	Plug, Square Head	3	
12	99611 1750	Ball, Steel	1	
13	0338 19 336	Race, Inner	1	
14	0338 19 337	Washer, Plain	8	
15	0338 19 338	Bolt	8	
16	0378 19 344	Breather, Air	1	
17	99611 2000	Ball, Steel	3	
18	1758 19 341	Bolt, Anchor End	1	

No.	Part Number	Description	Q'ty	Remarks
19	0338 19 361	Strut, Band	1	
20	0338 19 363	Spring, Return-Piston	1	
21	0842 19 381	Piston, Band Servo	1	
22	0338 19 384	Seal, Piston	1	
23	0842 19 385	Seal, Piston	1	
24	1758 19 386	Stem, Piston	1	
25	0338 19 388A	Washer, Plain	1	
26	0338 19 389	Nut, Band Adjust	1	
27	1758 19 391	Retainer, Servo	1	
28	1758 19 392	Cover, Servo	1	
29	0842 19 394	Seal, Lathe Cut Ring	1	
30	1758 19 394	Ring, "O"	1	
31	0338 19 395	Seal, "O" Ring	1	
32	0338 19 397	Bolt	3	
33	1758 19 397	Bolt, Servo	3	
34	1840 19 710	Housing, Extension	1	
35	0437 17 335	Oil Seal	1	
36	0338 19 735	Gasket, Extension Housing	1	

No.	Part Number	Description	Q'ty	Remarks
37	0338 19 737	Bolt, Extension Housing	8	
	0338 19 739	Washer, Plain	8	
38	3649 19 750	Valve, Control	1	
39	0338 19 768	Valve, Manual	1	
40	1758 19 815	Strainer, Oil	1	
41	0338 19 831	Bolt, Control Valve	3	
42	0338 19 832	Bolt, Control Valve	2	
43	0338 19 833	Bolt, Control Valve	2	
44	1675 19 821	Solenoid, Down Shift	1	
45	0338 19 822	Seal, "O" Ring	2	
46	1758 19 823	Diaphragm, Vacuum	1	
47	0338 19 825	Rod, Diaphragm (ℓ =30.0)	1	Selective use
	0338 19 826	Rod (ℓ =31.0)		
	0338 19 827	Rod (ℓ =30.5)		
	0338 19 828	Rod (ℓ =29.0)		
	0338 19 829	Rod (ℓ =29.5)		
48	1758 19 835	Gasket, Oil Pan	1	

No.	Part Number	Description	Q'ty	Remarks
49	1758 19 836	Pan, Oil	1	
50	0338 19 837	Bolt, Oil Pan	17	
51	1758 19 870A	Tube, Oil Level	1	
52	1758 19 880	Gauge, Oil Level	1	
53	99541 01601	Ring, "O" - Oil Level Tube	1	
54	99796 0610	Bolt, Oil Level Tube	1	
55	99796 0812	Bolt, Oil Level Tube	1	

AUTOMATIC T/MISSION (CLUTCH & PLANETARY GEAR)

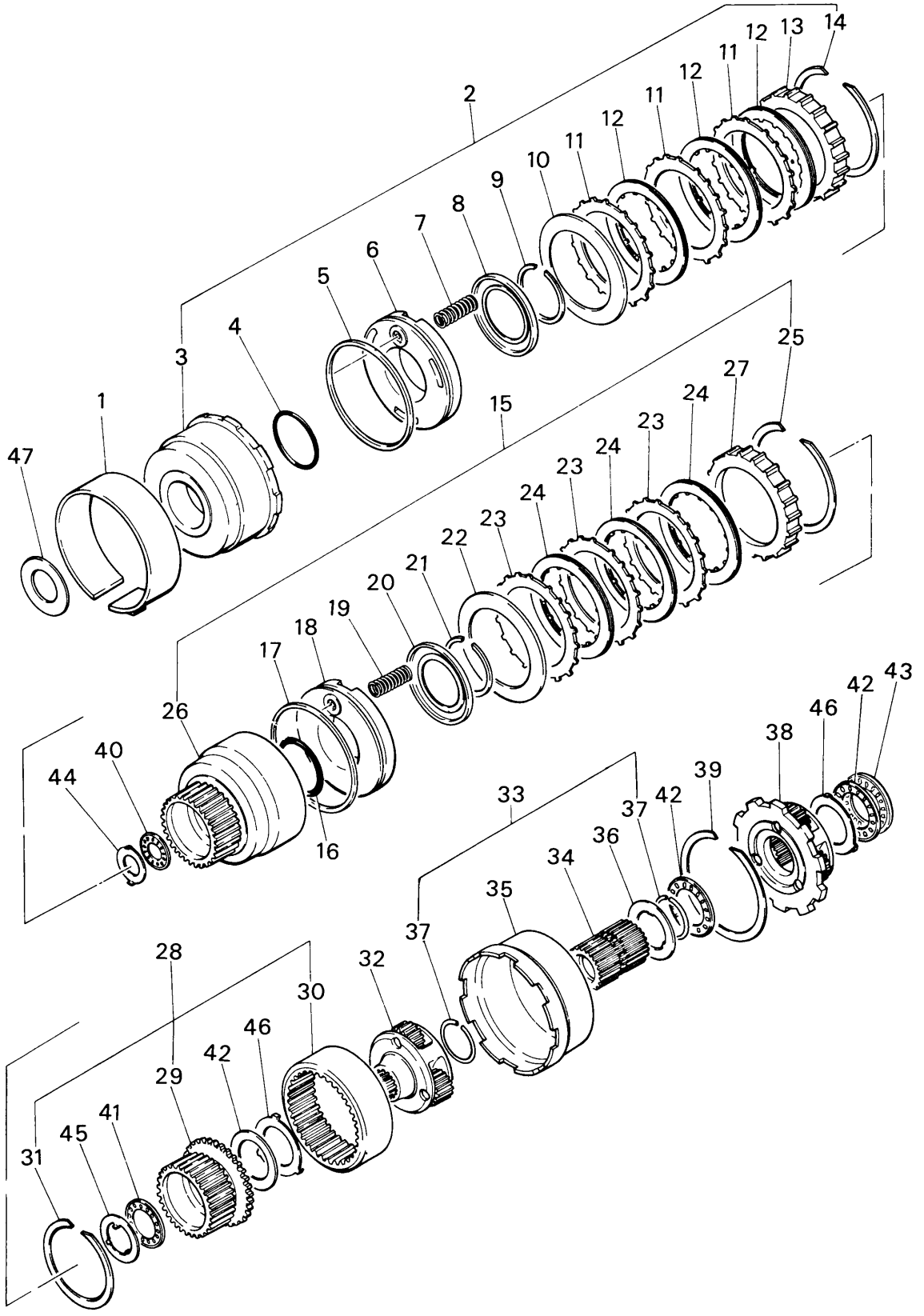

No.	Part Number	Description	Q'ty	Remarks
1	0338 19 360	Band, Brake	1	
2	0338 19 460	Clutch, Front	1	
3	0338 19 470	Drum, Clutch	1	
4	0338 19 475	Seal, "O" Ring	1	
5	0338 19 476	Seal, Lathe Cut	1	
6	0338 19 480	Piston, Clutch	1	
7	0338 19 486	Spring, Piston Return	10	
8	0338 19 487	Retainer, Spring	1	
9	0338 19 488	Ring, Snap	1	
10	0338 19 498	Plate, Dished	1	
11	0338 19 499	Plate, Driven	3	
12	0338 19 500	Plate, Drive	3	
13	0338 19 503	Plate, Retaining (t=10.6)	Selective use 1	
	0338 19 504	Plate, Retaining (t=10.8)		
	0338 19 505	Plate, Retaining (t=11.0)		
	0338 19 506	Plate, Retaining (t=11.2)		
	0338 19 507	Plate, Retaining (t=11.4)		
	0338 19 508	Plate, Retaining (t=11.6)		
14	0338 19 509	Ring, Snap	1	

No.	Part Number	Description	Q'ty	Remarks
15	0338 19 510	Clutch, Rear	1	
16	0338 19 475	Seal, "O" Ring	1	
17	0338 19 476	Seal, Lathe Cut	1	
18	0338 19 480	Piston, Clutch	1	
19	0338 19 486	Spring, Piston Return	10	
20	0338 19 487	Retainer, Spring	1	
21	0338 19 488	Ring, Snap	1	
22	0338 19 498	Plate, Dished	1	
23	0338 19 499	Plate, Driven	4	
24	0338 19 500	Plate, Driven	4	
25	0338 19 509	Ring, Snap	1	
26	0338 19 511	Drum, Rear Clutch	1	
27	0338 19 515	Plate, Retaining	1	
28	0338 19 530	Hub, Rear Clutch	1	
29	0338 19 531	Hub, Rear Clutch	1	
30	0338 19 533	Gear, Internal	1	
31	0338 19 534	Ring, Snap	1	
32	0338 19 540	Carrier, Front	1	

No.	Part Number	Description	Q'ty	Remarks
33	0338 19 550	Shell & Sun Gear	1	
34	0338 19 560	Gear, Sun	1	
35	0338 19 565	Shell, Connecting	1	
36	0338 19 566	Race, Bearing-Shell	1	
37	0338 19 567	Ring, Snap	2	
38	0338 19 570	Carrier, Rear	1	
39	0338 19 598	Ring, Snap	1	
40	0338 19 621	Bearing, Needle	1	
41	0338 19 622	Bearing, Needle	1	
42	0338 19 623	Bearing, Needle	3	
43	0338 19 624	Bearing, Needle	1	
44	0338 19 631	Race, Bearing (t=1.2)	Selective use 1	
	0338 19 632	Race, Bearing (t=1.4)		
	0338 19 633	Race, Bearing (t=1.6)		
	0338 19 634	Race, Bearing (t=1.8)		
	0338 19 635	Race, Bearing (t=2.0)		
	0338 19 636	Race, Bearing (t=2.2)		
45	0338 19 638	Race, Bearing-Rear Clutch	1	
46	0338 19 639	Race, Bearing	2	

No.	Part Number	Description	Q'ty	Remarks
47	0338 19 641	Washer, Front Clutch (t=1.90)	Selective use 1	
	0338 19 642	Washer (t=2.10)		
	0338 19 643	Washer (t=2.30)		
	0338 19 644	Washer (t=2.50)		
	0338 19 645	Washer (t=2.70)		
	0338 19 646	Washer (t=1.50)		
	0338 19 647	Washer (t=1.70)		
	0397 22 200	Clutch Repair Kit	1	Set
	0338 19 475	Seal, "O" Ring	2	
	0338 19 476	Seal, Lathe Cut	2	
	0338 19 486	Spring, Piston Return	20	
	0338 19 487	Retainer, Spring	2	
	0338 19 488	Ring, Snap	2	
	0338 19 498	Plate, Dished	2	
	0338 19 499	Plate, Driven	7	
	0338 19 500	Plate, Drive	1	
	0338 19 509	Ring, Snap	2	
	0338 19 621	Bearing, Needle	1	
	0397 19 638	Race, Bearing-Rear Clutch	1	

AUTOMATIC T/MISSION (LOW, REVERSE & GOVERNOR)

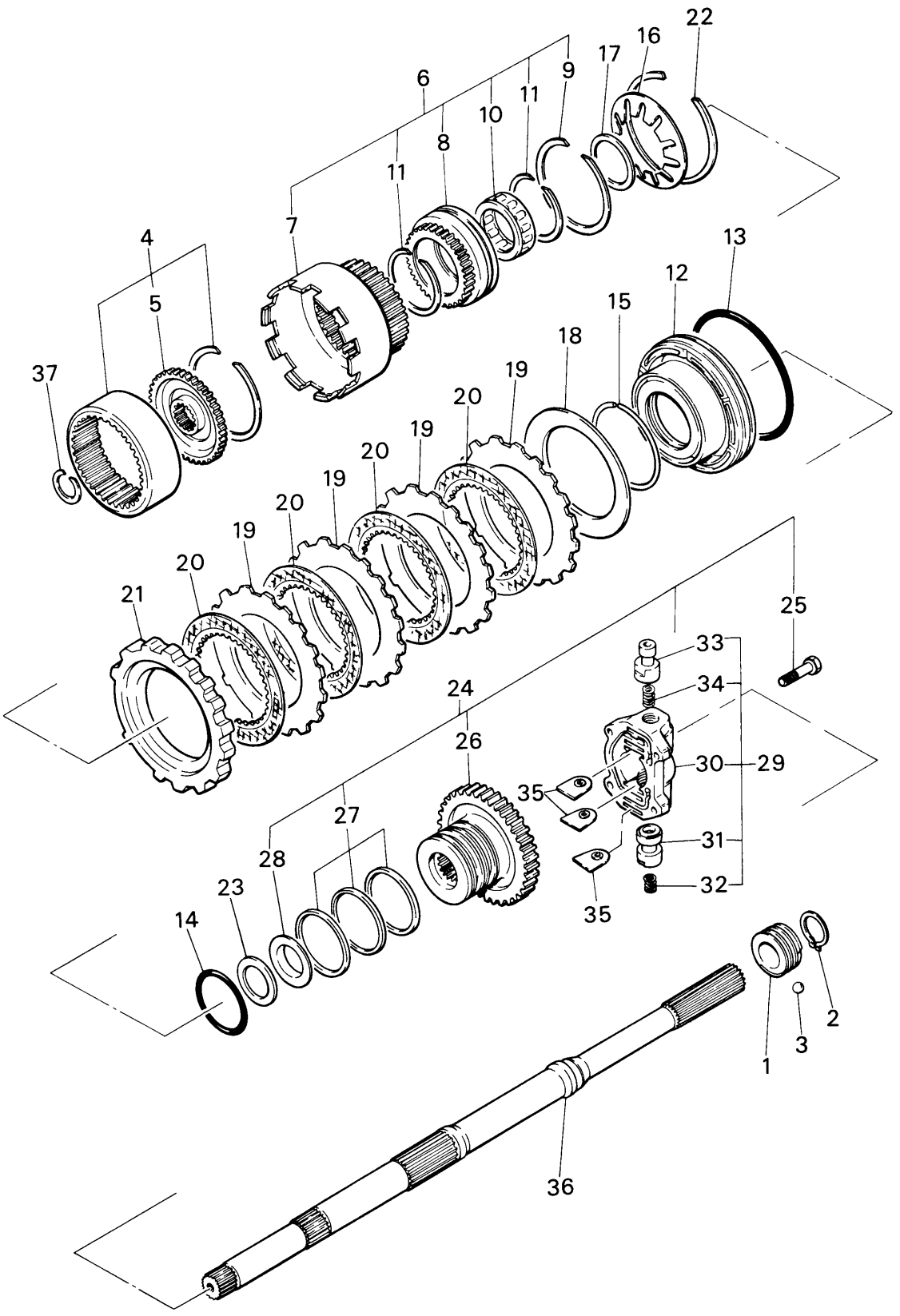

No.	Part Number	Description	Q'ty	Remarks
1	0862 17 341	Gear, Drive-Speedometer	1	
2	99573 2500	Ring, Snap-Drive Gear	1	
3	99611 1500	Ball, Steel	1	
4	0338 19 580	Flange	1	
5	0338 19 581	Flange, Drive	1	
6	0338 19 590	Drum, Connecting	1	
7	0338 19 591	Drum, Connecting	1	
8	0338 19 593	Race, Outer	1	
9	0338 19 594	Ring, Snap	1	
10	0338 19 595	Clutch, One Way	1	
11	0338 19 596	Ring, Snap	2	
12	0338 19 601	Piston, Low & Reverse	1	
13	0338 19 603	Seal, Piston	1	
14	0338 19 604	Seal, "O" Ring	1	
15	0338 19 605	Ring, Thrust Spring	1	
16	0338 19 606	Spring, Piston	1	
17	0338 19 607	Ring, Snap	1	

No.	Part Number	Description	Q'ty	Remarks
18	0338 19 608	Plate, Dished	1	
19	0338 19 609	Plate, Driven	4	
20	0338 19 610	Plate, Driven	4	
21	0338 19 613A	Plate, Retaining (t=15.8)	Selective use 1	
	0338 19 614A	Plate (t=16.0)		
	0338 19 615A	Plate (t=16.2)		
	0338 19 616A	Plate (t=16.4)		
	0338 19 617A	Plate (t=16.6)		
	0338 19 618A	Plate (t=16.8)		
22	0338 19 619	Ring, Snap	1	
23	0338 19 622	Bearing, Needle	1	
24	0842 19 650	Distributor, Oil	1	
25	0338 19 397	Bolt	4	
26	0338 19 651	Distributor	1	
27	0338 19 655	Ring, Seal	3	
28	0338 19 656	Race, Bearing	1	
29	0842 19 660	Governor, Fig. No. 30~33 included	1	
30	0338 19 661	Body	1	
31	0338 19 663	Valve	1	

No.	Part Number	Description	Q'ty	Remarks
32	0338 19 664	Spring	1	
33	0842 19 665	Valve	1	
34	0338 19 666	Spring, Governor	1	
35	0338 19 667	Plate, Retainer	3	
36	0338 19 670A	Shaft	1	
37	0338 19 676	Ring	1	

AUTOMATIC T/MISSION (MANUAL LINKAGE)

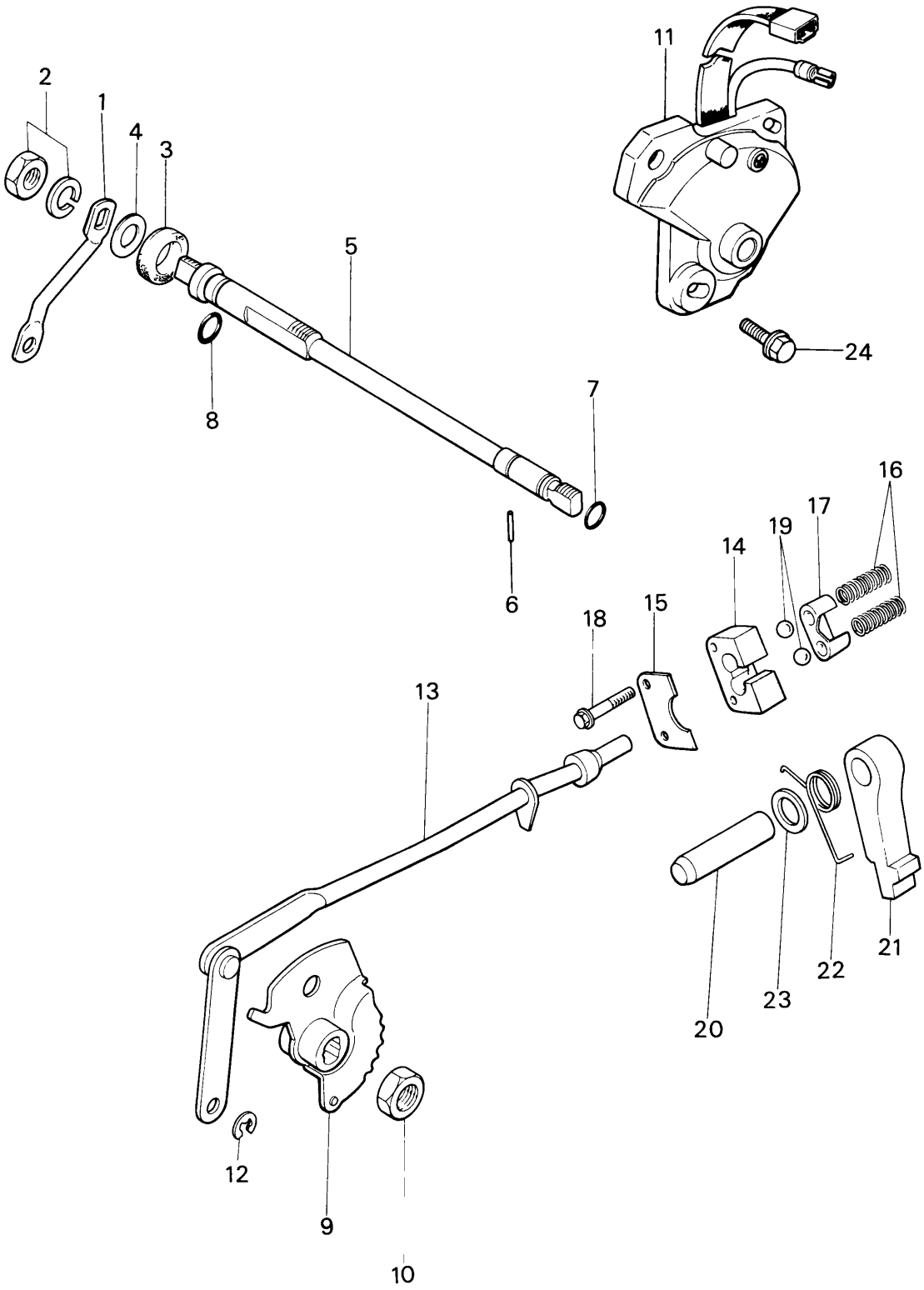

No.	Part Number	Description	Q'ty	Remarks
1	1015 19 031	Lever, Select	1	
2	99922 1400	Nut, Select Lever	1	
	99971 1400	Washer, Spring	1	
3	1758 19 036A	Seal, Dust	1	
4	1758 19 055	Washer	1	
5	1758 19 431	Shaft, Manual	1	
6	1758 19 434	Pin, Manual Shaft	1	
7	99541 00901	Ring, "O" - Manual Shaft	1	
8	99541 01201	Ring, "O"	1	
9	1758 19 440	Plate, Manual Shaft	1	
10	1758 19 443	Nut, Manual Shaft	1	
11	1758 19 444	Switch, Inhibitor	1	
12	0338 19 449	Ring, Snap	1	
13	1758 19 450	Rod, Parking	1	
14	0338 19 701A	Support, Actuator	1	
15	0338 19 702A	Plate, Retaining	1	
16	0338 19 703	Spring, Ball Park	2	
17	0338 19 704	Retainer, Actuator Support	1	
18	0338 19 706	Bolt, Actuator Support	2	
19	99611 2750	Ball, Steel	2	

No.	Part Number	Description	Q'ty	Remarks
20	0338 19 731	Shaft, Parking Pawl	1	
21	0338 19 732	Pawl, Parking	1	
22	0338 19 733C	Spring, Pawl Return	1	
23	0338 19 734A	Spacer, Dowel	1	
24	0397 19 838	Bolt, Inhibitor Switch	3	

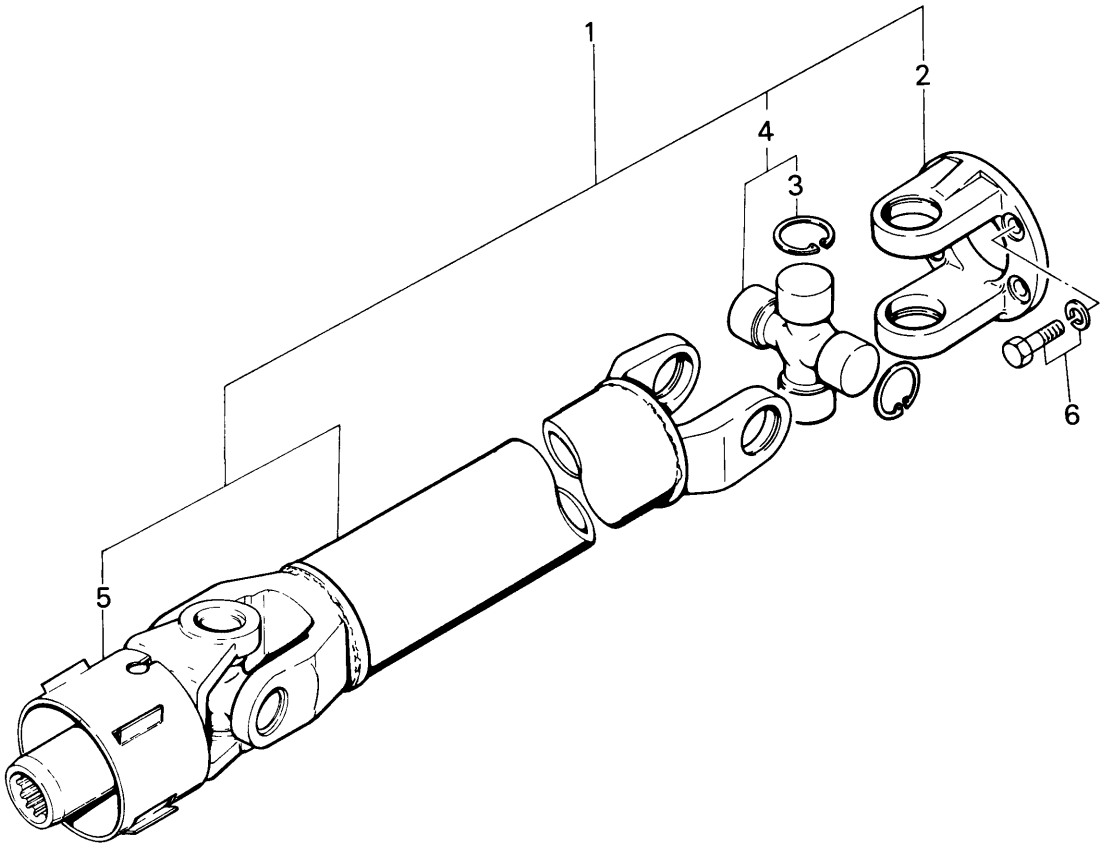
1
2
4
3
6
5

No.	Part Number	Description	Q'ty	Remarks
1	0862 25 100 A	Shaft, Propeller	1	
2	0259 25 021 B	Yoke	1	
3	0259 25 071 A	Ring, Snap (t=1.22)		
	0259 25 072 A	Ring, Snap (t=1.24)		
	0259 25 073 A	Ring, Snap (t=1.26)		
	0259 25 074 A	Ring, Snap (t=1.28)		
	0259 25 075 A	Ring, Snap (t=1.30)	Selective use 8	
	0259 25 076 A	Ring, Snap (t=1.32)		
	0259 25 077 A	Ring, Snap (t=1.34)		
	0259 25 078 A	Ring, Snap (t=1.36)		
	0259 25 079 A	Ring, Snap (t=1.38)		
4	0259 89 251	Joint Set, Universal	2	
5	0425 25 130	Yoke, Sliding	1	
6	99752 30818	Bolt	4	
	99971 0800	Washer, Spring	4	

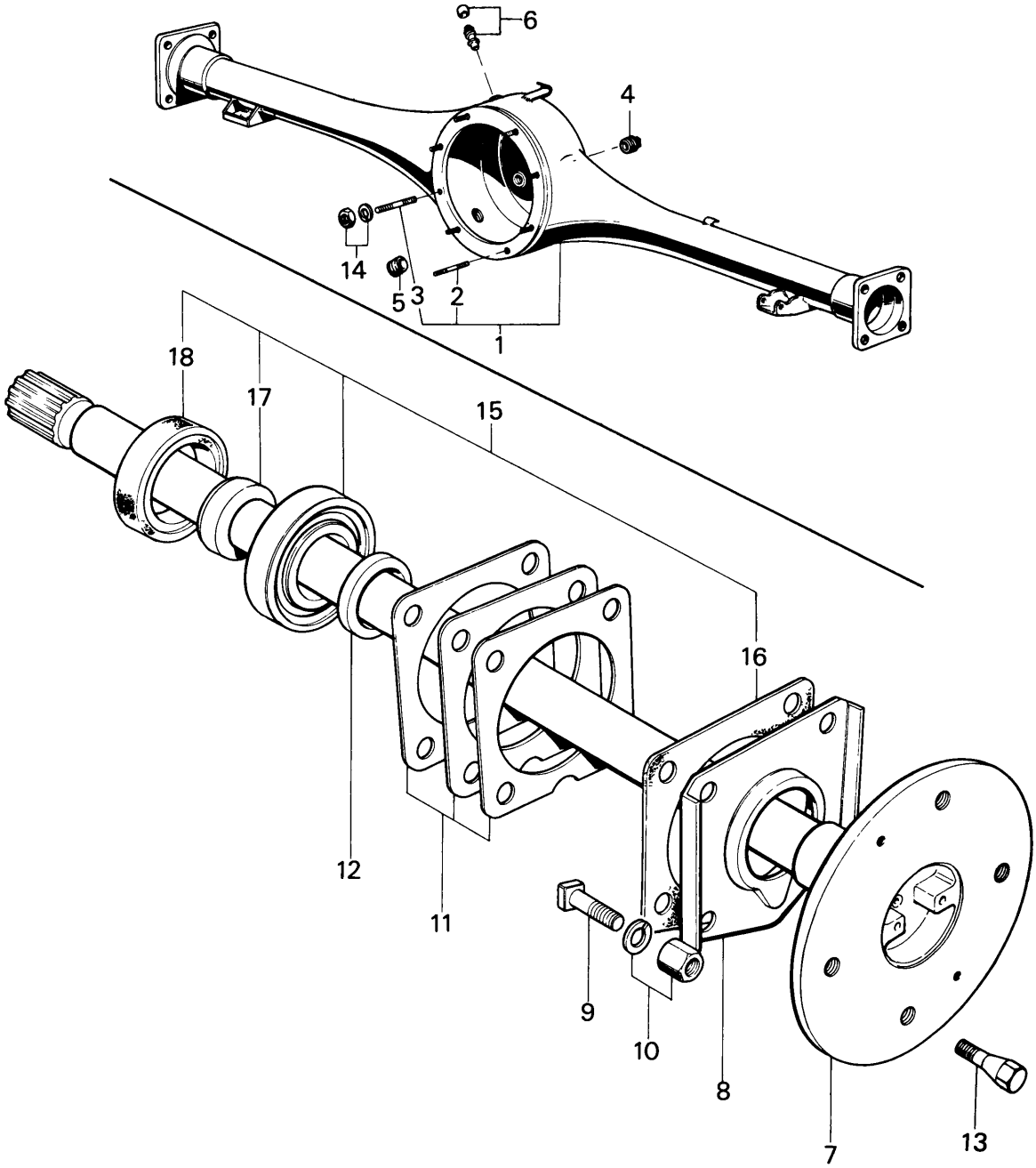
6
4
14
5
3
2
1
18
17
15
16
12
11
9
10
8
7
13

No.	Part Number	Description	Q'ty	Remarks
1	1881 26 010	Casing, Rear Axle (Sedan & Coupe)	1	
	1137 28 010	Casing, Rear Axle (Station Wagon)	1	
2	99789 0820F	Stud	7	
3	99789 0880F	Stud	1	
4	0259 26 041	Plug, Oil Level	1	
5	0259 26 051	Plug, Magnet Drain	1	
6	0866 26 060	Breather	1	
7	0870 26 111A	Shaft (R), Rear Axle	1	
	0870 26 115A	Shaft (L), Rear Axle	1	
8	0317 26 121	Retainer, Bearing	2	
9	0259 26 132	Bolt, Retainer	8	
10	99901 0800	Nut, Retainer	8	
	99971 0800	Washer, Spring	8	
11	0259 26 141	Shim, Adjust (t=0.1)	Selective use 4	
	0259 26 142	Shim, Adjust (t=0.4)		
12	0259 26 155	Spacer, Bearing	2	
13	0259 33 165	Bolt, Wheel Set (Wheel Cap use)	8	
	1029 33 165	Bolt, Wheel Set (Center Cap use)	8	
14	99901 0800	Nut, Differential Set	8	

No.	Part Number	Description	Q'ty	Remarks
	99971 0800	Washer, Spring	8	
15	0317 99 265 B	Bearing Set, Wheel	2	
16	0259 26 129	Gasket	2	
17	0259 26 152	Collar, Bearing	2	
18	0187 26 154	Oil Seal	2	

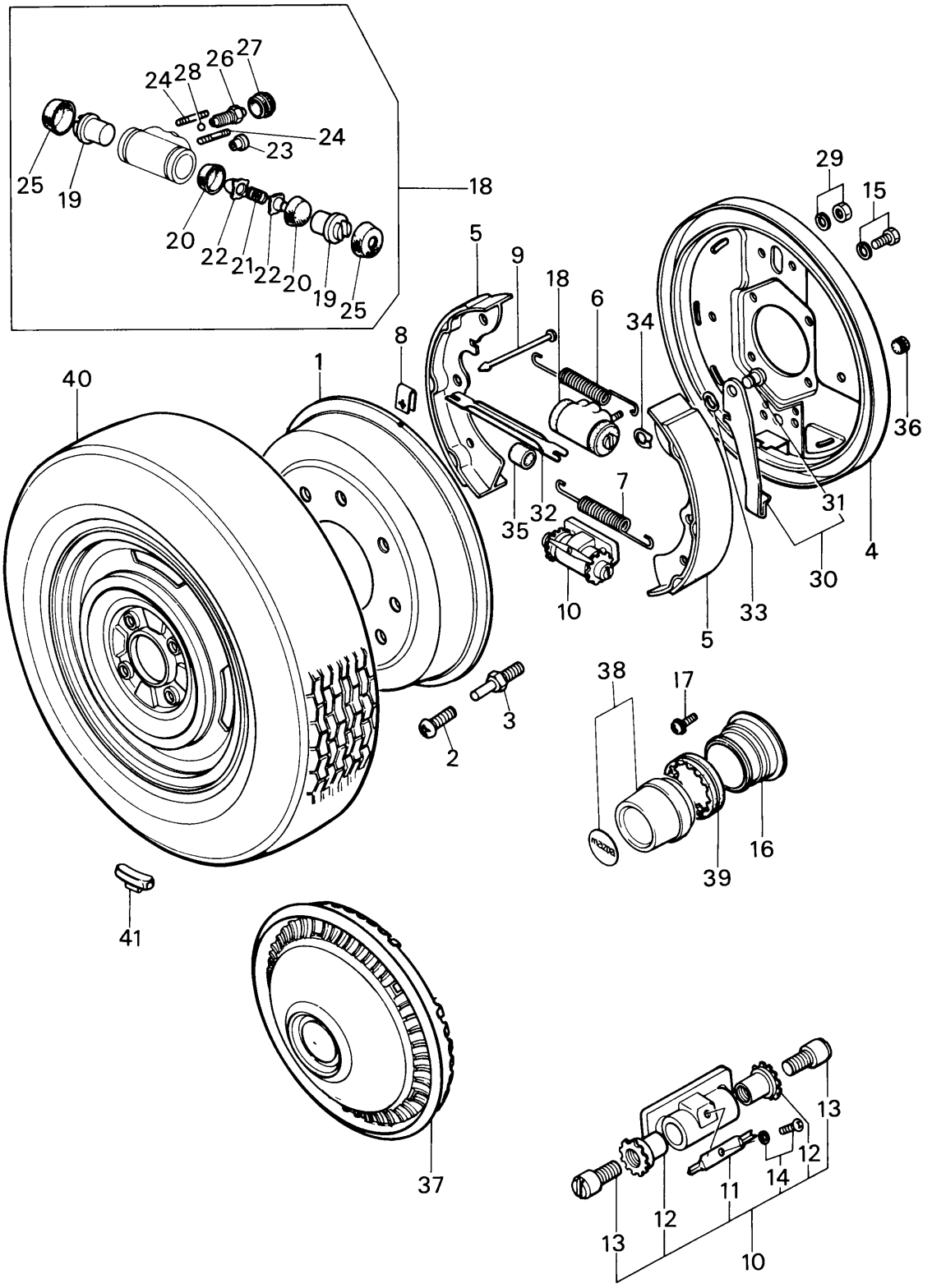
24
28
26
27
25
19
24
23
18
20
22
21
22
20
19
25
29
15
5
9
18
6
34
8
1
40
36
35
32
7
31
4
30
10
33
5
38
17
3
2
16
39
41
37
13
12
11
14
12
13
10

No.	Part Number	Description	Q'ty	Remarks
1	1504 26 251B	Drum, Rear Brake	2	
2	0305 26 255	Bolt, Wheel Cap use	4	
3	99833 0812	Screw, Center Cap use	4	
4	0866 26 280B	Plate (R), Brake Back	1	
	0866 26 290B	Plate (L), Brake Back	1	
5	0866 26 310A	Shoe, Brake	4	
6	0187 26 341	Spring, Return - Wheel Cylinder Side	2	
7	0118 26 342	Spring, Return - Anchor Block Side	2	
8	0110 26 345	Clip, Spring	4	
9	0187 33 391A	Pin, Shoe Hold Down	4	
10	0305 26 500A	Block, Anchor	2	
11	0710 26 352	Spring	2	
12	0710 26 461	Adjuster	4	
13	0305 26 465	Screw, Adjust	4	Ord. By 0305 26 500A
14	99833 0408	Screw	2	
	99971 0400	Washer, Spring	2	
15	99801 0814	Bolt, Anchor Block	4	
	99971 0800	Washer, Spring	4	

No.	Part Number	Description	Q'ty	Remarks
16	0820 26 570A	Adapter (Center Cap use)	2	
17	99833 0812	Screw, Adapter	4	
	99971 0800	Washer, Spring	4	
18	0233 26 610A	Cylinder, Wheel	2	
19	0221 26 651	Piston	4	Ord. By 0233 26 610A
20	0221 26 671	Cup, Piston	4	
21	0221 26 672	Spring	2	Ord. By 0233 26 610A
22	0221 26 673	Block, Filling	4	
23	0613 26 922	Seat, Tube	2	
24	99852 0612	Stud	4	
25	0613 33 681	Cover, Dust	4	
26	0259 33 691	Screw, Bleeder	2	
27	0259 33 693	Cap	2	
28	99611 1500	Ball, Steel	2	
29	99906 0600	Nut, Wheel Cylinder	4	
	99971 0600	Washer, Spring	4	
30	0305 26 800A	Lever (R), Operating	1	

No.	Part Number	Description	Q'ty	Remarks
	0305 26 810A	Lever (L), Operating	1	
31	0118 26 832	Pin	2	
32	0187 26 821	Strut (L), Operating	1	
	0187 26 921	Strut (R), Operating	1	
33	0118 26 834	Washer, Wave	2	
34	99575 0600	Ring, Retaining	2	
35	0118 26 897	Holder	2	
36	0710 33 288	Plug	4	
37	8038 37 170	Cap, Wheel	2	
38	8527 37 190	Cap, Center	2	
39	1011 37 192	Rubber, Set (Center Cap use)	2	
40	9962 16 1553	Tire, Radial Tubeless 155 SR 13 (BLK)	2	
	9963 60 4130	Valve, Air	2	
	9965 25 4530 00	Wheel, 4½–J×13WDC Disc (SIL M) (Wheel Cap use)	2	
	9965 29 4530 08	Wheel, 4½–J×13WDC Disc (SIL M) (Center Cap use)	2	
41	99655 30010	Weight, Balance (10g)		Selective use —
	99655 30015	Weight, Balance (15g)		
	99655 30020	Weight, Balance (20g)		
	99655 30025	Weight, Balance (25g)		

No.	Part Number	Description	Q'ty	Remarks
	99655 30030	Weight, Balance (30g)	Selective use —	
	99655 30035	Weight, Balance (35g)		
	99655 30040	Weight, Balance (40g)		
	99655 30045	Weight, Balance (45g)		
	99655 30050	Weight, Balance (50g)		
	99655 30060	Weight, Balance (60g)		

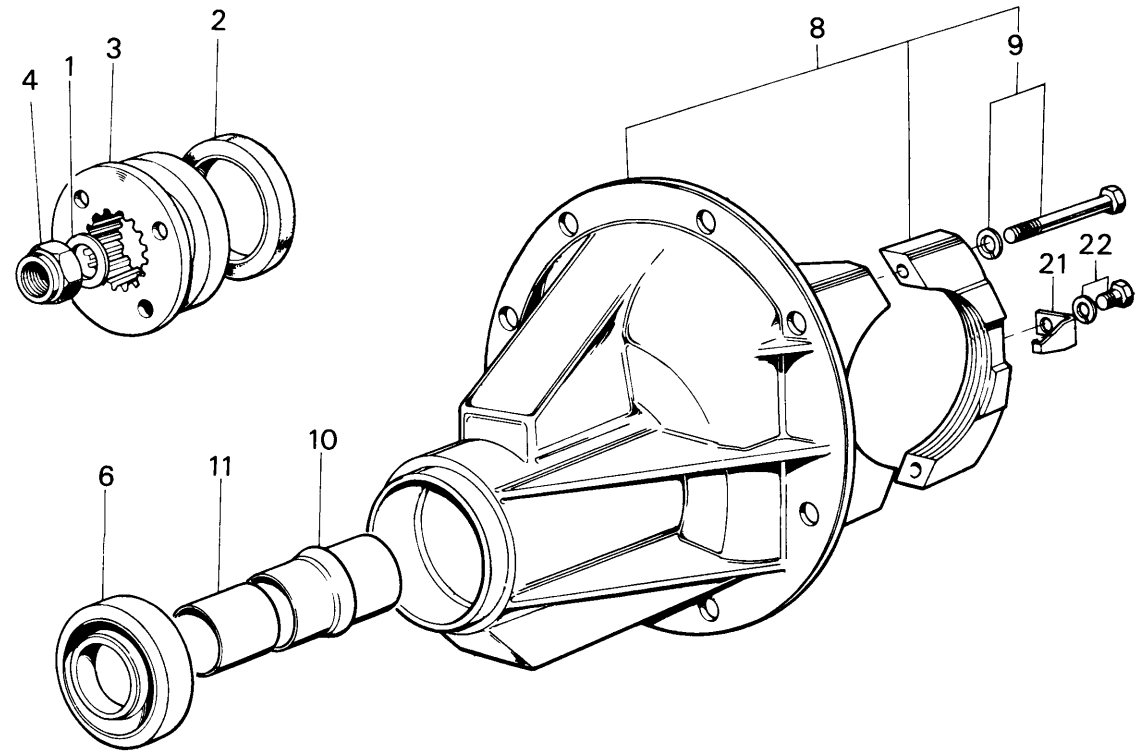
2
4
1
3
8
9
21
22
6
11
10

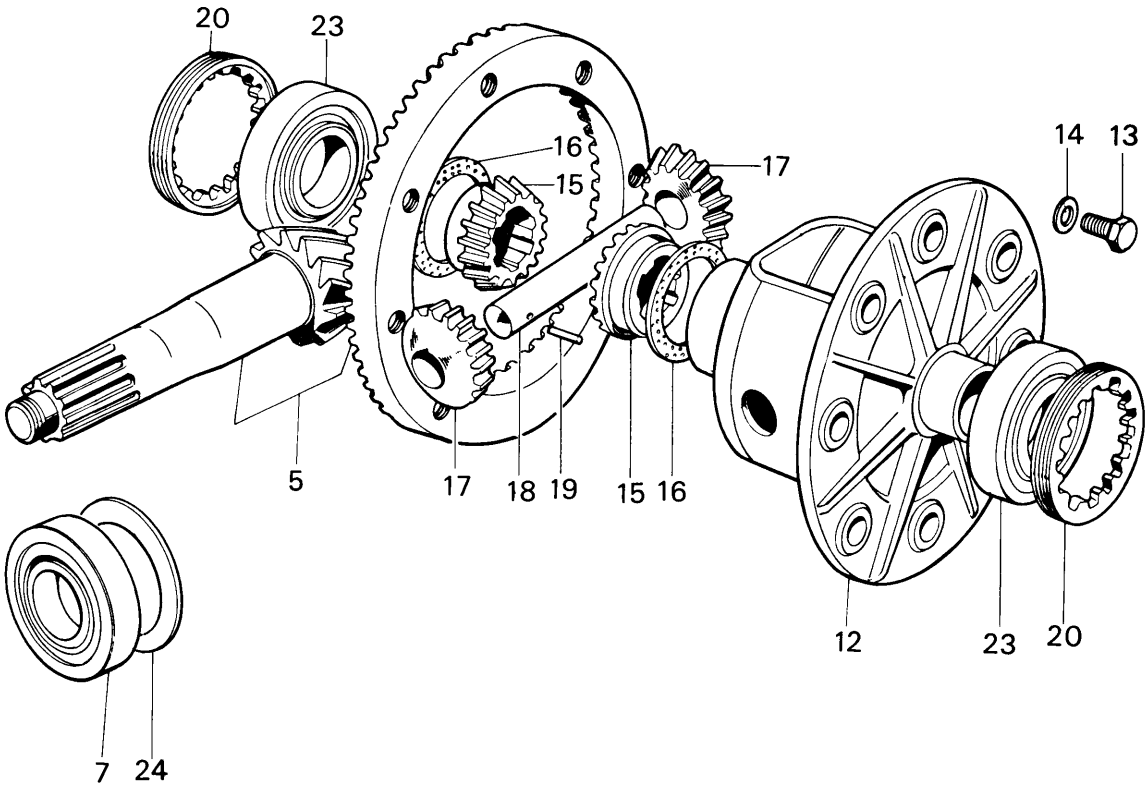
20
23
16
15
17
14
13
5
17
18
19
15
16
12
23
20
7
24

No.	Part Number	Description	Q'ty	Remarks
	3508 27 100	Driving & Differential	1	
1	0223 27 012	Washer, Drive Pinion	1	
2	2112 27 018	Oil Seal	1	
3	0223 27 020B	Flange, Companion	1	
4	0223 27 030	Nut, Lock	1	
5	1052 27 110A	Gear Set, Final	1	
6	0755 27 141	Bearing	1	
7	0221 27 141	Bearing	1	
8	0866 27 150	Carrier, Differential	1	
9	99811 1050	Bolt	4	
	99971 1000	Washer, Spring	4	
10	0305 27 171	Piece, Distance	1	
11	0866 27 172	Collar, Long	1	
12	0290 27 231B	Case, Differential Gear	1	
13	99754 21022	Bolt, Ring Gear	10	Selective use
	99754 61022	Bolt, Ring Gear	10	
14	99958 1018	Washer	2	
15	0820 27 251A	Gear, Differential Side	2	
16	0290 27 252	Washer, Thrust (t=1.6)	2	Selective use
	0290 27 253	Washer, Thrust (t=1.7)	2	

No.	Part Number	Description	Q'ty	Remarks
	0290 27 254	Washer, Thrust (t=1.8)		
17	0221 27 255	Pinion, Differential	2	
18	0305 27 261	Shaft, Pinion	1	
19	0114 27 262	Pin, Pinion Shaft	1	
20	0290 27 301	Screw, Adjust	2	
21	0290 27 302	Plate, Lock	2	
22	99796 8112	Bolt, Lock Plate	2	
23	0221 27 305 A	Bearing	2	
24	0223 27 401 A	Spacer (t=3.08)		
	0223 27 402 A	Spacer (t=3.11)		
	0223 27 403 A	Spacer (t=3.14)		
	0223 27 404 A	Spacer (t=3.17)		
	0223 27 405 A	Spacer (t=3.20)		
	0223 27 406 A	Spacer (t=3.23)		
	0223 27 407 A	Spacer (t=3.26)	Selective use	1
	0223 27 408 A	Spacer (t=3.29)		
	0223 27 409 A	Spacer (t=3.32)		
	0223 27 411 A	Spacer (t=3.35)		
	0223 27 412 A	Spacer (t=3.38)		
	0223 27 413 A	Spacer (t=3.41)		

No.	Part Number	Description	Q'ty	Remarks
	0223 27 414A	Spacer (t=3.44)		
	0223 27 415A	Spacer (t=3.47)		

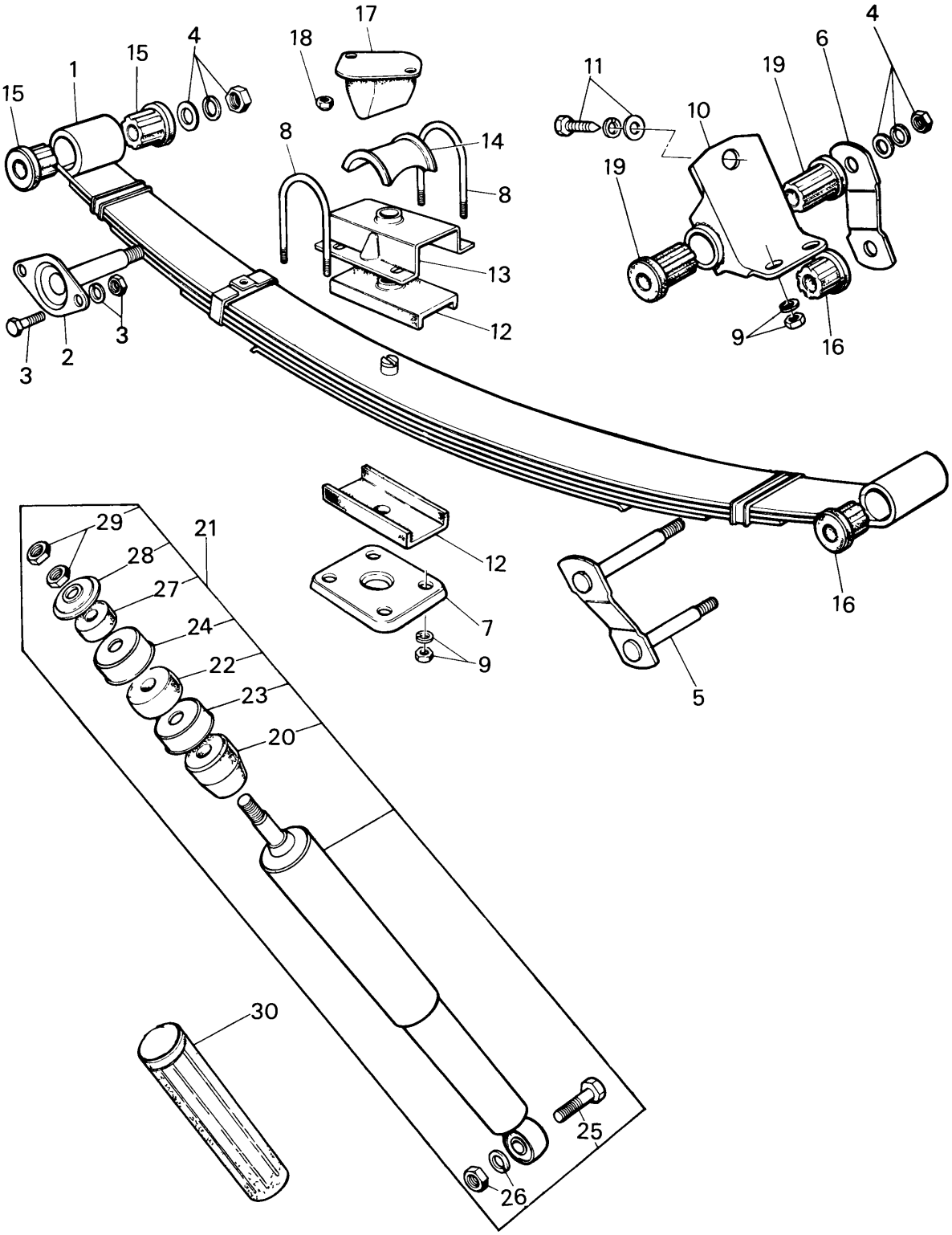
15
1
15
4
18
17
8
14
8
13
12
3
2
3
3
11
10
19
19
6
4
9
16
16
12
7
9
5
29
28
27
24
22
23
20
21
30
25
26

No.	Part Number	Description		Q'ty	Remarks
1	0866 28 010A	Spring, Rear	Coupe use	2	
	0866 28 011A	Spring No. 1, Leaf		2	
	0866 28 012A	Spring, No. 2, Leaf		2	
	0866 28 019	Interleaf		2	
	1881 28 010A	Spring, Rear	Sedan use	2	
	1881 28 011A	Spring, No. 1, Leaf		2	
	1881 28 012A	Spring No. 2, Leaf		2	
	0866 28 019	Interleaf		2	
2	1881 28 110	Pin, Spring		2	
3	99801 0822	Bolt, Spring Pin		4	
	99901 0800	Nut		4	
	99971 0800	Washer, Spring		4	
4	99901 0800	Nut		6	
	99971 0800	Washer, Spring		6	
5	0866 28 140B	Plate No. 1, Shackle		2	
6	0866 28 143	Plate No. 2, Shackle		2	
7	0866 28 151	Clamp, Spring		2	
8	0652 28 161	Bolt, Lock		4	

No.	Part Number	Description	Q'ty	Remarks
9	99921 1000	Nut	12	
	99971 1000	Washer, Spring	12	
10	0866 28 180A	Bracket, Shackle	2	
11	99783 1028	Bolt, Shackle Bracket	2	
	99952 1000	Washer, Plain	2	
	99971 1000	Washer, Spring	2	
12	0259 28 182	Pad, Rubber	4	
13	0866 28 183A	Holder, Rubber Pad	2	
14	0866 28 322	Seat, Lock Bolt	2	
15	0866 28 333C	Bush (Frt.)	4	
16	0866 28 343B	Bush No. 1 (Rr.)	4	
17	0866 28 350	Rubber, Stopper	1	
18	99940 0800	Nut, Stopper Rubber	2	
19	0866 28 353B	Bush No. 2 (Rr.)	4	
20	0866 28 591	Bumper, Bound	2	
21	0866 99 281C	Damper Set (Fig. No. 20,22～29 Included)	2	
22	0866 28 774	Bush, Rubber	2	
23	0866 28 778A	Casing, Stopper	2	
24	0866 28 779	Holder	2	

No.	Part Number	Description	Q'ty	Remarks
25	0866 28 799	Bolt, Rear Damper	2	
26	99921 1200	Nut, Rear Damper	2	
	99971 1200	Washer, Spring	2	
27	0603 34 153	Bush, Rubber	2	
28	0187 34 776	Retainer	2	
29	99921 1000	Nut, Rear Damper	2	
	99922 1000	Nut	2	
30	0866 28 747	Cover, Dust	2	

REAR SUSPENSION (STATION WAGON)

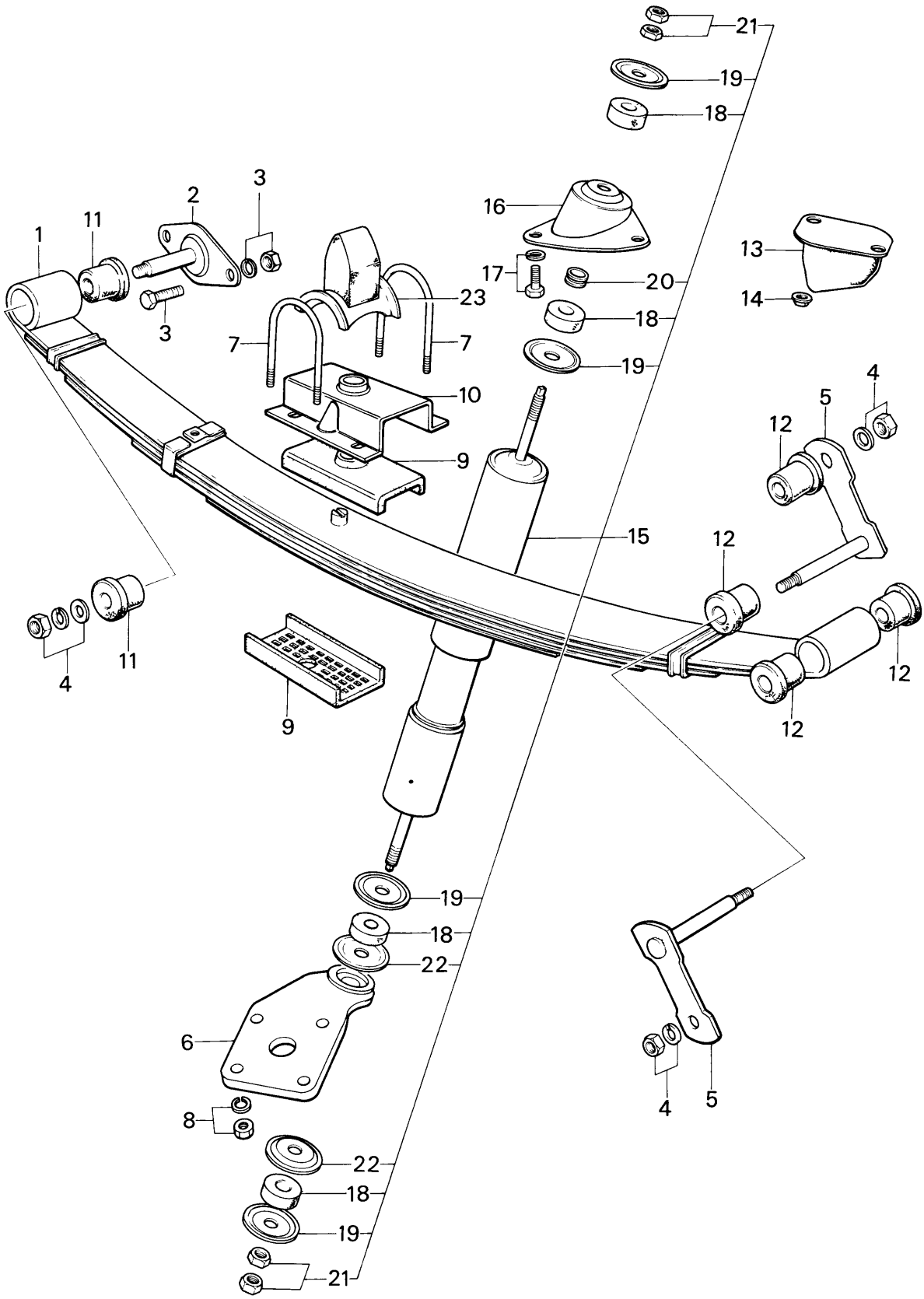

No.	Part Number	Description	Q'ty	Remarks
1	1889 28 010A	Spring, Rear	2	
	1889 28 011	Spring No. 1, Leaf	2	
	1889 28 012	Spring No. 2, Leaf	2	
	1889 28 013	Spring No. 3, Leaf	2	
	1889 28 014	Spring No. 4, Leaf	2	
	1889 28 019	Leaf, Inter	2	
2	0259 28 110	Pin, Spring	2	
3	99801 0822	Bolt	4	
	99901 0800	Nut	4	
	99971 0800	Washer, Spring	4	
4	99921 1000	Nut	6	
	99952 1000	Washer, Plain	2	
	99971 1000	Washer, Spring	6	
5	0899 28 140	Plate No. 1, Shackle	4	
6	0899 28 150A	Clamp (R), Spring	1	
	0899 28 170A	Clamp (L), Spring	1	
7	0652 28 161	Bolt, Lock	4	
8	99921 1000	Nut, Lock Bolt	8	
	99971 1000	Washer, Spring	8	

REAR SUSPENSION (STATION WAGON)

No.	Part Number	Description	Q'ty	Remarks
9	1889 28 182	Pad, Rubber	4	
10	0652 28 183	Holder, Rubber Pad	2	
11	0483 28 333	Bush (Frt.)	4	
12	0443 28 343	Bush (Rr.)	8	
13	0866 28 350	Rubber, Stopper	1	
14	99940 0800	Nut	2	
15	0585 99 281B	Damper Set, Rear (Fig. No. 18~22 Included)	2	
16	0585 28 180A	Bracket (R), Damper	1	
	0585 28 190A	Bracket (L), Damper	1	
17	99785 0825	Bolt, Damper Bracket	6	
	99971 0800	Washer, Spring	6	
18	0223 28 775	Bush, Rubber	8	
19	0223 28 776	Retainer	8	
20	0259 28 778	Grommet	2	
21	99921 1000	Nut, Rear Damper	4	
	99922 1000	Nut	4	
22	0223 28 777	Washer, Centering	4	
23	0899 28 320	Bumper, Bound	2	

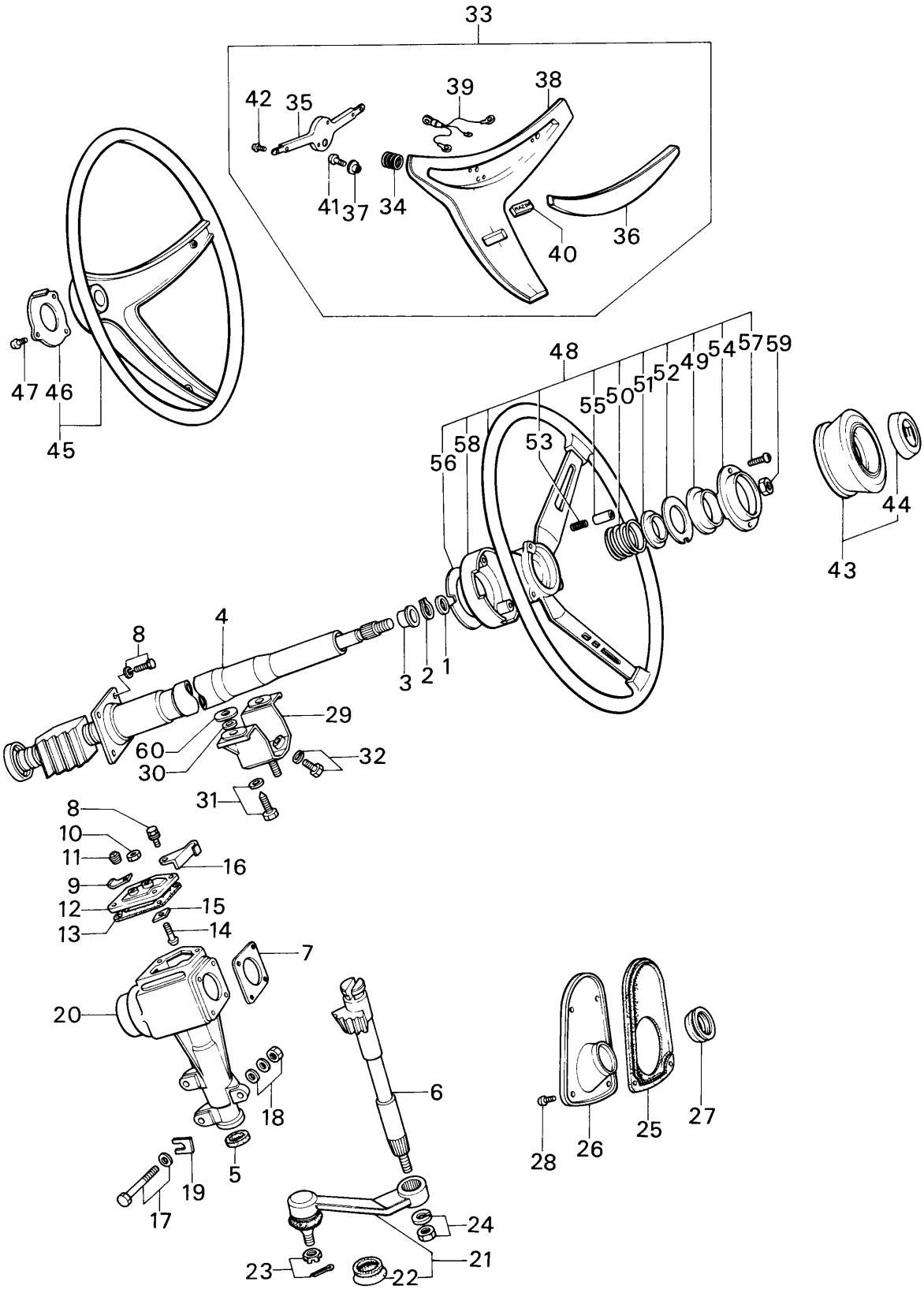
33
42
35
39
38
41
37
34
40
36
47
46
45
48
55
50
51
52
49
54
57
59
56
58
53
44
43
8
4
3
2
1
29
60
30
32
31
8
10
11
16
9
12
15
13
14
7
20
18
5
19
17
6
24
21
23
22
28
26
25
27

No.	Part Number	Description	Q'ty	Remarks
1	0820 32 058A	Washer, Energy Absorbing Shaft	2	
2	0208 32 059	Ring, Snap-Shaft	1	
3	0259 32 071	Bush, Support	1	
4	1632 32 100A	Shaft, Energy Absorbing	1	
5	1097 32 129	Oil Seal, Sector	1	
6	8038 32 141	Shaft, Sector	1	
7	0259 32 154	Shim, End Cover (t=0.05)		
	0259 32 155	Shim, End Cover (t=0.075)	Selective use 1	
	0259 32 156	Shim, End Cover (t=0.1)		
	0259 32 157	Shim, End Cover (t=0.2)		
8	99801 0816	Bolt, Cover	8	
	99971 0800	Washer, Spring	8	
9	99295 1508	Clip	1	
10	99922 1000	Nut, Sector Adjust Screw	1	
11	99502 2000	Plug, Oil	1	
12	0259 32 160	Cover, Side	1	
13	0259 32 163	Gasket, Side Cover	1	
14	0180 32 165A	Screw, Sector Adjust	1	
15	0180 32 171A	Shim, Adjust (t=1.95)		
	0180 32 172A	Shim, Adjust (t=2.00)	Selective use 1	

No.	Part Number	Description	Q'ty	Remarks
	0180 32 173A	Shim, Adjust (t=2.05)		
	0180 32 174A	Shim, Adjust (t=2.10)		
16	0259 55 556	Clip	1	
17	99781 1085	Bolt, Gear Housing	3	
	0305 32 119	Washer, Plain	3	
18	99921 1000	Nut, Gear Housing	3	
	99951 1022	Washer, Plain	2	
	99971 1000	Washer, Spring	3	
19	0208 32 188	Shim, Adjust-Steering Gear Housing	2	
20	3725 32 121	Housing, Steering Gear	1	
21	3725 32 220	Arm, Pitman	1	
22	3527 32 279	Seal, Dust	1	
23	99924 1000	Nut, Pitman Arm & Center Link	1	
	99221 2015	Pin, Split	1	
24	99921 1800	Nut, Pitman Arm & Sector Shaft	1	
	99971 1800	Washer, Spring	1	
25	1632 32 411	Cover, Dust	1	
26	1632 32 412	Plate, Set	1	

No.	Part Number	Description		Q'ty	Remarks
27	1097 32 413	Cover, Dust		1	
28	99735 0512	Screw, Set Plate		4	
29	1632 32 420	Bracket, Fixing-Shaft Jacket		1	
30	99952 0800	Washer, Plain-Selective use		2	
31	99799 0832	Bolt, Fixing Bracket		2	
	99951 0822	Washer, Plain		2	
32	99801 0810	Bolt, Fixing Bracket		4	
	99971 0800	Washer, Spring		4	
33	8028 32 800	Cap, Horn		1	
34	8028 32 014	Spring		3	
35	8028 32 015	Plate, Contact		1	
36	8028 32 020	Pad		1	
37	8028 32 029	Bush	(Sedan & Station Wagon)	1	
38	8028 32 030	Retainer		1	
39	8028 32 037	Cord		1	
40	8028 32 811	Emblem		1	
41	99835 0316	Screw		3	
42	99863 0310	Screw		4	

No.	Part Number	Description		Q'ty	Remarks
43	3608 32 800A	Cap, Horn	(Coupe)	1	
44	8033 32 811	Emblem	(Coupe)	1	
45	8028 32 980	Boss, Steering Wheel	(Sedan & Station Wagon)	1	
46	1003 32 018	Terminal	(Sedan & Station Wagon)	1	
47	99865 0416	Screw, Steering Wheel Boss	(Sedan & Station Wagon)	3	
48	0866 32 980	Boss, Steering Wheel		1	
49	0329 32 013A	Retainer, Cap		1	
50	0866 32 014	Spring		1	
51	0329 32 015	Insulator		1	
52	0329 32 016	Plate, Contact		1	
53	0866 32 019	Spring	(Coupe)	1	
54	0866 32 031	Retainer	(Coupe)	1	
55	0866 32 033	Pipe	(Coupe)	1	
56	0866 32 018	Terminal	(Coupe)	1	
57	99868 0312	Screw	(Coupe)	3	
	99971 0300	Washer, Spring	(Coupe)	3	
58	0866 32 049 00	Cover, Wheel Core	(BLK)	1	

No.	Part Number	Description	Q'ty	Remarks
59	99948 1200	Nut, Wheel & Shaft	1	
60	0259 43 088	Sheet, Fixing Bracket	2	

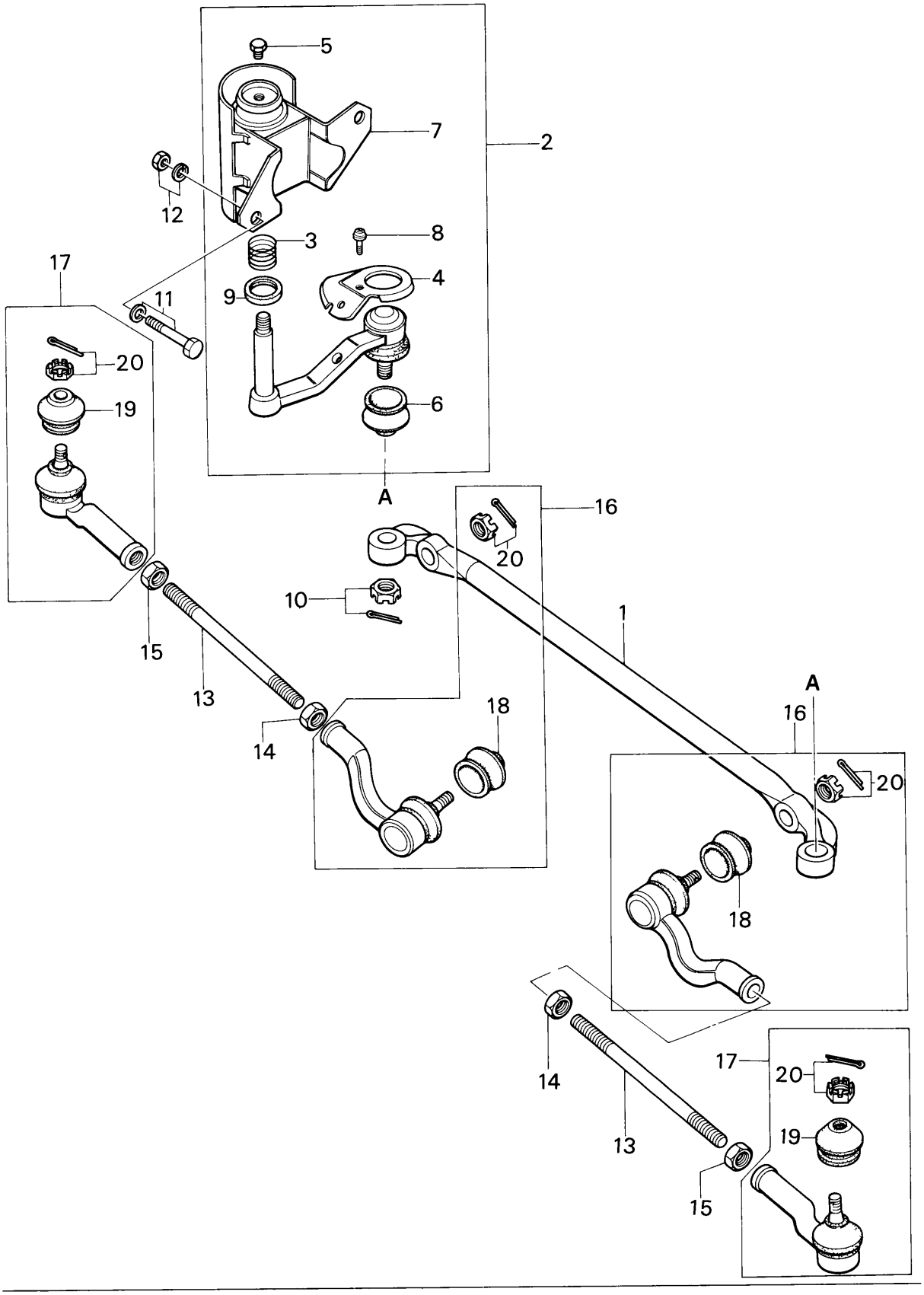
5
7
2
12
3
8
17
11
9
4
20
19
6
A
16
20
10
1
15
13
14
18
A
16
20
18
14
17
20
19
13
15

No.	Part Number	Description	Q'ty	Remarks
1	3525 32 261	Link, Center	1	
2	1562 32 320G	Idle	1	
3	0111 32 173	Spring	1	
4	1128 32 227E	Insulator	1	
5	0208 32 278	Plug	1	
6	0866 32 279	Seal, Dust	1	
7	1562 32 330G	Bracket	1	
8	99833 0408	Screw	2	
	99971 0400	Washer, Spring	2	
9	2113 32 356	Oil Seal	1	
10	99924 1201	Nut, Idle & Center Link	1	
	99221 3020	Pin, Split	1	
11	99781 1080	Bolt, Idler	2	
	0305 32 119	Washer, Plain	4	
12	99921 1000	Nut	2	
	99971 1000	Washer, Spring	2	
13	0305 32 365	Rod, Tie	2	
14	99922 1400	Nut, Tie Rod	2	

STEERING SYSTEM (ROD)

No.	Part Number	Description	Q'ty	Remarks
15	99944 1400	Nut, Tie Rod	2	
16	1175 99 322	Socket Set, Inner	2	
17	1175 99 324	Socket Set, Outer	2	
18	1175 32 279	Seal, Dust - Inner	2	
19	3527 32 279	Seal, Dust - Outer	2	
20	99924 1201	Nut	4	
	99221 3020	Pin, Split	4	

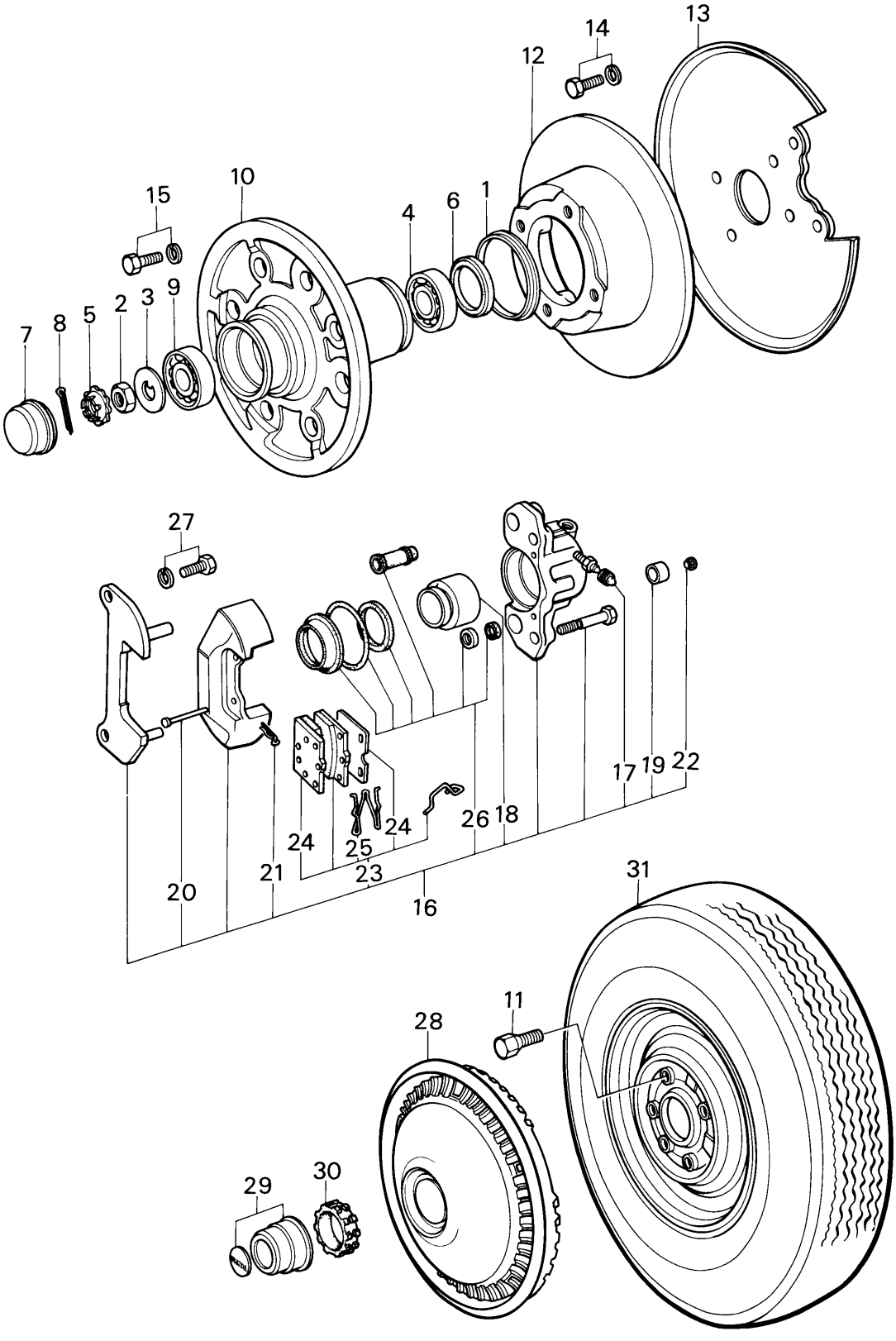
13
14
12
10
15
4
6
1
9
3
2
5
8
7
27
17
19
22
24
25
24
26
18
21
23
20
16
31
11
28
29
30

No.	Part Number	Description	Q'ty	Remarks
1	0221 33 035	Ring, Dust	2	
2	0662 33 042	Nut	2	
3	1011 33 043	Washer	2	
4	0259 33 047	Bearing, Wheel Inner	2	
5	0317 33 049	Cover, Set	2	
6	0398 33 065	Oil Seal	2	
7	0259 33 071	Cap, Hub	2	
8	99221 4030	Pin, Split	2	
9	0317 33 075	Bearing, Wheel Outer	2	
10	0820 33 091 B	Hub, Front	2	
11	0259 33 165	Bolt, Wheel Set (Wheel Cap use)	8	
	1029 33 165	Bolt, Wheel Set (Center Cap use)	8	
12	0866 33 251 A	Plate, Disc	2	
13	0866 33 260 A	Adapter (R), Mounting	1	
	0866 33 270 A	Adapter (L), Mounting	1	
14	99811 1020	Bolt, Mounting Adapter	8	
	99971 1000	Washer, Spring	8	
15	0221 33 698	Bolt, Hub	8	
	99971 1000	Washer, Spring	8	

No.	Part Number	Description	Q'ty	Remarks
16	0870 33 980C	Brake (R), Disc	1	
	0870 33 990C	Brake (L), Disc	1	
17	0820 33 693	Cap, Bleeder	2	
18	0866 49 111	Piston	2	
19	0866 49 112	Cup, Piston	2	
20	0866 49 114	Pin	4	
21	0866 49 115	Clip	4	
22	0866 49 117	Plug, Cup	2	
23	0870 49 230D	Pad, Set	1	
24	0870 49 231	Shim	4	
25	0866 49 235	Spring	2	
26	0866 49 240	Seal Kit	1	
27	99750 11018	Bolt, Disc Brake	4	
	99971 1000	Washer, Spring	4	
28	8038 37 170	Cap, Wheel (Wheel Cap use)	2	
29	8527 37 190	Cap, Center (Center Cap use)	2	
30	1011 37 192	Rubber, Set (Center Cap use)	2	
31	9962 16 1553	Tire, 155 SR—13 Radial (Tubeless)	3	
	9963 60 4130	Valve, Air	3	
	9965 25 4530 00	Wheel, 4 ½—JX13WDC Disc (SILV M)(Wheel Cap use)	3	
	9965 29 4530 08	Wheel, 4 ½—JX13WDC Disc (SILV.M) (Center Cap use)	3	

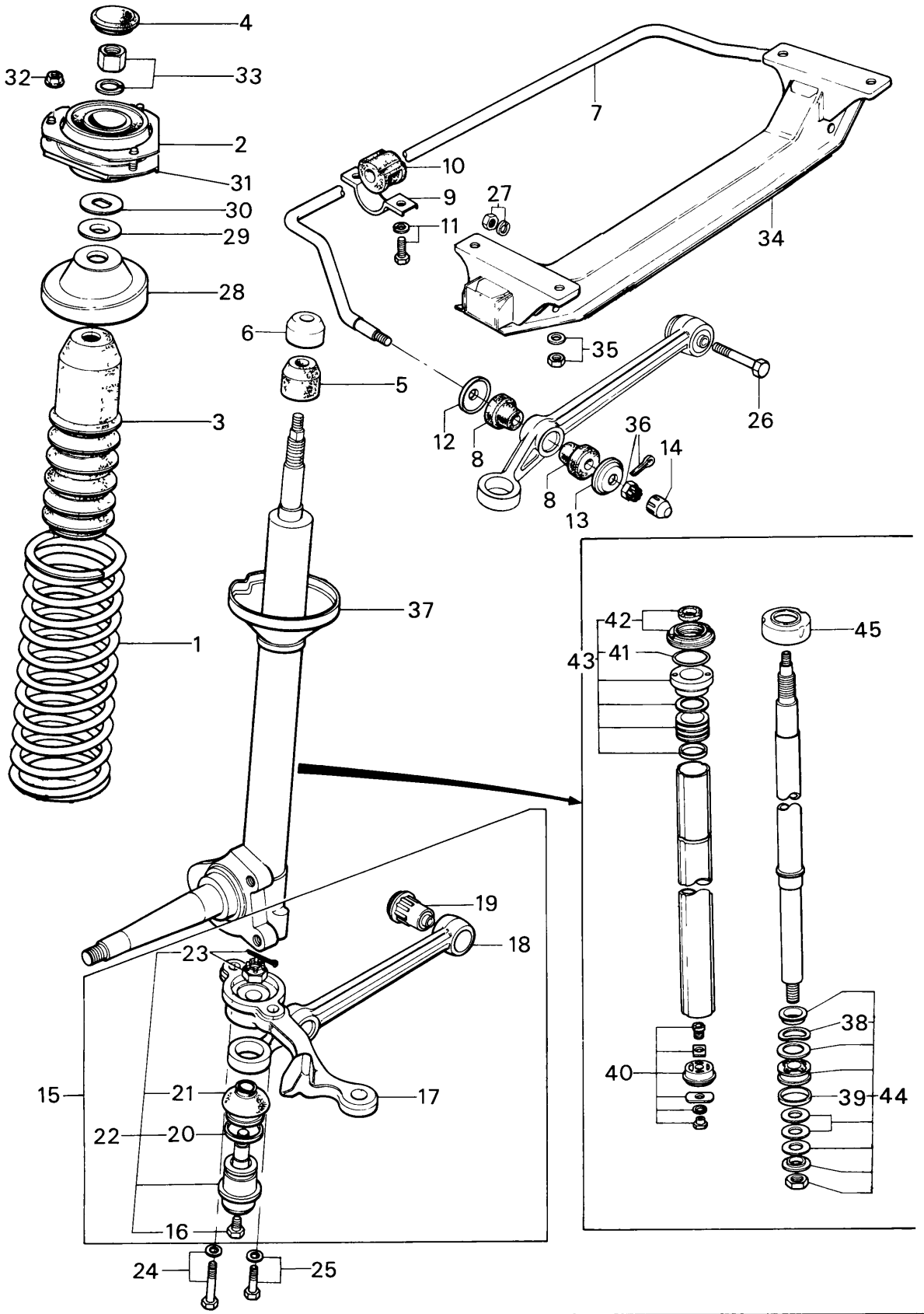
4
32
33
2
31
30
29
28
6
5
3
1
37
7
10
9
27
11
34
35
26
12
8
36
14
8
13
42
41
43
45
38
40
39
44
19
18
23
15
21
17
22
20
16
24
25

No.	Part Number	Description	Q'ty	Remarks
1	1881 34 011A	Spring, Coil	2	
2	0866 34 013A	Plate, Adjusting	2	
3	0866 34 015	Cover, Dust	2	
4	1011 34 019	Cap	2	
5	0866 34 111	Bumper, Bound	2	
6	1881 34 112	Seat, Bumper	2	
7	0866 34 151C	Stabilizer	1	
8	1757 34 153	Bush, Rubber - Stabilizer	4	
9	0259 34 155	Plate	2	
10	1881 34 156	Bush, Rubber	2	
11	99783 1035	Bolt, Stabilizer & Frame	4	
	99971 1000	Washer, Spring	4	
12	0866 34 157	Washer, Stabilizer	2	
13	0866 34 158	Washer	2	
14	1011 34 159A	Stopper	2	
15	0866 34 310C	Arm (R)	1	
	0866 34 320C	Arm (L)	1	
16	0208 32 278	Plug	2	
17	1273 32 301A	Arm (R), Knuckle	1	

No.	Part Number	Description	Q'ty	Remarks
	1273 32 311 A	Arm (L), Knuckle	1	
18	1011 34 311	Arm	2	
19	0866 34 460	Bush	2	
20	0187 34 536	Ring, Dust Seal	2	
21	0866 34 565	Seal, Dust	2	
22	0866 99 356 A	Joint, Ball	2	
23	99221 3020	Pin, Split	2	
	99924 1200	Nut	2	
24	99781 1225	Bolt, Arm & Damper	2	
	99971 1200	Washer, Spring	2	
25	99781 1235	Bolt, Arm & Damper	2	
	99971 1200	Washer, Spring	2	
26	0866 34 313 A	Bolt, Arm & Cross Member	2	
27	99921 1000	Nut, Arm	2	
	99971 1000	Washer, Spring	2	
28	0866 34 340	Seal, Spring	2	
29	0866 34 381	Bearing	2	
30	0866 34 382	Seal, Bearing	2	
31	0866 34 390 A	Rubber, Mounting	2	

No.	Part Number	Description	Q'ty	Remarks
32	99940 0802	Nut, Flange	6	
33	99942 1400	Nut	2	
	99951 1430	Washer, Plain	2	
34	0866 34 800B	Member, Cross	1	
35	99942 1000	Nut, Cross Member & Frame	4	
	99951 1030	Washer, Plain	4	
36	99923 1400	Nut	2	
	99221 3035	Pin, Split	2	
37	0866 34 910E	Damper (R), Front	1	
	0866 34 960E	Damper (L), Front	1	
38	0305 34 707	Spring, Check Valve	2	
39	0259 34 719A	Ring, Piston	2	
40	0305 34 720	Valve, Base	2	
41	0866 34 730	Guide, Piston Rod	2	
42	0866 34 735A	Oil Seal	2	
	0866 34 760	Oil Seal	2	
43	0259 99 361	Seal Set	2	
44	0317 99 362A	Piston Set	2	
45	0866 34 738A	Cap	2	

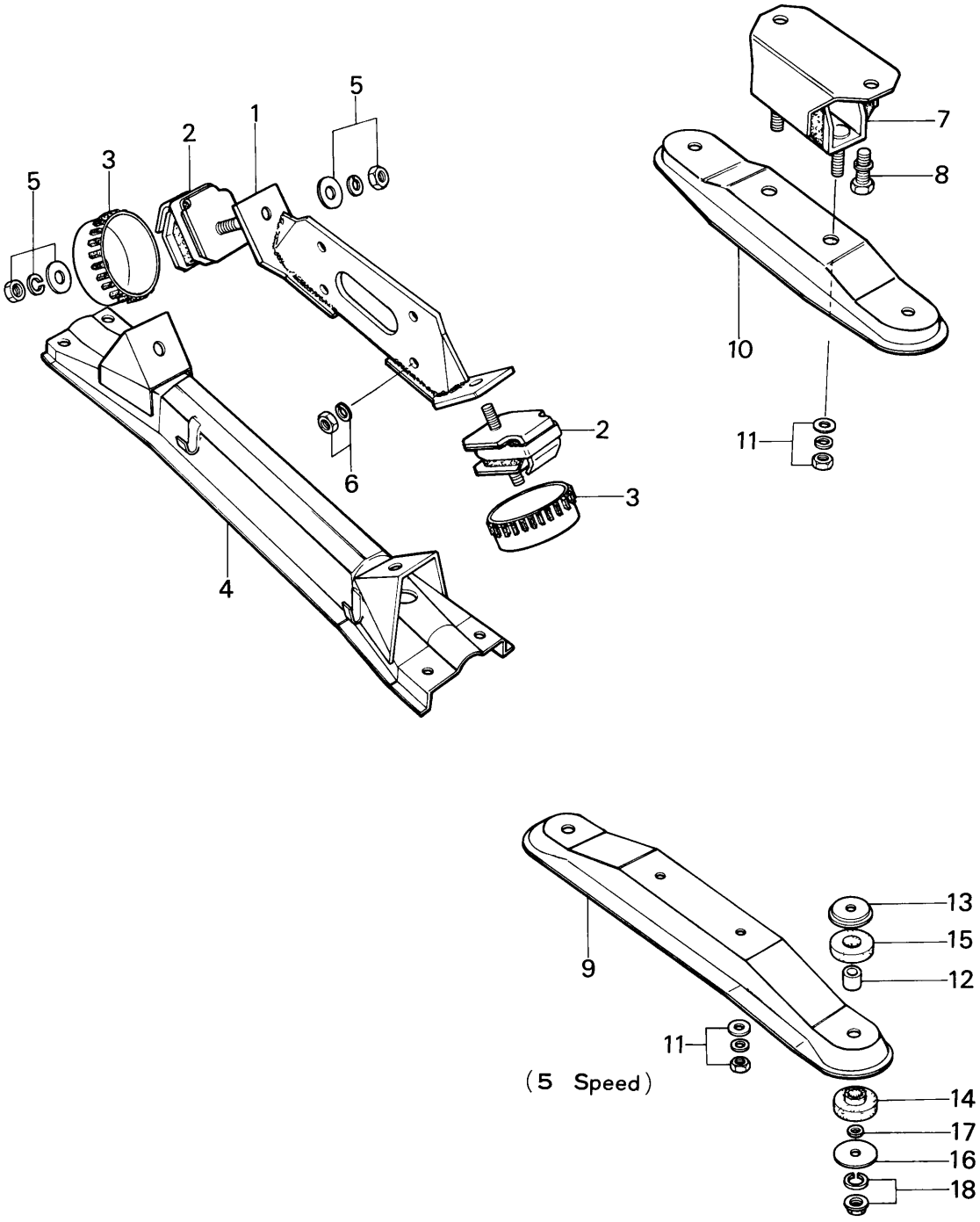
5
1
2
3
5
6
2
3
4
7
8
10
11
9
13
15
12
11
(5 Speed)
14
17
16
18

No.	Part Number	Description	Q'ty	Remarks
1	1622 39 020	Bracket, Engine Mounting	1	
2	1175 39 040A	Rubber, Engine Mounting	2	
3	1668 39 045A	Casing, Stopper	2	
4	0866 39 060B	Member, Engine Mounting	1	
5	99921 1000	Nut, Member+Mounting Rubber	4	
	99951 1030	Washer, Plain	4	
	99971 1000	Washer, Spring	4	
6	99921 1000	Nut, Bracket+Engine	4	
	99971 1000	Washer, Spring	4	
7	0259 39 340	Rubber, T/mission Mounting	1	
8	99801 0820	Bolt, Rubber+T/mission	2	
	99971 0800	Washer, Spring	2	
9	1608 39 381	Member, T/mission Mount (5 Speed)	1	
10	3743 39 381	Member, T/mission Mount (4 Speed)	1	
	3744 39 381	Member, T/mission Mount (Automatic)	1	
11	99921 1000	Nut, Member+Rubber	4	
	99951 1030	Washer, Plain	4	
	99971 1000	Washer, Spring	4	
12	0884 39 382A	Spacer	2	
13	0884 39 383A	Washer	2	

No.	Part Number	Description		Q'ty	Remarks
14	0884 39 384	Insulator, Lower		2	
15	0884 39 385A	Insulator, Upper	(5 Speed)	2	
16	0884 39 386	Washer		2	
17	0884 39 387	Washer		2	
18	99921 1000	Nut		4	
	99971 1000	Washer, Spring		4	

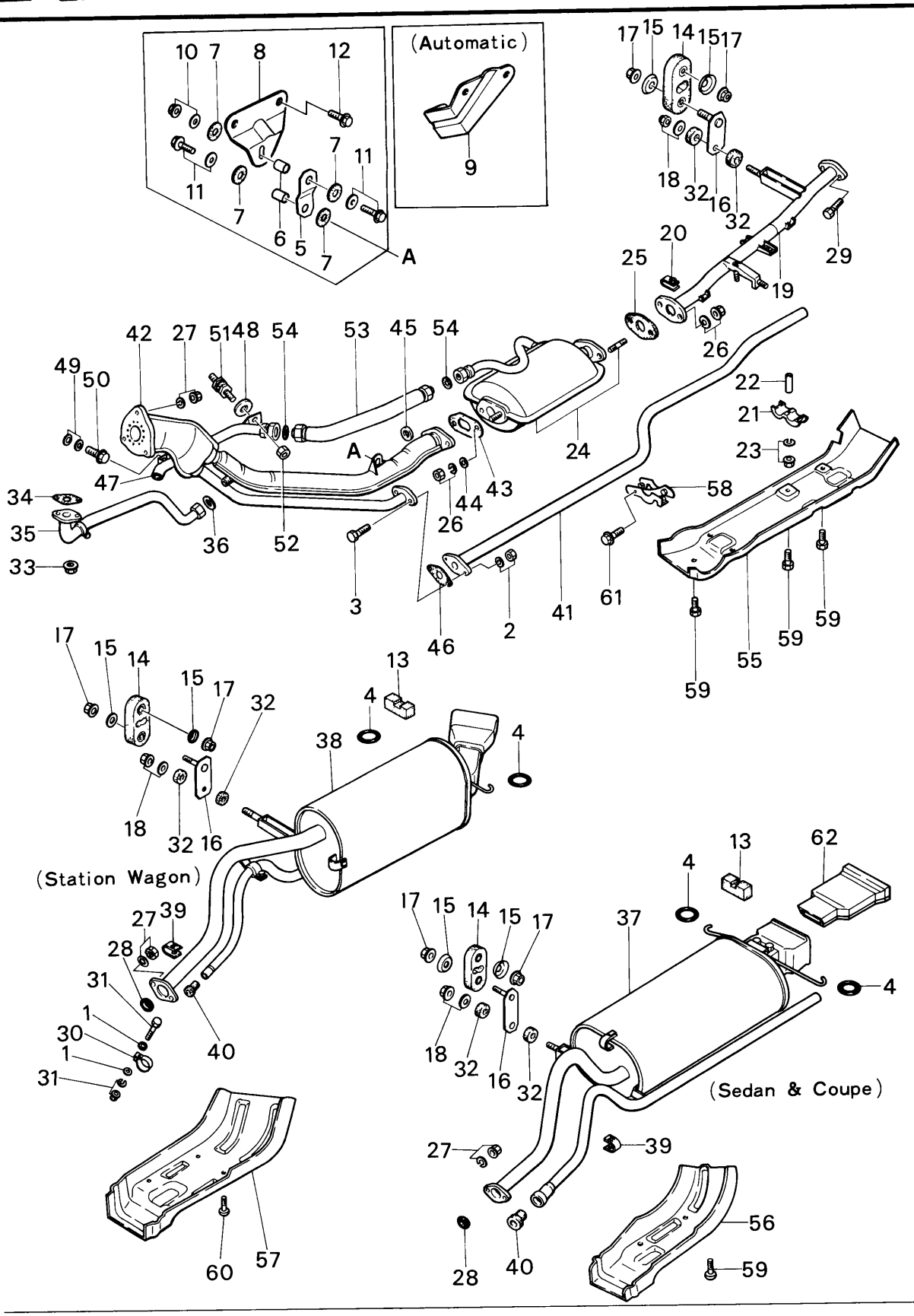
(Automatic)
(Station Wagon)
(Sedan & Coupe)

No.	Part Number	Description	Q'ty	Remarks
1	0208 13 458	Clamp, Joint (Station Wagon)	2	
2	0305 13 461	Nut, Air Pipe	2	
	99971 0800	Washer, Spring	2	
3	99801 0825	Bolt, Air Pipe	2	
4	1114 40 061	Hanger, Silencer - Main Silencer	2	
5	1259 40 071A	Plate, Air Duct (Automatic)	1	
	3743 40 071	Plate, Air Duct (Manual)	1	
6	1259 40 073	Spacer, Plate	2	
7	1259 40 075	Insulator, Plate	4	
8	3743 40 081B	Bracket, Plate - Air Duct (Manual)	1	
9	3744 40 081	Bracket, Plate - Air Duct (Automatic)	1	
10	99940 1000	Nut, Bracket	1	
	99952 1030	Washer, Plain	1	
11	99796 1030	Bolt, Bracket + Plate	2	
	99952 1030	Washer, Plain	2	
12	99801 0816	Bolt, Bracket	2	
	99971 0800	Washer, Spring	2	
13	1114 40 108B	Rubber, Stop - Main Silencer	1	
14	1114 40 160	Hanger, Silencer	3	
15	0820 40 166	Washer, Silencer Hanger	6	

No.	Part Number	Description	Q'ty	Remarks
16	1114 40 170	Plate, Hanger	3	
17	99940 0800	Nut, Silencer Hanger	6	
18	99949 0800	Nut, Silencer Hanger	3	
	99951 0800	Washer, Plain	3	
19	3743 40 200	Pipe, EX.	1	
20	99895 0600	Nut, Clip-Protector	2	
21	2090 40 307	Clamp, EX. Pipe+Air Pipe	1	
22	1128 40 308A	Pipe, Clamp	1	
23	99906 0600	Nut, Clamp	1	
	99971 0600	Washer, Spring	1	
24	3648 40 320A	Body, Heat EX.	1	
25	1259 40 325A	Gasket, Heat EX. Body (Rr.)	1	
26	1259 40 355	Nut, Heat EX. Body+Pipe	4	
	99971 1200	Washer, Spring	4	
27	2158 40 355	Nut, EX. Pipe & Main Silencer	5	
	99971 1000	Washer, Spring	5	
28	1757 40 356	Gasket, EX. Pipe+Main Silencer	1	
29	99801 1045	Bolt, EX. Pipe+Main Silencer	2	
30	0136 40 357	Joint, EX. Pipe+Main Silencer (Station Wagon)	1	
31	99801 0830	Bolt, Joint (Station Wagon)	1	

No.	Part Number	Description	Q'ty	Remarks
	99901 0800	Nut, Joint (Station Wagon)	1	
	99971 0800	Washer, Spring (Station Wagon)	1	
32	0824 40 401	Insulator, Silencer Hanger	1	
33	8501 40 425	Nut, Air Out Pipe	2	
34	8501 40 429	Gasket, Air Out Pipe	1	
35	3743 40 430	Pipe, Air Out	1	
36	3743 40 436A	Packing, Air Out Pipe	1	
37	3743 40 500	Silencer, Main (Sedan & Coupe)	1	
38	3747 40 500	Silencer, Main (Wagon)	1	
39	99895 0600	Nut, Clip-Protector	2	
40	2090 40 508A	Joint, Rubber-Air Pipe	1	
41	3743 40 610A	Pipe, Air	1	
42	3743 40 620E	Duct, Air	1	
43	1259 40 668A	Gasket, Air Duct+Heat EX. Body	1	
44	1259 40 669B	Insulator, Air Duct+Heat EX. Body	1	
45	99952 1200	Washer, Plain-Air Duct+Heat EX. Body	1	
46	1259 40 698	Gasket, Air Pipe	1	
47	3743 40 720B	Pipe, Air IN.	1	
48	3648 40 724	Stopper, Air IN. Pipe	1	
49	3648 40 726	Spacer, Air IN. Pipe	2	

No.	Part Number	Description	Q'ty	Remarks
50	99786 0630	Bolt, Air IN. Pipe	1	
	99952 0618	Washer, Plain	1	
51	3648 40 727A	Rubber, Mounting	1	
52	99940 0602	Nut, Mounting Rubber	1	
53	3648 40 730	Tube, Flexible	1	
54	99562 1800	Packing, Flexible Tube	2	
55	3743 40 811	Protector No. 1, Silencer	1	
56	1128 40 841C	Protector No. 4, Silencer (Sedan & Coupe)	1	
57	1137 40 841C	Protector No. 4, Silencer (Station Wagon)	1	
58	3565 40 850	Flexure, Protector	3	
59	99796 0612	Bolt, Protector (Sedan & Coupe)	10	
	99952 0618	Washer, Plain	10	
60	99796 0616	Bolt, Protector (Station Wagon)	10	
	99952 0618	Washer, Plain	10	
61	99806 0612	Bolt, Protector	6	
	99971 0600	Washer, Spring	6	
62	3565 40 560B	Cover, Diffuser	1	

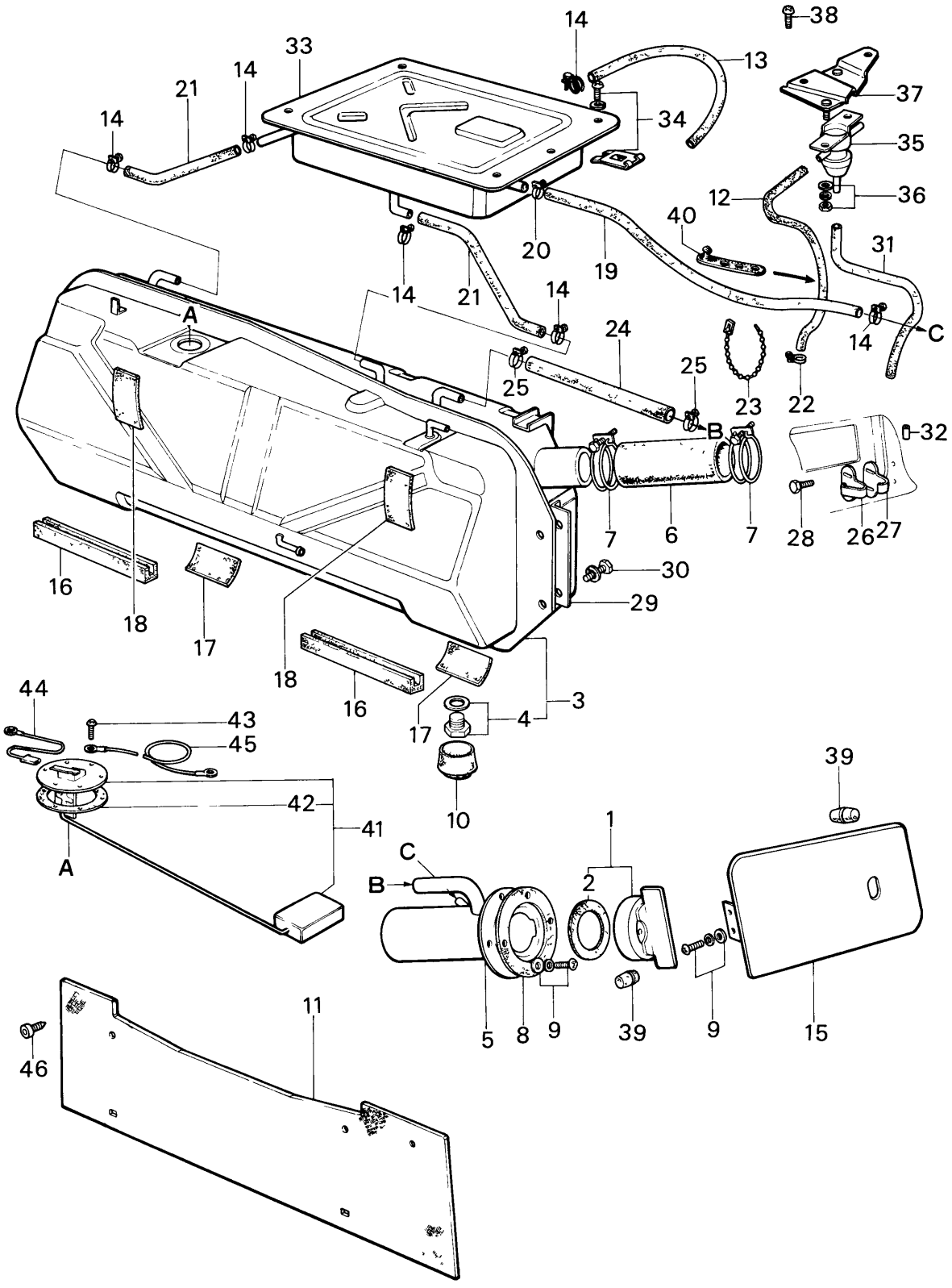
14
38
33
13
14
21
37
14
34
35
12
36
40
31
20
19
14
21
14
24
14
C
A
25
25
23
22
B
32
7
6
7
28
26
27
16
30
18
29
17
18
16
17
3
44
4
43
45
39
42
41
10
1
A
C
B
2
5
8
9
39
9
15
11
46

No.	Part Number	Description	Q'ty	Remarks
1	1011 42 250	Cap, Filler	1	
2	2280 42 462B	Gasket	1	
3	0866 42 310H	Tank, Fuel	1	
4	99796 1016	Bolt	1	
	0866 42 046	Gasket	1	
5	3625 42 350B	Pipe, Filler	1	
6	0259 42 364C	Hose, Joint	1	
7	99282 6000	Clamp	2	
8	0866 42 366	Gasket, Inlet Pipe	1	
9	99786 0516	Screw	6	
10	0187 42 371	Seal, Dust	1	
11	1570 42 381A	Board, Partition	1	
12	99346 06580	Tube, Vent-Check Valve~Evaporation (580㎜)	1	Ord. By 99349 90750 (1.75m)
13	99346 06330	Tube, Vent-Check Valve~Evaparation (580㎜)	1	
14	99283 1100	Clip, Vent Tube	9	
15	0866 42 410	Lid, Filler (Sedan)	1	
	0376 42 410	Lid, Filler (Coupe)	1	
16	0866 42 521	Pad, "A", Fuel Tank	2	
17	1011 42 711	Pad "B", Fuel Tank	2	

42 FUEL TANK (SEDAN & COUPE)

No.	Part Number	Description	Q'ty	Remarks
18	0866 42 523	Pad "C", Tube Tank	2	
19	99346 06520	Tube, Vent (520 ㎜)	1	Ord. By 99349 06750 (1.75m)
20	99283 1200	Band, Hose	1	
21	99346 06160	Pipe, Fuel-Condense Tank~Fuel Tank (160 ㎜)	2	Ord. By 99349 06750 (1.75m)
22	99283 1000	Clip, Fuel Pipe	1	
23	99709 0255	Clip	1	
24	99346 14400	Pipe, Fuel Tank~Filler Pipe (400 ㎜)	1	
25	99282 2201	Band, Hose	2	
26	0866 42 551	Plate, Lock	1	
27	0866 42 552	Plate, Back Up	1	
28	99786 0512	Screw, Lock Plate	2	
29	0866 42 561	Washer	2	
30	99786 0820	Bolt, Washer & Fuel Tank	4	
	99952 0822	Washer, Plain	4	
31	99346 06580	Tube, Vent Valve~Floor (580 ㎜)	1	Ord. By 99349 06750 (1.75m)
32	0866 42 544	Elbow	1	
33	1540 42 610B	Tank, Condense	1	
34	99735 0512	Screw, Tapping-Condense Tank	4	
	99896 0500	Nut, Spring	4	
35	3648 42 910	Valve, Check	1	

No.	Part Number	Description	Q'ty	Remarks
36	99940 0501	Nut, Check Valve	2	
37	3725 42 920	Bracket, Check Valve	1	
38	99786 0512	Screw, Check Valve Bracket	1	
39	0110 52 265	Rubber, Cushion	2	
40	0187 66 991	Clip, Rubber	1	
41	0866 67 170	Gauge, Fuel Tank	1	
42	0243 66 773	Gasket	1	
43	99833 0408	Screw	6	
44	0866 67 175	Cord, Earth	1	
45	0866 67 176	Cord, Earth	1	
46	0866 69 885	Fastener, Partition Board	2	

FUEL TANK (STATION WAGON)

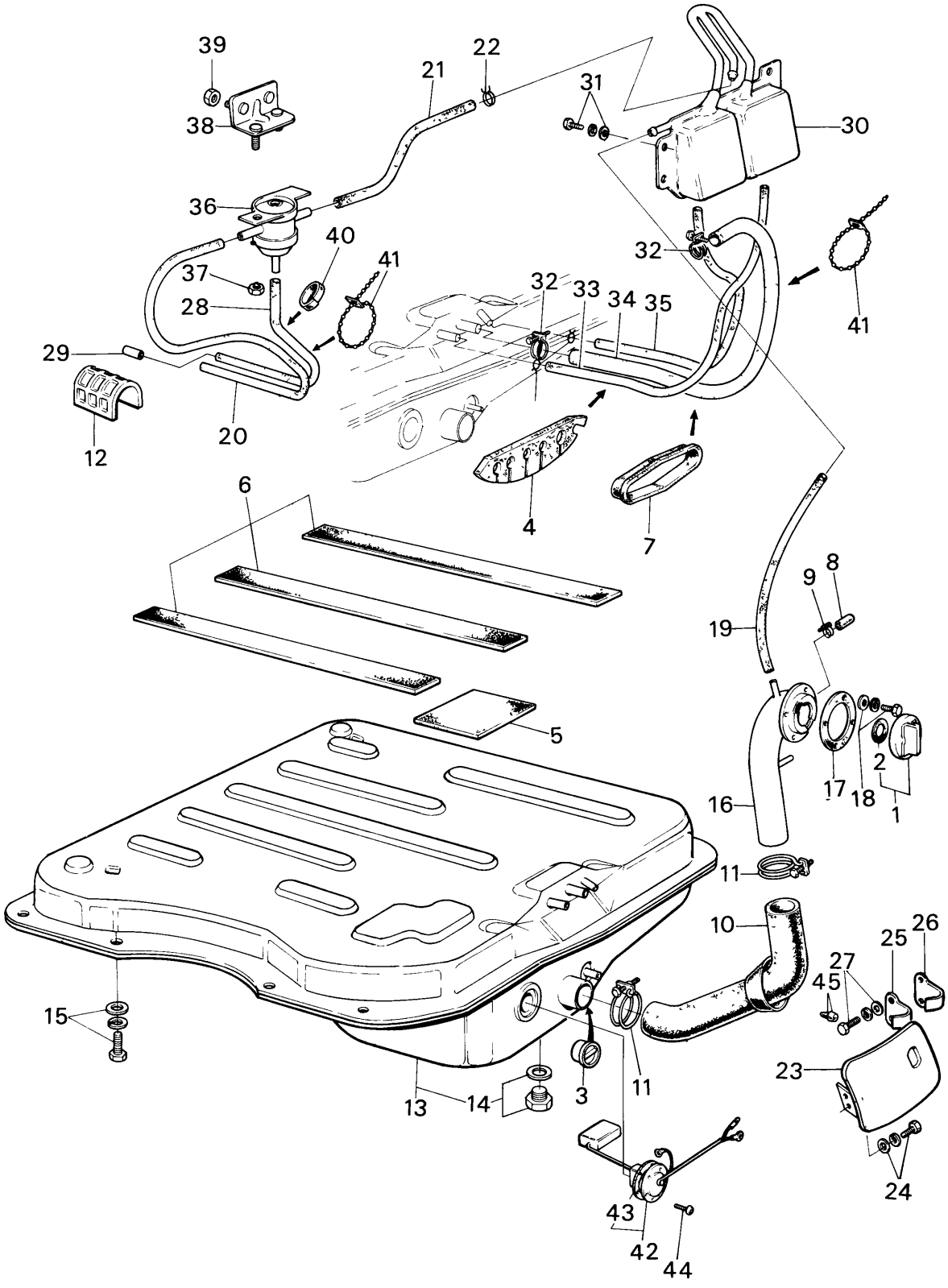

No.	Part Number	Description	Q'ty	Remarks
1	1011 42 250	Cap, Filler	1	
2	2280 42 462B	Gasket	1	
3	1624 42 280	Valve, Non Return	1	
4	1544 42 302A	Protector	1	
5	0652 42 304	Pad	3	
6	0585 42 305	Pad	3	
7	0585 42 306	Protector	1	
8	0223 42 307	Cap	2	
9	99283 1300	Clip	2	
10	3629 42 307	Joint, Hose	1	
11	99282 6000	Clamp, Hose	2	
12	0585 42 308	Spacer	1	
13	3747 42 310A	Tank, Fuel	1	
14	99796 1016	Bolt	1	
	0866 42 046	Gasket	1	
15	99796 1020	Bolt, Fuel Tank	8	
	99951 1022	Washer, Plain	8	

FUEL TANK (STATION WAGON)

No.	Part Number	Description	Q'ty	Remarks
16	3629 42 350C	Pipe, Filler	1	
17	0866 42 366	Gasket	1	
18	99786 0516	Bolt, Filler Pipe	4	
19	99346 06220	Tube, Vent-Condense Tank~Filler Pipe (220㎜)	1	Ord. By 99349 06750 (1.75m)
20	99346 06800	Tube, Vent-Condense Tank~Filler Pipe (800㎜)	1	Ord. By 99349 06750 (1.75m)
21	99346 06420	Tube, Vent-Condense Tank~Check Valve (420㎜)	1	Ord. By 99349 06750 (1.75m)
22	99283 1100	Clip, Hose	10	
	99283 1000	Clip, Hose	1	
23	0585 42 410	Lid, Fuel Filler	1	
24	99786 0516	Bolt, Fuel Filler Lid	2	
25	0866 42 551	Plate, Lock	1	
26	0866 42 552	Plate, Back Up	1	
27	99786 0512	Bolt, Lock Plate	2	
28	99346 06580	Tube, Vent-Check Valve~Floor (580㎜)	1	Ord. By 99349 06750 (1.75m)
29	0866 42 544	Elbow	1	
30	1544 42 610B	Tank, Condense	1	
31	99786 0616	Bolt, Condense Tank	2	
	99952 0618	Washer, Plain	2	
32	99282 2201	Clamp	2	
33	1544 42 613A	Tube, Vent-Condense Tank~Fuel Tank	1	

No.	Part Number	Description	Q'ty	Remarks
34	99346 14700	Tube, Vent-Fuel Tank~Filler Pipe (700㎜)	1	
35	1544 42 614A	Tube, Vent	1	
36	3648 42 910	Valve, Check	1	
37	99940 0501	Nut, Check Valve	2	
38	3729 42 920	Bracket, Check Valve	1	
39	99940 0501	Nut, Bracket	1	
40	0187 66 991	Clip, Rubber	1	
41	99709 0255	Band, Tube	2	
42	0899 67 170C	Gauge, Fuel Tank	1	
43	0585 60 965	Packing, Fuel Tank Gauge	1	
44	99833 0408	Screw, Fuel Tank Gauge	8	
45	0110 52 265	Rubber, Cushion	2	

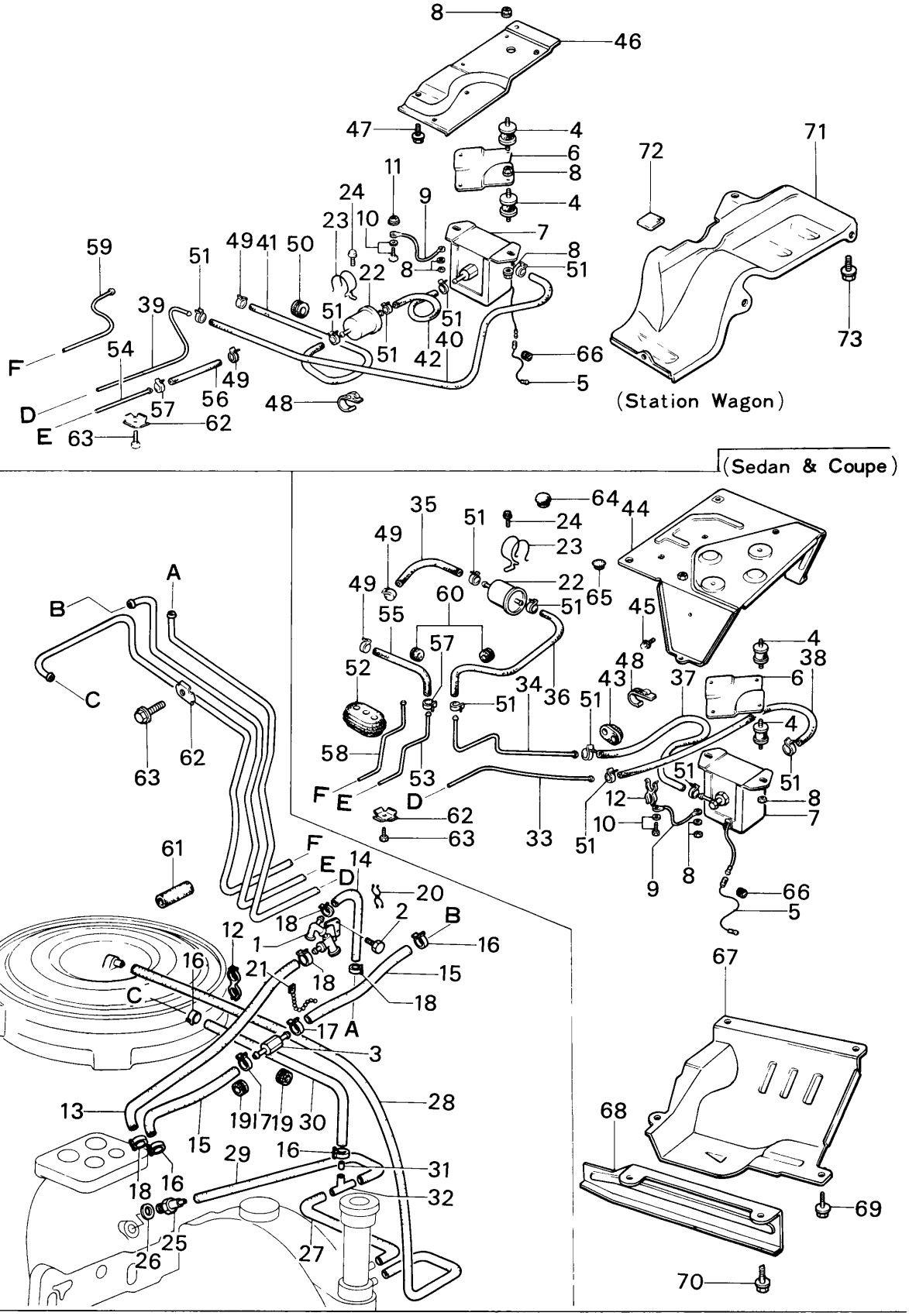
(Station Wagon)
(Sedan & Coupe)

No.	Part Number	Description	Q'ty	Remarks
1	3743 13 260A	Valve, Fuel Cut	1	
2	99786 0616	Bolt, Fuel Cut Valve	2	
3	3648 13 270	Valve, Fuel Check	1	
4	0223 13 363	Rubber, Insulation-Fuel Pump	4	
5	1690 13 359	Cord, Fuel Pump	1	
6	1690 13 361	Bracket, Fuel Pump	1	
7	1173 13 400A	Pump, Fuel	1	
8	99940 0600	Nut, Fuel Pump	8	
	99952 0600	Washer, Plain	1	
9	0866 13 402A	Wire, Earth-Fuel Pump	1	
10	99796 0610	Bolt, Earth Wire	1	
	99952 0600	Washer, Plain	1	
11	99940 0603	Nut, Earth Wire (Station Wagon)	1	
12	1570 13 447	Clip, Fuel Hose	2	
13	99348 08430	Hose, Fuel Main (430 m/m) Carburettor Side	1	Ord. By 99349 08750 (1.75m)
14	0899 45 802	Hose, Fuel Main-Fuel Tank Side	1	
15	99348 06210	Hose, Fuel Return (210 m/m)	2	Ord. By 99349 06750 (1.75m)
16	99283 1000	Clip, Fuel Hose	4	
17	99283 1100	Clip, Fuel Hose	2	
18	99283 1200	Clip, Fuel Hose	4	

No.	Part Number	Description	Q'ty	Remarks
19	99681 1503	Protector, Fuel Hose	3	
20	99288 1608	Clip, Fuel Hose	1	
21	99709 0108	Band, Fuel Hose	1	
22	0222 13 470B	Filter, Fuel	1	
23	0381 13 481	Clamp, Fuel Filter	1	
24	99797 0612	Bolt, Clamp	1	
	99952 0618	Washer, Plain	1	
25	1757 13 780	Valve, Ventilation	1	
26	99564 1600	Gasket, Ventilation Valve	1	
27	3565 13 785	Hose, Ventilation - "T" Joint ~ Oil Filler Pipe	1	
28	1757 13 786B	Hose, Ventilation - Air Cleaner ~ Intermediate Housing	1	
29	3565 13 788	Hose, Ventilation - "T" Joint ~ Ventilation Valve	1	
30	1854 13 792A	Hose, Evaporation - "T" Joint ~ Evaporation Pipe	1	
31	3565 13 795	Insert, "T" Joint	2	
32	1757 13 790	Joint, "T"	1	
33	1273 45 061B	Pipe, Fuel Main - Carburettor Side	1	
34	0866 45 062	Pipe, Fuel Main - Fuel Tank Side	1	
35	99348 08180	Hose, Fuel - Tank ~ Filter (180 m/m)	1	Ord. By 99349 08750 (1.75m) (Sedan & Coupe)
36	99348 08640	Hose, Fuel - Filter ~ Fuel Pipe (640 m/m)	1	Ord. By 99349 08750 (1.75m)
37	0866 45 801	Hose, Fuel - Tank ~ Pump	1	

No.	Part Number	Description	Q'ty	Remarks
38	0866 45 802	Hose, Fuel-Tank~Carburettor Side	1	
39	1283 45 071B	Pipe, Fuel Main	1	
40	0899 45 091B	Hose, Fuel-Pump~Main Pipe	1	
41	0899 45 801	Hose, Fuel-Tank~Filter	1	(Station Wagon)
42	0899 45 802	Hose, Fuel-Filter~Pump	1	
43	0866 45 807	Protector, Pipe	1	
44	0866 45 810A	Hanger, Fuel Pump	1	(Sedan & Coupe)
45	99786 0612	Bolt, Hanger	2	
46	0899 45 810A	Bracket, Fuel Pump	1	(Station Wagon)
47	99786 0612	Bolt, Bracket	3	
48	99278 1201	Clip, Fuel Hose	2	
49	99283 1100	Clip, Fuel Hose	2	
50	0866 45 805	Protector, Fuel Hose (Station Wagon)	1	
51	99283 1200	Clip, Fuel Hose	(Station Wagon) 4 (Sedan & Coupe) 7	
52	0866 45 806A	Grommet	1	(Sedan & Coupe)
53	1273 45 611A	Pipe, Fuel Return	1	
54	1283 45 611A	Pipe, Fuel Return (Station Wagon)	1	
55	99348 06330	Hose, Fuel Return (330 m/m) (Sedan & Coupe)	1	Ord. By 99349 06750 (1.75m)
56	99348 06140	Hose, Fuel Return (140 m/m) (Station Wagon)	1	Ord. By 99349 06750 (1.75m)
57	99283 1000	Clip, Hose	1	

No.	Part Number	Description	Q'ty	Remarks
58	3743 45 711	Pipe, Evaporation (Sedan & Coupe)	1	
59	3747 45 711	Pipe, Evaporation (Station Wagon)	1	
60	99686 1200	Protector, Fuel Hose (Sedan & Coupe)	3	
61	0899 45 803	Protector, Fuel Hose (Station Wagon)	1	
62	0866 45 903A	Clip, Pipe (Sedan & Coupe)	11	
		Clip, Pipe (Station Wagon)	13	
63	99786 0612	Bolt, Clip (Sedan & Coupe)	11	
		Bolt, Clip (Station Wagon)	13	
64	0118 56 241	Plug, Drain	1	(Sedan & Coupe)
65	0118 56 242B	Plug, Drain	1	(Sedan & Coupe)
66	0208 66 683	Protector, Pump Cord	1	
67	0866 56 781A	Cover, Fuel Pump	1	(Sedan & Coupe)
68	0866 56 782	Protector, Fuel Pump	1	(Sedan & Coupe)
69	99786 0616	Bolt, Fuel Pump Cover	4	(Sedan & Coupe)
70	99786 0612	Bolt, Fuel Pump Protector	2	(Sedan & Coupe)
71	0899 56 780	Cover, Fuel Pump	1	(Station Wagon)
72	0208 66 949	Pad, Protector	1	(Station Wagon)
73	99786 0616	Bolt, Fuel Pump Cover	4	(Station Wagon)
	99952 6618	Washer, Plain	4	(Station Wagon)

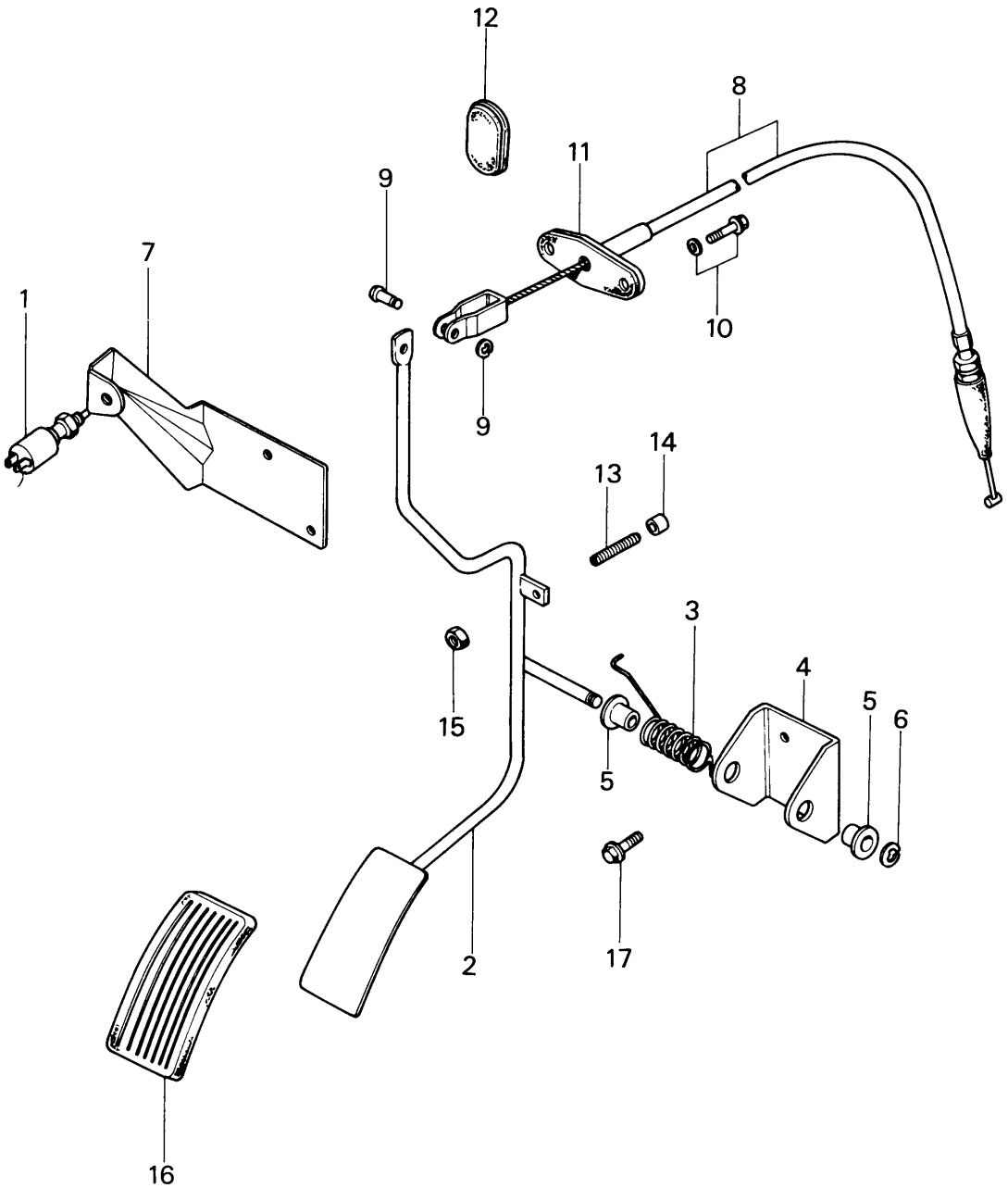
12
8
11
9
7
1
10
9
14
13
3
4
5
6
15
5
17
2
16

No.	Part Number	Description	Q'ty	Remarks
1	2691 18 660	Switch, Kick Down (Automatic)	1	
2	1881 41 610A	Pedal, Accelerator (Manual)	1	
	1883 41 610A	Pedal, Accelerator (Automatic)	1	
3	0370 41 619	Spring, Return	1	
4	0305 41 641	Retainer	1	
5	0259 41 644	Bush	2	
6	99575 0600	Ring, Retaining	1	
7	1637 41 650	Bracket, Kick Down Switch (Automatic)	1	
8	3743 41 660	Wire, Accelerator	1	
9	99230 0511	Pin, Joint - Accelerator Wire	1	
	99575 0300	Ring, Snap	1	
10	99786 0620	Bolt, Accelerator Wire	2	
	99952 0618	Washer, Plain	2	
11	0249 41 671	Seat	1	
12	1524 41 678	Seal	1	
13	0118 41 681	Stopper	1	
14	0118 41 682	Rubber, Stopper	1	
15	99940 0600	Nut	1	
16	1708 41 711	Pad, Pedal	1	
17	99786 0616	Bolt	2	

CLUTCH RELEASE & MASTER CYLINDER (MANUAL)

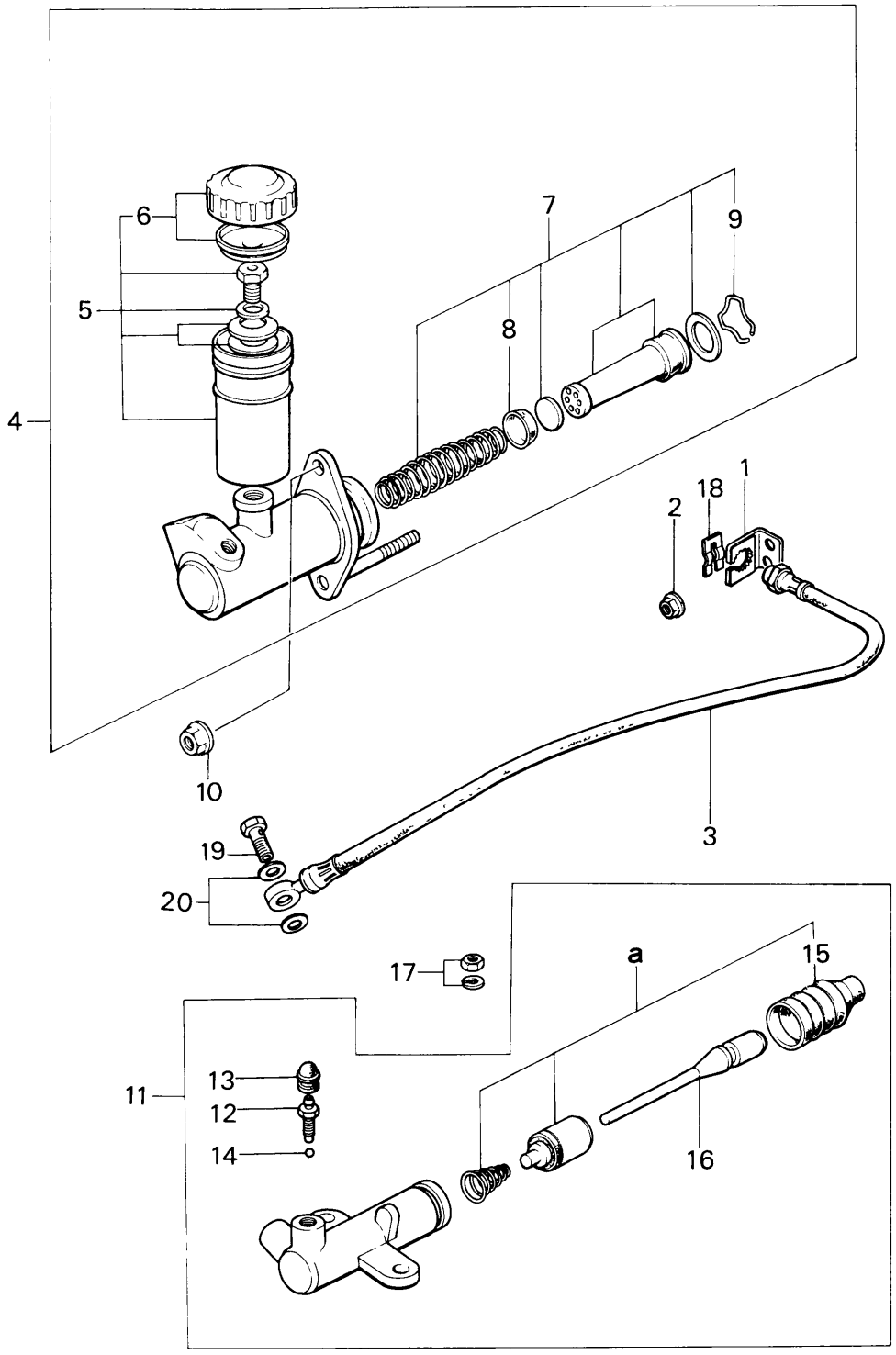

No.	Part Number	Description	Q'ty	Remarks
1	0866 41 370	Holder, Flexible Hose	1	
2	99940 0600	Nut, Holder	1	
3	0866 41 380	Hose, Flexible	1	
4	1524 41 400A	Cylinder, Clutch Master	1	
5	0317 89 435B	Tank Set	1	
6	0317 89 436A	Cap Set	1	
7	0839 89 431B	Cylinder Set, Clutch Master	1	
8	0839 41 461	Cup, Primary	1	
9	0111 43 432	Wire, Stop	1	
10	99940 0800	Nut, Clutch Master Cylinder	2	
11	1881 41 920A	Cylinder, Clutch Release	1	
12	0259 33 691	Screw, Bleeder	1	
13	0259 33 693	Cap	1	
14	99611 1500	Ball, Steel	1	
15	0603 41 331	Boot	1	
16	1881 41 341	Rod, Push	1	
a	1052 89 411A	Repair Kit, Clutch Release	1	

CLUTCH RELEASE & MASTER CYLINDER (MANUAL)

No.	Part Number	Description	Q'ty	Remarks
17	99940 0800	Nut, Release Cylinder	2	
18	0136 43 635	Clip, Flexible Hose	1	
19	0221 43 694	Bolt, Hose & Release Cylinder	1	
20	99562 1000	Gasket	2	

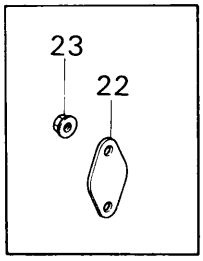
23
22

(Automatic)

19
20
21
18
17
29
3
5
4
1
6
9
28
24
25
27
26
10
14
10
15
16
15
10
2
10
8
7
12
11
13
12
11

No.	Part Number	Description	Q'ty	Remarks
1	0727 41 023	Bush, Clutch Fork	1	
2	1919 41 030A	Pedal, Clutch	1	
3	0223 41 131A	Rod, Clutch Push	1	(Manual)
4	1872 41 140	Fork, Clutch	1	
5	1872 41 142	Nut, Clutch Fork	1	
6	99972 0800	Washer, Wave-Clutch Fork	1	
7	0613 41 308	Spring, Return-Clutch & Brake	(Automatic) 1 (Manual) 2	
8	99686 0800	Protector, Clutch Return Spring	1	(Manual)
9	99575 0600	Ring, Snap-Clutch Fork	1	
10	1015 46 085	Bush, Pedal	(Automatic) 2 (Manual) 4	
11	0118 43 028A	Pad, Pedal-Clutch & Brake	(Manual) 2	
	0268 43 028	Pad, Pedal-Brake	(Automatic) 1	
12	0187 43 029	Rubber, Stopper-Pedal	(Automatic) 1 (Manual) 2	
13	99795 1032	Bolt, Stopper	1	(Manual)
	99922 1000	Nut	1	
14	1524 43 030	Pedal, Brake (Manual)	1	
	1525 43 030	Pedal, Brake (Automatic)	1	
15	0866 43 062	Pipe, Pedal	(Automatic) 1 (Manual) 2	
16	0866 43 063	Pipe, Pedal	1	
17	1919 43 070A	Bracket, Master Cylinder	1	

CLUTCH & BRAKE PEDAL

No.	Part Number	Description	Q'ty	Remarks
18	90786 0820	Bolt, Bracket	1	
19	99813 10110	Bolt, Pedal (Automatic)	1	
	99813 10165	Bolt, Pedal (Manual)	1	
20	99921 1000	Nut, Bracket	1	
	99952 1000	Washer, Plain	1	
	99971 1000	Washer, Spring	1	
21	0259 43 088	Seat, Bracket	1	
22	1525 43 090	Plate	1	(Automatic)
23	99940 0800	Nut, Plate	2	(Automatic)
24	99922 1000	Nut, Brake Fork	1	
25	1524 43 140	Fork, Brake	1	
26	99231 0820	Pin, Joint-Brake Fork	1	
27	99221 2020	Pin, Split-Brake Fork	1	
28	0223 46 683	Pin, Clutch Fork	1	
29	0233 66 790	Switch, Brake Stop	1	

TANDEM MASTER CYLINDER & VACUUM POWER ASSIST

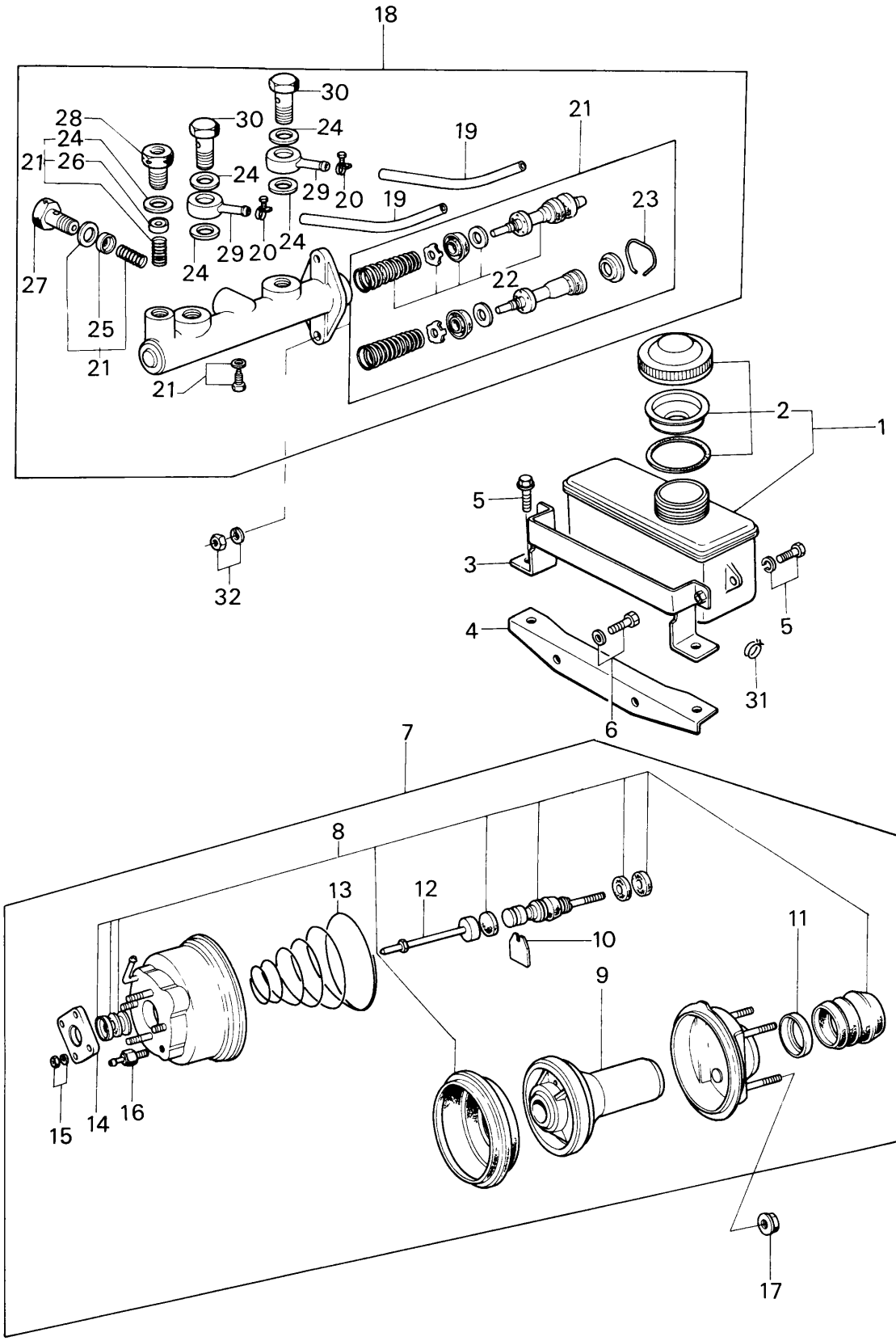

TANDEM MASTER CYLINDER & VACUUM POWER ASSIST

No.	Part Number	Description	Q'ty	Remarks
1	0839 43 550A	Tank, Reserve	1	
2	0317 89 436A	Cap Set	1	
3	0870 43 570	Holder, Reserve Tank	1	
4	0870 43 580	Holder, Reserve Tank	1	
5	99833 0512	Screw, Holder & Tank	4	
	99971 0500	Washer, Spring	4	
6	99785 0612	Screw, Holder	2	
	99971 0600	Washer, Spring	2	
7	3743 43 800A	Assist, Vacuum Power	1	
8	3743 49 720	Repair Kit	1	
9	0824 49 745	Plate, Diaphragm	1	
10	2046 49 746	Key	1	
11	2046 49 747	Retainer, Silencer	1	
12	0870 49 770	Rod, Push	1	
13	0824 49 781	Spring	1	
14	0824 49 782	Flange	1	
15	99906 0800	Nut, Flange	2	
	99971 0800	Washer, Spring	2	

TANDEM MASTER CYLINDER & VACUUM POWER ASSIST

No.	Part Number	Description	Q'ty	Remarks
16	0870 49 785	Valve, Check	1	
17	99940 0800	Nut, Vacuum Power Assist	4	
18	1620 43 990A	Cylinder, Tandem Master	1	
19	1881 43 422	Hose, Reserve	2	
20	99282 1401	Clamp, Hose	2	
21	1128 49 610	Inner Parts Kit	1	
22	1128 49 630	Piston, Floating	1	
23	0305 49 638	Wire, Piston Stop	1	
24	0305 49 656	Gasket, Joint Bolt	6	
25	0559 49 660	Valve, Check	2	
26	1128 49 670	Valve, Outlet	1	
27	0512 49 651	Bolt, Joint	1	
28	1620 49 651	Bolt, Joint	1	
29	0512 49 682A	Joint, Union	2	
30	0512 49 686	Bolt, Connector	2	
31	99285 0800	Clip, Wire-Oil Pipe	2	
32	99901 0800	Nut, Tandem Master Cylinder	2	
	99971 0800	Washer, Spring	2	

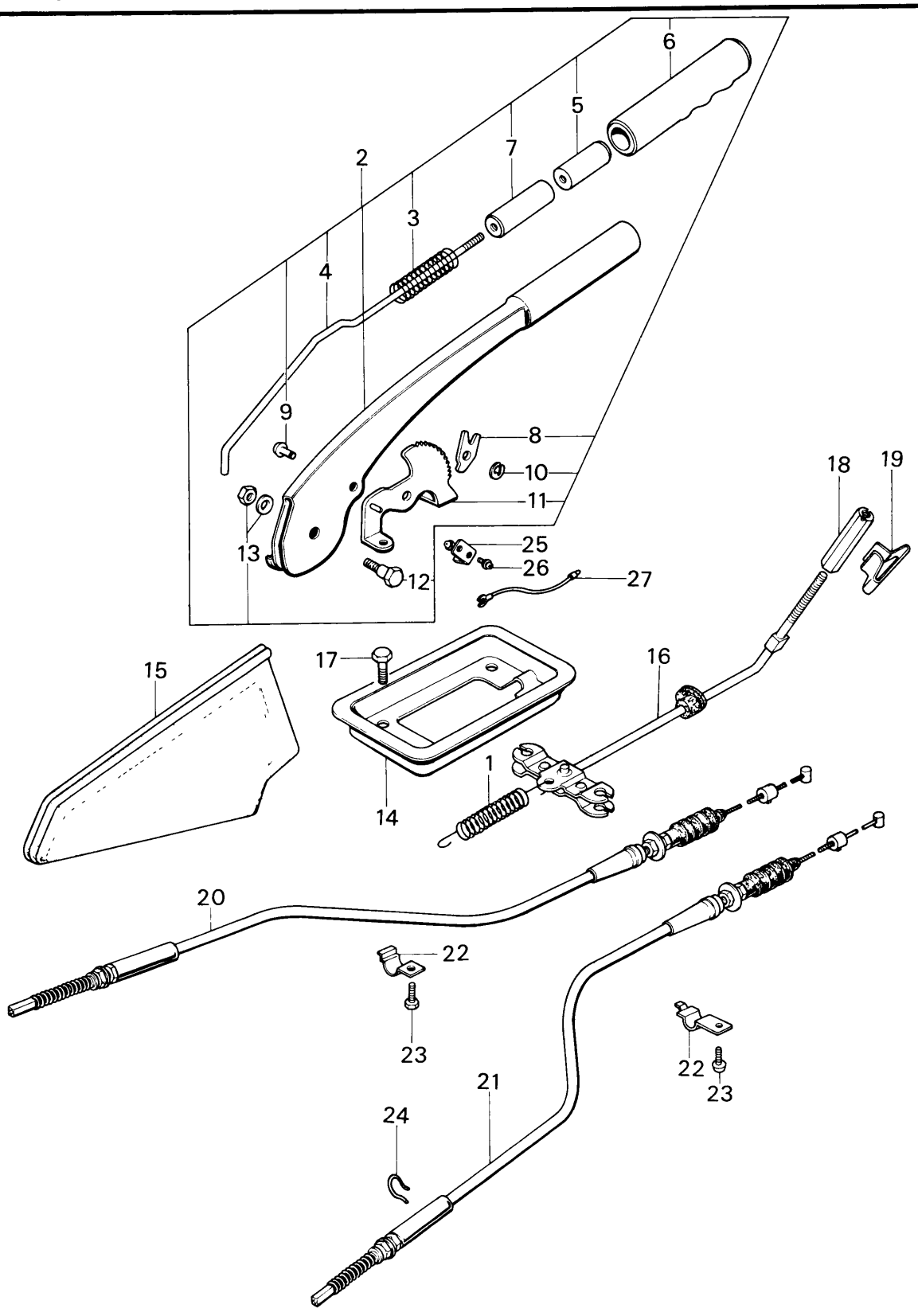
6
5
7
2
3
4
9
8
10
11
13
25
26
12
27
18
19
15
17
16
1
14
20
22
23
22
23
21
24

No.	Part Number	Description	Q'ty	Remarks
1	0183 41 308	Spring, Return	1	
2	0866 44 010	Lever, Hand Brake	1	
3	0813 44 031	Spring	1	
4	0303 44 032	Rod, Release	1	
5	0221 44 033	Button	1	
6	0813 44 034	Cap	1	
7	0813 44 035	Spacer	1	
8	0221 44 044	Ratchet	1	
9	99230 0815B	Pin	1	
10	99575 0500	Ring, Snap	1	
11	0866 44 051	Sector	1	
12	0303 44 053	Bolt, Hand Brake Lever	1	
13	99901 0800B	Nut	1	
	99971 0800	Washer, Spring	1	
14	1881 44 130	Plate	1	
15	0370 44 140	Boot	1	
16	0866 44 150A	Cable, Front	1	
17	99786 0616	Bolt, Front Cable	4	

No.	Part Number	Description	Q'ty	Remarks
18	0866 44 187A	Screw, Adjust	1	
19	0866 44 189	Clip	1	
20	0866 44 410B	Cable, Rear (L)	1	
21	1570 44 410C	Cable, Rear (R)	1	
22	0866 44 439	Clip, Cable	2	
23	99786 0616	Bolt	2	
24	0305 44 471	Clip	2	
25	0820 66 840	Switch, Parking Lamp	1	
26	99830 0410	Screw, Switch	2	
27	0317 67 551	Cord, Parking Lamp Switch	1	

PIPING (CLUTCH & BRAKE)

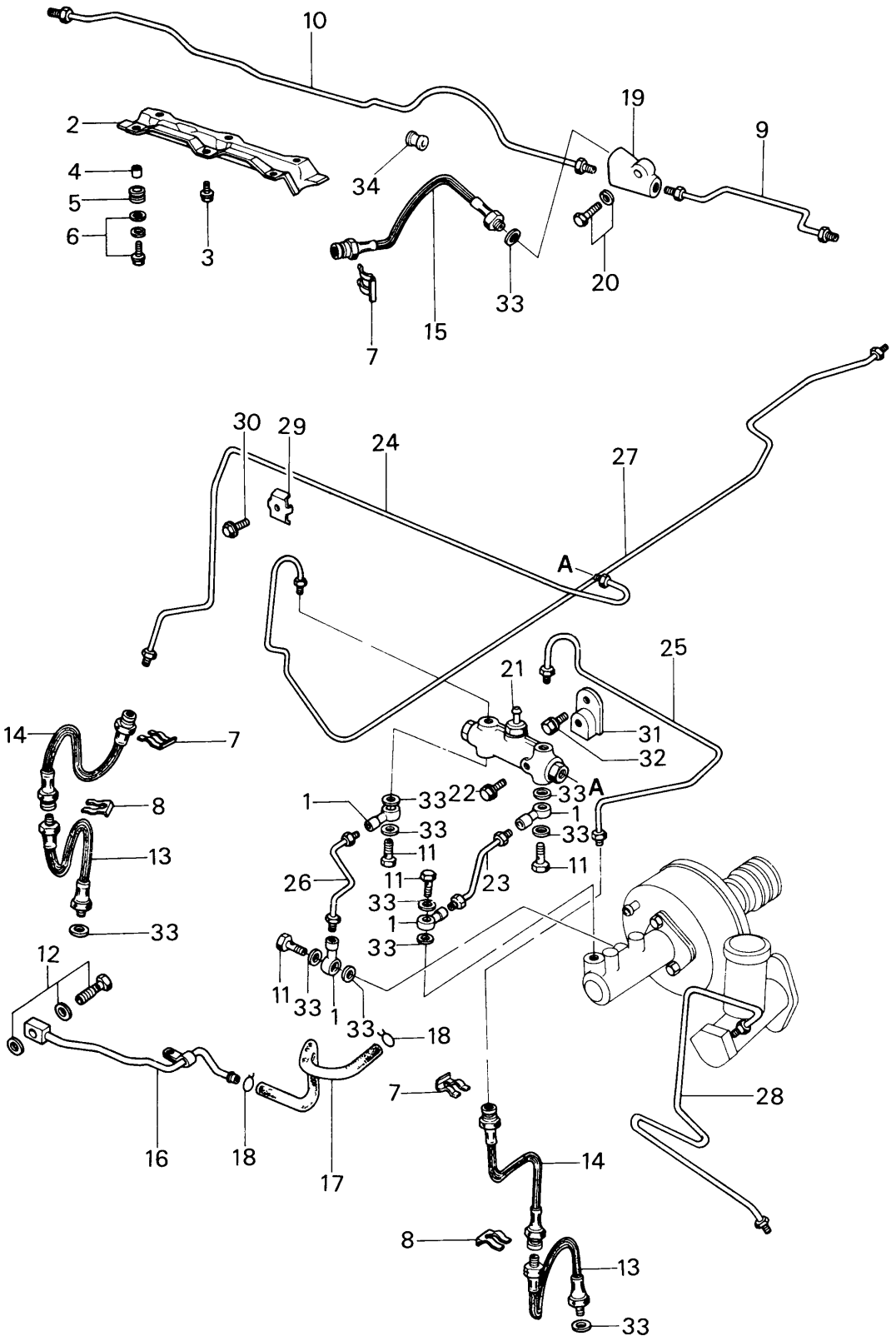

No.	Part Number	Description	Q'ty	Remarks
1	0118 41 375	Connector, Pipe	4	
2	1128 43 605 B	Protector, Brake Pipe	1	
3	99781 0816	Bolt, Protector	2	
	99952 0800	Washer, Plain	2	
	99971 0800	Washer, Spring	2	
4	1114 43 608 B	Spacer	4	
5	1114 43 609 A	Rubber, Cushion	4	
6	99781 0825	Bolt, Protector	4	
	99951 0822	Washer, Plain	4	
	99971 0800	Washer, Spring	4	
7	0136 43 635	Clip, Flexible Hose	3	
8	0305 43 635	Clip, Flexible Hose - Front	2	
9	0370 43 650 A	Pipe No. 1, Rear (Sedan & Coupe)	1	
	0585 43 650 A	Pipe No. 1, Rear (Station Wagon)	1	
10	1881 43 660	Pipe, No. 2, Rear (Sedan & Coupe)	1	
	1137 43 660	Pipe No. 2, Rear (Station Wagon)	1	
11	0221 43 694	Bolt, Connector	4	
12	1570 43 694 A	Bolt, Connector - Vacuum Hose	1	
	99562 1200	Gasket	2	
13	1881 43 810	Hose, Flexible	2	

No.	Part Number	Description	Q'ty	Remarks
14	1757 43 820	Hose, Flexible - Front	2	
15	1881 43 820	Hose, Flexible - Rear	1	
16	3743 43 830	Pipe, Vacuum	1	
17	1559 43 836C	Hose, Vacuum	1	
18	99282 1901	Clamp, Hose	2	
19	0118 43 853	Joint, Pipe - Rear	1	
20	99806 0625	Bolt, Pipe - Joint	1	
	99971 0600	Washer, Spring	1	
21	1540 43 890	Indicator, Brake Fail	1	
22	99786 0635	Bolt, Brake Fail Indicator	1	
23	1598 45 250A	Pipe, Brake (Frt.) - Main	1	
24	3743 45 280	Pipe, Brake (Frt., R)	1	
25	3725 45 320	Pipe, Brake (Frt., L)	1	
26	1559 45 350A	Pipe, Brake (Rr.) - Main	1	
27	3743 45 360	Pipe, Brake (Rr.) (Sedan & Coupe)	1	
	3747 45 360	Pipe, Brake (Rr.) (Station Wagon)	1	
28	1562 45 510C	Pipe, Clutch (Manual)	1	
29	0866 45 903A	Clip, Pipe	9	
30	99786 0612	Bolt, Clip	9	
31	1540 45 920A	Bracket, Brake Fail Indicator	1	

No.	Part Number	Description	Q'ty	Remarks
32	99786 0616	Bolt, Bracket	1	
33	99562 1000	Gasket	11	
34	0578 45 995	Protector, Rear Pipe No. 2	1	

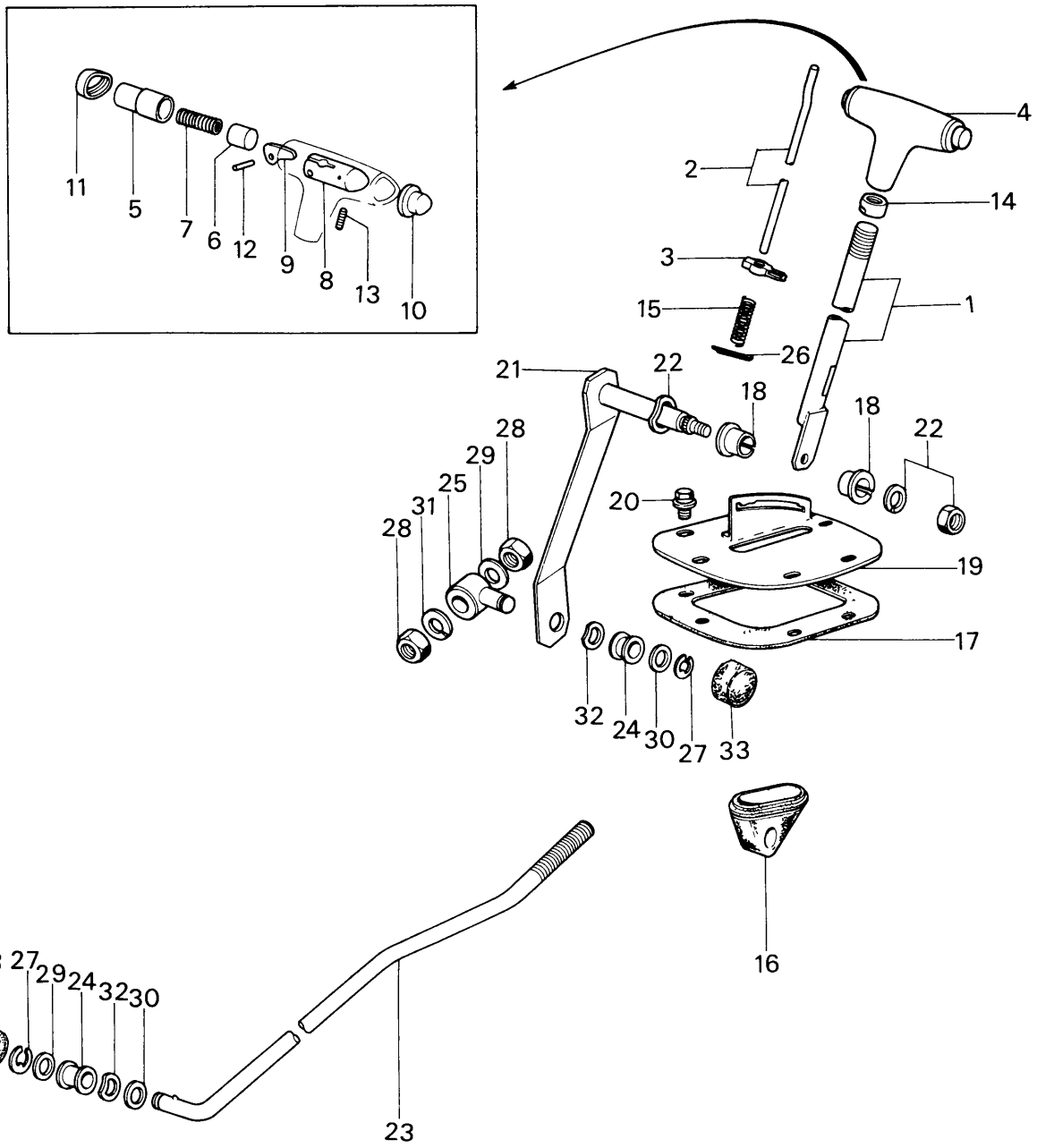
11
5
7
6
12
9
8
13
10
4
2
14
3
1
15
26
21
22
18
18
22
28
29
25
31
28
20
19
17
32
24
30
27
33
16
33
27
29
24
32
30
23

No.	Part Number	Description	Q'ty	Remarks
1	1840 46 010 A	Lever, Selector	1	
2	1840 46 021	Rod	1	
3	1840 46 022	Pin, Guide	1	
4	1736 46 030	Knob	1	
5	2375 46 051 A	Knob	1	
6	2375 46 052	Piston	1	
7	2375 46 053	Spring	1	
8	2375 46 054	Supporter	1	
9	2375 46 055	Lever	1	
10	2375 46 056 A	Plug	1	
11	0308 46 057 A	Cap	1	
12	99225 0320	Pin	1	
13	99887 0412	Screw Set	1	
14	2375 46 061	Nut	1	
15	2375 46 062	Spring	1	
16	0842 46 081	Boot	1	
17	0308 46 083	Seal	1	
18	1015 46 085	Bush	2	

No.	Part Number	Description	Q'ty	Remarks
19	2070 46 110A	Bracket	1	
20	99786 0616	Bolt, Bracket	6	
	99952 0618	Washer, Plain	6	
21	1053 46 150	Lever	1	
22	99922 1000	Nut	1	
	99971 1000	Washer, Spring	1	
	99972 1400	Washer, Wave	1	
23	1856 46 571	Rod	1	
24	1015 46 684	Bush	2	
25	1015 46 691	Joint, "T"	1	
26	99221 2020	Pin, Split	1	
27	99575 0600	Ring, Retaining	2	
28	99902 0800	Nut	2	
29	99952 0816	Washer, Plain	1	
30	99953 0800	Washer, Plain	2	
31	99971 0800	Washer, Spring	1	
32	99972 0800	Washer, Wave	2	
33	1015 46 648	Cover, Dust	2	

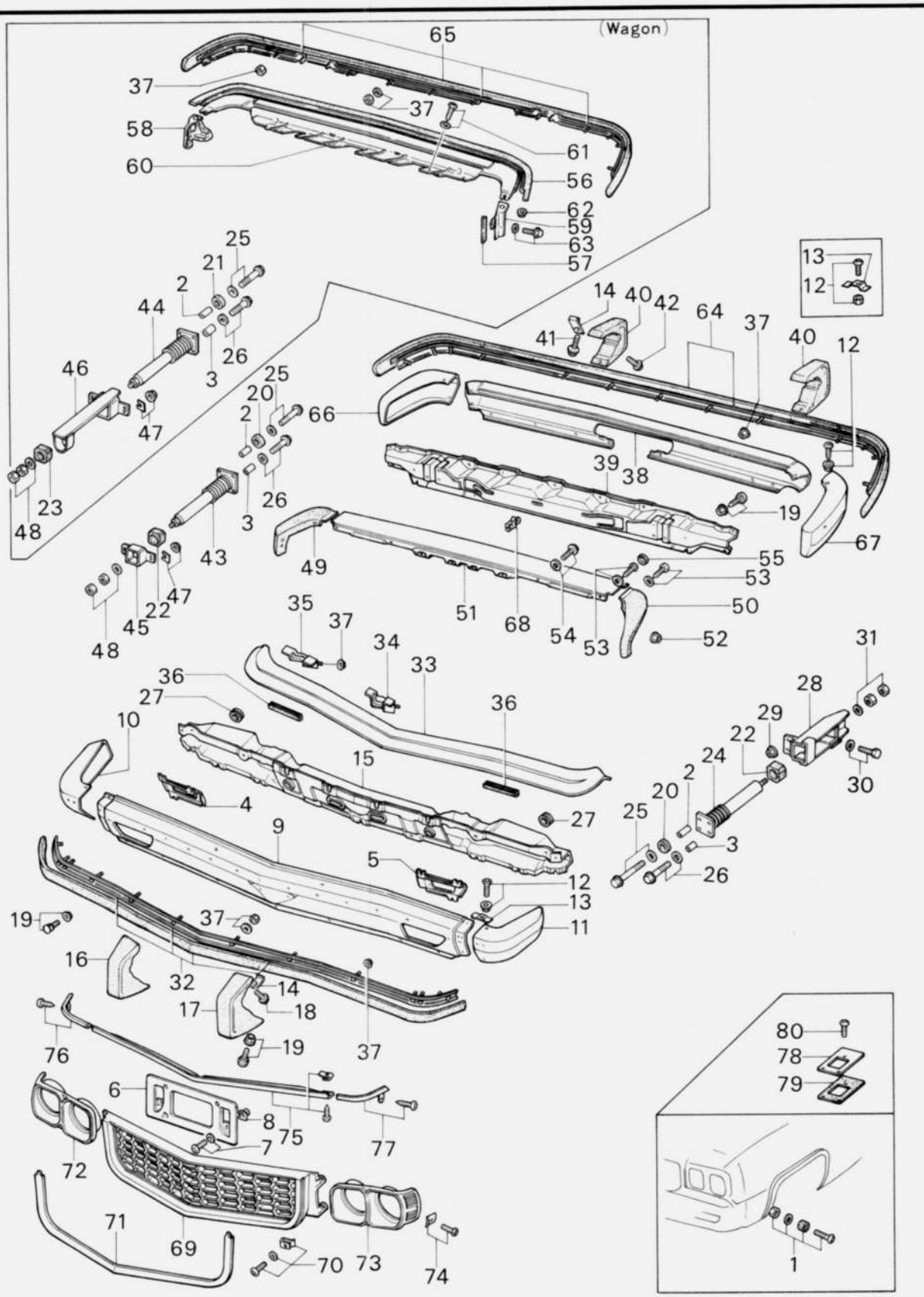
(Wagon)
65
37
58
60
61
56
62
59
63
57
25
21
2
44
26
3
46
47
23
48
13
12
14
40
42
41
64
37
40
12
66
39
38
19
67
55
53
50
52
49
51
68
54
53
43
22
45
35
37
34
33
36
27
10
15
4
9
5
12
13
11
16
32
14
17
18
76
6
8
75
7
77
72
71
69
70
73
74
31
28
29
22
24
2
20
25
3
26
30
80
78
79
1

No.	Part Number	Description	Q'ty	Remarks
1	3625 50 011	Screw, Front Bumper	2	
	3565 50 071 A	Rubber, Front Bumper	2	
	99926 1000	Nut	2	
	99952 1030	Washer, Plain	2	
2	3625 50 021	Spacer "A", Shock Absorber	8	
3	3625 50 022	Spacer "B", Shock Absorber	4	
4	3625 50 025 A	Cover (R), Lamp	1	
5	3625 50 026 A	Cover (L), Lamp	1	
6	3648 50 030	Holder, Number Plate	1	
7	99860 0620	Screw	2	
	99952 0618	Washer, Plain	2	
8	99910 0601	Grommet, Screw	2	
9	3625 50 031 B	Face (C), Front Bumper	1	
10	3625 50 032	Face (R), Front Bumper	1	
11	3625 50 033	Face (L), Front Bumper	1	
12	3625 50 034 A	Screw, Front Bumper Face	4	
	99940 0602	Nut	4	
13	3625 50 035	Protector, Bolt-Bumper Face	(Station Wagon) 4 (Sedan & Coupe) 2	
14	3625 50 036	Protector, Bolt-Bumper Guard	(Station Wagon) 2 (Sedan & Coupe) 4	
15	3625 50 040 B	Reinforcement, Front Bumper	1	

No.	Part Number	Description	Q'ty	Remarks
16	3625 50 050	Guard (R), Front Bumper	1	
17	3625 50 060	Guard (L), Front Bumper	1	
18	99796 0612	Bolt, Bumper Guard	2	
19	0223 50 275	Screw, Bumper Face+Reinforcement	19	
	99940 0602	Nut	19	
20	3565 50 071 A	Rubber, Hinge-Shock Absorber	8	
21	3625 50 071	Rubber, Hinge (Rr.) (Station Wagon)	4	
22	1755 50 091	Rubber, Mounting (Sedan & Coupe) (Station Wagon)	4 2	
23	1756 50 091	Rubber, Mounting (Rear) (Station Wagon)	2	
24	3625 50 100 A	Absorber (Frt.) Shock	2	
25	99794 0830	Bolt, Shock Absorber	2	
	1845 40 357	Washer, Plain	8	
26	99796 0825	Bolt, Shock Absorber	8	
	99952 0822	Washer, Plain	4	
27	99682 2003	Protector, Lamp Cover	4	
28	1881 50 110 B	Bracket (R), Shock Absorber-Front	2	
	1881 50 130 B	Bracket (L), Shock Absorber-Front	1	
29	99940 0802	Nut, Bracket	1	
30	99786 0820	Bolt, Bracket	4	
	99952 0822	Washer, Plain	4	

No.	Part Number	Description	Q'ty	Remarks
31	99921 1000	Nut, Shock Absorber	4	
	99953 1000	Washer, Plain	2	
32	3625 50 120B	Protector (Frt.)	1	
33	3625 50 150C	Cover, Front	1	
34	3625 50 160A	Bracket "A", Front Cover	2	
35	3625 50 170A	Bracket "B", Front Cover	4	
36	3629 50 325	Spacer, Front Bumper Cover & Protector	2	
37	99940 0602	Nut, Bumper Cover & Protector	31	
	99951 0822	Washer, Plain-Protector	(Sedan & Coupe) 4 (Station Wagon) 6	
38	3625 50 221A	Face (C), Rear Bumper (Sedan & Coupe)	1	
	3629 50 221A	Face (C), Rear Bumper (Station Wagon)	1	
39	3625 50 230A	Reinforcement (Sedan & Coupe)	1	
	3629 50 230B	Reinforcement (Station Wagon)	1	
40	3625 99 806A	Guard, Rear Bumper	2	
41	99796 0612	Bolt, Rear Bumper Guard (Sedan & Coupe)	2	
42	99740 0625	Bolt, Rear Bumper Guard	2	
43	3625 50 290A	Absorber (Rr.), Shock (Sedan & Coupe)	2	
44	3629 50 290B	Absorber (Rr.), Shock (Station Wagon)	2	
45	3625 50 301	Bracket, Shock Absorber (Sedan & Coupe)	2	
46	3629 50 110A	Bracket, Shock Absorber (Station Wagon)	2	

No.	Part Number	Description	Q'ty	Remarks
47	99940 1002	Nut, Shock Absorber	4	
	0187 34 668	Shim, Adjust (Station Wagon)	2	
48	99921 1000	Nut, Shock Absorber	2	
	99922 1000	Nut	2	
	99953 1000	Washer, Plain	2	
49	3625 50 320 AD6	Cover (R), Rear Side	1	
50	3625 50 330 AD6	Cover (L), Rear Side	1	
51	3625 50 360 A	Cover (C), Rear	1	
52	99940 0502	Nut, Cover	4	
53	99865 0512	Screw, Tapping-Cover	6	(Sedan & Coupe)
	99952 0516	Washer, Plain	2	
54	99797 0612	Screw, Cover	4	
	99952 0618	Washer, Plain	4	
55	0317 68 018	Cap	6	
56	3629 50 311	Filler,.Cover	1	
57	3629 50 325	Spacer, Cover	2	
58	3629 50 340 C	Cover (R), Rear Side	1	
58	3629 50 350 C	Cover (L), Rear Side	1	
60	3629 50 361 C	Cover (C), Rear	1	(Station Wagon)
61	99865 0510	Screw, Tapping-Cover	8	

No.	Part Number	Description	Q'ty	Remarks
	99952 0516	Washer, Plain	8	
62	99940 0502	Nut, Cover	2	
63	99786 0616	Screw, Tapping-Cover	2	
	0136 65 752	Gasket, Cover	2	
64	3625 50 380B	Protector (Rr.) (Sedan & Coupe)	1	
65	3629 50 380	Protector (Rr.) (Station Wagon)	1	
66	3565 50 930	Face (R), Rear Bumper (Sedan & Coupe)	1	
	3629 50 222	Face (R), Rear Bumper (Station Wagon)	1	
67	3565 50 940	Face (L), Rear Bumper (Sedan & Coupe)	1	
	3629 50 223	Face (L), Rear Bumper (Station Wagon)	1	
68	99279 0803	Clip (Sedan & Coupe)	1	
69	1128 50 511B02	Grille, Radiator (D.GRY M)	1	
70	99769 0420B	Screw, Tapping	6	
	99952 0412B	Washer, Plain	6	
	99896 0400	Nut, Spring	6	
71	1128 50 521	Mould, Grille	1	
72	1128 50 531A	Bezel (R), Lamp	1	
73	1128 50 541A	Bezel (L), Lamp	1	
74	99769 0420B	Screw, Tapping-Lamp Bezel	6	
	99896 0400	Nut, Spring	6	

No.	Part Number	Description	Q'ty	Remarks
75	1128 99 711	Mould Set (C), Nose	1	
76	1128 99 712	Mould Set (R), Nose	1	
77	1128 99 713	Mould Set (L), Nose	1	
78	1907 50 310	Cover, Hole-Rear Floor	2	
79	1907 50 292	Gasket, Hole Cover	2	
80	99869 0410	Screw, Hole Cover	6	

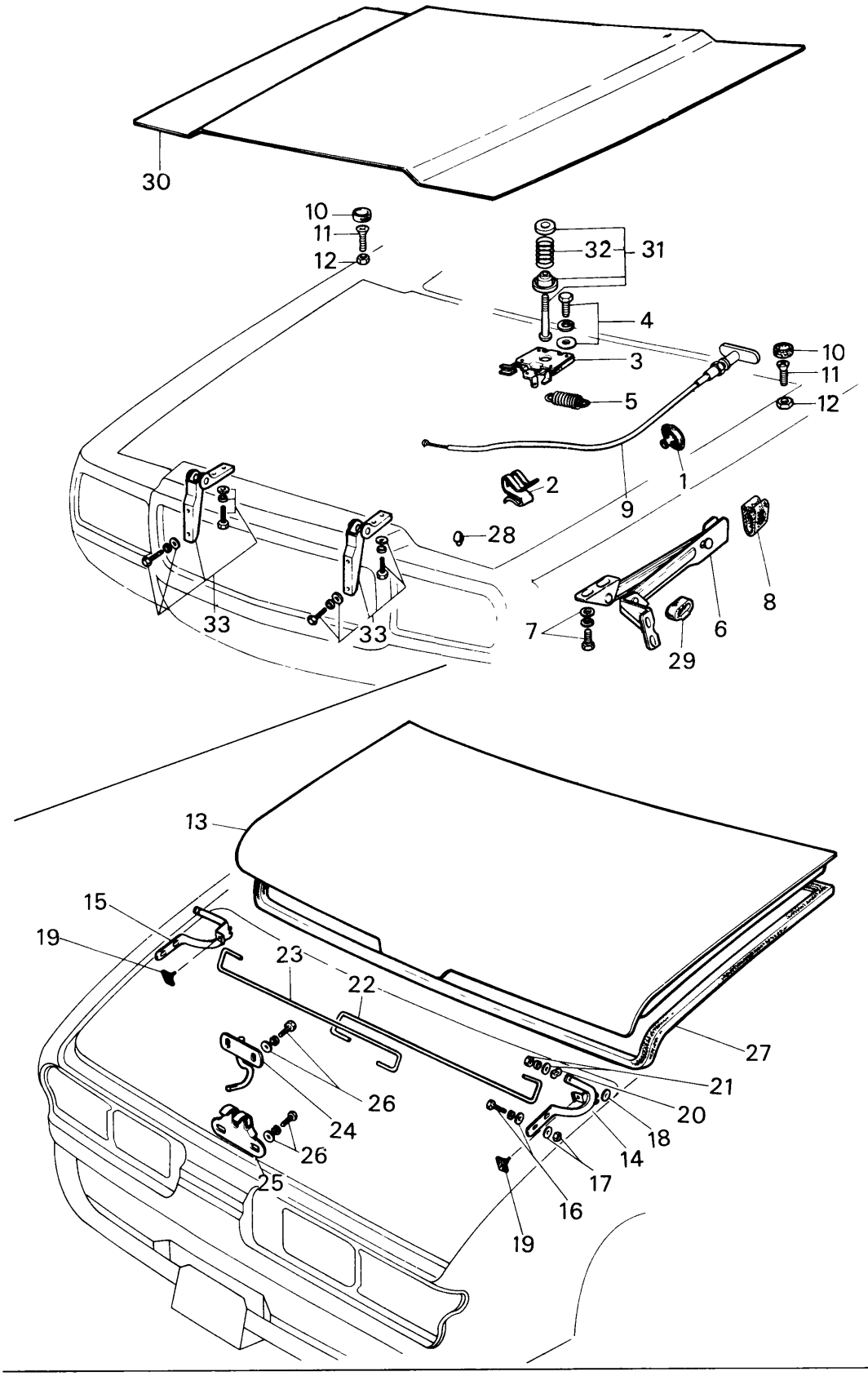
30
10
11
12
32
31
4
3
5
10
11
12
2
1
9
28
33
33
8
7
6
29
13
15
19
23
22
27
21
20
18
14
17
16
19
26
24
26
25

No.	Part Number	Description	Q'ty	Remarks
1	0259 52 301	Grommet, Release Wire	1	
2	0223 52 302	Clamp, Release Wire	1	
3	2835 52 330	Lock, Bonnet	1	
4	99806 0616	Bolt, Bonnet Lock	4	
	99952 0618	Washer, Plain	4	
5	0305 52 331	Spring, Bonnet Lock	1	
6	1524 52 390	Stop, Bonnet	6	
7	99806 0616	Bolt, Stop	4	
	99952 0618	Washer, Plain	4	
8	0866 52 397A	Rubber, Cushion	1	
9	1524 52 410A	Wire, Release-Bonnet	1	
10	0866 52 451	Cushion, Bonnet	2	
11	99831 0640	Screw, Cushion	2	
12	99907 0600	Nut, Cushion	2	
13	8042 52 510A	Lid, Trunk (Coupe)	1	
	8038 52 510A	Lid, Trunk (Sedan)	1	
14	0866 52 610	Hinge (R)	1	(Sedan & Coupe)
15	0866 52 620	Hinge (L)	1	
16	99794 0616	Bolt Set, Hinge	4	
17	99940 0602	Nut, Hinge	4	

52 BONNET & TRUNK LID

No.	Part Number	Description		Q'ty	Remarks
18	99952 0822	Washer, Plain		2	
19	0305 52 628	Rubber, Cushion		2	
20	0866 52 631	Washer, Wave		2	
21	99940 0603	Nut, Hinge		2	
22	0866 52 661A	Spring (R), Balance		1	
23	0866 52 671A	Spring (L), Balance		1	
24	0866 52 750A	Striker, Trunk Lid	(Sedan & Coupe)	1	
25	0305 52 850B	Lock, Lid		1	
26	99786 0616	Bolt, Lock & Striker		4	
	99953 0600	Washer, Plain		4	
	99971 0600	Washer, Spring		4	
27	0376 52 901B	Weatherstrip (Coupe)		1	
	0866 52 901B	Weatherstrip (Sedan)		1	
28	0111 53 771	Cushion, Bonnet		2	
29	0223 58 306	Rubber, Cushion		1	
30	0866 74 250	Bonnet		1	
31	0305 99 521	Hook Set, Bonnet		1	
32	0305 52 312B	Spring		1	
33	0866 99 522A	Hinge Set, Bonnet		2	

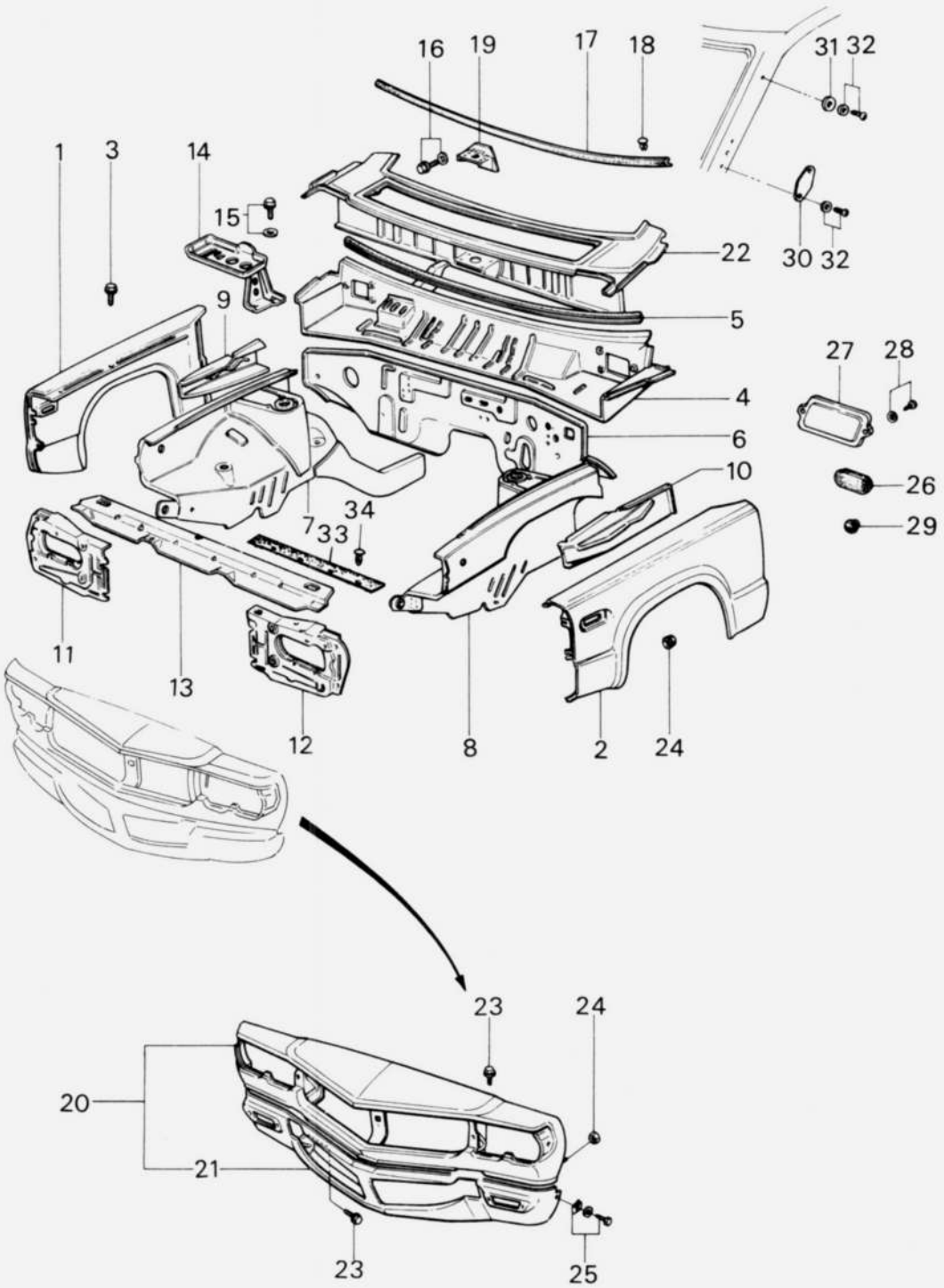
16
19
17
18
31
32
1
3
14
15
22
30
32
9
5
27
28
4
6
10
26
29
7
34
33
11
13
12
8
2
24
23
24
20
21
23
25

No.	Part Number	Description	Q'ty	Remarks
1	1524 51 020B	Panel (R), Front Fender	1	
2	1524 51 120B	Panel (L), Front Fender	1	
3	99796 0612	Bolt, Fender	12	
	99953 0600	Washer, Plain	12	
	99971 0600	Washer, Spring	12	
4	1524 53 020H	Panel, Dashboard-Upper	1	
5	0866 53 029A	Rubber, Edge	1	
6	1524 53 100I	Panel, Dashboard-Lower	1	(Manual)
	1620 53 100D	Panel, Dashboard-Lower (Cooler)	1	(Manual)
	1525 53 100I	Panel, Dashboard-Lower	1	(Automatic)
	1621 53 100C	Panel, Dashboard-Lower (Cooler)	1	(Automatic)
7	1881 53 220G	Panel (R), Wheel Apron	1	
8	1881 54 220H	Panel (L), Wheel Apron	1	
9	0866 53 281A	Reinforcement (R)	1	
10	0866 54 281A	Reinforcement (L)	1	
11	0866 53 720E	Panel (R), Shroud	1	
12	0866 54 720B	Panel (L), Shroud	1	
13	0866 53 750A	Panel, Shroud-Upper	1	
14	3625 53 780	Carrier, Battery	1	
15	99796 0816	Bolt, Battery Carrier	4	

BODY PANELS (FRONT)

No.	Part Number	Description	Q'ty	Remarks
	99953 0800	Washer, Plain	4	
	99971 0800	Washer, Spring	4	
16	99796 0612	Bolt, Lock Bracket	4	
17	0866 53 979A	Rubber, Seal	1	
18	99264 0531A	Rivet, Seal Rubber	8	
19	0866 53 980	Bracket, Lock	1	
20	1128 70 120A	Panel Ass'y, Nose	1	
21	3743 70 160	Skirt, Front	1	
22	1524 74 040	Panel, Cowl	1	
23	99796 0612	Bolt, Nose Panel	6	
	99953 0600	Washer, Plain	6	
	99971 0600	Washer, Spring	6	
24	99940 0602	Nut, Nose & Skirt	4	
25	99864 0616	Screw, Skirt & Fender	2	
	99952 0618	Washer, Plain	2	
	99896 0600	Nut, Spring	2	
26	0257 61 051	Grommet	1	(Cars Without Car Heater)
27	0366 61 070A	Cover, Dash Panel Upper	1	(Cars Without Car Heater)

No.	Part Number	Description	Q'ty	Remarks
28	99863 0516	Screw, Cover	2	
	99952 0500	Washer, Plain (Cars Without Car Heater)	2	
29	0118 56 242B	Plug, Hole	2	
30	0727 66 991A	Cover, Hole - Antenna	1	
31	0727 66 992	Cover, Hole - Antenna	1	(Without Auto Radio)
32	99863 0410B	Screw, Hole Cover	3	
	99953 0400B	Washer, Plain	3	
33	0459 56 751	Rubber, Seal	1	
34	99264 0531B	Rivet, Real Rubber	4	

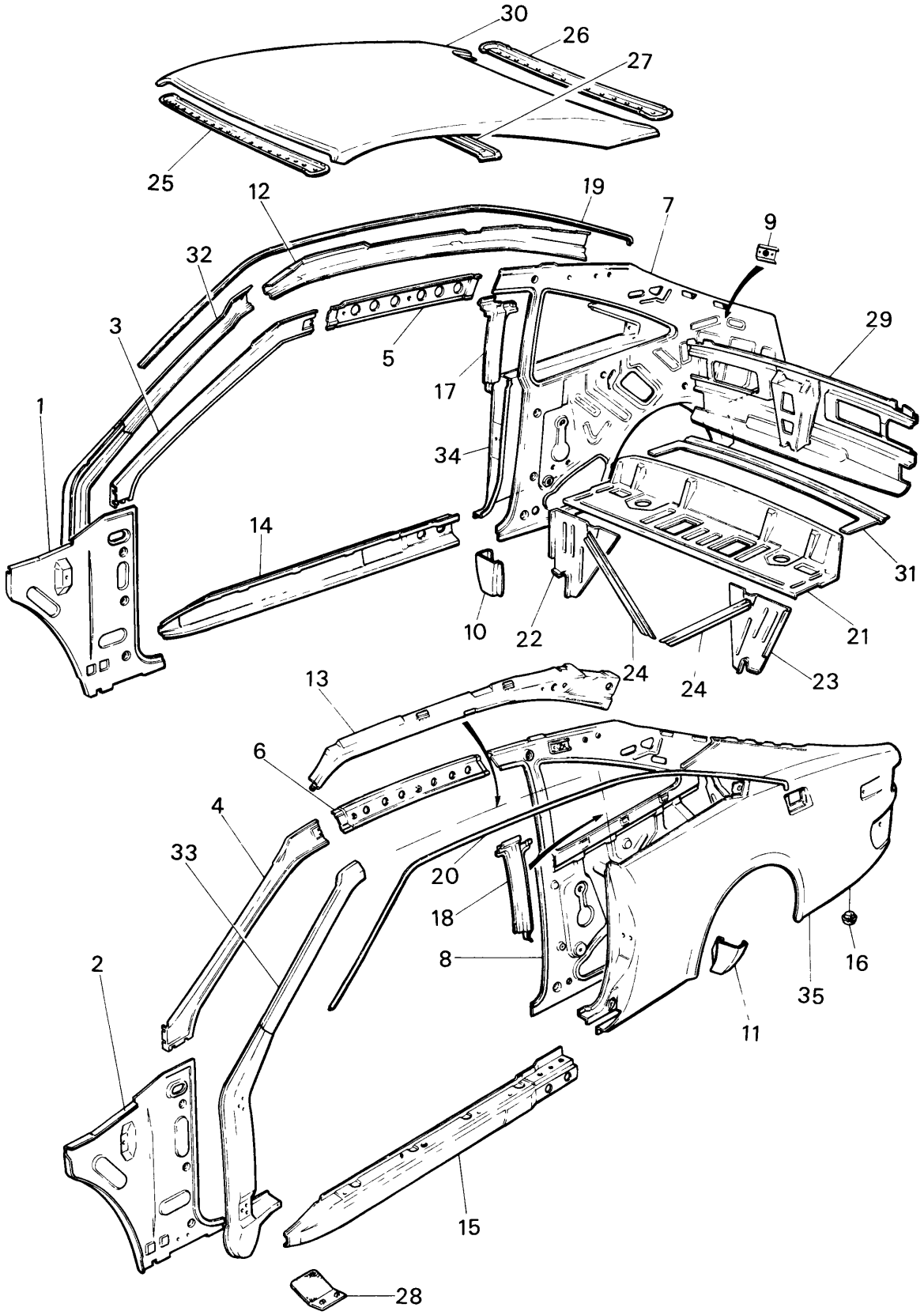
30
26
27
25
12
19
7
9
32
3
5
29
17
1
34
14
31
10
22
21
24
24
23
13
6
4
33
20
18
8
16
35
2
11
15
28

No.	Part Number	Description	Q'ty	Remarks
1	1524 53 320 B	Panel (R), Cowl Side	1	
2	1524 54 320 B	Panel (L), Cowl Side	1	
3	0376 53 330	Pillar (R), Front - Inner	1	
4	0376 54 330	Pillar (L), Front - Inner	1	
5	0376 53 340	Rail (R), Roof - Inner	1	
6	0376 54 340	Rail (L), Roof - Inner	1	
7	0376 53 350 D	Panel (R), Quarter - Inner	1	
8	0376 54 350 F	Panel (L), Quarter - Inner	1	
9	0223 56 190 A	Nut Plate (Included in Fig. No. 7 & 8)	2	
10	0376 53 391 A	Plate (R), End	1	
11	0376 54 391 A	Plate (L), End	1	
12	0376 53 430	Rail (R), Roof - Outer	1	
13	0376 54 430	Rail (L), Roof - Outer	1	
14	0376 53 451	Sill (R), Center - Outer	1	
15	0376 54 451	Sill (L), Center - Outer	1	
16	0259 53 455	Plug, Drain	6	
17	0376 53 500 A	Pillar (R), Center - Outer	1	
18	0376 54 500 A	Pillar (L), Center - Outer	1	
19	3745 53 591	Rail (R), Rain	1	
20	3745 54 591	Rail (L), Rain	1	

BODY PANELS (SIDE, COUPE)

No.	Part Number	Description	Q'ty	Remarks
21	0376 53 810D	Tray, Package	1	
22	0866 53 830A	Brace (R), Side	1	
23	0866 54 830A	Brace (L), Side	1	
24	0866 53 845	Brace, Diagonal	2	
25	0376 53 920	Header, Front	1	
26	0376 53 941	Header, Rear	1	
27	0376 53 950	Reinforcement, Roof	1	
28	0824 56 999	Valve, Check-Side Sill	2	
29	3745 70 050	Panel, Rear End	1	
30	0376 74 030	Panel, Roof	1	
31	0376 74 050	Panel, Rear Deck	1	
32	1562 74 090	Pillar (R), Hinge Outer	1	
33	1562 74 120	Pillar (L), Hinge Outer	1	
34	0376 74 100	Panel (R), Rear Fender	1	
35	0376 74 130	Panel (L), Rear Fender	1	

BODY PANELS (SIDE, SEDAN)

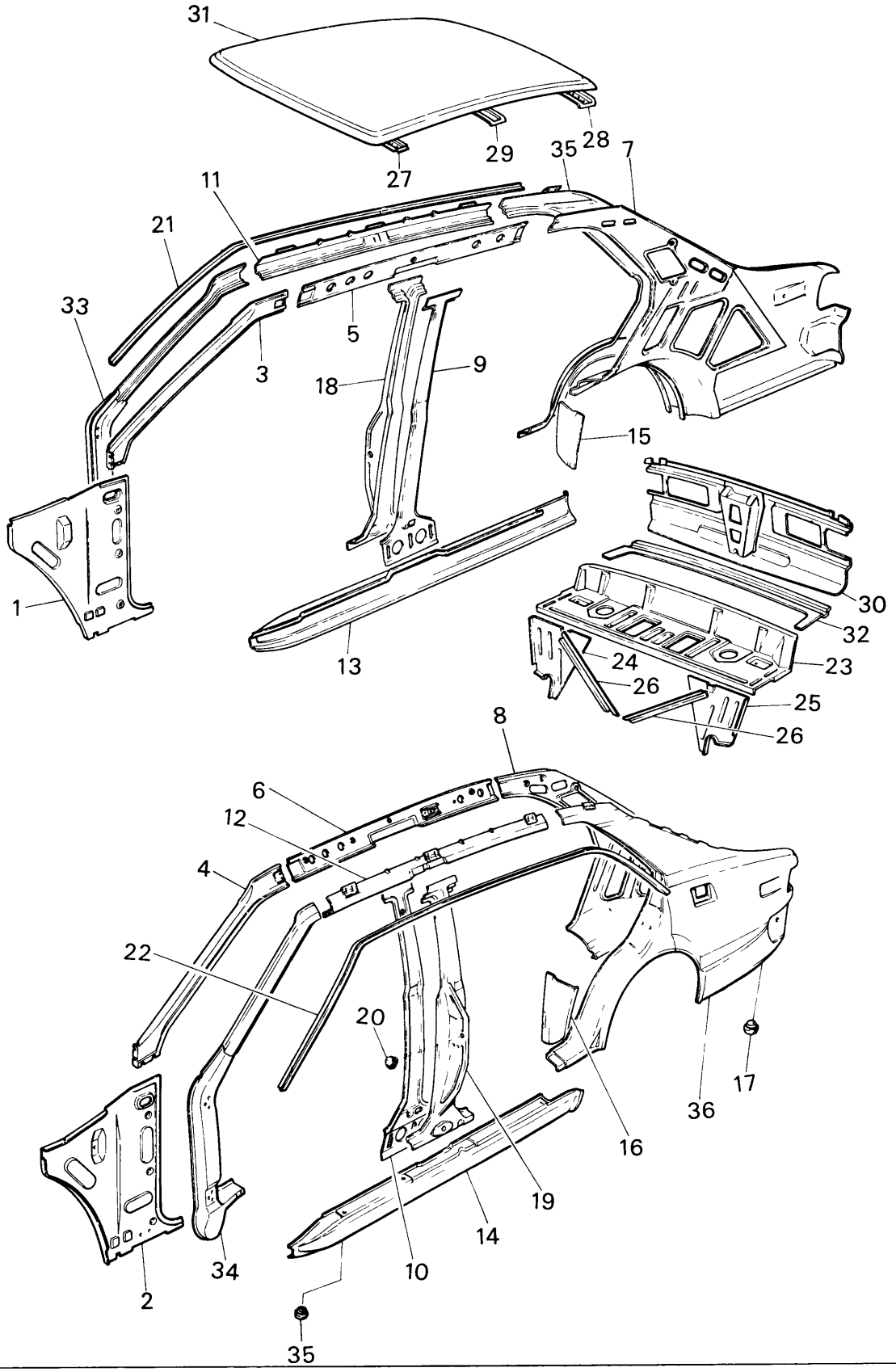

No.	Part Number	Description	Q'ty	Remarks
1	1524 53 320 B	Panel (R), Cowl Side	1	
2	1524 54 320 B	Panel (L), Cowl Side	1	
3	0866 53 330	Pillar (R), Front - Inner	1	
4	0866 54 330	Pillar (L), Front - Inner	1	
5	0866 53 340 B	Rail (R), Roof - Inner	1	
6	0866 54 340 A	Rail (L), Roof - Inner	1	
7	0866 53 350 C	Pillar (R), Rear - Inner	1	
8	0866 54 350 C	Pillar (L), Rear - Inner	1	
9	1881 53 380 A	Pillar (R), Center - Inner	1	
10	1881 54 380 A	Pillar (L), Center - Inner	1	
11	0866 53 430	Rail (R), Roof - Outer	1	
12	0866 54 430	Rail (L), Roof - Outer	1	
13	0866 53 451	Sill (R), Side	1	
14	0866 54 451	Sill (L), Side	1	
15	0866 53 452	Plate (R), Filler	1	
16	0866 54 452	Plate (L), Filler	1	
17	0259 53 455	Plug, Drain (Side, Sill Outer···6, Rear Fender···2)	8	
18	0866 53 500 A	Pillar (R), Center - Outer	1	
19	0866 54 500 A	Pillar (L), Center - Outer	1	
20	0118 56 242 B	Plug, Drain - Center Pillar	2	

BODY PANELS (SIDE, SEDAN)

No.	Part Number	Description	Q'ty	Remarks
21	3743 53 591	Rail (R), Rain	1	
22	3743 54 591	Rail (L), Rain	1	
23	0866 53 810E	Tray, Package	1	
24	0866 53 830A	Brace (R), Side	1	
25	0866 54 830A	Brace (L), Side	1	
26	0866 53 845	Brace, Diagonal	2	
27	0866 53 920	Header, Front	1	
28	0866 53 941	Header, Rear	1	
29	0866 53 950	Reinforcement, Roof	1	
30	3743 70 050	Panel, Rear End	1	
31	0866 74 030	Panel, Roof	1	
32	0866 74 050	Panel, Rear Deck	1	
33	0866 74 090	Pillar (R), Hinge-Outer	1	
34	0866 74 120	Pillar (L), Hinge-Outer	1	
35	0866 74 100	Panel (R), Rear Fender	1	
36	0866 74 130	Panel (L), Rear Fender	1	

BODY PANELS (SIDE, STATION WAGON)

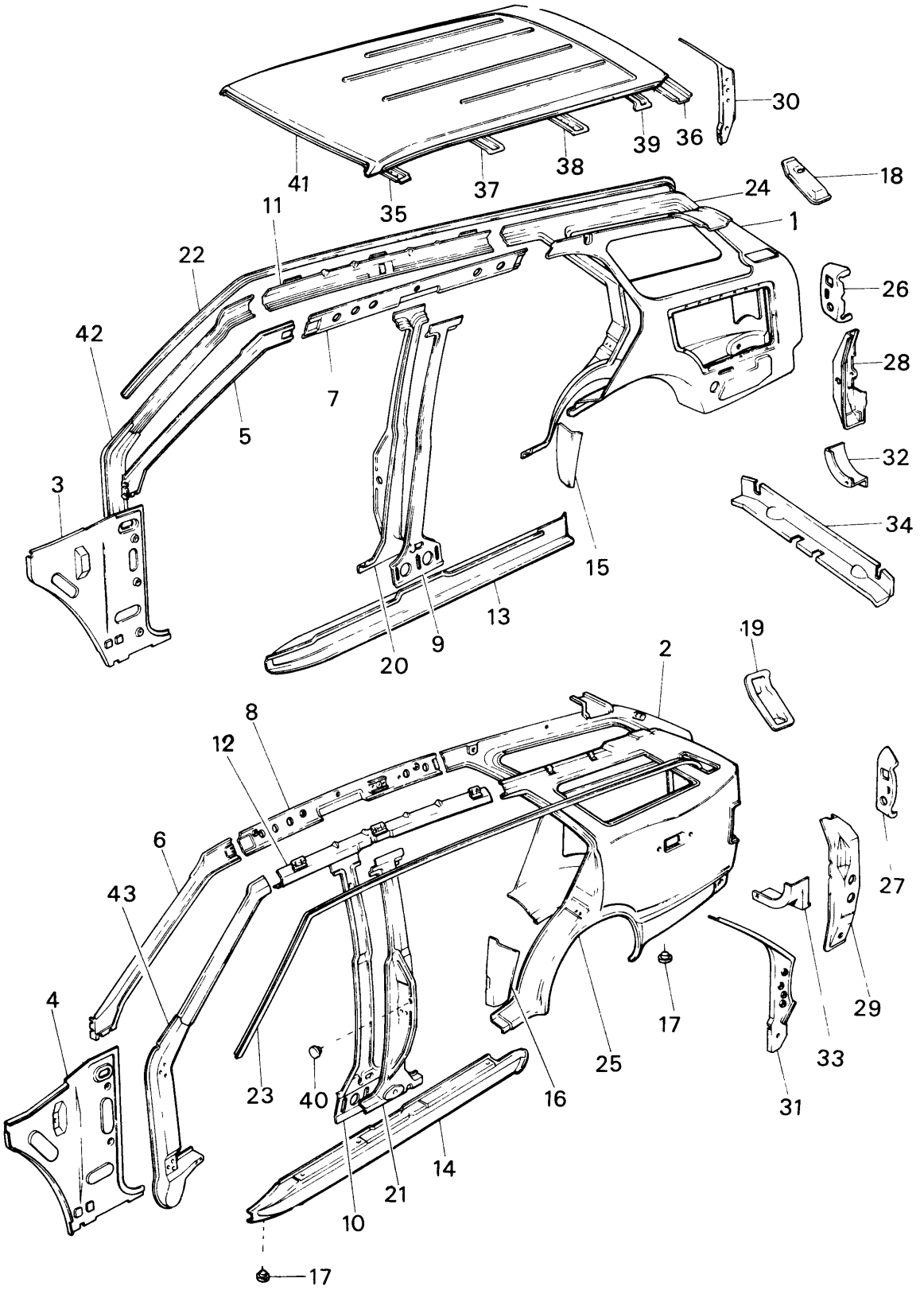

BODY PANELS (SIDE, STATION WAGON) 53 54

No.	Part Number	Description	Q'ty	Remarks
1	3629 53 310	Panel (R), Inside	1	
2	0585 54 310A	Panel (L), Inside	1	
3	1524 53 320B	Panel (R), Cowl Side	1	
4	1524 54 320B	Panel (L), Cowl Side	1	
5	0866 53 330	Pillar (R), Front Inner	1	
6	0866 54 330	Pillar (L), Front Inner	1	
7	0585 53 340A	Rail (R), Roof Inner	1	
8	0585 54 340A	Rail (L), Roof Inner	1	
9	1881 53 380A	Pillar (R), Center-Inner	1	
10	1881 54 380A	Pillar (L), Center-Inner	1	
11	0585 53 430	Rail (R), Roof Outer	1	
12	0585 54 430	Rail (L), Roof Outer	1	
13	0866 53 451	Sill (R), Side Outer	1	
14	0866 54 451	Sill (L), Side Outer	1	
15	0866 53 452	Plate (R), Filler	1	
16	0866 54 452	Plate (L), Filler	1	
17	0259 53 455	Plug, Drain (Side Sill···6, Rear Fender··· 2)	8	
18	0585 53 480B	Chamber (R)	1	
19	0585 54 480B	Chamber (L)	1	
20	0866 53 500A	Pillar (R), Center-Outer	1	

BODY PANELS (SIDE, STATION WAGON)

No.	Part Number	Description	Q'ty	Remarks
21	0866 54 500A	Pillar (L), Center-Outer	1	
22	3747 53 591	Rail (R), Rain	1	
23	3747 54 591	Rail (L), Rain	1	
24	1544 53 600A	Panel (R), Fender	1	
25	1544 54 600A	Panel (L), Fender	1	
26	0585 53 651	Housing (R), Lamp	1	
27	0585 54 651	Housing (L), Lamp	1	
28	0585 53 660A	Reinforcement (R)	1	
29	0585 54 660A	Reinforcement (L)	1	
30	0585 53 670A	Pillar (R), Rear-Outer	1	
31	0585 54 670A	Pillar (L), Rear-Outer	1	
32	0585 53 691	Junction (R), Center	1	
33	0585 54 691	Junction (L), Center	1	
34	1889 53 701	Cross Member, Rear-Outer	1	
35	0866 53 920	Header, Front	1	
36	0585 53 941	Header, Rear	1	
37	0866 53 950	Reinforcement, Roof	1	
38	0866 53 951	Reinforcement, Roof	1	
39	0585 53 970A	Reinforcement, Roof	1	
40	0118 56 242B	Plug, Drain-Center Pillar	2	

No.	Part Number	Description	Q'ty	Remarks
41	0585 74 030	Panel, Roof	1	
42	0866 74 090	Pillar (R), Hinge Outer	1	
43	0866 74 120	Pillar (L), Hinge Outer	1	

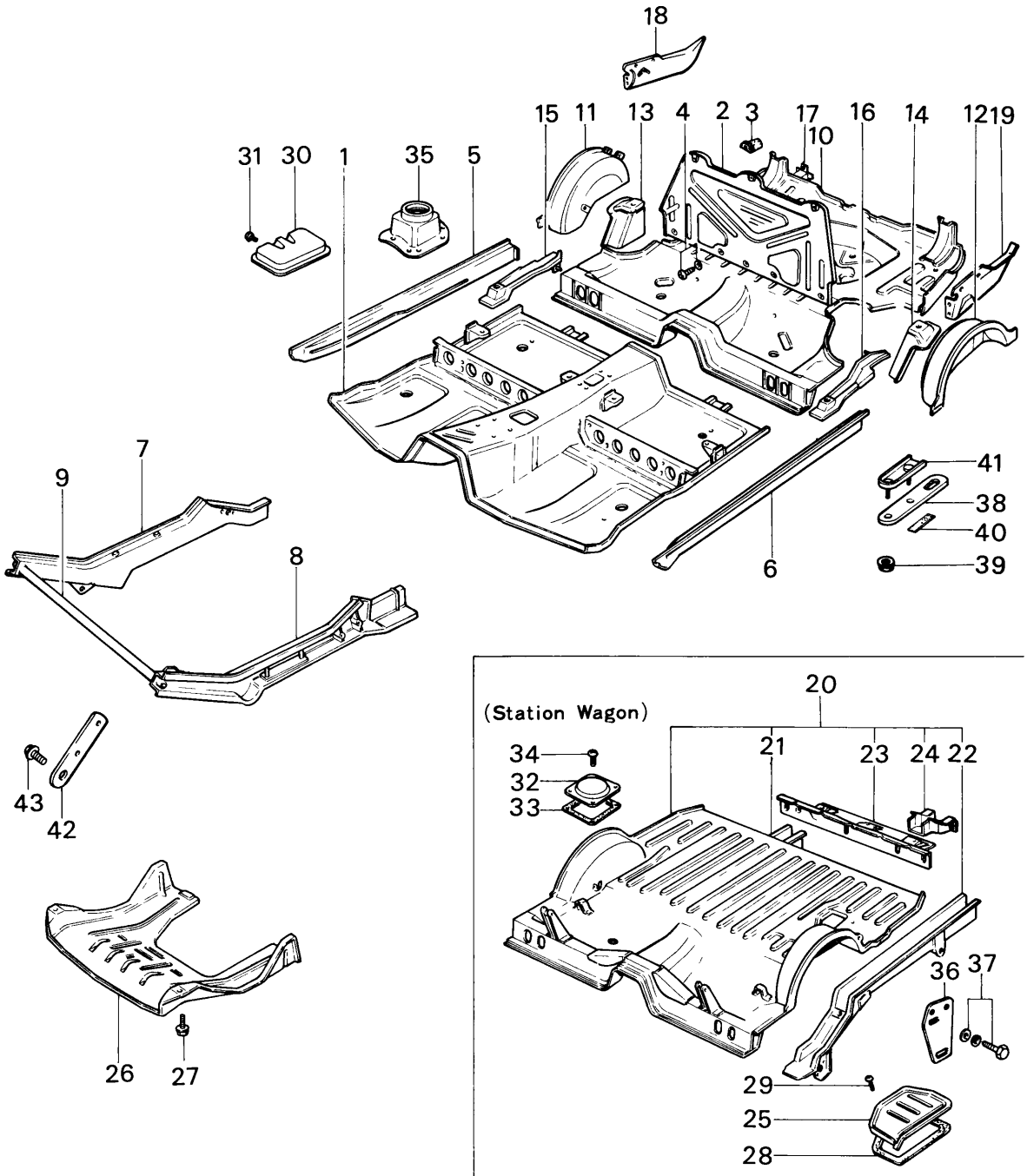
18
15 11 13 4 2 3 17 16 14 12 19
10
31 30 1 35 5
7
9
8
41
38
40
39
6
43
42
26 27
(Station Wagon)
20
21 23 24 22
34
32
33
36 37
29
25
28

No.	Part Number	Description	Q'ty	Remarks
1	1273 56 010C	Pan, Front Floor (4 Speed)	1	
	1281 56 010C	Pan, Front Floor (5 Speed)	1	
	1275 56 010C	Pan, Front Floor (Automatic)	1	
2	3710 56 070A	Panel, Bulkhead	1	
3	3710 56 074	Protector, Cord	1	(Sedan & Coupe)
4	99865 0510	Screw, Bulkhead Plate	8	
	99952 0516	Washer, Plain	8	
5	0376 56 080D	Sill (R), Side-Inner (Coupe)	1	
	0866 56 080E	Sill (R), Side-Inner (Sedan & Station Wagon)	1	
6	0376 56 580B	Sill (L), Side-Inner (Coupe)	1	
	0866 56 580C	Sill (L), Side-Inner (Sedan & Station Wagon)	1	
7	1881 56 110G	Frame (R), Front	1	
8	1881 56 610F	Frame (L), Front	1	
9	0866 56 171A	Member No. 1, Cross	1	
10	1881 56 210F	Pan, Rear Floor (Sedan & Coupe)	1	
11	0866 56 330	Panel (R), Wheel House	1	
12	0866 56 830	Panel (L), Wheel House	1	
13	0866 56 350B	Bracket (R), Damper	1	
14	0866 56 850	Bracket (L), Damper	1	
15	0866 56 310B	Frame (R)	1	

No.	Part Number	Description	Q'ty	Remarks
16	0866 56 810C	Frame (L)	1	
17	1881 56 870A	Frame (L), Side-Up	1	
	1881 56 370A	Frame (R), Side-Up	1	
18	0376 56 381A	Panel (R), Floor Side (Coupe)	1	
	0866 56 381A	Panel (R), Floor Side (Sedan)	1	
19	0376 56 880	Panel (L), Floor Side (Coupe)	1	
	0866 56 880	Panel (L), Floor Side (Sedan)	1	
20	3629 56 300D	Pan, Rear Floor	1	
21	1889 56 330	Member (R), Rear	1	
22	1889 56 830A	Member (L), Rear	1	(Station Wagon)
23	1889 56 500	Member, Rear Cross	1	
24	1889 56 580A	Bracket	2	
25	0585 56 901B	Cover, Service Hole (Station Wagon)	1	
26	1128 56 901B	Cover, Under	1	
27	99786 0616	Bolt, Under Cover	4	
	99952 0618	Washer, Plain	4	
28	0585 56 902	Tape	1	(Station Wagon)
29	99868 0408	Screw, Tapping	4	

No.	Part Number	Description	Q'ty	Remarks
30	8038 56 951	Protector	1	
31	99786 0612	Screw, Tapping	2	
32	0585 56 961	Cover, Service Hole	1	
33	0585 56 962	Tape, Hole Cover	1	(Station Wagon)
34	99830 0610	Screw	4	
35	0866 56 981	Insulator (Manual)	1	
36	0585 78 521B	Hook, Rear	1	
37	99794 1025	Bolt, Rear Hook	1	(Station Wagon)
	99951 1022	Washer, Plain	1	
38	1881 78 521	Hook, Rear	1	
39	99940 1000	Nut, Rear Hook	2	(Sedan & Coupe)
40	1755 50 037	Spacer, Bumper	2	
41	1881 78 530	Reinforcement	1	
42	8038 78 541	Hook, Front	2	
43	99796 1020	Bolt, Front Hook	4	

BODY PANELS (FLOOR ATTACHMENT)

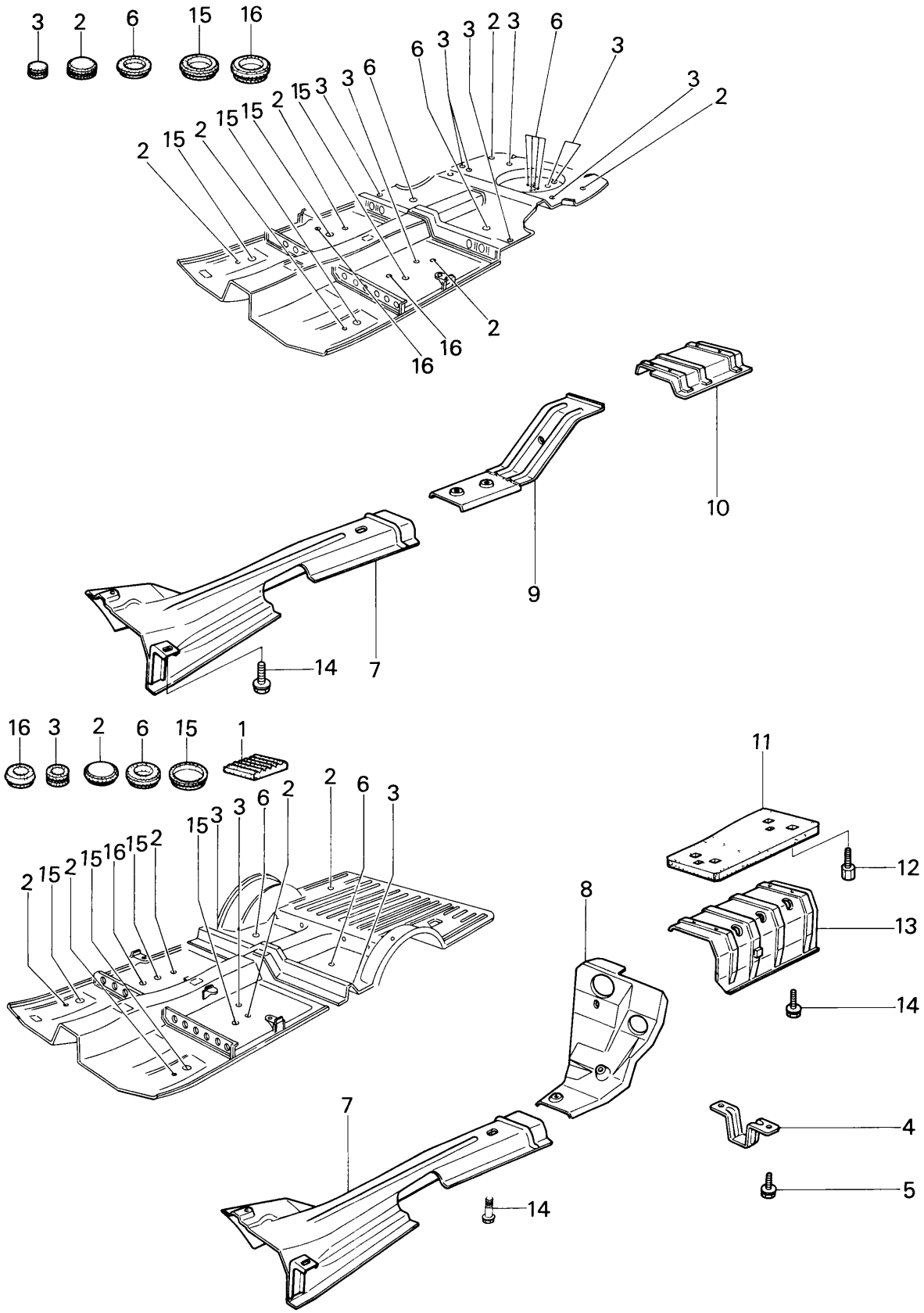

BODY PANELS (FLOOR ATTACHMENT)

No.	Part Number	Description		Q'ty	Remarks
1	0187 56 235	Supporter, Seat	(Station Wagon)	2	
2	0118 56 241	Plug, Drain (20φ)	(Sedan & Coupe)	6	
			(Station Wagon)	5	
3	0118 56 242B	Plug, Drain (12φ)	(Sedan & Coupe)	10	
			(Station Wagon)	4	
4	1137 56 541B	Hanger, Silencer		1	
5	99786 0816	Bolt, Silencer Hanger	(Station Wagon)	4	
	99952 0822	Washer, Plain		4	
6	0810 56 639	Cover, Serrice Hole (40φ)	(Sedan & Coupe)	6	
			(Station Wagon)	2	
7	1273 56 711B	Insulator No. 3		1	
8	1571 56 712E	Insulator No. 4	(Station Wagon)	1	
9	1570 56 720C	Insulator No. 4	(Sedan & Coupe)	1	
10	1128 56 730	Insulator No. 2		1	
11	1571 56 750	Insulator No. 5	(Station Wagon)	1	
12	1571 56 755	Bolt, Insulator		4	
13	1137 56 920	Insulater No. 2	(Station Wagon)	1	
14	99786 0612	Bolt, Insulator		10	
	99952 0618	Washer, Plain		10	
15	0866 56 971	Cover, Hole (50φ)		4	
16	0559 58 868	Plug, Service Hole		1	

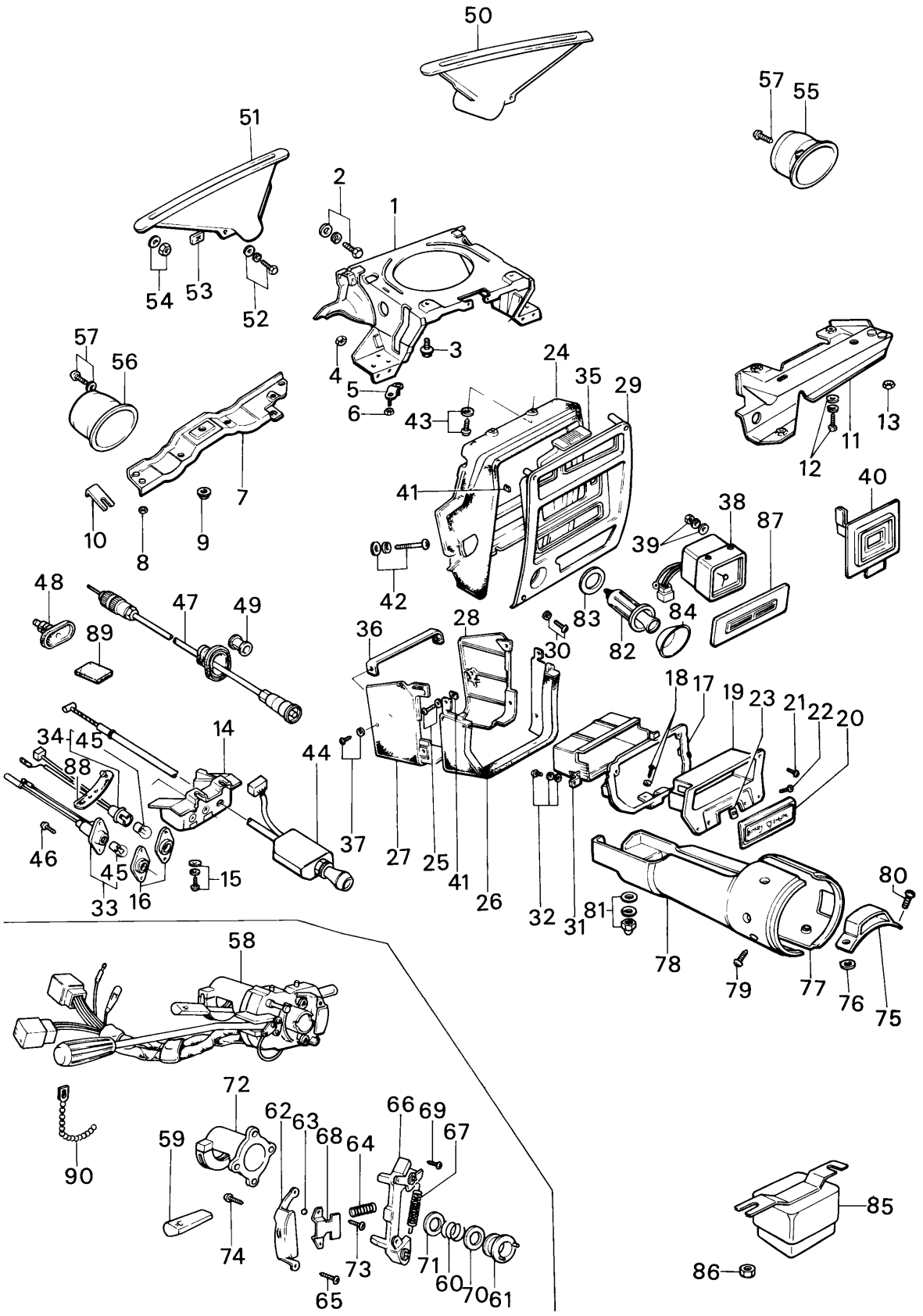
50
57
55
51
2
1
54
53
52
57
56
4
3
24
35
29
5
6
43
13
11
12
40
7
41
38
39
87
10
8
9
42
83
84
82
48
47
49
89
36
28
30
18
17
19
23
21
22
20
34
45
14
88
44
46
45
15
37
27
25
41
26
32
31
81
80
33
16
78
79
77
76
75
58
72
62
63
68
64
66
69
67
59
90
74
73
71
60
70
61
65
85
86

No.	Part Number	Description	Q'ty	Remarks
1	0866 55 100G	Bracket, Center Panel	1	
2	99786 0820	Bolt, Center Panel Bracket	2	
	99953 0800	Washer, Plain	2	
	99971 0800	Washer, Spring	2	
3	99786 0816	Bolt, Center Panel Bracket	2	
4	99940 0802	Nut, Center Panel Bracket	2	
5	0370 55 150	Bracket, Cooler	1	
6	99940 0602	Nut, Cooler Bracket	2	
7	1524 55 210B	Member (L), Lower	1	
8	99940 0602	Nut, Member	4	
9	99940 0800	Nut, Member	1	
10	0866 55 216	Shim (t=1.0)		
	0866 55 217	Shim (t=2.0) } Selective use	1	
	0866 55 218	Shim (t=3.2)		
11	1524 55 230B	Member (R), Lower	1	
12	99786 0616	Bolt, Lower Member	1	
	99952 0618	Washer, Plain	1	
13	99940 0602	Nut, Lower Member	2	
14	3625 55 330A	Bracket, Choke (BLK) } Selective use	1	
	3737 55 330 20	Bracket, Choke (BRN)	1	

No.	Part Number	Description	Q'ty	Remarks
15	99839 0520 B	Screw, Choke Bracket	2	
	99952 0500 B	Washer, Plain	2	
	99971 0500	Washer, Spring	2	
16	1570 55 340	Cover, Lamp	2	
17	0866 55 360 C	Holder, Grille	1	
18	99740 0616	Bolt, Grille Holder	1	
	99952 0618	Washer, Plain	1	
19	0866 55 365 C00	Body, Grille (BLK)	1	
20	0866 55 368	Ornament, Tuner	1	
21	99838 0412 B	Screw, Grille Body	2	
22	99861 0416 B	Screw, Grille Body	2	
23	99896 0400	Nut, Spring-Grille Body	2	
24	0865 55 401 D00	Hood, No. 1 (BLK)	1	Selective use
	0866 55 401 D20	Hood No. 1 (BRN)	1	
25	99862 0525 B	Screw, Hood No. 1	4	
	99967 0500 B	Washer	4	
26	0865 55 402 B00	Hood No. 2 (BLK)	1	Selective use
	0866 55 402 A	Hood No. 2 (BRN)	1	
27	0865 55 403 B00	Hood No. 3 (R) (BLK)	1	Selective use
	0866 55 403 B	Hood No. 3 (R) (BRN)	1	

No.	Part Number	Description	Q'ty	Remarks
28	0865 55 404 B00	Hood No. 3 (L) (BLK)	1	Selective use
	0866 55 404 B	Hood No. 3 (L) (BRN)	1	Selective use
29	1562 55 405	Plate, Center	1	
30	99863 0510	Screw, Center Plate	4	
	99952 0500	Washer, Plain	4	
31	0866 55 406 B00	Box, Hood Center (BLK)	1	
32	99838 0412	Screw, Hood Box	2	
	99952 0400	Washer, Plain	2	
	99971 0400	Washer, Spring	2	
33	1570 55 410	Lamp, Warning - Choke Cable	1	
34	3625 55 410	Lamp, Warning - Over Heat EXH. System	1	
35	0866 55 412 A	Lens, Illumination	1	
36	0866 55 590	Stiffener, Hood	1	
37	99837 0525 B	Screw, Stiffener	2	
	99967 0500 B	Washer	2	
38	1872 55 710	Clock, Auto	1	
39	99906 0500	Nut, Auto Clock	1	
	99952 0500	Washer, Plain	1	
	99971 0500	Washer, Spring	1	
40	1561 55 720 A	Ornament, Without Auto Clock	1	

No.	Part Number	Description	Q'ty	Remarks
41	0820 56 905	Nut, Spring-Hood No. 1, & No. 2	4	
42	99838 0650	Screw, Hood No. 1	2	
	99952 0600	Washer, Plain	2	
	99971 0600	Washer, Spring	2	
43	99833 0620	Screw, Hood No. 1	2	
	99952 0618	Washer, Plain	2	
	99971 0600	Washer, Spring	2	
44	3625 60 050	Cable, Choke	1	
45	99701 6030	Bulb, Warning Lamp	2	
46	99865 0410	Screw, Lamp Cover	4	
47	1562 60 070	Cable, Speedometer	1	
48	0370 60 073B	Grommet, Speedometer Cable	1	
49	99686 0800	Protector, Speedometer Cable	1	
50	0866 60 101	Nozzle (R), Defroster	1	
51	0866 60 102	Nozzle (L), Defroster	1	
52	99865 0516	Bolt, Defroster Nozzle	2	
53	99896 0500	Nut, Spring-Defroster Nozzle	2	
54	99940 0501	Nut, Defroster Nozzle	4	
	99952 0516	Washer, Plain	4	
55	0866 60 120	Guide (R), Ventilator	1	

No.	Part Number	Description	Q'ty	Remarks
56	0866 60 130	Guide (L), Ventilator	1	
57	99864 0412	Screw, Ventilator Guide	4	
	99952 0412	Washer, Plain	4	
58	3514 66 120	Switch, Combination (Station Wagon)	1	
	3596 66 120 A	Switch, Combination (Sedan & Coupe)	1	(Components not Available yet)
59	1011 66 121	Knob, Light Switch	1	
60	0317 60 252	Spring, Cancel Cam	1	
61	0317 60 253	Cam, Cancel	1	
62	1634 60 254	Bracket, Fixing	1	
63	0317 60 255	Ball	1	
64	0317 60 256	Spring, Arm Set	1	
65	0317 60 257	Screw, Bracket	1	
66	0317 60 258	Arm	1	
67	0317 60 259	Spring, Ratchet	1	
68	0317 60 261	Plate, Set	1	
69	0317 60 262	Screw, Set Plate	2	
70	0866 60 263	Washer, "A"	1	
71	0866 60 264	Washer, "B"	1	
72	1011 66 125	Band	1	

No.	Part Number	Description	Q'ty	Remarks
73	0317 60 266	Screw	2	
74	0866 60 267	Screw, Light Switch	2	
75	1611 60 311	Plate, Name-Column Cover	1	
76	1611 60 312	Spacer, Name Plate	2	
77	1620 60 335	Cover (R), Column	1	
78	1620 60 345	Cover (L), Column	1	
79	99832 0408B	Screw, Column Cover	2	
80	99832 0412B	Screw, Column Cover	2	
81	99945 0500B	Nut, Cap-Column Cover	1	
	99952 0500B	Washer, Plain	1	
	99971 0500	Washer, Spring	1	
82	0866 60 720A	Lighter, Cigar	1	
83	0305 60 715	Shield, Heat-Cigar Lighter	1	
84	0866 60 721	Protector, Cigar Lighter	1	
85	1540 60 930	Relay, Turn Signal	1	(Station Wagon)
86	99940 0602	Nut, Turn Signal Relay	2	(Station Wagon)
87	0316 66 865A	Ornament, Cars Without Auto Radio	1	
88	0187 66 991	Clip, Rubber	1	
89	0208 66 949	Pad, Protector	1	
90	99709 0255	Clip, Band	1	

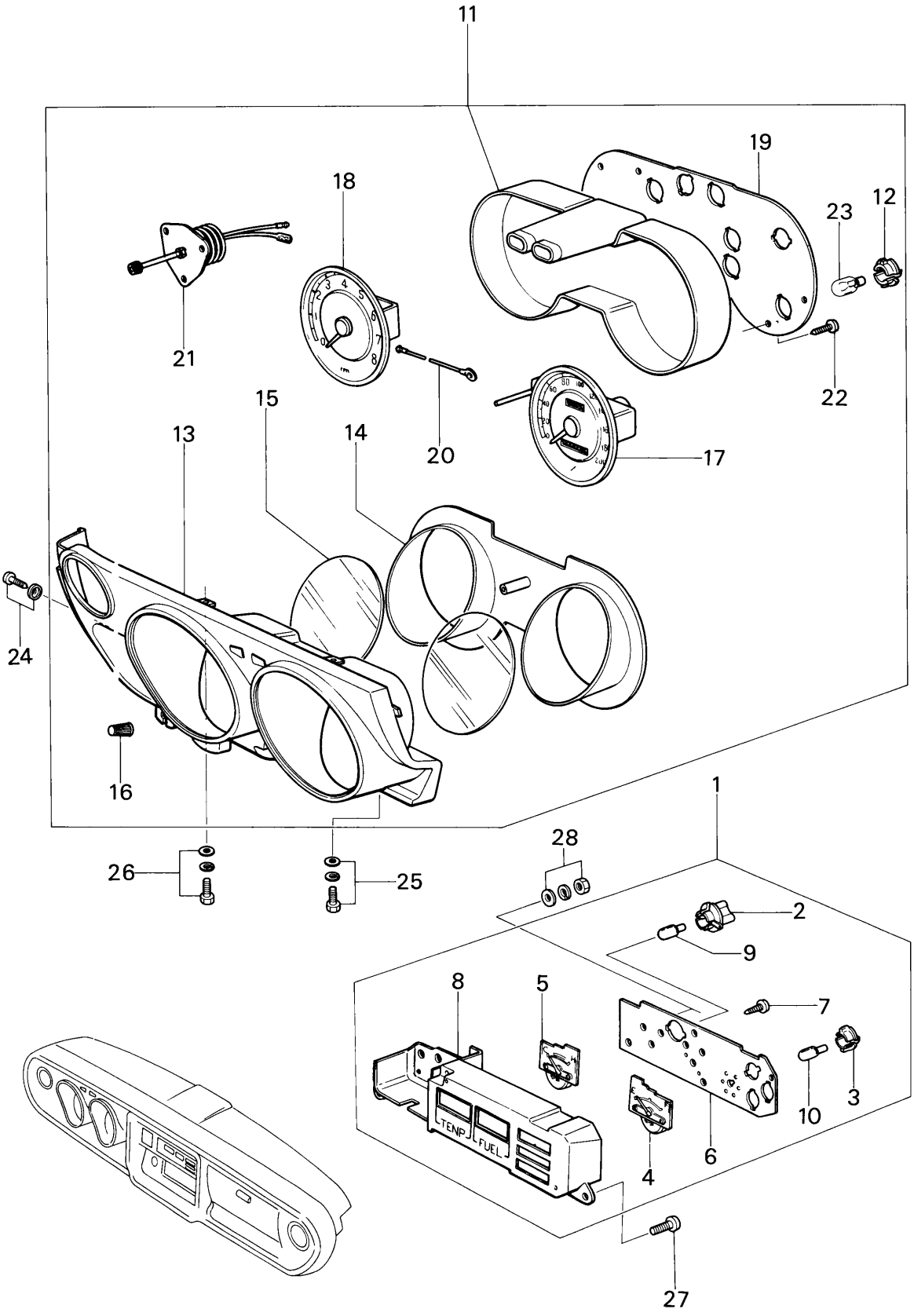
11
19
18
12
23
21
22
15
13
14
20
17
24
16
26
25
28
1
2
9
8
5
7
10
3
6
4
27
TEMP
FUEL

No.	Part Number	Description	Q'ty	Remarks
1	3743 55 460	Meter, Combination	1	
2	0259 55 261	Socket	1	
3	3625 55 261	Socket	3	
4	1562 75 122A	Meter, Fuel	1	
5	1562 75 123A	Thermometer	1	
6	3743 75 125	Plate, Print	1	
7	0275 75 140	Screw, Tapping	4	
8	3625 75 200	Case	1	
9	99701 6030	Bulb	1	
10	3625 75 139	Bulb	3	
11	3737 55 530A20	Meter Set (BRN)	1	(Manual)
	3743 55 530A00	Meter Set (BLK)	1	(Manual)
	3738 55 530A20	Meter Set (BRN)	1	(Automatic)
	3744 55 530A00	Meter Set (BLK)	1	(Automatic)
12	0259 55 261	Socket	9	
13	3631 75 010	Hood (BLK)	1	
	3737 75 010	Hood (BRN)	1	
14	0866 75 011	Plate, Window	1	
15	0866 75 013	Glass, Window	2	

No.	Part Number	Description	Q'ty	Remarks
16	0370 75 018	Knob, Trip	1	
17	1514 75 021 A	Meter	1	
18	3743 75 026	Tachometer (Manual)	1	
	3744 75 026	Tachometer (Automatic)	1	
19	3625 75 025	Plate, Print	1	
20	0866 75 028	Wire, Lead - Tachometer	1	
21	1881 75 040	Resistor	1	
22	0710 75 436	Screw, Tapping	1	
23	99701 6030	Bulb	3	
24	99836 0516 B	Screw	1	
	99967 0500 B	Washer	1	
25	99833 0616	Screw	3	
	99952 0618	Washer, Plain	3	
	99971 0600	Washer, Spring	3	
26	99838 0630	Bolt, Meter	2	
	99952 0618	Washer, Plain	2	
	99971 0600	Washer, Spring	2	
27	99865 0512	Screw, Tapping - Combination Meter	3	
28	99906 0400	Nut	1	

No.	Part Number	Description	Q'ty	Remarks
	99952 0400	Washer, Plain	1	
	99971 0400	Washer, Spring	1	

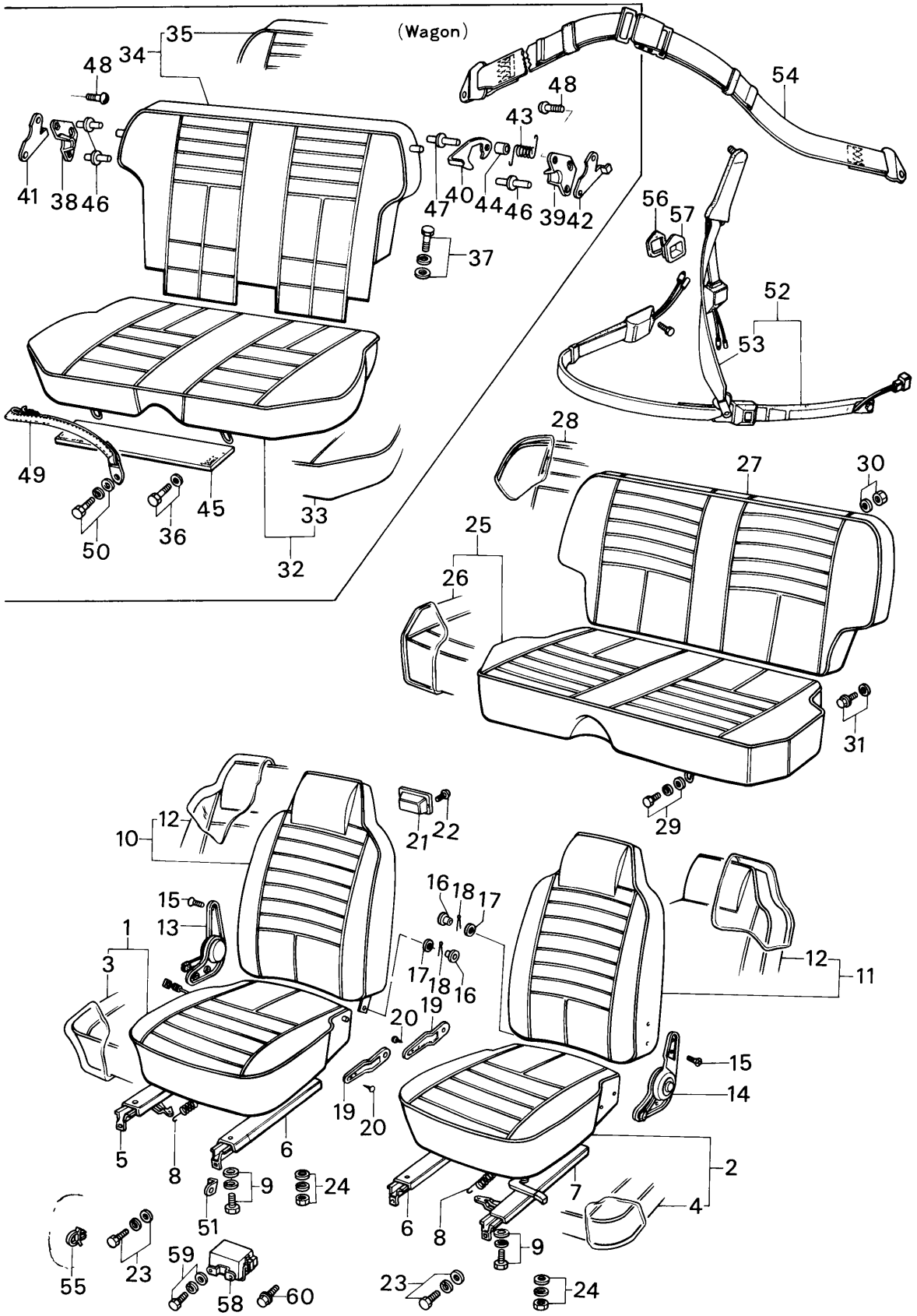
(Wagon)
35
34
48
41
38
46
49
50
36
45
33
32
47
40
44
46
39
42
37
48
43
54
56
57
52
53
28
27
30
25
26
31
29
10
12
21
22
15
13
1
3
5
8
9
24
51
55
23
59
58
60
6
20
19
16
18
17
12
11
15
14
2
4
7
6
8
9
23
24

No.	Part Number	Description	Q'ty	Remarks

When ordering the following Seats & Trims
Add colour code nos. given below after parts number
-32 (BRN) -35 (BLK) -36 (BEIG) (Vinyl Leather)
-27 (BRN) -37 (BLU) (Cloth)

1	1881 88 110	© Cushion (R), Front Seat (Vinyl Leather)	1	(Sedan & Station Wagon)
	3725 88 710	© Cushion (R), Front Seat (Cloth)	1	
	1882 88 110	© Cushion (R), Front Seat (Vinyl Leather)	1	(Coupe)
	3728 88 710	© Cushion (R), Front Seat (Cloth)	1	
2	1881 88 160	© Cushion (L), Front Seat (Vinyl Leather)	1	(Sedan & Station Wagon)
	3725 88 760	© Cushion (L), Front Seat (Cloth)	1	
	1882 88 160	© Cushion (L), Front Seat (Vinyl Leather)	1	(Coupe)
	3728 88 760	© Cushion (L), Front Seat (Cloth)	1	
3	1694 88 111	© Trim (R), Cushion (Vinyl Leather)	1	
	3725 88 711	© Trim (R), Cushion (Cloth)	1	
4	1694 88 161	© Trim (L), Cushion (Vinyl Leather)	1	
	3725 88 761	© Trim (L), Cushion (Cloth)	1	
5	0866 88 102	Adjuster No. 1, Seat (Sedan & Station Wagon)	1	
	1882 88 102	Adjuster No. 1, Seat (Coupe)	1	
6	0866 88 103	Adjuster No. 2, Seat	2	
7	0866 88 152	Adjuster No. 3, Seat	1	

No.	Part Number		Description	Q'ty	Remarks
8	3490 88 107		Spring, Seat Adjuster	2	
9	99801 0820		Bolt, Seat Adjuster	8	
	99952 0816		Washer, Plain	8	
	99971 0800		Washer, Spring	8	
10	1694 88 130	©	Seat (R), Back-Front (Vinyl Leather)	1	
	3725 88 730	©	Seat (R), Back-Front (Cloth)	1	
11	1694 88 180	©	Seat (L), Back-Front (Vinyl Leather)	1	
	3725 88 780	©	Seat (L), Back-Front (Cloth)	1	
12	1694 88 131	©	Trim, Back Seat (Vinyl Leather)	2	
	3725 88 731	©	Trim, Back Seat (Cloth)	2	
13	0866 88 101		Knuckle (R), Reclining (Sedan & Station Wagon)	1	
	1882 88 101		Knuckle (R), Reclining-With Foot Pedal (Coupe)	1	
14	0866 88 151		Knuckle (L), Reclining	1	
15	2155 57 109		Screw, Reclining Knuckle	8	
16	0866 88 105		Bush, Hinge	2	
17	0866 88 106		Washer, Hinge	2	
18	99221 3020		Pin, Split-Hinge	2	
19	1881 88 107		Protector	2	

No.	Part Number	Description	Q'ty	Remarks
20	99864 0412B	Screw, Protector	4	
21	0259 68 250	Tray, Ash-Rear	1	
22	99864 0406	Screw, Ash Tray	2	
23	99786 0820B	Bolt, Front Seat	4	
	99952 0822	Washer, Plain	4	
	99971 0800	Washer, Spring	4	
24	99940 0800	Nut, Front Seat	4	
	99952 0822	Washer, Plain	4	
25	1693 57 200A©	Cushion, Rear Seat (Vinyl Leather)	1	(Sedan)
	3725 57 800 ©	Cushion, Rear Seat (Cloth)	1	
	1694 57 200A©	Cushion, Rear Seat (Vinyl Leather)	1	(Coupe)
	3728 57 800 ©	Cushion, Rear Seat (Cloth)	1	
26	1693 88 201 ©	Trim, Cushion (Vinyl Leather)	1	(Sedan)
	3725 88 801 ©	Trim, Cushion (Cloth)	1	
	1694 88 201 ©	Trim, Cushion (Vinyl Leather)	1	(Coupe)
	3728 88 801 ©	Trim, Cushion (Cloth)	1	
27	1694 57 250A©	Seat, Rear Back (Vinyl Leather)	1	(Sedan & Coupe)
	3725 57 850 ©	Seat, Rear Back (Cloth)	1	

No.	Part Number		Description	Q'ty	Remarks
28	1694 88 251	©	Trim, Back Seat (Vinyl Leather)	1	(Sedan & Coupe)
	3725 88 851	©	Trim, Back Seat (Cloth)	1	
29	99786 0825B		Bolt, Rear Seat Cushion	2	
	0317 57 015		Washer	2	
30	99940 0800		Nut, Rear Back Seat	2	(Sedan & Coupe)
	99952 0822		Washer, Plain	2	
31	99786 0820B		Screw, Rear Back Seat	2	
	99952 0822B		Washer, Plain	2	
32	3629 57 200A	©	Cushion, Rear Seat (Vinyl Leather)	1	
	3729 57 800	©	Cushion, Rear Seat (Cloth)	1	(Station Wagon)
33	3629 88 201	©	Trim, Cushion (Vinyl Leather)	1	
	3729 88 801		Trim, Cushion (Cloth)	1	
34	3629 57 250A	©	Seat, Rear Back (Vinyl Leather)	1	
	3729 57 850	©	Seat, Rear Back (Cloth)	1	(Station Wagon)
35	3629 88 251	©	Trim, Back Seat (Vinyl Leather)	1	
	3729 88 851	©	Trim, Back Seat (Cloth)	1	

No.	Part Number	Description	Q'ty	Remarks
36	99786 0825B	Bolt, Rear Seat Cushion	2	
	0317 57 015	Washer	2	
37	99864 0625	Bolt, Rear Back Seat	2	
	99952 0600	Washer, Plain	2	
38	3629 57 012A	Stopper (R), Rear Seat Back	1	
39	3629 57 013A	Stopper (L), Rear Seat Back	1	
40	0585 57 015	Plate, Lock-Rear Back Seat	1	
41	0585 57 016	Washer (R), Stopper	1	
42	0585 57 017	Washer (L), Stopper	1	
43	0585 57 018	Spring, Stopper	1	
44	0585 57 019	Bush, Stopper	1	(Station Wagon)
45	3629 57 021	Pad, Rear Seat Lower	1	
46	0710 57 022	Rivet, Stopper	3	
47	0710 57 023	Rivet, Stopper	1	
48	99806 0620	Bolt, Stopper	4	
	99952 0600	Washer, Plain	4	
	99971 0600	Washer, Spring	4	
49	3629 57 080A	Band, Rear Seat Cushion	1	
50	99806 0620	Bolt, Band	1	
	99952 0600	Washer, Plain	1	

No.	Part Number	Description	Q'ty	Remarks
	99971 0600	Washer, Spring (Station Wagon)	1	
51	0636 41 353	Hanger, Spring-Front Seat	2	
52	1881 57 900D 00	Belt (L), Safety-Front Seat (BLK)	1	(Sedan & Station Wagon)
	3726 57 900 00	Belt (R), Safety-Front Seat (BLK)	1	(Sedan & Station Wagon)
	1882 57 900D 00	Belt (L), Safety-Front Seat (BLK)	1	(Coupe)
	3727 57 900 00	Belt (R), Safety-Front Seat (BLK)	1	(Coupe)
53	3727 88 901	Belt, Seat "A"-Front (R) Side	1	
54	1881 57 940	Belt, Safety-Rear Seat (With Retractor)	2	
	3630 57 940	Belt, Safety-Rear Seat	2	
55	1011 67 912	Clip, Seat Switch Cord	2	
56	1882 57 996	Tape, Seal-Cover	2	(Coupe)
57	1882 57 998	Cover, Seal	2	(Coupe)
58	1757 57 999A	"G" Sencer, Seat Belt	1	
59	99796 0612	Bolt, "G" Sencer	1	
	99953 0600	Washer, Plain	1	
	99971 0600	Washer, Spring	1	
60	99794 0612	Bolt, "G" Sencer	1	

FRONT SIDE DOOR (GLASS)

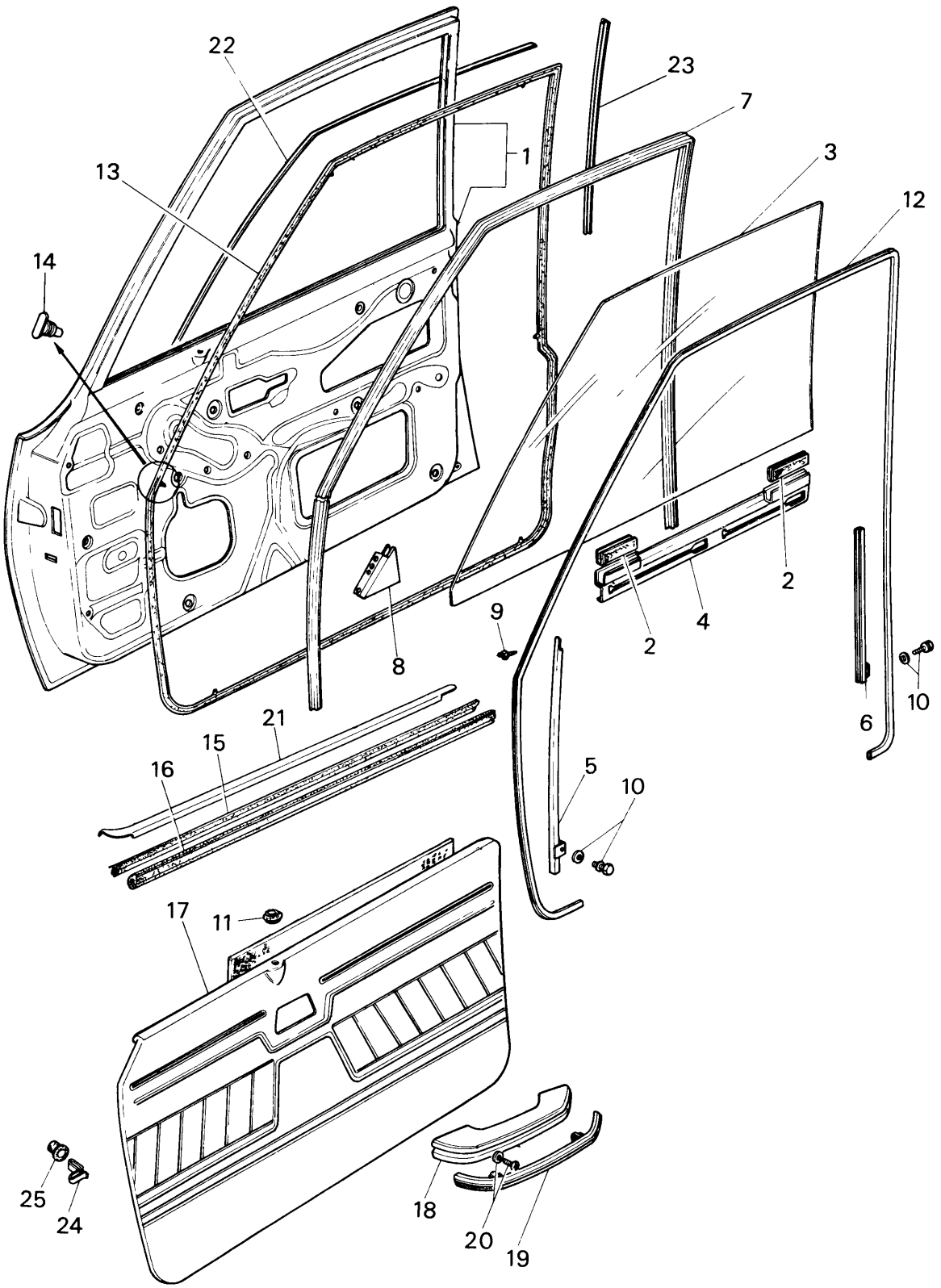

No.	Part Number	Description	Q'ty	Remarks
1	1620 58 010B	Body (R), Door	1	(Sedan)
	1620 59 010B	Body (L), Door	1	(Sedan)
	1622 58 010B	Body (R), Door	1	(Coupe)
	1622 59 010B	Body (L), Door	1	(Coupe)
	3747 58 010	Body (R), Door	1	(Station Wagon)
	3747 59 010	Body (L), Door	1	(Station Wagon)
	0866 58 020A	Panel (R), Outer	1	(Sedan & Station Wagon)
	1540 59 020	Panel (L), Outer	1	(Sedan & Station Wagon)
	1622 58 020	Panel (R), Outer	1	(Coupe)
	1622 59 020	Panel (L), Outer	1	(Coupe)
2	2292 58 232	Rubber, Strip-Door Glass	4	
3	0368 58 501A	Glass (R), Door (Transparent)	1	(Sedan & Station Wagon)
	0866 58 501A	Glass (R), Door (Blue Pane)	1	(Sedan & Station Wagon)
	0368 59 501A	Glass (L), Door (Transparent)	1	(Sedan & Station Wagon)
	0866 59 501A	Glass (L), Door (Blue Pane)	1	(Sedan & Station Wagon)
	0374 58 501A	Glass (R), Door (Transparent)	1	(Coupe)
	0376 58 501A	Glass (R), Door (Blue Pane)	1	(Coupe)
	0374 59 501A	Glass (L), Door (Transparent)	1	(Coupe)
	0376 59 501A	Glass (L), Door (Blue Pane)	1	(Coupe)

FRONT SIDE DOOR (GLASS)

No.	Part Number	Description	Q'ty	Remarks
4	0305 58 505	Bracket (R), Lift	1	
	0305 59 505	Bracket (L), Lift	1	
5	0866 58 603	Guide "A" (R), Glass	1	
	0866 59 603	Guide "A" (L), Glass	1	
6	0376 58 604	Guide "B" (R), Glass	1	(Coupe)
	0376 59 604	Guide "B" (L), Glass	1	(Coupe)
	0866 58 604	Guide "B" (R), Glass	1	(Sedan & Station Wagon)
	0866 59 604	Guide "B" (L), Glass	1	(Sedan & Station Wagon)
7	0376 58 605	Channel, Glass Run (Coupe)	2	
	0866 58 605	Channel, Glass Run (Sedan & Station Wagon)	2	
8	0866 58 620	Bracket, Corner	2	
9	99832 0410	Screw, Glass Guide	4	
10	99806 0612	Bolt, Glass Guide	4	
	99971 0600	Washer, Spring	4	
	99951 0618	Washer, Plain	2	
	2850 13 332	Washer, Plain	2	
11	0223 58 692A	Grommet	2	
12	0398 58 755 01	Welt, Seaming (BLK)	2	
	0398 58 755 20	Welt, Seaming (BRN)	2	

No.	Part Number	Description	Q'ty	Remarks
13	0376 58 760A	Weatherstrip (R)	1	(Coupe)
	0376 59 760A	Weatherstrip (L)	1	(Coupe)
	0866 58 760A	Weatherstrip (R)	1	(Sedan & Station Wagon)
	0866 59 760A	Weatherstrip (L)	1	(Sedan & Station Wagon)
14	0305 58 762	Fastener	50	(Sedan & Station Wagon)
			54	(Coupe)
15	0376 58 781D	Weatherstrip, Outer (Coupe)	2	
	0866 58 781D	Weatherstrip, Outer (Sedan & Station Wagon)	2	
16	0376 58 791	Weatherstrip, Inner (R)	1	(Coupe)
	0376 59 791	Weatherstrip, Inner (L)	1	(Coupe)
	0866 58 791	Weatherstrip, Inner (R)	1	(Sedan & Station Wagon)
	0866 59 791	Weatherstrip, Inner (L)	1	(Sedan & Station Wagon)

When ordering the following Trims
Add colour code nos. given below after parts number
-35 (BRN) -37 (BLK) -38 (BEIG)

17	1620 58 810A©	Trim (R), Door	1	(Sedan & Station Wagon)
	1620 59 810A©	Trim (L), Door	1	(Sedan & Station Wagon)
	1622 58 810B©	Trim (R), Door	1	(Coupe)
	1622 59 810B©	Trim (L), Door	1	(Coupe)

FRONT SIDE DOOR (GLASS)

No.	Part Number	Description	Q'ty	Remarks
18	0398 58 821A 00	Rest, Arm (BLK)	2	
	0398 58 821A 01	Rest, Arm (BEIG)	2	
	0398 58 821A 23	Rest, Arm (BRN)	2	
19	0398 58 822A 00	Garnish, Arm Rest (BLK)	2	
	0398 58 822A 01	Garnish, Arm Rest (BEIG)	2	
	0398 58 822A 23	Garnish, Arm Rest (BRN)	2	
20	99830 0520	Screw, Tapping-Arm Rest	4	
21	0376 58 880	Mould (R), Beltline	1	(Coupe)
	0376 59 880	Mould (L), Beltline	1	(Coupe)
	0866 58 880	Mould (R), Beltline	1	(Sedan & Wagon)
	0866 59 880	Mould (L), Beltline	1	(Sedan & Wagon)
22	0866 58 841A	Mould "A" (R), Sash	1	(Sedan & Wagon)
	0866 59 841A	Mould "A" (L), Sash	1	(Sedan & Wagon)
23	0866 58 842A	Mould "B" (R), Sash	1	(Sedan & Wagon)
	0866 59 842A	Mould "B" (L), Sash	1	(Sedan & Wagon)
24	0208 58 921	Fastener, Door Trim	14	(Sedan & Wagon)
			18	(Coupe)
25	0187 58 922	Seal, Fastener-Door Trim	14	(Sedan & Wagon)
			18	(Coupe)

FRONT SIDE DOOR (LOCK)

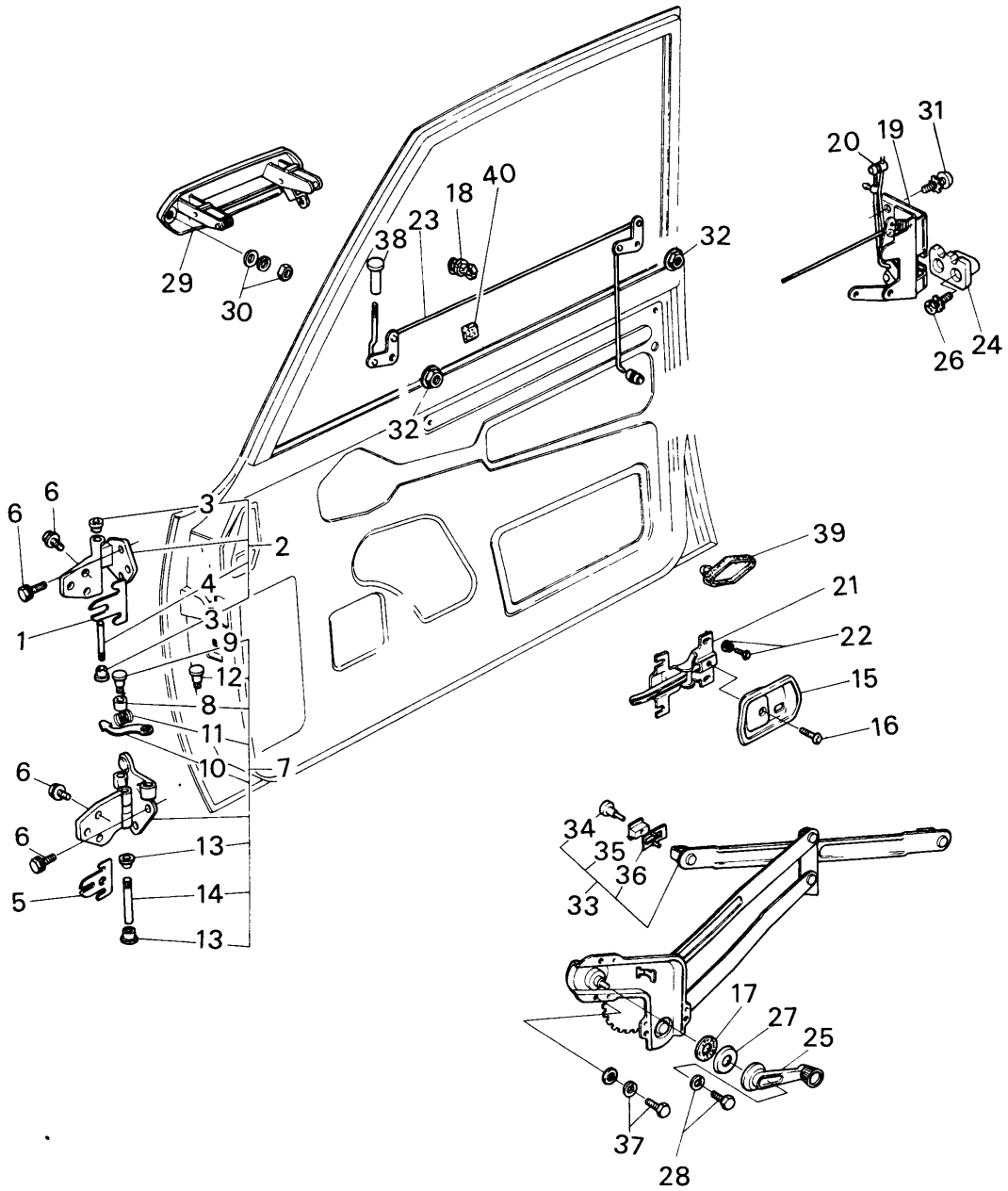

No.	Part Number	Description	Q'ty	Remarks
1	0866 58 201	Shim, Hinge"A" - Selective use	1	
2	0866 58 210	Hinge, "A"	2	
3	0223 58 721	Bush	4	
4	0187 58 731	Pin, Hinge	2	
5	1011 58 231	Shim, Hinge "B" - Selective use	1	
6	99786 0830	Bolt, Hinge	24	
	99971 0800	Washer, Spring	24	
7	0866 58 240D	Hinge, "B" (R)	1	
	0866 59 240D	Hinge, "B" (L)	1	
8	0866 58 281C	Roller	2	
9	0866 58 282B	Pin, "A"	2	
10	0866 58 291B	Lever, Check	2	
11	0866 58 292B	Spring, Check	2	
12	0866 58 293	Pin, "B"	2	
13	0223 58 721	Bush	4	
14	0187 58 731	Pin, Hinge	2	

FRONT SIDE DOOR (LOCK)

No.	Part Number	Description	Q'ty	Remarks
15	0866 58 303B	Cover (R), Inner Handle	1	
	0866 59 303B	Cover (L), Inner Handle	1	
16	99832 0408B	Screw, Cover	2	
17	0259 58 305B	Gasket, Window Regulator	2	
18	0305 58 309	Holder, Rod	4	
			1	
19	1566 58 310H	Lock (R), Door	1	(Coupe)
	1566 59 310H	Lock (L), Door	1	(Coupe)
	1534 58 310H	Lock (R), Door	1	(Sedan & Station Wagon)
	1534 59 310H	Lock (L), Door	2	(Sedan & Station Wagon)
20	0398 58 319A	Bush	4	
21	0866 58 321B	Handle, Inner	2	
22	99796 0508	Bolt, Inner Handle	6	
23	0376 58 330C	Rod (R)	1	(Coupe)
	0376 59 330C	Rod (L)	1	(Coupe)
	0866 58 330C	Rod (R)	1	(Sedan & Wagon)
	0866 59 330C	Rod (L)	1	(Sedan & Wagon)
24	0866 58 361C	Rack (R)	1	
	0866 59 361C	Rack (L)	1	

No.	Part Number	Description	Q'ty	Remarks
25	0223 58 370 D	Handle, Regulator	2	
26	1540 58 371	Screw, Rack	4	
	99975 0600	Washer	4	
27	0223 58 375 A	Escutcheon, Regulator Handle	2	
28	99806 0516	Bolt, Regulator Handle	2	
	99971 0500	Washer, Spring	2	
29	0866 58 410 A	Handle (R), Outer Side	1	
	0866 59 410 A	Handle (L), Outer Side	1	
	0305 58 411 A	Bush	2	
30	99906 0500	Nut, Outer	4	
	99951 0618	Washer, Plain	4	
	99971 0500	Washer, Spring	4	
31	99832 0630	Screw, Door Lock	6	
	99974 0600	Washer, Toothed	6	
32	99940 0600	Nut, Flange	4	
33	0866 58 560	Regulator (R)	1	
	0866 59 560	Regulator (L)	1	

FRONT SIDE DOOR (LOCK)

No.	Part Number	Description	Q'ty	Remarks
34	0223 58 303 A	Pin	4	
35	0223 58 304 A	Guide	4	
36	0223 58 311	Spring	4	
37	99806 0612	Bolt, Window Regulator	8	
	99971 0600	Washer, Spring	8	
	99951 0618	Washer, Plain	8	
38	0259 58 691	Knob, Door Lock	2	
39	0259 58 906	Cushion, Door Body	2	
40	0259 72 509	Pad, Door Lock	2	

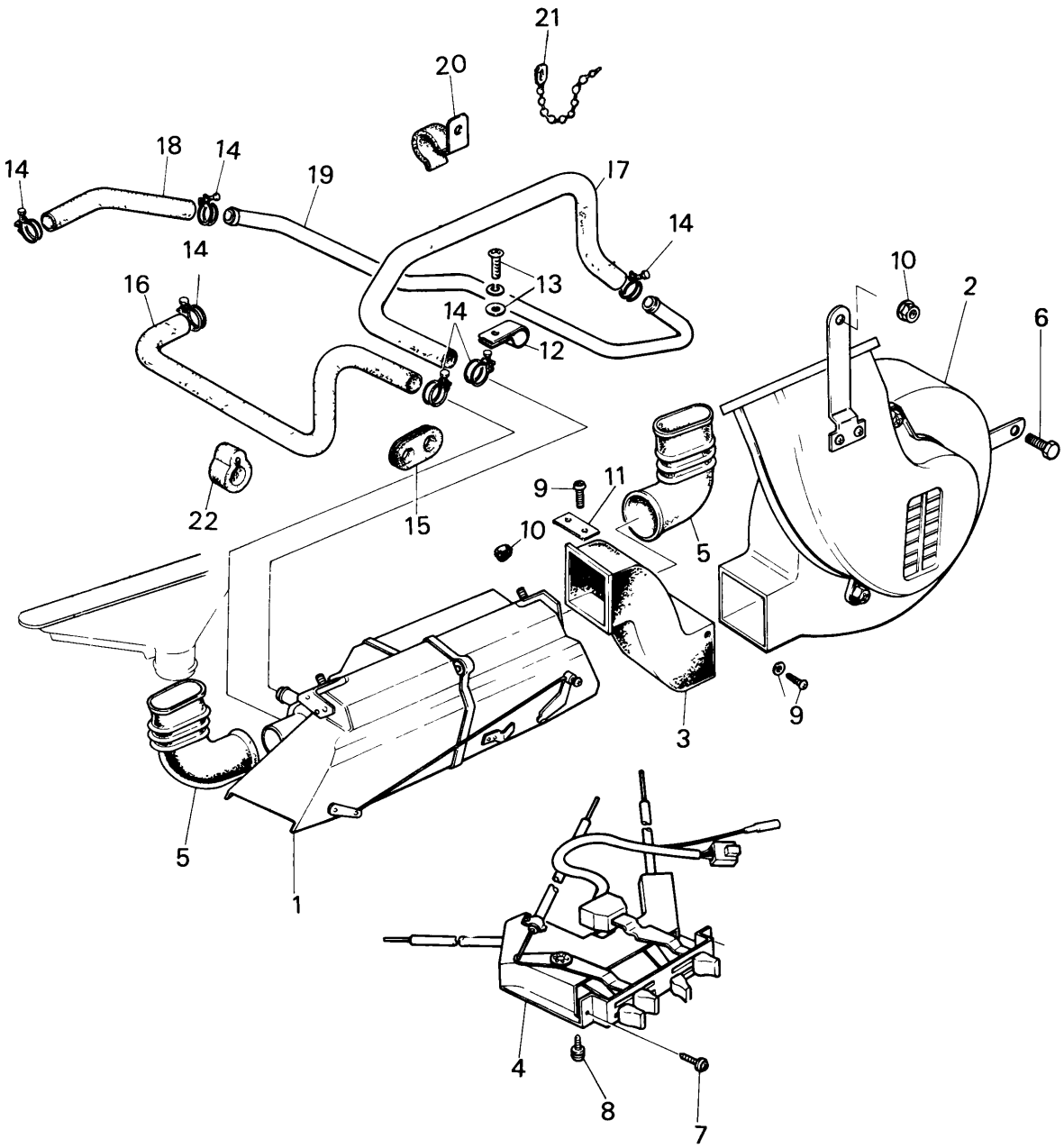
21
20
18
14
14
19
17
14
14
16
13
14
12
10
2
6
22
15
9
11
10
5
9
3
5
1
4
8
7

No.	Part Number	Description	Q'ty	Remarks
	3743 61 080	Heater Set	1	
1	1524 61 130 B	Unit, Heater	1	
2	3743 61 140	Blower	1	
3	1524 61 151 A	Duct	1	
4	3743 61 190	Control, Heater	1	(Components not available yet)
5	0866 61 251	Hose, Defroster	2	
6	99786 0830	Bolt, Blower	3	
	99952 0822	Washer, Plain	3	
7	99833 0516	Screw, Control	2	
	99952 0500	Washer, Plain	2	
	99971 0500	Washer, Spring	2	
8	99833 0512	Screw, Control	1	
	99952 0516	Washer, Plain	1	
	99971 0500	Washer, Spring	1	
9	99863 0512 B	Screw, Duct	2	
	99952 0516 B	Washer, Plain	2	
10	99940 0802	Nut, Heater Unit	3	
	99952 0822	Washer, Plain	1	
11	0862 61 156	Washer, Duct	1	
12	0824 61 192	Clip, Heater Pipe	2	

No.	Part Number	Description	Q'ty	Remarks
13	99865 0512	Screw, Clip	2	
14	99282 2600	Band, Heater Hose	6	
15	0866 61 235	Grommet, Heater Hose	1	
16	1562 61 211 C	Hose No. 1, Heater	1	
17	1620 61 212	Hose No. 2, Heater	1	
18	0862 61 215	Hose No. 3, Heater	1	
19	1881 61 214 A	Pipe, Heater	1	
20	1620 61 225	Clip, Heater Hose	1	
21	99709 0108	Band, Heater Hose	1	
22	1881 61 476	Protector, Heater Hose	1	

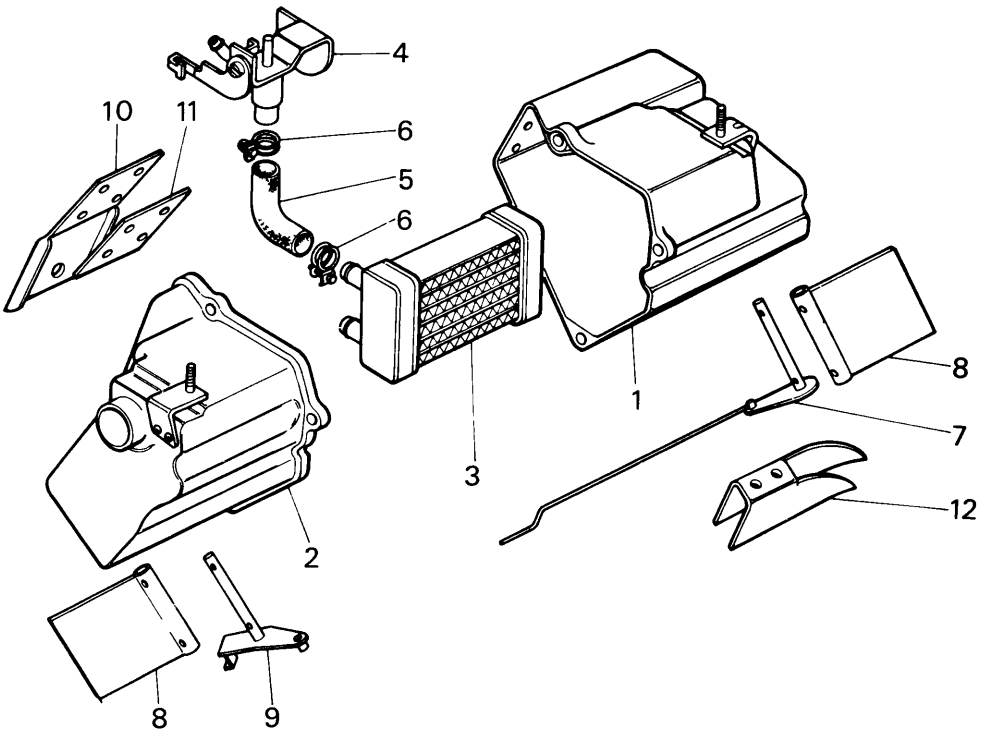
4
10
11
6
5
6
1
8
7
12
3
2
8
9

No.	Part Number	Description	Q'ty	Remarks
	1524 61 130B	Unit, Heater	1	
1	1524 76 501A	Case, Unit	1	
2	1524 76 502A	Case, Unit	1	
3	1524 76 503A	Radiator Unit	1	
4	1524 76 504A	Valve, Water	1	
5	1524 76 505A	Hose, Water	1	
6	99282 2600	Band, Hose	2	
7	0862 76 506	Shaft	1	
8	0862 76 507	Damper	2	
9	0862 76 508	Shaft	1	
10	0866 76 509	Bracket	1	
11	0866 76 511	Plate	1	
12	1524 76 512	Guide, Air	1	

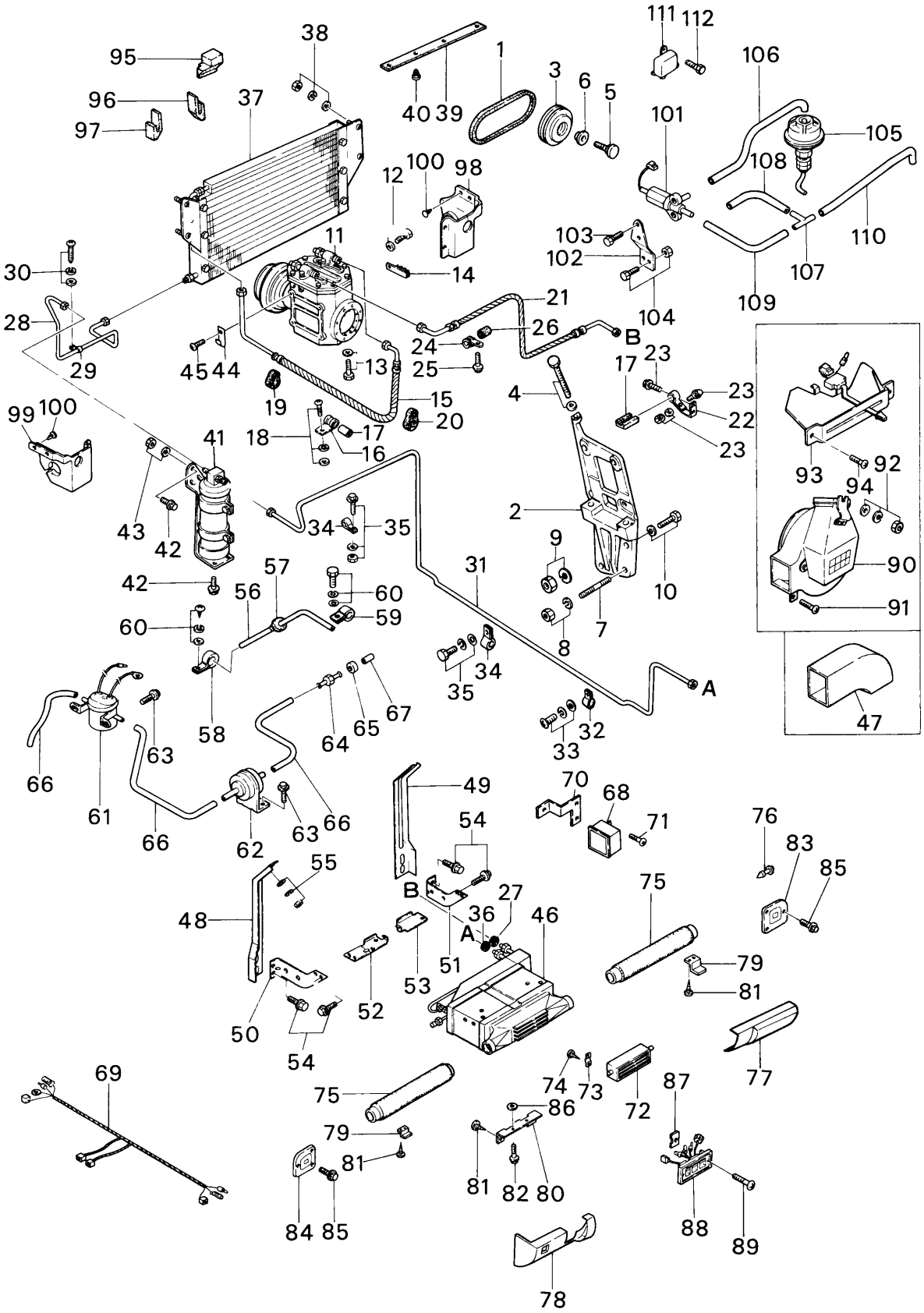
111 112
106
38
95
1
3 6 5
96
37
40 39
101
105
97
12 100 98
108
103
110
11
102
107
30
14
104
21
109
28
26
B
24
23
17
23
29
45 44
13
25
4
23
22
23
99 100
19
15
20
18
17
16
41
93
92
94
43
42
34
35
2
9
90
42
57
56
31
10
60
60
59
7
91
8
35
34
A
58
64
65
67
33
32
47
66
63
61
49
70
68
71
76
83
85
54
B
27
75
55
36
46
48
A
51
53
52
79
81
50
54
77
74 73
72
87
69
75
86
79
81
81 82 80
84 85
88
89
78

No.	Part Number	Description	Q'ty	Remarks
		Ⓝ Sign indicates Nippon Denso make		
	3737 61 390	Air Conditioner-Heater Less	1	Ⓝ
	3743 61 400	Air Conditioner-Heater Less	1	Ⓝ
1	1881 15 906 A	Belt, "V"	1	Ⓝ
2	1881 15 920 B	Bracket, Compressor (Fig No. 3 ~6 Included)	1	Ⓝ
3	1881 15 940	Pulley, Idle	1	Ⓝ
4	1757 15 966	Bolt, Adjust	1	Ⓝ
	99971 0600	Washer, Spring	1	
5	1881 15 967	Shaft, Idle Pulley	1	Ⓝ
6	0317 78 034	Collar "A", Idle Pulley	1	Ⓝ
7	99859 1035 A	Stud, Compressor Bracket	3	
8	99921 1000	Nut, Compressor Bracket	3	
	99971 1000	Washer, Spring	3	
9	99921 1200	Nut, Compressor Bracket	1	
	99971 1200	Washer, Spring	1	
10	99811 1025	Bolt, Compressor Bracket	1	
	99971 1000	Washer, Spring	1	
11	1881 61 450	Compressor	1	Ⓝ
12	99801 0825	Bolt, Compressor	4	
	99971 0800	Washer, Spring	4	

No.	Part Number	Description	Q'ty	Remarks
13	99801 0840	Bolt, Compressor	1	
	99971 0800	Washer, Spring	1	
14	0866 61 472	Clamp	1	Ⓝ
15	0866 61 461	Hose, Flexible - Compressor~Condenser	1	Ⓝ
16	0259 78 857	Clip, Flexible Hose	2	Ⓝ
17	0259 78 858	Packing, Flexible Hose Clip	3	Ⓝ
18	99868 0520	Bolt, Clip	2	
	99952 0500	Washer, Plain	2	
	99971 0500	Washer, Spring	2	
19	0866 61 476	Protector, Flexible Hose	1	Ⓝ
20	1540 61 476	Protector, Flexible Hose	1	Ⓝ
21	1562 61 462 A	Hose, Flexible - Compressor~Cooler Unit	1	Ⓝ
22	1562 61 469	Clip, Flexible Hose	1	Ⓝ
23	99806 0612	Bolt, Flexible Hose Clip	2	
	99952 0600	Washer, Plain	3	
	99971 0600	Washer, Spring	2	
	99906 0600	Nut	1	
24	1622 61 474	Clip, Flexible Hose	1	Ⓝ
25	99806 0628	Bolt, Flexible Hose Clip	1	
	99952 0600	Washer, Plain	1	

No.	Part Number	Description	Q'ty	Remarks	
	99971 0600	Washer, Spring	1		
26	1622 61 475	Packing, Flexible Hose Clip	1		Ⓝ
27	0866 61 475	Grommet, Flexible Hose	1		Ⓝ
28	1128 61 463	Pipe No. 1, Condenser~Receiver Tank	1		Ⓝ
29	0259 61 868	Clip, Pipe	1		Ⓝ
30	99868 0520	Screw, Pipe Clip	1		
	99952 0500	Washer, Plain	1		
	99971 0500	Washer, Spring	1		
31	1562 61 464 B	Pipe No. 2, Receiver Tank~Cooler Unit	1		Ⓝ
32	1562 61 473	Clip, Pipe	2		Ⓝ
33	99868 0520	Screw, Pipe Clip	1		
	99952 0618	Washer, Plain	1		
	99971 0500	Washer, Spring	1		
34	0259 78 868	Clip, Pipe	2		Ⓝ
35	99806 0612	Bolt, Pipe Clip	2		
	99952 0600	Washer, Plain	3		
	99971 0600	Washer, Spring	2		
	99906 0600	Nut	2		
36	0208 78 875	Grommet, Pipe No. 2	1		Ⓝ
37	1562 61 490	Condenser	1		Ⓝ

No.	Part Number	Description	Q'ty	Remarks
38	99906 0600	Nut, Condenser	4	
	99952 0618	Washer, Plain	4	
	99971 0600	Washer, Spring	4	
39	0459 56 751	Rubber, Seal-Condenser	1	Ⓝ
40	99264 0531B	Rivet, Seal Rubber	4	
41	0866 61 500	Tank, Receiver	1	Ⓝ
42	99806 0612	Bolt, Receiver Tank	3	
	99952 0600	Washer, Plain	3	
	99971 0600	Washer, Spring	3	
43	99906 0600	Nut, Receiver Tank	1	
	99952 0600	Washer, Plain	1	
44	99276 1008	Clip, Flexible Hose	1	
45	99801 0812	Bolt, Flexible Hose Clip	1	
	99971 0800	Washer, Spring	1	
46	1608 61 520	Cooler Unit	1	Ⓝ
47	1524 61 526	Duct, Rubber (With Heater)	1	Ⓝ
48	0866 61 531	Bracket No. 1, Cooler Unit	1	Ⓝ
49	0866 61 532	Bracket No. 2, Cooler Unit	1	Ⓝ
50	0866 61 533	Bracket No. 3, Cooler Unit	1	Ⓝ
51	0866 61 534	Bracket No. 4, Cooler Unit	1	Ⓝ

No.	Part Number	Description	Q'ty	Remarks	
52	0866 61 535	Bracket No. 5, Cooler Unit	1		Ⓝ
53	0866 61 536	Bracket No. 6, Cooler Unit	1		Ⓝ
54	99806 0612	Bolt, Bracket	12		
	99952 0600	Washer, Plain	12		
	99971 0600	Washer, Spring	12		
55	99906 0800	Nut, Bracket	2		
	99952 0800	Washer, Plain	2		
	99971 0800	Washer, Spring	2		
56	0866 61 525 A	Hose, Drain	2		Ⓝ
57	0820 78 883	Grommet, Drain Hose	2		Ⓝ
58	0370 61 467	Clip, Drain Hose	4		Ⓝ
59	0866 61 527	Clip, Drain Hose	1		Ⓝ
60	99868 0520	Screw, Clip	5		
	99952 0500	Washer, Plain	5		
	99971 0500	Washer, Spring	5		
61	0824 61 236 A	Valve, Magnet	1		Ⓝ
62	0866 61 541	Valve, Check	1		Ⓝ
63	99863 0620	Bolt, Magnet & Check Valve	4		
	99952 0600	Washer, Plain	4		
	99971 0600	Washer, Spring	4	(With Heater)	

No.	Part Number	Description	Q'ty	Remarks	
64	0866 61 542	Connector	1		Ⓝ
65	99564 1000	Gasket, Connector	1		
66	0866 61 543 A	Hose, Vacuum	1		Ⓝ
67	0866 61 549	Spacer, Connector	1		Ⓝ
68	1662 61 545	Stabilizer Amplifier	1		Ⓝ
69	3743 61 546	Harness, Wiring	1		Ⓝ
70	1622 61 548	Bracket, Stabilizer Amplifier	1		Ⓝ
71	99833 0512 B	Screw, Stabilizer Amplifier	2		
	99952 0500 B	Washer, Plain	2		
	99971 0500	Washer, Spring	2		
72	0866 61 551	Grille, Center	1		Ⓝ
73	0866 61 552	Holder, Grille	2		Ⓝ
74	99868 0408	Screw, Holder	4		
75	1622 61 561	Duct, Air	2		Ⓝ
76	1622 61 564	Fastener, Air Duct	1		Ⓝ
77	1622 61 565	Cover (R), Air Duct	1		Ⓝ
78	1622 61 575	Cover (L), Air Duct	1		Ⓝ
79	1622 61 566	Bracket, Duct Cover	4		Ⓝ
80	1622 61 567	Bracket, Duct Cover	1		Ⓝ
81	99868 0410	Screw, Bracket	8		

No.	Part Number	Description	Q'ty	Remarks	
82	99833 0525	Screw, Duct Cover	2		
	99952 0500	Washer, Plain	2		
	99971 0500	Washer, Spring	2		
83	1622 61 568	Cover (R), Ventilator	1		Ⓝ
84	1622 61 578	Cover (L), Ventilator	1		Ⓝ
85	99806 0620	Bolt, Ventilator Cover	6		
	99952 0618	Washer, Plain	6		
	99971 0600	Washer, Spring	6		
86	1622 61 569	Spacer, Cover Bracket	2		Ⓝ
87	1622 61 572	Bracket, Panel Control	2		Ⓝ
88	1622 61 580	Panel, Control	1		Ⓝ
89	99833 0310B	Screw, Control Panel	2		
	99952 0300	Washer, Plain	2		
90	3737 61 140	Blower	1	(Components not available yet)	Ⓝ
91	99805 0830	Bolt, Blower	2		
	99952 0822	Washer, Plain	2		
	99971 0800	Washer, Spring	2		
92	99906 0800	Nut, Blower	1	(Heater Less)	
	99952 0822	Washer, Plain	1		
	99971 0800	Washer, Spring	1		

No.	Part Number	Description	Q'ty	Remarks	
93	3737 61 190	Control, Cooler	1	(Components not available yet)	Ⓝ
94	99833 0512	Screw, Cooler Control	3		
	99971 0500	Washer, Spring	3		
95	1128 61 911	Packing No. 1, Condenser	1		Ⓝ
96	1128 61 912	Packing No. 2, Condenser	1		Ⓝ
97	1128 61 913	Packing No. 3, Condenser	1		Ⓝ
98	1620 61 025	Rubber (R), Seal-Condenser	1		Ⓝ
99	1620 61 926	Rubber (L), Seal-Condenser	1		Ⓝ
100	99264 0531 B	Rivet, Seal Rubber	4		
101	8501 13 240	Valve, 3 Way	1		
102	3666 13 241	Bracket, 3 Way Valve	1		
103	99796 0610	Bolt, 3 Way Valve	2		
104	99796 0616	Bolt, Bracket	2		
	99940 0600	Nut	2		
105	8501 13 290	Actuator	1		
106	3666 13 296	Tube, Vacuum-3 Way Valve~Actuator	1		
107	0822 78 450	Pipe, Joint	1		
108	99340 04090	Tube, Vacuum	1	Ord. By 993410 4750 (1.75m)	
109	99340 04150	Tube, Vacuum	1	Ord. By 99341 04750 (1.75m)	
110	99340 04260	Tube, Vacuum	1	Ord. By 993410 4750 (1.75m)	

No.	Part Number	Description	Q'ty	Remarks
111	1016 67 620	Relay, Cooler	1	
112	99786 0612	Screw, Relay	1	

COMPRESSOR (CAR COOLER)

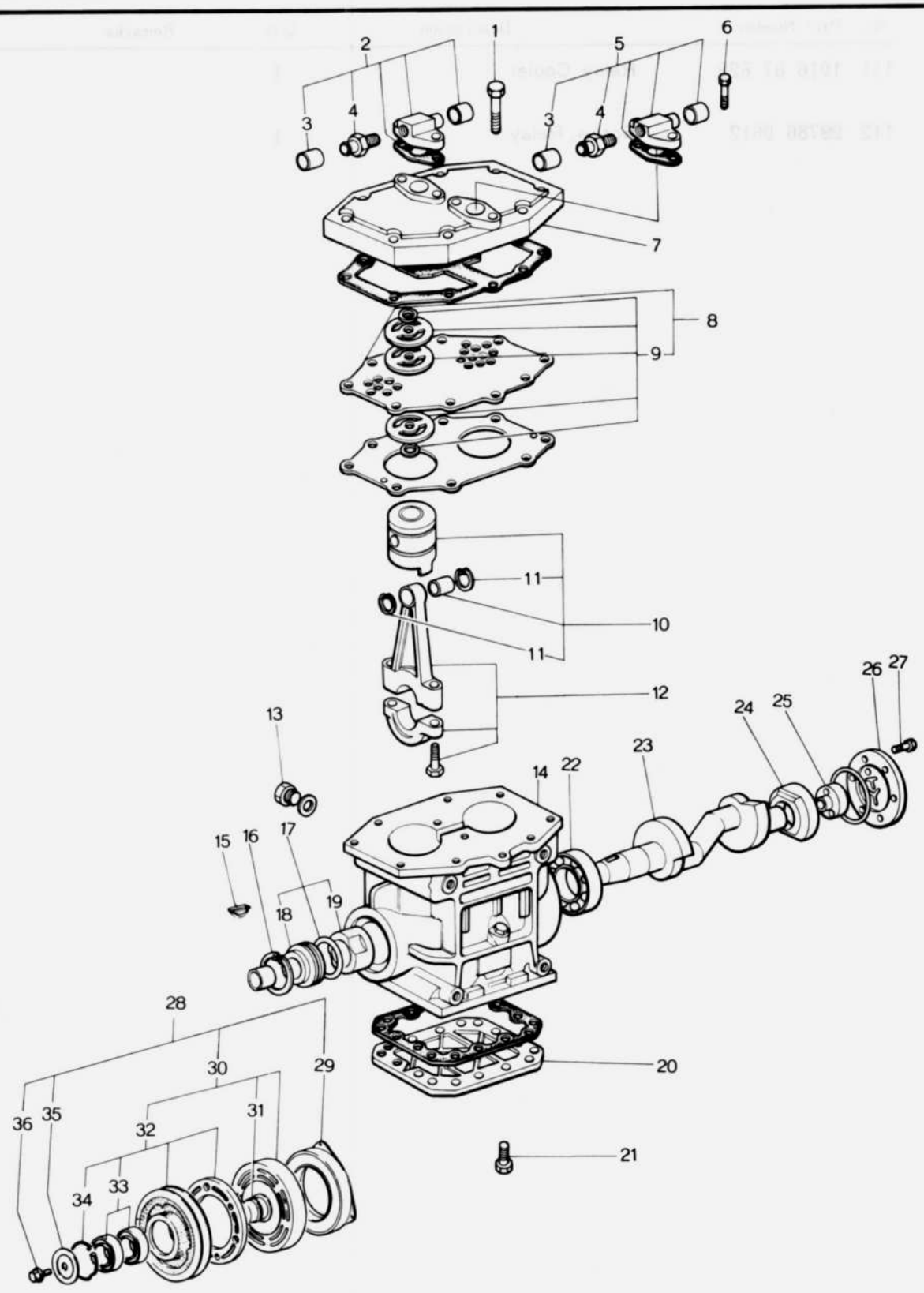

No.	Part Number	Description	Q'ty	Remarks
		Ⓝ Sign indicates Nippon Denso make		
	1881 61 450	Compressor	1	Ⓝ
	0866 76 710	Compressor (Fig. No. 1～27 included)	1	Ⓝ
1	0866 76 701	Bolt	4	Ⓝ
2	0866 76 810	Valve Kit, Service (Fig. No. 3,4 included)	1	Ⓝ
3	0866 76 755	Cap, Service Valve	2	Ⓝ
4	0866 76 754	Valve, Service	2	Ⓝ
5	0866 76 820	Valve Kit (Fig. No. 3,4 included)	1	Ⓝ
6	0866 76 702	Bolt, Cylinder Head	8	Ⓝ
7	0866 76 752	Head, Cylinder	1	Ⓝ
8	0866 76 760	Valve Set (Fig. No. 9 included)	1	Ⓝ
9	0866 76 703	Valve Kit, Lead	2	Ⓝ
10	0866 76 830	Piston Set (Fig. No. 11 included)	2	Ⓝ
11	0866 76 739	Ring, Snap	4	Ⓝ
12	0866 76 750	Rod, Connecting	2	Ⓝ
13	0866 76 704	Plug, Oil	1	Ⓝ
14	0866 76 721A	Block, Cylinder	1	Ⓝ
15	0866 76 723	Key, Woodruff	1	Ⓝ
16	0866 76 734	Clip	1	Ⓝ
17	0866 76 730	Seal Set, Shaft	1	Ⓝ
18	0866 76 733	Plate, Seal	1	Ⓝ

No.	Part Number	Description	Q'ty	Remarks	
19	0866 76 731	Seal	1		Ⓝ
20	0866 76 743A	Plate, Bottom	1		Ⓝ
21	0866 76 705	Bolt	12		Ⓝ
22	0866 76 722	Bearing	1		Ⓝ
23	0866 76 724A	Crankshaft	1		Ⓝ
24	0866 76 725	Bearing	1		Ⓝ
25	0866 76 726	Pump	1		Ⓝ
26	0866 76 729	Plate, Cover	1		Ⓝ
27	0866 76 706	Bolt	6		Ⓝ
28	1881 76 720	Clutch (Fig. No. 29~36 included)	1		Ⓝ
29	1881 76 763	Stator	1		Ⓝ
30	1881 76 790	Clutch, Magnet (Fig. No. 31,32 included)	1		Ⓝ
31	1881 76 771	Washer, Plain	1		Ⓝ
32	1881 76 850A	Pulley, Clutch (Fig. No 33,34 included)	1		Ⓝ
33	0866 76 766	Bearing, Ball	2		Ⓝ
34	1881 76 765A	Ring, Snap	1		Ⓝ
35	1881 76 772A	Washer, Plain	1		Ⓝ
36	1881 76 707	Bolt	1		Ⓝ
	0866 76 709A	Gasket Set	1		Ⓝ

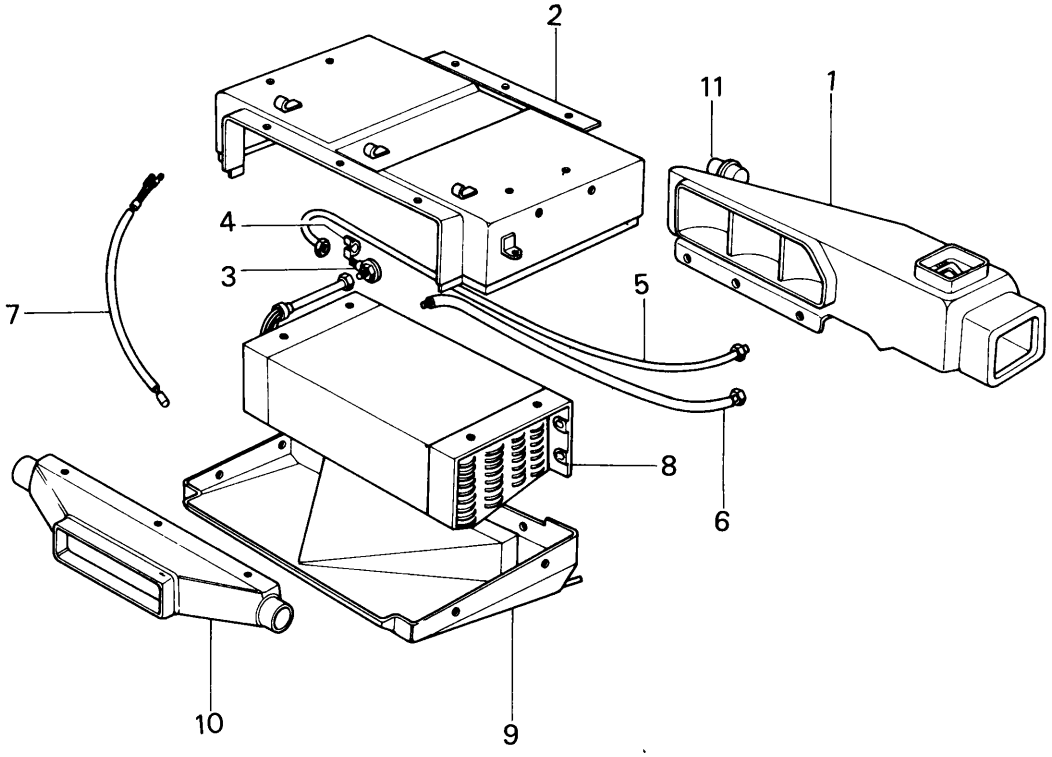
2
11
1
4
3
5
7
8
6
10
9

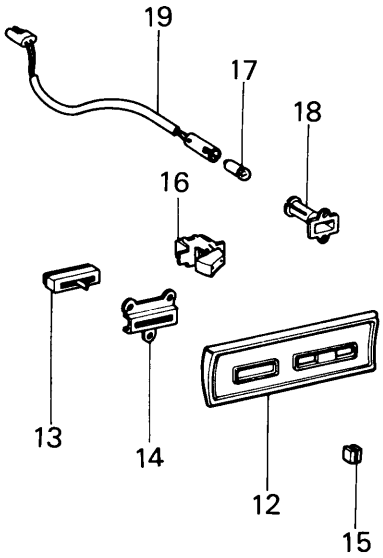
19
17
18
16
13
14
12
15

No.	Part Number	Description	Q'ty	Remarks
		Ⓝ Sign indicates Nippon Denso make		
	1608 61 520	Cooler Unit	1	Ⓝ
1	1531 76 701	Duct, Air	1	Ⓝ
2	1622 76 702	Case, Main	1	Ⓝ
3	0370 76 703	Valve, Expansion	1	Ⓝ
4	0370 76 704	Holder, Valve	1	Ⓝ
5	1524 76 705A	Pipe No. 1	1	Ⓝ
6	1524 76 706	Pipe No. 2	1	Ⓝ
7	0370 76 707	Thermister	1	Ⓝ
8	1622 76 708A	Evaporator	1	Ⓝ
9	1622 76 709	Case, Main	1	Ⓝ
10	1622 76 717	Duct, Air	1	Ⓝ
11	0866 76 719	Actuator	1	Ⓝ
	1622 61 580	Panel Ass'y, Control	1	Ⓝ
12	1622 76 901	Panel, Control	1	Ⓝ
13	1622 76 902	Resistor, Variable	1	Ⓝ
14	1622 76 903	Bracket, Switch	1	Ⓝ
15	1622 76 904	Knob, Control	1	Ⓝ
16	1622 76 905	Switch, Snap	1	Ⓝ

No.	Part Number	Description	Q'ty	Remarks	
17	1622 76 906	Bulb	1		Ⓝ
18	1622 76 907	Socket, Bulb	1		Ⓝ
19	1622 76 908	Holder, Bulb	1		Ⓝ

BACK DOOR (STATION WAGON)

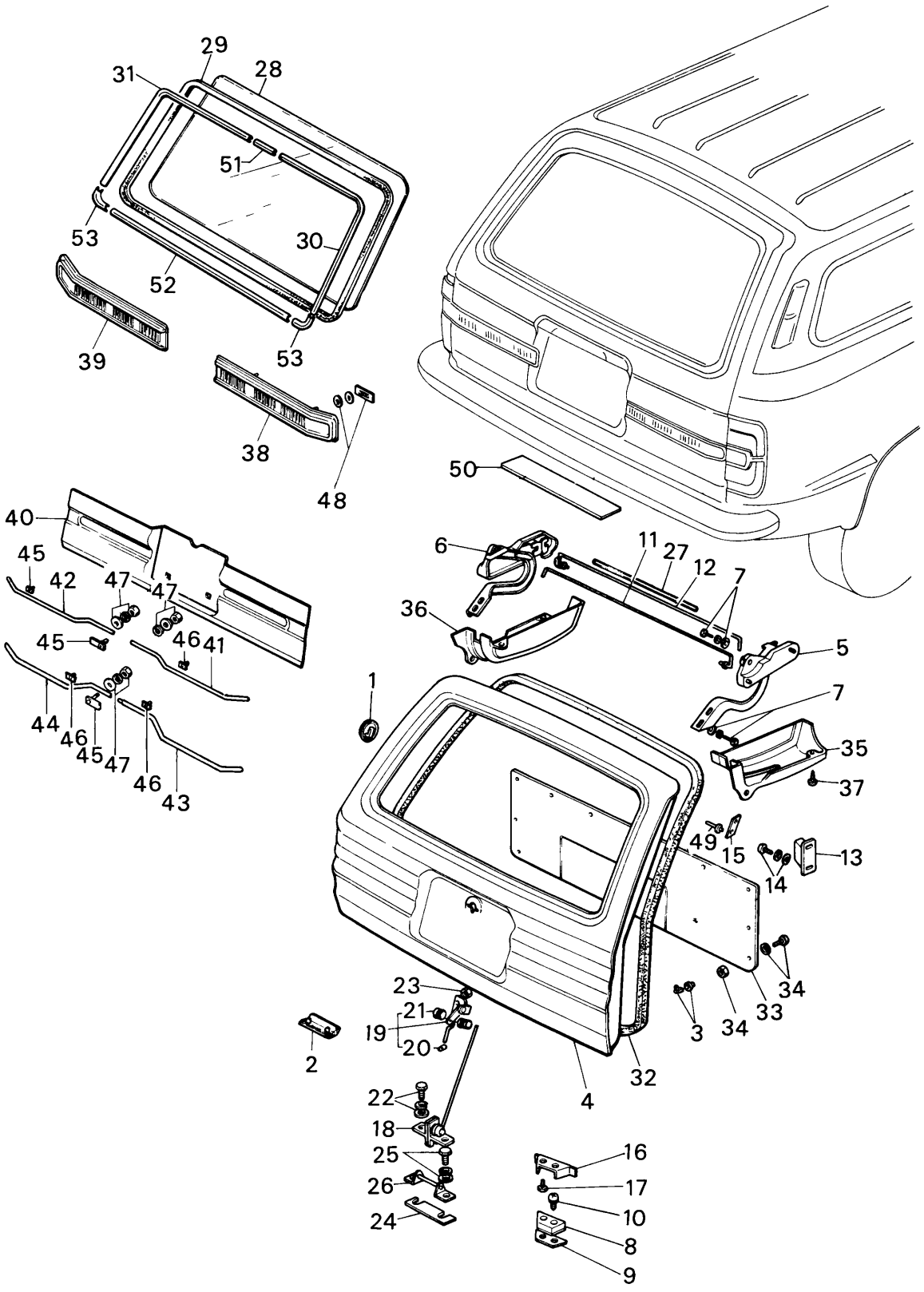

BACK DOOR (STATION WAGON)

No.	Part Number	Description	Q'ty	Remarks
1	0136 56 112	Hole Cover, Switch-Without Heating Wire	2	
2	0305 58 872	Valve, Drain	2	
3	0208 58 921	Fastener, Door Trim	2	
	0187 58 922	Fastener, Seal	2	
4	1571 62 510B	Body, Back Door	1	Ord. By 1528 62 510G & 99940 0602
5	0585 62 610	Hinge (R), Door	1	
6	0585 63 610	Hinge (L), Door	1	
7	99781 0820	Bolt, Hinge	8	
	99951 0818	Washer, Plain	8	
	99971 0800	Washer, Spring	4	
8	0621 62 640A	Wedge	2	
9	0621 62 641	Shim, Adjust-Wedge	2	
	0621 62 642	Shim, Adjust-Wedge	2	
10	99833 0616	Screw, Wedge	4	
	99971 0600	Washer, Spring	4	
11	0585 62 650C	Spring (R), Balance	1	
12	0585 63 650C	Spring (L), Balance	1	
13	0585 62 671A	Wedge, Upper	2	
14	99765 0616	Screw, Wedge	4	
	99952 0600	Washer, Plain	4	

BACK DOOR (STATION WAGON)

No.	Part Number	Description	Q'ty	Remarks
15	0585 62 672A	Protector	2	
16	0585 62 695A	Wedge	2	
17	99831 0616A	Screw, Wedge	4	
	99940 0602	Nut, Flange	4	
18	0585 62 710B	Lock, Back Door	1	
19	0585 62 720D	Control, Remote	1	
20	0866 58 313	Joint	1	
21	0824 58 546A	Bush	1	
22	99806 0620	Bolt, Back Door Lock	2	
	99971 0600	Washer, Spring	2	
	99952 0618	Washer, Plain	2	
23	99940 0602	Nut, Flange	2	
24	0585 62 741	Plate, "A"-Adjust (t=2.0)	1	Selective use
	0585 62 742	Plate, "B"-Adjust (t=1.0)	1	
25	99806 0620	Bolt, Striker	2	
	99951 0618	Washer, Plain	2	
	99971 0600	Washer, Spring	2	
26	0585 62 750	Striker	1	

No.	Part Number	Description	Q'ty	Remarks
27	0621 62 792	Pipe, Balance Spring	1	
28	1528 62 801A	Glass, Back Window (Transparent)	1	
	1544 62 801A	Glass, Back Window	1	(Blue Pane)
	1889 62 801	Glass, Back Window (With Heating Wire)	1	(Blue Pane)
	1901 62 801	Glass, Back Window (With Heating Wire) (Transparent)	1	
29	0585 62 802A	Weatherstrip	1	
30	0585 62 823C	Mould (R), Back Window	1	
31	0585 63 823C	Mould (L), Back Window	1	
32	0585 62 831B	Weatherstrip, Back Window Body	1	
33	1624 62 851 35	Trim, Back Door (BRN)	1	
	1624 62 851 37	Trim, Back Door (BLK)	1	
	1624 62 851 38	Trim, Back Door (BEIG)	1	
34	99862 0416B	Screw, Back Door Trim (BLK)	6	Selective use
	99862 0416C	Screw, Back Door Trim (SILV)	6	Selective use
	99967 0400A	Washer, Plain (YLW)	6	Selective use
	99967 0400B	Washer, Plain (BLK)	6	Selective use
	99910 0401	Grommet, Screw	6	
35	0585 62 871C	Cover (R), Hinge	1	
36	0585 63 871C	Cover (L), Hinge	1	
37	99864 0516C	Screw, Hinge Cover	6	

BACK DOOR (STATION WAGON)

No.	Part Number	Description	Q'ty	Remarks
38	0585 62 940A	Finisher (R), Tail	1	
39	0585 63 940A	Finisher (L), Tail	1	
40	0899 62 955B	Film, Decoration	1	
41	0899 62 961	Mould (R), Upper-Back Window Finisher	1	
42	0899 62 962A	Mould (L), Upper-Back Window Finisher	1	
43	0899 62 963	Mould (R), Lower-Back Window Finisher	1	
44	0899 62 964	Mould (L), Lower-Back Window Finisher	1	
45	0899 62 970	Bolt, Moulding	3	
46	0899 62 975A	Clip, Back Window Finisher Mould	10	
47	99906 0300	Nut, Decoration Film	3	
	99952 0300	Washer, Plain	3	
	99971 0300	Washer, Spring	3	
48	0305 68 951	Packing, Tail Finisher	4	
	0305 68 952	Washer	4	
	99579 4000	Nut, Speed	4	
49	0223 69 032	Rivet, Blend-Protector	4	
50	0603 69 323A	Cushion, Balance Spring	1	
51	0483 70 804	Junction, Back Window Mould Upper	1	
52	0585 62 826	Mould, Back Window-Lower	1	
53	0585 62 828	Joint, Mould-Back Window	2	

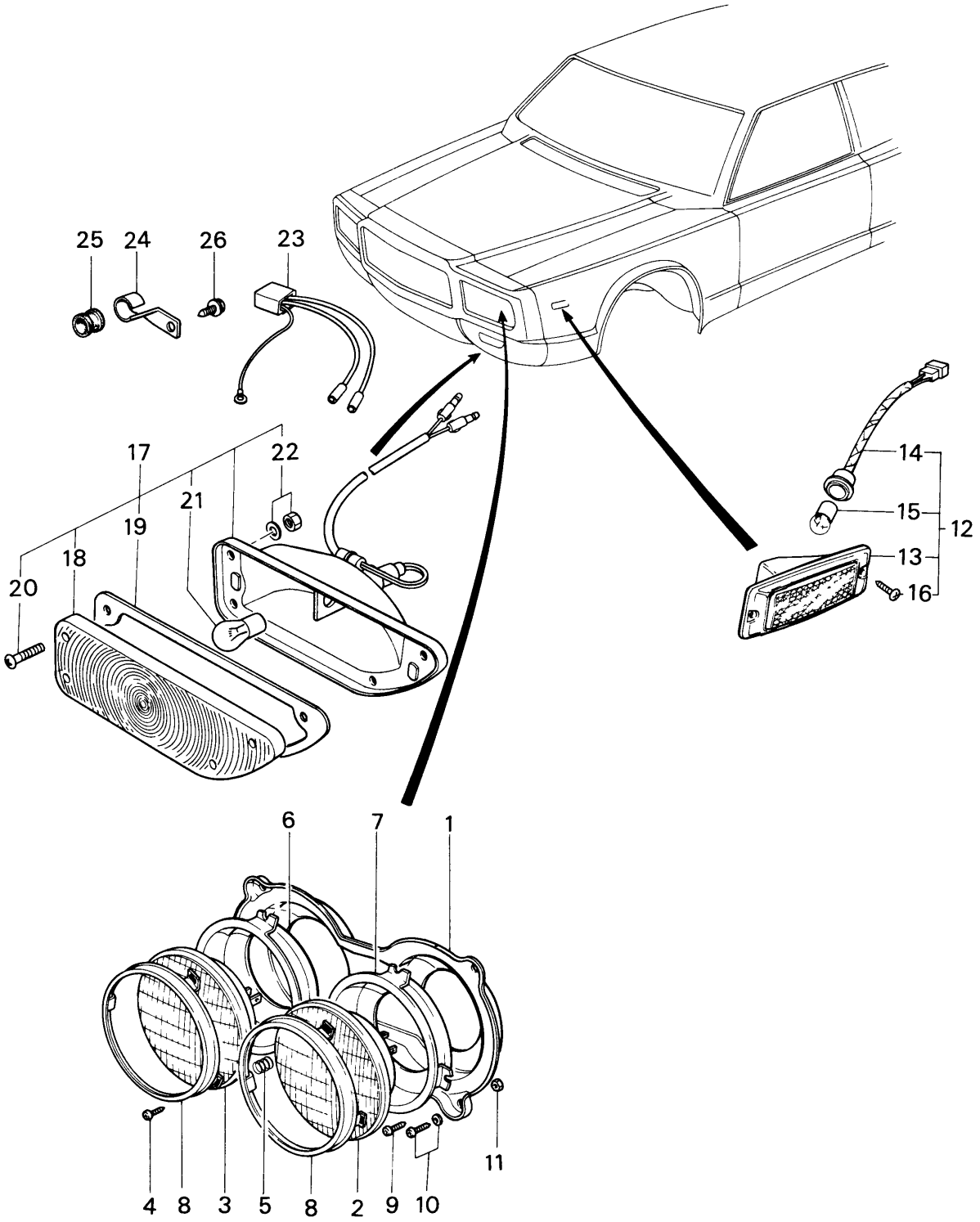
25
24
26
23
17
22
21
19
18
20
14
15
12
13
16
6
7
1
11
4
8
3
5
8
2
9
10

No.	Part Number	Description	Q'ty	Remarks
1	1893 66 031A	Housing (R)	1	
	1893 66 061A	Housing (L)	1	
2	2801 66 022	Beam, Sealed ("Plus 25" Lower & Upper Beam 12V 60/37.5W)	2	
3	0183 66 021	Beam, Sealed (Upper Beam 12V 37.5W)	2	
4	0275 87 007	Screw	12	
5	2850 87 012	Spring	4	
6	0727 87 012	Holder Type 2	1	
	0727 87 022	Holder Type 2	1	
7	0727 87 013	Holder Type 1	1	
	0727 87 023	Holder Type 1	1	
8	0727 87 014	Holder, Lamp	4	
9	0727 87 016	Screw, Adjust	8	
10	99860 0616	Screw, Head Lamp	8	
	99952 0816	Washer, Plain	8	
11	99910 0601	Grommet, Screw	8	
12	1540 89 663	Lamp (R), Front Side Marker	1	
	1540 89 668	Lamp (L), Front Side Marker	1	
13	1540 66 481	Lamp Unit (R)	1	
	1540 66 491	Lamp Unit (L)	1	

LAMPS (FRONT)

No.	Part Number	Description	Q'ty	Remarks
14	1540 66 482	Socket	2	
15	99701 2080	Bulb	2	
16	99769 0416	Screw, Tapping	4	
17	1854 89 662	Lamp (R), Front Turn Signal	1	
	1854 89 667	Lamp (L), Front Turn Signal	1	
18	2244 87 031	Globe (R)	1	
	2244 87 032	Globe (L)	1	
19	0259 66 094A	Gasket (R)	1	
	0259 66 114	Gasket (L)	1	
20	0259 66 095	Screw, Lamp Globe	8	
21	99701 4278	Bulb	2	
22	99906 0500	Nut, Front Turn Signal Lamp	4	
	99952 0500	Washer, Plain	4	
23	3625 66 105	Harness, Joint	2	
24	4899 10 262	Clip, Front Turn Signal Lamp Cord	2	
25	99686 0700	Protector	2	
26	99786 0616	Screw	2	

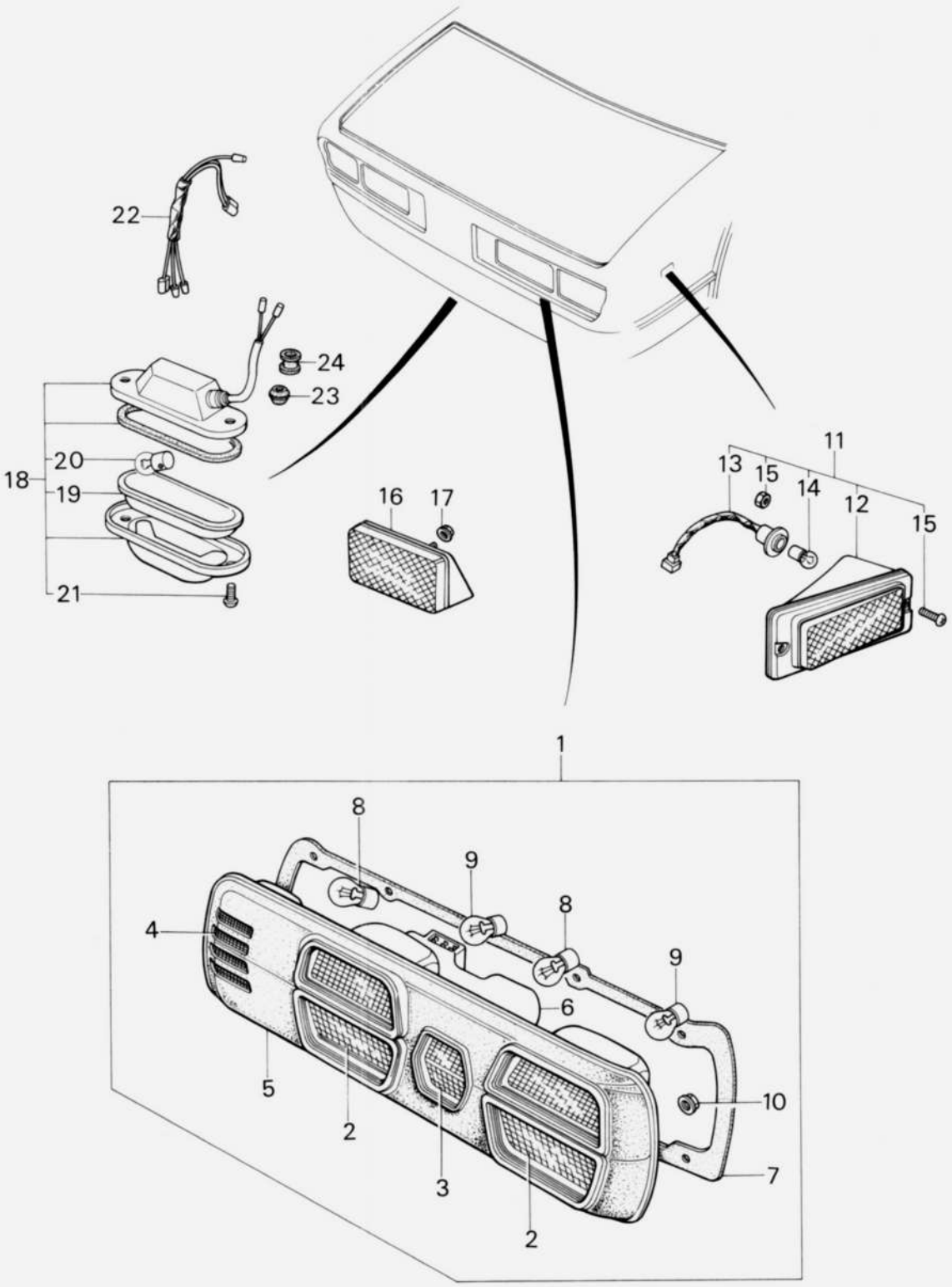
22
24
23
18
20
19
21
16
17
11
13
15
14
12
15
1
8
9
8
9
4
6
5
2
3
2
10
7

LAMPS (REAR, SEDAN & COUPE)

No.	Part Number	Description	Q'ty	Remarks
1	3743 89 664	Lamp (R), Rear Combination	1	
	3743 89 669	Lamp (L), Rear Combination	1	
2	1128 66 211	Lens, Stop & Tail Lamp	4	
3	1128 66 212	Lens, Turn Signal	2	
4	3743 66 213	Lens, Back Up Lamp	2	
5	3743 66 215	Rim (R)	1	
	3743 66 255	Rim (L)	1	
6	3743 66 216	Socket (R)	1	
	3743 66 256	Socket (L)	1	
7	1128 66 217	Packing	2	
8	99701 3270	Bulb	4	
9	99701 4278	Bulb	4	
10	99940 0502	Nut	20	
11	1540 89 673	Lamp (R), Rear Side Marker	1	
	1540 89 678	Lamp (L), Rear Side Marker	1	
12	1540 66 501	Lens & Body (R)	1	
	1540 66 511	Lens & Body (L)	1	
13	1540 66 482	Socket	2	
14	99701 2080	Bulb	2	

No.	Part Number	Description	Q'ty	Remarks
15	99774 0416	Screw, Rear Side Marker Lamp	4	
	99940 0400	Nut	4	
16	1881 66 700	Reflector (R), Reflex-Rear	1	
	1881 66 710	Reflector (L), Reflex-Rear	1	
17	99940 0500	Nut	4	
18	3625 89 665	Lamp, Licence	2	
19	3625 66 373	Lens	2	
20	99701 2080	Bulb	2	
21	99864 0420C	Screw	4	
22	3625 66 355	Harness, Joint	1	
23	0111 41 692	Protector, Licence Lamp	2	
24	99681 1503	Protector, Licence Lamp Cord	2	

LAMPS (REAR, STATION WAGON)

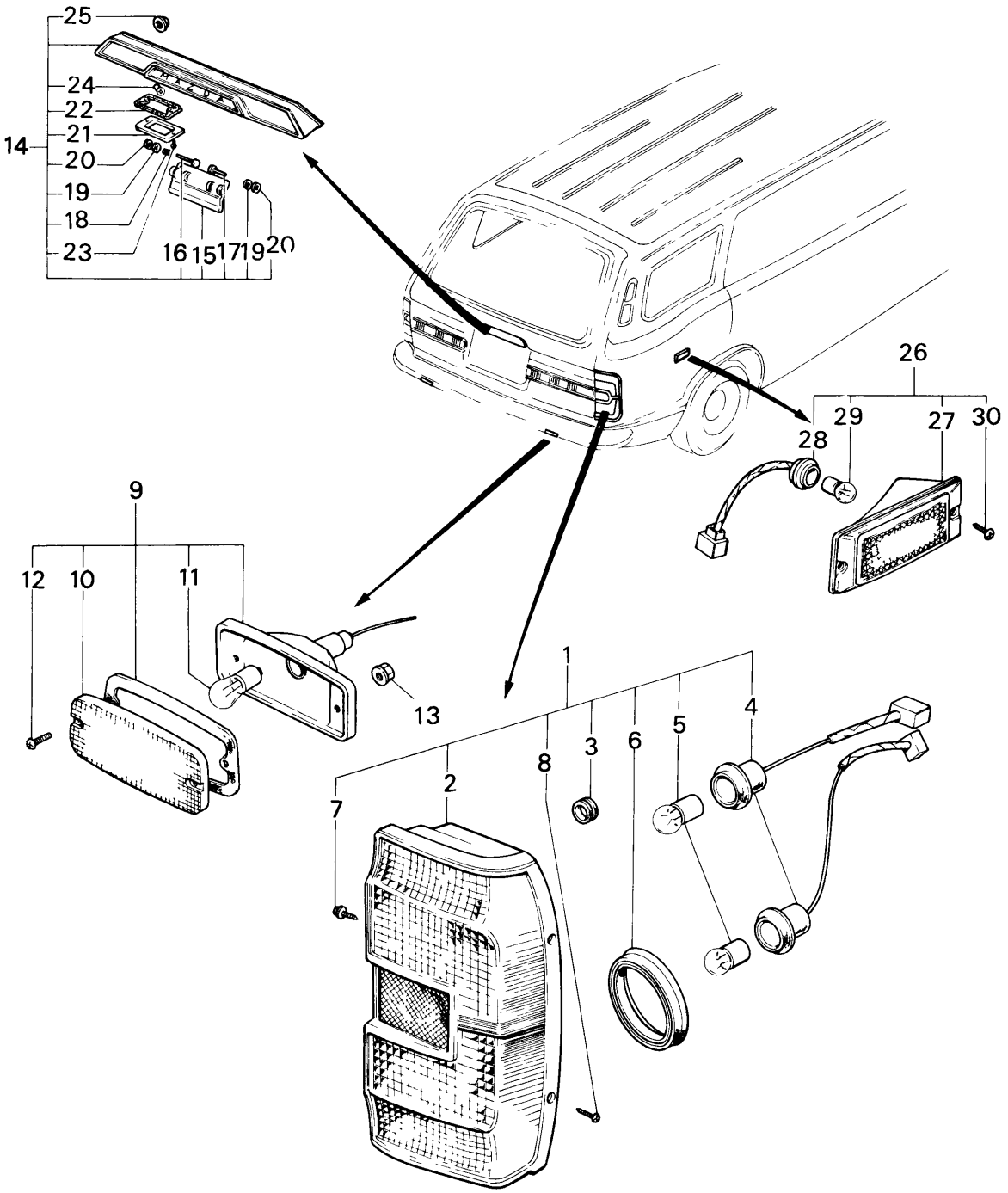

No.	Part Number	Description	Q'ty	Remarks
1	1889 89 664	Lamp (R), Rear Combination	1	
	1889 89 669	Lamp (L), Rear Combination	1	
2	0585 66 211	Lens & Body (R)	1	
	0585 66 231	Lens & Body (L)	1	
	0585 66 219	Lens Only (R) (Included in 0585 66 211)	1	
	0585 66 239	Lens Only (L) (Included in 0585 66 231)	1	
3	1529 66 212	Grommet	2	
4	0585 66 213	Cord & Socket No. I	4	
5	99701 4278	Bulb (12V $\frac{23}{8}$W)	4	
6	1529 66 217	Rim (R)	1	
	1529 66 237	Rim (L)	1	
7	99833 0616	Screw, Rear Combination Lamp	4	
	99952 0600	Washer, Plain	4	
	99971 0600	Washer, Spring	4	
8	99767 0525	Screw, Tapping-Rear Combination Lamp	4	
	99896 0500	Nut, Spring	2	
9	1889 89 654A	Lamp, Back Up	2	
10	0710 87 103	Lens	2	

LAMPS (REAR, STATION WAGON)

No.	Part Number	Description	Q'ty	Remarks
11	99700 8120	Bulb (12V 23W)	2	
12	99768 0420	Screw, Tapping	4	
13	99910 0401	Grommet	4	
14	0585 89 665	Lamp & Handle	1	
15	0585 66 373	Handle	1	
16	0585 66 374	Pin No. 1, Hinge	1	
17	0585 66 375	Pin No. 2, Hinge	1	
18	0585 66 376	Spring, Return	1	
19	0111 58 443	Washer	1	
20	99575 0400	Snap, Ring	2	
21	0585 66 377	Lens	2	
22	0585 66 378	Packing	2	
23	99773 0410	Screw	4	
24	99701 2080	Bulb (12V 8W)	2	
25	99940 0602	Nut, Flange-Lamp & Handle	4	
26	1540 89 673	Lamp (R), Side Marker	1	
	1540 89 678	Lamp (L), Side Marker	1	
27	1540 66 501	Unit (R), Lamp	1	
	1540 66 511	Unit (L), Lamp	1	

No.	Part Number	Description	Q'ty	Remarks
28	1540 66 482	Socket	2	
29	99701 2080	Bulb (12V 8W)	2	
30	99769 0416	Screw, Tapping-Side Marker Lamp	8	

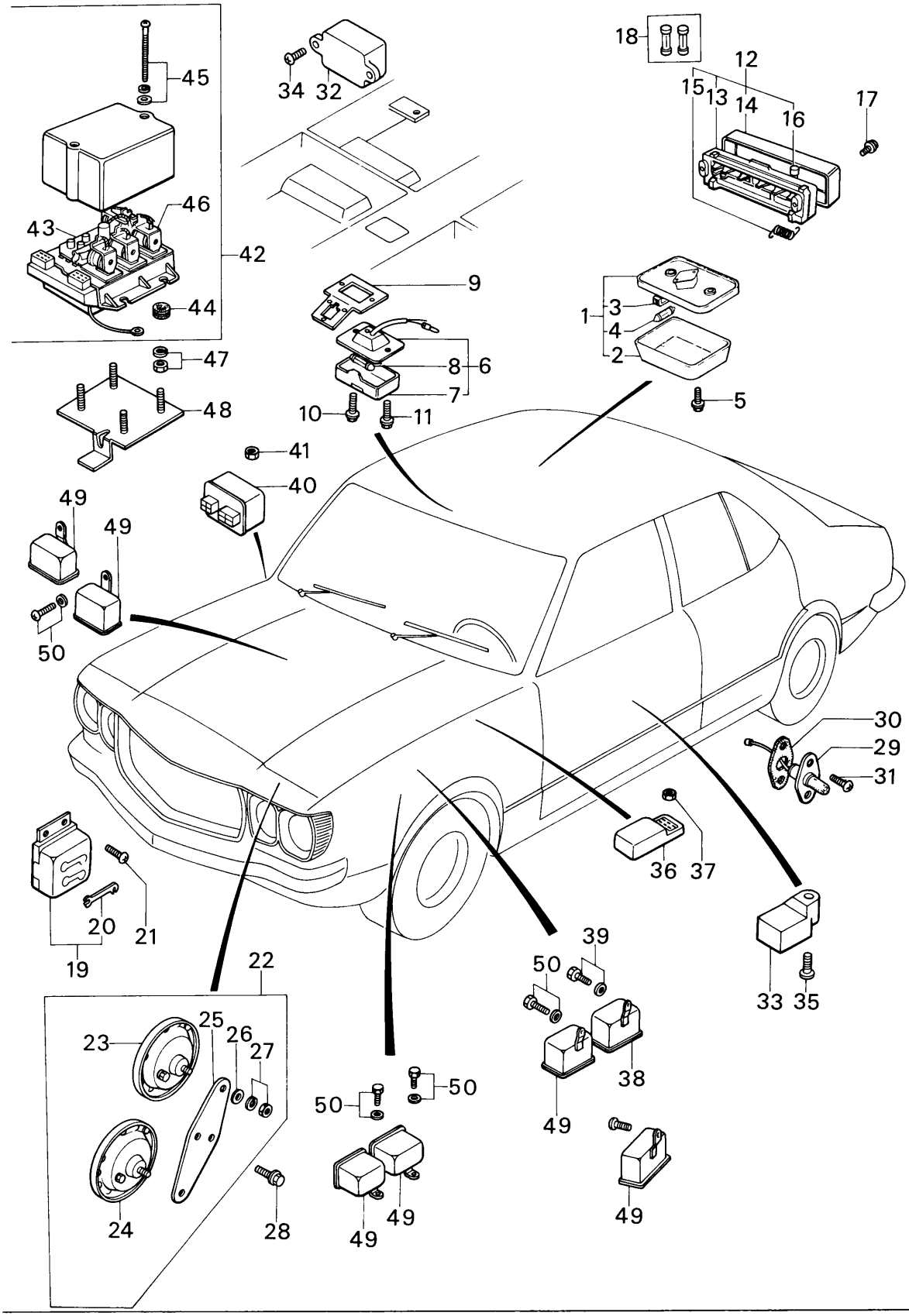
45
46
43
42
44
47
48
34
32
9
8
6
7
10
11
18
12
15
13
14
16
17
1
3
4
2
5
41
40
49
49
50
30
29
31
36
37
20
21
19
22
23
25
26
27
24
28
50
50
49
49
39
50
38
49
49
33
35

No.	Part Number	Description	Q'ty	Remarks
1	0390 66 410	Lamp, Interior	1	
2	0398 66 412	Lens	1	
3	0398 66 413	Knob	1	
4	99701 5050	Bulb	1	
5	99838 0510	Screw, Interior Lamp	2	
6	1650 66 620	Lamp, Warning-Seat	1	
7	1650 66 621	Lens	1	
8	99701 5050	Bulb	1	
9	1540 66 630	Bracket, Warning Lamp	1	
10	99863 0310 B	Screw, Warning Lamp	1	
11	99865 0412	Screw, Bracket	2	
12	8038 66 730 A	Block, Fuse	1	
13	8038 66 731	Body	1	
14	8038 66 732	Cover	1	
15	0866 66 733	Spring, Return	1	
16	99706 0110	Fuse (10A)	5	

No.	Part Number	Description	Q'ty	Remarks
	99706 0115	Fuse (15A)	2	
	99706 0120	Fuse (20A)	4	
17	99833 0625	Screw, Fuse Block	2	
	99971 0600	Washer, Spring	2	
18	1011 66 130	Fuse, Spacer	1	
19	0865 66 760	Block, Main Fuse	1	
20	2852 66 763	Fuse (50A)	2	
21	99786 0620	Screw, Main Fuse Block	2	
22	0865 66 780A	Horn, Electric (High & Low Tone)	1	
23	0865 66 790A	Horn (High Tone)	1	
24	0865 66 800	Horn (Low Tone)	1	
25	0865 66 805	Holder	1	
26	0865 66 809	Washer, Holder	2	
27	99906 0600	Nut, Horn	2	
	99971 0600	Washer, Spring	2	

No.	Part Number	Description	Q'ty	Remarks
28	99801 0820	Bolt, Electric Horn	2	
	99971 0800	Washer, Spring	2	
29	0209 66 820	Switch, Door	2	
30	0209 66 821	Washer, Adjust-Door Switch	4	
31	99864 0412	Screw, Door Switch	4	
32	1757 67 700	Timer	1	
33	3564 67 700	Timer	1	
34	99794 0612	Bolt, Timer	2	
35	99830 0625	Screw, Timer	1	
36	1757 67 720A	Buzzer	1	
37	99940 0600	Nut, Buzzer	1	
38	0839 67 880	Relay, Ignition Coil	1	
39	99797 0612	Bolt, Relay	1	
	99971 0600	Washer, Spring	1	
40	1016 67 620	Relay	1	
41	99940 0600	Nut, Relay	1	
42	1755 67 560	Unit, Centrol Control (Sedan & Coupe)	1	
	1757 67 560	Unit, Central Control (Station Wagon)	1	
43	1755 67 562	Unit, Flasher (Sedan & Coupe)	1	

No.	Part Number	Description	Q'ty	Remarks
	1757 67 562	Unit, Flasher (Station Wagon)	1	
44	0866 67 717	Bush, Rubber	4	
45	0866 67 718	Screw, Cover	2	
	99952 0500B	Washer, Plain	2	
	99971 0500B	Washer, Spring	2	
46	0866 67 719	Relay	1	
47	99940 0600	Nut, Central Control Unit	3	
	99952 0618	Washer, Plain	1	
48	1919 67 720	Bracket, Central Control Unit	1	
49	1220 67 740	Relay (Manual Fed.)	4	
		Relay (Manual Calif. & Automatic Fed.)	5	
		Relay (Automatic Calif.)	6	
50	99796 0612	Bolt, Relay (Manual Fed.)	4	
		Bolt, Relay (Manual Calif. & Automatic Fed.)	5	
		Bolt, Relay (Automatic Calif.)	6	
	99952 0600	Washer, Plain (Manual Fed.)	4	
		Washer, Plain (Manual Calif & Automatic Fed.)	5	
		Washer, Plain (Automatic Calif.)	6	

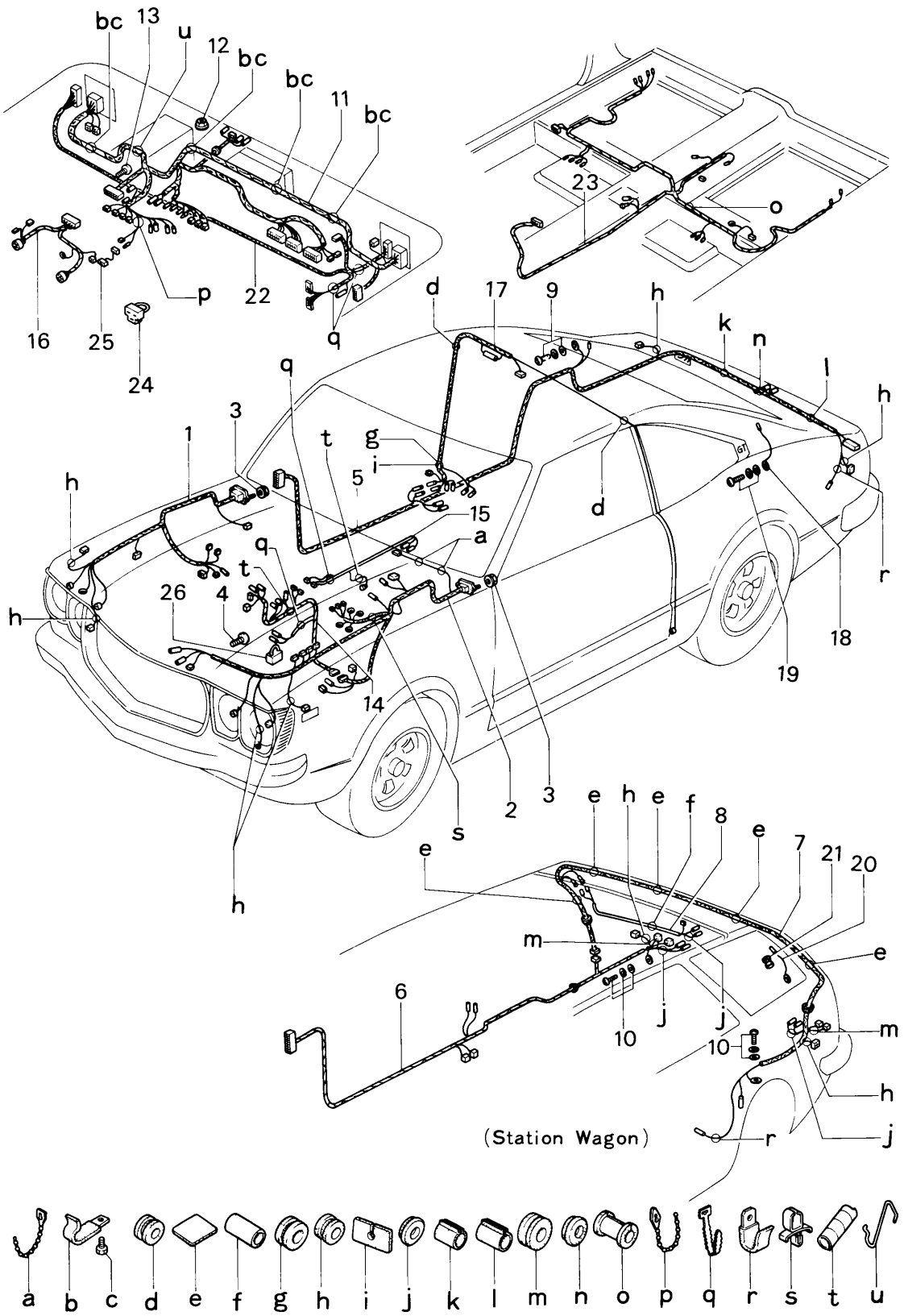
bc
13
u
12
bc
bc
11
bc
23
o
p
22
16
25
24
q
d
17
9
h
k
n
l
h
q
3
1
t
g
i
5
h
15
a
d
q
t
26
4
h
r
18
19
14
2
3
s
h
e
h
e
f
8
e
7
21
20
e
e
m
6
j
j
10
10
e
m
h
(Station Wagon)
r
j
a
b
c
d
e
f
g
h
i
j
k
l
m
n
o
p
q
r
s
t
u

No.	Part Number	Description	Q'ty	Remarks
1	3743 67 010	Harness, Wiring (Frt., R)	1	
2	3743 67 020 B	Harness, Wiring (Frt., L)	1	
3	99940 0600	Nut, Wiring Harness (Frt)	4	
4	99833 0812	Screw, Wiring Harness (Frt.) Earth	1	
5	8038 67 030 B	Harness, Wiring (Rr.) (Sedan & Coupe)	1	
6	3712 67 030 A	Harness No. 1, Wiring (Rr.)	1	
7	1889 67 035 B	Harness No. 2, Wiring (Rr.) (Station Wagon)	1	
8	0585 67 036 B	Harness, Wiring-Licence Lamp	1	
9	99806 0616	Screw, Wiring Harness (Rr.)	1	
	99952 0600	Washer, Plain (Sedan & Coupe)	1	
	99971 0600	Washer, Spring	1	
10	99833 0612	Screw, Wiring Harness (Rr.)	2	
	99952 0600	Washer, Plain (Station Wagon)	2	
	99971 0600	Washer, Spring	2	
11	3743 67 050 A	Harness, Wiring-Meter Panel (Sedan & Coupe)	1	
	3747 67 050 A	Harness, Wiring-Meter Panel (Station Wagon)	1	
12	99940 0500	Nut, Wiring Harness-Panel Earth	1	
13	99868 0525	Screw, Wiring Harness Cupler	2	
14	3743 67 060 B	Harness, Wiring-Engine	1	
15	3743 67 065	Harness, Wiring-T/mission	1	

No.	Part Number	Description	Q'ty	Remarks
16	3743 67 070	Harness, Wiring-Meter	1	
17	1540 67 080B	Harness, Wiring-Interior Lamp	1	
18	1881 67 133	Cord, Rear Window Heating Earth (Sedan & Coupe)	1	
19	99806 0616	Bolt, Cord	1	
	99952 0600	Washer, Plain	1	
	99971 0600	Washer, Spring	1	
20	1889 67 133	Cord, Back Door Heating Earth	1	(Station Wagon)
21	0585 67 154	Protector, Heating Earth Cord	2	(Station Wagon)
22	3743 67 120	Harness, Wiring-Emission	1	
23	3743 67 130	Harness, Wiring-Seat Switch	1	
24	3725 67 970	Connector, Short	1	
25	3725 67 980	Cord, Short-Steering Lock	1	
26	1220 67 985	Connector, Short (Fed.)	1	
a	99709 0108	Band, Cut Valve & Indicator Cord	2	
b	0866 67 059	Clip, Wiring Harness Panel	4	
c	99865 0512	Screw, Clip	4	
d	0114 43 625	Protector, Cord-Interior Lamp	2	
e	0208 66 949	Pad, Protector (Station Wagon)	8	
f	0585 67 151	Protector, Cord-Licence Lamp Wire Harness	1	(Station Wagon)
g	0820 67 151	Protector, Cord-Interior Lamp (Coupe)	1	

No.	Part Number	Description	Q'ty	Remarks
h	0866 67 152	Protector, Cord-Side Turn Signal & Marker Lamp	6	
i	0866 67 153A	Pad, Protector-Interior Lamp Cord (4 Door)	1	
j	0585 67 154	Protector, Licence & Back Up Lamp Cord	3	(Station Wagon)
k	0866 67 155	Protector, Wire-Rear End Panel	1	(Sedan & Coupe)
l	0862 67 155	Protector, Wire-Rear End Panel	1	(Sedan & Coupe)
m	1524 67 155	Protector, Cord-Rear Combination Lamp	2	(Station Wagon)
n	0866 67 156	Protector, Cord-Licence Lamp (Sedan & Coupe)	1	
o	99684 1500	Protector, Cord-Seat Switch Wire Harness	2	
p	99709 0255	Band, Steering Lock Cord	1	
q	99709 3250	Band, Wiring Harness	7	
r	99276 1406	Clip, Fuel Pump Cord & Wiring Harness	1	
s	99279 1105	Clip, Ignition Wire Harness	1	
t	0305 67 994	Supporter, Engine Wire Harness	1	
u	3625 67 909	Clip, Wiring Harness (Master Cylinder Bracket)	1	

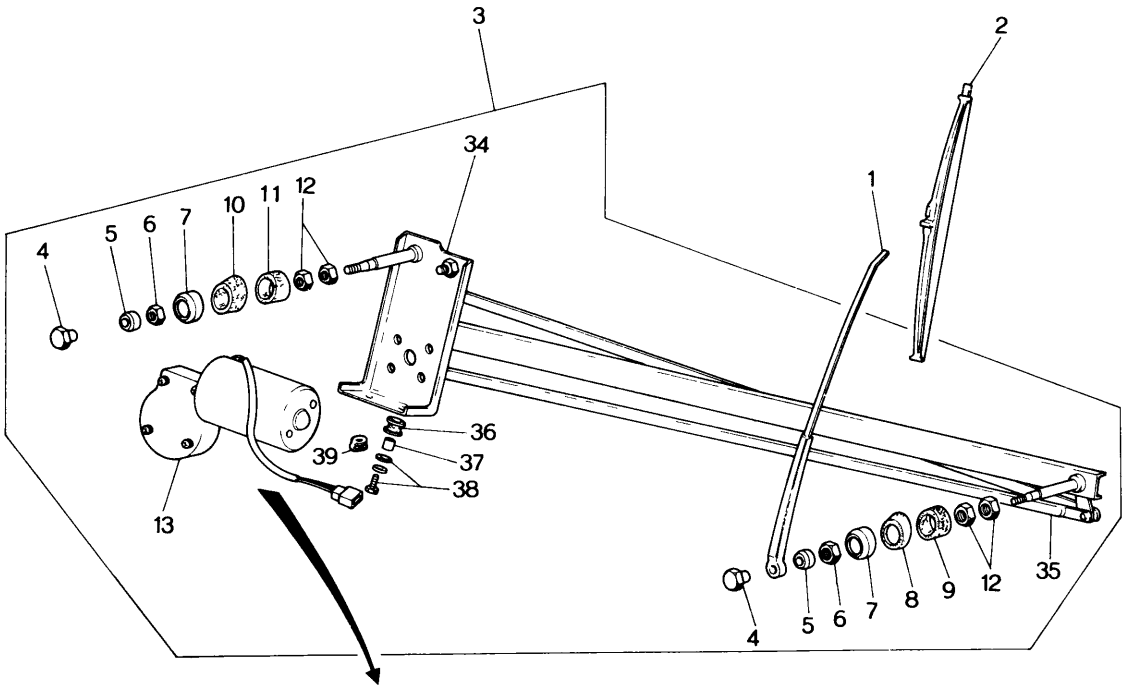
3
2
34
1
4
5
6
7
10
11
12
36
39
37
38
13
4
5
6
7
8
9
12
35

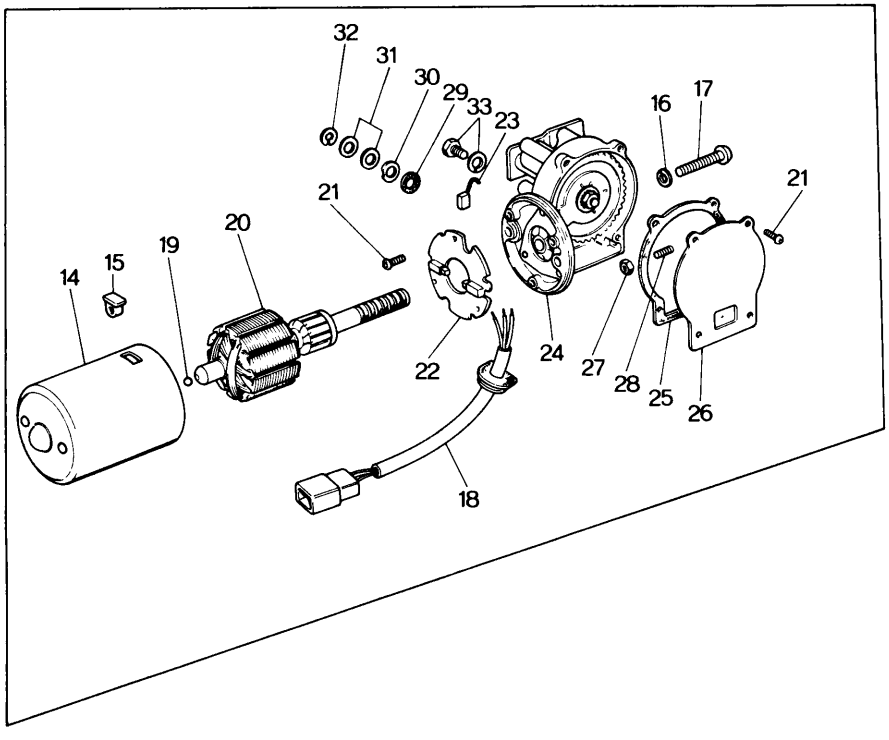
32
31
30
29
33
23
16
17
21
21
20
19
14
15
22
24
27
28
25
26
18

No.	Part Number	Description	Q'ty	Remarks
1	1524 67 321 A	Arm, Wiper	2	
2	2835 67 330	Blade, Wiper	2	
3	1524 67 340 C	Motor & Link	1	
4	0223 66 371	Nut, Cap	2	
5	0212 66 371	Cap, Seal	2	
6	0212 66 372	Nut	2	
7	0305 87 906	Washer	2	
8	1524 76 604	Bush, Outer	1	
9	1524 76 603	Bush, Inner	1	
10	0866 76 606	Bush, Outer	1	
11	0866 76 605	Bush, Inner	1	
12	0259 87 134	Nut	4	
13	1524 67 350 A	Motor	1	
14	0259 87 109 A	Yoke	1	
15	0257 87 108	Nut	2	
16	99971 0500	Washer, Spring	2	
17	0257 87 107	Screw	2	
18	1524 76 607 A	Wire, Lead	1	
19	0259 87 107	Ball	2	

No.	Part Number	Description	Q'ty	Remarks
20	0259 87 108 A	Rotor	1	
21	0259 87 105	Screw	7	
22	1011 76 612 A	Plate, Bush Holder	1	
23	0259 87 106	Brush	3	
24	1524 76 608	Box, Gear	1	
25	0259 87 103	Gasket	1	
26	0259 87 104 A	Plate, End	1	
27	0259 87 119	Nut	1	
28	0259 87 120	Screw	1	
29	0738 87 803	Felt	1	
30	0702 87 135	Washer, Wave	1	
31	0738 87 804	Washer	2	
32	0702 87 138	Ring, Retaining	1	
33	99806 0510	Bolt, Motor	4	
	99971 0500	Washer, Spring	4	
34	1524 76 608	Frame, Wiper	1	
35	1524 76 601	Link, Wiper	1	
36	0866 67 301 A	Washer, Rubber	2	
37	0866 67 302	Spacer	2	

No.	Part Number	Description	Q'ty	Remarks
38	99786 0616	Bolt, Frame	3	
	99952 0618	Washer, Plain	3	
	99971 0600	Washer, Spring	3	
39	0118 13 432	Clip, Earth	1	

SCREEN WASHER

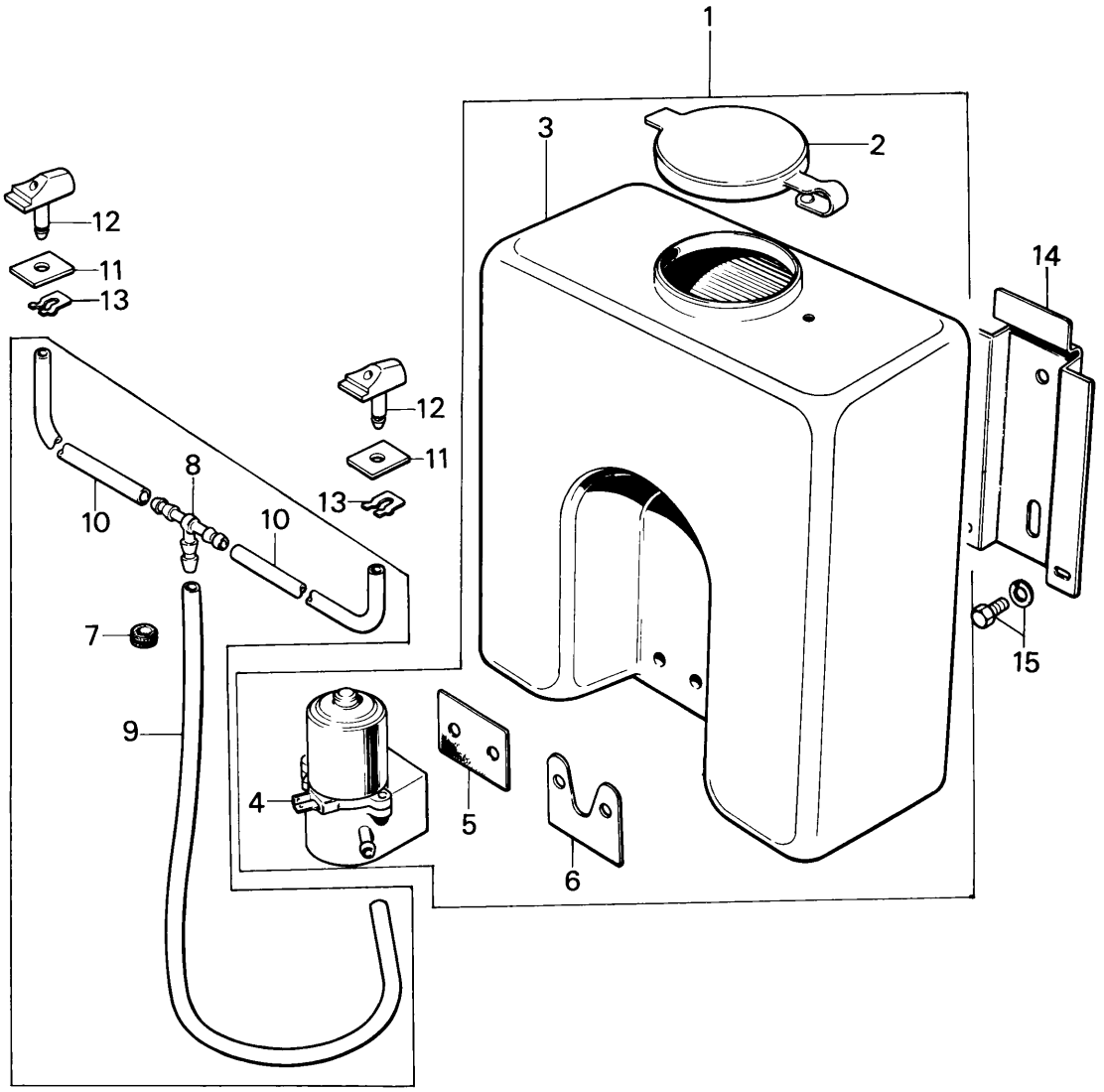

No.	Part Number	Description	Q'ty	Remarks
1	0317 67 480	Tank, Washer	1	
2	0727 87 992	Cap	1	
3	0317 67 511	Tank	1	
4	0305 87 993	Pump	1	
5	0727 87 994	Gasket	1	
6	0727 87 995	Plate	1	
7	0111 41 692	Protector, Pipe	1	
8	0813 66 879	Joint, Pipe	1	
9	99335 04015	Pipe	1	
10	99335 04066	Pipe	2	
11	0866 67 511A	Washer, Nozzle	2	
12	0866 67 510A	Nozzle	2	
13	0866 67 512	Nut, Speed	2	
14	0866 67 521	Bracket, Tank	1	
15	99781 0612	Bolt, Tank Bracket	2	
	99971 0600	Washer, Spring	2	

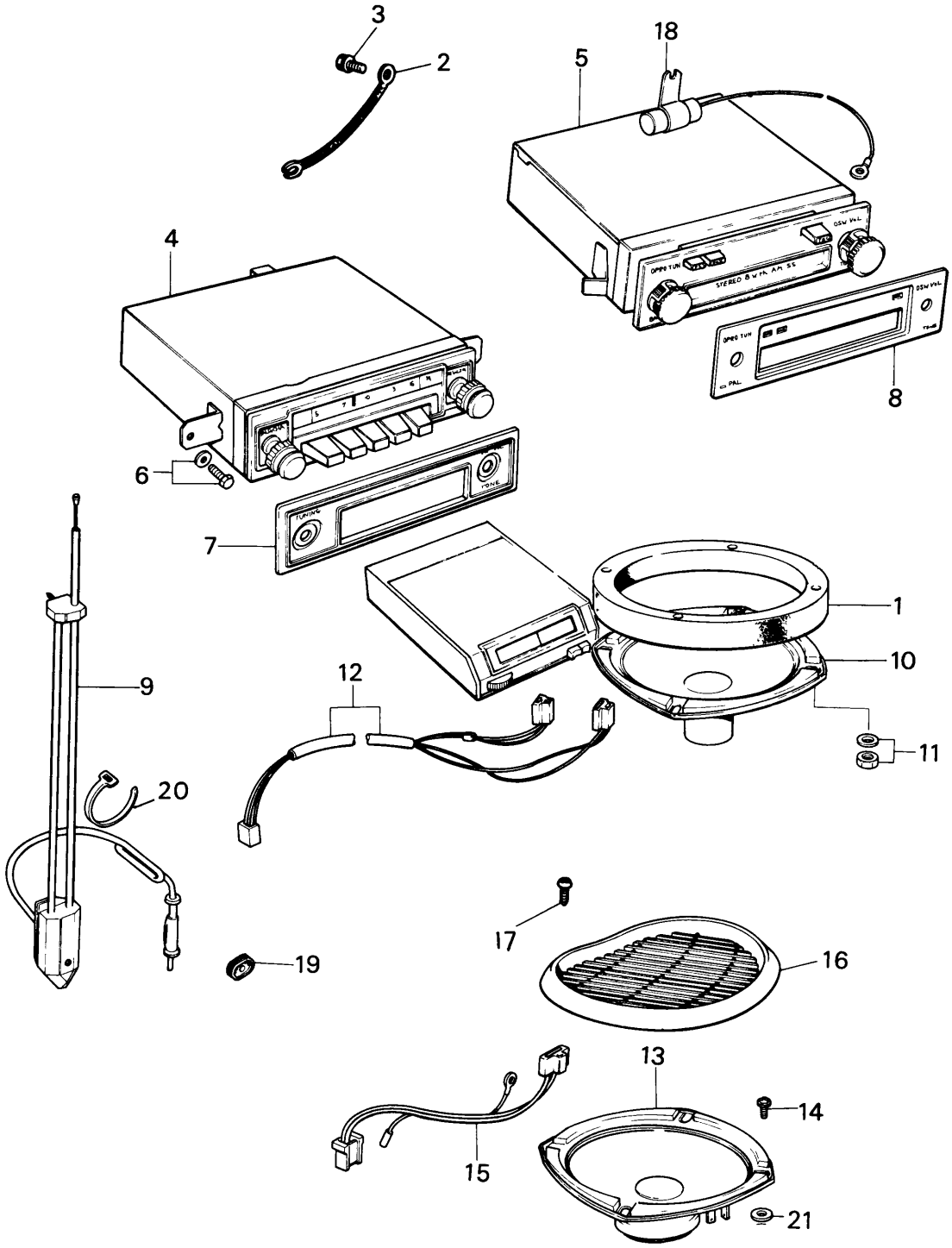
3
2
18
5
4
8
6
7
1
10
12
11
9
20
17
16
19
13
14
15
21

No.	Part Number	Description	Q'ty	Remarks
	1560 66 860B	Auto Radio Cpt., AM	1	
	1561 66 860B	Auto Radio Cpt., AM /SW	1	
	1562 66 860B	Auto Radio Cpt., AM /FM	1	
	1564 66 860B	Auto Radio & Stereo (Sedan & Coupe)	1	
1	0317 66 862	Partition	1	
2	0866 66 871	Wire, Earth	1	
3	99860 0512	Bolt, Earth Wire	1	
	99971 0500	Washer, Spring	1	
4	0866 66 900	Tuner, AM	1	
	1561 66 900	Tuner, AM /SM	1	
	1562 66 900	Tuner, AM /FM	1	
5	0870 66 900A	Tuner & Player	1	
6	99797 0516	Bolt, Tuner	2	
	99952 0500	Washer, Plain	2	
	99971 0500	Washer, Spring	2	
7	0866 66 905	Plate, Decoration - Radio	1	
8	0870 66 905	Plate, Decoration - Radio & Stereo	1	
9	1524 66 930A	Antenna	1	
10	0866 66 960	Loud, Speaker	1	
11	99940 0500	Nut, Flange - Loud Speaker	4	

No.	Part Number	Description	Q'ty	Remarks
12	0866 66 965	Cord, Loud Speaker	1	
13	0870 66 970B	Loud Speaker, Stereo	2	
14	99864 0410	Screw, Loud Speaker - Stereo	8	
15	0870 66 975A	Cord, Stereo Loud Speaker	1	
16	0870 66 980	Grille, Loud Speaker - Stereo use	1	
17	99748 0410	Screw, Grille	8	
18	0820 66 992	Condenser	2	
19	0866 67 153A	Pad, Protector	1	
20	0305 67 993A	Clip, Wire Harness	1	
21	0275 68 088	Spacer	8	

CRUSH PAD, GLOVE POCKET & CONSOLE BOX

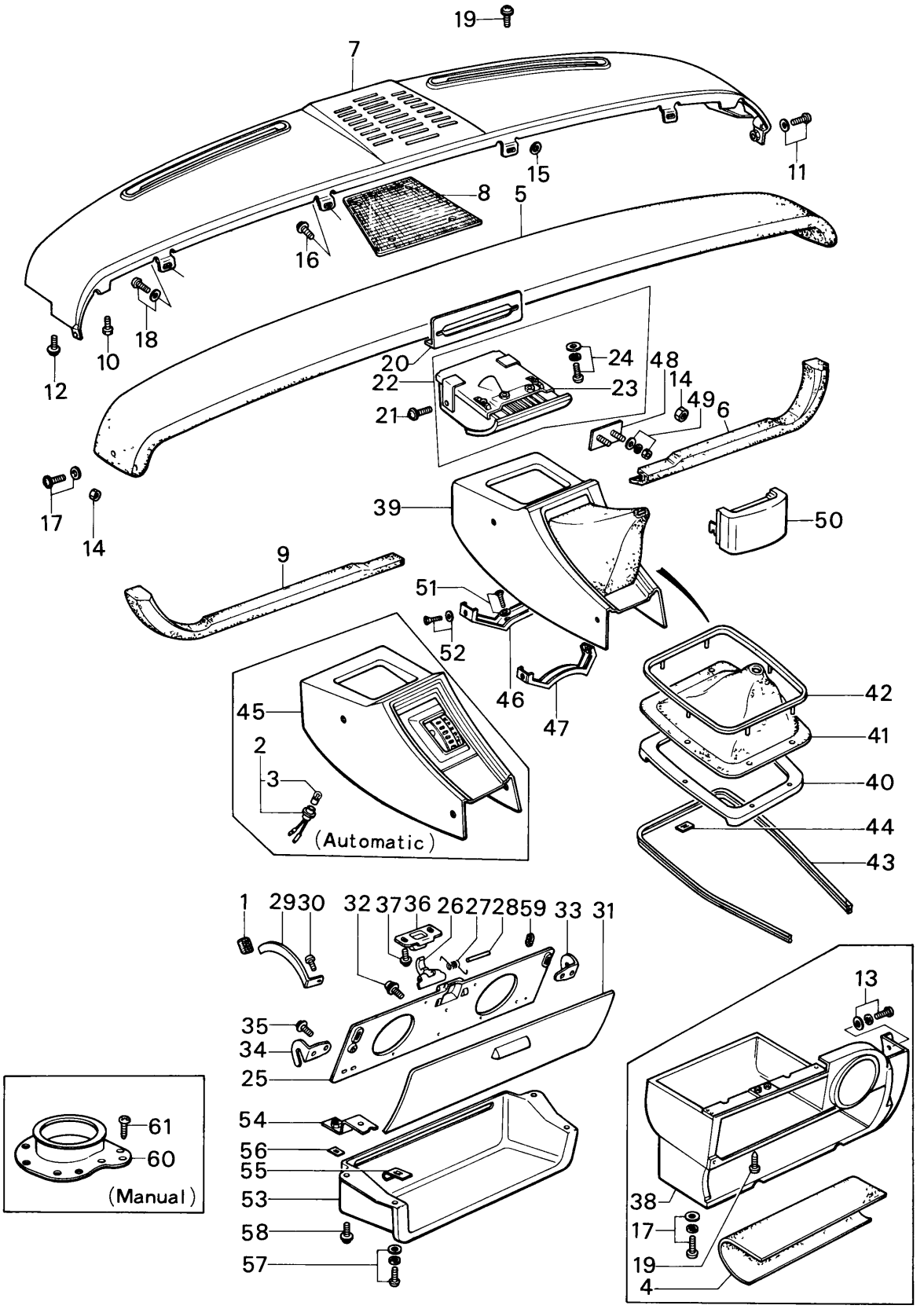

CRUSH PAD, GLOVE POCKET & CONSOLE BOX

No.	Part Number	Description	Q'ty	Remarks
1	0275 55 195 A	Cushion, Rubber - Glove Pocket	1	
2	0305 66 580 A	Bulb & Socket, Console Box	1	(Automatic)
3	99701 6030	Bulb	1	(Automatic)
4	1524 68 011	Sheet, Glove Tray	1	
5	0865 68 020 C00	Pad, Crush (BLK)	1	
	0866 68 020 C20	Pad, Crush (BRN)	1	
6	1562 68 040 A	Pad (R), Lower (BLK)	1	
	3737 68 040 20	Pad (R), Lower (BRN)	1	
7	0866 68 090 B	Garnish, Crush Pad	1	
8	0866 68 095	Cloth, Cover - Loud Speaker	1	
9	1562 68 140 B00	Pad (L), Crush (BLK)	1	
	3737 68 140 20	Pad (L), Crush (BRN)	1	
10	99786 0820	Bolt, Crush Pad	2	
	99952 0822	Washer, Plain	2	
11	99830 0512 B	Screw, Crush Pad & Garnish	4	
	99953 0500 B	Washer, Plain	4	
	99971 0500	Washer, Spring	4	
12	99833 0516 B	Screw, Crush Pad & Garnish	2	

CRUSH PAD, GLOVE POCKET & CONSOLE BOX

No.	Part Number	Description	Q'ty	Remarks
	99952 0516 B	Washer, Plain	2	
	99971 0500	Washer, Spring	2	
13	99836 0516 B	Screw, Crush Pad & Glove Box	1	
	99967 0500 B	Washer	1	
14	99940 0501	Nut, Crush Pad Lower	5	
15	99952 0516	Washer, Plain - Adjust	4	Selective use
	99952 0800	Washer, Plain - Adjust	4	Selective use
16	99833 0512	Screw, Garnish	2	
	99952 0500	Washer, Plain	2	
	99971 0500	Washer, Spring	2	
17	99830 0616 B	Screw, Glove Pocket	2	
	99952 0618 B	Washer, Plain	2	
18	99865 0512	Screw, Garnish	2	
19	99834 0616 B	Screw, Garnish	2	
20	0866 68 175	Plate, Set - Ash Tray	1	
21	99833 0512	Screw, Set Plate	2	
	99952 0516	Washer, Plain	2	
	99971 0500	Washer, Spring	2	
22	0866 68 180 A	Tray, Ash - Front	1	

No.	Part Number	Description	Q'ty	Remarks
23	0866 64 630	Case, Inner	1	
24	99833 0512	Screw, Ash Tray	2	
	99952 0500	Washer, Plain	2	
	99971 0500	Washer, Spring	2	
25	0866 68 331 00	Lid, Glove-Inner (BLK)	1	
26	0866 68 332	Hook, Glove Lid	1	
27	0866 68 333	Spring, Glove Lid Hook	1	
28	0866 68 334	Pin, Glove Lid Hook	1	
29	0866 68 335 B	Stopper, Glove Lid	1	
30	99832 0408 B	Screw, Stopper	1	
31	0865 68 340 00	Lid, Glove-Outer (BLK)	1	
	0866 68 340 20	Lid, Glove-Outer (BRN)	1	
32	99262 1806 B	Screw, Glove Lid	8	
33	0866 68 351 A	Hinge (R), Glove Lid	1	
34	0866 68 352 A	Hinge (L), Glove Lid	1	
35	99834 0412 B	Screw, Hinge	4	
	99952 0412 B	Washer, Plain	4	
	99971 0400	Washer, Spring	4	
36	0866 68 361	Striker, Glove Lid	1	

CRUSH PAD, GLOVE POCKET & CONSOLE BOX

No.	Part Number	Description		Q'ty	Remarks
37	99833 0512 B	Screw, Striker		2	
	99952 0500 B	Washer, Plain		2	
	99971 0500	Washer, Spring		2	
38	1524 68 380 A	Box, Glove-Outer (BLK)		1	
	3737 68 380 20	Box, Glove-Outer (BRN)		1	
39	0376 68 890 B	Console, Front (BLK.)	(Manual)	1	
	0866 68 890 B20	Console, Front (BRN.)		1	
40	0376 68 892	Plate, Set		1	
41	0376 68 893	Boot, Change		1	
42	0376 68 894	Mould, Change Boot		1	
43	0376 68 895	Mould, Console Front		1	
44	99579 3000	Nut, Speed-Mould		6	
45	1525 68 890	Console, Front (BLK)	(Automatic)	1	
	3738 68 890 20	Console, Front (BRN)		1	
46	0376 68 900	Bracket No. 1, Console (Manual)		1	
	0378 68 900	Bracket No. 1, Console (Automatic)		1	
47	0376 68 910	Bracket No. 2, Console		1	
48	0866 68 920	Bracket, Console (BLK)		1	

No.	Part Number	Description	Q'ty	Remarks
49	99906 0500	Nut, Bracket	2	
	99952 0500	Washer, Plain	2	
	99971 0500	Washer, Spring	2	
50	0370 68 920 00	Console, End (BLK)	1	
	3737 68 920 20	Console, End (BRN)	1	
51	99786 0616	Bolt, Console Bracket	4	
52	99832 0516 B	Screw, Console	4	
	99967 0500 B	Washer	4	
53	0866 69 811	Shelf, Parcel	1	
54	0866 69 821 A	Bracket, Parcel Shelf	1	
55	0820 56 905	Nut, Spring-Parcel Shelf	2	
56	99896 0500	Nut, Spring-Parcel Shelf	1	
57	99833 0616	Bolt, Parcel Shelf	1	
	99952 0618	Washer, Plain	1	
	99971 0600	Washer, Spring	1	
58	99863 0520 B	Screw, Parcel Shelf	3	
	99952 0500 B	Washer, Plain	3	
59	0317 70 269	Cushion, Glove Lid	2	
60	0367 68 832 A	Seat, Change Boot	1	(Manual)
61	99864 0512	Screw, Seat	4	(Manual)

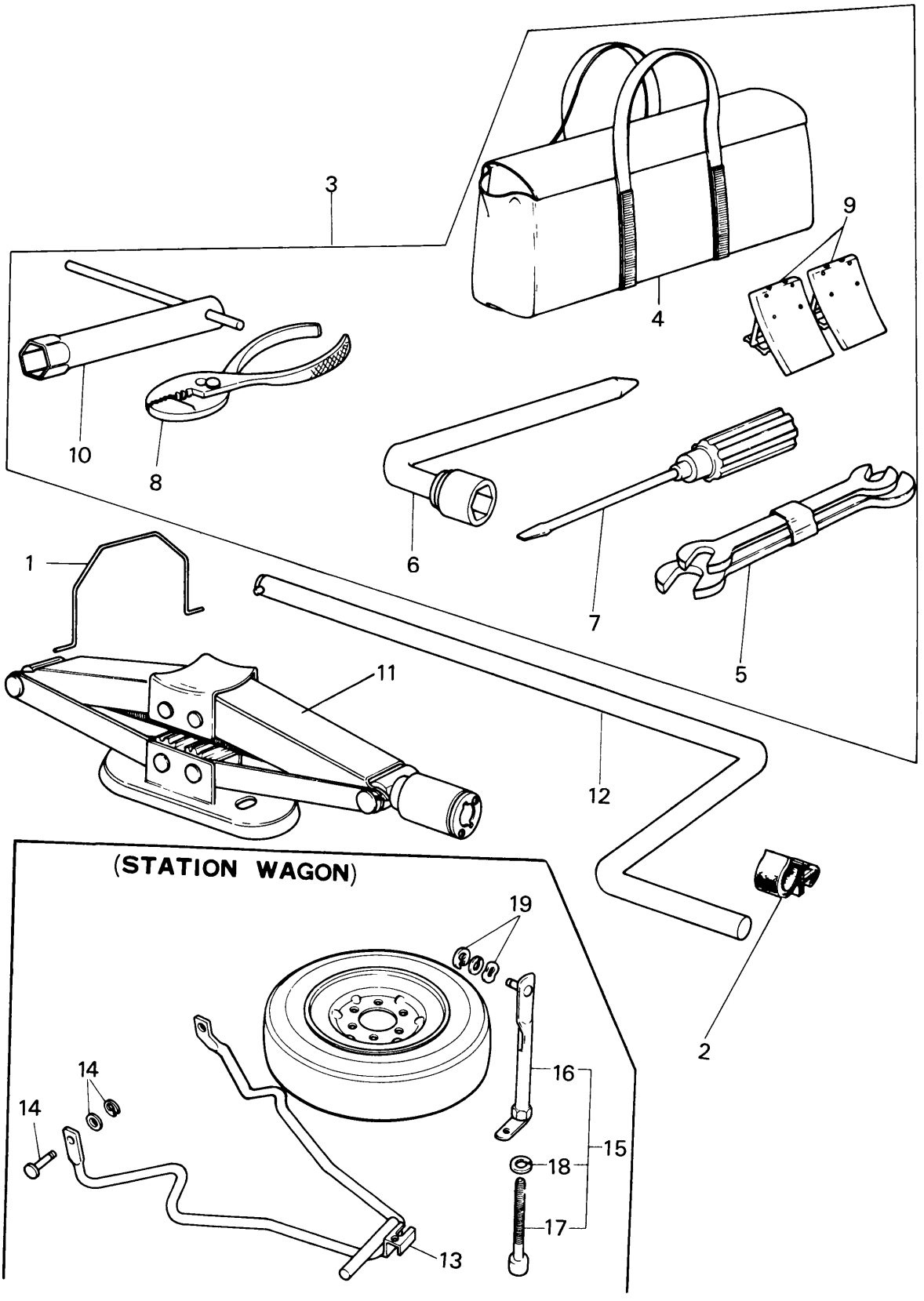
3
9
4
10
8
6
7
5
1
11
12
(STATION WAGON)
19
2
16
14
14
15
18
17
13

No.	Part Number	Description	Q'ty	Remarks
1	0866 56 991	Wire, Jack	1	(Sedan & Coupe)
2	99715 1101	Holder, Rod-Jack Handle	3	
3	1128 68 660	Tools	1	
4	1128 68 670	Bag, Tool	1	
5	0672 68 060A	Spanner Set	1	
6	0603 68 070A	Wrench, Hub Nut	1	
7	0187 68 110A	Driver Set	1	
8	0118 68 180A	Plier	1	
9	0208 68 230	Stopper, Wheel	1	
10	0839 68 720	Wrench, Plug	1	
11	0305 68 800F	Jack	1	
12	0305 68 810A	Handle	1	
13	0585 70 710A	Frame, Hanger-Spare Tire	1	(Station Wagon)
14	99230 0820	Pin, Joint	2	
	99576 0500	Ring, Snap	2	
	99953 0800	Washer, Plain	2	
15	0585 70 720A	Lock, Spare Tire	1	

No.	Part Number	Description	Q'ty	Remarks
16	0585 70 730A	Clamp	1	
17	0585 70 733A	Bolt	1	
18	99952 1224	Washer, Plain	1	(Station Wagon)
19	99576 0700	Ring, Retaining-Spare Tire Lock	1	
	99952 1000	Washer, Plain	1	
	99972 1000	Washer, Wave	1	

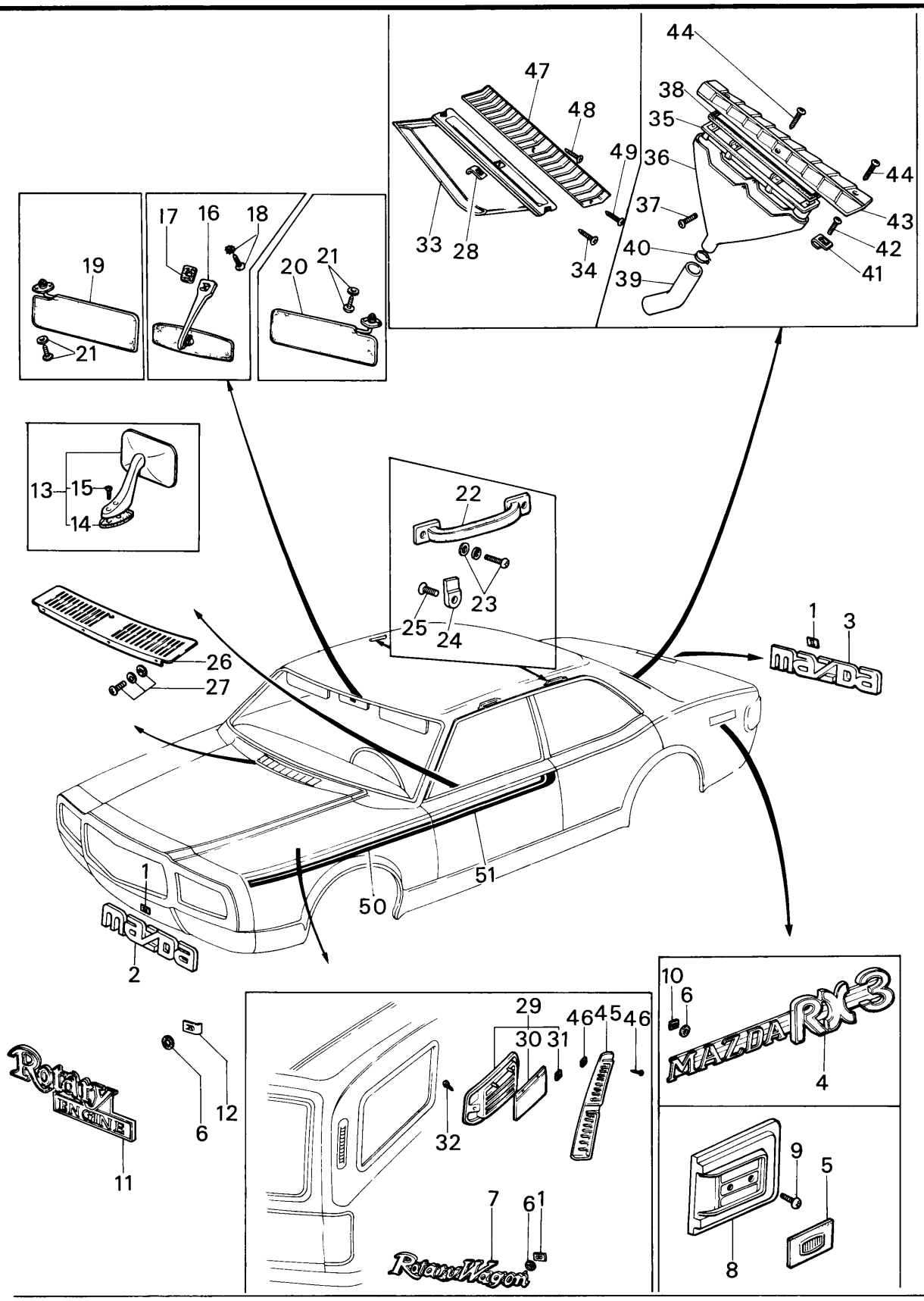
44
47
38
35
48
49
36
44
37
43
33
28
34
40
42
39
41
17
16
18
19
20
21
21
21
13
15
14
22
23
25
24
1
3
26
27
1
51
50
2
10
6
29
30
31
46
45
46
4
32
12
6
11
9
5
7
61
8

No.	Part Number	Description	Q'ty	Remarks
1	0187 69 049A	Nut, Speed-Ornament (Sedan & Coupe) / (Station Wagon)	4 / 5	
2	8501 51 771A	Ornament, mazda-Front	1	
3	8501 51 781A	Ornament, mazda-Rear	1	
4	1562 69 053	Name, MAZDA RX-3	2	
5	0380 69 055B	Ornament (Coupe)	2	
6	0730 69 057A	Gasket, Ornament	6	
7	0899 69 058	Ornament, Rotary Wagon (Station Wagon)	1	
8	0862 69 061	Base (R), Ornament	1	
	0862 69 065	Base (L), Ornament (Coupe)	1	
9	99863 0416	Screw, Base	4	
10	99579 3000	Nut, Speed-Ornament	8	
11	3743 69 085	Mark, Front (RE)	1	
12	99579 3000	Nut, Speed	2	
13	1540 69 130B	Mirror, Door	1	
14	1540 69 101	Gasket, Door Mirror	1	
15	99772 0516	Screw, Door Mirror	1	
	99772 0525	Screw, Door Mirror	1	
16	0310 69 170	Mirror, Interior	1	
17	0839 69 171	Base	1	

No.	Part Number	Description	Q'ty	Remarks
18	99831 0516	Screw, Interior Mirror	2	
	99975 0500	Washer, Toothed	2	
19	1632 69 210A 00	Visor, Sun (R) (BLK)	1	
	1632 69 210A 25	Visor, Sun (R) (BRN)	1	
	1632 69 210A 31	Visor, Sun (R) (BEIG)	1	
20	1632 69 240A 00	Visor, Sun (L) (BLK)	1	
	1632 69 240A 25	Visor, Sun (L) (BRN)	1	
	1632 69 240A 31	Visor, Sun (L) (BEIG)	1	
21	99837 0516C	Screw, Sun Visor	4	
	99975 0500	Washer, Toothed	4	
22	0866 69 920 02	Handle, Assist-Rear (BLK)	2	
23	99838 0620	Screw, Assist Handle	4	(Sedan & Station Wagon)
	99952 0600	Washer, Plain	4	
	99971 0600	Washer, Spring	4	
24	0376 69 941 00	Hanger, Coat (GRY)	1	(Coupe)
25	99837 0620C	Screw, Coat Hanger	1	
26	1524 70 401A	Grille	1	
27	0866 56 405	Rubber, Cushion	4	
	99864 0412B	Screw, Grille	4	
	99952 0412B	Washer, Plain	4	

No.	Part Number	Description	Q'ty	Remarks
28	0866 70 412	Nut, Spring-Extractor (Sedan)	6	
29	0585 70 420A	Extractor (R)	1	
	0585 71 420A	Extractor (L)	1	
30	0585 70 423A	Valve	2	(Station Wagon)
31	99579 2000	Nut, Speed-Valve	4	
32	99864 0410B	Screw, Tapping-Extractor	4	
33	0866 70 420	Extractor (R)	1	
	0866 71 420	Extractor (L)	1	(Sedan)
34	99864 0416	Screw, Extractor	4	
35	0376 70 421	Frame (R), Extractor	1	
	0376 71 421	Frame (L), Extractor	1	
36	0376 70 422	Chamber (R)	1	
	0376 71 422	Chamber (L)	1	
37	99864 0410	Screw, Frame & Chamber	8	
38	0376 70 426	Gasket	2	
39	0376 70 427	Pipe	2	(Coupe)
40	0376 70 428	Clip	2	
41	0866 70 412	Nut, Spring-Extractor	8	

No.	Part Number	Description	Q'ty	Remarks
42	99864 0416	Screw, Extractor	8	
43	0376 70 431A 03	Grille, Extractor (R) (GRY. M)	1	
	0376 71 431A 03	Grille, Extractor (L) (GRY. M)	1	
44	99864 0416B	Screw, Tapping-Grille	6	
45	0899 70 431 03	Grille (R) (GRY. M)	1	
	0899 71 431 03	Grille (L) (GRY. M)	1	(Station Wagon)
46	99863 0420B	Screw, Tapping-Grille	4	
	99896 0400	Nut, Spring-Grille	2	
47	0866 70 431E 03	Grille (R), Extractor (GRY. M)	1	
	0866 71 431E 03	Grille (L), Extractor (GRY. M)	1	(Sedan)
48	99863 0412B	Screw, Tapping-Grille	2	
49	99863 0425B	Screw, Tapping-Grille	2	
50	0376 70 891 00	Stripe (R), Fender (BLU)	1	
	0376 70 891 04	Stripe (R), Fender (BLK)	1	
	0376 70 891 01	Stripe (R), Fender (WHT)	1	
	0376 71 891 00	Stripe (L), Fender (BLU)	1	
	0376 71 891 04	Stripe (L), Fender (BLK)	1	
	0376 71 891 01	Stripe (L), Fender (WHT)	1	(Coupe)
51	0376 70 892A 00	Stripe (R), Door (BLU)	1	
	0376 70 892A 04	Stripe (R), Door (BLK)	1	

No.	Part Number	Description	Q'ty	Remarks
	0376 70 892A 01	Stripe (R), Door (WHT)	1	
	0376 71 892A 00	Stripe (L), Door (BLU)	1	(Coupe)
	0376 71 892A 04	Stripe (L), Door (BLK)	1	(Coupe)
	0376 71 892A 01	Stripe (L), Door (WHT)	1	(Coupe)

TOP CEILING & TRIM (SEDAN & COUPE)

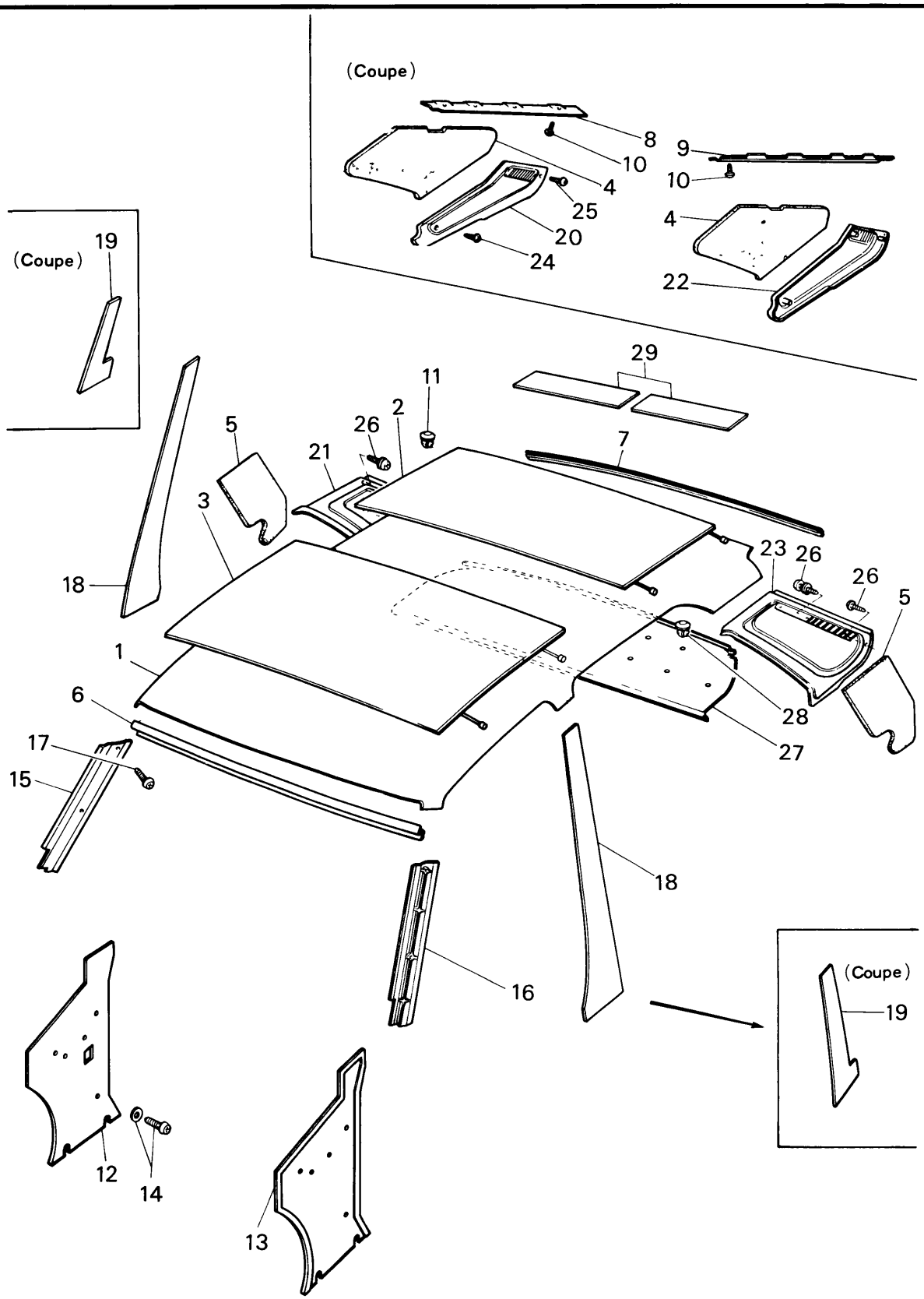

TOP CEILING & TRIM (SEDAN & COUPE)

No.	Part Number	Description	Q'ty	Remarks
1	1634 69 290B 00	Ceiling, Top (BLK)	1	(Coupe)
	1634 69 290B 25	Ceiling, Top (BRN)	1	(Coupe)
	1632 69 290 31	Ceiling, Top (BEIG)	1	(Sedan)
2	0259 69 311A	Insulator No. 1	1	
3	0866 69 311A	Lining, Head	1	
4	0376 69 314B	Pad, Rear Pillar	2	(Coupe)
5	0866 69 314A	Pad, Rear Pillar	2	(Sedan)
6	0376 69 321	Plate, Fixing-Front	1	(Coupe)
	0866 69 321	Plate, Fixing-Front	1	(Sedan)
7	0376 69 341	Plate, Fixing-Rear	1	(Coupe)
	0866 69 341	Plate, Fixing-Rear	1	(Sedan)
8	0376 69 342	Plate, No. 2 Fixing-Rear	1	(Coupe)
9	0376 69 343	Plate, No. 3 Fixing-Rear	1	(Coupe)
10	99864 0412	Screw, Fixing Plate	8	(Coupe)
11	99274 0821	Fastener	2	(Coupe)
12	1524 69 360C 01	Trim (R), Front Side (BLK)	1	
13	1524 69 380A 01	Trim (L), Front Side (BLK)	1	
14	99862 0512B	Screw, Front Side	6	
	99967 0500B	Washer	6	
15	0376 69 411 00	Trim (R), Front Pillar (BLK)	1	(Coupe)

TOP CEILING & TRIM (SEDAN & COUPE)

No.	Part Number	Description	Q'ty	Remarks
	0866 69 411 00	Trim (R), Front Pillar (BLK)	(Sedan) 1	
16	0376 69 431 00	Trim (L), Front Pillar (BLK)	(Coupe) 1	
	0866 69 431 00	Trim (L), Front Pillar (BLK)	(Sedan) 1	
17	99862 0412B	Screw, Front Pillar Trim	4	
18	0866 69 461B 35	Trim, Center Pillar (BRN)	2	
	0866 69 461B 37	Trim, Center Pillar (BLK)	(Sedan) 2	
	0866 69 461B 38	Trim, Center Pillar (BEIG)	2	
19	0376 69 462A 00	Trim, Center Pillar (BLK)	2	
	0376 69 462A 25	Trim, Center Pillar (BRN)	2	
	0376 69 462A 31	Trim, Center Pillar (BEIG)	2 (Coupe)	
20	0376 69 511 00	Trim (R), Rear Pillar (BLK)	1	
	0376 69 511 05	Trim (R), Rear Pillar (BRN)	1	
	0376 69 511 07	Trim (R), Rear Pillar (BEIG)	1	
21	0866 69 511 02	Trim (R), Rear Pillar (BEIG)	(Sedan) 1	
22	0376 69 521 00	Trim (L), Rear Pillar (BLK)	1	
	0376 69 521 05	Trim (L), Rear Pillar (BRN)	(Coupe) 1	
	0376 69 521 07	Trim (L), Rear Pillar (BEIG)	1	
23	0866 69 521 02	Trim (L), Rear Pillar (BEIG)	(Sedan) 1	
24	99864 0516B	Screw, Rear Pillar Trim	(Coupe) 4	
25	99864 0525B	Screw, Rear Pillar Trim	(Coupe) 2	

No.	Part Number	Description	Q'ty	Remarks
26	99864 0416	Screw, Rear Pillar Trim	4	(Sedan)
	99864 0412	Screw, Rear Pillar Trim	2	(Sedan)
27	0376 69 870B00	Trim, Package Tray (BLK)	1	(Coupe)
	0870 69 870B00	Trim, Package Tray (BLK) (With Car Stereo)	1	(Coupe)
	0866 69 870C00	Trim, Package Tray (BLK)	1	(Sedan)
	1524 69 870C00	Trim, Package Tray (BLK) (With Car Stereo)	1	(Sedan)
28	0866 69 885	Fastener, Package Tray Trim	2	
29	1011 68 022	Pad, Rear Header (Coupe)	2	

TOP CEILING & TRIM (STATION WAGON)

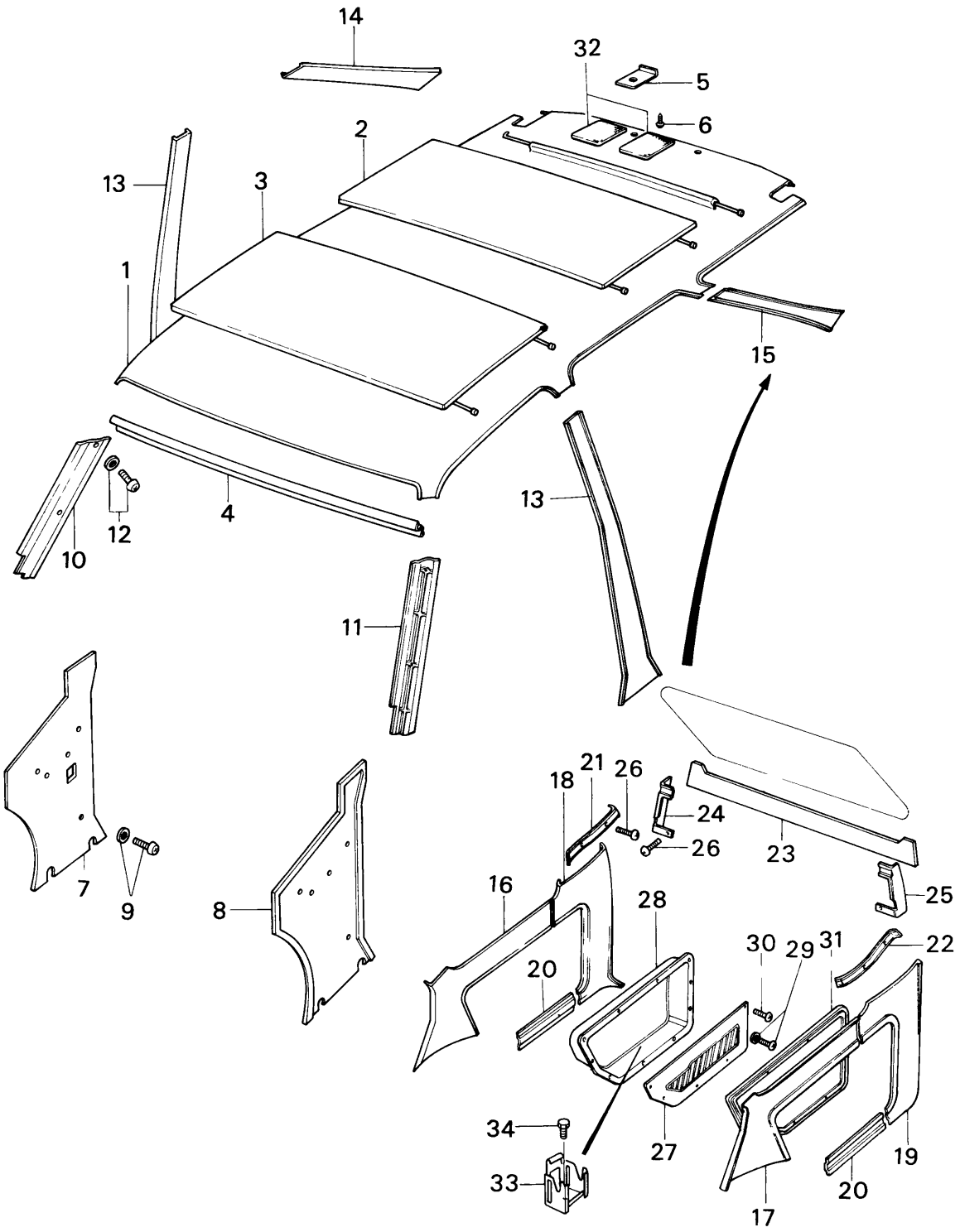

No.	Part Number	Description	Q'ty	Remarks
1	1636 69 290 14	Ceiling, Top (GRY)	1	
2	0585 69 311 A	Lining, Head	1	
3	0866 69 311 A	Lining, Head	1	
4	0866 69 321	Plate, Fixing-Front	1	
5	0585 69 341 B00	Plate, Fixing-Rear (BLK)	2	
6	99862 0512 C	Screw, Tapping-Rear Fixing Plate	2	
	99967 0500 A	Washer	2	
7	1524 69 360 C01	Trim (R), Front Side (BLK)	1	
8	1524 69 380 A01	Trim (L), Front Side (BLK)	1	
9	99862 0512 B	Screw, Tapping-Trim	4	
	99967 0500 B	Washer	4	
10	0866 69 411 00	Trim (R), Front Pillar (BLK)	1	
11	0866 69 431 00	Trim (L), Front Pillar (BLK)	1	
12	99862 0412 B	Screw, Tapping-Trim	4	
13	0866 69 461 B35	Trim, Center (BRN)	2	
	0866 69 461 B37	Trim, Center (BLK)	2	
	0866 69 461 B38	Trim, Center (BEIG)	2	
14	0899 69 561 C31	Trim (R), Quarter (BEIG)	1	
15	0899 69 571 C31	Trim (L), Quarter (BEIG)	1	
16	0899 69 711 B35	Trim No. I (R), Rear Side (BRN)	1	

TOP CEILING & TRIM (STATION WAGON)

No.	Part Number	Description	Q'ty	Remarks
	0899 69 711 B37	Trim No. 1 (R), Rear Side (BLK)	1	
	0899 69 711 B38	Trim No. 1 (R), Rear Side (BEIG)	1	
17	0899 69 712 B35	Trim No. 1 (L), Rear Side (BRN)	1	
	0899 69 712 B37	Trim No. 1 (L), Rear Side (BLK)	1	
	0899 69 712 B38	Trim No. 1 (L), Rear Side (BEIG)	1	
18	0899 69 710 A35	Trim No. 2 (R), Rear Side (BRN)	1	
	0899 69 710 A37	Trim No. 2 (R), Rear Side (BLK)	1	
	0899 69 710 A38	Trim No. 2 (R), Rear Side (BEIG)	1	
19	0899 69 730 A35	Trim No. 2 (L), Rear Side (BRN)	1	
	0899 69 730 A37	Trim No. 2 (L), Rear Side (BLK)	1	
	0899 69 730 A38	Trim No. 2 (L), Rear Side (BEIG)	1	
20	0899 69 715 A35	Trim, Rear Side-Lower (BRN)	2	
	0899 69 715 A37	Trim, Rear Side-Lower (BLK)	2	
	0899 69 715 A38	Trim, Rear Side-Lower (BEIG)	2	
21	0899 69 717 A	Garnish (R), Rear Side Trim	1	
22	0899 69 718 A	Garnish (L), Rear Side Trim	1	
23	0899 69 721 B35	Trim, Back Door-Upper (BRN)	1	
	0899 69 721 B37	Trim, Back Door-Upper (BLK)	1	
	0899 69 721 B38	Trim, Back Door-Upper (BEIG)	1	
24	0899 69 723 B	Garnish (R), Back Door Trim	1	

No.	Part Number	Description	Q'ty	Remarks
25	0899 69 724 B	Garnish (L), Back Door Trim	1	
26	99864 0410 C	Screw, Tapping-Garnish	6	
27	1529 70 911 01	Cover, Pocket (BLK)	1	
	1529 70 911 15	Cover, Pocket (BEIG)	1	
	1529 70 911 16	Cover, Pocket (BRN)	1	
28	1529 70 920 A01	Pocket, Side (BLK)	1	
	1529 70 920 A15	Pocket, Side (BEIG)	1	
	1529 70 920 A16	Pocket, Side (BRN)	1	
29	99862 0416 B	Screw, Tapping-Side Pocket & Trim } Selective use	23	
	99862 0416 C	Screw, Tapping-Side Pocket & Trim } Selective use		
	99967 0400 A	Washer } Selective use	23	
	99967 0400 B	Washer } Selective use		
30	99780 0625	Screw, Tapping-Side Pocket (R)	2	
31	1624 71 911 01	Trim (L), Side (BLK)	1	
	1624 71 911 15	Trim (L), Side (BEIG)	1	
	1624 71 911 16	Trim (L), Side (BRN)	1	
32	0419 68 021	Cushion, Wire	2	
33	1529 70 930	Bracket, Jack	1	
34	99780 0625	Bolt, Jack Bracket	1	

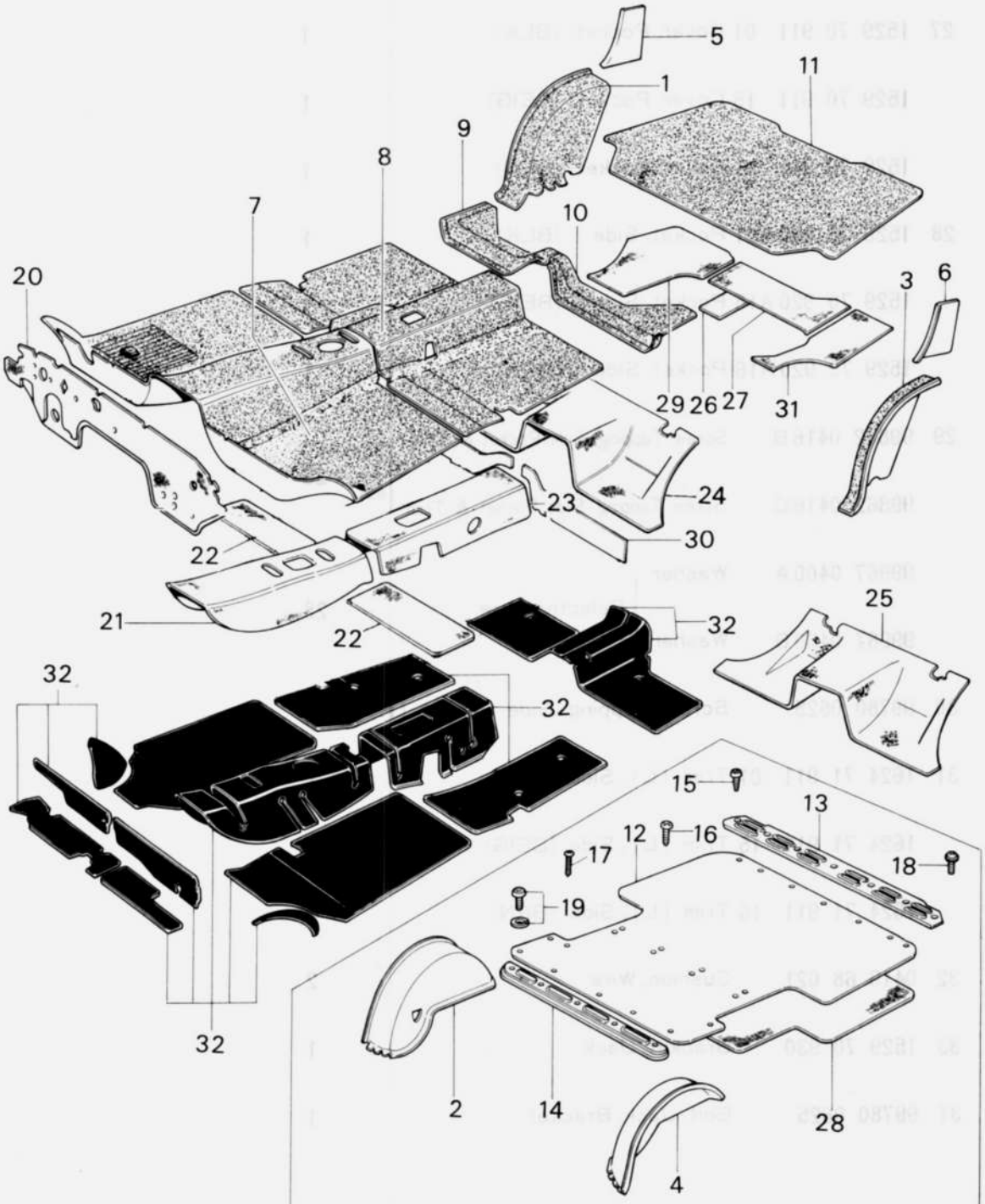
5
1
11
9
8
7
10
20
3
6
29
26
27
31
24
23
30
22
21
22
32
25
32
32
32
15
13
12
16
17
18
19
2
14
28
4
(Station Wagon)

No.	Part Number	Description	Q'ty	Remarks
		When ordering the following Trims,		
		Add colour code nos. given below after parts number		
		-35 (BRN) -37 (BLK) -38 (BEIG)		
1	1632 69 541	© Trim (R), Tire House (Sedan & Coupe)	1	
2	1636 69 541A	© Trim (R), Tire House (Station Wagon)	1	
3	1632 69 542	© Trim (L), Tire House (Sedan & Coupe)	1	
4	1636 69 543A	© Trim (L), Tire House (Station Wagon)	1	
5	0866 69 543A	© Trim (R), Rear Seat Side	1	(Sedan)
6	0866 69 544A	© Trim (L), Rear Seat Side	1	(Sedan)
		When ordering the following Mats & Carpets,		
		Add colour code nos. given below after parts number		
		-70 (BLK) -71 (BRN)		
7	3725 69 612	© Mat (Frt.), Carpet (Manual)	1	
	3728 69 612	© Mat (Frt.), Carpet (Automatic)	1	
8	3725 69 617	© Mat (Rr.), Carpet	1	
9	0866 69 625A 05	Mat (R), End (BLK) (Sedan & Coupe)	1	
	1529 69 625 05	Mat (R), End (BLK) (Station Wagon)	1	
10	0866 69 626A 05	Mat (L), End (BLK) (Sedan & Coupe)	1	

No.	Part Number	Description	Q'ty	Remarks
	1529 69 626 05	Mat (L), End (BLK) (Station Wagon)	1	
11	0866 69 627A	Mat, Trunk Room (BLK) (Sedan & Coupe)	1	
12	3629 69 627A 70	Mat, Trunk Room (BLK)	1	(Station Wagon)
	3629 69 627A 71	Mat, Trunk Room (BRN)	1	(Station Wagon)
13	0585 69 628F	Plate No. 1, Seat-Mat Rear	1	
14	1529 69 629	Plate No. 2, Seat-Mat Front	1	
15	99862 0410	Screw, Tapping-Trunk Room Mat	6	
16	99864 0410	Screw, Tapping-Trunk Room Mat	4	(Station Wagon)
17	99864 0420	Screw, Tapping	4	
18	99864 0412B	Screw, Tapping	7	
19	99862 0410B	Screw, Tapping-Trunk Room Mat	2	
	99967 0400B	Washer	2	
20	1598 69 660	Insulator	1	
21	3719 69 683	Pad (Frt.) (Manual)	1	
	3720 69 683	Pad (Frt.) (Automatic)	1	
22	1907 69 685A	Pad, Seat Lower	2	
23	3719 69 687	Pad (Rr.)	1	
24	3719 69 692	Pad, End (Sedan & Coupe)	1	
25	3723 69 692	Pad, End (Station Wagon)	2	
26	1570 69 695A	Pad, Heat Insulator (Sedan & Coupe)	1	

No.	Part Number	Description	Q'ty	Remarks
27	0866 69 696	Pad, Trunk (C) (Sedan & Coupe)	1	
28	0899 69 696A	Pad, Trunk Room (Station Wagon)	1	
29	0866 69 697	Pad (R), Trunk Room	1	
30	1128 69 681C	Pad, Rear Member (Sedan & Coupe)	1	
	1137 69 681C	Pad, Rear Member (Station Wagon)	1	
31	3719 69 682A	Pad, Tank Room (Sedan & Coupe)	1	
32	0208 76 071	Silencer, Floor (30cm Square)	—	

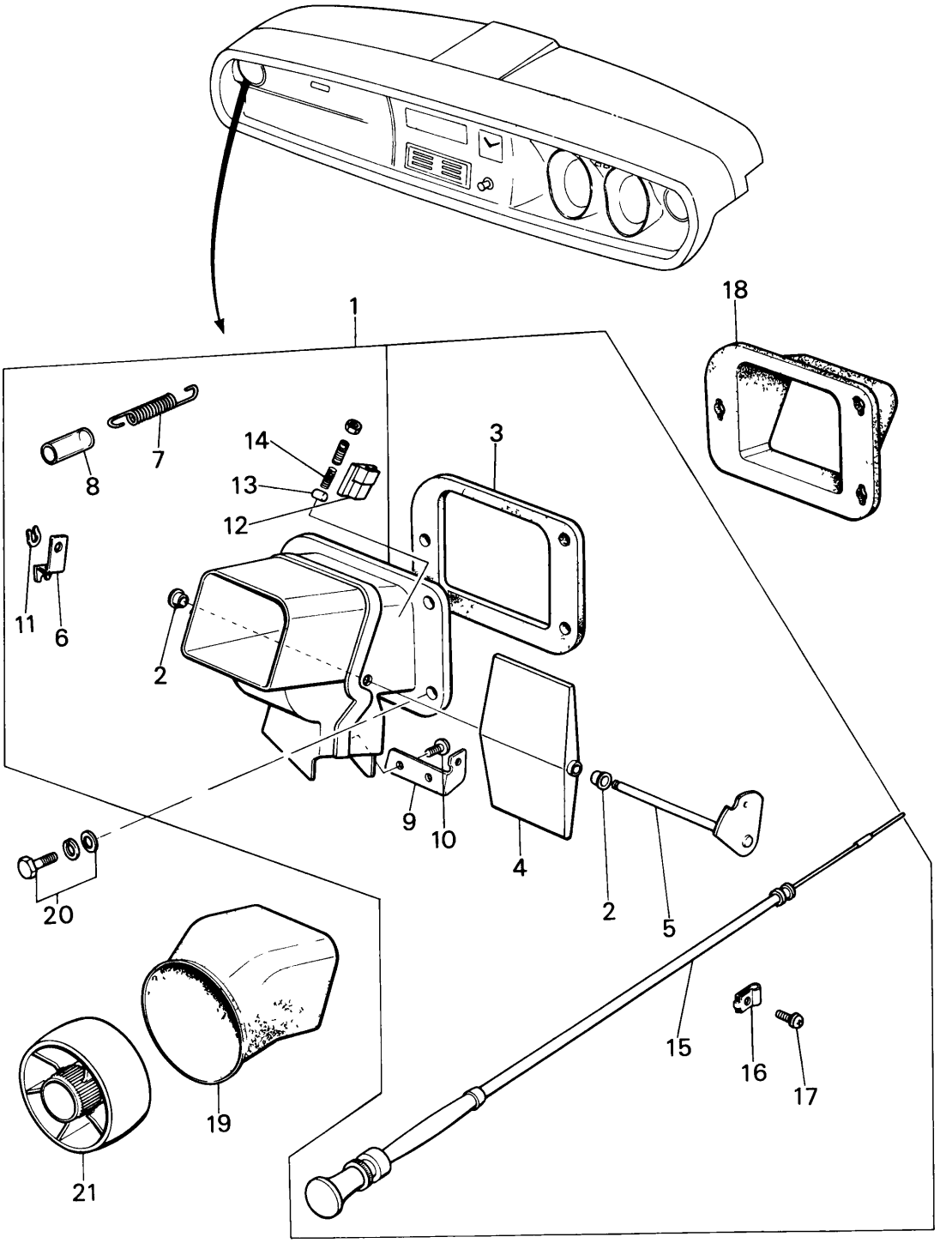
1
18
3
14
13
12
7
8
11
6
2
9
10
4
2
5
20
15
16
17
19
21

No.	Part Number	Description	Q'ty	Remarks
1	0866 70 310B	Ventilator (R)	1	
	0866 71 310B	Ventilator (L)	1	
2	0317 70 307	Bush	4	
3	0866 70 313	Gasket	2	
4	0866 70 320	Flap	2	
5	0866 70 330A	Lever	2	
6	0866 70 341A	Lever	2	
7	0866 70 342	Spring	2	
8	99335 0800B	Pipe	2	
9	0866 70 343	Bracket (R)	1	
	0866 71 343	Bracket (L)	1	
10	99864 0410	Screw, Tapping	4	
11	99576 0400	Ring, Snap	2	
12	0866 70 365	Holder, Spring	2	
13	0866 70 366	Roller	2	
14	0866 70 367	Spring	2	
15	0866 70 360C	Wire, Ventilator Control	2	
16	0866 70 395	Clamp, Wire	2	
17	99833 0410	Screw, Clamp	2	
	99971 0400	Washer, Spring	2	

No.	Part Number	Description	Q'ty	Remarks
18	0866 70 351	Gasket (R)	1	
	0866 71 351	Gasket (L)	1	
19	0866 70 352	Duct (R), Ventilator	1	
	0866 71 352	Duct (L), Ventilator	1	
20	90786 0620	Bolt, Ventilator	6	
	99952 0618	Washer, Plain	6	
21	0866 70 371	Louver	2	

WINDOW GLASS & MOULDING (SEDAN & COUPE)

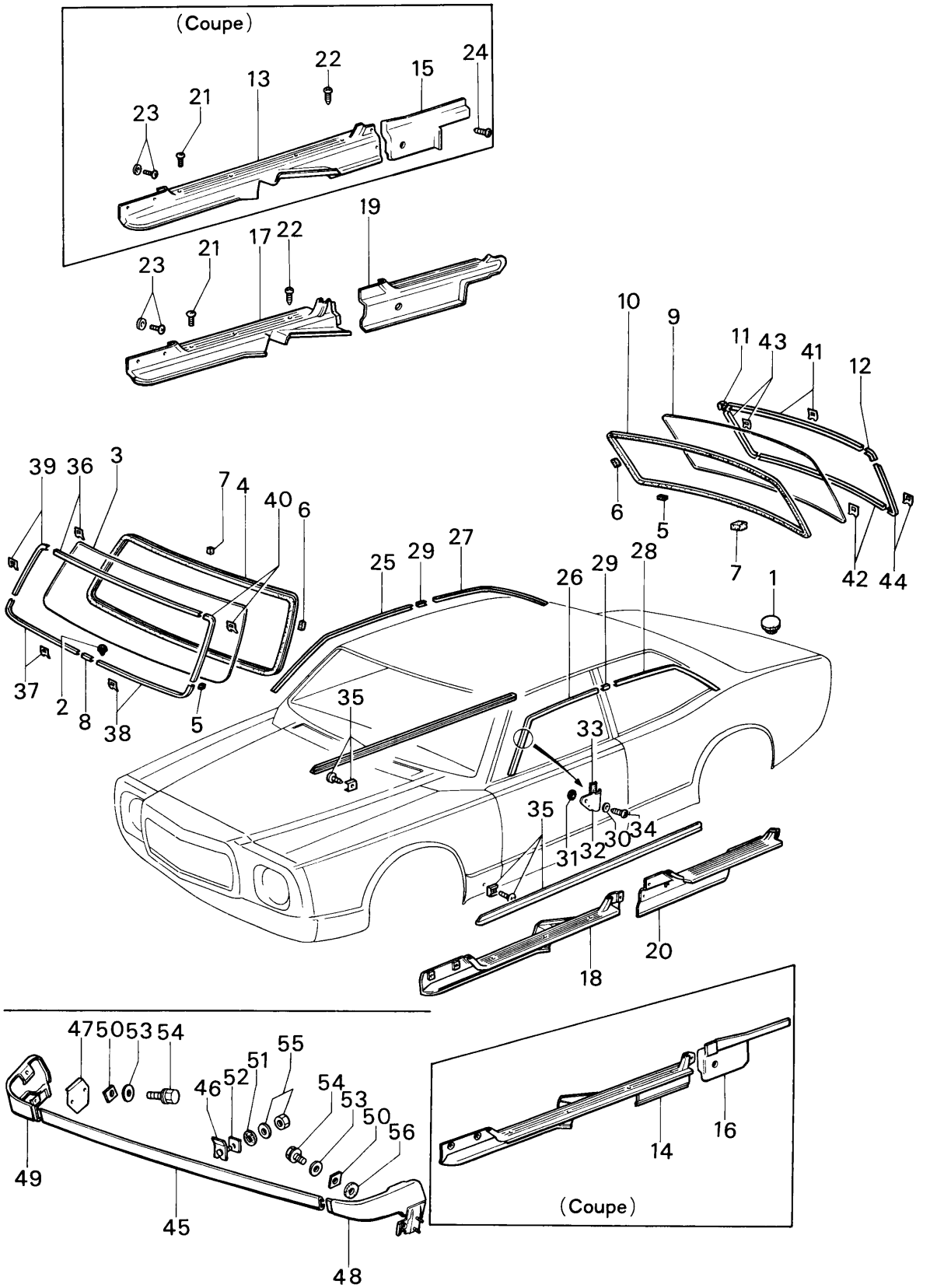

WINDOW GLASS & MOULDING (SEDAN & COUPE)

70 71

No.	Part Number	Description	Q'ty	Remarks
1	0114 43 625	Protector, Back Window Cord	2	
2	0118 56 241	Plug, Drain-Front Window	1	
3	1540 70 441	Glass, Front Window (Blue Pane)	1	(Sedan)
	1531 70 441	Glass, Front Window (Transparent)	1	(Sedan)
	1542 70 441	Glass, Front Window (Blue Pane)	1	(Coupe)
	1568 70 441	Glass, Front Window (Transparent)	1	(Coupe)
4	0305 70 443B	Dam, Front Window Glass	1	
5	0305 70 447B	Spacer "A", Window Glass-Front···3, Rear···2	5	
6	0305 70 448A	Spacer "B", Window Glass-Front···2, Rear···2	4	
7	0839 70 449	Spacer "C", Window Glass-Front···2, Rear···2	4	
8	0866 70 454	Joint, Mould-Front Window Glass	1	
9	0374 70 471A	Glass, Back Window (Transparent) (W/O Heating Wire)	1	
	0375 70 471A	Glass, Back Window (Blue Pane) (W/O Heating Wire)	1	(Coupe)
	1882 70 471	Glass, Back Window (Blue Pane) (With Heating Wire)	1	(Coupe)
	1895 70 471	Glass, Back Window (Transparent) (With Heating Wire)	1	(Coupe)
	1523 70 471A	Glass, Back Window (Transparent) (W/O Heating Wire)	1	(Sedan)
	1893 70 471	Glass, Back Window (Transparent) (With Heating Wire)	1	(Sedan)
	1881 70 471	Glass, Back Window (Blue Pane) (With Heating Wire)	1	(Sedan)
	1535 70 471A	Glass, Back Window (Blue Pane) (W/O Heating Wire)	1	(Sedan)
10	0866 70 473	Dam, Back Window Glass	1	

WINDOW GLASS & MOULDING (SEDAN & COUPE)

No.	Part Number	Description	Q'ty	Remarks
11	0376 70 570	Joint (R), Mould-Back Window (Coupe)	1	
	0866 70 570	Joint (R), Mould-Back Window (Sedan)	1	
12	0376 71 570	Joint (L), Mould-Back Window (Coupe)	1	
	0866 71 570	Joint (L), Mould-Back Window (Sedan)	1	
13	0376 70 801B00	Plate (R), Scarf-Front (BLK)	1	
14	0376 71 801B00	Plate (L), Scarf-Front (BLK)	1	(Coupe)
15	1882 70 802	Plate (R), Scarf-Rear (BLK)	1	
16	1882 71 802	Plate (L), Scarf-Rear (BLK)	1	
17	0866 70 801B00	Plate (R), Scarf-Front (BLK)	1	
18	0866 71 801B00	Plate (L), Scarf-Front (BLK)	1	(Sedan)
19	1881 70 802	Plate (R), Scarf-Rear (BLK)	1	
20	1881 71 802	Plate (L), Scarf-Rear (BLK)	1	
21	99862 0425B	Screw, Scarf Plate	(Sedan) 10 (Coupe) 8	
22	99864 0416B	Screw, Scarf Plate	(Sedan) 2 (Coupe) 4	
23	99865 0416B	Screw, Scarf Plate	(Sedan) 12 (Coupe) 8	
	99952 0516B	Washer, Plain	(Sedan) 2 (Coupe) 6	
24	99864 0425B	Screw, Scarf Plate (Coupe)	2	
25	3745 70 830	Mould (R), Drip-Front (Coupe)	1	
	3743 70 830	Mould (R), Drip-Front (Sedan)	1	
26	3745 71 830	Mould (L), Drip-Front (Coupe)	1	

No.	Part Number	Description	Q'ty	Remarks
	3743 71 830	Mould (L), Drip-Front (Sedan)	1	
27	0376 70 822B	Mould (R), Drip-Rear (Coupe)	1	
	0866 70 822D	Mould (R), Drip-Rear (Sedan)	1	
28	0376 71 822B	Mould (L), Drip-Rear (Coupe)	1	
	0866 71 822D	Mould (L), Drip-Rear (Sedan)	1	
29	0866 70 823B	Joint, Drip Mould	2	
30	8501 50 642	Washer, Drip Mould	6	
31	1029 51 769	Packing, Drip Mould	6	
32	3743 70 824A	Clip, Drip Mould	6	
33	3743 70 825	Filler, Drip Mould	2	
34	99739 0410	Screw, Drip Mould	6	
35	1128 99 721	Mould Set, Step	2	
36	0376 99 741	Mould Set, Upper-Front Window Glass (Coupe)	1	
	0866 99 741	Mould Set, Upper-Front Window Glass (Sedan)	1	
37	0866 99 742A	Mould Set (R), Lower-Front Window Glass	1	
38	0866 99 745A	Mould Set (L), Lower-Front Window Glass	1	
39	0376 99 743A	Mould Set (R), Side-Front Window Glass (Coupe)	1	
	0866 99 743A	Mould Set (R), Side-Front Window Glass (Sedan)	1	
40	0376 99 744A	Mould Set (L), Side-Front Window Glass (Coupe)	1	
	0866 99 744A	Mould Set (L), Side-Front Window Glass (Sedan)	1	

WINDOW GLASS & MOULDING (SEDAN & COUPE)

No.	Part Number	Description	Q'ty	Remarks
41	0376 99 746	Mould Set, Upper-Back Window Glass (Coupe)	1	
	0866 99 746	Mould Set, Upper-Back Window Glass (Sedan)	1	
42	0376 99 747	Mould Set, Lower-Back Window Glass (Coupe)	1	
	0866 99 747	Mould Set, Lower-Back Window Glass (Sedan)	1	
43	0376 99 748A	Mould Set (R), Back Window Glass (Coupe)	1	
	0866 99 748A	Mould Set (R), Back Window Glass (Sedan)	1	
44	0376 99 749A	Mould Set (L), Back Window Glass (Coupe)	1	
	0866 99 749A	Mould Set (L), Back Window Glass (Sedan)	1	
45	1881 70 611	Garnish (C), Rear Bumper	1	
46	1881 70 620	Bracket, Garnish	4	
47	1881 70 630	Bracket, Garnish	2	
48	1881 70 640A	Garnish (R), Rear Bumper	1	
49	1881 70 650A	Garnish (L), Rear Bumper	1	
50	0223 58 446	Sheet, Garnish	4	
51	0111 57 111	Rubber, Garnish	4	
52	0839 70 526	Sheet, Garnish	4	
53	0730 78 541	Washer, Plain-Garnish	4	
54	99796 0616	Bolt, Garnish Bracket	4	
55	99940 0600	Nut, Garnish Bracket	4	
	99952 0618	Washer, Plain	4	
56	0866 50 102A	Spacer, Garnish Bracket	2	

WINDOW GLASS & MOULDING (STATION WAGON)

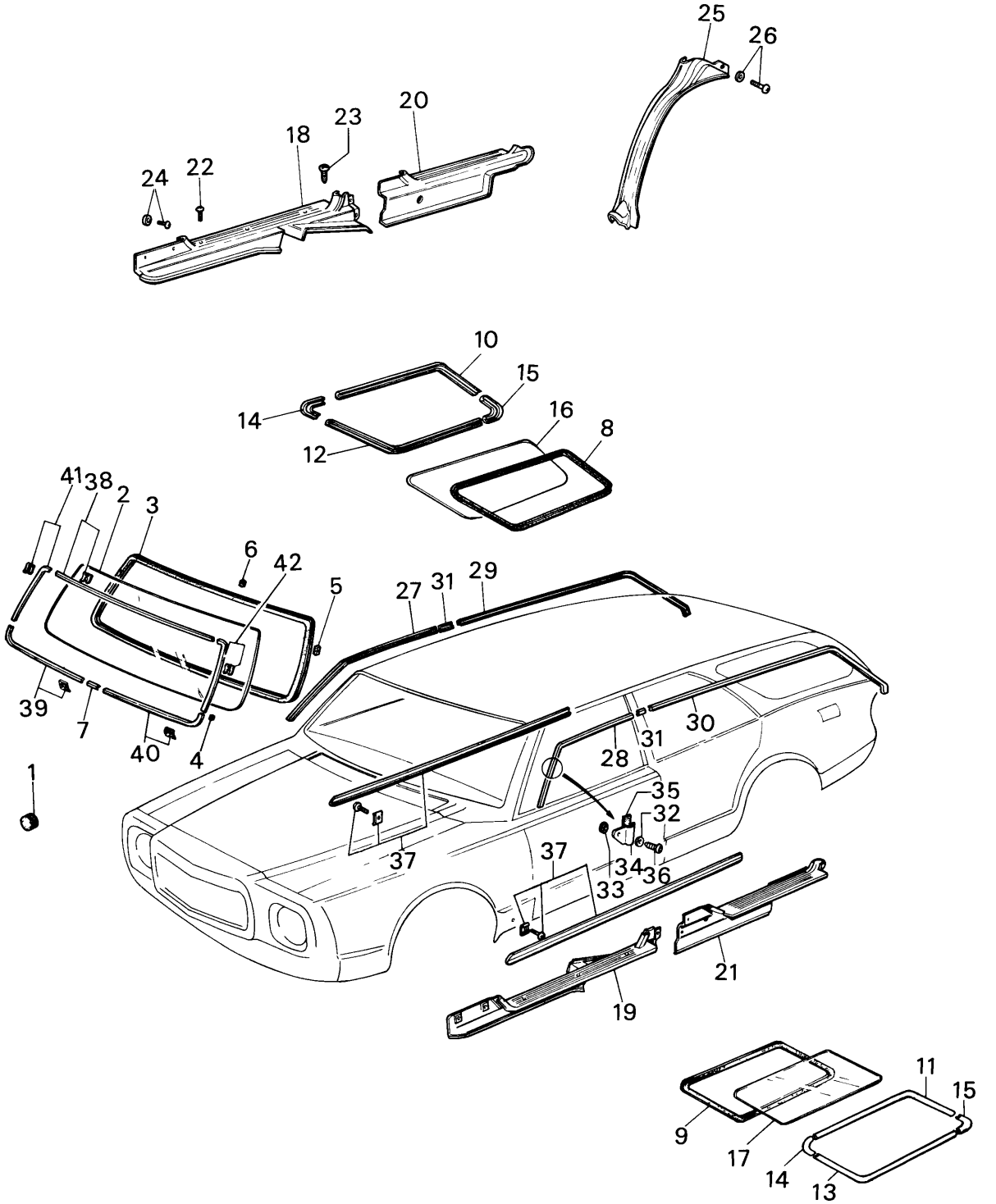

WINDOW GLASS & MOULDING (STATION WAGON)

70 71

No.	Part Number	Description	Q'ty	Remarks
1	0118 56 241	Plug, Drain-Front Window Glass	1	
2	1531 70 441	Glass, Front Window (Transparent)	1	
	1540 70 441	Glass, Front Window (Blue Pane)	1	
3	0305 70 443B	Dam, Front Window Glass	1	
4	0305 70 447B	Spacer "A", Front Window Glass	3	
5	0305 70 448A	Spacer "B", Front Window Glass	2	
6	0839 70 449	Spacer "C", Front Window Glass	2	
7	0866 70 454	Joint, Front Mould	1	
8	0585 70 521C	Weatherstrip (R), Rear Side Glass	1	
9	0585 71 521C	Weatherstrip (L), Rear Side Glass	1	
10	0585 70 531A	Mould (R), Upper-Rear Side Glass	1	
11	0585 71 531A	Mould (L), Upper-Rear Side Glass	1	
12	0585 70 532A	Mould (R), Lower-Rear Side Glass	1	
13	0585 71 532A	Mould (L), Lower-Rear Side Glass	1	
14	0585 70 533A	Mould (Frt.), Rear Side Glass	2	
15	0585 70 534A	Mould (Rr.), Rear Side Glass	2	
16	1529 70 551A	Glass (R), Rear Side (Transparent)	1	
	1544 70 551A	Glass (R), Rear Side (Blue Pane)	1	
17	1529 71 551A	Glass (L), Rear Side (Transparent)	1	
	1544 71 551A	Glass (L), Rear Side (Blue Pane)	1	

WINDOW GLASS & MOULDING (STATION WAGON)

No.	Part Number	Description	Q'ty	Remarks
18	0866 70 801 B00	Plate (R), Scarf-Front (BLK)	1	
19	0866 71 801 B00	Plate (L), Scarf-Front (BLK)	1	
20	1881 70 802	Plate (R), Scarf-Rear (BLK)	1	
21	1881 71 802	Plate (L), Scarf-Rear (BLK)	1	
22	99862 0425 B	Screw, Scarf Plate	10	
23	99865 0416 B	Screw, Scarf Plate	12	
24	99864 0416 B	Screw, Scarf Plate	2	
	99952 0516 B	Washer, Plain	2	
25	0585 70 811 C	Plate (Rr.), Scarf	1	
26	99864 0412 B	Screw, Scarf Plate (Rr.)	2	
	99952 0412 B	Washer, Plain	2	
27	3743 70 830	Mould (R), Drip-Front	1	
28	3743 71 830	Mould (L), Drip-Front	1	
29	0585 70 822 B	Mould (R), Drip-Rear	1	
30	0585 71 822 B	Mould (L), Drip-Rear	1	
31	0866 70 823 B	Joint, Drip Mould	2	
32	8501 50 642	Washer, Drip Mould	6	
33	1029 51 769	Packing, Drip Mould	6	
34	3743 70 824 A	Clip, Drip Mould	6	
35	3743 70 825	Filler, Drip Mould	2	

No.	Part Number	Description	Q'ty	Remarks
36	99739 0410	Screw, Drip Mould	6	
37	1128 99 721	Mould Set, Step	2	
38	0866 99 741	Mould Set, Upper-Front Window Glass	1	
39	0866 99 742A	Mould Set (R), Lower-Front Window Glass	1	
40	0866 99 745A	Mould Set (L), Lower-Front Window Glass	1	
41	0866 99 743A	Mould Set (R), Front Window Glass	1	
42	0866 99 744A	Mould Set (L), Front Window Glass	1	

REAR SIDE WINDOW (COUPE)

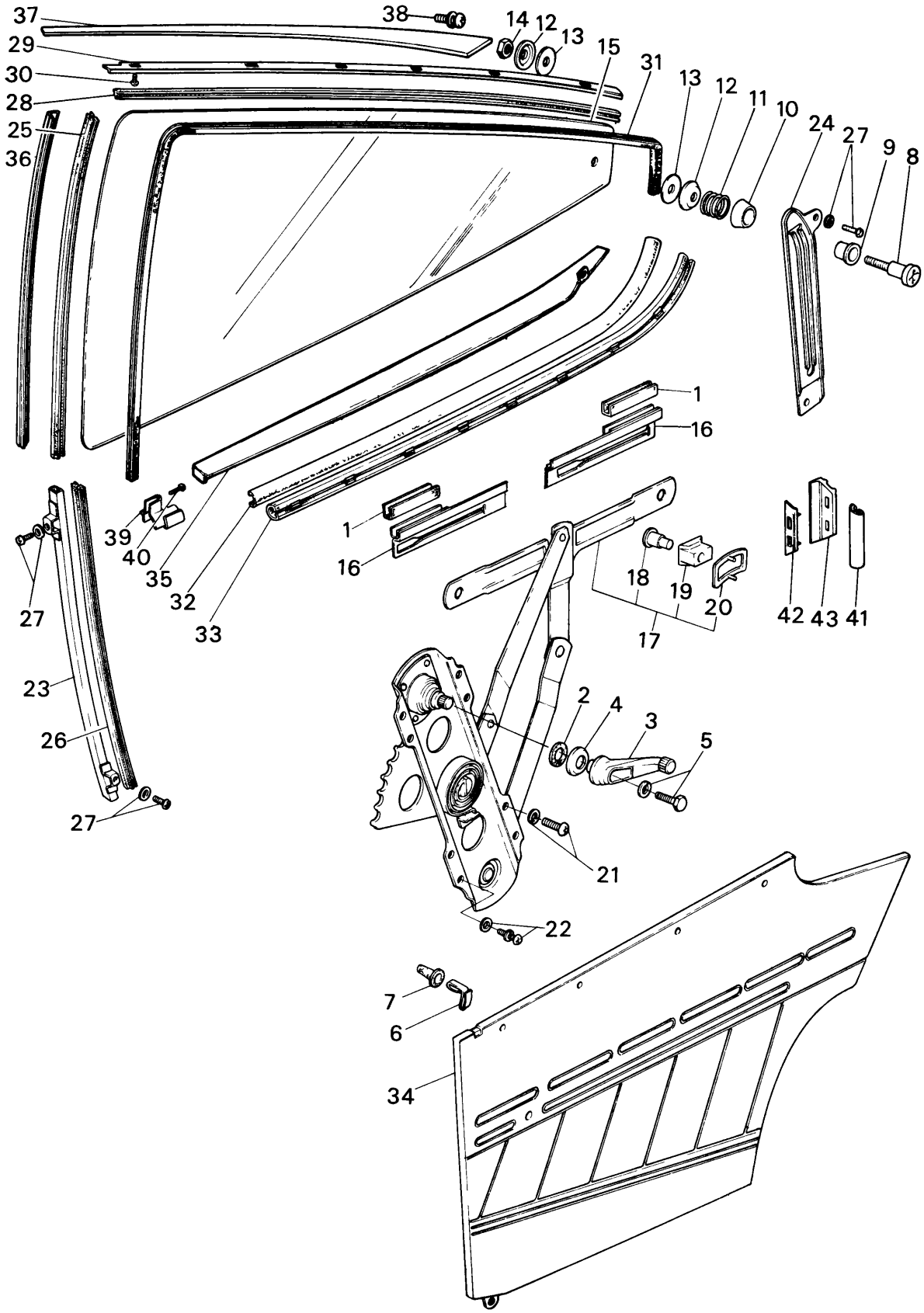

REAR SIDE WINDOW (COUPE) 72 73

No.	Part Number	Description	Q'ty	Remarks
1	2292 58 232	Strip, Rubber	4	
2	0259 58 305 B	Gasket, Regulator	2	
3	0223 58 370 D	Handle, Regulator	2	
4	0223 58 375 A	Escutcheon, Regulator Handle	2	
5	99806 0516	Bolt, Regulator Handle	2	
	99971 0500	Washer, Spring	2	
6	0208 58 921	Fastener, Quarter Trim	4	
7	0187 58 922	Cap, Fastener-Quarter Trim	4	
8	0839 70 521	Pin, Glass Guide	2	
9	0839 70 522	Roller, Glass Guide	2	
10	0839 70 523 A	Seat, Spring	2	
11	0839 70 524	Spring, Glass Guide	2	
12	0839 70 525	Washer, Glass Guide	4	
13	0839 70 526	Seat, Glass Guide	4	
14	99906 0500	Nut, Glass Guide Pin	2	
15	0374 72 501 A	Glass (R), Window } (Transparent)	1	
	0374 73 501 A	Glass (L), Window } (Transparent)	1	
	0376 72 501 A	Glass (R), Window ✓ } (Blue Pane)	1	
	0376 73 501 A	Glass (L), Window } (Blue Pane)	1	
16	0376 72 505	Bracket, Lift	4	

REAR SIDE WINDOW (COUPE)

No.	Part Number	Description	Q'ty	Remarks
17	0376 72 560	Regulator (R), Window	1	
	0376 73 560	Regulator (L), Window	1	
18	0223 58 303 A	Pin	4	
19	0223 58 304 A	Guide	4	
20	0223 58 311	Spring, Guide	4	
21	99794 0616	Bolt, Window Regulator	4	
	99953 0600	Washer, Plain	4	
	99971 0600	Washer, Spring	4	
22	99806 0612	Bolt, Window Regulator	8	
	99971 0600	Washer, Spring	8	
	99951 0618	Washer, Plain	8	
23	0376 72 602	Guide "A" (R), Glass	1	
	0376 73 602	Guide "A" (L), Glass	1	
24	0376 72 603	Guide "B" (R), Glass	1	
	0376 73 603	Guide "B" (L), Glass	1	
25	0376 72 605	Channel "A", Glass Run	2	
26	0376 72 606	Channel "B", Glass Run	2	
27	99806 0612	Bolt, Glass Guide	8	
	99971 0600	Washer, Spring	8	

No.	Part Number	Description	Q'ty	Remarks
	99951 0618	Washer, Plain	8	
28	0376 72 761	Weatherstrip (R)	1	
	0376 73 761	Weatherstrip (L)	1	
29	0376 72 771	Retainer, Weatherstrip	1	
	0376 73 771	Retainer, Weatherstrip	1	
30	99864 0408	Screw, Weatherstrip	8	
31	0376 72 755 A01	Welt, Seaming (BLK)	2	
	0376 72 755 A20	Welt, Seaming (BRN)	2	
32	0376 72 781 C	Weatherstrip, Outer "A"	2	
33	0376 72 790	Weatherstrip, Inner "A" (R)	1	
	0376 73 790	Weatherstrip, Inner "A" (L)	1	

When ordering following Door Trims,

Add colour code nos. given below after parts number

-35 (BRN) -37 (BLK) -38 (BEIG)

34	1882 72 810	© Trim (R), Quarter	1	
	1882 73 810	© Trim (L), Quarter	1	
35	0376 72 880	Mould (R), Beltline	1	
	0376 73 880	Mould (L), Beltline	1	
36	0376 72 851 B	Garnish (R)	1	

72 73 REAR SIDE WINDOW (COUPE)

No.	Part Number	Description	Q'ty	Remarks
	0376 73 851 B	Garnish (L)	1	
37	0376 72 855	Mould (R), Quarter Line	1	
	0376 73 855	Mould (L), Quarter Line	1	
38	99865 0410	Screw, Quarter Line Mould	2	
	99952 0412	Washer, Plain	2	
39	0376 72 881	Cover (R)	1	
	0376 73 881	Cover (L)	1	
40	99864 0410 B	Screw, Cover	2	
41	0376 72 890	Weatherstrip "B" (R)	1	Rear Pillar Trim
	0376 73 890	Weatherstrip "B" (L)	1	Rear Pillar Trim
42	0376 72 901 C	Weatherstrip, Outer "B"	2	
43	0376 72 902 B	Plate, Set	2	

REAR SIDE DOOR (GLASS, SEDAN & STATION WAGON)

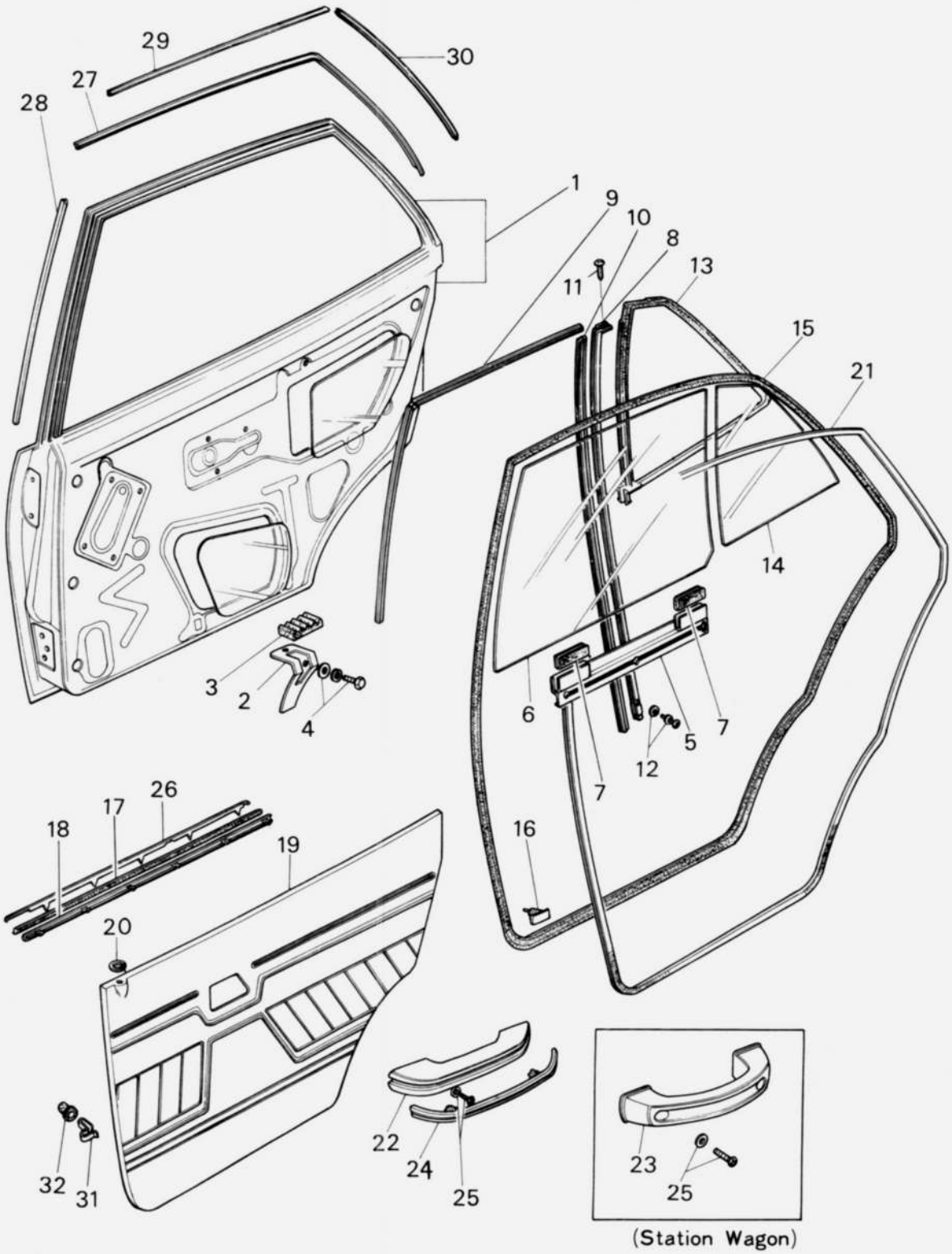

REAR SIDE DOOR (GLASS, SEDAN & STATION WAGON)

72 73

No.	Part Number	Description	Q'ty	Remarks
1	1620 72 010	Body (R), Rear Door (Sedan)	1	
	1620 73 010	Body (L), Rear Door (Sedan)	1	
	1636 72 010	Body (R), Rear Door (Station Wagon)	1	
	1636 73 010	Body (L), Rear Door (Station Wagon)	1	
	0866 72 020A	Panel (R), Outer	1	
	0866 73 020A	Panel (L), Outer	1	
2	0259 72 080	Stopper, Glass Down	2	
3	0187 56 235	Rubber, Glass Down Stopper	2	
4	99806 0612	Bolt, Glass Down Stopper	2	
	99951 0618	Washer, Plain	2	
	99971 0600	Washer, Spring	2	
5	0259 72 210	Bracket, Lift-Door Glass	2	
6	0368 72 501A	Glass (R), Door (Transparent) (Sedan)	1	
	0368 73 501A	Glass (L), Door (Transparent) (Sedan)	1	
	0866 72 501A	Glass (R), Door (Blue Pane) (Sedan)	1	
	0866 73 501A	Glass (L), Door (Blue Pane) (Sedan)	1	
	0583 72 501A	Glass (R), Door (Transparent) (Station Wagon)	1	
	0583 73 501A	Glass (L), Door (Transparent) (Station Wagon)	1	
	0585 72 501A	Glass (R), Door (Blue Pane) (Station Wagon)	1	

72 73 REAR SIDE DOOR (GLASS, SEDAN & STATION WAGON)

No.	Part Number	Description	Q'ty	Remarks
	0585 73 501A	Glass (L), Door (Blue Pane)	1	
7	0866 72 502	Strip, Rubber-Door Glass	2	
8	0585 72 602C 00	Channel (R), Center (BLK)	1	(Station Wagon)
	0585 73 602C 00	Channel (L), Center (BLK)	1	(Station Wagon)
	0866 72 602A 00	Channel (R), Center (BLK)	1	(Sedan)
	0866 73 602A 00	Channel (L), Center (BLK)	1	(Sedan)
9	0585 72 605	Channel "A", Glass Run (Station Wagon)	2	
	0866 72 605	Channel "A", Glass Run (Sedan)	2	
10	0585 72 606	Channel "B", Glass Run (Station Wagon)	2	
	0866 72 606	Channel "B", Glass Run (Sedan)	2	
11	99832 0410	Screw, Center Channel	4	
12	99796 0608	Bolt, Glass Run Channel	2	
	99952 0618	Washer, Plain	2	
13	0585 72 651A	Weatherstrip, Quarter Glass (Station Wagon)	2	
	0866 72 651B	Weatherstrip, Quarter Glass (Sedan)	2	
14	1524 72 661C	Glass (R), Quarter (Transparent)	1	(Sedan)
	1524 73 661C	Glass (L), Quarter (Transparent)	1	(Sedan)
	1540 72 661B	Glass (R), Quarter (Blue Pane)	1	(Sedan)
	1540 73 661B	Glass (L), Quarter (Blue Pane)	1	(Sedan)
	1529 72 661A	Glass (R), Quarter (Transparent)	1	

REAR SIDE DOOR (GLASS, SEDAN & STATION WAGON)

72 73

No.	Part Number	Description	Q'ty	Remarks
	1529 73 661 A	Glass (L), Ouarter (Transparent)	1	(Station Wagon)
	1544 72 661 A	Glass (R), Ouarter (Blue Pane)	1	
	1544 73 661 A	Glass (L), Quarter (Blue Pane)	1	
15	0585 72 760 A	Weatherstrip (R), Door Body	1	(Station Wagon)
	0585 73 760 A	Weatherstrip (L), Door Body	1	(Station Wagon)
	0866 72 760 A	Weatherstrip (R), Door Body	1	(Sedan)
	0866 73 760 A	Weatherstrip (L), Door Body	1	(Sedan)
16	0305 58 762	Fastener	48	
17	0866 72 781 C	Weatherstrip, Outer-Door Glass	2	
18	0866 72 791	Weatherstrip, Inner-Door Glass	2	

When ordering following Door Trims,

Add colour code nos. given below after parts number

-35 (BRN) -37 (BLK) -38 (BEIG)

19	1620 72 810	© Trim (R), Door	1	
	1620 73 810	© Trim (L), Door	1	
20	0223 58 692 A	Grommet, Door Lock Knob	2	

72 73 REAR SIDE DOOR (GLASS, SEDAN & STATION WAGON)

No.	Part Number	Description	Q'ty	Remarks
21	0398 58 755 01	Welt, Seaming (BLK)	(Sedan) 2 (Station Wagon) 1	(Left Side use)
	0398 58 755 20	Welt, Seaming (BRN)	(Sedan) 2 (Station Wagon) 1	(Left Side use)
	1004 68 911 01	Welt, Seaming (R) (BLK)	1 (Station Wagon)	
	1004 68 911 20	Welt, Seaming (R) (BRN)	1	
22	0398 58 821A 01	Rest, Arm (BEIG)	2 (Sedan)	
	0398 58 821A 23	Rest, Arm (BRN)	2	
23	0585 72 821	Handle, Pull (Station Wagon)	2	
24	0398 58 822A 01	Garnish, Arm Rest (BEIG)	2 (Sedan)	
	0398 58 822A 23	Garnish, Arm Rest (BRN)	2	
25	99830 0520	Screw, Arm Rest & Pull Handle	4	
26	0866 72 831D	Mould (R), Beltline	1	
	0866 73 831D	Mould (L), Beltline	1	
27	0866 72 841A	Mould "A" (R), Sash	1 (Sedan)	
	0866 73 841A	Mould "A" (L), Sash	1	
28	0866 59 842A	Mould "B" (R), Sash-Front	1	
	0866 58 842A	Mould "B" (L), Sash-Front	1	
29	0899 72 841B	Mould "A" (R), Sash-Upper	1 (Station Wagon)	
	0899 73 841B	Mould "A" (L), Sash-Upper	1	
30	0899 72 843A	Mould (R), Sash-Rear	1	
	0899 73 843A	Mould (L), Sash-Rear	1	

No.	Part Number	Description	Q'ty	Remarks
31	0208 58 921	Fastener, Door Trim	12	
32	0187 58 922	Cap, Fastener - Door Trim	12	

REAR SIDE DOOR (LOCK, SEDAN & STATION WAGON)

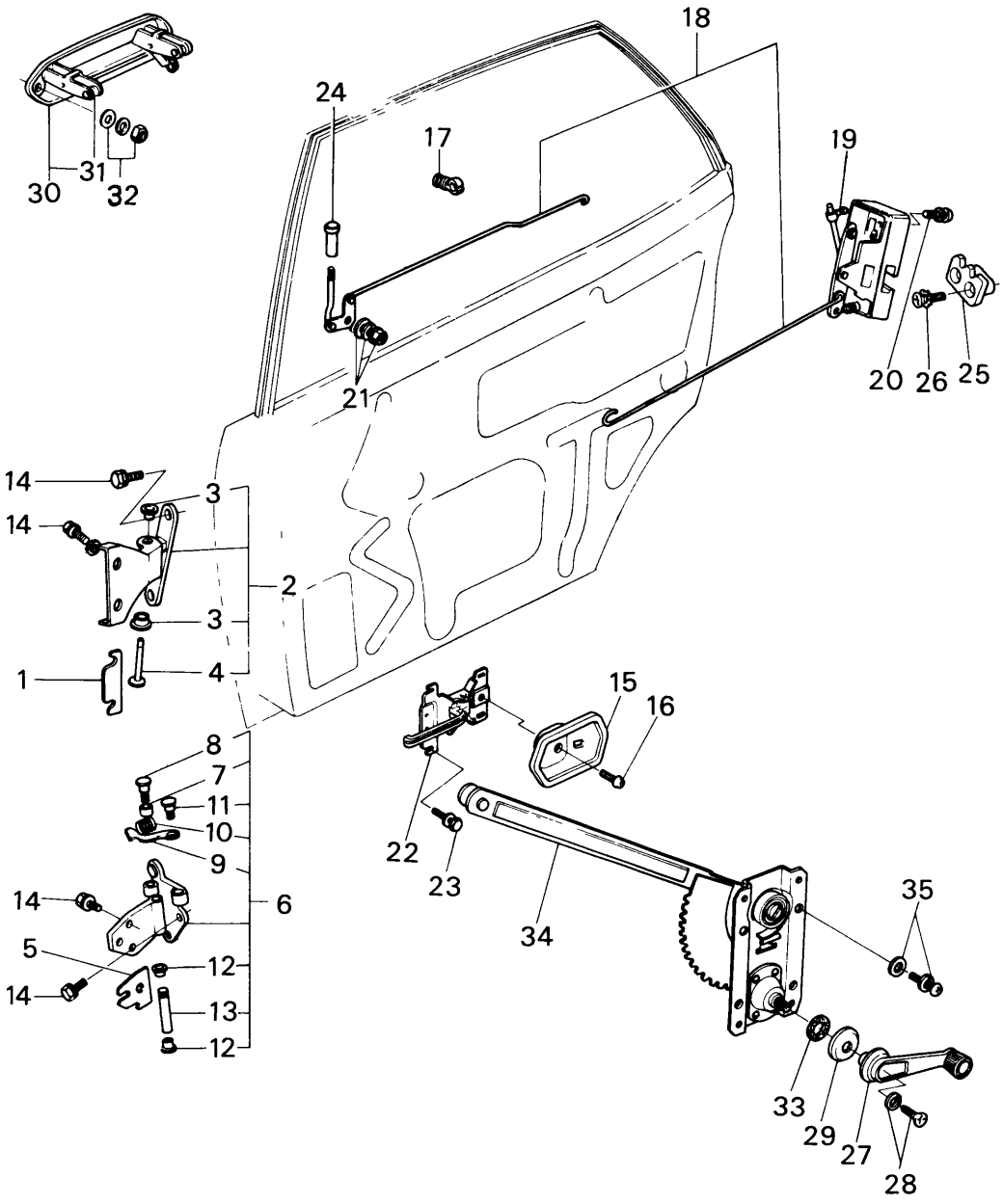

REAR SIDE DOOR (LOCK, SEDAN & STATION WAGON)

72 73

No.	Part Number	Description	Q'ty	Remarks
1	0866 72 201	Shim, Hinge "A" - Selective use	—	
2	0866 72 210 B	Hinge "A" (R), Door	1	
	0866 73 210 B	Hinge "A" (L), Door	1	
3	0223 58 721	Bush, Hinge Pin	2	
4	0866 72 212 A	Pin, Hinge	2	
5	1011 58 231	Shim, Hinge "B" - Selective use	—	
6	0866 72 240 C	Hinge "B" (R), Door	1	
	0866 73 240 C	Hinge "B" (L), Door	1	
7	0866 58 281 C	Roller	2	
8	0866 58 282 B	Pin, "A"	2	
9	0866 58 291 B	Lever, Check	2	
10	0866 72 292 A	Spring, Check	2	
11	0866 58 293	Pin "B"	2	
12	0223 58 721	Bush, Hinge Pin	4	
13	0187 58 731	Pin, Hinge	2	
14	99786 0830	Bolt, Door Hinge	20	

72 73 REAR SIDE DOOR (LOCK, SEDAN & STATION WAGON)

No.	Part Number	Description	Q'ty	Remarks
	99971 0800	Washer, Spring	20	
	99951 0822	Washer, Plain-Door Hinge "A"	4	
15	0866 58 303B01	Cover (R), Inner Handle (BLK)	1	
	0866 59 303B01	Cover (L), Inner Handle (BLK)	1	
16	99832 0408B	Screw, Inner Handle Cover	2	
17	0305 58 309	Holder, Door Lock Rod	4	
18	0866 72 310G	Lock (R), Door	1	
	0866 73 310G	Lock (L), Door	1	
19	0398 58 319A	Bush, Link	4	
20	99832 0630	Screw, Door Lock	6	
	99974 0600	Washer, Toothed	6	
21	99940 0600	Nut, Door Lock Rod	2	
22	0866 58 321B	Handle, Inner	2	
23	99796 0508	Bolt, Inner Handle	6	
24	0259 58 691 00	Knob, Door Lock (BLK)	2	
25	0866 58 361C	Rack (R), Door Lock	1	
	0866 59 361C	Rack (L), Door Lock	1	
26	1540 58 371	Screw, Rack	4	

No.	Part Number	Description	Q'ty	Remarks
	99975 0600	Washer, Toothed	4	
27	0223 58 370 D	Handle, Regulator	2	
28	99806 0516	Bolt, Regulator Handle	2	
	99971 0500	Washer, Spring	2	
29	0223 58 375 A	Escutcheon, Regulator Handle	2	
30	0866 72 410 A	Handle (R), Outer Side	1	
	0866 73 410 A	Handle (L), Outer Side	1	
31	0305 58 411 A	Bush, Outer Handle	2	
32	99906 0500	Nut, Outer Handle	4	
	99951 0618	Washer, Plain	4	
	99971 0500	Washer, Spring	4	
33	1011 58 552	Gasket, Window Regulator	2	
34	0866 72 560	Regulator (R), Window	1	
	0866 73 560	Regulator (L), Window	1	
35	99796 0610	Bolt, Window Regulator	8	

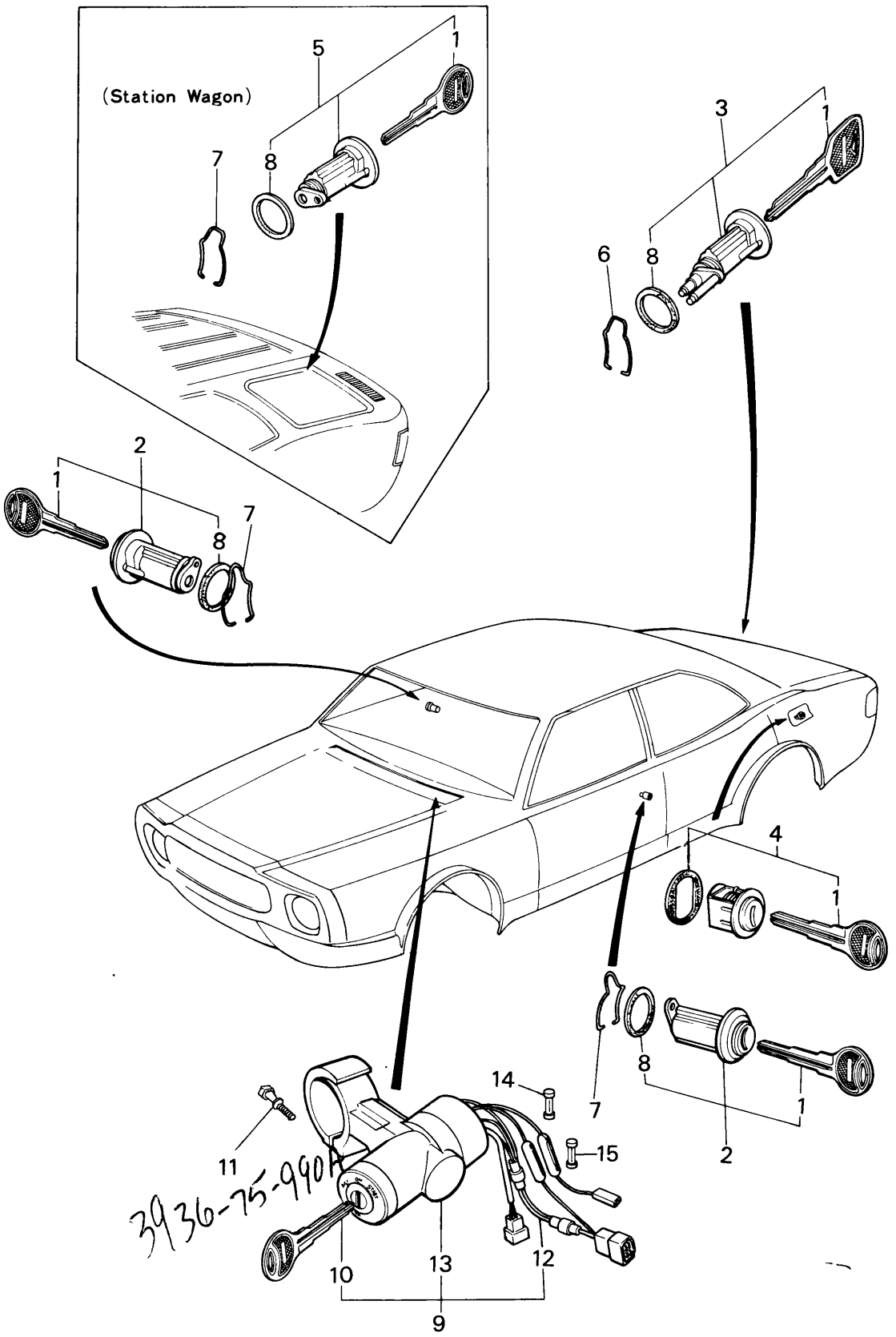
(Station Wagon)
5
1
7
8
3
1
6
8
2
1
8
7
4
1
8
7
1
2
14
15
11
3936-75-990A
10
13
12
9

No.	Part Number	Description	Q'ty	Remarks
	1524 09 010B	Key Set (Sedan & Coupe)	1	
	1529 09 010B	Key, Set (Station Wagon)	1	
1	0305 58 492A	Key, Primary	2	
2	0305 74 910A	Key Sub Set, Door	2	
3	0370 75 930	Key Sub Set, Trunk Lid (Sedan & Coupe)	1	
4	0866 74 430	Key Sub Set, Filler Lid (Key No. 2500~2999)	1	
	0866 74 440	Key Sub Set, Filler Lid (Key No. 3000~3499)	1	
5	0585 75 960	Key Sub Set, Back Door (Station Wagon)	1	
6	0305 52 802	Retainer, Trunk Lid	1	
7	0223 58 961	Fastener, Door Key Cylinder (Sedan & Coupe)	2	
		(Station Wagon)	3	
8	0223 58 962	Gasket, Door Key Cylinder (Sedan & Coupe)	2	
		(Station Wagon)	3	
9	3725 66 150	Lock, Steering	1	
10	2835 60 438	Key	2	
11	2280 60 433	Bolt	2	
12	1175 66 710	Link, Fusible	1	
13	1711 66 155	Switch, Ignition	1	
14	90706 0110	Fuse (10A)	1	
15	90706 0120	Fuse (20A)	1	

No.	Part Number	Description	Q'ty	Remarks
	0305 74 158	Key Blank, Primary Key No. 2500~2999	—	
	0305 74 168	Key Blank, Primary Key No. 3000~3499	—	
	2280 75 641	Key Blank, Steering Lock	—	

INDEX.

PARTS NUMBER	PARTS COMP. LIST PAGE	FIG. NO.
1524 09 010B	349	
1529 09 010B	349	
3743 10 100	2	1
0839 10 105	2	3
0839 10 111B	2	5
3743 10 150	2	2
1757 10 171A	2	6
1757 10 172	2	7
0813 10 173	2	8
0813 10 174	2	9
1258 10 200	2	10
0820 10 203	3	26
0839 10 203	2	11
2329 10 204	2	12
0839 10 205	2	13
0839 10 205	3	27
1757 10 206A	2	14
1757 10 207	2	15
1757 10 208	3	19
0324 10 250	3	23
0324 10 252	3	24
4899 10 262	268	24
3743 10 300	3	25
1029 10 305	4	40
1757 10 305	4	38
1757 10 309	3	28
0866 10 320A	3	29
1757 10 351	4	43
3565 10 410A	7	84
2329 10 417	7	81
1015 10 451	4	45
1015 10 452	4	45
0839 10 455	4	46
2306 10 481	25	29
3743 10 500	10	1
0820 10 502B	10	2
0820 10 502B	10	5
0839 10 504	10	3
3743 10 550	10	4
0813 10 555	10	8
1668 10 556	10	6
1757 10 600B	4	47
0820 10 605	4	48
1757 10 609	5	58
0820 10 631B	4	49
1757 10 641	5	62
1757 10 641	7	
3625 10 700A	5	63
3744 10 700	5	63
0839 10 711	6	66
0839 10 711	7	
0839 10 721	6	67
0839 10 722	6	68
0839 10 723	6	69
3565 10 730A	6	71
3565 10 830	6	73
1757 10 845	6	74
3565 10 860A	6	75
1757 10 862	6	78
3565 10 865A	6	76
1011 11 111	13	52
1056 11 300A	10	9
1202 11 302	10	10
1011 11 304A	10	11
0820 11 317	10	12
1202 11 321	10	13
1202 11 323	10	14
0820 11 341	10	15
1202 11 343	10	16
1011 11 351	10	17
1011 11 353A	11	18
1011 11 361	11	19
1011 11 363A	11	20
1881 11 400A	11	21
1883 11 400A	11	21
1881 11 403	11	22
1881 11 404	11	23
0813 11 405	11	24
0839 11 411A	11	25
0839 11 412	11	26
1011 11 501	11	29
0839 11 502	11	31
1011 11 504	12	32
0813 11 505B	12	33
0839 11 506	11	31
1011 11 507	12	34
0839 11 508	11	31
0839 11 509	12	31
1881 11 511	12	35
1757 11 512	12	36
0839 11 531	12	37
1757 11 551	12	38
3625 11 600A	12	39
0820 11 611B	12	40
1881 11 700	12	42
0866 11 702	12	43
0820 11 705	12	45
0810 11 711	12	46
0820 11 712	12	47
1883 11 750	13	48
3743 13 100C	15	1
1010 13 104	25	27

INDEX.

PARTS NUMBER	PARTS COMP. LIST PAGE	FIG. NO.
3648 13 111	7	
3743 13 111	7	
3743 13 111	15	8
3648 13 120	25	25
3648 13 150B	24	1
3666 13 150B	24	1
8501 13 150	24	10
3743 13 153	24	2
3648 13 180	25	30
3743 13 186	25	32
3738 13 200	18	1
3743 13 200	18	1
3744 13 200	18	1
0839 13 201	18	2
3743 13 220	18	3
8501 13 240	24	18
8501 13 240	253	101
3666 13 241	25	19
3666 13 241	253	102
1757 13 251A	24	7
3743 13 260A	157	1
3648 13 270	157	3
8501 13 290	25	23
8501 13 290	253	105
3666 13 296	25	24
3666 13 296	253	106
3743 13 300B	20	1
1617 13 305A	20	7
3743 13 311	20	8
3743 13 330B	15	10
2850 13 331	83	1
2850 13 332	232	10
1881 13 351	20	2
1690 13 359	157	5
1690 13 361	157	6
0223 13 363	157	4
3648 13 370A	16	21
1259 13 371C	16	19
1173 13 400A	157	7
0866 13 402A	157	9
0118 13 432	288	39
1570 13 447	157	12
0208 13 458	144	1
0305 13 461	144	2
0222 13 470B	158	22
0381 13 481	158	23
1881 13 510E	22	1
1881 13 515A	22	2
1668 13 527	22	4
1668 13 531A	22	5
0839 13 614	15	16
8501 13 636	26	51
1757 13 710A	25	33
1757 13 714	26	36
1757 13 715	26	39
1757 13 717	26	40
3565 13 718	26	41
3743 13 720	26	42
3648 13 724	7	
3648 13 724	26	45
3648 13 725	26	46
2329 13 726	26	49
3648 13 727A	26	50
8501 13 730B	27	52
8501 13 740	27	53
2090 13 742B	15	15
1757 13 744	27	55
2090 13 746	27	56
1757 13 750	27	57
1757 13 752	27	59
1757 13 753A	27	60
3648 13 754	27	62
1259 13 757	27	63
3648 13 759	27	61
3737 13 759	26	48
3648 13 772	27	67
1029 13 776	27	69
1757 13 780	158	25
3565 13 785	158	27
1757 13 786B	158	28
3565 13 788	158	29
1757 13 790	158	32
1854 13 792A	158	30
3565 13 795	158	31
1259 13 797	28	70
3743 13 800B	15	13
2329 13 876	15	14
2329 13 882	16	16
3743 13 889A	7	
3743 13 889A	16	17
8501 13 891A	7	
8501 13 891A	16	18
3648 13 980A	24	5
3744 13 980	24	5
1757 14 020	30	1
8501 14 100	30	8
1757 14 112	30	9
0810 14 113	30	10
0839 14 115	4	50
0839 14 117	30	11
8501 14 118	30	12
0839 14 119B	30	13

PARTS NUMBER	PARTS COMP. LIST PAGE	FIG. NO.
0823 14 130	30	2
0823 14 131	30	3
1757 14 132	30	4
0839 14 133	30	5
0839 14 141A	31	16
0839 14 142	31	17
0866 14 160E	31	18
0810 14 171	31	19
3648 14 250	31	21
0839 14 273A	4	51
0839 14 274	4	52
0839 14 300	31	22
1757 14 600	31	28
1757 14 611	32	38
0820 14 620A	32	40
0813 14 623	32	41
0820 14 625A	32	42
0813 14 641	32	43
1757 14 651	32	44
1757 14 652	33	51
1757 14 653	33	51
3565 14 660A	33	48
3565 14 662A	36	33
3565 14 670A	33	49
1881 14 700A	35	1
0813 14 716	35	6
0865 14 720	35	7
0881 14 730	35	8
1757 14 740	35	9
1758 14 740	35	9
0839 14 745	35	11
1757 14 810	35	2
1757 14 821	35	3
1757 14 822	35	4
1757 14 823	35	5
3648 15 010C	36	17
2090 15 104	36	18
1757 15 105A	8	
1757 15 105A	37	36
1757 15 106	8	
1757 15 106	37	37
1757 15 114	36	19
1757 15 118	36	20
1757 15 120	36	21
3648 15 130	36	29
1757 15 132	36	22
1757 15 151B	37	39
1757 15 152A	36	23
1259 15 171A	36	24
1757 15 172	36	25
1757 15 173	36	27
3648 15 180B	36	28
1202 15 200	37	43
0488 15 205	38	48
1202 15 210	37	44
1907 15 211	37	41
1202 15 250	37	42
3625 15 310B	37	47
3626 15 310B	37	47
1128 15 312A	38	50
3565 15 350B	38	53
3625 15 351	38	59
1883 15 356	38	55
3565 15 370	38	54
3625 15 411	38	61
3625 15 421A	38	62
3625 15 511	39	66
3625 15 521	39	67
1881 15 906A	246	1
1881 15 920B	246	2
1881 15 940	246	3
1757 15 966	246	4
1881 15 967	246	5
0603 16 102B	41	1
0603 16 103	41	5
0222 16 105	41	6
0813 16 112	41	3
1881 16 210A	41	4
0866 16 214A	41	7
0839 16 410B	41	8
0839 16 432	41	9
0862 16 460A	41	11
0820 16 510	41	12
0820 16 515	41	13
0454 16 520	41	14
1011 17 100C	44	1
0839 17 105	44	2
0839 17 105	48	6
0839 17 111	44	5
0839 17 111	46	
0839 17 111	48	1
0839 17 111	50	
0107 17 121	48	2
0810 17 121	44	6
0810 17 121	48	3
0862 17 200H	48	5
0862 17 201	52	1
0862 17 201	56	1
0810 17 204	52	2
0810 17 204	56	5
0810 17 205	52	3
0810 17 205	56	6

INDEX.

PARTS NUMBER	PARTS COMP. LIST PAGE	FIG. NO.
1011 17 221A	52	4
3648 17 221	56	7
0317 17 225	52	5
0317 17 225	56	9
0862 17 230	52	6
1013 17 231	56	10
0862 17 241	52	7
0862 17 241	56	11
0187 17 243	52	8
0187 17 243	56	8
0187 17 243	56	12
0103 17 244A	56	13
0862 17 245A	56	14
0881 17 245B	52	9
0881 17 245B	56	15
0862 17 250	52	10
1013 17 251	56	16
0862 17 261	52	11
0862 17 261	56	17
0862 17 262B	52	12
0862 17 262B	56	18
1011 17 270	52	13
0862 17 271	56	19
0884 17 274	57	20
0839 17 275	52	14
0884 17 275A	57	21
0839 17 276	52	15
0839 17 276	57	22
0839 17 277	52	15
0839 17 277	57	22
0839 17 278	52	15
0839 17 278	57	22
0839 17 281	52	16
3648 17 281	58	48
0839 17 284	52	17
0839 17 285	52	18
0839 17 287	53	19
0839 17 287	57	23
0839 17 288	53	19
0839 17 288	57	23
0821 17 297	53	20
0821 17 297	57	24
0862 17 301A	57	25
1853 17 301	53	21
0839 17 302	53	22
3648 17 302	57	26
0821 17 303	53	23
0821 17 303	57	27
0884 17 304	57	28
0839 17 305	53	24
0839 17 305	57	29
3648 17 308	57	31
0839 17 310	53	25
3648 17 310	57	33
0118 17 313	61	1
0118 17 313	64	1
0821 17 313	57	34
0839 17 313	53	26
0884 17 315	57	35
0884 17 316	57	36
0884 17 317	58	36
0884 17 318	58	36
0839 17 321A	53	27
0111 17 323	61	2
0111 17 323	64	2
4069 17 323	58	38
0600 17 324	53	29
0600 17 324	58	40
0884 17 325B	58	41
0305 17 327	53	30
0305 17 327	58	43
0305 17 328	53	30
0305 17 328	58	43
1011 17 330A	44	8
3648 17 330B	48	16
0437 17 335	44	11
0437 17 335	49	18
0437 17 335	88	35
0862 17 341	53	31
0862 17 341	58	44
0862 17 341	97	1
0114 17 351	61	3
0114 17 351	64	3
0862 17 351	44	12
0862 17 351	49	20
0862 17 351	87	1
0187 17 352	44	13
0187 17 352	49	21
0187 17 352	87	2
0111 17 354	44	14
0111 17 354	49	22
0111 17 354	87	3
0839 17 361	44	16
0839 17 361	46	
0862 17 371	45	17
1281 17 371	49	24
0862 17 375	45	19
0862 17 375	46	
0862 17 375	49	25
0862 17 375	50	
0810 17 381	45	20
0810 17 381	49	27

PARTS NUMBER	PARTS COMP. LIST PAGE	FIG. NO.
0810 17 385	45	21
0810 17 385	46	
0810 17 385	49	28
0810 17 385	50	
0862 17 393	49	31
0862 17 393	50	
0810 17 402	61	4
0810 17 402	64	4
0810 17 404	61	5
0810 17 404	64	5
1011 17 406	61	6
3648 17 406	64	6
1011 17 410A	61	7
3648 17 410	64	7
0103 17 411	61	8
0103 17 411	64	8
0498 17 411A	64	9
1011 17 420	61	9
0498 17 421B	64	10
0498 17 422	64	11
0839 17 431	61	10
3648 17 431	64	12
3648 17 432	64	13
0821 17 435	64	14
0221 17 441	61	11
0221 17 441	64	15
0259 17 441	61	12
0259 17 441	64	16
1669 17 441	45	24
1669 17 441	49	32
1669 17 441	87	5
0862 17 442	45	25
0862 17 442	49	33
0862 17 442	87	6
1011 17 450	61	16
3648 17 450	65	20
0398 17 461A	61	17
3648 17 461A	65	21
0398 17 462A	61	18
0398 17 462A	65	22
3648 17 463	65	23
3648 17 464	65	24
3648 17 465	65	25
0303 17 470	61	19
0303 17 470	65	27
0647 17 473	62	22
0647 17 473	65	30
0303 17 474	46	
0303 17 474	50	
0303 17 474	62	34
0303 17 474	66	43
0862 17 475	62	24
0862 17 475	65	32
0271 17 478	46	
0271 17 478	50	
0271 17 478	62	25
0271 17 478	65	33
0303 17 482	62	35
0303 17 482	66	44
0824 17 483	65	34
0183 17 491	62	26
0191 17 491	65	35
0187 17 492	62	27
0187 17 492	65	36
0821 17 505A	66	41
1011 17 510B	62	28
1011 17 510B	65	37
1274 17 520	65	38
1931 17 520	62	29
1934 17 520	62	29
3648 17 520	66	38
0862 17 530B	50	37
1011 17 530	45	29
0862 17 535	50	38
0862 17 535	50	
1011 17 535	45	30
1011 17 535	46	
0862 17 540B	50	40
1011 17 540A	45	32
0221 17 551A	62	30
3648 17 551A	66	39
0221 17 552	62	31
0221 17 552	66	40
3648 17 611	58	46
0884 17 612	58	47
3648 17 621	59	53
3648 17 622A	59	54
3648 17 626	59	55
3648 17 629	58	49
0884 17 633A	58	50
0884 17 634A	58	50
0884 17 635A	58	50
0884 17 636A	59	50
0376 17 640A	62	32
0862 17 641	59	52
0862 17 642	59	52
0862 17 643	59	52
0862 17 644	59	52
0862 17 660A	48	7
1562 18 100A	68	1
1672 18 100	68	2
0845 18 101	68	16

INDEX.

PARTS NUMBER	PARTS COMP. LIST PAGE	FIG. NO.
3648 18 101	68	17
0866 18 107	68	3
3648 18 110A	68	4
3648 18 111	68	5
0820 18 114	68	10
3648 18 115A	68	6
1757 18 120A	68	7
1757 18 130A	68	11
1757 18 140A	68	12
1757 18 150C	68	9
8501 18 160	68	8
1757 18 170A	68	13
1757 18 180A	68	14
3648 18 190	68	15
3743 18 200	69	20
0107 18 216A	69	21
0810 18 276	33	50
0810 18 277	33	50
1202 18 291	70	43
3648 18 291	70	43
1011 18 300	73	1
1757 18 311	74	20
1881 18 361	74	23
0222 18 375	74	26
0222 18 376	74	26
0222 18 377	74	26
1672 18 381A	74	27
1620 18 390	70	46
0453 18 391	70	48
1757 18 400C	76	1
1883 18 400	79	1
1757 18 510A	3	31
0504 18 520A	77	24
0504 18 520A	80	23
1689 18 520	80	23
3648 18 600	71	50
3743 18 600	71	50
3744 18 600	71	50
2691 18 660	162	1
0866 18 810	71	51
3648 18 860	28	71
3648 18 861A	28	72
1881 18 880	39	71
1259 18 890	71	55
3648 18 940A	71	53
3666 18 940A	71	53
3738 18 940	71	53
2090 18 999	39	70
1758 19 020	83	2
0842 19 025	83	4
1908 19 027	83	6
0454 19 028A	83	7
1758 19 028	83	9
1015 19 031	101	1
1758 19 036A	101	3
1758 19 055	101	4
3744 19 090A	85	
1758 19 100	83	12
1758 19 211B	83	13
1758 19 215	83	14
0338 19 216	83	15
1758 19 220	83	16
0338 19 223	83	17
1758 19 240	83	18
0338 19 245A	84	19
0338 19 256	84	20
0338 19 257	84	21
0338 19 258	84	22
1758 19 310A	87	10
0338 19 331A	87	11
0338 19 336	87	13
0338 19 337	87	14
0338 19 338	87	15
1758 19 341	87	18
0378 19 344	87	16
0338 19 360	92	1
0338 19 361	88	19
0338 19 363	88	20
0842 19 381	88	21
0338 19 384	88	22
0842 19 385	88	23
1758 19 386	88	24
0338 19 388A	88	25
0338 19 389	88	26
1758 19 391	88	27
1758 19 392	88	28
0842 19 394	88	29
1758 19 394	88	30
0338 19 395	88	31
0338 19 397	88	32
0338 19 397	98	25
1758 19 397	88	33
1758 19 431	101	5
1758 19 434	101	6
1758 19 440	101	9
1758 19 443	101	10
1758 19 444	101	11
0338 19 449	101	12
1758 19 450	101	13
0338 19 460	92	2
0338 19 470	92	3
0338 19 475	92	4

PARTS NUMBER	PARTS COMP. LIST PAGE	FIG. NO.	PARTS NUMBER	PARTS COMP. LIST PAGE	FIG. NO.	PARTS NUMBER	PARTS COMP. LIST PAGE	FIG. NO.
0338 19 475	93	16	0338 19 510	93	15	0338 19 615A	98	21
0338 19 475	95		0338 19 511	93	26	0338 19 616A	98	21
0338 19 476	92	5	0338 19 515	93	27	0338 19 617A	98	21
0338 19 476	93	17	0338 19 530	93	28	0338 19 618A	98	21
0338 19 476	95		0338 19 531	93	29	0338 19 619	98	22
0338 19 480	92	6	0338 19 533	93	30	0338 19 621	94	40
0338 19 480	93	18	0338 19 534	93	31	0338 19 621	95	
0338 19 486	92	7	0338 19 540	93	32	0338 19 622	94	41
0338 19 486	93	19	0338 19 550	94	33	0338 19 622	98	23
0338 19 486	95		0338 19 560	94	34	0338 19 623	94	42
0338 19 487	92	8	0338 19 565	94	35	0338 19 624	94	43
0338 19 487	93	20	0338 19 566	94	36	0338 19 631	94	44
0338 19 487	95		0338 19 567	94	37	0338 19 632	94	44
0338 19 488	92	9	0338 19 570	94	38	0338 19 633	94	44
0338 19 488	93	21	0338 19 580	97	4	0338 19 634	94	44
0338 19 488	95		0338 19 581	97	5	0338 19 635	94	44
0338 19 498	92	10	0338 19 590	97	6	0338 19 636	94	44
0338 19 498	93	22	0338 19 591	97	7	0338 19 638	94	45
0338 19 498	95		0338 19 593	97	8	0397 19 638	95	
0338 19 499	92	11	0338 19 594	97	9	0338 19 639	94	46
0338 19 499	93	23	0338 19 595	97	10	0338 19 641	95	47
0338 19 499	95		0338 19 596	97	11	0338 19 642	95	47
0338 19 500	92	12	0338 19 598	94	39	0338 19 643	95	47
0338 19 500	93	24	0338 19 601	97	12	0338 19 644	95	47
0338 19 500	95		0338 19 603	97	13	0338 19 645	95	47
0338 19 503	92	13	0338 19 604	97	14	0338 19 646	95	47
0338 19 504	92	13	0338 19 605	97	15	0338 19 647	95	47
0338 19 505	92	13	0338 19 606	97	16	0842 19 650	98	24
0338 19 506	92	13	0338 19 607	97	17	0338 19 651	98	26
0338 19 507	92	13	0338 19 608	98	18	0338 19 655	98	27
0338 19 508	92	13	0338 19 609	98	19	0338 19 656	98	28
0338 19 509	92	14	0338 19 610	98	20	0842 19 660	98	29
0338 19 509	93	25	0338 19 613A	98	21	0338 19 661	98	30
0338 19 509	95		0338 19 614A	98	21	0338 19 663	98	31

INDEX.

PARTS NUMBER	PARTS COMP. LIST PAGE	FIG. NO.
0338 19 664	99	32
0842 19 665	99	33
0338 19 666	99	34
0338 19 667	99	35
0338 19 670A	99	36
0338 19 676	99	37
0338 19 678	84	23
0338 19 701A	101	14
0338 19 702A	101	15
0338 19 703	101	16
0338 19 704	101	17
0338 19 706	101	18
1840 19 710	88	34
0338 19 731	102	20
0338 19 732	102	21
0338 19 733C	102	22
0338 19 734A	102	23
0338 19 735	88	36
0338 19 737	89	37
0338 19 739	89	37
3649 19 750	89	38
0338 19 768	89	39
1758 19 815	89	40
1675 19 821	89	44
0338 19 822	89	45
1758 19 823	89	46
0338 19 825	89	47
0338 19 826	89	47
0338 19 827	89	47
0338 19 828	89	47
0338 19 829	89	47
0338 19 831	89	41
0338 19 832	89	42
0338 19 833	89	43
1758 19 835	89	48
1758 19 836	90	49
0338 19 837	90	50
0397 19 838	102	24
1758 19 870A	90	51
1758 19 880	90	52
0338 19 904A	84	26
1080 19 910A	84	27
0842 19 915A	84	28
1053 19 920B	84	30
1053 19 930B	84	31
1129 19 933	84	32
1129 19 934	84	33
3744 19 940	71	53
1015 19 945A	84	34
2579 19 989	84	35
0397 22 200	95	
0881 22 297	54	38
0881 22 297	59	56
0398 22 333	44	9
0398 22 333	48	17
0866 23 025	7	85
0866 23 025	8	
1757 23 040	8	
3648 23 070	7	80
3743 23 103	13	50
3743 23 113	13	51
1011 23 151A	13	53
1202 23 180	13	54
3743 23 200	7	
3744 23 200	7	
3648 23 319	69	30
3743 23 540	18	1
1757 23 672	20	3
3648 23 673	20	4
1757 23 680	20	5
3648 23 693A	20	6
1757 23 713	25	34
1757 23 725	27	58
3565 23 725A	26	43
0839 23 801	31	23
0813 23 802B	31	24
0813 23 803	31	25
0820 23 832B	31	29
0820 23 833B	32	30
0820 23 834B	32	31
0820 23 835A	32	33
0730 23 837	32	34
0730 23 839	32	35
0820 23 848A	32	36
8501 23 882	30	14
1011 23 911	39	69
1757 24 302	69	22
3648 24 303	69	23
3648 24 304	70	37
3648 24 305	70	38
3625 24 308	69	24
1757 24 310	69	25
1757 24 311	70	40
1219 24 313	69	26
1757 24 314	69	28
1757 24 317	69	29
1757 24 322	69	31
3648 24 323	69	27
3743 24 330	69	32
1757 24 334	70	33
3648 24 340	70	34
3743 24 350	70	35

PARTS NUMBER	PARTS COMP. LIST PAGE	FIG. NO.
3743 24 351	70	36
3648 24 360	70	39
1011 24 501	73	2
0820 24 503	73	8
1011 24 510	73	13
0208 24 514	73	10
0866 24 526	73	11
1011 24 527	73	3
0866 24 530	73	4
0866 24 533	73	5
1011 24 533	73	14
1011 24 534	73	15
0866 24 535	73	6
0866 24 540	73	7
1011 24 541	73	16
0866 24 550	73	9
1011 24 560	73	12
1011 24 563	73	17
0290 24 581	73	18
0866 24 704	76	2
0866 24 704	79	2
1757 24 705	76	3
1758 24 705	79	3
1758 24 706	79	19
1757 24 709	76	4
1757 24 709	79	4
1757 24 710B	76	5
1758 24 710A	79	5
0426 24 712	76	6
0426 24 712	79	6
0426 24 715A	76	7
0426 24 715A	79	7
0866 24 716	76	8
0866 24 716	79	8
0845 24 720	76	9
0845 24 720	79	9
0426 24 725	76	10
0426 24 725	79	10
0426 24 726	76	11
1758 24 726	79	11
1757 24 730A	76	12
1883 24 730	79	12
0426 24 731	76	13
1758 24 731A	79	13
1758 24 736	79	18
0222 24 741	76	14
0222 24 741	79	14
0222 24 750	76	15
1758 24 750	79	15
0222 24 752A	76	16
0222 24 753	76	17
0426 24 753	76	18
0426 24 753	79	16
0426 24 754	76	19
0426 24 754	79	17
0324 24 760	76	20
0259 25 021B	104	2
0259 25 071A	104	3
0259 25 072A	104	3
0259 25 073A	104	3
0259 25 074A	104	3
0259 25 075A	104	3
0259 25 076A	104	3
0259 25 077A	104	3
0259 25 078A	104	3
0259 25 079A	104	3
0862 25 100A	104	1
0425 25 130	104	5
1881 26 010	106	1
0259 26 041	106	4
0259 26 051	106	5
0866 26 060	106	6
0870 26 111A	106	7
0870 26 115A	106	7
0317 26 121	106	8
0259 26 129	107	16
0259 26 132	106	9
0259 26 141	106	11
0259 26 142	106	11
0259 26 152	107	17
0187 26 154	107	18
0259 26 155	106	12
1504 26 251B	109	1
0305 26 255	109	2
0866 26 280B	109	4
0866 26 290B	109	4
0866 26 310A	109	5
0187 26 341	109	6
0118 26 342	109	7
0110 26 345	109	8
0710 26 352	109	11
0710 26 461	109	12
0305 26 465	109	13
0305 26 500A	109	10
0820 26 570A	110	16
0233 26 610A	110	18
0221 26 651	110	19
0221 26 671	110	20
0221 26 672	110	21
0221 26 673	110	22
0305 26 800A	110	30
0305 26 810A	111	30

INDEX.

PARTS NUMBER	PARTS COMP. LIST PAGE	FIG. NO.
0187 26 821	111	32
0118 26 832	111	31
0118 26 834	111	33
0118 26 897	111	35
0187 26 921	111	32
0613 26 922	110	23
0223 27 012	114	1
2112 27 018	114	2
0223 27 020B	114	3
0223 27 030	114	4
3508 27 100	114	
1052 27 110A	114	5
0221 27 141	114	7
0755 27 141	114	6
0866 27 150	114	8
0305 27 171	114	10
0866 27 172	114	11
0290 27 231B	114	12
0820 27 251A	114	15
0290 27 252	114	16
0290 27 253	114	16
0290 27 254	115	16
0221 27 255	115	17
0305 27 261	115	18
0114 27 262	115	19
0290 27 301	115	20
0290 27 302	115	21
0221 27 305A	115	23
0223 27 401A	115	24
0223 27 402A	115	24
0223 27 403A	115	24
0223 27 404A	115	24
0223 27 405A	115	24
0223 27 406A	115	24
0223 27 407A	115	24
0223 27 408A	115	24
0223 27 409A	115	24
0223 27 411A	115	24
0223 27 412A	115	24
0223 27 413A	115	24
0223 27 414A	116	24
0223 27 415A	116	24
0866 28 010A	118	1
1137 28 010	106	1
1881 28 010A	118	1
1889 28 010A	122	1
0866 28 011A	118	1
1881 28 011A	118	1
1889 28 011	122	1
0866 28 012A	118	1
1881 28 012A	118	1
1889 28 012	122	1
1889 28 013	122	1
1889 28 014	122	1
0866 28 019	118	1
0866 28 019	118	1
1889 28 019	122	1
0259 28 110	122	2
1881 28 110	118	2
0866 28 140B	118	5
0899 28 140	122	5
0866 28 143	118	6
0899 28 150A	122	6
0866 28 151	118	7
0652 28 161	118	8
0652 28 161	122	7
0899 28 170A	122	6
0585 28 180A	123	16
0866 28 180A	119	10
0259 28 182	119	12
1889 28 182	123	9
0652 28 183	123	10
0866 28 183A	119	13
0585 28 190A	123	16
0899 28 320	123	23
0866 28 322	119	14
0483 28 333	123	11
0866 28 333C	119	15
0443 28 343	123	12
0866 28 343B	119	16
0866 28 350	119	17
0866 28 350	123	13
0866 28 353B	119	19
0866 28 591	119	20
0866 28 747	120	30
0866 28 774	119	22
0223 28 775	123	18
0223 28 776	123	19
0223 28 777	123	22
0259 28 778	123	20
0866 28 778A	119	23
0866 28 779	119	24
0866 28 799	120	25
0329 32 013A	128	49
0866 32 014	128	50
8028 32 014	127	34
0329 32 015	128	51
8028 32 015	127	35
0329 32 016	128	52
0866 32 018	128	56
1003 32 018	128	46
0866 32 019	128	53

PARTS NUMBER	PARTS COMP. LIST PAGE	FIG. NO.
8028 32 020	127	36
8028 32 029	127	37
8028 32 030	127	38
0866 32 031	128	54
0866 32 033	128	55
8028 32 037	127	39
0866 32 049 00	128	58
0820 32 058A	125	1
0208 32 059	125	2
0259 32 071	125	3
1632 32 100A	125	4
0305 32 119	126	17
0305 32 119	131	11
3725 32 121	126	20
1097 32 129	125	5
8038 32 141	125	6
0259 32 154	125	7
0259 32 155	125	7
0259 32 156	125	7
0259 32 157	125	7
0259 32 160	125	12
0259 32 163	125	13
0180 32 165A	125	14
0180 32 171A	125	15
0180 32 172A	125	15
0111 32 173	131	3
0180 32 173A	126	15
0180 32 174A	126	15
0208 32 188	126	19
3725 32 220	126	21
1128 32 227E	131	4
3525 32 261	131	1
0208 32 278	131	5
0208 32 278	137	16
0866 32 279	131	6
1175 32 279	132	18
3527 32 279	126	22
3527 32 279	132	19
1273 32 301A	137	17
1273 32 311A	138	17
1562 32 320G	131	2
1562 32 330G	131	7
2113 32 356	131	9
0305 32 365	131	13
1632 32 411	126	25
1632 32 412	126	26
1097 32 413	127	27
1632 32 420	127	29
3608 32 800A	128	43
8028 32 800	127	33
8028 32 811	127	40
8033 32 811	128	44
0866 32 980	128	48
8028 32 980	128	45
0221 33 035	134	1
0662 33 042	134	2
1011 33 043	134	3
0259 33 047	134	4
0317 33 049	134	5
0398 33 065	134	6
0259 33 071	134	7
0317 33 075	134	9
0820 33 091B	134	10
0259 33 165	106	13
0259 33 165	134	11
1029 33 165	106	13
1029 33 165	134	11
0866 33 251A	134	12
0866 33 260A	134	13
0866 33 270A	134	13
0710 33 288	111	36
0187 33 391A	109	9
0613 33 681	110	25
0259 33 691	110	26
0259 33 691	164	12
0259 33 693	110	27
0259 33 693	164	13
0820 33 693	135	17
0221 33 698	134	15
0870 33 980C	135	16
0870 33 990C	135	16
1881 34 011A	137	1
0866 34 013A	137	2
0866 34 015	137	3
1011 34 019	137	4
0866 34 111	137	5
1881 34 112	137	6
0866 34 151C	137	7
0603 34 153	120	27
1757 34 153	137	8
0259 34 155	137	9
1881 34 156	137	10
0866 34 157	137	12
0866 34 158	137	13
1011 34 159A	137	14
0866 34 310C	137	15
1011 34 311	138	18
0866 34 313A	138	26
0866 34 320C	137	15
0866 34 340	138	28
0866 34 381	138	29
0866 34 382	138	30

INDEX.

PARTS NUMBER	PARTS COMP. LIST PAGE	FIG. NO.
0866 34 390A	138	31
0866 34 460	138	19
0187 34 536	138	20
0866 34 565	138	21
0187 34 668	186	47
0305 34 707	139	38
0259 34 719A	139	39
0305 34 720	139	40
0866 34 730	139	41
0866 34 735A	139	42
0866 34 738A	139	45
0866 34 760	139	42
0187 34 776	120	28
0866 34 800B	139	34
0866 34 910E	139	37
0866 34 960E	139	37
8038 37 170	111	37
8038 37 170	135	28
8527 37 190	111	38
8527 37 190	135	29
1011 37 192	111	39
1011 37 192	135	30
1622 39 020	141	1
1175 39 040A	141	2
1668 39 045A	141	3
0866 39 060B	141	4
0259 39 340	141	7
1608 39 381	141	9
3743 39 381	141	10
3744 39 381	141	10
0884 39 382A	141	12
0884 39 383A	141	13
0884 39 384	142	14
0884 39 385A	142	15
0884 39 386	142	16
0884 39 387	142	17
1114 40 061	144	4
1259 40 071A	144	5
3743 40 071	144	5
1259 40 073	144	6
1259 40 075	144	7
3743 40 081B	144	8
3744 40 081	144	9
1114 40 108B	144	13
1114 40 160	144	14
0820 40 166	144	15
1114 40 170	145	16
3743 40 200	145	19
2090 40 307	145	21
1128 40 308A	145	22
3648 40 320A	145	24
1259 40 325A	145	25
1259 40 355	145	26
2158 40 355	15	16
2158 40 355	145	27
1757 40 356	145	28
0136 40 357	145	30
1845 40 357	184	25
0824 40 401	146	32
8501 40 425	146	33
8501 40 429	146	34
3743 40 430	146	35
3743 40 436A	146	36
3743 40 500	146	37
3747 40 500	146	38
2090 40 508A	146	40
3565 40 560B	147	62
3743 40 610A	146	41
3743 40 620E	146	42
1259 40 668A	146	43
1259 40 669B	146	44
1259 40 698	146	46
3743 40 720B	146	47
3648 40 724	146	48
3648 40 726	146	49
3648 40 727A	147	51
3648 40 730	147	53
3743 40 811	147	55
1128 40 841C	147	56
1137 40 841C	147	57
3565 40 850	147	58
0727 41 023	167	1
1919 41 030A	167	2
0223 41 131A	167	3
1872 41 140	167	4
1872 41 142	167	5
0183 41 308	173	1
0613 41 308	167	7
0603 41 331	164	15
1881 41 341	164	16
0636 41 353	229	51
0866 41 370	164	1
0118 41 375	176	1
0866 41 380	164	3
1524 41 400A	164	4
0839 41 461	164	8
1881 41 610A	162	2
1883 41 610A	162	2
0370 41 619	162	3
0305 41 641	162	4
0259 41 644	162	5
1637 41 650	162	7

PARTS NUMBER	PARTS COMP. LIST PAGE	FIG. NO.
3743 41 660	162	8
0249 41 671	162	11
1524 41 678	162	12
0118 41 681	162	13
0118 41 682	162	14
0111 41 692	271	23
0111 41 692	290	7
1708 41 711	162	16
1881 41 920A	164	11
0866 42 046	149	4
0866 42 046	153	14
1011 42 250	149	1
1011 42 250	153	1
1624 42 280	153	3
1544 42 302A	153	4
0652 42 304	153	5
0585 42 305	153	6
0585 42 306	153	7
0223 42 307	25	28
0223 42 307	153	8
3629 42 307	153	10
0585 42 308	153	12
0866 42 310H	149	3
3747 42 310A	153	13
3625 42 350B	149	5
3629 42 350C	154	16
0259 42 364C	149	6
0866 42 366	149	8
0866 42 366	154	17
0187 42 371	149	10
1570 42 381A	149	11
0376 42 410	149	15
0585 42 410	154	23
0866 42 410	149	15
2280 42 462B	149	2
2280 42 462B	153	2
0866 42 521	149	16
0866 42 523	150	18
0866 42 544	150	32
0866 42 544	154	29
0866 42 551	150	26
0866 42 551	154	25
0866 42 552	150	27
0866 42 552	154	26
0866 42 561	150	29
1540 42 610B	150	33
1544 42 610B	154	30
1544 42 613A	154	33
1544 42 614A	155	35
1011 42 711	149	17
3648 42 910	150	35
3648 42 910	155	36
3725 42 920	151	37
3729 42 920	155	38
0118 43 028A	167	11
0268 43 028	167	11
0187 43 029	167	12
1524 43 030	167	14
1525 43 030	167	14
0866 43 062	167	15
0866 43 063	167	16
1919 43 07CA	167	17
0259 43 088	129	60
0259 43 088	168	21
1525 43 090	168	22
1524 43 140	168	25
1881 43 422	171	19
0111 43 432	164	9
0839 43 550A	170	1
0870 43 570	170	3
0870 43 580	170	4
1128 43 605B	176	2
1114 43 608B	176	4
1114 43 609A	176	5
0114 43 625	283	4
0114 43 625	325	1
0136 43 635	165	18
0136 43 635	176	7
0305 43 635	176	8
0370 43 650A	176	9
0585 43 650A	176	9
1137 43 660	176	10
1881 43 660	176	10
0221 43 694	165	19
0221 43 694	176	11
1570 43 694A	176	12
3743 43 800A	170	7
1881 43 810	176	13
1757 43 820	177	14
1881 43 820	177	15
3743 43 830	177	16
1559 43 836C	177	17
0118 43 853	177	19
1540 43 890	177	21
1620 43 990A	171	18
0866 44 010	173	2
0813 44 031	173	3
0303 44 032	173	4
0221 44 033	173	5
0813 44 034	173	6
0813 44 035	173	7
0221 44 044	173	8

INDEX.

PARTS NUMBER	PARTS COMP. LIST PAGE	FIG. NO.	PARTS NUMBER	PARTS COMP. LIST PAGE	FIG. NO.	PARTS NUMBER	PARTS COMP. LIST PAGE	FIG. NO.
0866 44 051	173	11	0866 45 807	159	43	0866 49 114	135	20
0303 44 053	173	12	0866 45 810A	159	44	0866 49 115	135	21
1881 44 130	173	14	0899 45 810A	159	46	0866 49 117	135	22
0370 44 140	173	15	0866 45 903A	85	37	0870 49 230D	135	23
0866 44 150A	173	16	0866 45 903A	160	62	0870 49 231	135	24
0866 44 187A	174	18	0866 45 903A	177	29	0866 49 235	135	25
0866 44 189	174	19	1540 45 920A	177	31	0866 49 240	135	26
0866 44 410B	174	20	0578 45 995	178	34	1128 49 610	171	21
1570 44 410C	174	21	1840 46 010A	180	1	1128 49 630	171	22
0866 44 439	174	22	1840 46 021	180	2	0305 49 638	171	23
0305 44 471	174	24	1840 46 022	180	3	0512 49 651	171	27
1273 45 061B	158	33	1736 46 030	180	4	1620 49 651	171	28
0866 45 062	158	34	2375 46 051A	180	5	0305 49 656	171	24
1283 45 071B	159	39	2375 46 052	180	6	0559 49 660	171	25
0899 45 091B	159	40	2375 46 053	180	7	1128 49 670	171	26
1598 45 250A	177	23	2375 46 054	180	8	0512 49 682A	171	29
3743 45 280	177	24	2375 46 055	180	9	0512 49 686	171	30
3725 45 320	177	25	2375 46 056A	180	10	3743 49 720	170	8
1559 45 350A	177	26	0308 46 057A	180	11	0824 49 745	170	9
3743 45 360	177	27	2375 46 061	180	14	2046 49 746	170	10
3747 45 360	177	27	2375 46 062	180	15	2046 49 747	170	11
1562 45 510C	177	28	0842 46 081	180	16	0870 49 770	170	12
1273 45 611A	159	53	0308 46 083	180	17	0824 49 781	170	13
1283 45 611A	159	54	1015 46 085	167	10	0824 49 782	170	14
3743 45 711	160	58	1015 46 085	180	18	0870 49 785	171	16
3747 45 711	160	59	2070 46 110A	181	19	3625 50 011	183	1
0866 45 801	158	37	1053 46 150	181	21	3625 50 021	183	2
0899 45 801	159	41	1856 46 571	181	23	3625 50 022	183	3
0866 45 802	159	38	1015 46 648	181	33	3625 50 025A	183	4
0899 45 802	157	14	0223 46 683	168	28	3625 50 026A	183	5
0899 45 802	159	42	1015 46 684	181	24	3648 50 030	183	6
0899 45 803	160	61	1015 46 691	181	25	3625 50 031B	183	9
0866 45 805	159	50	0866 49 111	135	18	3625 50 032	183	10
0866 45 806A	159	52	0866 49 112	135	19	3625 50 033	183	11

PARTS NUMBER	PARTS COMP. LIST PAGE	FIG. NO.
3625 50 034A	183	12
3625 50 035	183	13
3625 50 036	183	14
1755 50 037	209	40
3625 50 040B	183	15
3625 50 050	184	16
3625 50 060	184	17
3565 50 071A	183	1
3565 50 071A	184	20
3625 50 071	184	21
1755 50 091	184	22
1756 50 091	184	23
3625 50 100A	184	24
0866 50 102A	328	56
1881 50 110B	184	28
3629 50 110A	185	46
3625 50 120B	185	32
1881 50 130B	184	28
3625 50 150C	185	33
3625 50 160A	185	34
3625 50 170A	185	35
3625 50 221A	185	38
3629 50 221A	185	38
3629 50 222	187	66
3629 50 223	187	67
3625 50 230A	185	39
3629 50 230B	185	39
0223 50 275	184	19
3625 50 290A	185	43
3629 50 290B	185	44
1907 50 292	188	79
3625 50 301	185	45
1907 50 310	188	78
3629 50 311	186	56
3625 50 320A D6	186	49
3629 50 325	185	36
3629 50 325	186	57
3625 50 330A D6	186	50
3629 50 340C	186	58
3629 50 350C	186	58
3625 50 360A	186	51
3629 50 361C	186	60
3625 50 380B	187	64
3629 50 380	187	65
1128 50 511B 02	187	69
1128 50 521	187	71
1128 50 531A	187	72
1128 50 541A	187	73
8501 50 642	327	30
8501 50 642	331	32
3565 50 930	187	66
3565 50 940	187	67
1524 51 020B	193	1
1524 51 120B	193	2
1029 51 769	327	31
1029 51 769	331	33
8501 51 771A	304	2
8501 51 781A	304	3
0110 52 265	151	39
0110 52 265	155	45
0259 52 301	190	1
0223 52 302	190	2
0305 52 312B	191	32
2835 52 330	190	3
0305 52 331	190	5
1524 52 390	190	6
0866 52 397A	190	8
1524 52 410A	190	9
0866 52 451	190	10
8038 52 510A	190	13
8042 52 510A	190	13
0866 52 610	190	14
0866 52 620	190	15
0305 52 628	191	19
0866 52 631	191	20
0866 52 661A	191	22
0866 52 671A	191	23
0866 52 750A	191	24
0305 52 802	349	6
0305 52 850B	191	25
0376 52 901B	191	27
0866 52 901B	191	27
1524 53 020H	193	4
0866 53 029A	193	5
1524 53 100I	193	6
1525 53 100I	193	6
1620 53 100D	193	6
1621 53 100C	193	6
1881 53 220G	193	7
0866 53 281A	193	9
3629 53 310	203	1
1524 53 320B	197	1
1524 53 320B	200	1
1524 53 320B	203	3
0376 53 330	197	3
0866 53 330	200	3
0866 53 330	203	5
0376 53 340	197	5
0585 53 340A	203	7
0866 53 340B	200	5
0376 53 350D	197	7
0866 53 350C	200	7

INDEX.

PARTS NUMBER	PARTS COMP. LIST PAGE	FIG. NO.
1881 53 380A	200	9
1881 53 380A	203	9
0376 53 391A	197	10
0376 53 430	197	12
0585 53 430	203	11
0866 53 430	200	11
0376 53 451	197	14
0866 53 451	200	13
0866 53 451	203	13
0866 53 452	200	15
0866 53 452	203	15
0259 53 455	197	16
0259 53 455	200	17
0259 53 455	203	17
0585 53 480B	203	18
0376 53 500A	197	17
0866 53 500A	200	18
0866 53 500A	203	20
3743 53 591	201	21
3745 53 591	197	19
3747 53 591	204	22
1544 53 600A	204	24
0585 53 651	204	26
0585 53 660A	204	28
0585 53 670A	204	30
0585 53 691	204	32
1889 53 701	204	34
0866 53 720E	193	11
0866 53 750A	193	13
0111 53 771	191	28
3625 53 780	193	14
0376 53 810D	198	21
0866 53 810E	201	23
0866 53 830A	198	22
0866 53 830A	201	24
0866 53 845	198	24
0866 53 845	201	26
0376 53 920	198	25
0866 53 920	201	27
0866 53 920	204	35
0376 53 941	198	26
0585 53 941	204	36
0866 53 941	201	28
0376 53 950	198	27
0866 53 950	201	29
0866 53 950	204	37
0866 53 951	204	38
0585 53 970A	204	39
0866 53 979A	194	17
0866 53 980	194	19
1881 54 220H	193	8
0866 54 281A	193	10
2113 54 295	77	25
2113 54 295	80	24
0585 54 310A	203	2
1524 54 320B	197	2
1524 54 320B	200	2
1524 54 320B	203	4
0376 54 330	197	4
0866 54 330	200	4
0866 54 330	203	6
0376 54 340	197	6
0585 54 340A	203	8
0866 54 340A	200	6
0376 54 350F	197	8
0866 54 350C	200	8
1881 54 380A	200	10
1881 54 380A	203	10
0376 54 391A	197	11
0376 54 430	197	13
0585 54 430	203	12
0866 54 430	200	12
0376 54 451	197	15
0866 54 451	200	14
0866 54 451	203	14
0866 54 452	200	16
0866 54 452	203	16
0585 54 480B	203	19
0376 54 500A	197	18
0866 54 500A	200	19
0866 54 500A	204	21
3743 54 591	201	22
3745 54 591	197	20
3747 54 591	204	23
1544 54 600A	204	25
0585 54 651	204	27
0585 54 660A	204	29
0585 54 670A	204	31
0585 54 691	204	33
0866 54 720B	193	12
0866 54 830A	198	23
0866 54 830A	201	25
0866 55 100G	213	1
0370 55 150	213	5
0275 55 195A	295	1
1524 55 210B	213	7
0866 55 216	213	10
0866 55 217	213	10
0866 55 218	213	10
1524 55 230B	213	11
0259 55 261	220	2
0259 55 261	220	12

INDEX.

PARTS NUMBER	PARTS COMP. LIST PAGE	FIG. NO.
3625 55 261	220	3
0730 55 302	24	8
3625 55 330A	213	14
3737 55 330 20	213	14
1570 55 340	214	16
0866 55 360C	214	17
0866 55 365C 00	214	19
0866 55 368	214	20
0865 55 401D 00	214	24
0866 55 401D 20	214	24
0865 55 402B 00	214	26
0866 55 402A	214	26
0865 55 403B 00	214	27
0866 55 403B	214	27
0865 55 404B 00	215	28
0866 55 404B	215	28
1562 55 405	215	29
0866 55 406B 00	215	31
1570 55 410	215	33
3625 55 410	215	34
0866 55 412A	215	35
3743 55 460	220	1
3737 55 530A 20	220	11
3738 55 530A 20	220	11
3743 55 530A 00	220	11
3744 55 530A 00	220	11
0259 55 556	126	16
0866 55 590	215	36
1872 55 710	215	38
1561 55 720A	215	40
1273 56 010C	207	1
1275 56 010C	207	1
1281 56 010C	207	1
3710 56 070A	207	2
3710 56 074	207	3
0376 56 080D	207	5
0866 56 080E	207	5
1881 56 110G	207	7
0136 56 112	262	1
0866 56 171A	207	9
0223 56 190A	197	9
1881 56 210F	207	10
0243 56 231	77	27
0243 56 231	80	26
0187 56 235	211	1
0187 56 235	339	3
0118 56 241	160	64
0118 56 241	211	2
0118 56 241	325	2
0118 56 241	330	1
0118 56 242B	160	65
0118 56 242B	195	29
0118 56 242B	200	20
0118 56 242B	204	40
0118 56 242B	211	3
3629 56 300D	208	20
0866 56 310B	207	15
0866 56 330	207	11
1889 56 330	208	21
0866 56 350B	207	13
1881 56 370A	208	17
0376 56 381A	208	18
0866 56 381A	208	18
0866 56 405	305	27
1889 56 500	208	23
1137 56 541B	211	4
0376 56 580B	207	6
0866 56 580C	207	6
1889 56 580A	208	24
1881 56 610F	207	8
0810 56 639	211	6
1273 56 711B	211	7
1571 56 712E	211	8
1570 56 720C	211	9
1128 56 730	211	10
1571 56 750	211	11
0459 56 751	195	33
0459 56 751	249	39
1571 56 755	211	12
0899 56 780	160	71
0866 56 781A	160	67
0866 56 782	160	68
0866 56 810C	208	16
0866 56 830	207	12
1889 56 830A	208	22
0866 56 850	207	14
1881 56 870A	208	17
0376 56 880	208	19
0866 56 880	208	19
0585 56 901B	208	25
1128 56 901B	208	26
0585 56 902	208	28
0820 56 905	39	64
0820 56 905	216	41
0820 56 905	299	55
1137 56 920	211	13
8038 56 951	209	30
0585 56 961	209	32
0585 56 962	209	33
0866 56 971	211	15
0866 56 981	209	35
0866 56 991	301	1

INDEX.

PARTS NUMBER	PARTS CCMP. LIST PAGE	FIG. NO.
0824 56 999	198	28
3629 57 012A	228	38
3629 57 013A	228	39
0317 57 015	227	29
0317 57 015	228	36
0585 57 015	228	40
0585 57 016	228	41
0585 57 017	228	42
0585 57 018	228	43
0585 57 019	228	44
3629 57 021	228	45
0710 57 022	228	46
0710 57 023	228	47
3629 57 080A	228	49
2155 57 109	225	15
0111 57 111	328	51
1693 57 200A	226	25
1694 57 200A	226	25
3629 57 200A	227	32
1694 57 250A	226	27
3629 57 250A	227	34
3725 57 800	226	25
3728 57 800	226	25
3729 57 800	227	32
3725 57 850	226	27
3729 57 850	227	34
1881 57 900D 00	229	52
1882 57 900D 00	229	52
3726 57 900 00	229	52
3727 57 900 00	229	52
1881 57 940	229	54
3630 57 940	229	54
1882 57 996	229	56
1882 57 998	229	57
1757 57 999A	229	58
1620 58 010B	231	1
1622 58 010B	231	1
3747 58 010	231	1
0866 58 020A	231	1
1622 58 020	231	1
0866 58 201	236	1
0866 58 210	236	2
1011 58 231	236	5
1011 58 231	345	5
2292 58 232	231	2
2292 58 232	334	1
0866 58 240D	236	7
0866 58 281C	236	8
0866 58 281C	345	7
0866 58 282B	236	9
0866 58 282B	345	8
0866 58 291B	236	10
0866 58 291B	345	9
0866 58 292B	236	11
0866 58 293	236	12
0866 58 293	345	11
0223 58 303A	239	34
0223 58 303A	335	18
0866 58 303B	237	15
0866 58 303B 01	346	15
0223 58 304A	239	35
0223 58 304A	335	19
0259 58 305B	237	17
0259 58 305B	334	2
0223 58 306	191	29
0305 58 309	237	18
0305 58 309	346	17
1534 58 310H	237	19
1566 58 310H	237	19
0223 58 311	239	36
0223 58 311	335	20
0866 58 313	263	20
0398 58 319A	237	20
0398 58 319A	346	19
0866 58 321B	237	21
0866 58 321B	346	22
0376 58 330C	237	23
0866 58 330C	237	23
0866 58 361C	237	24
0866 58 361C	346	25
0223 58 370D	238	25
0223 58 370D	334	3
0223 58 370D	347	27
1540 58 371	238	26
1540 58 371	346	26
0223 58 375A	238	27
0223 58 375A	334	4
0223 58 375A	347	29
0866 58 410A	238	29
0305 58 411A	238	29
0305 58 411A	347	31
0111 58 443	274	19
0223 58 446	328	50
0305 58 492A	349	1
0368 58 501A	231	3
0374 58 501A	231	3
0376 58 501A	231	3
0866 58 501A	231	3
0305 58 505	232	4
0824 58 546A	263	21
1011 58 552	347	33
0866 58 560	238	33

INDEX.

PARTS NUMBER	PARTS COMP. LIST PAGE	FIG. NO.
0866 58 603	232	5
0376 58 604	232	6
0866 58 604	232	6
0376 58 605	232	7
0866 58 605	232	7
0866 58 620	232	8
0259 58 691	239	38
0259 58 691 00	346	24
0223 58 692A	232	11
0223 58 692A	341	20
0223 58 721	236	3
0223 58 721	236	13
0223 58 721	345	3
0223 58 721	345	12
0187 58 731	236	4
0187 58 731	236	14
0187 58 731	345	13
0398 58 755 01	232	12
0398 58 755 01	342	21
0398 58 755 20	232	12
0398 58 755 20	342	21
0376 58 760A	233	13
0866 58 760A	233	13
0305 58 762	233	14
0305 58 762A	341	16
0376 58 781D	233	15
0866 58 781D	233	15
0376 58 791	233	16
0866 58 791	233	16
1620 58 810A	233	17
1622 58 810B	233	17
0398 58 821A 00	234	18
0398 58 821A 01	234	18
0398 58 821A 01	342	22
0398 58 821A 23	234	18
0398 58 821A 23	342	22
0398 58 822A 00	234	19
0398 58 822A 01	234	19
0398 58 822A 01	342	24
0398 58 822A 23	234	19
0398 58 822A 23	342	24
0866 58 841A	234	22
0866 58 842A	234	23
0866 58 842A	342	28
0559 58 868	211	16
0305 58 872	262	2
0376 58 880	234	21
0866 58 880	234	21
0259 58 906	239	39
0208 58 921	234	24
0208 58 921	262	3
0208 58 921	334	6
0208 58 921	343	31
0187 58 922	234	25
0187 58 922	262	3
0187 58 922	334	7
0187 58 922	343	32
0223 58 961	349	7
0223 58 962	349	8
1620 59 010B	231	1
1622 59 010B	231	1
3747 59 010	231	1
1540 59 020	231	1
1622 59 020	231	1
0866 59 240D	236	7
0866 59 303B	237	15
0866 59 303B 01	346	15
1534 59 310H	237	19
1566 59 310H	237	19
0376 59 330C	237	23
0866 59 330C	237	23
0866 59 361C	237	24
0866 59 361C	346	25
0866 59 410A	238	29
0368 59 501A	231	3
0374 59 501A	231	3
0376 59 501A	231	3
0866 59 501A	231	3
0305 59 505	232	34
0866 59 560	238	33
0866 59 603	232	5
0376 59 604	232	6
0866 59 604	232	6
0376 59 760A	233	13
0866 59 760A	233	13
0376 59 791	233	16
0866 59 791	233	16
1620 59 810A	233	17
1622 59 810B	233	17
0866 59 841A	234	22
0866 59 842A	234	23
0866 59 842A	342	28
0376 59 880	234	21
0866 59 880	234	21
3625 60 050	216	44
1562 60 070	216	47
0370 60 073B	216	48
0866 60 101	216	50
0866 60 102	216	51
0866 60 120	216	55
0866 60 130	217	56
0317 60 252	217	60

INDEX.

PARTS NUMBER	PARTS COMP. LIST PAGE	FIG. NO.
0317 60 253	217	61
1634 60 254	217	62
0317 60 255	217	63
0317 60 256	217	64
0317 60 257	217	65
0317 60 258	217	66
0317 60 259	217	67
0317 60 261	217	68
0317 60 262	217	69
0866 60 263	217	70
0866 60 264	217	71
0317 60 266	218	73
0866 60 267	218	74
1611 60 311	218	75
1611 60 312	218	76
1620 60 335	218	77
1620 60 345	218	78
2280 60 433	349	11
2835 60 438	349	10
0305 60 715	218	83
0866 60 720A	218	82
0866 60 721	218	84
1540 60 930	218	85
0585 60 965	155	43
1620 61 025	253	98
0257 61 051	194	26
0864 61 061A	39	73
0366 61 070A	194	27
3743 61 080	241	
1524 61 130B	241	1
1524 61 130B	244	
3737 61 140	252	90
3743 61 140	241	2
1524 61 151A	241	3
0862 61 156	241	11
3737 61 190	253	93
3743 61 190	241	4
0824 61 192	241	12
1562 61 211C	242	16
1620 61 212	242	17
1881 61 214A	242	19
0862 61 215	242	18
1620 61 225	242	20
0866 61 235	242	15
0824 61 236A	250	61
0866 61 251	241	5
3737 61 390	246	
3743 61 400	246	
1881 61 450	246	11
1881 61 450	256	
0866 61 461	247	15
1562 61 462A	247	21
1128 61 463	248	28
1562 61 464B	248	31
0370 61 467	250	58
1562 61 469	247	22
0866 61 472	247	14
1562 61 473	248	32
1622 61 474	247	24
0866 61 475	248	27
1622 61 475	248	26
0866 61 476	247	19
1540 61 476	247	20
1881 61 476	242	22
1562 61 490	248	37
0866 61 500	249	41
1608 61 520	249	46
1608 61 520	259	
0866 61 525A	250	56
1524 61 526	249	47
0866 61 527	250	59
0866 61 531	249	48
0866 61 532	249	49
0866 61 533	249	50
0866 61 534	249	51
0866 61 535	250	52
0866 61 536	250	53
0866 61 541A	250	62
0866 61 542	251	64
0866 61 543A	251	66
1662 61 545	251	68
3743 61 546	251	69
1622 61 548	251	70
0866 61 549	251	67
0866 61 551	251	72
0866 61 552	251	73
1622 61 561	251	75
1622 61 564	251	76
1622 61 565	251	77
1622 61 566	251	79
1622 61 567	251	80
1622 61 568	252	83
1622 61 569	252	86
1622 61 572	252	87
1622 61 575	251	78
1622 61 578	252	84
1622 61 580	252	88
1622 61 580	259	
0259 61 868	248	29
1128 61 911	253	95
1128 61 912	253	96
1128 61 913	253	97

PARTS NUMBER	PARTS COMP. LIST PAGE	FIG. NO.
1620 61 926	253	99
1571 62 510B	262	4
0585 62 610	262	5
0621 62 640A	262	8
0621 62 641	262	9
0621 62 642	262	9
0585 62 650C	262	11
0585 62 671A	262	13
0585 62 672A	263	15
0585 62 695A	263	16
0585 62 710B	263	18
0585 62 720C	263	19
0585 62 741	263	24
0585 62 742	263	24
0585 62 750	263	26
0621 62 792	264	27
1528 62 801A	264	28
1544 62 801A	264	28
1889 62 801	264	28
1901 62 801	264	28
0585 62 802A	264	29
0585 62 823C	264	30
0585 62 826	265	52
0585 62 828	265	53
0585 62 8318	264	32
1624 62 851 35	264	33
1624 62 851 37	264	33
1624 62 851 38	264	33
0585 62 871C	264	35
0585 62 940A	265	38
0899 62 955B	265	40
0899 62 961	265	41
0899 62 962A	265	42
0899 62 963	265	43
0899 62 964	265	44
0899 62 970	265	45
0899 62 975A	265	46
0585 63 610	262	6
0585 63 650C	262	12
0585 63 823C	264	31
0585 63 871C	264	36
0585 63 940A	265	39
0866 64 630	297	23
0136 65 752	187	63
0183 66 021	267	3
2801 66 022	267	2
1893 66 031A	267	1
1893 66 061A	267	1
0259 66 094A	268	19
0259 66 095	268	20
3625 66 105	268	23
0259 66 114	268	19
3514 66 120	217	58
3596 66 120A	217	58
1011 66 121	217	59
1011 66 125	217	72
1011 66 130	278	18
3725 66 150	349	9
1711 66 155	349	13
0585 66 211	273	2
1128 66 211	270	2
1128 66 212	270	3
1529 66 212	273	3
0585 66 213	273	4
3743 66 213	270	4
3743 66 215	270	5
3743 66 216	270	6
1128 66 217	270	7
1529 66 217	273	6
0585 66 219	273	2
0585 66 231	273	2
1529 66 237	273	6
0585 66 239	273	2
3743 66 255	270	5
3743 66 256	270	6
3625 66 355	271	22
0212 66 371	286	5
0223 66 371	286	4
0212 66 372	286	6
0585 66 373	274	15
3625 66 373	271	19
0585 66 374	274	16
0585 66 375	274	17
0585 66 376	274	18
0585 66 377	274	21
0585 66 378	274	22
0390 66 410	277	1
0398 66 412	277	2
0398 66 413	277	3
1540 66 481	267	13
1540 66 482	268	14
1540 66 482	270	13
1540 66 482	275	28
1540 66 491	267	13
1540 66 501	270	12
1540 66 501	274	27
1540 66 511	270	12
1540 66 511	274	27
0305 66 580A	295	2
1650 66 620	277	6
1650 66 621	277	7
1540 66 630	277	9

INDEX.

PARTS NUMBER	PARTS COMP. LIST PAGE	FIG. NO.
0208 66 683	160	66
1881 66 700	271	16
1175 66 710	349	12
1881 66 710	271	16
8038 66 730A	277	12
8038 66 731	277	13
8038 66 732	277	14
0866 66 733	277	15
0865 66 760	278	19
2852 66 763	278	20
0243 66 773	151	42
0865 66 780A	278	22
0233 66 790	168	29
0865 66 790A	278	23
0865 66 800	278	24
0865 66 805	278	25
0865 66 809	278	26
0209 66 820	279	29
0209 66 821	279	30
0820 66 840	174	25
1560 66 860B	292	
1561 66 860B	292	
1562 66 860B	292	
1564 66 860B	292	
0317 66 862	292	1
0316 66 865A	218	87
0866 66 871	292	2
0813 66 879	290	8
0866 66 900	292	4
0870 66 900A	292	5
1561 66 900	292	4
1562 66 900	292	4
0866 66 905	292	7
0870 66 905	292	8
1524 66 930A	292	9
0208 66 949	160	72
0208 66 949	218	89
0208 66 949	283	5
0866 66 960	292	10
0866 66 965	293	12
0870 66 970B	293	13
0870 66 975A	293	15
0870 66 980	293	16
0187 66 991	151	40
0187 66 991	155	40
0187 66 991	218	88
0727 66 991A	195	30
0727 66 992	195	31
0820 66 992	293	18
3743 67 010	282	1
3743 67 020B	282	2
3712 67 030A	282	6
8038 67 030B	282	5
1889 67 035B	282	7
0585 67 036B	282	8
3743 67 050A	282	11
3747 67 050A	282	11
0866 67 059	283	2
3743 67 060B	282	14
3743 67 065	282	15
3743 67 070	283	16
1540 67 080B	283	17
1881 67 100A	77	29
1881 67 100A	80	28
0872 67 110	77	30
0872 67 110	80	29
3743 67 120	283	22
3743 67 130	283	23
1881 67 133	283	18
1889 67 133	283	20
0585 67 151	283	6
0820 67 151	283	7
0866 67 152	284	8
0866 67 153A	284	9
0866 67 153A	293	19
0585 67 154	283	21
0585 67 154	284	1
0862 67 155	284	3
0866 67 155	284	2
1524 67 155	284	4
0866 67 156	284	5
0866 67 170	151	41
0899 67 170C	155	42
0866 67 175	151	44
0866 67 176	151	45
0866 67 301A	287	36
0866 67 302	287	37
1524 67 321A	286	1
2835 67 330	286	2
1524 67 340C	286	3
1524 67 350A	286	13
0317 67 480	290	1
0866 67 510A	290	12
0317 67 511	290	3
0866 67 511A	290	11
0866 67 512	290	13
0866 67 521	290	14
0317 67 551	174	27
1755 67 560	279	42
1757 67 560	279	42
1755 67 562	279	43
1757 67 562	280	43

PARTS NUMBER	PARTS COMP. LIST PAGE	FIG. NO.
1016 67 620	254	111
1016 67 620	279	40
1757 67 700	279	32
3564 67 700	279	33
0866 67 717	280	44
0866 67 718	280	45
0866 67 719	280	46
1757 67 720A	279	36
1919 67 720	280	48
1220 67 740	280	49
0839 67 880	279	38
3625 67 909	284	4
1011 67 912	229	55
3725 67 970	283	24
3725 67 980	283	25
1220 67 985	283	26
0305 67 993A	293	20
0305 67 994	284	3
1524 68 011	295	4
0317 68 018	186	55
0865 68 020C 00	295	5
0866 68 020C 20	295	5
0419 68 021	316	32
1011 68 022	312	29
1562 68 040A	295	6
3737 68 040 20	295	6
0672 68 060A	301	5
0603 68 070A	301	6
0275 68 088	293	21
0866 68 090B	295	7
0866 68 095	295	8
0187 68 110A	301	7
1562 68 140B 00	295	9
3737 68 140 20	295	9
0866 68 175	296	20
0118 68 180A	301	8
0866 68 180A	296	22
0208 68 230	301	9
0259 68 250	226	21
0866 68 331 00	297	25
0866 68 332	297	26
0866 68 333	297	27
0866 68 334	297	28
0866 68 335B	297	29
0865 68 340 00	297	31
0866 68 340 20	297	31
0866 68 351A	297	33
0866 68 352A	297	34
0866 68 361	297	36
1524 68 380A	298	38
3737 68 380 20	298	38
1128 68 660	301	3
1128 68 67C	301	4
0839 68 720	301	10
0305 68 800F	301	11
0305 68 810A	301	12
0367 68 832A	299	60
0376 68 890B	298	39
0866 68 890B 20	298	39
1524 68 890	298	45
3738 68 890 20	298	45
0376 68 892	298	40
0376 68 893	298	41
0376 68 894	298	42
0376 68 895	298	43
0376 68 900	298	46
0378 68 900	298	46
0376 68 910	298	47
1004 68 911 01	342	21
1004 68 911 20	342	21
0370 68 920 00	299	50
0866 68 920	298	48
3737 68 920 20	299	50
0305 68 951	265	48
0305 68 952	265	48
0223 69 032	265	49
0187 69 049A	304	1
1562 69 053	304	4
0380 69 055B	304	5
0730 69 057A	304	6
0899 69 058	304	7
0862 69 061	304	8
0862 69 065	304	8
3743 69 085	304	11
1540 69 101	304	14
1540 69 130B	304	13
0310 69 170	304	16
0839 69 171	304	17
1632 69 210A 00	305	19
1632 69 210A 25	305	19
1632 69 210A 31	305	19
1632 69 240A 00	305	20
1632 69 240A 25	305	20
1632 69 240A 31	305	20
1632 69 290 31	310	1
1634 69 290B 00	310	1
1634 69 290B 25	310	1
1636 69 290 14	314	1
0259 69 311A	310	2
0585 69 311A	314	2
0866 69 311A	310	3
0866 69 311A	314	3

INDEX.

PARTS NUMBER	PARTS COMP. LIST PAGE	FIG. NO.
0376 69 314B	310	4
0866 69 314A	310	5
0376 69 321	310	6
0866 69 321	310	6
0866 69 321	314	4
0603 69 323A	265	50
0376 69 341	310	7
0585 69 341B 00	314	5
0866 69 341	310	7
0376 69 342	310	8
0376 69 343	310	9
1524 69 360C 01	310	12
1524 69 360C 01	314	7
1524 69 380A 01	310	13
1524 69 380A 01	314	8
0376 69 411 00	310	15
0866 69 411 00	311	15
0866 69 411 00	314	10
0376 69 431 00	311	16
0866 69 431 00	311	16
0866 69 431 00	314	11
0866 69 461B 35	311	18
0866 69 461B 35	314	13
0866 69 461B 37	311	18
0866 69 461B 37	314	13
0866 69 461B 38	311	18
0866 69 461B 38	314	13
0376 69 462A 00	311	19
0376 69 462A 25	311	19
0376 69 462A 31	311	19
0376 69 511 00	311	20
0376 69 511 05	311	20
0376 69 511 07	311	20
0866 69 511 02	311	21
0376 69 521 00	311	22
0376 69 521 05	311	22
0376 69 521 07	311	22
0866 69 521 02	311	23
1632 69 541	318	1
1636 69 541A	318	2
1632 69 542	318	3
0866 69 543A	318	5
1636 69 543A	318	4
0866 69 544A	318	6
0899 69 561C 31	314	14
0899 69 571C 31	314	15
3725 69 612	318	7
3728 69 612	318	7
3725 69 617	318	8
0866 69 625A 05	318	9
1529 69 625 05	318	9
0866 69 626A 05	318	10
1529 69 626 05	319	10
0866 69 627A	319	11
3629 69 627A 70	319	12
3629 69 627A 71	319	12
0585 69 628F	319	13
1529 69 629	319	14
1598 69 660	319	20
1128 69 681C	320	30
1137 69 681C	320	30
3719 69 682A	320	31
3719 69 683	319	21
3720 69 683	319	21
1907 69 685A	319	22
3719 69 687	319	23
3719 69 692	319	24
3723 69 692	319	25
1570 69 695A	319	26
0866 69 696	320	27
0899 69 696A	320	28
0866 69 697	320	29
0899 69 710A 35	315	18
0899 69 710A 37	315	18
0899 69 710A 38	315	18
0899 69 711B 35	314	16
0899 69 711B 37	315	16
0899 69 711B 38	315	16
0899 69 712B 35	315	17
0899 69 712B 37	315	17
0899 69 712B 38	315	17
0899 69 715A 35	315	20
0899 69 715A 37	315	20
0899 69 715A 38	315	20
0899 69 717A	315	21
0899 69 718A	315	22
0899 69 721B 35	315	23
0899 69 721B 37	315	23
0899 69 721B 38	315	23
0899 69 723B	315	24
0899 69 724B	316	25
0899 69 730A 35	315	19
0899 69 730A 37	315	19
0899 69 730A 38	315	19
0866 69 811	299	53
0866 69 821A	299	54
0376 69 870B 00	312	27
0866 69 870C 00	312	27
0870 69 870B 00	312	27
1524 69 870C 00	312	27
0866 69 885	151	46
0866 69 885	312	28

PARTS NUMBER	PARTS COMP. LIST PAGE	FIG. NO.
0866 69 920 02	305	22
0376 69 941 00	305	24
3743 70 050	201	30
3745 70 050	198	29
1128 70 120A	194	20
3743 70 160	194	21
0317 70 269	299	59
0317 70 307	322	2
0866 70 310B	322	1
0866 70 313	322	3
0866 70 320	322	4
0866 70 330A	322	5
0866 70 341A	322	6
0866 70 342	322	7
0866 70 343	322	9
0866 70 351	323	18
0866 70 352	323	19
0866 70 360C	322	15
0866 70 365	322	12
0866 70 366	322	13
0866 70 367	322	14
0866 70 371	323	21
0866 70 395	322	16
1524 70 401A	305	26
0866 70 412	306	28
0866 70 412	306	41
0585 70 420A	306	29
0866 70 420	306	33
0376 70 421	306	35
0376 70 422	306	36
0585 70 423A	306	30
0376 70 426	306	38
0376 70 427	306	39
0376 7C 428	306	40
0376 70 431A 03	307	43
0866 70 431E 03	307	47
0899 70 431 03	307	45
1531 70 441	325	3
1531 70 441	330	2
1540 70 441	325	3
1540 70 441	330	2
1542 70 441	325	3
1568 70 441	325	3
0305 70 443B	325	4
0305 70 443B	330	3
0305 70 447B	325	5
0305 70 447B	330	4
0305 70 448A	325	6
0305 70 448A	330	5
0839 70 449	325	7
0839 70 449	330	6
0866 70 454	325	8
0866 70 454	330	7
0374 70 471A	325	9
0375 70 471A	325	9
1523 70 471A	325	9
1535 70 471A	325	9
1881 70 471	325	9
1882 70 471	325	9
1893 70 471	325	9
1895 7C 471	325	9
0866 70 473	325	10
0585 70 521C	330	8
0839 70 521	334	8
0839 70 522	334	9
0839 70 523A	334	10
0839 70 524	334	11
0839 70 525	334	12
0839 70 526	328	52
0839 70 526	334	13
0585 70 531A	330	10
0585 70 532A	330	12
0585 70 533A	330	14
0585 70 534A	330	15
1529 70 551A	330	16
1544 70 551A	330	16
0376 70 570	326	11
0866 70 570	326	11
1881 70 611	328	45
1881 70 620	328	46
1881 70 630	328	47
1881 70 640A	328	48
1881 70 650A	328	49
0585 70 710A	301	13
0585 70 720A	301	15
0585 70 730A	302	16
0585 70 733A	302	17
0376 70 801B 00	326	13
0866 70 801B 00	326	17
0866 70 801B 00	331	18
1881 70 802	326	19
1881 70 802	331	20
1882 70 802	326	15
0483 70 804	265	51
0585 70 811C	331	25
0376 70 822B	327	27
0585 70 822B	331	29
0866 70 822D	327	27
0866 70 823B	327	29
0866 70 823B	331	31
3743 70 824A	327	32
3743 70 824A	331	34

INDEX.

PARTS NUMBER	PARTS COMP. LIST PAGE	FIG. NO.
3743 70 825	327	33
3743 70 825	331	35
3743 70 830	326	25
3743 70 830	331	27
3745 70 830	326	25
0376 70 891 00	307	50
0376 70 891 01	307	50
0376 70 891 04	307	50
0376 70 892A 00	307	51
0376 70 892A 01	308	51
0376 70 892A 04	307	51
1529 70 911 01	316	27
1529 70 911 15	316	27
1529 70 911 16	316	27
1529 70 920A 01	316	28
1529 70 920A 15	316	28
1529 70 920A 16	316	28
1529 70 930	316	33
1524 70 980	77	34
1524 70 980	81	33
0866 71 310B	322	1
0866 71 343	322	9
0866 71 351	323	18
0866 71 352	323	19
0585 71 420A	306	29
0866 71 420	306	33
0376 71 421	306	35
0376 71 422	306	36
0376 71 431A 03	307	43
0866 71 431E 03	307	47
0899 71 431 03	307	45
0585 71 521C	330	9
0585 71 531A	330	11
0585 71 532A	330	13
1529 71 551A	330	17
1544 71 551A	330	17
0866 71 570	326	12
0376 71 801B 00	326	14
0866 71 801B 00	326	18
0866 71 801B 00	331	19
1881 71 802	326	20
1881 71 802	331	21
1882 71 802	326	16
0376 71 822B	327	28
0585 71 822B	331	30
0866 71 822D	327	28
3743 71 830	327	26
3743 71 830	331	28
3745 71 830	326	26
0376 71 891 00	307	50
0376 71 891 01	307	50
0376 71 891 04	307	50
0376 71 892A 00	308	51
0376 71 892A 01	308	51
0376 71 892A 04	308	51
1624 71 911 01	316	31
1624 71 911 15	316	31
1624 71 911 16	316	31
1620 72 010	339	1
1636 72 010	339	1
0866 72 020A	339	1
0259 72 080	339	2
0866 72 201	345	1
0259 72 210	339	5
0866 72 210B	345	2
0866 72 212A	345	4
0866 72 240C	345	6
0866 72 292A	345	10
0866 72 310G	346	18
0866 72 410A	347	30
0368 72 501A	339	6
0374 72 501A	334	15
0376 72 501A	334	15
0583 72 501A	339	6
0585 72 501A	339	6
0866 72 501A	339	6
0866 72 502	340	7
0376 72 505	334	16
0259 72 509	239	40
0376 72 560	335	17
0866 72 560	347	34
0376 72 602	335	23
0585 72 602C 00	340	8
0866 72 602A 00	340	8
0376 72 603	335	24
0376 72 605	335	25
0585 72 605	340	9
0866 72 605	340	9
0376 72 606	335	26
0585 72 606	340	10
0866 72 606	340	10
0585 72 651A	340	13
0866 72 651B	340	13
1524 72 661C	340	14
1529 72 661A	340	14
1540 72 661B	340	14
1544 72 661A	341	14
0376 72 755A 01	336	31
0376 72 755A 20	336	31
0585 72 760A	341	15
0866 72 760A	341	15
0376 72 761	336	28

INDEX.

PARTS NUMBER	PARTS COMP. LIST PAGE	FIG. NO.
0376 72 771	336	29
0376 72 781C	336	32
0866 72 781C	341	17
0376 72 790	336	33
0866 72 791	341	18
1620 72 810	341	19
1882 72 810	336	34
0585 72 821	342	23
0866 72 831D	342	26
0866 72 841A	342	27
0899 72 841B	342	29
0899 72 843A	342	30
0376 72 851B	336	36
0376 72 855	337	37
0376 72 880	336	35
0376 72 881	337	39
0376 72 890	337	41
0376 72 901C	337	42
0376 72 902B	337	43
1620 73 010	339	1
1636 73 010	339	1
0866 73 020A	339	1
0866 73 210B	345	2
0866 73 240C	345	6
0866 73 310G	346	18
1052 73 341A	15	12
0866 73 410A	347	30
0368 73 501A	339	6
0374 73 501A	334	15
0376 73 501A	334	15
0583 73 501A	339	6
0585 73 501A	340	6
0866 73 501A	339	6
0376 73 560	335	17
0866 73 560	347	34
0376 73 602	335	23
0585 73 602C 00	340	8
0866 73 602A 00	340	8
0376 73 603	335	24
1524 73 661C	340	14
1529 73 661A	341	14
1540 73 661B	340	14
1544 73 661A	341	14
0585 73 760A	341	15
0866 73 760A	341	15
0376 73 761	336	28
0376 73 771	336	29
0376 73 790	336	33
1620 73 810	341	19
1882 73 810	336	34
0866 73 831D	342	26
0866 73 841A	342	27
0899 73 841B	342	29
0899 73 843A	342	30
0376 73 851B	337	36
0376 73 855	337	37
0376 73 880	336	35
0376 73 881	337	39
0376 73 890	337	41
0376 74 030	198	30
0585 74 030	205	41
0866 74 030	201	31
1524 74 040	194	22
0376 74 050	198	31
0866 74 050	201	32
0866 74 090	201	33
0866 74 090	205	42
1562 74 090	198	32
0376 74 100	198	34
0866 74 100	201	35
0866 74 120	201	34
0866 74 120	205	43
1562 74 120	198	33
0376 74 130	198	35
0866 74 130	201	36
0305 74 158	350	
0305 74 168	350	
0866 74 250	191	30
0866 74 430	349	4
0866 74 440	349	4
0376 74 570	326	12
0305 74 910A	349	2
3631 75 010	220	13
3737 75 010	220	13
0866 75 011	220	14
0866 75 013	220	15
0370 75 018	221	16
1514 75 021A	221	17
3625 75 025	221	19
3743 75 026	221	18
3744 75 026	221	18
0866 75 028	221	20
1881 75 040	221	21
1562 75 122A	220	4
1562 75 123A	220	5
3743 75 125	220	6
3625 75 139	220	10
0275 75 140	220	7
3625 75 200	220	8
0710 75 436	221	22
2280 75 641	350	
0370 75 930	349	3

INDEX.

PARTS NUMBER	PARTS COMP. LIST PAGE	FIG. NO.
0585 75 960	349	5
0208 76 071	320	32
1524 76 501A	244	1
1524 76 502A	244	2
1524 76 503A	244	3
1524 76 504A	244	4
1524 76 505A	244	5
0862 76 506	244	7
0862 76 507	244	8
0862 76 508	244	9
0866 76 509	244	10
0866 76 511	244	11
1524 76 512	244	12
1524 76 601	287	35
1524 76 603	286	9
1524 76 604	286	8
0866 76 605	286	11
0866 76 606	286	10
1524 76 607A	286	18
1524 76 608	287	24
1524 76 608	287	34
1011 76 612A	287	22
0866 76 701	256	1
1531 76 701	259	1
0866 76 702	256	6
1622 76 702	259	2
0370 76 703	259	3
0866 76 703	256	9
0370 76 704	259	4
0866 76 704	256	13
0866 76 705	257	21
1524 76 705A	259	5
0866 76 706	257	27
1524 76 706	259	6
0370 76 707	259	7
1881 76 707	257	36
1622 76 708A	259	8
0866 76 709A	257	
1622 76 709	259	9
0866 76 710	256	
1622 76 717	259	10
0866 76 719	259	11
1881 76 720	257	28
0866 76 721A	256	14
0866 76 722	257	22
0866 76 723	256	15
0866 76 724A	257	23
0866 76 725	257	24
0866 76 726	257	25
0866 76 729	257	26
0866 76 730	256	17
0866 76 731	257	19
0866 76 733	256	18
0866 76 734	256	16
0866 76 739	256	11
0866 76 743A	257	20
0866 76 750	256	12
0866 76 752	256	7
0866 76 754	256	4
0866 76 755	256	3
0866 76 760	256	8
1881 76 763	257	29
1881 76 765A	257	34
0866 76 766	257	33
1881 76 771	257	31
1881 76 772A	257	35
1881 76 790	257	30
0866 76 810	256	2
0866 76 820	256	5
0866 76 830	256	10
1881 76 850A	257	32
1622 76 901	259	12
1622 76 902	259	13
1622 76 903	259	14
1622 76 904	259	15
1622 76 905	259	16
1622 76 906	260	17
1622 76 907	260	18
1622 76 908	260	19
0317 78 034	246	6
0822 78 450	24	13
0822 78 450	258	107
0585 78 521B	209	36
1881 78 521	209	38
1881 78 530	209	41
0730 78 541	328	53
8038 78 541	209	42
0259 78 857	247	16
0259 78 858	247	17
0259 78 868	248	34
0208 78 875	248	36
0820 78 883	250	57
0275 87 007	267	4
0727 87 012	267	6
2850 87 012	267	5
0727 87 013	267	7
0727 87 014	267	8
0727 87 016	267	9
0727 87 022	267	6
0727 87 023	267	7
2244 87 031	268	18
2244 87 032	268	18

PARTS NUMBER	PARTS COMP. LIST PAGE	FIG. NO.
0259 87 103	287	25
0710 87 103	273	10
0259 87 104A	287	26
0259 87 105	287	21
0259 87 106	287	23
0257 87 107	286	17
0259 87 107	286	19
0257 87 108	286	15
0259 87 108A	287	20
0259 87 109A	286	14
0259 87 119	287	27
0259 87 120	287	28
0259 87 134	286	12
0702 87 135	287	30
0702 87 138	287	32
0738 87 803	287	29
0738 87 804	287	31
0305 87 906	286	7
0727 87 992	290	2
0305 87 993	290	4
0727 87 994	290	5
0727 87 995	290	6
0866 88 101	225	13
1882 88 101	225	13
0866 88 102	224	5
1882 88 102	224	5
0866 88 103	224	6
0866 88 105	225	16
0866 88 106	225	17
1881 88 107	225	19
3490 88 107	225	8
1881 88 110	224	1
1882 88 110	224	1
1694 88 111	224	3
1694 88 130	225	10
1694 88 131	225	12
0866 88 151	225	14
0866 88 152	224	7
1881 88 160	224	2
1882 88 160	224	2
1694 88 161	224	4
1694 88 180	225	11
1693 88 201	226	26
1694 88 201	226	26
3629 88 201	227	33
1694 88 251	227	28
3629 88 251	227	35
3725 88 710	224	1
3728 88 710	224	1
3725 88 711	224	3
3725 88 730	225	10
3725 88 731	225	12
3725 88 760	224	2
3728 88 760	224	2
3725 88 761	224	4
3725 88 78C	225	11
3725 88 801	226	26
3728 88 801	226	26
3729 88 801	227	33
3725 88 851	227	28
3729 88 851	227	35
3727 88 901	229	53
0862 89 175	50	
1011 89 175	46	
0259 89 251	104	4
1052 89 411A	164	1
0839 89 431B	164	7
0317 89 435B	164	5
0317 89 436A	164	6
0317 89 436A	170	2
1889 89 654A	273	9
1854 89 662	268	17
1540 89 663	267	12
1889 89 664	273	1
3743 89 664	270	1
0585 89 665	274	14
3625 89 665	271	18
1854 89 667	268	17
1540 89 668	267	12
1889 89 669	273	1
3743 89 669	270	1
1540 89 673	270	11
1540 89 673	274	26
1540 89 678	270	11
1540 89 678	274	26
3743 99 100B	7	
0305 99 178	62	33
0305 99 178	66	42
0317 99 265B	107	15
0585 99 281B	123	15
0866 99 281C	119	21
1175 99 322	132	16
1175 99 324	132	17
0866 99 356A	138	22
0259 99 361	139	43
0317 99 362A	139	44
0305 99 521	191	31
0866 99 522A	191	33
1128 99 711	188	75
1128 99 712	188	76
1128 99 713	188	77
1128 99 721	327	35

INDEX.

PARTS NUMBER	PARTS COMP. LIST PAGE	FIG. NO.
1128 99 721	332	37
0376 99 741	327	36
0866 99 741	327	36
0866 99 741	332	38
0866 99 742A	327	37
0866 99 742A	332	39
0376 99 743A	327	39
0866 99 743A	327	39
0866 99 743A	332	41
0376 99 744A	327	40
0866 99 744A	327	40
0866 99 744A	332	42
0866 99 745A	327	38
0866 99 745A	332	40
0376 99 746	328	41
0866 99 746	328	41
0376 99 747	328	42
0866 99 747	328	42
0376 99 748A	328	43
0866 99 748A	328	43
0376 99 749A	328	44
0866 99 749A	328	44
3625 99 806A	185	40
9070 60 110	349	14
9070 60 120	349	15
9078 60 620	323	20
9078 60 820	168	18
9085 71 0135	48	14
9922 11 212	32	46
9922 12 015	126	23
9922 12 020	168	27
9922 12 020	181	26
9922 13 020	131	10
9922 13 020	132	20
9922 13 020	138	23
9922 13 020	225	18
9922 13 035	139	36
9922 14 030	134	8
9922 20 216	45	26
9922 20 216	49	34
9922 20 216	87	7
9922 20 610	12	44
9922 20 610	13	49
9922 50 320	180	12
9923 00 511	162	9
9923 00 815B	173	9
9923 00 820	301	14
9923 10 513	24	17
9923 10 820	168	26
9923 31 225	44	3
9923 31 225	48	8
9924 61 230	48	9
9926 21 806B	297	32
9926 40 531A	194	18
9926 40 531B	195	34
9926 40 531B	249	40
9926 40 531B	253	100
9927 40 821	310	11
9927 60 506	45	23
9927 60 506	49	30
9927 61 006	28	74
9927 61 006	38	57
9927 61 006	85	36
9927 61 008	249	44
9927 61 208	77	32
9927 61 208	80	31
9927 61 210	3	36
9927 61 406	284	9
9927 62 008	74	28
9927 81 201	159	48
9927 90 803	187	68
9927 91 105	284	2
9928 21 401	171	20
9928 21 700	85	39
9928 21 901	177	18
9928 22 201	150	25
9928 22 201	154	32
9928 22 600	39	74
9928 22 600	242	14
9928 22 600	244	6
9928 24 309	27	54
9928 24 900	39	68
9928 26 000	149	7
9928 26 000	153	11
9928 31 000	150	22
9928 31 000	154	22
9928 31 000	157	16
9928 31 000	159	57
9928 31 100	149	14
9928 31 100	154	22
9928 31 100	157	17
9928 31 100	159	49
9928 31 200	150	20
9928 31 200	157	18
9928 31 200	159	51
9928 31 300	38	58
9928 31 300	153	9
9928 50 800	171	31
9928 80 808	85	43
9928 81 608	158	20
9928 90 701	38	60
9929 51 508	125	9

INDEX.

PARTS NUMBER	PARTS COMP. LIST PAGE	FIG. NO.
9930 52 800	7	82
9930 63 000	2	16
9930 63 C00	3	32
9930 70 400	15	2
9930 70 600	4	53
9930 71 000	15	3
9933 50 4015	290	9
9933 50 4066	290	10
9933 50 8008	322	8
9934 00 4050	24	4
9934 00 4060	24	12
9934 00 4090	253	108
9934 00 4120	24	14
9934 00 4150	253	109
9934 00 4160	24	15
9934 00 4175	26	47
9934 00 4230	27	66
9934 00 426C	253	110
9934 00 4290	24	16
9934 00 4300	70	44
9934 00 4370	70	44
9934 10 400C	24	6
9934 60 6150	85	45
9934 60 6160	25	26
9934 60 6160	150	21
9934 60 6220	154	19
9934 60 6330	149	13
9934 60 6420	154	21
9934 60 6520	150	19
9934 60 6580	149	12
9934 60 6580	150	31
9934 60 6580	154	28
9934 60 6800	154	20
9934 61 4400	150	24
9934 61 4700	155	34
9934 80 6140	159	56
9934 8C 6210	157	15
9934 80 6330	159	55
9934 80 8180	158	35
9934 80 8430	157	13
9934 80 8640	158	36
9938 10 800	85	40
9938 11 400	35	13
9938 41 200	5	54
9938 41 20CF	35	15
9950 22 000	125	11
9950 23 000A	36	26
9950 24 000	45	34
9950 24 000	48	15
9950 31 000F	3	30
9950 33 000	15	4
9951 01 000	7	83
9951 11 400	5	64
9954 10 0901	101	7
9954 10 1101	11	27
9954 10 1201	101	8
9954 10 1601	31	27
9954 10 1601	90	53
9954 10 2211	45	27
9954 10 2211	49	35
9954 10 2211	87	8
9954 10 240	15	9
9954 10 350	70	41
9956 21 000	165	20
9956 21 000	178	33
9956 21 200	176	12
9956 21 400	6	65
9956 21 400	46	
9956 21 400	50	
9956 21 400	61	13
9956 21 400	64	17
9956 21 600	3	33
9956 21 600	5	55
9956 21 800	35	14
9956 21 800	147	54
9956 22 800	12	41
9956 40 800	3	34
9956 40 800	50	
9956 40 800	58	39
9956 41 000	7	83
9956 41 000	46	
9956 41 000	50	
9956 41 000	61	14
9956 41 000	64	18
9956 41 000	251	65
9956 41 200	85	41
9956 41 600	35	16
9956 41 600	39	72
9956 41 600	158	26
9956 41 800	44	7
9956 41 800	46	
9956 41 800	48	4
9956 41 800	50	
9957 32 200	58	37
9957 32 500	53	32
9957 32 500	58	45
9957 32 500	97	2
9957 33 500	53	33
9957 33 500	56	3
9957 44 000	36	30
9957 50 300	162	9
9957 50 400	274	20

INDEX.

PARTS NUMBER	PARTS COMP. LIST PAGE	FIG. NO.
9957 50 500	173	10
9957 50 600	111	34
9957 50 600	162	6
9957 50 600	167	9
9957 50 600	181	27
9957 60 400	322	11
9957 60 500	301	14
9957 60 700	302	19
9957 60 800	33	47
9957 92 000	306	31
9957 93 000	298	44
9957 93 000	304	10
9957 93 000	304	12
9957 94 000	265	48
9958 61 0207	45	28
9958 61 0207	49	36
9958 61 0207	87	9
9960 63 3070	53	34
9960 63 3070	56	4
9960 66 3050	57	30
9960 66 3440	57	32
9960 67 2030	36	31
9961 11 500	53	35
9961 11 500	59	51
9961 11 500	97	3
9961 11 500	110	28
9961 11 500	164	14
9961 11 750	87	12
9961 12 000	11	28
9961 12 000	87	17
9961 12 500	61	15
9961 12 500	64	19
9961 12 750	101	19
9962 16 1553	111	40
9962 16 1553	135	31
9963 60 4130	111	40
9963 60 4130	135	31
9965 25 4530 00	111	40
9965 25 4530 00	135	31
9965 29 4530 08	111	40
9965 29 4530 08	135	31
9965 53 0010	111	41
9965 53 0015	111	41
9965 53 0020	111	41
9965 53 0025	111	41
9965 53 0030	112	41
9965 53 0035	112	41
9965 53 0040	112	41
9965 53 0045	112	41
9965 53 0050	112	41
9965 53 0060	112	41
9968 11 503	158	19
9968 11 503	271	24
9968 22 003	184	27
9968 41 500	284	6
9968 60 700	268	25
9968 60 800	167	8
9968 60 800	216	49
9968 61 200	160	60
9970 08 120	274	11
9970 12 080	268	15
9970 12 080	270	14
9970 12 080	271	20
9970 12 080	274	24
9970 12 080	275	29
9970 13 270	270	8
9970 14 278	268	21
9970 14 278	270	9
9970 14 278	273	5
9970 15 050	277	4
9970 15 050	277	8
9970 16 030	216	45
9970 16 030	220	9
9970 16 030	221	23
9970 16 030	295	3
9970 60 110	277	16
9970 60 115	278	16
9970 60 120	278	16
9970 90 108	6	79
9970 90 108	22	6
9970 90 108	28	73
9970 90 108	70	45
9970 90 108	85	42
9970 90 108	158	21
9970 90 108	242	21
9970 90 108	283	1
9970 90 225	22	7
9970 90 255	24	9
9970 90 255	150	23
9970 90 255	155	41
9970 90 255	218	90
9970 90 255	284	7
9970 93 250	284	8
9971 51 101	301	2
9973 50 512	127	28
9973 50 512	150	34
9973 90 410	327	34
9973 90 410	332	36
9974 00 616	214	18
9974 00 625	185	42
9974 80 410	293	17
9975 01 1018	135	27

PARTS NUMBER	PARTS COMP. LIST PAGE	FIG. NO.
9975 23 0818	104	6
9975 37 8118	41	10
9975 42 1022	114	13
9975 46 1022	114	13
9976 50 616	262	14
9976 70 525	273	8
9976 80 420	274	12
9976 90 416	268	16
9976 90 416	275	30
9976 90 420B	187	70
9976 90 420B	187	74
9977 20 516	304	15
9977 20 525	304	15
9977 30 410	274	23
9977 40 416	271	15
9978 00 625	316	30
9978 00 625	316	34
9978 10 612	290	15
9978 10 816	176	3
9978 10 820	53	28
9978 10 820	58	42
9978 10 820	262	7
9978 10 825	176	6
9978 11 012	83	3
9978 11 080	131	11
9978 11 085	126	17
9978 11 225	138	24
9978 11 235	138	25
9978 31 028	119	11
9978 31 035	137	11
9978 41 016	83	5
9978 50 612	170	6
9978 50 825	123	17
9978 60 512	150	28
9978 60 512	151	38
9978 60 512	154	27
9978 60 516	149	9
9978 60 516	154	18
9978 60 516	154	24
9978 60 610	38	51
9978 60 612	22	3
9978 60 612	70	49
9978 60 612	71	52
9978 60 612	159	45
9978 60 612	159	47
9978 60 612	160	63
9978 60 612	160	70
9978 60 612	177	30
9978 60 612	209	31
9978 60 612	211	14
9978 60 612	254	112
9978 60 612B	71	54
9978 60 616	16	20
9978 60 616	77	26
9978 60 616	80	25
9978 60 616	154	31
9978 60 616	157	2
9978 60 616	160	69
9978 60 616	160	73
9978 60 616	162	17
9978 60 616	173	17
9978 60 616	174	23
9978 60 616	178	32
9978 60 616	181	20
9978 60 616	187	63
9978 60 616	191	26
9978 60 616	208	27
9978 60 616	213	12
9978 60 616	268	26
9978 60 616	288	38
9978 60 616	299	51
9978 60 620	38	56
9978 60 620	162	10
9978 60 620	278	21
9978 60 630	147	50
9978 60 635	177	22
9978 60 816	38	49
9978 60 816	211	5
9978 60 916	213	3
9978 60 820	150	30
9978 60 820	184	30
9978 60 820	213	2
9978 60 820	295	10
9978 60 820B	226	23
9978 60 820B	227	31
9978 60 825B	227	29
9978 60 825B	228	36
9978 60 830	236	6
9978 60 830	241	6
9978 60 830	345	14
9978 60 845	69	19
9978 90 820F	106	2
9978 90 880F	106	3
9979 40 612	229	60
9979 40 612	279	34
9979 40 616	190	16
9979 40 616	335	21
9979 40 830	184	25
9979 41 025	209	37
9979 51 032	167	13
9979 60 508	237	22
9979 60 508	346	23

INDEX.

PARTS NUMBER	PARTS COMP. LIST PAGE	FIG. NO.
9979 60 608	45	31
9979 60 608	50	39
9979 60 608	340	12
9979 60 610	4	39
9979 60 610	4	41
9979 60 610	16	22
9979 60 610	24	3
9979 60 610	24	11
9979 60 610	25	20
9979 60 610	25	31
9979 60 610	27	64
9979 60 610	70	47
9979 60 610	83	8
9979 60 610	83	10
9979 60 610	84	29
9979 60 610	90	54
9979 60 610	157	10
9979 60 610	253	103
9979 60 610	347	35
9979 60 612	44	15
9979 60 612	49	23
9979 60 612	62	23
9979 60 612	65	31
9979 60 612	87	4
9979 60 612	147	59
9979 60 612	184	18
9979 60 612	185	41
9979 60 612	193	3
9979 60 612	194	16
9979 60 612	194	23
9979 60 612	229	59
9979 60 612	280	50
9979 60 616	25	21
9979 60 616	30	15
9979 60 616	32	39
9979 60 616	147	60
9979 60 616	253	104
9979 60 616	328	54
9979 60 620	37	40
9979 60 620	37	46
9979 60 620	45	18
9979 60 620	49	26
9979 60 620	85	38
9979 60 812	15	11
9979 60 812	27	65
9979 60 812	27	68
9979 60 812	35	10
9979 60 812	39	65
9979 60 812	90	55
9979 60 816	4	44
9979 60 816	26	37
9979 60 816	65	26
9979 60 816	77	31
9979 60 816	80	30
9979 60 816	83	11
9979 60 816	193	15
9979 60 820	26	38
9979 60 820	36	32
9979 60 820	74	25
9979 60 822	62	20
9979 60 822	65	28
9979 60 825	74	24
9979 60 825	184	26
9979 60 832	62	21
9979 60 832	65	29
9979 61 016	4	37
9979 61 016	4	42
9979 61 016	149	4
9979 61 016	153	14
9979 61 020	153	15
9979 61 020	209	43
9979 61 030	144	11
9979 61 035	42	16
9979 61 035	84	24
9979 61 045	41	15
9979 61 045	84	24
9979 61 050	84	24
9979 61 090	42	17
9979 68 112	115	22
9979 70 516	292	6
9979 70 612	158	24
9979 70 612	186	54
9979 70 612	279	39
9979 90 832	127	31
9980 01 0155	74	21
9980 10 810	127	32
9980 10 812	249	45
9980 10 814	109	15
9980 10 816	125	8
9980 10 816	144	12
9980 10 820	6	77
9980 10 820	10	7
9980 10 820	141	8
9980 10 820	225	9
9980 10 820	279	28
9980 10 822	118	3
9980 10 822	122	3
9980 10 825	11	30
9980 10 825	144	3
9980 10 825	246	12
9980 10 830	145	31
9980 10 840	5	59

PARTS NUMBER	PARTS COMP. LIST PAGE	FIG. NO.
9980 10 840	247	13
9980 10 865	5	60
9980 10 875	5	61
9980 11 032	77	21
9980 11 032	80	20
9980 11 045	145	29
9980 11 075	80	21
9980 30 8100	25	35
9980 31 0120	77	22
9980 50 830	252	91
9980 60 510	287	33
9980 60 516	238	28
9980 60 516	334	5
9980 60 516	347	28
9980 60 612	45	33
9980 60 612	50	41
9980 60 612	147	61
9980 60 612	232	10
9980 60 612	239	37
9980 60 612	247	23
9980 60 612	248	35
9980 60 612	249	42
9980 60 612	250	54
9980 60 612	335	22
9980 60 612	335	27
9980 60 612	339	4
9980 60 614	37	45
9980 60 616	6	70
9980 60 616	31	20
9980 60 616	35	12
9980 60 616	190	4
9980 60 616	190	7
9980 60 616	282	9
9980 60 616	283	19
9980 60 620	228	48
9980 60 620	228	50
9980 60 620	252	85
9980 60 620	263	22
9980 60 620	263	25
9980 60 625	177	20
9980 60 628	247	25
9981 11 020	134	14
9981 11 025	246	10
9981 11 050	114	9
9981 31 0110	168	19
9981 31 0165	168	19
9983 00 410	174	26
9983 00 512B	295	11
9983 00 520	234	20
9983 00 520	342	25
9983 00 610	6	72
9983 00 610	209	34
9983 00 616B	296	17
9983 00 625	279	35
9983 10 516	305	18
9983 10 616A	263	17
9983 10 640	190	11
9983 20 408B	218	79
9983 20 408B	237	16
9983 20 408B	297	30
9983 20 408B	346	16
9983 20 410	232	9
9983 20 410	340	11
9983 20 412B	218	80
9983 20 516B	299	52
9983 20 630	238	31
9983 20 630	346	20
9983 30 310B	252	89
9983 30 408	32	32
9983 30 408	109	14
9983 30 408	131	8
9983 30 408	151	43
9983 30 408	155	44
9983 30 410	322	17
9983 30 512	170	5
9983 30 512	241	8
9983 30 512	253	94
9983 30 512	296	16
9983 30 512	296	21
9983 30 512	297	24
9983 30 512B	251	71
9983 30 512B	298	37
9983 30 516	241	7
9983 30 516B	295	12
9983 30 525	252	82
9983 30 612	282	10
9983 30 616	221	25
9983 30 616	262	10
9983 30 616	273	7
9983 30 616	299	57
9983 30 620	216	43
9983 30 625	278	17
9983 30 812	109	3
9983 30 812	110	17
9983 30 812	282	4
9983 40 412B	297	35
9983 40 616B	296	19
9983 50 316	127	41
9983 60 516B	221	24
9983 60 516B	296	13
9983 70 516C	305	21
9983 70 525B	215	37

INDEX.

PARTS NUMBER	PARTS COMP. LIST PAGE	FIG. NO.	PARTS NUMBER	PARTS COMP. LIST PAGE	FIG. NO.	PARTS NUMBER	PARTS COMP. LIST PAGE	FIG. NO.
9983 70 620C	305	25	9986 20 412B	314	12	9986 40 412	310	10
9983 80 412	215	32	9986 20 416B	264	34	9986 40 412	312	26
9983 80 412B	214	21	9986 20 416B	316	29	9986 40 412B	226	20
9983 80 510	277	5	9986 20 416C	264	34	9986 40 412B	305	27
9983 80 620	305	23	9986 20 416C	316	29	9986 40 412B	319	18
9983 80 630	221	26	9986 20 425B	326	21	9986 40 412B	331	26
9983 80 650	216	42	9986 20 425B	331	22	9986 40 416	306	34
9983 90 520B	214	15	9986 20 512B	310	14	9986 40 416	307	42
9985 10 612A	5	56	9986 20 512B	314	9	9986 40 416	312	26
9985 10 622A	15	5	9986 20 512C	314	6	9986 40 416B	307	44
9985 10 822A	2	4	9986 20 525B	214	25	9986 40 416B	326	22
9985 10 830A	15	6	9986 30 310	127	42	9986 40 416B	331	24
9985 20 612	110	24	9986 30 310B	277	10	9986 40 420	319	17
9985 20 660	2	17	9986 30 410B	195	32	9986 40 420C	271	21
9985 20 822A	2	18	9986 30 412B	307	48	9986 40 425B	326	24
9985 20 822A	3	35	9986 30 416	304	9	9986 40 512	299	61
9985 21 C16	3	20	9986 30 420B	307	46	9986 40 516B	311	24
9985 51 020	5	57	9986 30 425B	307	49	9986 40 516C	264	37
9985 51 C25	44	4	9986 30 510	215	30	9986 40 525B	311	25
9985 51 025	48	10	9986 30 512B	241	9	9986 40 616	194	25
9985 51 025F	44	4	9986 30 516	195	28	9986 40 625	228	37
9985 51 048	48	11	9986 30 520B	259	58	9986 50 410	216	46
9985 71 0135	48	12	9986 30 620	250	63	9986 50 410	337	38
9985 71 0160	48	13	9986 40 406	226	22	9986 50 412	277	11
9985 91 035A	246	7	9986 40 408	336	30	9986 50 416	128	47
9985 91 220A	3	21	9986 40 410	293	14	9986 50 416B	326	23
9985 91 225A	3	22	9986 40 410	306	37	9986 50 416B	331	23
9986 00 512	292	3	9986 40 410	319	16	9986 50 510	71	56
9986 00 616	267	10	9986 40 410	322	10	9986 50 510	186	61
9986 00 620	183	7	9986 40 410B	306	32	9986 50 510	207	4
9986 10 416B	214	22	9986 40 410B	337	40	9986 50 512	186	53
9986 20 410	319	15	9986 40 410C	316	26	9986 50 512	221	27
9986 20 410B	319	19	9986 40 412	217	57	9986 50 512	242	13
9986 20 412B	311	17	9986 40 412	279	31	9986 50 512	283	3

INDEX.

PARTS NUMBER	PARTS COMP. LIST PAGE	FIG. NO.
9986 50 512	296	18
9986 50 516	39	63
9986 50 516	216	52
9986 80 312	128	57
9986 80 408	208	29
9986 80 408	251	74
9986 80 410	251	81
9986 80 520	247	18
9986 80 520	248	30
9986 80 520	248	33
9986 80 520	250	60
9986 80 525	282	13
9986 90 410	188	80
9988 70 412	180	13
9989 50 600	145	20
9989 50 600	146	39
9989 60 400	187	70
9989 60 400	187	74
9989 60 400	214	23
9989 60 400	307	46
9989 60 500	150	34
9989 60 500	216	53
9989 60 500	273	8
9989 60 500	299	56
9989 60 600	194	25
9990 10 800	18	4
9990 10 800	31	26
9990 10 800	36	35
9990 10 800	37	38
9990 10 800	77	23
9990 10 800	80	22
9990 10 800	106	10
9990 10 800	106	14
9990 10 800	118	3
9990 10 800	118	4
9990 10 800	122	3
9990 10 800	146	31
9990 10 800	171	32
9990 10 800B	173	13
9990 20 800	181	28
9990 60 300	265	47
9990 60 400	221	28
9990 60 500	69	18
9990 60 500	73	19
9990 60 500	215	39
9990 60 500	238	30
9990 60 500	268	22
9990 60 500	299	49
9990 60 500	334	14
9990 60 500	347	32
9990 60 600	30	6
9990 60 600	45	22
9990 60 600	49	29
9990 60 600	110	29
9990 60 600	145	23
9990 60 600	247	23
9990 60 600	248	35
9990 60 600	249	38
9990 60 600	249	43
9990 60 600	278	27
9990 60 800	170	15
9990 60 800	250	55
9990 60 800	252	92
9990 70 600	32	37
9990 70 600	190	12
9991 00 401	264	34
9991 00 401	274	13
9991 00 601	183	8
9991 00 601	267	11
9992 11 000	119	9
9992 11 000	120	29
9992 11 000	122	4
9992 11 000	122	8
9992 11 000	123	21
9992 11 000	126	18
9992 11 000	131	12
9992 11 000	138	27
9992 11 000	141	5
9992 11 000	141	6
9992 11 000	141	11
9992 11 000	142	18
9992 11 000	168	20
9992 11 000	185	31
9992 11 000	186	48
9992 11 000	246	8
9992 11 200	120	26
9992 11 200	246	9
9992 11 800	126	24
9992 21 000	120	29
9992 21 000	123	21
9992 21 000	125	10
9992 21 000	167	13
9992 21 000	168	24
9992 21 000	181	22
9992 21 000	186	48
9992 21 200	30	7
9992 21 400	101	2
9992 21 400	131	14
9992 31 400	139	36
9992 41 000	126	23
9992 41 200	138	23
9992 41 201	131	10

INDEX.

PARTS NUMBER	PARTS COMP. LIST PAGE	FIG. NO.
9992 41 201	132	20
9992 61 000	183	1
9994 00 400	271	15
9994 00 500	271	17
9994 00 500	282	12
9994 00 500	292	11
9994 00 501	151	36
9994 00 501	155	37
9994 00 501	155	39
9994 00 501	216	54
9994 00 501	296	14
9994 00 502	186	52
9994 00 502	187	62
9994 00 502	270	10
9994 00 600	25	22
9994 00 600	38	52
9994 00 600	157	8
9994 00 600	162	15
9994 00 600	164	2
9994 00 600	238	32
9994 00 600	253	104
9994 00 600	279	37
9994 00 600	279	41
9994 00 600	280	47
9994 00 600	282	3
9994 00 600	328	55
9994 00 600	346	21
9994 00 601	26	44
9994 00 602	77	28
9994 00 602	80	27
9994 00 602	147	52
9994 00 602	183	12
9994 00 602	184	19
9994 00 602	185	37
9994 00 602	190	17
9994 00 602	194	24
9994 00 602	213	6
9994 00 602	213	8
9994 00 602	213	13
9994 00 602	218	86
9994 00 602	263	17
9994 00 602	263	23
9994 00 602	274	25
9994 00 603	70	42
9994 00 603	157	11
9994 00 603	191	21
9994 00 800	77	33
9994 00 800	81	32
9994 00 800	119	18
9994 00 800	123	14
9994 00 800	145	17
9994 00 800	164	10
9994 00 800	165	17
9994 00 800	168	23
9994 00 800	171	17
9994 00 800	213	9
9994 00 800	226	24
9994 00 800	227	30
9994 00 801	15	7
9994 00 802	20	9
9994 00 802	139	32
9994 00 802	184	29
9994 00 802	213	4
9994 00 802	241	10
9994 01 000	144	10
9994 01 000	209	39
9994 01 001	42	18
9994 01 001	44	10
9994 01 001	49	19
9994 01 001	74	22
9994 01 001	84	25
9994 01 002	186	47
9994 10 801	20	10
9994 21 000	139	35
9994 21 400	139	33
9994 41 400	132	15
9994 50 5008	218	81
9994 81 200	129	59
9994 90 800	145	18
9995 10 618	232	10
9995 10 618	238	30
9995 10 618	239	37
9995 10 618	263	25
9995 10 618	335	22
9995 10 618	336	27
9995 10 618	339	4
9995 10 618	347	32
9995 10 800	145	18
9995 10 816	36	34
9995 10 818	262	7
9995 10 822	127	31
9995 10 822	176	6
9995 10 822	185	37
9995 10 822	346	14
9995 11 022	126	18
9995 11 022	153	15
9995 11 022	209	37
9995 11 030	139	35
9995 11 030	141	5
9995 11 030	141	11
9995 11 430	139	33
9995 20 300	252	89

INDEX.

PARTS NUMBER	PARTS COMP. LIST PAGE	FIG. NO.
9995 20 300	265	47
9995 20 400	215	32
9995 20 400	222	28
9995 20 412	217	57
9995 20 412	337	38
9995 20 412B	187	70
9995 20 412B	297	35
9995 20 412B	305	27
9995 20 412B	331	26
9995 20 500	69	18
9995 20 500	74	19
9995 20 500	195	28
9995 20 500	215	30
9995 20 500	215	39
9995 20 500	241	7
9995 20 500	247	18
9995 20 500	248	30
9995 20 500	250	60
9995 20 500	252	82
9995 20 500	268	22
9995 20 500	292	6
9995 20 500	296	16
9995 20 500	297	24
9995 20 500	299	49
9995 20 500B	214	15
9995 20 500B	218	81
9995 20 500B	251	71
9995 20 500B	280	45
9995 20 500B	298	37
9995 20 500B	299	58
9995 20 516	186	53
9995 20 516	187	61
9995 20 516	207	4
9995 20 516	216	54
9995 20 516	241	8
9995 20 516	296	15
9995 20 516	296	21
9995 20 516B	241	9
9995 20 516B	296	12
9995 20 516B	326	23
9995 20 516B	331	24
9995 20 600	37	45
9995 20 600	85	44
9995 20 600	157	8
9995 20 600	157	10
9995 20 600	216	42
9995 20 600	228	37
9995 20 600	228	48
9995 20 600	228	50
9995 20 600	247	23
9995 20 600	247	25
9995 20 600	248	35
9995 20 600	249	42
9995 20 600	249	43
9995 20 600	250	54
9995 20 600	250	63
9995 20 600	262	14
9995 20 600	273	7
9995 20 600	280	50
9995 20 600	282	9
9995 20 600	282	10
9995 20 600	283	19
9995 20 600	305	23
9995 20 618	16	20
9995 20 618	77	26
9995 20 618	147	50
9995 20 618	147	59
9995 20 618	147	60
9995 20 618	154	31
9995 20 618	158	24
9995 20 618	162	10
9995 20 618	181	20
9995 20 618	183	7
9995 20 618	186	54
9995 20 618	190	4
9995 20 618	190	7
9995 20 618	194	25
9995 20 618	208	27
9995 20 618	211	14
9995 20 618	213	12
9995 20 618	214	18
9995 20 618	216	43
9995 20 618	221	25
9995 20 618	221	26
9995 20 618	248	33
9995 20 618	249	38
9995 20 618	252	85
9995 20 618	263	22
9995 20 618	280	47
9995 20 618	288	38
9995 20 618	299	57
9995 20 618	323	20
9995 20 618	328	55
9995 20 618	340	12
9995 20 618B	296	17
9995 20 800	5	59
9995 20 800	5	60
9995 20 800	5	61
9995 20 800	25	35
9995 20 800	26	38
9995 20 800	58	42
9995 20 800	69	19

INDEX.

PARTS NUMBER	PARTS COMP. LIST PAGE	FIG. NO.	PARTS NUMBER	PARTS COMP. LIST PAGE	FIG. NO.	PARTS NUMBER	PARTS COMP. LIST PAGE	FIG. NO.
9995 20 800	77	23	9995 26 618	160	73	9996 70 400B	264	34
9995 20 800	80	22	9995 30 400	32	45	9996 70 400B	316	29
9995 20 800	127	30	9995 30 400B	195	32	9996 70 400B	319	19
9995 20 800	176	3	9995 30 500B	295	11	9996 70 500A	314	6
9995 20 800	250	55	9995 30 600	80	25	9996 70 500B	214	25
9995 20 800	296	15	9995 30 600	191	26	9996 70 500B	215	37
9995 20 816	181	29	9995 30 600	193	3	9996 70 500B	221	24
9995 20 816	225	9	9995 30 600	194	23	9996 70 500B	296	13
9995 20 816	267	10	9995 30 600	229	59	9996 70 500B	299	52
9995 20 822	39	65	9995 30 600	335	21	9996 70 500B	310	14
9995 20 822	74	25	9995 30 800	31	26	9996 70 500B	314	9
9995 20 822	150	30	9995 30 800	36	35	9997 10 300	128	57
9995 20 822	184	26	9995 30 800	38	49	9997 10 300	265	47
9995 20 822	184	30	9995 30 800	74	24	9997 10 400	32	32
9995 20 822	191	18	9995 30 800	181	30	9997 10 400	109	14
9995 20 822	211	5	9995 30 800	194	15	9997 10 400	131	8
9995 20 822	226	23	9995 30 800	213	2	9997 10 400	215	32
9995 20 822	226	24	9995 30 800	301	14	9997 10 400	222	28
9995 20 822	227	30	9995 31 000	41	2	9997 10 400	297	35
9995 20 822	241	6	9995 31 000	77	22	9997 10 400	322	17
9995 20 822	241	10	9995 31 000	80	21	9997 10 500	69	18
9995 20 822	252	91	9995 31 000	185	31	9997 10 500	74	19
9995 20 822	252	92	9995 31 000	186	48	9997 10 500	170	5
9995 20 822	295	10	9995 81 018	114	14	9997 10 500	214	15
9995 20 822B	227	31	9996 33 310	62	36	9997 10 500	215	39
9995 21 000	119	11	9996 33 310	66	45	9997 10 500	218	81
9995 21 000	122	4	9996 33 330	62	36	9997 10 500	238	28
9995 21 000	168	20	9996 33 330	66	45	9997 10 500	238	30
9995 21 000	302	19	9996 36 910	54	36	9997 10 500	241	7
9995 21 030	144	10	9996 36 910	56	2	9997 10 500	241	8
9995 21 030	144	11	9996 36 930	54	36	9997 10 500	247	18
9995 21 030	183	1	9996 36 930	56	2	9997 10 500	248	30
9995 21 200	146	45	9996 70 400A	264	34	9997 10 500	248	33
9995 21 224	302	18	9996 70 400A	316	29	9997 10 500	250	60

PARTS NUMBER	PARTS COMP. LIST PAGE	FIG. NO.
9997 10 500	251	71
9997 10 500	252	82
9997 10 500	253	94
9997 10 500	286	16
9997 10 500	287	33
9997 10 500	292	3
9997 10 500	292	6
9997 10 500	295	11
9997 10 500	296	12
9997 10 500	296	16
9997 10 500	296	21
9997 10 500	297	24
9997 10 500	298	37
9997 10 500	299	49
9997 10 500	334	5
9997 10 500	347	28
9997 10 500	347	32
9997 10 500B	280	45
9997 10 600	6	70
9997 10 600	30	6
9997 10 600	31	20
9997 10 600	32	37
9997 10 600	35	12
9997 10 600	45	22
9997 10 600	45	33
9997 10 600	49	29
9997 10 600	50	41
9997 10 600	80	25
9997 10 600	110	29
9997 10 600	145	23
9997 10 600	147	61
9997 10 600	170	6
9997 10 600	177	20
9997 10 600	191	26
9997 10 600	193	3
9997 10 600	194	23
9997 10 600	216	42
9997 10 600	216	43
9997 10 600	221	25
9997 10 600	221	26
9997 10 600	228	48
9997 10 600	229	50
9997 10 600	229	59
9997 10 600	232	10
9997 10 600	239	37
9997 10 600	246	4
9997 10 600	247	23
9997 10 600	248	25
9997 10 600	248	35
9997 10 600	249	38
9997 10 600	249	42
9997 10 600	250	54
9997 10 600	250	63
9997 10 600	252	85
9997 10 600	262	10
9997 10 600	263	22
9997 10 600	263	25
9997 10 600	273	7
9997 10 600	278	17
9997 10 600	278	27
9997 10 600	279	39
9997 10 600	282	9
9997 10 600	282	10
9997 10 600	283	19
9997 10 600	288	38
9997 10 600	290	15
9997 10 600	299	57
9997 10 600	305	23
9997 10 600	335	21
9997 10 600	335	22
9997 10 600	335	27
9997 10 600	339	4
9997 10 601	61	1
9997 10 601	64	1
9997 10 800	5	59
9997 10 800	5	60
9997 10 800	5	61
9997 10 800	6	77
9997 10 800	10	7
9997 10 800	11	30
9997 10 800	18	4
9997 10 800	26	35
9997 10 800	31	26
9997 10 800	37	35
9997 10 800	37	38
9997 10 800	38	49
9997 10 800	41	9
9997 10 800	41	10
9997 10 800	53	28
9997 10 800	62	27
9997 10 800	65	36
9997 10 800	69	19
9997 10 800	74	24
9997 10 800	77	23
9997 10 800	80	22
9997 10 800	104	6
9997 10 800	106	10
9997 10 800	107	14
9997 10 800	109	15
9997 10 800	110	17
9997 10 800	118	3
9997 10 800	118	4

INDEX.

PARTS NUMBER	PARTS COMP. LIST PAGE	FIG. NO.
9997 10 800	122	3
9997 10 800	123	17
9997 10 800	125	8
9997 10 800	127	32
9997 10 800	141	8
9997 10 800	144	2
9997 10 800	144	12
9997 10 800	146	31
9997 10 800	170	15
9997 10 800	171	32
9997 10 800	173	13
9997 10 800	176	3
9997 10 800	176	6
9997 10 800	181	31
9997 10 800	194	15
9997 10 800	213	2
9997 10 800	225	9
9997 10 800	226	23
9997 10 800	236	6
9997 10 800	246	12
9997 10 800	247	13
9997 10 800	249	45
9997 10 800	250	55
9997 10 800	252	91
9997 10 800	252	92
9997 10 800	262	7
9997 10 800	279	28
9997 10 800	346	14
9997 11 000	6	74
9997 11 000	41	2
9997 11 000	77	21
9997 11 000	77	22
9997 11 000	80	20
9997 11 000	80	21
9997 11 000	83	3
9997 11 000	114	9
9997 11 000	119	9
9997 11 000	119	11
9997 11 000	122	4
9997 11 000	122	8
9997 11 000	126	18
9997 11 000	131	12
9997 11 000	134	14
9997 11 000	134	15
9997 11 000	135	27
9997 11 000	137	11
9997 11 000	138	27
9997 11 000	141	5
9997 11 000	141	6
9997 11 000	141	11
9997 11 000	142	18
9997 11 000	145	27
9997 11 000	168	20
9997 11 000	181	22
9997 11 000	246	8
9997 11 000	246	10
9997 11 200	120	26
9997 11 200	138	24
9997 11 200	138	25
9997 11 200	145	26
9997 11 200	246	9
9997 11 400	101	2
9997 11 800	126	24
9997 20 800	167	6
9997 20 800	181	32
9997 21 000	302	19
9997 21 400	181	22
9997 40 600	238	31
9997 40 600	346	20
9997 50 500	305	18
9997 50 500	305	21
9997 50 600	238	26
9997 50 600	347	26
9997 83 200	54	37
9997 91 200	30	7