Mazda RX-4
WORKSHOP MANUAL



mazda

K A

WORKSHOP MANUAL

MAZDA RX-4

SECTION INDEX	
Name	Section
Engine	1
Emission Control System	1A
Lubricating System	2
Cooling System	3
Fuel System	4
Electrical System (Engine)	5
Clutch	6
Four Speed Transmission	7
Automatic Transmission	7B
Five Speed Transmission	7C
Propeller Shaft	8
Rear Axle	9
Steering	10
Brakes	11
Wheels and Tires	12
Suspension	13
Body	14
Body (Rotary Wagon)	14A
Electrical System (Body)	15
Technical Data	T

Note:
The specifications and design details contained in this manual are not binding. We reserve the right to carry out the modifications without previous notice.

LICENSE NSU-WANKEL

TOYO KOGYO CO., LTD.
HIROSHIMA, JAPAN

© 1973 TOYO KOGYO CO., LTD.
PRINTED IN JAPAN 3H
1001210

ENGINE

1–A. ENGINE DISASSEMBLY ..... 1 : 4
1–B. INSPECTION AND REPAIR ..... 1 : 8
1–B–1. Inspecting Front, Intermediate and Rear Housing ..... 1 : 8
1–B–2. Regrinding Side Housings ..... 1 : 9
1–B–3. Inspecting Front Stationary Gear and Main Bearing ..... 1 : 9
1–B–4. Inspecting Rear Stationary Gear and Main Bearing ..... 1 : 10
1–B–5. Inspecting Rotor Housing ..... 1 : 10
1–B–6. Inspecting Rotor ..... 1 : 11
1–B–7. Inspecting Rotor Bearing ..... 1 : 12
1–B–8. Inspecting Seal Springs ..... 1 : 12
1–B–9. Inspecting Rotor Oil Seal ..... 1 : 13
1–B–10. Inspecting Apex Seal ..... 1 : 13
1–B–11. Inspecting Side Seal ..... 1 : 14
1–B–12. Inspecting Corner Seal ..... 1 : 14
1–B–13. Inspecting Eccentric Shaft ..... 1 : 15
1–B–14. Inspecting Needle Bearing ..... 1 : 16
1–C. ENGINE ASSEMBLY ..... 1 : 17
1–C–1. Installing Oil Seal ..... 1 : 17
1–C–2. Installing Each Seal ..... 1 : 17
1–C–3. Installing Front Rotor ..... 1 : 18
1–C–4. Installing Eccentric Shaft ..... 1 : 18
1–C–5. Installing Front Rotor Housing ..... 1 : 18
1–C–6. Installing Intermediate Housing ..... 1 : 19
1–C–7. Installing Rear Rotor and Rotor Housing ..... 1 : 20
1–C–8. Installing Rear Housing ..... 1 : 20
1–C–9. Tightening Tension Bolts ..... 1 : 20
1–C–10. Installing Flywheel or Counter Weight ..... 1 : 20
1–C–11. Adjusting Eccentric Shaft End Play ... 1 : 21
1–C–12. Installing Front Cover and Eccentric Shaft Pulley ..... 1 : 22
1–C–13. Installing Oil Strainer and Oil Pan .... 1 : 22
1–C–14. Installing Water Pump ..... 1 : 23
1–C–15. Installing Distributor ..... 1 : 23
1–C–16. Installing Exhaust Manifold ..... 1 : 24
1–C–17. Installing Intake Manifold ..... 1 : 24
1–C–18. Installing Alternator and Air Pump ... 1 : 24
SPECIAL TOOLS ..... 1 : 25

1

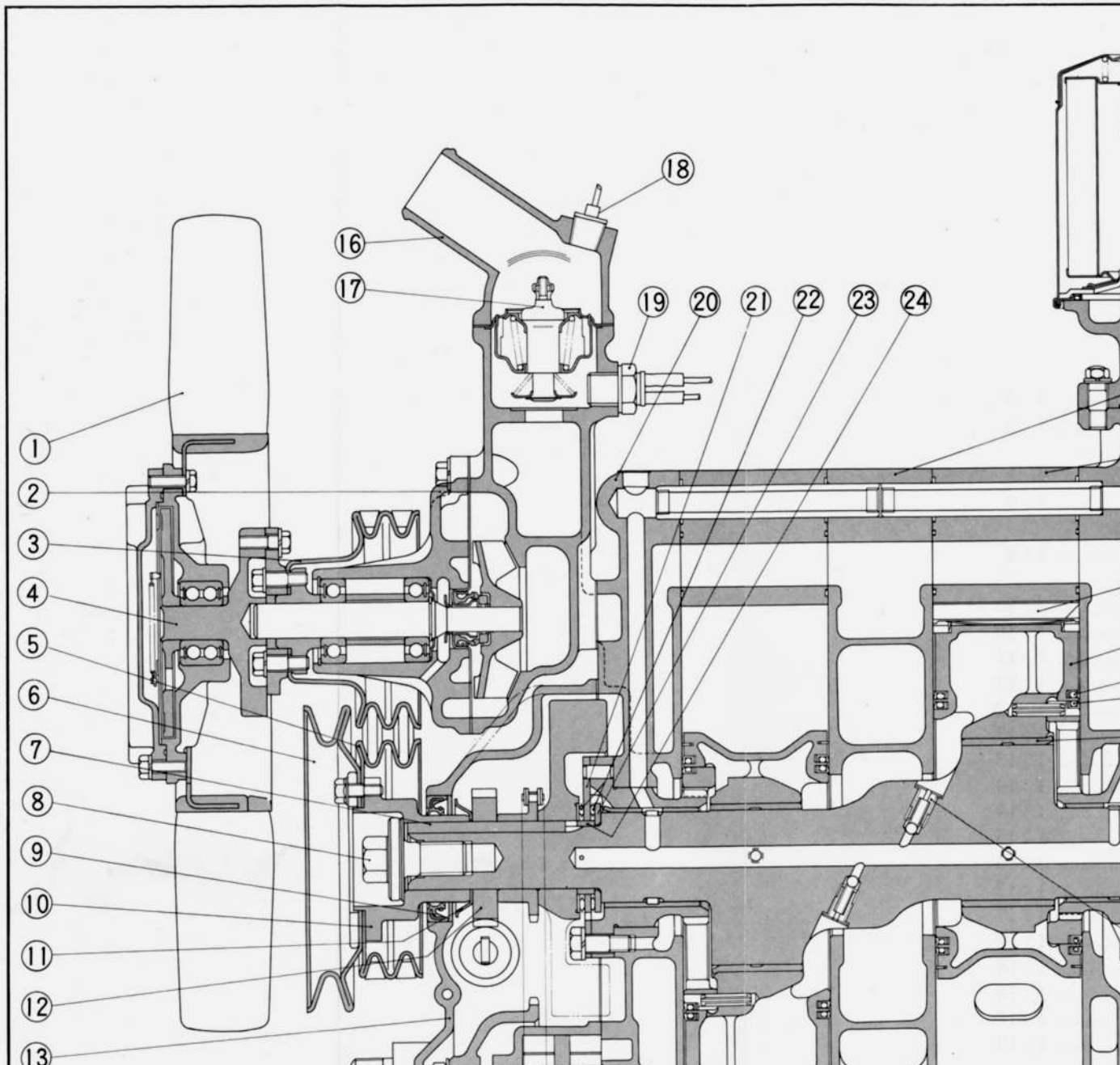

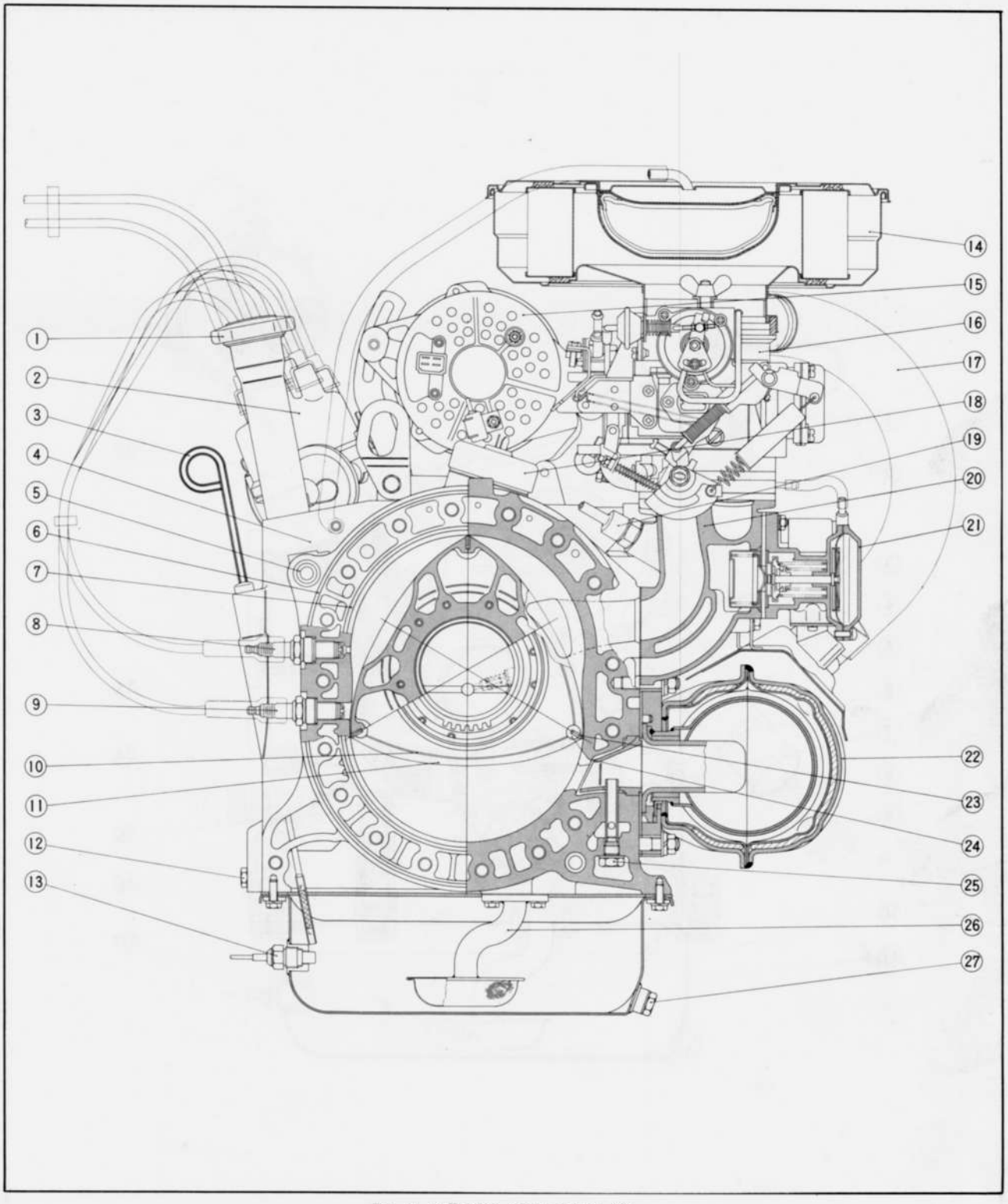

Fig. 1–2 Engine cross section (2)

1. Oil feller cap
2. Distributor
3. Dipstick gauge
4. Rotor housing
5. Tubular dowel
6. Sealing rubber (outer)
7. Sealing rubber (inner)
8. Trailing spark plug
9. Leading spark plug
10. Side seal
11. Rotor
12. Coolant drain plug
13. Oil warning siwtch
14. Air cleaner
15. Alternator
16. Carburetor
17. Hot air hose
18. Water thermo senser
19. P.C.V. valve
20. Intake manifold
21. Air control value
22. Thermal reactor
23. Apex seal
24. Corner seal
25. Air injection nozzle
26. Oil strainer
27. Oil drain plug

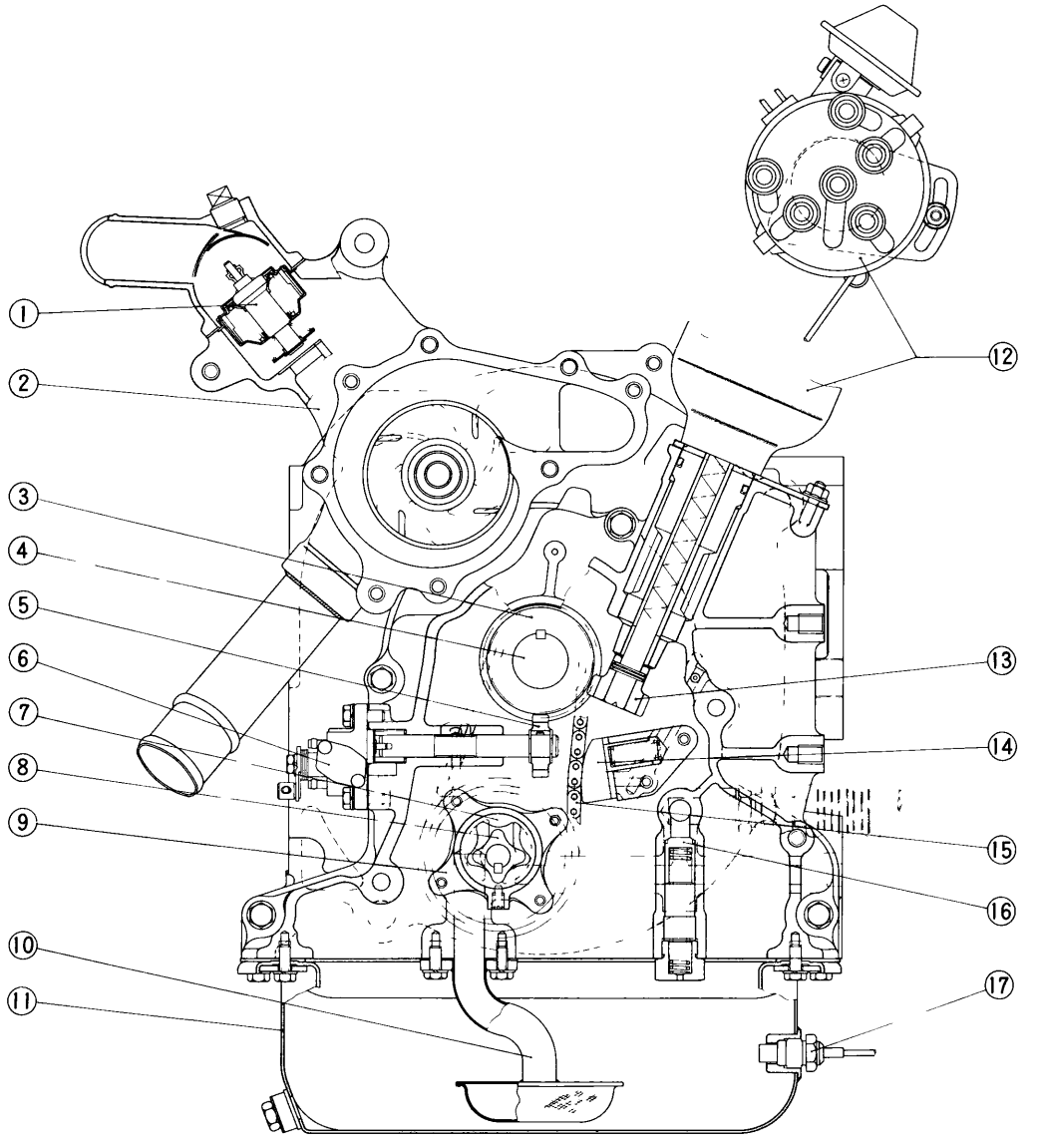

Fig. 1–3 Engine cross section (3)

1. Thermostat
2. Water pump casing
3. Distributor drive gear
4. Eccentric shaft
5. Metering pump drive gear
6. Metering pump
7. Oil pump outer gear
8. Oil pump inner gear
9. Oil pump body
10. Oil strainer
11. Oil pan
12. Distributor
13. Distributor driven gear
14. Oil pump chain adjuster
15. Oil pump chain
16. Pressure control valve
17. Oil warning switch

1–A. ENGINE DISASSEMBLY

Engine disassembly should be done in the following order after removing the engine from the vehicle.

Note: When overhauling a rotary engine, the former method of mounting the engine on to the work stand was to support the rear housing. Henceforth, on this occasion when the '74 year-type of rotary engine is being introduced, we have adopted the method of supporting the front housing by using the **New Hanger** (49 1114 005) for the purpose of facilitating the working procedure. The new hanger can be used for any type of engine now in service.

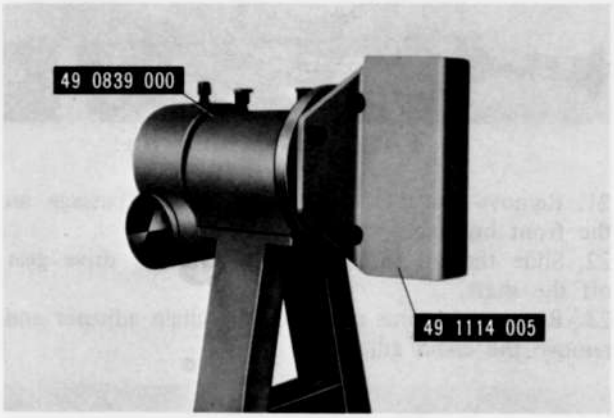

Fig. 1–4 Engine work stand

1. Remove the oil hose support bracket from the front housing.
2. Mount the engine on the **engine work stand** (49 0839 000) with the **hanger** (49 1114 005).
3. Remove the engine hanger bracket from the front cover.
4. Disconnect the vacuum hoses, air hoses and wires, then remove the deceleration valve if equipped.
5. Remove the air pump attaching bolts and bar, and remove the air pump if equipped and the V-belt.
6. Remove the alternator attaching bolts, and remove the alternator and V-belt.
7. Disconnect the metering oil pump connecting rod, oil tubes and vacuum sensing tube from the carburetor.
8. Remove the intake manifold attaching nuts, and remove the carburetor and intake manifold assembly.

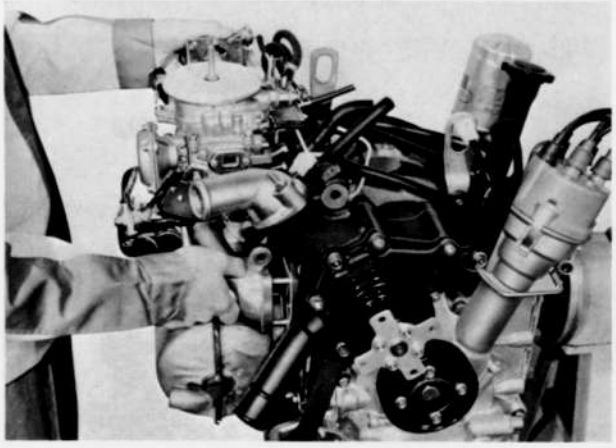

Fig. 1–5 Removing intake manifold ass'y

Then remove the gasket and two rubber rings.
9. Remove the thermal reactor (or exhaust manifold) attaching nuts and remove it with gaskets.
10. Remove the distributor securing nut and pull it out from the front cover.

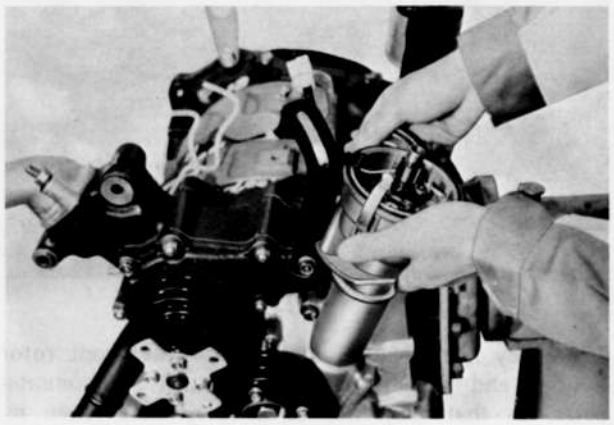

Fig. 1–6 Removing distributor

11. Remove the water pump attaching bolts, and remove the pump and gasket.

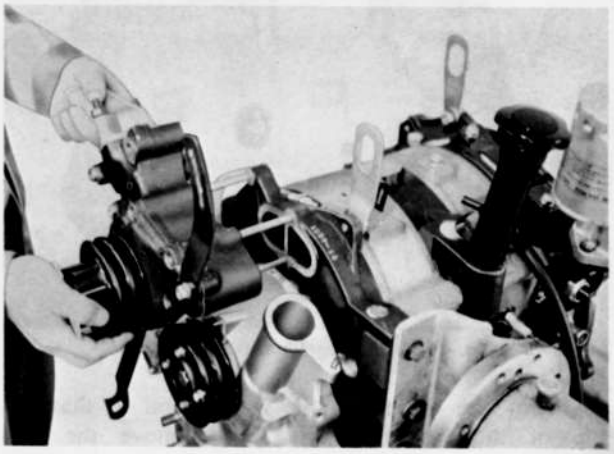

Fig. 1–7 Removing water pump

12. Invert the engine on the work stand.
13. Remove the bolts attaching the oil pan, and remove the oil pan and gasket.



Fig. 1–8 Removing oil pan

14. Remove the bolts attaching the oil strainer, and remove the oil strainer and gasket.

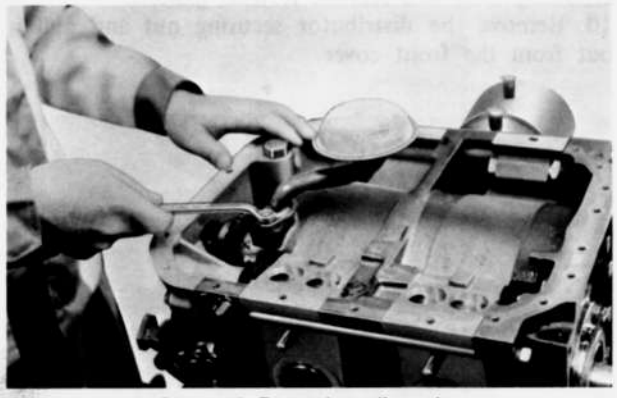

Fig. 1–9 Removing oil strainer

15. Apply identification marks onto the front rotor housing and rear rotor housing, which are common parts, so that they will be as they were when re-assembling the engine.

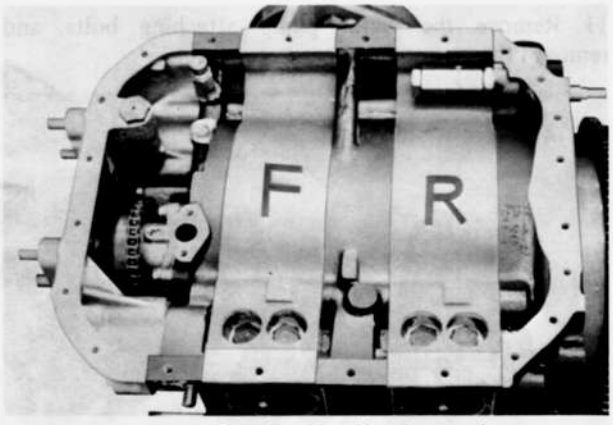

Fig. 1–10 Putting identification marks

16. Turn the engine on the work stand so that the top of the engine is up. Then remove the nuts attaching the engine mounting bracket to the front cover and remove the mounting bracket.
17. Attach the **ring gear brake** (49 1881 060) to the flywheel or drive plate.
18. Remove the eccentric shaft pulley bolt and remove the pulley.

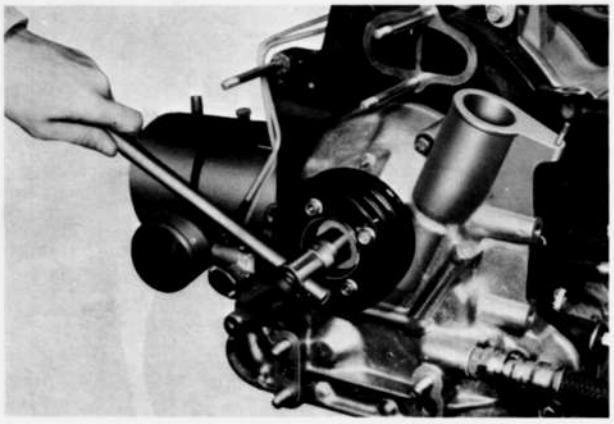

Fig. 1–11 Removing eccentric shaft pulley

19. Turn the engine on the work stand so that the front end of the engine is up.
20. Remove the front cover attaching bolts, and remove the front cover and gasket.

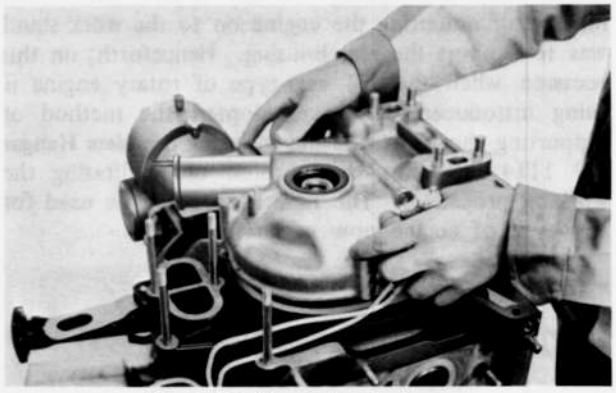

Fig. 1–12 Removing front cover

21. Remove the "O" ring from the oil passage on the front housing.
22. Slide the oil thrower and distributor drive gear off the shaft.
23. Remove the nuts attaching the chain adjuster and remove the chain adjuster.

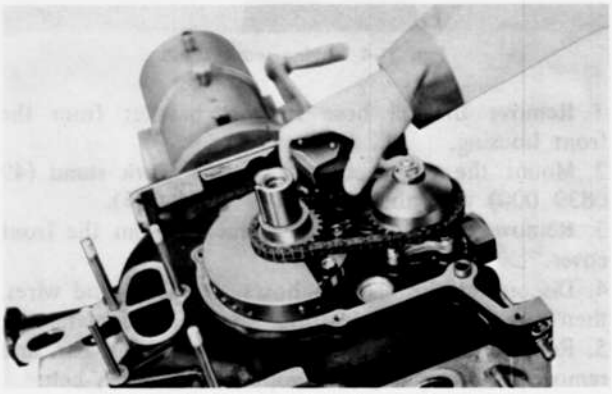

Fig. 1–13 Removing chain adjuster

24. Remove the lock nut and washer for the oil pump driven sprocket.
25. Slide the oil pump drive sprocket and driven sprocket together with the drive chain off the eccentric shaft and oil pump shaft simultaneously.

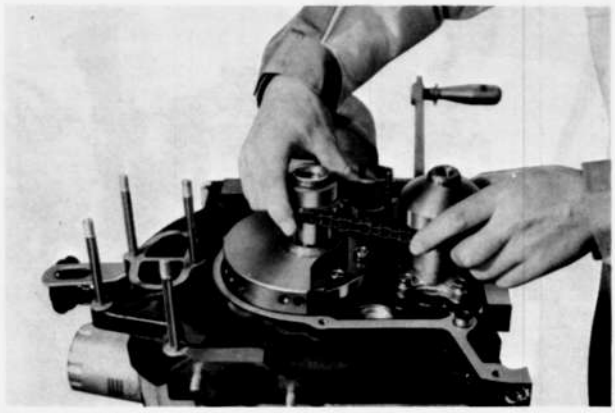

Fig. 1–14 Removing chain and sprockets

26. Remove the keys on the eccentric shaft and pump shaft.
27. Slide the balance weight, thrust washer and needle bearing off the shaft.
28. Remove the bolts attaching the bearing housing, and slide the bearing housing, needle bearing, spacer and thrust plate off the shaft.
29. Turn the engine on the work stand so that the top of the engine is up.
30. To remove the flywheel in case of engine mounted with manual transmission, proceed as follows:
1) Remove the clutch pressure plate assembly attaching bolts, and remove the pressure plate assembly and clutch disk.
2) Straighten the tab of the lock washer and remove the flywheel nut using the **special wrench** (49 0820 035).

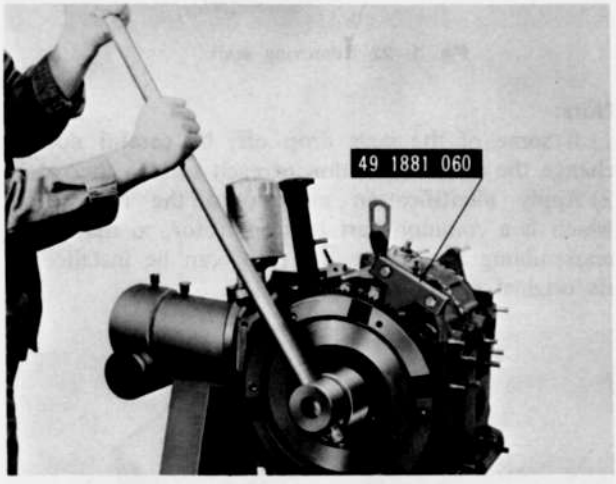

Fig. 1–15 Removing flywheel nut

3) Remove the flywheel by using the **flywheel puller** (49 0823 300), turning the handle of the puller and lightly hitting the head of the puller.

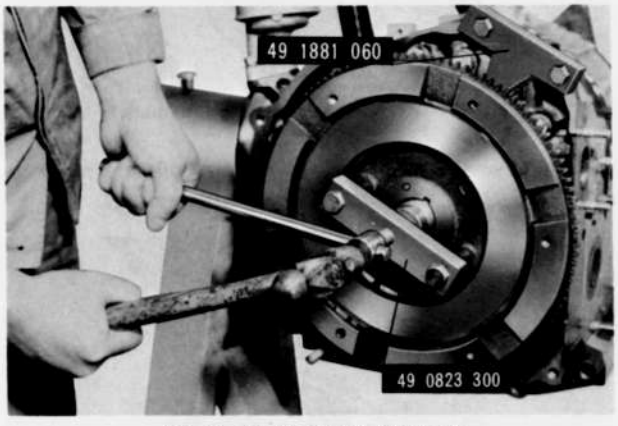

Fig. 1–16 Removing flywheel

31. To remove the counter weight in case of engine mounted with automatic transmission, proceed as follows.
1) Remove the drive plate, and then remove the **ring gear brake** (49 1881 060).
2) Attach the **counter weight brake** (49 1881 055). Then straighten the tab of the lock washer and remove the counter weight nut using the **special wrench** (49 0820 035).
3) Remove the counter weight by using the **counter weight puller** (49 0839 305), turning the handle of the puller and lightly hitting the head of the puller.
32. Turn the engine on the work stand so that the rear of the engine is up.
33. Loosen the tension bolts in the sequence shown in Fig. 1–17, and remove the tension bolts.

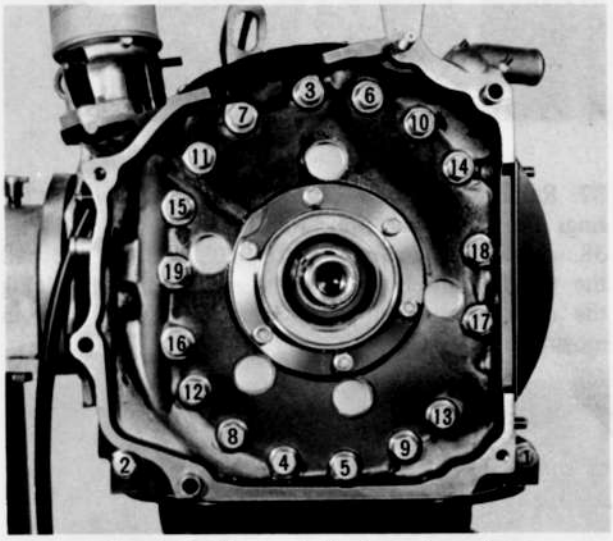

Fig. 1–17 Tension bolts loosening order

Note:
Do not loosen the tension bolts at one time. Perform the removal in two or three procedures.

34. Lift the rear housing off the shaft.

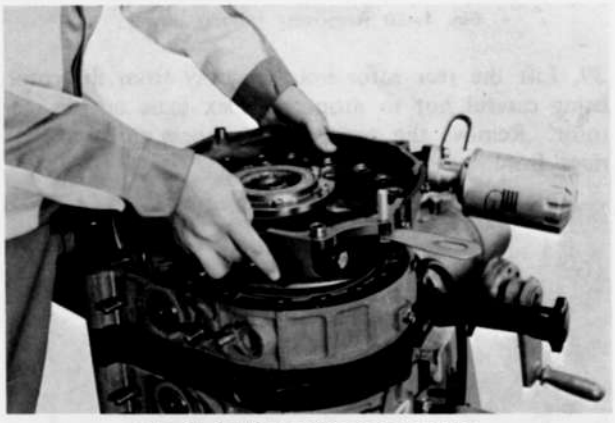

Fig. 1–18 Removing rear housing

35. Remove any seals stuck to the rotor sliding surface of the rear housing and place them back into their respective original positions.
36. Remove the all corner seals, corner seal springs, side seals and side seal springs from the rear side of the rotor, and place them in the **seal case** (49 0813 250), in accordance with the numbers near each respective groove on the face of the rotor. These marks are made in order to prevent each seal from changing its original position in reassembling.

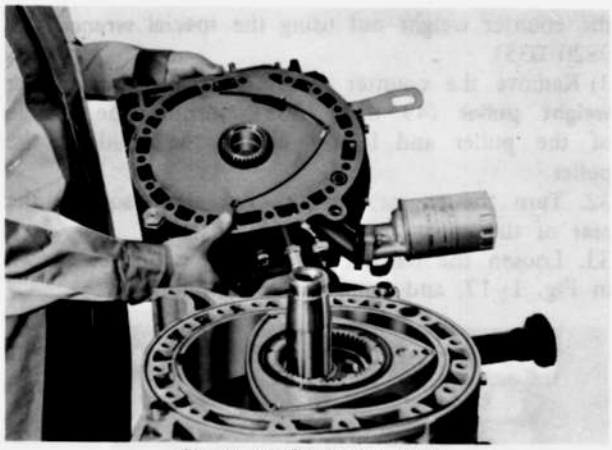

Fig. 1–19 Removing seals

37. Remove the two sealing rubbers and two "O" rings from the rear rotor housing.
38. Attach the **dowel puller** (49 0813 215), and pull the tubular dowels off the rear rotor housing holding the rotor housing down by hand to prevent it from moving up.



Fig. 1–20 Removing tubular dowel

39. Lift the rear rotor housing away from the rotor, being careful not to drop the apex seals on the rear rotor. Remove the two sealing rubbers and two "O" rings from the rear rotor housing.



Fig. 1–21 Removing rear rotor housing

40. Remove the each apex seal, side piece and spring from the rear rotor and place them in the seal case.
41. Remove the rear rotor away from the eccentric shaft and place it upside down on a clean sheet of cloth.
42. Remove each seal and spring on the other side of the rear rotor, and place them in the seal case as shown in Fig. 1–22.



Fig. 1–22 Removing seals

Note:
1) If some of the seals drop off, be careful not to change the original position of each seal on the rotor.
2) Apply identification mark onto the rear rotor, which is a common part to front rotor, so that when reassembling the engine the rotor can be installed in its original position.

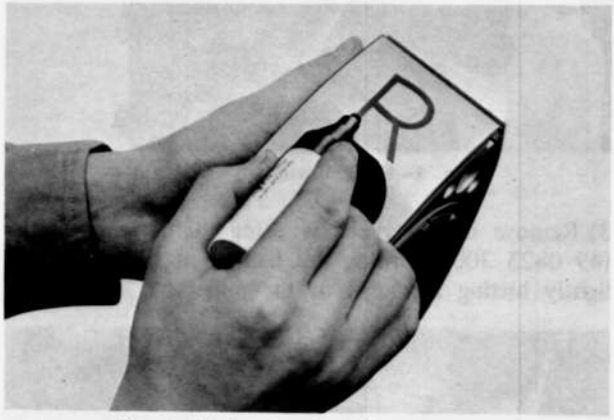

Fig. 1–23 Putting identification mark

43. Remove the oil seals by using the **oil seal remover** (49 0813 225). Remove the oil seal springs.



Fig. 1–24 Removing oil seal

Note:
1) Do not exert strong pressure at only one place to prevent deformation of the oil seal.
2) Be careful not to damage the oil seal lip. Use a suitable protector shown in Fig. 1–24.
3) Replace the "O" rings in the oil seals when the engine is overhauled.

44. Holding the intermediate housing down by hand, pull the tubular dowel off the intermediate housing using the **dowel puller** (49 0813 215).
45. Lift the intermediate housing off the shaft being careful not to damage the shaft. The intermediate housing should be removed by sliding it beyond the rear rotor journal on the eccentric shaft while holding the intermediate housing up and at the same time pushing up the eccentric shaft.

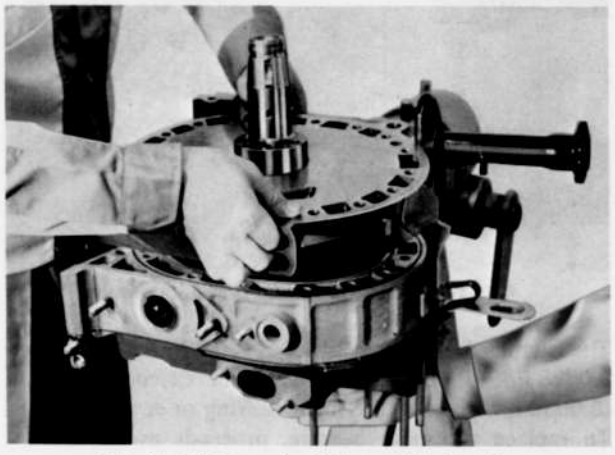

Fig. 1–25 Removing intermediate housing

46. Lift out the eccentric shaft.
47. Repeat the above procedures to remove the front rotor housing and the front rotor assembly.

1–B. INSPECTION AND REPAIR

1–B–1. Inspecting Front, Intermediate and Rear Housing

1. Check the side housings for traces of gas or water leakage.
2. Remove all carbon on the housings with an extra-fine emery paper. When using a carbon scraper, be careful not to damage the finished surfaces of the housings.
3. Remove the sealing agent on the housings by using a cloth or a brush soaked in a solution of ketone or thinner.
4. Check for housing distortion by placing a straight edge on the housing surface. Measure the clearance between the straight edge and the housing surface with a feeler gauge, as shown in Fig. 1–27. If the distortion exceeds **0.04 mm (0.0016 in)**, reface or replace the housing.

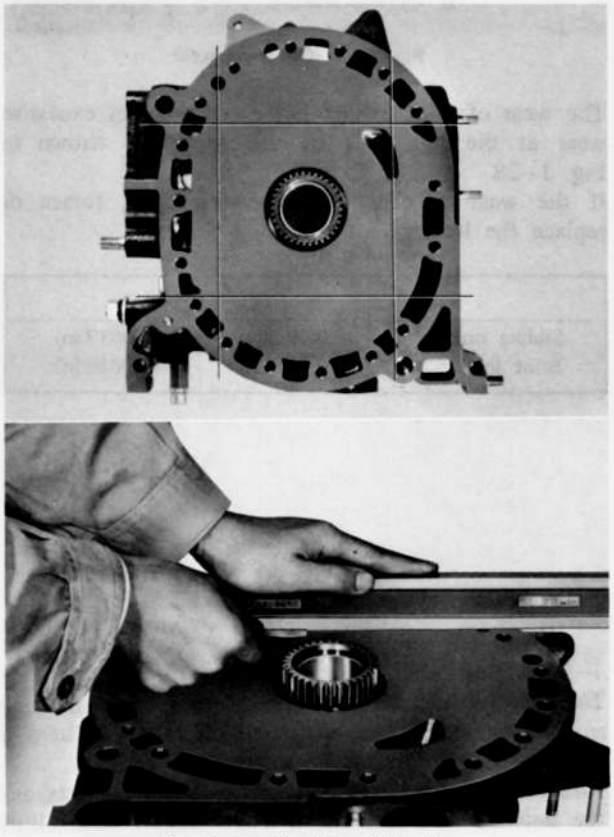

Fig. 1–27 Checking distortion

5. Check for wear on the rotor sliding surfaces of the housing and joint surfaces with rotor housing. The wear of sliding surface has a tendency of excessive wear occurring at following minor axis area of the housing.

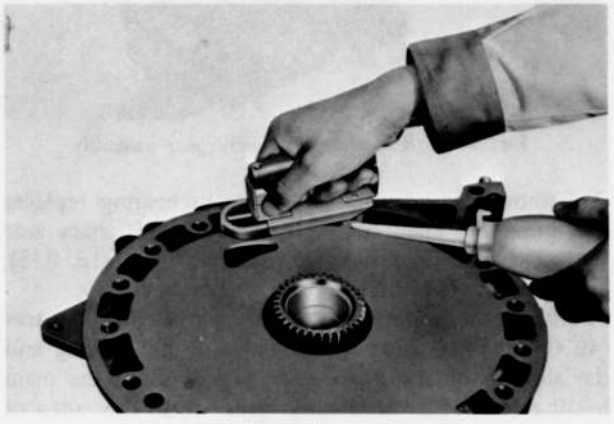

Fig. 1–26 Removing sealing agent

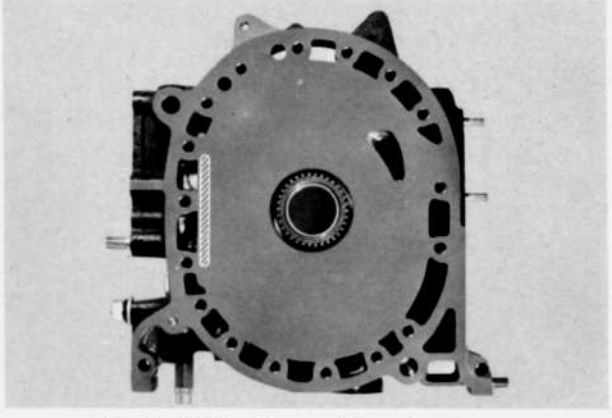

Fig. 1–28 Checking position of wear

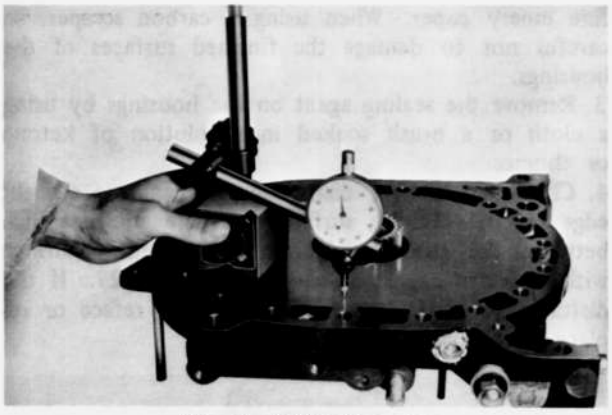

Fig. 1–29 Checking wear

The wear of joint surface has a tendency of excessive wear at the hot zone of the engine as shown in Fig. 1–28
If the wear exceeds the following limit, reface or replace the housing.

	Limit	
Sliding surface Joint surface	0.10 mm 0.05 mm	(0.0039 in) (0.0020 in)

1–B–2. Regrinding Side Housings

The side housings (front housing, intermediate housing and rear housing) can be reused by grinding them if the required finish can be maintained.
And when this work is performed on the markets, ask the detailed informations of Toyo Kogyo, and follow them.

1–B–3. Inspecting Front Stationary Gear and Main Bearing

1. Check the teeth on the stationary gear for wear, crack or damage.
2. Check the main bearing for wear, scratching, flaking or other damages.
3. Check the clearance between the main bearing and eccentric shaft main journal by measuring the inner diameter of the main bearing and outer diameter of the eccentric shaft main journal.

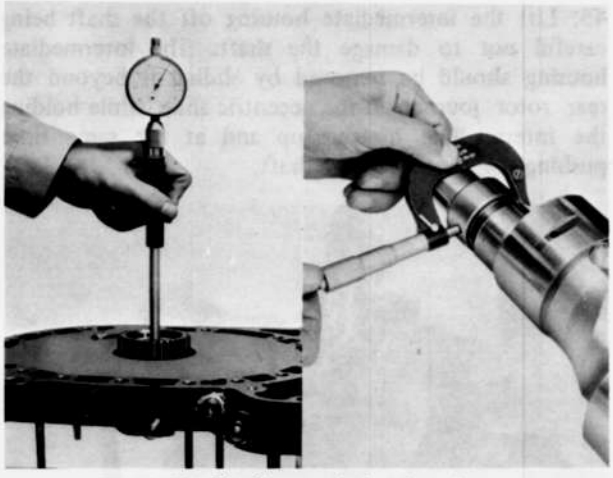

Fig. 1–30 Checking main bearing clearance

The standard clearance is **0.04 ~ 0.07 mm (0.0016 ~ 0.0028 in)**. If the bearing clearance exceeds **0.10 mm (0.0039 in)**, replace the main bearing or eccentric shaft.
To replace the main bearing, proceeds as follows:
1) Remove the stationary gear and main bearing assembly from the housing, using the **main bearing replacer** (49 0813 235), shown in Fig. 1–31.

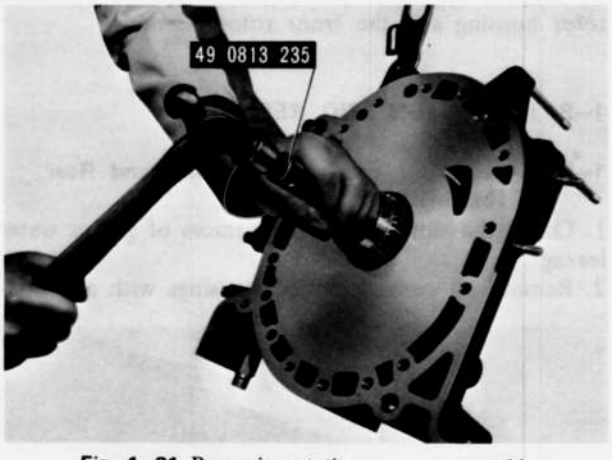

Fig. 1–31 Removing stationary gear assembly

2) Remove the adaptor on the main bearing replacer and press the main bearing out of the stationary gear by using the **main bearing replacer** (49 0813 235), as shown in Fig. 1–32.
3) Attach the adaptor onto the **main bearing replacer** (49 0813 235), aligning the tang of the bearing and the slot of the stationary gear, and press fit the main bearing into the stationary gear until the adaptor touches the stationary gear flange.

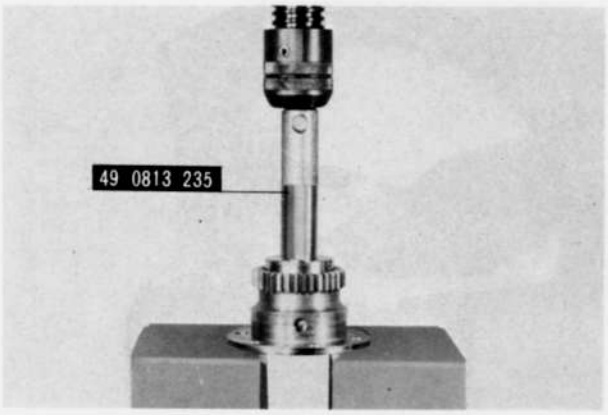

Fig. 1–32 Removing main bearing

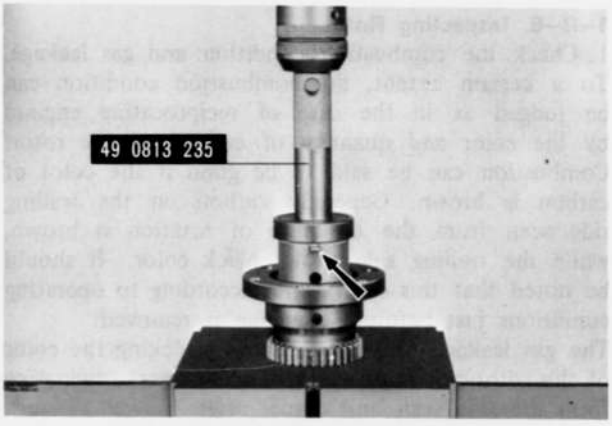

Fig. 1–33 Installing main bearing

4. Press in the stationary gear to the housing with the **main bearing replacer** (49 0813 235), aligning the slot of the stationary gear flange and the dowel pin on the housing, as shown in Fig. 1–34

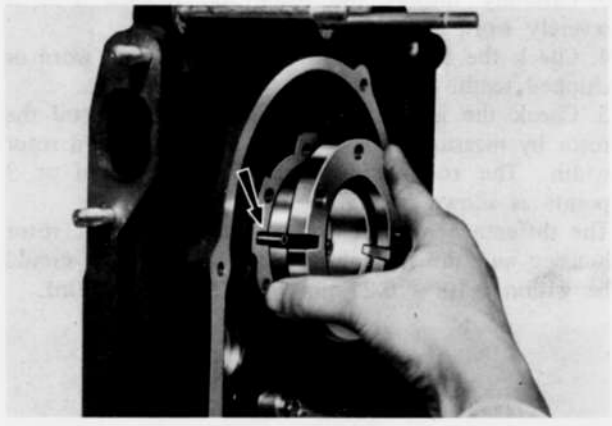

Fig. 1–34 Installing stationary gear

1–B–4. Inspecting Rear Stationary Gear and Main Bearing

1. Check the rear stationary gear and main bearing according to Par. 1–B–3.
2. The "O" ring in the stationary gear for a damage. Replace the "O" ring if necessary.

To remove and install the stationary gear, proceed as follows:

1) Remove the bolts attaching the stationary gear to the rear housing.
2) Using the **main bearing replacer** (49 0813 235), remove the stationary gear from the rear housing.
3) Apply a thin coat of grease on the "O" ring and place it in the groove of the stationary gear.

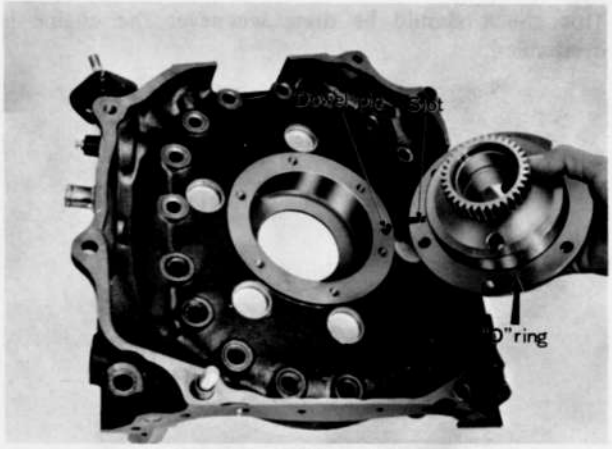

Fig. 1–35 Assembling stationary gear

4) Apply sealing agent onto the stationary gear flange.
5) Install the stationary gear to the rear housing being careful not to damage the "O" ring and aligning the slot of the stationary gear with the dowel pin on the rear housing.
6) Tighten the bolts attaching the stationary gear.

1–B–5 Inspecting Rotor Housing

1. Check for traces of gas or water leakage along the inner margin of each side face of the rotor housing.
2. Remove all carbon from the inner surface of the rotor housing by wiping with cloth. Soak the cloth in a solution of ketone or thinner if the carbon is difficult to remove.
3. Remove all deposits and rust from the cooling water passages on the housing.
4. Remove sealing agent by wiping with a cloth or brush soaked in a solution of ketone or thinner.

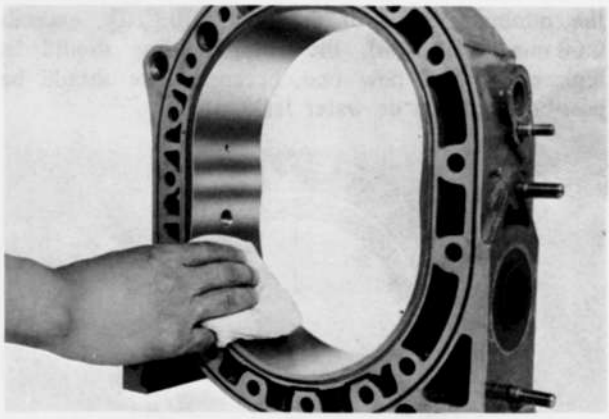

Fig. 1–36 Removing carbon

5. Check the chromium plated surface on the rotor housing for scoring, flaking or any other damage. If any of these condition exists, replace the rotor housing.

6. Check for rotor housing distortion by placing a straight edge at the position shown in Fig. 1–37. Measure the clearance between the straight edge and rotor housing surface with a feeler gauge. If the distortion exceeds **0.04 mm (0.0016 in)**, replace the rotor housing.
This check should be done whenever the engine is overhauled.

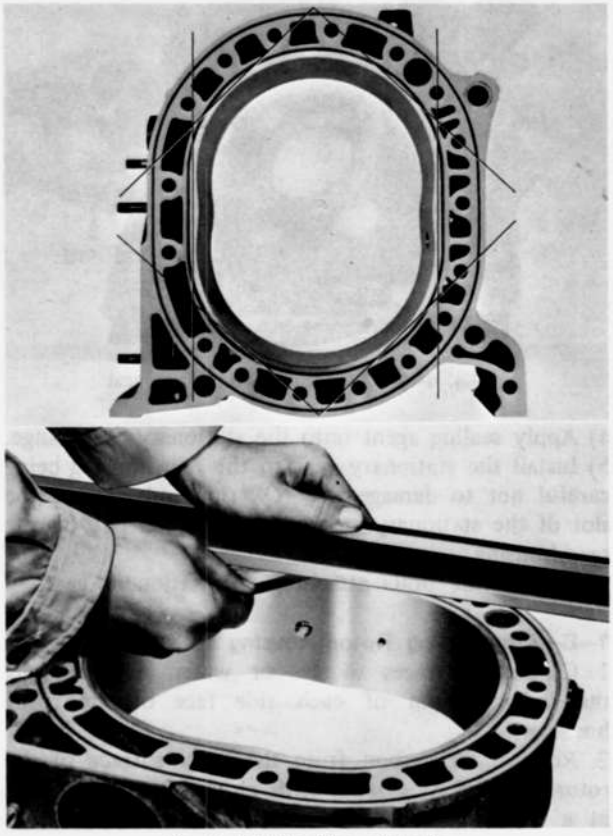

Fig. 1–37 Checking distortion

7. Check the rotor housing width at points close to the trochoid surface by using a micrometer. The measurements should be taken at least at 4 points. If the difference between the value of Ⓐ point and the minimum value of the points ⒷⒸⒹ, exceeds **0.06 mm (0.0024 in)**, the rotor housing should be replaced with a new one, because there should be possibility of gas or water leakage.

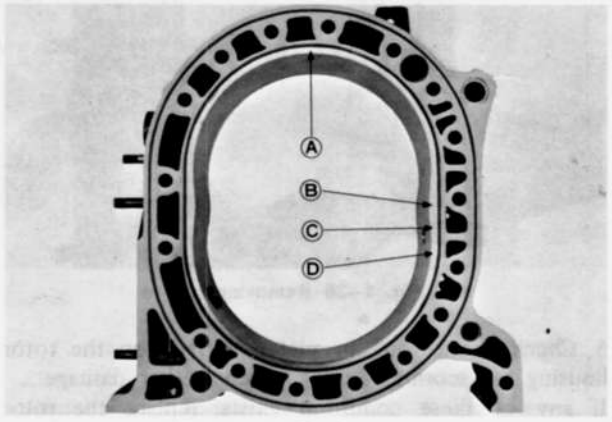

Fig. 1–38 Checking points

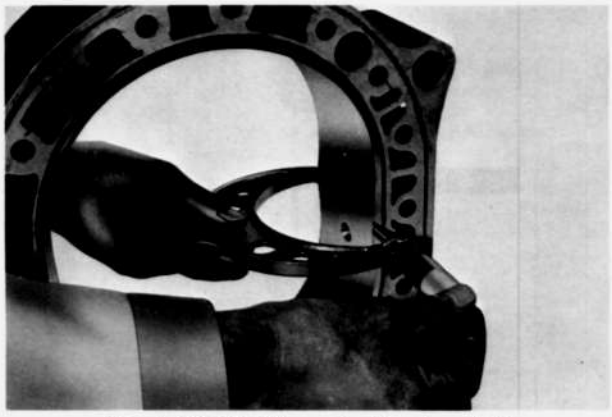

Fig. 1–39 Checking rotor housing width

1–B–6. Inspecting Rotor

1. Check the combustion condition and gas leakage. To a certain extent, the combustion condition can be judged as in the case of reciprocating engines by the color and quantity of carbon on the rotor. Combustion can be said to be good if the color of carbon is brown. Generally carbon on the leading side seen from the direction of rotation is brown, while the trailing side shows black color. It should be noted that this color varies according to operating conditions just before the engine is removed.
The gas leakage can be judged by checking the color of the rotor side surface for blow-by traces originating from the side seals and corner seals.
2. Remove the carbon on the rotor by using a carbon remover or emery paper. Carbon in the seal grooves of the rotor should be removed with a carbon remover being careful not to damage the grooves. Wash the rotor in cleaning solution and dry by blowing with compressed air.
3. Carefully inspect the rotor and replace if it is severely worn or damaged.
4. Check the internal gear for cracks, score, worn or chipped teeth.
5. Check the gap between the side housing and the rotor by measuring the rotor housing width and rotor width. The rotor width should be measured at 3 points as shown in Fig. 1–40.
The difference between the minimum width of rotor housing and the maximum width of the rotor should be within **0.10 ~ 0.21 mm (0.0039 ~ 0.0083 in).**

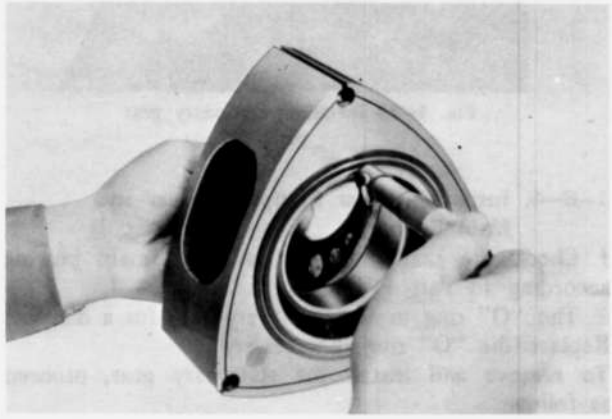

Fig. 1–40 Checking rotor width

If the clearance is more than the specifications, replace the rotor assembly. If the clearance is less than the specifications, it indicates that the internal gear has come out, so strike the internal gear lightly with plastic hammer being careful not to damage.

1–B–7. Inspecting Rotor Bearing

1. Check the rotor bearing for wear, flaking, scoring or any damage. If any of these conditions is found, replace the bearing.
2. Check the rotor bearing clearance by measuring the inner diameter of the rotor bearing and outer diameter of the eccentric shaft rotor journal. The standard clearance is **0.04 ~ 0.08 mm (0.0016 ~ 0.0031 in)**. Replace the bearing if it is more than **0.10 mm (0.0039 in)**.

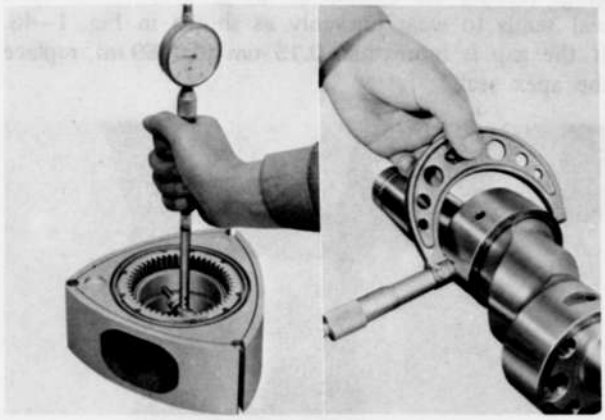

Fig. 1–41 Checking rotor bearing clearance

To replace the rotor bearing, proceed as follows:
1) Place the rotor on the support so that the internal gear is facing downward. Using the **rotor bearing replacer** (49 0813 240) without the adaptor ring, press the bearing out of the rotor, being careful not to damage the internal gear. If the bearing bore in the rotor is damaged, finish the bore with emery paper and blow with compressed air.

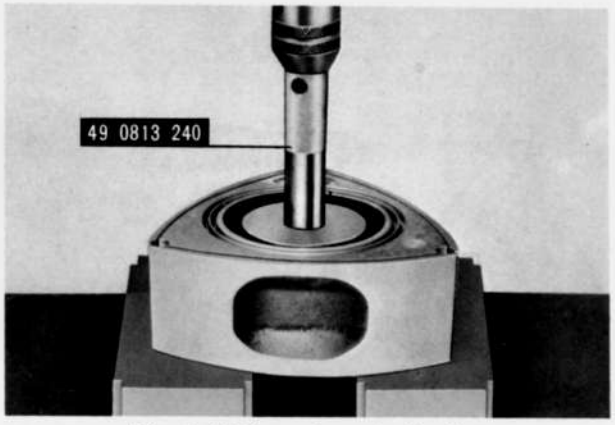

Fig. 1–42 Removing rotor bearing

2) Place the rotor on the support with internal gear faced upward. And place the new rotor bearing on the rotor so that the rotor bore is in line with the bearing lug.
3) Press fit the new bearing using the **rotor bearing replacer** (49 0813 240) with the adaptor removed attaching screws, until the bearing is flush with the rotor boss.

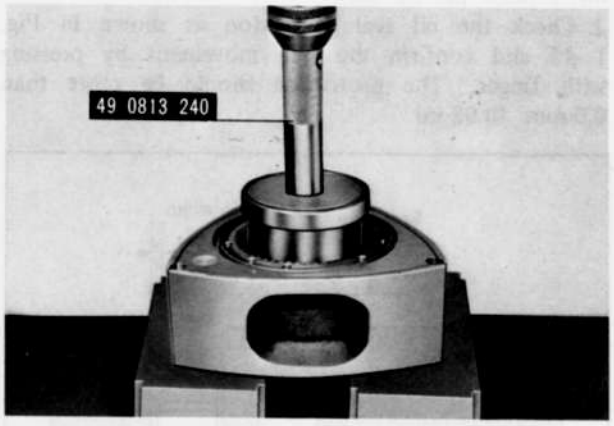

Fig. 1–43 Installing rotor bearing

4) Wash the rotor thoroughly and blow with compressed air.

Note:
The rotors are classified into five grades according to their weight and marked a, b, c, d, and e on the internal gear side.
In order to balance the front rotor and rear rotor, the following combinations are adopted in the factory.

Combination of rotor		
a – b	c – b, c, d	e – e
b – a, b, c	d – c, d, e	

If it becomes necessary to replace a rotor, use the rotor marked "C" in all cases.

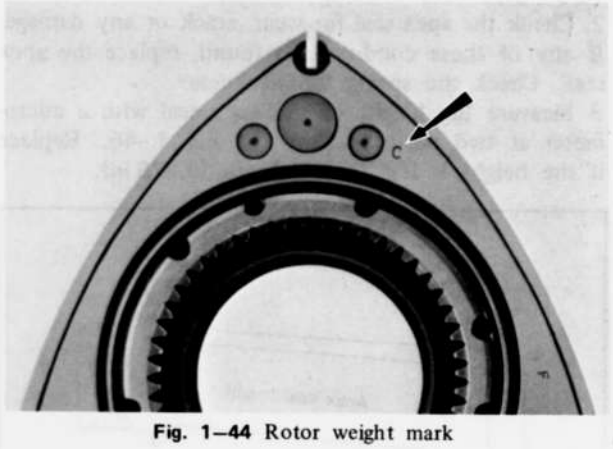

Fig. 1–44 Rotor weight mark

1–B–8. Inspecting Seal Springs

1. Check for weakness, wear or damage of the seal springs, especially the sections of the springs contacting the rotor or seal.
2. Check the free height of the apex seal spring. It should be more than **3.8 mm (0.15 in)**.

Note:
About the springs of oil seal, side seal and corner seal, confirm the protrusion of seals when installing seals to the rotor.

1–B–9. Inspecting Rotor Oil Seal

1. Check the oil seal for wear or any damage. If the lip width of the oil seal is more than **0.8 mm (0.031 in)**, replace the oil seal.
2. Check the oil seal protrusion as shown in Fig. 1–45 and confirm the free movement by pressing with finger. The protrusion should be more than **0.5 mm (0.02 in)**

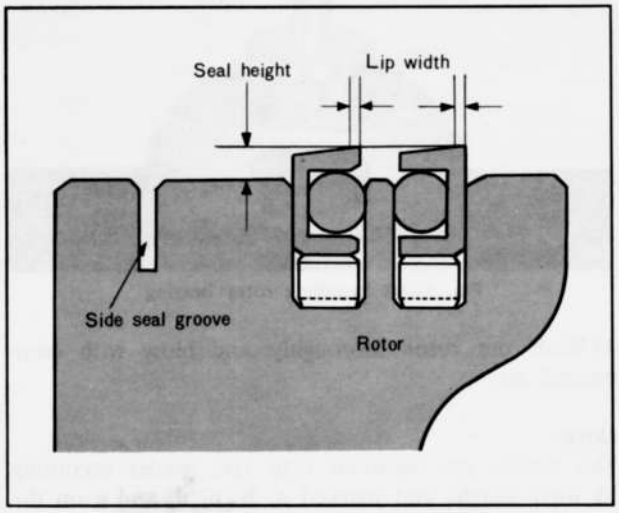

Fig. 1–45 Checking oil seal

Note:
When installing oil seal, refer to Par. 1–C–1.

1–B–10. Inspecting Apex Seal

1. Remove all carbon from the apex seal and spring, being careful not to damage the apex seal. **Never use** emery paper as it will damage the apex seal. Wash them with cleaning solution.
2. Check the apex seal for wear, crack or any damage. If any of these conditions is found, replace the apex seal. Check the spring for weakness.
3. Measure the height of the apex seal with a micrometer at two positions shown in Fig. 1–46. Replace if the height is less than **7.0 mm (0.275 in)**.

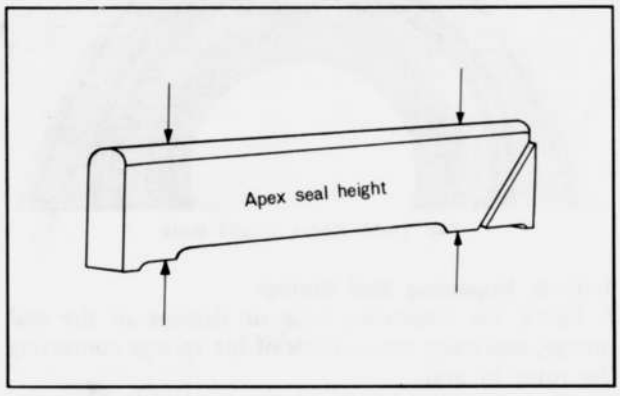

Fig. 1–46 Apex seal height

4. Check the gap between the apex seal and the groove. To check the gap, place the apex seal in its respective groove on the rotor and measure the gap between the apex seal and the groove with a feeler gauge. The feeler gauge should be inserted until the tip of the



Fig. 1–47 Checking apex seal

gauge reaches the bottom of the groove, for the apex seal tends to wear unevenly as shown in Fig. 1–48. If the gap is more than **0.15 mm (0.0059 in)**, replace the apex seal.

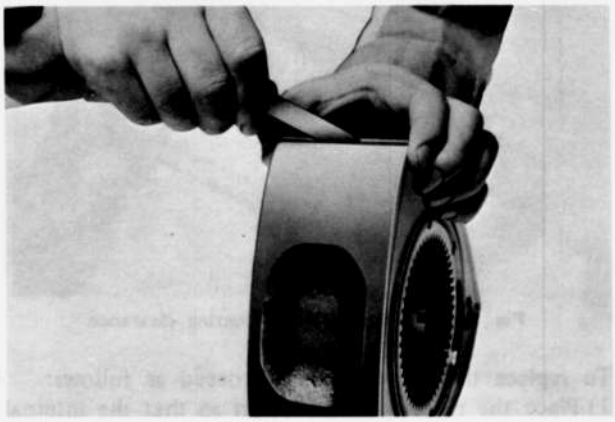

Fig. 1–48 Checking apex seal and groove

5. Check the gap between the apex seal and side housing. To check, measure the length of the apex seal with a micrometer.

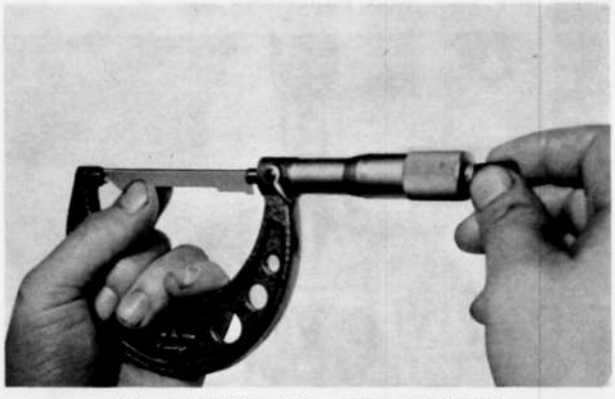

Fig. 1–49 Measuring apex seal length

Compare the measured apex seal length with the minimum value among Ⓑ Ⓒ and Ⓓ points of the rotor housing (see Fig. 1–38). The standard gap is **0.13 ~ 0.17 mm (0.0051 ~ 0.0067 in)**.
If it is more than **0.30 mm (0.0118 in)**, replace the apex seal. If necessary, correct the apex seal length with emery paper.

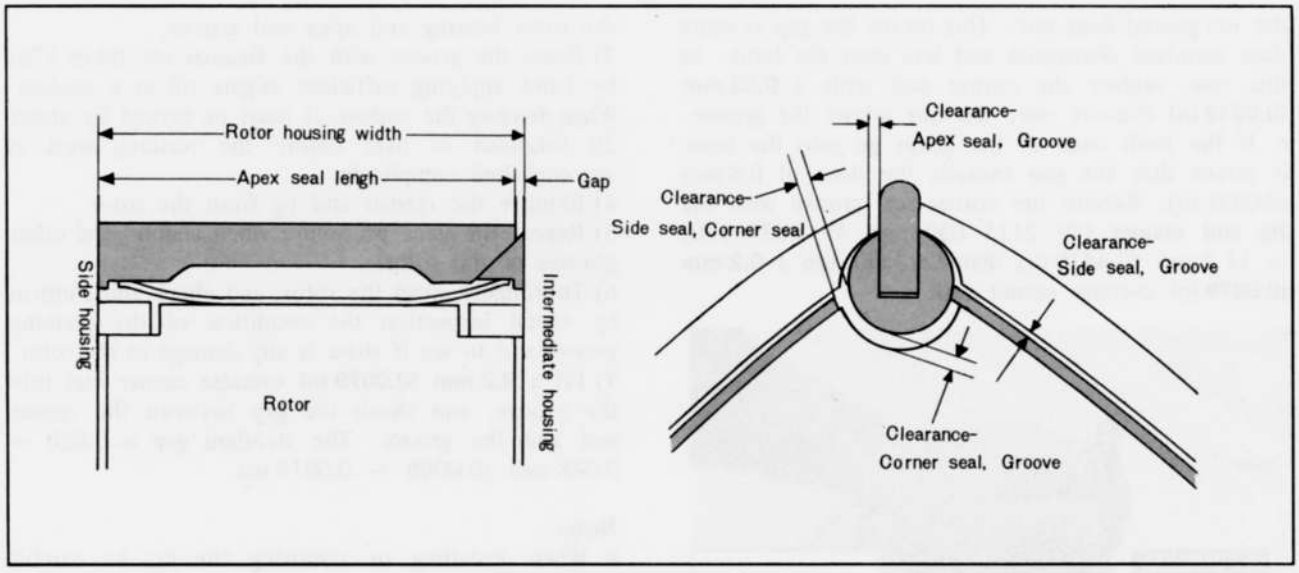

Fig. 1–50 Clearance of seals

1–B–11. Inspecting Side Seal

1. Remove all carbon from the side seal and spring with a carbon remover.
2. Check the side seal for wear, crack or any other damage and replace if any of these conditions is found.
3. Check the side seal protrusion from the rotor surface, and also confirm the free movement by pressing with finger. The protrusion should be more than **0.5 mm (0.02 in)**.
4. Check the gap between the side seal and the groove with a feeler gauge as shown in Fig. 1–51. The standard gap is **0.04 ~ 0.07 mm (0.0016 ~ 0.0028 in)**. If the gap exceeds **0.10 mm (0.0040 in)**, replace the side seal.
5. Check the gap between the side seal and the corner seal with these seals installed on the rotor.

To check, insert a feeler gauge between the end of the side seal (against the rotating direction of rotor) and the corner seal. If the gap exceeds **0.4 mm (0.016 in)**, replace the side seal.

When the side seal is replaced, adjust the gap between the side seal and the corner seal by grinding the one end of the side seal along the round shape of the corner seal with a fine file so that the gap will be **0.05 ~ 0.15 mm (0.002 ~ 0.006 in)**. And then make respective identification notches on the reverse side of the side seal. If this gap is too large, gas-sealing performance will deteriorate.



Fig. 1–51 Checking side seal gap

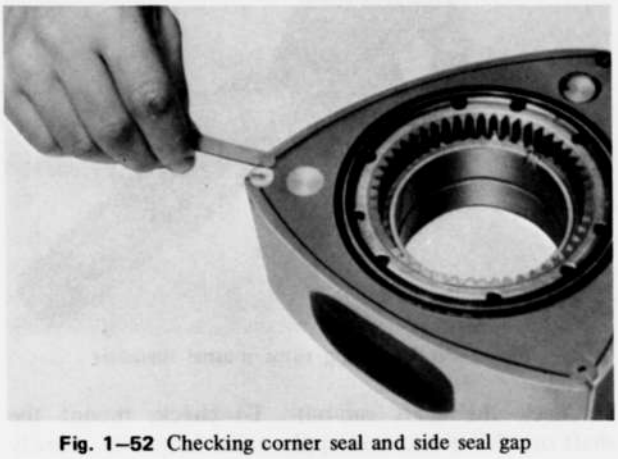

Fig. 1–52 Checking corner seal and side seal gap

1–B–12. Inspecting Corner Seal

1. Remove carbon from the corner seal.
2. Check the corner seal for wear or damage.
3. Check the corner seal protrusion from the rotor surface, and also confirm the free movement by pressing with finger. The protrusion should be more than **0.5 mm (0.02 in)**.
4. Check the gap between the corner seal and the corner seal groove. The standard gap is **0.020 ~ 0.048 mm (0.0008 ~ 0.0019 in)** and the limit is **0.08 mm (0.0031 in)**. This gap enlargement shows uneven wear of the corner seal groove, which occur when the engine is operated with dust entering through a clogged element, damaged air cleaner or any other cause. When the wear is permitted to increase, the engine power will be reduced and the engine will become hard to start. The extent of wear of the corner seal groove is determined by the **bar limit gauge** (49 0839 165) and classified into three conditions.

a. Neither end of the gauge goes into the groove. This means that the gap conforms to the specifications.

b. While the go-end of the gauge goes into the groove,

the not-go-end does not. This means the gap is more than standard dimension and less than the limit. In this case, replace the corner seal with a **0.03 mm (0.0012 in)** oversize one. **Do not** rebore the groove.
c. If the both ends of the gauge go into the bore, it means that the gap exceeds the limit of 0.8 mm (0.0031 in). Rebore the corner seal groove with the **Jig and reamer** (49 2113 030 and 49 0839 170) to 11.2 mm (0.4410 in) diameter and use a **0.2 mm (0.0079 in)** oversize corner seal.

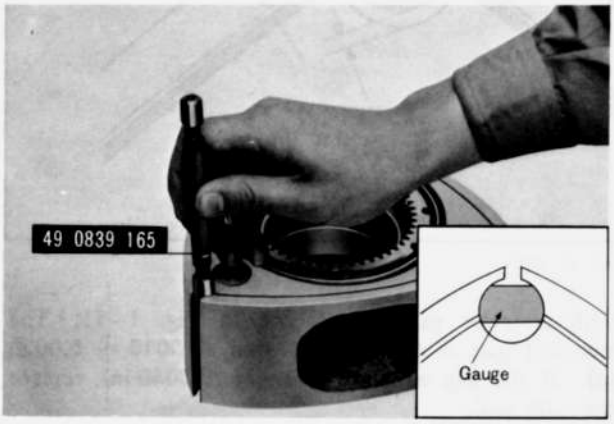

Fig. 1–53 Checking corner seal groove

Note:
a. As the corner seal groove tends to show a heavy wear in the direction of the rotation, the side arcs on the gauge are partially cut off. Be sure to take the measurement in the direction of the maximum wear of the groove.
b. If the gauge is not available, use a feeler gauge.
c. The dimensions of the outer diameter of the gauge are as follows:

Go-end	$11.0\ ^{+0.019}_{+0.021}$ mm ($0.4331\ ^{+0.0007}_{+0.0008}$ in)
Not-go-end	$11.0\ ^{+0.044}_{+0.046}$ mm ($0.4331\ ^{+0.0017}_{+0.0018}$ in)

To rebore the corner seal groove, proceed as follows:
1) Remove carbon, rust and other deposits from the groove, being careful not to damage.
2) Install the **jig** (49 2113 030) onto the rotor and tighten the correct bar being careful not to damage the rotor bearing and apex seal groove.
3) Ream the groove with the **Reamer** (49 0839 170) by hand applying sufficient engine oil as a coolant. When feeding the reamer, it must be turned by about 20 rotations or over before the reaming work is accomplished completely.
4) Remove the reamer and jig from the rotor.
5) Repeat the same procedure when reaming the other grooves of the rotor.
6) Thoroughly clean the rotor, and check and confirm by visual inspection the condition of the reaming groove and to see if there is any damage to the rotor.
7) Fit a **0.2 mm (0.0079 in)** oversize corner seal into the groove, and check the gap between the corner seal and the groove. The standard gap is 0.020 ~ 0.048 mm (0.0008 ~ 0.0019 in).

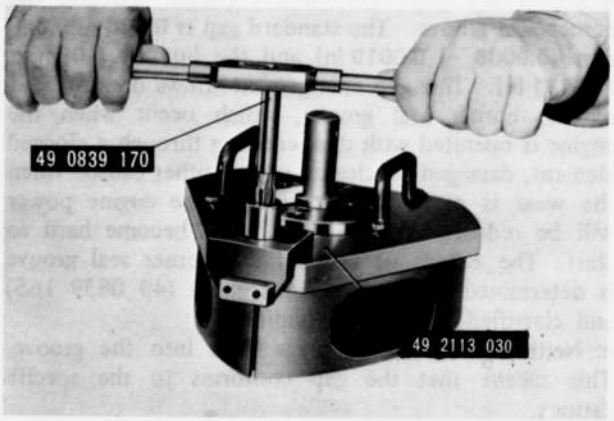

Fig. 1–54 Reaming corner seal groove

Note:
a. When installing or removing the jig, be careful not to hit the rotor.
b. If the reaming is carried out without applying oil, it will be difficult to obtain the proper surface roughness no matter how many times the reaming may be repeated.
c. Avoid two stage reaming, that is, drawing the reamer halfway during the reaming work and then resuming the reaming, because chips may affect the surface roughness.
d. Before starting the reaming work, it must be confirmed that the reamer diameter is up to specifications, because the reamer could be worn in excess of the limit if it was used many times.

1–B–13. Inspecting Eccentric Shaft

1. Wash the shaft in a cleaning solution and blow the oil passage with compressed air.
2. Check the shaft for cracks, scratches, wear or any other damage. Be sure that the oil passages are open.
3. Measure the diameter of the shaft journals with a micrometer. Replace the shaft if the wear is excessive. The standard diameter is **43 mm (1.6929 in)** on the main journal and **74 mm (2.9134 in)** on the rotor journal.

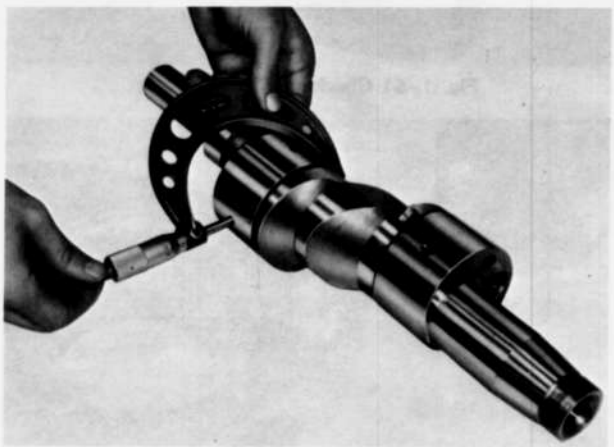

Fig. 1–55 Measuring rotor journal diameter

4. Check the shaft run-out. To check, mount the shaft on "V"-blocks and apply a dial indicator. Slowly

rotate the shaft and note the reading on the indicator. If the run-out is more than **0.06 mm (0.0024 in)**, replace the shaft with a new one.

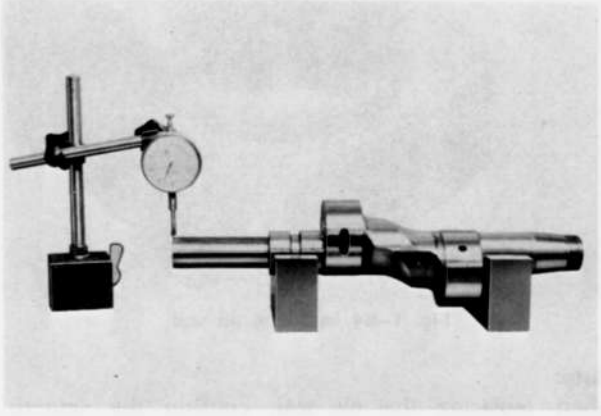

Fig. 1–56 Checking run-out

5. Check the blind plug in the shaft end for oil leakage or looseness. If any oil leakage is found, remove the blind plug with a hexagonal Allen key and replace the "O" ring.

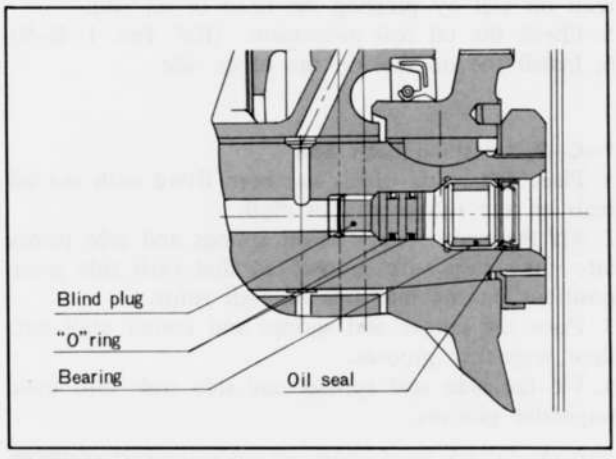

Fig. 1–57 Blind plug

6. Check the needle roller bearing in the shaft end for wear or any damage. Then insert the main drive shaft into the needle roller bearing and check the needle bearing for smooth operation and proper clearance. (Only the car with manual transmission)

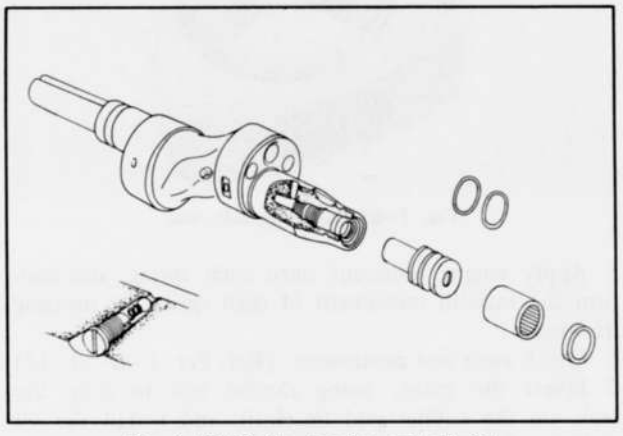

Fig. 1–58 Roller bearing and oil jet

To replace the bearing, use the **bearing replacer** (49 0823 070A).

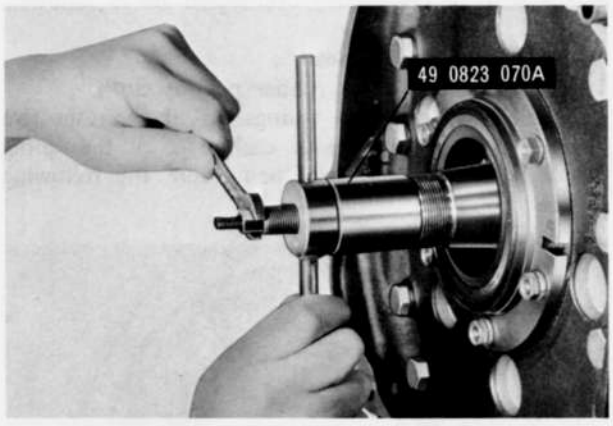

Fig. 1–59 Removing roller bearing

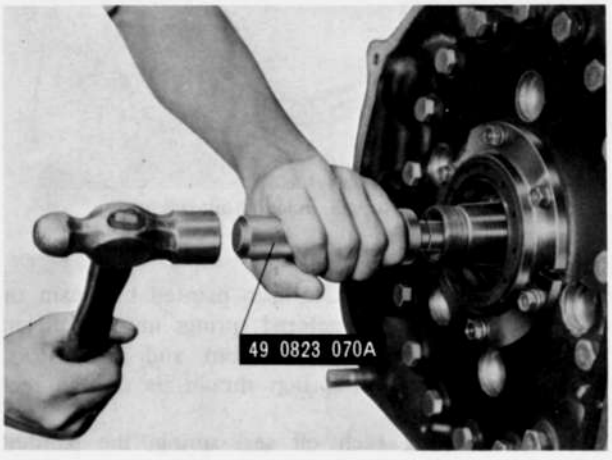

Fig. 1–60 Installing roller bearing

7. The oil jets are installed in the eccentric shaft. The oil jets open when the number of engine revolutions increases and the oil pressure rises. Check for spring weakness, stick or damage of the steel ball. (Fig. 1–58)

1–B–14. Inspecting Needle Bearing

Check the needle bearing for wear or damage.
Inspect the bearing housing and thrust plate for wear or any damage.

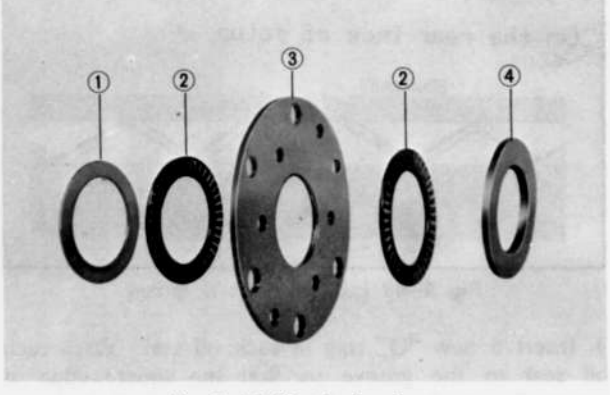

Fig. 1–61 Needle bearings

1. Thrust washer
2. Needle bearing
3. Bearing housing
4. Thrust plate

1–C. ENGINE ASSEMBLY

The procedures for assembling the engine when the engine is to be completely overhauled are as follows:

1–C–1. Installing Oil Seal

1. Place the rotor on a rubber pad or cloth.
2. Install the oil seal springs in their respective grooves on the rotors with each edge of the spring fitted in the stopper hole, being sure the following points.

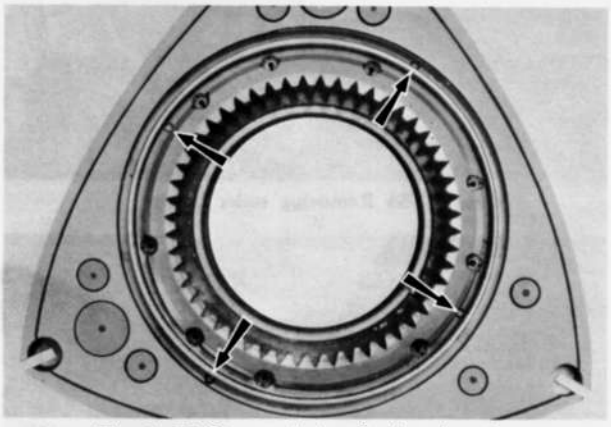

Fig. 1–62 Stopper hole of oil seal spring

Caution:

a. The oil seal springs have been painted in cream or blue color. The **cream-colored** springs must be fitted on the front faces of both front and rear rotors. While the **blue-colored** springs should be on the rear faces of the rotors.

b. When installing each oil seal spring, the painted side of spring must be faced to the oil seal (upward), that is the square edge of spring faces to the oil seal (upward).

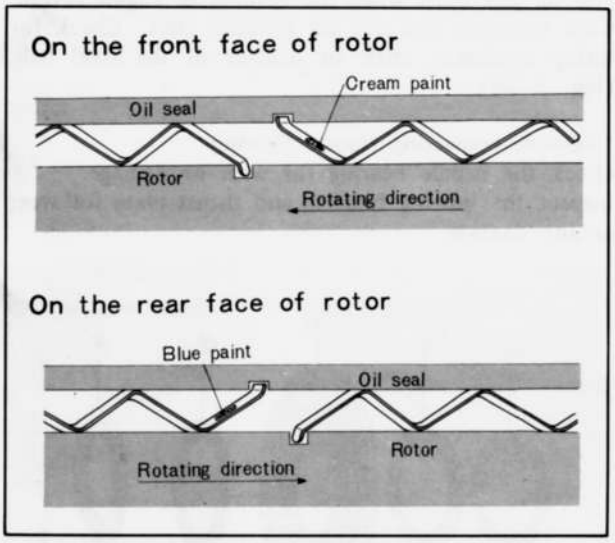

Fig. 1–63 Installing oil seal springs

3. Insert a new "O" ring in each oil seal. Place each oil seal to the groove so that the square edge of spring fit in the stopper hole of the oil seal and push the head of the oil seal slowly with fingers. Be careful not to deform the oil seal.

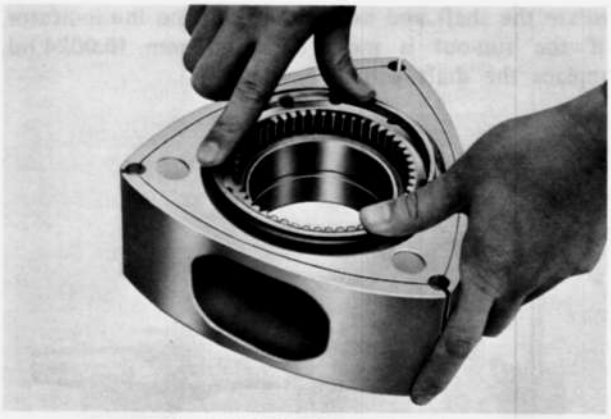

Fig. 1–64 Installing oil seal

Note:

When replacing the oil seal, confirm the smooth movement of oil seal by placing the oil seal on the oil seal spring in the groove before inserting the "O" ring.

4. Apply sufficient engine lubricant onto each oil seal and groove, and confirm the smooth movement of each oil seal by pressing the head of oil seal.
5. Check the oil seal protrusion. (Ref. Par. 1–B–9)
6. Install the oil seal on the other side.

1–C–2. Installing Each Seal

1. Place the rotor which has been fitted with the oil seals on the rubber pad or cloth.
2. Fit the apex seals without springs and side pieces into their respective grooves so that each side piece positions on the rear side of each rotor.
3. Place the corner seal springs and corner seals into their respective grooves.
4. Fit the side seal springs and side seals into their respective grooves.



Fig. 1–65 Installing side seal

5. Apply engine lubricant onto each spring, and confirm the smooth movement of each spring by pressing its head.
6. Check each seal protrusion. (Ref. Par. 1–B–11, 12)
7. Invert the rotor, being careful not to drop the seals on the rubber pad or cloth, and install the oil seals on the other side in the same manner as above.

1–C–3. Installing Front Rotor

1. Mount the front housing on the **work stand** (49 0839 000) with the **hanger** (49 1114 005).
2. Turn the front housing on the work stand so that the top of the housing is up.
3. Apply engine lubricant onto the internal gear of the rotor.
4. Hold the apex seals by using the used "O" ring to keep the apex seals in position and place the rotor assembly on the front housing taking care not to drop the seals. Then turn the front housing with the rotor so that the sliding surface of the front housing faces upward.

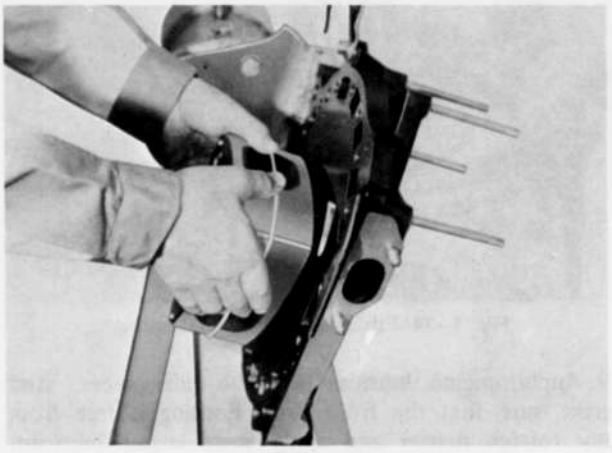

Fig. 1–66 Install front rotor assembly

5. Mesh the internal gear and stationary gear so that one of the rotor apexes is set to any one of the four places shown in Fig. 1–67, and remove the used "O" ring.

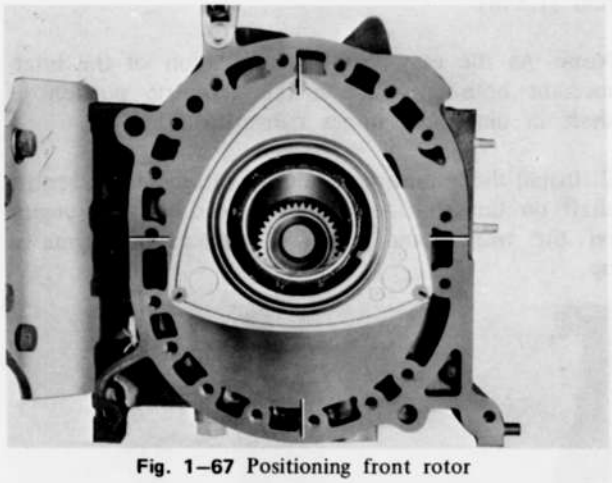

Fig. 1–67 Positioning front rotor

Note:
In this case, be careful not to drop the corner seal into the ports.

1–C–4. Installing Eccentric Shaft

1. Lubricate the front rotor journal and main journal on the shaft with engine lubricant.
2. Insert the eccentric shaft being careful not to damage the rotor bearing and main bearing.

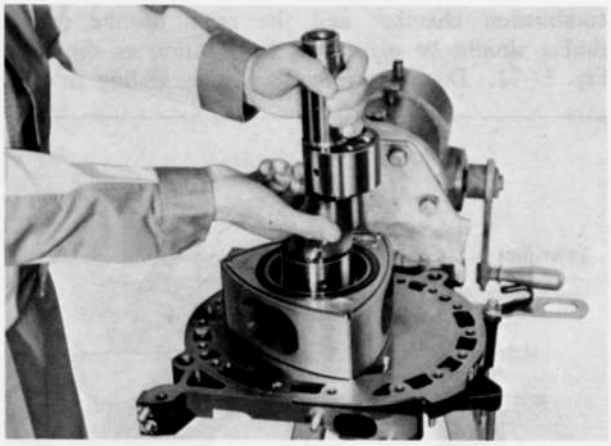

Fig. 1–68 Installing eccentric shaft

1–C–5. Installing Front Rotor Housing

1. Apply sealing agent onto the front side of the rotor housing, as shown in Fig. 1–69.

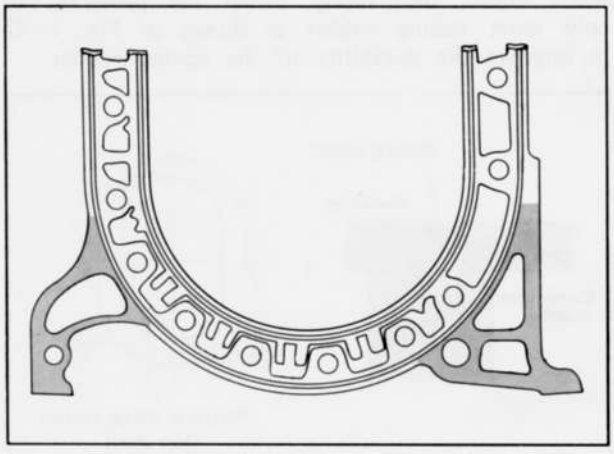

Fig. 1–69 Applying sealing agent

2. Slightly apply vaseline or petrolatum onto new "O" rings and sealing rubbers to prevent them from coming off, and place the "O" rings and sealing rubbers on the front side of the rotor housing.

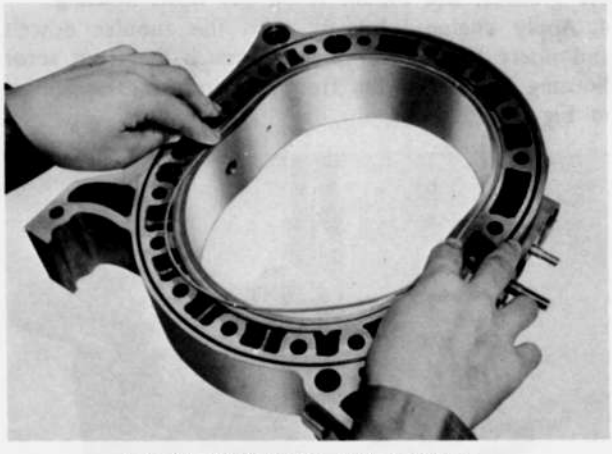

Fig. 1–70 Installing sealing rubber

Note:
The inner sealing rubber is square type. The wider white line of the sealing rubber should face with

combustion chamber and the seam of the sealing rubber should be placed at the position as shown in Fig. 1–71. Do not stretch the inner sealing rubber.

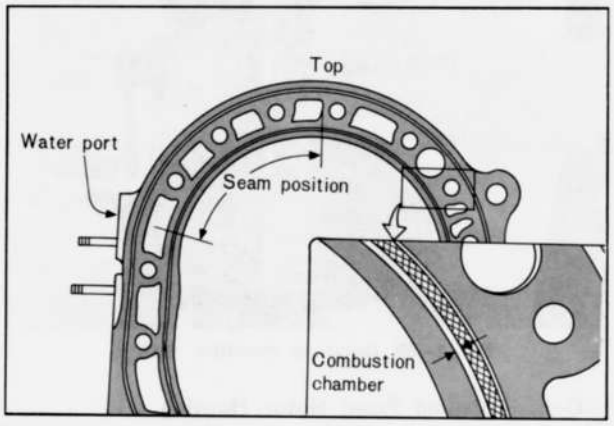

Fig. 1–71 Positioning inner sealing rubber

When engine overhauling, install the protector to only inner sealing rubber as shown in Fig. 1–72 to improve the durability of the sealing rubber.

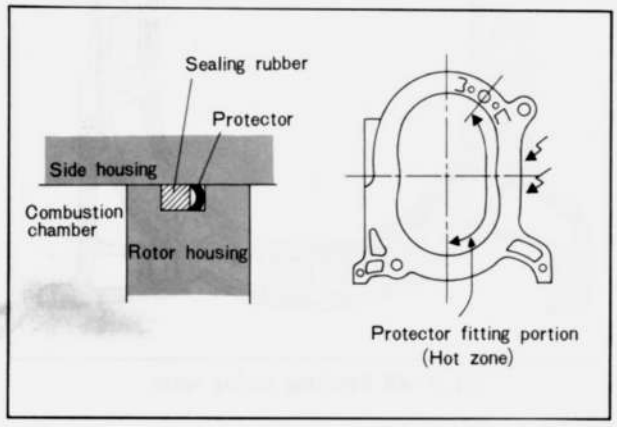

Fig. 1–72 Installing sealing rubber protector

3. Invert the front rotor housing being careful not to let the sealing rubbers and "O" rings drop out of the grooves, and mount it on the front housing.
4. Apply engine lubricant onto the tubular dowels and insert the tubular dowels through the front rotor housing holes into the front housing holes as shown in Fig. 1–73.

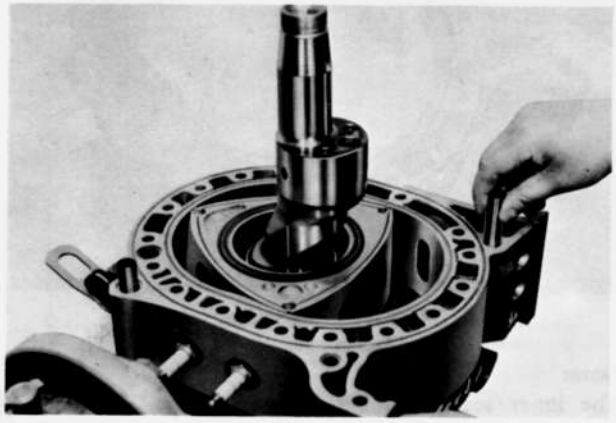

Fig. 1–73 Installing tubular dowel

5. Apply the sealing agent on the front side of the rotor housing reffering to the other side.
6. Place new "O" rings and sealing rubbers on the front rotor housing in the same manner as on the other side.
7. Insert the each apex seal spring confirming the spring direction.
8. Fit the each side piece to its original position. And confirm that the spring should be set correctly on the side piece.

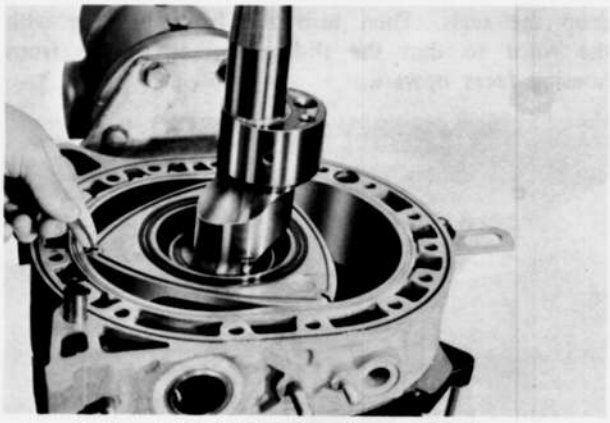

Fig. 1–74 Fitting side piece and spring

9. Apply engine lubricant on the side pieces. And make sure that the front rotor housing is free from any foreign matter and apply some engine lubricant onto the sliding surface of the front housing.

1–C–6. Installing Intermediate Housing

1. Turn the front housing with rotor assembly so that the top of the housing is up, and pull the eccentric shaft about 25 mm (1 in), but do not pull over 35 mm (1.5 in).

Note: As the easy way of installation of the intermediate housing, position the eccentric portion of shaft in diagonally upper right direction.

2. Install the intermediate housing through the eccentric shaft on the front rotor housing, and turn the engine on the work stand so that the rear of engine is up.

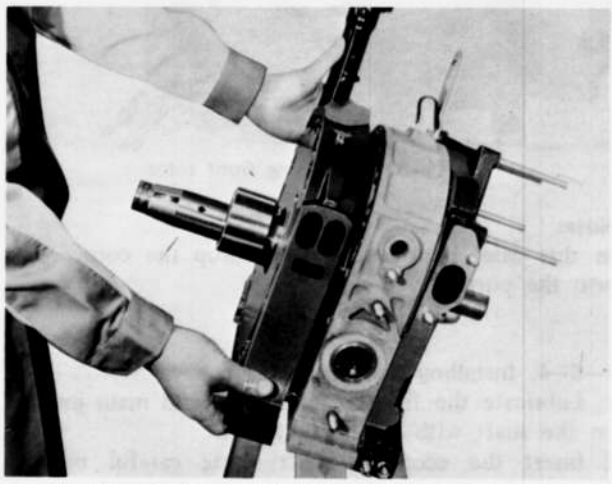

Fig. 1–75 Installing intermediate housing

1–C–7. Installing Rear Rotor and Rear Rotor Housing

Refer to steps 1–C–1 to 1–C–5 and install the rear rotor and rear rotor housing.

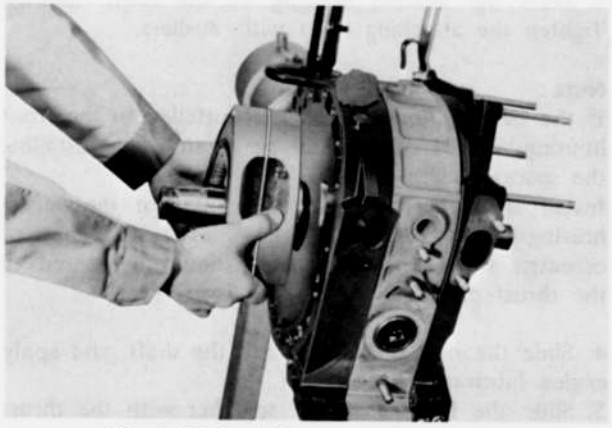

Fig. 1–76 Installing rear rotor assembly

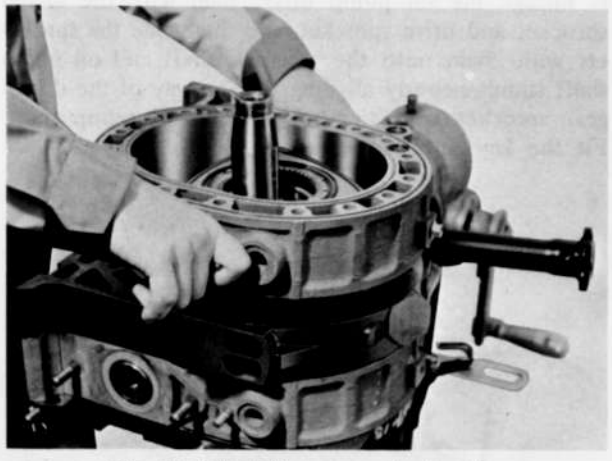

Fig. 1–77 Installing rear rotor housing

1–C–8. Installing Rear Housing

1. Turn the engine on the work stand so that the rear of engine is up.
2. Apply sufficient engine lubricant onto the stationary gear and main bearing.
3. Install the rear housing on the rear rotor housing. If necessary, turn the rear rotor slightly to engage the rear housing stationary gear with the rear rotor internal gear.



Fig. 1–78 Installing rear housing

1–C–9. Tightening Tension Bolts

1. Place a new sealing washer in each tension bolt.
2. Apply engine oil onto the thread of the bolt.
3. Fit the tension bolts and tighten the bolts gradually in the order shown in Fig. 1–79. The specified torque is **3.2 ~ 3.8 m-kg (23 ~ 27 ft-lb)**. Do not tighten the tension bolts at one time.

Note:
Replace the sealing washer in the tension bolt when the engine is overhauled.

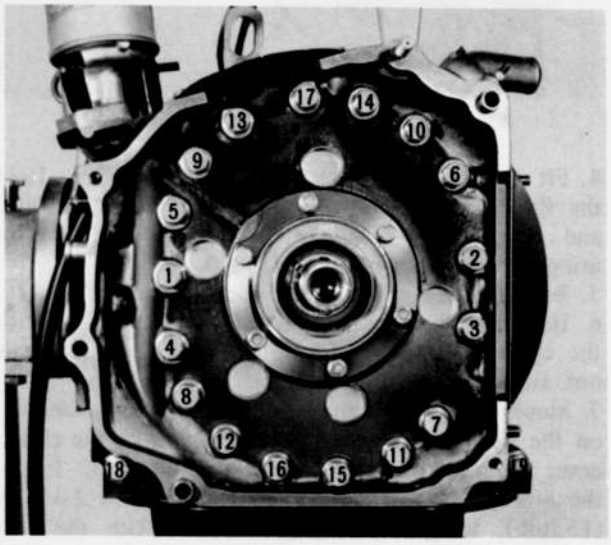

Fig. 1–79 Tension bolt tightening order

4. After tightening, turn the eccentric shaft and make sure that the rotation is light and smooth.

1–C–10. Installing Flywheel or Counter Weight

a. Manual transmission

1. Apply lubricant to the oil seal in the rear housing.
2. Mount the flywheel to the rear end of the eccentric shaft so that the key fits into the keyway of the flywheel.

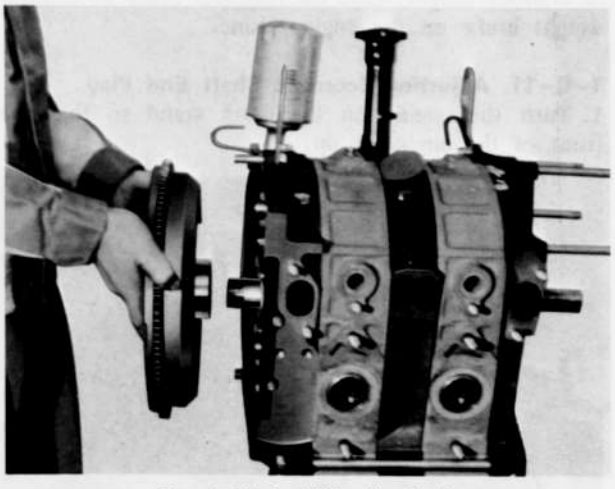

Fig. 1–80 Installing flywheel

3. Apply sealing agent to both sides of the flywheel lock washer and place the lock washer in position.

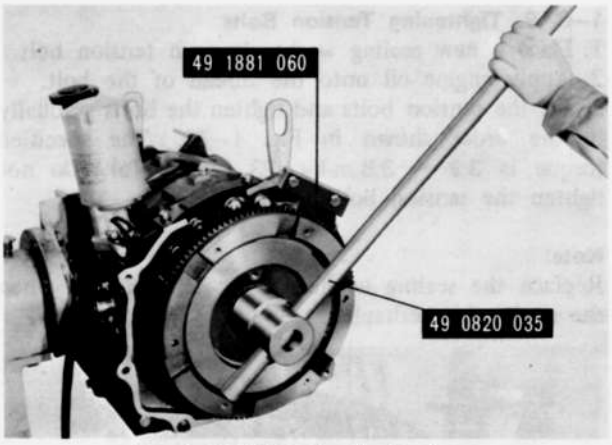

Fig. 1–81 Tightening flywheel nut

4. Fit the flywheel lock nut by the fingers. Hold the flywheel with the **ring gear brake** (49 1881 060) and tighten the lock nut to **45.0 m-kg (350 ft-lb)** using the **special wrench** (49 0820 035).
5. Bent the tab of the lock washer.
6. Hold the clutch disc in its mounting position with the **clutch disc arbor** (49 0813 310). If the arbor is not available, use a spare main drive shaft.
7. Mount the clutch cover and pressure plate assembly on the flywheel, and align the "O" mark on the clutch cover with the reamed hole of the flywheel. Install the attaching bolts and tighten the bolts to 2.0 m-kg (15 ft-lb), using the ring gear brake. Use the two reamer bolts in the reamed holes.

b. Automatic transmission

1. Referring to the above manners (1–C–10. a), fit the key, counter weight, lock washer and nut on the eccentric shaft.
2. Hold the counter weight with the **counter weight brake** (49 1881 055) and tighten the lock nut to **45.0 m-kg (350 ft-lb)** using the **special wrench** (49 0820 035).
3. Fit the drive plate on the counter weight and tighten attaching nuts. After installing the flywheel or counter weight, leave the ring gear brake or counter weight brake on the engine alone.

1–C–11. Adjusting Eccentric Shaft End Play

1. Turn the engine on the work stand so that the front of the engine is up.

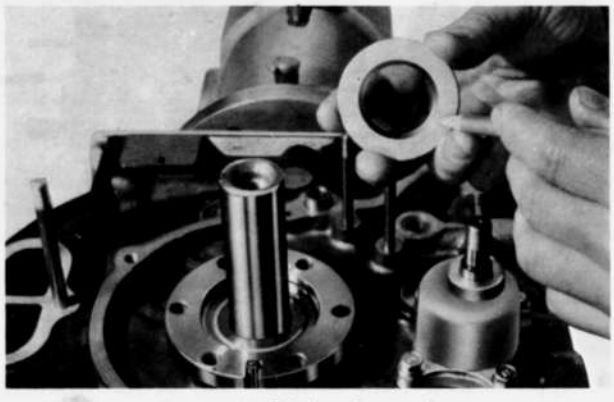

Fig. 1–82 Fitting thrust plate

2. Fit the thrust plate with the tapered face down, and slide the spacer and needle bearing onto the eccentric shaft. Then apply sufficient engine lubricant onto them.
3. Place the bearing housing on the front housing. Tighten the attaching bolts with washers.

Note :

If the bearing housing has been installed to the front housing, special care should be taken when installing the spacer.
Install the spacer so that the center of the needle bearing in the bearing housing comes to the center of eccentric shaft, and the spacer should be seated to the thrust plate.

4. Slide the needle bearing onto the shaft, and apply engine lubricant onto it.
5. Slide the balance weight together with the thrust washer onto the shaft.
6. Engage the oil pump drive chain with the driven sprocket and drive sprocket, and then slide the sprockets with chain onto the eccentric shaft and oil pump shaft simultaneously aligning the keyway of the driven gear sprocket with the key on the oil pump shaft. Fit the key onto the eccentric shaft.

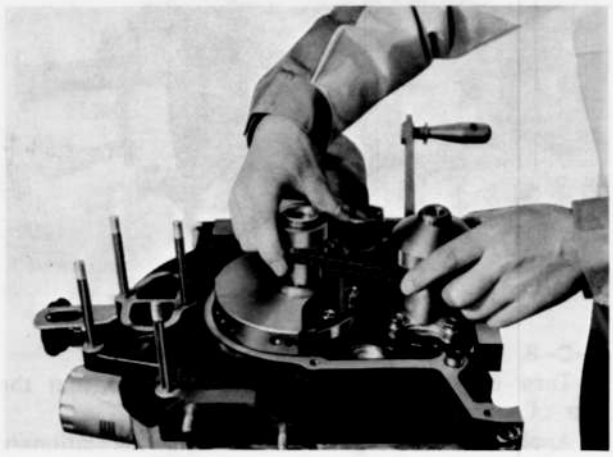

Fig. 1–83 Installing chain and sprockets

7. Slide the distributor drive gear onto the eccentric shaft with "F" mark on the gear faced the front of

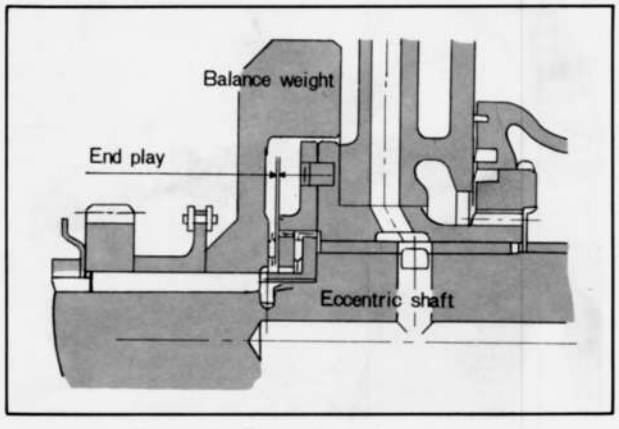

Fig. 1–84 Eccentric shaft end play

engine, and then slide the spacer and oil thrower onto the eccentric shaft.
8. Install the eccentric shaft pulley onto the shaft aligning the keyway of the pulley with the key.
9. Tighten the pulley bolt to **8.5 m-kg (60 ft-lb).**
10. Turn the engine on the work stand so that the top of the engine is up.
11. Apply a dial indicator onto the flywheel as shown in Fig. 1-85. Move the flywheel fore and aft, and note the reading of the indicator. The standard end play is **0.04 ~ 0.07 mm (0.0016 ~ 0.0028 in).**

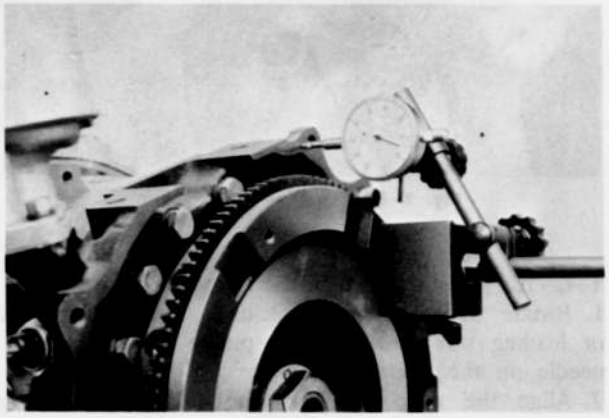

Fig. 1–85 Checking end play

If the end play is more than **0.09 mm (0.0035 in),** adjust it by grinding the spacer on a surface plate using an emery paper or replace the spacer. And then recheck the end play in the same manner as above.



Fig. 1–86 Adjusting spacer

Note :
(1) If the end play is below the specified amount, the spacer thickness is too small. If the end play is above the specified amount, the spacer thickness is too big.
(2) The spacers are available in the following thicknesses :

Identification Mark	Thickness
X	8.08 ± 0.01 mm (0.3181 ± 0.0004 in)
Y	8.04 ± 0.01 mm (0.3165 ± 0.0004 in)
V	8.02 ± 0.01 mm (0.3158 ± 0.0004 in)
Z	8.00 ± 0.01 mm (0.3150 ± 0.0004 in)

If the end play is 0.04 ~ 0.07 mm (0.0016 ~ 0.0028 in), remove the eccentric shaft pulley, and proceed as follows to install the front cover.

1–C–12. Installing Front Cover and Eccentric Shaft Pulley

1. Turn the engine on the work stand so that the front of the engine is up.
2. Tighten the oil pump driven sprocket nut and bend the tab of the lock washer.
3. Place the chain adjuster in position and tighten the attaching nuts.
4. Place a new "O" ring on the oil passage of the front cover.

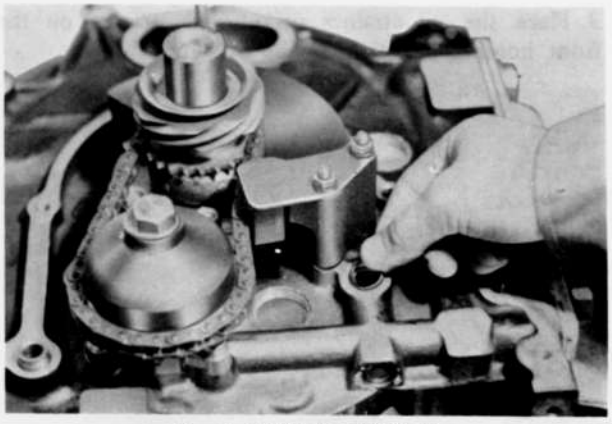

Fig. 1–87 Placing "O" ring

5. Place the gasket and front cover on the front housing, and tighten the attaching bolts.

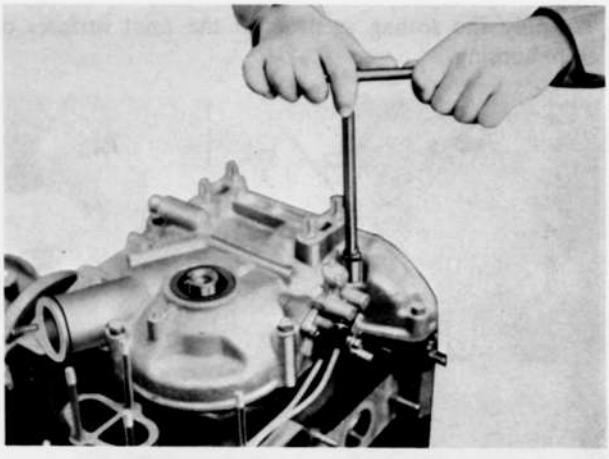

Fig. 1–88 Installing front cover

6. Apply engine lubricant onto the oil seal in the front cover.
7. Install the eccentric shaft pulley onto the shaft and tighten the pulley bolt to 8.5 m-kg (60 ft-lb).

1–C–13. Installing Oil Strainer and Oil Pan

1. Turn the engine on the work stand so that the bottom of the engine is up.
2. Cut off the excess gasket on the front cover along the mounting surface of the oil pan.

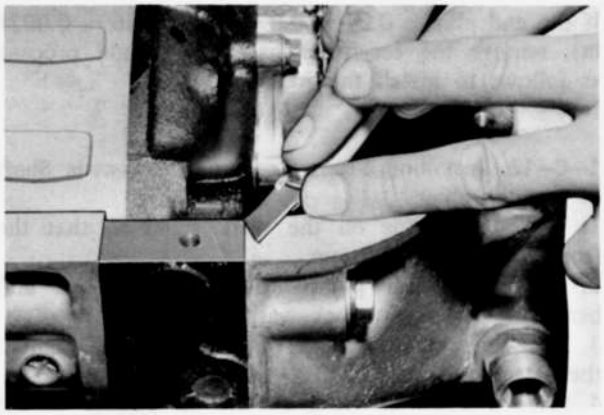

Fig. 1–89 Cutting off excess gasket

3. Place the oil strainer gasket and strianer on the front housing and tighten the attaching bolts.

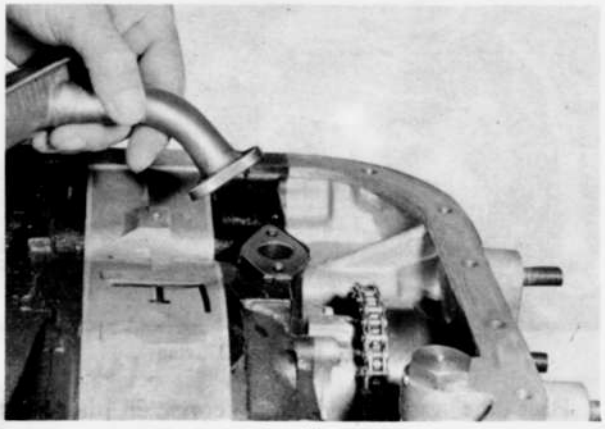

Fig. 1–90 Installing oil strainer

4. Apply the sealing agent onto the joint surfaces of each housing.

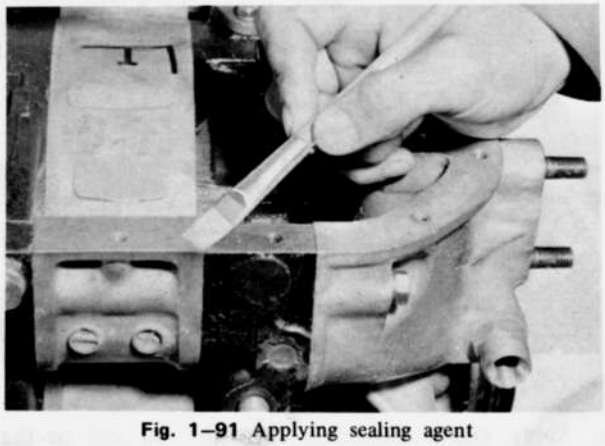

Fig. 1–91 Applying sealing agent

5. Place the gasket and oil pan in position.
6. Insert the bolts through the stiffeners, and tighten the bolts little by little in turn until the torque becomes 0.55 m-kg (3.5 ft-lb) evenly.

1–C–14. Installing Water Pump

1. Turn the engine on the work stand so that the top of the engine is up.
2. Place the gasket and water pump on the front housing, and tighten the attaching nuts.

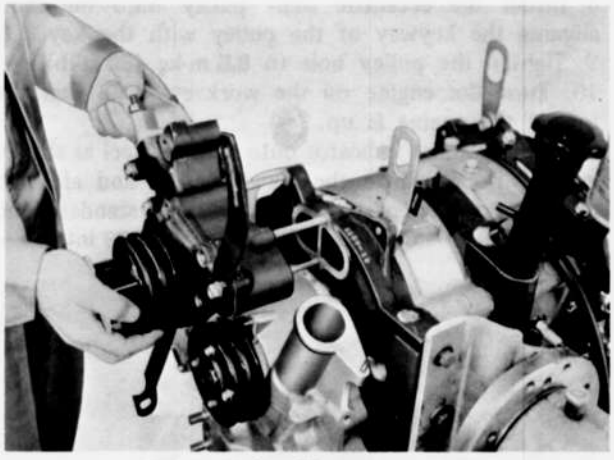

Fig. 1–92 Installing water pump

1–C–15. Installing Distributor

1. Rotate the eccentric shaft until the yellow mark or leading side mark on the pulley aligns with the needle on the front cover.
2. Align the tally mark on the distributor housing and driven gear as shown in Fig. 1–93.

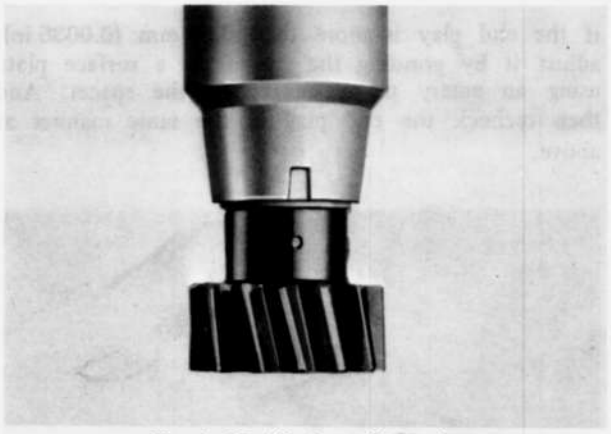

Fig. 1–93 Aligning tally mark

3. Insert the distributor so that the distributor lock bolt is located in the center of the slit, and engage the gears.



Fig. 1–94 Installing distributor

4. Rotate the distributor clockwise until the leading contact point starts to separate, and tighten the distributor lock nut.
5. Fit the distributor cap.

1–C–16. Installing Exhaust Manifold

1. Remove the engine from the work stand.
2. Place the gaskets and the thermal reactor (or exhaust manifold) in position, and tighten the attaching nuts.
3. Place the hot air duct in position and tighten the attaching nuts.

1–C–17. Installing Intake Manifold

1. Place the carburetor and intake manifold assembly, with the gaskets in position and tighten the attaching nuts.

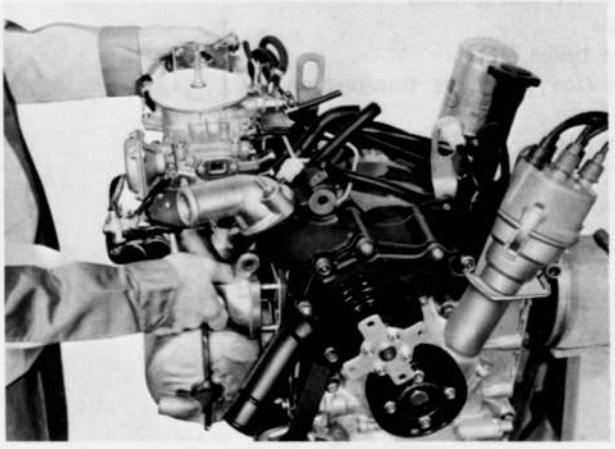

Fig. 1–95 Installing intake manifold assembly

2. Connect the oil tubes, vacuum tube and metering oil pump connecting rod with the carburetor.
3. Install the deceleration valve if equipped and connect the vacuum hoses, air hoses and wires.

1–C–18. Installing Alternator and Air Pump

1. Place the alternator to the bracket with the bolt, and check the clearance Ⓐ as shown in Fig. 1–96.

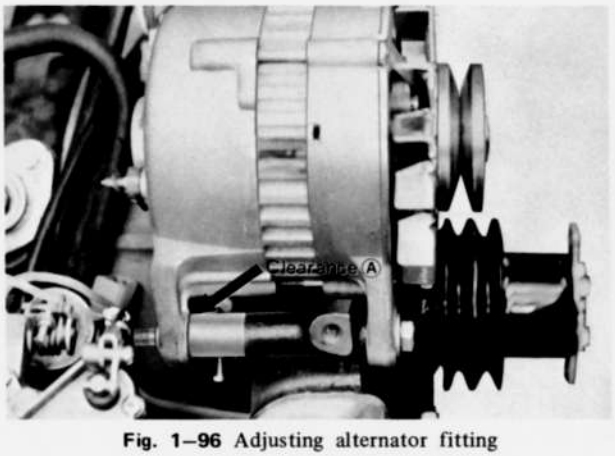

Fig. 1–96 Adjusting alternator fitting

If the clearance is more than 0.15 mm (0.0059 in), adjust it by using the following adjust shim.

0.15 mm	(0.0059 in)
0.3 mm	(0.0118 in)
0.5 mm	(0.0197 in)

2. Attach the upper end of the alternator flange to the adjusting bar, and fit the "V" belt.
3. Adjust the belt deflection.
The belt deflaction should be **15 mm (0.59 in)** when thumb pressure of about 10 kg (22 lb) is applied to the middle of the belt between the alternator pulley and eccentric shaft pulley.mOn a new belt, the deflaction should be **13 mm (0.51 in)**. After adjusting, tighten the bolts and nuts.

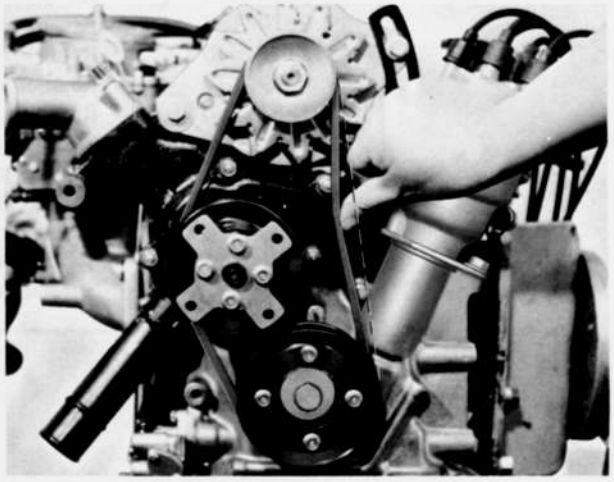

Fig. 1–97 Adjusting alternator belt

4. Install the air pump with the attaching bar and bolts, if equipped. Fit the "V" belt.
5. To adjust the "V" belt tension, push the "V" belt with about 10 kg (22 lb) as shown in Fig. 1–98. The belt deflection should be **10 mm (0.39 in)**. On the new belt, it should be **8 mm (0.31 in)**. After adjusting, tighten the bolts and nuts.

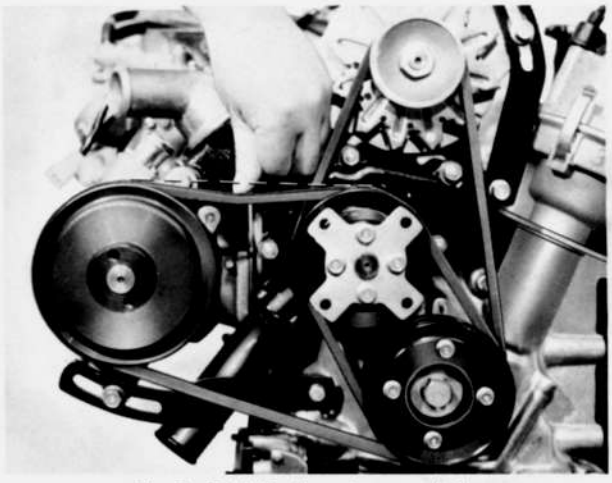

Fig. 1–98 Adjusting air pump belt

6. Before removing the engine from the work stand, install the engine hanger bracket to the front cover.

SPECIAL TOOLS

49 0839 000	Engine work stand
49 1114 005	Engine hanger
49 0820 035	Special wrench
49 0823 300	Flywheel puller
49 0839 305	Counter weight puller
49 0813 250	Seal case
49 0813 215	Tubular dowel puller
49 0813 235	Main bearing replacer
49 0813 240	Rotor bearing replacer
49 0813 225	Oil seal remover
49 0839 165	Bar limit gauge (for corner seal groove)
49 2113 030	Reboring jig (for corner seal groove)
49 0839 170	Reamer (for corner seal groove)
49 1881 060	Ring gear brake
49 1881 055	Counter weight brake
49 0877 435	Special wrench (for automatic transmission)
49 0813 310	Clutch disk arbor
49 0823 070A	Eccentric shaft bearing replacer
49 1881 135	Special wrench (for P.C.V. valve)
49 1881 125	Special wrench (for thermal reactor)

1974 EMISSION CONTROL SYSTEM

DESCRIPTION ..... 1A : 3
1A–A. EXHAUST EMISSION CONTROL SYSTEM ..... 1A : 3
1A–A–1. Air Injection and Thermal Reactor System ..... 1A : 3
a. Air pump ..... 1A : 4
b. Check valve ..... 1A : 4
c. Air injection nozzles .... 1A : 4
d. Air control valve ..... 1A : 4
e. Thermal reactor ..... 1A : 6
1A–A–2. Ignition and Air Flow Control System ..... 1A : 6
a. Thermosensor ..... 1A : 7
b. Thermodetector ..... 1A : 7
c. Control unit ..... 1A : 8
d. Idle switch ..... 1A : 9
1A–A–3. Additional Air Control System ..... 1A : 9
a. Deceleration control valve ..... 1A : 9
b. Altitude compensator (U.S.A and Canada spec models only) ..... 1A : 10
1A–A–4. Kick-down Control System (For automatic transmission only) ..... 1A : 11
a. Water temperature switch (Full-automatic choke system U.S.A and Canada spec models only) ..... 1A : 12
b. Choke switch (Semi-automatic choke system ..... 1A : 12
1A–B. CRANKCASE EMISSION CONTROL SYSTEM (VENTILATION SYSTEM).. 1A : 12
1A–B–1. Ventilation Valve ..... 1A : 12
1A–C. EVAPORATIVE EMISSION CONTROL SYSTEM (U.S.A and Canada spec models only) ..... 1A : 13
1A–C–1. Charcoal Canister ..... 1A : 13
1A–C–2. Condense Tank ..... 1A : 14
1A–C–3. Check Valve ..... 1A : 14
1A–D. PROTECTIVE SYSTEM ..... 1A : 15
1A–D–1. Heat Hazard Sensor and Heat Hazard Warning Lamp..... 1A : 15
1A–E. MAINTENANCE SCHEDULE ..... 1A : 16
1A–E–1. Air Pump ..... 1A : 16
1A–E–2. Check Valve (Air Injection System) ..... 1A : 16
1A–E–3. Thermal Reactor ..... 1A : 16
1A–E–4. Air Control Valve ..... 1A : 17
1A–E–5. Thermosensor ..... 1A : 17
1A–E–6. Thermodetector ..... 1A : 18
1A–E–7. Control Unit ..... 1A : 18
1A–E–8. Deceleration Control Valve ..... 1A : 19
1A–E–9. Altitude Compensator (U.S.A and Canada spec models only) ..... 1A : 20
1A–E–10. Water Temperature Switch (U.S.A and Canada spec models only) ..... 1A : 21
1A–E–11. Idle Switch ..... 1A : 21
1A–E–12. Choke Switch (For semi-automatic choke system ... 1A : 22
1A–E–13. Ventilation Valve ..... 1A : 22
1A–E–14. Evaporative Line (U.S.A and Canada spec models only) ..... 1A : 22
1A–E–15. Charcoal Canister (U.S.A and Canada spec models only) ..... 1A : 23
1A–E–16. Condense Tank (U.S.A and Canada spec models only) ..... 1A : 23
1A–E–17. Check Valve (Evaporative emission control sytem, U.S.A and Canada spec models only) ..... 1A : 23
1A–E–18. Heat Hazard Warning System ..... 1A : 24
1A–E–19 Hoses and Tubes (All systems) ..... 1A : 24
1A–F. TROUBLE SHOOTING ..... 1A : 25
SPECIAL TOOLS ..... 1A : 30

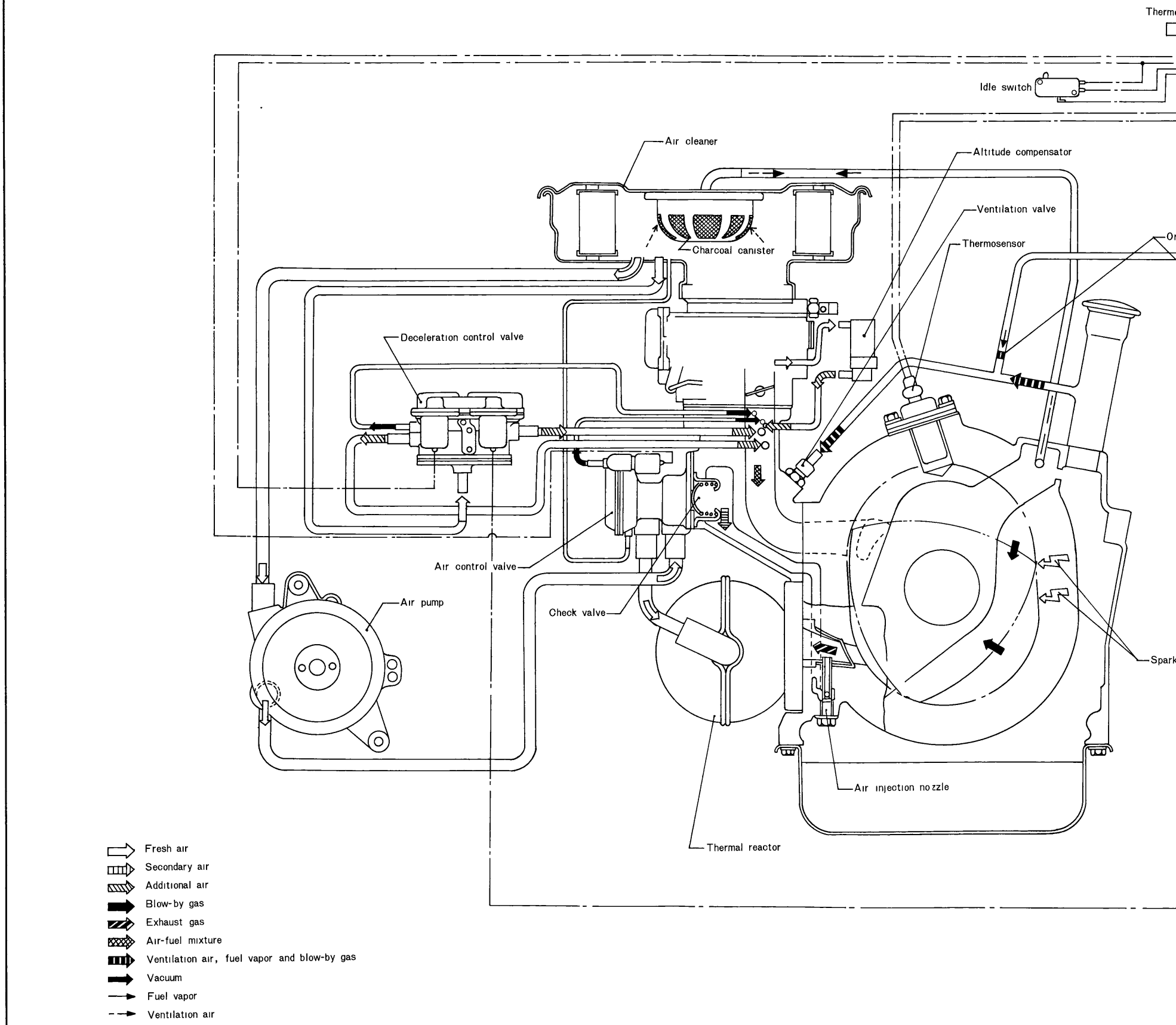

Fig. 1A–1 Emission control system (For U.S.A. and Canada spec. models)

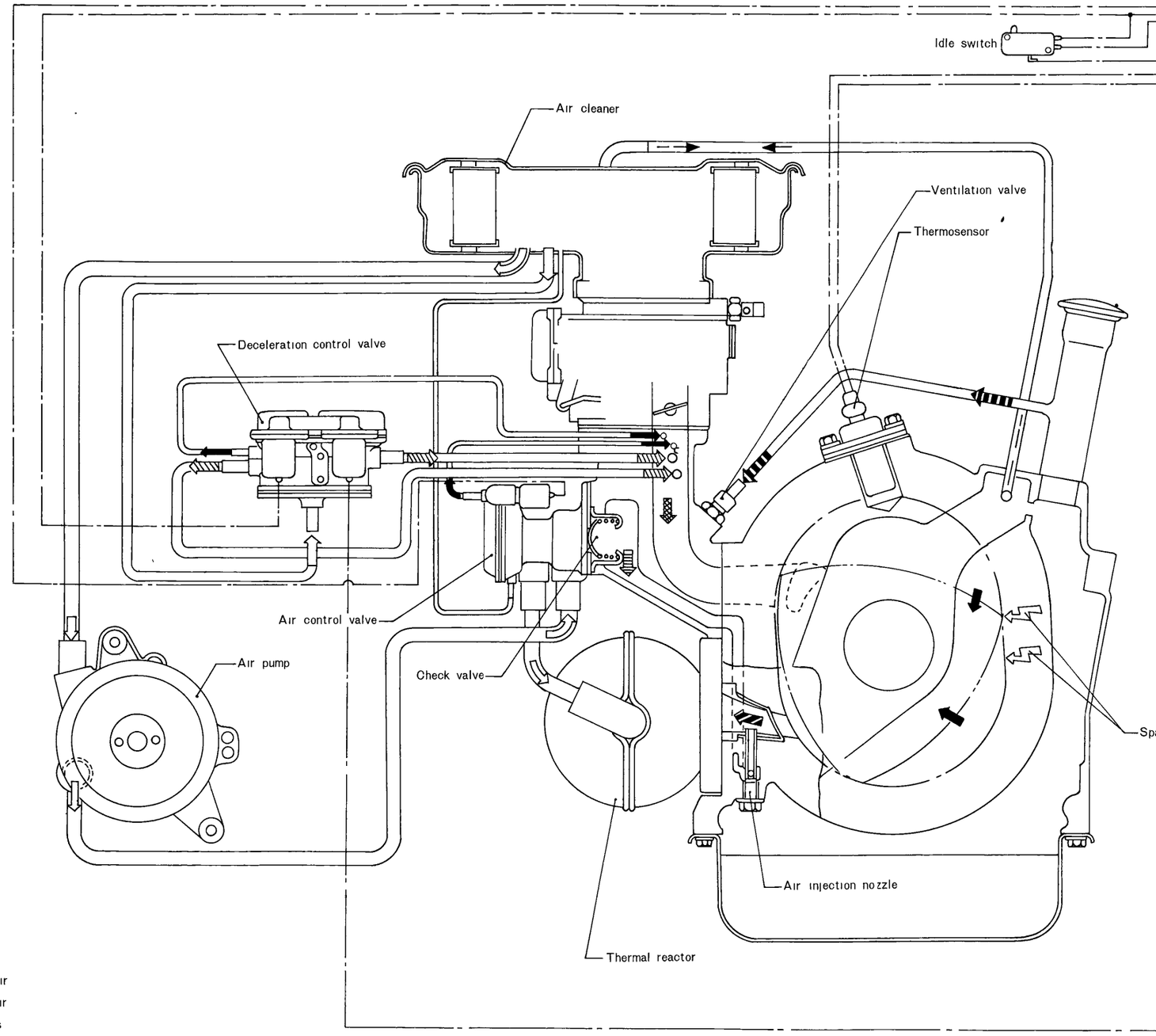
Idle switch
Air cleaner
Ventilation valve
Thermosensor
Deceleration control valve
Air control valve
Air pump
Check valve
Air injection nozzle
Thermal reactor
Fresh air
Secondary air
Additional air
Blow-by gas
Exhaust gas
Air-fuel mixture
Ventilation air, fuel vapor and blow-by gas
Vacuum
Fuel vapor
Ventilation air

DESCRIPTION

The emission control system consists of an exhaust emission control system, a crankcase emission control system (ventilation system), an evaporative emission control system and a protective system.

Note: The vehicles for U.S.A and Canada are equipped with an evaporative emission control system and an altitude compensator in the additional air control system.

1A–A. EXHAUST EMISSION CONTROL SYSTEM

The exhaust emission control system, consisting of an air injection and thermal reactor system, an ignition and air flow control system, an additional air control system and a kick-down control system (automatic transmission), reduces air polluting hydrocarbon and carbon monoxide contained in the exhaust gas of the operating engine.

1A–A–1. Air Injection and Thermal Reactor System

The air injection and thermal reactor system, consisting of a thermal reactor, an air pump, a check valve, air injection nozzles and an air control valve, injects into the exhaust port secondary air necessary for oxidation of hydrocarbon and carbon monoxide contained in the exhaust gas.

The air sucked from the air cleaner by the air pump is sent into the air control valve. The air (secondary air) from the air control valve ordinarily flows into the exhaust ports through the check valve and the air injection nozzles. However, under the conditions mentioned below, the flow of the secondary air into the exhaust ports is stopped by the ignition and air flow control system as well as protective system (operation of air cut valve), and the air (cooling air) flows into the thermal reactor cooling air jacket to properly maintain the temperature of the reactor.

1. When the engine speed is over 4,000 rpm (in case of automatic transmission, 4,800 rpm when engine is cold and 3,400 rpm when engine is hot)–operation of ignition and air flow control system–
2. When the engine speed is over 1,200 rpm during deceleration (1,400 rpm in case of automatic transmission)–operation of ignition and air flow control system.
3. When running under full load (throttle valve is nearly wide open)
4. When the floor temperature is over approximately

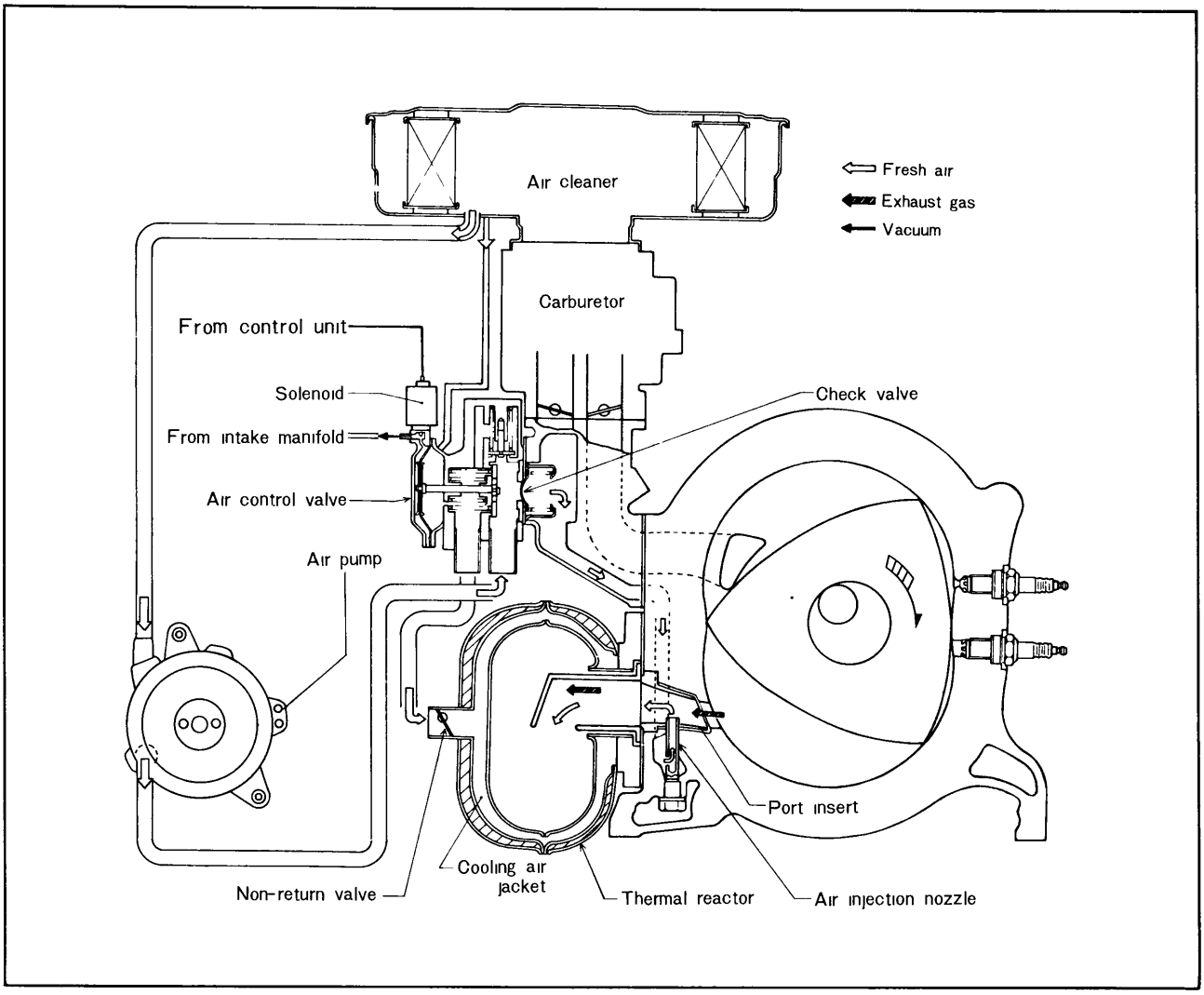

Fig. 1A–3 Air injection and thermal reactor system

120°C (248°F)–operation of protective system–
The timing of supplying the secondary air into the exhaust ports and the cooling air into the thermal reactor cooling air jacket is controlled in accordance with the operating conditions of the vehicle (See Par. 1A–A–2).

a. Air pump
The air pump is a vane type driven by the V-belt mounted on the eccentric shaft pulley. The air pump sucks fresh filtered air from the air cleaner, compresses the air and injects it through the air control valve, check valve and air injection nozzles into the exhaust ports adjacent to the thermal reactor.

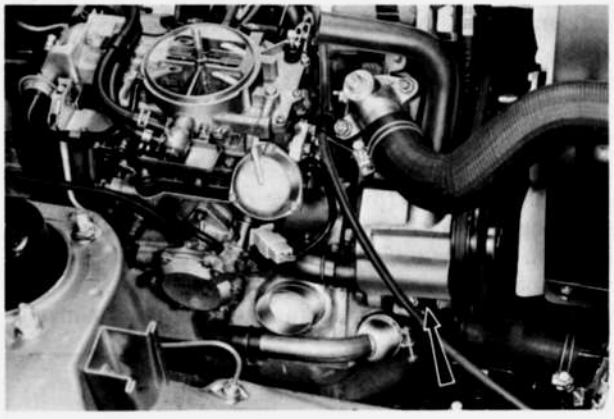

Fig. 1A–4 Air pump

b. Check valve
The check valve opens and closes according to the pressure difference between secondary air and exhaust gas to prevent exhaust gas from backflowing into the air injection system and scorching the air pump, hoses, etc. When the pressure of secondary air in the air injection system exceeds the exhaust gas pressure, the secondary air opens the check valve and flows through the air injection nozzles into the exhaust ports.
When the secondary air pressure drops lower than the exhaust gas pressure due to failure of the air pump belt, breaking of the secondary air hose, etc., the check valve closes to prevent the backflow of the exhaust gas into the air injection system.

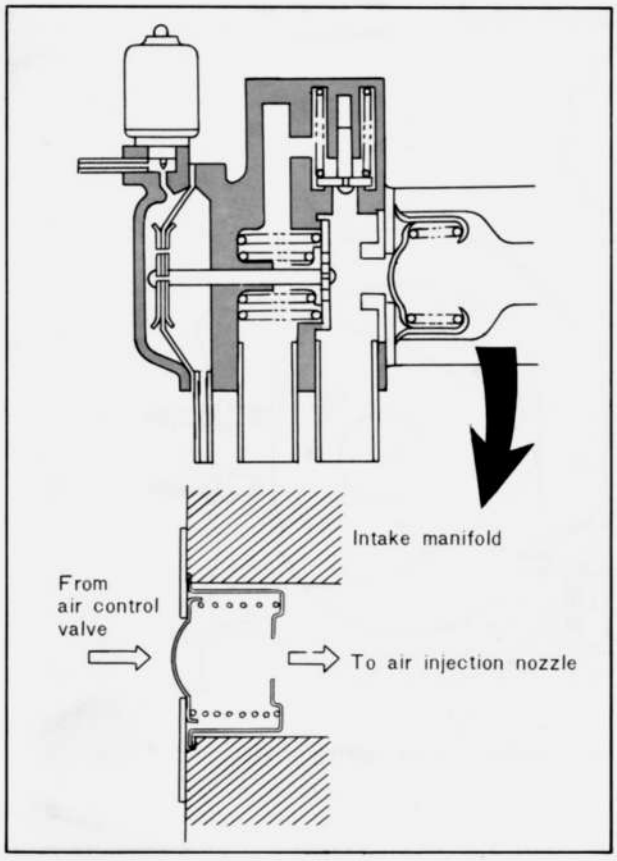

Fig. 1A–5 Check valve

c. Air injection nozzles
The air injection nozzles are attached to each of the front and rear rotor housings. The secondary air channeled via the air pump and the check valve is injected through the nozzles into the exhaust ports adjacent to the thermal reactor.

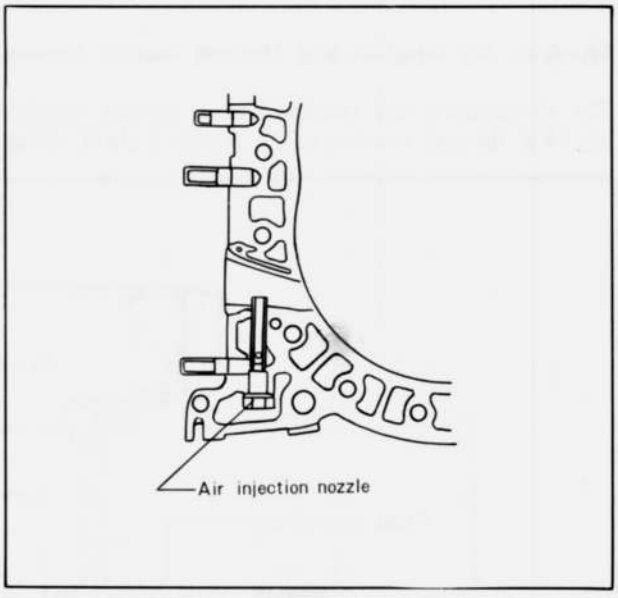

Fig. 1A–6 Air injection nozzle

d. Air control valve
The air control valve, consisting of an air cut valve, a No. 1 relief valve and a No. 2 relief valve, has the following functions.



Fig. 1A–7 Air control valve

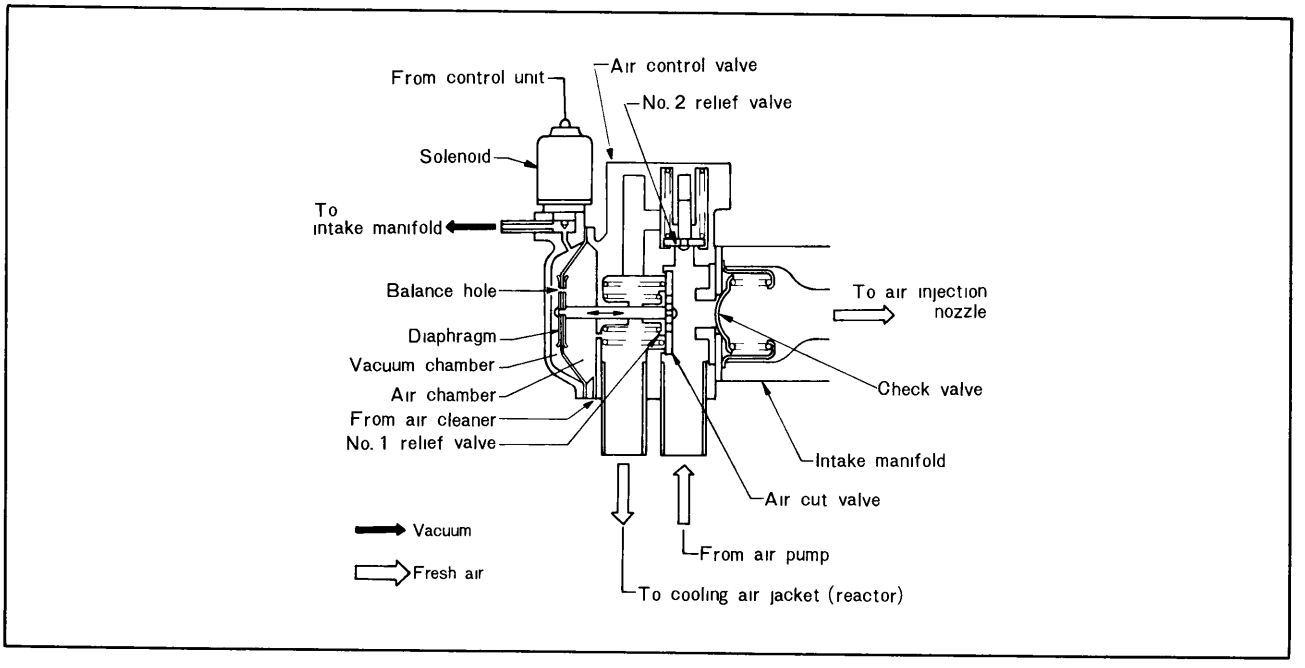

Fig. 1A–8 Air control valve cross section

1. When the air cut valve is not operating, it becomes the passage of the secondary air from the air pump into the exhaust ports through the check valve and air injection nozzles.–operation of air control valve–

2. When the engine speed is over 4,000 rpm (in case of automatic transmission, 3,400 rpm when the engine is hot and 4,800 rpm when it is cold), the supply of the secondary air into the exhaust ports stops and the secondary air (cooling air) flows into the thermal reactor cooling air jacket to cool the reactor to properly maintain the temperature of the reactor.–operation of air cut valve–

3. When the engine speed is over 1,200 rpm during deceleration (1,400 rpm in case of automatic transmission), supply of the secondary air into the exhaust ports stops and the secondary air (cooling air) flows to the thermal reactor cooling air jacket. The secondary air cutting in this instance prevents excessive supply of the secondary air into the exhaust ports and deteriorated reaction efficiency of the exhaust gas in the reactor. –operation of air cut valve–

4. When the air pressure in the air injection system exceeds, the supply of the secondary air into the exhaust ports is adjusted properly and the excessive secondary air (cooling air) is relieved to the thermal reactor cooling air jacket to cool the reactor.–operation of No. 1 relief valve and No. 2 relief valve–

The air cut valve opens and closes according to the difference of pressure between the vacuum chamber and air chamber. This valve, which is connected to the diaphragm, is closed during normal operation by the intake manifold vacuum.

When the engnie speed exceeds 4,000 rpm (in case of automatic transmission 3,400 rpm at warm condition, 4,800 rpm at cold condition), the control unit actuates the solenoid to close the vacuum sensing way. This equalizes the pressures in the two chambers, the spring force causes the valve to open and the air in the air injection system is channeled to the thermal reactor cooling air jacket before being expelled to the atmosphere. At the same time, the air cut valve closes the secondary air passage to cut secondary air supply into the exhaust ports.

During deceleration with the accelerator pedal released completely when the engine speed is over 1,200 rpm (1,400 rpm in case of automatic transmission), the solenoid of the air control valve closes the vacuum sensing way between the intake manifold and the air control valve by means of the low speed switch in the control unit and the idle switch. Consequently, the spring force causes the valve to open and the air in the air injection system is channeled to the thermal reactor cooling air jacket before being expelled to the atmosphere. At the same time, the air cut valve closes the secondary air passage to cut secondary air supply into the exhaust ports.

When the engine is running with full load, the difference of pressure between the vacuum chamber and the air chamber of the air control valve diminishes because the intake manifold vacuum which is led to the vacuum chamber decreases. Consequently, the spring force causes the valve to open and the air in the air injection system is channeled to the thermal reactor cooling air jacket before being expelled to the atmosphere. At the same time, the air cut valve closes the secondary air passage to cut secondary air supply into the exhaust ports.

The No. 1 relief valve is opened and closed in accordance with air pressure in the air injection system and the force of the return spring. When the air pressure in the air injection system increases, the No. 1 relief valve is opened and the air is led to the thermal reactor cooling air jacket to cool it before being expelled to the atmosphere, thus the seoncdary air flow rate being controlled. When the air pressure decreases, the spring closes the valve.

The No. 2 relief valve is opened and closed in accordance with air pressure in the air injection system and the force of the return spring. When the air pressure in the air injection system exceeds the specified value, the No. 2 relief valve is opened and the air is led to the thermal

reactor cooling air jacket to cool it before being expelled to the atmosphere, thus the secondary air flow rate being controlled. When the air pressure decreases, the spring closes the valve.

e. Thermal reactor

The thermal reactor is mounted just outside the exhaust ports. It oxidizes the unburned exhaust gas expelled from the engine, to reduce the noxious components such as hydrocarbon and carbon monoxide. When the engine speed is high or during deceleration or full load running, the air control valve feeds fresh air from the air pump to the thermal reactor cooling air jacket to properly maintain the temperature of the reactor. The non-return valve which prevents backflow of exhaust gas from the reactor is attached at the air inlet of the reactor.

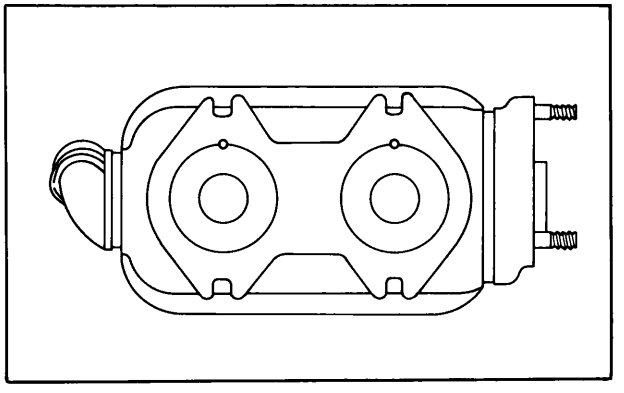

Fig. 1A–9 Thermal reactor

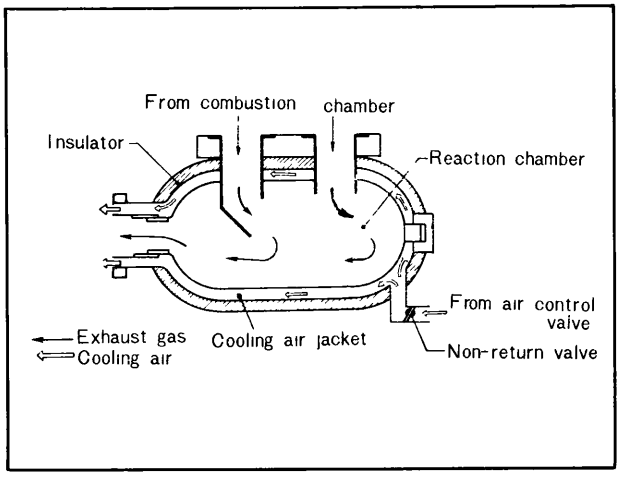

Fig. 1A–10 Cooling air circuit

1A–A–2. Ignition and Air Flow Control System

The ignition and air flow control system consists of a thermosensor, a thermodetector, an idle switch, and a control unit including high speed switch, low speed switch, thermoswitch and trailing ignition switch. This system ignites and cuts the trailing spark plug to suit engine temperature and engine speed in order to enhance the reactivity of the thermal reactor when the engine is cold. This system has an additional function of regulating the air control valve and the deceleration control valve.

The operating time of the ignition and air flow control system is shown by the following table.

Secondary Air Injection Cut

Manual transmission

Operating time	Parts that operate coordinately
When engine speed is over 4,000 rpm	solenoid of air control valve, air cut valve, high speed switch
During deceleration when engine speed is over 1,200 rpm	solenoid of air control valve, air cut valve, low speed switch, idle switch
When running under full load (throttle valve is nearly wide open)	air cut valve
When floor temperature is over approximately 120°C (248°F) (Protective System)	heat hazard sensor, control unit, solenoid of air control valve, air cut valve

Automatic Transmission

Operating time	Parts that operate coordinately
When engine speed is over the specified value 4,800 rpm when cold 3,400 rpm when hot	solenoid of air control valve, air cut valve, high speed switch thermosensor, thermoswitch (the last two parts when engine is hot)
During deceleration when engine speed is 1,400 rpm	solenoid of air control valve, air cut valve, low speed switch, idle switch
When running with full load (throttle valve is nearly wide open)	air cut valve
When floor temperature is over approximately 120°C (248°F) (Protective system)	heat hazard sensor, control unit, solenoid of air control valve, air cut valve

Control of Trailing Spark Plug Ignition

Mannual Transmission

Operating time	Parts that operate coordinately
1. Trailing spark plug does not ignite. (Only leading spark plug ignites.)	
During cruising and acceleration (deceleration excluded) when engine speed is 1,200~4,000 rpm at cold condition	low speed switch, high speed switch, idle switch, trailing ignition switch
2. Trailing spark plug ignites. (Both leading and trailing spark plugs ignite.)	
When engine is hot	thermosensor, thermoswitch, trailing ignition switch
During cruising, acceleration and deceleration when engine speed is below 1,200 rpm or over 4,000 rpm at cold condition	low speed switch, high speed switch, trailing ignition switch, idle switch

Automatic Transmission

Operating time	Parts that operate coordinately
1. Trailing spark plug does not ginite. (Only leading spark plug ignites.)	
During cruising and acceleration (deceleration excluded) when engine speed is 1,400~4,800 rpm at cold condition	low speed switch, high speed switch, idle switch, trailing ignition switch
2. Trailing spark plug ignites. (Both leading and trailing spark plugs ignite.)	
When engine is hot	thermosensor, thermoswitch, trailing ignition switch
During cruising, acceleration and deceleration when engine speed is below 1,400 rpm or over 4,800 rpm at cold condition	low speed switch, high speed switch, trailing ignition switch, idle switch

a. Thermosensor

The thermosensor, which is placed in the cooling water passage, detects the water temperature and sends the signal to the control unit.

When the water temperature rises to the specified value, the thermoswitch and the trailing ignition switch in the control unit close by means of the thermosensor. The electric current then flows to the trailing side ignition coil and the trailing spark plug is ignited. In case of automatic transmission, the opening/closing time of the high speed switch in the control unit becomes from 4,800 rpm when the engine is cold to 3,400 rpm when it is hot. Consequently, when the engine speed is over 3,400 rpm at hot condition, the high speed switch closes and the electric current flows to the solenoid of the air control valve and the solenoid cuts the vacuum sensing way between the intake manifold and the air chamber of the air control valve. The air cut valve of the air control valve then stops the supply of the secondary air into the exhaust ports by means of the spring force. The secondary air flows into the thermal reactor cooling air jacket to cool the reactor.

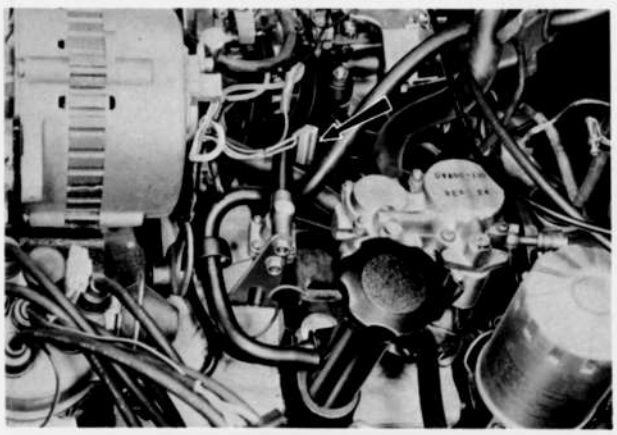

Fig. 1A–11 Thermosensor

b. Thermodetector

The thermodetector which detects the ambient temperature corrects the operating temperature of the thermosensor to resume the ignition of the trailing spark plug after the minimum time required for the thermal reactor warm-up.

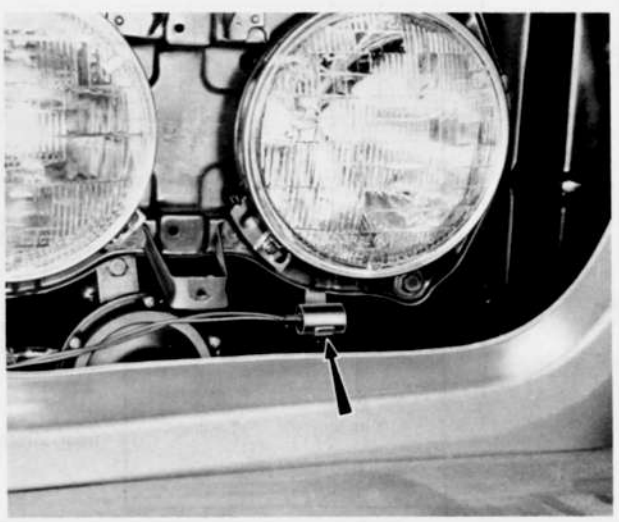

Fig. 1A–12 Thermodetector

c. Control unit

In the control unit are the thermoswitch, trailing ignition switch, low speed switch and high speed switch. The functions are as follows. (Refer to electric diagram in Fig. 1A–14)



Fig. 1A–13 Control unit

1. In the whole operating range at hot condition, the thermoswitch and the trailing ignition switch close and the electric current flows to the trailing side ignition coil and the trailing spark plug is ignited.–operation of thermoswitch and trailing ignition switch–

2. When the engine speed is over 3,400 rpm at hot condition, the thermoswitch and the high speed switch close and the electric current flows to the solenoid of the air control valve. Consequently, the solenoid cuts the vacuum sensing way between the intake manifold and the vacuum chamber. This actuates the air cut valve to stop the supply of the secondary air into the exhaust ports and the air flows into the thermal reactor cooling air jacket (only in case of automatic transmission).–operation of thermoswitch and high speed switch–

3. When the engine speed becomes over 4,000 rpm (in case of automatic transmission, 4,800 rpm at cold condition and 3,400 rpm at hot condition), the high speed switch closes and the electric current flows to the solenoid of the air control valve. The solenoid consequently cuts the vacuum sensing way between the intake manifold and the vacuum chamber of the air contorl valve. This actuates the air cut valve to stop the supply of the secondary air into the exhaust ports and the air flows to the thermal reactor cooling air jacket.–operation of high speed switch–

4. Whether at cold or hot condition, when the engine speed is over 1,200 rpm (1,400 rpm in case of automatic transmission), point Ⓐ of the low speed switch closes and the electric current flows to the idle switch, during deceleration when the accelerator pedal is relieved completely, point Ⓐ of the idle switch closes, and so the electric current from the low speed switch flows to the solenoid of the air control valve. The solenoid then closes the vacuum sensing way between the intake manifold and the air control valve, and this actuates the air cut valve to stop the supply of the secondary air into the exhaust port and the air flows into the thermal reactor cooling air jacket. At the same time, since the electric current to the solenoid of the coasting valve stops, the solenoid opens the atmospheric pressure sensing line. This actuates the coasting valve and the fresh air from the air cleaner enters the intake manifold and prevents afterburn.–operation of low speed switch–

5. When the engine speed is below 1,200 rpm (1,400 rpm in case of automatic transmission), point Ⓑ of the low speed switch closes. The electric current flows

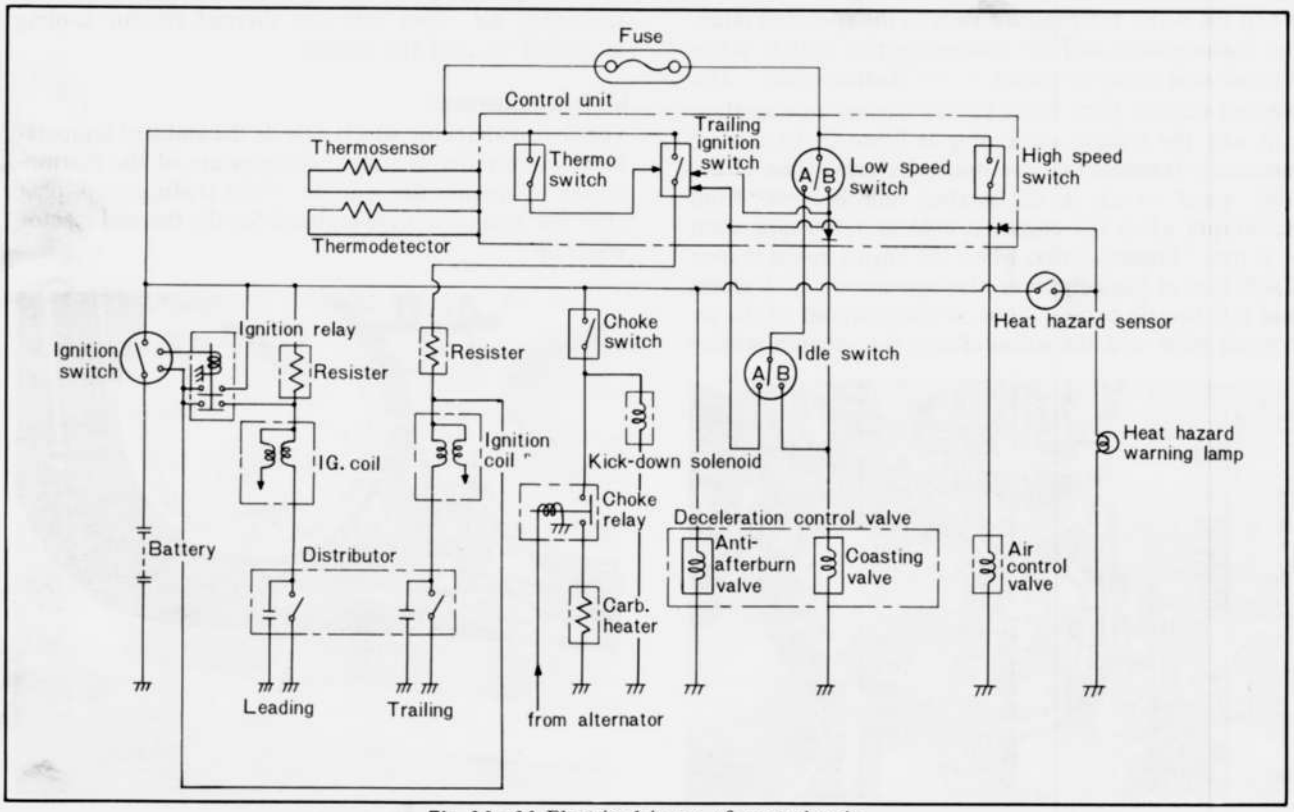

Fig. 1A–14 Electric daigram of control unit

to the trailing side ignition coil through the trailing ignition switch, and ignites the trailing spark plug. –operation of low speed switch and trailing ignition switch–

d. Idle switch

The idle switch detects the deceleration condition of the car. It sends the decelerating condition signal to the control unit and the coasting valve. The functions are

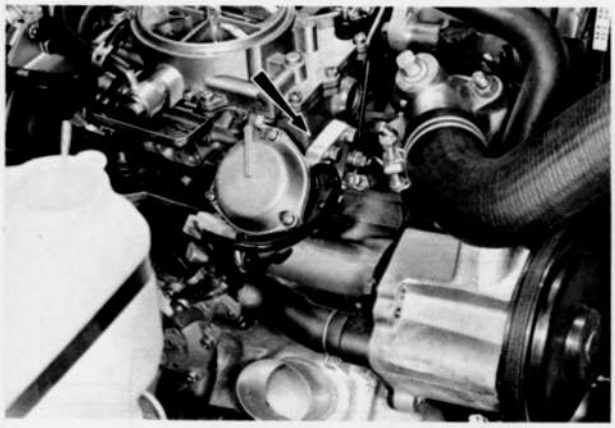

Fig. 1A–15 Idle switch

as follows. (Refer to electric diagram in Fig. 1A–14)

1. While deceleration (with the accelerator pedal released) when the engine speed is over 1,200 rpm (1,400 rpm in case of automatic transmission), point Ⓐ of the idle switch closes and the electric current flows to the air control valve solenoid from the low speed switch. The solenoid consequently cuts the vacuum sensing way between the intake manifold and the vacuum chamber of the air control valve. This actuates the air cut valve to stop the supply of the secondary air into the exhaust ports and the air flows to the thermal reactor cooling air jacket.
2. At the same time, since the electric current to the solenoid of the coasting valve stops, the solenoid opens the atmospheric pressure sensing line. This actuates the coasting valve and the fresh air from the air cleaner enters the intake manifold and prevents afterburn.
3. When the point Ⓑ of the low speed switch and point Ⓐ of the idle switch are closed, the electric current flows to the trailing side ignition coil through the trailing ignition switch, and ignites the trailing spark plug.

1A–A–3 Additional Air Control System

The additional air control system consists of the deceleration control valve and the altitude compensator. During deceleration and gear shifting and immediately after turning off of the ignition switch, the additional air control system sends the fresh air from the air cleaner to the intake manifold and adjusts the excessively rich fuel-air mixture preventing afterburn and reducing emissions during deceleration. (operation of deceleration control valve) In order to adjust the excessively rich fuel-air mixture in running in the highland area, the air is supplied to the intake manifold to improve the combustion. (operation of altitude compensator)

Note: The vehicles for U.S.A and Canada are equipped with the altitude compensator.

a. Deceleration control valve

The deceleration control valve consists of an anti-afterburn valve and the coasting valve and the functions are as follows.

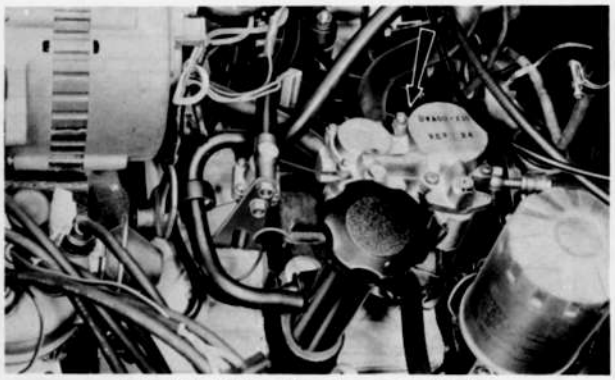

Fig. 1A–16 Deceleration control valve

1. When the engine speed is over 1,200 rpm (1,400 rpm in case of automatic transmission), and during deceleration when the accelerator pedal is relieved completely, the deceleration control valve sends the fresh air from the air cleaner to the intake manifold.–operation of coasting valve–
2. Immediately after deceleration and during gear shifting, the deceleration control valve sends the fresh air from the air cleaner to the intake manifold.–operation of anti-afterburn valve–
3. Immediately after turning off the ignition switch, the deceleration control valve sends the fresh air from the air cleaner to the intake manifold.–operation of anti-afterburn valve and coasting valve–

The anti-afterburn valve operates by pressure difference between the vacuum chamber and the air chamber, and the spring force. The balance hole in the diaphragm connects the vacuum chamber and the air chamber to control the duration of valve opening.

The intake manifold vacuum rises during deceleration and gear shifting, and the pressure difference between the two chambers opens the valve connected to the diaphragm, so that fresh air from the air cleaner is led into the intake manifold to correct overrich mixture, thus preventing afterburn. When the balance hole equalizes pressure difference, the valve is closed to shut off air. When the ignition switch is turned on, the solenoid shuts the atmospheric pressure sensing line leading to the air chamber. When the engine is switched off the solenoid opens the sensing line, and, due to the resulting pressure difference between the vacuum chamber and the air chamber, the valve connected to the diaphragm is opened, and fresh air is led from the air cleaner into the intake manifold to prevent afterburn.

The coasting valve operates by pressure difference between the vacuum chamber and the air chamber, and the spring force. The rise of intake manifold vacuum during deceleration and gear shifting causes the valve to open,

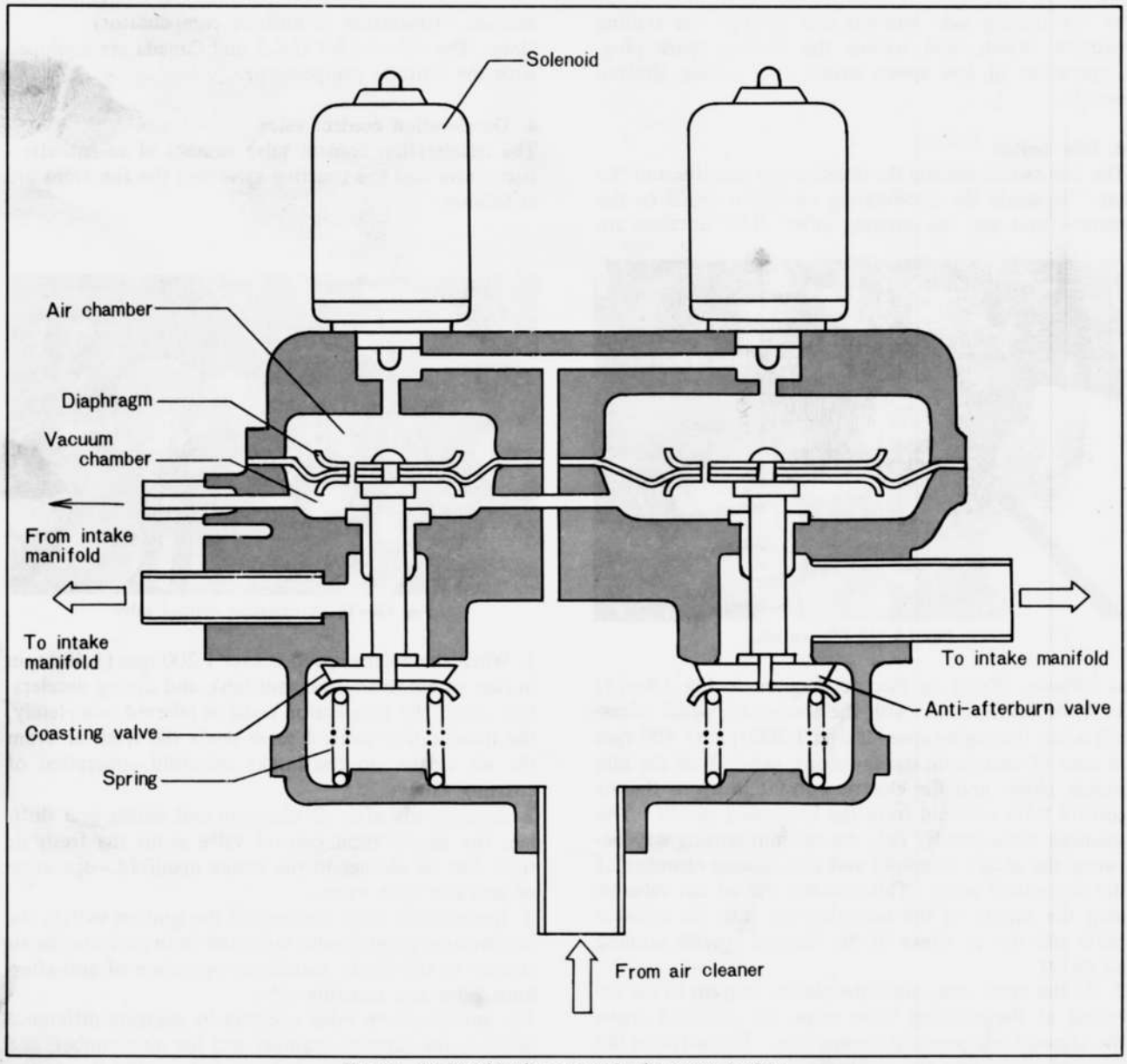

Fig. 1A–17 Deceleration control valve cross section

and air from the air cleaner is supplied into the intake manifold to prevent afterburn and to keep the thermal reactor operating.

During deceleration when the engine speed is above 1,200 rpm, (1,400 rpm for automatic transmission) the control unit and idle switch command solenoid to open the atmospheric pressure sensing line leading to the air chamber, and, due to resulting pressure difference between the vacuum chamber and the air chamber, the valve connected to the diaphragm is opened, and fresh air is led from the air cleaner into the intake manifold to prevent afterburn. When the ignition switch is turned on, the solenoid shuts the atmospheric pressure sensing line leading to the air chamber. When the engine is switched off the solenoid opens the sensing line, and, due to the resulting pressure difference between the vacuum chamber and the air chamber, the valve connected to the diaphragm is opened, and fresh air is led from the air cleaner into the intake manifold to prevent afterburn.

b. Altitude compensator (U.S.A and Canada spec models only)

In order to prevent the fuel-air mixture from becoming excessively rich because of the low atmospheric pressure in the highland area, the altitude compensator sends the air to the intake manifold and adjusts the fuel-air mixture.

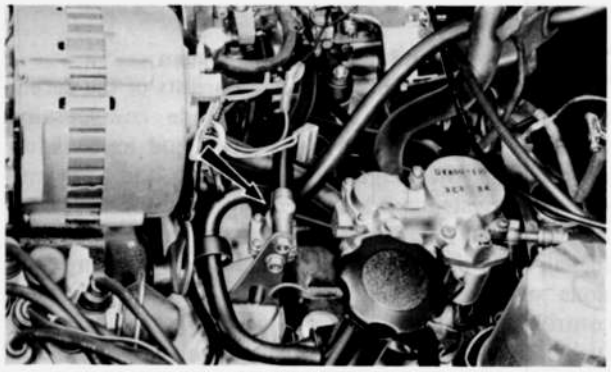

Fig. 1A–18 Altitude compensator

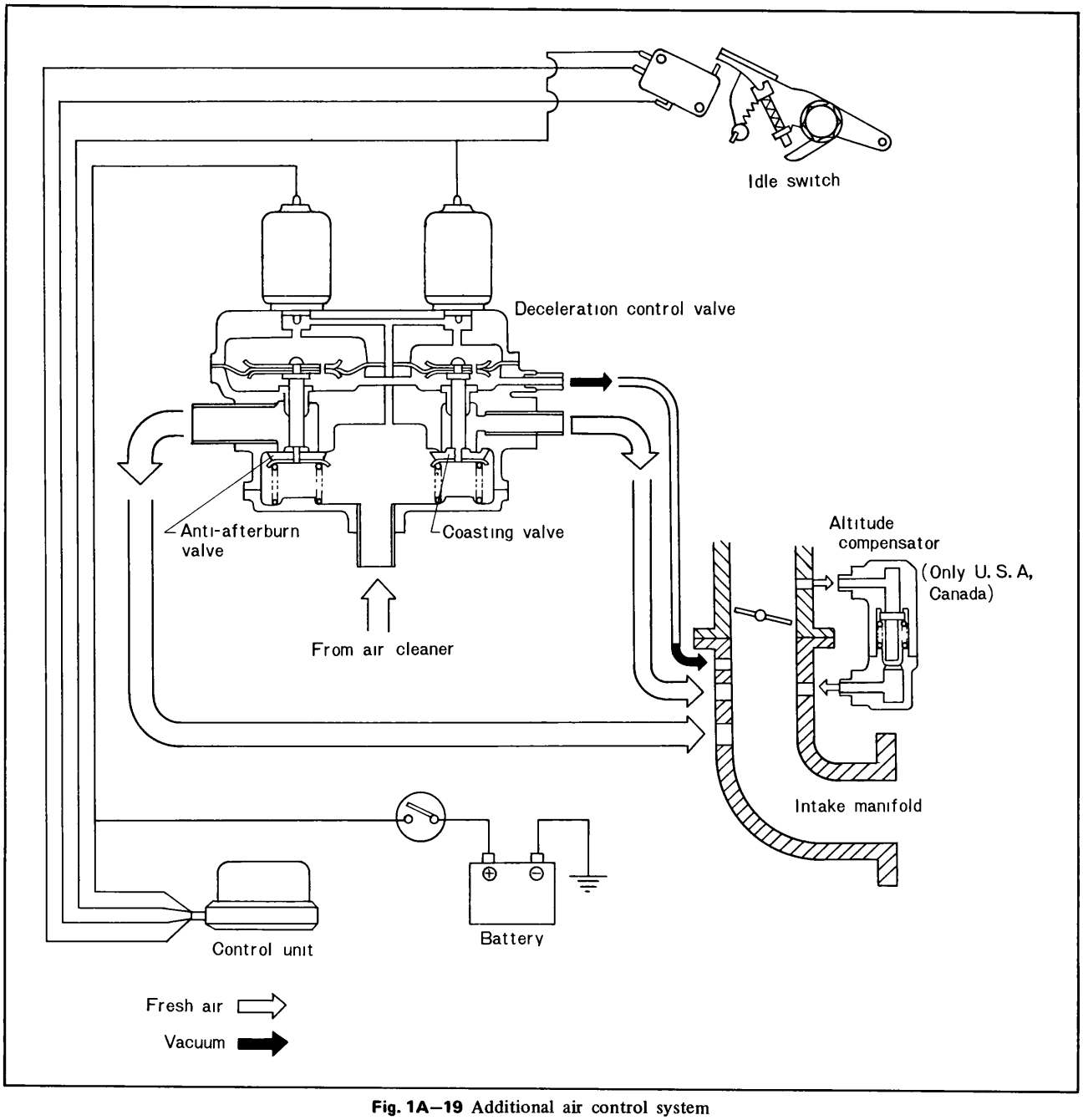

Fig. 1A–19 Additional air control system

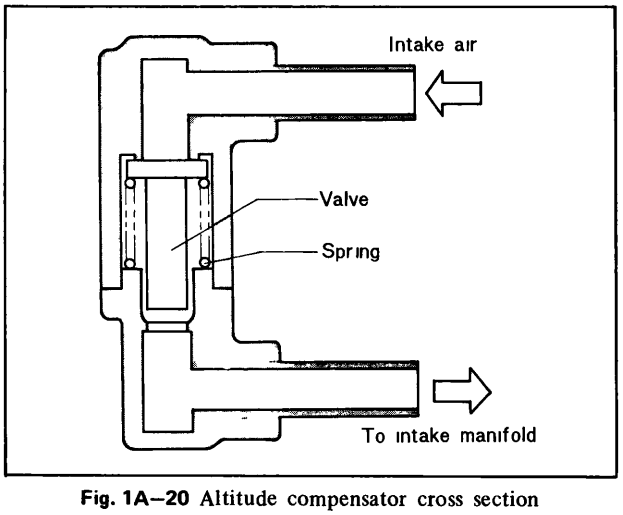

Fig. 1A–20 Altitude compensator cross section

In the highland area, especially during idling, part of the inhaled air is controlled by the altitude compensator and enters the intake manifold directly. This enables the overrich mixture to be properly adjusted. The hoses for altitude compensator are colored in Blue for identification.

1A–A–4. Kick-down Control System (For automatic transmission only)

As well as the normal kick-down operation for the transmission shifting, the kick-down solenoid is energized to cause the kick-down when the choke system is in operating condition (the choke switch is closed) for semi-automatic choke system or when the engine water temperature is cold (the water temperature switch is closed) for full-automatic choke system, in order to obtain quicker

warm-up.

a. Water temperature switch (Full-automatic choke system U.S.A and Canada spec models only)

The water temperature switch detects the engine water temperature and sends the signal to the kick-down solenoid. And it operates the kickdown solenoid when the engine is cold.

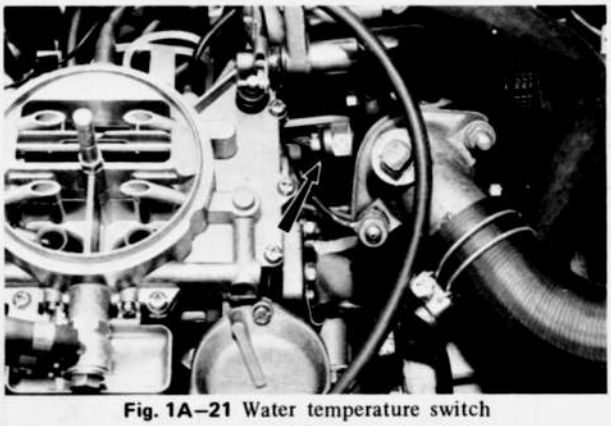

Fig. 1A–21 Water temperature switch

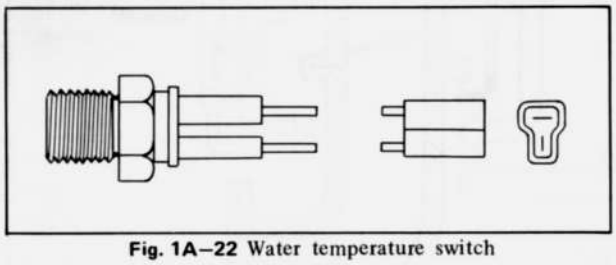

Fig. 1A–22 Water temperature switch

b. Choke switch (Semi-automatic choke system)

The choke switch is equipped in order to detect whether the choke knob is pulled or not and it sends the signal to the kick-down solenoid. The choke switch has the function to operate the kick-down solenoid when the choke knob is pulled.

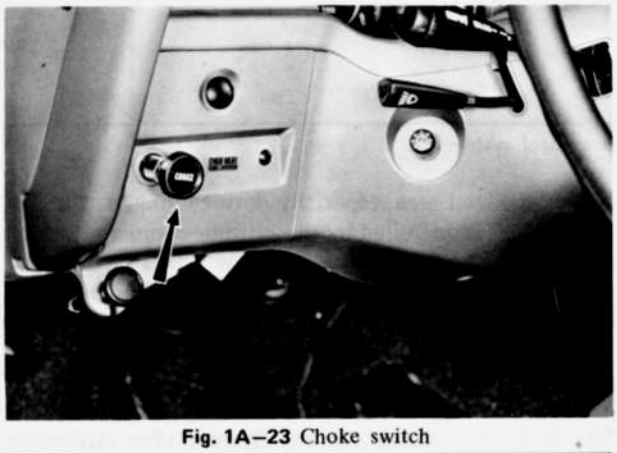

Fig. 1A–23 Choke switch

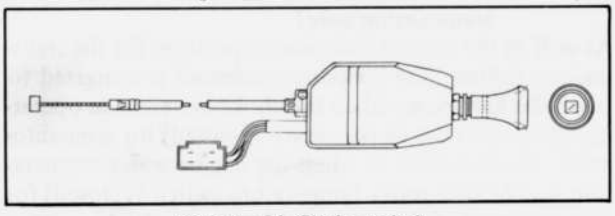

Fig. 1A–24 Choke switch

1A–B. CRANKCASE EMISSION CONTROL SYSTEM (VENTILATION SYSTEM)

The crankcase emission control system channels blow-by gas into the intake manifold to burn it up in the combustion chamber and helps to control air pollution caused by engine blow-by gas. This system consists mainly of a ventilation valve and hose necessary to connect the ventilation valve. All connecting hoses in a ventilation system are colored in Red for identification. The air and blow-by gases flow in the ventilation system as shown in Fig. 1A–25. Ventilating air from the air cleaner enters the engine air space. The ventilating air with blow-by gas enters the ventilation valve which regulates the amount of air flow to meet the change of operating conditions and then is directed to the engine.

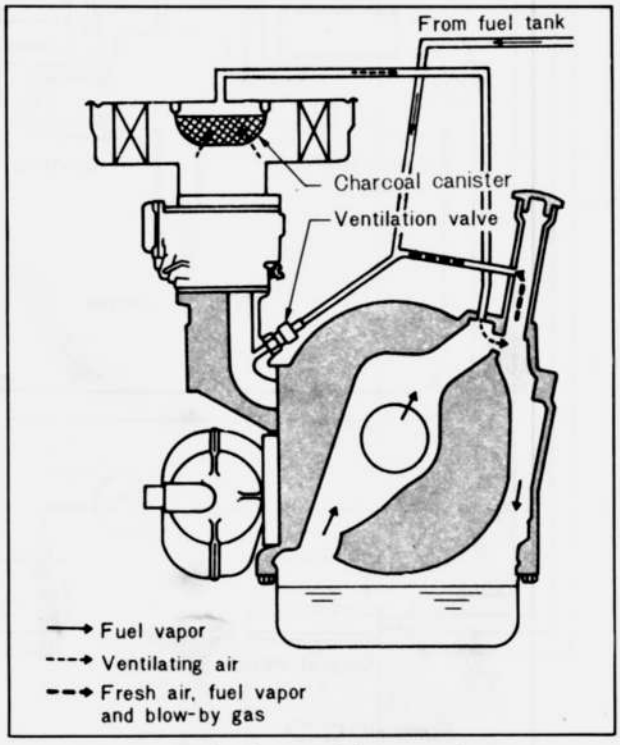

Fig. 1A–25 Crankcase emission control system

1A–B–1. Ventilation Valve

The ventilation valve is operated by the difference of the pressure between the intake manifold and engine air space. When there is no difference of the pressure (engine at stall condition) or the pressure of the intake manifold is more than that of the engine air space (backfire) the ventilation valve is closed by the tension of

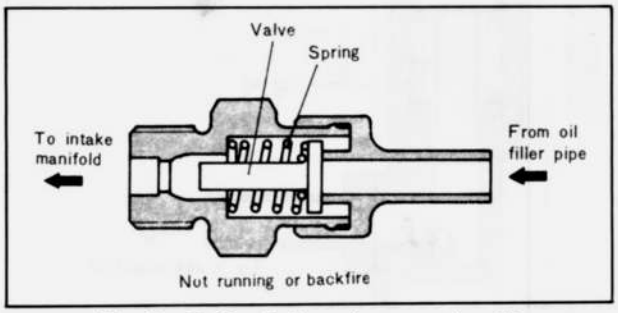

Fig. 1A–26 Ventilation valve operation (1)

valve spring as shown in Fig. 1A–26.

If there is large difference (during idling or deceleration), the high vacuum of the intake manifold overcomes the tension of the valve spring, and the valve is pulled towards intake manifold side by the manifold vacuum as shown in Fig. 1A–27. Therefore, the air passes through the restricted passage in the valve.

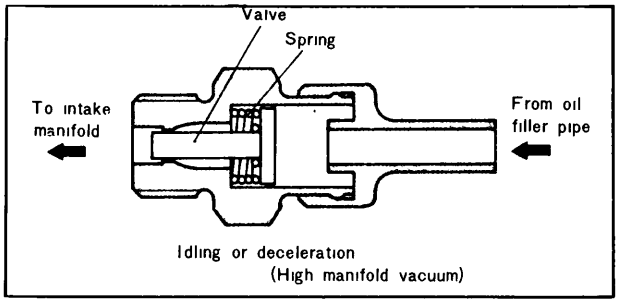

Fig. 1A–27 Ventilation valve operation (2)

When the difference is small (at normal operation), the valve is balanced by the tension of valve spring and intake manifold vacuum. This increases the flow of blow-by gas. (Fig. 1A–28)

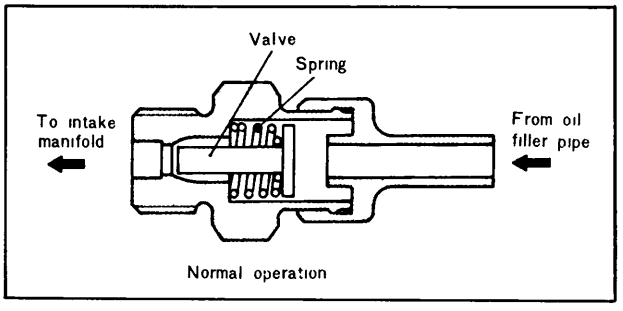

Fig. 1A–28 Ventilation valve operation (3)

1A–C. EVAPORATIVE EMISSION CONTROL SYSTEM (U.S.A and Canada spec models only)

The evaporative emission control system is so designed as to prevent the escape of fuel vapor into the air from the fuel system. The fuel vapor rising from the surface of fuel in the fuel tank due to the ambient temperature is channeled into the condense tank and then fed back to the fuel tank when the engine is not running.

Any fuel vapor that has not condensed in the condense tank is led into the air space of the engine and into the charcoal canister in the air cleaner, and is trapped there. When running, the fuel vapor trapped in the charcoal canister is vaporized again by fresh air from the air cleaner and by the engine temperature, and goes to the ventilation valve from which it is sucked into the intake manifold together with the fuel vapor trapped in the air space of engine and blow-by gas to be burned up in the combustion chamber.

The fuel vapor from the condense tank when the engine is running is directly sucked into the intake manifold via the ventilation valve to be burned up in the combustion chamber.

All connecting hoses in an evaporative emission control system are colored in Red for identification as same as ventilation hoses.

1A–C–1. Charcoal Canister

While the engine is stopped, some of the fuel vapor generated in the fuel tank does not condense in the condense tank and, when channeled into the engine air space without being fed back to the fuel tank, still cannot be trapped in the air space. Such vapor is absorbed by the charcoal canister.

While the engine is running, the fuel vapor trapped in the charcoal canister is released into the intake manifold together with fresh air from the air cleaner and burned

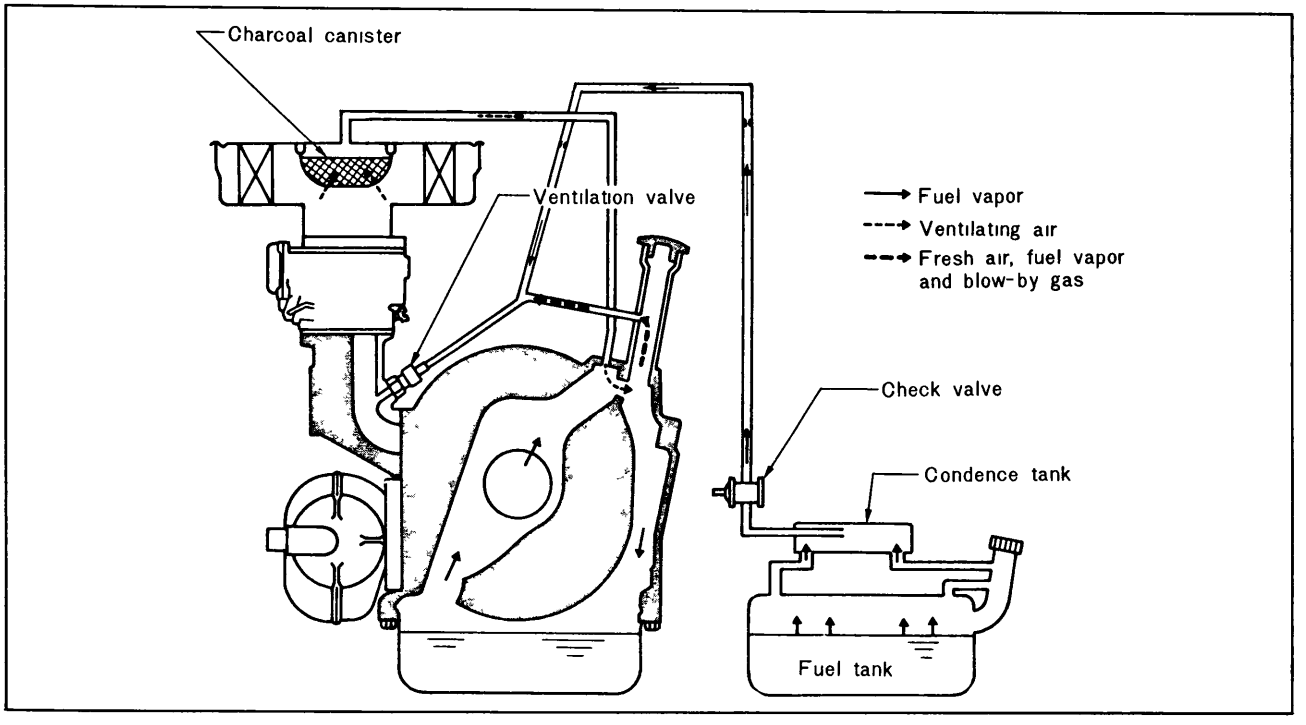

Fig. 1A–29 Evaporative emission control system

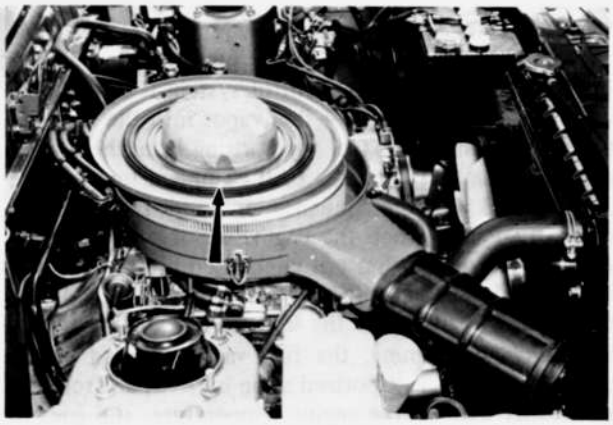

Fig. 1A–30 Charcoal canister

up in the engine. The canister is always being purged by fresh air during engine operation.

1A–C–2. Condense Tank

The condense tank condenses the fuel vapor coming from the fuel tank and returns it to the fuel tank.

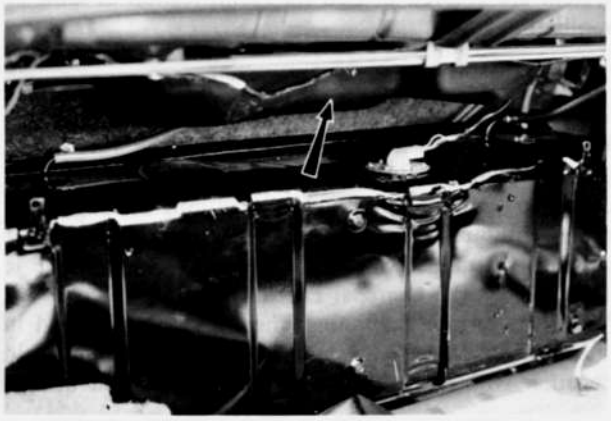

Fig. 1A–31 Condense tank

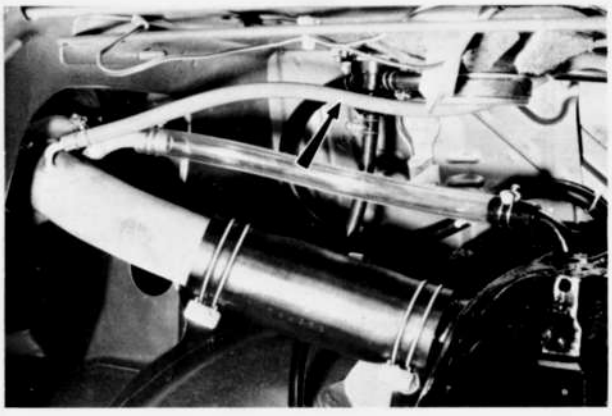

Fig. 1A–32 Check valve

1A–C–3. Check Valve

The check valve located between the condense tank and the charcoal canister in the air cleaner works appropriately when the conditions mentioned below take place, relating to the completely sealed ventilation type fuel system

1. When the evaporative system is normal, the flows of fuel vapor and ventilation during engine operation are as shown in Fig. 1A–33.

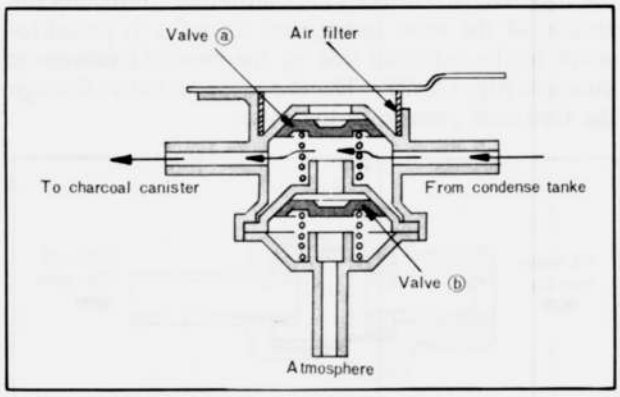

Fig. 1A–33 Check valve cross section

2. If the hose between the check valve and the canister is clogged or frozen, system would not be ventilated at all and as the result, the fuel supply to the engine is cut off. Therefore, when the evaporative line is clogged, the valve ⓐ is opened by the negative pressure in the fuel tank and the ventilation passage to the atmosphere is opened.

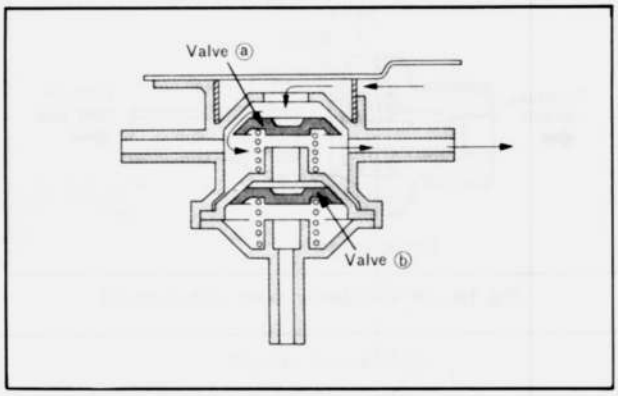

Fig. 1A–34 Check valve operation (1)

3. When the fuel vapor in the fuel tank is expanded due to intense heat, the pressure in the fuel tank will increase. In order to prevent the increase of the pressure in the fuel tank, the valve ⓑ is opened to release the pressure to the atmosphere.

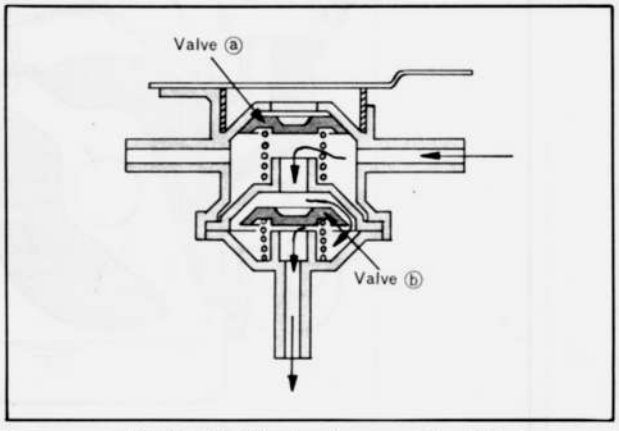

Fig. 1A–35 Check valve operation (2)

1A–D. PROTECTIVE SYSTEM

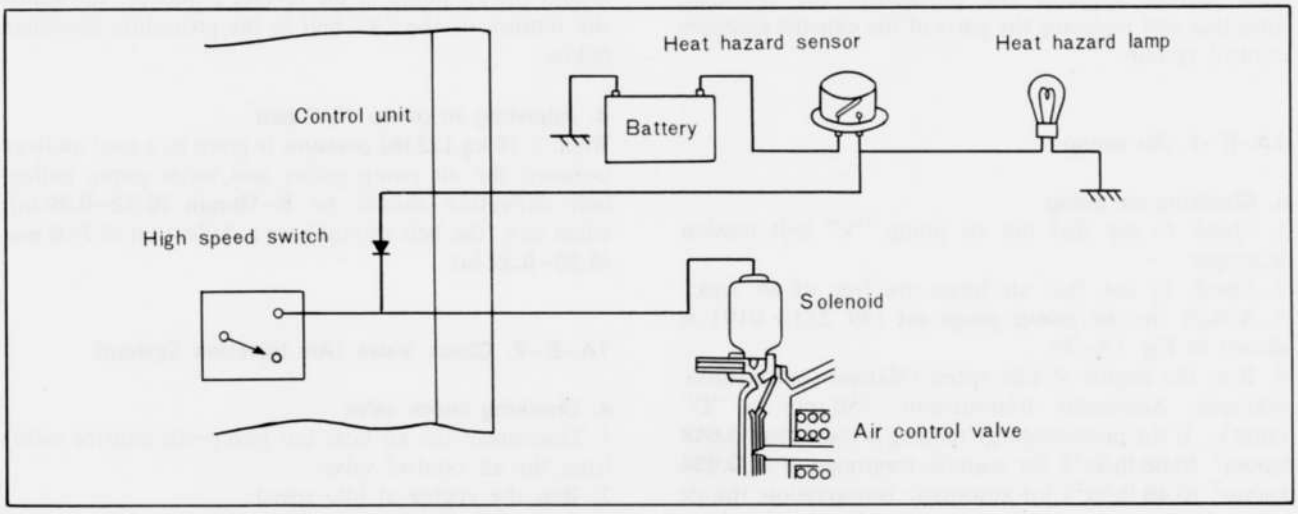

Fig. 1A–36 Heat hazard Warning system

This system consisting of a heat hazard sensor and a heat hazard warning lamp is employed to prevent potential heat hazard to the vehicle due to excessive heat radiation from the exhaust system under specific driving conditions. This system is not operative under a normal driving condition, but it is operative under such a specific driving condition as the engine idle speed is kept raised intensionally for a considerable period so that efficient air conditioning may be obtained while the vehicle is standing.

1A–D–1. Heat Hazard Sensor and Heat Hazard Warning Lamp

When the floor temperature becomes more than 120°C (248°F), the heat hazard sensor becomes operative and the heat hazard warning lamp on the instrument panel lights up. At the same time, the electric current from the heat hazard sensor flows to the solenoid of the air control valve through the control unit. Consequently, the solenoid closes the vacuum sensing way between the intake manifold and the air control valve, and so the air cut valve of the air control valve actuates and stops the supply of the secondary air into the exhaust ports, which prevents the floor temperature from rising. When the floor temperature becomes lower than the specified value (approximately 120°C), the heat hazard sensor becomes inoperative and the heat hazard lamp goes off and at the same time, the electric current stops flowing to the solenoid of the air control valve, and so the secondary air is injected into the exhaust ports.

The heat hazard sensor is located inside the trunk as shown in Fig. 1A–37.

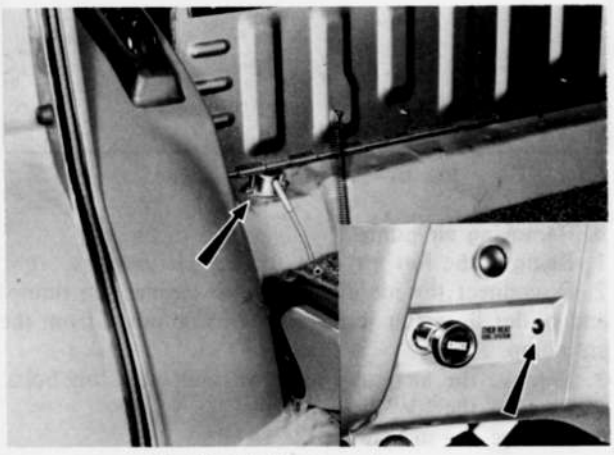

Fig. 1A–37 Heat hazard sensor

1A–E. MAINTENANCE PROCEDURE

This section explains the procedures for checking, adjusting and replacing the parts of the exhaust emission control system.

1A–E–1. Air pump

a. Checking air pump

1. Check to see that the air pump "V" belt tension is proper.
2. Check to see that air hoses are free of air leaks.
3. Attach the **air pump gauge set** (49 2113 010) as shown in Fig. 1A–38.
4. Run the engine at idle speed (Manual transmission: 900 rpm, Automatic transmission: 750 rpm in "D" range). If the pressure gauge reading is more than **0.048 kg/cm² (0.68 lb/in²)** for manual transmission or **0.034 kg/cm² (0.48 lb/in²)** for automatic transmission, the air pump is normal.

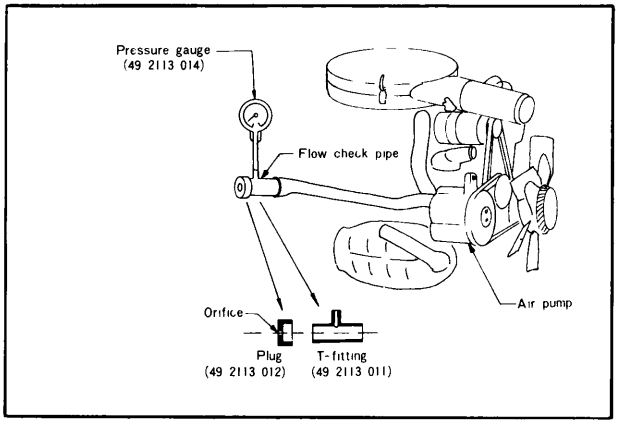

Fig. 1A–38 Checking air pump

b. Removing air pump

1. Remove the hot air duct for the air cleaner.
2. Disconnect the air inlet hose (air cleaner~air pump) and outlet hose (air pump~air control valve) from the air pump.
3. Remove the air pump mounting and adjusting bolts.
4. Remove the "V" belt.
5. Remove the air pump.

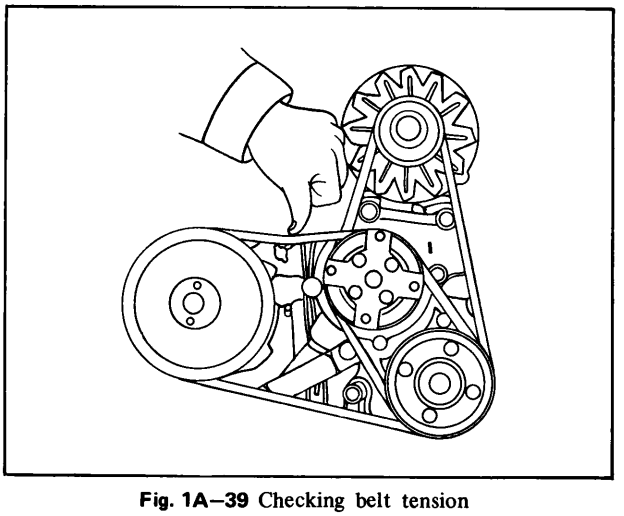

Fig. 1A–39 Checking belt tension

c. Installing air pump

Mount the air pump in the reverse sequence, and adjust the tension of the "V" belt in the procedure described below.

d. Adjusting air pump "V" belt

When a **10 kg (22 lb) pressure** is given to a spot midway between the air pump pulley and water pump pulley, belt deflection should be **8~10 mm (0.32~0.39 in);** when new, the belt should have a deflection of **7~8 mm (0.28~0.32 in).**

1A–E–2. Check Valve (Air Injection System)

a. Checking check valve

1. Disconnect the air hose (air pump~air control valve) from the air control valve.
2. Run the engine at idle speed.
3. Hold a finger over the inlet of the air control valve (the inlet from which the air hose is removed).

If exhaust gas flow is felt, replace the check valve, spring and gasket.

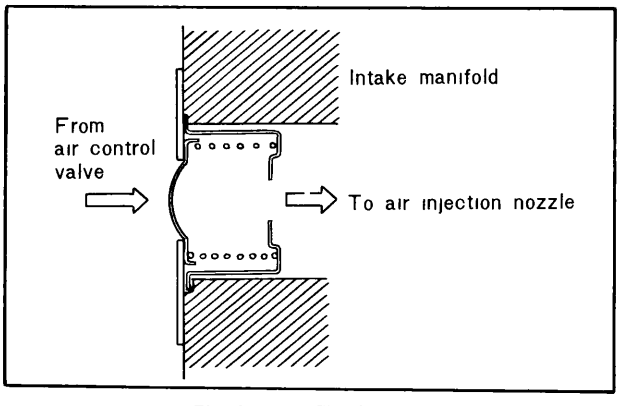

Fig. 1A–40 Check valve

b. Removing check valve

1. Remove the air control valve as described in Par. 1A–E–4.
2. Remove the gasket, valve and spring.

c. Installing check valve

Install the check valve in the reverse sequence.

1A–E–3. Thermal Reactor

a. Checking thermal reactor

1. Check to see that the thermal reactor is not damaged or cracked.

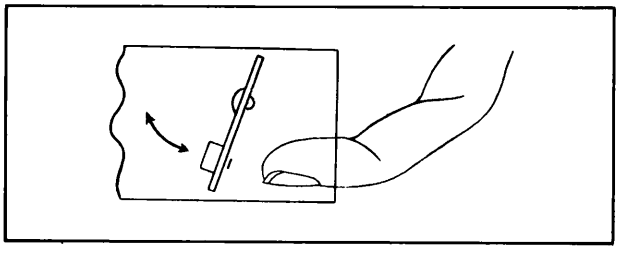

Fig. 1A–41 Checking non-return valve

2. Remove the air hose leading to the air control valve and check to see that the non-return valve works smoothly.
3. Start the engine and keep it running at idle speed.
4. Make sure that most exhaust gas is not released from the tail of cooling air pipe.

b. Removing thermal reactor

1. Remove the air control valve as described in Par. 1A–E–4.
2. Remove the bolts attaching the heat insulator to the intake manifold and remove the heat insulator.
3. Raise the front of vehicle and support with stands.
4. Disconnect the exhaust pipe from the thermal reactor.
5. Remove the engine under cover attaching bolts and remove the engine under cover.
6. Remove the nuts attaching the thermal reactor to the engine.

Note: The upper nuts should be removed with the **thermal reactor remover** (49 1881 125).

7. Remove the thermal reactor.

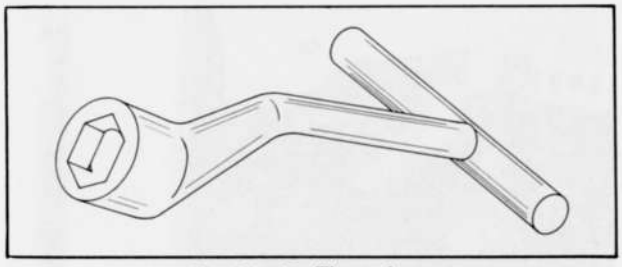

Fig. 1A–42 Thermal reactor

1A–E–4. Air Control Valve

a. Checking air control valve

1. Check the air pump according to the procedures in Par. 1A–E–1.
2. Connect the connector of the solenoid terminal to the battery and check the operation of the solenoid. If the clicking sound is audible, the solenoid is normal.
3. Attach the pressure gauge as shown in Fig. 1A–43.
4. Remove the air hose from outlet Ⓐ of the air control valve.
5. Start the engine and keep it running at idle speed (900 rpm for manual transmission, 750 rpm for automatic transmission). Check to see that there is no air leak from outlet Ⓐ of the air control valve.

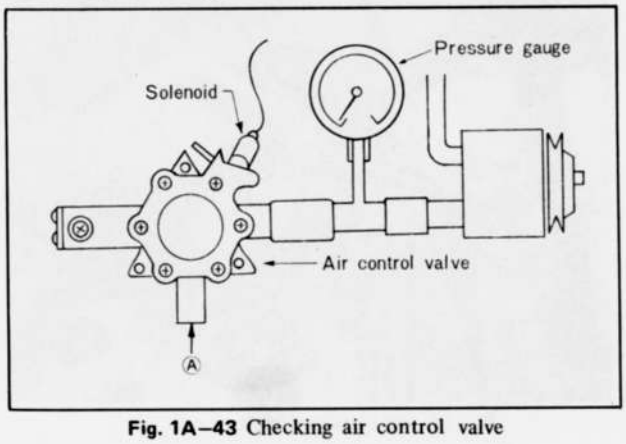

Fig. 1A–43 Checking air control valve

Manual transmission:

Make sure that the pressure gauge reads **0.12~0.20 kg/cm² (1.2~2.8 lb/in²)** when the engine speed is **3,500 rpm** and that there is air leak from outlet Ⓐ.

Automatic transmission:

Make sure that the pressure gauge reads **0.12~0.18 kg/cm² (1.2~2.6 lb/in²)** when the engine speed is **3,000 rpm** and that there is air leak from outlet Ⓐ.

6. Connect the solenoid terminal to the battery. Make sure that the pressure gauge reads **0~0.053 kg/cm² (0 ~0.75 lb/in²)** and that air flows from outlet Ⓐ of the air control valve.
7. Simply checking of air control valve (check every valve incorporated) When the No. 1 relief valve, No. 2 relief valve or the air cut valve is faulty, the air sent from the air pump during idling flows into the air cooling pipe.

b. Removing air control valve

1. Remove the hot air duct for the air cleaner.
2. Disconnect the air hose (air pump~air control valve) from the air control valve.
3. Disconnect the cooling air hose (air control valve~ thermal reactor) from the air control valve.
4. Disconnect the vacuum and atmospheric sensing tubes from the air control valve.
5. Disconnect the lead wire for the air control valve solenoid at the quick disconnect.
6. Remove the air control valve attaching nuts and remove the air control valve.

c. Installing air control valve

Install the air control valve in the reverse sequence.

1A–E–5. Thermosensor

a. Checking thermosensor

1. Make sure that there is no boot breakage.
2. Connect the ohm meter as shown in Fig. 1A–44, and check the resistance. The readings as shown below indicate that the thermosensor is normal;

Over 7 kΩ before warm-up the engine (when ambient and water temperatures are under 30°C (86°F)

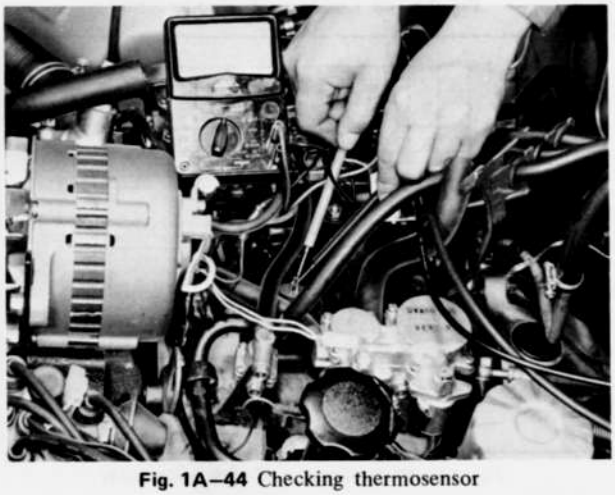

Fig. 1A–44 Checking thermosensor

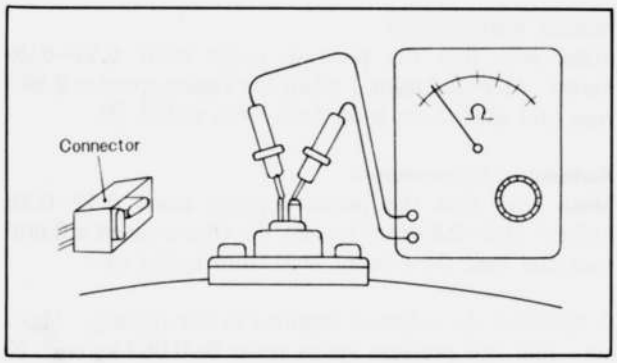

Fig. 1A–45 Checking thermosensor

Under 2.3 kΩ after warm-up the engine (when temperature is over 70°C (156°F)).

b. Removing thermosensor

1. Remove the air cleaner.
2. Remove the deceleration control valve and remove the starting motor if necessary.
3. Disconnect the multiple coupler from the thermosensor.
4. Remove the rubber boot from the thermosensor.
5. Remove the nuts attaching the thermosensor to the engine and remove the thermosensor.

c. Installing thermosensor

Install the thermosensor in the reverse sequence.

1A–E–6. Thermodetector

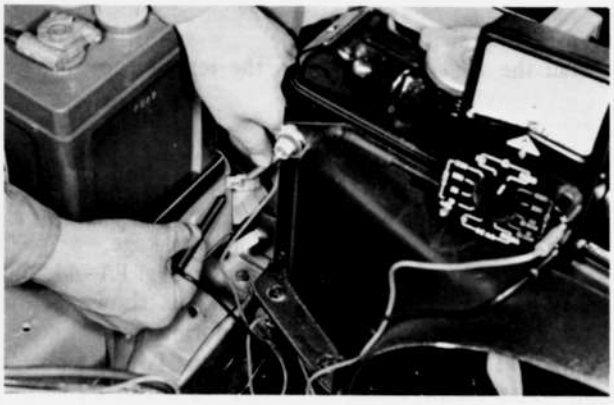

Fig. 1A–46 Checking thermodetector

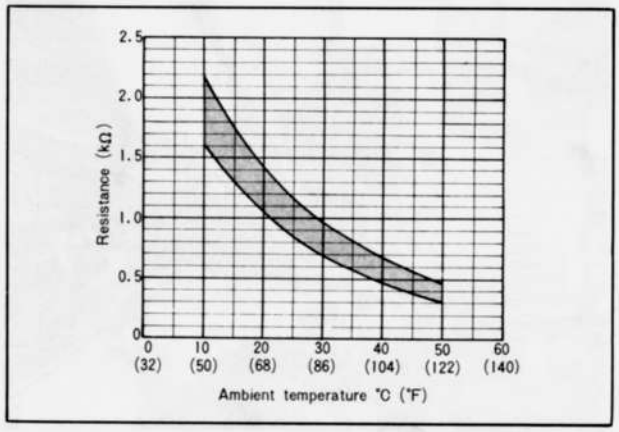

Fig. **1A–47** Resistance of thermodetector

a. Checking thermodetector

Connect the ohm meter to the terminals of the thermodetector as shown in Fig. 1A–46, and check the resistance. If the ohm meter readings are within the range shown in Fig. 1A–47, the thermodetector is normal.

b. Removing thermodetector

1. Remove the front grille.
2. Disconnect the multiple coupler of thermodetector.
3. Remove the screw attaching the thermodetector and remove the thermodetector.

c. Installing thermodetector

Install the thermodetector in the reverse sequence.

1A–E–7. Control Unit

a. Checking control unit

1. Make sure that the fuse of the control unit is in good condition.



Fig. 1A–48 Checking control unit fuse

2. Disconnect the couplers of thermosensor and idle switch. And check the following points:
1) Connect the timing light to the high tension cord of the trailing side distributor. Check to see that the timing light does not go on when the engine speed is under **3,600~4,400 rpm** (Automatic transmission: **4,320~5,280 rpm**), and goes on when the engine speed is raised to more than **3,600~4,400 rpm** (Automatic transmission: **4,320~5,280 rpm**).

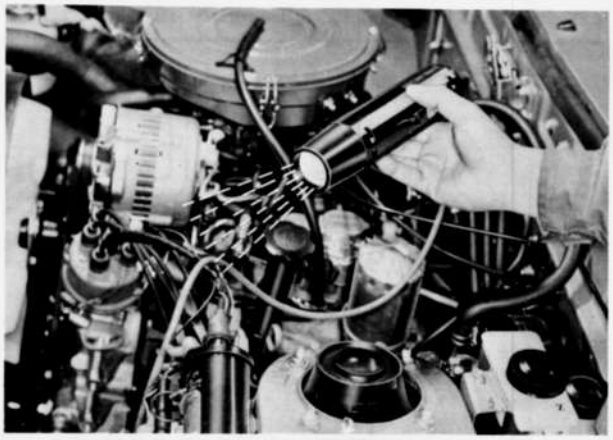

Fig. 1A–49 Checking control unit (1)

2) Connect an ammeter to the air control valve solenoid. Check to see that the current does not flows to the solenoid when the engine speed is under **3,600~4,400 rpm** (Automatic transmission: **4,320~5,280 rpm**), and there is flow to the solenoid when the engine speed is above **3,600~4,400 rpm** (Automatic transmission: **4,320~5,280 rpm).**

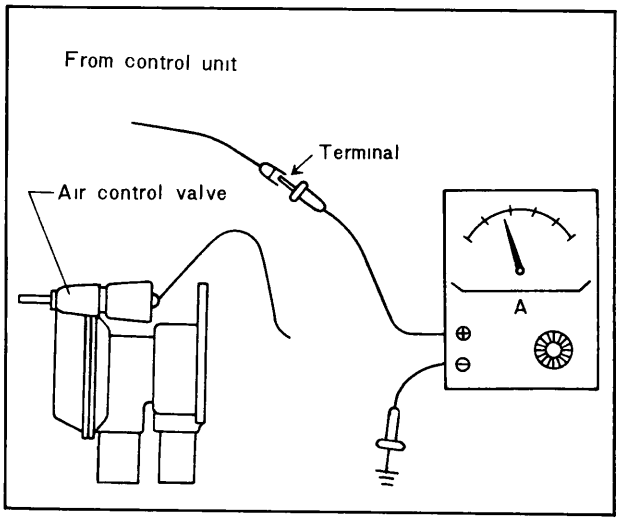

Fig. 1A–50 Checking control unit (2)

3. With the thermosensor connector terminal short-circuited as shown in Fig. 1A–51, check the following points:

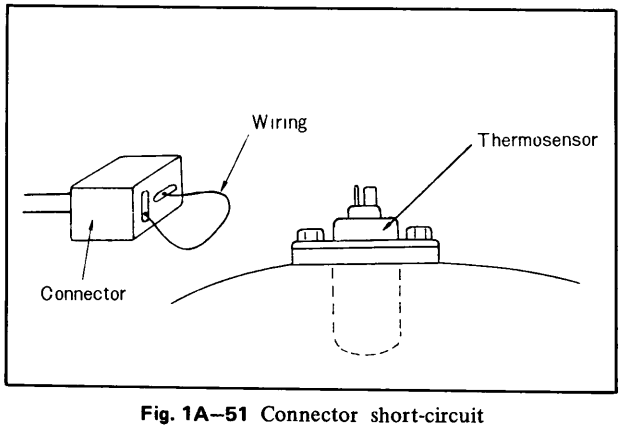

Fig. 1A–51 Connector short-circuit

1) Connect the timing light to the high tension cord of the trailing side distributor and check to see that the timing light goes on in the whole range of revolution including under **3,600~4,400 rpm** (Automatic transmission: **4,320~5,280 rpm**).
2) Only automatic transmission:
Connect an ammeter to the air control valve solenoid. Check to see that the current does not flows to the solenoid when the engine speed is under **3,060~3,740 rpm** and there is flow to the solenoid when the engine speed is above **3,060~3,740 rpm.**
4. Connect the thermosensor coupler as before. With the idle switch coupler removed, check the following point:
1) Connect an ammeter to the coasting valve solenoid and check to see that there is current flows to the ammeter when idling.

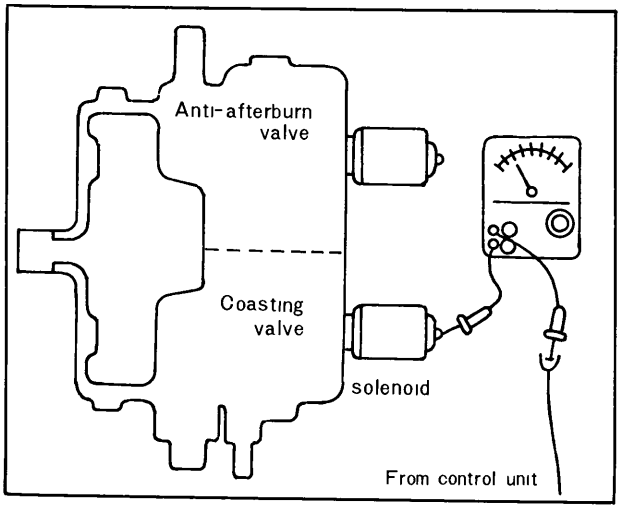

Fig. 1A–52 Checking control unit (3)

2) Disconnect the hose (air cleaner~deceleration control valve) from the deceleration control valve and plug the air suction port of the deceleration control valve.

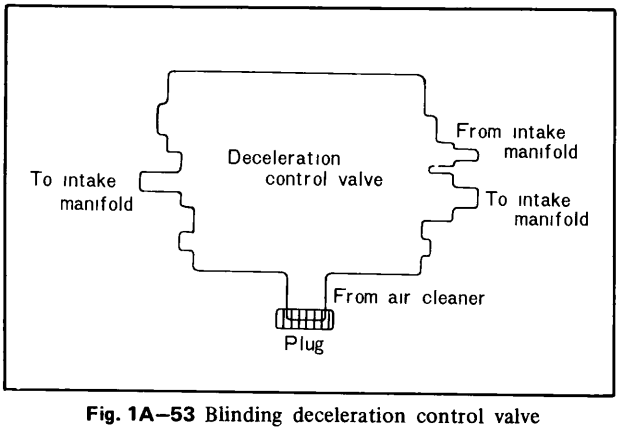

Fig. 1A–53 Blinding deceleration control valve

3) When the engine speed is gradually lowered from 2,000~3,000 rpm, the current begins to flow at **1,100~1,450 rpm** (Automatic transmission: **1,250~1,650 rpm**).
4. Connect the idle switch coupler as before.
5. Connect the hose to the deceleration control valve.

b. Removing control unit
1. Disconnect the multiple coupler of control unit.
2. Remove the control unit attaching nuts and remove the control unit.

c. Installing control unit
Install the control unit in the reverse sequence.

1A–E–8. Deceleration Control Valve

a. Checking deceleration control valve
1. Disconnect the hose (air cleaner~deceleration control valve) from the air cleaner.
2. Run the engine at idle speed.
3. Make sure that air is not sucked in through the air suction hose of the deceleration control valve.
4. Stop the engine.
5. Disconnect the hose (coasting valve~intake manifold)

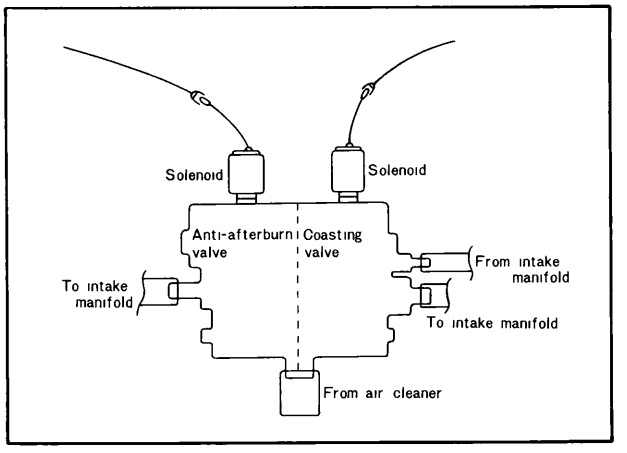

Fig. 1A–54 Checking deceleration control valve (1)

from the deceleration control valve and pulg the air suction port of the deceleration control valve (coasting valve).
6. Run the engine at idle speed.
7. Disconnect the solenoid terminal for the anti-afterburn valve at the quick disconnect.
8. Hold the hand over the opening of the air suction hose for the deceleration control valve. If the vacuum felt, the deceleration control valve (anti-afterburn valve) is normal.

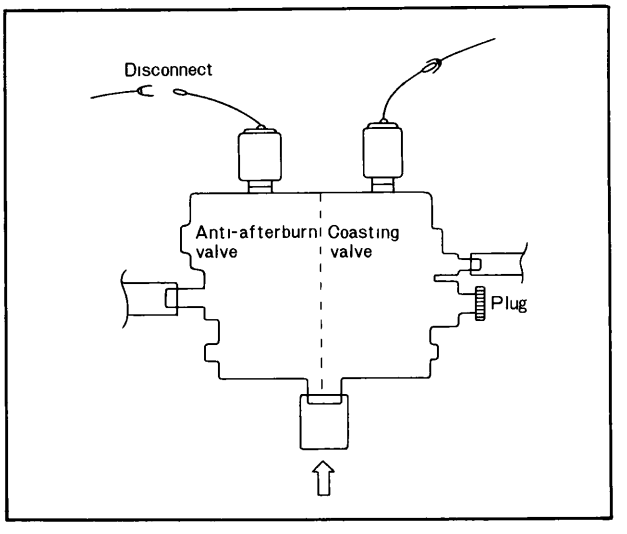

Fig. 1A–55 Checking deceleration control valve (2)

9. Stop the engine.
10. Connect the solenoid terminal at the quick disconnect.
11. Connect the hose to the deceleration control valve (coasting valve).
12. Disconnect the hose (anti-afterburn valve~intake manifold) from the deceleration control valve and plug the air suction port of the deceleration control valve (anti-afterburn valve).
13. Run the engine at idle speed.
14. Disconnect the solenoid terminal for the coasting valve at the quick disconnect.
15. Hold the hand over the opening of the air suction hose for the deceleration control valve. If the vacuum felt, the deceleration control valve (coasting valve) is normal.

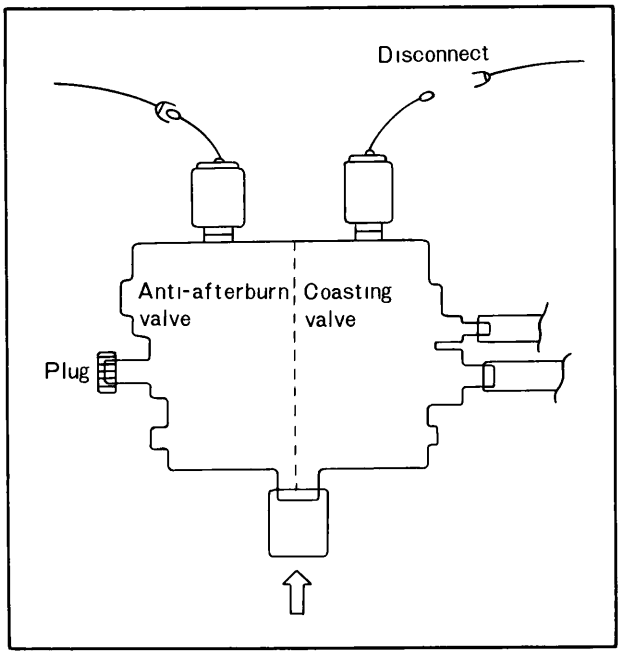

Fig. 1A–56 Checking deceleration control valve (3)

16. Stop the engine.
17. Connect the solenoid terminal at the quick disconnect.
18. Connect the hoses to the air cleaner and deceleration control valve (anti-afterburn valve).

1A–E–9. Altitude Compensator (U.S.A and Canada spec models only)

a. Checking altitude compensator

1. Disconnect the air inlet hose from the altitude compensator.
2. Run the engine at idle speed.
3. Hold a finger over the inlet of the altitude compensator (the inlet from which the air inlet hose is removed). At this moment, decrease in the number of engine revolutions indicates a good condition of the altitude compensator. The inspection on high elevation areas will cause further decrease of the number of engine revolutions.

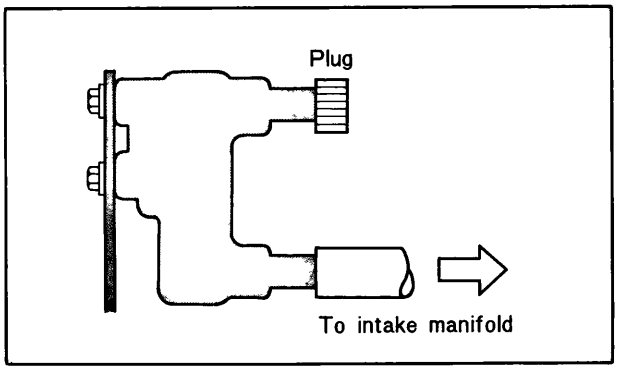

Fig. 1A–57 Checking altitude compensator

b. Removing altitude compensator

1. Disconnect the hoses from the altitude compensator.
2. Remove the bolts attaching the altitude compensator and remove the altitude compensator.

1A–E–10. Water Temperature Switch (U.S.A and Canada spec models only)

a. Checking water temperature switch

1. Make sure that the conduction between the terminals under the normal temperature (20°C or 68°F).
2. Start and warm up the engine.

If the two terminals of the switch are disconducted, the water temperature switch is in good condition.

3. If there is something extraordinary in the steps 1 and 2, replace the switch with a new one.

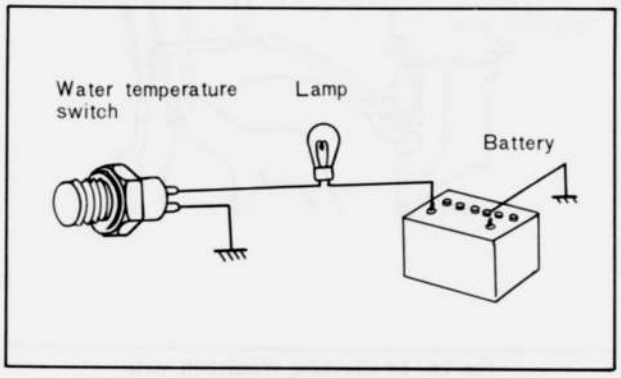

Fig. 1A–58 Checking water temperature switch

b. Removing water temperature switch

1. Drain the coolant from the radiator until the coolant level is below water temperature switch.
2. Remove the alternator and "V" belt if necessary.
3. Disconnect the multiple coupler from the water temperature switch.
4. Loosen and remove the water temperature switch.

c. Installing water temperature switch

Install the water temperature switch in the reverse sequence.

1A–E–11. Idle Switch

a. Checking idle switch

1. Remove the idle switch coupler.
2. If there is conduction between terminal Ⓐ and Ⓒ (Fig. 1A–60), and there is no conduction between terminal Ⓐ and Ⓑ when an external force is not applied to the idle switch lever (when the primary throttle valve is idle position) and if there is no conduction between terminal Ⓐ and Ⓒ, and there is conduction between terminal and when an external force is applied (when the primary throttle valve is open), the idle switch is normal.

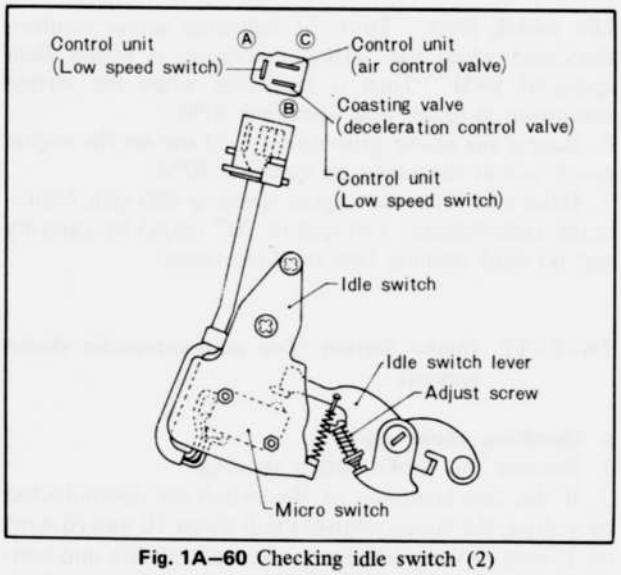

Fig. 1A–60 Checking idle switch (2)

b. Removing idle switch

1. Remove the air cleaner.
2. Disconnect the multiple coupler of idle switch.
3. Remove the bolts attaching the idle switch and remove the idle switch.

c. Installing idle switch

Install the idle switch in the reverse sequence.

d. Adjusting idle switch

1. Install the idle switch in the reverse sequence.
2. Warm up the engine until the water temperature rises about 70°C (159°F).
3. Set the engine speed to **900 rpm** (Automatic transmission: **750 rpm** in "D" range) by turning the air adjusting screw.
4. By increasing and decreasing the engine speed with the accelerator pedal, make sure that switch changes over from "OFF" to "ON" or "ON" to "OFF" at the engine speed of **1,000~1,100 rpm** (**1,100~1,250 rpm** for Automatic transmission).
5. If the switch doesn't change within the range of specified RPM, adjust it by turning adjusting screw of

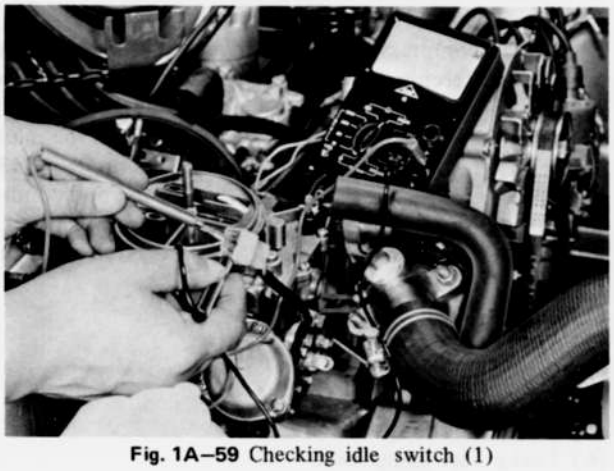

Fig. 1A–59 Checking idle switch (1)

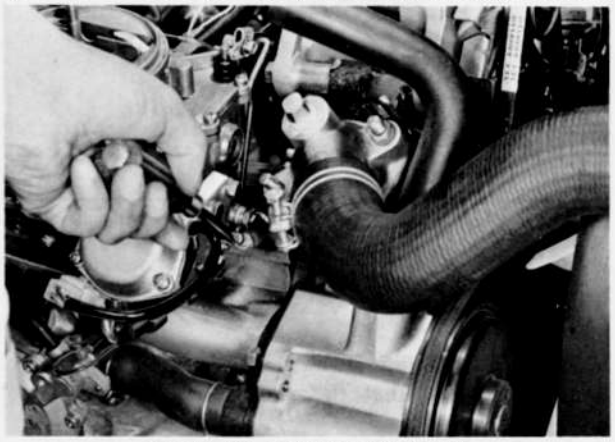

Fig. 1A–61 Adjusting idle switch

idle switch lever. Turn the adjusting screw counter-clockwise when the setting revolution is higher than specified RPM. Turn it clockwise when the setting revolution is lower than specified RPM.
6. Repeat the above procedure (4, 5) and set the engine speed within the range of specified RPM.
7. Make sure that the engine speed is 900 rpm (Automatic transmission: 750 rpm in "D" range) by carrying out no load running two or three times.

1A–E–12. Choke Switch (For semi-automatic choke system)

a. Checking choke switch
1. Remove the choke switch terminal.
2. If the two terminals of the switch are disconducted by pulling the choke control knob about 10 mm (0.4 in) or 25 mm (1.0 in) for automatic transmission and conducted by returning the knob, the choke switch is normal.

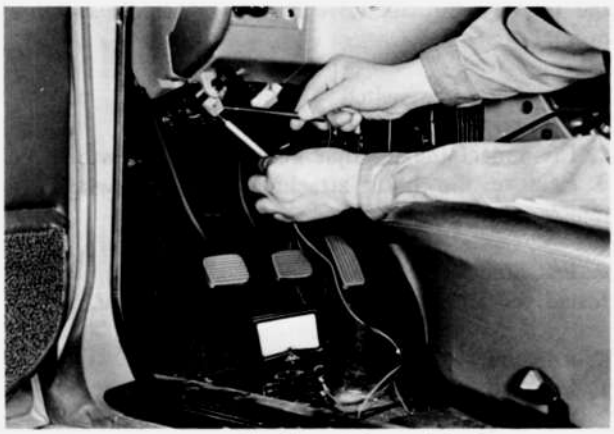

Fig. 1A–62 Checking choke switch (1)

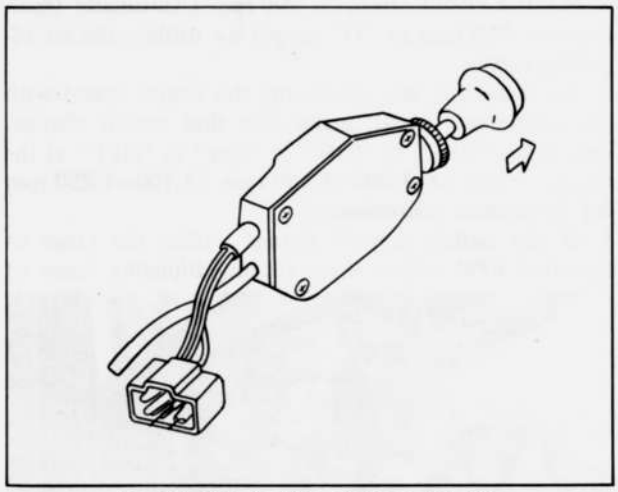

Fig. 1A–63 Checking choke switch (2)

1A–E–13. Ventilation Valve

a. Checking ventilation valve
1. Check to see that the air cleaner element is not clogged.
2. Install a vacuum gauge as shown in Fig. 1A–64.

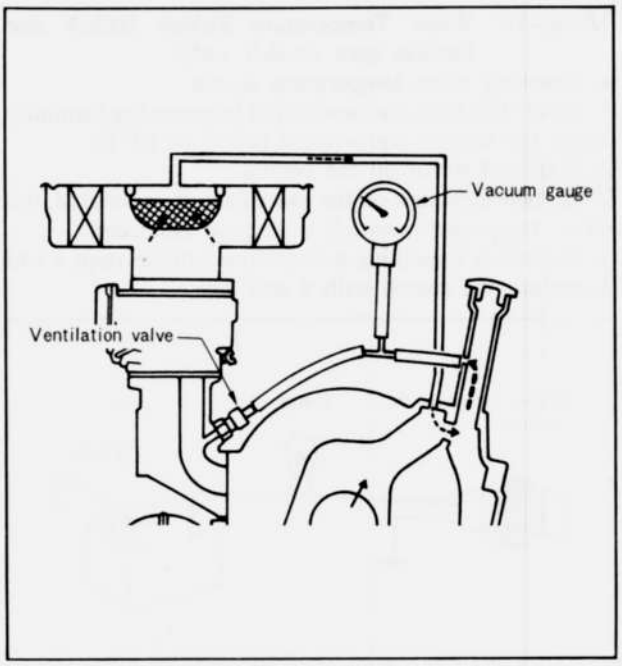

Fig. 1A–64 Checking ventilation valve

3. Start the engine. When the engine speed is raised to 2,500~3,000 rpm, the vacuum reading must be under **60 mm-Hg.**

b. Removing ventilation valve
1. Remove the deceleration control valve, as described in Par. 1A–E–8.
2. Remove the starting motor if necessary.
3. Disconnect the ventilation hose at the ventilation valve.
4. Loosen and remove the ventilation valve with the **ventilation valve wrench** (49 1881 135).

c. Installing ventilation valve
Install the ventilation valve in the reverse sequence.

1A–E–14. Evaporative Line (U.S.A and Canada spec models only)

a. Checking evaporative Line
1. Disconnect the evaporative hose from the "T" joint which is connected to the ventilation hose.
2. Connect the disconnected hose to the "U" type manometer as shown in Fig. 1A–65.
3. Apply a compressed air gradually into the manometer and the difference of water level should be **356 mm (14.0 in).** After that, blind the inlet of the manometer.
4. Leave the manometer for five minutes, with the inlet blind. Then, if the difference of water level is over **343 mm (13.5 in),** the evaporative line will be in good condition. If the difference is not within the specifications, inspect the following parts. If any defect, repair or replace.
(1) Leaky or loosen hoses
(2) Leaky condense tank
(3) Leaky fuel tank
(4) Leaky or loosen fuel line
(5) Leaky filler cap
(6) Leaky fuel gauge unit

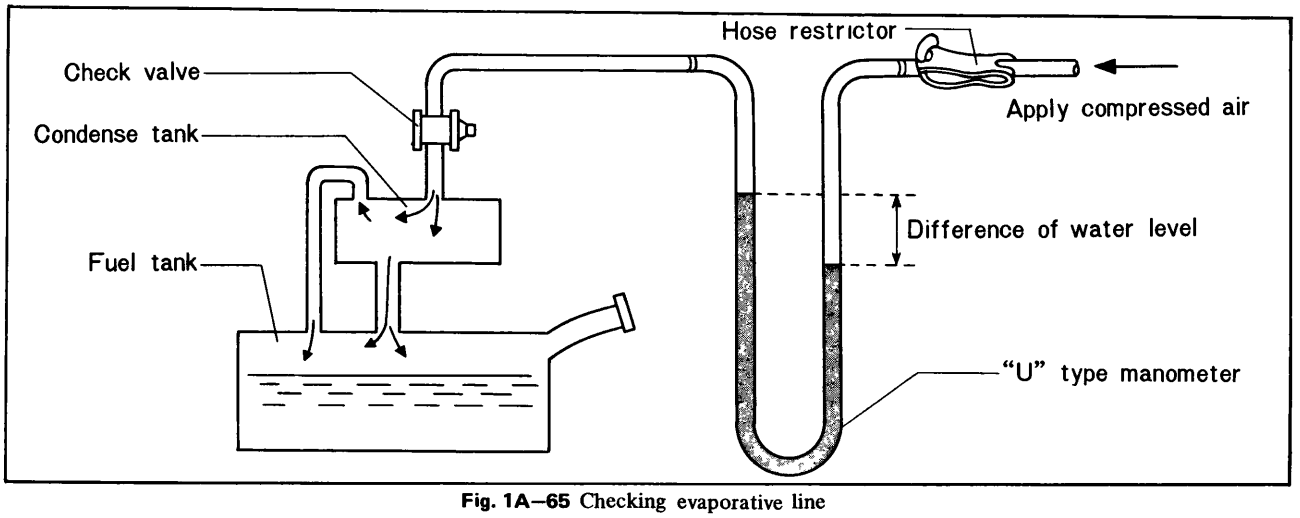

Fig. 1A–65 Checking evaporative line

1A–E–15. Charcoal Canister (U.S.A and Canada spec models only)

a. Checking charcoal canister

1. Check to see that the air cleaner element is not clogged.
2. Visually check the adhering condition of oil. When the whole surface is damp with oil, measure the ventiallation resistance.
3. Attach a vacuum gauge as shown in Fig. 1A–66. Check to see that when the engine speed is raised to 2,500~3,000 rpm, the vacuum gauge reads under **60 mm-Hg.**

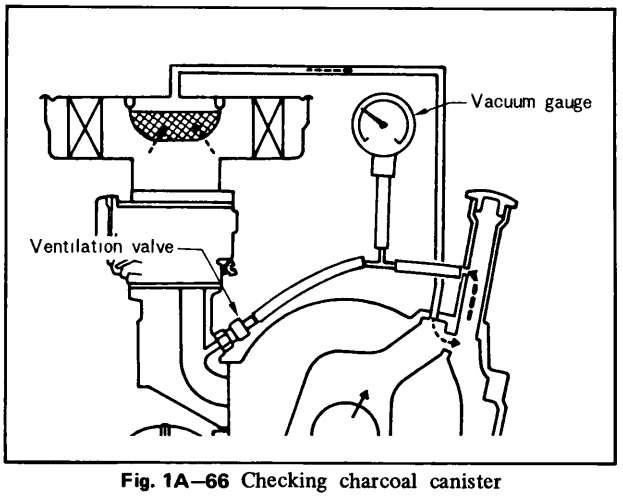

Fig. 1A–66 Checking charcoal canister

Note: The charcoal canister and air cleaner cover should be replaced as an assembly only.

1A–E–16. Condense Tank (U.S.A and Canada spec models only)

a. Removing condense tank

Sedan and Hard Top:

1. Disconnect the hoses from the condense tank.
2. Remove the rear package tray trim.
3. Remove the screws attaching the condense tank and remove the condense tank.

Rotary wagon:

1. Remove the service hole cover.
2. Disconnect the hoses from the condense tank.
3. Remove the screws attaching the condense tank and remove the condense tank.

b. Installing condense tank

Install the condense tank in the reverse sequence.

1A–E–17. Check Valve (Evaporative emission control system, U.S.A and Canada spec models only)

a. Checking check valve

1. Remove the check valve.
2. Blind one end of the check valve by hand, and install the pressure gauge to the other end as shown in Fig. 1A–67.

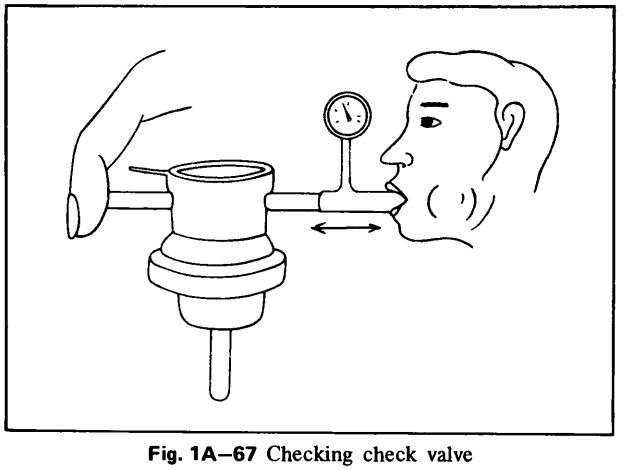

Fig. 1A–67 Checking check valve

3. Breath in and out the check valve with the pressure of about **0.5 kg/cm^2 (7.1 lb/in^2)**,and if the valve operates, it will be satisfactory. But, if not, replace it with new one.

b. Removing check valve

Sedan and Hard Top:

1. Disconnect the hoses from the check valve.
2. Remove the nuts attaching the check valve and remove the check valve.

Rotary wagon:

1. Remove the service hole cover.
2. Disconnect the hoses from the check valve.

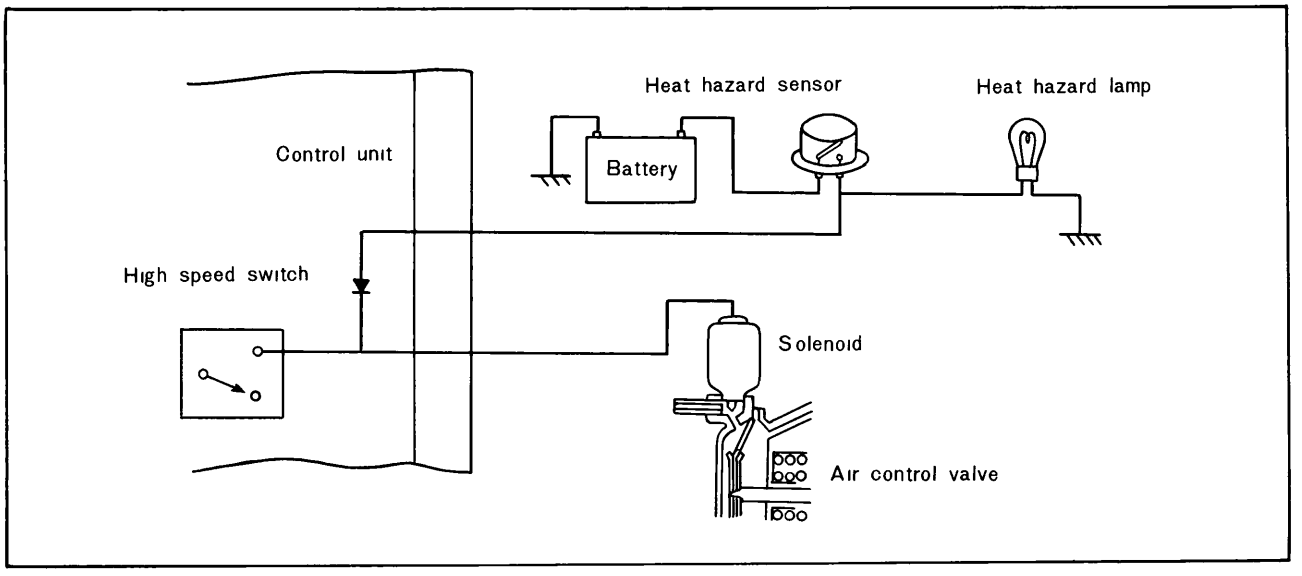

Fig. 1A–68 Checking heat hazard warning system

3. Remove the nuts attaching the check valve and remove the check valve.

c. Installing check valve
Install the check valve in the reverse sequence.

1A–E–18. Heat Hazard Warning System

a. Checking heat hazard warning system
1. Remove the heat hazard sensor from the body.
2. Disconnect the air control valve lead and connect the test light as shown in Fig. 1A–69.

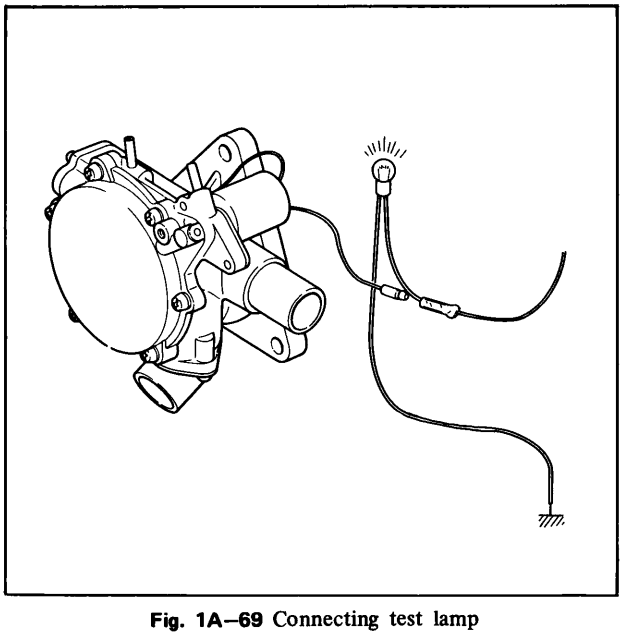

Fig. 1A–69 Connecting test lamp

3. Place it in engine oil with a thermometer. Be sure to prevent the oil entering into the inside of the sensor.
4. Gradually heat the oil so as to raise its temperature at the rate of one degree a minute. The test lamp which is connected to the air control valve lead and the heat hazard warning lamp should light at the temperature of 120 ± 5°C (248 ± 10°F) when the engine is running at idle speed.

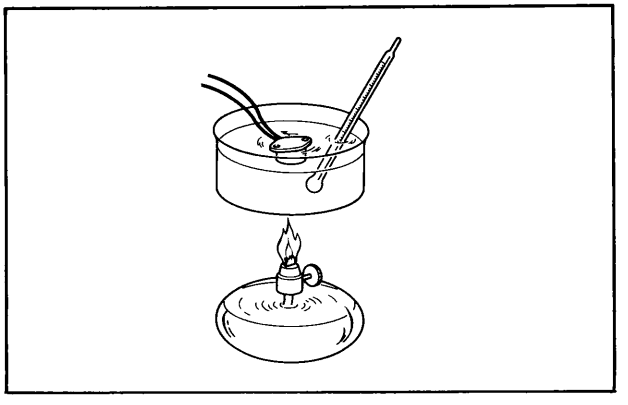

Fig. 1A–70 Heating up heat hazard sensor

b. Removing heat hazard sensor
Sedan and Hard Top
1. Open the luggage compartment door and remove the mat.
2. Disconnect the multiple coupler from the heat hazard sensor.
3. Remove the screws attaching the heat hazard sensor and remove the heat hazard sensor.

Rotary wagon
1. Fold the rear seat back forward.
2. Disconnect the multiple coupler from the heat hazard sensor.
3. Remove the screws attaching the heat hazard sensor and remove the heat hazard sensor.

1A–E–19. Hoses and Tubes (All systems)

a. Inspecting hoses and tubes
1. Inspect all hoses and tubes for deterioration or holes and all tubes for cracks or holes.
2. Check all hoses and tubes for improper connections.
3. If any defect is suspected, fit properly or replace if necessary.

1A–F. TROUBLE SHOOTING

1A–F–1. Symptoms, Causes and Remedies

The possible faults and their remedies are listed in the following table. When the symptoms of troubles are detected, proper care must be taken immediately before proceeding to the next probable cause.

Symptoms and probable causes	Remedies
1. Poor acceleration	
* The engine does not fully respond to the depression of the accelerator pedal.	
* The accelerative force is poor.	
* The climbing capacity is insufficient.	
* The max. speed can not be obtained.	
1) Improper ignition timings for leading and trailing plugs	See 5–C–2 Adjust
2) Improper opening of carburetor secondary throttle valve	Check
3) Fouling and excessive gap of spark plugs (Fouling by lead or carbon)	See 5–E Clean or replace
4) Burned or improperly adjusted distributor contact point	See 5–C–1 Replace if necessary
5) Lack of fuel supply at high speed running	See 4–B Replace if necessary
6) Clogging of air cleaner	Clean
2. Rough engine idling and hard starting	
* The idling speed can not be lowered.	
* Too much engine vibration at idling.	
* The engine starting is too hard.	
* The engine stalls immediately even if it starts.	
1) Air leak from each hose	See 1A–E–19 Replace if necessary
2) Clogging of carburetor jets	Clean
3) Improper seating of carburetor secondary throttle valve	Check
4) Fouled spark plug	See 5–E–3 Clean or replace
5) Burned or improperly adjusted distributor contact point	See 5–C–1 Clean or replace
6) Improper ignition timings of leading and trailing plugs	See 5–C–2 Adjust
7) Defective ventilation valve	See 1A–E–13 Replace if necessary
8) Internal disconnection of leading and trailing ignition coils	Replace
9) Air leak from air intake system	Repair or replace if necessary
10) Defective deceleration control valve	See 1A–E–8 Replace if necessary
11) Low compression pressure	Repair
12) Defective altitude compensator	See 1A–E–9 Replace if necessary
3. Noisy air pump	
* The noise is generated by the air pump when the engine is idling.	
* The noise is generated by the air pump when the engine is racing.	
1) Improperly adjusted "V" belt	See 1A–E–1 Adjust
2) Defective air pump	See 1A–E–1 Replace
3) Disconnected or leaky air hose	Connect and replace
4) Insufficient tightening of pump attaching bolts	Tighten
4. Improper fuel connection between slow and main zones (Flat spot)	
* Shock is felt when depressing the accelerator pedal to accelerate from the low speed cruising condition.	
* Shock is felt when depressing the accelerator pedal after turning left at low speed.	
1) Improper injection of carburetor accelerator pump	See 4–A–5
2) Clogging of carburetor jets	Clean
3) Fouled leading spark plug	See 5–E–3
4) Excessively low carburetor fuel level	See 4–A–3 Adjust
5) Continuously opened anti-afterburn valve	See 1A–E–8 Replace if necessary
5. Improper fuel connection between primary and secondary zones	
* Shock is caused when accelerating from running at around 3,000 rpm by depressing the accelerator pedal.	

Symptoms and probable causes	Remedies
* Shock is caused when promptly accelerating from the middle speed or the decelerating condition.	
1) Clogging of carburetor jets	Clean
2) Excessively low carburetor fuel level	See 4-A-3 Adjust
3) Serious clogging of air cleaner element	Clean or replace
4) Continuously opened anti-afterburn valve and coasting valve (deceleration control valve).	See 1A-E-8 Replace if necessary
6. Large car knocking during cruising.	
* It is impossible to cruise constantly in any gear.	
* Shock is sometimes caused during running in top gear.	
Note: These phenomena are more or less inevitable. Therefore, unless the car knocking is excessive, it can be regarded to be normal.	
1) Clogging of carburetor jets or excessively low fuel level	Clean or adjust (See 4-A-3)
2) Trailing side ignition does not occur.	Check and replace if necessary
3) Air leak from each hose	See 1A-E-19 Repair and replace if necessary
4) Air leak from each valve	Replace if necessary
5) Fouled spark plug	See 5-E-3 Clean or replace
6) Improper distributor vacuum advance (no advance)	See 5-C-4 Repair and replace parts
7. Abnormally large engine knocking	
1) Improper ignition timing of leading and trailing sides (excessive advance)	See 5-C-2 Adjust
2) Excessive distributor vacuum advance	See 5-C-4 Adjust
3) Excessive distributor centrifugal advance	See 5-C-4 Adjust
4) Too poor fuel	Clean
5) Insufficient heat range or extreme gap erosion of spark plug	See 5-E-1 Adjust or replace
8. Pre-ignition or spit back	
* Large noise comes from the engine compartment at high speed running, e.g. on the free way, and the engine horsepower falls.	
Note: If the car is run continuously under the condition mentioned above, the insulator of the spark plug is broken and bites into the combustion chamber, causing the vehicle to be inoperable.	
Pre-ignition / Spit back: 1) Excessive spark plug gap for trailing side	
2) Excessive advance of trailing side ignition	
3) Excessive advance of leading side ignition	
4) Insufficient heat range of spark plug	
5) Insufficient metering oil	
6) Sticky apex seal	
7) Improper alignment of high tension cords	
9. Large car bucking or deceleration vibration	
* Within the range where the coasting valve should operate (when decelerating from 1,200 rpm [automatic transmission: 1,400 rpm]or over) large car bucking occurs.	
Note: Even if the car bucking happens to occur within the range of engine speed less than 1,200 rpm (automatic transmission: 1,400 rpm) where the coasting valve does not operate, it may be regarded as normal.	
1) Improper operation of coasting valve (deceleration control valve)	See 1A-E-8 Replace
2) Defective control unit	See 1A-E-7 Replace
3) Improper idle fuel flow or idle speed	See 4-A-L Adjust
4) Air leak from each hose	See 1A-E-19 Repair and replace if necessary
5) Air leak from each valve	Repair and replace if necessary
6) Defective idle switch	See 1A-E-11 Replace
7) Improperly adjusted idle switch	See 1A-E-11 Adjust
8) Fouled spark plug	Clean and replace
10. Afterburning	
* Extremely annoying afterburning occurs during deceleration.	
* Afterburning occurs when turning off the ignition switch.	

Symptoms and probable causes	Remedies
1) Deceleration control valve not opening properly	See 1A–E–8 Replace
2) Coasting valve (deceleration control valve) not opening properly	See 1A–E–8 Replace
3) Rich idle mixture	See 4–A–1 Adjust
4) Gas leak from exhaust system	Repair and replace parts
5) Too low idle revolution	See 4–A–1 Adjust
11. Over flow from carburetor	
1) Dust biting into needle valve	Clean
2) Improper sealing of needle valve	Clean and replace parts
3) Improper movement of float	Adjust and replace parts
4) Large fuel pressure or fuel pump	See 4–B Replace if necessary
12. The engine brake does not work even if the accelerator pedal is released.	
* Even if the accelerator pedal is released when running, the engine brake does not work, which causes the overrunning and makes the driver uneasy.	
1) Improper returning of carburetor primary throttle valve	Clean
2) Improper returning of carburetor secondary throttle valve	Clean
13. The air jets out from the tail pipe for the forced air cooling during idling.	
1) Improper operation of air control valve	See 1A–E–4 Replace if necessary
2) Electric current flowing from the control unit to air control valve	See 1A–E–7 Replace
14. Factors which adversely affect overall emissions under proper procedure	
1) Improper operation of air control valve (Air cut valve, No. 1 relief valve and No. 2 relief valve)	See 1A–E–4 Replace if necessary
2) Defective control unit	See 1A–E–7 Replace
3) Trailing side spark plug is not controlled. (when the engine is cold.)	See 1A–E–7 Replace if necessary
4) Improper ignition timings of leading and trailing plugs.	See 5–C–2 Adjust
5) Improper engine idling speed	See 4–A–1 Adjust
6) Defective carburetor (improper fuel level, jet, etc.)	See 4–A Adjust or repair
7) Improper operation of deceleration control valve	See 1A–E–8 Replace if necessary
8) Fouled spark plug	See 5–E–3 Clean or replace
9) Breakage of reactor	See 1A–E–3 Replace
10) Air leak from secondary air passage	Repair and replace
11) Air leak from each sensing tube to intake manifold	Repair and replace
15. Factors which adversely affect idling emissions	
1) Improper idling speed or mixture	See 4–A–1 Adjust
2) Defective spark plug	See 5–E Clean or replace
3) Improper ignition timings of leading and trailing sides	See 5–C–2 Adjust
4) Defective distributor contact point	See 5–C–1 Clean or replace
5) Deteriorated air pump	See 1A–E–1 Repalce
6) Improper operation of air control valve	See 1A–E–4 Replace if necessary
7) Defective control unit	See 1A–E–7 Replace
8) Air leak from each valve into intake manifold	Repair and replace
9) Breakage of reactor	See 1A–E–3 Replace
16. Factors which adversely affect deceleration emissions	
1) Improper idling speed and fuel flow	See 4–A–1 Adjust
2) Improper operation of deceleration control valve	See 1A–E–8 Replace if necessary
3) Improper operation of air control valve (Air cut valve, No. 1 relief valve and No. 2 relief valve)	See 1A–E–4 Replace if necessary
4) Defective idle switch	See 1A–E–11 Replace
5) Breakage of reactor	See 1A–E–3 Replace
17. Factors which adversely affect acceleration emissions	
1) Improper air pump flow	See 1A–E–1 Replace
2) Defective air control valve (Air cut valve, No. 1 relief valve and No. 2 relief valve)	See 1A–E–4 Replace if necessary

Symptoms and probable causes	Remedies
3) Trailing side spark plug also ignited (when the engine is cold)	See 1A–E–7 Replace if necessary
4) Defective thermosensor	See 1A–E–5 Replace
5) Defective thermodetector	See 1A–E–6 Replace
6) Defective carburetor (improper fuel level and other)	See 4–A Adjust
7) Defective control unit	See 1A–E–7 Replace
8) Defective reactor	See 1A–E–3 Replace
9) Defective spark plug	See 5–E Replace

1A–F–2. Detects, Conditions of Trouble and Causes of Defects Related to Each System

a. Air control valve

Possible troubles	Corresponded item
1. Number of revolutions during idling decreases	B
2. Emission during idling becomes unfavourable.	B, C
3. Emission during acceleration becomes unfavourable.	B
4. Emission during cruising becomes unfavourable.	B
5. Emission during deceleration becomes unfavourable.	B
6. Damage is liable to occur on reactor	A
7. Rough engine idling	B
Conditions of trouble of system	**Corresponded item**
A. Remains constantly open (air inject)	a, b
B. Remains constantly closed (air cut)	a, b
C. Excessive air leakage from valve	b
Probable causes	
a. Defective control unit	
b. Defective air control valve	

b. Thermosensor

Possible troubles	Corresponded item
1. Exhaust emission becomes abnormally unfavourable.	A
2. Possibility of the reactor being damaged is great.	B
3. Penalty in fuel economy	B
4. Power drop	B
Conditions of trouble of system	**Corresponded item**
A. Trailing ignition does not cut off in driving ranges other than "idling, deceleration or wide open throttle" at normal temperature cold start.	a, b
B. Trailing ignition remains constantly off in driving ranges other than "idling, deceleration, or wide open throttle" when the engine is warm.	a, b
Probable causes	
a. Defective control unit	
b. Defective thermosensor	

c. Thermodetector

Possible trouble	Corresponded item
1. Trailing ignition does not cut off at normal temperature cold condition and 4 plugs are in operation.	A, B
Conditions of trouble of system	**Corresponded item**
A. Disconnection of connector	a
B. Broken connection of wires inside thermodetector	a
Probable causes	
a. Defective thermodetector	

d. Control Unit

Possible troubles	Corresponded item
1. Exhaust emission becomes abnormally unfavourable.	A, C, D
2. Power drop	B, C
3. Driveability shows abnormally deterioration	B, D
Conditions of trouble of system	**Corresponded item**
A. Trailing ignition does not cut off when engine is cold. (4 plugs in all ranges)	a, b
B. Trailing ignition remains constantly off.	a, b
C. Deceleration control valve or air control valve operate improperly.	a
Probable causes	
a. Defective control unit	
b. Defective thermosensor	

e. Fuse of the control unit

Possible troubles	Corresponded item
1. Possibility of the reactor being damage is grate.	A
2. Rough engine idling	B
3. Abnormal CO, HC readings at engine idling and decelerating	B
4. Flat spot occurs during driving	B
5. Excessive periodical engine knocks (Serzing)	B
6. Flat spot occurs during light acceleration from low speed running or deceleration condition.	B
7. Engine idle speed becomes high.	B
Condition of trouble of system	**Corresponded item**
A. Air control valve remains open (air injection)	a, b, c
B. Deceleration control valve (coasting valve) remains open.	a, b, d
Probable causes	
a. Fuse of control unit blows	
b. Defective control unit	
c. Defective air control valve	
d. Defective deceleration control valve	

f. Deceleration control valve

Possible troubles	Corresponded items
1. Extremely annoying afterburning occurs during deceleration or after turning off the ignition switch.	B, C
2. Rough engine idling	A, C
3. Hard engine starting	A, C
4. Abnormal CO, HC readings at engine idling and decelerating	A, C
5. Flat spot occurs during driving	A, C
6. Excessive periodical engine knocks (Serzing)	A, C
7. Flat spot occurs during light acceleration from low speed running or deceleration condition	A, C
8. Engine idle speed becomes high	A, C
Condition of trouble of system	**Corresponded item**
A. Valve stay open or delay to close	a, b, c
B. Valve stay closed or delay to open	a, b, c
C. Excessive air leak at valve	c
Probable causes	
a. Defective idle switch	
b. Defective control unit	
c. Defective deceleration control valve	

g. Idle switch

Possible troubles	Corresponded item
1. Exhaust emission becomes abnormally unfavourable.	B
2. Driveability deteriorates	A
3. Abnormal afterburn occurs	B

4. Car bucking becomes abnormally excessive	B
Contitions of trouble of system	**Corresponded item**
A. Coasting valve remains constantly open at acceleration and normal speed running	b, c
B. Coasting valve does not open during deceleration.	a, b, c, d
Probable causes	
a. Defective control unit b. Defective coasting valve solenoid c. Defective idle switch d. Improper return of the carburetor primary throttle valve	

h. Ventilation valve

Possible troubles	Corresponded item
1. Misfiring frequently occurs during idling and fluctuations in number of revolutions increase.	B
2. Number of revolutions at idling decreases.	A
3. Dilution of engine oil with gasoline increses.	B
4. Defective purging occurs in charcoal canister.	A
Conditions of trouble of system	**Corresponded item**
A. Remains constantly closed	a
B. Remains constantly open	a
Probable cause	
a. Defective ventilation valve	

SPECIAL TOOLS

49 2113 010	Air pump gauge set
49 2113 011	T-fitting
49 2113 012	Plug
49 2113 014	Pressure gauge
49 1881 125	Thermal reactor remover
49 1881 135	Ventilation valve wrench

LUBRICATING SYSTEM

2–A. LUBRICATING CIRCUIT ..... 2 : 1
2–B. OIL PUMP ..... 2 : 2
2–B–1. Disassembling Oil Pump ..... 2 : 2
2–B–2. Inspecting Oil Pump ..... 2 : 2
2–B–3. Assembling Oil Pump ..... 2 : 3
2–C. OIL PUMP DRIVING ..... 2 : 3
2–C–1. Chain Adjuster Inspection ..... 2 : 3
2–C–2. Oil Pump Chain and Sprocket Inspection ..... 2 : 3
2–D. PRESSURE CONTROL VALVE ..... 2 : 4
2–D–1. Checking Pressure Control Vlave ..... 2 : 4
2–E. OIL COOLER ..... 2 : 4
2–E–1. Repairing Oil Cooler ..... 2 : 4
2–F. BY-PASS VALVE ..... 2 : 4
2–F–1. Checking By-pass Valve ..... 2 : 4
2–G. PRESSURE REGULATOR ..... 2 : 5
2–G–1. Checking Pressure Regulator ..... 2 : 5
2–G–2. Checking Oil Pressure ..... 2 : 5
2–H. OIL PRESSURE SWITCH ..... 2 : 5
2–I. OIL FILTER ..... 2 : 5
2–I–1. Replacing Oil Filter ..... 2 : 6
2–J. METERING OIL PUMP ..... 2 : 6
2–J–1. Checking Metering Oil Pump ..... 2 : 6
2–J–2. Adjusting Metering Oil Pump ..... 2 : 7
2–J–3. Disassembling Metering Oil Pump ..... 2 : 7
2–J–4. Assembling Metering Oil Pump ..... 2 : 7
2–K. CHECK VALVE ..... 2 : 9
2–L. OIL PAN ..... 2 : 9
2–L–1. Oil Pan Removal ..... 2 : 9
2–L–2. Oil Pan Inspection ..... 2 : 9
SPECIAL TOOL ..... 2 : 9

2–A. LUBRICATING CIRCUIT

1. The oil pump which is driven by the eccentric shaft, draws up the oil from the oil pan through the strainer and sends it to the oil cooler through the pressure control valve.
2. The pressure control valve sends the surplus oil back to the oil pan when the oil pressure exceeds 11 kg/cm² (156 lb/in²) in order to prevent the oil cooler and the oil hose from damage by the exceeding pressure which is generated at the starting in the very cold weather.
3. The by-pass valve is installed on the oil cooler in order to prevent drop of oil supply which is caused by resistance of oil cooler in the cold weather and regulate the temperature of the oil circulating in the engine. The oil is sent directly to the engine without passing through the oil cooler when the difference of the oil pressure of inlet and outlet pipes is more than 3.56 kg/cm² (50.7 lb/in²) at 70°C (158°F) and/or the temperature of the oil is under 60°C (140°F).
4. The oil from the oil cooler is forced to the pressure regulator on the rear housing.
5. The oil of which pressure is regulated to 5 kg/cm² (71.1 lb/in²), is forced to the oil filter.
6. The oil that has been filtered by the oil filter is forced to the front main bearing through the tubular dowel and to the rear main bearing through the passage of the rear housing.
7. The oil that has passed through the oil holes of the bearings, lubricate the front and rear main bearings and enters the oil passage provided in the eccentric shaft.
8. The oil passing through the eccentric shaft passage lubricates the rotor bearings.
9. Needle bearings which are provided in front of the front housing are lubricated by the oil forced through the little hole led to the oil passage of the eccentric shaft and the oil coming after lubricating the front main bearing.
10. The eccentric shaft is equipped with two oil jets. The oil in the passage of the eccentric shaft is injected through the oil jets into the front and rear rotors and cools the rotors.
11. Stationary gears and internal gears are lubricated by the oil coming after cooling the rotors and after lubricating the main bearings.
12. The oil passing through the tubular dowel is sent to the front cover and led to the metering oil pump.
13. From the metering oil pump, the oil is forced to the carburetor and is supplied into the combustion chambers together with the air-fuel mixture to lubricate the apex seals, corner seals, side seals and housings.

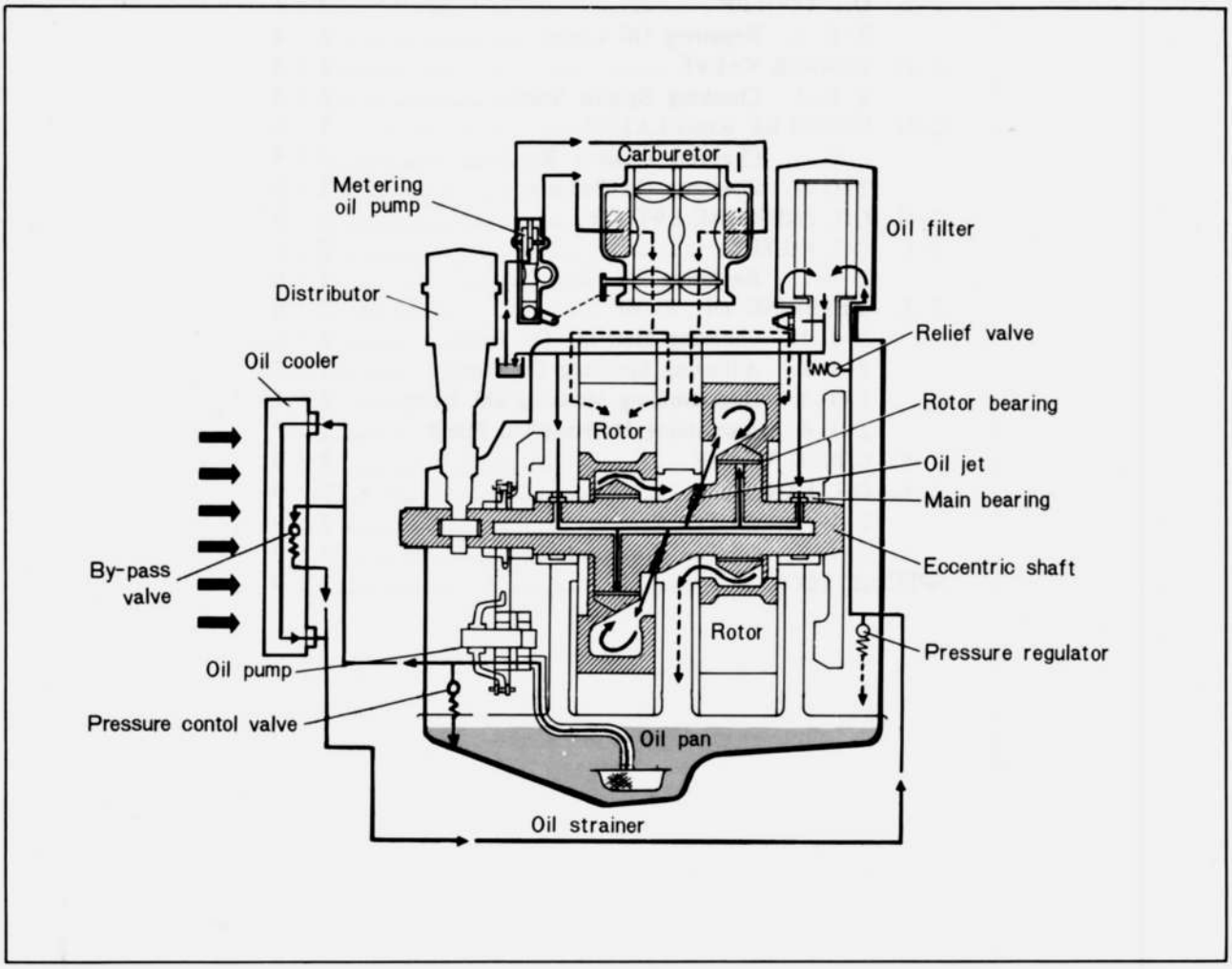

Fig. 2–1 Lubricating circuit

2–B. OIL PUMP

The oil pump is of a rotor type based on a trochoid curve and consists of the parts as shown in Fig. 2–5. The feeding capacity is 6 liters/min. (12.7 U.S. pints/min., 10.6 Imp. pints/min.) at 1,000 rpm of engine speed.

2–B–1. Disassembling Oil Pump

1. Remove the oil pump from the front housing.
2. Remove the snap ring from the shaft, and remove the rear rotors and key.
3. Remove the middle plate attaching screw and remove the middle plate.
4. Remove the front rotors and key from the shaft.

2–B–2. Inspecting Oil Pump

1. Check the clearance between the lobes of the rotors with a feeler gauge, as shown in Fig. 2–3. The standard clearance is 0.01 ~ 0.09 mm (0.0004 ~ 0.0035 in). If the clearance exceeds **0.15 mm (0.006 in)**, replace both inner rotor and outer rotor.
2. Check the clearance between the outer rotor and pump body with a feeler gauge as shown in Fig. 2–4. The specified clearance is 0.20 ~ 0.25 mm (0.008 ~ 0.01 in). If the clearance is more than **0.30 mm**

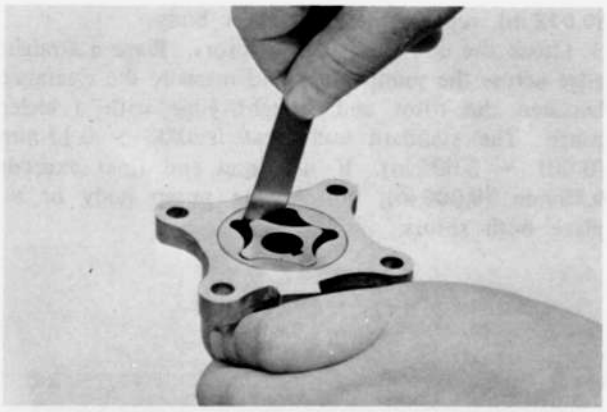

Fig. 2–3 Checking rotor clearance

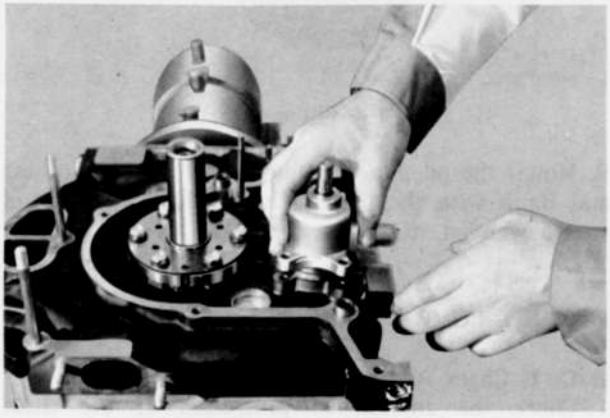

Fig. 2–2 Removing oil pump

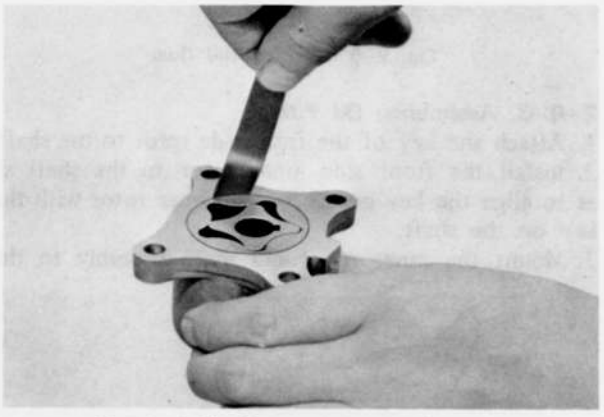

Fig. 2–4 Checking outer rotor clearance

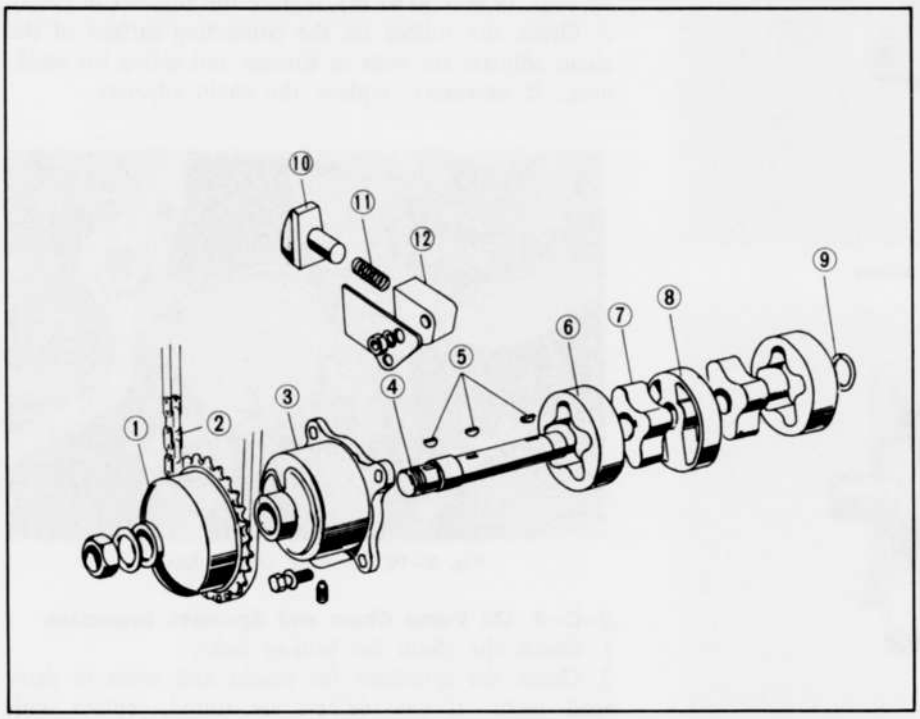

Fig. 2–5 Oil pump components

1. Oil pump driven sprocket
2. Oil pump chain
3. Pump body
4. Shaft
5. Keys
6. Outer rotor
7. Inner rotor
8. Middle plate
9. Snap ring
10. Slipper head
11. Spring
12. Body

(0.012 in), replace the rotor(s) or body.
3. Check the end float of the rotors. Place a straight edge across the pump body and measure the clearance between the rotor and straight edge with a feeler gauge. The standard end float is 0.03 ~ 0.13 mm (0.001 ~ 0.005 in). If the total end float exceeds **0.15 mm (0.006 in)**, correct the pump body or replace both rotors.

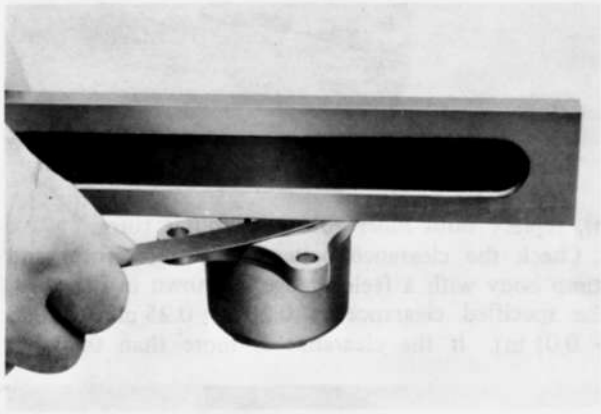

Fig. 2–6 Checking end float

2–B–3. Assembling Oil Pump

1. Attach the key of the front side rotor to the shaft.
2. Install the front side inner rotor to the shaft so as to align the key groove of the inner rotor with the key on the shaft.
3. Mount the inner rotor and shaft assembly to the pump body.
4. Install the outer rotor to the body so as to see the identification marks of triangle. Apply oil to the rotors. (Fig. 2–7)
5. Install the middle plate to the body. Tighten the set screw. (Fig. 2–8)
6. Attach the key of the rear side rotor to the shaft.
7. Install the rear side inner rotor and outer rotor.
8. Fit the snap ring on the shaft. Apply oil to the rotors.

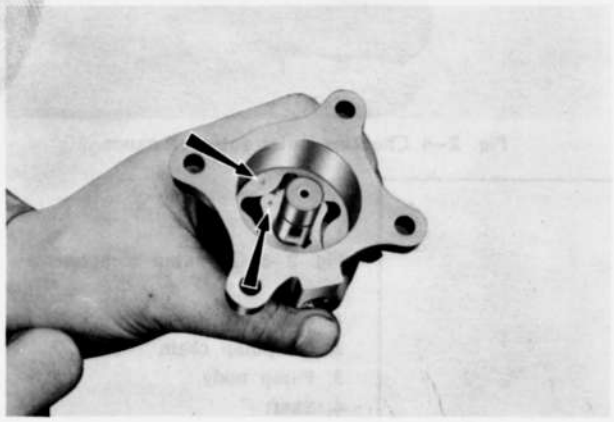

Fig. 2–7 Installing rotors

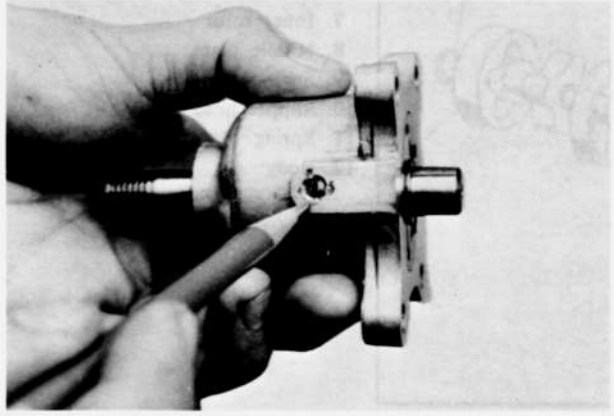

Fig. 2–8 Tightening intermediate plate



Fig. 2–9 Fitting snap ring

9. Mount the oil pump assembly on the front housing and fix it with the bolts. Rotate the shaft by hand to see whether it rotates smoothly.

2–C. OIL PUMP DRIVING

2–C–1. Chain Adjuster Inspection

1. Check the amount of protrusion of the chain adjuster, as shown in Fig. 2–10. If the protrusion exceeds **12 mm (0.47 in)**, replace the adjuster or chain.
2. Check the rubber on the contacting surface of the chain adjuster for wear or damage and spring for weakness. If necessary, replace the chain adjuster.

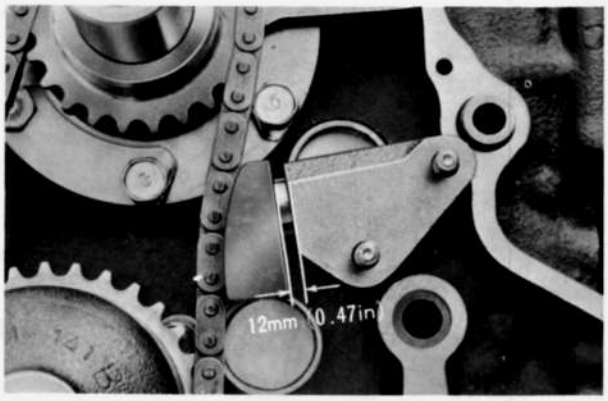

Fig. 2–10 Checking chain adjuster

2–C–2. Oil Pump Chain and Sprocket Inspection

1. Check the chain for broken links.
2. Check the sprockets for cracks and worn or damaged teeth. If any defects are found, replace with new parts.

2–D. PRESSURE CONTROL VALVE

The pressure control valve mounted on the front cover sends the surplus oil back to the oil pan when the pressure exceeds 11 kg/cm² (156 lb/in²) in order to prevent the oil cooler and the oil hose from damage by the exceeding pressure which is generated at the starting in the very cold weather.

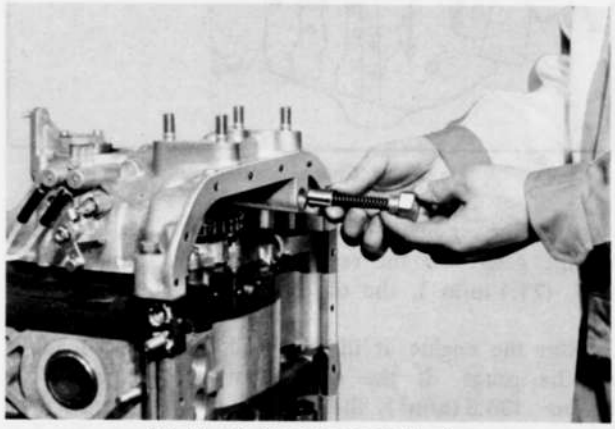

Fig. 2–11 Pressure control valve

2–D–1. Checking Pressure Control Valve

Remove the cap of the pressure control valve from the front cover.
Examine the spring and the plunger for corrosion or any damage. If it is severe, replace with new ones. Measure the free length, set length and set pressure. Replace with new spring if these are not in the specifications.

2–E. OIL COOLER

The rotor is cooled by the lubricating oil, and the oil cooler is employed to cool the oil.
The oil cooler is of the corrugated fin type like a water radiator and is mounted under the radiator through insulation rubber. The oil cooler is made of aluminum which has outstanding cooling efficiency.

2–E–1. Repairing Oil Cooler

The inner pressure of the oil cooler is much higher than the cooling radiator, so it should be repaired by **aluminum welding** when damaged.

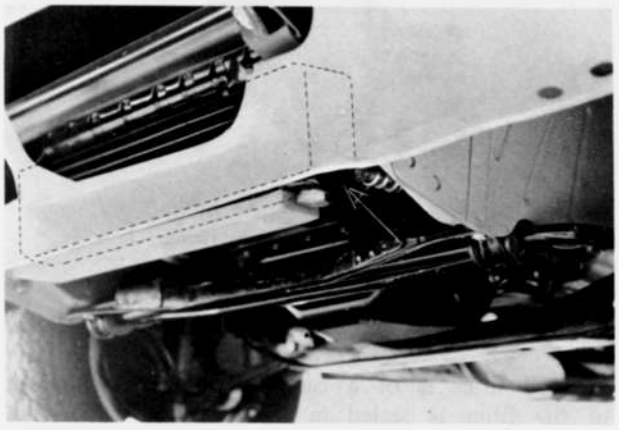

Fig. 2–12 Oil cooler

2–F. BY-PASS VALVE

The by-pass valve is installed on the oil cooler in order to prevent drop of oil supply which is caused by the resistance of the oil cooler in the cold weather and regulate the temperature of the oil circulating in the engine. The oil is sent directly to the engine without passing through the oil cooler when the difference of the oil pressure of inlet and outlet pipes is more than 3.56 kg/cm² (50.7 lb/in²) at 70°C (158°F) and/or the temperature of the oil is under 60°C (140°F).

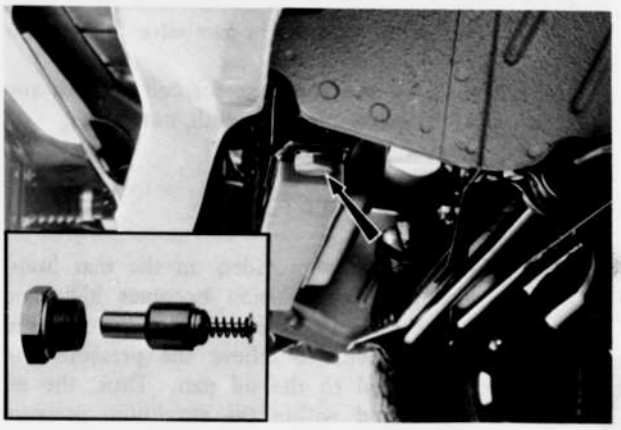

Fig. 2–13 By-pass valve

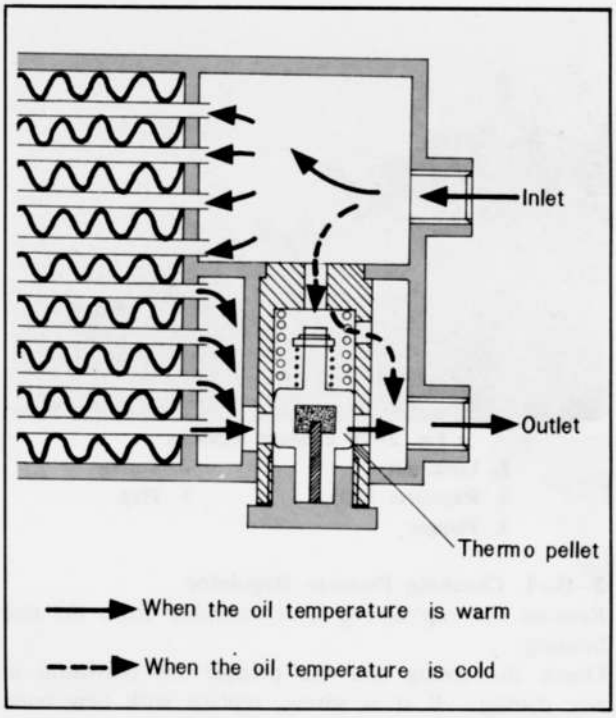

Fig. 2–14 By-pass valve

2–F–1. Checking By-pass Valve

1. Remove the cap nut and pull out the by-pass valve.
2. Soak the by-pass valve in hot oil of 75°C ~ 80°C (167°F ~ 176°C). If the protrusion of piston is more than 5 mm (0.2 in), the by-pass valve is normal. (Fig. 2–15)

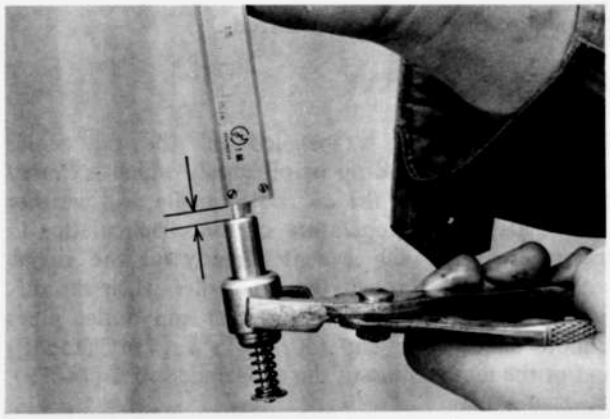

Fig. 2–15 Checking by-pass valve

3. Check the spring and the valve for corrosion or any damage. If it is severe, replace with new ones.

2–G. PRESSURE REGULATOR

The pressure regulator is provided on the rear housing. When the engine revolution becomes high and excessive oil pressure develops in the system, the pressure regulator opens to relieve the pressure and to send the excess oil to the oil pan. Thus, the oil pressure is maintained within the maximum pressure of 5 kg/cm² (71.1 lb/in²).

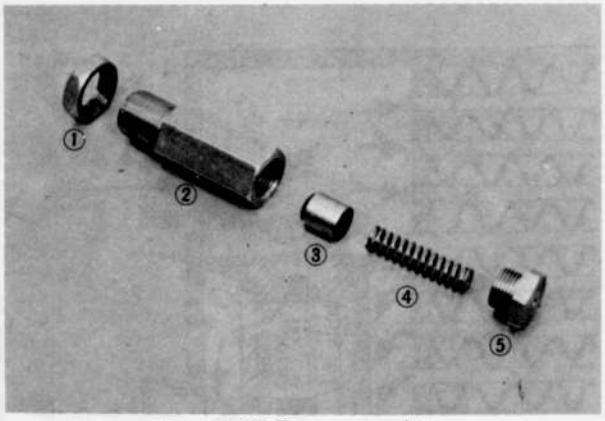

Fig. 2–16 Pressure regulator

1. Lock nut
2. Regulator body
3. Plunger
4. Spring
5. Plug

2–G–1. Checking Pressure Regulator

Remove the cap or regulator assembly from the rear housing.

Check the spring and the plunger for corrosion or any damage. If it is severe, replace with new ones. Measure the free length, set length and set pressure. Replace with new spring if these are not in specifications.

2–G–2. Checking Oil Pressure

To check the oil pressure, proceed as follows :

1. Warm up the engine to the normal operating temperature and remove the oil pressure switch and install an oil pressure gauge **(49 0187 280)** in its place.

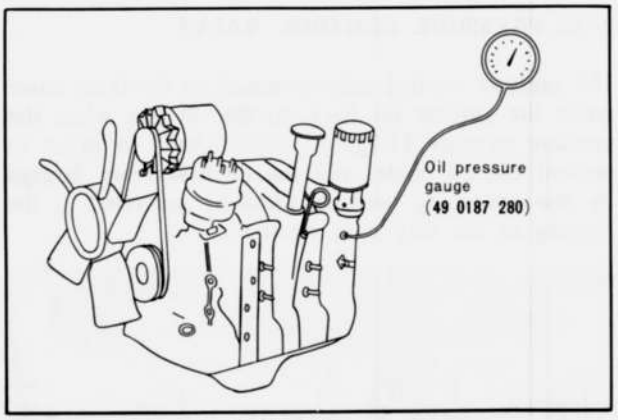

Fig. 2–17 Checking oil pressure

2. Run the engine at **3,000 rpm** and take a reading of the gauge. If the reading of the gauge is **5.0 kg/cm² (71.1 lb/in²)**, the oil pressure is normal.

3. Run the engine at idling speed and take a reading of the gauge. If the reading of the gauge is **2.5 kg/cm² (35.6 lb/in²)**, the idling pressure is normal.

If the oil pressure is extremely low, check the following points :

1. Ensure that the oil level is between the "F" and "L" marks of the dipstick gauge.
2. Check the oil pump, as described in **Par. 2–B–2.**
3. Check the pressure regulator for wear on the plunger and fatigue on the spring. The free length of the spring is **46.4 mm (1.827 in).**

2–H. OIL PRESSURE SWITCH

The oil pressure switch fitted to the rear housing is connected by the wiring to the oil pressure warning lamp. The safe minimum pressure is **0.3 kg/cm² (4.3 lb/in²)** at idle. If the oil pressure drops below 0.3 kg/cm² (4.3 lb/in²) the warning lamp lights up to indicate a trouble in the lubricating system. Therefore, when the warning lamp goes on, the oil pressure should be checked immediately.

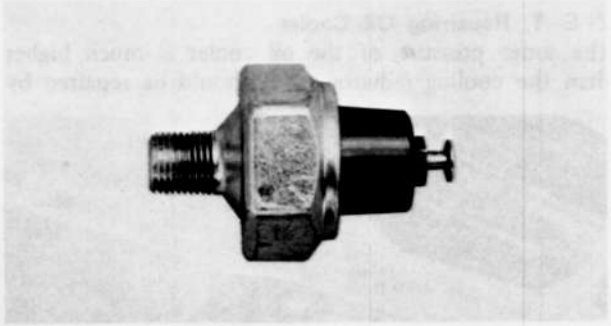

Fig. 2–18 Oil pressure switch

2–I. OIL FILTER

The oil filter is of a cartridge type. The element of the filter is sealed in the container as a unit. The oil filter is provided with a relief valve. If the

oil filter is clogged by impurities in the oil and the filtering resistance reaches **1.0 kg/cm² (14.2 lb/in²)**, the oil can not pass through the element. In this case, the oil pushes the relief valve open and unfiltered oil is supplied to the engine.
The oil filter should be replaced **every 12,000 km (8,000 miles).**

2–I–1. Replacing Oil Filter

1. Remove the oil filter cartridge with a suitable oil filter wrench.



Fig. 2–19 Removing oil filter

2. Apply oil onto the rubber gasket on the new filter cartridge.
3. Place the cartridge on the cover and screw in until it just touches the cover.
4. Tighten the cartridge further 2/3 turn but absolutely no more.
Do not use the oil filter wrench.
5. Start the engine and check to see that the oil is not leaking from the joints. Top up with oil if necessary.

2–J. METERING OIL PUMP

The oil enters the metering oil pump from the lubricating oil passage in the front cover and the oil which is measured and discharged from the metering oil pump enters the carburetor through a hose. The oil entering the carburetor is discharged from a portion of venturi to the working chamber to lubricate the gas seals. The plunger type metering oil pump is provided to send the proper amount of oil to the carburetor and is driven by the distributor drive gear.

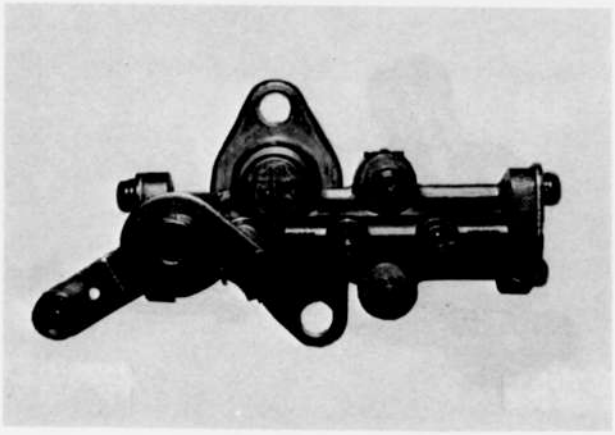

Fig. 2–20 Metering oil pump

2–J–1. Checking Metering Oil Pump

As sufficient consideration is being given on the performance and durability of the metering oil pump in its production process, generally there is no need of adjustment.
But as previously mentioned, the metering oil pump is the heart of the operation of the gas seals and insufficient amount of oil discharge could cause troubles such as drop in engine power and development of noise, because of insufficient lubrication, while excessive amount of oil discharge could cause problems as white smoke.
Therefore, the amount of oil discharge should always be within the proper range.
In case the engine tends to show any of the above troubles, the amount of oil discharge should be checked, proceeding as follows.
1. Disconnect the connecting rod by removing the cotter pin.
2. Disconnect the 2 metering oil hoses from the carburetor.
3. Install the tachodwell tester and set the engine at a constant speed of **2,000 rpm.** Wait until the oil discharge from the end of the metering oil hoses becomes steady and, when it is steady receive the oil in the measuring cylinder and start measuring the time simultaneously.
4. Stop the engine after **6 minutes** and check the amount of oil discharge. If it is within the proper range shown below, the discharge is satisfactory. Otherwise, adjust the oil metering pump.

2.2 cc /6 min. /2,000 rpm

Note :
As lubricating oil is not being supplied to the gas seals while the measurements are being taken, a proper amount of clean engine oil should be added into the carburetor or the engine should be run on mixed gasoline into which oil has been mixed at the ratio of 100 : 1.

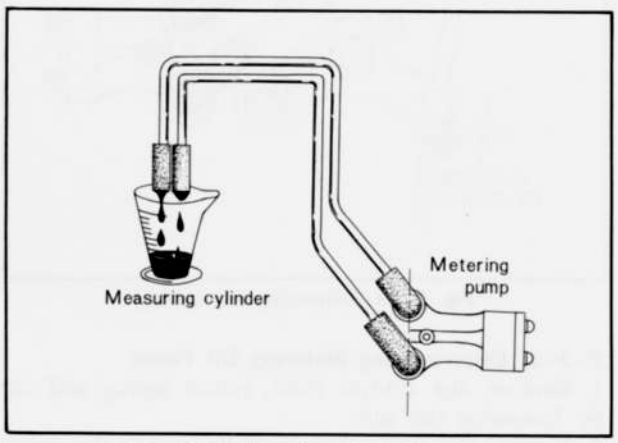

Fig. 2–21 Checking oil discharge

2–J–2. Adjusting Metering Oil Pump

If the amount of oil discharge measured by the procedure shown in the previous paragraph is not proper it would be adjusted by the adjusting screw.

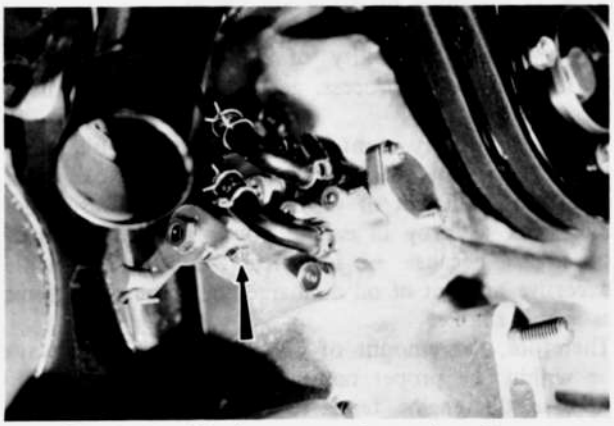

Fig. 2–22 Adjusting screw of metering oil pump

The amount of oil discharge increases when the adjusting screw is tightened, and decreases when loosened. As the amount of oil discharge changes by **0.2 ~ 0.3 cc/6 min./2,000 rpm** per rotation of the screw, adjust the screw after calculating the number of rotations necessary to obtain the proper adjustment.

Also check to ensure that the lock nut of the adjusting screw will lock without fail and be sure not to bend the lever when adjusting. After adjustment has been completed, measure the amount of oil discharge again and make sure that it is within the proper range.

In case the metering oil pump cannot be adjusted, it should be replaced as a damaged parts or a pump assembly.

Connecting rod setting

Set the clearance of connecting rod stopper pin and metering oil pump lever to **0 ~ 1.0 mm (0 ~ 0.04 in)** by using a suitable washer.

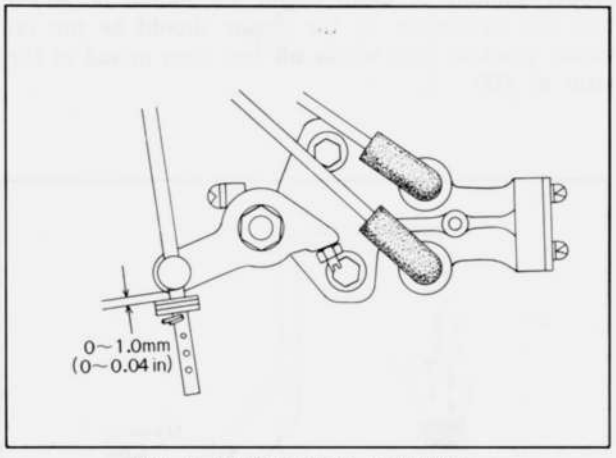

Fig. 2–23 Connecting rod setting

2–J–3. Disassembling Metering Oil Pump

1. Remove the control lever, return spring and cap by loosening the nut.
2. Remove the front plate carefully as it is the spring-loaded, and remove the sub plunger, plunger spring and oil seal ring.
3. Remove the rear plate and oil seal ring.
4. Push in the plunger slightly from the rear plate side by using a small screw driver and pull the control pin out from the pump body.
5. Pull the driving worm with the worm bearing out from the pump body by using a plier and remove the thrust plate.
6. Push out the plunger and differential plunger from rear side to front side.

2–J–4. Assembling Metering Oil Pump

Wash all the parts in clean kerosene before reassembling them. As the pump has a highly delicate mechanism, the greatest possible care should be taken in reassembling the pump not to admit any foreign matter in it and not to cause any small scar.

1. Apply the clean oil in the cylinder. Slide the plunger into the body from front side of the body and then slide the differential plunger into the body until the gear of the plunger reaches the position of the hole for the driving worm.

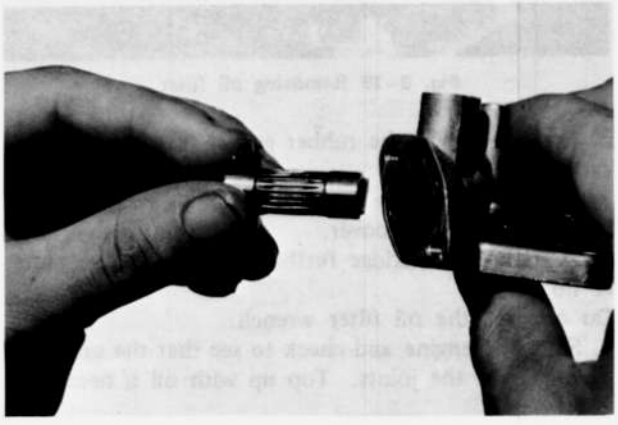

Fig. 2–24 Assembling plunger

Note :

Make sure that the slot of the differential plunger matches the key of the plunger.

2. Carefully insert the thrust plate, driving worm and worm bearing.

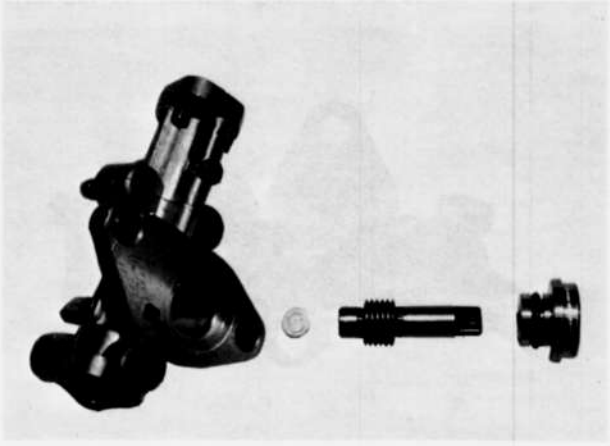

Fig. 2–25 Assembling drive worm

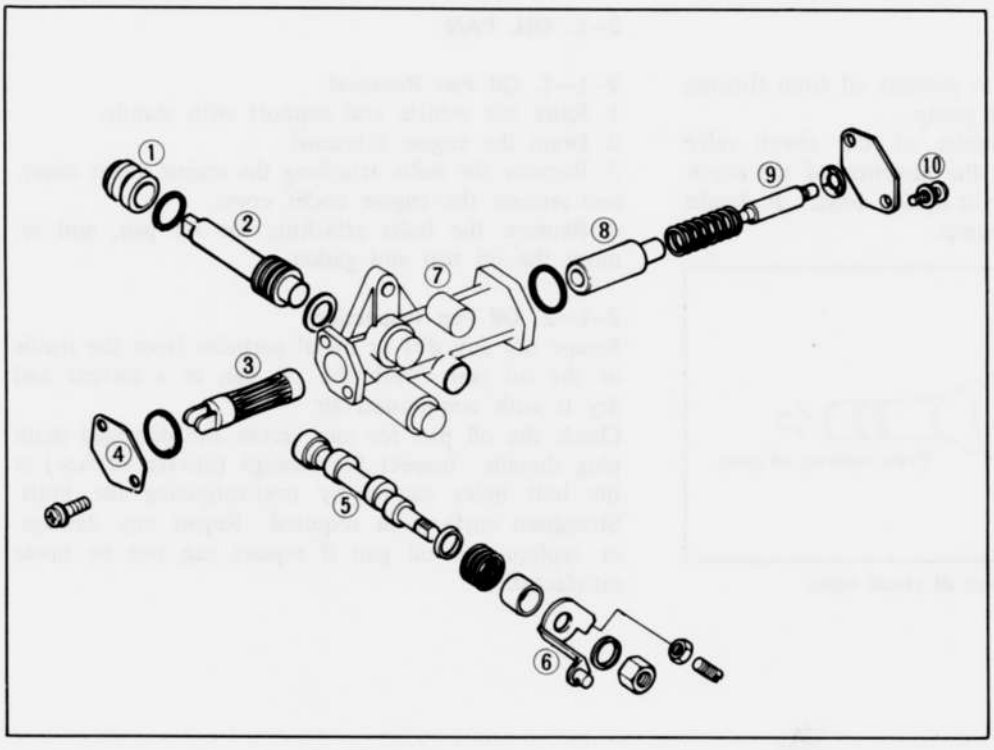

Fig. 2–26
Metering oil pump component

1. Worm bearing
2. Driving worm
3. Plunger
4. Rear plate
5. Control pin
6. Control lever
7. Body
8. Differential plunger
9. Sub plunger
10. Front plate

3. Insert the control pin.



Fig. 2–27 Inserting control pin

4. Place the oil seal ring on the groove.
5. Fit the rear plate on the body making sure the stopper for the control pin facing the control lever.

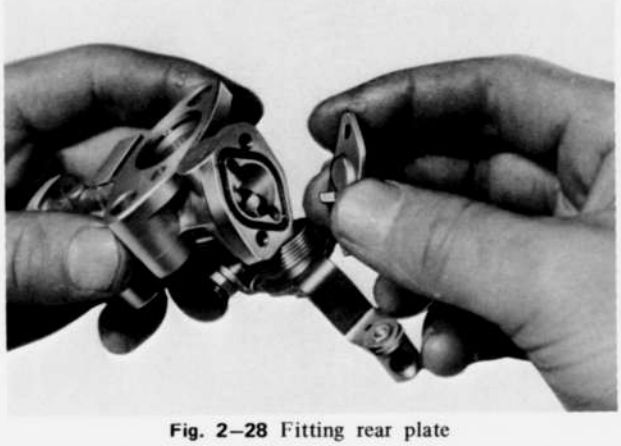

Fig. 2–28 Fitting rear plate

6. Insert the plunger spring and sub plunger from the front side of the body.

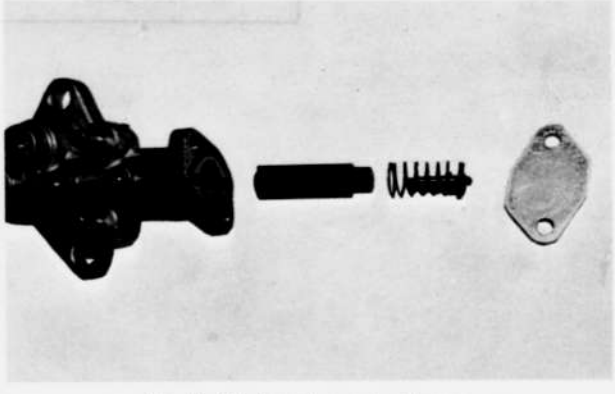

Fig. 2–29 Inserting sub plunger

7. Place the oil seal ring on the groove and fit the front plate.
8. Install the spring, control lever and connectors.

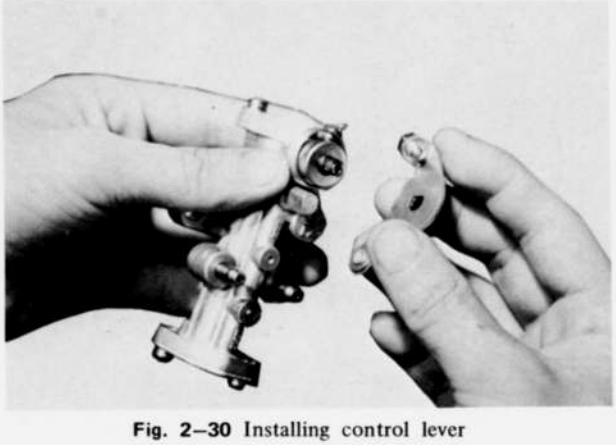

Fig. 2–30 Installing control lever

2–K. CHECK VALVE

The check valve operates to prevent oil from flowing back into the metering oil pump.
Confirm the tapered shoulder of the check valve before installing it so that the direction of the check valve will not be mistaken for upside down. It should face to the metering oil pump.

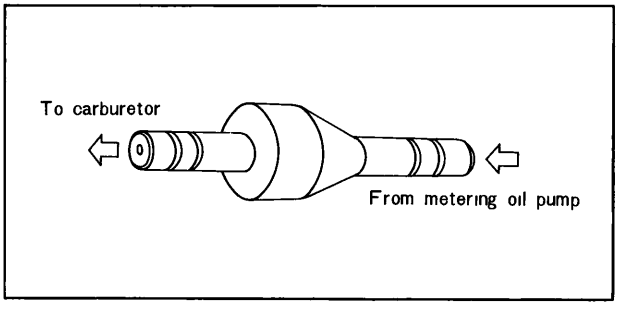

Fig. 2–31 Direction of check valve

2–L. OIL PAN

2–L–1. Oil Pan Removal

1. Raise the vehicle and support with stands.
2. Drain the engine lubricant.
3. Remove the bolts attaching the engine under cover, and remove the engine under cover.
4. Remove the bolts attaching the oil pan, and remove the oil pan and gasket.

2–L–2. Oil Pan Inspection

Scrape off any dirt or metal particles from the inside of the oil pan. Wash the oil pan in a solvent and dry it with compressed air.
Check the oil pan for any cracks and damaged drain plug threads. Inspect for damage (uneven surface) at the bolt holes caused by over-torqueing the bolts. Straighten surfaces as required. Repair any damage, or replace the oil pan if repairs can not be made satisfactorily.

SPECIAL TOOL

49 0187 280	Oil pressure gauge

COOLING SYSTEM

DESCRIPTION ..... 3 : 1
3–A. COOLANT CIRCULATION ..... 3 : 1
3–B. FLUSHING OF COOLING SYSTEM ..... 3 : 1
3–C. COOLANT ..... 3 : 2
3–C–1. Checking Coolant Leakage ..... 3 : 2
3–D. RADIATOR ..... 3 : 2
3–D–1. Checking Radiator ..... 3 : 2
3–D–2. Repairing Radiator ..... 3 : 2
3–D–3. Checking Radiator Sealed Cap ..... 3 : 2
3–D–4. Checking Expansion Tank Cap ..... 3 : 3
3–E. FAN DRIVE ..... 3 : 3
3–E–1. Checking Fan Drive ..... 3 : 3
3–F. THERMOSTAT ..... 3 : 4
3–F–1. Removing Thermostat ..... 3 : 4
3–F–2. Inspecting Thermostat ..... 3 : 4
3–G. WATER PUMP ..... 3 : 5
3–G–1. Inspecting Water Pump ..... 3 : 5
3–G–2. Removing Water Pump ..... 3 : 5
3–G–3. Disassembling Water Pump ..... 3 : 5
3–G–4. Assembling Water Pump ..... 3 : 6
SPECIAL TOOL ..... 3 : 6

3

DESCRIPTION

The completely sealed cooling system consists of a radiator with a sealed filler cap, an expansion chamber (sub-tank) with a pressure cap, centrifugal water pump, a thermostat and a fan.
The radiator and the expansion chamber are connected by hose. When the engine is heated sufficiently, the coolant in the radiator flows out and is led into the expansion chamber through the hose. The coolant is then returned to the radiator by negative pressure which builds up in the cooling system when the engine cools down. The coolant should be changed every two years or every **48,000 km (32,000 miles).**

3–A. COOLANT CIRCULATION

The water pump is driven by the eccentric shaft pulley over a V-belt and discharges the cooling water to the front housing. The water circulates from the front housing through the water passage provided in each housing and flows to the rear housing. From the rear housing, the water is returned to the front housing. At low engine temperature, the thermostat is closed to keep the water from entering the radiator. The water is then recirculated directly to the water pump and discharged to each housing. As the thermostat opens when the engine is warmed up, the water flows into the radiator. The cooled water flows from the radiator to the water pump through the connecting hose and cools the engine by circulation.

3–B. FLUSHING OF COOLING SYSTEM

The cooling system should be flushed **every two years or 48,000 km (32,000 miles).**
The flushing procedures are as follows:
1. Open the drain plugs and drain the coolant.
2. Close the drain plugs and supply clean soft water.



Fig. 3–2 Radiator drain plug

Note:
If necessary, use cleaning solution to loosen rust and scale, by following the instructions given by the maker of the cleaning solution.

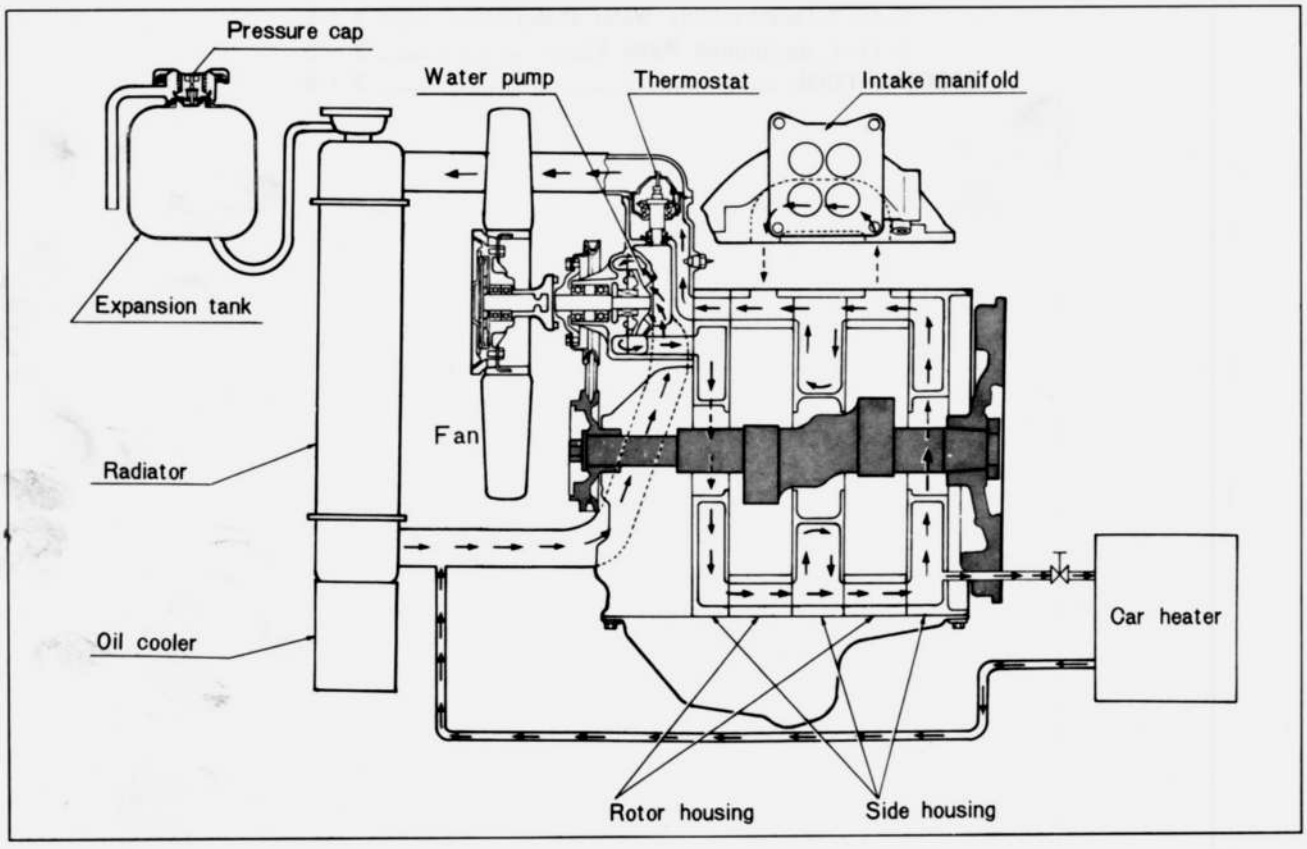

Fig. 3–1 Cooling circuit

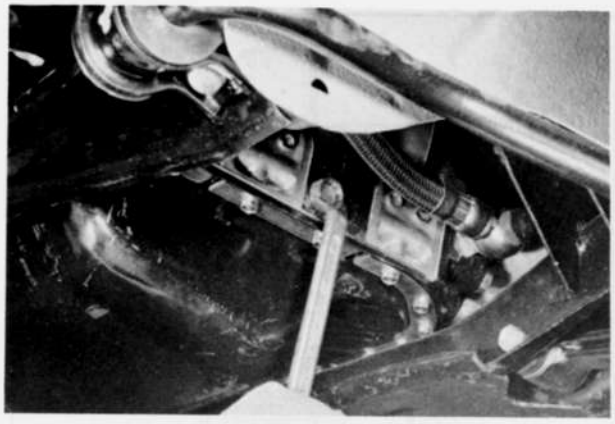

Fig. 3–3 Engine drain plug

3. Run the engine for about one hour, at the normal operating temperature.
4. Drain the water completely.
5. Fill with soft water (demineralized water) and genuine long life coolant, referring to **Par. 3–C.**

3–C. COOLANT

The genuine **long life coolant** (Parts Nos. 0866 77 264, 0880 77 264 or 0884 77 264) is used in the cooling system.
The genuine long life coolant was developed for the aluminum engine. Antifreeze solution and anticorrosive solution are included in this coolant. The table below shows the mixing rate of water and genuine long life coolant. Follow the table when changing the coolant.

Freezing point °C	Freezing point °F	Mixture ratio % Antifreeze solution	Mixture ratio % Water	Specific gravity of mixture at 20°C (68°F)
- 6.3	20.7	15	85	1.022
- 9.3	15.3	20	80	1.029
-12.6	9.3	25	75	1.037
-16.2	2.8	30	70	1.044
-20.5	- 4.9	35	65	1.051
-25.2	-13.4	40	60	1.058
-31.2	-24.2	45	55	1.066

The mixture ratio of antifreeze solution to water must be under 45 to 55% in the area where the temperature does not fall to -30°C (-22°F).
Avoid to use the rich mixture coolant.

3–C–1. Checking Coolant Leakage

Carefully check the various parts for any leakage of cooling water by using a radiator cap tester. Refill the coolant full in the radiator and 1/3 full in the expansion tank.
Run the engine until it reaches normal operating temperature. With the engine running and tester installed, pump up the system to approximately 0.9 kg/cm² (13 lb/in²).

Note: Never allow the pressure to build up to more than 1.1 kg/cm² (14 lb/in²).

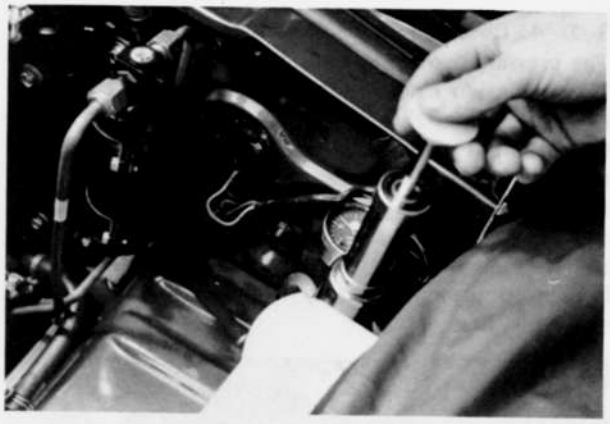

Fig. 3–4 Checking coolant leakage

If pressure drops rapidly, visually inspect all external parts for leaks. If no external leaks appear and pressure continues to drop, inspect the engine oil to determine whether or not coolant is leaking into the rotor housing due to a cracked rotor housing or leaking "O" rings.

3–D. RADIATOR

The radiator is of the corrugated fin type with a sealed filler cap, and an expansion tank is adopted.

3–D–1. Checking Radiator

Carefully check the radiator for water leakage. (Refer to Par. 3–C–1.) A clogged radiator badly influences the cooling effect and should be cleaned with the compressed air.

3–D–2. Repairing Radiator

The radiator used on this model is made of copper. Any minor leakage must be completely eliminated by soldering.

3–D–3. Checking Radiator Sealed Cap

The radiator cap is sealed type and pull out the stop wire in the direction of arrow when this cap removes. Check the cap rubber gasket to insure an airtight seal.



Fig. 3–5 Radiator cap

3–D–4. Checking Expansion Tank Cap

The pressure cap is provided on the expansion chamber. The expansion chamber and the radiator are connected by hose. When the cooling water is pressurized, the boiling point rises and this prevents overheating and minimizes the loss of water. When the pressure in the cooling system exceeds 0.9 kg/cm² (13.0 lb/in²), the cap opens. When the coolant temperature falls, the vacuum release valve open at 0.1 kg/cm² (1.4 lb/in²) to prevent vacuum from building up in the cooling system.

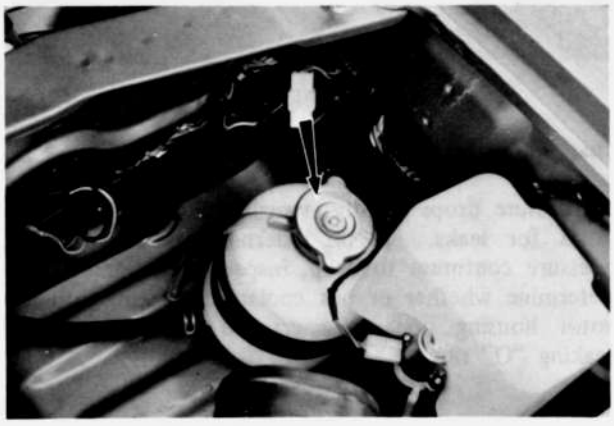

Fig. 3–6 Expansion tank cap

To test the expansion tank cap, first wet the cap rubber gasket to insure an air tight seal then attach the radiator cap tester. The cap should be capable of retaining pressure 0.9 kg/cm² (13 lb/in²).

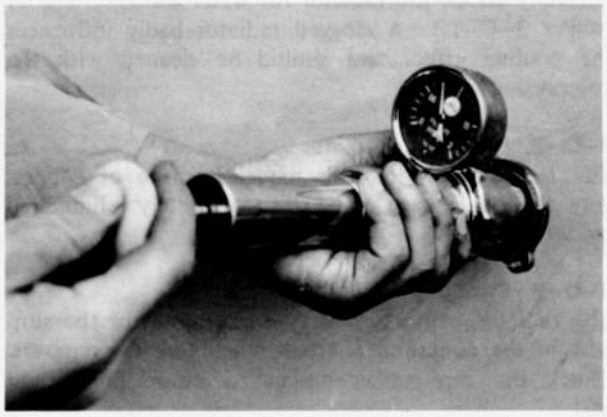

Fig. 3–7 Checking expansion tank cap

3–E. FAN DRIVE

As shown in Fig. 3–8, the fan drive is driven with the water pump pulley, and by the work of the silicon oil in the body, prevents the fan from marking more than a certain number of rotations.

As may be seen from this structure, the number of fan rotations will presumably drop if a defect, such as oil leakage, should occur on the fan drive.

If an engine has the tendency to overheat, the number of fan rotations should be checked in the following manner.

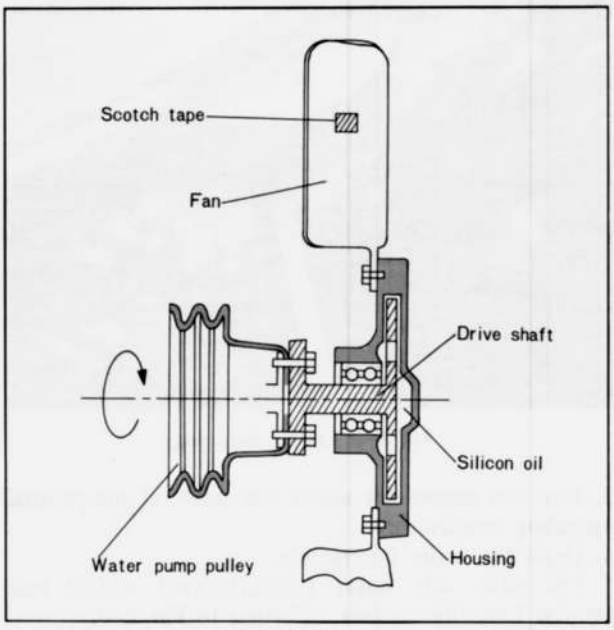

Fig. 3–8 Fan drive

3–E–1. Checking Fan Drive

Testers to be used : Photoelectric revolution counter and tochodwell tester.

1. Apply scotch tape to the positions on the fan as shown in Fig. 3–8.
2. Set the tachodwell tester to the engine. Then start the engine and run it at 1,500 rpm.
3. Then turn the photoelectric revolution counter toward the fan and read the speed of the fan rotation. The fan speed should be within the standards shown in the following table.

Prescribed Revolution	
Engine	Fan
1,500 rpm 5,000 rpm	1,400 rpm or more 2,000 rpm ~ 2,500 rpm

If the reading is below the standard, replace the fan drive assembly.

If the reading is more than the standard–Make a recheck in the following manner.

4. When the reading exceeds the standard, warm up the engine for five minutes at engine speed of more than 3,000 rpm, and then read the speed of the fan rotation at engine speed of 5,000 rpm. If the speed of the fan rotation is within the standard shown in the above table, the operation of the fan drive is satisfactory.

Note :

When the photoelectric revolution counter is not prepared, the revolution of the fan will be also checked by the procedure as follows:

1. Prepare another car, and set the tachodwell tester and the timing light to the engine.
2. Apply the scotch tape on the fan of the checking car and run the engine at 1,500 rpm.
3. Start the engine set the timing light to and aim the light to the scotch tape of the fan.

Regulate the engine rpm of the car being set the

timing light so as to coincide with the fan speed, and read the engine speed on the tachodwell tester, which is the speed of fan revolution.
4. The fan speed at 5,000 rpm of engine, if necessary, can be checked in the same manner as above.

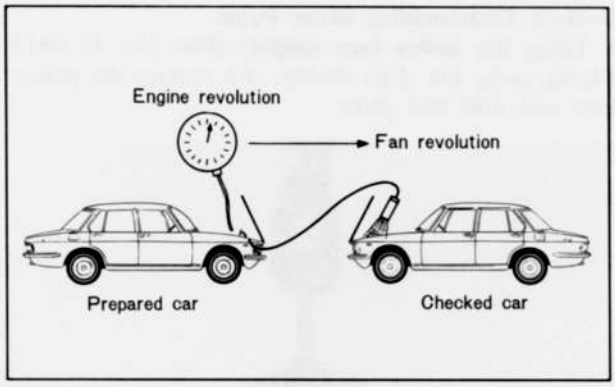

Fig. 3–9 Checking fan drive

3–F. THERMOSTAT

To regulate the temperature of the cooling water circulating in the engine, a wax type thermostat is adopted. The thermostat is of a bottom by-pass type, which has outstanding cooling efficiency, and is different from the conventional in-line type thermostat in the undermentioned points. Therefore, it should be handled with particular care.

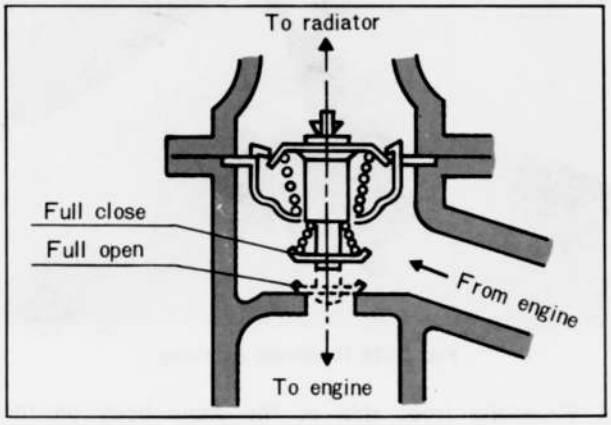

Fig. 3–10 Thermostat and by-pass hole

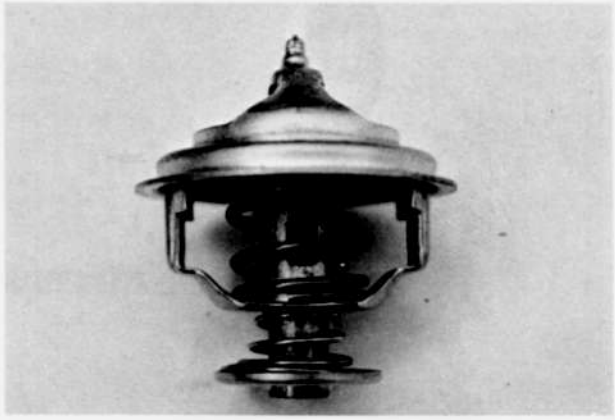

Fig. 3–11 Thermostat

As shown in Fig. 3–10, a by-pass hole is provided at the bottom of the thermostat. The by-pass hole on the bottom by-pass type thermostat is larger than that on the in-line type. The bottom by-pass type thermostat, therefore, has the following advantages : when the thermostat is fully closed, a large amount of cooling water circulates, thus preventing any local rise in the cooling water temperature, and, when the thermostat is fully opened, the valve of the thermostat closes the by-pass hole and so all of the cooling water flows into the radiator, making effective use of the radiator. But, if the thermostat is removed, a large amount of cooling water flows through the by-pass hole because the hole is large, and so the amount of cooling water flowing into the radiator decreases to half, causing the cooling water temperature to rise.
Therefore, **the thermostat should never be removed** and **no other type of thermostat should be used.**

3–F–1. Removing Thermostat

1. Drain the cooling system.
2. Remove the bolts attaching the thermostat cover to the water pump and remove the cover.
3. Lift out the thermostat.

3–F–2. Inspecting Thermostat

To inspect the thermostat, place it in water with a thermometer and gradually heat the water.
Check the temperature when the thermostat starts to open and when it is fully opened, and also, measure the lift height when the thermostat is fully opened. If the reading shows a large difference from the standard specifications, replace the thermostat. The specifications of the thermostat are shown in the following table :

Starts to open	82°C (180°F)
Fully opens	95°C (203°F)
Lift height	8 mm (0.31 in)

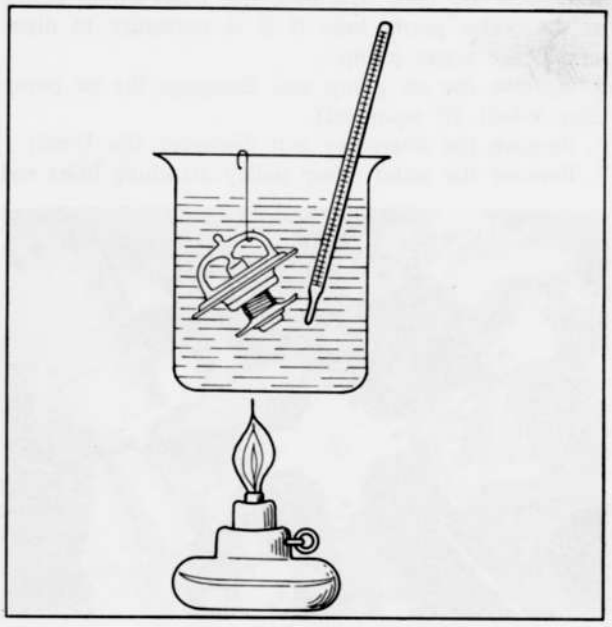

Fig. 3–12 Checking thermostat

3–G. WATER PUMP

The water pump employs a centrifugal impeller. In the pump body, the shaft is supported by two bearings. The impeller is fitted to the rear end of the shaft. The seal assembly prevents water leakage.

3–G–1. Inspecting Water Pump

Check the water pump for leaks and excessive end play or looseness of the shaft and bearings. If there is evidence of excessive play when the pulley is manually moved up and down, this indicates that the bearings are rough. If water leaks from the hole located on the body, this is an indication of a defective seal necessitating overhaul of the pump and check of the seal and seat surface. If defective, replace the seal assembly.

3–G–2. Removing Water Pump

1. Drain the cooling system.
2. Remove the air cleaner.
3. Remove the bolts attaching back of the fan drive and remove the fan drive assembly.

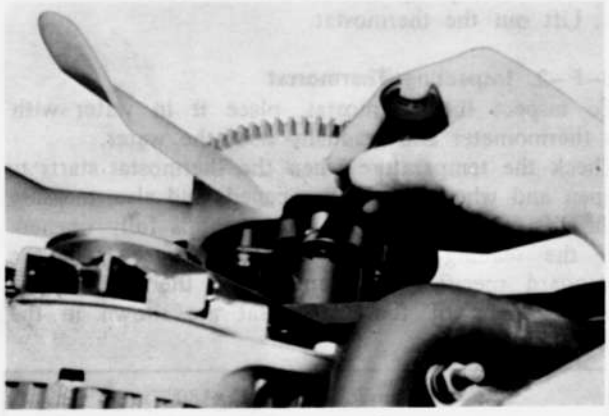

Fig. 3-13 Removing fan drive

4. Loosen the bolts attaching the water pump pulley to the water pump boss if it is necessary to disassemble the water pump.
5. Remove the air pump and disengage the air pump drive V-belt. (if equipped)
6. Remove the alternator and disengage the V-belt.
7. Remove the water pump pulley attaching bolts and remove the pulley if necessary.
8. Remove the nuts and bolts attaching the water pump body and remove the pump body. In case the water pump is removed assembly, only four nuts will be removed.

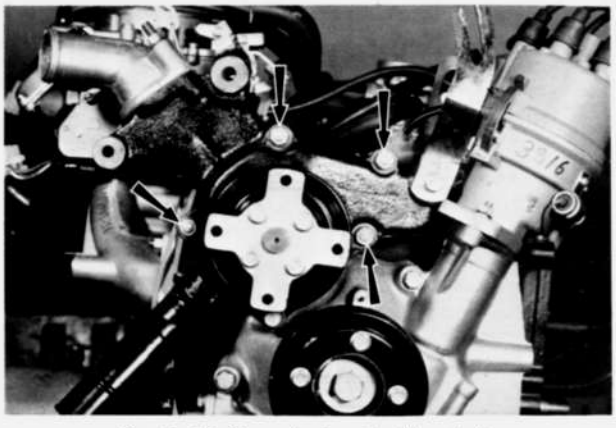

Fig. 3-14 Pump body attaching bolts

3–G–3. Disassembling Water Pump

1. Using the **pulley boss support** (Part No. 49 0813 145A), press the shaft slowly, and remove the pulley boss and dust seal plate.

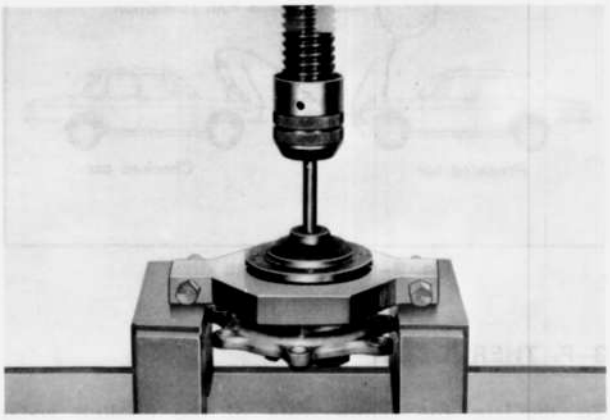

Fig. 3–15 Removing pulley boss

2. Remove the snap ring retaining the shaft and bearing assembly in the pump body.

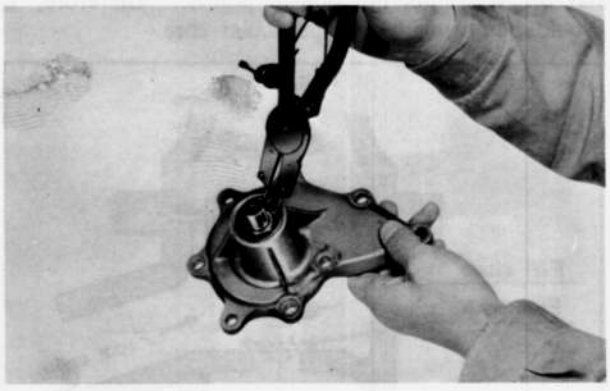

Fig. 3–16 Removing snap ring

3. Place the front side of the pump body on the **support** (Part No. 49 0813 145A) and apply pressure

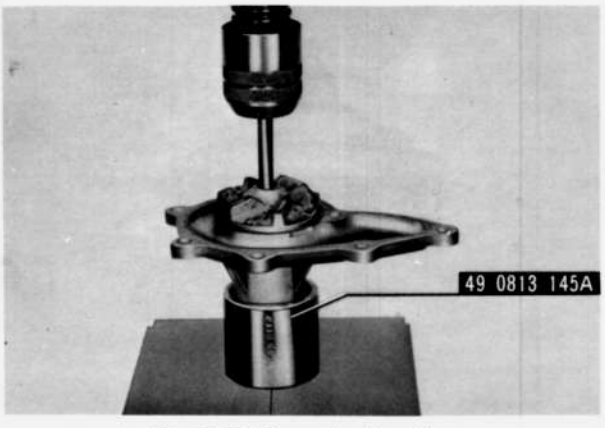

Fig. 3–17 Removing impeller

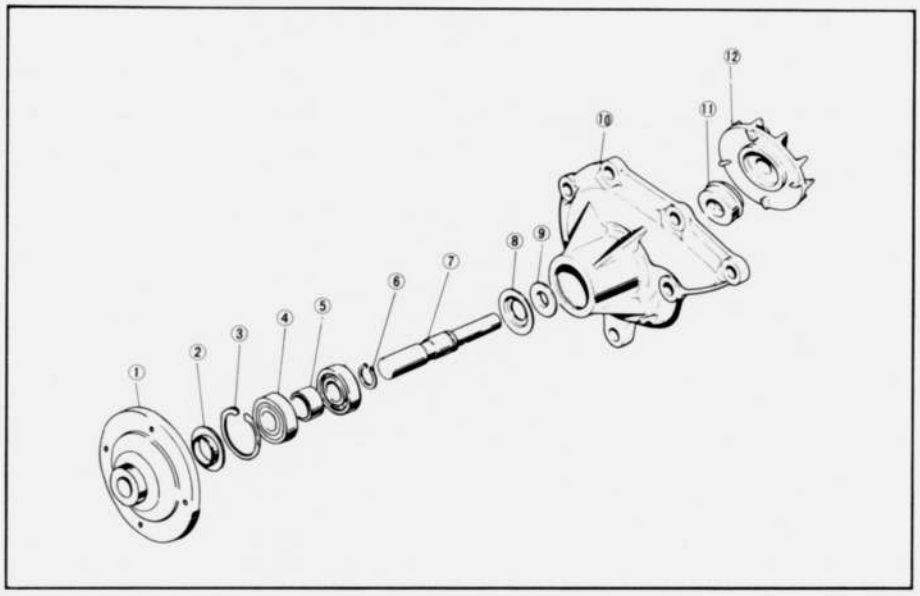

Fig. 3–18
Water pump components

1. Pulley boss
2. Dust seal plate
3. Snap ring
4. Bearing
5. Spacer
6. Stop ring
7. Shaft
8. Dust seal
9. Baffle plate
10. Pump body
11. Seal assembly
12. Impeller

to the rear end of the shaft to press the shaft and remove the impeller from the shaft.
Then press the shaft and bearing assembly out of the pump body.
4. Remove the seal assembly from the pump body.
5. Slide the baffle plate and dust seal plate off the shaft.
6. Remove the bearing stop ring from the shaft.
7. Remove the bearings and spacer from the shaft.

3–G–4. Assembling Water Pump

1. Fit the bearing stop ring onto the groove of the shaft.
2. Slide the dust seal plate onto the shaft.
3. Slide the baffle plate onto the taper of the shaft.
4. Press fit the bearing onto the shaft with sealed side rearward.
5. Press the shaft and bearing into the pump body.
6. Slide the spacer onto the shaft and **fill 1/3 of the space** between the two bearings with grease.
7. Press fit the bearing onto the shaft with the sealed side forward until the snap ring can be installed.
8. Install the snap ring onto the groove of the pump body to retain the shaft and bearing assembly in position.
9. Slide the dust seal plate onto the shaft, and press the pulley boss onto the shaft until it is flush with the front end of the shaft.
10. Apply lubricant onto the seal assembly and install the seal assembly into the pump body.
11. Press the impeller onto the shaft until it is flush with the end of the shaft.

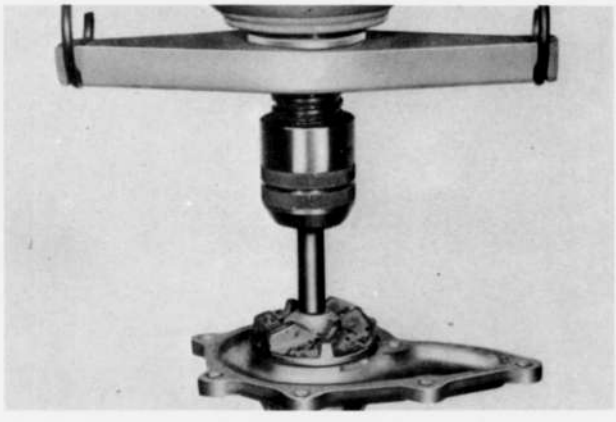

Fig. 3–19 Assembling impeller

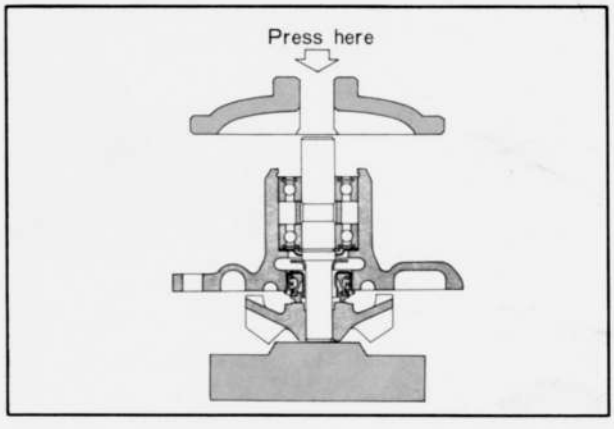

Fig. 3–20 Assembling pulley

SPECIAL TOOL

49 0813 145A	Water pump pulley boss support

FUEL SYSTEM

FUEL SYSTEM ..... 4 : 1
4–A. CARBURETOR ..... 4 : 1
4–A–1. Idle Adjustment ..... 4 : 2
4–A–2. Fast Idle Adjustment ..... 4 : 3
4–A–3. Float Adjustment ..... 4 : 3
4–A–4. Automatic Choke System (Semi-auto) ..... 4 : 4
4–A–5. Accelerator Pump ..... 4 : 5
4–A–6. Fuel Inlet Fitting ..... 4 : 6
4–A–7. Sub-Zero Starting Assist Device (U.S.A., Canada and Arctic spec. models only) ..... 4 : 6
4–A–8. Safety Throttle Return System ..... 4 : 7
4–A–9. Disassembling Carburetor ..... 4 : 8
4–A–10. Inspecting Carburetor ..... 4 : 10
4–A–11. Carburetor Assembly ..... 4 : 10
4–AA. CARBURETOR (OPTION FOR RX-4 U.S.A. and Canada spec. models only) ..... 4 : 11
4–AA–1. Automatic Choke System (Full-auto) ..... 4 : 11
4–B. FUEL PUMP ..... 4 : 12
4–C. FUEL FILTER ..... 4 : 12
4–D. FUEL LINES ..... 4 : 12
4–E. FUEL TANK ..... 4 : 12
4–F. AIR CLEANER ..... 4 : 12
4–F–1. Air Cleaner Element ..... 4 : 12
4–F–2. Intake Air Temperatire Control System ..... 4 : 13

4

FUEL SYSTEM

The fuel system consists of the carburetor, fuel pump, fuel filter, fuel tank, fuel line, accelerator linkage and air cleaner.

By the suction of the fuel pump, the fuel flows through the fuel line into the fuel filter. The fuel passes through the filter element from the outside to the inside of the element. During this fuel flow, the filter element cleans out all the dirt. The fuel pump is producing a constant controlled pressure, and the fuel volume required for engine operations. The fuel supplied by the fuel pump flows passing through the fuel hose into the carburetor.

The carburetor mixes the air and fuel in varying proportions for different operating conditions. As the air passes through the carburetor before entering the engine, fuel is supplied into the engine through the various circuits of the carburetor.

The air cleaner operates primarily to remove dust and dirt from the air which is drawn into the carburetor and then into the engine.

4–A. CARBURETOR

MAZDA RX-4 makes use of a two-stage, four-barrel, down-draft carburetor.

This carburetor comprises two sets each of primary barrels and secondary barrels.

The primary stage includes an idle system, slow system, accelerator pump system, choke system, and main metering system. In addition, an idle switch for exhaust emission control system is attached to primary throttle shaft. The fluid of sub-zero starting assist device and the oil from the metering oil pump are admitted from primary stage barrels to combustion chamber.

The altitude compensator takes the air from primary stage barrels and controls the air supply to the intake manifold at low atmospheric pressure such as high altitudes driving.

The secondary stage includes a secondary operating diaphragm system, step system and main metering system. Choking action is accomplished by means of a semi-automatic choke.

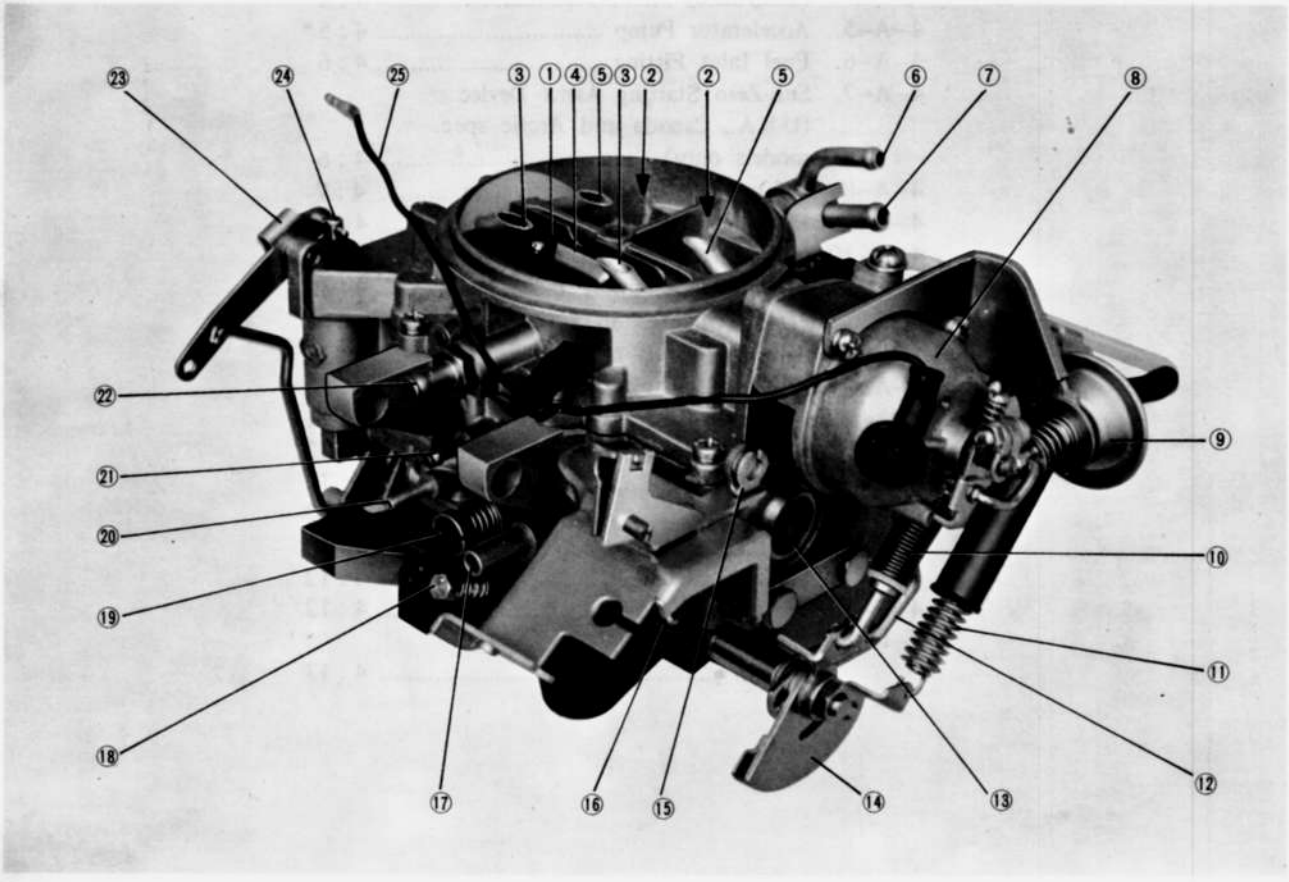

Fig. 4–1 Carburetor

1. Primary stage
2. Secondary stage
3. Primary air bent
4. Choke valve
5. Secondary air bent
6. Fuel inlet fitting (return side)
7. Fuel inlet fitting (inlet side)
8. Bimetal spring housing
9. Vacuum break diaphragm
10. Safety return spring
11. Throttle return spring
12. Fast idle connecting rod
13. Fuel bowl sight glass
14. Throttle lever
15. Choke lever
16. Throttle adjust screw (locked)
17. To altitude compensator
18. Idle adjust screw (locked)
19. Air adjust screw (for idle adjustment)
20. To distributor vacuum control diaphragm
21. From metering oil pump
22. From sub-zero starting assist fluid tank
23. Accelerator pump lever
24. Accelerator pump piston
25. Lead wire of bimetal

4–A–1. Idle Adjustment

a. Normal adjustment

1. Fully warm up the engine.
2. Make sure that the return of the secondary throttle valve is proper.
3. Adjust the idling speed so that the engine revolution will be in specifications by manipulating the air adjust screw. **Never meddle with the idle adjust screw and throttle adjust screw.**

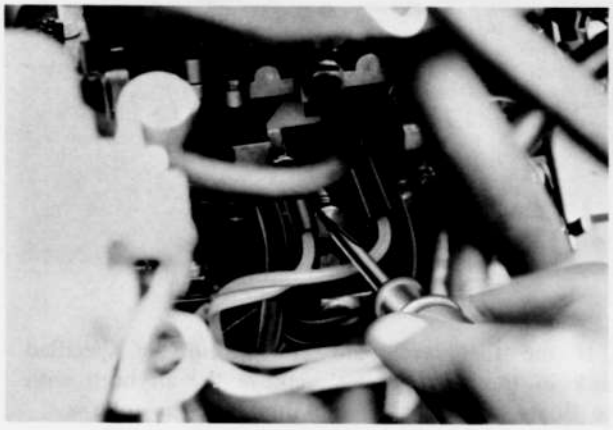

Fig. 4–2 Idle adjustment

Note :

To measure the engine revolution, be sure to use a revolution counter intended for general servicing instead of the tachometer equipped on the vehicle.

Specifications – Idling Speed :

Car with Manual Transmission	900 rpm
Car with Automatic Transmission	750 rpm in "D" range

b. Particular adjustment

Idle adjust screw and throttle adjust screw are adjusted by the manufacturer. These screws should not be adjusted. However, if the idle adjust screw and/or throttle adjust screw get out of order for some reason, or after overhauling the carburetor, adjust them in the following procedures.

b-1.

1. Adjust throttle opening to specifications from fully closed position by the throttle adjust screw. Lock the screw lock nut firmly after adjustment.
2. Start the engine and adjust the idling speed to the specified value by the air adjust screw.
3. Set the idle CO, HC gas analyzer.
4. Adjust the idle CO gas reading as close to 0.1% as possible by the idle adjust screw. The idle HC reading must be less than 200 ppm.
5. Recheck or readjust the engine idle speed and CO, HC readings until they meet their respective specifications.

Note:

The gas analyzer should be adopted for checking purpose only, and no adjustment is needed if CO reading is within 0.1% ~ 2.0% and HC reading is less than 200 ppm.

b-2.

It is better for the idle adjustment to use the fuel flow checker (49 2113 015) than to use the gas analyzer. The adjustment by the fuel flow checker should be done as follows.

1. Adjust throttle opening angle to specifications from fully closed position by the throttle adjust screw. Lock the screw lock nut firmly after adjustment.
2. Set the fuel flow checker (49 2113 015) as shown in Fig. 4–3.
3. Start the engine and adjust the idling speed approximately to specifications by the air adjust screw.
4. Adjust the idle fuel flow to specifications by the idle adjust screw.
5. Adjust the idle speed to specifications by the air adjust screw.
6. Recheck the idle fuel flow and the idle speed.

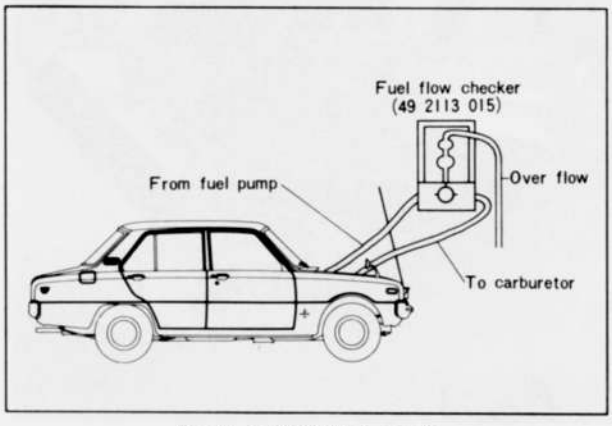

Fig. 4–3 Fuel flow check

Specifications – Idling fuel adjustment :

	Throttle opening angle	Idling fuel flow	Time required to consume 50 cc
Car with Manual Transmission	2 ± 0.5 degrees	2.2 ~ 2.4 liters/h (0.57 ~ 0.62 U.S. gallons/h)	75 sec ~ 82 sec/50 cc
Car with Automatic Transmission	2 ± 0.5 degrees	2.25 ~ 2.45 liters/h (0.59 ~ 0.63 U.S. gallons/h)	73 sec ~ 80 sec/50 cc

4–A–2. Fast Idle Adjustment

1. With the choke knob or choke lever, fully pulled out, measure the primary throttle opening angle (A) or the clearance (B) between the primary throttle valve and the wall of the throttle bore when the carburetor is disassembled.

Note :
To measure the angle (A), install a protractor to the primary throttle shaft centering correctly.
To measure the clearance (B), use a suitable wire gauge or drill.

2. If the clearance isnnot within specifications, adjust the fast idle by bending the connecting rod.

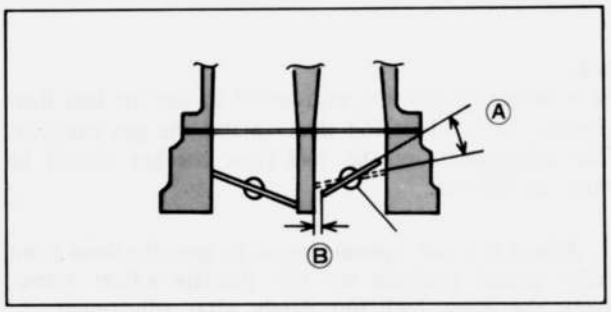

Fig. 4–4 Fast idle

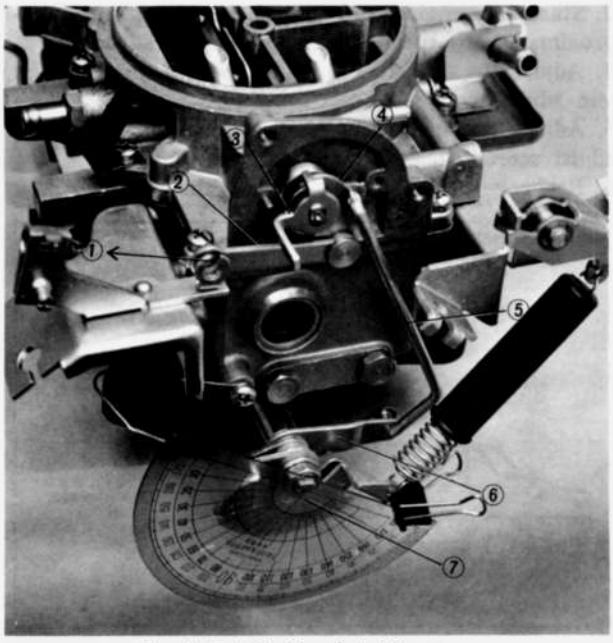

Fig. 4–5 Adjusting fast idle

1. Pulled by choke wire
2. Link
3. Choke shaft lever
4. Choke lever
5. Fast idle rod (Bend this rod for adjustment)
6. Fast idle lever
7. Throttle lever

4–A–3. Float Adjustment

a. Float level adjustment
1. With engine operating, check the fuel levels in the fuel bowl through the sight glasses using a suitable mirror.

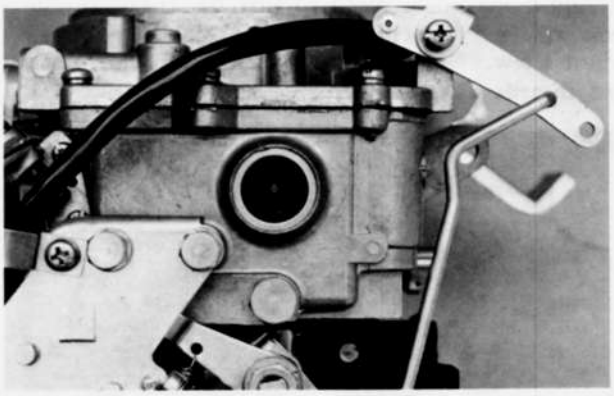

Fig. 4–6 Fuel bowl sight glass

2. If the fuel levels are not within the specified mark in the sight glasses, remove the air horn with the floats. Then adjust the float level as follows.
3. Invert the air horn on a stand, lift the float and let it down quietly until the float seat lip just touches the needle valve. By keeping this position, take measurement of clearance (H) between the float and the face of air horn gasket. Standard of this clearance (H) is 11 mm (0.43 in).

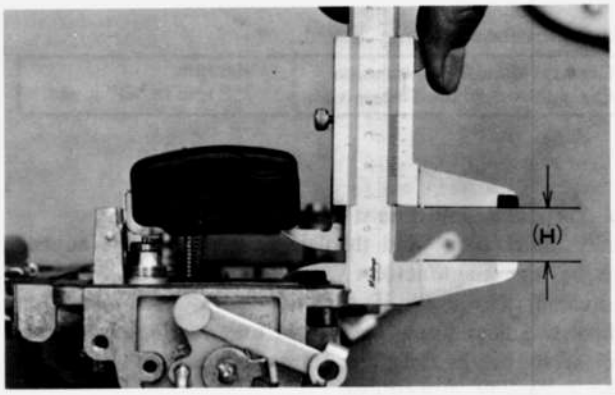

Fig. 4–7 Checking float level

4. If the clearance is not within specification, adjust the clearance (H) by bending the float seat lip (A) shown in Fig. 4–9.
5. Install the air horn and recheck the fuel levels through the sight glasses.

b. Float drop adjustment
Allow the float to lower by its own weight, and measure the distance between the bottom of float and the face of air horn gasket. The distance should be 52 ± 0.5 mm (2.05 ± 0.02 in). (Fig. 4–8)

Specifications – Fast Idle Adjustment :

	Throttle valve opening angle (A)	Clearance between throttle valve and bore (B)
Car with Manual Transmission	14.0 ~ 17.0 degrees	1.01 ~ 1.33 mm (0.0398 ~ 0.0524 in)
Car with Automatic Transmission	16.0 ~ 19.0 degrees	1.22 ~ 1.57 mm (0.0480 ~ 0.0618 in)

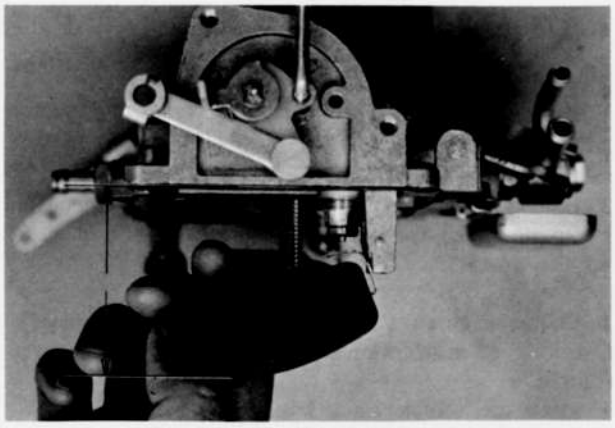

Fig. 4–8 Checking float drop

If the distance is not within specifications, adjust it by bending the float stopper (B) shown in Fig. 4–9.

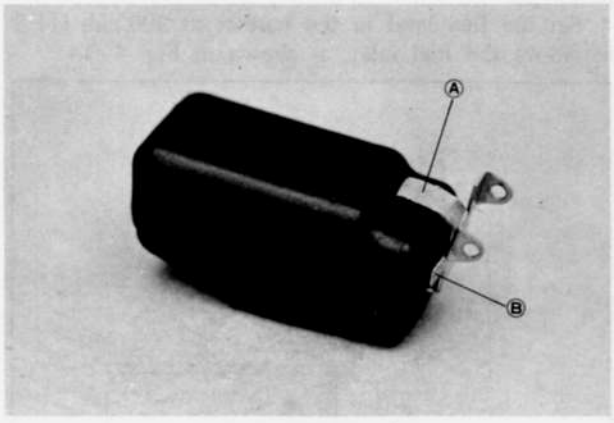

Fig. 4–9 Adjusting float
A. Float seat lip
B. Float stopper

4–A–4. Automatic Choke System (Semi-auto)

The carburetor for this model is equipped with a semi-automatic choke system.
The semi-automatic choke control is accurately adjusted when originally assembled. Under normal service operations, it is recommended not to change the setting or to disassemble the components for servicing. However, if the setting has been disturbed, adjust it in the following procedures.
The bimetal spring should be adjusted before engine starting. In the case of adjustment that is made after the engine warmed-up, it can not obtain a correct adjustment because the ambient temperature is different from the atmospheric temperature.

a. Vacuum break diaphragm adjustment
Push the diaphragm plunger in until seated and check the stroke of it. This stroke should be in the following specifications.

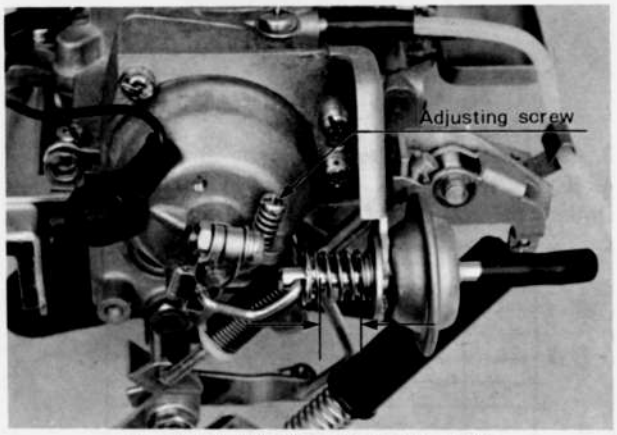

Fig. 4–10 Adjusting diaphragm stroke

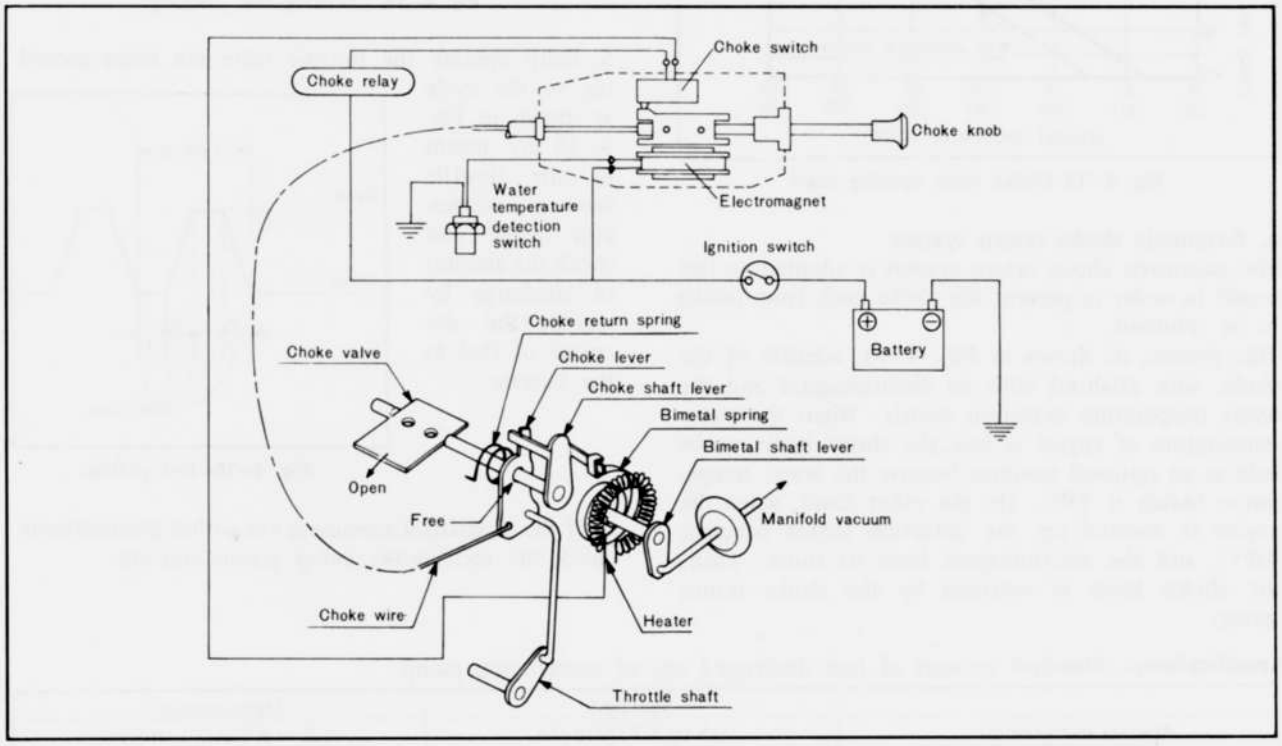

Fig. 4–11 Automatic choke system

Specifications – Diaphragm stroke

Manual transmission	7.0 ~ 7.2 mm (0.276 ~ 0.283 in)
Automatic transmission	5.9 ~ 6.1 mm (0.232 ~ 0.240 in)

b. Bimetal spring adjustment

1. Fully pull out the choke knob or choke lever and keep its position by wire.
2. Push the vacuum break diaphragm plunger in fully and keep its position by wire as shown in Fig. 4–12.

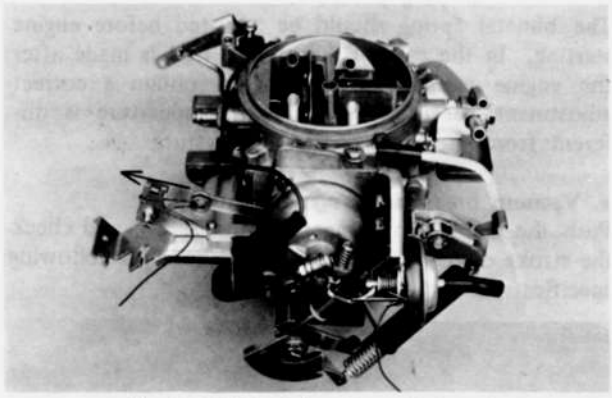

Fig. 4–12 Bimetal spring adjustment

3. Check the choke valve opening angle.
4. If the setting has been out of order, adjust the choke opening angle following Fig. 4–13.

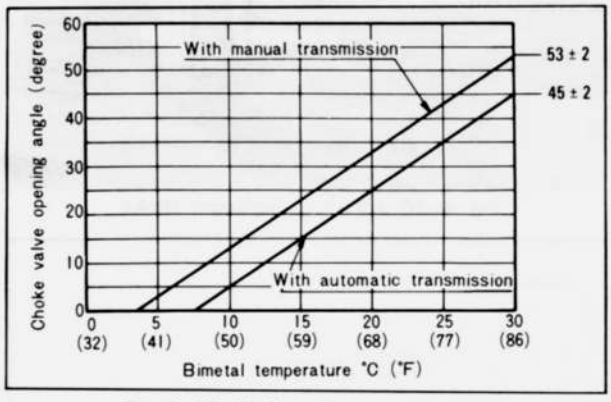

Fig. 4–13 Choke valve opening angle

c. Automatic choke return system

The automatic choke return system is adopted on this model in oeder to prevent the choke knob from failing to be returned.

This system, as shown in Fig. 4–11, consists of the choke wire attahced with an electromagnet and the water temperature detection switch. When the water temperature of engine is low, the choke knob can be held at an optional position because the water temperature switch is 'ON'. On the other hand, when the engine is warmed up, the detection switch becomes 'OFF', and the electromagnet loses its force. Then, the choke knob is returned by the choke return spring.

4–A–5. Accelerator Pump

a. Normal checking

1. Remove the air cleaner.
2. Check the pump for discharge by moving the primary throttle valve.
3. Check the pump for nozzle's clogging. When the pump nozzle is clogged, remove the nozzle and clean up the nozzle.

b. Checking amount of accelerator pump discharge

Checking of accelerator pump discharge amount is as follows:

1. Place the vehicle on a level ground.
2. Set the burette at the fuel inlet of the carburetor and fill it with fuel.
3. Fully operate the throttle valve about five times and confirm the fuel discharged from the accelerating pump jet.
4. Set the fuel level in the burette at 300 mm (11.8 in) above the fuel inlet, as shown in Fig. 4–14.

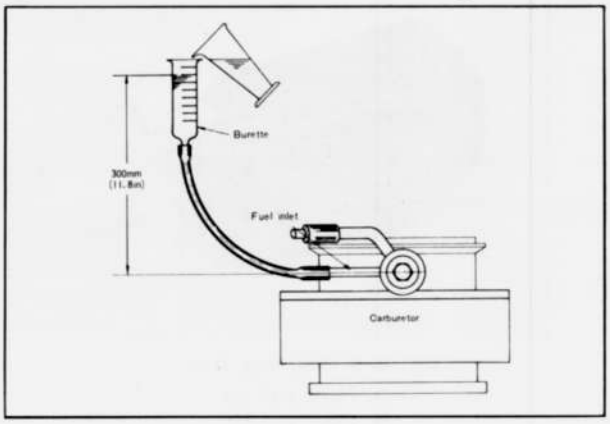

Fig. 4–14 Checking fuel discharge

5. Fully operate the throttle valve ten times according to the cycle as shown in Fig. 4–15 by means of the throttle lever or accelerator pedal and check the amount of discharge by reading the decrease of fuel in the burette.

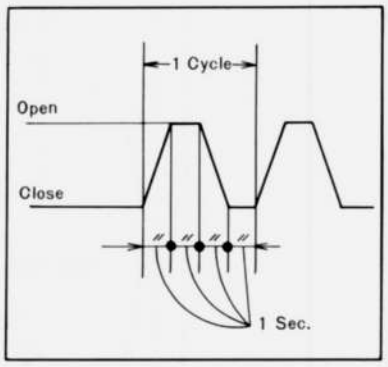

Fig. 4–15 Test pattern

6. If the discharged amount is not within specifications, check the accelerating pump piston and etc.

Specifications – Standard amount of fuel discharged out of accelerating pump

	Standard	Measurement
Manual transmission	0.8 cc ± 15%/stroke	6.8 ~ 9.2 cc/10 strokes
Automatic transmission	0.8 cc ± 15%/stroke	6.8 ~ 9.2 cc/10 strokes

4–A–6. Fuel Inlet Fitting

The carburetor inlet fitting is provided with a fuel return device to prevent percolation. Whenever the key switch is on, a small amount of fuel which is led to the carburetor, returns to the fuel tank through the orifice of fuel return pipe.
Check the orifice for clog. When it is clogged, remove the fuel inlet fitting and clean it by compressed air.

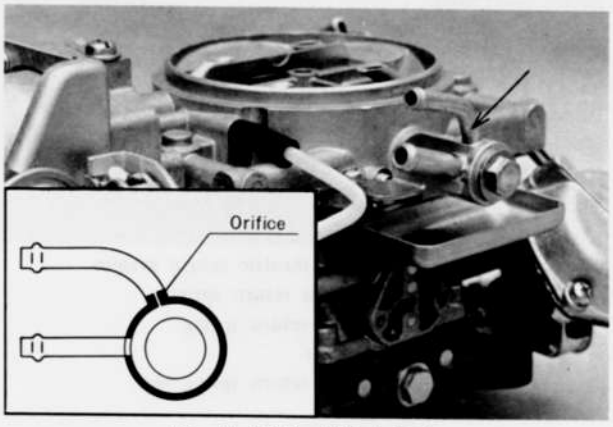

Fig. 4–16 Fuel inlet fitting

4–A–7. Sub-Zero Starting Assist Device (U.S.A., Canada and Arctic spec. models only)

This is the device for increasing the starting ability of the engine in extreme cold. When the ignition key is turned to the position of "start" under the circumstances where the temperature is below –18°C (0°F), a certain amount of starting assist fluid is supplied into the carburetor by a pump installed for supplying the starting assist fluid.

Check whether the device is operating normally or not by the following procedure.

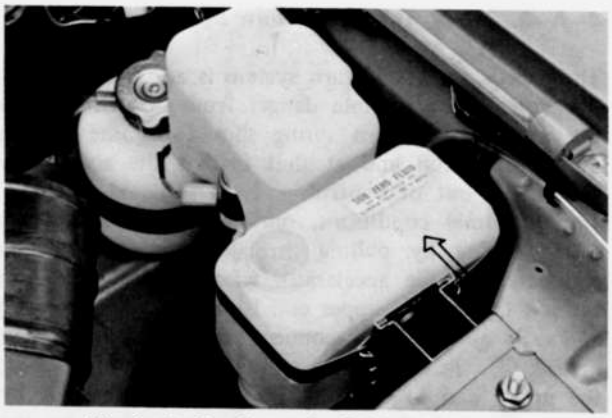

Fig. 4–17 Starting assist fluid tank

1. Make sure that there is sufficient starting assist fluid in the tank. Replenish if necessary.
2. Disconnect the hose on the side of the carburetor.
3. Disconnect the lead line of (S) terminal connected to the starter magnetic switch. This is to prevent the engine from revolving when the ignition key is turned to "start".
4. Disconnect the connector of the lead line of the thermo-unit and connect the body with the earth.
5. Turn the ignition key to the position of "start" and make sure that the starting assist fluid sprouts out from the tip of a hose for about 5 seconds.
6. Make sure that the check valve fitted on the carburetor is in proper working condition by blowing through it with your mouth.
7. Reinstall the rubber hose and wires, which have been removed for the check-up to their proper positions.

Note :

a. Check the level of the starting assist fluid at suitable internals and replenish as required so that it will not run short.

b. The mixture proportion of starting assist fluid should be 90% of anti-freeze solution for Aluminum engine plus 10% of water.

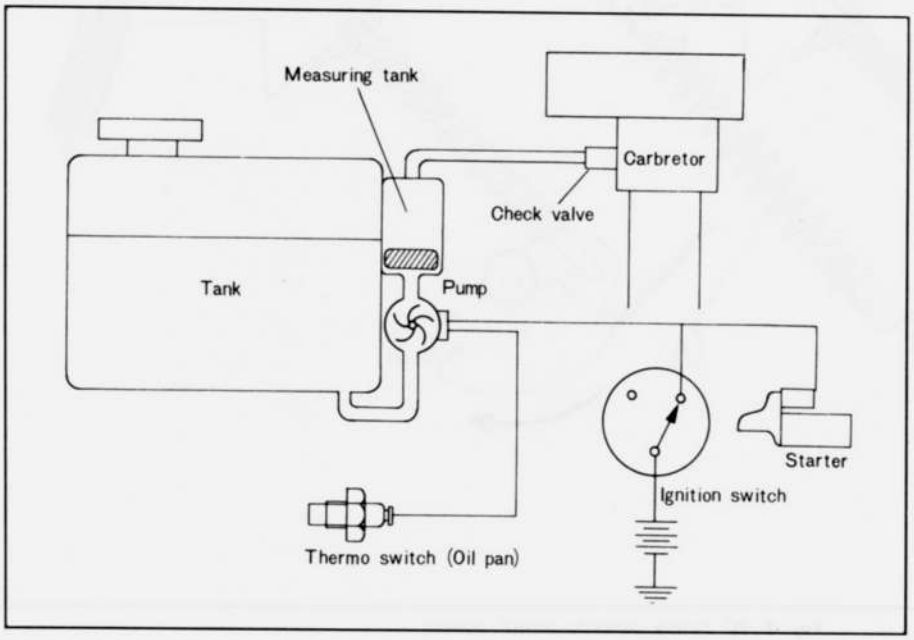

Fig. 4–18
Sub-zero starting assist system

4–A–8. Safety Throttle Return System

The safety throttle return system is adopted in order to prevent any possible danger from occurring when the accelerator return spring should become broken during operation and at that instant the accelerator should get out of control.
Under normal conditions, only spring Ⓐ operates a return spring by pulling throttle lever ④ which is connected to the accelerator wire. Link ③ is fixed by rod ② (whose upper end is fixed by counter ①) and does not have any connection with the movement of link ④. In case spring Ⓐ should become broken, the upper end of rod ② slips off of counter ① by spring Ⓑ and throttle lever ④ is pushed by the movement of link ③ instantaneously.
Compression spring Ⓑ works as an accelerator return spring with the same force as when spring Ⓐ is in operation. Consequently even if spring Ⓐ should become broken during operation, no adverse effects will occur in the operation of the accelerator control.

Checking :
1. Check that the throttle valve opens compeltely with the safety return system in set position.
2. Turn the counter ① by hand anticlockwise and make sure that the upper end of rod ② slips off of counter ① instantaneously.

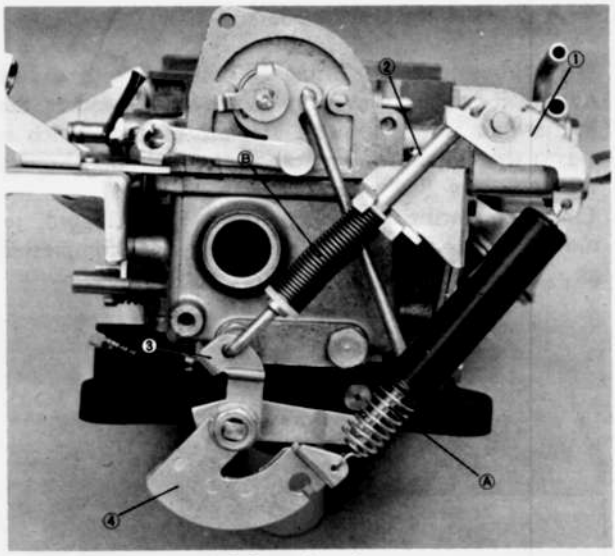

Fig. 4–19 Safety throttle return system
A. Throttle return spring
B. Safety return spring
1. Counter
2. Safety return spring rod
3. Link
4. Throttle lever

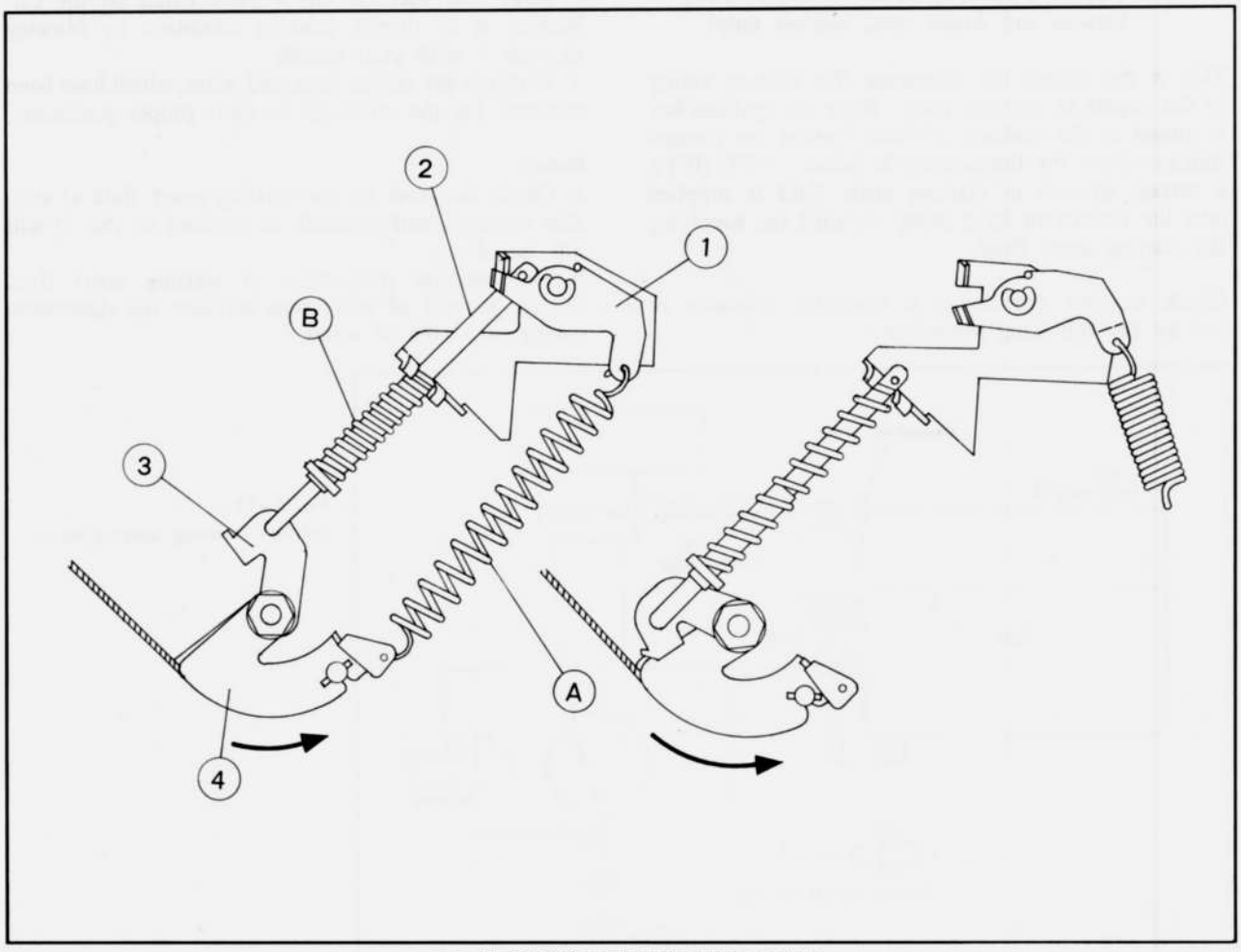

Fig. 4–20 Safety throttle return system

4–A–9. Disassembling Carburetor

a. Removing bimetal spring houisng assembly

1. Disconnect the vacuum sensing tube ① led to the vacuum break diaphragm.
2. Remove the screws ② (don't remove the screw ③ attaching the bimetal spring housing ④ with diaphragm bracket ⑤ to the carburetor and remove the housing assembly ④.

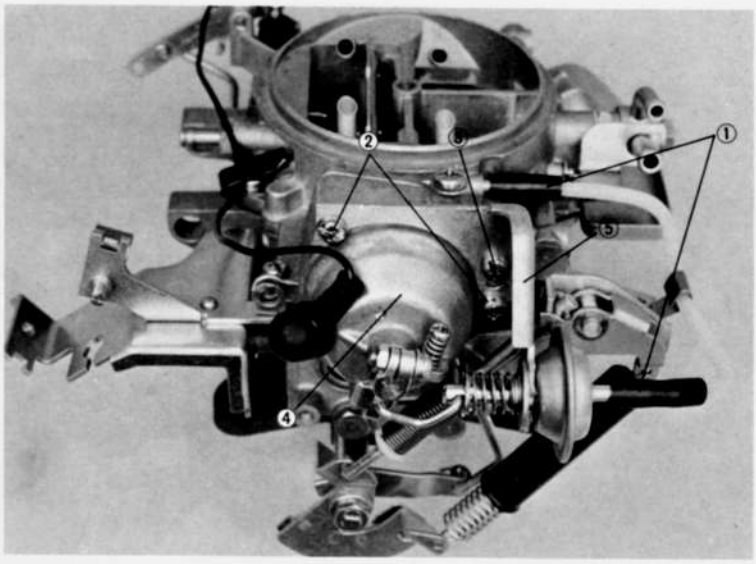

Fig. 4–21

b. Removing throttle return springs

1. Dislocate the safety return spring ⑥ by turning the counter lever ⑦ anticlockwise and remove the spring ⑥ from the spring stopper bracket ⑧.
2. Remove the throttle return spring ⑨ deliberately so as not to get hurt.
3. Remove the spring stopper bracket ⑧ and spring counter lever bracket ⑩ by removing the screws ⑪.

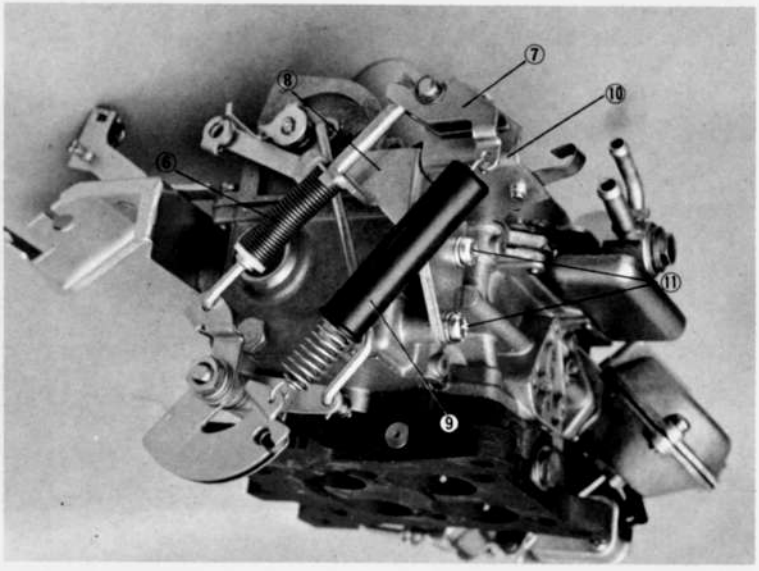

Fig. 4–22

c. Removing air horn

1. Disconnect the fast idle connecting rod ⑫ by removing the cotter pin ⑬.
2. Remove the accelerating pump connecting rod ⑭ by removing the cotter pin ⑮.
3. Remove the bolt ⑯ attaching the inlet fitting ⑰ by box wrench or offset wrench (don't use a spanner – open end wrench), and remove the fitting ⑰ and filter. Remove the connector ⑱ if necessary.
4. Remove the screws ⑲ and the center bolt ⑳ attaching the air horn ㉑ to the body ㉒ and remove the air horn ㉑ being careful not to break the gasket.

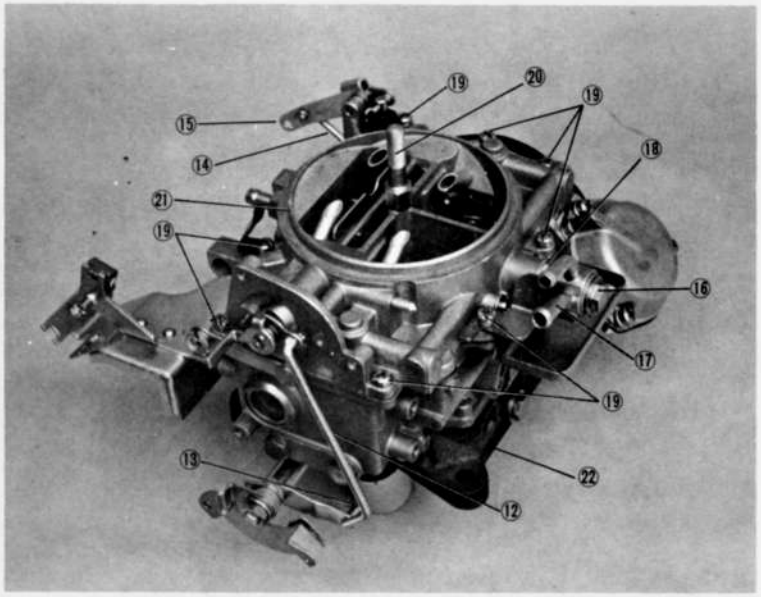

Fig. 4–23

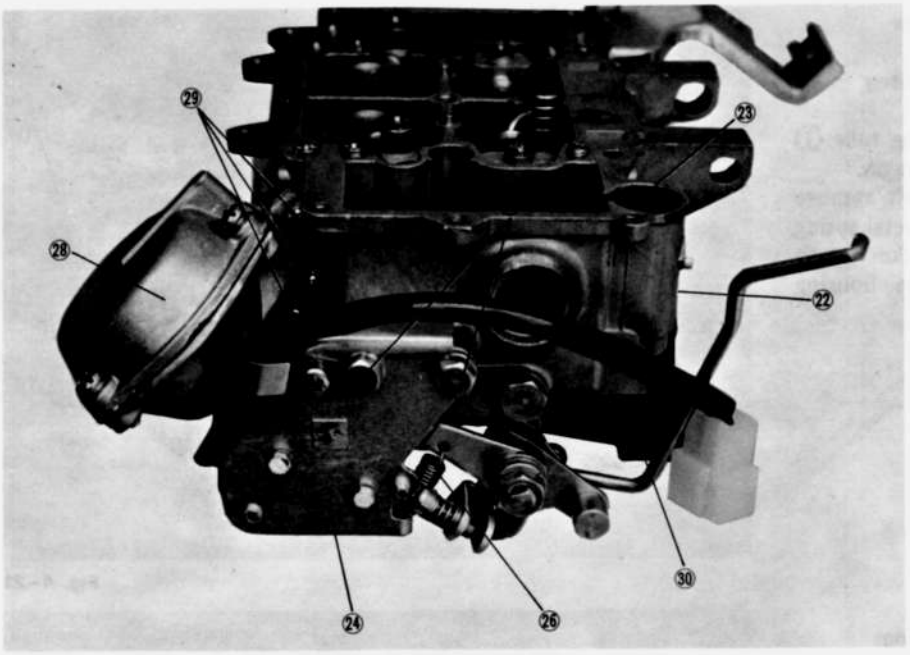

Fig. 4–24

d. Removing carburetor body

1. Remove the spring, retainer plate and check ball from the accelerator pump cylinder (23) of the body (22).
2. Remove the idle switch (24) by removing the screws (25) and spring (26).
3. Disconnect the connecting rod (27) of the secondary operating diaphragm (28) by removing the cotter pin (29) and remove the diaphragm (28) by removing the screws (29).
4. Remove the screws attaching the throttle body (30) to the carburetor body (22) and remove the body.

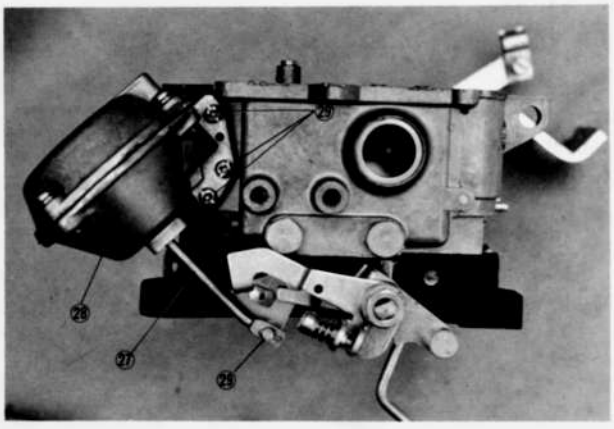

Fig. 4–25

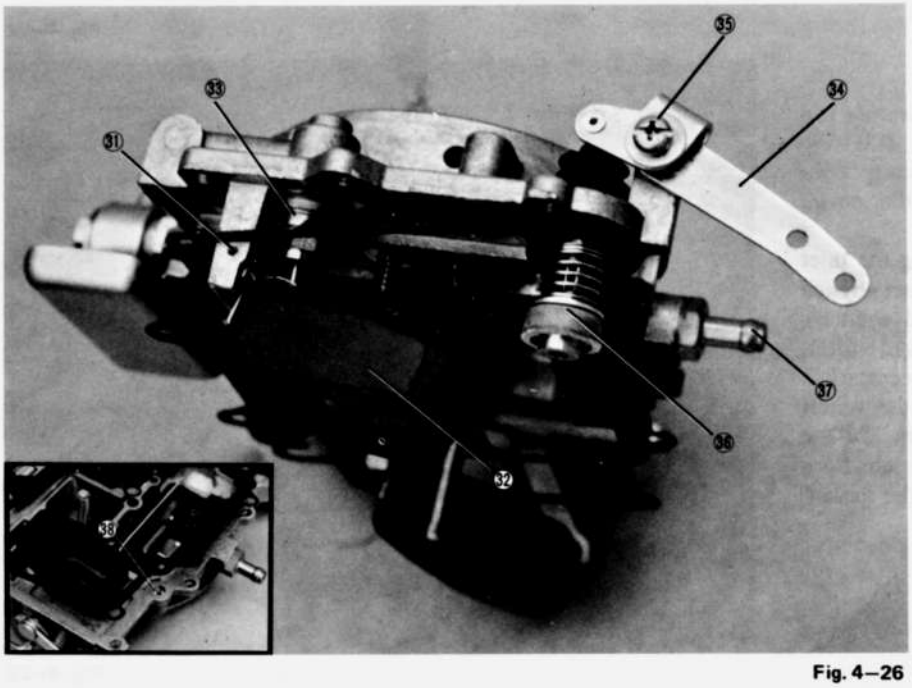

Fig. 4–26

e. Disassembling air horn

1. Remove the float retaining pin (31), float (32) and needle valve (33).
2. Remove the accelerator pump lever (34) by removing the screw (35) and pull out the pump piston (36).
3. Remove the starting assist fluid inlet fitting (37).
4. Remove the slow air bleeds (38).

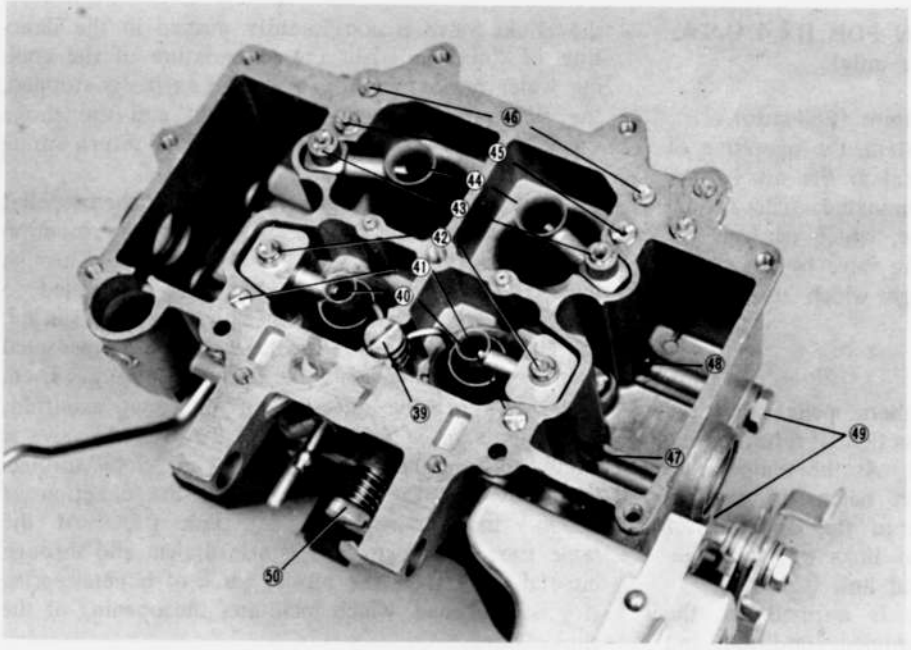

Fig. 4–27

40. Primary venturi
41. Primary slow jet
42. Primary main air bleed
43. Secondary main air bleed
44. Secondary venturi
45. Secondary slow jet (Step jet) and air bleed
46. Plug
47. Primary main jet
48. Secondary main jet

f. Disassembling carburetor body

1. Remove the accelerator injection nozzle (39) from the body and remove the weight and ball.
2. Write down the numbers and positions of all jets and remove the all jets from the surface of the body.
3. Remove the main jets (47) (48) by removing the plugs (49) from the body.
4. Remove the air adjust screws (50).

g. Throttle chamber

1. Remove the idle adjust screw (51).

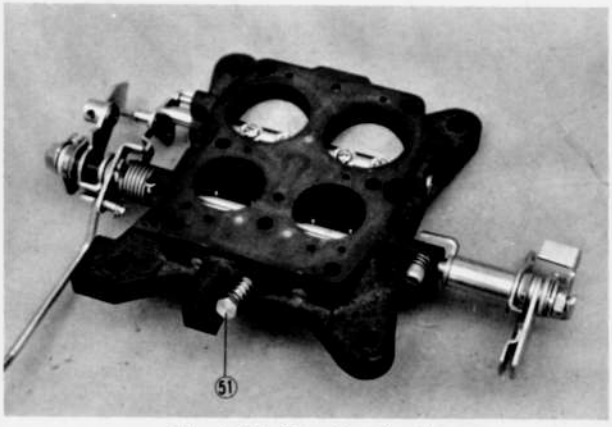

Fig. 4–28 Throttle chamber

4–A–10. Inspecting Carburetor

1. Wash all parts in clean gasoline and dry with compressed air. All passages of the carburetor must be blown very carefully.
Never use a wire for cleaning the jets.
2. Inspect the air horn, body and body flange for cracks, nicks or burrs on their respective gasket surfaces.
3. Inspect the float for deformation, damaged tab and worn retaining pin bore.
4. Check the float needle valve for wear and for proper seating.
5. Inspect the filter for rust and damage.
6. Check the choke valve for proper choking, smooth movement and excessive play of choke shaft.
7. Check all jets and air bleeds for clog, damaged threads, damaged head slots and damaged holes.
8. Check the primary and secondary throttle valves if these close firmly or not, check them for smooth movement and excessive play of the shafts.
9. Check the diaphragm of vacuum control unit for damage. Check the spring for weakness.

4–A–11. Carburetor Assembly

To assemble, follow the disassembly procedures in the reverse order with the following cautions.
1. Discard the old gaskets and use new ones.
2. Confirm that all parts are in good condition and clean.
3. Both the primary and secondary systems have their respective parts which are of a shape. Therefore, when installing, care should be taken so as not to mistake one for the other.
4. When installing the bimetal spring housing to the carburetor, fit the choke shaft lever to the bimetal spring end accurately by means of closing the choke valve and pulling the vacuum break diaphragm shaft.

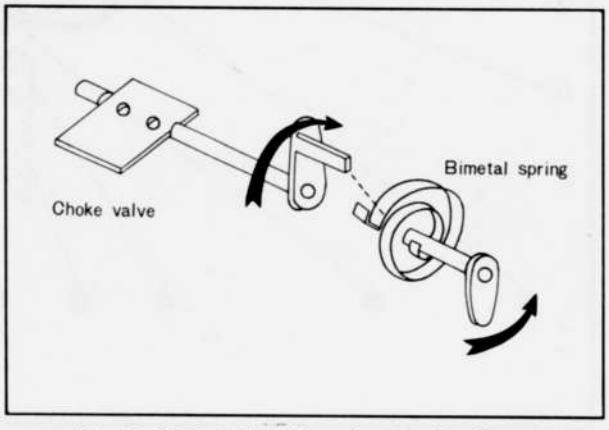

Fig. 4–29 Installing bimetal spring housing

4–AA. CARBURETOR (OPTION FOR RX-4 U.S.A. and Canada spec. models only)

4–AA–1. Automatic Choke System (Full-auto)

In the full automatic choke system, the operation of the choke wire which is essential in the usual semi-automatic system has been eliminated. The system provides a full automatic choke, which controls the opening and closing of the choke valve by the operation of the thermopellet through which the cooling water of the engine runs.

Outline of the Operation

When the engine is cold, the thermopellet is in the contracted condition. By the function of return spring ㉔, the choke valve is closed. As the temperature of water rises, the thermopellet begins to expand, thus pushing the choke valve in the direction of "open" through the medium of links ⑤, ⑥, camshaft ④, link ⑩, rod ⑪, and link ⑫.

In the state where the engine is warmed up, the thermopellet remains in the expanded condition, and the choke valve is continuously pushed in the direction of "open". When the temperature of the cooling water begins to drop after the engine is stopped, the thermopellet begins to contract and the choke valve is closed again by the function of return spring ㉔.

Further, while the engine is cold, the thermopellet is in the contracted condition and by the function of return spring ㉔, rod ㉓ is pulled up. Through links ㉒ and ㉑, the throttle valve is opened to the degree of "fast idle". Once the engine is started, the choke valve and the throttle valve are compensated to the opening degree suitable for the warm-up. Then, under the negative pressure of the inlet manifold, the diaphragm is pulled. Thus, the throttle valve is compulsorily moved in the direction of "close" through link ⑳; and the choke valve, in the direction of "open" through rod ⑰ and link ⑫. At the same time diaphragm ⑮ is also drawn, and through bimetal shaft ⑯, the tensile force of bimetal spring ⑬ is weakened, which facilitates the opening of the choke valve.

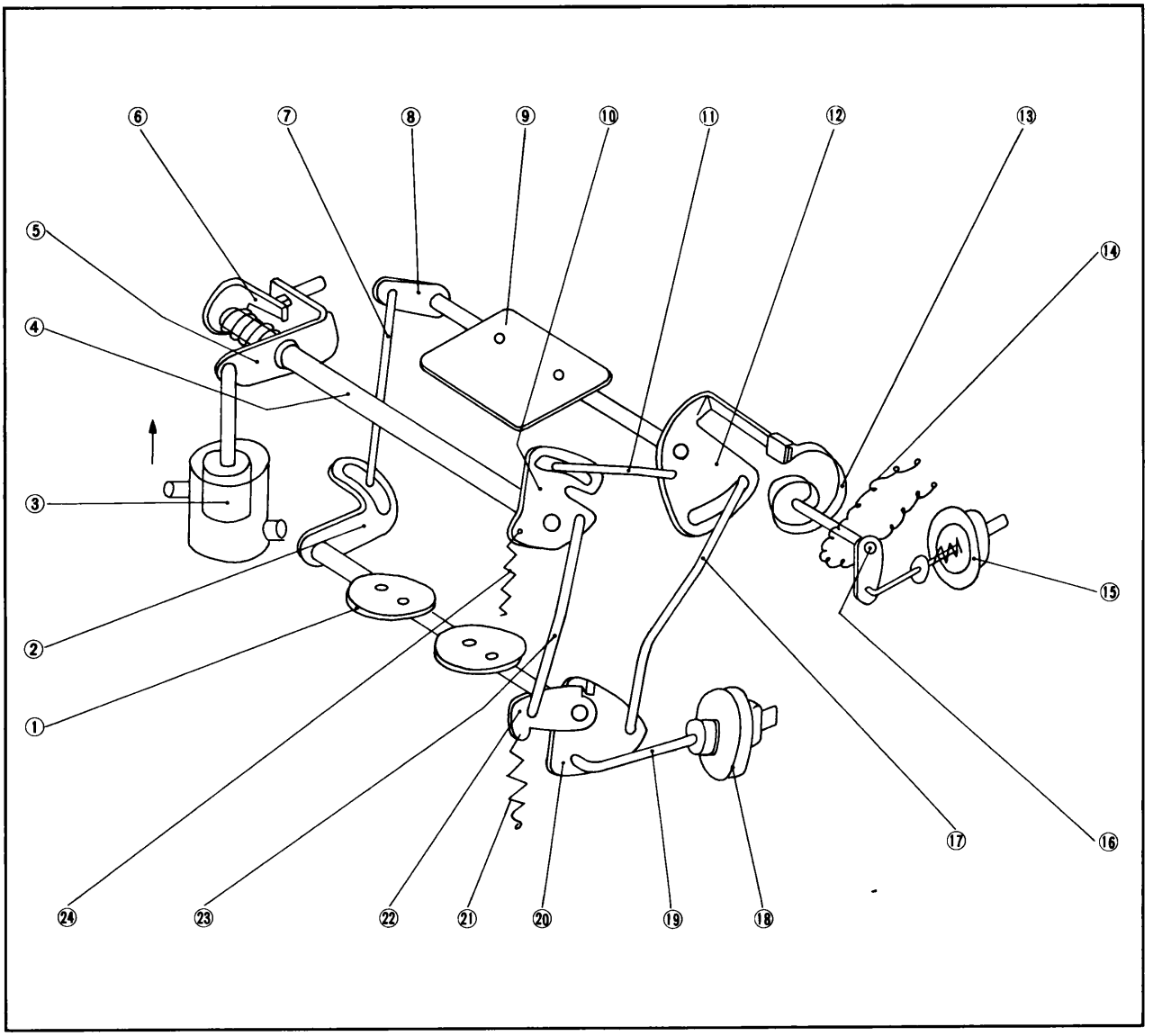

Fig. 4–30 Full automatic choke system

4–B. FUEL PUMP

To determine that the fuel pump is in satisfactory operating condition, tests for both fuel pump pressure and fuel pump capacity (volume) should be performed. The tests are performed with the pump installed on the car.

a. Pressure test

1. It is required that measurement should be performed while the engine is in cold condition, and make sure that there is no fire around.
2. Remove the aircleaner assembly. Disconnect the fuel inlet hose at the carburetor. Use care to prevent combustion due to fuel spillage.
3. Connect the pressure gauge to the fuel inlet hose.

Note:
It is recommended to place the pressure gauge outside the engine compartment using a hose of adequate length. In this case, place the gauge almost at the height of carburetor.

4. Turn the ignition switch on and note the pressure reading.
If the reading is not within the specifications mentioned below, the pump is damaged and should be repaired or replaced.
If the pump pressure is within the specifications, perform the test for volume.

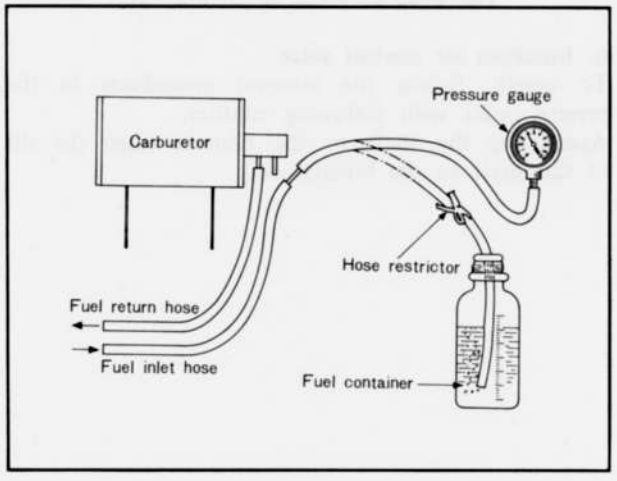

Fig. 4–31 Testing fuel pump

b. Volume test

Turn the ignition switch on, open the hose restrictor and expel the fuel into the container, while observing the expelling amount for one minute. Close the restrictor and read the amount.

Specification – Fuel pump

Fuel pressure	0.25 ~ 0.35 kg/cm^2 (3.55 ~ 4.98 lb/in^2)
Feeding capacity	More than 1,150 cc/min (1.22 U.S. quart/min)

If the pump volume is below specifications, repeat the test using an auxiliary fuel supply and a new fuel filter. If the pump volume meets specifications while using the auxiliary fuel supply, check for a restriction in the fuel supply from the tank and for the tank not venting properly.

4–C. FUEL FILTER

The fuel filter is of a cartridge type. The element of the filter is sealed cartridge and should be replaced following the maintenance schedule.

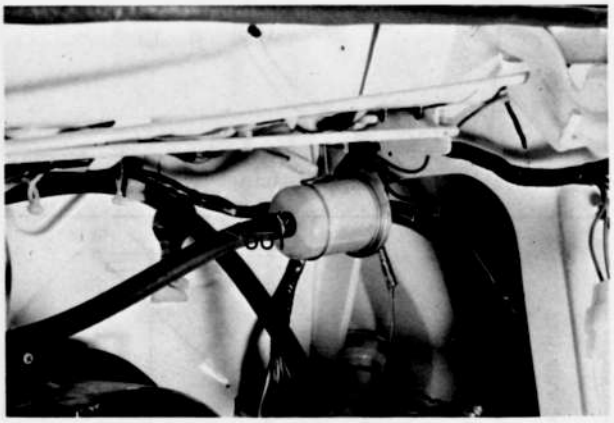

Fig. 4–32 fuel filter

4–D. FUEL LINES

Inspect the fuel lines for leaks and tighten the fuel line connections to prevent leakage. It is important that the fuel system should be kept clean and free from water. In an excessive amount of dirt or water is found, drain the fuel from the tank and blow out the fuel lines with compressed air.

4–E. FUEL TANK

Inspect the fuel tank for cracks and corrosion. If any defect is present, repair or replace as necessary.

Note :
Before repairing, clean the fuel tank thoroughly with steam and sufficiently to remove all explosive gas.

4–F. AIR CLEANER

4–F–1. Air Cleaner Element

The air cleaner is of a paper filter type. The element should be serviced following the maintenance schedule. To clean, blow the element with compressed air at low pressure.

4–F–2. Intake Air Temperature Control System

Intake air temperature control system consisting of a control valve and a bimetal is located within the air cleaner and senses the engine room temperature for a stabilized intake air temperature.

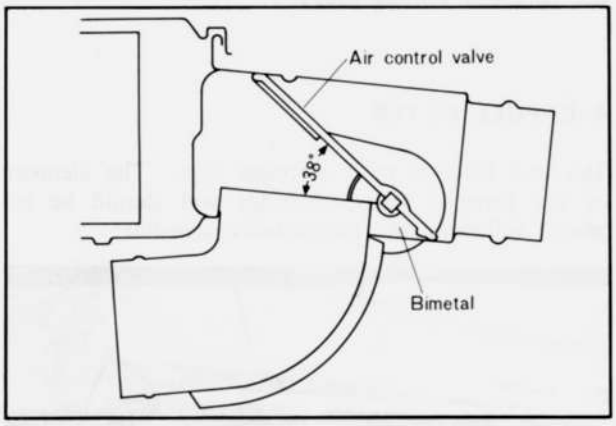

Fig. 4–33 Air control valve

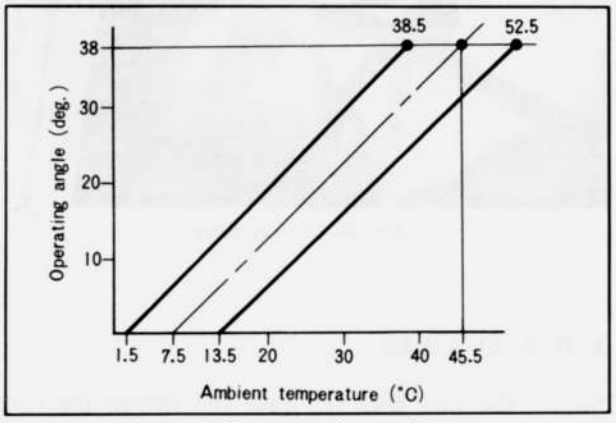

Fig. 4–34 Valve opening angle

The intake of fresh air and hot air is automatically controlled over by means of the bimetal and control valve installed in the air cleaner inlet side.

The control valve closes the fresh side air completely below 7.5 ± 6°C (45.5 ± 10.8°F) of the ambient temperature and only hot air is led into the engine through the air cleaner element.

The hot air is completely closed above 45.5 ± 7°C (113.5 ± 12.6°F) and all the fresh air is sucked into the engine.

a. Removing air control valve

1. Remove the clip and bush from the bimetal side shaft.
2. Pull out the shaft from the air cleaner body.
3. Remove the bimetal by removing the set screw.



Fig. 4–35 Removing air control valve

b. Installing air control valve

To install, follow the removal procedures in the reverse order with following caution.

Assembling the shaft to the bimetal, align the slit of the shaft to the bimetal end.

ELECTRICAL SYSTEM (ENGINE)

5–A. BATTERY ..... 5 : 1
5–A–1. Checking Battery ..... 5 : 1
5–A–2. Charging Battery ..... 5 : 1
5–B. IGNITION SYSTEM ..... 5 : 2
5–C. DISTRIBUTOR ..... 5 : 3
5–C–1. Adjusting Point Gap ..... 5 : 3
5–C–2. Adjusting Ignition Timing ..... 5 : 3
5–C–3. Removing Distributor ..... 5 : 4
5–C–4. Testing Distributor ..... 5 : 4
5–C–5. Disassembling Distributor ..... 5 : 5
5–C–6. Inspecting Distributor ..... 5 : 5
5–C–7. Assembling Distributor ..... 5 : 6
5–C–8. Installing Distributor ..... 5 : 6
5–D. IGNITION COIL ..... 5 : 7
5–E. SPARK PLUG ..... 5 : 7
5–E–1. Spark Plug Heat Range ..... 5 : 7
5–E–2. Removing Spark Plug ..... 5 : 7
5–E–3. Checking Spark Plug ..... 5 : 7
5–E–4. Installing Spark Plug ..... 5 : 7
5–F. ALTERNATOR ..... 5 : 8
5–F–1. Precautions on Service ..... 5 : 8
5–F–2 Checking Charging System on Car .... 5 : 8
5–F–3. Disassembling Alternator ..... 5 : 9
5–F–4. Inspecting Alternator ..... 5 : 9
5–F–5. Assembling Alternator ..... 5 : 10
5–G. REGULATOR ..... 5 : 11
5–G–1. Checking Constant Voltage Relay ..... 5 : 11
5–G–2. Checking Pilot Lamp Relay ..... 5 : 11
5–G–3. Adjusting Regulator ..... 5 : 11
5–H. STARTING MOTOR ..... 5 : 12
5–H–1. Checking Starting Circuit ..... 5 : 12
5–H–2. Testing Starting Motor ..... 5 : 12
5–H–3. Disassembling Starting Motor ..... 5 : 12
5–H–4. Inspecting Starting Motor ..... 5 : 13
5–H–5. Magnetic Switch Test ..... 5 : 14
5–H–6. Assembling Starting Motor ..... 5 : 15
SPECIAL TOOLS ..... 5 : 15

5–A. BATTERY

5–A–1. Checking Battery

As the battery has an important influence on startability, ignition and lighting, check the following points periodically and always keep the battery in perfect condition.

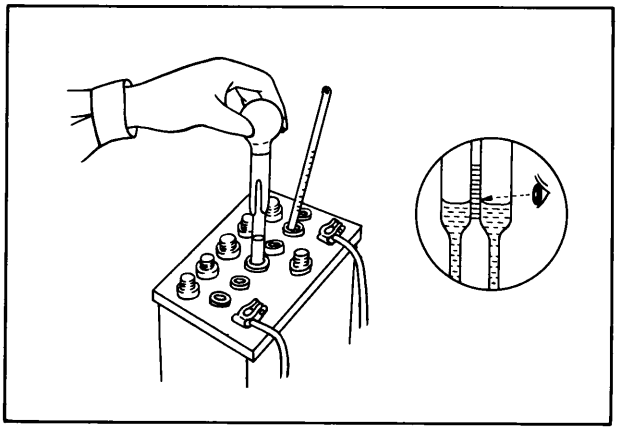

Fig. 5–1 Checking specific gravity

1. Check the electrolyte level in each cell of the battery, and add distilled water to maintain the solution 10 ~ 20 mm (0.4 ~ 0.8 in) above the plates.
Do not overfill.

2. Check the specific gravity of the electrolyte with a hydrometer, as shown in Fig. 5–1. If the reading is 1.28 or more, it indicates that the battery is fully charged. If the reading is below 1.22, the battery requires recharging.
3. Check the tightness of the terminals to ensure good electrical connections. Clean the terminals and coat the terminals with grease.
4. Inspect for corroded or frayed battery cables.

5–A–2. Charging Battery

a. Constant current charge

1. If the exterior of the battery is dirty with sulphuric acid or dust and dirt, wash these off with clean water and dry thoroughly before charging the battery.
2. Check the electrolyte level and add distilled water if necessary.

Note:
If addition of distilled water is neglected, the plates and separators will become exposed to air, causing a sulphation to occur on the plates.
Do not add dilute sulphuric acid unless the electrolyte has overflown or led out.

3. Connect the battery to the charger ensuring that the polarities are correct.

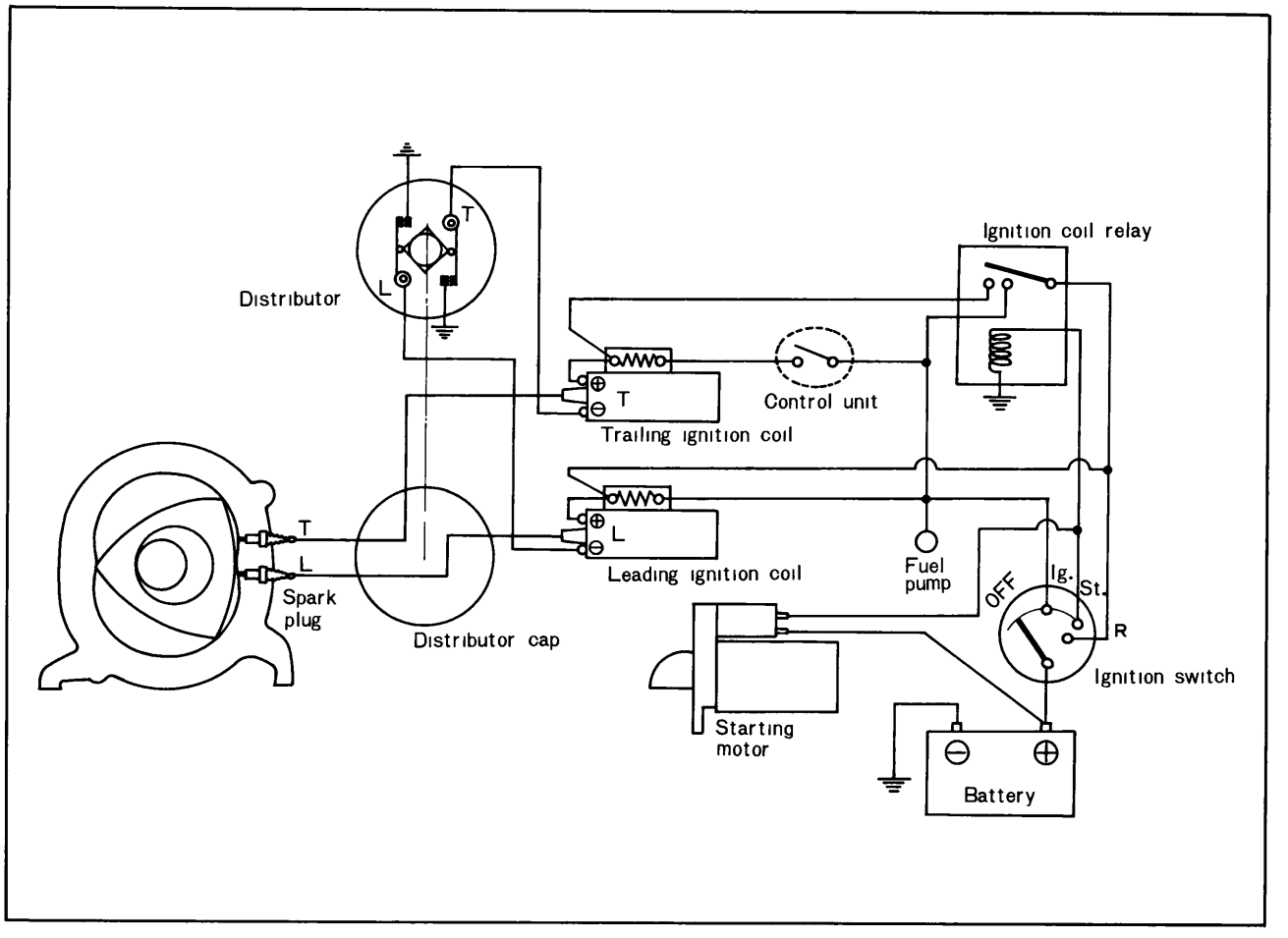

Fig. 5–2 Ignition system

4. To charge, apply an electric current of approximately 5A until the specific gravity of the electrolyte reaches 1.27 ~ 1.29.

b. Fast charge

As a fast charge causes both the temperature and the level of the electrolyte to rise suddenly, it does not have a favorable effect on the battery. Therefore, this should not be performed unless in the case of an emergency.

When a fast charge is being applied with the battery mounted on the vehicle, ensure that the cables are removed from the battery terminals before the charge is applied. If this is neglected, it could cause a damage to the diodes on the alternator.

The battery should be kept by the use of cooling water to prevent the temperature of the electrolyte from exceeding 55°C (131°F), otherwise the charging should be discontinued temporarily when the temperature rises above this point.

5–B. IGNITION SYSTEM

In the rotary engine, two spark plugs are provided in the working chamber, one above the minor axis (called the trailing side) and the other below the minor axis (called leading side) of the epitrochoid surface, so as to enable the engine to obtain the optimum combustion efficiency under any operating condition.

The primary wires from the individual breaker points for trailing and leading plugs are led to the two separate coils and the secondary wires also are separately led via the distributor to the trailing and leading plugs.

In the distributor, the vacuum advance works on the trailing side and the centrifugal advance works on both the trailing and leading sides, and the interval of the initial ignition timing between trailing and leading can be adjusted.

The coil with external resistor is used.

The ignition coil relay is equipped to short-circuit the external resistor in starting (when the starter is running) so as to increase the secondary voltage and improve the startability.

Short-circuiting of resistor by the ignition coil relay is made on the trailing side only and that on the leading side by the ignition switch. The ignition coil relay has another contact point which serves to energize the ignition circuit for the fuel pump, etc.

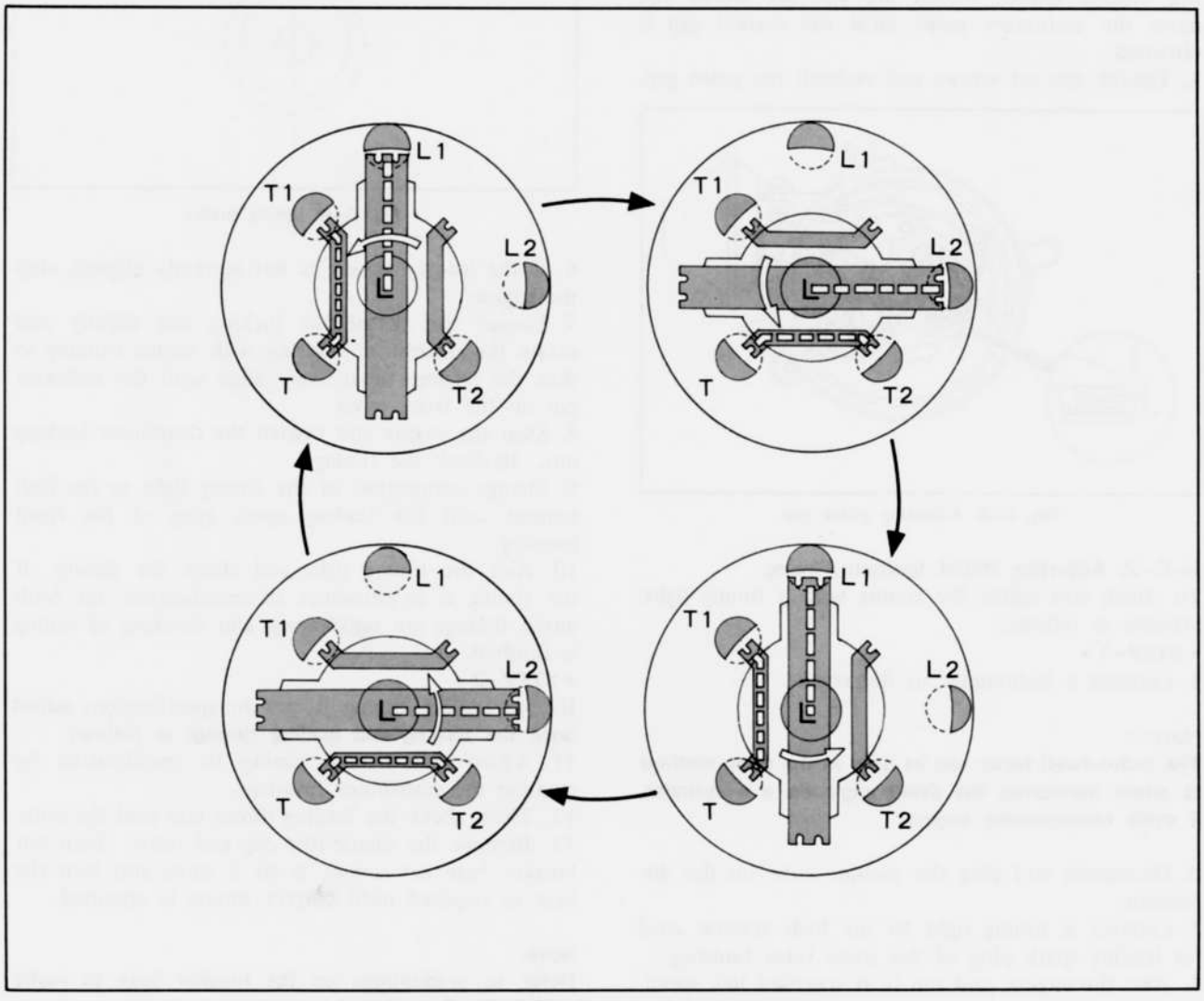

Fig. 5–3 Distribution of ignition

5–C. DISTRIBUTOR

The distributor for this model had two breaker points, one for leading spark plugs and the other for trailing spark plugs.
The distributor consists of distributing mechanism, contact breaker mechanism, and ignition timing advance control of centrifugal and vacuum.

5–C–1. Adjusting Point Gap

A scope, a dwell meter, or a feeler gauge can be used to check the gap of new breaker points. A scope or a dwell meter should be used to check the gap of used breaker points. Due to the roughness of used points, it is not advisable to use a feeler gauge to check the gap.
To check and adjust the breaker points with a feeler gauge:
1. Check the breaker points alignment. If necessary, bend the stationary point bracket so as to obtain contact in the center of the breaker points.
2. Crank and stop the engine when the rubbing block on the breaker arm just rests on the highest point of the cam.
3. Insert a feeler gauge of 0.45 mm (0.018 in) between the breaker points, loosen the two set screws and move the stationary point until the correct gap is obtained.
4. Tighten the set screws and recheck the point gap.

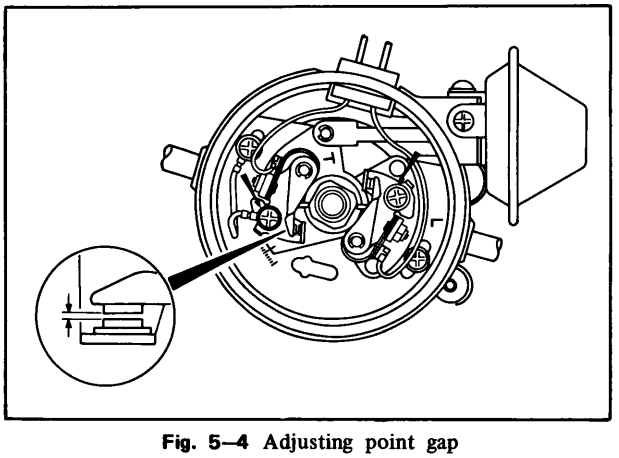

Fig. 5–4 Adjusting point gap

5–C–2. Adjusting Initial Ignition Timing

To check and adjust the timing with a timing light, proceed as follows:
*** STEP–1 ***
1. Connect a tachometer to the engine.

Note:
The tacho-dwell tester can be used in the same method as when measuring the dwell angle on a 4 cylinder, 4 cycle reciprocating engine.

2. Disconnect and plug the vacuum tube on the distributor.
3. Connect a timing light to the high tension cord for leading spark plug of the front rotor housing.
4. Start the engine, and run it at specified idle speed. (See page 4 : 2)

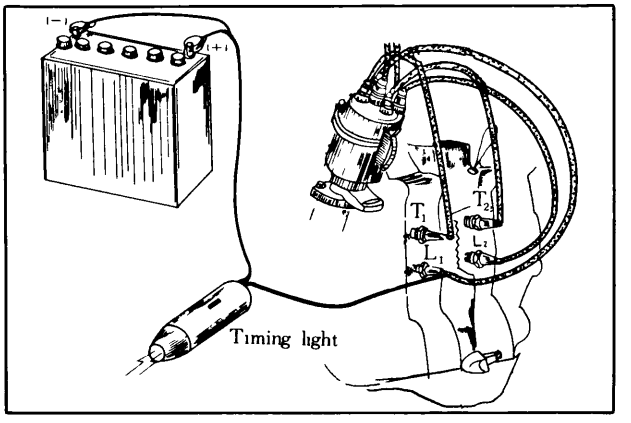

Fig. 5–5 Checking ignition timing

5. Aim the timing light at the timing indicator pin on the front cover.

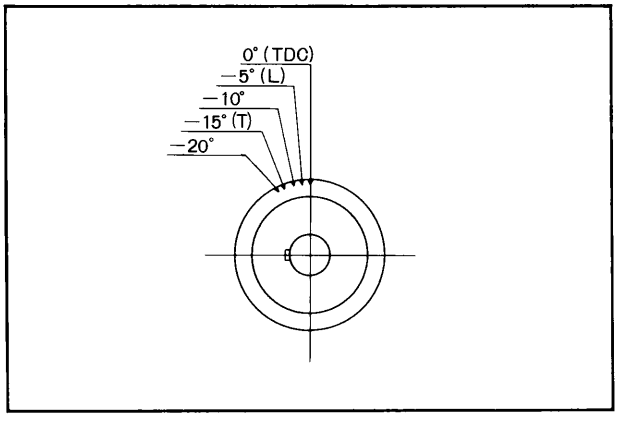

Fig. 5–6 Timing marks

6. If the leading timing is not correctly aligned, stop the engine.
7. Loosen the distributor locking nut slightly and rotate the distributor housing with engine running so that the leading timing may align with the indicator pin on the front cover.
8. Stop the engine and tighten the distributor locking nut. Recheck the timing.
9. Change connection of the timing light to the high tension cord for trailing spark plug of the front housing.
10. Aim the timing light and check the timing. If the timing is in allowance of specification, the both initial timings are satisfactory and checking of timing is finished.
*** STEP–2 ***
If the trailing timing is not in specification, **adjust both the trailing and leading timings** as follows:
11. Adjust the trailing timing to specification by rotating the distributor housing.
12. Then, check the leading timing and read the error.
13. Remove the distributor cap and rotor. Turn out breaker base set screws ½ to 2 turns and turn the base as required until correct timing is obtained.

Note:
Refer to graduations on the breaker base to make adjustment easier.

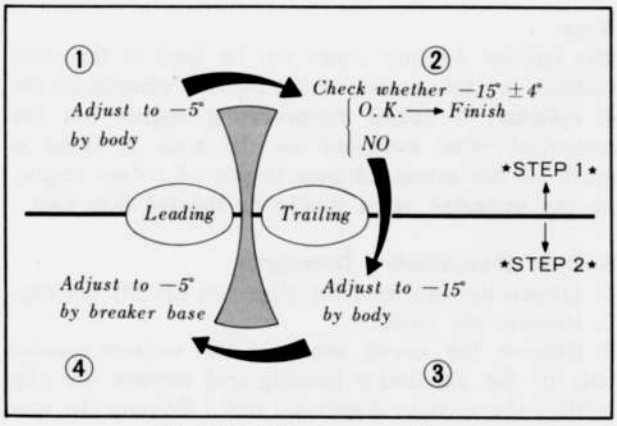

Fig. 5–7 Adjusting procedure

One graduation correspond to eccentric shaft angular displacement of 4 degrees.

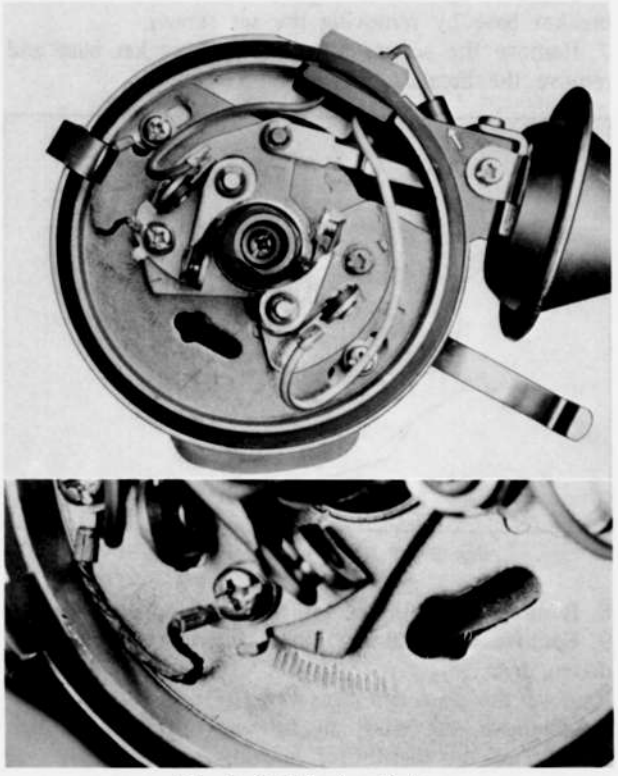

Fig. 5–8 Adjusting timing

14. Recheck the timing. If the timing mark is not correctly aligned, repeat this performing until the correct timing is obtained.

Specifications — Initial timing

Leading	−5° at idle speed
Trailing	−15° ± 4° at idle speed

5–C–3. Removing Distributor

1. Remove the distributor cap and disconnect the vacuum tube from the vacuum advance unit.
2. Disconnect the coupler of primary wires from the distributor.
3. Remove the distributor attaching nut.
4. Pull the distributor out of the front cover.

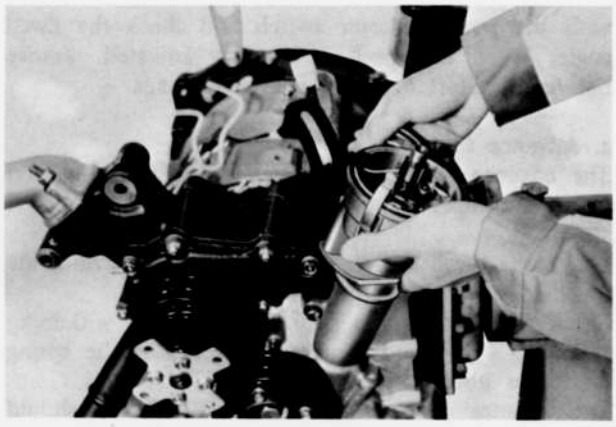

Fig. 5–9 Removing distributor

5–C–4. Testing Distributor

a. Dwell angle test

1. Disconnect and plug the distributor vacuum tube and connect the tester following the instructions of the manufacturer. Then start the engine and let it idle.
2. Turn the cylinder selector to the **4 cylinder, 4 cycle** position.
3. Read the dwell angle on the dwell meter and compare the reading to specification. (55 ~ 61° in this case)
4. If the dwell angle is below specification, the breaker point gap is too wide. If the dwell angle is above specification, the breaker point gap is too close.

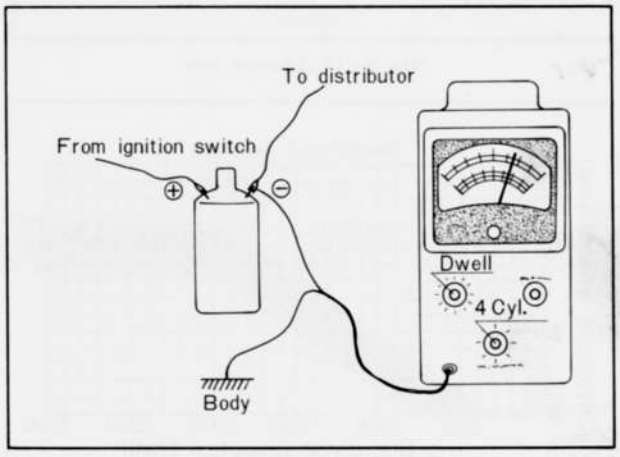

Fig. 5–10 Checking dwell angle

b. Dwell angle adjustment

If the dwell angle is not within specifications, proceed as follows:

1. Remove the coil high tension cords from the distributor and ground them.
2. Remove the distributor cap and place them out of the way.
3. Connect the **remote starter switch** (49 0242 685A) in the circuit.
4. Loosen the breaker point attaching screws.
5. With the ignition switch on, crank the engine with a remote starter switch and adjust the gap to specification.
6. Release the remote starter switch and tighten the breaker point attaching screws.
7. Since the adjustment may have changed when the attaching screw was tightened, crank the engine again

with the remote starter switch and check the dwell angle. When the dwell is properly adjusted, remove the remote starter switch and tester leads.

c. Advance test

The advance is checked to determine if the ignition timing advances in proper relation to engine speed and load.

Check the dwell angle. If the angle is not within the specifications, adjust the breaker points.

Check the breaker arm spring tension [0.5 ~ 0.65 kg (1.1 ~ 1.4 lb)] and replace the points if the spring tension is not within specifications.

The advance characteristic of the distributor should be within the range as shown in Fig. 5–12.

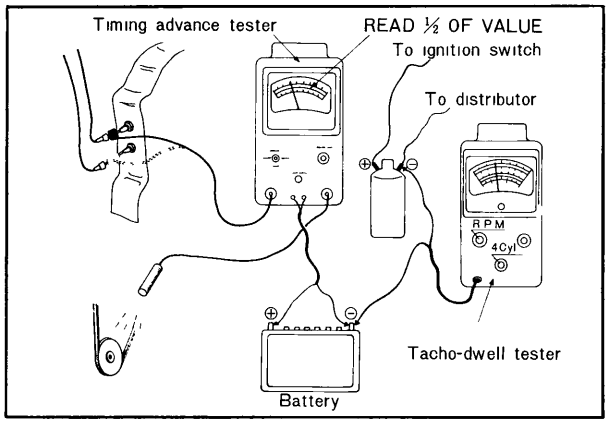

Fig. 5–11 Advance test

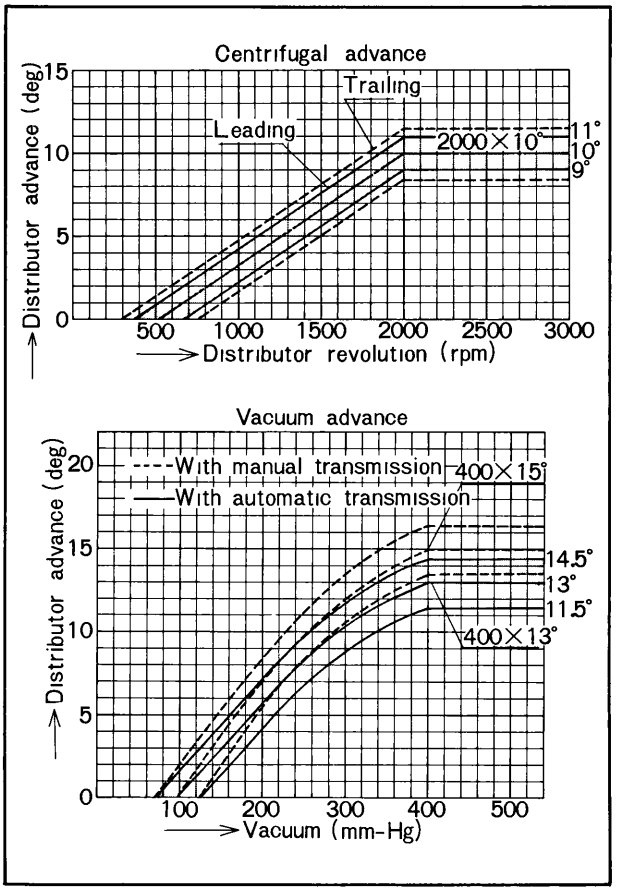

Fig. 5–12 Advance characteristic

Note:

The ignition advance tester can be used in the same method as when measuring the ignition advance on the **4 cylinder, 4 stroke reciprocating engine** but the numerical value indicated on the scale is twice as much as the actual advance degree of rotary engine. So the **indicated value should be divided into two.**

5–C–5. Disassembling Distributor

1. Loosen the cap retaining clips and lift off the cap.
2. Remove the rotor.
3. Remove the screws attaching the vacuum control unit to the distributor housing and remove the clip holding the vacuum diaphragm link. Remove the vacuum control unit.
4. Remove the screws attaching the condensers.
5. Remove the primary wires (rubber block) from the housing.
6. Remove the contact point assemblies from the breaker base by removing the set screws.
7. Remove the screws attaching the breaker base and remove the breaker base.

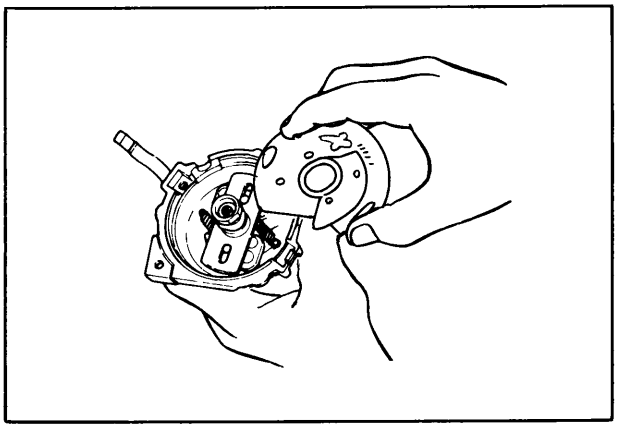

Fig. 5–13 Removing breaker base

8. Remove the cam set screw and remove the cam.
9. Remove the retaining pin attaching the distributor driven gear.

Remove the gear and the washer(s).

10. Remove the shaft in upward direction through the top of the distributor housing.
11. Remove the governors by removing the springs and clips.

5–C–6. Inspecting Distributor

a. Checking cap

Inspect the distributor cap for crack, carbon runners and evidence of arcing. If any of these conditions exists, the cap should be replaced. Clean any corroded high tension terminals.

b. Checking rotor

Inspect the rotor for cracks or evidence of excessive burning at the end of the metal strip. If any of these conditions exists, the rotor should be replaced.

c. Checking contact points

Inspect the points for wear, burning, transferred metal and pitting. If they are slight, the points can be

cleaned with an oil stone. If they are severe, replace with new ones.

d. Checking tension of contact arm spring

For inspection, hook a spring scale on the contact arm and pull in a straight line at a right angle to the contact arm. Take a reading when the contact points start to separate. The reading should be between 0.5 ~ 0.65 kg (1.1 ~ 1.4 lb).

e. Checking condenser

If the condenser is leaky, it will cause a weak spark or burned contact points. Check the capacity of the condenser with a condenser tester.

The capacity is 0.24 ~ 0.30 microfarads. In the absence of a tester, check by substituting a new condenser.

5–C–7. Assembling Distributor

Assemble the distributor in the reverse order of disassembling.

5–C–8. Installing Distributor

1. Turn the eccentric shaft until the TDC mark on the drive pulley aligns with the indicator pin on the front cover. (See Fig. 5–6)
2. Align the tally mark on the distributor housing and driven gear as shown in Fig. 5–14.
3. Insert the distributor so that the distributor lock bolt is located in the center of the slit, and engage the gears.
4. Rotate the distributor clockwise until the leading contact point starts to separate, and tighten the distributor attaching nut.
5. Install the distributor cap and connect the primary wires coupler.
6. Set the timing with a timing light, then tighten the distributor attaching nut. (Refer to Par. 5–C–2)
7. Connect the vacuum tube to the vacuum advance unit.

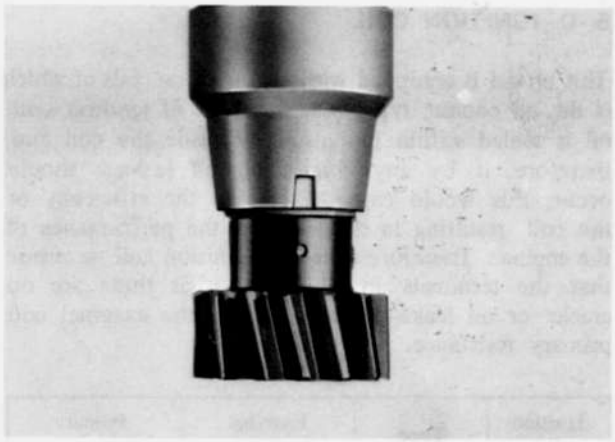

Fig. 5–14 Aligning tally mark

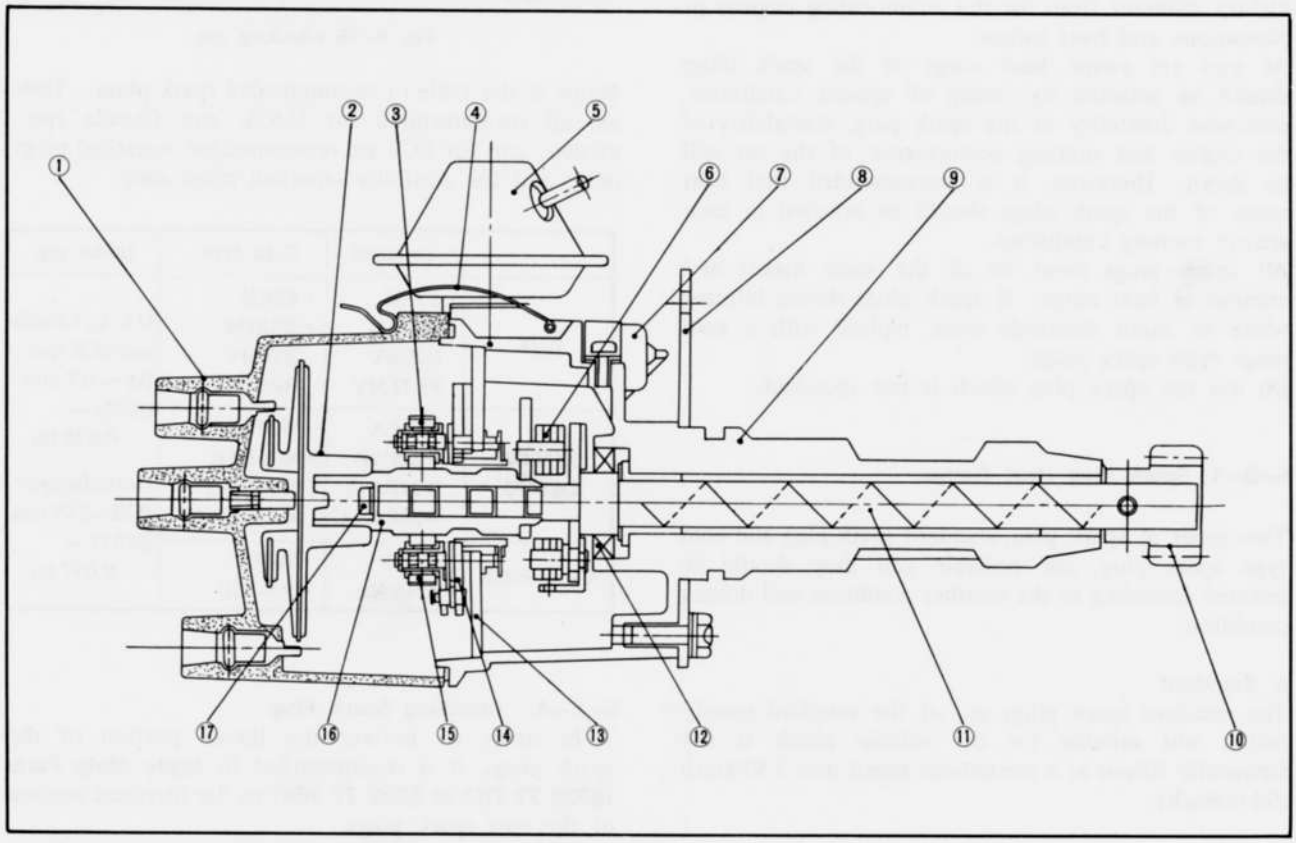

Fig. 5–15 Distributor components

1. Cap
2. Rotor
3. Leading breaker point
4. Clamp
5. Vacuum diaphragm
6. Governor
7. Condenser
8. Lock plate
9. Distributor body
10. Distributor driven gear
11. Shaft
12. Oil seal
13. Breaker base (Leading)
14. Breaker base (Trailing)
15. Trailing breaker point
16. Cam
17. Cam set screw

5–D. IGNITION COIL

This model is equipped with two ignition coils of which is the oil cooling type. On this type of ignition coil, oil is sealed within the insulator inside the coil and, therefore, if by any chance an oil leakage should occur, this would cause a drop in the efficiency of the coil, resulting in deteriorating the performance of the engine. Therefore check the ignition coil to ensure that the terminals are clean and that there are no cracks or oil leakages. Also, check the external and primary resistance.

Ignition Coil	Type	External Resistance	Primary Resistance
Leading	HP5-13J	1.4 Ω/20°C	1.35 Ω/20°C
Trailing	HP5-13E	1.6 Ω/20°C	1.46 Ω/20°C

5–E. SPARK PLUG

On this engine, 2 spark plugs are provided in each working chamber so as to enable the engine to obtain the optimum combustion efficiency under any operating condition. These spark plugs for this engine are slightly different from for the reciprocating engines in dimensions and heat values.
As you are aware, heat range of the spark plugs should be selected by owing of various conditions, otherwise durability of the spark plug, startability of the engine and running performance of the car will be down. Therefore, it is recommended that heat range of the spark plugs should be selected in each vehicle running conditions.
All spark plugs must be of the same maker and number or heat range. If spark plugs shown burning white or rapid electrode wear, replace with a **cold range type** spark plugs.
Do not use spark plug which is not specified.

5–E–1. Spark Plug Heat Range

Two types of spark plug, standard spark plug and cold type spark plug, are available and they should be selected according to the weather condition and driving condition.

a. Standard
The standard spark plugs are of the standard specification and suitable for the vehicle which is not frequently driven at a continuous speed over 150 km/h (95 miles/h).

b. Cold type
The cold type spark plugs are of a heat range higher than the standard spark plugs. They should be used in case the standard spark plugs are overheated, or for the vehicles which is frequently driven at a continuous speed of over 150 km/h (95 miles/h).

5–E–2. Removing Spark Plug
1. Disconnect the wire from each spark plug by grasping, twisting and then pulling the moulded cap of the wire only. Do not pull on the wire because the wire connection inside the cap may become separated or the boot may be damaged.
2. After loosening each spark plugs one or two turns, clean the area around each spark plug port with compressed air, then remove the spark plugs.

5–E–3. Checking Spark Plug
1. Inspect each plug individually for badly worn electrodes, glazed, broken or blistered porcelain, and replace the plug as necessary.
2. Clean the spark plugs throughly using a sand blast cleaner.
3. Inspect each spark plug for make, and heat range.

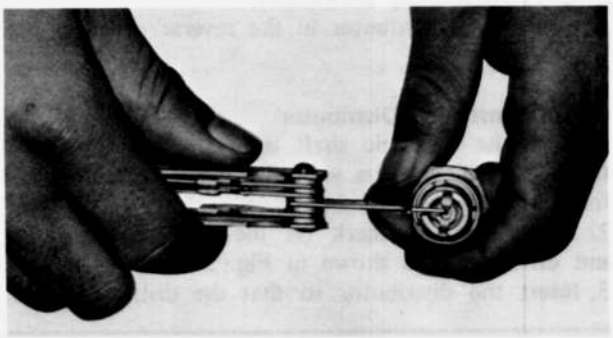

Fig. 5–16 Checking gap

Below is the table of recommended spark plugs. They are all recommended for U.S.A. and Canada spec. models, and for ECE are recommended *-marked plugs only, and for Australia ·-marked plugs only.

	Standard	Cold type	Initial gap
NGK	· B7EM * BR7EM B7EMV BR7EMV	· B8EM * BR8EM B8EMV BR8EMV	U.S.A., Canada and ECE spec: 0.6 ~ 0.7 mm (0.024 ~ 0.028 in) Australia spec: 0.85~0.95 mm (0.033 ~ 0.037 in)
NIPPON-DENSO	· W22EA * W22EAR W22EA-G W22EAR-G	· W25EA * W25EAR W25EA-G W25EAR-G	
CHAMPION	N-80B * RN-80B	N-78B * RN-78B	

5–E–4. Installing Spark Plug
1. In order to protect the thread portion of the spark plugs, it is recommended to **apply Moly Paste (0259 77 767 or 0259 77 768)** to the threaded portion of the new spark plugs.
2. Thread the spark plugs into the rotor housing finger tight until the gaskets contact the housing. If the plugs cannot be installed with finger pressure, clean the threads with a suitable greased thread chaser. Torque each plug to specifications.
3. Connect the spark plug wires.

5–F. ALTERNATOR

5–F–1. Precautiosn on Service

When servicing the charging system, observe the following precaution. If not followed, the result will be in serious damage of the system.

1. **Do not** short across or ground any of the terminals on the alternator.
2. **Never** operate the alternator on with an open circuit (with the field terminal connected and the armature terminal disconnected).
3. When installing a battery, always make sure that the negative post of the battery is attached securely to the ground strap.
4. **Never** reverse battery cables, not even for an instant, as reverse polarity current flow will damage the diodes in the alternator.
5. When charging the battery with a fast charger, disconnect the positive cable at the battery.

5–F–2. Checking Charging System on Car

If the electrical system is not charging properly, check all electrical connections and the fan belt tension prior to performing any test of the charging system, then determine whether the trouble is in the alternator or regulator before removing the alternator.

Check the alternator by using a **alternator tester** (49 0370 290). If the checker is not available, check as follows:

1. Disconnect the wire from "B" terminal of the alternator and connect the negative lead of the ammeter to the wire and the positive lead to the "B" terminal.
2. Disconnect the alternator coupler led to the regulator.
3. Start the engine and hold the alternator speed to 2,000 rpm.
4. Make the short circuit for a moment by connecting "B" terminal and "F" terminal of the alternator with the suitable wire as shown in Fig. 5–18.
5. If the meter reading increases remarkably, the trouble is in the regulator and if there is no change in current, it is in the alternator.

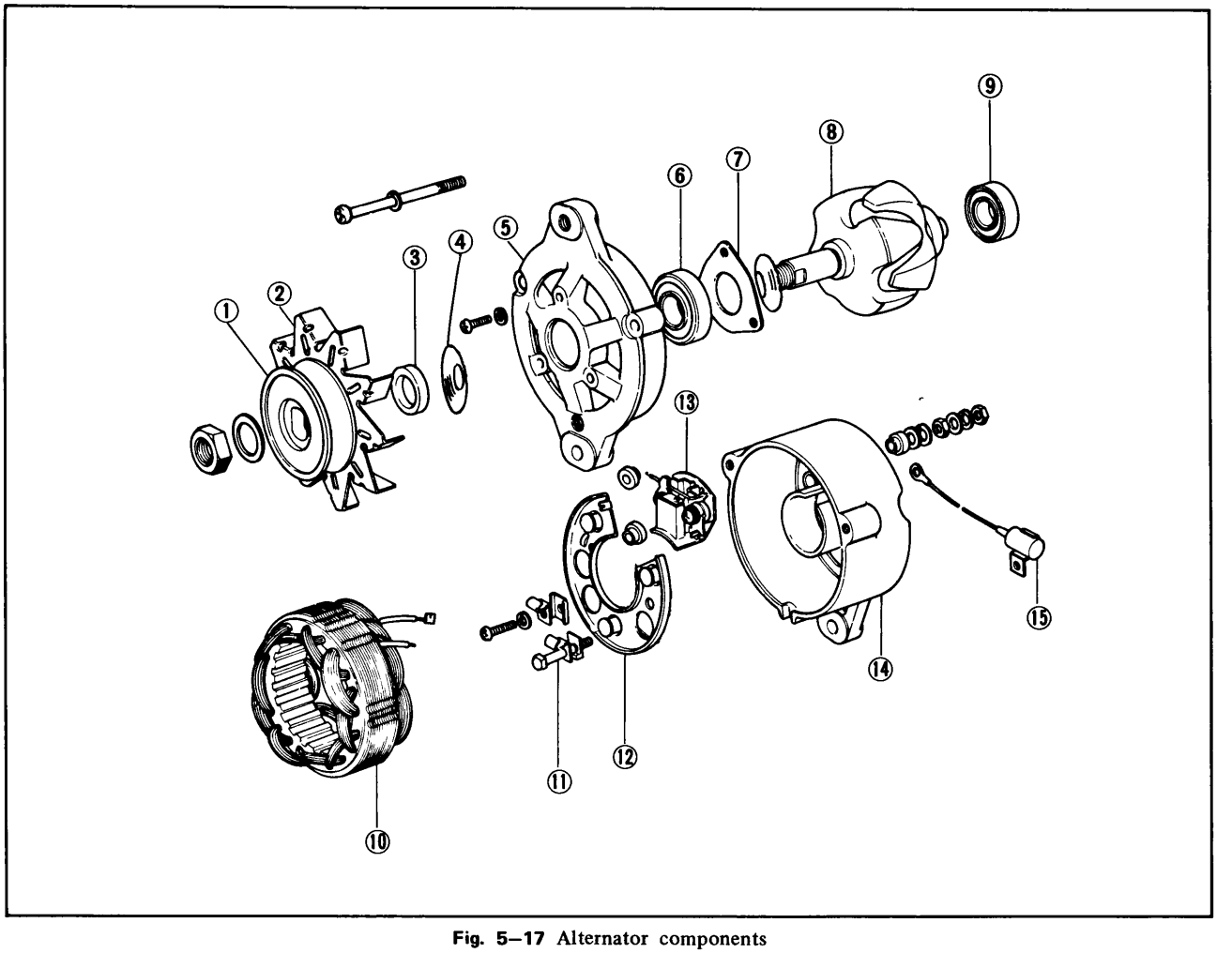

Fig. 5–17 Alternator components

1. Pulley
2. Fan
3. Spacer
4. Slinger
5. Front housing
6. Front bearing
7. Bearing retainer
8. Rotor
9. Rear bearing
10. Stator
11. Terminal bolt
12. Rectifier
13. Brush and holder
14. Rear housing
15. Condenser

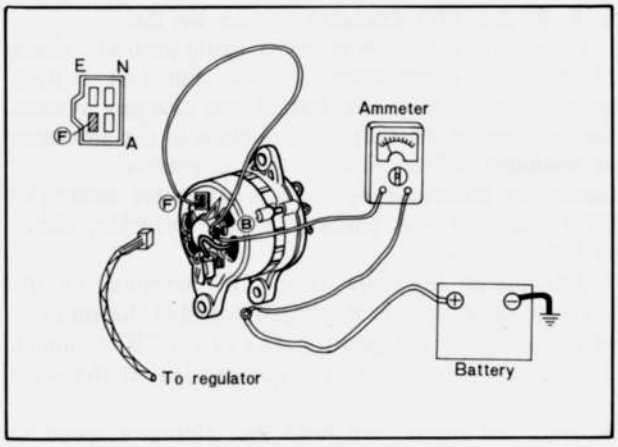

Fig. 5–18 Checking charging system

5–F–3. Disassembling Alternator

1. Remove the radio noise suppression condenser from the rear of the alternator.
2. Remove the through bolts.
3. Separate the front housing assembly by prying apart with a screwdriver at the slots of the front housing.
4. Hold the front housing and rotor assembly, clamping the rotor.

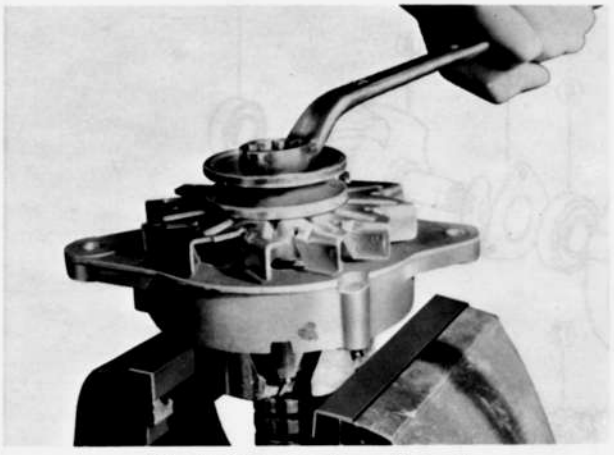

Fig. 5–19 Loosening pulley nut

5. Loosen the pulley retaining nut and remove the nut, washer, pulley, fan, spacer and front slinger.
6. Remove the front housing with bearing and remove the rear slinger.
7. Remove the nut, washers and insulator from the "B" terminal at the rear of the alternator.
8. Remove the screw attaching the rectifier to the rear housing and remove two screws attaching brush holder and rectifier.
9. Carefully remove the stator, rectifier and brush holder assembly from the rear housing. Use care to keep the brush holder assembly intact during removal from the rear housing.
10. Remove the brush holder assembly.
11. Unsolder the stator leads from the rectifier.
12. If bearing replacement is necessary, remove the rear bearing from the rotor shaft with a puller.

To replace the front bearing, remove the bearing retainer attaching screws, and press the bearing from the front housing

5–F–4. Inspecting Alternator

a. Checking stator coil

Check the stator coil for both open and grounded circuits with a tester.

To check for open, connect the prods to each of the two leads, as shown in Fig. 5–20. If there is no flow of current, the coil is open circuit and must be repaired or replaced.

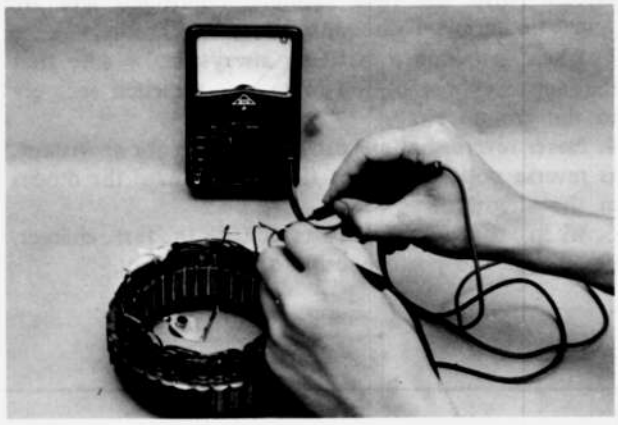

Fig. 5–20 Checking stator coil for open

To check for ground, connect one prod to the core and the other to each lead wire, as shown in Fig. 5–21. If a ground is present the current will flow and the stator coil must be repaired or replaced.

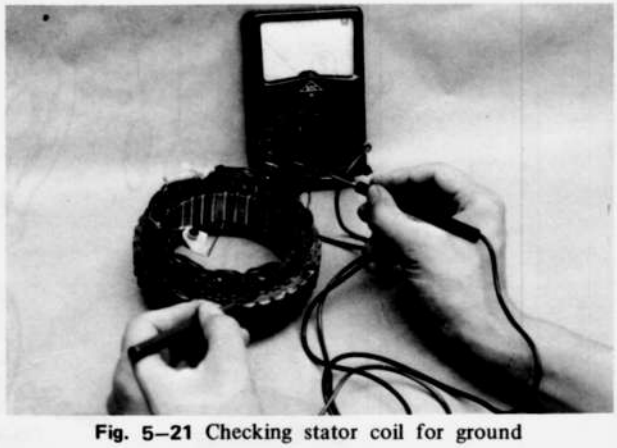

Fig. 5–21 Checking stator coil for ground

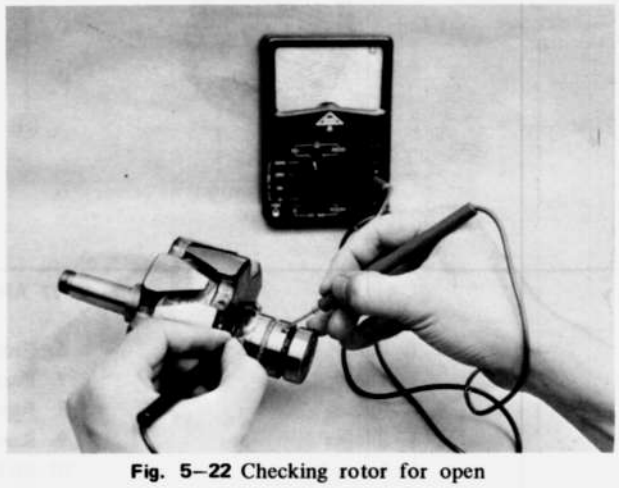

Fig. 5–22 Checking rotor for open

b. Checking rotor
To check for open circuit, place both prods of a tester on the slip rings, as shown in Fig. 5–22. If the reading is 4 to 6 ohms, there is no trouble in the rotor. To check for ground, connect one prod to the slip ring and other prod to the core, as shown in Fig. 5–23. If the current flows the rotor must be repaired or replaced.

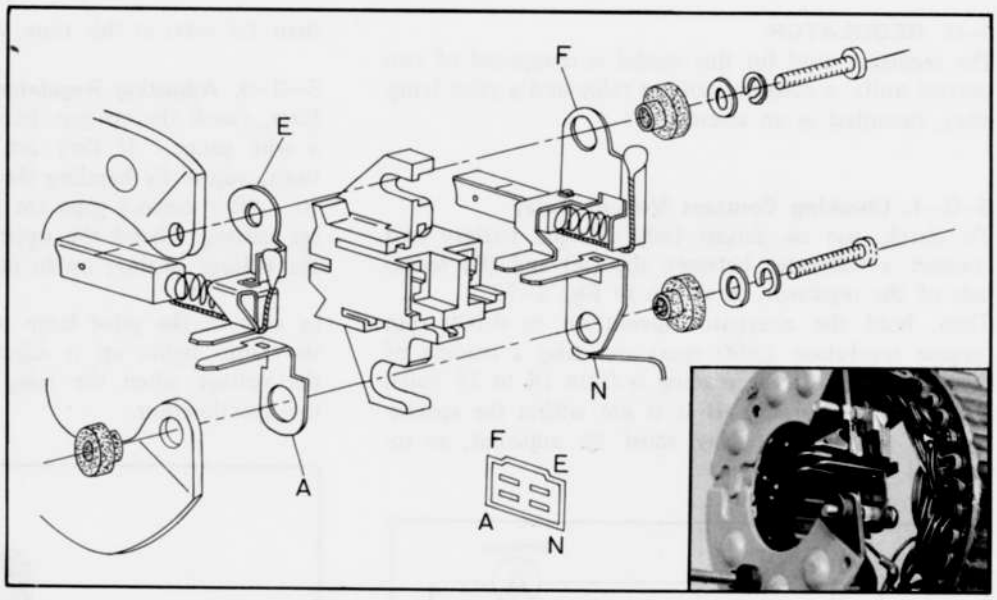

Fig. 5- 25 Brush holder assembly

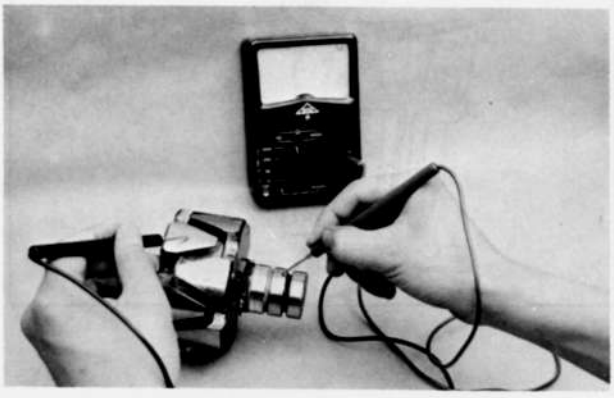

Fig. 5–23 Checking rotor for ground

c. Checking diodes
Diodes for use in the alternator are available in two different types, the positive diode which allows current to flow from the lead wire to the case but not from the case to the lead wire and the negative diode which has the opposite properties.
To check, read the resistance between the lead wire and case with a tester. Then reverse the tester leads and note the reading. If both readings are very low or high, the diode is defective.
A good diode will give one low reading and one high reading.

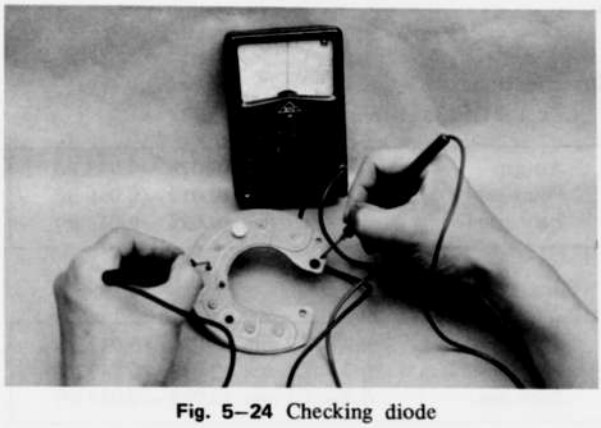

Fig. 5–24 Checking diode

d. Checking brushes and springs
The brushes should be replaced when one-third of the original length is worn away. This is indicated by a wear limit line on the side surface of each brush. Check the brush spring tension. The tension should be between 330 and 450 gr (12 and 16 oz). Replace the springs if the tension is less than 330 gr (12 oz) or if excessive corrosion exists.

e. Checking bearings
There is no need of lubricating as the bearing is prelubricated. In a long spell of use, when the bearing is worn or damaged, replace it with a new one.

5–F–5. Assembling Alternator
Assemble the alternator in the reverse order of disassembling, noting the following points.
1. When installing the rotor assembly to the rear housing and stator assembly, hold the brushes in position by inserting a piece of stiff wire into the hole of the brush through the rear housing as shown in Fig. 5–26.

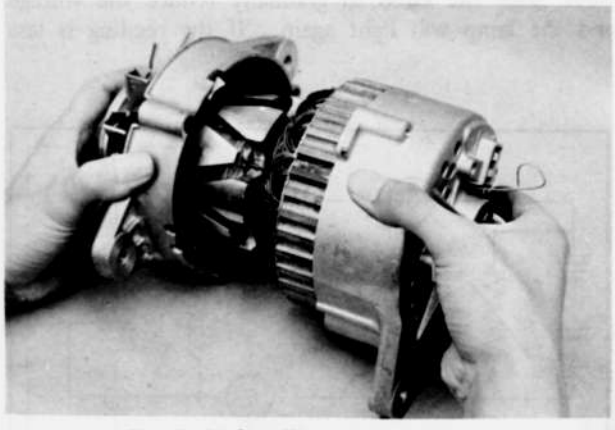

Fig. 5–26 Installing rotor assembly

2. The soldering of the diode leads should be performed in **less than twenty seconds** as the excessive heat may damage the diode.

5–G. REGULATOR

The regulator used for this model is composed of two control units, a constant voltage relay and a pilot lamp relay, mounted as an assembly.

5–G–1. Checking Constant Voltage Relay

To check, use an almost fully charged battery and connect a voltmeter between the (A) and (E) terminals of the regulator, as shown in Fig. 5–27.
Then, hold the alternator revolution to 4,000 rpm (engine revolution 1,800 rpm) and take a reading of the voltmeter. If the reading is from 14 to 15 volts, it is in proper order. If it is not within the specifications, the voltage relay must be adjusted, as instructed in Par. 5–G–3.

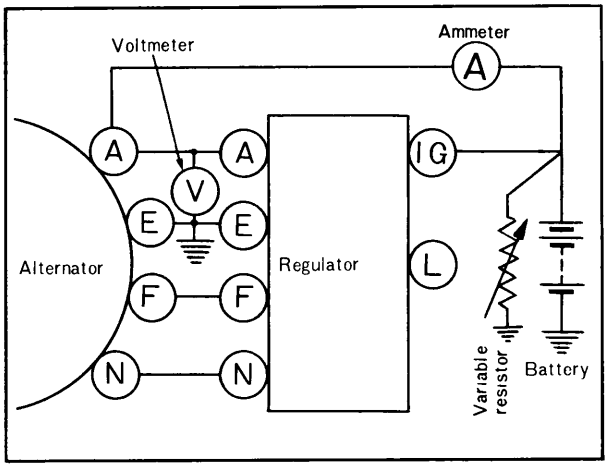

Fig. 5–27 Checking constant voltage relay

5–G–2. Checking Pilot Lamp Relay

Make a circuit, as shown in Fig. 5–28, using a voltmeter and variable resistor, and light up the pilot lamp. Then, slide the knob of the variable resistor so that the voltage gradually increases.
Read the voltage between the (N) and (E) terminal when the lamp goes out. If this voltage is 3.7 to 5.7 volts, it is normal.
Next, slide the knob to gradually reduce the voltage and the lamp will light again. If the reading is less than 3.5 volts at this time, it is proper.

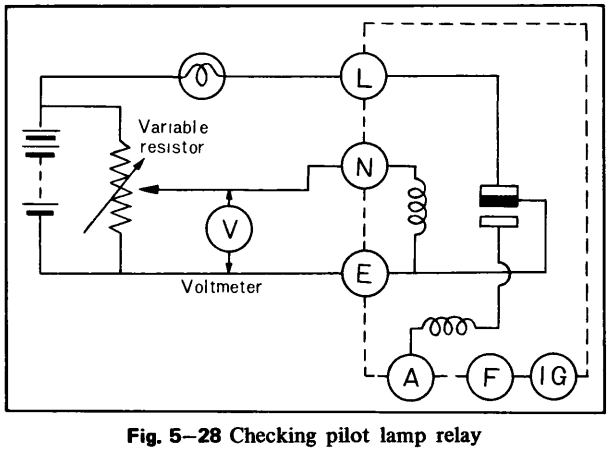

Fig. 5–28 Checking pilot lamp relay

5–G–3. Adjusting Regulator

First, check the air gap, back gap and point gap with a wire gauge. If they are not within the specifications, adjust by bending the stationary contact bracket. After correct gaps are obtained, adjust the voltage setting. Bend the upper plate down to decrease the voltage setting, up to increase the voltage setting.

In case of the pilot lamp relay, if the voltage when the lamp lights up is adjusted to the specification, the voltage when the lamp goes out may be within the specification.

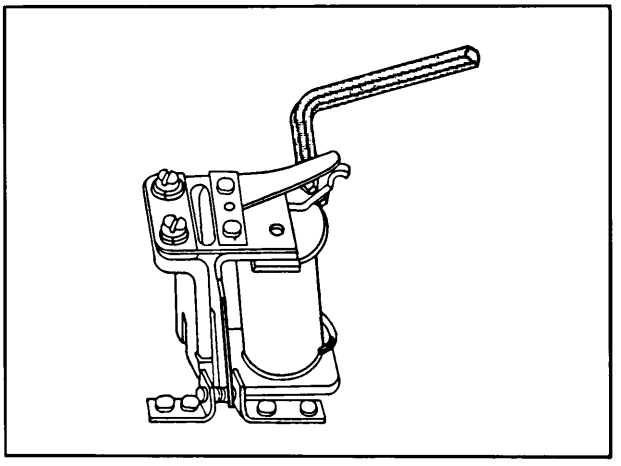

Fig. 5–29 Adjusting regulator

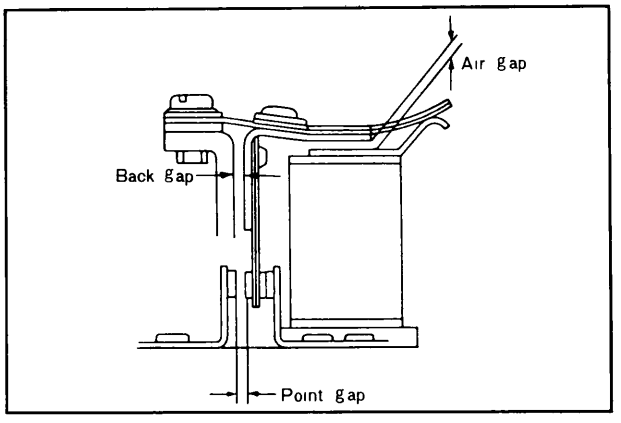

Fig. 5–30 Gaps of regulator

Specifications

Constant voltage relay

Air gap	0.7 ~ 1.1 mm (0.028 ~ 0.043 in)
Point gap	0.3 ~ 0.4 mm (0.012 ~ 0.016 in)
Back gap	0.7 ~ 1.1 mm (0.028 ~ 0.043 in)

Pilot lamp relay

Air gap	0.9 ~ 1.2 mm (0.035 ~ 0.047 in)
Point gap	0.7 ~ 1.1 mm (0.028 ~ 0.043 in)
Back gap	0.7 ~ 1.1 mm (0.028 ~ 0.043 in)

5–H. STARTING MOTOR (Under the engine type)

5–H–1. Checking Starting Circuit

When the starting motor fails to operate or does not satisfactorily operate, check the following points before removing the starting motor:

1. Weak battery
2. Corroded or loose battery terminal
3. Loose starting motor terminal
4. Broken or loose wires of the starting circuit
5. Faulty ignition switch

5–H–2. Testing Starting Motor

a. Free running test

1. Place the starting motor in a vise equipped with soft jaws and connect a fully-charged 12 volt battery to the starting motor.
2. Connect an ammeter between the (B) terminal of the starting motor and the battery.
3. Operate the starting motor and take a reading. On 1.2 KW starting motor, the current draw should be less than 75 amperes at 4,900 rpm or more. [2.0 KW: less than 100 amperes at 7,800 rpm or more]

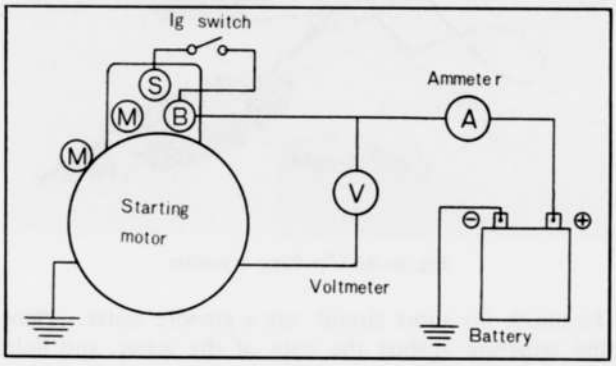

Fig. 5–31 Free running test

b. Lock resistance test

1. Install the starting motor on a test bench.
2. Test the lock resistance of the starting motor, following the instructions of the test equipment manufacturer.
3. With applied battery voltage adjusted to 5.0 volts, the current flow should be 780 amperes [1.2 KW: 1,100 amperes] or less and the torque should be 1.1 m-kg (7.95 ft-lb). [1.2 KW: 2.4 m-kg (17.3 ft-lb)].

If the starting motor does not perform to the above test requirements, repair it referring to the following list.

1) Starter rotates slowly with a large current at free running.
   a) Worn, dirty or defective bearings
   b) Short circuit of armature
   c) Grounded armature and field coil
2) Starter does not rotate with a large current.
   a) Defective field circuit
   b) Defective armature circuit
   c) Burnt commutator
3) Low torque and low current flow. Low free running speed.
   a) Breakage of field circuit
   b) Excessive internal resistance
4) Low torque. High free running speed.
   a) Short circuit of field coil

5–H–3. Disassembling Starting Motor

1. Disconnect the field strap from the terminal on the magnetic switch.
2. Remove the magnetic switch attaching screws and remove the magnetic switch, spring and washers from the driving housing.

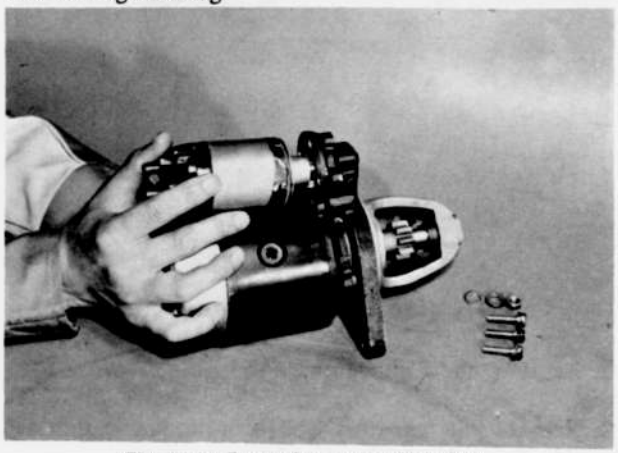

Fig. 5–32 Removing magnetic switch

3. Remove the plunger from the driving lever.

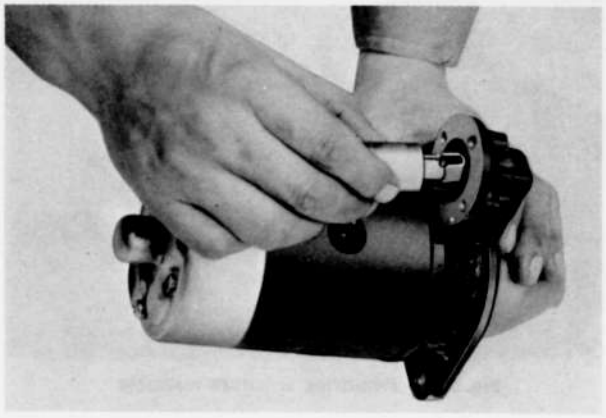

Fig. 5–33 Removing plunger

4. Remove the through bolts and brush holder attaching screws. Then, remove the rear cover.

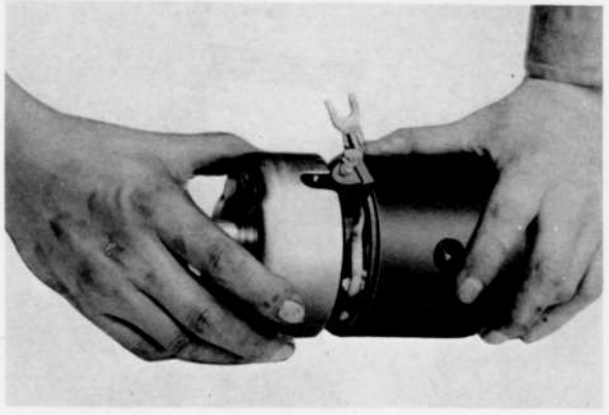

Fig. 5–34 Removing rear cover

5. Remove the insulator and washers from the rear end of the armature shaft.
6. Remove the brush holder.
7. Separate the yoke from the driving housing.

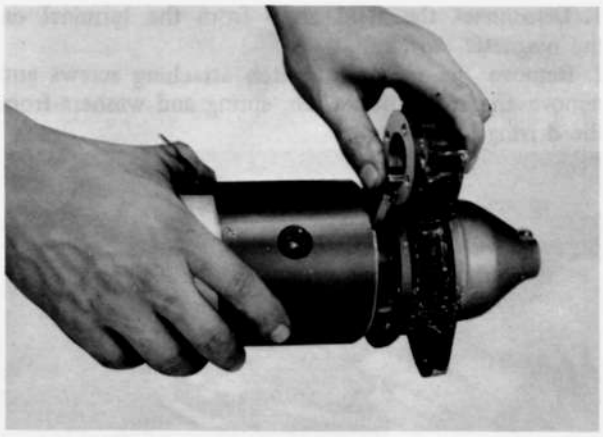

Fig. 5–35 Removing yoke assembly

8. Remove the rubber packing, springs and spring seat.
9. Remove the armature and over-running clutch assembly from the driving housing.

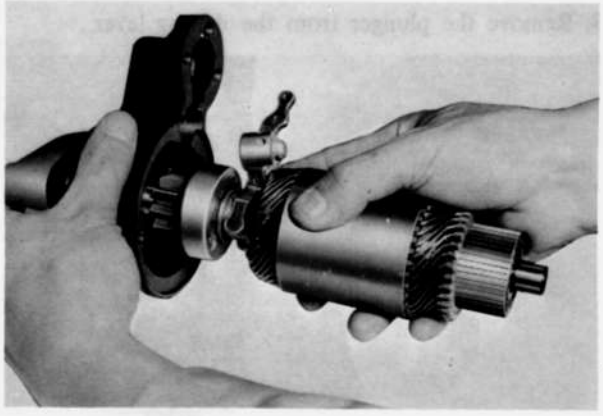

Fig. 5–36 Removing armature assembly

10. Remove the driving lever.
11. Drive the pinion stop collar toward the armature, and remove the stop ring. Then, slide the stop collar and over-running clutch off the armature shaft.
12. If the field coil removal is necessary, remove the pole shoe retaining screws. Then, remove the pole shoes and field coil from the yoke.

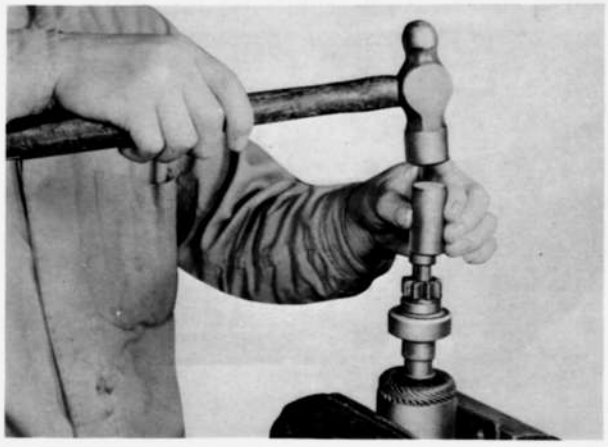

Fig. 5–37 Removing pinion stop collar

5–H–4. Inspecting Starting Motor

a. Checking armature

Check the armature for both ground and short circuit. To check for ground, touch one prod of an ohmmeter to each segment and the other prod to the core or shaft.
An infinite reading should be obtained for each segment. If the meter reading is not infinite, the armature windings are shorted to the core or shaft and the armature must be replaced.

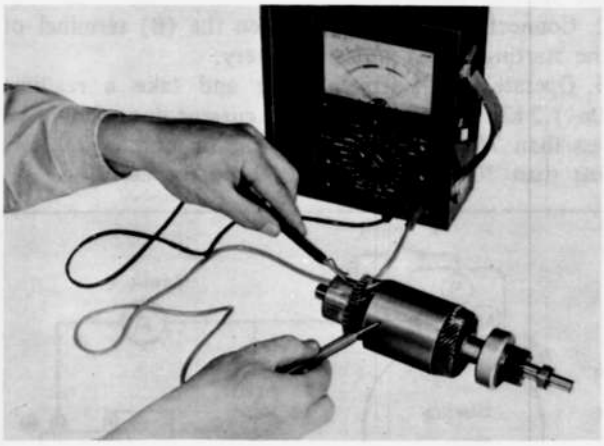

Fig. 5–38 Checking armature

To check for short circuit, use a growler tester. Place the armature against the core of the tester, and hold a steel strip on the armature. Then, rotate the armature slowly by hand. If the armature coil is shorted, the steel strip will become magnetized and vibrate. Replace the armature if a short is found.

b. Checking commutator

If the commutator is dirty, discolored or worn, clean it with emery paper and wash with clean solvent. After cleaning, undercut the mica between the segments to the depth of $0.5 \sim 0.8$ mm ($0.020 \sim 0.031$ in), as shown in Fig. 5–39.

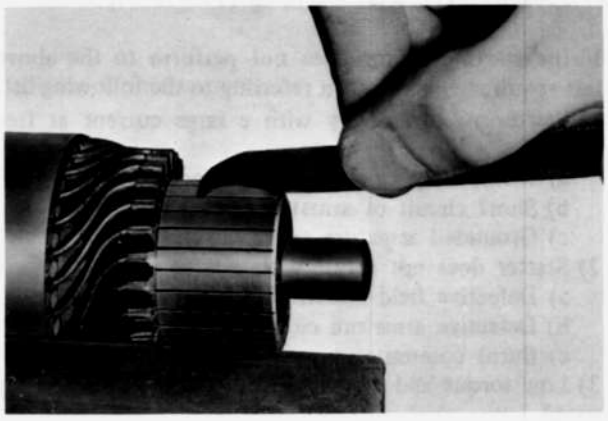

Fig. 5–39 Undercutting mica

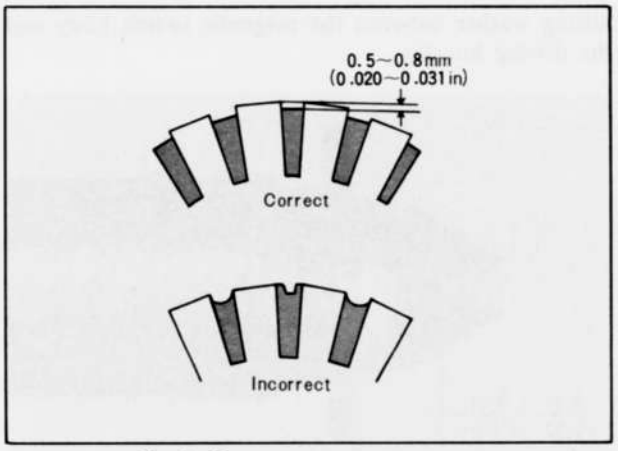

Fig. 5–40 Commutator mica depth

c. Checking field coil

To test the field coil for ground with an ohmmeter, place one prod on the yoke or pole core and the other prod to the field terminal. An infinite meter reading should be obtained. If a reading other than infinite is found, replace the field windings.

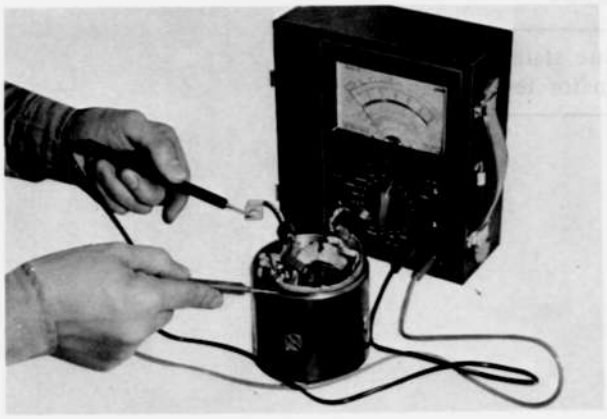

Fig. 5–41 Checking field coil for ground

d. Checking brush holder

Check the brush holder for ground. Touch one prod of an ohmmeter to the insulated brush holder and the other prod to the brush holder frame.

If the meter reading is other than infinite, the brush holder assembly is shorted and must be replaced. Repeat this test for the other insulated brush holder. Do not use this test on the two grounded brush holders.

e. Checking brushes and brush springs

Check the brushes and replace if they are worn down more than one third of their original length. Otherwise, the brush spring tension will be reduced, leading to an increase in the brush-commutator contact resistance. This will lower the torque and cause the burnt commutator surface.

The spring tension is 1.4 ~ 1.8 kg (49 ~ 63 oz). If the tension is too low, replace the springs.

f. Checking bushes

Check the clearance between the armature shaft and the bush. If it exceeds 0.2 mm (0.08 in), replace the bush.

5–H–5. Magnetic Switch Test

a. Pull-in coil test

Apply the specified voltage (12V) between the (S) termianl and (M) terminal. If the magnetic switch is forcefully attracted, the pull-in coil is in good condition.

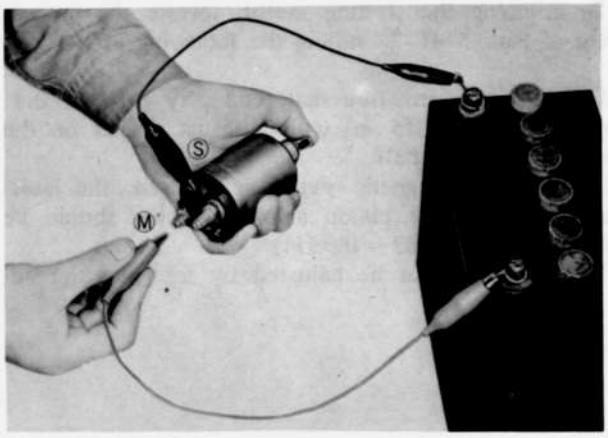

Fig. 5–42 Pull-in coil test

b. Holding coil test

Ground the (M) terminal to the magnetic switch body with a lead and impose the specified voltage (12V) upon the (S) terminal to pull in the plunger. If the plunger remains attracted after disconnecting the lead from the (M) terminal, there is no trouble with the holding coil.

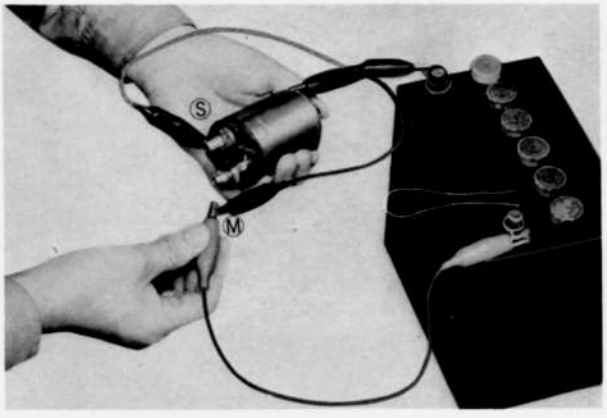

Fig. 5–43 Holding coil test

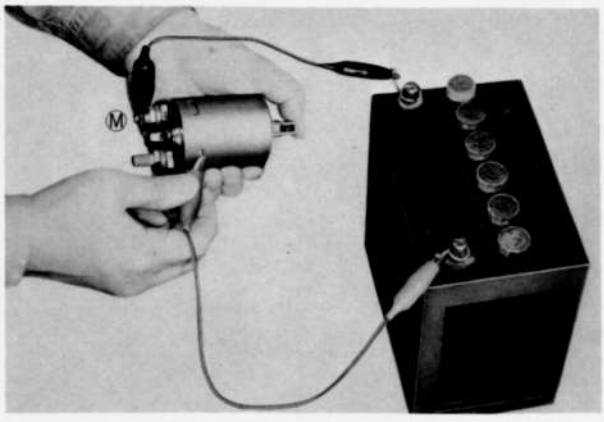

Fig. 5–44 Return test

c. Return test
Push in the plunger by hand and apply the specified voltage (12V) between the (M) terminal and the magnetic switch body. If the plunger is not attracted, there is no trouble.

5–H–6. Assembling Starting Motor
To assemble the starting motor, reverse the procedure of Par. 5–H–3, **noting** the following points.

1. Adjust the armature shaft end play to 0.1 ~ 0.4 mm (0.004 ~ 0.015 in) with a thrust washer on the rear end of the shaft.
2. When the magnetic switch is engaged, the clearance between the pinion and stop collar should be 0.5 ~ 2.0 mm (0.02 ~ 0.08 in).
This clearance can be adjusted by inserting the adjusting washer between the magnetic switch body and the driving housing.

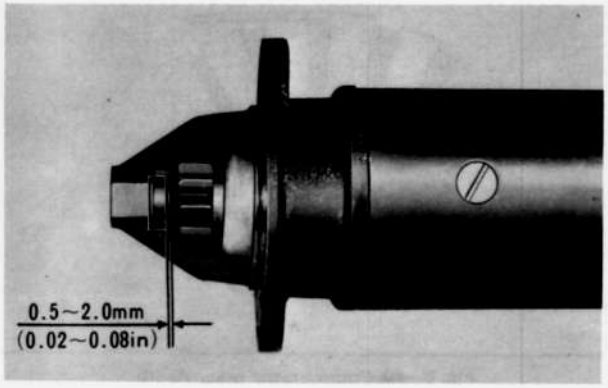

Fig. 5–45 Checking pinion position

SPECIAL TOOLS

49 0242 685A	Remote starter switch
49 0370 290	Alternator tester

CLUTCH

DESCRIPTION ..... 6 : 1
6–A. CLUTCH PEDAL ADJUSTMENT ..... 6 : 1
6–B. RELEASE FORK ADJUSTMENT ..... 6 : 1
6–C. CLUTCH REMOVAL ..... 6 : 1
6–D. CLUTCH INSPECTION ..... 6 : 2
6–D–1. Checking Release Bearing and Fork ..... 6 : 2
6–D–2. Checking Pressure Plate and Cover Assembly ..... 6 : 2
6–D–3. Checking Clutch Disc ..... 6 : 3
6–D–4. Flywheel Inspection ..... 6 : 3
6–D–5. Ring Gear Replacement ..... 6 : 3
6–D–6. Checking Pilot Bearing ..... 6 : 3
6–D–7. Pilot Bearing Replacement ..... 6 : 3
6–D–8. Checking Eccentric Shaft Rear Oil Seal ..... 6 : 4
6–E. CLUTCH INSTALLATION ..... 6 : 4
6–F. CLUTCH MASTER CYLINDER ..... 6 : 4
6–F–1. Removing Clutch Master Cylinder ..... 6 : 5
6–F–2. Disassembling Clutch Master Cylinder ..... 6 : 5
6–F–3. Checking Clutch Master Cylinder ..... 6 : 5
6–F–4. Assembling Clutch Master Cylinder ..... 6 : 5
6–F–5. Installing Clutch Master Cylinder ..... 6 : 5
6–G. CLUTCH RELEASE CYLINDER ..... 6 : 6
6–G–1. Removing Clutch Release Cylinder ..... 6 : 6
6–G–2. Disassembling Clutch Release Cylinder ..... 6 : 6
6–G–3. Checking Clutch Release Cylinder ..... 6 : 6
6–G–4. Assembling Clutch Release Cylinder ..... 6 : 6
6–G–5. Installing Clutch Release Cylinder ..... 6 : 7
6–H. AIR BLEEDING ..... 6 : 7
SPECIAL TOOLS ..... 6 : 8

DESCRIPTION

The clutch is of the single dry disc type. The clutch assembly consists of the clutch disc assembly, clutch cover and pressure plate assembly and clutch release mechanism.

The clutch operating mechanism is of the hydraulic type, consisting of a dash mounted master cylinder and a clutch release cylinder mounted on the clutch housing.

6–A. CLUTCH PEDAL ADJUSTMENT

The free travel of the clutch pedal before the push rod contacts with the piston should be **0.6 to 3.0 mm (0.02 to 0.12 in).**

To adjust the free travel, loosen the lock nut and turn the push rod until the proper adjustment is made. Tighten the lock nut after adjustment is completed.

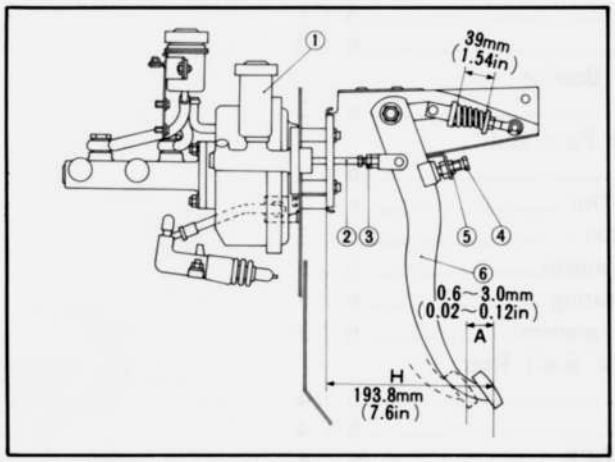

Fig. 6–1 Adjusting clutch pedal

A: Free play (Clearance between piston cup and piston rod)
B: Pedal height (Height from toe board to pedal)

1. Master cylinder
2. Rod
3. Lock nut
4. Height adjusting bolt
5. Lock nut
6. Pedal

6–B. RELEASE FORK ADJUSTMENT

If the adjustable type release cylinder is used on the clutch operating mechanism, adjust the free play as follows:

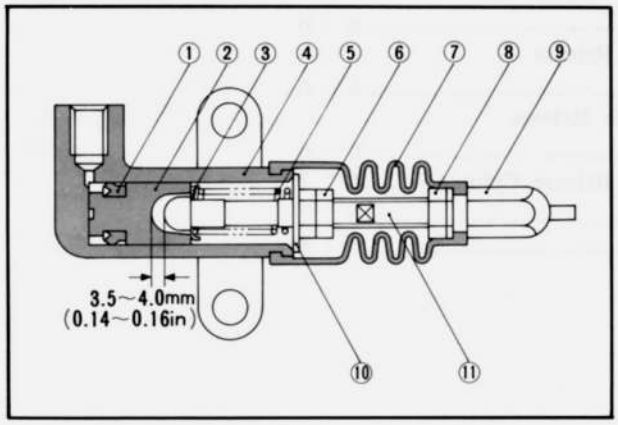

Fig. 6–2 Adjustable type release cylinder

1. Piston cup
2. Piston
3. Spring seat
4. Cylinder
5. Spring
6. Piston clearance adjusting nut
7. Boot
8. Lock nut
9. Release fork adjusting nut
10. Washer
11. Release rod

1. Remove the boot from the release rod.
2. Loosen the release rod lock nut and turn the free play adjusting nut until the correct free play is obtained. The free play **is 3.0 ~ 4.0 mm (0.12 ~ 0.16 in).**
3. Tighten the lock nut.

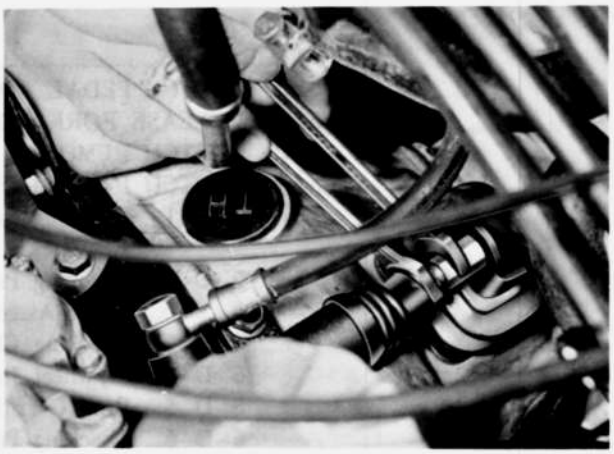

Fig. 6–3 Adjusting release fork free play

If the non-adjustable type release cylinder is used on the clutch operating mechanism, the free play adjustment is not necessary.

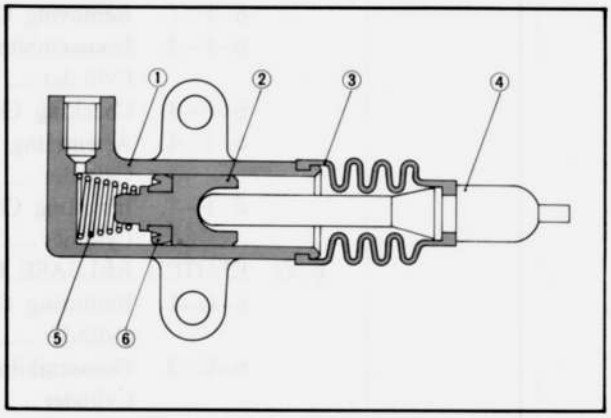

Fig. 6–4 Non-adjustable type release cylinder

1. Cylinder
2. Piston
3. Boot
4. Release rod
5. Spring
6. Piston cup

6–C. CLUTCH REMOVAL

To remove the clutch from the vehicle, proceed as follows:

1. Remove the transmission.
2. Install the **ring gear brake** (49 1881 060).
3. Remove the 4 standard bolts and 2 reamer bolts holding the clutch cover assembly to the flywheel and remove the clutch cover assembly and the clutch disc.

4. Straighten the tab of the lockwasher. With the **wrench** (49 0820 035), loosen the nut that attaches the flywheel to the eccentric shaft and remove the nut.

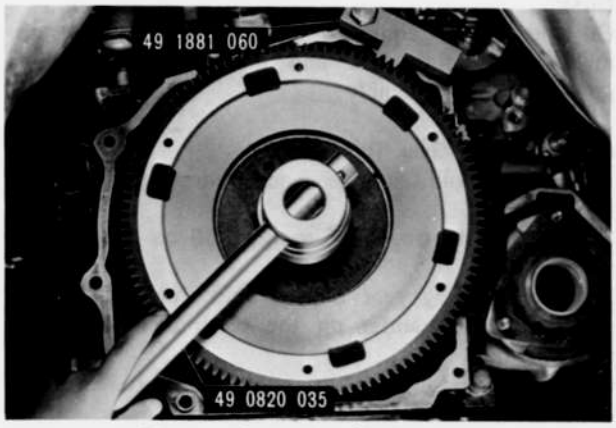

Fig. 6–5 Loosening flywheel nut

5. Using the **puller** (49 0823 300), remove the flywheel from the eccentric shaft.

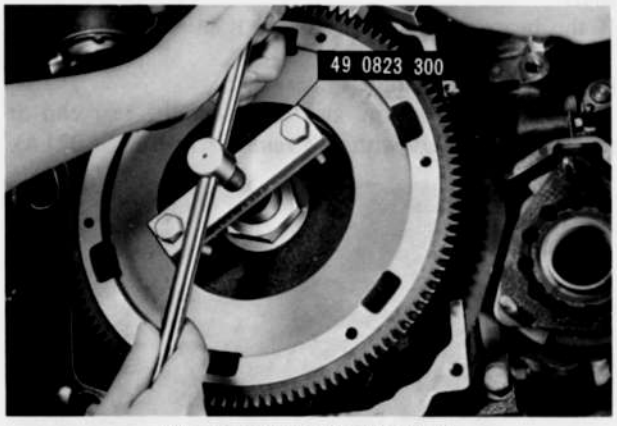

Fig. 6–6 Removing flywheel

6. Pull the release fork outward until the spring clip of the fork releases from the ball pivot. Remove the fork and release bearing from the clutch housing.

6–D. CLUTCH INSPECTION

6–D–1. Checking Release Bearing and Fork

Note:

The release bearing is packed with lubricant which is intended to last the whole life time of the bearing. Therefore, the bearing must not be washed in gasoline or any other solvent.

Check the release bearing by pressing and turning the front race slowly by hand. Replace if the bearing feels rough or seems noisy when turning.



Fig. 6–7 Checking release bearing

Examine the clutch housing carefully to be certain there are no burrs on the outer surface of the clutch housing which pilots the release bearing.
Check the release fork for crack or bend. If necessary, replace the fork.

6–D–2. Checking Pressure Plate and Cover Assembly

Check the contact surfaces of the pressure plate with the clutch facing for wear, damage or warpage.
If it is slight, correct it by lapping with compound or by turning a lathe. But if severe, replace with a new one.
Check the diaphragm spring and cover and if any wear or damage is found, replace the pressure plate and cover assembly.

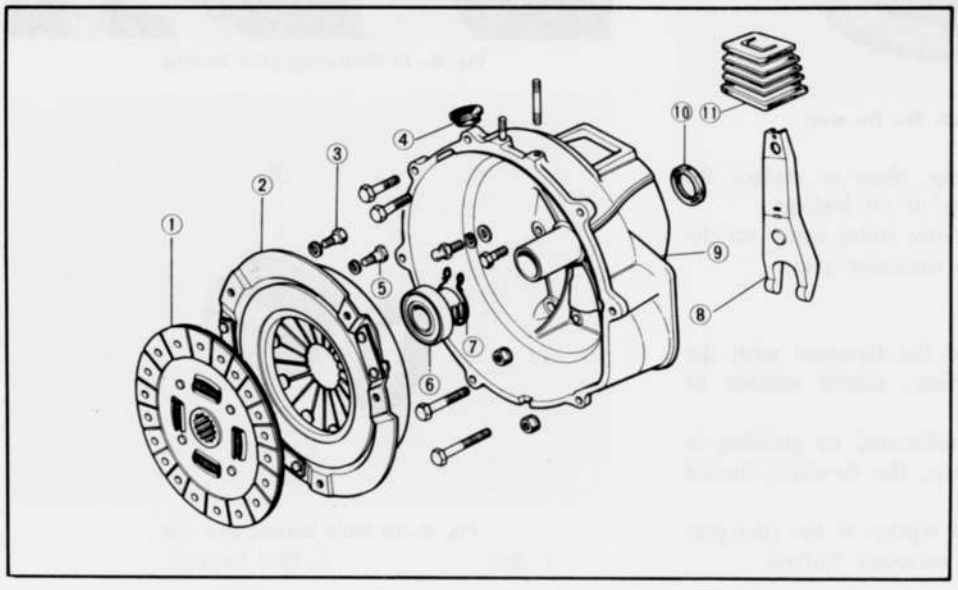

Fig. 6–8 Clutch components
1. Clutch disc
2. Clutch cover and pressure plate assembly
3. Bolt
4. Service hole cover
5. Reamer bolt
6. Release bearing
7. Spring
8. Release fork
9. Clutch housing
10. Oil seal
11. Dust boot

6–D–3. Checking Clutch Disc

Inspect the clutch disc for warpage with a dial indicator or a feeler gauge, as shown in Fig. 6–9.
If it is **more than 1.0 mm (0.039 in)**, replace with a new one.

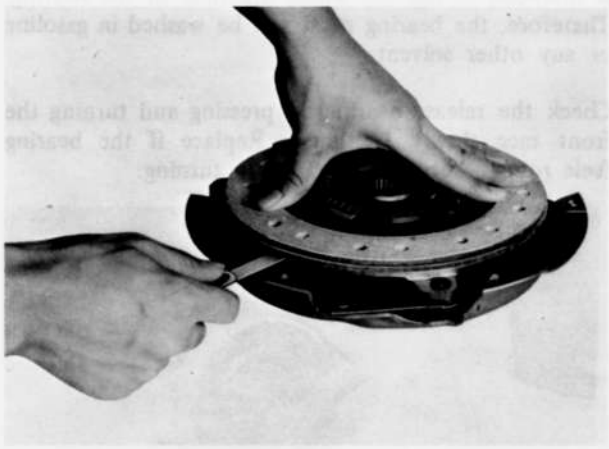

Fig. 6–9 Checking clutch disc for warpage

Excessively worn facing will cause slippage or score the pressure plate and flywheel due to the projected heads of rivets.

Check the depth between the facing surface and the rivet using a depth gauge, as shown in Fig. 6–10. If the reading is **less than 0.30 mm (0.012 in)**, replace the clutch disc.



Fig. 6–10 Checking clutch disc for wear

If oil is evident on the facing, clean or replace the facing and eliminate the cause of oil leakage.
Make certain that the clutch disc slides easily on the main drive shaft without any excessive play.

6–D–4. Flywheel Inspection

Inspect the contact surface of the flywheel with the clutch facing for burnt surface, scored surface or rivet grooves.
If it is slight, it can be reconditioned by grinding in a lathe. If the damage is deep, the flywheel should be replaced.
Check the ring gear teeth and replace if the ring gear teeth are broken, cracked or seriously burred.
Check the oil seal contacting surface of the flywheel for roughness. Repair or replace the flywheel if necessary.

Note:
On the vehicle equipped with an automatic transmission, the ring gear and drive plate should be replaced as an assembly.

6–D–5. Ring Gear Replacement

1. Heat the old ring gear and remove it from the flywheel.
2. Heat a new ring gear **evenly 250 to 300°C (480 to 570°F)**.
3. Place the ring gear on the cold flywheel, making sure that the **chamfer on the teeth is faced to the transmission.**
4. Allow the ring gear to cool slowly to shrink it onto the flywheel.

6–D–6. Checking Pilot Bearing

Check the transmission main drive shaft pilot bearing which is pressed into the rear end of the eccentric shaft.
If the bearing is loose or rough, it should be replaced.

6–D–7. Pilot Bearing Replacement

1. Remove the bearing and seal from the rear end of the eccentric shaft with the **remover** (49 0823 071A).



Fig. 6–11 Removing pilot bearing

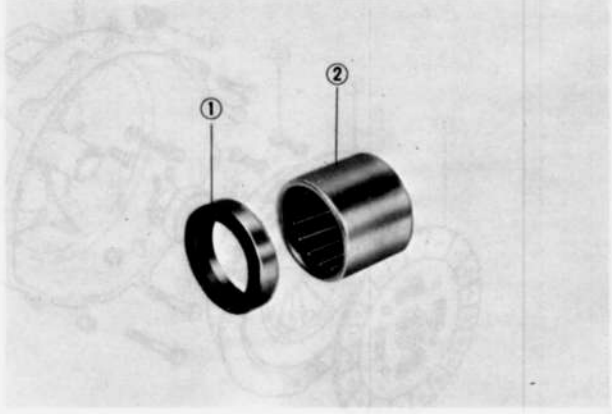

Fig. 6–12 Pilot bearing and seal
1. Seal 2. Pilot bearing

2. Install a new bearing with the **installer** (49 0823 072A).
3. Install the seal.

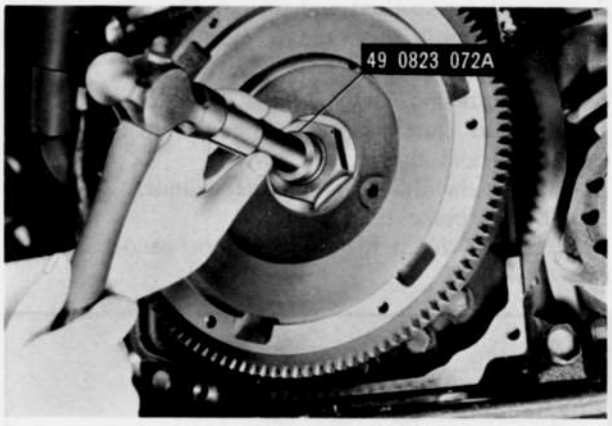

Fig. 6–13 Installing pilot bearing

6–D–8. Checking Eccentric Shaft Rear Oil Seal
Check the oil seal fitted into the rear stationary gear for wear or damage.
If traces of oil leakage are found, replace the oil seal.

6–E. CLUTCH INSTALLATION

1. Clean the contact surfaces of the flywheel, pressure plate and disc thoroughly with fine sandpaper or crocus cloth.

Note:
Avoid touching the clutch disc facing, dropping the parts or contaminating them with oil or grease as a clutch chatter may result.

2. Fit the key into the keyway on the eccentric shaft.
3. Install the flywheel onto the rear end of the eccentric shaft, aligning the keyway of the flywheel with the key.
4. Apply sealer on both sides of the lockwasher and place it in position. Install the nut.

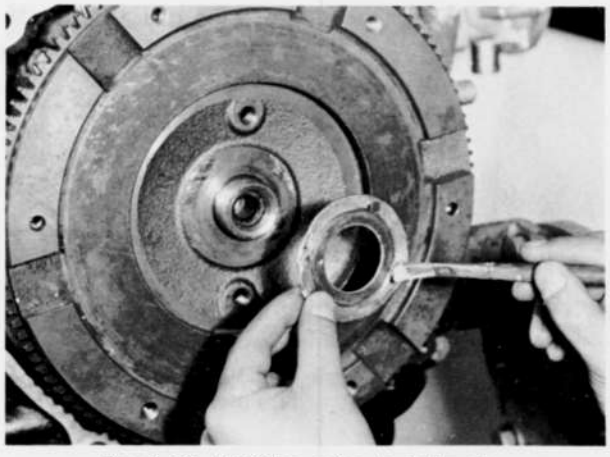

Fig. 6–14 Applying sealer to lockwasher

5. Install the **ring gear brake** (49 1881 060) and with the **wrench** (49 0820 035) tighten the nut to **40 ~ 50 m-kg (289 ~ 362 ft-lb)**.
6. Bend the tab of the lockwasher to prevent loosening.
7. Hold the clutch disc in its mounting position with the **clutch disc centering tool** (49 0813 310).
If the tool is not available, use a spare main drive shaft.
8. Install the clutch cover and pressure plate assembly, **aligning the "O" makrs** of the clutch cover and flywheel and install the 4 standard and 2 reamer bolts finger tight. To avoid pressure plate cover distortion, tighten the bolts a few turns at a time until they are all tight.

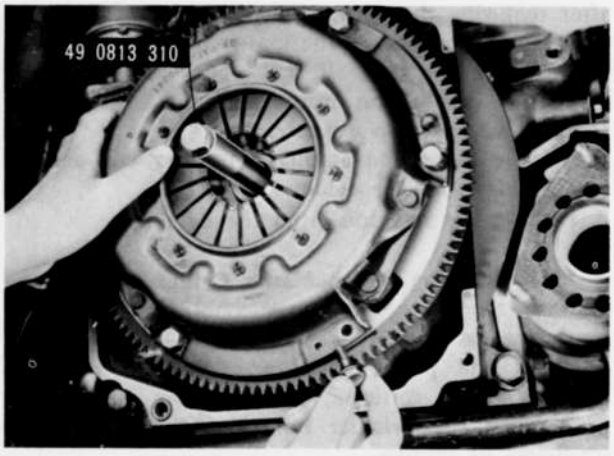

Fig. 6–15 Installing clutch cover assembly

9. Torque the bolts to **1.8 ~ 2.7 m-kg (13 ~ 20 ft-lb)**.
10. Remove the disc centering tool and ring gear brake.
11. Apply a light film of grease to the face of the release bearing and the bearing retainer of the clutch housing. Install the release bearing to the release fork.
12. Apply grease to the pivot pin. Insert the release fork and release bearing assembly through the dust boot and press it inward so that the spring clip of the fork fits to the ball pivot.
Operate the release fork to ensure that the bearing slides on the retainer back and forth smoothly.
13. Install the transmission and propeller shaft. Care should be taken in order not to bend the clutch disc by allowing the transmission to hang.

6–F. CLUTCH MASTER CYLINDER



Fig. 6–16 Removing master cylinder

6–F–1. Removing Clutch Master Cylinder

If it becomes necessary to remove the master cylinder for repair or overhaul, proceed as follows :

1. Disconnect the fluid pipe at the master cylinder outlet.
2. Remove the nuts that attach the master cylinder to the dash panel.
3. Pull the master cylinder straight out and away from the dash panel.

6–F–2. Disassembling Clutch Master Cylinder

The procedures for disassembling the master cylinder after removing the master cylinder are as follows:

1. Clean the outside of the master cylinder thoroughly and drain the brake fluid.
2. Remove the piston stop wire with a screwdriver and remove the stop washer.
3. Remove the piston assembly, primary cup and return spring from the cylinder.
4. Remove the reservoir from the cylinder.

6–F–3. Checking Clutch Master Cylinder

1. Wash the parts in clean alcohol or brake fluid. **Never** use gasoline or kerosene.
2. Check the piston cups and replace if they are damaged, worn, softened, or swelled.
3. Examine the cylinder bore and piston for wear, roughness or scoring.
4. Check the clearance between the cylinder bore and the piston. If it is **more than 0.15 mm (0.006 in)**, replace the cylinder or piston.
5. Ensure that the compensating port on the cylinder is open.

6–F–4. Assembling Clutch Master Cylinder

1. Before assembling, dip the piston and cups in clean brake fluid.
2. Install the reservoir.
3. Insert the return spring into the cylinder.
4. Install the primary cup so that the flat side of the cup goes toward the piston.
5. Fit the secondary cup onto the piston and install them into the cylinder.
6. Install the stop washer and stop wire.
7. Fill with brake fluid and operate the piston with a screwdriver until the fluid is ejected at the outlet.

6–F–5. Installing Clutch Master Cylinder

1. Install the clutch master cylinder assembly onto the dash panel and tighten the nuts.
2. Connect the fluid pipe to the cylinder.
3. Fill with brake fluid.
4. Bleed the clutch hydraulic system, as described in Par. 6–H.

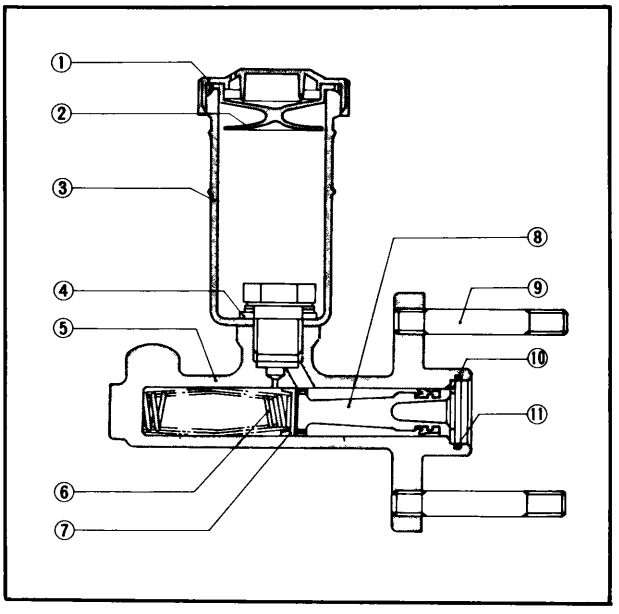

Fig. 6–17 Clutch master cylinder cross section

1. Cap
2. Fluid baffle
3. Reservoir
4. Washer
5. Cylinder
6. Spring
7. Primary piston cup
8. Piston and secondary cup assembly
9. Bolt
10. Stop washer
11. Stop wire

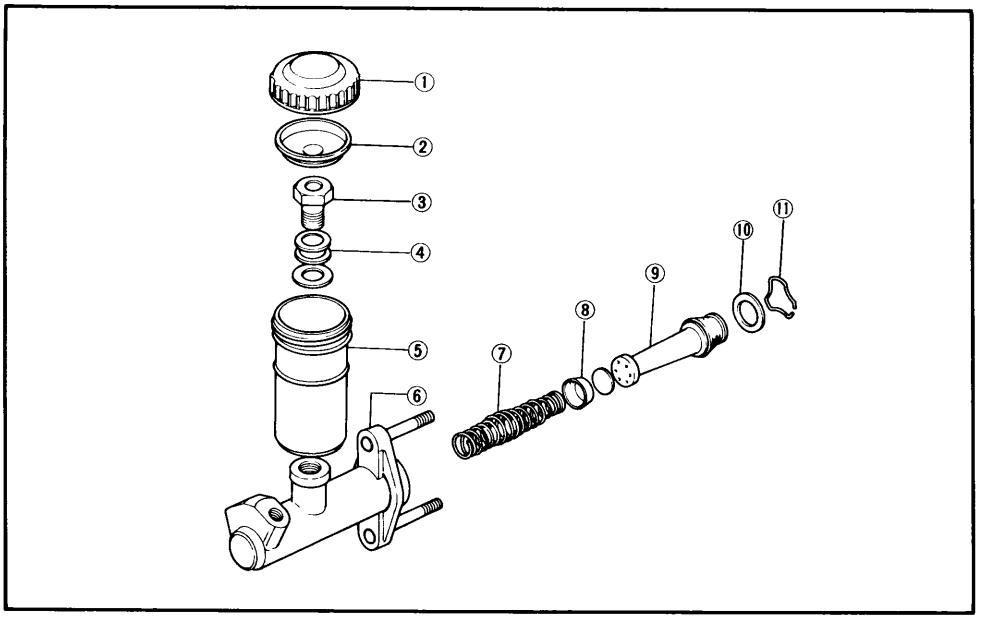

Fig. 6–18 Clutch master cylinder components

1. Cap
2. Fluid baffle
3. Bolt
4. Washer
5. Reservoir
6. Cylinder
7. Spring
8. Primary cup
9. Piston and secondary cup assembly
10. Piston stop washer
11. Piston stop wire

6–G. CLUTCH RELEASE CYLINDER

6–G–1. Removing Clutch Release Cylinder

1. Disconnect the fluid pipe at the clutch release cylinder.
2. Remove the nuts attaching the cylinder to the clutch housing. Remove the release cylinder.

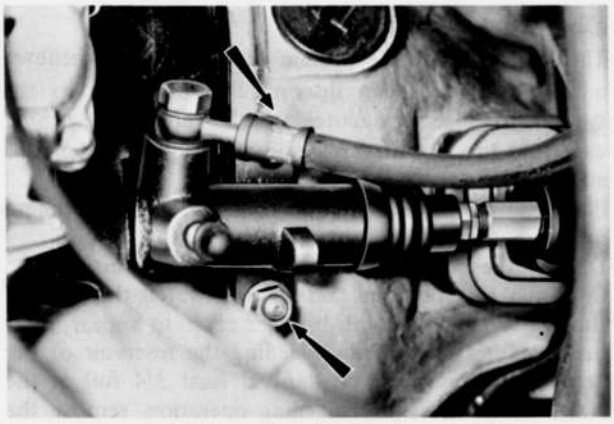

Fig. 6–19 Removing clutch release cylinder

6–G–2. Disassembling Clutch Release Cylinder

If the release cylinder is adjustable type, proceed as follows:

1. Clean the outside of the cylinder thoroughly.
2. Remove the dust boot from the cylinder.
3. Remove the release rod and spring assembly.
4. Remove the piston and cup assembly from the cylinder. If necessary, blow out with compressed air from the fluid passage.
5. Remove the bleeder screw and valve (steel ball).

If the release cylinder is non-adjustable type, proceed as follows:

1. Clean the outside of the cylinder thoroughly.
2. Remove the dust boot from the cylinder.
3. Remove the release rod.
4. Remove the piston and cup assembly from the cylinder. If necessary, blow out with compressed air from the fluid passage.
5. Remove the spring.
6. Remove the bleeder screw and valve (steel ball).

6–G–3. Checking Clutch Release Cylinder

Refer to Par. 6–F–3 and inspect the clutch release cylinder.

6–G–4. Assembling Clutch Release Cylinder

If the release cylinder is adjustable type, proceed as follows:

1. Fit the cups to the piston and install them into the cylinder.
2. Install the spring seat, spring, washer and nuts to the release rod.
3. Install the release rod assembly into the cylinder and adjust the clearance between the piston and release rod to **3.5 ~ 4.0 mm (0.14 ~ 0.16 in)**.

To adjust, push the release rod toward the piston until the spring seat touches the piston. Then, tighten the nut so that the washer comes in contact with the cylinder. Tighten the lock nut.

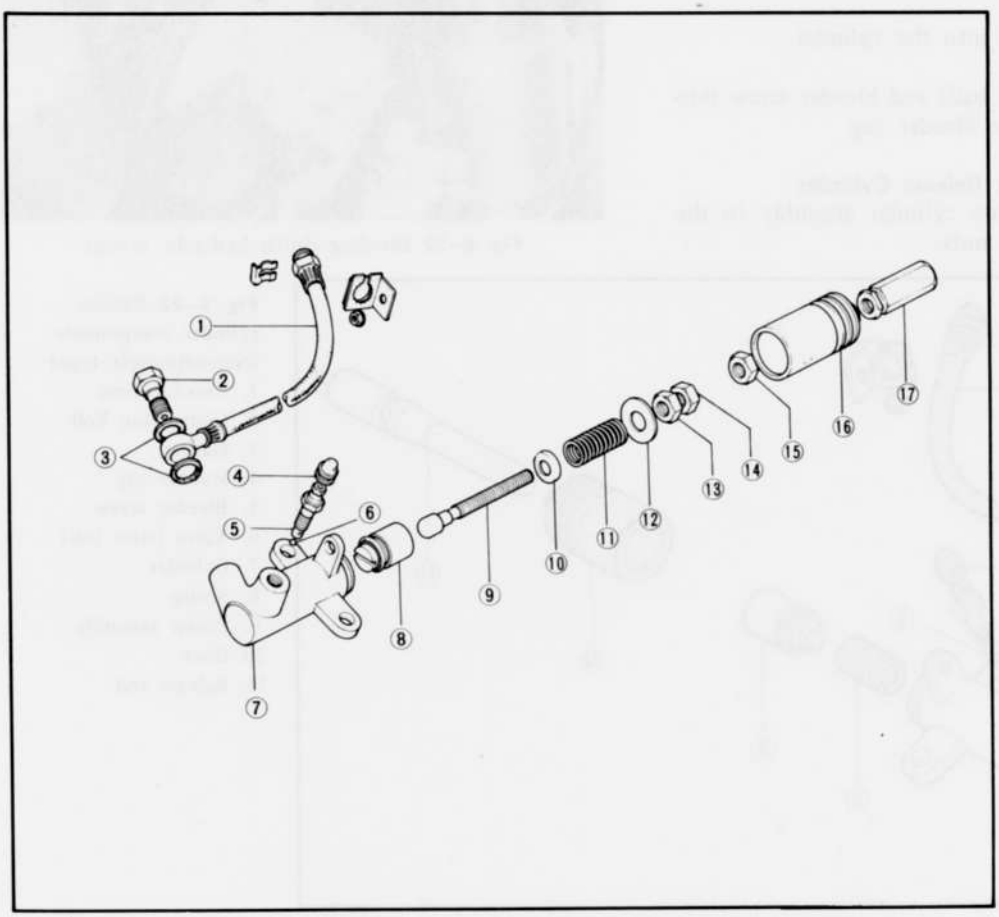

Fig. 6–20 Release cylinder components (Adjustable-type)
1. Flexible hose
2. Connection bolt
3. Gasket
4. Rubber cap
5. Bleeder screw
6. Valve (steel ball)
7. Cylinder
8. Piston assembly
9. Rod
10. Spring seat
11. Spring
12. Washer
13. Adjusting nut
14. Lock nut
15. Lock nut
16. Boot
17. Adjusting nut

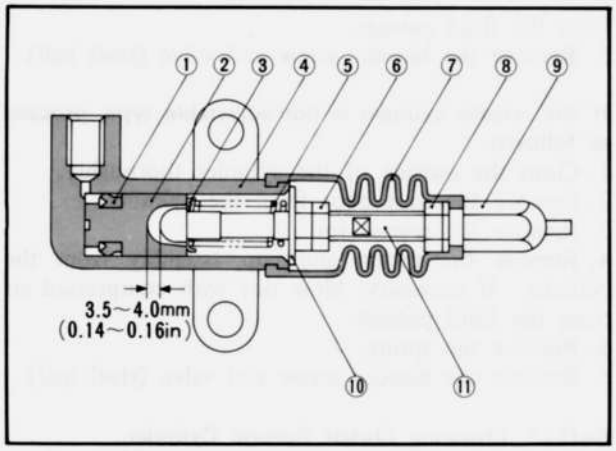

Fig. 6–21 Adjusting piston clearance

1. Piston cup
2. Piston
3. Spring seat
4. Cylinder
5. Spring
6. Piston clearance adjusting nut
7. Boot
8. Lock nut
9. Release fork adjusting nut
10. Washer
11. Release rod

4. Install the valve (steel ball) and bleeder screw into the bleeder hole. Fit the bleeder cap.
5. Install the dust boot.

If the release cylinder is non-adjustable type, proceed as follows:

1. Install the spring into the cylinder.
2. Fit the piston cup to the piston and install them into the cylinder.
3. Install the release rod into the cylinder.
4. Install the dust boot.
5. Install the valve (steel ball) and bleeder screw into the bleeder hole. Fit the bleeder cap.

6–G–5. Installing Clutch Release Cylinder

1. Install the clutch release cylinder assembly to the clutch housing with two nuts.
2. Connect the fluid pipe.
3. Fill the reservoir of the master cylinder with brake fluid and bleed the system, as described in Par. 6–H.
4. Adjust the free play of the release fork, as instructed in Par. 6–B.

6–H. AIR BLEEDING

The clutch hydraulic system must be bled whenever a fluid line has been disconnected or air enters the system. To bleed the clutch system, remove the rubber cap from the bleeder screw and attach the bleeder tube and fixture of the bleeder screw.

Place the end of the tube in the glass jar and submerge in brake fluid. Open the bleeder valve.

Depress the clutch pedal and allow it to return slowly. Continue this pumping action and watch the flow of fluid in the jar. When air bubbles cease to appear, close the bleeder valve. During bleeding the reservoir of the master cylinder must be kept at least 3/4 full of the brake fluid. After the bleeding operation, remove the tube, fit the cap to the bleeder screw, fill the reservoir and fit the filler cap.



Fig. 6–22 Bleeding clutch hydraulic system

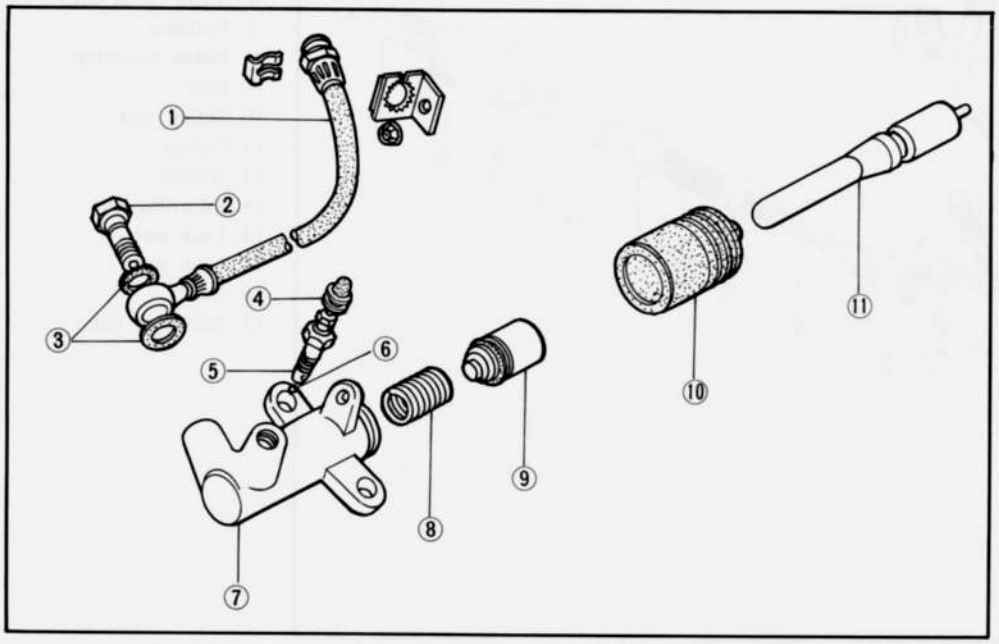

Fig. 6–23 Release cylinder components (Non-adjustable type)

1. Flexible hose
2. Connection bolt
3. Gasket
4. Rubber cap
5. Bleeder screw
6. Valve (steel ball)
7. Cylinder
8. Spring
9. Piston assembly
10. Boot
11. Release rod

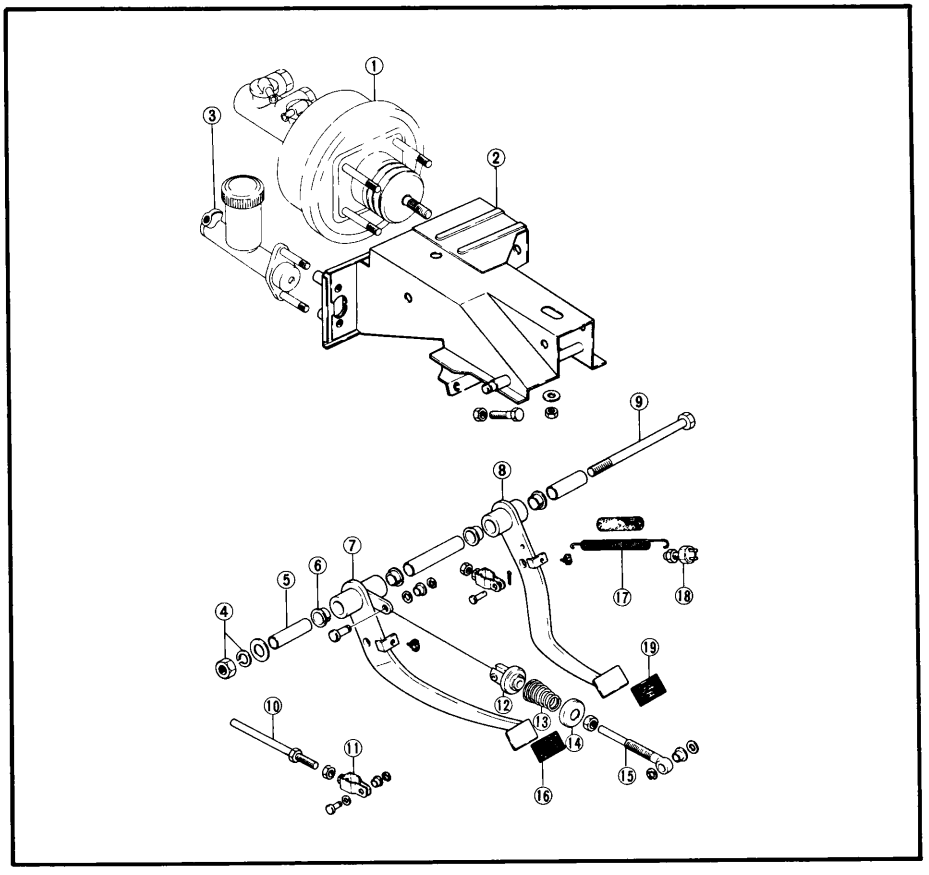

Fig. 6–24 Clutch pedal and brake pedal
1. Brake master cylinder and power brake unit
2. Master cylinder bracket
3. Clutch master cylinder
4. Nut and washer
5. Pipe
6. Bush
7. Clutch pedal
8. Brake pedal
9. Bolt
10. Push rod
11. Fork end
12. Spring seat
13. Spring
14. Spring seat
15. Rod
16. Pedal pad
17. Spring
18. Stop light switch
19. Pedal pad

SPECIAL TOOLS

49 1881 060	Ring gear brake
49 0820 035	Wrench for flywheel nut
49 0823 300	Flywheel puller
49 0823 071A	Pilot bearing remover
49 0823 072A	Pilot bearing installer
49 0813 310	Clutch disk centering tool

DESCRIPTION ..... 7 : 3
7–A. BACK-UP LAMP SWITCH REPLACEMENT ..... 7 : 3
7–B. MAIN SHAFT OIL SEAL REPLACEMENT ..... 7 : 3
7–C. TRANSMISSION REMOVAL ..... 7 : 3
7–D. TRANSMISSION DISASSEMBLY ..... 7 : 4
7–E. TRANSMISSION INSPECTION ..... 7 : 6
7–E–1. Checking Transmission Case and Clutch Housing ..... 7 : 6
7–E–2. Checking Bearings ..... 7 : 6
7–E–3. Checking Gears ..... 7 : 6
7–E–4. Checking Main Shaft and Main Drive Shaft ..... 7 : 6
7–E–5. Checking Counter Shaft ..... 7 : 7
7–E–6. Checking Control Lever and Shift Rod ..... 7 : 7
7–E–7. Checking Shift Fork ..... 7 : 7
7–E–8. Checking Clutch Sleeve ..... 7 : 7
7–E–9. Checking Synchronizer Ring ..... 7 : 8
7–E–10. Checking Synchronizer Key and Spring ..... 7 : 8
7–E–11. Checking Clutch Hub ..... 7 : 8
7–E–12. Checking Extension Housing ..... 7 : 8
7–E–13. Checking Speedometer Gears ..... 7 : 8
7–F. TRANSMISSION ASSEMBLY ..... 7 : 9
7–G. TRANSMISSION INSTALLATION ..... 7 : 13
SPECIAL TOOLS ..... 7 : 13

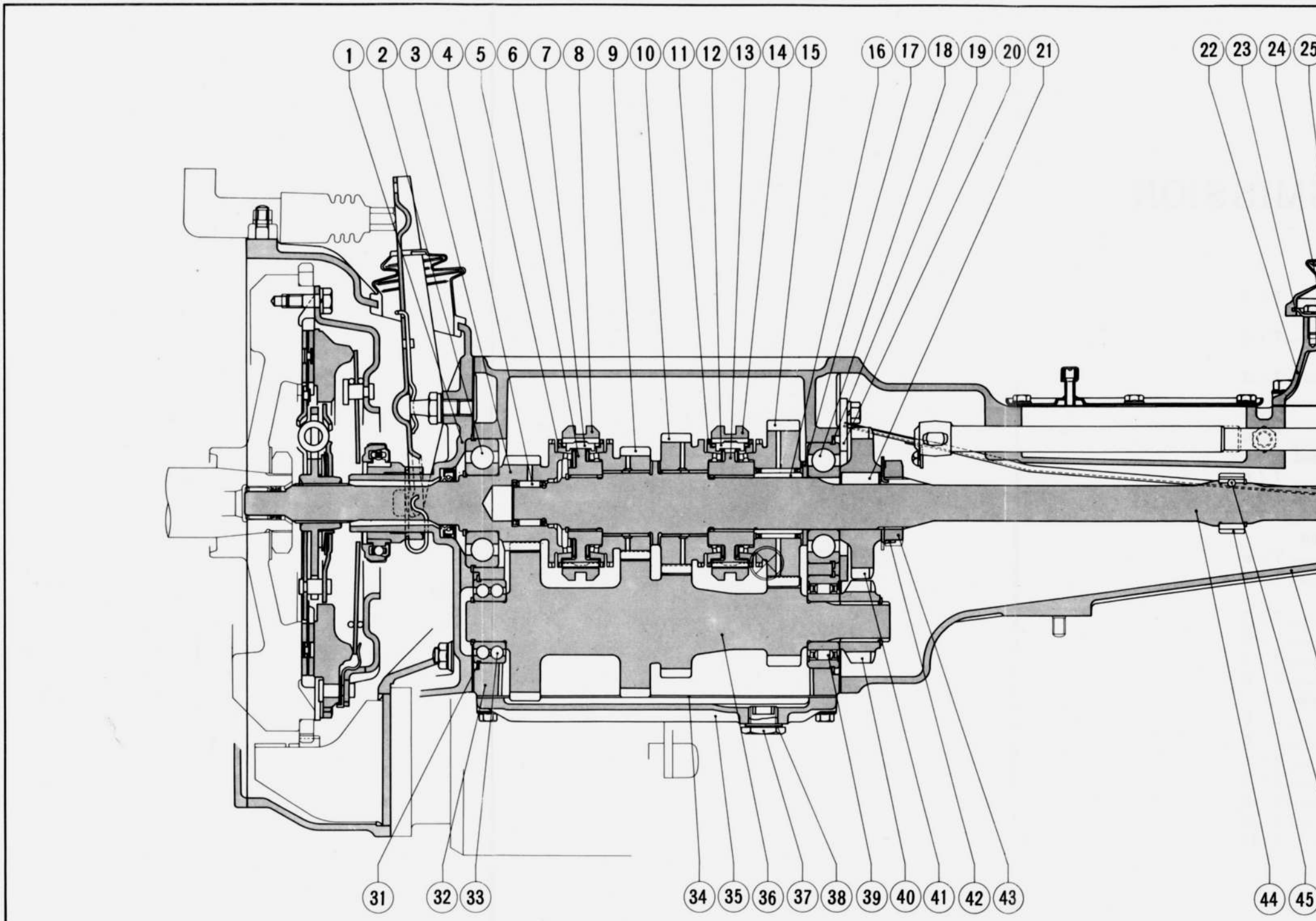

Fig. 7–1 Transmission cross section (1)

1. Adjusting shim
2. Main drive shaft bearing
3. Main drive shaft and gear
4. Needle bearing
5. Synchronizer ring
6. Third-and-fourth clutch hub
7. Synchronizer key
8. Clutch sleeve
9. Third gear
10. Second gear
11. Synchronizer ring
12. Synchronizer key
13. First-and-second clutch hub
14. Clutch sleeve
15. First gear
16. First gear sleeve
17. Thrust washer
18. Main shaft bearing
19. Adjusting shim
20. Bearing cover plate
21. Key
22. Gearshift lever retainer
23. Cover
24. Shim
25. Boot
26. Gearshift lever
27. Gearshift lever knob
28. Bush
29. Control lever end
30. Gearshift control lever
31. Adjusting shim
32. Transmission case
33. Counter shaft front bearing
34. Gasket
35. Transmission under cov
36. Counter shaft
37. Drain plug
38. Gasket
39. Counter shaft rear be
40. Counter reverse gear
41. Reverse gear
42. Lock washer
43. Lock nut
44. Main shaft

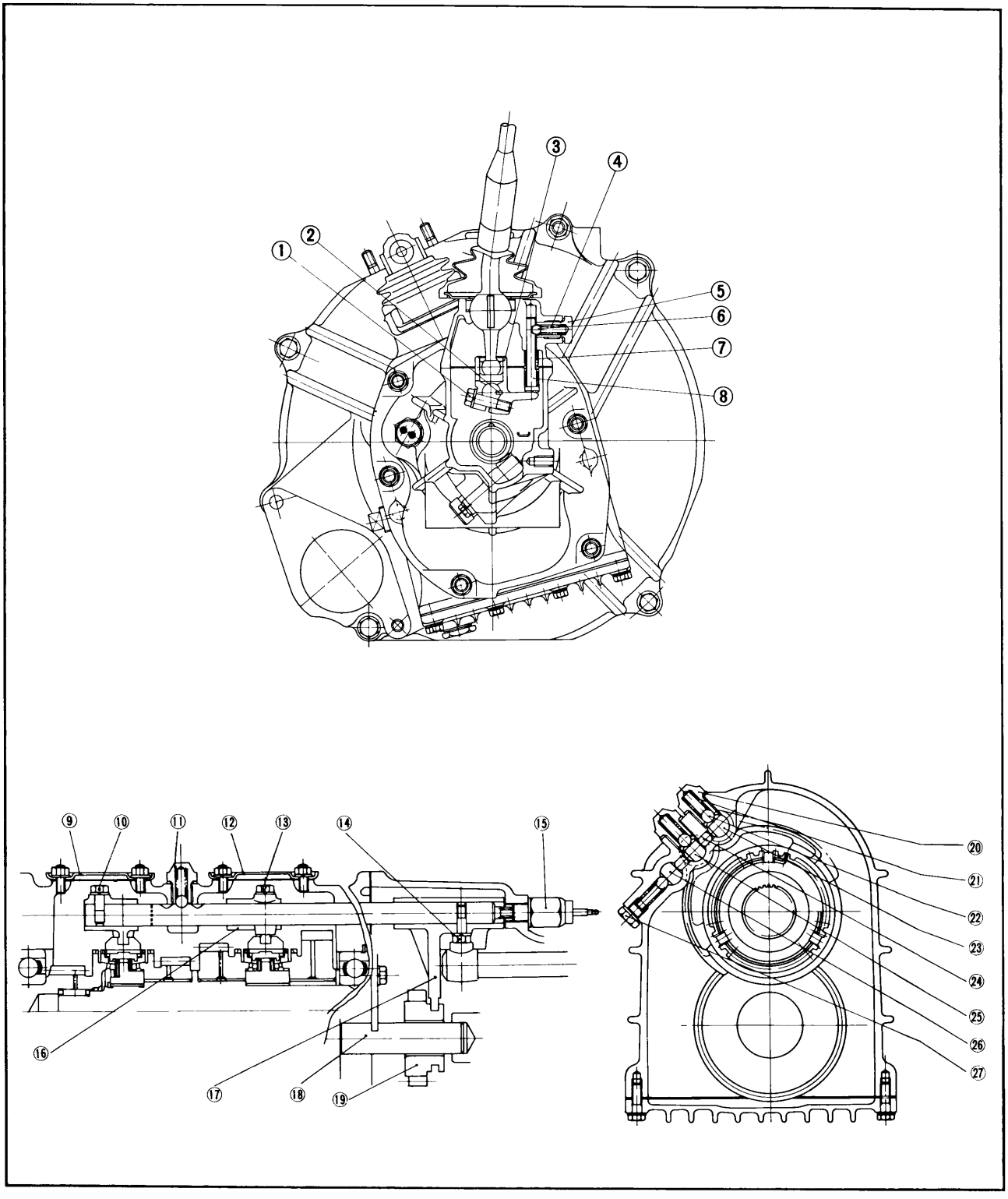

Fig. 7–2 Transmission cross section (2)

1. Reamer bolt
2. Key
3. Control lever end
4. Spring
5. Spring cap bolt
6. Detent ball
7. Spring
8. Select lock spindle
9. Blind cover
10. Screw
11. Spring cap bolt
12. Blind cover
13. Screw
14. Screw
15. Back-up lamp switch
16. First-and-second shift fork
17. Reverse shift fork
18. Reverse idler gear shaft
19. Reverse idler gear
20. Spring cap bolt
21. Spring
22. Detent ball
23. First-and-second shift rod
24. Shift inter-lock pin
25. Third-and-top shift rod
26. Reverse shift rod
27. Spring cap bolt

DESCRIPTION

This model is equipped with a four speed manual transmission which is of the fully synchronized type with all gears except the reverse gear being in selective sliding mesh.
The gearshift mechanism is a direct control with a floor-shift type.

7–A. BACK-UP LAMP SWITCH REPLACEMENT

1. Raise the vehicle and support with stands.
2. Disconnect the wires from the back-up lamp switch.
3. Loosen the back-up lamp switch and remove from the extension housing.
4. Install a new back-up lamp switch to the extension housing and tighten the switch.
5. Connect the wires to the switch.
6. Lower the vehicle.



Fig. 7–3 Back-up lamp switch

7–B. MAIN SHAFT OIL SEAL REPLACEMENT

1. Raise the vehicle and support with stands.
2. Remove the propeller shaft, as described in Par. 8–A–1.
3. Remove the main shaft oil seal from the extension housing.
4. Position a new oil seal in the extension housing and insert the oil seal by tapping it slightly with a plastic hammer.
5. Apply gear lubricant to the lip of the oil seal.
6. Install the propeller shaft.



Fig. 7–4 Main shaft oil seal

7–C. TRANSMISSION REMOVAL

When removing the transmission from the vehicle, proceed as follows :

1. Remove the gearshift lever knob.
2. Remove the screws attaching the console box and remove the console box.
3. Remove the screws attaching the gearshift lever boot to the body floor and remove the gear shift lever boot.
4. Remove the bolts attaching the retainer cover to the gearshift lever retainer.
5. Pull the gearshift lever, shim and bush straight up and away from the gearshift lever retainer.
6. Open the hood and disconnect the negative battery cable from the battery terminal.
7. Remove the nuts attaching the clutch release cylinder and remove the clutch release cylinder.
8. Disconnect the connector of the back-up lamp switch and neutral switch near the clutch release cylinder.
9. Remove the bolt attaching the power brake vacuum pipe clip to the clutch housing. (Left hand drive vehicles only)
10. Remove the bolts attaching the wiring harness holder to the wiring harness bracket near the starting motor.
11. Remove the one upper bolt securing the starting motor, then remove the three upper bolts securing the transmission to the engine rear end.
12. Raise the vehicle and support with stands.
13. Remove the bolts and screws attaching the heat insulators to the exhaust front pipe, and remove the heat insulators.
14. Disconnect the exhaust front pipe flange from the exhaust manifold by removing the nuts. Disconnect the exhaust front pipe from the brackets by removing the bolts and nuts. Remove the bolts and nuts attaching the front pipe flange to the main silencer, and remove the exhaust front pipe.
15. Remove the bolts attaching the heat insulator to the underbody and remove the heat insulator.
16. Remove the propeller shaft, as described in Par. 8–A–1, and insert the **mainshaft holder** (49 0259 440) into the extension housing.



Fig. 7–5 Transmission oil plug

17. Disconnect the speedometer cable from the extension housing.

18. Remove the lower bolt securing the starting motor to the clutch housing and remove the starting motor. Disconnect the wire at the starting motor.
16. Place a jack under the front side of the transmission and support the transmission with the jack.
17. Remove the bolts securing the transmission support to the body.
21. Remove the two lower bolts securing the transmission to the engine rear end.
22. Slide the transmission rearward until the main drive shaft clears the clutch disc and carefully withdraw it downward from the vehicle.

7–D. TRANSMISSION DISASSEMBLY

The procedures for disassembling the transmission after removing the transmission from the vehicle are as follows :

1. Place the transmission on a work stand.
2. Remove the drain plug, and drain the lubricant from the transmission. Clean the metal fillings adhered on the magnet of the drain plug if necessary. Refit the drain plug after draining lubricant.
3. Pull the release fork outward until the fork retaining spring release itself from the ball stud. Slide off the fork and release bearing from the clutch housing.
4. Remove the nuts attaching the clutch housing, and remove the clutch housing and gasket.

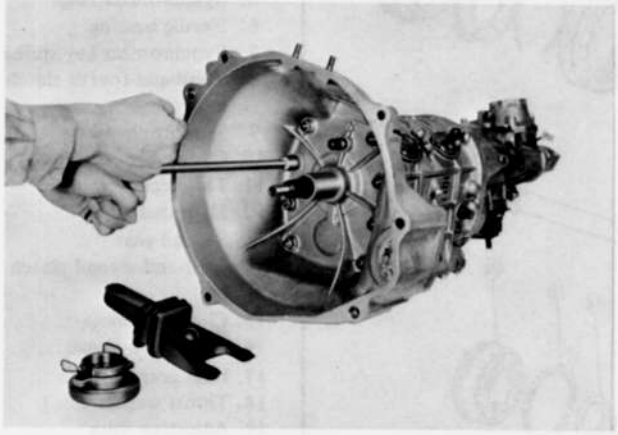

Fig. 7–6 Removing clutch housing

5. Remove the adjusting shim from the bearing bore of the clutch housing.
6. Remove the bolts attaching the gearshift lever retainer to the extension housing and remove the retainer and gasket.
7. Remove the nuts attaching the extension housing to the transmission case. With the control lever end in neutral, press the end to the left as far as it will go, and slide the extension housing off the transmission.
8. Remove the spring cap bolt and remove the spring and friction piece from the extension housing.
9. Remove the neutral switch from the extension housing. (U.S.A. & Canada vehicles only)
10. Remove the bolt that attach the gearshift control lever end to the gearshift control lever, and remove the control lever end, key and control lever.
11. Remove the speedometer sleeve lock plate, and remove the sleeve and driven gear assembly from the extension housing.
12. Remove the back-up lamp switch from the extension housing.

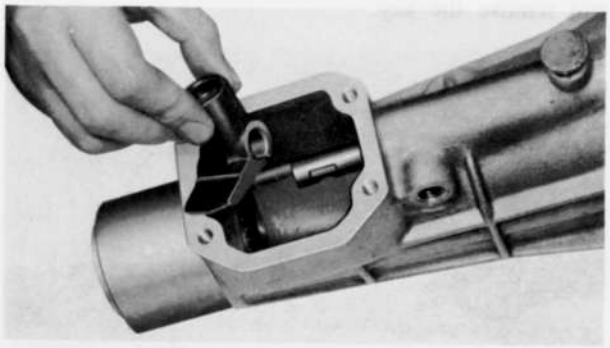

Fig. 7–7 Removing control lever end

13. Remove the snap ring that secures the speedometer drive gear to the main shaft. Slide the drive gear off the main shaft, and remove the lock ball.
14. Evenly loosen the bolts securing the under cover to the transmission case and remove the under cover and gasket.
15. Remove the three spring cap bolts and remove the detent springs and detent balls (locking balls) from the transmission case.

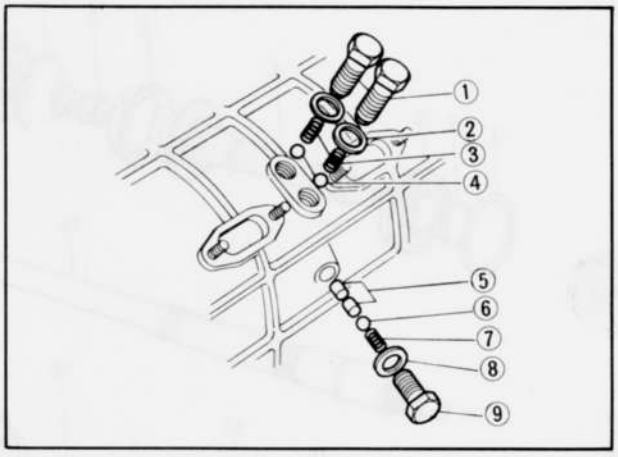

Fig. 7–8 Spring cap bolts

1. Spring cap bolt
2. Washer
3. Detent spring
4. Detent ball
5. Shift inter-lock pin
6. Detent ball
7. Detent spring
8. Washer
9. Spring cap bolt

16. Remove the nuts attaching the two blind covers to the transmission case and remove the blind covers and gaskets.
17. Slide the reverse shifr rod with the reverse idler gear out the rear of the transmission case. Remove the attaching bolt from the reverse shift fork and remove the shift fork.
18. Remove the attaching bolt from the third-and-fourth shift fork. Slide the third-and-fourth shift rod out the rear of the transmission case.
19. Remove the attaching bolt from the first-and-second shift fork. Slide the first-and-second shift rod out the rear of the transmission case.

20. Straighten the tab of the lock washer, hold the rear end of the main shaft with the **main shaft holder** (49 0259 440) and loosen the main shaft lock nut. Slide the reverse gear off the rear of the main shaft, and remove the key.

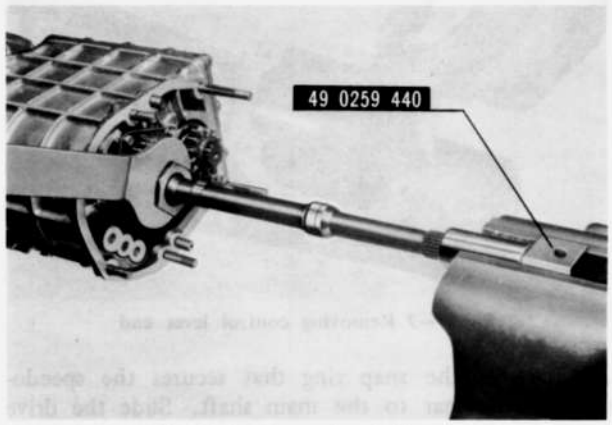

Fig. 7–9 Removing lock nut

21. Remove the snap ring from the rear end of the counter shaft and remove the counter reverse gear.
22. Remove the bolts attaching the bearing cover plate to the transmission case and remove the bearing cover plate.
23. Remove the reverse idler gear shaft from the transmission case.
24. Install the **synchronizer ring holder** (49 0839 445) between the fourth synchronizer ring and the synchromesh gear on the main drive shaft.
25. Remove the snap ring that secures the counter shaft front bearing to the front end of the counter shaft. Remove the counter shaft front bearing from the counter shaft with the **bearing puller** (49 0839 425A).
26. Remove the adjusting shim from the counter shaft front bearing bore of the transmission case.
27. Remove the counter shaft rear bearing from the counter shaft with the **puller** (49 0839 425A).
28. Remove the main shaft bearing from the main shaft with the **puller** (49 0839 425A).

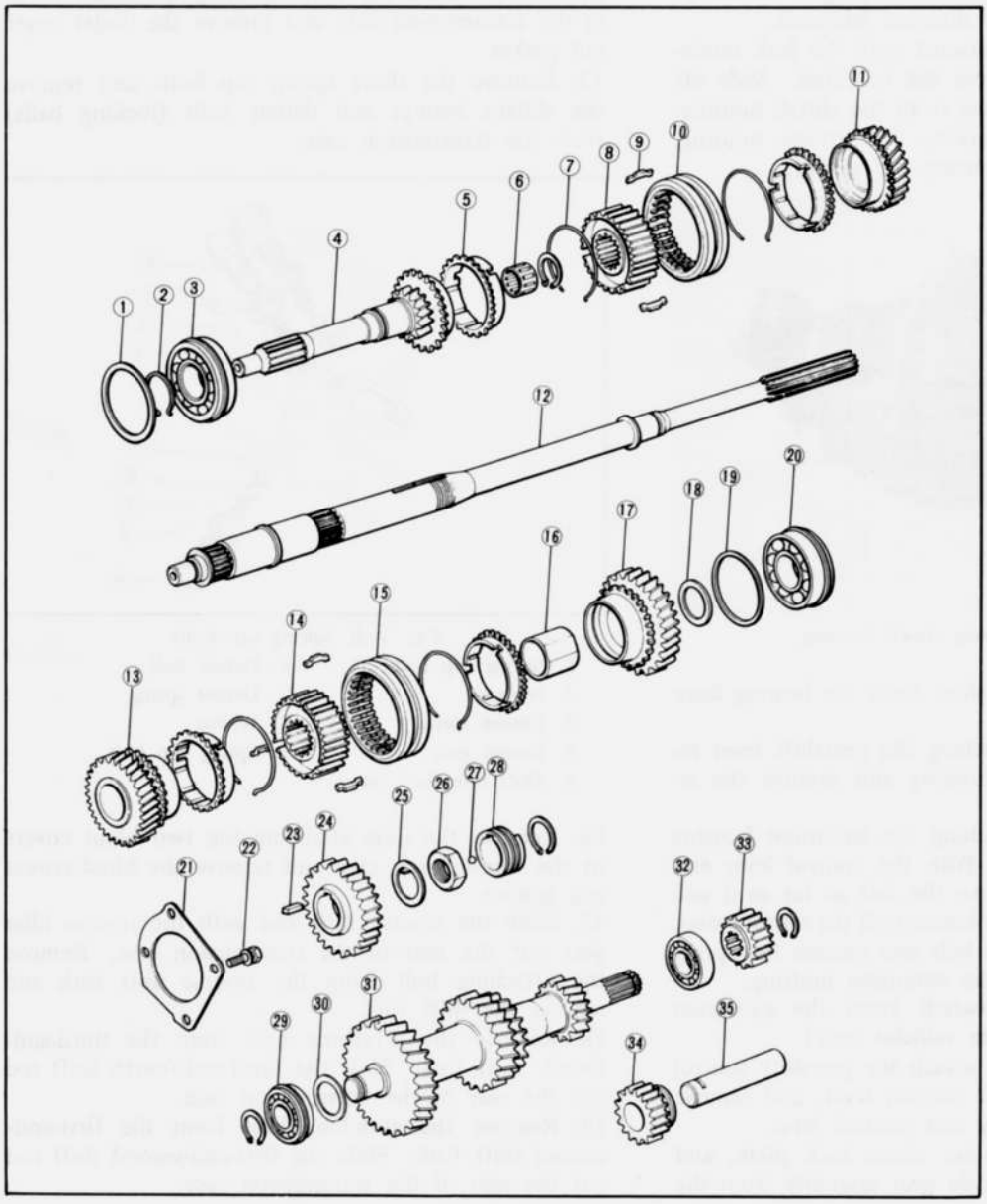

Fig. 7–10 Shafts and gears

1. Adjusting shim
2. Snap ring
3. Main drive shaft bearing
4. Main drive shaft
5. Synchronizer ring
6. Needle bearing
7. Synchronizer key spring
8. Third-and-fourth clutch hub
9. Synchronizer key
10. Clutch sleeve
11. Third gear
12. Main shaft
13. Second gear
14. First-and-second clutch hub
15. Clutch sleeve
16. First gear sleeve
17. First gear
18. Thrust washer
19. Adjusting shim
20. Main shaft bearing
21. Bearing cover plate
22. Bolt
23. Key
24. Reverse gear
25. Lock washer
26. Lock nut
27. Lock ball
28. Speedometer drive gear
29. Counter shaft front bearing
30. Adjusting shim
31. Counter shaft
32. Counter shaft rear bearing
33. Counter reverse gear
34. Reverse idler gear
35. Reverse idler gear shaft

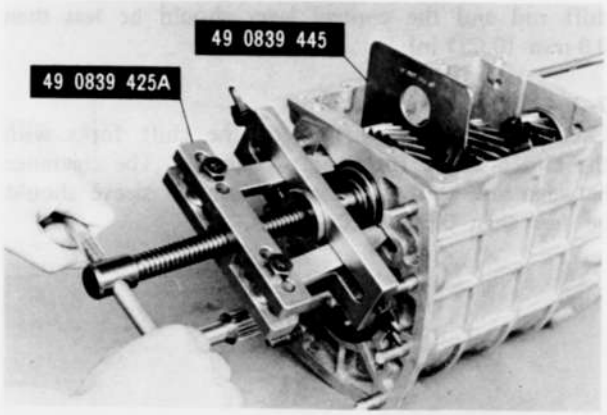

Fig. 7–11 Removing counter shaft front bearing

29. Remove the adjusting shim from the main shaft bearing bore of the transmission case.
30. Remove the snap ring that secures the main drive shaft bearing to the main drive shaft. Remove the main drive shaft bearing with the **puller** (49 0839 425A).

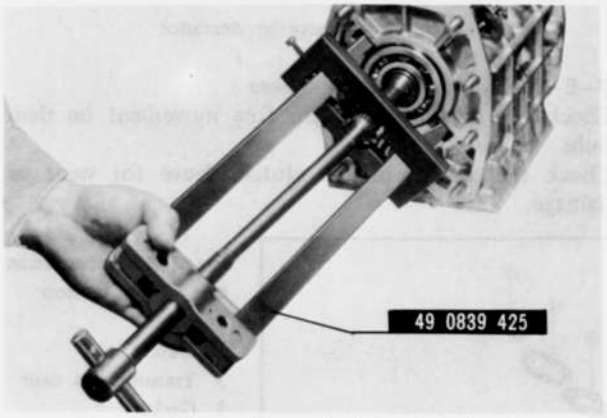

Fig. 7–12 Removing main drive shaft bearing

31. Take out the counter shaft from the transmission case.
32. Separate the main drive shaft from the main shaft and remove the main drive shaft from the case. Remove the fourth synchronizer ring and needle bearing from the main drive shaft.
33. Take out the main shaft and gears assembly from the case.

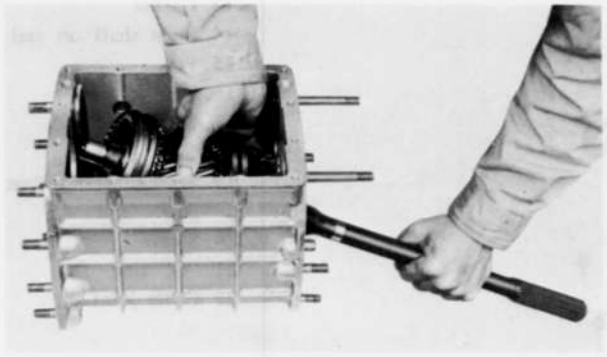

Fig. 7–13 Removing main shaft and gears assembly

34. Remove the first-and-second shift fork and third-and-fourth shift fork from the case.
35. Remove the two shift inter-lock pins from the case.
36. Remove the snap ring that secures the third-and-fourth clutch hub and sleeve assembly. Slide the third-and-fourth clutch hub and sleeve assembly, third synchronizer ring, third gear out the front of the main shaft. **Do not** mix the synchronizer rings.
37. Slide the first gear and first synchronizer ring out the rear of the main shaft.
38. Remove the first gear sleeve, second gear, second synchronizer ring, first-and-second clutch hub and sleeve assembly from the main shaft.

7–E. TRANSMISSION INSPECTION

Thoroughly clean all the parts. Inspect the parts for wear, damage and other defects. The parts found defective must be repaired or replaced.

7–E–1. Checking Transmission Case and Clutch Housing

Inspect the case for cracks or any damage.
Check the clutch housing for cracks or any damage. Replace the oil seal in the clutch housing if necessary.

7–E–2. Checking Bearings

Inspect each bearing for roughness or noise by holding the outer race, and rotating the inner race while applying pressure with hand. Replace the bearings if necessary. Replace the needle bearings that are broken, worn or rough.

7–E–3. Checking Gears

Inspect the teeth of each gear. If excessively worn, broken or chipped, replace with new gear. Excessive wear of the gears causes increase of backlash, which results in producing noises or may cause the gear to work off while running.

7–E–4. Checking Main Shaft and Main Drive Shaft

Check the main shaft run-out with a dial indicator. If the run-out exceeds **0.03 mm (0.0012 in)**, correct with a press or replace with a new one.

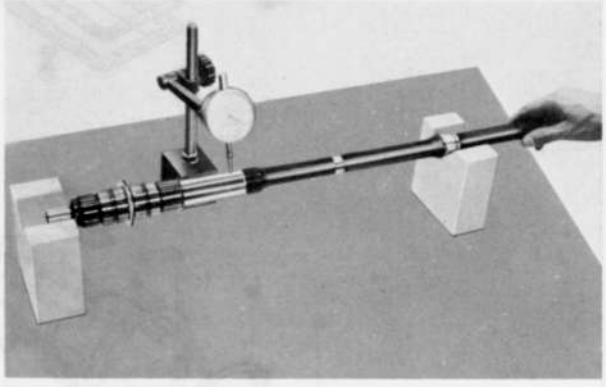

Fig. 7–14 Checking main shaft run-out

Replace the main shaft if there is any evidence of wear or if any of the splines is damaged.
Replace the main drive shaft if the splines are dam-

aged. If the needle bearing surface in the bore of the bearing is worn or rough, or if the cone surface is damaged, replace with a new shaft.

7–E–5. Checking Counter Shaft

Check the teeth of the counter shaft gear for wear or damage. Replace the counter shaft if it is bent, scored or worn.

7–E–6. Checking Control Lever and Shift Rod

Check the contact surface of the shift rod with the detent ball for wear or damage.

Check the contact surface of the shift rod with the control lever for wear. The clearance between the shift rod and the control lever should be **less than 0.8 mm (0.031 in).**

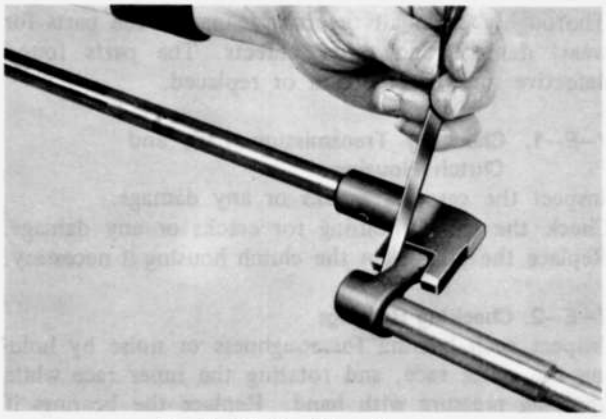

Fig. 7–15 Checking clearance

7–E–7. Checking Shift Fork

Check the contact surface of the shift forks with the clutch sleeve for wear or damage. The clearance between the shift fork and the clutch sleeve should be **less than 0.5 mm (0.020 in).**

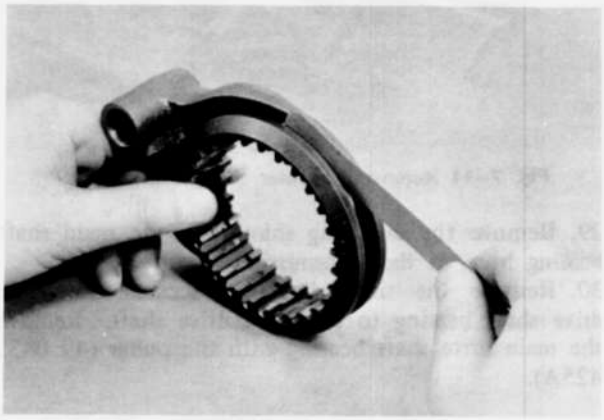

Fig. 7–16 Checking clearance

7–E–8. Checking Clutch Sleeve

Check the clutch sleeves for free movement on their hubs.

Check the splines of the clutch sleeve for wear or damage.

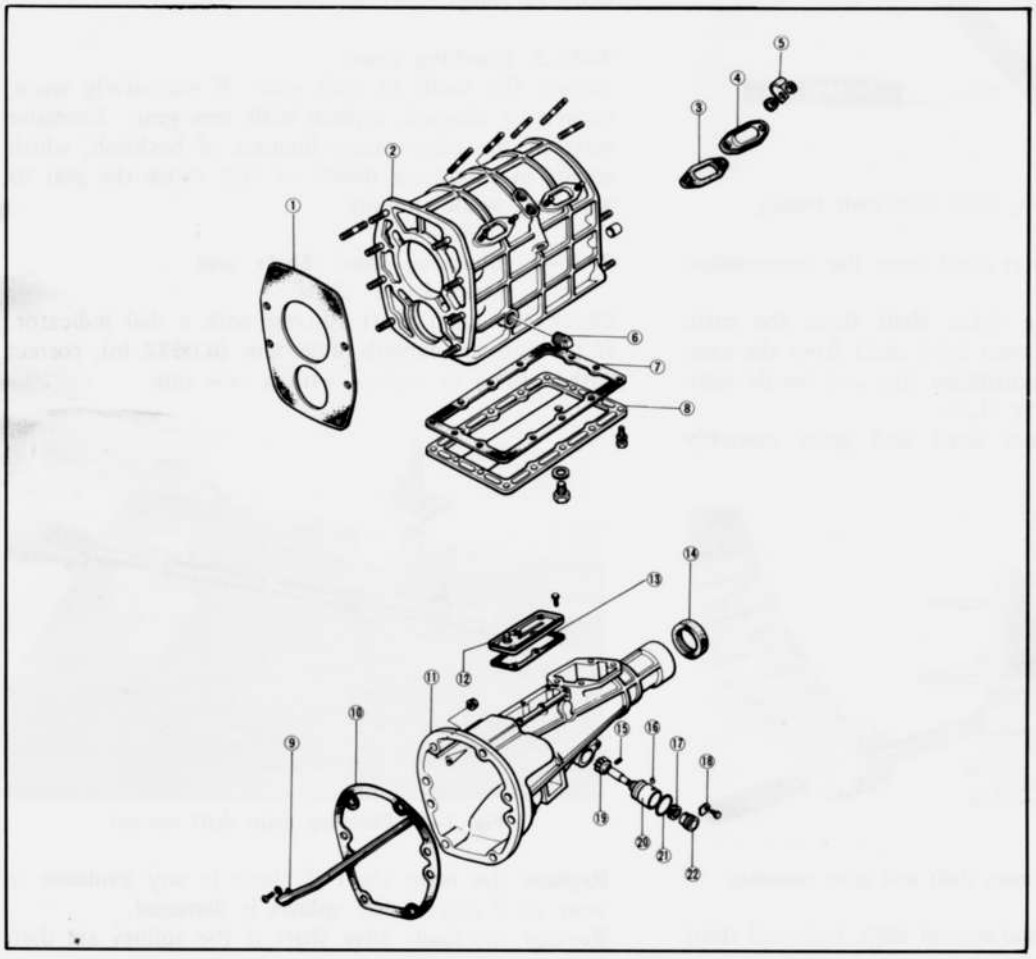

Fig. 7–17 Transmission case and extension housing.

1. Gasket
2. Transmission case
3. Gasket
4. Blind cover
5. Clip
6. Drain plug
7. Gasket
8. Transmission under cover
9. Oil pass
10. Gasket
11. Extension housing
12. Cover
13. Gasket
14. Main shaft oil seal
15. Pin
16. Pin
17. Oil seal
18. Lock plate
19. Speedometer driven gear
20. Sleeve
21. "O" ring
22. Cable joint

Check the contact surface of the clutch sleeve with the shift fork for wear or damage.

7–E–9. Checking Synchronizer Ring

1. Check the synchromesh gear on the synchronizer ring for wear or damage.
2. Check the tapered portion for uneven wear or damage. Also place the ring on the gear cone, and check the clearance between the gear and the ring. If the clearance is **less than 0.8 mm (0.031 in)**, replace the synchronizer ring.

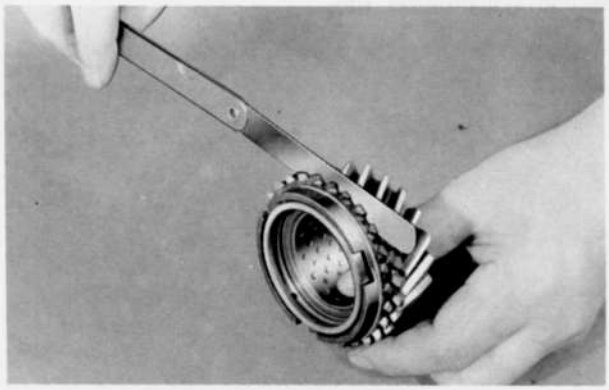

Fig. 7–18 Checking clearance

3. If the contact between the ring and the gear cone is incorrect, or if a new synchronizer ring is used, lap the synchronizer ring with the gear cone using a lapping compound. Apply a light pressure for lapping. After lapping, clean the ring and the gear cone with a suitable solvent, then check the clearance and contact between the ring and the gear cone.

7–E–10. Checking Synchronizer Key and Spring

1. Check the synchronizer key for wear or damage.
2. Check the synchronizer key spring for wear or weakness.

7–E–11. Checking Clutch Hub

Check the splines for wear or damage.
Check the contact surface of the clutch hub with the synchronizer ring for wear or damage.
Check the contact surface of the clutch hub with the thrust surface of the gears for wear or damage.

7–E–12. Checking Extension Housing

Inspect the extension housing for cracks and the machined mating surface for burrs, nicks or any damage.
Inspect the oil seal in the extension housing.
Replace the oil seal if it is worn or damaged.

7–E–13. Checking Speedometer Gears

Check the drive gear and driven gear and the driven gear shaft for wear or damage.
Check the "O" ring for weakness or damage.

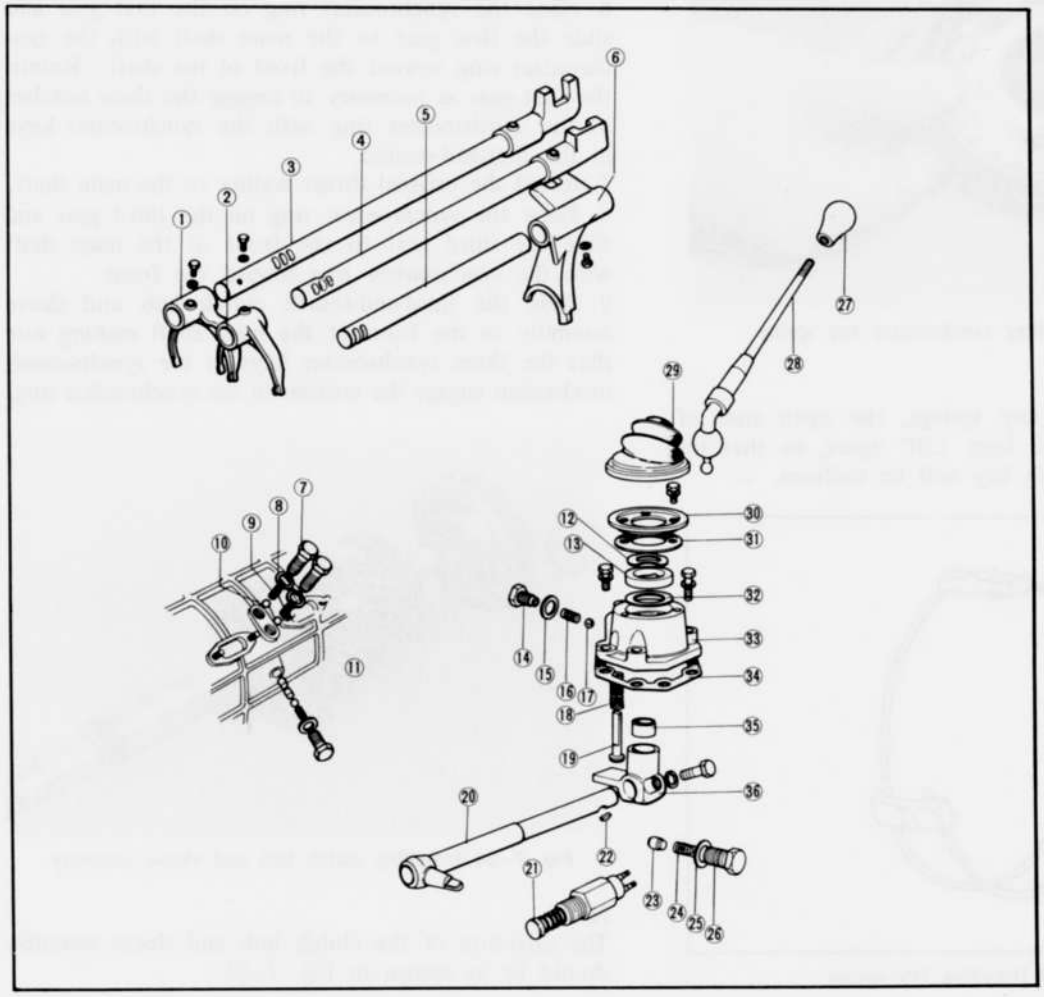

Fig. 7–19 Gearshift mechanism
1. Third-and-fourth shift fork
2. First-and-second shift fork
3. Third-and-fourth shift rod
4. First-and-second shift rod
5. Reverse shift rod
6. Reverse shift fork
7. Spring cap bolt
8. Washer
9. Detent spring
10. Detent ball
11. Shift interlock-pin
12. Washer
13. Bush
14. Spring cap bolt
15. Washer
16. Spring
17. Detent ball (Locking ball)
18. Spring
19. Select lock spindle
20. Gearshift control lever
21. Back-up lamp switch
22. Key
23. Friction piece
24. Spring
25. Washer
26. Spring cap bolt
27. Gearshift lever knob
28. Gearshift lever
29. Dust boot
30. Cover
31. Gasket
32. Shim
33. Gearshift lever retainer
34. Gasket
35. Bush
36. Gearshift control lever end
37. Neutral switch

7–F. TRANSMISSION ASSEMBLY

1. Assemble the first-and-second synchromesh mechanism by installing the clutch hub to the sleeve, placing the three synchronizer keys into the clutch hub key slots and installing the key springs to the clutch hub.

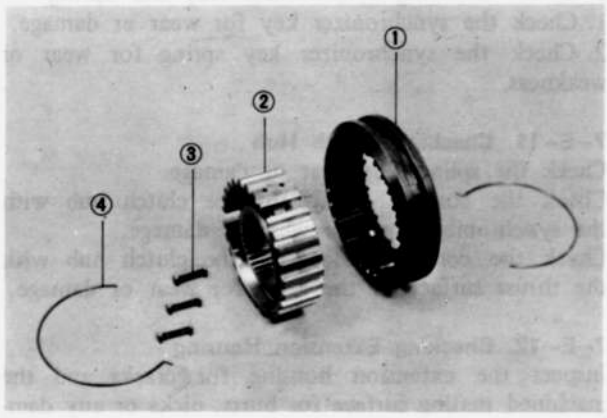

Fig. 7–20 Synchromesh mechanism

1. Clutch sleeve
2. Clutch hub
3. Synchronizer key
4. Key spring



Fig. 7–21 Installing synchronizer key spring

Note :
When installing the key springs, the open ends of the springs should be kept 120° apart, so that the spring tension on each key will be uniform.

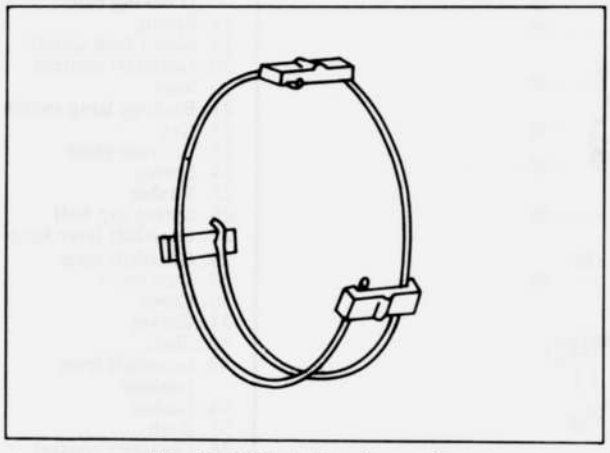

Fig. 7–22 Installing key spring

2. Assemble the third-and-fourth synchromesh mechanism in the same manner as first-and-second synchromesh mechanism.
3. Place the synchronizer ring on the second gear and slide the second gear to the main shaft with the synchronizer ring toward the rear of the shaft.
4. Slide the first-and-second clutch hub and sleeve assembly to the main shaft with the oil grooves of the clutch hub toward the front of the main shaft. Make sure that the three synchronizer keys in the synchromesh mechanism engage the notches in the second synchronizer ring.

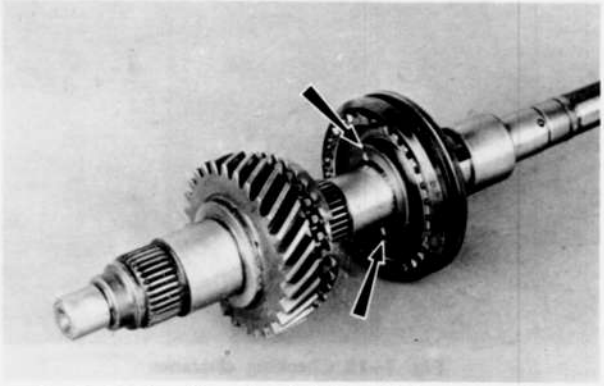

Fig. 7–23 Installing clutch hub and sleeve assembly

5. Slide the first gear sleeve to the main shaft.
6. Place the synchronizer ring on the first gear and slide the first gear to the main shaft with the synchronizer ring toward the front of the shaft. Rotate the first gear as necessary to engage the three notches in the synchronizer ring with the synchronizer keys in the first-and-second.
7. Install the original thrust washer to the main shaft.
8. Place the synchronizer ring on the third gear and slide the third gear to the front of the main shaft with the synchronizer ring toward the front.
9. Slide the third-and-fourth clutch hub and sleeve assembly to the front of the main shaft making sure that the three synchronizer keys in the synchromesh mechanism engage the notches in the synchronizer ring.

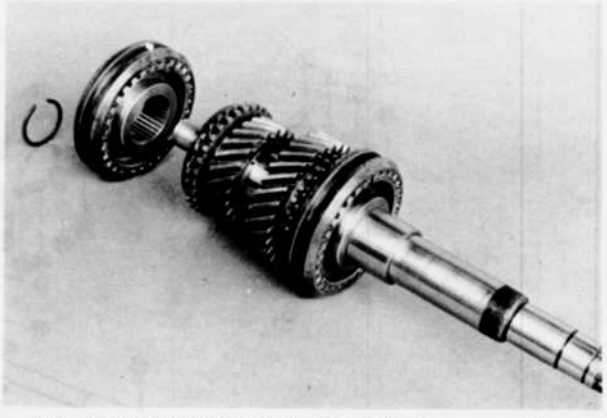

Fig. 7–24 Installing clutch hub and sleeve assembly

Note :
The direction of the clutch hub and sleeve assembly should be as shown in Fig. 7–25.

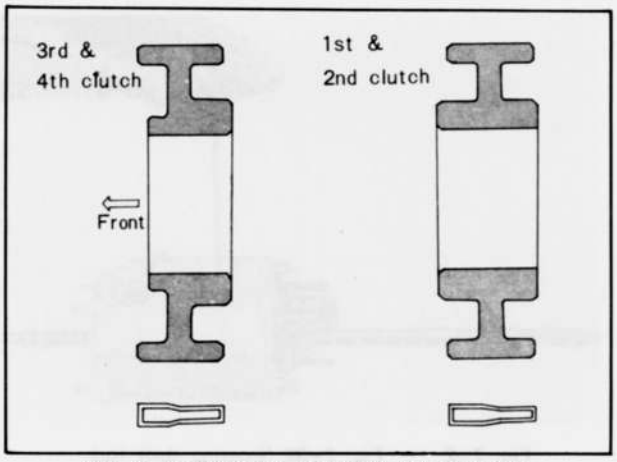

Fig. 7–25 Direction of clutch hub assembly

10. Install the snap ring to the front of the main shaft.
11. Position the main shaft and gears assembly in the case.

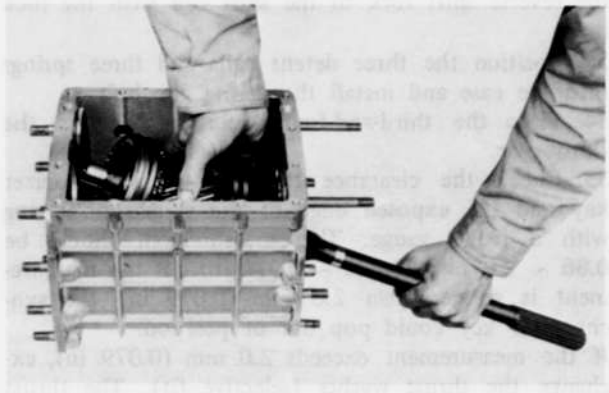

Fig. 7–26 Installing main shaft and gears assembly

12. Place the needle bearing to the front end of the main shaft.
13. Place the synchronizer ring on the main drive shaft gear (fourth gear) and install the main drive shaft gear to the front end of the main shaft making sure that the three synchronizer keys in the third-and-fourth synchromesh mechanism engage the notches in the synchronizer ring.
14. Position the first-and-second shift fork and third-and-fourth shift fork in the groove of the clutch hub and sleeve assembly.

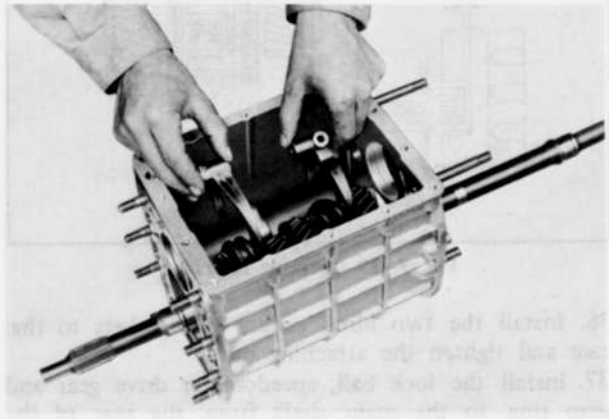

Fig. 7–27 Installing shift forks

15. Position the counter shaft gear in the case, making sure that the counter shaft gear engage each gear of the main shaft assembly.

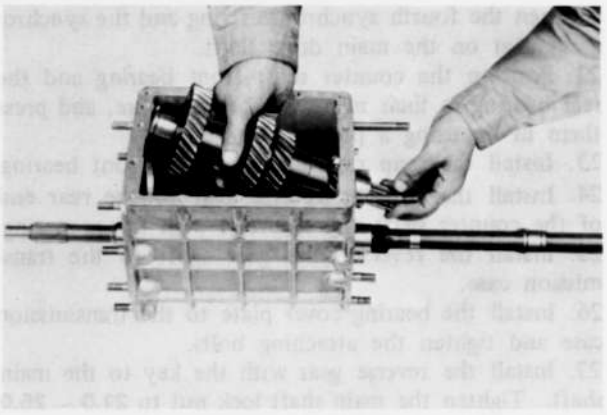

Fig. 7–28 Installing counter shaft gear

16. Check the main shaft bearing end play, proceed as follows : Measure the depth of the main shaft bearing bore in the transmission case by using a depth gauge. Then, measure the main shaft bearing height. The difference between the two measurements indicates the required thickness of the adjusting shim. The standard end play is **0 ~ 0.1 mm (0 ~ 0.0039 in)**. The adjusting shims are available in the following thickness :

0.1 mm (0.0039 in)	0.3 mm (0.0118 in)

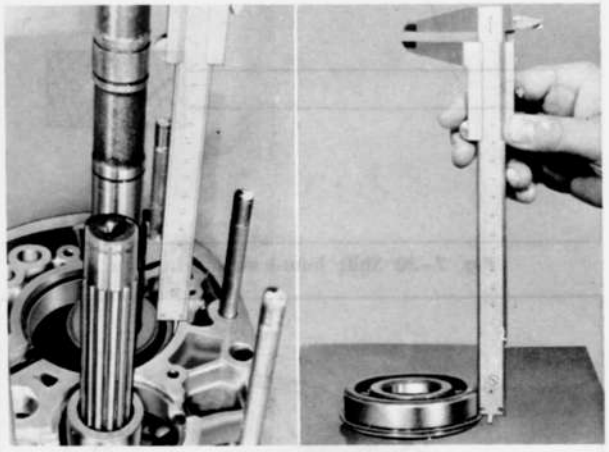

Fig. 7–29 Checking end play

17. Install the **synchronizer ring holder** (49 0839 445) between the fourth sunchronizer ring and the synchromesh gear on the main drive shaft.
18. Position the main drive shaft bearing and the main shaft bearing in their respective bearing bore, and press them in by using a press.
19. Install the snap ring to secure the main drive shaft bearing.
20. Check the counter shaft bearing end play in the same manner for the main shaft bearing end play.
The standard end play is **0 ~ 0.1 mm (0 ~ 0.0039 in)**. The adjusting shims are available in the following thickness :

0.1 mm (0.0039 in)	0.3 mm (0.0118 in)

21. Install the **synchronizer ring holder** (49 0839 445) between the fourth synchronizer ring and the synchromesh gear on the main drive shaft.
22. Position the counter shaft front bearing and the rear bearing in their respective bearing bore, and press them in by using a press.
23. Install the snap ring to secure the front bearing.
24. Install the counter reverse gear to the rear end of the counter shaft and secure it with the snap ring.
25. Install the reverse idler gear shaft to the transmission case.
26. Install the bearing cover plate to the transmission case and tighten the attaching bolts.
27. Install the reverse gear with the key to the main shaft. Tighten the main shaft lock nut to **21.0 ~ 25.0 m-kg (151.0 ~ 180.0 ft-lb)**, by using the **holder** (49 0259 440) and bend the tab of the lock washer.
28. Slide the first-and-second shift rod into the case from the rear of the case. Secure the first-and-second shift fork to the shift rod with the lock bolt.
29. Place the shift rod in neutral position.
Insert the shift inter-lock pin into the case with the **shift inter-lock pin installer** (49 0862 350).

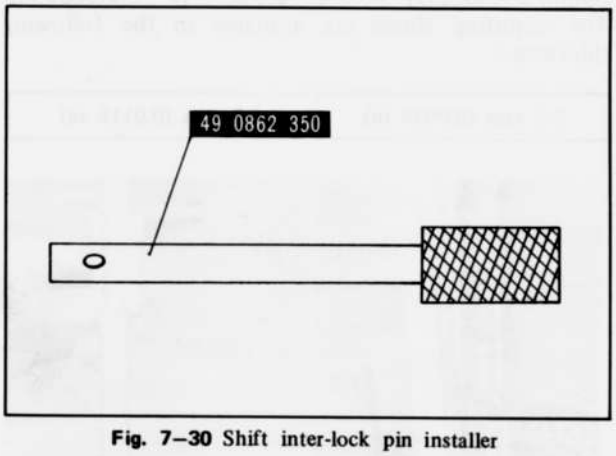

Fig. 7–30 Shift inter-lock pin installer

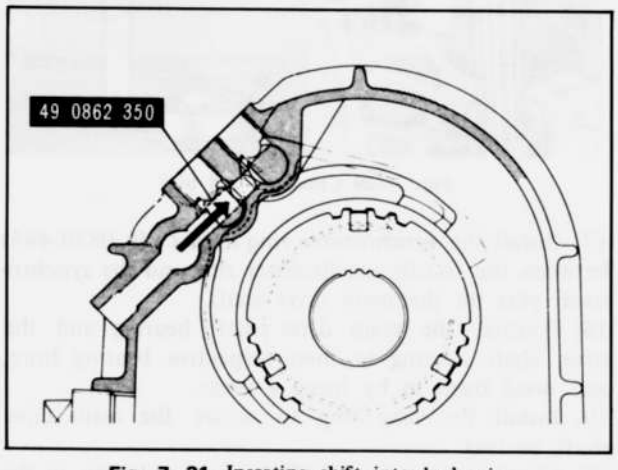

Fig. 7–31 Inserting shift inter-lock pin

30. Slide the third-and-fourth shift rod into the case from the rear of the case. Secure the third-and-fourth shift fork to the shift rod with the lock bolt.

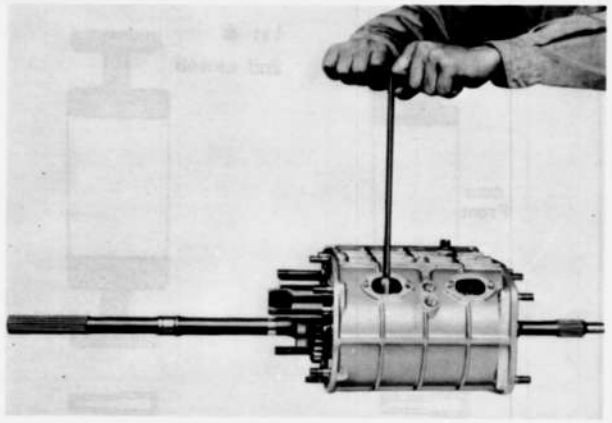

Fig. 7–2 **Fig. 7–32** Securing shift fork

31. Insert the shift inter-lock pin into the case by using the **installer** (49 0862 350).
32. Slide the reverse shift rod with the reverse idler gear into the case from the rear of the case. Secure the reverse shift fork to the shift rod with the lock bolt.
33. Position the three detent balls and three springs into the case and install the spring cap bolts.
34. Place the third-and-fourth clutch sleeve in the third gear.
35. Check the clearance between the synchronizer key and the exposed edge of the synchronizer ring with a feeler gauge. This measurement should be **0.66 ~ 2.0 mm (0.026 ~ 0.079 in).** If the measurement is greater than 2.0 mm (0.079 in), the synchronizer key could pop out of position.
If the measurement exceeds 2.0 mm (0.079 in), exchange the thrust washer (selective fit). The thrust washers are available as in the following table.

2.5 mm (0.098 in)	3.5 mm (0.138 in)
3.0 mm (0.118 in)	

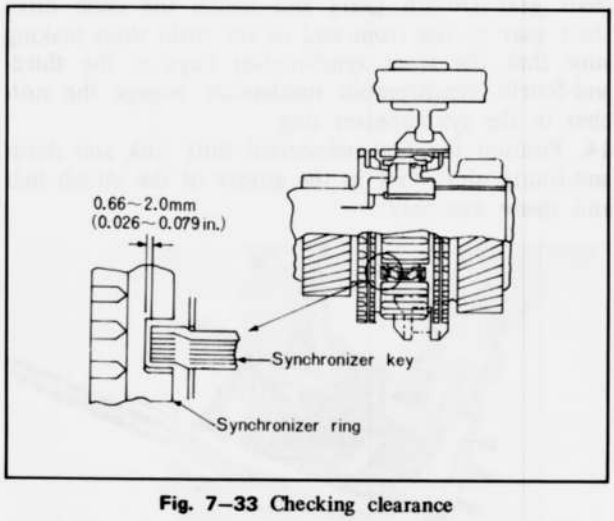

Fig. 7–33 Checking clearance

36. Install the two blind covers and gaskets to the case and tighten the attaching nuts.
37. Install the lock ball, speedometer drive gear and snap ring to the main shaft from the rear of the main shaft.



Fig. 7–34 Installing drive gear

38. Insert the gearshift control lever through the holes from the front of the extension housing. Position the woodruff key in place and slide the gearshift control lever end to the gearshift control lever. Secure the lever end to the control lever with the bolt.
39. Install the neutral switch to the extension housing and tighten the switch. (U.S.A. & Canada vehicles only)
40. Position the spring and friction piece in the extension housing and tighten the spring cap bolt to the extension housing.

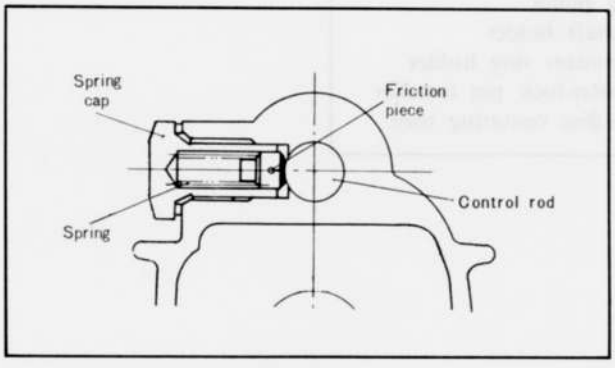

Fig. 7–35 Friction piece

41. Install the back-up lamp switch to the extension housing and tighten the switch.
42. Insert the speedometer driven gear assembly to the extension housing and secure it with the bolt and lock plate.
43. Place the gasket on the rear of the transmission case and position the extension housing on the transmission case with the gearshift control lever end laid down to the left as far as it will go. Tighten the attaching nuts.

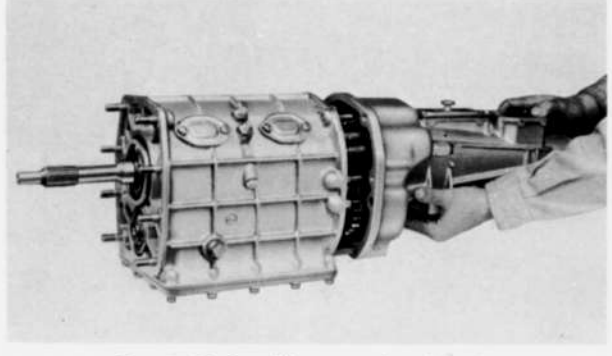

Fig. 7–36 Installing extension housing

44. Check to ensure that the gearshift control lever operates properly.
45. Install the transmission under cover to the case and tighten the attaching bolts.
46. Insert the select lock spindle and spring from the inside of the gearshift lever retainer. Position the lock ball and spring in alignment with the select lock spindle and tighten the spring cap bolt.

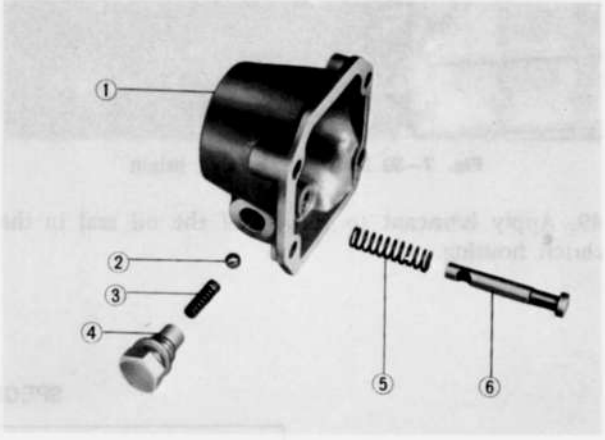

Fig. 7–37 Gearshift lever retainer

1. Retainer
2. Locking ball
3. Spring
4. Spring cap bolt
5. Spring
6. Select lock spindle

47. Position the gasket and gearshift lever retainer to the extension housing, and tighten the attaching bolts.
48. Check the bearing end play as follows :
Measure the depth of the main drive shaft bearing bore in the clutch housing using a depth gauge. Then, measure the bearing height. The difference between two measurements indicates the required thickness of the adjusting shim. The standard end play is **0 ~ 0.1 mm (0 ~ 0.0039 in)**. If necessary, select and use the properly sized shim.
The shims are available in the following thickness :

0.1 mm (0.0039 in)	0.3 mm (0.0118 in)



Fig. 7–38 Measuring bearing bore depth

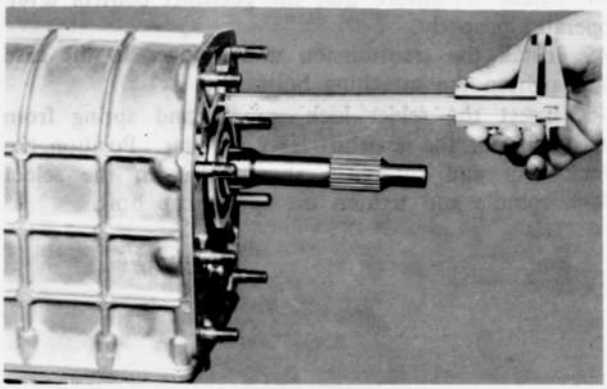

Fig. 7–39 Measuring bearing height

49. Apply lubricant to the lip of the oil seal in the clutch housing.

50. Place the gasket on the front side of the case and install the clutch housing to the case. Tighten the attaching nuts.
51. Install the release bearing, release fork and release fork boot to the clutch housing.

7–G. TRANSMISSION INSTALLATION

Follow the removal procedures in the reverse order.

Note :
(a) Apply a thin coat of grease to the splines of the main drive shaft.
(b) Use the **clutch disc centering tool** (49 0813 310) to align the splines of the main drive shaft and clutch disc.
(c) Fill the transmission case with lubricant until the lubricant overflows from the level hole.

SPECIAL TOOLS

49 0839 425A	Bearing puller
49 0259 440	Main shaft holder
49 0839 445	Synchronizer ring holder
49 0862 350	Shift inter-lock pin installer
49 0813 310	Clutch disc centering tool

AUTOMATIC TRANSMISSION

7B–A. TROUBLE DIAGNOSIS AND ADJUSTMENT ..... 7B : 2
7B–B. ITEMS TO CHECK AND ADJUST .... 7B : 2
7B–B–1. Torque Converter Oil ..... 7B : 2
a. Oil level check ..... 7B : 2
b. Oil leakage check ..... 7B : 2
c. Oil condition check ..... 7B : 2
7B–B–2. Engine Idling Speed ..... 7B : 2
7B–B–3. Kick-Down Switch and Down Shift Solenoid ..... 7B : 2
7B–B–4. Manual Linkage ..... 7B : 3
7B–B–5. Inhibitor Switch ..... 7B : 3
7B–C. DIAGNOSTIC TEST ITEMS ..... 7B : 4
7B–C–1. Stall Test ..... 7B : 4
a. Stall test procedure ..... 7B : 4
b. Judgement ..... 7B : 4
7B–C–2. Road Test ..... 7B : 5
a. Shift point check ..... 7B : 5
b. Shift point check procedure ..... 7B : 5
c. Other checks in driving ..... 7B : 5
7B–C–3. Oil Pressure Test ..... 7B : 6
a. Line pressure test ..... 7B : 6
b. Line pressure test procedures ..... 7B : 6
c. Diagnosis from measurements ..... 7B : 6
d. Governor pressure test ..... 7B : 6
7B–D. TROUBLE DIAGNOSIS CHART ..... 7B : 7
7B–D–1. Items to Check ..... 7B : 7
7B–D–2. Trouble Diagnosis Chart .... 7B : 7
7B–E. REMOVAL OF TRANSMISSION ..... 7B : 9
7B–F. DISASSEMBLY OF TRANSMISSION COMPLETE ..... 7B : 10
7B–F–1. Disassemble Procedure ..... 7B : 10
7B–G. OVERHAUL OF MAIN COMPONENTS ..... 7B : 11
7B–G–1. Torque Converter ..... 7B : 11
7B–G–2. Front Clutch Assembly ..... 7B : 11
7B–G–3. Rear Clutch Assembly ..... 7B : 12
7B–G–4. Low and Reverse Brake Assembly ..... 7B : 13
7B–G–5. Band Servo ..... 7B : 14
7B–G–6. Governor Valve Assembly.. 7B : 15
7B–G–7. Oil Pump Assembly ..... 7B : 16
7B–G–8. Control Valve Assembly .... 7B : 17
7B–G–9. Bearing and Bearing Race... 7B : 18
7B–G–10. Other Component Parts ..... 7B : 18
a. Front planet carrier assembly rear planet carrier assembly, input shaft and output shaft ..... 7B : 18
b. Shell and sun gear assembly ..... 7B : 19
c. Internal drive flange assembly ..... 7B : 19
d. Connecting drum assembly ..... 7B : 19
e. Manual control system and parking lock system ..... 7B : 19
7B–H. REASSEMBLY OF TRANSMISSION ... 7B : 19
7B–I. INSTALLATION AND ADJUSTMENT OF TRANSMISSION ..... 7B : 22
SERVICE SPECIAL TOOLS ..... 7B : 23

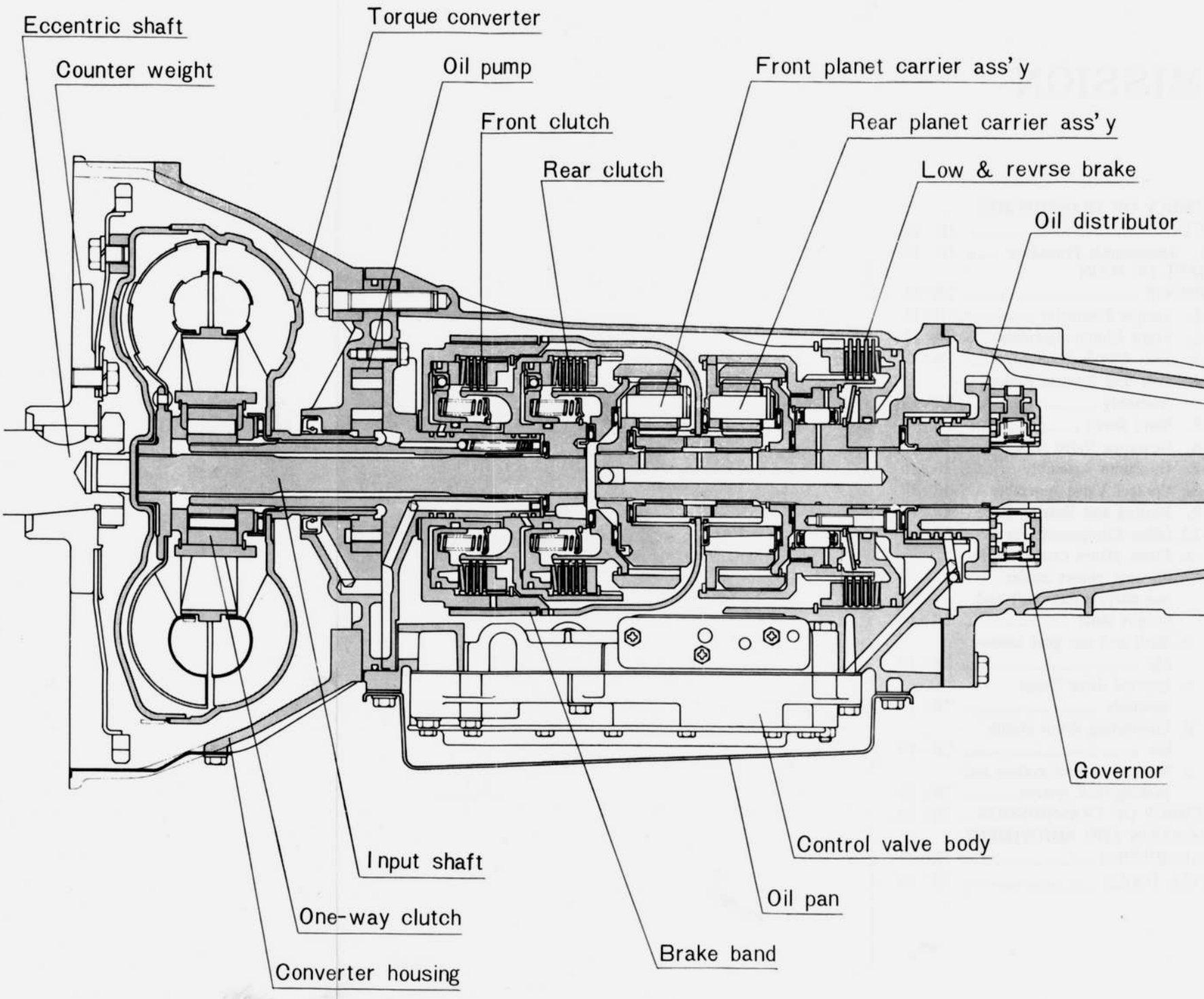
Eccentric shaft
Counter weight
Torque converter
Oil pump
Front clutch
Rear clutch
Front planet carrier ass'y
Rear planet carrier ass'y
Low & revrse brake
Oil distributor
Governor
Control valve body
Oil pan
Brake band
Input shaft
One-way clutch
Converter housing

7B–A. TROUBLE DIAGNOSIS AND ADJUSTMENT

In trouble-shooting an automatic transmission it is necessary first of all to correctly define a faulty phenomenon, and then make efficient and orderly check to determine possible causes so that a proper remedy can be effected.

To grasp a faulty phenomenon. check whether the automatic transmission functions normally in all aspects under all conditions including starting, running and stopping. Find out a corresponding trouble from among the troubles in the TROUBLE DIAGNOSIS CHART, and check "Items to Check" in the sequence as indicated.

In diagnosing according to the TROUBLE DIAGNOSIS CHART, make sure to first check and adjust the following items (described in 7B–B):

1. Oil level
2. Idling speed
3. Down-shift solenoid and kickdown switch
4. Manual linkage
5. Inhibitor switch

It is meaningless to proceed to check other items without checking the above items carefully.

In the case of the automatic transmission particularly, there are a great number of troubles which can be solved by inspecting and regulating the above items with the transmission mounted on the vehicle.

So do not remove or disassemble the transmission without checking such items first. Also there are some troubles which require further detailed diagnostic tests including stall test, road test and hydraulic pressure test before removing the transmission from the vehicle. Such tests are described in 7B–C.

If a trouble should prove not correctable by inspection, adjustments and repairs made according to TROUBLE DIAGNOSIS CHART with the transmission installed, that is, if removal and overhauling are indicated by diagnosis, only then, the transmission should be removed and overhauled in the procedure mentioned later.

7B–B. ITEMS TO CHECK AND ADJUST

7B–B–1. Torque Converter Oil

a. Oil level check

Put the vehicle on a level surface and run the engine approximately two minutes at 1,200 rpm. Then move the manual lever through all driving ranges applying brake with the engine idling condition. Place the manual lever in "P". Insert the dipstick fully and take it out quickly before splashing oil adheres to the gauge, and then observe the level on the dipstick. The oil level must be somewhere between L and F marks and never be outside the limits.

Note :

1. The recommended oil is Genuine Automatic Transmission Fluid M2C33F (Type F) or Automatic Transmission Fluid M2C33F (Type F) of any make. Do not mix with other type of automatic transmission fluid than mentioned above.
2. Periodic oil change is not necessary, but the oil level must be checked at lest every 6,000 km (4,000 miles).
3. The total amount of oil is 6.2 liters (13.1 U.S. pints, 10.9 Imp. pints. 6.6 U.S. quarts) and the difference between the amounts shown by L and F marks on the dipstick is about 0.45 liter (1.0 U.S. pints, 0.8 Imp. pints, 0.5 U.S. quart).

b. Oil leakage check

When the oil level is lower than specified, add it and at the same time check carefully for possible leaks and repair any if found.

Note :

1. Torque converter oil is of a red-wine color and is distinguishable from engine oil.
2. In checking for possible leak from the transmission breather pipe, jack up one of the rear wheels and run the engine to simulate the running condition. When the oil level is over the "F" limit, the oil never fails to spurt out from the breather pipe. When water is contained in it, the oil sometimes spurts out even when the oil level is within the specified range.

c. Oil condition check

In checking the condition of oil by the oil sticking on the dipstick, note that, if the oil appears like varnish, it might cause control values to stick, and if it is black, it shows that linings of clutch or brake band have been scorched. In case such oil deterioration is found severe, it sometimes indicates that overhaul should be made without conducting tests listed in TROUBLE DIAGNOSIS CHART. If it is difficult to readily determine whether or not to make such tests, oil should be drained for confirmation.

7B–B–2. Engine Idling Speed

The engine idling speed should be properly adjusted to the specified revolution by using a tachometer for servicing rather than the one installed on the vehicle. If the engine idling speed is too low, the engine cannot revolve smoothly and when it is too high, shifts from "N" or "P" to other ranges will be harsh with increased shock or creep. Adjust the engine idling speed to 750 rpm in "D" range.

7B–B–3. Kick-down Switch and Downshift Solenoid

Position the ignition switch at the first stage after making sure that the accelerator pedal goes through the entire stroke properly. Depress the accelerator pedal as far as it goes. As the throttle nears the wide-open position, the contact point of the kick-down switch is closed with a light click from the solenoid.

The kick-down switch must begin to operate in between 7/8–15/16 of the entire pedal travel or full

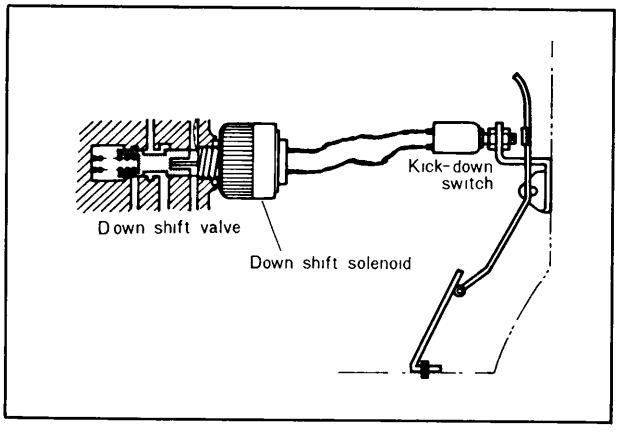

Fig. 7B–2 Kick-down switch and down shift solenoid

throttle. If not, adjust the kick-down switch. If the solenoid should not make any clicking sound it indicates some abnormality, so check with a tester must be made.

Note :
When the solenoid is removed for replacing, some one liter of fluid leaks out. So a receptacle should be made ready to catch it.

7B–B–4. Manual Linkage

The adjustment of linkage is equally important as "Inspection of oil level" for the automatic transmission. Therefore, great care should be exercised because defective adjustment will result in the breakdown of the transmission.
Pull the manual lever toward you and turn it so far as "P" to "1" range, where clicks will be felt by hand. This is the detent of manual valve in the body, and indicates the correct position of the lever. Inspect whether the pointer of selector dial corresponds to this point, and also whether the lever comes in alignment with the stepping of position plate when it is released.
When the position of the manual lever is found incorrect, disconnect the T joint on the lower rod, and place in "N" the range select lever on the transmission (where the slot of the manual shaft is positioned vertically).

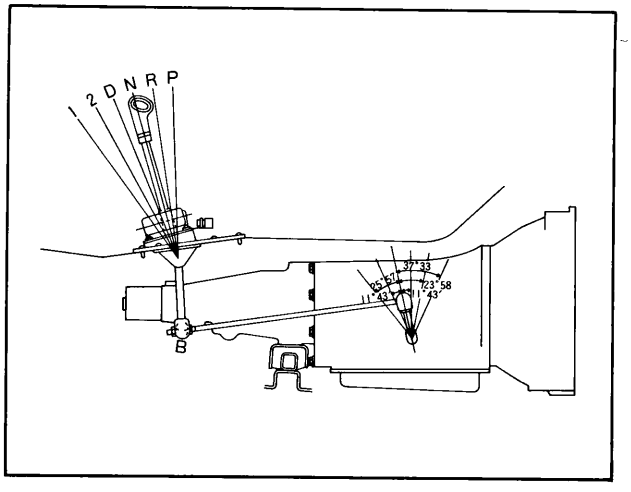

Fig. 7B–3 Manual linkage

Adjust the position of the manual lever by turning the T joint so as to position the manual lever in "N". Finally make sure that the lever travels to "P" and "1" ranges correctly. Check at the same time to see that the linkage has no looseness.

7B–B–5. Inhibitor Switch

The inhibitor switch permits the reverse lamp to light up only when "R" range is selected and the starter motor to revolve only when the lever is in "N" or "P" position, so that when "D", "2" or "1" is selected, the reverse lamp does not light up and the starter motor cannot revolve.
If any abnormality is found in any range, check and adjust the manual linkage; if the manual linkage is found normal, then check the inhibitor switch.
Engage the manual lever in each range and check the connection of the inhibitor switch with a tester. Check also the extent through which the electrical connection is made for "R", "N" and "P". If anything wrong is revealed as a result of the conductivity check of the inhibitor switch, make adjustments in the following procedures.

1. Adjust the select lever so that the clearance between pin and guide plate will be 0 ~ 0.3 mm when the lever is in "N" position by using the adjusting nut "B" of the rod.
2. Adjust the inhibitor switch so that the pin hole of the switch body will be aligned with the pin hole of the sliding plate when the select lever is in "N" position.
3. The starter switch should turn on only when "N" and "P" range are selected.

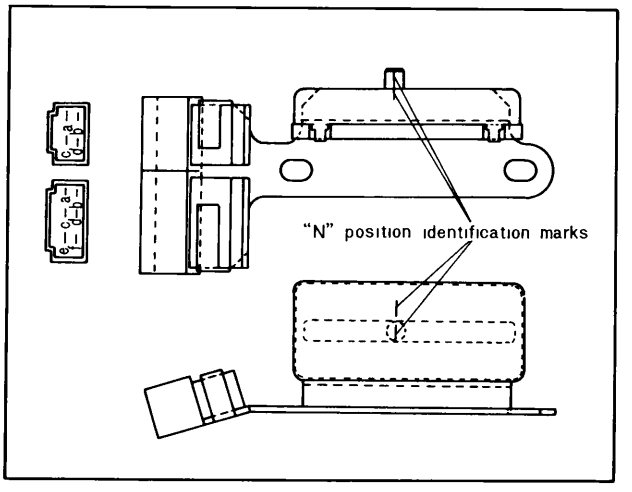

Fig. 7B–4 Inhibitor wiring

Color	
GL	Warning lamp "P" ~ Inhibitor switch
GB	Warning lamp "N" ~ Inhibitor switch
GR	Warning lamp "D" ~ Inhibitor switch
GW	Warning lamp "2" ~ Inhibitor switch
G	Warning lamp "1". ~ Inhibitor switch
BY	Starter switch ~ Inhibitor switch
RY	Reverse lamp ~ Inhibitor switch
GY	Fuse box Ig. ~ Inhibitor switch
BY	Key switch St. ~ Inhibitor switch

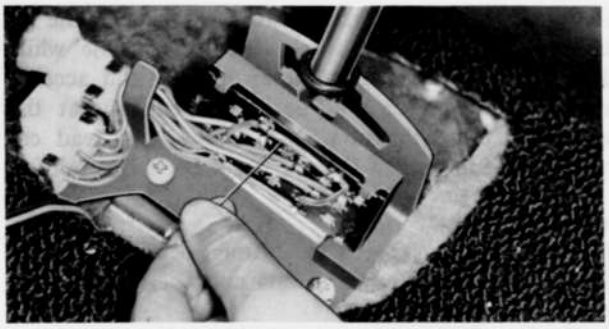

Fig. 7B–5 Inhibitor switch

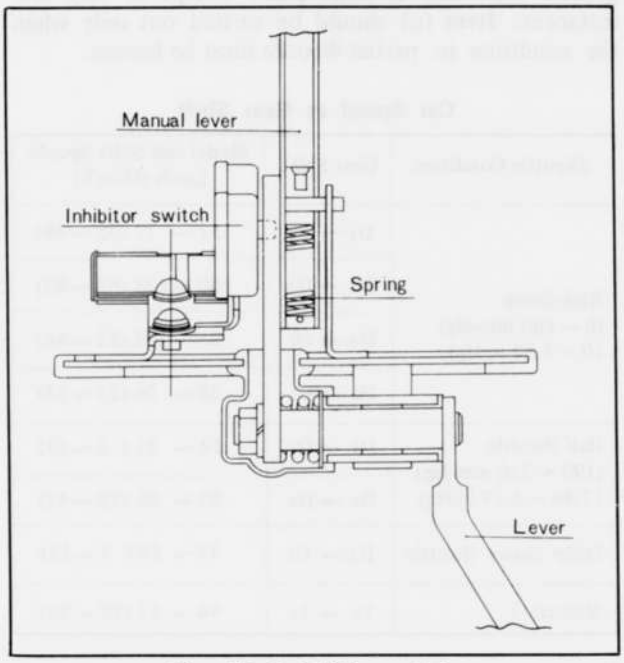

Fig. 7B–6 Inhibitor switch

7B–C. DIAGNOSTIC TEST ITEMS

Make sure that all the inspection items described in 7B–B are normal before starting the diagnostic tests– stall test, road test and oil pressure test.

7B–C–1. Stall Test

The purpose of this test is to check the transmission and engine for trouble by measuring the maximum numbers of the engine revolutions while the vehicle is held in a stalled condition and the carburetor is in full throttle operation with the manual lever in ranges "D", "2", "1" and "R" respectively and by comparing the measured results with the standard values.

The specified stall revolution is in the following table.

Stall revolution (rpm)	
In breaking in	After breaking in
2,400 ~ 2,650	2,450 ~ 2,700

a. Stall test procedure

1. Check the levels of engine coolant, engine oil and torque converter oil. Warm up the engine at about 1,200 rpm for several minutes with the manual lever in "P" in order to heat the torque converter oil to a suitable temperature of 60° ~ 100°C (140° ~ 212°F).
2. Mount the engine tachometer at a location that allows good visibility from the driver's seat and put a mark on specified revolutions on the meter.
3. Secure the front and rear wheels completely with chocks and apply the hand brake. Be sure to depress the brake pedal firmly with the left foot before depressing down the accelerator pedal.
4. Place the manual lever in "D" range.
5. Gradually step on the accelerator pedal to the wide-open position. As soon as the engine speed becomes constant, read the engine speed and release the accelerator pedal.
6. Place the manual lever in "N" or "P" and run the engine at about 1,200 rpm for more than one minute to cool down the torque converter oil and coolant.
7. Proceed to do the stall test for "2", "1'. and "R" in the same manner as for "D".

Note :

The stall test operation as specified in the item (5) should be made within five seconds. If it takes too long, the oil deteriorates and the clutches, brake and band are adversely affected. Sufficient cooling time should be given between each test for the four ranges "D", "2", "1" and "R".

b. Judgement

By comparing the measured stall speed and the specified one, troubles can be surmised as follows :

1. Standard stall revolution

Both transmission control elements and engine performance are normal, and the one-way clutch of the torque converter is not slipping though whether or not there is sticking is unknown.

* In the road test, if the maximum speed cannot be attained and the torque converter oil is found to be at unusually high temperature, the one-way clutch of the torque converter is diagnosed to be sticking.

2. High stall revolution more than standard revolution.

If the engine revolution in stall condition is higher than the standard values, it indicates that one or more clutches in the transmission are slipping and, therefore, no further test is required. For the following abnormalities, the respective causes are presumed.

High rpm in all ranges
Line pressure is low or all clutches, brake and band are slipping.

High rpm in "D", "2" and "1" (normal in "R")
The rear clutch is slipping.

High rpm in "D" (normal in "2", "1" and "R")
The one-way clutch is slipping.

High rpm in "R" (normal in "D", "2" and "1")
The front clutch or the low and reverse brake is slipping.

* In the road test, if there is no engine braking in "1" range, the low and reverse brake is slipping, and if there is engine braking in "1" range, the front clutch is slipping.

High rpm in "2" (normal in "D", "1" and "R")
The band is slipping.

3. Low stall revolution less than standard
The one-way clutch of the torque converter is slipping, or the engine performance is poor.
* In the road test, if poor acceleration is noted at various speeds, indicates poor engine performance or incorrect engine adjustment. In case the starting acceleration is poor while acceleration at high speeds is normal, the one-way clutch of the torque converter is slipping.

7B–C–2. Road Test
An accurate knowledge of the automatic transmission is prerequisite to its exact diagnosis by a road test.
The purpose of road test is to make a comprehensive check of the transmission under varying running conditions to detect and analyze troubles and to clear up the cause of troubles.

a. Shift Point Check
Check to see that the up-shift and down-shift occur within the range specified in the shift point table below, following the checking procedures.

b. Shift point check procedure
1. Make sure that the tire air pressure is in the standard range and preheat the converter oil to appropriate temperature about 60 ~ 100°C (140 ~ 212°F) in engine idling condition.
2. Place the manual lever in "D" range and accelerate in wide open throttle (kick-down switch energized), and read the car speed at the instant of $D_1 \rightarrow D_2$ and $D_2 \rightarrow D_3$ up-shifts with speedometer which is installed on this car.
3. Drive the car with the manual lever in "D". When it is running at a constant speed in D_3, depress the accelerator pedal to the full (the kickdown switch energized) and make sure that $D_3 \rightarrow D_2$ shift occurs. Continue this check at higher speeds until a critical speed from which that down-shift does not occur any more is reached. Proceed to check the critical speed for $D_2 \rightarrow D_1$ kick-down by using the same method. Shift-down can be noted by a shift shock or change in engine sound.
4. When the car is running in D_3 at a speed about 60 km/h (45 mile/h), release the accelerator pedal completely and read the car speed just when $D_3 \rightarrow D_1$ down shift occurs at the fully closes throttle condition.
5. When the car is running in D_3 at a speed more than 60 km/h (45 mile/h), place the manual lever from "D" into "1", and read the car speed just when $1_2 \rightarrow 1_1$ downshift occurs.

Note :
Care must be taken not to shift from "D" to "1" (from "2" to "1") in exceeding the speed in "2" range ("1" range) shown below to avoid the engine overrun.

Engine Max. speed (rpm)	"1" Range	"2" Range
	Km/h (Mile/h)	Km/h (Mile/h)
6,500	70 (45)	120 (75)

6. Connect a vacuum gauge into the socket in the intake manifold and set it so that it is visible while driving. Place the manual lever in "D" and accelerate with accelerator pressure controlled so that the vacuum gauge will show 200 mm-kg, and read car speed at the instant of $D_1 \rightarrow D_2$ and $D_2 \rightarrow D_3$ upshifts.

Note :
1. In reading car speeds at shifting, acceleration and deceleration around shift points must be made gently except for (2) above.
2. Checks of (2), (3) and (4) above should indicate general condition of shift point except in very rare instances. Item (6) should be carried out only when the condition in partial throttle must be known.

Car Speed at Gear Shift

Throttle Condition	Gear Shift	Model and Shift Speeds Km/h (Mile/h)
Kick-down (0 ~ 100 mm-Hg) (0 ~ 3.94 in-Hg)	$D_1 \rightarrow D_2$	57 ~ 77 (35 ~ 48)
	$D_2 \rightarrow D_3$	100 ~ 128 (62 ~ 80)
	$D_3 \rightarrow D_2$	85 ~ 109 (53 ~ 68)
	$D_2 \rightarrow D_1$	38 ~ 56 (23 ~ 35)
Half throttle (190 ~ 210 mm-Hg) (7.48 ~ 8.27 in-Hg)	$D_1 \rightarrow D_2$	14 ~ 31 (8 ~ 19)
	$D_2 \rightarrow D_3$	30 ~ 66 (19 ~ 41)
Fully closes throttle	$D_3 \rightarrow D_1$	11 ~ 19 (7 ~ 12)
Manual 1	$1_2 \rightarrow 1_1$	44 ~ 57 (27 ~ 36)

Note :
The shift speeds in the above table include the permissible allowance of a speedometer on the car. Therefore check the shift speed with the speedometer on the car.

c. Other checks in driving
1. Check each range for faulty performance or shifting. Check to see, for instance, that :
(1) Firm locking is effected when "P" is selected.
(2) Reversing is effected when "R" is selected.
(3) Completely neutral condition is attained by selecting "N".
(4) $D_1 \leftrightarrow D_2 \leftrightarrow D_3$ shifts take place in "D" range.
(5) Kick-down takes place.
(6) When "1" is selected from "D", there occur $D_3 \rightarrow 1_2 \rightarrow 1_1$ or $D_3 \rightarrow 1_1$ shifts with engine braking effected in I_2 and I_1.
(7) The transmission does not shift up in "I" range.
(8) In "2" range, the transmission is fixed to 2nd speed.
2. Check to see that shifting is smooth without conspicuous shock and there is no marked creep. (Slight creep in each range is normal.)
3. Check to see that shifts are effected promptly without drag.
4. Check for abnormal gear noise, clutch, band squeal, poor acceleration or oil leak.

7B–C–3. Oil Pressure Test

When there is slippage in the gear train or when shifts do not feel proper, line pressure and governor pressure must be checked.
The following chart shows standard line pressures (before cut back).

Manual Range	Line Pressure kg/cm² (lb/in²)	
	Engine Idling	Stall
"R"	4.0 ~ 7.0 (57 ~ 100)	15.5 ~ 19.0 (220 ~ 270)
"D"	3.0 ~ 4.0 (43 ~ 57)	9.5 ~ 11.0 (135 ~ 156)
"2"	8.0 ~ 12.0 (114 ~ 170)	10.0 ~ 12.0 (142 ~ 170)
"1"	3.0 ~ 4.0 (43 ~ 57)	9.5 ~ 11.0 (135 ~ 156)

a. Line pressure test

Place the transmission in "D", "2", "1" and "R", and check respective line pressure at engine idling and stall conditions. Compare the results with specified pressures to trace the cause of trouble.

b. Line pressure test procedures

1. Warm up the engine to bring the converter oil to operating temperature 60°~ 100°C (140 ~ 212°F).
2. Line pressure for "R" range is taken out at an inspection hole at the right front of the transmission case, and for "D", "2" and "1" ranges the inspection hole is at the right rear. Connect a pressure gauge to the inspection hole and put it where it is visible from the driver's seat.
3. Firmly check the front and rear wheels and apply the hand brake as in the stall test.
4. With the manual lever put in the range to be checked, run the engine at engine idling condition and read the pressure gauge.
5. With the brake pedal depressed fully, press the accelerator pedal gradually to the wide open position. While checking whether the pressure rises smoothly, read the pressure gauge at the stall condition. The test time from starting accelerator depression to its release must not exceed 5 seconds.
6. Measure line pressure for each of other ranges in the same manner. Be sure to interpose more than one minute cooling time at 1,200 rpm with the manual lever placed in "P" or "N".
7. After aboves, check whether the cut-back function to release the shock at gear shifting is operative properly. The cut-back function can be judged normal if the line pressure drops suddenly when the car is accelerated gradually and reaches to the certain running speed.

c. Diagnosis from measurements

1. When line pressure at idling is low in all of "R", "D", "2" and "1", possible causes include a fault in the pressure supply system, e.g. increased side clearance in the oil pump, reduced pump output because of bolts left untightened, oil leak from pump, valve body or transmission case, and sticking of regulator valve or vacuum throttle valve.
2. In case line pressure at idling is low in one range only, there probably are pressure leaks in some devices or oil passages for the relevant range.
3. In case line pressure at idling is high in all ranges, possible cause is throttle pressure rise due to leak from vacuum tube or vacuum diaphragm, or regulator valve sticking.
4. When pressure does not rise at stall condition, the vacuum rod possibly may not be installed.
5. When pressure rise is not smooth or pressure at stall condition does not come within the specified range, possible cause is sticking of vacuum throttle valve, pressure regulator valve or pressure regulator plug.

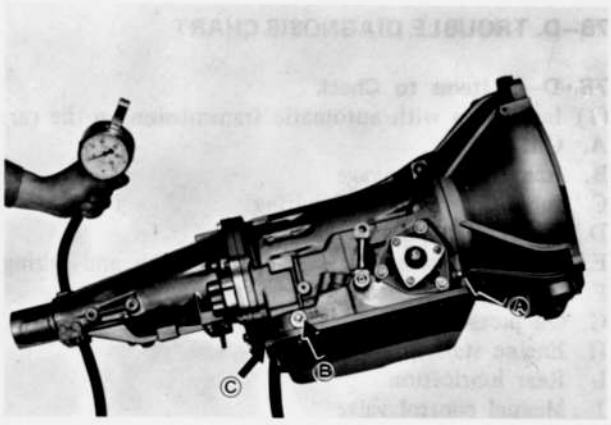

Fig. 7B–7 Oil pressure test
A. For line pressure in "R" range
B. For line pressure in forward ranges
C. For governor pressure

D. Governor pressure test

Governor pressure has only to be measured when shift point is different from the specified.
Connect a pressure gauge in the inspection hole on the left rear of transmission case, and put it where it is visible during driving. Read governor pressure when the car is going at required speeds for each model. If the result is out of the specified range shown in the following table, disassemble and check the governor valve.

Governor Pressure (1)

Driving speed	Output shaft speed rpm	Standard governor pressure kg/cm²	lb/in²
30 km/h	950 ~ 1,065	0.8 ~ 1.3	11 ~ 18
55 km/h	1,785 ~ 1,900	1.5 ~ 2.2	21 ~ 31
85 km/h	2,765 ~ 2,910	2.7 ~ 3.6	38 ~ 51
20 mile/h	1,030 ~ 1,130	0.8 ~ 1.3	11 ~ 18
35 mile/h	1,830 ~ 1,960	1.5 ~ 2.2	21 ~ 31
55 mile/h	2,900 ~ 3,050	3.0 ~ 3.9	43 ~ 55

Governor Pressure (2)

Break point	at 1,000 rpm	at 2,000 rpm	at 3,000 rpm
400~600 rpm	0.9~1.3 kg/cm² (13~18 lb/in²)	1.6~2.2 kg/cm² (23~28 lb/in²)	3.0~3.8 kg/cm² (43~54 lb/in²)

7B–D. TROUBLE DIAGNOSIS CHART

7B–D–1. Items to Check

(1) Inspection with automatic transmission on the car.

A. Oil level
B. Range select linkage
C. Inhibitor switch and wiring
D. Vacuum diaphragm and piping
E. Downshift solenoid, kick-down switch and wiring
F. Engine idling speed
G. Oil pressure
H. Engine stall speed
I. Rear lubrication
J. Manual control valve
K. Governor valve
L. Band servo
M. Transmission air check
N. Oil drain check
O. Ignition switch and starter motor
P. Engine adjustment and brake inspection

(2) Inspection after inspecting automatic transmission on the car.

a. Rear clutch
b. Front clutch
c. Band brake
d. Low & reverse brake
e. Oil pump
f. Leak from hydraulic passages
g. One-way clutch in torque converter
h. One-way clutch in power train
i. Front clutch check ball
j. Parking linkage
k. Planetary gear

7B–D–2. Trouble Diagnosis Chart

The numerals show the sequence of inspection for detecting trouble.

Trouble	A	B	C	D	E	F	G	H	I	J	K	L	M	N	O	P	a	b	c	d	e	f	g	h	i	j	k
Engine won't start in "N" and "P" ranges		2	3												1												
Engine starts in other ranges than "N" and "P" ranges		1	2																								
Excessive shock on "N" →"D" range shift				2		1	3			4							⑤										
Car won't move in "D" range (but moves in "2", "1" and "R" ranges)		1					2			3														④			
No drive, excessive slip or very poor acceleration in "D", "2" or "1" range (Driver in "R" range)	1	2					4			5			6	3		7	⑧	⑩				⑨					
No drive, excessive slip or very poor acceleration in "R" range (but Drives in "D", "2" and "1" ranges)	1	2					3			5			6	4			⑨	⑧		⑦		⑩			⑪		
Car won't move in any range	1	2					3			5			6	4							⑦	⑧				⑨	
Tendency to slip when starting	1	2		6			3			5			7	4							⑧	⑨					
Car moves in "N" range		1								3				2			④										
Maximum speed too low and poor acceleration	1	2					4	5		7		6		3		8	⑪	⑫	⑨	⑩	⑬						
Car braked when "R" range is selected												3	2	1			④		⑤							⑥	
Excessive creep						1																					
No creep at all	1	2				3				5				4			⑧	⑨			⑥	⑦					
No D1 →D2 change		1		2	3					5	6	8	7	4					⑨			⑩					
No D2 →D3 change		1		2	3					5	6	8	7	4				⑨				⑩			⑪		
D1 →D2 and D2 →D3 shift-points too high				1	2		3			5	6			4								⑦					
D1 →D3 change without through D2										2	4		3	1				⑤				⑥					
Excessive shock on D1 →D2 change				1				2		4		5		3					⑥								

Trouble	A	B	C	D	E	F	G	H	I	J	K	L	M	N	O	P	a	b	c	d	e	f	g	h	i	j	k
Excessive shock on $D_2 \rightarrow D_3$ change	.	.	.	1	.	.	2	.	.	3	.	5	4	.	.	.	.	⑥	.	.	.	.	.	.	.	.	.
Practically no shift shock or excessive slip on $D_1 \rightarrow D_2$ change	1	2	.	3	.	.	4	.	.	6	.	8	7	5	.	.	.	.	⑨	.	.	⑩	.	.	.	.	.
Practically no shock; or excessive slip; or engine runaway on $D_2 \rightarrow D_3$ change	1	2	.	3	.	.	4	.	.	6	.	8	7	5	.	.	.	⑨	.	.	.	⑩	.	.	⑪	.	.
Car braked on $D_1 \rightarrow D_2$ change	.	.	.	.	.	.	.	.	.	2	.	.	.	1	.	.	.	④	.	③	.	.	.	⑤	.	.	.
Car braked on $D_2 \rightarrow D_3$ change	.	.	.	.	.	.	.	.	.	3	.	2	.	1	.	.	.	.	④	.	.	.	.	.	.	.	.
No $D_3 \rightarrow D_2$ change	.	.	.	1	.	.	.	.	.	3	4	6	5	2	.	.	.	⑦	⑧	.	.	⑨	.	.	.	.	.
No $D_2 \rightarrow D_1$ or $D_3 \rightarrow D_1$ change	.	.	.	1	.	.	.	.	.	3	4	6	5	2	.	.	.	.	⑦	.	.	.	.	⑧	.	.	.
Shift shock felt when accelerator is released and deceleration occurs	.	1	.	2	3	.	4	.	.	5	6	.	.	.	.	.	.	.	.	.	.	⑦	.	.	.	.	.
$D_3 \rightarrow D_2$ and $D_2 \rightarrow D_1$ shift-points too high	.	1	.	2	3	.	4	.	.	5	6	.	.	.	.	.	.	.	.	.	.	⑦	.	.	.	.	.
No kick-down on accelerator depression in D_3 (within kick-down speed limits)	.	.	.	2	1	.	.	.	.	4	5	.	.	3	.	.	.	.	⑥	.	.	⑦	.	.	.	.	.
Abnormal rise of engine speed on accelerator depression in D_3 (above kick-down upper limit)	.	1	.	2	.	.	3	.	.	5	6	.	7	4	.	.	.	⑧	.	.	.	⑨	.	.	.	.	.
Engine runaway or slip on $D_3 \rightarrow D_2$ change	.	.	.	1	.	.	2	.	.	4	.	6	5	3	.	.	.	⑦	⑧	.	.	⑨	.	.	⑩	.	.
No $D_3 \rightarrow 2$ change on "D" $\rightarrow$ "2" range shift	.	1	.	.	.	.	2	.	.	4	.	5	.	3	.	.	.	.	⑥	.	.	⑦	.	.	.	.	.
$2 \rightarrow 1$, $2 \rightarrow D$, or $2 \rightarrow D_3$ change in "2" range	.	1	.	.	.	.	2	.	.	3	.	.	.	.	.	.	.	.	.	.	.	.	.	.	.	.	.
No shift shock or engine run-away on "1" $\rightarrow$ "2" range shift	1	2	.	3	.	4	.	1	.	6	.	.	7	5	.	.	.	.	⑨	.	⑩	.	.	.	.	.	.
No $D_3 \rightarrow 1_1$ change on "D" $\rightarrow$ "1" range shift	.	1	.	.	.	.	2	.	.	4	5	7	6	3	.	.	.	⑧	⑨	.	.	⑩	.	.	.	.	.
No engine braking in "1" range	.	1	.	.	.	.	2	.	.	4	.	.	5	3	.	.	.	.	.	⑥	.	⑦	.	.	.	.	.
$1 \rightarrow 2$ or D_2 change, or 2 or $D_2 \rightarrow D_3$ change in "1" range	.	1	.	.	.	.	.	.	.	2	.	.	.	.	.	.	.	.	.	.	.	③	.	.	.	.	.
No $1_2 \rightarrow 1_1$ change on "D" $\rightarrow$ "1" range shift	1	2	.	.	.	.	.	.	.	4	5	6	7	3	.	.	.	.	.	⑧	.	⑨	.	.	.	.	.
Excessive shift shock on $1_2 \rightarrow 1_1$ change in "1" range	.	.	.	1	.	.	.	2	.	4	.	.	.	3	.	.	.	.	.	⑤	.	.	.	.	.	.	.
Car moves in "P" range, and parking gear not removed when "P" range is disengaged.	.	1	.	.	.	.	.	.	.	.	.	.	.	.	.	.	.	.	.	.	.	.	.	.	.	②	.
Transmission overheats	1	.	.	.	.	.	3	4	2	6	.	8	7	5	.	.	.	⑨	⑩	⑪	⑫	⑬	⑭	.	.	.	⑮
Oil spurting up or white exhaust during running	1	.	.	3	.	.	5	6	2	7	.	.	8	4	.	.	.	⑨	⑩	⑪	⑫	⑬	⑭	.	.	.	⑮
Offensive smell from oil charging pipe	1	.	.	.	.	.	.	.	.	.	.	.	.	2	.	.	③	④	⑤	⑥	⑦	⑧	⑨	.	.	.	⑩
Transmission noisy in "P" and "N" ranges	1	.	.	.	.	.	2	.	.	.	.	.	.	.	.	.	.	.	.	③	.	.	.	.	.	.	.
Transmission noisy in "D", "2", "1" and "R" ranges	1	.	.	.	.	.	2	.	.	.	.	.	.	.	.	.	③	.	.	④	.	.	⑤	.	.	.	⑥

7B–E. REMOVAL OF TRANSMISSION

When dismounting the automatic transmission from a vehicle, pay attention to the following point.
Before dismounting the transmission, rigidly inspect it by aid of the "Trouble Diagnosis Chart", and dismount it only when considered to be necessary. The transmission should be removed in the following sequence :

1. Remove the battery earth.
2. Remove the power brake vacuum pipe clip from the converter housing. (Left hand drive vehicles only)
3. Remove the service hole cover. To lock the drive plate, apply the wrench to the drive pulley lock bolt. Loosen and remove four bolts that attach the torque converter to the drive plate by using the **special wrench** (49 0877 435). At the same time, make aligning mark across torque converter and drive plate.
4. Jack up the vehicle and support it with safety stands.
5. Remove the screws attaching the heat insulator to the exhaust pipe and remove the heat insulator.
6. Remove the bolt and nut attaching the exhaust front pipe to the exhaust pipe bracket. Disconnect the exhaust front pipe flange from the exhaust manifold by removing nuts. Remove the bolts and nuts attaching the exhaust front pipe flange to the main silencer, and remove the exhaust front pipe.
7. Remove the bolts attaching the heat insulator to the underbody and remove the heat insulator.
8. Remove the four propeller shaft attaching bolts and remove the center bearing attaching bolts. Then pull it out from the extension housing. Apply a plug to prevent oil leak.

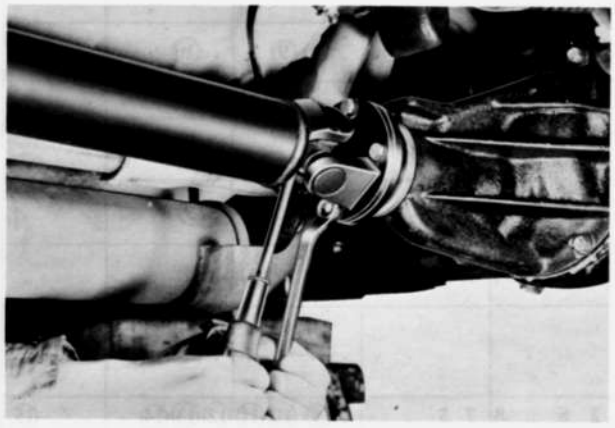

Fig. 7B–8 Removing propellar shaft

9. Disconnect the speedometer cable from the extension housing.
10. Disconnect the control rod by removing snap ring.
11. Disconnect the wirings from the starting motor. Loosen the upper and lower bolt attaching the starting motor to the converter housing and remove the starting motor.
12. Remove the undercover (or service cover) on the converter housing.
13. With the transmission supported with the transmission holder, remove the tightening nuts of the



Fig. 7B–9 Removing speedometer cable

transmission member and take out the member. Then lower the transmission holder, widen the clearance between the transmission and the floor.
14. Remove the vacuum union bolt from the inlet manifold. Remove the vacuum pipe clips from the converter housing, transmission case and extension housing. Disconnect the vacuum hose from the vacuum diaphragm and remove the vacuum pipe.
15. Disconnect the wire connections of down-shift solenoid and remove the wires from the clip.
16. Disconnect the feed pipe and return pipe for cooling on the left side of the transmission. Remove the feed pipe and return pipe clips from the converter housing and transmission case.

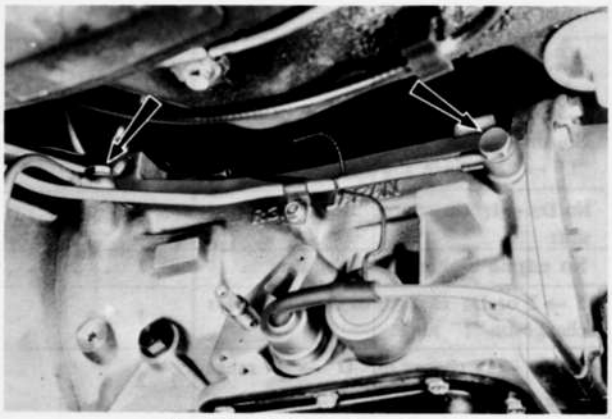

Fig. 7B–10 Removing pipes

17. Loosen and remove the bolts that connect the engine and the torque converter housing to disconnect the transmission and engine.



Fig. 7B–11 Bolts on engine & converter housing

18. Return the transmission to the level position. While slowly plying a screw driver or something between the converter and the drive plate, pull out the transmission rearward with the converter attached to it. Then lower the holder and dismount the transmission.

7B–F. DISASSEMBLY OF TRANSMISSION COMPLETE

Attention must be paid to the following matter in disassembling the transmission :

(1) Clean the outside of the transmission thoroughly before overhauling. In case of that, see that the steam does not enter the transmission and the gasoline is not used in using rubber parts.

(2) Disassembly should be made in a clean workshop, preferably in a dust-proof workshop.

7B–F–1. Disassembly Procedure

1. Remove the torque converter from the housing taking care not to have the converter oil spill.
Then tilt the transmission housing and drain the oil in the oil pan through the end of the extension housing into a vessel.
2. Loosen the bolt for the oil gauge tube and remove it together with the "O" ring.
3. Remove the connecting rod attached to the range select lever.
4. Loosen and remove the bolts that attach the converter housing and the transmission case, and remove the converter housing.

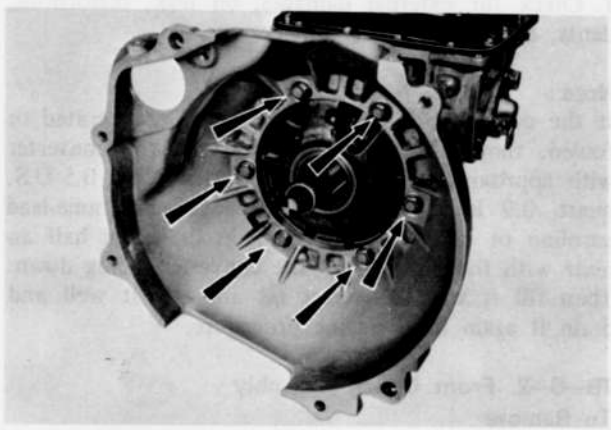

Fig. 7B–12 Bolts on converter housing

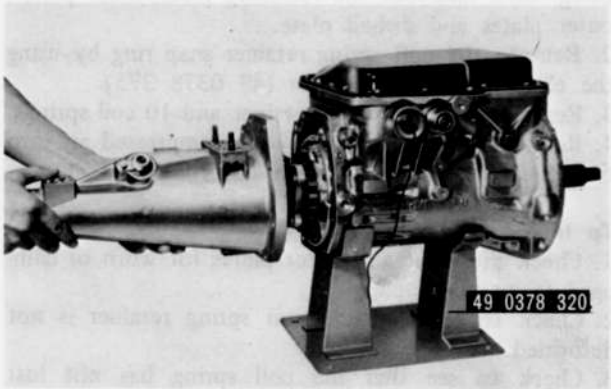

Fig. 7B–13 Removing extension housing

5. Loosen and remove the bolts that attach the extension housing and the transmission case, and pull out the extension housing rearward taking care so that the washer does not fall down. Then remove the parking pawl, spring and washer. Remove the gasket from the transmission case.
6. Loosen and remove out the oil pan bolts and take out the oil pan and the gasket.
7. Turn the downshift solenoid and the vacuum diaphragm unit by hand and remove them together with "O" rings. Take care not to forget taking out the vacuum diaphragm rod.

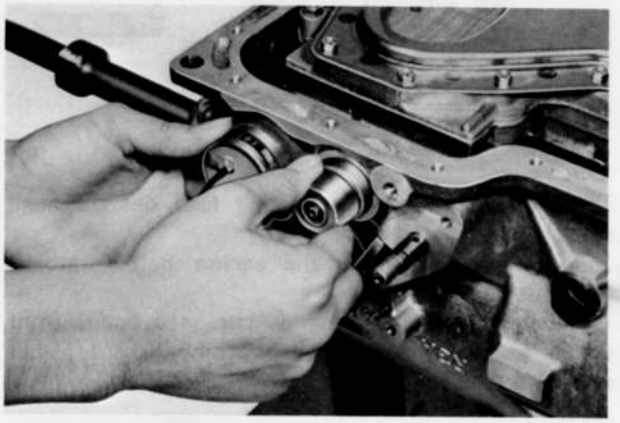

Fig. 7B–14 Removing downshift solenoid

8. Remove the control valve assembly by loosening out nine attaching bolts.

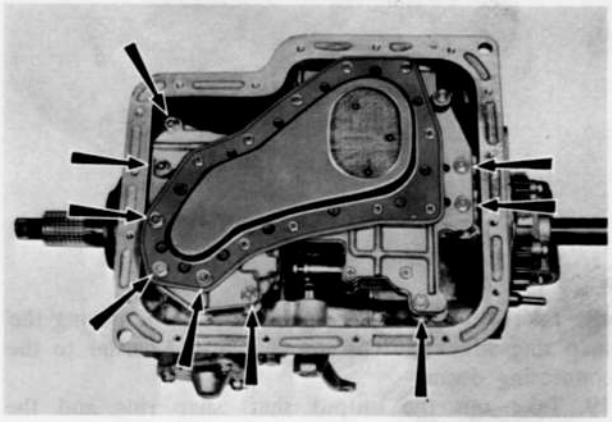

Fig. 7B–15 Control valve body ass'y setting bolts

9. Remove the nut attaching the range select lever to the manual shaft and remove the select lever.
10. Disconnect the parking rod from the parking lever by removing snap ring.
Loosen the nut attaching the manual plate to the manual shaft and remove the manual shaft from the transmission case tapping the manual shaft with the plastic hammer. Then, take out the manual plate, washer, nut and parking rod.
11. Pull out the input shaft.
12. Remove the bolts that attach the band servo cover to the servo retainer and remove the servo cover.
13. Loosen lock nut on piston stem. Then tighten piston stem in order to prevent to fall front clutch drum down when oil pump is withdrawn.

14. Pull out the oil pump with the **oil pump remover** (49 0378 390) and remove the gasket.

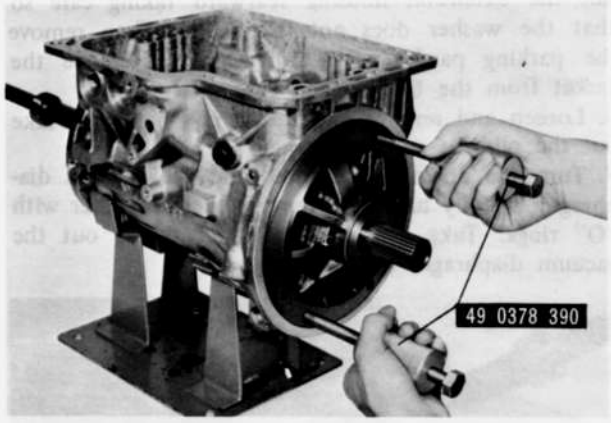

Fig. 7B–16 Removing oil pump

15. Loosen the piston stem and take out the band strut.
16. Loosen and remove the anchor bolt from the transmission case.
17. Remove the following as one set : band, front clutch assembly, rear clutch assembly, front planet carrier assembly with sun gear.

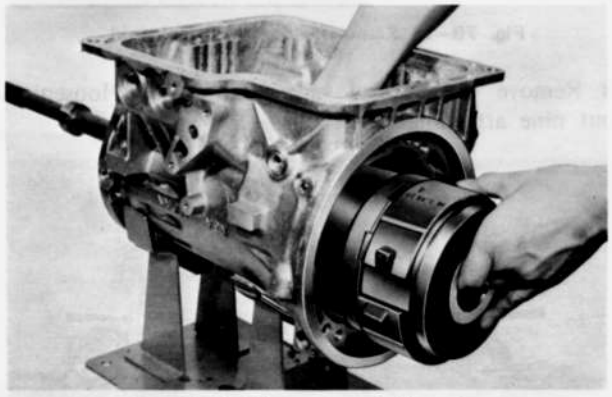

Fig. 7B–17 Removing clutch ass'y

18. Take out the rear planet carrier by removing the snap ring which fastens the rear planet carrier to the connecting drum.
19. Take out the output shaft snap ring and the internal drive flange.

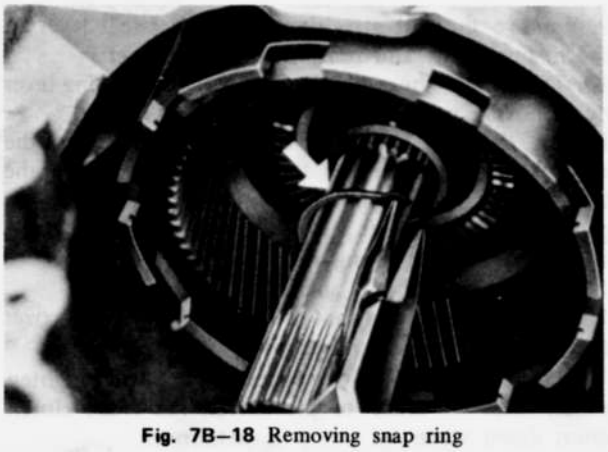

Fig. 7B–18 Removing snap ring

20. Turn left the connecting drum as far as it goes and make sure it is firmly locked. Then turn it right and remove together with the one-way clutch.
21. Remove the snap ring that secures the speedometer drive gear to the output shaft. Slide the drive gear off the output shaft, and remove the lock ball.
22. Pull out the output shaft rearward. Then remove the oil distributor together with governor and take out the needle bearing remaining on the transmission case side.

The above operations complete the disassembly of the principal transmission parts excepting the low-reverse brake which still remain on the transmission case. The low-reverse brake can of course be removed from the transmission case but the disassembling operations of it are described in the next section dealing with overhaul of principal components.

7B–G. OVERHAUL OF MAIN COMPONENTS

The principal components each include a large number of similar parts finished to high precision. So all related parts of each component should be placed apart from others to avoid confusion. Overhaul should be made in the following sequence. (Bearings and bearing races must be checked with respect to parts to which they are mounted.)

7B–G–1. Torque Converter

1. The torque converter is welded all along the circumference and so cannot be disassembled.

To Inspect

1. Check for external damages, oil leak, distortions, dents, etc., and replace if necessary.

Note :

If the converter oil is found markedly degenerated or fouled, thoroughly rinse the inside of the converter with approximately 0.5 liter (1.0 U.S. pints, 0.5 U.S. quart, 0.9 Imp. pint) of cleaning solvent (none-lead gasoline or kerosene) and make it drain for half an hour with the rear side of the converter facing down. Then fill it with converter oil and stir it well and drain it again in the same procedure.

7B–G–2. Front Clutch Assembly

To Remove

1. Remove the snap ring with a screw driver or something, then take out the retaining plate, inner plates, outer plates and dished plate.
2. Remove the coil spring retainer snap ring by using the **clutch spring compressor** (49 0378 375).
3. Remove the coil spring retainer and 10 coil springs.
4. Remove the piston by blowing compressed air into the oil hole as shown in Fig. 7B–21.

To Inspect

1. Check the inner and outer plates for worn or damaged facings.
2. Check to see that the coil spring retainer is not deformed.
3. Check to see that the coil spring has not lost tension.

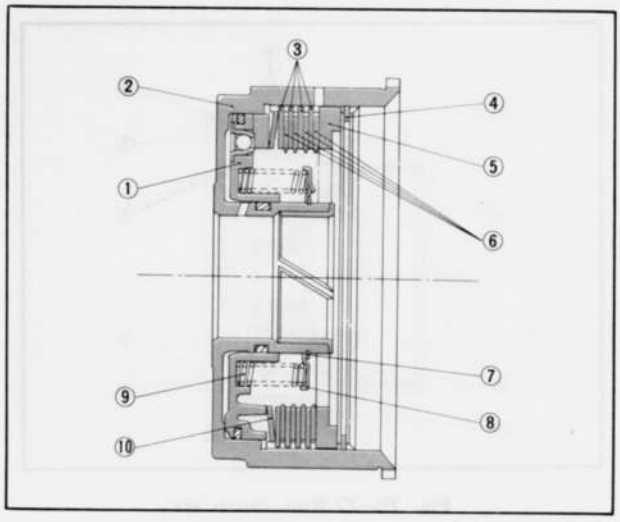

Fig. 7B–19 Front clutch ass'y

1. Piston
2. Front clutch drum
3. Outer plate
4. Snap ring
5. Retaining plate
6. Inner plate
7. Snap ring
8. Spring retainer
9. Coil spring
10. Dished plate

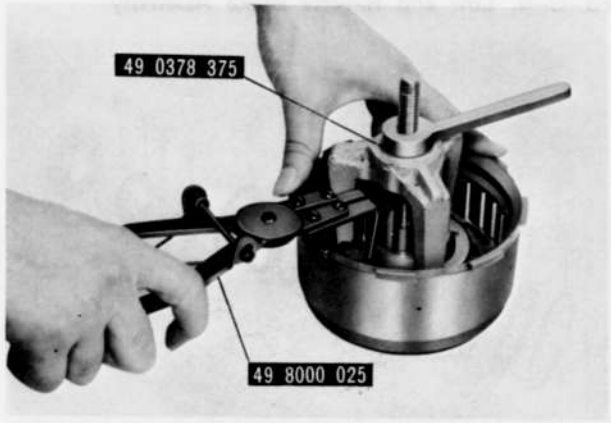

Fig. 7B–20 Removing snap ring

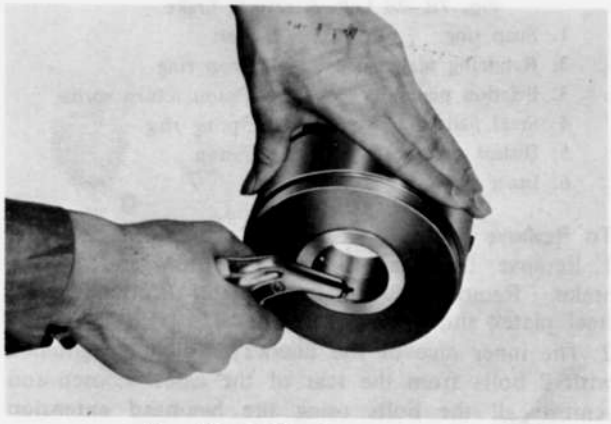

Fig. 7B–21 Blowing out piston

4. Check to see that the seal around the piston and the "O" ring inside the clutch drum are not damaged.
5. If defective parts are found, replace them with new ones.

To Reassemble

1. All parts are smeared with converter oil and re-assembled in the reverse sequence of the disassembly.
2. Measure the clearance between the snap ring and retaining plate with a thickness gauge after reassembly and selectively use a retaining plate to provide the standard clearance **1.6 ~ 1.8 mm (0.062 ~ 0.071 in)**.



Fig. 7B–22 Measuring clearance

Note :

To adjust above clearance, the retaining plate comes in the following six thicknesses.

7.2 mm (0.283 in), 7.4 mm (0.291 in)
7.6 mm (0.299 in), 7.8 mm (0.307 in)
8.0 mm (0.315 in), 8.2 mm (0.323 in)

3. Install the front clutch assembly to the oil pump. Blow compressed air into the oil hole as shown in Fig. 7B–23 and check the clutch operation.

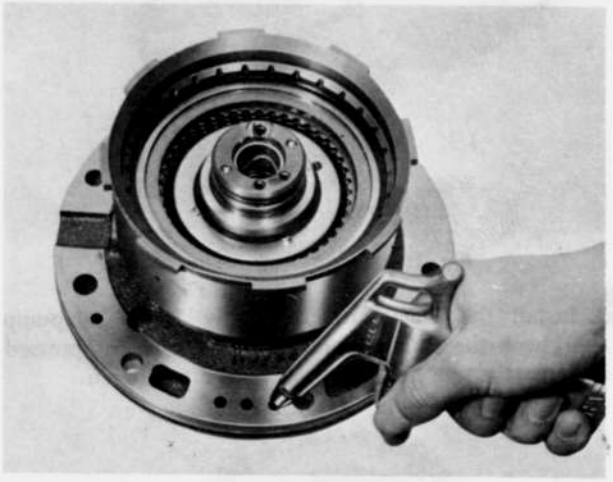

Fig. 7B–23 Testing front clutch

7B–G–3. Rear Clutch Assembly

To Remove

1. Remove the snap ring, retaining plate, outer plates, inner plates and dished plate in the same procedure as for the front clutch assembly.
2. Remove the coil spring retainer snap ring by the use of the **clutch spring compressor** (49 0378 375). Then remove the coil spring retainer and 10 coil springs.
3. Remove the piston by blowing compressed air into the oil hole.

To Inspect

1. Make the same inspection as for the front clutch

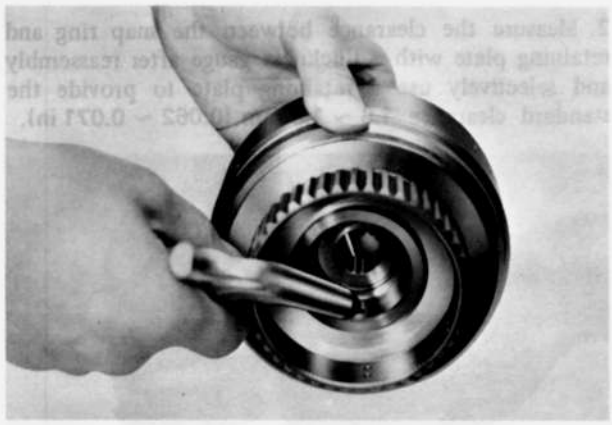

Fig. 7B–24 Blowing out piston

assembly and replace any defective parts with new ones.

To Reassemble

1. All parts are reassembled with converter oil smeared in the reverse sequence of the disassembly, as in the case of the front clutch.
2. After reassembly, check to see that the clearance between the snap ring and retaining plate is within the standard range of **0.8 ~ 1.5 mm (0.032 ~ 0.059 in)**.

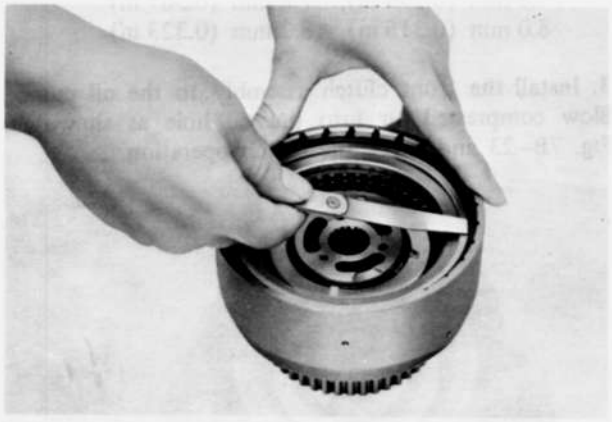

Fig. 7B–25 Measuring clearance

3. Install the rear clutch assembly to the oil pump and check the clutch operation by blowing compressed air into the oil hole as shown in Fig. 7B–26.

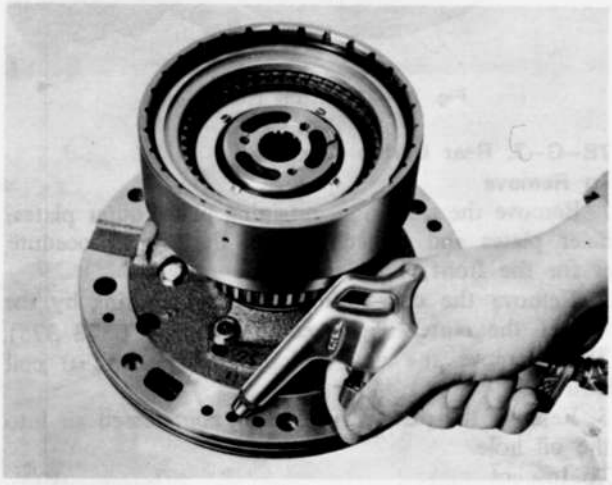

Fig. 7B–26 Testing rear clutch

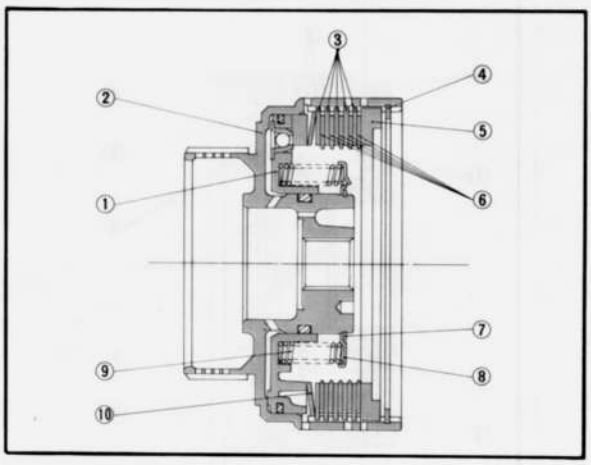

Fig. 7B–27 Rear clutch ass'y

1. Piston
2. Rear clutch drum
3. Outer plate
4. Snap ring
5. Retaining plate
6. Inner plate
7. Snap ring
8. Spring retainer
9. Coil spring
10. Dished plate

7B–G–4. Low and Reverse Brake Assembly

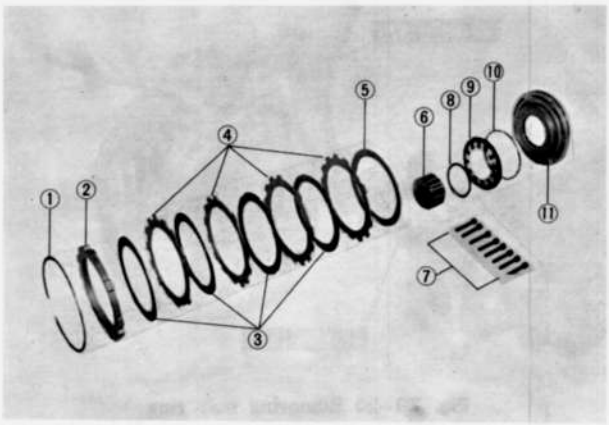

Fig. 7B–28 Low & reverse brake

1. Snap ring
2. Retaining plate
3. Friction plate
4. Steel plate
5. Dished plate
6. Inner race
7. Bolt
8. Snap ring
9. Piston return spring
10. Spring ring
11. Piston

To Remove

1. Remove the snap ring of the low and reverse brake. Remove the retaining plate, friction plates, steel plates and dished plate.
2. The inner race of the one-way clutch is tightened with 8 bolts from the rear of the case. Loosen and remove all the bolts using the **hex-head extension** (49 8000 040), then remove the inner race, snap ring, piston return spring and ring.
3. Remove the piston by blowing compressed air into the low and reverse brake oil hole located at the rear of the transmission case.

To Inspect

1. Check the friction and steel plates for worn or damaged facing.

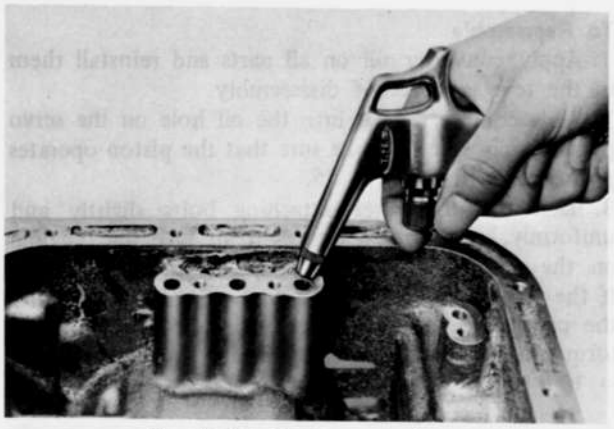

Fig. 7B–29 Blowing out piston

2. Check to see that the piston return spring has not lost tension.
3. Check to see that there is no deformation on the snap ring (stopper) for piston return spring, attached on the one-way clutch inner race.
4. Check to see that the seal rubber on the inside and outside of the piston are not damaged.
5. If any defective part is found, replace with new one.

To Reassemble

1. Lubricate the piston with converter oil and install it into the transmission case.
2. Install the return spring support ring, return spring, snap ring and one-way clutch inner race on the piston in this order. Then tighten the inner race, from rear of the case, with eight bolts by using the **hex-head extension** (49 8000 040) to a specified torque of **1.3 ~ 1.8 m-kg (10 ~ 13 ft-lb)**.

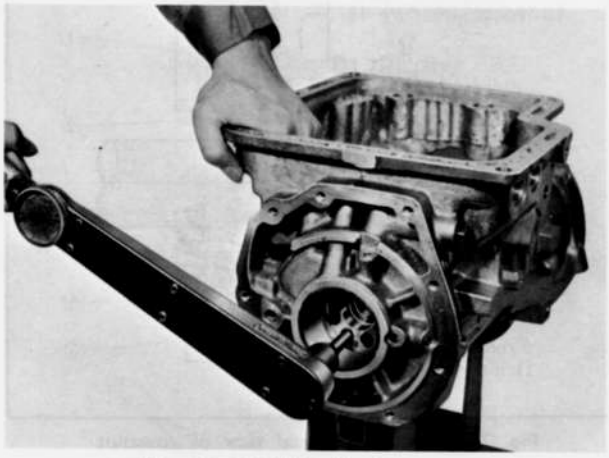

Fig. 7B–30 Tightening inner race

3. Reassemble the dished plate, steel plates, friction plates and retaining plate in the reverse order, smearing each with converter oil. Then fit the snap ring.
4. After reassembly, measure the clearance between the snap ring and retaining plate and select the retaining plate to provide a standard clearance of **0.8 ~ 1.05 mm (0.032 ~ 0.042 in)**.

Note :

To adjust above clearance the retaining plate is available in the following six thicknesses.

11.8 mm (0.466 in), 12.0 mm (0.472 in),
12.2 mm (0.480 in), 12.4 mm (0.488 in),
12.6 mm (0.496 in), 12.8 mm (0.504 in)

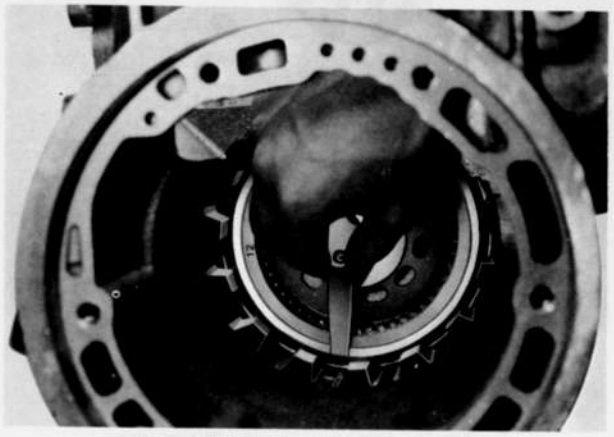

Fig. 7B–31 Measuring clearance

5. Check the operation of the low and reverse brake by blowing air into the oil hole as shown in Fig. 7B–29.

7B–G–5. Band Servo

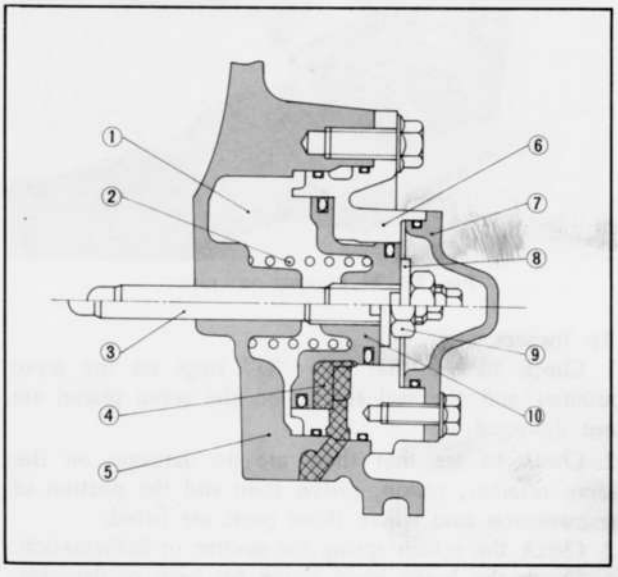

Fig. 7B–32 Cross-sectional of servo

1. Release pressure	6. Retainer
2. Return spring	7. Cover
3. Piston stem	8. Washer
4. Apply pressure	9. Adjust nut
5. Transmission case	10. Piston

To Remove

1. Loosen and remove three bolts that attach the band servo retainer to the transmission case, and remove the band servo retainer together with the servo piston. Take out the return spring. If the servo retainer is difficult to disconnect from the case, it can be readily removed by blowing air into the oil hole on the piston release side.
2. Blow compressed air into the oil hole on the apply side of the servo piston to remove the piston from the retainer.

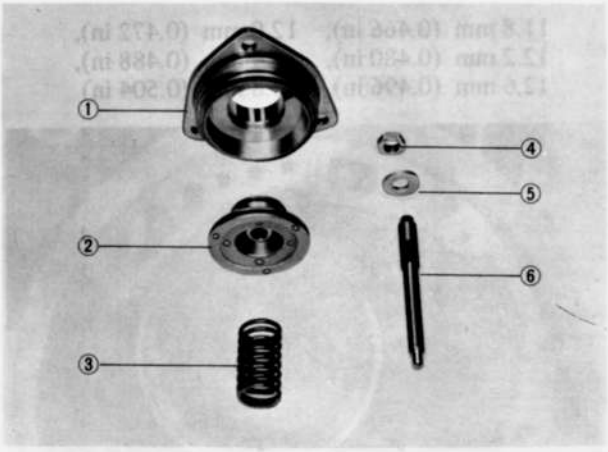

Fig. 7B–33 Band servo

1. Retainer
2. Piston
3. Return spring
4. Adjust nut
5. Washer
6. Piston stem



Fig. 7B–34 Blowing out piston

To Inspect

1. Check to see that two "O" rings on the servo retainer and the seal rubber on the servo piston are not damaged.
2. Check to see that there are no damages on the servo retainer, piston, piston stem and the portion of transmission case where those parts are fitted.
3. Check the return spring for decline or deformation.
4. Check the brake band lining for wear or damages.

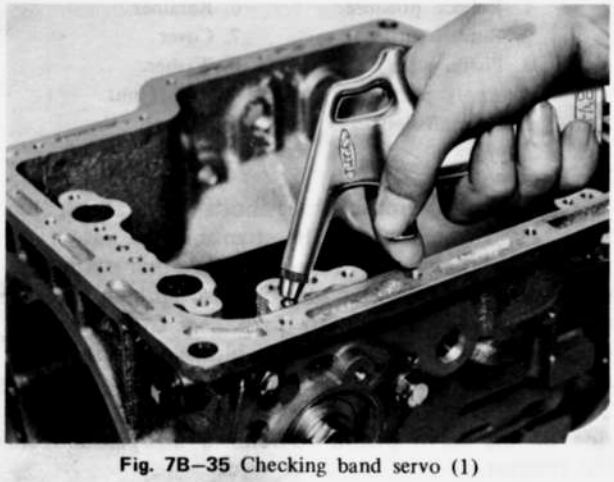

Fig. 7B–35 Checking band servo (1)

To Reassemble

1. Apply converter oil on all parts and reinstall them in the reverse order of disassembly.
2. Blow compressed air into the oil hole on the servo piston apply side to make sure that the piston operates properly, as in Fig. 7B–35.
3. Back off the three attaching bolts slightly and uniformly, and apply compressed air into the oil hole on the servo piston release side, as in Fig. 7B–36. If the retainer rises by the extent of bolt backing off, the piston operation on release is normal. Tightening torque of the servo retainer is **1.0 ~ 1.5 m-kg (7.3 ~ 10.8 ft-lb)**.

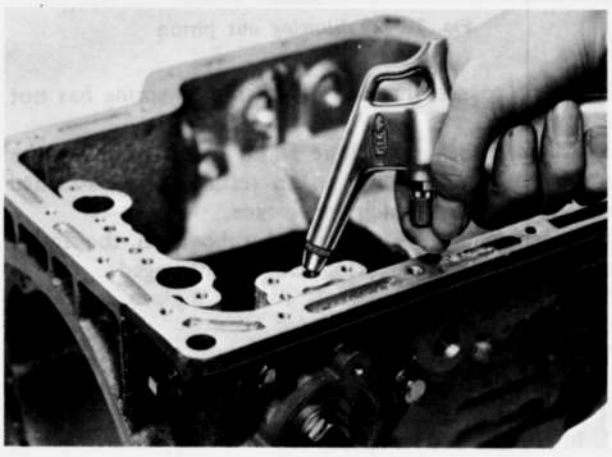

Fig. 7B–36 Checking band servo (2)

7B–G–6. Governor Valve Assembly

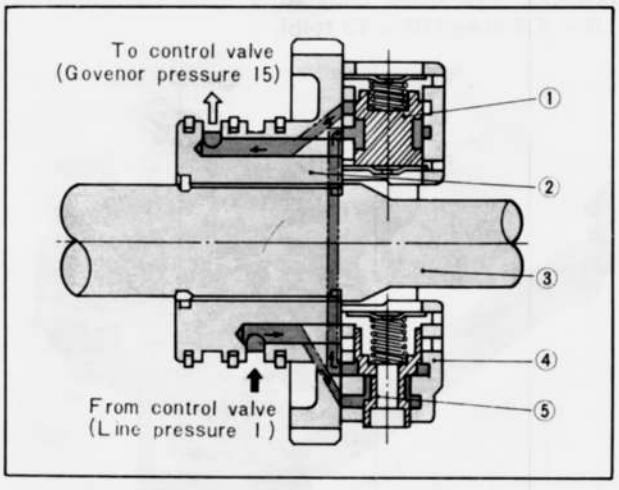

Fig. 7B–37 Cross-sectional view of governor

1. Primary valve
2. Oil distributor
3. Output shaft
4. Governor valve body
5. Secondary valve

To Remove

1. Loosen and remove four bolts that attach the governor. Remove the governor from the oil distributor.
2. Remove the secondary governor retainer plate. Then remove the spring and secondary governor valve from the body.
3. Remove the primary governor valve in the same procedure as for the secondary, if primary governor is to be disassembled for any purpose.

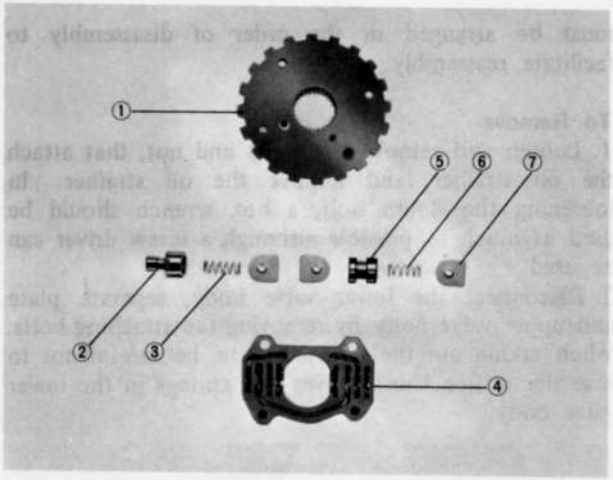

Fig. 7B–38 Governor valve

1. Oil distributor
2. Secondary valve
3. Spring
4. Valve body
5. Primary valve
6. Spring
7. Retainer plate

To Inspect

1. Check the valve and the body to see that there is nothing that may cause valve sticking or catching.
2. Check to see that the spring has not lost tension and the retainer plates are not deformed.
3. Check the side clearance between the sealing and gloove as shown in Fig. 7B–39. The standard clearance is **0.04 ~ 0.16 mm (0.002 ~ 0.006 in)**. When disassembling the seal ring, squeeze it up so that its joint will rise above the groove, and disconnect the joint.

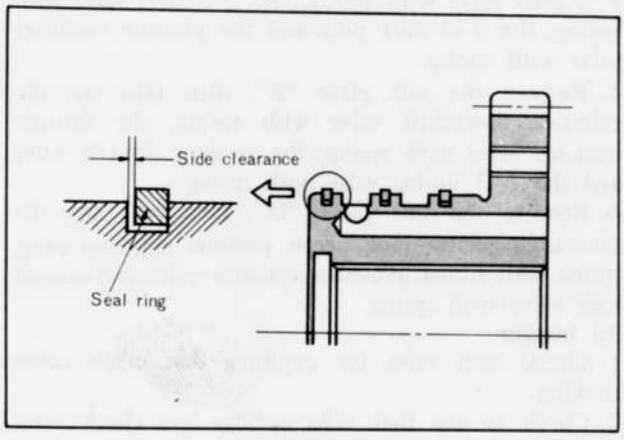

Fig. 7B–39 Clearance of oil seal ring

To Reassemble

1. Lubricate all parts with converter oil and reinstall them in the reverse order of disassembly so as not to confuse primary with secondary. After reassembly, make sure that the governor spring is straight and there is no catch in the governor valve movement.
2. Tighten the governor to the oil distributor with four bolts to a standard torque of **0.50 ~ 0.70 m-kg (3.6 ~ 5.1 ft-lb)**.
3. To determine if secondary governor is in good condition, blow air under light pressure into line pressure hole in Fig. 7B–37 to listen for noise like a model plane.

7B–G–7. Oil Pump Assembly

To Remove

1. Disconnect the pump cover from the pump housing by loosening five bolts that attach them.
2. Take out the inner gear and the outer gear from the pump housing. At the same time, put a sign indicating the installing side with quick-dry ink or something and not with a punch, to avoid erroneous assembly.

To Inspect

1. Check to see that tooth faces of the inner and outer gears are not damaged or worn.
2. Check the side play of the inner (or outer) gear by using a straight edge and thickness gauge as in Fig. 7B–40. The standard valve is **0.02 ~ 0.04 mm (0.001 ~ 0.002 in)**. If the clearance exceeds **0.08 mm (0.003 in)**, replace the gears with those selected from the three kinds. Make sure that the inner and outer gears are replaced as a set.



Fig. 7B–40 Measuring clearance (1)

3. Check the clearance between the outer gear teeth and crescent. The standard valve is **0.14 ~ 0.21 mm (0.006 ~ 0.008 in)**. If the clearance exceeds **0.25 mm (0.010 in)**, replace the gears.

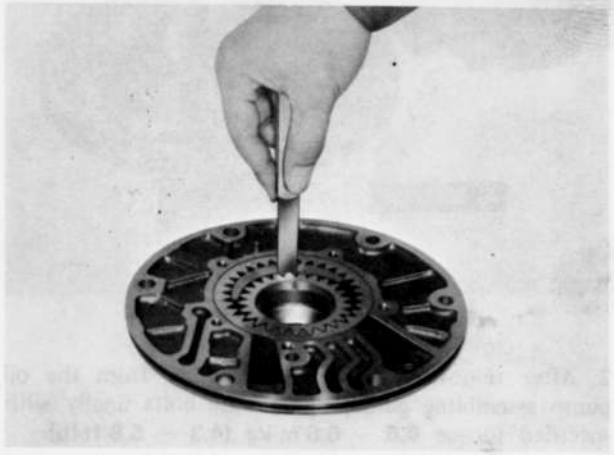

Fig. 7B–41 Measuring clearance (2)

4. Check the clearance between the outer gear and the housing. The standard valve is **0.05 ~ 0.20 mm (0.002 ~ 0.008 in)**. If the clearance exceeds **0.25 mm (0.010 in)**, replace the gears as a set.



Fig. 7B–42 Measuring clearance (3)

5. Check to see that the seal rubber attached on the pump housing periphery is not damaged.
6. Check to see that the oil seal lip is not damaged and the spring has not lost tension.
7. Check to see that the seal rings of oil feed grooves for the front and rear clutches are not damaged or lost tension. Measure the side clearance of the seal ring. The standard valve is **0.04 ~ 0.16 mm (0.002 ~ 0.006 in)**. When replacing seal ring refer to part 7B–G–6.
8. Check to see that the pump housing and the cover are not damaged.
9. If any defective part is found, replace with new one.

To Reassemble

1. Fix the pump housing to the **oil pump assembling guide** (49 0378 405) and fit the inner gear and outer gear in the pump housing as were installed in original. Then fit the pump cover as shown in Fig. 7B–43 and tighten it temporarily with five bolts.



Fig. 7B–43 Assembling oil pump

2. After removing the pump assembly from the oil pump assembling guide, tighten the bolts finally with specified torque **0.6 ~ 0.8 m-kg (4.3 ~ 5.8 ft-lb)**.

7B–G–8. Control Valve Assembly

The control valves are composed of the most accurate of the automatic transmission parts and so particular care must be paid in disassembly and reassembly. Also, since a number of similar parts are used, they must be arranged in the order of disassembly to facilitate reassembly.

To Remove

1. Loosen and remove the bolts and nut, that attach the oil strainer, and remove the oil strainer. In loosening the 8 mm bolt, a box wrench should be used as much as possible although a screw driver can be used.
2. Disconnect the lower valve body, separate plate and upper valve body by removing the attaching bolts. When taking out the separate plate, be careful not to lose the orifice check valves and springs in the lower valve body.

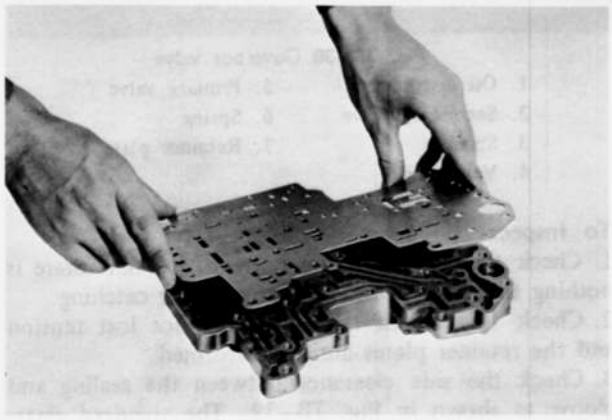

Fig. 7B–44 Removing separate plate

3. Take out the manual valve.
4. Remove the side plate "A", then take out the 1–2 shift valve with spring, the 2–3 shift valve with spring, the 2–3 shift plug and the pressure modifier valve with spring.
5. Remove the side plate "B", then take out the solenoid downshift valve with spring, the throttle back-up valve with spring, the vacuum throttle valve and the 2–3 timing valve with spring.
6. Remove the side plate "D", then take out the pressure regulator plug sleeve, pressure regulator plug, spring seat, spring, pressure regulator valve and second lock valve with spring.

To Inspect

1. Check each valve for anything that might cause sticking.
2. Check to see that valve springs and check valve springs have not lost tension.
3. Check to see that the oil strainer is not damaged.
4. Check for possible abnormal oil passage developing on the separate plate.
5. Check for possible damages or other abnormalities in the oil passages of valve body.
6. If any defective part is found, replace with new one.

To Reassemble

1. Reassemble in the reverse order to disassembly paying special attention to the following points :

a. Install small valves and springs by referring to the components parts of control valve Fig. 7B–45.
b. Lubricate all valves and springs with converter oil before installing.

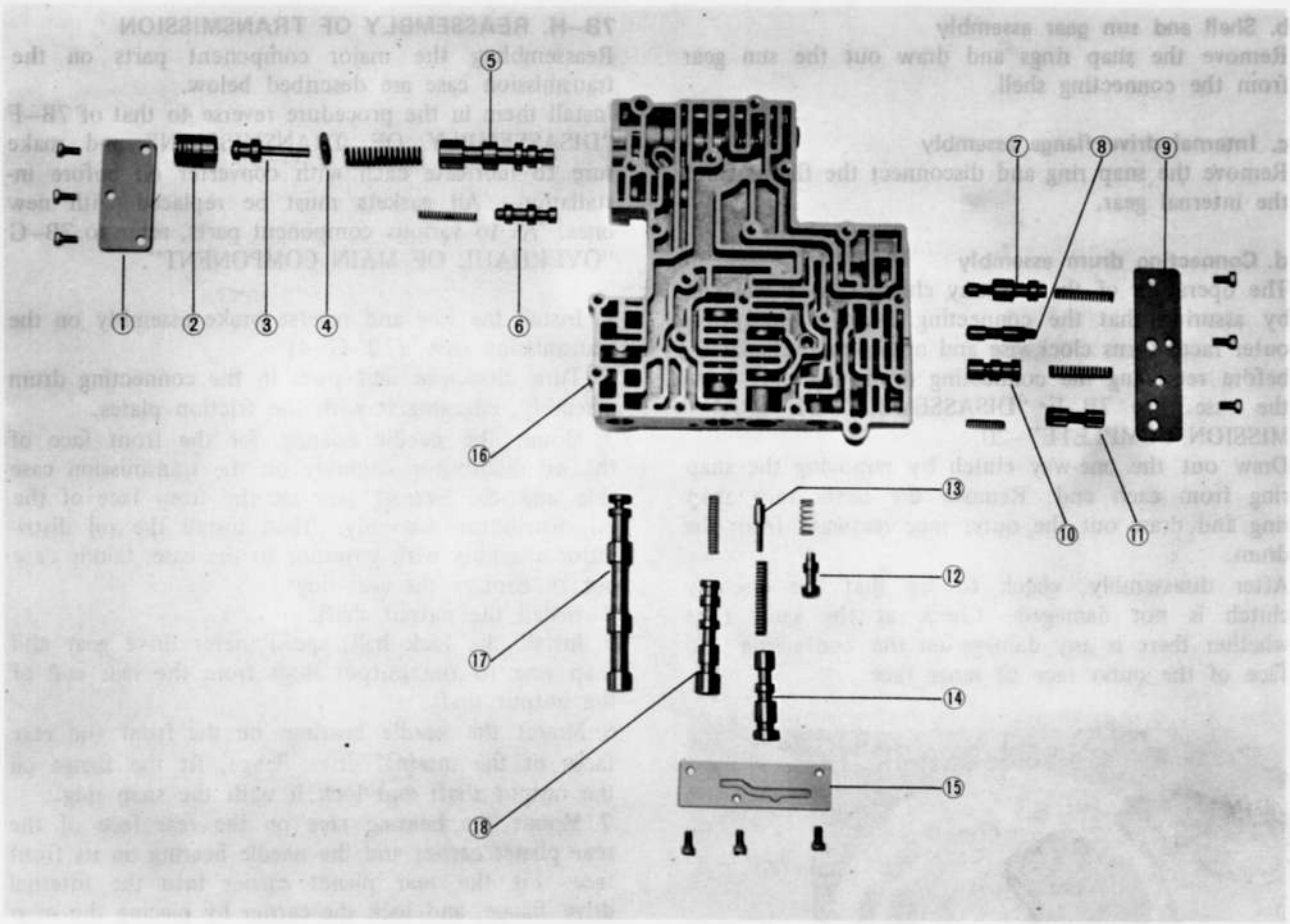

Fig. 7B–45 Component parts of control valve

1. Side plate "D"
2. Plug sleeve
3. Regulator pressure plug
4. Spring seat
5. Regulator pressure valve
6. Second lock valve
7. 2–3 timing valve
8. Vacuum throttle valve
9. Side plate "B"
10. Throttle back-up valve
11. Down-shift valve
12. Modifier valve
13. 2–3 shift plug
14. 2–3 shift valve
15. Side plate "A"
16. Upper valve body
17. Manual valve
18. 1–2 shift valve

c. If there is any valve that is difficult to insert, do not force it in but give it a light, straight push.
d. Make sure that the followings are strictly tightened to **0.25 ~ 0.35 m-kg (1.8 ~ 2.5 ft-lb)**.
Side plate to valve body
Lower valve body to upper valve body
Oil strainer to lower valve body

7B–G–9. Bearing and Bearing Race

Check each bearing and bearing race after cleaning carefully. Also check to see that the mating parts of each bearing and bearing race are not damaged. If any defective part is found, replace it.

7B–G–10. Other Component Parts

Check to see by sight that the following parts are not damaged. Disassembly, if indicated, should be made in the procedure below.

a. Front planet carrier assembly, rear planet carrier assembly, input shaft and output shaft

The planetary carrier cannot be divided into its individual components.
If any part or component is defective, replace the carrier as a unit.
Check the clearance between pinion washer and planetary carrier with a feeler.
The standard clearance is **0.20 ~ 0.70 mm (0.008 ~ 0.027 in)**.

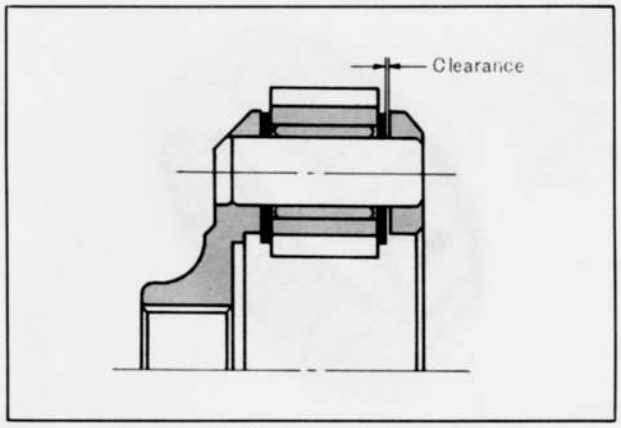

Fig. 7B–46 Clearance of planetary gear

If the clearance exceeds **0.80 mm (0.032 in)**, replace with new one.

b. Shell and sun gear assembly
Remove the snap rings and draw out the sun gear from the connecting shell.

c. Internal drive flange assembly
Remove the snap ring and disconnect the flange from the internal gear.

d. Connecting drum assembly
The operation of the one-way clutch can be checked by assuring that the connecting drum assembly (or outer race) turns clockwise and not counter-clockwise, before removing the connecting drum assembly from the case. See 7B–F "DISASSEMBLY OF TRANSMISSION COMPLETE"–20.
Draw out the one-way clutch by removing the snap ring from each end. Remove the outer race snap ring and draw out the outer race rearward from the drum.
After disassembly, check to see that the one-way clutch is not damaged. Check at the same time whether there is any damage on the contacting surface of the outer race or inner race.

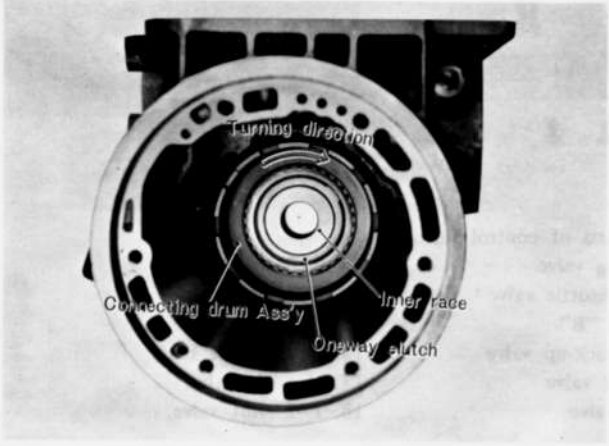

Fig. 7B–47 One-way clutch

When installing the one-way clutch, make sure that it is fitted with the arrow mark "→" on the front of vehicle.



Fig. 7B–48 Mark on the one-way clutch

e. Manual control system and parking lock system
Removal and disassembly of these parts are omitted.

7B–H. REASSEMBLY OF TRANSMISSION

Reassembling the major component parts on the transmission case are described below.
Install them in the procedure reverse to that of 7B–F "DISASSEMBLY OF TRANSMISSION" and make sure to lubricate each with converter oil before installation. All gaskets must be replaced with new ones. As to various component parts, refer to 7B–G "OVERHAUL OF MAIN COMPONENT".

1. Install the low and reverse brake assembly on the transmission case. (7B–G–4)
2. Turn clockwise and push in the connecting drum assembly, engaging it with the friction plates.
3. Mount the needle bearing for the front face of the oil distributor assembly on the transmission case side and the bearing race on the front face of the oil distributor assembly. Then install the oil distributor assembly with governor to the case, taking care not to damage the seal rings.
4. Install the output shaft.
5. Install the lock ball, speedometer drive gear and snap ring to the output shaft from the rear end of the output shaft.
6. Mount the needle bearings on the front and rear faces of the internal drive flange, fit the flange on the output shaft and lock it with the snap ring.
7. Mount the bearing race on the rear face of the rear planet carrier and the needle bearing on its front face. Fit the rear planet carrier into the internal drive flange, and lock the carrier by placing the snap ring on the connecting drum.
8. Install the band servo on the case. (7B–G–5)
9. Mount the needle bearing on the rear face of the rear clutch hub and the bearing race on the front face of the front planet carrier. Assemble the rear clutch hub and the planet carrier, and install its assembly on the sun gear and connecting shell.
10. Put the above assembly with the rear clutch hub side facing upward. Mount the needle bearing on the front face of the rear clutch hub and the bearing race on the rear face of the rear clutch assembly, and install the rear clutch assembly downward on the rear clutch hub. In doing so, turn it a little so that the teeth of the clutch plates may come into engagement with the clutch hub spline.
11. Install the front clutch assembly into the rear one as in the case of the rear clutch assembly.
12. Install the assembly including the connecting shell, front clutch, rear clutch and front planet carrier into the transmission case.
13. Install the brake band on the front clutch drum.
14. Install the anchor blot to the transmission case and tighten it to **5.6 ~ 8.2 m-kg (41 ~ 59 ft-lb)**.
15. Install the band strut between the piston stem and the brake band.
16. Set the front clutch thrust washer, which adjusts the end play of the front clutch drum, on the rear face of the oil pump cover assembly, and also set the bearing race, which adjusts the total end play, on the rear end of the oil pump cover. Apply some amount of vaseline to prevent bearing race falling.
Install the oil pump assembly with gasket to the



Fig. 7B–49 Assembling clutches

transmission case. Then install and tighten the converter housing onto the transmission case with six bolts to **4.5 ~ 5.5 m-kg (33 ~ 39 ft-lb)**. Insert the input shaft.

Note :
Above two end plays should be checked after the oil pump is properly installed and adjusted following 17 and 18.

17. Push the front clutch drum back and forth and insert a thickness gauge in the clearance between the front clutch drum and connecting shell in order to measure the end play between the rear face of the oil pump cover and the front face of the front clutch drum. Select a thrust washer from the following seven washers to adjust the clearance to specified **0.5 ~ 0.8 mm (0.020 ~ 0.032 in)**.

1.50 mm (0.059 in),	1.70 mm (0.067 in),
1.90 mm (0.075 in),	2.10 mm (0.083 in),
2.30 mm (0.091 in),	2.50 mm (0.098 in),
2.70 mm (0.106 in)	

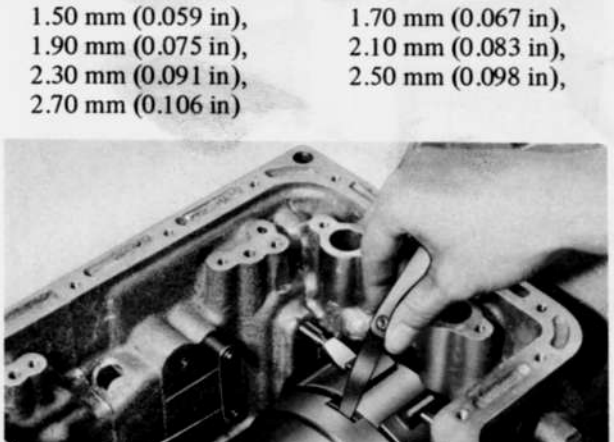

Fig. 7B–50 Checking end play

18. In measuring the total end play, apply the dial gauge on the tip of the input shaft and move the connecting shell fore and aft, and read the needle vibration. The standard clearance is **0.25 ~ 0.50 mm (0.010 ~ 0.020 in)**. Adjust end play by selecting a proper race in the followings.

1.20 mm (0.047 in),	1.40 mm (0.055 in),
1.60 mm (0.063 in),	1.80 mm (0.071 in),
2.00 mm (0.079 in),	2.20 mm (0.087 in)

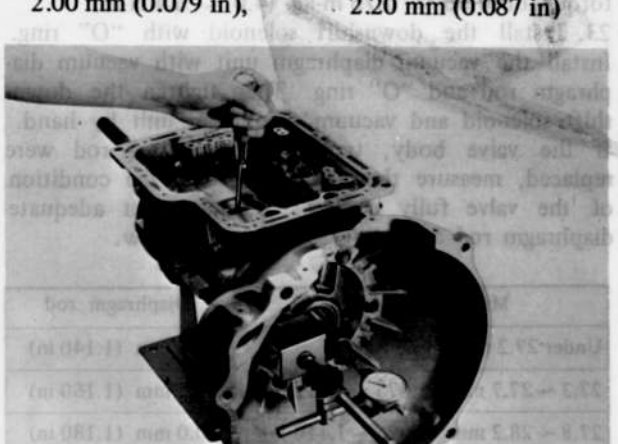

Fig. 7B–51 Checking end play

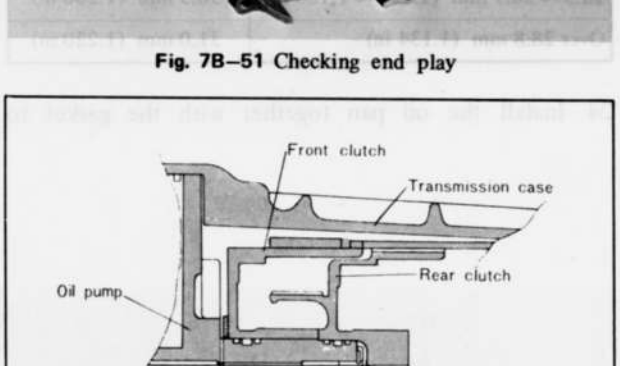

Fig. 7B–52 End plays

19. Tighten the stem of the servo piston to a torque of **1.2 ~ 1.5 m-kg (8.6 ~ 11.0 ft-lb)**. Then loosen it by two turns and lock with the lock nut to a tightening torque of **1.5 ~ 4.0 m-kg (11 ~ 29 ft-lb)**.
Install and tighten the band servo cover to the retainer.

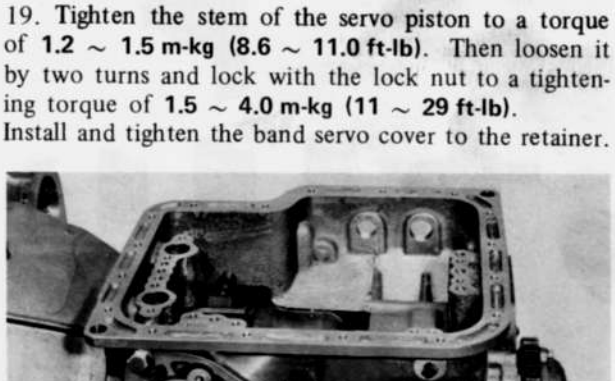

Fig. 7B–53 Tightening stem

20. Push in the manual shaft into the case with manual plate, washer and nut and tighten the nut. Then mount the parking lever and parking rod.
21. Install the range select lever to the manual shaft with the washer and nut then tighten the nut.

22. Install the control valve assembly onto the transmission case with nine bolts to a specified tightening torque of **0.55 ~ 0.75 m-kg (4.0 ~ 5.4 ft-lb)**.
23. Install the downshift solenoid with "O" ring. Install the vacuum diaphragm unit with vacuum diaphragm rod and "O" ring. Then tighten the downshift solenoid and vacuum diaphragm unit by hand. If the valve body, transmission case or rod were replaced, measure the distance "L" in the condition of the valve fully compressed and select adequate diaphragm rod according to the table below.

Measurement "L"	Diaphragm rod
Under 27.2 mm (1.071 in)	29.0 mm (1.140 in)
27.3 ~ 27.7 mm (1.075 ~ 1.091 in)	29.5 mm (1.160 in)
27.8 ~ 28.2 mm (1.095 ~ 1.110 in)	30.0 mm (1.180 in)
28.3 ~ 28.7 mm (1.114 ~ 1.130 in)	30.5 mm (1.200 in)
Over 28.8 mm (1.134 in)	31.0 mm (1.220 in)

24. Install the oil pan together with the gasket to a tightening torque of **0.50 ~ 0.70 m-kg (3.6 ~ 5.0 ft-lb)**.

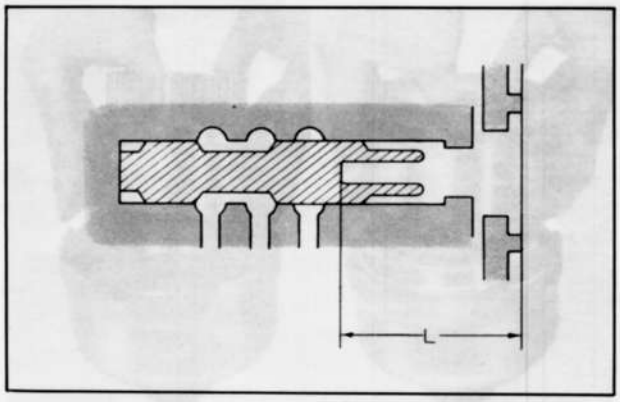

Fig. 7B–54 Vacuum throttle valve

25. Install the spacer, return spring and parking pawl on the shaft. Fit the rear end of the parking rod between the two steel balls in the supporter, then install the extension housing onto the case. Tighten the bolts to a specified torque of **2.0 ~ 2.5 m-kg (15 ~ 18 ft-lb)**.

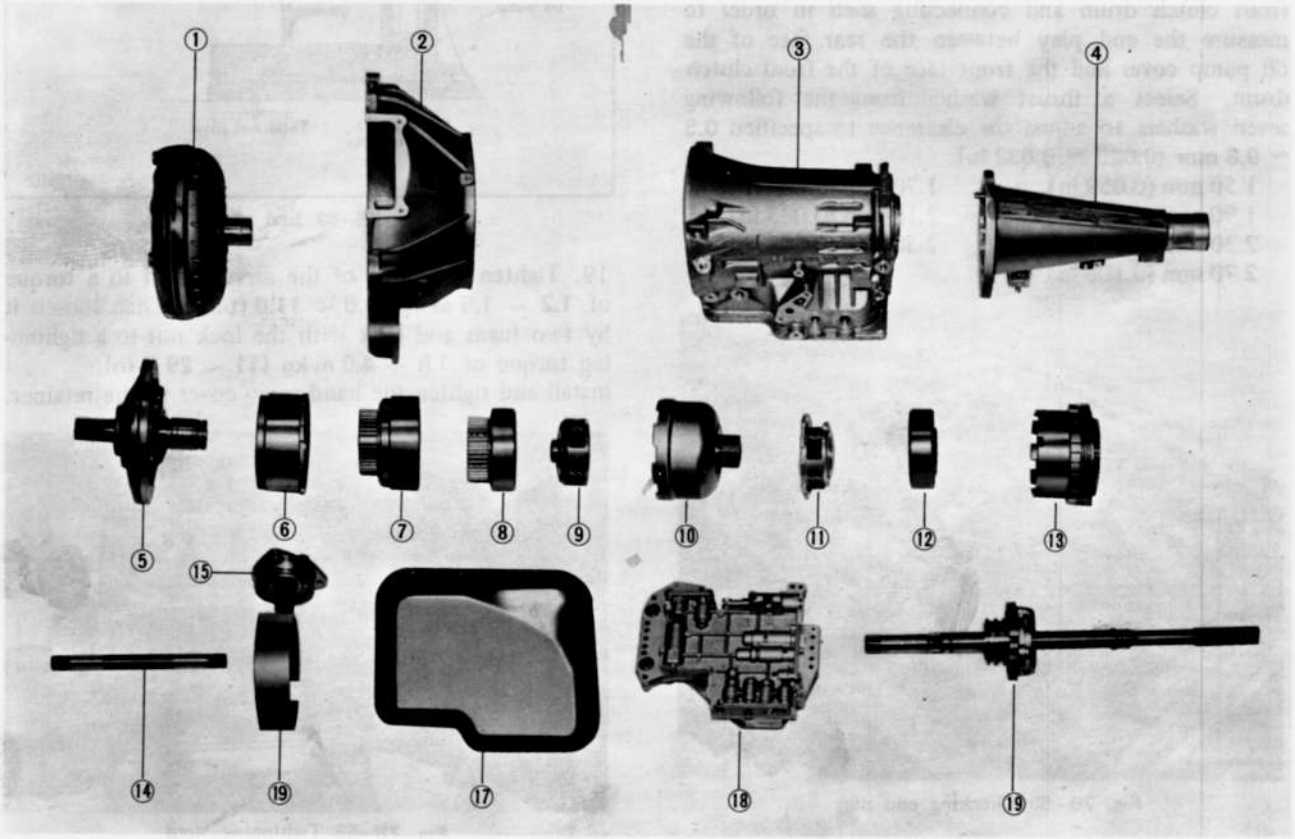

Fig. 7B–55 Main components of transmission

1. Torque converter
2. Converter housing
3. Case
4. Extension housing
5. Oil pump ass'y
6. Front clutch ass'y
7. Rear clutch ass'y
8. Rear clutch hub ass'y
9. Front planet carrier ass'y
10. Shell & sun gear ass'y
11. Rear planet carrier ass'y
12. Drive flange ass'y
13. Low & reverse brake ass'y
14. Input shaft
15. Brake band
16. Servo piston ass'y
17. Oil pan
18. Control valve ass'y
19. Governor valve ass'y and output shaft

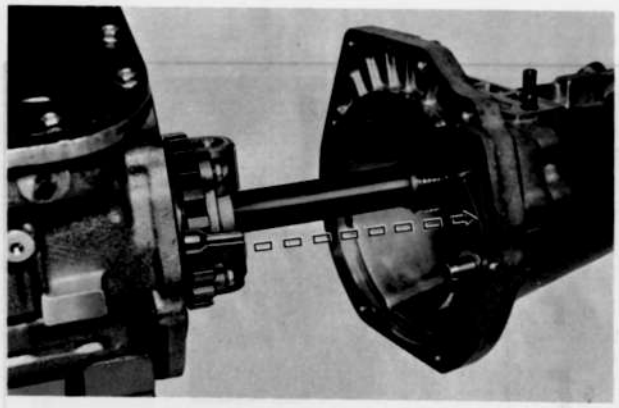

Fig. 7B–56 Installing extension housing

7B–I. INSTALLATION AND ADJUSTMENT OF TRANSMISSION

1. Before installing the transmission, measure the runout of the torque converter drive plate with a dial gauge. The runout must be within **0.3 mm (0.012 in)**. In case the runout exceeds **0.5 mm (0.020 in)**, replace the drive plate.
2. When combining the converter with oil pump, check whether they are rightly combined with each other by measuring the distance shown in Fig. 7B–57. The distance is approximately **19.5 mm (0.78 in)**. If there is great difference in the measurement, the converter should be rightly combined again.

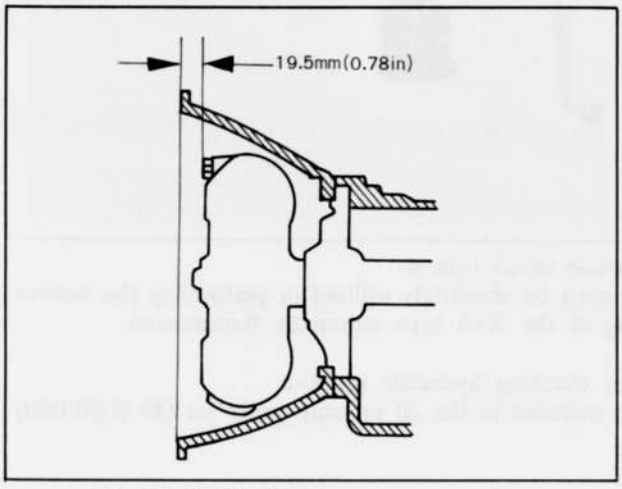

Fig. 7B–57 Checking torque converter fit

3. Installation procedure for the transmission is reverse to the removing procedure, referring to "REMOVAL OF TRANSMISSION" in 7B–E. In tightening the torque converter and the drive plate, temporarily tighten four bolts first, then lock the drive plate by applying the wrench to the drive pulley lock bolt. And tighten the four bolts to a specified torque of **3.7 ~ 5.5 m-kg (27 ~ 40 ft-lb)**. In case of confirming the tightening torque accurately, it is recommendable to proceed as follows:

Install a torque wrench to the hole in the center of the **special wrench** (49 0877 435), and tighten the bolt until the reading on the torque wrench comes to the value to be obtained by the undermentioned formula.

"L" indicates the effective length of the torque wrench. In the case of the torque wrench expressed in the m-kg unit, measure the "L" in terms of cm, and substitute the value (for example, 30 in case of 30 cm) into formula (1). In the case of the ft-lb torque wrench, on the other hand, measure the "L" in the inch unit, and substitute the value into formula (2). The prescribed tightening torque will thus be obtained.

$$\frac{5L}{10+L} \text{ . m-kg} \quad \text{.....(1)}$$

$$\frac{35L}{4+L} \text{ . ft-lb} \quad \text{..... (2)}$$

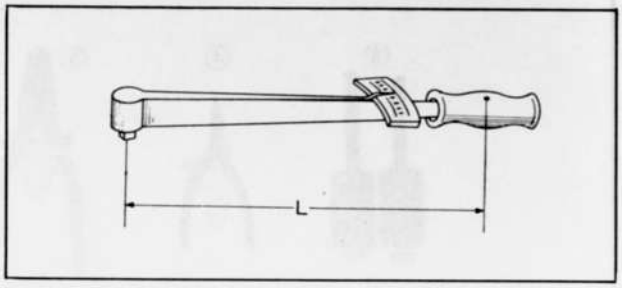

Fig. 7B–58 "L" length of torque wrench



Fig. 7B–59 Tightening torque converter

4. When the installation is finished, rotate the torque converter and check to see that there is no interference in the transmission. Then make the following check:
(1) Fill converter oil. The converter, when empty, can hold **6.2 liters (13.1 U.S. pints, 10.9 Imp. pints, 6.6 U.S. quarts)**. (7B–B–1)
(2) Check and regulate the manual linkage. (7B–B–4)
(3) Check and regulate the inhibitor switch. (7B–B–5)
(4) Check and regulate the engine idling. (7B–B–2) Apply the hand brake. With the engine idling, place the manual lever in "N", "D", "2", "1" and "R", and check to see that there is a slight shock of the transmission.
(5) Confirm the operation of the kick-down switch and downshaft solenoid. (7B–B–3)
(6) Check the oil level again.

5. When checking and regulating are over, conduct stall test, road test and hydraulic test referring to diagnostic test items (7B–C) in order to make sure that the transmission works normally.

SERVICE SPECIAL TOOLS

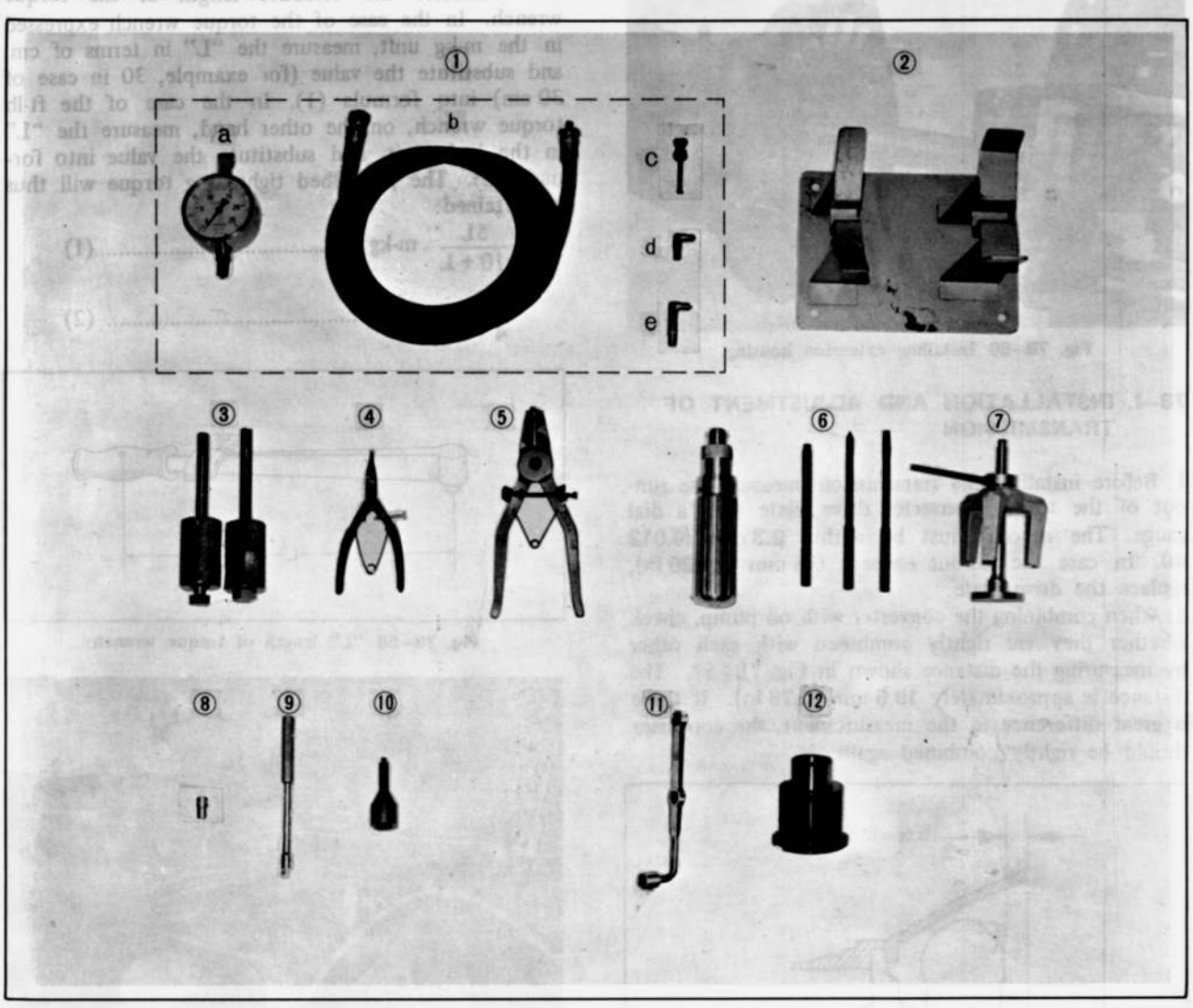

Fig. 7B–60 Automatic transmission service tools set

It is essential that the service special tools in this manual must be absolutely utilized in performing the various operations of trouble shooting, disassembling and assembling of the R3A type automatic transmission.

1. Oil pressure gauge set	49 0378 400	Use for checking hydraulic pressure
a. Oil pressure gauge	49 8000 001	This is included in the oil pressure gauge set (49 8000 000)
b. Rubber hose	49 0378 401	– do –
c. Joint pipe	49 0378 402	– do –
d. Hose adaptor	49 0378 403	– do –
e. Hose adaptor	49 0378 404	– do –
2. Transmission case stand	49 0378 320	Use for setting transmission
3. Puller oil pump	49 0378 390	Use for removing oil pump
4. Snap ring remover	49 8000 015	Use for removing or installing snap ring
5. Snap ring remover	49 8000 025	Use for removing or installing snap ring
6. Torque driver	49 8000 021	Use for tightening in accurate torque Max. torque 1.04 m-kg (90 lb-in)
7. Clutch spring compressor	49 0378 375	Use for assembling or disassembling front and rear clutch
8. Hexagon wrench	49 8000 031	Use for disassembling and assembling control valve
9. Spinner handle	49 8000 035	Use for disassembling and assembling control valve
10. Hex-head extension	49 0378 346	Use for removing and installing one-way clutch inner race with torque wrench. Drive angle 1/2" square and 5 mm (across flat width)
11. Special wrench	49 0877 435	A tool used for removing the bolt that attaches the drive-plate to the torque converter
12. Oil pump assembling gauge	49 0378 405	Use for centering oil pump

FIVE SPEED TRANSMISSION

DESCRIPTION ..... 7C : 3
7C–A. BACK-UP LAMP SWITCH REPLACEMENT .... 7C : 3
7C–B. MAIN SHAFT OIL SEAL REPLACEMENT .... 7C : 3
7C–C. TRANSMISSION REMOVAL ..... 7C : 3
7C–D. TRANSMISSION DISASSEMBLY ..... 7C : 4
7C–E. TRANSMISSION INSPECTION ..... 7C : 9
7C–E–1. Checking Transmission Case and Housing ..... 7C : 9
7C–E–2. Checking Bearings ..... 7C : 9
7C–E–3. Checking Gears ..... 7C : 9
7C–E–4. Checking Main Shaft and Main Drive Shaft ..... 7C : 9
7C–E–5. Checking Counter Shaft ..... 7C : 9
7C–E–6. Checking Control Lever and Shift Rod ..... 7C : 9
7C–E–7. Checking Shift Fork ..... 7C : 10
7C–E–8. Checking Clutch Sleeve ..... 7C : 10
7C–E–9. Checking Synchronizer Ring ..... 7C : 10
7C–E–10. Checking Synchronizer Key and Spring ..... 7C : 10
7C–E–11. Checking Clutch Hub ..... 7C : 10
7C–E–12. Checking Extension Housing ..... 7C : 10
7C–E–13. Checking Speedometer Gears ..... 7C : 10
7C–F. TRANSMISSION ASSEMBLY ..... 7C : 11
7C–G. TRANSMISSION INSTALLATION ..... 7C : 21
SPECIAL TOOLS ..... 7C : 21

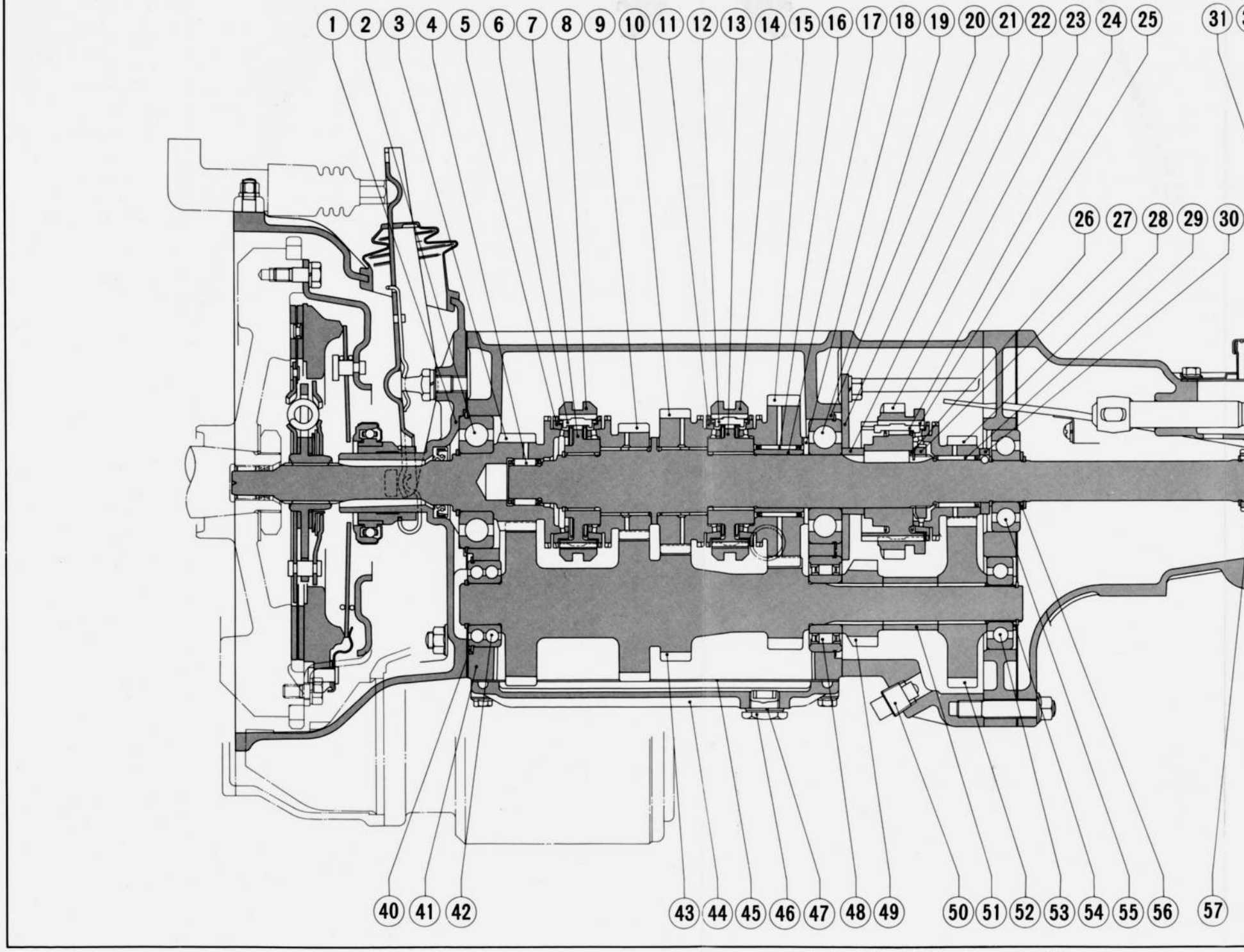

Fig. 7C–1 Transmission cross section (1)

1. Adjusting shim
2. Main drive shaft bearing
3. Main drive shaft gear
4. Needle bearing
5. Synchronizer ring
6. Synchronizer key
7. 3rd-and-4th clutch hub
8. Clutch sleeve
9. 3rd gear
10. 2nd gear
11. Synchronizer ring
12. Synchronizer key
13. 1st-and-2nd clutch hub
14. Clutch sleeve
15. 1st gear
16. Needle bearing
17. Needle bearing inner race
18. Thrust washer
19. Main shaft front bearing
20. Adjusting shim
21. Bearing cover plate
22. Spacer
23. Reverse gear and clutch sleeve assembly
24. Synchronizer key
25. Synchronizer ring
26. Lock washer
27. Lock nut
28. 5th gear
29. Needle bearing
30. Thrust washer
31. Gearshift lever retainer
32. Cover
33. Gasket
34. Boot
35. Gearshift lever
36. Gearshift lever knob
37. Bush
38. Gearshift control lever end
39. Gearshift control lever

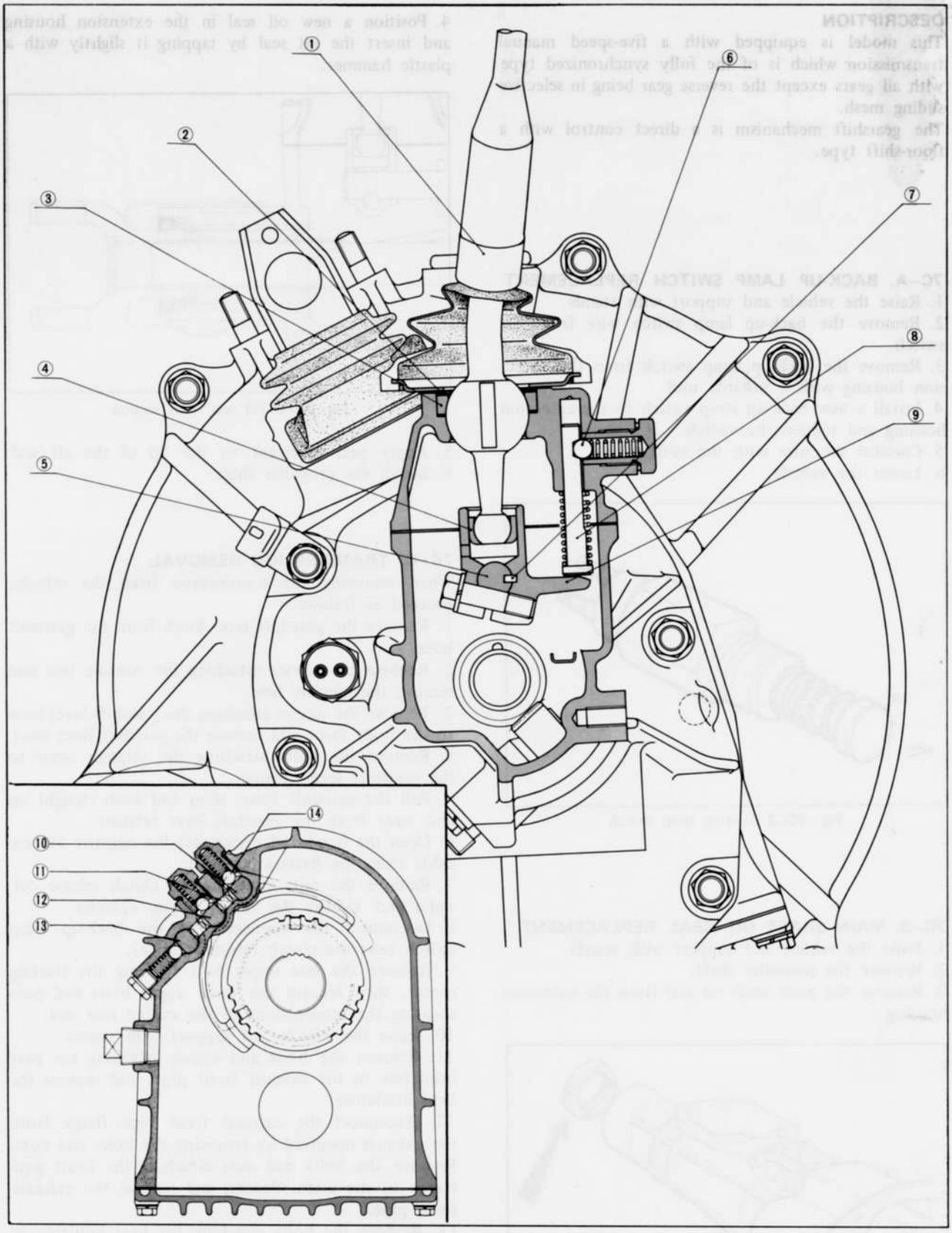

Fig. 7C–2 Transmission cross section (2)

1. Gearshift lever
2. Gasket
3. Bush
4. Bush
5. Gearshift control lever
6. Lock ball
7. Woodruff key
8. Select lock spindle
9. Gearshift control lever end
10. 1st-and-2nd shift rod
11. Shift inter-lock pin
12. 3rd-and-4th shift rod
13. Rev.-and-5th shift rod
14. Detent ball

DESCRIPTION

This model is equipped with a five-speed manual transmission which is of the fully synchronized type with all gears except the reverse gear being in selective sliding mesh.
The gearshift mechanism is a direct control with a floor-shift type.

7C–A. BACK-UP LAMP SWITCH REPLACEMENT

1. Raise the vehicle and support with stands.
2. Remove the back-up lamp switch wire from the switch.
3. Remove the back-up lamp switch from the extension housing with a suitable tool.
4. Install a new back-up lamp switch to the extension housing and tighten the switch.
5. Connect the wire with the switch.
6. Lower the vehicle.

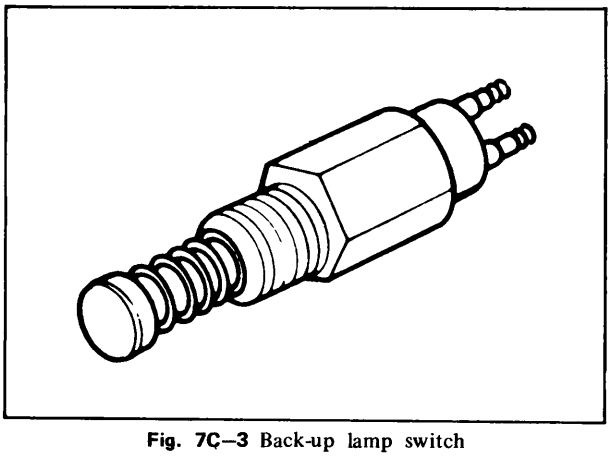

Fig. 7C–3 Back-up lamp switch

7C–B. MAIN SHAFT OIL SEAL REPLACEMENT

1. Raise the vehicle and support with stands.
2. Remove the propeller shaft.
3. Remove the main shaft oil seal from the extension housing.

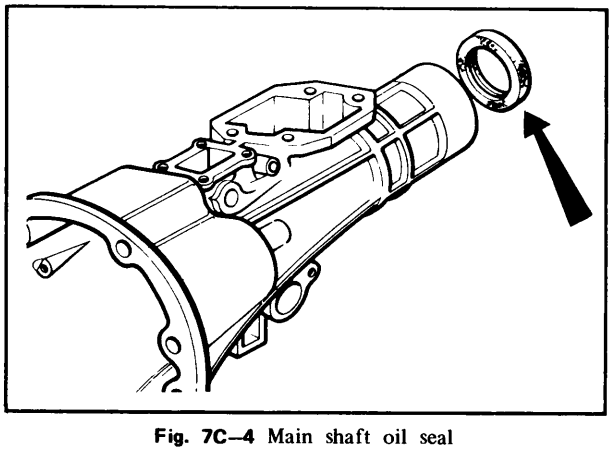

Fig. 7C–4 Main shaft oil seal

4. Position a new oil seal in the extension housing and insert the oil seal by tapping it slightly with a plastic hammer.

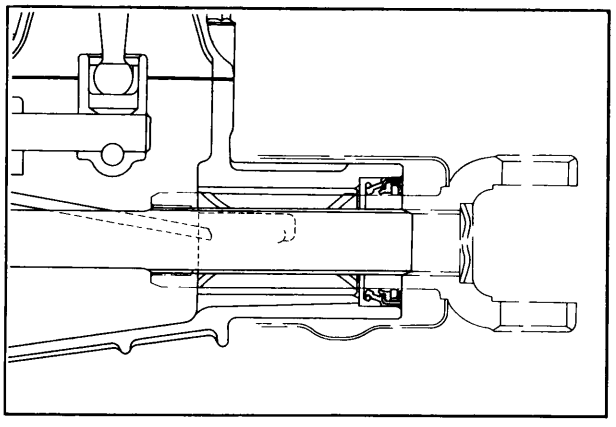

Fig. 7C–5 Oil seal cross section

5. Apply gear lubricant to the lip of the oil seal.
6. Install the propeller shaft.

7C–C. TRANSMISSION REMOVAL

When removing the transmission from the vehicle, proceed as follows :
1. Remove the gearshift lever knob from the gearshift lever.
2. Remove the screws attaching the console box and remove the console box.
3. Remove the screws attaching the gearshift lever boot to the body floor and remove the gearshift lever boot.
4. Remove the bolts attaching the retainer cover to the gearshift lever retainer.
5. Pull the gearshift lever, shim and bush straight up and away from the gearshift lever retainer.
6. Open the hood and disconnect the negative battery cable from the battery terminal.
7. Remove the nuts attaching the clutch release cylinder and remove the clutch release cylinder.
8. Disconnect the connector of the back-up lamp switch near the clutch release cylinder.
9. Remove the one upper bolt securing the starting motor, then remove the three upper bolts and nuts securing the transmission to the engine rear end.
10. Raise the vehicle and support with stands.
11. Remove the bolts and screws attaching the heat insulators to the exhaust front pipe, and remove the heat insulators.
12. Disconnect the exhaust front pipe flange from the exhaust manifold by removing the bolts and nuts. Remove the bolts and nuts attaching the front pipe flange to the main silencer, and remove the exhaust front pipe.
13. Remove the bolts attaching the heat insulator to the underbody and remove the heat insulator.
14. Remove the propeller shaft and insert the **transmission oil plug** (49 0259 440) into the extension housing.
15. Disconnect the speedometer cable from the extension housing.

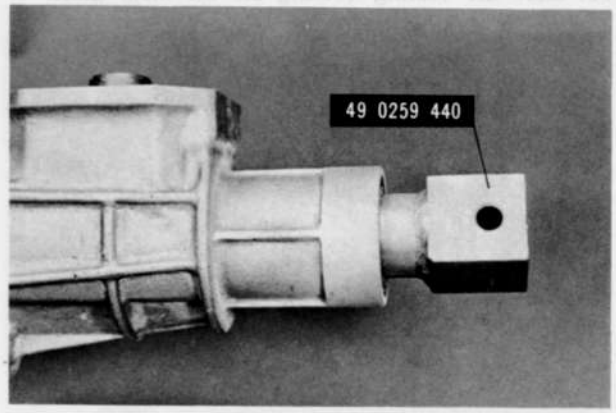

Fig. 7C–6 Transmission oil plug

16. Remove the lower bolt securing the starting motor to the clutch housing and remove the starting motor. Disconnect the wire at the starting motor.
17. Place a jack under the front side of the transmission and support the transmission with the jack.
18. Remove the bolts securing the transmission support to the body.
19. Remove the two lower bolts securing the transmission to the engine rear end.
20. Slide the transmission rearward until the main drive shaft clears the clutch disc and carefully withdraw it downward from the vehicle.

7C–D. TRANSMISSION DISASSEMBLY

The procedures for disassembling the transmission after removing the transmission from the vehicle are as follows :

1. Place the transmission on a work stand.
2. Remove the drain plug, and drain the lubricant from the transmission. Clean the metal fillings adhered on the magnet of the drain plug if necessary. Refit the drain plug after draining lubricant.
3. Pull the release fork outward until the fork retaining spring release itself form the ball stud. Slide the fork and release bearing off the clutch housing.
4. Remove the release bearing from the fork.
5. Remove the nuts attaching the clutch housing, and remove the clutch housing and gasket.

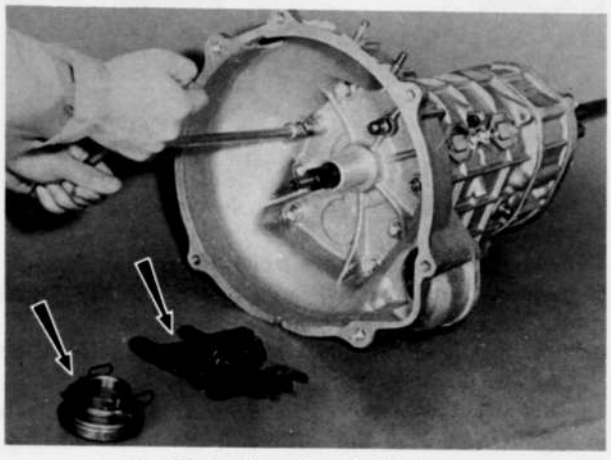

Fig. 7C–7 Removing clutch housing

6. Remove the adjusting shim from the bearing bore of the clutch housing.
7. Remove the bolts attaching the gearshift lever retainer to the extension housing and remove the retainer and gasket.

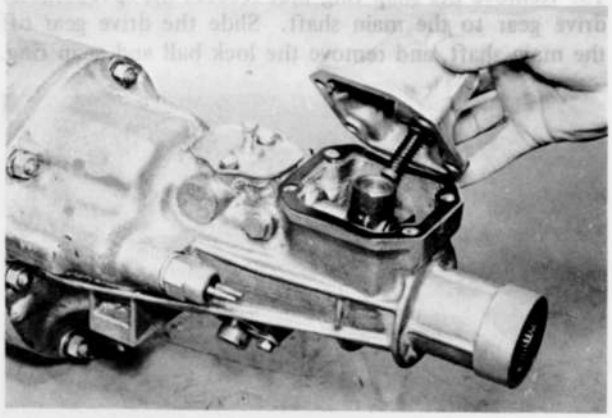

Fig. 7C–8 Removing gearshift lever retainer

8. Remove the nuts attaching the extension housing to the transmission case. With the control lever end in neutral, press the end to the left as far as it will go, and slide the extension housing off the main shaft without damaging the oil seal.
9. Remove the spring cap bolt and remove the spring and friction piece from the extension housing.
10. Remove the bolt that attach the gearshift control lever end to the gearshift control lever, and remove the control lever end, key and control lever.

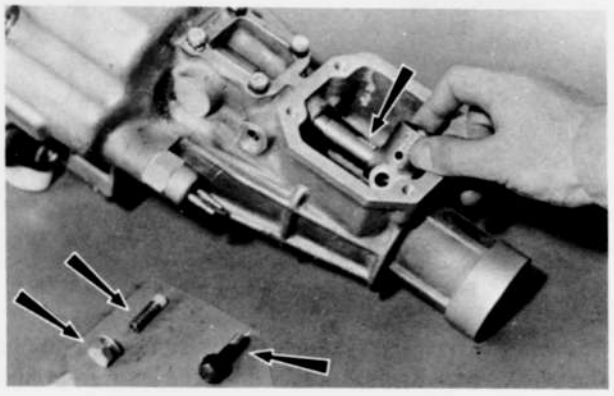

Fig. 7C–9 Removing control lever end

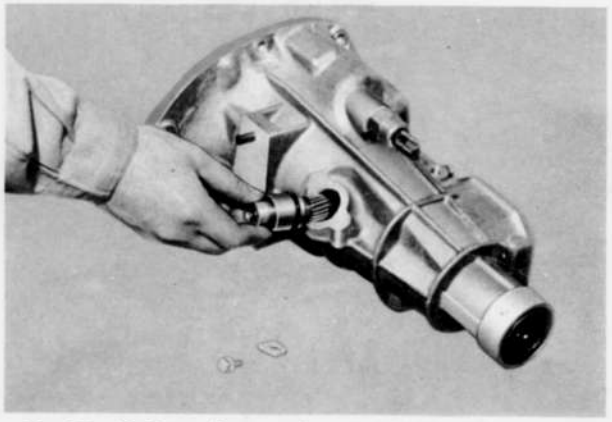

Fig. 7C–10 Removing speedometer driven gear assembly

11. Remove the speedometer sleeve lock plate, and remove the sleeve and driven gear assembly from the extension housing.
12. Remove the back-up lamp switch from the extension housing.
13. Remove the snap ring that secures the speedometer drive gear to the main shaft. Slide the drive gear off the main shaft, and remove the lock ball and snap ring.

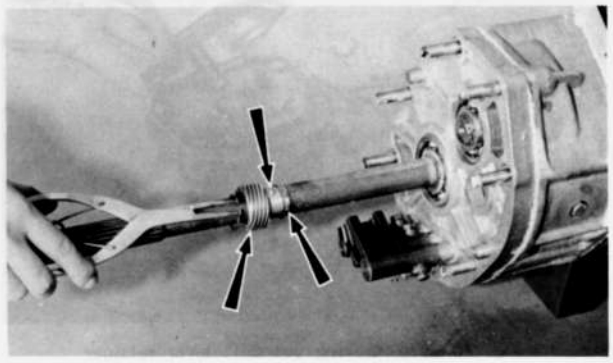

Fig. 7C–11 Removing snap ring

14. Evenly loosen the bolts securing the under cover to the transmission case and remove the under cover and gasket.

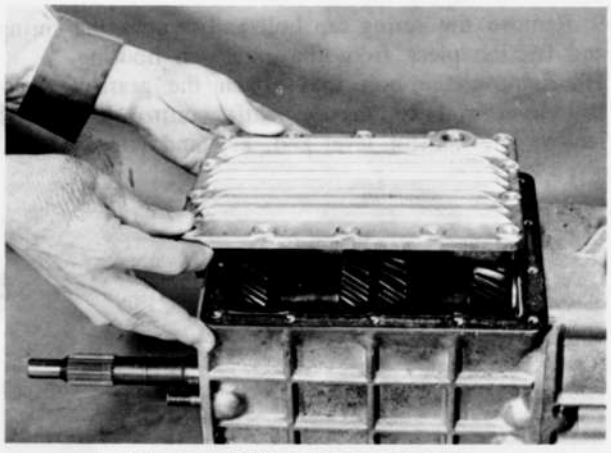

Fig. 7C–12 Removing under cover

15. Remove the bolts attaching the shift rod ends to the shift rod. Remove each shift rod end from the shift rods.

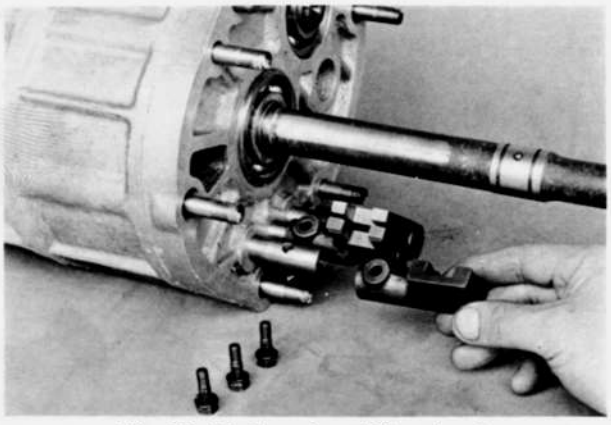

Fig. 7C–13 Removing shift rod end

16. Slide the bearing housing off the main shaft.

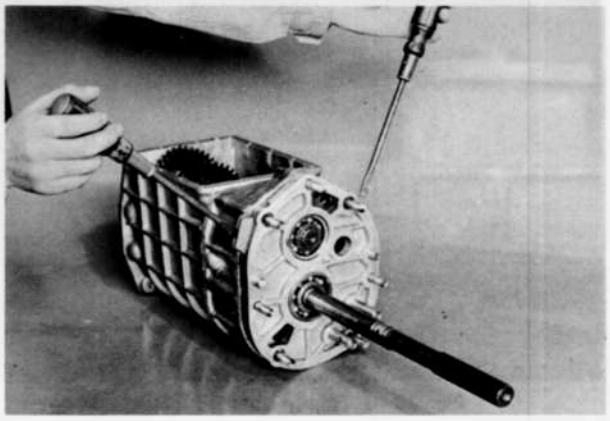

Fig. 7C–14 Removing bearing housing

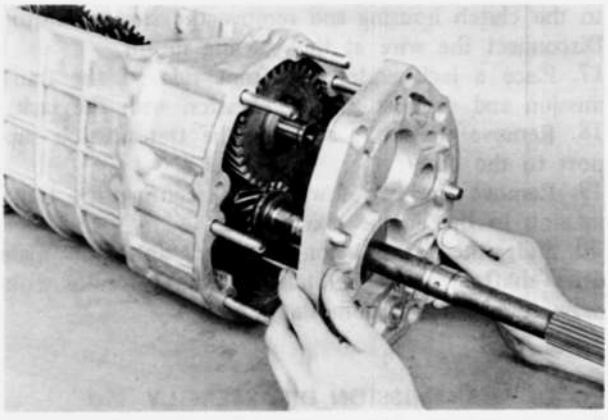

Fig. 7C–15 Removing bearing housing

17. Remove the snap ring that secures the main shaft rear bearing to the main shaft. Using the **bearing puller** (49 0839 425A) shown in Fig. 7C–16, remove the rear bearing from the main shaft.

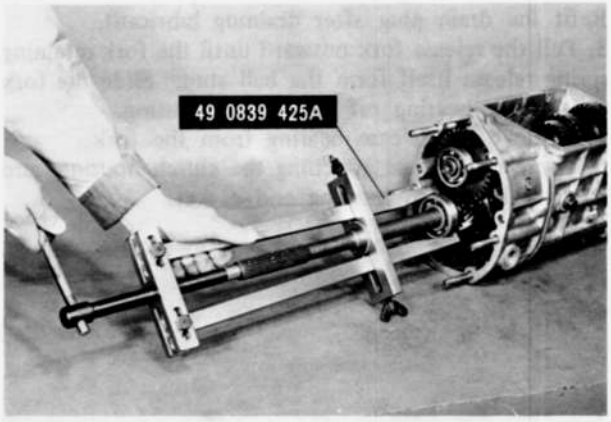

Fig. 7C–16 Removing main shaft rear bearing

18. Remove the snap ring from the rear end of the counter shaft. Using the **bearing puller** (49 0839 425A) shown in Fig. 7C–17, remove the counter shaft rear bearing together with the counter fifth gear from the rear of the counter shaft.
19. Remove the center housing attaching bolt shown in Fig. 7C–18 from the outside of the center housing.
20. Remove the center housing. Tap the center

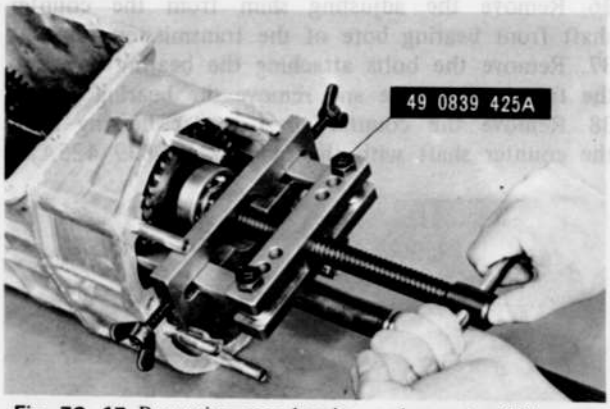

Fig. 7C–17 Removing rear bearing and counter fifth gear

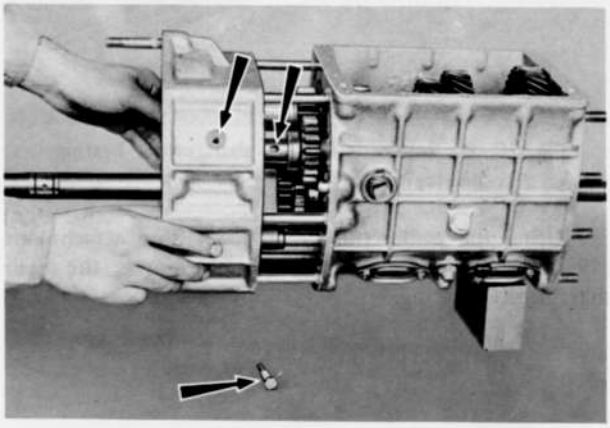

Fig. 7C–18 Removing center housing

housing with a plastic hammer to facilitate the removal if necessary.

21. Remove the three spring cap bolts and remove the detent springs and detent balls (locking balls) from the transmission case.
22. Remove the nuts attaching the blind covers to the transmission case and remove the blind covers and gaskets.

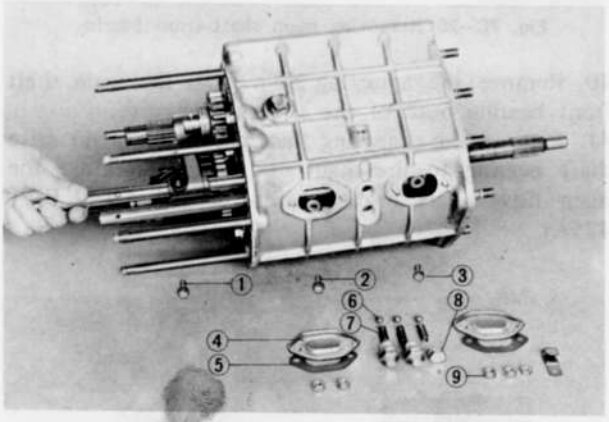

Fig. 7C–19 Removing shift rod

1. Fifth-and-reverse shift fork attaching bolt
2. First-and-second shift fork attaching bolt
3. Third-and-fourth shift fork attaching bolt
4. Blind cover
5. Gasket
6. Detent ball
7. Detent spring
8. Spring cap bolt
9. Nut

23. Remove the attaching bolt from the fifth-and-reverse shift fork. Slide the fifth-and-reverse shift rod out the rear of the transmission case.
24. Remove the attaching bolt from the third-and-fourth shift fork. Slide the third-and-fourth shift rod out the rear of the transmission case.
25. Remove the attaching bolt from the first-and-second shift fork. Slide the first-and-second shift rod out the rear of the transmission case.
26. Remove the snap ring that secures the fifth gear to the main shaft.
27. Remove the thrust washer, fifth gear, lock ball and needle bearing from the rear of the main shaft.

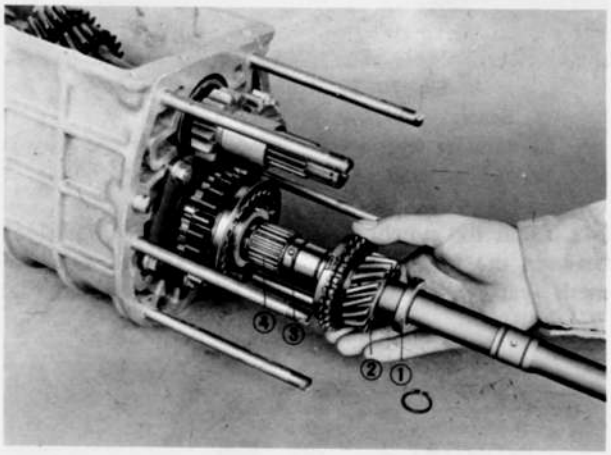

Fig. 7C–20 Removing fifth gear

1. Thrust washer
2. Fifth gear
3. Lock ball
4. Needle bearing

28. Shift into the second gear and the counter reverse gear to lock the rotation of the main shaft.
29. Straighten the tab of the lock washer. Using the **lock nut wrench** (49 0813 465A) shown in Fig. 7C–21, remove the lock nut from the main shaft.

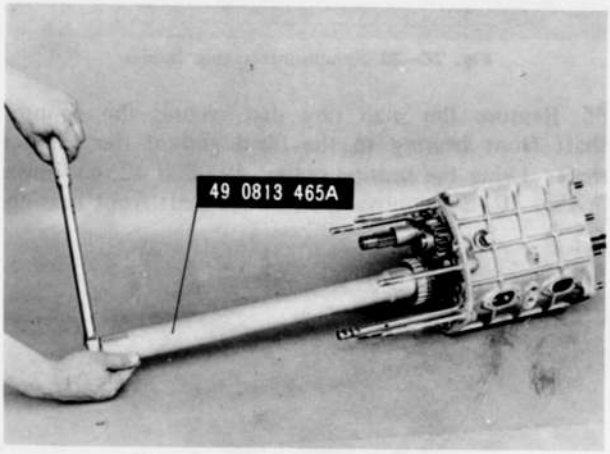

Fig. 7C–21 Removing lock nut

30. Slide the reverse gear and clutch hub assembly off the main shaft.
31. Slide the spacer and counter reverse gear off the rear of the counter shaft.
32. Remove the reverse idler gear together with the idler gear shaft from the transmission case.

33. Remove the key and spacer from the main shaft.

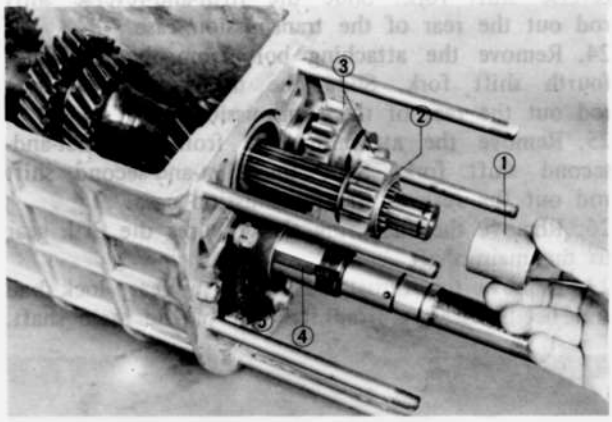

Fig. 7C–22 Removing spacer
1. Spacer
2. Counter reverse gear
3. Reverse idler gear and shaft
4. Key
5. Spacer

34. Install the **synchronizer ring holder** (49 0839 445) between the fourth synchronizer ring and the synchromesh gear on the main drive shaft, as shown in Fig. 7C–23.

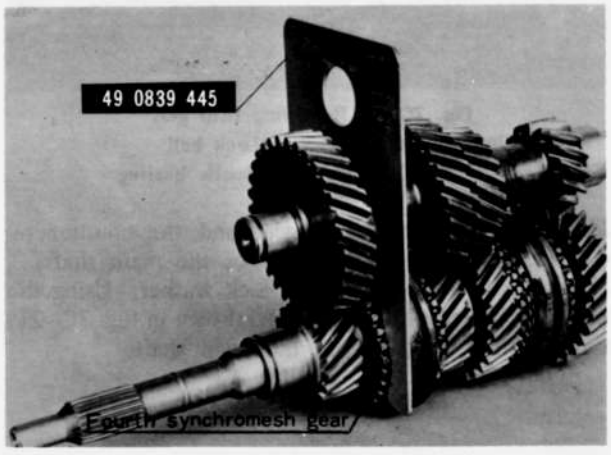

Fig. 7C–23 Synchronizer ring holder

35. Remove the snap ring that secures the counter shaft front bearing to the front end of the counter shaft. Using the **bearing puller** (49 0839 425A) shown in Fig. 7C–24, remove the counter shaft front bearing.

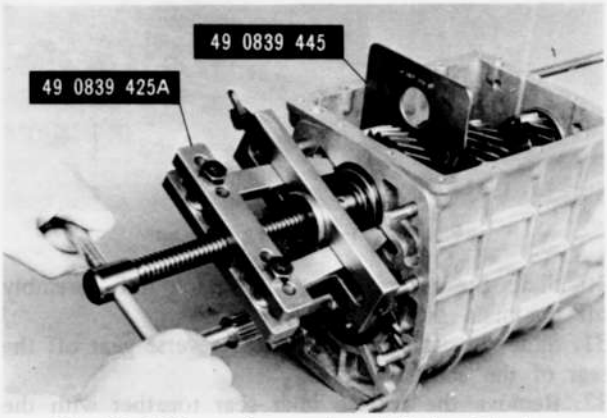

Fig. 7C–24 Removing counter shaft front bearing

36. Remove the adjusting shim from the counter shaft front bearing bore of the transmission case.
37. Remove the bolts attaching the bearing cover to the transmission case and remove the bearing cover.
38. Remove the counter shaft center bearing from the counter shaft with the **puller** (49 0839 425A).

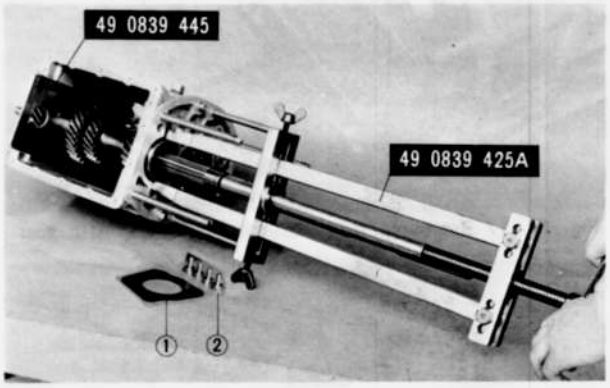

Fig. 7C–25 Removing counter shaft center bearing
1. Bearing cover
2. Bolt

39. Using the **puller** (49 0839 425A) and **attachment** (49 0862 426) shown in Fig. 7C–26, remove the main shaft front bearing.

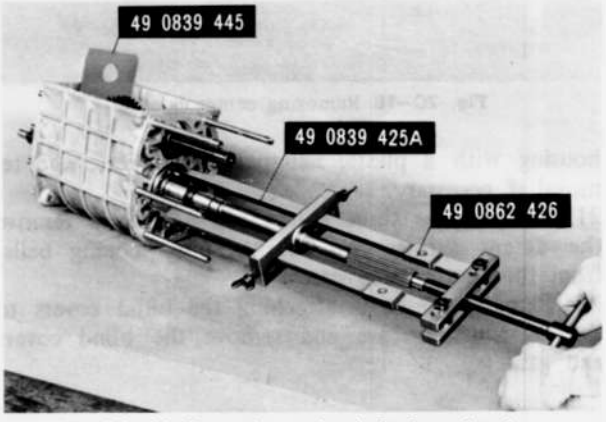

Fig. 7C–26 Removing main shaft front bearing

40. Remove the adjusting shim from the main shaft front bearing bore of the transmission case.
41. Remove the snap ring that secures the main drive shaft bearing to the main drive shaft. Remove the main drive shaft bearing with the **puller** (49 0839 425A).

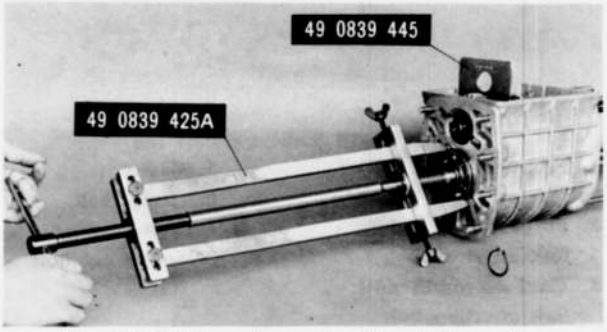

Fig. 7C–27 Removing main drive shaft bearing

42. Take out the counter shaft gear from the transmission case. Remove the inner race of the counter shaft center bearing from the counter shaft with the **puller** (49 0710 520).



Fig. 7C–28 Removing bearing inner race

43. Take out the main drive shaft from the case. Remove the fourth synchronizer ring from the main drive shaft.

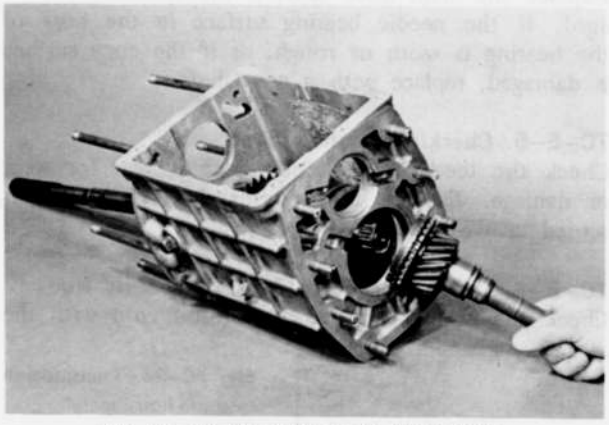

Fig. 7C–29 Removing main drive shaft

44. Take out the main shaft and gears assembly from the case.

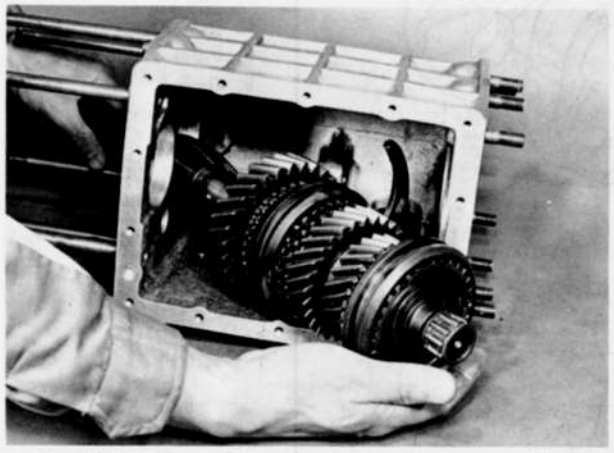

Fig. 7C–30 Removing main shaft and gears assembly

45. Remove the first-and-second shift fork and third-and-fourth shift fork from the case.
46. Remove the shift inter-lock pins from the case.
47. Remove the needle bearing from the front end of the main shaft.
48. Remove the snap ring that secures the third-and-fourth clutch hub and sleeve assembly. Slide the third-and-fourth clutch hub and sleeve assembly, third synchronizer ring and third gear out the front of the main shaft. **Do not** mix the synchronizer rings.

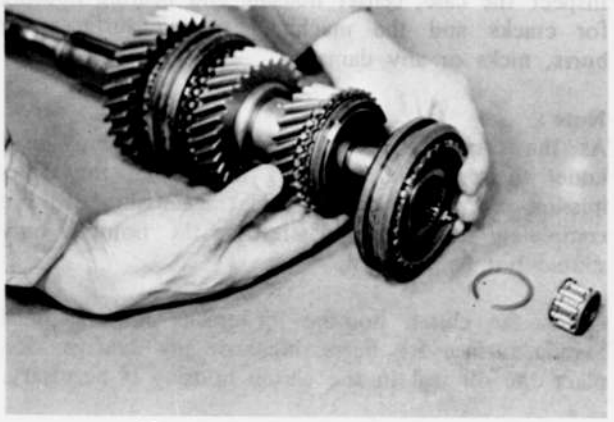

Fig. 7C–31 Removing third gear

49. Slide the thrust washer, first gear and needle bearing out the rear of the main shaft.
50. Press out the inner race, the first-and-second clutch hub and sleeve assembly, second synchronizer ring and second gear.

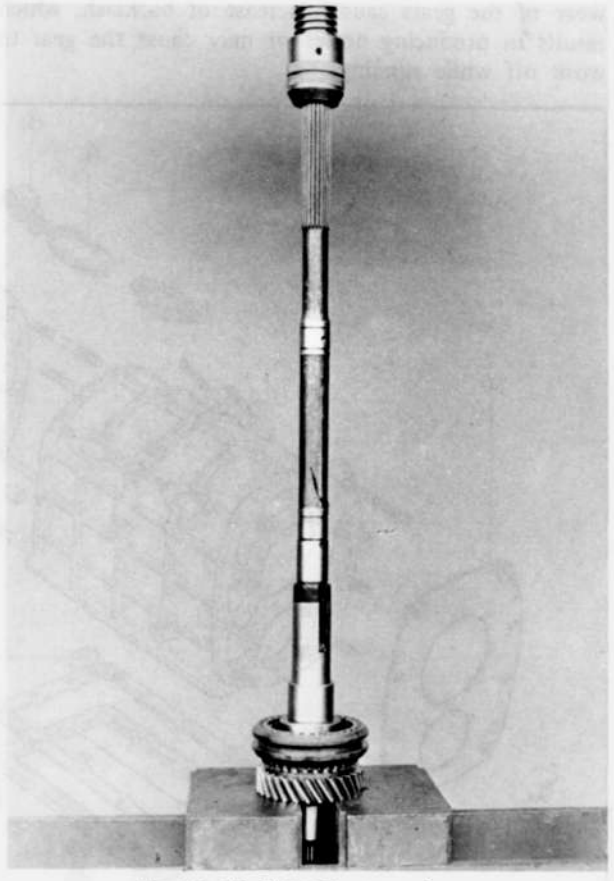

Fig. 7C–32 Removing second gear

7C–E. TRANSMISSION INSPECTION

Thoroughly clean all the parts. Inspect the parts for wear, damage and other defects. The parts found defective must be repaired or replaced.

7C–E–1. Checking Transmission Case and Housing

Inspect the case, center housing and bearing housing for cracks and the machined mating surfaces for burrs, nicks or any damage.

Note :

As the center and bearing housings are machined under the condition of being fitted with the transmission case, the housings and transmission case are completely centerized. Therefore, the housing only should not be replaced.

Check the clutch housing for cracks and machined mating surface for burrs, nicks or any damage. Replace the oil seal in the clutch housing if necessary.

7C–E–2. Checking Bearings

Inspect each bearing for roughness or noise by holding the outer race, and rotating the inner race while applying pressure with hand. Replace the bearings if necessary. Replace the needle bearings that are broken, worn or rough.

7C–E–3. Checking Gears

Inspect the teeth of each gear. If excessively worn, broken or chipped, replace with new gear. Excessive wear of the gears causes increase of backlash, which results in producing noises or may cause the gear to work off while running.

7C–E–4. Checking Main Shaft and Main Drive Shaft

Check the main shaft run-out with a dial indicator. If the run-out exceeds **0.03 mm (0.0012 in)**, correct with a press or replace with a new one. Replace the main shaft if there is any evidence of wear or if any of the splines is damaged.

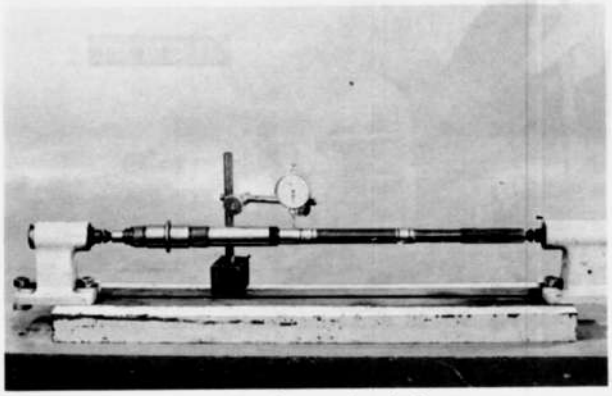

Fig. 7C–33 Checking main shaft run-out

Replace the main drive shaft if the splines are damaged. If the needle bearing surface in the bore of the bearing is worn or rough, or if the cone surface is damaged, replace with a new shaft.

7C–E–5. Checking Counter Shaft

Check the teeth of the counter shaft gear for wear or damage. Replace the counter shaft if it is bend, scored or worn.

7C–E–6. Checking Control Lever and Shift Rod

Check the contact surface of the shift rod with the

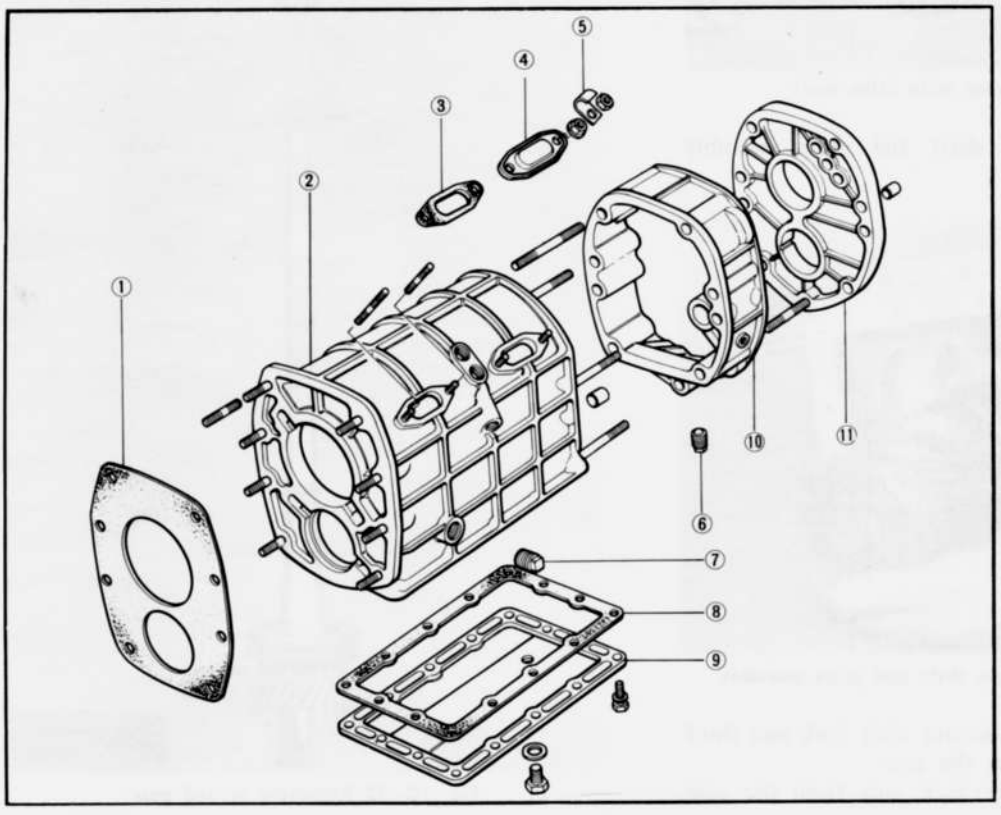

Fig. 7C–34 Transmission case and housing

1. Gasket
2. Transmission case
3. Gasket
4. Blind cover
5. Clip
6. Drain plug
7. Filler and level plug
8. Gasket
9. Transmission under cover
10. Center housing
11. Bearing housing

detent ball for wear or damage.
Cehck the contact surface of the shift rod with the control lever for wear. The clearance between the shift rod and the control lever should be **less than 0.8 mm (0.0031 in).**

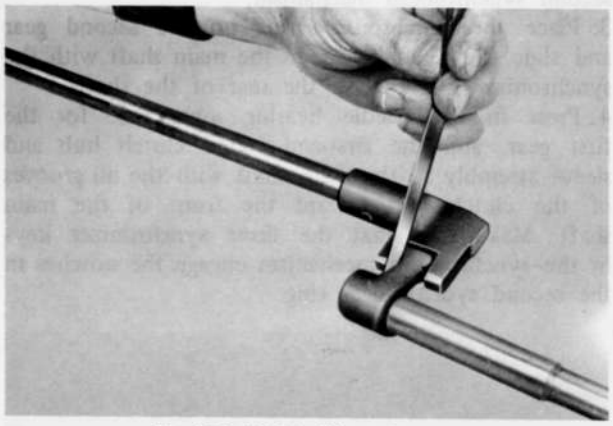

Fig. 7C–35 Checking clearance

7C–E–7. Checking Shift Fork

Check the contact surface of the shift forks with the clutch sleeve for wear or damage. The clearance between the shift fork and the clutch sleeve should be **less than 0.5 mm (0.020 in).**

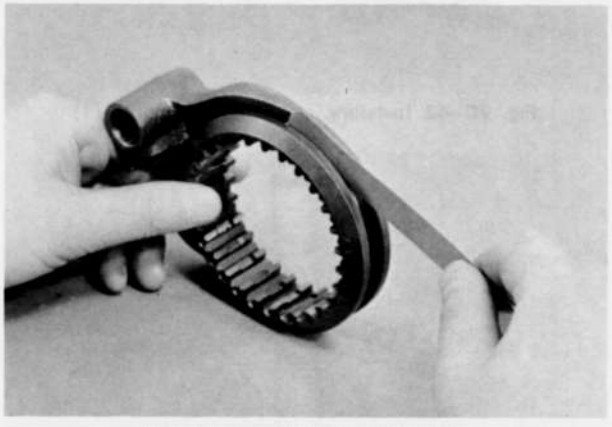

Fig. 7C–36 Checking clearance

7C–E–8. Checking Clutch Sleeve

Check the clutch sleeves for free movement on their hubs.
Check the splines of the clutch sleeve for wear or damage.
Check the contact surface of the clutch sleeve with the shift fork for wear or damage.

7C–E–9. Checking Synchronizer Ring

1. Check the synchromesh gear on the synchronizer ring for wear or damage.
2. Check the tapered portion for uneven wear or damage. Also place the ring on the gear cone, and check the clearance between the gear and the ring. If the clearance is **less than 0.8 mm (0.031 in)**, replace the synchronizer ring.
3. If the contact between the ring and the gear cone is incorrect, or if a new synchronizer ring is used, lap the synchronizer ring with the gear cone using a lapping compound. Apply a light pressure for lapping. After lapping, clean the ring and the gear cone with a suitable solvent, then check the clearance and contact between the ring and the gear cone.

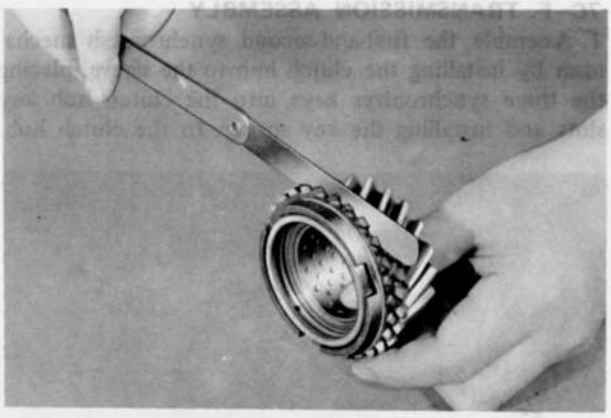

Fig. 7C–37 Checking clearance

7C–E–10. Checking Synchronizer Key and Spring

1. Check the synchronizer key for wear or damage.
2. Check the synchronizer key spring for wear or weakness.

7C–E–11. Checking Clutch Hub

Check the splines for wear or damage.
Check the contact surface of the clutch hub with the synchronizer ring for wear or damage.
Check the contact surface of the clutch hub with the thrust surface of the gears for wear or damage.

7C–E–12. Checking Extension Housing

Inspect the extension housing for cracks and the machined mating surface for burrs, nicks or any damage. Inspect the oil seal in the extension housing. Replace the oil seal if it is worn or damaged.

7C–E–13. Checking Speedometer Gears

Check the drive gear and driven gear and the driven gear shaft for wear or damage. Check the "O" ring and oil seal for weakness or damage.

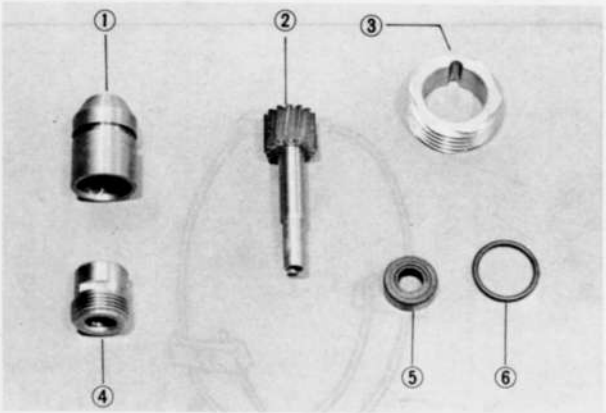

Fig. 7C–38 Speedometer gears

1. Sleeve
2. Speedometer driven gear and shaft
3. Speedometer drive gear
4. Joint
5. Oil seal
6. "O" ring

7C–F. TRANSMISSION ASSEMBLY

1. Assemble the first-and-second synchromesh mechanism by installing the clutch hub to the sleeve, placing the three synchronizer keys into the clutch hub key slots and installing the key springs to the clutch hub.

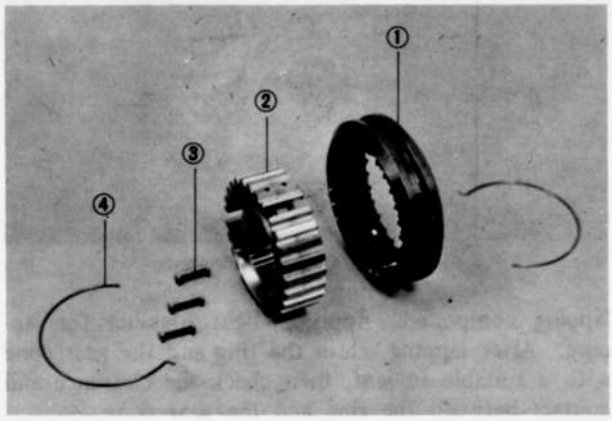

Fig. 7C–39 Synchromesh mechanism
1. Clutch sleeve
2. Clutch hub
3. Synchronizer key
4. Key spring

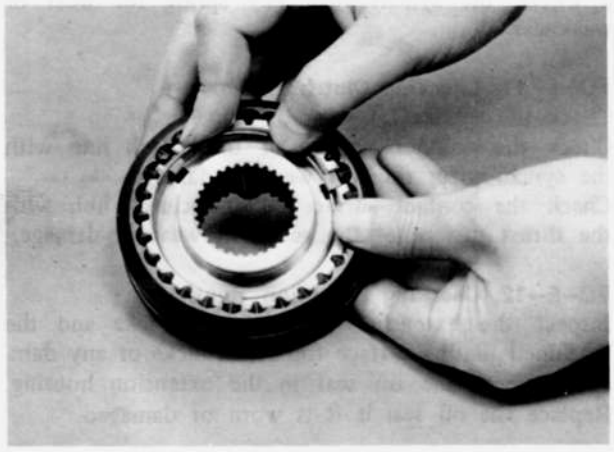

Fig. 7C–40 Assembling clutch hub

Note :
When installing the key springs, the open ends of the springs should be kept 120° apart as shown in Fig. 7C–41, so that the spring tension on each key will be uniform.

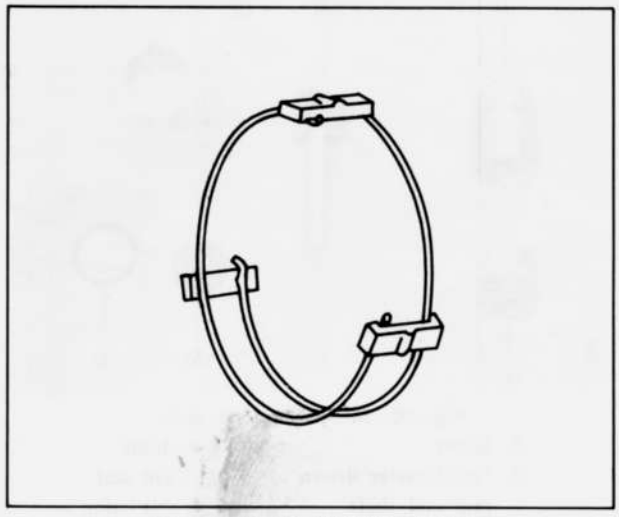

Fig. 7C–41 Installing key spring

2. Assemble the third-and-fourth and fifth synchromesh mechanisms in the same manner as first-and-second synchromesh mechanism.
3. Place the synchronizer ring on the second gear and slide the second gear to the main shaft with the synchronizer ring toward the rear of the shaft.
4. Press in the needle bearing inner race for the first gear, and the first-and-second clutch hub and sleeve assembly to the main shaft with the oil grooves of the clutch hub toward the front of the main shaft. Make sure that the three synchronizer keys in the synchromesh mechanism engage the notches in the second synchronizer ring.

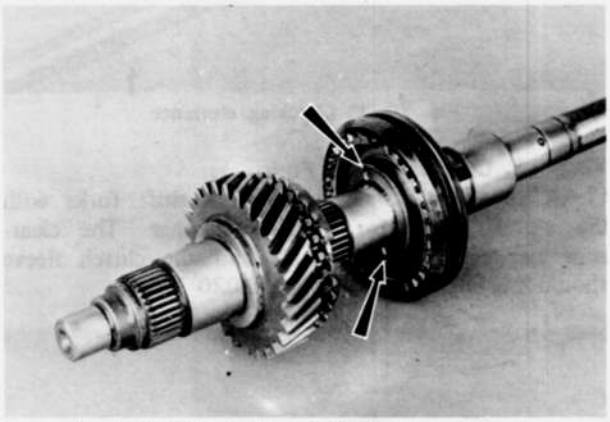

Fig. 7C–42 Installing clutch hub assembly (1)

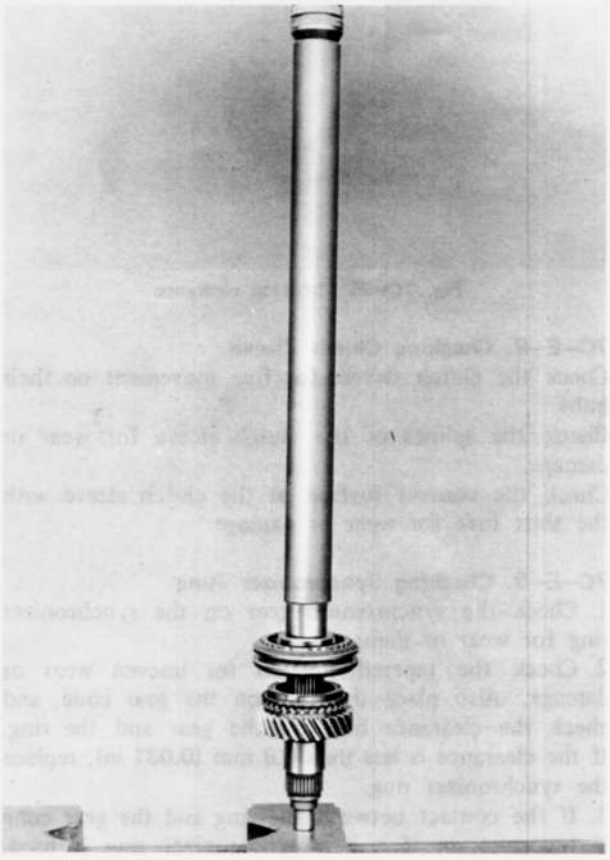

Fig. 7C–43 Installing clutch hub assembly (2)

5. Place the synchronizer ring on the third gear and slide the third gear to the front of the main shaft with the synchronizer ring toward the front.
6. Slide the third-and-fourth clutch hub and sleeve assembly to the front of the main shaft making sure that the three synchronizer keys in the synchromesh mechanism engage the notches in the synchronizer ring.

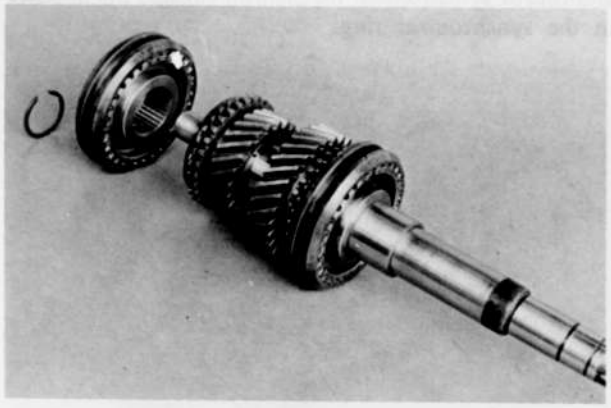

Fig. 7C–44 Installing clutch hub assembly (3)

Note :
The direction of the third-and-fourth clutch hub and sleeve assembly should be as shown in Fig. 7C–45.

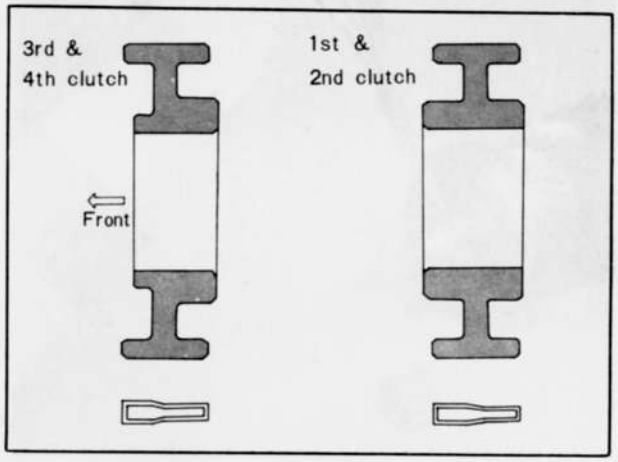

Fig. 7C–45 Direction of clutch hub assembly

7. Install the snap ring to the front of the main shaft.

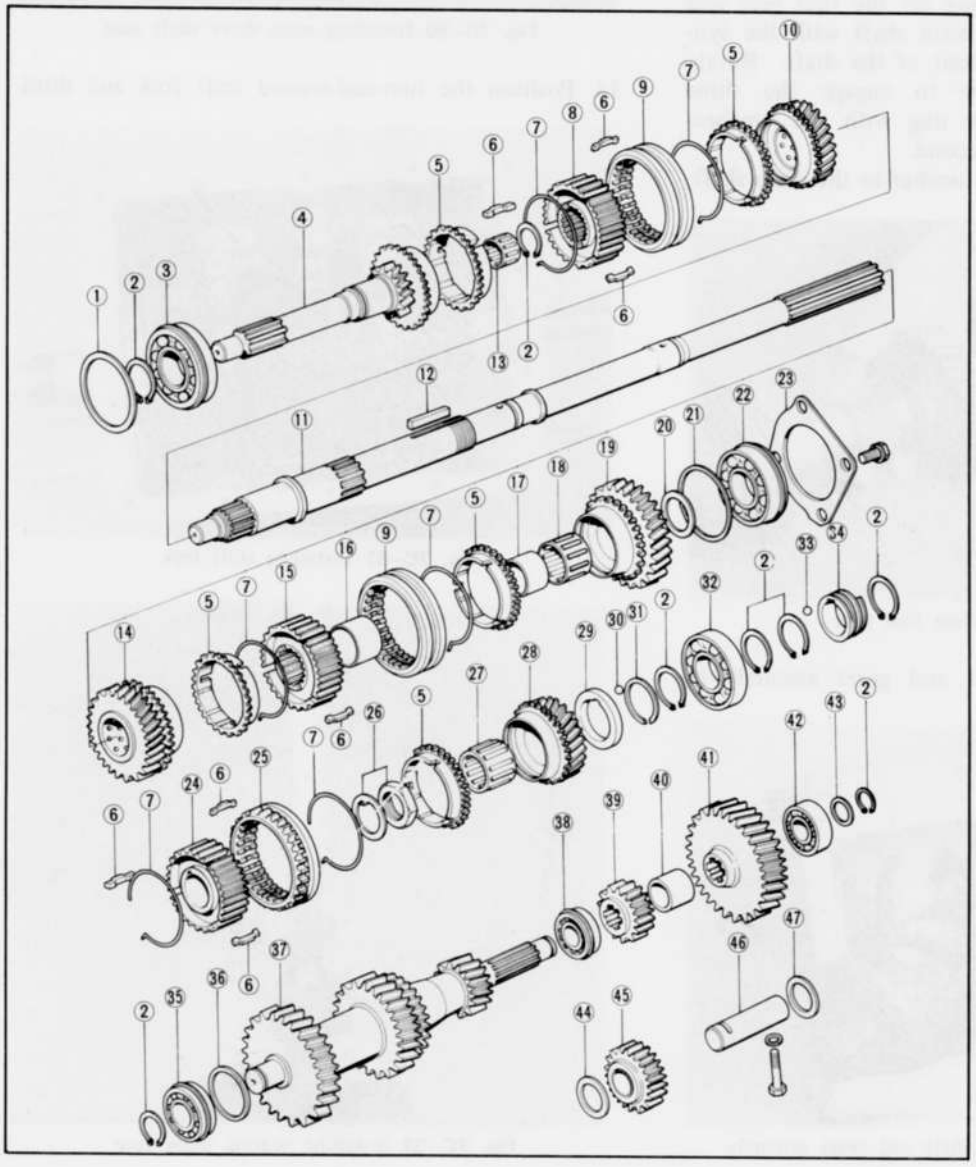

Fig. 7C–46 Shafts and gears
1. Adjusting shim
2. Snap ring
3. Main drive shaft bearing
4. Main drive shaft gear
5. Synchronizer ring
6. Synchronizer key
7. Synchronizer key spring
8. 3rd-and-4th clutch hub
9. Clutch sleeve
10. 3rd gear
11. Main shaft
12. Key
13. Needle bearing
14. 2nd gear
15. 1st-and-2nd clutch hub
16. Spacer
17. Needle bearing inner race
18. Needle bearing
19. 1st gear
20. Thrust washer
21. Adjusting shim
22. Main shaft front bearing
23. Bearing cover
24. 5th clutch hub
25. Reverse gear and sleeve
26. Washer and nut
27. Needle bearing
28. 5th gear
29. Thrust washer
30. Lock ball
31. Thrust washer
32. Main shaft rear bearing
33. Lock ball
34. Speedometer drive gear
35. Counter shaft front bearing
36. Adjusting shim
37. Counter shaft gear
38. Counter shaft center bearing
39. Counter reverse gear
40. Spacer
41. Reverse gear
42. Counter shaft rear bearing
43. Thrust washer
44. Washer
45. Reverse idler gear
46. Reverse idler gear shaft
47. Washer

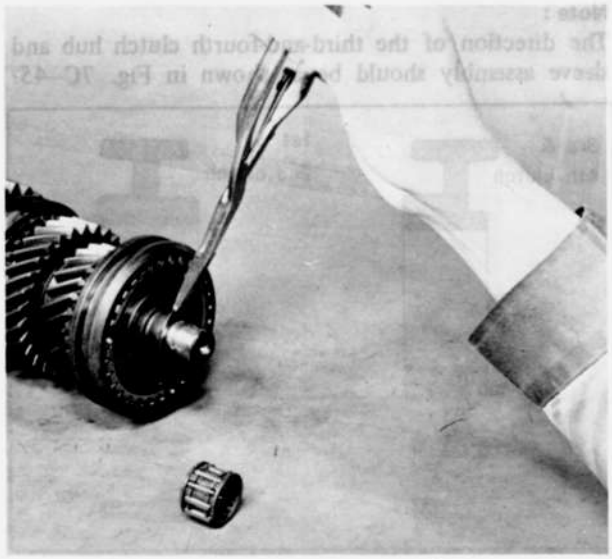

Fig. 7C–47 Installing snap ring

8. Slide the needle bearing for the first gear to the main shaft.
9. Place the synchronizer ring on the first gear and slide the first gear to the main shaft with the synchronizer ring toward the front of the shaft. Rotate the first gear as necessary to engage the three notches in the synchronizer ring with the synchronizer keys in the first-and-second.
10. Install the original thrust washer to the main shaft.



Fig. 7C–48 Installing first gear

11. Position the main shaft and gears assembly in the case.
12. Place the needle bearing to the front end of the main shaft.
13. Place the synchronizer ring on the main drive shaft gear (fourth gear) and install the main drive shaft gear to the front end of the main shaft making sure that the three synchronizer keys in the third-and-fourth synchromesh mechanism engages the notches in the synchronizer ring.

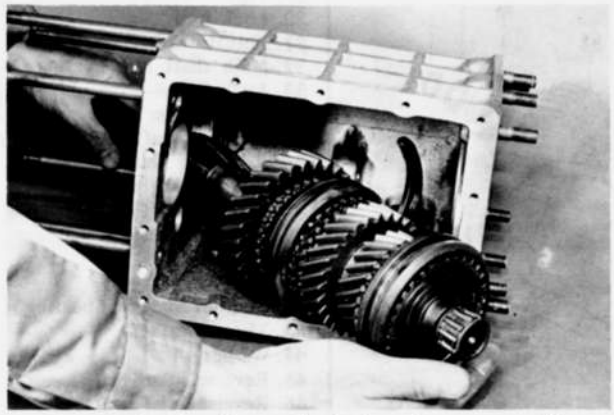

Fig. 7C–49 Installing main shaft and gears assembly

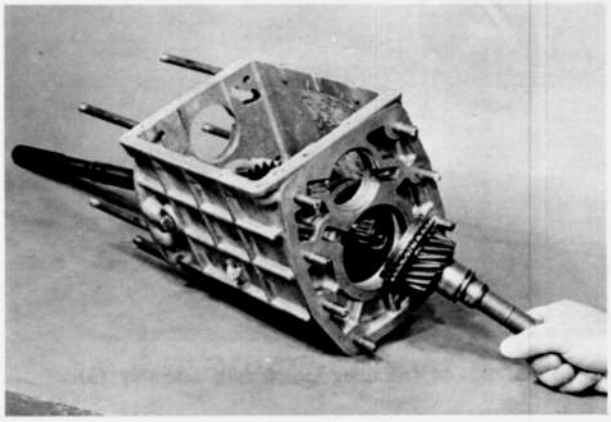

Fig. 7C–50 Installing main drive shaft gear

14. Position the first-and-second shift fork and third-

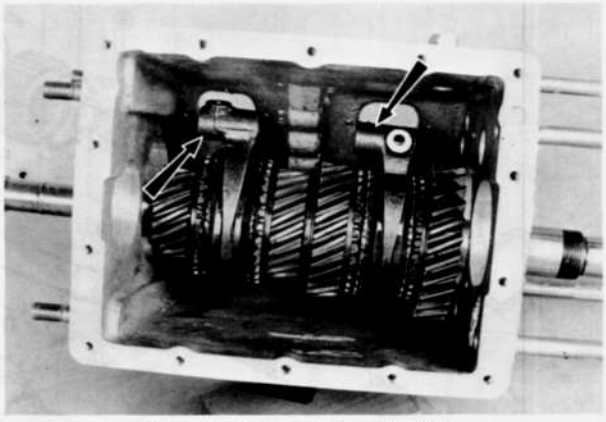

Fig. 7C–51 Installing shift fork

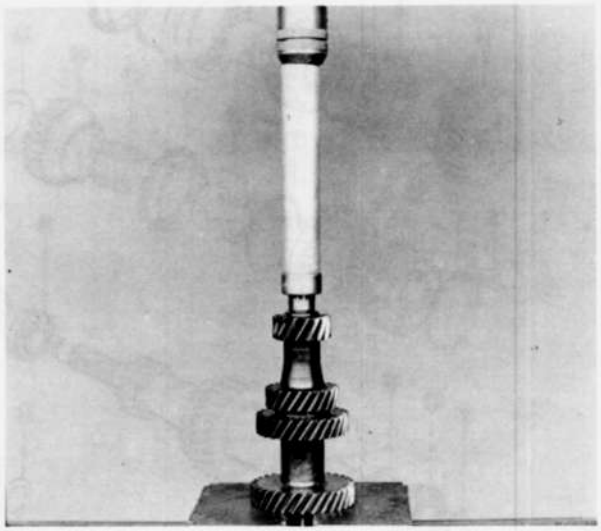

Fig. 7C–52 Installing bearing inner race

and-fourth shift fork in the groove of the clutch hub and sleeve assembly, as shown in Fig. 7C–51.
15. Press in the inner race of the counter shaft center bearing to the counter shaft, as shown in Fig. 7C–52.
16. Position the counter shaft gear in the case, making sure that the counter shaft gear engage each gear of the main shaft assembly.
17. Check the main shaft bearing end play.
To check the end play, proceed as follows:
Measure the depth of the main shaft front bearing bore in the clutch housing by using a depth gauge. Then, measure the main shaft front bearing height shown in Fig. 7C–53. The difference between the two measurements indicates the required thickness of the adjusting shim. The standard end play is **0 ~ 0.1 mm (0 ~ 0.0039 in)**. The adjusting shims are available in the following thickness :

0.1 mm (0.0039 in)	0.3 mm (0.0118 in)

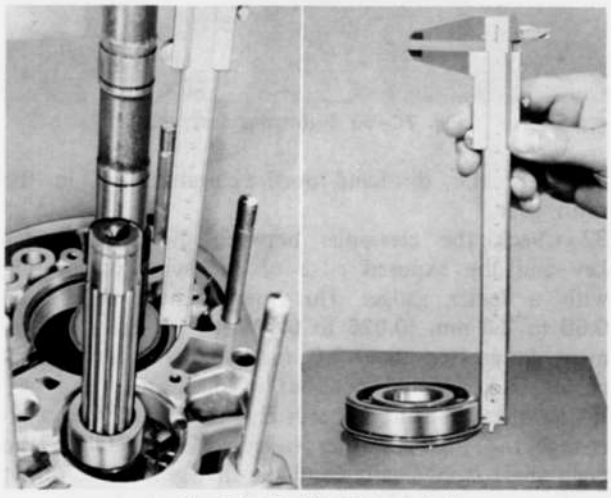

Fig. 7C–53 Checking end play

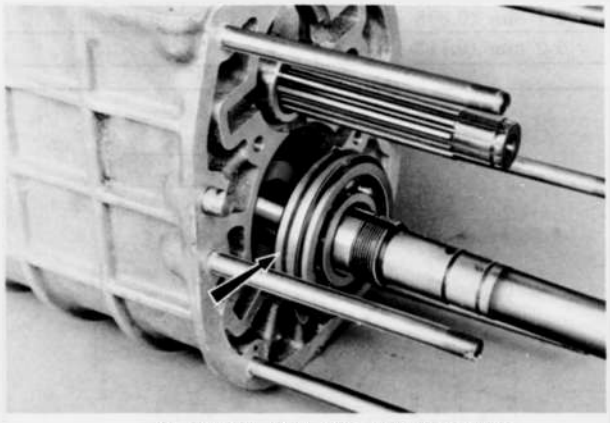

Fig. 7C–54 End play adjusting shim

18. Install the **synchronizer ring holder** (49 0839 445) between the fourth synchronizer ring and the synchromesh gear on the main drive shaft.
19. Position the main drive shaft bearing and the main shaft front bearing in their respective bearing bore, and press in them by using a press and suitable installer.

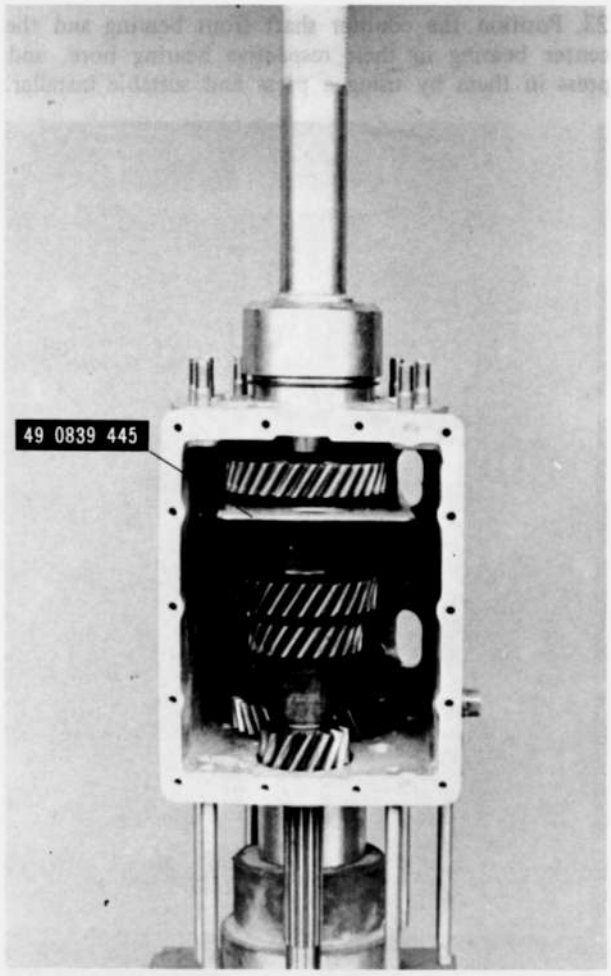

Fig. 7C–55 Installing bearings

20. Install the snap ring to secure the main drive shaft bearing.
21. Check the counter shaft bearing end play in the same manner for the main shaft bearing end play. The standard end play is **0 ~ 0.1 mm (0 ~ 0.0039 in)**. The adjusting shims are available in the following thickness:

0.1 mm (0.0039 in)	0.3 mm (0.0118 in)

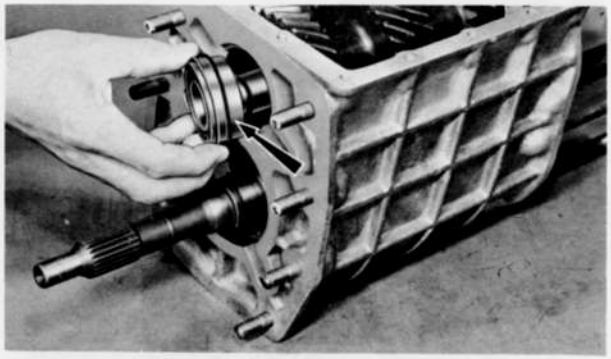

Fig. 7C–56 End play adjusting shim

22. Install the **synchronizer ring holder** (49 0839 445) between the fourth synchronizer ring and synchromesh gear on the main drive shaft.

23. Position the counter shaft front bearing and the center bearing in their respective bearing bore, and press in them by using a press and suitable installer.

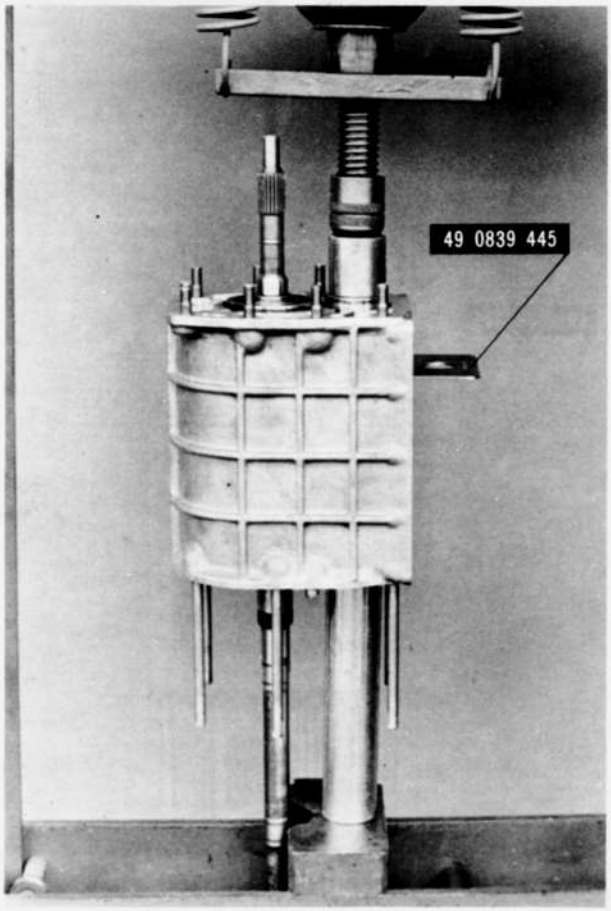

Fig. 7C–57 Installing bearings

24. Install the snap ring to secure the counter shaft front bearing.
25. Remove the synchronizer ring holder.
26. Install the bearing cover to the transmission case and tighten the attaching bolts.
27. Install the thrust washers and reverse idler gear with the reverse idler gear shaft to the transmission case.
28. Slide the counter reverse gear and spacer to the counter shaft.
29. Install the spacer and key to the main shaft.
30. Slide the reverse gear and clutch hub assembly to the main shaft and tighten the lock nut temporarily. Shift into the second gear and counter reverse gear to lock the rotation of the main shaft.
Tighten the lock nut to **16 ~ 24 m-kg (115.2 ~ 172.8 ft-lb)** by using the **wrench** (49 0813 465A).

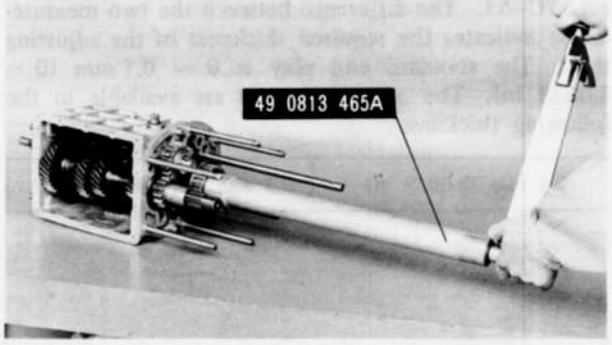

Fig. 7C–59 Tightening lock nut

31. Place the third-and-fourth clutch sleeve in the third gear.
32. Check the clearance between the synchronizer key and the exposed edge of the synchronizer ring with a feeler gauge. This measurement should be **0.66 to 2.0 mm (0.026 to 0.079 in)**. If the measurement is greater than 2.0 mm (0.079 in), the synchronizer key could pop out of position.
If the measurement exceeds 2.0 mm (0.079 in), exchange the thrust washer (selective fit) between the main shaft front bearing and the first gear. The thrust washers are available in the following thickness:

2.5 mm (0.098 in)	3.5 mm (0.138 in)
3.0 mm (0.118 in)	

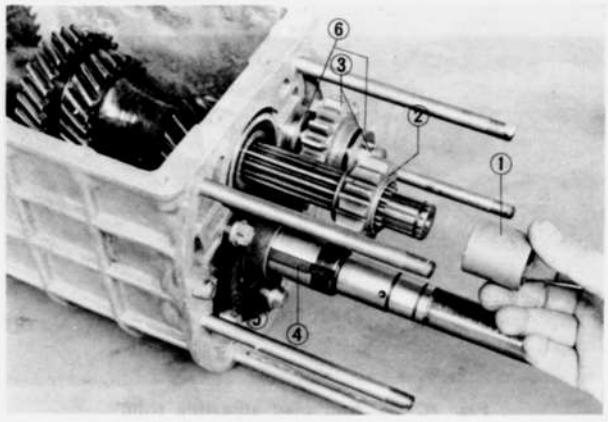

Fig. 7C–58 Installing spacer

1. Spacer
2. Counter reverse gear
3. Reverse idler gear and shaft
4. Key
5. Spacer
6. Thrust washer

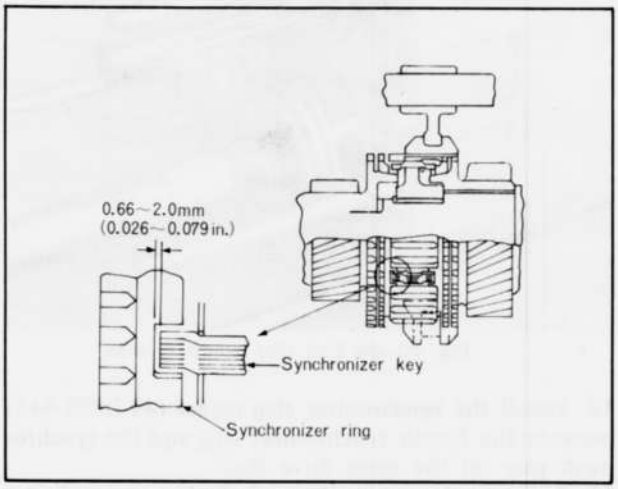

Fig. 7C–60 Checking clearance

If the measurement corrects, bend the tab of the lock washer.

33. Install the needle bearing and lock ball to the main shaft.
34. Place the fifth synchronizer ring on the fifth gear and slide the fifth gear to the main shaft with the synchronizer ring toward the front of the shaft. Rotate the fifth gear as necessary to engage the three notches in the synchronizer ring with the synchronizer keys in the reverse and fifth clutch hub assembly.
35. Install the thrust washer on the rear of the fifth gear.

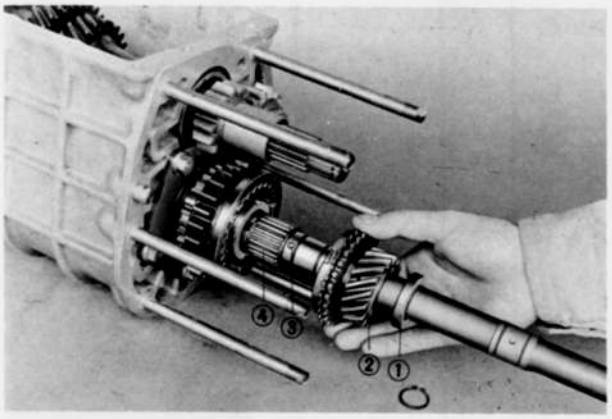

Fig. 7C–61 Installing fifth gear
1. Thrust washer
2. Fifth gear
3. Lock ball
4. Needle bearing

36. Install the snap ring on the rear of the thrust washer, and check the clearance between the thrust washer and the snap ring. The standard clearance is **0.1 ~ 0.3 mm (0.0039 ~ 0.0118 in)**. If necessary, select and use the properly sized thrust washer. The thrust washers are available in the following thickness :

6.0 mm (0.2362 in)	6.7 mm (0.2638 in)
6.2 mm (0.2441 in)	6.8 mm (0.2677 in)
6.4 mm (0.2520 in)	7.0 mm (0.2756 in)
6.5 mm (0.2559 in)	7.2 mm (0.2835 in)
6.6 mm (0.2598 in)	

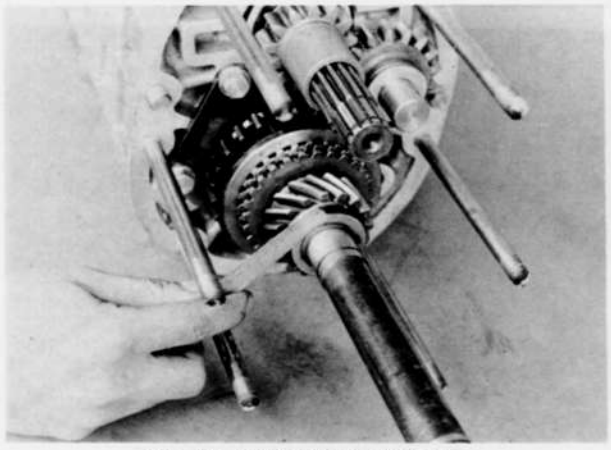

Fig. 7C–62 Checking clearance

37. Slide the first-and-second shift rod into the case from the rear of the case. Secure the first-and-second shift fork to the shift rod with the lock bolt.

38. Using the **shift inter-lock pin installer** (49 0862 350) shown in Fig. 7C–63, insert the shift inter-lock pin into the case.

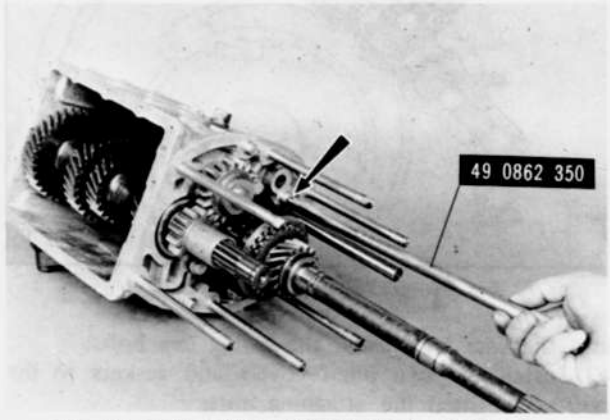

Fig. 7C–63 Installing shift inter-lock pin installer

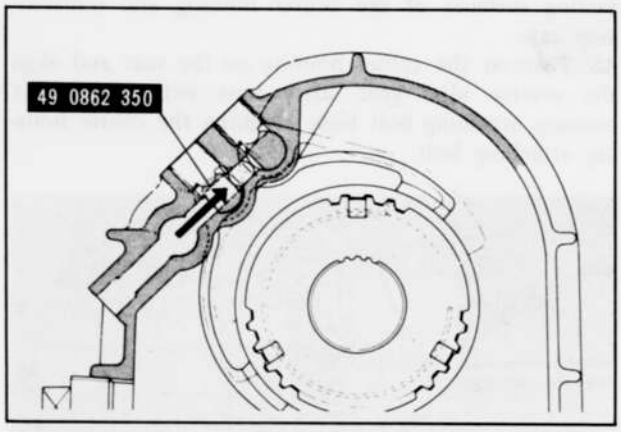

Fig. 7C–64 Installing inter-lock pin (1)

39. Slide the third-and-fourth shift rod into the case from the rear of the case. Secure the third-and-fourth shift fork to the shift rod with the lock bolt.
40. Insert the shift inter-lock pin into the case by using the **installer** (49 0862 350).

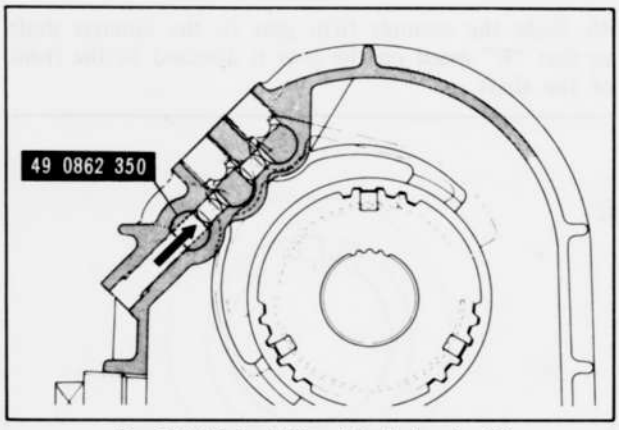

Fig. 7C–65 Installing inter-lock pin (2)

41. Slide the reverse-and-fifth shift rod into the case from the rear of the case. Secure the reverse-and-fifth shift fork to the shift rod with the lock bolt.
42. Position the three detent balls and three springs

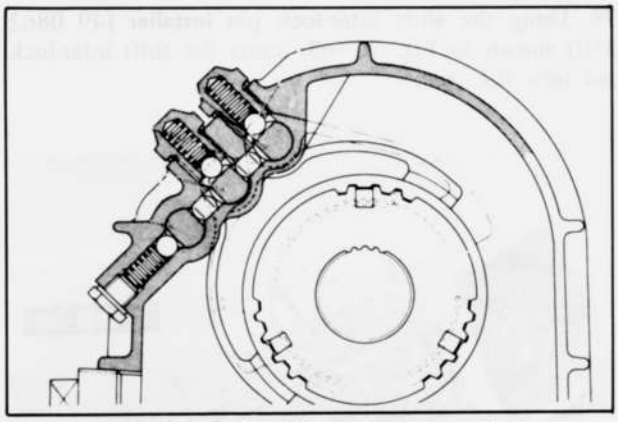

Fig. 7C–66 Installing spring cap bolt

into the case and install the spring cap bolts.
43. Install the two blind covers and gaskets to the case and tighten the attaching nuts.
44. Apply a thin coat of sealing agent to the contacting surfaces of the center housing and transmission case.
45. Position the center housing on the case and align the reverse idler gear shaft boss with the center housing attaching bolt boss. Tighten the center housing attaching bolt.

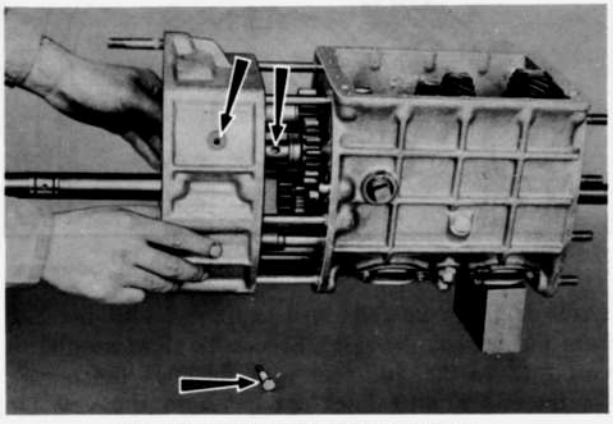

Fig. 7C–67 Installing center housing

46. Slide the counter fifth gear to the counter shaft so that **"F" mark** on the gear is directed to the front of the shaft.

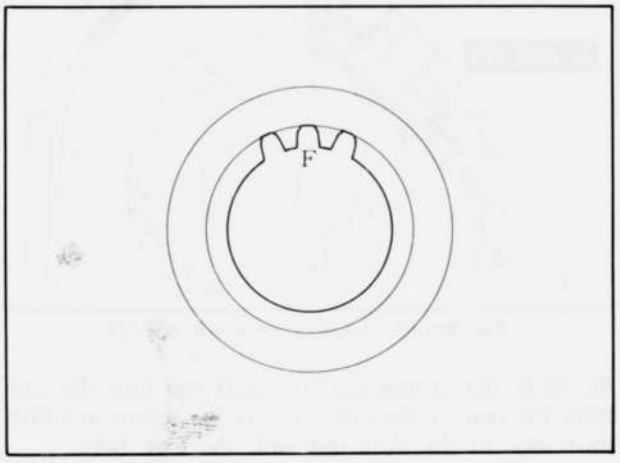

Fig. 7C–68 Counter fifth gear

47. Press in the counter shaft rear bearing to the counter shaft by using a press and suitable installer.

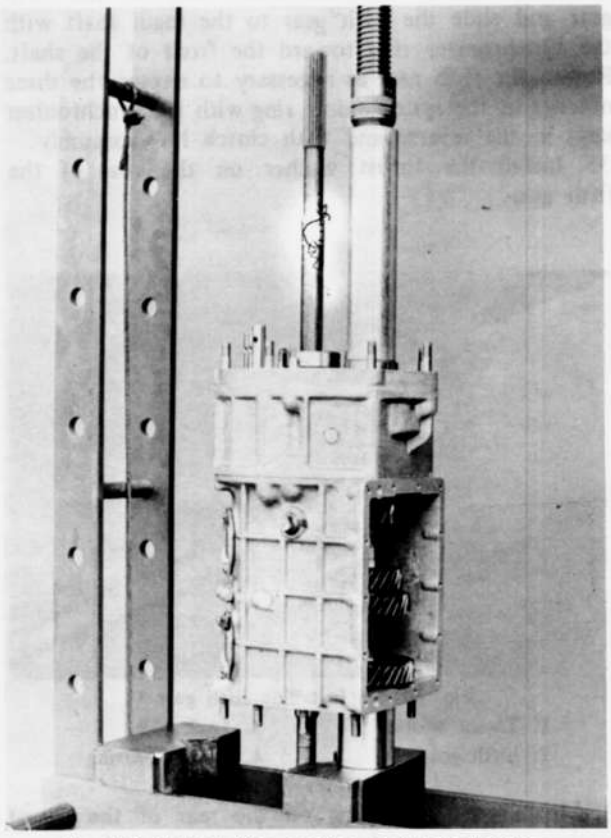

Fig. 7C–69 Installing counter shaft rear bearing

48. Install the thrust washer and snap ring to the rear of the counter shaft rear bearing, and check the clearance between the thrust washer and the snap ring. The standard clearance is **0 ~ 0.1 mm (0 ~ 0.0039 in)**. If necessary, select and use the properly sized thrust washer. The thrust washers are available in the following thickness :

2.00 mm (0.0787 in)	2.30 mm (0.0906 in)
2.15 mm (0.0846 in)	

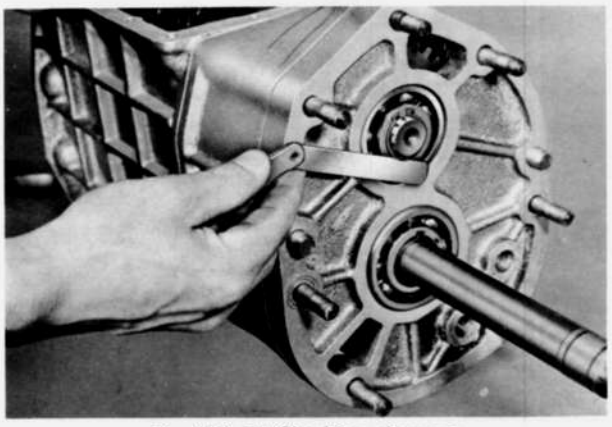

Fig. 7C–70 Checking clearance

49. Recheck the clearance between the thrust washer and the snap ring. (Refer to step 36). The standard clearance is 0.1 ~ 0.3 mm (0.0039 ~ 0.0118 in).

50. Press in the main shaft rear bearing to the main shaft by using a press and suitable installer.

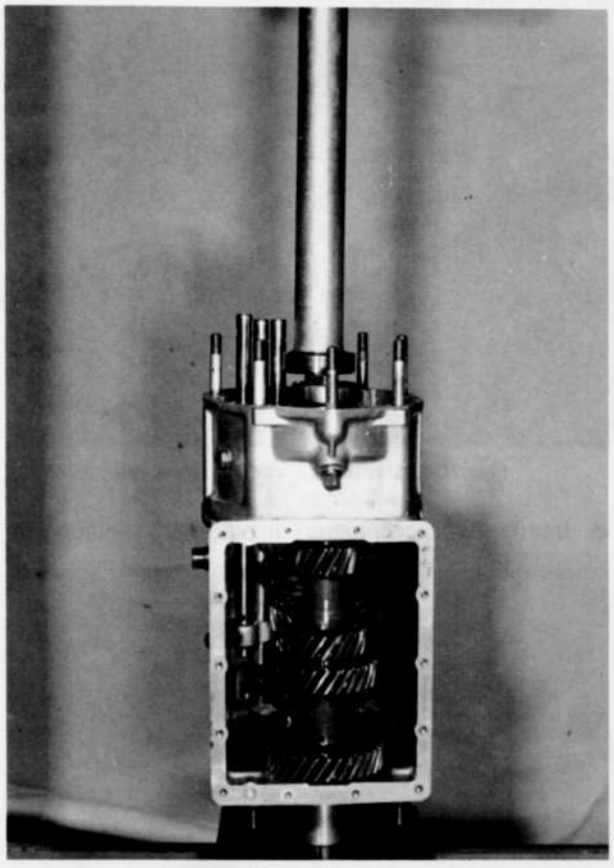

Fig. 7C–71 Installing main shaft rear bearing

51. Install the thrust washer and snap ring to the rear of the main shaft rear bearing, and check the clearance between the thrust washer and the snap ring. The clearance is **0 ~ 0.15 mm (0 ~ 0.0059 in).** If necessary, select and use the properly sized thrust washer. The thrust washers are available in the following thickness :

1.9 mm (0.0748 in)	2.1 mm (0.0827 in)
2.0 mm (0.0787 in)	2.2 mm (0.0866 in)

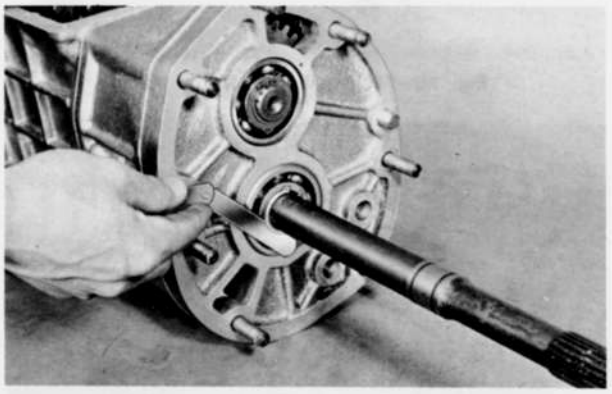

Fig. 7C–72 Checking clearance

52. Apply a thin coat of sealing agent to the contacting surfaces of the bearing housing and center housing.
53. Position the bearing housing on the center housing.
54. Install each shift rod end to the shift rods and tighten the bolts.
55. Install the snap ring, lock ball, speedometer drive

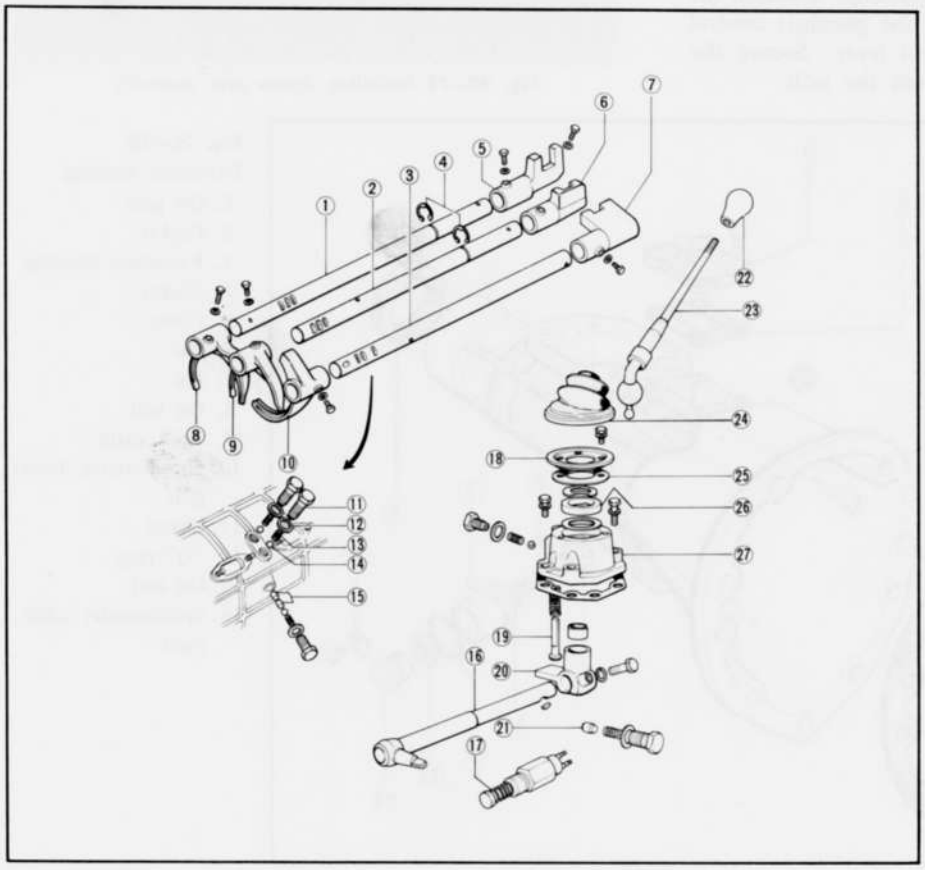

Fig. 7C–73 Gearshift mechanism

1. 3rd-and-4th shift rod
2. 1st-and-2nd shift rod
3. Rev.-and-5th shift rod
4. Stop ring
5. Shift rod end
6. Shift rod end
7. Shift rod end
8. Shift fork
9. Shift fork
10. Shift fork
11. Spring cap bolt
12. Washer
13. Detent spring
14. Detent ball
15. Shift inter-lock pin
16. Gearshift control lever
17. Back-up lamp switch
18. Cover
19. Select lock spindle
20. Gearshift control lever end
21. Friction piece
22. Gearshift lever knob
23. Gearshift lever
24. Boot
25. Gasket
26. Bush
27. Gearshift lever retainer

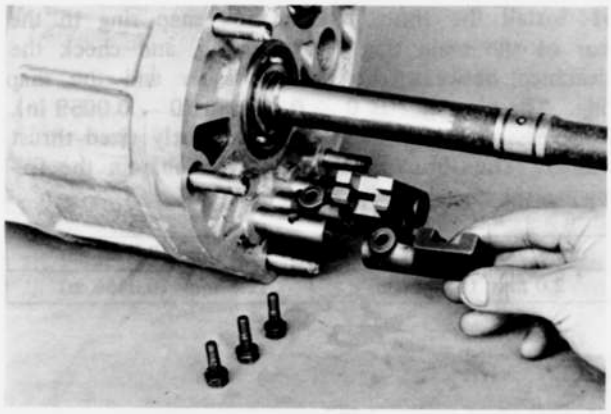

Fig. 7C–74 Installing shift rod end

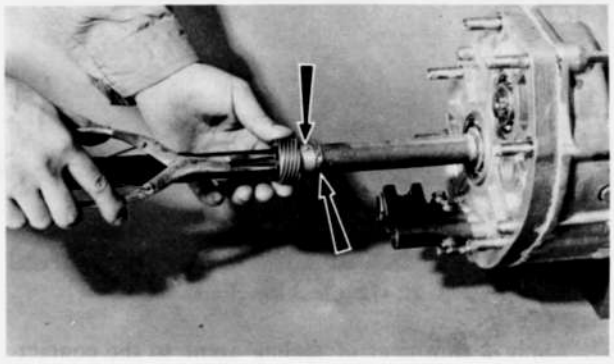

Fig. 7C–75 Installing snap ring

gear and snap ring to the main shaft from the rear of the main shaft.

56. Insert the gearshift control lever through the holes from the front of the extension housing. Position the woodruff key in place and slide the gearshift control lever end to the gearshift control lever. Secure the lever end to the control lever with the bolt.

57. Position the spring and friction piece in the extension housing and tighten the spring cap bolt to the extension housing.

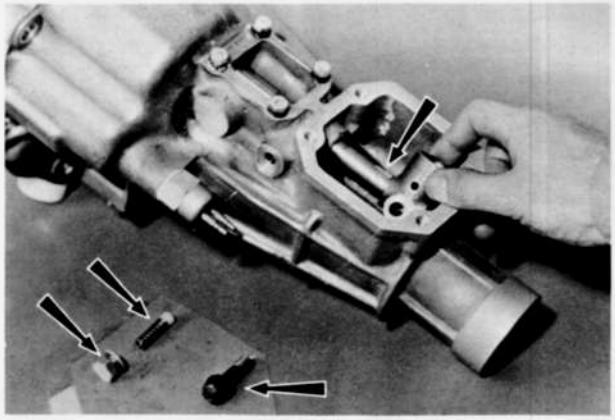

Fig. 7C–76 Installing control lever end

58. Insert the speedometer driven gear assembly to

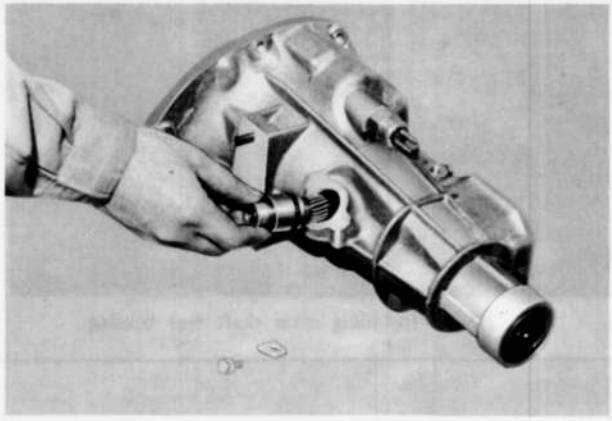

Fig. 7C–77 Installing driven gear assembly

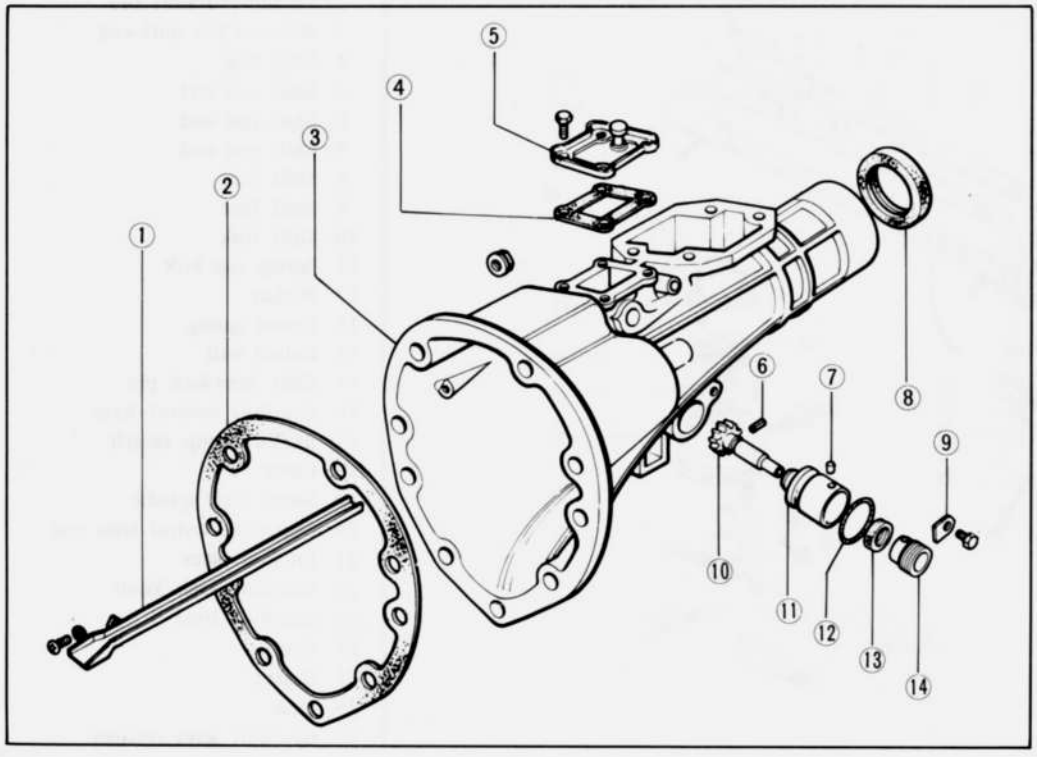

Fig. 7C–78
Extension housing
1. Oil pass
2. Gasket
3. Extension housing
4. Gasket
5. Cover
6. Pin
7. Pin
8. Oil seal
9. Lock plate
10. Speedometer driven gear
11. Sleeve
12. "O" ring
13. Oil seal
14. Speedometer cable joint

the extension housing and secure it with the bolt and lock plate.
59. Apply a thin coat of sealing agent to the contacting surfaces of the bearing housing and extension housing.
60. Position the extension housing in the bearing housing with the gearshift control lever end laid down to the left as far as it will go. Tighten the attaching nuts.

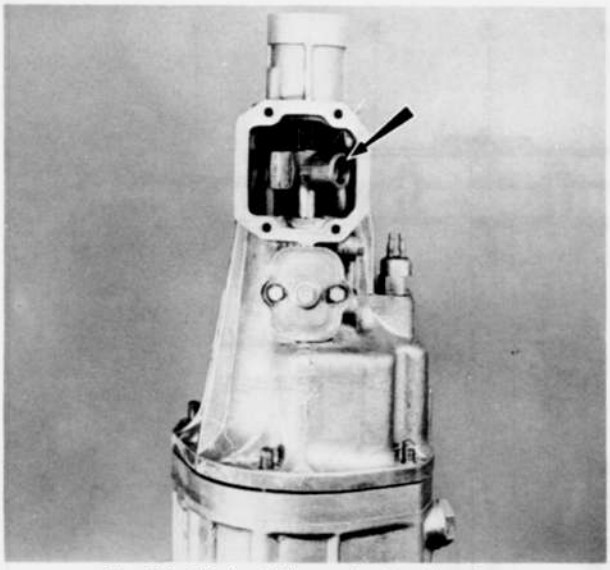

Fig. 7C–79 Installing extension housing

61. Check to ensure that the gearshift control lever operates properly.
62. Install the transmission under cover to the case and tighten the attaching bolts.

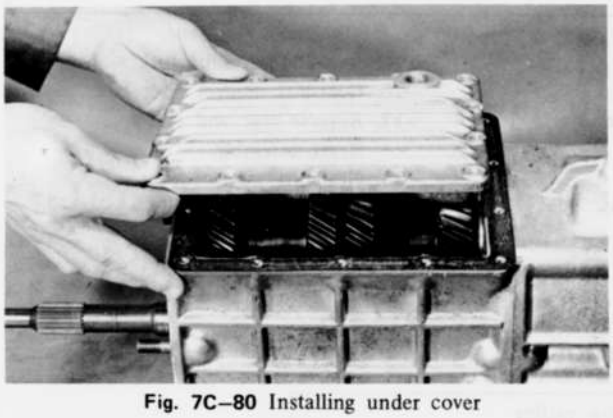

Fig. 7C–80 Installing under cover

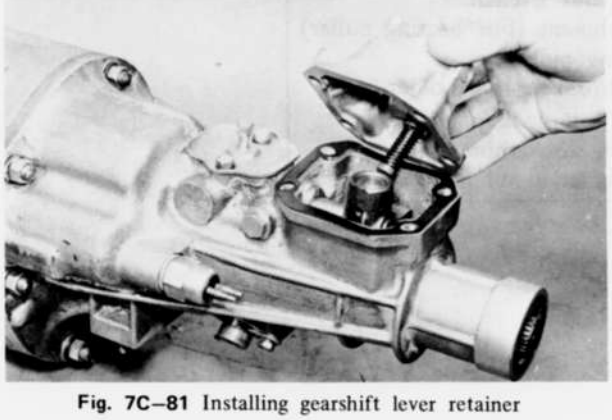

Fig. 7C–81 Installing gearshift lever retainer

63. Insert the select lock spindle and spring from the inside of the gearshift lever retainer. Position the lock ball and spring in alignment with the select lock spindle and tighten the spring cap bolt.
64. Position the gasket and gearshift lever retainer to the extension housing, and tighten the attaching bolts.
65. Check the main drive shaft bearing end play as follows :
Measure the depth of the bearing bore in the clutch housing using a depth gauge. Then, measure the bearing height shown in Fig. 7C–83.
The difference between two measurements indicates the required thickness of the adjusting shim. The standard end play is **0 ~ 0.1 mm (0 ~ 0.0039 in)**. If necessary, select and use the properly sized shim. The shims are available in the following thickness :

0.1 mm (0.0039 in)	0.3 mm (0.0118 in)



Fig. 7C–82 Measuring bore depth

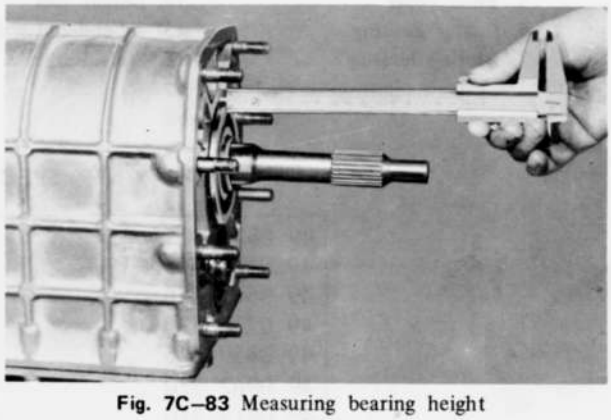

Fig. 7C–83 Measuring bearing height

66. Apply lubricant to the lip of the oil seal in the clutch housing.
67. Place the gasket on the front side of the case and install the clutch housing to the case. Tighten the attaching nuts.
68. Install the release bearing to the release fork and slide release fork and release bearing to the clutch housing.

7C–G. TRANSMISSION INSTALLATION

Follow the removal procedures in the reverse order.

(a) Apply a thin coat of grease to the splines of the main drive shaft.

(b) Use the **clutch disc arbor** (49 0813 310) to align the splines of the main drive shaft and clutch disc.

(c) Fill the transmission case with lubricant until the lubricant overflows from the level hole.

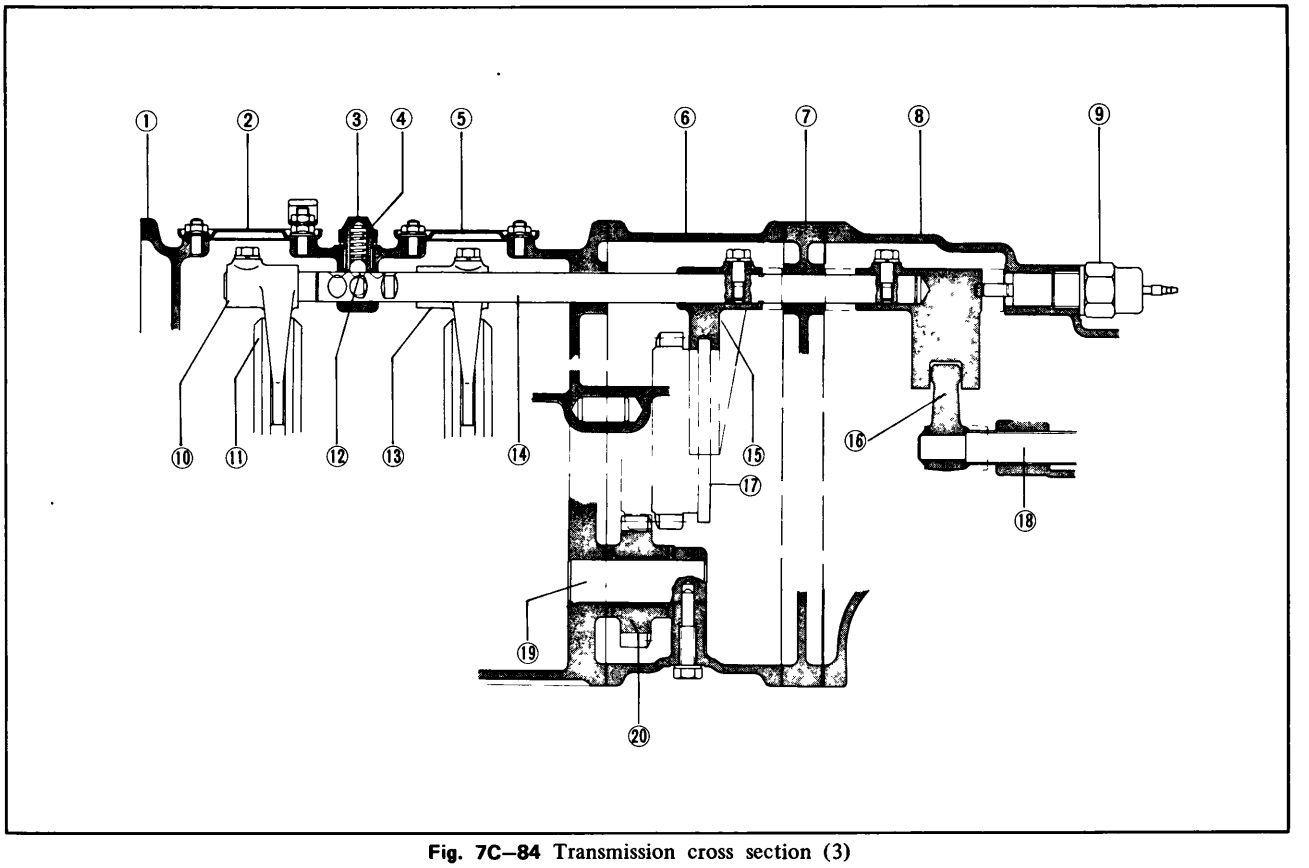

Fig. 7C–84 Transmission cross section (3)

1. Transmission case
2. Blind cover
3. Spring cap bolt
4. Detent spring
5. Blind cover
6. Center housing
7. Bearing housing
8. Extension housing
9. Back-up lamp switch
10. 3rd-and-4th shift fork
11. Clutch sleeve
12. Detent ball
13. 1st-and-2nd shift fork
14. Shift rod
15. Rev.-and-5th shift fork
16. Gearshift control lever end
17. Reverse gear and clutch sleeve assembly
18. Gearshift control lever
19. Reverse idler gear shaft
20. Reverse idler gear

SPECIAL TOOLS

49 0839 425A	Bearing puller
49 0813 465A	Lock nut wrench
49 0862 426	Attachment (For bearing puller)
49 0710 520	Bearing puller
49 0839 445	Synchronizer ring holder
49 0862 350	Shift inter-lock pin installer
49 0813 310	Clutch disc arbor
49 0259 440	Transmission oil plug

PROPELLER SHAFT

DESCRIPTION ..... 8 : 1
8–A. PROPELLER SHAFT ..... 8 : 1
8–A–1. Propeller Shaft Removal ..... 8 : 1
8–A–2. Checking Propeller Shaft ..... 8 : 3
8–A–3. Propeller Shaft Installation ..... 8 : 3
8–B. UNIVERSAL JOINT ..... 8 : 3
8–B–1. Universal Joint Removal ..... 8 : 3
8–B–2. Checking Universal Joint ..... 8 : 4
8–B–3. Universal Joint Installation ..... 8 : 4
SPECIAL TOOLS ..... 8 : 5

DESCRIPTION

The propeller shaft assembly consists of the tubular piece of steel, center support bearing, universal joints and yokes. The rear end of the propeller shaft is attached to the companion flange of the rear axle through the universal joints and the front end is attached to the main shaft of the transmission by means of the splined slip yoke, which permits fore and aft movement of the propeller shaft whenever the rear axle moves up and down.

The center of the propeller shaft is supported by the bearing attached to the under body.

The universal joints are lubricated for life, so **do not** require lubricating.

8–A. PROPELLER SHAFT

8–A–1. Propeller Shaft Removal

1. Raise the rear end of the vehicle and support with stands.
2. Remove the bolts and screws attaching the heat insulators to the exhaust front pipe, and remove the heat insulators.
3. Disconnect the exhaust front pipe flange from the exhaust manifold by removing the nuts.

Disconnect the exhaust front pipe from the brackets by removing the bolts and nuts.

Remove the bolts and nuts attaching the front pipe flange to the main silencer, and remove the exhaust front pipe.

4. Remove the bolts attaching the heat insalator to the underbody and remove the heat insulator.
5. Mark the companion flange of the rear axle and the propeller shaft so they can be reinstalled in their original position.
6. Remove the bolts that attach the propeller shaft to the companion flange of the rear axle.

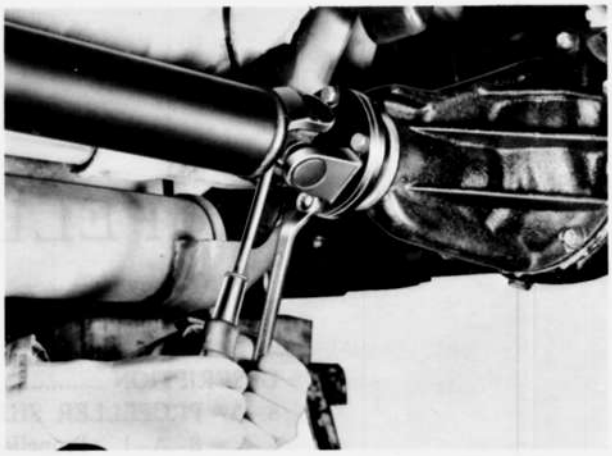

Fig. 8–1 Removing propeller shaft attaching bolts



Fig. 8–2 Removing center bearing attaching bolts

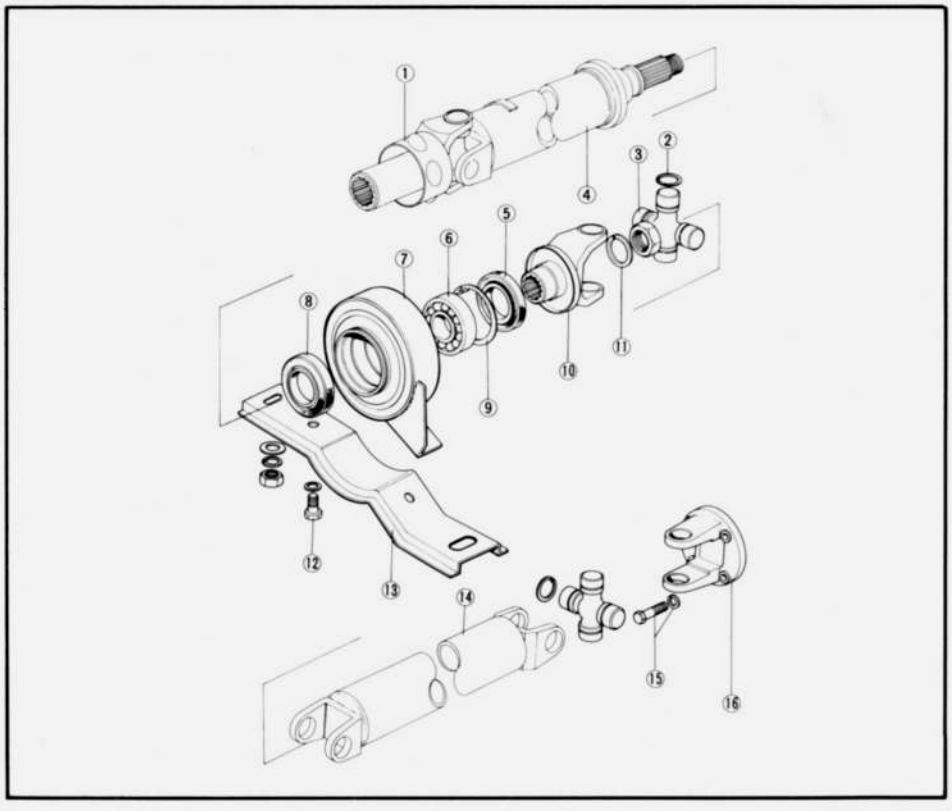

Fig. 8–3 Propeller shaft components

1. Slip yoke
2. Snap ring
3. Spider
4. Front shaft
5. Oil seal
6. Center bearing
7. Center bearing support
8. Oil seal
9. Snap ring
10. Yoke
11. Lock nut and washer
12. Bolt
13. Bracket
14. Rear shaft
15. Bolt and washer
16. Yoke

7. Remove the center bearing attaching bolts.
8. Lower the rear of the shaft and slide rearward.
9. Install the **mainshaft holder** (49 0259 440) into the extension housing to prevent lubricant from running out of the housing.



Fig. 8–4 Mainshaft holder

10. Mark the mating parts of the yokes and propeller shafts.
11. Remove the universal joints, as described in Par. 8–B.

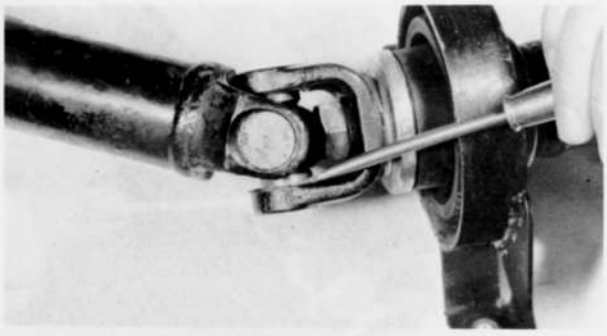

Fig. 8–5 Removing snap ring

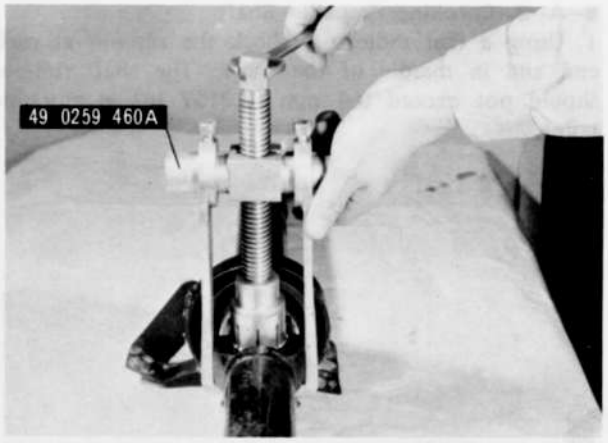

Fig. 8–6 Removing bearing cup

12. Remove the nut attaching the yoke and bearing to the front propeller shaft. Remove the yoke and bearing support.

Note :
Do not remove the oil seals and bearing from the support unless they are defective.

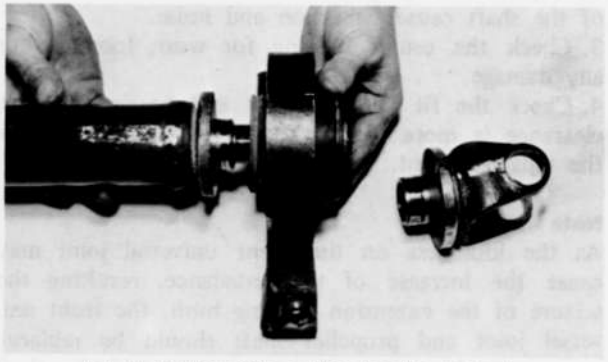

Fig. 8–7 Removing center bearing support

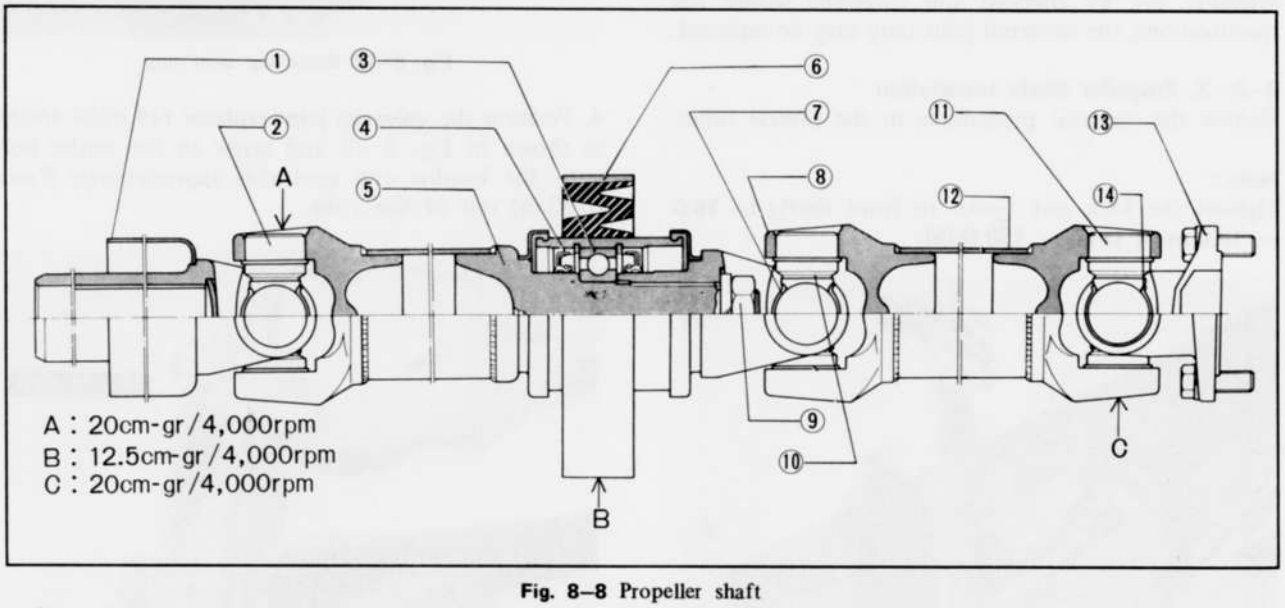

Fig. 8–8 Propeller shaft

1. Slip yoke
2. Front universal joint
3. Bearing
4. Oil seal
5. Front shaft
6. Center bearing support
7. Snap ring
8. Yoke
9. Nut
10. Center universal joint
11. Rear universal joint
12. Rear shaft
13. Yoke
14. Snap ring

8–A–2. Checking Propeller Shaft

1. Using a dial indicator, check the run-out at each end and in middle of the shaft. The shaft run-out should not exceed **0.4 mm (0.0157 in)** at any one point.

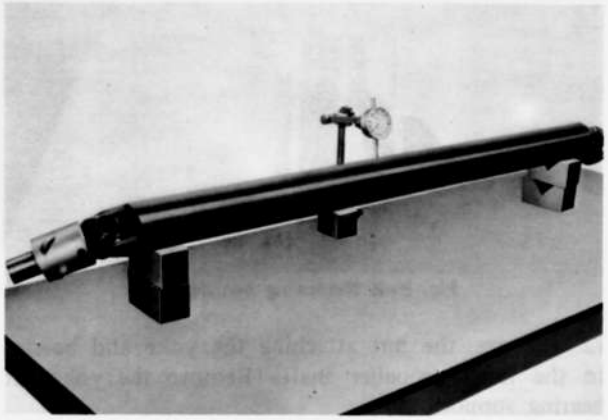

Fig. 8–9 Checking propeller shaft run-out

2. Check the shaft for dynamic unbalance. If it is not within specifications (See Fig. 8–8), correct or replace the propeller shaft. Excessive unbalance of the shaft causes vibration and noise.
3. Check the center bearing for wear, looseness or any damage.
4. Check the fit of the spider and bearing. If this clearance is **more than 0.2 mm (0.0079 in)**, replace the universal joint.

Note :
As the looseness on the front universal joint may cause the increase of the unbalance, resulting the seizure of the extension housing bush, the front universal joint and propeller shaft should be replaced as an assembly. But, if the unbalance of the shaft assembly can be checked and corrected within the specifications, the universal joint only may be replaced.

8–A–3. Propeller Shaft Installation

Follow the removal procedures in the reverse order.

Note :
Tighten the lock nut (yoke to front shaft) to **16.0 ~ 18.0 m-kg (116 ~ 130 ft-lb)**.

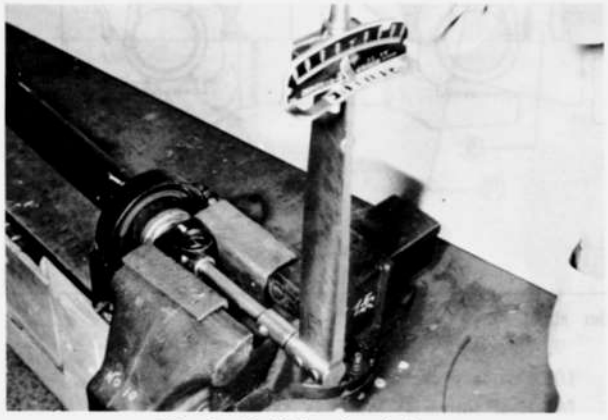

Fig. 8–10 Tightening lock nut

8–B. UNIVERSAL JOINT

8–B–1. Universal Joint Removal

1. Remove the propeller shaft from the vehicle as described in Par. 8–A–1 on page 8–1.
2. Mark both yoke and shaft so that the units may be reassembled in their original position in order to maintain the original balance.



Fig. 8–11 Applying marks

3. Remove the snap rings that secure the bearings in the yoke.



Fig. 8–12 Removing snap ring

4. Position the **universal joint replacer** (49 0259 460A) as shown in Fig. 8–13 and screw in the center bolt until the bearing cup protrudes approximately 8 mm (0.32 in) out of the yoke.

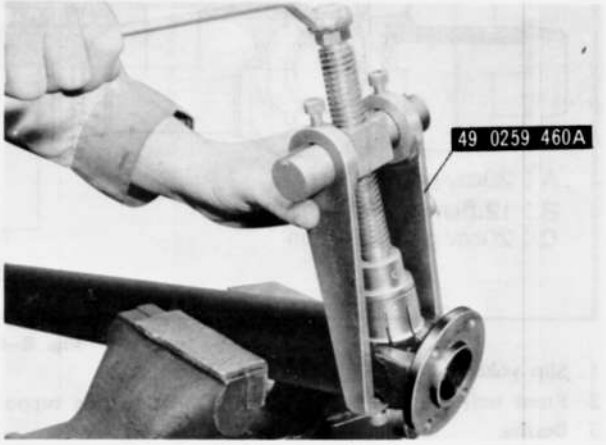

Fig. 8–13 Removing bearing cup

5. Loosen the center bolt and install the spacer between the yoke and the spider as shown in Fig. 8–14.

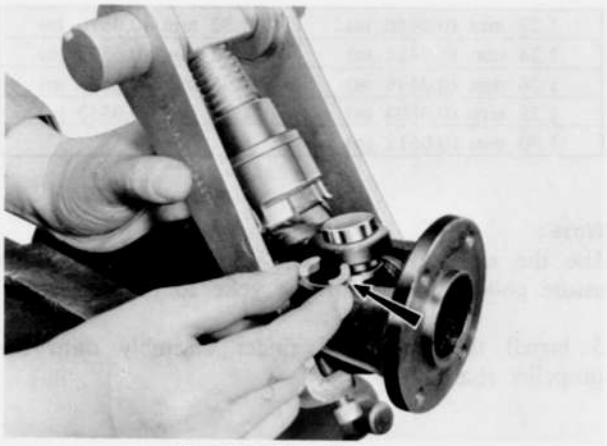

Fig. 8–14 Installing spacer

6. Screw in the center bolt until the bearing cup comes out of the yoke.
7. Remove the replacer and remove the bearing cup.
8. Remove the yoke and spider assembly as shown in Fig. 8–15.



Fig. 8–15 Removing yoke and spider assembly

9. Position the replacer on the yoke as shown in Fig. 8–16 and remove the bearing cup in the same manner.

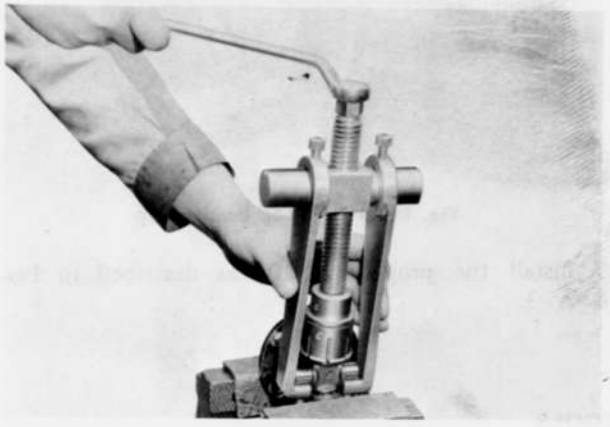

Fig. 8–16 Removing bearing cup

10. Remove the spider from the yoke.

8–B–2. Checking Universal Joint

1. Check the spider journals for rust and wear.
2. Measure the diameter of the spider. If the wear of the spider exceeds **0.1 mm (0.0039 in)**, replace with a new one. The standard diameter is **16.55 mm (0.6516 in).**

Note :
The spider and bearing cup are serviced as an assembly only.

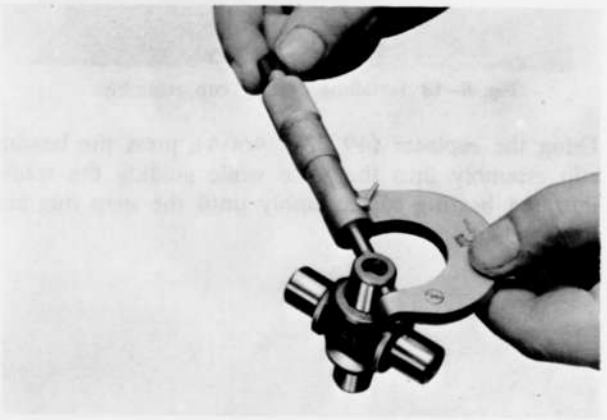

Fig. 8–17 Measuring spider diameter

3. Check the seal for weakness or damage.
4. Check the needle rollers and the bearing cup for wear or damage.

8–B–3. Universal Joint Installation

1. Pack the wall of the bearing cup with grease, then assemble the needle rollers into the bearing cup and assemble the seal onto the bearing cup.
2. Install the bearing cup assembly and the spider onto one end of the bearing cup bore on the yoke, then install the spider onto the yoke.

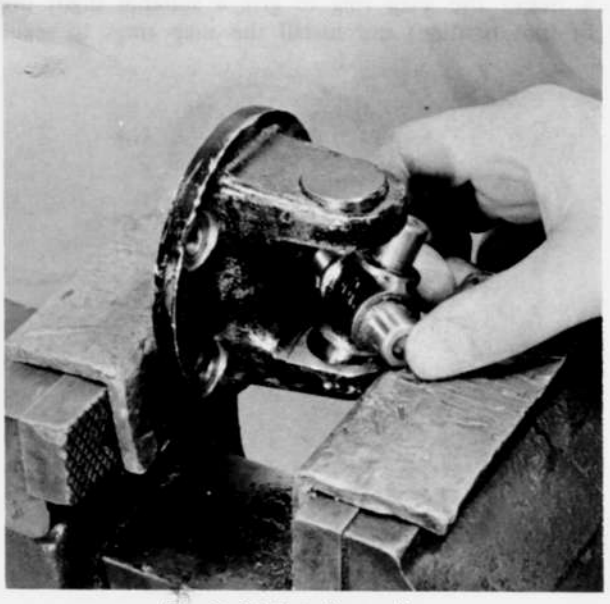

Fig. 8–18 Installing spider

3. Install the bearing cup assembly onto the other end of the bearing cup bore on the yoke.



Fig. 8–19 Installing bearing cup assembly

Using the **replacer** (49 0259 460A), press the bearing cup assembly into the yoke while guiding the spider into the bearing cup assembly until the snap ring can be installed.

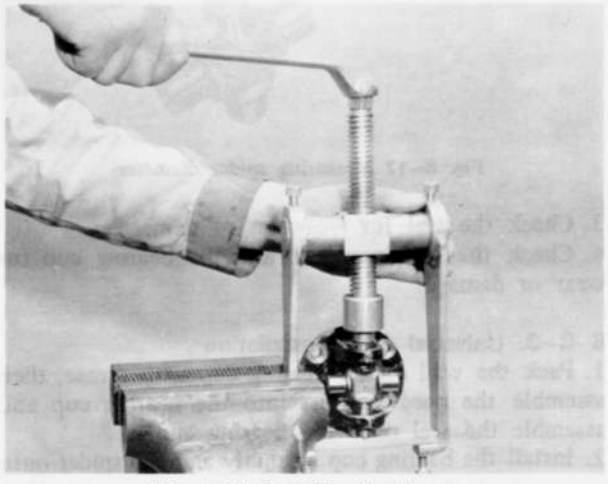

Fig. 8–20 Installing bearing cup

4. Select the snap ring to give a suitable slight drag fit (not binding) and install the snap rings to secure the bearing cups in the yoke. The snap rings are available in the following thicknesses :

1.22 mm (0.0480 in)	1.32 mm (0.0520 in)
1.24 mm (0.0488 in)	1.34 mm (0.0528 in)
1.26 mm (0.0496 in)	1.36 mm (0.0535 in)
1.28 mm (0.0504 in)	1.38 mm (0.0543 in)
1.30 mm (0.0512 in)	



Fig. 8–21 Installing snap ring

Note :
Use the same-thickness snap rings for both sides to assure good centering of the yoke to the spider.

5. Install the yoke and spider assembly onto the propeller shaft.



Fig. 8–22 Installing yoke and spider assembly

6. Install the bearing cup assembly and snap ring as instructed above.



Fig. 8–23 Installing bearing cup

7. Install the propeller shaft, as described in Par. 8–A–3.

SPECIAL TOOLS

49 0259 440	Mainshaft holder	49 0259 460A	Universal joint replacer

REAR AXLE

DESCRIPTION ..... 9 : 1
9–A. REAR AXLE SHAFT ..... 9 : 1
9–A–1. Removing Rear Axle Shaft ..... 9 : 1
9–A–2. Replacing Axle Shaft Bearing ..... 9 : 1
9–A–3. Installing Rear Axle Shaft ..... 9 : 2
9–B. REAR AXLE REMOVAL ..... 9 : 3
9–C. REAR AXLE DISASSEMBLY ..... 9 : 3
9–C–1. Removing Differential ..... 9 : 3
9–C–2. Disassembling Differential ..... 9 : 3
9–C–3. Removing Drive Pinion ..... 9 : 4
9–D. REAR AXLE INSPECTION ..... 9 : 5
9–D–1. Checking Drive Pinion and Ring Gear ..... 9 : 5
9–D–2. Checking Differential Gears ..... 9 : 5
9–D–3. Checking Bearings ..... 9 : 5
9–D–4. Replacing Pinion Bearing Outer Race ..... 9 : 5
9–D–5. Checking Collapsible Spacer ..... 9 : 6
9–D–6. Checking Oil Seal ..... 9 : 6
9–D–7. Checking Companion Flange ..... 9 : 6
9–E. REAR AXLE ASSEMBLY ..... 9 : 6
9–E–1. Adjusting Drive Pinion ..... 9 : 6
9–E–2. Adjusting Pinion Bearing Preload ..... 9 : 7
9–E–3. Assembling Differential ..... 9 : 7
9–E–4. Installing Differential ..... 9 : 8
9–E–5. Adjusting Backlash ..... 9 : 8
9–F. REAR AXLE INSTALLATION ..... 9 : 9
SPECIAL TOOLS ..... 9 : 9

DESCRIPTION

RX-4 is equipped with a semi-floating type rear axle with a hypoid ring gear and pinion set. The final reduction ratio is 3.900.

9–A. REAR AXLE SHAFT

9–A–1. Removing Rear Axle Shaft

1. Raise the rear end of the vehicle and support the rear axle housing with stands.
2. Remove the rear wheel and brake drum.
3. Remove the center cap adapter from the axle shaft flange.
4. Remove the brake shoe assembly, as detailed in Par. 11–F–1.
5. Remove the bolts holding the brake backing plate and bearing retainer to the axle housing.
6. Extract the axle shaft assembly using the **puller** (49 0223 630A and 49 0259 631).



Fig. 9–1 Removing rear axle shaft

7. Remove the oil seal from the axle housing, if necessary.

9–A–2. Replacing Axle Shaft Bearing

1. Remove the rear axle shaft assembly as described in Par. 9–A–1.

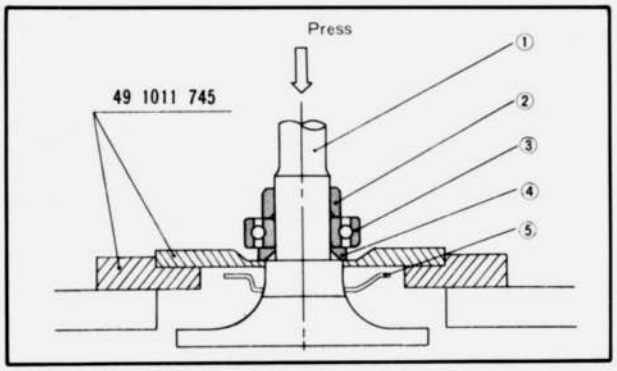

Fig. 9–2 Bearing replacer

1. Rear axle shaft
2. Collar
3. Bearing
4. Spacer
5. Retainer

2. Using the **bearing remover set** (49 1011 745), support the spacer and press the axle shaft out of the collar and bearing, as shown in Fig. 9–3.

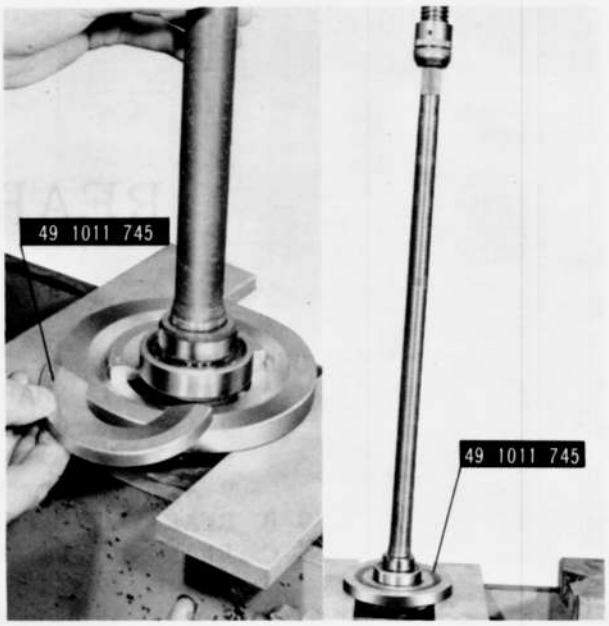

Fig. 9–3 Removing bearing and collar

Note:
In case the pressure necessary to press out the axle shaft exceeds 10 tons (22,000 lb) or if the bearing remover set is not available, grind off the part of bearing retaining collar and cut it with the use of a chisel, as shown in Fig. 9–4, taking care not to damage the axle shaft.



Fig. 9–4 Cutting bearing retaining collar

3. Remove the bearing retainer from the axle shaft.
4. Clean all parts and check the condition of the collar, spacer and axle shaft.
5. Install the bearing retainer and spacer onto the axle shaft.
6. Position the bearing on the axle shaft with the sealed side toward the axle shaft flange, and press it on until the spacer comes in contact with the shoulder of the shaft.
7. Press the bearing retaining collar onto the axle shaft using the **bearing replacer** (49 1011 745) until it is firm contact with the bearing inner race.

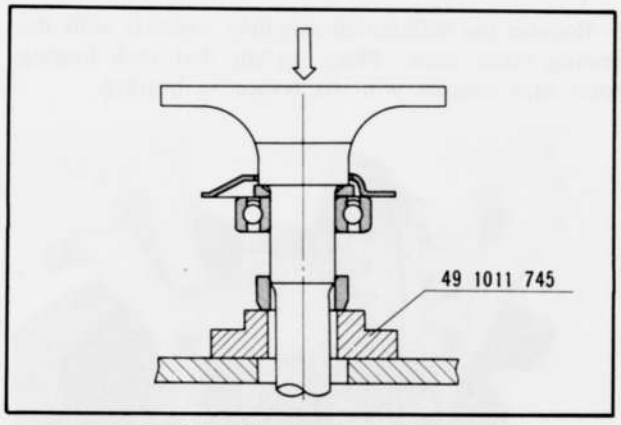

Fig. 9–5 Installing bearing retaining collar

Note:
If the bearing retaining collar is press-fitted with less than 2.5 tons (5,500 lb), replace the collar with a new one.

9–A–3. Installing Rear Axle Shaft

1. Apply grease to the oil seal located in the axle housing.
2. Check the rear axle shaft end play as follows:
Install the backing plate with gasket temporarily and measure the depth of the bearing seat in the axle housing using a depth gauge as shown in Fig. 9–6. Then, measure the width of bearing outer race. The difference between the two measurements indicates the required thickness of the shims.

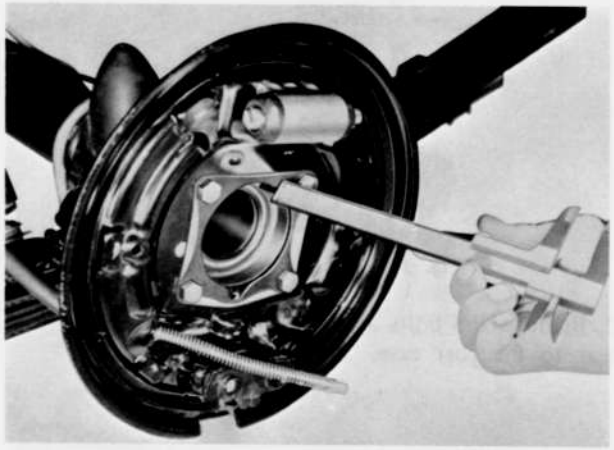

Fig. 9–6 Measuring depth of bearing seat

The maximum permissible end play is **0.1 mm (0.004 in)**. Shims are available in thickness of 0.1 mm and 0.4 mm (0.004 in and 0.016 in).

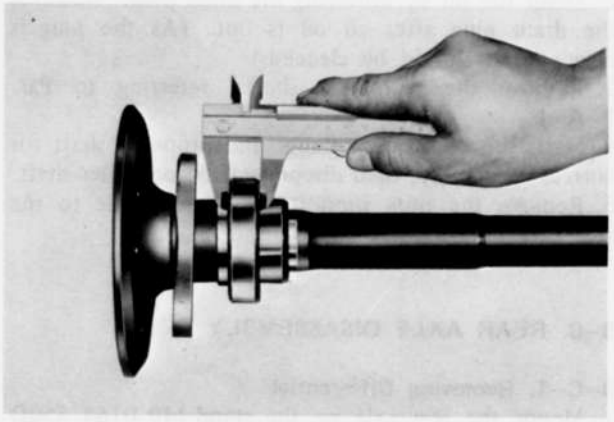

Fig. 9–7 Measuring width of bearing outer race

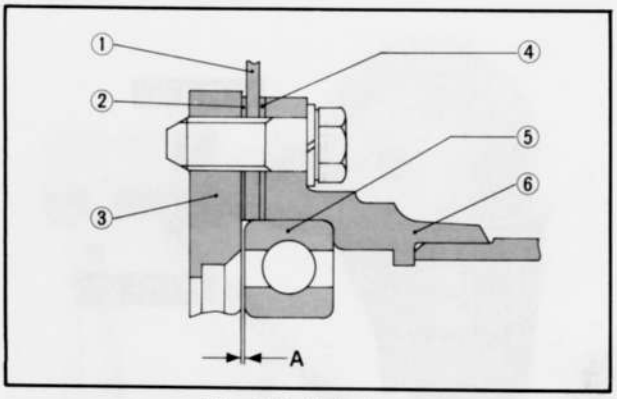

Fig. 9–8 End play

A: Bearing end play
1. Brake backing plate
2. Gasket
3. Bearing retainer
4. Adjusting shim
5. Bearing
6. Rear axle housing

3. Remove the brake backing plate.
4. Apply a thin coat of sealer to both sides of the shims.
5. Position the shims and brake backing plate in place. Then, install the bearing retainer and axle shaft assembly with gasket and tighten the bolts.
6. Install the brake shoe assembly.
7. Install the brake drum, center cap adapter and wheel.

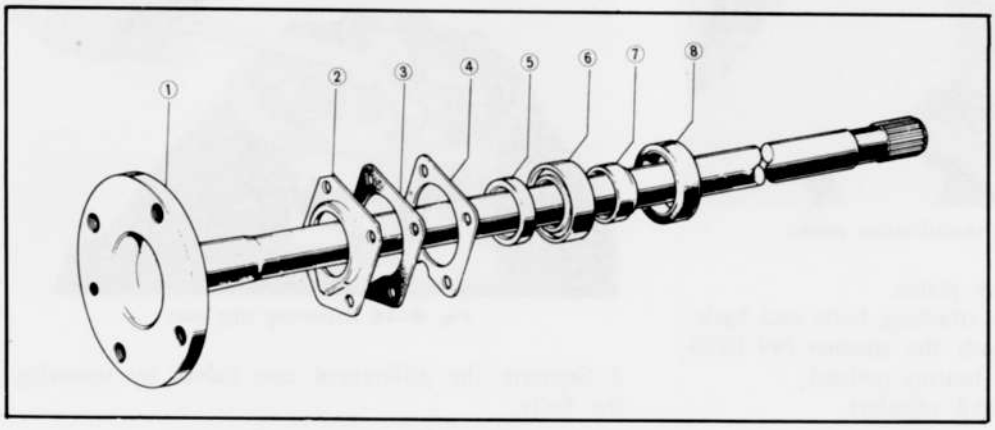

Fig. 9–9 Rear axle shaft

1. Rear axle shaft
2. Bearing retainer
3. Gasket
4. Shim
5. Spacer
6. Bearing
7. Bearing collar
8. Oil seal

9–B. REAR AXLE REMOVAL

1. Jack up the vehicle until the rear wheels are clear of the ground.
2. Drain the oil by removing the drain plug. Reinstall the drain plug after all oil is out. (As the plug is magnetic, it should be cleaned.)
3. Remove the rear axle shafts, referring to Par. 9–A–1.
4. Mark the companion flange and propeller shaft for correct reassembly, then disconnect the propeller shaft.
5. Remove the nuts supporting the rear axle to the rear axle housing and remove the rear axle.

9–C. REAR AXLE DISASSEMBLY

9–C–1. Removing Differential

1. Mount the rear axle on the **stand** (49 0164 550D and 49 0223 561).

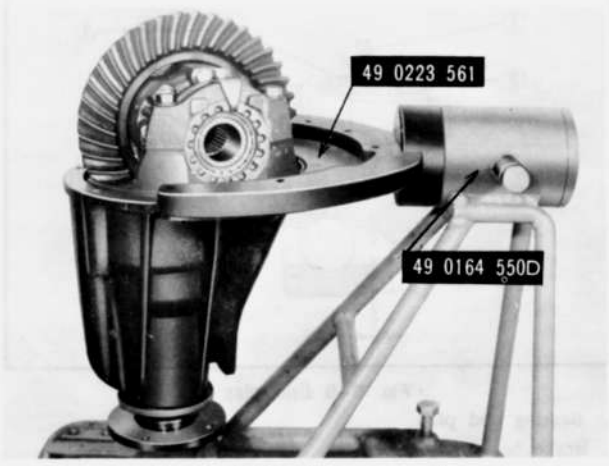

Fig. 9–10 Stand for rear axle

2. Apply identification punch marks on the carrier, differential bearing cap, and adjuster for reassembly purpose.

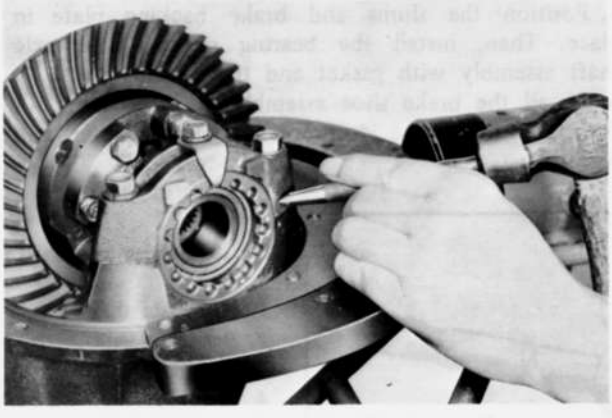

Fig. 9–11 Applying identification marks

3. Remove the adjuster lock plates.
4. Loosen the bearing cap attaching bolts and back off the adjuster slightly with the **spanner** (49 0259 720) to relieve differential bearing preload. Remove the bearing caps and adjusters.
5. Remove the differential assembly together with the bearing outer races. Make certain that each bearing outer race remains with its respective bearing.

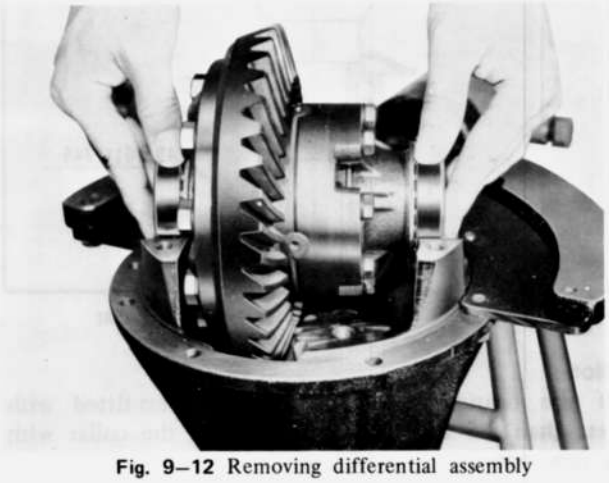

Fig. 9–12 Removing differential assembly

9–C–2. Disassembling Differential

1. If the bearing replacement is necessary, remove the bearings from the differential gear case with a suitable puller.



Fig. 9–13 Removing bearing

2. Remove the bolts and washers that attach the ring gear to the gear case. Remove the ring gear.

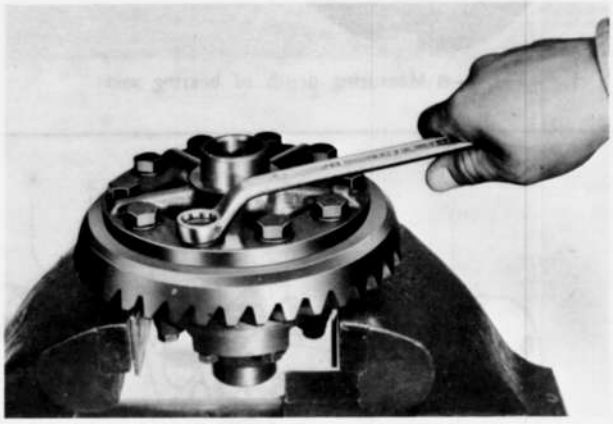

Fig. 9–14 Removing ring gear

3. Separate the differential case halves by removing the bolts.

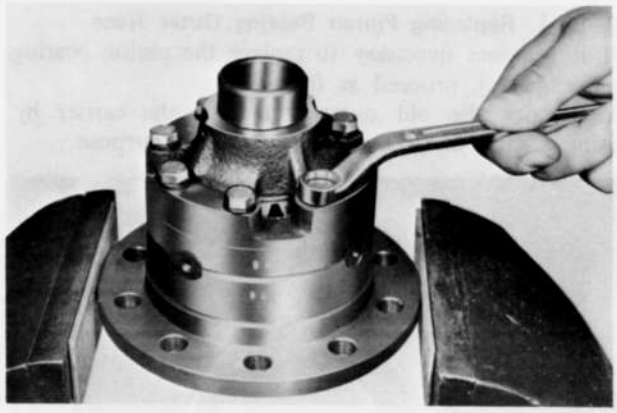

Fig. 9–15 Separating case halves

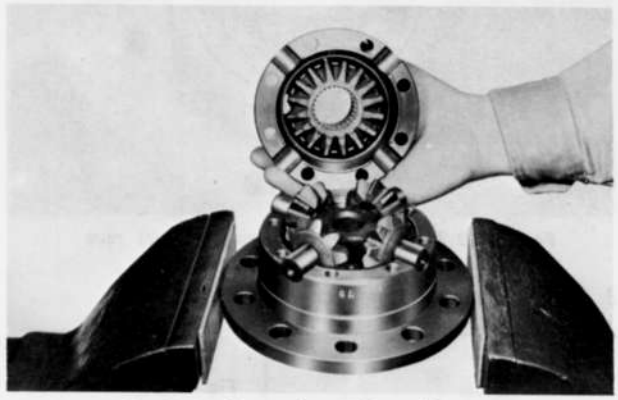

Fig. 9–16 Removing differential gears

4. Remove the side gears, thrust washers, pinion gears and spider.

9–C–3. Removing Drive Pinion

1. Hold the companion flange with the **holder** (49 0259 710A) and remove the drive pinion nut.

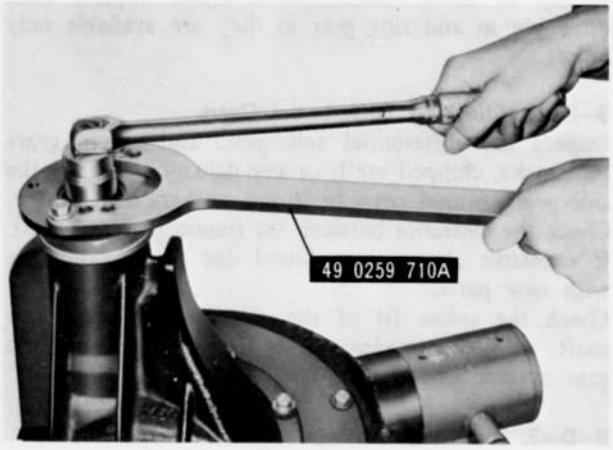

Fig. 9–17 Loosening pinion nut

2. Remove the companion flange.
3. Remove the drive pinion and rear bearing from the carrier. If necessary, tap the pinion out with a plastic hammer, while being careful to guide the pinion with hand to avoid damage.
4. Remove the oil seal and the front bearing.

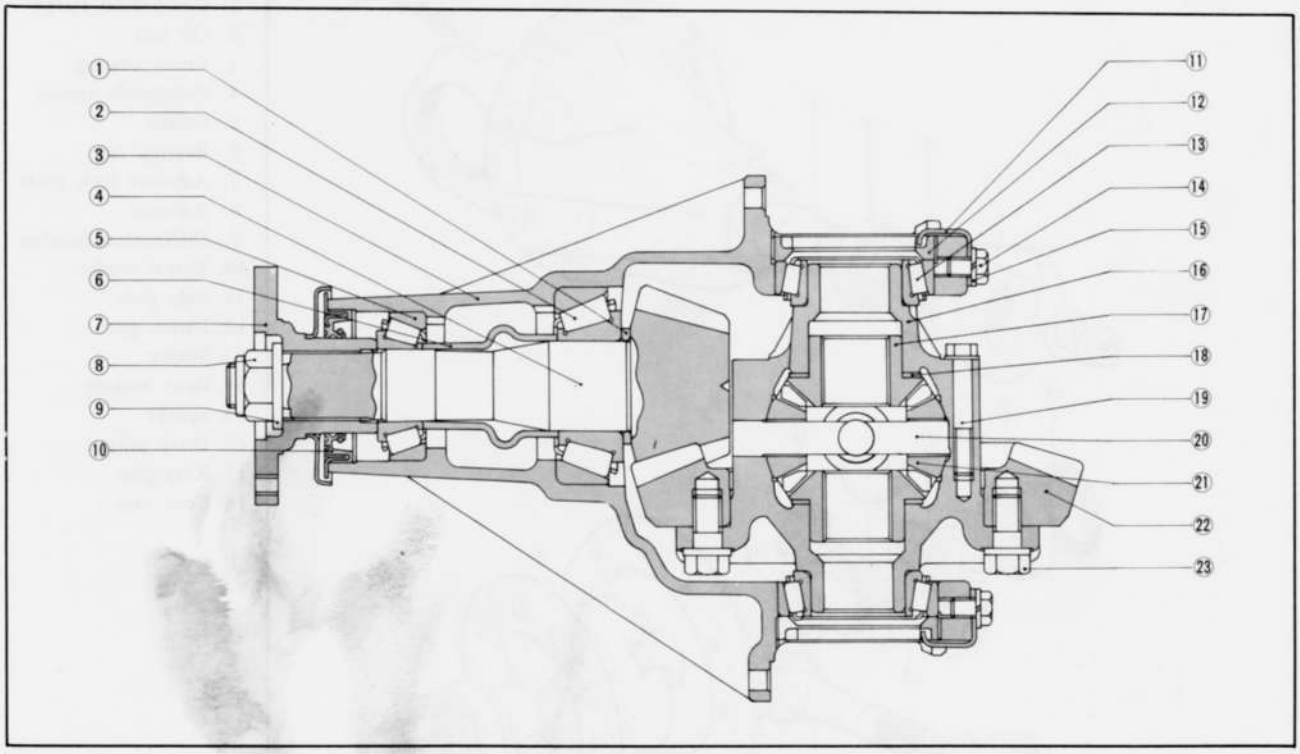

Fig. 9–18 Rear axle cross section

1. Spacer
2. Pinion rear bearing
3. Differential carrier
4. Drive pinion
5. Pinion front bearing
6. Collapsible spacer
7. Companion flange
8. Pinion nut
9. Washer
10. Pinion oil seal
11. Nut lock
12. Adjuster
13. Differential bearing
14. Bolt
15. Washer
16. Gear case
17. Side gear
18. Thrust washer
19. Bolt
20. Spider
21. Pinion gear
22. Ring gear
23. Bolt

9–D. REAR AXLE INSPECTION

9–D–1. Checking Drive Pinion and Ring Gear

Check the drive pinion for damaged or excessively worn teeth, damaged bearing journals and splines. Inspect the ring gear for worn or chipped teeth. If any of above conditions is found, replace both drive pinion and ring gear as they are available only in set.

9–D–2. Checking Differential Gears

Inspect the differential side gears and pinion gears for cracks, chipped teeth or any damage. Replace the side gears, pinion gears or thrust washers if necessary. Check the clearance between the pinion gear and shaft. If excessive clearance is found due to wear, replace with new parts.

Check the spline fit of the side gear and rear axle shaft. If excessive clearance is found, replace the side gear or rear axle shaft.

9–D–3. Checking Bearings

Inspect the differential bearings and pinion bearings for wear, flaking or any damage. If inspection reveals that either bearing cones or outer race are unfit for further service, replace the bearing.

9–D–4. Replacing Pinion Bearing Outer Race

If it becomes necessary to replace the pinion bearing outer race(s), proceed as follows:

1. Remove the old outer race from the carrier by using a drift in slots provided for this purpose.

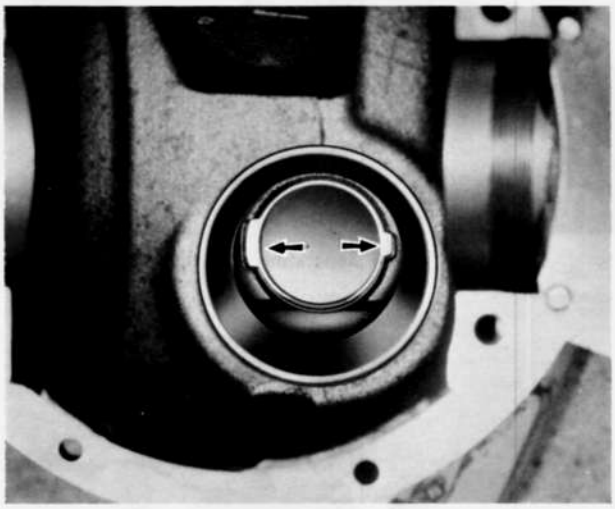

Fig. 9–19 Removing pinion bearing outer race

2. Install a new outer race into the carrier.

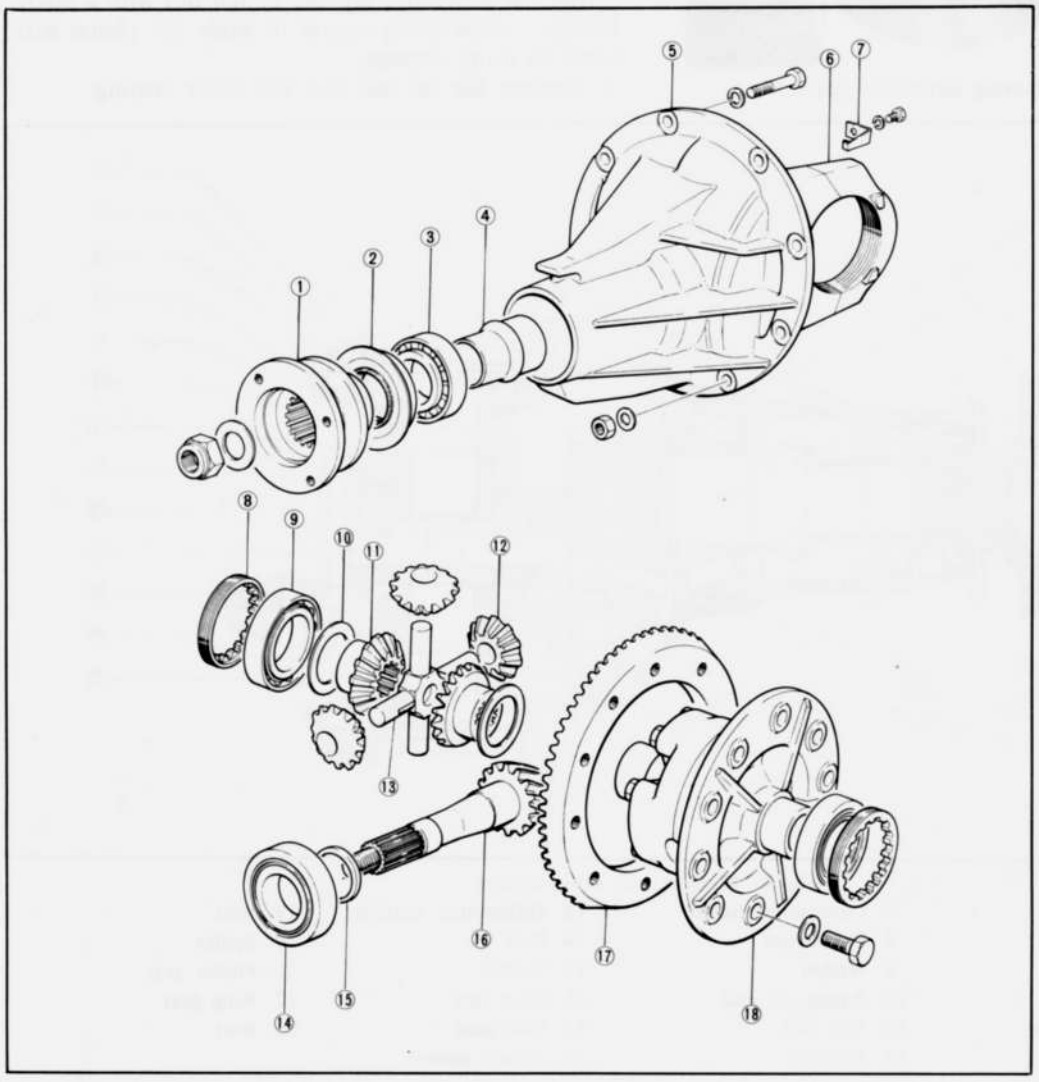

Fig. 9–20
Rear axle components
1. Companion flange
2. Oil seal
3. Front bearing
4. Collapsible spacer
5. Carrier
6. Bearing cap
7. Adjuster lock plate
8. Adjuster
9. Differential bearing
10. Thrust washer
11. Side gear
12. Pinion gear
13. Spider
14. Rear bearing
15. Spacer
16. Drive pinion
17. Ring gear
18. Gear case

9–D–5. Checking Collapsible Spacer

Measure the length of the collapsible spacer with a micrometer. The standard length is 59 ± 0.15 mm (2.3229 ± 0.0059 in).

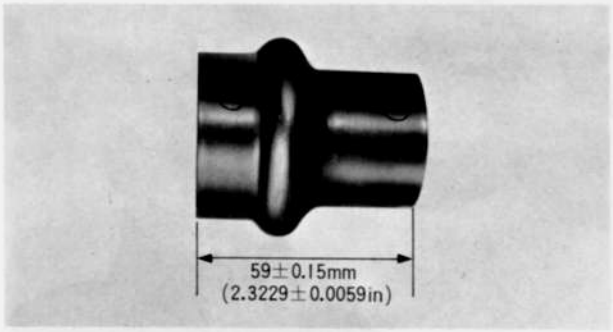

Fig. 9–21 Collapsible spacer

9–D–6. Checking Oil Seal

Check the oil seal for wear or damage. If there is any possibility of oil leakage, replace the oil seal.

9–D–7. Checking Companion Flange

Check the companion flange for cracks, worn splines, or rough oil seal contacting surface. Repair or replace the companion flange if necessary.

9–E. REAR AXLE ASSEMBLY

9–E–1. Adjusting Drive Pinion

The drive pinion should be correctly positioned in relation to the ring gear by the use of spacer which is placed between the drive pinion and the pinion rear bearing.

To adjust the drive pinion position, use the **special gauge** (49 0727 570 and 49 0305 555) and proceed as follows:

1. Install the dial indicator to the gauge body. Place the gauge body on the surface plate as shown in Fig. 9–22 and lock the dial indicator by the screw so that the needle is pointing toward 1 to 3 mm.

Then, set the reading to "Zero" by turning the outer ring of the indicator.



Fig. 9–22 ZERO setting

2. Make certain that the differential bearing support bores are free of dirt and burrs.
3. Install the pinion and **bearing model** (49 1029 572) together with a spacer into the carrier.

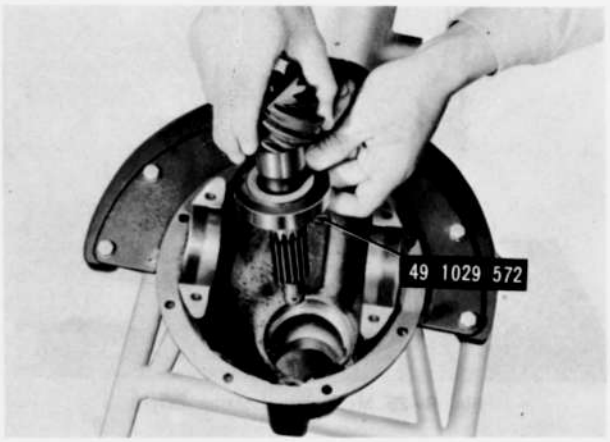

Fig. 9–23 Installing pinion and bearing model

4. Place the gauge block on the pinion and carefully place the gauge body adjusted in Step 1 on the gauge block so that the feeler of the indicator comes in contact with the lowest portion of the differential bearing support bore.

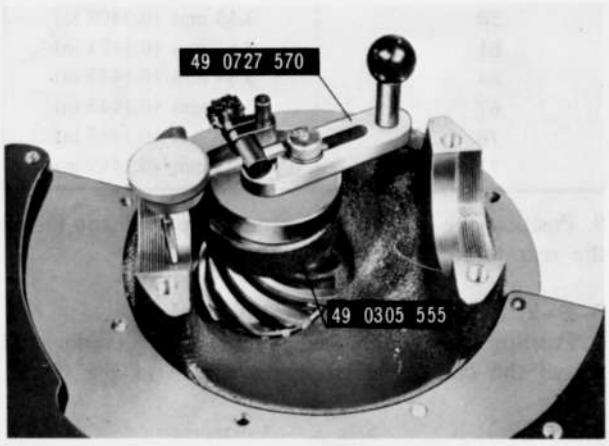

Fig. 9–24 Measuring pinion height

5. Record the number of hundredths dial indicator moves in a "+" (plus) or "–" (minus) direction from zero. Remove the gauge body and dial indicator from the carrier and check zero setting on the surface plate to make sure this setting was not disturbed by handling.
6. In order to compensate for all of the machining variables, the pinion has a plus or minus reading recorded in hundredth millimeters on the rear face of the pinion.
(a) If the pinion is marked "+" (plus), subtract the amount specified on the pinion.
(b) If the pinion is marked "–" (minus), add the amount specified on the pinion.
7. Place the bearing model and the rear pinion bearing on the surface plate and compare their heights as shown in Fig. 9–25.
(a) If the bearing is higher than the model, subtract the amount equivalent to the difference.
(b) If the bearing is lower than the model, add the amount equivalent to the difference.
8. Finally select the correct pinion spacer to be used during pinion assembly by adding or subtracting the

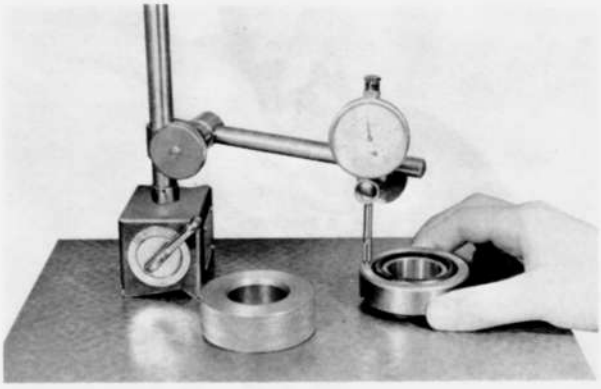

Fig. 9–25 Measuring bearing height

amount determined in Step 5, 6 and 7 from the thickness of the spacer used in Step 3.
The spacers are available in the following thickness:

Identification mark	Thickness
52	3.52 mm (0.1386 in)
55	3.55 mm (0.1398 in)
58	3.58 mm (0.1409 in)
61	3.61 mm (0.1421 in)
64	3.64 mm (0.1433 in)
67	3.67 mm (0.1445 in)
70	3.70 mm (0.1457 in)
73	3.73 mm (0.1469 in)

9. Position the correct spacer on the pinion and install the rear pinion bearing.

9–E–2. Adjusting Pinion Bearing Preload

1. Position the pinion assembly in the carrier and install the collapsible spacer as shown in Fig. 9–26.

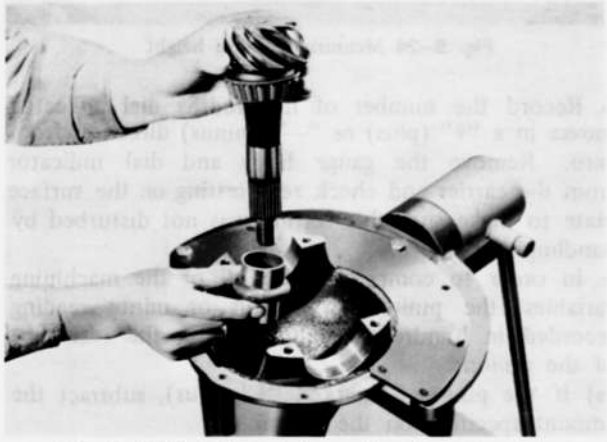

Fig. 9–26 Installing pinion and collapsible spacer

2. Place the front pinion bearing in position on the pinion. Hold the pinion fully forward and drive the pinion bearing over the pinion until seated.
3. Apply gear lubricant to the lip of the pinion oil seal and install the pinion oil seal into the carrier.
4. Install the companion flange on the pinion by tapping with a soft hammer.
5. Install the pinion washer and nut. Before tightening the nut (When the pinion preload is Zero), check the drag by the oil seal by using a torque wrench.
6. Tighten the pinion nut to **14 m-kg (101 ft-lb)** and check the preload as shown in Fig. 9–27.

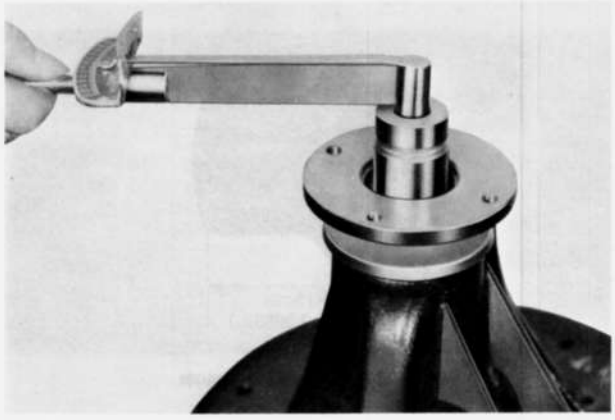

Fig. 9–27 Checking pinion bearing preload

Note:
After preload has been checked, final tightening should be done very cautiously.
The pinion nut should be further tightened only a little at a time and preload should be checked after each slight amount of tightening. Exceeding preload specifications will compress the collapsible spacer too far and requires its replacement. The maximum tightening torque of the nut is 20 m-kg (144 ft-lb).
If the specified preload is not obtained after tightening the nut to the permissible maximum tightening torque, replace the collapsible spacer with a new one.

7. While observing the proceeding caution, carefully set the preload drag at **9 to 14 cm-kg (7.8 to 12.2 in-lb)** plus the oil seal drag determined in Step 5.

Note:
If the preload is measured by using a spring scale at the bolt hole of the companion flange, the reading should be **2.1 ~ 3.3 kg (4.6 ~ 7.3 lb)**.

9–E–3. Assembling Differential

1. Install the thrust washer on each differential side gears and install these in the gear case.

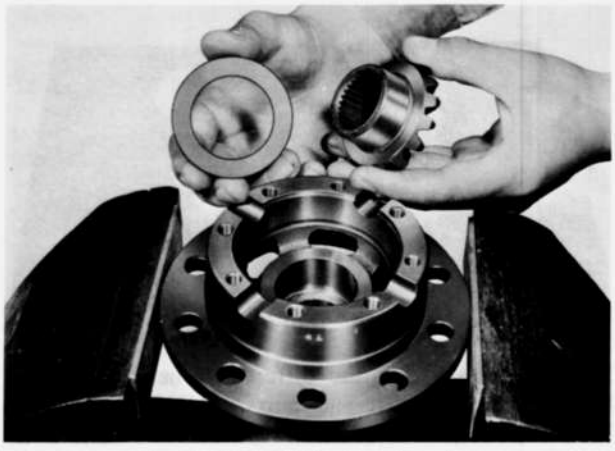

Fig. 9–28 Installing thrust washer

2. Fit the pinion gears onto the spider and install the spider into the differential case.

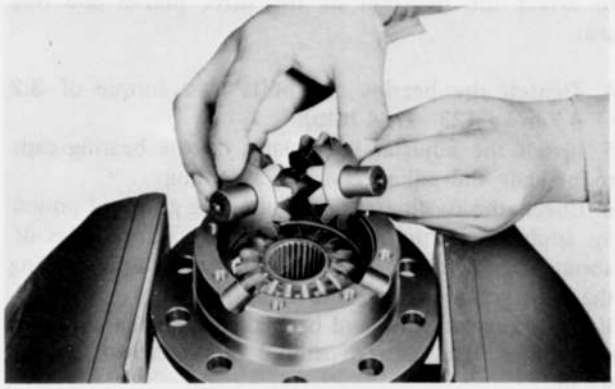

Fig. 9–29 Installing differential gears

3. Align the identification marks as shown in Fig. 9–30 and secure the case halves together with bolts. Torque the bolts to **2.5 ~ 3.0 m-kg (18 ~ 21 ft-lb)**.

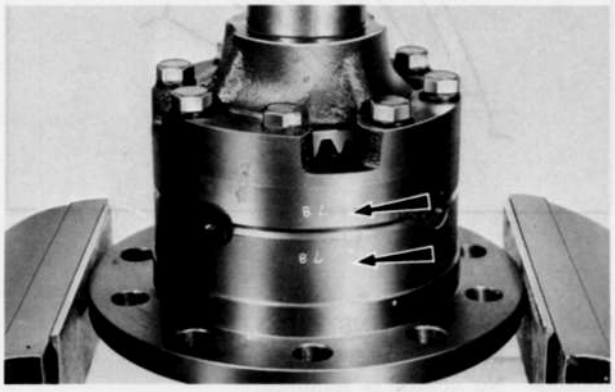

Fig. 9–30 Identification marks

4. Check the backlash of the side gear and the pinion gear. The backlash should be less than **0.1 mm (0.004 in)**.
If it is exceeds 0.1 mm (0.004 in), adjust with the thrust washers.
The following thrust washers are available:

Identification mark	Thickness
0	2.0 mm (0.0787 in)
1	2.1 mm (0.0827 in)
2	2.2 mm (0.0866 in)

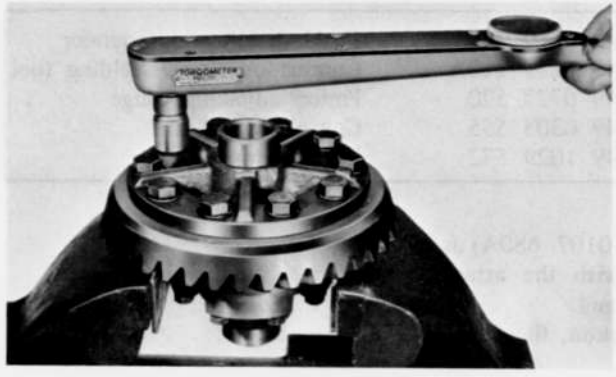

Fig. 9–31 Tightening ring gear bolts

5. Install the ring gear to the case and torque the bolts to **9.0 ~ 11.0 m-kg (65 ~ 79 ft-lb)**.
6. Install each differential bearing to the gear case.
7. Install the differential bearing outer races to their respective bearings.

9–E–4. Installing Differential

1. Place the differential gear assembly in the carrier, making ensure that the marks on the face of the pinion and ring gear tooth are in alignment.

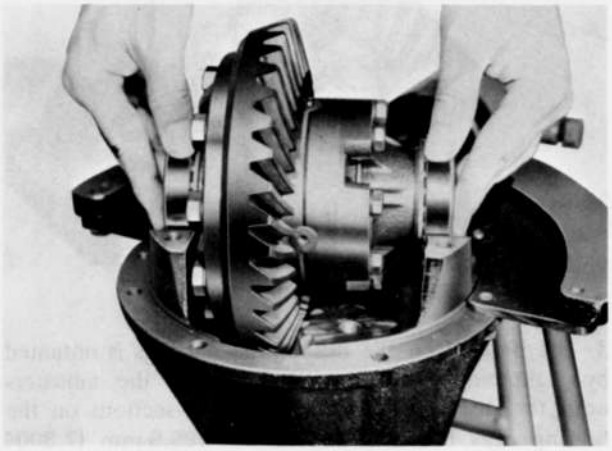

Fig. 9–32 Installing differential assembly

2. Note the identification marks on the adjusters and install each to its respective side.

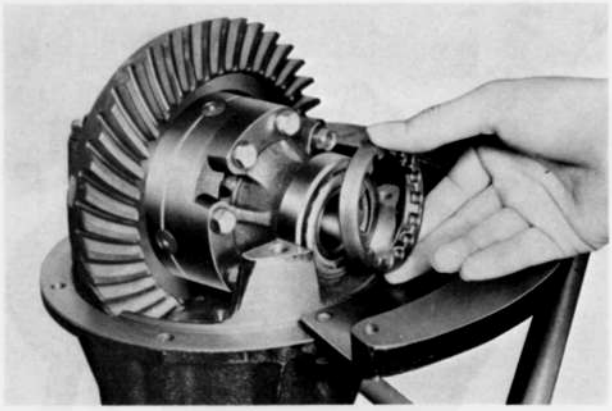

Fig. 9–33 Installing adjuster

3. Install the differential bearing caps making sure that the identification marks on the caps correspond with those on the carrier and install the attaching bolts.
4. Turn the adjusters with the **spanner** (49 0259 720) until the bearings are properly positioned in their respective outer races and the end play is eliminated with some backlash existing between the ring gear and drive pinion.
5. Slightly tighten one of the bearing cap bolts on each side and adjust the backlash, as instructed in the following paragraph.

9–E–5. Adjusting Backlash

1. Secure a dial indicator to the carrier flange so that the feeler comes in conatct at right angles with one of the ring gear teeth.

2. Check the backlash between the ring gear and drive pinion. With the **spanner** (49 0259 720), turn both bearing adjusters equally until the backlash becomes **0.17 to 0.19 mm (0.0067 to 0.0075 in)**.



Fig. 9–34 Adjusting backlash

3. The preload on the differential bearings is obtained by tightening the adjusters. Tighten the adjusters until the distance between both pilot sections on the bearing caps becomes **185.428 ~ 185.5 mm (7.3004 7.3033 in)**, as shown in Fig. 9–35.

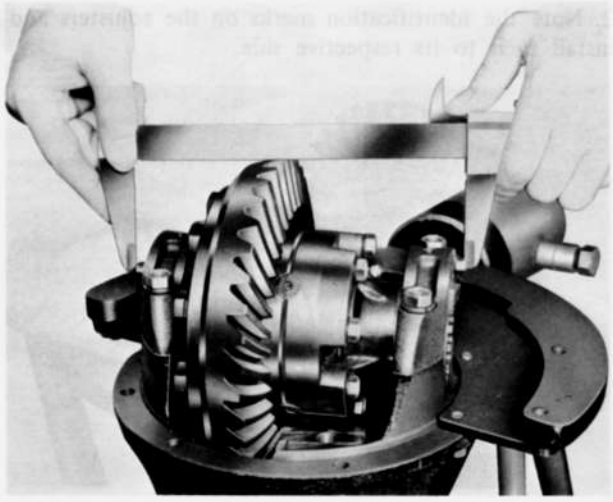

Fig. 9–35 Adjusting bearing preload (case spread)

Note:
When adjusting the preload, care must be taken not to affect the backlash of the drive pinion and ring gear.

4. Tighten the bearing cap bolts to a torque of **3.2 ~ 4.7 m-kg (23 ~ 34 ft-lb)**.
5. Install the adjuster lock plates on the bearing caps to prevent the adjusters from loosening.
6. Check the tooth contact of the ring gear and pinion by applying a thin coat of red lead on both sides of about six or eight of ring gear teeth and rotating the ring gear few times to and fro.
If the pinion position and backlash have been correctly set, the contact pattern should be as shown in Fig. 9–36.

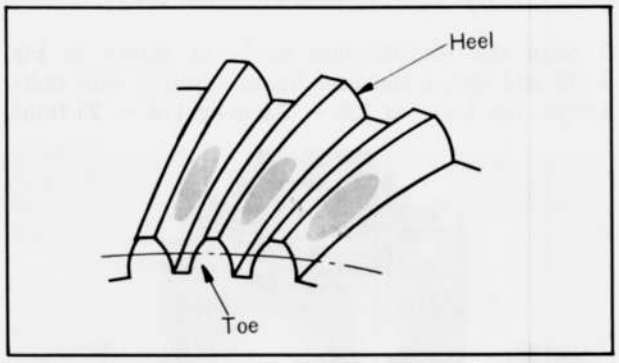

Fig. 9–36 Correct tooth contact

9–F. REAR AXLE INSTALLATION

1. Clean the sealing surface of the carrier and the housing. No gesket is required.
2. Apply oil resistant sealer to the surfaces.
3. Position the carrier to the housing.
4. Install the nuts and torque them to **2.3 ~ 2.7 m-kg (17 ~ 19 ft-lb)**.
5. Connect the propeller shaft following the markings closely to prevent any out of balance condition. Torque the bolts to **3.5 ~ 3.8 m-kg (25 ~ 27 ft-lb)**.
6. Install the axle shafts, drums and wheels.
7. Fill the axle with the correct grade and quantity of lubricant.
8. Lower the vehicle.

SPECIAL TOOLS

49 0223 630A	Rear axle shaft puller	49 0259 720	Backlash adjusting spanner
49 0259 631	Attachment (for puller)	49 0259 710A	Companion flange holding tool
49 1011 745	Bearing remover set	49 0727 570	Pinion adjusting gauge
49 0164 550D	Rear axle stand	49 0305 555	Gauge block
49 0223 561	Attachment (for stand)	49 1029 572	Bearing model

Note:
1. If the **engine stand** (49 0107 680A) is available, this can be used together with the **attachment** (49 0419 561) as a rear axle stand.
2. To adjust the pinion position, the **gauge** (49 0180 570) can also be used.

STEERING

DESCRIPTION ..... 10 : 1
10–A. STEERING WHEEL ..... 10 : 1
10–A–1. Checking Steering Wheel Play ..... 10 : 1
10–A–2. Steering Wheel Removal ..... 10 : 1
10–A–3. Steering Wheel Inspection ..... 10 : 1
10–A–4. Steering Wheel Installation ..... 10 : 1
10–B. STEERING GEAR ..... 10 : 2
10–B–1. Steering Gear Removal ..... 10 : 2
10–B–2. Steering Gear Disassembly ..... 10 : 3
10–B–3. Steering Gear Inspection ..... 10 : 3
10–B–4. Steering Gear Assembly ..... 10 : 4
10–B–5. Steering Gear Installation ..... 10 : 5
10–C. STEERING COLUMN SHAFT ..... 10 : 6
10–C–1. Steering Column Shaft Removal ..... 10 : 6
10–C–2. Steering Column Shaft Installation ..... 10 : 6
10–D. STEERING LINKAGE ..... 10 : 7
10–D–1. Checking Ball Joint ..... 10 : 7
10–D–2. Idler Arm ..... 10 : 7
Left Hand Drive Vehicles ..... 10 : 7
a. Checking idler arm ..... 10 : 7
b. Removing idler arm ..... 10 : 7
c. Installing idler arm ..... 10 : 7
Right Hand Drive Vehicles ..... 10 : 8
a. Removing idler arm ..... 10 : 8
b. Disassembling idler arm ..... 10 : 8
c. Checking idler arm ..... 10 : 8
d. Assembling idler arm ..... 10 : 8
e. Installing idler arm ..... 10 : 8
10–D–3. Replacing Pitman Arm ..... 10 : 8
10–D–4. Replacing Tie-rod ..... 10 : 9
10–D–5. Replacing Center Link ..... 10 : 9
10–D–6. Steering Damper ..... 10 : 10
a. Removing steering damper ..... 10 : 10
b. Installing steering damper ..... 10 : 10
10–E. FRONT WHEEL ALIGNMENT ..... 10 : 10
10–E–1. Toe-in ..... 10 : 10
a. Checking toe-in ..... 10 : 10
b. Adjusting toe-in ..... 10 : 10
10–E–2. Caster, Camber and King Pin Inclination ..... 10 : 11
a. Checking caster, camber and king pin inclination ..... 10 : 11
b. Adjusting camber and caster ..... 10 : 11
10–F. STEERING LOCK ASSEMBLY ..... 10 : 12
SPECIAL TOOLS ..... 10 : 12

10

DESCRIPTION

The steering system consists of the steering gear, steering column, steering lock assembly, steering wheel and steering linkage. The steering lock assembly is installed at the upper portion of the steering column shaft and at the lower section is provided with a flexible coupling yoke utilizing a two-joint steering column shaft mechanism and also a collapsible type column shaft is utilized. The steering gear is of a recirculating ball nut type and the steering gear ratio varies from 18.0 : 1 to 20.0 : 1, according to the turning angle of the sector shaft. Therefore, this steering gear provides easy steering.

The steering linkage consists of the pitman arm, center link (pitman arm to idler arm), idler arm and bracket assembly, and tie-rods.

The steering linkage ball joints and idler arm are filled with lithium grease and are sealed completely which require no lubrication service.

The toe-in, camber and caster can be adjusted.

10–A. STEERING WHEEL

10–A–1. Checking Steering Wheel Play

The steering wheel play should be **5 ~ 20 mm (0.20 ~ 0.79 in)**. With the front wheels on the ground and in the straight ahead position, move the steering wheel in both directions without moving the front wheels.

If excessive play is found, the following points should be carefully checked.

1. Fit of the ball joints of the steering linkage
2. Looseness of the wheel bearings
3. Backlash between the sector gear and ball nut

10–A–2. Steering Wheel Removal

1. Pull the steering wheel center cap toward the top of the wheel.
2. Punch the mating marks on the steering wheel hub and the column shaft.
3. Remove the steering wheel attaching nut and then remove the steering wheel assembly.

Note:

Do not use any hammer for removal and **never** pound on the column shaft.

10–A–3. Steering Wheel Inspection

1. Cracks and damage of the steering wheel
2. Damage of the cap, set plate, terminal, wheel core cover, under cover, horn lever and spring.
3. Cracks and damage of the horn button

10–A–4. Steering Wheel Installation

Follow the removal procedures in the reverse order.

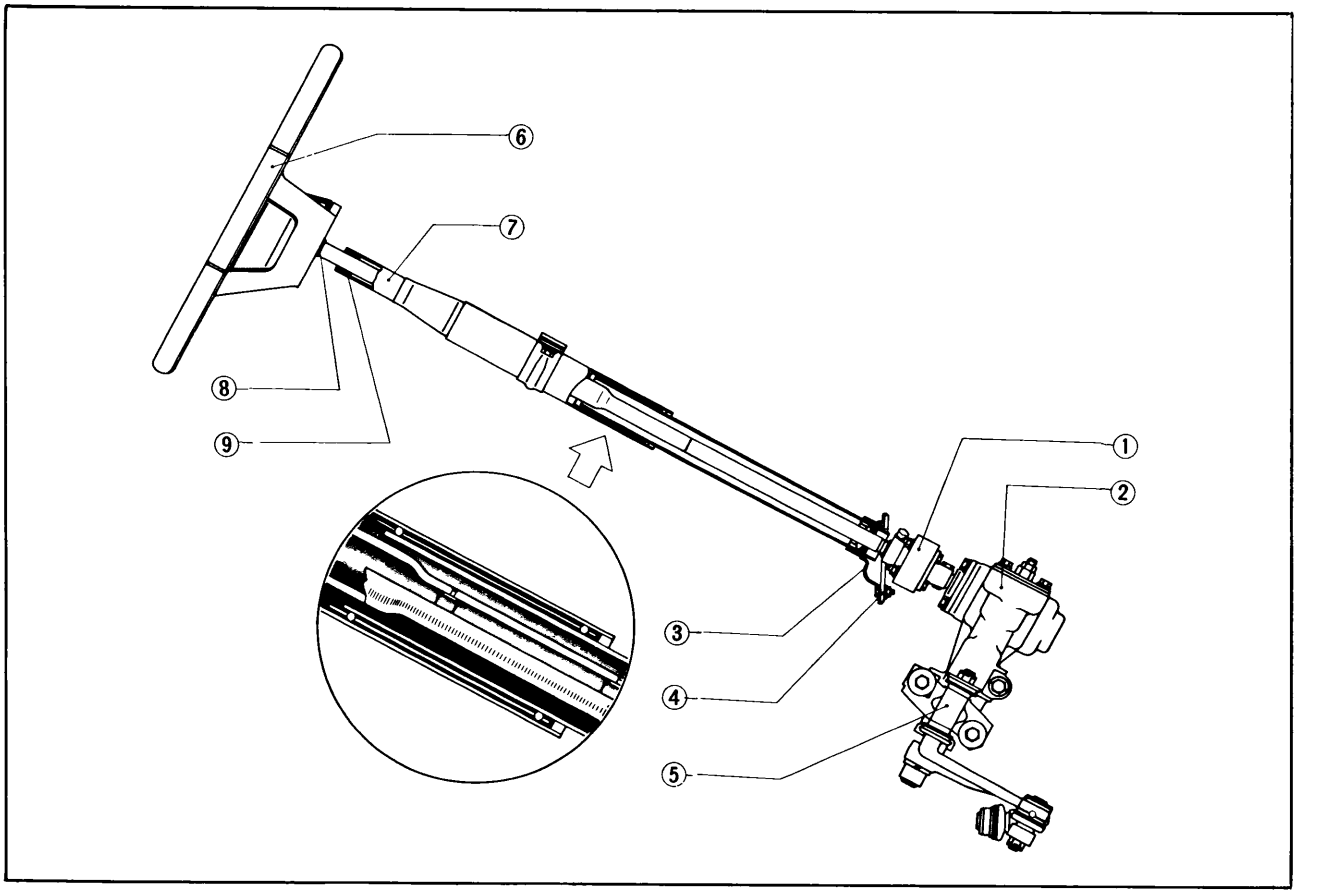

Fig. 10–1 Steering assembly

1. Flexible coupling yoke
2. Steering gear housing
3. Set plate
4. Gasket
5. Idler arm
6. Steering wheel
7. Steering column shaft
8. Retaining ring
9. Bush

10–B. STEERING GEAR

10–B–1. Steering Gear Removal

1. Raise the front end of the vehicle and support with stands.
2. Remove the front wheel.
3. Remove the cotter pin and castellated nut attaching the center link to the pitman arm.
4. Disconnect the center link from the pitman arm with the **ball joint puller** (49 0118 850C).



Fig. 10–2 Disconnecting center link

5. Remove the bolt securing the flexible coupling yoke to the worm shaft.
6. Remove the speedometer cable from the clips attached to the steering gear housing and the power brake unit. (Left hand drive vehicles only)
7. Remove the bolts and nuts retaining the steering gear housing to the body. At this point, check for the possible presence of aligning shim between the gear housing and the body.

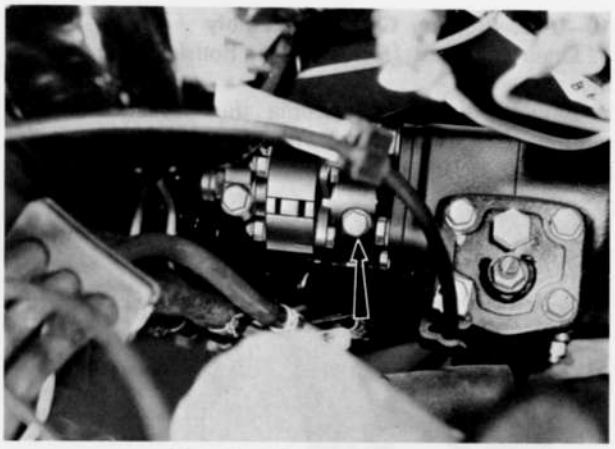

Fig. 10–3 Removing bolt

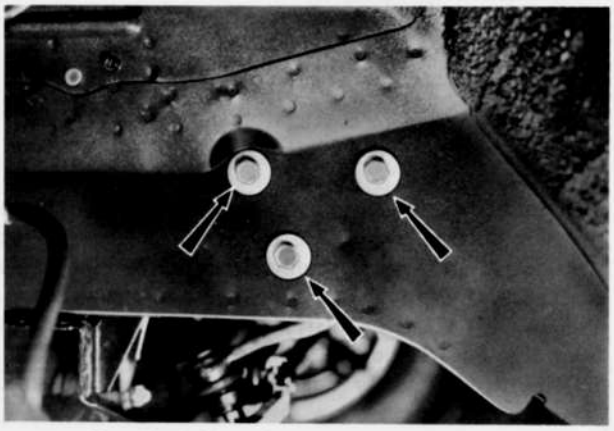

Fig. 10–4 Removing steering gear housing

8. Remove the gear housing assembly and aligning shim and lower the vehicle.

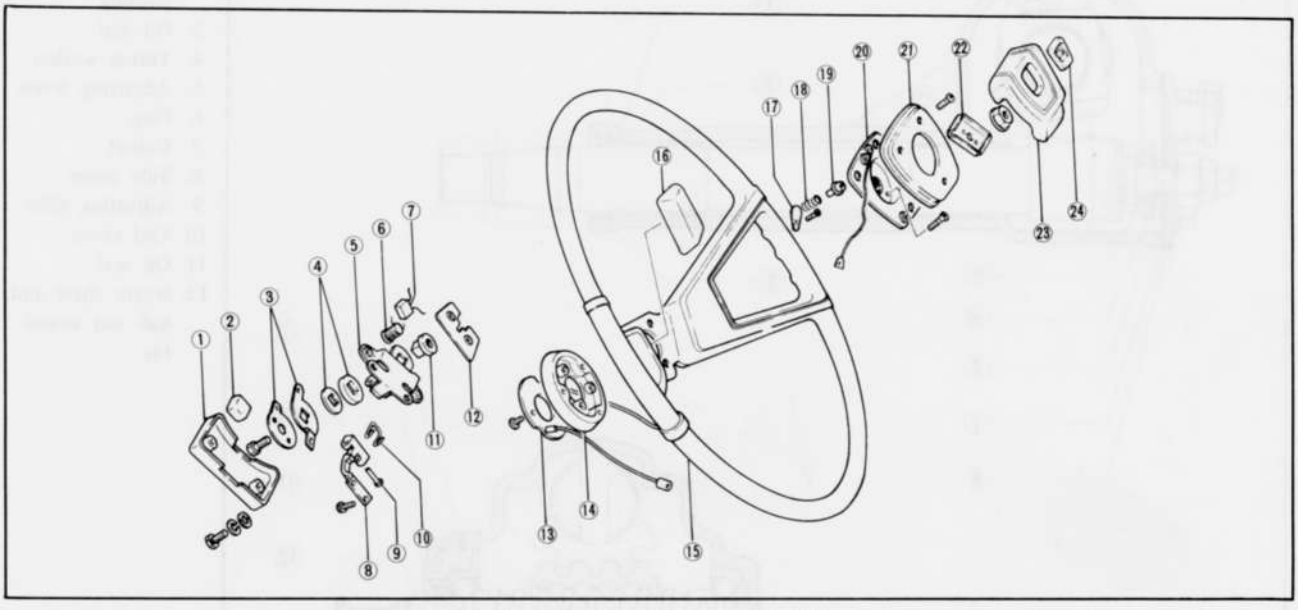

Fig. 10–5 Steering wheel components

1. Under cover
2. Supporter
3. Earth plate
4. Insulation
5. Lever support
6. Check coil
7. Condenser
8. Horn lever
9. Lever shaft
10. Spring
11. Insulation
12. Wheel core cover
13. Terminal
14. Cover
15. Steering wheel
16. Horn button
17. Earth plate
18. Spring
19. Insulator
20. Set plate
21. Cap
22. Spring cap
23. Center cap
24. Emblem

10–B–2. Steering Gear Disassembly

1. Drain lubricant from the gear housing by removing the plug.
2. Remove the nut attaching the pitman arm and remove the pitman arm with the **pitman arm puller** (49 0223 695B), as shown in Fig. 10–6.

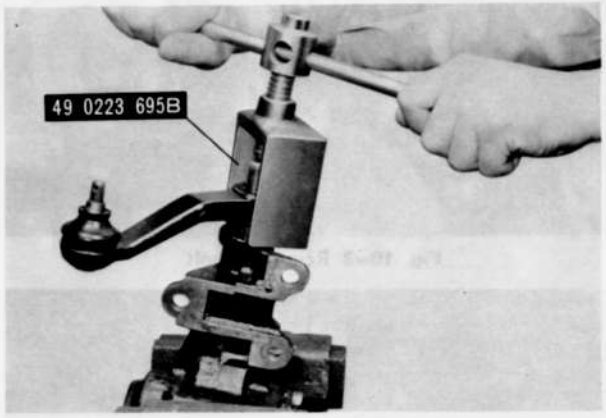

Fig. 10–6 Removing pitman arm

3. Remove the bolts that attach the side cover to the gear housing and loosen the sector shaft adjusting screw lock nut, then remove the sector shaft side cover screwing in the sector shaft adjusting screw.
4. Remove the sector shaft adjusting screw and shim from the slot at the end of the sector shaft.
5. Remove the sector shaft from the gear housing.

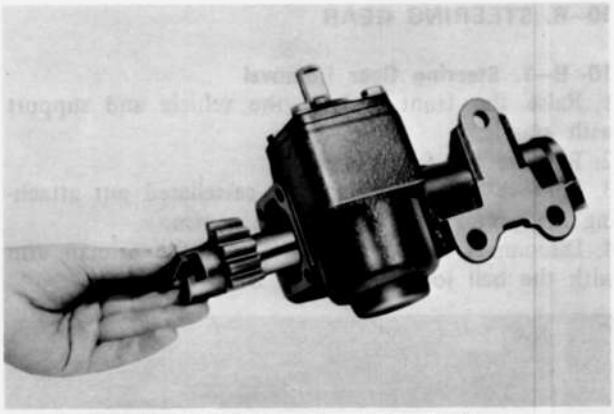

Fig. 10–7 Removing sector shaft

6. Remove the bolts that attach the end cover to the gear housing and remove the end cover and shims.
7. Remove the worm shaft and ball nut assembly from the gear housing.
8. Remove the oil seal from the gear housing, if necessary.

10–B–3. Steering Gear Inspection

1. Check the operation of the ball nut assembly on the worm shaft. If the ball nut does not travel smoothly and freely on the worm shaft and there is roughness, the ball nut and worm shaft assembly should be replaced.

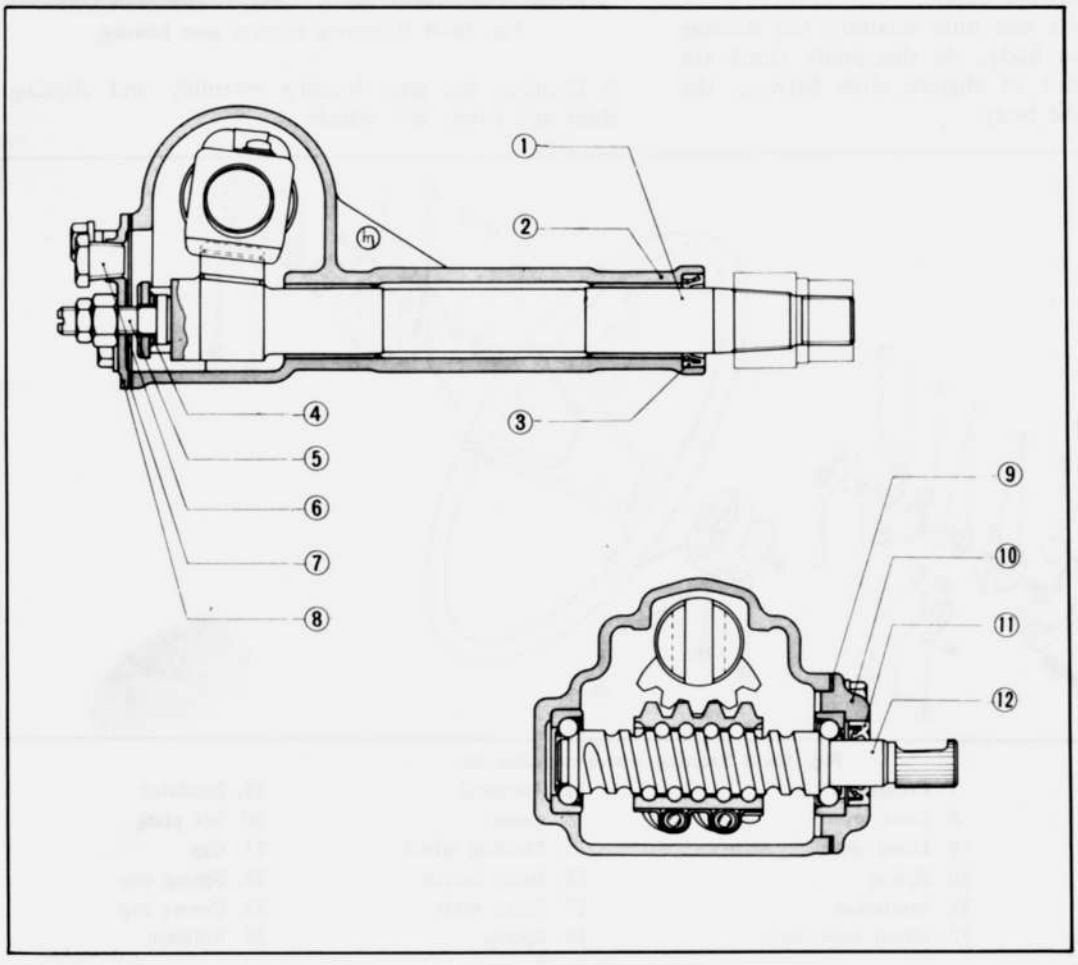

Fig. 10–8 Steering gear cross section
1. Sector shaft
2. Steering gear housing
3. Oil seal
4. Thrust washer
5. Adjusting screw
6. Plug
7. Gasket
8. Side cover
9. Adjusting shim
10. End cover
11. Oil seal
12. Worm shaft and ball nut assembly

Note:
The worm shaft and ball nut are serviced as an assembly only.

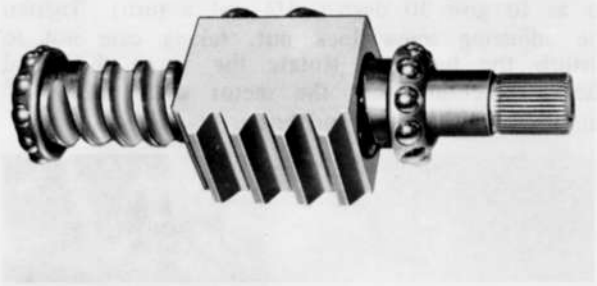

Fig. 10–9 Worm shaft and ball nut assembly

2. Check the worm bearings and cups for wear or any damage. If defective, replace with new ones.
3. Check the sector shaft for wear or damage at the gear surface.
4. Check the oil seal for wear, flaw, or any damage. If there is any possibility of oil leakage, replace the oil seal.

10–B–4. Steering Gear Assembly

1. Install the oil seal to the gear housing.
2. Insert the worm shaft and ball nut assembly into the gear housing.
3. Install the end cover and the bearing preload adjusting shims to the gear housing and tighten the end cover attaching bolts to **1.6 ~ 2.3 m-kg (12.0 ~ 17.0 ft-lb).**

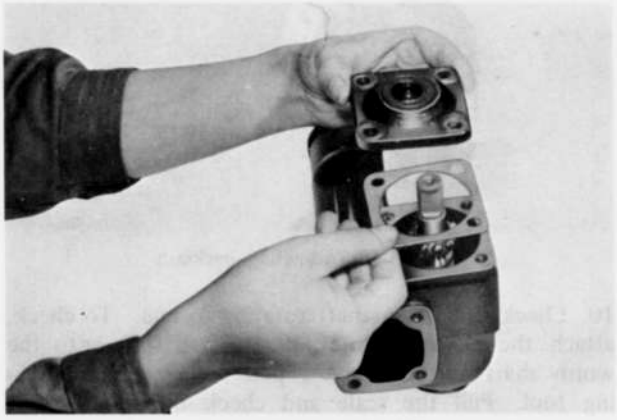

Fig. 10–10 Installing end cover and adjusting shim

4. Adjust the bearing preload. To check the preload, attach the **preload checking tool** (49 0180 510A) onto the worm shaft and connect a pull scale to the preload checking tool. Pull the scale gradually, and read the scale keeping the worm shaft rotating. If the reading is less than **0.1 kg (0.22 lb)**, reduce the shim, and add the shim if the preload is more than **0.4 kg (0.88 lb)**.
The following shims are available.

0.050 mm (0.002 in)	0.100 mm (0.004 in)
0.075 mm (0.003 in)	0.200 mm (0.008 in)

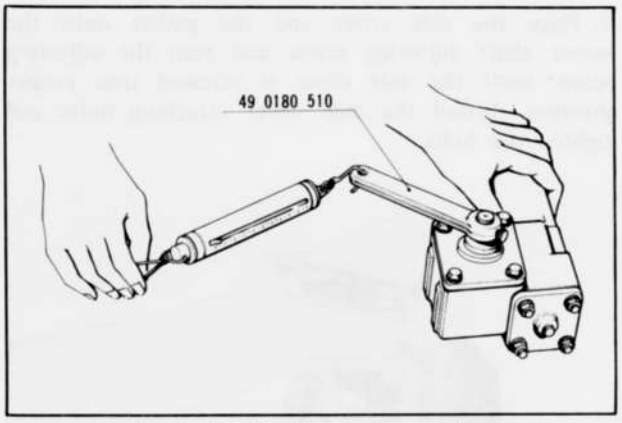

Fig. 10–11 Checking bearing preload

5. Insert the sector shaft into the gear housing, being careful not to damage the oil seal, and ensuring that the center of the sector gear is in alignment with the center of the worm gear as shown in Fig. 10–12.

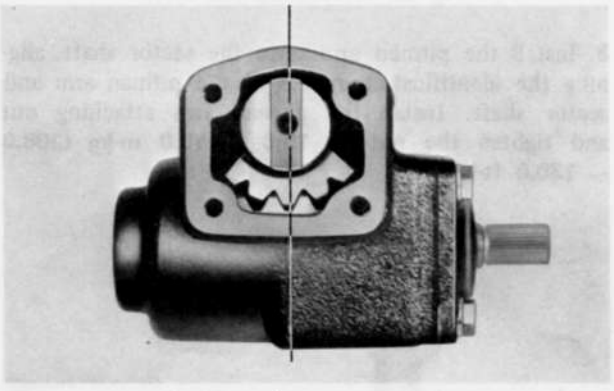

Fig. 10–12 Position of sector gear and worm gear

6. Install the sector shaft adjusting screw into the slot at the end of the sector shaft. Check the end clearance between the sector shaft and adjusting screw with a feeler gauge and adjust this clearance to **0 ~ 0.1 mm (0 ~ 0.004 in)** by inserting appropriate thrust washer.
The thrust washers are available in the following four thicknesses :

1.95 mm (0.077 in)	2.05 mm (0.081 in)
2.00 mm (0.079 in)	2.10 mm (0.083 in)

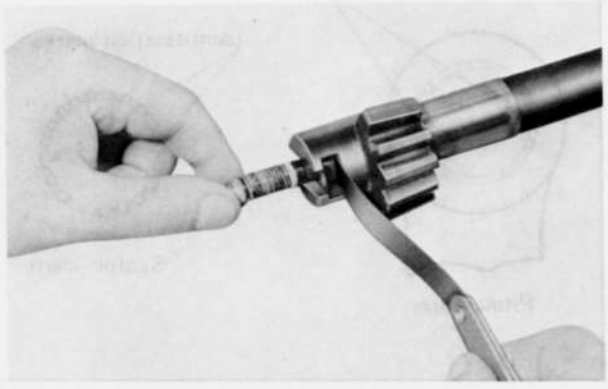

Fig. 10–13 Checking end clearance

7. Place the side cover and the gasket onto the sector shaft adjusting screw and turn the adjusting screw until the side cover is screwed into proper position. Install the side cover attaching bolts and tighten the bolts.

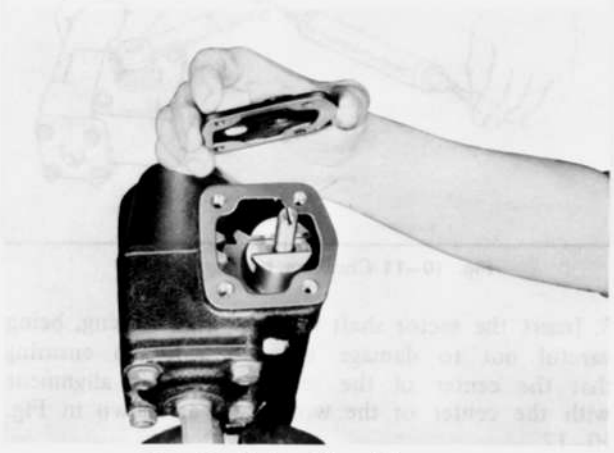

Fig. 10–14 Installing side cover

8. Install the pitman arm onto the sector shaft, aligning the identification marks of the pitman arm and sector shaft. Install the pitman arm attaching nut and tighten the nut to **15.0 ~ 18.0 m-kg (108.0 ~ 130.0 ft-lb).**

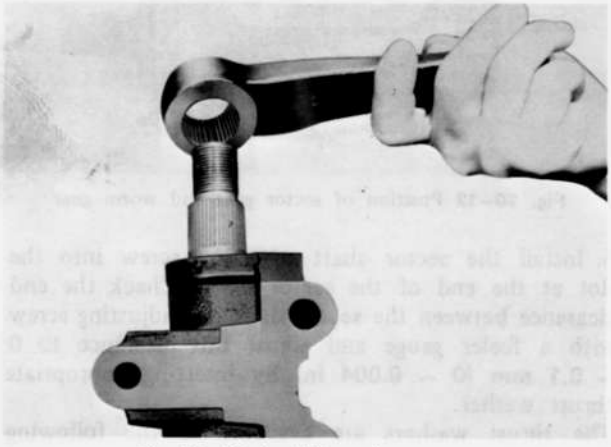

Fig. 10–15 Installing pitman arm

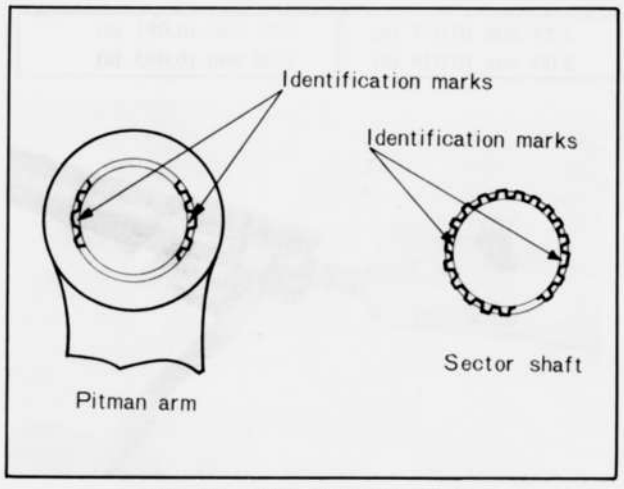

Fig. 10–16 Identification marks

9. Adjust the backlash between the worm gear and sector shaft gear. To adjust the backlash, position the sector shaft at the center of the worm gear, then, gradually screw in or out the sector shaft adjusting screw until the backlash is obtained 0 mm at the pitman arm end. Turn out the adjusting screw so as to give 30 degrees (1/12 of a turn). Tighten the adjusting screw lock nut, taking care not to disturb the backlash. Rotate the worm shaft and check to ensure that the sector shaft **turns 40°** smoothly to the right and left.

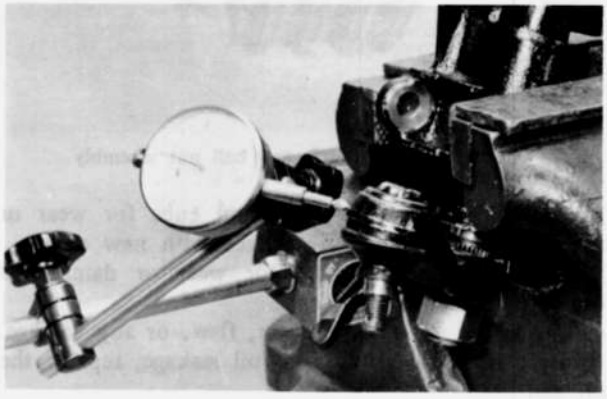

Fig. 10–17 Checking backlash

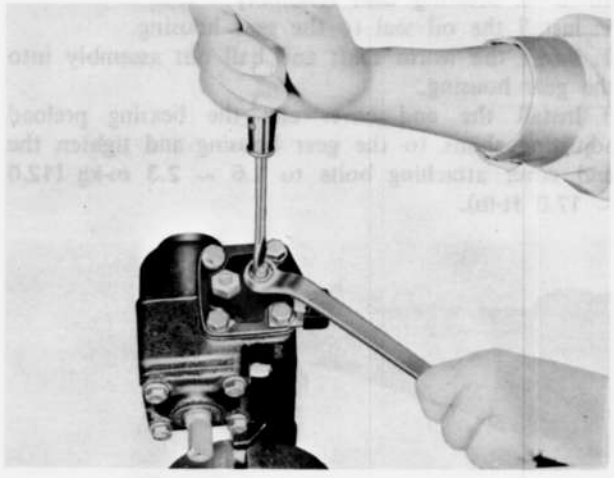

Fig. 10–18 Adjusting backlash

10. Check the worm shaft rotating torque. To check, attach the **checking tool** (49 0180 510A) onto the worm shaft and connect a pull scale to the checking tool. Pull the scale and check the worm shaft rotating torque. If the rotating torque is less than **0.9 kg (1.98 lb)** or more than **1.5 kg (3.30 lb)**, readjust the bearing preload.

10–B–5. Steering Gear Installation

Follow the removal procedures in the reverse order.

Note :

(a) Align the steering worm shaft cut portion with the flexible coupling yoke and install the steering gear housing to the body, and tighten the securing bolts and nuts.
(b) Place the shim in original position to obtain proper shaft alignment.
(c) Fill the gear housing with gear lubricant.

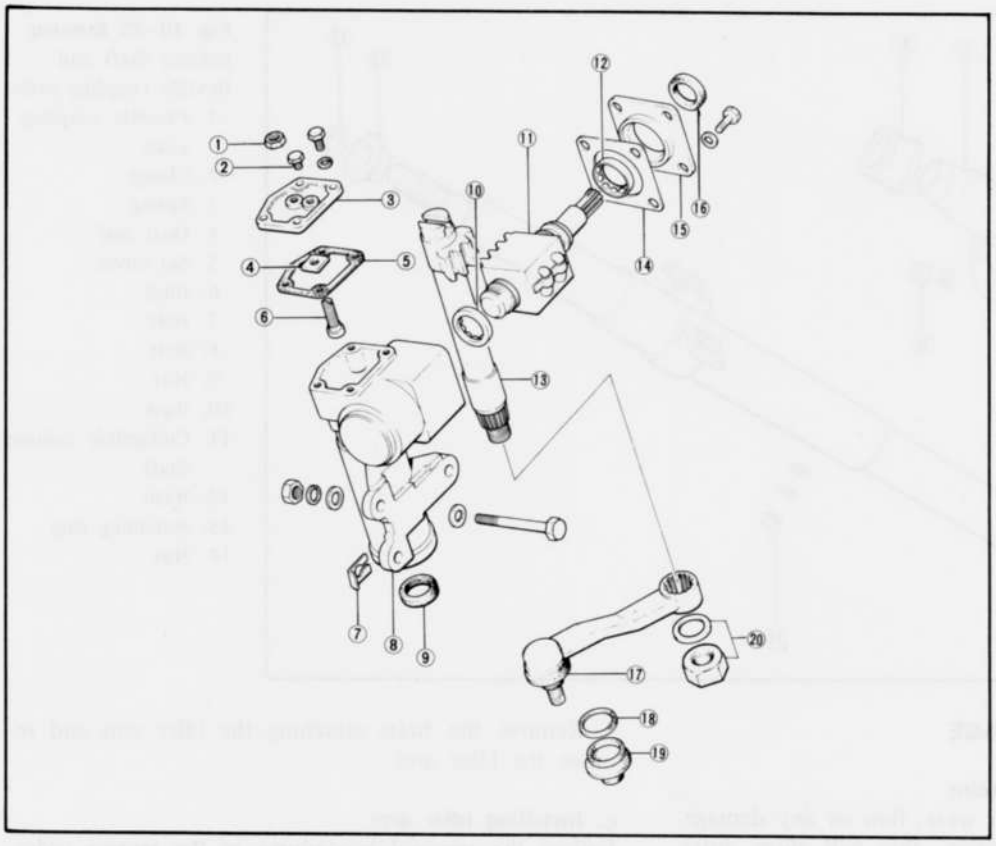

Fig. 10–19 Steering gear components

1. Lock nut
2. Oil plug
3. Side cover
4. Thrust washer
5. Gasket
6. Adjusting screw
7. Adjusting shim
8. Steering gear housing
9. Oil seal
10. Bearing
11. Worm shaft and ball nut assembly
12. Bearing
13. Sector shaft
14. Adjusting shim
15. End cover
16. Oil seal
17. Pitman arm
18. Dust seal set ring
19. Ball joint dust seal
20. Washer and nut

10–C. STEERING COLUMN SHAFT

10–C–1. Steering Column Shaft Removal

1. Remove the bolt and clamp securing the flexible coupling yoke to the column shaft.

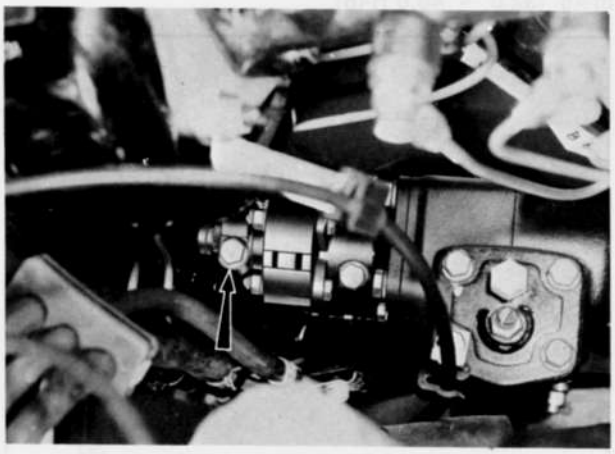

Fig. 10–20 Removing bolt

2. Remove the steering wheel, as described in Par. 10–A–2.
3. Remove the column covers.
4. Remove the bolts attaching the instrument frame junction and remove the frame junction.
5. Remove the steering lock assembly, as described in Par. 15–D–6.
6. Remove the nuts attaching the column shaft clamp.
7. Remove the column shaft assembly toward the interior.



Fig. 10–21 Removing junction

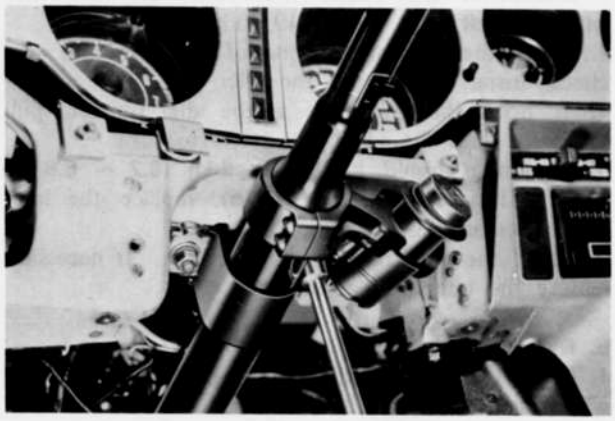

Fig. 10–22 Removing column shaft clamp

10–C–2. Steering Column Shaft Installation

Follow the removal procedures in the reverse order.

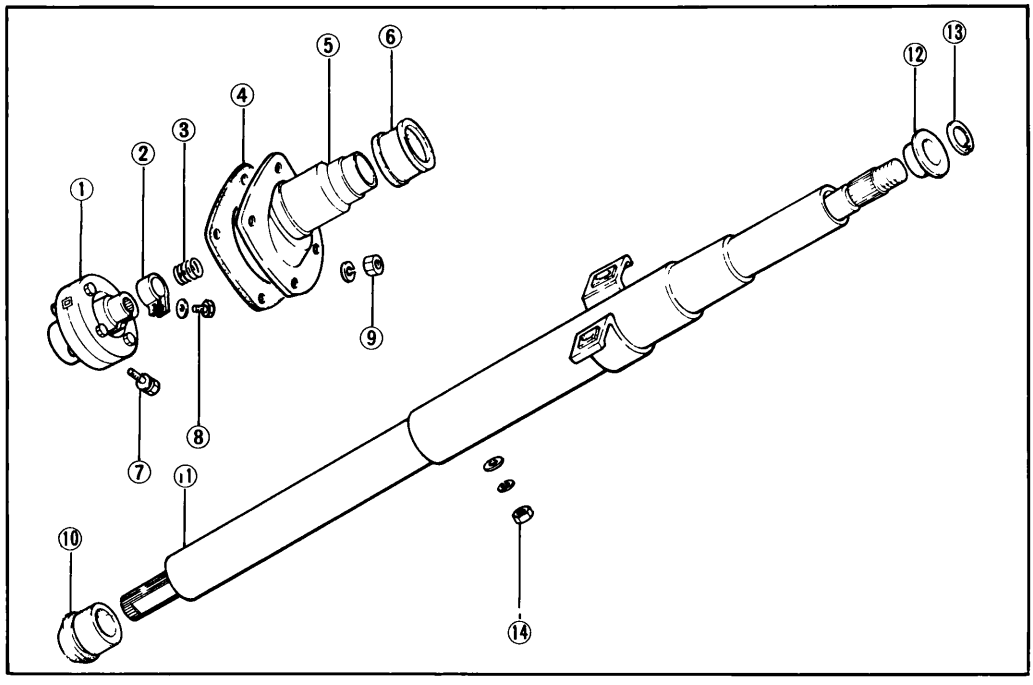

Fig. 10–23 Steering column shaft and flexible coupling yoke
1. Flexible coupling yoke
2. Clamp
3. Spring
4. Dust seal
5. Set cover
6. Bush
7. Bolt
8. Bolt
9. Nut
10. Bush
11. Collapsible column shaft
12. Bush
13. Retaining ring
14. Nut

10–D. STEERING LINKAGE

10–D–1. Checking Ball Joint

1. Check the dust seal for wear, flaw or any damage. If the dust seal is defective, this will allow entry of water and dust, resulting in ball joint wear. Replace the dust seal if necessary.
2. The end play of the ball stud is preadjusted at the factory to be from **0 ~ 0.25 mm (0 ~ 0.010 in).** If it exceeds **1.0 mm (0.040 in),** replace the ball joint in its assembled form.

10–D–2. Idler Arm

Left Hand Drive Vehicles

a. Checking idler arm

1. Raise the front end of the vehicle and support with stand.
2. Remove the cotter pin and nut attaching the center link at the idler arm.
3. Disconnect the center link from the idler arm with the **ball joint puller** (49 0118 850C).
4. Check the revolving torque of the idler arm. To check, install the nut to the idler pin.
Then, hook the pull scale at the idler pin and pull the scale until the idler arm starts to turn.
The reading should be **0.1 ~ 3 kg (0.2 ~ 6.6 lb).** If it is less than **0.1 kg (0.2 lb),** replace the idler arm in its assembled form.
5. Check the end play of the idler pin. If necessary replace the idler arm assembly.

b. Removing idler arm

1. Raise the front end of the vehicle and support with stands.
2. Remove the cotter pin and nut attaching the center link at the idler arm.
3. Disconnect the center link from the idler arm with the **ball joint puller** (49 0118 850C).
4. Remove the bolts attaching the idler arm and remove the idler arm.

c. Installing idler arm

Follow the removal procedures in the reverse order.

Note:

a) Check the clearance between the idler arm edge and the idler housing end as shown in Fig. 10–24. The clearance should be **3.5 ~ 5.5 mm (0.14 ~ 0.21 in).**
b) Tighten the idler arm attaching bolts to **4.4 ~ 5.5 m-kg (32.0 ~ 40.0 ft-lb).**

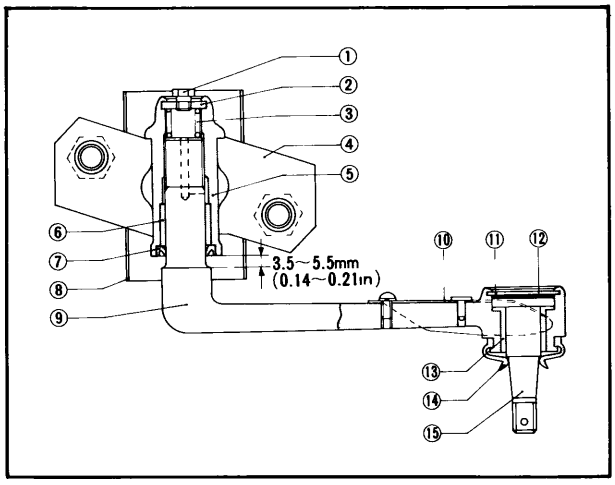

Fig. 10–24 Idler arm cross section

1. Grease plug
2. Plug
3. Spring
4. Bracket
5. Idler housing
6. Bush
7. Oil seal
8. Insulator
9. Idler arm
10. Insulator
11. End plate
12. Shim
13. Bush
14. Dust seal
15. Idler pin

Right Hand Drive Vehicles

a. Removing idler arm

1. Raise the front end of the vehicle and support with stands.
2. Remove the cotter pin and nut attaching the center link at the idler arm.
3. Disconnect the center link from the idler arm with the **ball joint puller** (49 0118 850C).
4. Remove the bolts attaching the idler arm and remove the idler arm.

b. Disassembling idler arm

1. Hold the idler arm in a vise, protecting with aluminum plates, remove the cotter pin and remove the bracket attaching nut.
2. Remove the washers, bushes and bracket.

c. Checking idler arm

1. Inspect the bush for wear or damage.
2. Check the end play of the ball stud. If necessary, replace the idler arm assembly.

d. Assembling idler arm

Follow the disassembly procedures in the reverse order.

Note:

Apply grease to the bracket and bushes.

e. Installing idler arm

Follow the removal procedures in the reverse order.

Note:

Tighten the idler arm attaching bolts to **4.4 ~ 5.5 m-kg (32.0 ~ 40.0 ft-lb).**

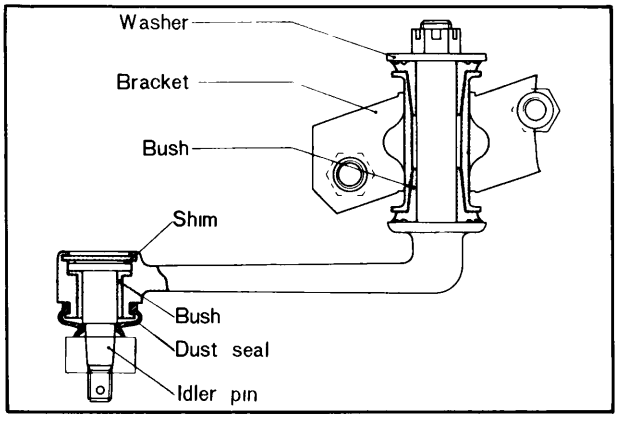

Fig. 10–25 Idler arm cross section

10–D–3. Replacing Pitman Arm

1. Raise the front end of the vehicle and support with stands.
2. Remove the cotter pin and castellated nut that attach the steering center link to the pitman arm.
3. Disconnect the steering center link from the pitman arm with the **ball joint puller** (49 0118 850C).
4. Remove the pitman arm attaching nut.
5. Remove the pitman arm from the sector shaft using the **pitman arm puller** (49 0223 695B).
6. Install the pitman arm onto the sector shaft, aligning the identification marks of the pitman arm and sector shaft.
7. Install the pitman arm attaching nut and tighten the nut to **15.0 ~ 18.0 m-kg (108.0 ~ 130.0 ft-lb).**
8. Secure the steering center link to the pitman arm with the castellated nut. Tighten the nut and install the cotter pin.

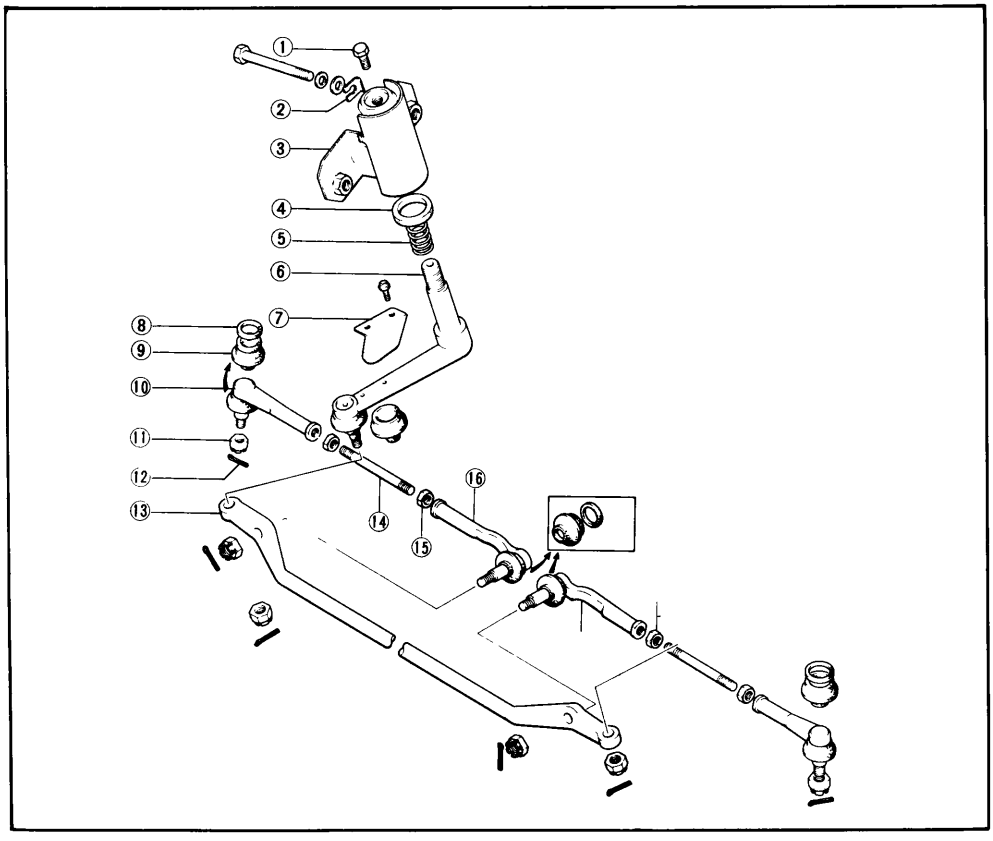

Fig. 10–26 Steering linkage components (Left hand drive vehicles)

1. Plug
2. Adjusting shim
3. Idler arm bracket
4. Oil seal
5. Spring
6. Idler arm
7. Insulator
8. Dust seal set ring
9. Ball joint dust seal
10. Tie-rod end socket
11. Castellated nut
12. Cotter pin
13. Center link
14. Tie-rod
15. Lock nut
16. Tie-rod end socket

Note :
Always tighten the nut to the next castellation if necessary to install the cotter pin.

10–D–4. Replacing Tie-rod

The tie-rod should be replaced, if it becomes worn or damaged. **Do not** attempt to straighten the tie-rod if damaged.

1. Raise the front end of the vehicle and support with stands.
2. Remove the cotter pins and castellated nuts that attach both tie-rod ends to the center link and steering knuckle.
3. Disconnect the tie-rod ends from the center link and steering knuckle with the **ball joint puller** (49 0118 850C).



Fig. 10–27 Disconnecting tie-rod end

4. Remove the tie-rod.
5. Secure the tie-rod to the center link and steering knuckle with castellated nut. Tighten the nut and install the cotter pin.
6. Check and, if necessary, adjust toe-in.

Note :
Whenever the tie-rod or ball joint is replaced, the toe-in is reset.

10–D–5. Replacing Center Link

The center link connecting the pitman arm and the idler arm should be replaced when damaged or worn at the ball stud. **Do not** attempt to straighten the center link if damaged.

1. Raise the front end of the vehicle and support with stands.
2. Loosen the U-bolt nuts and remove the steering damper bracket from the center link. (U.S.A. and Canada vehicles only)
3. Remove the cotter pins and castellated nuts that attach both tie-rod ends to the center link.
4. Disconnect the tie-rod ends from the center link using the **ball joint puller** (49 0118 850C).
5. Remove the cotter pin and castellated nut attaching the idler arm to the center link.
6. Remove the cotter pin and castellated nut attaching the pitman arm to the center link.
7. Disconnect the pitman arm and idler arm from the center link using the ball joint puller and remove the center link.
8. Position the center link to the pitman arm and

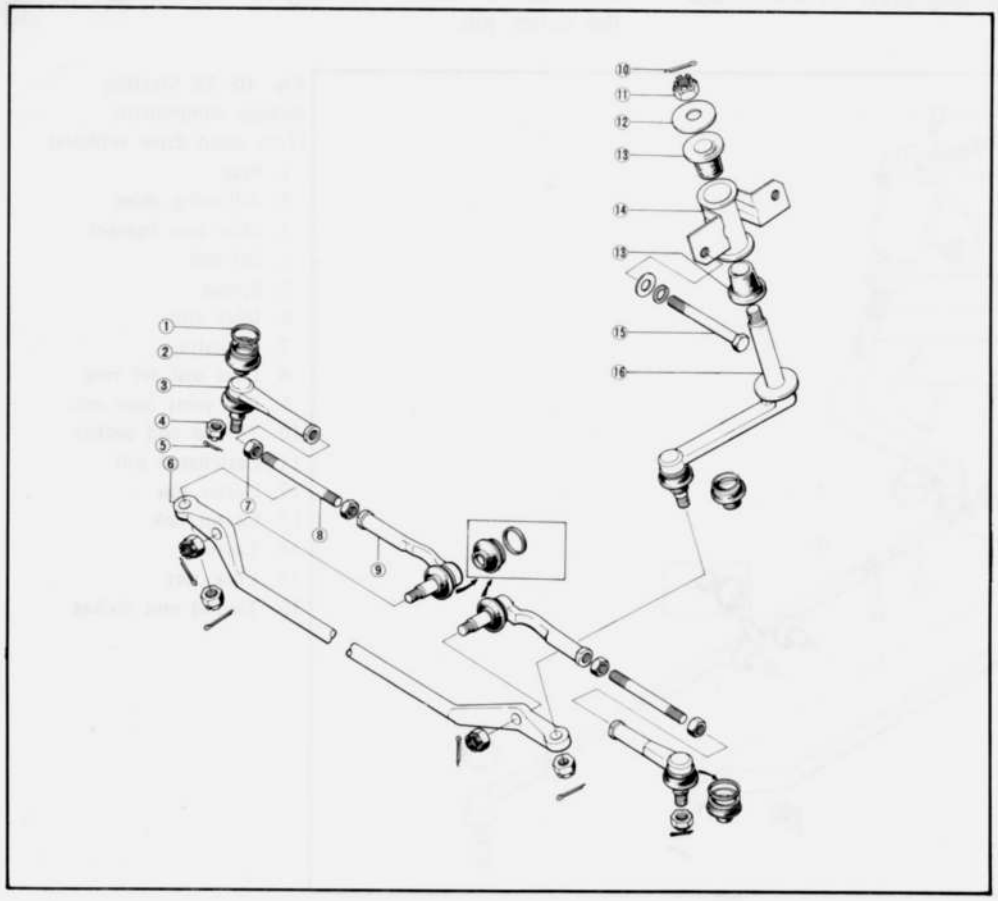

Fig. 10–28 Steering linkage components (Right hand drive vehicles)
1. Dust seal set ring
2. Ball joint dust seal
3. Tie-rod end socket
4. Castellated nut
5. Cotter pin
6. Center link
7. Lock nut
8. Tie-rod
9. Tie-rod end socket
10. Cotter pin
11. Castellated nut
12. Washer
13. Bush
14. Idler arm bracket
15. Bolt
16. Idler arm spindle

idler arm and install the castellated nuts loosely. Tighten the nut and install the cotter pin.
9. Position the tie-rod ends to the center link and install the castellated nuts. Tighten the nuts and install the cotter pins.
10. Straighten the front wheel and install the steering damper bracket to the center link with U-bolts and nuts aligning the assembly mark as shown in Fig. 10–30. Then, tighten the nuts to **3.2 ~ 4.7 m-kg (23 ~ 34 ft-lb)**. (U.S.A. and Canada vehicles only)
11. Check and, if necessary, adjust toe-in.

10–D–6. Steering Damper (U.S.A. and Canada Vehicles Only)

a. Removing steering damper
1. Raise the front end of the vehicle and support with stands.
2. Remove the clip that attaches the steering damper to the bracket at the center link.
3. Loosen the nut attaching the steering damper to the bracket at the body frame and remove the steering damper.

b. Installing steering damper
Follow the removal procedures in the reverse order.

Note:
a) Make sure the steering damper is placed in the correct position so that the assembly mark is aligned as shown in Fig. 10–30, when the front wheel is straight.
b) Tighten the steering damper attaching nut to **3.2 ~ 4.7 m-kg (23 ~ 34 ft-lb)**.

10–E. FRONT WHEEL ALIGNMENT

Front wheel alignment is most important if correct steering, and reasonable tire wear are to be obtained. Before attempting to check the wheel alignment, the following points should be investigated, and if necessary, corrected.
1. Tires for correct inflation
2. Unbalanced tires
3. Wobbling wheels
4. Front wheel bearing adjustment
5. Ball joints, and tie-rod ends for looseness
6. Front coil springs for correct seating

When the above points are all in order, the vehicle should be stood on a perfectly level surface in the wheel alignment bay or stall.

10–E–1. Toe-in

a. Checking toe-in
1. Raise the front end of the vehicle until the wheels clear the ground.
2. Turning the wheel by hand, mark a line in the center of the wheel with a scribing block.
3. Lower the vehicle and place the front wheels in the straight ahead position.
4. Measure the distances between the marked lines at the front and rear of the wheels with a suitable toe-in gauge. The difference between these two distances is the toe-in. The standard toe-in is **0 ~ 6 mm (0 ~ 0.24 in)**.

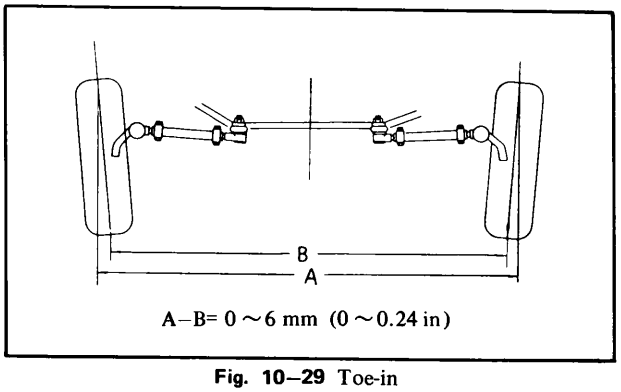

Fig. 10–29 Toe-in

b. Adjusting toe-in
If the toe-in is incorrect, proceed as follows:
1. Loosen the tie-rod locking nuts at each end of the tie-rod.
2. Check that the tie-rod ends are in the same position on each rod, thus ensuring that the tie-rods are the same length.
3. Turn the both tie-rods an equal amount until the correct toe-in is obtained.

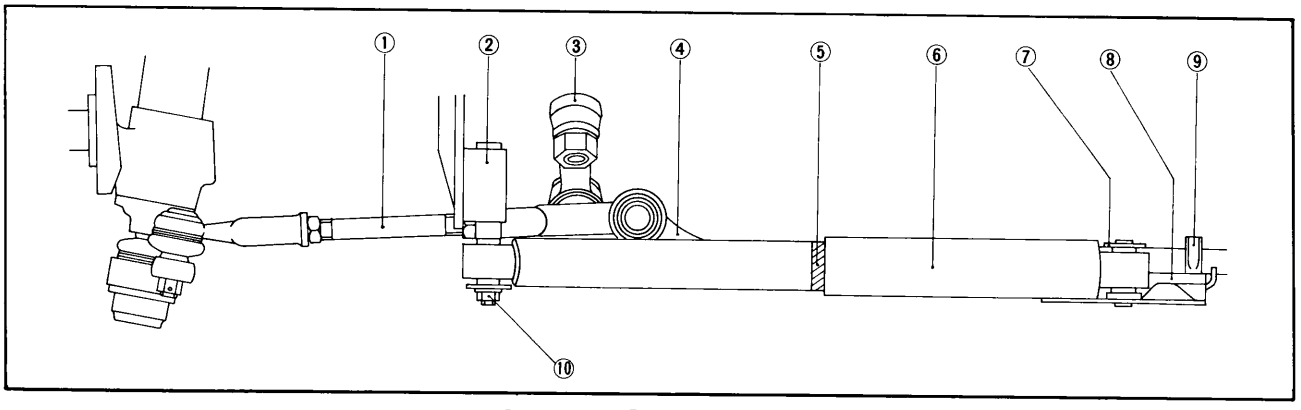

Fig. 10–30 Steering damper

1. Tie-rod
2. Bracket
3. Pitman arm
4. Center link
5. Assembly mark
6. Steering damper
7. Clip
8. Bracket
9. U-bolt
10. Nut

Note :
The tie-rod is threaded with right and left hand threads.

4. Tighten the tie-rod locking nuts and recheck the toe-in.



Fig. 10–31 Tie-rod

10–E–2. Caster, Camber and King Pin Inclination

a. Checking caster, camber and king pin inclination
There are several alignment machines available, and the instruction furnished by each manufacturer for the operation of the machine must be followed. Regardless of type of equipment used, it is essential that the vehicle is placed on absolutely level surface at all time, and before checking them, the front and rear of the vehicle is moved up and down several times to set the suspension to normal condition.

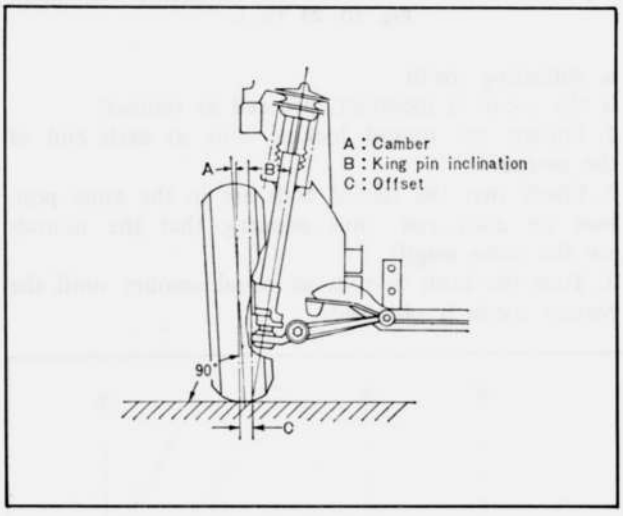

Fig. 10–32 Camber

Specified angles are shown in the following table.

Steering geometry	U.S.A. Canada	E.C.E. Australia England
Camber Caster King pin inclination	1°00′ ± 1° 2°00′ ± 45′ 9°45′	1°25′ ± 1° 2°10′ ± 45′ 9°40′

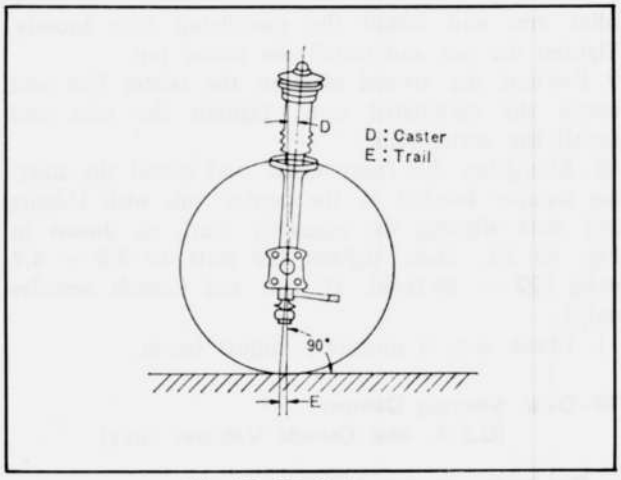

Fig. 10–33 Caster

b. Adjusting camber and caster
The camber and caster can be adjusted by changing the position of the shock absorber support. The shock absorber supports are installed at the manufacture so that the ▲ mark on the support is in position shown in Fig. 10–34.

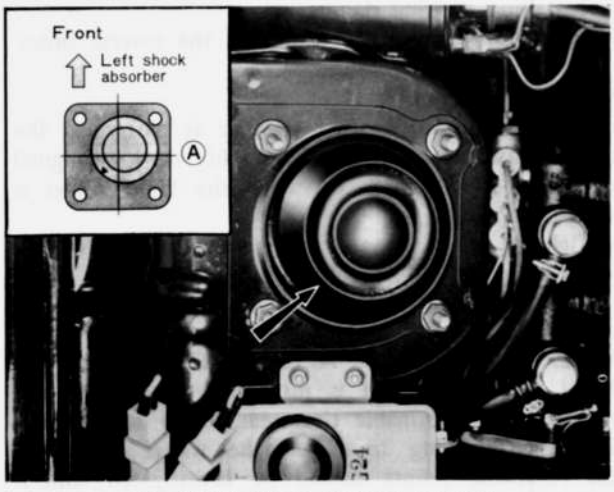

Fig. 10–34 Shock absorber support

If necessary, adjust it as follows :
1. Open the hood, and remove the four nuts that attach the shock absorber support to the fender apron.
2. Raise the front end of the vehicle and support with stands.
3. Remove the center cap and front wheel.
4. Press the shock absorber downward and change the position of the support according to the following table.

	Adjustment	Variation	
	Shcok absorber support	Camber	Caster
A	0°	0	0
B	90°	0	+28′
C	180°	+28′	+28′
D	−90°	+28′	0

5. Tighten the shock absorber support attaching nuts.
6. Install the wheel and tighten the wheel bolts temporarily.

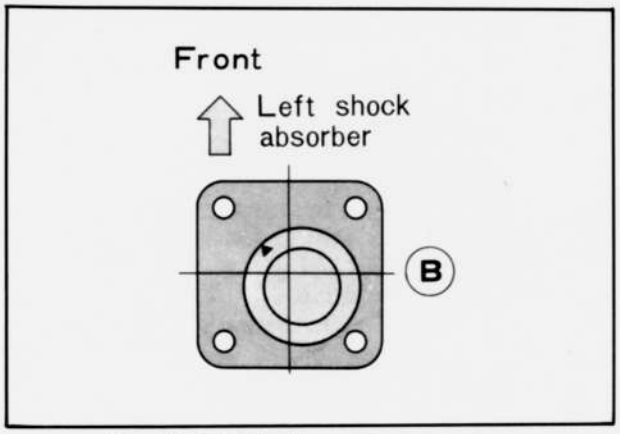

Fig. 10–35 Adjusting camber and caster

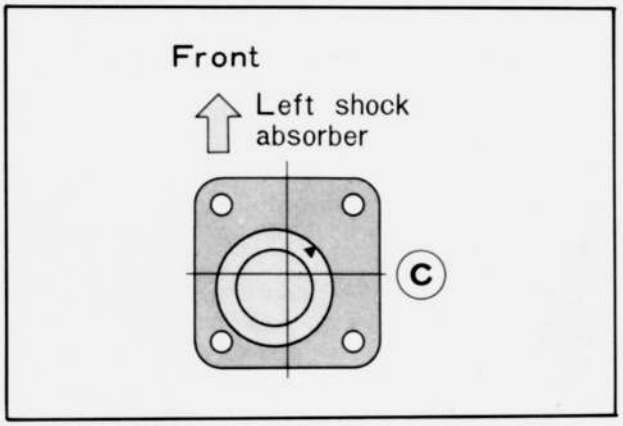

Fig. 10–36 Adjusting cabmer and caster

7. Lower the vehicle and tighten the wheel bolts to **9.0 ~ 10.0 m-kg (65.0 ~ 72.0 ft-lb)**.
8. Check the camber and caster.
9. Install the center cap.

If the camber and caster can not be adjusted to correct angle, check all parts of the front suspension and body alignment, and replace or repair necessary parts.

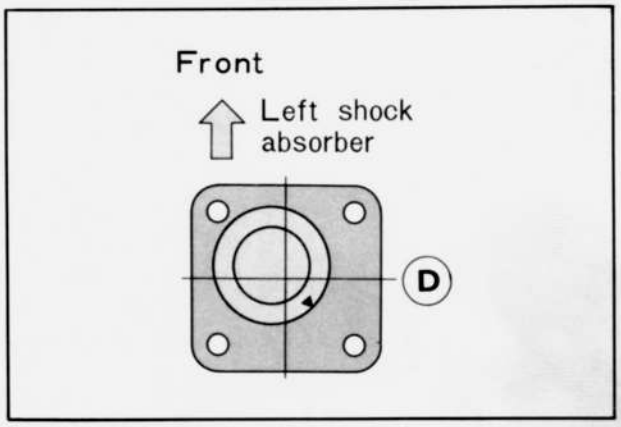

Fig. 10–37 Adjusting camber and caster

10–F. STEERING LOCK ASSEMBLY

Servicing the steering lock assembly is explained in Par 15–D.

SPECIAL TOOLS

49 0118 850C	Ball joint puller	49 0223 695B	Pitman arm puller
49 0180 510A	Preload checking tool		

BRAKES

DESCRIPTION ..... 11 : 1
11–A. BRAKE ADJUSTMENT ..... 11 : 1
11–A–1. Adjusting Brake Pedal ..... 11 : 1
11–A–2. Bleeding Hydraulic System.. 11 : 1
11–A–3. Adjusting Rear Brake Shoe ..... 11 : 1
11–B. DUAL MASTER CYLINDER ..... 11 : 2
11–B–1. Removing Dual Master Cylinder ..... 11 : 2
11–B–2. Disassembling Dual Master Cylinder ..... 11 : 2
11–B–3. Checking Dual Master Cylinder ..... 11 : 3
11–B–4. Assembling Dual Master Cylinder ..... 11 : 4
11–B–5. Installing Dual Master Cylinder ..... 11 : 5
11–C. POWER BRAKE UNIT ..... 11 : 5
11–C–1. Checking Power Brake Unit on Vehicle ..... 11 : 5
11–C–2. Removing Power Brake Unit ..... 11 : 5
11–C–3. Disassembling Power Brake Unit ..... 11 : 5
11–C–4. Checking Power Brake Unit ..... 11 : 8
11–C–5. Assembling Power Brake Unit ..... 11 : 8
11–C–6. Installing Power Brake Unit ..... 11 : 9
11–D. HYDRAULIC LINES ..... 11 : 9
11–D–1. Checking Brake Lines ..... 11 : 9
11–E. FRONT BRAKE ..... 11 : 9
11–E–1. Disc Brake Shoe ..... 11 : 9
a. Replacing disc brake shoe ..... 11 : 9
11–E–2. Caliper ..... 11 : 10
a. Removing caliper ..... 11 : 10
b. Disassembling caliper ..... 11 : 10
c. Checking caliper ..... 11 : 11
d. Assembling caliper ..... 11 : 11
e. Installing caliper ..... 11 : 11
11–E–3. Rotor (Brake Disc) and Front Wheel Hub Assembly ..... 11 : 12
a. Checking rotor assembly ..... 11 : 12
b. Replacing rotor assembly ..... 11 : 12
11–F. REAR BRAKE ..... 11 : 12
11–F–1. Rear Brake Drum and Shoe ..... 11 : 12
a. Removing rear brake drum and shoe ..... 11 : 12
b. Inspecting rear brake drum and shoe ..... 11 : 13
c. Installing rear brake drum and shoe ..... 11 : 13
11–F–2. Wheel Cylinder ..... 11 : 13
a. Removing wheel cylinder ..... 11 : 13
b. Disassembling wheel cylinder ..... 11 : 14
c. Checking wheel cylinder ..... 11 : 14
d. Assembling wheel cylinder ..... 11 : 14
e. Installing wheel cylinder ..... 11 : 14
11–G. PARKING BRAKE ..... 11 : 14
11–G–1. Parking Brake Adjustment... 11 : 14
SPECIAL TOOL ..... 11 : 14

11

DESCRIPTION

The brakes consist of two systems, the foot brake, and the parking brake. The front brakes are of a disc brake type.
The rear brakes are of a drum type with leading and trailing shoes. The brake pedal is of a pendant type.
The parking brake operates the brake shoes of the rear wheels through the wire linkage.

11–A. BRAKE ADJUSTMENT

11–A–1. Adjusting Brake Pedal

1. Disconnect the stop light switch wiring terminals.
2. Loosen the lock nut and adjust the pedal height to **188.8 mm (7.4 in)** between the pedal and the toe board by turning the stop light switch and push rod. Next, tighten the lock nut.

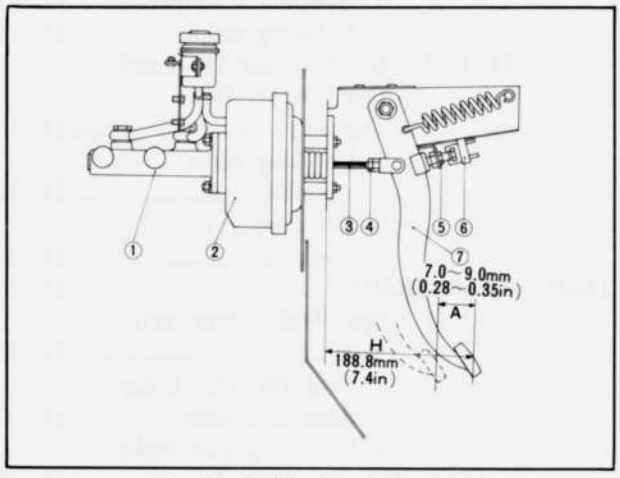

Fig. 11–1 Adjusting brake pedal
A: Free play (Before power piston starts to move)
H: Pedal height (Height from toe board to pedal)

1. Master cylinder
2. Power brake unit
3. Push rod
4. Lock nut
5. Lock nut
6. Stop light switch
7. Brake pedal

11–A–2. Bleeding Hydraulic System

When any parts of the hydraulic system has been disconnected for repair or replacement, air may enter into the lines, and causes spongy pedal action.
This requires the bleeding of the hydraulic system after it has been properly connected to be sure that all air is expelled from the brake cylinders and lines.
When bleeding the brake system, bleed one brake bleeder screw at a time, beginning at the bleeder screw with the longest hydraulic line first. **Never use** brake fluid which has been drained from the hydraulic system.
The bleeding procedures are as follows :
1. Keep the brake master cylinder reservoir filled with new brake fluid during bleeding operation.

Note :
Never allow the brake fluid to drop on any painted surface.

2. Remove the rubber cap from the bleeder screw, and connect a vinyl drain tube onto the bleeder screw. Submerge the other end of the vinyl tube into a suitable container while bleeding the brake system.
3. Depress the brake pedal slowly several times to bleed the air, and with the brake pedal depressed, loosen the bleeder screw one-third to half of a turn, then close the bleeder screw before brake pedal is released.

Note :
Do not release the brake pedal until the bleeder screw is tightened as additional air may enter into the wheel cylinder.

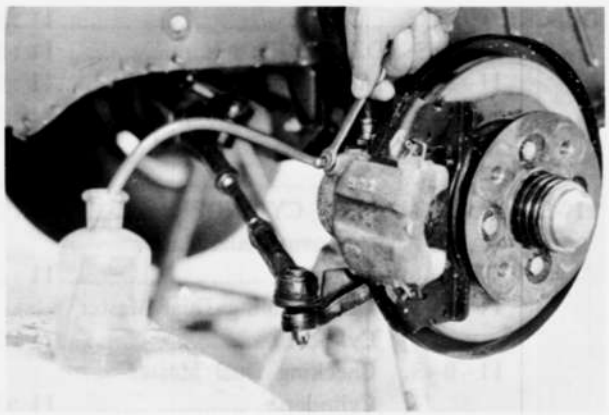

Fig. 11–2 Bleeding front brake

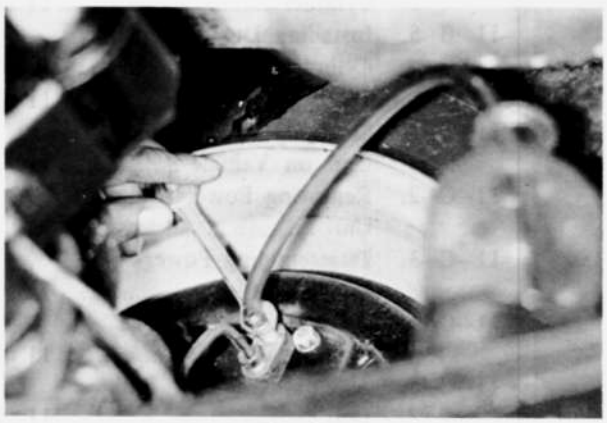

Fig. 11–3 Bleeding rear brake

4. Repeat this operation until the brake fluid flows into the container without any air bubbles.
5. After bleeding completely, tighten the bleeder screw, and install the rubber cap onto the bleeder screw.
6. Fill the reservoir with brake fluid.

11–A–3. Adjusting Rear Brake Shoe

To adjust the brake shoe, proceed as follows :
1. Jack the rear end of the vehicle, then support with stands.
2. Make sure that the parking brake is fully released.
3. Remove the shoe adjusting hole plug from the backing plate, and expand the brake shoe by turning the adjuster toward the arrow direction (⇐) marked on the backing plate until the wheel locks. At this

time, pump the brake pedal several times to make sure that the shoes contact the drum on the entire surface. If the wheel turns after removing the foot from the brake pedal, turn the adjuster further until the wheel locks firmly.



Fig. 11–4 Removing plug

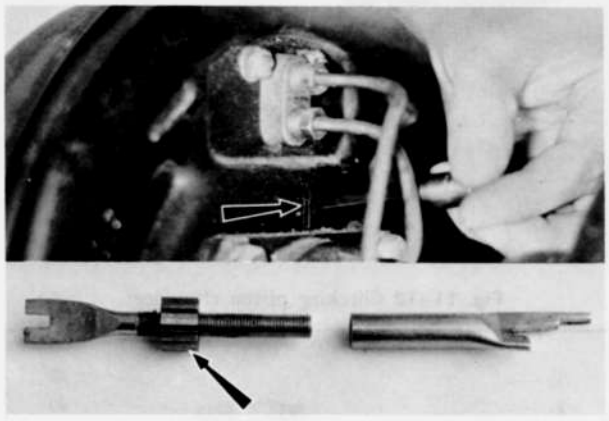

Fig. 11–5 Adjusting rear brake shoe

4. Back off the adjuster about 2 ~ 3 notches so that the drum rotates freely without any drag.
5. Check that the wheel rotates freely after pumping the brake pedal several times. Next, install the adjusting hole plug onto the backing plate.

Note :
If the wheel does not rotate freely, check and repair the drum, shoes or other necessary parts.

6. Perform the same adjustment on the other side shoes of the rear wheels. The adjustments must be equal at all shoes.

11–B. DUAL MASTER CYLINDER

11–B–1. Removing Dual Master Cylinder

1. Disconnect the fluid pipes (reservoir tank ~ master cylinder) at the brake master cylinder and plug the end of the pipes to prevent fluid leakage. (Left hand drive vehicles only)
2. Disconnect the fluid pipes at the master cylinder outlets.
3. Remove the nuts that attach the master cylinder to the power brake unit.
4. Remove the master cylinder assembly from the power brake unit.

Note:
Never allow the brake fluid to drop on any painted surface.

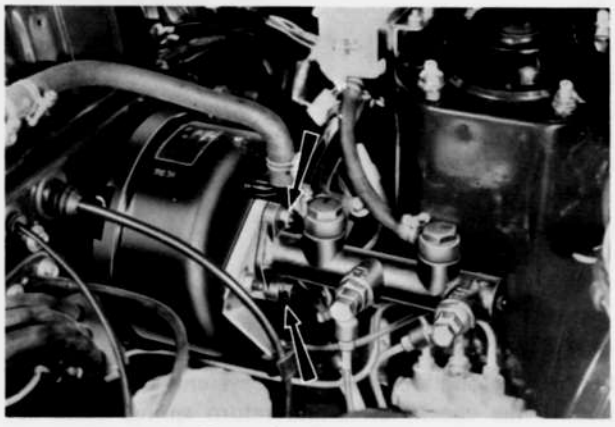

Fig. 11–6 Removing dual master cylinder

11–B–2. Disassembling Dual Master Cylinder

1. Clean the outside of the master cylinder.
2. Pour out any brake fluid that remains in the cylinder. Discard the old brake fluid.
3. On the left hand drive vehicles, remove the connector bolts from the primary and secondary inlets. Then, remove the unions and washers.
4. On the right hand drive vehicles, separate the reservoir from the cylinder by removing the connector bolts and washers.
5. Depress the primary piston assembly and remove the snap ring from the retaining groove at the rear of the cylinder bore. Remove the stop washer.
6. Remove the primary piston, cups, spacer and spring seat assembly and primary spring from the cylinder.

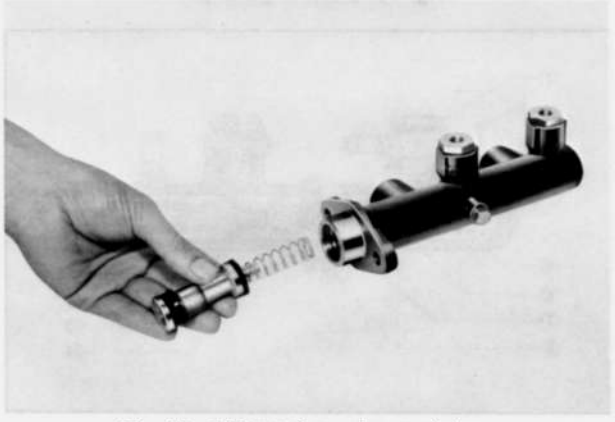

Fig. 11–7 Removing primary piston

7. Loosen the secondary piston set bolt. Do not remove it.
8. Pushing in the secondary piston with a screwdriver, remove the set bolt and insert the guide pin in its place. Then, gradually take out the screwdriver and remove the secondary piston and cups assembly and floating spring from the cylinder. (See Fig. 11–9).

If necessary, blow out with compressed air from the outlet hole.

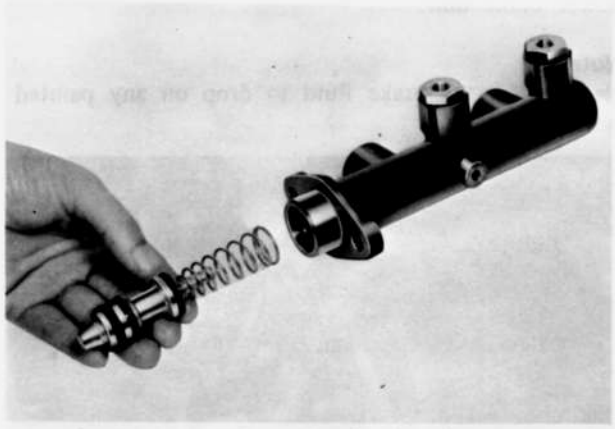

Fig. 11–8 Removing floating piston

9. Remove the fluid pipe fittings and gaskets from the primary and secondary brake system outlets. Then, remove the check valves and return springs from the outlets.

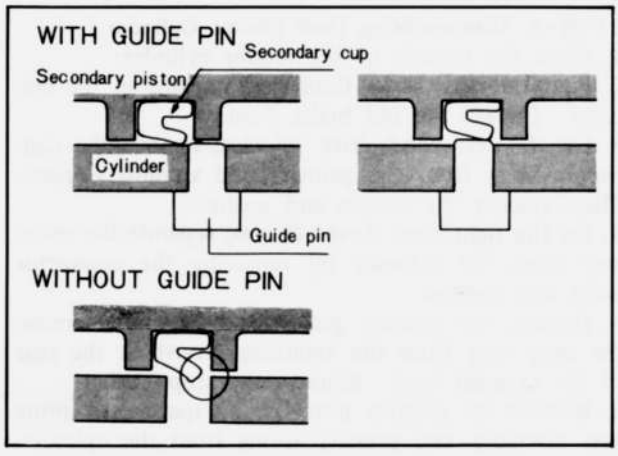

Fig. 11–9 Piston guide pin

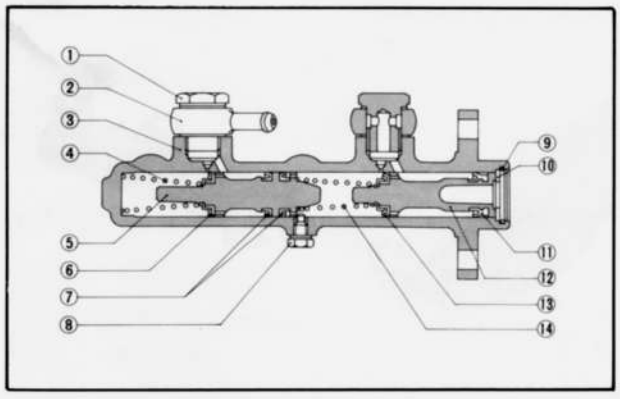

Fig. 11–10 Dual master cylinder cross section (Left hand drive vehicles)

1. Connector bolt
2. Connector union
3. Cylinder
4. Floating spring
5. Floating piston
6. Primary cup
7. Secondary cup
8. Set bolt
9. Snap ring
10. Washer
11. Secondary cup
12. Primary piston
13. Primary cup
14. Primary spring

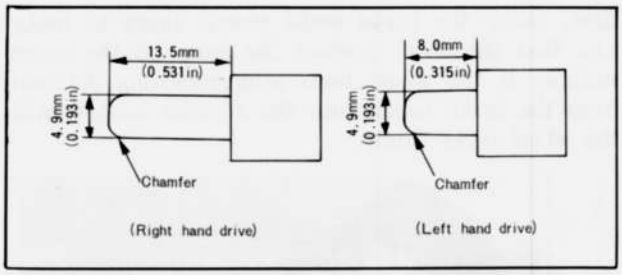

Fig. 11–11 Piston guide pin

11–B–3. Checking Dual Master Cylinder

1. Clean all parts in clean alcohol or brake fluid. **Never use** gasoline or kerosene.
2. Check the piston cups and replace if they are damaged, worn, softened, or swelled.
3. Examine the cylinder bore and piston for wear,

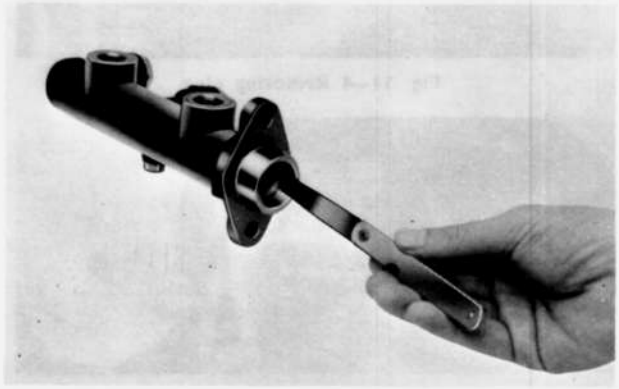

Fig. 11–12 Checking piston clearance

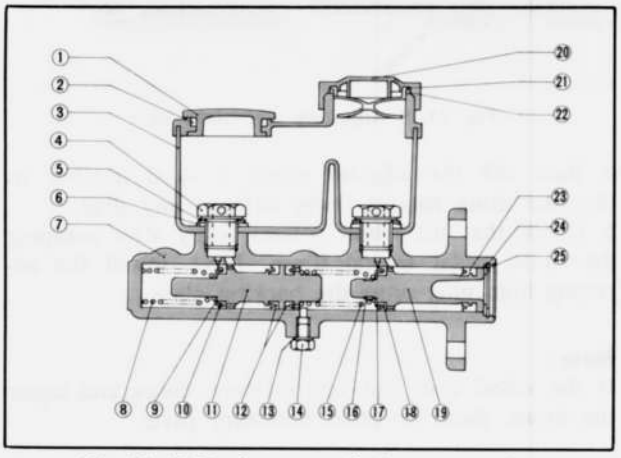

Fig. 11–13 Dual master cylinder cross section (Right hand drive vehicles)

1. Reservoir cap
2. "O" ring
3. Reservoir
4. Filler connector
5. Cone spring
6. Washer
7. Cylinder
8. Floating spring
9. Spring seat
10. Primary cup
11. Floating piston
12. Secondary cup
13. Gasket
14. Set bolt
15. Primary spring
16. Spring seat stopper
17. Spring seat
18. Primary cup
19. Primary piston
20. Reservoir cap
21. Baffle plate
22. Rubber gasket
23. Secondary cup
24. Washer
25. Snap ring

roughness or scoring. Check the clearance between the cylinder bore and the piston. If it is more than **0.15 mm (0.006 in)**, replace the cylinder or piston.
4. Check all recesses, openings and internal passages to be sure they are open and free of foreign matter. Use compressed air to blow out dirt and cleaning solvent.
5. Check the piston return spring for weakness.

11–B–4. Assembling Dual Master Cylinder

1. Dip all parts except the cylinder in clean brake fluid.
2. Insert the check valve springs into the outlets and place the check valves over the springs. Install the fluid pipe fittings and gaskets for the outlet holes. Tighten the fittings to **6.0 ~ 7.0 m-kg (43 ~ 51 ft-lb)**.

Note:
The check valve with hole in center is for disc brake (front brake). The check valve without hole in center is for drum brake (rear brake).

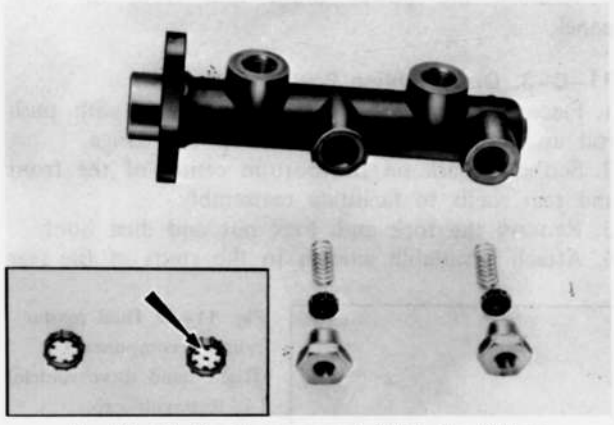

Fig. 11–14 Check valves and fluid pipe fittings

3. Fit the secondary cup and primary cup onto the floating piston so that the flat side of the cup goes toward the piston.
4. Fit the floating piston guide pin into the floating piston set bolt hole and insert the floating piston and return spring assembly into the cylinder. Depress the floating piston with a suitable rod and remove the guide pin. Then, install the floating piston set bolt.

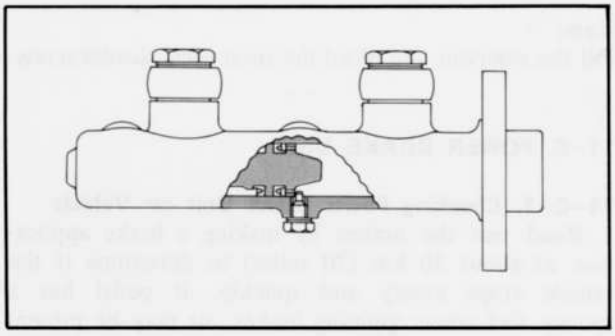

Fig. 11–15 Installing set bolt

5. Fit the primary cup onto the primary piston so that the flat side of the cup goes toward the piston.
6. Fit the secondary cup onto the primary piston, with the edge side of the cup facing the secondary piston.
7. Insert the return spring and the primary piston assembly.
8. Hold the primary piston down and install the stop washer. Then, install the snap ring into position in groove of the cylinder bore.

Note:
Make sure that the piston cups do not cover the compensating ports.

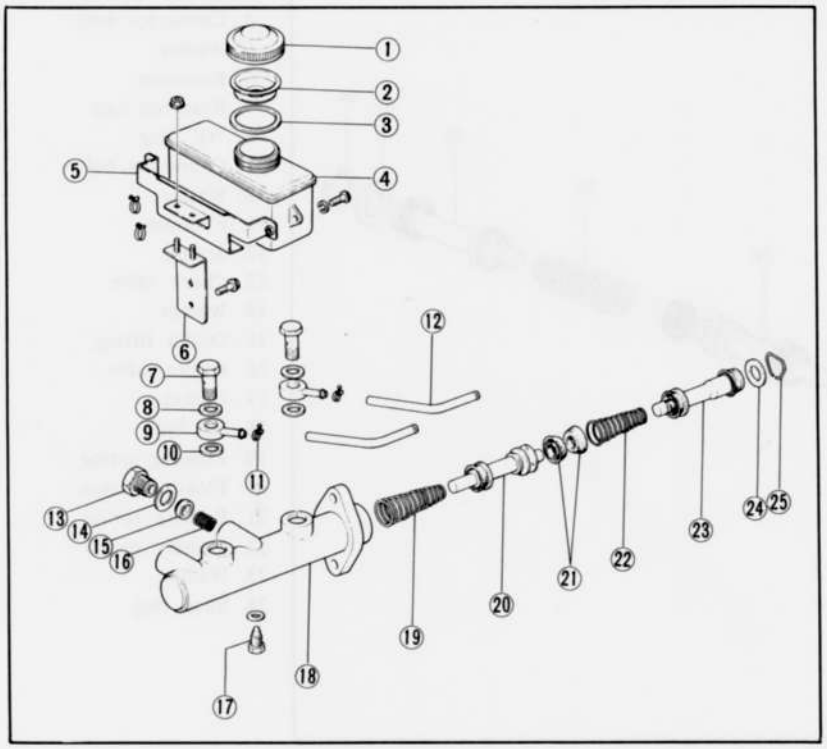

Fig. 11–16 Dual master cylinder components (Left hand drive vehicles)

1. Reservoir cap
2. Baffle plate
3. Rubber gakset
4. Reservoir
5. Bracket
6. Bracket
7. Connector union
8. Washer
9. Connector union
10. Washer
11. Hose clip
12. Hose
13. Fluid pipe fitting
14. Washer
15. Check valve
16. Spring
17. Set bolt
18. Cylinder
19. Floating spring
20. Floating piston
21. Secondary cup
22. Primary spring
23. Primary piston
24. Stop washer
25. Snap ring

9. On the right hand drive vehicles, install the reservoir to the cylinder body. Tighten the connector bolts.
10. On the left hand drive vehicles, install the unions and washers to the primary and secondary-inlets with connector bolts and tighten them.

11–B–5. Installing Dual Master Cylinder
Follow the removal procedures in the reverse order.

Note:
Fill the reservoir and bleed the air at each bleeder screw.

11–C. POWER BRAKE UNIT

11–C–1. Checking Power Brake Unit on Vehicle
1. Road test the brakes by making a brake application at about 30 km (20 miles) to determine if the vehicle stops evenly and quickly. If pedal has a spongy feel when applying brakes, air may be present in hydraulic system. Bleed the system as described in Par. 11–A–2.
2. With the engine stopped and transmission in neutral, apply brakes several times to deplete all vacuum reverse in the power brake unit. Depress brake pedal, hold light-foot pressure on the pedal and start the engine. If vacuum system is operating, pedal will tend to fall away under foot pressure and less pressure will be required to hold pedal in applied position. If no action is felt, vacuum system is not functioning.
3. Stop the engine. Again deplete all vacuum reverse in system. Depress the brake pedal and hold foot pressure on the pedal. If pedal gradually falls away under foot pressure, hydraulic system is leaking internally or externally.
4. Start the engine with brakes off and transmission in neutral. Run the engine to medium speed and turn off ignition switch. Immediately close throttle. This build up vacuum. Wait no less than 90 seconds, then try brake action. If not vacuum assisted for two or more applications, vacuum check valve is faulty or there is a leak in vacuum system.

11–C–2. Removing Power Brake Unit
1. Remove the brake master cylinder, as described in Par. 11–B–1.
2. Disconnect the vacuum hose at the power brake unit.
3. Disconnect the push rod from the brake pedal by removing the cotter pin at the fork end.
4. Remove the nuts that attach the power brake unit to the dash panel.
5. Remove the power brake unit from the dash panel.

11–C–3. Disassembling Power Brake Unit
1. Place the power brake unit in a vice with push rod up. Clamp the unit firmly on the flange.
2. Scribe a mark on the bottom center of the front and rear shells to facilitate reassembly.
3. Remove the fork end, lock nut and dust boot.
4. Attach a suitable wrench to the studs of the rear

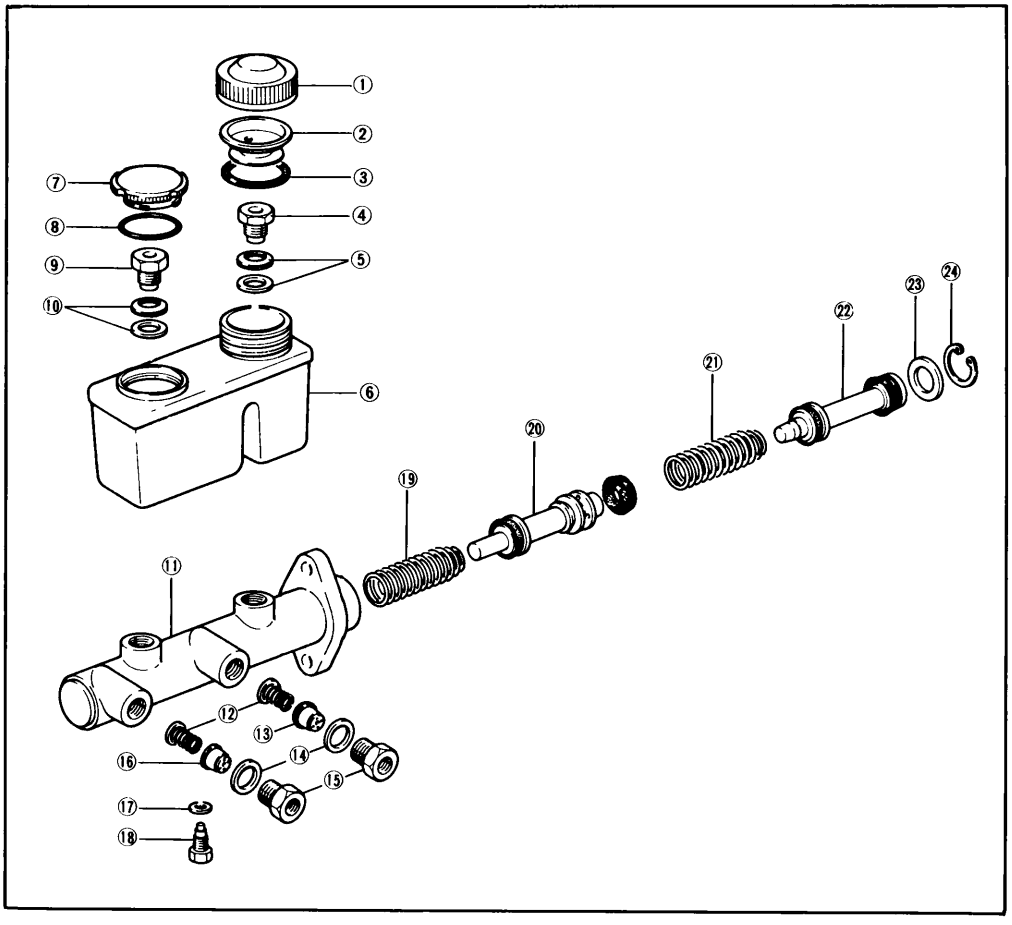

Fig. 11–17 Dual master cylinder components (Right hand drive vehicle)
1. Reservoir cap
2. Baffle plate
3. Rubber gasket
4. Connector bolt
5. Washer
6. Reservoir
7. Reservoir cap
8. "O" ring
9. Connector bolt
10. Washer
11. Cylinder
12. Spring
13. Check valve
14. Washer
15. Outlet fitting
16. Outlet valve
17. Gasket
18. Set bolt
19. Floating spring
20. Floating piston
21. Primary spring
22. Primary piston
23. Washer
24. Snap ring

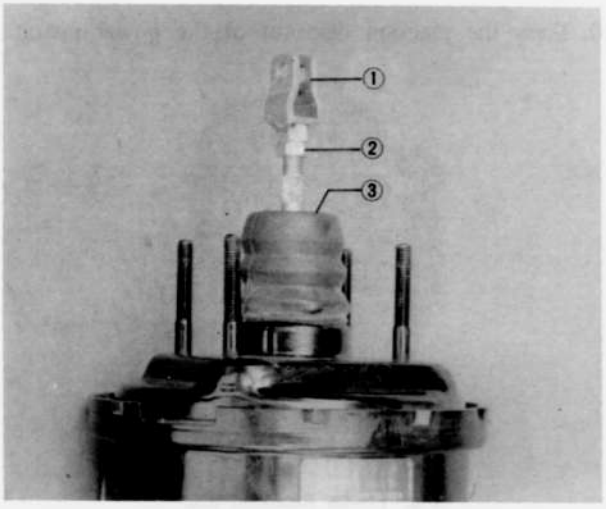

Fig. 11–18 Removing boot
1. Fork end 2. Lock nut 3. Boot

shell as shown in Fig. 11–19. Rotate the rear shell clockwise to unlocked position.

Note:
Loosen the rear shell carefully as it is spring-loaded.

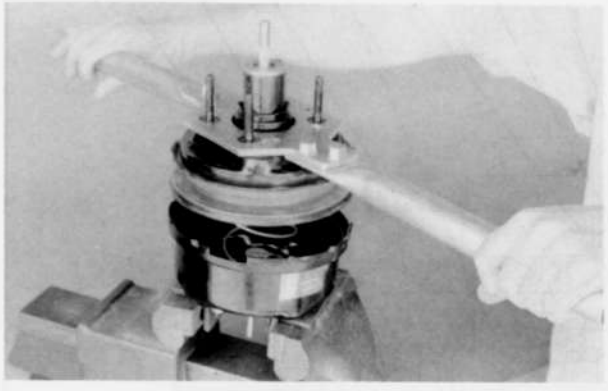

Fig. 11–19 Removing rear shell

5. Lift the rear shell, diaphragm and power piston assembly, rod and plunger assembly from the unit. Then, remove the return spring.

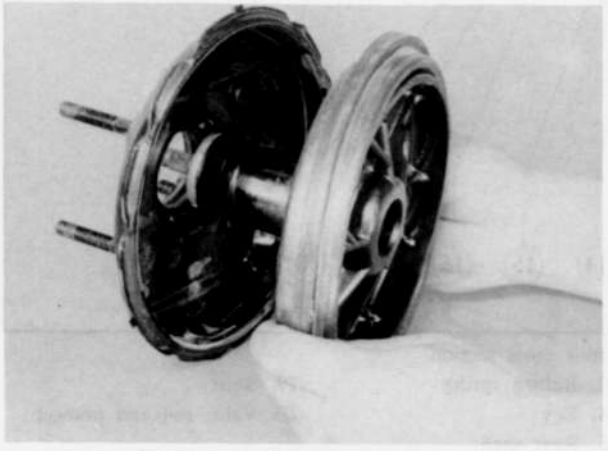

Fig. 11–20 Removing power piston assembly

6. Remove the diaphragm and power piston assembly, valve rod and plunger assembly from the rear shell.

Note :
Do not remove the rear seal from the rear shell unless seal is defective and the new seal is available. **To remove** the rear seal, support the rear shell and drive out the rear seal with a punch or a screwdriver.

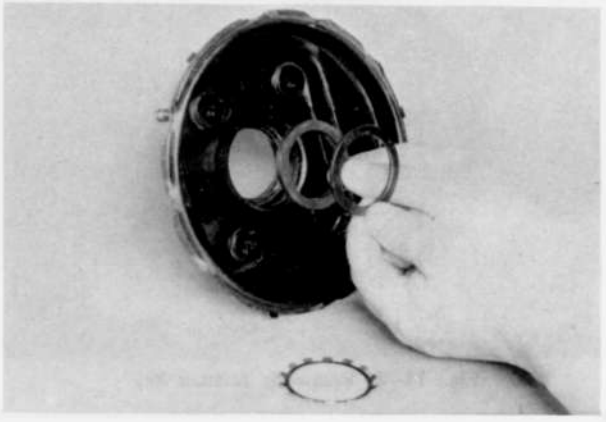

Fig. 11–21 Removing rear seal

7. Remove the diaphragm from the power piston.

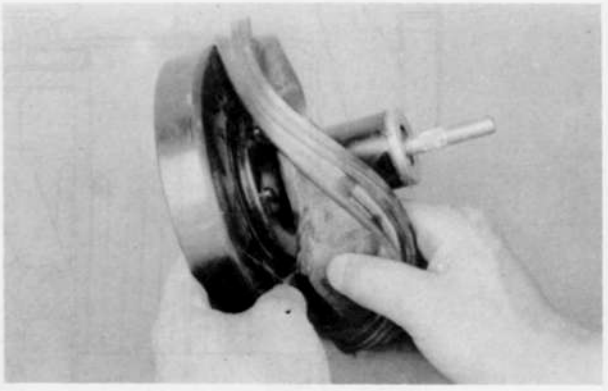

Fig. 11–22 Removing diaphragm

8. Remove the air silencer with the air filter from the power piston, being careful not to chip plastic.

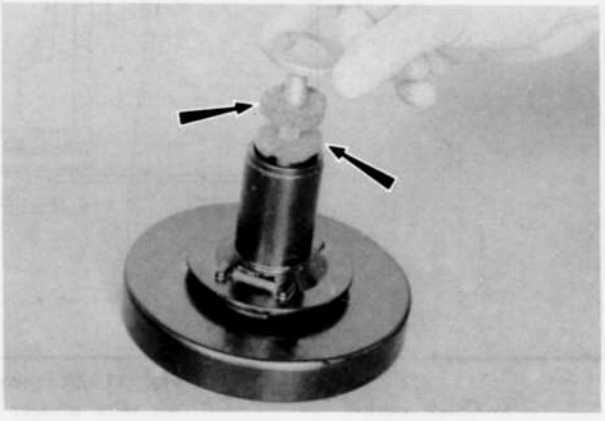

Fig. 11–23 Removing air filter

9. Press in on the valve rod to remove the retainer key.
Remove the valve rod and plunger assembly.

Note:
The valve rod and plunger are serviced as an assembly only.

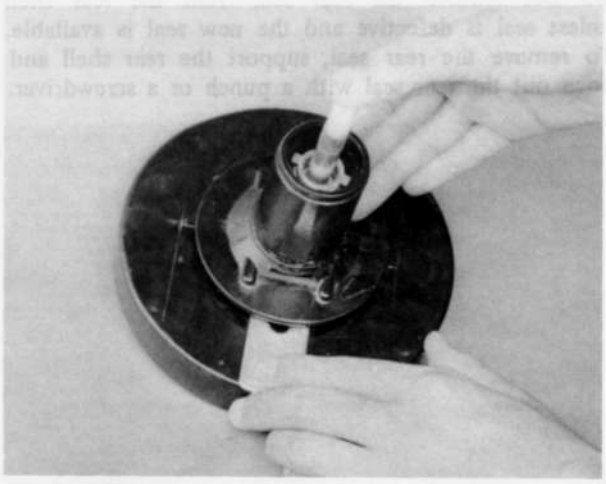

Fig. 11–24 Removing retainer key

10. Press the reaction disc out of the power piston.

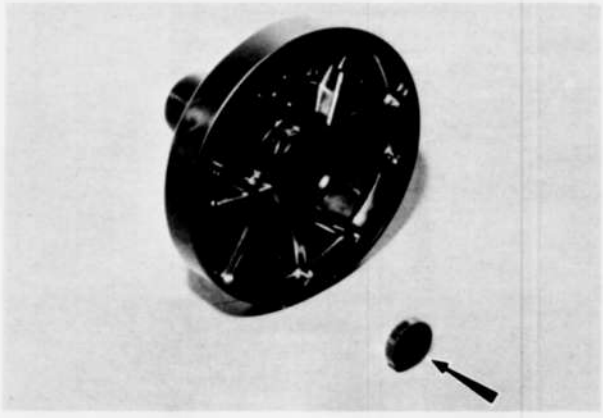

Fig. 11–25 Reaction disc

11. Remove the push rod from the front shell.
12. Remove the front seal from the front shell if necessary.

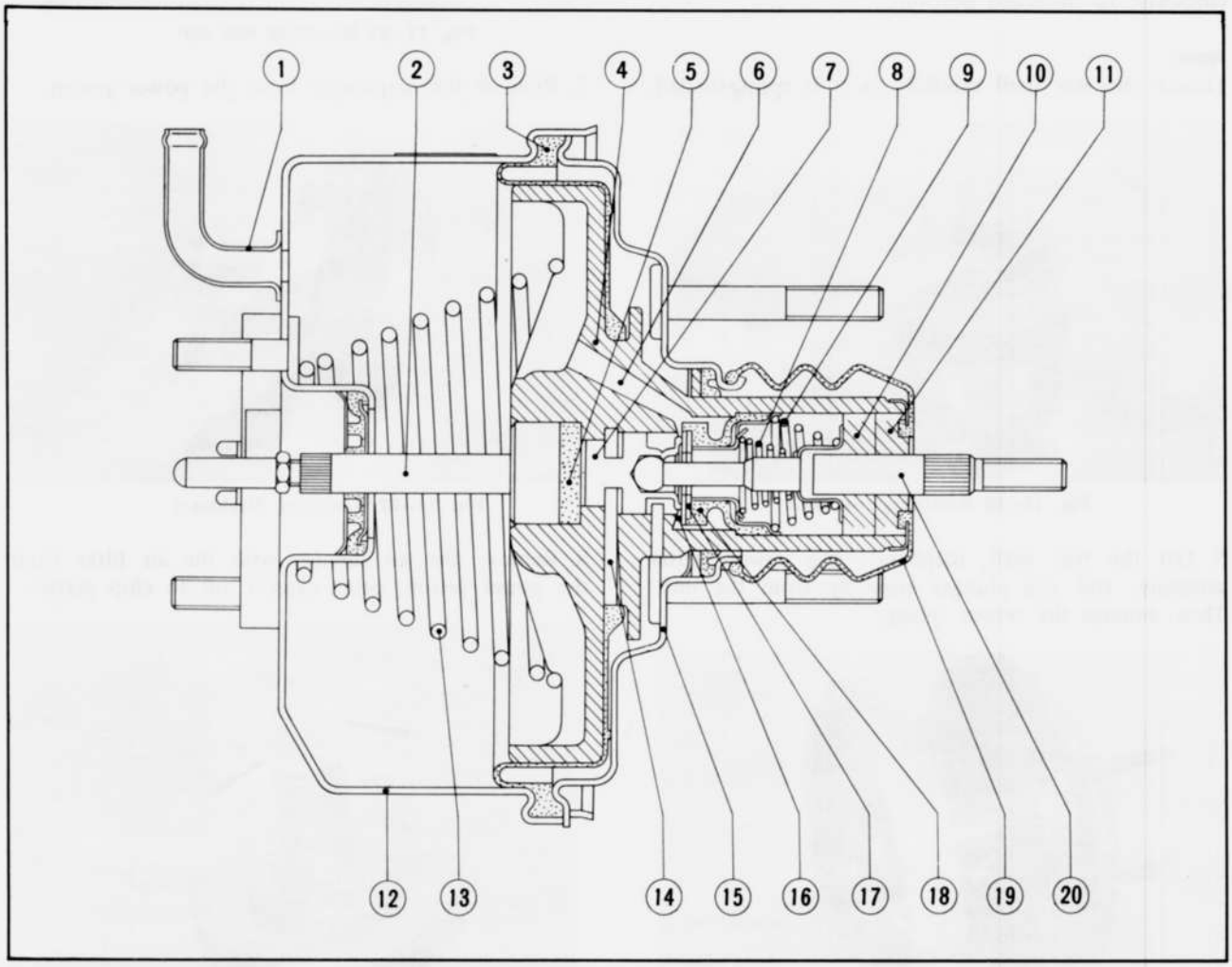

Fig. 11–26 Power brake unit cross section

1. Check valve
2. Push rod
3. Diaphragm
4. Power piston
5. Reaction disc
6. Vacuum passage
7. Air valve plunger
8. Spring
9. Spring
10. Silencer
11. Silencer filter
12. Front shell
13. Return spring
14. Key
15. Rear shell
16. Atmospheric port
17. Air valve piston
18. Floating control valve
19. Boot
20. Valve rod and plunger

11–C–4. Checking Power Brake Unit

1. Check the clearance between primary piston and the push rod of the power brake unit and if necessary, adjust the push rod so that the correct clearance is obtained. The standard clearance is **0.1 ~ 0.5 mm (0.004 ~ 0.020 in).**

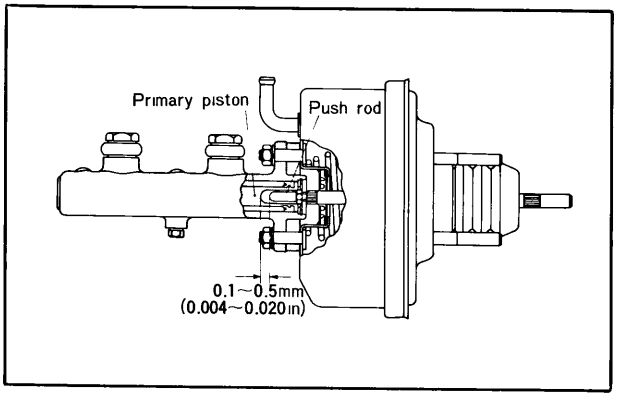

Fig. 11–27 Clearance between piston and rod

2. Inspect all rubber parts. Wipe free of fluid and carefully inspect each rubber part for cuts, nicks or other damage.
3. Check the power piston for cracks, distortion, chipping and damaged seats.
4. Inspect the reaction disc for deterioration of rubber.
5. Check the valve rod and plunger for all seats to be smooth and free of nicks and dents. Replace with a new one if defective.
6. Inspect the front and rear shells for scratches, scores, pits, dents or other damage.
7. Check the diaphragm for cuts, or other damage.

11–C–5. Assembling Power Brake Unit

1. Apply power brake lubricant to the inner surface of the tube section of the power piston and to the surfaces of the valve rod and plunger.
2. Insert the valve rod and plunger assembly into the tube section of the power piston.
3. Press down on the valve rod and lign the groove in the valve plunger with the slot of the power piston.

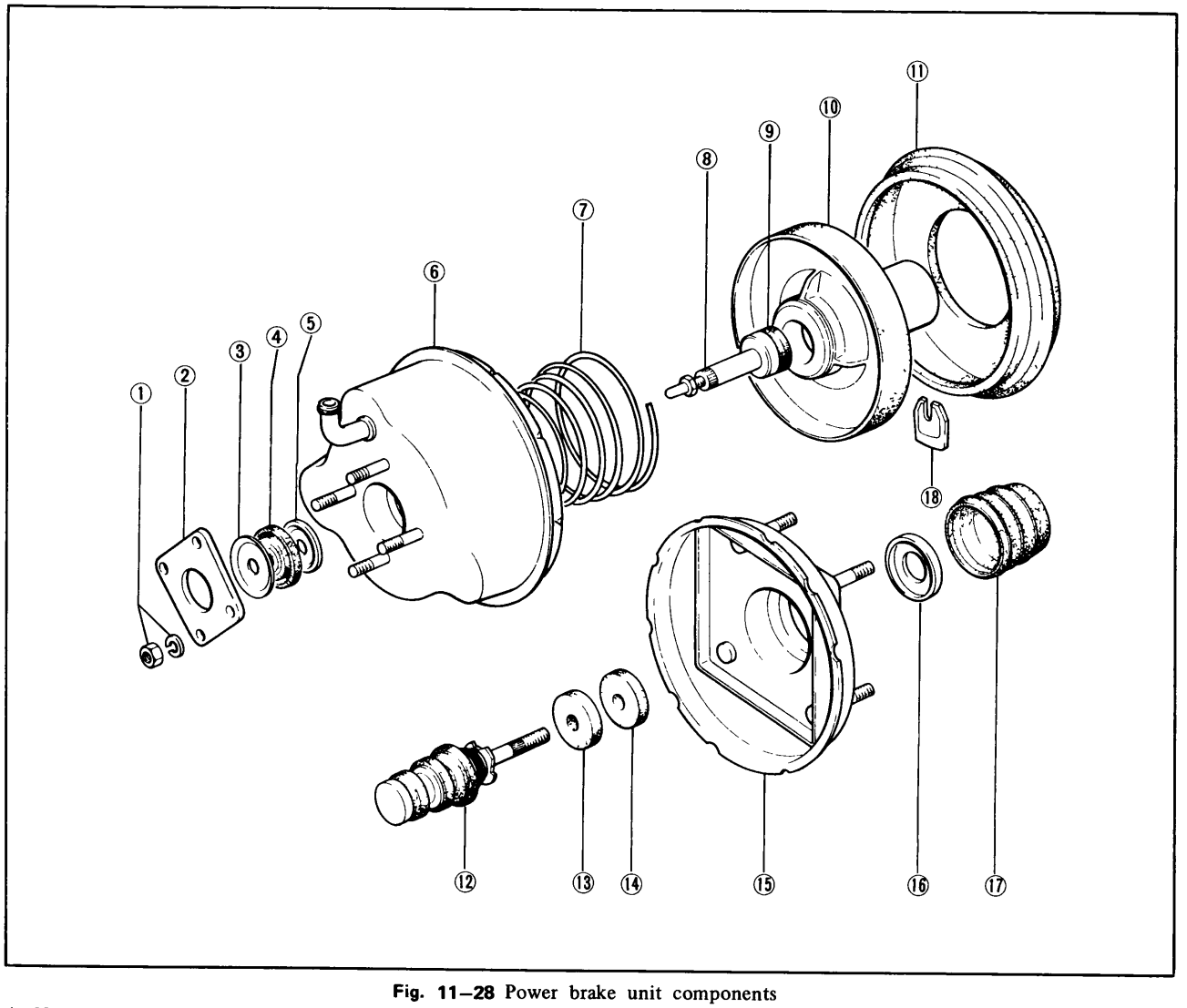

Fig. 11–28 Power brake unit components

1. Nut and washer
2. Flange
3. Retainer
4. Front seal
5. Support plate
6. Front shell
7. Return spring
8. Push rod
9. Reaction disc
10. Power piston
11. Diaphragm
12. Valve rod and plunger assembly
13. Air filter
14. Air silencer
15. Rear shell
16. Air silencer retainer
17. Boot
18. Retainer key

Insert the retainer key.
4. Install the diaphragm on the power piston making certain the diaphragm is seated in the groove.
5. Assemble the air filter and the air silencer over the rod and position in the power piston.
6. Apply power brake lubricant liberally to the entire surface of the reaction disc and install the reaction disc into the power piston.
7. Coat the outer bead of the diaphragm with power brake lubricant where it bears against the outer rims of the front and rear shells to aid in assembly.
8. Apply power brake lubricant to the seal in the rear shell and carefully guide tube end of the power piston, through the seal in the rear shell.
9. Install the plate and valve body into the rear shell.
10. Install the push rod through the front of the power piston.
11. Install the return spring.
12. Install the rear shell assembly by using the wrench to rotate the rear shell counter-clockwise until scribe marks align.

Note:
Press the rear shell down firmly, maintaining a pressure until the shell flanges are fully locked.

13. Install the dust boot down against the rear shell.

11–C–6. Installing Power Brake Unit
Follow the removal procedures in the reverse order.

Note:
After installing the unit, bleed the hydraulic system according to the procedure described in Par. 11–A–2.

11–D. HYDRAULIC LINES

11–D–1. Checking Brake Lines
Inspect all brake lines for any leakage with the foot brakes applied. Check all brake pipes, hoses and connections for signs of chafing, deterioration or any other damage.

11–E. FRONT BRAKE

11–E–1. Disc Brake Shoe

a. Replacing disc brake shoe
The lining should be inspected whenever the wheels are removed for any reason. The shoe and lining assembly should be replaced, if the thickness of the shoe and lining assembly is **7.0 mm (0.276 in)** or less due to wear.
To replace the disc brake shoes, proceed as follows:
1. Raise the front end of the vehicle and support with stands.
2. Remove the front wheel.
3. Remove the hair pin retainers and pull out the stopper plates.
4. Remove the caliper and anti-rattle spring and pull out the brake shoes.

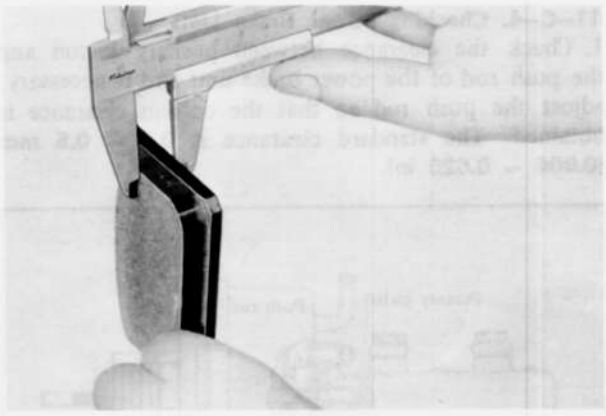

Fig. 11–29 Checking lining thickness

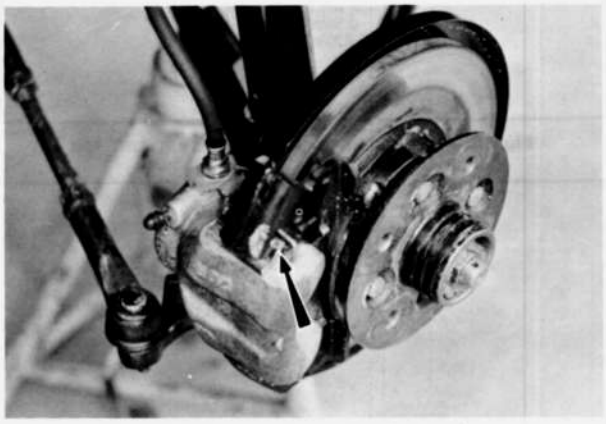

Fig. 11–30 Removing hair pin retainers

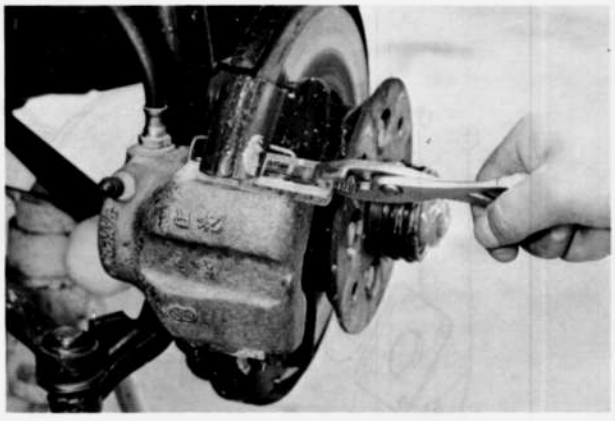

Fig. 11–31 Removing stopper plates

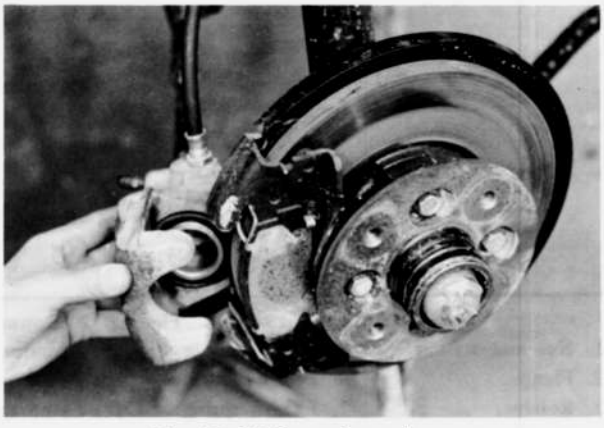

Fig. 11–32 Removing caliper

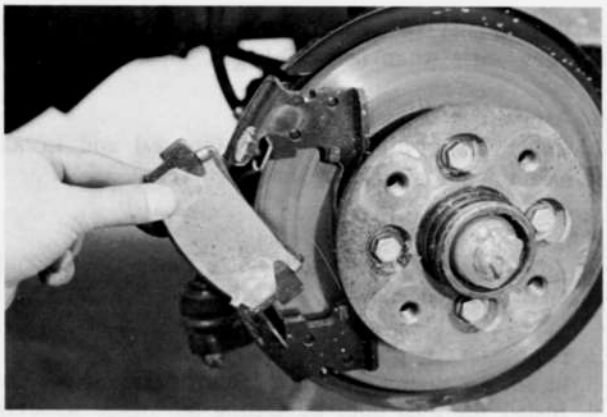

Fig. 11–33 Removing brake shoe

5. Remove the rubber cap from the bleeder screw, and connect a vinyl drain tube onto the bleeder screw. Submerge the other end of the vinyl tube into a suitable container.
6. Open the bleeder screw and press the piston into the cylinder with the **piston retracting tool** (49 0221 600B).

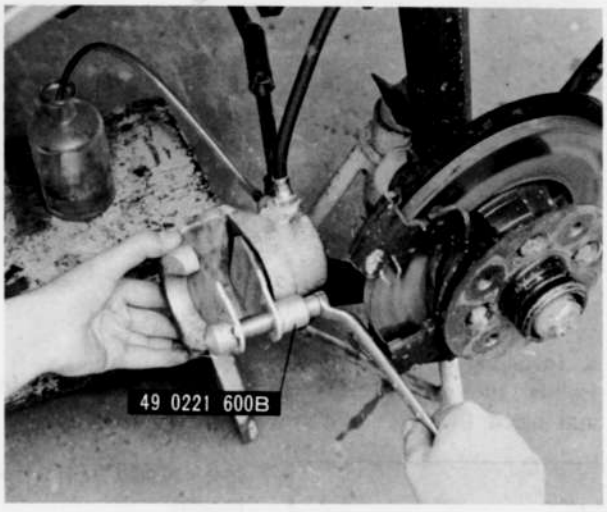

Fig. 11–34 Piston retaining tool

7. Tighten the bleeder screw and remove the vinyl tube and retracting tool.
8. Install new brake shoes and shims on the caliper.

Note :
(a) When the disc brake shoes are replaced, replace all shoes on both wheels at the same time.
(b) **Do not** mix different types of linings when replacing.

9. Install the anti-rattle spring, caliper, stopper plates and hair pin retainers.
10. Install the front wheel and lower the vehicle.

11–E–2. Caliper

a. Removing caliper

1. Raise the front end of the vehicle and support with stands.
2. Remove the front wheel.
3. Remove the shoe and lining assembly as described in Par. 11–E–1.
4. Disconnect the brake fluid pipe from the caliper and plug the end of the fluid pipe to prevent entrance of dirt and loss of fluid.
5. Remove the caliper.

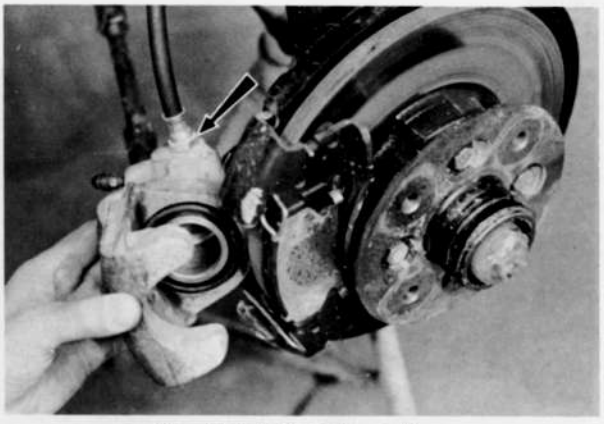

Fig. 11–35 Removing caliper

6. If necessary, remove the caliper bracket by removing the two bolts.

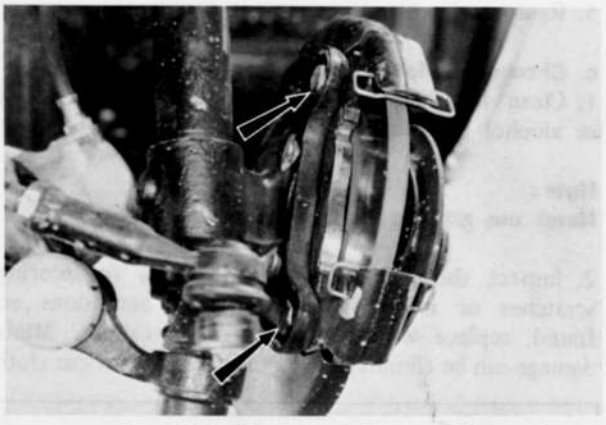

Fig. 11–36 Removing caliper bracket

b. Disassembling caliper

1. Clean outside of the caliper.
2. Place a hardwood in front of piston to prevent damage to piston. Apply air pressure to the fluid port in the caliper to remove the piston.



Fig. 11–37 Removing piston

Note :
If the piston is seized and cannot be forced from the caliper, tap lightly around the piston while applying air pressure.

3. Remove the retainer and dust boot from the caliper.
4. Remove the piston seal from the caliper bore.



Fig. 11–38 Removing piston seal

5. Remove the bleeder screw, if necessary.

c. Checking caliper
1. Clean the disassembled parts in clean brake fulid or alcohol and dry with compressed air.

Note :
Never use gasoline or kerosene.

2. Inspect the caliper bore and piston for scoring, scratches or rust. If any of these conditions are found, replace with a new piston or caliper. Minor damage can be eliminated by polishing with crocus cloth.
3. Discard the old piston seal and dust boot, and use new ones when reassembling.

d. Assembling caliper
1. Apply brake fluid to the piston seal and install it into the groove of the caliper bore.

Note :
Be sure the piston seal does not become twisted and that it is seated fully in the groove.

2. Lubricate the piston and caliper bore.
3. Insert the piston into the caliper bore.
4. Install the dust boot by setting the flange squarely in the inner groove of the caliper bore. Install the dust boot retainer.



Fig. 11–39 Installing retainer

e. Installing caliper
Follow the removal procedures in the reverse order and bleed the hydraulic system.

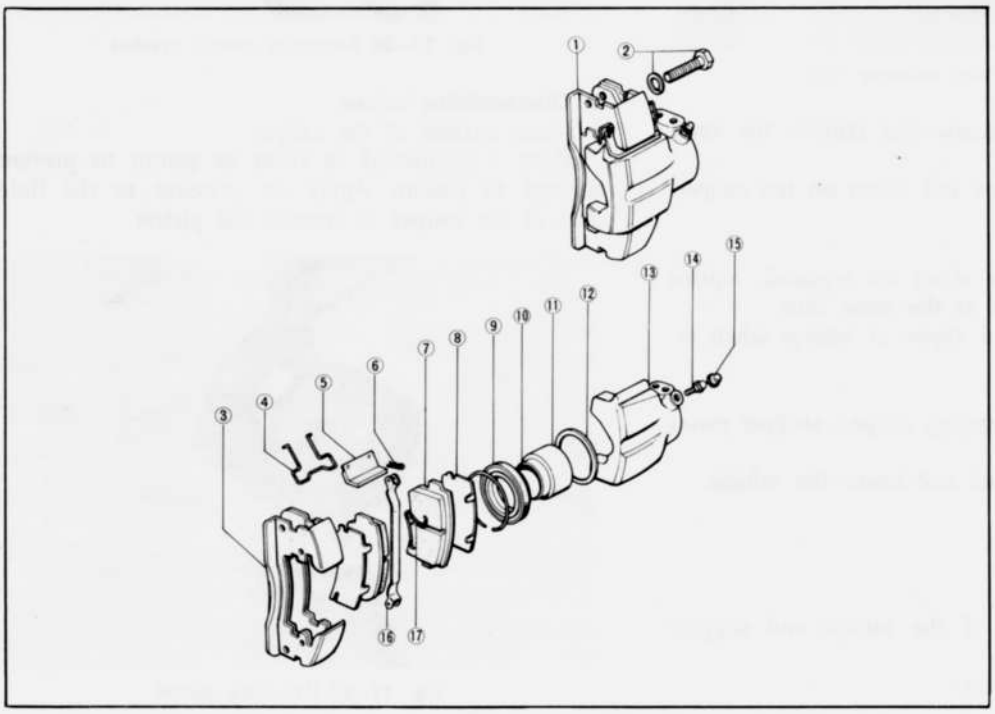

Fig. 11–40 Caliper components
1. Caliper assembly
2. Bolt and washer
3. Caliper bracket
4. Spring
5. Stopper plate
6. Hair pin retainer
7. Brake shoe and lining assembly
8. Shim
9. Dust boot retainer
10. Dust boot
11. Piston
12. Piston seal
13. Caliper body
14. Bleeder screw
15. Bleeder cap
16. Anti-rattle spring clip
17. Anti-rattle spring

11–E–3. Rotor (Brake Disc) and Front Wheel Hub Assembly

a. Checking rotor assembly

1. Inspect the friction surface of the rotor and recondition if it is scored, scratched or rusted.
2. Check the run-out of the rotor with a dial indicator.

Note :
Make sure that the wheel bearings are correctly adjusted, before checking the run-out of the rotor.

If the run-out is more than **0.10 mm (0.0039 in)**, reface the rotor. **Do not** reface any more than necessary to clean up the rotor.

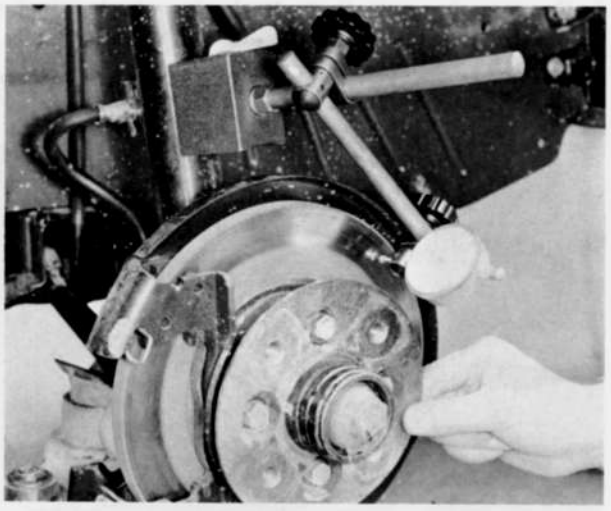

Fig. 11–41 Checking rotor run-out

3. Check the rotor for thickness. If the thickness of the rotor becomes less than **11 mm (0.433 in)** from excessive refacing, the rotor should be replaced.

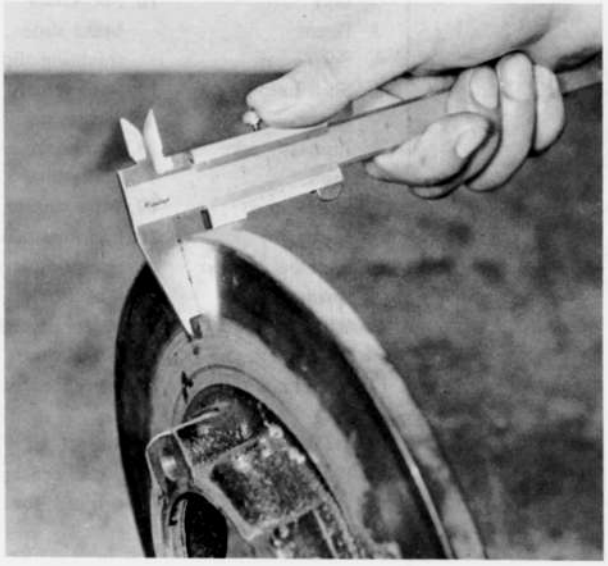

Fig. 11–42 Checking rotor thickness

b. Replacing rotor assembly

Replace the rotor and front wheel hub assembly, as described in Par. 12–C–1.

11–F. REAR BRAKE

11–F–1. Rear Brake Drum and Shoe

a. Removing rear brake drum and shoe

1. Raise the rear end of the vehicle and support with stands.
2. Remove the rear wheel.
3. Make sure that the parking brake is fully released.
4. Remove the screws that attach the brake drum to the rear axle shaft flange and pull the drum off from the axle shaft flange. If the drum will not come off, place the drum attaching screws into the tapped holes on the drum. Then, tighten in evenly to force the drum away from the axle shaft flange.

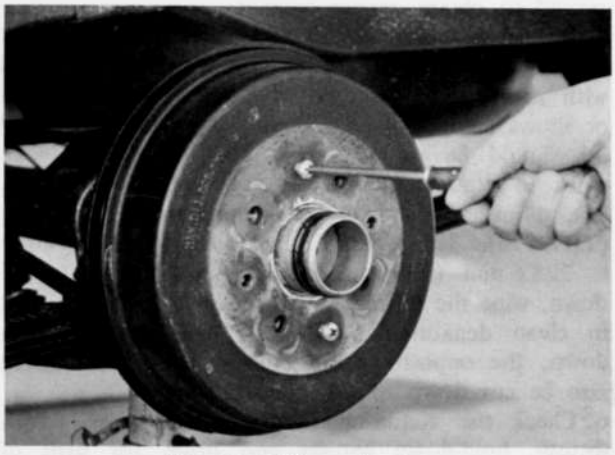

Fig. 11–43 Removing drum

5. Remove the return spring located on the upper side of the brake shoes using a suitable tool, then remove the return spring located on the lower side of the brake shoes.
6. Remove the shoe hold-down spring and spring cap from the brake shoe by removing the shoe hold-down spring pin with a plier.

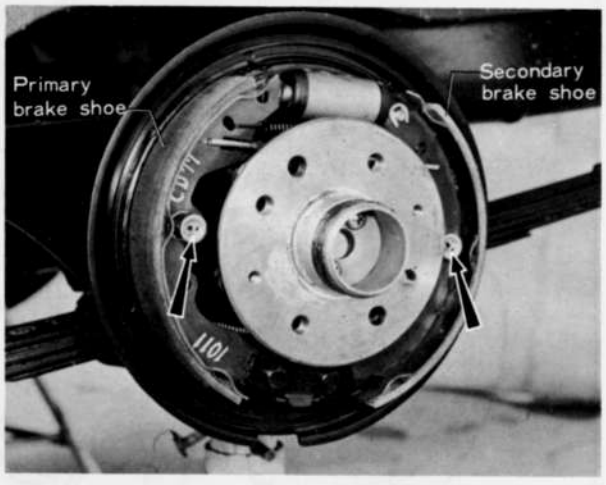

Fig. 11–44 Removing shoe hold-down spring

7. Remove the primary brake shoe and the male and fe-male push rod assembly.
8. Remove the secondary brake shoe by disengaging the parking brake cable from the operating lever.

b. Inspecting rear brake drum and shoe

1. Brush all dust from the backing plate and interior of the brake drum.
2. Inspect the springs for weakness.
3. Inspect the brake shoes for excessive lining wear or shoe damage. If the lining is excessively worn or if the shoes are damaged, they must be replaced. Replace any lining that had been contaminated with oil, grease or brake fluid.
4. Examine the lining contact pattern. To inspect, chalk the entire inner surface of the drum and slide the lining along the chalked surface. The lining should show a uniform contact across the entire width, extending from toe to heel. Shoes having sufficient lining but improper contact should be re-ground to obtain proper contact.
5. Inspect the brake drum and, if necessary, refinish. Minor scores on the brake drum can be removed with sandpaper. The drum that is excessively scored or shows an out of roundness over **0.15 mm (0.0059 in)** should be turned down. Remove only enough stock to eliminate the scores and true up the drum. The refinished diameter must not exceed 229.6 mm (9.0395 in). The standard inner diameter of the drum is 228.6 mm (9.000 in). After the drum is turned down, wipe the refinished surface with a cloth soaked in clean denatured alcohol. If one drum is turn down, the opposite drum on the same axle should also be cut down to the same size.
6. Check the condition of the brake shoes, return springs, hold-down springs and drum for signs of overheating. If the shoes and drums are heat spotted, indicating a overheated condition, replace with new ones.

c. Installing rear brake drum and shoe

Follow the removal procedures in the reverse order.

Note :

Adjust the brake shoe clearance as described in Par. 11–A–3.

11–F–2. Wheel Cylinder

a. Removing wheel cylinder

1. Remove the rear brake shoes, as described in Par. 11–F–1.
2. Disconnect the brake fluid pipe from the wheel cylinder by removing the flare nut located on the rear side of the backing plate.
3. Remove the nuts that attach the wheel cylinder to the backing plate and remove the wheel cylinder.

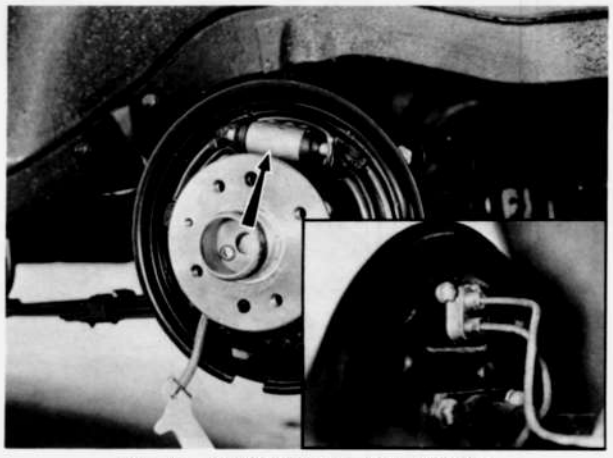

Fig. 11–45 Removing wheel cylinder

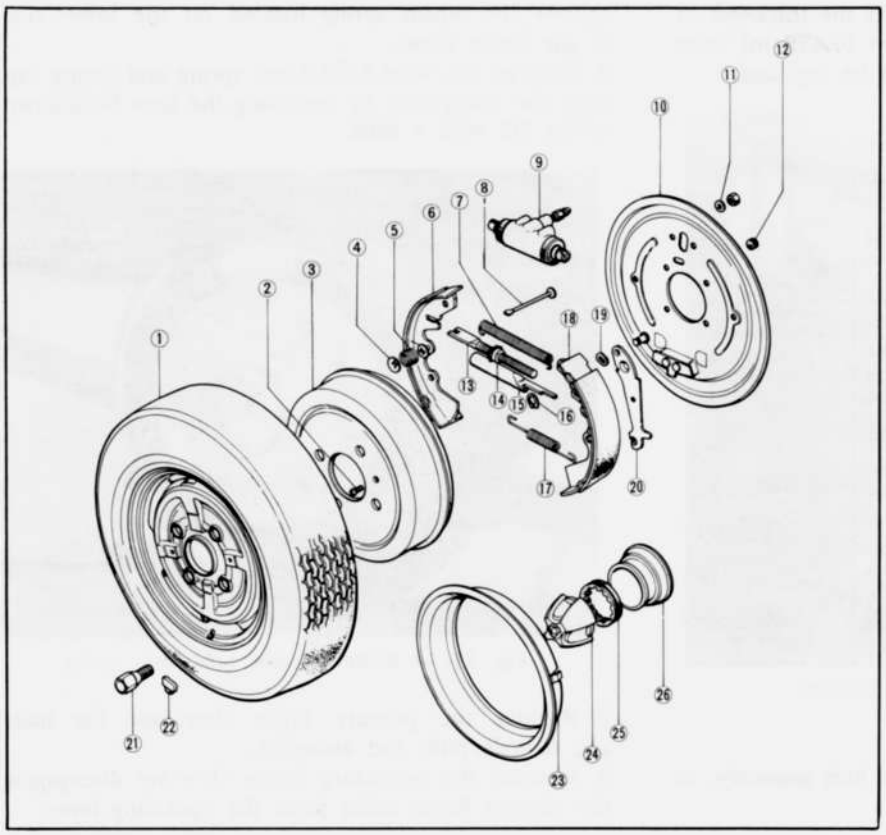

Fig. 11–46 Rear brake components

1. Rear wheel
2. Drum attaching bolt
3. Drum
4. Spring cap
5. Shoe hold-down spring
6. Primary brake shoe
7. Shoe return spring
8. Shoe hold-down spring pin
9. Wheel cylinder
10. Backing plate
11. Nut and washer
12. Plug
13. Male-push rod
14. Shoe clearance
15. Female-push rod
16. Secondary brake shoe retaining clip
17. Shoe return spring
18. Secondary brake shoe
19. Wave washer
20. Parking brake operating lever
21. Wheel bolt
22. Balance weight
23. Wheel ring
24. Wheel center cap
25. Set rubber
26. Wheel center cap adaptor

b. Disassembling wheel cylinder

1. Remove the boots from both ends of the wheel cylinder.
2. Remove the piston and piston cup assemblies and return spring.
3. Remove the bleeder screw and steel ball, if necessary.

c. Checking wheel cylinder

1. Wash all parts in clean alcohol or brake fluid. **Never use** gasoline or kerosene.
2. Examine the cylinder bore, and piston for wear, roughness, or score.
3. Check the clearance between the piston and the cylinder. If it is **more than 0.15 mm (0.006 in),** replace with new parts.
4. Check the piston cups for wear, softening, swelling, or any damage. If any of these conditions exists, replace the cups.

d. Assembling wheel cylinder

1. Apply clean brake fluid to the cylinder bore, pistons and piston cups.
2. Insert the steel ball into the bleeder hole and thread the bleeder screw into the bleeder hole.
3. Insert the return spring and, piston and piston cup assemblies into their respective position in the cylinder bore.

Note :
When installing the piston cups to the piston, face the lip side of the cups inward.

4. Place the boots over each end of the cylinder.

e. Installing wheel cylinder

Follow the removal procedures in the reverse order.

Note :
Bleed the hydraulic system and adjust the brake shoe clearance.

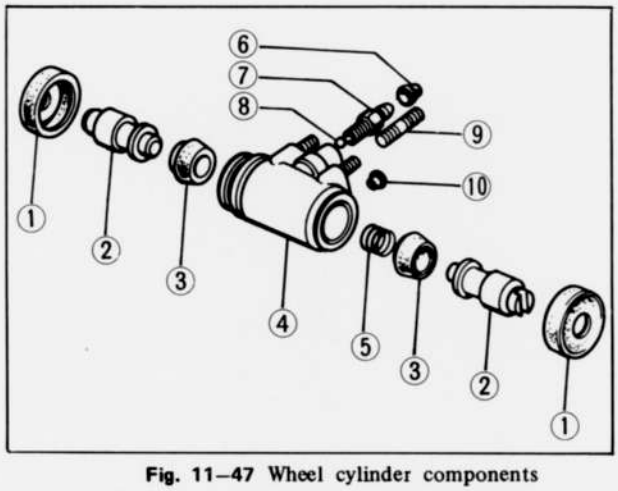

Fig. 11–47 Wheel cylinder components

1. Boot
2. Piston
3. Piston cup
4. Cylinder
5. Spring
6. Steel ball
7. Bleeder screw
8. Bleeder cap
9. Stud bolt
10. Tube seat

11–G. PARKING BRAKE

11–G–1. Parking Brake Adjustment

To adjust, proceed as follows :
After adjusting the rear brake shoe clearance, adjust the parking brake lever adjusting screw so that the brake begins to apply when pulling the parking brake lever three to seven notches.

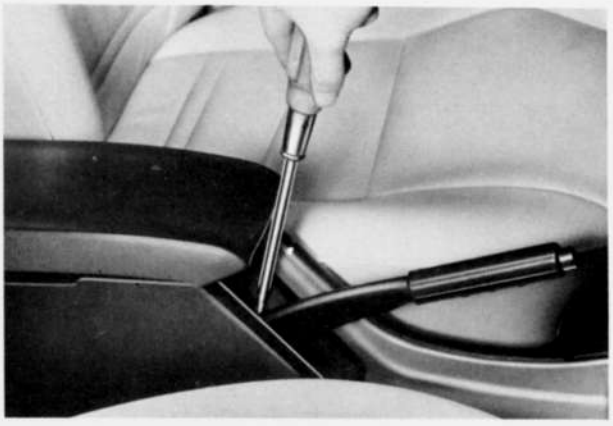

Fig. 11–48 Adjusting parking brake

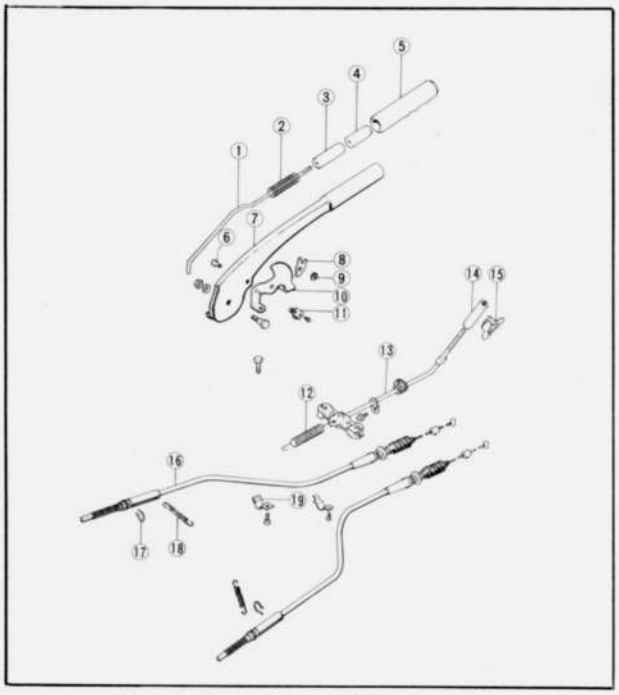

Fig. 11–49 Parking brake components

1. Release rod
2. Spring
3. Spacer
4. Release button
5. Cap
6. Pin
7. Lever
8. Ratchet
9. Clip
10. Sector
11. Parking lamp switch
12. Spring
13. Front cable
14. Adjusting nut
15. Clip
16. Rear cable
17. Clip
18. Spring
19. Cable clip

SPECIAL TOOL

49 0221 600B	Piston retracting tool

WHEELS AND TIRES

DESCRIPTION ..... 12 : 1
12–A. WHEELS AND TIRES ..... 12 : 1
12–A–1. Tire Inflation ..... 12 : 1
12–A–2. Tire Rotation (Replacement).. 12 : 2
12–A–3. Changing Wheels ..... 12 : 3
12–A–4. Wheel Balance ..... 12 : 3
12–A–5. Wheel and Tire Run-out ..... 12 : 3
12–B. TUBELESS TIRE REPAIR ..... 12 : 3
12–C. FRONT WHEEL HUB ..... 12 : 3
12–C–1. Removing Front Wheel Hub .. 12 : 3
12–C–2. Checking Front Wheel Hub ... 12 : 4
12–C–3. Installing Front Wheel Hub ... 12 : 4
12–D. FRONT WHEEL BEARING ..... 12 : 5
12–D–1. Checking Front Wheel Bearing ..... 12 : 5
12–D–2. Adjusting Front Wheel Bearing ..... 12 : 5
12–E. REAR WHEEL BEARING ..... 12 : 5

12

DESCRIPTION

Each front wheel is bolted to its respective front hub and rotor assembly. Two opposed tapered roller bearings are installed in each hub. A grease seal is installed at inner end of the hub to prevent grease from leaking on the rotor. The entire assembly is retained to steering knuckle spindle by the adjusting nut, nut lock and cotter pin.

The rear wheel is bolted to the rear axle shaft flange. The rear wheel bearing is pressed onto axle shaft just inside the shaft flange and entire assembly is retained to the rear axle housing by the bearing retainer which is attached to the housing flange.

12–A. WHEELS AND TIRES

12–A–1. Tire Inflation

Maintenance of correct inflation pressure is one of the most important elements of tire care.

Excessive inflation pressure will cause:
1. Hard rides
2. Damage to tire carcas
3. Poor traction
4. Premature tread wear in center of tire

Low inflation pressure will cause:
1. Hard steering
2. Rapid and uneven wear on the edges of tire tread
3. Increased cord fatigue or broken tire cords
4. High tire temperature
5. Blows out

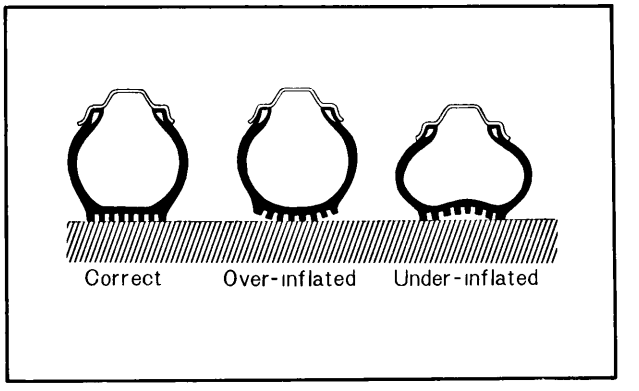

Fig. 12–1 Tire deformation and pressure

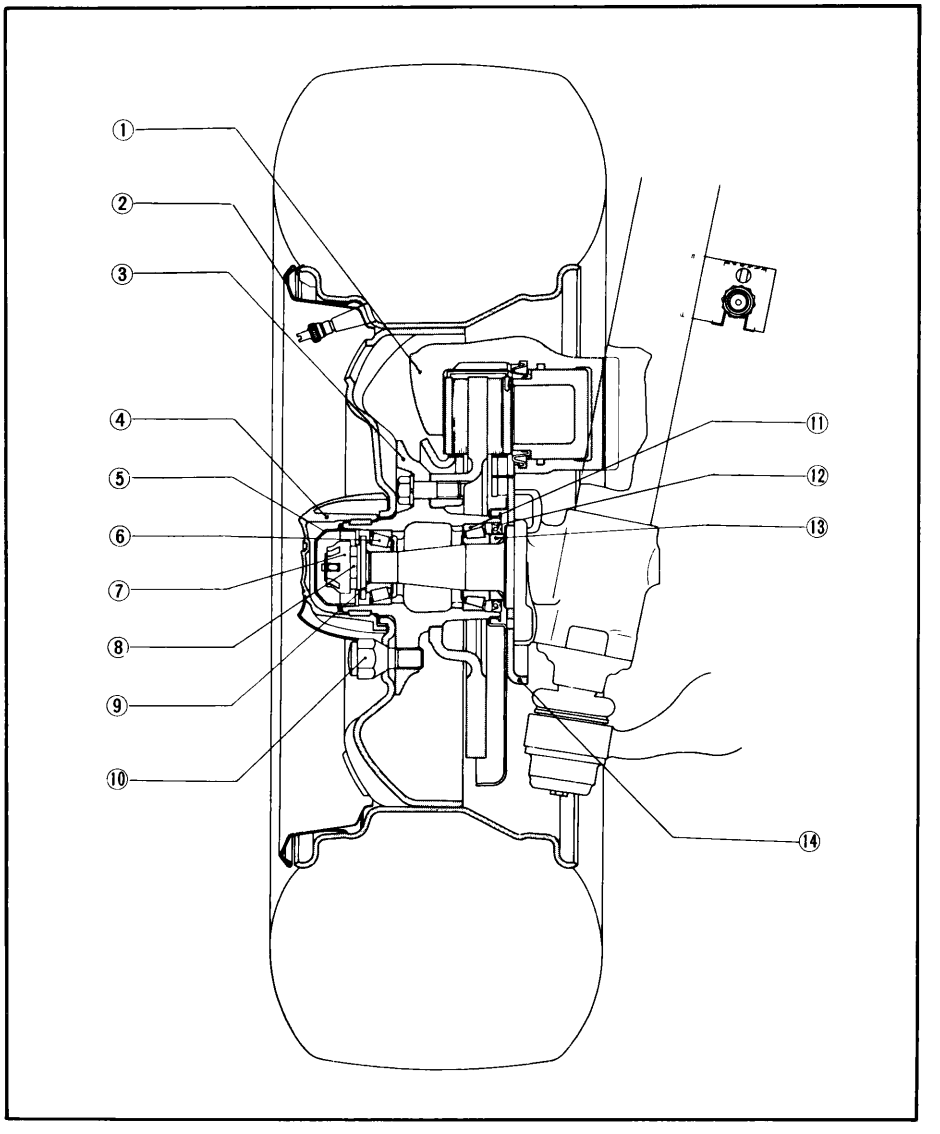

Fig. 12–2 Front wheel cross section
1. Caliper
2. Wheel ring
3. Hub
4. Center cap
5. Grease cap
6. Hub outer bearing
7. Nut lock
8. Bearing preload adjusting nut
9. Flat washer
10. Wheel bolt
11. Hub inner bearing
12. Grease seal
13. Spacer
14. Mounting adaptor

Check the inflation pressure with a reliable gauge when the tires are cold. The standard pressures are as follows :

For U.S.A. & Canada

	Sedan & Hard Top	Wagon
Front	26 lb/in^2	24 lb/in^2
Rear	26 lb/in^2	28 lb/in^2

For E.C.E. & England (Sedan & Hard Top)

	Less than 100 km/h (60 miles/h)	More than 100 km/h (60 miles/h)
Front	1.7 kg/cm^2 (24 lb/in^2)	2.0 kg/cm^2 (28 lb/in^2)
Rear	1.7 kg/cm^2 (24 lb/in^2)	2.0 kg/cm^2 (28 lb/in^2)

For Australia & England (Wagon)

	Sedan & Hard Top	Wagon
Front	26 lb/in^2	24 lb/in^2
Rear	26 lb/in^2	28 lb/in^2

After checking or inflating the pressure, place the valve cap back on and tighten by hand. It helps to maintain the air pressure in the tires in case of any valve leak and keeps dust and water out of the valve.

12–A–2. Tire Rotation (Replacement)

If the tires are utilized by installing at the same locations, these will create wear pattern characteristic to the locations, therefore, it is recommended to alter the installing location by rotating the tires periodically at every 6,000 kilometers or 4,000 miles, to wear the tires evenly. In this case, the rotation of the tires must be performed including the spare tire.

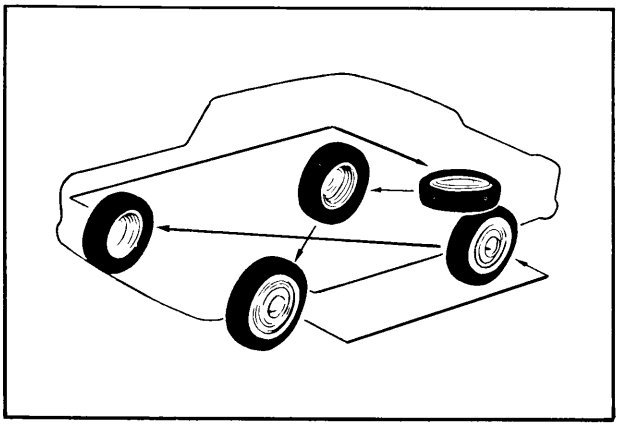

Fig. 12–3 Tire rotation

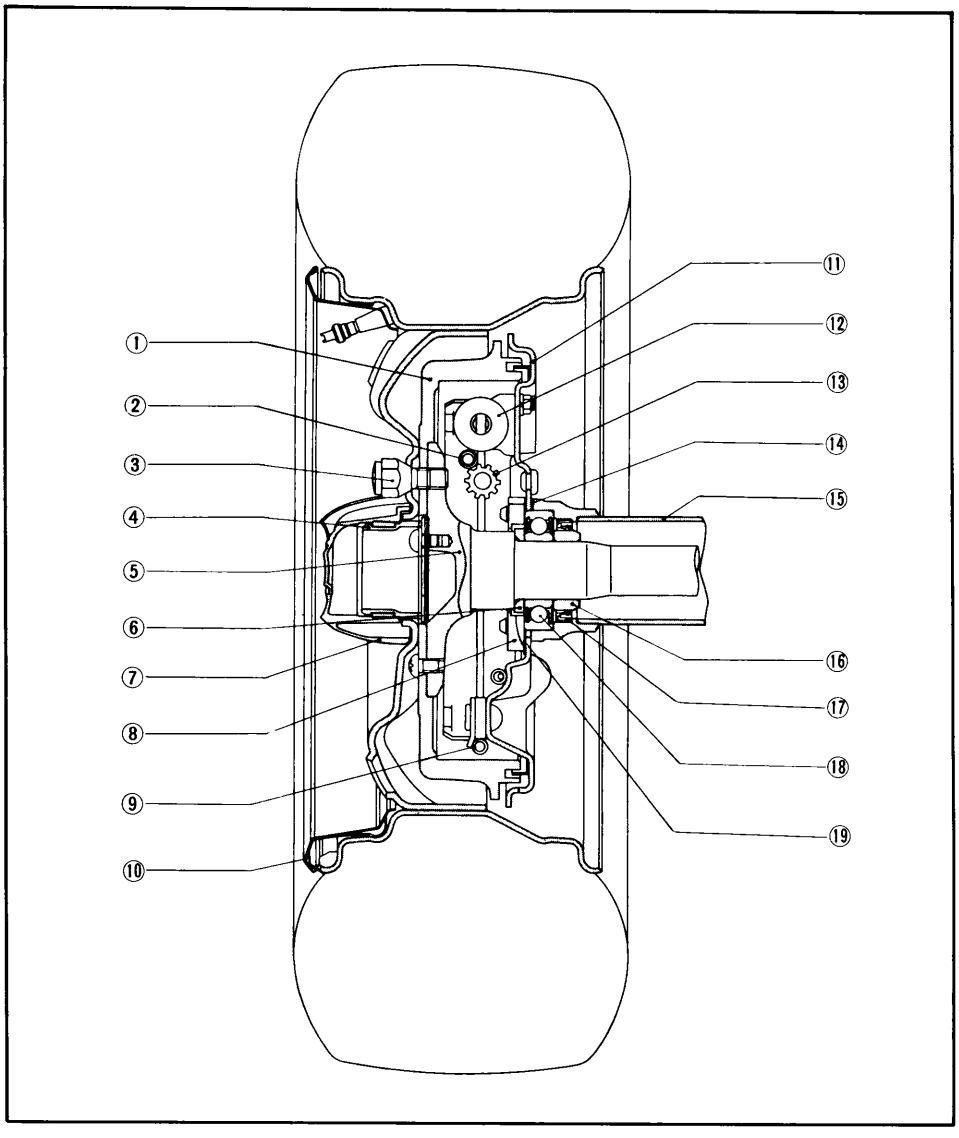

Fig. 12–4 Rear wheel cross section

1. Brake drum
2. Brake shoe return spring
3. Wheel bolt
4. Center cap adaptor
5. Rear axle shaft
6. Spacer
7. Center cap
8. Bearing retainer
9. Brake shoe return spring
10. Wheel ring
11. Backing plate
12. Wheel cylinder
13. Brake shoe adjusting nut and push rod assembly
14. Adjusting shim
15. Rear axle housing
16. Bearing collar
17. Oil seal
18. Bearing
19. Gasket

12–A–3. Changing Wheels

1. Remove the center cap and loosen the wheel bolts. **Do not** loosen the wheel bolts at one time.

Note :
The wheel bolts are loosened by turning these in the counter-clockwise direction.

2. Raise the vehicle until the wheel and tire clear the ground.
3. Remove the wheel bolts and change the wheel.
4. Install the wheel bolts and alternately tighten the diametrically opposite bolts until the wheel closely touches the hub flange for front or the axle flange for rear.
5. Lower the vehicle and firmly tighten the bolts to **9.0 ~ 10.0 m-kg (65.0 ~ 72.0 ft-lb). Do not** tighten the wheel bolts at one time.
6. Refit the center cap.

12–A–4. Wheel Balance

The allowable unbalance is 360 cm-gr (5.0 in-oz), which is less than 20 gr (0.7 oz) at the rim.
The wheel balance including the tire and tube may be destroyed by the abnormal tire wear from the improper adjustment of wheel alignment, sudden brake application, side skidding, incorrect tire inflation, and/or from the repair of the tire or tube. Therefore, whenever the wheel becomes unsteady, or replaced after rapair, always inspect the static balance and the dynamic balance of the wheel.

To perform the balance correction, the following methods can be considered.
1. Correction by removing the wheel from the car.
2. Correction without removing the wheel from the car.
Both methods can be recommended utilizing the respective wheel balancer to correct the balance precisely both for static balance and dynamic balance.
Balancing weight must be estimated, and the installing positions must be determined by referring to the instruction manuals furnished with each of the balancers.

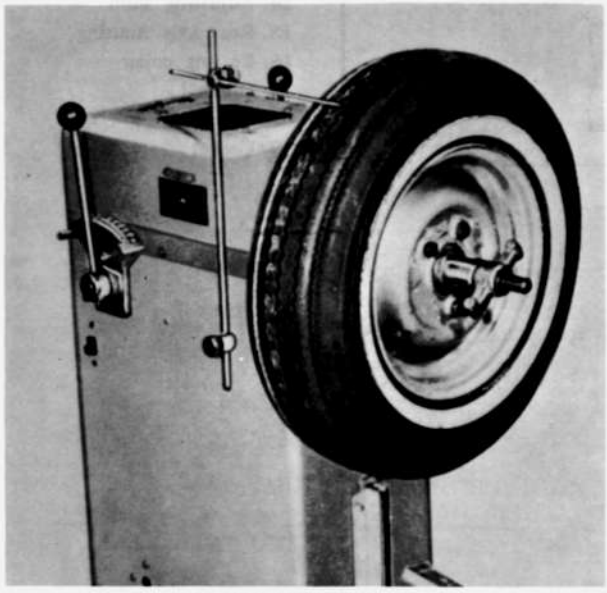

Fig. 12–5 Wheel balance

Balancing weight

Part No.	Weight
99655 30010	10 g (0.35 oz)
99655 30015	15 g (0.53 oz)
99655 30020	20 g (0.71 oz)
99655 30025	25 g (0.81 oz)
99655 30030	30 g (1.05 oz)
99655 30035	35 g (1.23 oz)
99655 30040	40 g (1.41 oz)
99655 30045	45 g (1.50 oz)
99655 30050	50 g (1.75 oz)
99655 30060	60 g (2.12 oz)

12–A–5. Wheel and Tire Run-out

Wheel and tire should be measured for both radial and lateral runout. The radial runout is the difference between the high and low points on the tread of tire; while the lateral runout is the wobble of the wheel. To measure the radial runout, apply a dial indicator against the center rib of the tire tread and rotate the wheel slowly. This measurement should not **exceed 2.0 mm (0.08 in).** To measure the lateral runout, position a dial indicator against the side of the tire. The reading of the indicator should be **within 2.5 mm (0.10 in).**

12–B. TUBELESS TIRE REPAIR

A leak in the tubeless tire may be located by inflating the tire to recommended pressure and then submerging the tire and wheel assembly in water, or by applying water to the tire with a hose if wheel is mounted on vehicle. Remove water from area where air bubbles show and mark the area with a crayon. After removal of the puncturing object from tire, the puncture must be sealed to prevent entrance of dirt and water which would cause damage to the tire carcass. Tire repair kits are available through tire dealers. These materials should be used as directed in the instructions supplied with kits.

12–C. FRONT WHEEL HUB

12–C–1. Removing Front Wheel Hub

1. Raise the vehicle with a jack until the front wheels clear the ground.
2. Remove the center cap and remove the wheel.
3. Remove the bolts that attach the caliper and bracket assembly and remove the caliper and bracket assembly.
4. Remove the grease cap from the hub. Remove the cotter pin, nut lock, adjusting nut and flat washer from the spindle.
5. Pull the hub and rotor assembly off the spindle.
6. Remove the outer bearing from the hub.
7. Thoroughly clean the spindle and the inside of

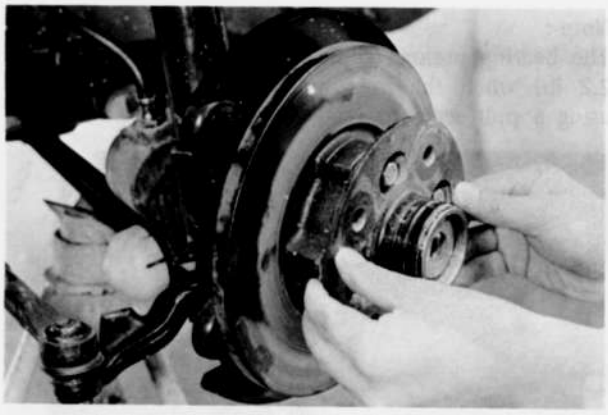

Fig. 12–6 Removing hub and rotor assembly

the hub with solvent to remove all old grease.
8. Apply the identification marks on the hub and rotor for convenience in reassembly.

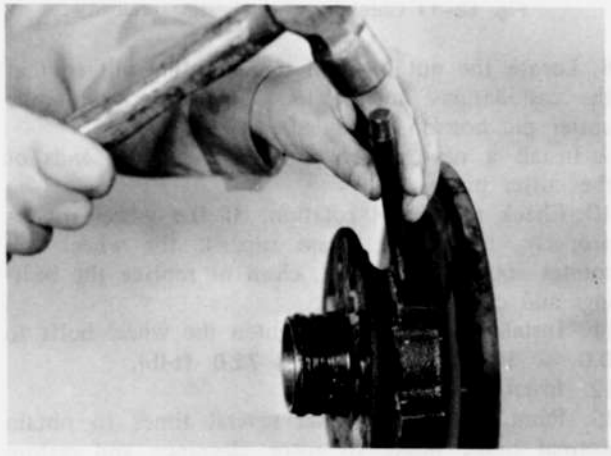

Fig. 12–7 Applying identification marks

9. Remove the bolts that attach the hub to the rotor. Remove the hub from the rotor.
10. Drive out the grease seal and remove the spacer and inner bearing from the hub.
11. Clean the lubricant off the outer and inner bearing cups with solvent and inspect the bearing cups for scratches, pits, excessive wear, and other damage.

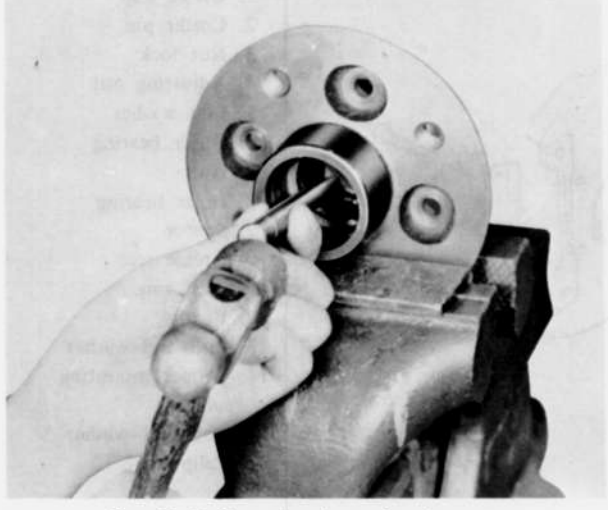

Fig. 12–8 Removing inner bearing cup

If necessary, replace the cup as follows:
1) Remove the outer and inner bearing cups from the hub using a suitable brass rod.
2) Install the inner and outer bearing cups into the hub using a suitable tool. Be sure to seat the cups properly in the hub.

12–C–2. Checking Front Wheel Hub

Thoroughly clean the inner and outer bearings with solvent, and dry them thoroughly.

Note :
Do not spin the bearings dry with compressed air.

Inspect the bearing for wear and damage, and replace them if necessary. The bearing and bearing cup should be replaced as a set if damage to either is encountered.

12–C–3. Installing Front Wheel Hub

1. Pack the inside of the hub with lithium grease.
2. Pack the inner and outer bearings with lithium grease, taking care to fill between rollers.
3. Place the inner bearing in the inner bearing cup.
4. Install the spacer and grease seal into the hub.
5. Install the hub to the rotor. Install the attaching bolts and tighten the bolts to **5.0 m-kg (36.2 ft-lb).**

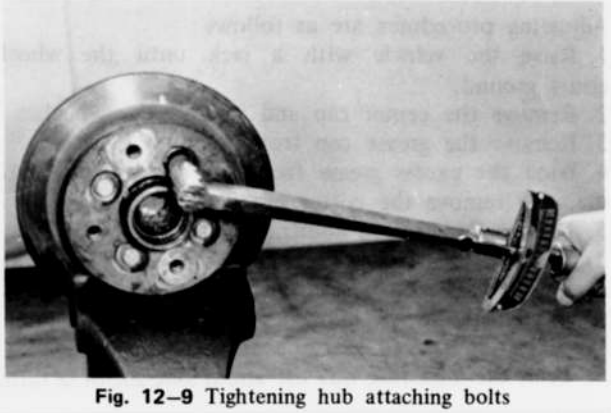

Fig. 12–9 Tightening hub attaching bolts

6. Install the hub and rotor assembly on the spindle.
7. Install the outer bearing, flat washer and adjusting nut.
8. Adjust the wheel bearing preload as described in

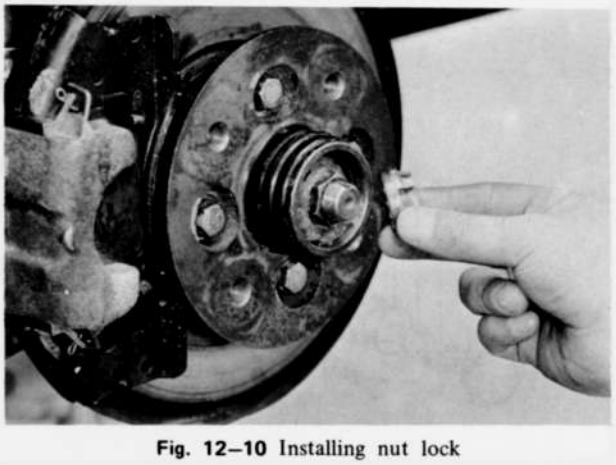

Fig. 12–10 Installing nut lock

Par 12–D–2 and install the nut lock and a new cotter pin. Pack the grease cap with lithium grease and install the grease cap.
9. Install the caliper to the mounting adaptor and tighten the attaching bolts.
10. Position the wheel on the hub. Install the wheel bolts and tighten them alternately in order to draw the wheel evenly against the hub.
11. Install the center cap.
12. Pump the brake pedal several times to obtain normal brake lining to rotor clearance and restore normal brake pedal travel.

12–D. FRONT WHEEL BEARING

12–D–1. Checking Front Wheel Bearing

To check the front wheel bearings, raise the front of vehicle and support with stands. Grip the tire and shake it sideways. If considerable play is noticed, this is an indication that the bearings are worn or scarred.

12–D–2. Adjusting Front Wheel Bearing

The front wheel bearings should be adjusted if the wheel is loose on the spindle or if the wheel does not rotate freely.

Adjusting procedures are as follows :
1. Raise the vehicle with a jack until the wheel clears ground.
2. Remove the center cap and remove the wheel.
3. Remove the grease cap from the hub.
4. Wipe the excess grease from the end of the spindle, and remove the cotter pin and nut lock.
5. Loosen the bearing adjusting nut three turns.
Then, rock the hub and rotor assembly in and out several times to push the shoes away from the rotor.
6. While rotating the hub and rotor assembly, tighten the adjusting nut to seat the bearings.
7. Back the adjusting nut off about one-six of a turn.

Note :
The bearing preload should be **0.4 ~ 1.0 kg (0.88 ~ 2.2 lb)** when the hub and rotor assembly is pulled using a pull scale to read the preload.

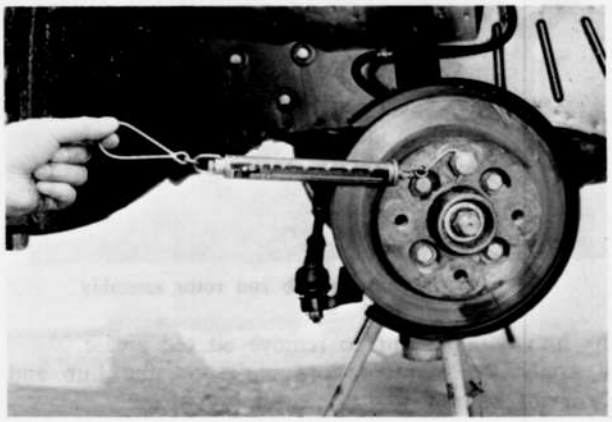

Fig. 12–11 Checking wheel bearing preload

8. Locate the nut lock on the adjusting nut so that the castellations on the lock are aligned with the cotter pin hole in the spindle.
9. Install a new cotter pin and bend the ends of the cotter pin.
10. Check the wheel rotation. If the wheel rotates properly, install the grease cap. If the wheel still rotates roughly or noisily, clean or replace the bearings and cups as required.
11. Install the wheel and tighten the wheel bolts to **9.0 ~ 10.0 m-kg (65.0 ~ 72.0 ft-lb).**
12. Install the center cap.
13. Pump the brake pedal several times to obtain normal brake lining to rotor clearance and restore normal brake pedal travel.

12–E. REAR WHEEL BEARING

Servicing the rear wheel bearing is explained in Par. 9–A on page 9 : 1.

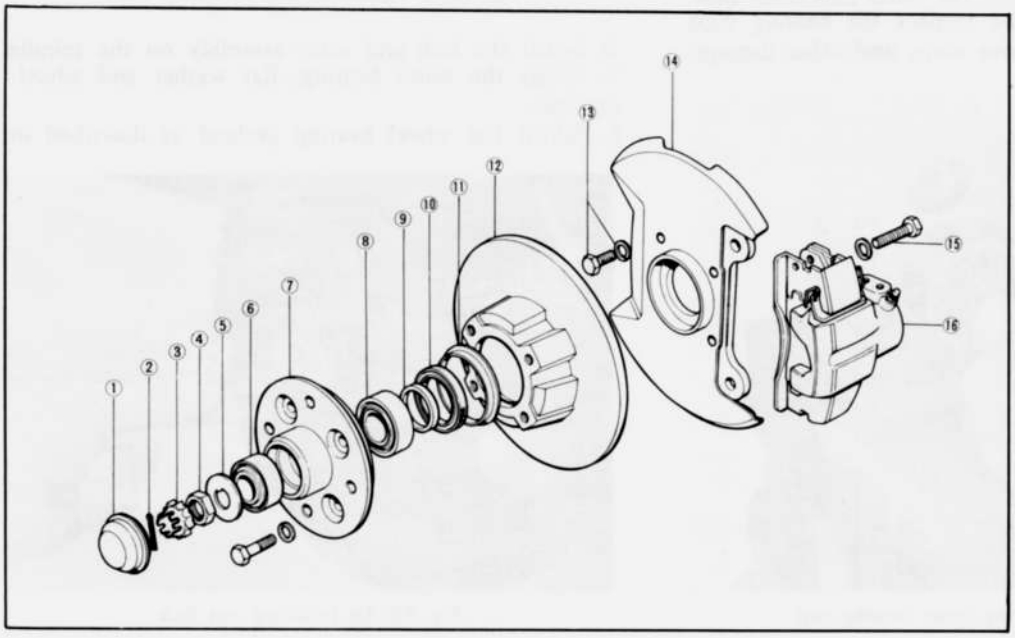

Fig. 12–12 Front wheel hub components
1. Grease cap
2. Cotter pin
3. Nut lock
4. Adjusting nut
5. Flat washer
6. Outer bearing
7. Hub
8. Inner bearing
9. Spacer
10. Grease seal
11. Dust ring
12. Rotor
13. Bolt and washer
14. Caliper mounting adaptor
15. Bolt and washer
16. Caliper

SUSPENSION

DESCRIPTION ..... 13 : 1
13–A. FRONT SUSPENSION ..... 13 : 1
13–A–1. Front Shock Absorber ..... 13 : 1
a. Removing front shock absorber ..... 13 : 1
b. Disassembling front shock absorber ..... 13 : 2
c. Checking front shock absorber ..... 13 : 4
d. Assembling front shock absorber ..... 13 : 5
e. Installing front shock absorber ..... 13 : 7
13–A–2. Suspension Arm ..... 13 : 7
a. Removing suspension arm .. 13 : 7
b. Inspecting suspension arm .. 13 : 7
c. Installing suspension arm ... 13 : 7
13–A–3. Ball Joint ..... 13 : 7
a. Greasing ball joint ..... 13 : 7
b. Checking ball joint ..... 13 : 8
c. Replacing ball joint ..... 13 : 9
13–B. REAR SUSPENSION ..... 13 : 9
13–B–1. Rear Shock Absorber ..... 13 : 9
a. Removing rear shock absorber ..... 13 : 9
b. Installing rear shock absorber ..... 13 : 9
13–B–2. Rear Spring ..... 13 : 9
a. Removing rear spring ..... 13 : 9
b. Disassembling rear spring ... 13 : 10
c. Inspecting rear spring ..... 13 : 11
d. Assembling rear spring ..... 13 : 11
e. Installing rear spring..... 13 : 11
13–B–3. Torque Rod ..... 13 : 11
(E.C.E. Vehicles Only (excluding England))
a. Removing torque rod ..... 13 : 11
b. Checking torque rod ..... 13 : 11
c. Installing torque rod..... 13 : 11
SPECIAL TOOLS ..... 13 : 11

DESCRIPTION

The front suspension consists mainly of the vertical shock absorbers integrally made with each steering knuckle, suspension arms and stabilizer bar. This front suspension **does not require lubrication, except the lower ball joints** which are provided with plugs to attaching the grease fittings when required.
The rear suspension consists mainly of leaf springs and gas sealed type shock absorbers. The gas sealed type shock absorbers **should not be disassembled** as it contains a highly compressed gas. If it is found to be defective, replace it as assembly.

13–A. FRONT SUSPENSION

13–A–1. Front Shock Absorber

a. Removing front shock absorber

1. Open the hood and remove the four nuts that attach the shock absorber support to the fender apron.
2. Raise the front end of the vehicle and support with stands.
3. Remove the center cap and remove the wheel.
4. Remove the clip attaching the fluid pipe to the shock absorber and remove the fluid pipe.

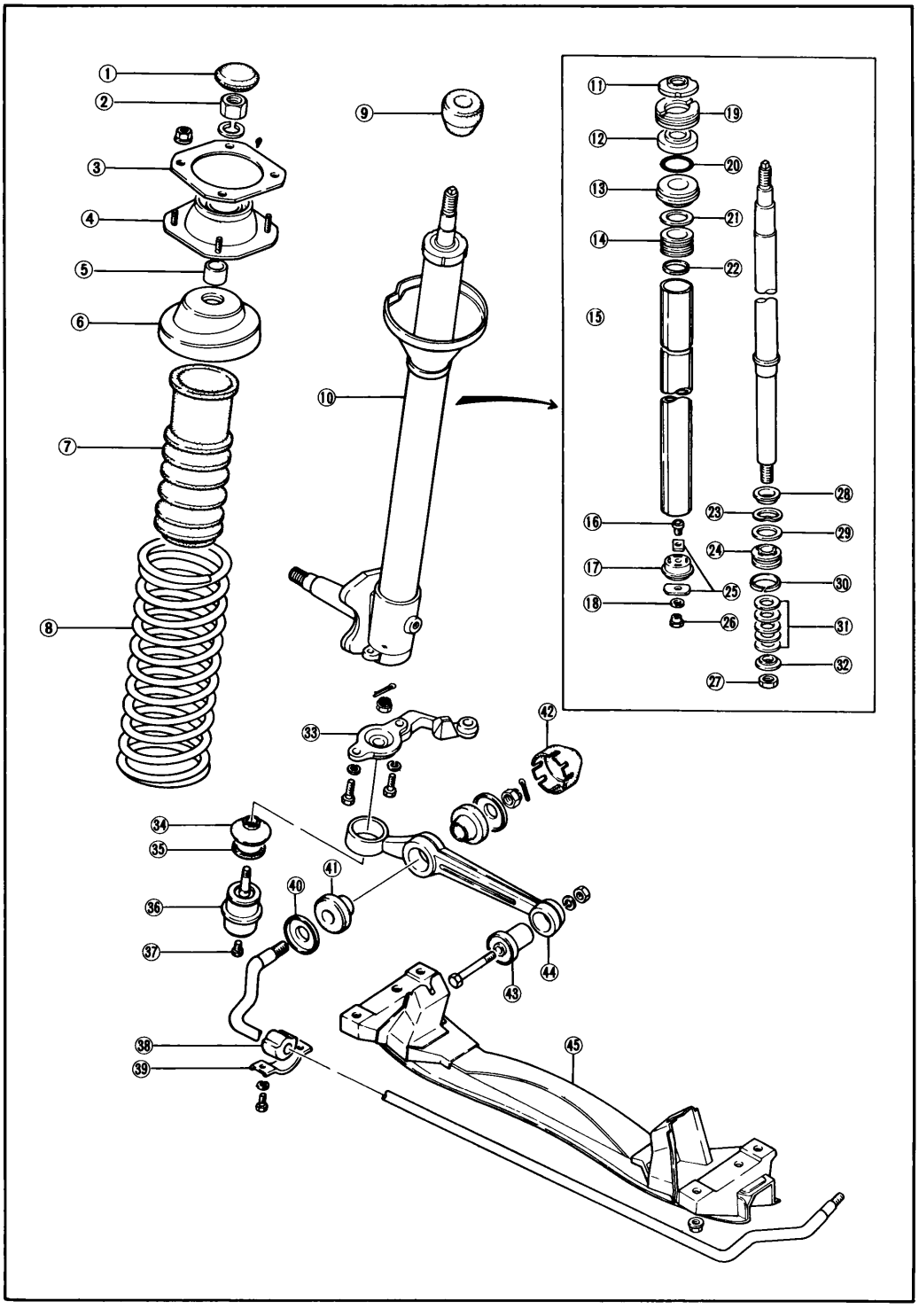

Fig. 13–1 Front suspension components
1. Cap
2. Nut
3. Road clearance adjusting plate
4. Shock absorber support
5. Spacer
6. Spring seat
7. Dust boot
8. Coil spring
9. Damper stopper
10. Front shock absorber
11. Dust cover
12. Oil seal
13. Piston rod guide
14. Stopper guide
15. Pressure tube
16. Bolt
17. Base valve casing
18. Valve seat
19. Cap nut
20. "O" ring
21. Back-up ring
22. Stopper
23. Check valve spring
24. Piston
25. Relief valve
26. Nut
27. Nut
28. Washer
29. Check valve
30. Piston ring
31. Relief valve
32. Washer
33. Knuckle arm
34. Dust seal
35. Set ring
36. Ball joint
37. Plug
38. Bush
39. Stabilizer bar bracket
40. Washer
41. Bush
42. Steering stopper
43. Bush
44. Suspension arm
45. Cross member

5. Remove the bolts attaching the caliper and pull the caliper off the rotor.
6. Remove the hub grease cap, cotter pin, nut lock and bearing adjusting nut from the steering knuckle spindle. Pull the hub and rotor assembly off the steering knuckle spindle.
7. Remove the bolts attaching the caliper mounting adaptor to the knuckle and remove the adaptor.
8. Remove the two bolts that attach the lower end of the shock absorber onto the steering knuckle arm.

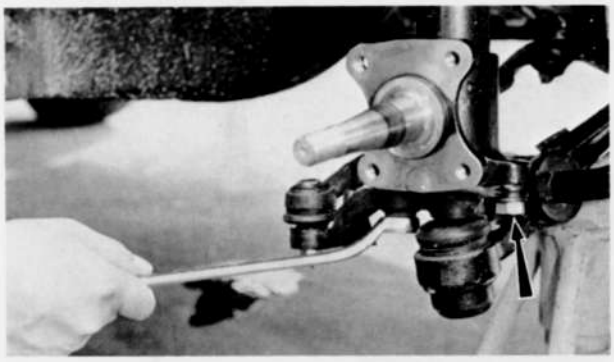

Fig. 13–2 Removing bolts

9. Lower the suspension arm and remove the shock absorber.

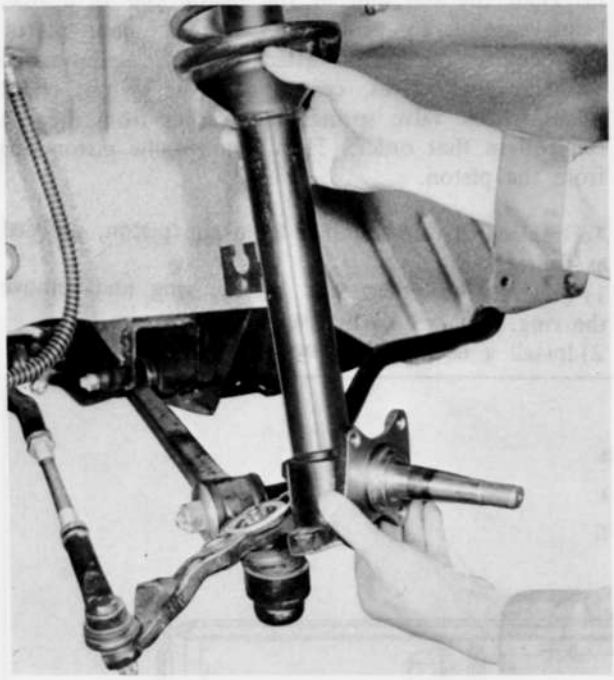

Fig. 13–3 Removing front shock absorber

b. Disassembling front shock absorber

1. Compress the coil spring with the **spring compressor** (49 0223 640A and 49 0370 641 or 49 0223 641).
2. Hold the shock absorber support in a vise and remove the nut attaching the piston rod onto the shock absorber support.
3. Remove the shock absorber support, spring seat, coil spring, dust boot, damper stopper and dust cover from the shock absorber.

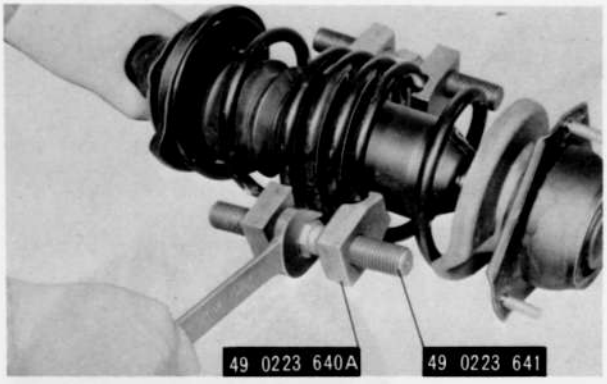

Fig. 13–4 Spring compressor

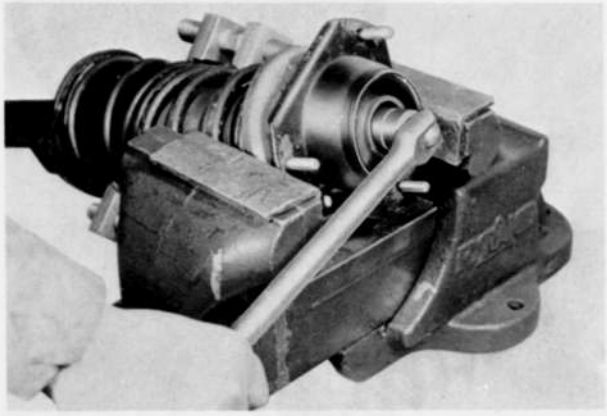

Fig. 13–5 Removing nut

4. Hold the reservoir tube in a vise equipped with soft jaws.
5. Remove the cap nut and seal assembly from the reservoir tube with the **cap nut wrench** (49 0259 700A).

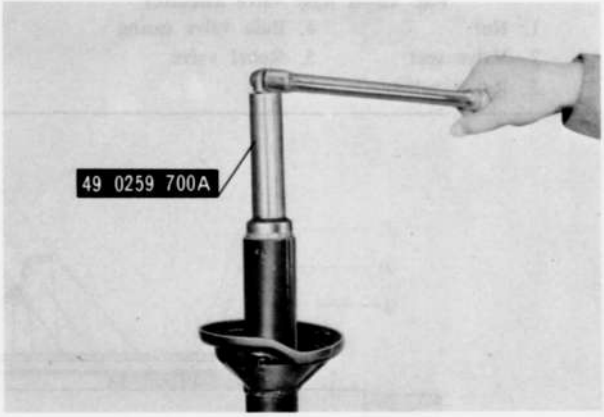

Fig. 13–6 Removing cap nut and seal assembly

6. Remove the "0" ring installed on the piston rod guide with a suitable tool.
7. Pull out the piston rod and pressure tube assembly from the reservoir tube.
8. Remove the piston rod guide, back-up ring, stopper and stopper guide from the piston rod.
9. Remove the base valve assembly from the pressure tube. Then, remove the bolt and nut of the base valve assembly, and remove the valve seat, relief valves, base valve casing and relief valves.

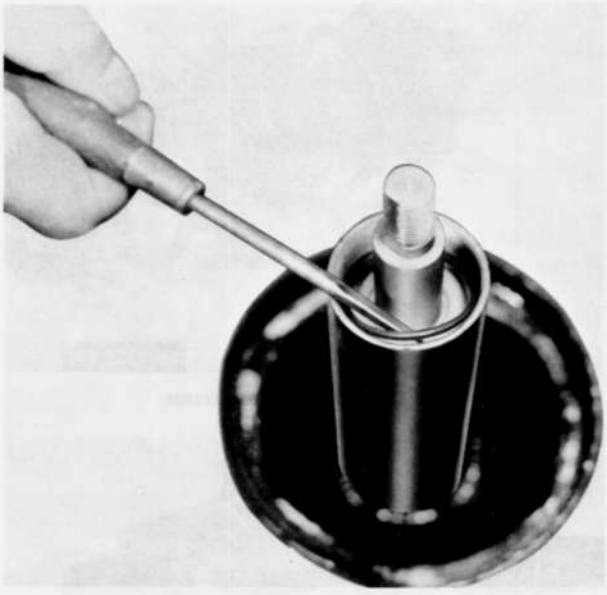

Fig. 13–7 Removing "O" ring

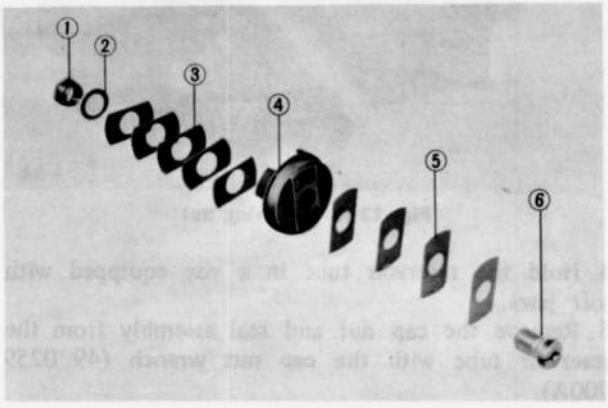

Fig. 13–8 Base valve assembly

1. Nut
2. Valve seat
3. Relief valve
4. Base valve casing
5. Relief valve
6. Bolt

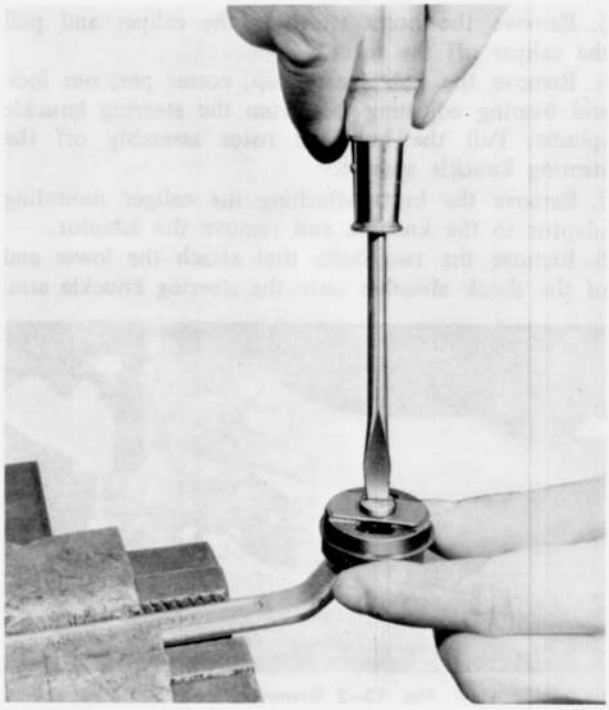

Fig. 13–9 Disassembling base valve assembly

10. Remove the piston rod from the pressure tube.
11. Hold the top end of the piston rod in a vice, being careful to protect it with alminum plates and remove the piston attaching nut. Remove the washer, relief valves, centering valve, piston, check valves, check valve springs and washer from the piston rod in that order. Then, remove the piston ring from the piston.

To replace the piston ring from the piston, proceed as follows :

1) Expand the open ends of the ring and remove the ring. **Do not** over-expand the ring.
2) Install a new piston ring.

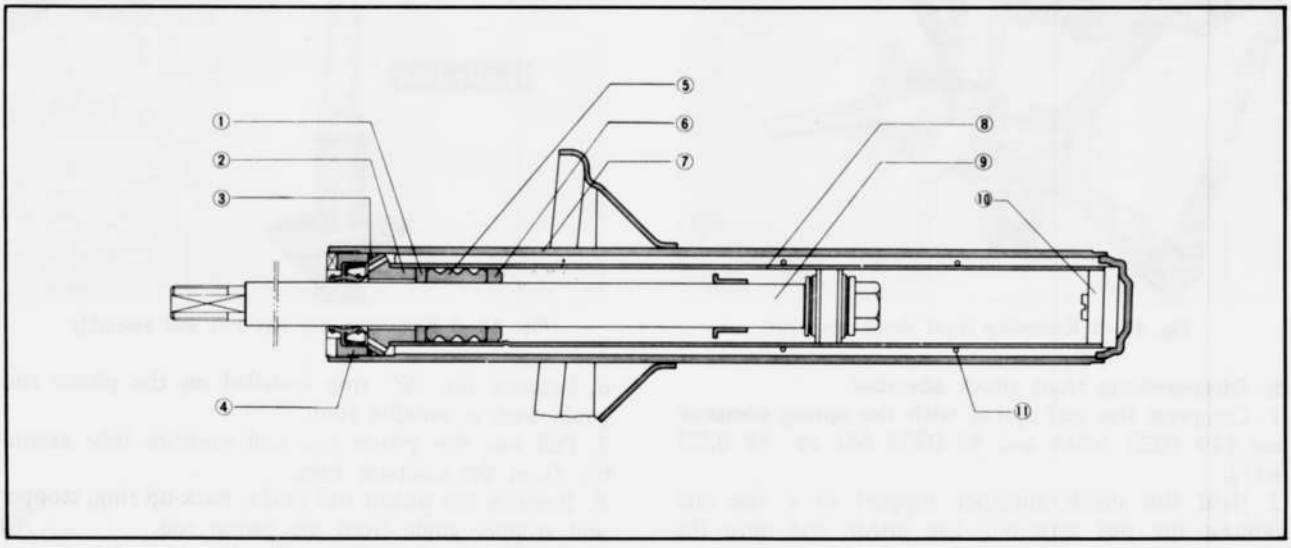

Fig. 13–10 Front shock absorber cross section

1. Back-up ring
2. Piston rod guide
3. "O" ring
4. Cap nut and seal assembly
5. Stopper
6. Stopper guide
7. Reservoir tube
8. Pressure tube
9. Piston rod
10. Base valve
11. Oil stop ring

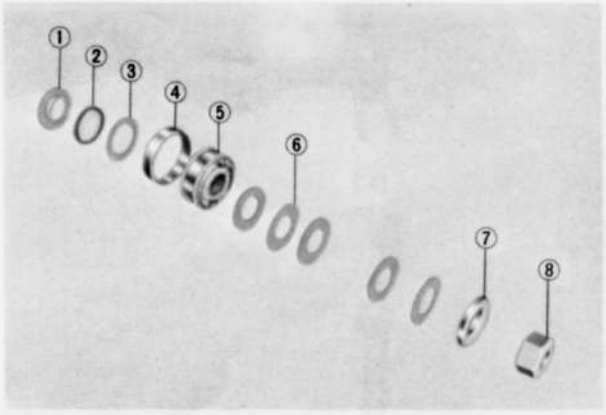

Fig. 13–11 Piston components

1. Washer
2. Check valve spring
3. Check valve
4. Piston ring
5. Piston
6. Relief valve
7. Washer
8. Nut

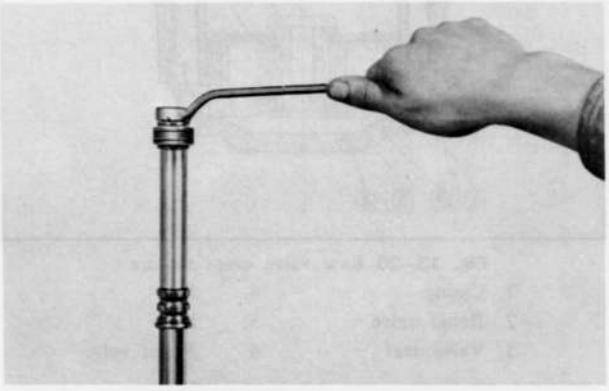

Fig. 13–12 Removing piston nut

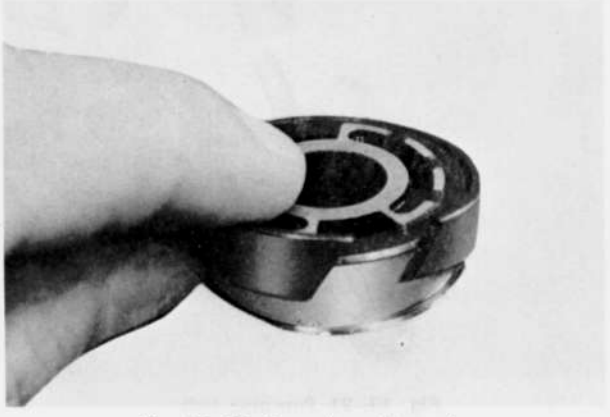

Fig. 13–13 Removing piston ring

c. Checking front shock absorber

1. Check the piston rod for wear, scores and bend. The piston rod diameter should be more than **19.94 mm (0.7851 in)**. The standard diameter is **20.0 mm (0.7874 in)**.
2. Check the run-out of the piston rod. The run-out should be less than **0.15 mm (0.0059 in)**.
3. Check the contacting surface of the piston with the check valve and relief valve for wear or damage.
4. Check the relief valve and check valve for wear, damages and flatness. The flatness is less than **0.02 mm (0.008 in)**.

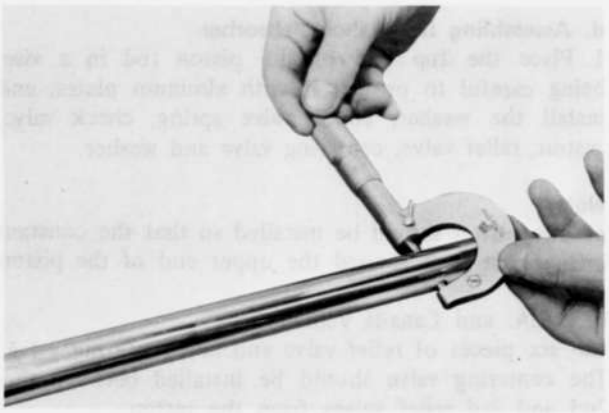

Fig. 13–14 Measuring piston rod diameter

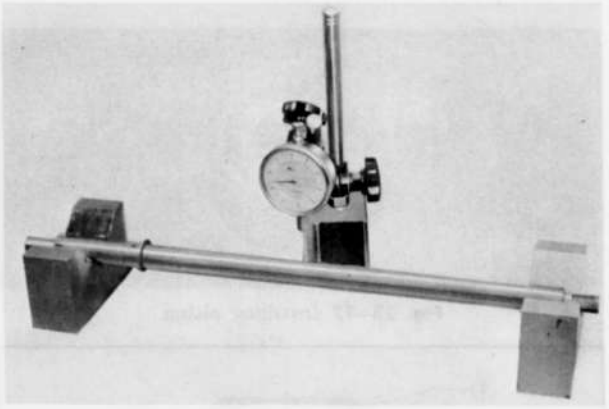

Fig. 13–15 Checking piston rod run-out

5. Check the reservoir tube for fluid leak or deformation and check the steering knuckle for crack.
6. Check the coil spring for weakness.
7. Inspect the pressure tube for inner diameter and bend. The inner diameter of the pressure tube should be **30.07 mm (1.1839 in)** and the tube run-out should be less than **0.2 mm (0.0079 in)**.

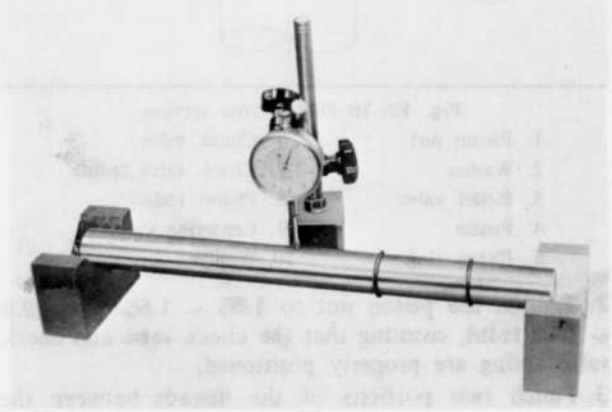

Fig. 13–16 Checking pressure tube run-out

8. Check the cap nut for damaged thread and check the oil seal lip in the cap nut for wear or other damages.
9. Check the piston rod guide for wear or damage.
10. Check the base valve casing and relief valve for wear, damage or flatness. The flatness is less than **0.02 mm (0.0008 in)**.

d. Assembling front shock absorber

1. Place the top end of the piston rod in a vise, being careful to protect it with alminum plates, and install the washer, check valve spring, check valve, piston, relief valve, centering valve and washer.

Note:

a) The piston should be installed so that the constant orifice side goes toward the upper end of the piston rod.

b) U.S.A. and Canada Vehicles

Use six pieces of relief valve and one centering valve. The centering valve should be installed between the 2nd and 3rd relief valves from the piston.

c) E.C.E., Australia and England Vehicles

Use five pieces of relief valve.

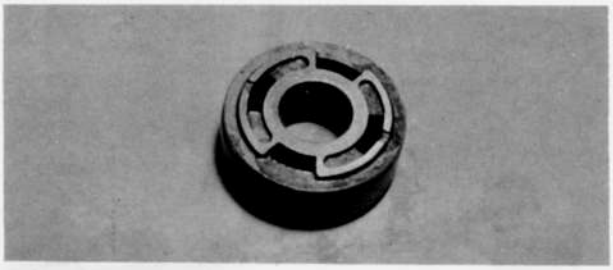

Fig. 13–17 Installing piston

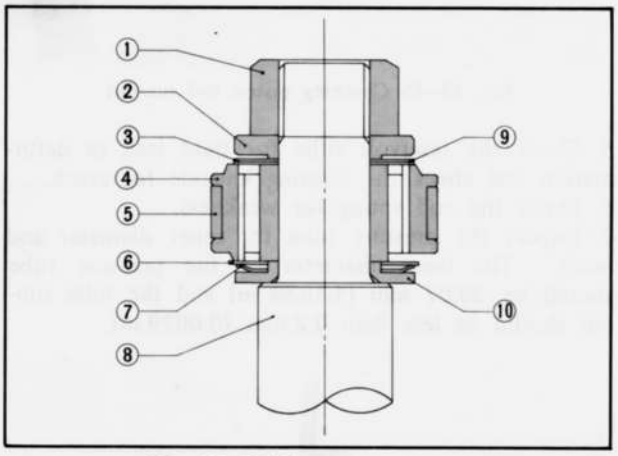

Fig. 13–18 Piston cross section

1. Piston nut
2. Washer
3. Relief valve
4. Piston
5. Piston ring
6. Check valve
7. Check valve spring
8. Piston rod
9. Centering valve
10. Washer

2. Tighten the piston nut to **1.35 ~ 1.65 m-kg (9.0 ~ 13.0 ft-lb),** ensuring that the check valve and check valve spring are properly positioned.

3. Punch two portions of the threads between the piston nut and the piston rod with a punch to prevent loosening of the piston nut.

4. Fit the four relief valves onto the base valve bolt and install it into the base valve casing.

5. Fit the five relief valves, valve seat and nut to the base valve casing and tighten the nut to **0.15 m-kg (1.0 ft-lb).**

6. After tightening the nut, punch the center of the bolt with a punch.

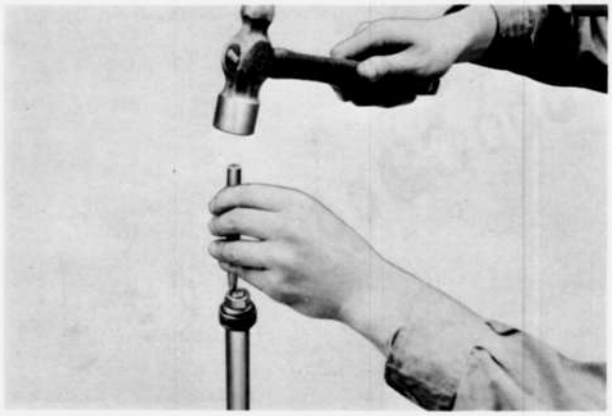

Fig. 13–19 Punching threads

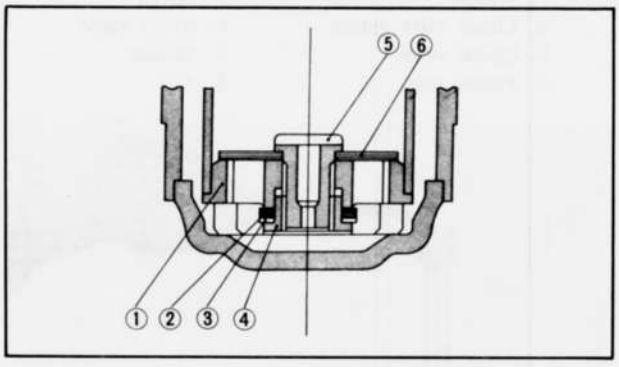

Fig. 13–20 Base valve cross section

1. Casing
2. Relief valve
3. Valve seat
4. Nut
5. Bolt
6. Relief valve

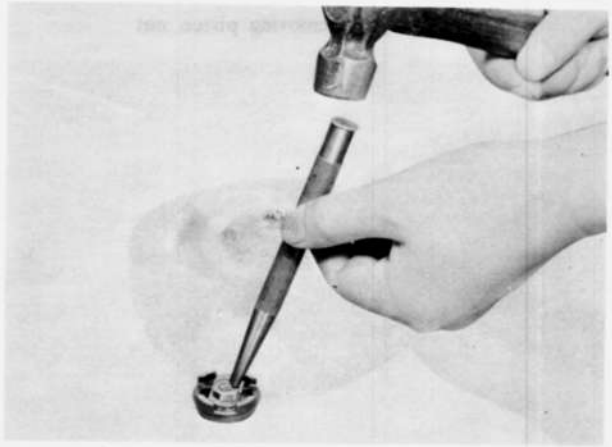

Fig. 13–21 Punching bolt

7. Insert the piston rod into the pressure tube from the bottom side.

8. Install the stopper guide onto the piston rod with the grooves of the stopper guide toward the base valve.

9. Install the stopper and back-up ring onto the piston rod.

10. Install the base valve assembly into the bottom of the pressure tube.

11. Install the two oil stop rings onto the bottom side of the pressure tube as shown in Fig. 13–23.

12. Insert the pressure tube and piston rod assembly into the reservoir tube.

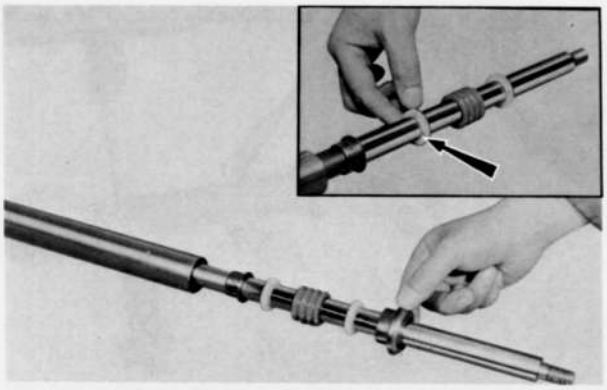

Fig. 13–22 Installing stopper guide

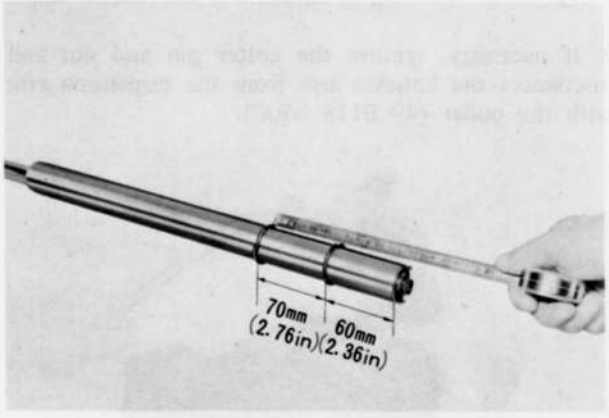

Fig. 13–23 Installing oil stop rings

13. Fill the reservoir tube with shock absorber fluid. The capacity of reservoir tube should be exactly **270 cc (16.5 cu-in).**

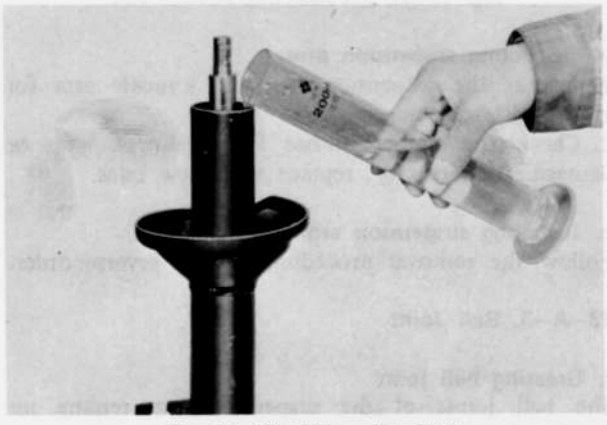

Fig. 13–24 Filling with fluid

14. Install the rod guide into the pressure tube and install a new "O" ring between the rod guide and reservoir tube.
15. Apply a light coating of grease to the lip of the cap nut oil seal and install the **oil seal guide** (49 0370 590) onto the top end of the piston rod, then insert the cap nut slowly onto the piston rod.
16. Tighten the cap nut temporarily, ensuring that the piston rod is extended to its maximum length, with the **cap nut wrench** (49 0259 702).
17. Fully lower the piston rod and tighten the cap nut to **5.0 ~ 6.0 m-kg (36.0 ~ 43.0 ft-lb)** with the **cap nut wrench** (49 0259 700A). Then, install the dust cover.



Fig. 13–25 Inserting cap nut and seal assembly

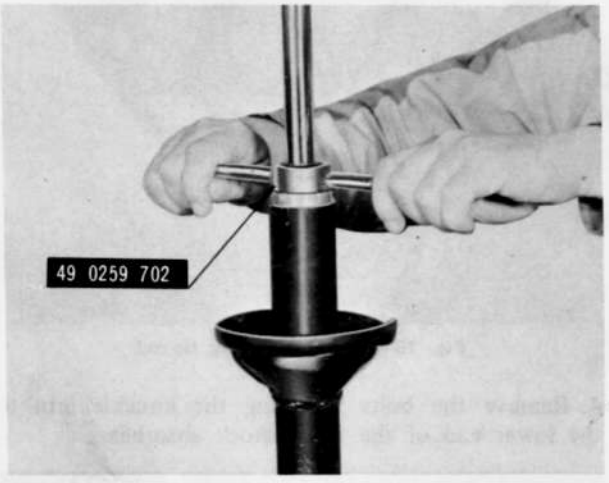

Fig. 13–26 Tightening cap nut temporarily



Fig. 13–27 Tightening cap nut

18. Install the damper stopper onto the piston rod.
19. Install the dust boot onto the piston rod.
20. Install the coil spring onto the reservoir tube.
21. Install the dust boot, spring seat, spacer, and shock absorber support in that order.
22. Tighten the support nut.

e. Installing front shock absorber
Follow the removal procedures in the reverse order.

Note :
When replacing the coil spring, adjust the road clearance by combining the coil spring and adjusting plate to equal road clearance both on the right and left.

13–A–2. Suspension Arm

a. Removing suspension arm
1. Raise the front end of the vehicle and support with stands.
2. Remove the front wheel.
3. Disconnect the tie-rod from the knuckle arm by removing the cotter pin and nut and using the **puller** (49 0118 850C).

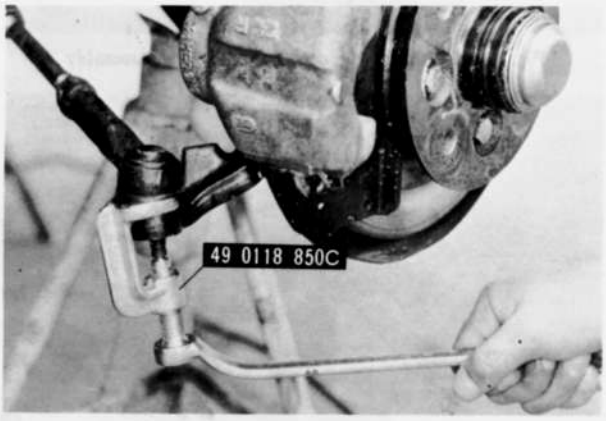

Fig. 13–28 Disconnecting tie-rod

4. Remove the bolts attaching the knuckle arm to the lower end of the front shock absorber.

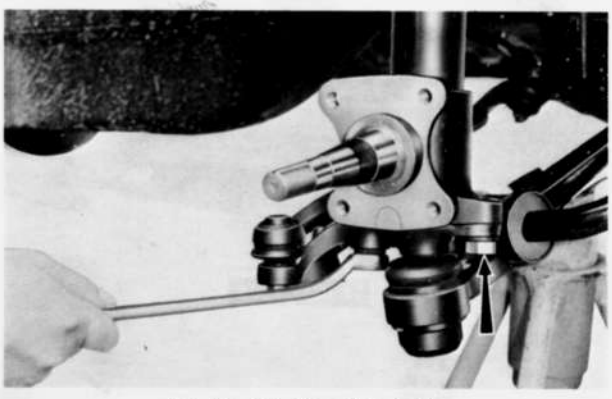

Fig. 13–29 Removing bolts

5. Remove the steering stopper, cotter pin, nut, washer and rubber bush holding the stabilizer bar to the suspension arm.
6. Remove the nut and bolt attaching the suspension arm to the cross member. Remove the suspension arm and knuckle arm.
7. Hold the suspension arm in a vise. Check the suspension arm, knuckle arm and ball joint as instructed in Par. 13–A–2 (step b) and in Par. 13–A–3 (step b).

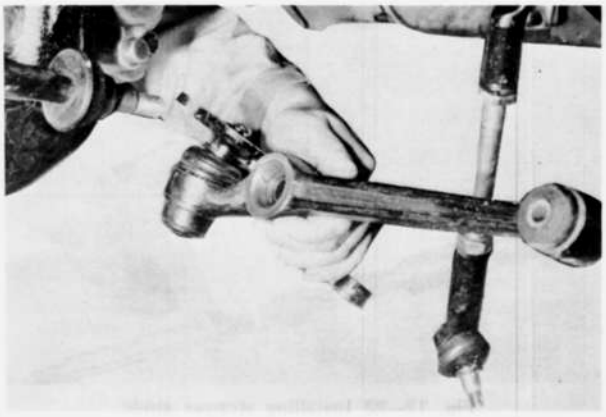

Fig. 13–30 Removing suspension arm and knuckle arm

8. If necessary, remove the cotter pin and nut and disconnect the knuckle arm from the suspension arm with the puller (49 0118 850C).



Fig. 13–31 Disconnecting knuckle arm

b. Inspecting suspension arm
1. Inspect the suspension arm and knuckle arm for any crack or damage.
2. Check the rubber bushes for weakness, wear or damage. If necessary, replace with new ones.

c. Installing suspension arm
Follow the removal procedures in the reverse order.

13–A–3. Ball Joint

a. Greasing ball joint
The ball joints of the suspension arm require no greasing for **48,000 km (32,000 miles)**.
When greasing becomes necessary on the ball joint, proceed as follows :
1. Remove the set ring from the groove on the dust seal and turn the dust seal inside out.
2. Remove the plug and fit a grease nipple in its stead.
3. Remove all of the used grease in the socket and the dust seal by gradually supplying new **Molybdenum Disulphide Grease** through the nipple.
4. When the used grease is thoroughly removed, fit the dust seal to the groove on the socket and secure it in place with the set ring.
5. Add new grease until the dust seal begins to baloon. Then, depress the dust seal with the fingers

so that about half of the grease remains in the dust seal.
6. Wipe off excess grease around the ball joint.
7. Remove the grease nipple and fit the plug.

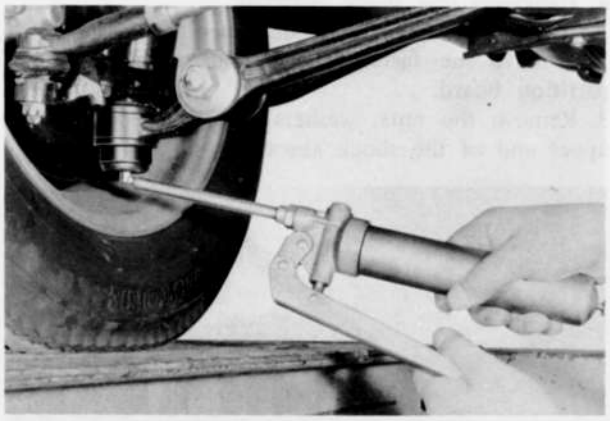

Fig. 13–32 Supplying new grease

b. Checking ball joint

1. Check the dust seal for wear, flaw or any damage. If the dust seal is defective, this will allow entry of water and dirt, resulting in ball joint wear.
2. Check the revolving torque of the ball stud. To check, hook the pull scale in the hole of the knuckle arm for connecting the tie-rod and pull the scale until the knuckle arm starts to turn. The reading of the scale should be **12 ~ 18 kg (26.5 ~ 39.7 lb)**. If it is less than **12 kg (26.5 lb)**, replace the ball joint in its assembled form.



Fig. 13–33 Checking revolving torque

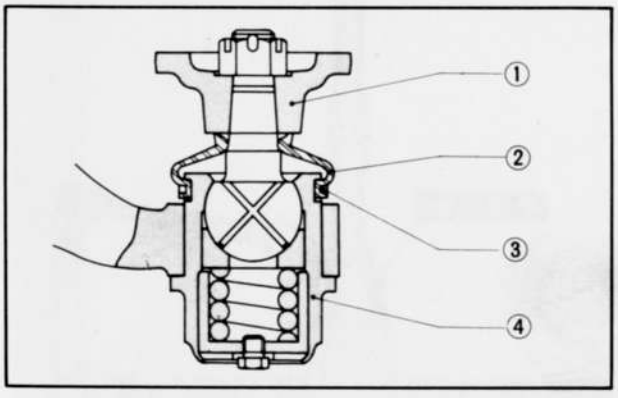

Fig. 13–34 Ball joint cross section

1. Knuckle arm
2. Dust seal
3. Set ring
4. Ball joint

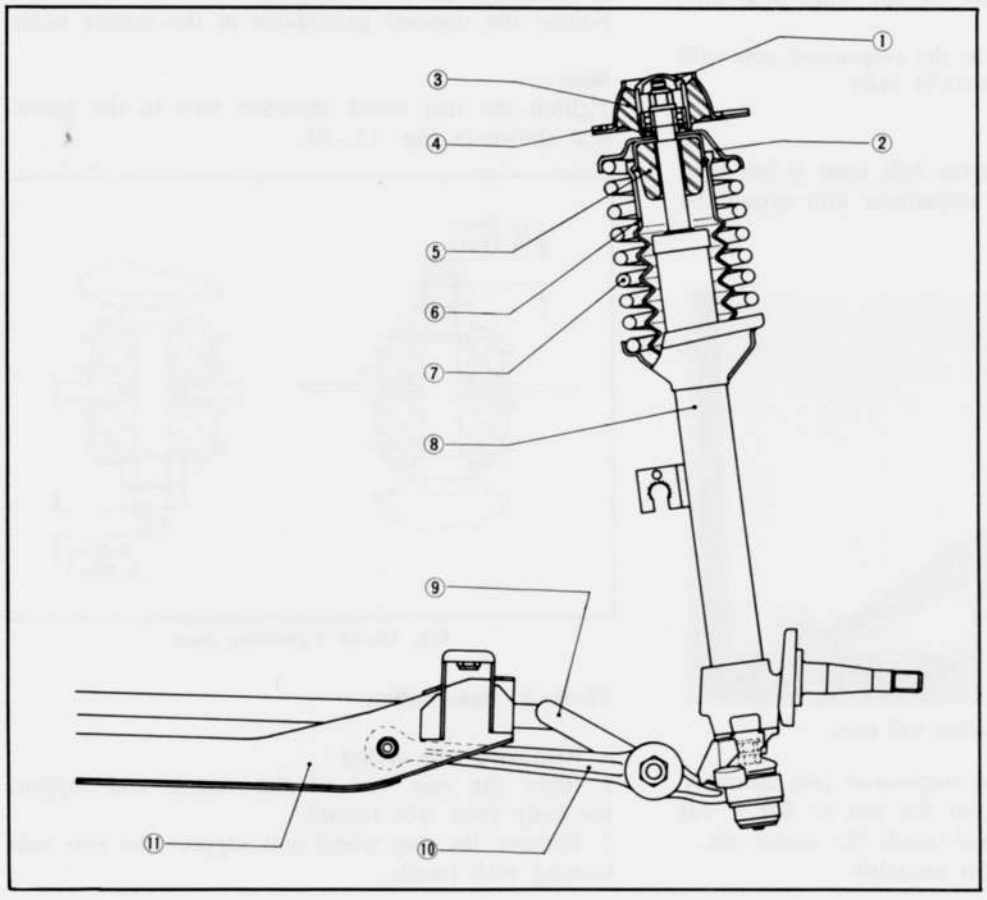

Fig. 13–35 Front suspension

1. Cap
2. Spring seat
3. Shock absorber support
4. Road clearance adjusting plate
5. Damper stopper
6. Dust boot
7. Coil spring
8. Front shock absorber
9. Stabilizer bar
10. Suspension arm
11. Cross member

c. Replacing ball joint

1. Remove the suspension arm from the vehicle and disconnect the suspension arm from the knuckle arm with the suitable puller as described in Par. 13–A–2. (step a).
2. Remove the set ring and dust seal from the ball joint.
3. Press the ball joint out of the suspension arm with the **ball joint remover** (49 0370 860).

Note :
Before pressing out the ball joint, clean the ball joint and suspension arm so as not to damage the mounting bore of the suspension arm.

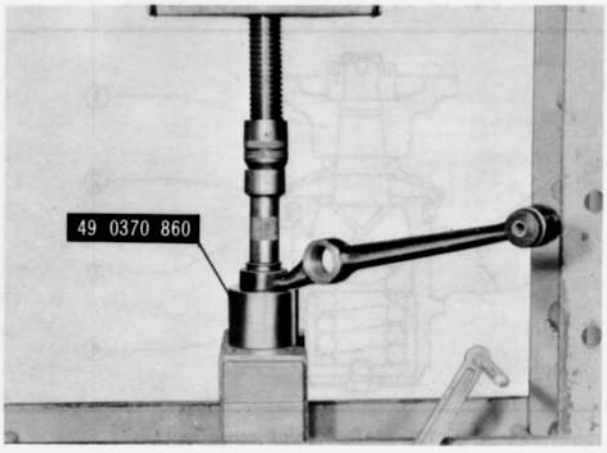

Fig. 13–36 Removing ball joint

4. Clean the mounting bore of the suspension arm and apply kerosene.
5. Press fit the ball joint to the suspension arm with the **ball joint installer** (49 0370 860).

Note :
If the pressure to press in the ball joint is less than **1,500 kg (3,300 lb),** the suspension arm should be replaced.

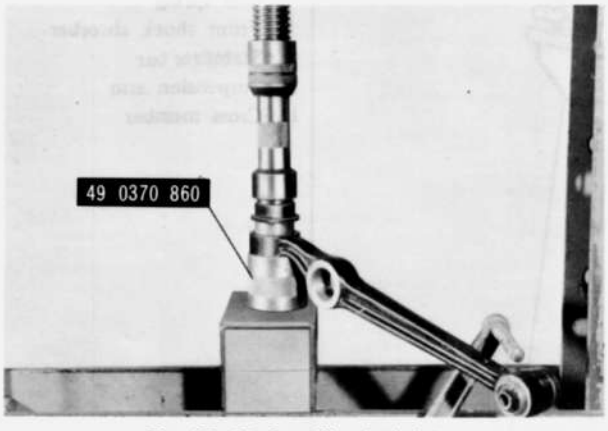

Fig. 13–37 Installing ball joint

6. Install the ball joint and suspension arm assembly to the knuckle arm. Tighten the nut to **6.0 ~ 7.0 m-kg (43.0 ~ 50.0 ft-lb)** and install the cotter pin.
7. Install the suspension arm assembly.

13–B. REAR SUSPENSION

13–B–1. Rear Shock Absorber

a. Removing rear shock absorber

1. Remove the rear seat, as described in Par. 14–H–1.
2. Remove the fasteners and remove the fuel tank partition board.
3. Remove the nuts, washers and rubber bush from upper end of the shock absorber.

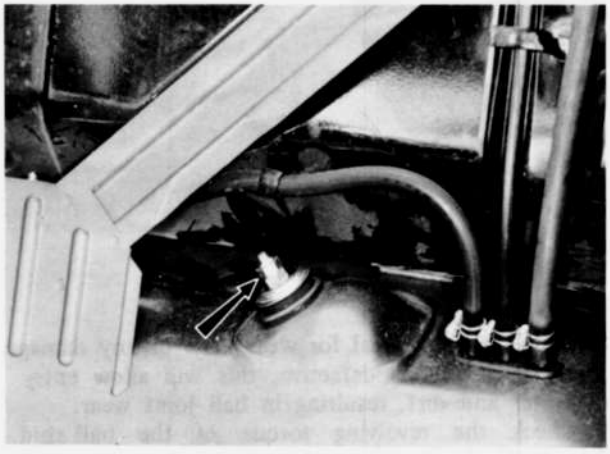

Fig. 13–38 Removing nuts

4. Remove nuts attaching the lower end of the shock absorber to the spring clamp, and remove the shock absorber.

b. Installing rear shock absorber

Follow the removal procedures in the reverse order.

Note :
Tighten the rear shock absorber nuts to the dimension shown in Fig. 13–39.

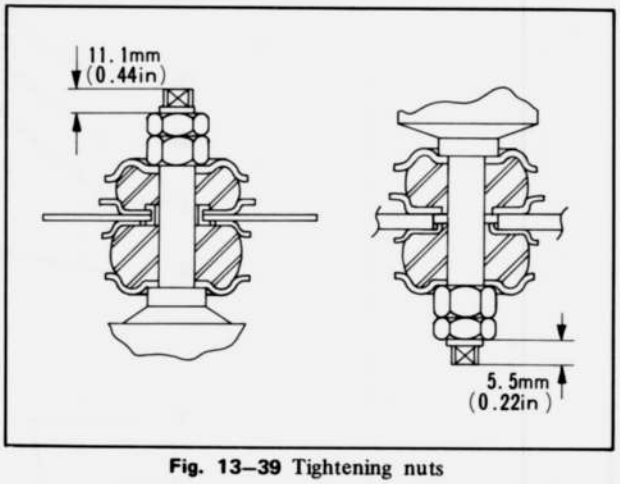

Fig. 13–39 Tightening nuts

13–B–2. Rear Spring

a. Removing rear spring

1. Raise the rear end of the vehicle and support the body (rear side frame).
2. Remove the rear wheel and support the rear axle housing with stands.

3. Disconnect the lower end of the rear shock absorber from the spring clamp by removing the nuts.
4. Remove the "U"-bolt attaching nuts, and then remove the bound bumber, rubber pads, holder, spring clamp and "U"-bolts.



Fig. 13–40 Removing "U"-bolt attaching nuts

5. Remove the two bolts and one nut attaching the spring pin located at the front end of the rear spring. Insert a suitable tool as a screwdriver between the spring pin and bracket of the body, and pry them.
6. Remove the shackle nuts, shackle plate and shackle and remove the rear end of the rear spring from the vehicle.
7. Remove the bushes from the rear end of the rear spring.
8. Remove the bushes from the front end of the rear spring.

b. Disassembling rear spring

1. Pry the four clips with a suitable tool.

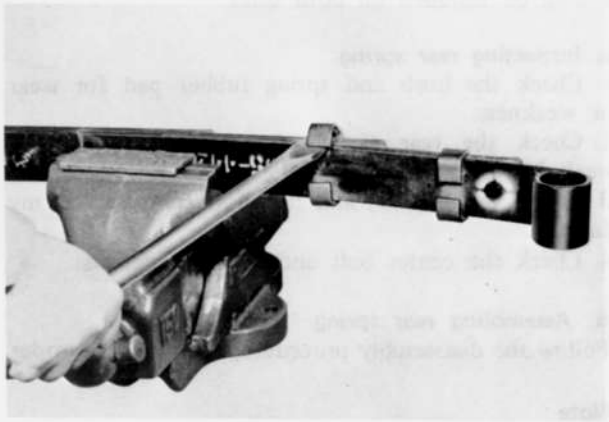

Fig. 13–41 Removing clip

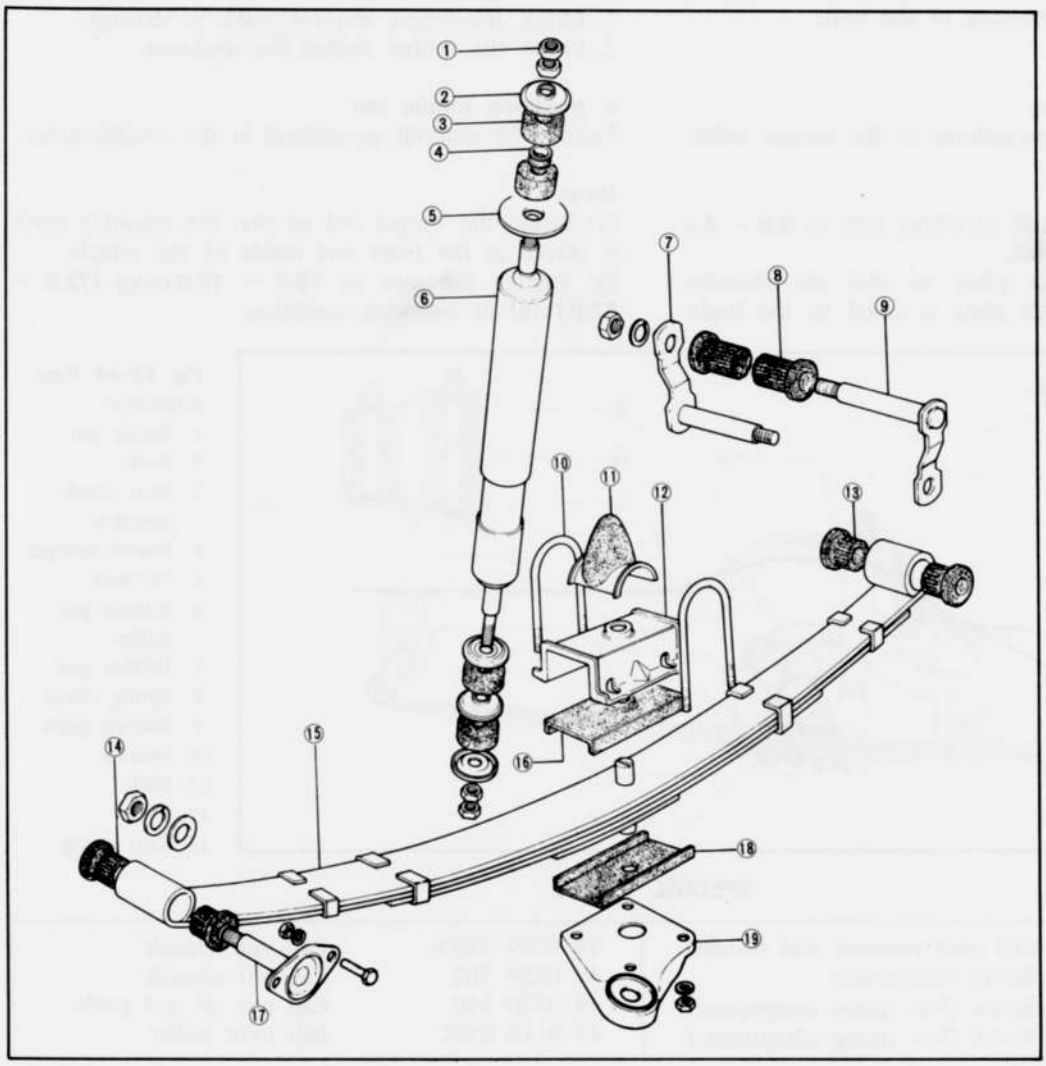

Fig. 13–42
Rear suspension components
1. Nut
2. Washer
3, Bush
4. Bush
5. Washer
6. Rear shock absorber
7. Shackle plate
8. Bush
9. Shackle
10. "U" bolt
11. Bound bumper
12. Holder
13. Bush
14. Bush
15. Rear spring
16. Rubber pad
17. Spring pin
18. Rubber pad
19. Spring clamp

2. Remove the center bolt and nut, and disassemble the rear spring.

Note :
According to the size of camber, the rear springs are classified into the three categories of –, 0, and +. They are marked on the main leaf. Since difference in camber between the right and left springs results in a difference in road clearance causing inclination of the vehicle, those with the same mark should be installed on both sides.

c. Inspecting rear spring
1. Check the bush and spring rubber pad for wear or weakness.
2. Check the rear springs for breakage, cracks or weak leaves.
3. Check the shackle, and "U"-bolt for wear or any damage.
4. Check the center bolt and clips for defects.

d. Assembling rear spring
Follow the disassembly procedures in the reverse order.

Note :
(a) Bend the clips until the leaves are firmly contacted.
(b) After tightening the center bolt and nut, punch the nut to prevent loosening of the bolt.

e. Installing rear spring
Follow the removal procedures in the reverse order.

Note :
(a) Tighten the "U"-bolt attaching nuts to **3.8 ~ 4.6 m-kg (27.0 ~ 33.0 ft-lb)**.
(b) Install the shackle plate so that the chamfer on the hole of shackle plate is faced to the bush. The pressed mark on the shackle plate should be faced outward, as shown in Fig. 13–43.

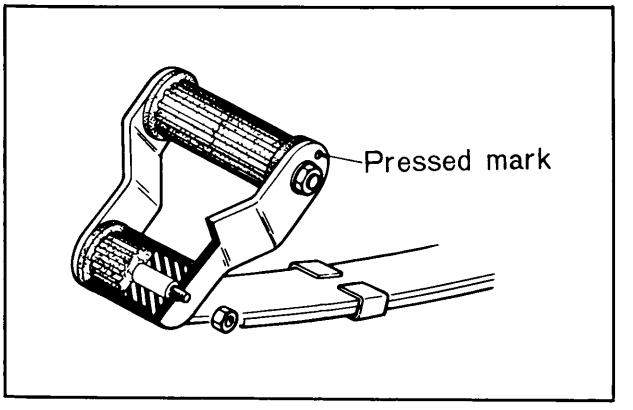

Fig. 13–43 Installing shackle plate

13–B–3. Torque Rod (E.C.E. Vehicles Only (excluding England))

a. Removing torque rod
1. Raise the rear end of the vehicle and support the rear axle housing with stands.
2. Remove the torque rod attaching bolt and nuts and remove the torque rod.

b. Checking torque rod
1. Check the torque rod for crack or damage.
2. Check the rubber bushes for weakness.

c. Installing torque rod
Follow the removal procedures in the reverse order.

Note:
(a) Install the torque rod so that the assembly mark is placed at the front and inside of the vehicle.
(b) Tighten the nuts to **10.0 ~ 12.0 m-kg (72.0 ~ 87.0 ft-lb)** in unloaded condition.

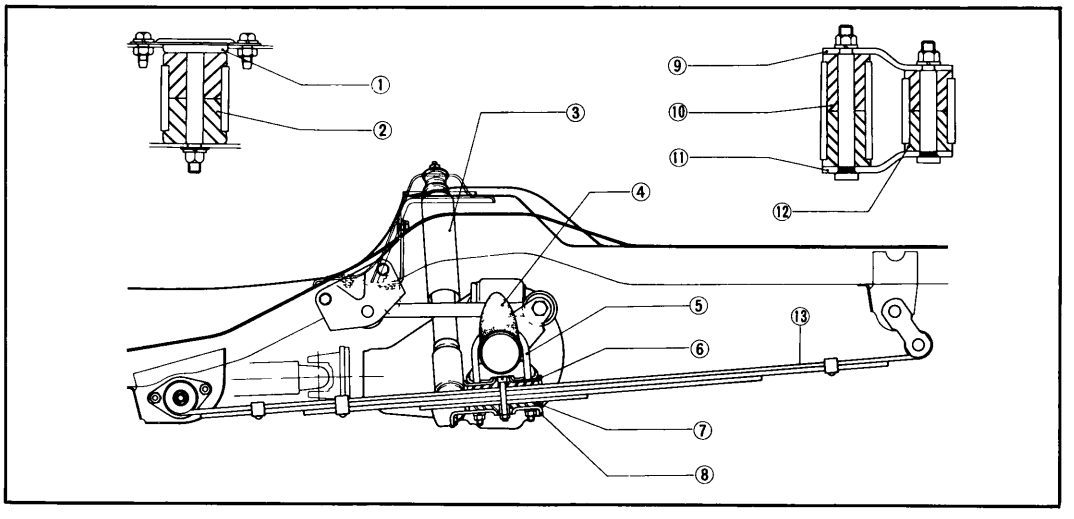

Fig. 13–44 Rear suspension
1. Spring pin
2. Bush
3. Rear shock absorber
4. Bound bumper
5. "U"-bolt
6. Rubber pad holder
7. Rubber pad
8. Spring clamp
9. Shackle plate
10. Shackle
11. Bush
12. Bush
13. Rear spring

SPECIAL TOOLS

49 0370 860	Ball joint remover and installer	49 0259 700A	Cap nut wrench
49 0223 640A	Spring compressor	49 0259 702	Cap nut wrench
49 0370 641	Screw (For spring compressor)	49 0370 590	Cap nut oil seal guide
49 0223 641	Screw (For spring compressor)	49 0118 850C	Ball joint puller

BODY

DESCRIPTION ..... 14 : 1
14–A. HOOD ..... 14 : 1
14–A–1. Removing Hood ..... 14 : 1
14–A–2. Installing Hood ..... 14 : 1
14–A–3. Adjusting Hood ..... 14 : 1
14–A–4. Adjusting Hood Latch ..... 14 : 2
14–B. LUGGAGE COMPARTMENT DOOR ..... 14 : 2
14–B–1. Removing Luggage Door ..... 14 : 2
14–B–2. Installing Luggage Door ..... 14 : 2
14–B–3. Adjusting Luggage Door ..... 14 : 2
14–B–4. Adjusting Luggage Door Latch ..... 14 : 2
14–C. FRONT BUMPER ..... 14 : 3
14–C–1. Removing Front Bumper ..... 14 : 3
a. U.S.A. and Canada vehicles (sedan & wagon) ..... 14 : 3
b. U.S.A. and Canada vehicles (hard top) E.C.E., Australia and England vehicles ..... 14 : 3
14–C–2. Checking Shock Absorber ..... 14 : 4
14–C–3. Installing Front Bumper ..... 14 : 4
14–D REAR BUMPER ..... 14 : 4
14–D–1. Removing Rear Bumper ..... 14 : 4
a. U.S.A. and Canada vehicles (sedan & wagon) ..... 14 : 4
b. U.S.A. and Canada vehicles (hard top) E.C.E., Australia and England vehicles ..... 14 : 4
14–D–2. Checking Shock Absorber ..... 14 : 5
14–D–3. Installing Rear Bumper ..... 14 : 5
14–E. WINDSHIELD GLASS ..... 14 : 8
14–E–1. Removing Windshield Glass ..... 14 : 8
14–E–2. Installing Windshield Glass ..... 14 : 9
14–F. REAR WINDOW GLASS ..... 14 : 11
14–F–1. Removing and Installing Rear Window Glass ..... 14 : 11
14–F–2. Heatable Window ..... 14 : 11
14–G. FRONT SEAT ..... 14 : 12
14–G–1. Front Seat Replacement ..... 14 : 12
14–G–2. Seat Adjuster Inspection ..... 14 : 12
14–G–3. Reclining Knuckle Replacement ..... 14 : 12
14–H. REAR SEAT ..... 14 : 12
14–H–1. Removing Rear Seat ..... 14 : 12
14–H–2. Installing Rear Seat ..... 14 : 12
14–I. DOOR ..... 14 : 12
14–I–1. Door Adjustment ..... 14 : 12
a. Adjusting door latch striker ..... 14 : 12
b. Adjusting door alignment ..... 14 : 12
14–I–2. Door Hinge Replacement ..... 14 : 13
14–I–3. Door Weatherstrip Replacement (Sedan & Wagon) ..... 14 : 13
14–I–4. Door Weatherstrip Replacement (Hard Top) ..... 14 : 14
14–J. FRONT DOOR (Sedan & Wagon) ..... 14 : 14
14–J–1. Door Window Regulator and Glass ..... 14 : 14
a. Removing door window regulator and glass ..... 14 : 14
b. Checking door window regulator ..... 14 : 14
c. Installing door window regulator and glass ..... 14 : 14
14–J–2. Door Latch, Lock Cylinder and Outer Handle ..... 14 : 14
a. Removing door latch, lock cylinder and outer handle ..... 14 : 14
b. Installing door latch, lock cylinder and outer handle ..... 14 : 15
14–K. FRONT DOOR (Hard Top) ..... 14 : 17
14–K–1. Door Window Regulator and Glass ..... 14 : 17
a. Removing door window regulator and glass ..... 14 : 17
b. Checking door window regulator ..... 14 : 17
c. Installing door window regulator and glass ..... 14 : 17
14–K–2. Inner Handle, Door Latch and Outer Handle ..... 14 : 17
a. Removing inner handle ..... 14 : 17
b. Installing inner handle ..... 14 : 17
c. Removing door latch ..... 14 : 17
d. Installing door latch ..... 14 : 17
e. Removing outer handle ..... 14 : 17
f. Installing outer handle ..... 14 : 18
14–K–3. Front Door Glass Regulator Adjustment ..... 14 : 18
a. Horizontal adjustment of the window ..... 14 : 18
b. The fore and aft adjustment of the window ..... 14 : 18
c. Vertical adjustment of the window ..... 14 : 18
d. The in and out adjustment of the window ..... 14 : 18
e. Final check ..... 14 : 18
14–L. REAR DOOR ..... 14 : 19
14–L–1. Stationary Glass ..... 14 : 19
a. Removing stationary glass ..... 14 : 19
b. Installing stationary glass ..... 14 : 20
14–L–2. Rear Door Window Regulator and Glass ..... 14 : 20
a. Removing rear door window regulator and glass ..... 14 : 20
b. Installing rear door window regulator and glass ..... 14 : 20
14–M. QUARTER WINDOW ..... 14 : 20
14–M–1. Removing the quarter trim ..... 14 : 20
14–M–2. Installing the quarter trim ..... 14 : 21
14–M–3. Removing the quarter window glass ..... 14 : 21
14–M–4. Installing the quarter window glass ..... 14 : 21
14–M–5. Removing regulator ..... 14 : 21
14–M–6. Installing the regulator ..... 14 : 21
14–N. QUARTER WINDOW ADJUSTMENT ..... 14 : 22
14–N–1. Horizontal Adjustment of the Window Glass ..... 14 : 22
14–N–2. Vertical Adjustment of the Window Glass ..... 14 : 22
14–N–3. The Fore and Aft Adjustment of the Window ..... 14 : 22
14–N–4. The In and Out Adjustment ..... 14 : 22
14–O. TOP CEILING ..... 14 : 24
14–O–1. Removing Top Ceiling ..... 14 : 24
14–O–2. Installing Top Ceiling ..... 14 : 25
14–P. INSTRUMENT PANEL ..... 14 : 26
14–P–1. Removing Instrument Panel Assembly ..... 14 : 26
14–P–2. Installing Instrument Panel Assembly ..... 14 : 28
SPECIAL TOOLS ..... 14 : 28
BODY CHECKING DIMENSION, SEDAN & HARD TOP ..... 14 : 30
BODY CHECKING DIMENSION, ROTARY WAGON ..... 14 : 31

14

DESCRIPTION

The body is designed to give an unitary construction with the body and chassis frame unified for light, rigid and durable construction. This section explains service procedures of the hood, luggage compartment, bumper, door, seat, top ceiling, windshield.

14–A. HOOD

14–A–1. Removing Hood

1. Open the hood and support the hood in the open position. Mark the hood hinge locations on the hood.
2. Remove the hood support from the hood.

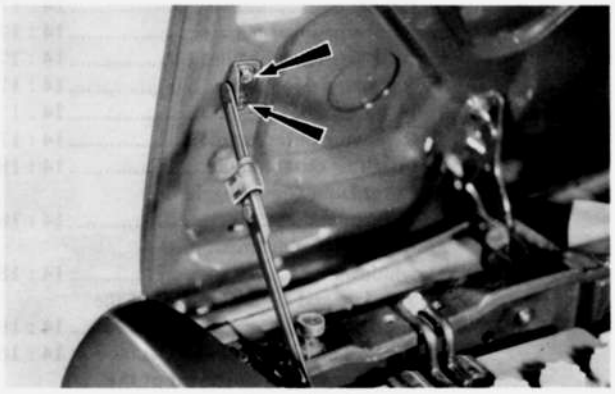

Fig. 14–1 Removing hood support

3. Remove two nuts attaching each hinge to the hood.
4. Remove the hood from the vehicle.



Fig. 14–2 Removing hinge attaching bolts

14–A–2. Installing Hood

Follow the removal procedures in the reverse order and adjust the hood by applying the procedures explained in the following paragraph.

14–A–3. Adjusting Hood

The hood is provided with to-and-fro, up-and-down and side-to-side adjustments.

To make the to-and-fro and side-to-side adjustments, loosen the hood attaching bolts and move the hood to the proper position, then tighten the attaching bolts.

To make the up-and-down adjustment at the rear edge of the hood, loosen the hood stop bolts and move the hood to proper position, then tighten the attaching bolts.

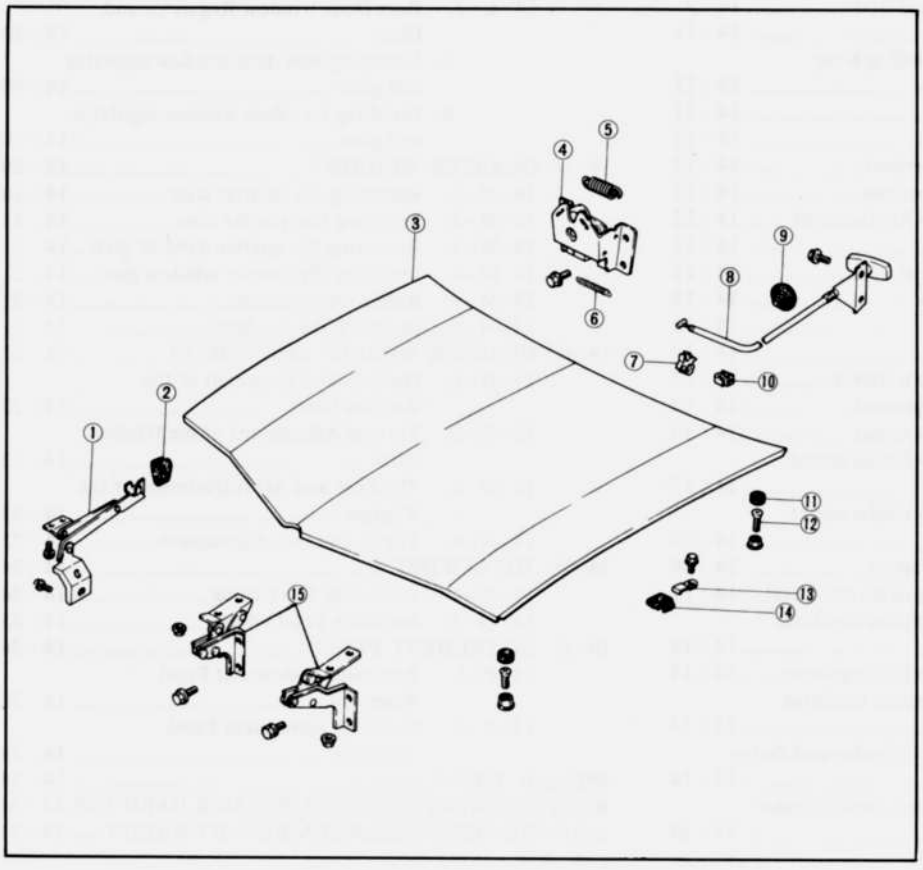

Fig. 14–3 Hood components

1. Hood support
2. Cushion rubber
3. Hood
4. Hood latch
5. Spring
6. Spring
7. Release wire clip
8. Release wire
9. Grommet
10. Release wire clamp
11. Cushion rubber
12. Screw
13. Set plate
14. Cushion rubber
15. Hood hinge

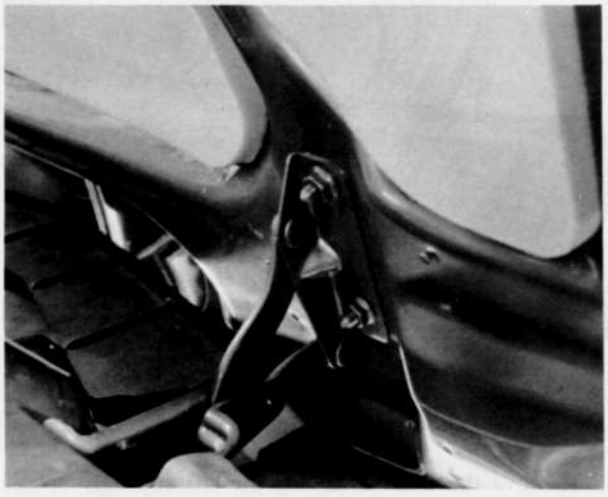

Fig. 14–4 To-and-fro adjustment

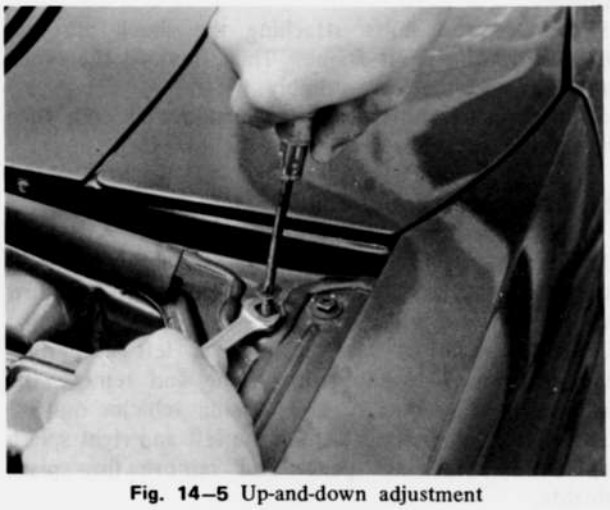

Fig. 14–5 Up-and-down adjustment

14–A–4. Adjusting Hood Latch

1. Make certain that it is properly aligned.
2. Loosen the hood latch attaching bolts. Then move it as required to align with the latch.
3. Loosen the attaching bolts on the hood latch, and adjust the position of the hood. The proper height of the hood is when it flushes with the fender.

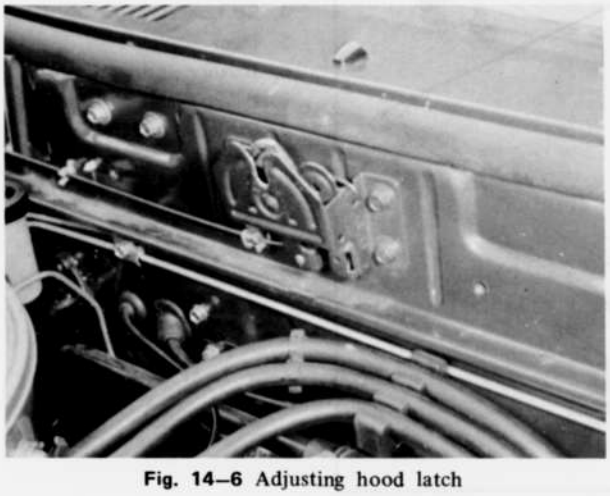

Fig. 14–6 Adjusting hood latch

14–B. LUGGAGE COMPARTMENT DOOR

14–B–1. Removing Luggage Compartment Door

1. Open the luggage compartment door and support the door in the luggage compartment.
2. Remove the two bolts attaching the hinge to the luggage compartment door.
3. Remove the luggage compartment door from the vehicle.

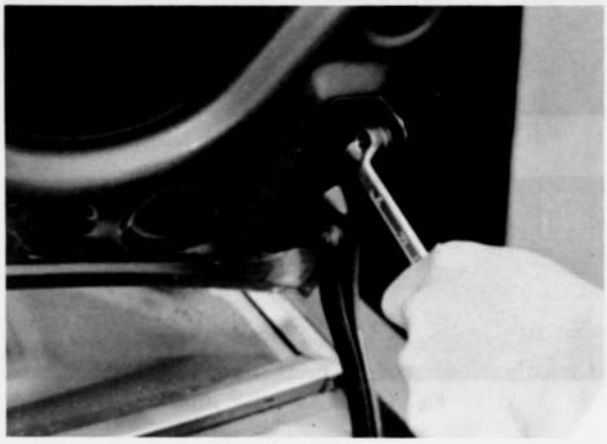

Fig. 14–7 Removing compartment door

14–B–2. Installing Luggage Compartment Door

Follow the removal procedures in the reverse order and adjust the luggage compartment door by applying procedures explained in the following paragraph.

14–B–3. Adjusting Luggage Compartment Door

To make the to-and-fro or side-to-side adjustment, loosen the luggage compartment door attaching bolts, and move the door as required.

To make the up-and-down adjustment, loosen the hinge-to-hinge support attaching bolts and raise or lower the hinge as required.



Fig. 14–8 Up-and-down adjustment

14–B–4. Adjusting Luggage Compartment Door Latch

To adjust the door latch, loosen the door latch striker attaching bolts, and move the striker as required, then tighten the attaching bolts.

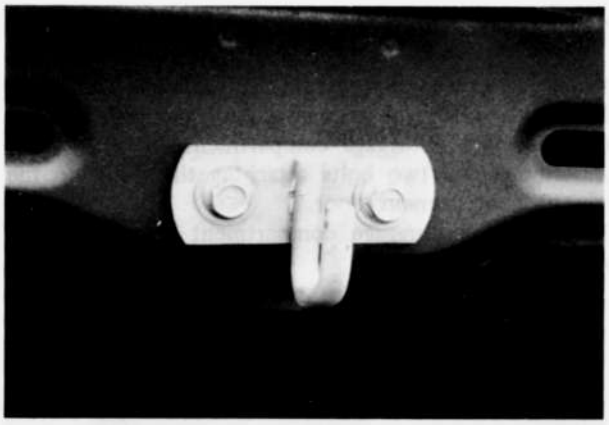

Fig. 14–9 Adjusting door latch



Fig. 14–10 Adjusting striker

14–C. FRONT BUMPER

14–C–1. Removing Fornt Bumper

a. U.S.A. and Canada vehicles (sedan & wagon)

1. Remove the screws attaching the left and right turn signal lights to the bumper and remove the turn signal lights form the bumper.
2. Remove the bolts attaching the left and right bumper ends to the fender.
3. Remove the nuts and bolts attaching the bumper to the left and right hinge plate.

Then, remove the bumper.



Fig. 14–11 Removing bolt

4. Remove the bolts attaching the left and right splash shields to the skirt panel and remove the splash shields.
5. Remove the bolts attaching the shock absorber bracket to the front frame. Then, remove the shock absorber and bracket assembly.
6. Remove the nuts from the piston rod end, then separates shock absorber form the bracket.

b. U.S.A. and Canada vehicles (hard top) E.C.E., Australia and England vehicles.

1. Remove the screws attaching the left and right turn signal lights to the bumper and remove the turn signal lights from the bumper.
2. Remove the bolts attaching the left and right bumper guards to the front frame and remove the bumper guards. (U.S.A. and Canada vehicles only)
3. Remove the bolts attaching the left and right splash shields to the skirt panel and remove the splash shields.
4. Remove the bolts attaching the left and right bumper stays to the front frame.
5. Remove the screws attaching the left and right

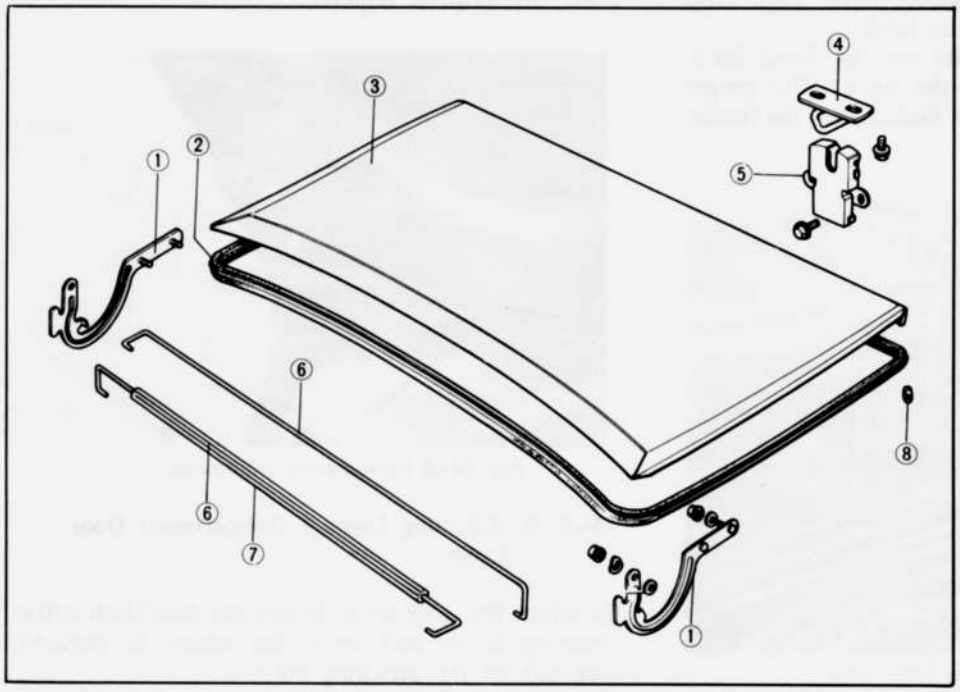

Fig. 14–12 Luggage compartment door components
1. Door hinge
2. Weatherstrip
3. Luggage compartment door (Tank lid)
4. Striker
5. Door latch
6. Balance spring
7. Balance spring protector
8. Cushion rubber

bumper ends to the inside of the frame and remove the bumper.
6. Remove the bolts attaching each bumper stay to the bumper and remove the stays.

14–C–2. Checking Shock Absorber
U.S.A. and Canada Vehicles Only (Sedan & Wagon)
To check the chock absorber, measure the dimension (A) shwon in Fig. 14–14.
This measurement should be **75 ± 2 mm (2.95 ± 0.08 in).**
If this measurement is not within the specification, replace the shock absorber with a new one.

14–C–3. Installing Front Bumper
Follow the removal procedures in the reverse order and align the bumper for good fit and appearance.

Note:
When installing the bumper equipped the vehicles for the U.S.A. and Canada (Sedan & Wagon), care must be taken in the following point:
(a) After installing the shock absorber assembly to the body frame, check the hinge plate height from the level ground surface.
The height should be **457 ± 29 mm (17.99 ± 1.14 in)** as shown in Fig. 14–13.
If necessary, adjust the height by moving the position of hinge plate or shock absorber assembly.
The hinge plate height must be equal on either side.
(b) If the bumper attaching bolts can not fit smoothly into the bumper and hinge plate holes, correct the posiiton of hinge plate or shock absorber assembly so that the bumper hole aligns with the hinge plate hole on either side.
Incorrectly installed bumper may cause its poor recovery.
(c) The bumper attaching bolt has a slight inclination on the under surface of the bolt head.
So, the bumper attaching bolt should be installed in the correct direction so that the under surface nicely fits the bumper surface.
(d) Tighten the bumper attaching bolt to **1.8 ~ 2.7 m-kg (13 ~ 19 ft-lb).**
(e) Tighten the shock absorber bracket attaching bolt to **1.8 ~ 2.7 m-kg (13 ~ 19 ft-lb).**

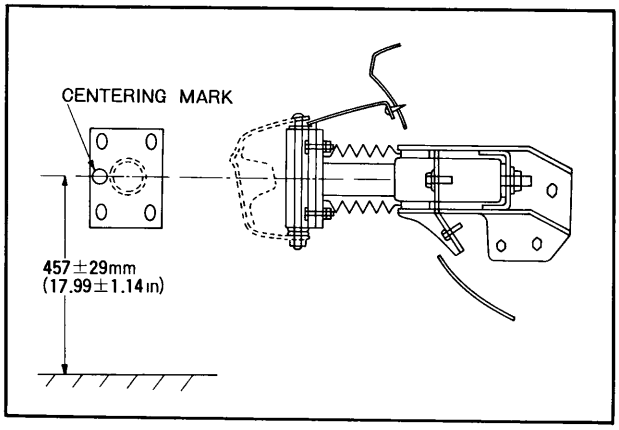

Fig. 14–13 Front hinge plate height

14–D. REAR BUMPER

14–D–1. Removing Rear Bumper

a. U.S.A. and Canada vehicles (sedan & wagon)
1. Remove the bolts attaching the left and right bumper ends to the fender.
2. Remove the nuts and bolts attaching the bumper to the left and right hinge plates. Then, remove the bumper.
3. Remove the bolts attaching the shock absorber bracket to the rear frame and nuts attaching the piston rod end to the rear frame. Then, remove the shock absorber and bracket assembly.
4. Remove the shock absorber from the bracket.

b. U.S.A. and Canada vehicles (hard top)
E.C.E., Australia and England vehicles.
1. Open the luggage compartment door and remove

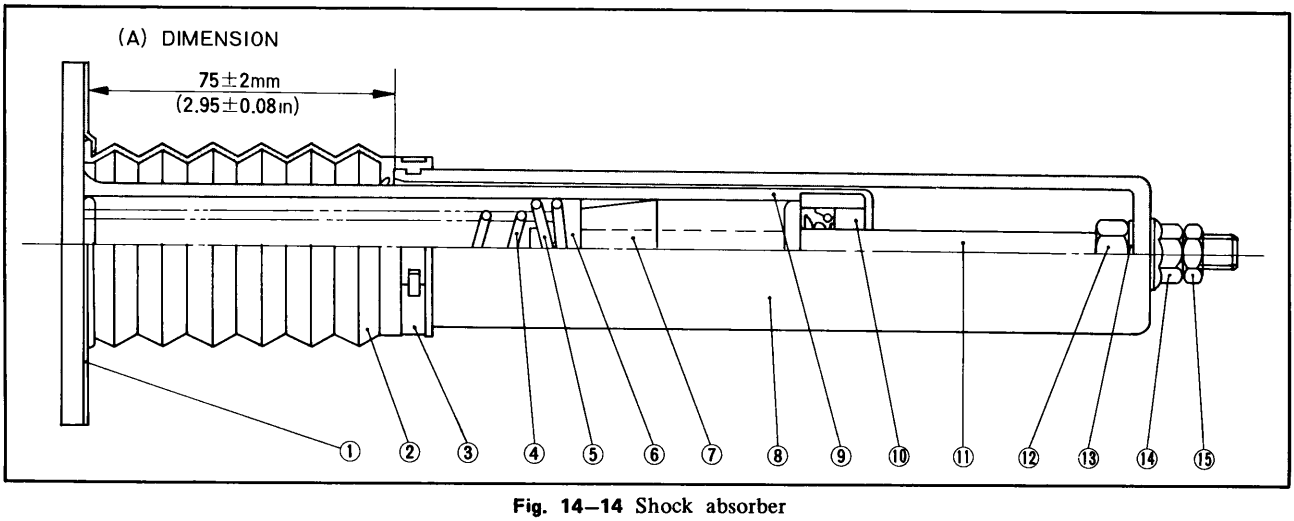

Fig. 14–14 Shock absorber

1. Boot plate
2. Boot
3. Boot clamp
4. Inner coil spring
5. Outer coil spring
6. Guide
7. Rubber bush
8. Outer casing
9. Inner casing
10. Inner casing end
11. Piston rod
12. Nut
13. Seal washer
14. Nut
15. Nut

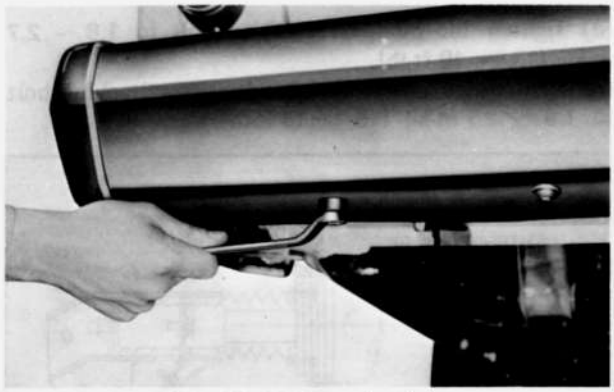

Fig. 14–15 Removing bolt

the luggage compartment end trim. (Sedan & Hard Top Only)
2. Remove the bolts and nuts attaching the left and right bumper stays to the body frame.
3. Remove the bolts attaching the left and right bumper end to the body and remove the bumper.
4. Remove the nuts attaching the left and right bumper guards to the bumper and remove the bumper guards. (U.S.A. and Canada Vehicles (Hard Top) Only)

14–D–2. Checking Shock Absorber
U.S.A. and Canada Vehicles Only (Sedan & Wagon)
To check the rear shock absorber, make the same inspection as for the front shock absorber described in **Par. 14–C–2.**

14–D–3. Installing Rear Bumper
Follow the removal procedures in the reverse order and align the bumper for good fit and appearance.

Note:
When installing the rear bumper equipped the vehicles for the U.S.A. and Canada (Sedan & Wagon), care should be taken the same as in the case of the front bumper installation described in **Par. 14–C–3.**

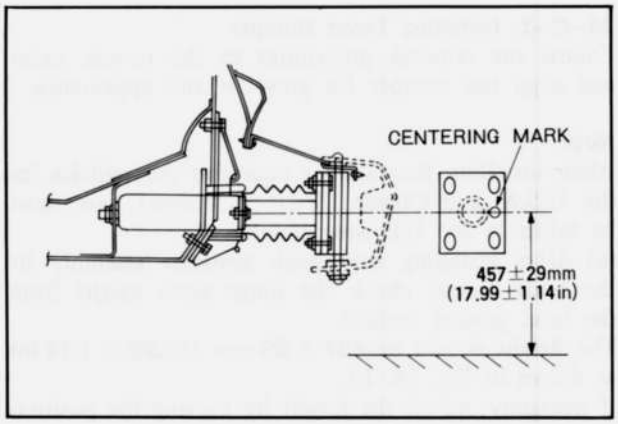

Fig. 14–16 Rear hinge plate height

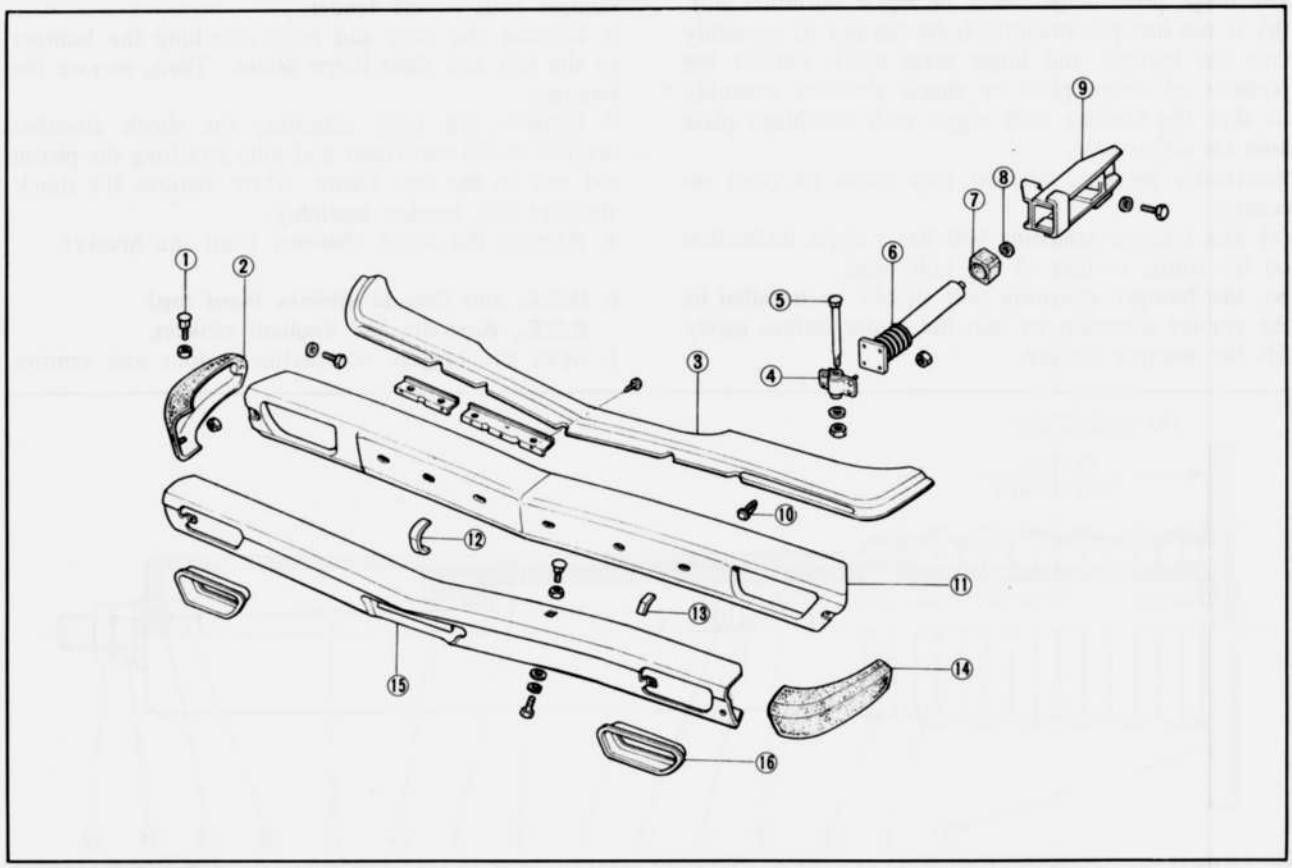

Fig. 14–17 Front bumper components – U.S.A. & Canada Vehicles (Sedan & Wagon)

1. Screw
2. Bumper (Right)
3. Bumper cover
4. Hinge plate
5. Bolt
6. Shock absorber
7. Mounting rubber
8. Seal washer
9. Shock absorber bracket
10. Rivet
11. Bumper (Center)
12. Spacer
13. Spacer
14. Bumper (Left)
15. Bumper (Outer)
16. Turn signal ring

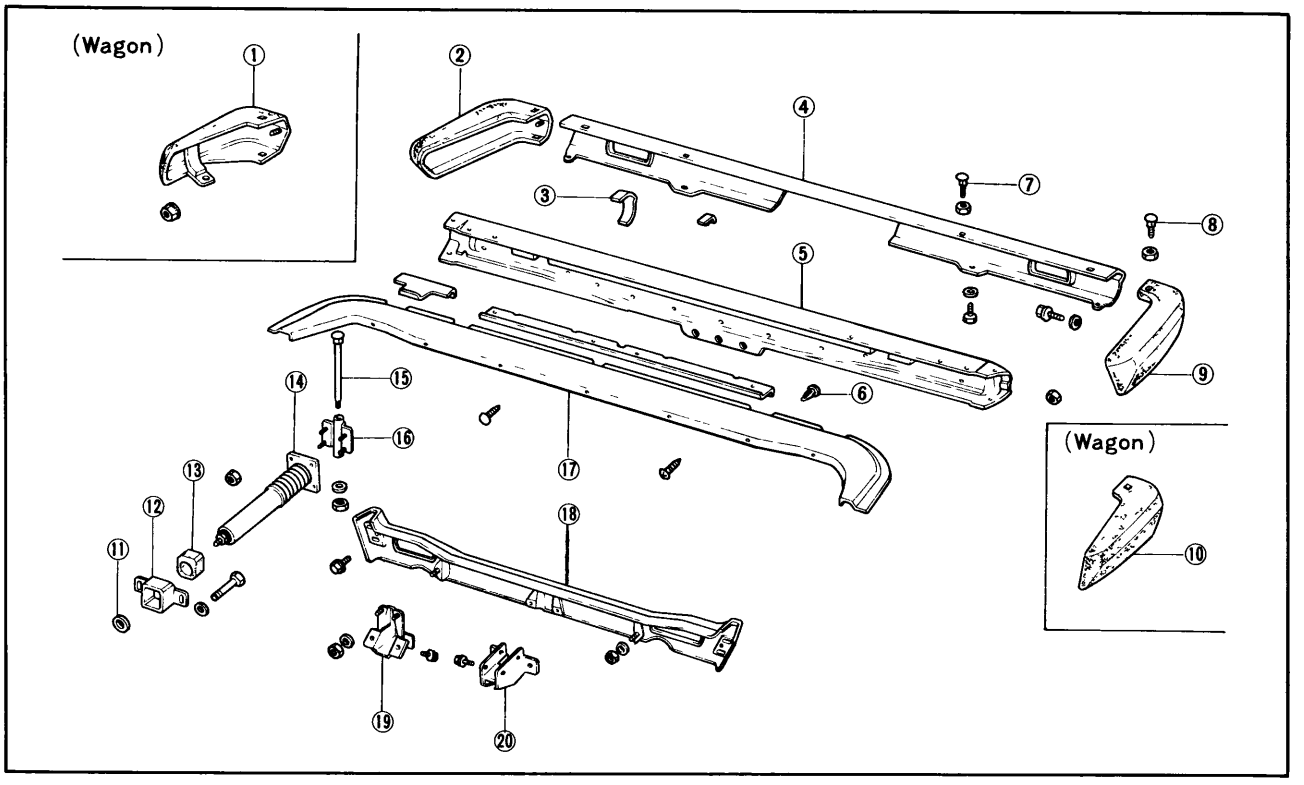

Fig. 14–18 Rear bumper components – U.S.A. & Canada Vehicles (Sedan & Wagon)

1. Bumper (Right, Wagon)
2. Bumper (Right, Sedan)
3. Spacer
4. Bumper (Outer)
5. Bumper (Center)
6. Rivet
7. Screw
8. Screw
9. Bumper (Left, Sedan)
10. Bumper (Left, Wagon)
11. Seal Washer
12. Shock absorber bracket
13. Mounting rubber
14. Shock absorber
15. Bolt
16. Hinge plate
17. Bumper cover
18. Garnish (Sedan)
19. Bumper bracket (Sedan)
20. Bumper bracket (Wagon)

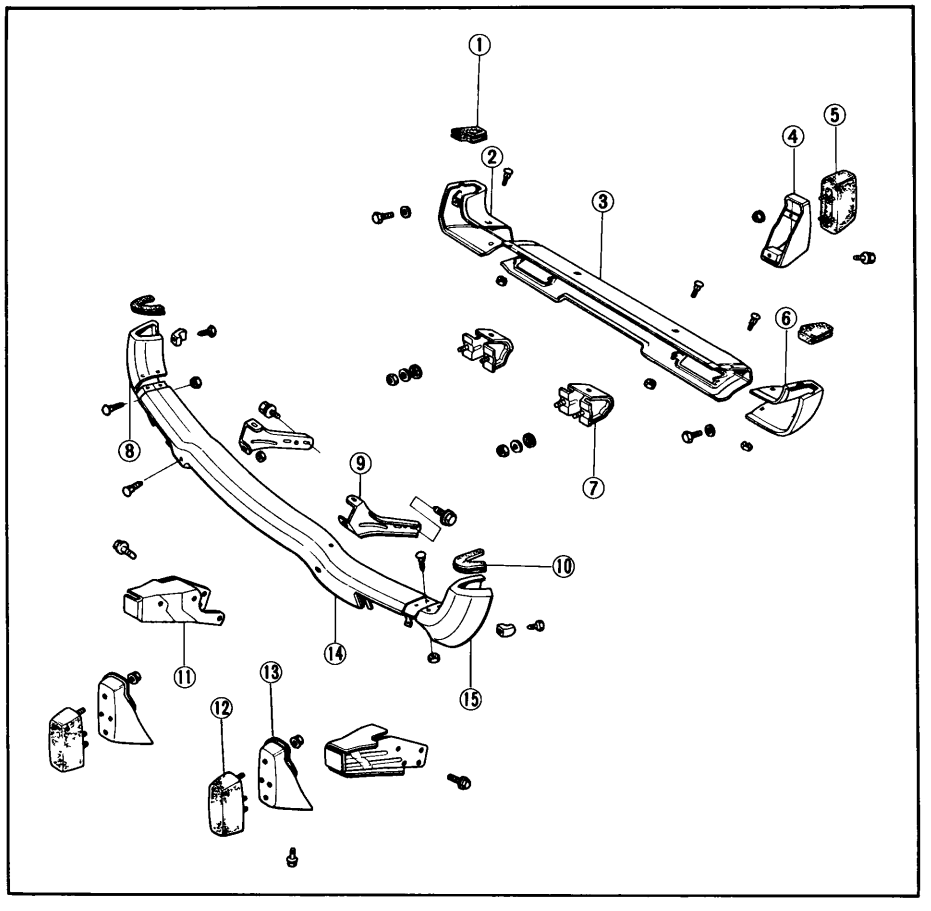

Fig. 14–19 Bumper components – U.S.A. & Canada Vehicles (Hard Top)

1. Cover
2. Rear bumper (Right)
3. Rear bumper (Center)
4. Bumper guard bracket
5. Bumper guard
6. Rear bumper (Left)
7. Bumper stay
8. Front bumper (Right)
9. Bumper stay
10. Cover
11. Bumper bracket
12. Bumper guard
13. Bumper guard bracket
14. Front bumper (Center)
15. Front bumper (Left)

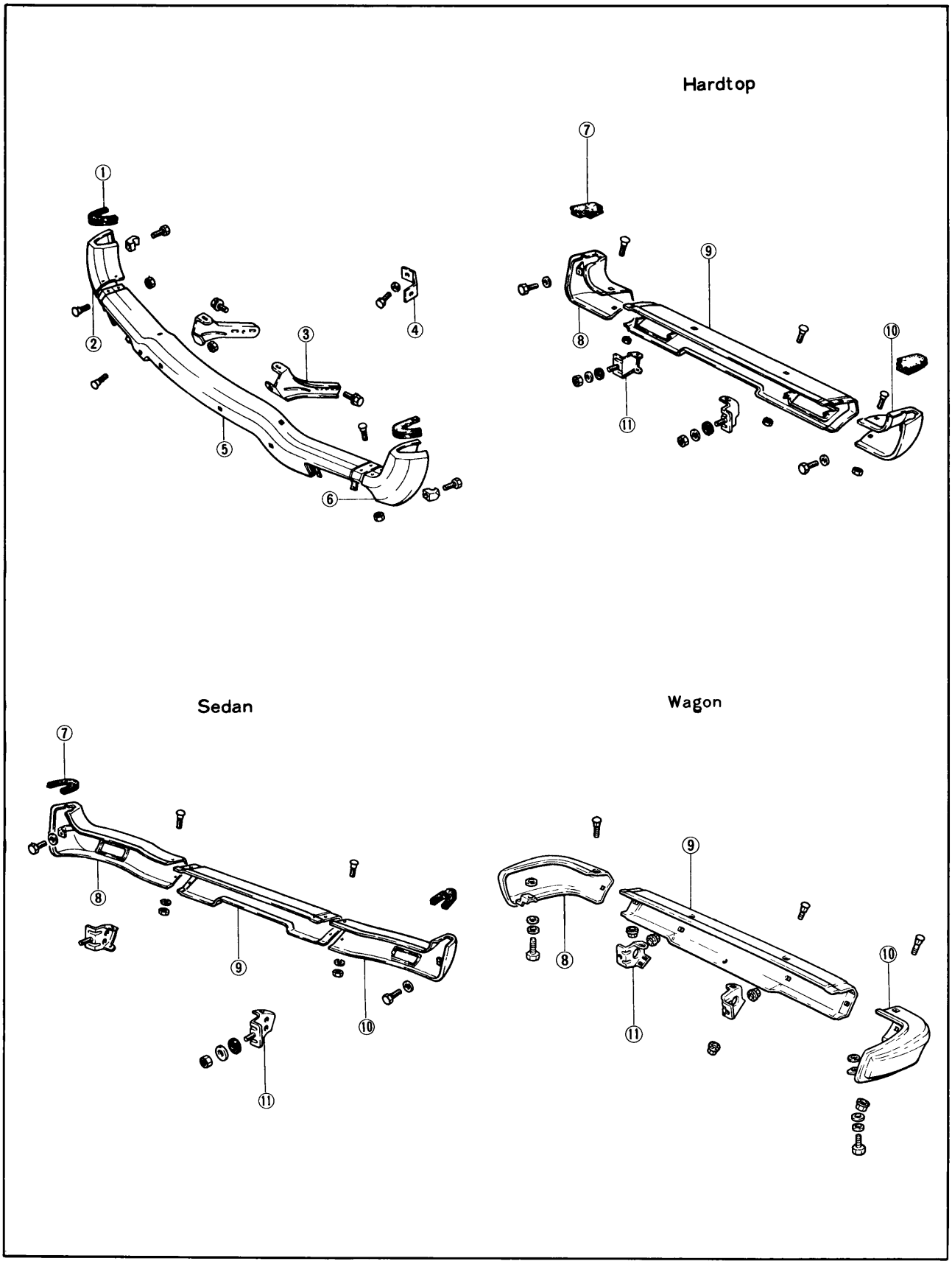

Fig. 14–20 Front bumper and rear bumper components – E.C.E., Australia and England Vehicles

1. Cover
2. Front bumper (Right)
3. Bumper stay
4. Bumper bracket
5. Front bumper (Center)
6. Front bumper (Left)
7. Cover
8. Rear bumper (Right)
9. Rear bumper (Center)
10. Rear bumper (Left)
11. Bumper stay

14–E. WINDSHIELD GLASS

14–E–1. Removing Windshield Glass

To replace the windshield glass, use the **window service tool set** (49 0305 870) shown in Fig. 14–25.

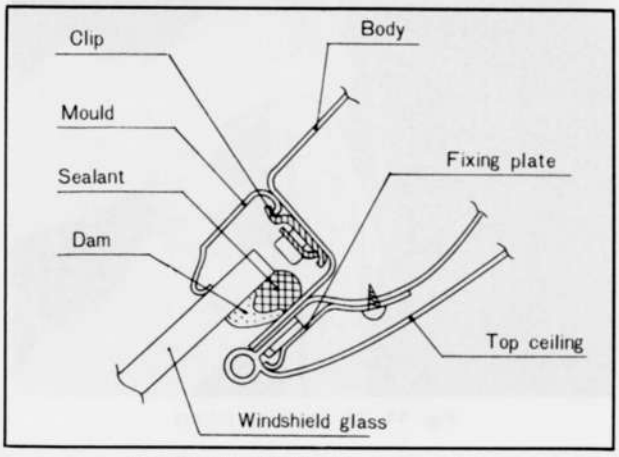

Fig. 14–21 Windshield cross section

1. Remove the interior mirror and also right and left front pillar trims from the interior of the vehicle.
2. Remove the windshield wiper arms and blades.
3. Insert the mould remover between the mould and the glass and pull the retaining clip to remove the mould upward. Remove the mould.

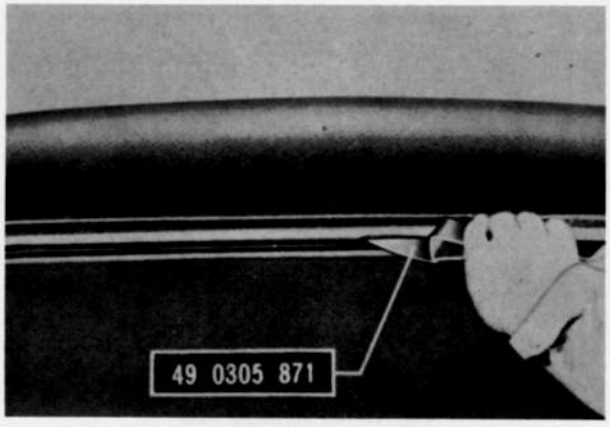

Fig. 14–22 Removing mould

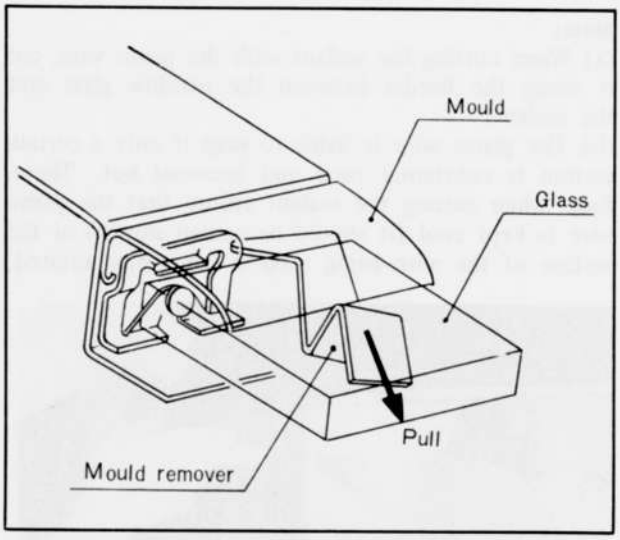

Fig. 14–23 Removing mould

4. Remove the mould retaining clips.
5. Pierce the needle between the glass and the sealant and insert the 500 mm (20 in) length of piano wire into the pierced hole. Wrap each end of the wire around the bars.

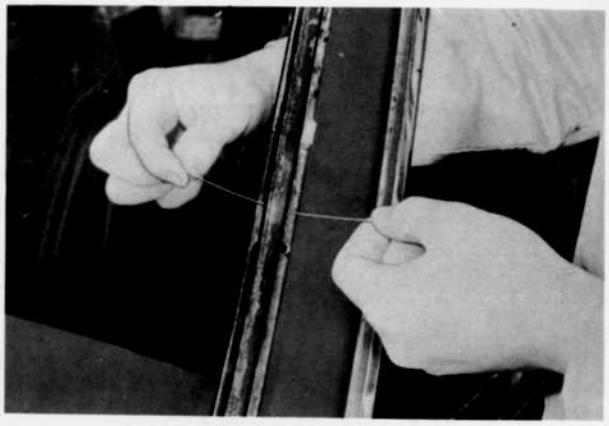

Fig. 14–24 Piercing piano wire

6. With the aid of an assistant, cut the sealant all the way around the glass with a sawing motion and remove the glass.

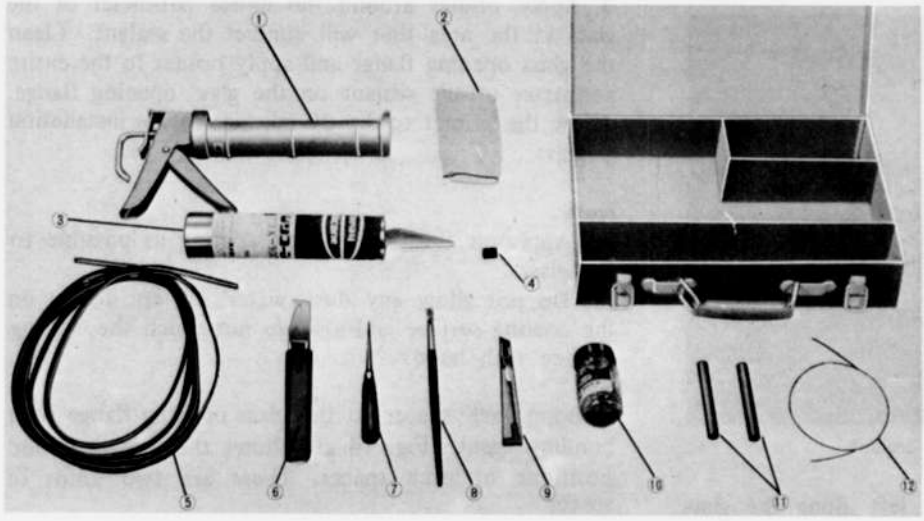

Fig. 14–25
Window service tool set
(49 0305 870)

1. Sealant gun
2. Gauze
3. Sealant
4. Spacer
5. Dam
6. Mould remover
7. Needle
8. Brush
9. Cutting knife
10. Primer
11. Bar
12. Piano wire

Note:
(a) When cutting the sealant with the piano wire, cut it along the border between the window glass and the sealant.
(b) The piano wire is liable to snap if only a certain section is constantly used and becomes hot. Therefore, when cutting the sealant ensure that the piano wire is kept cool (it should be cooled slowly) or the section of the wire being used is constantly rotated,



Fig. 14–26 Cutting sealant

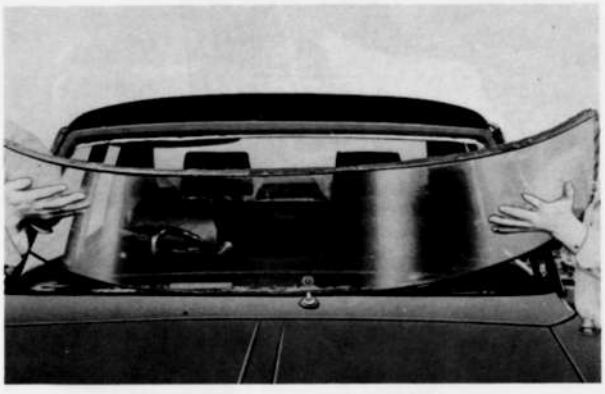

Fig. 14–27 Removing glass

14–E–2. Installing Window Glass

1. Using the cutting knife, cut the sealant off smoothly so that **1 to 2 mm (0.04 to 0.08 in)** of the sealant remains along the glass opening flange.

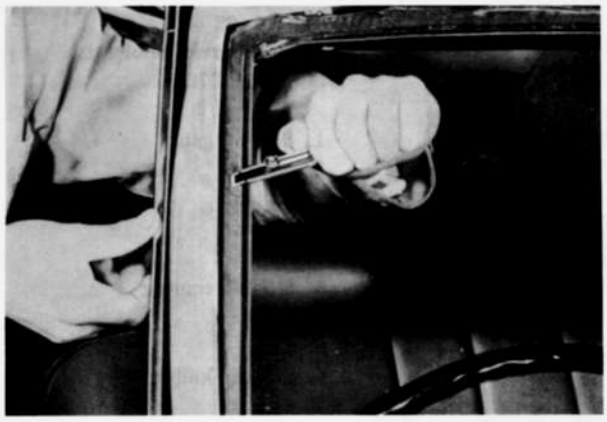

Fig. 14–28 Cutting sealant

If the thickness of the sealant left along the glass opening flange is too small, first, clean with a solvent. Then, apply primer with the brush and leave it to dry for **20 to 30 minutes**. Then, apply sealant until a thickness of **1 to 2 mm (0.04 to 0.08 in)** is obtained



Fig. 14–29 Applying primer

2. Clean the glass thoroughly and bond the dam with bonding agent parallel to the edge of the glass at a position **7 mm (0.28 in)** away from it. Bond the dam in the direction shown in Fig. 14–30.

Note:
Securely bond the dam so that it is straight and will not come apart.

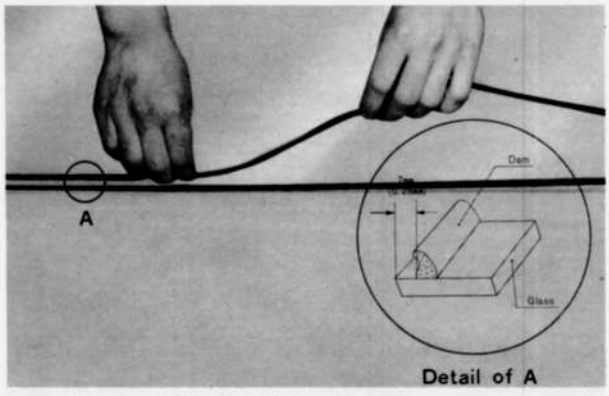

Fig. 14–30 Bonding dam

3. Apply primer around the entire perimeter of the glass in the area that will contact the sealant. Clean the glass opening flange and apply primer to the entire perimeter of the sealant on the glass opening flange. Allow the primer to dry **30 minutes** before installation of glass.

Note:
(a) Apply as thin the sealant coating as possible to the glass.
(b) **Do not** allow any dust, water, oil, etc. to get on the coating surface and also **do not** touch the coating surface with hand.

4. Bond each spacer to the glass opening flange with bonding agent. Fig. 14–31 shows the directions and positions of each spacer. There are two kinds of spacer.

Part Nos.	Name of Part	Color
0305 70 448A	Spacer	Gray
0305 70 447B	Spacer	Black

Although the spacer is bonded on both the right and the left hand sides of the windshield glass in Fig. 14–31, the spacer on only one side of the glass should be sufficient.

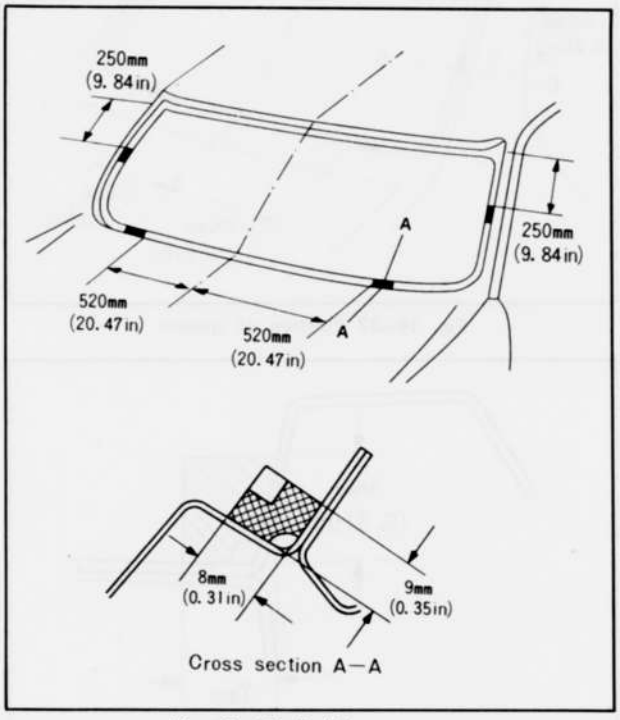

Fig. 14–31 Position spacers

5. Insert each mould retaining clip to the clip insertion portion in the manner shown in Fig. 14–32. Replace the retaining clips as required to insure adequate mould retention.

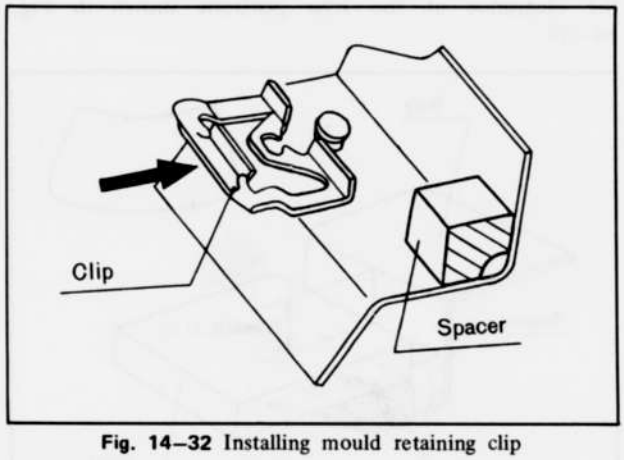

Fig. 14–32 Installing mould retaining clip

6. After the primer is dry, apply the sealant so that it is **8 mm (0.31 in)** high along the entire perimeter of the glass with the sealant gun fitted with the sealant cartridge. If the sealant comes apart from the painted surface on the body side, use the remainder of the sealant for rectification.

Note:
(a) Shape the nozzle of the sealant cartridge with the cutting knife as shown in Fig. 14–33. Then, break the film of the sealant with a piece of wire and it is ready for application.
(b) If the application is unsatisfactory, rectify it with a wooden spatula.
(c) If any seal adheres to your hand, it should be removed immediately.

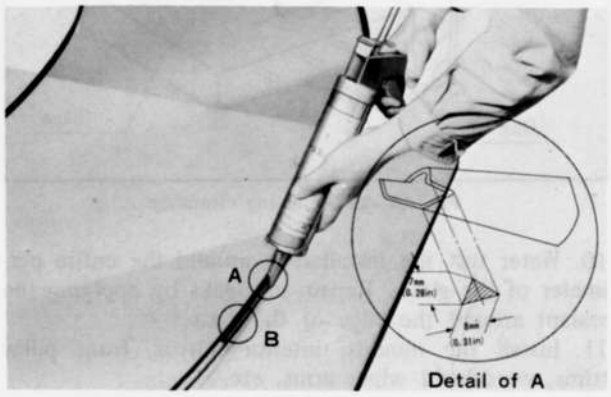

Fig. 14–33 Applying sealant

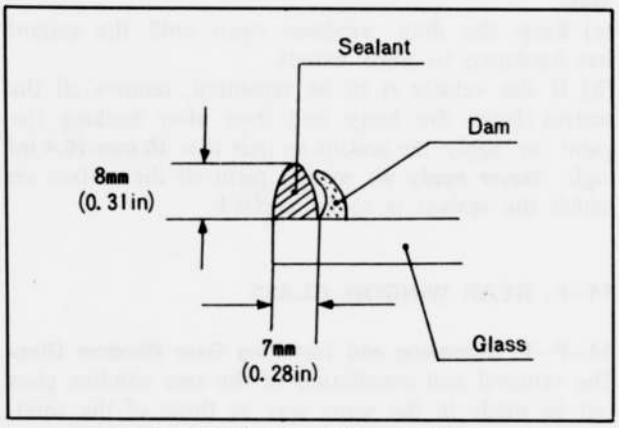

Fig. 14–34 Detail B of Fig. 14–33

7. Place the glass in the opening flange, locating the best position for equal sealant contact.
8. Firmly press the glass against the sealant with hand pressure. Then, inspect the appearance of the sealant through the glass. A dull sport indicates an area where the sealant does not contact glass surface. Additional hand pressure will seal most areas. When installing the glass, **5.8 mm (0.23 in)** clearance should exist between the body and the glass. Check the clearance at the four positions shown in Fig. 14–35.

Note:
If possible, **do not** apply any force to the glass until the sealant has hardened. Time required for the seal to harden after it is applied.

Summer (20°C or 68°F)	5 hours
Winter (5°C or 41°F)	24 hours

9. Remove any excess primer from the glass with a wooden spatula and wipe with a clean solvent.

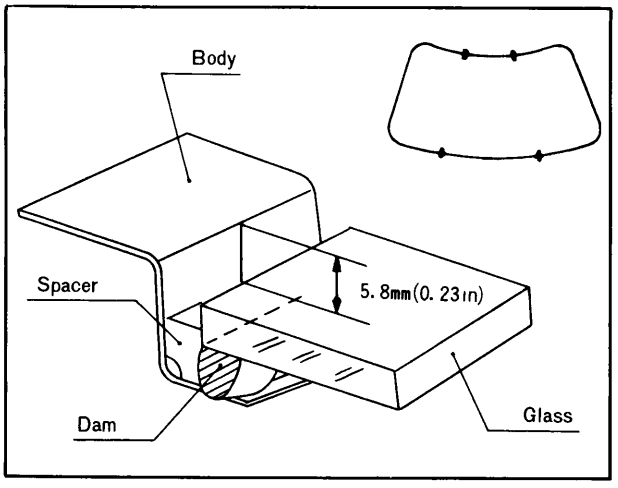

Fig. 14–35 Adjusting clearance

10. Water test the installation around the entire perimeter of the glass. Repair any leaks by applying the sealant around the edge of the glass.
11. Install the moulds, interior mirror, front pillar trims, windshield wiper arms, etc.

Note:
(a) Keep the door windows open until the sealant has hardened to some extent.
(b) If the vehicle is to be repainted, remove all the sealant from the body and then after backing the paint on, apply the sealant so that it is **10 mm (0.4 in)** high. **Never apply** air setting paint to the surface on which the sealant is to be applied.

14–F. REAR WINDOW GLASS

14–F–1. Removing and Installing Rear Window Glass

The removal and installation of the rear window glass can be made in the same way as those of the windshield glass. But care should be taken to the following points:
1. Rear window mould lower can be installed only by inserting it into the body panel because clip is sub-assembled. When removing the mould, push part A of the clip with the driver through the bottom hole.

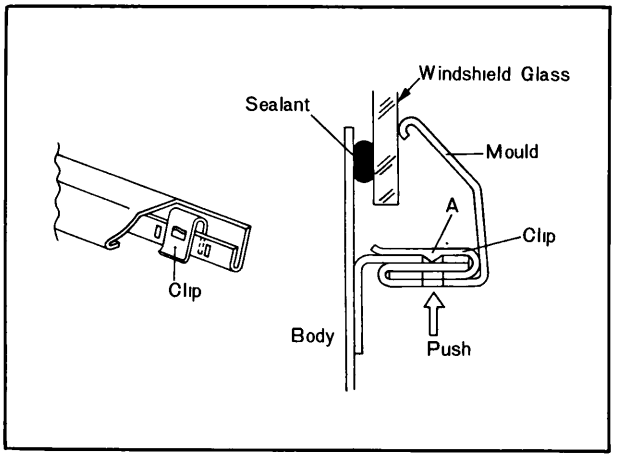

Fig. 14–36 Rear window mould lower

2. In the case of a vehicle equipped with a heatable window, perform the works of disconnection and connection of the relevant wiring.
3. The directions and positions each spacer to be bonded are shown in Fig. 14–37.

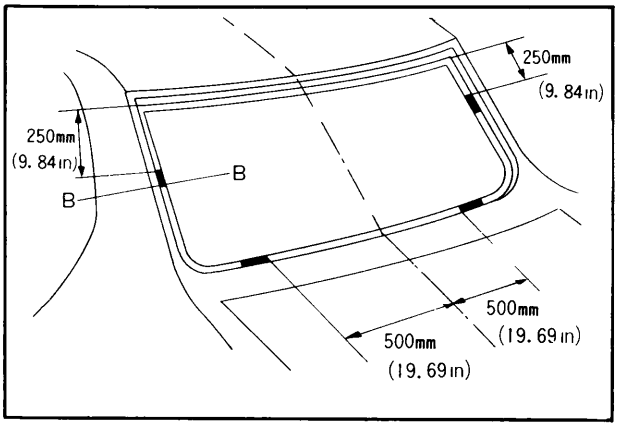

Fig. 14–37 Position of spacers

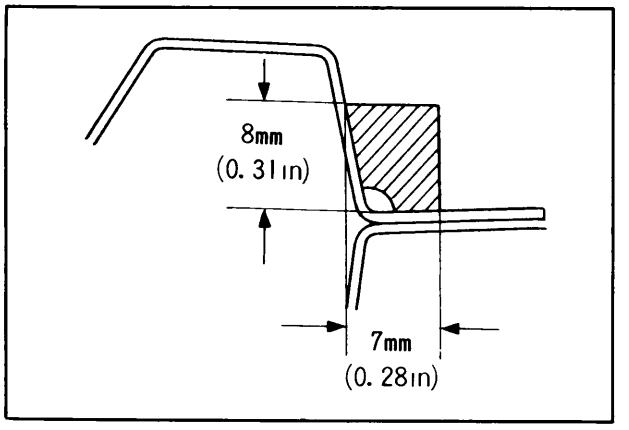

Fig. 14–38 B-B section of Fig. 14–37

4. When installing the glass, **7.8 mm (0.31 in)** clearance should exist between the body and the glass. Check the clearance at the four portions shown in Fig. 14–39.

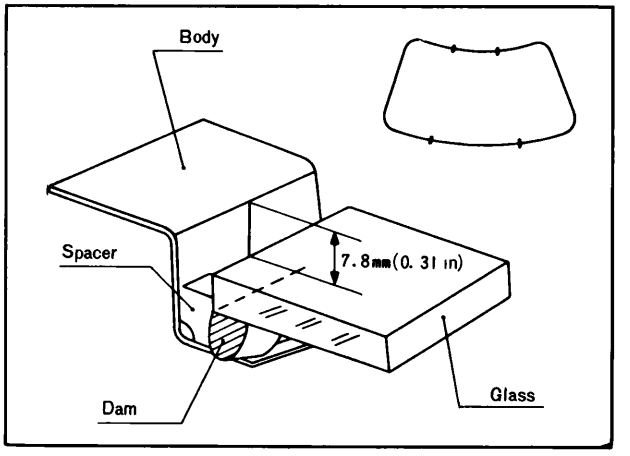

Fig. 14–39 Adjusting clearance

14–F–2. Heatable Window

Servicing the heatable window is explained in **Par. 15–I.**

14–G. FRONT SEAT

14–G–1. Front Seat Replacement

1. Remove the front seat by removing the two attaching bolts and two attaching nuts.
2. To install, reverse the removal procedures.

14–G–2. Seat Adjuster Inspection

1. Inspect the seat adjuster for smooth operation by moving the seat back and forth. If necessary, apply grease to the seat adjuster.
2. Inspect the seat adjusting lever for wear. If defective, repair or replace it.

14–G–3. Reclining Knuckle Replacement

To replace the reclining knuckle, **use the tool** (49 0259 855).



Fig. 14–40 Removing reclining knuckle

14–H. REAR SEAT

14–H–1. Removing Rear Seat

1. Remove the two bolts attaching the seat cushion and remove the seat cushion.
2. Remove the rear seat back attaching bolts.
3. Raise the seat to full up position and pull it in the B direction shown in Fig. 14–41.

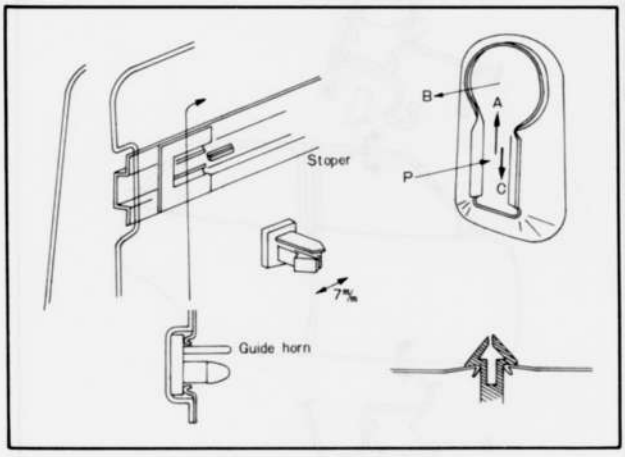

Fig. 14–41 Rear seat back

14–H–2. Installing Rear Seat

1. Tighten temporarily the rear seat back to tire housing.
2. Push the rear seat back attaching fastener in P direction and press it down into the catch of the body as shown in Fig. 14–41

Note:
Make sure that the seat is inserted by pulling the upper end of the seat back.



Fig. 14–42 Installing seat back

3. Further tighten the bolt which has been tightened temporarily.
4. Place the seat cushion and tighten the two bolts attaching the seat cushion.

14–I. DOOR

14–I–1. Door Adjustment

a. Adjusting door latch striker

The striker can be adjusted laterally and vertically as well as fore and aft. The striker should not be adjusted to correct door sag.

1. Loosen the striker attaching screws and move the striker as required.
2. Tighten the attaching screws and check the door fit.

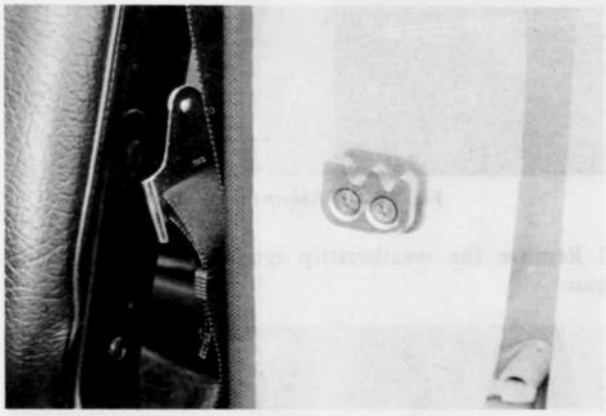

Fig. 14–43 Adjusting striker

b. Adjusting door alignment

The door hinges provide sufficient adjustment latitude to correct most door misalignment conditions. **Do not** cover up a poor door alignment with the door latch striker adjustment.

1. Loosen the hinge attaching bolts and move the hinge as required.
2. Tighten the attaching bolts and check the door fit.

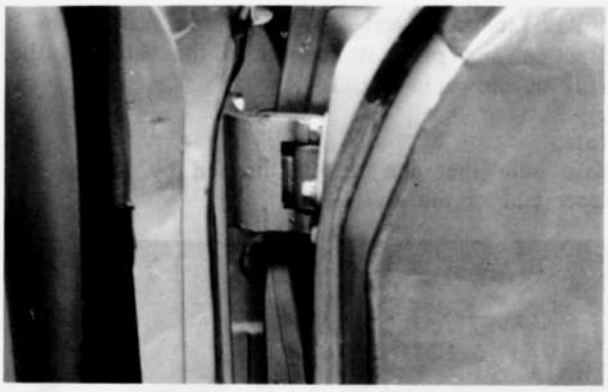

Fig. 14–44 Adjusting door alignment

14–I–2. Door Hinge Replacement

1. Support the door.
2. Remove the hinge-to-body attaching bolts.
3. Remove the hinge-to-door attaching bolts and remove the hinge.
4. Position the hinge to the door and body, and install the attaching bolts.
5. Adjust the door as described in **Par. 14–I–1** and tighten the attaching bolts.

14–I–3. Door Weatherstrip Replacement (Sedan & Wagon)

1. Pull the weatherstrip from the retaining clips, and remove the weatherstrip without damaging the rubber if the weatherstrip is to be used again.

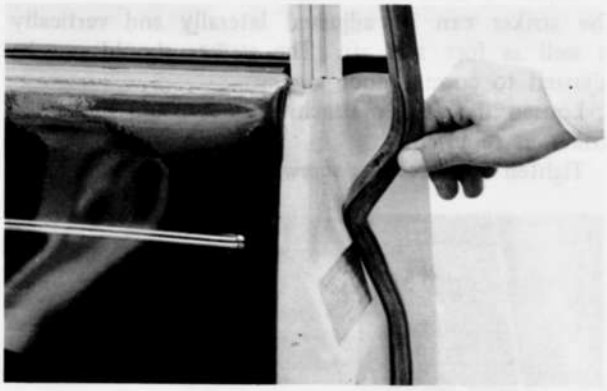

Fig. 14–45 Removing weatherstrip

2. Remove the weatherstrip retaining clips form the door.

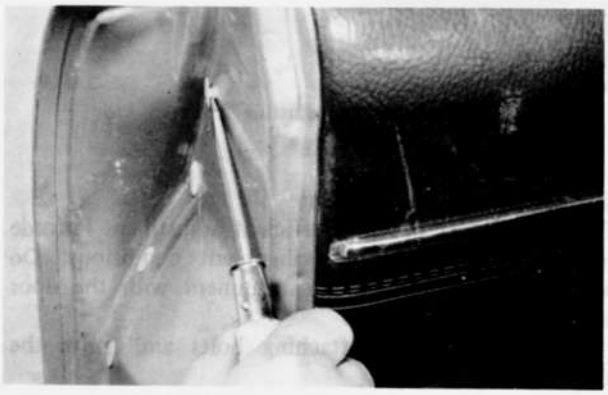

Fig. 14–46 Removing retaining clip

3. Inspect the weatherstrip for crack, deformation and damage. If defective, replace it.
4. Fit the retaining clips to the weatherstrip with a plier.

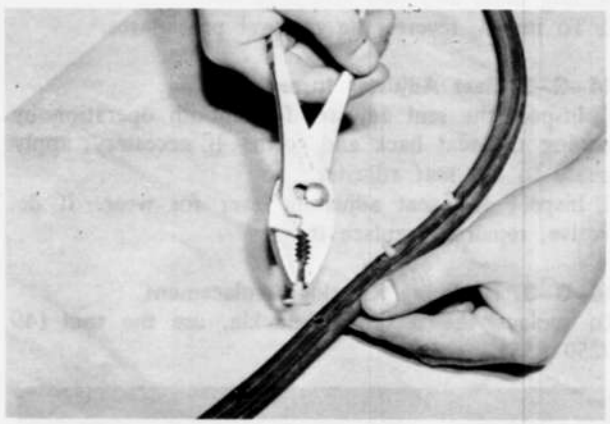

Fig. 14–47 Fitting retaining clip

5. Position the weatherstrip to the door and fit the retaining clips into place.

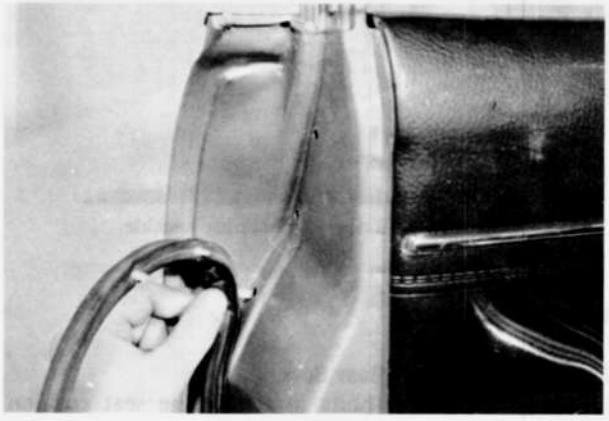

Fig. 14–48 Installing weatherstrip

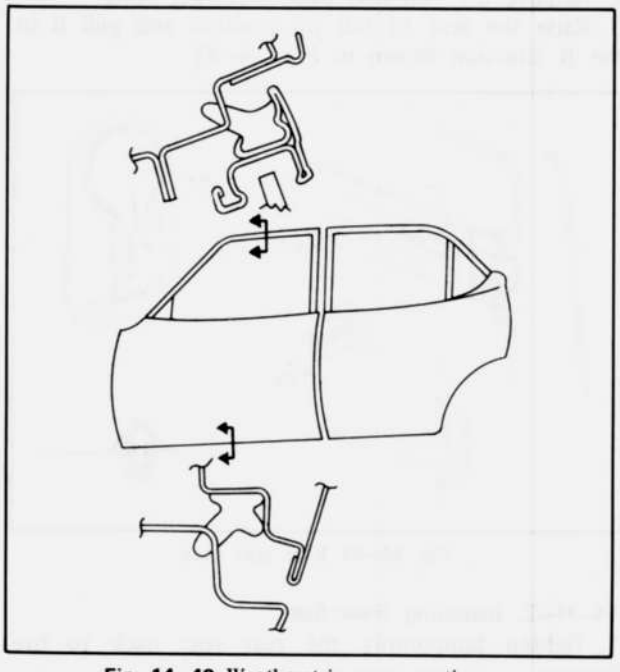

Fig. 14–49 Weatherstrip cross section

14–I–4. Door Weatherstrip Replacement (Hard Top)

1. Refer to the **Par. 14–K–1** and remove the door trim.
2. Remove the screws attaching the both ends of the weatherstrip to the door.
3. Pull the weatherstrip from the retaining clips, and remove the weatherstrip without damaging the rubber if the weatherstrip is to be used again.
4. Remove the weatherstrip retaining clips from the door.
5. Inspect the weatherstrip for crack, deformation and damage. If defective, replace it.
6. Fit the retaining clips to the weatherstrip with a plier.
7. Position the weatherstrip to the door and fit the retaining clips into place.
8. Install the door trim to the door.

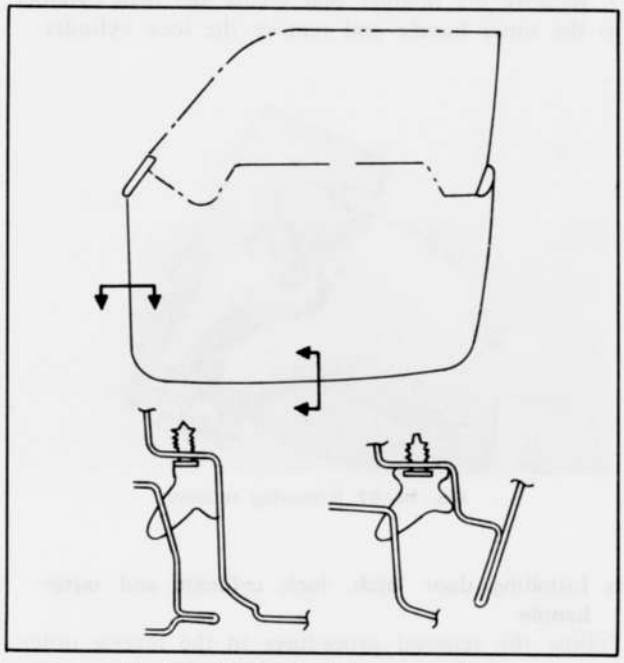

Fig. 14–50 Weatherstrip corss section

14–J. FRONT DOOR (Sedan & Wagon)

14–J–1. Door Window Regulator and Glass

a. Removing door window regulator and glass

1. Remove the regualtor handle by removing the attaching bolt.
2. Remove the arm rest by removing the attaching screws.
3. Remove the inner handle cover by removing the attaching screw.
4. Remove the trim panel and watershield.
5. Remove the regulator attaching bolts, and lower the regulator to disconnect the regualtor roller from the glass channel, then remove the reuglator assembly.
6. Remove the glass.

b. Checking door window regulator

1. Inspect the regulator gear and spring for wear and damage. If defective, replace the reuglator assembly.
2. If necessary, apply grease to each operation portion.



Fig. 14–51 Removing regulator handle

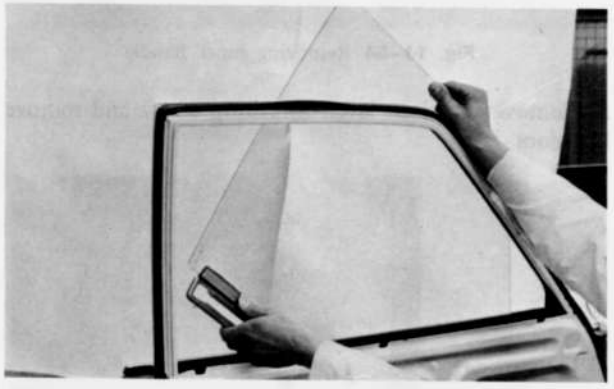

Fig. 14–52 Removing glass

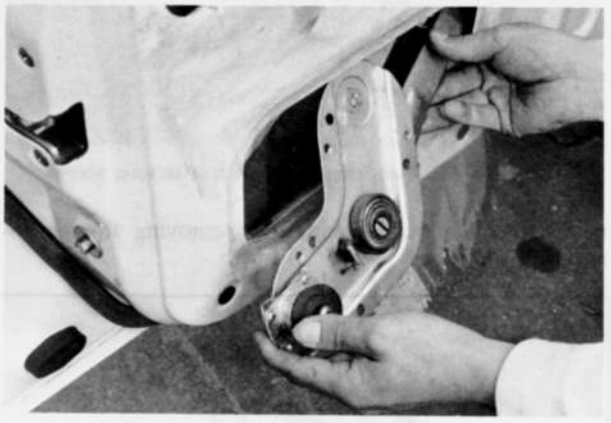

Fig. 14–53 Removing regulator

c. Installing door window regulator and glass

Follow the removal procedures in the reverse order.

Note:

Adjust the regualtor and check the operation of the regualtor.

14–J–2. Door Latch, Lock Cylinder and Outer Handle

a. Removing door latch, lock cylinder and outer handle

1. Remove the regualtor handle, arm rest, etc.
2. Remove the trim panel and watershield.
3. Remove the bolts attaching the inner handle and remove the inner handle.
4. Raise the glass fully and disconnect the remote

control rod from the lock cylinder.

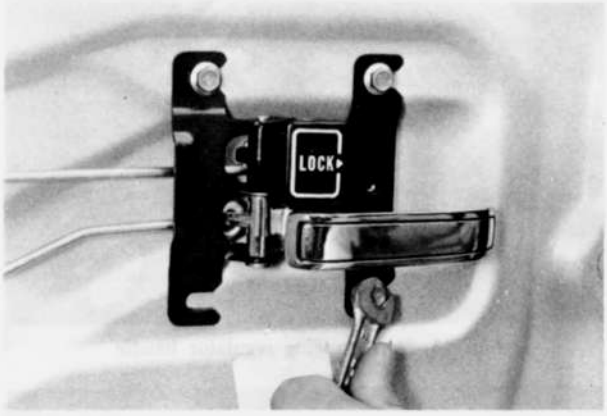

Fig. 14–54 Removing inner handle

5. Remove the door latch attaching screw and remove the door latch.

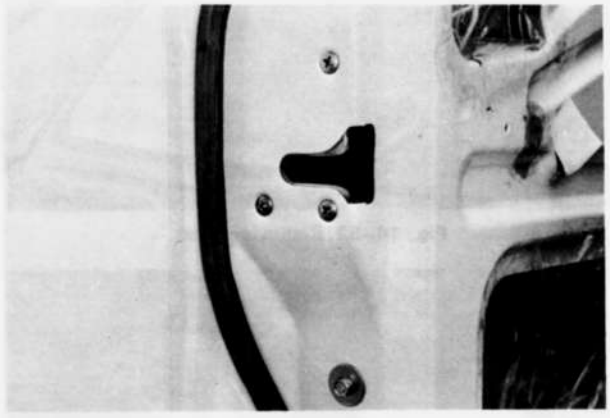

Fig. 14–55 Removing door latch attaching screws

6. Remove the outer handle by removing the attaching bolts.

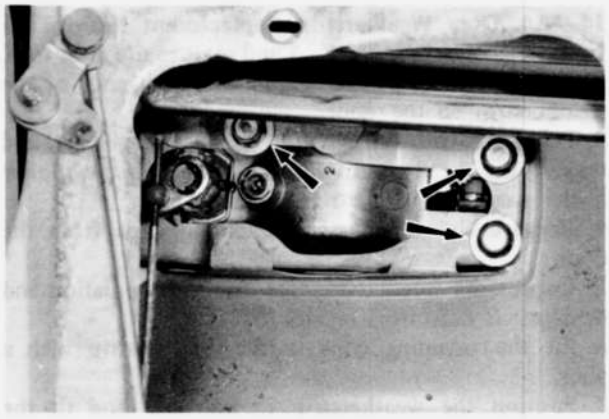

Fig. 14–56 Removing outer handle attaching bolts

7. Remove the retainer that secure the lock cylinder to the outer handle and remove the lock cylinder.

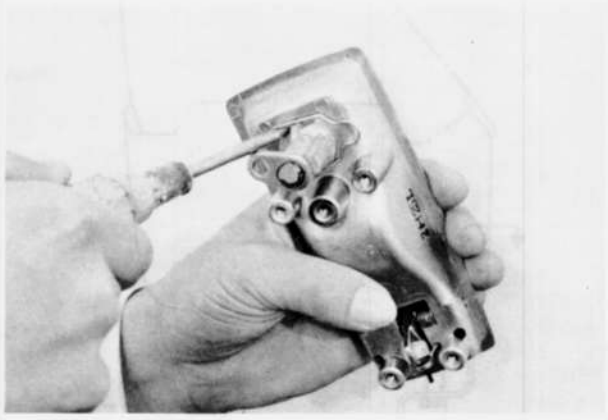

Fig. 14–57 Removing retainer

b. Installing door latch, lock cylinder and outer handle

Follow the removal procedures in the reverse order.

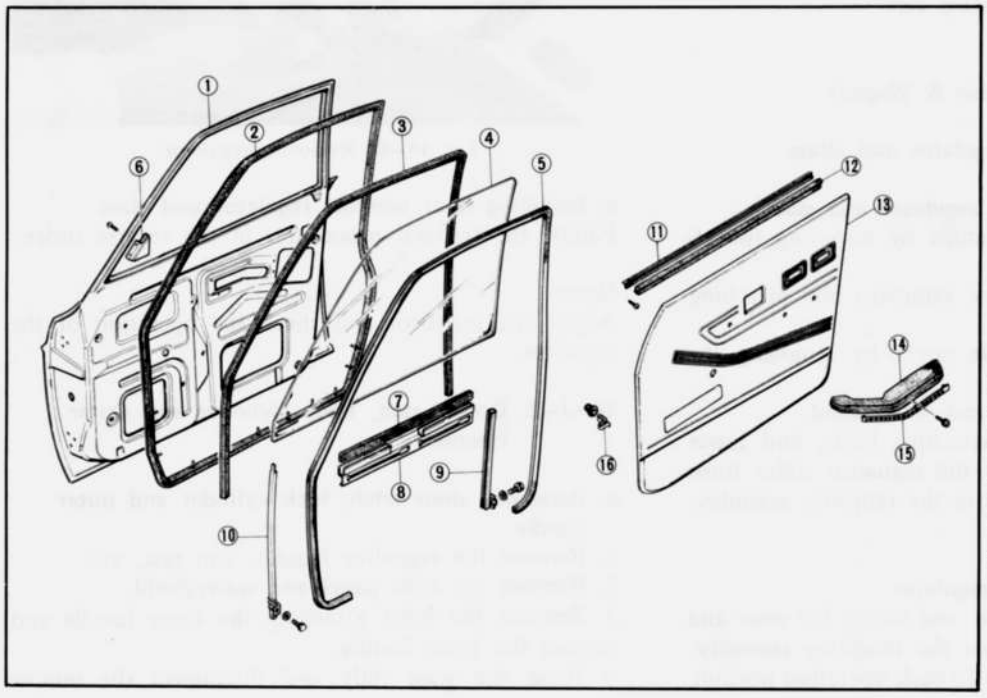

Fig. 14–58
Front door components (Sedan & Wagon)
1. Front door body
2. Weatherstrip
3. Glass run channel
4. Door glass
5. Seaming welt
6. Corner bracket
7. Door glass rubber strip
8. Door galss lift bracket
9. Glass guide "B"
10. Glass guide "A"
11. Weatherstrip outer
12. Weatherstrip inner
13. Door trim
14. Arm rest
15. Arm rest garnish
16. Trim fastener

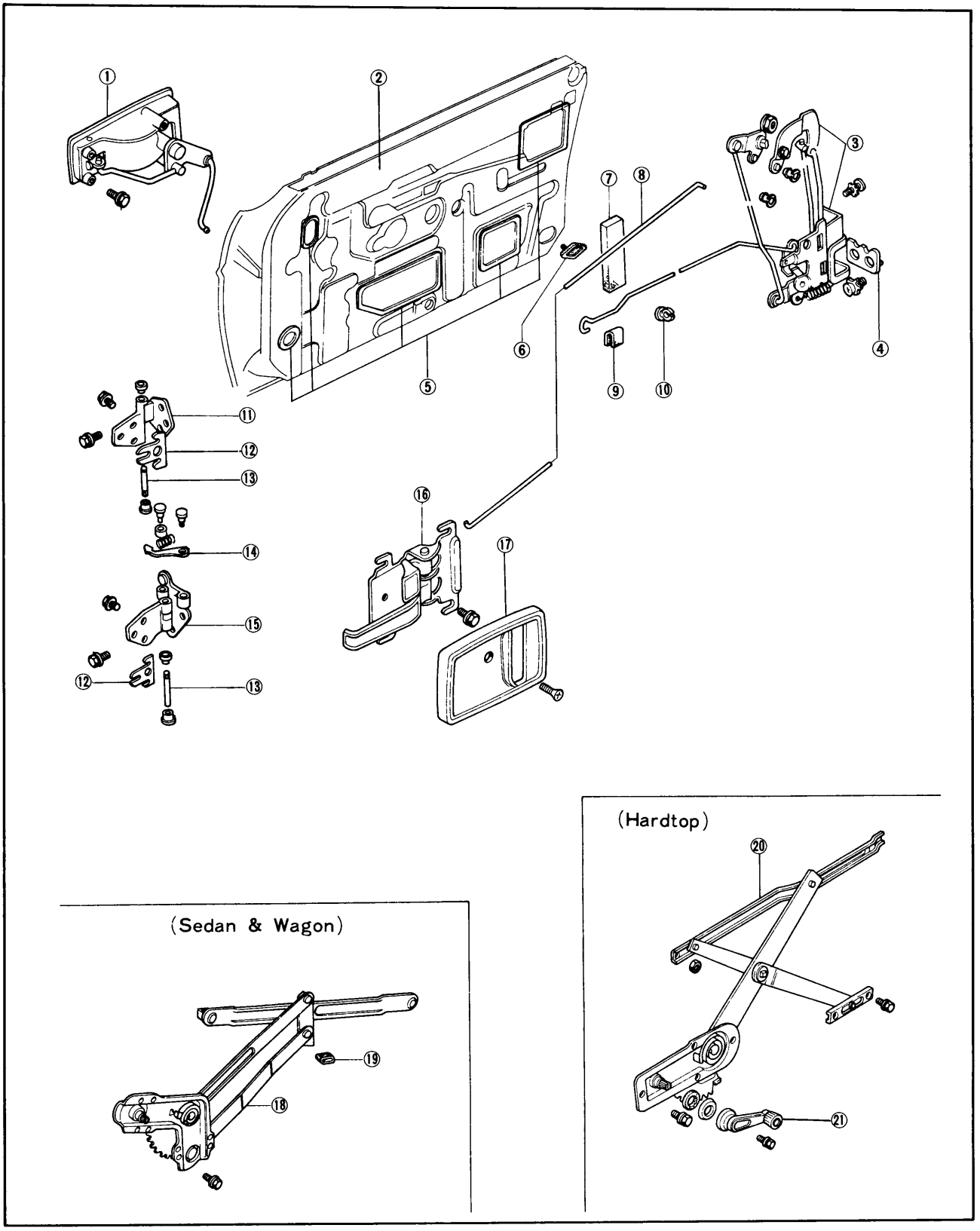

Fig. 14–59 Front door regulator components

1. Outer handle
2. Door body
3. Door lock
4. Rack
5. Watershield
6. Door cushion
7. Insulator
8. Inner handle rod
9. Pad
10. Rod holder
11. Door hinge upper
12. Door hinge lower shim
13. Hinge pin
14. Check lever
15. Door hinge lower
16. Inner handle
17. Inner handle cover
18. Window regulator (Sedan & Wagon)
19. Cushion (Sedan)
20. Window regulator (Hard Top)
21. Window regulator handle

14–K. FRONT DOOR (Hard Top)

14–K–1. Door Window Regulator and Glass

a. Removing door window regulator and glass
1. Remove the regulator handle.
2. Remove the inner handle cover.
3. Remove the garnish and arm rest.
4. Remove the door trim.
5. Fully open the window glass.
6. Remove the belt line mould.
7. Remove the door screen.
8. Remove the nuts.
9. Remove the window glass assembly from the regulator and take it upward.
10. Remove the nut and take out the regulator from the service hole.

b. Checking door window regulator
1. Inspect the regulator gear and spring for wear and damage. If defective, replace the regulator assembly.
2. If necessary, apply grease to each operation portion.

c. Installing door window regulator and glass
Follow the removal procedures in the reverse order.

Note:
Adjust the regulator and check the operation of the regulator.

14–K–2. Inner Handle, Door Latch and Outer Handle

a. Removing inner handle
1. Remove the door trim.
2. Remove the door screen.
3. Remove the bolt joint.
4. Remove the rod from rod holder and remove the inner handle.

b. Installing inner handle
Follow the removal procedures in the reverse order.

Note:
Adjust the inner handle and inner lock lower with bolt and nut in order to prevent the free play of them.

c. Removing door latch
1. Remove the door window glass. (Refer to 14–K–1)
2. Remove the inner handle.
3. Incline forward the glass guide by removing the bolts and loosening the nuts.
4. Take out the door latch from the service hole by removing the nuts, joints, bolts and screens.

d. Installing door latch
Follow the removal procedures in the reverse order.

e. Removing outer handle
1. Remove the door window glass. (Refer to 14–K–1)

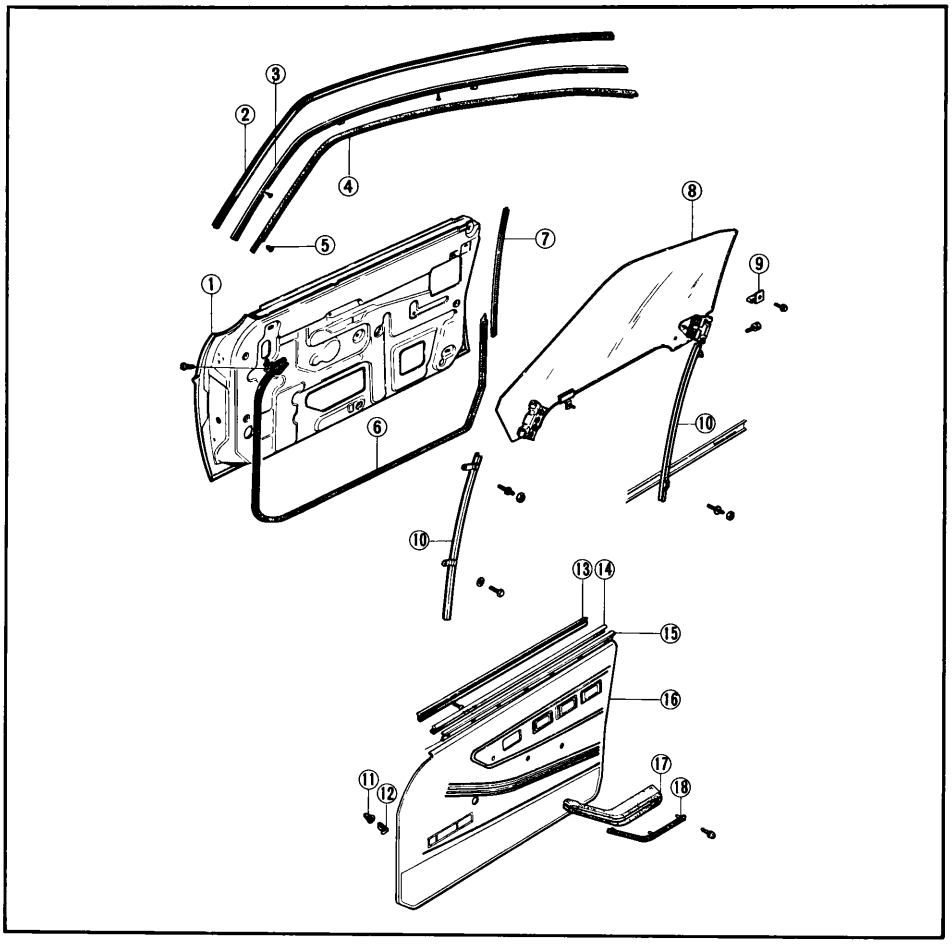

Fig. 14–60
Front door components (Hard Top)
1. Door body
2. Seaming welt (Roof side)
3. Weatherstrip retainer
4. Weatherstrip roof side
5. Weatherstrip fastener
6. Door body weatherstrip
7. Seaming welt (Door body rear)
8. Door glass
9. Glass stopper
10. Glass guide
11. Fastener cap
12. Trim fastener
13. Outer weatherstrip
14. Weatherstrip
15. Mould
16. Door trim
17. Arm rest
18. Arm rest garnish

2. Remove the joint and bolt.
3. Remove the bolt and take out the outer handle.

f. Installing outer handle
Follow the removal procedures in the reversr order after adjusting the joint not to play.

Note:
When removing or installing the door lock, nylon bush and joint should be changed.

14–K–3. Front Door Glass Regulator Adjustment

a. Horizontal adjustment of the window
1. Raise the window to full up position.
2. Make the horizontal adjustment of the glass by moving regulator guide No. 2 up and down and tighten it.
3. Make sure that the regulator guide No. 2 is parallel with the standard line.
4. Make sure that the glass moves smoothly.

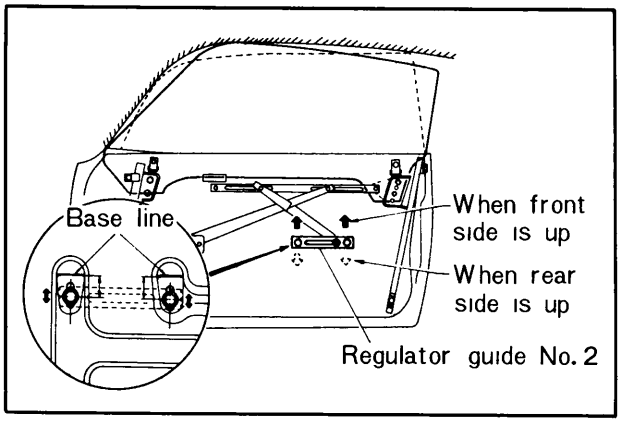

Fig. 14–61 Horizontal adjustment

b. The fore and aft adjustment of the window
1. Tighten the upper bolt of the glass guide B at the center of the long hole.
2. Push rearwards the glass guide A as shown in Fig. 14–62 and tighten the upper bolt.

Note:
Make sure that the glass does not play back and forth.

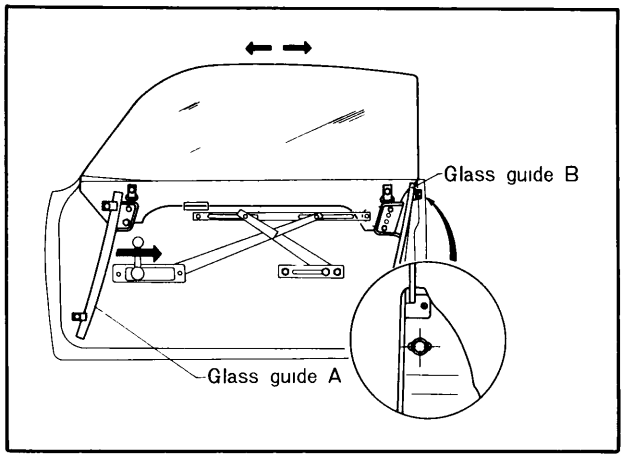

Fig. 14–62 Fore and aft adjustment

c. Vertical adjustment of the window
With the window glass raised to full up position, adjust the up stoppers (Front and Rear) and tighten the up stopper bolts.

Note:
Make sure that the regulator touches both up stoppers. The clearance between the top of glass and weatherstrip is **0 ~ 2 mm (0 ~ 0.08 in)**, when door is opened and closed.

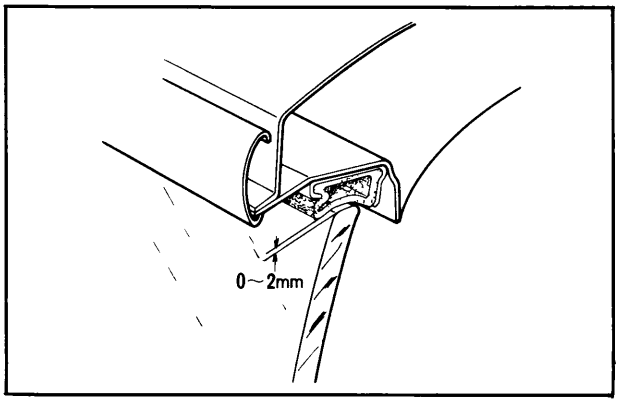

Fig. 14–63 Vertical adjustment

d. The in and out adjustment of the window
With the window raised adjust the glass guide lower adjusting bolts so that the glass circumference touches cab side weatherstrip evenly.

Note:
Make sure there is no space between the inner panel and the brim of the adjust bolt.

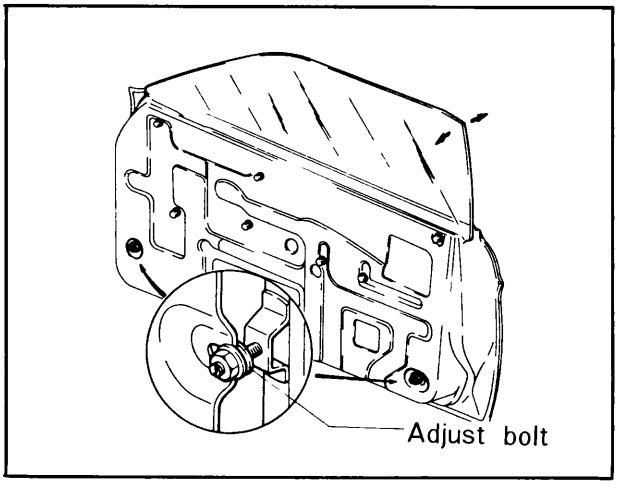

Fig. 14–64 In and out adjustment

e. Final check
1. If it is impossible to adjust the glass by using glass guide lower adjusting bolts only, adjust it by the upper bolt of the glass guide B.
Check the glass contact with the outer weatherstrip.
2. Adjust hte lower glass guide to prevent the glass from playing back and forth and tighten it.
In principle, it is advisable to tighten the glass guide B (lower) at the center of the long hole and adjust the glass guide A.

Note:
After adjusting, apply the putty to the bolt, nut and long hole and paste the door screen.

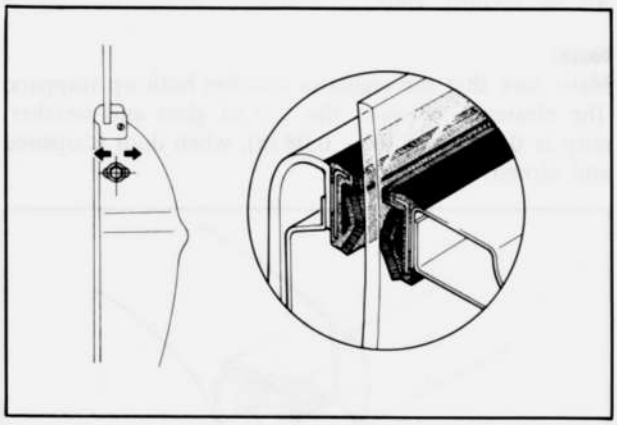

Fig. 14–65 Adjusting bolt

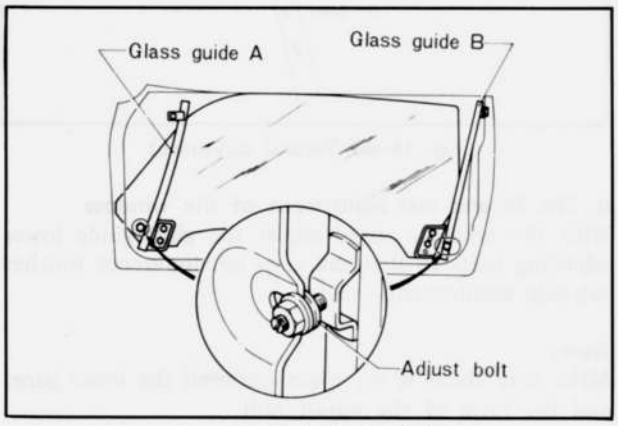

Fig. 14–66 Adjusting bolts

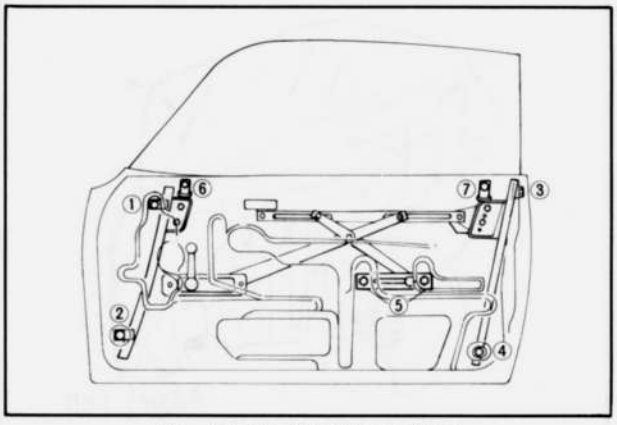

Fig. 14–67 Adjusting position

Horizontal adjustment	**5**
Fore and aft adjustment	**1, 2, 4**
Vertical adjustment	**6, 7**
In and out adjustment	**2, 4, 3**

14–L. REAR DOOR

14–L–1. Stationary Glass

a. Removing stationary glass

1. Lower the window glass all the way.
2. Remove the trim panel and watershield.

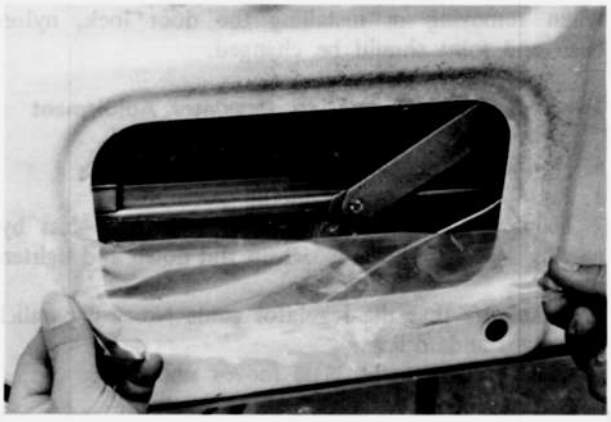

Fig. 14–68 Removing watershield

3. Remove the screws attaching the upper end of the division bar to the window frame.

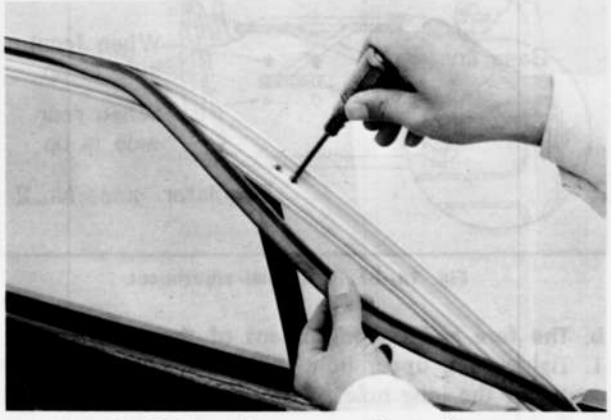

Fig. 14–69 Removing upper end attaching screws

4. Remove the bolt attaching the lower end of the division bar to the door panel.

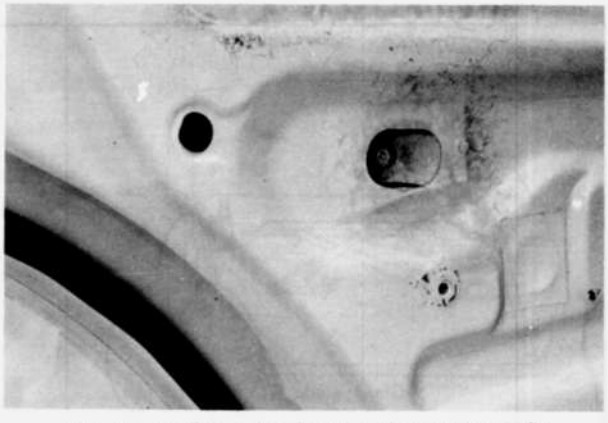

Fig. 14–70 Removing lower end attaching bolts

5. Pull the division bar off the stationary glass and

remove the stationary glass.

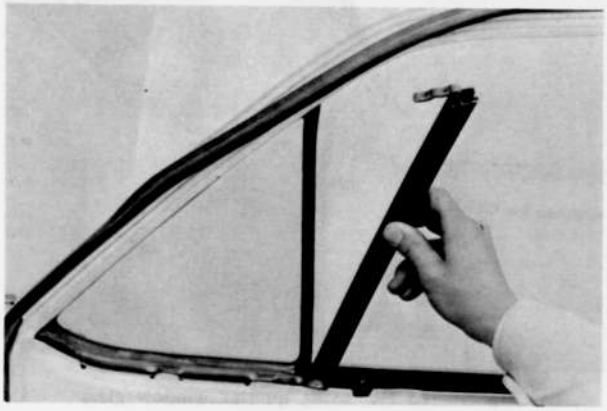

Fig. 14–71 Removing division bar

6. Remove the weatherstrip from the stationary glass.

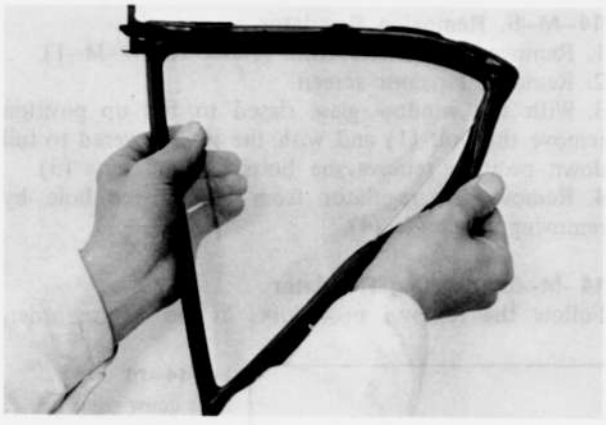

Fig. 14–72 Removing weatherstrip

b. Installing stationary glass
Follow the removal procedures in the reverse order.

14–L–2. Rear Door Window Regulator and Glass

a. Removing rear door window regulator and glass
1. Lower the window glass all the way.
2. Remove the regulator handle, arm rest, etc.
3. Remove the trim panel and watershield.
4. Remove the screws attaching the upper end of the division bar to the window frame.
5. Remove the bolt attaching the lower end of the division bar to the door panel.
6. Remove the division bar.
7. Remove the regulator attaching bolts and disconnect the regulator roller from the glass channel, then remove the regulator assembly.
8. Remove the glass.

b. Installing rear door window regulator and glass
Follow the removal procedures in the reverse order.

Note:
Adjust the regulator and check the operation of the regulator.

14–M. QUARTER WINDOW

14–M–1. Removing Quarter Trim
1. Remove the rear seat cushion and the rear seat back. The rear seat back will be easily taken out by raising and pulling it.
2. Remove the regulator handle.
3. Remove the garnish and arm rest.
4. Remove the belt holder.
5. Remove the cap and screw.
6. Remove the corner cover.
7. Remove the scarf plate by removing the bolt.
8. Remove the quarter trim.

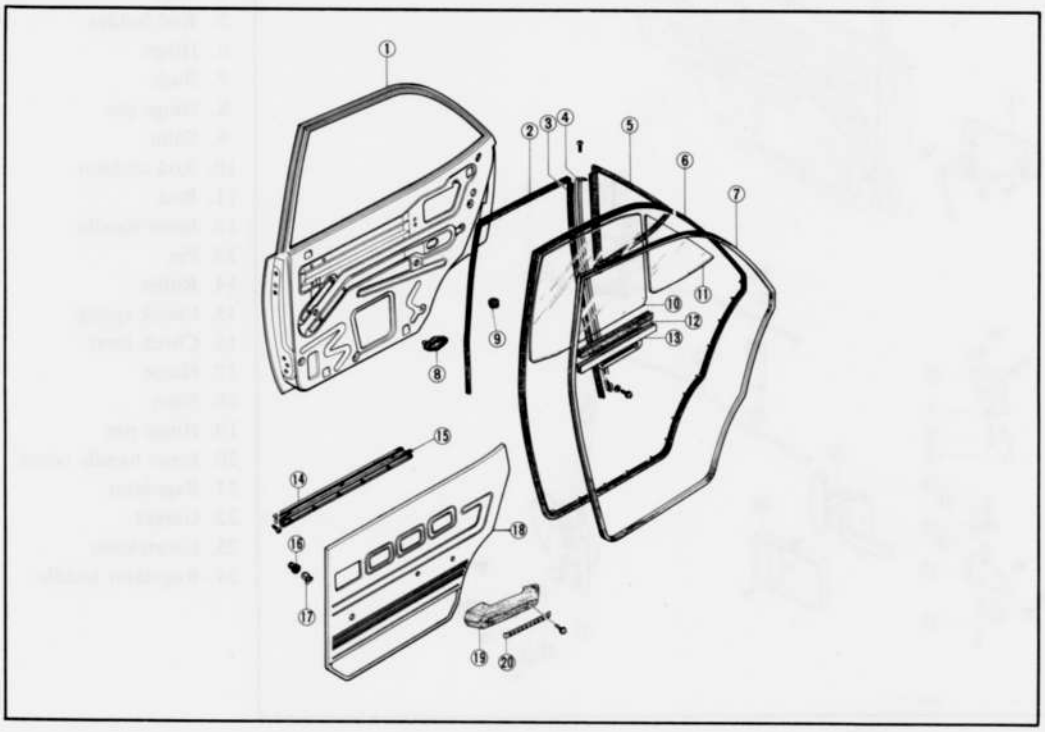

Fig. 14–73
Rear door components
1. Rear door body
2. Run channel "A"
3. Run channel "B"
4. Division bar
5. Weatherstrip
6. Weatherstrip
7. Seaming welt
8. Door cushion
9. Rubber cushion
10. Door glass
11. Window glass
12. Rubber strip
13. Lift bracket
14. Weatherstrip (outer)
15. Weatherstrip (inner)
16. Fastener cap
17. Trim fastener
18. Door trim
19. Arm rest
20. Arm rest garnish

14–M–2. Installing Quarter Trim
Follow the removal procedures in the reverse order.

14–M–3. Removing Quarter Window Glass
1. Remove the quarter trim. (Refer to 14–M–1)
2. Remove the door screen.
3. With the window glass raised to 150 mm high, remove the belt line mould.
4. With the window glass riased to full up position remove the bolt (1). And with the window glass lowered to full down position remove the bolts (2) and nuts (3).
5. Move the glass guide B rearwards by loosening the bolts (4).
6. Take out the quarter window glass.

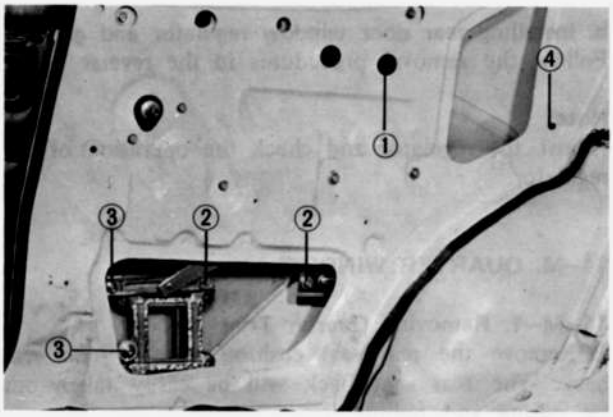

Fig. 14–74 Removing quarter window



Fig. 14–75 Removing quarter window glass

14–M–4. Installing Quarter Window Glass
Follow the removal procedures in the reverse order.

14–M–5. Removing Regulator
1. Remove the quarter trim. (Refer to 14–M–1)
2. Remove the door screen.
3. With the window glass riased to full up position remove the bolt (1) and with the glass lowered to full down position remove the bolts (2) and nuts (3).
4. Remove the regulator from the service hole by removing the bolts (4).

14–M–6. Installing Regulator
Follow the removal procedures in the reverse order.

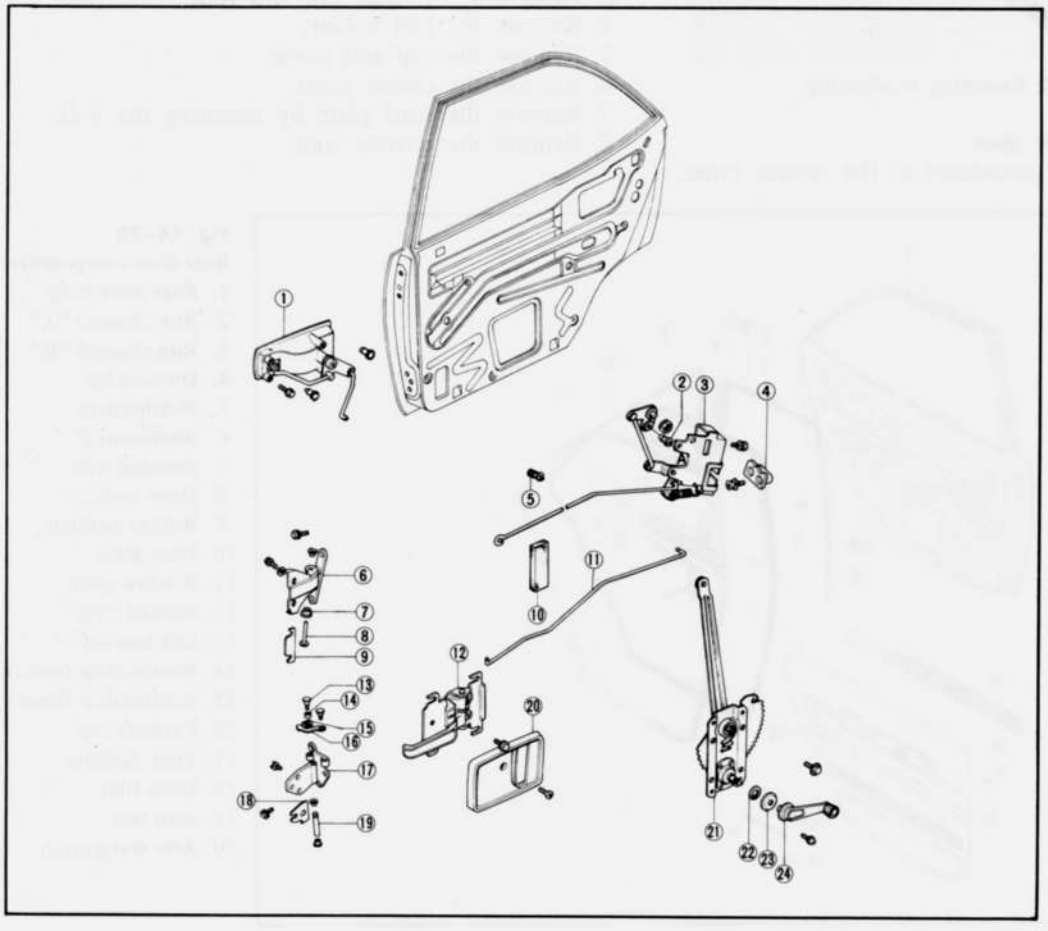

Fig. 14–76
Rear doow regulator components
1. Outer handle
2. Bush
3. Door lock
4. Rack
5. Rod holder
6. Hinge
7. Bush
8. Hinge pin
9. Shim
10. Rod cushion
11. Rod
12. Inner handle
13. Pin
14. Roller
15. Check spring
16. Check lever
17. Hinge
18. Shim
19. Hinge pin
20. Inner handle cover
21. Regulator
22. Gasket
23. Escutcheon
24. Regulator handle

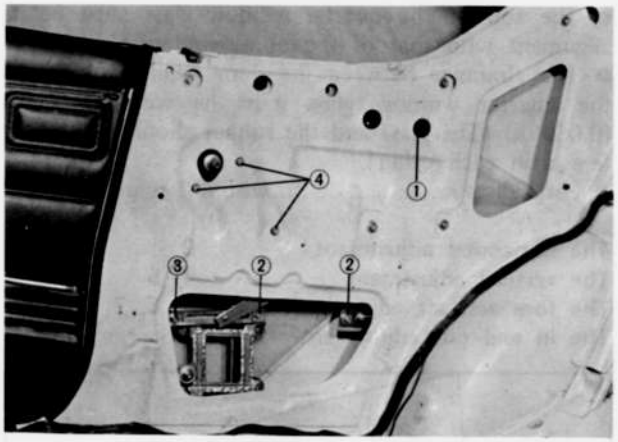

Fig. 14–77 Removing regulator

14–N. QUARTER WINDOW ADJUSTMENT

14–N–1. Horizontal Adjustment of the Window Glass

1. Raise the window glass to full up position.
2. Adjust the window glass so that the glass touches cab side weatherstrip evenly by moving the regulator guide No. 2 up and down. And tighten the regulator guide.
3. Move the regulator guide parallel with the standard line, and adjust the position of the glass.

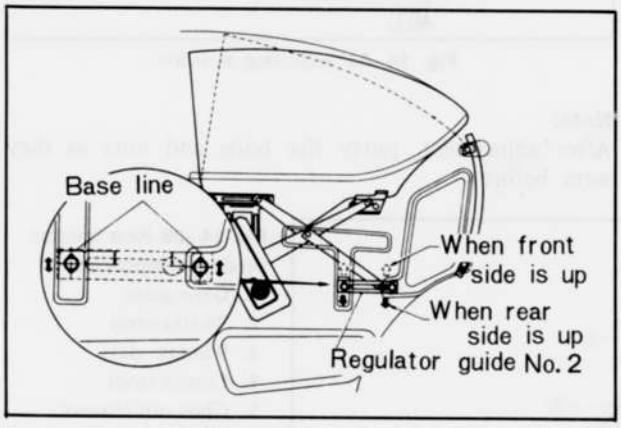

Fig. 14–78 Horizontal adjustment

14–N–2. Vertical Adjustment of the Window Glass

Adjust the up stopper with the window glass raised to the full up position so that the height of the quarter window glass is the same as that of the front door glass.

Note:
Make sure that the regulator touches both stoppers. (Front and Rear)

14–N–3. The Fore and Aft Adjustment of the Window

Move the glass back and forth so that the glass accords with the front door glass and tighten the regulator guide No. 4.

Note:
After making sure that the glass touches the weatherstrip evenly tighten the regulator guide No. 4.

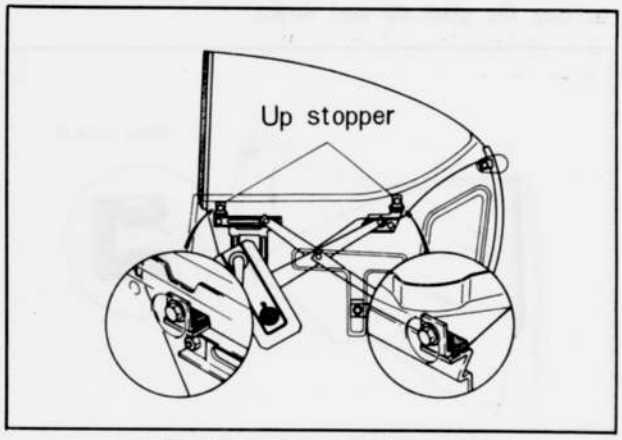

Fig. 14–79 Vertical adjustment

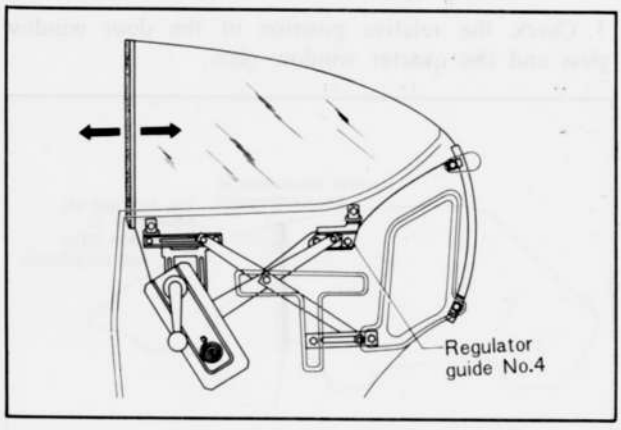

Fig. 14–80 Fore and aft adjustment

14–N–4. The In and Out Adjustment

1. Tighten temporary the upper bolt of glass guide A. With the glass raised to full up position, adjust the lower glass guide A so that the glass circumference touches cab side weatherstrip evenly. Tighten securely both upper and lower bolts.

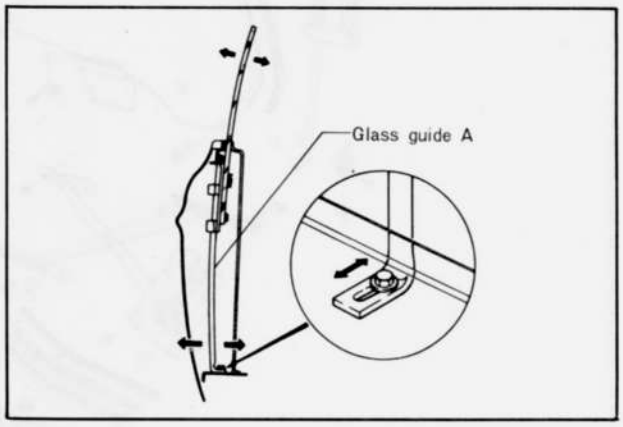

Fig. 14–81 In and out adjustment

2. Tighten the upper part of the glass guide B. After lowering the glass, tighten the lower part.

Note:
Install the glass guide B so that it touches the glass lightly as shown in Fig. 14–82 in order to prevent

the weatherstrip from tearing off or biting when moving the glass up and down.

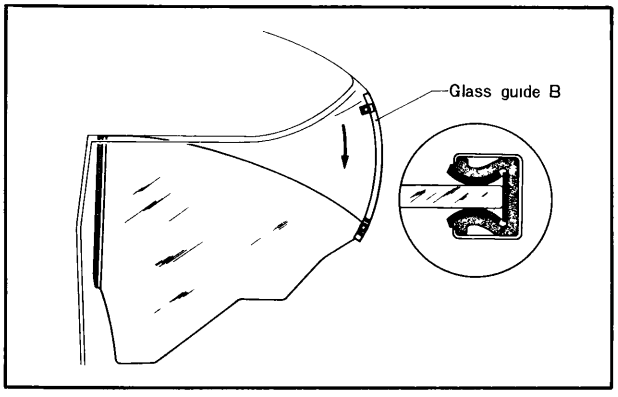

Fig. 14–82 Installing glass guide B

3. Check the relative position of the door window glass and the quarter window glass.

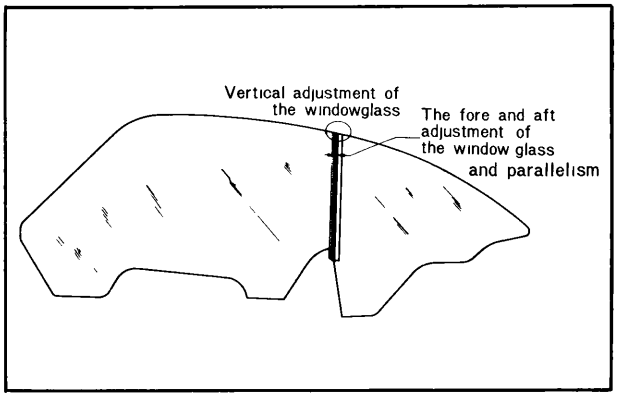

Fig. 14–83 Checking relative position

- The top of the quarter window glass must be in alignment with that of the door window glass.
- The clrarance between the door window glass and the quarter window glass must be within 1.5 mm (0.059 in) (The glass and the rubber should not interfere with each other).
- Parallelism ..... within 1 mm (0.039 in)

The horizontal adjustment	**2**
The vertical adjustment	**4, 5**
The fore and aft adjustment	**3, 6, 7**
The in and out adjustment	**1**

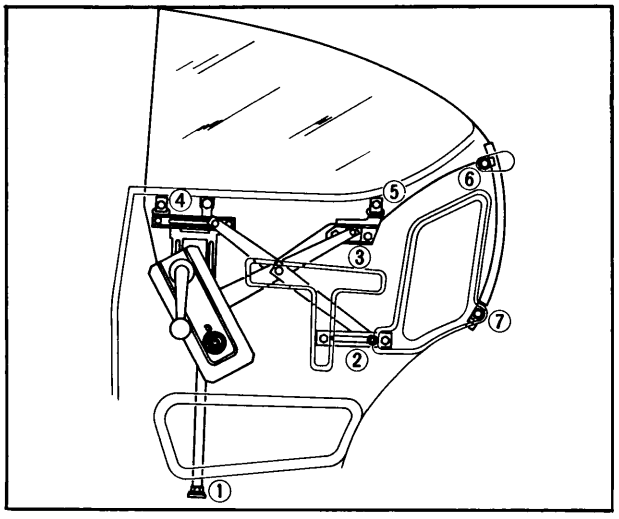

Fig. 14–84 Adjusting position

Note:
After adjustment, putty the bolts and nuts as they were before.

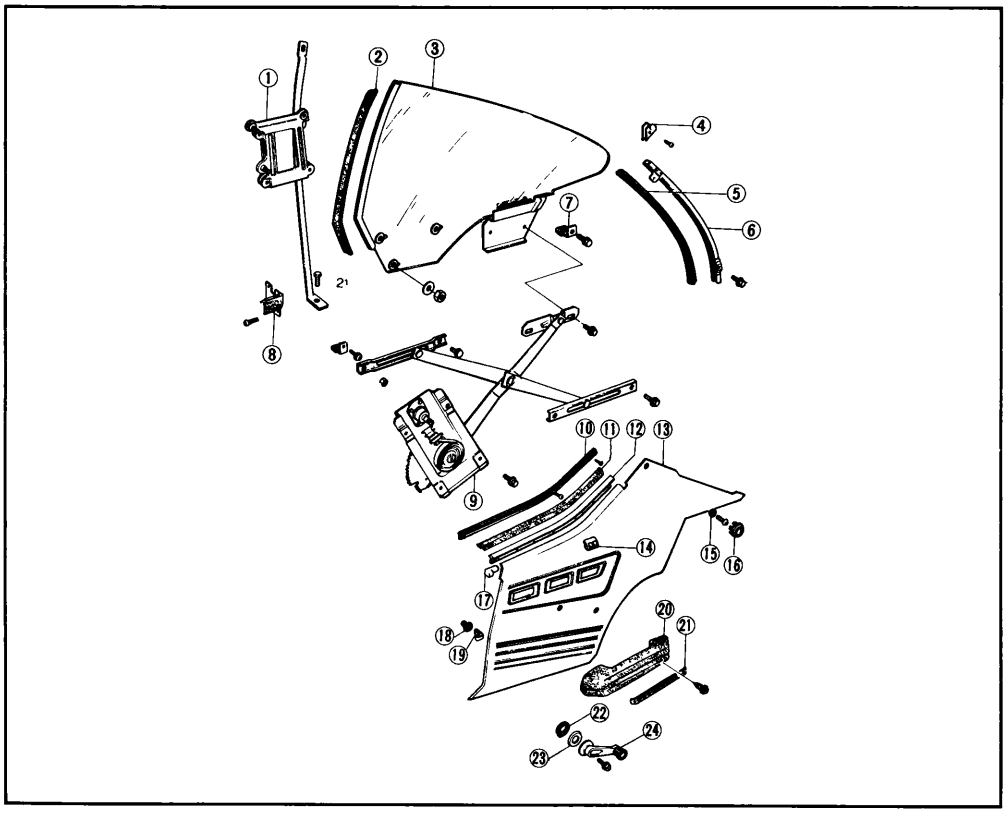

Fig. 14–85 Rear quarter window components
1. Glass guide
2. Weatherstrip
3. Window glass
4. Corner cover
5. Glass run channel
6. Glass guide
7. Glass stopper
8. Rubber garnish
9. Window regulator
10. Weatherstrip
11. Weatherstrip
12. Mould
13. Trim
14. Trim spacer
15. Trim spacer
16. Trim cap
17. Corner cap
18. Fastener cap
19. Trim fastener
20. Arm rest
21. Garnish
22. Seal rubber
23. Escutcheon
24. Regulator handle

14–O. TOP CEILING

14–O–1. Removing Top Ceiling

1. Remove the sun visors, interior mirror, interior lamp, assist straps, overhead console (if equipped), etc.



Fig. 14–86 Removing interior lamp

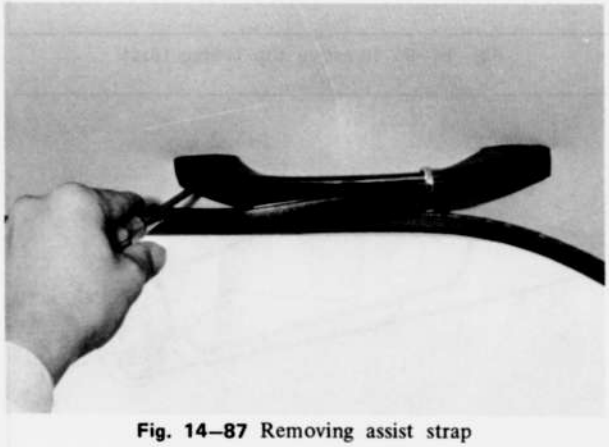

Fig. 14–87 Removing assist strap

2. Remove the front pillar trims and rear package tray trim panel.

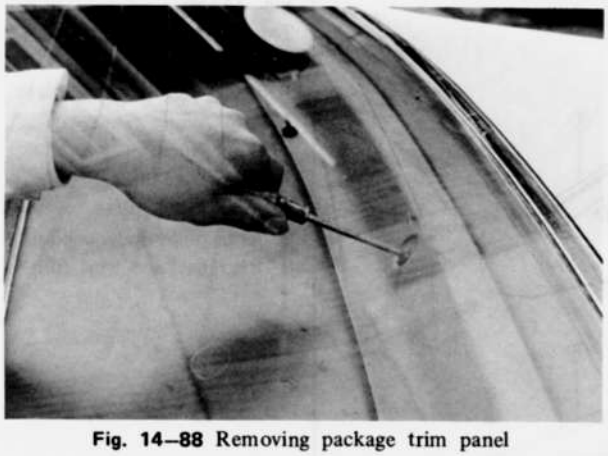

Fig. 14–88 Removing package trim panel

3. Strip off the seaming welts from the body flange and tear the cemented surface of the top ceiling from the outside of the flange.
4. Remove the polyethylene plates of the top ceiling from the inserting points of the body.
5. Remove the listing wires and top ceiling.

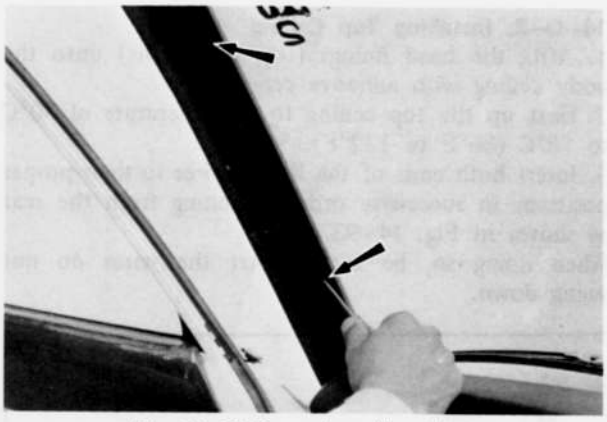

Fig. 14–89 Removing pillar trim



Fig. 14–90 Removing seaming welt

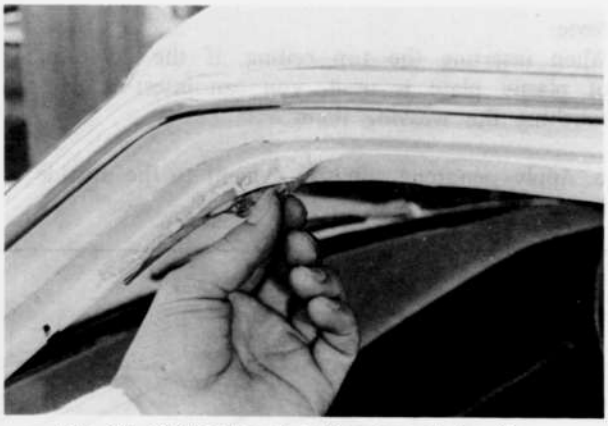

Fig. 14–91 Tearing of ceiling cemented surface

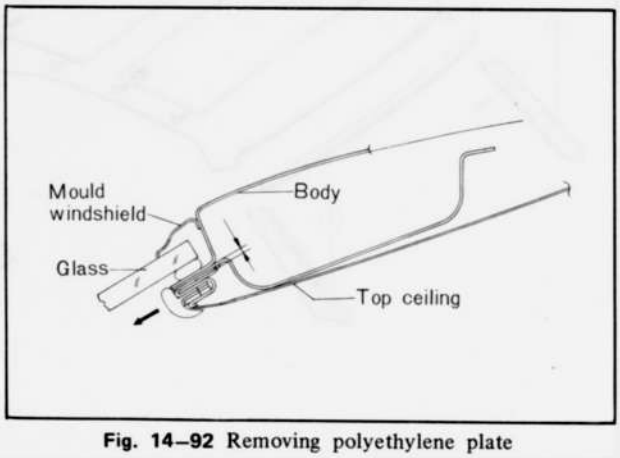

Fig. 14–92 Removing polyethylene plate

14–O–2. Installing Top Ceiling

1. Affix the head linings (top insulations) onto the body ceiling with adhesive cement.
2. Heat up the top ceiling to a temperature of 30°C to 50°C (86°F to 122°F).
3. Insert both ends of the listing wires to their proper positions in successive order beginning from the rear as shown in Fig. 14–93.
When doing so, be careful that the wires do not swing down.

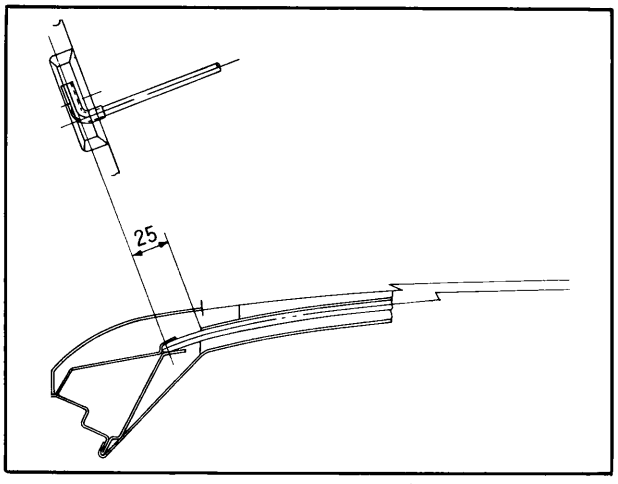

Fig. 14–93 Listing wire

4. Insert the front and rear polyethylene plates of the top ceiling to the inserting point of the body.

Note:
When inserting the top ceiling, if the guide made of plastic plate is used, you can insert it without touching the weaving point.

5. Apply neoprene adhesive cement to the outside of the body flange.

6. After one or two minutes, pull the top ceiling from both side to avoid any slackening and glue both side onto the body flange.
7. After the top ceiling is properly attached to the body flange, clip off the all protruding edges.
8. Install the seaming welts, rear view mirror, sun visors, interior lamp, assist handles, front pillar trims, rear package tray trim, overhead console (if equipped), etc.

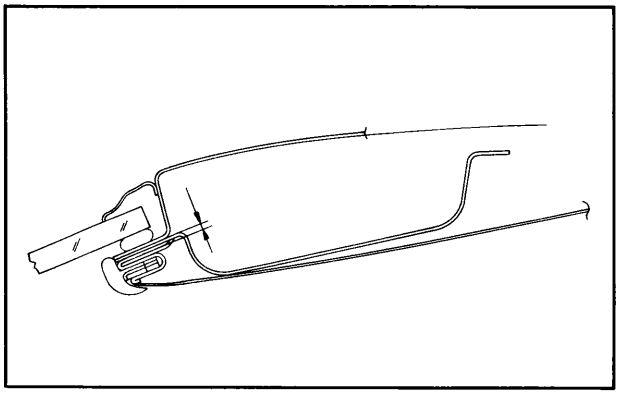

Fig. 14–94 Inserting top ceiling front

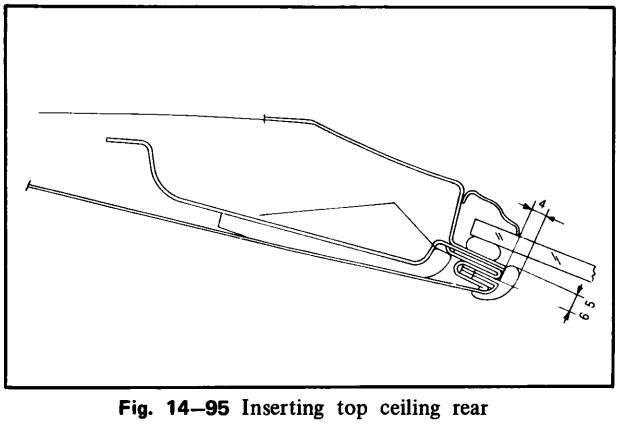

Fig. 14–95 Inserting top ceiling rear

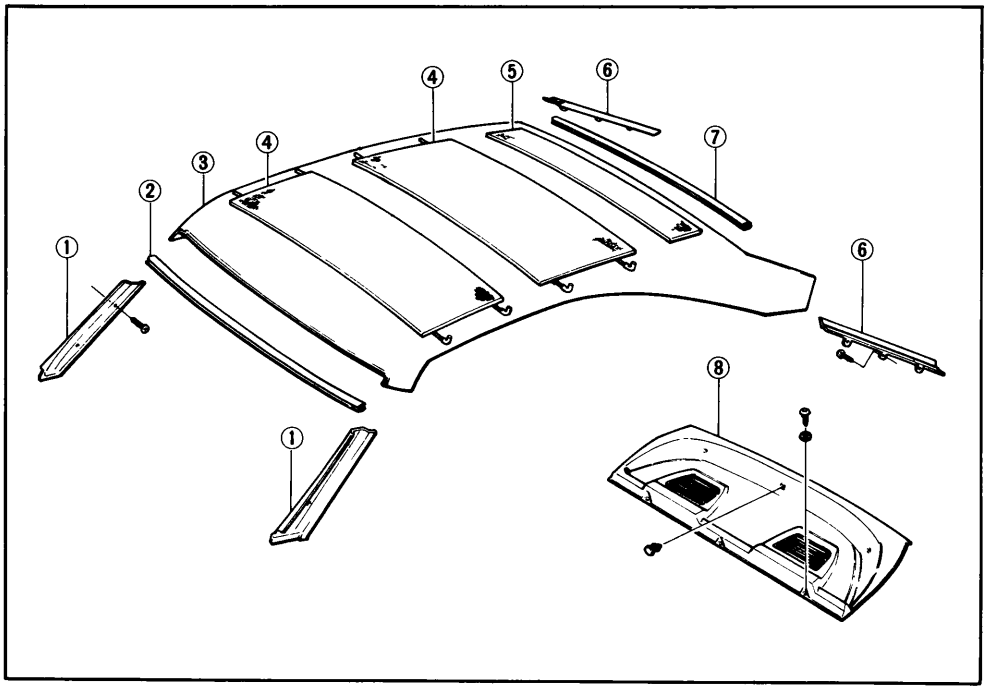

Fig. 14–96
Top ceiling (Hard top)
1. Front pillar trim
2. Front polyethylene plate
3. Top ceiling
4. Head lining
5. Rear head lining
6. Rear fixing plate
7. Rear polyethylene plate
8. Rear package tray trim

14–P. INSTRUMENT PANEL

14–P–1. Removing Instrument Panel Assembly

1. Pull the console pad upward and remove the console pad. Please note that the attaching clips give a little resistance when pulling the console pad out.



Fig. 14–97 Removing console pad

2. Loosen the center console attaching screws and move the console rearward.
3. Remove the screws attaching the left and right side garnishes to the instrument panel and remove the garnishes.
4. Remove the steering wheel and column cover as described in **Par 15–B–2**.

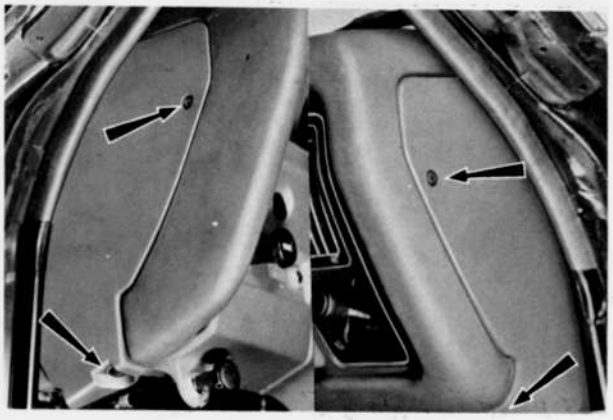

Fig. 14–98 Removing side garnish

5. Remove the bolts attaching the instrument frame junction and remove the junction.
6. Remove the steering shaft bracket attaching nuts and disconnect the steering shaft from the instrument panel.
7. Remove the screw attaching the ventilator knob and screw out the knob from the shaft.
Remove the nut attaching the ventilator to the decoration panel. Then, remove the ventilator cable away from the decoration panel.
8. Remove the glove box attaching screws and fasteners. Pull the glove box out and disconnect the wirings to the glove box light.
Then, remove the glove box.

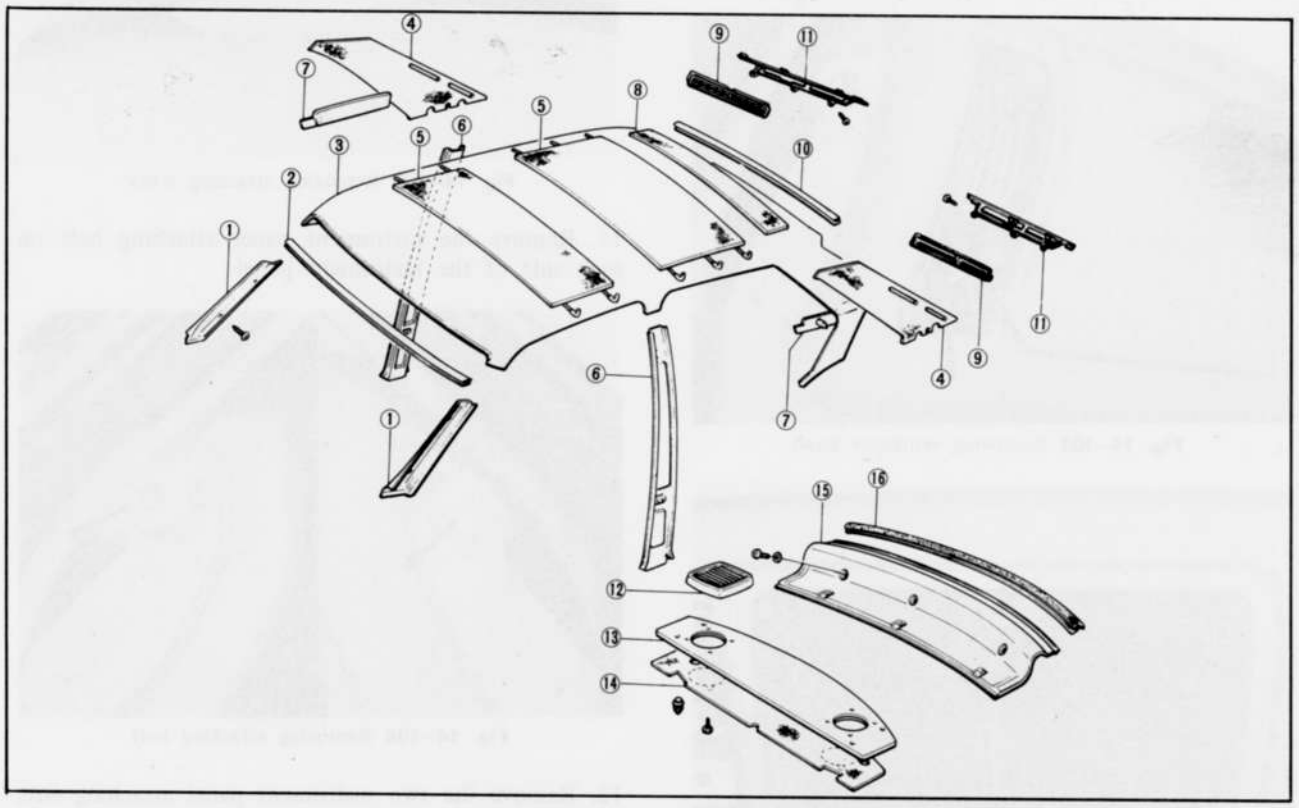

Fig. 14–99 Top ceiling (Sedan)

1. Front pillar trim
2. Front polyethylene plate
3. Top ceiling
4. Rear pillar pad
5. Head lining
6. Center pillar trim
7. Ceiling end
8. Rear head lining
9. Air grille
10. Rear polyethylene plate
11. Rear fixing plate
12. Speaker grille
13. Rear package tray trim
14. Insulator
15. Rear package trim back
16. Back trim brim

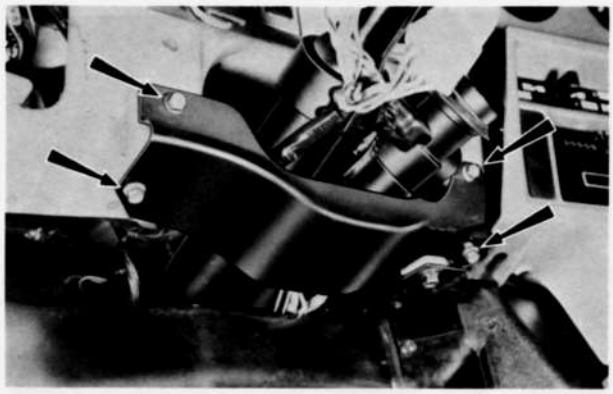

Fig. 14–100 Removing junction

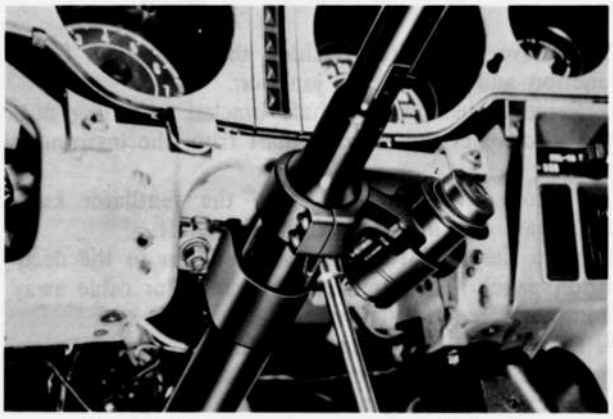

Fig. 14–101 Removing steering shaft bracket



Fig. 14–102 Removing ventilator knob

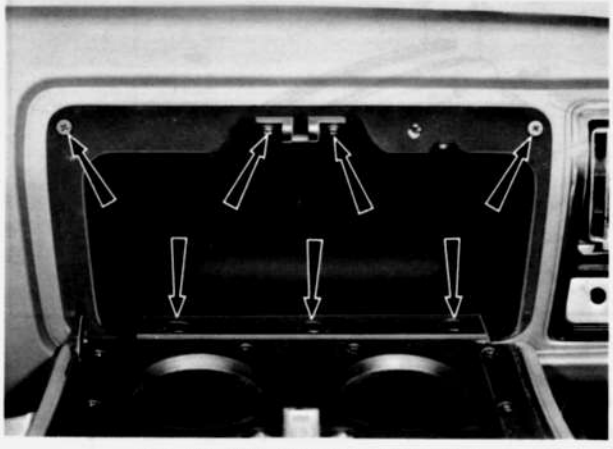

Fig. 14–103 Removing glove box

9. Disconnect the speedometer cable from the instrument and three heater control wires from the heater.

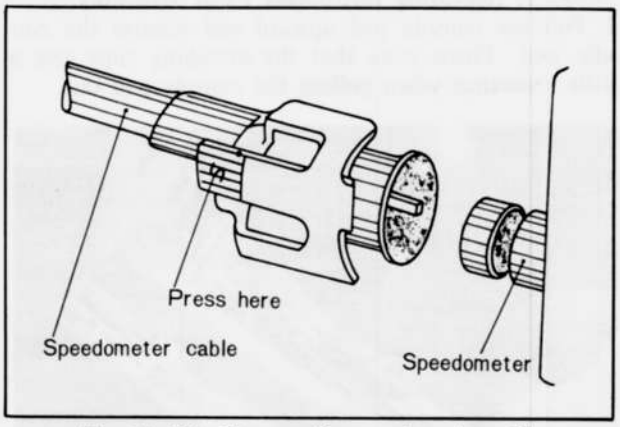

Fig. 14–104 Disconnecting speedometer cable

10. Remove the upper garnish attaching screw.

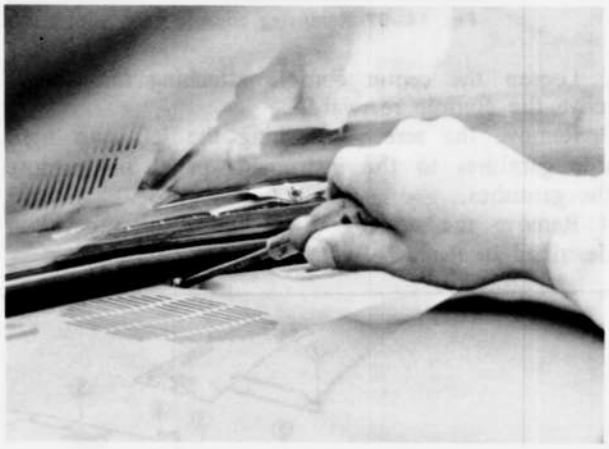

Fig. 14–105 Removing attaching screw

11. Remove the instrument panel attaching bolt on each side of the instrument panel.

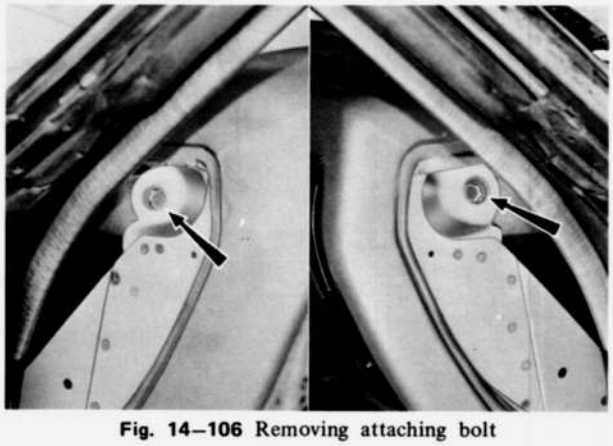

Fig. 14–106 Removing attaching bolt

12. Remove the two instrument panel attaching nuts on each side of the instrument panel lower.
13. Remove the two instrument panel attaching bolts located near the steering shaft bracket.
14. Remove the two instrument panel attaching bolts through the glove box hole.



Fig. 14–107 Removing attaching bolts

15. Pull the instrument panel assembly rearward by about 20 cm (6 in), then disconnect the whole of the electrical leads from the instrument panel assembly.
16. Remove the instrument panel assembly.

14–P–2. Installing Instrument Panel Assembly
Follow the removal procedures in the reverse order.

SPECIAL TOOLS

49 0305 870	Window service tool set
49 0259 855	Seat reclining knuckle remover

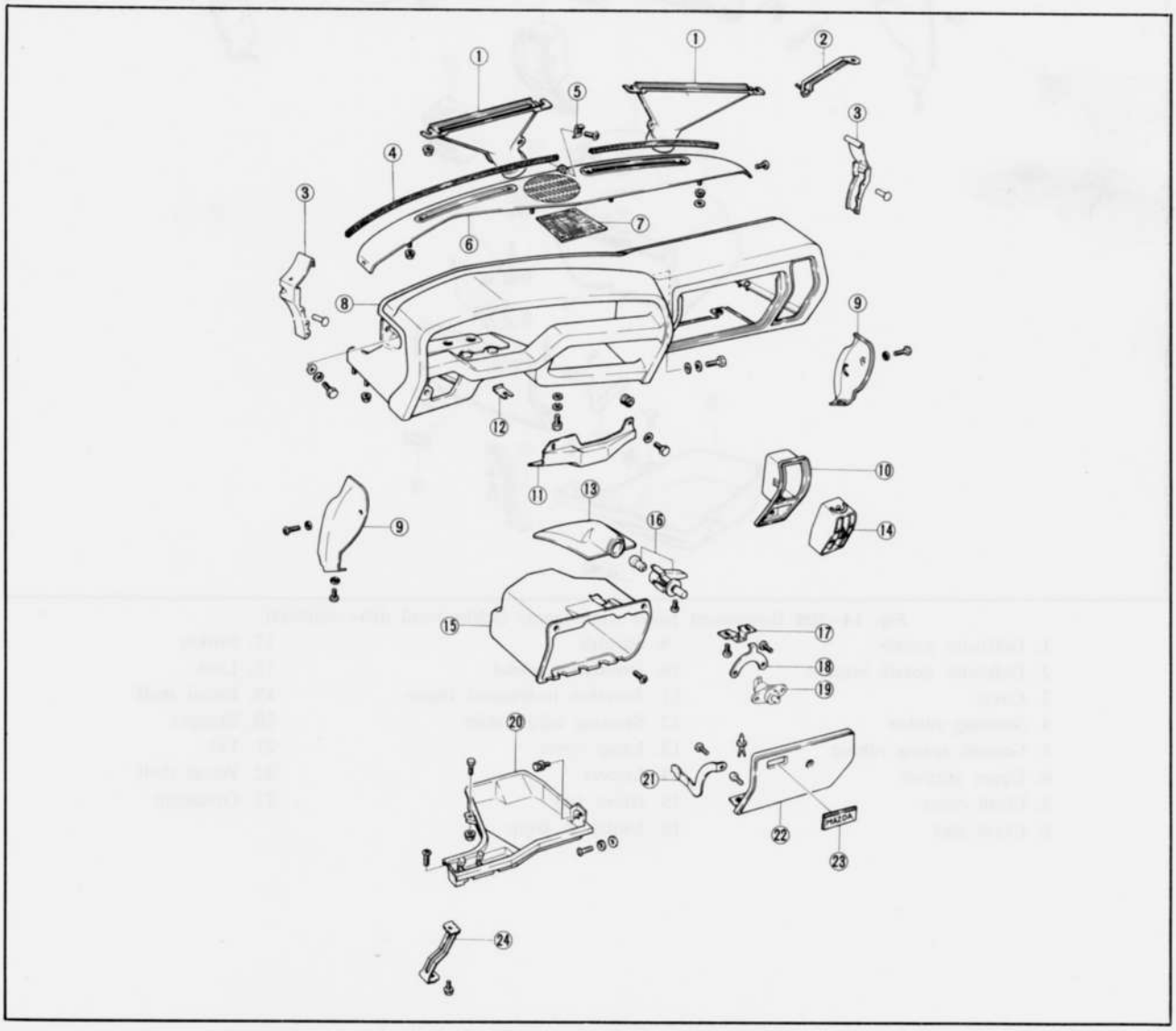

Fig. 14–108 Instrument panel components (Left hand drive vehicles)

1. Defroster nozzle
2. Defroster nozzle bracket
3. Cover
4. Seaming rubber
5. Garnish spring rubber
6. Upper garnish
7. Cloth cover
8. Crush pad
9. Garnish
10. Decoration panel
11. Junction instrument frame
12. Steering adjust shim
13. Lamp cover
14. Louver
15. Glove tray
16. Switch & lamp
17. Striker
18. Lock guide
19. Lock
20. Parcel shelf
21. Stopper
22. Lid
23. Ornament
24. Bracket

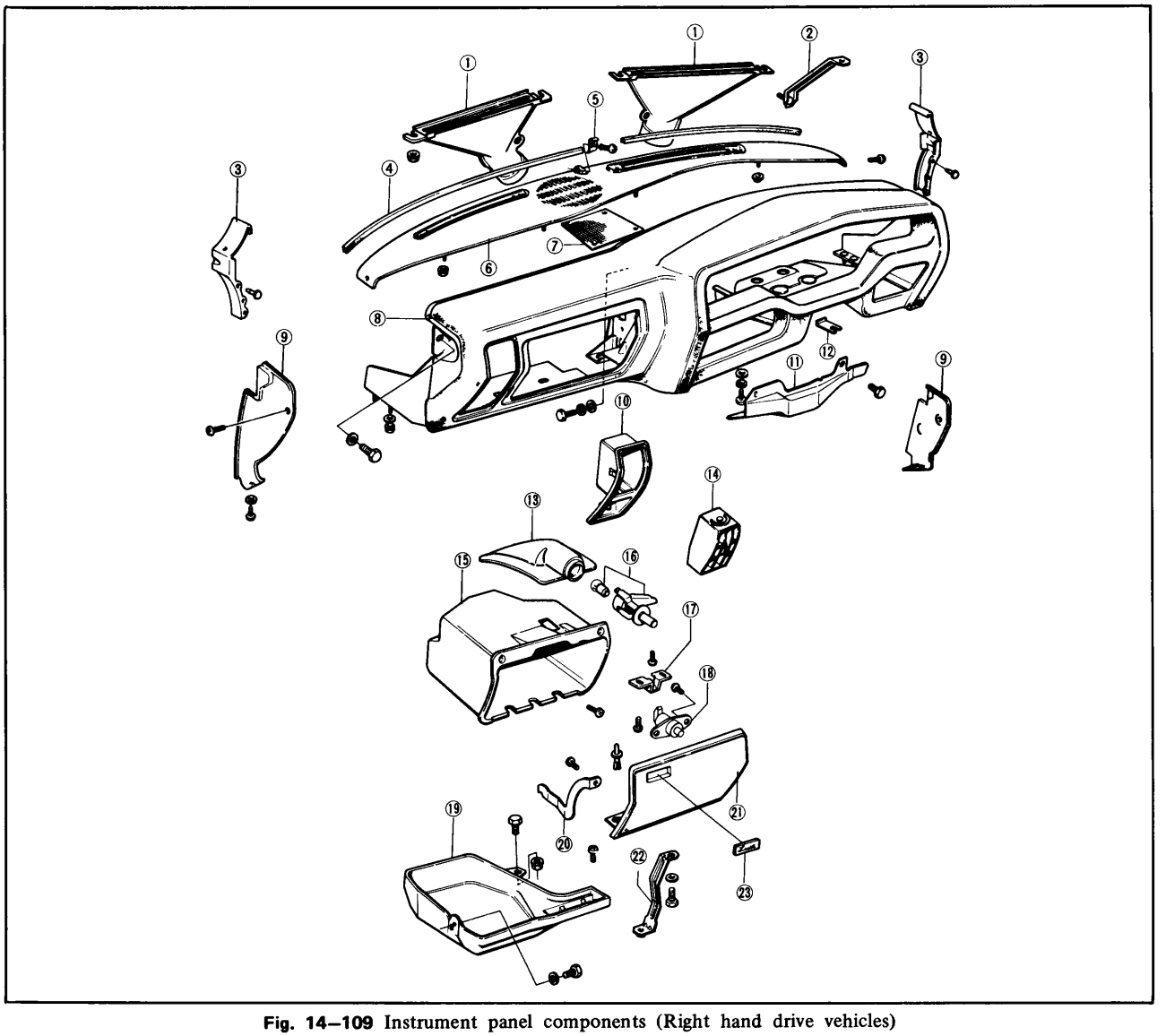

Fig. 14–109 Instrument panel components (Right hand drive vehicles)

1. Defroster nozzle
2. Defroster nozzle bracket
3. Cover
4. Seaming rubber
5. Garnish spring rubber
6. Upper garnish
7. Cloth cover
8. Crush pad
9. Garnish
10. Decoration panel
11. Junction instrument frame
12. Steering adjust shim
13. Lamp cover
14. Louver
15. Glove tray
16. Switch & lamp
17. Striker
18. Lock
19. Parcel shelf
20. Stopper
21. Lid
22. Parcel shelf
23. Ornament

BODY CHECKING DIMENSION
SEDAN & HARDTOP

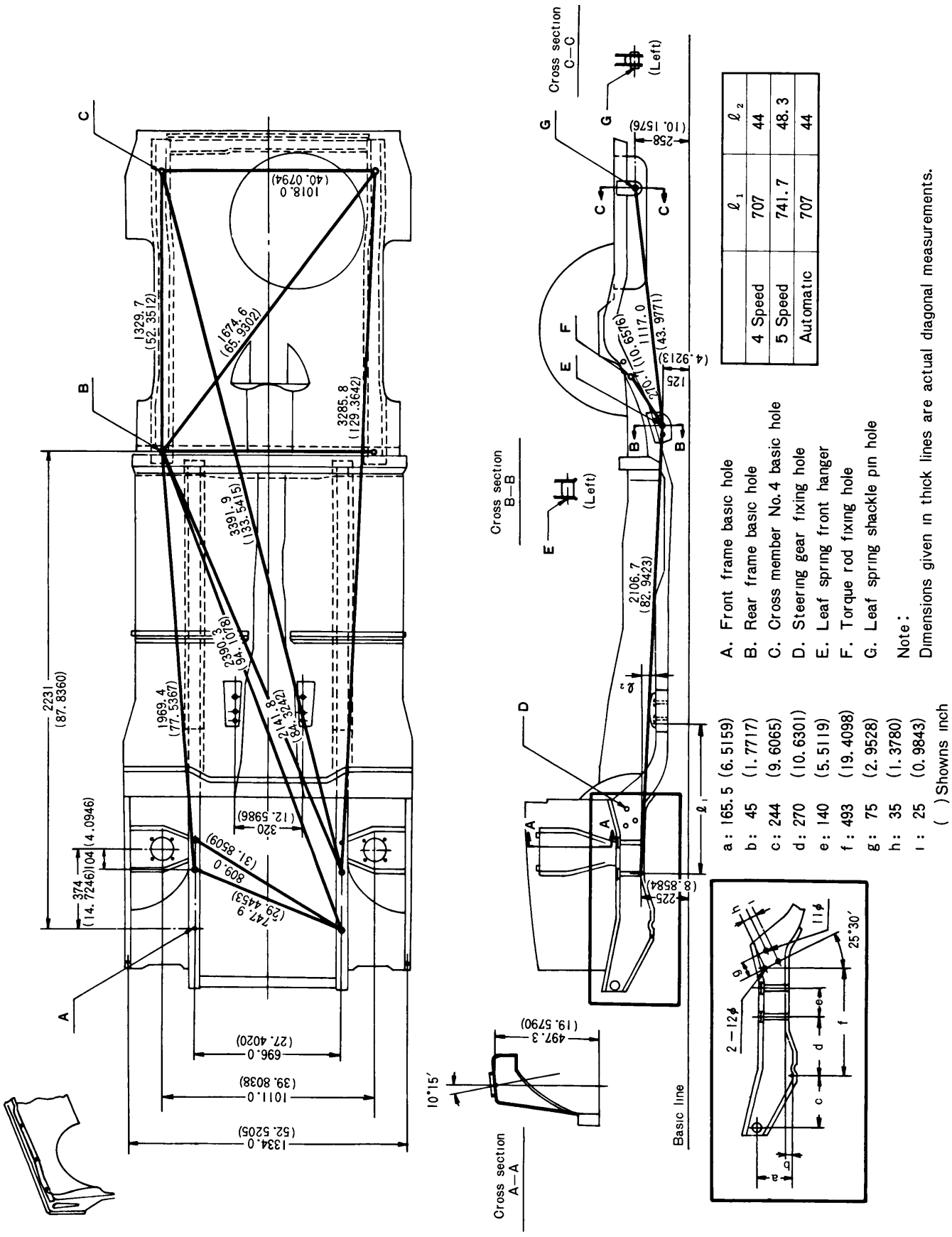

	ℓ_1	ℓ_2
4 Speed	707	44
5 Speed	741.7	48.3
Automatic	707	44

A. Front frame basic hole
B. Rear frame basic hole
C. Cross member No.4 basic hole
D. Steering gear fixing hole
E. Leaf spring front hanger
F. Torque rod fixing hole
G. Leaf spring shackle pin hole

Note:
Dimensions given in thick lines are actual diagonal measurements.
( ) Showns inch

a: 165.5	(6.5159)
b: 45	(1.7717)
c: 244	(9.6065)
d: 270	(10.6301)
e: 140	(5.5119)
f: 493	(19.4098)
g: 75	(2.9528)
h: 35	(1.3780)
i: 25	(0.9843)

14 BODY CHECKING DIMENSION

ROTARY WAGON

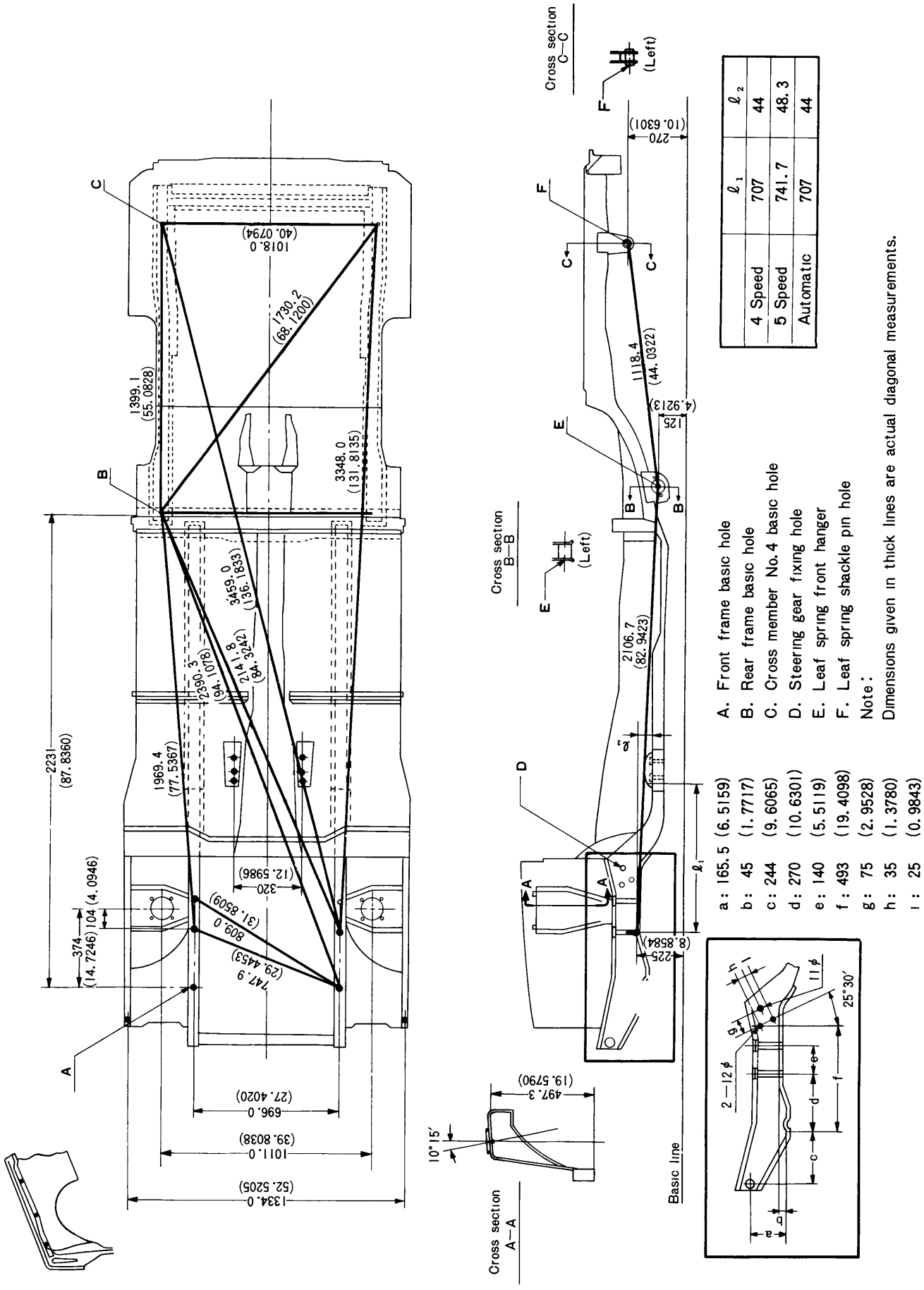

	ℓ_1	ℓ_2
4 Speed	707	44
5 Speed	741.7	48.3
Automatic	707	44

A. Front frame basic hole
B. Rear frame basic hole
C. Cross member No. 4 basic hole
D. Steering gear fixing hole
E. Leaf spring front hanger
F. Leaf spring shackle pin hole

Note:
Dimensions given in thick lines are actual diagonal measurements.
( ) Showns inch

a: 165.5 (6.5159)
b: 45 (1.7717)
c: 244 (9.6065)
d: 270 (10.6301)
e: 140 (5.5119)
f: 493 (19.4098)
g: 75 (2.9528)
h: 35 (1.3780)
i: 25 (0.9843)

BODY

(ROTARY WAGON)

14A–A. BACK DOOR ..... 14A : 1
14A–A–1. Removing Back Door ..... 14A : 1
14A–A–2. Installing Back Door ..... 14A : 1
14A–A–3. Adjusting Back Door ..... 14A : 1
14A–B. BACK DOOR HINGE ..... 14A : 2
14A–B–1. Removing Back Door Hinge ..... 14A : 2
14A–B–2. Installing Back Door Hinge ..... 14A : 3
14A–C. BALANCE SPRING ..... 14A : 3
14A–C–1. Removing Balance Spring ..... 14A : 3
14A–C–2. Installing Balance Spring ..... 14A : 3
14A–D. BACK DOOR LOCK ..... 14A : 3
14A–D–1. Removing Back Door Lock ..... 14A : 3
14A–D–2. Installing Back Door Lock ..... 14A : 3
14A–D–3. Adjusting Back Door Lock ..... 14A : 4
14A–E. BACK DOOR GLASS ..... 14A : 4
14A–E–1. Removing Back Door Glass ..... 14A : 4
14A–E–2. Installing Back Door Glass ..... 14A : 4
14A–F. STATIONARY GLASS (Rear Side Glass) ..... 14A : 5
14A–F–1. Removing Stationary Glass ..... 14A : 5
14A–F–2. Installing Stationary Glass ..... 14A : 5
14A–G. TOP CEILING ..... 14A : 6
14A–H. HEATABLE WINDOW ..... 14A : 6
SPECIAL TOOL ..... 14A : 6

14A–A. BACK DOOR

14A–A–1. Removing Back Door

1. Open the back door.
2. Remove the trim fasteners with the driver as shown in Fig. 14A–1, and remove the back door trim.

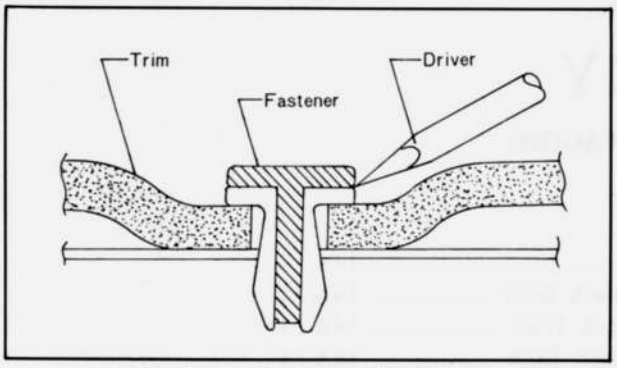

Fig. 14A–1 Removing trim fastener

3. Remove the hinge arm link covers.



Fig. 14A–2. Removing link cover

4. Disconnect the wiring connectors for the rear combination light, licence plate light and heatable window (if equipped).
Pull out the wiring harness from the hole (A) of the back door as shown in Fig. 14A–3.

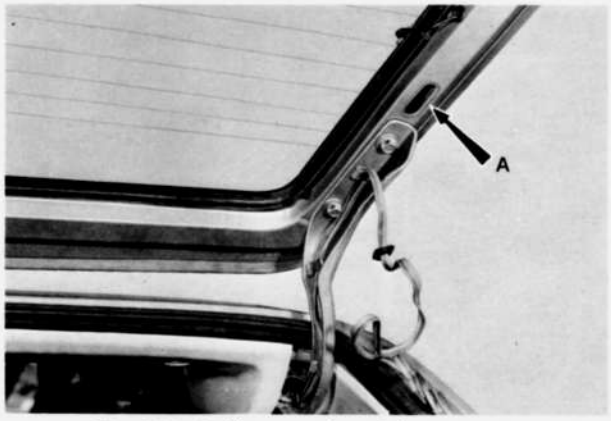

Fig. 14A–3 Disconnecting wiring connector

5. Remove the back door and hinge arm tightening bolts, and remove the back door.

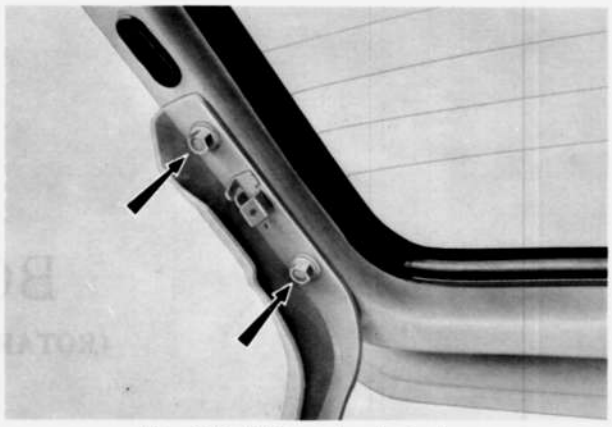

Fig. 14A–4 Removing back door

14A–A–2. Installing Back Door

Follow the removal procedures in the reverse order.

14A–A–3. Adjusting Back Door

1. To adjust the back door for **to-and-fro** position, loosen the back door hinge bracket attaching bolts on the body side and the dovetail attaching screws on the door side.

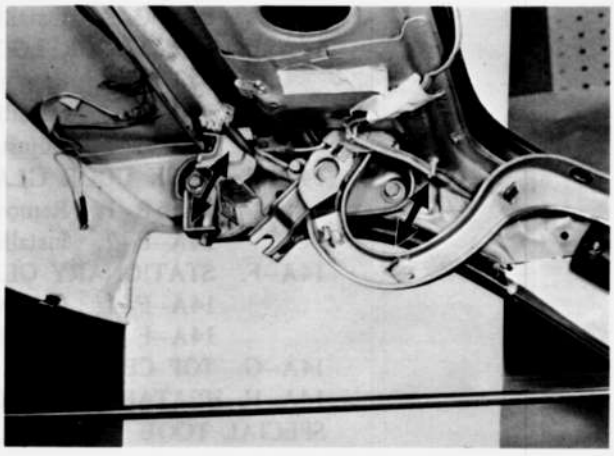

Fig. 14A–5 Adjusting to-and-fro

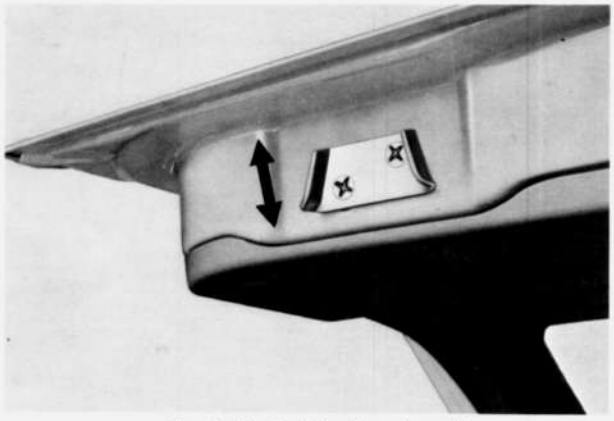

Fig. 14A–6 Adjusting dovetail

2. To adjust the back door for **up-and-down** position, loosen the back door hinge arm tightening bolts on the back door side.
When the up-and-down adjustment is made, the striker also should be adjusted by using the shims.

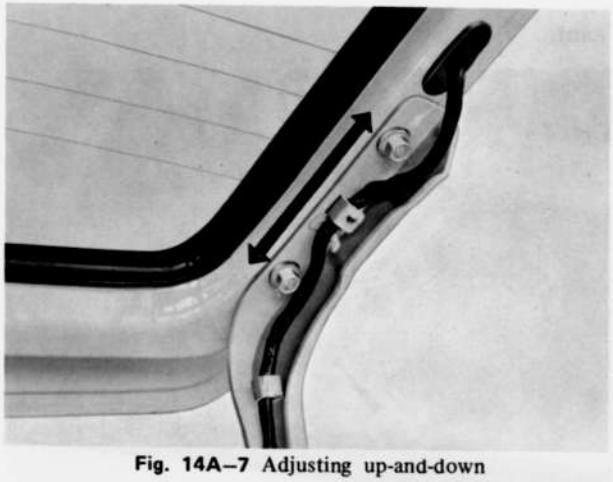

Fig. 14A–7 Adjusting up-and-down

3. Adjust the back door for closing, by moving the back door lock striker as shown in Fig. 14A–8, or inserting the shims of proper thickness between the striker and the body.
The adjusting shims are of 1.0 mm (0.039 in) and 2.0 mm (0.079 in) in thickness.

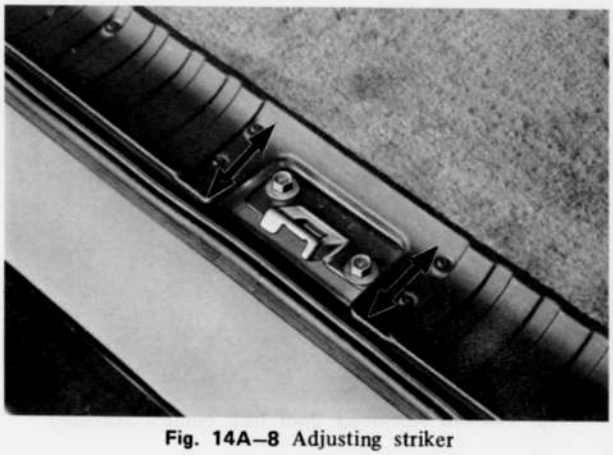

Fig. 14A–8 Adjusting striker

4. The back door can be shifted from **side to side** by moving the upper wedge to fore-and-aft.

Note:
Care should be taken not to distort the back door or mar the surrounding body.

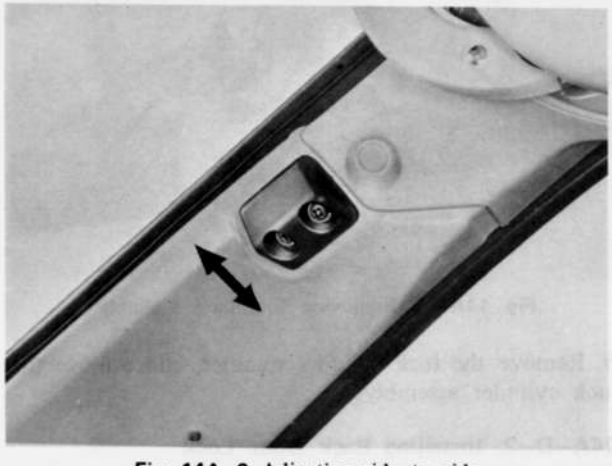

Fig. 14A–9 Adjusting side to side

14A–B. BACK DOOR HINGE

14A–B–1. Removing Back Door Hinge

1. Remove the back door as described in **Par. 14A–A–1.**
2. Remove the hinge cover fasteners and disconnect the wiring connectors. Then remove the hinge cover.

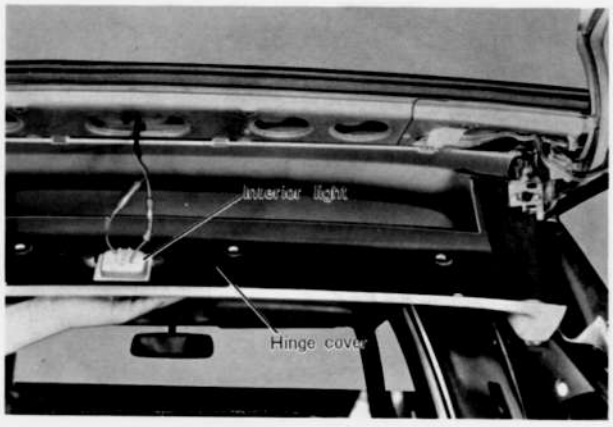

Fig. 14A–10 Removing hinge cover

3. Remove the wiring harness from the right side hinge arm link.
4. Remove the top ceiling from the top ceiling clips.
5. Disconnect the wiring to the interior light switch at the right side hinge.
6. Loosen but do not remove the hinge attaching bolts to ease removing the balance springs.

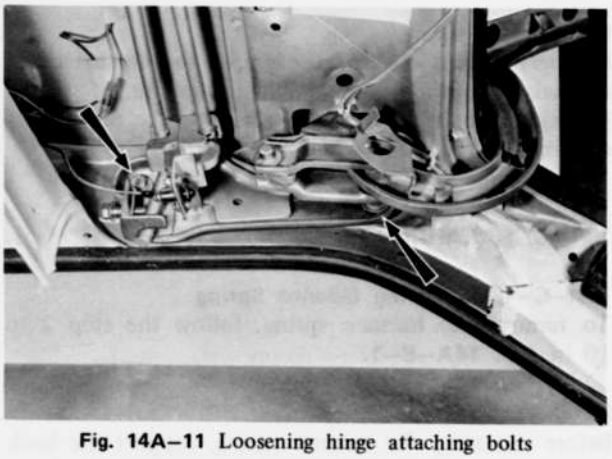

Fig. 14A–11 Loosening hinge attaching bolts

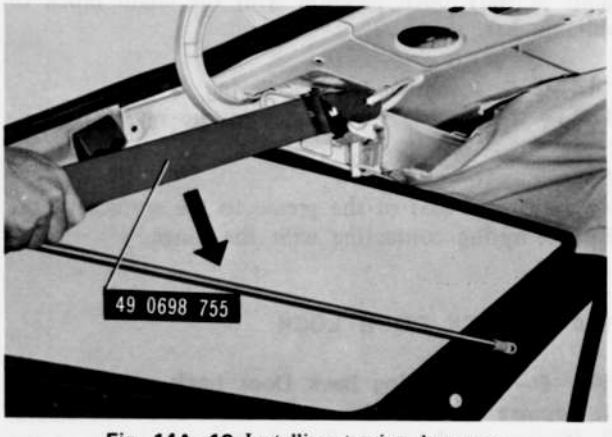

Fig. 14A–12 Installing torsion bar arm

7. Install the **torsion bar arm** (49 0698 755) to the left side balance spring as shown in Fig. 14A–12.
8. Push the torsion bar arm downward and disconnect the balance spring from the hinge arm link.
9. Position the hinge arm link upward.
Depress and pull the torsion bar arm and remove the balance spring from the hinge bracket.

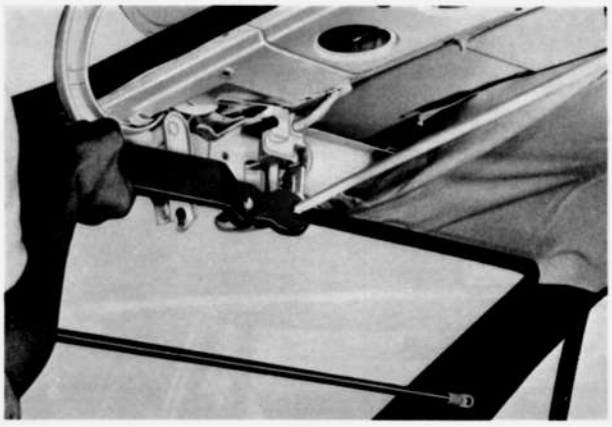

Fig. 14A–13 Removing balance spring

10. Remove the right side balance spring in the same manner as the left side balance spring.
11. Remove the both hinge attaching bolts and remove the hinge brackets.

14A–B–2. Installing Back Door Hinge

Follow the removal procedures in the reverse order.

Note:
a) Apply a thin coat of the grease to the surface of the balance spring contacting with the hinge.
b) Adjust the back door according to the procedures described in Par. 14A–A–3.

14A–C. BALANCE SPRING

14A–C–1. Removing Balance Spring

To remove the balance spring, follow the step 2 to 10 in **Par. 14A–B–1.**

Note:
Before removing the balance spring, support the back door at fully open position with the chain block or suitable bar.

14A–C–2. Installing Balance Spring

Follow the removal procedures in the reverse order.

Note:
Apply a thin coat of the grease to the surface of the balance spring contacting with the hinge.

14A–D. BACK DOOR LOCK

14A–D–1. Removing Back Door Lock

1. Remove the back door trim board and watershield.
2. Disconnect the back door lock control link at the joint.

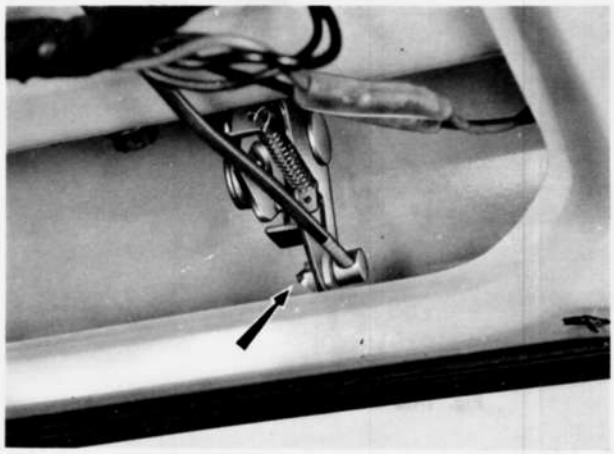

Fig. 14A–14 Disconnecting door lock control link

3. Remove the two back door lock control attaching nuts and remove the back door lock control assembly.

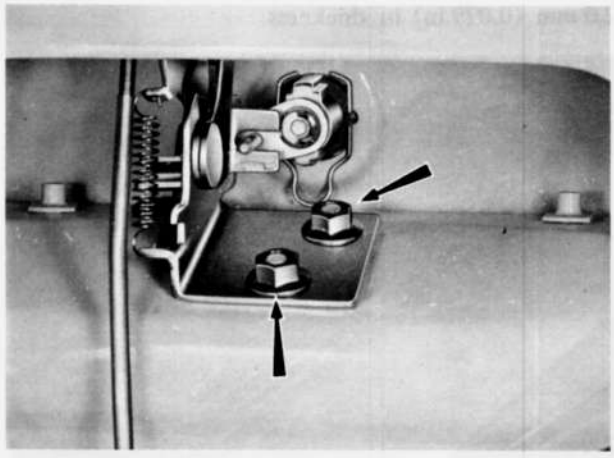

Fig. 14A–15 Removing door lock control assembly

4. Remove the two back door lock attaching bolts, and remove the back door lock assembly.

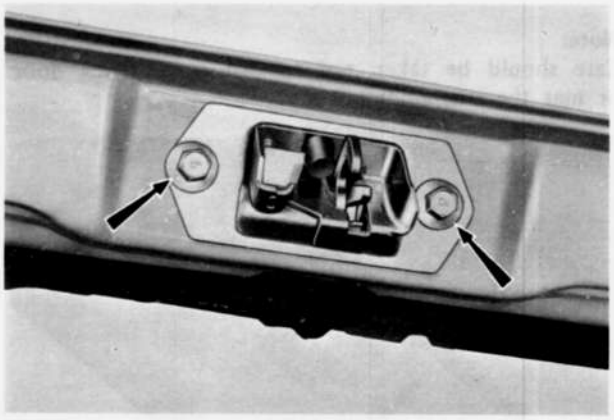

Fig. 14A–16 Removing door lock assembly

5. Remove the lock cylinder retainer, and remove the lock cylinder assembly.

14A–D–2. Installing Back Door Lock

Follow the removal procedures in the reverse order.

14A–D–3. Adjusting Back Door Lock

1. To adjust the back door lock, loosen the back door lock control assembly attaching screws and move the lock control assembly so as to give the specified clearance between the outer handle and push lever. The specified clearance should be **1.0 mm (0.04 in).** Tighten the screws attaching the back door lock control assembly and apply lubricant to the assembly.

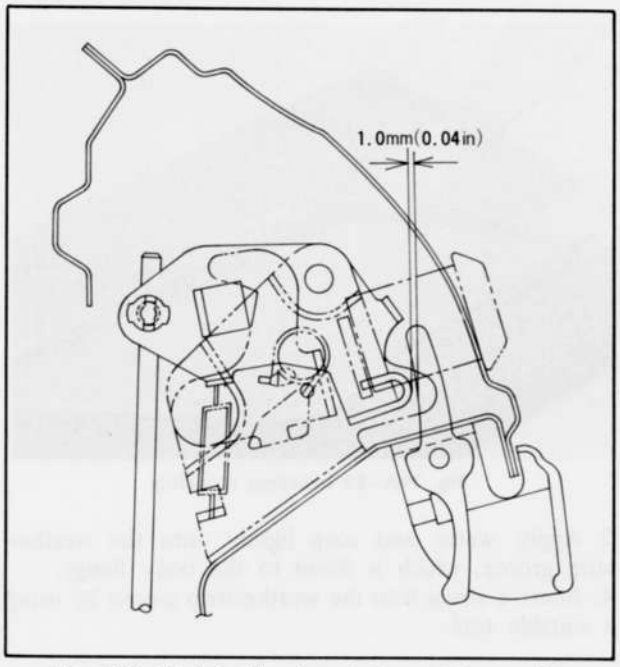

Fig. 14A–17 Adjusting door lock control assembly

2. To adjust the back door lock striker, refer to the step 3 **Par. 14A–A–3.**

14A–E. BACK DOOR GLASS

14A–E–1. Removing Back Door Glass

1. Remove the back door trim board and disconnect the heatable window wirings from the wiring harness.
2. Tear the weatherstrip cemented surface from the body with a wooden spatula.
3. Drive out the inner lip of the weatherstrip with a suitable tool from the inside of the vehicle while pushing the back door glass outwards.

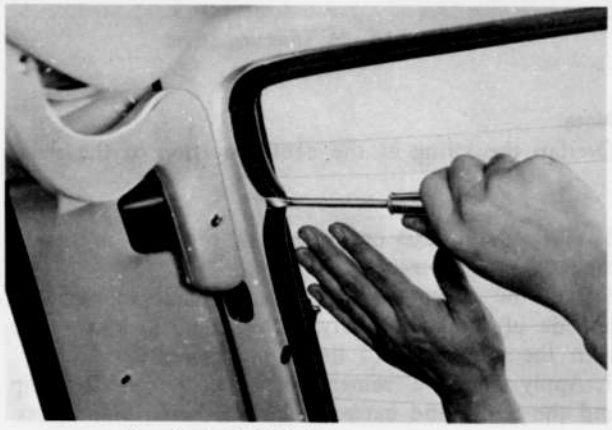

Fig. 14A–18 Drive out weatherstrip

4. Remove the back door glass together with the weatherstrip.
5. Remove the moulding and glass from the weatherstrip.

Note:
When removing the heatable window, be careful not to damage the filament surface.

14A–E–2. Installing Back Door Glass

Before installing the back door glass, clean off the old adhesive cement around the glass and body thoroughly.

1. Install the weatherstrip onto the back door glass and align the corners of the weatherstrip and glass.

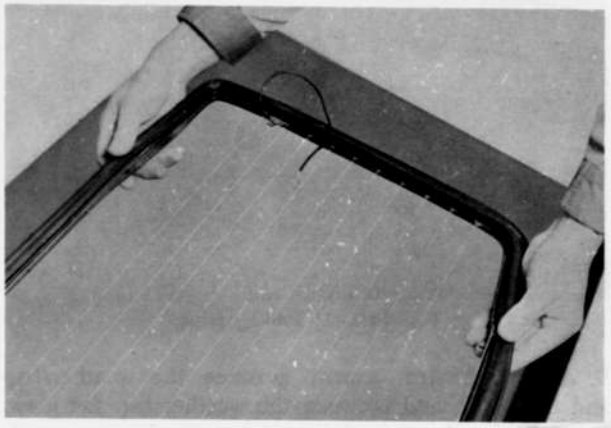

Fig. 14A–19 Installing weatherstrip

2. Fit a string of 4 mm (0.16 in) in diameter into the mould fitting groove of the weatherstrip with a suitable tool.
3. Apply water and soap lightly onto the weatherstrip groove.
4. Connect the right, left, upper and lower mouldings with four joints. Push the moulding against the groove of the weatherstrip and pull the string to fit the moulding.
5. Apply water and soap lightly onto the weatherstrip groove, which is fitted to the body flange.
6. Insert a string into the weatherstrip groove by using a suitable tool.

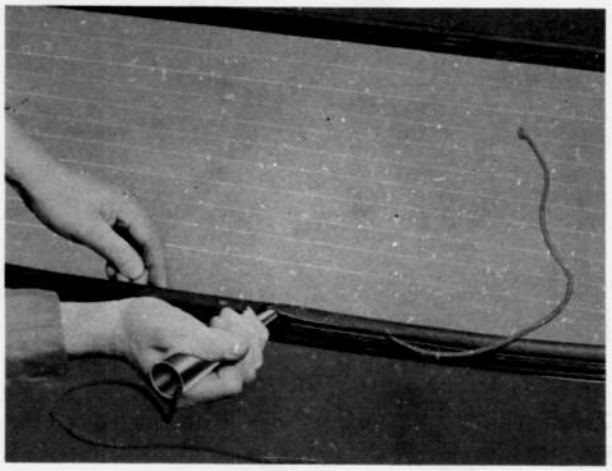

Fig. 14A–20 Inserting string

Note:
Overlap the string at the center portion of the glass.

7. Position the glass onto the body properly, and place the string ends inside the body. To facilitate the procedure, apply water and soap lightly onto the body flange.
8. Pull the string from the inside while tapping the outside of the glass lightly with a hand in accordance with the movement of the string pulled.

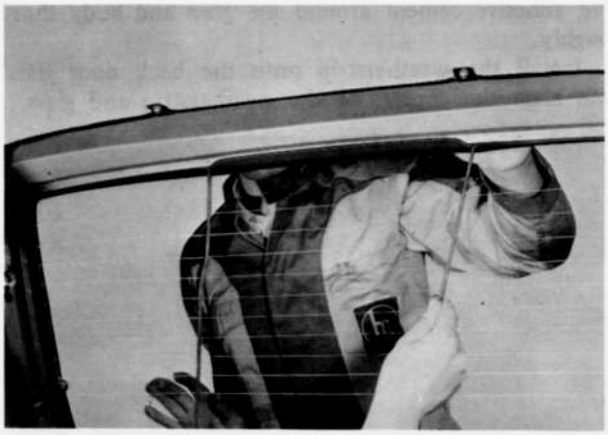

Fig. 14A–21 Pulling string

9. Apply adhesive cement between the weatherstrip and the body, and between the weatherstrip and glass. To facilitate cleaning after applying the cement, attach a suitable tape onto the glass and body.
10. Clean off the excessive adhesive cement together with the tape.

14A–F. STATIONARY GLASS (Rear Side Glass)

14A–F–1. Removing Stationary Glass

1. Dirve out the inner lip of the weatherstrip with a suitable tool from the inside of the vehicle while pushing the stationary glass.

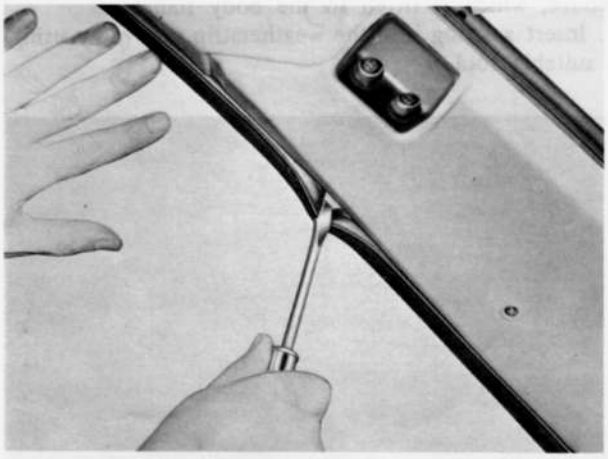

Fig. 14A–22 Drive out weatherstrip

2. Remove the stationary glass together with the weatherstrip.
3. Remove the mould and glass from the weatherstrip.

14A–F–2. Installing Stationary Glass

Before installing the stationary glass, clean off the old adhesive cement around the glass and body thoroughly.
1. Install the weatherstrip onto the stationary glass.
2. Install the moulding onto the weatherstrip using a string.

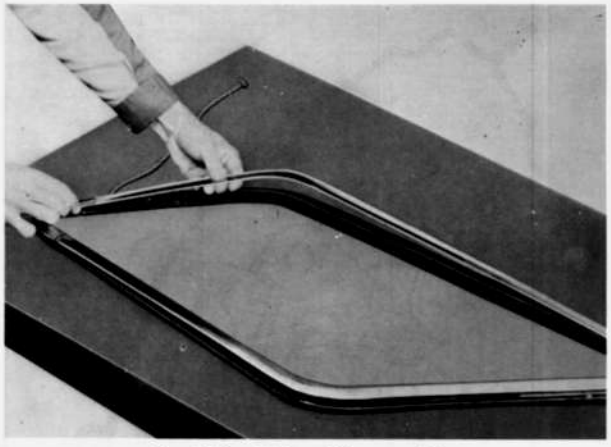

Fig. 14A–23 Installing moulding

3. Apply water and soap lightly onto the weatherstrip groove, which is fitted to the body flange.
4. Insert a string into the weatherstrip groove by using a suitable tool.

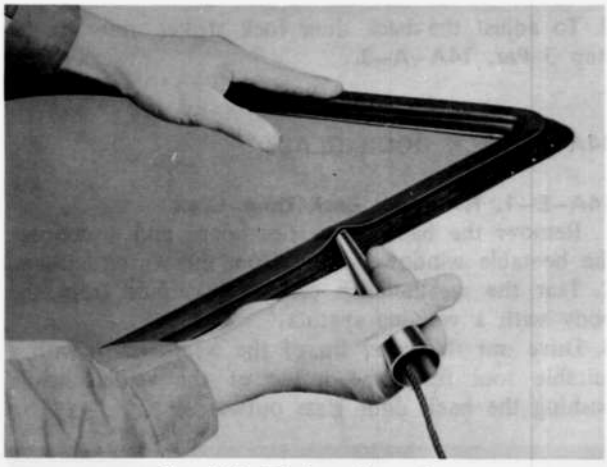

Fig. 14A–24 Inserting string

Note:
Overlap the string at the center portion of the glass.

5. Position the glass onto the body properly, and place the string ends inside the body.
6. Pull the string from the inside while tapping the outside of the glass lightly with a hand in accordance with the movement of the string pulled.
7. Apply adhesive cement between the weatherstrip and the body, and between the weatherstrip and glass.
8. Clean off the excessive adhesive cement.

14A–G. TOP CEILING

To remove and install the top ceiling, refer to **Par. 14–O.**

SPCIAL TOOL

49 0698 755	Torsion bar arm

14A–H. HEATABLE WINDOW

Servicing the heatable window is explained in **Par. 15–I.**

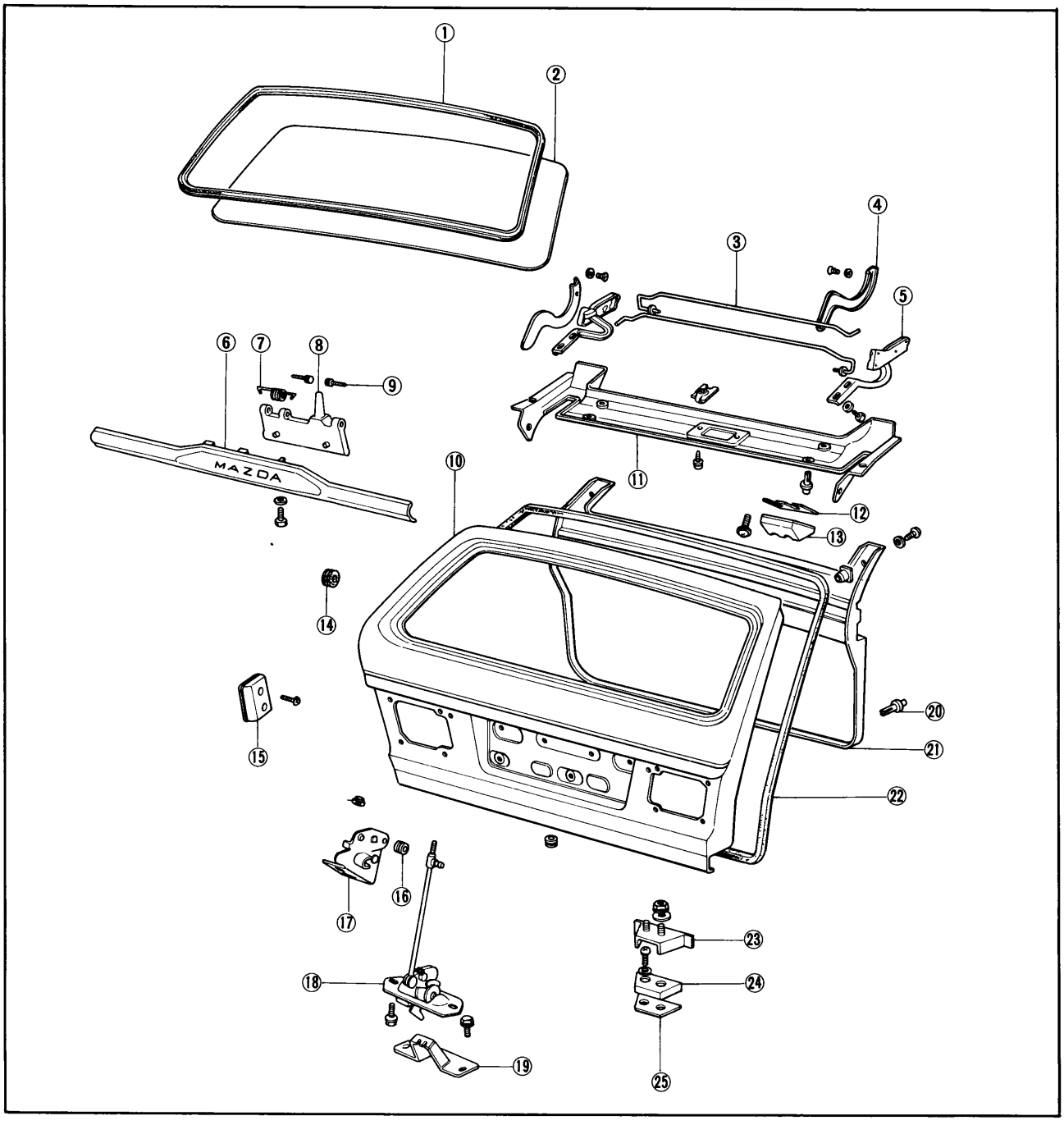

Fig. 14A–25 Back door components

1. Weatherstrip
2. Back window glass
3. Balance spring
4. Hinge arm cover
5. Hinge
6. Outer handle
7. Spring
8. Lever
9. Pin
10. Back door body
11. Hinge cover
12. Shim
13. Upper wedge
14. Protector
15. Side wedge
16. Bush
17. Door lock control assembly
18. Door lock assembly
19. Striker
20. Fastener
21. Back door trim
22. Weatherstrip
23. Dovetail
24. Wedge
25. Shim

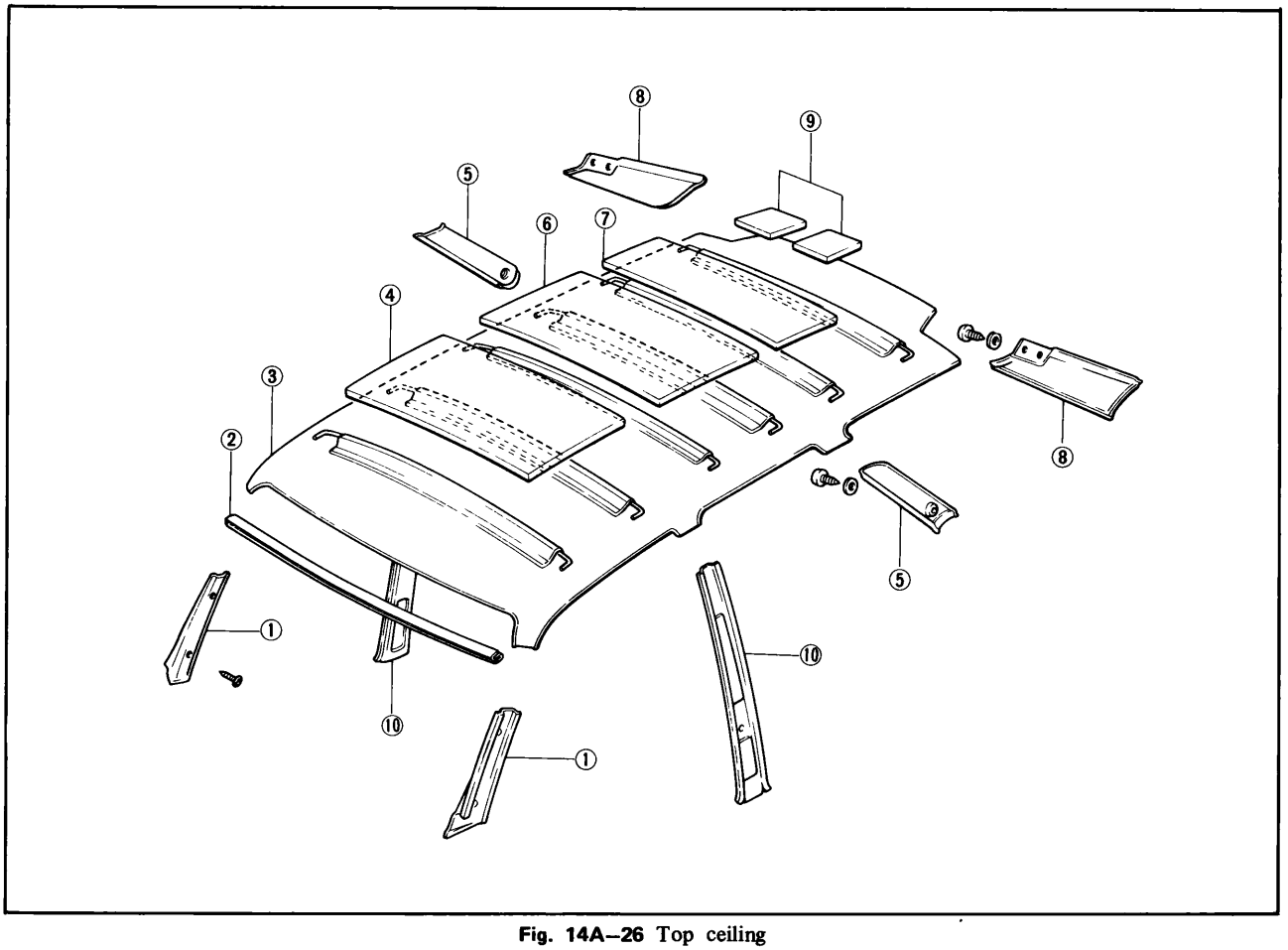

Fig. 14A–26 Top ceiling

1. Front pillar trim
2. Front polyethylen plate
3. Top ceiling
4. Head lining
5. Quarter pillar trim
6. Roof insulator
7. Head lining
8. Rear pillar trim
9. Wire cushion
10. Center pillar trim

ELECTRICAL SYSTEM (BODY)

15–A. LIGHTING SYSTEM ..... 15 : 1
15–A–1. Adjusting Head Light ..... 15 : 1
15–A–2. Bulb Capacity ..... 15 : 1
15–B. FUEL AND WATER TEMPERATURE GAUGE ..... 15 : 1
15–B–1. Checking Fuel and Water Temperature Gauge ..... 15 : 1
a. Fuel and water temperature gauge ..... 15 : 1
b. Fuel gauge unit ..... 15 : 3
c. Water temperature gauge unit ..... 15 : 3
15–B–2. Removing Fuel and Water Temperature Gauge ..... 15 : 4
15–B–3. Installing Fuel and Water Temperature Gauge ..... 15 : 6
15–C. COMBINATION SWITCH ..... 15 : 6
15–C–1. Checking Combination Switch ..... 15 : 6
15–C–2. Removing Combination Switch ..... 15 : 6
15–C–3. Installing Combination Switch ..... 15 : 6
15–D. IGNITION SWITCH & STEERING LOCK ..... 15 : 7
15–D–1. Removing Ignition Switch Contact Housing ..... 15 : 7
15–D–2. Checking Ignition Switch Contact Housing ..... 15 : 7
15–D–3. Installing Ignition Switch Contact Housing ..... 15 : 7
15–D–4. Removing Key Cylinder ..... 15 : 7
15–D–5. Installing Key Cylinder ..... 15 : 7
15–D–6. Replacing Steering Lock ..... 15 : 7
15–E. WIPER MOTOR ..... 15 : 7
15–E–1. Removing Wiper Motor ..... 15 : 7
15–E–2. Checking Wiper Motor ..... 15 : 8
15–E–3. Installing Wiper Motor ..... 15 : 8
15–F. HORN ..... 15 : 9
15–F–1. Removing Horn ..... 15 : 9
15–F–2. Adjusting Horn ..... 15 : 9
15–F–3. Installing Horn ..... 15 : 9
15–G. CENTRAL CONTROL BOX ..... 15 : 9
15–G–1. Checking Central Control Box ..... 15 : 9
a. Wiper relay ..... 15 : 9
b. Horn relay ..... 15 : 10
c. Turn signal and hazard flasher relay ..... 15 : 11
15–G–2. Removing Central Control Box ..... 15 : 11
15–G–3. Installing Central Control Box ..... 15 : 11
15–H. STOP LIGHT CHECKER RELAY ..... 15 : 11
15–H–1. Checking Stop Light Checker Relay ..... 15 : 11
15–H–2. Removing Stop Light Checker Relay ..... 15 : 12
15–H–3. Installing Stop Light Checker Relay ..... 15 : 12
15–I. HEATABLE WINDOW ..... 15 : 12
15–I–1. Checking Heatable Window ..... 15 : 12
15–I–2. Repairing Printed Filament ..... 15 : 12
SPECIAL TOOL ..... 15 : 12

15–A. LIGHTING SYSTEM

The wiring of the lighting systems is shown in the wiring diagrams. The wires in the various circuits are of different colors to aid when checking individual circuits.

15–A–1. Adjusting Head Light

Before adjusting the headlights, make sure that the tires are inflated uniformly to recommended pressure and the vehicle is on the level ground without load. Adjust the headlight to meet the regulation of each country.

To adjust the headlight, turn the three spring loaded screws of the sealed beam unit until the headlights are properly aimed.



Fig. 15–1 Adjusting head light

15–A–2. Bulb Capacity

When replacing the bulb, conform to the following table.

15–B. FUEL AND WATER TEMPERATURE GAUGE

The fuel gauge indicates the quantity of gasoline in the tank only when the ignition switch is turned on. The fuel gauge circuit is composed of the fuel gauge, mounted on the instrument panel, and the fuel tank unit, connected by a single wire through the ignition switch.

The water temperature gauge electrically operated like the fuel gauge, consists of the water temperature gauge in the instrument panel and sending unit installed on the rear housing.

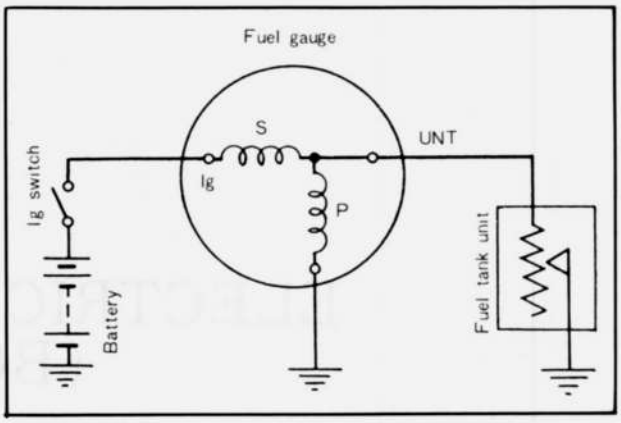

Fig. 15–2 Diagram of fuel gauge

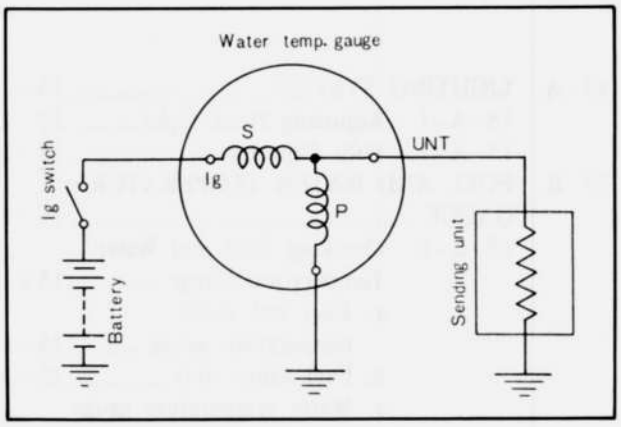

Fig. 15–3 Diagram of water temp. gauge

15–B–1. Checking Fuel and Water Temperature Gauge

a. Fuel and water temperature gauge

If the checker (49 0839 285) is available, use it according to the following procedure to confirm whether the trouble lies in the meter or in the unit.

1. Disconnect wiring connector from unit.
2. Connect this wiring connector to red lead of checker.
3. Connect black lead of checker to earth connection on vehicle body.

Note:

Make this earth connection at position close to unit.

	U.S.A. & Canada	E.C.E.	Australia	England
Head light lower beam	60/37.5W	45/40W	50/37.5W	50/37.5W
Head light upper beam	37.5W	45W	37.5W	37.5W
Front turn signal light	8/27W	5/21W	21W	21W
Front side light	8W	5W	5W	5W
Tail and stop light	8/27W	5/21W	5/21W	5/21W
Rear turn signal light	27W	21W	21W	21W
Reverse light				
Sedan	12W	10W	12W	10W
Hard Top	27W	10W	12W	10W
Wagon	27W			10W
License light				
Sedan and Hard Top	7.5W	5W	5W	5W
Wagon	8W			5W
Rear side light	8W			

Combination meter illumination light	3.4W
Glove box light	5W
Step light	3.4W
Cigar lighter light	3W (24V)
Exhaust system over heat warning light	3.4W
Decoration panel light	3.4W
Air conditioner light	3.4W
Interior light	5W
Trunk room light	5W
Over head console	
Indicator light	3.4W
Spot light	6W
Interior light	10W

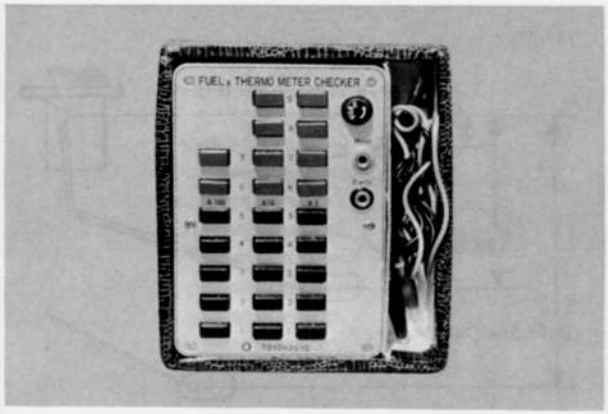

Fig. 15–4 Checker

4. Turn engine key on (in ignition position).
5. Set checker to the specified resistance value according to the following resistance figure.

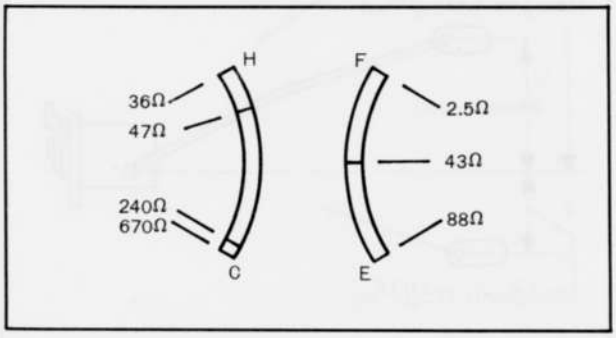

Fig. 15–5 Resistance figure

Example:
If specified resistance value of temperature gauge C is 671,

671 = 600 + 70 + 1

Therefore, push 6 of column x 100
7 of column x 10
1 of column x 1

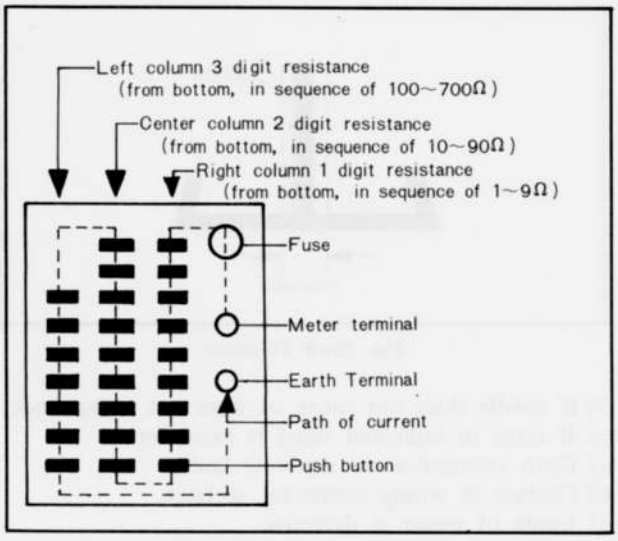

Fig. 15–6 Setting checker

Note:
a) To return button to its original position, push another button in same column half-way down.
b) When setting checker, push buttons in sequence starting from the largest value.

6. Check and see whether indicated value on meter concurs with set value on checker.

Note:
When making judgement, wait for about 20 secs before making judgement.

Judgement:
1) If indicated value on meter concurs with set value on checker, the operation of meter is satisfactory. The unit or wiring is defective.
2) If there is error in indicated value of meter, use following standard to checker error. Tolerance is roughly ± 2 widths of needle (± 1/16 of one graduation).

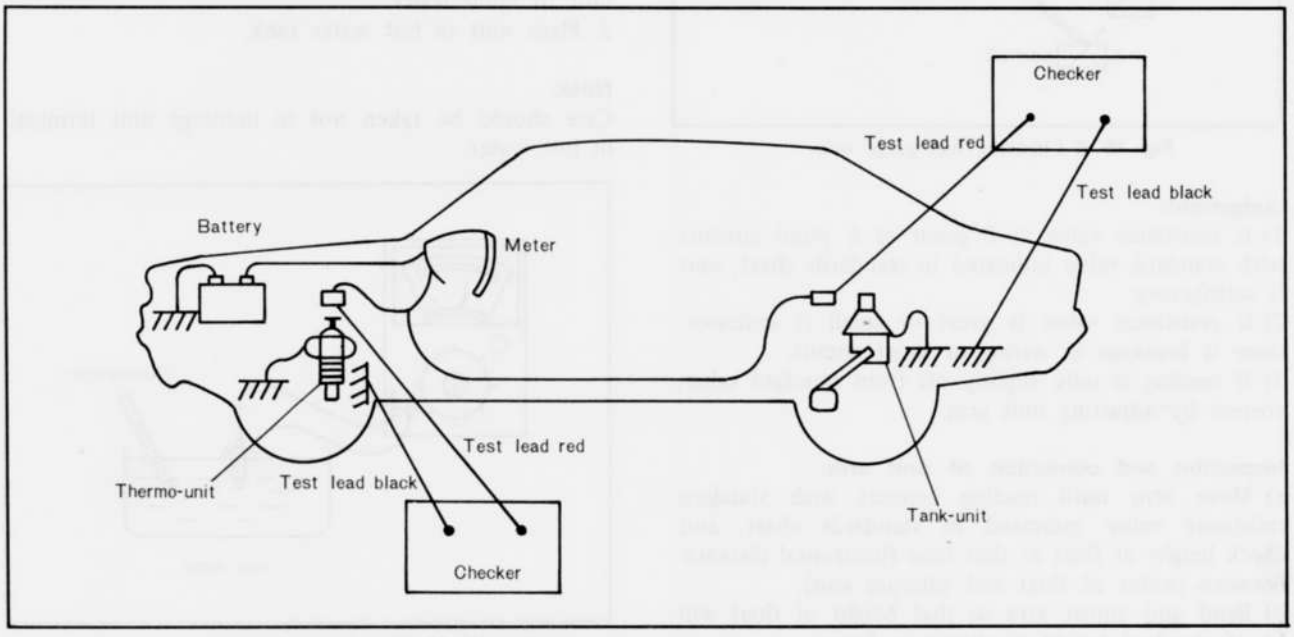

Fig. 15–7 Connecting checker

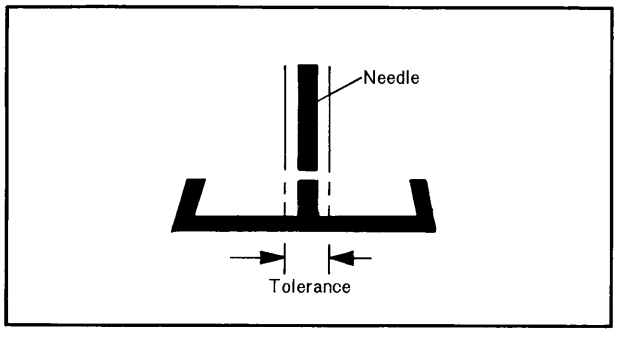

Fig. 15–8 Tolerance

3) If needle does not move or does not swing back, or if error in indicated value is excessive:
a) Earth connection of meter is fault.
b) Contact in wiring connector is fault.
c) Inside of meter is defective.

b. Fuel gauge unit

For inspecting the fuel gauge unit, proceed as follows.
1. Remove unit, and connect terminal and body of unit to radio tester.
2. Slowly move unit arm to E point or F point and take reading of resistance value of tester at that time.

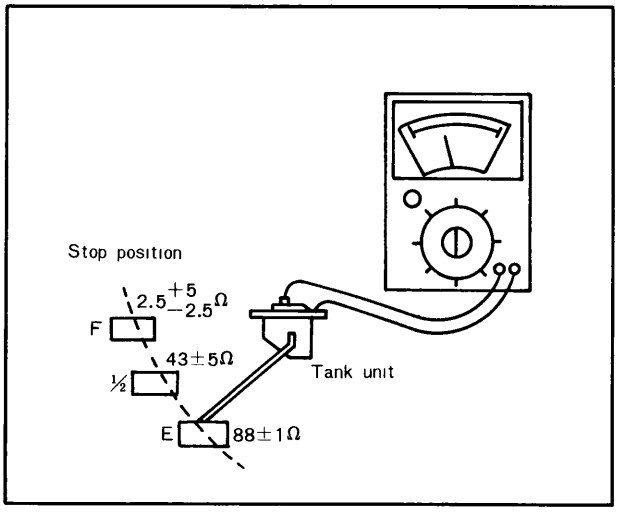

Fig. 15–9 Checking fuel gauge unit

Judgement:

1) If resistance value at E point or F point concurs with standard value indicated in standards chart, unit is satisfactory.
2) If resistance value is great or small it indicates there is breakage in wiring or short circuit.
3) If reading is only slightly off from standard value, correct by adjusting unit arm.

Inspection and correction of unit arm:

a) Move arm until reading concurs with standard resistance value indicated in standards chart, and check height of float at that time (horizontal distance between center of float and fulcrum arm).
b) Bend and adjust arm so that height of float will be of standard height as shown in figure.

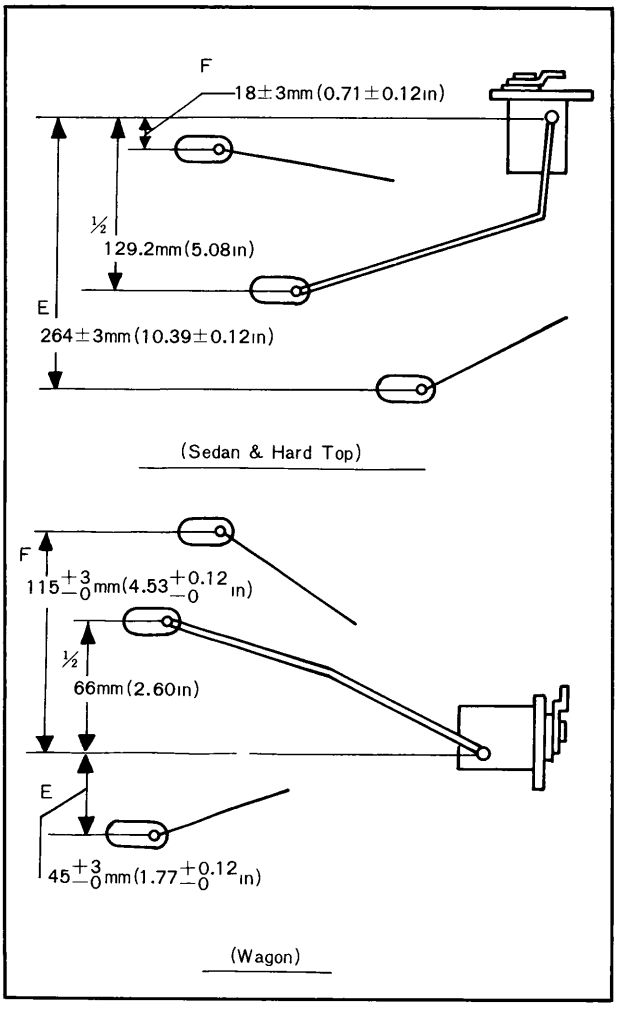

Fig. 15–10 Adjusting unit arm

c. Water temperature gauge unit

For inspecting the water temperature gauge unit, proceed as follows.
1. Remove unit, and connect terminal and body of unit to radio tester.
2. Place unit in hot water tank.

Note:

Care should be taken not to immerge unit terminal in hot water.

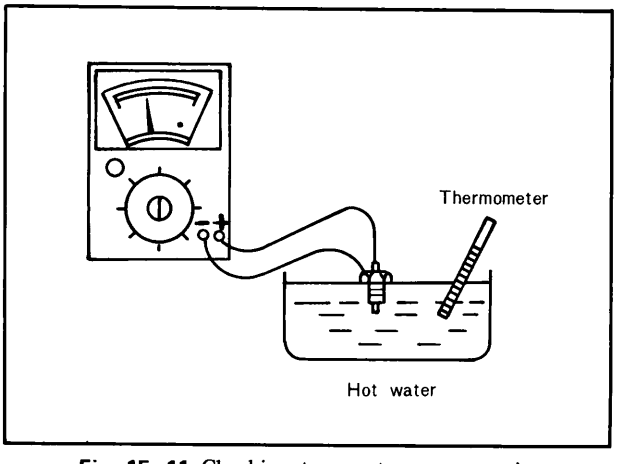

Fig. 15–11 Checking temperature gauge unit

3. Place thermometer in hot water tank.
4. Take rading of thermometer and at the same time reading of resistance value on tester.

Note:
a) Water should be hot (about 80°C) when inspection is being made.
b) Change temperature of hot water and make another inspection.

Judgement:
1) If temperature and resistance value at that temperature are within range of tolerance, unit is satisfactory. Range of tolerance is ±20% of resistance value shown in standards chart (including measuring errors).
2) If unit is outside of range of tolerance replace with new unit.

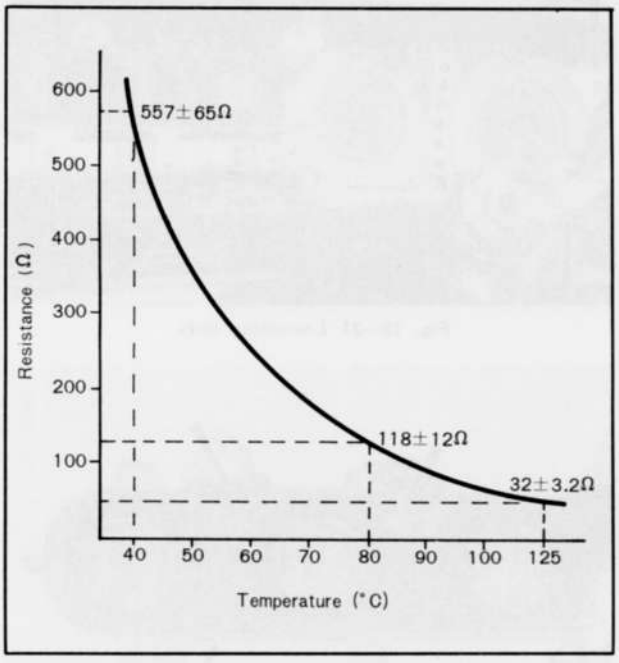

Fig. 15–12 Characteristic of thermister

15–B–2. Removing Fuel and Water Temperature Gauge

1. Pull the center cap out from the steering wheel.
2. Loosen the steering wheel attaching nut and remove the steering wheel.
3. Loosen the nut attaching the ventilator knob and move the knob away from the panel.



Fig. 15–13 Removing ventilator knob

4. Loosen the screw attaching the choke knob and remove the choke knob.
Remove the nut attaching the choke and move the choke away from the panel.
5. Loosen the screws attaching the column cover and remove the column cover.

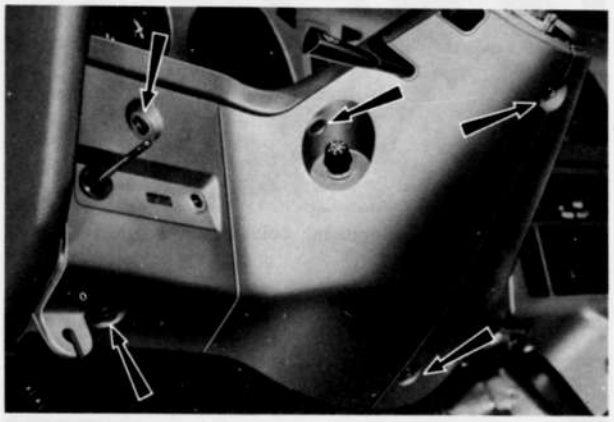

Fig. 15–14 Column cover attaching screw

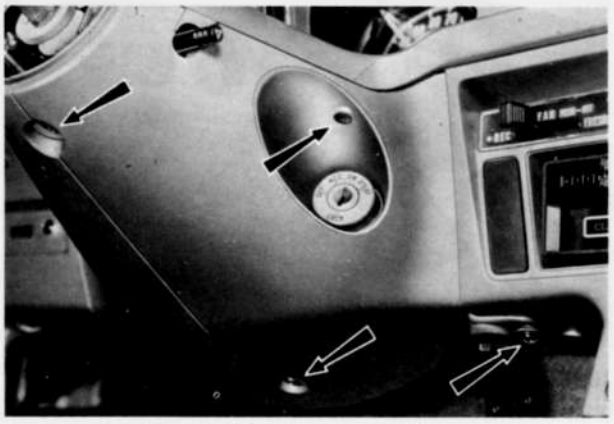

Fig. 15–15 Column cover attaching screw

6. Disconnect the wirings from the panel light resister by loosening the attaching screws.
7. Disconnect the wirings to the exhaust system over heat warning light.
8. Loosen but do not remove the two screws shown in the Fig. 15–16 and pull the column cover out from the instrument panel.
Note that the attaching clips give a little resistance when pulling column cover out.

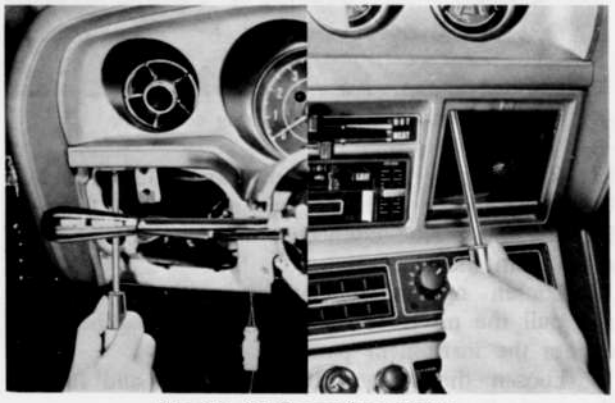

Fig. 15–16 Loosening screws



Fig. 15–17 Removing column cover upper

9. Loosen the meter cover attaching nuts and pull the cover out from the combination meter.

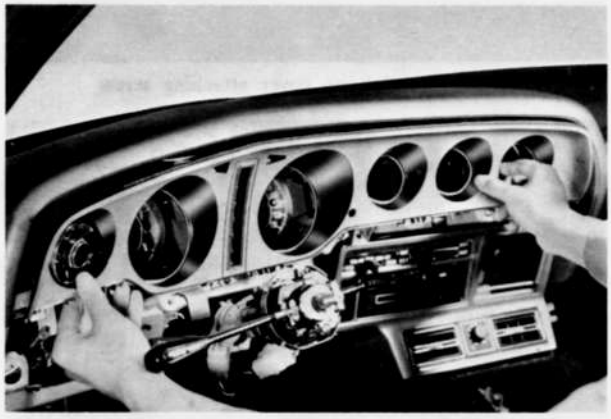

Fig. 15–18 Removing meter cover

10. Disconnect the wiring connectors from the combination meter.

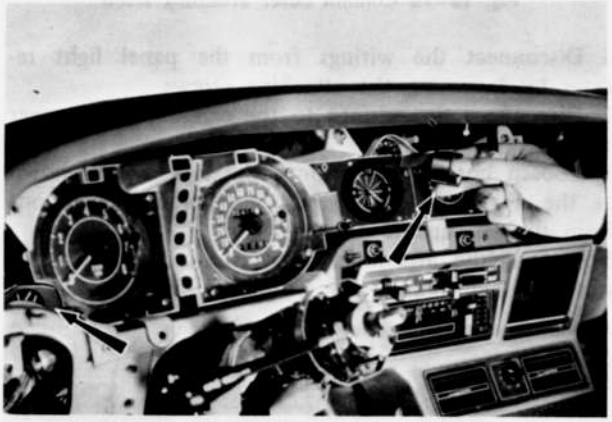

Fig. 15–19 Removing wiring connector

11. Reach under the instrument panel and disconnect the speedometer cable by pressing on the flat surface of the plastic connector and pulling the cable away from the head.
12. Loosen nuts attaching the combination meter and pull the meter top away from the dashboard to expose the instrument panel.
13. Loosen the screws attaching cover and remove the cover from the combination meter.

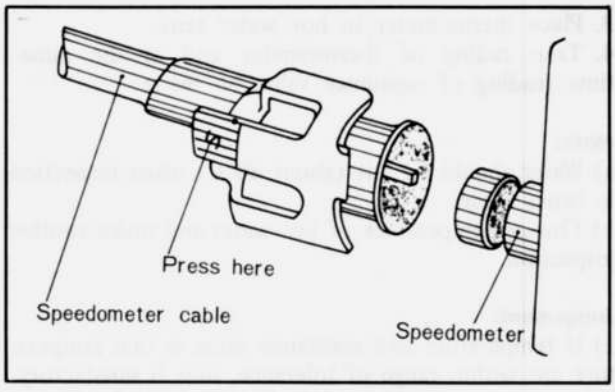

Fig. 15–20 Disconnecting speedometer cable



Fig. 15–21 Loosening nuts

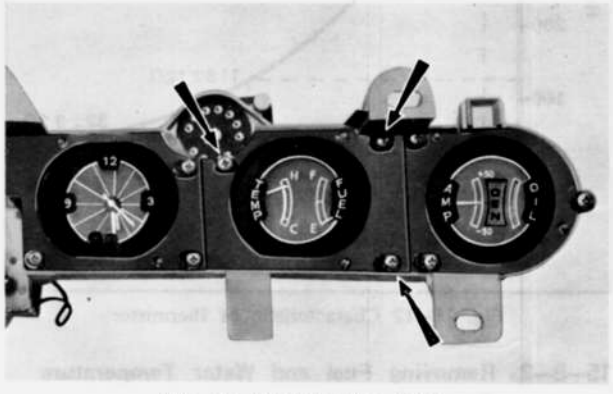

Fig. 15–22 Removing cover

14. Loosen the nuts attaching fuel and water temperature gauge assembly and remove gauge assembly from the combination meter.

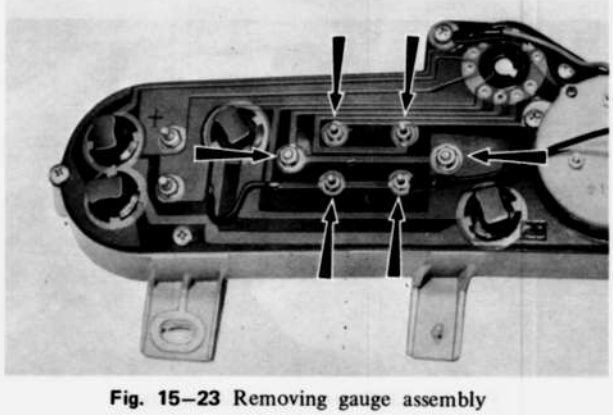

Fig. 15–23 Removing gauge assembly

15–B–3. Installing Fuel and Water Temperature Gauge

Follow the removal procedures in reverse order.

15–C. COMBINATION SWITCH

15–C–1. Checking Combination Switch

The combination switch can be checked in the vehicle using an ohm-meter.

1. Refer to the step **1** to **8** in **Par. 15–B–3** and remove the column cover.
2. Disconnect the connectors from the main wiring harness at the combination switch.

Fig. 15–26 shows the connection of each terminal of the combination switch.

Check the connection of each terminal by using an ohm-meter.

If at any one or more points the meter pointer either does not move or has only a slight movement (high resistance), the entire combination switch assembly must be replaced.

15–C–2. Removing Combination Switch

1. Refer to the step **1** to **8** in **Par. 15–B–3** and remove the column cover.
2. Disconnect the wiring connectors.
3. Remove the stop ring from the column shaft.
4. Loosen the screw attaching the combination switch and remove the combination switch.

15–C–3. Installing Combination Switch

Follow the removal procedures in the reverse order.

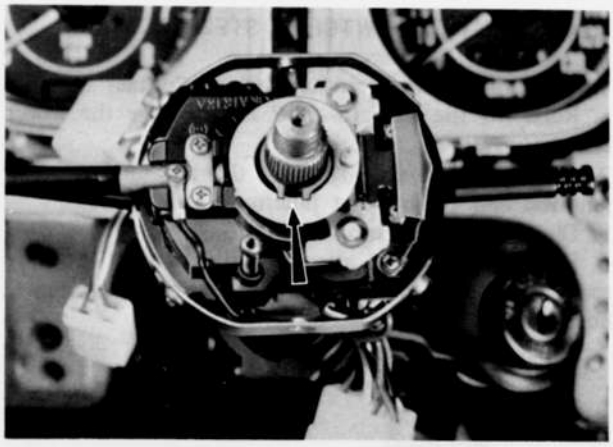

Fig. 15–24 Removing stop ring

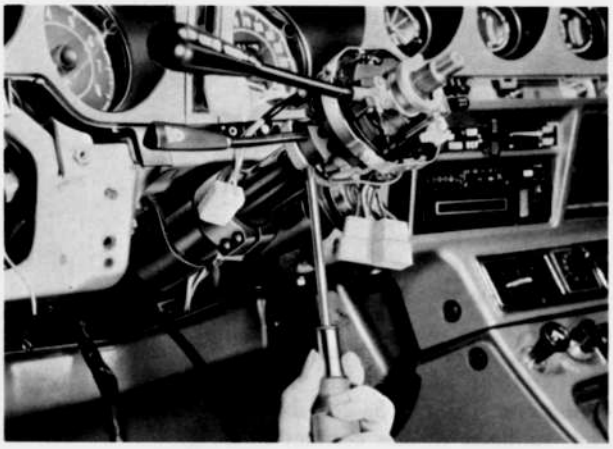

Fig. 15–25 Removing combination switch

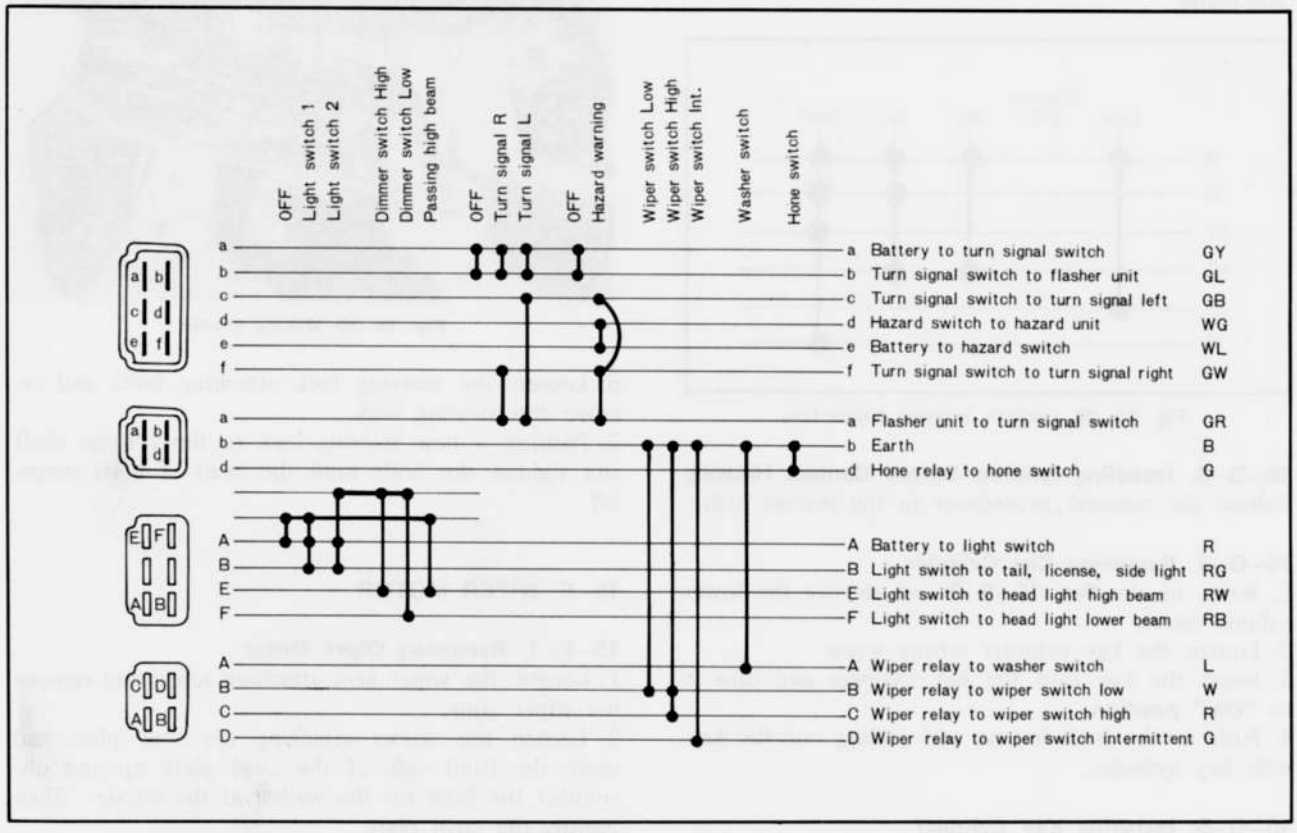

Fig. 15–26 Combination switch connection

15–D. IGNITION SWITCH & STEERING LOCK

15–D–1. Removing Ignition Switch Contact Housing

1. Refer to the **Par. 15–B–2** and remove the lower column cover.
2. Remove the bolts attaching the instrument frame junction and remove the junction.
3. Disconnect the wiring connector.
4. Loosen the screw attaching the contact housing to the steering lock body and remove the contact housing.

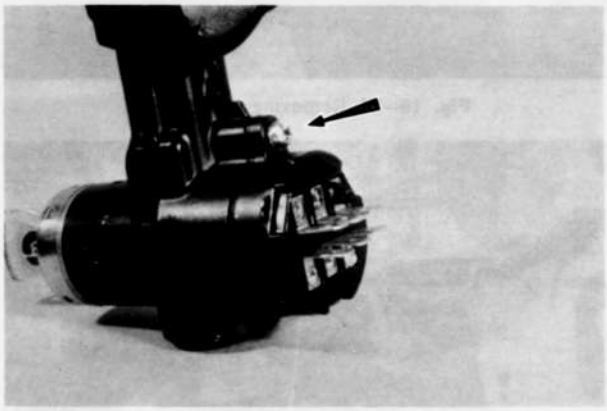

Fig. 15–27 Removing contact housing

15–D–2. Checking Ignition Switch Contact Housing

The contact housing can be checked by using an ohm-meter. Fig. 15–28 shows the connection of each terminal of the contact housing.
Check the connection of each terminal by using an ohm-meter.

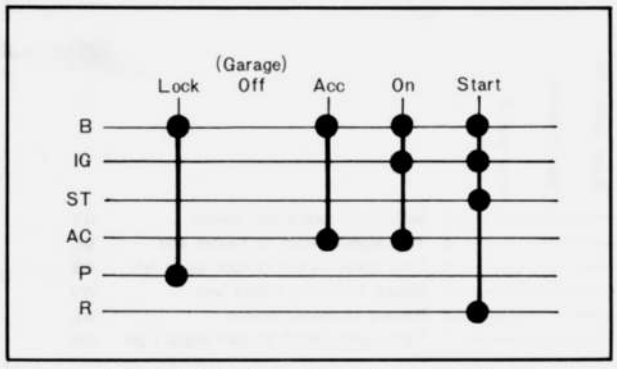

Fig. 15–28 Contact housing connection

15–D–3. Installing Ignition Switch Contact Housing

Follow the removal procedures in the reverse order.

15–D–4. Removing Key Cylinder

1. Refer to the **Par. 15–B–2** and remove the lower column cover.
2. Loosen the key cylinder setting screw.
3. Insert the key into the key cylinder and turn it to **"ON" position.**
4. Push in the lock button and pulling out the key with key cylinder.

15–D–5. Installing Key Cylinder

Follow the removal procedures in the reverse order.

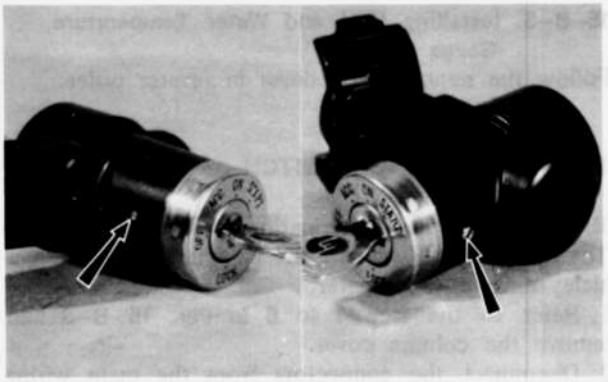

Fig. 15–29 Lock button and set screw

15–D–6. Replacing Steering Lock

1. Refer to the **Par. 15–C–2** and remove the combination switch.
2. Remove the bolts attaching the instrument frame junction and remove the junction.
3. Loosen the two nuts attaching the column shaft bracket to dash panel and remove the bracket.
4. Move the column shaft approximately 3 cm (1 in) from the dash board.
5. Make a groove on the head of the bolts attaching the steering lock body to the column shaft by using a saw so that the screw driver can be used to loosen the screws.



Fig. 15–30 Making groove

6. Loosen the steering lock attaching bolts and remove the steering lock.
7. Position a new steering lock to the column shaft and tighten the bolts until the head of bolts snaps-off.

15–E. WIPER MOTOR

15–E–1. Removing Wiper Motor

1. Loosen the wiper arm attaching screw and remove the wiper arms.
2. Loosen the screws attaching the cowl plate and move the front side of the cowl plate up and disconnect the hose for the washer at the nozzle. Then remove the cowl plate.
3. Disconnect the wiring at the wiper motor.



Fig. 15–31 Removing wiper arm

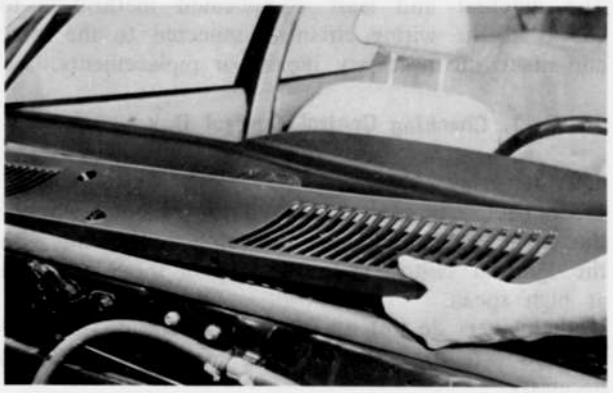

Fig. 15–32 Removing cowl plate

4. Loosen bolts attaching the wiper motor and remove the wiper motor.



Fig. 15–33 Motor attaching bolts

15–E–2. Checking Wiper Motor

1. Use a 12 volt test light and test for power at the blue wire of the main wiring harness connector with ignition switch ON.
If no power is present, trace the blue wire back to the fuse and repair as necessary.
2. Using a jumper wire, connect 12 volts to the blue wire of the motor connector. Then, ground the wires as outlined below and observe the results.

a. With the blue-white wire grounded, the wipers should operate at low speed.
b. With the blue-red wire grounded, the wipers should operate at high speed. Stop the wiper blades in an up position so that Step 3 can be performed.

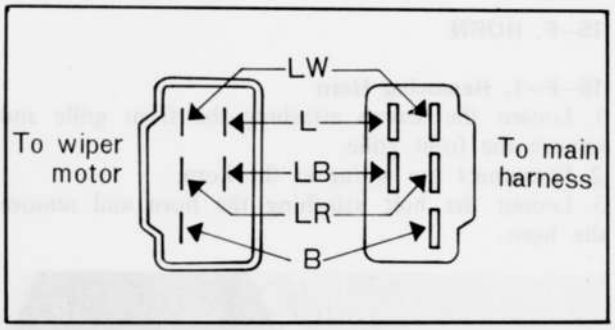

Fig. 15–34 Wiper motor connector

3. With the wiper blades stopped in an up position and with the jumper wire still connected to the blue wire as in Step 2, connect another jumper wire between the blue-black and the blue-white wires. The wipers should move to the park position and stop.
4. If the motor does not operate, check the ground before replacing it.

Wiper motor operation	Continuity between
High speed	① and ②
Low speed	① and ③
Auto-stop	① and ④

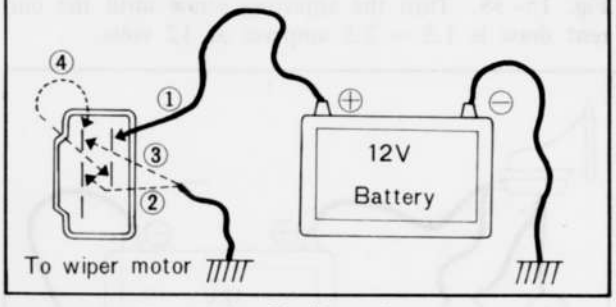

Fig. 15–35 Checking wiper motor

15–E–3. Installing Wiper Motor

To install the wiper motor, follow the removal procedure in the reverse order.

Note:
Tighten the bolts attaching the wiper motor assembly in numerical order as shown in Fig. 15–36.

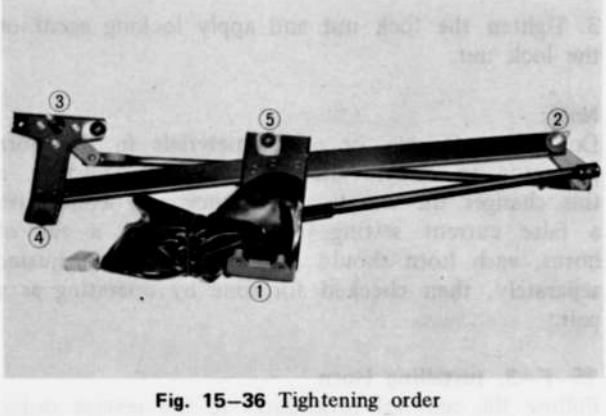

Fig. 15–36 Tightening order

15–F. HORN

15–F–1. Removing Horn

1. Loosen the screws attaching the front grille and remove the front grille.
2. Disconnect the wiring at the horn.
3. Loosen the bolt attaching the horn and remove the horn.



Fig. 15–37 Horn attaching bolt

15–F–2. Adjusting Horn

1. Refer to the Par. 15–F–1 and remove the horn.
2. Connect the ammeter and volt-meter as shown in Fig. 15–38. Turn the adjusting screw until the current draw is 1.5 ~ 2.5 amperes at 12 volts.

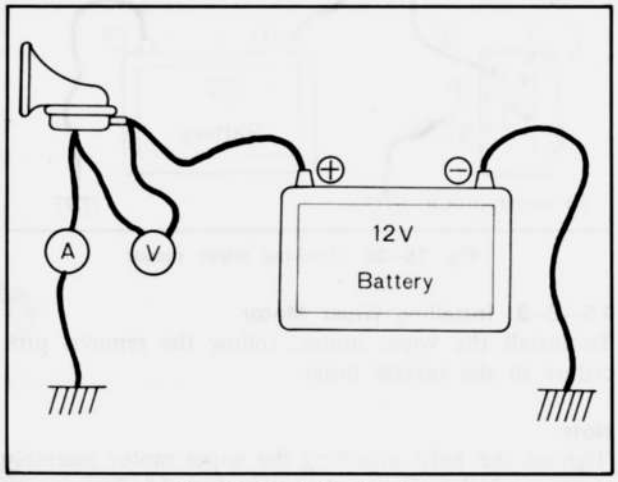

Fig. 15–38 Adjusting horn

3. Tighten the lock nut and apply locking agent on the lock nut.

Note:
Do not stuff rags or other materials in the horn protector to muffle the sound while adjusting, as this changes the vibration frequency and would give a false current setting. When adjusting a set of horns, each horn should be connected and adjusted separately, then checked for tone by operating as a pair.

15–F–3. Installing Horn

Follow the removal procedures in the reverse order.

15–G. CENTRAL CONTROL BOX

The wiper relay, flasher & hazard warning unit and horn relay are all placed collectively in this central control box.
The **multi-grade realy** (Parts No. 0866 67 719) can be used as a substitute for any relay of central control box. So in case any one of the relays of central control box becomes defective, please replace it for multi-grade relay.

Testing the relay unit itself would be so time consuming and would require so many jumper wires and test light hookups as to be impractical for service. The quickest and least complicated method is to check all the wiring circuits connected to the relay and make the necessary repairs or replacements.

15–G–1. Checking Central Control Box

a. Wiper relay

1. Connect a jumper wire from the blue-red wire of the main wiring harness connector to ground with the ignition switch ON. The wipers should operate at high speed.
If the wipers do not operate at high speed, trace the blue-red wire back to the wiper motor and repair as necessary.

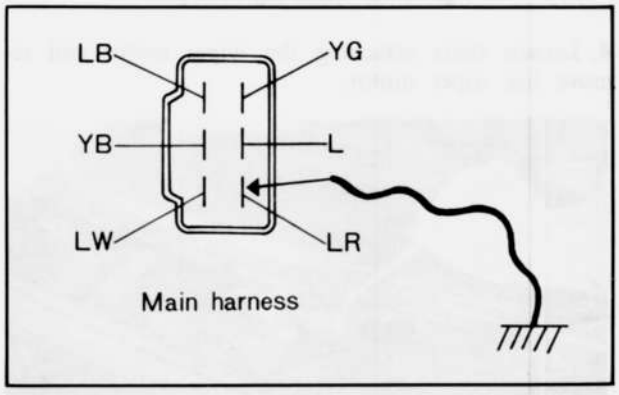

Fig. 15–39 Checking high speed circuit

2. Connect a 12 volt test light between the blue wire and ground, the test light bulb should glow. If the test light does not glow, trace the blue wire back to the fuse box and repair as necessary.

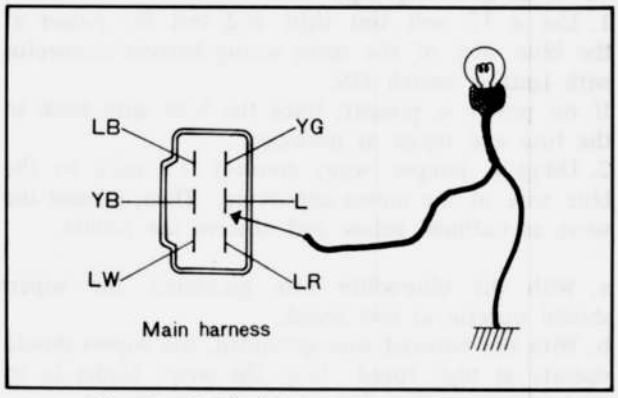

Fig. 15–40 Checking power source circuit

3. Connect a self-powered test light (or ohm-meter) between the yellow-green wire and ground. The bulb should glow when the wiper switch is in the High and Low positions.
If the test light does not glow, trace the yellow-green wire back to the wiper switch and repair as necessary.

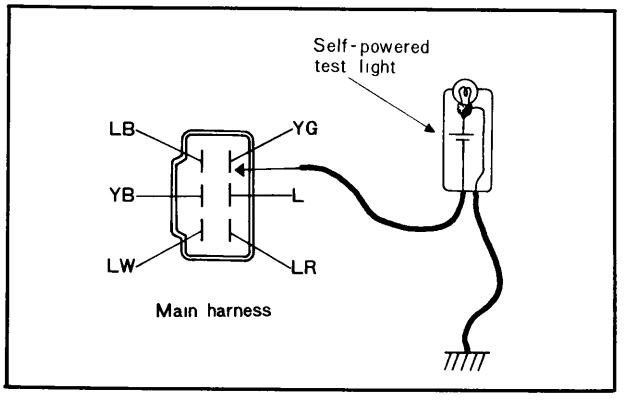

Fig. 15–41 Checking wiper switch low circuit

4. Connect a jumper wire between the blue-white wire and ground. The wipers should operate at low speed.
If the wipers do not operate at low speed, trace the blue-white wire back to the wiper motor and repair as necessary.

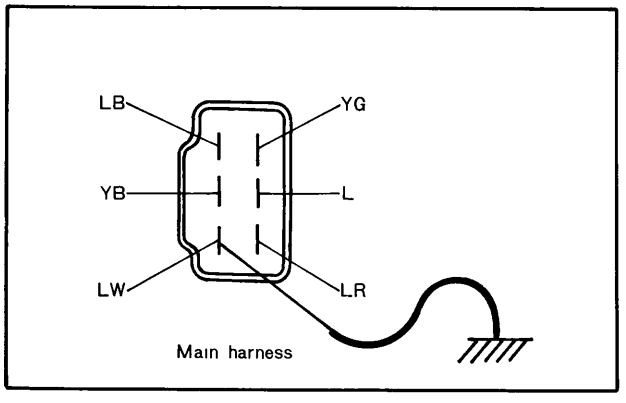

Fig. 15–42 Checking low speed circuit

5. Connect a self-powered test light (or ohm-meter) between the yellow-black wire and ground. The bulb should glow only when the wiper switch is in the High position.
If the test light does not glow, trace the yellow-black wire back to the wiper switch and repair as necessary.
6. Connect a jumper wire between the blue-black wire and the blue-white wire. The wipers should return to the park position.
If the operation is not carried out properly, trace the blue-black wire back to the auto-stop switch and repair as necessary.

If the above tests prove satisfactory, check the central control box for ground before replacing the relay.

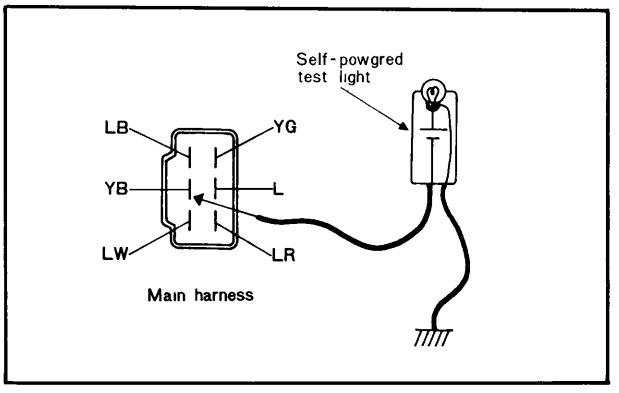

Fig. 15–43 Checking wiper switch high circuit

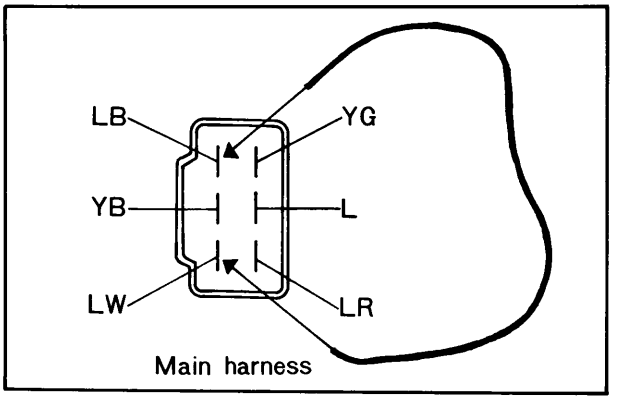

Fig. 15–44 Checking auto-stop circuit

b. Horn relay
1. Connect a 12 volt test light between the green-white wire of the main wiring harness connector and ground, the test light bulb should glow. If no power is present, trace the green-white wire back to the fuse and repair as necessary.

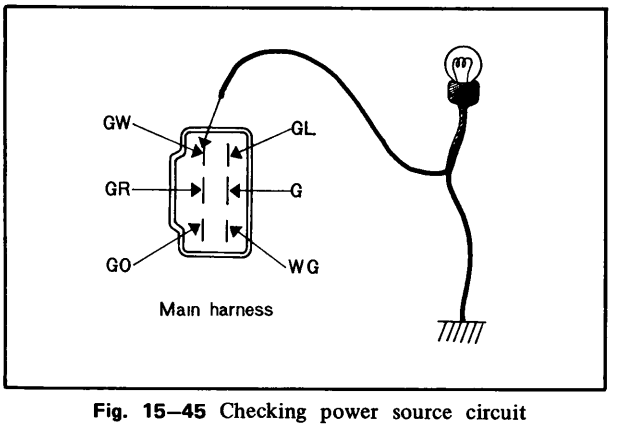

Fig. 15–45 Checking power source circuit

2. Connect a jumper wire from the green-white wire of the main wiring harness connector to the green-orange wire of the connector. The horns should operate.
If the horn does not operate, trace the green-orange wire back to the horn and repair as necessary.
3. Connect a self-powered test light (or ohm-meter) between the green wire and ground. The bulb should glow when the horn button is in pushed on.
If the test light does not glow, trace the green wire back to the horn button or check the horn contact.

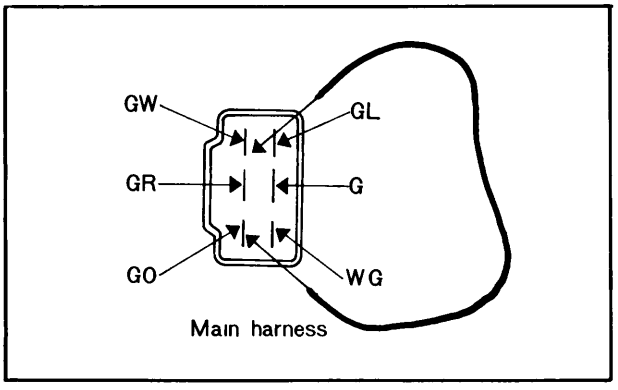

Fig. 15–46 Checking horn circuit

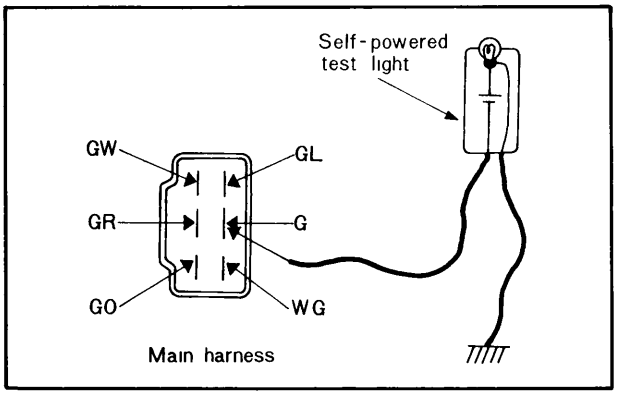

Fig. 15–47 Checking switch circuit

and repair as necessary.

If the above tests prove satisfactory, check the relay by exchanging with new one.

c. Turn signal and hazard flasher relay

1. Connect the 12 volt test light between the green-blue wire of the main wiring harness connector and ground with the ignition switch on, and the test light should glow. The test light should off when the hazard warning switch is ON.
If the above operations are not carried out properly, trace the green-blue wire to the combination switch and repair as necessary.

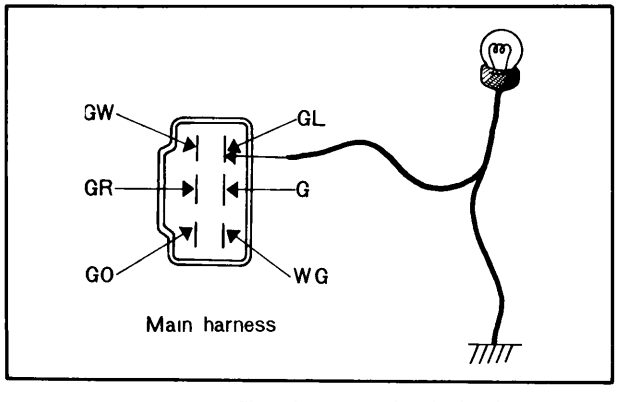

Fig. 15–48 Checking turn signal circuit

2. Connect the 12 volt test light between the white-green wire of the main wiring connector and ground with the hazard warning switch ON, and the test light should glow. If no power is present, trace the white-green wire to the combination switch and repair as necessary.

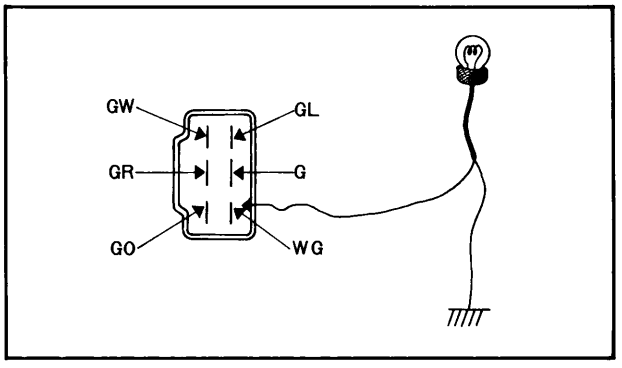

Fig. 15–49 Checking hazard warning circuit

3. Connect a 12 volt power source to the green-red wire. With the turn signal switch ON, the light should come on. With the hazard switch ON, the hazard warning lights should come on.
If it does not, check for a loose connection or broken wire in the circuit or a burned out bulb.

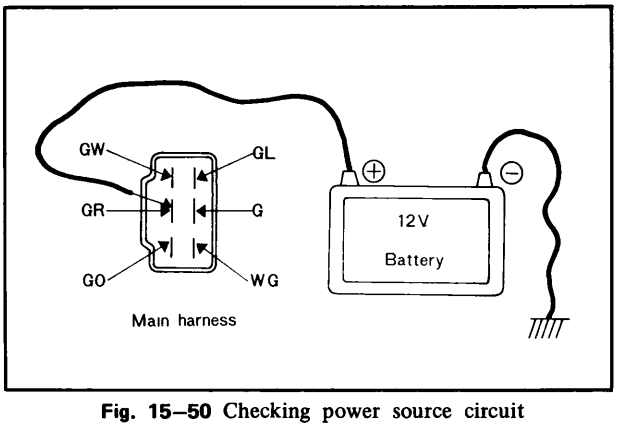

Fig. 15–50 Checking power source circuit

If these systems worked properly, all of the wires used in these circuit would be O.K. and not have to be tested. Check the elements of the central control box by exchange with the new relay or unit.

15–G–2. Removing Central Control Box

1. Reach under the instrument panel and disconnect the wiring connectors.
2. Loosen the nuts attaching the central control box and remove the box.

15–G–3. Installing Central Control Box

Follow the removal procedures in the reverse order.

15–H. STOP LIGHT CHECKER RELAY

15–H–1. Checking Stop Light Checker Relay

1. Disconnect the stop light connector in the trunk compartment.
2. Check to see whether buzzer actuates when brake pedal is depressed. If the buzzer actuates, the relay is satisfactory.

If the buzzer does not actuate, disconnect the wiring connector from the relay prongs.
3. Connect the B terminal of relay to power source (from fuse box) with lead line, and check whether buzzer will actuate. If the buzzer actuates, the stop switch is defective or wiring of stop switch is faulty. If buzzer does not actuate, remove and replace checker relay.

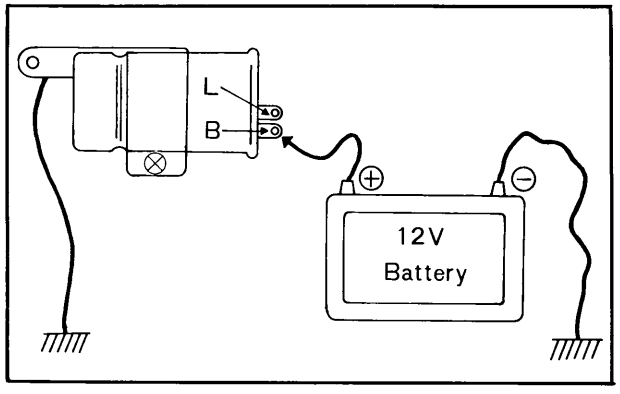

Fig. 15–51 Checking checker relay

15–H–2. Removing Stop Light Checker Relay
1. Reach under the instrument panel and disconnect the wiring connector.
2. Loosen the checker attaching nut and remove the checker relay.

15–H–3. Installing Stop Light Checker Relay
Follow the removal procedures in the reverse order.

15–I. HEATABLE WINDOW

15–I–1. Checking Heatable Window
1. Turned on the heater switch.
2. Ground the negative terminal of the voltmeter on the body and touch the positive terminal on the center of each filament to measure the voltage. Normal filament registers approximately 6 volts at the center. A high voltage on the order of 12 volts shows that breakage is on the negative side from the center (grounded side) and a voltage close to zero volt shown that breakage is on the positive side.
3. Move the positive terminal to the side where breakage is known to exist, and you will note sudden change in voltage at a portion. That portion is where the filament is broken.

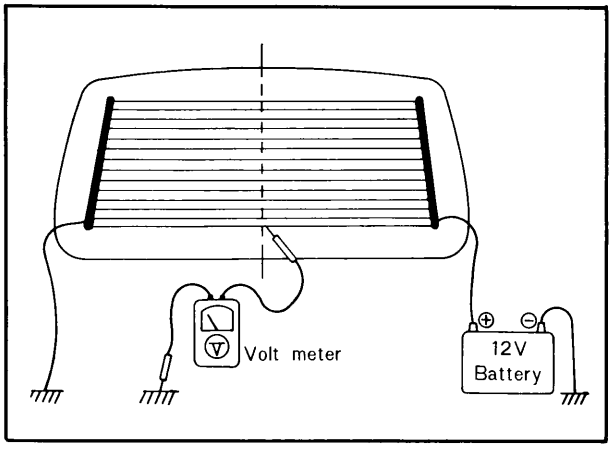

Fig. 15–52 Checking heatable window

15–I–2. Repairing Printed Filament
1. Clean the broken portion with solvent.
2. By using a small brush or a drawing pen, apply conductive silver paint (Parts No. 2835 77 6000), i.e., Dupont No. 4817 to the broken section.
3. Completely dry the painted section by leaving it intact for 24 hours in the case of 20°C (68°F) (for 30 minutes when the painted section is heated up to 60°C (140°F) with a dryer).

Note:
a) Never turn on the heater before the paint has completely dried.
b) Do not use any alkaline chemical cleanser to clean the section thus repaired.
c) The life of Dupont No. 4817. conductive silver paint, is one year and must be kept at a dry place having a temperature of less than 20°C (68°F).

SPECIAL TOOL

49 0839 285	Checker

TECHNICAL DATA

ENGINE (General Data)

	mm	inch
Type	Rotary piston engine, in line 2 rotors, water cooled	
Displacement	654 cc x 2 rotors	40.0 cu.in x 2 rotors
Compression ratio	9.2 : 1	
Compression pressure		
Limit	6.0 kg/cm^2 at 250 rpm	85 lb/in^2 at 250 rpm
Port timing:		
Intake opens	32° A.T.D.C	
Intake closes	50° A.B.D.C.	
Exhaust opens	75° B.B.D.C.	
Exhaust closes	38° A.T.D.C.	

ENGINE

Front and rear housing:		
Limit of distortion	0.04	0.0016
Limit of wear (sliding surface)	0.10	0.0039
Limit of wear (joint surface)	0.05	0.0020
Rotor housing:		
Limit of distortion	0.04	0.0016
Limit of wear	0.06	0.0024
Permissible difference in width	0.06	0.0024
Intermediate housing:		
Limit of distortions	0.04	0.0016
Limit of wear (sliding surface)	0.10	0.0039
Limit of wear (joint surface)	0.05	0.0020
Rotor:		
Clearance of side housing and rotor	0.10~0.21	0.0039~0.0083
Apex seal:		
Limit of height	7.0	0.276
Clearance of apex seal and side housing:		
Standard	0.13~0.17	0.0051~0.0067
Limit	0.30	0.0118
Clearance of apex seal and rotor groove:		
Standard	0.05 ~ 0.09	0.0020 ~ 0.0035
Limit	0.15	0.0059
Apex seal spring:		
Free height	more than 4.7	0.18
Limit of free height	3.8	0.15
Corner seal:		
Outer diameter		
Standard	$11^{-0.020}_{-0.030}$	0.4331 $^{-0.0008}_{-0.0012}$
0.03 over size	$11^{-0.015}_{+0}$	0.4331 $^{+0.0006}_{+0}$
0.20 over size	$11.2^{-0.020}_{-0.030}$	0.4410 $^{-0.0008}_{-0.0012}$
Clearance of corner seal and rotor groove:		
Standard	0.020 ~ 0.048	0.0008 ~ 0.0019
Limit	0.08	0.0031
Clearance of side seal and rotor groove:		
Standard	0.04 ~ 0.07	0.0016 ~ 0.0028
Limit	0.10	0.0040
Clearance of side seal and corner seal:		
Standard	0.05 ~ 0.15	0.002 ~ 0.006
Limit	0.4	0.016
Oil seal:		
Contact width of oil seal lip		
Standard	0.2	0.008
Limit	0.8	0.031
Seal springs:		
Permissible seal Protrusion		
Corner seal	over 0.5	0.02
Side seal	over 0.5	0.02
Oil seal	over 0.5	0.02
Main bearing clearance:		
Standard	0.04 ~ 0.07	0.0016 ~ 0.0028
Limit	0.10	0.0039
Rotor bearing clearance:		
Standard	0.04 ~ 0.08	0.0016 ~ 0.0031
Limit	0.10	0.0039

	mm	inch
Eccentric shaft:		
Permissible run-out	Less than 0.06	Less than 0.0024
Eccentric shaft end play:		
Standard	0.04 ~ 0.07	0.0016 ~ 0.0028
Limit	0.09	0.0035
"V" belt tension:		
Air pump–New	8	0.31
Old	10	0.39
Alternator–New	13	0.51
Old	15	0.59
LUBRICATING SYSTEM		
Oil pump:		
Feeding capacity	6 liters/min at 1,000 rpm	12.7 U.S. pints/min. 10.6 Imp.pints/min at 1,000 rpm
Clearance of outer rotor and body		
Standard	0.20 ~ 0.25	0.008 ~ 0.010
Limit	0.30	0.012
Clearance of outer rotor and inner rotor		
Standard	0.01 ~ 0.09	0.0004 ~ 0.0035
Limit	0.15	0.006
Rotor end float		
Standard	0.03 ~ 0.13	0.001 ~ 0.005
Limit	0.15	0.006 ~
Limit of chain adjuster protrusion	12	0.47
Oil pressure:		
Normal	5.0 kg/cm^2 at 3,000 rpm 2.5 kg/cm^2 at Engine idling	71.1 lb/in^2 at 3,000 rpm 35.6 lb/in^2 at Engine idling
Warning lamp lights	0.3 kg/cm^2	4.3 lb/in^2
Pressure control valve (Front cover):		
Operating pressure	11.0 kg/cm^2	157 lb/in^2
Spring		
Free length	73.0	2.874
Pressure regulator (Rear housing):		
Operating Pressure	5.0 kg/cm^2	71.1 lb/in^2
Spring		
Free length	46.4	1.827
By-pass valve (Oil cooler):		
Starts ot close	60 ~ 65°C	140 ~ 149°F
Fully closes	70 ~ 75°C	158 ~ 167°F
Oil filter:		
Type	Paper element, cartridge type	
Relief opening pressure	0.8 ~ 1.2 kg/cm^2	11 ~ 17 lb/in^2

	mm	inch
Oil metering pump:		
Feeding capacity	2.2 cc/6 min. at 2,000 rpm (Disconnected connecting rod)	
Oil capacity:		
Oil pan	5.0 liters	10.6 U.S. pints
Full capacity	6.4 liters	13.5 U.S. pints
Lubricant:		
Below -18°C (0°F)	SAE 5W-20 or 5W-30	
-18°C ~ 30°C (0°F ~ 85°F)	SAE 10W-30	
-18°C ~ 40°C (0°F ~ 100°F)	SAE 10W-40	
-18°C ~ 50°C (0°F ~ 120°F)	SAE 10W-50	
-10°C ~ 40°C (15°F ~ 100°F)	SAE 20W-40 or 20W-50	
COOLING SYSTEM		
Water Pump:		
Type	Centrifugal	
Feeding capacity	160 ~ 170	338~359 U.S. pints/min. at 6,500 rpm of engine
Fan:		
Standard revolution	1,400 rpm or more at 1,500 rpm of engine. 2,000 ~ 2,500 rpm at 5,000 rpm of engine	
Number of blades	8	
Thermostat:		
Starts to open	82 ± 1.5°C	180 ± 2.7°F
Fully opens	95°C	203°F
Lift	More than 8mm at 95°C	More than 0.31 in at 203°F
Radiator:		
Type	Corrugated fin with expansion tank	
Pressure valve opens	0.9 kg/cm^2	13 lb/in^2
Cooling capacity: with heater	10.0 liters	21 U.S. pints
FUEL SYSTEM		
Fuel tank capacity		
Sedan and Hardtop	65 liters	16.9 U.S. gallons, 14.3 Imp. gallons

	mm	inch
Wagon	67 liters	17.4 U.S. gallons, 14.7 Imp. gallons
Fule filter	Paper element, cartridge type	
Fuel pump:		
Type	Transistor	
Rated terminal voltage	12V	
Min. operating voltage	Less than 10V	
Feeding pressure	0.25 ~ 0.35 kg/cm^2	3.55 ~ 4.98 lb/in^2
Feeding capacity	More than 1,150 cc/min	1.22 U.S. quart/min
Carburetor:		
Type	Down-draft, 4-barrel, 2-stage	
Throat diameter		
Primary	28	1,102
Secondary	34	1,339
Venturi diameter		
Primary	22 x 13 x 6.5	0.866 x 0.512 x 0.256
Secondary	28 x 10	1.102 x 0.394
Main nozzle diameter		
Primary	2.5	0.098
Secondary	3.0	0.118
Main jet		
Primary	#106	
Secondary	#140	
Main air bleed		
Primary	#80	
Secondary	#160	
Slow jet		
Primary	#50	
Secondary	#90	
Slow air bleed		
Primary	#190	
Secondary	#150	
Accelerating pump		
Type	Diaphragm type	
Injection capacity	0.8 cc ± 15%/stroke	
Secondary throttle valve operation		
Type	Diaphragm type	
Vacuum port	Primary #2.2 Secondary #1.2	
Fast idle throttle opening angle & clearance of valve and bore (Fully choked)		

	mm	inch
Manul transmission	14° ~ 17°	
	1.01 ~ 1.33	0.0398 ~ 0.0524
Automatic transmission	16° ~ 19°	
	1.22 ~ 1.57	0.0480 ~ 0.0618
Flaot:		
Float level (from upper surface of gasket)	11	0.43
Float drop (from upper surface of gasket)	51.5 ~ 52.5	2.03 ~ 2.07
Idling speed		
Manual transmission	900 rp,	
Automatic transmission	750 rpm in "D" range	

ELECTRICAL SYSTEM

Battery		
Voltage	12V	
Capacity N70Z	70AH (20 hours rate)	
Y110-5	60AH (20 hours rate)	
N50Z	60AH (20 hours rate)	
Terminal ground	Negative	
Specific gravity at 20°C (68°F)	Fully charged: 1.28 Recharge at: 1.22	
Distributor (T & L)		
Contact point gap	0.45 ± 0.05	0.018 ± 0.002
Point pressure	500 ~ 650 gr	18 ~ 23 oz
Condenser capacity	0.27 ± 0.0027 μF	
Centrifugal advance:		
Trailing	Starts: 0±1.5° at 500 rpm of dis. Max.: 10±1.5° at 2,000 rpm of dis.	
Leading	Starts: 0± 1° 500 rpm of dis.	Max.: 10±1° 2,000 rpm of dis.
Vacuum advance:		
(Trailing only)		
Manual transmission	Starts: 0±1.5° at 100 mm-Hg Max.: 15±1.5° at 400 mm-Hg	
Automatic transmission	Starts: 0±1.5° at 100 mm-Hg Max.: 13±1.5° at 400 mm-Hg	
Dwelle angle	58° ± 3°	
Firing order	1 – 2	
Ignition timing	Trailing: 15° A.T.D.C. Leading: 5° A.T.D.C.	
Marking location	Eccentric shaft pulley	

	mm	inch
Ignition coil		
External resistance		
Leading	1.4 Ω/20°C	
Trailing	1.6 Ω/20°C	
Primary resistance		
Leading	1.35 Ω/20°C	
Trailing	1.46 Ω/20°C	
Secondary resistance		
Leading	8.7 KΩ/20°C	
Trailing	9.5 KΩ/20°C	
Spark plug		
Standard type		
NGK	● B7EM, B7EMV, * BR7EM or BR7EMV	
NIPPONDENSO	● W22EA, W22EA-G, * W22EAR or W22EAR-G	
CHAMPION	N-80B or * RN-80B	
Cold type		
NGK	● B8EM, B8EMV, * BR8EM or BR8EMV	
NIPPONDENSO	● W25EA, W25EA-G, * W25EAR or W25EAR-G	
CHAMPION	N-78B or * RN-78B	
(All spark plugs are used for U.S.A. and Canada spec. * : for ECE spec. ● : for Australia spec.)		
Starting motor (For U.S.A., Canada and Arctic spec. models with only automatic transmission–under the engine type)		
Capacity	2.0KW	
Free running test	Voltage: 11.5 Current: Less than 100A at 7,800 rpm or more	
Lock test	Voltage: 5V Current: 1,100 A or less Torque: 2.4 m-kg or more	17.36 ft-lb or more
Brush spring tension	1.4 ~ 1.8 kg	49 ~ 63 oz
Brush length		
New	18.5	0.73
Wear limit	7	0.28
Number of brushes	4	
Magnet switch operating voltage	8V or less	
Starting motor (For models except aboves)		
Capacity	1.2 KW	
Free running test	Voltage: 11.5V Current: Less than 75A at 4,900 rpm or more	
Lock test	Voltage: 5.0V Current: 780A or less Torque: 1.1 m-kg or more	7.96 ft-lb or more
Brush spring tension	1.4 ~ 1.8 kg	49 ~ 63 oz

	mm	inch
Brush length		
New	18.5	0.73
Wear limit	7	0.28
Number of brush	4	
Magnet switch operating voltage	8.0 V or less	
Alternator:		
Ground polarity	Negative	
Rated output	12V 63A	
Number of poles	12	
No load test	Voltage: 14V at 950 rpm or less Current: 0A	
Load test	Voltage: 14V at 2,500 rpm or less Current: 56A	
Brush spring pressure	350 gr	12.5 oz
Slip ring diameter	33±0.2	1.299 ± 0.008
Ratio of alternator and eccentric shaft	2.08 : 1	
Regulator:		
Constant voltage relay	Air gap: 0.7 ~ 1.1	0.028 ~ 0.043
	Point gap: 0.3 ~ 0.4	0.012 ~ 0.016
	Back gap: 0.7 ~ 1.1	0.028 ~ 0.043
Pilot lamp relay	Air gap: 0.9 ~ 1.2	0.035 ~ 0.047
	Point gap: 0.7 ~ 1.1	0.028 ~ 0.043
	Back gap: 0.7 ~ 1.1	0.028 ~ 0.043
Regulated voltage, without load	14 ± 0.5V	

CLUTCH

Type	Single dry plate, diaphragm spring	
Pressure plate		
Inner diameter	128	5.039
Outer diameter	217	8.543
Permissible lateral run-out	0.05	0.0020
Clutch disc		
Facing		
Inner diameter	150	5.906
Outer diameter	215	8.465
Thickness (Single plate)	3.5	0.138
Lateral run-out of clutch disc		
Limit	1.0	0.039
Clutch release mechanism	Hydraulic	
Release fork free play		
Adjustable type	3.0 ~ 4.0	0.12 ~ 0.16
Non-adjustable type	0	0
Clutch pedal free travel (Before push rod contacts with piston)	0.6 ~ 3.0	0.02 ~ 0.12
Master cylinder bore	15.87	5/8

	mm	inch
Clearance of piston and master cylinder bore		
New	0.032~0.102	0.0013 ~ 0.0040
Wear limit	0.15	0.006
Release cylinder bore	19.05	3/4
Clearance of piston and release cylinder bore		
New	0.040~0.125	0.0016 ~ 0.0049
Wear limit	0.15	0.006

MANUAL TRANSMISSION

Gear ratio	4-speed (U.S.A. & Canada)	4-speed (Australia)	5-speed (E.C.E. & England)
First	3.683	3.380	3.683
Second	2.263	2.077	2.263
Third	1.397	1.390	1.397
Fourth	1.000	1.000	1.000
Fifth			0.862
Reverse	3.692	3.389	3.692

Main shaft		
Permissbile run-out of main shaft	0.03	0.0012
Clearance between main shaft and gear bush		
Wear limit	0.15	0.006
Reverse idle gear		
Clearance between reverse idle gear bush and shaft		
Wear limit	0.15	0.006
Shift fork and rod		
Clearance between shift fork and clutch sleeve		
Wear limit	0.5	0.020
Clearance between shift fork and reverse idle gear		
Wear limit	0.5	0.020
Clearance between shift rod gate and control lever		
Wear limit	0.8	0.031
Synchronizer ring		
Clearance between synchronizer ring and side of gear when fitted		
New	1.5	0.059
Wear limit	0.8	0.031
Lubricant		
Above −18°C (0°F)	EP. SAE90	
Below −18°C (0°F)	EP. SAE80	
Oil capacity		
4-speed	1.7 liters	1.8 U.S. quarts 1.5 Imp. quarts
5-speed	2.2 liters	2.3 U.S. quarts 1.9 Imp. quarts

AUTOMATIC TRANSMISSION

	mm	inch
Model	JATCO R3A	
Gear ratio		
First	2.458	
Second	1.458	
Third	1.000	
Reverse	2.181	
Torque converter		
Type	Symmetrical 3-element 1-stage 2-phase torque converter coupling	
Stall torque ratio	2.0 : 1	
Fluid type	M2C33F (Type F)	
Fluid capacity	6.2 liters	6.6 U.S. quarts 5.5 Imp. quarts
Oil pump		
Side play of inner gear and outer gear		
New	0.02 ~ 0.04	0.001~0.002
Limit	0.08	0.003
Clearance between outer gear and crest		
New	0.14 ~ 0.21	0.006~0.008
Limit	0.25	0.010
Clearance between outer gear and housing		
New	0.05 ~ 0.20	0.002~0.008
Limit	0.25	0.010
Side clearance between oil seal ring and groove on oil pump cover	0.04 ~ 0.16	0.002~0.006
Front clutch		
Number of drive plates or driven plates	4	
Thickness of drive plate	1.6	0.063
Total clearance measured between retaining plate and stopper	1.6 ~ 1.8	0.062~0.071
End play of front clutch drum	0.5 ~ 0.8	0.020~0.031
Governor		
Type	38	
Drive plate run-out		
New	Less than 0.3	Less than 0.012
Limit	0.5	0.020
Rear clutch		
Number of drive plates or driven plates	5	
Thickness of drive plate	1.6	0.063
Total clearance measured between retaining plate and stopper	0.8 ~ 1.5	0.032~0.059
Low and reverse brake		
Number of friction plates or steel plates	4	
Thickness of friction plate	2.0	0.079
Total clearance measured between retaining plate and stopper	0.8 ~ 1.05	0.032~0.042
Gear assembly		
Total end play	0.25 ~ 0.50	0.010~0.020
Planetary gear side play		
New	0.2 ~ 0.7	0.008~0.028
Limit	0.8	0.032

	mm	inch
Engine stall speed In break-in period After break-in period	2400 ~ 2650 rpm 2450 ~ 2700 rpm	

Shift speed

Throttle condition (Manifold vacuum)		Km/h	Mile/h
Kickdown (0 ~ 100 mm-Hg / 0 ~ 3.94 in-Hg)	D1 → D2	57 ~ 77	35 ~ 48
	D2 → D3	100 ~ 128	62 ~ 80
	D3 → D2	85 ~ 109	53 ~ 68
	D2 → D1	38 ~ 56	24 ~ 35
Half throttle (190 ~ 210 mm-Hg / 7.48 ~ 8.27 in-Hg)	D1 → D2	14 ~ 31	8 ~ 19
	D2 → D3	30 ~ 66	19 ~ 41
Fully closes throttle	D3 → D1	11 ~ 19	7 ~ 12
Manual 1	12 → 11	44 ~ 57	27 ~ 36

Line pressure

Manual range	Engine idling condition		Engine stall condition	
	kg/cm²	lb/in²	kg/cm²	lb/in²
R	4.0 ~ 7.0	57 ~ 100	15.5 ~ 19.0	220 ~ 270
D	3.0 ~ 4.0	43 ~ 57	9.5 ~ 11.0	135 ~ 156
2	8.0 ~ 12.0	114 ~ 170	10.0 ~ 12.0	142 ~ 171
1	3.0 ~ 4.0	43 ~ 57	9.5 ~ 11.0	135 ~ 156

Governor pressure (1)

Driving speed		Output shaft speed	Governor pressure	
km/h	mph	rpm	kg/cm²	lb/in²
30		950 ~ 1065	0.8 ~ 1.3	11 ~ 18
55		1785 ~ 1900	1.5 ~ 2.2	21 ~ 31
85		2765 ~ 2910	2.7 ~ 3.6	38 ~ 51
	20	1030 ~ 1130	0.8 ~ 1.3	11 ~ 18
	35	1830 ~ 1960	1.5 ~ 2.2	21 ~ 31
	55	2900 ~ 3050	3.0 ~ 3.9	43 ~ 55

Governor pressure (2)

Output shaft rpm	kg/cm²	lb/in²
1000	0.9 ~ 1.3	13 ~ 18
2000	1.6 ~ 2.2	23 ~ 28
3000	3.0 ~ 3.8	43 ~ 54

PROPELLER SHAFT

	mm	inch
Max. permissible run-out	0.4	0.016
Max. permissible unbalance at 4000 rpm		
At front	20 cm-gr	0.28 in-oz
At center	12.5 cm-gr	0.17 in-oz
At rear	20 cm-gr	0.28 in-oz
Universal joint		
Spider diameter		
New	$16.55^{+0}_{-0.011}$	$0.6516^{+0}_{-0.0004}$
Wear limit	16.439	0.6472

REAR AXLE

Type	Semi-floating, hypoid gears	
Reduction ratio	3.900	
Number of gear teeth	39 : 10	
Backlash of ring gear and pinion	0.17 ~ 0.19	0.0067 ~ 0.0075
Max. allowable variation of backlash	0.07	0.0028
Pinion bearing preload (Without pinion oil seal)	9 ~ 14 cm-kg	7.8 ~ 12.2 in-lb
Backlash of side gear and pinion gear	0 ~ 0.10	0 ~ 0.004
Rear wheel bearing end play	0 ~ 0.10	0 ~ 0.004
Lubricant		
Above −18°C (0°F)	HP. SAE90	
Below −18°C (0°F)	HP. SAE80	
Oil capacity	1.3 liters	1.4 U.S. quarts 1.1 Imp. quarts

STEERING

Type	Recirculating ball nut	
Reduction ratio	18 ~ 20 : 1	
Maximum wheel angle on full lock		
Wheel on inside of curve	37° 10'	
Wheel on outside of curve	29° 11'	
Free play of steering wheel (Turning direction)		
New	5 ~ 20	0.2 ~ 0.8
Limit	30	1.2
Backlash between rack and sector gear	0 ~ 0.1	0 ~ 0.004
Worm bearing preload		
Without sector shaft and column bush	1 ~ 4 cm-kg	0.9 ~ 3.5 in-lb
With sector shaft and column bush	9 ~ 15 cm-kg	7.8 ~ 13.0 in-lb
Clearance between sector shaft and bush		
New	0.028 ~ 0.049	0.0011 ~ 0.0019
Wear limit	0.20	0.008
End clearance of sector shaft	0 ~ 0.1	0 ~ 0.004
Lubricant	EP. SAE90	
End play of center link and tie rod ball studs		
New	0 ~ 0.25	0 ~ 0.010
Wear limit	1.0	0.039

	mm	inch
Steering geometry (U.S.A. & Canada)		
King pin inclination	9° 45′	
Camber	1° 00′ ± 1°	
Maximum permissible difference in camber between sides	30′	
Camber offset	45.0	1.77
Caster	2° 00′ ± 45′	
Maximum permissible difference in caster between sides	40′	
Caster trail	10.0	0.39
Toe-in	0 ~ 6	0 ~ 0.24
Steering geometry (E.C.E., Australia & England)		
King pin inclination	9° 40′	
Camber	1° 25′ ± 1°	
Maximum permissible difference in camber between sides	30′	
Camber offset	43.3	1.70
Caster	2° 10′ ± 45′	
Maximum permissible difference in caster between sides	40′	
Caster trail	10.7	0.42
Toe-in	0 ~ 6	0 ~ 0.24

BRAKES

Brake pedal free travel (Before power brake piston operates)	7 ~ 9	0.28 ~ 0.35
Master cylinder		
Type	Dual (Tandem)	
Bore	22.22	7/8
Clearance between piston and bore		
New	0.040~0.125	0.0016 ~ 0.0049
Wear limit	0.15	0.006
Front disc brake		
Brake disc outer diameter	230	9.055
Thickness of brake disc		
New	12	0.4724
Limit	11	0.4331
Max. allowable lateral run-out of brake disc	0.1	0.0039
Thickness of lining and shoe		
New	14	0.551
Limit	7	0.276
Wheel cylinder bore	53.97	2.1248
Rear drum brake		
Type	Leading-and-trailing shoes	
Drum diameter		
New	228.6	9.000
Max. permissible diameter	229.6	9.0395
Thickness of lining		
New	5.5	0.217
Wear limit	1.0	0.039
Wheel cylinder bore	17.46	11/16
Wheel cylinder bore (Sweden & E.C.E. arctic spec.)	15.87	5/8
Clearance between piston and bore		
New	0.032~0.102	0.0013 ~ 0.0040
Wear limit	0.15	0.006
Parking brake		
Type	Mechanical	
Operates at	Rear wheels	

WHEELS AND TIRES – (U.S.A. & Canada)

Wheel disc	5½J x 13WDC
Tire	BR 70-13 (U.S.A. only) 195/70 SR 13 (Canada only)
Inflation pressure	
Sedan & Hard top	26 psi
Wagon	
Front	24 psi
Rear	28 psi

WHEELS AND TIRES – (E.C.E.)

Wheel disc	5½J x 13WDC	
Tire	175 SR 13 175 HR13 195/70 SR 13 195/70 HR 13	
Inflation pressure		
Less than 100 km/h (60 mph)	1.7 kg/cm²	24 psi
More than 100 km/h (60 mph)	2.0 kg/cm²	28 psi

WHEELS AND TIRES – (Australia & England)

Wheel disc	5½J x 13WDC	
Tire	175 HR 13 195/70 HR 13	
Inflation pressure (Australia)	26 psi	
Inflation pressure (England)		
Sedan & Hard top		
Less than 100 km/h (60 mph)	1.7 kg/cm²	24 psi
More than 100 km/h (60 mph)	2.0 kg/cm²	28 psi
Wagon		
Front	24 psi	
Rear	28 psi	

FRONT SUSPENSION

Type	Strut, coil spring	
Coil spring		
Spring constant	2.05 kg/mm	115 lb/in
Wire diameter	12.5	0.49
Coil diameter	124	4.92
Free length	375	14.76
Fitting length	203	7.99
Fitting load	340.5 ~367.5 kg	751~810 lb

REAR SUSPENSION – U.S.A. & Canada (Sedan & Hard Top) Australia (Hard Top) England (Hard Top)

	mm	inch
Type	Leaf spring	
Leaf spring		
Spring constant	2.3 kg/mm	129 lb/in
Number of leaves	5	
Length	1150	45.28
Width	50	1.97
Thickness	6	0.24

REAR SUSPENSION – E.C.E. (Sedan & Hard Top) Australia (Sedan) England (Sedan)

Type	Leaf spring	
Leaf spring		
Spring constant	2.1 kg/mm	118 lb/in
Number of leaves	4	
Length	1150	45.28
Width	50	1.97
Thickness	6	0.24

REAR SUSPENSION – Wagon

	mm	inch
Type	Leaf spring	
Leaf spring		
Spring constant	2.4 ~ 4.5 kg/mm	134 ~ 252 lb/in
Number of leaves	6	
Length	1150	45.28
Width	60	2.36
Thickness		
No. 1	6	0.24
No. 2 ~ No. 5	5	0.20
No. 6	12	0.47

DIMENSIONS

SEDAN	mm	inch	mm	inch
	U.S.A. & Canada		E.C.E., Australia & England	
Overall length	4,550	179	4,325	170
Overall width	1,660	65	1,660	65
Overall height	1,410	56	1,410	56
Wheel base	2,510	99	2,510	99
Tread				
Front	1,380	54	1,380	54
Rear	1,370	54	1,370	54
Minimum road clearance	175	7	175	7
Minimum turning radius	5 m	16.5ft	5 m	165 ft

HARD TOP	U.S.A. & Canada		E.C.E., Australia & England	
Overall length	4,490	177	4,320	170
Overall width	1,665	66	1,665	66
Overall height	1,380	54	1,380	54
Wheel base	2,510	99	2,510	99
Tread				
Front	1,380	54	1,380	54
Rear	1,370	54	1,370	54
Minimum road clearance	175	7	175	7
Minimum turning radius	5 m	16.5 ft	5 m	16.5 ft

WAGON	U.S.A. & Canada		England	
Overall length	4,685	184	4,490	177
Overall width	1,660	65	1,660	65
Overall height	1,410	56	1,420	56
Wheel base	2,510	99	2,510	99
Tread				
Front	1,380	54	1,380	54
Rear	1,370	54	1,370	54
Minimum road clearance	175	7	175	7
Minimum turning radius	5 m	16.5 ft	5 m	16.5 ft

TIGHTENING TORQUE

	m-kg	ft-lb
ENGINE		
Tension bolt	3.2 ~ 3.8	23 ~ 27
Front cover	1.6 ~ 2.3	12 ~ 17
Eccentric shaft pulley	7.5 ~ 9.5	54 ~ 69
Bearing housing	1.6 ~ 2.3	12 ~ 17
Oil pan	0.4 ~ 0.7	3 ~ 5
Oil drain plug	2.4 ~ 3.6	17 ~ 26
Oil filter	0.7 ~ 1.0	5 ~ 7
Oil pressure switch	1.2 ~ 1.8	9 ~ 13
Thermostat cover	1.6 ~ 2.3	12 ~ 17
Cooling fan	0.7 ~ 1.0	5 ~ 7
Coolant drain plug	1.8 ~ 2.5	13 ~ 18
Water pump	2.3	17
Water pump pulley	0.7 ~ 1.0	5 ~ 7
Carburetor	1.6 ~ 2.3	12 ~ 17
Intake manifold	1.6 ~ 2.3	12 ~ 17
Exhaust manifold	3.2 ~ 4.7	23 ~ 34
Spark plug	1.3 ~ 1.8	9 ~ 13
CLUTCH		
Flywheel	40.0 ~ 50.0	289 ~ 362
Clutch cover	1.8 ~ 2.7	13 ~ 20
MANUAL TRANSMISSION		
Main shaft lock nut	21.0 ~ 25.0	151 ~ 180
Shift lock spring caps	4.5 ~ 5.5	33 ~ 40
Plug for interlock pin hole	1.0 ~ 1.5	7 ~ 11
Control lever to control rod	2.8 ~ 3.4	20 ~ 25
Shift fork set bolts	0.9 ~ 1.3	7 ~ 9
Reverse lock spring cap	4.5 ~ 5.5	33 ~ 40
Under cover to case	0.6 ~ 0.9	4 ~ 7
Reverse lamp switch	2.5 ~ 3.5	18 ~ 25
AUTOMATIC TRANSMISSION		
Drive plate to crankshaft	14.0 ~ 16.0	101 ~ 116
Drive plate to torque converter	4.0 ~ 5.0	29 ~ 36
Converter housing to engine	4.0 ~ 5.0	29 ~ 36
Converter housing to transmission case	4.5 ~ 5.5	33 ~ 39
Extension housing to transmission case	2.0 ~ 2.5	15 ~ 18
Oil pan	0.5 ~ 0.7	4 ~ 5
Piston stem (when adjusting band brake)	1.2 ~ 1.5	9 ~ 11
Piston stem lock nut	1.5 ~ 4.0	11 ~ 29
Servo piston retainer	1.0 ~ 1.5	7 ~ 11
One-way clutch inner race	1.3 ~ 1.8	10 ~ 13
Control valve body	0.55 ~ 0.75	4 ~ 5
Lower valve body to upper valve body	0.25 ~ 0.35	2 ~ 3
Side plate to control valve body	0.25 ~ 0.35	2 ~ 3
Reamer bolt and nut of control valve body	0.5 ~ 0.7	4 ~ 5
Oil strainer to lower valve body	0.25 ~ 0.35	2 ~ 3
Governor valve body to oil distributor	0.5 ~ 0.7	4 ~ 5
Oil pump cover	0.6 ~ 0.8	4 ~ 6
Manual shaft lock nut	3.0 ~ 4.0	22 ~ 29
Oil cooler pipe set bolt to transmission	2.4 ~ 3.6	17 ~ 26
Oil pressure test plug	0.5 ~ 1.0	4 ~ 7
Actuator for parking rod to extension housing	0.8 ~ 1.1	6 ~ 8
Vacuum pipe to inlet manifold	1.2 ~ 1.8	9 ~ 13
PROPELLER SHAFT		
Yoke to rear axle companion flange	3.5 ~ 3.8	25 ~ 27
Yoke to front propeller shaft	16.0 ~ 18.0	116 ~ 130
Center bearing support	2.0 ~ 2.9	14 ~ 21
REAR AXLE		
Ring gear	9.0 ~ 11.0	65 ~ 79
Differential case halves	2.5 ~ 3.0	18 ~ 21
Differential side bearing caps	3.2 ~ 4.7	23 ~ 34
Companion flange to pinion	14.0 ~ 20.0	101 ~ 144
Rear axle to housing	2.3 ~ 2.7	17 ~ 19
STEERING		
Steering wheel	3.0 ~ 4.0	22 ~ 29
Steering gear housing to frame	4.4 ~ 5.5	32 ~ 40
Pitman arm to sector shaft	15.0 ~ 18.0	108 ~ 130
Idler arm bracket to frame	4.4 ~ 5.5	32 ~ 40
Idler arm to bracket	4.4 ~ 5.5	32 ~ 40
Idler arm to center link	2.5 ~ 3.5	18 ~ 25
Pitman arm to center link	2.5 ~ 3.5	18 ~ 25
Tie-rod to center link	2.5 ~ 3.5	18 ~ 25
Tie-rod to knuckle arm	2.5 ~ 3.5	18 ~ 25
Tie-rod lock nut	7.0 ~ 8.0	51 ~ 58
WHEELS		
Wheel bolts	9.0 ~ 10.0	65 ~ 72
FRONT SUSPENSION		
Stabilizer support	3.8 ~ 4.7	27 ~ 34
Stabllizer bar to suspension arm	8.1 ~ 9.8	59 ~ 71
Suspension arm to cross member	4.0 ~ 5.5	29 ~ 40
Knuckle arm to shock absorber	6.4 ~ 9.5	46 ~ 69
Suspension arm ball joint to knuckle arm	6.0 ~ 7.0	43 ~ 51
Mounting block to body	2.3 ~ 3.0	17 ~ 22
Front shock absorber		
Piston rod to mounting block	6.5 ~ 8.2	47 ~ 59
Seal cap nut	5.0 ~ 6.0	36 ~ 43
Piston rod nut	1.5	10
Base valve nut	0.15	1.0
Cross member	4.4 ~ 6.2	31 ~ 45
REAR SUSEPSNION		
Torque rod to body	10.0 ~ 12.0	72 ~ 87
Torque rod to rear axle housing	10.0 ~ 12.0	72 ~ 87
Spring pin	3.2 ~ 4.7	23 ~ 34
Shackle pin	3.2 ~ 4.7	23 ~ 34
"U" bolts	3.8 ~ 4.6	27 ~ 33

	m-kg	ft-lb
UNLESS OTHERWISE SPECIFIED		
6T		
6 mm bolt/nut	0.7 ~ 1.0	5 ~ 7
8 mm bot/nut	1.6 ~ 2.3	12 ~ 17
10 mm bolt/nut	3.2 ~ 4.7	23 ~ 34
12 mm bolt/nut	5.6 ~ 8.2	41 ~ 59
14 mm bolt/nut	7.7 ~ 10.5	56 ~ 76

	m-kg	ft-lb
8T		
6 mm bolt/nut	0.8 ~ 1.2	6 ~ 9
8 mm bolt/nut	1.8 ~ 2.7	13 ~ 20
10 mm bolt/nut	3.7 ~ 5.5	27 ~ 40
12 mm bolt/nut	6.4 ~ 9.5	46 ~ 69
14 mm bolt/nut	10.4 ~ 14.0	75 ~ 101