1975
MAZDA RX-4

WORKSHOP MANUAL

1975
MAZDA RX-4
WORKSHOP MANUAL

SECTION INDEX	
Name	Section
Engine	1
Emission Control System	1A
Lubricating System	2
Cooling System	3
Fuel System	4
Electrical System (Engine)	5
Clutch	6
Transmission	7
Automatic Transmission	7A
Propeller Shaft	8
Rear Axle	9
Steering	10
Brakes	11
Wheels and Tires	12
Suspension	13
Body	14
Body (Rotary Wagon)	14A
Electrical System (Body)	15
Technical Data	T

FOREWORD

This workshop manual was prepared as reference material for the service personnel of authorized Mazda dealers to enable them to correctly carry out the task of delivering services and maintenance on Mazda vehicles.

In order to ensure that the customers are satisfied with Mazda products, proper servicing and maintenance must be provided. For this purpose, the service personnel must fully understand the contents of this workshop manual and at the same time, are recommended to keep the manual in a place where reference can readily be made.

The information, photographs, drawings and specifications entered in this manual were the best available at the time of printing this manual. All alterations to this manual occurring as the result of modifications will be notified by the issuance of Service Informations or supplementary volumes. It is, therefore, requested that the manual be kept up to date by carefully maintaining a follow-up of these materials.

Toyo Kogyo reserves the right to alter the specifications and contents of this manual without any obligation and advance notice.

All rights reserved. No part of this book may be reproduced or utilized in any form or by any means, electronic or mechanical, including photocopying, recording, or by any informational storage and retrieval system, without permission in writing.

TOYO KOGYO CO.,LTD.
HIROSHIMA, JAPAN

© 1974 TOYO KOGYO CO., LTD.
PRINTED IN JAPAN DEC., '74
MAZDA ROTARY ENGINE;
LICENSE NSU-WANKEL
1001410

ENGINE

1–A. ENGINE DISASSEMBLY ..... 1 : 4
1–B. INSPECTION AND REPAIR ..... 1 : 8
1–B–1. Inspecting Front, Intermediate and Rear Housing ..... 1 : 8
1–B–2. Inspecting Front Stationary Gear and Main Bearing ..... 1 : 9
1–B–3. Inspecting Rear Stationary Gear and Main Bearing ..... 1 : 10
1–B–4. Inspecting Rotor Housing ..... 1 : 10
1–B–5. Inspecting Rotor ..... 1 : 10
1–B–6. Inspecting Rotor Bearing ..... 1 : 11
1–B–7. Inspecting Rotor Oil Seal and Spring ..... 1 : 11
1–B–8. Inspecting Apex Seal, Side Piece and Spring ..... 1 : 12
1–B–9. Inspecting Side Seal and Spring ..... 1 : 13
1–B–10. Inspecting Corner Seal and Spring ..... 1 : 13
1–B–11. Inspecting Eccentric Shaft ..... 1 : 14
1–B–12. Inspecting Needle Bearing ..... 1 : 15
1–B–13. Inspecting Eccentric Shaft Front and Rear Oil Seals ..... 1 : 15
1–C. ENGINE ASSEMBLY ..... 1 : 16
1–C–1. Installing Oil Seal ..... 1 : 16
1–C–2. Installing Each Seal ..... 1 : 16
1–C–3. Installing Front Rotor ..... 1 : 17
1–C–4. Installing Eccentric Shaft ..... 1 : 17
1–C–5. Installing Front Rotor Housing ..... 1 : 17
1–C–6. Installing Intermediate Housing ..... 1 : 18
1–C–7. Installing Rear Rotor and Rear Rotor Housing ..... 1 : 19
1–C–8. Installing Rear Housing ..... 1 : 19
1–C–9. Tightening Tension Bolts ..... 1 : 19
1–C–10. Installing Flywheel or Counter Weight ..... 1 : 19
1–C–11. Adjusting Eccentric Shaft End Play ..... 1 : 20
1–C–12. Installing Front Cover and Eccentric Shaft Pulley ..... 1 : 21
1–C–13. Installing Oil Strainer and Oil Pan ..... 1 : 22
1–C–14. Installing Water Pump ..... 1 : 22
1–C–15. Installing Distributor ..... 1 : 23
1–C–16. Installing Exhaust Manifold ..... 1 : 23
1–C–17. Installing Intake Manifold ..... 1 : 23
1–C–18. Installing Alternator and Air Pump ..... 1 : 23
SPECIAL TOOLS ..... 1 : 24

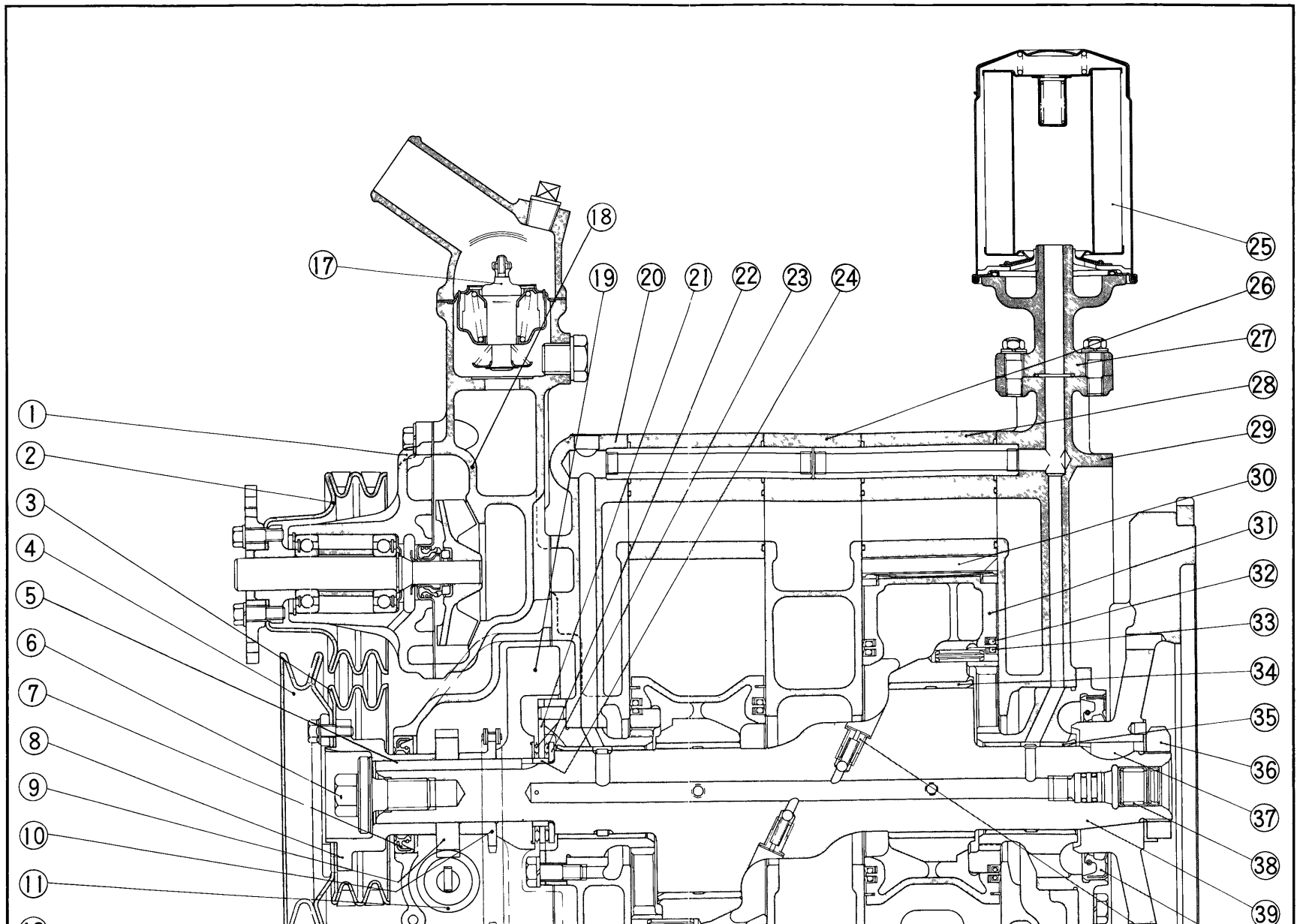

1. Water pump body
2. Water pump pulley
3. Eccentric shaft pulley
4. Eccentric shaft pulley (for compresso
5. Key
6. Eccentric shaft pulley bolt
7. Eccentric shaft front oil seal
8. Eccentric shaft pulley boss
9. Distributor drive gear
10. Oil pump drive sprocket
11. Driven gear (for metering oil pump)
12. Front cover
13. Oil pump driven sprocket
14. Oil pump body
15. Oil strainer
16. Oil pan
17. Thermostat
18. Water pump casing
19. Balance weight
20. Front housing
21. Bearing housing
22. Needle bearing
23. Thrust plate
24. Spacer
25. Oil filter
26. Intermediate housing
27. Oil filter cover
28. Rear rotor housing
29. Rear housing
30. Apex seal
31. Rear rotor
32. Oil seal (outer)
33. Oil seal (inner)
34. Rear rotor bearing
35. Rear main bearing
36. Flywheel lock nut
37. Key
38. Needle bearing
39. Eccentric shaft
40. Eccentric shaft rear oil seal

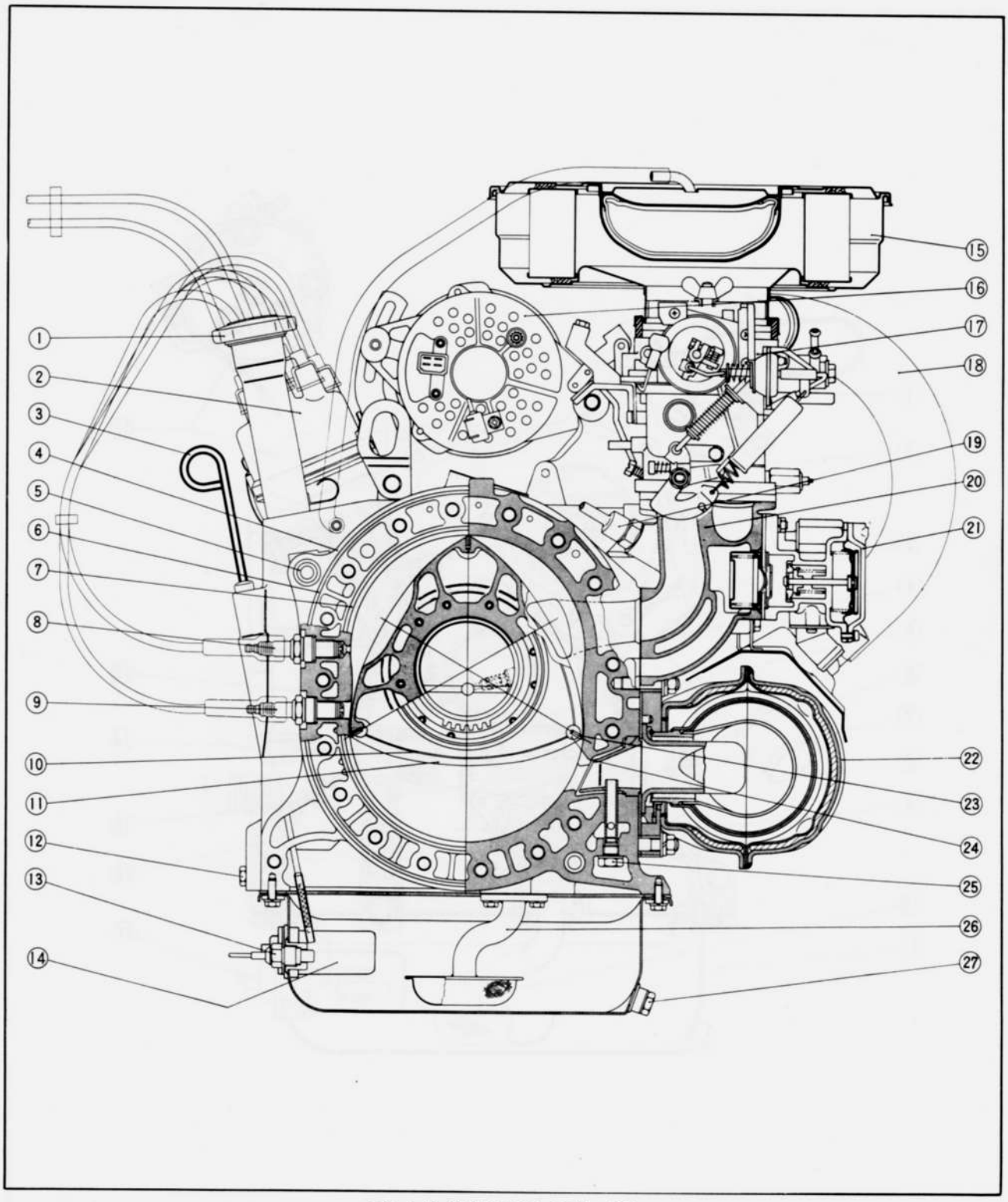

Fig. 1–2 Engine cross section (2)

1. Oil filler cap
2. Distributor
3. Dipstick gauge
4. Rotor housing
5. Tubular dowel
6. Sealing rubber (outer)
7. Sealing rubber (inner)
8. Trailing spark plug
9. Leading spark plug
10. Side seal
11. Rotor
12. Coolant drain plug
13. Oil thermo unit
14. Oil level sensor
15. Air cleaner
16. Alternator
17. Carburetor
18. Hot air hose
19. PCV valve
20. Intake manifold
21. Air control valve
22. Thermal reactor
23. Apex seal (side piece)
24. Corner seal
25. Air injection nozzle
26. Oil strainer
27. Oil drain plug

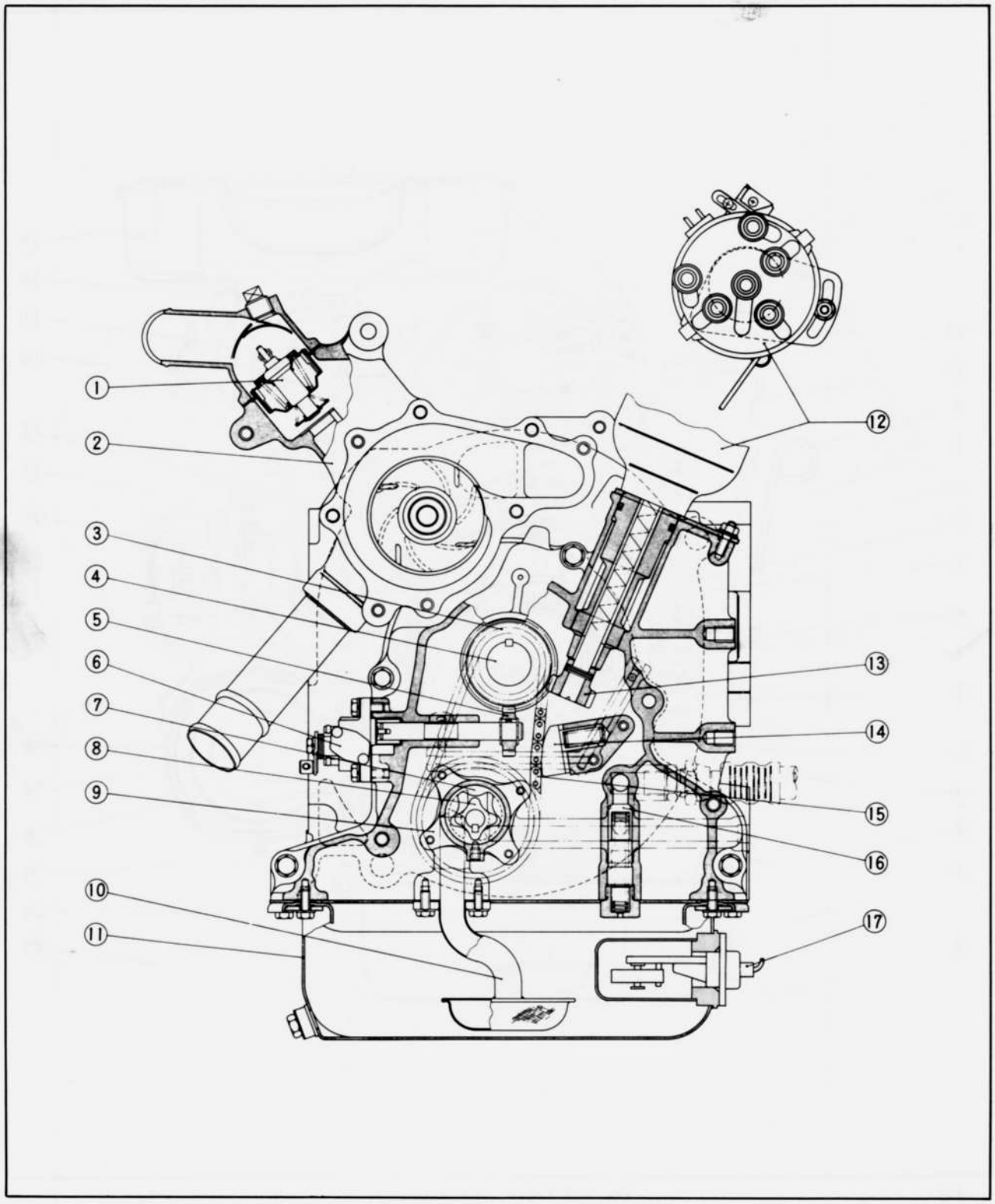

Fig. 1–3 Engine cross section (3)

1. Thermostat
2. Water pump casing
3. Distributor drive gear
4. Eccentric shaft
5. Metering pump drive gear
6. Metering pump
7. Oil pump outer gear
8. Oil pump inner gear
9. Oil pump body
10. Oil strainer
11. Oil pan
12. Distributor
13. Distributor driven gear
14. Oil pump chain adjuster
15. Oil pump chain
16. Pressure control valve
17. Oil level sensor

1–A. ENGINE DISASSEMBLY

Engine disassembly should be done in the following order after removing the engine from the vehicle.

Note:
Henceforth, on this occasion when the '74 year-type of rotary engine is being introduced, we have adopted the method of supporting the front housing by using the **engine hanger** (49 1114 005) for the purpose of facilitating the working procedure. The **engine hanger** can be used for any type of engine now in service.

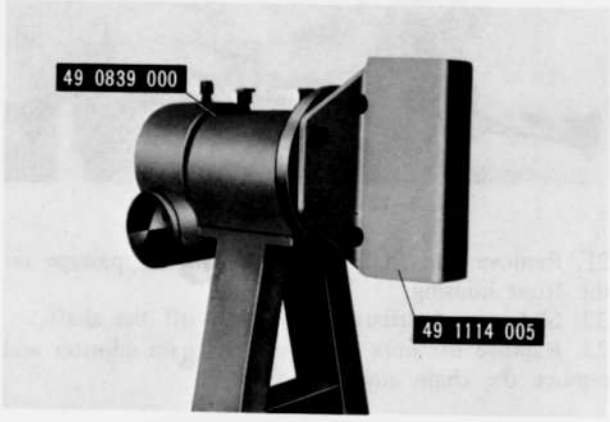

Fig. 1–4 Engine work stand

1. Remove the oil hose support bracket from the front housing.
2. Mount the engine on the **engine work stand** (49 0839 000) with the **engine hanger** (49 1114 005).
3. Remove the engine mounting bracket from the front cover.
4. Disconnect the vacuum hoses, air hoses and wires, then remove the valves.
5. Remove the air pump attaching bolts and bar, and remove the air pump and V-belt.
Remove the alternator attaching bolts, and remove the alternator and V-belt.
6. Disconnect the metering oil pump connecting rod and oil tubes from the carburetor.
7. Remove the intake manifold attaching nuts, and remove the carburetor and intake manifold assembly.

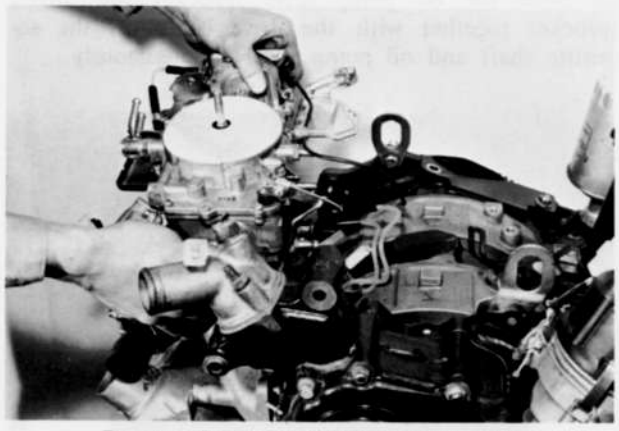

Fig. 1–5 Removing intake manifold ass'y

Then remove the gasket and two rubber rings.
8. Remove the thermal reactor attaching nuts and remove it with gaskets.
9. Remove the distributor securing nut and pull it out from the front cover.



Fig. 1–6 Removing distributor

10. Remove the eccentric shaft pulley (for compressor) from the pulley boss.
11. Remove the water pump attaching bolts, and remove the pump and gasket.

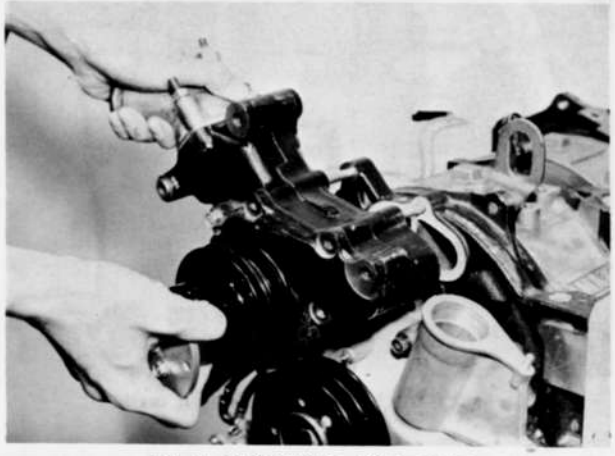

Fig. 1–7 Removing water pump

12. Invert the engine on the work stand.
13. Remove the bolts attaching the oil pan, and remove the oil pan and gasket.



Fig. 1–8 Removing oil pan

14. Remove the bolts attaching the oil strainer, and remove the oil strainer and gasket.

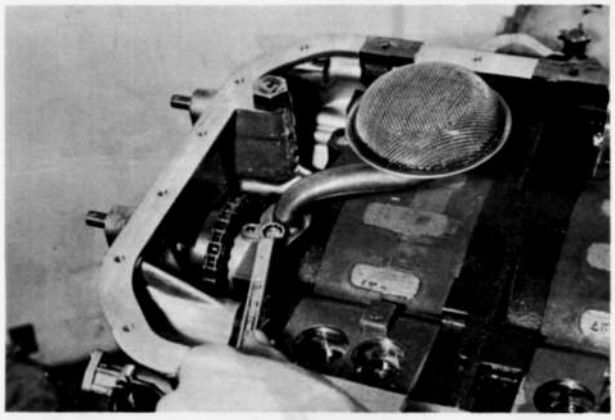

Fig. 1–9 Removing oil strainer

15. Apply identification marks onto the front rotor housing and rear rotor housing, which are common parts, so that they will be as they were when re-assembling the engine.

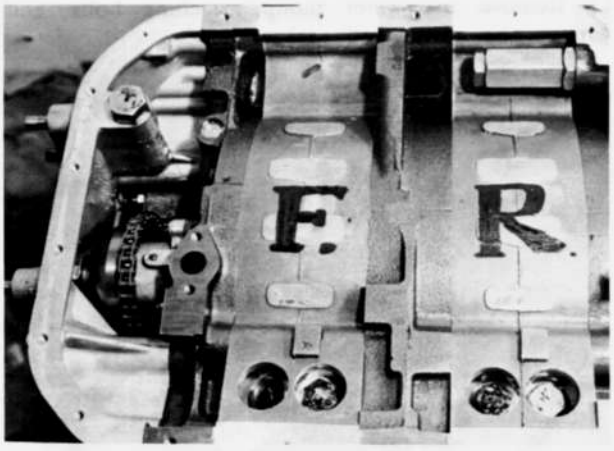

Fig. 1–10 Putting identification marks

16. Turn the engine on the work stand so that the top of the engine is up.
17. Attach the **ring gear brake** (49 1881 060) to the flywheel or drive plate.
18. Remove the eccentric shaft pulley bolt and remove the pulley.

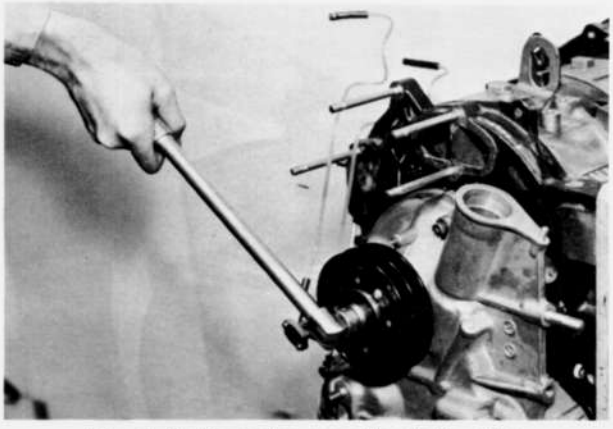

Fig. 1–11 Removing eccentric shaft pulley

19. Turn the engine on the work stand so that the front end of the engine is up.
20. Remove the front cover attaching bolts, and remove the front cover and gasket.

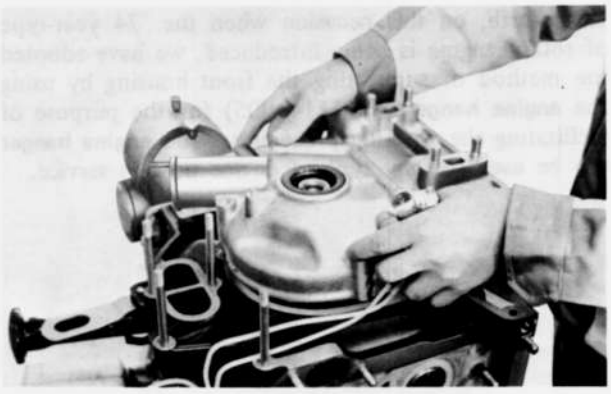

Fig. 1–12 Removing front cover

21. Remove the "O" ring from the oil passage on the front housing.
22. Slide the distributor drive gear off the shaft.
23. Remove the nuts attaching the chain adjuster and remove the chain adjuster.

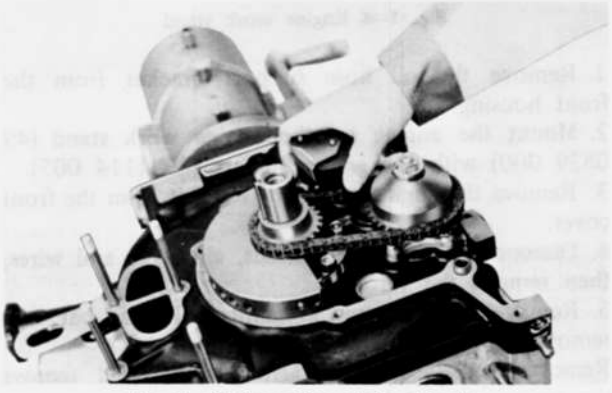

Fig. 1–13 Removing chain adjuster

24. Straighten the tab of the lock washer and remove the nut and lock washer from the oil pump driven sprocket.
25. Slide the oil pump drive sprocket and driven sprocket together with the drive chain off the eccentric shaft and oil pump shaft simultaneously.



Fig. 1–14 Removing chain and sprockets

26. Remove the keys on the eccentric shaft and oil pump shaft.
27. Slide the balance weight, thrust washer and needle bearing off the shaft.
28. Remove the bolts attaching the bearing housing, and slide the bearing housing, needle bearing, spacer and thrust plate off the shaft.
29. Turn the engine on the work stand so that the top of the engine is up.
30. To remove the flywheel in case of engine mounted with manual transmission, proceed as follows:
1) Remove the clutch pressure plate assembly attaching bolts, and remove the pressure plate assembly and clutch disk.
2) Straighten the tab of the lock washer and remove the flywheel nut using the **special wrench** (49 0820 035).

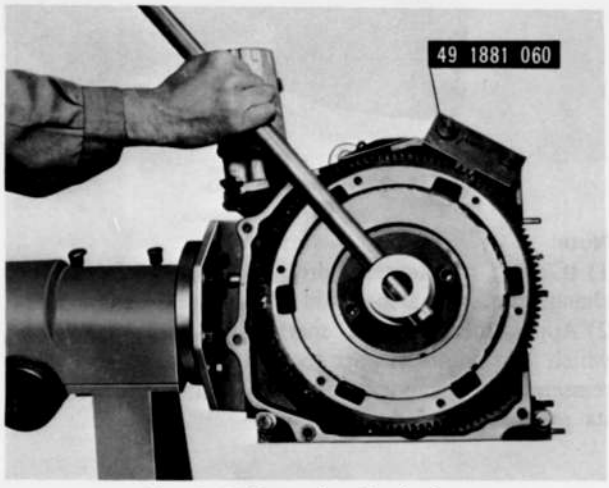

Fig. 1–15 Removing flywheel nut

3) Remove the flywheel by using the **flywheel puller** (49 0823 300A), turning the handle of the puller and lightly hitting the head of the puller.



Fig. 1–16 Removing flywheel

31. To remove the counter weight in case of engine mounted with automatic transmission, proceed as follows.
1) Remove the drive plate, and then remove the **ring gear brake** (49 1881 060).
2) Attach the **counter weight brake** (49 1881 055). Then straighten the tab of the lock washer and remove the counter weight nut using the **special wrench** (49 0820 035).
3) Remove the counter weight by using the **counter weight puller** (49 0839 305A), turning the handle of the puller and lightly hitting the head of the puller.
32. Remove the key on the eccentric shaft and turn the engine on the work stand so that the rear of the engine is up.
33. Loosen the tension bolts in the sequence shown in Fig. 1–17, and remove the tension bolts.

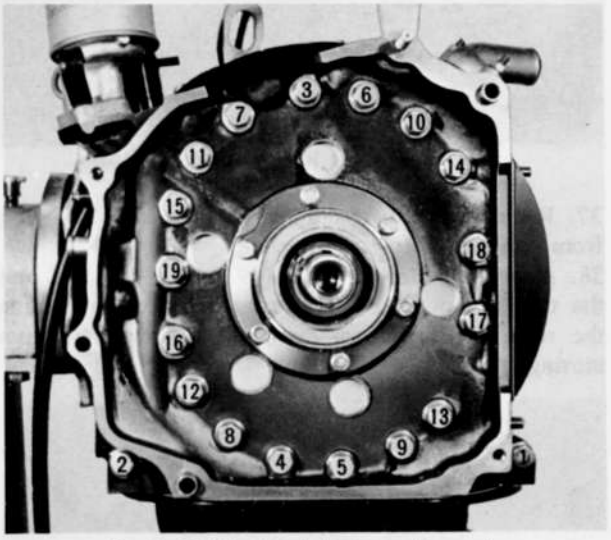

Fig. 1–17 Tension bolts loosening order

Note:
Do not loosen the tension bolts at one time. Perform the removal in two or three procedures.

34. Lift the rear housing off the shaft.

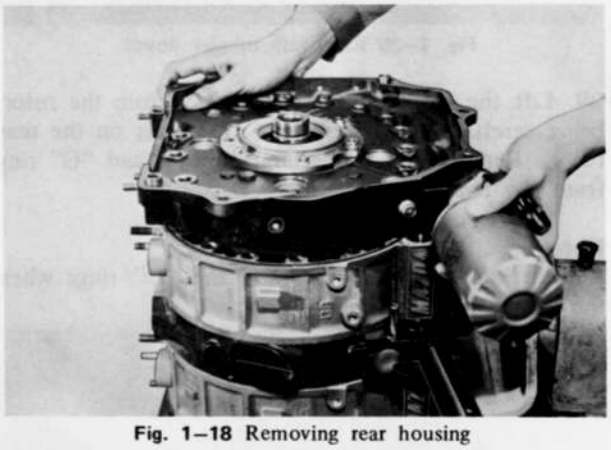

Fig. 1–18 Removing rear housing

35. Remove any seals stuck to the rotor sliding surface of the rear housing and place them back into their respective original positions.
36. Remove the all corner seals, corner seal springs, side seals, side seal springs and side pieces from the rear side of the rotor, and place them in the **seal case** (49 0813 250), in accordance with the numbers near each respective groove on the face of the rotor. These marks are made in order to prevent each seal from

changing its original position in reassembling.

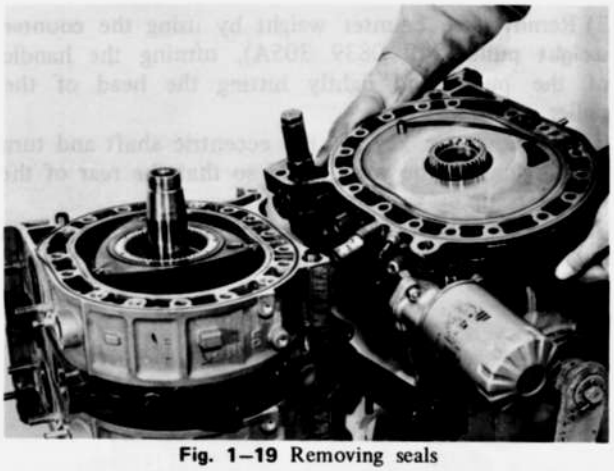

Fig. 1–19 Removing seals

37. Remove the two sealing rubbers and "O" ring from the rear rotor housing.
38. Attach the **dowel puller** (49 0813 215), and pull the tubular dowels off the rear rotor housing holding the rotor housing down by hand to prevent it from moving up.

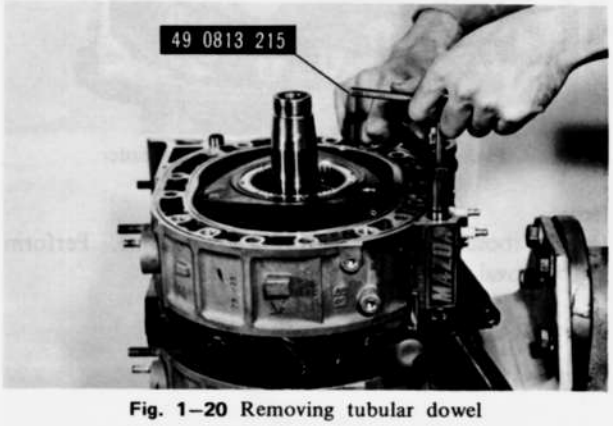

Fig. 1–20 Removing tubular dowel

39. Lift the rear rotor housing away from the rotor, being careful not to drop the apex seals on the rear rotor. Remove the two sealing rubbers and "O" ring from the rear rotor housing.

Note:
Replace the sealing rubbers and the "O" rings when the engine is overhauled.



Fig. 1–21 Removing rear rotor housing

40. Remove the each apex seal and spring from the rear rotor and place them in the seal case.
41. Remove the rear rotor away from the eccentric shaft and place it upside down on a clean sheet of cloth.
42. Remove each seal and spring on the other side of the rear rotor, and place them in the seal case as shown in Fig. 1–22.

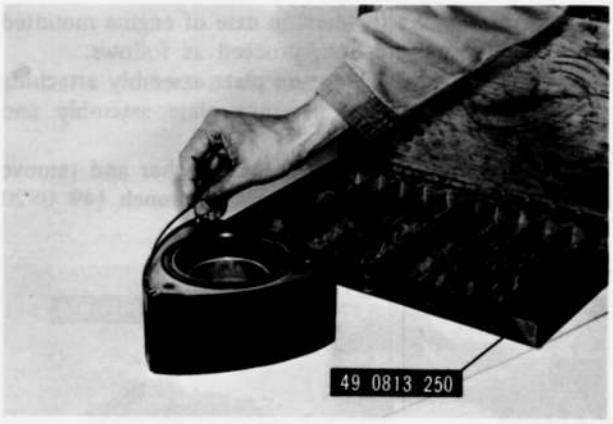

Fig. 1–22 Removing seals

Note:
1) If some of the seals drop off, be careful not to change the original position of each seal on the rotor.
2) Apply identification mark onto the rear rotor, which is a common part to front rotor, so that when reassembling the engine the rotor can be installed in its original position.



Fig. 1–23 Putting identification mark

43. Remove the oil seals and springs, first the outer oil seal then the inner oil seal, using the **oil seal remover** (49 0813 225).

Note:
1) Do not exert strong pressure at only one place to prevent deformation of the oil seal.
2) Be careful not to damage the oil seal lip. Use a suitable protector shown in Fig. 1–24.
3) Replace the "O" rings in the oil seals when the engine is overhauled.
4) Apply identification mark onto rear oil seal springs of each rotor so that, when reassembling the engine, oil seal springs can be installed in their respective face of the rotor as described in Par. 1–C–1.



Fig. 1–24 Removing oil seal

44. Holding the intermediate housing down by hand, pull the tubular dowel off the intermediate housing using the **dowel puller** (49 0813 215).
45. Lift the intermediate housing off the shaft being careful not to damage the shaft. The intermediate housing should be removed by sliding it beyond the rear rotor journal on the eccentric shaft while holding the intermediate housing up and at the same time pushing up the eccentric shaft.



Fig. 1–25 Removing intermediate housing

46. Lift out the eccentric shaft.
47. Repeat the above procedures to remove the front rotor housing and the front rotor assembly.

1–B. INSPECTION AND REPAIR

1–B–1. Inspecting Front, Intermediate and Rear Housing

1. Remove all carbon on the housings with an extra-fine emery paper. When using a carbon scraper, be careful not to damage the finished surfaces of the housings.
2. Remove the sealing agent on the housings by using a cloth or a brush soaked in a solution of ketone or thinner.



Fig. 1–26 Removing sealing agent

3. Check for housing distortion by placing a straight edge on the housing surface. Measure the clearance between the straight edge and the housing surface with a feeler gauge, as shown in Fig. 1–27. If the distortion exceeds **0.04 mm (0.0016 in)**, reface or replace the housing.

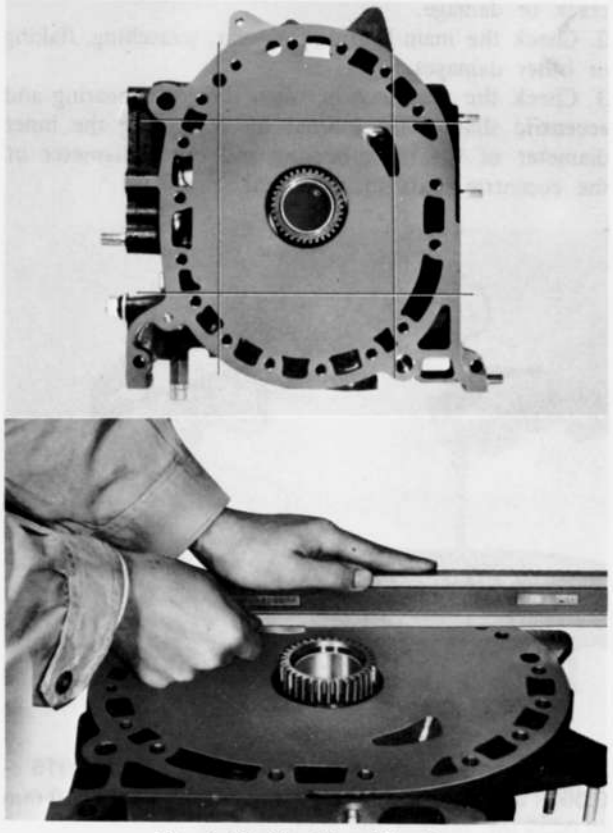

Fig. 1–27 Checking distortion

4. Check for wear on the rotor sliding surfaces of the housing and joint surfaces with rotor housing as shown in Fig. 1–28.
If the wear exceeds 0.10 mm (0.0039 in), reface or replace the housing.

Caution:
The side housings (front housing, intermediate housing and rear housing) can be reused by grinding them if the required finish can be maintained.

And when this work is performed on the markets, ask the detailed informations of Toyo Kogyo, and follow them.

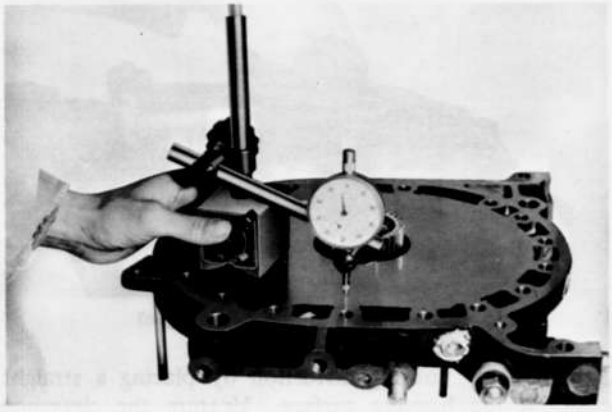

Fig. 1–28 Checking wear

1–B–2. Inspecting Front Stationary Gear and Main Bearing

1. Check the teeth on the stationary gear for wear, crack or damage.
2. Check the main bearing for wear, scratching, flaking or other damages.
3. Check the clearance between the main bearing and eccentric shaft main journal by measuring the inner diameter of the main bearing and outer diameter of the eccentric shaft main journal.

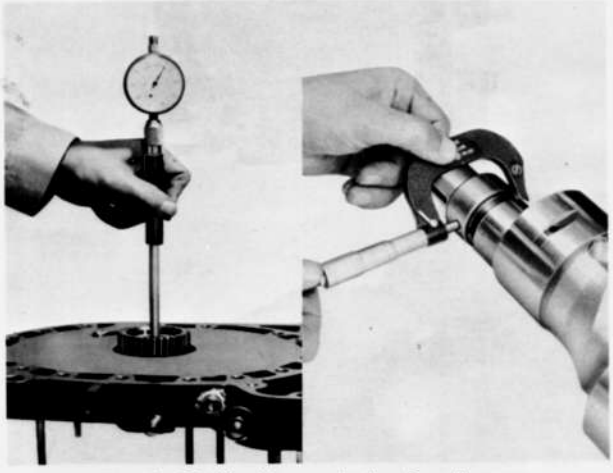

Fig. 1–29 Checking main bearing clearance

The standard clearance is **0.04 ~ 0.07 mm (0.0016 ~ 0.0028 in)**. If the bearing clearance exceeds **0.10 mm (0.0039 in)**, replace the main bearing.

Note:

To replace the main bearing, proceeds as follows:

1) Remove the stationary gear and main bearing assembly from the housing, using the **main bearing replacer** (49 0813 235), shown in Fig. 1–30.

2) Remove the adaptor on the main bearing replacer and press the main bearing out of the stationary gear by using the **main bearing replacer** (49 0813 235), as shown in Fig. 1–31.

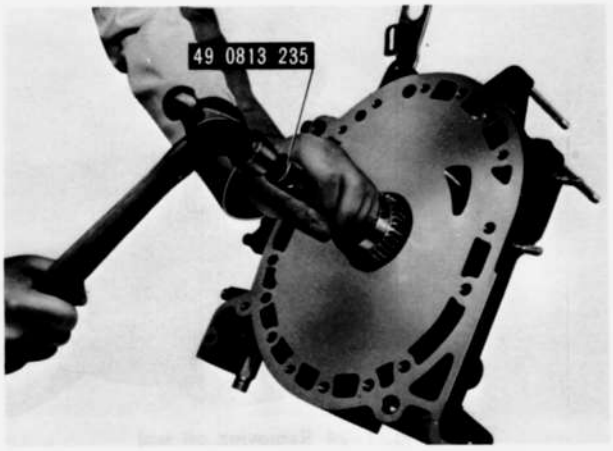

Fig. 1–30 Removing stationary gear assembly

3) Attach the adaptor onto the **main bearing replacer** (49 0813 235), aligning the tang of the bearing and the slot of the stationary gear, and press fit the main bearing into the stationary gear until the adaptor touches the stationary gear flange.

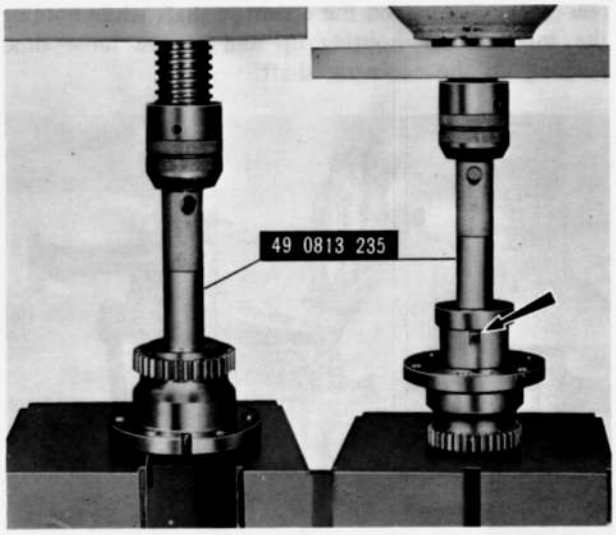

Fig. 1–31 Removing and installing main bearing

4) Press in the stationary gear to the housing with the **main bearing replacer** (49 0813 235), aligning the slot of the stationary gear flange and the dowel pin on the housing, as shown in Fig. 1–32.

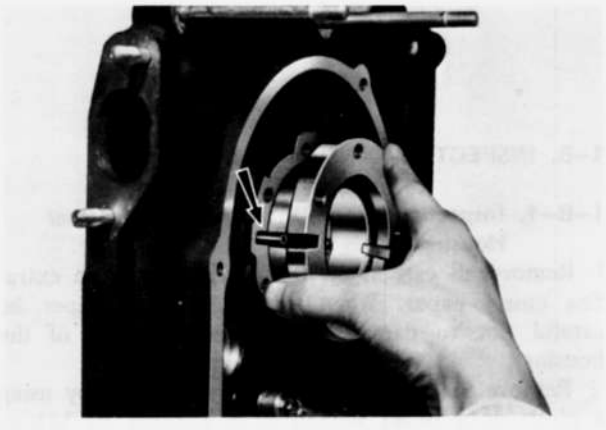

Fig. 1–32 Aligning stationary gear

1–B–3. Inspecting Rear Stationary Gear and Main Bearing

Check the rear stationary gear and main bearing according to Par. 1–B–2.

To remove and install the stationary gear, proceed as follows:

1) Remove the bolts attaching the stationary gear to the rear housing.
2) Using the **main bearing replacer** (49 0813 235), remove the stationary gear from the rear housing.
3) Check the "O" ring in the stationary gear for a damage. Replace the "O" ring if necessary.
4) Apply a thin coat of vaseline on the "O" ring and place it in the groove of the stationary gear.

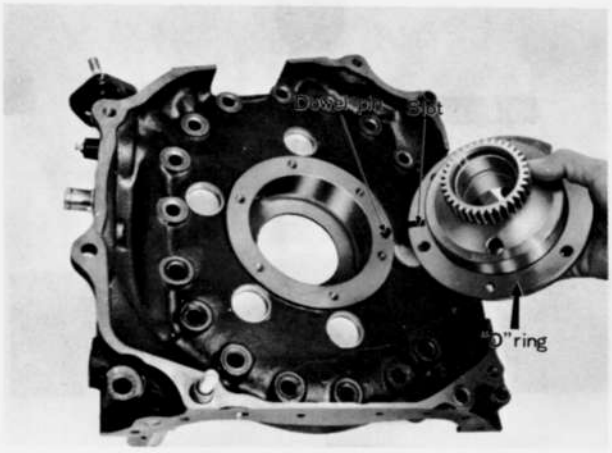

Fig. 1–33 Assembling stationary gear

5) Apply sealing agent onto the stationary gear flange.
6) Install the stationary gear to the rear housing being careful not to damage the "O" ring and aligning the slot of the stationary gear with the dowel pin on the rear housing.
7) Tighten the bolts attaching the stationary gear.

1–B–4. Inspecting Rotor Housing

1. Check for traces of gas or water leakage along the inner margin of each side face of the rotor housing.
2. Remove all carbon from the inner surface of the rotor housing by wiping with cloth. Soak the cloth in a solution of ketone or thinner if the carbon is difficult to remove.

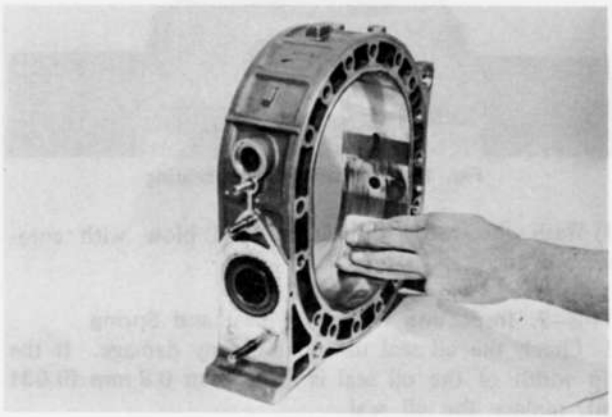

Fig. 1–34 Removing carbon

3. Remove all deposits and rust from the cooling water passages on the housing.
4. Remove sealing agent by wiping with a cloth or brush soaked in a solution of ketone or thinner.
5. Check the chromium plated surface on the rotor housing for scoring, flaking or any other damage.
If any of these excessive condition exists, replace the rotor housing.
6. Check the rotor housing width at points close to the trochoid surface by using a micrometer. The measurements should be taken at least at 4 points. If the difference between the value of Ⓐ point and the minimum value of the points ⒷⒸⒹ, exceeds **0.06 mm (0.0024 in)**. the rotor housing should be replaced with a new one.

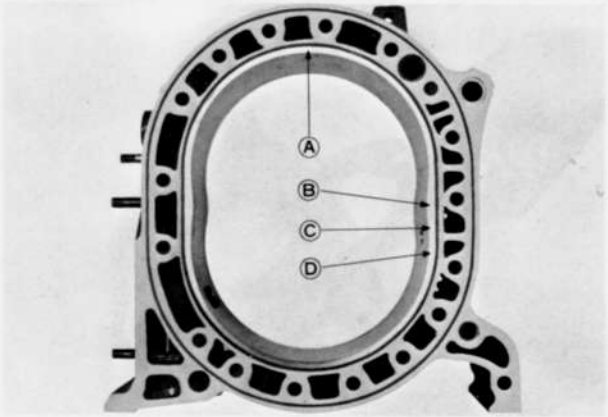

Fig. 1–35 Checking points

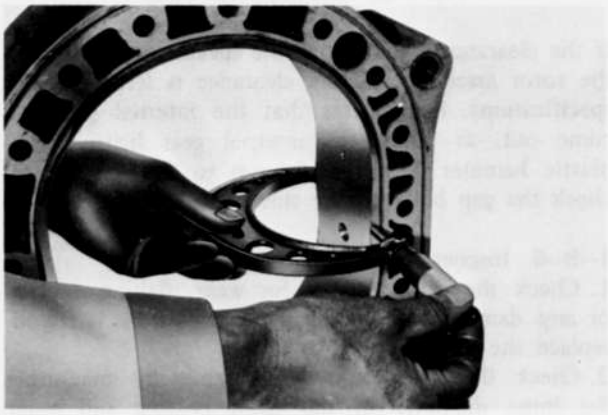

Fig. 1–36 Checking rotor housing width

1–B–5. Inspecting Rotor

1. Check the combustion condition and gas leakage.
To a certain extent, the combustion condition can be judged as in the case of reciprocating engines by the color and quantity of carbon on the rotor. Combustion can be said to be good if the color of carbon is brown. Generally carbon on the leading side seen from the direction of rotation is brown, while the trailing side shows black color. It should be noted that this color varies according to operating conditions just before the engine is removed.
The gas leakage can be judged by checking the color of the rotor side surface for blow-by traces originating from the side seals and corner seals.
2. Remove the carbon on the rotor by using a carbon

remover or emery paper. Carbon in the seal grooves of the rotor should be removed with a carbon remover being careful not to damage the grooves. Wash the rotor in cleaning solution and dry by blowing with compressed air.

3. Carefully inspect the rotor and replace if it is severely worn or damaged.

4. Check the internal gear for cracks, score, worn or chipped teeth.

5. Check the gap between the side housing and the rotor by measuring the rotor housing width and rotor width. The rotor width should be measured at 3 points as shown in Fig. 1–37.

The difference between the minimum width of rotor housing and the maximum width of the rotor should be within **0.10 ~ 0.21 mm (0.0039 ~ 0.0083 in).**

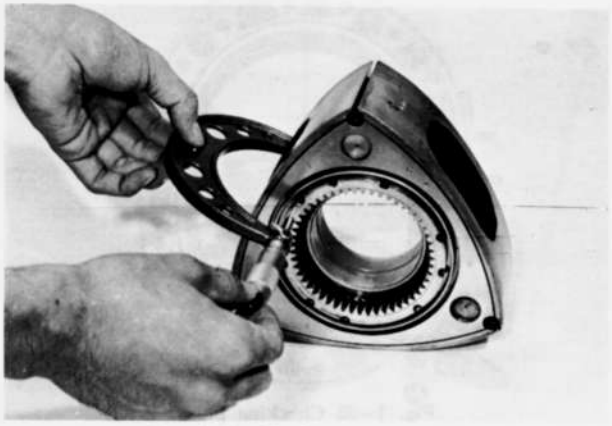

Fig. 1–37 Checking rotor width

If the clearance is more than the specifications, replace the rotor assembly. If the clearance is less than the specifications, it indicates that the internal gear has come out, so strike the internal gear lightly with plastic hammer being careful not to damage and re-check the gap between the side housing and the rotor.

1–B–6. Inspecting Rotor Bearing

1. Check the rotor bearing for wear, flaking, scoring or any damage. If any of these conditions is found, replace the bearing.

2. Check the rotor bearing clearance by measuring the inner diameter of the rotor bearing and outer diameter of the eccentric shaft rotor journal.

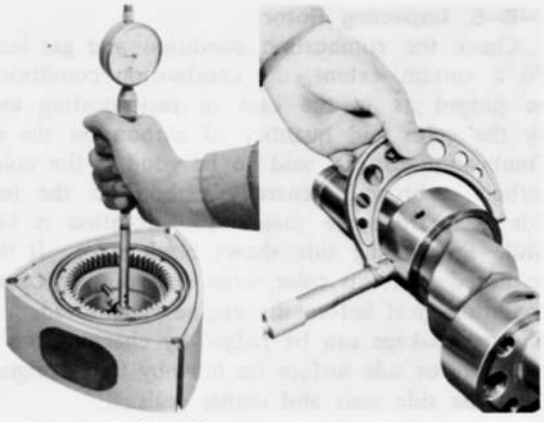

Fig. 1–38 Checking rotor bearing clearance

The standard clearance is **0.04 ~ 0.08 mm (0.0016 ~ 0.0031 in)**. Replace the bearing if it is more than **0.10 mm (0.0039 in)**.

Note:

To replace the rotor bearing, proceed as follows:

1) Place the rotor on the support so that the internal gear is facing downward. Using the **rotor bearing replacer** (49 0813 240) without the adaptor ring, press the bearing out of the rotor, being careful not to damage the internal gear. If the bearing bore in the rotor is damaged, finish the bore with emery paper and blow with compressed air.

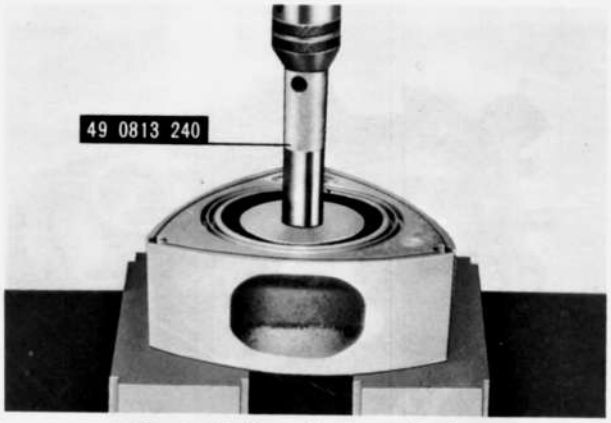

Fig. 1–39 Removing rotor bearing

2) Place the rotor on the support with internal gear faced upward. And place the new rotor bearing on the rotor so that the rotor bore is in line with the bearing lug.

3) Press fit the new bearing using the **rotor bearing replacer** (49 0813 240) with the adaptor removed attaching screws, until the bearing is flush with the rotor boss.

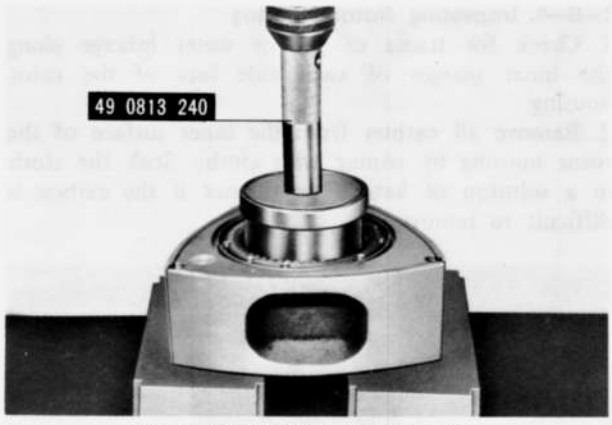

Fig. 1–40 Installing rotor bearing

4) Wash the rotor thoroughly and blow with compressed air.

1–B–7. Inspecting Rotor Oil Seal and Spring

1. Check the oil seal for wear or any damage. If the lip width of the oil seal is more than **0.8 mm (0.031 in)**, replace the oil seal.

2. Check the oil seal protrusion as shown in Fig.

1–41 and confirm the free movement by pressing with finger. The protrusion should be more than **0.5 mm (0.02 in)**.

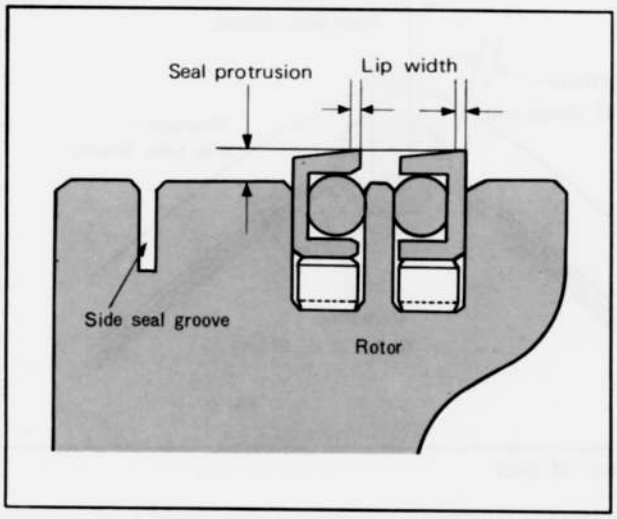

Fig. 1–41 Checking oil seal

1–B–8. Inspecting Apex Seal, Side Piece and Spring

1. Remove all carbon from the apex seal, side piece and spring, being careful not to damage the apex seal. **Never use** emery paper as it will damage the apex seal. Wash them with cleaning solution.
2. Check the apex seal and side piece for wear, crack on any damage. If any of these conditions is found, replace the seal. Check the spring for wear.
3. Measure the height of the apex seal with a micrometer at two positions shown in Fig. 1–42. Replace if the height is less than **7.0 mm (0.275 in)**.

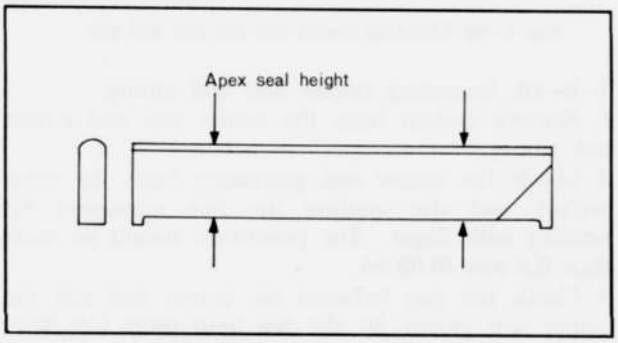

Fig. 1–42 Apex seal height



Fig. 1–43 Checking apex seal

4. Check the gap between the apex seal and the groove. To check the gap, place the apex seal in its respective groove on the rotor and measure the gap between the apex seal and the groove with a feeler gauge. The feeler gauge should be inserted until the tip of the gauge reaches the bottom of the groove. The standard gap is **0.05 ~ 0.09 mm (0.0020 ~ 0.0035 in)**. If the gap is more than **0.15 mm (0.0059 in)**, replace the apex seal.

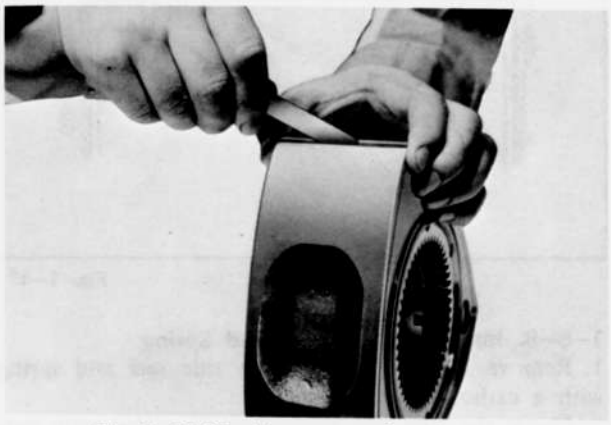

Fig. 1–44 Checking apex seal and groove

5. Check the gap between the apex seal and side housing. To check, measure the length of the apex seal with a micrometer.
Compare the measured apex seal length with the minimum value among Ⓑ Ⓒ and Ⓓ points of the rotor housing (see Fig. 1–35). The standard gap is **0.13 ~ 0.17 mm (0.0051 ~ 0.0067 in)**.
If it is more than **0.30 mm (0.0118 in)**, replace the apex seal. If necessary, correct the apex seal length with emery paper.

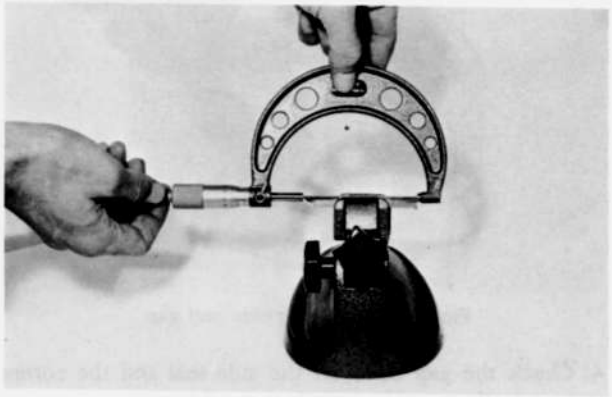

Fig. 1–45 Measuring apex seal length

6. Check the free height of the apex seal spring as shown in Fig. 1–46. It should be more than **3.8 mm (0.15 in)**.

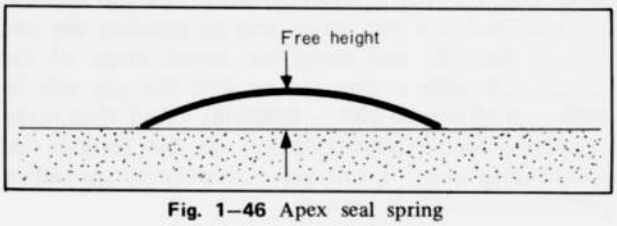

Fig. 1–46 Apex seal spring

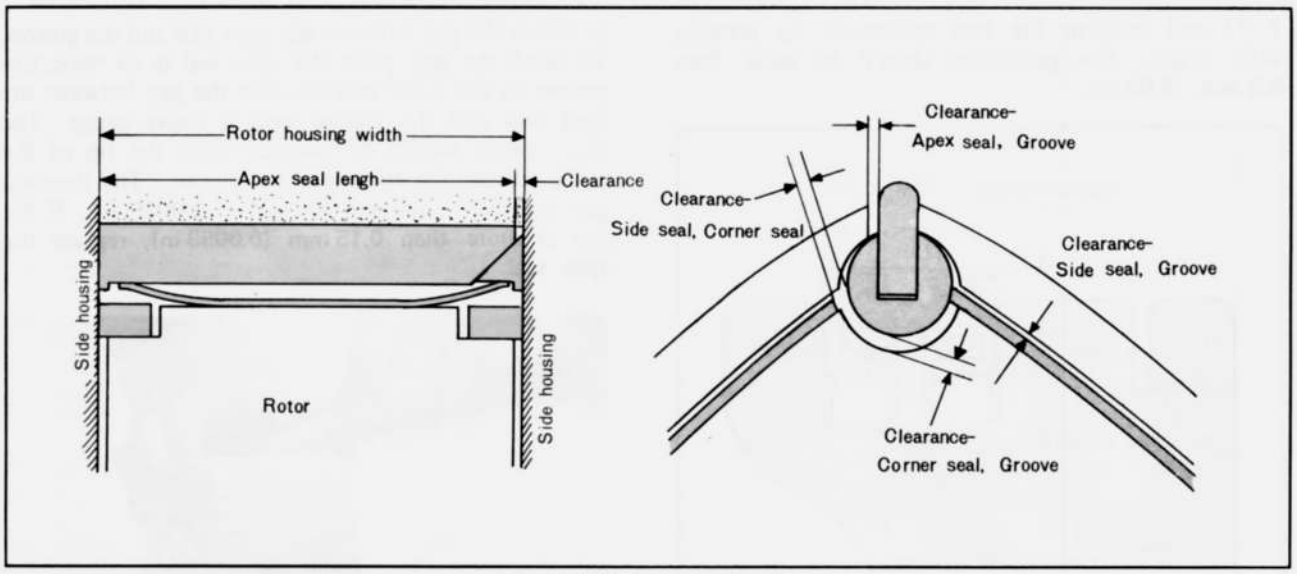

Fig. 1–47 Clearance of seals

1–B–9. Inspecting Side Seal and Spring

1. Remove all carbon from the side seal and spring with a carbon remover.
2. Check the side seal protrusion from the rotor surface, and also confirm the free movement by pressing with finger. The protrusion should be more than **0.5 mm (0.02 in)**.
3. Check the gap between the side seal and the groove with a feeler gauge as shown in Fig. 1–48. The standard gap is **0.04 ~ 0.07 mm (0.0016 ~ 0.0028 in)**. If the gap exceeds **0.10 mm (0.0040 in)**, replace the side seal.



Fig. 1–48 Checking side seal gap

4. Check the gap between the side seal and the corner seal with these seals installed on the rotor.

To check, insert a feeler gauge between the end of the side seal (against the rotating direction of rotor) and the corner seal. If the gap exceeds **0.4 mm (0.016 in)**, replace the side seal.

When the side seal is replaced, adjust the gap between the side seal and the corner seal by grinding the one end of the side seal along the round shape of the corner seal with a fine file so that the gap will be **0.05 ~ 0.15 mm (0.002 ~ 0.006 in)**. And then make respective identification notches on the reverse side of the side seal. If this gap is too large, gas-sealing performance will deteriorate.

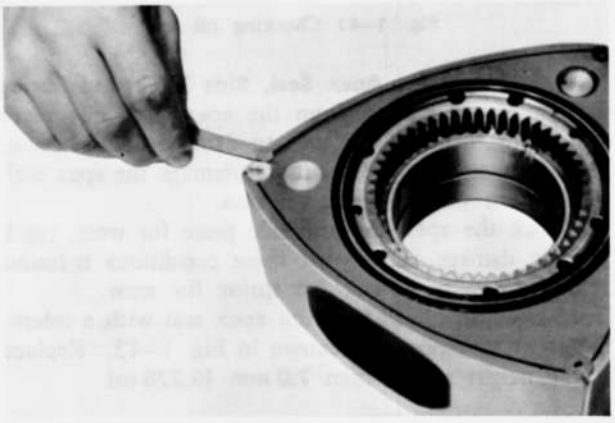

Fig. 1–49 Checking corner seal and side seal gap

1–B–10. Inspecting Corner Seal and Spring

1. Remove carbon from the corner seal and corner seal groove.
2. Check the corner seal protrusion from the rotor surface, and also confirm the free movement by pressing with finger. The protrusion should be more than **0.5 mm (0.02 in)**.
3. Check the gap between the corner seal and the corner seal groove by the **bar limit gauge** (49 0839 165). This gap enlargement shows uneven wear of the corner seal groove, which occurs when the engine is operated with dust entering through a clogged element, damaged air cleaner or any other cause. When the wear is permitted to increase, the engine power will be reduced and the engine will become hard to start. The decision whether the gap has correct dimension is made by examining wear of the corner seal groove with **bar limit gauge** (49 0839 165). The wear is classified into three conditions.

a. Neither end of the gauge goes into the groove. This means that the gap conforms to the specifications.

b. While the go-end of the gauge goes into the groove, the not-go-end does not. In this case, replace the corner seal with a **0.03 mm (0.0012 in)** oversize one. **Do not** rebore the groove.

c. If the both ends of the gauge go into the bore, it means that the gap exceeds the limit of **0.08 mm (0.0031 in).** **Rebore** the corner seal groove with the **Jig and reamer** (49 2113 030 and 49 0839 170) to 11.2 mm (0.4410 in) diameter and use a **0.2 mm (0.0079 in)** oversize corner seal.

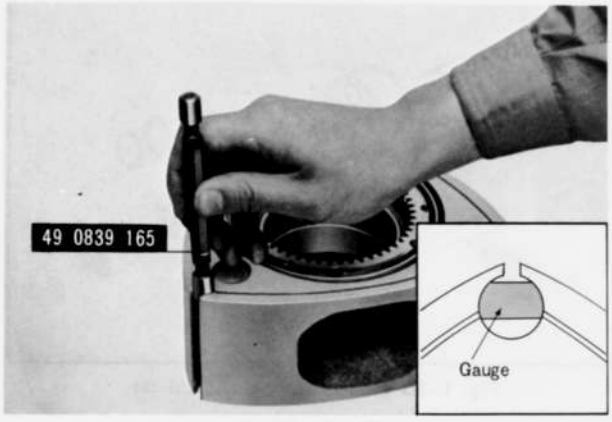

Fig. 1–50 Checking corner seal groove

Note:

a. As the corner seal groove tends to show a heavy wear in the direction of the rotation, the side arcs on the gauge are partially cut off. Be sure to take the measurement in the direction of the maximum wear of the groove.

b. The dimensions of the outer diameter of the gauge are as follows:

Go-end	$11.0\ ^{+0.019}_{+0.021}$ mm (0.4331 $^{+0.0007}_{+0.0008}$ in)
Not-go-end	$11.0\ ^{+0.044}_{+0.046}$ mm (0.4331 $^{+0.0017}_{+0.0018}$ in)

c. If the bar limit gauge is not available, use a feeler gauge. The standard gap is **0.020 ~ 0.048 mm (0.0008 ~ 0.0019 in)** and the limit is **0.08 mm (0.0031 in).**

To rebore the corner seal groove, proceed as follows:

1) Remove carbon, rust and other deposits from the groove, being careful not to damage.

2) Install the **jig** (49 2113 030) onto the rotor and tighten the correct bar being careful not to damage the rotor bearing and apex seal groove.

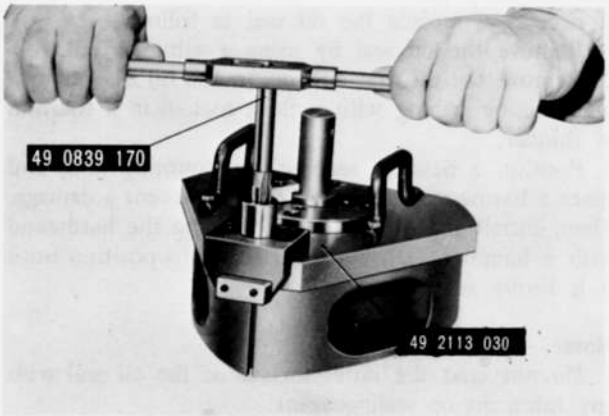

Fig. 1–51 Reaming corner seal groove

3) Ream the groove with the **Reamer** (49 0839 170) by hand applying sufficient engine oil as a coolant. When feeding the reamer, it must be turned by about 20 rotations or over before the reaming work is accomplished completely.

4) Remove the reamer and jig from the rotor.

5) Repeat the same procedure when reaming the other grooves of the rotor.

6) Thoroughly clean the rotor, and check and confirm by visual inspection the condition of the reaming groove and to see if there is any damage to the rotor.

7) Fit a **0.2 mm (0.0079 in)** oversize corner seal and a spring into the groove, and check the corner seal protrusion from the rotor surface, and also confirm the free movement by pressing with finger.

8) Recheck the gap between the side seal and the corner seal. The standard gap is **0.05 ~ 0.15 mm (0.002 ~ 0.006 in).**

Note:

a. When installing or removing the jig, be careful not to hit the rotor.

b. If the reaming is carried out without applying oil, it will be difficult to obtain the proper surface roughness no matter how many times the reaming may be repeated.

c. Avoid two stage reaming, that is, drawing the reamer halfway during the reaming work and then resuming the reaming, because chips may affect the surface roughness.

d. Before starting the reaming work, it must be confirmed that the reamer diameter is up to specifications, because the reamer could be worn in excess of the limit if it was used many times.

1–B–11. Inspecting Eccentric Shaft

1. Wash the shaft in a cleaning solution and blow the oil passage with compressed air.

2. Check the shaft for cracks, scratches, wear or any other damage. Be sure that the oil passages are open.

3. Check the shaft run-out. To check, mount the shaft on "V"-blocks and apply a dial indicator. Slowly rotate the shaft and note the reading on the indicator. If the run-out is more than **0.06 mm (0.0024 in)**, replace the shaft with a new one.

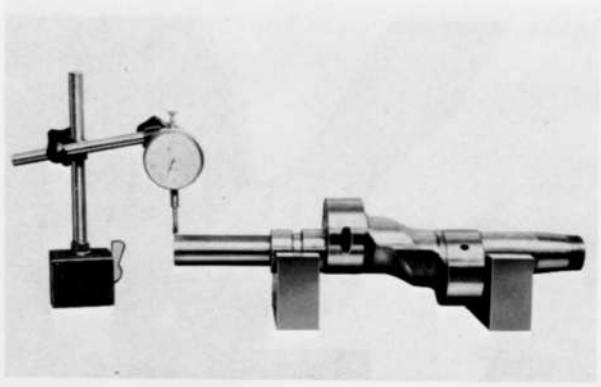

Fig. 1–52 Checking run-out

4. Check the blind plug in the shaft end for oil leakage or looseness. If any oil leakage is found,

remove the blind plug with a hexagonal Allen key and replace the "O" ring.

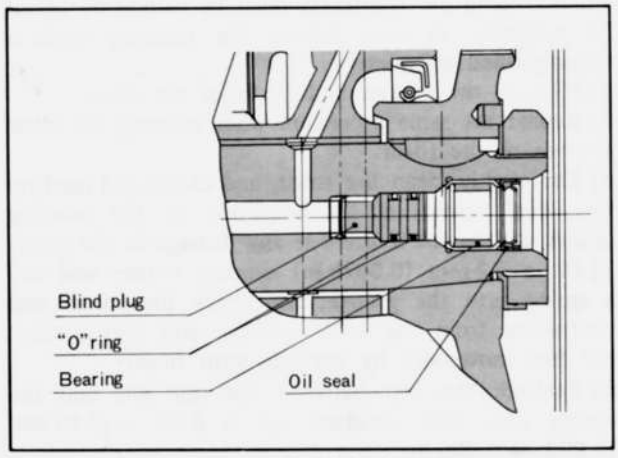

Fig. 1–53 Blind plug

5. Check the needle roller bearing in the shaft end for wear or any damage. If any of these conditions is found, replace the needle roller bearing. If necessary, supply a lithium grease onto the roller bearing. (Only the car with manual transmission)

Note:
To replace the bearing, use the **bearing replacer** (49 0823 070A).

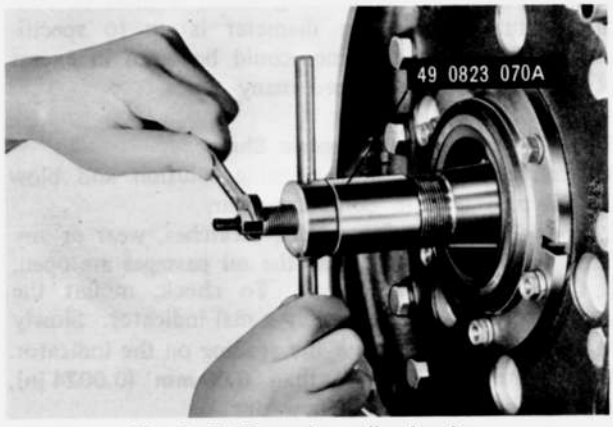

Fig. 1–54 Removing roller bearing

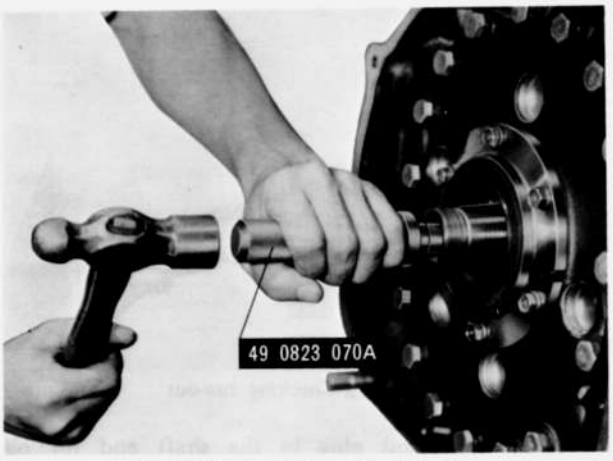

Fig. 1–55 Installing roller bearing

6. The oil jets are installed in the eccentric shaft. The oil jets open when the number of engine revolutions increases and the oil pressure rises. Check for spring weakness, stick or damage of the steel ball.

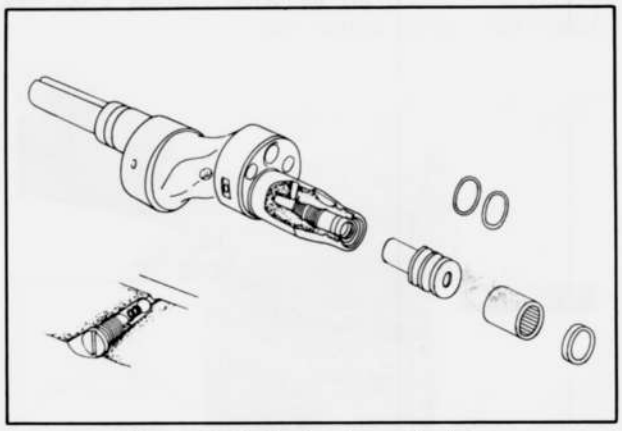

Fig. 1–56 Roller bearing and oil jet

1–B–12. Inspecting Needle Bearing

Check the needle bearing for wear or damage.
Inspect the bearing housing and thrust plate for wear or any damage.

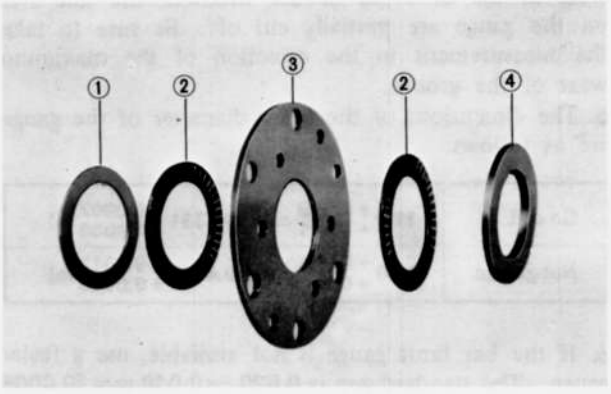

Fig. 1–57 Needle bearings

1. Thrust washer
2. Needle bearing
3. Bearing housing
4. Thrust plate

1–B–13. Inspecting Eccentric Shaft Front and Rear Oil Seals

Check for oil leaks of the front oil seal fitted into the front cover and the rear oil seal fitted into the rear staionary gear.
If necessary, replace the oil seal as follows:
1. Remove the oil seal by using a suitable tool.
2. Remove the oil that adheres to the oil seal mounting bore by wiping with a cloth soaked in a solution of thinner.
3. Position a new oil seal on its mounting bore and place a hardwood on the oil seal to prevent a damage. Then, install the oil seal while tapping the hardwood with a hammer. Drive the oil seal into position until it is firmly seated.

Note:
1. Do not coat the outer surface of the oil seal with any lubricant or sealing agent.
2. Do not tap the oil seal directly with a hammer.

3. When installing the flywheel or front pulley, apply a small amount of engine lubricant to the oil seal lip.

1–C. ENGINE ASSEMBLY

The procedures for assembling the engine when the engine is to be completely overhauled are as follows:

1–C–1. Installing Oil Seal

1. Place the rotor on a rubber pad or cloth.
2. Install the oil seal springs in their respective grooves on the rotor with each round edge of the spring fitted in the stopper hole shown in Fig. 1–58.

Caution:

a. The oil seal springs have been painted in cream or blue color. The **cream-colored** springs must be fitted on the front faces of both front and rear rotors. While the **blue-colored** springs should be on the rear faces of the rotors.

b. When installing each oil seal spring, the painted side of spring must be faced to the oil seal (upward), that is the square edge of spring faces to the oil seal (upward).

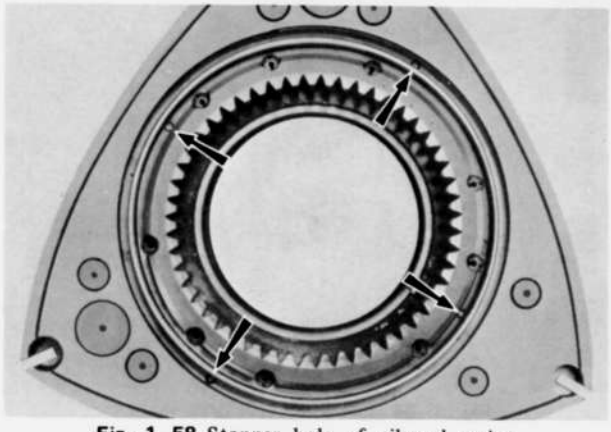

Fig. 1–58 Stopper hole of oil seal spring

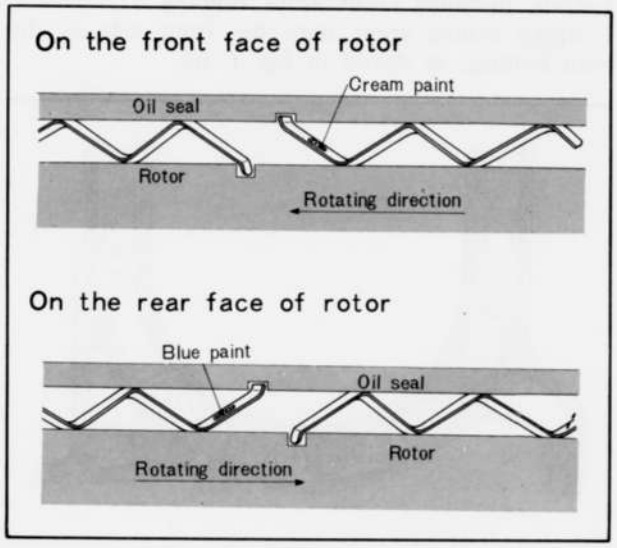

Fig. 1–59 Installing oil seal springs

3. Insert a new "O" ring in each oil seal. For each side of the rotor, install the oil seals, first the inner oil seal then the outer oil seal.

To install the inner oil seal, the following steps should be taken:

1) Place the oil seal to the groove so that the square edge of spring fits in the stopper notch of the oil seal.
2) Press the inner oil seal by using a used inner oil seal so that the lip surface of the inner oil seal sinks into a position approximately 0.4 mm (0.016 in) below the surface of the rotor as shown in Fig. 1–60.

Caution:

Apply the above method to the inner oil seal only.

To install the outer oil seal, proceed as follows.

1) Place the oil seal to the groove so that the square edge of spring fits in the stopper notch of the oil seal.
2) Push the head of the oil seal slowly with fingers.

Note:

a. When replacing the oil seal, confirm the smooth movement of oil seal by placing the oil seal on the oil seal spring in the groove before inserting the "O" ring.

b. Be careful not to deform the lip of the oil seal.

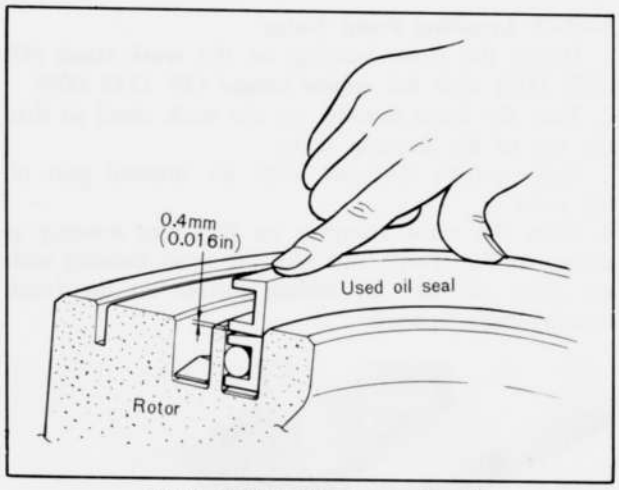

Fig. 1–60 Installing inner oil seal

4. Apply sufficient engine lubricant onto each oil seal and groove, and confirm the smooth movement of each oil seal by pressing the head of oil seal.
5. Check the oil seal protrusion. (Ref. Par. 1–B–7)
6. Install the oil seal springs and oil seals on the other side of the rotor.

1–C–2. Installing Each Seal

1. Place the rotor which has been fitted with the oil seals on the rubber pad or cloth.
2. Fit the apex seals without springs and side pieces into their respective grooves so that each side piece positions on the rear side of each rotor.
Hold the apex seals by using the used "O" ring to keep the apex seals in position.
3. Place the corner seal springs and corner seals into their respective grooves.
4. Fit the side seal springs and side seals into their respective grooves as shown in Fig. 1–61.



Fig. 1–61 Installing side seal

5. Apply engine lubricant onto each seal, and confirm the smooth movement of each seal by pressing its head.
6. Check each seal protrusion. (Ref. Par. 1–B–9, 10)
7. Invert the rotor, being careful not to drop the seals on the rubber pad or cloth, and install the corner seals, side seals and springs on the other side in the same manner as above.

1–C–3. Installing Front Rotor

1. Mount the front housing on the **work stand** (49 0839 000) with the **engine hanger** (49 1114 005).
2. Turn the front housing on the work stand so that the top of the housing is up.
3. Apply engine lubricant onto the internal gear of the rotor.
4. Place the rotor assembly on the front housing as shown in Fig. 1–62, and turn the front housing with thr rotor so that the sliding surface of the front housing faces upward.

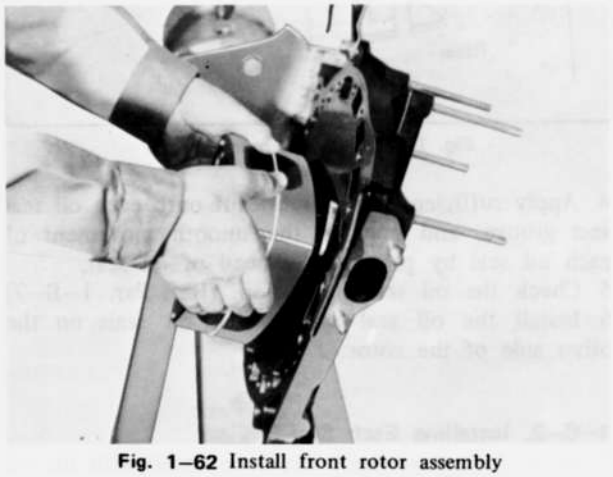

Fig. 1–62 Install front rotor assembly

5. Mesh the internal gear and stationary gear so that one of the rotor apexes is set to any one of the four places shown in Fig. 1–63, and remove the used "O" ring.

Note:
In this case, be careful not to drop the corner seal into the port.

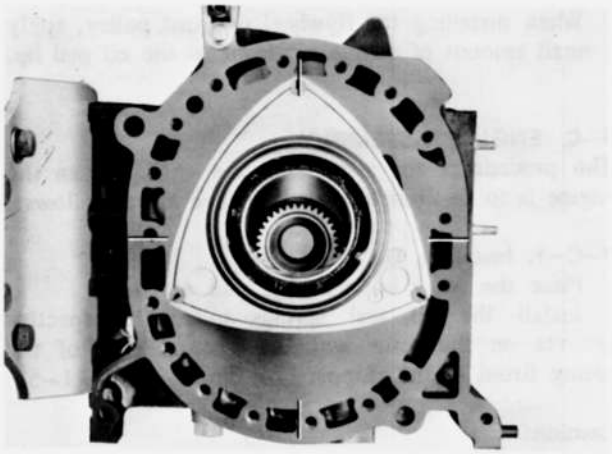

Fig. 1–63 Positioning front rotor

1–C–4. Installing Eccentric Shaft

1. Lubricate the front rotor journal and main journal on the shaft with engine lubricant.
2. Insert the eccentric shaft being careful not to damage the rotor bearing and main bearing.

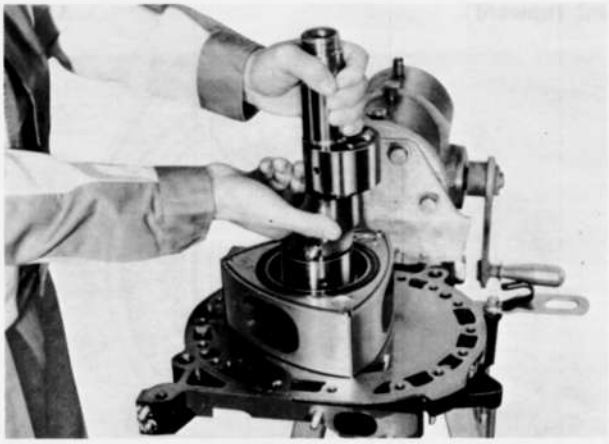

Fig. 1–64 Installing eccentric shaft

1–C–5. Installing Front Rotor Housing

1. Apply sealing agent onto the front side of the rotor housing, as shown in Fig. 1–65.

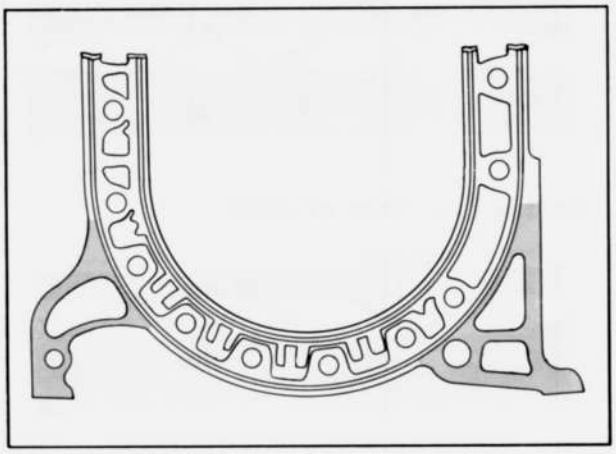

Fig. 1–65 Applying sealing agent

2. Slightly apply vaseline or petrolatum onto new "O" ring and sealing rubbers to prevent them from coming

off, and place the "O" ring and sealing rubbers on the front side of the rotor housing.

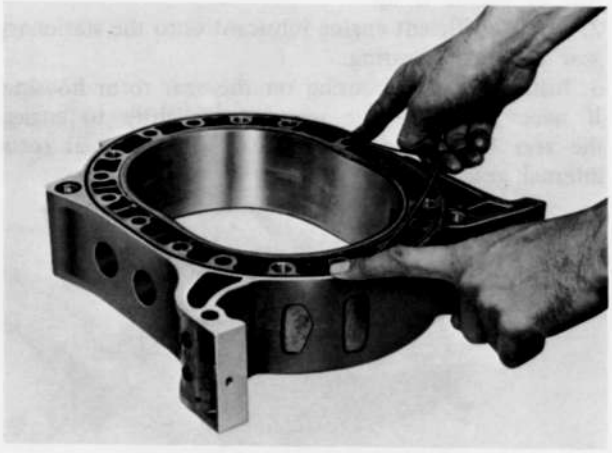

Fig. 1–66 Installing sealing rubber

Note:
The inner and outer sealing rubbers are square type. The wider line of the inner sealing rubber should face with combustion chamber and the seam of the sealing rubber should be placed at the position as shown in Fig. 1–67.
Do not stretch the inner sealing rubber.

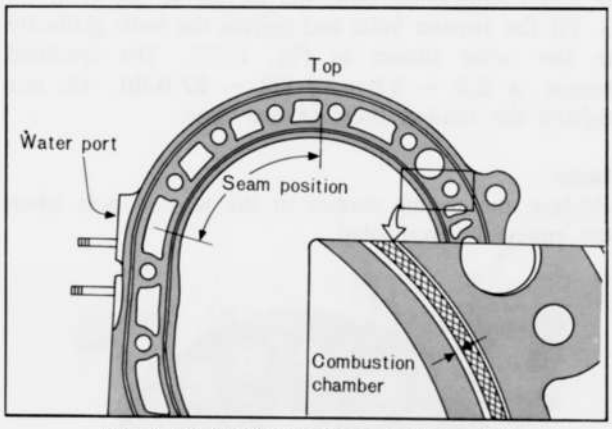

Fig. 1–67 Positioning inner sealing rubber

Note:
When engine overhauling, install the protector to only inner sealing rubber as shown in Fig. 1–68 to improve the durability of the sealing rubber.

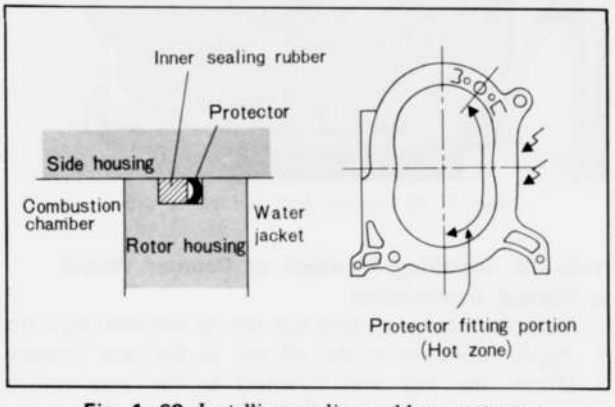

Fig. 1–68 Installing sealing rubber protector

3. Invert the front rotor housing being careful not to let the sealing rubbers and "O" ring drop out of the grooves, and mount it on the front housing.
4. Apply engine lubricant onto the tubular dowels and insert the tubular dowels through the front rotor housing holes into the front housing holes as shown in Fig. 1–69.

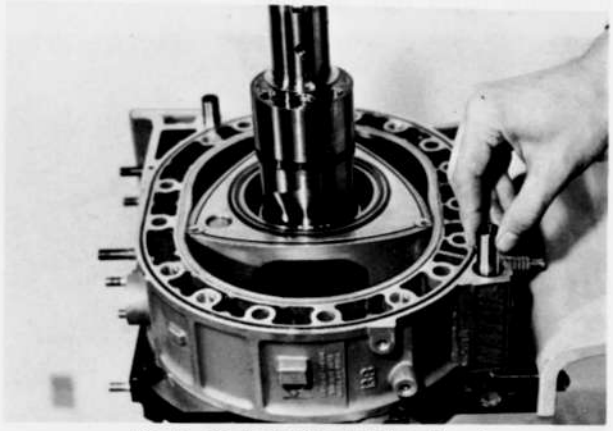

Fig. 1–69 Installing tubular dowel

5. Apply the sealing agent on the rear side of the rotor housing referring to the other side.
6. Place new "O" ring, sealing rubbers and protector on the front rotor housing in the same manner as on the other side.
7. Insert the each apex seal spring confirming the spring direction as shown in Fig. 1–47.
8. Fit the each side piece to its original position. And confirm that the spring should be set correctly on the side piece.

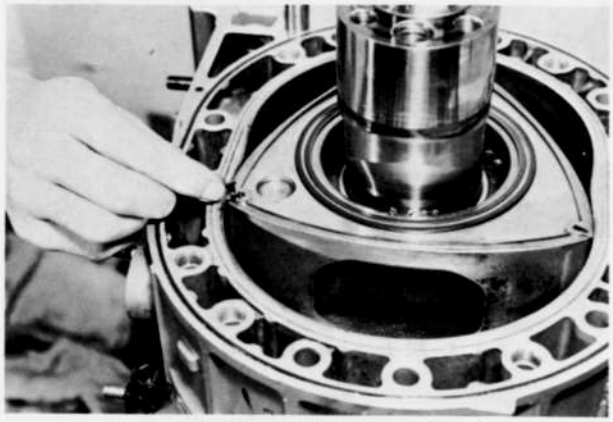

Fig. 1–70 Fitting side piece and spring

9. Apply engine lubricant on the side pieces. And make sure that the front rotor housing is free from any foreign matter and apply some engine lubricant onto the sliding surface of the front rotor housing.

1–C–6. Installing Intermediate Housing

1. Turn the front housing with rotor assembly so that the top of the housing inclines to upward, and pull the eccentric shaft about 25 mm (1 in), but do not pull over 35 mm (1.5 in).

2. Install the intermediate housing through the eccentric shaft on the front rotor housing, and turn the engine on the work stand so that the rear of engine is up.

Note:
As the easy way of installation of the intermediate housing, position the eccentric portion of shaft in diagonally upper right direction.

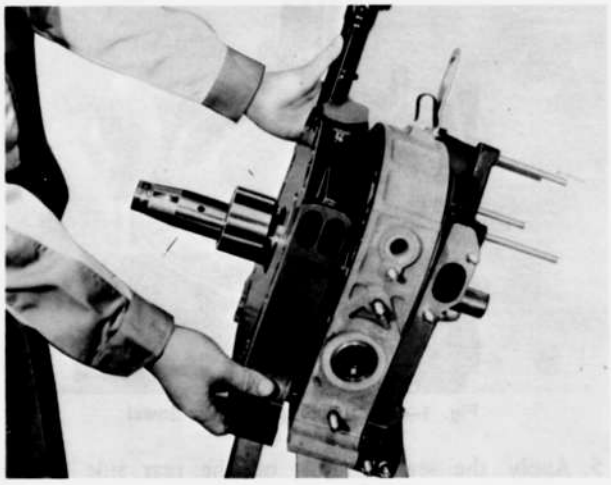

Fig. 1–71 Installing intermediate housing

1–C–7. Installing Rear Rotor and Rear Rotor Housing

Refer to steps 1–C–1 to 1–C–5 and install the rear rotor and rear rotor housing.

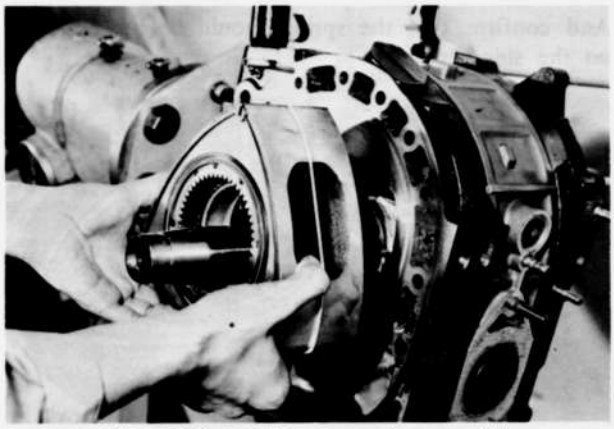

Fig. 1–72 Installing rear rotor assembly

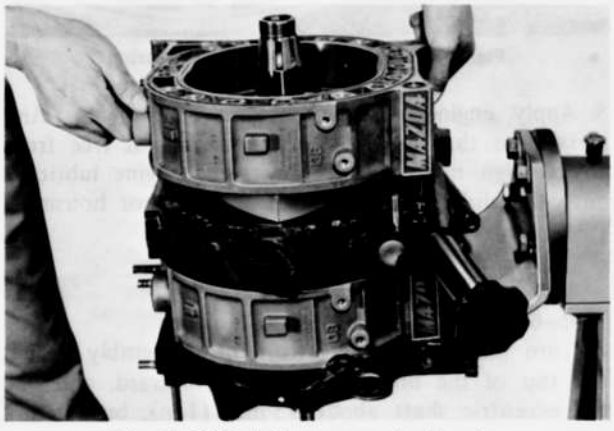

Fig. 1–73 Installing rear rotor housing

1–C–8. Installing Rear Housing

1. Turn the engine on the work stand so that the rear of engine is up.
2. Apply sufficient engine lubricant onto the stationary gear and main bearing.
3. Install the rear housing on the rear rotor housing. If necessary, turn the rear rotor slightly to engage the rear housing stationary gear with the rear rotor internal gear.

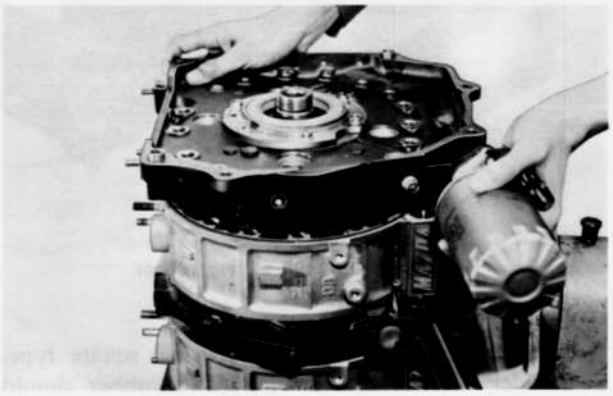

Fig. 1–74 Installing rear housing

1–C–9. Tightening Tension Bolts

1. Place a new sealing washer in each tension bolt.
2. Apply engine oil onto the thread of the bolt.
3. Fit the tension bolts and tighten the bolts gradually in the order shown in Fig. 1–75. The specified torque is **3.2 ~ 3.8 m-kg (23 ~ 27 ft-lb)**. Do not tighten the tension bolts at one time.

Note:
Replace the sealing washer in the tension bolt when the engine is overhauled.

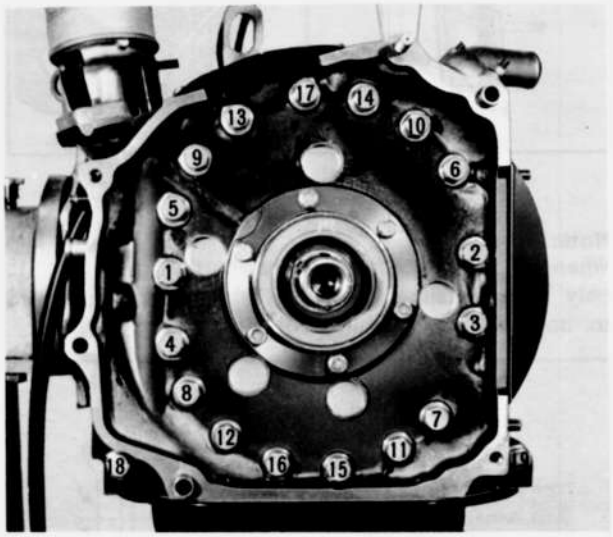

Fig. 1–75 Tension bolt tightening order

1–C–10. Installing Flywheel or Counter Weight

a. Manual transmission

1. Turn the engine so that the top of the housing is up.
2. Apply lubricant to the oil seal in the rear housing.
3. Mount the key and flywheel to the rear end of the eccentric shaft so that the key fits into the

keyway of the flywheel.

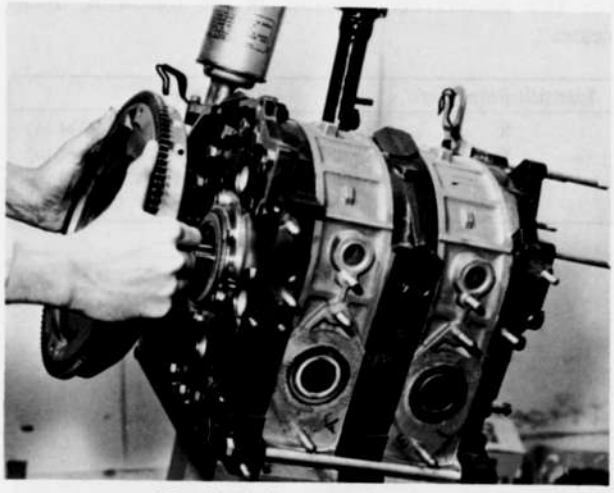

Fig. 1–76 Installing flywheel

4. After mounting, turn the eccentric shaft and make sure that the rotation is light and smooth.
5. Apply sealing agent to both sides of the flywheel lock washer and place the lock washer in position.
6. Fit the flywheel lock nut by the fingers. Hold the flywheel with the **ring gear brake** (49 1881 060) and tighten the lock nut to **45.0 m-kg (350 ft-lb)** using the **special wrench** (49 0820 035).

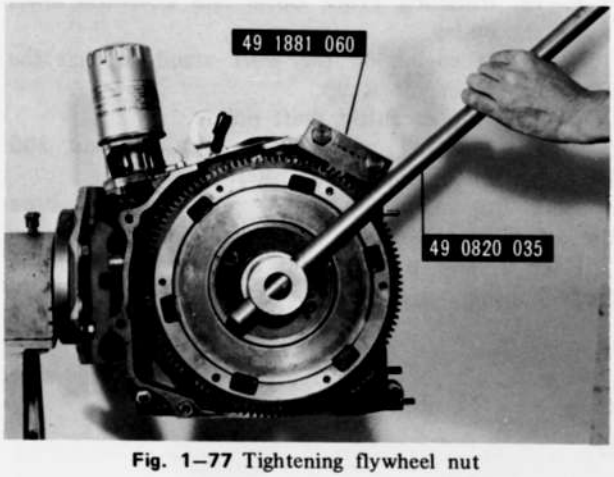

Fig. 1–77 Tightening flywheel nut

7. Bent the tab of the lock washer.
8. Hold the clutch disc in its mounting position with the **clutch disc arbor** (49 0813 310). If the arbor is not available, use a spare main drive shaft.
9. Mount the clutch cover and pressure plate assembly on the flywheel, and align the "O" mark on the clutch cover with the reamed hole of the flywheel. Install the attaching bolts and tighten the bolts to 2.0 m-kg (15 ft-lb), using the ring gear brake. Use the two reamer bolts in the reamed holes.

b. Automatic transmission

1. Referring to the above manners (1–C–10. a), fit the key, counter weight, lock washer and nut on the eccentric shaft.
2. Hold the counter weight with the **counter weight brake** (49 1881 055) and tighten the lock nut to **45.0 m-kg (350 ft-lb)** using the **special wrench** (49 0820 035).
3. Fit the drive plate on the counter weight and tighten attaching nuts. After installing the flywheel or counter weight, leave the ring gear brake or counter weight brake on the engine alone.

1–C–11. Adjusting Eccentric Shaft End Play

1. Turn the engine on the work stand so that the front of the engine is up.
2. Fit the thrust plate with the tapered face down, and slide the spacer and needle bearing onto the eccentric shaft. Then apply sufficient engine lubricant onto them.

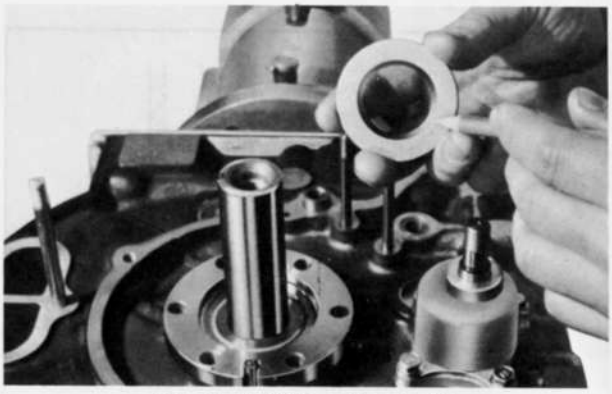

Fig. 1–78 Fitting thrust plate

3. Place the bearing housing on the front housing. Tighten the attaching bolts with washers.

Note :

If the bearing housing has been installed to the front housing, special care should be taken when installing the spacer.
Install the spacer so that the center of the needle bearing in the bearing housing comes to the center of eccentric shaft, and the spacer should be seated to the thrust plate.

4. Slide the needle bearing onto the shaft, and apply engine lubricant onto it.
5. Slide the balance weight together with the thrust washer onto the shaft.

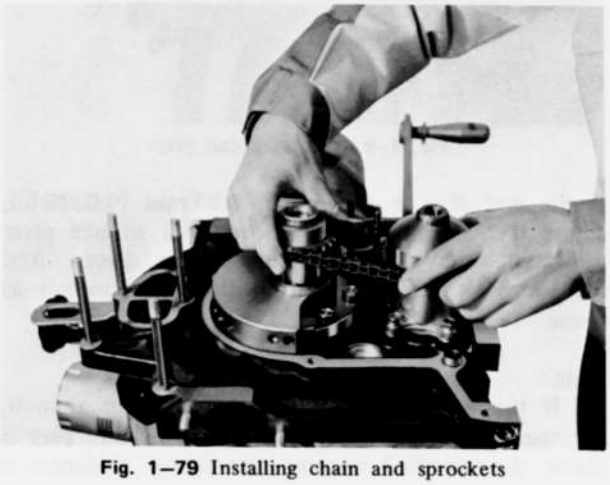

Fig. 1–79 Installing chain and sprockets

6. Engage the oil pump drive chain with the driven sprocket and drive sprocket, and then slide the sprockets with chain onto the eccentric shaft and oil pump shaft simultaneously aligning the keyway of the driven gear sprocket with the key on the oil pump shaft. Fit the key onto the eccentric shaft.
7. Slide the distributor drive gear onto the eccentric shaft with "F" mark on the gear faced the front of engine.
8. Install the eccentric shaft pulley onto the shaft aligning the keyway of the pulley with the key.
9. Tighten the pulley bolt with washer to **7.5 ~ 9.5 m-kg (54 ~ 69 ft-lb).**
10. Turn the engine on the work stand so that the top of the engine is up.

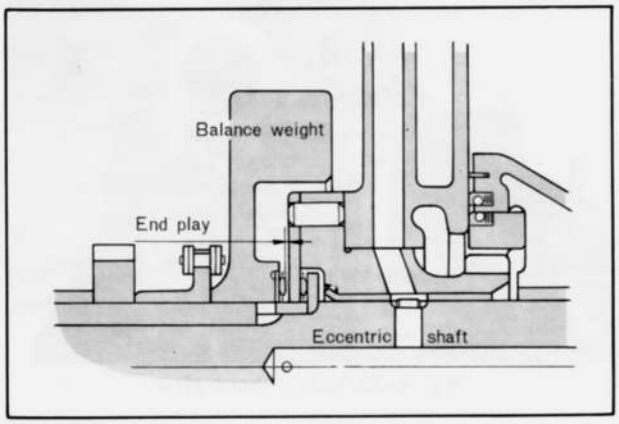

Fig. 1–80 Eccentric shaft end play

11. Apply a dial indicator onto the flywheel as shown in Fig. 1–81. Move the flywheel fore and aft, and note the reading of the indicator. The standard end play is **0.04 ~ 0.07 mm (0.0016 ~ 0.0028 in).**

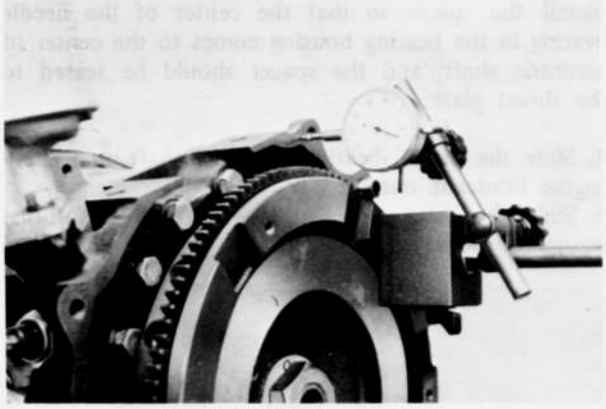

Fig. 1–81 Checking end play

If the end play is more than **0.09 mm (0.0035 in),** adjust it by grinding the spacer on a surface plate using an emery paper or replace the spacer. And then recheck the end play in the same manner as above.

Note :
(1) If the end play is below the specified amount, the spacer thickness is too small. If the end play is above the specified amount, the spacer thickness is too big.
(2) The spacers are available in the following thicknesses :

Identification Mark	Thickness
X	8.08 ± 0.01 mm (0.3181 ± 0.0004 in)
Y	8.04 ± 0.01 mm (0.3165 ± 0.0004 in)
V	8.02 ± 0.01 mm (0.3158 ± 0.0004 in)
Z	8.00 ± 0.01 mm (0.3150 ± 0.0004 in)



Fig. 1–82 Adjusting spacer

12. If the end play is 0.04 ~ 0.09 mm (0.0016 ~ 0.0035 in), proceed as follows to install the front cover.

1–C–12. Installing Front Cover and Eccentric Shaft Pulley

1. Turn the engine on the work stand so that the front of the engine is up.
2. Remove the eccentric shaft pulley.
3. Tighten the oil pump driven sprocket nut and bend the tab of the lock washer.
4. Place the chain adjuster in position and tighten the attaching nuts.
5. Place a new "O" ring on the oil passage of the front housing.

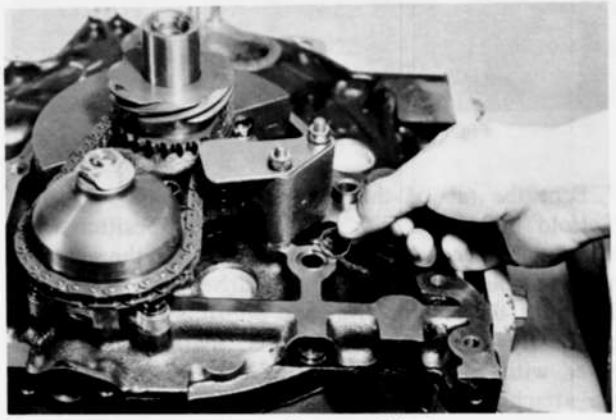

Fig. 1–83 Placing "O" ring

6. Place the gasket and front cover on the front housing, and tighten the attaching bolts.
7. Apply engine lubricant onto the oil seal in the front cover.
8. Install the eccentric shaft pulley onto the shaft and tighten the pulley bolt with washer to 7.5 ~ 9.5 m-kg (54 ~ 69 ft-lb).

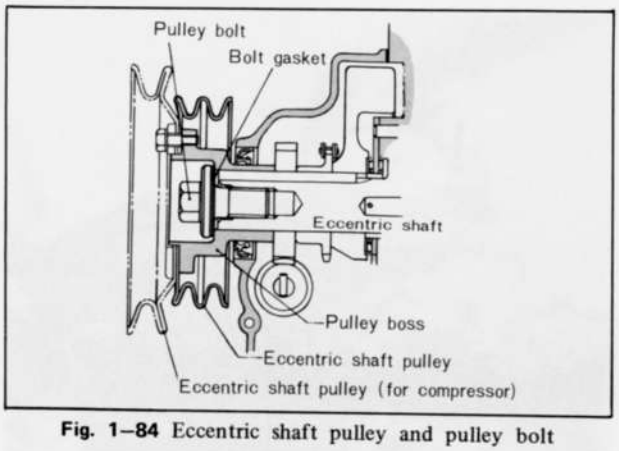

Fig. 1–84 Eccentric shaft pulley and pulley bolt

Note:
When tightening the pulley bolt, be careful not to slip the washer from the bolt.

1–C–13. Installing Oil Strainer and Oil Pan

1. Turn the engine on the work stand so that the bottom of the engine is up.
2. Cut off the excess gasket on the front cover along the mounting surface of the oil pan.

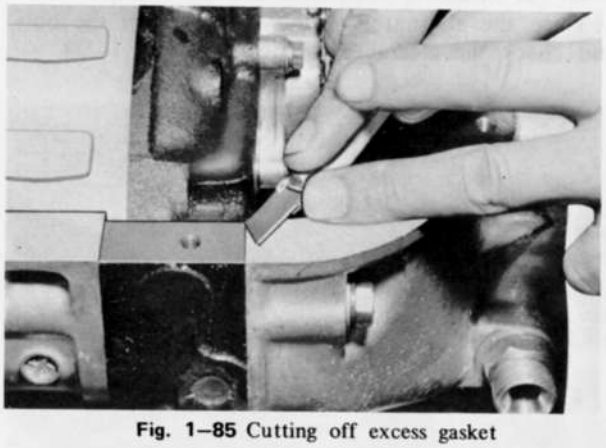

Fig. 1–85 Cutting off excess gasket

3. Place the oil strainer gasket and strianer on the front housing and tighten the attaching bolts.

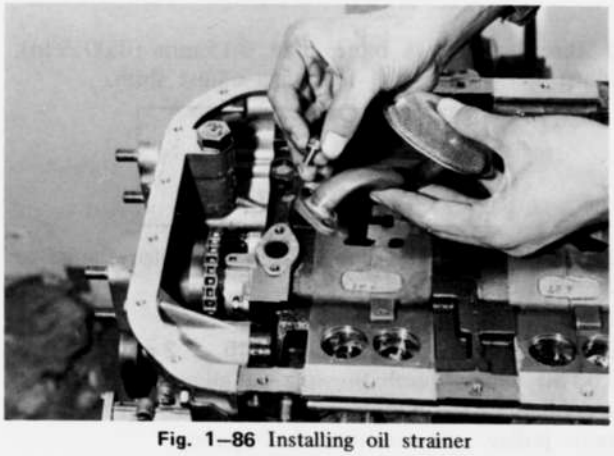

Fig. 1–86 Installing oil strainer

4. Apply the sealing agent onto the joint surfaces of each housing.



Fig. 1–87 Applying sealing agent

5. Place the gasket and oil pan in position.
6. Insert the bolts through the stiffeners, and tighten the bolts little by little in turn until the torque becomes 0.85 m-kg (6.1 ft-lb) evenly.

1–C–14. Installing Water Pump

1. Turn the engine on the work stand so that the top of the engine is up.
2. Place the gaskets and water pump on the front housing, and tighten the attaching nuts evenly to 2.75 m-kg (20 ft-lb) in the sequence shown in Fig. 1–89.

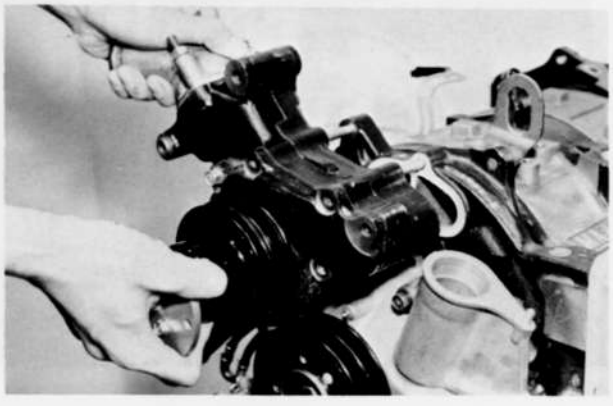

Fig. 1–88 Installing water pump

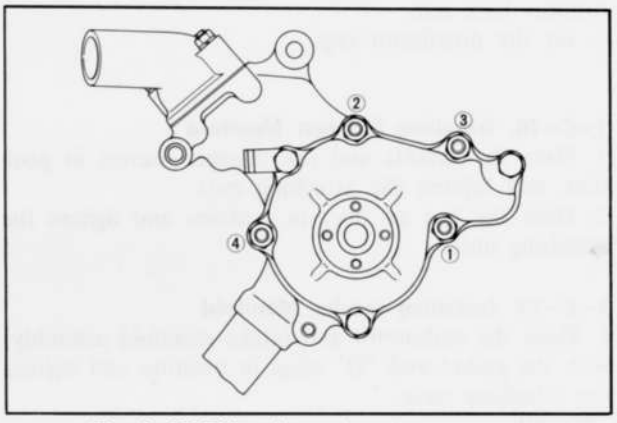

Fig. 1–89 Tightening order of water pump

3. Install the eccentric shaft pulley (for compressor) to the pulley boss.

1–C–15. Installing Distributor

1. Rotate the eccentric shaft until the yellow mark or leading side mark on the pulley aligns with the needle on the front cover.
2. Align the tally mark on the distributor housing and driven gear as shown in Fig. 1–90.

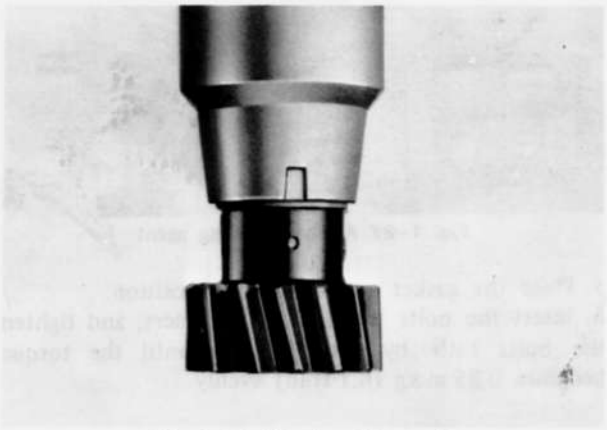

Fig. 1–90 Aligning tally mark

3. Insert the distributor so that the distributor lock bolt is located in the center of the slit, and engage the gears.



Fig. 1–91 Installing distributor

4. Rotate the distributor clockwise until the leading contact point starts to separate, and tighten the distributor lock nut.
5. Fit the distributor cap.

1–C–16. Installing Exhaust Manifold

1. Place the gaskets and the thermal reactor in position, and tighten the attaching nuts.
2. Place the hot air duct in position and tighten the attaching nuts.

1–C–17. Installing Intake Manifold

1. Place the carburetor and intake manifold assembly, with the gasket and "O" rings in position and tighten the attaching nuts.

Note:
Slightly apply vaseline onto "O" rings to prevent them from coming off.

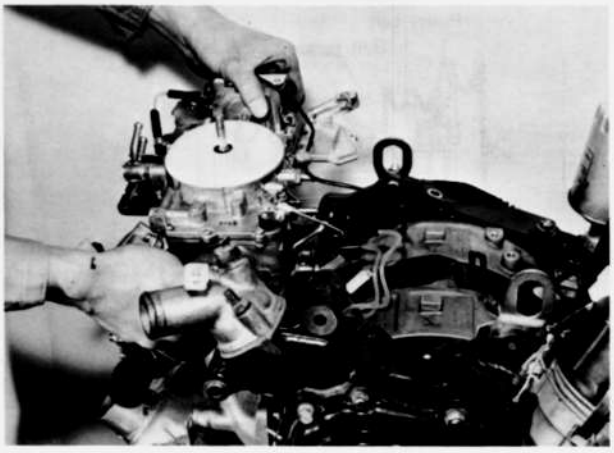

Fig. 1–92 Installing intake manifold assembly

2. Connect the oil tubes and metering oil pump connecting rod with the carburetor as described in Par. 2–I–2.
3. Install the deceleration valve, altitude compensator and evapo compensator valve and connect the vacuum hoses, air hoses and wires with the carburetor.

1–C–18. Installing Alternator and Air Pump

1. Place the alternator to the bracket with the bolt, and check the clearance as shown in Fig. 1–93.

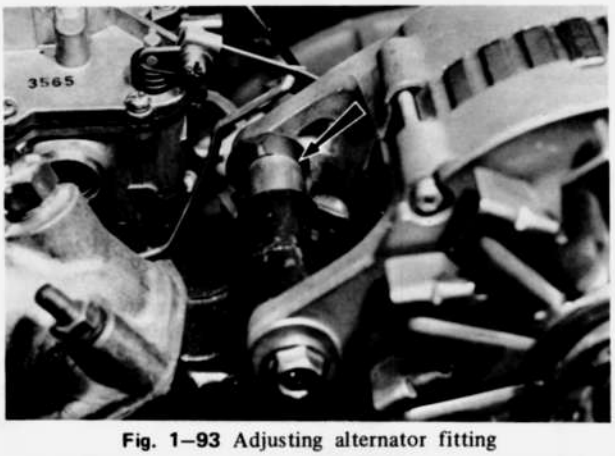

Fig. 1–93 Adjusting alternator fitting

If the clearance is more than 0.15 mm (0.0059 in), adjust it by using the following adjust shim.

0.15 mm	(0.0059 in)
0.3 mm	(0.0118 in)
0.5 mm	(0.0197 in)

2. Attach the upper end of the alternator flange to the adjusting bar, and fit the "V" belt.
3. Adjust the belt deflection.
The belt deflection should be **15 ± 2 mm (0.60 ± 0.08 in)** when thumb pressure of about 10 kg (22 lb) is applied to the middle of the belt between the alternator pulley and eccentric shaft pulley.
After adjusting, tighten the bolts and nuts.
4. Install the air pump with the attaching bar and bolts. Fit the "V" belt.

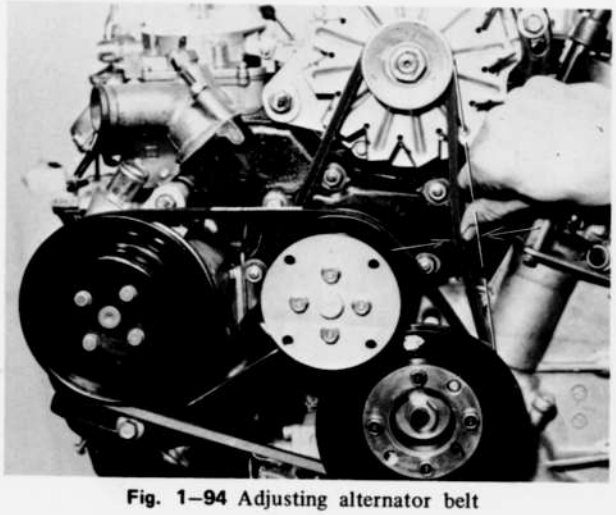

Fig. 1–94 Adjusting alternator belt

5. To adjust the "V" belt tension, push the "V" belt with about 10 kg (22 lb) as shown in Fig. 1–95. The belt deflection should be **10 ± 1 mm (0.40 ± 0.04 in).**

After adjusting, tighten the bolts and nuts.

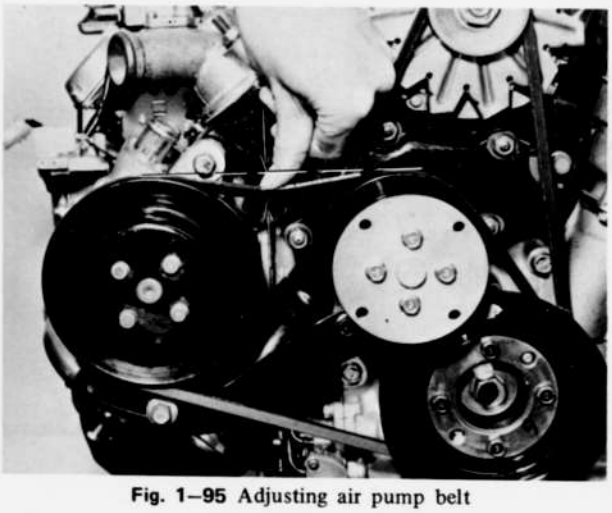

Fig. 1–95 Adjusting air pump belt

6. Before removing the engine from the work stand, install the engine mounting bracket to the front cover.

SPECIAL TOOLS

49 0839 000	Engine work stand
49 1114 005	Engine hanger
49 0820 035	Special wrench
49 0823 300	Flywheel puller
49 0839 305A	Counter weight puller
49 0813 250	Seal case
49 0813 215	Tubular dowel puller
49 0813 235	Main bearing replacer
49 0813 240	Rotor bearing replacer
49 0813 225	Oil seal remover
49 0839 165	Bar limit gauge (for corner seal groove)
49 2113 030	Reboring jig (for corner seal groove)
49 0839 170	Reamer (for corner seal groove)
49 1881 060	Ring gear brake
49 1881 055	Counter weight brake
49 0877 435	Special wrench (for automatic transmission)
49 0813 310	Clutch disk arbor
49 0823 070A	Eccentric shaft bearing replacer
49 1881 135	Special wrench (for P.C.V. valve)
49 1881 125	Special wrench (for thermal reactor)

EMISSION CONTROL SYSTEM

EMISSION CONTROL SYSTEM ..... 1A : 1
1A–A. MAINTENANCE PROCEDURE ..... 1A : 1
1A–A–1. Air Pump ..... 1A : 1
1A–A–2. Check Valve (Air Injection System) ..... 1A : 1
1A–A–3. Thermal Reactor ..... 1A : 2
1A–A–4. Air Control Valve ..... 1A : 2
1A–A–5. Deceleration Control Valve ..... 1A : 5
1A–A–6. Altitude Compensator ..... 1A : 6
1A–A–7. Evapo Compensator Valve ..... 1A : 7
1A–A–8. Ignition Control System ..... 1A : 7
1A–A–9. No. 1 Retard Switch ..... 1A : 8
1A–A–10. No. 2 Retard Switch ..... 1A : 9
1A–A–11. Kick-down Control System (Car with automatic transmission only) ..... 1A : 9
1A–A–12. Heat Hazard Protective and Warning System ..... 1A : 9
1A–A–13. Automatic Throttle Release System ..... 1A : 10
1A–A–14. Control Unit ..... 1A : 11
1A–A–15. Water Temperature Switch ..... 1A : 11
1A–A–16. Idle Switch ..... 1A : 12
1A–A–17. No. 1 Choke Switch ..... 1A : 12
1A–A–18. No. 2 Choke Switch ..... 1A : 13
1A–A–19. Choke Relay ..... 1A : 13
1A–A–20. Ventilation Valve ..... 1A : 13
1A–A–21. Charcoal Canister ..... 1A : 14
1A–A–22. Evaporative Line ..... 1A : 14
1A–A–23. Condense Tank ..... 1A : 15
1A–A–24. Check Valve (Evaporative Emission Control System) ..... 1A : 15
1A–A–25. Hoses and Connections (All Systems) ..... 1A : 15
1A–B. TROUBLE CHECK GUIDE ..... 1A : 16
1A–C. TROUBLE SHOOTING ..... 1A : 23
SPECIAL TOOLS ..... 1A : 29

EMISSION CONTROL SYSTEM

This section explains the procedures for checking, adjusting and replacing the parts of the emission control system.

1A–A. MAINTENANCE PROCEDURE

1A–A–1. Air Pump

a. Checking air pump

1. Check for cracks or damages on the body of the air pump and for looseness of the attaching bolts and nuts.
2. Check to see that the air pump belt tension is proper.
3. Run the engine at idle speed.
4. Check to see that the air hoses are free of air leaks.
5. Stop the engine.
6. Attach the **air pump gauge set** (49 2113 010A) as shown in Fig. 1A–1.

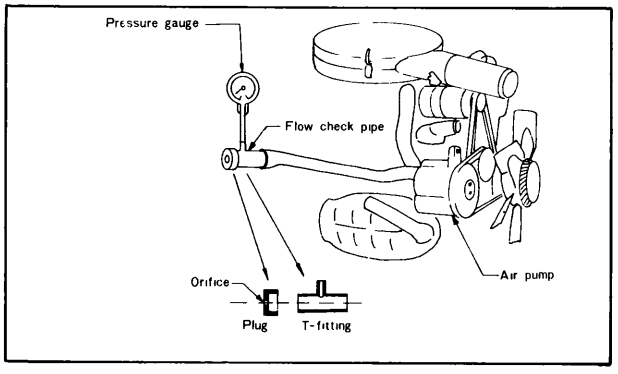

Fig. 1A–1 Checking air pump

7. Run the engine.
8. If the pressure gauge reading is not within the range of each of the following specifications, replace the air pump.

Manual transmission	more than 0.039 kg/cm2 (0.55 lb/in2) at 800 rpm
Automatic transmission	more than 0.034 kg/cm2 (0.48 lb/in2) at 750 rpm

b. Removing air pump

1. Remove the hot air duct for the air cleaner.
2. Disconnect the air inlet hose (air cleaner ~ air pump) and outlet hose (air pump ~ air control valve) from the air pump.
3. Remove the air pump mounting and adjusting bolts.
4. Remove the air pump drive belt and air pump.

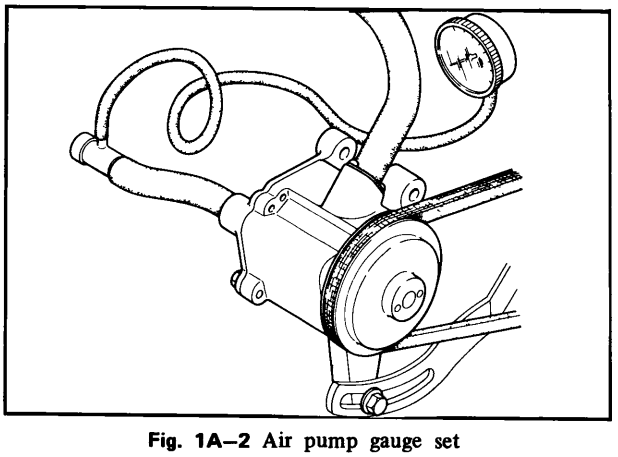

Fig. 1A–2 Air pump gauge set

c. Installing air pump

Follow the removal procedures in the reverse order.

d. Adjusting air pump drive belt

When a **10 kg (22 lb) pressure** is given to a spot midway between the air pump pulley and water pump pulley, belt deflection should be **10 ± 1 mm (0.40 ± 0.04 in).**

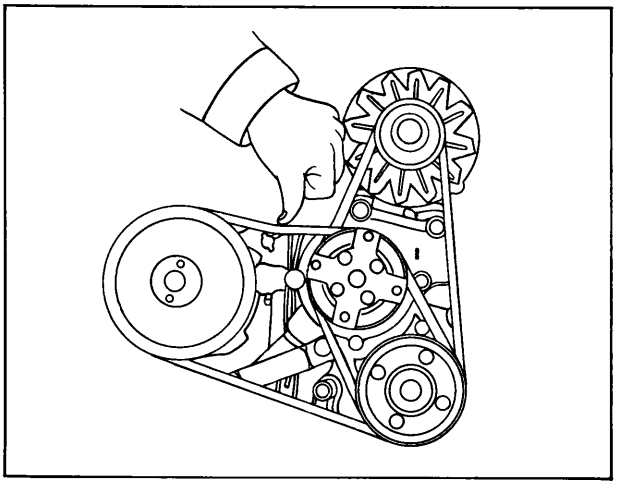

Fig. 1A–3 Adjusting belt tension

1A–A–2. Check Valve (Air Injection System)

a. Checking check valve

1. Disconnect the air hose (air pump ~ air control valve) from the air control valve.
2. Run the engine at 1,500 rpm.
3. Hold a finger over the inlet of the air control valve. If exhaust gas flow is felt, replace the check valve, spring and gasket.

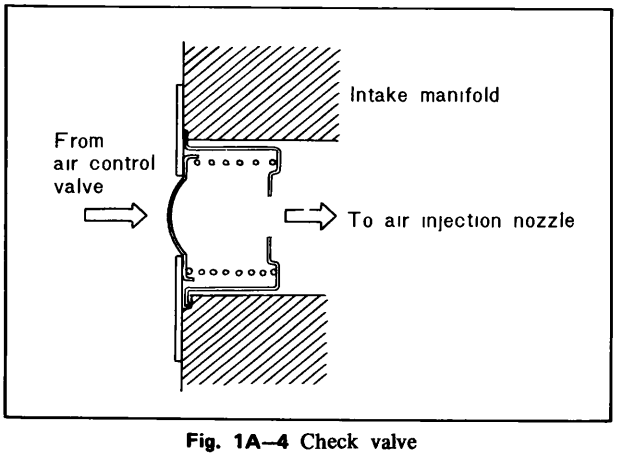

Fig. 1A–4 Check valve

b. Replacing check valve

1. Remove the air control valve, as described in Par. 1A–A–4.
2. Remove the gasket, valve and spring.
3. Install the check valve by following the removal

procedures in the reverse order.

1A–A–3. Thermal Reactor

a. Checking thermal reactor

1. Check to see that the appearance of the thermal reactor is not damaged or cracked by visual inspection or striking it with the hammer lightly.
2. Remove the air pipe (thermal reactor ~ air control valve) from the thermal reactor.
3. Check to see that the non-return valve works smoothly. If the foreign substance or sludge exists, remove it. If the sticking exists, replace the thermal reactor.

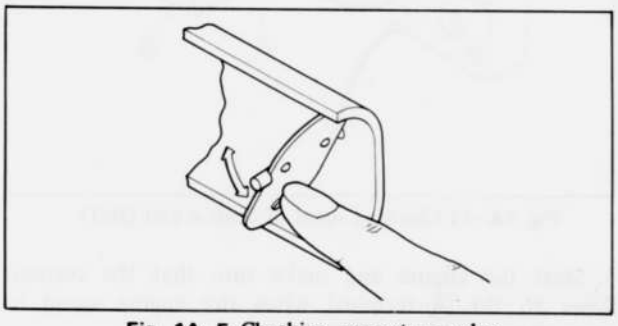

Fig. 1A–5 Checking non-return valve

4. Connect the air pipe to the thermal reactor.
5. Start the engine and keep it running at idle speed.
6. Make sure that most exhaust gas is not released from the tail of cooling air pipe. If the most exhaust gas releases, replace the thermal reactor.

b. Replacing thermal reactor

1. Remove the air control valve, as described in Par. 1A–A–4.
2. Remove the bolts attaching the heat insulator to the intake manifold and remove the heat insulator.
3. Raise the front of vehicle and support with stands.
4. Remove the bolts attaching the engine under cover and remove the cover.
5. Remove the bolts attaching the thermal reactor cover and remove the cover.

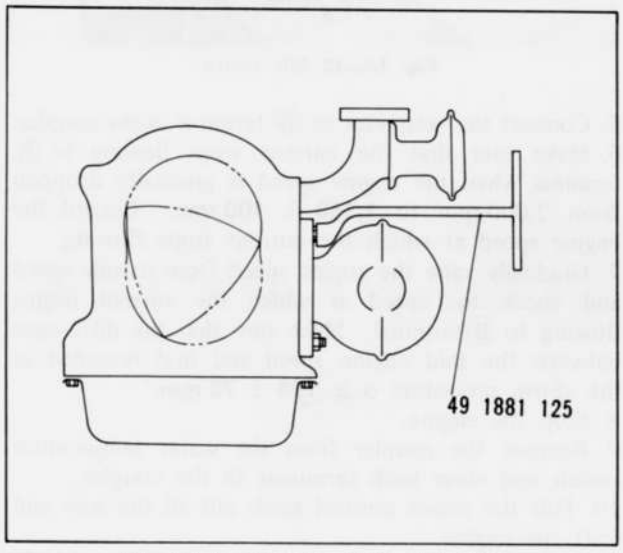

Fig. 1A–6 Removing thermal reactor

6. Disconnect the exhaust pipe from the thermal reactor.
7. Remove the nuts attaching the thermal reactor to the engine.

Note:
The upper nuts should be removed with the **thermal reactor remover** (49 1881 125).

8. Remove the thermal reactor.
9. Install the thermal reactor by following the removal procedures in the reverse order.

1A–A–4. Air Control Valve

a. Checking air control valve

Manual transmission:

1. Disconnect the coupler from the air control valve.
2. Apply the voltage (12V) of the battery on each of the terminals in the coupler. If the clicking sound is audible from each solenoid, the solenoid is in good conditions. If the solenoid is defective, replace it.



Fig. 1A–7 Air control valve

3. Connect the coupler to the air control valve.
4. Remove the air pipe (air control valve ~ thermal reactor) from the thermal reactor.

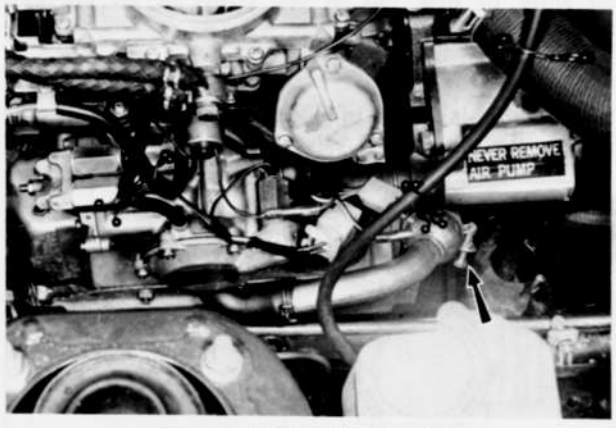

Fig. 1A–8 Removing air pipe

5. Start the engine and keep it running at idle speed.
6. Hold a finger over the outlet of the air pipe and make sure that the air hardly flows out of the air pipe.
7. Disconnect the coupler from the air control valve.

8. Apply the voltage (12V) of the battery on Ⓐ terminal in the coupler. Make sure that the air flows out of the outlet of the air pipe on that occasion.
9. Apply the voltage (12V) of the battery on Ⓑ terminal in the coupler. Make sure that the air flows out of the outlet of the air pipe on that occasion.

Note:
1. If the air flow is noted in the above procedure 6, check every part according to Par. 1A–B. Trouble Check Guide.
2. If the air does not flow out in the above procedures 8 and 9, replace the air control valve.

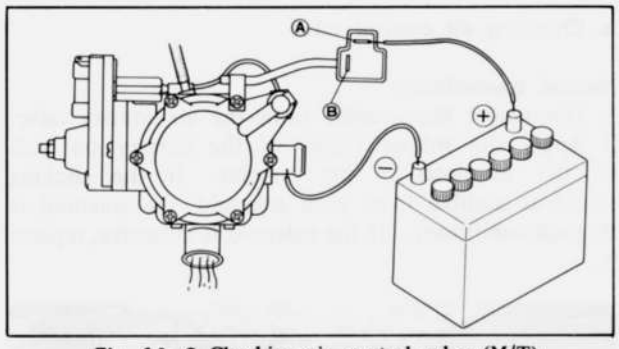

Fig. 1A–9 Checking air control valve (M/T)

Automatic transmission:
1. Take the same procedures as those of 1 ~ 7 indicated in the item of Manual Transmission.
2. Apply the voltage (12V) of the battery on Ⓐ terminal in the coupler. Make sure that the air flows out of the outlet of the air pipe on that occasion.
3. Apply the voltage (12V) of the battery on Ⓑ terminal in the coupler. Make sure that the air flows out of the outlet of the air pipe on that occasion.
4. Make sure that the air continues to flow out of the outlet of the air pipe even when it is stopped to apply the voltage of the battery in the above procedure 3.
5. Apply the voltage (12V) of the battery directly on Ⓒ terminal in the coupler. Make sure that the air stops to flow out of the outlet of the air pipe on that occasion.

Note:
If a trouble is found in the above procedures 2 ~ 5, replace the air control valve.

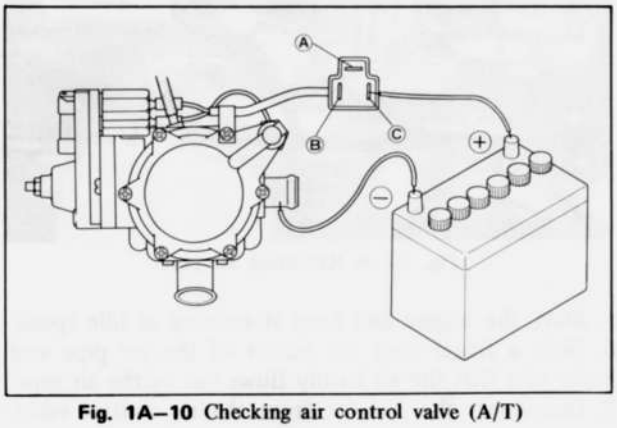

Fig. 1A–10 Checking air control valve (A/T)

b. Checking signal of control unit

Manual transmission:
1. Disconnect the coupler from the air control valve.
2. Connect the voltmeter to Ⓐ terminal in the coupler.

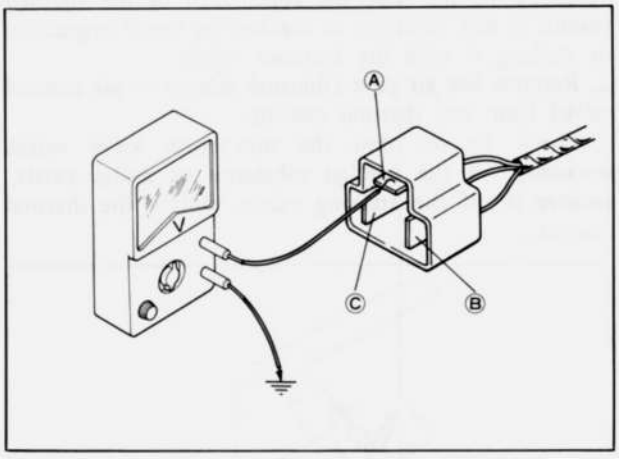

Fig. 1A–11 Checking signal of control unit (M/T)

3. Start the engine and make sure that the current flows to the Ⓐ terminal when the engine speed is **more than 4,000 ± 400 rpm.**
4. Make sure that the current stops flowing to Ⓐ terminal when the idle switch is pushed with the fingers in the above procedure 3.

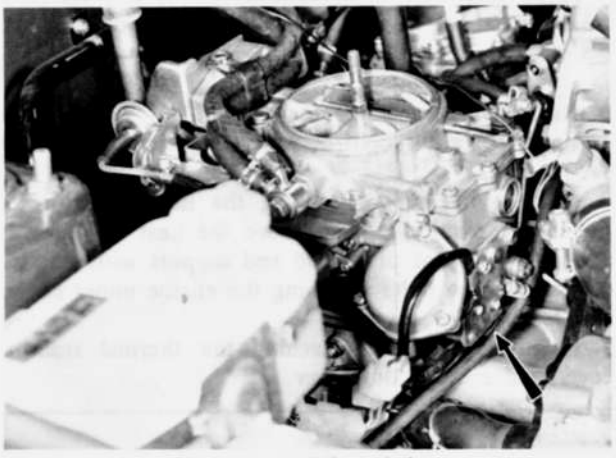

Fig. 1A–12 Idle switch

5. Connect the voltmeter to Ⓑ terminal in the coupler.
6. Make sure that the current stops flowing to Ⓑ terminal when the engine speed is gradually dropped from 2,000 rpm to **1,150 ± 100 rpm.** Record the engine speed at which the current stops flowing.
7. Gradually raise the engine speed from its idle speed and check the speed at which the current begins flowing to Ⓑ terminal. Make sure that the difference between the said engine speed and that recorded in the above procedure 6 is **150 ± 70 rpm.**
8. Stop the engine.
9. Remove the coupler from the water temperature switch and close both terminals in the coupler.
10. Pull the choke control knob out all the way and start the engine.
11. Make sure that the current does not flow to Ⓑ

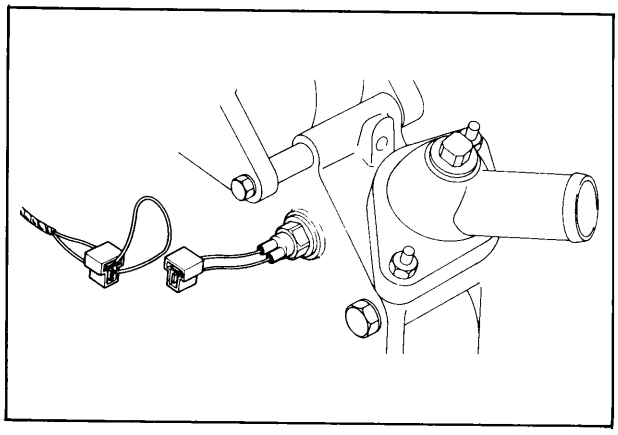

Fig. 1A–13 Closing both terminals

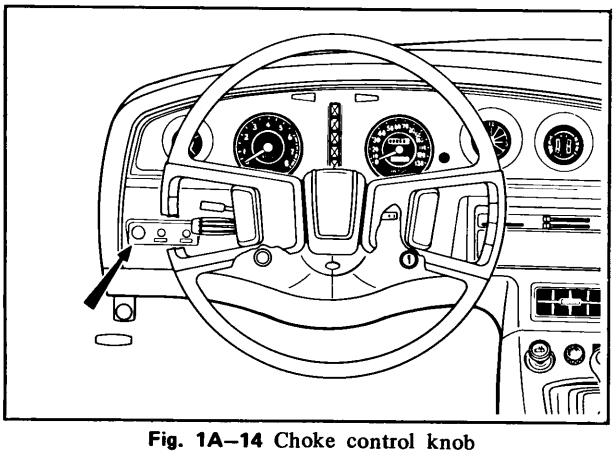

Fig. 1A–14 Choke control knob

terminal when the engine speed is set to **2,000 rpm** by adjusting the choke control knob.

Note:
1. This check should be completed **within 130 seconds** after the engine was started in the above procedure 10.
2. If a trouble is found in the above procedures 3, 4 and 11, check every part according to Par. 1A–B. Trouble Check Guide.
3. If a trouble is found in the above procedures 6 and 7, replace the control unit.

Automatic transmission:
1. Disconnect the coupler from the air control valve.

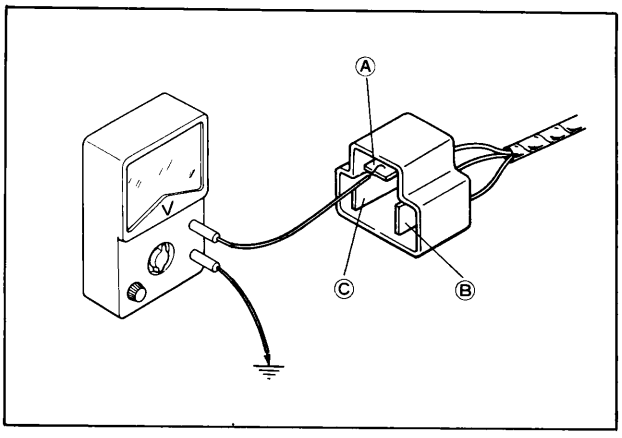

Fig. 1A–15 Checking signal of control unit (A/T)

2. Connect the voltmeter to Ⓐ terminal in the coupler.
3. Start the engine and make sure that the current flows to the Ⓐ terminal when the engine speed is **more than 4,000 ± 400 rpm.**
4. Connect the voltmeter to Ⓑ terminal in the coupler.
5. Make sure that the current stops flowing to Ⓑ terminal when the engine speed is gradually dropped from 2,000 rpm to **1,150 ± 100 rpm.** Record the engine speed at which the current stops flowing.
6. Gradually raise the engine speed from its idle speed and check the speed at which the current begins flowing to Ⓑ terminal. Make sure that the difference between the said engine speed and that recorded in the above procedure 5 is **150 ± 70 rpm.**
7. Connect the voltmeter to Ⓒ terminal in the coupler. Gradually raise the engine speed and make sure that the current stops flowing to Ⓒ terminal when the engine speed rises up to **2,500 ± 200 rpm.**
8. Stop the engine.
9. Remove the coupler from the water temperature switch and close both terminals in the coupler.
10. Pull the choke control knob out all the way and start the engine.

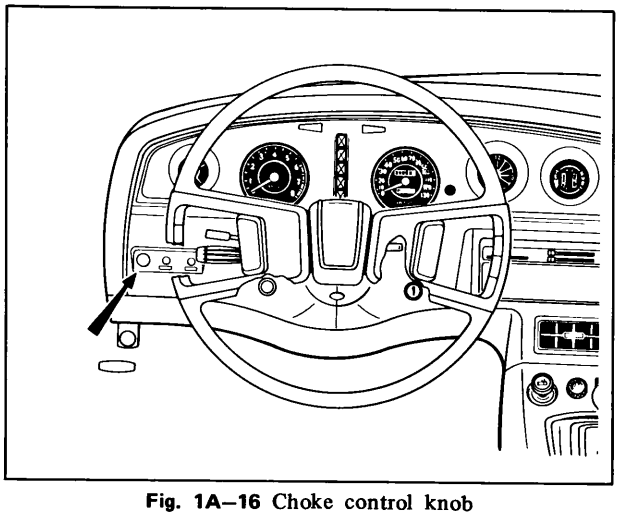

Fig. 1A–16 Choke control knob

11. Set the engine speed to **2,000 rpm** by adjusting the choke control knob.
Make sure that, when the engine speed is raised up to 3,000 rpm by operating the throttle, the current does not flow to Ⓑ terminal but flows to Ⓒ terminal.

Note:
1. This check should be completed **within 130 seconds** after the engine was started in the above procedure 10.
2. If a trouble is found in the above procedures 3 and 11, check every part according to Par. 1A–B. Trouble Check Guide.
3. If a trouble is found in the above procedures 5, 6 and 7, replace the control unit.

c. Replacing air control valve
1. Remove the hot air duct for the air cleaner.
2. Disconnect the air hose (air pump ~ air control valve) from the air control valve.
3. Disconnect the air hose (air control valve ~ ther-

mal reactor) from the air control valve.
4. Disconnect the atmospheric sensing tube from the air control valve.
5. Disconnect the coupler from the air control valve.
6. Remove the nuts attaching the air control valve and remove the air control valve.
7. Install the air control valve by following the removal procedures in the reverse order.

1A–A–5. Deceleration Control Valve

a. Checking deceleration control valve
1. Disconnect the air hose (air cleaner ~ deceleration control valve) from the air cleaner.

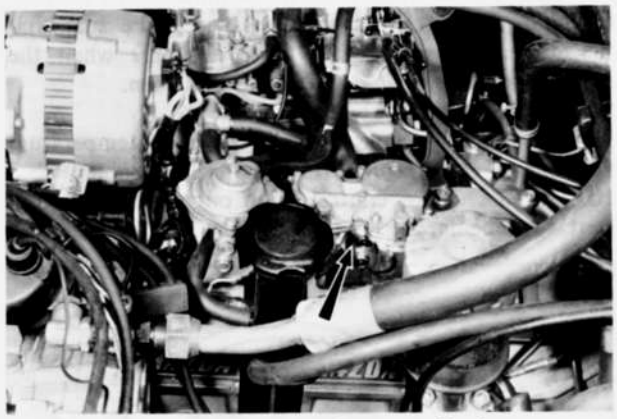

Fig. 1A–17 Deceleration control valve

2. Turn the ignition switch on.
3. Open and close repeatedly the terminal of each solenoid of the deceleration control valve, and make sure that the clicking sound from each solenoid is audible on that occasion.

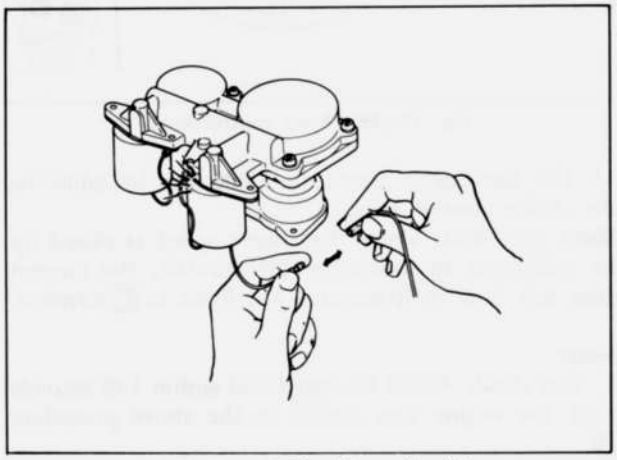

Fig. 1A–18 Checking solenoid

4. Start the engine and keep it running at idle speed.
5. Close with the fingers the air hose removed in the above procedure 1 and make sure that the engine speed hardly varies.
6. Make sure that the air is drawn into the air hose removed in the above procedure 1 when the terminal of the solenoid for the coasting valve is removed. Check the anti-afterburn valve in the same procedure.
7. Close with the fingers three-fourth of the opening

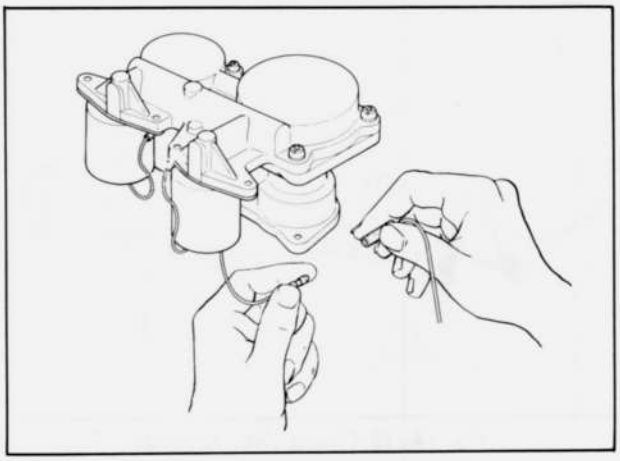

Fig. 1A–19 Removing terminal

of the air hose removed in the above procedure 1. Raise the engine speed up to about 4,000 rpm rapidly and then release the acceleration abruptly. Make sure that the fingers feel a large amount of air being drawn into the air hose for **1 ~ 1.5 seconds** just after the engine speed begins to drop and afterwards feel less amount of air being drawn until the speed drops to 1,150 rpm.

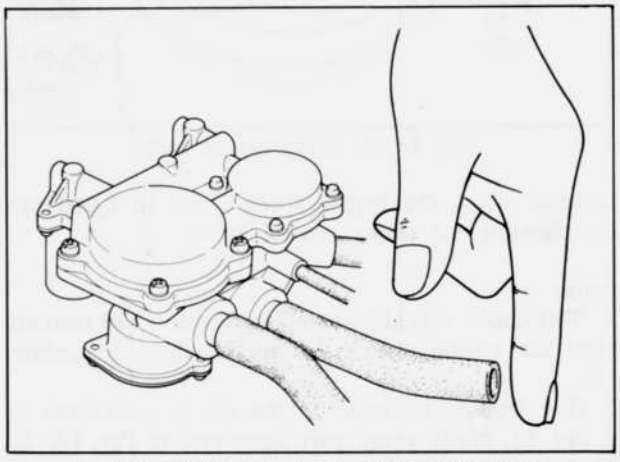

Fig. 1A–20 Checking deceleration control valve

It is only on the car with manual transmission that a small amount of air being drawn into the air hose is felt.

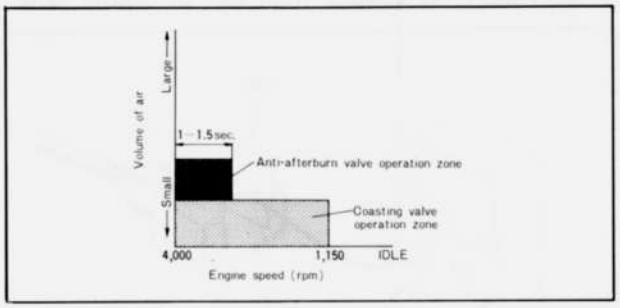

Fig. 1A–21 Volume of air

Note:
1. If a trouble is found in the above procedures 3, 5 and 7, check every part according to Par. 1A–B. Trouble Check Guide.

2. If a trouble is found in the above procedure 6, replace the deceleration control valve.

b. Checking signal of control unit (car with manual transmission only)

2. Remove the terminal of the solenoid for the coasting valve and apply the voltage (12V) of the battery directly on the terminal.

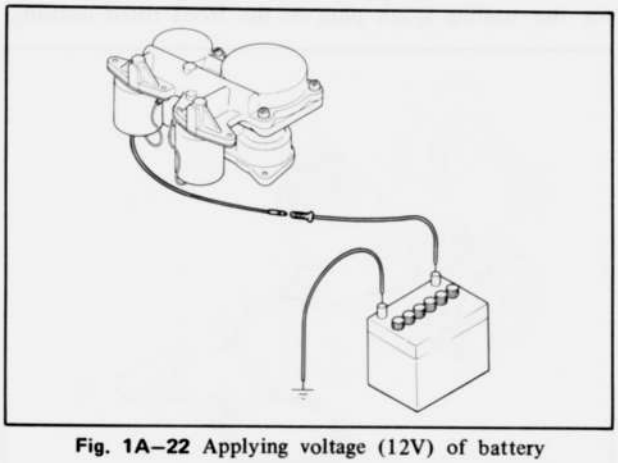

Fig. 1A–22 Applying voltage (12V) of battery

3. Remove the coupler of the idle switch and connect the voltmeter to the power lead of the coasting valve solenoid. Make sure that the current begins to flow to the voltmeter when the engine speed is gradually dropped from 2,000 rpm to **1,150 ± 100 rpm** and continues to flow even when the speed is dropped to the idle speed. Record the engine speed at which the current begins to flow.

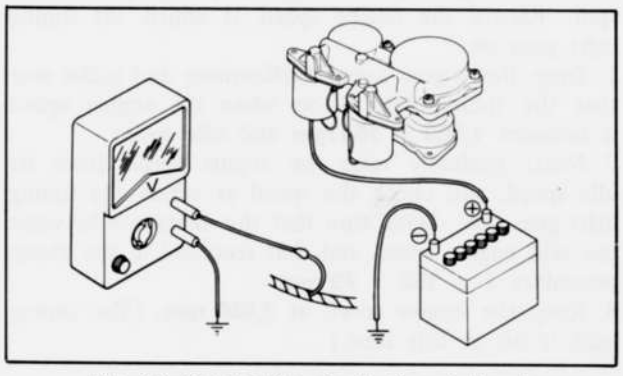

Fig. 1A–23 Checking signal of control unit

4. Gradually raise the engine speed from its idle speed and check the speed at which the current stops flowing to the voltmeter. Make sure that the difference between the said engine speed and that recorded in the above procedure 3 is **150 ± 70 rpm.**

Note:
If a trouble is found in the above procedures 3 and 4, replace the control unit.

c. Replacing deceleration control valve

1. Disconnect the hoses and lead wires from the deceleration control valve.
2. Remove the bolts attaching the deceleration control valve and remove the deceleration control valve.
3. Install the deceleration control valve by following the removal procedures in the reverse order.

1A–A–6. Altitude Compensator

a. Checking altitude compensator

1. Disconnect the hoses (carburetor ~ altitude compensator, altitude compensator ~ evapo compensator valve) from the altitude compensator.
2. Start the engine and keep it running at idle speed.
3. Close with the fingers the mouths of the altitude compensator from which the hoses indicated in the above procedure 1 are disconnected.

If the engine speed drops on that occasion, the altitude compensator is in normal conditions.

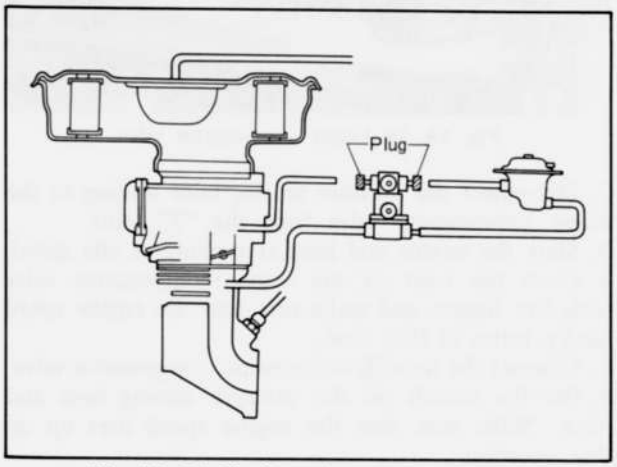

Fig. 1A–24 Checking altitude compensator

b. Replacing altitude compensator

1. Disconnect the hoses from the altitude compensator.
2. Remove the bolts attaching the altitude compensator and remove the altitude compensator.
3. Install the altitude compensator by following the removal procedures in the reverse order.

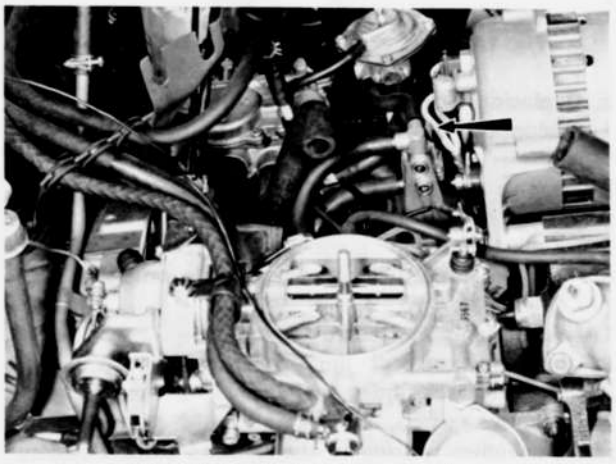

Fig. 1A–25 Altitude compensator

1A–A–7. Evapo Compensator Valve

a. Checking evapo compensator valve

1. Disconnect the hose Ⓐ (altitude compensator ~ evapo compensator valve) from evapo compensator valve.

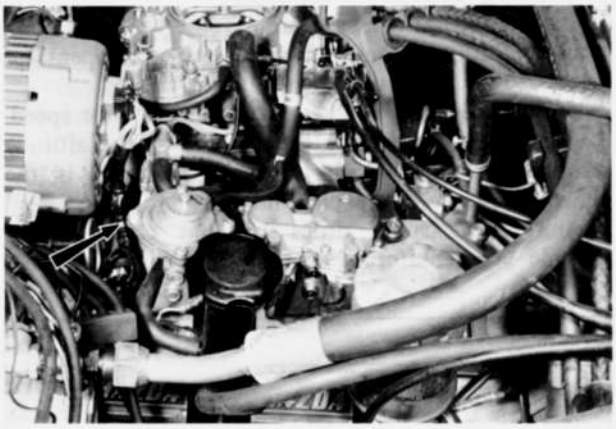

Fig. 1A–26 Evapo compensator valve

2. Disconnect the pressure sensing hose leading to the evapo compensator valve from the "T" joint.
3. Start the engine and keep it running at idle speed.
4. Close the inlet of the evapo compensator valve with the fingers and make sure that the engine speed hardly varies at that time.
5. Connect the hose Ⓐ to the evapo compensator valve.
6. Put the mouth on the pressure sensing hose and blow. Make sure that the engine speed rises up on that occasion.

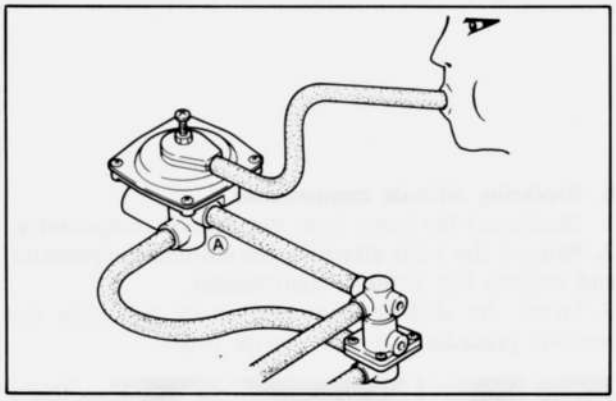

Fig. 1A–27 Checking evapo compensator valve

b. Replacing evapo compensator valve

1. Disconnect the hoses from the evapo compensator valve.
2. Remove the bolts attaching the evapo compensator valve and remove the evapo compensator valve.
3. Install the evapo compensator valve by following the removal procedures in the reverse order.

1A–A–8. Ignition Control System

In this item, inspect the operation of each of the idle switch, kick-down switch, No. 1 choke switch, No. 2 choke switch, control unit and No. 1 and No. 2 retard switches relating to the ignition control system. If a trouble is found, check defective parts according to Par. 1A–B. Trouble Check Guide.

Note:
Before this inspection, warm up the engine sufficiently and make sure that the ignition timing is as specified.

a. Checking ignition control system (trailing side)

1. Connect a timing light to the high tension cord for the trailing spark plug of the front rotor housing.

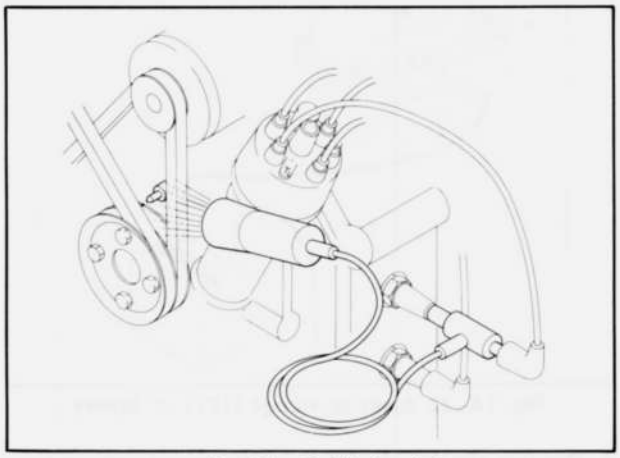

Fig. 1A–28 Timing light

2. Start the engine.
3. Gradually drop the engine speed from 4,500 rpm.
4. Make sure that the timing light goes out when the engine speed drops to **4,000 ± 400 rpm.**
5. Make sure that the timing light goes on again when the engine speed further drops to **1,150 ± 100 rpm**. Record the engine speed at which the timing light goes on.
6. Drop the engine speed furthermore and make sure that the timing light is on when the engine speed is between **1,150 ± 100 rpm** and idle speed.
7. Next, gradually raise the engine speed from its idle speed, and check the speed at which the timing light goes out. Make sure that the difference between the said engine speed and that recorded in the above procedure 5 is **150 ± 70 rpm.**
8. Keep the engine speed **at 2,000 rpm.** (The timing light is off at this time.)

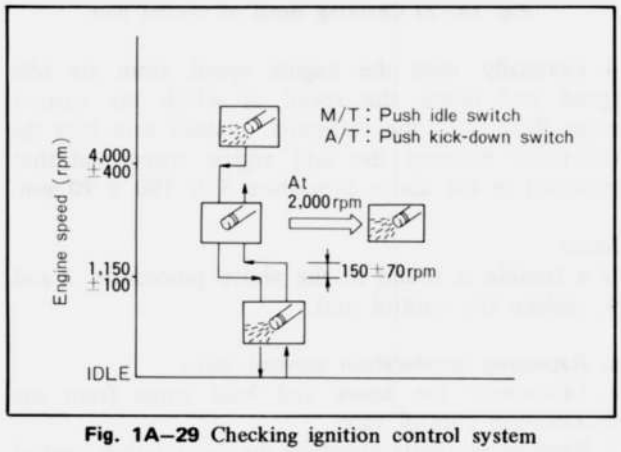

Fig. 1A–29 Checking ignition control system (trailing side)

(1) Manual transmission:
Make sure that the timing light goes on when the idle switch is pushed.

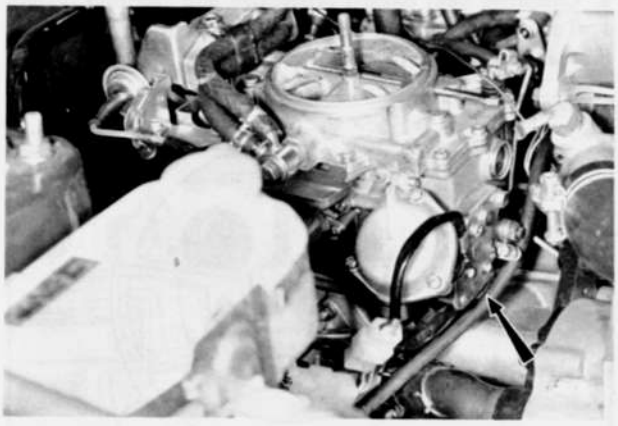

Fig. 1A–30 Idle switch

(2) Automatic transmission:
Make sure that the timing light goes on when the kick-down switch is pushed.

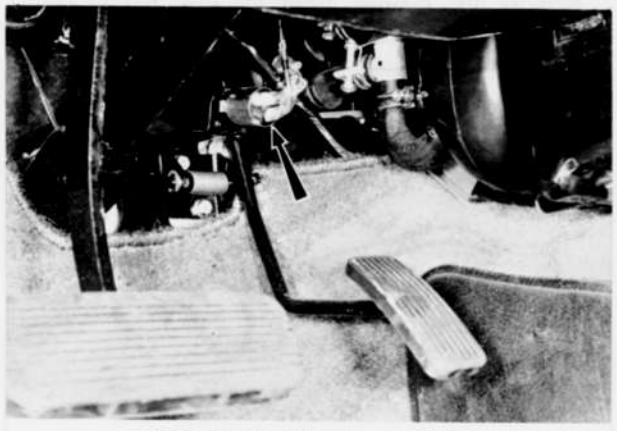

Fig. 1A–31 Kick-down switch

b. Checking ignition control system (leading side)
1. Connect a timing light to the high tension cord for the leading spark plug of the front rotor housing.
2. Remove the coupler from the water temperature switch and close both terminals in the coupler.

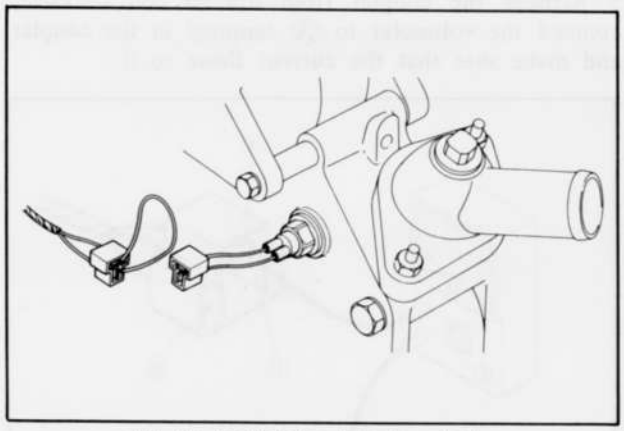

Fig. 1A–32 Closing both terminals

3. Pull the choke control knob out all the way and

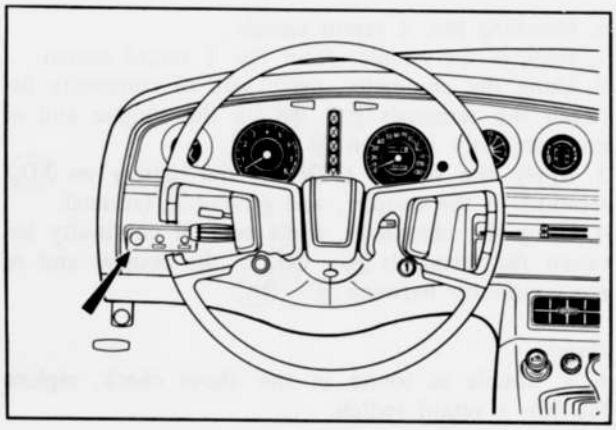

Fig. 1A–33 Choke control knob

start the engine.
4. Keep the engine speed at 2,000 rpm by adjusting the choke control knob.
Make sure that the timing indicator pin points between the **yellow and red marks** notched on the eccentric shaft pulley.

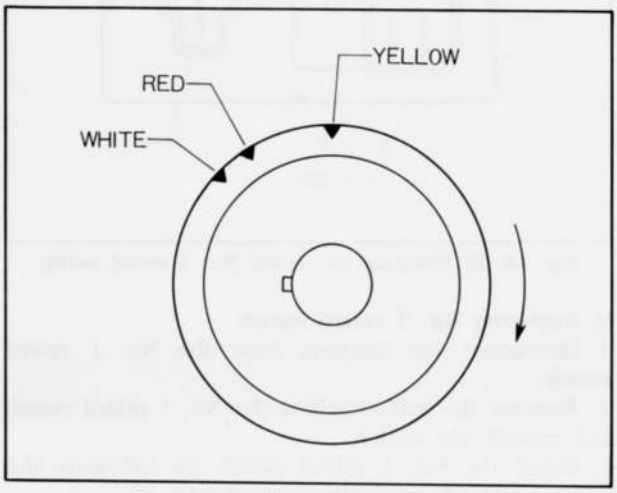

Fig. 1A–34 Eccentric shaft pulley

5. Make sure that the engine speed rises up by several hundred rpm when it is **130 ± 26 seconds** since the engine was started.

1A–A–9. No. 1 Retard Switch



Fig. 1A–35 No. 1 and No. 2 retard switch

a. Checking No. 1 retard switch

1. Remove the coupler from No. 1 retard switch.
2. Using the ohmmeter, make sure of continuity between the terminals Ⓑ – ⓃⒸ in the coupler and of non-continuity between Ⓑ – ⓃⓄ.
3. Apply the voltage (12V) of the battery on ⓈⒹ₁ terminal in the coupler, and ground Ⓔ terminal.
4. Using the ohmmeter, make sure of continuity between the terminals Ⓑ – ⓃⓄ in the coupler and of non-continuity between Ⓑ – ⓃⒸ.

Note:
If a trouble is found in the above check, replace the No. 1 retard switch.

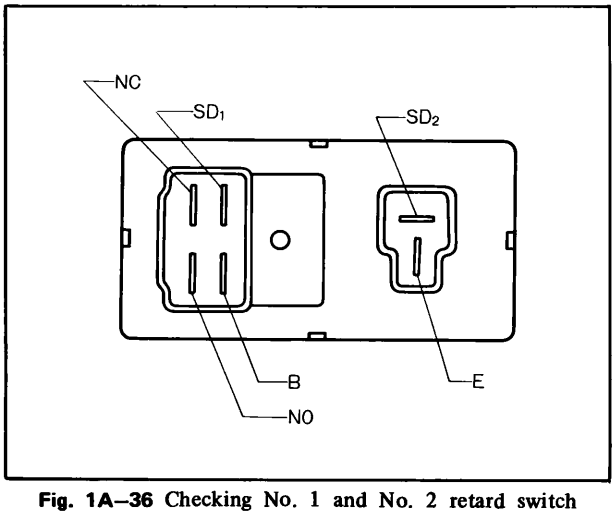

Fig. 1A–36 Checking No. 1 and No. 2 retard switch

b. Replacing No. 1 retard switch

1. Disconnect the couplers from the No. 1 retard switch.
2. Remove the bolt attaching the No. 1 retard switch and remove the switch.
3. Install the No. 1 retard switch by following the removal procedures in the reverse order.

1A–A–10. No. 2 Retard Switch

Both checking and replacing procedures of this switch are the same as those of the No. 1 retard switch.

1A–A–11. Kick-down Control System (Car with automatic transmission only)

In this item, inspect the operation of each of the No. 1 choke switch, control unit, kick-down switch and kick-down relay relating to the kick-down control system.

a. Checking kick-down control system

1. Disconnect the terminal from the kick-down solenoid and connect the voltmeter.
2. Start the engine and make sure that the current flows to the voltmeter when choke knob is pulled. If a trouble is found, check every part according to Par. 1A–B. Trouble Check Guide.

1A–A–12. Heat Hazard Protective and Warning System

a. Checking heat hazard protective and warning system

1. Turn the ignition switch on and make sure that the warning light is on.

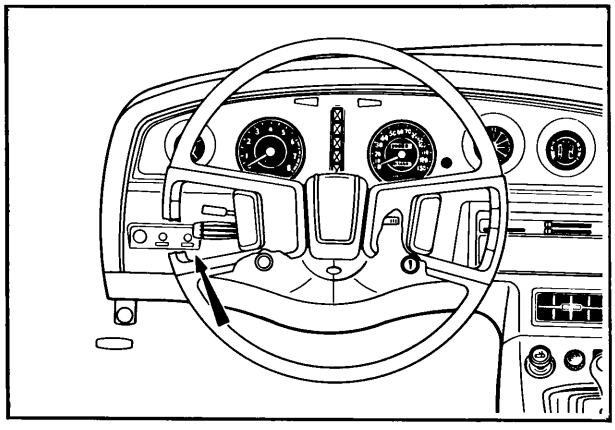

Fig. 1A–37 Heat hazard warning light

2. Remove the coupler from the heat hazard sensor and close both terminals in the coupler.

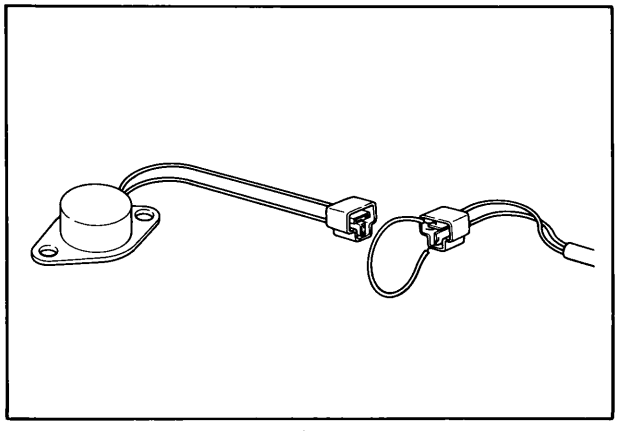

Fig. 1A–38 Closing both terminals

3. Start the engine and keep it running at idle speed.
4. Make sure that the warning light is on at this time.
5. Remove the coupler from the air control valve, connect the voltmeter to Ⓐ terminal in the coupler and make sure that the current flows to it.

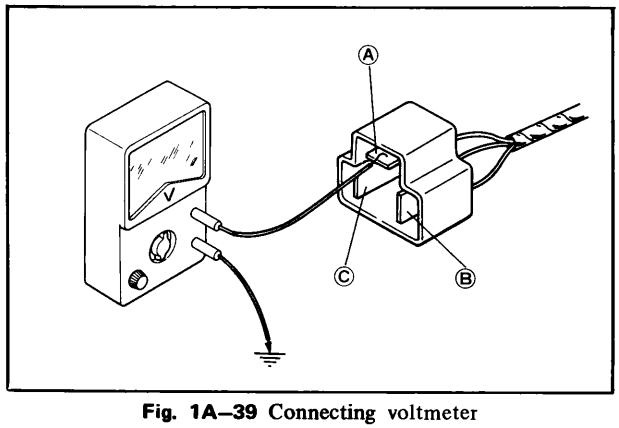

Fig. 1A–39 Connecting voltmeter

6. Connect a timing light to the high tension cord for the trailing spark plug of front rotor housing.
7. Make sure that the timing light is on when the engine speed is set to **2,000 rpm.**

Note:
1. If a trouble is found in the above procedure 1, check every part according to Par. 1A–B. Trouble Check Guide.
2. If a trouble is found in the above procedures 4 and 5, check for breaking of the wire harness and faulty contact of the terminals in the coupler; in case they are in normal conditions, replace the control unit.

b. Checking heat hazard sensor
Inspect the operating temperature of the heat hazard sensor as follows:
1. Remove the heat hazard sensor.
2. Wrap the sensor together with the thermometer in aluminum foil to prevent oil ingress.
3. Attach the test lamp to the sensor as shown in Fig. 1A–40.
Submerge the wrapped sensor and thermometer in oil and gradually heat the oil.

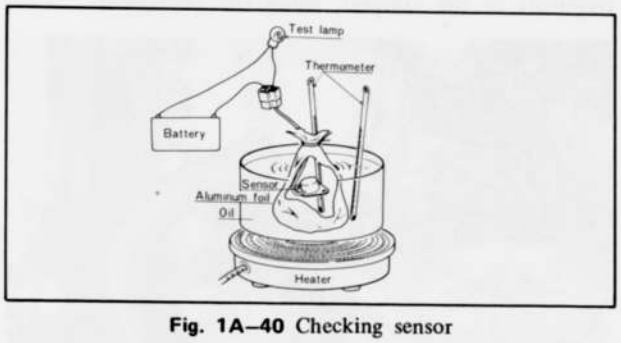

Fig. 1A–40 Checking sensor

4. Measure the temperature at which the lamp attached to the sensor lights up. The sensor should operate at **120 ± 10°C (248 ± 18°F).** If the sensor should operate at a temperature deviating from the standard temperature, replace the sensor.

Note:
Avoid heating the oil to **more than 130°C (266°F).**

c. Replacing heat hazard sensor

Sedan and Hardtop:
1. Open the trunk and remove the mat.
2. Disconnect the coupler from the heat hazard sensor.
3. Remove the screws attaching the heat hazard sensor and remove the heat hazard sensor.
4. Install the sensor by following the removal procedures in the reverse order.

Rotary wagon:
1. Fold the rear seat back forward.
2. Disconnect the coupler from the heat hazard sensor.
3. Remove the screws attaching the heat hazard sensor and remove the heat hazard sensor.
4. Install the sensor by following the removal procedures in the reverse order.

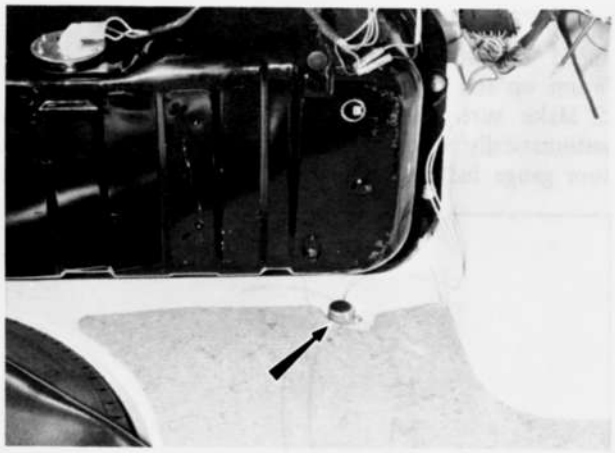

Fig. 1A–41 Hazard sensor (Sedan)



Fig. 1A–42 Hazard sensor (Wagon)

1A–A–13. Automatic Throttle Release System

a. Checking automatic throttle release system
1. Make sure that the engine is cold.
Pull the choke control knob out all the way with the ignition switch off, and make sure that the knob returns automatically. If the trouble is found, check choke wire and choke return spring, replace if necessary.

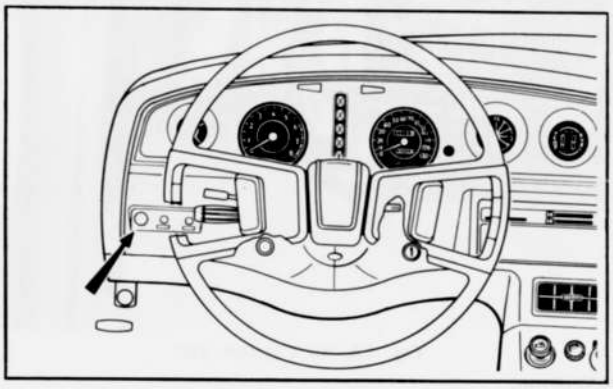

Fig. 1A–43 Choke control knob

2. Pull the choke control knob out all the way and start the engine.
3. Make sure that the choke control knob returns automatically when it is **30 ± 10 seconds** since the engine was started.

4. Pull the choke control knob to set the engine speed to **2,000 rpm.**
Warm up the engine under the above condition.
5. Make sure that the choke control knob returns automatically when the needle of the water temperature gauge indicates the point shown in Fig. 1A–44.

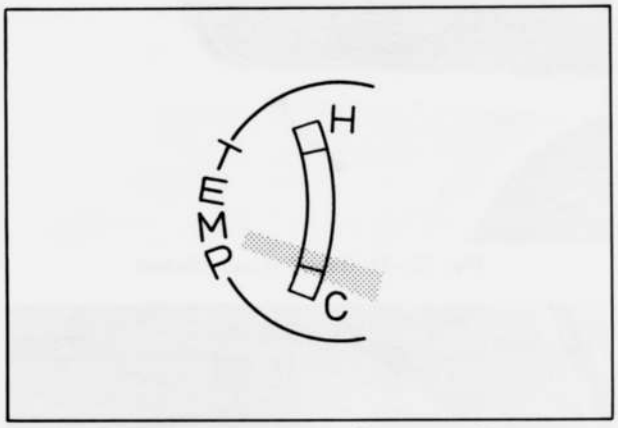

Fig. 1A–44 Position of gauge needle

Note:
1. If a trouble is found in the above procedure 3, replace the control unit.
2. If a trouble is found in the above procedure 5, check the water temperature switch.

1A–A–14. Control Unit

a. Checking control unit
The control unit controls the air control valve, deceleration control valve, ignition system, solenoid of the carburetor, automatic throttle release system, heat hazard warning system and kick-down control system. So the checking procedure of the control unit is described together in the item of each part and each system.

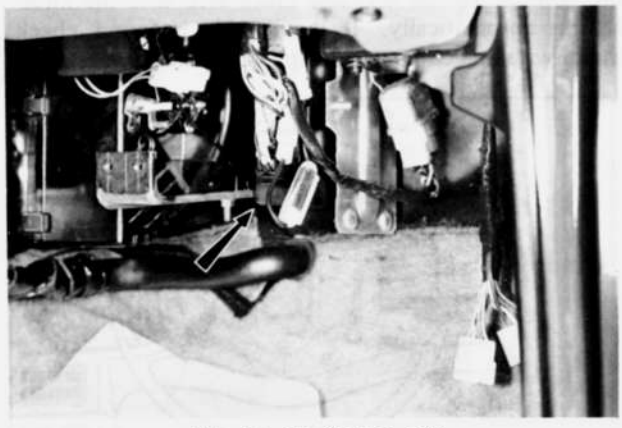

Fig. 1A–45 Control unit

Warning:
1. The choke warning light on the instrument panel goes on when the fuse of the control unit is burnt out. Use a **5-amp. fuse** *when replacing.*
2. If, in checking the signal of the control unit, there is any terminal in the coupler to which the signal does not come, check first for breaking of the wire harness and faulty contact of the terminal.

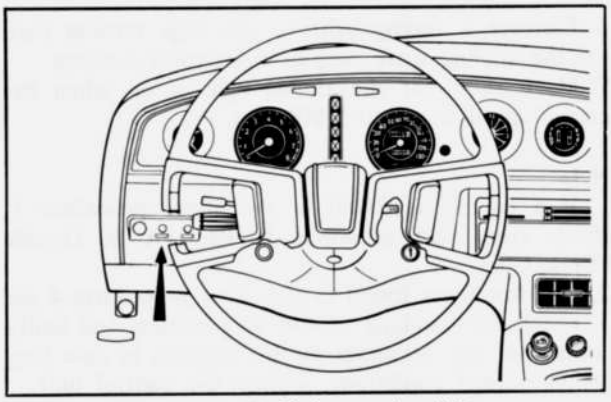

Fig. 1A–46 Choke warning light

3. **Do not use more than 3.4 watt lamp** *when checking the signal of the control unit, using test lamp.*

1A–A–15. Water Temperature Switch

a. Checking operation of water temperature switch
1. Make sure that the engine is cold.
2. Remove the coupler from the water temperature switch, and make sure of continuity between both terminals in the coupler, using the ohmmeter.

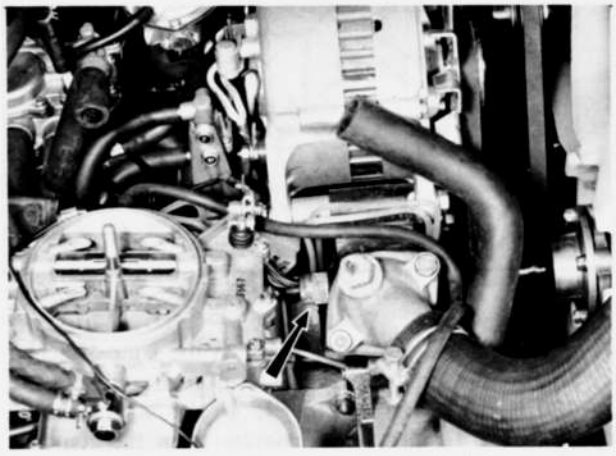

Fig. 1A–47 Water temperature switch

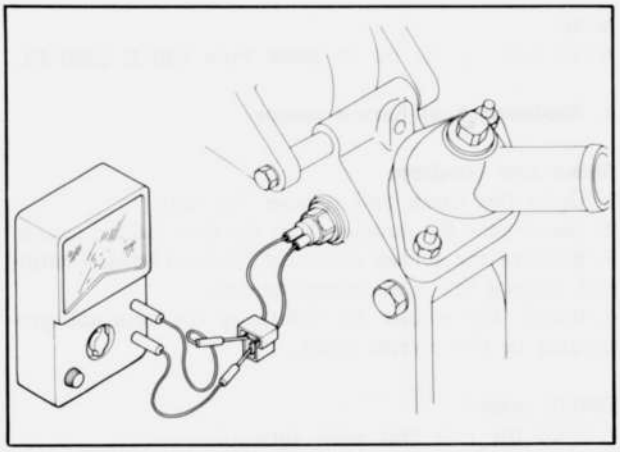

Fig. 1A–48 Checking water temperature switch

3. Connect the coupler to the water temperature switch.
4. Fully warm up the engine.

5. Remove the coupler from the water temperature switch and make sure of non-continuity between both terminals in the coupler, using the ohmmeter.

Note:
If a trouble is found in the above procedures 2 and 5, replace the water temperature switch.

b. Checking operating temperature of water temperature switch
1. Remove the water temperature switch.
2. Place the water temperature switch in water with a thermometer and gradually heat the water.
3. Make sure, using the ohmmeter, that there is no continuity between both terminals in the coupler of the water temperature switch when the water temperature rises up to **67 ± 6°C (153 ± 11°F)** (automatic transmission: **60 ± 7°C (140 ± 13°F)**. If there is, replace the switch.

c. Replacing water temperature switch
1. Drain the coolant from the radiator by 1.7ℓ to reduce its level below the water temperature switch.
2. Remove the alternator and "V" belt if necessary.
3. Disconnect the coupler from the water temperature switch.
4. Loosen and remove the water temperature switch.
5. Install the water temperature switch by following the removal procedures in the reverse order.
6. Refill the radiator with the coolant. Check to see that the level of the subtank is proper, add the coolant if necessary.

1A–A–16. Idle Switch

a. Checking idle switch
1. Start the engine and keep it running at idle speed.
2. Disconnect the coupler from the idle switch.
3. Using the ohmmeter, make sure of continuity between the terminals Ⓐ – Ⓑ in the coupler and of non-continuity between Ⓒ – Ⓑ.
4. Next, gradually raise the engine speed up to **1,000 ± 50 rpm** (with the gear shift lever in "N" range in case of the car with automatic transmission). Make sure that continuity between the terminals Ⓐ – Ⓑ stops but continuity between Ⓒ – Ⓑ begins.

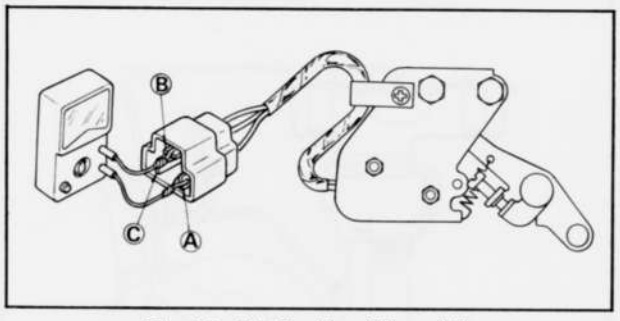

Fig. 1A–49 Checking idle switch

Note:
If a trouble is found in the above procedures 3 and 4, adjust or replace the idle switch.

b. Adjusting idle switch
Adjust the idle switch, using the adjusting screw, so as to turn from "ON" to "OFF" (between Ⓐ terminals and Ⓑ terminals) when the engine speed is gradually raised up to **1,000 ± 50 rpm** (with the gear selector lever in "N" range in case of the car with automatic transmission).



Fig. 1A–50 Idle switch

Note:
1. Turn the adjusting screw counter-clockwise when the setting revolution is higher than specified rpm.
2. Turn it clockwise when the setting revolution is lower than specified rpm.

c. Replacing idle switch
1. Remove the air cleaner.
2. Disconnect the coupler from the idle switch.
3. Remove the bolts attaching the idle switch and remove the idle switch.
4. Install the idle switch by following removal procedures in the reverse order.

Note:
When the idle switch is replaced, be sure to adjust the new one.

1A–A–17. No. 1 Choke Switch

a. Checking No. 1 choke switch
1. Remove the coupler from the water temperature switch and close both terminals in the coupler.

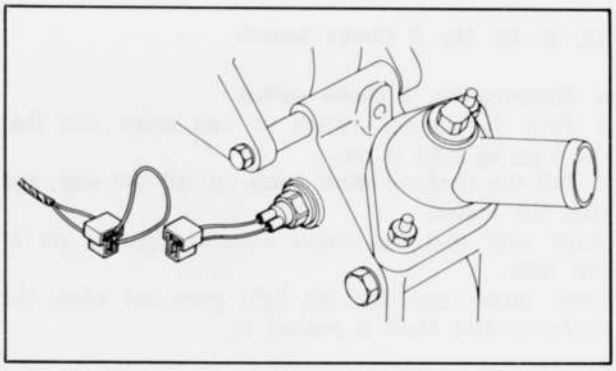

Fig. 1A–51 Closing both terminals

2. Pull the choke control knob out all the way and

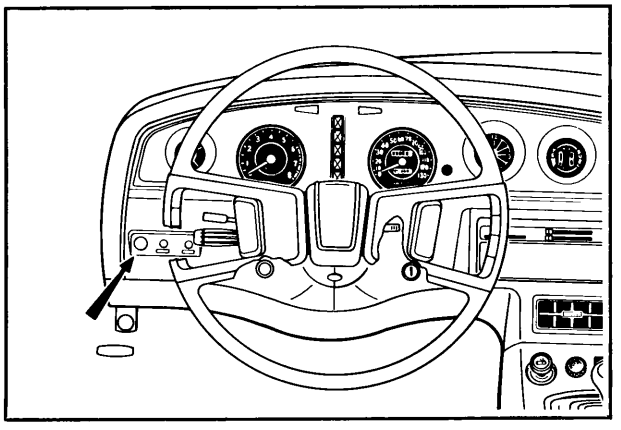

Fig. 1A–52 Choke control knob

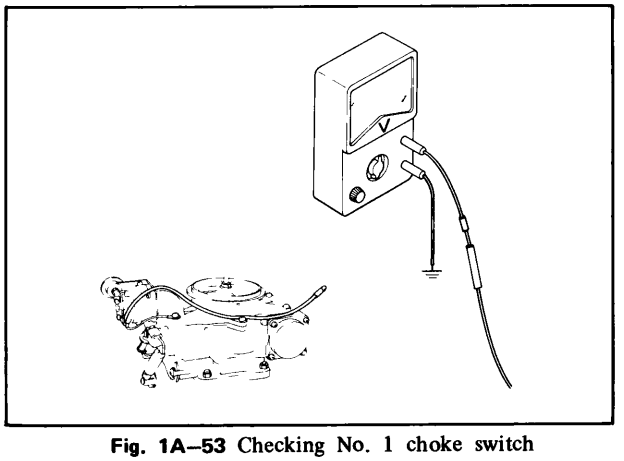

Fig. 1A–53 Checking No. 1 choke switch

start the engine.
3. Make sure, using the voltmeter, that the current flows to the bimetal of the carburetor when the engine speed is set to **2,000 rpm** by adjusting the choke control knob.
4. Push the choke control knob in to idle the engine.
5. Make sure that the current does not flow to the bimetal of the carburetor.

Note:
1. If a trouble is found in the above procedure 3, check the choke relay; in case the choke relay is in normal conditions, replace the choke switch.
2. If a trouble is found in the above procedure 5, replace the No. 1 choke switch.

1A–A–18. No. 2 Choke Switch

a. Checking No. 2 choke switch
1. Turn the ignition switch on and make sure that the warning light is on.
2. Pull the choke control knob out all the way, and start the engine.
Make sure that the choke warning light is on at this time.
Next, make sure that the light goes out when the choke control knob is pushed in.

Note:
If a trouble is found in the above procedures 1 and 2, replace the No. 2 choke switch.

1A–A–19. Choke Relay

a. Checking choke relay
1. Disconnect the coupler from the choke relay.
2. Using the ohmmeter, make sure of continuity between the terminals Ⓑ – ⓃⒸ in the coupler and of non-continuity between Ⓑ – ⓃⓄ.
3. Apply the voltage (12V) of the battery on (SD1) terminal in the coupler, and ground Ⓔ terminal.
4. Using the ohmmeter, make sure of continuity between the terminals Ⓑ – ⓃⓄ in the coupler and of non-continuity between Ⓑ – ⓃⒸ.

Note:
If a trouble is found in the above procedures 2 and 4, replace the choke relay.

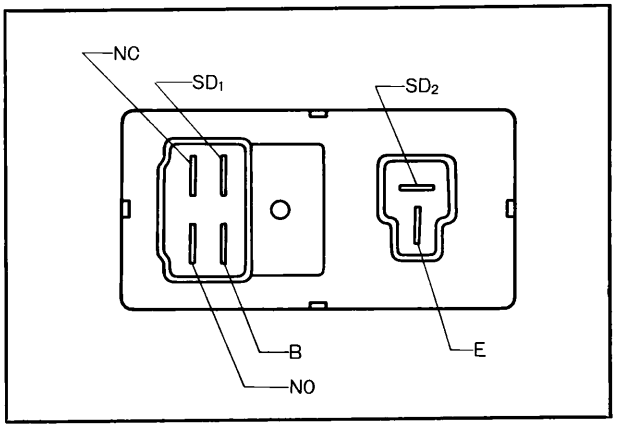

Fig. 1A–54 Checking choke relay

1A–A–20. Ventilation Valve

a. Checking ventilation valve
1. Start the engine and keep it running at idle speed.
2. Disconnect the ventilation hose from the filler pipe.
3. Make sure that the engine speed drops when the evaporative hose is squeezed by hand as shown in Fig. 1A–55 and then the ventilation hose removed in the above procedure 2 is closed with the fingers. If the engine stalls on that occasion, replace the ventilation valve.

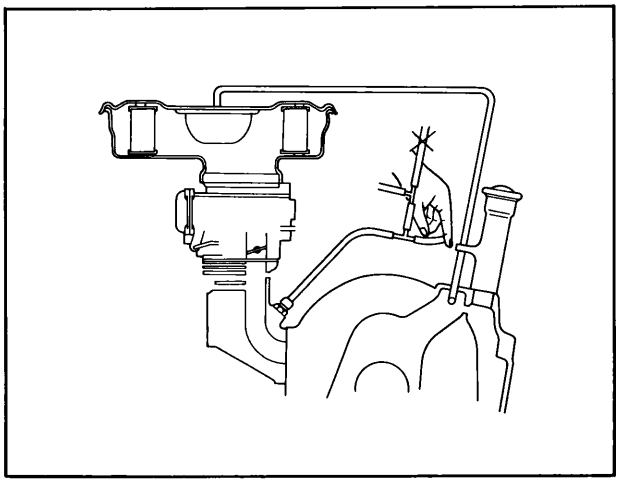

Fig. 1A–55 Checking ventilation valve

b. Replacing ventilation valve

1. Remove the deceleration control valve.
2. Disconnect the ventilation hose at the ventilation valve.
3. Loosen and remove the ventilation valve with the **wrench** (49 1011 120).

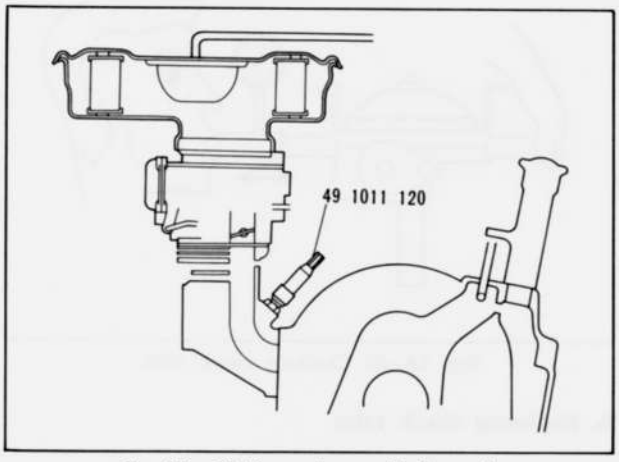

Fig. 1A–56 Removing ventilation valve

4. Install the ventilation valve by following the removal procedures in the reverse order.

1A–A–21. Carcoal Canister

a. Checking charcoal canister

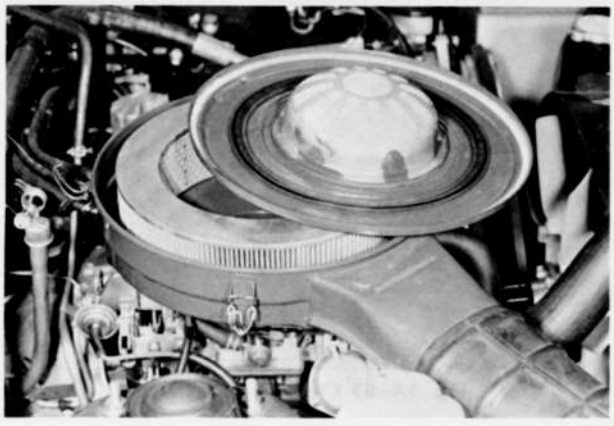

Fig. 1A–57 Charcoal canister

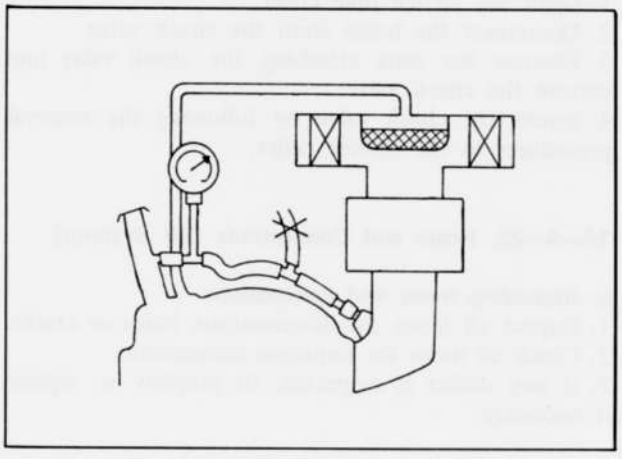

Fig. 1A–58 Checking charcoal canister

1. Check by sight for stains of the charcoal canister due to oil, etc. and for leakage of active carbon.
2. Install the vacuum gauge as shown in Fig. 1A–58 and check for clogging of the canister.

The vacuum gauge reading is as follows:

– 60 ~ 0 mm-Hg/2,500 rpm

Note:

If a trouble is found in the above procedures 1 and 2, replace the canister and air cleaner cover assembly.

1A–A–22. Evaporative Line

a. Checking evaporative line

1. Remove the "T" joint from the evaporative hose and install the pressure gauge on the hose.
2. Disconnect the ventilation hose from the evapo compensator valve.
3. Apply compressed air gradually into the "U" tube pressure gauge so that the difference of water level should be **356 ± 12 mm (14 ± 0.5 in).** After that, blind the inlet of the "U" tube pressure gauge.
4. Leave the "U" tube pressure gauge stand for five minutes, with the inlet blind. If the water level is within the hatched lines shown in Fig. 1A–59, the evaporative line is in good condition. If it is not within limits, inspect the following parts, and repair or replace as required.

(1) Leaky or loose hoses
(2) Leaky codense tank
(3) Leaky fuel tank
(4) Leaky or loose fuel line
(5) Leaky filler cap
(6) Leaky fuel gauge unit

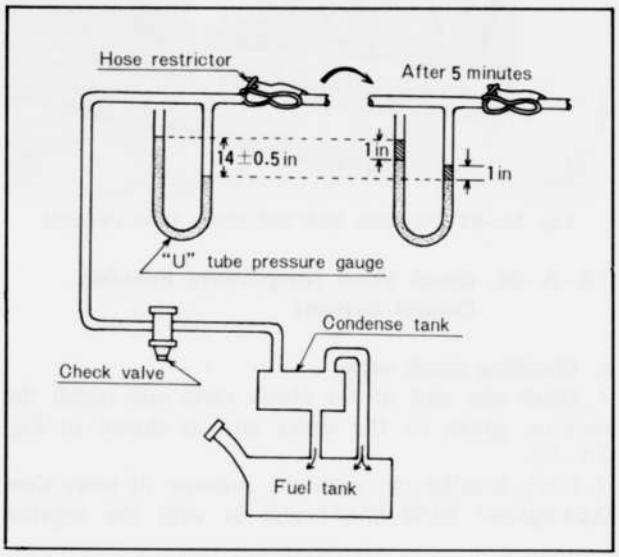

Fig. 1A–59 Checking evaporative line

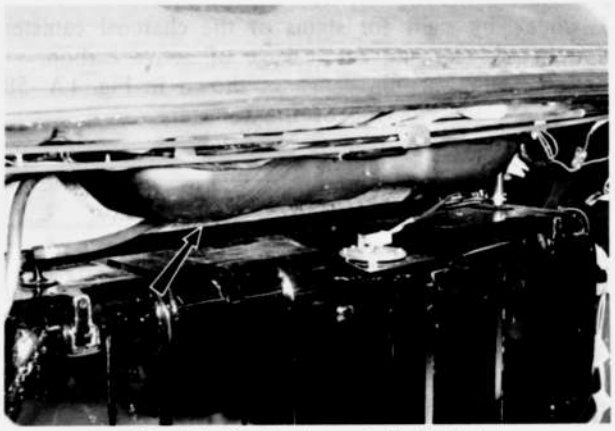

Fig. 1A–60 Condense tank (Sedan)

1A–A–23. Condense Tank

a. Replacing condense tank

Sedan and Hardtop:
1. Disconnect the hoses from the condense tank.
2. Remove the partition board.
3. Remove the screws attaching the condense tank and remove the condense tank.
4. Install the condense tank by following the removal procedures in the reverse order.

Rotary wagon:
1. Open the service hole cover.
2. Disconnect the hoses from the condense tank.
3. Remove the screws attaching the condense tank and remove the condense tank.
4. Install the condense tank by removal procedures in the reverse order.

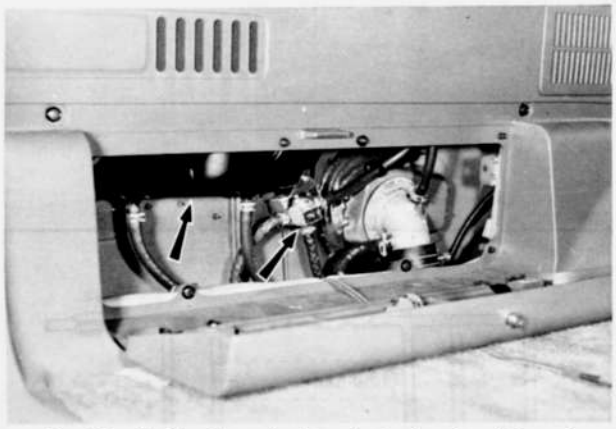

Fig. 1A–61 Condense tank and check valve (Wagon)

1A–A–24. Check Valve (Evaporative Emission Control System)

a. Checking check valve
1. Blind one end of the check valve and install the pressure gauge to the other end as shown in Fig. 1A–62.
2. Next, breathe out with the pressure of **more than 0.04 kg/cm² (0.57 lb/in²)** and in with the negative pressure of **more than 0.01 kg/cm² (0.14 lb/in²)** and make sure that the check valve operates then. If a trouble is found, replace the valve.

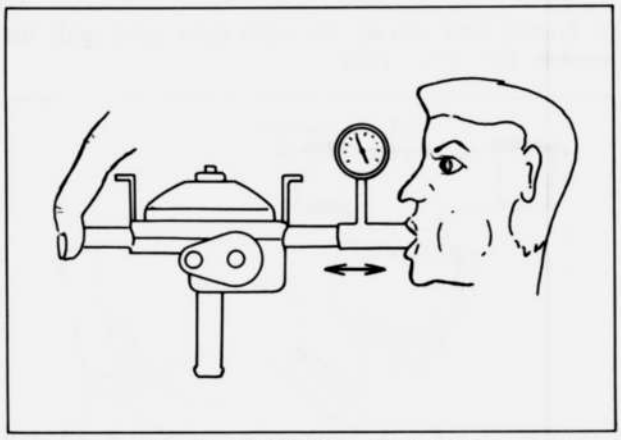

Fig. 1A–62 Checking check valve

b. Replacing check valve

Sedan and Hardtop:
1. Disconnect the hoses from the check valve.
2. Remove the nuts attaching the check valve and remove the check valve.
3. Install the check valve by following the removal procedures in the reverse order.

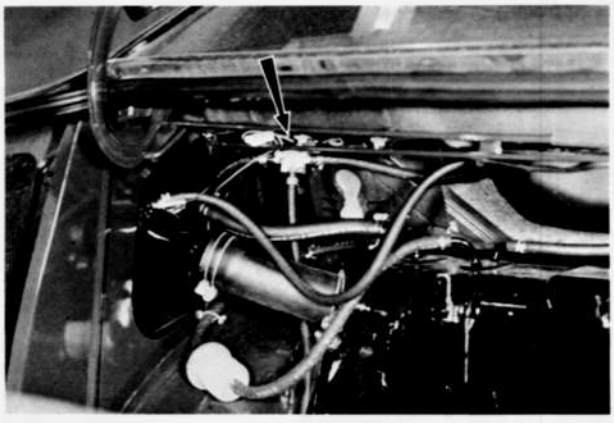

Fig. 1A–63 Check valve (Sedan)

Rotary wagon:
1. Open the service hole cover.
2. Disconnect the hoses from the check valve.
3. Remove the nuts attaching the check valve and remove the check valve.
4. Install the check valve by following the removal procedures in the reverse order.

1A–A–25. Hoses and Connections (All Systems)

a. Inspecting hoses and connections
1. Inspect all hoses for deterioration, holes or cracks.
2. Check all hoses for improper connection.
3. If any defect is suspected, fit properly or replace if necessary.

1A–B. TROUBLE CHECK GUIDE

Trouble Check Guide should be used following instructions in Par. 1A–A. Maintenance Procedure.

AIR CONTROL VALVE

Checking Air Control Valve

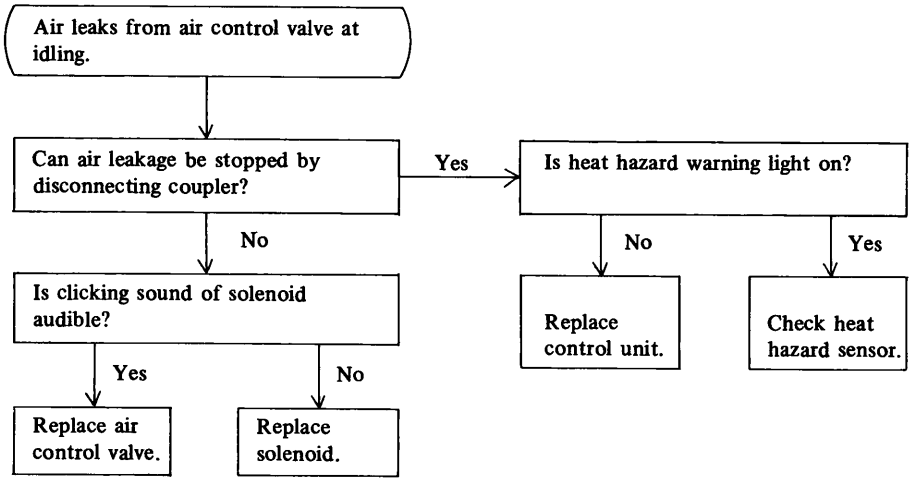

Checking Signal of Control Unit

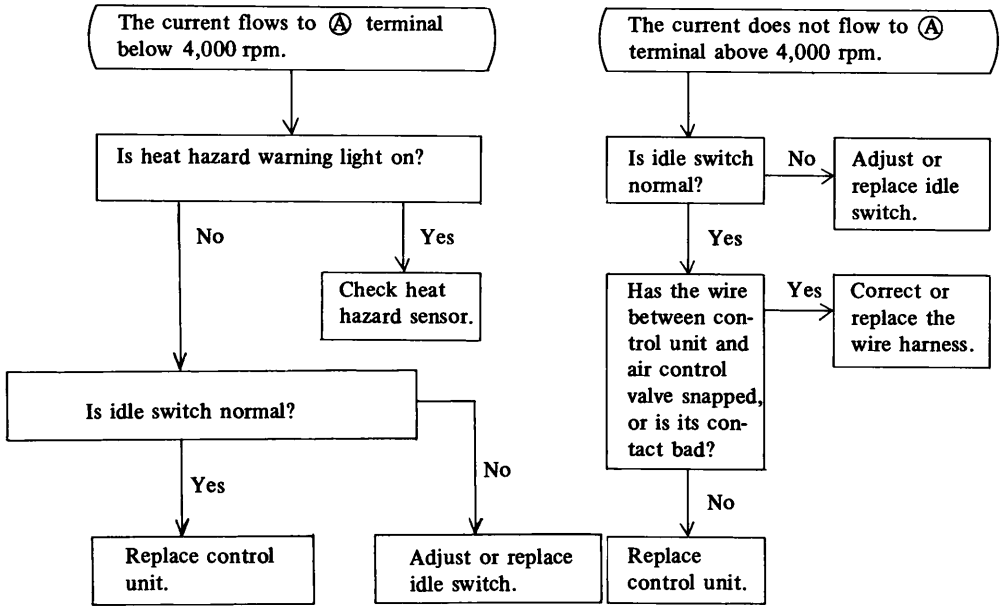

Checking Signal of Control Unit

When engine starts with water temperature switch short-circuited and choke knob pulled, the current flows to Ⓑ terminal at 2,000 rpm in case of manual transmission, or the current flows to Ⓑ terminal and/or the current doesn't flow to Ⓒ terminal at 3,000 rpm in case of automatic transmission.

↓

Was the above checked within 130 sec. from engine starting? — No → Recheck.

↓ Yes

Is No. 1 choke switch normal? — No → Replace No. 1 choke switch.

↓ Yes

Have the wires from control unit to No. 1 choke switch, water temperature switch and air control valve snapped, or is their contact bad? — Yes → Correct or replace the wire harness.

↓ No

Replace control unit.

Only for manual transmission

The current doesn't flow to Ⓐ terminal though idle switch is pushed above 4,000 rpm.

↓

Is heat hazard warning light on? — Yes → Check heat hazard sensor.

↓ No

Is idle switch normal? — No → Adjust or replace idle switch.

↓ Yes

Replace control unit.

DECELERATION CONTROL VALVE

Checking Deceleration Control Valve

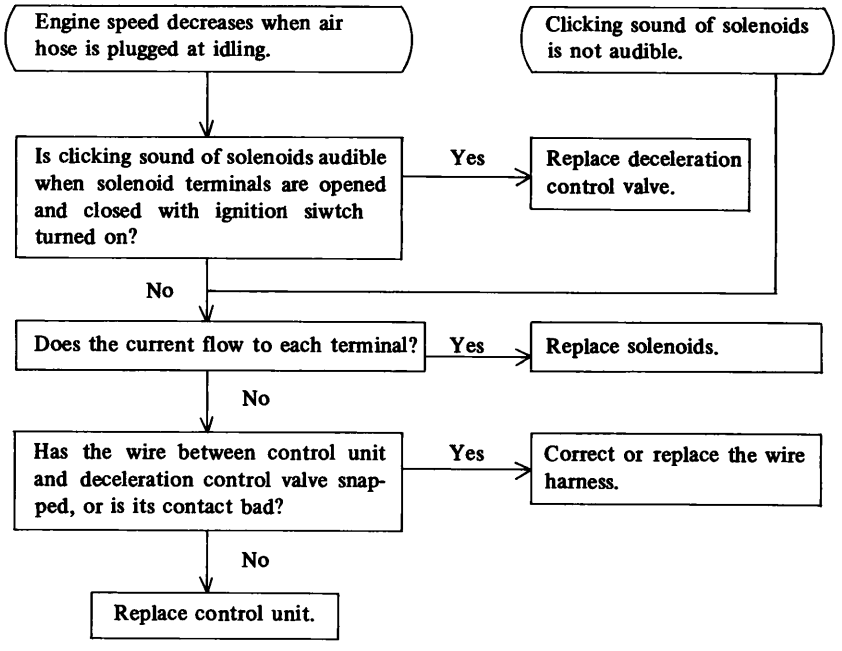

Only for manual transmission

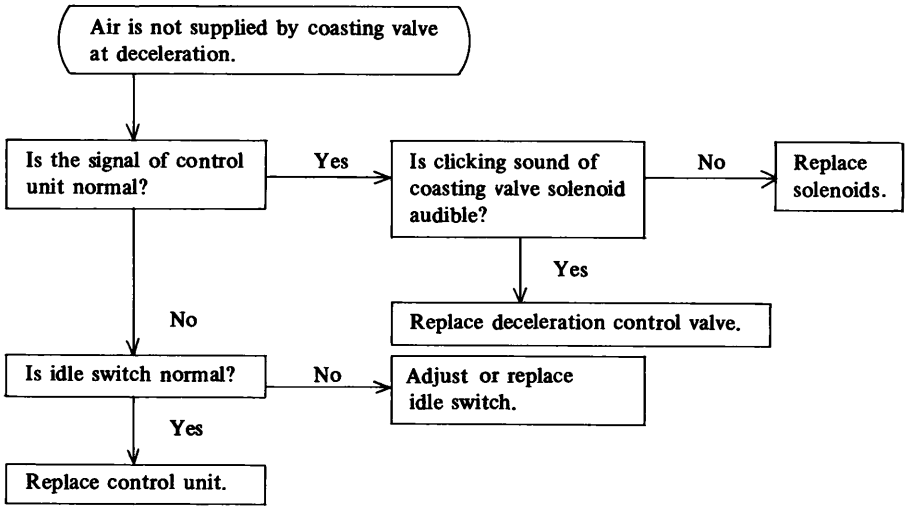

IGNITION CONTROL SYSTEM

Checking Trailing Side Ignition

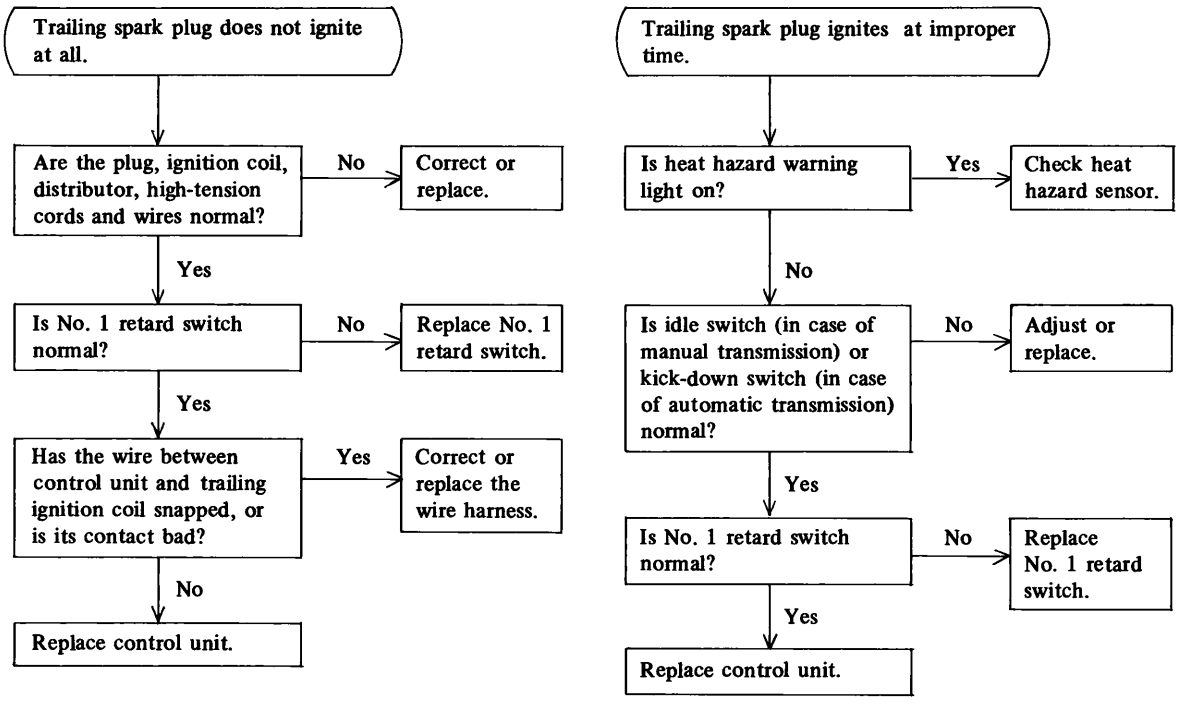

Checking Trailing Side Ignition

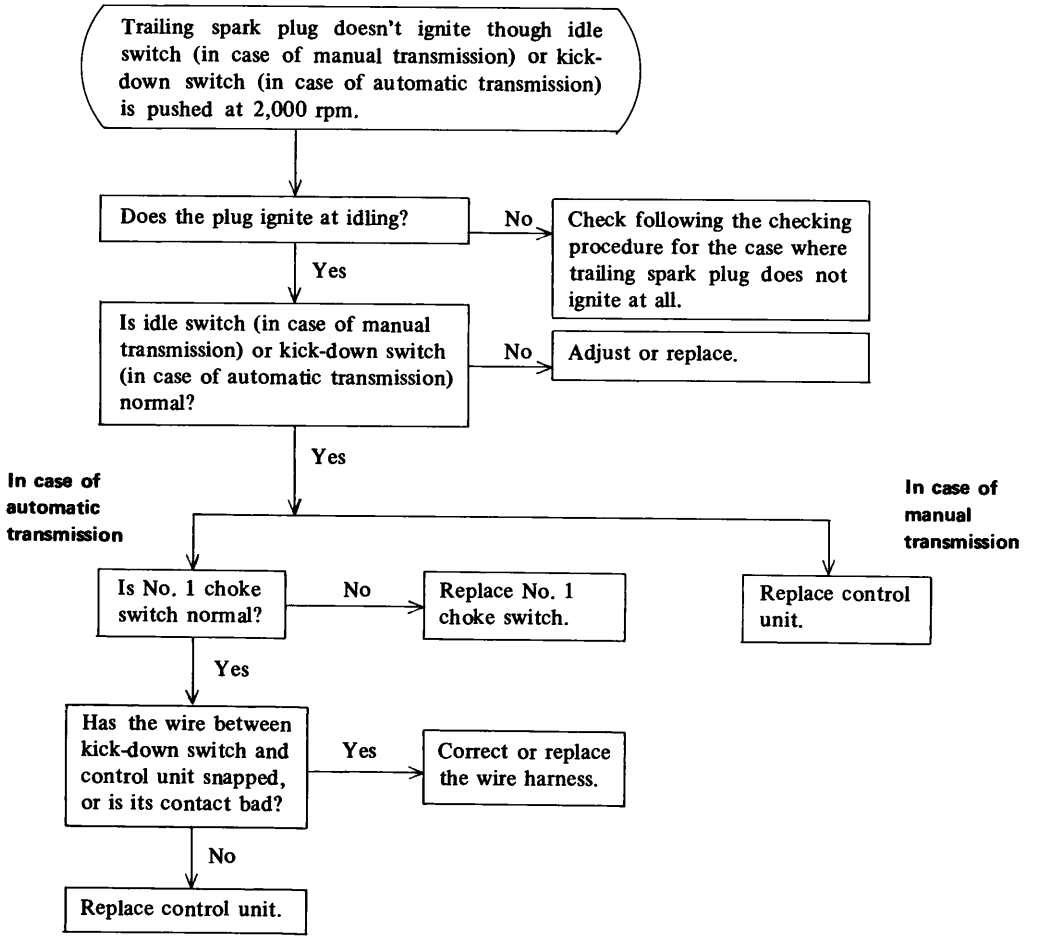

Checking Leading Side Ignition

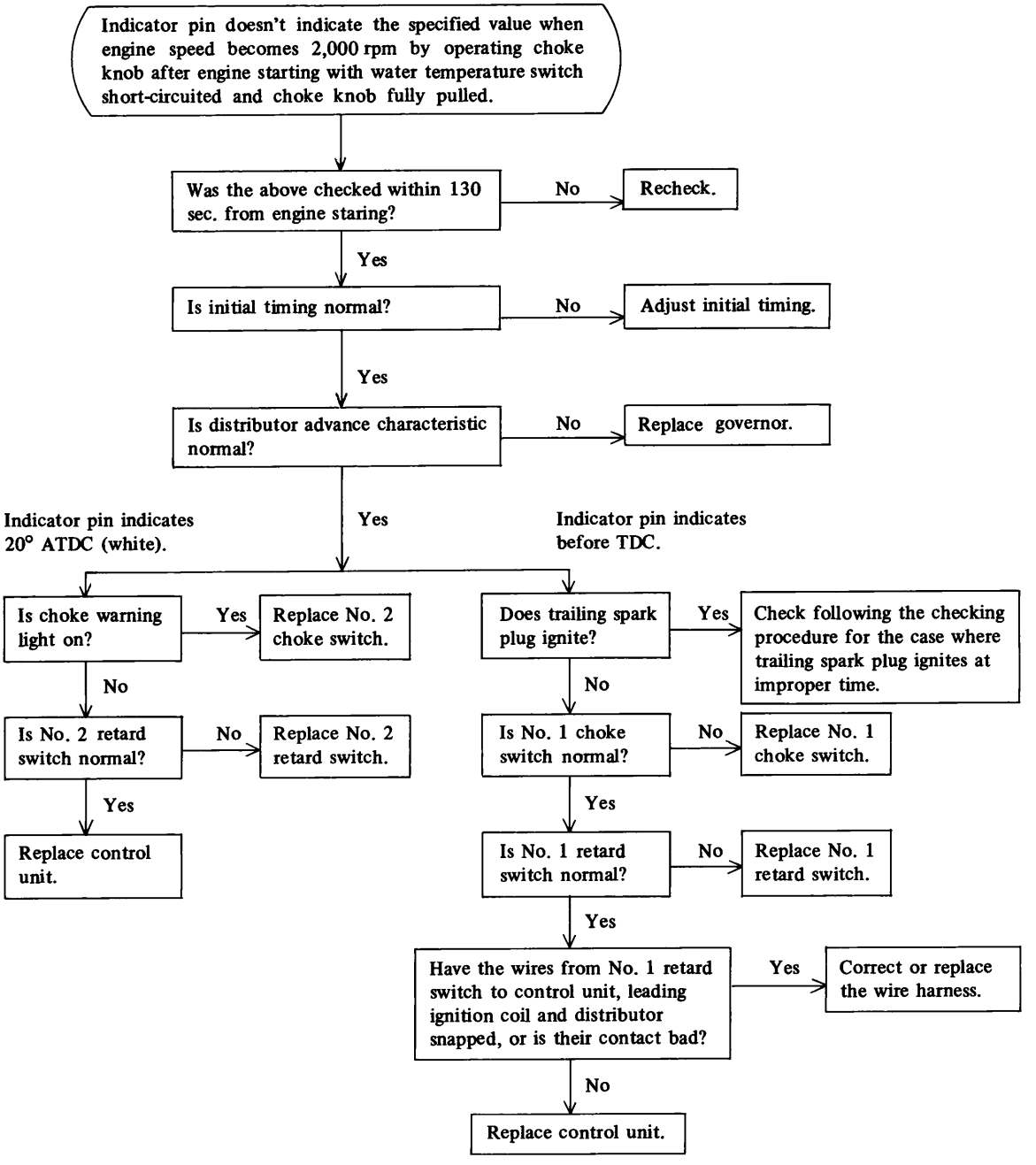

KICK-DOWN CONTROL SYSTEM
(only for automatic transmission)

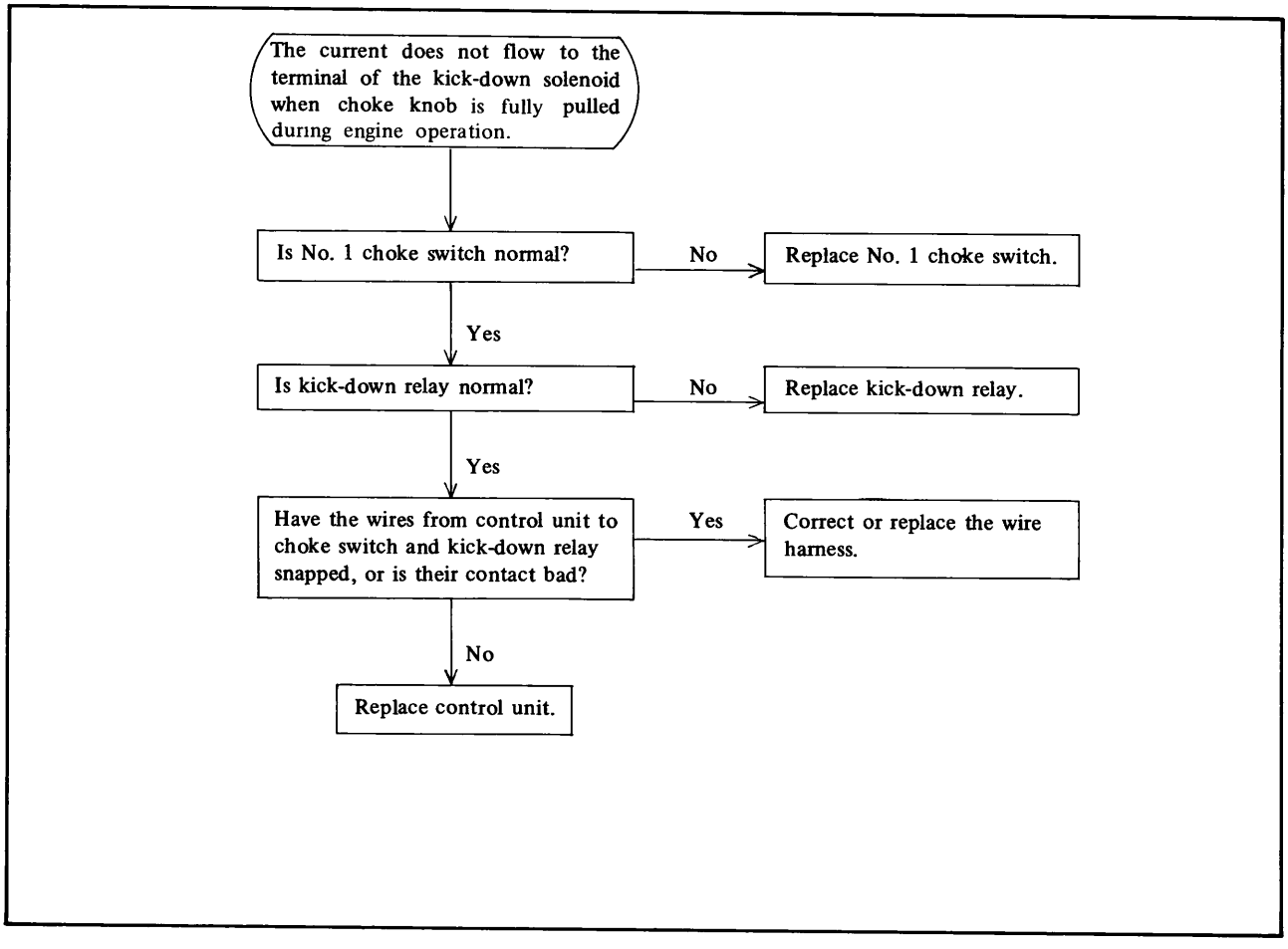

HEAT HAZARD PROTECTIVE AND WARNING SYSTEM

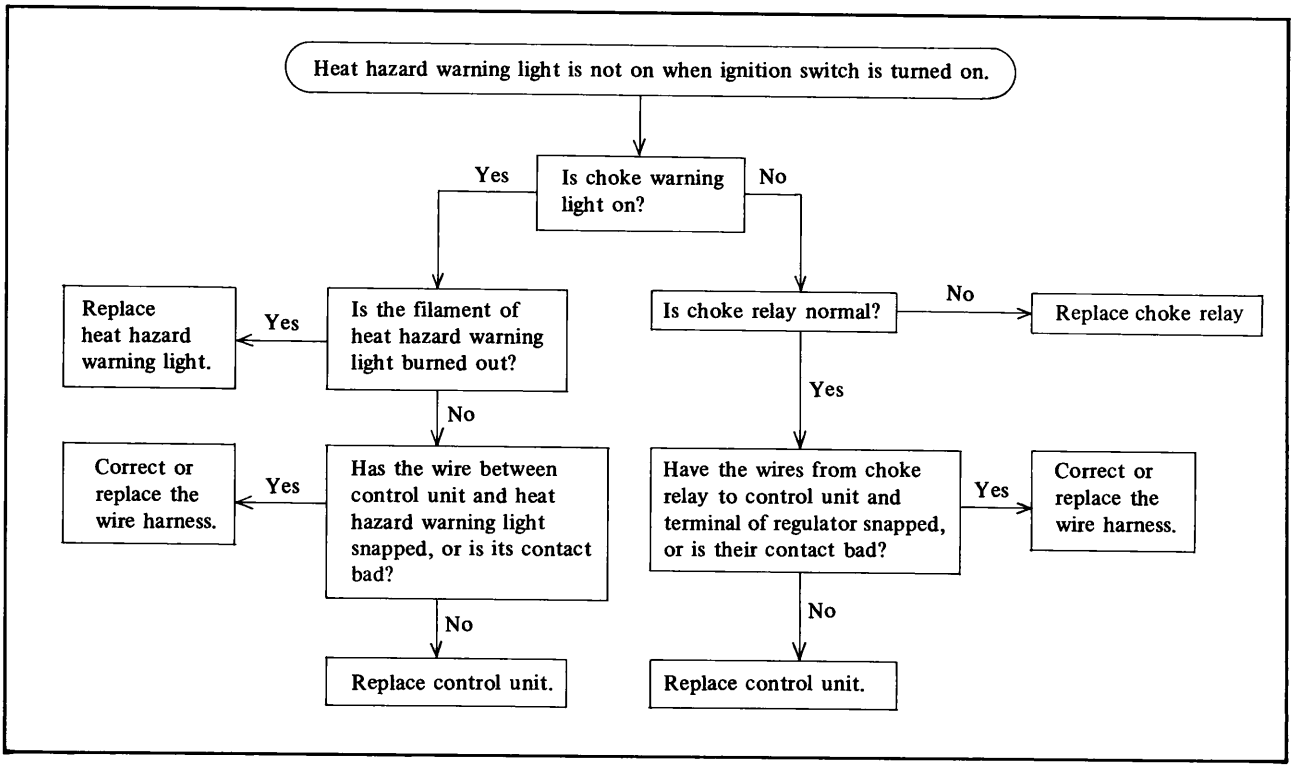

1A–C. TROUBLE SHOOTING

1A–C–1. Symptoms, Causes and Remedies

The possible faults and their remedies are listed in the following table. When the symptoms of troubles are detected, proper care must be taken immediately. (It would be better to check the ignition timing, spark plug and idle setting at first.)

Symptoms and probable causes	Remedies
1. Poor acceleration and poor engine power	
* The engine does not fully respond to the depression of the accelerator pedal.	
* The accelerative force is poor.	
* The climbing capacity is insufficient.	
* The max. speed can not be obtained.	
A. Defect of air intake system	
1) Clogging of air cleaner	Clean or replace
2) Defect of intake air temperature control valve	See 4–F–2 Replace if necessary
B. Defect of fuel system	
1) Improper injection of carburetor accelerator pump	See 4–A–5 Adjust or replace
2) Clogging of carburetor jets	Clean or replace
3) Improper opening of throttle valve and choke valve	Repair
4) Lack of fuel supply at high speed running	See 4–B Replace if necessary
C. Defect of ignition system	
1) Improper ignition timing and ignition advance	See 5–C–3, 5–C–5 Adjust
2) Defect of ignition control system (control unit, retard switch etc.)	See 1A–A–8 Replace if necessary
3) Burned or improperly adjusted distributor contact point	See 5–C–1, 5–C–2 Adjust or replace
4) Fouling and excessive gap of spark plugs	See 5–E Clean or replace
D. Air leak from each hose and each valve	Repair or replace
E. Low compression pressure	Repair
F. Collapse of exhaust system	Repair or replace
G. Defect of kick-down control system	See 1A–A–11
..... only in case of automatic transmission	
2. Rough engine idling and hard starting	
* The idling speed cannot be lowered.	
* Too much engine vibration at idling.	
* The engine starting is too hard.	
* The engine stalls immediately even if it starts.	
A. Defect of air intake system	
1) Clogging of air cleaner	Clean or replace
2) Defect of intake air temperature control valve	See 4–F–2 Replace if necessary
B. Defect of fuel system etc.	
1) Improper idle setting	See 4–A–1 Adjust
2) Clogging of carburetor jets	Clean or replace
3) Clogging of fuel return passage	Clean or replace
4) Improper seating of carburetor secondary throttle valve	Repair
5) Defect of choke system	See 4–A–4 Adjust
6) Defect of richer or improper signal from control unit ..... only in case of manual transmission (Richer is continuously opened)	See 4–A–6 Replace if necessary
C. Defect of ignition system	
1) Improper ignition timing and ignition advance	See 5–C–3, 5–C–5 Adjust
2) Defect of ignition control system (control unit etc.)	See 1A–A–8 Replace if necessary
3) Burned or improperly adjusted distributor contact point	See 5–C–1, 5–C–2 Adjust or replace
4) Fouling and excessive gap of spark plugs	See 5–E Clean or replace
5) Internal disconnection of ignition coils	See 5–D Replace
6) Electric leak from high tension cords, distributor, ignition coil etc.	Repair
D. Defect of deceleration control valve or improper signal from control unit (Deceleration control valve is continuously opened)	See 1A–A–5 Replace if necessary

Symptoms and probable causes	Remedies
E. Defect of altitude compensator	See 1A–A–6 Replace if necessary
F. Defect of evapo compensator valve	See 1A–A–7 Replace if necessary
G. Defect of ventilation valve	See 1A–A–20 Replace if necessary
H. Defect of secondary air control system (Secondary air is not injected properly)	
1) Defect of air pump and/or "V" belt	See 1A–A–1 Replace if necessary
2) Defect of air control valve	See 1A–A–4 Replace if necessary
3) Improper signal from control unit	See 1A–A–4 Replace if necessary
I. Air leak from each hose and each valve	Repair or replace
J. Low compression pressure	Repair
K. Defect of sub-zero starting assist device (extremely cold weather)	See 4–A–8 Replace if necessary
3. Improper fuel connection between slow and main zones (Flat Spot)	
* Shock is felt when depressing the accelerator pedal to accelerate from the low speed cruising condition.	
A. Defect of fuel system	
1) Improper idle setting	See 4–A–1 Adjust
2) Clogging of carburetor jets	Clean or replace
3) Improper fuel level	See 4–A–3 Adjust
4) Improper injection of carburetor accelerator pump	See 4–A–5 Adjust, replace if necessary
B. Defect of ignition system	
1) Fouled spark plug	See 5–E Clean or replace
2) Burned or improperly adjusted distributor contact point	See 5–C–1, 5–C–2 Adjust or replace
C. Defect of deceleration control valve or improper signal from control unit	See 1A–A–5 Replace if necessary
4. Improper fuel connection between primary and secondary zones	
* Shock is caused when accelerating from running at around 3,000 rpm by depressing the accelerator pedal fully.	
A. Serious clogging of air cleaner	Clean or replace
B. Defect of fuel system	
1) Clogging of carburetor jets	Clean of replace
2) Excessively low fuel level	See 4–A–3 Adjust
3) Lack of fuel supply	See 4–B Replace if necessary
4) Improper opening of carburetor secondary throttle valve	Repair
C. Defect of ignition system	
1) Fouled spark plug	See 5–E Clean or replace
2) Burned or improperly adjusted distributor contact point	See 5–C–1, 5–C–2 Adjust or replace
D. Defect of deceleration control valve or improper signal from control unit	See 1A–A–5 Replace if necessary
5. Abnormally large engine knocking	
A. Too poor fuel (Octane number is low)	
B. Defect of ignition system	
1) Improper ignition timing	See 5–C–3 Adjust
2) Excessive ignition advance	See 5–C–5 Replace if necessary
3) Insufficcient heat range or extreme gap erosion of spark plug	See 5–E Clean or replace
6. Pre-ignition or spit back	
* Large noises comes from the engine compartment at high speed running, e.g. on the free way, and the engine horsepower falles.	
NOTE: If the car runs on under the condition mentioned above, the insulator of the spark plug in broken and bites into the combustion chamber, causing the vehicle to be inoperable.	

Symptoms and probable causes	Remedies	
A. Defect of ignition system		
Pre-ignition — 1) Excessive ignition advance	See 5–C–5	Replace if necessary
Pre-ignition — 2) Insufficient heat range of spark plug	See 5–E	Replace
Spit-back — 3) Excessive spark plug gap	See 5–E	Replace
Spit-back — 4) Improper alignment of high tension cords	Correct	
B. Insufficient metering oil		
C. Sticky apex seal	Clean	
7. Large car bucking (deceleration surging)		
* Large car bucking occurs at deceleration.		
A. Defect of fuel system		
1) Improper idle setting	See 4–A–1	Adjust
2) Defect of richer or improper signal from control unit ..... only in case of manual transmission (Richer does not operate properly at deceleration)	See 4–A–6	Replace if necessary
B. Defect of ignition system		
1) Improper ignition timing and ignition advance	See 5–C–3, 5–C–5	Adjust or replace
2) Fouled spark plug	See 5–E	Clean or replace
3) Burned or improperly adjusted distributor contact point	See 5–C–1, 5–C–2	Adjust or replace
C. Defect of deceleration control valve or improper signal from control unit (Deceleration control valve does not operate properly at deceleration)	See 1A–A–5	Replace if necessary
D. Defect of secondary air control system (Secondary air is not injected properly)		
1) Defect of air pump and/or "V" belt	See 1A–A–1	Adjust or replace
2) Defect of air control valve	See 1A–A–4	Replace if necessary
3) Improper signal from control unit	See 1A–A–4	Replace if necessary
E. Air leak from each hose and each valve	Repair or replace	
8. Afterburning (Back fire)		
* Extremely annoying afterburning occurs during deceleration.		
* Afterburning occurs when turning off the ignition switch.		
A. Defect of fuel system		
1) Improper idle setting	See 4–A–1	Adjust
2) Defect of richer or improper signal from control unit ..... only in case of manual transmission (Richer does not operate properly at deceleration)	See 4–A–6	Replace if necessary
B. Defect of ignition system		
1) Improper ignition timing and ignition advance	See 5–C–3, 5–C–5	Adjust or replace
2) Fouled spark plug	See 5–E	Clean or replace
3) Burned or improperly adjusted distributor contact point	See 5–C–1, 5–C–2	Adjust or replace
C. Defect of deceleration control valve or improper signal from control unit (Deceleration control valve does not operate properly at deceleration or when ignition switch is turned off.)	See 1A–A–5	Replace if necessary
D. Defect of secondary air control system (Secondary air is not injected properly)		
1) Defect of air pump and/or "V" belt	See 1A–A–1	Adjust or replace
2) Defect of air control valve	See 1A–A–4	Replace if necessary
3) Improper signal from control unit	See 1A–A–4	Replace if necessary
E. Defect of altitude compensator	See 1A–A–6	Replace if necessary
F. Defect of evapo compensator valve	See 1A–A–7	Replace if necessary
G. Defect of ventilation valve	See 1A–A–20	Replace if necessary
H. Air leak from each hose and each valve	Repair or replace	
I. Gas leak from exhaust system	Repair or replace	
9. Overflow from carburetor		
A. Defect of fuel system		
1) Dust biting into needle valve	See 4–A–3	Clean

Symptoms and probable causes	Remedies
2) Improper seating of needle valve	See 4–A–3 Clean or replace
3) Improper movement of float	See 4–A–3 Adjust or replace
4) Clogging of fuel return passage	See 4–A–9 Clean or replace
5) Large fuel pressure of fuel pump	See 4–B Replace if necessary
10. The engine brake does not work even if the accelerator pedal is released.	
* Even if the accelerator pedal is released when running, the engine brake does not work, which causes the overrunning and makes the driver uneasy.	
A. Clogging of air cleaner	Clean or replace
B. Defect of fuel system	
1) Improper returning of carburetor primary throttle valve	Repair
2) Improper returning of carburetor secondary throttle valve	Repair
C. Defect of deceleration control valve (The opening period of anti-afterburn valve is too long.)	See 1A–A–5 Replace if necessary
11. Overheat	
* Indicating "H" of the thermometer on the instrument panel denotes overheating. Running on with such an overheated engine may lead to serious damage of the engine.	
A. Defect of cooling system	
1) Lack of coolant	Replenish
2) Coolant leak from water pump, radiator, car heater, water hose etc.	Repair or replace if necessary
3) Defect of fan drive	Replace if necessary
4) Defect of thermostat	Replace if necessary
5) Clogging of radiator	Clean
B. Loosening or breakage of "V" belt	Adjust or replace
C. Lack of engine oil	Replenish if necessary
D. Defect of water thermo switch for car cooler	Replace if necessary
E. Defect of thermometer or heat gauge unit	Replace if necessary
12. Improper operation of choke control knob	
* Choke knob cannot remain pulled.	
* Choke knob does not return automatically.	
A. Defect of choke relay	See 1A–A–19 Replace if necessary
B. Defect of water temperature switch	See 1A–A–15 Replace if necessary
C. Defect of control unit	See 1A–A–14 Replace if necessary
D. Defect of choke wire (electromagent, choke switch etc.)	See 1A–A–9, 1A–A–10, 1A–A–13 Replace if necessary
E. Defect of choke return spring	See 1A–A–13 Replace if necessary
13. Abnormal fast idle speed	
* Fast idle speed is abnormally high or low.	
A. Defect of No. 1 choke switch and/or No. 2 choke switch.	See 1A–A–9, 1A–A–10 Replace if necessary
B. Defect of ignition system	
1) Improper ignition timing and ignition advance	See 5–C–3, 5–C–5 Adjust or replace
2) Defect of ignition control system (control unit, No. 2 retard switch etc.)	See 1A–A–8 Replace if necessary
C. Defect of fuel system	
1) Improper opening of carburetor throttle valve	Repair
2) Defect of choke system	See 1A–A–13 Replace if necessary

Symptoms and probable causes	Remedies
14. Abnormal exhaust emissions under proper procedure	
A. Defect of air intake system	
1) Serious clogging of air cleaner	Clean or replace
2) Defect of intake air temperature control valve	See 4–F–2 Replace if necessary
B. Defect of fuel system	
1) Improper idle setting	See 4–A–1 Adjust
2) Improper fuel level	See 4–A–3 Adjust
3) Clogging of jets	Clean or replace
4) Defect of choke system	See 4–A–4 Adjust
5) Defect of richer ..... only in case of manual transmission	See 4–A–6 Replace if necessary
6) Defect of power valve ..... only in case of automatic transmission	See 4–A–7 Replace if necessary
C. Defect of ignition system	
1) Improper ignition timing and ignition advance	See 5–C–3, 5–C–5 Adjust or replace
2) Defect of ignition control system (control unit etc.)	See 1A–A–8 Replace if necessary
3) Burned or improperly adjusted distributor contact point	See 5–C–1, 5–C–2 Adjust or replace
4) Fouled spark plug etc.	See 5–E Clean or replace
D. Defect of secondary air control system	
1) Defect of air pump and/or "V" belt	See 1A–A–1 Adjust or replace
2) Defect of air control valve	See 1A–A–4 Replace if necessary
3) Improper signal from control unit	See 1A–A–4 Replace if necessary
E. Defect of deceleration control valve or improper signal from control unit	See 1A–A–5 Replace if necessary
F. Defect of altitude compensator	See 1A–A–6 Replace if necessary
G. Defect of evapo compensator	See 1A–A–7 Replace if necessary
H. Defect of ventilation valve	See 1A–A–20 Replace if necessary
I. Defect of evaporative emission control system	See 1A–A–22, 1A–A–23, 1A–A–24 Replace if necessary
J. Defect of thermal reactor	See 1A–A–3 Replace if necessary
K. Air leak from each hose and each valve	Repair or replace
L. Defect of heat hazard sensor	See 1A–A–12 Replace if necessary

1A–C–2. Possible Troubles Caused by Defects of Each Device

Air control valve

* Exhaust emission becomes unfavourable.
* Rough engine idling
* Afterburning
* Car bucking (deceleration surging)
* Damage is liable to occur on reactor.

Deceleration control valve

* Extremely annoying afterburning occurs during deceleration or after turning off the ignition siwtch.
* Hard engine starting
* Rough engine idling
* Engine speed becomes high.
* Exhaust emission becomes unfavourable.
* Car bucking (deceleration surging)
* Flat spot occurs during driving.
* Flat spot occurs during light acceleration from low speed running or deceleration condition.

Altitude compensator

* Hard engine starting
* Rough engine idling
* Afterburning
* Car bucking (deceleration surging)
* Exhaust emission becomes unfavourable.

Evapo compensator valve
* Hard engine starting
* Rough engine idling
* Afterburning
* Car bucking (deceleration surging)
* Exhaust emission becomes unfavourable.

Ventilation valve
* Misfiring frequently occurs during idling.
* Rough engine idling
* Afterburning
* Car bucking (deceleration surging)
* Dilution of engine oil with gasoline increases.
* Defective purging occurs in charcoal canister.
* Exhaust emission becomes unfavourable.

Air pump
* Exhaust emission becomes unfavourable.
* Noisy air pump

Richer (Manuall transmission only)
* Exhaust emission becomes unfavourable
* Rough engine idling
* Afterburning
* Car bucking (deceleration surging)

Power valve (Automatic transmission only)
* Exhaust emission becomes unfavourable.
* Poor acceleration

Kick-down switch (Automatic transmission only)
* Improper operation of kick-down control system

Water temperature switch
* Improper operation of automatic throttle release system
* Improper operation of ignition control system
* Improper operation of air control valve

Idle switch (Manual transmission only)
* Improper operation of deceleration control valve
* Improper operation of ignition control system
* Improper operation of air control valve
* Improper operation of richer

No. 1 retard switch
* Improper operation of ignition control system

No. 2 retard switch
* Improper operation of ignition control system

No. 1 choke switch
* Improper operation of automatic throttle release system
* Improper operation of ignition control system
* Improper operation of air control valve
* Improper operation of kick-down control system (Automatic transmission only)
* Improper operation of choke system

No. 2 choke switch
* Improper operation of automatic throttle release system
* Improper operation of ignition control system

Control unit
* Improper operation of deceleration control valve

* Improper operation of air control valve
* Improper operation of ignition control system
* Improper operation of fuel system (Richer or power valve)
* Improper operation of automatic throttle release system
* Improper operation of heat hazard protective and warning system
* Improper operation of kick-down control system (Automatic transmission only)

Fuse of control unit
* Hard starting, rough idling and large car knocking may be caused by leaving deceleration control valve open.

SPECIAL TOOLS

49 2113 010	Air pump gauge set
49 1881 125	Thermal reactor remover
49 1011 120	Ventilation valve wrench

LUBRICATING SYSTEM

2–A. LUBRICATING CIRCUIT ..... 2 : 1
2–B. OIL PUMP ..... 2 : 2
2–B–1. Disassembling Oil Pump ..... 2 : 2
2–B–2. Inspecting Oil Pump ..... 2 : 2
2–B–3. Assembling Oil Pump ..... 2 : 3
2–C. OIL PUMP DRIVING ..... 2 : 3
2–C–1. Chain Adjuster Inspection ..... 2 : 3
2–C–2. Oil Pump Chain and Sprocket Inspection ..... 2 : 3
2–D. PRESSURE CONTROL VALVE ..... 2 : 4
2–D–1. Checking Pressure Control Valve ..... 2 : 4
2–E. OIL COOLER ..... 2 : 4
2–E–1. Repairing Oil Cooler ..... 2 : 4
2–F. BY-PASS VALVE ..... 2 : 4
2–F–1. Checking By-pass Valve ..... 2 : 4
2–G. PRESSURE REGULATOR ..... 2 : 5
2–G–1. Checking Pressure Regulator ..... 2 : 5
2–G–2. Checking Oil Pressure ..... 2 : 5
2–H. OIL FILTER ..... 2 : 5
2–H–1. Replacing Oil Filter ..... 2 : 5
2–I. METERING OIL PUMP ..... 2 : 6
2–I–1. Checking Metering Oil Pump ..... 2 : 6
2–I–2. Adjusting Metering Oil Pump ..... 2 : 6
2–J. OIL PAN ..... 2 : 7
2–J–1. Oil Pan Removal ..... 2 : 7
2–J–2. Oil Pan Inspection ..... 2 : 7
2–J–3. Oil Pan Installation ..... 2 : 7
2–K. OIL LEVEL SENSOR ..... 2 : 7
2–K–1. Removing Oil Level Sensor ..... 2 : 7
2–K–2. Checking Oil Level Sensor ..... 2 : 7
2–K–3. Installing Oil Level Sensor ..... 2 : 7
SPECIAL TOOL ..... 2 : 7

2

2–A. LUBRICATING CIRCUIT

1. The oil pump which is driven by the eccentric shaft, draws up the oil from the oil pan through the strainer and sends it to the oil cooler through the pressure control valve.
2. The pressure control valve sends the surplus oil back to the oil pan when the oil pressure exceeds 11 kg/cm² (156 lb/in²) in order to prevent the oil cooler and the oil hose from damage by the exceeding pressure which is generated at the starting in the very cold weather.
3. The by-pass valve is installed on the oil cooler in order to prevent drop of oil supply which is caused by resistance of oil cooler in the cold weather and regulate the temperature of the oil circulating in the engine. The oil is sent directly to the engine without passing through the oil cooler when the difference of the oil pressure of inlet and outlet pipes is more than 3.56 kg/cm² (50.7 lb/in²) at 70°C (158°F) and/or the temperature of the oil is under 60°C (140°F).
4. The oil from the oil cooler is forced to the pressure regulator on the rear housing.
5. The oil of which pressure is regulated to 5 kg/cm² (71.1 lb/in²), is forced to the oil filter.
6. The oil that has been filtered by the oil filter is forced to the front main bearing through the tubular dowel and to the rear main bearing through the passage of the rear housing.
7. The oil that has passed through the oil holes of the bearings, lubricate the front and rear main bearings and enters the oil passage provided in the eccentric shaft.
8. The oil passing through the eccentric shaft passage lubricates the rotor bearings.
9. Needle bearings which are provided in front of the front housing are lubricated by the oil forced through the little hole led to the oil passage of the eccentric shaft and the oil coming after lubricating the front main bearing.
10. The eccentric shaft is equipped with two oil jets. The oil in the passage of the eccentric shaft is injected through the oil jets into the front and rear rotors and cools the rotors.
11. Stationary gears and internal gears are lubricated by the oil coming after cooling the rotors and after lubricating the main bearings.
12. The oil passing through the tubular dowel is sent to the front cover and led to the metering oil pump.
13. From the metering oil pump, the oil is forced to the carburetor and is supplied into the combustion chambers together with the air-fuel mixture to lubricate the apex seals, corner seals, side seals and housings.

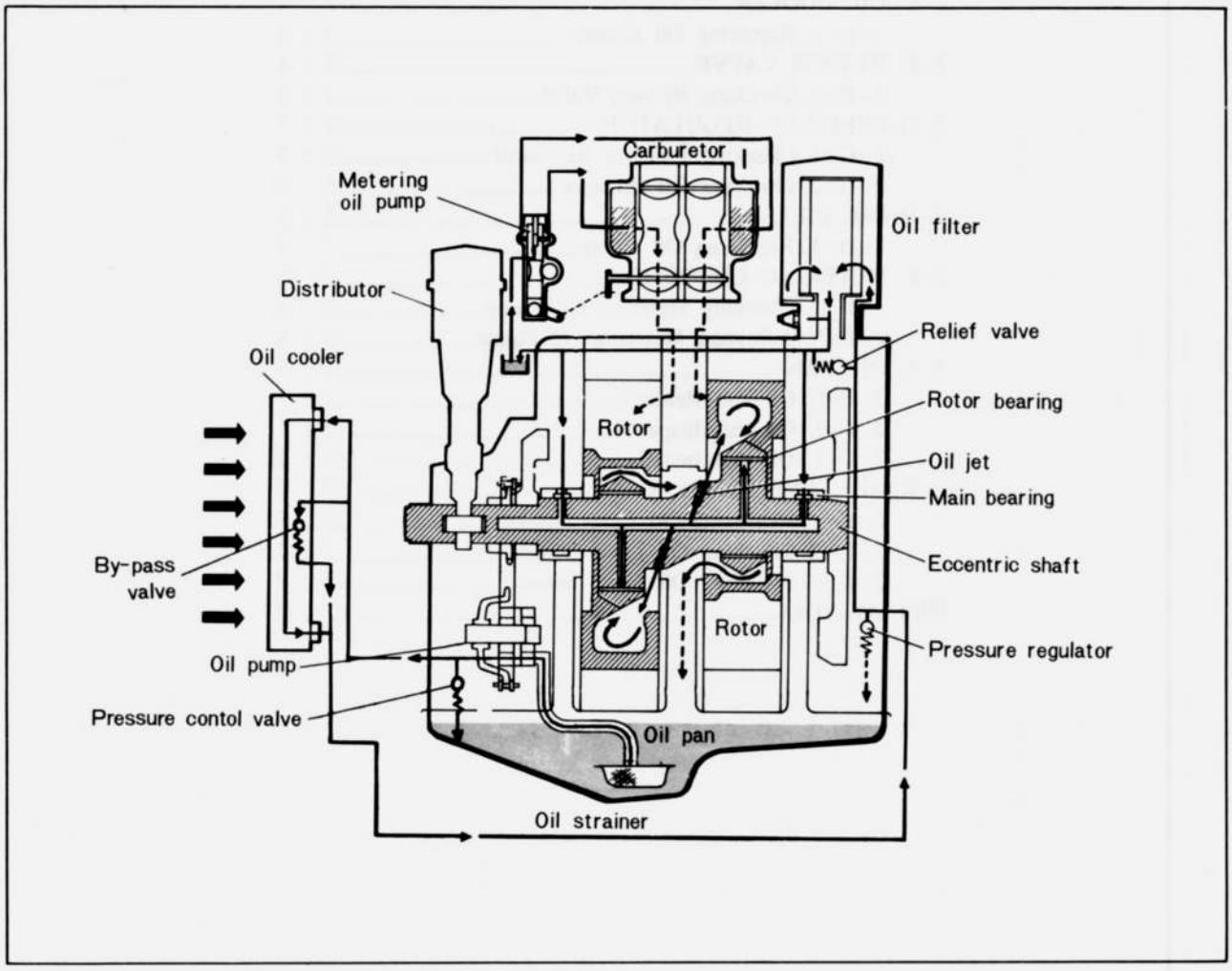

Fig. 2–1 Lubricating circuit

2–B. OIL PUMP

The oil pump is of a rotor type based on a trochoid curve and consists of the parts as shown in Fig. 2–5. The feeding capacity is 6 liters/min. (1.56 U.S. gal/min.) at 1,000 rpm of engine speed.

2–B–1. Disassembling Oil Pump

1. Remove the oil pump from the front housing.
2. Remove the snap ring from the shaft, and remove the rear rotors and key.
3. Remove the middle plate attaching screw and remove the middle plate.
4. Remove the front rotors and key from the shaft.

2–B–2. Inspecting Oil Pump

1. Check the clearance between the lobes of the rotors with a feeler gauge, as shown in Fig. 2–3. The standard clearance is 0.01 ~ 0.09 mm (0.0004 ~ 0.0035 in). If the clearance exceeds **0.15 mm (0.006 in),** replace both inner rotor and outer rotor.

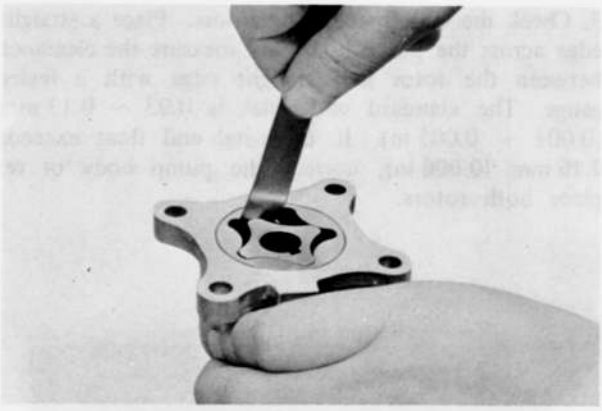

Fig. 2–3 Checking rotor clearance

2. Check the clearance between the outer rotor and pump body with a feeler gauge as shown in Fig. 2–4. The specified clearance is 0.20 ~ 0.25 mm (0.008 ~ 0.01 in). If the clearance is more than **0.30 mm (0.012 in),** replace the rotor(s) or body.

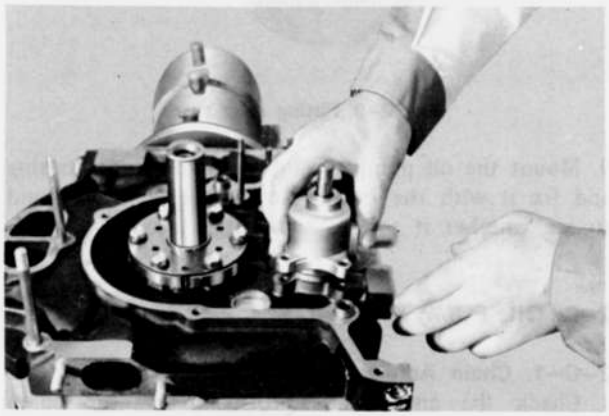

Fig. 2–2 Removing oil pump



Fig. 2–4 Checking outer rotor clearance

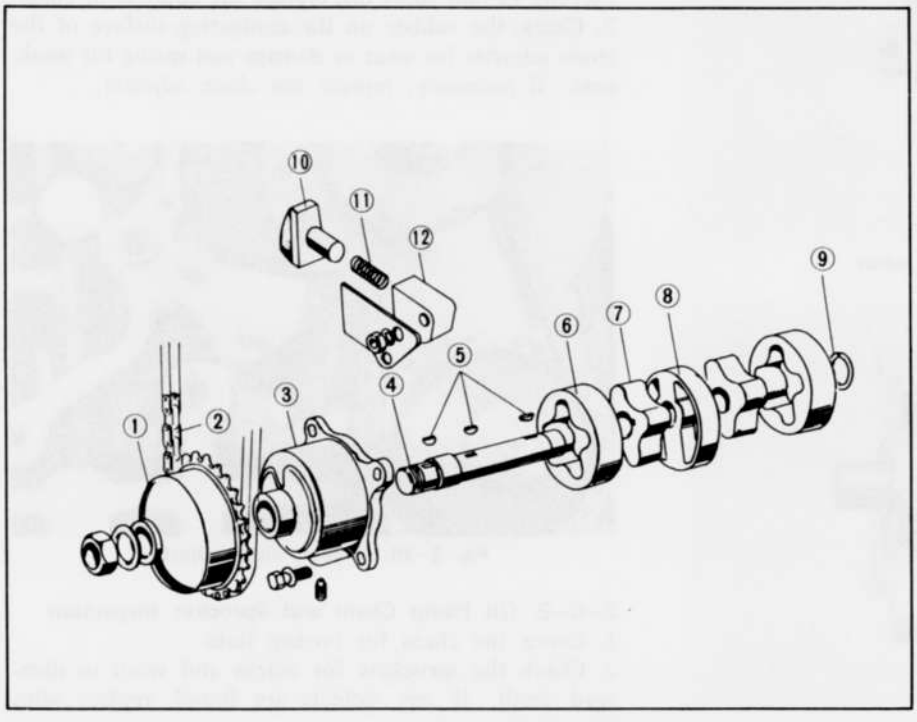

Fig. 2–5 Oil pump components

1. Oil pump driven sprocket
2. Oil pump chain
3. Pump body
4. Shaft
5. Keys
6. Outer rotor
7. Inner rotor
8. Middle plate
9. Snap ring
10. Adjuster
11. Spring
12. Body

3. Check the end float of the rotors. Place a straight edge across the pump body and measure the clearance between the rotor and straight edge with a feeler gauge. The standard end float is 0.03 ~ 0.13 mm (0.001 ~ 0.005 in). If the total end float exceeds **0.15 mm (0.006 in)**, correct the pump body or replace both rotors.

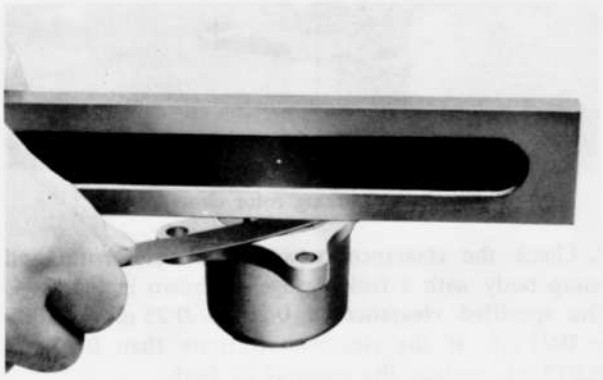

Fig. 2–6 Checking end float

2–B–3. Assembling Oil Pump

1. Attach the key of the front side rotor to the shaft.
2. Install the front side inner rotor to the shaft so as to align the key groove of the inner rotor with the key on the shaft.
3. Mount the inner rotor and shaft assembly to the pump body.
4. Install the outer rotor to the body so as to see the identification marks of triangle. Apply oil to the rotors. (Fig. 2–7)
5. Install the middle plate to the body. Tighten the set screw. (Fig. 2–8)
6. Attach the key of the rear side rotor to the shaft.
7. Install the rear side inner rotor and outer rotor.
8. Fit the snap ring on the shaft. Apply oil to the rotors.

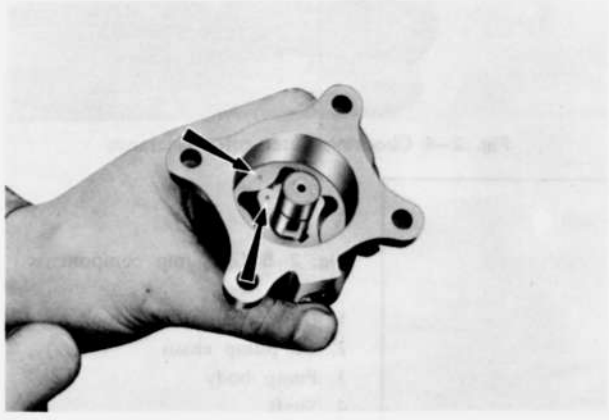

Fig. 2–7 Installing rotors

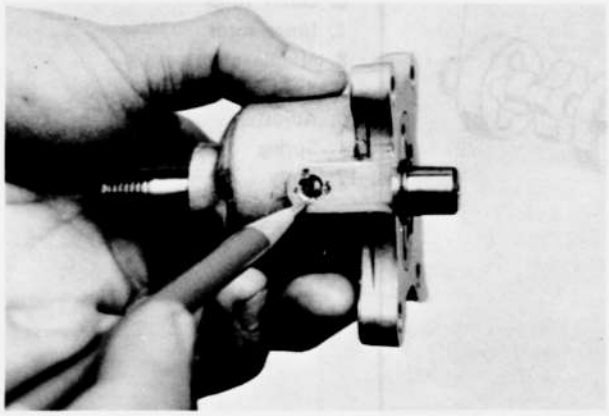

Fig. 2–8 Tightening intermediate plate



Fig. 2–9 Fitting snap ring

9. Mount the oil pump assembly on the front housing and fix it with the bolts. Rotate the shaft by hand to see whether it rotates smoothly.

2–C. OIL PUMP DRIVING

2–C–1. Chain Adjuster Inspection

1. Check the amount of protrusion of the chain adjuster, as shown in Fig. 2–10. If the protrusion exceeds **12 mm (0.47 in)**, replace the adjuster or chain.
2. Check the rubber on the contacting surface of the chain adjuster for wear or damage and spring for weakness. If necessary, replace the chain adjuster.

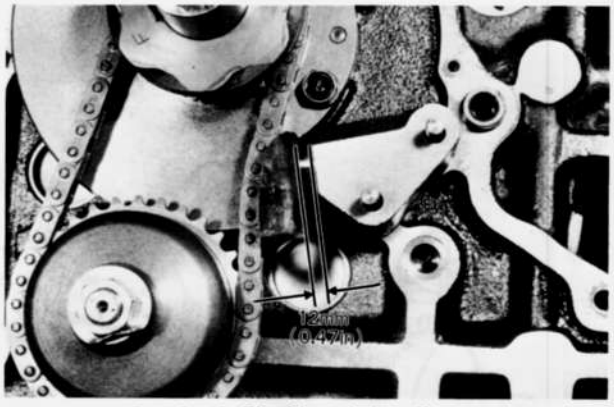

Fig. 2–10 Checking chain adjuster

2–C–2. Oil Pump Chain and Sprocket Inspection

1. Check the chain for broken links.
2. Check the sprockets for cracks and worn or damaged teeth. If any defects are found, replace with new parts.

2–D. PRESSURE CONTROL VALVE

The pressure control valve mounted on the front cover sends the surplus oil back to the oil pan when the pressure exceeds 11 kg/cm² (156 lb/in²) in order to prevent the oil cooler and the oil hose from damage by the exceeding pressure which is generated at the starting in the very cold weather.

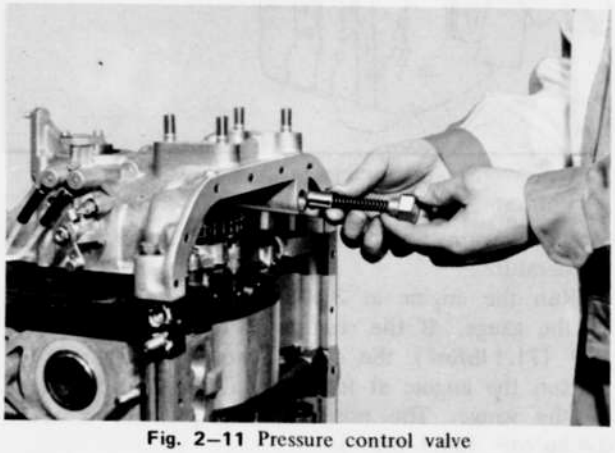

Fig. 2–11 Pressure control valve

2–D–1. Checking Pressure Control Valve

Remove the cap of the pressure control valve from the front cover.

Examine the spring and the plunger for corrosion or any damage. If it is severe, replace with new ones. Measure the free length and replace with new spring if these are not in the specification.

2–E. OIL COOLER

The rotor is cooled by the lubricating oil, and the oil cooler is employed to cool the oil.

The oil cooler is of the corrugated fin type like a water radiator and is mounted under the radiator through insulation rubber. The oil cooler is made of aluminum which has outstanding cooling efficiency.

2–E–1. Repairing Oil Cooler

The inner pressure of the oil cooler is much higher than the cooling radiator, so it should be repaired by **aluminum welding** when damaged.

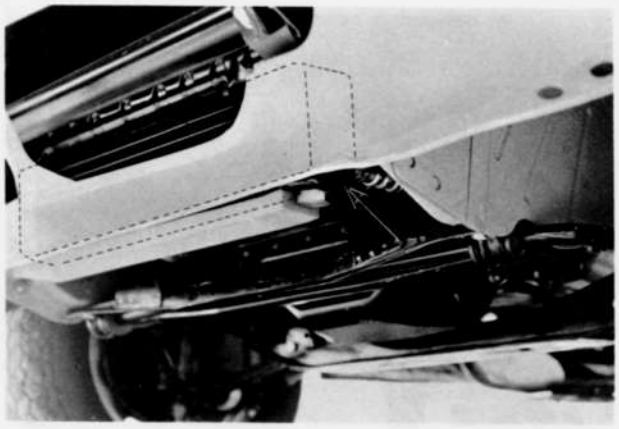

Fig. 2–12 Oil cooler

2–F. BY-PASS VALVE

The by-pass valve is installed on the oil cooler in order to prevent drop of oil supply which is caused by the resistance of the oil cooler in the cold weather and regulate the temperature of the oil circulating in the engine. The oil is sent directly to the engine without passing through the oil cooler when the difference of the oil pressure of inlet and outlet pipes is more than 3.56 kg/cm² (50.7 lb/in²) at 70°C (158°F) and/or the temperature of the oil is under 60°C (140°F).

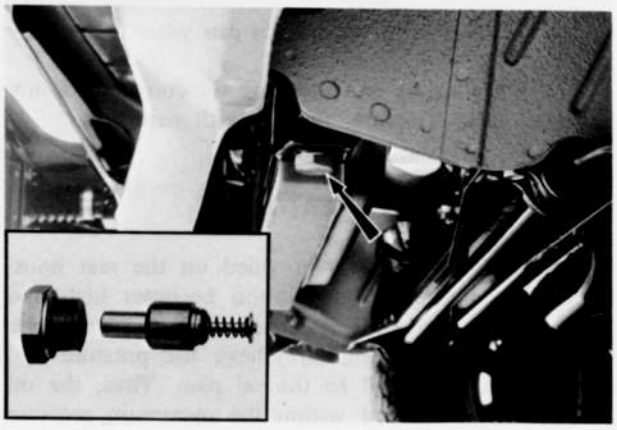

Fig. 2–13 By-pass valve

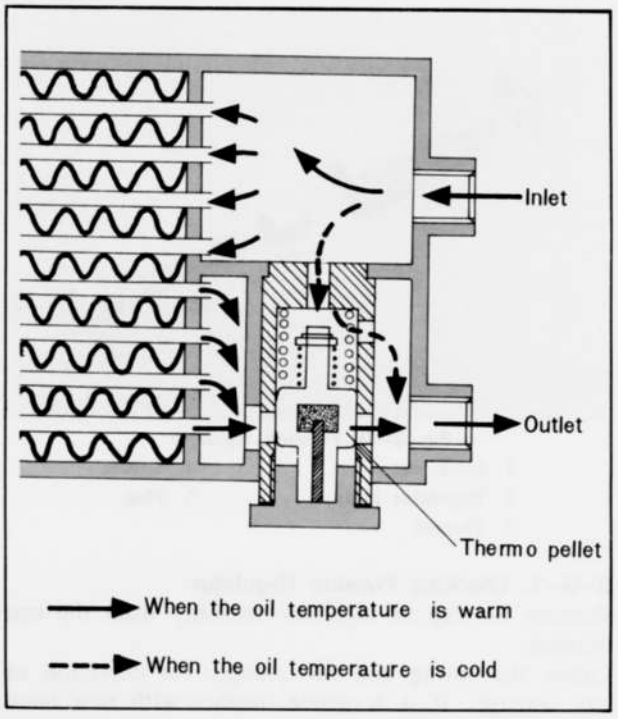

Fig. 2–14 By-pass valve

2–F–1. Checking By-pass Valve

1. Remove the cap nut and pull out the by-pass valve.
2. Soak the by-pass valve in hot oil of 75°C ~ 80°C (167°F ~ 176°C). If the protrusion of piston is more than 5 mm (0.2 in), the by-pass valve is normal. (Fig. 2–15)

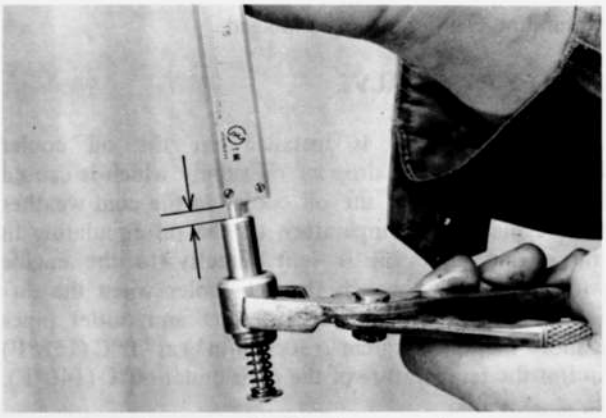

Fig. 2–15 Checking by-pass valve

3. Check the spring and the valve for corrosion or any damage. If it is severe, replace with new ones.

2–G. PRESSURE REGULATOR

The pressure regulator is provided on the rear housing. When the engine revolution becomes high and excessive oil pressure develops in the system, the pressure regulator opens to relieve the pressure and to send the excess oil to the oil pan. Thus, the oil pressure is maintained within the maximum pressure of 5 kg/cm² (71.1 lb/in²).

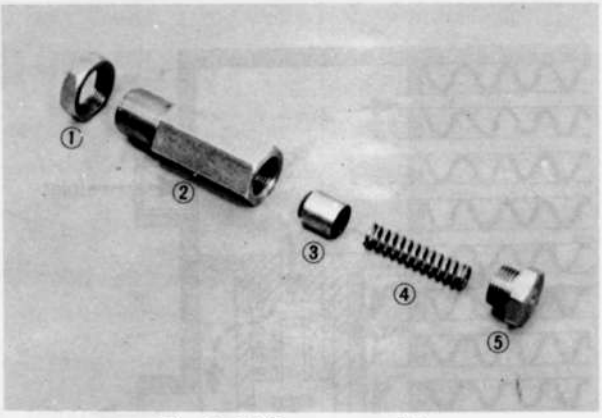

Fig. 2–16 Pressure regulator

1. Lock nut
2. Regulator body
3. Plunger
4. Spring
5. Plug

2–G–1. Checking Pressure Regulator

Remove the cap or regulator assembly from the rear housing.

Check the spring and the plunger for corrosion or any damage. If it is severe, replace with new ones. Measure the free length, set length and set pressure. Replace with new spring if these are not in specifications.

2–G–2. Checking Oil Pressure

To check the oil pressure, proceed as follows:

1. Remove the oil pressure switch under the oil filter of rear housing and install an **oil pressure gauge** (49 0187 280) in its place.

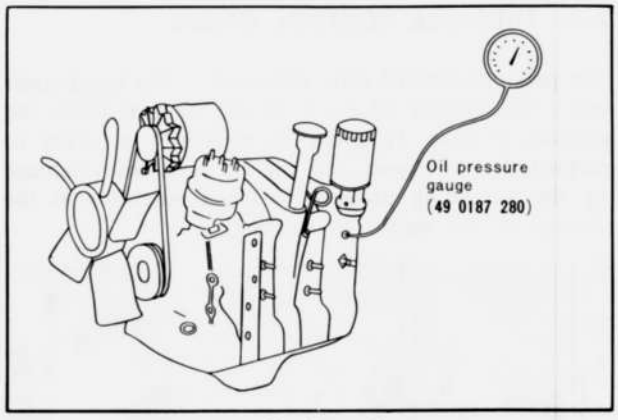

Fig. 2–17 Checking oil pressure

Start and warm up the engine to the normal operating temperature.

2. Run the engine at **3,000 rpm** and take a reading of the gauge. If the reading of the gauge is **5.0 kg/cm² (71.1 lb/in²)**, the oil pressure is normal.

3. Run the engine at idling speed and take a reading of the gauge. The normal idling pressure is about **2.4 kg/cm² (34.1 lb/in²)**.

If the oil pressure is less than **1 kg/cm² (14.2 lb/in²)**, check the following points:

a. Ensure that the oil level is between the "F" and "L" marks of the dipstick gauge.

b. Check the oil pump, as described in **Par. 2–B–2.**

c. Check the pressure regulator for wear on the plunger and fatigue on the spring. The free length of the spring is **46.4 mm (1.827 in).**

2–H. OIL FILTER

The oil filter is of a cartridge type. The element of the filter is sealed in the container as a unit. The oil filter is provided with a relief valve. If the oil filter is clogged by impurities in the oil and the filtering resistance reaches **0.8 ~ 1.2 kg/cm² (11 ~ 17 lb/in²)**, the oil can not pass through the element. In this case, the oil pushes the relief valve open and unfiltered oil is supplied to the engine.

2–H–1. Replacing Oil Filter

1. Remove the oil filter cartridge with a suitable oil filter wrench.

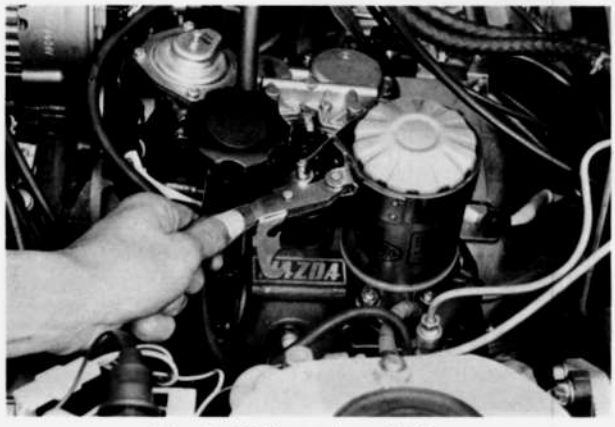

Fig. 2–18 Removing oil filter

2. Apply oil onto the rubber gasket on the new filter cartridge.
3. Place the cartridge on the cover and screw it on until it just touches the cover.
Then tighten the cartridge fully by hand.
4. Start the engine and check to see that the oil is not leaking from the joints.
5. After stopping the engine, ensure that the oil level is between the "F" and "L" marks of the dipstick gauge. Top up with oil if necessary.

2–I. METERING OIL PUMP

The oil enters the metering oil pump from the lubricating oil passage in the front cover and the oil which is measured and discharged from the metering oil pump enters the carburetor through a hose. The oil entering the carburetor is discharged from a portion of venturi to the working chamber to lubricate the gas seals. The plunger type metering oil pump is provided to send the proper amount of oil to the carburetor and is driven by the distributor drive gear.

2–I–1. Checking Metering Oil Pump

As sufficient consideration is being given on the performance and durability of the metering oil pump in its production process, generally there is no need of adjustment.
But as previously mentioned, the metering oil pump is the heart of the operation of the gas seals and insufficient amount of oil discharge could cause troubles such as drop in engine power and development of noise, because of insufficient lubrication, while excessive amount of oil discharge could cause problems as white smoke.
Therefore, the amount of oil discharge should always be within the proper range.
In case the engine tends to show any of the above troubles, the amount of oil discharge should be checked, proceeding as follows.
1. Disconnect the connecting rod by removing the cotter pin.
2. Disconnect the 2 metering oil hoses from the carburetor.
3. Install the tachodwell tester and set the engine at a constant speed of **2,000 rpm.** Wait until the oil discharge from the end of the metering oil hoses becomes steady and, when it is steady receive the oil in the measuring cylinder and start measuring the time simultaneously.
4. Stop the engine after **6 minutes** and check the amount of oil discharge. If it is within the proper range shown below, the discharge is satisfactory. Otherwise, adjust the oil metering pump.

2.0 ~ 2.5 cc/6 min. at 2,000 rpm

Note :
As lubricating oil is not being supplied to the gas seals while the measurements are being taken, a proper amount of clean engine oil should be added into the carburetor or the engine should be run on mixed gasoline into which oil has been mixed at the ratio of 100 : 1.

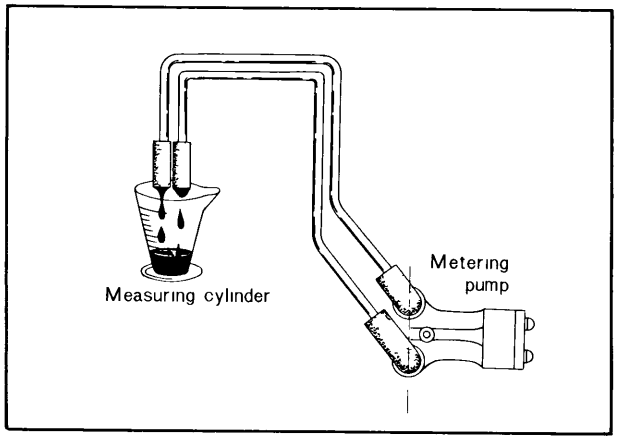

Fig. 2–19 Checking oil discharge

2–I–2. Adjusting Metering Oil Pump

If the amount of oil discharge measured by the procedure shown in the previous paragraph is not proper it would be adjusted by the adjusting screw.

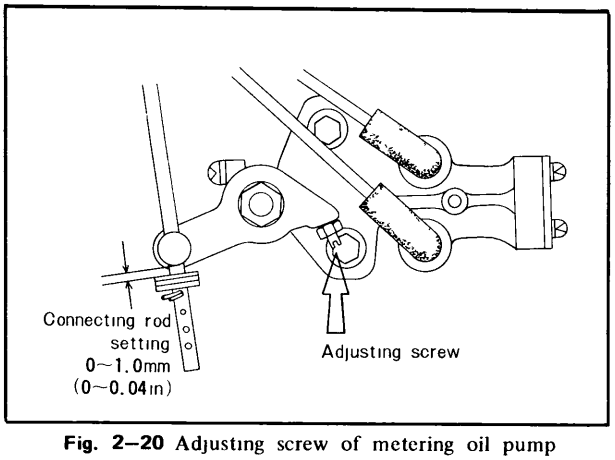

Fig. 2–20 Adjusting screw of metering oil pump

The amount of oil discharge increases when the adjusting screw is tightened, and decreases when loosened. As the amount of oil discharge changes by **0.2 ~ 0.3 cc/6 min./2,000 rpm** per rotation of the screw, adjust the screw after calculating the number of rotations necessary to obtain the proper adjustment.
Also check to ensure that the lock nut of the adjusting screw will lock without fail and be sure not to bend the lever when adjusting. After adjustment has been completed, measure the amount of oil discharge again and make sure that it is within the proper range.
In case the metering oil pump cannot be adjusted, check the oil leakage from pump body or tubes.
If the oil leakage cannot be found, replace a pump assembly.

Connecting rod setting

Set the clearance of connecting rod stopper pin and metering oil pump lever to **0 ~ 1.0 mm (0 ~ 0.04 in)** by using a suitable washer as shown in Fig. 2–20.

2–J. OIL PAN

2–J–1. Oil Pan Removal

1. Raise the vehicle and support with stands.
2. Drain the engine lubricant.
3. Remove the bolts attaching the engine under cover, and remove the engine under cover.
4. Remove the coupler of the oil level sensor and the bolts attaching the oil pan, and remove the oil pan and gasket.

2–J–2. Oil Pan Inspection

Scrape off any dirt or metal particles from the inside of the oil pan. Wash the oil pan in a solvent and dry it with compressed air.
Check the oil pan for any cracks and damaged drain plug threads. Inspect for damage (uneven surface) at the bolt holes caused by over-torqueing the bolts. Straighten surfaces as required. Repair any damage, or replace the oil pan if repairs can not be made satisfactorily.

2–J–3. Oil Pan Installation

Follow the removal procedures in the reverse order.

2–K. OIL LEVEL SENSOR

The oil level sensor fitted to the oil pan is connected by the wiring to the oil level warning lamp.
The oil level sensor is switched on to light the warning lamp when the engine lubricant level in the oil pan goes down to around "L" mark of the dipstick gauge.
When the ignition is switched on, the warning lamp goes on to check for its failure even under the normal lubricant level, but the lamp goes out under the normal level when the engine is started. So if the lamp comes on while the engine is operating, it means a drop of the engine lubricant level and warns necessity of replenishment of the engine lubricant.

2–K–1. Removing Oil Level Sensor

1. Remove the bolts attaching the engine under cover, and remove the engine under cover.
2. Remove the drain plug, and drain the lubricant from the oil pan. Refit the drain plug after draining lubricant.
3. Disconnect the coupler from the oil level sensor.
4. Remove the screws attaching the oil level sensor to the oil pan, and remove the oil level sensor.

2–K–2. Checking Oil Level Sensor

1. Connect the circuit tester to the level sensor as shown in Fig. 2–21, and check the continuity by moving the float up and down.
When the float is on the upper side, the circuit tester should not show any continuity, and when moved to the lower side, it should show a continuity of the circuit. If it is found not to be so, replace the oil level sensor.
2. Check the oil chamber with finger that deposits aren't piled up and the oil hole isn't clogged.

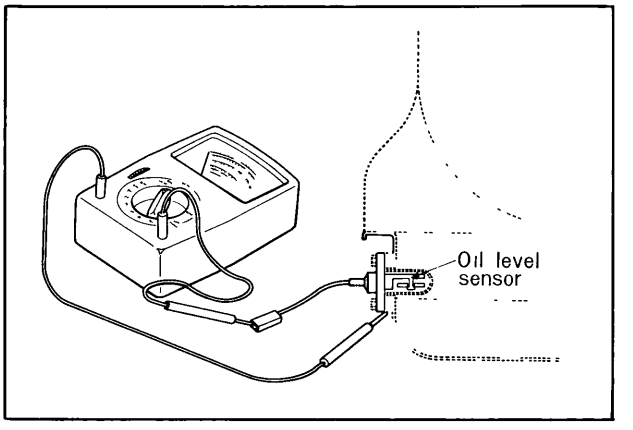

Fig. 2–21 Checking oil level sensor

Note:
1) If the oil hole should be clogged, the float of the oil level sensor can't work correctly, so take care to clean up the oil chamber.
2) The oil level warning lamp is common to the oil pressure warning lamp. When the oil level is between "F" and "L" marks of the dipstick gauge and the oil level sensor is normal, the warning lamp should not light while the engine is running. If the warning lamp should light while the engine is running, check the oil pressure as described in Par. 2–G–2. If the oil pressure drops below 0.3 kg/cm² (4.3 lb/in²), the warning lamp lights up to indicate a trouble in the lubricating system.
3) To check the function of the oil level sensor on the car, the following steps should be taken:
a. Disconnect the coupler from the oil level sensor.
b. Connect the circuit tester to the level sensor as shown in Fig. 2–21.
c. Make sure that the oil level is between "F" and "L" marks of the dipstick gauge, and check to see that there is no continuity of the circuit.
d. Drain the lubricant from the oil pan, and check to see that there is a continuity of the circuit tester.

2–K–3. Installing Oil Level Sensor

Follow the removal procedures in the reverse order. Fill the lubricant in the engine and check to see that the oil is not leaking from the joining faces of the level sensor.

SPECIAL TOOL

49 0187 280	Oil pressure gauge

COOLING SYSTEM

DESCRIPTION ..... 3 : 1
3–A. COOLANT CIRCULATION ..... 3 : 1
3–B. FLUSHING COOLING SYSTEM ..... 3 : 1
3–C. COOLANT ..... 3 : 2
3–C–1. Checking Coolant Leakage ..... 3 : 2
3–D. RADIATOR ..... 3 : 2
3–D–1. Checking Radiator ..... 3 : 2
3–D–2. Repairing Radiator ..... 3 : 2
3–D–3. Checking Radiator Pressure Cap ..... 3 : 2
3–E. FAN DRIVE ..... 3 : 3
3–E–1. Checking Fan and Fan Drive ..... 3 : 3
3–F. THERMOSTAT ..... 3 : 3
3–F–1. Removing Thermostat ..... 3 : 4
3–F–2. Inspecting Thermostat ..... 3 : 4
3–G. WATER PUMP ..... 3 : 4
3–G–1. Inspecting Water Pump ..... 3 : 4
3–G–2. Removing Water Pump ..... 3 : 4
3–G–3. Disassembling Water Pump ..... 3 : 5
3–G–4. Assembling Water Pump ..... 3 : 5
3–G–5. Installing Water Pump ..... 3 : 6
SPECIAL TOOL ..... 3 : 6

3

DESCRIPTION

The completely sealed cooling system consists of a radiator with a pressure cap, an expansion chamber (sub-tank), centrifugal water pump, a thermostat and a fan.

The radiator and the expansion chamber are connected by hose. When the engine is heated sufficiently, the coolant in the radiator flows out and is led into the expansion chamber through the hose. The coolant is then returned to the radiator by negative pressure which builds up in the cooling system when the engine cools down.

3–A. COOLANT CIRCULATION

The water pump is driven by the eccentric shaft pulley over a V-belt and discharges the cooling water to the front housing. The water circulates from the front housing through the water passage provided in each housing and flows to the rear housing. From the rear housing, the water is returned to the front housing. At low engine temperature, the thermostat is closed to keep the water from entering the radiator. The water is then recirculated directly to the water pump and discharged to each housing. As the thermostat opens when the engine is warmed up, the water flows into the radiator. The cooled water flows from the radiator to the water pump through the connecting hose and cools the engine by circulation.

3–B. FLUSHING COOLING SYSTEM

Caution:

Avoid injury when checking a hot engine. Muffle the radiator cap in a thick cloth and turn it slowly counter-clockwise only until the pressure starts to escape. After the pressure has completely dissipated finish removing the cap.

The flushing procedures are as follows:

1. Remove the radiator cap.
2. Remove the engine under cover.
3. Open the drain plugs in base of radiator and left-hand side of engine.

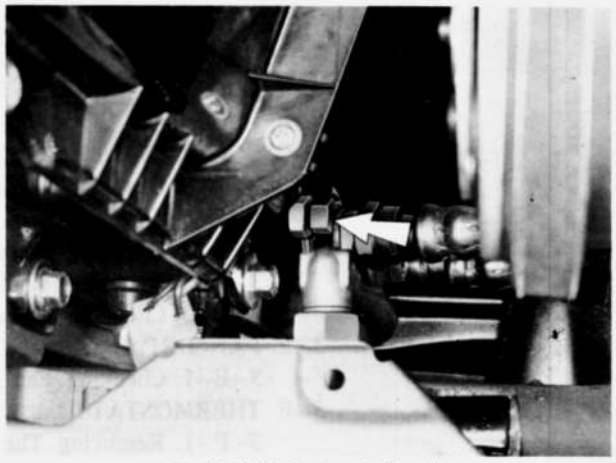

Fig. 3–2 Radiator drain plug

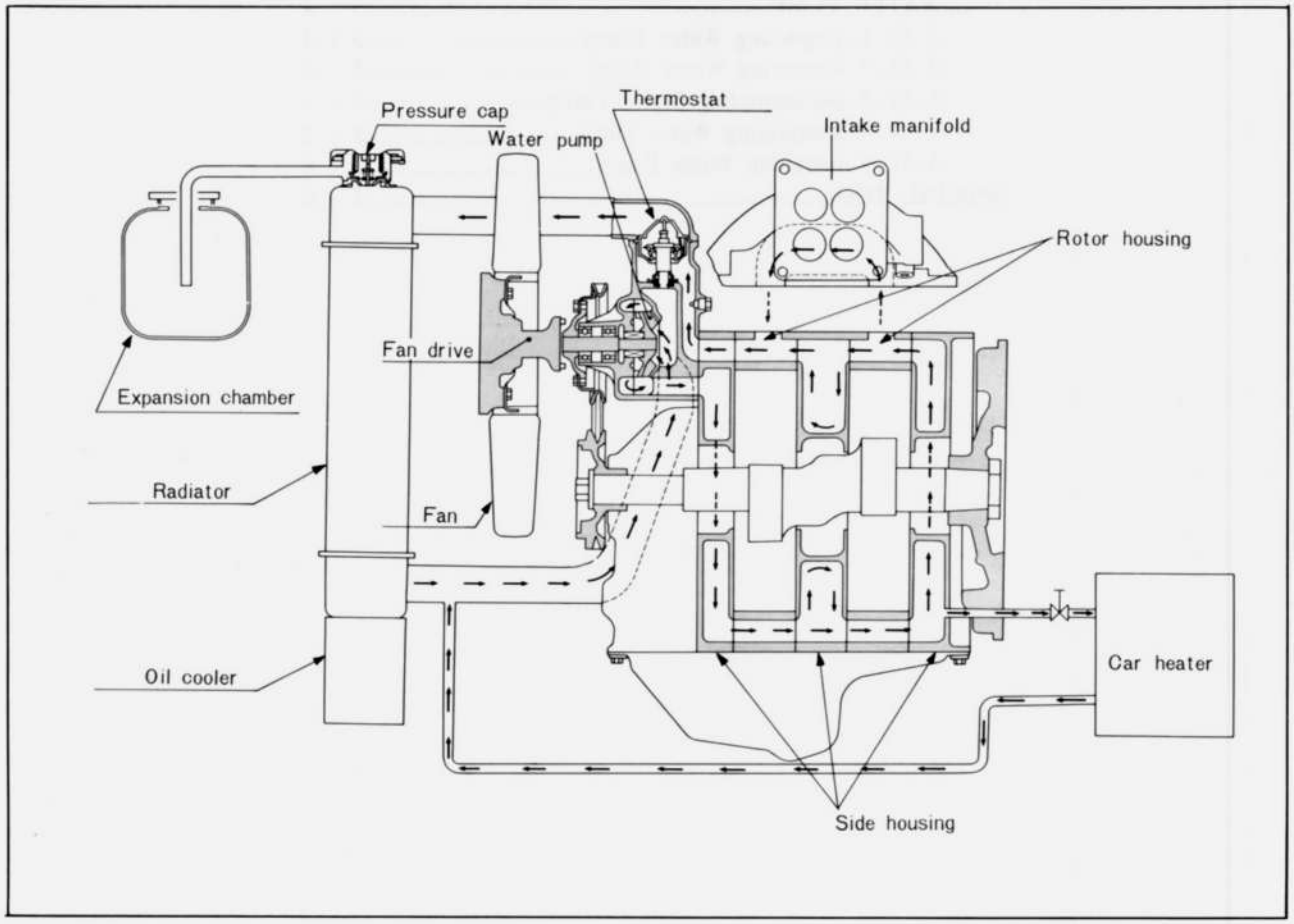

Fig. 3–1 Cooling circuit

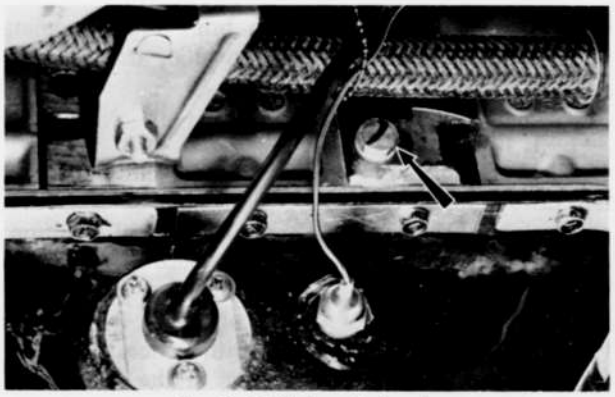

Fig. 3–3 Engine drain plug

4. Drain the coolant and close the drain plugs.
5. Supply clean soft water and install the cap.
6. Run the engine for about one hour, at the normal operating temperature.

Note:
If necessary, use cleaning solution to loosen rust and scale, by following the instructions given by the maker of the cleaning solution.

7. Drain the water completely.
8. Fill with soft water (demineralized water) and high quality ethylene glycol anti-freeze, referring to **Par. 3–C.**
9. Run the engine at idle with the radiator cap removed and slowly add coolant in accordance with drop of coolant level.
10. When the engine reaches normal operating temperature, pump the accelerator pedal 2 or 3 times and add coolant as required. Install the radiator cap.
11. Inspect all connections for leaks and stop the engine to recheck the coolant level.

3–C. COOLANT

The high quality ethylene glycol anti-freeze which is suitable for aluminum engine is used in the cooling system.
Use recommended mixture of 50% anti-freeze solution (Ethylene glycol base for aluminum engine) and 50% water.
For proper system protection in regions where the temperature goes below −20°F, add the amount of ethylene glycol base coolant recommended by the coolant manufacturer. However, be careful so that the proportion of ethylene glycol anti-freeze contained in the coolant may not exceed 60%; higher proportion than that only has a bad effect upon the engine.

Note:
Always use soft water (demineralized water) in the cooling system.

3–C–1. Checking Coolant Leakage

Carefully check the various parts for any leakage of cooling water by using a radiator cap tester. Refill the coolant, full in the radiator and between the "F" and "L" marks on the expansion tank.

Run the engine until it reaches normal operating temperature. With the engine running and tester installed, pump up the system to approximately 0.9 kg/cm² (13 lb/in²).

Note: Never allow the pressure to build up to more than 1.1 kg/cm² (14 lb/in²).

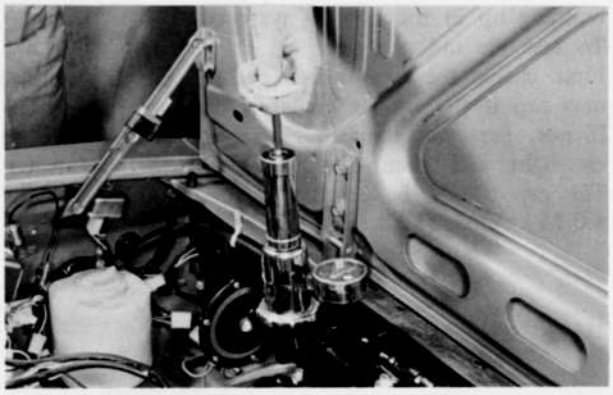

Fig. 3–4 Checking coolant leakage

If pressure drops rapidly, visually inspect all external parts for leaks. If no external leaks appear and pressure continues to drop, inspect the engine oil to determine whether or not coolant is leaking into the rotor housing due to a cracked rotor housing or leaking sealing rubbers.

3–D. RADIATOR

The radiator is of the corrugated fin type with a pressure cap, and an expansion tank is adopted.

3–D–1. Checking Radiator

Carefully check the radiator for water leakage. (Refer to Par. 3–C–1.) A clogged radiator badly influences the cooling effect and should be cleaned with the compressed air.

3–D–2. Repairing Radiator

The radiator used on this model is made of copper. Any minor leakage must be completely eliminated by soldering.

3–D–3. Checking Radiator Pressure Cap

The pressure cap is provided on the radiator.



Fig. 3–5 Radiator pressure cap

When the cooling water is pressurized, the boiling point rises and this prevents overheating and minimizes the loss of water. When the pressure in the cooling system exceeds 0.9 kg/cm² (12.8 lb/in²), the cap opens to prevent the radiator and water hose from damage by the excessive pressure. When the coolant temperature falls, the vacuum release valve opens at −0.1 kg/cm² (−1.4 lb/in²) to prevent vacuum from building up in the cooling system.
To test the radiator cap;
First check the cap rubber gasket. Replace with a new cap if the rubber gasket is damaged.
If not, first wet the cap rubber gasket to insure an air tight seal then attach the radiator cap tester. The cap should be capable of retaining pressure 0.9 ± 0.15 kg/cm² (12.8 ± 2.13 lb/in²).

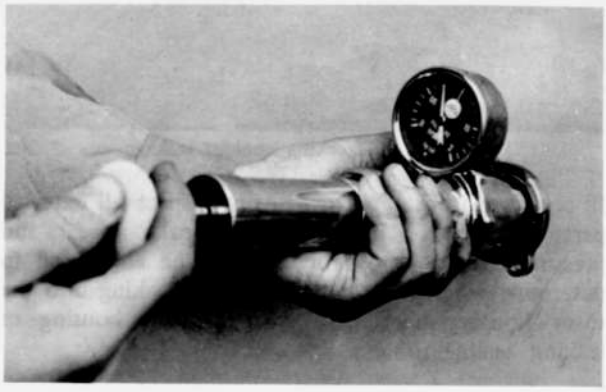

Fig. 3–6 Checking radiator pressure cap

3–E. FAN DRIVE

The fan drive is driven with the water pump pulley. The fan speed is adjusted by the work of the silicon oil to prevent the fan from making more than a certain number of rotations. In addition, the fan speed is changed into two steps, as shown in Fig. 3–7, according to operation of the bimetal which senses the temperature of the air passing through the radiator.
The temperature of the air passing through the radiator becomes higher with rise of the temperature of engine coolant; when the temperature of this air becomes higher than about 80°C (176°F), the bimetal opens the silicon oil passage and, as a result, the contacting area of the fan drive and silicon oil is extended and the fan speed is increased, to bring higher cooling efficiency of the engine at the time of its high temperature.

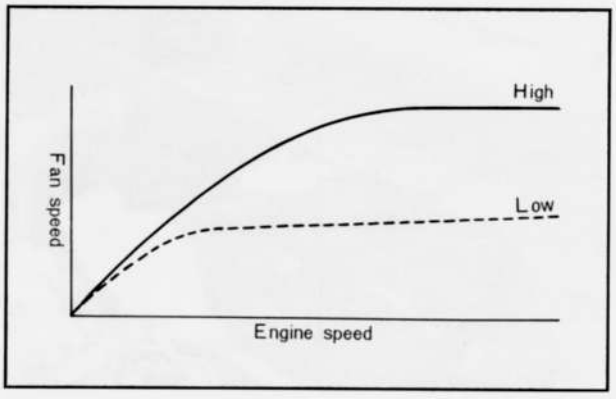

Fig. 3–7 Rotating characteristic of the fan

3–E–1. Checking Fan and Fan Drive

1. Check for damage and deformation of the fan and fan drive and also check for looseness or deflection of the fan by shaking it by hand in the axial direction; if such troubles are so serious, replace the fan and fan drive assembly with new ones.
2. Check for seepage of the silicon oil; if it is found, replace the fan drive assembly with a new one.
3. Check the rotating characteristic of the fan according to the following procedure, using the photoelectric revolution counter and tachodwell tester.
a. Apply scotch tape to the positions on the fan.
b. Set the tachodwell test to the engine. Then start and warm up the engine for about a minute at engine speed of 3,000 rpm.
c. Then turn the photoelectric revolution counter toward the fan and read the speed of the fan rotation at engine speed of 4,200 rpm. The fan speed should be within the standards shown in the following table.

Prescribed Revolution	
Engine	Fan
4,200 rpm	1,500 ± 200 rpm

If the reading is below the standard, replace the fan drive assembly.

Note:
When the photoelectric revolution counter is not prepared, the revolution of the fan will be also checked by the procedure as follows:
1. Prepare another car, and set the tachodwell tester and the timing light to the engine.
2. Regulate the engine speed of the car to make the timing light coincide with the fan speed, and read the engine speed on the tachodwell tester, which is the speed of fan revolution.

3–F. THERMOSTAT

To regulate the temperature of the cooling water circulating in the engine, a wax type thermostat is adopted.

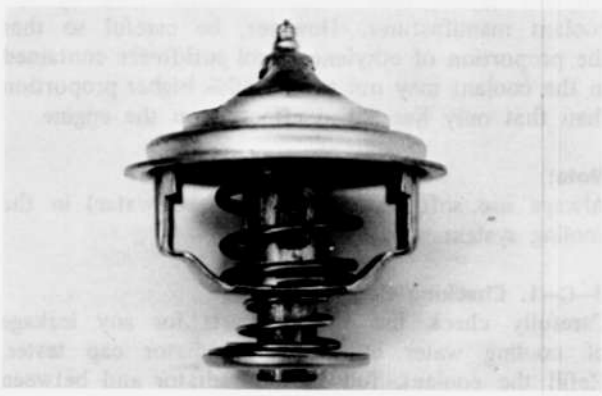

Fig. 3–8 Thermostat

The thermostat is of a bottom by-pass type, which has outstanding cooling efficiency, and is different from the conventional in-line type thermostat in the under-mentioned points. Therefore, it should be handled with particular care.

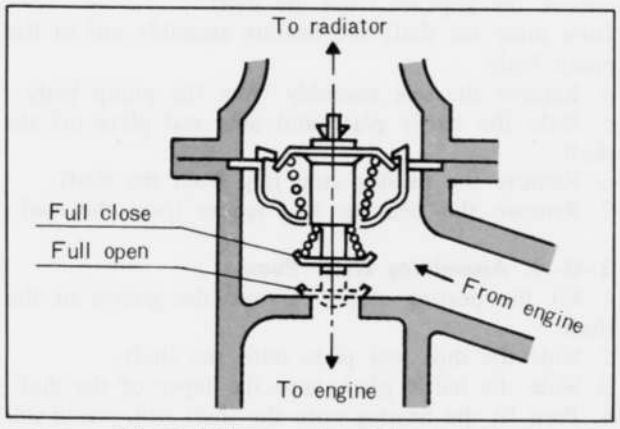

Fig. 3–9 Thermostat and by-pass hole

As shown in Fig. 3–9, a by-pass hole is provided at the bottom of the thermostat. The by-pass hole on the bottom by-pass type thermostat is larger than that on the in-line type. The bottom by-pass type thermostat, therefore, has the following advantages : when the thermostat is fully closed, a large amount of cooling water circulates, thus preventing any local rise in the cooling water temperature, and, when the thermostat is fully opened, the valve of the thermostat closes the by-pass hole and so all of the cooling water flows into the radiator, making effective use of the radiator. But, if the thermostat is removed, a large amount of cooling water flows through the by-pass hole because the hole is large, and so the amount of cooling water flowing into the radiator decreases to half, causing the cooling water temperature to rise.
Therefore, **the thermostat should never be removed** and **no other type of thermostat should be used.**

3–F–1. Removing Thermostat

1. Drain the cooling system.
2. Remove the bolts attaching the thermostat cover to the water pump and remove the cover.
3. Lift out the thermostat.

3–F–2. Inspecting Thermostat

To inspect the thermostat, place it in water with a thermometer and gradually heat the water.
Check the temperature when the thermostat starts to open and when it is fully opened, and also, measure the lift height when the thermostat is fully opened. If the reading shows a large difference from the standard specifications, replace the thermostat. The specifications of the thermostat are shown in the following table :

Starts to open	82°C (180°F)
Fully opens	95°C (203°F)
Lift height	8 mm (0.31 in) or more

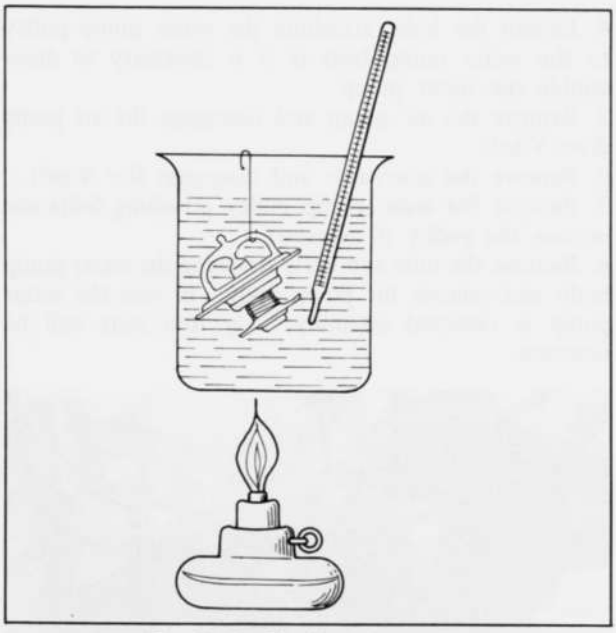

Fig. 3–10 Checking thermostat

3–G. WATER PUMP

The water pump employs a centrifugal impeller. In the pump body, the shaft is supported by two bearings. The impeller is fitted to the rear end of the shaft. The seal assembly prevents water leakage.

3–G–1. Inspecting Water Pump

Check the water pump for leaks and excessive end play or looseness of the shaft and bearings. If there is evidence of excessive play when the pulley is manually moved up and down, this indicates that the bearings are rough. If water leaks from the hole located on the body, this is an indication of a defective seal necessitating overhaul of the pump and check of the seal and seat surface. If defective, replace the seal assembly.

3–G–2. Removing Water Pump

1. Drain the cooling system.
2. Remove the air cleaner.
3. Remove the bolts attaching back of the fan drive and remove the fan drive assembly.

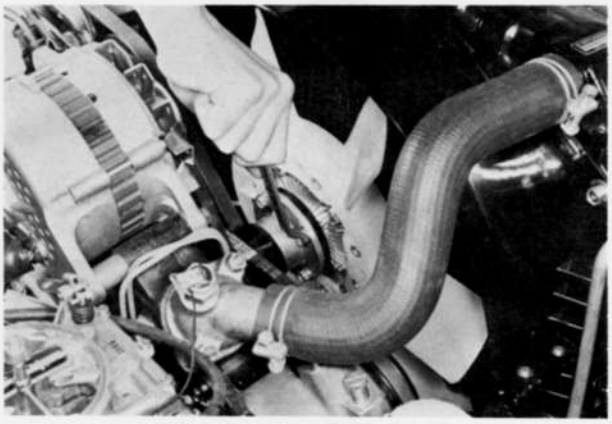

Fig. 3–11 Removing fan drive assembly

4. Loosen the bolts attaching the water pump pulley to the water pump boss if it is necessary to disassemble the water pump.
5. Remove the air pump and disengage the air pump drive V-belt.
6. Remove the alternator and disengage the V-belt.
7. Remove the water pump pulley attaching bolts and remove the pulley if necessary.
8. Remove the nuts and bolts attaching the water pump body and remove the pump body. In case the water pump is removed assembly, only four nuts will be removed.



Fig. 3–12 Pump body attaching bolts

3–G–3. Disassembling Water Pump

1. Using the suitable support, press the shaft slowly, and remove the pulley boss.

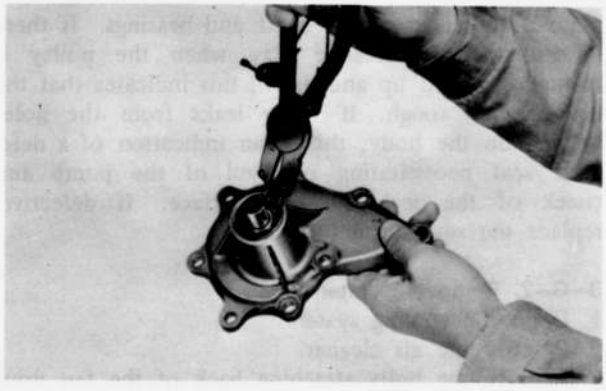

Fig. 3–13 Removing snap ring

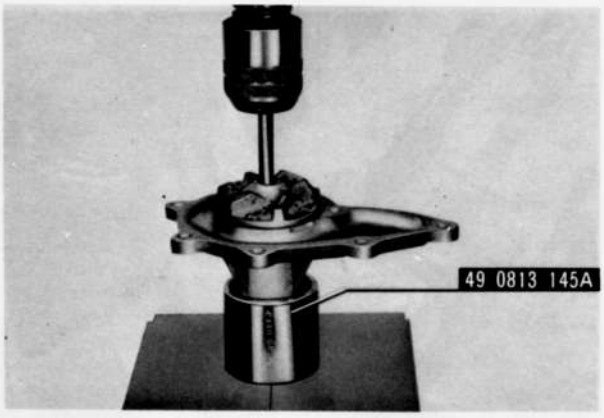

Fig. 3–14 Removing impeller

2. Remove the snap ring retaining the shaft and bearing assembly in the pump body.
3. Place the front side of the pump body on the **support** (Part No. 49 0813 145A) and apply pressure to the rear end of the shaft to press the shaft and remove the impeller from the shaft.
Then press the shaft and bearing assembly out of the pump body.
4. Remove the seal assembly from the pump body.
5. Slide the baffle plate and dust seal plate off the shaft.
6. Remove the bearing stop ring from the shaft.
7. Remove the bearings and spacer from the shaft.

3–G–4. Assembling Water Pump

1. Fit the bearing stop ring onto the groove of the shaft.
2. Slide the dust seal plate onto the shaft.
3. Slide the baffle plate onto the taper of the shaft.
4. Press fit the bearing onto the shaft with sealed side rearward.
5. Press the shaft and bearing into the pump body.
6. Slide the spacer onto the shaft and **fill 1/3 of the space** between the two bearings with grease.
7. Press fit the bearing onto the shaft with the sealed side forward until the snap ring can be installed.
8. Install the snap ring onto the groove of the pump body to retain the shaft and bearing assembly in position.
9. Press the pulley boss onto the shaft until it is flush with the front end of the shaft.

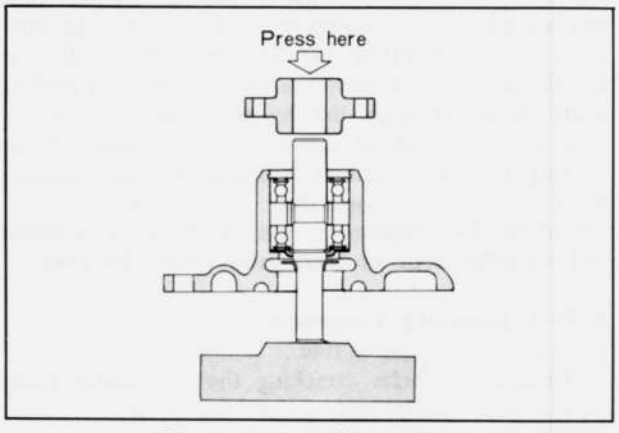

Fig. 3–15 Assembling pulley

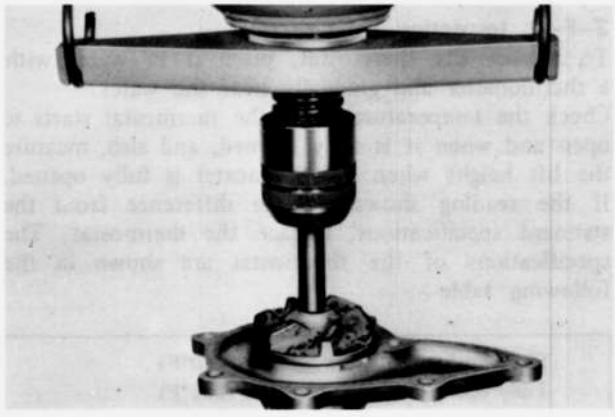

Fig. 3–16 Assembling impeller

10. Apply lubricant onto the seal assembly and install the seal assembly into the pump body.
11. Press the impeller onto the shaft until it is flush with the end of the shaft.

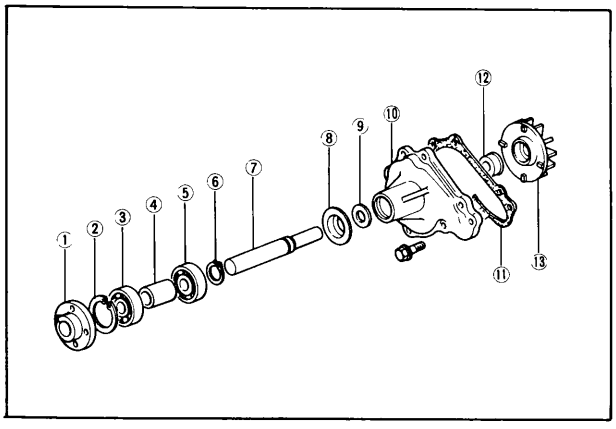

Fig. 3–17 Water pump components

1. Pulley boss
2. Snap ring
3. Bearing
4. Spacer
5. Bearing
6. Stop ring
7. Shaft
8. Dust seal
9. Baffle plate
10. Pump body
11. Gasket
12. Seal assembly
13. Impeller

3–G–5. Installing Water Pump

To install, follow the removal procedures in the reverse order with the following caution.
Tighten the water pump attaching bolts evenly to 2.25 ~ 3.25 m-kg (16.3 ~ 23.5 ft-lb) in the sequence shown in Fig. 3–18.

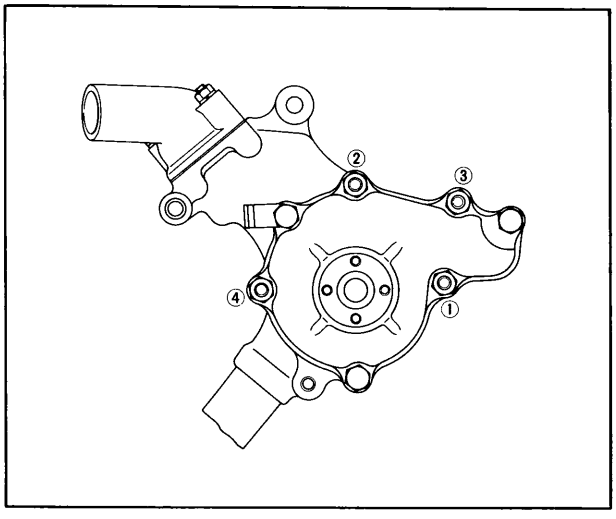

Fig. 3–18 Tightening order of water pump attaching bolts

SPECIAL TOOL

49 0813 145A	Water pump support

FUEL SYSTEM

FUEL SYSTEM ..... 4 · 1
4–A. CARBURETOR 4 1
4–A–1. Idle Adjustment 4 1
4–A–2. Fast Idle Adjustment ..... 4 . 2
4–A–3. Float Adjustment ..... 4 : 2
4–A–4. Choke System ..... 4 . 3
4–A–5. Accelerator Pump ..... 4 : 4
4–A–6. Richer Solenoid Inspection ..... 4 : 5
4–A–7. Power Valve Solenoid Inspection ..... 4 : 5
4–A–8. Sub-Zero Starting Assist Device ..... 4 : 5
4–A–9. Fuel Inlet Fitting ..... 4 : 6
4–A–10. Safety Throttle Return System ..... 4 : 6
4–A–11. Disassembling Carburetor ..... 4 . 7
4–A–12. Inspecting Carburetor ..... 4 . 9
4–A–13. Carburetor Assembly ..... 4 : 9
4–B. FUEL PUMP ..... 4 : 10
4–C. FUEL FILTER ..... 4 : 10
4–D. FUEL LINES ..... 4 : 10
4–E. FUEL TANK ..... 4 : 10
4–F. AIR CLEANER ..... 4 : 11
4–F–1. Air Cleaner Element ..... 4 : 11
4–F–2. Intake Air Temperature Control System ..... 4 : 11
4–F–3. Checking Control Valve ..... 4 : 11

4

FUEL SYSTEM

The fuel system consists of the carburetor, fuel pump, fuel filter, fuel tank, fuel line, accelerator linkage, air cleaner and sub-zero starting assist device. By the suction of the fuel pump, the fuel flows through the fuel line into the fuel filter. The fuel passes through the filter element from the outside to the inside of the element. During this fuel flow, the filter element cleans out all the dirt. The fuel pump is producing a constant controlled pressure, and the fuel volume required for engine operations. The fuel supplied by the fuel pump flows passing through the fuel hose into the carburetor.

The carburetor mixes the air and fuel in varying proportions for different operating conditions. As the air passes through the carburetor before entering the engine, fuel is supplied into the engine through the various circuits of the carburetor

The air cleaner operates primarily to remove dust and dirt from the air which is drawn into the carburetor and then into the engine.

4–A. CARBURETOR

The carburetor is of a two-stage, four-barrel, downdraft type. This carburetor comprises two sets each of primary barrels and secondary barrels.

The primary stage includes an idle system, slow system, accelerator pump system, choke system and main metering system. In addition, an idle switch, and richer solenoid, or power valve solenoid for exhaust emission control system is attached to the carburetor. The fluid of sub-zero starting assist device and the oil from the metering oil pump are admitted from primary stage barrels to combustion chamber. The altitude compensator and evapo compensator valve takes the air from primary stage barrels and controls the air supply to the intake manifold.

The secondary stage includes a secondary operating diaphragm system, step system and main metering system. Choking action is accomplished by means of choke knob, bimetal and diaphragm.

4–A–1. Idle Adjustment

Inspect and adjust, the idle speed and mixture after sufficiently warming up the engine, switching off the accessaries such as an air conditioner, etc. and removing the fuel filler cap to avoid the influence of evaporative gas.

Note: Idle speed changes according to ambient temperature. It is recommended that the idle setting should be carried out indoor by blowing the engine room with the additional cooling fan.

a. Adjusting idle speed

Adjust the idle speed to specifications with the throttle adjust screw.

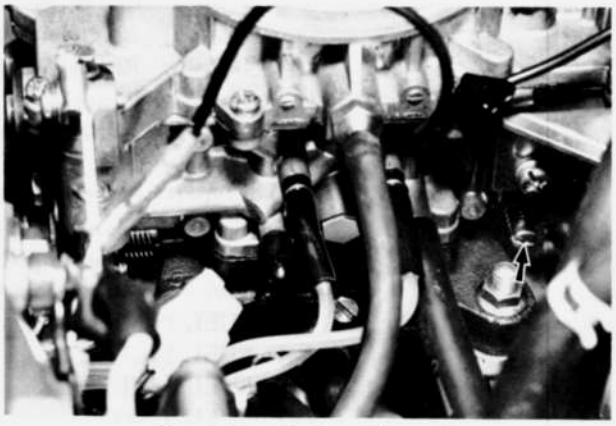

Fig. 4–1 Adjusting idle speed

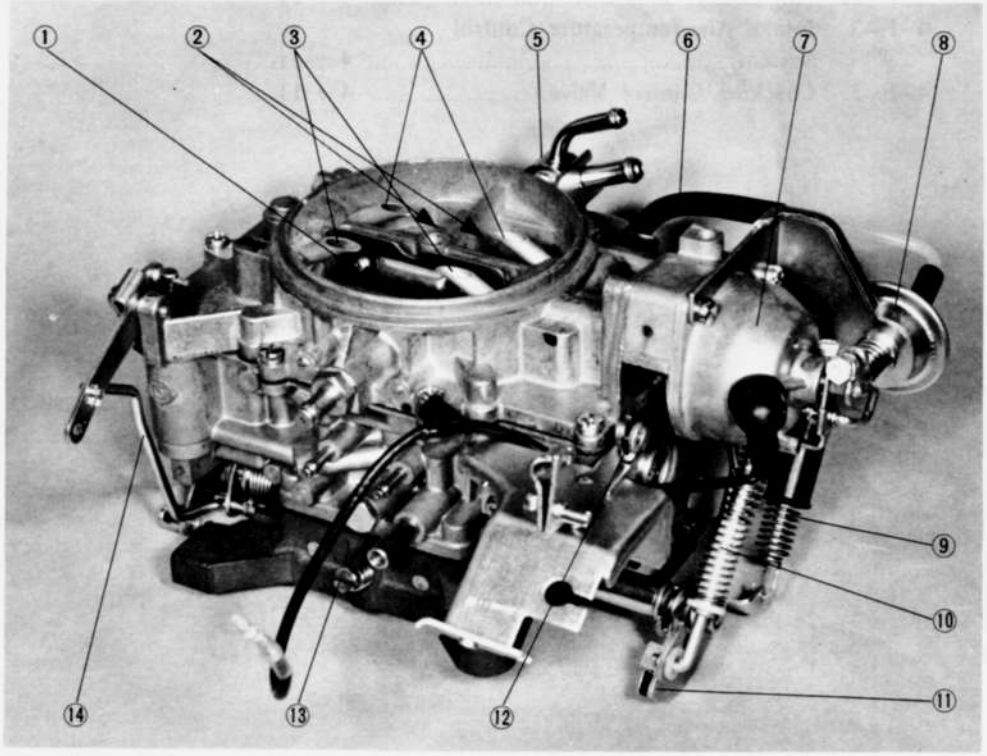

Fig. 4–2 Carburetor
1. Primary stage
2. Secondary stage
3. Primary air vent
4. Secondary air vent
5. Fuel inlet fitting
6. Vacuum sensing tube
7. Bimetal spring housing
8. Vacuum diaphragm
9. Throttle return spring
10. Sub-return spring
11. Throttle lever
12. Choke lever link
13. Mixture adjust screw
14. Accelerating pump connecting rod

Specifications – idle speed

Car with manual transmission	800^{+50}_{-0} rpm
Car with automatic transmission	750^{+50}_{-0} rpm in "D" range

b. Inspecting idle mixture

1. Check the float level as described in Par. 4–A–3.
2. Measure the CO density at the time of the engine idling.
3. Make sure that the CO concentration is below 0.1% and the engine operation is stable. If not, adjust the idle mixture.

c. Adjusting idle mixture

1. Adjust the idle speed.
2. Adjust CO concentration to about 0 % by using MAS (Mixture Adjust Screw).
3. Turn MAS counter-clockwise until CO increases to 0.5 %.
4. Turn MAS clockwise until CO first reaches 0.1 %. (CO shows little change after reaching 0.1 % even if MAS is turned clockwise continuously.)
5. Turn MAS further in the same direction by 1/4 turn from that position.
6. If the idle speed shifts from the specified RPM as the result of the above, repeat the procedures 1 ~ 5.

4–A–2. Fast Idle Adjustment

a. Inspecting fast idle speed

Sufficiently warm up the engine and turn it off. Next, start the engine again with the choke knob fully pulled; the fast idle speed is normal if, after about 10 seconds, the engine speed settled to within 3,000 ~ 3,500 rpm. The fast idle speed is concerned with ignition system, choke system and throttle valve opening angle.

b. Adjusting the throttle valve opening angle at fast idle

Adjust the fast idle speed to the specified RPM by bending the choke connecting rod.

When the carburetor is disassembled, measure the clearance Ⓑ with the choke lever link fully pulled by using a suitable wire gauge or drill. If the clearance Ⓑ is not within the specifications, adjust it by bending the choke connecting rod.

Note:

Be sure to check the ignition timing before inspecting idle adjustment and fast idle adjustment.

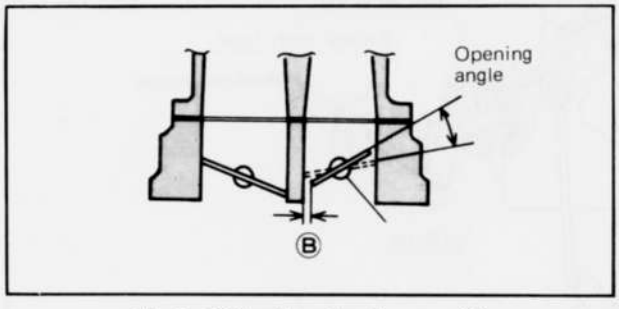

Fig. 4–3 Throttle valve clearance (B)

Specifications – clearance (B)

1.75 ~ 2.15 mm (0.069 ~ 0.085 in)

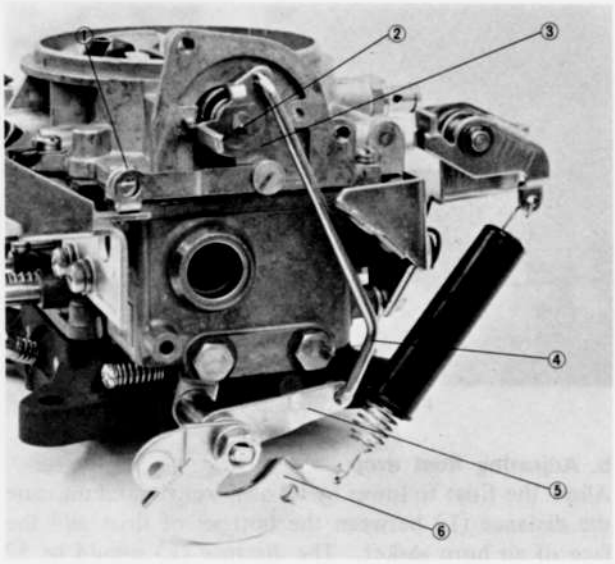

Fig. 4–4 Adjusting fast idle

1. Choke lever link
2. Choke shaft lever
3. Choke lever
4. Choke connecting rod
5. First idle lever
6. Throttle lever

4–A–3. Float Adjustment

a. Adjusting float level

1. With engine operating, check the fuel levels in the float chamber through the fuel sight glasses using a suitable mirror.

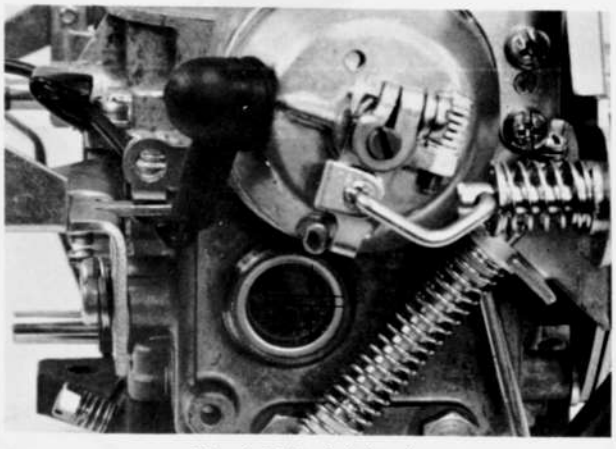

Fig. 4–5 Fuel sight glass

2. If the fuel levels are not within the specified mark on the sight glasses, remove the air horn with the floats.
3. Invert the air horn on a stand, lift the float and let it down quietly until the float seat lip just touches the needle valve.

By keeping this position, take measurement of clearance (H) between the float and the face of air horn gasket.

4. Adjust the clearance (H) to be 10 mm (0.39 in) by bending the float seat lip shown in Fig. 4–8.
5. Install the air horn and recheck the fuel levels through the sight glasses.

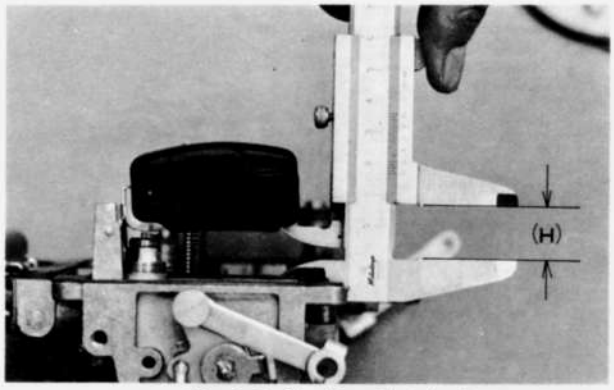

Fig. 4–6 Checking float level

b. Adjusting float drop

Allow the float to lower by its own weight, and measure the distance (L) between the bottom of float and the face of air horn gasket. The distance (L) should be 52 ± 0.5 mm (2.05 ± 0.02 in).

If the distance (L) is not within specifications, adjust it by bending the float stopper shown in Fig. 4–8.

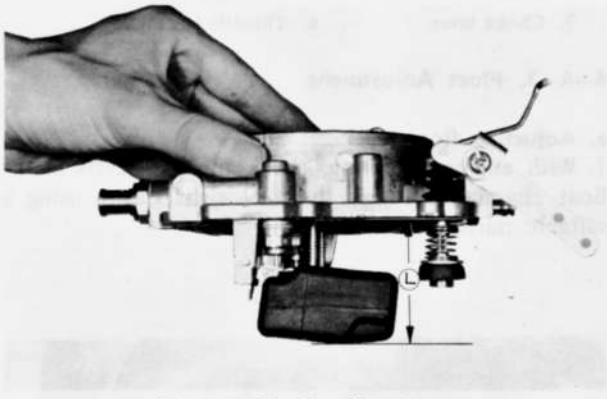

Fig. 4–7 Checking float drop

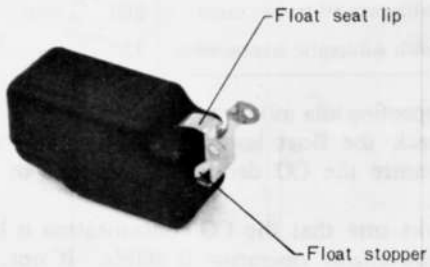

Fig. 4–8 Float

4–A–4. Choke System

a. Adjusting vacuum diaphragm

1. First, confirm that the diaphragm plunger has been pulled out during the engine idling.
2. Push the diaphragm plunger in until seated and check the stroke of it.

This stroke should be in the following specifications.

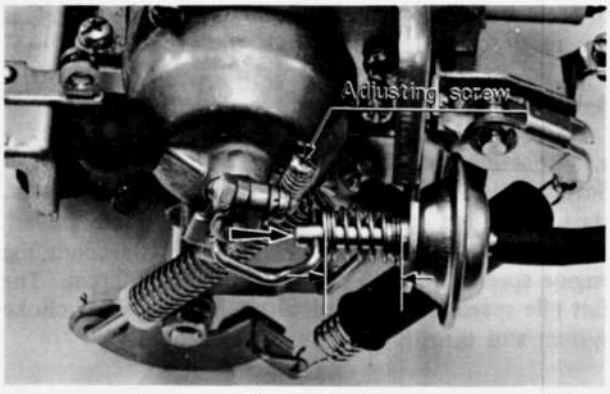

Fig. 4–9 Adjusting diaphragm stroke

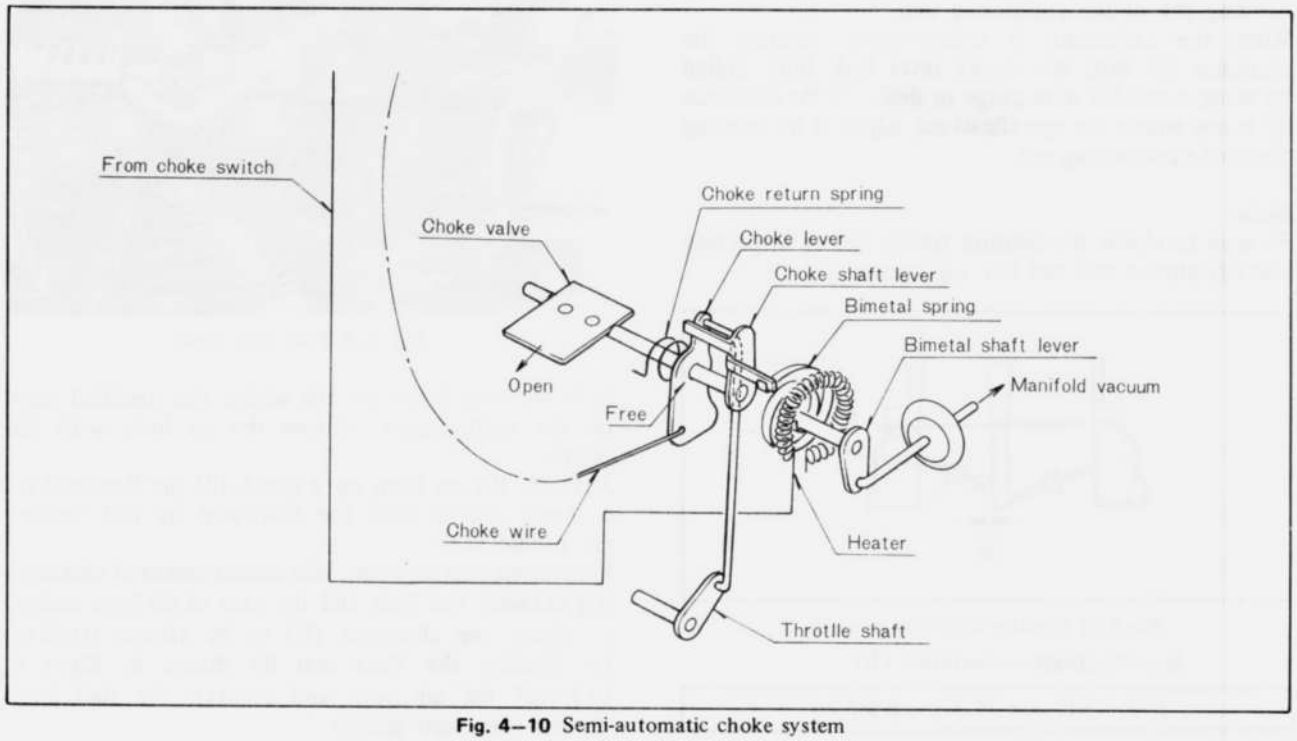

Fig. 4–10 Semi-automatic choke system

Spcifications – diaphragm stroke

Car with manual transmission	3.3 ± 0.1 mm (0.130 ± 0.004 in)
Car with automatic transmission	3.9 ± 0.1 mm (0.154 ± 0.004 in)

b. Adjusting bimetal spring

1. Fully pull out the choke lever link and keep its position by wire.
2. Push the diaphragm plunger in fully and keep its position by wire as shown in Fig. 4–11.

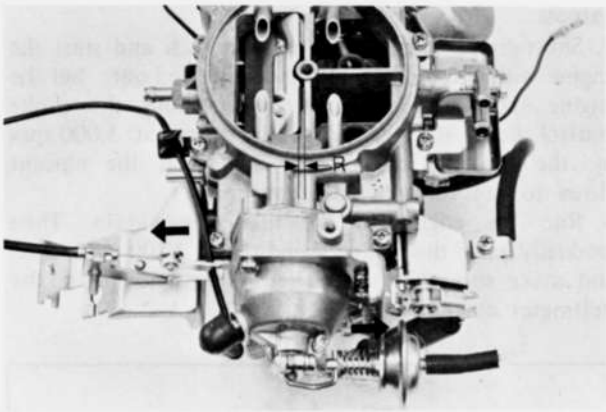

Fig. 4–11 Adjusting bimetal spring

3. Check the choke valve clearance (R) as shown in Fig. 4–11.
4. If the clearance (R) is not within specifications, first loosen Ⓐ then turn Ⓑ to adjust the clearance (R).

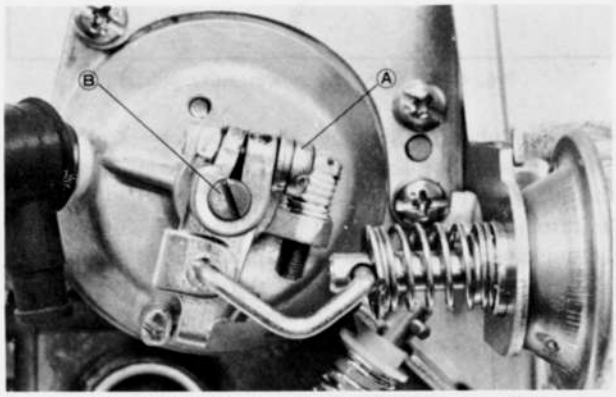

Fig. 4–12 Adjusting choke valve clearance (R)

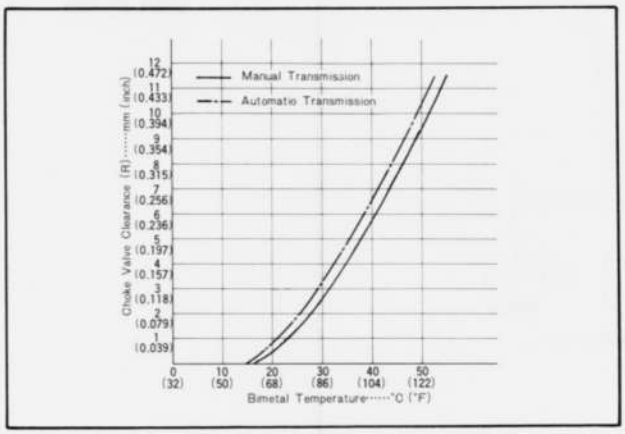

Fig. 4–13 Choke valve clearance (R)

4–A–5. Accelerator Pump

a. Checking accelerator pump

1. Remove the air cleaner.
2. Check the pump for discharge by moving the primary throttle valve.
3. Check the pump for nozzle's clogging.

When the pump nozzle is clogged, remove the nozzle and clean up the nozzle.

b. Checking amount of accelerator pump discharge

Checking of accelerator pump discharge amount is as follows:

1. Make sure that the pump connecting rod is set inside hole of the pump lever.
2. Place the vehicle on a level ground.
3. Set the burette at the fuel inlet of the carburetor and fill it with fuel.
4. Fully operate the throttle valve about five times and confirm the fuel discharged from the accelerating pump jet.
5. Set the fuel level in the burette at 300 mm (11.8 in) above the fuel inlet, as shown in Fig. 4–14.

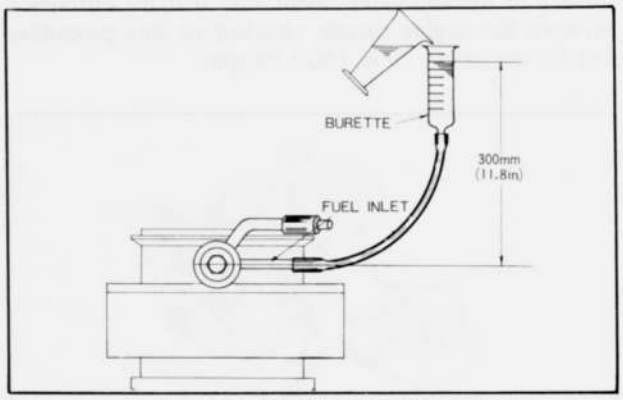

Fig. 4–14 Checking fuel discharge

6. Fully operate the throttle valve ten times according to the cycle as shown in Fig. 4–15 by means of the throttle lever or accelerator pedal and check the amount of discharge by reading the decrease of fuel in the burette.
7. If the discharge amount is not within specifications, check the accelerator pump piston and etc.

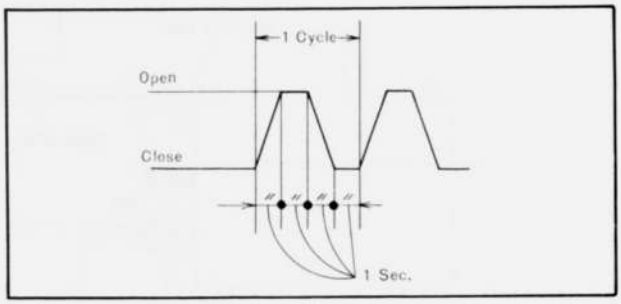

Fig. 4–15 Test pattern

Specifications – amount of fuel discharged out of accelerator pump

6.8 ~ 9.2 cc/10 strokes

4–A–6. Richer Solenoid Inspection (Car with manual transmission only)

a. Checking richer solenoid

1. Warm up the engine and keep it idling.
2. Remove the coupler of the richer solenoid and apply 12V directly on the solenoid; if the engine hunts on this occasion, the operation of the solenoid is normal.
3. If the engine does not hunt then, confirm the operating noise of the richer solenoid and check for clogging of the richer jet.

b. Checking signal of control unit

1. Connect a voltmeter with the coupelr of the wire harness.
2. Remove the coupler from the idle switch and then directly apply 12V on the coasting valve of the deceleration control valve.
3. Gradually drop the engine speed from 2,000 rpm. Make sure that the current stops flowing to the voltmeter at 1,150 ± 100 rpm.
4. Gradually raise the engine speed from the idling and check the speed at which the current begins flowing to the voltmeter. Make sure that the difference between the engine speeds checked in this procedure and in the above 3 is 150 ± 70 rpm.

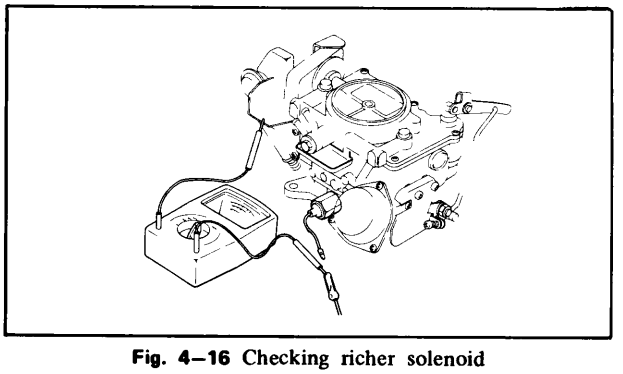

Fig. 4–16 Checking richer solenoid

4–A–7. Power Valve Solenoid Inspection (Car with automatic transmission only)

a. Checking power valve solenoid

1. Apply 12V directly on Ⓐ solenoid of the air control valve.
2. Set the CO meter.
3. Set the engine speed at 2,000 rpm; the operation of the solenoid is normal if the CO density varies when the coupler is opened and shut repeatedly.
4. If the CO density does not vary on that occasion, confirm the operating noise of the solenoid and check the power valve and power jet of the carburetor.

b. Checking signal of control unit

1. Connect a voltmeter with the coupler of the wire harness.
2. Short-circuit the water thermo switch and start the engine with the choke control knob pulled out. Set the engine speed to 2,000 rpm by operating the choke control knob and then keep the speed at 3,000 rpm by the throttle lever. Make sure that the current flows to the voltmeter at that time.
3. Run the engine at the idle speed again. Then gradually raise the engine speed up to 2,500 ± 200 rpm and make sure that the current stops flowing to the voltmeter at that time.

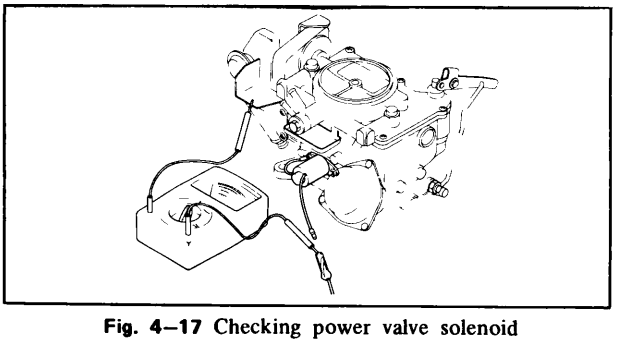

Fig. 4–17 Checking power valve solenoid

4–A–8. Sub-Zero Starting Assist Device

This is the device for increasing the starting ability of the engine in extreme cold. When the ignition key is turned to the position of "START" under the circumstances where the temperature is below −18°C (0°F), a certain amount of starting assist fluid is supplied into the carburetor by a pump installed for supplying the starting assist fluid.

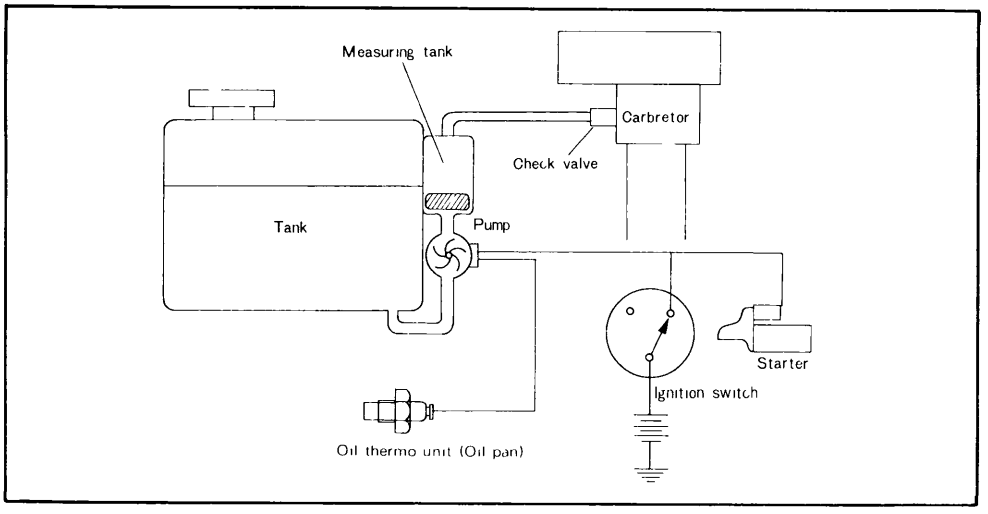

Fig. 4–18 Sub-zero starting assist system

a. Checking sub-zero starting assist device

1. Make sure that there is sufficient starting assist fluid in the tank. Replenish if necessary.
2. Disconnect the coupler of S terminal connected to the starter magnetic switch. This is to prevent the engine from revolving when the ignition key is turned to "START".
3. Remove the air cleaner cover.
4. Turn the ignition key to the position of "START" and make sure that the starting assist fluid does not spouts out from the nozzle of the carburetor. [Ambient temperature should be above -18°C (0°F)]
5. Disconnect the coupler of the oil thermo unit and connect the body with the earth.

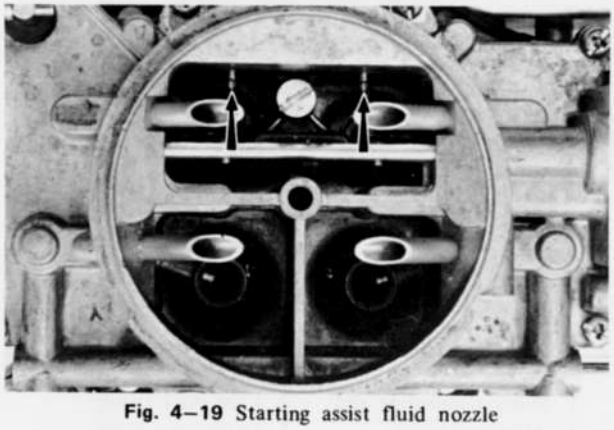

Fig. 4–19 Starting assist fluid nozzle

6. Turn the ignition key to the position of "START" and make sure that the starting assist fluid spouts out from the nozzle of the carburetor.

Note:

Let air out of the pump following the below procedures when the pump races due to air staying therein.

1. Disconnect the hose (tank ~ carburetor) from the tank.
2. Push the rubber cap several times until the fluid begins to drip down from the tank.
3. Connect the hose to the tank.
4. Repeat the above procedure 5 and 6. If the fluid does not spout in this case, turn the ignition key once more in several minutes from the first trial (this is after the float of the metering chamber returns to the bottom).

b. Checking oil thermo unit

The oil thermo unit is in normal condition if it is energized below -18°C (0°F) and is not above it.

c. Sub-zero starting assist fluid

The mixture proportion of starting assist fluid should be 90% of high quality ethylene glycole anti-freeze solution plus 10% of water.

4–A–9. Fuel Inlet Fitting

The carburetor inlet fitting is provided with a fuel return device to prevent percolation. Whenever the ignition key is "ON", a small amount of fuel which is led to the carburetor, returns to the fuel tank through the orifice of fuel return pipe.

Check the orifice for clog. When it is clogged, remove the fuel inlet fitting and clean it by compressed air.

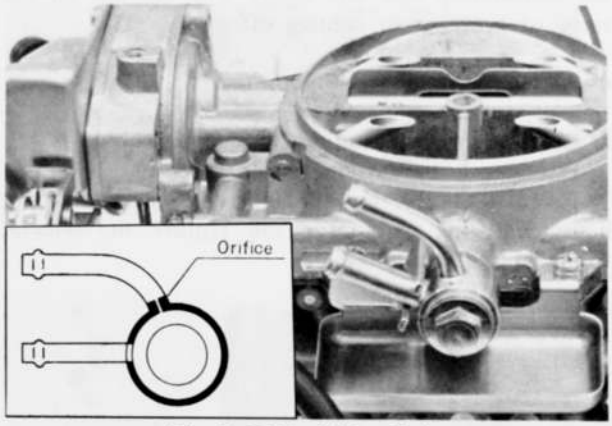

Fig. 4–20 Fuel inlet fitting

4–A–10. Safety Throttle Return System

The safety throttle return system is adopted in order to prevent any possible danger from occurring when the throttle return spring should become broken during operation and at that instant the accelerator should get out of control.

Under normal conditions, only throttle return spring operates as a return spring by pulling throttle lever which is connected to the accelerator wire. Link is fixed by rod (whose upper end is fixed by counter lever) and does not have any connection with the movement of link. In case throttle return spring should become broken, the upper end of rod slips off of counter lever by sub-spring and throttle lever is pushed by the movement of link instantaneously.

Compressed sub-spring works as an accelerator return spring with the same force as when throttle return spring is in operation. Consequently even if throttle return spring should become broken during operation, no adverse effects will occur in the operation of the accelerator control.

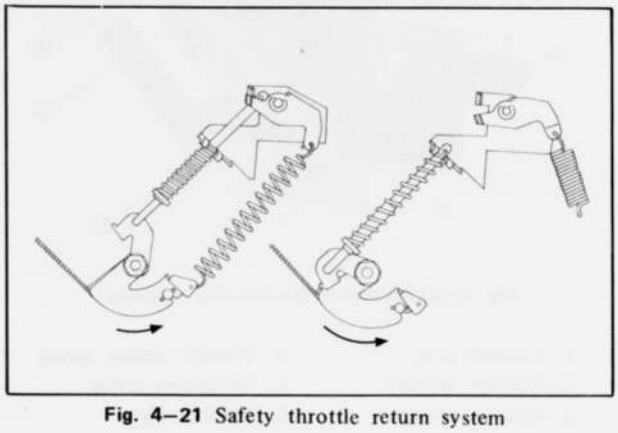

Fig. 4–21 Safety throttle return system

a. Checking throttle return system

Make sure that the sub-return spring and the rod are arranged as shown in Fig. 4–22. The throttle return lever should not be stressed by the rod.

b. Checking carburetor linkage

Check the operation of each of the secondary system linkage, accelerating pump linkage, accelerating wire linkage and choke linkage, and also check whether the accelerating wire and choke wire are not on the verge of breaking or coming off.

4–A–11 Disassembling Carburetor

a. Removing bimetal spring housing assembly

1. Disconnect the vacuum sensing tube.
2. Remove the screws attaching the bimetal spring housing to the carburetor and remove the bimetal spring housing assembly.

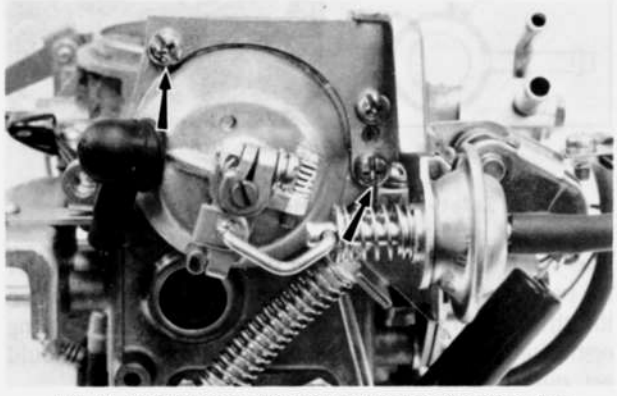

Fig. 4–22 Removing bimetal spring housing assembly

b. Removing throttle return springs

1. Dislocate the sub-return spring by turning the counter lever counter-clockwise and remove the sub-return spring from the spring stopper bracket set.
2. Remove the throttle return spring.
3. Remove the spring stopper bracket set by removing the attaching screws.

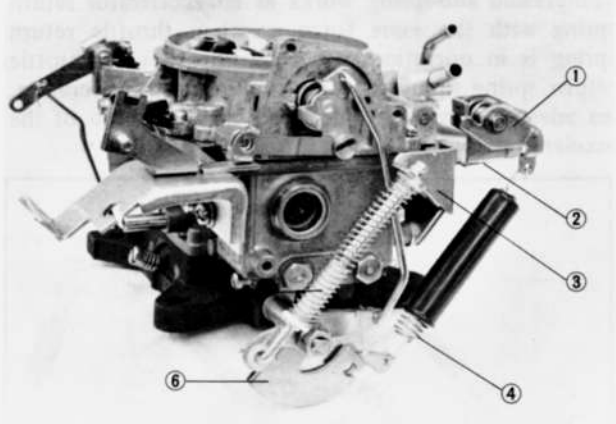

Fig. 4–23 Removing throttle return springs

1. Counter lever
2. Counter bracket
3. Stopper bracket
4. Throttle return spring
5. Sub-return spring
6. Throttle lever

c. Removing air horn

1. Disconnect the choke connecting rod by removing the cotter pin, plain washer and spring.
2. Remove the accelerating pump connecting rod by removing the cotter pin.
3. Remove the bolt attaching the fuel inlet fitting by box wrench or offset wrench (don't use a spanner – open end wrench), and remove the fitting and filter. Remove the connector if necessary.
4. Remove the screws attaching the air horn to the carburetor body and remove the air horn being careful not to break the gasket.

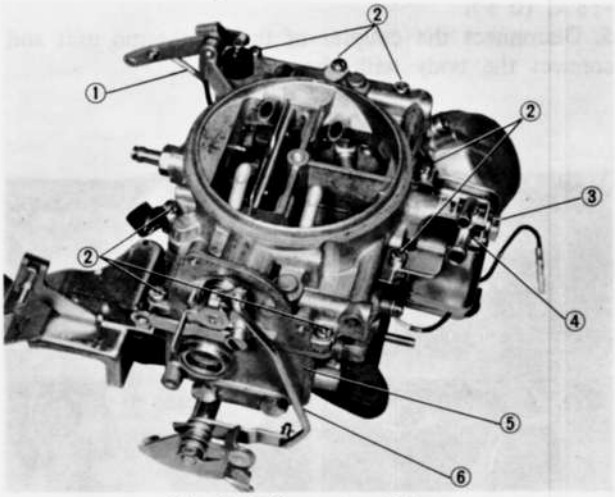

Fig. 4–24 Removing air horn

1. Pump connecting rod
2. Attaching screw
3. Bolt
4. Fuel inlet fitting
5. Carburetor body
6. Choke connecting rod

d. Disassembling air horn

1. Remove the float retaining pin, float and remove the needle valve assembly.
2. Remove the accelerating pump lever by removing the attaching screw and pull out the pump piston.
3. Remove the starting assist fluid inlet fitting if necessary.

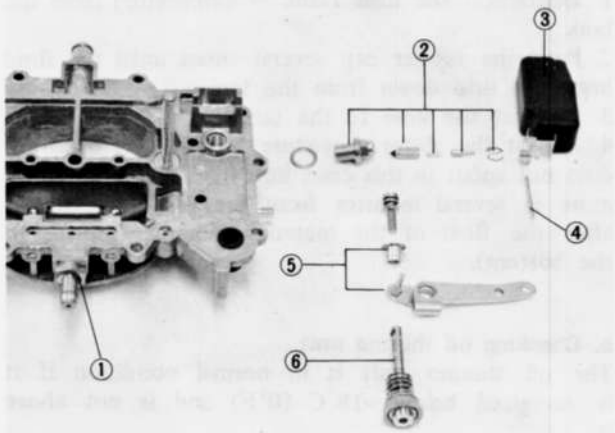

Fig. 4–25 Disassembling air horn

1. Inlet fitting (for starting assist)
2. Needle valve assembly
3. Float
4. Retaining pin
5. Accelerating pump lever
6. Accelerating pump piston

4. Remove the primary slow air bleeds.

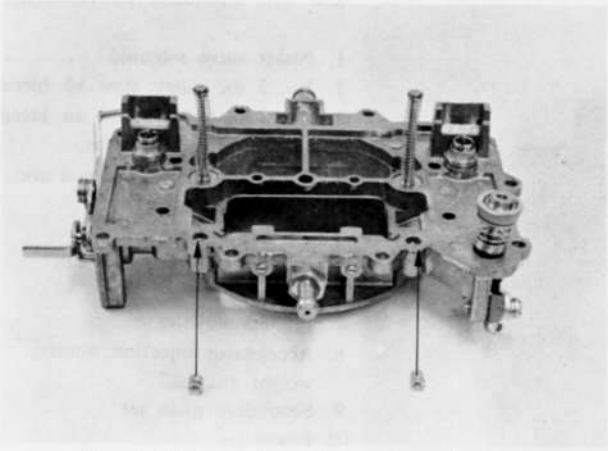

Fig. 4–26 Removing primary slow air bleed

e. Removing carburetor body

1. Remove the spring, retainer plate and check ball from the accelerating pump cylinder of the carburetor body.
2. Remove the idle switch by removing the attaching bolt and spring (Car with manual transmission only).

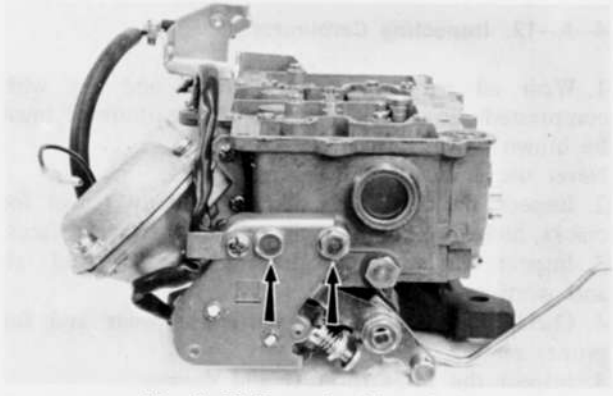

Fig. 4–27 Removing idle switch

3. Disconnect the connecting rod of the diaphragm chamber by removing the cotter pin and remove the diaphragm chamber by removing the screws.

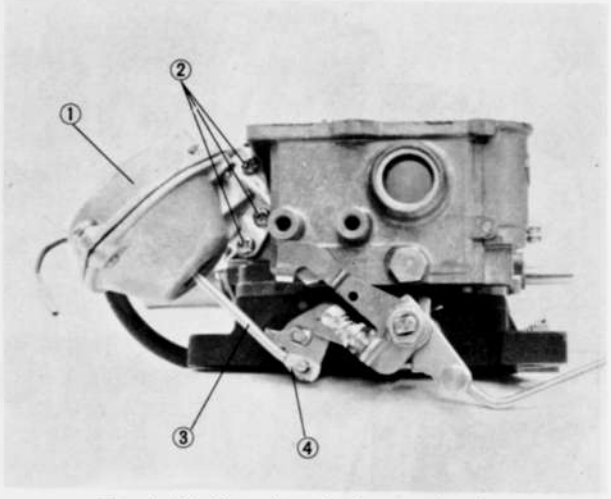

Fig. 4–28 Removing diaphragm chamber

1. Diaphragm chamber
2. Attaching screw
3. Connecting rod
4. Cotter pin

4. Remove the screws attaching the throttle body to the carburetor body and remove the carburetor body.

f. Disassembling carburetor body

1. Remove the accelerator injection nozzle, weight and ball from the carburetor body.
2. Write down the numbers and positions of all jets and air bleeds.
3. Remove the all jets and air bleeds from the surface of the carburetor body.
4. Remove the power valve solenoid by removing the attaching screws (Car with automatic transmission only).

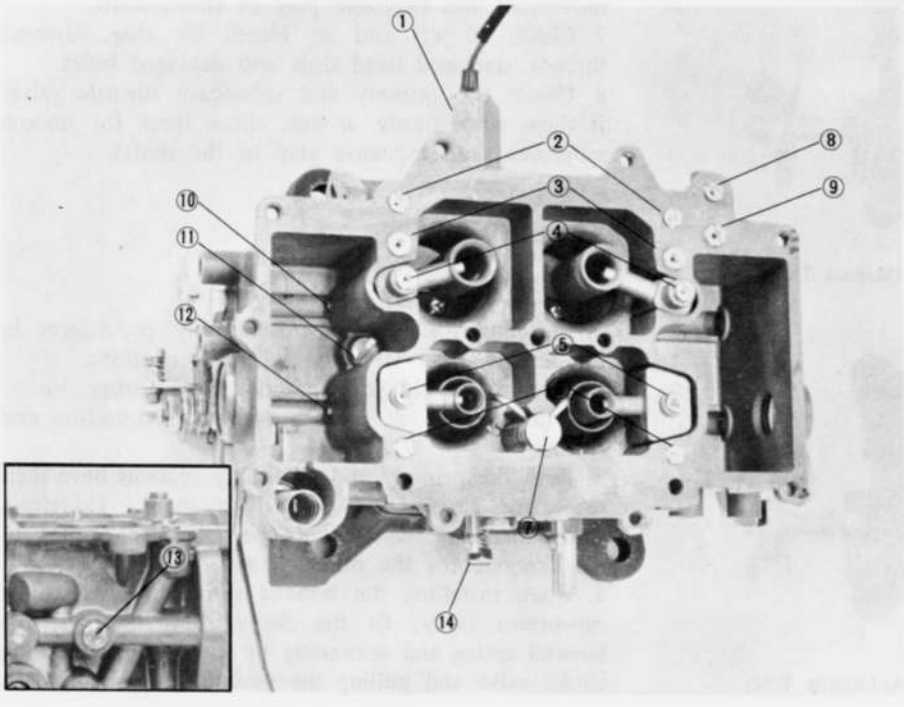

Fig. 4–29 Carburetor body (Car with manual transmission)

1. Richer solenoid
2. No. 2 secondary slow air bleed
3. No. 1 secondary slow air bleed and secondary slow jet
4. Secondary main air bleed and emulsion tube
5. Primary main air bleed and emulsion tube
6. Primary slow jet
7. Accelerator injection nozzle, weight and ball
8. No. 2 richer air bleed
9. No. 1 richer air bleed and richer jet
10. Secondary main jet
11. Plug
12. Primary main jet
13. Vacuum jet
14. Mixture adjust screw

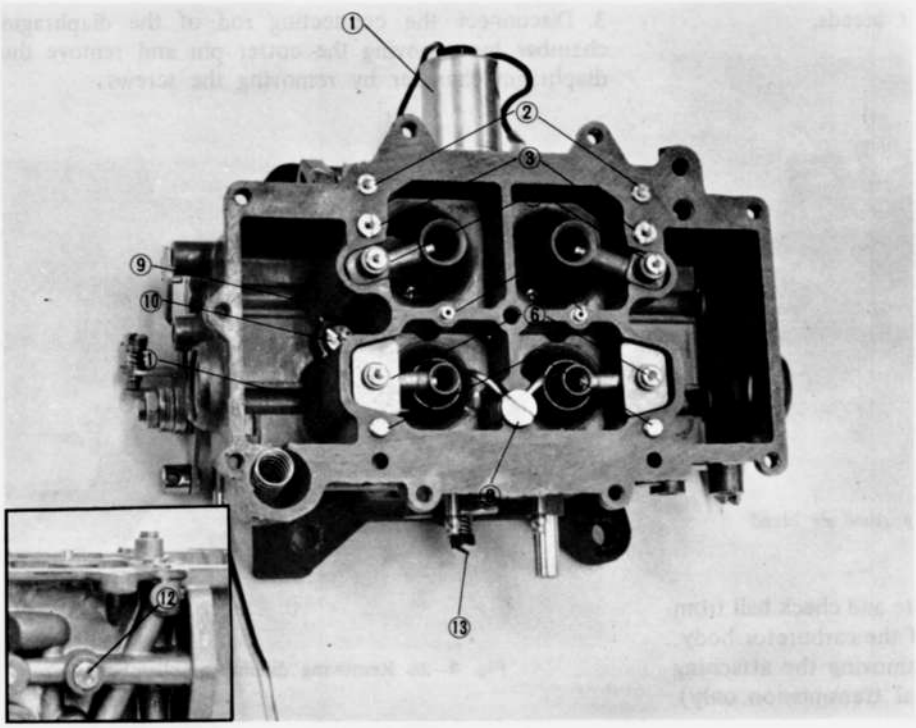

Fig. 4–30 Carburetor body
(Car with automatic transmission)

1. Power valve solenoid
2. No. 2 secondary slow air bleed
3. No. 1 secondary slow air bleed and secondary slow jet
4. Secondary main air bleed and emulsion tube
5. Vacuum passage
6. Primary main air bleed and emulsion tube
7. Primary slow jet
8. Accelerator injection nozzle, weight and ball
9. Secondary main jet
10. Power jet
11. Primary main jet
12. Vacuum jet
13. Mixture adjust screw

g. Disassembling throttle chamber

1. Remove the mixture adjust screw.
2. Remove the throttle adjust screw.
3. Remove the richer solenoid (Car with manual transmission only).
4. Remove the front lever set by removing the attaching nut.
5. Remove the rear lever set by removing the attaching nut.

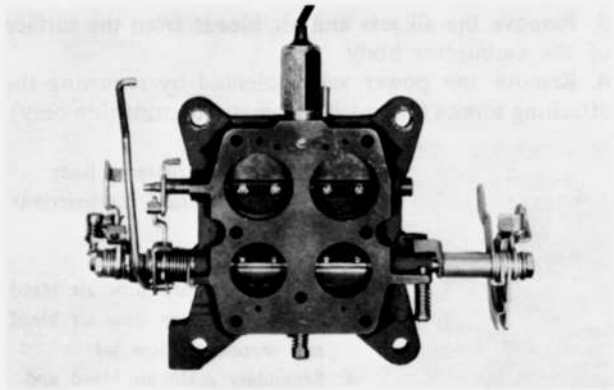

Fig. 4–31 Throttle chamber (Manual T/M)

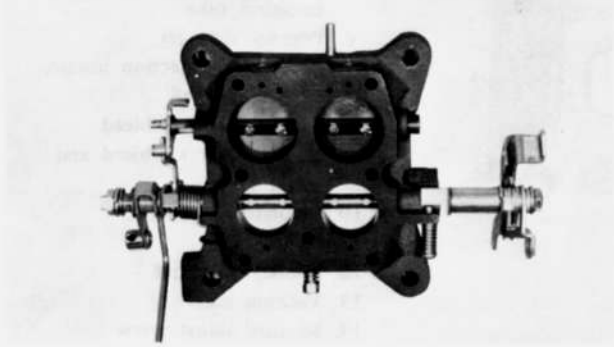

Fig. 4–32 Throttle chamber (Automatic T/M)

4–A–12. Inspecting Carburetor

1. Wash all parts in clean gasoline and dry with compressed air. All passages of the carburetor must be blown very carefully.
Never use a wire for cleaning the jets.
2. Inspect the air horn, body and body flange for cracks, nicks or burrs on their respective gasket surfaces.
3. Inspect the float for deformation, damaged tab and worn retaining pin bore.
4. Check the float needle valve for wear and for proper seating.
5. Inspect the filter for rust and damage.
6. Check the choke valve for proper choking, smooth movement and excessive play of choke shaft.
7. Check all jets and air bleeds for clog, damaged threads, damaged head slots and damaged holes.
8. Check the primary and secondary throttle valves if these close firmly or not, check them for smooth movement and excessive play of the shafts.

4–A–13. Carburetor Assembly

To assemble, follow the disassembly procedures in the reverse order with the following cautions.
1. Discard the old gaskets and use new ones.
2. Confirm that all parts are in good condition and clean.
3. Both the primary and secondary systems have their respective parts which are of a shape. Therefore, when installing, care should be taken so as not to mistake one for the other.
4. When installing the bimetal spring housing to the carburetor body, fit the choke shaft lever to the bimetal spring and accurately by means of closing the choke valve and pulling the vacuum diaphragm shaft.

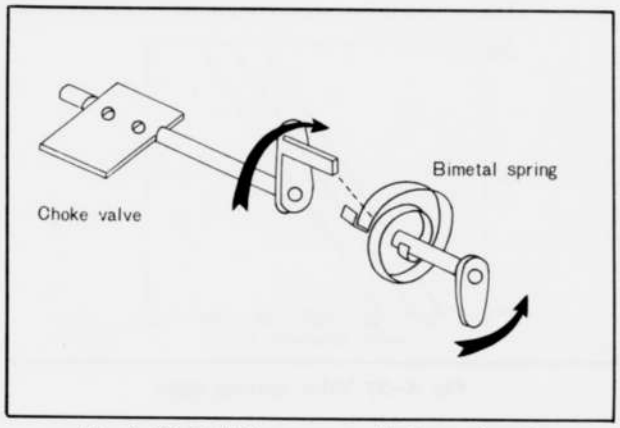

Fig. 4–33 Installing vacuum diaphragm housing

4–B. FUEL PUMP

Turn the ignition key "ON" and check the operational noise of the fuel pump. In case that there is no operational noise from the fuel pump, check the disconnection of the harness.
And if there is no abnormality, replace the fuel pump. The pressure test and volume test shall be conducted according to the following procedures.

a. Pressure test

1. It is required that measurement should be performed while the engine is in cold condition, and make sure that there is no fire around.
2. Remove the air cleaner assembly. Disconnect the fuel inlet hose at the carburetor. Use care to prevent combustion due to fuel spillage.
3. Connect the pressure gauge to the fuel inlet hose.

Note:
It is recommended to place the pressure gauge outside the engine compartment using a hose of adequate length. In this case, place the gauge almost at the height of carburetor.

4. Turn the ignition switch on and note the pressure reading. If the reading is not within the specifications mentioned below, the pump is damaged and should be repaired or replaced. If the pump pressure is within the specifications, perform the test for volume.

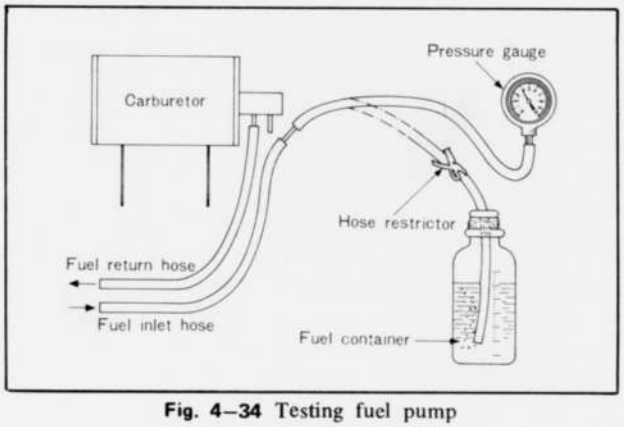

Fig. 4–34 Testing fuel pump

b. Volume test

Turn the ignition switch on, open the hose restrictor and expel the fuel into the container, while observing the expelling amount for one minute. Close the restrictor and read the amount.
If the pump volume is below specifications, repeat the test using an auxiliary fuel supply and a new fuel filter. If the pump volume meets specifications while using the auxiliary fuel supply, check for a restriction in the fuel supply from the tank and for the tank not venting properly.

Specifications — fuel pump

Fuel pressure	0.3 ~ 0.38 kg/cm² (4.26 ~ 5.41 lb/in²)
Feeding capacity	More than 1,150 cc/min (1.2 U.S. quart/min)

4–C. FUEL FILTER

The fuel filter is of a cartridge type. The element of the filter is sealed cartridge and should be replaced following the maintenance schedule.

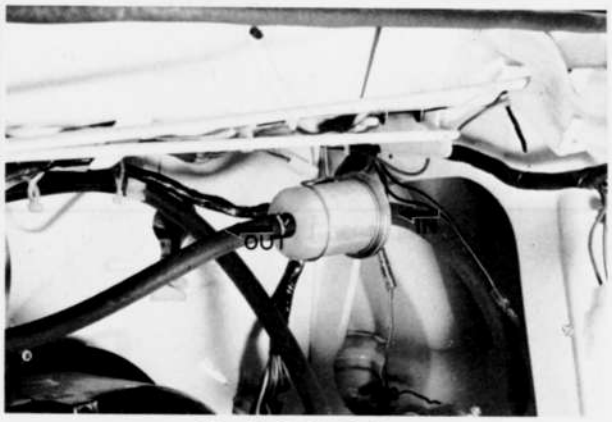

Fig. 4–35 Fuel filter

4–D. FUEL LINES

Inspect the fuel lines for leaks and tighten the fuel line connections to prevent leakage. It is important that the fuel system should be kept clean and free from water. In an excessive amount of dirt or water is found, drain the fuel from the tank and blow out the fuel lines with compressed air.

4–E. FUEL TANK

Inspect the fuel tank for cracks and corrosion. If any defect is present, repair or replace as necessary.

Note:
Before repairing, clean the fuel tank thoroughly with steam and sufficiently to remove all explosive gas.

4–F. AIR CLEANER

4–F–1. Air Cleaner Element

The air cleaner is of a paper filter type. The element should be serviced following the maintenance schedule. To clean, blow the element with compressed air at low pressure.

4–F–2. Intake Air Temperature Control System

Intake air temperature control system consisting of a control valve and a bimetal is located within the air cleaner and senses the engine room temperature for a stabilized intake air temperature.

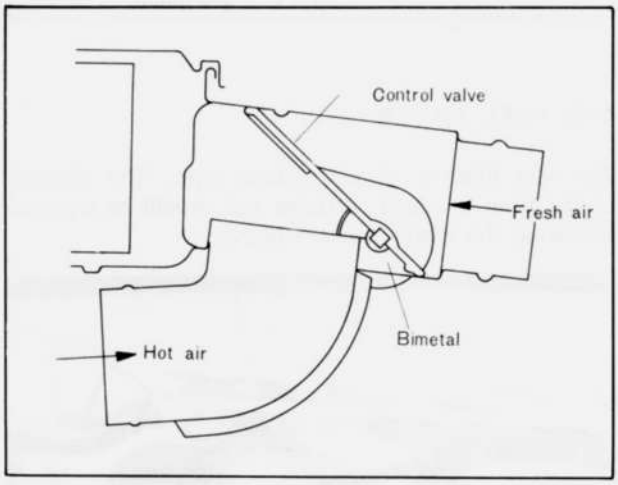

Fig. 4–36 Control valve

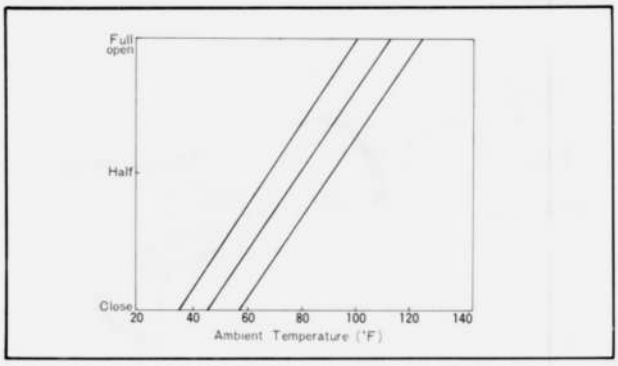

Fig. 4–37 Valve opening angle

4–F–3. Checking Control Valve

Move the control valve up and down inside the air cleaner and if there is no difficulty to move and also the spring force of the bimetal is felt, it is in good order.

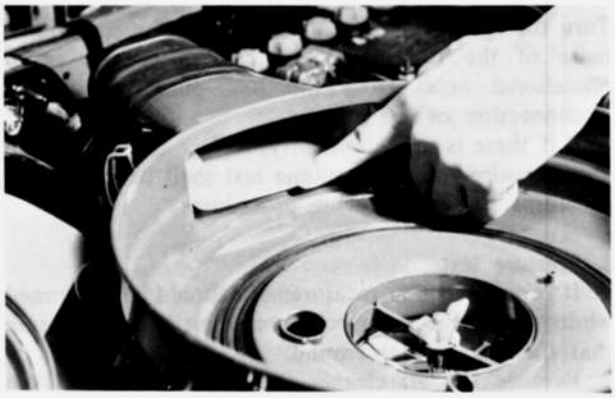

Fig. 4–38 Control valve

ELECTRICAL SYSTEM (ENGINE)

5–A. BATTERY ..... 5 : 1
5–A–1. Checking Battery ..... 5 : 1
5–A–2. Charging Battery ..... 5 : 1
5–B. IGNITION SYSTEM ..... 5 : 2
5–C. DISTRIBUTOR ..... 5 : 2
5–C–1. Checking Breaker Points ..... 5 : 2
5–C–2. Adjusting Breaker Points ..... 5 : 2
5–C–3. Adjusting Initial Ignition Timing ..... 5 : 2
5–C–4. Removing Distributor ..... 5 : 3
5–C–5. Testing Distributor ..... 5 : 4
5–C–6. Disassembling Distributor ..... 5 : 5
5–C–7. Inspecting Distributor ..... 5 : 5
5–C–8. Assembling Distributor ..... 5 : 6
5–C–9. Installing Distributor ..... 5 : 6
5–D. IGNITION COIL ..... 5 : 6
5–E. SPARK PLUG ..... 5 : 6
5–E–1. Spark Plug Heat Range ..... 5 : 6
5–E–2. Removing Spark Plug ..... 5 : 6
5–E–3. Checking Spark Plug ..... 5 : 7
5–E–4. Installing Spark Plug ..... 5 : 7
5–F. ALTERNATOR ..... 5 : 7
5–F–1. Precautions on Service ..... 5 : 7
5–F–2 Checking Charging System on Car ..... 5 : 7
5–F–3. Disassembling Alternator ..... 5 : 7
5–F–4. Inspecting Alternator ..... 5 : 8
5–F–5. Assembling Alternator ..... 5 : 10
5–G. REGULATOR ..... 5 : 10
5–G–1. Checking Constant Voltage Relay ..... 5 : 10
5–G–2. Checking Pilot Lamp Relay ..... 5 : 10
5–G–3. Adjusting Regulator ..... 5 : 10
5–H. STARTING MOTOR ..... 5 : 11
5–H–1. Checking Starting Circuit ..... 5 : 11
5–H–2. Testing Starting Motor ..... 5 : 11
5–H–3. Disassembling Starting Motor ..... 5 : 11
5–H–4. Inspecting Starting Motor ..... 5 : 12
5–H–5. Magnetic Switch Test ..... 5 : 13
5–H–6. Assembling Starting Motor ..... 5 : 14
SPECIAL TOOLS ..... 5 : 14

5

5–A. BATTERY

5–A–1. Checking Battery

As the battery has an important influence on startability, ignition and lighting, check the following points periodically and always keep the battery in perfect condition.

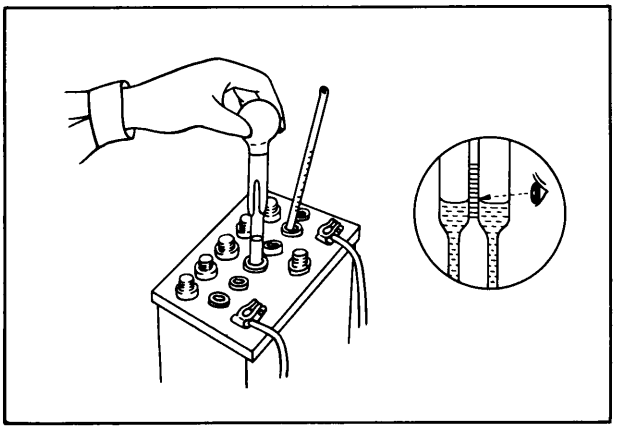

Fig. 5–1 Checking specific gravity

1. Check the electrolyte level in each cell of the battery, and add distilled water to maintain the solution 10 ~ 20 mm (0.4 ~ 0.8 in) above the plates.
Do not overfill.

2. Check the specific gravity of the electrolyte with a hydrometer, as shown in Fig. 5–1. If the reading is 1.28 or more, it indicates that the battery is fully charged. If the reading is below 1.22, the battery requires recharging.
3. Check the tightness of the terminals to ensure good electrical connections. Clean the terminals and coat the terminals with grease.
4. Inspect for corroded or frayed battery cables.

5–A–2. Charging Battery

a. Constant current charge

1. If the exterior of the battery is dirty with sulphuric acid or dust and dirt, wash these off with clean water and dry thoroughly before charging the battery.
2. Check the electrolyte level and add distilled water if necessary.

Note:
If addition of distilled water is neglected, the plates and separators will become exposed to air, causing a sulphation to occur on the plates.
Do not add dilute sulphuric acid unless the electrolyte has overflown or led out.

3. Connect the battery to the charger ensuring that the polarities are correct.

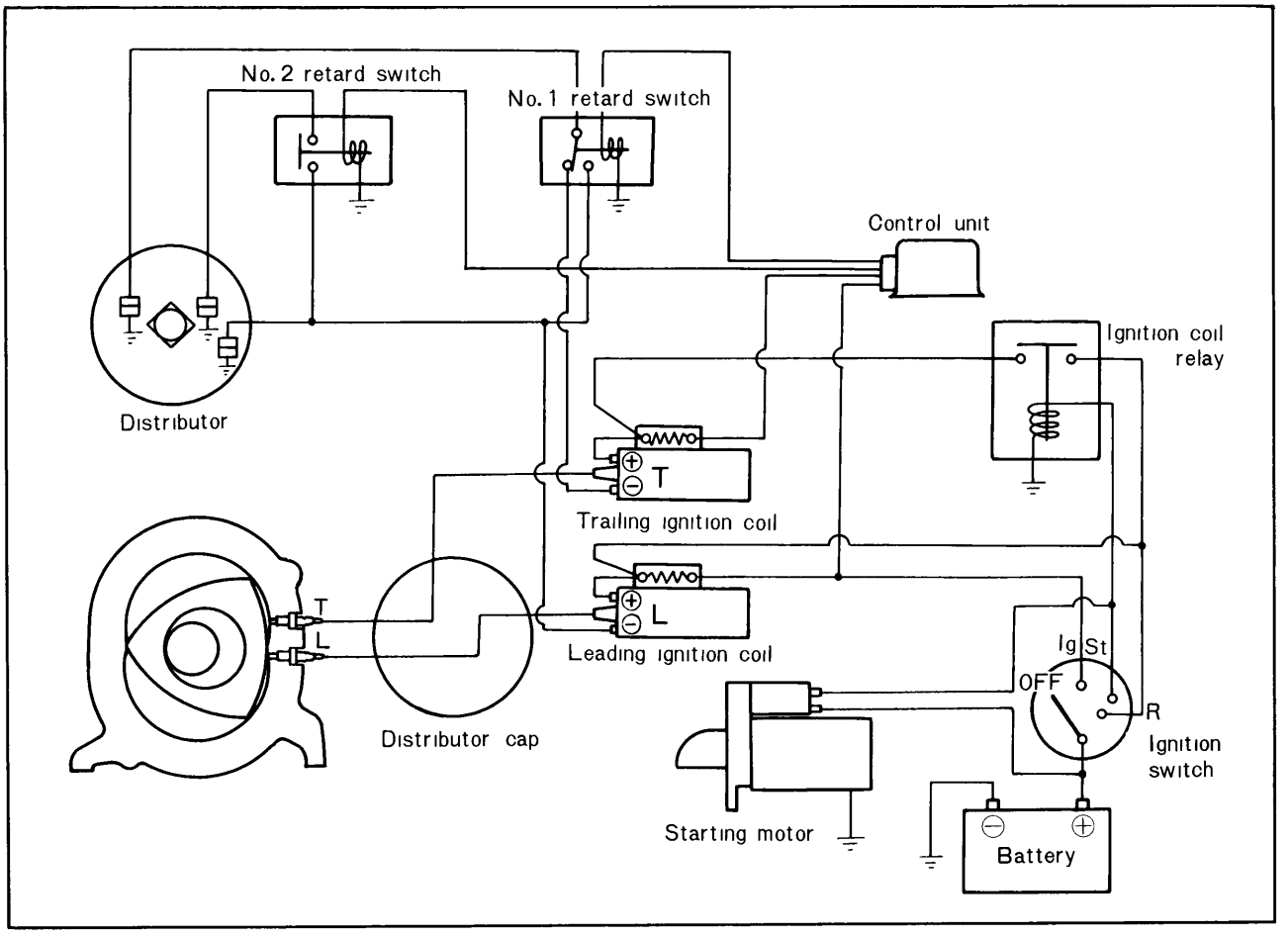

Fig. 5–2 Ignition system

4. To charge, apply an electric current of approximately 7A until the specific gravity of the electrolyte reaches 1.27 ~ 1.29.

b. Fast charge

As a fast charge causes both the temperature and the level of the electrolyte to rise suddenly, it does not have a favorable effect on the battery. Therefore, this should not be performed unless in the case of an emergency.

When a fast charge is being applied with the battery mounted on the vehicle, ensure that the cables are removed from the battery terminals before the charge is applied. If this is neglected, it could cause a damage to the diodes on the alternator.

The battery should be kept by the use of cooling water to prevent the temperature of the electrolyte from exceeding 55°C (131°F), otherwise the charging should be discontinued temporarily when the temperature rises above this point.

5–B. IGNITION SYSTEM

In the rotary engine, two spark plugs are provided in each working chamber, one above the minor axis (called the trailing side) and the other below the minor axis (called leading side) of the trochoid surface, so as to enable the engine to obtain the optimum combustion efficiency under any operating condition.

The primary wires from the individual breaker points for trailing and leading plugs are led to the two separate coils and the secondary wires also are separately led via the distributor to the trailing and leading plugs.

The inside of the distributor is divided into two sections; leading and trailing points are installed in the lower part and leading retard point is installed in the upper part.

These points are used properly by the signal of the control unit given according to the operating conditions of the vehicle.

The coil with external resistor is used.

The ignition coil relay is equipped to short-circuit the external resistor in starting (when the starter is running) so as to increase the secondary voltage and improve the startability.

Short-circuiting of resistor by the ignition coil relay is made on the trailing side only and that on the leading side by the ignition switch. The ignition coil relay has another contact point which serves to energize the ignition circuit for the fuel pump, etc.

5–C. DISTRIBUTOR

The distributor for this model had three breaker points: one is leading normal point, another is trailing point, and the other is leading retarded point.

The distributor consists of distributing mechanism, contact breaker mechanism, and ignition timing advance control of centrifugal.

5–C–1. Checking Breaker Points

Check the conditions of wear, burning, transferred metal and pitting of the breaker points.

In case any abnormality is found in those checking in the above, clean or replace them.

If there is an abnormal damage on the contact face, check the condenser.

5–C–2. Adjusting Breaker Points

1. Check the dwell angle of each point following the instructions of 5–C–5. a.
2. If the dwell angle is within specifications, adjustment of breaker points is not required. If not, adjust the breaker points following the instructions of 5–C–5. b.

Point gap	0.45 ± 0.05 mm (0.018 ± 0.002 in)

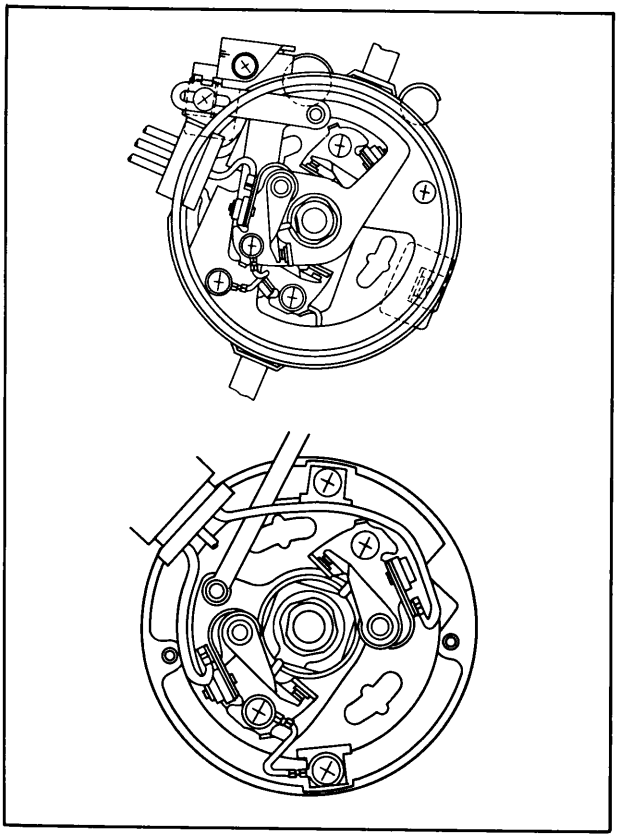

Fig. 5–3 Adjusting breaker points

5–C–3. Adjusting Initial Ignition Timing

To check and adjust the timing with a timing light, proceed as follows:

*** STEP–1 * (Leading)**

1. Connect a tacho-dwell tester to the engine.

Note:

The tacho-dwell tester can be used in the same method as when measuring the dwell angle on a 4 cylinder, 4 cycle reciprocating engine.

2. Connect a timing light to the high tension cord for leading spark plug of the front rotor housing.
3. Start the engine, and run it at specified idle speed.

(See page 4 : 2)

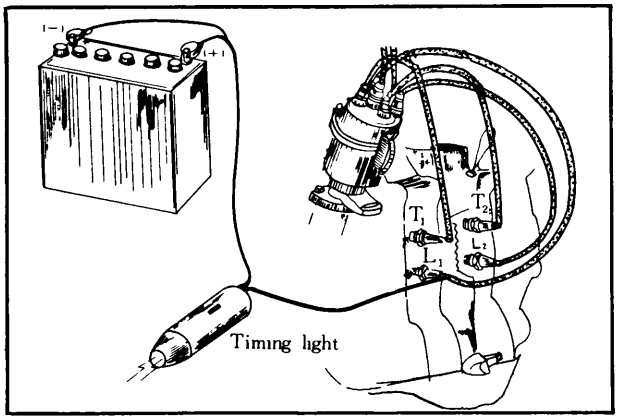

Fig. 5–4 Checking ignition timing

4. Check the ignition timing by aiming the timing light at the timing indicator pin on the front cover and specified timing mark on the pulley.

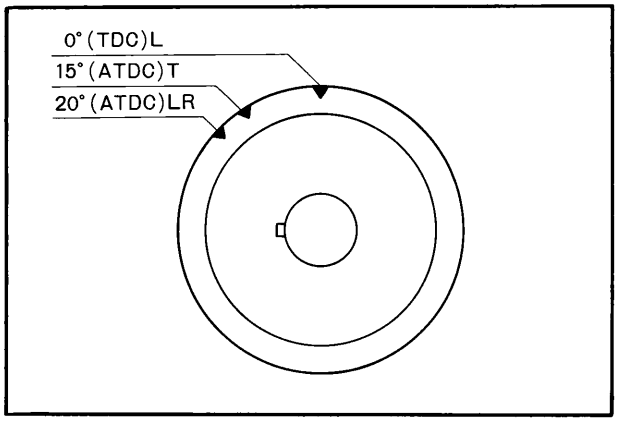

Fig. 5–5 Timing marks

5. If the leading timing is not correctly aligned, stop the engine.
6. Loosen the distributor locking nut slightly and rotate the distributor housing with engine running so that the leading timing may align with the indicator pin on the front cover.
7. Stop the engine and tighten the distributor locking nut. Recheck the timing.

*** STEP–2 * (Leading retard)**

8. Remove the coupler of the distributor and connect proper leading wires to the ends of separated couplers as shown in Fig. 5–6.

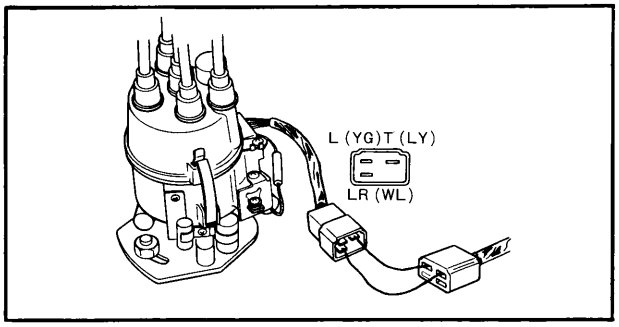

Fig. 5–6 Coupuler connection diagram

9. Start the engine and check the initial timing of the leading retard side in the same manner as in STEP–1.
10. If the timing is outside the specification, loosen the screw of the external adjusting lever for the leading retard side with the engine idling and, after operating the lever to the front and rear and adjusting the timing to the specification, tighten the screw. Reconfirm the timing.

*** STEP–3 * (Trailing)**

11. Change connection of the timing light to the high tension cord for trailing spark plug of the front housing.
12. Start the engine and check the initial timing of the trailing side in the same manner as in STEP–1.
13. If the timing is outside the specification, adjust it to the specification by operating the external adjusting lever for the trailing side in the same manner as in STEP–2.
Reconfirm the timing.

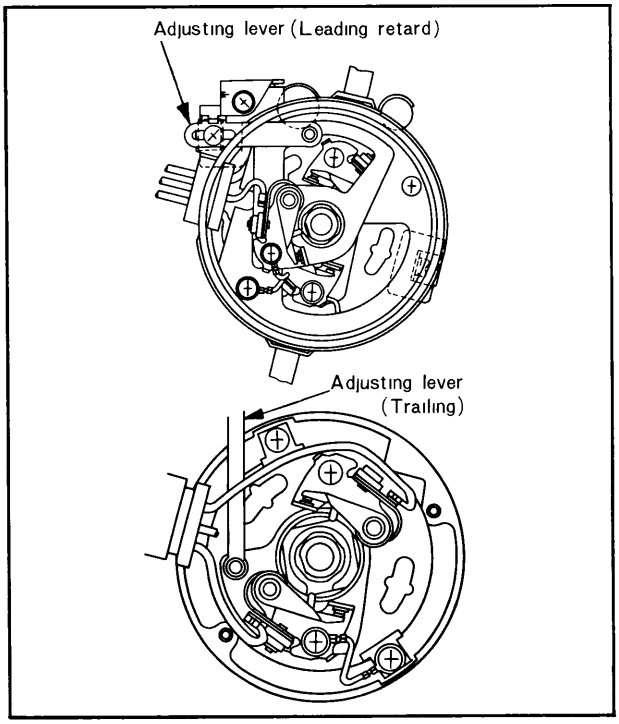

Fig. 5–7 Adjusting timing

14. Recheck the timing. If the timing mark is not correctly aligned, repeat this performing until the correct timing is obtained.

Specifications — Initial timing

Leading	0° ± 1° TDC
Leading retard	20° ± 2° ATDC
Trailing	15° ± 2° ATDC

5–C–4. Removing Distributor

1. Remove the high tension cords.
2. Disconnect the coupler of primary wires from the distributor.
3. Remove the distributor attaching nut.
4. Pull the distributor out of the front cover.



Fig. 5–8 Removing distributor

5–C–5. Testing Distributor

a. Dwell angle test

*** STEP–1 * (Leading & Trailing)**

1. Connect the tester following the instructions of the manufacturer. Then start the engine and let it idle.
2. Turn the cylinder selector to the **4 cylinder, 4 cycle** position.
3. Read the dwell angle on the dwell meter and compare the reading to specification.
4. If the dwell angle is below specification, the breaker point gap is too wide. If the dwell angle is above specification, the breaker point gap is too close.

*** STEP–2 * (Leading retard)**

1. Remove the coupler of the distributor and connect wires as shown in Fig. 5–6
2. Check the dwell angle in the same manner as in STEP–1.

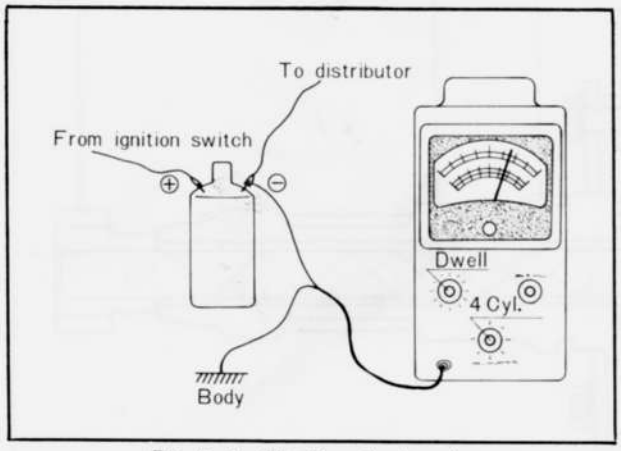

Fig. 5–9 Checking dwell angle

Specifications — Dwell angle

Leading Leading retard Trailing	58° ± 3°

b. Dwell angle adjustment

If the dwell angle is not within specifications, proceed as follows:

1. Remove the high tension cord (ignition coil to distributor) from the ignition coil.
2. Remove the distributor cap and place them out of the way.
3. Connect the **remote starter switch** (49 0242 685A) in the circuit.
4. Loosen the breaker point attaching screws.
5. With the ignition switch on, crank the engine with a remote starter switch and adjust the gap to specification.
6. Release the remote starter switch and tighten the breaker point attaching screws.
7. Since the adjustment may have changed when the attaching screw was tightened, crank the engine again with the remote starter switch and check the dwell angle. When the dwell is properly adjusted, remove the remote starter switch and tester leads.

c. Advance test

Centrifugal advance mechanism is installed in the leading and trailing sides of the distributor, but no advance mechanism is installed in the leading retard side.

The advance is checked to determine if the ignition timing advances in proper relation to engine speed.

1. Check the dwell angle. If the angle is not within the specifications, adjust the breaker points.
2. Check the breaker arm spring tension and replace the points if the spring tension is not within specifications.
3. Check the advance characteristic. The advance characteristic of the distributor should be within the range as shown in Fig. 5–11.

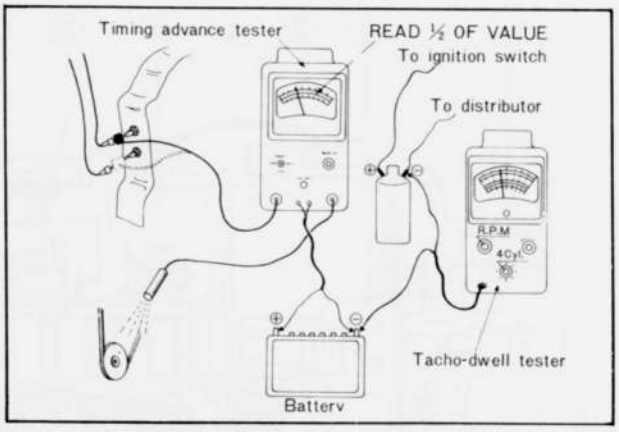

Fig. 5–10 Advance test

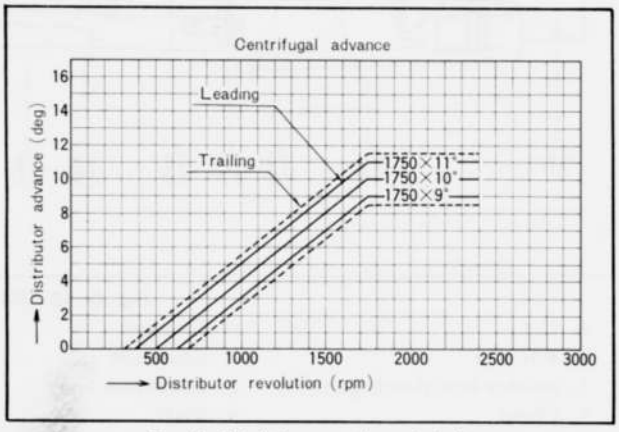

Fig. 5–11 Advance characteristic

Note:
The ignition advance tester can be used in the same method as when measuring the ignition advance on the **4 cylinder, 4 stroke reciprocating engine** but the numerical value indicated on the scale is twice as much as the actual advance degree of rotary engine. So the **indicated value should be divided into two.**

5–C–6. Disassembling Distributor

1. Loosen the cap retaining clips and lift off the cap.
2. Remove the rotor.
3. Remove the clip and installation screw of the exterior adjusting lever for the leading retard side and remove the lever. Next, remove the primary wire and set screw from the leading retard point and remove the point assembly from the breaker base.
4. Remove the installation screws of the breaker base and lift off the breaker base.
5. Remove the primary wire and set screw from the leading point and trailing point. Next, remove the primary wires with rubber block from the distributor housing.
6. Remove the condensers by removing the attaching screws.
7. Remove the clip and installation screw of the exterior adjusting lever for the trailing side. Next, remove the lever bracket installation screws and remove the lever and lever bracket.
8. Remove the set screw from the leading point and trailing point and remove each point assembly from the breaker base.
9. Remove the breaker base installation screws and lock plates and lift off the breaker base.
10. Remove the distrubutor cam by removing the snap ring.
11. Remove the distrubutor driven gear by removing the retaining pin.
12. Remove the distrubutor shaft in upward direction through the top of the distrubutor housing.
13. Remove the governors by removing the springs.

5–C–7. Inspecting Distributor

a. Checking cap

Inspect the distributor cap for crack, carbon runners and evidence of arcing. If any of these conditions exists, the cap should be replaced. Clean any corroded high tension terminals.

b. Checking rotor

Inspect the rotor for cracks or evidence of excessive burning at the end of the metal strip. If any of these conditions exists, the rotor should be replaced.

c. Checking tension of contact arm spring

For inspection, hook a spring scale on the contact arm and pull in a straight line at a right angle to the

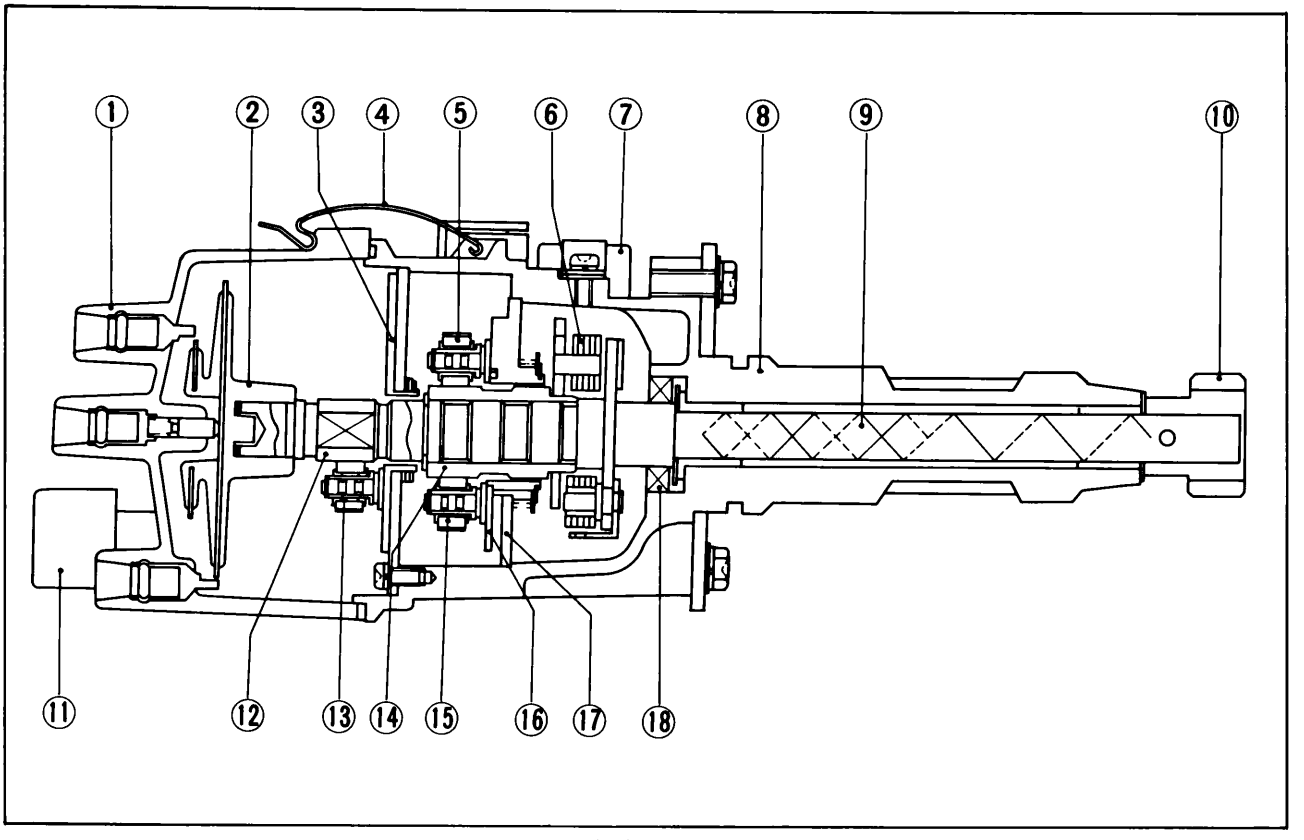

Fig. 5–12 Distributor components

1. Cap
2. Rotor
3. Breaker base (Leading retard)
4. Clamp
5. Leading breaker point
6. Governor
7. Condenser
8. Distributor body
9. Shaft
10. Distributor driven gear
11. Rubber cap
12. Cam
13. Leading retard breaker point
14. Cam
15. Trailing breaker point
16. Breaker base (Leading)
17. Breaker base (Trailing)
18. Oil seal

contact arm. Take a reading when the contact points start to separate. The reading should be between 0.5 ~ 0.65 kg (1.1 ~ 1.4 lb).

d. Checking condenser
If the condenser is leaky, it will cause a weak spark or burned contact points. Check the capacity of the condenser with a condenser tester.
The capacity is 0.24 ~ 0.30μF.

5–C–8. Assembling Distributor
Assemble the distributor in the reverse order of disassembling.

Note:
When installing the breaker base for the leading and trailing sides in the distributor housing, match the arrow mark on the housing with the center of graduation of the breaker base.

5–C–9. Installing Distributor
1. Turn the eccentric shaft until the TDC mark on the drive pulley aligns with the indicator pin on the front cover. (See Fig. 5–5)
2. Align the tally mark on the distributor housing and driven gear as shown in Fig. 5–13.

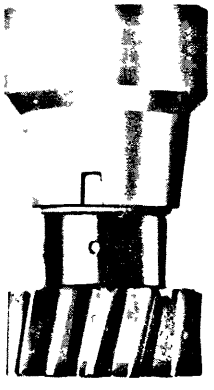

Fig. 5–13 Aligning tally mark

3. Insert the distributor so that the distributor lock bolt is located in the center of the slit, and engage the gears.
4. Rotate the distributor clockwise until the leading contact point starts to separate, and tighten the distributor attaching nut.
5. Install the distributor cap and connect the primary wires coupler.
6. Set the timing with a timing light, then tighten the distributor attaching nut. (Refer to Par. 5–C–3)

5–D. IGNITION COIL

This model is equipped with two ignition coils of which is the oil cooling type. On this type of ignition coil, oil is sealed within the insulator inside the coil and, therefore, if by any chance an oil leakage should occur, this would cause a drop in the efficiency of the coil, resulting in deteriorating the performance of the engine. Therefore check the ignition coil to ensure that the terminals are clean and that there are no cracks or oil leakages. Also, check the external and primary resistance.

Ignition Coil	Type	External Resistance	Primary Resistance
Leading	HP5-13J	1.4 Ω/20°C	1.35 Ω/20°C
Trailing	HP5-13E	1.6 Ω/20°C	1.5 Ω/20°C

5–E. SPARK PLUG

On this engine, 2 spark plugs are provided in each working chamber so as to enable the engine to obtain the optimum combustion efficiency under any operating condition. These spark plugs for this engine are slightly different from for the reciprocating engines in dimensions and heat values.
As you are aware, heat range of the spark plugs should be selected by owing of various conditions, otherwise durability of the spark plug, startability of the engine and running performance of the car will be down. Therefore, it is recommended that heat range of the spark plugs should be selected in each vehicle running conditions.
All spark plugs must be of the same maker and number or heat range. If spark plugs shown burning white or rapid electrode wear, replace with a **cold range type** spark plugs.
Do not use spark plug which is not specified.

5–E–1. Spark Plug Heat Range
Two types of spark plug, standard spark plug and cold type spark plug, are available and they should be selected according to the weather condition and driving condition.

a. Standard
The standard spark plugs are of the standard specification and suitable for the vehicle which is not frequently driven at a continuous speed over 150 km/h (95 miles/h).

b. Cold type
The cold type spark plugs are of a heat range higher than the standard spark plugs. They should be used in case the standard spark plugs are overheated, or for the vehicles which is frequently driven at a continuous speed of over 150 km/h (95 miles/h).

5–E–2. Removing Spark Plug
1. Disconnect the wire from each spark plug by grasping, twisting and then pulling the moulded cap of the wire only. Do not pull on the wire because the wire connection inside the cap may become separated or the boot may be damaged.
2. After loosening each spark plugs one or two turns, clean the area around each spark plug port with compressed air, then remove the spark plugs.

5–E–3. Checking Spark Plug

1. Inspect each plug individually for badly worn electrodes, glazed, broken or blistered porcelain, and replace the plug as necessary.
2. Clean the spark plugs thoroughly using a sand blast cleaner.
3. Inspect each spark plug for make, and heat range.

Note:
Don't adjust the plug gap because the porcelain may be cracked or broken.
If broken pieces of the porcelain should enter working chambers, they may cause serious damage to the engine.

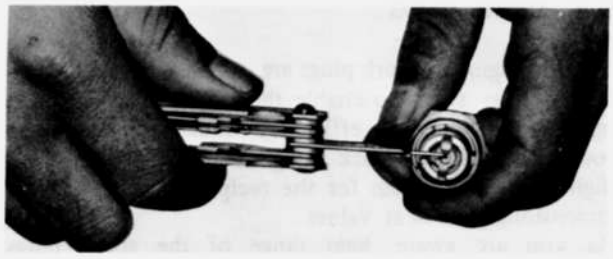

Fig. 5–14 Checking gap

Below is the table of recommended spark plugs.

	Standard	Cold type	Initial gap
NGK	B7EM BR7EM B7EMV BR7EMV	B8EM BR8EM B8EMV BR8EMV	0.65 ± 0.05 mm (0.026 ± 0.002 in)
NIPPON-DENSO	W22EA W22EAR W22EA-G W22EAR-G	W25EA W25EAR W25EA-G W25EAR-G	
CHAMPION	N-80B RN-80B N-180B RN-180B	N-78B RN-78B N-178B RN-178B	

5–E–4. Installing Spark Plug

1. In order to protect the thread portion of the spark plugs, it is recommended to **apply Moly Paste (0259 77 767 or 0259 77 768)** to the threaded portion of the new spark plugs.
2. Thread the spark plugs into the rotor housing finger tight until the gaskets contact the housing. If the plugs cannot be installed with finger pressure, clean the threads with a suitable greased thread chaser.
Torque each plug to 1.3 ~ 1.8 m-kg (9 ~ 13 ft-lb).
3. Connect the spark plug wires.

5–F. ALTERNATOR

5–F–1. Precautiosn on Service

When servicing the charging system, observe the following precaution. If not followed, the result will be in serious damage of the system.
1. **Do not** short across or ground any of the terminals on the alternator or requlator.
2. **Never** operate the alternator on with an open circuit (with the field terminal connected and the armature terminal disconnected).
3. When installing a battery, always make sure that the negative post of the battery is attached securely to the ground strap.
4. **Never** reverse battery cables, not even for an instant, as reverse polarity current flow will damage the diodes in the alternator.
5. When charging the battery with a fast charger, disconnect the positive cable at the battery.
6. Do not remove the A terminal from the alternator or regulator while the engine is running.

5–F–2. Checking Charging System on Car

If the electrical system is not charging properly, check all electrical connections and the fan belt tension prior to performing any test of the charging system, then determine whether the trouble is in the alternator or regulator before removing the alternator.
Check the alternator by using a **alternator tester** (49 0370 290). If the checker is not available, check as follows:
1. Disconnect the wire from "B" terminal of the alternator and connect the negative lead of the ammeter to the wire and the positive lead to the "B" terminal.
2. Remove the regulator couplers and connect them by using the proper lead wire as shown in Fig. 5–15.
3. Start the engine and hold the engine speed to 2,000 rpm.
4. Remove the lead wire for "F" terminal of the regulator and make the short circuit for a moment by connecting the lead wire removed to the lead wire for "A" terminal.
5. If the meter reading increases remarkably, the trouble is in the regulator and if there is no change in current, it is in the alternator.

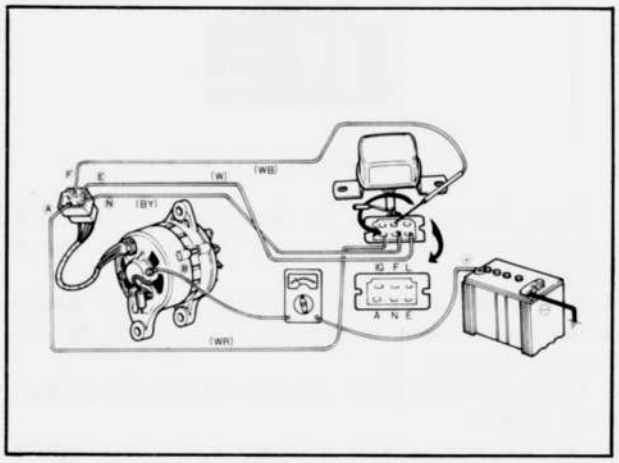

Fig. 5–15 Checking charging system

5–F–3. Disassembling Alternator

1. Remove the radio noise suppression condenser from the rear of the alternator.
2. Remove the through bolts.
3. Separate the front housing assembly by prying apart with a screwdriver at the slots of the front housing.
4. Hold the front housing and rotor assembly, clamping the rotor.



Fig. 5–16 Loosening pulley nut

5. Loosen the pulley retaining nut and remove the nut, washer, pulley, fan, spacer and front slinger.
6. Remove the front housing with bearing and remove the rear slinger.
7. Remove the nut, washers and insulator from the "B" terminal at the rear of the alternator.
8. Remove the screw attaching the rectifier to the rear housing and remove two screws attaching brush holder and rectifier.
9. Carefully remove the stator, rectifier and brush holder assembly from the rear housing. Use care to keep the brush holder assembly intact during removal from the rear housing.
10. Remove the brush holder assembly.
11. Unsolder the stator leads from the rectifier.
12. If bearing replacement is necessary, remove the rear bearing from the rotor shaft with a puller.

To replace the front bearing, remove the bearing retainer attaching screws, and press the bearing from the front housing

5–F–4. Inspecting Alternator

a. Checking stator coil

Check the stator coil for both open and grounded circuits with a tester.

To check for open, connect the prods to each of the two leads, as shown in Fig. 5–20. If there is no flow of current, the coil is open circuit and must be repaired or replaced.

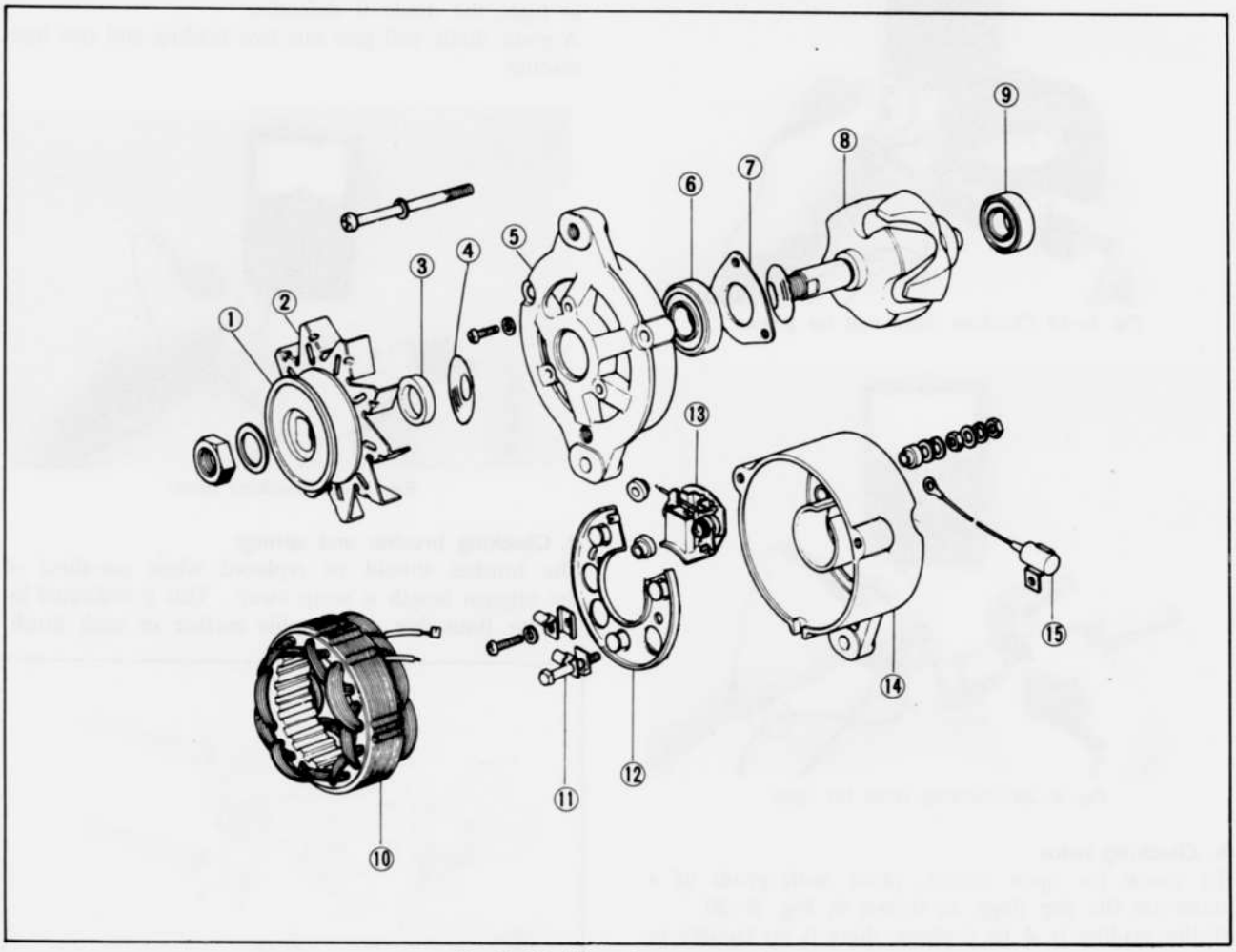

Fig. 5–17 Alternator components

1. Pulley
2. Fan
3. Spacer
4. Slinger
5. Front housing
6. Front bearing
7. Bearing retainer
8. Rotor
9. Rear bearing
10. Stator
11. Terminal bolt
12. Rectifier
13. Brush and holder
14. Rear housing
15. Condenser

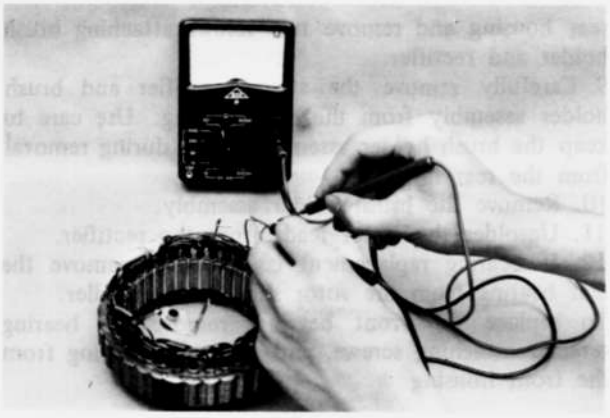

Fig. 5–18 Checking stator coil for open

To check for ground, connect one prod to the core and the other to each lead wire, as shown in Fig. 5–21. If a ground is present the current will flow and the stator coil must be repaired or replaced.



Fig. 5–19 Checking stator coil for ground



Fig. 5–20 Checking rotor for open

b. Checking rotor

To check for open circuit, place both prods of a tester on the slip rings, as shown in Fig. 5–20.
If the reading is 4 to 6 ohms, there is no trouble in the rotor.
To check for ground, connect one prod to the slip ring and other prod to the core, as shown in Fig. 5–21. If the current flows the rotor must be repaired or replaced.

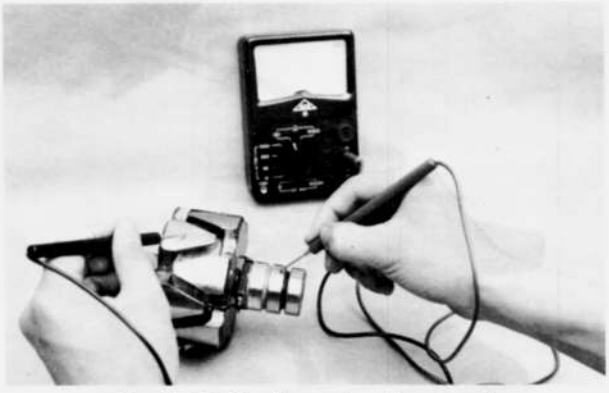

Fig. 5–21 Checking rotor for ground

c. Checking diodes

Diodes for use in the alternator are available in two different types, the positive diode which allows current to flow from the lead wire to the case but not from the case to the lead wire and the negative diode which has the opposite properties.
To check, read the resistance between the lead wire and case with a tester. Then reverse the tester leads and note the reading. If both readings are very low or high, the diode is defective.
A good diode will give one low reading and one high reading.

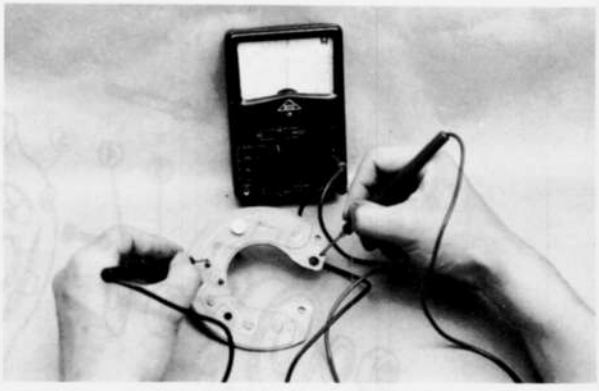

Fig. 5–22 Checking diode

d. Checking brushes and springs

The brushes should be replaced when one-third of the original length is worn away. This is indicated by a wear limit line on the side surface of each brush.

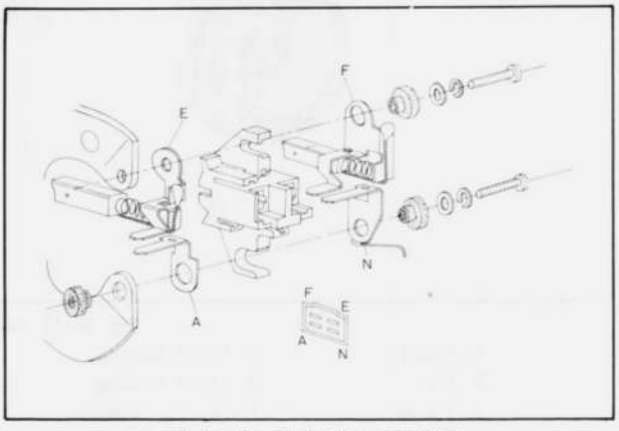

Fig. 5–23 Brush holder assembly

Check the brush spring tension. The tension should be between 330 and 450 gr (12 and 16 oz). Replace the springs if the tension is less than 330 gr (12 oz) or if excessive corrosion exists.

e. Checking bearings

There is no need of lubricating as the bearing is prelubricated. In a long spell of use, when the bearing is worn or damaged, replace it with a new one.

5–F–5. Assembling Alternator

Assemble the alternator in the reverse order of disassembling, noting the following points.

1. When installing the rotor assembly to the rear housing and stator assembly, hold the brushes in position by inserting a piece of stiff wire into the hole of the brush through the rear housing as shown in Fig. 5–24.

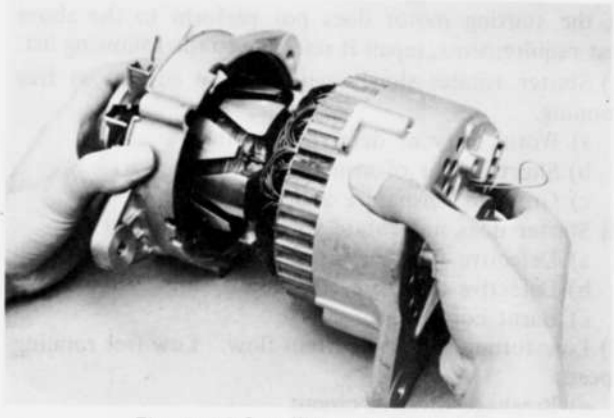

Fig. 5–24 Installing rotor assembly

2. The soldering of the diode leads should be performed in **less than twenty seconds** as the excessive heat may damage the diode.

5–G. REGULATOR

The regulator used for this model is composed of two control units, a constant voltage relay and a pilot lamp relay, mounted as an assembly.

5–G–1. Checking Constant Voltage Relay

To check, use an almost fully charged battery and connect a voltmeter between the (A) and (E) terminals of the regulator, as shown in Fig. 5–25.

Then, hold the alternator revolution to 4,000 rpm (engine revolution 1,800 rpm) and take a reading of the voltmeter. If the reading is from 14 to 15 volts, it is in proper order. If it is not within the specifications, the voltage relay must be adjusted, as instructed in Par. 5–G–3.

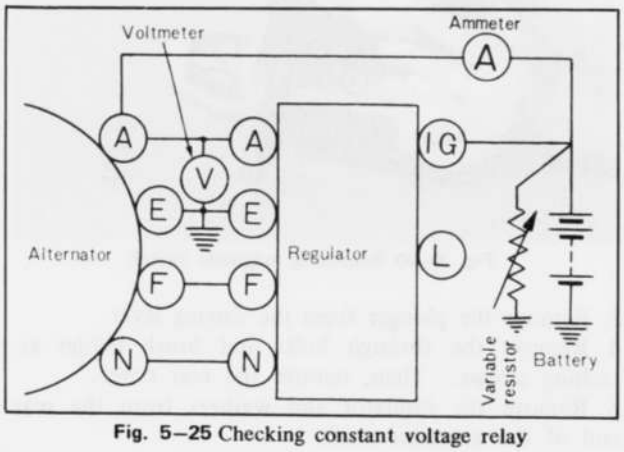

Fig. 5–25 Checking constant voltage relay

5–G–2. Checking Pilot Lamp Relay

Make a circuit, as shown in Fig. 5–26, using a voltmeter and variable resistor, and light up the pilot lamp. Then, slide the knob of the variable resistor so that the voltage gradually increases.

Read the voltage between the (N) and (E) terminal when the lamp goes out. If this voltage is 4.2 to 5.2 volts, it is normal.

Next, slide the knob to gradually reduce the voltage and the lamp will light again. If the reading is 0.5 ~ 3.0 volts at this time, it is proper.

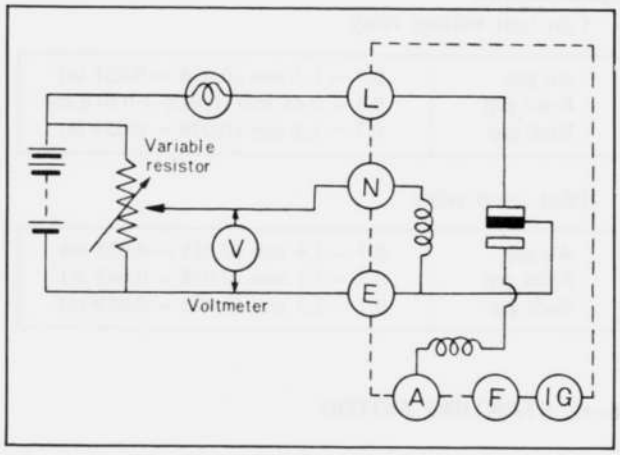

Fig. 5–26 Checking pilot lamp relay

5–G–3. Adjusting Regulator

First, check the air gap, back gap and point gap with a wire gauge. If they are not within the specifications, adjust by bending the stationary contact bracket. After correct gaps are obtained, adjust the voltage setting. Bend the upper plate down to decrease the voltage setting, up to increase the voltage setting.

In case of the pilot lamp relay, if the voltage when the lamp lights up is adjusted to the specification,

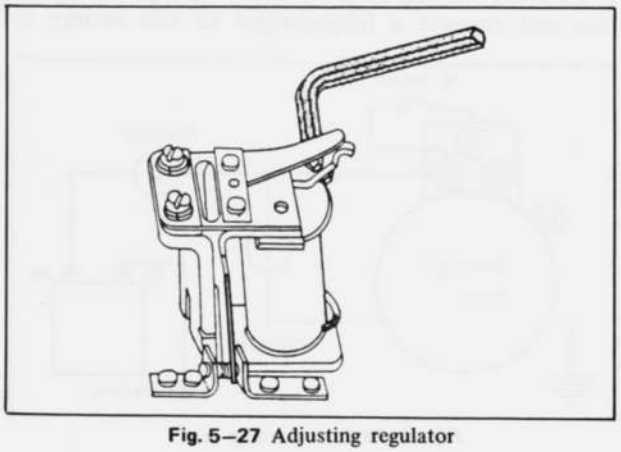

Fig. 5–27 Adjusting regulator

the voltage when the lamp goes out may be within the specification.

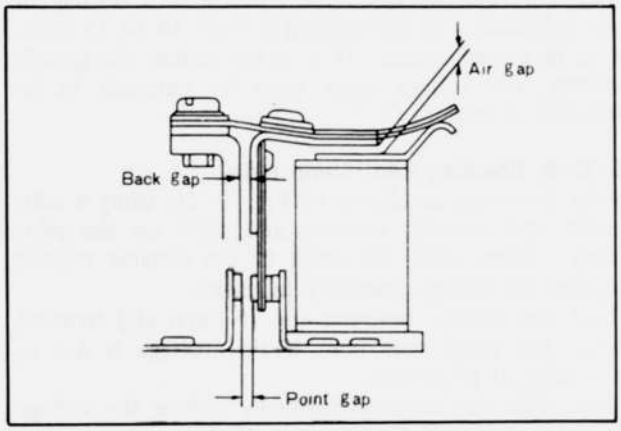

Fig. 5–28 Gaps of regulator

Specifications

Constant voltage relay

Air gap	0.7 ~ 1.3 mm (0.028 ~ 0.051 in)
Point gap	0.3 ~ 0.45 mm (0.012 ~ 0.018 in)
Back gap	0.7 ~ 1.5 mm (0.028 ~ 0.059 in)

Pilot lamp relay

Air gap	0.9 ~ 1.4 mm (0.035 ~ 0.055 in)
Point gap	0.7 ~ 1.1 mm (0.028 ~ 0.043 in)
Back gap	0.7 ~ 1.5 mm (0.028 ~ 0.059 in)

5–H. STARTING MOTOR

5–H–1. Checking Starting Circuit

When the starting motor fails to operate or does not satisfactorily operate, check the following points before removing the starting motor:

1. Weak battery
2. Corroded or loose battery terminal
3. Loose starting motor terminal
4. Broken or loose wires of the starting circuit
5. Faulty ignition switch

5–H–2. Testing Starting Motor

a. Free running test

1. Place the starting motor in a vise equipped with soft jaws and connect a fully-charged 12 volt battery to the starting motor.
2. Connect an ammeter between the (B) terminal of the starting motor and the battery.
3. Operate the starting motor and take a reading. On 1.2 KW starting motor, the current draw should be less than 75 amperes at 4,900 rpm or more. [2.0 KW: less than 100 amperes at 7,800 rpm or more]

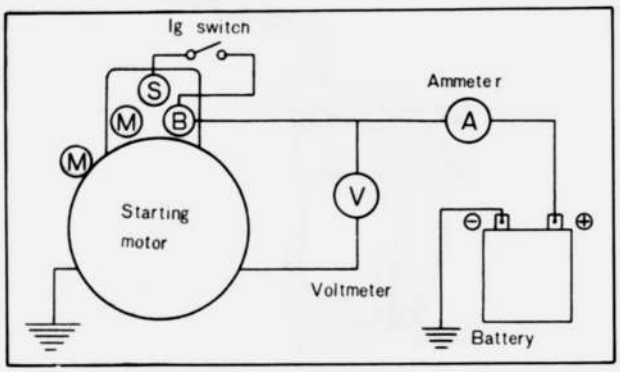

Fig. 5–29 Free running test

b. Lock resistance test

1. Install the starting motor on a test bench.
2. Test the lock resistance of the starting motor, following the instructions of the test equipment manufacturer.
3. With applied battery voltage adjusted to 5.0 volts, the current flow should be 780 amperes [2.0KW: 1,100 amperes] or less and the torque should be 1.1 m-kg (8.0 ft-lb) [2.0KW: 2.4 m-kg (17.4 ft-lb)] or more.

If the starting motor does not perform to the above test requirements, repair it referring to the following list.

1) Starter rotates slowly with a large current at free running.
   a) Worn, dirty or defective bearings
   b) Short circuit of armature
   c) Grounded armature and field coil
2) Starter does not rotate with a large current.
   a) Defective field circuit
   b) Defective armature circuit
   c) Burnt commutator
3) Low torque and low current flow. Low free running speed.
   a) Breakage of field circuit
   b) Excessive internal resistance
4) Low torque. High free running speed.
   a) Short circuit of field coil

5–H–3. Disassembling Starting Motor

1. Disconnect the field strap from the terminal on the magnetic switch.
2. Remove the magnetic switch attaching screws and remove the magnetic switch, spring and washers from the driving housing.

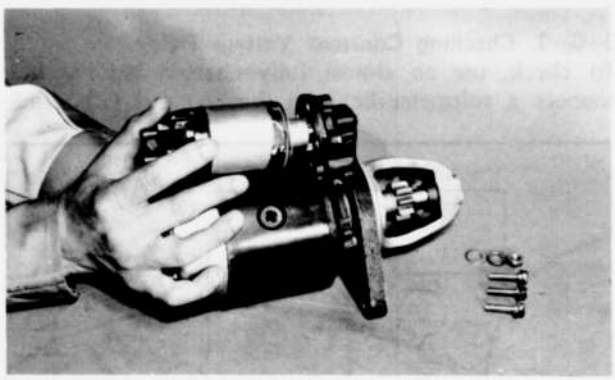

Fig. 5–30 Removing magnetic switch

3. Remove the plunger from the driving lever.
4. Remove the through bolts and brush holder attaching screws. Then, remove the rear cover.
5. Remove the insulator and washers from the rear end of the armature shaft.



Fig. 5–31 Removing plunger

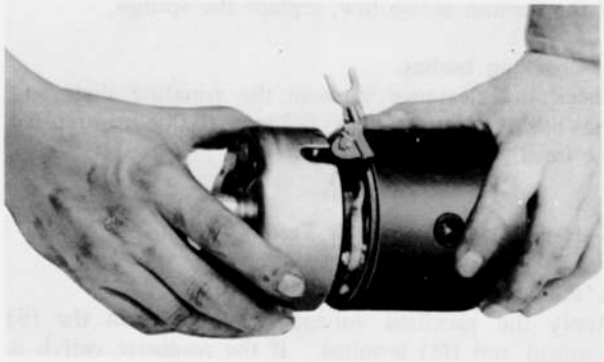

Fig. 5–32 Removing rear cover

6. Remove the brush holder.
7. Separate the yoke from the driving housing.

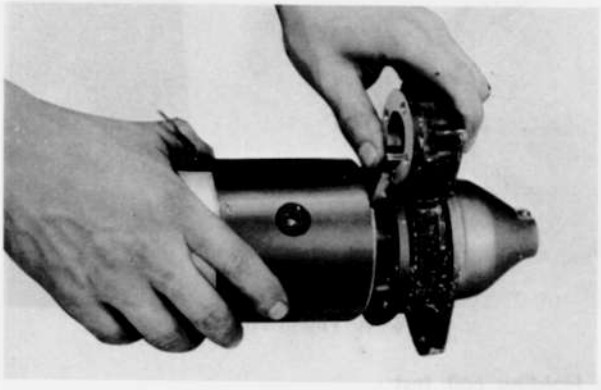

Fig. 5–33 Removing yoke assembly

8. Remove the rubber packing, springs and spring seat.

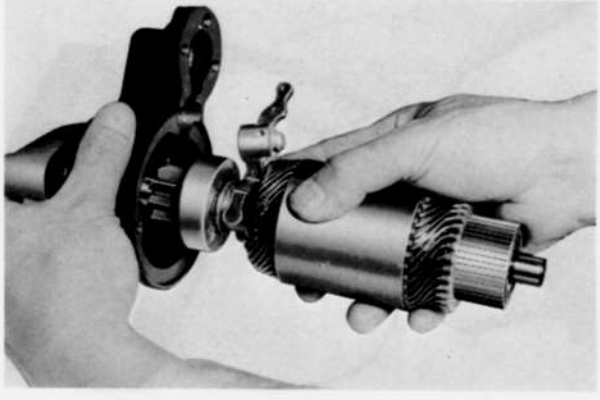

Fig. 5–34 Removing armature assembly

9. Remove the armature and over-running clutch assembly from the driving housing.
10. Remove the driving lever.
11. Drive the pinion stop collar toward the armature, and remove the stop ring. Then, slide the stop collar and over-running clutch off the armature shaft.

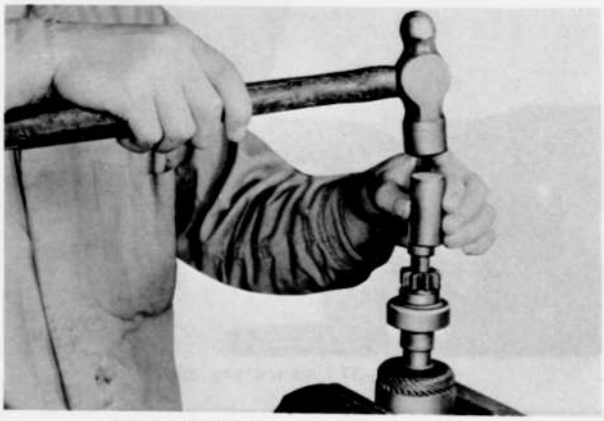

Fig. 5–35 Removing pinion stop collar

12. If the field coil removal is necessary, remove the pole shoe retaining screws. Then, remove the pole shoes and field coil from the yoke.

5–H–4. Inspecting Starting Motor

a. Checking armature

Check the armature for both ground and short circuit. To check for ground, touch one prod of an ohmmeter to each segment and the other prod to the core or shaft.

An infinite reading should be obtained for each segment. If the meter reading is not infinite, the armature windings are shorted to the core or shaft and the armature must be replaced.

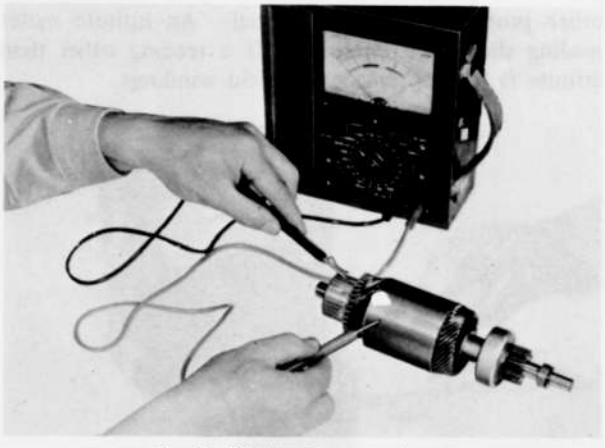

Fig. 5–36 Checking armature

To check for short circuit, use a growler tester. Place the armature against the core of the tester, and hold a steel strip on the armature. Then, rotate the armature slowly by hand. If the armature coil is shorted, the steel strip will become magnetized and vibrate. Replace the armature if a short is found.

b. Checking commutator

If the commutator is dirty, discolored or worn, clean it with emery paper and wash with clean solvent. After cleaning, undercut the mica between the segments to the depth of 0.5 ~ 0.8 mm (0.020 ~ 0.032 in), as shown in Fig. 5–37.

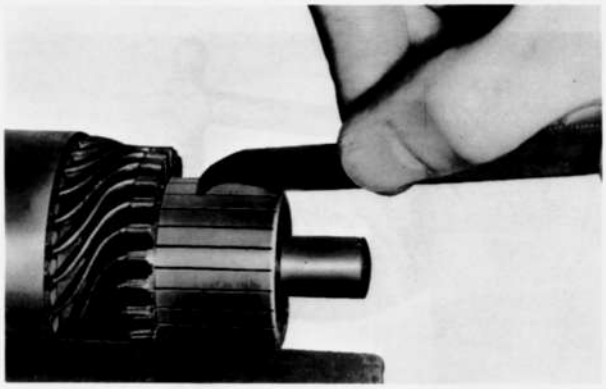

Fig. 5–37 Undercutting mica

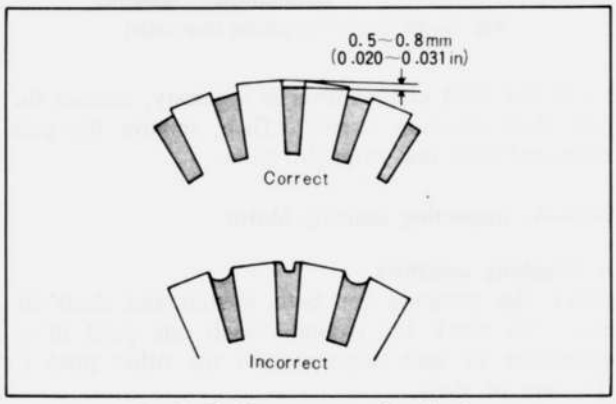

Fig. 5–38 Commutator mica depth

c. Checking field coil

To test the field coil for ground with an ohmmeter, place one prod on the yoke or pole core and the other prod to the field terminal. An infinite meter reading should be obtained. If a reading other than infinite is found, replace the field windings.



Fig. 5–39 Checking field coil for ground

d. Checking brush holder

Check the brush holder for ground. Touch one prod of an ohmmeter to the insulated brush holder and the other prod to the brush holder frame.

If the meter reading is other than infinite, the brush holder assembly is shorted and must be replaced. Repeat this test for the other insulated brush holder. Do not use this test on the two grounded brush holders.

e. Checking brushes and brush springs

Check the brushes and replace if they are worn down more than one third of their original length. Otherwise, the brush spring tension will be reduced, leading to an increase in the brush-commutator contact resistance. This will lower the torque and cause the burnt commutator surface.

The spring tension is 1.4 ~ 1.8 kg (49 ~ 63 oz). If the tension is too low, replace the springs.

f. Checking bushes

Check the clearance between the armature shaft and the bush. If it exceeds 0.2 mm (0.008 in), replace the bush.

5–H–5. Magnetic Switch Test

a. Pull-in coil test

Apply the specified voltage (12V) between the (S) termianl and (M) terminal. If the magnetic switch is forcefully attracted, the pull-in coil is in good condition.

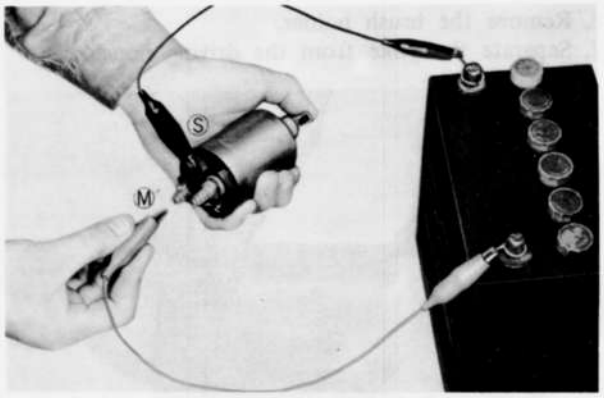

Fig. 5–40 Pull-in coil test

b. Holding coil test

Ground the (M) terminal to the magnetic switch body with a lead and impose the specified voltage (12V)

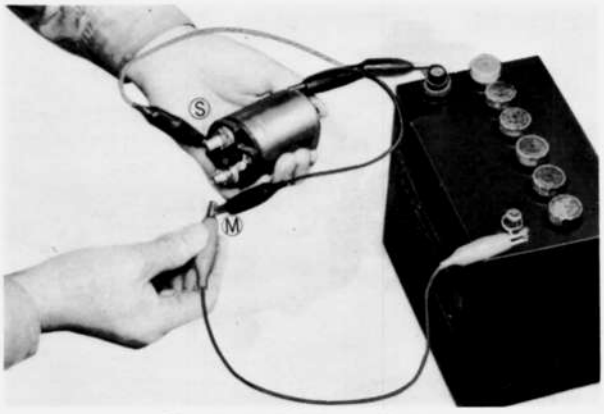

Fig. 5–41 Holding coil test

upon the (S) terminal to pull in the plunger. If the plunger remains attracted after disconnecting the lead from the (M) terminal, there is no trouble with the holding coil.

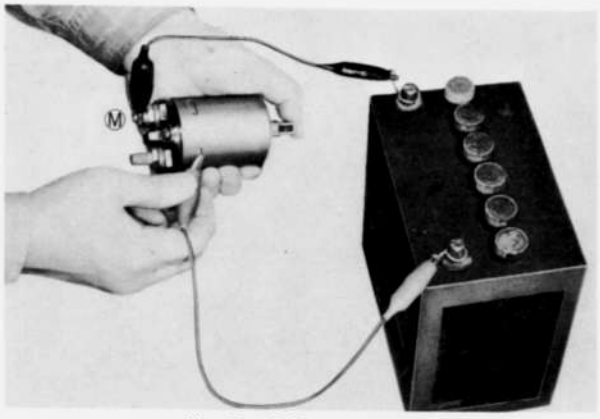

Fig. 5–42 Return test

c. Return test

Push in the plunger by hand and apply the specified voltage (12V) between the (M) terminal and the magnetic switch body. If the plunger is not attracted, there is no trouble.

5–H–6. Assembling Starting Motor

To assemble the starting motor, reverse the procedure of Par. 5–H–3, **noting** the following points.

1. Adjust the armature shaft end play to 0.1 ~ 0.4 mm (0.004 ~ 0.016 in) with a thrust washer on the rear end of the shaft.
2. When the magnetic switch is engaged, the clearance between the pinion and stop collar should be 0.5 ~ 2.0 mm (0.020 ~ 0.079 in).

This clearance can be adjusted by inserting the adjusting washer between the magnetic switch body and the driving housing.

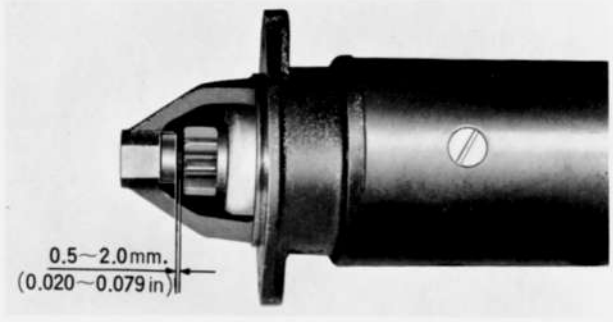

Fig. 5–43 Checking pinion position

SPECIAL TOOLS

49 0242 685A	Remote starter switch
49 0370 290	Alternator tester

CLUTCH

DESCRIPTION ..... 6 : 1
6–A. CLUTCH PEDAL ADJUSTMENT ..... 6 : 1
6–B. CLUTCH REMOVAL ..... 6 : 1
6–C. CLUTCH INSPECTION ..... 6 : 2
6–C–1. Checking Release Bearing and Fork ..... 6 : 2
6–C–2. Checking Pressure Plate and Cover Assembly ..... 6 : 2
6–C–3. Checking Clutch Disc ..... 6 : 2
6–C–4. Flywheel Inspection ..... 6 : 2
6–C–5. Ring Gear Replacement ..... 6 : 2
6–C–6. Checking Pilot Bearing ..... 6 : 3
6–D. CLUTCH INSTALLATION ..... 6 : 3
6–E. CLUTCH MASTER CYLINDER ..... 6 : 3
6–E–1. Removing Clutch Master Cylinder ..... 6 : 3
6–E–2. Disassembling Clutch Master Cylinder ..... 6 : 3
6–E–3. Checking Clutch Master Cylinder ..... 6 : 4
6–E–4. Assembling Clutch Master Cylinder ..... 6 : 4
6–E–5. Installing Clutch Master Cylinder ..... 6 : 4
6–F. CLUTCH RELEASE CYLINDER ..... 6 : 4
6–F–1. Removing Clutch Release Cylinder ..... 6 : 4
6–F–2. Disassembling Clutch Release Cylinder ..... 6 : 5
6–F–3. Checking Clutch Release Cylinder ..... 6 : 5
6–F–4. Assembling Clutch Release Cylinder ..... 6 : 5
6–F–5. Installing Clutch Release Cylinder ..... 6 : 5
6–G. AIR BLEEDING ..... 6 : 5
SPECIAL TOOLS ..... 6 : 5

DESCRIPTION

The clutch is of the single dry disc type. The clutch assembly consists of the clutch disc assembly, clutch cover and pressure plate assembly and clutch release mechanism.

The clutch operating mechanism is of the hydraulic type, consisting of a dash mounted master cylinder and a clutch release cylinder mounted on the clutch housing.

6–A. CLUTCH PEDAL ADJUSTMENT

The free travel of the clutch pedal before the push rod contacts with the piston should be **0.5 to 3.0 mm (0.02 to 0.12 in).**

To adjust the free travel, loosen the lock nut and turn the push rod until the proper adjustment is made. Tighten the lock nut after adjustment is completed.

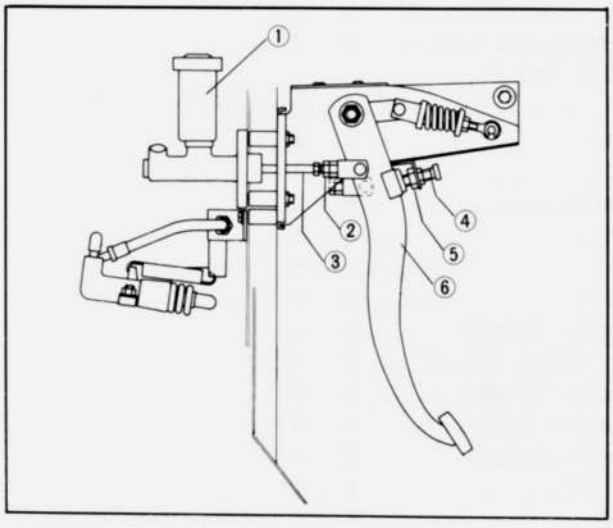

Fig. 6–1 Adjusting clutch pedal

1. Master cylinder
2. Lock nut
3. Push rod
4. Stopper
5. Lock nut
6. Pedal

6–B. CLUTCH REMOVAL

To remove the clutch from the vehicle, proceed as follows:

1. Remove the transmission.
2. Install the **ring gear brake** (49 1881 060).
3. Remove the 4 standard bolts and 2 reamer bolts holding the clutch cover assembly to the flywheel and remove the clutch cover assembly and the clutch disc.
4. Straighten the tab of the lockwasher. With the **wrench** (49 0820 035), loosen the nut that attaches the flywheel to the eccentric shaft and remove the nut.

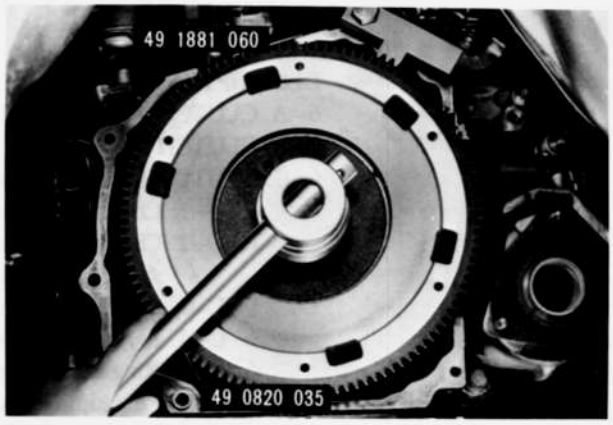

Fig. 6–2 Loosening flywheel nut

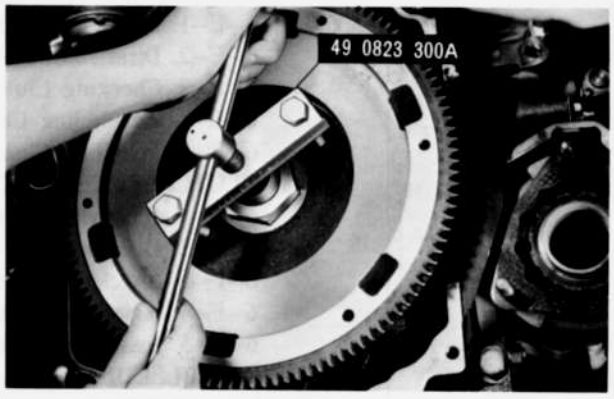

Fig. 6–3 Removing flywheel

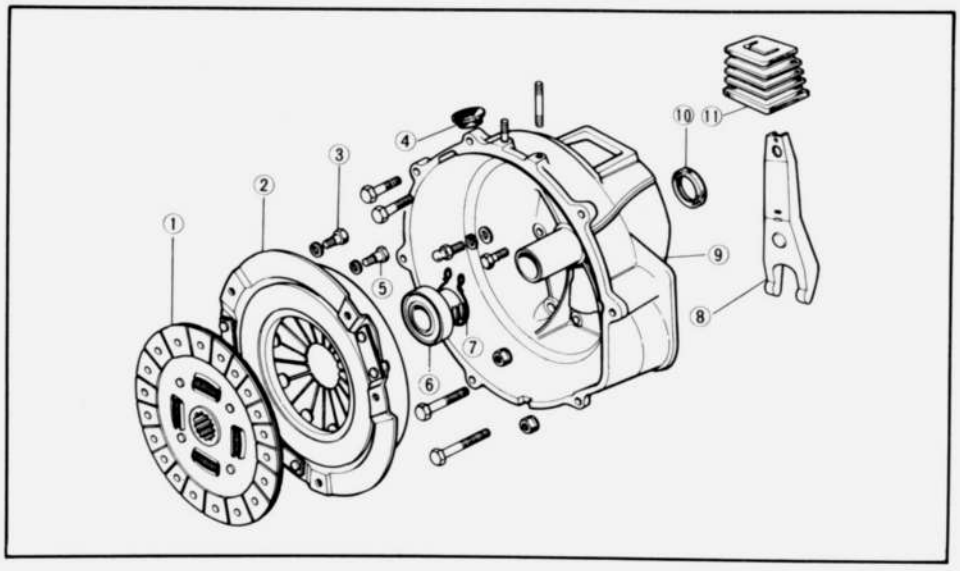

Fig. 6–4 Clutch components

1. Clutch disc
2. Clutch cover and pressure plate assembly
3. Bolt
4. Service hole cover
5. Reamer bolt
6. Release bearing
7. Spring
8. Release fork
9. Clutch housing
10. Oil seal
11. Dust boot

5. Using the **puller** (49 0823 300A), remove the flywheel from the eccentric shaft.
6. Pull the release fork outward until the spring clip of the fork releases from the ball pivot. Remove the fork and release bearing from the clutch housing.

6–C. CLUTCH INSPECTION

6–C–1. Checking Release Bearing and Fork

Note:
The release bearing is packed with lubricant which is intended to last the whole life time of the bearing. Therefore, the bearing must not be washed in gasoline or any other solvent.

Check the release bearing by pressing and turning the front race slowly by hand. Replace if the bearing feels rough or seems noisy when turning.



Fig. 6–5 Checking release bearing

Examine the clutch housing carefully to be certain there are no burrs on the outer surface of the clutch housing which pilots the release bearing.
Check the release fork for crack or bend. If necessary, replace the fork.

6–C–2. Checking Pressure Plate and Cover Assembly

Check the contact surfaces of the pressure plate with the clutch facing for wear, damage or warpage.
If it is slight, correct it by lapping with compound or by turning a lathe. But if severe, replace with a new one.
Check the diaphragm spring and cover and if any wear or damage is found, replace the pressure plate and cover assembly.

6–C–3. Checking Clutch Disc

Inspect the clutch disc for warpage with a dial indicator or a feeler gauge, as shown in Fig. 6–6.
If it is **more than 1.0 mm (0.039 in)**, replace with a new one.

Excessively worn facing will cause slippage or score the pressure plate and flywheel due to the projected heads of rivets.

Check the depth between the facing surface and the rivet using a depth gauge, as shown in Fig. 6–7. If

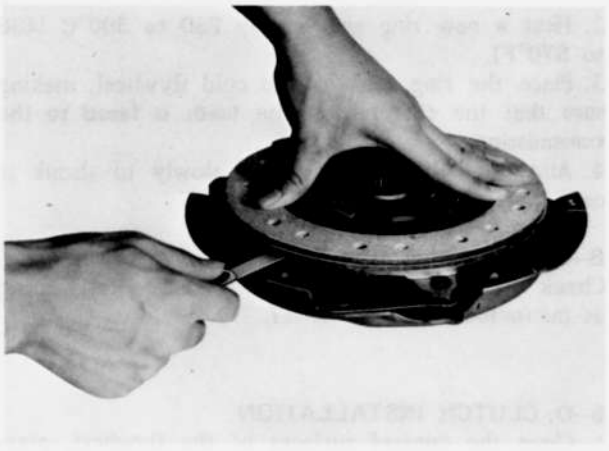

Fig. 6–6 Checking clutch disc for warpage



Fig. 6–7 Checking clutch disc for wear

the reading is **less than 0.30 mm (0.012 in)**, replace the clutch disc.

If oil is evident on the facing, clean or replace the facing and eliminate the cause of oil leakage.
Make certain that the clutch disc slides easily on the main drive shaft without any excessive play.

6–C–4. Flywheel Inspection

Inspect the contact surface of the flywheel with the clutch facing for burnt surface, scored surface or rivet grooves.
If it is slight, it can be reconditioned by grinding in a lathe. If the damage is deep, the flywheel should be replaced.
Check the ring gear teeth and replace if the ring gear teeth are broken, cracked or seriously burred.
Check the oil seal contacting surface of the flywheel for roughness. Repair or replace the flywheel if necessary.

Note:
On the vehicle equipped with an automatic transmission, the ring gear and drive plate should be replaced as an assembly.

6–C–5. Ring Gear Replacement

1. Heat the old ring gear and remove it from the flywheel.

2. Heat a new ring gear **evenly 250 to 300°C (480 to 570°F).**
3. Place the ring gear on the cold flywheel, making sure that the **chamfer on the teeth is faced to the transmission.**
4. Allow the ring gear to cool slowly to shrink it onto the flywheel.

6–C–6. Checking Pilot Bearing
Check the transmission main drive shaft pilot bearing as instructed in Par. 1–B–11.

6–D. CLUTCH INSTALLATION

1. Clean the contact surfaces of the flywheel, pressure plate and disc thoroughly with fine sandpaper or crocus cloth.

Note:
Avoid touching the clutch disc facing, dropping the parts or contaminating them with oil or grease as a clutch chatter may result.

2. Fit the key into the keyway on the eccentric shaft.
3. Install the flywheel onto the rear end of the eccentric shaft, aligning the keyway of the flywheel with the key.
4. Apply sealer on both sides of the lockwasher and place it in position. Install the nut.

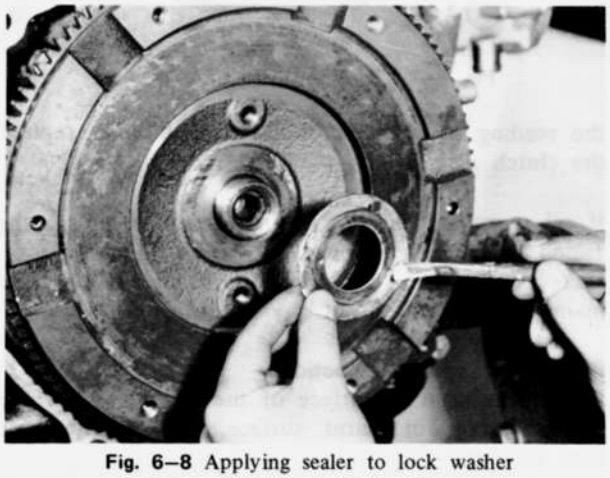

Fig. 6–8 Applying sealer to lock washer

5. Install the **ring gear brake** (49 1881 060) and with the **wrench** (49 0820 035) tighten the nut to **40 ~ 50 m-kg (289 ~ 362 ft-lb).**
6. Bend the tab of the lockwasher to prevent loosening.
7. Hold the clutch disc in its mounting position with the **clutch disc centering tool** (49 0813 310).
If the tool is not available, use a spare main drive shaft.
8. Install the clutch cover and pressure plate assembly, **aligning the "O" marks** of the clutch cover and flywheel and install the 4 standard and 2 reamer bolts finger tight. To avoid pressure plate cover distortion, tighten the bolts a few turns at a time until they are all tight.
9. Torque the bolts to **1.8 ~ 2.7 m-kg (13 ~ 20 ft-lb).**

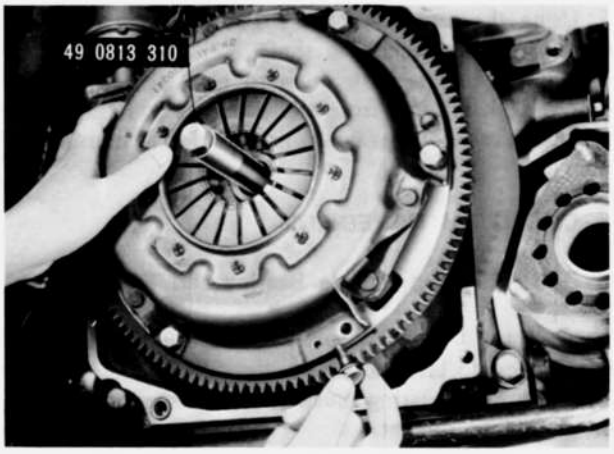

Fig. 6–9 Installing clutch cover assembly

10. Remove the disc centering tool and ring gear brake.
11. Apply a light film of grease to the face of the release bearing and the bearing retainer of the clutch housing. Install the release bearing to the release fork.
12. Apply grease to the pivot pin. Insert the release fork and release bearing assembly through the dust boot and press it inward so that the spring clip of the fork fits to the ball pivot.
Operate the release fork to ensure that the bearing slides on the retainer back and forth smoothly.
13. Install the transmission and propeller shaft. Care should be taken in order not to bend the clutch disc by allowing the transmission to hang.

6–E. CLUTCH MASTER CYLINDER

6–E–1. Removing Clutch Master Cylinder
If it becomes necessary to remove the master cylinder for repair or overhaul, proceed as follows :
1. Disconnect the fluid pipe at the master cylinder outlet.

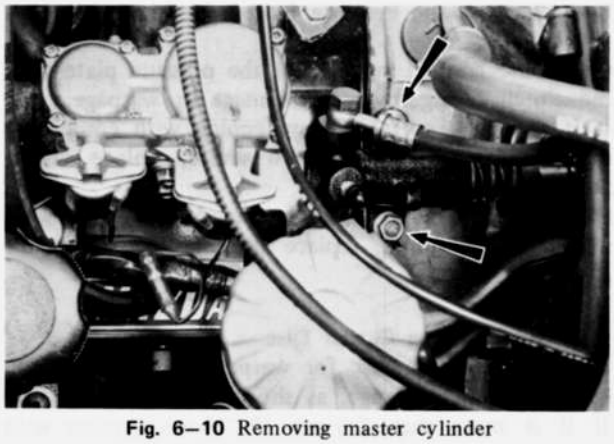

Fig. 6–10 Removing master cylinder

2. Remove the nuts that attach the master cylinder to the dash panel.
3. Pull the master cylinder straight out and away from the dash panel.

6–E–2. Disassembling Clutch Master Cylinder
The procedures for disassembling the master cylinder

after removing the master cylinder are as follows:
1. Clean the outside of the master cylinder thoroughly and drain the brake fluid.
2. Remove the piston stop wire with a screwdriver and remove the stop washer.
3. Remove the piston assembly, primary cup and return spring from the cylinder.
4. Remove the reservoir from the cylinder.

6–E–3. Checking Clutch Master Cylinder

1. Wash the parts in clean alcohol or brake fluid. **Never** use gasoline or kerosene.
2. Check the piston cups and replace if they are damaged, worn, softened, or swelled.
3. Examine the cylinder bore and piston for wear, roughness or scoring.
4. Check the clearance between the cylinder bore and the piston. If it is **more than 0.15 mm (0.006 in)**, replace the cylinder or piston.
5. Ensure that the compensating port on the cylinder is open.

6–E–4. Assembling Clutch Master Cylinder

1. Before assembling, dip the piston and cups in clean brake fluid.
2. Install the reservoir.
3. Insert the return spring into the cylinder.
4. Install the primary cup so that the flat side of the cup goes toward the piston.
5. Fit the secondary cup onto the piston and install them into the cylinder.
6. Install the stop washer and stop wire.
7. Fill with brake fluid and operate the piston with a screwdriver until the fluid is ejected at the outlet.

6–E–5. Installing Clutch Master Cylinder

1. Install the clutch master cylinder assembly onto the dash panel and tighten the nuts.
2. Connect the fluid pipe to the cylinder.
3. Fill with brake fluid.
4. Bleed the clutch hydraulic system, as described in Par. 6–H.

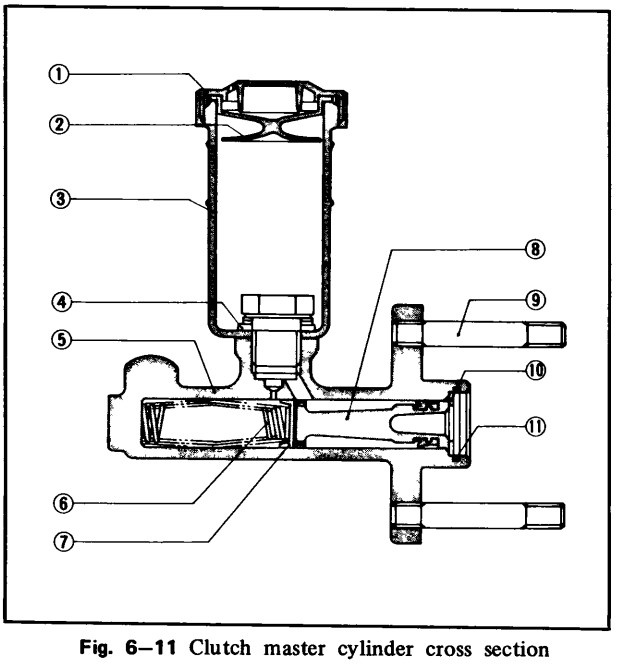

Fig. 6–11 Clutch master cylinder cross section

1. Cap
2. Fluid baffle
3. Reservoir
4. Washer
5. Cylinder
6. Spring
7. Primary cup
8. Piston and secondary cup assembly
9. Bolt
10. Stop washer
11. Stop wire

6–F. CLUTCH RELEASE CYLINDER

6–F–1. Removing Clutch Release Cylinder

1. Disconnect the fluid pipe at the clutch release cylinder.
2. Remove the nuts attaching the cylinder to the clutch housing. Remove the release cylinder.

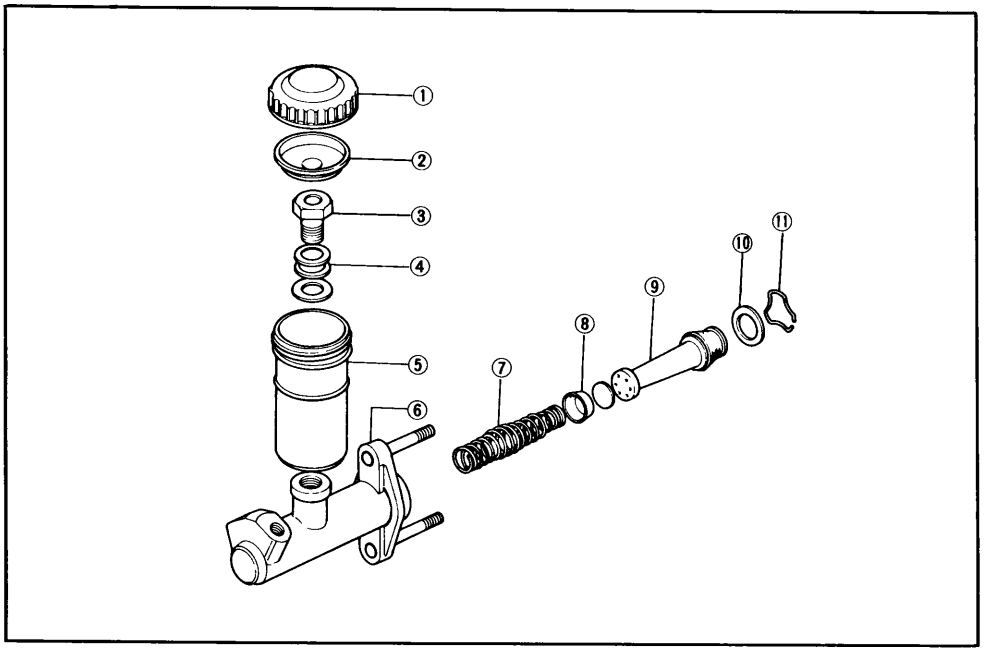

Fig. 6–12 Clutch master cylinder components

1. Cap
2. Fluid baffle
3. Bolt
4. Washer
5. Reservoir
6. Cylinder
7. Spring
8. Primary cup
9. Piston and secondary cup assembly
10. Piston stop washer
11. Piston stop wire

6–F–2. Disassembling Clutch Release Cylinder
1. Clean the outside of the cylinder thoroughly.
2. Remove the dust boot from the cylinder.
3. Remove the release rod.
4. Remove the piston and cup assembly from the cylinder. If necessary, blow out with compressed air from the fluid passage.
5. Remove the spring.
6. Remove the bleeder screw and valve (steel ball).

6–F–3. Checking Clutch Release Cylinder
Refer to Par. 6–E–3 and inspect the clutch release cylinder.

6–F–4. Assembling Clutch Release Cylinder
1. Install the spring into the cylinder.
2. Fit the piston cup to the piston and install them into the cylinder.
3. Install the release rod into the cylinder.
4. Install the dust boot.
5. Install the valve (steel ball) and bleeder screw into the bleeder hole. Fit the bleeder cap.

6–F–5. Installing Clutch Release Cylinder
1. Install the clutch release cylinder assembly to the clutch housing with two nuts.
2. Connect the fluid pipe.
3. Fill the reservoir of the master cylinder with brake fluid and bleed the system, as described in Par. 6–G.

6–G. AIR BLEEDING
1. Remove the rubber cap from the bleeder screw and attach a vinyl tube to the bleeder screw.
2. Insert the free end of the vinyl tube into a suitable container while bleeding the clutch system.
3. Depress the clutch pedal several times quickly, then with the clutch pedal depressed, open the bleeder screw to expel the air. Close the screw, then return the pedal to the full-released position.
4. Repeat this operation until air bubbles cease to appear at the free end of the vinyl tube.

Note:
a) During bleeding operation, the reservoir of the master cylinder must be kept at least 3/4 full of the brake fluid.
b) Never re-use the brake fluid which has been drained from the clutch hydraulic system.

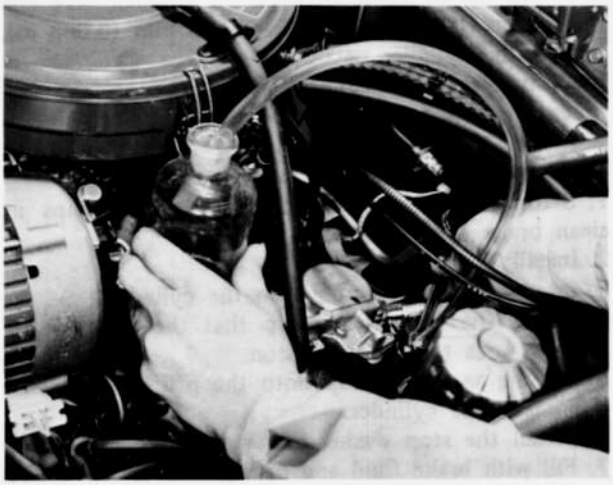

Fig. 6–13 Air bleeding of clutch hydraulic system

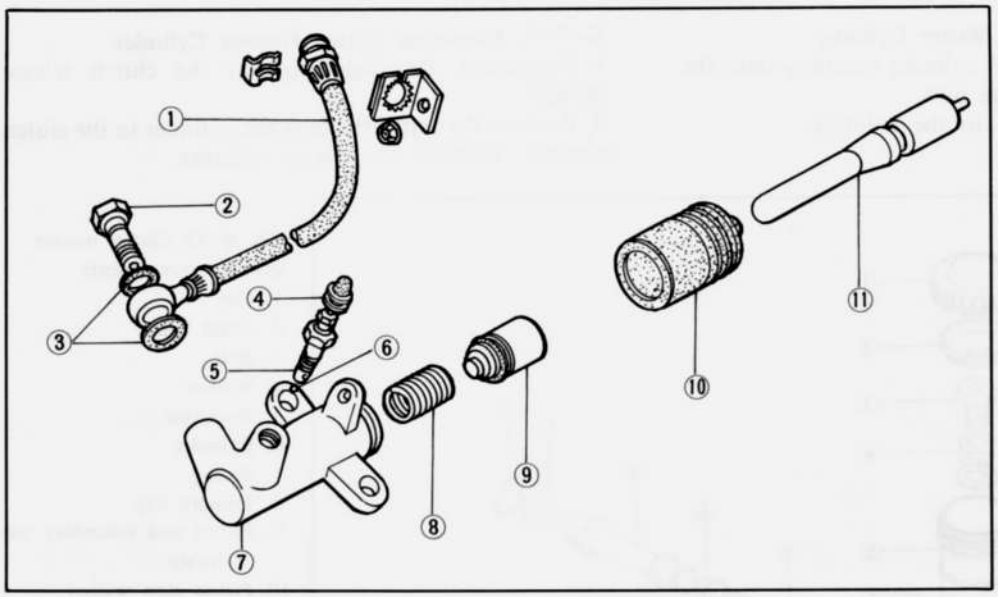

Fig. 6–14 Release cylinder components
1. Flexible hose
2. Connection bolt
3. Gasket
4. Rubber cap
5. Bleeder screw
6. Valve (steel ball)
7. Cylinder
8. Spring
9. Piston assembly
10. Boot
11. Release rod

SPECIAL TOOLS

49 1881 060	Ring gear brake
49 0820 035	Wrench for flywheel nut
49 0823 300A	Flywheel puller
49 0823 070A	Pilot bearing replacer
49 0813 310	Clutch disc centering tool

TRANSMISSION

DESCRIPTION ..... 7 : 3
7–A. BACK-UP LAMP SWITCH REPLACEMENT ..... 7 : 3
7–B. MAIN SHAFT OIL SEAL REPLACEMENT ..... 7 : 3
7–C. TRANSMISSION REMOVAL ..... 7 : 3
7–D. TRANSMISSION DISASSEMBLY ..... 7 : 4
7–E. TRANSMISSION INSPECTION ..... 7 : 6
7–E–1. Checking Transmission Case and Clutch Housing ..... 7 : 6
7–E–2. Checking Bearings ..... 7 : 6
7–E–3. Checking Gears ..... 7 : 6
7–E–4. Checking Main Shaft and Main Drive Shaft ..... 7 : 6
7–E–5. Checking Counter Shaft ..... 7 : 7
7–E–6. Checking Control Lever and Shift Rod ..... 7 : 7
7–E–7. Checking Shift Fork ..... 7 : 7
7–E–8. Checking Clutch Sleeve ..... 7 : 7
7–E–9. Checking Synchronizer Ring ..... 7 : 8
7–E–10. Checking Synchronizer Key and Spring ..... 7 : 8
7–E–11. Checking Clutch Hub ..... 7 : 8
7–E–12. Checking Extension Housing ..... 7 : 8
7–E–13. Checking Speedometer Gears ..... 7 : 8
7–F. TRANSMISSION ASSEMBLY ..... 7 : 9
7–G. TRANSMISSION INSTALLATION ..... 7 : 13
SPECIAL TOOLS ..... 7 : 13

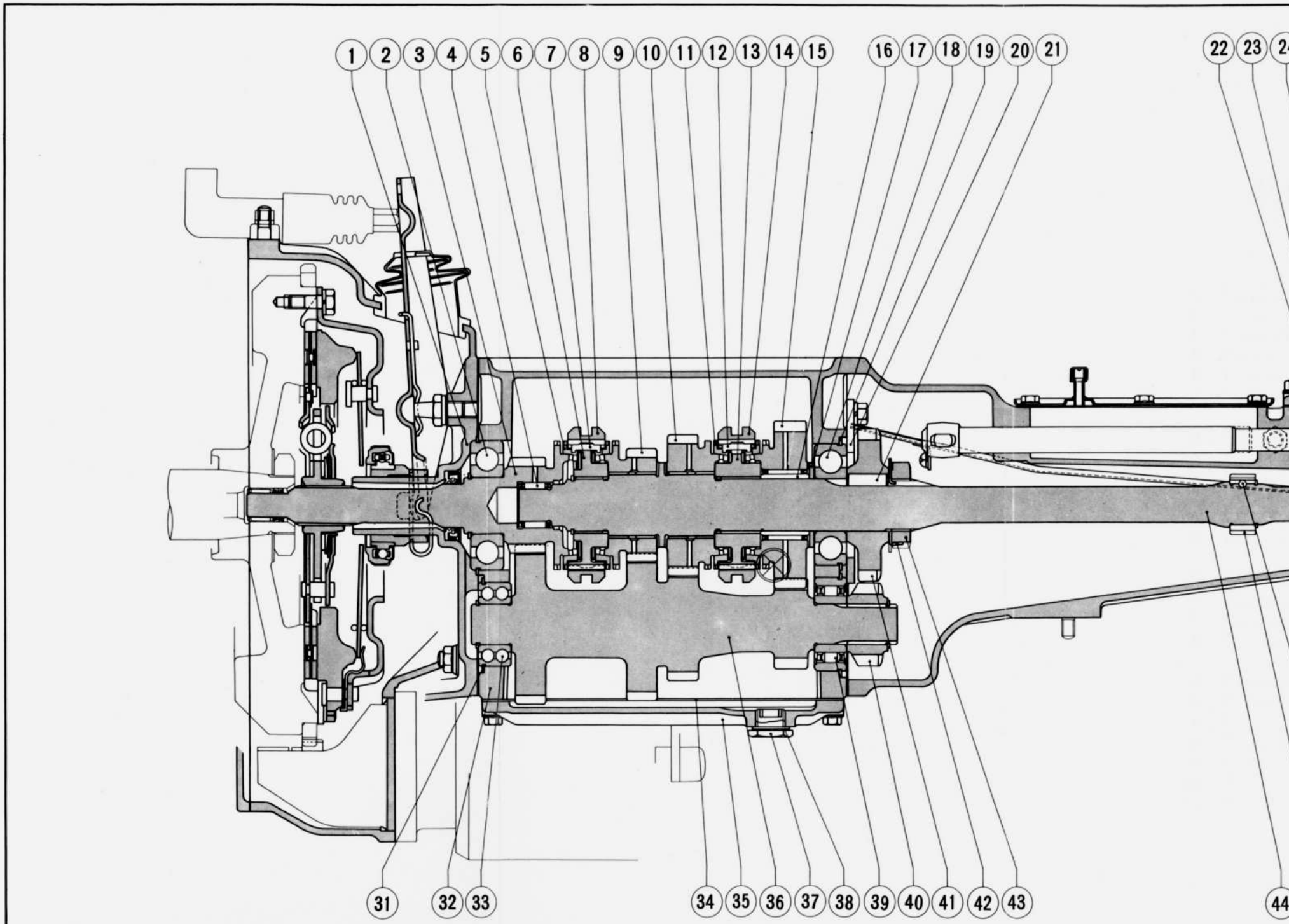

Fig. 7–1 Transmission cross section (1)

1. Clutch housing
2. Main drive shaft bearing
3. Main drive shaft and gear
4. Needle bearing
5. Synchronizer ring
6. Third-and-fourth clutch hub
7. Synchronizer key
8. Clutch sleeve
9. Third gear
10. Second gear
11. Synchronizer ring
12. Synchronizer key
13. First-and-second clutch hub
14. Clutch sleeve
15. First gear
16. First gear sleeve
17. Thrust washer
18. Main shaft bearing
19. Adjusting shim
20. Bearing cover plate
21. Key
22. Gearshift lever retainer
23. Cover
24. Shim
25. Boot
26. Gearshift lever
27. Gearshift lever knob
28. Bush
29. Control lever end
30. Gearshift control lever
31. Adjusting shim
32. Transmission case
33. Counter shaft front bearing
34. Gasket
35. Transmission und
36. Counter shaft
37. Drain plug
38. Gasket
39. Counter shaft r
40. Counter reverse
41. Reverse gear
42. Lock washer
43. Lock nut
44. Main shaft

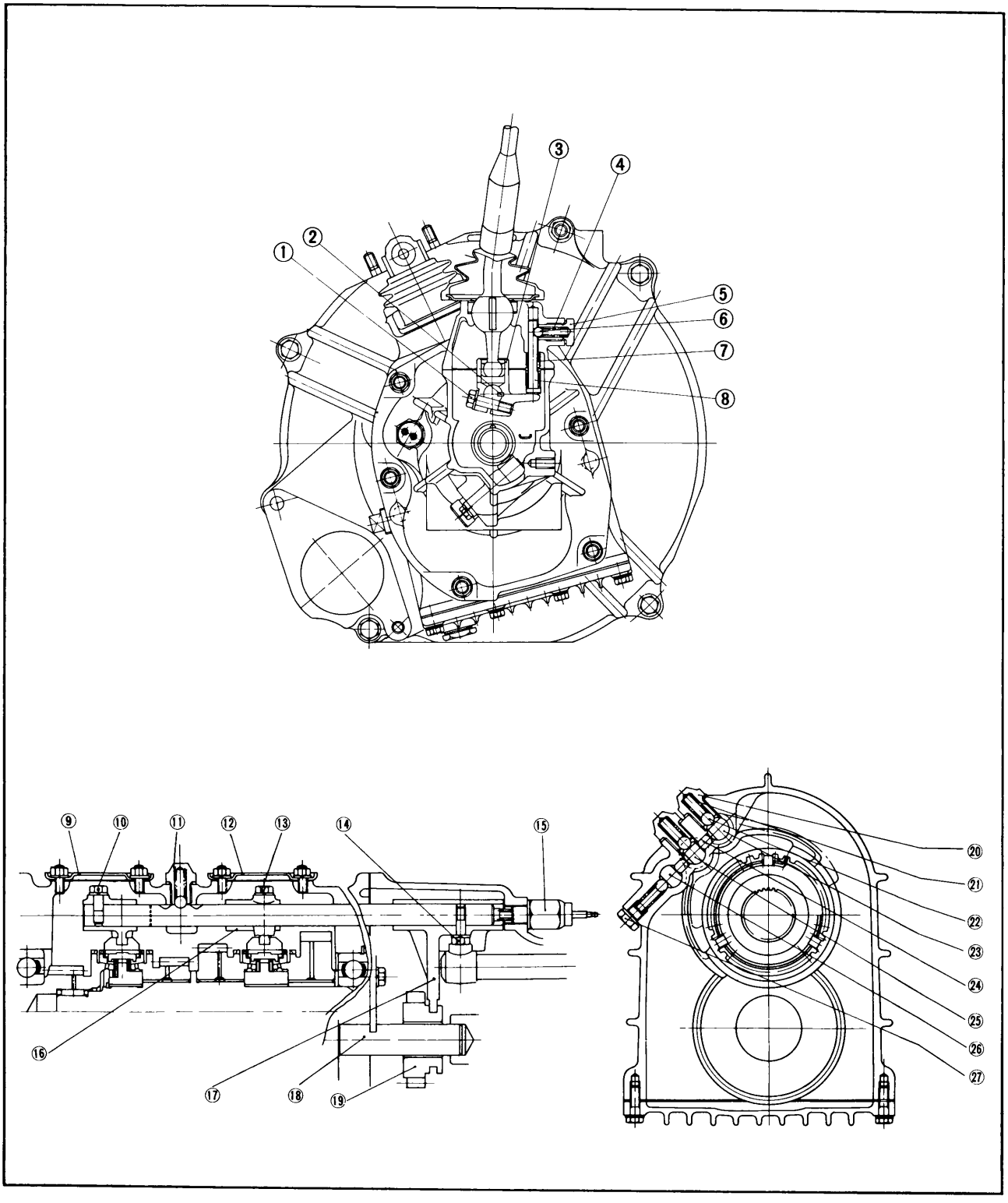

Fig. 7–2 Transmission cross section (2)

1. Reamer bolt
2. Key
3. Control lever end
4. Spring
5. Spring cap bolt
6. Detent ball
7. Spring
8. Select lock spindle
9. Blind cover
10. Screw
11. Spring cap bolt
12. Blind cover
13. Screw
14. Screw
15. Back-up lamp switch
16. First-and-second shift fork
17. Reverse shift fork
18. Reverse idler gear shaft
19. Reverse idler gear
20. Spring cap bolt
21. Spring
22. Detent ball
23. First-and-second shift rod
24. Inter-lock pin
25. Third-and-top shift rod
26. Reverse shift rod
27. Spring cap bolt

DESCRIPTION

This model is equipped with a four speed manual transmission which is of the fully synchronized type with all gears except the reverse gear being in selective sliding mesh.
The gearshift mechanism is a direct control with a floor-shift type.

7–A. BACK-UP LAMP SWITCH REPLACEMENT

1. Raise the vehicle and support with stands.
2. Disconnect the wires from the back-up lamp switch.
3. Loosen the back-up lamp switch and remove from the extension housing.
4. Install a new back-up lamp switch to the extension housing and tighten the switch.
5. Connect the wires to the switch.
6. Lower the vehicle.

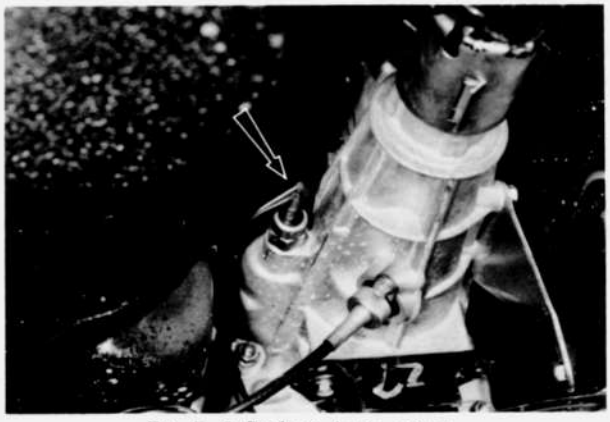

Fig. 7–3 Back-up lamp switch

7–B. MAIN SHAFT OIL SEAL REPLACEMENT

1. Raise the vehicle and support with stands.
2. Remove the propeller shaft, as described in Par. 8–A–1.
3. Remove the main shaft oil seal from the extension housing.
4. Position a new oil seal in the extension housing and insert the oil seal by tapping it slightly with a plastic hammer.
5. Apply gear lubricant to the lip of the oil seal.
6. Install the propeller shaft.



Fig. 7–4 Main shaft oil seal

7–C. TRANSMISSION REMOVAL

When removing the transmission from the vehicle, proceed as follows :

1. Remove the gearshift lever knob.
2. Remove the screws attaching the console box and remove the console box.
3. Remove the screws attaching the gearshift lever boot to the body floor and remove the gear shift lever boot.
4. Remove the bolts attaching the retainer cover to the gearshift lever retainer.
5. Pull the gearshift lever, shim and bush straight up and away from the gearshift lever retainer.
6. Open the hood and disconnect the negative battery cable from the battery terminal.
7. Remove the nuts attaching the clutch release cylinder and remove the clutch release cylinder.
8. Disconnect the connector of the back-up lamp switch and neutral switch near the clutch release cylinder.
9. Remove the bolt attaching the power brake vacuum pipe clip to the clutch housing.
10. Remove the bolts attaching the wiring harness holder to the wiring harness bracket near the starting motor.
11. Remove the one upper bolt securing the starting motor, then remove the three upper bolts securing the transmission to the engine rear end.
12. Raise the vehicle and support with stands.
13. Remove the bolts and screws attaching the heat insulators to the exhaust front pipe, and remove the heat insulators.
14. Disconnect the exhaust front pipe flange from the exhaust manifold by removing the nuts. Disconnect the exhaust front pipe from the brackets by removing the bolts and nuts. Remove the bolts and nuts attaching the front pipe flange to the main silencer, and remove the exhaust front pipe.
15. Remove the bolts attaching the heat insulator to the underbody and remove the heat insulator.
16. Remove the propeller shaft, as described in Par. 8–A–1, and insert the **mainshaft holder** (49 0259 440) into the extension housing.

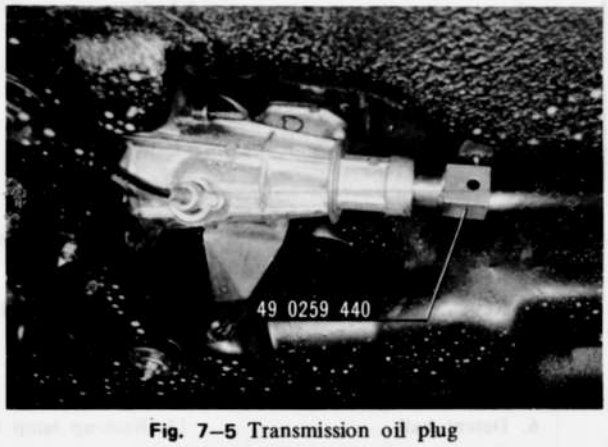

Fig. 7–5 Transmission oil plug

17. Disconnect the speedometer cable from the extension housing.

18. Remove the lower bolt securing the starting motor to the clutch housing and remove the starting motor. Disconnect the wire at the starting motor.
16. Place a jack under the front side of the transmission and support the transmission with the jack.
17. Remove the bolts securing the transmission support to the body.
21. Remove the two lower bolts securing the transmission to the engine rear end.
22. Slide the transmission rearward until the main drive shaft clears the clutch disc and carefully withdraw it downward from the vehicle.

7–D. TRANSMISSION DISASSEMBLY

The procedures for disassembling the transmission after removing the transmission from the vehicle are as follows :

1. Place the transmission on a work stand.
2. Remove the drain plug, and drain the lubricant from the transmission. Clean the metal fillings adhered on the magnet of the drain plug if necessary. Refit the drain plug after draining lubricant.
3. Pull the release fork outward until the fork retaining spring release itself from the ball stud. Slide off the fork and release bearing from the clutch housing.
4. Remove the nuts attaching the clutch housing, and remove the clutch housing and gasket.

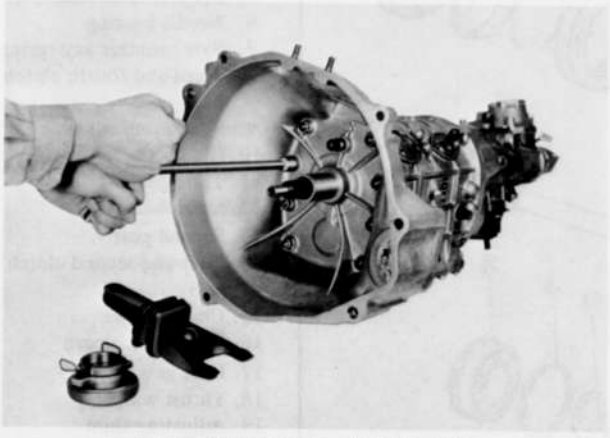

Fig. 7–6 Removing clutch housing

5. Remove the adjusting shim from the bearing bore of the clutch housing.
6. Remove the bolts attaching the gearshift lever retainer to the extension housing and remove the retainer and gasket.
7. Remove the nuts that attach the extension housing to the transmission case. Slide the extension housing off the main shaft, with control lever end laid down to the left as far as it will go.
8. Remove the spring cap bolt and remove the spring and friction piece from the extension housing.
9. Remove the neutral switch from the extension housing.
10. Remove the bolt that attach the gearshift control lever end to the gearshift control lever, and remove the control lever end, key and control lever.
11. Remove the speedometer sleeve lock plate, and remove the sleeve and driven gear assembly from the extension housing.
12. Remove the back-up lamp switch from the extension housing.

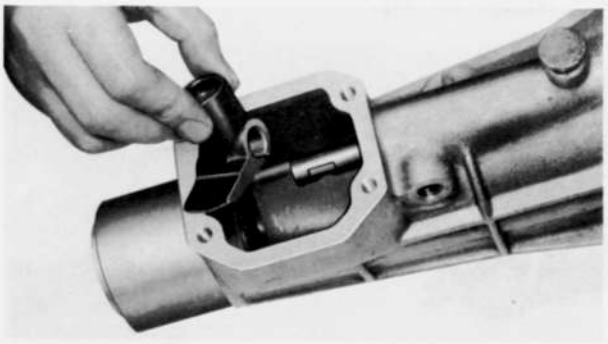

Fig. 7–7 Removing control lever end

13. Remove the snap ring that secures the speedometer drive gear to the main shaft. Slide the drive gear off the main shaft, and remove the lock ball.
14. Evenly loosen the bolts securing the under cover to the transmission case and remove the under cover and gasket.
15. Remove the three spring cap bolts and remove the detent springs and detent balls (locking balls) from the transmission case.

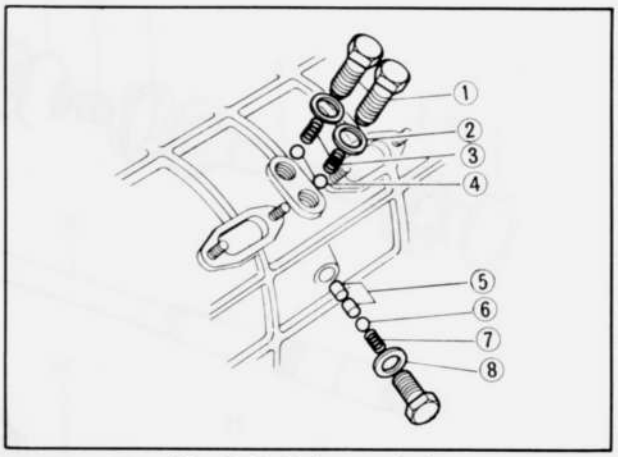

Fig. 7–8 Spring cap bolts

1. Spring cap bolt
2. Washer
3. Detent spring
4. Detent ball
5. Inter-lock pin
6. Detent ball
7. Detent spring
8. Washer

16. Remove the nuts attaching the two blind covers to the transmission case and remove the blind covers and gaskets.
17. Slide the reverse shift rod with the reverse idler gear out the rear of the transmission case. Remove the attaching bolt from the reverse shift fork and remove the shift fork. Remove the inter-lock pin.
18. Remove the attaching bolt from the third-and-fourth shift fork. Slide the third-and-fourth shift rod out the rear of the transmission case.
Remove the inter-lock pin.
19. Remove the attaching bolt from the first-and-second shift fork. Slide the first-and-second shift rod out the rear of the transmission case.

20. Straighten the tab of the lock washer, hold the rear end of the main shaft with the **main shaft holder** (49 0259 440) and loosen the main shaft lock nut. Slide the reverse gear off the rear of the main shaft, and remove the key.

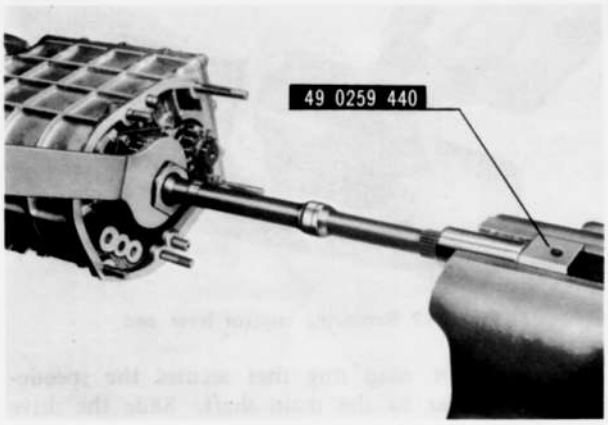

Fig. 7–9 Removing lock nut

21. Remove the snap ring from the rear end of the counter shaft and remove the counter reverse gear.
22. Remove the bolts attaching the bearing cover plate to the transmission case and remove the bearing cover plate.
23. Remove the reverse idler gear shaft from the transmission case.
24. Install the **synchronizer ring holder** (49 0839 445) between the fourth synchronizer ring and the synchromesh gear on the main drive shaft.
25. Remove the snap ring that secures the counter shaft front bearing to the front end of the counter shaft. Remove the counter shaft front bearing from the counter shaft with the **bearing puller** (49 0839 425B).
26. Remove the adjusting shim from the counter shaft front bearing bore of the transmission case.
27. Remove the counter shaft rear bearing from the counter shaft with the **puller** (49 0839 425B).
28. Remove the main shaft bearing from the main shaft with the **puller** (49 0839 425B).

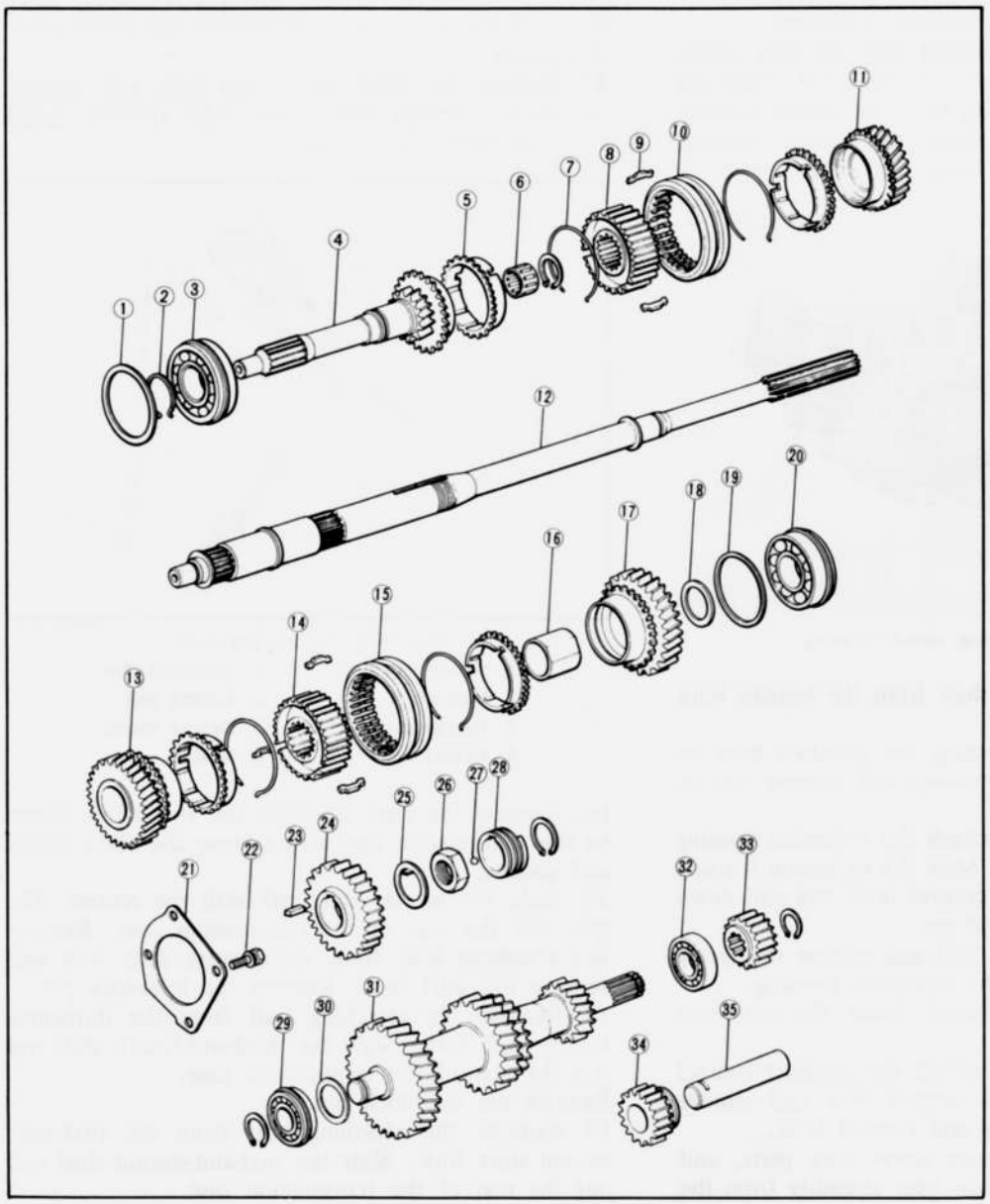

Fig. 7–10 Shafts and gears

1. Adjusting shim
2. Snap ring
3. Main drive shaft bearing
4. Main drive shaft
5. Synchronizer ring
6. Needle bearing
7. Synchronizer key spring
8. Third-and-fourth clutch hub
9. Synchronizer key
10. Clutch sleeve
11. Third gear
12. Main shaft
13. Second gear
14. First-and-second clutch hub
15. Clutch sleeve
16. First gear sleeve
17. First gear
18. Thrust washer
19. Adjusting shim
20. Main shaft bearing
21. Bearing cover plate
22. Bolt
23. Key
24. Reverse gear
25. Lock washer
26. Lock nut
27. Lock ball
28. Speedometer drive gear
29. Counter shaft front bearing
30. Adjusting shim
31. Counter shaft
32. Counter shaft rear bearing
33. Counter reverse gear
34. Reverse idler gear
35. Reverse idler gear shaft

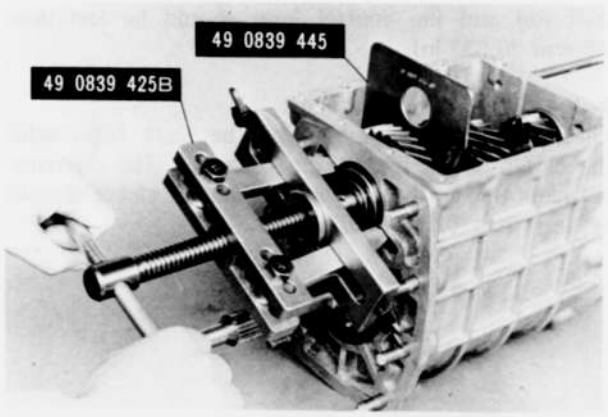

Fig. 7–11 Removing counter shaft front bearing

29. Remove the adjusting shim from the main shaft bearing bore of the transmission case.
30. Remove the snap ring that secures the main drive shaft bearing to the main drive shaft. Remove the main drive shaft bearing with the **puller** (49 0839 425B).

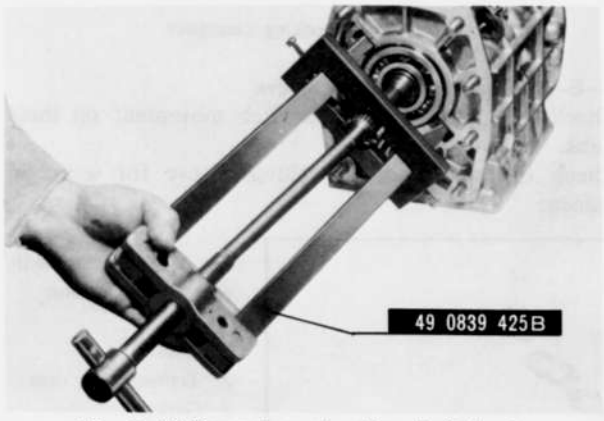

Fig. 7–12 Removing main drive shaft bearing

31. Take out the counter shaft from the transmission case.
32. Separate the main drive shaft from the main shaft and remove the main drive shaft from the case. Remove the fourth synchronizer ring and needle bearing from the main drive shaft.
33. Take out the main shaft and gears assembly from the case.

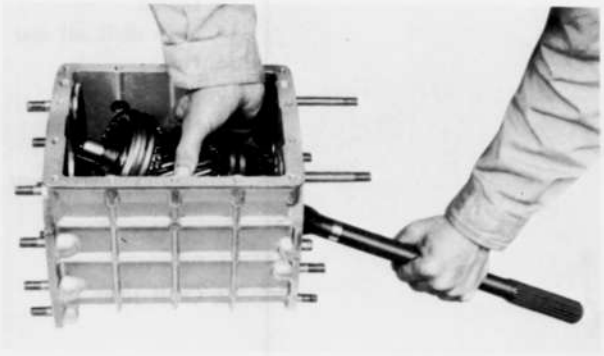

Fig. 7–13 Removing main shaft and gear assembly

34. Remove the first-and-second shift fork and third-and-fourth shift fork from the case.
35. Remove the snap ring that secures the third-and-fourth clutch hub and sleeve assembly.
Slide the third-and-fourth clutch hub and sleeve assembly, third synchronizer ring, third gear out the front of the main shaft. **Do not** mix the synchronizer rings.
36. Slide the first gear and first synchronizer ring out the rear of the main shaft.
37. Remove the first gear sleeve, second gear, second synchronizer ring, first-and-second clutch hub and sleeve assembly from the main shaft.

7–E. TRANSMISSION INSPECTION

Thoroughly clean all the parts. Inspect the parts for wear, damage and other defects. The parts found defective must be repaired or replaced.

7–E–1. Checking Transmission Case and Clutch Housing

Inspect the case for cracks or any damage.
Check the clutch housing for cracks or any damage. Replace the oil seal in the clutch housing if necessary.

7–E–2. Checking Bearings

Inspect each bearing for roughness or noise by holding the outer race, and rotating the inner race while applying pressure with hand. Replace the bearings if necessary. Replace the needle bearings that are broken, worn or rough.

7–E–3. Checking Gears

Inspect the teeth of each gear. If excessively worn, broken or chipped, replace with new gear. Excessive wear of the gears causes increase of backlash, which results in producing noises or may cause the gear to work off while running.

7–E–4. Checking Main Shaft and Main Drive Shaft

Check the main shaft run-out with a dial indicator. If the run-out exceeds **0.03 mm (0.0012 in),** correct with a press or replace with a new one.

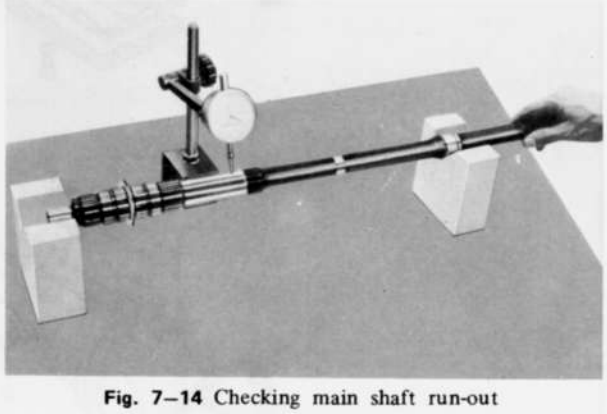

Fig. 7–14 Checking main shaft run-out

Replace the main shaft if there is any evidence of wear or if any of the splines is damaged.
Replace the main drive shaft if the splines are dam-

aged. If the needle bearing surface in the bore of the bearing is worn or rough, or if the cone surface is damaged, replace with a new shaft.

7–E–5. Checking Counter Shaft
Check the teeth of the counter shaft gear for wear or damage. Replace the counter shaft if it is bent, scored or worn.

7–E–6. Checking Control Lever and Shift Rod
Check the contact surface of the shift rod with the detent ball for wear or damage.
Check the contact surface of the shift rod with the control lever for wear. The clearance between the shift rod and the control lever should be **less than 0.8 mm (0.031 in)**.

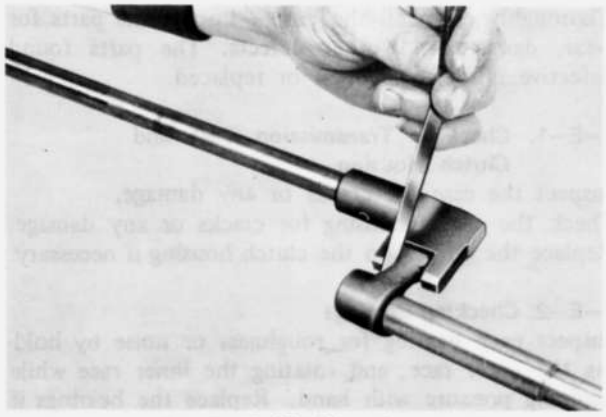

Fig. 7–15 Checking clearance

7–E–7. Checking Shift Fork
Check the contact surface of the shift forks with the clutch sleeve for wear or damage. The clearance between the shift fork and the clutch sleeve should be **less than 0.5 mm (0.020 in).**



Fig. 7–16 Checking clearance

7–E–8. Checking Clutch Sleeve
Check the clutch sleeves for free movement on their hubs.
Check the splines of the clutch sleeve for wear or damage.

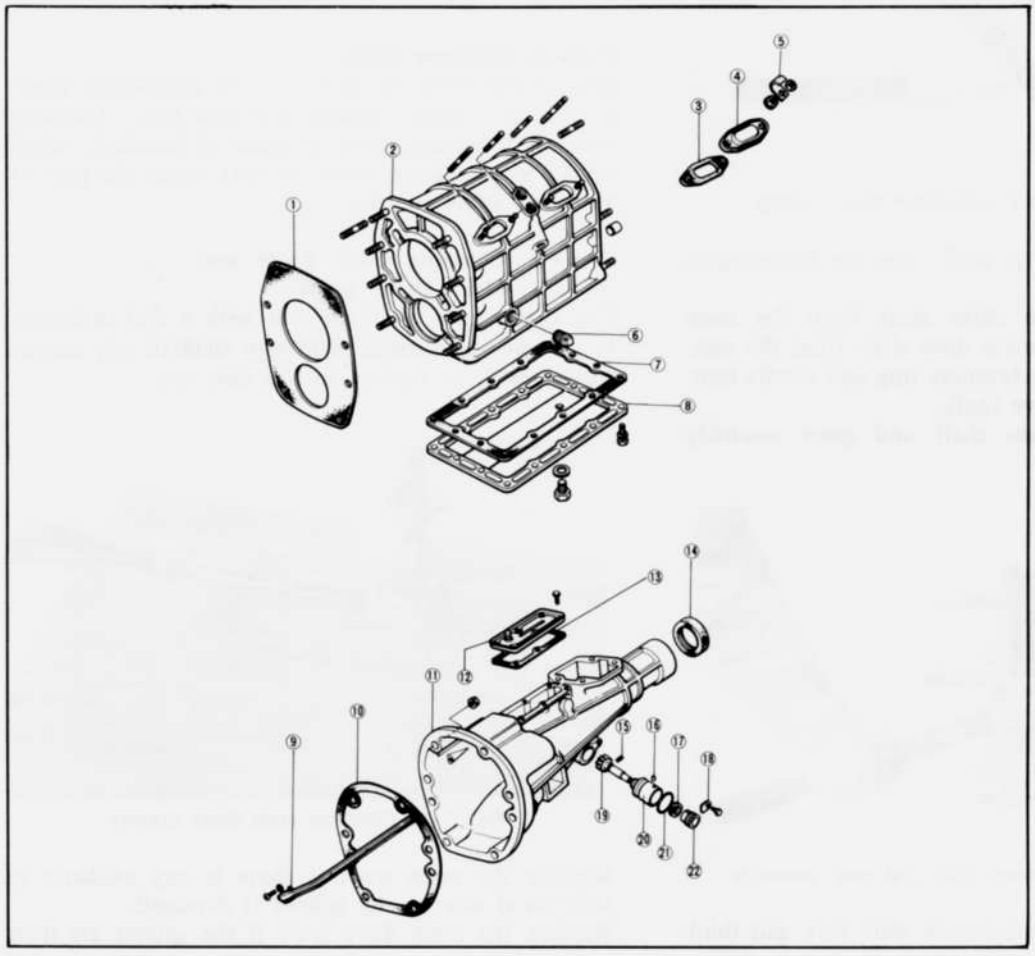

Fig. 7–17 Transmission case and extension housing.
1. Gasket
2. Transmission case
3. Gasket
4. Blind cover
5. Clip
6. Plug
7. Gasket
8. Transmission under cover
9. Oil pass
10. Gasket
11. Extension housing
12. Cover
13. Gasket
14. Main shaft oil seal
15. Pin
16. Pin
17. Oil seal
18. Lock plate
19. Speedometer driven gear
20. Sleeve
21. "O" ring
22. Cable joint

Check the contact surface of the clutch sleeve with the shift fork for wear or damage.

7–E–9. Checking Synchronizer Ring

1. Check the synchromesh gear on the synchronizer ring for wear or damage.
2. Check the tapered portion for uneven wear or damage. Also place the ring on the gear cone, and check the clearance between the gear and the ring. If the clearance is **less than 0.8 mm (0.031 in)**, replace the synchronizer ring.

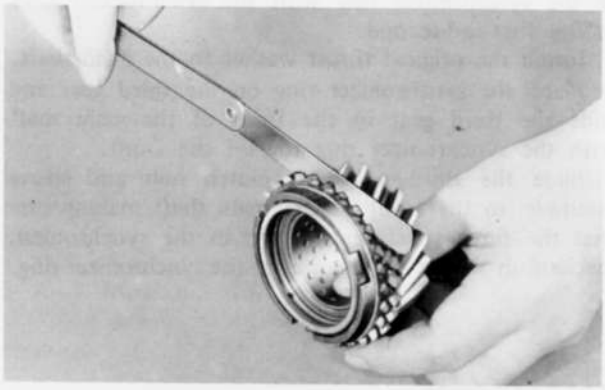

Fig. 7–18 Checking clearance

3. If the contact between the ring and the gear cone is incorrect, or if a new synchronizer ring is used, lap the synchronizer ring with the gear cone using a lapping compound. Apply a light pressure for lapping. After lapping, clean the ring and the gear cone with a suitable solvent, then check the clearance and contact between the ring and the gear cone.

7–E–10. Checking Synchronizer Key and Spring

1. Check the synchronizer key for wear or damage.
2. Check the synchronizer key spring for wear or weakness.

7–E–11. Checking Clutch Hub

Check the splines for wear or damage.
Check the contact surface of the clutch hub with the synchronizer ring for wear or damage.
Check the contact surface of the clutch hub with the thrust surface of the gears for wear or damage.

7–E–12. Checking Extension Housing

Inspect the extension housing for cracks and the machined mating surface for burrs, nicks or any damage.
Inspect the oil seal in the extension housing.
Replace the oil seal if it is worn or damaged.

7–E–13. Checking Speedometer Gears

Check the drive gear and driven gear and the driven gear shaft for wear or damage.
Check the "O" ring for weakness or damage.

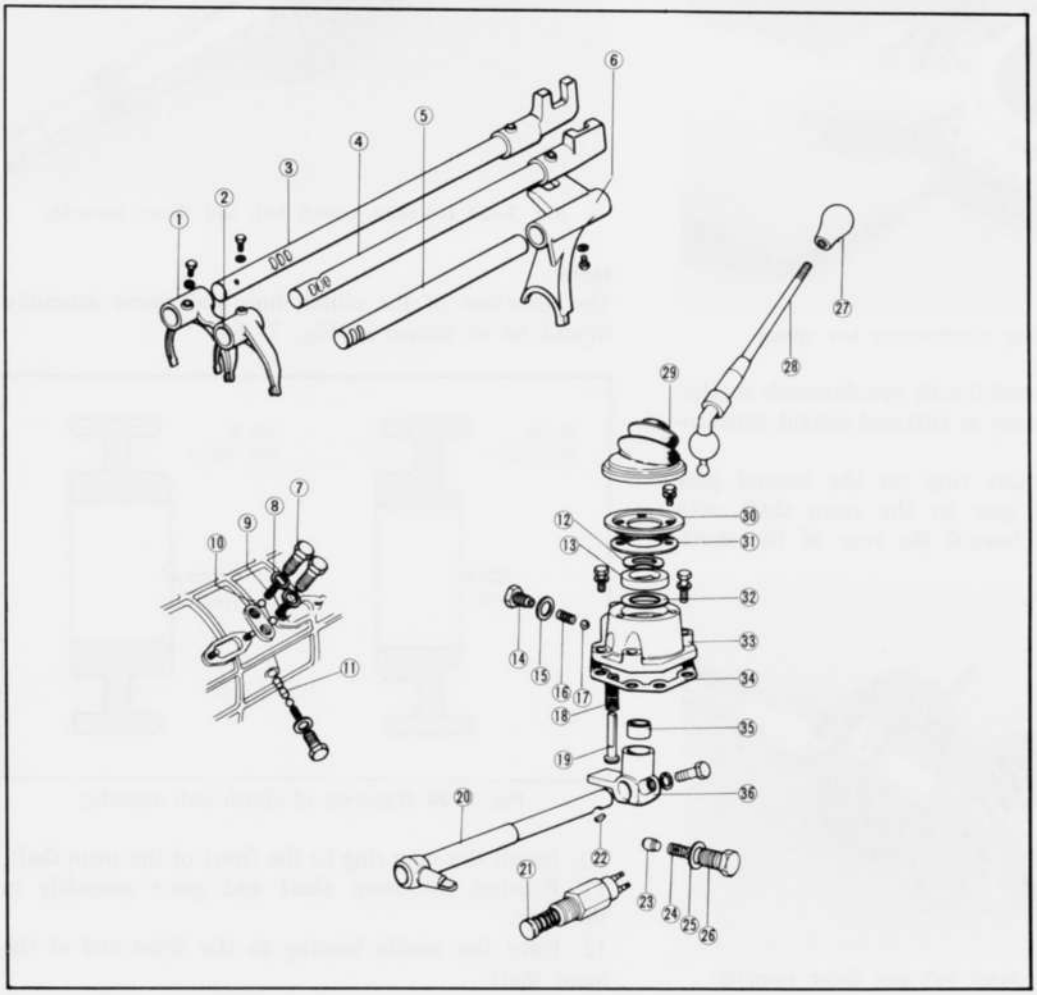

Fig. 7–19 Gearshift mechanism
1. Third-and-fourth shift fork
2. First-and-second shift fork
3. Third-and-fourth shift rod
4. First-and-second shift rod
5. Reverse shift rod
6. Reverse shift fork
7. Spring cap bolt
8. Washer
9. Detent spring
10. Detent ball
11. Interlock-pin
12. Washer
13. Bush
14. Spring cap bolt
15. Washer
16. Spring
17. Detent ball (Locking ball)
18. Spring
19. Select lock spindle
20. Gearshift control lever
21. Back-up lamp switch
22. Key
23. Friction piece
24. Spring
25. Washer
26. Spring cap bolt
27. Gearshift lever knob
28. Gearshift lever
29. Dust boot
30. Cover
31. Gasket
32. Shim
33. Gearshift lever retainer
34. Gasket
35. Bush
36. Gearshift control lever end

7–F. TRANSMISSION ASSEMBLY

1. Assemble the first-and-second synchromesh mechanism by installing the clutch hub to the sleeve, placing the three synchronizer keys into the clutch hub key slots and installing the key springs to the clutch hub.

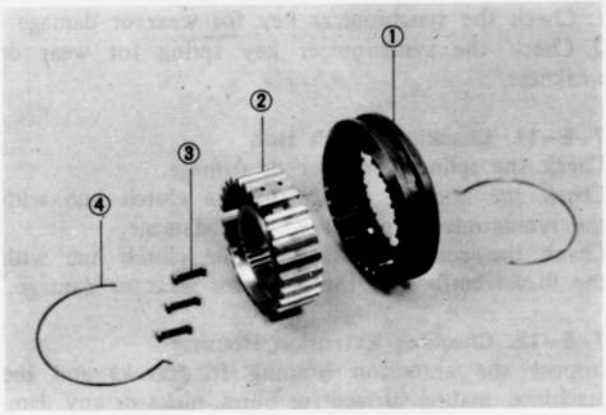

Fig. 7–20 Synchromesh mechanism

1. Clutch sleeve
2. Clutch hub
3. Synchronizer key
4. Key spring



Fig. 7–21 Installing synchronizer key spring

2. Assemble the third-and-fourth synchromesh mechanism in the same manner as first-and-second synchromesh mechanism.
3. Place the synchronizer ring on the second gear and slide the second gear to the main shaft with the synchronizer ring toward the rear of the shaft.

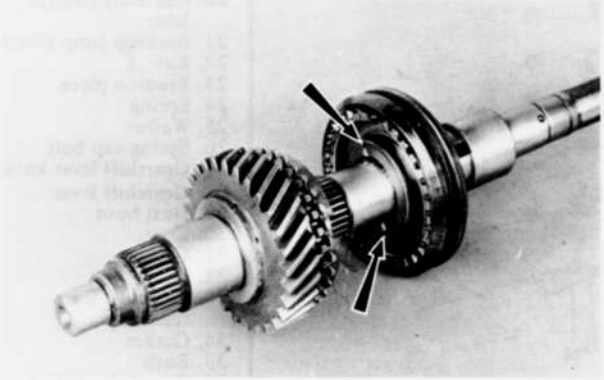

Fig. 7–22 Installing clutch hub and sleeve assembly

4. Slide the first-and-second clutch hub and sleeve assembly to the main shaft with the oil grooves of the clutch hub toward the front of the main shaft. Make sure that the three synchronizer keys in the synchromesh mechanism engage the notches in the second synchronizer ring.
5. Slide the first gear sleeve to the main shaft.
6. Place the synchronizer ring on the first gear and slide the first gear to the main shaft with the synchronizer ring toward the front of the shaft. Rotate the first gear as necessary to engage the three notches in the synchronizer ring with the synchronizer keys in the first-and-second.
7. Install the original thrust washer to the main shaft.
8. Place the synchronizer ring on the third gear and slide the third gear to the front of the main shaft with the synchronizer ring toward the front.
9. Slide the third-and-fourth clutch hub and sleeve assembly to the front of the main shaft making sure that the three synchronizer keys in the synchromesh mechanism engage the notches in the synchronizer ring.

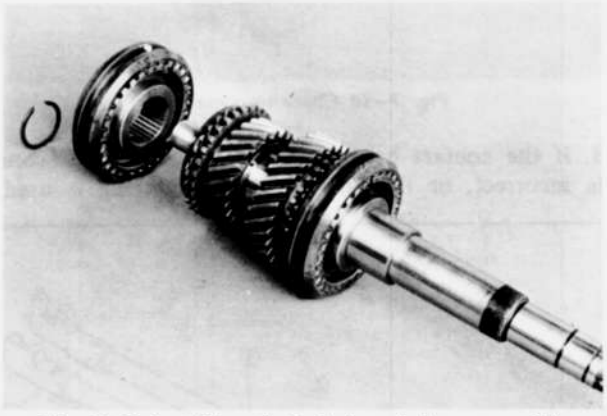

Fig. 7–23 Installing clutch hub and sleeve assembly

Note :
The direction of the clutch hub and sleeve assembly should be as shown in Fig. 7–24.

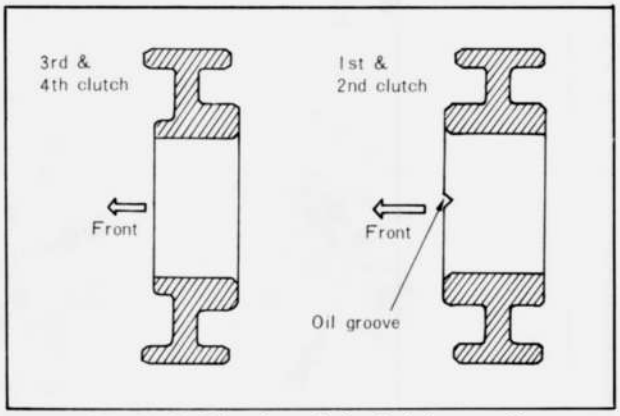

Fig. 7–24 Direction of clutch hub assembly

10. Install the snap ring to the front of the main shaft.
11. Position the main shaft and gears assembly in the case.
12. Place the needle bearing to the front end of the main shaft.

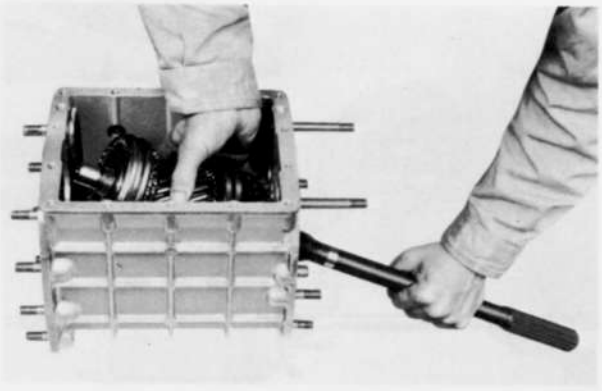

Fig. 7–25 Installing main shaft and gear assembly

13. Place the synchronizer ring on the main drive shaft gear (fourth gear) and install the main drive shaft gear to the front end of the main shaft making sure that the three synchronizer keys in the third-and-fourth synchromesh mechanism engage the notches in the synchronizer ring.

14. Position the first-and-second shift fork and third-and-fourth shift fork in the groove of the clutch hub and sleeve assembly.

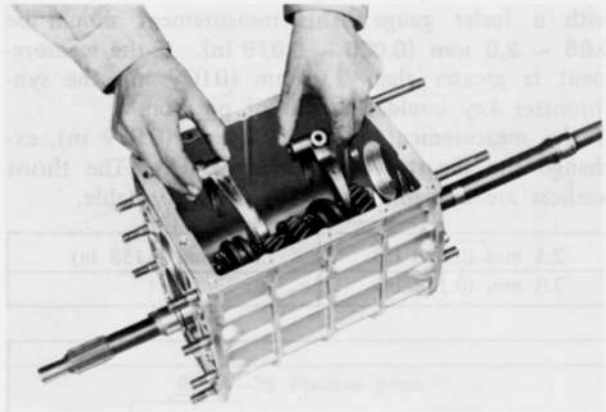

Fig. 7–26 Installing shift forks

15. Position the counter shaft gear in the case, making sure that the counter shaft gear engage each gear of the main shaft assembly.

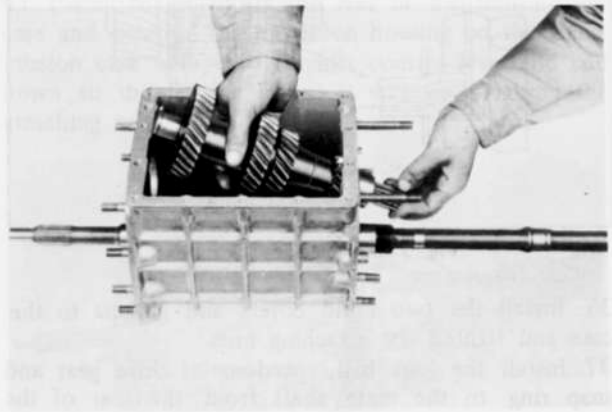

Fig. 7–27 Installing counter shaft gear

16. Check the main shaft bearing end play, proceed as follows : Measure the depth of the main shaft bearing bore in the transmission case by using a depth gauge. Then, measure the main shaft bearing height. The difference between the two measurements indicates the required thickness of the adjusting shim. The standard end play is **0 ~ 0.1 mm (0 ~ 0.0039 in)**. The adjusting shims are available in the following thickness :

0.1 mm (0.0039 in)	0.3 mm (0.0118 in)

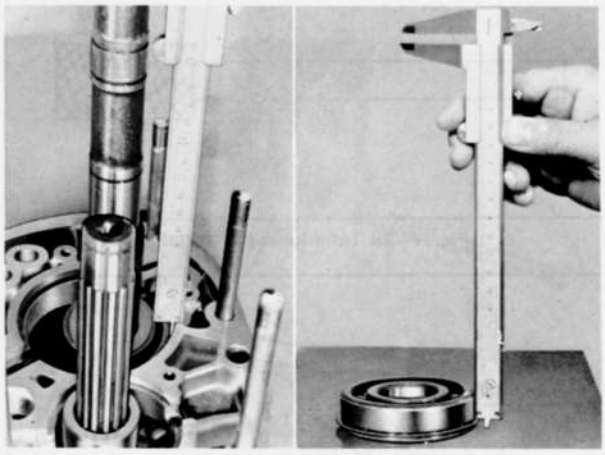

Fig. 7–28 Checking end play

17. Install the **synchronizer ring holder** (49 0839 445) between the fourth synchronizer ring and the synchromesh gear on the main drive shaft.

18. Position the shims and main shaft bearing in the bearing bore, and press the bearing by using a press.

19. Position the main drive shaft bearing in the bearing bore, and press it with a press.
Install the snap ring to secure the main drive shaft bearing.

20. Check the counter shaft bearing end play in the same manner for the main shaft bearing end play.
The standard end play is 0 ~ 0.1 mm (0 ~ 0.0039 in).
The adjusting shims are available in the following thickness:

0.1 mm (0.0039 in)	0.3 mm (0.0118 in)

21. Position the shims and counter shaft rear bearing to the bearing bore, and press them with a press.

22. Install the counter shaft front bearing with a press.

23. Install the snap ring to secure the front bearing.

24. Install the counter reverse gear to the rear end of the counter shaft and secure it with the snap ring.

25. Install the reverse idler gear shaft to the transmission case.

26. Install the bearing cover plate to the transmission case and tighten the attaching bolts.

27. Install the reverse gear with the key to the main shaft. Tighten the main shaft lock nut to **20.0 ~ 28.0 m-kg (145 ~ 203 ft-lb)**, by using the **holder** (49 0259 440) and bend the tab of the lock washer.

28. Slide the first-and-second shift rod into the case from the rear of the case. Secure the first-and-second

shift fork to the shift rod with the lock bolt.
29. Place the shift rod in neutral position.
Insert the inter-lock pin into the case with the **shift fork rod guide** (49 0862 350).

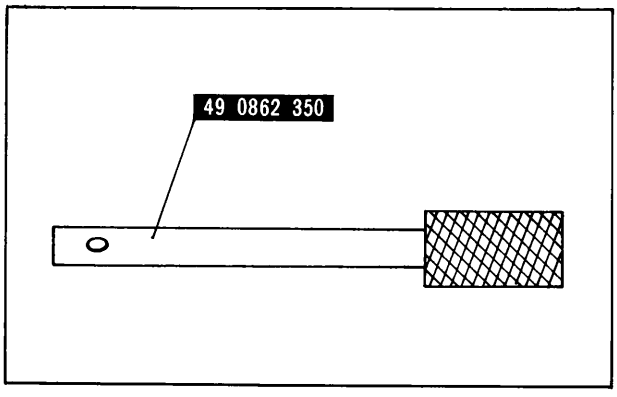

Fig. 7–29 Inter-lock pin installer

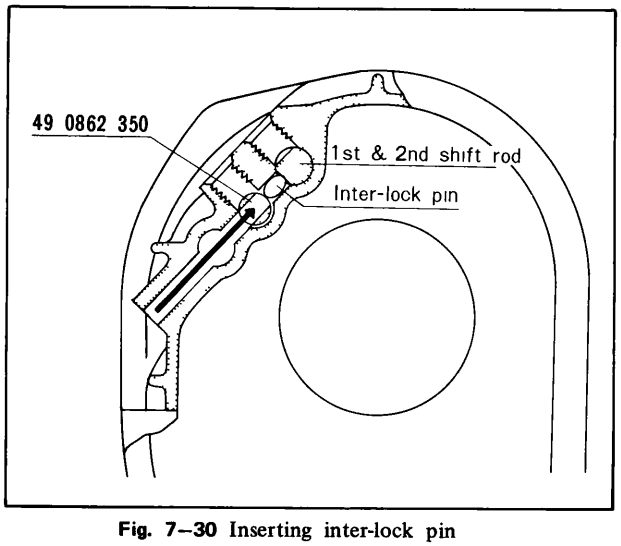

Fig. 7–30 Inserting inter-lock pin

30. Slide the third-and-fourth shift rod into the case from the rear of the case. Secure the third-and-fourth shift fork to the shift rod with the lock bolt.
31. Insert the inter-lock pin into the case by using the **shift fork rod guide** (49 0862 350).

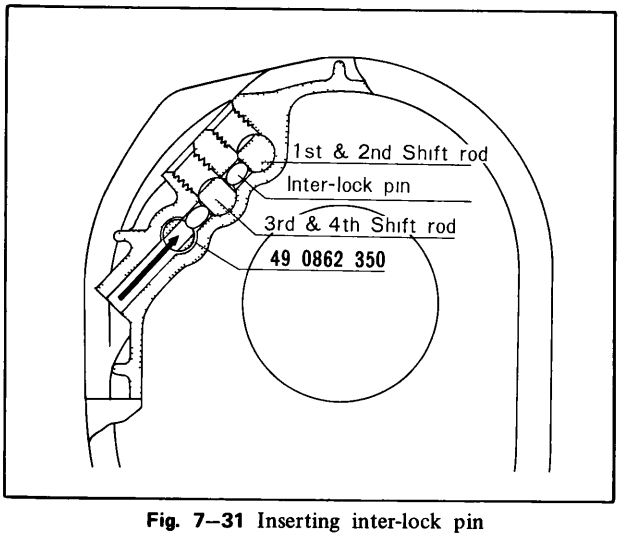

Fig. 7–31 Inserting inter-lock pin

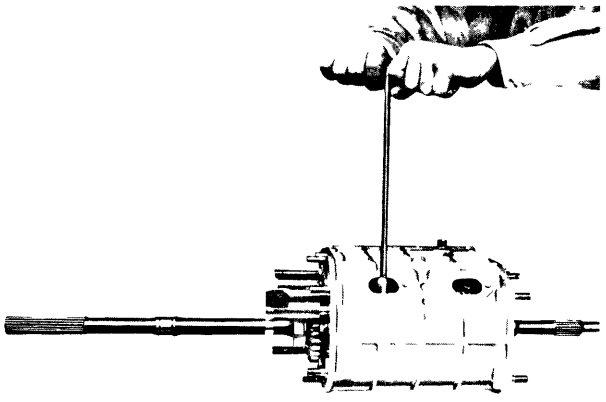

Fig. 7–32 Securing shift fork

32. Slide the reverse shift rod and shift fork assembly together with the reverse idle gear into the case from the rear of the case.
33. Position the three detent balls and three springs into the case and install the spring cap bolts.
34. Place the third-and-fourth clutch sleeve in the third gear.
35. Check the clearance between the synchronizer key and the exposed edge of the synchronizer ring with a feeler gauge. This measurement should be **0.66 ~ 2.0 mm (0.026 ~ 0.079 in).** If the measurement is greater than 2.0 mm (0.079 in), the synchronizer key could pop out of position.
If the measurement exceeds 2.0 mm (0.079 in), exchange the thrust washer (selective fit). The thrust washers are available as in the following table.

2.5 mm (0.098 in)	3.5 mm (0.138 in)
3.0 mm (0.118 in)	

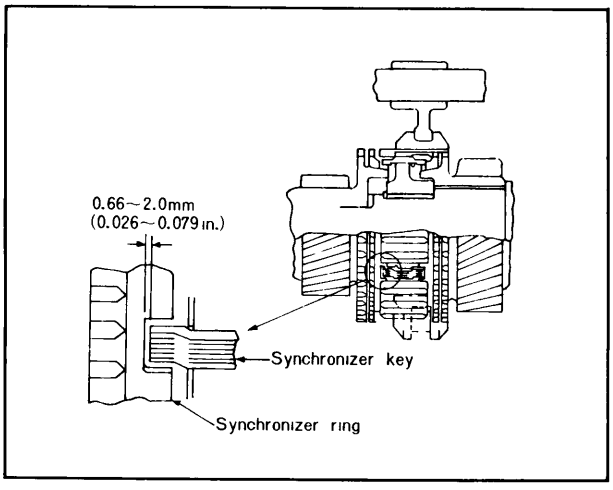

Fig. 7–33 Checking clearance

36. Install the two blind covers and gaskets to the case and tighten the attaching nuts.
37. Install the lock ball, speedometer drive gear and snap ring to the main shaft from the rear of the main shaft.
38. Insert the gearshift control lever through the holes from the front of the extension housing. Position the woodruff key in place and slide the gearshift

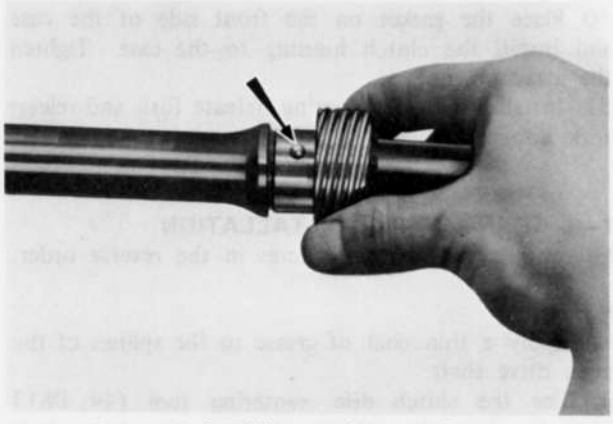

Fig. 7–34 Installing speedometer drive gear

control lever end to the gearshift control lever. Secure the lever end to the control lever with the bolt.
39. Install the neutral switch to the extension housing and tighten the switch.
40. Position the spring and friction piece in the extension housing and tighten the spring cap bolt to the extension housing.

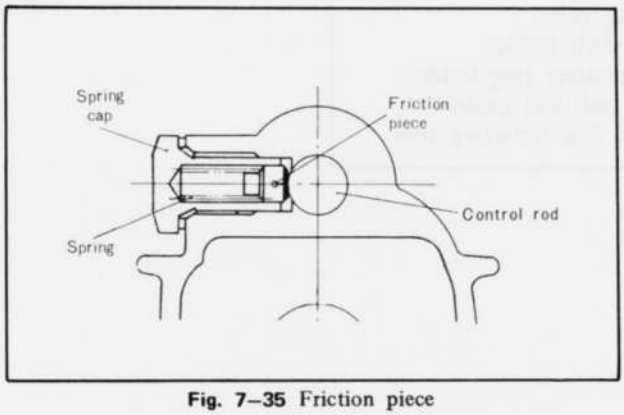

Fig. 7–35 Friction piece

41. Install the back-up lamp switch to the extension housing and tighten the switch.
42. Insert the speedometer driven gear assembly to the extension housing and secure it with the bolt and lock plate.
43. Place the gasket on the rear of the transmission case and position the extension housing on the transmission case with the gearshift control lever end laid down to the left as far as it will go. Tighten the attaching nuts.

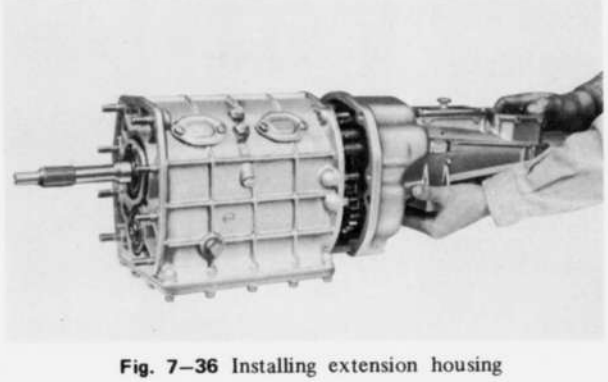

Fig. 7–36 Installing extension housing

44. Check to ensure that the gearshift control lever operates properly.
45. Install the transmission under cover to the case and tighten the attaching bolts.
46. Insert the select lock spindle and spring from the inside of the gearshift lever retainer. Position the lock ball and spring in alignment with the select lock spindle and tighten the spring cap bolt.

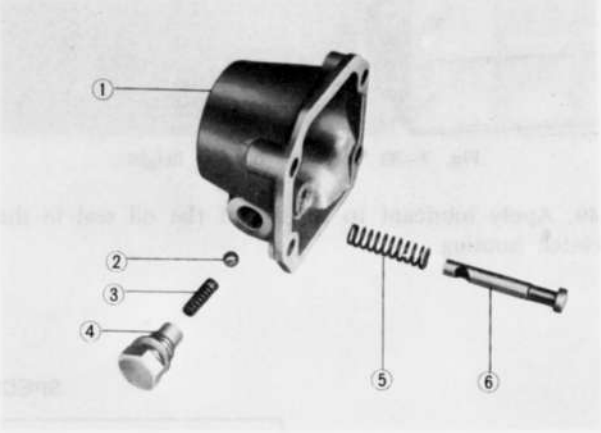

Fig. 7–37 Gearshift lever retainer

1. Retainer
2. Locking ball
3. Spring
4. Spring cap bolt
5. Spring
6. Select lock spindle

47. Position the gasket and gearshift lever retainer to the extension housing, and tighten the attaching bolts.
48. Check the bearing end play as follows :
Measure the depth of the main drive shaft bearing bore in the clutch housing using a depth gauge. Then, measure the bearing height. The difference between two measurements indicates the required thickness of the adjusting shim. The standard end play is **0 ~ 0.1 mm (0 ~ 0.0039 in)**. If necessary, select and use the properly sized shim.
The shims are available in the following thickness :

0.1 mm (0.0039 in)	0.3 mm (0.0118 in)



Fig. 7–38 Measuring bearing bore depth

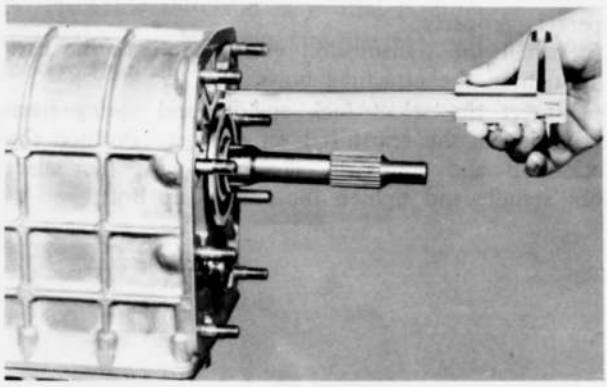

Fig. 7–39 Measuring bearing height

49. Apply lubricant to the lip of the oil seal in the clutch housing.

50. Place the gasket on the front side of the case and install the clutch housing to the case. Tighten the attaching nuts.
51. Install the release bearing, release fork and release fork boot to the clutch housing.

7–G. TRANSMISSION INSTALLATION

Follow the removal procedures in the reverse order.

Note :
(a) Apply a thin coat of grease to the splines of the main drive shaft.
(b) Use the **clutch disc centering tool** (49 0813 310) to align the splines of the main drive shaft and clutch disc.
(c) Fill the transmission case with lubricant until the lubricant overflows from the level hole.

SPECIAL TOOLS

49 0839 425B	Bearing puller
49 0259 440	Main shaft holder
49 0839 445	Synchronizer ring holder
49 0862 350	Shift fork rod guide
49 0813 310	Clutch disc centering tool

AUTOMATIC TRANSMISSION

7A–A. TROUBLE DIAGNOSIS AND ADJUSTMENT ..... 7A : 2
7A–B. ITEMS TO CHECK AND ADJUST .... 7A : 2
7A–B–1. Torque Converter Oil ..... 7A : 2
a. Oil level check ..... 7A : 2
b. Oil leakage check ..... 7A : 2
c. Oil condition check ..... 7A : 2
7A–B–2. Engine Idling Speed ..... 7A : 2
7A–B–3. Kick-Down Switch and Down Shift Solenoid ..... 7A : 2
7A–B–4. Manual Linkage ..... 7A : 3
7A–B–5. Select Lever knob ..... 7A : 3
7A–B–6. Inhibitor Switch ..... 7A : 3
7A–C. DIAGNOSTIC TEST ITEMS ..... 7A : 4
7A–C–1. Stall Test ..... 7A : 4
a. Stall test procedure ..... 7A : 4
b. Judgement ..... 7A : 4
7A–C–2. Road Test ..... 7A : 5
a. Shift point check ..... 7A : 5
b. Shift point check procedure ..... 7A : 5
c. Other checks in driving ..... 7A : 5
7A–C–3. Oil Pressure Test ..... 7A : 6
a. Line pressure test ..... 7A : 6
b. Line pressure test procedures ..... 7A : 6
c. Diagnosis from measurements ..... 7A : 6
d. Governor pressure test ..... 7A : 6
7A–D. TROUBLE DIAGNOSIS CHART ..... 7A : 7
7A–D–1. Items to Check ..... 7A : 7
7A–D–2. Trouble Diagnosis Chart .... 7A : 7
7A–E. REMOVAL OF TRANSMISSION ..... 7A : 9
7A–F. DISASSEMBLY OF TRANSMISSION COMPLETE ..... 7A : 10
7A–F–1. Disassemble Procedure ..... 7A : 10
7A–G. OVERHAUL OF MAIN COMPONENTS ..... 7A : 11
7A–G–1. Torque Converter ..... 7A : 11
7A–G–2. Front Clutch Assembly ..... 7A : 11
7A–G–3. Rear Clutch Assembly ..... 7A : 12
7A–G–4. Low and Reverse Brake Assembly ..... 7A : 13
7A–G–5. Band Servo ..... 7A : 14
7A–G–6. Governor Valve Assembly .. 7A : 15
7A–G–7. Oil Pump Assembly ..... 7A : 16
7A–G–8. Control Valve Assembly .... 7A : 17
7A–G–9. Bearing and Bearing Race... 7A : 18
7A–G–10. Other Component Parts ..... 7A : 18
a. Front planet carrier assembly, rear planet carrier assembly, input shaft and output shaft ..... 7A : 18
b. Shell and sun gear assembly ..... 7A : 19
c. Internal drive flange assembly ..... 7A : 19
d. Connecting drum assembly ..... 7A : 19
e. Manual control system and parking lock system ..... 7A : 19
7A–H. REASSEMBLY OF TRANSMISSION ... 7A : 19
7A–I. INSTALLATION AND ADJUSTMENT OF TRANSMISSION ..... 7A : 22
SERVICE SPECIAL TOOLS ..... 7A : 23

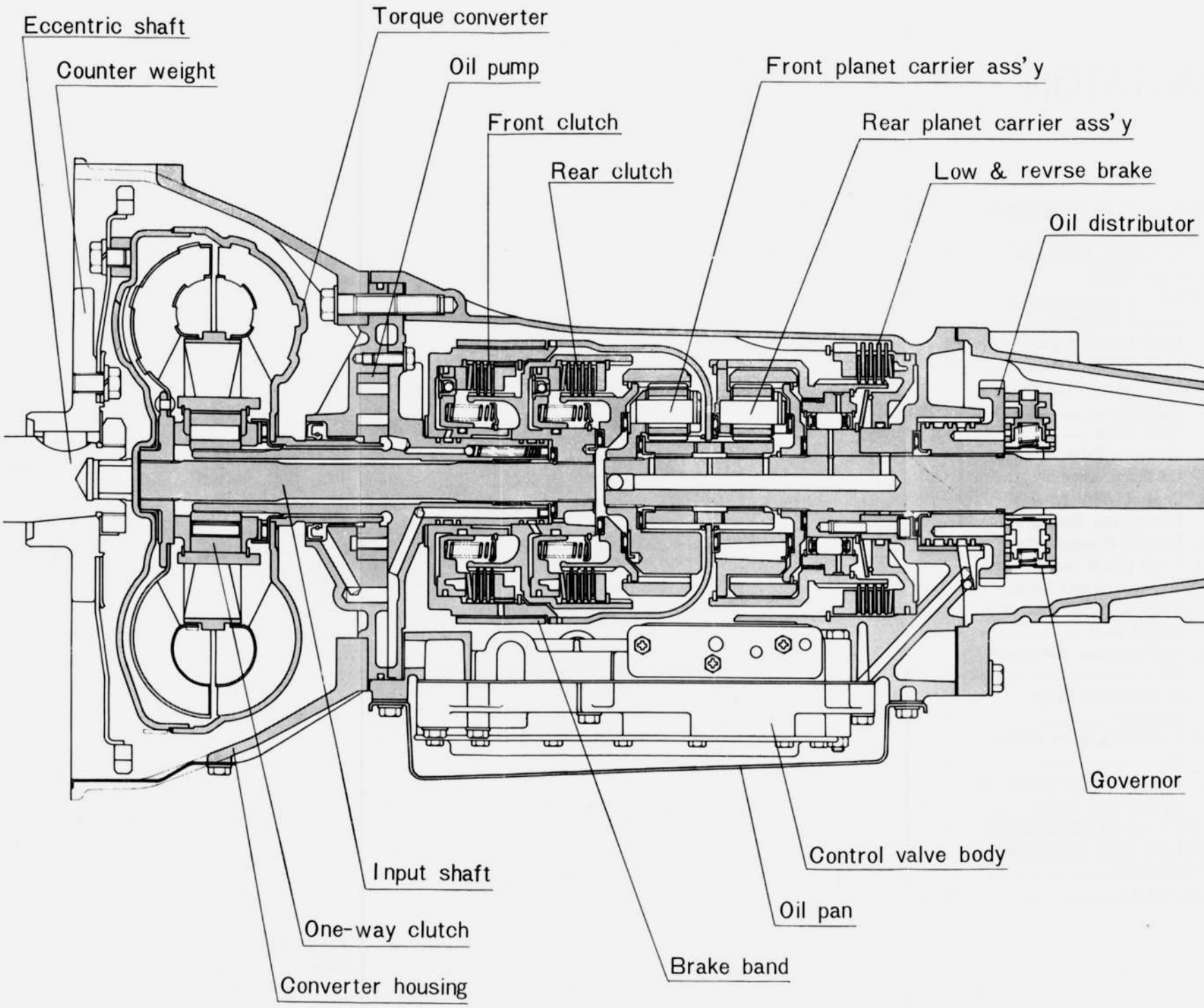

AUTOMATIC TRANSMISSION MODEL R3A (JATCO)

7A–A. TROUBLE DIAGNOSIS AND ADJUSTMENT

In trouble-shooting an automatic transmission it is necessary first of all to correctly define a faulty phenomenon, and then make efficient and orderly check to determine possible causes so that a proper remedy can be effected.

To grasp a faulty phenomenon. check whether the automatic transmission functions normally in all aspects under all conditions including starting, running and stopping. Find out a corresponding trouble from among the troubles in the TROUBLE DIAGNOSIS CHART, and check "Items to Check" in the sequence as indicated.

In diagnosing according to the TROUBLE DIAGNOSIS CHART, make sure to first check and adjust the following items (described in 7A–B):

1. Oil level
2. Idling speed
3. Down-shift solenoid and kickdown switch
4. Manual linkage
5. Inhibitor switch

It is meaningless to proceed to check other items without checking the above items carefully.

In the case of the automatic transmission particularly, there are a great number of troubles which can be solved by inspecting and regulating the above items with the transmission mounted on the vehicle.

So do not remove or disassemble the transmission without checking such items first. Also there are some troubles which require further detailed diagnostic tests including stall test, road test and hydraulic pressure test before removing the transmission from the vehicle. Such tests are described in 7A–C.

If a trouble should prove not correctable by inspection, adjustments and repairs made according to TROUBLE DIAGNOSIS CHART with the transmission installed, that is, if removal and overhauling are indicated by diagnosis, only then, the transmission should be removed and overhauled in the procedure mentioned later.

7A–B. ITEMS TO CHECK AND ADJUST

7A–B–1. Torque Converter Oil

a. Oil level check

Put the vehicle on a level surface and run the engine approximately two minutes at 1,200 rpm. Then move the manual lever through all driving ranges applying brake with the engine idling condition. Place the manual lever in "P". Insert the dipstick fully and take it out quickly before splashing oil adheres to the gauge, and then observe the level on the dipstick. The oil level must be somewhere between L and F marks and never be outside the limits.

Note :

1. The recommended oil is Genuine Automatic Transmission Fluid M2C33F (Type F) or Automatic Transmission Fluid M2C33F (Type F) of any make. Do not mix with other type of automatic transmission fluid than mentioned above.
2. Periodic oil change is not necessary, but the oil level must be checked at least every 10,000 km (6,250 miles).
3. The total amount of oil is 6.2 liters (13.1 U.S. pints, 10.9 Imp. pints. 6.6 U.S. quarts) and the difference between the amounts shown by L and F marks on the dipstick is about 0.45 liter (1.0 U.S. pints, 0.8 Imp. pints, 0.5 U.S. quart).

b. Oil leakage check

When the oil level is lower than specified, add it and at the same time check carefully for possible leaks and repair any if found.

Note :

1. Torque converter oil is of a red-wine color and is distinguishable from engine oil.
2. In checking for possible leak from the transmission breather pipe, jack up one of the rear wheels and run the engine to simulate the running condition. When the oil level is over the "F" limit, the oil never fails to spurt out from the breather pipe. When water is contained in it, the oil sometimes spurts out even when the oil level is within the specified range.

c. Oil condition check

In checking the condition of oil by the oil sticking on the dipstick, note that, if the oil appears like varnish, it might cause control valves to stick, and if it is black, it shows that linings of clutch or brake band have been scorched. In case such oil deterioration is found severe, it sometimes indicates that overhaul should be made without conducting tests listed in TROUBLE DIAGNOSIS CHART. If it is difficult to readily determine whether or not to make such tests, oil should be drained for confirmation.

7A–B–2. Engine Idling Speed

The engine idling speed should be properly adjusted to the specified revolution by using a tachometer for servicing rather than the one installed on the vehicle. If the engine idling speed is too low, the engine cannot revolve smoothly and when it is too high, shifts from "N" or "P" to other ranges will be harsh with increased shock or creep. Adjust the engine idling speed to the specification described in Par. 4–A–1.

7A–B–3. Kick-down Switch and Down Shift Solenoid

Position the ignition switch at the first stage after making sure that the accelerator pedal goes through the entire stroke properly. Depress the accelerator pedal as far as it goes. As the throttle nears the wide-open position, the contact point of the kick-down switch is closed with a light click from the solenoid.

The kick-down switch must begin to operate in between 7/8–15/16 of the entire pedal travel or full

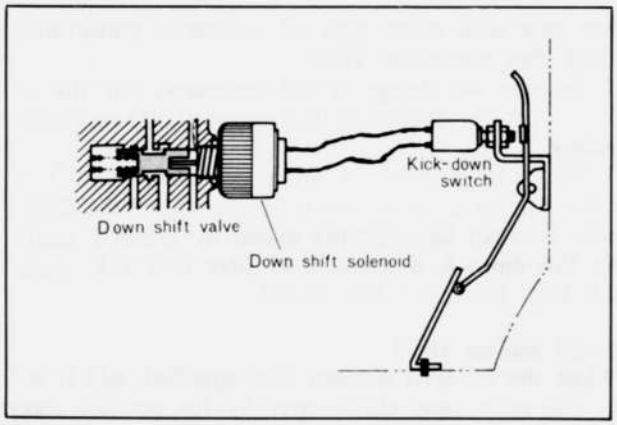

Fig. 7A–2 Kick-down switch and down shift solenoid

throttle. If not, adjust the kick-down switch. If the solenoid should not make any clicking sound it indicates some abnormality, so check with a tester must be made.

Note :
When the solenoid is removed for replacing, some one liter of fluid leaks out. So a receptacle should be made ready to catch it.

7A–B–4. Manual Linkage

The adjustment of linkage is equally important as "Inspection of oil level" for the automatic transmission. Therefore, great care should be exercised because defective adjustment will result in the breakdown of the transmission.

Pull the manual lever toward you and turn it so far as "P" to "1" range, where clicks will be felt by hand. This is the detent of manual valve in the body, and indicates the correct position of the lever. Inspect whether the pointer of selector dial corresponds to this point, and also whether the lever comes in alignment with the stepping of position plate when it is released.

When the position of the manual lever is found incorrect, disconnect the T joint on the lower rod, and place in "N" the range select lever on the transmission (where the slot of the manual shaft is positioned vertically).

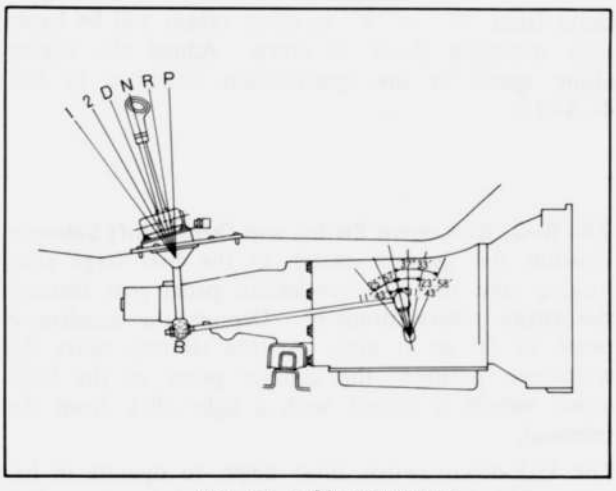

Fig. 7A–3 Manual linkage

Adjust the position of the manual lever by turning the T joint so as to position the manual lever in "N". Finally make sure that the lever travels to "P" and "1" ranges correctly. Check at the same time to see that the linkage has no looseness.

7A–B–5. Select Lever Knob

When the select lever knob is removed, it should be adjusted properly in the following manner.

1) Position the select lever at "N" or "D" range.
2) Loosen the lock nut and screw the select lever knob in until there is no play of the push button.
3) Screw back the select lever knob within one turn to the position where the push button is on the driver's side.
4) Push the push button and confirm that the select lever can be shifted to "P" range.
5) In case the select lever cannot be shifted to "P" range, screw in the select lever knob by one turn.
6) Repeat items (4) and (5) until the select lever can be shifted to "P" range smoothly.
7) Confirm that the select lever cannot, without pushing the push button, be shifted from "N" to "R" or from "D" to "2" range.
8) In case, in item (7), the select lever can be shifted to "R" or "2" range without pushing the push button, it means that the select lever knob is excessively screwed in and so screw back the knob.
9) Make final confirmation on whether the function of the push button is perfect when shifting the select lever to each range.
10) Finally lock the lever by the lock nut under the select lever knob. Tightening torque is 1.5 ~ 2.0 kg-m (10.8 ~ 14.5 ft-lb).

7A–B–6. Inhibitor Switch

The inhibitor switch permits the reverse lamp to light up only when "R" range is selected and the starter motor to revolve only when the lever is in "N" or "P" position, so that when "D", "2" or "1" is selected, the reverse lamp does not light up and the starter motor cannot revolve.

If any abnormality is found in any range, check and adjust the manual linkage; if the manual linkage is found normal, then check the inhibitor switch.

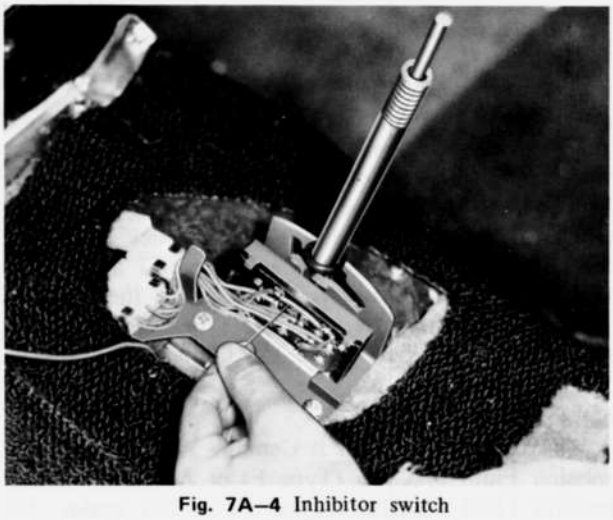

Fig. 7A–4 Inhibitor switch

Engage the manual lever in each range and check the connection of the inhibitor switch with a tester, as described in Par. 15–E.
Move the range select lever to both sides from the center position of each range ("R", "P" and "N"), and it is normal if the electricity is on while the lever is within an angle of about 3° on the both sides from each lever set line.
If anything wrong is revealed as a result of the conductivity check of the inhibitor switch, make adjustments in the following procedures.
1. Remove the nut that holds the range select lever and bolts holding the inhibitor switch body, then remove the screw.
2. Correctly position the manual shaft in "N" position by adjusting the range select lever.
The proper "N" position is where the slot of the manual shaft is positioned vertically and detent works to position in the shaft correctly with a click sound.
3. Move the switch slightly aside so that the screw hole will be aligned with the pin hole of the sliding plate when the range select lever is in "N" position by inserting a 2.0 mm (0.079 in) diameter pin into the holes.
4. If the alignment is made correct, tighten the switch body with the bolts, pull out the pin and tighten up the screw again into the hole, and tighten the range select lever as before.
5. Check over again the continuity with the tester. If the malfunction still remains, replace the inhibitor switch.

7A–C. DIAGNOSTIC TEST ITEMS

Make sure that all the inspection items described in 7A–B are normal before starting the diagnostic tests– stall test, road test and oil pressure test.

7A–C–1. Stall Test

The purpose of this test is to check the transmission and engine for trouble by measuring the maximum numbers of the engine revolutions while the vehicle is held in a stalled condition and the carburetor is in full throttle operation with the manual lever in ranges "D", "2", "1" and "R" respectively and by comparing the measured results with the standard values.
The specified stall revolution is in the following table.

Stall revolution (rpm)	
In breaking in	After breaking in
2,400 ~ 2,650	2,450 ~ 2,700

a. Stall test procedure

1. Check the levels of engine coolant, engine oil and torque converter oil. Warm up the engine at about 1,200 rpm for several minutes with the manual lever in "P" in order to heat the torque converter oil to a suitable temperature of 60° ~ 100°C (140° ~ 212°F).
2. Mount the engine tachometer at a location that allows good visibility from the driver's seat and put a mark on specified revolutions on the meter.
3. Secure the front and rear wheels completely with chocks and apply the hand brake. Be sure to depress the brake pedal firmly with the left foot before depressing down the accelerator pedal.
4. Place the manual lever in "D" range.
5. Gradually step on the accelerator pedal to the wide-open position. As soon as the engine speed becomes constant, read the engine speed and release the accelerator pedal.
6. Place the manual lever in "N" or "P" and run the engine at about 1,200 rpm for more than one minute to cool down the torque converter oil and coolant.
7. Proceed to do the stall test for "2", "1'. and "R" in the same manner as for "D".

Note :

The stall test operation as specified in the item (5) should be made within five seconds. If it takes too long, the oil deteriorates and the clutches, brake and band are adversely affected. Sufficient cooling time should be given between each test for the four ranges "D", "2", "1" and "R".

b. Judgement

By comparing the measured stall speed and the specified one, troubles can be surmised as follows :
1. Standard stall revolution
Both transmission control elements and engine performance are normal, and the one-way clutch of the torque converter is not slipping though whether or not there is sticking is unknown.

* In the road test, if the maximum speed cannot be attained and the torque converter oil is found to be at unusually high temperature, the one-way clutch of the torque converter is diagnosed to be sticking.

2. High stall revolution more than standard revolution.
If the engine revolution in stall condition is higher than the standard values, it indicates that one or more clutches in the transmission are slipping and, therefore, no further test is required. For the following abnormalities, the respective causes are presumed.

High rpm in all ranges
Line pressure is low or all clutches, brake and band are slipping.

High rpm in "D", "2" and "1" (normal in "R")
The rear clutch is slipping.

High rpm in "D" (normal in "2", "1" and "R")
The one-way clutch is slipping.

High rpm in "R" (normal in "D", "2" and "1")
The front clutch or the low and reverse brake is slipping.

* In the road test, if there is no engine braking in "1" range, the low and reverse brake is slipping, and if there is engine braking in "1" range, the front clutch is slipping.

High rpm in "2" (normal in "D", "1" and "R")
The band is slipping.

3. Low stall revolution less than standard
The one-way clutch of the torque converter is slipping, or the engine performance is poor.
* In the road test, if poor acceleration is noted at various speeds, indicates poor engine performance or incorrect engine adjustment. In case the starting acceleration is poor while acceleration at high speeds is normal, the one-way clutch of the torque converter is slipping.

7A–C–2. Road Test
An accurate knowledge of the automatic transmission is prerequisite to its exact diagnosis by a road test.
The purpose of road test is to make a comprehensive check of the transmission under varying running conditions to detect and analyze troubles and to clear up the cause of troubles.

a. Shift point check
Check to see that the up-shift and down-shift occur within the range specified in the shift point table below, following the checking procedures.

b. Shift point check procedure
1. Make sure that the tire air pressure is in the standard range and preheat the converter oil to appropriate temperature about 60 ~ 100°C (140 ~ 212°F) in engine idling condition.
2. Place the manual lever in "D" range and accelerate in wide open throttle (kick-down switch energized), and read the car speed at the instant of $D_1 \rightarrow D_2$ and $D_2 \rightarrow D_3$ up-shifts with speedometer which is installed on this car.
3. Drive the car with the manual lever in "D". When it is running at a constant speed in D_3, depress the accelerator pedal to the full (the kickdown switch energized) and make sure that $D_3 \rightarrow D_2$ shift occurs. Continue this check at higher speeds until a critical speed from which that down-shift does not occur any more is reached. Proceed to check the critical speed for $D_2 \rightarrow D_1$ kick-down by using the same method. Shift-down can be noted by a shift shock or change in engine sound.
4. When the car is running in D_3 at a speed about 60 km/h (45 mile/h), release the accelerator pedal completely and read the car speed just when $D_3 \rightarrow D_1$ down shift occurs at the fully closes throttle condition.
5. When the car is running in D_3 at a speed more than 60 km/h (45 mile/h), place the manual lever from "D" into "1", and read the car speed just when $1_2 \rightarrow 1_1$ downshift occurs.

Note :
Care must be taken not to shift from "D" to "1" (from "2" to "1") in exceeding the speed in "2" range ("1" range) shown below to avoid the engine overrun.

Engine Max. speed (rpm)	"1" Range	"2" Range
	Km/h (Mile/h)	Km/h (Mile/h)
6,500	70 (45)	120 (75)

6. Connect a vacuum gauge into the socket in the intake manifold and set it so that it is visible while driving. Place the manual lever in "D" and accelerate with accelerator pressure controlled so that the vacuum gauge will show 200 mm-Hg, and read car speed at the instant of $D_1 \rightarrow D_2$ and $D_2 \rightarrow D_3$ upshifts.

Note :
1. In reading car speeds at shifting, acceleration and deceleration around shift points must be made gently except for (2) above.
2. Checks of (2), (3) and (4) above should indicate general condition of shift point except in very rare instances. Item (6) should be carried out only when the condition in partial throttle must be known.

Car Speed at Gear Shift

Throttle Condition	Gear Shift	Model and Shift Speeds Km/h (Mile/h)
Kick-down (0 ~ 100 mm-Hg) (0 ~ 3.94 in-Hg)	$D_1 \rightarrow D_2$	57 ~ 77 (35 ~ 48)
	$D_2 \rightarrow D_3$	100 ~ 128 (62 ~ 80)
	$D_3 \rightarrow D_2$	85 ~ 109 (53 ~ 68)
	$D_2 \rightarrow D_1$	38 ~ 56 (23 ~ 35)
Half throttle (190 ~ 210 mm-Hg) (7.48 ~ 8.27 in-Hg)	$D_1 \rightarrow D_2$	14 ~ 31 (8 ~ 19)
	$D_2 \rightarrow D_3$	30 ~ 66 (19 ~ 41)
Fully closes throttle	$D_3 \rightarrow D_1$	11 ~ 19 (7 ~ 12)
Manual 1	$1_2 \rightarrow 1_1$	44 ~ 57 (27 ~ 36)

Note :
The shift speeds in the above table include the permissible allowance of a speedometer on the car. Therefore check the shift speed with the speedometer on the car.

c. Other checks in driving
1. Check each range for faulty performance or shifting. Check to see, for instance, that :
(1) Firm locking is effected when "P" is selected.
(2) Reversing is effected when "R" is selected.
(3) Completely neutral condition is attained by selecting "N".
(4) $D_1 \leftrightarrow D_2 \leftrightarrow D_3$ shifts take place in "D" range.
(5) Kick-down takes place.
(6) When "1" is selected from "D", there occur $D_3 \rightarrow 1_2 \rightarrow 1_1$ or $D_3 \rightarrow 1_1$ shifts with engine braking effected in 1_2 and 1_1.
(7) The transmission does not shift up in "1" range.
(8) In "2" range, the transmission is fixed to 2nd speed.
2. Check to see that shifting is smooth without conspicuous shock and there is no marked creep. (Slight creep in each range is normal.)
3. Check to see that shifts are effected promptly without drag.
4. Check for abnormal gear noise, clutch, band squeal, poor acceleration or oil leak.

7A–C–3. Oil Pressure Test

When there is slippage in the gear train or when shifts do not feel proper, line pressure and governor pressure must be checked.
The following chart shows standard line pressures (before cut back).

Manual Range	Line Pressure kg/cm² (lb/in²)	
	Engine Idling	Stall
"R"	4.0 ~ 7.0 (57 ~ 100)	15.5 ~ 19.0 (220 ~ 270)
"D"	3.0 ~ 4.0 (43 ~ 57)	9.5 ~ 11.0 (135 ~ 156)
"2"	8.0 ~ 12.0 (114 ~ 170)	10.0 ~ 12.0 (142 ~ 170)
"1"	3.0 ~ 4.0 (43 ~ 57)	9.5 ~ 11.0 (135 ~ 156)

a. Line pressure test

Place the transmission in "D", "2", "1" and "R", and check respective line pressure at engine idling and stall conditions. Compare the results with specified pressures to trace the cause of trouble.

b. Line pressure test procedures

1. Warm up the engine to bring the converter oil to operating temperature 60°~ 100°C (140 ~ 212°F).
2. Line pressure for "R" range is taken out at an inspection hole at the right front of the transmission case, and for "D", "2" and "1" ranges the inspection hole is at the right rear. Connect a pressure gauge to the inspection hole and put it where it is visible from the driver's seat.
3. Firmly check the front and rear wheels and apply the hand brake as in the stall test.
4. With the manual lever put in the range to be checked, run the engine at engine idling condition and read the pressure gauge.
5. With the brake pedal depressed fully, press the accelerator pedal gradually to the wide open position. While checking whether the pressure rises smoothly, read the pressure gauge at the stall condition. The test time from starting accelerator depression to its release must not exceed 5 seconds.
6. Measure line pressure for each of other ranges in the same manner. Be sure to interpose more than one minute cooling time at 1,200 rpm with the manual lever placed in "P" or "N".
7. After aboves, check whether the cut-back function to release the shock at gear shifting is operative properly. The cut-back function can be judged normal if the line pressure drops suddenly when the car is accelerated gradually and reaches to the certain running speed.

c. Diagnosis from measurements

1. When line pressure at idling is low in all of "R", "D", "2" and "1", possible causes include a fault in the pressure supply system, e.g. increased side clearance in the oil pump, reduced pump output because of bolts left untightened, oil leak from pump, valve body or transmission case, and sticking of regulator valve or vacuum throttle valve.
2. In case line pressure at idling is low in one range only, there probably are pressure leaks in some devices or oil passages for the relevant range.
3. In case line pressure at idling is high in all ranges, possible cause is throttle pressure rise due to leak from vacuum tube or vacuum diaphragm, or regulator valve sticking.
4. When pressure does not rise at stall condition, the vacuum rod possibly may not be installed.
5. When pressure rise is not smooth or pressure at stall condition does not come within the specified range, possible cause is sticking of vacuum throttle valve, pressure regulator valve or pressure regulator plug.

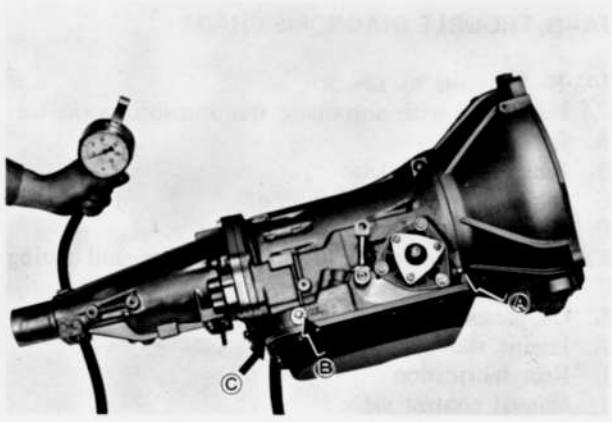

Fig. 7A–5 Oil pressure test
A. For line pressure in "R" range
B. For line pressure in forward ranges
C. For governor pressure

d. Governor pressure test

Governor pressure has only to be measured when shift point is different from the specified.
Connect a pressure gauge in the inspection hole on the left rear of transmission case, and put it where it is visible during driving. Read governor pressure when the car is going at required speeds for each model. If the result is out of the specified range shown in the following table, disassemble and check the governor valve.

Governor Pressure (1)

Driving speed	Output shaft speed rpm	Standard governor pressure kg/cm²	lb/in²
30 km/h	950 ~ 1,065	0.8 ~ 1.3	11 ~ 18
55 km/h	1,785 ~ 1,900	1.5 ~ 2.2	21 ~ 31
85 km/h	2,765 ~ 2,910	2.7 ~ 3.6	38 ~ 51
20 mile/h	1,030 ~ 1,130	0.8 ~ 1.3	11 ~ 18
35 mile/h	1,830 ~ 1,960	1.5 ~ 2.2	21 ~ 31
55 mile/h	2,900 ~ 3,050	3.0 ~ 3.9	43 ~ 55

Governor Pressure (2)

Break point	at 1,000 rpm	at 2,000 rpm	at 3,000 rpm
400~600 rpm	0.9~1.3 kg/cm² (13~18 lb/in²)	1.6~2.2 kg/cm² (23~28 lb/in²)	3.0~3.8 kg/cm² (43~54 lb/in²)

7A–D. TROUBLE DIAGNOSIS CHART

7A–D–1. Items to Check

(1) Inspection with automatic transmission on the car.

A. Oil level
B. Range select linkage
C. Inhibitor switch and wiring
D. Vacuum diaphragm and piping
E. Downshift solenoid, kick-down switch and wiring
F. Engine idling speed
G. Oil pressure
H. Engine stall speed
I. Rear lubrication
J. Manual control valve
K. Governor valve
L. Band servo
M. Transmission air check
N. Oil drain check
O. Ignition switch and starter motor
P. Engine adjustment and brake inspection

(2) Inspection after inspecting automatic transmission on the car.

a. Rear clutch
b. Front clutch
c. Band brake
d. Low & reverse brake
e. Oil pump
f. Leak from hydraulic passages
g. One-way clutch in torque converter
h. One-way clutch in power train
i. Front clutch check ball
j. Parking linkage
k. Planetary gear

7A–D–2. Trouble Diagnosis Chart

The numerals show the sequence of inspection for detecting trouble.

Trouble	A	B	C	D	E	F	G	H	I	J	K	L	M	N	O	P	a	b	c	d	e	f	g	h	i	j	k
Engine won't start in "N" and "P" ranges		2	3												1												
Engine starts in other ranges than "N" and "P" ranges		1	2																								
Excessive shock on "N" →"D" range shift				2		1	3			4							⑤										
Car won't move in "D" range (but moves in "2", "1" and "R" ranges)		1					2			3														④			
No drive, excessive slip or very poor acceleration in "D", "2" or "1" range (Driver in "R" range)	1	2					4			5			6	3		7	⑧	⑩				⑨					
No drive, excessive slip or very poor acceleration in "R" range (but Drives in "D", "2" and "1" ranges)	1	2					3			5			6	4			⑨	⑧		⑦		⑩			⑪		
Car won't move in any range	1	2					3			5			6	4							⑦	⑧				⑨	
Tendency to slip when starting	1	2		6			3			5			7	4							⑧	⑨					
Car moves in "N" range		1								3				2			④										
Maximum speed too low and poor acceleration	1	2					4	5		7		6		3		8	⑪	⑫	⑨	⑩	⑬						
Car braked when "R" range is selected												3	2	1			④		⑤							⑥	
Excessive creep						1																					
No creep at all	1	2				3				5				4			⑧	⑨			⑥	⑦					
No $D_1 \rightarrow D_2$ change		1		2	3					5	6	8	7	4					⑨			⑩					
No $D_2 \rightarrow D_3$ change		1		2	3					5	6	8	7	4				⑨				⑩			⑪		
$D_1 \rightarrow D_2$ and $D_2 \rightarrow D_3$ shift-points too high				1	2		3			5	6			4								⑦					
$D_1 \rightarrow D_3$ change without through D_2										2	4		3	1				⑤				⑥					
Excessive shock on $D_1 \rightarrow D_2$ change				1				2		4		5		3					⑥								

Trouble	A	B	C	D	E	F	G	H	I	J	K	L	M	N	O	P	a	b	c	d	e	f	g	h	i	j	k
Excessive shock on $D_2 \rightarrow D_3$ change				1			2			3		5	4					⑥									
Practically no shift shock or excessive slip on $D_1 \rightarrow D_2$ change	1	2		3			4			6		8	7	5					⑨			⑩					
Practically no shock; or excessive slip; or engine runaway on $D_2 \rightarrow D_3$ change	1	2		3			4			6		8	7	5				⑨				⑩			⑪		
Car braked on $D_1 \rightarrow D_2$ change										2				1				④	③					⑤			
Car braked on $D_2 \rightarrow D_3$ change										3		2		1					④								
No $D_3 \rightarrow D_2$ change				1						3	4	6	5	2				⑦	⑧			⑨					
No $D_2 \rightarrow D_1$ or $D_3 \rightarrow D_1$ change				1						3	4	6	5	2					⑦					⑧			
Shift shock felt when accelerator is released and deceleration occurs		1		2	3		4			5	6											⑦					
$D_3 \rightarrow D_2$ and $D_2 \rightarrow D_1$ shift-points too high		1		2	3		4			5	6											⑦					
No kick-down on accelerator depression in D_3 (within kick-down speed limits)				2	1					4	5			3					⑥			⑦					
Abnormal rise of engine speed on accelerator depression in D_3 (above kick-down upper limit)		1		2			3			5	6		7	4				⑧				⑨					
Engine runaway or slip on $D_3 \rightarrow D_2$ change				1			2			4		6	5	3				⑦	⑧			⑨			⑩		
No $D_3 \rightarrow 2$ change on "D" $\rightarrow$ "2" range shift		1					2			4		5		3					⑥			⑦					
$2 \rightarrow 1$, $2 \rightarrow D$, or $2 \rightarrow D_3$ change in "2" range		1					2			3																	
No shift shock or engine run-away on "1" $\rightarrow$ "2" range shift	1	2		3		4		1		6			7	5					⑨		⑩						
No $D_3 \rightarrow 1_1$ change on "D" $\rightarrow$ "1" range shift		1					2			4	5	7	6	3				⑧	⑨			⑩					
No engine braking in "1" range		1					2			4			5	3						⑥		⑦					
$1 \rightarrow 2$ or D_2 change, or 2 or $D_2 \rightarrow D_3$ change in "1" range		1								2												③					
No $1_2 \rightarrow 1_1$ change on "D" $\rightarrow$ "1" range shift	1	2								4	5	6	7	3						⑧		⑨					
Excessive shift shock on $1_2 \rightarrow 1_1$ change in "1" range				1				2		4				3						⑤							
Car moves in "P" range, and parking gear not removed when "P" range is disengaged.		1																								②	
Transmission overheats	1						3	4	2	6		8	7	5				⑨	⑩	⑪	⑫	⑬	⑭				⑮
Oil spurting up or white exhaust during running	1			3			5	6	2	7			8	4				⑨	⑩	⑪	⑫	⑬	⑭				⑮
Offensive smell from oil charging pipe	1													2			③	④	⑤	⑥	⑦	⑧	⑨				⑩
Transmission noisy in "P" and "N" ranges	1						2														③						
Transmission noisy in "D", "2", "1" and "R" ranges	1						2										③				④			⑤			⑥

7A–E. REMOVAL OF TRANSMISSION

When dismounting the automatic transmission from a vehicle, pay attention to the following point.
Before dismounting the transmission, rigidly inspect it by aid of the "Trouble Diagnosis Chart", and dismount it only when considered to be necessary. The transmission should be removed in the following sequence :

1. Remove the battery earth.
2. Remove the power brake vacuum pipe clip from the converter housing. (Left hand drive vehicles only)
3. Remove the service hole cover. To lock the drive plate, apply the wrench to the drive pulley lock bolt. Loosen and remove four bolts that attach the torque converter to the drive plate by using the **special wrench** (49 0877 435). At the same time, make aligning mark across torque converter and drive plate.
4. Jack up the vehicle and support it with safety stands.
5. Remove the screws attaching the heat insulator to the exhaust pipe and remove the heat insulator.
6. Remove the bolt and nut attaching the exhaust front pipe to the exhaust pipe bracket. Disconnect the exhaust front pipe flange from the exhaust manifold by removing nuts. Remove the bolts and nuts attaching the exhaust front pipe flange to the main silencer, and remove the exhaust front pipe.
7. Remove the bolts attaching the heat insulator to the underbody and remove the heat insulator.
8. Remove the four propeller shaft attaching bolts and remove the center bearing attaching bolts. Then pull it out from the extension housing. Apply a plug to prevent oil leak.

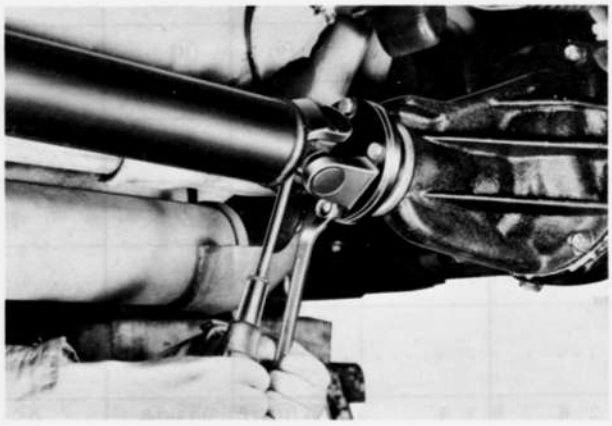

Fig. 7A–6 Removing propellar shaft

9. Disconnect the speedometer cable from the extension housing.
10. Disconnect the control rod by removing snap ring.
11. Disconnect the wirings from the starting motor. Loosen the upper and lower bolt attaching the starting motor to the converter housing and remove the starting motor.
12. Remove the undercover (or service cover) on the converter housing.
13. With the transmission supported with the transmission holder, remove the tightening nuts of the



Fig. 7A–7 Removing speedometer cable

transmission member and take out the member. Then lower the transmission holder, widen the clearance between the transmission and the floor.
14. Remove the vacuum union bolt from the inlet manifold. Remove the vacuum pipe clips from the converter housing, transmission case and extension housing. Disconnect the vacuum hose from the vacuum diaphragm and remove the vacuum pipe.
15. Disconnect the wire connections of down-shift solenoid and remove the wires from the clip.
16. Disconnect the feed pipe and return pipe for cooling on the left side of the transmission. Remove the feed pipe and return pipe clips from the converter housing and transmission case.

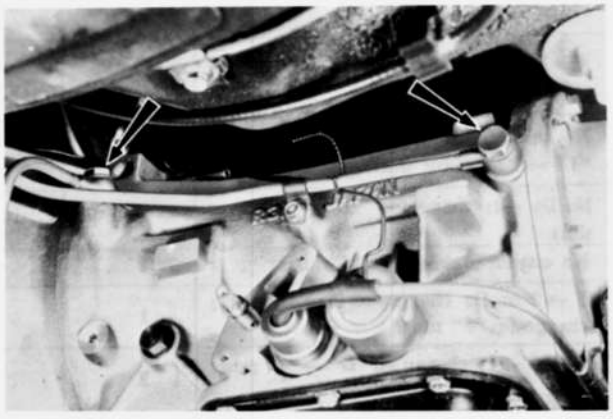

Fig. 7A–8 Removing pipes

17. Loosen and remove the bolts that connect the engine and the torque converter housing to disconnect the transmission and engine.



Fig. 7A–9 Bolts on engine & converter housing

18. Return the transmission to the level position. While slowly plying a screw driver or something between the converter and the drive plate, pull out the transmission rearward with the converter attached to it. Then lower the holder and dismount the transmission.

7A–F. DISASSEMBLY OF TRANSMISSION COMPLETE

Attention must be paid to the following matter in disassembling the transmission :
(1) Clean the outside of the transmission thoroughly before overhauling. In case of that, see that the steam does not enter the transmission and the gasoline is not used in using rubber parts.
(2) Disassembly should be made in a clean workshop, preferably in a dust-proof workshop.

7A–F–1. Disassembly Procedure

1. Remove the torque converter from the housing taking care not to have the converter oil spill.
Then tilt the transmission housing and drain the oil in the oil pan through the end of the extension housing into a vessel.
2. Loosen the bolt for the oil gauge tube and remove it together with the "O" ring.
3. Remove the connecting rod attached to the range select lever.
4. Loosen and remove the bolts that attach the converter housing and the transmission case, and remove the converter housing.

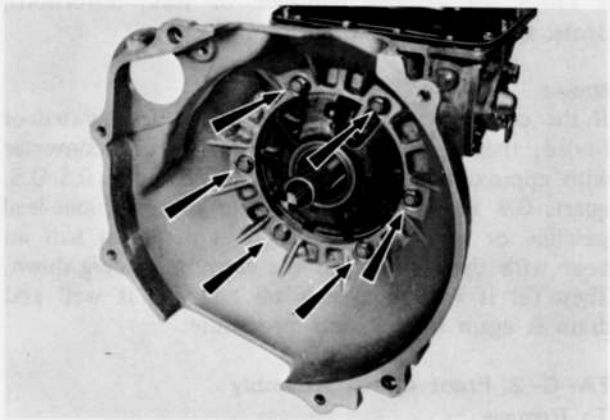

Fig. 7A–10 Bolts on converter housing

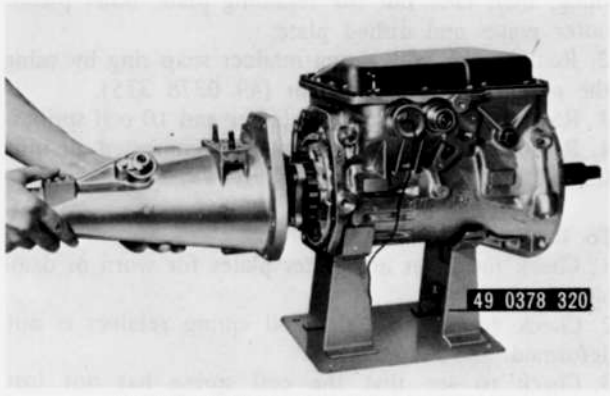

Fig. 7A–11 Removing extension housing

5. Loosen and remove the bolts that attach the extension housing and the transmission case, and pull out the extension housing rearward taking care so that the washer does not fall down. Then remove the parking pawl, spring and washer. Remove the gasket from the transmission case.
6. Loosen and remove out the oil pan bolts and take out the oil pan and the gasket.
7. Turn the downshift solenoid and the vacuum diaphragm unit by hand and remove them together with "O" rings. Take care not to forget taking out the vacuum diaphragm rod.

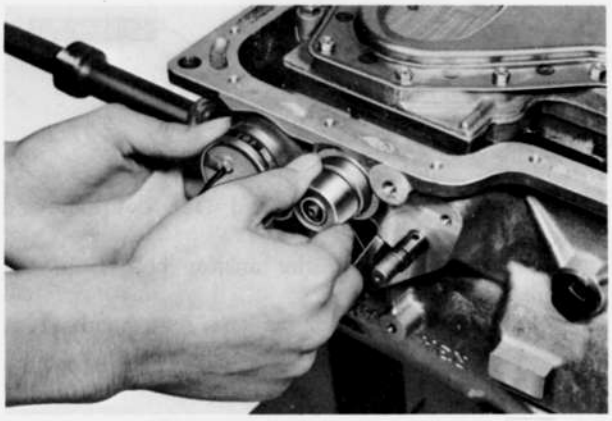

Fig. 7A–12 Removing downshift solenoid

8. Remove the control valve assembly by loosening out nine attaching bolts.

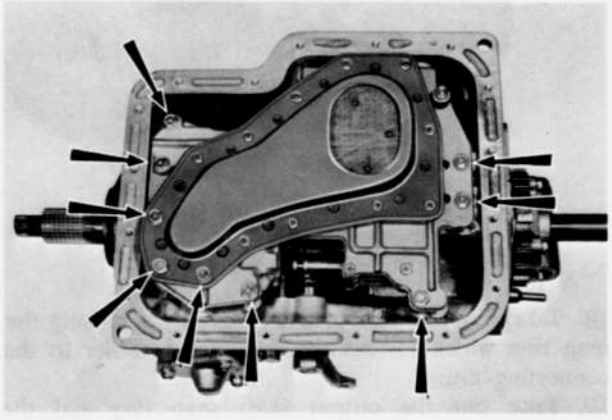

Fig. 7A–13 Control valve body assembly setting bolts

9. Remove the nut attaching the range select lever to the manual shaft and remove the select lever.
10. Disconnect the parking rod from the parking lever by removing snap ring.
Loosen the nut attaching the manual plate to the manual shaft and remove the manual shaft from the transmission case tapping the manual shaft with the plastic hammer. Then, take out the manual plate, washer, nut and parking rod.
11. Pull out the input shaft.
12. Remove the bolts that attach the band servo cover to the servo retainer and remove the servo cover.
13. Loosen lock nut on piston stem. Then tighten piston stem in order to prevent to fall front clutch drum down when oil pump is withdrawn.

14. Pull out the oil pump with the **oil pump remover** (49 0378 390) and remove the gasket.

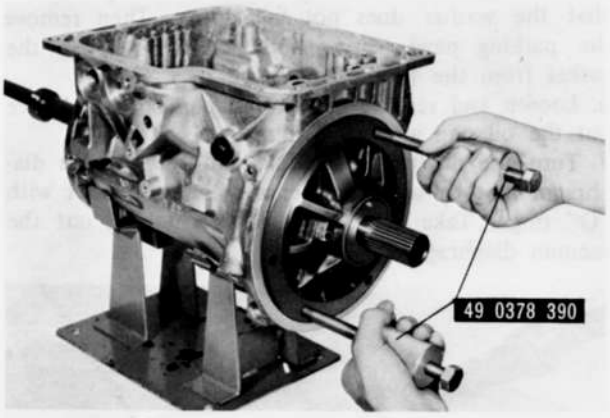

Fig. 7A–14 Removing oil pump

15. Loosen the piston stem and take out the band strut.
16. Loosen and remove the anchor bolt from the transmission case.
17. Remove the following as one set : band, front clutch assembly, rear clutch assembly, front planet carrier assembly with sun gear.

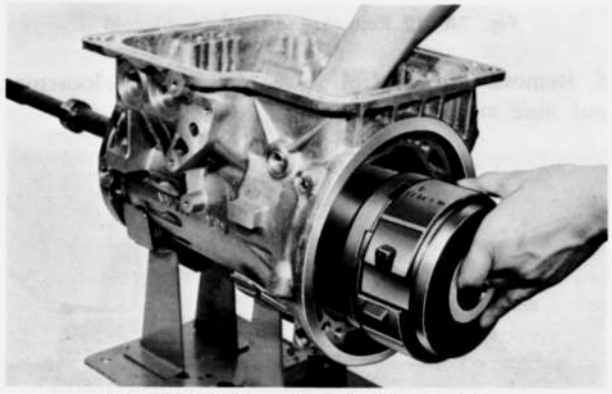

Fig. 7A–15 Removing clutch assembly

18. Take out the rear planet carrier by removing the snap ring which fastens the rear planet carrier to the connecting drum.
19. Take out the output shaft snap ring and the internal drive flange.

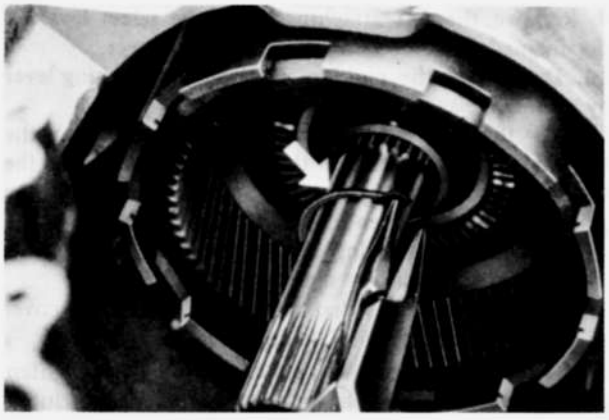

Fig. 7A–16 Removing snap ring

20. Turn left the connecting drum as far as it goes and make sure it is firmly locked. Then turn it right and remove together with the one-way clutch.
21. Remove the snap ring that secures the speedometer drive gear to the output shaft. Slide the drive gear off the output shaft, and remove the lock ball.
22. Pull out the output shaft rearward. Then remove the oil distributor together with governor and take out the needle bearing remaining on the transmission case side.

The above operations complete the disassembly of the principal transmission parts excepting the low-reverse brake which still remain on the transmission case. The low-reverse brake can of course be removed from the transmission case but the disassembling operations of it are described in the next section dealing with overhaul of principal components.

7A–G. OVERHAUL OF MAIN COMPONENTS

The principal components each include a large number of similar parts finished to high precision. So all related parts of each component should be placed apart from others to avoid confusion. Overhaul should be made in the following sequence. (Bearings and bearing races must be checked with respect to parts to which they are mounted.)

7A–G–1. Torque Converter

1. The torque converter is welded all along the circumference and so cannot be disassembled.

To Inspect

1. Check for external damages, oil leak, distortions, dents, etc., and replace if necessary.

Note :

If the converter oil is found markedly degenerated or fouled, thoroughly rinse the inside of the converter with approximately 0.5 liter (1.0 U.S. pints, 0.5 U.S. quart, 0.9 Imp. pint) of cleaning solvent (none-lead gasoline or kerosene) and make it drain for half an hour with the rear side of the converter facing down. Then fill it with converter oil and stir it well and drain it again in the same procedure.

7A–G–2. Front Clutch Assembly

To Remove

1. Remove the snap ring with a screw driver or something, then take out the retaining plate, inner plates, outer plates and dished plate.
2. Remove the coil spring retainer snap ring by using the **clutch spring compressor** (49 0378 375).
3. Remove the coil spring retainer and 10 coil springs.
4. Remove the piston by blowing compressed air into the oil hole as shown in Fig. 7A–19.

To Inspect

1. Check the inner and outer plates for worn or damaged facings.
2. Check to see that the coil spring retainer is not deformed.
3. Check to see that the coil spring has not lost tension.

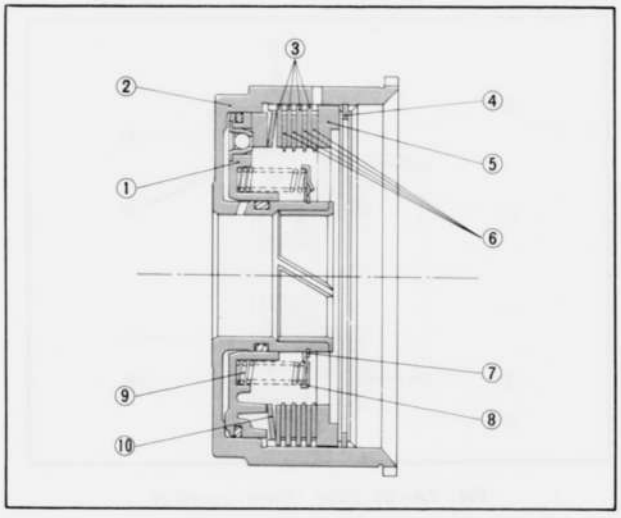

Fig. 7A–17 Front clutch assembly

1. Piston
2. Front clutch drum
3. Outer plate
4. Snap ring
5. Retaining plate
6. Inner plate
7. Snap ring
8. Spring retainer
9. Coil spring
10. Dished plate



Fig. 7A–18 Removing snap ring



Fig. 7A–19 Blowing out piston

4. Check to see that the seal around the piston and the "O" ring inside the clutch drum are not damaged.
5. If defective parts are found, replace them with new ones.

To Reassemble

1. All parts are smeared with converter oil and re-assembled in the reverse sequence of the disassembly.
2. Measure the clearance between the snap ring and retaining plate with a thickness gauge after reassembly and selectively use a retaining plate to provide the standard clearance **1.6 ~ 1.8 mm (0.062 ~ 0.071 in)**.



Fig. 7A–20 Measuring clearance

Note :

To adjust above clearance, the retaining plate comes in the following six thicknesses.

7.2 mm (0.283 in), 7.4 mm (0.291 in)
7.6 mm (0.299 in), 7.8 mm (0.307 in)
8.0 mm (0.315 in), 8.2 mm (0.323 in)

3. Install the front clutch assembly to the oil pump. Blow compressed air into the oil hole as shown in Fig. 7A–21 and check the clutch operation.

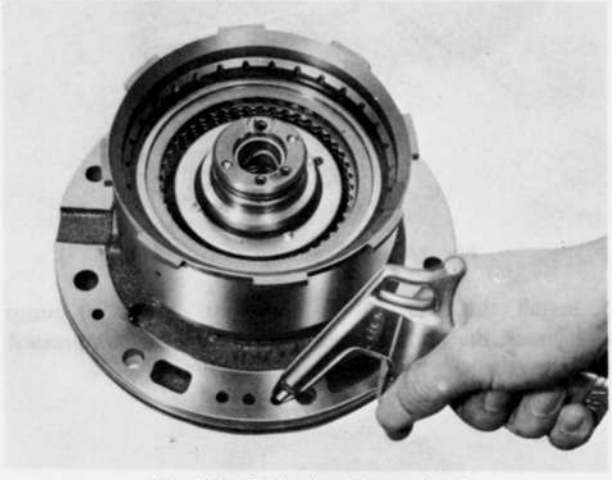

Fi.g 7A–21 Testing front clutch

7A–G–3. Rear Clutch Assembly

To Remove

1. Remove the snap ring, retaining plate, outer plates, inner plates and dished plate in the same procedure as for the front clutch assembly.
2. Remove the coil spring retainer snap ring by the use of the **clutch spring compressor** (49 0378 375). Then remove the coil spring retainer and 10 coil springs.
3. Remove the piston by blowing compressed air into the oil hole.

To Inspect

1. Make the same inspection as for the front clutch

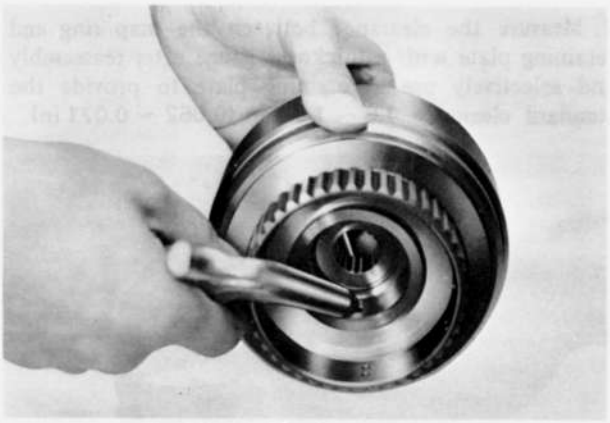

Fig. 7A–22 Blowing out piston

assembly and replace any defective parts with new ones.

To Reassemble

1. All parts are reassembled with converter oil smeared in the reverse sequence of the disassembly, as in the case of the front clutch.
2. After reassembly, check to see that the clearance between the snap ring and retaining plate is within the standard range of **0.8 ~ 1.5 mm (0.032 ~ 0.059 in)**.

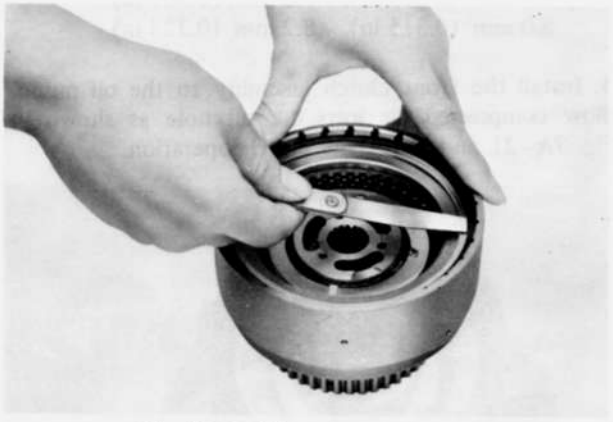

Fig. 7A–23 Measuring clearance

3. Install the rear clutch assembly to the oil pump and check the clutch operation by blowing compressed air into the oil hole as shown in Fig. 7A–24.

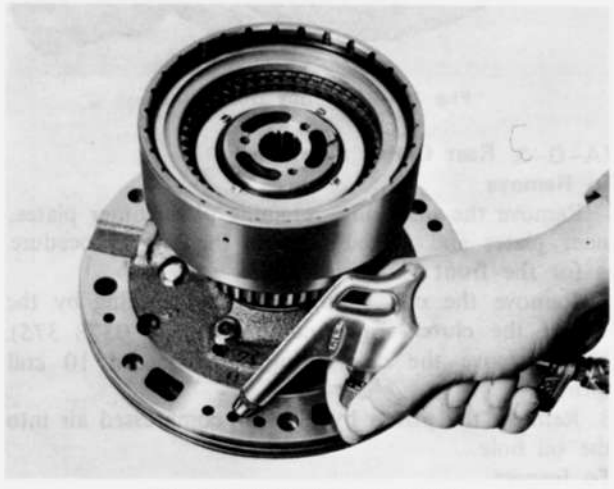

Fig. 7A–24 Testing rear clutch

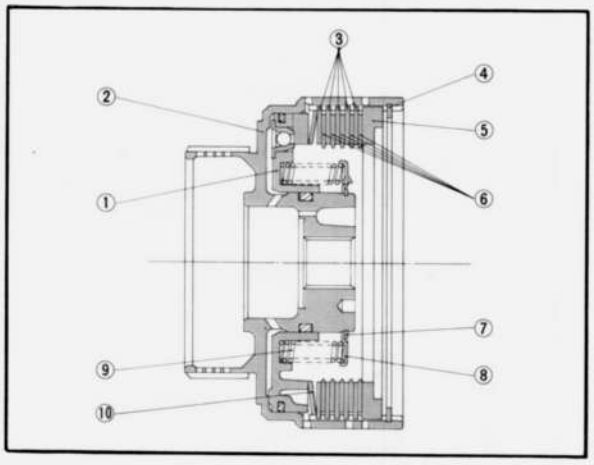

Fig. 7A–25 Rear cltuch assembly

1. Piston
2. Rear clutch drum
3. Outer plate
4. Snap ring
5. Retaining plate
6. Inner plate
7. Snap ring
8. Spring retainer
9. Coil spring
10. Dished plate

7A–G–4. Low and Reverse Brake Assembly

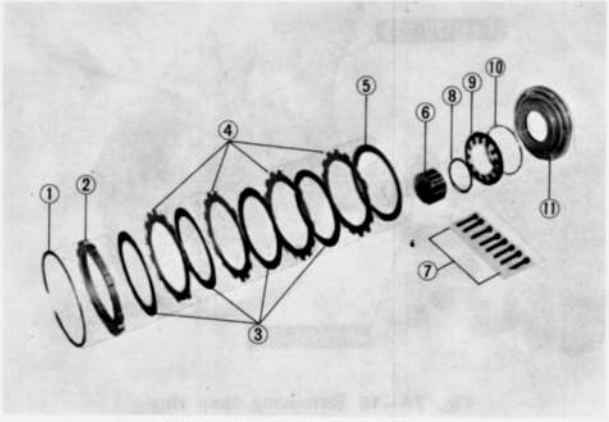

Fig. 7A–26 Low & reverse brake

1. Snap ring
2. Retaining plate
3. Friction plate
4. Steel plate
5. Dished plate
6. Inner race
7. Bolt
8. Snap ring
9. Piston return spring
10. Spring ring
11. Piston

To Remove

1. Remove the snap ring of the low and reverse brake. Remove the retaining plate, friction plates, steel plates and dished plate.
2. The inner race of the one-way clutch is tightened with 8 bolts from the rear of the case. Loosen and remove all the bolts using the **hex-head extension** (49 0378 346), then remove the inner race, snap ring, piston return spring and ring.
3. Remove the piston by blowing compressed air into the low and reverse brake oil hole located at the rear of the transmission case.

To Inspect

1. Check the friction and steel plates for worn or damaged facing.

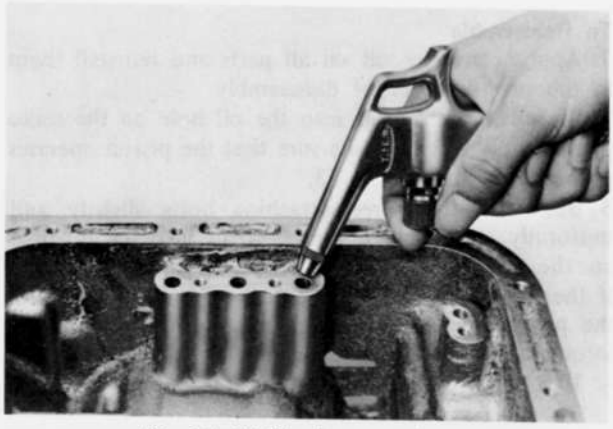

Fig. 7A–27 Blowing out piston

2. Check to see that the piston return spring has not lost tension.
3. Check to see that there is no deformation on the snap ring (stopper) for piston return spring, attached on the one-way clutch inner race.
4. Check to see that the seal rubber on the inside and outside of the piston are not damaged.
5. If any defective part is found, replace with new one.

To Reassemble

1. Lubricate the piston with converter oil and install it into the transmission case.
2. Install the return spring support ring, return spring, snap ring and one-way clutch inner race on the piston in this order. Then tighten the inner race, from rear of the case, with eight bolts by using the **hex-head extension** (49 0378 346) to a specified torque of **1.3 ~ 1.8 m-kg (10 ~ 13 ft-lb)**.

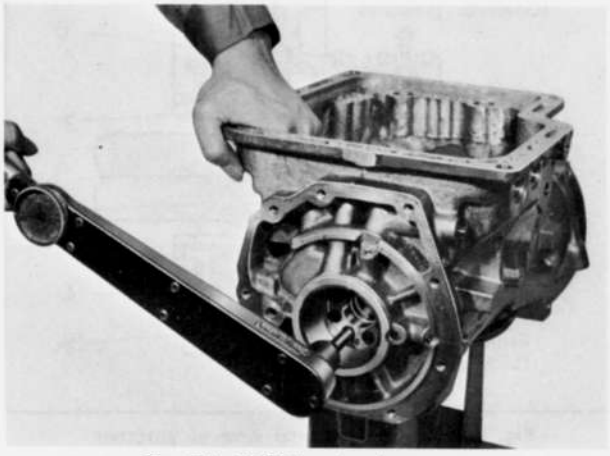

Fig. 7A–28 Tightening inner race

3. Reassemble the dished plate, steel plates, friction plates and retaining plate in the reverse order, smearing each with converter oil. Then fit the snap ring.
4. After reassembly, measure the clearance between the snap ring and retaining plate and select the retaining plate to provide a standard clearance of **0.8 ~ 1.05 mm (0.032 ~ 0.042 in)**.

Note :
To adjust above clearance the retaining plate is available in the following six thicknesses.

11.8 mm (0.466 in), 12.0 mm (0.472 in),
12.2 mm (0.480 in), 12.4 mm (0.488 in),
12.6 mm (0.496 in), 12.8 mm (0.504 in)

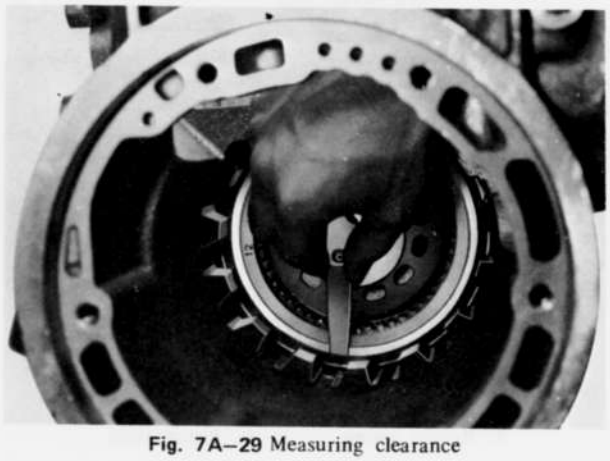

Fig. 7A–29 Measuring clearance

5. Check the operation of the low and reverse brake by blowing air into the oil hole as shown in Fig. 7A–27.

7A–G–5. Band Servo

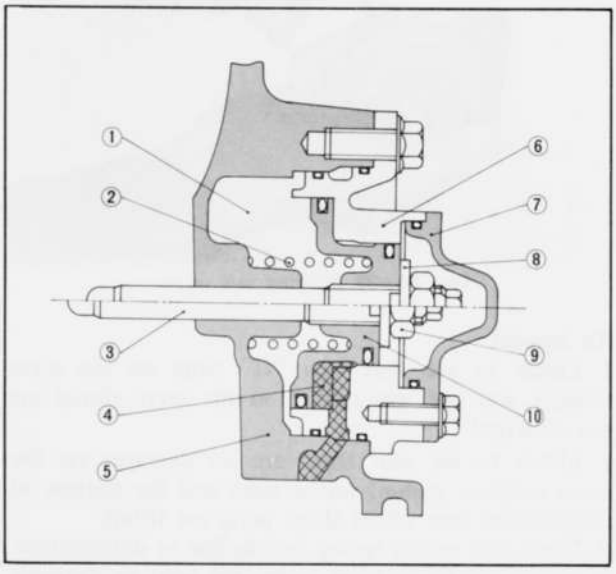

Fig. 7A–30 Cross-sectional of servo

1. Release pressure	6. Retainer
2. Return spring	7. Cover
3. Piston stem	8. Washer
4. Apply pressure	9. Adjust nut
5. Transmission case	10. Piston

To Remove

1. Loosen and remove three bolts that attach the band servo retainer to the transmission case, and remove the band servo retainer together with the servo piston. Take out the return spring. If the servo retainer is difficult to disconnect from the case, it can be readily removed by blowing air into the oil hole on the piston release side.
2. Blow compressed air into the oil hole on the apply side of the servo piston to remove the piston from the retainer.

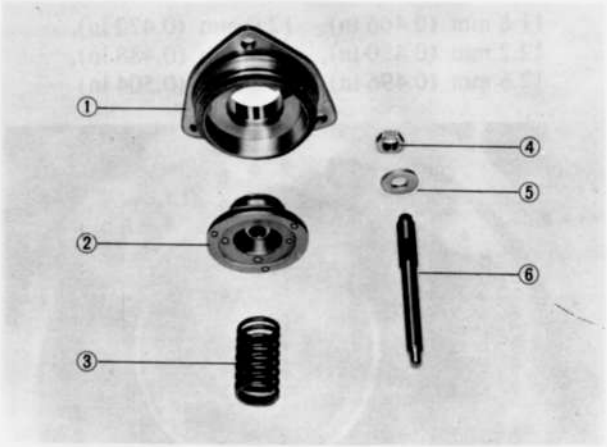

Fig. 7A–31 Band servo

1. Retainer
2. Piston
3. Return spring
4. Adjust nut
5. Washer
6. Piston stem



Fig. 7A–32 Blowing out piston

To Inspect

1. Check to see that two "O" rings on the servo retainer and the seal rubber on the servo piston are not damaged.
2. Check to see that there are no damages on the servo retainer, piston, piston stem and the portion of transmission case where those parts are fitted.
3. Check the return spring for decline or deformation.
4. Check the brake band lining for wear or damages.

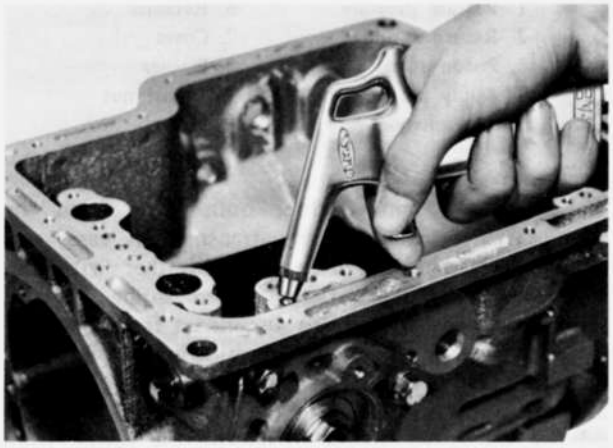

Fig. 7A–33 Checking band servo (1)

To Reassemble

1. Apply converter oil on all parts and reinstall them in the reverse order of disassembly.
2. Blow compressed air into the oil hole on the servo piston apply side to make sure that the piston operates properly, as in Fig. 7A–33.
3. Back off the three attaching bolts slightly and uniformly, and apply compressed air into the oil hole on the servo piston release side, as in Fig. 7A–34. If the retainer rises by the extent of bolt backing off, the piston operation on release is normal. Tightening torque of the servo retainer is **1.0 ~ 1.5 m-kg (7.3 ~ 10.8 ft-lb)**.

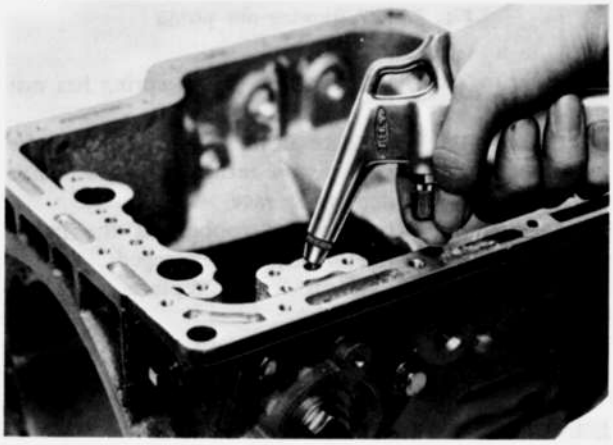

Fig. 7A–34 Checking band servo (2)

7A–G–6. Governor Valve Assembly

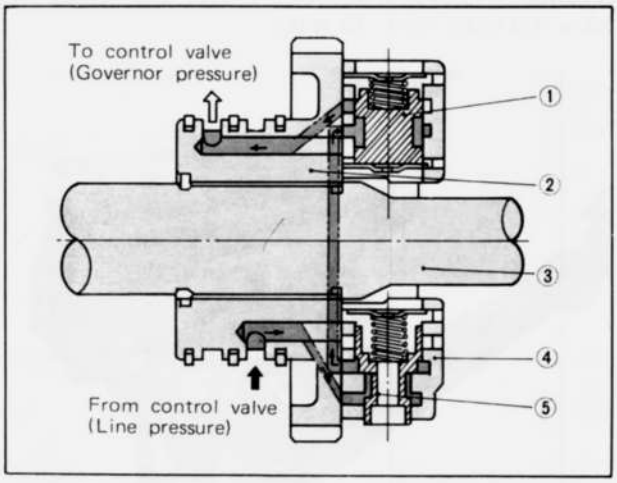

Fig. 7A–35 Cross-sectional view of governor

1. Primary valve
2. Oil distributor
3. Output shaft
4. Governor valve body
5. Secondary valve

To Remove

1. Loosen and remove four bolts that attach the governor. Remove the governor from the oil distributor.
2. Remove the secondary governor retainer plate. Then remove the spring and secondary governor valve from the body.
3. Remove the primary governor valve in the same procedure as for the secondary, if primary governor is to be disassembled for any purpose.

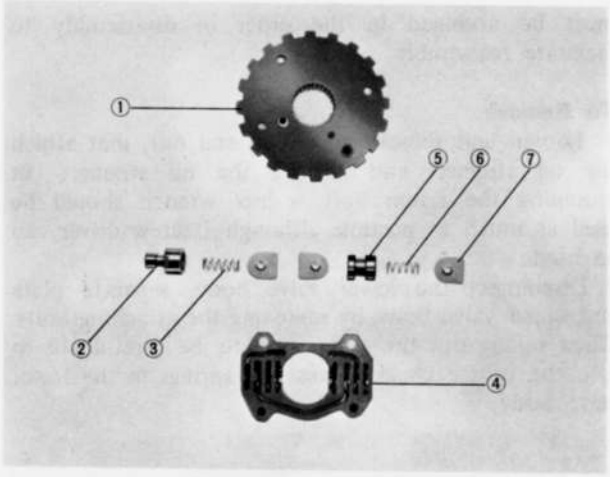

Fig. 7A–36 Governor valve

1. Oil distributor
2. Secondary valve
3. Spring
4. Valve body
5. Primary valve
6. Spring
7. Retainer plate

To Inspect

1. Check the valve and the body to see that there is nothing that may cause valve sticking or catching.
2. Check to see that the spring has not lost tension and the retainer plates are not deformed.
3. Check the side clearance between the sealing and gloove as shown in Fig. 7A–37. The standard clearance is **0.04 ~ 0.16 mm (0.002 ~ 0.006 in)**. When disassembling the seal ring, squeeze it up so that its joint will rise above the groove, and disconnect the joint.

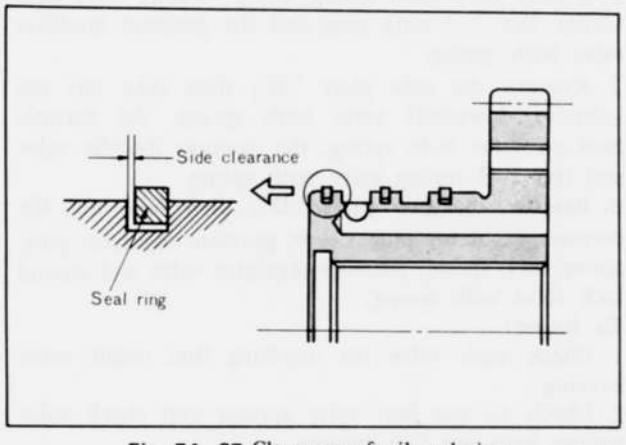

Fig. 7A–37 Clearance of oil seal ring

To Reassemble

1. Lubricate all parts with converter oil and reinstall them in the reverse order of disassembly so as not to confuse primary with secondary. After reassembly, make sure that the governor spring is straight and there is no catch in the governor valve movement.
2. Tighten the governor to the oil distributor with four bolts to a standard torque of **0.50 ~ 0.70 m-kg (3.6 ~ 5.1 ft-lb)**.
3. To determine if secondary governor is in good condition, blow air under light pressure into line pressure hole in Fig. 7A–35 to listen for noise like a model plane.

7A–G–7. Oil Pump Assembly

To Remove

1. Disconnect the pump cover from the pump housing by loosening five bolts that attach them.
2. Take out the inner gear and the outer gear from the pump housing. At the same time, put a sign indicating the installing side with quick-dry ink or something and not with a punch, to avoid erroneous assembly.

To Inspect

1. Check to see that tooth faces of the inner and outer gears are not damaged or worn.
2. Check the side play of the inner (or outer) gear by using a straight edge and thickness gauge as in Fig. 7A–38. The standard value is **0.02 ~ 0.04 mm (0.001 ~ 0.002 in)**. If the clearance exceeds **0.08 mm (0.003 in)**, replace the gears with those selected from the three kinds. Make sure that the inner and outer gears are replaced as a set.



Fig. 7A–38 Measuring clearance (1)

3. Check the clearance between the outer gear teeth and crescent. The standard value is **0.14 ~ 0.21 mm (0.006 ~ 0.008 in)**. If the clearance exceeds **0.25 mm (0.010 in)**, replace the gears.



Fig. 7A–39 Measuring clearance (2)

4. Check the clearance between the outer gear and the housing. The standard value is **0.05 ~ 0.20 mm (0.002 ~ 0.008 in)**. If the clearance exceeds **0.25 mm (0.010 in)**, replace the gears as a set.



Fig. 7A–40 Measuring clearance (3)

5. Check to see that the seal rubber attached on the pump housing periphery is not damaged.
6. Check to see that the oil seal lip is not damaged and the spring has not lost tension.
7. Check to see that the seal rings of oil feed grooves for the front and rear clutches are not damaged or lost tension. Measure the side clearance of the seal ring. The standard value is **0.04 ~ 0.16 mm (0.002 ~ 0.006 in)**. When replacing seal ring refer to Par. 7A–G–6.
8. Check to see that the pump housing and the cover are not damaged.
9. If any defective part is found, replace with new one.

To Reassemble

1. Fix the pump housing to the **oil pump assembling gauge** (49 2113 025A) and fit the inner gear and outer gear in the pump housing as were installed in original.
Then fit the pump cover and tighten it temporarily with five bolts.
2. Set the runout of pump cover within 0.07 mm (0.0028 in) total indicator reading by tapping the cover with a plastic hammer.

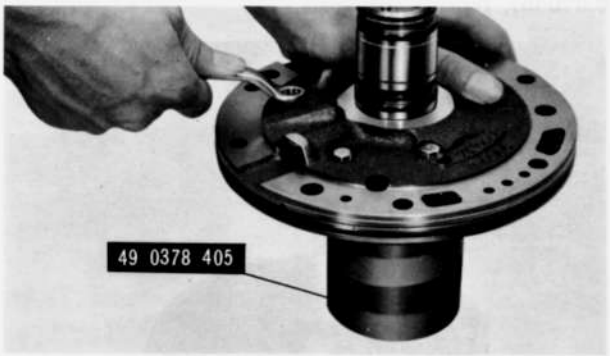

Fig. 7A–41 Assembling oil pump

3. Tighten the bolts finally with specified torque of **0.6 ~ 0.8 m-kg (4.3 ~ 5.8 ft-lb).**

7A–G–8. Control Valve Assembly

The control valves are composed of the most accurate of the automatic transmission parts and so particular care must be paid in disassembly and reassembly. Also, since a number of similar parts are used, they must be arranged in the order of disassembly to facilitate reassembly.

To Remove

1. Loosen and remove the bolts and nut, that attach the oil strainer, and remove the oil strainer. In loosening the 8 mm bolt, a box wrench should be used as much as possible although a screw driver can be used.
2. Disconnect the lower valve body, separate plate and upper valve body by removing the attaching bolts. When taking out the separate plate, be careful not to lose the orifice check valves and springs in the lower valve body.

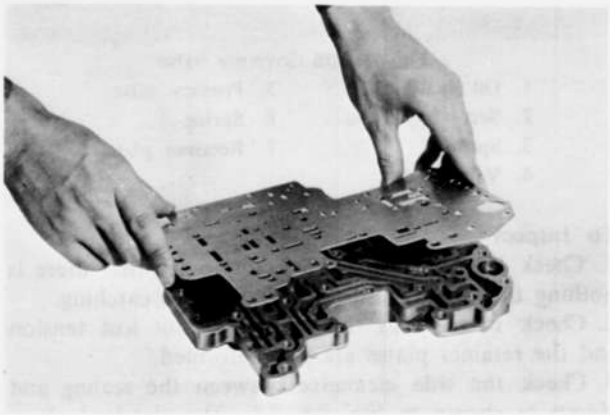

Fig. 7A–42 Removing separate plate

3. Take out the manual valve.
4. Remove the side plate "A", then take out the 1–2 shift valve with spring, the 2–3 shift valve with spring, the 2–3 shift plug and the pressure modifier valve with spring.
5. Remove the side plate "B", then take out the solenoid downshift valve with spring, the throttle back-up valve with spring, the vacuum throttle valve and the 2–3 timing valve with spring.
6. Remove the side plate "D", then take out the pressure regulator plug sleeve, pressure regulator plug, spring seat, spring, pressure regulator valve and second lock valve with spring.

To Inspect

1. Check each valve for anything that might cause sticking.
2. Check to see that valve springs and check valve springs have not lost tension.
3. Check to see that the oil strainer is not damaged.
4. Check for possible abnormal oil passage developing on the separate plate.
5. Check for possible damages or other abnormalities in the oil passages of valve body.
6. If any defective part is found, replace with new one.

To Reassemble

1. Reassemble in the reverse order to disassembly paying special attention to the following points :
a. Install small valves and springs by referring to the components parts of control valve Fig. 7A–43.
b. Lubricate all valves and springs with converter oil before installing.

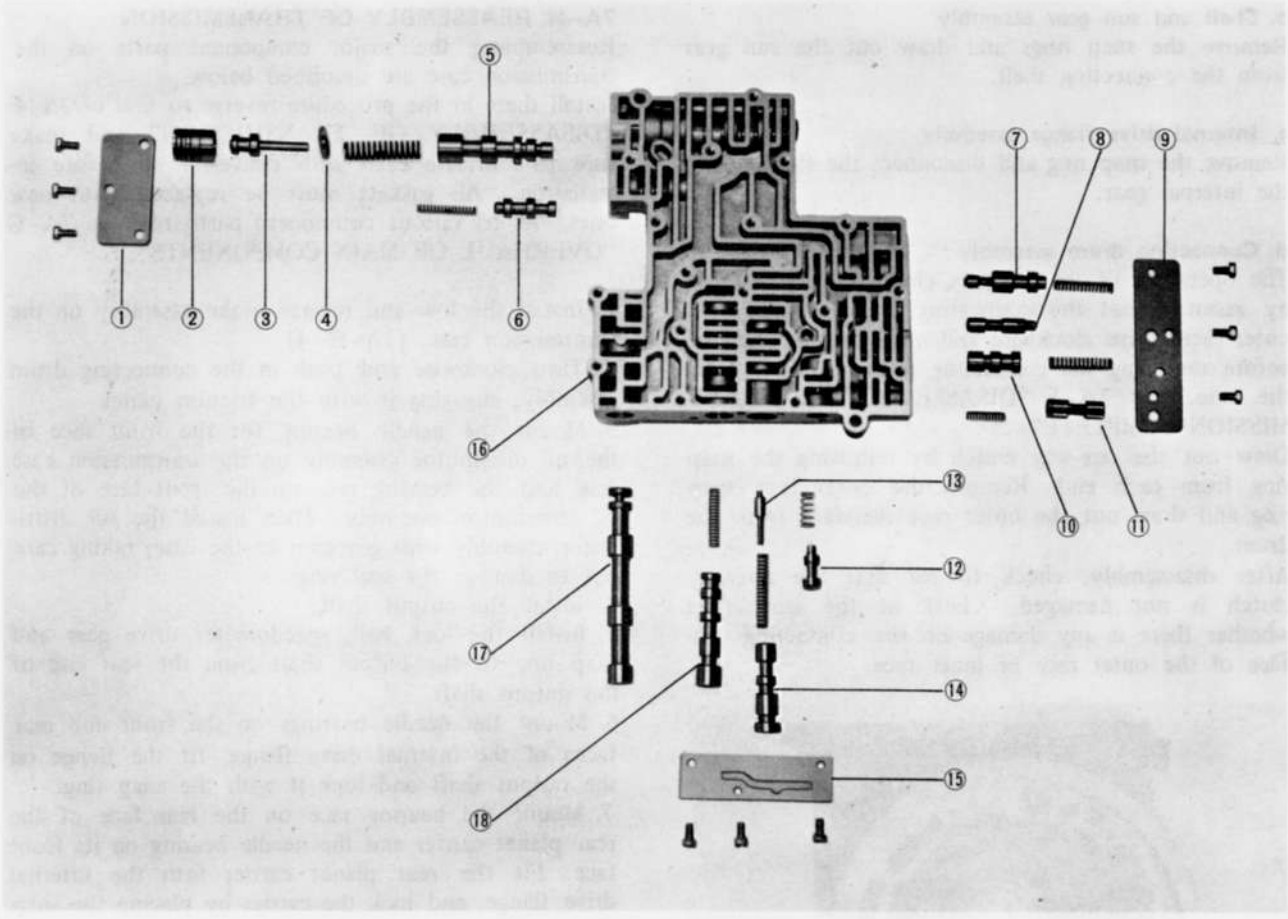

Fig. 7A–43 Component parts of control valve

1. Side plate "D"
2. Plug sleeve
3. Regulator pressure plug
4. Spring seat
5. Regulator pressure valve
6. Second lock valve
7. 2–3 timing valve
8. Vacuum throttle valve
9. Side plate "B"
10. Throttle back-up valve
11. Down-shift valve
12. Modifier valve
13. 2–3 shift plug
14. 2–3 shift valve
15. Side plate "A"
16. Upper valve body
17. Manual valve
18. 1–2 shift valve

c. If there is any valve that is difficult to insert, do not force it in but give it a light, straight push.
d. Make sure that the followings are strictly tightened to **0.25 ~ 0.35 m-kg (1.8 ~ 2.5 ft-lb)**.
Side plate to valve body
Lower valve body to upper valve body
Oil strainer to lower valve body

7A–G–9. Bearing and Bearing Race

Check each bearing and bearing race after cleaning carefully. Also check to see that the mating parts of each bearing and bearing race are not damaged. If any defective part is found, replace it.

7A–G–10. Other Component Parts

Check to see by sight that the following parts are not damaged. Disassembly, if indicated, should be made in the procedure below.

a. Front planet carrier assembly, rear planet carrier assembly, input shaft and output shaft

The planetary carrier cannot be divided into its individual components.
If any part or component is defective, replace the carrier as a unit.
Check the clearance between pinion washer and planetary carrier with a feeler.
The standard clearance is **0.20 ~ 0.70 mm (0.008 ~ 0.027 in)**.

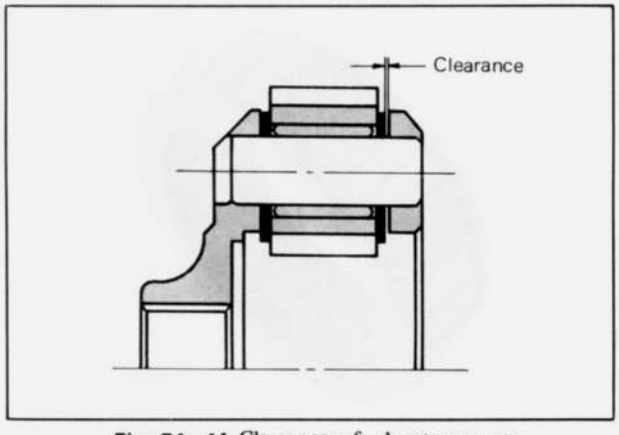

Fig. 7A–44 Clearance of planetary gear

If the clearance exceeds **0.80 mm (0.032 in)**, replace with new one.

b. Shell and sun gear assembly
Remove the snap rings and draw out the sun gear from the connecting shell.

c. Internal drive flange assembly
Remove the snap ring and disconnect the flange from the internal gear.

d. Connecting drum assembly
The operation of the one-way clutch can be checked by assuring that the connecting drum assembly (or outer race) turns clockwise and not counter-clockwise, before removing the connecting drum assembly from the case. See 7A–F "DISASSEMBLY OF TRANSMISSION COMPLETE"–20.
Draw out the one-way clutch by removing the snap ring from each end. Remove the outer race snap ring and draw out the outer race rearward from the drum.
After disassembly, check to see that the one-way clutch is not damaged. Check at the same time whether there is any damage on the contacting surface of the outer race or inner race.

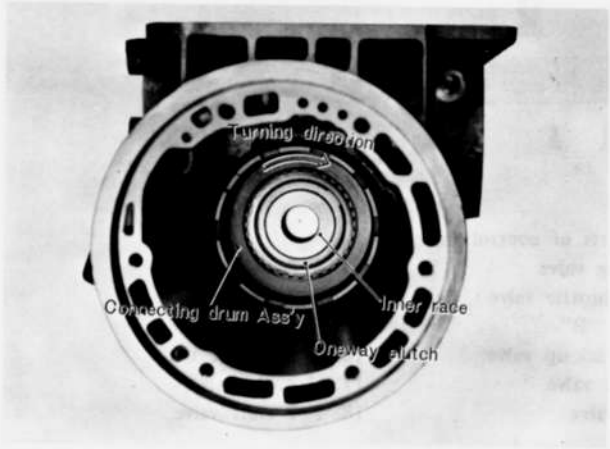

Fig. 7A–45 One-way clutch

When installing the one-way clutch, make sure that it is fitted with the arrow mark "→" on the front of vehicle.



Fig. 7A–46 Mark on the one-way clutch

e. Manual control system and parking lock system
Removal and disassembly of these parts are omitted.

7A–H. REASSEMBLY OF TRANSMISSION

Reassembling the major component parts on the transmission case are described below.
Install them in the procedure reverse to that of 7A–F "DISASSEMBLY OF TRANSMISSION" and make sure to lubricate each with converter oil before installation. All gaskets must be replaced with new ones. As to various component parts, refer to 7A–G "OVERHAUL OF MAIN COMPONENTS".

1. Install the low and reverse brake assembly on the transmission case. (7A–G–4)
2. Turn clockwise and push in the connecting drum assembly, engaging it with the friction plates.
3. Mount the needle bearing for the front face of the oil distributor assembly on the transmission case side and the bearing race on the front face of the oil distributor assembly. Then install the oil distributor assembly with governor to the case, taking care not to damage the seal rings.
4. Install the output shaft.
5. Install the lock ball, speedometer drive gear and snap ring to the output shaft from the rear end of the output shaft.
6. Mount the needle bearings on the front and rear faces of the internal drive flange, fit the flange on the output shaft and lock it with the snap ring.
7. Mount the bearing race on the rear face of the rear planet carrier and the needle bearing on its front face. Fit the rear planet carrier into the internal drive flange, and lock the carrier by placing the snap ring on the connecting drum.
8. Install the band servo on the case. (7A–G–5)
9. Mount the needle bearing on the rear face of the rear clutch hub and the bearing race on the front face of the front planet carrier. Assemble the rear clutch hub and the planet carrier, and install its assembly on the sun gear and connecting shell.
10. Put the above assembly with the rear clutch hub side facing upward. Mount the needle bearing on the front face of the rear clutch hub and the bearing race on the rear face of the rear clutch assembly, and install the rear clutch assembly downward on the rear clutch hub. In doing so, turn it a little so that the teeth of the clutch plates may come into engagement with the clutch hub spline.
11. Install the front clutch assembly into the rear one as in the case of the rear clutch assembly.
12. Install the assembly including the connecting shell, front clutch, rear clutch and front planet carrier into the transmission case.
13. Install the brake band on the front clutch drum.
14. Install the anchor blot to the transmission case and tighten it to **5.6 ~ 8.2 m-kg (41 ~ 59 ft-lb)**.
15. Install the band strut between the piston stem and the brake band.
16. Set the front clutch thrust washer, which adjusts the end play of the front clutch drum, on the rear face of the oil pump cover assembly, and also set the bearing race, which adjusts the total end play, on the rear end of the oil pump cover. Apply some amount of vaseline to prevent bearing race falling.
Install the oil pump assembly with gasket to the



Fig. 7A–47 Assembling clutches

transmission case. Then install and tighten the converter housing onto the transmission case with six bolts to **4.5 ~ 5.5 m-kg (33 ~ 39 ft-lb)**. Insert the input shaft.

Note :
Above two end plays should be checked after the oil pump is properly installed and adjusted following 17 and 18.

17. Push the front clutch drum back and forth and insert a thickness gauge in the clearance between the front clutch drum and connecting shell in order to measure the end play between the rear face of the oil pump cover and the front face of the front clutch drum. Select a thrust washer from the following seven washers to adjust the clearance to specified **0.5 ~ 0.8 mm (0.020 ~ 0.032 in)**.

1.50 mm (0.059 in),	1.70 mm (0.067 in),
1.90 mm (0.075 in),	2.10 mm (0.083 in),
2.30 mm (0.091 in),	2.50 mm (0.098 in),
2.70 mm (0.106 in)	

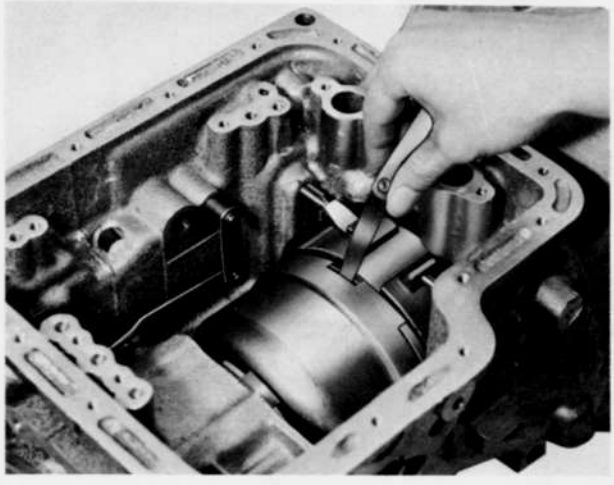

Fig. 7A–48 Checking end play

18. In measuring the total end play, apply the dial gauge on the tip of the input shaft and move the connecting shell fore and aft, and read the needle vibration. The standard clearance is **0.25 ~ 0.50 mm (0.010 ~ 0.020 in)**. Adjust end play by selecting a proper race in the followings.

1.20 mm (0.047 in),	1.40 mm (0.055 in),
1.60 mm (0.063 in),	1.80 mm (0.071 in),
2.00 mm (0.079 in),	2.20 mm (0.087 in)

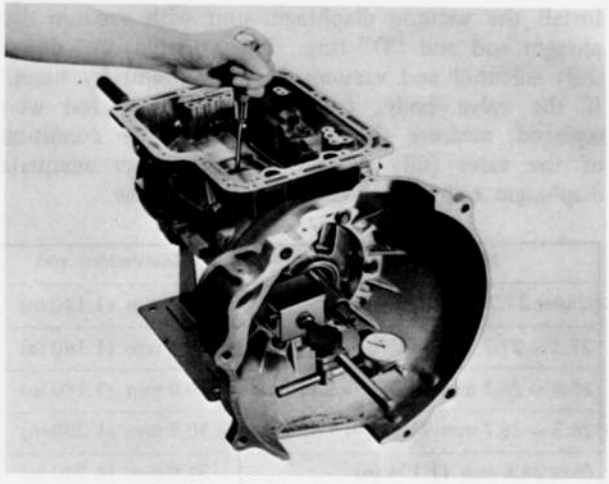

Fig. 7A–49 Checking end play

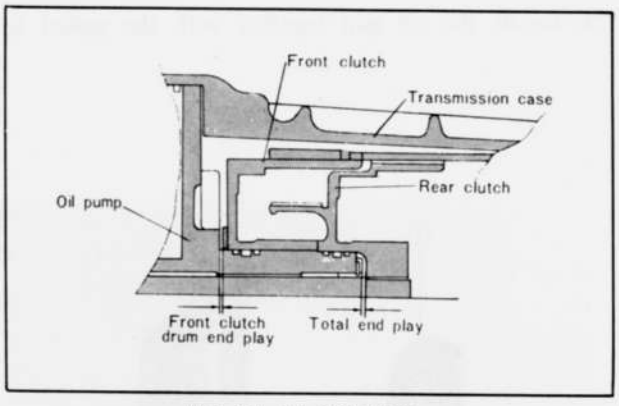

Fig. 7A–50 End plays

19. Tighten the stem of the servo piston to a torque of **1.2 ~ 1.5 m-kg (8.6 ~ 11.0 ft-lb)**. Then loosen it by two turns and lock with the lock nut to a tightening torque of **1.5 ~ 4.0 m-kg (11 ~ 29 ft-lb)**.
Install and tighten the band servo cover to the retainer.

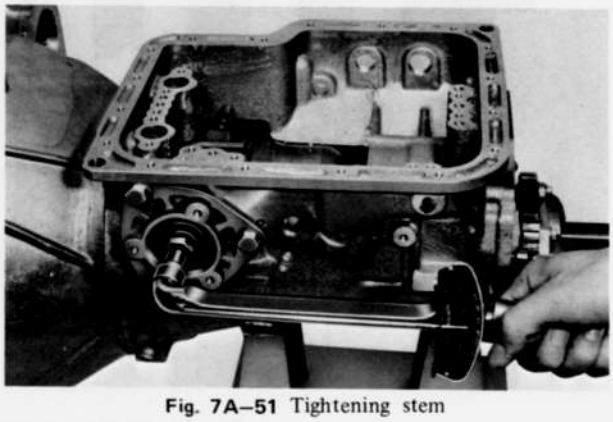

Fig. 7A–51 Tightening stem

20. Push in the manual shaft into the case with manual plate, washer and nut and tighten the nut. Then mount the parking lever and parking rod.
21. Install the range select lever to the manual shaft with the washer and nut then tighten the nut.

22. Install the control valve assembly onto the transmission case with nine bolts to a specified tightening torque of **0.55 ~ 0.75 m-kg (4.0 ~ 5.4 ft-lb)**.
23. Install the downshift solenoid with "O" ring. Install the vacuum diaphragm unit with vacuum diaphragm rod and "O" ring. Then tighten the downshift solenoid and vacuum diaphragm unit by hand. If the valve body, transmission case or rod were replaced, measure the distance "L" in the condition of the valve fully compressed and select adequate diaphragm rod according to the table below.

Measurement "L"	Diaphragm rod
Under 27.2 mm (1.071 in)	29.0 mm (1.140 in)
27.3 ~ 27.7 mm (1.075 ~ 1.091 in)	29.5 mm (1.160 in)
27.8 ~ 28.2 mm (1.095 ~ 1.110 in)	30.0 mm (1.180 in)
28.3 ~ 28.7 mm (1.114 ~ 1.130 in)	30.5 mm (1.200 in)
Over 28.8 mm (1.134 in)	31.0 mm (1.220 in)

24. Install the oil pan together with the gasket to a tightening torque of **0.50 ~ 0.70 m-kg (3.6 ~ 5.0 ft-lb)**.
25. Install the spacer, return spring and parking pawl on the shaft. Fit the rear end of the parking rod between the two steel balls in the supporter, then install the extension housing onto the case. Tighten the bolts to a specified torque of **2.0 ~ 2.5 m-kg (15 ~ 18 ft-lb)**.

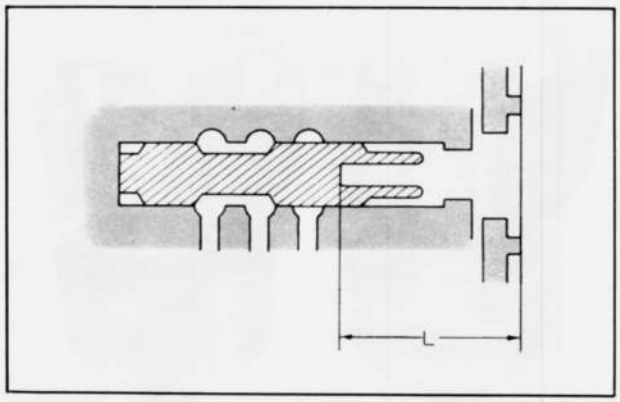

Fig. 7A–52 Vacuum throttle valve

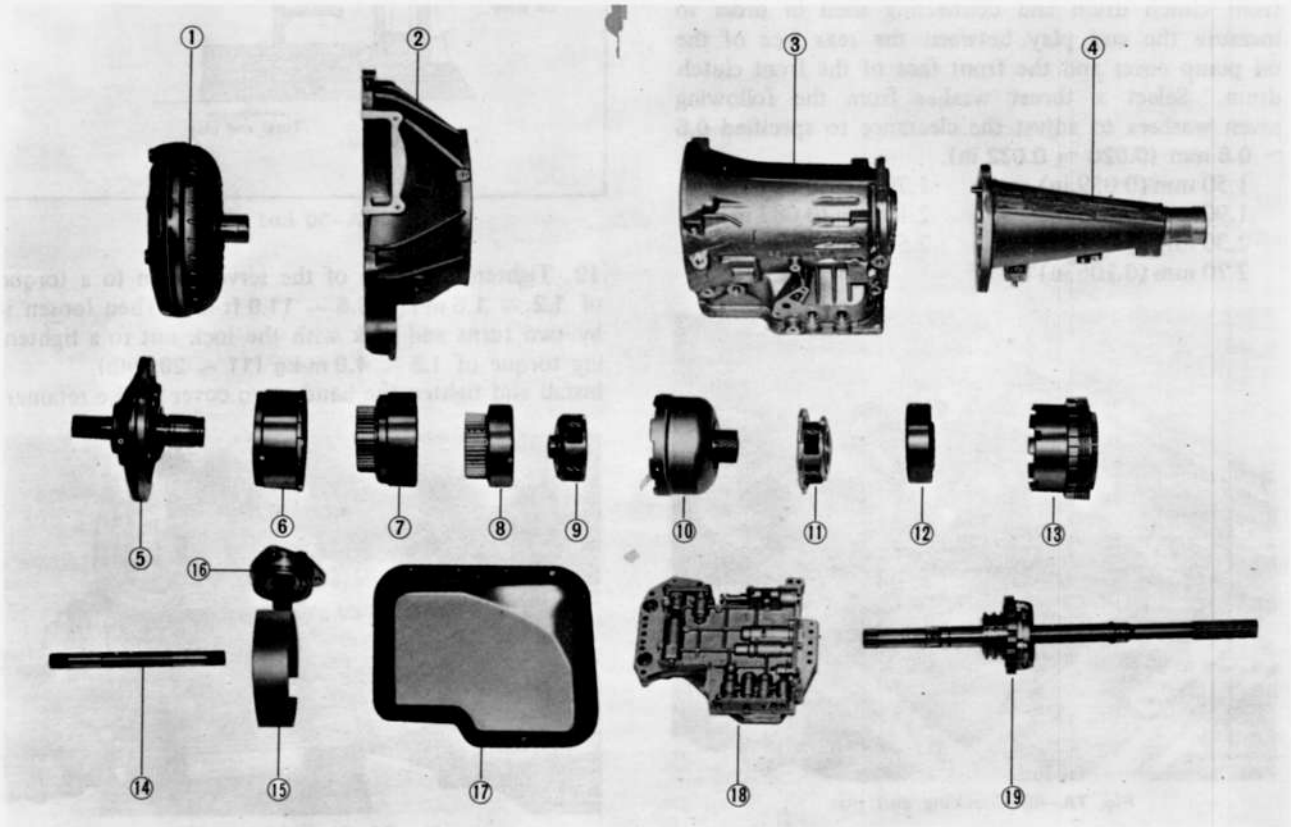

Fig. 7A–53 Main components of transmission

1. Torque converter
2. Converter housing
3. Case
4. Extension housing
5. Oil pump assembly
6. Front clutch assembly
7. Rear clutch assembly
8. Rear clutch hub assembly
9. Front planet carrier assembly
10. Shell & sun gear assembly
11. Rear planet carrier assembly
12. Drive flange assembly
13. Low & reverse brake assembly
14. Input shaft
15. Brake band
16. Servo piston assembly
17. Oil pan
18. Control valve assembly
19. Governor valve assembly and output shaft

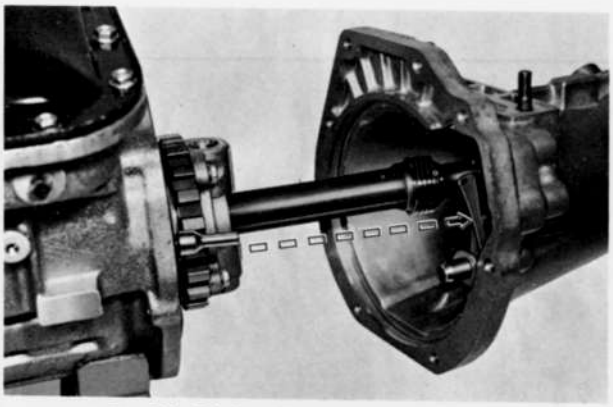

Fig. 7A–54 Installing extension housing

7A–I. INSTALLATION AND ADJUSTMENT OF TRANSMISSION

1. Before installing the transmission, measure the runout of the torque converter drive plate with a dial gauge. The runout must be within **0.3 mm (0.012 in)**. In case the runout exceeds **0.5 mm (0.020 in)**, replace the drive plate.

2. When combining the converter with oil pump, check whether they are rightly combined with each other by measuring the distance shown in Fig. 7A–55. The distance is approximately **19.5 mm (0.78 in)**. If there is great difference in the measurement, the converter should be rightly combined again.

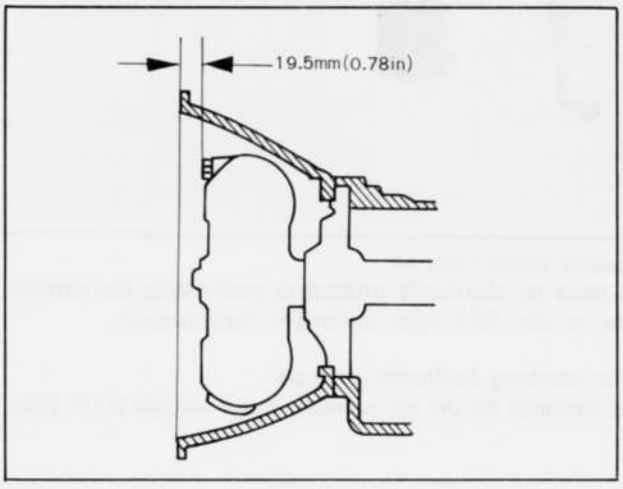

Fig. 7A–55 Checking torque converter fit

3. Installation procedure for the transmission is reverse to the removing procedure, referring to "REMOVAL OF TRANSMISSION" in 7A–E. In tightening the torque converter and the drive plate, temporarily tighten four bolts first, then lock the drive plate by applying the wrench to the drive pulley lock bolt. And tighten the four bolts to a specified torque of **3.7 ~ 5.5 m-kg (27 ~ 40 ft-lb)**. In case of confirming the tightening torque accurately, it is recommendable to proceed as follows:

Install a torque wrench to the hole in the center of the **special wrench** (49 0877 435), and tighten the bolt until the reading on the torque wrench comes to the value to be obtained by the undermentioned formula.

"L" indicates the effective length of the torque wrench. In the case of the torque wrench expressed in the m-kg unit, measure the "L" in terms of cm, and substitute the value (for example, 30 in case of 30 cm) into formula (1). In the case of the ft-lb torque wrench, on the other hand, measure the "L" in the inch unit, and substitute the value into formula (2). The prescribed tightening torque will thus be obtained.

$$\frac{5L}{10+L} \text{ . m-kg} \quad \text{.....(1)}$$

$$\frac{35L}{4+L} \text{ . ft-lb} \quad \text{..... (2)}$$

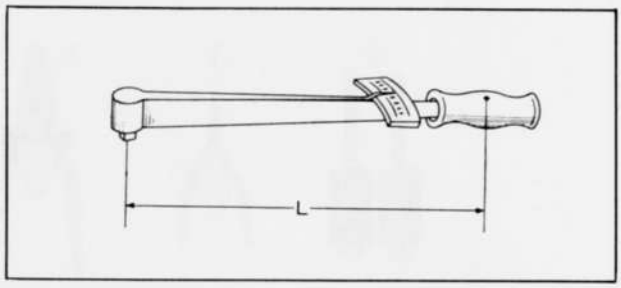

Fig. 7A–56 "L" length of torque wrench

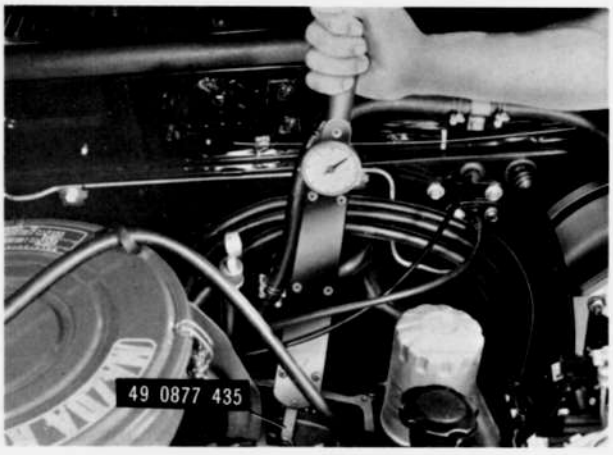

Fig. 7A–57 Tightening torque converter

4. When the installation is finished, rotate the torque converter and check to see that there is no interference in the transmission. Then make the following check:

(1) Fill converter oil. The converter, when empty, can hold **6.2 liters (13.1 U.S. pints, 10.9 Imp. pints, 6.6 U.S. quarts)**. (7A–B–1)
(2) Check and regulate the manual linkage. (7A–B–4)
(3) Check and regulate the inhibitor switch. (7A–B–6)
(4) Check and regulate the engine idling. (7A–B–2) Apply the hand brake. With the engine idling, place the manual lever in "N", "D", "2", "1" and "R", and check to see that there is a slight shock of the transmission.
(5) Confirm the operation of the kick-down switch and downshaft solenoid. (7A–B–3)
(6) Check the oil level again.

5. When checking and regulating are over, conduct stall test, road test and hydraulic test referring to diagnostic test items (7A–C) in order to make sure that the transmission works normally.

SERVICE SPECIAL TOOLS

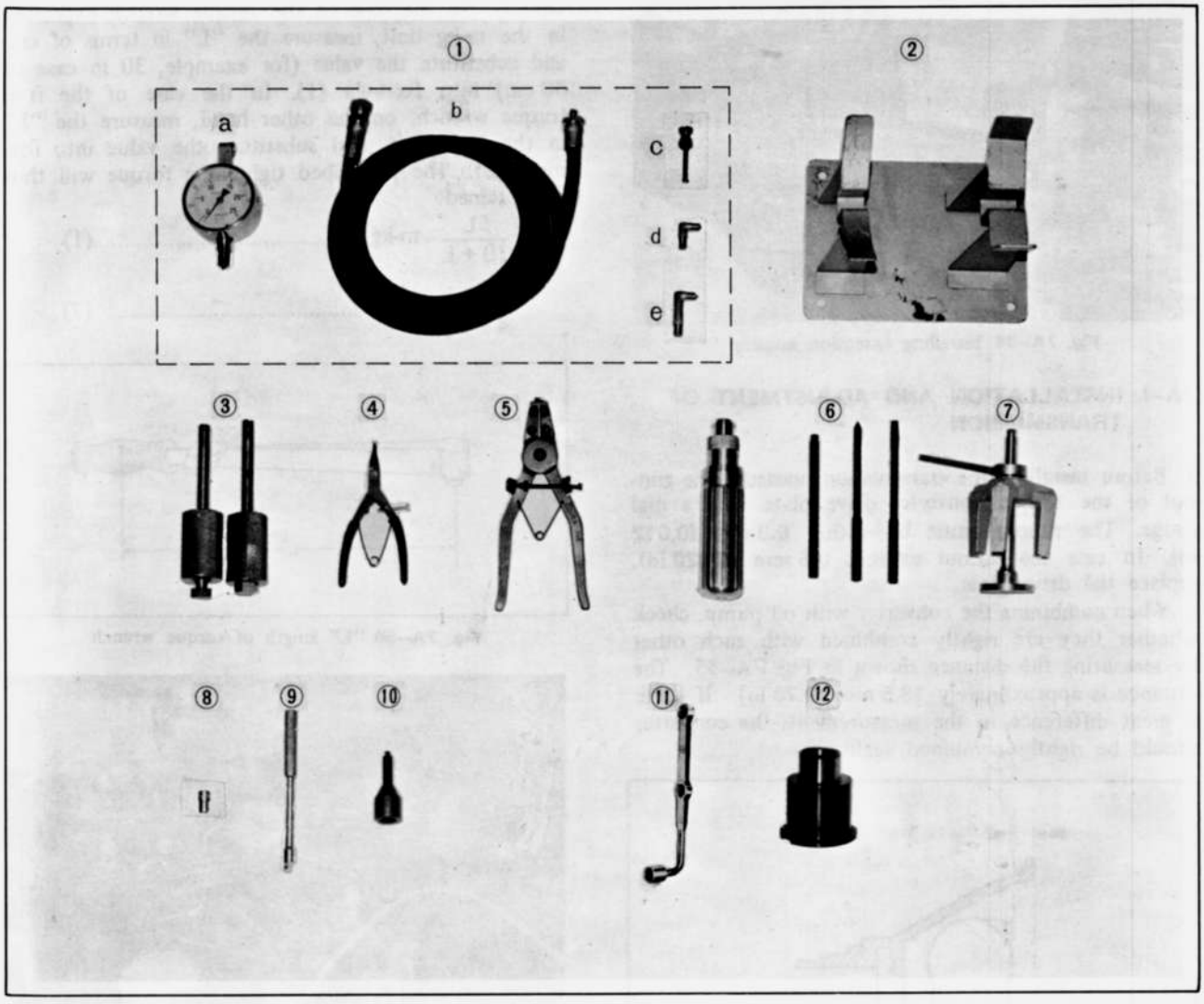

Fig. 7A–58 Automatic transmission service tools set

It is essential that the service special tools in this manual must be absolutely utilized in performing the various operations of trouble shooting, disassembling and assembling of the R3A type automatic transmission.

1. Oil pressure gauge set	49 0378 400	Use for checking hydraulic pressure
a. Oil pressure gauge	49 8000 001	This is included in the oil pressure gauge set (49 0378 400)
b. Rubber hose	49 0378 401	– do –
c. Joint pipe	49 0378 402	– do –
d. Hose adaptor	49 0378 403	– do –
e. Hose adaptor	49 0378 404	– do –
2. Transmission case stand	49 0378 320	Use for setting transmission
3. Oil pump puller	49 0378 390	Use for removing oil pump
4. Snap ring remover	49 8000 015	Use for removing or installing snap ring
5. Snap ring remover	49 8000 025	Use for removing or installing snap ring
6. Torque driver	49 8000 021	Use for tightening in accurate torque Max. torque 1.04 m-kg (95 lb-in)
7. Clutch spring compressor	49 0378 375	Use for assembling or disassembling front and rear clutch
8. Hexagon wrench	49 8000 031	Use for disassembling and assembling control valve
9. Spinner handle	49 8000 035	Use for disassembling and assembling control valve
10. Hex-head extension	49 0378 346	Use for removing and installing one-way clutch inner race with torque wrench. Drive angle 1/2" square and 5 mm (across flat width)
11. Special wrench	49 0877 435	A tool used for removing the bolt that attaches the drive-plate to the torque converter
12. Oil pump assembling gauge	49 2113 025A	Use for centering oil pump

PROPELLER SHAFT

DESCRIPTION ..... 8 : 1
8–A. PROPELLER SHAFT ..... 8 : 1
8–A–1. Propeller Shaft Removal ..... 8 : 1
8–A–2. Checking Propeller Shaft ..... 8 : 3
8–A–3. Propeller Shaft Installation ..... 8 : 3
8–B. UNIVERSAL JOINT ..... 8 : 3
8–B–1. Universal Joint Removal ..... 8 : 3
8–B–2. Checking Universal Joint ..... 8 : 4
8–B–3. Universal Joint Installation ..... 8 : 4
SPECIAL TOOLS ..... 8 : 5

DESCRIPTION

The propeller shaft assembly consists of the tubular piece of steel, center support bearing, universal joints and yokes. The rear end of the propeller shaft is attached to the companion flange of the rear axle through the universal joints and the front end is attached to the main shaft of the transmission by means of the splined slip yoke, which permits fore and aft movement of the propeller shaft whenever the rear axle moves up and down.

The center of the propeller shaft is supported by the bearing attached to the under body.

The universal joints are lubricated for life, so **do not** require lubricating.

8–A. PROPELLER SHAFT

8–A–1. Propeller Shaft Removal

1. Raise the rear end of the vehicle and support with stands.
2. Remove the bolts and screws attaching the heat insulators to the exhaust front pipe, and remove the heat insulators.
3. Disconnect the exhaust front pipe flange from the exhaust manifold by removing the nuts.
Disconnect the exhaust front pipe from the brackets by removing the bolts and nuts.
Remove the bolts and nuts attaching the front pipe flange to the main silencer, and remove the exhaust front pipe.
4. Remove the bolts attaching the heat insulator to the underbody and remove the heat insulator.
5. Mark the companion flange of the rear axle and the propeller shaft so they can be reinstalled in their original position.
6. Remove the bolts that attach the propeller shaft to the companion flange of the rear axle.

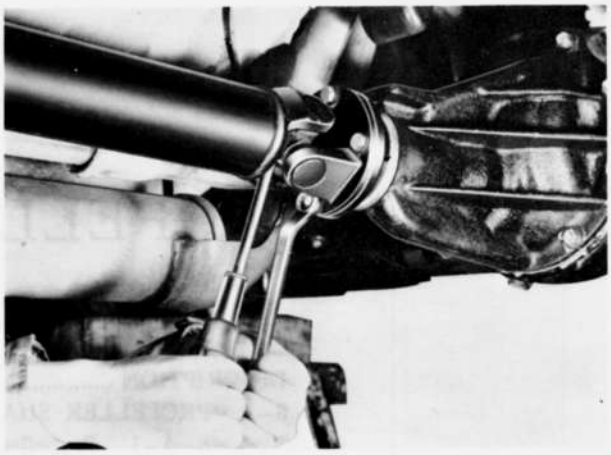

Fig. 8–1 Removing propeller shaft attaching bolts

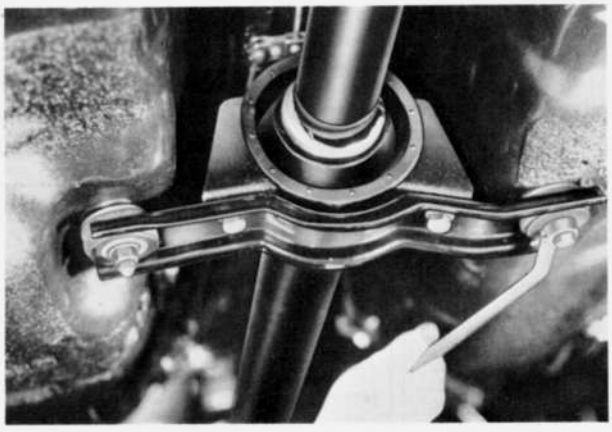

Fig. 8–2 Removing center bearing attaching bolts

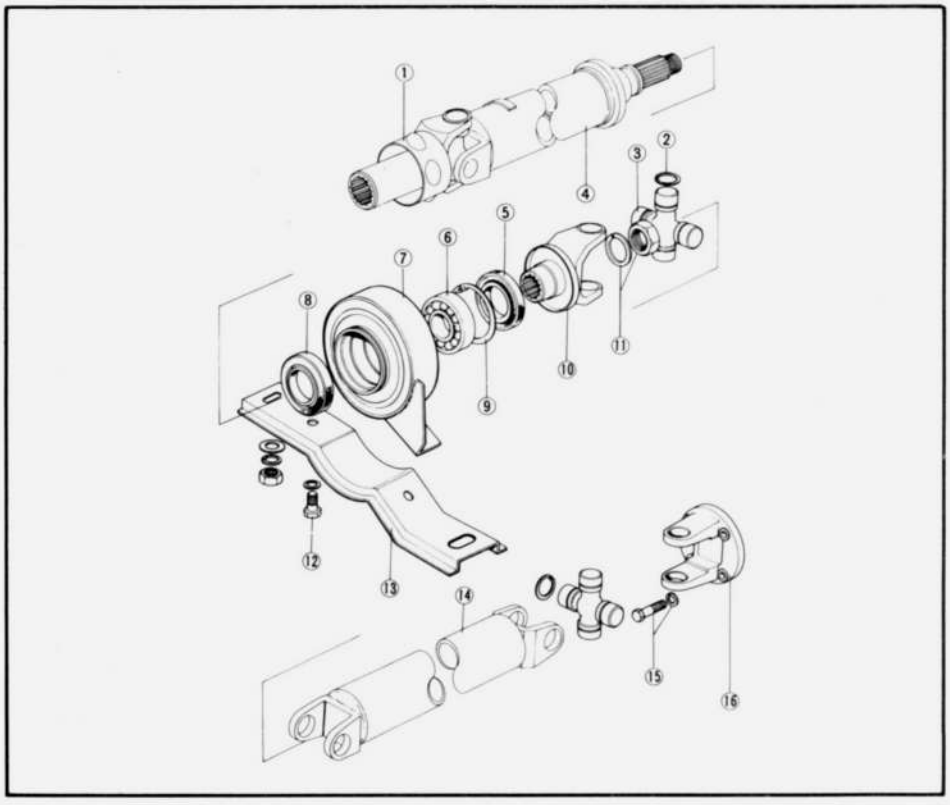

Fig. 8–3 Propeller shaft components
1. Slip yoke
2. Snap ring
3. Spider
4. Front shaft
5. Oil seal
6. Center bearing
7. Center bearing support
8. Oil seal
9. Snap ring
10. Yoke
11. Lock nut and washer
12. Bolt
13. Bracket
14. Rear shaft
15. Bolt and washer
16. Yoke

7. Remove the center bearing attaching bolts.
8. Lower the rear of the shaft and slide rearward.
9. Install the **mainshaft holder** (49 0259 440) into the extension housing to prevent lubricant from running out of the housing.

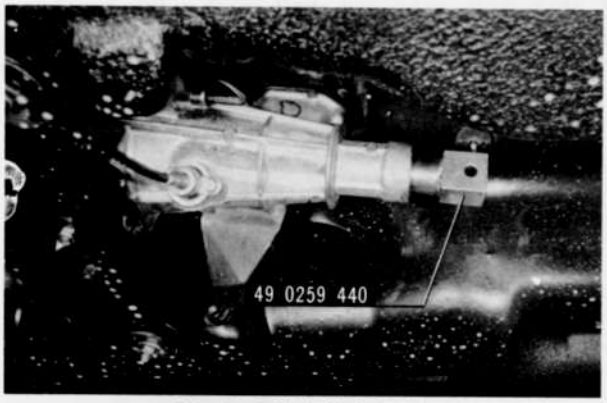

Fig. 8–4 Mainshaft holder

10. Mark the mating parts of the yokes and propeller shafts.
11. Remove the universal joints, as described in Par. 8–B.

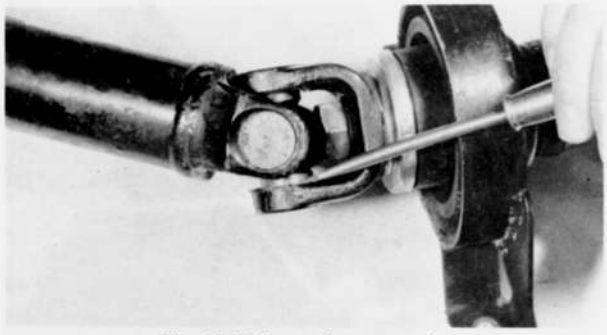

Fig. 8–5 Removing snap ring

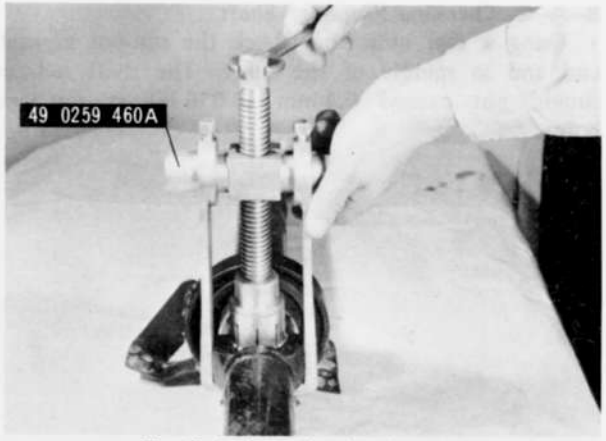

Fig. 8–6 Removing bearing cup

12. Remove the nut attaching the yoke and bearing to the front propeller shaft. Remove the yoke and bearing support.

Note :
Do not remove the oil seals and bearing from the support unless they are defective.

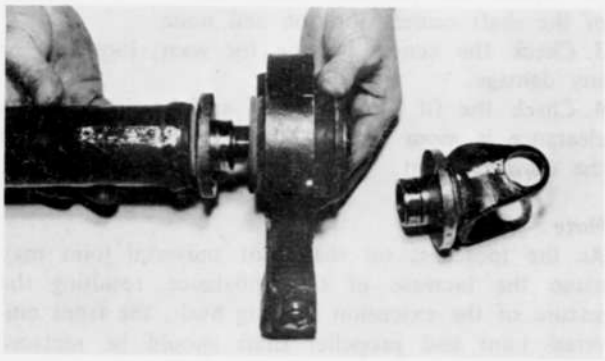

Fig. 8–7 Removing center bearing support

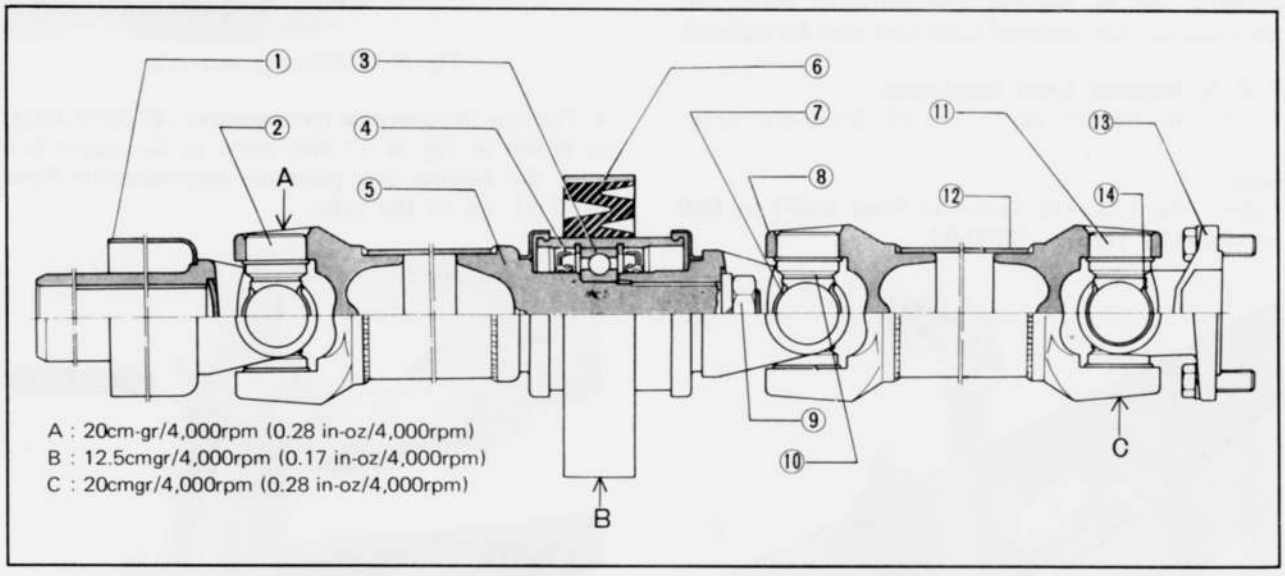

Fig. 8–8 Propeller shaft

1. Slip yoke
2. Front universal joint
3. Bearing
4. Oil seal
5. Front shaft
6. Center bearing support
7. Snap ring
8. Yoke
9. Nut
10. Center universal joint
11. Rear universal joint
12. Rear shaft
13. Yoke
14. Snap ring

8–A–2. Checking Propeller Shaft

1. Using a dial indicator, check the run-out at each end and in middle of the shaft. The shaft run-out should not exceed **0.4 mm (0.016 in)** at any one point.

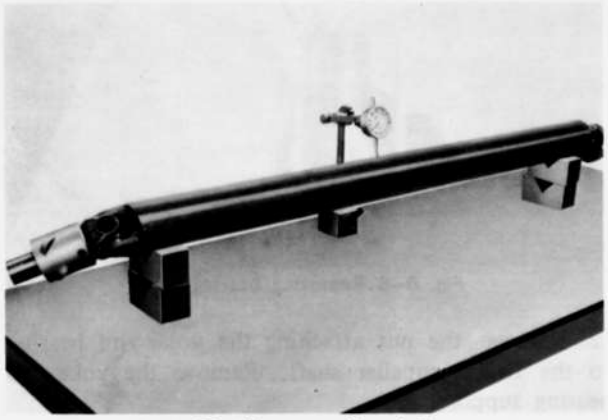

Fig. 8–9 Checking propeller shaft run-out

2. Check the shaft for dynamic unbalance. If it is not within specifications (See Fig. 8–8), correct or replace the propeller shaft. Excessive unbalance of the shaft causes vibration and noise.
3. Check the center bearing for wear, looseness or any damage.
4. Check the fit of the spider and bearing. If this clearance is **more than 0.2 mm (0.0079 in),** replace the universal joint.

Note :
As the looseness on the front universal joint may cause the increase of the unbalance, resulting the seizure of the extension housing bush, the front universal joint and propeller shaft should be replaced as an assembly. But, if the unbalance of the shaft assembly can be checked and corrected within the specifications, the universal joint only may be replaced.

8–A–3. Propeller Shaft Installation

Follow the removal procedures in the reverse order.

Note :
Tighten the lock nut (yoke to front shaft) to **16.0 ~ 18.0 m-kg (116 ~ 130 ft-lb).**



Fig. 8–10 Tightening lock nut

8–B. UNIVERSAL JOINT

8–B–1. Universal Joint Removal

1. Remove the propeller shaft from the vehicle as described in Par. 8–A–1 on page 8–1.
2. Mark both yoke and shaft so that the units may be reassembled in their original position in order to maintain the original balance.



Fig. 8–11 Applying marks

3. Remove the snap rings that secure the bearings in the yoke.



Fig. 8–12 Removing snap ring

4. Position the **universal joint replacer** (49 0259 460A) as shown in Fig. 8–13 and screw in the center bolt until the bearing cup protrudes approximately 8 mm (0.32 in) out of the yoke.



Fig. 8–13 Removing bearing cup

5. Loosen the center bolt and install the spacer between the yoke and the spider as shown in Fig. 8–14.

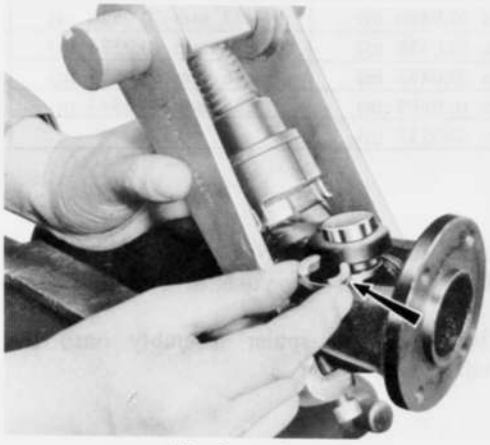

Fig. 8–14 Installing spacer

6. Screw in the center bolt until the bearing cup comes out of the yoke.
7. Remove the replacer and remove the bearing cup.
8. Remove the yoke and spider assembly as shown in Fig. 8–15.



Fig. 8–15 Removing yoke and spider assembly

9. Position the replacer on the yoke as shown in Fig. 8–16 and remove the bearing cup in the same manner.

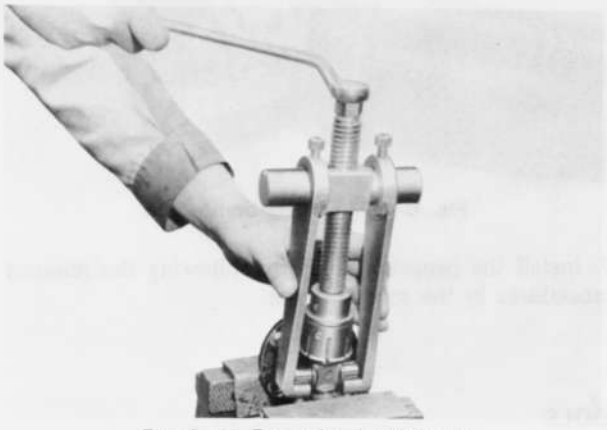

Fig. 8–16 Removing bearing cup

10. Remove the spider from the yoke.

8–B–2. Checking Universal Joint

1. Check the spider journals for rust and wear.
2. Measure the diameter of the spider. If the wear of the spider exceeds **0.1 mm (0.0039 in)**, replace with a new one. The standard diameter is **16.55 mm (0.6516 in)**.

Note :
The spider and bearing cup are serviced as an assembly only.

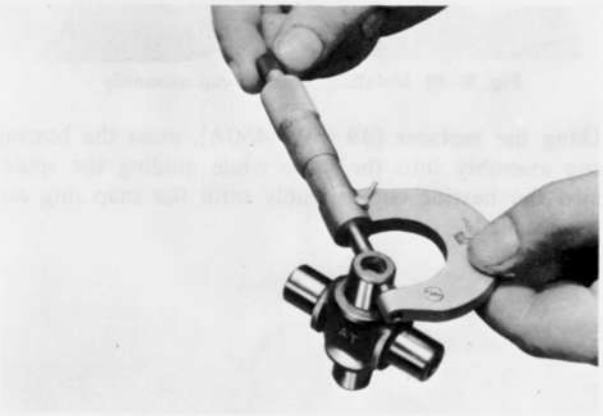

Fig. 8–17 Measuring spider diameter

3. Check the seal for weakness or damage.
4. Check the needle rollers and the bearing cup for wear or damage.

8–B–3. Universal Joint Installation

1. Pack the wall of the bearing cup with grease, then assemble the needle rollers into the bearing cup and assemble the seal onto the bearing cup.
2. Install the bearing cup assembly and the spider onto one end of the bearing cup bore on the yoke, then install the spider onto the yoke.



Fig. 8–18 Installing spider

3. Install the bearing cup assembly onto the other end of the bearing cup bore on the yoke.



Fig. 8–19 Installing bearing cup assembly

Using the **replacer** (49 0259 460A), press the bearing cup assembly into the yoke while guiding the spider into the bearing cup assembly until the snap ring can be installed.

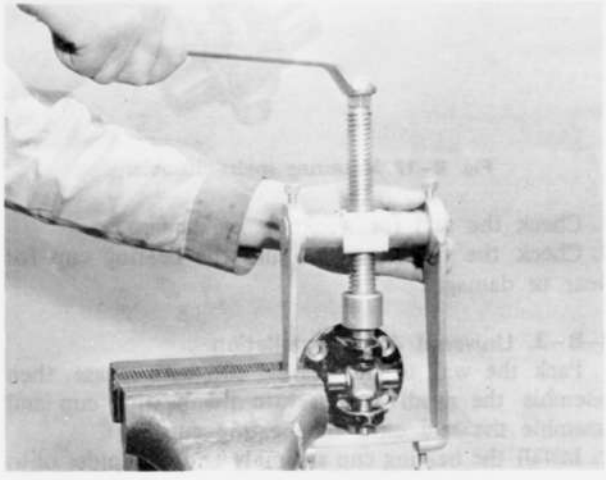

Fig. 8–20 Installing bearing cup

4. Select the snap ring to give a suitable slight drag fit (not binding) and install the snap rings to secure the bearing cups in the yoke. The snap rings are available in the following thicknesses :

1.22 mm (0.0480 in)	1.32 mm (0.0520 in)
1.24 mm (0.0488 in)	1.34 mm (0.0528 in)
1.26 mm (0.0496 in)	1.36 mm (0.0535 in)
1.28 mm (0.0504 in)	1.38 mm (0.0543 in)
1.30 mm (0.0512 in)	

Note :
Use the same-thickness snap rings for both sides to assure good centering of the yoke to the spider.

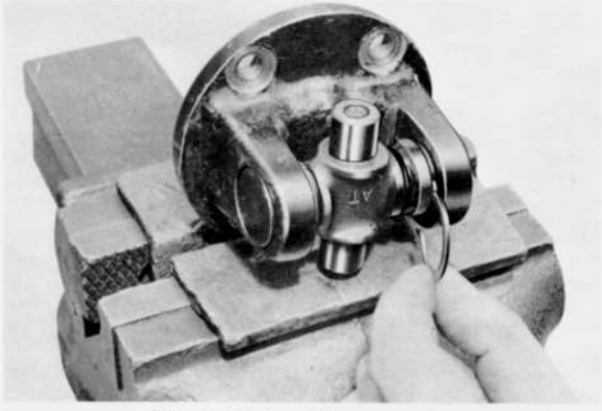

Fig. 8–21 Installing snap ring

5. Install the yoke and spider assembly onto the propeller shaft.



Fig. 8–22 Installing yoke and spider assembly

6. Install the bearing cup assembly and snap ring as instructed above.



Fig. 8–23 Installing bearing cup

7. Install the propeller shaft by following the removal procedures in the reverse order.

SPECIAL TOOLS

49 0259 440	Mainshaft holder	49 0259 460A	Universal joint replacer

REAR AXLE

DESCRIPTION ..... 9 : 1
9–A. REAR AXLE SHAFT ..... 9 : 1
9–A–1. Removing Rear Axle Shaft ..... 9 : 1
9–A–2. Replacing Axle Shaft Bearing ..... 9 : 1
9–A–3. Installing Rear Axle Shaft ..... 9 : 2
9–B. REAR AXLE REMOVAL ..... 9 : 3
9–C. REAR AXLE DISASSEMBLY ..... 9 : 3
9–C–1. Removing Differential ..... 9 : 3
9–C–2. Disassembling Differential ..... 9 : 3
9–C–3. Removing Drive Pinion ..... 9 : 4
9–D. REAR AXLE INSPECTION ..... 9 : 5
9–D–1. Checking Drive Pinion and Ring Gear ..... 9 : 5
9–D–2. Checking Differential Gears ..... 9 : 5
9–D–3. Checking Bearings ..... 9 : 5
9–D–4. Replacing Pinion Bearing Outer Race ..... 9 : 5
9–D–5. Checking Collapsible Spacer ..... 9 : 6
9–D–6. Checking Oil Seal ..... 9 : 6
9–D–7. Checking Companion Flange ..... 9 : 6
9–E. REAR AXLE ASSEMBLY ..... 9 : 6
9–E–1. Adjusting Drive Pinion ..... 9 : 6
9–E–2. Adjusting Pinion Bearing Preload ..... 9 : 7
9–E–3. Assembling Differential ..... 9 : 7
9–E–4. Installing Differential ..... 9 : 8
9–E–5. Adjusting Backlash ..... 9 : 8
9–F. REAR AXLE INSTALLATION ..... 9 : 9
SPECIAL TOOLS ..... 9 : 9

DESCRIPTION

RX-4 is equipped with a semi-floating type rear axle with a hypoid ring gear and pinion set. The final reduction ratio is 3.900.

9–A. REAR AXLE SHAFT

9–A–1. Removing Rear Axle Shaft

1. Raise the rear end of the vehicle and support the rear axle housing with stands.
2. Remove the rear wheel and brake drum.
3. Remove the center cap adapter from the axle shaft flange.
4. Remove the brake shoe assembly, as detailed in Par. 11–G–1.
5. Remove the bolts holding the brake backing plate and bearing retainer to the axle housing.
6. Extract the axle shaft assembly using the **puller** (49 0223 630A and 49 0259 631).



Fig. 9–1 Removing rear axle shaft

7. Remove the oil seal from the axle housing, if necessary.

9–A–2. Replacing Axle Shaft Bearing

1. Remove the rear axle shaft assembly as described in Par. 9–A–1.

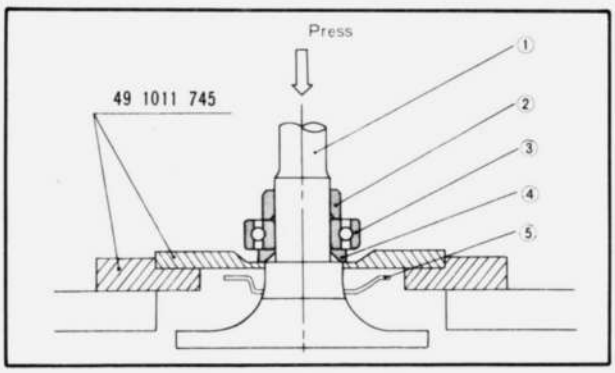

Fig. 9–2 Bearing replacer

1. Rear axle shaft
2. Collar
3. Bearing
4. Spacer
5. Retainer

2. Using the **bearing remover set** (49 1011 745), support the spacer and press the axle shaft out of the collar and bearing, as shown in Fig. 9–3.

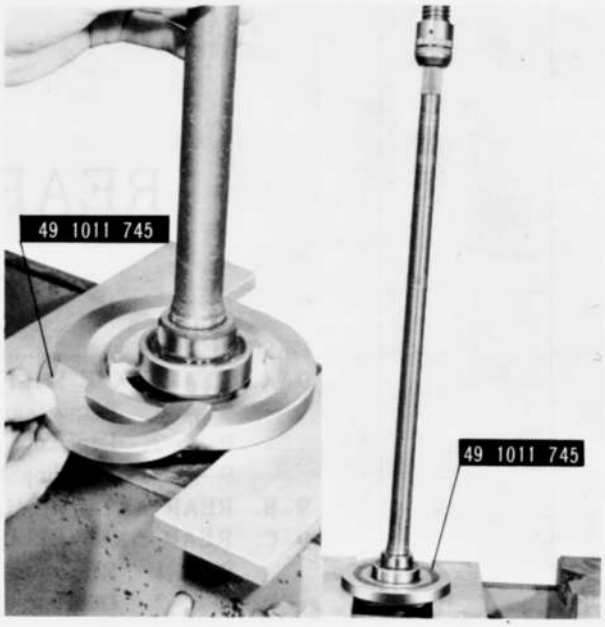

Fig. 9–3 Removing bearing and collar

Note:

In case the pressure necessary to press out the axle shaft exceeds 10 tons (22,000 lb) or if the bearing remover set is not available, grind off the part of bearing retaining collar and cut it with the use of a chisel, as shown in Fig. 9–4, taking care not to damage the axle shaft.



Fig. 9–4 Cutting bearing retaining collar

3. Remove the bearing retainer from the axle shaft.
4. Clean all parts and check the condition of the collar, spacer and axle shaft.
5. Install the bearing retainer and spacer onto the axle shaft.
6. Position the bearing on the axle shaft with the sealed side toward the axle shaft flange, and press it on until the spacer comes in contact with the shoulder of the shaft.
7. Press the bearing retaining collar onto the axle shaft using the **bearing replacer** (49 1011 745) until it is firm contact with the bearing inner race.

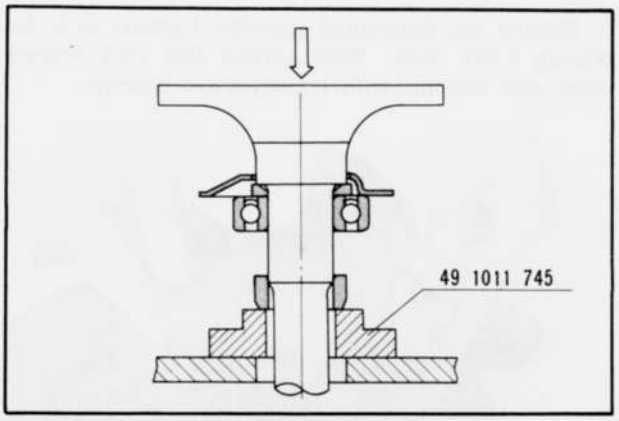

Fig. 9–5 Installing bearing retaining collar

Note:
If the bearing retaining collar is press-fitted with less than 2.5 tons (5,500 lb), replace the collar with a new one.

9–A–3. Installing Rear Axle Shaft

1. Apply grease to the oil seal located in the axle housing.
2. Check the rear axle shaft end play as follows:
Install the backing plate with gasket temporarily and measure the depth of the bearing seat in the axle housing using a depth gauge as shown in Fig. 9–6. Then, measure the width of bearing outer race. The difference between the two measurements indicates the required thickness of the shims.

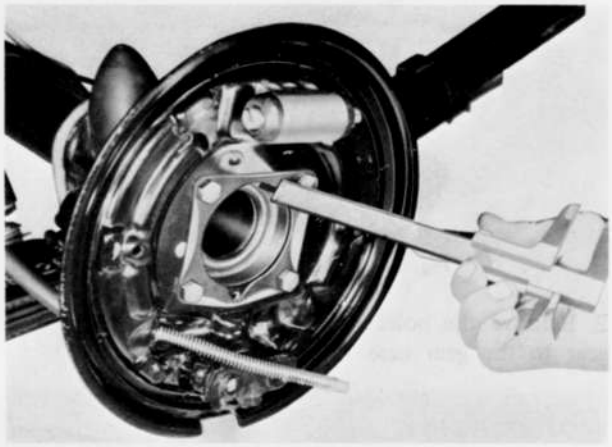

Fig. 9–6 Measuring depth of bearing seat

The maximum permissible end play is **0.1 mm (0.004 in)**. Shims are available in thickness of 0.1 mm and 0.4 mm (0.004 in and 0.016 in).

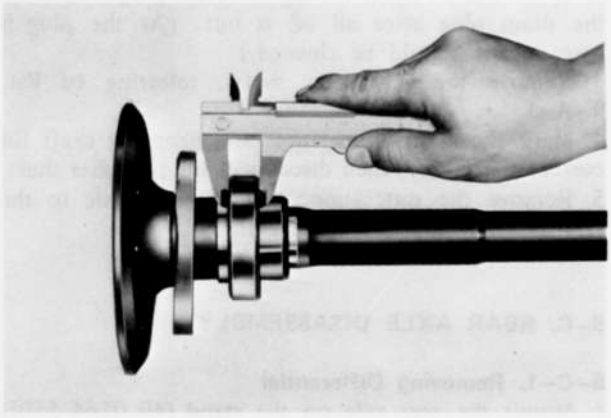

Fig. 9–7 Measuring width of bearing outer race

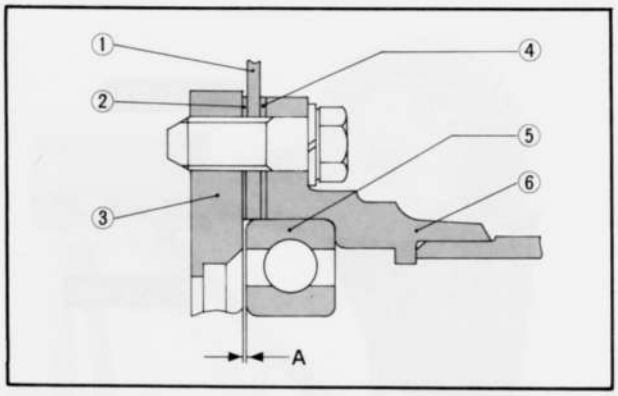

Fig. 9–8 End play

A: Bearing end play
1. Brake backing plate
2. Gasket
3. Bearing retainer
4. Adjusting shim
5. Bearing
6. Rear axle housing

3. Remove the brake backing plate.
4. Apply a thin coat of sealer to both sides of the shims.
5. Position the shims and brake backing plate in place. Then, install the bearing retainer and axle shaft assembly with gasket and tighten the bolts.
6. Install the brake shoe assembly.
7. Install the brake drum, center cap adapter and wheel.

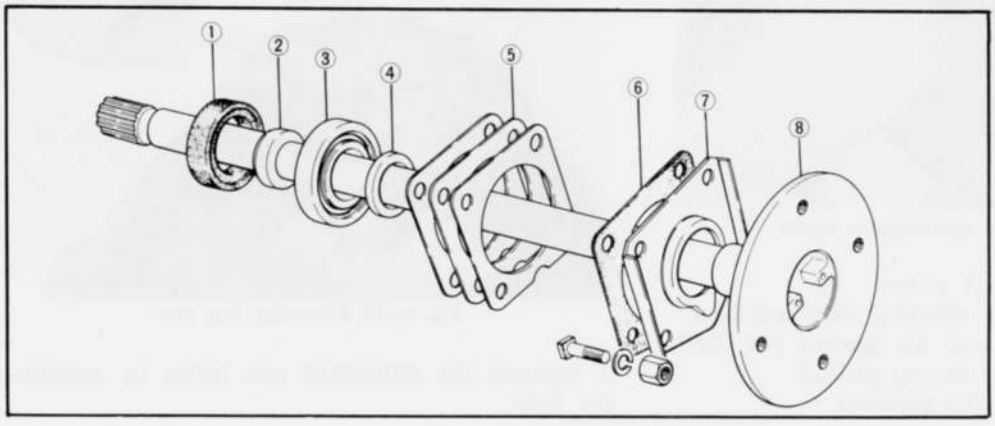

Fig. 9–9 Rear axle shaft

1. Oil seal
2. Bearing collar
3. Bearing
4. Spacer
5. Shim
6. Gasket
7. Bearing retainer
8. Rear axle shaft

9–B. REAR AXLE REMOVAL

1. Jack up the vehicle until the rear wheels are clear of the ground.
2. Drain the oil by removing the drain plug. Reinstall the drain plug after all oil is out. (As the plug is magnetic, it should be cleaned.)
3. Remove the rear axle shafts, referring to Par. 9–A–1.
4. Mark the companion flange and propeller shaft for correct reassembly, then disconnect the propeller shaft.
5. Remove the nuts supporting the rear axle to the rear axle housing and remove the rear axle.

9–C. REAR AXLE DISASSEMBLY

9–C–1. Removing Differential

1. Mount the rear axle on the **stand** (49 0164 550D and 49 0223 561A).

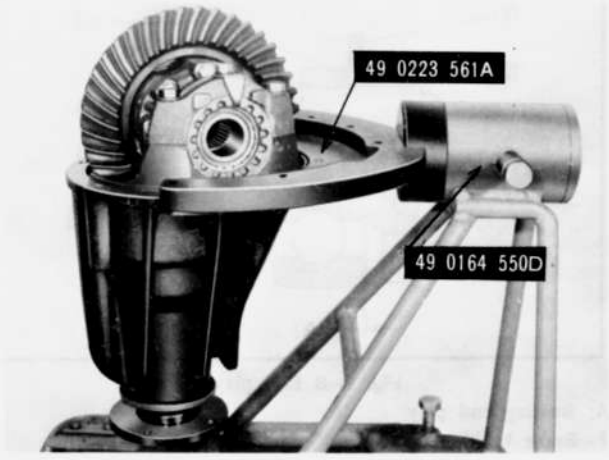

Fig. 9–10 Stand for rear axle

2. Apply identification punch marks on the carrier, differential bearing cap, and adjuster for reassembly purpose.

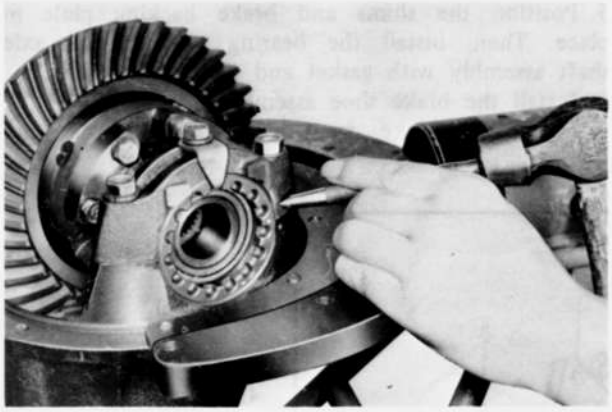

Fig. 9–11 Applying identification marks

3. Remove the adjuster lock plates.
4. Loosen the bearing cap attaching bolts and back off the adjuster slightly with the **spanner** (49 0259 720) to relieve differential bearing preload. Remove the bearing caps and adjusters.
5. Remove the differential assembly together with the bearing outer races. Make certain that each bearing outer race remains with its respective bearing.

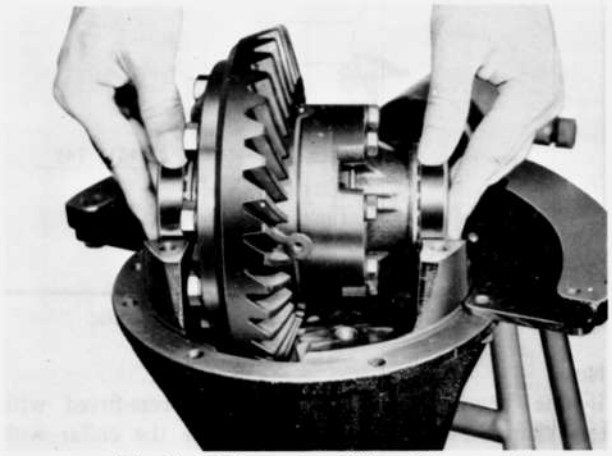

Fig. 9–12 Removing differential assembly

9–C–2. Disassembling Differential

1. If the bearing replacement is necessary, remove the bearings from the differential gear case with a suitable puller.

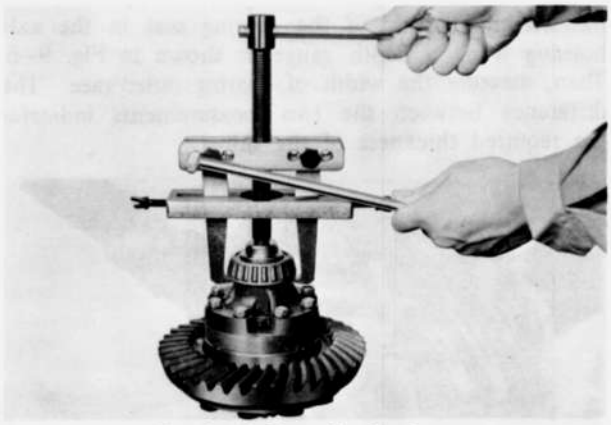

Fig. 9–13 Removing bearing

2. Remove the bolts and washers that attach the ring gear to the gear case. Remove the ring gear.

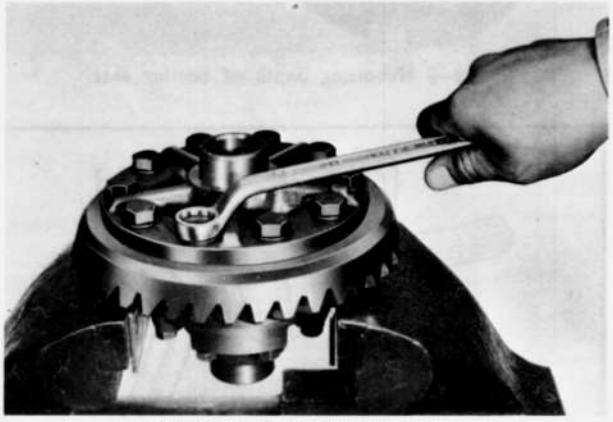

Fig. 9–14 Removing ring gear

3. Separate the differential case halves by removing the bolts.

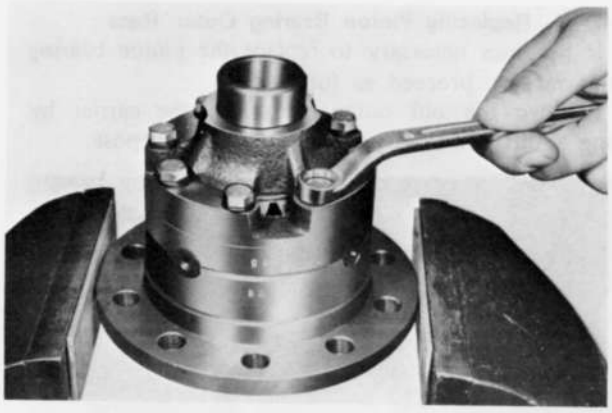

Fig. 9–15 Separating case halves

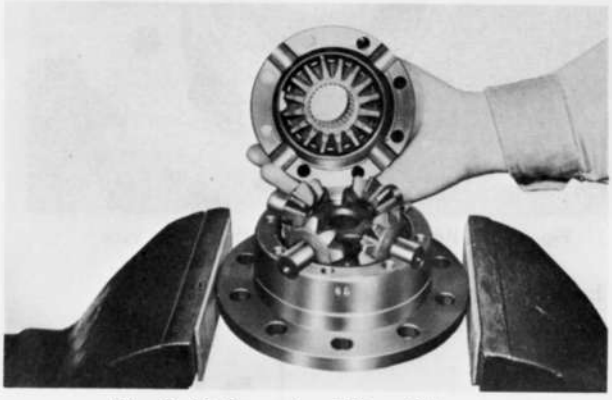

Fig. 9–16 Removing differential gears

4. Remove the side gears, thrust washers, pinion gears and spider.

9–C–3. Removing Drive Pinion

1. Hold the companion flange with the **holder** (49 0259 710A) and remove the drive pinion nut.

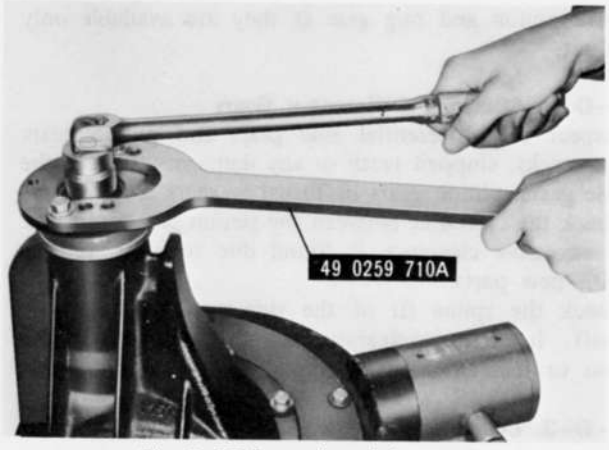

Fig. 9–17 Loosening pinion nut

2. Remove the companion flange.
3. Remove the drive pinion and rear bearing from the carrier. If necessary, tap the pinion out with a plastic hammer, while being careful to guide the pinion with hand to avoid damage.
4. Remove the oil seal and the front bearing.

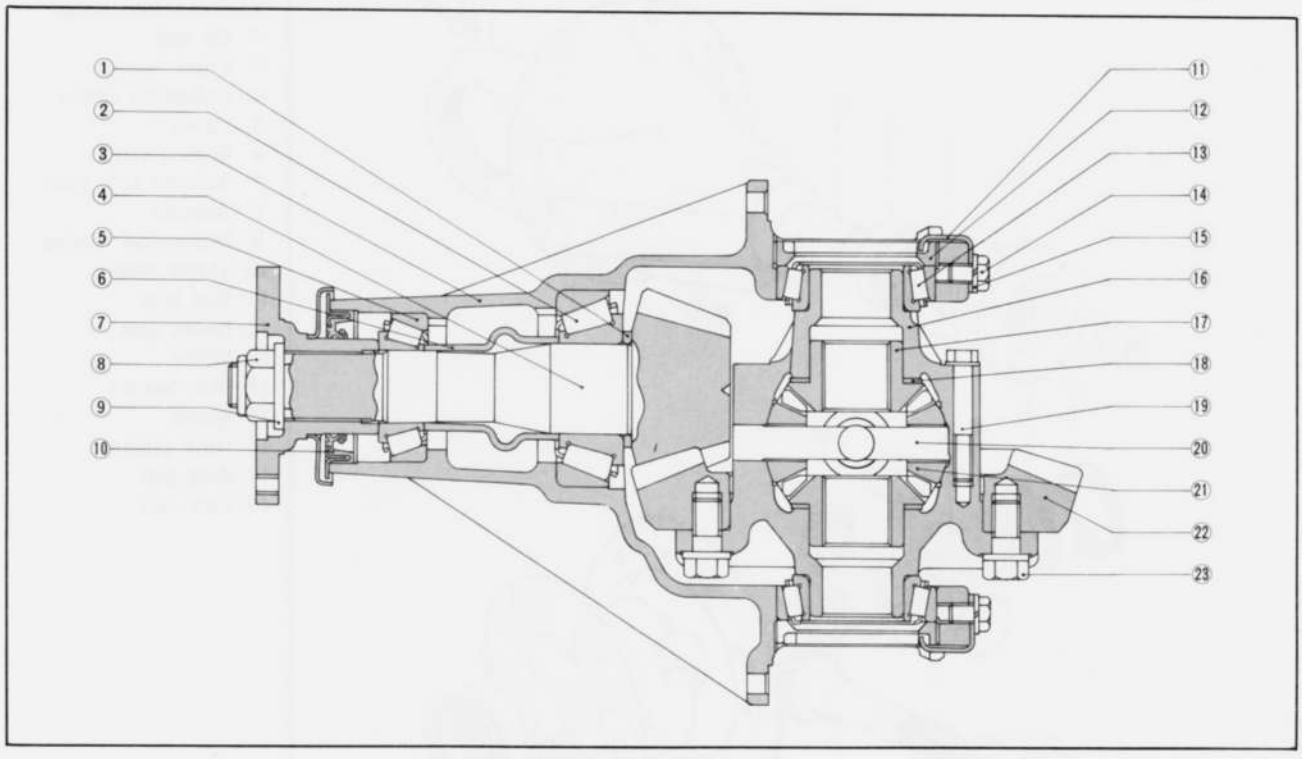

Fig. 9–18 Rear axle cross section

1. Spacer
2. Pinion rear bearing
3. Differential carrier
4. Drive pinion
5. Pinion front bearing
6. Collapsible spacer
7. Companion flange
8. Pinion nut
9. Washer
10. Pinion oil seal
11. Lock plate
12. Adjuster
13. Differential bearing
14. Bolt
15. Washer
16. Gear case
17. Side gear
18. Thrust washer
19. Bolt
20. Spider
21. Pinion gear
22. Ring gear
23. Bolt

9–D. REAR AXLE INSPECTION

9–D–1. Checking Drive Pinion and Ring Gear

Check the drive pinion for damaged or excessively worn teeth, damaged bearing journals and splines. Inspect the ring gear for worn or chipped teeth. If any of above conditions is found, replace both drive pinion and ring gear as they are available only in set.

9–D–2. Checking Differential Gears

Inspect the differential side gears and pinion gears for cracks, chipped teeth or any damage. Replace the side gears, pinion gears or thrust washers if necessary. Check the clearance between the pinion gear and shaft. If excessive clearance is found due to wear, replace with new parts.

Check the spline fit of the side gear and rear axle shaft. If excessive clearance is found, replace the side gear or rear axle shaft.

9–D–3. Checking Bearings

Inspect the differential bearings and pinion bearings for wear, flaking or any damage. If inspection reveals that either bearing cones or outer race are unfit for further service, replace the bearing.

9–D–4. Replacing Pinion Bearing Outer Race

If it becomes necessary to replace the pinion bearing outer race(s), proceed as follows:

1. Remove the old outer race from the carrier by using a drift in slots provided for this purpose.

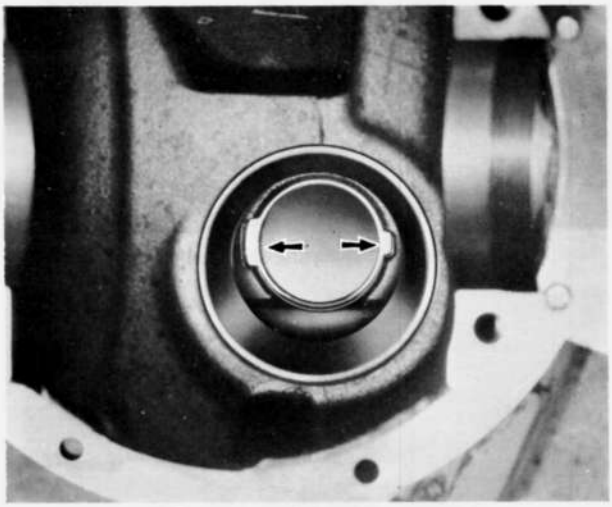

Fig. 9–19 Removing pinion bearing outer race

2. Install a new outer race into the carrier.

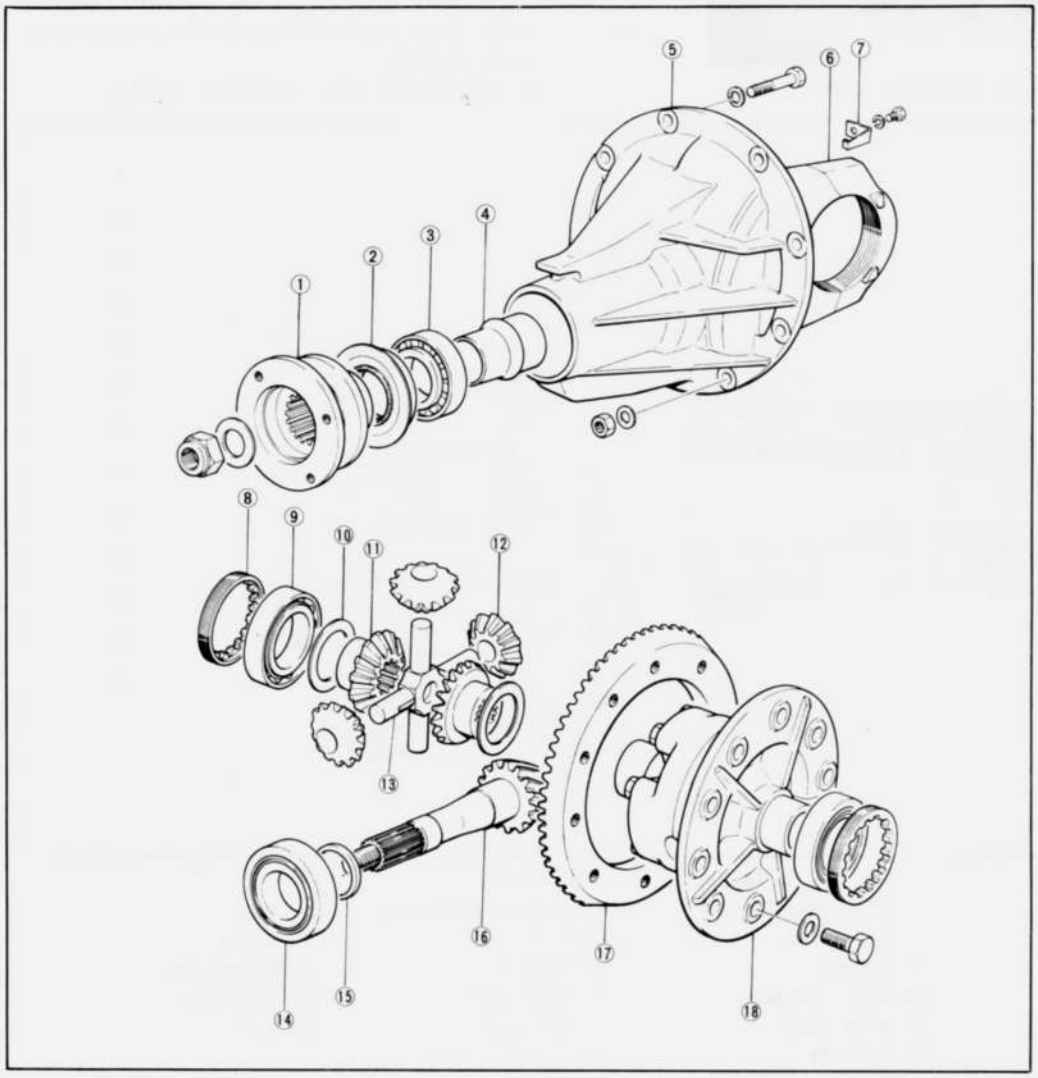

Fig. 9–20
Rear axle components
1. Companion flange
2. Oil seal
3. Front bearing
4. Collapsible spacer
5. Carrier
6. Bearing cap
7. Adjuster lock plate
8. Adjuster
9. Differential bearing
10. Thrust washer
11. Side gear
12. Pinion gear
13. Spider
14. Rear bearing
15. Spacer
16. Drive pinion
17. Ring gear
18. Gear case

9–D–5. Checking Collapsible Spacer

Measure the length of the collapsible spacer with a micrometer. The standard length is 59 ± 0.15 mm (2.3229 ± 0.0059 in).

9–D–6. Checking Oil Seal

Check the oil seal for wear or damage. If there is any possibility of oil leakage, replace the oil seal.

9–D–7. Checking Companion Flange

Check the companion flange for cracks, worn splines, or rough oil seal contacting surface. Repair or replace the companion flange if necessary.

9–E. REAR AXLE ASSEMBLY

9–E–1. Adjusting Drive Pinion

The drive pinion should be correctly positioned in relation to the ring gear by the use of spacer which is placed between the drive pinion and the pinion rear bearing.

To adjust the drive pinion position, use the **special gauge** (49 0727 570 and 49 0305 555) and proceed as follows:

1. Install the dial indicator to the gauge body. Place the gauge body on the surface plate as shown in Fig. 9–21 and lock the dial indicator by the screw so that the needle is pointing toward 1 to 3 mm.

Then, set the reading to "Zero" by turning the outer ring of the indicator.



Fig. 9–21 ZERO setting

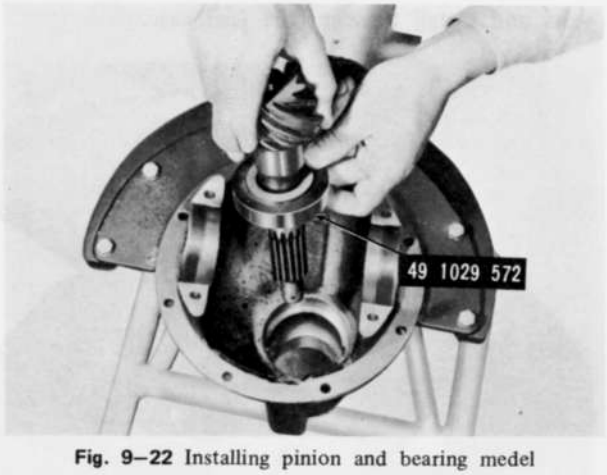

Fig. 9–22 Installing pinion and bearing medel

2. Make certain that the differential bearing support bores are free of dirt and burrs.
3. Install the pinion and **bearing model** (49 1029 572) together with a spacer into the carrier.
4. Place the gauge block on the pinion and carefully place the gauge body adjusted in Step 1 on the gauge block so that the feeler of the indicator comes in contact with the lowest portion of the differential bearing support bore.



Fig. 9–23 Measuring pinion height

5. Record the number of hundredths dial indicator moves in a "+" (plus) or "–" (minus) direction from zero.

(a) If the dial indicator shows "+" (plus), add the amount equivalent to the reading.
(b) If the dial indicator shows "–" (minus), subtract the amount equivalent to the reading.

6. Remove the gauge body and dial indicator from the carrier and check zero setting on the surface plate to make sure this setting was not disturbed by handling.
7. Repeat the measurement on the opposite bearing support bore in the same manner as above.
8. Place the bearing model and the rear pinion bearing on the surface plate facing the inner race downward and compare their heights as shown in Fig. 9–24.

(a) If the bearing is higher than the model, subtract the amount equivalent to the difference.
(b) If the bearing is lower than the model, add the amount equivalent to the difference.

9. In order to compensate for all of the machining variables, the pinion has a plus or minus reading recorded in hundredth millimeters on the rear face of the pinion.

Example:
M + 2 = + 0.02 mm
M – 1 = – 0.01 mm

(a) If the pinion is marked "+" (plus), subtract the amount specified on the pinion.
(b) If the pinion is marked "–" (minus), add the amount specified on the pinion.

10. Finally select the correct pinion spacer to be used during pinion assembly by adding or subtracting the amount determined in Step 5, 6 and 7 from the thickness of the spacer used in Step 3.

The spacers are available in the following thickness:

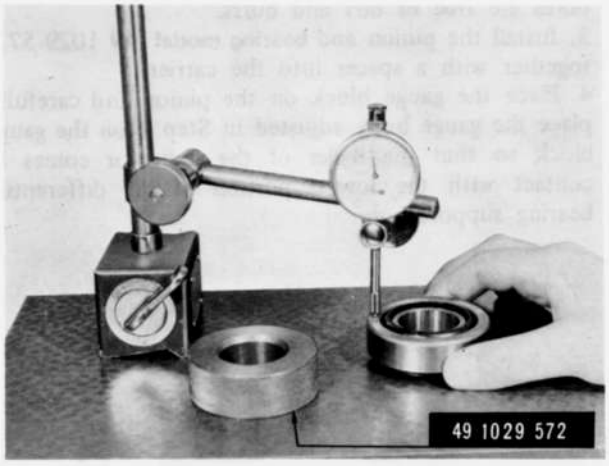

Fig. 9–24 Measuring bearing height

Identification mark	Thickness
52	3.52 mm (0.1386 in)
55	3.55 mm (0.1398 in)
58	3.58 mm (0.1409 in)
61	3.61 mm (0.1421 in)
64	3.64 mm (0.1433 in)
67	3.67 mm (0.1445 in)
70	3.70 mm (0.1457 in)
73	3.73 mm (0.1469 in)

11. Position the correct spacer on the pinion and install the rear pinion bearing.

9–E–2. Adjusting Pinion Bearing Preload

1. Position the pinion assembly in the carrier and install the collapsible spacer as shown in Fig. 9–25.

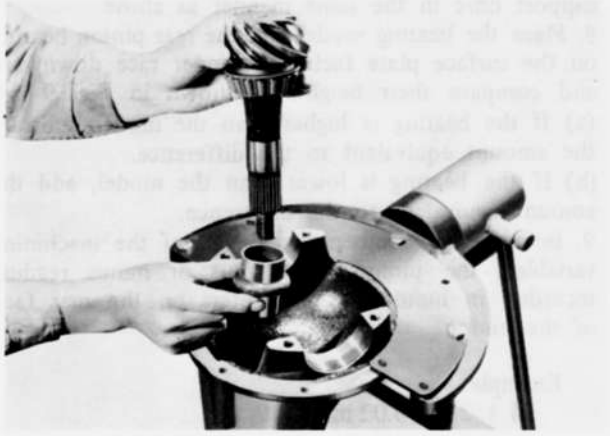

Fig. 9–25 Installing pinion and collapsible spacer

2. Place the front pinion bearing in position on the pinion. Hold the pinion fully forward and drive the pinion bearing over the pinion until seated.
3. Apply gear lubricant to the lip of the pinion oil seal and install the pinion oil seal into the carrier.
4. Install the companion flange on the pinion by tapping with a soft hammer.
5. Install the pinion washer and nut. Before tightening the nut (When the pinion preload is Zero), check the drag by the oil seal by using a torque wrench.
6. Tighten the pinion nut to **14 m-kg (101 ft-lb)** and check the preload as shown in Fig. 9–26.

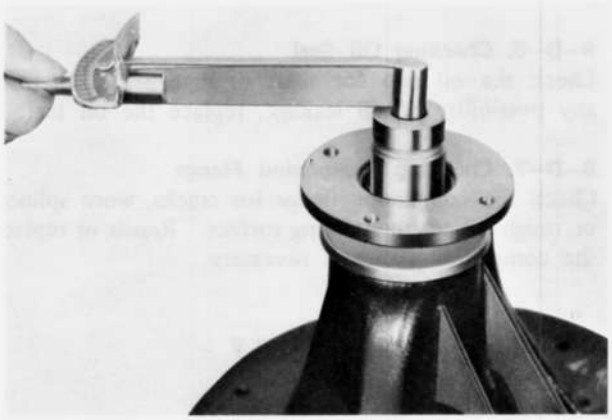

Fig. 9–26 Checking pinion bearing preload

Note:
After preload has been checked, final tightening should be done very cautiously.
The pinion nut should be further tightened only a little at a time and preload should be checked after each slight amount of tightening. Exceeding preload specifications will compress the collapsible spacer too far and requires its replacement. The maximum tightening torque of the nut is 20 m-kg (145 ft-lb).
If the specified preload is not obtained after tightening the nut to the permissible maximum tightening torque, replace the collapsible spacer with a new one.

7. While observing the proceeding caution, carefully set the preload drag at **9 to 14 cm-kg (7.8 to 12.2 in-lb)** plus the oil seal drag determined in Step 5.

Note:
If the preload is measured by using a spring scale at the bolt hole of the companion flange, the preload drage is **2.1 ~ 3.3 kg (4.6 ~ 7.3 lb).**

9–E–3. Assembling Differential

1. Install the thrust washer on each differential side gears and install these in the gear case.



Fig. 9–27 Installing thrust washer

2. Fit the pinion gears onto the spider and install the spider into the differential case.



Fig. 9–28 Installing differential gears

3. Align the identification marks as shown in Fig. 9–29 and secure the case halves together with bolts. Torque the bolts to **2.5 ~ 3.0 m-kg (18 ~ 21 ft-lb)**.

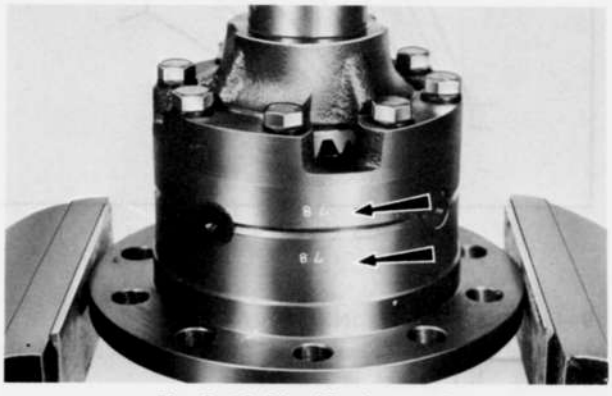

Fig. 9–29 Identification marks

4. Check the backlash of the side gear and the pinion gear. The backlash should be less than **0.1 mm (0.004 in)**.
If it is exceeds 0.1 mm (0.004 in), adjust with the thrust washers.
The following thrust washers are available:

Identification mark	Thickness
0	2.0 mm (0.0787 in)
1	2.1 mm (0.0827 in)
2	2.2 mm (0.0866 in)



Fig. 9–30 Tightening ring gear bolts

5. Install the ring gear to the case and torque the bolts to **9.0 ~ 11.0 m-kg (65 ~ 80 ft-lb).**
6. Install each differential bearing to the gear case.
7. Install the differential bearing outer races to their respective bearings.

9–E–4. Installing Differential

1. Place the differential gear assembly in the carrier, making ensure that the marks on the face of the pinion and ring gear tooth are in alignment.

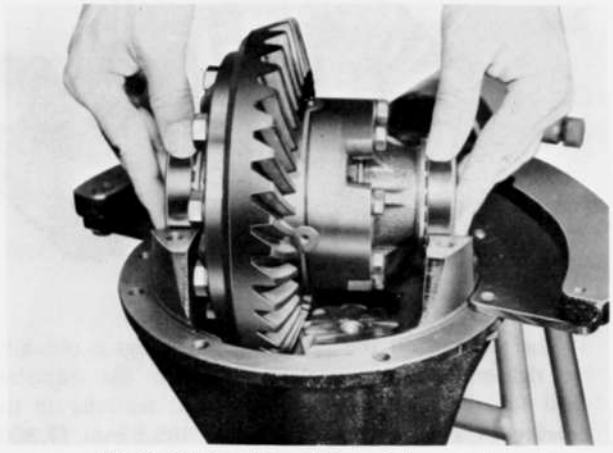

Fig. 9–31 Installing differential assembly

2. Note the identification marks on the adjusters and install each to its respective side.



Fig. 9–32 Installing adjuster

3. Install the differential bearing caps making sure that the identification marks on the caps correspond with those on the carrier and install the attaching bolts.
4. Turn the adjusters with the **spanner** (49 0259 720) until the bearings are properly positioned in their respective outer races and the end play is eliminated with some backlash existing between the ring gear and drive pinion.
5. Slightly tighten one of the bearing cap bolts on each side and adjust the backlash, as instructed in the following paragraph.

9–E–5. Adjusting Backlash

1. Secure a dial indicator to the carrier flange so that the feeler comes in conatct at right angles with one of the ring gear teeth.

2. Check the backlash between the ring gear and drive pinion. With the **spanner** (49 0259 720), turn both bearing adjusters equally until the backlash becomes **0.17 to 0.19 mm (0.0067 to 0.0075 in)**.

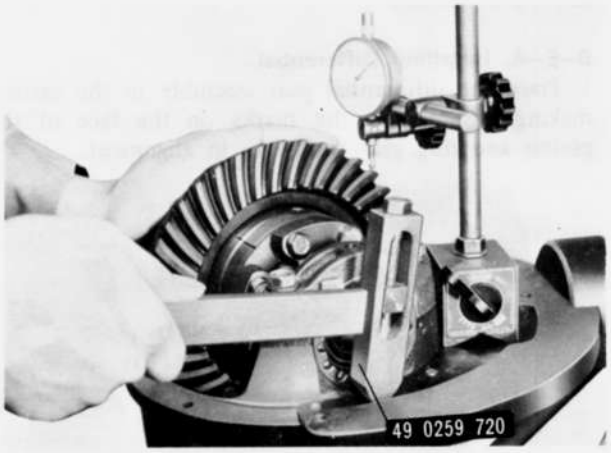

Fig. 9–33 Adjusting backlash

3. The preload on the differential bearings is obtained by tightening the adjusters. Tighten the adjusters until the distance between both pilot sections on the bearing caps becomes **185.428 ~ 185.5 mm (7.3004 ~ 7.3033 in)**, as shown in Fig. 9–34.

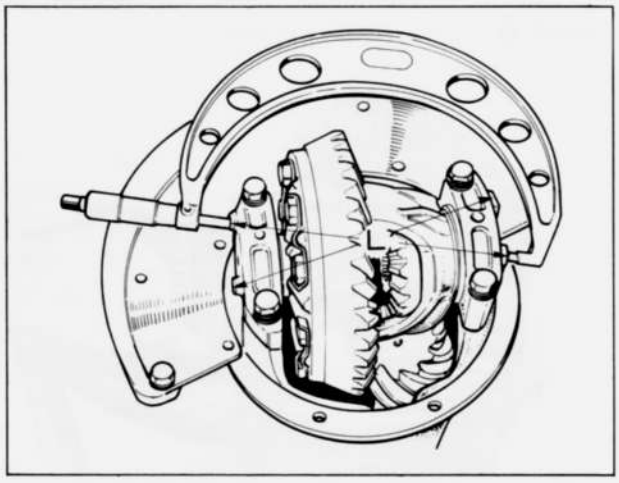

Fig. 9–34 Adjusting bearing preload (case spread)

Note:
When adjusting the preload, care must be taken not to affect the backlash of the drive pinion and ring gear.

4. Tighten the bearing cap bolts to a torque of **3.2 ~ 4.7 m-kg (23 ~ 34 ft-lb)**.
5. Install the adjuster lock plates on the bearing caps to prevent the adjusters from loosening.
6. Check the tooth contact of the ring gear and pinion by applying a thin coat of red lead on both sides of about six or eight of ring gear teeth and rotating the ring gear few times to and fro.
If the pinion position and backlash have been correctly set, the contact pattern should be as shown in Fig. 9–35.

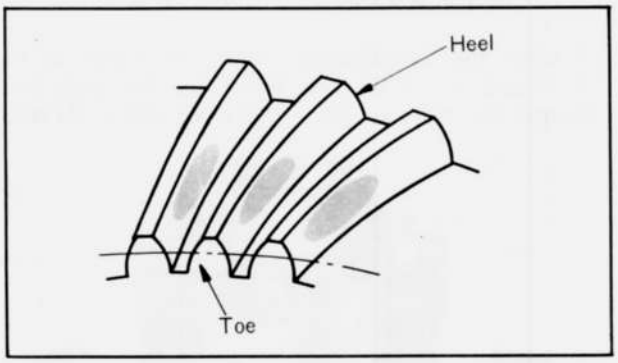

Fig. 9–35 Correct tooth contact

9–F. REAR AXLE INSTALLATION

1. Clean the sealing surface of the carrier and the housing. No gesket is required.
2. Apply oil resistant sealer to the surfaces.
3. Position the carrier to the housing.
4. Install the nuts and torque them to **2.3 ~ 2.7 m-kg (17 ~ 19 ft-lb)**.
5. Connect the propeller shaft following the markings closely to prevent any out of balance condition. Torque the bolts to **3.5 ~ 3.8 m-kg (25 ~ 27 ft-lb)**.
6. Install the axle shafts, drums and wheels.
7. Fill the axle with the correct grade and quantity of lubricant.
8. Lower the vehicle.

SPECIAL TOOLS

49 0223 630A	Rear axle shaft puller	49 0259 720	Backlash adjusting spanner
49 0259 631	Attachment (for puller)	49 0259 710A	Companion flange holding tool
49 1011 745	Bearing remover set	49 0727 570	Pinion adjusting gauge
49 0164 550D	Rear axle stand	49 0305 555	Gauge block
49 0223 561A	Attachment (for stand)	49 1029 572	Bearing model

Note:
1. If the **engine stand** (49 0107 680A) is available, this can be used together with the **attachment** (49 0419 561) as a rear axle stand.
2. To adjust the pinion position, the **gauge** (49 0180 570) can also be used.

STEERING

DESCRIPTION ..... 10 : 1
10–A. STEERING WHEEL ..... 10 : 1
10–A–1. Checking Steering Wheel Play ..... 10 : 1
10–A–2. Steering Wheel Removal ..... 10 : 1
10–A–3. Steering Wheel Inspection ..... 10 : 1
10–A–4. Steering Wheel Installation ..... 10 : 1
10–B. STEERING GEAR ..... 10 : 2
10–B–1. Steering Gear Removal ..... 10 : 2
10–B–2. Steering Gear Disassembly ..... 10 : 3
10–B–3. Steering Gear Inspection ..... 10 : 3
10–B–4. Steering Gear Assembly ..... 10 : 4
10–B–5. Steering Gear Installation ..... 10 : 5
10–C. STEERING COLUMN SHAFT ..... 10 : 6
10–C–1. Steering Column Shaft Removal ..... 10 : 6
10–C–2. Steering Column Shaft Installation ..... 10 : 6
10–D. STEERING LINKAGE ..... 10 : 7
10–D–1. Checking Ball Joint ..... 10 : 7
10–D–2. Idler Arm ..... 10 : 7
a. Checking idler arm ..... 10 : 7
b. Removing idler arm ..... 10 : 7
c. Installing idler arm ..... 10 : 7
10–D–3. Replacing Pitman Arm ..... 10 : 8
10–D–4. Replacing Tie-rod ..... 10 : 8
10–D–5. Replacing Center Link ..... 10 : 8
10–E. FRONT WHEEL ALIGNMENT ..... 10 : 9
10–E–1. Toe-in ..... 10 : 9
a. Checking toe-in ..... 10 : 9
b. Adjusting toe-in ..... 10 : 9
10–E–2. Caster, Camber and King Pin Inclination ..... 10 : 9
a. Checking caster, camber and king pin inclination ..... 10 : 9
b. Adjusting camber and caster ..... 10 : 10
SPECIAL TOOLS ..... 10 : 10

10

DESCRIPTION

The steering system consists of the steering gear, steering column, steering lock assembly, steering wheel and steering linkage. The steering lock assembly is installed at the upper portion of the steering column shaft and at the lower section is provided with a flexible coupling yoke utilizing a two-joint steering column shaft mechanism and also a collapsible type column shaft is utilized. The steering gear is of a recirculating ball nut type and the steering gear ratio varies from 18.0 : 1 to 20.0 : 1, according to the turning angle of the sector shaft. Therefore, this steering gear provides easy steering.

The steering linkage consists of the pitman arm, center link (pitman arm to idler arm), idler arm and bracket assembly, and tie-rods.

The steering linkage ball joints and idler arm are filled with lithium grease and are sealed completely which require no lubrication service.

The toe-in, camber and caster can be adjusted.

10–A. STEERING WHEEL

10–A–1. Checking Steering Wheel Play

The steering wheel play should be **5 ~ 20 mm (0.20 ~ 0.80 in)**. With the front wheels on the ground and in the straight ahead position, move the steering wheel in both directions without moving the front wheels.

If excessive play is found, the following points should be carefully checked.

1. Fit of the ball joints of the steering linkage
2. Looseness of the wheel bearings
3. Backlash between the sector gear and ball nut

10–A–2. Steering Wheel Removal

1. Pull the steering wheel center cap toward the top of the wheel.
2. Punch the mating marks on the steering wheel hub and the column shaft.
3. Remove the steering wheel attaching nut and then remove the steering wheel assembly.

Note:

Do not use any hammer for removal and **never** pound on the column shaft.

10–A–3. Steering Wheel Inspection

1. Cracks and damage of the steering wheel
2. Damage of the cap, set plate, terminal, wheel core cover, under cover, horn lever and spring.
3. Cracks and damage of the horn button

10–A–4. Steering Wheel Installation

Follow the removal procedures in the reverse order.

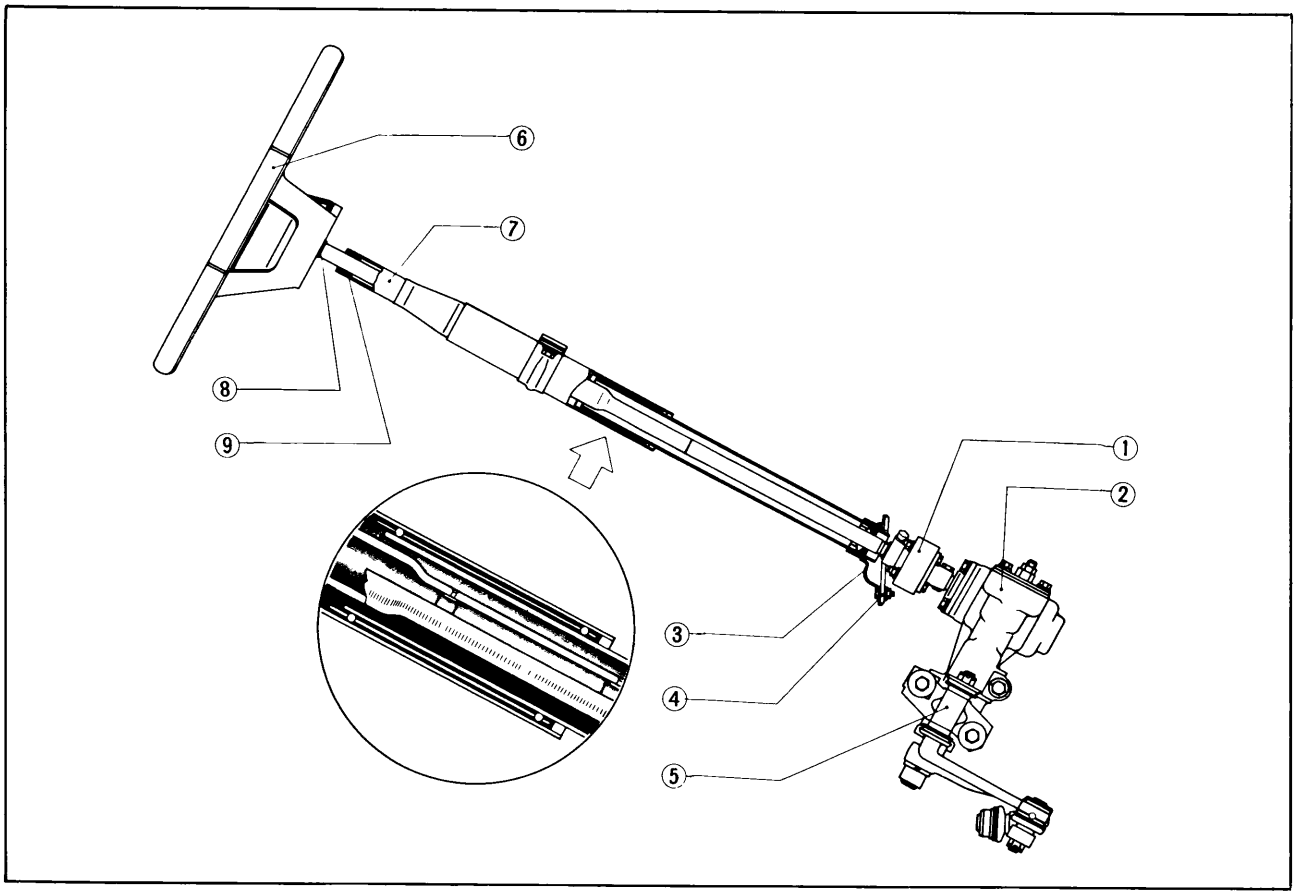

Fig. 10–1 Steering assembly

1. Flexible coupling yoke
2. Steering gear housing
3. Set plate
4. Gasket
5. Idler arm
6. Steering wheel
7. Steering column shaft
8. Retaining ring
9. Bush

10–B. STEERING GEAR

10–B–1. Steering Gear Removal

1. Raise the front end of the vehicle and support with stands.
2. Remove the front wheel.
3. Remove the cotter pin and castellated nut attaching the center link to the pitman arm.
4. Disconnect the center link from the pitman arm with the **ball joint puller** (49 0118 850C).



Fig. 10–2 Disconnecting center link

5. Remove the bolt securing the flexible coupling yoke to the worm shaft.
6. Remove the speedometer cable from the clips attached to the steering gear housing and the power brake unit.
7. Remove the bolts and nuts retaining the steering gear housing to the body. At this point, check for the possible presence of aligning shim between the gear housing and the body.

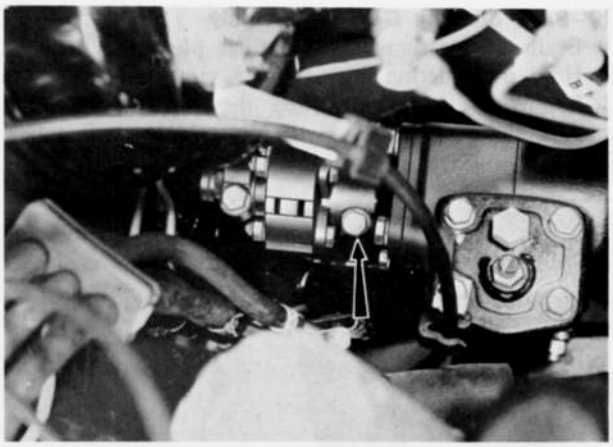

Fig. 10–3 Removing bolt

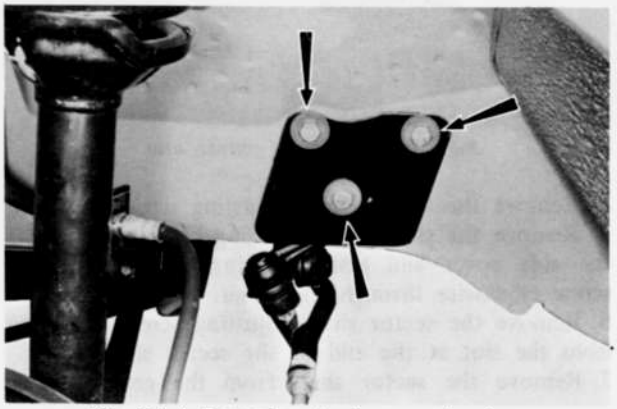

Fig. 10–4 Removing steering gear housing

8. Remove the gear housing assembly and aligning shim and lower the vehicle.

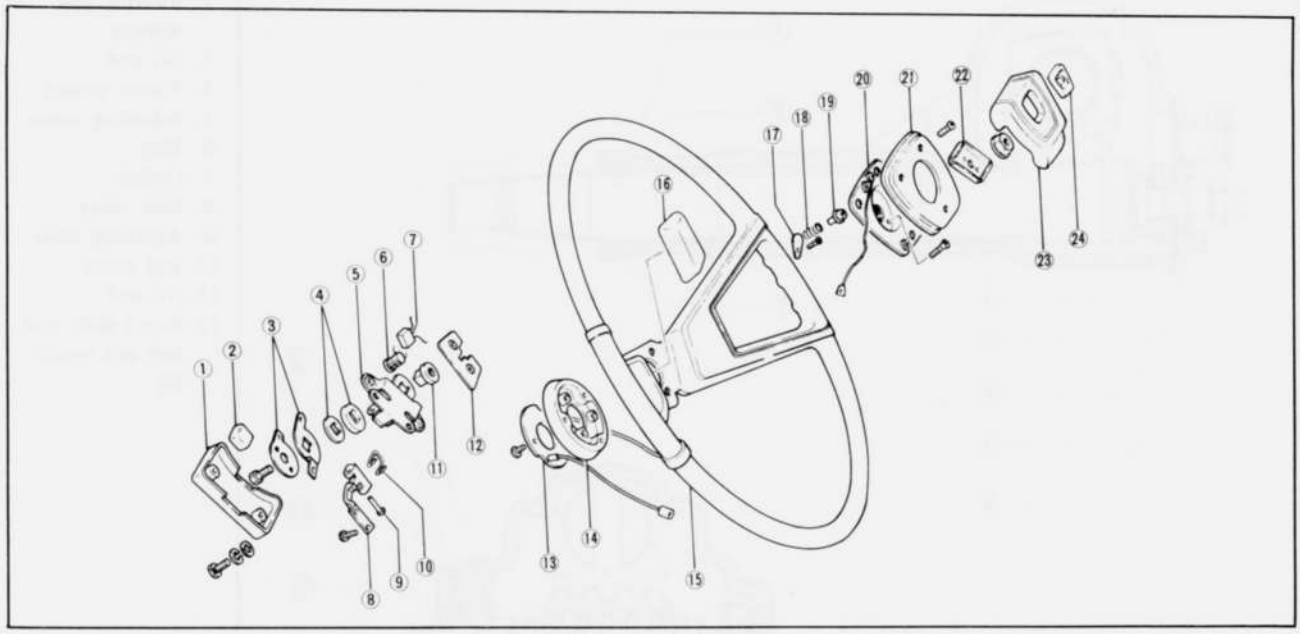

Fig. 10–5 Steering wheel components

1. Under cover
2. Supporter
3. Earth plate
4. Insulation
5. Lever support
6. Check coil
7. Condenser
8. Horn lever
9. Lever shaft
10. Spring
11. Insulation
12. Wheel core cover
13. Terminal
14. Cover
15. Steering wheel
16. Horn button
17. Earth plate
18. Spring
19. Insulator
20. Set plate
21. Cap
22. Spring cap
23. Center cap
24. Emblem

10–B–2. Steering Gear Disassembly

1. Drain oil by removing the filler plug.
2. Hold the steering housing in a vise.
3. Remove the nut attaching the pitman arm and remove the pitman arm with the **pitman arm puller** (49 0223 695D), as shown in Fig. 10–6.

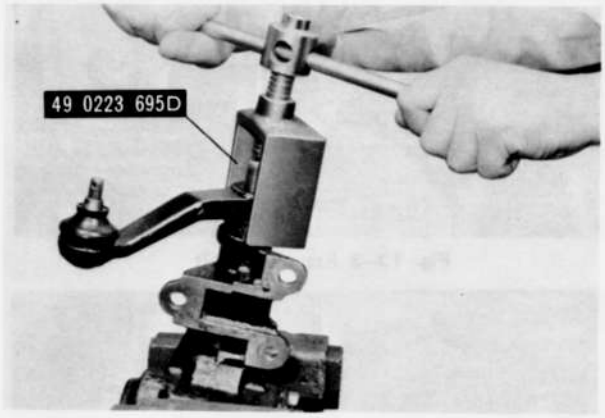

Fig. 10–6 Removing pitman arm

4. Remove the sector shaft adjusting screw lock nut.
5. Remove the side cover attaching bolts, and remove the side cover and gasket by turning the adjusting screw clockwise through the cover.
6. Remove the sector shaft adjusting screw and shim from the slot at the end of the sector shaft.
7. Remove the sector shaft from the gear housing.

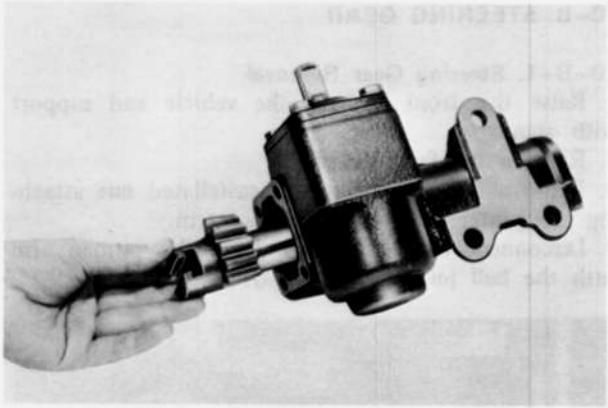

Fig. 10–7 Removing sector shaft

8. Remove the bolts that attach the end cover to the gear housing and remove the end cover and shims.
9. Remove the worm shaft and ball nut assembly from the gear housing.
10. Remove the oil seal from the gear housing, if necessary.

10–B–3. Steering Gear Inspection

1. Check the operation of the ball nut assembly on the worm shaft. If the ball nut does not travel smoothly and freely on the worm shaft and there is roughness, the ball nut and worm shaft assembly should be replaced.

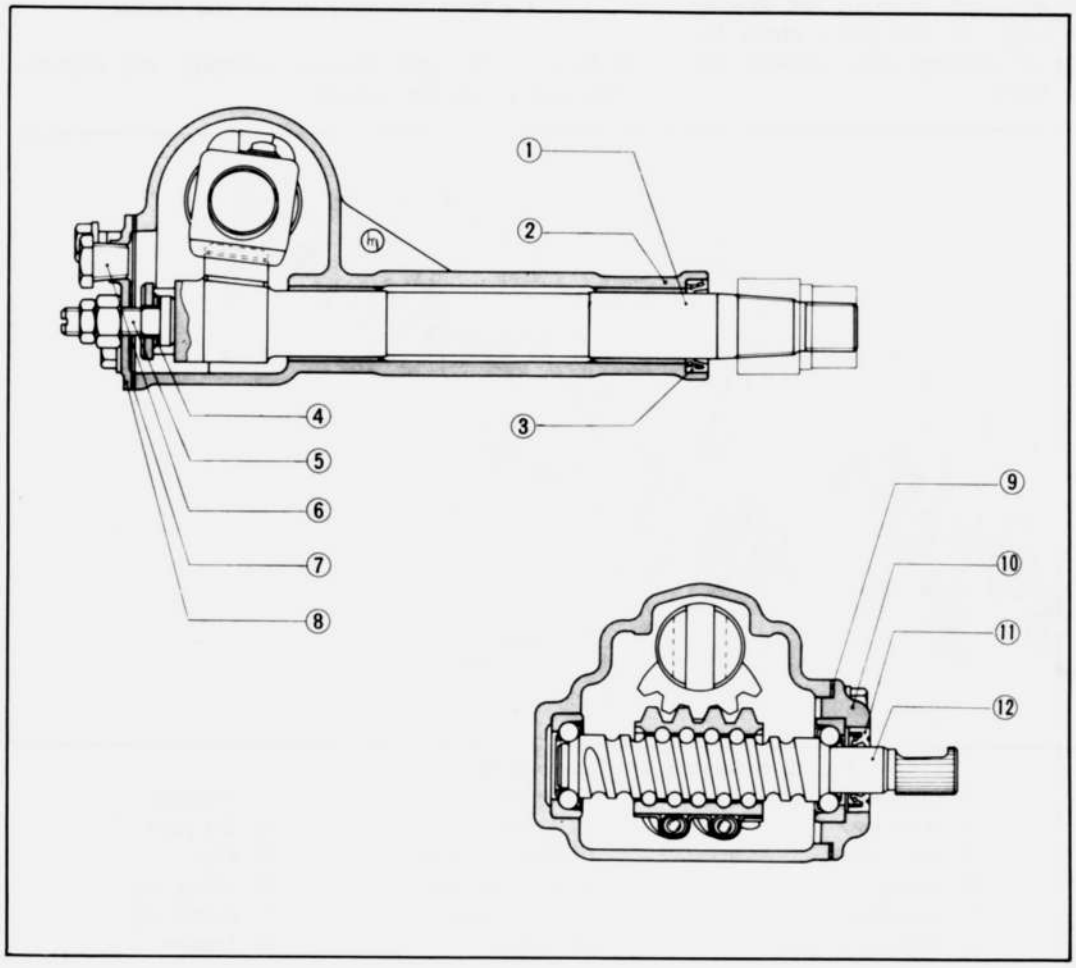

Fig. 10–8 Steering gear cross section
1. Sector shaft
2. Steering gear housing
3. Oil seal
4. Thrust washer
5. Adjusting screw
6. Plug
7. Gasket
8. Side cover
9. Adjusting shim
10. End cover
11. Oil seal
12. Worm shaft and ball nut assembly

Note:
The worm shaft and ball nut are serviced as an assembly only.

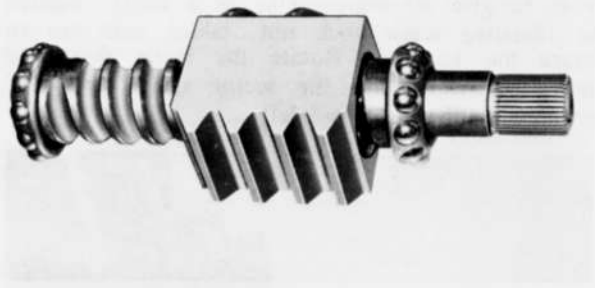

Fig. 10–9 Worm shaft and ball nut assembly

2. Check the worm bearings and cups for wear or any damage. If defective, replace with new ones.
3. Check the sector shaft for wear or damage at the gear surface.
4. Check the oil seal for wear, flaw, or any damage. If there is any possibility of oil leakage, replace the oil seal.

10–B–4. Steering Gear Assembly
1. Install the oil seal to the gear housing.
2. Insert the worm shaft and ball nut assembly into the gear housing.
3. Install the end cover and the bearing preload adjusting shims to the gear housing and tighten the end cover attaching bolts to **1.6 ~ 2.3 m-kg (12.0 ~ 17.0 ft-lb).**

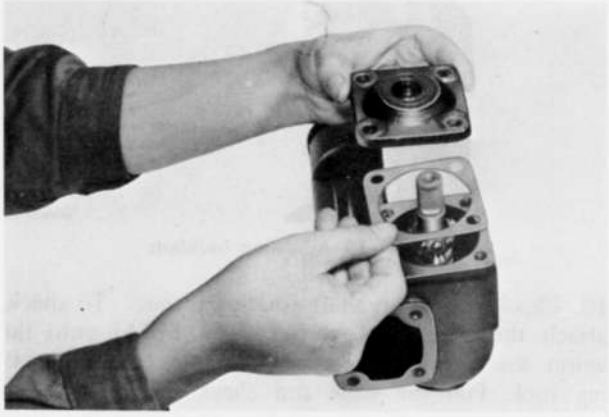

Fig. 10–10 Installing end cover and adjusting shim

4. Adjust the bearing preload. To check the preload, attach the **preload checking tool** (49 0180 510A) onto the worm shaft and connect a pull scale to the preload checking tool. Pull the scale gradually, and read the scale keeping the worm shaft rotating. If the reading is less than **0.1 kg (0.22 lb)**, reduce the shim, and add the shim if the preload is more than **0.4 kg (0.88 lb)**.
The following shims are available.

0.050 mm (0.002 in)	0.100 mm (0.004 in)
0.075 mm (0.003 in)	0.200 mm (0.008 in)

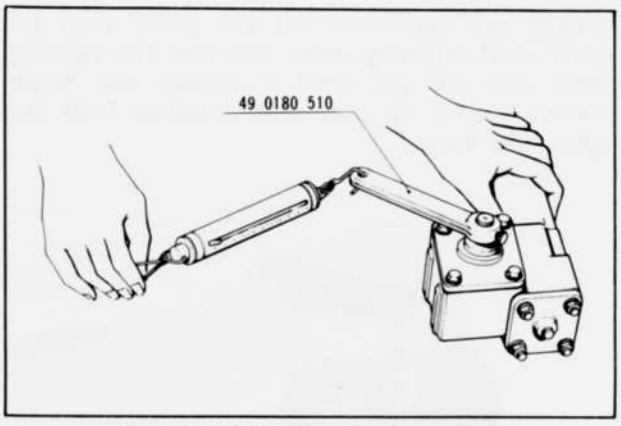

Fig. 10–11 Checking bearing preload

5. Insert the sector shaft into the gear housing, being careful not to damage the oil seal, and ensuring that the center of the sector gear is in alignment with the center of the worm gear as shown in Fig. 10–12.

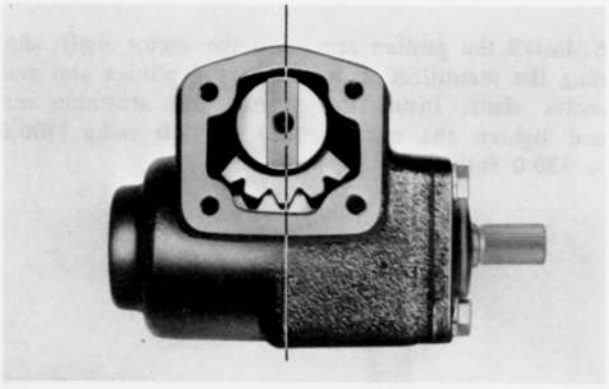

Fig. 10–12 Position of sector gear and worm gear

6. Install the sector shaft adjusting screw into the slot at the end of the sector shaft. Check the end clearance between the sector shaft and adjusting screw with a feeler gauge and adjust this clearance to **0 ~ 0.1 mm (0 ~ 0.004 in)** by inserting appropriate thrust washer.
The thrust washers are available in the following four thicknesses :

1.95 mm (0.077 in)	2.05 mm (0.081 in)
2.00 mm (0.079 in)	2.10 mm (0.083 in)



Fig. 10–13 Checking end clearance

7. Place the side cover and the gasket onto the sector shaft adjusting screw and turn the adjusting screw until the side cover is screwed into proper position. Install the side cover attaching bolts and tighten the bolts.

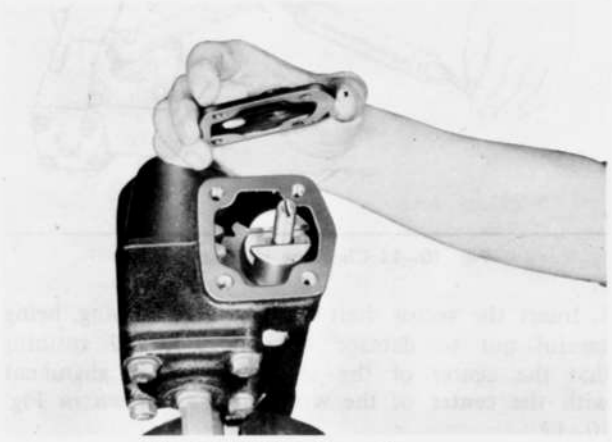

Fig. 10–14 Installing side cover

8. Install the pitman arm onto the sector shaft, aligning the identification marks of the pitman arm and sector shaft. Install the pitman arm attaching nut and tighten the nut to **15.0 ~ 18.0 m-kg (108.0 ~ 130.0 ft-lb).**

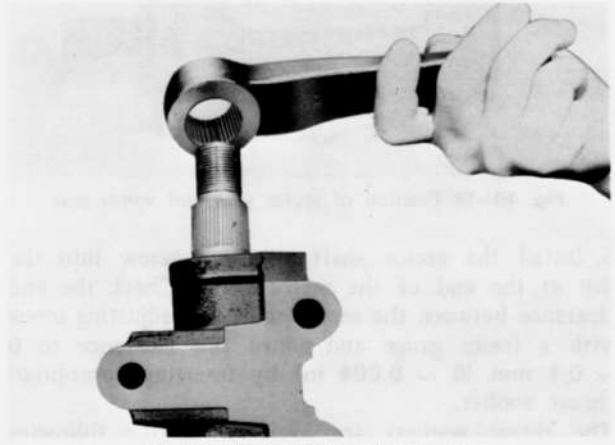

Fig. 10–15 Installing pitman arm

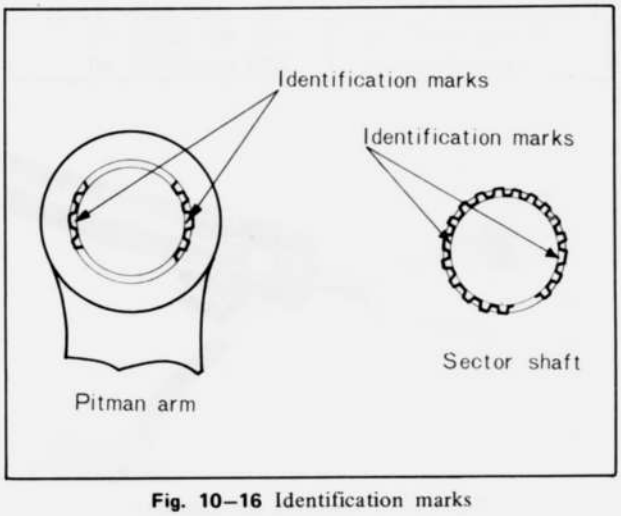

Fig. 10–16 Identification marks

9. Adjust the backlash between the worm gear and sector shaft gear. To adjust the backlash, position the sector shaft at the center of the worm gear, then, gradually screw in or out the sector shaft adjusting screw until the backlash is obtained 0 mm at the pitman arm end. Turn out the adjusting screw so as to give 30 degrees ($^1/_{12}$ of a turn). Tighten the adjusting screw lock nut, taking care not to disturb the backlash. Rotate the worm shaft and check to ensure that the sector shaft **turns 40°** smoothly to the right and left.

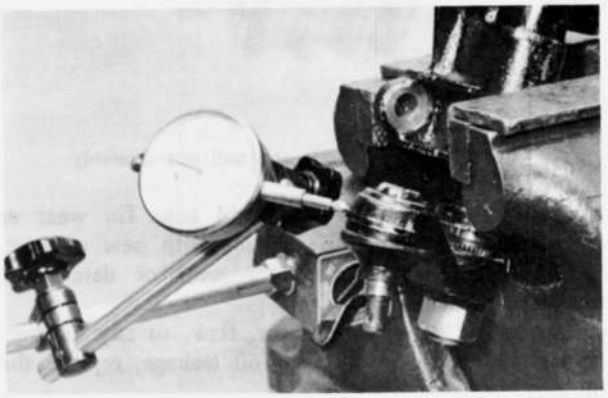

Fig. 10–17 Checking backlash

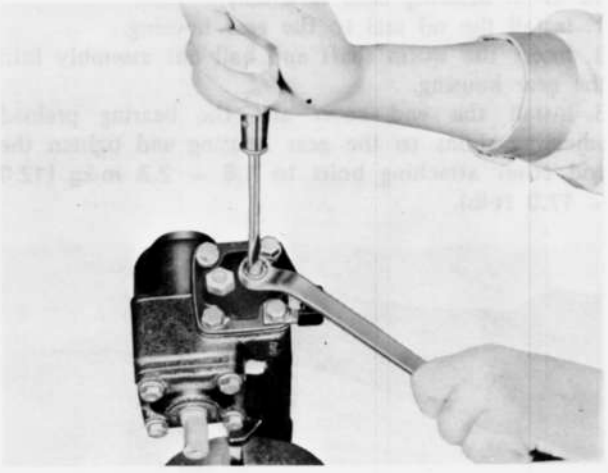

Fig. 10–18 Adjusting backlash

10. Check the worm shaft rotating torque. To check, attach the **checking tool** (49 0180 510A) onto the worm shaft and connect a pull scale to the checking tool. Pull the scale and check the worm shaft rotating torque. If the rotating torque is less than **0.9 kg (1.98 lb)** or more than **1.5 kg (3.30 lb)**, readjust the bearing preload.

10–B–5. Steering Gear Installation

Follow the removal procedures in the reverse order.

Note :

(a) Align the steering worm shaft cut portion with the flexible coupling yoke and install the steering gear housing to the body, and tighten the securing bolts and nuts.
(b) Place the shim in original position to obtain proper shaft alignment.
(c) Fill the gear housing with gear lubricant.

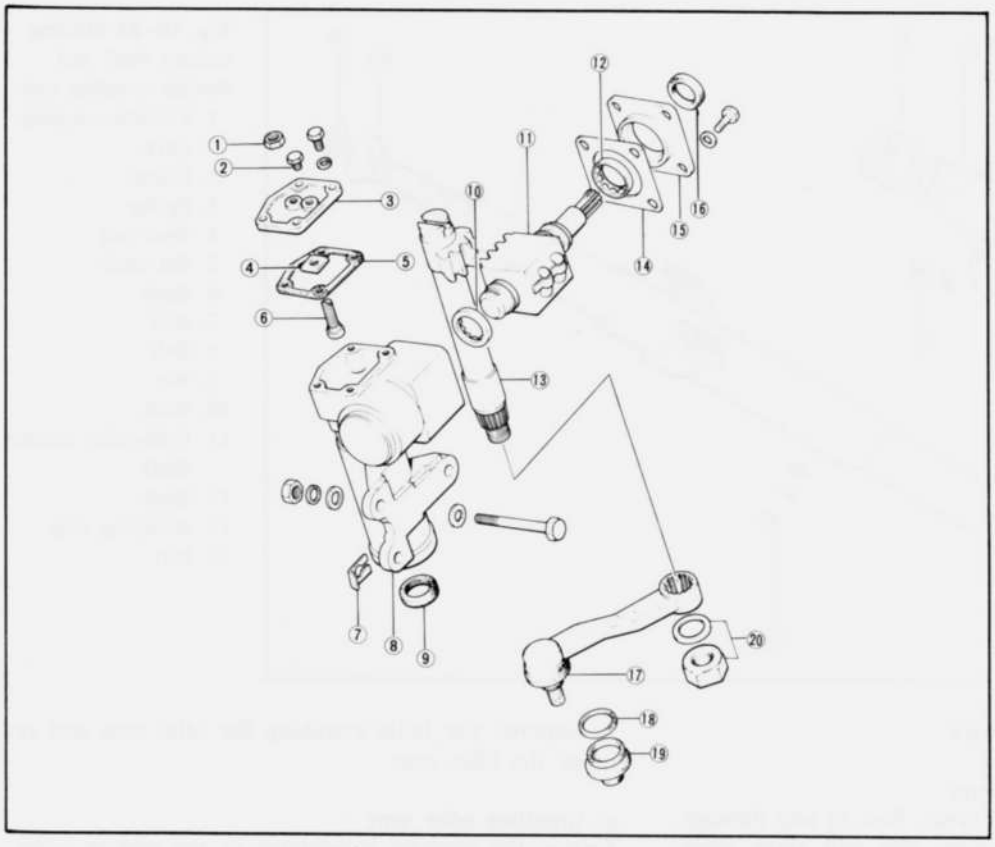

Fig. 10–19 Steering gear components
1. Lock nut
2. Oil plug
3. Side cover
4. Thrust washer
5. Gasket
6. Adjusting screw
7. Adjusting shim
8. Steering gear housing
9. Oil seal
10. Bearing
11. Worm shaft and ball nut assembly
12. Bearing
13. Sector shaft
14. Adjusting shim
15. End cover
16. Oil seal
17. Pitman arm
18. Dust seal set ring
19. Ball joint dust seal
20. Washer and nut

10–C. STEERING COLUMN SHAFT

10–C–1. Steering Column Shaft Removal

1. Remove the bolt and clamp securing the flexible coupling yoke to the column shaft.

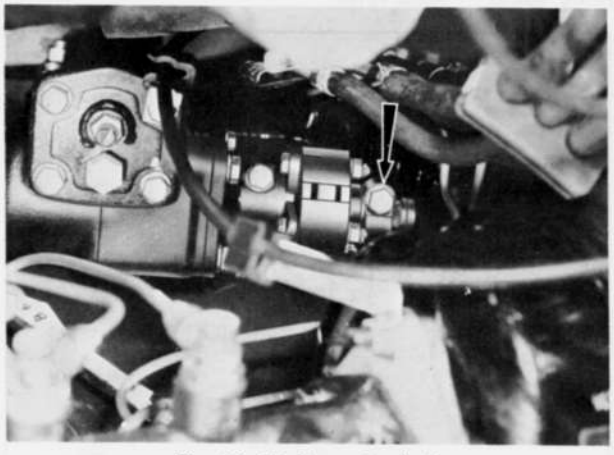

Fig. 10–20 Removing bolt

2. Remove the steering wheel, as described in Par. 10–A–2.
3. Remove the column covers.
4. Remove the bolts attaching the instrument frame junction and remove the frame junction.
5. Remove the steering lock assembly, as described in Par. 15–D–6.
6. Remove the nuts attaching the column shaft clamp.
7. Remove the column shaft assembly toward the interior.

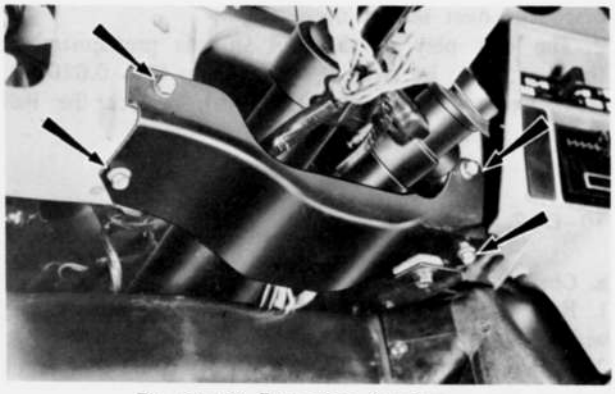

Fig. 10–21 Removing junction



Fig. 10–22 Removing column shaft clamp

10–C–2. Steering Column Shaft Installation

Follow the removal procedures in the reverse order.

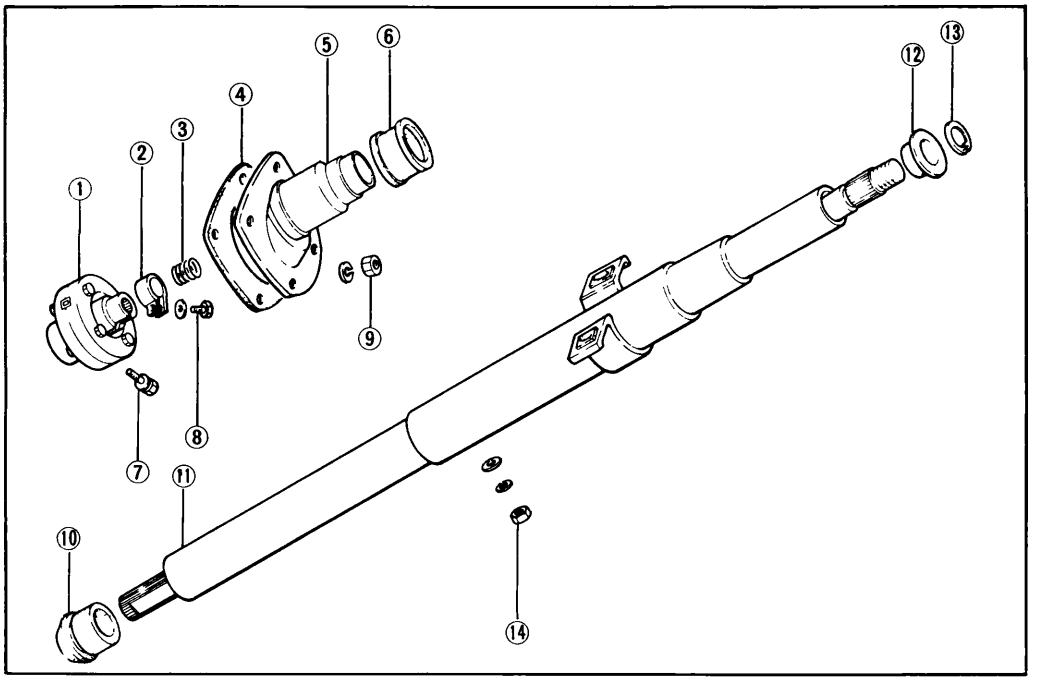

Fig. 10–23 Steering column shaft and flexible coupling yoke
1. Flexible coupling yoke
2. Clamp
3. Spring
4. Dust seal
5. Set cover
6. Bush
7. Bolt
8. Bolt
9. Nut
10. Bush
11. Collapsible column shaft
12. Bush
13. Retaining ring
14. Nut

10–D. STEERING LINKAGE

10–D–1. Checking Ball Joint

1. Check the dust seal for wear, flaw or any damage. If the dust seal is defective, this will allow entry of water and dust, resulting in ball joint wear. Replace the dust seal if necessary.
2. The end play of the ball stud is preadjusted at the factory to be from **0 ~ 0.25 mm (0 ~ 0.010 in).** If it exceeds **1.0 mm (0.039 in),** replace the ball joint in its assembled form.

10–D–2. Idler Arm

a. Checking idler arm

1. Raise the front end of the vehicle and support with stands.
2. Remove the cotter pin and nut attaching the center link at the idler arm.
3. Disconnect the center link from the idler arm with the **ball joint puller** (49 0118 850C).
4. Check the revolving torque of the idler arm. To check, hook the pull scale at the idler pin and pull the scale until the idler arm starts to turn.
The reading should be **0.1 ~ 3 kg (0.2 ~ 6.6 lb).** If it is less than **0.1 kg (0.2 lb),** replace the idler arm in its assembled form.
5. Check the end play of the idler pin. If necessary replace the idler arm assembly.

b. Removing idler arm

1. Raise the front end of the vehicle and support with stands.
2. Remove the cotter pin and nut attaching the center link at the idler arm.
3. Disconnect the center link from the idler arm with the **ball joint puller** (49 0118 850C).
4. Remove the bolts attaching the idler arm and remove the idler arm.

c. Installing idler arm

Follow the removal procedures in the reverse order.

Note:

a) Check the clearance between the idler arm edge and the idler housing end as shown in Fig. 10–24. The clearance should be **4.0 ~ 5.5 mm (0.16 ~ 0.21 in).**
b) Tighten the idler arm attaching bolts to **4.4 ~ 5.5 m-kg (32.0 ~ 40.0 ft-lb).**

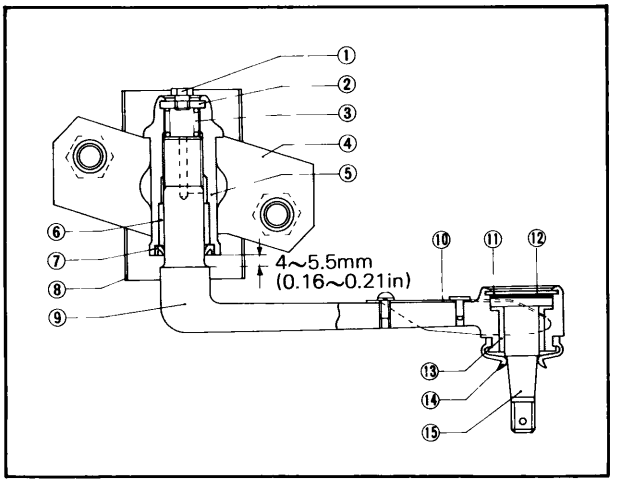

Fig. 10–24 Idler arm cross section

1. Grease plug
2. Plug
3. Spring
4. Bracket
5. Idler housing
6. Bush
7. Oil seal
8. Insulator
9. Idler arm
10. Insulator
11. End plate
12. Shim
13. Bush
14. Dust seal
15. Idler pin

10–D–3. Replacing Pitman Arm

1. Raise the front end of the vehicle and support with stands.
2. Remove the cotter pin and castellated nut that attach the steering center link to the pitman arm.
3. Disconnect the steering center link from the pitman arm with the **ball joint puller** (49 0118 850C).
4. Remove the pitman arm attaching nut.
5. Remove the pitman arm from the sector shaft using the **pitman arm puller** (49 0223 695D).
6. Install the pitman arm onto the sector shaft, aligning the identification marks of the pitman arm and sector shaft.
7. Install the pitman arm attaching nut and tighten the nut to **15.0 ~ 18.0 m-kg (108.0 ~ 130.0 ft-lb).**
8. Secure the steering center link to the pitman arm with the castellated nut. Tighten the nut and install the cotter pin.

Note :
Always tighten the nut to the next castellation if necessary to install the cotter pin.

10–D–4. Replacing Tie-rod

The tie-rod should be replaced, if it becomes worn or damaged. **Do not** attempt to straighten the tie-rod if damaged.

1. Raise the front end of the vehicle and support with stands.
2. Remove the cotter pins and castellated nuts that attach both tie-rod ends to the center link and steering knuckle.
3. Disconnect the tie-rod ends from the center link and steering knuckle with the **ball joint puller** (49 0118 850C).
4. Remove the tie-rod.
5. Secure the tie-rod to the center link and steering knuckle with castellated nut. Tighten the nut and install the cotter pin.
6. Check and, if necessary, adjust toe-in.

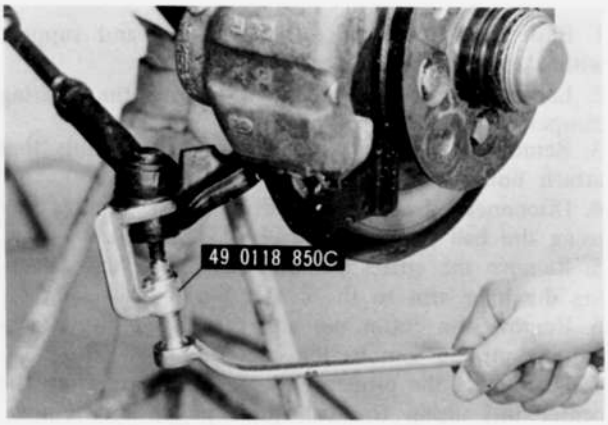

Fig. 10–25 Disconnecting tie-rod end

Note :
Whenever the tie-rod or ball joint is replaced, the toe-in is reset.

10–D–5. Replacing Center Link

The center link connecting the pitman arm and the idler arm should be replaced when damaged or worn at the ball stud. **Do not** attempt to straighten the center link if damaged.

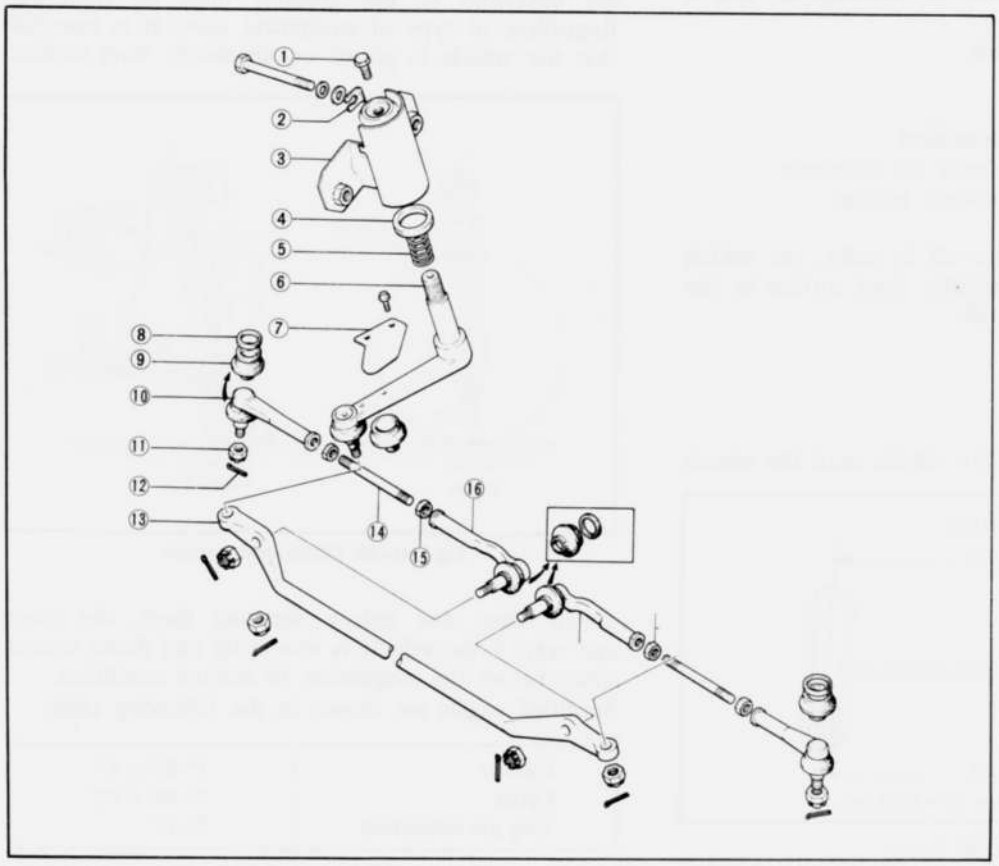

Fig. 10–26 Steering linkage components
1. Plug
2. Adjusting shim
3. Idler arm bracket
4. Oil seal
5. Spring
6. Idler arm
7. Insulator
8. Dust seal set ring
9. Ball joint dust seal
10. Tie-rod end socket
11. Castellated nut
12. Cotter pin
13. Center link
14. Tie-rod
15. Lock nut
16. Tie-rod end socket

1. Raise the front end of the vehicle and support with stands.
2. Loosen the U-bolt nuts and remove the steering damper bracket from the center link.
3. Remove the cotter pins and castellated nuts that attach both tie-rod ends to the center link.
4. Disconnect the tie-rod ends from the center link using the **ball joint puller** (49 0118 850C).
5. Remove the cotter pin and castellated nut attaching the idler arm to the center link.
6. Remove the cotter pin and castellated nut attaching the pitman arm to the center link.
7. Disconnect the pitman arm and idler arm from the center link using the ball joint puller and remove the center link.
8. Position the center link to the pitman arm and idler arm and install the castellated nuts loosely. Tighten the nut and install the cotter pin.
9. Position the tie-rod ends to the center link and install the castellated nuts. Tighten the nuts and install the cotter pins.
10. Straighten the front wheel and install the steering damper bracket to the center link with U-bolts and nuts aligning the assembly mark as shown in Fig. 10–28. Then, tighten the nuts to **3.2 ~ 4.7 m-kg (23 ~ 34 ft-lb)**.
11. Check and, if necessary, adjust toe-in.

10–E. FRONT WHEEL ALIGNMENT

Front wheel alignment is most important if correct steering, and reasonable tire wear are to be obtained. Before attempting to check the wheel alignment, the following points should be investigated, and if necessary, corrected.

1. Tires for correct inflation
2. Unbalanced tires
3. Wobbling wheels
4. Front wheel bearing adjustment
5. Ball joints, and tie-rod ends for looseness
6. Front coil springs for correct seating

When the above points are all in order, the vehicle should be stood on a perfectly level surface in the wheel alignment bay or stall.

10–E–1. Toe-in

a. Checking toe-in

1. Raise the front end of the vehicle until the wheels clear the ground.
2. Turning the wheel by hand, mark a line in the center of the wheel with a scribing block.
3. Lower the vehicle and place the front wheels in the straight ahead position.
4. Measure the distances between the marked lines at the front and rear of the wheels with a suitable toe-in gauge. The difference between these two distances is the toe-in. The standard toe-in is **0 ~ 6 mm (0 ~ 0.24 in).**

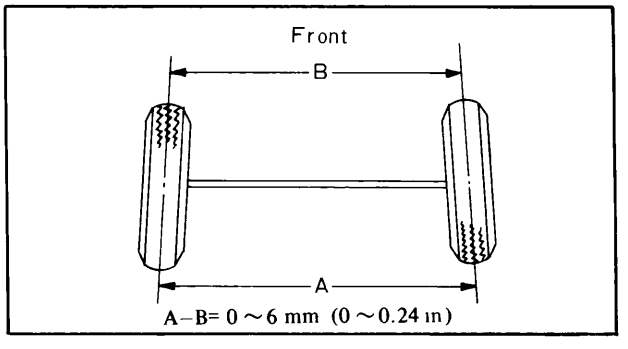

Fig. 10–27 Toe-in

b. Adjusting toe-in

If the toe-in is incorrect, proceed as follows:

1. Loosen the tie-rod locking nuts at each end of the tie-rod.
2. Check that the tie-rod ends are in the same position on each rod, thus ensuring that the tie-rods are the same length.
3. Turn the both tie-rods an equal amount until the correct toe-in is obtained.

Note :

The tie-rod is threaded with right and left hand threads.

4. Tighten the tie-rod locking nuts and recheck the toe-in.

10–E–2. Caster, Camber and King Pin Inclination

a. Checking caster, camber and king pin inclination

There are several alignment machines available, and the instruction furnished by each manufacturer for the operation of the machine must be followed. Regardless of type of equipment used, it is essential that the vehicle is placed on absolutely level surface at all time, and before checking them, the front and rear of the vehicle is moved up and down several times to set the suspension to normal condition. Specified angles are shown in the following table.

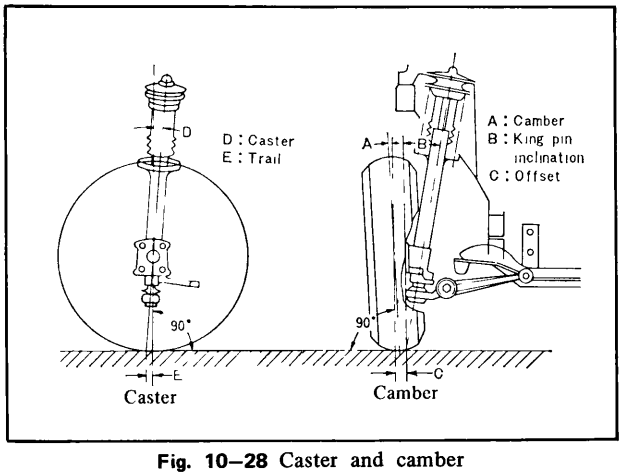

Fig. 10–28 Caster and camber

Camber	1° 00′ ± 1°
Caster	2° 00′ ± 45′
King pin inclination	9° 45′

b. Adjusting camber and caster

The camber and caster can be adjusted by changing the position of the shock absorber support. The shock absorber supports are installed at the manufacture so that the ▲ mark on the support is in position shown in Fig. 10–29.

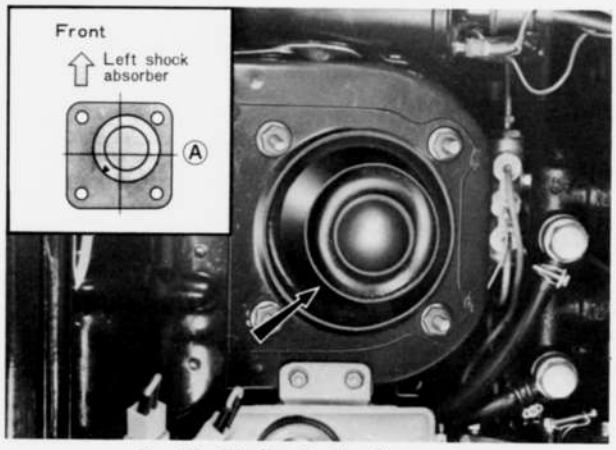

Fig. 10–29 Shock absorber support

If necessary, adjust it as follows :

1. Open the hood, and remove the four nuts that attach the shock absorber support to the fender apron.
2. Raise the front end of the vehicle and support with stands.
3. Remove the center cap and front wheel.
4. Press the shock absorber downward and change the position of the support according to the following table.

	Adjustment	Variation	
	Shock absorber support	Camber	Caster
A	0°	0	0
B	90°	0	+28′
C	180°	+28′	+28′
D	−90°	+28′	0

5. Tighten the shock absorber support attaching nuts.
6. Install the wheel and tighten the wheel bolts temporarily.
7. Lower the vehicle and tighten the wheel bolts to **9.0 ~ 10.0 m-kg (65.0 ~ 72.0 ft-lb)**.
8. Check the camber and caster.
9. Install the center cap.

If the camber and caster can not be adjusted to correct angle, check all parts of the front suspension and body alignment, and replace or repair necessary parts.

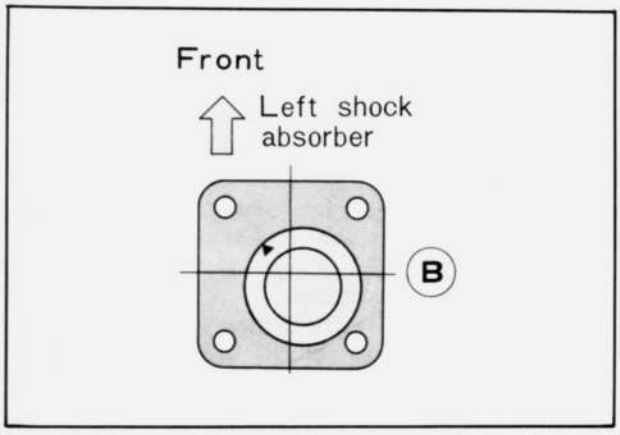

Fig. 10–30 Adjusting camber and caster

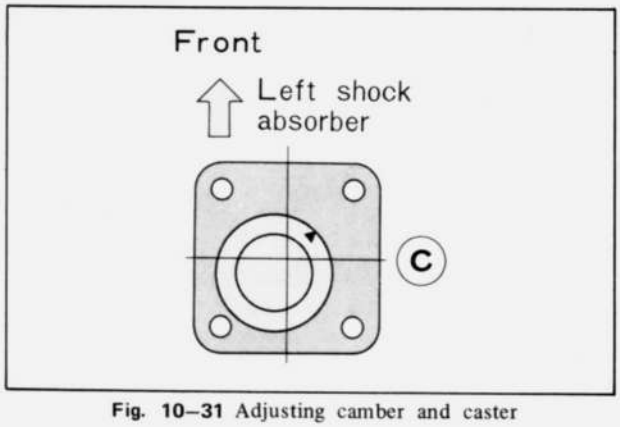

Fig. 10–31 Adjusting camber and caster

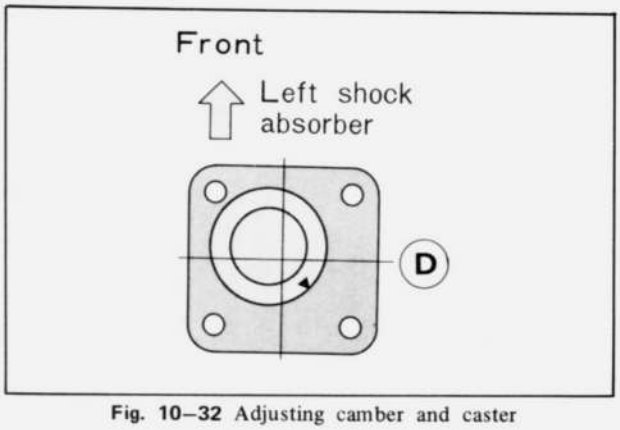

Fig. 10–32 Adjusting camber and caster

SPECIAL TOOLS

49 0118 850C	Ball joint puller
49 0180 510A	Preload checking tool
49 0223 695D	Pitman arm puller

BRAKES

DESCRIPTION ..... 11 : 1
11–A. BRAKE ADJUSTMENT ..... 11 : 1
11–A–1. Adjusting Brake Pedal Free Play ..... 11 : 1
11–A–2. Bleeding Hydraulic System ..... 11 : 1
11–A–3. Adjusting Rear Brake Shoe ..... 11 : 1
11–B. BRAKE FAIL INDICATOR ..... 11 : 2
11–B–1. Centralizing Brake Fail Indicator ..... 11 : 2
11–C. BRAKE MASTER CYLINDER ..... 11 : 2
11–C–1. Removing Brake Master Cylinder ..... 11 : 2
11–C–2. Disassembling Brake Master Cylinder ..... 11 : 2
11–C–3. Checking Brake Master Cylinder ..... 11 : 3
11–C–4. Assembling Brake Master Cylinder ..... 11 : 3
11–C–5. Installing Brake Master Cylinder ..... 11 : 4
11–D. POWER BRAKE UNIT ..... 11 : 4
11–D–1. Checking Power Brake Unit on Vehicle ... 11 : 4
11–D–2. Removing Power Brake Unit ..... 11 : 5
11–D–3. Disassembling Power Brake Unit ..... 11 : 5
11–D–4. Checking Power Brake Unit ..... 11 : 7
11–D–5. Assembling Power Brake Unit ..... 11 : 7
11–D–6. Installing Power Brake Unit ..... 11 : 8
11–E. HYDRAULIC LINES ..... 11 : 8
11–E–1. Checking Brake Lines ..... 11 : 8
11–F. FRONT BRAKE ..... 11 : 8
11–F–1. Disc Brake Shoe ..... 11 : 8
a. Replacing disc brake shoe ..... 11 : 8
11–F–2. Caliper ..... 11 : 9
a. Removing caliper ..... 11 : 9
b. Disassembling caliper ..... 11 : 9
c. Checking caliper ..... 11 : 10
d. Assembling caliper ..... 11 : 10
e. Installing caliper ..... 11 : 10
11–F–3. Brake Disc and Front Wheel Hub Assembly ..... 11 : 11
a. Checking Brake disc assembly ..... 11 : 11
b. Replacing brake disc assembly ..... 11 : 11
11–G. REAR BRAKE ..... 11 : 11
11–G–1. Rear Brake Drum and Shoe ..... 11 : 11
a. Removing rear brake drum and shoe ..... 11 : 11
b. Inspecting rear brake drum and shoe ..... 11 : 12
c. Installing rear brake drum and shoe ..... 11 : 12
11–G–2. Wheel Cylinder ..... 11 : 12
a. Removing wheel cylinder ..... 11 : 12
b. Disassembling wheel cylinder ..... 11 : 13
c. Checking wheel cylinder ..... 11 : 13
d. Assembling wheel cylinder ..... 11 : 13
e. Installing wheel cylinder ..... 11 : 13
11–H. PARKING BRAKE ..... 11 : 13
11–H–1. Parking Brake Adjustment ..... 11 : 13
SPECIAL TOOL ..... 11 : 13

DESCRIPTION

The brakes consist of two systems, the foot brake, and the parking brake. The front brakes are of a disc brake type.
The rear brakes are of a drum type with leading and trailing shoes. The brake pedal is of a pendant type.
The parking brake operates the brake shoes of the rear wheels through the wire linkage.

11–A. BRAKE ADJUSTMENT

11–A–1. Adjusting Brake Pedal Free Play

There should always be **7.0 ~ 9.0 mm (0.28 ~ 0.35 in)** free pedal travel before the push rod contact with piston. To adjust the free play, loosen the lock nut and turn the master cylinder push rod connected to the brake pedal. After proper adjustment is obtained, tighten the lock nut.

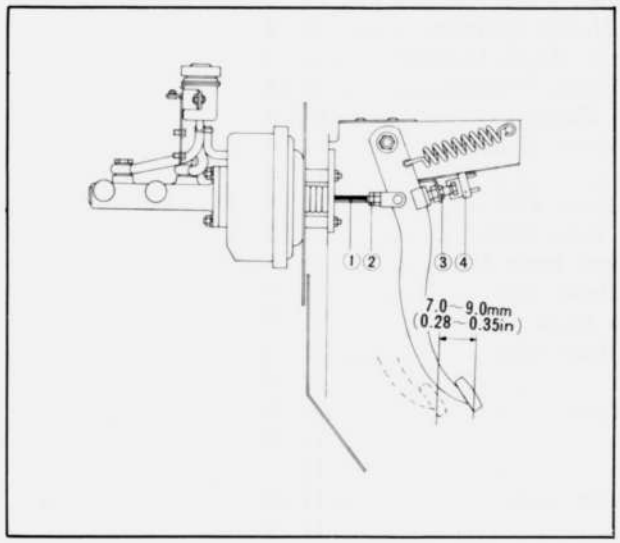

Fig. 11–1 Brake pedal
1. Push rod
2. Lock nut
3. Lock nut
4. Stop light switch

11–A–2. Bleeding Hydraulic System

The front and rear hydraulic brake systems are individual systems and are bled separately. When bleeding the brake system, bleed one bleeder screw at a time, being at the bleeder screw with the longest hydraulic line first.
1. Remove the rubber cap from the bleeder screw on the right rear wheel cylinder and attach a vinyl tube to the bleeder screw.
2. Insert the free end of the vinyl tube into a suitable container while bleeding the brake system.
3. Depress the brake pedal several times quickly, then with the brake pedal depressed, open the bleeder screw to expel the air. Close the screw, then return the pedal to the full-released position.
4. Repeat this operation until air bubbles cease to appear at the free end of the vinyl tube.
5. If the rear brake system is to be bled, repeat Step 1 through 4 at right front and left front cylinder.

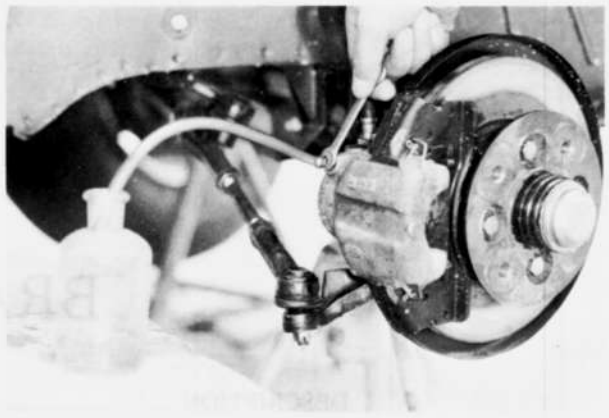

Fig. 11–2 Bleeding front brake

6. Centralize the brake fail indicator, as described in Par. 11–B–1.

Note:
a) During bleeding operation, the reservoir of the master cylinder must be kept at least 3/4 full of the brake fluid.
b) Do not mix low temperature brake fluid with the specified fluid.
c) Never re-use brake fluid which has been drained from the hydraulic systems.
d) Do not use the secondary piston stop bolt, located on the side of the master cylinder to bleed the brake system.
Loosening or removing this bolt could result in damage to the secondary piston or stop bolt.

11–A–3. Adjusting Rear Brake Shoe

To adjust the brake shoe, proceed as follows :
1. Jack the rear end of the vehicle, then support with stands.
2. Make sure that the parking brake is fully released.
3. Remove the shoe adjusting hole plug from the backing plate, and expand the brake shoe by turning the adjuster toward the arrow direction (⇐) marked on the backing plate until the wheel locks. At this

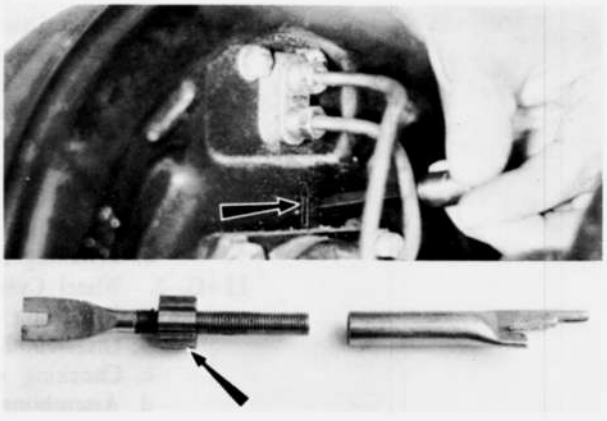

Fig. 11–3 Adjusting rear brake shoe

time, pump the brake pedal several times to make sure that the shoes contact the drum on the entire surface. If the wheel turns after removing the foot

from the brake pedal, turn the adjuster further until the wheel locks firmly.
4. Back off the adjuster about 4 ~ 5 notches so that the drum rotates freely without any drag.
5. Check that the wheel rotates freely after pumping the brake pedal several times. Next, install the adjusting hole plug onto the backing plate.

Note :
If the wheel does not rotate freely, check and repair the drum, shoes or other necessary parts.

6. Perform the same adjustment on the other side shoes of the rear wheels. The adjustments must be equal at all shoes.

11–B. BRAKE FAIL INDICATOR

11–B–1. Centralizing Brake Fail Indicator

After any repair or bleeding of the front or rear brake system, the brake warning light will usually continue to be illuminated due to the brake fail indicator remaining in the off center position. To centralize the brake fail indicator, turn off the warning light after repair operation.
1. Turn the ignition switch to the ON position.
2. Check the fluid level in the master cylinder reservoir and fill them to 3/4 full of the brake fluid.
3. Depress the brake pedal and the piston will center itself causing the brake warning light to go out.
4. Turn the ignition switch to the OFF position.
5. Before driving the vehicle, check operation of the brakes and be sure that a firm pedal is obtained.

11–C. BRAKE MASTER CYLINDER

11–C–1. Removing Brake Master Cylinder

1. Disconnect the fluid pipes (reservoir tank ~ master cylinder) at the brake master cylinder and plug the end of the pipes to prevent fluid leakage.
2. Disconnect the fluid pipes at the master cylinder outlets.
3. Remove the nuts that attach the master cylinder to the power brake unit.
4. Remove the master cylinder assembly from the power brake unit.

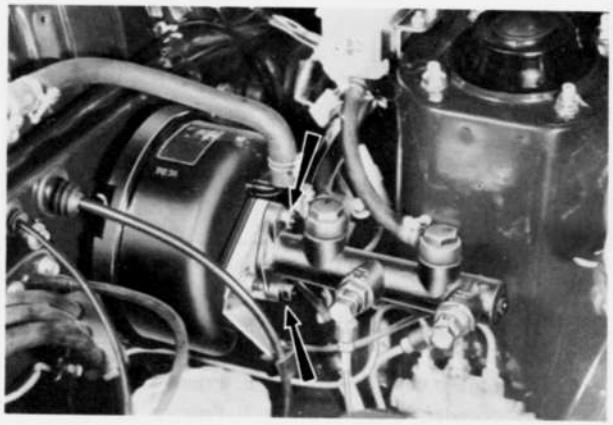

Fig. 11–4 Removing brake master cylinder

Note:
Never allow the brake fluid to drop on any painted surface.

11–C–2. Disassembling Brake Master Cylinder

1. Clean the outside of the master cylinder.
2. Pour out any brake fluid that remains in the cylinder. Discard the old brake fluid.
3. Remove the connector bolts from the primary and secondary inlets. Then, remove the unions and washers.
4. Depress the primary piston assembly and remove the snap ring from the retaining groove at the rear of the cylinder bore. Remove the stop washer.
5. Remove the primary piston, cups, spacer and spring seat assembly and primary spring from the cylinder.

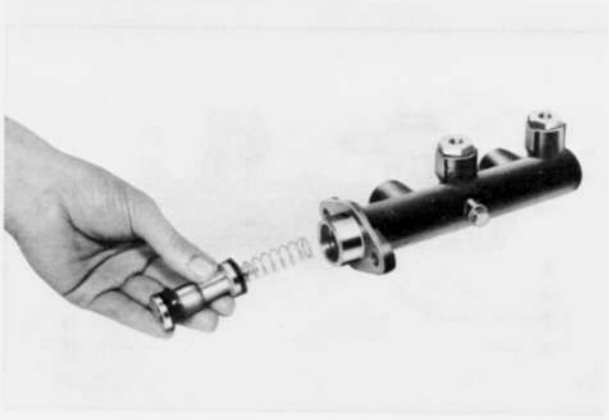

Fig. 11–5 Removing primary piston

6. Loosen the secondary piston set bolt. Do not remove it.
7. Pushing in the secondary piston with a screwdriver, remove the set bolt and insert the guide pin in its place. Then, gradually take out the screwdriver and remove the secondary piston and cups assembly and spring from the cylinder.

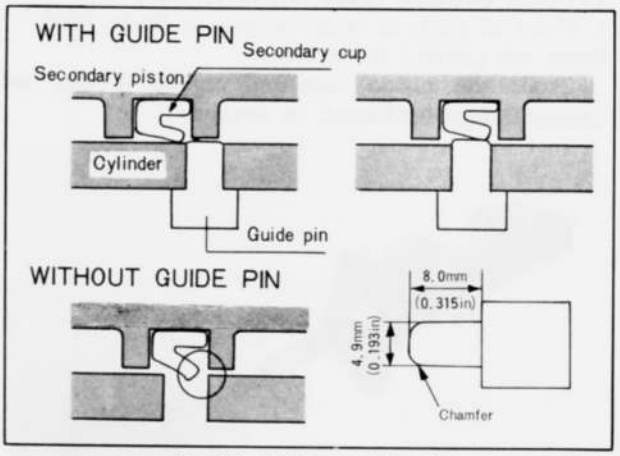

Fig. 11–6 Piston guide pin

If necessary, blow out with compressed air from the outlet hole.

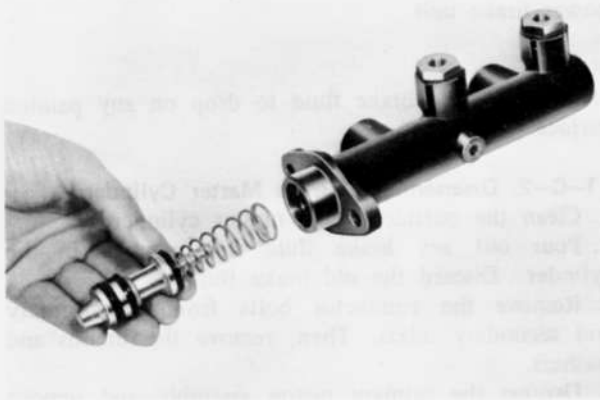

Fig. 11–7 Removing secondary piston

8. Remove the fluid pipe fittings and gaskets from the primary and secondary brake system outlets. Then, remove the check valves and return springs from the outlets.

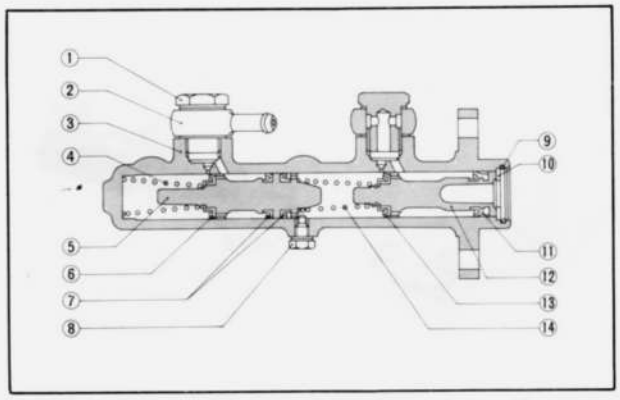

Fig. 11–8 Brake master cylinder cross section

1. Connector bolt
2. Connector union
3. Cylinder
4. Secondary spring
5. Secondary piston
6. Primary cup
7. Secondary cup
8. Set bolt
9. Snap ring
10. Stop washer
11. Secondary cup
12. Primary piston
13. Primary cup
14. Primary spring

11–C–3. Checking Brake Master Cylinder

1. Clean all parts in clean alcohol or brake fluid. **Never use** gasoline or kerosene.
2. Check the piston cups and replace if they are damaged, worn, softened, or swelled.



Fig. 11–9 Checking piston clearance

3. Examine the cylinder bore and piston for wear, roughness or scoring. Check the clearance between the cylinder bore and the piston. If it is more than **0.15 mm (0.006 in)**, replace the cylinder or piston.
4. Check all recesses, openings and internal passages to be sure they are open and free of foreign matter. Use compressed air to blow out dirt and cleaning solvent.
5. Check the piston return spring for weakness.

11–C–4. Assembling Brake Master Cylinder

1. Dip all parts except the cylinder in clean brake fluid.
2. Insert the check valve springs into the outlets and place the check valves over the springs. Install the fluid pipe fittings and gaskets for the outlet holes. Tighten the fittings to **6.0 ~ 7.0 m-kg (43 ~ 51 ft-lb)**.

Note:
The check valve with hole in center is for disc brake (front brake). The check valve without hole in center is for drum brake (rear brake).

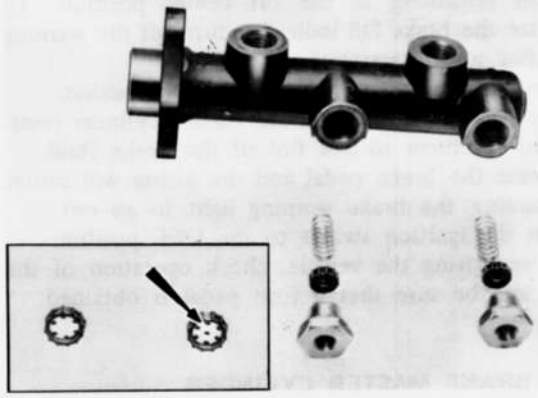

Fig. 11–10 Check valves and fluid pipe fittings

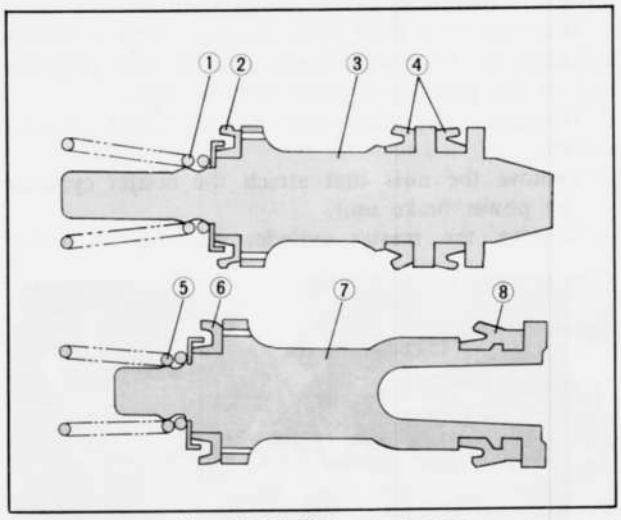

Fig. 11–11 Pistons and cups

1. Secondary return spring
2. Primary cup
3. Secondary piston
4. Secondary cups
5. Primary return spring
6. Primary cup
7. Primary piston
8. Secondary cup

3. Fit the secondary cup and primary cup onto the secondary piston as shown in Fig. 11–11.
4. Fit the secondary piston guide pin into the secondary piston set bolt hole and insert the secondary piston and return spring assembly into the cylinder. Depress the secondary piston with a suitable rod and remove the guide pin. Then, install the secondary piston set bolt.

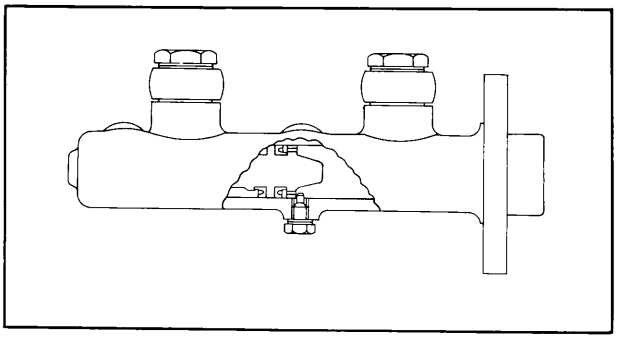

Fig. 11–12 Installing set bolt

5. Fit the primary cup and secondary cup onto the primary piston as shown in Fig. 11–12.
6. Insert the return spring and the primary piston assembly.
7. Hold the primary piston down and install the stop washer. Then, install the snap ring into position in groove of the cylinder bore.

Note:
Make sure that the piston cups do not cover the compensating ports.

8. Install the unions and washers to the primary and secondary-inlets with connector bolts and tighten them.

11–C–5. Installing Brake Master Cylinder

Follow the removal procedures in the reverse order.

Note:
Fill the reservoir and bleed the air at each bleeder screw.

11–D. POWER BRAKE UNIT

11–D–1. Checking Power Brake Unit on Vehicle

1. Road test the brakes by making a brake application at about 30 km (20 miles) to determine if the vehicle stops evenly and quickly. If pedal has a spongy feel when applying brakes, air may be present in hydraulic system. Bleed the system as described in Par. 11–A–2.
2. With the engine stopped and transmission in neutral, apply brakes several times to deplete all vacuum reverse in the power brake unit. Depress brake pedal, hold light-foot pressure on the pedal and start the engine. If vacuum system is operating, pedal will tend to fall away under foot pressure and less pressure will be required to hold pedal in applied position. If no action is felt, vacuum system is not functioning.
3. Stop the engine. Again deplete all vacuum reverse in system. Depress the brake pedal and hold foot pressure on the pedal. If pedal gradually falls away under foot pressure, hydraulic system is leaking internally or externally.
4. Start the engine with brakes off and transmission in neutral. Run the engine to medium speed and turn off ignition switch. Immediately close throttle. This build up vacuum. Wait no less than 90 seconds, then try brake action. If not vacuum assisted for two or more applications, vacuum check valve is faulty or there is a leak in vacuum system.

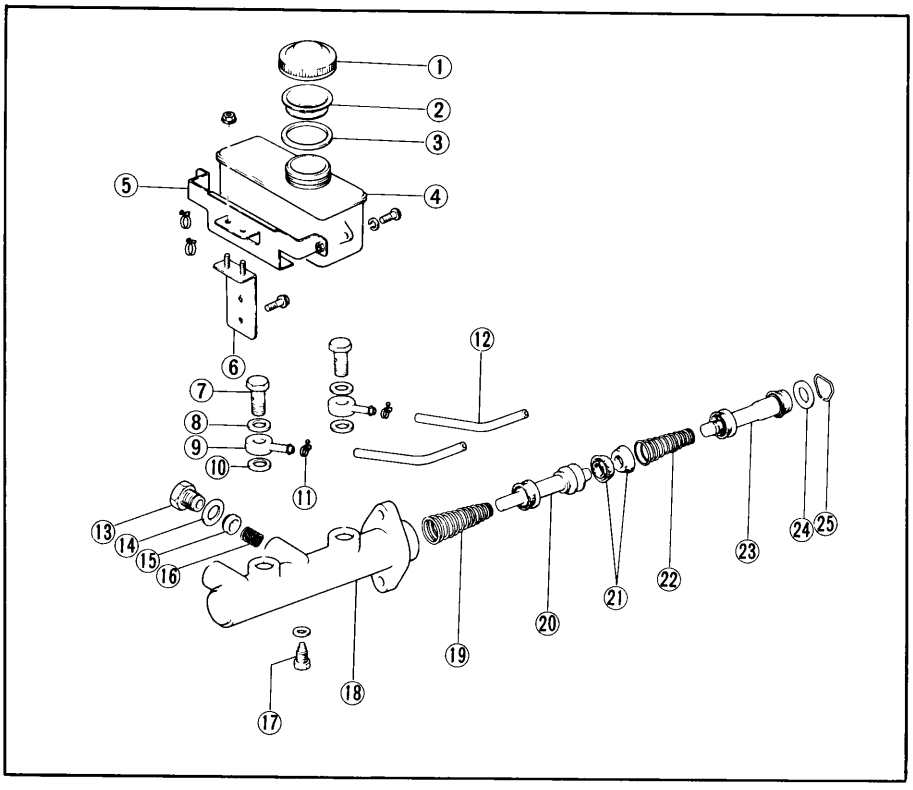

Fig. 11–13 Brake master cylinder components

1. Reservoir cap
2. Baffle plate
3. Rubber gasket
4. Reservoir
5. Bracket
6. Bracket
7. Connector union bolt
8. Washer
9. Connector union
10. Washer
11. Hose clip
12. Hose
13. Fluid pipe fitting
14. Washer
15. Check valve
16. Spring
17. Set bolt
18. Cylinder
19. Secondary spring
20. Secondary piston
21. Secondary cup
22. Primary spring
23. Primary piston
24. Stop washer
25. Snap ring

11–D–2. Removing Power Brake Unit

1. Remove the brake master cylinder, as described in Par. 11–C–1.
2. Disconnect the vacuum hose at the power brake unit.
3. Disconnect the push rod from the brake pedal by removing the cotter pin at the fork end.
4. Remove the nuts that attach the power brake unit to the dash panel.
5. Remove the power brake unit from the dash panel.

11–D–3. Disassembling Power Brake Unit

1. Place the power brake unit in a vice with push rod up. Clamp the unit firmly on the flange.
2. Scribe a mark on the bottom center of the front and rear shells to facilitate reassembly.
3. Remove the fork end, lock nut and dust boot.

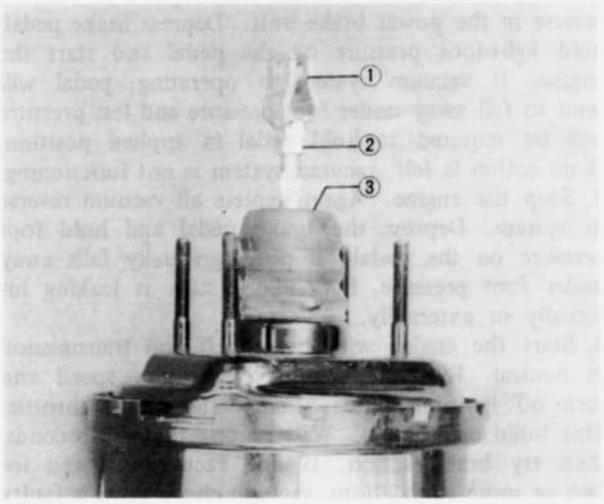

Fig. 11–14 Removing boot
1. Fork end 2. Lock nut 3. Boot

4. Attach a suitable wrench to the studs of the rear shell as shown in Fig. 11–15. Rotate the rear shell clockwise to unlocked position.

Note:
Loosen the rear shell carefully as it is spring-loaded.

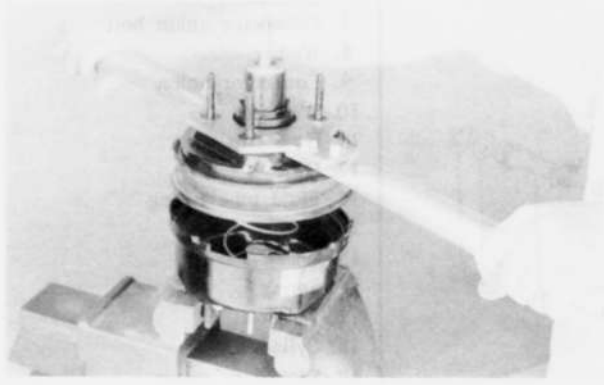

Fig. 11–15 Removing rear shell

5. Lift the rear shell, diaphragm and power piston assembly, rod and plunger assembly from the unit. Then, remove the return spring.

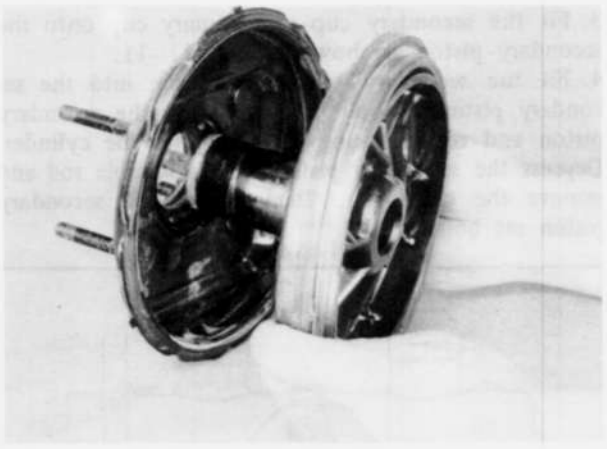

Fig. 11–16 Removing power piston assembly

6. Remove the diaphragm and power piston assembly, valve rod and plunger assembly from the rear shell.

Note :
Do not remove the rear seal from the rear shell unless seal is defective and the new seal is available. **To remove** the rear seal, support the rear shell and drive out the rear seal with a punch or a screwdriver.

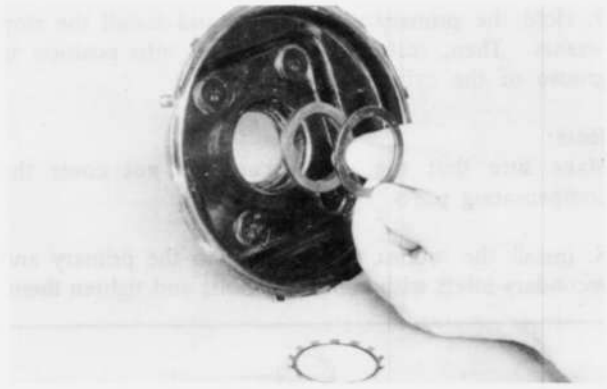

Fig. 11–17 Removing rear seal

7. Remove the diaphragm from the power piston.
8. Remove the air silencer with the air filter from the power piston, being careful not to chip plastic.

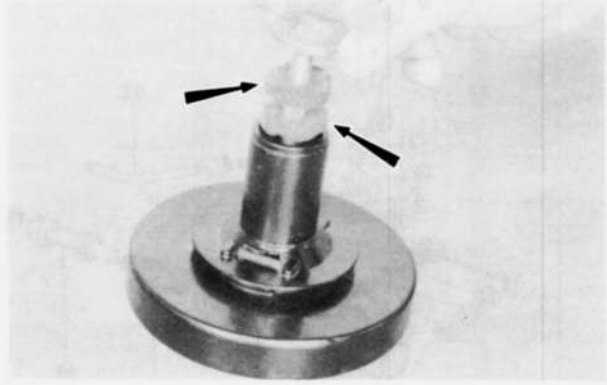

Fig. 11–18 Removing air filter

9. Press in on the valve rod to remove the retainer key.
Remove the valve rod and plunger assembly.

Note:
The valve rod and plunger are serviced as an assembly only.

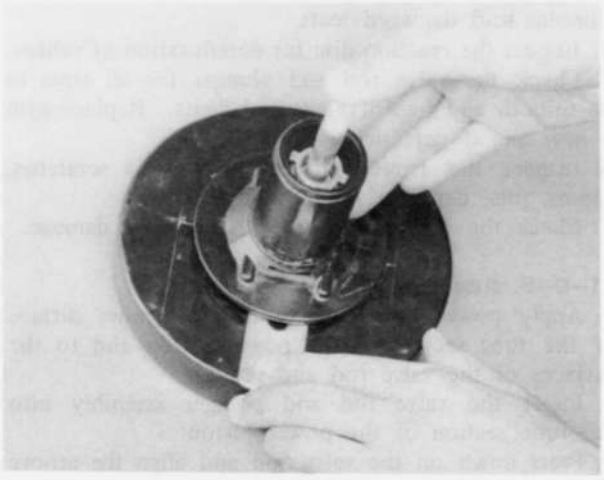

Fig. 11–19 Removing retainer key

10. Press the reaction disc out of the power piston.



Fig. 11–20 Reaction disc

11. Remove the push rod from the front shell.
12. Remove the front seal from the front shell if necessary.

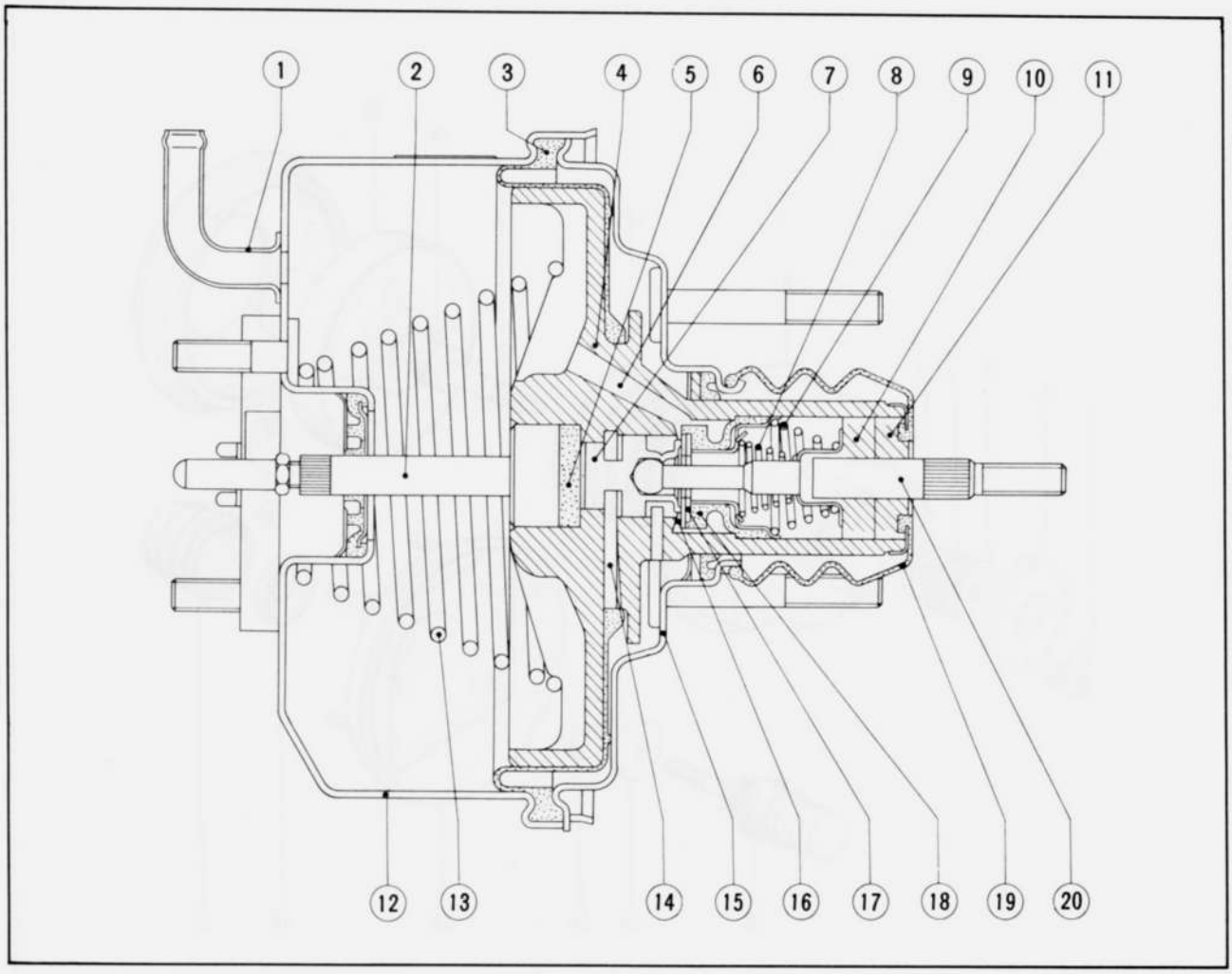

Fig. 11–21 Power brake unit cross section

1. Check valve
2. Push rod
3. Diaphragm
4. Power piston
5. Reaction disc
6. Vacuum passage
7. Air valve plunger
8. Spring
9. Spring
10. Silencer
11. Silencer filter
12. Front shell
13. Return spring
14. Key
15. Rear shell
16. Atmospheric port
17. Air valve piston
18. Floating control valve
19. Boot
20. Valve rod and plunger

11–D–4. Checking Power Brake Unit

1. Check the clearance between primary piston and the push rod of the power brake unit and if necessary, adjust the push rod so that the correct clearance is obtained. The standard clearance is **0.1 ~ 0.5 mm (0.004 ~ 0.020 in).**

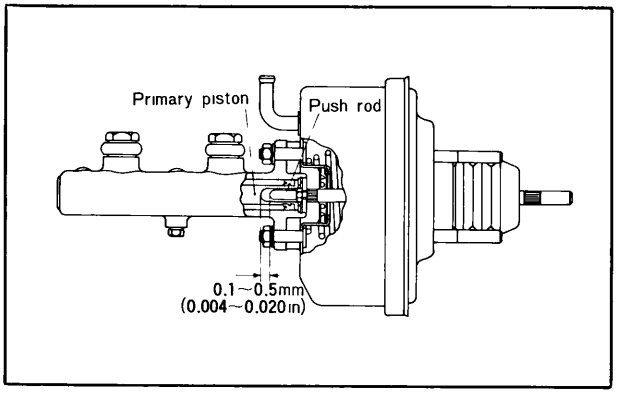

Fig. 11–22 Clearance between piston and rod

2. Inspect all rubber parts. Wipe free of fluid and carefully inspect each rubber part for cuts, nicks or other damage.
3. Check the power piston for cracks, distortion, chipping and damaged seats.
4. Inspect the reaction disc for deterioration of rubber.
5. Check the valve rod and plunger for all seats to be smooth and free of nicks and dents. Replace with a new one if defective.
6. Inspect the front and rear shells for scratches, scores, pits, dents or other damage.
7. Check the diaphragm for cuts, or other damage.

11–D–5. Assembling Power Brake Unit

1. Apply power brake lubricant to the inner surface of the tube section of the power piston and to the surfaces of the valve rod and plunger.
2. Insert the valve rod and plunger assembly into the tube section of the power piston.
3. Press down on the valve rod and align the groove in the valve plunger with the slot of the power piston.

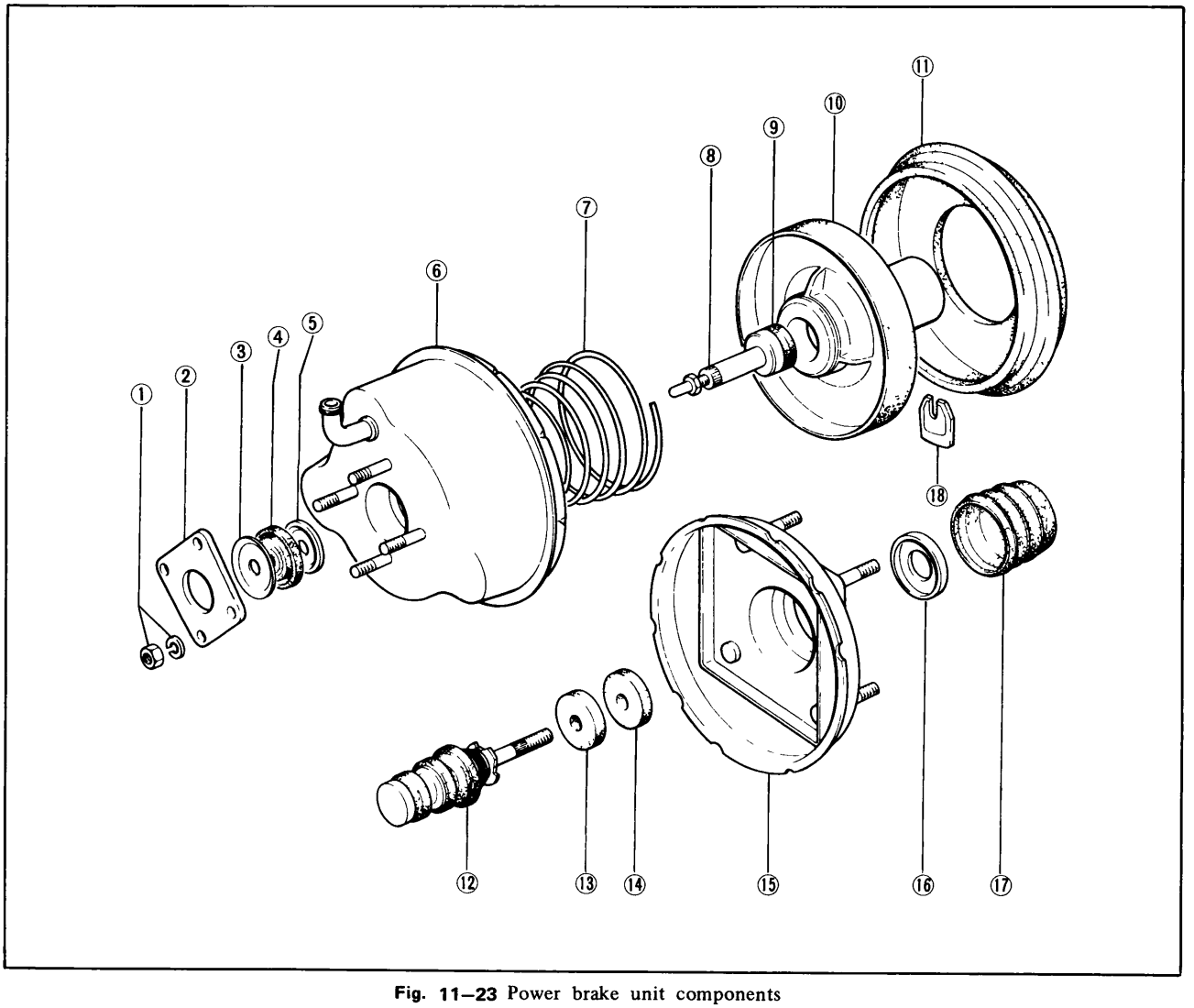

Fig. 11–23 Power brake unit components

1. Nut and washer
2. Flange
3. Retainer
4. Front seal
5. Support plate
6. Front shell
7. Return spring
8. Push rod
9. Reaction disc
10. Power piston
11. Diaphragm
12. Valve rod and plunger assembly
13. Air filter
14. Air silencer
15. Rear shell
16. Air silencer retainer
17. Boot
18. Retainer key

Insert the retainer key.
4. Install the diaphragm on the power piston making certain the diaphragm is seated in the groove.
5. Assemble the air filter and the air silencer over the rod and position in the power piston.
6. Apply power brake lubricant liberally to the entire surface of the reaction disc and install the reaction disc into the power piston.
7. Coat the outer bead of the diaphragm with power brake lubricant where it bears against the outer rims of the front and rear shells to aid in assembly.
8. Apply power brake lubricant to the seal in the rear shell and carefully guide tube end of the power piston, through the seal in the rear shell.
9. Install the plate and valve body into the rear shell.
10. Install the push rod through the front of the power piston.
11. Install the return spring.
12. Install the rear shell assembly by using the wrench to rotate the rear shell counter-clockwise until scribe marks align.

Note:
Press the rear shell down firmly, maintaining a pressure until the shell flanges are fully locked.

13. Install the dust boot down against the rear shell.

11–D–6. Installing Power Brake Unit
Follow the removal procedures in the reverse order.

Note:
After installing the unit, bleed the hydraulic system according to the procedure described in Par. 11–A–2.

11–E. HYDRAULIC LINES

11–E–1. Checking Brake Lines
Inspect all brake lines for any leakage with the foot brakes applied. Check all brake pipes, hoses and connections for signs of chafing, deterioration or any other damage.

11–F. FRONT BRAKE

11–F–1. Disc Brake Shoe

a. Replacing disc brake shoe
The lining should be inspected whenever the wheels are removed for any reason. The shoe and lining assembly should be replaced, if the thickness of the shoe and lining assembly is **7.0 mm (0.276 in)** or less due to wear.
To replace the disc brake shoes, proceed as follows:
1. Raise the front end of the vehicle and support with stands.
2. Remove the front wheel.
3. Remove the hair pin retainers and pull out the stopper plates.
4. Remove the caliper and anti-rattle spring and pull out the brake shoes.

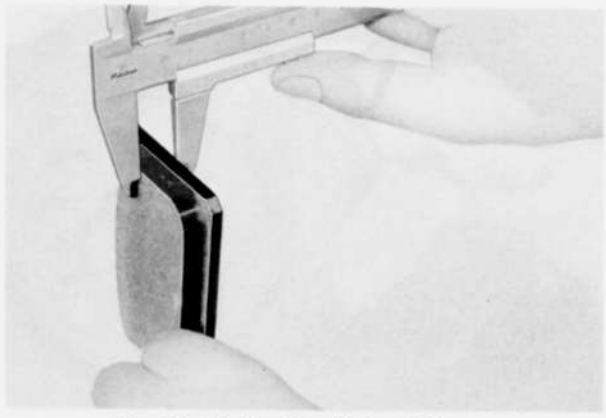

Fig. 11–24 Checking lining thickness

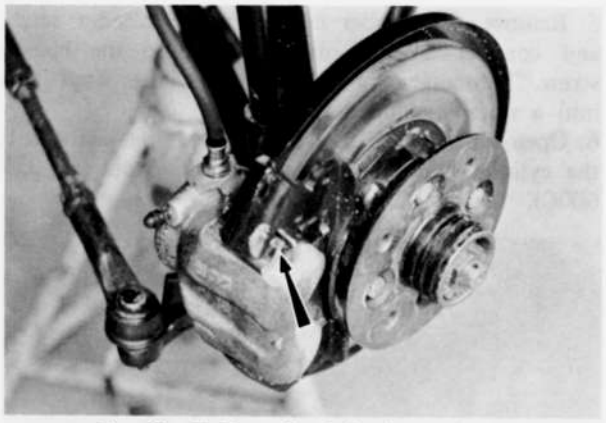

Fig. 11–25 Removing hair pin retainers

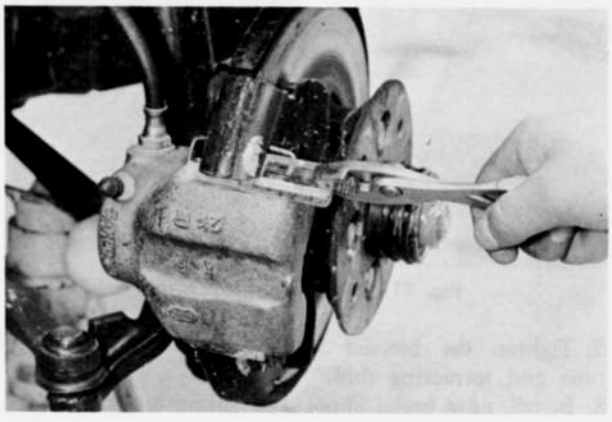

Fig. 11–26 Removing stopper plates

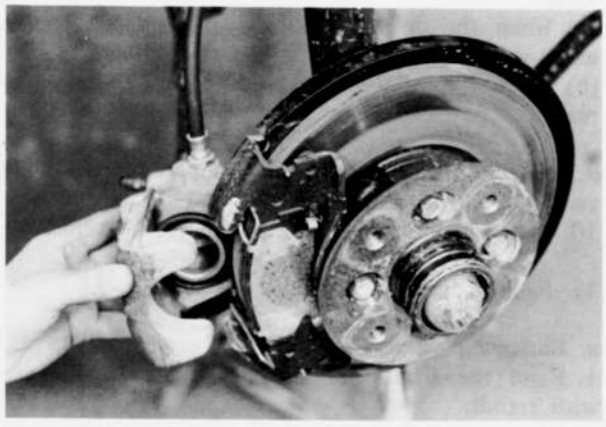

Fig. 11–27 Removing caliper

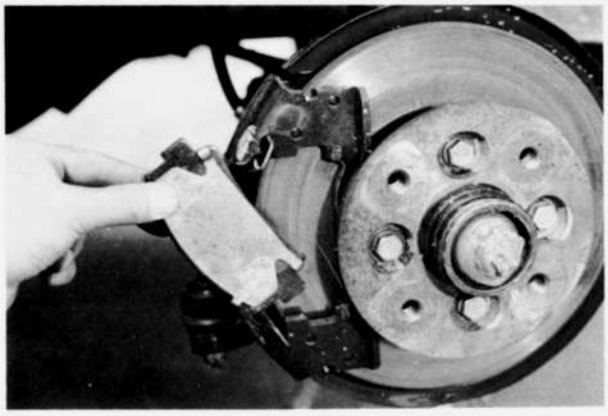

Fig. 11–28 Removing brake shoe

5. Remove the rubber cap from the bleeder screw, and connect a vinyl drain tube onto the bleeder screw. Submerge the other end of the vinyl tube into a suitable container.
6. Open the bleeder screw and press the piston into the cylinder with the **piston expanding tool** (49 0221 600C).

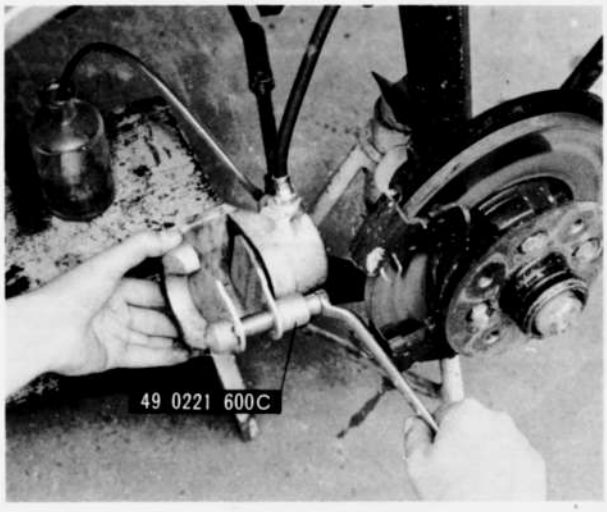

Fig. 11–29 Piston retaining tool

7. Tighten the bleeder screw and remove the vinyl tube and retracting tool.
8. Install new brake shoes and shims on the caliper.

Note :
(a) When the disc brake shoes are replaced, replace all shoes on both wheels at the same time.
(b) **Do not** mix different types of linings when replacing.

9. Install the anti-rattle spring, caliper, stopper plates and hair pin retainers.
10. Install the front wheel and lower the vehicle.

11–F–2. Caliper

a. Removing caliper

1. Raise the front end of the vehicle and support with stands.
2. Remove the front wheel.
3. Remove the disc brake shoes as described in Par. 11–F–1.
4. Disconnect the brake fluid pipe from the caliper and plug the end of the fluid pipe to prevent entrance of dirt and loss of fluid.
5. Remove the caliper.

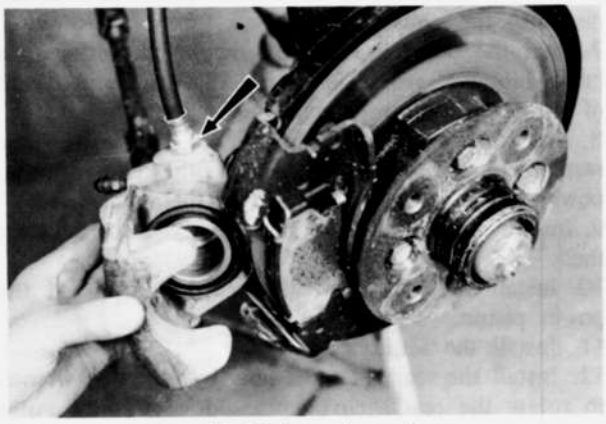

Fig. 11–30 Removing caliper

6. If necessary, remove the caliper bracket by removing the two bolts.



Fig. 11–31 Removing caliper bracket

b. Disassembling caliper

1. Clean outside of the caliper.
2. Place a hardwood in front of piston to prevent damage to piston. Apply air pressure to the fluid port in the caliper to remove the piston.



Fig. 11–32 Removing piston

Note :
If the piston is seized and cannot be forced from the caliper, tap lightly around the piston while applying air pressure.

3. Remove the retainer and dust boot from the caliper.
4. Remove the piston seal from the caliper bore.



Fig. 11–33 Removing piston seal

5. Remove the bleeder screw, if necessary.

c. Checking caliper
1. Clean the disassembled parts in clean brake fulid or alcohol and dry with compressed air.

Note :
Never use gasoline or kerosene.

2. Inspect the caliper bore and piston for scoring, scratches or rust. If any of these conditions are found, replace with a new piston or caliper. Minor damage can be eliminated by polishing with crocus cloth.
3. Discard the old piston seal and dust boot, and use new ones when reassembling.

d. Assembling caliper
1. Apply brake fluid to the piston seal and install it into the groove of the caliper bore.

Note :
Be sure the piston seal does not become twisted and that it is seated fully in the groove.

2. Lubricate the piston and caliper bore.
3. Insert the piston into the caliper bore.
4. Install the dust boot by setting the flange squarely in the inner groove of the caliper bore. Install the dust boot retainer.



Fig. 11–34 Installing retainer

e. Installing caliper
Follow the removal procedures in the reverse order and bleed the hydraulic system.

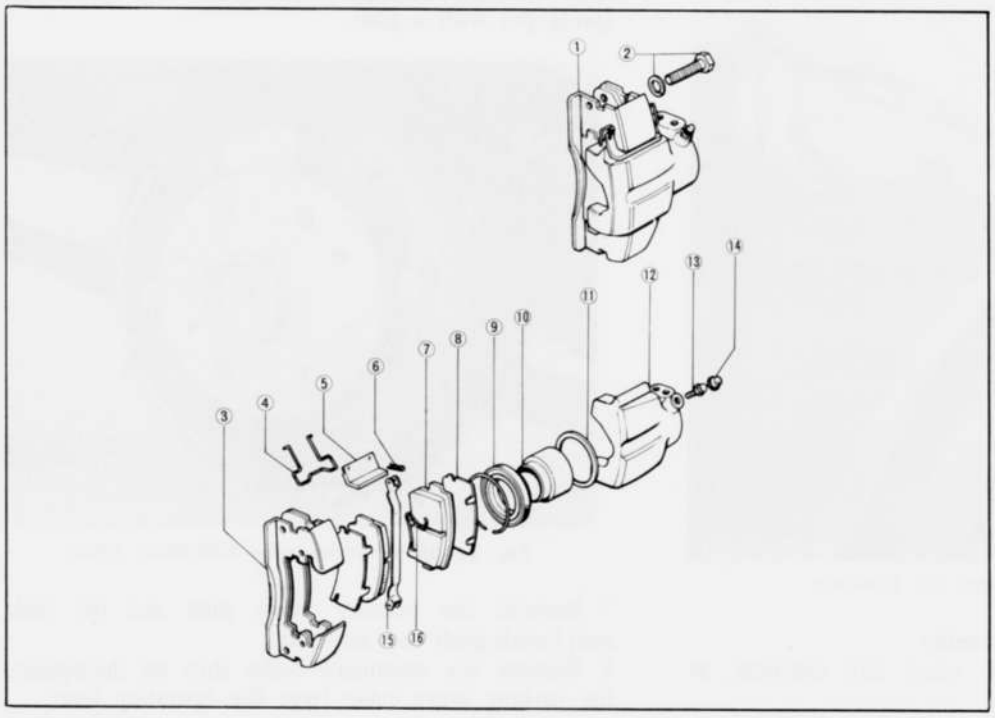

Fig. 11–35 Caliper components
1. Caliper assembly
2. Bolt and washer
3. Caliper bracket
4. Spring
5. Stopper plate
6. Hair pin retainer
7. Brake shoe and lining assembly
8. Shim
9. Dust boot
10. Piston
11. Piston seal
12. Caliper body
13. Bleeder screw
14. Bleeder cap
15. Anti-rattle spring clip
16. Anti-rattle spring

11–F–3. Brake Disc and Front Wheel Hub Assembly

a. Checking brake disc assembly

1. Inspect the friction surface of the disc and recondition if it is scored, scratched or rusted.
2. Check the run-out of the disc with a dial indicator.

Note:
Make sure that the wheel bearings are correctly adjusted, before checking the run-out of the disc.

If the run-out is more than **0.10 mm (0.0039 in)**, reface the disc. **Do not** reface any more than necessary to clean up the disc.

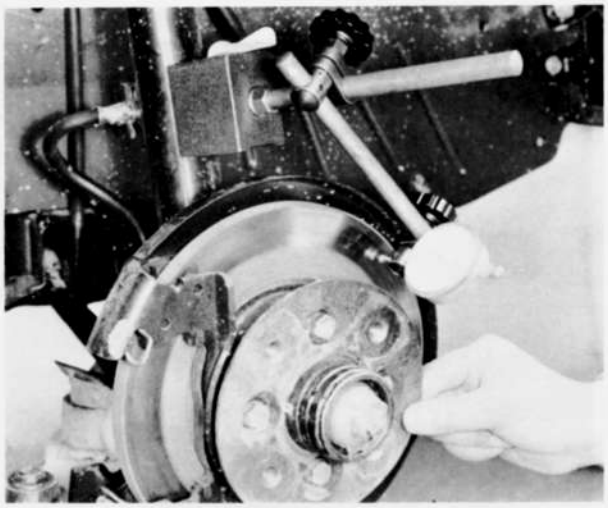

Fig. 11–36 Checking disc run-out

3. Check the disc for thickness. If the thickness of the disc becomes less than **11 mm (0.4331 in)** from excessive refacing, the disc should be replaced.

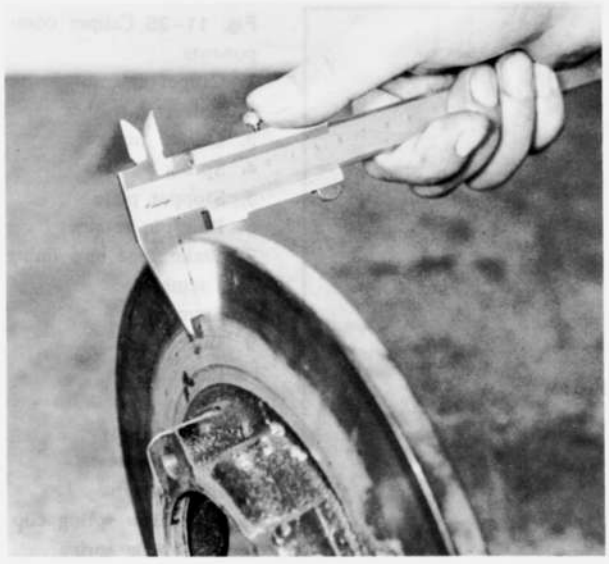

Fig. 11–37 Checking disc thickness

b. Replacing brake disc assembly

Replace the disc and front wheel hub assembly, as described in Par. 12–C–1.

11–G. REAR BRAKE

11–G–1. Rear Brake Drum and Shoe

a. Removing rear brake drum and shoe

1. Raise the rear end of the vehicle and support with stands.
2. Remove the rear wheel.
3. Make sure that the parking brake is fully released.
4. Remove the screws that attach the brake drum to the rear axle shaft flange and pull the drum off from the axle shaft flange. If the drum will not come off, place the drum attaching screws into the tapped holes on the drum. Then, tighten in evenly to force the drum away from the axle shaft flange.

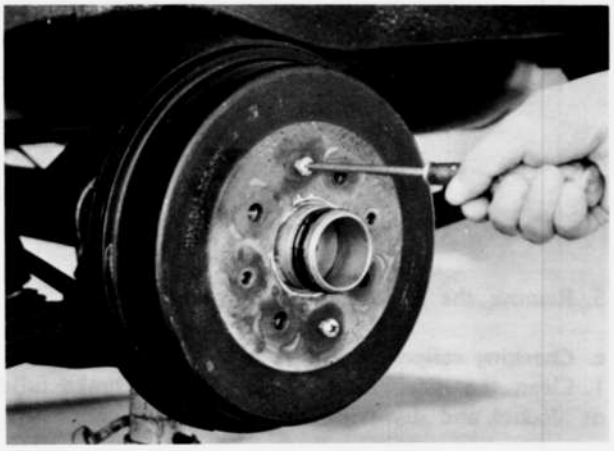

Fig. 11–38 Removing drum

5. Remove the return spring located on the upper side of the brake shoes using a suitable tool, then remove the return spring located on the lower side of the brake shoes.
6. Remove the shoe hold-down spring and spring cap from the brake shoe by removing the shoe hold-down spring pin with a plier.

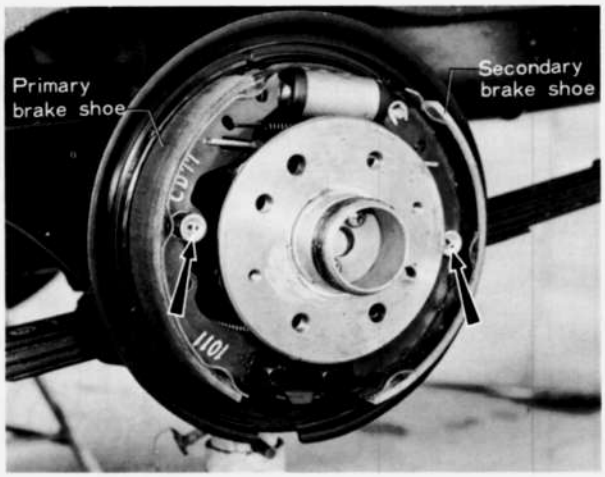

Fig. 11–39 Removing shoe hold-down spring

7. Remove the primary brake shoe and the male and female-push rod assembly.
8. Remove the secondary brake shoe by disengaging the parking brake cable from the operating lever.

b. Inspecting rear brake drum and shoe

1. Brush all dust from the backing plate and interior of the brake drum.
2. Inspect the springs for weakness.
3. Inspect the brake shoes for excessive lining wear or shoe damage. If the lining is excessively worn or if the shoes are damaged, they must be replaced. Replace any lining that had been contaminated with oil, grease or brake fluid.
4. Examine the lining contact pattern. To inspect, chalk the entire inner surface of the drum and slide the lining along the chalked surface. The lining should show a uniform contact across the entire width, extending from toe to heel. Shoes having sufficient lining but improper contact should be re-ground to obtain proper contact.
5. Inspect the brake drum and, if necessary, refinish. Minor scores on the brake drum can be removed with sandpaper. The drum that is excessively scored or shows an out of roundness over **0.15 mm** should be turned down. Remove only enough stock to eliminate the scores and true up the drum. The refinished diameter must not exceed 229.6 mm (9.0395 in). The standard inner diameter of the drum is 228.6 mm (9.000 in). After the drum is turned down, wipe the refinished surface with a cloth soaked in clean denatured alcohol. If one drum is turn down, the opposite drum on the same axle should also be cut down to the same size.
6. Check the condition of the brake shoes, return springs, hold-down springs and drum for signs of overheating. If the shoes and drums are head spotted, indicating a overheated condition, replace with new ones.

c. Installing rear brake drum and shoe

Follow the removal procedures in the reverse order.

Note :

Adjust the brake shoe clearance as described in Par. 11–A–3.

11–G–2. Wheel Cylinder

a. Removing wheel cylinder

1. Remove the rear brake shoes, as described in Par. 11–G–1.
2. Disconnect the brake fluid pipe from the wheel cylinder by removing the flare nut located on the rear side of the backing plate.
3. Remove the nuts that attach the wheel cylinder to the backing plate and remove the wheel cylinder.

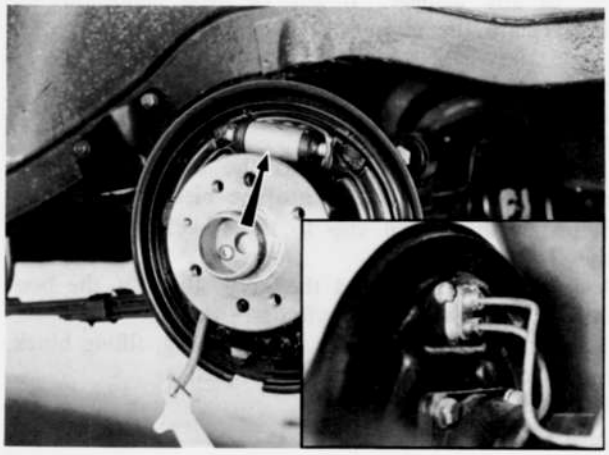

Fig. 11–40 Removing wheel cylinder

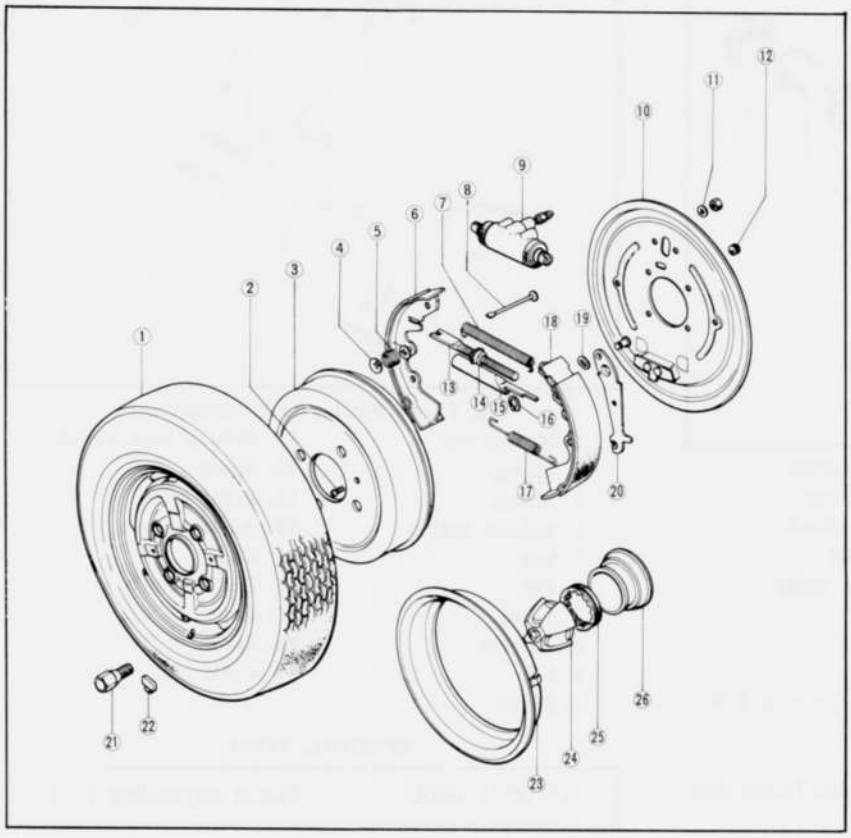

Fig. 11–41 Rear brake components

1. Rear wheel
2. Drum attaching bolt
3. Drum
4. Spring cap
5. Shoe hold-down spring
6. Primary brake shoe
7. Shoe return spring
8. Shoe hold-down spring pin
9. Wheel cylinder
10. Backing plate
11. Nut and washer
12. Plug
13. Male-push rod
14. Shoe clearance adjuster
15. Female-push rod
16. Secondary brake shoe retaining clip
17. Shoe return spring
18. Secondary brake shoe
19. Wave washer
20. Parking brake operating lever
21. Wheel bolt
22. Balance weight
23. Wheel ring
24. Wheel center cap
25. Set rubber
26. Wheel center cap adaptor

b. Disassembling wheel cylinder

1. Remove the boots from both ends of the wheel cylinder.
2. Remove the pistons, piston cups, filling blocks and return spring.
3. Remove the bleeder screw and steel ball, if necessary.

c. Checking wheel cylinder

1. Wash all parts in clean alcohol or brake fluid. **Never use** gasoline or kerosene.
2. Examine the cylinder bore, and piston for wear, roughness, or score.
3. Check the clearance between the piston and the cylinder. If it is **more than 0.15 mm (0.006 in),** replace with new parts.
4. Check the piston cups for wear, softening, swelling, or any damage. If any of these conditions exists, replace the cups.

d. Assembling wheel cylinder

1. Apply clean brake fluid to the cylinder bore, pistons and piston cups.
2. Insert the steel ball into the bleeder hole and thread the bleeder screw into the bleeder hole.
3. Install the piston cup to the wheel cylinder with the flat side outward.
4. Install the piston and the boot, then fit the boot into the groove of the cylinder.
5. Install the filling block, return spring, filling block, piston cup and piston in this sequence.
6. Install the boot.

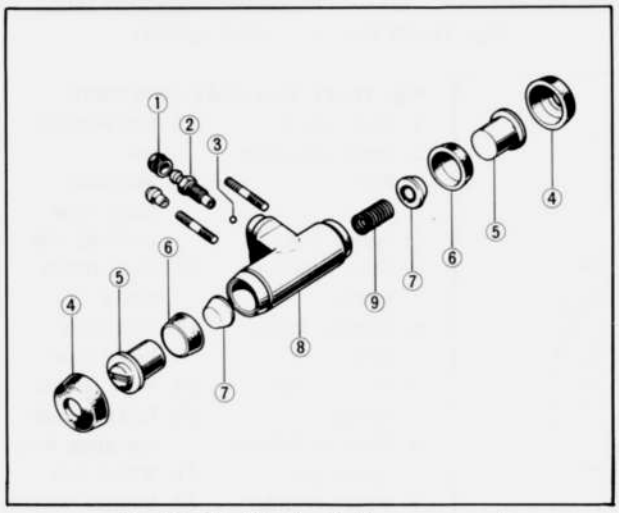

Fig. 11–42 Wheel cylinder components

1. Rubber cap
2. Bleeder screw
3. Steel ball
4. Boot
5. Piston
6. Piston cup
7. Filling block
8. Cylinder
9. Return spring

e. Installing wheel cylinder

Follow the removal procedures in the reverse order.

Note:

Bleed the hydraulic system and adjust the brake shoe clearance.

11–H. PARKING BRAKE

11–H–1. Parking Brake Adjustment

To adjust, proceed as follows :

After adjusting the rear brake shoe clearance, adjust the parking brake lever adjusting screw so that the brake begins to apply when pulling the parking brake lever three to seven notches.

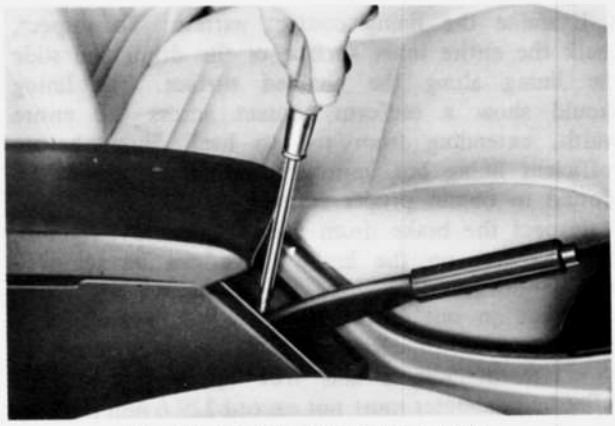

Fig. 11–43 Adjusting parking brake

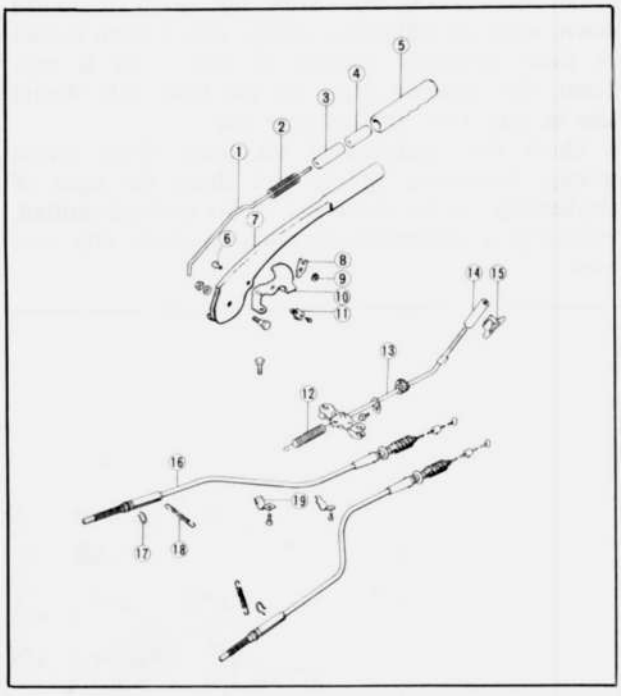

Fig. 11–44 Parking brake components

1. Release rod
2. Spring
3. Spacer
4. Release button
5. Cap
6. Pin
7. Lever
8. Ratchet
9. Clip
10. Sector
11. Parking lamp switch
12. Spring
13. Front cable
14. Adjusting nut
15. Clip
16. Rear cable
17. Clip
18. Spring
19. Cable clip

SPECIAL TOOL

49 0221 600C	Piston expanding tool

WHEELS AND TIRES

DESCRIPTION ..... 12 : 1
12–A. WHEELS AND TIRES ..... 12 : 1
12–A–1. Tire Inflation ..... 12 : 1
12–A–2. Tire Rotation (Replacement).. 12 : 2
12–A–3. Changing Wheels ..... 12 : 2
12–A–4. Wheel Balancing ..... 12 : 3
12–A–5. Wheel and Tire Run-out ..... 12 : 3
12–B. TUBELESS TIRE REPAIR ..... 12 : 3
12–C. FRONT WHEEL HUB ..... 12 : 3
12–C–1. Removing Front Wheel Hub .. 12 : 3
12–C–2. Checking Front Wheel Hub ... 12 : 4
12–C–3. Installing Front Wheel Hub ... 12 : 4
12–D. FRONT WHEEL BEARING ..... 12 : 4
12–D–1. Checking Front Wheel Bearing ..... 12 : 4
12–D–2. Adjusting Front Wheel Bearing ..... 12 : 4
12–E. REAR WHEEL BEARING ..... 12 : 5

12

DESCRIPTION

Each front wheel is bolted to its respective front hub and brake disc assembly. Two opposed tapered roller bearings are installed in each hub. A grease seal is installed at inner end of the hub to prevent grease from leaking on the brake disc. The entire assembly is retained to steering knuckle spindle by the adjusting nut, nut lock and cotter pin.

The rear wheel is bolted to the rear axle shaft flange. The rear wheel bearing is pressed onto axle shaft just inside the shaft flange and entire assembly is retained to the rear axle housing by the bearing retainer which is attached to the housing flange.

12–A. WHEELS AND TIRES

12–A–1. Tire Inflation

Maintenance of correct inflation pressure is one of the most important elements of tire care.

Excessive inflation pressure will cause:
1. Hard rides
2. Damage to tire carcas
3. Poor traction
4. Premature tread wear in center of tire

Low inflation pressure will cause:
1. Hard steering
2. Rapid and uneven wear on the edges of tire tread
3. Increased cord fatigue or broken tire cords
4. High tire temperature
5. Blows out

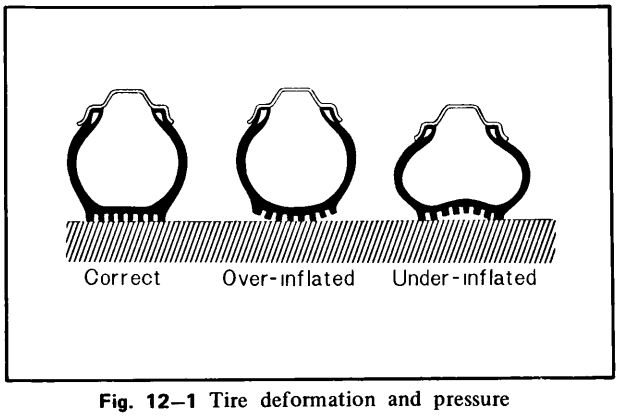

Fig. 12–1 Tire deformation and pressure

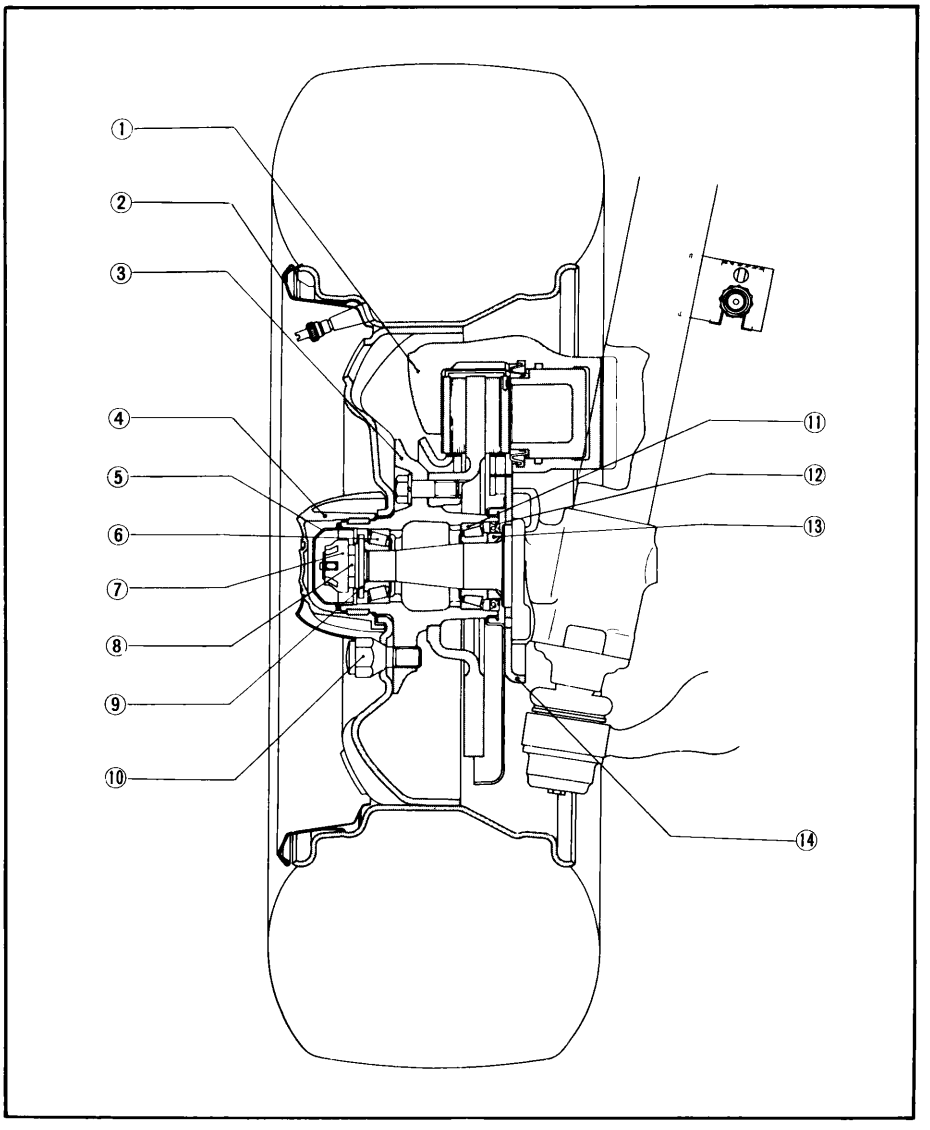

Fig. 12–2 Front wheel cross section
1. Caliper
2. Wheel ring
3. Hub
4. Center cap
5. Grease cap
6. Hub outer bearing
7. Nut lock
8. Bearing preload adjusting nut
9. Flat washer
10. Wheel bolt
11. Hub inner bearing
12. Grease seal
13. Spacer
14. Mounting adaptor

Check the inflation pressure with a reliable gauge when the tires are cold. The standard pressures are as follows :

	Sedan & Hard Top	Wagon
Front	26 psi	24 psi
Rear	26 psi	30 psi

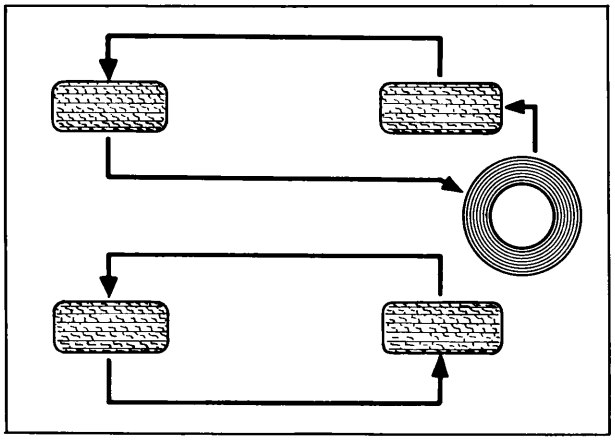

Fig. 12–3 Tire rotation

After checking or inflating the pressure, place the valve cap back on and tighten by hand. It helps to maintain the air pressure in the tires in case of any valve leak and keeps dust and water out of the valve.

12–A–2. Tire Rotation (Replacement)

If the tires are utilized by installing at the same locations, these will create wear pattern characteristic to the locations, therefore, it is recommended to alter the installing location by rotating the tires periodically at every 6,250 miles (or sonner if irregular wear develops), to wear the tires evenly. In this case, the rotation of the tires must be performed including the spare tire.

12–A–3. Changing Wheels

1. Remove the center cap and loosen the wheel bolts. **Do not** loosen the wheel bolts at one time.

Note: The wheel bolts are loosened by turning these in the counter-clockwise direction.

2. Raise the vehicle until the wheel and tire clear the ground.

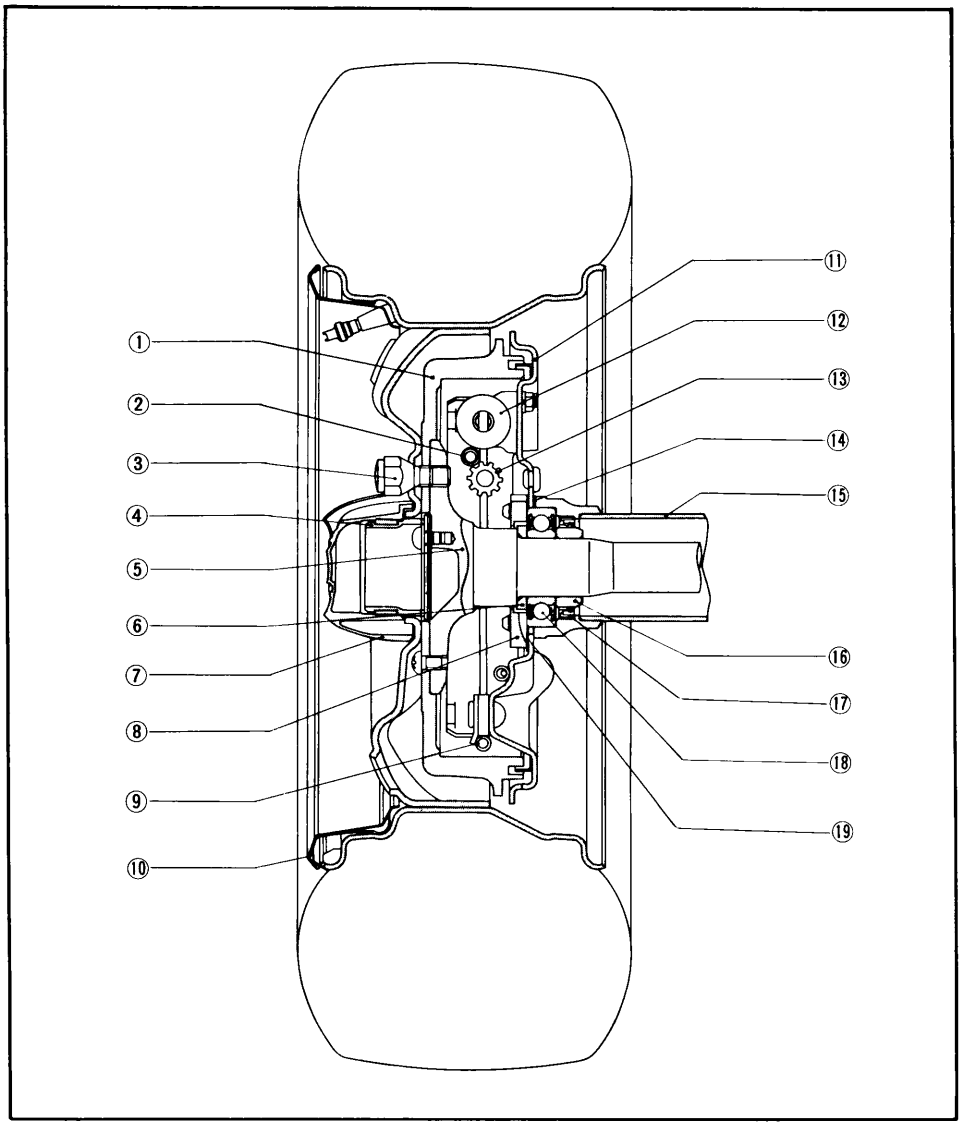

Fig. 12–4 Rear wheel cross section

1. Brake drum
2. Brake shoe return spring
3. Wheel bolt
4. Center cap adaptor
5. Rear axle shaft
6. Spacer
7. Center cap
8. Bearing retainer
9. Brake shoe return spring
10. Wheel ring
11. Backing plate
12. Wheel cylinder
13. Brake shoe adjusting nut and push rod assembly
14. Adjusting shim
15. Rear axle housing
16. Bearing collar
17. Oil seal
18. Bearing
19. Gasket

3. Remove the wheel bolts and change the wheel.
4. Install the wheel bolts and alternately tighten the diametrically opposite bolts until the wheel closely touches the hub flange for front or the axle flange for rear.
5. Lower the vehicle and firmly tighten the bolts to **9.0 ~ 10.0 m-kg (65.0 ~ 72.0 ft-lb). Do not** tighten the wheel bolts at one time.
6. Refit the center cap.

12–A–4. Wheel Balancing

The allowable unbalance is 360 cm-gr (5.0 in-oz), which is less than 20 gr (0.7 oz) at the rim. Excessive wheel unbalance causes shimmy at high speed. If unbalance exceeds 360 cm-gr (5.0 in-oz) or when a tire is disassembled for repair, the tire and wheel assembly should be staticall and dynamically balanced with a wheel balancer in accordance with the manufacturer's instructions.

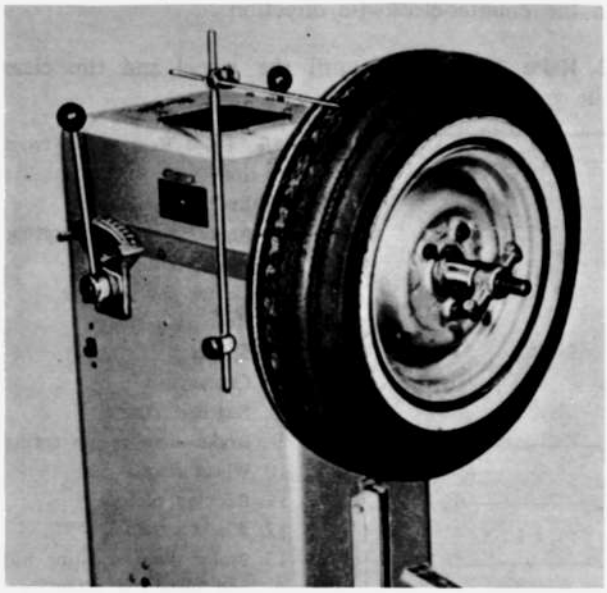

Fig. 12–5 Wheel balance

12–A–5. Wheel and Tire Run-out

Wheel and tire should be measured for both radial and lateral runout. The radial runout is the difference between the high and low points on the tread of tire; while the lateral runout is the wobble of the wheel. To measure the radial runout, apply a dial indicator against the center rib of the tire tread and rotate the wheel slowly. This measurement should not **exceed 2.0 mm (0.08 in).** To measure the lateral runout, position a dial indicator against the side of the tire. The reading of the indicator should be **within 2.5 mm (0.10 in).**

12–B. TUBELESS TIRE REPAIR

A leak in the tubeless tire may be located by inflating the tire to recommended pressure and then submerging the tire and wheel assembly in water, or by applying water to the tire with a hose if wheel is mounted on vehicle. Remove water from area where air bubbles show and mark the area with a crayon. After removal of the puncturing object from tire, the puncture must be sealed to prevent entrance of dirt and water which would cause damage to the tire carcass. Tire repair kits are available through tire dealers. These materials should be used as directed in the instructions supplied with kits.

12–C. FRONT WHEEL HUB

12–C–1. Removing Front Wheel Hub

1. Raise the vehicle with a jack until the front wheels clear the ground.
2. Remove the center cap and remove the wheel.
3. Remove the bolts that attach the caliper and bracket assembly and remove the caliper and bracket assembly.
4. Remove the grease cap from the hub. Remove the cotter pin, nut lock, adjusting nut and flat washer from the spindle.
5. Pull the hub and brake disc assembly off the spindle.

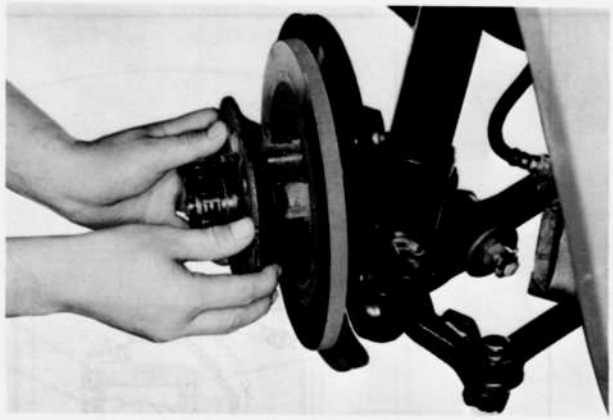

Fig. 12–6 Removing hub and disc assembly

6. Remove the outer bearing from the hub.
7. Apply the identification marks on the hub and disc for convenience in reassembly.

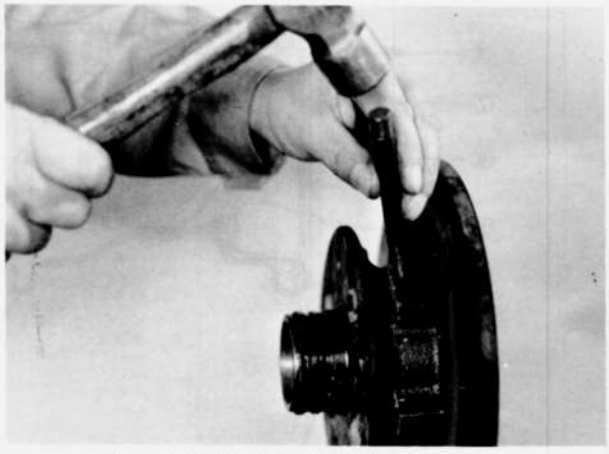

Fig. 12–7 Applying identification marks

8. Remove the bolts that attach the hub to brake disc. Remove the hub from the disc.

9. Drive out the grease seal and remove the inner bearing from the hub.
10. Thoroughly clean the spindle and the inside of the hub with solvent to remove all old grease.
11. Clean the lubricant off the outer and inner bearing cups with solvent and inspect the bearing cups for scratches, pits, excessive wear, and other damage. If necessary, replace the cup as follows:
1) Remove the outer and inner bearing cups from the hub using a suitable brass rod.
2) Install the inner and outer bearing cups into the hub using a suitable tool. Be sure to seat the cups properly in the hub.

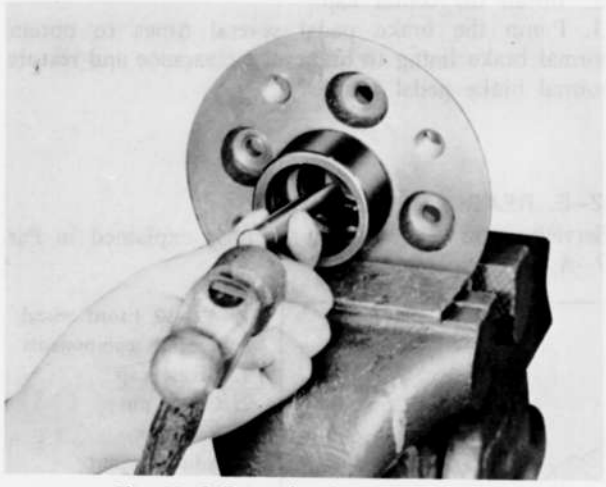

Fig. 12–8 Removing inner bearing cup

12–C–2. Checking Front Wheel Hub

Thoroughly clean the inner and outer bearings with solvent, and dry them thoroughly.

Note :
Do not spin the bearings dry with compressed air.

Inspect the bearing for wear and damage, and replace them if necessary. The bearing and bearing cup should be replaced as a set if damage to either is encountered.

12–C–3. Installing Front Wheel Hub

1. Pack the inside of the hub with lithium grease.
2. Pack the inner and outer bearings with lithium grease, taking care to fill between rollers.

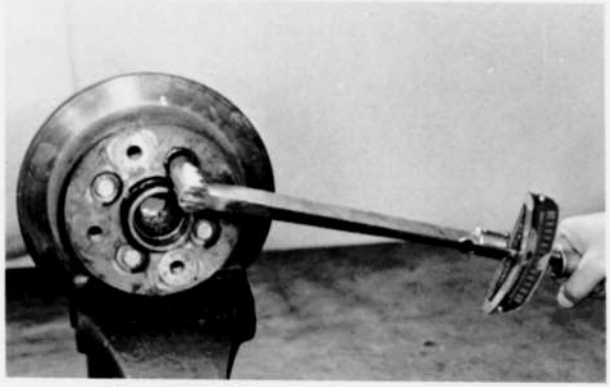

Fig. 12–9 Tightening hub attaching bolts

3. Place the inner bearing in the inner bearing cup.
4. Install the grease seal into the hub.
5. Install the hub to the disc. Install the attaching bolts and tighten the bolts to **5.0 m-kg (36.2 ft-lb).**
6. Install the hub and disc assembly on the spindle.
7. Install the outer bearing, flat washer and adjusting nut.

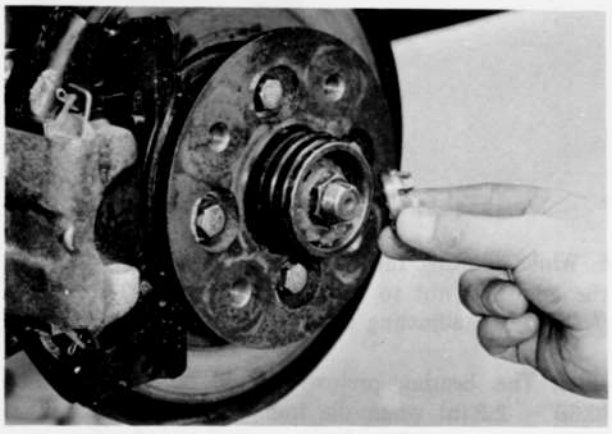

Fig. 12–10 Installing nut lock

8. Adjust the wheel bearing preload as described in Par 12–D–2 and install the nut lock and a new cotter pin. Pack the grease cap with lithium grease and install the grease cap.
9. Install the caliper to the mounting adaptor and tighten the attaching bolts.
10. Position the wheel on the hub. Install the wheel bolts and tighten them alternately in order to draw the wheel evenly against the hub.
11. Install the center cap.
12. Pump the brake pedal several times to obtain normal brake lining to brake disc clearance and restore normal brake pedal travel.

12–D. FRONT WHEEL BEARING

12–D–1. Checking Front Wheel Bearing

To check the front wheel bearings, raise the front of vehicle and support with stands. Grip the tire and shake it sideways. If considerable play is noticed, this is an indication that the bearings are worn or scarred.

12–D–2. Adjusting Front Wheel Bearing

The front wheel bearings should be adjusted if the wheel is loose on the spindle or if the wheel does not rotate freely.

Adjusting procedures are as follows :
1. Raise the vehicle with a jack until the wheel clears ground.
2. Remove the center cap and remove the wheel.
3. Remove the grease cap from the hub.
4. Wipe the excess grease from the end of the spindle, and remove the cotter pin and nut lock.
5. Loosen the bearing adjusting nut three turns. Then, rock the hub and disc assembly in and out several times to push the shoes away from the disc.

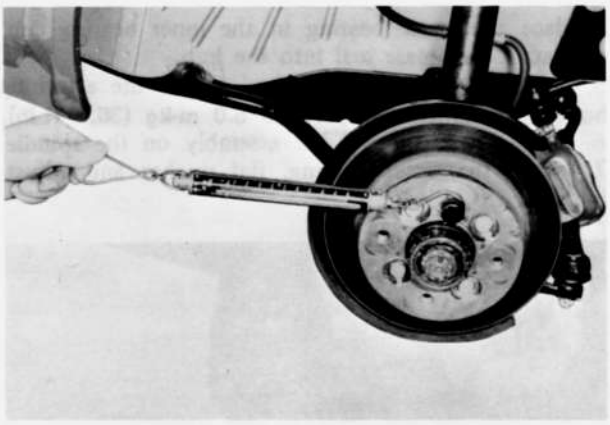

Fig. 12–11 Checking wheel bearing preload

6. While rotating the hub and disc assembly, tighten the adjusting nut to seat the bearings.
7. Back the adjusting nut off about one-six of a turn.

Note: The bearing preload should be **0.4 ~ 1.0 kg (0.88 ~ 2.2 lb)** when the hub brake disc assembly is pulled using a pull scale to read the preload.

using a pull scale to read the preload.

8. Locate the nut lock on the adjusting nut so that the castellations on the lock are aligned with the cotter pin hole in the spindle.
9. Install a new cotter pin and bend the ends of the cotter pin.
10. Check the wheel rotation. If the wheel rotates properly, install the grease cap. If the wheel still rotates roughly or noisily, clean or replace the bearings and cups as required.
11. Install the wheel and tighten the wheel bolts to **9.0 ~ 10.0 m-kg (65.0 ~ 72.0 ft-lb).**
12. Install the center cap.
13. Pump the brake pedal several times to obtain normal brake lining to brake disc clearance and restore normal brake pedal travel.

12–E. REAR WHEEL BEARING

Servicing the rear wheel bearing is explained in Par. 9–A on page 9 : 1.

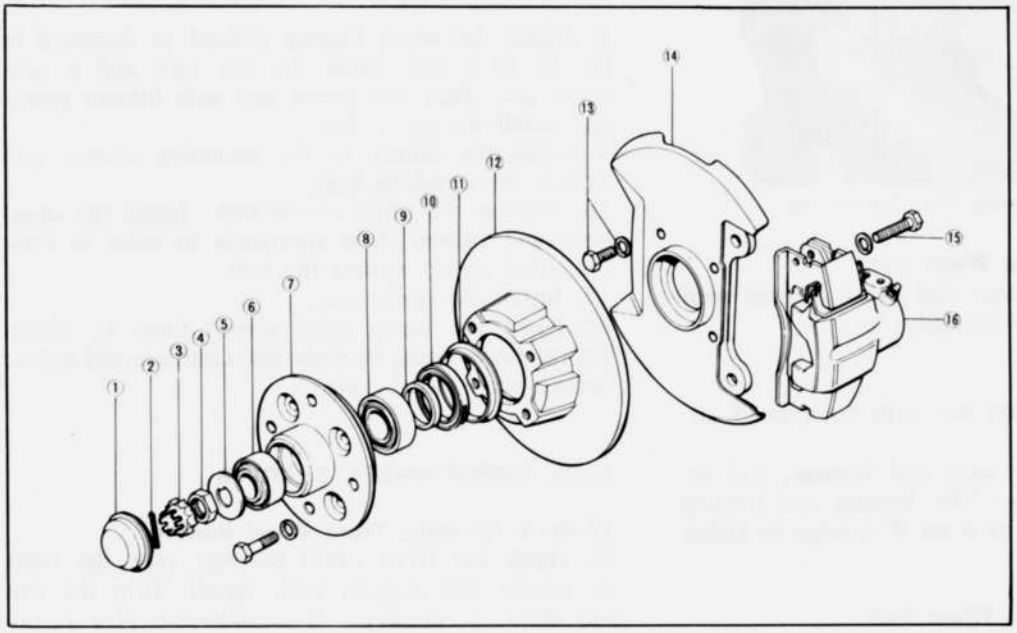

Fig. 12–12 Front wheel hub components

1. Grease cap
2. Cotter pin
3. Nut lock
4. Adjusting nut
5. Flat washer
6. Outer bearing
7. Hub
8. Inner bearing
9. Spacer
10. Grease seal
11. Dust ring
12. Brake disc
13. Bolt and washer
14. Caliper mounting adaptor
15. Bolt and washer
16. Caliper

SUSPENSION

DESCRIPTION ..... 13 : 1
13–A. FRONT SUSPENSION ..... 13 : 1
13–A–1. Front Shock Absorber ..... 13 : 1
a. Removing front shock absorber ..... 13 : 1
b. Disassembling front shock absorber ..... 13 : 2
c. Checking front shock absorber ..... 13 : 4
d. Assembling front shock absorber ..... 13 : 5
e. Installing front shock absorber ..... 13 : 7
13–A–2. Suspension Arm ..... 13 : 7
a. Removing suspension arm .. 13 : 7
b. Inspecting suspension arm .. 13 : 7
c. Installing suspension arm ... 13 : 7
13–A–3. Ball Joint ..... 13 : 7
a. Greasing ball joint ..... 13 : 7
b. Checking ball joint ..... 13 : 8
c. Replacing ball joint ..... 13 : 9
13–B. REAR SUSPENSION ..... 13 : 9
13–B–1. Rear Shock Absorber ..... 13 : 9
a. Removing rear shock absorber ..... 13 : 9
b. Installing rear shock absorber ..... 13 : 9
13–B–2. Rear Spring ..... 13 : 9
a. Removing rear spring .. .. 13 : 9
b. Disassembling rear spring ... 13 : 10
c. Inspecting rear spring ..... 13 : 11
d. Assembling rear spring ..... 13 : 11
e. Installing rear spring..... 13 : 11
SPECIAL TOOLS ..... 13 : 11

13

DESCRIPTION

The front suspension consists mainly of the vertical shock absorbers integrally made with each steering knuckle, suspension arms and stabilizer bar. This front suspension **does not require lubrication, except the lower ball joints** which are provided with plugs to attaching the grease fittings when required.

The rear suspension consists mainly of leaf springs and gas sealed type shock absorbers. The gas sealed type shock absorbers **should not be disassembled** as it contains a highly compressed gas. If it is found to be defective, replace it as assembly.

13–A. FRONT SUSPENSION

13–A–1. Front Shock Absorber

a. Removing front shock absorber

1. Open the hood and remove the four nuts that attach the shock absorber support to the fender apron.
2. Raise the front end of the vehicle and support with stands.
3. Remove the center cap and remove the wheel.
4. Remove the clip attaching the fluid pipe to the shock absorber and remove the fluid pipe.

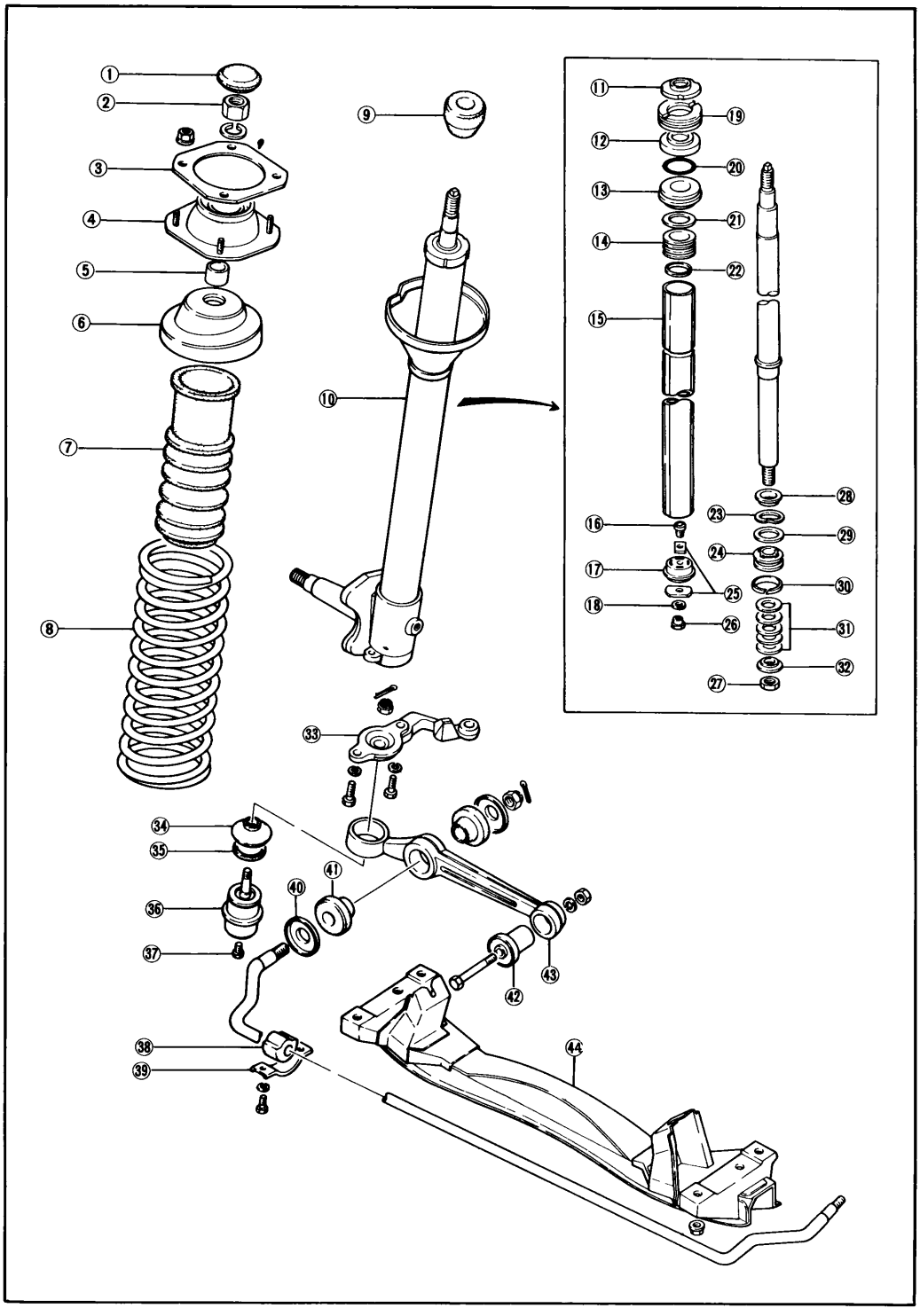

Fig. 13–1 Front suspension components

1. Cap
2. Nut
3. Road clearance adjusting plate
4. Shock absorber support
5. Spacer
6. Spring seat
7. Dust boot
8. Coil spring
9. Damper stopper
10. Front shock absorber
11. Dust cover
12. Oil seal
13. Piston rod guide
14. Stopper guide
15. Pressure tube
16. Bolt
17. Base valve casing
18. Valve seat
19. Cap nut
20. "O" ring
21. Back-up ring
22. Stopper
23. Check valve spring
24. Piston
25. Relief valve
26. Nut
27. Nut
28. Washer
29. Check valve
30. Piston ring
31. Relief valve
32. Washer
33. Knuckle arm
34. Dust seal
35. Set ring
36. Ball joint
37. Plug
38. Bush
39. Stabilizer bar bracket
40. Washer
41. Bush
42. Bush
43. Suspension arm
44. Cross member

5. Remove the bolts attaching the caliper and pull the caliper off the brake disc.
6. Remove the hub grease cap, cotter pin, nut lock and bearing adjusting nut from the steering knuckle spindle. Pull the hub and brake disc assembly off the steering knuckle spindle.
7. Remove the bolts attaching the caliper mounting adaptor to the knuckle and remove the adaptor.
8. Remove the two bolts that attach the lower end of the shock absorber onto the steering knuckle arm.

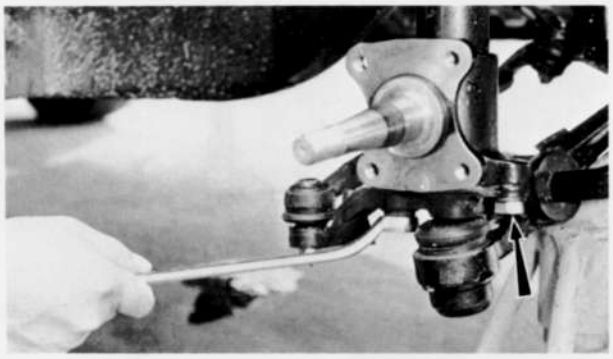

Fig. 13–2 Removing bolts

9. Lower the suspension arm and remove the shock absorber.

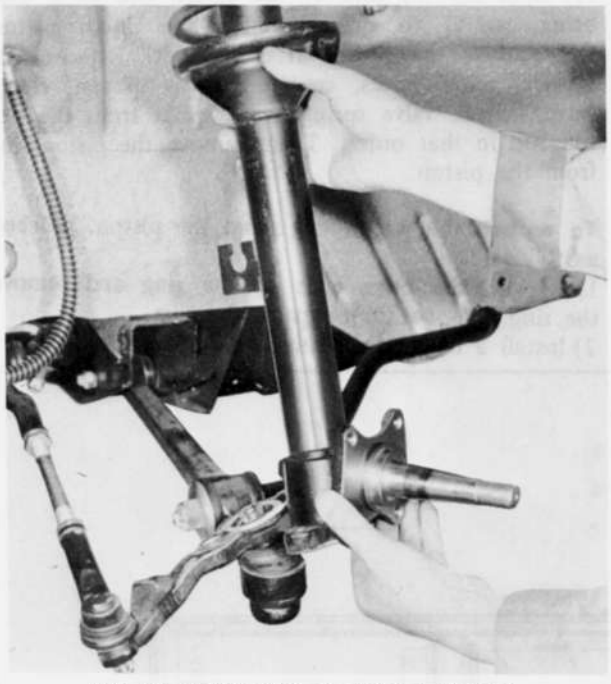

Fig. 13–3 Removing front shock absorber

b. Disassembling front shock absorber

1. Compress the coil spring with the **spring compressor** (49 0223 640A and 49 0370 641 or 49 0223 641).
2. Hold the shock absorber support in a vise and remove the nut attaching the piston rod onto the shock absorber support.
3. Remove the shock absorber support, spring seat, coil spring, dust boot and damper stopper from the shock absorber.

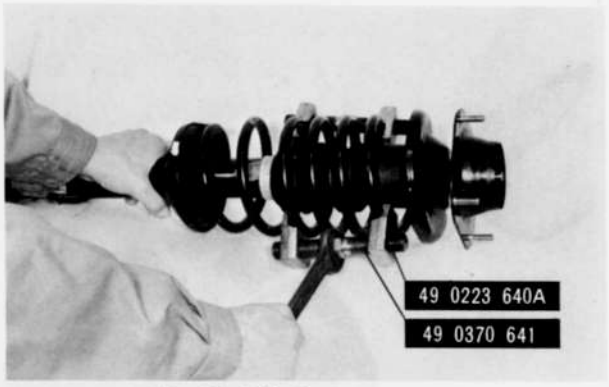

Fig. 13–4 Spring compressor

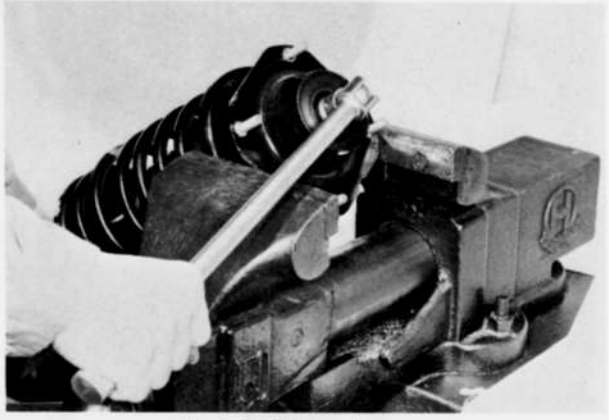

Fig. 13–5 Removing nut

4. Hold the reservoir tube in a vise equipped with soft jaws.
5. Remove the cap nut and seal assembly from the reservoir tube with the **cap nut wrench** (49 0259 700A).



Fig. 13–6 Removing cap nut and seal assembly

6. Remove the "O" ring installed on the piston rod guide with a suitable tool.
7. Pull out the piston rod and pressure tube assembly from the reservoir tube.
8. Remove the piston rod guide, back-up ring, stopper and stopper guide from the piston rod.
9. Remove the base valve assembly from the pressure tube. Then, remove the bolt and nut of the base valve assembly, and remove the valve seat, compression valves, base valve casing and tension valves.



Fig. 13–7 Removing "O" ring

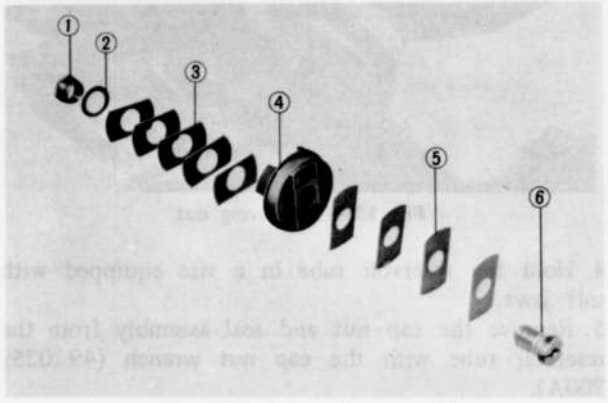

Fig. 13–8 Base valve assembly

1. Nut
2. Valve seat
3. Compression valve
4. Base valve casing
5. Tension valve
6. Bolt

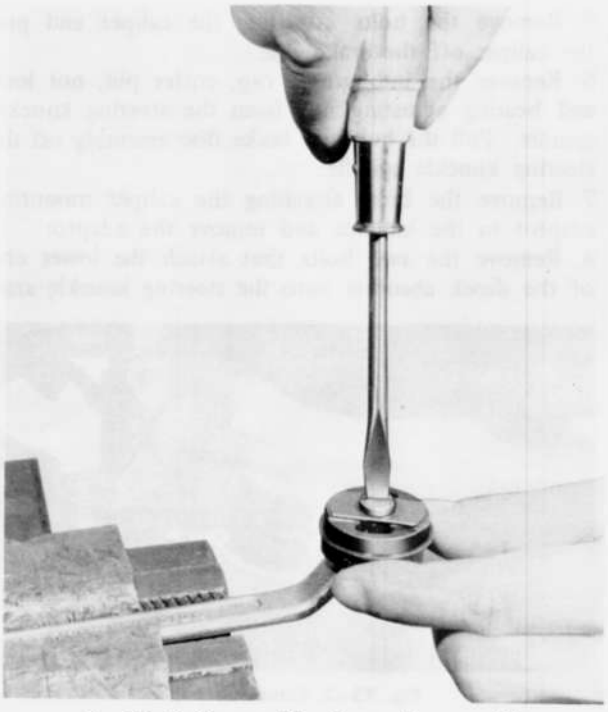

Fig. 13–9 Disassembling base valve assembly

10. Remove the piston rod from the pressure tube.
11. Hold the top end of the piston rod in a vice, being careful to protect it with alminum plates and remove the piston attaching nut. Remove the washer, relief valves, centering valve, piston, check valves, check valve springs and washer from the piston rod in that order. Then, remove the piston ring from the piston.

To replace the piston ring from the piston, proceed as follows :

1) Expand the open ends of the ring and remove the ring. **Do not** over-expand the ring.
2) Install a new piston ring.

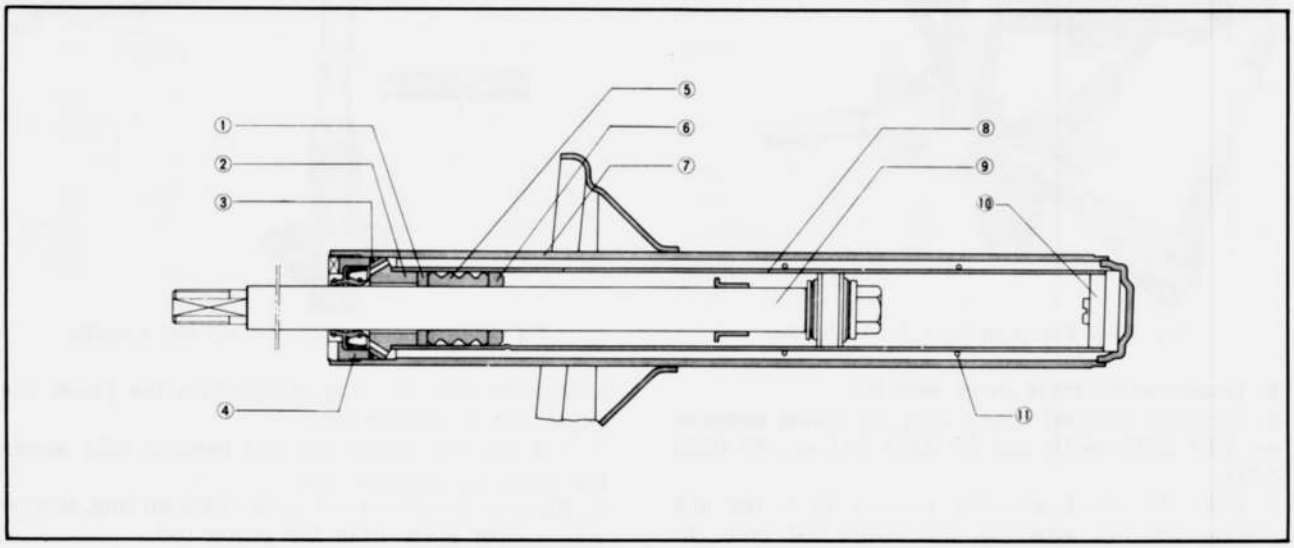

Fig. 13–10 Front shock absorber cross section

1. Back-up ring
2. Piston rod guide
3. "O" ring
4. Cap nut and seal assembly
5. Stopper
6. Stopper guide
7. Reservoir tube
8. Pressure tube
9. Piston rod
10. Base valve
11. Oil stop ring

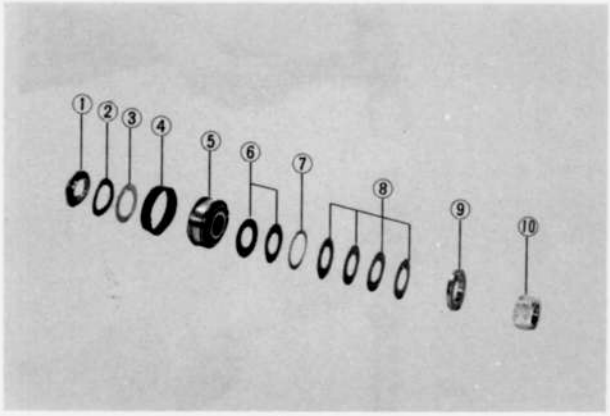

Fig. 13–11 Piston components

1. Washer
2. Check valve spring
3. Check valve
4. Piston ring
5. Piston
6. Relief valve
7. Centering valve
8. Relief valve
9. Washer
10. Nut

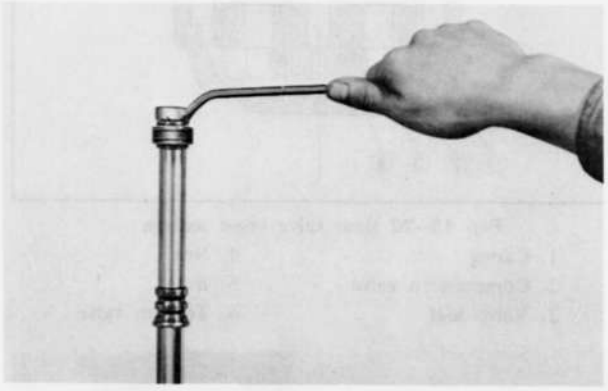

Fig. 13–12 Removing piston nut

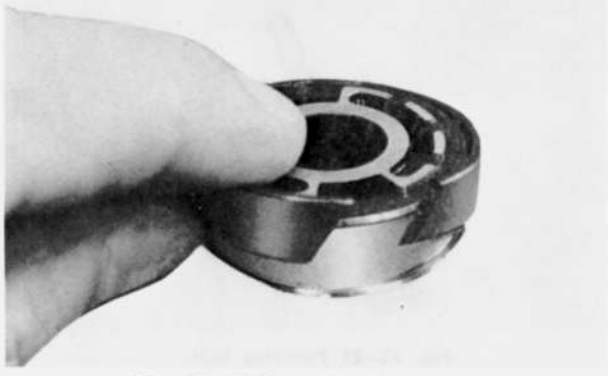

Fig. 13–13 Removing piston ring

c. Checking front shock absorber

1. Check the piston rod for wear, scores and bend. The piston rod diameter should be more than **19.94 mm (0.7851 in)**. The standard diameter is **20.0 mm (0.7874 in)**.
2. Check the run-out of the piston rod. The run-out should be less than **0.15 mm (0.0059 in)**.
3. Check the contacting surface of the piston with the check valve and relief valve for wear or damage.
4. Check the relief valve and check valve for wear, damages and flatness. The flatness is less than **0.02 mm (0.008 in)**.

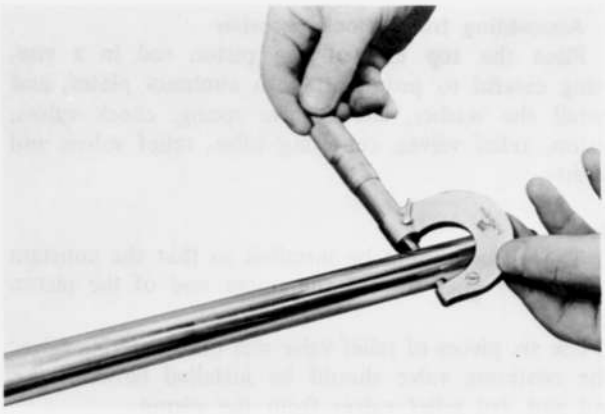

Fig. 13–14 Measuring piston rod diameter

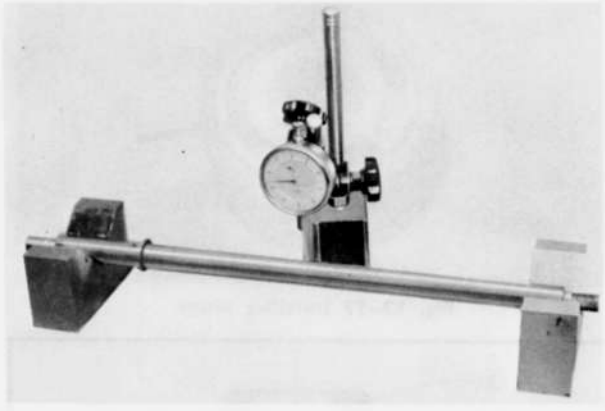

Fig. 13–15 Checking piston rod run-out

5. Check the reservoir tube for fluid leak or deformation and check the steering knuckle for crack.
6. Check the coil spring for weakness.
7. Inspect the pressure tube for inner diameter and bend. The inner diameter of the pressure tube should be **30.07 mm (1.1839 in)** and the tube run-out should be less than **0.2 mm (0.0079 in)**.

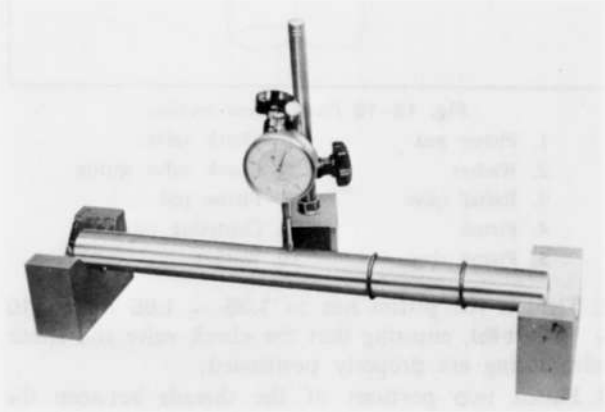

Fig. 13–16 Checking pressure tube run-out

8. Check the cap nut for damaged thread and check the oil seal lip in the cap nut for wear or other damages.
9. Check the piston rod guide for wear or damage.
10. Check the base valve casing and relief valve for wear, damage or flatness. The flatness is less than **0.02 mm (0.0008 in)**.

d. Assembling front shock absorber

1. Place the top end of the piston rod in a vise, being careful to protect it with alminum plates, and install the washer, check valve spring, check valves, piston, relief valves, centering valve, relief valves and washer.

Note:

a) The piston should be installed so that the constant orifice side goes toward the upper end of the piston rod.

b) Use six pieces of relief valve and one centering valve. The centering valve should be installed between the 2nd and 3rd relief valves from the piston.

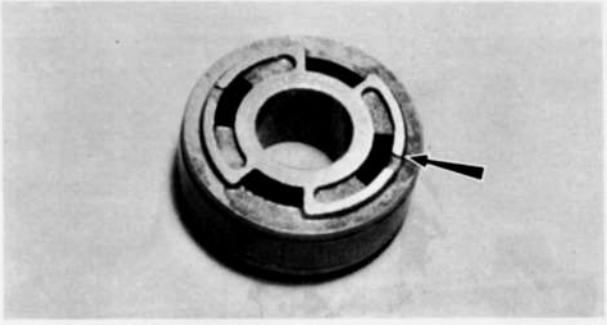

Fig. 13–17 Installing piston

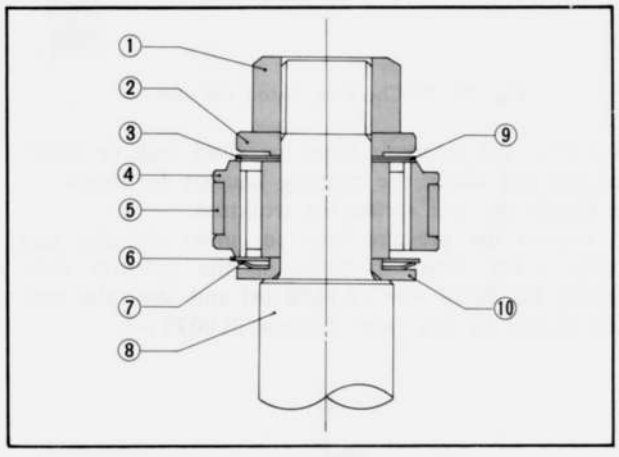

Fig. 13–18 Piston cross section

1. Piston nut
2. Washer
3. Relief valve
4. Piston
5. Piston ring
6. Check valve
7. Check valve spring
8. Piston rod
9. Centering valve
10. Washer

2. Tighten the piston nut to **1.35 ~ 1.65 m-kg (10 ~ 12.0 ft-lb),** ensuring that the check valve and check valve spring are properly positioned.

3. Punch two portions of the threads between the piston nut and the piston rod with a punch to prevent loosening of the piston nut.

4. Fit the four tension valves onto the base valve bolt and install it into the base valve casing.

5. Fit the five compression valves, valve seat and nut to the base valve casing and tighten the nut to **0.15 m-kg (1.0 ft-lb).**

6. After tightening the nut, punch the center of the bolt with a punch.



Fig. 13–19 Punching threads

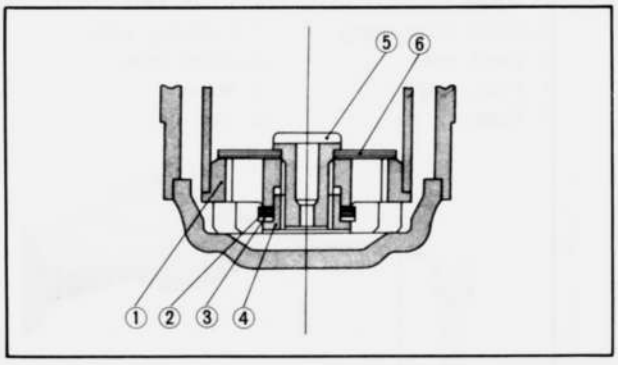

Fig. 13–20 Base valve cross section

1. Casing
2. Compression valve
3. Valve seat
4. Nut
5. Bolt
6. Tension valve

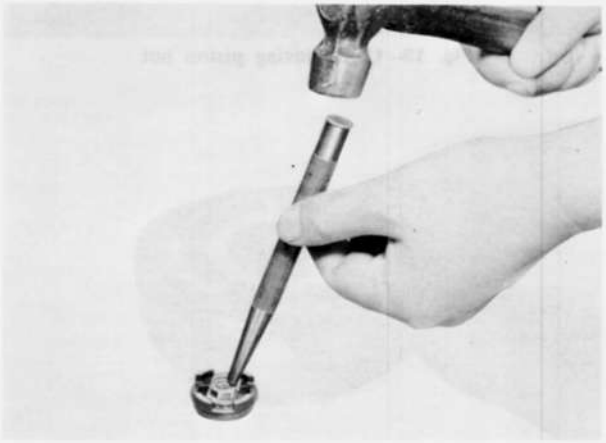

Fig. 13–21 Punching bolt

7. Insert the piston rod into the pressure tube from the bottom side.

8. Install the stopper guide onto the piston rod with the grooves of the stopper guide toward the base valve.

9. Install the stopper and back-up ring onto the piston rod.

10. Install the base valve assembly into the bottom of the pressure tube.

11. Install the two oil stop rings onto the bottom side of the pressure tube as shown in Fig. 13–23.

12. Insert the pressure tube and piston rod assembly into the reservoir tube.

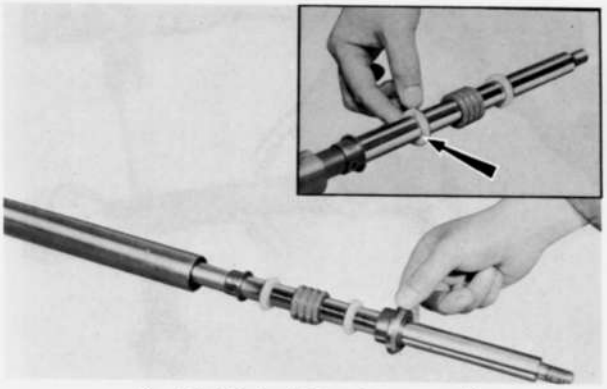

Fig. 13–22 Installing stopper guide

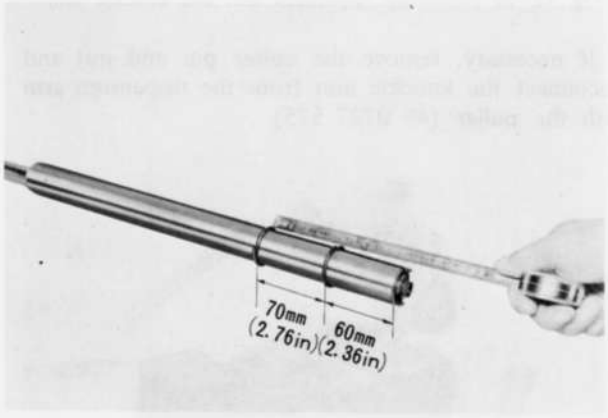

Fig. 13–23 Installing oil stop rings

13. Fill the reservoir tube with shock absorber fluid. The capacity of reservoir tube should be exactly **270 cc (16.5 cu-in).**

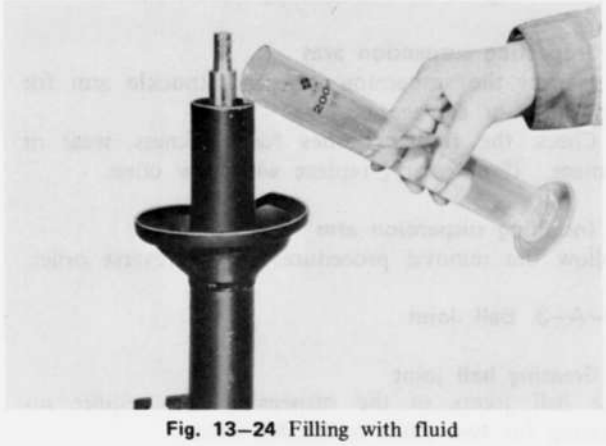

Fig. 13–24 Filling with fluid

14. Install the rod guide into the pressure tube and install a new "0" ring between the rod guide and reservoir tube.
15. Apply a light coating of grease to the lip of the cap nut oil seal and install the **oil seal guide** (49 0370 590) onto the top end of the piston rod, then insert the cap nut slowly onto the piston rod.
16. Tighten the cap nut temporarily, ensuring that the piston rod is extended to its maximum length, with the **cap nut wrench** (49 0259 702).
17. Fully lower the piston rod and tighten the cap nut to **5.0 ~ 6.0 m-kg (36.0 ~ 43.0 ft-lb)** with the **cap nut wrench** (49 0259 700A). Then, install the dust cover.



Fig. 13–25 Inserting cap nut and seal assembly

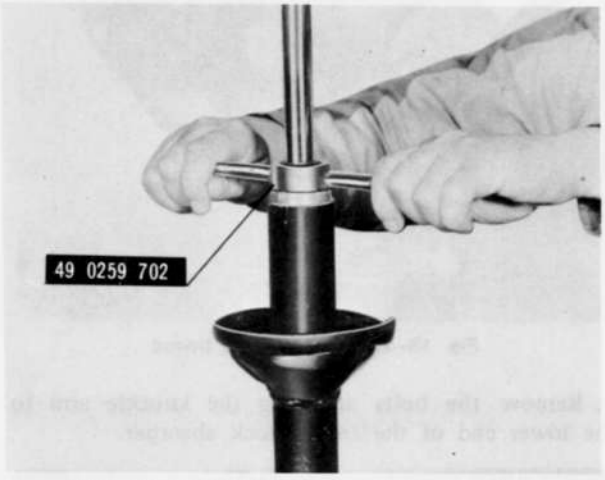

Fig. 13–26 Tightening cap nut temporarily



Fig. 13–27 Tightening cap nut

18. Install the damper stopper onto the piston rod.
19. Install the dust boot onto the piston rod.
20. Install the coil spring onto the reservoir tube.
21. Install the spring seat, spacer and shock absorber support in that order.
22. Tighten the support nut.

e. Installing front shock absorber
Follow the removal procedures in the reverse order.

Note :
When replacing the coil spring, adjust the road clearance by combining the coil spring and adjusting plate to equal road clearance both on the right and left.

13–A–2. Suspension Arm

a. Removing suspension arm
1. Raise the front end of the vehicle and support with stands.
2. Remove the front wheel.
3. Disconnect the tie-rod from the knuckle arm by removing the cotter pin and nut and using the **puller** (49 0118 850C).

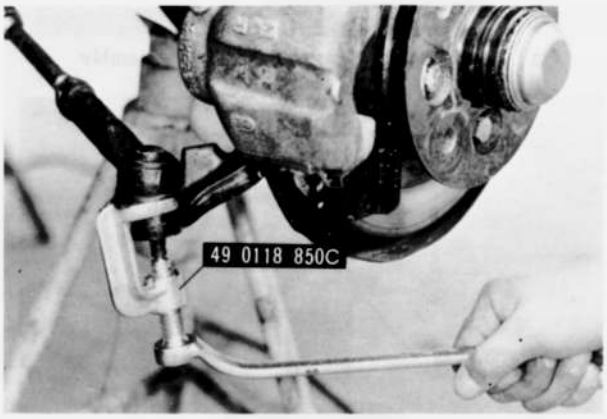

Fig. 13–28 Disconnecting tie-rod

4. Remove the bolts attaching the knuckle arm to the lower end of the front shock absorber.

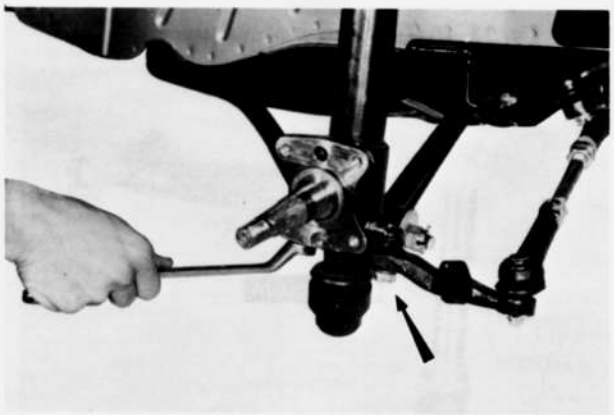

Fig. 13–29 Removing bolts

5. Remove the steering stopper, cotter pin, nut, washer and rubber bush holding the stabilizer bar to the suspension arm.
6. Remove the nut and bolt attaching the suspension arm to the cross member. Remove the suspension arm and knuckle arm.
7. Hold the suspension arm in a vise. Check the suspension arm, knuckle arm and ball joint as instructed in Par. 13–A–2, **b** and in Par. 13–A–3, **b**.

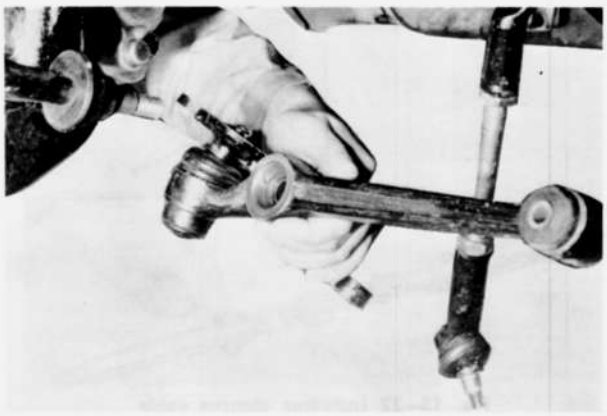

Fig. 13–30 Removing suspension arm and knuckle arm

8. If necessary, remove the cotter pin and nut and disconnect the knuckle arm from the suspension arm with the **puller** (49 0727 575).



Fig. 13–31 Disconnecting knuckle arm

b. Inspecting suspension arm
1. Inspect the suspension arm and knuckle arm for any crack or damage.
2. Check the rubber bushes for weakness, wear or damage. If necessary, replace with new ones.

c. Installing suspension arm
Follow the removal procedures in the reverse order.

13–A–3. Ball Joint

a. Greasing ball joint
The ball joints of the suspension arm require no greasing for **two years or 25,000 miles.**
When greasing becomes necessary on the ball joint, proceed as follows :
1. Remove the set ring from the groove on the dust seal and turn the dust seal inside out.
2. Remove the plug and fit a grease nipple in its stead.
3. Remove all of the used grease in the socket and the dust seal by gradually supplying new **Molybdenum Disulphide Grease** through the nipple.
4. When the used grease is thoroughly removed, fit the dust seal to the groove on the socket and secure it in place with the set ring.
5. Add new grease until the dust seal begins to balloon. Then, depress the dust seal with the fingers

so that about half of the grease remains in the dust seal.
6. Wipe off excess grease around the ball joint.
7. Remove the grease nipple and fit the plug.

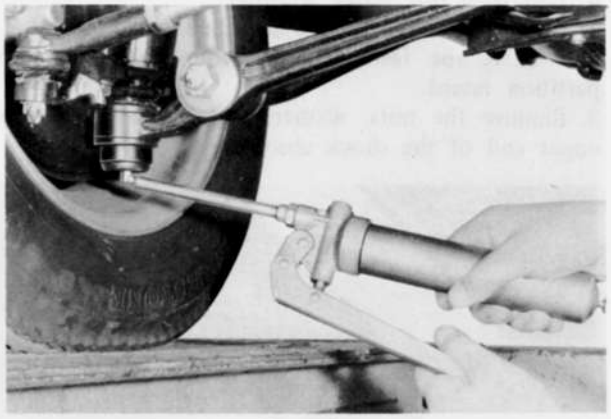

Fig. 13–32 Supplying new grease

b. Checking ball joint

1. Check the dust seal for wear, flaw or any damage. If the dust seal is defective, this will allow entry of water and dirt, resulting in ball joint wear.
2. Check the revolving torque of the ball stud. To check, hook the pull scale in the hole of the knuckle arm for connecting the tie-rod and pull the scale until the knuckle arm starts to turn. The reading of the scale should be **12 ~ 18 kg (26.5 ~ 39.7 lb)**. If it is less than **12 kg (26.5 lb)**, replace the ball joint in its assembled form.



Fig. 13–33 Checking revolving torque

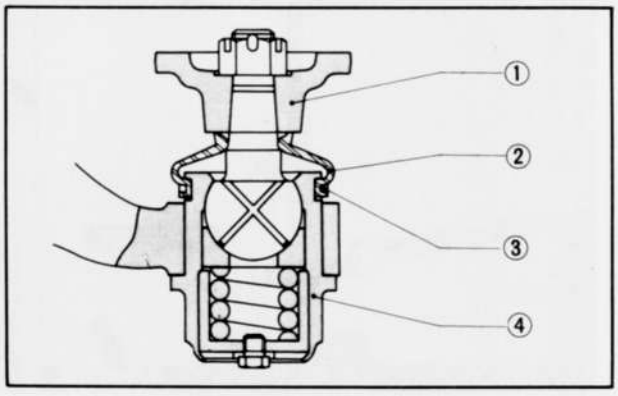

Fig. 13–34 Ball joint cross section

1. Knuckle arm
2. Dust seal
3. Set ring
4. Ball joint

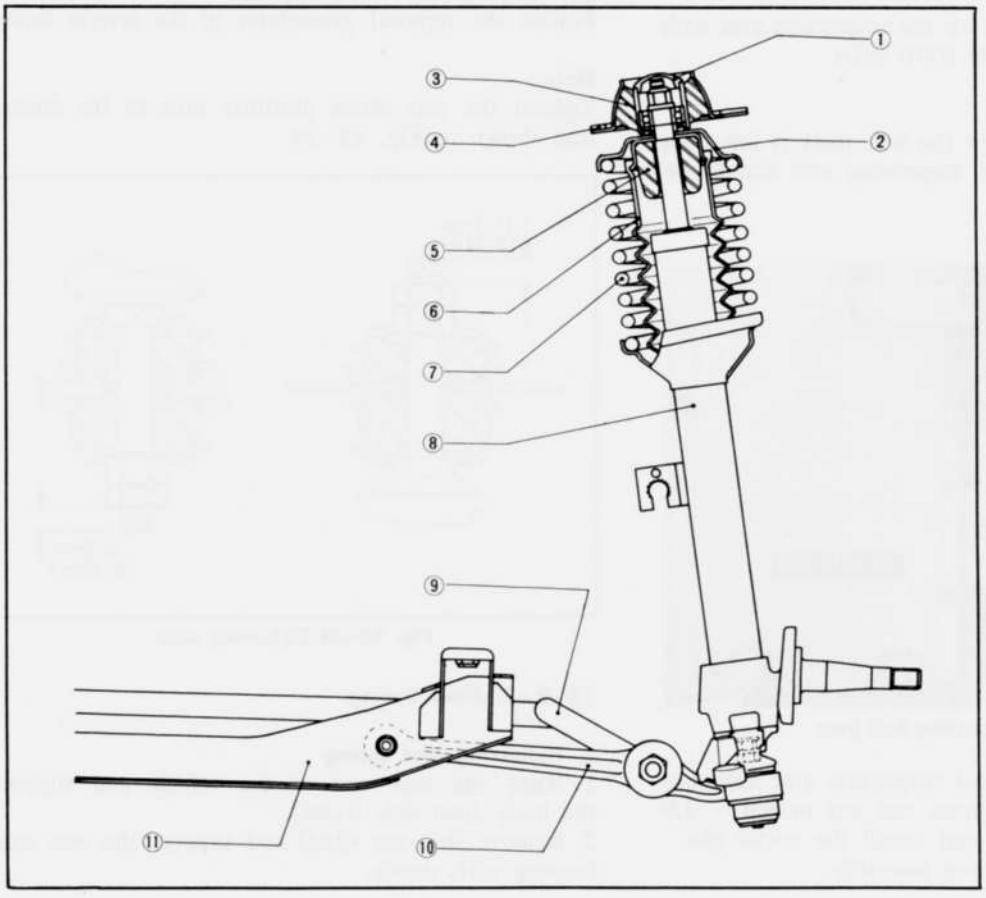

Fig. 13–35 Front suspension

1. Cap
2. Spring seat
3. Shock absorber support
4. Road clearance adjusting plate
5. Damper stopper
6. Dust boot
7. Coil spring
8. Front shock absorber
9. Stabilizer bar
10. Suspension arm
11. Cross member

c. Replacing ball joint

1. Remove the suspension arm from the vehicle as described in Par. 13–A–2.
2. Remove the set ring and dust seal from the ball joint.
3. Press the ball joint out of the suspension arm with the **ball joint remover** (49 0370 860).

Note :

Before pressing out the ball joint, clean the ball joint and suspension arm so as not to damage the mounting bore of the suspension arm.

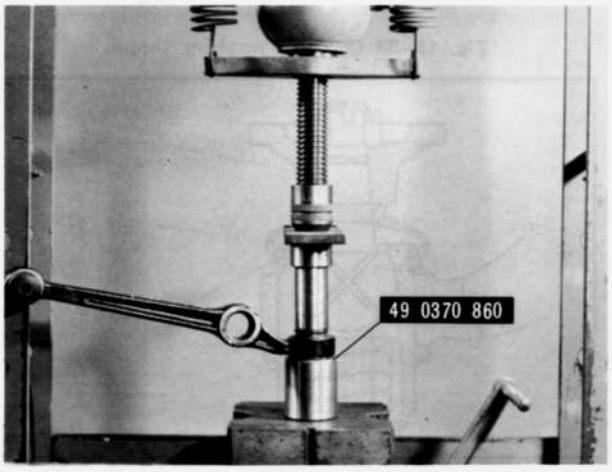

Fig. 13–36 Removing ball joint

4. Clean the mounting bore of the suspension arm and apply kerosene.
5. Press fit the ball joint to the suspension arm with the **ball joint installer** (49 0370 860).

Note :

If the pressure to press in the ball joint is less than **1,500 kg (3,300 lb)**, the suspension arm should be replaced.

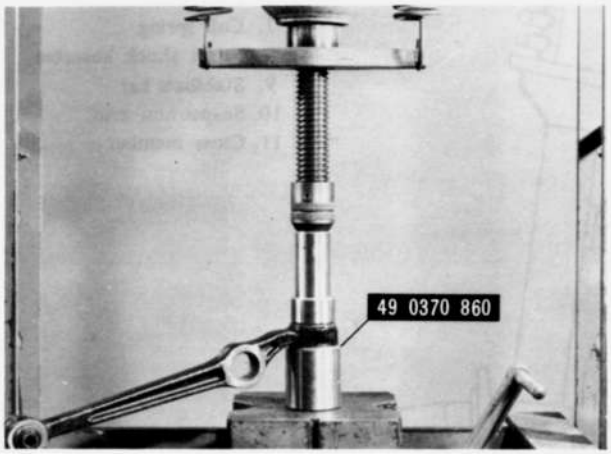

Fig. 13–37 Installing ball joint

6. Install the ball joint and suspension arm assembly to the knuckle arm. Tighten the nut to **6.0 ~ 7.0 m-kg (43.0 ~ 51.0 ft-lb)** and install the cotter pin.
7. Install the suspension arm assembly.

13–B. REAR SUSPENSION

13–B–1. Rear Shock Absorber

a. Removing rear shock absorber

1. Remove the rear seat, as described in Par. 14–H–1.
2. Remove the fasteners and remove the fuel tank partition board.
3. Remove the nuts, washers and rubber bush from upper end of the shock absorber.

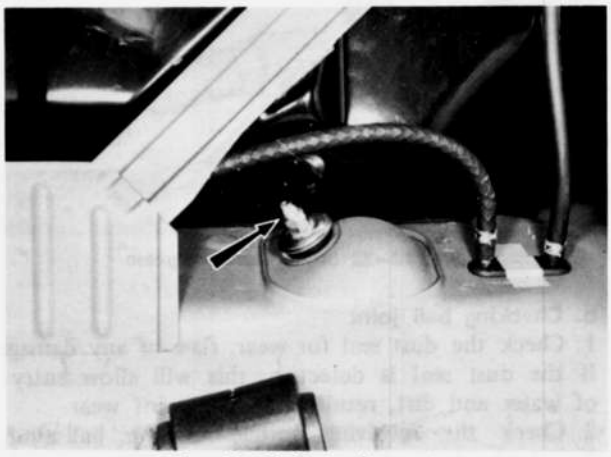

Fig. 13–38 Removing nuts

4. Remove nuts attaching the lower end of the shock absorber to the spring clamp, and remove the shock absorber.

b. Installing rear shock absorber

Follow the removal procedures in the reverse order.

Note :

Tighten the rear shock absorber nuts to the dimension shown in Fig. 13–39.

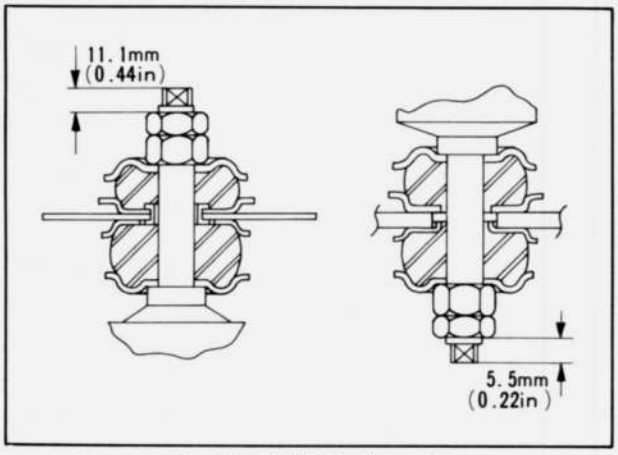

Fig. 13–39 Tightening nuts

13–B–2. Rear Spring

a. Removing rear spring

1. Raise the rear end of the vehicle and support the body (rear side frame).
2. Remove the rear wheel and support the rear axle housing with stands.

3. Disconnect the lower end of the rear shock absorber from the spring clamp by removing the nuts.
4. Remove the "U"-bolt attaching nuts, and then remove the bound bumber, rubber pads, holder, spring clamp and "U"-bolts.



Fig. 13–40 Removing "U"-bolt attaching nuts

5. Remove the two bolts and one nut attaching the spring pin located at the front end of the rear spring. Insert a suitable tool as a screwdriver between the spring pin and bracket of the body, and pry them.
6. Remove the shackle nuts, shackle plate and shackle and remove the rear end of the rear spring from the vehicle.
7. Remove the bushes from the rear end of the rear spring.
8. Remove the bushes from the front end of the rear spring.

b. Disassembling rear spring

1. Pry the four clips with a suitable tool.



Fig. 13–41 Removing clip

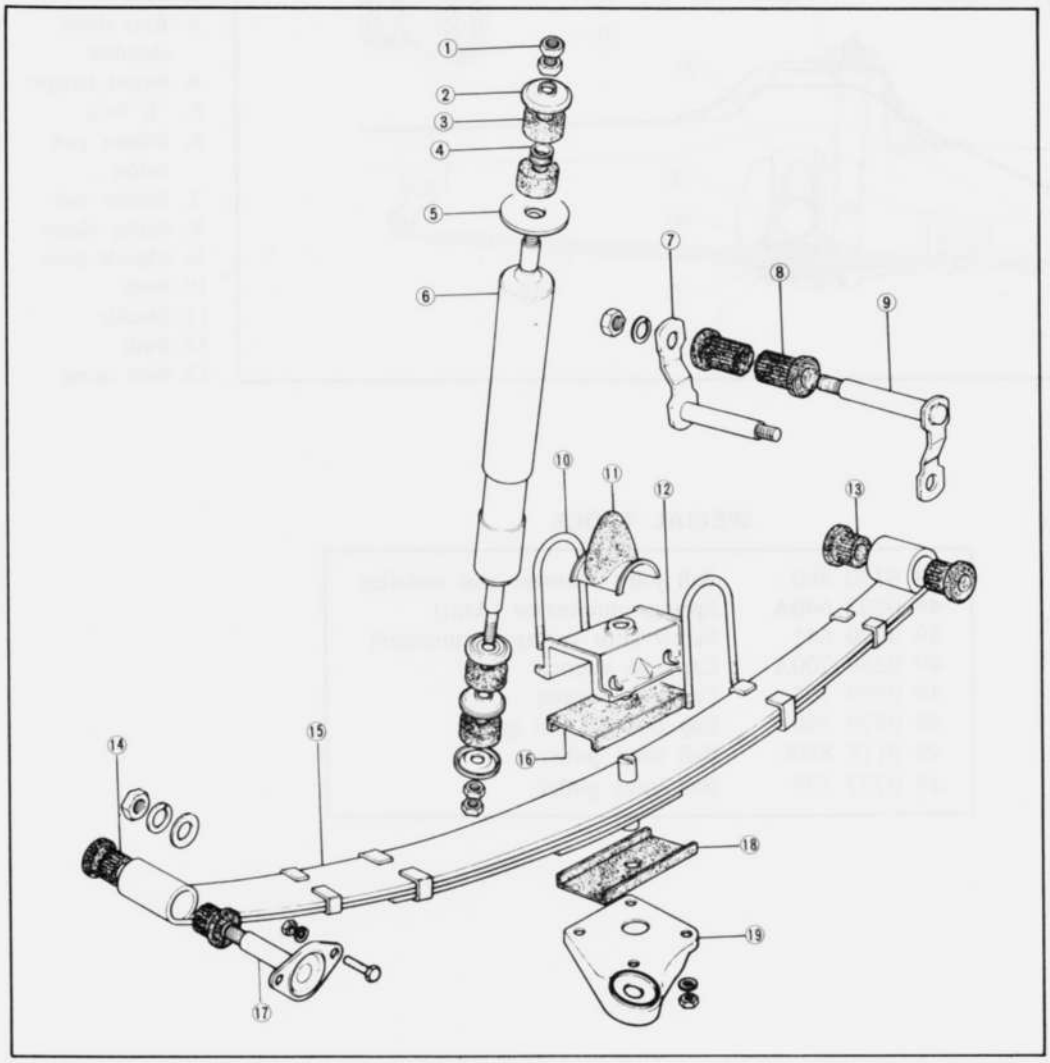

Fig. 13–42
Rear suspension components
1. Nut
2. Washer
3. Bush
4. Bush
5. Washer
6. Rear shock absorber
7. Shackle plate
8. Bush
9. Shackle
10. "U" bolt
11. Bound bumper
12. Holder
13. Bush
14. Bush
15. Rear spring
16. Rubber pad
17. Spring pin
18. Rubber pad
19. Spring clamp

2. Remove the center bolt and nut, and disassemble the rear spring.

c. Inspecting rear spring

1. Check the bush and spring rubber pad for wear or weakness.
2. Check the rear springs for breakage, cracks or weak leaves.
3. Check the shackle, and "U"-bolt for wear or any damage.
4. Check the center bolt and clips for defects.

d. Assembling rear spring

Follow the disassembly procedures in the reverse order.

Note :

(a) Bend the clips until the leaves are firmly contacted.
(b) After tightening the center bolt and nut, punch the nut to prevent loosening of the bolt.

e. Installing rear spring

Follow the removal procedures in the reverse order.

Note :

(a) Tighten the "U"-bolt attaching nuts to **3.8 ~ 4.6 m-kg (27.0 ~ 33.0 ft-lb)**.
(b) Install the shackle plate so that the chamfer on the hole of shackle plate is faced to the bush. The pressed mark on the shackle plate should be faced outward, as shown in Fig. 13–43.

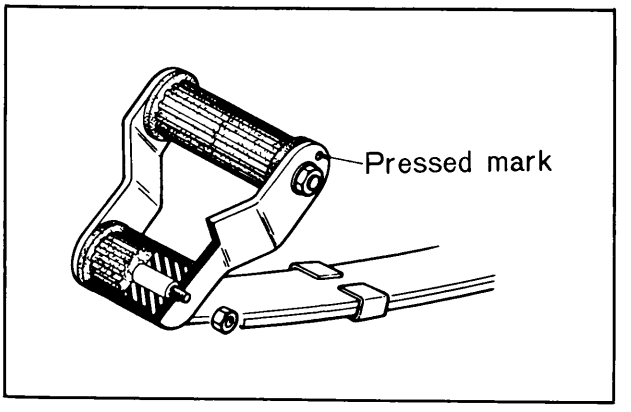

Fig. 13–43 Installing shackle plate

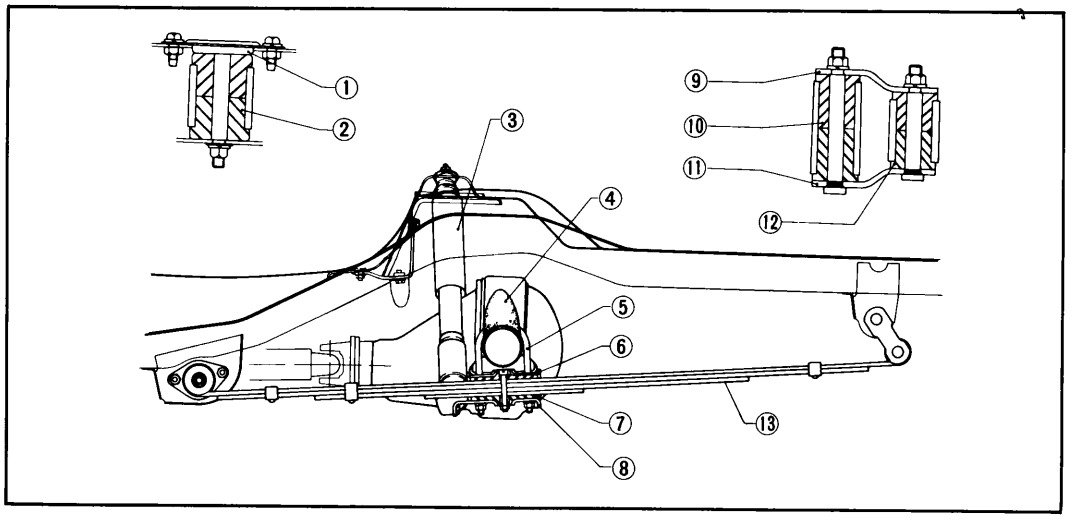

Fig. 13–44 Rear suspension
1. Spring pin
2. Bush
3. Rear shock absorber
4. Bound bumper
5. "U"-bolt
6. Rubber pad holder
7. Rubber pad
8. Spring clamp
9. Shackle plate
10. Bush
11. Shackle
12. Bush
13. Rear spring

SPECIAL TOOLS

49 0370 860	Ball joint remover and installer
49 0223 640A	Spring compressor (Arm)
49 0370 641	Screw (For spring compressor)
49 0259 700A	Cap nut wrench
49 0259 702	Cap nut wrench
49 0370 590	Cap nut oil seal guide
49 0118 850C	Ball joint puller
49 0727 575	Ball joint puller

BODY

DESCRIPTION ..... 14 : 1
14–A. HOOD ..... 14 : 1
14–A–1. Removing Hood ..... 14 : 1
14–A–2. Installing Hood ..... 14 : 1
14–A–3. Adjusting Hood ..... 14 : 1
14–A–4. Adjusting Hood Latch ..... 14 : 2
14–B. LUGGAGE COMPARTMENT DOOR ..... 14 : 2
14–B–1. Removing Luggage Door ..... 14 : 2
14–B–2. Installing Luggage Door ..... 14 : 2
14–B–3. Adjusting Luggage Door ..... 14 : 2
14–B–4. Adjusting Luggage Door Latch ..... 14 : 2
14–C. FRONT BUMPER ..... 14 : 3
14–C–1. Removing Front Bumper ..... 14 : 3
a. Sedan & wagon ..... 14 : 3
b. Hardtop ..... 14 : 3
14–C–2. Checking Shock Absorber (Sedan & Wagon) ..... 14 : 4
14–C–3. Installing Front Bumper ..... 14 : 4
14–D. REAR BUMPER ..... 14 : 4
14–D–1. Removing Rear Bumper ..... 14 : 4
a. Sedan & wagon ..... 14 : 4
b. Hardtop ..... 14 : 4
14–D–2. Checking Shock Absorber (Sedan & Wagon) ..... 14 : 5
14–D–3. Installing Rear Bumper ..... 14 : 5
14–E. WINDSHIELD GLASS ..... 14 : 7
14–E–1. Removing Windshield Glass ..... 14 : 7
14–E–2. Installing Windshield Glass ..... 14 : 8
14–F. REAR WINDOW GLASS ..... 14 : 10
14–F–1. Removing and Installing Rear Window Glass ..... 14 : 10
14–F–2. Heatable Window ..... 14 : 10
14–G. FRONT SEAT ..... 14 : 11
14–G–1. Front Seat Replacement ..... 14 : 11
14–G–2. Seat Adjuster Inspection ..... 14 : 11
14–G–3. Reclining Knuckle Replacement ..... 14 : 11
14–H. REAR SEAT ..... 14 : 11
14–H–1. Removing Rear Seat ..... 14 : 11
14–H–2. Installing Rear Seat ..... 14 : 11
14–I. DOOR ..... 14 : 11
14–I–1. Door Adjustment ..... 14 : 11
a. Adjusting door latch striker ..... 14 : 11
b. Adjusting door alignment ..... 14 : 11
14–I–2. Door Hinge Replacement ..... 14 : 12
14–I–3. Door Weatherstrip Replacement (Sedan & Wagon) ..... 14 : 12
14–I–4. Door Weatherstrip Replacement (Hard Top) ..... 14 : 13
14–J. FRONT DOOR (Sedan & Wagon) ..... 14 : 13
14–J–1. Door Window Regulator and Glass ..... 14 : 13
a. Removing door window regulator and glass ..... 14 : 13
b. Checking door window regulator ..... 14 : 13
c. Installing door window regulator and glass ..... 14 : 13
14–J–2. Door Latch, Lock Cylinder and Outer Handle ..... 14 : 13
a. Removing door latch, lock cylinder and outer handle ..... 14 : 13
b. Installing door latch, lock cylinder and outer handle ..... 14 : 14
14–K. FRONT DOOR (Hard Top) ..... 14 : 16
14–K–1. Door Window Regulator and Glass ..... 14 : 16
a. Removing door window regulator and glass ..... 14 : 16
b. Checking door window regulator ..... 14 : 16
c. Installing door window regulator and glass ..... 14 : 16
14–K–2. Inner Handle, Door Latch and Outer Handle ..... 14 : 16
a. Removing inner handle ..... 14 : 16
b. Installing inner handle ..... 14 : 16
c. Removing door latch ..... 14 : 16
d. Installing door latch ..... 14 : 16
e. Removing outer handle ..... 14 : 16
f. Installing outer handle ..... 14 : 17
14–K–3. Front Door Glass Regulator Adjustment ..... 14 : 17
a. Horizontal adjustment of the window ..... 14 : 17
b. The fore and aft adjustment of the window ..... 14 : 17
c. Vertical adjustment of the window ..... 14 : 17
d. The in and out adjustment of the window ..... 14 : 17
e. Final check ..... 14 : 17
14–L. REAR DOOR ..... 14 : 18
14–L–1. Stationary Glass ..... 14 : 18
a. Removing stationary glass ..... 14 : 18
b. Installing stationary glass ..... 14 : 19
14–L–2. Rear Door Window Regulator and Glass ..... 14 : 19
a. Removing rear door window regulator and glass ..... 14 : 19
b. Installing rear door window regulator and glass ..... 14 : 19
14–M. QUARTER WINDOW ..... 14 : 19
14–M–1. Removing the quarter trim ..... 14 : 19
14–M–2. Installing the quarter trim ..... 14 : 20
14–M–3. Removing the quarter window glass ..... 14 : 20
14–M–4. Installing the quarter window glass ..... 14 : 20
14–M–5. Removing regulator ..... 14 : 20
14–M–6. Installing the regulator ..... 14 : 20
14–N. QUARTER WINDOW ADJUSTMENT ..... 14 : 21
14–N–1. Horizontal Adjustment of the Window Glass ..... 14 : 21
14–N–2. Vertical Adjustment of the Window Glass ..... 14 : 21
14–N–3. The Fore and Aft Adjustment of the Window ..... 14 : 21
14–N–4. The In and Out Adjustment ..... 14 : 21
14–O. TOP CEILING ..... 14 : 23
14–O–1. Removing Top Ceiling ..... 14 : 23
14–O–2. Installing Top Ceiling ..... 14 : 24
14–P. INSTRUMENT PANEL ..... 14 : 25
14–P–1. Removing Instrument Panel Assembly ..... 14 : 25
14–P–2. Installing Instrument Panel Assembly ..... 14 : 27
SPECIAL TOOLS ..... 14 : 27
BODY CHECKING DIMENSION, SEDAN & HARDTOP ..... 14 : 28

14

DESCRIPTION

The body is designed to give an unitary construction with the body and chassis frame unified for light, rigid and durable construction. This section explains service procedures of the hood, luggage compartment, bumper, door, seat, top ceiling, windshield.

14–A. HOOD

14–A–1. Removing Hood

1. Open the hood and support the hood in the open position. Mark the hood hinge locations on the hood.
2. Remove the hood support from the hood.

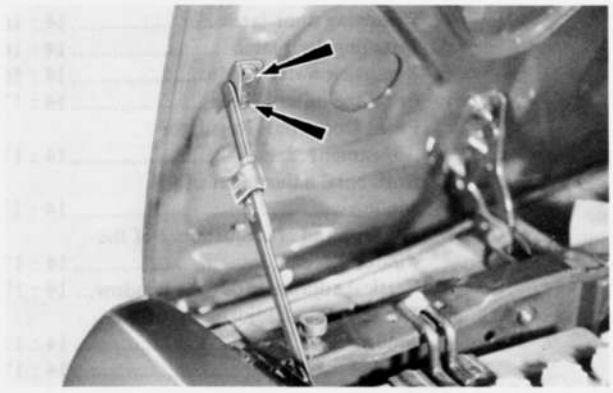

Fig. 14–1 Removing hood support

3. Remove two nuts attaching each hinge to the hood.
4. Remove the hood from the vehicle.



Fig. 14–2 Removing hinge attaching bolts

14–A–2. Installing Hood

Follow the removal procedures in the reverse order and adjust the hood by applying the procedures explained in the following paragraph.

14–A–3. Adjusting Hood

The hood is provided with to-and-fro, up-and-down and side-to-side adjustments.

To make the to-and-fro and side-to-side adjustments, loosen the hood attaching bolts and move the hood to the proper position, then tighten the attaching bolts.

To make the up-and-down adjustment at the rear edge of the hood, loosen the hood stop bolts and move the hood to proper position, then tighten the attaching bolts.

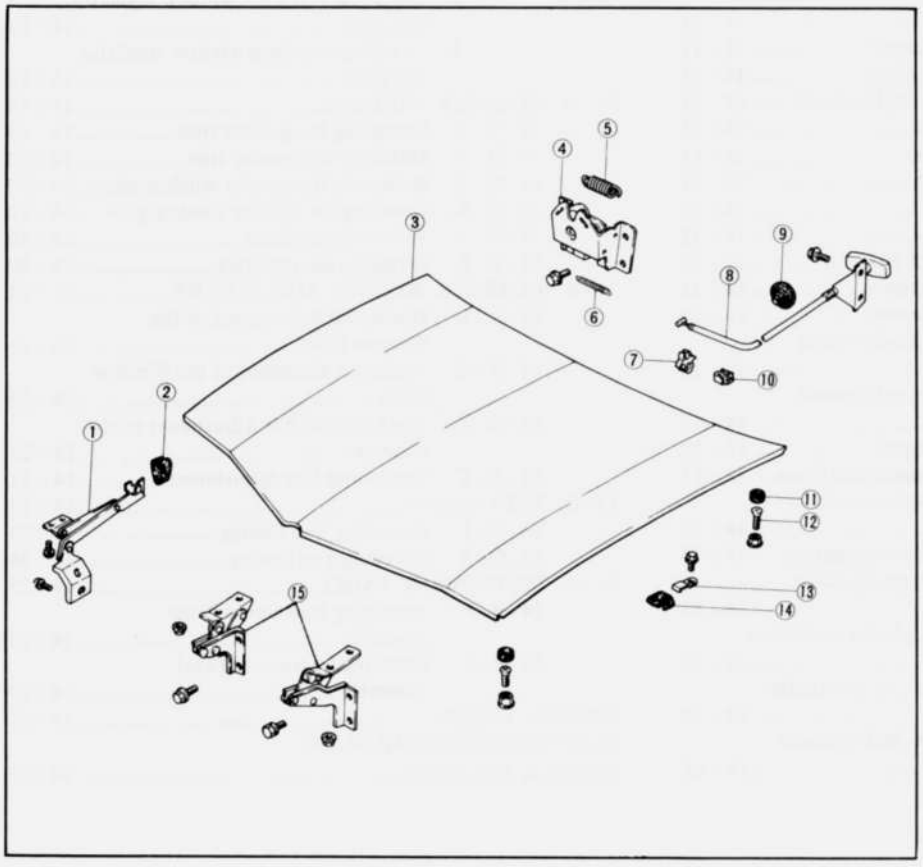

Fig. 14–3 Hood components

1. Hood support
2. Cushion rubber
3. Hood
4. Hood latch
5. Spring
6. Spring
7. Release wire clip
8. Release wire
9. Grommet
10. Release wire clamp
11. Cushion rubber
12. Screw
13. Set plate
14. Cushion rubber
15. Hood hinge

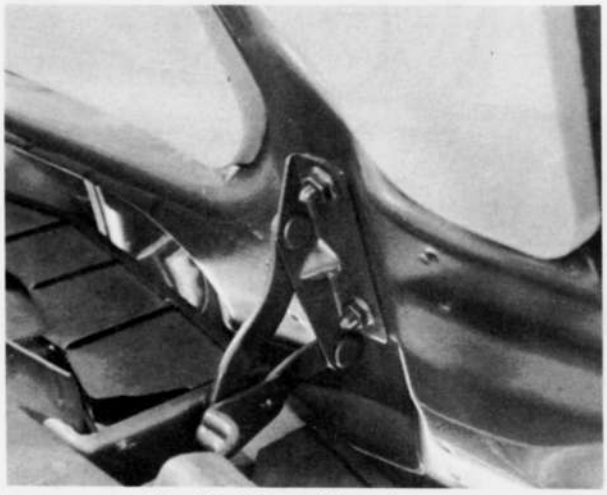

Fig. 14–4 To-and-fro adjustment

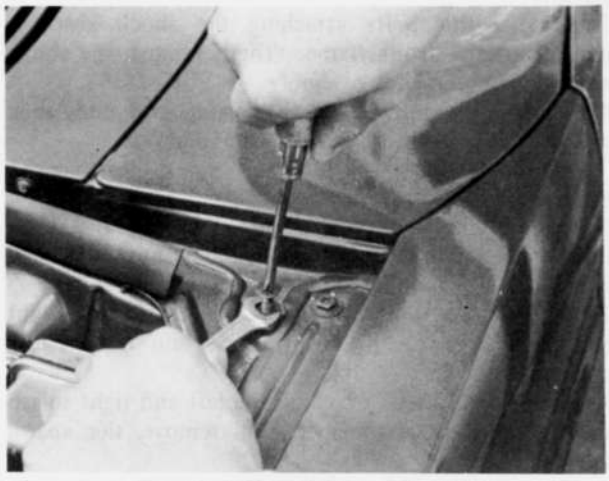

Fig. 14–5 Up-and-down adjustment

14–A–4. Adjusting Hood Latch

1. Make certain that it is properly aligned.
2. Loosen the hood latch attaching bolts. Then move it as required to align with the latch.
3. Loosen the attaching bolts on the hood latch, and adjust the position of the hood. The proper height of the hood is when it flushes with the fender.

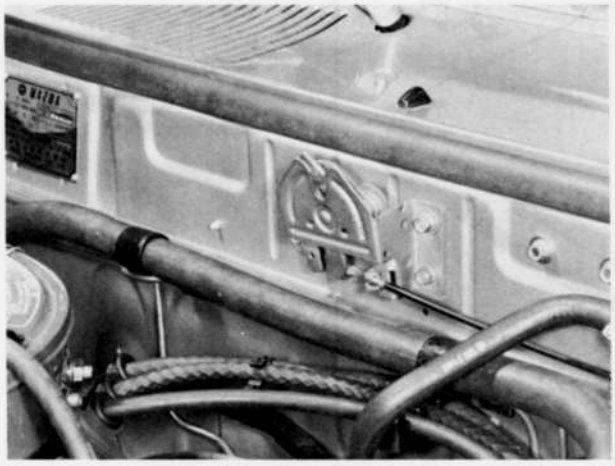

Fig. 14–6 Adjusting hood latch

14–B. LUGGAGE COMPARTMENT DOOR

14–B–1. Removing Luggage Compartment Door

1. Open the luggage compartment door and support the door in the luggage compartment.
2. Remove the two bolts attaching the hinge to the luggage compartment door.
3. Remove the luggage compartment door from the vehicle.



Fig. 14–7 Removing compartment door

14–B–2. Installing Luggage Compartment Door

Follow the removal procedures in the reverse order and adjust the luggage compartment door by applying procedures explained in the following paragraph.

14–B–3. Adjusting Luggage Compartment Door

To make the to-and-fro or side-to-side adjustment, loosen the luggage compartment door attaching bolts, and move the door as required.

To make the up-and-down adjustment, loosen the hinge-to-hinge support attaching bolts and raise or lower the hinge as required.



Fig. 14–8 Up-and-down adjustment

14–B–4. Adjusting Luggage Compartment Door Latch

To adjust the door latch, loosen the door latch striker attaching bolts, and move the striker as required, then tighten the attaching bolts.

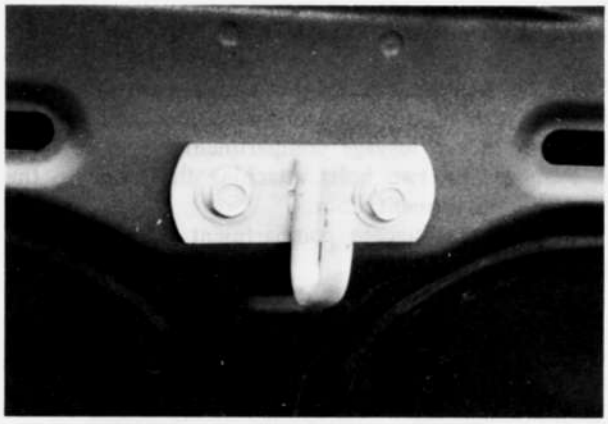

Fig. 14–9 Adjusting door latch



Fig. 14–10 Adjusting striker

14–C. FRONT BUMPER

14–C–1. Removing Fornt Bumper

a. Sedan & Wagon

1. Remove the screws attaching the left and right turn signal lights to the bumper and remove the turn signal lights form the bumper.
2. Remove the bolts attaching the left and right bumper ends to the fender.
3. Remove the nuts and bolts attaching the bumper to the left and right hinge plate.

Then, remove the bumper.



Fig. 14–11 Removing bolt

4. Remove the bolts attaching the left and right splash shields to the skirt panel and remove the splash shields.
5. Remove the bolts attaching the shock absorber bracket to the front frame. Then, remove the shock absorber and bracket assembly.
6. Remove the nuts from the piston rod end, then separates shock absorber form the bracket.

b. Hardtop

1. Remove the screws attaching the left and right turn signal lights to the bumper and remove the turn signal lights from the bumper.
2. Remove the bolts attaching the left and right bumper guards to the front frame and remove the bumper guards.
3. Remove the bolts attaching the left and right splash shields to the skirt panel and remove the splash shields.
4. Remove the bolts attaching the left and right bumper stays to the front frame.
5. Remove the screws attaching the left and right bumper ends to the inside of the frame and remove

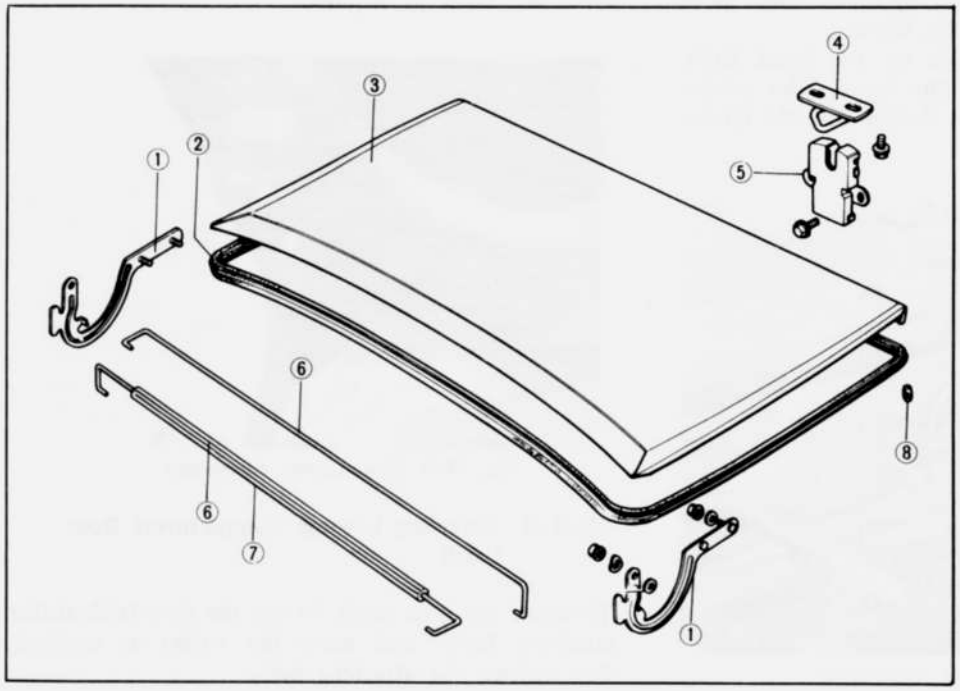

Fig. 14–12 Luggage compartment door components

1. Door hinge
2. Weatherstrip
3. Luggage compartment door (Tank lid)
4. Striker
5. Door latch
6. Balance spring
7. Balance spring protector
8. Cushion rubber

the bumper.
6. Remove the bolts attaching each bumper stay to the bumper and remove the stays.

14–C–2. Checking Shock Absorber (Sedan & Wagon)

To check the chock absorber, measure the dimension (A) shwon in Fig. 14–14.
This measurement should be **58 ± 2 mm (2.28 ± 0.08 in)**.
If this measurement is not within the specification, replace the shock absorber with a new one.

14–C–3. Installing Front Bumper

Follow the removal procedures in the reverse order and align the bumper for good fit and appearance.

Note:
When installing the bumper equipped the vehicles for Sedan & Wagon, care must be taken in the following point:
(a) After installing the shock absorber assembly to the body frame, check the hinge plate height from the level ground surface.
The height should be **457 ± 29 mm (17.99 ± 1.14 in)** as shown in Fig. 14–13.
If necessary, adjust the height by moving the position of hinge plate or shock absorber assembly.
The hinge plate height must be equal on either side.
(b) If the bumper attaching bolts can not fit smoothly into the bumper and hinge plate holes, correct the posiiton of hinge plate or shock absorber assembly so that the bumper hole aligns with the hinge plate hole on either side.
Incorrectly installed bumper may cause its poor recovery.
(c) The bumper attaching bolt has a slight inclination on the under surface of the bolt head.
So, the bumper attaching bolt should be installed in the correct direction so that the under surface nicely fits the bumper surface.
(d) Tighten the bumper attaching bolt to **1.8 ~ 2.7 m-kg (13 ~ 19 ft-lb)**.
(e) Tighten the shock absorber bracket attaching bolt to **1.8 ~ 2.7 m-kg (13 ~ 19 ft-lb)**.

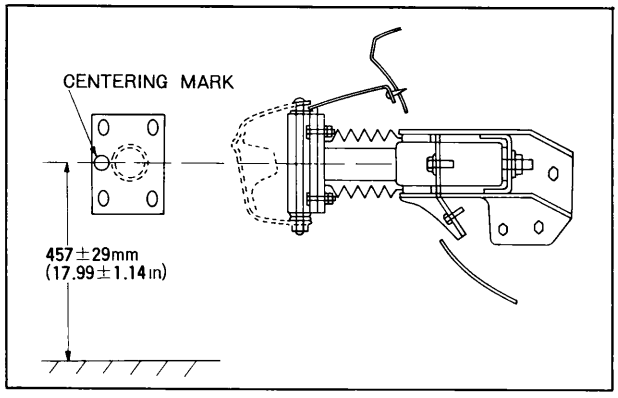

Fig. 14–13 Front hinge plate height

14–D. REAR BUMPER

14–D–1. Removing Rear Bumper

a. Sedan & Wagon
1. Remove the bolts attaching the left and right bumper ends to the fender.
2. Remove the nuts and bolts attaching the bumper to the left and right hinge plates. Then, remove the bumper.
3. Remove the bolts attaching the shock absorber bracket to the rear frame and nuts attaching the piston rod end to the rear frame. Then, remove the shock absorber and bracket assembly.
4. Remove the shock absorber from the bracket.

b. Hardtop
1. Open the luggage compartment door and remove the luggage compartment end trim. (Sedan & Hard Top Only)
2. Remove the bolts and nuts attaching the left and right bumper stays to the body frame.

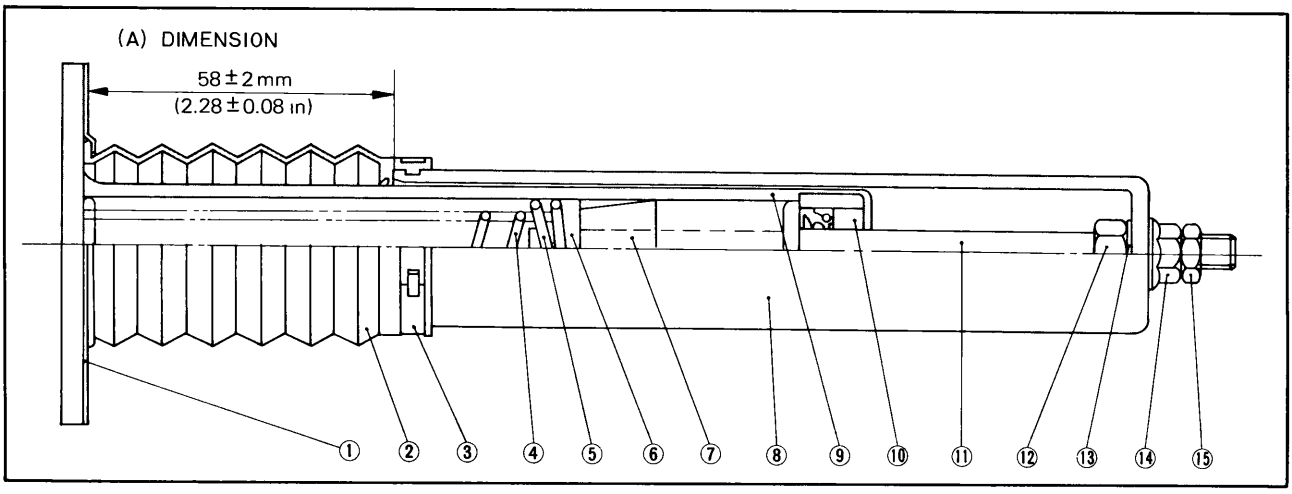

Fig. 14–14 Shock absorber

1. Boot plate
2. Boot
3. Boot clamp
4. Inner coil spring
5. Outer coil spring
6. Guide
7. Rubber bush
8. Outer casing
9. Inner casing
10. Inner casing end
11. Piston rod
12. Nut
13. Seal washer
14. Nut
15. Nut



Fig. 14–15 Removing bolt

3. Remove the bolts attaching the left and right bumper end to the body and remove the bumper.
4. Remove the nuts attaching the left and right bumper guards to the bumper and remove the bumper guards. (Hardtop only)

14–D–2. Checking Shock Absorber (Sedan & Wagon)
To check the rear shock absorber, make the same inspection as for the front shock absorber described in **Par. 14–C–2.**

14–D–3. Installing Rear Bumper
Follow the removal procedures in the reverse order and align the bumper for good fit and appearance.

Note:
When installing the rear bumper equipped the vehicles for Sedan & Wagon, care should be taken the same as in the case of the front bumper installation described in **Par. 14–C–3.**

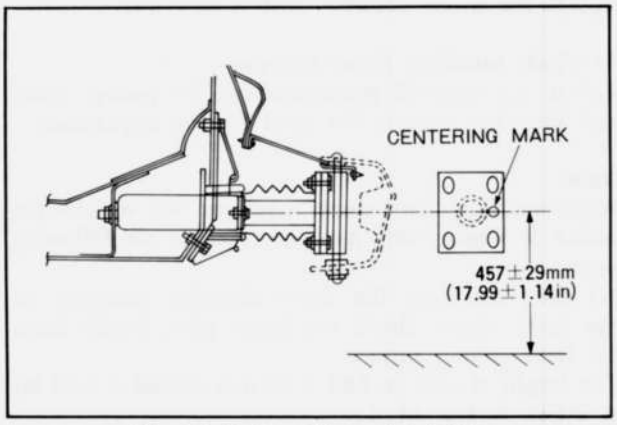

Fig. 14–16 Rear hinge plate height

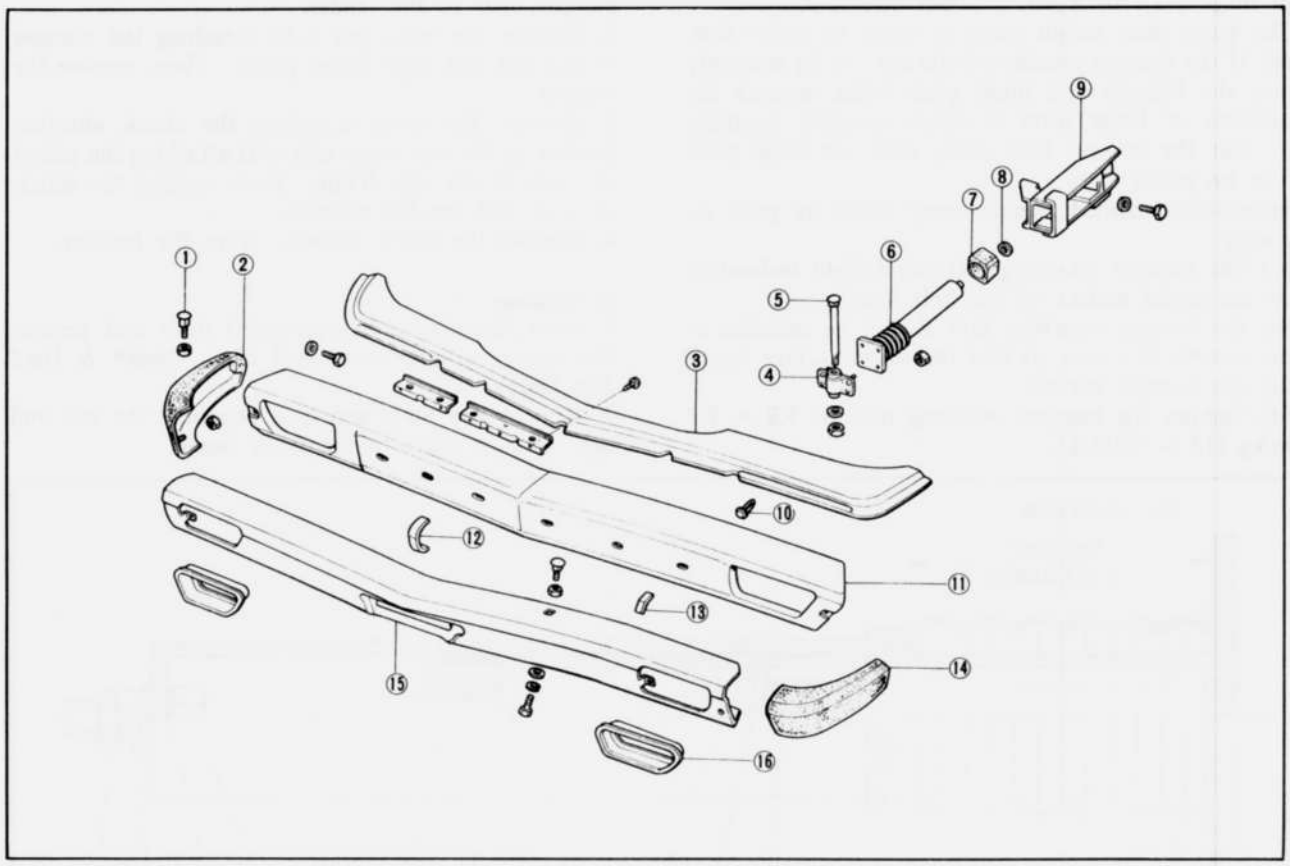

Fig. 14–17 Front bumper components – Sedan & Wagon

1. Screw
2. Bumper (Right)
3. Bumper cover
4. Hinge plate
5. Bolt
6. Shock absorber
7. Mounting rubber
8. Seal washer
9. Shock absorber bracket
10. Rivet
11. Bumper (Center)
12. Spacer
13. Spacer
14. Bumper (Left)
15. Bumper (Outer)
16. Turn signal ring

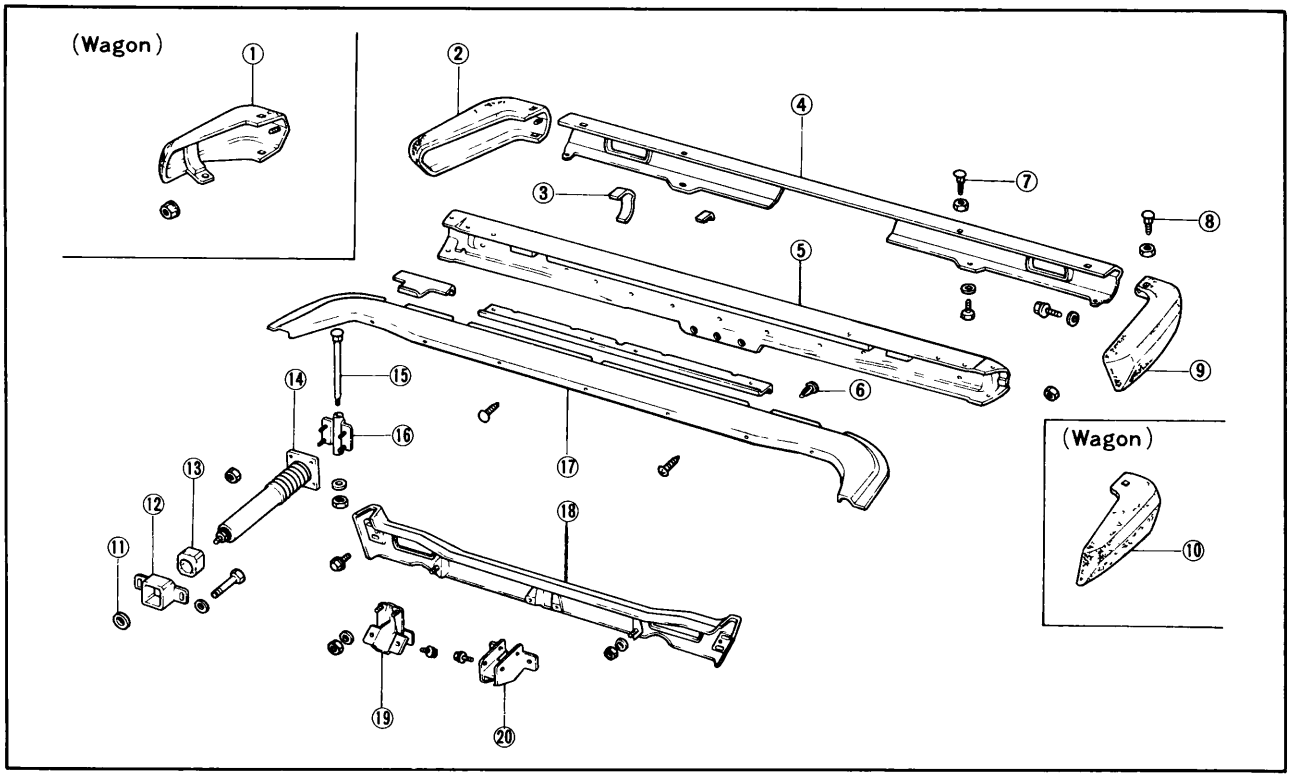

Fig. 14–18 Rear bumper components – Sedan & Wagon

1. Bumper (Right, Wagon)
2. Bumper (Right, Sedan)
3. Spacer
4. Bumper (Outer)
5. Bumper (Center)
6. Rivet
7. Screw
8. Screw
9. Bumper (Left, Sedan)
10. Bumper (Left, Wagon)
11. Seal Washer
12. Shock absorber bracket
13. Mounting rubber
14. Shock absorber
15. Bolt
16. Hinge plate
17. Bumper cover
18. Garnish (Sedan)
19. Bumper bracket (Sedan)
20. Bumper bracket (Wagon)

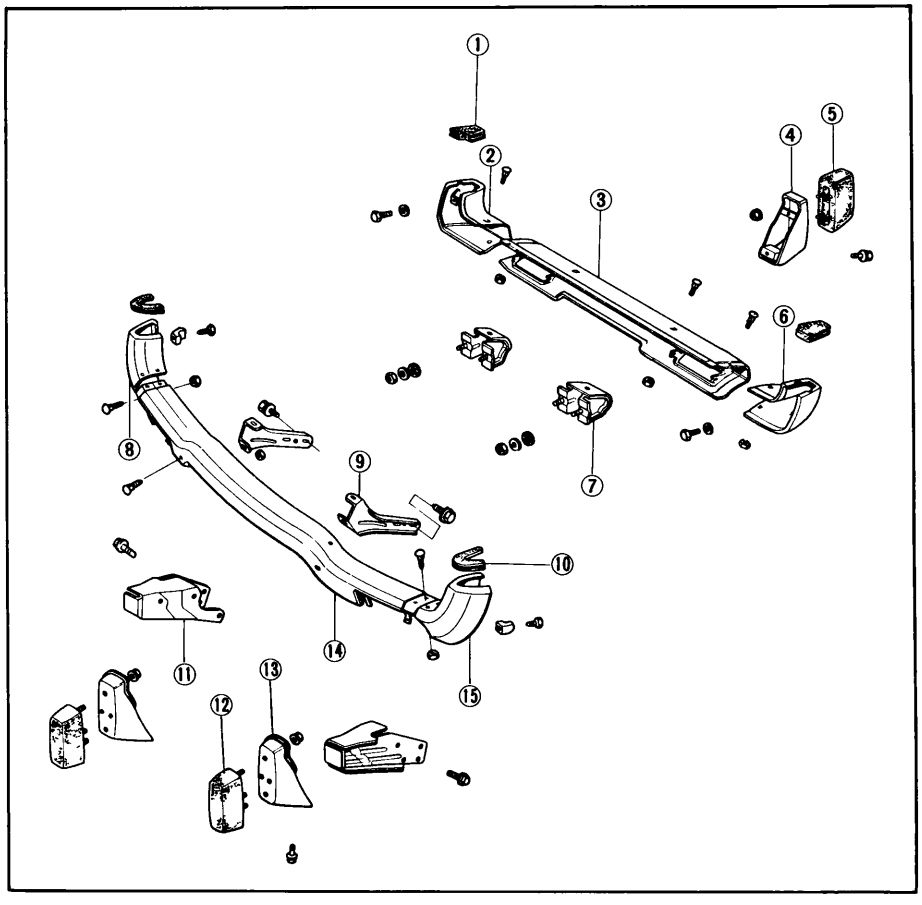

Fig. 14–19 Bumper components – Hardtop

1. Cover
2. Rear bumper (Right)
3. Rear bumper (Center)
4. Bumper guard bracket
5. Bumper guard
6. Rear bumper (Left)
7. Bumper stay
8. Front bumper (Right)
9. Bumper stay
10. Cover
11. Bumper bracket
12. Bumper guard
13. Bumper guard bracket
14. Front bumper (Center)
15. Front bumper (Left)

14–E. WINDSHIELD GLASS

14–E–1. Removing Windshield Glass

To replace the windshield glass, use the **window service tool set** (49 0305 870) shown in Fig. 14–24.

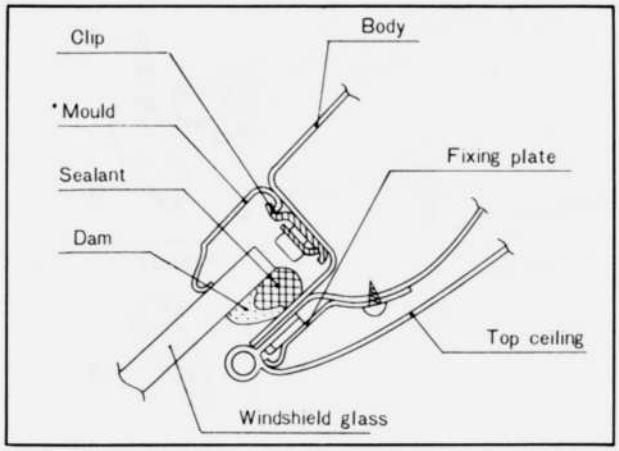

Fig. 14–20 Windshield cross section

1. Remove the interior mirror and also right and left front pillar trims from the interior of the vehicle.
2. Remove the windshield wiper arms and blades.
3. Insert the mould remover between the mould and the glass and pull the retaining clip to remove the mould upward. Remove the mould.

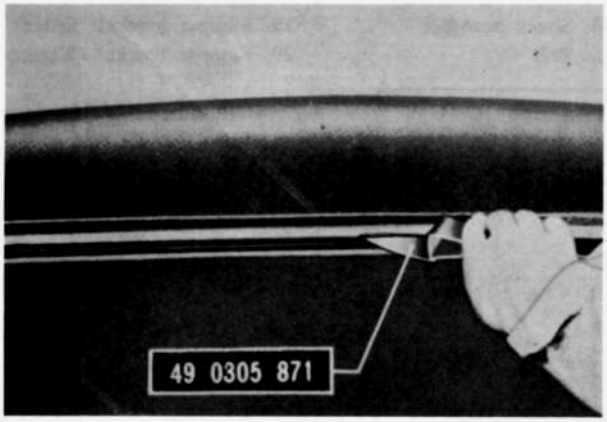

Fig. 14–21 Removing mould

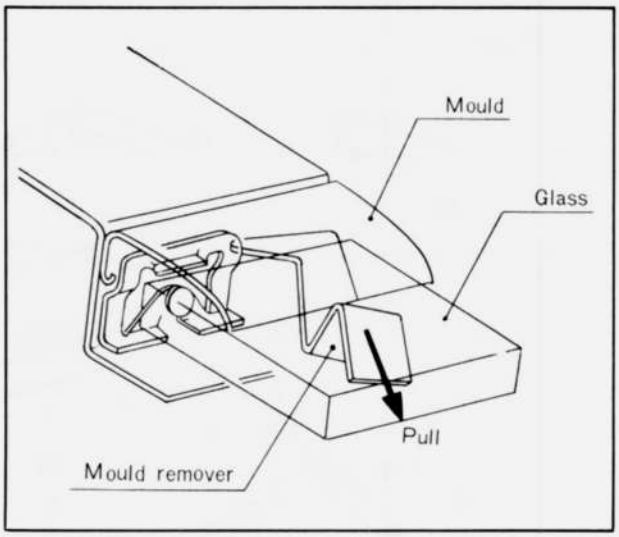

Fig. 14–22 Removing mould

4. Remove the mould retaining clips.
5. Pierce the needle between the glass and the sealant and insert the 500 mm (20 in) length of piano wire into the pierced hole. Wrap each end of the wire around the bars.

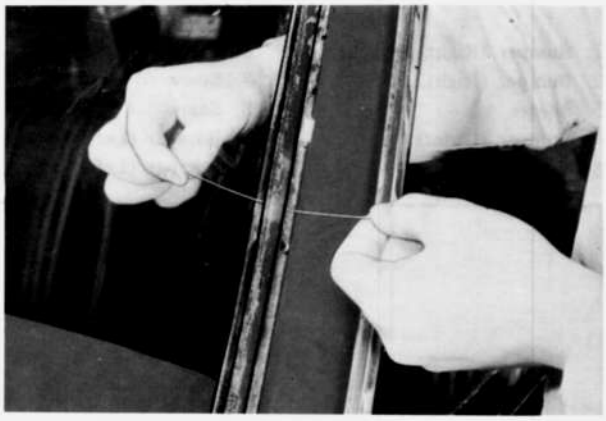

Fig. 14–23 Piercing piano wire

6. With the aid of an assistant, cut the sealant all the way around the glass with a sawing motion and remove the glass.

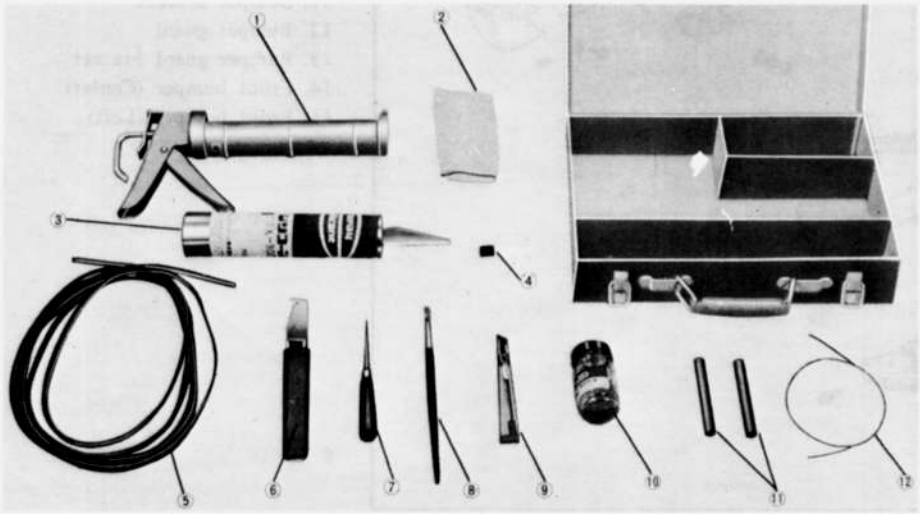

Fig. 14–24
Window service tool set
(49 0305 870)

1. Sealant gun
2. Gauze
3. Sealant
4. Spacer
5. Dam
6. Mould remover
7. Needle
8. Brush
9. Cutting knife
10. Primer
11. Bar
12. Piano wire

Note:
(a) When cutting the sealant with the piano wire, cut it along the border between the window glass and the sealant.
(b) The piano wire is liable to snap if only a certain section is constantly used and becomes hot. Therefore, when cutting the sealant ensure that the piano wire is kept cool (it should be cooled slowly) or the section of the wire being used is constantly rotated,



Fig. 14–25 Cutting sealant

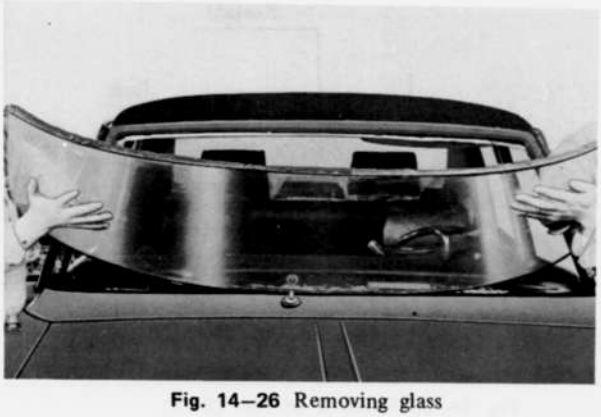

Fig. 14–26 Removing glass

14–E–2. Installing Windshield Glass
1. Using the cutting knife, cut the sealant off smoothly so that **1 to 2 mm (0.04 to 0.08 in)** of the sealant remains along the glass opening flange.

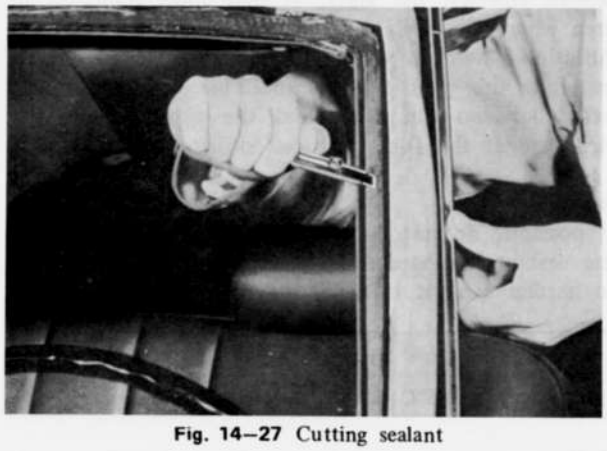

Fig. 14–27 Cutting sealant

If the thickness of the sealant left along the glass opening flange is too small, first, clean with a solvent. Then, apply primer with the brush and leave it to dry for **20 to 30 minutes**. Then, apply sealant until a thickness of **1 to 2 mm (0.04 to 0.08 in)** is obtained



Fig. 14–28 Applying primer

2. Clean the glass thoroughly and bond the dam with bonding agent parallel to the edge of the glass at a position **7 mm (0.28 in)** away from it. Bond the dam in the direction shown in Fig. 14–29.

Note:
Securely bond the dam so that it is straight and will not come apart.

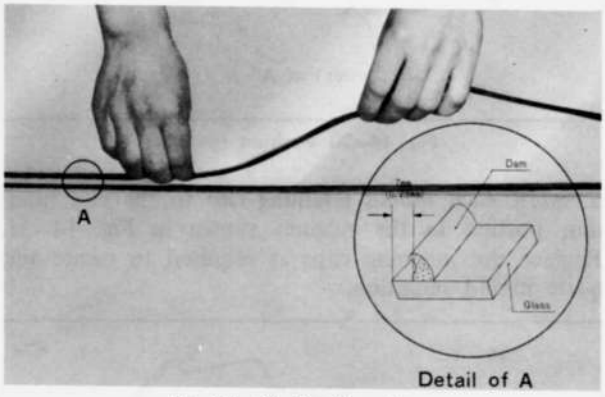

Fig. 14–29 Bonding dam

3. Apply primer around the entire perimeter of the glass in the area that will contact the sealant. Clean the glass opening flange and apply primer to the entire perimeter of the sealant on the glass opening flange. Allow the primer to dry **30 minutes** before installation of glass.

Note:
(a) Apply as thin the sealant coating as possible to the glass.
(b) **Do not** allow any dust, water, oil, etc. to get on the coating surface and also **do not** touch the coating surface with hand.

4. Bond each spacer to the glass opening flange with bonding agent. Fig. 14–30 shows the directions and positions of each spacer. There are two kinds of spacer.

Part Nos.	Name of Part	Color
0305 70 448A	Spacer	Gray
0305 70 447B	Spacer	Black

Although the spacer is bonded on both the right and the left hand sides of the windshield glass in Fig. 14–30, the spacer on only one side of the glass should be sufficient.

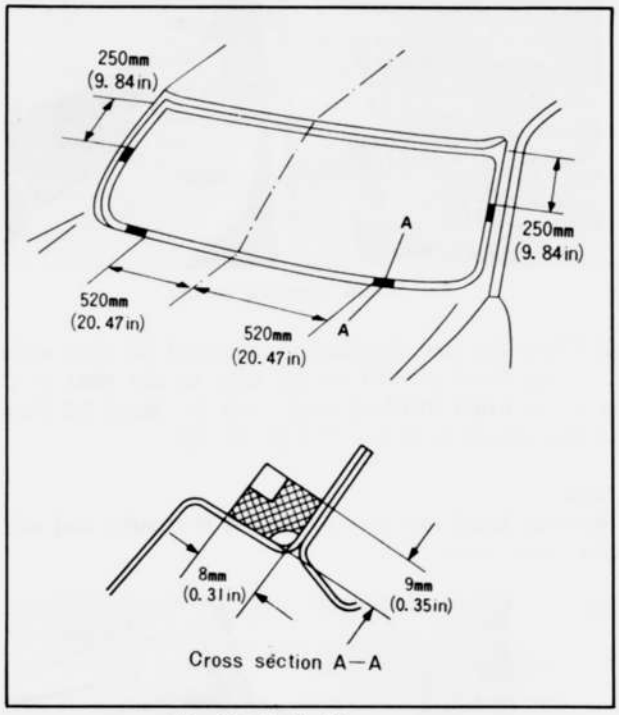

Fig. 14–30 Position spacers

5. Insert each mould retaining clip to the clip insertion portion in the manner shown in Fig. 14–31. Replace the retaining clips as required to insure adequate mould retention.

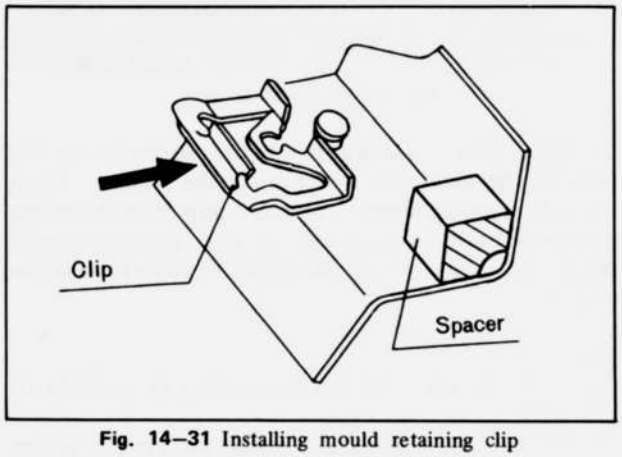

Fig. 14–31 Installing mould retaining clip

6. After the primer is dry, apply the sealant so that it is **8 mm (0.31 in)** high along the entire perimeter of the glass with the sealant gun fitted with the sealant cartridge. If the sealant comes apart from the painted surface on the body side, use the remainder of the sealant for rectification.

Note:
(a) Shape the nozzle of the sealant cartridge with the cutting knife as shown in Fig. 14–32. Then, break the film of the sealant with a piece of wire and it is ready for application.
(b) If the application is unsatisfactory, rectify it with a wooden spatula.
(c) If any seal adheres to your hand, it should be removed immediately.

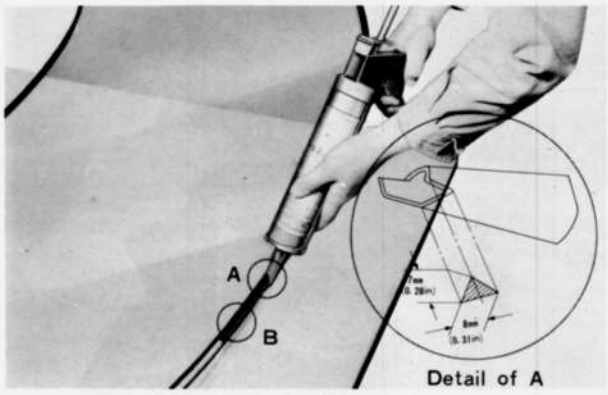

Fig. 14–32 Applying sealant

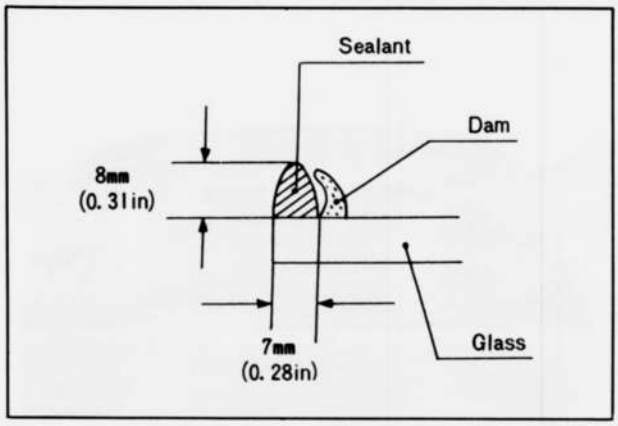

Fig. 14–33 Detail B of Fig. 14–32

7. Place the glass in the opening flange, locating the best position for equal sealant contact.
8. Firmly press the glass against the sealant with hand pressure. Then, inspect the appearance of the sealant through the glass. A dull sport indicates an area where the sealant does not contact glass surface. Additional hand pressure will seal most areas. When installing the glass, **5.8 mm (0.23 in)** clearance should exist between the body and the glass. Check the clearance at the four positions shown in Fig. 14–34.

Note:
If possible, **do not** apply any force to the glass until the sealant has hardened. Time required for the seal to harden after it is applied.

Summer (20°C or 68°F)	5 hours
Winter (5°C or 41°F)	24 hours

9. Remove any excess primer from the glass with a wooden spatula and wipe with a clean solvent.

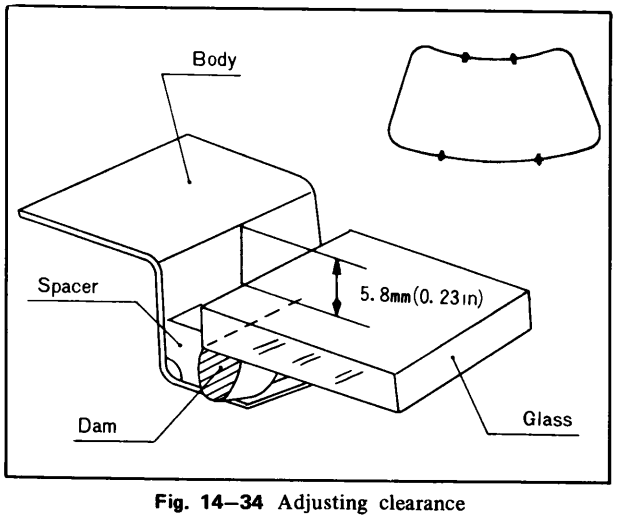

Fig. 14–34 Adjusting clearance

10. Water test the installation around the entire perimeter of the glass. Repair any leaks by applying the sealant around the edge of the glass.
11. Install the moulds, interior mirror, front pillar trims, windshield wiper arms, etc.

Note:
(a) Keep the door windows open until the sealant has hardened to some extent.
(b) If the vehicle is to be repainted, remove all the sealant from the body and then after baking the paint on, apply the sealant so that it is **10 mm (0.4 in)** high. **Never apply** air setting paint to the surface on which the sealant is to be applied.

14–F. REAR WINDOW GLASS

14–F–1. Removing and Installing Rear Window Glass

The removal and installation of the rear window glass can be made in the same way as those of the windshield glass. But care should be taken to the following points:
1. Rear window mould lower can be installed only by inserting it into the body panel because clip is sub-assembled. When removing the mould, push part A of the clip with the driver through the bottom hole.

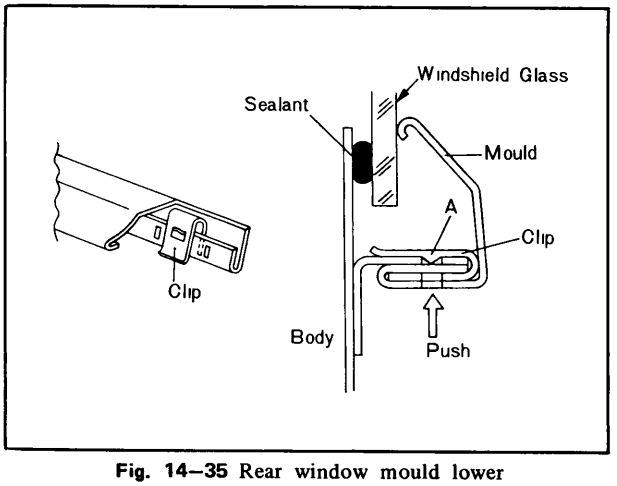

Fig. 14–35 Rear window mould lower

2. In the case of a vehicle equipped with a heatable window, perform the works of disconnection and connection of the relevant wiring.
3. The directions and positions each spacer to be bonded are shown in Fig. 14–36.

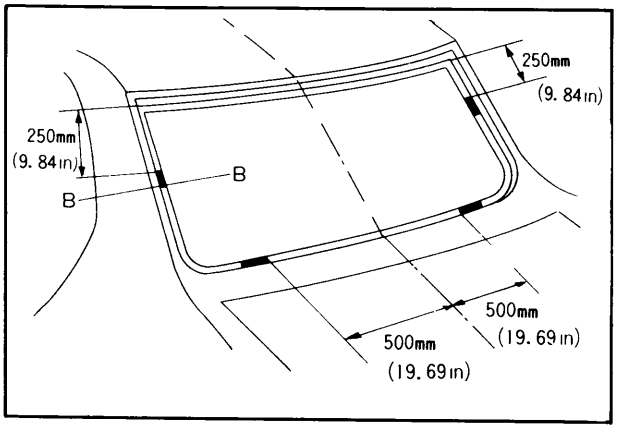

Fig. 14–36 Position of spacers

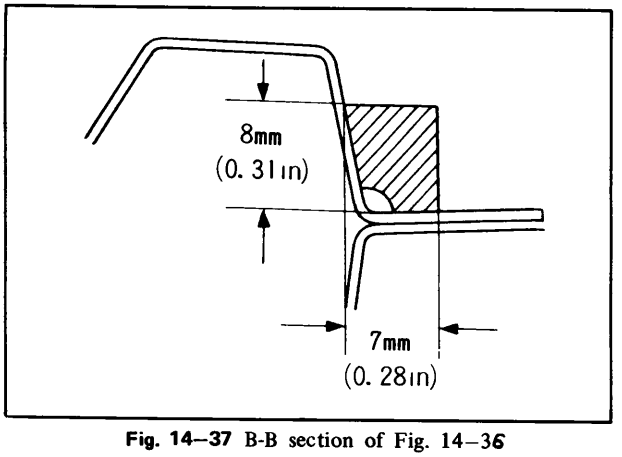

Fig. 14–37 B-B section of Fig. 14–36

4. When installing the glass, **7.8 mm (0.31 in)** clearance should exist between the body and the glass. Check the clearance at the four portions shown in Fig. 14–38.

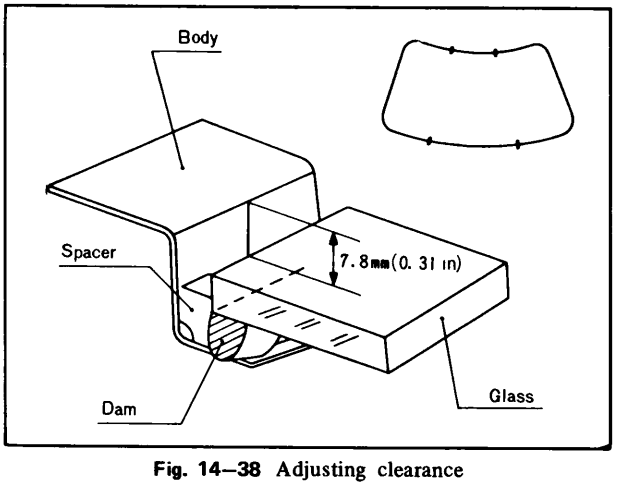

Fig. 14–38 Adjusting clearance

14–F–2. Heatable Window

Servicing the heatable window is explained in **Par. 15–K.**

14–G. FRONT SEAT

14–G–1. Front Seat Replacement

1. Remove the front seat by removing the two attaching bolts and two attaching nuts.
2. To install, reverse the removal procedures.

14–G–2. Seat Adjuster Inspection

1. Inspect the seat adjuster for smooth operation by moving the seat back and forth. If necessary, apply grease to the seat adjuster.
2. Inspect the seat adjusting lever for wear. If defective, repair or replace it.

14–G–3. Reclining Knuckle Replacement

To replace the reclining knuckle, **use the tool** (49 0259 855).



Fig. 14–39 Removing reclining knuckle

14–H. REAR SEAT

14–H–1. Removing Rear Seat

1. Remove the two bolts attaching the seat cushion and remove the seat cushion.
2. Remove the rear seat back attaching bolts.
3. Raise the seat to full up position and pull it in the B direction shown in Fig. 14–40.

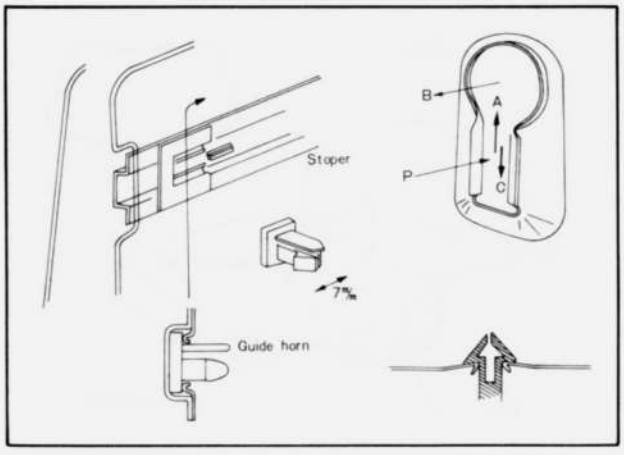

Fig. 14–40 Rear seat back

14–H–2. Installing Rear Seat

1. Tighten temporarily the rear seat back to tire housing.
2. Push the rear seat back attaching fastener in P direction and press it down into the catch of the body as shown in Fig. 14–40.

Note:
Make sure that the seat is inserted by pulling the upper end of the seat back.

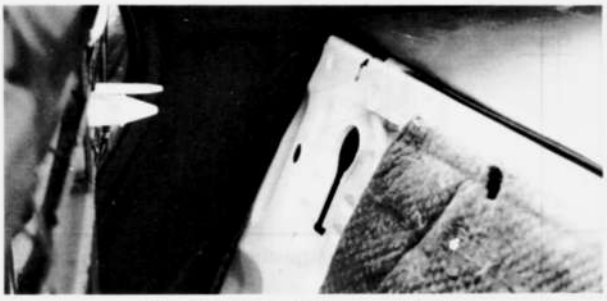

Fig. 14–41 Installing seat back

3. Further tighten the bolt which has been tightened temporarily.
4. Place the seat cushion and tighten the two bolts attaching the seat cushion.

14–I. DOOR

14–I–1. Door Adjustment

a. Adjusting door latch striker

The striker can be adjusted laterally and vertically as well as fore and aft. The striker should not be adjusted to correct door sag.

1. Loosen the striker attaching screws and move the striker as required.
2. Tighten the attaching screws and check the door fit.

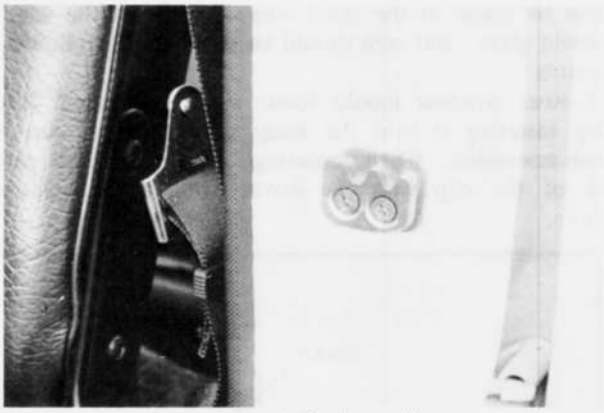

Fig. 14–42 Adjusting striker

b. Adjusting door alignment

The door hinges provide sufficient adjustment latitude to correct most door misalignment conditions. **Do not** cover up a poor door alignment with the door latch striker adjustment.

1. Loosen the hinge attaching bolts and move the hinge as required.
2. Tighten the attaching bolts and check the door fit.

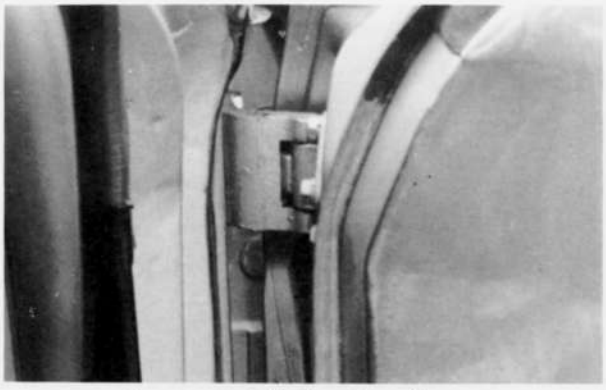

Fig. 14–43 Adjusting door alignment

14–I–2. Door Hinge Replacement

1. Support the door.
2. Remove the hinge-to-body attaching bolts.
3. Remove the hinge-to-door attaching bolts and remove the hinge.
4. Position the hinge to the door and body, and install the attaching bolts.
5. Adjust the door as described in **Par. 14–I–1** and tighten the attaching bolts.

14–I–3. Door Weatherstrip Replacement (Sedan & Wagon)

1. Pull the weatherstrip from the retaining clips, and remove the weatherstrip without damaging the rubber if the weatherstrip is to be used again.

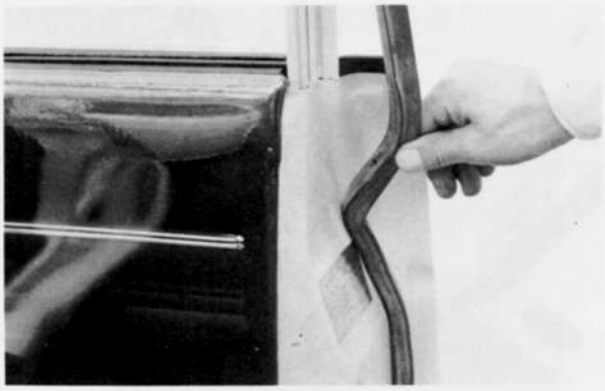

Fig. 14–44 Removing weatherstrip

2. Remove the weatherstrip retaining clips form the door.

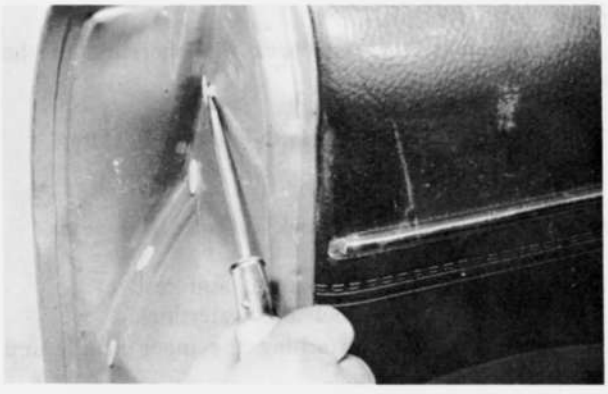

Fig. 14–45 Removing retaining clip

3. Inspect the weatherstrip for crack, deformation and damage. If defective, replace it.
4. Fit the retaining clips to the weatherstrip with a plier.

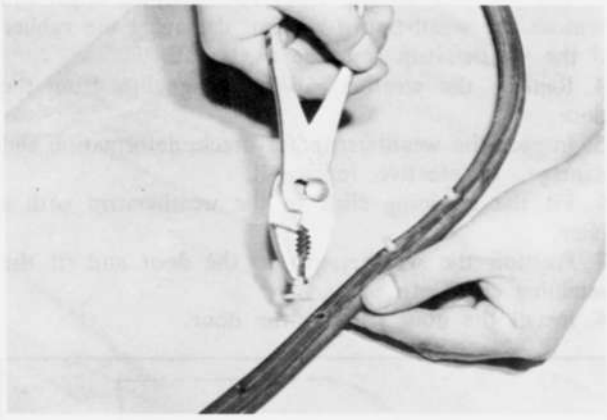

Fig. 14–46 Fitting retaining clip

5. Position the weatherstrip to the door and fit the retaining clips into place.

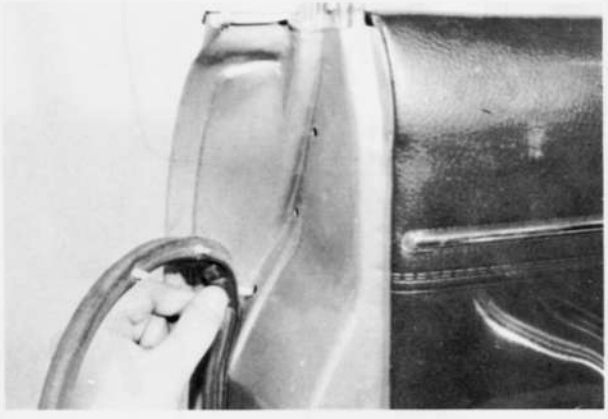

Fig. 14–47 Installing weatherstrip

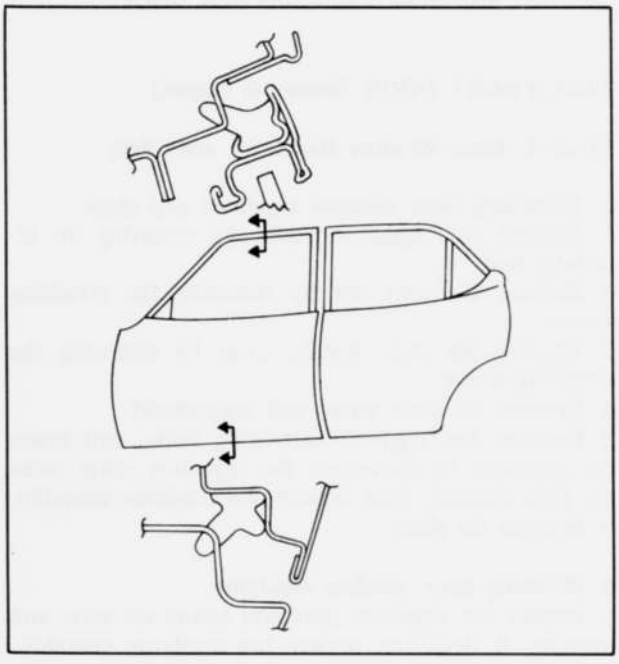

Fig. 14–48 Weatherstrip cross section

14–I–4. Door Weatherstrip Replacement (Hard Top)

1. Refer to the **Par. 14–K–1** and remove the door trim.
2. Remove the screws attaching the both ends of the weatherstrip to the door.
3. Pull the weatherstrip from the retaining clips, and remove the weatherstrip without damaging the rubber if the weatherstrip is to be used again.
4. Remove the weatherstrip retaining clips from the door.
5. Inspect the weatherstrip for crack, deformation and damage. If defective, replace it.
6. Fit the retaining clips to the weatherstrip with a plier.
7. Position the weatherstrip to the door and fit the retaining clips into place.
8. Install the door trim to the door.

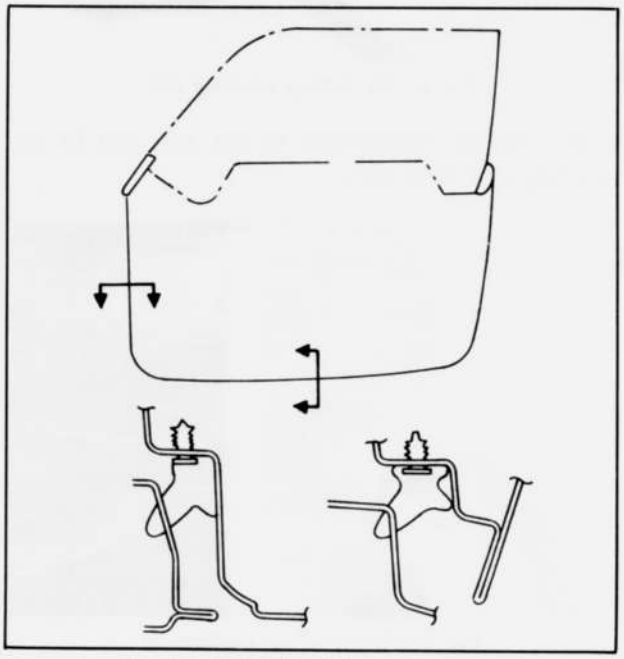

Fig. 14–49 Weatherstrip corss section

14–J. FRONT DOOR (Sedan & Wagon)

14–J–1. Door Window Regulator and Glass

a. Removing door window regulator and glass

1. Remove the regualtor handle by removing the attaching bolt.
2. Remove the arm rest by removing the attaching screws.
3. Remove the inner handle cover by removing the attaching screw.
4. Remove the trim panel and watershield.
5. Remove the regulator attaching bolts, and lower the regulator to disconnect the regualtor roller from the glass channel, then remove the reuglator assembly.
6. Remove the glass.

b. Checking door window regulator

1. Inspect the regulator gear and spring for wear and damage. If defective, replace the reuglator assembly.
2. If necessary, apply grease to each operation portion.



Fig. 14–50 Removing regulator handle

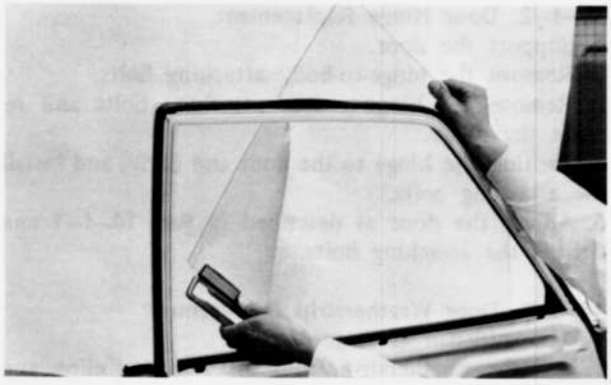

Fig. 14–51 Removing glass

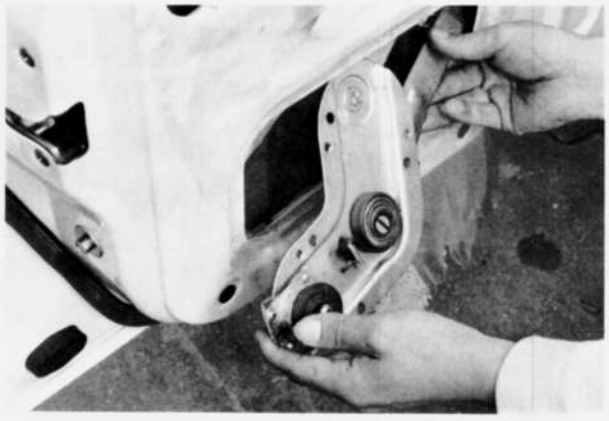

Fig. 14–52 Removing regulator

c. Installing door window regulator and glass

Follow the removal procedures in the reverse order.

Note:

Adjust the regualtor and check the operation of the regualtor.

14–J–2. Door Latch, Lock Cylinder and Outer Handle

a. Removing door latch, lock cylinder and outer handle

1. Remove the regualtor handle, arm rest, etc.
2. Remove the trim panel and watershield.
3. Remove the bolts attaching the inner handle and remove the inner handle.
4. Raise the glass fully and disconnect the remote

control rod from the lock cylinder.

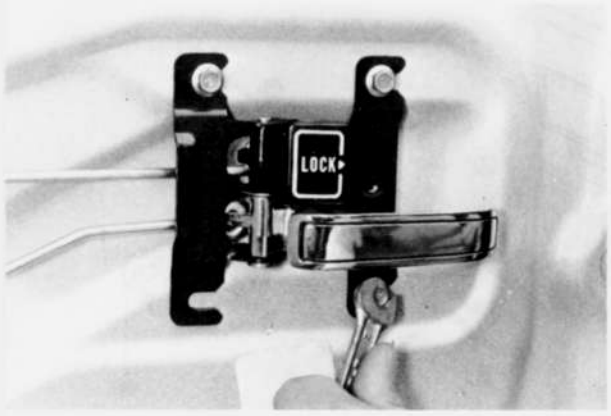

Fig. 14–53 Removing inner handle

5. Remove the door latch attaching screw and remove the door latch.

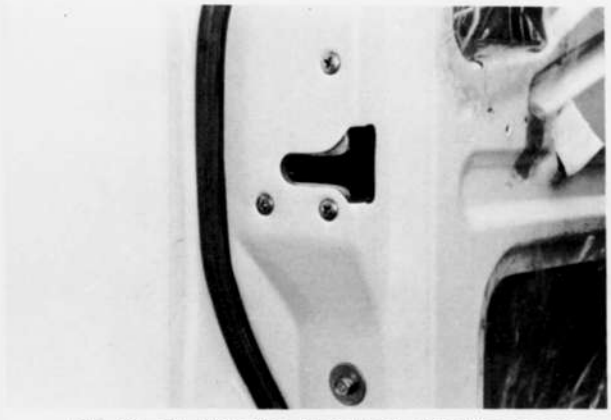

Fig. 14–54 Removing door latch attaching screws

6. Remove the outer handle by removing the attaching bolts.

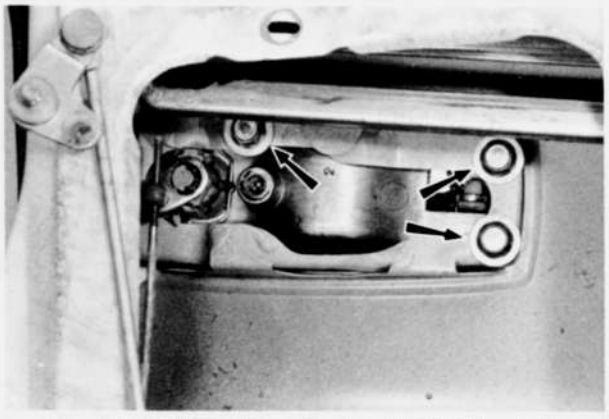

Fig. 14–55 Removing outer handle attaching bolts

7. Remove the retainer that secure the lock cylinder to the outer handle and remove the lock cylinder.

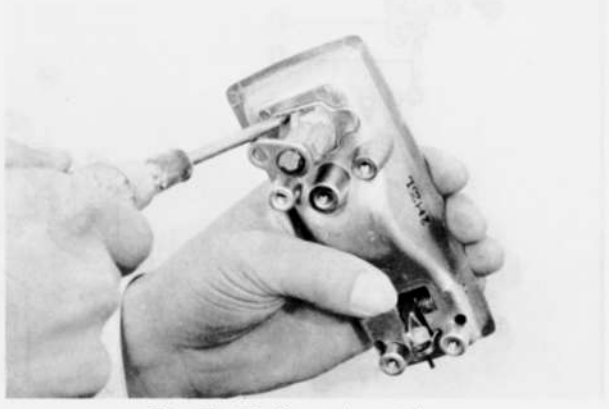

Fig. 14–56 Removing retainer

b. Installing door latch, lock cylinder and outer handle

Follow the removal procedures in the reverse order.

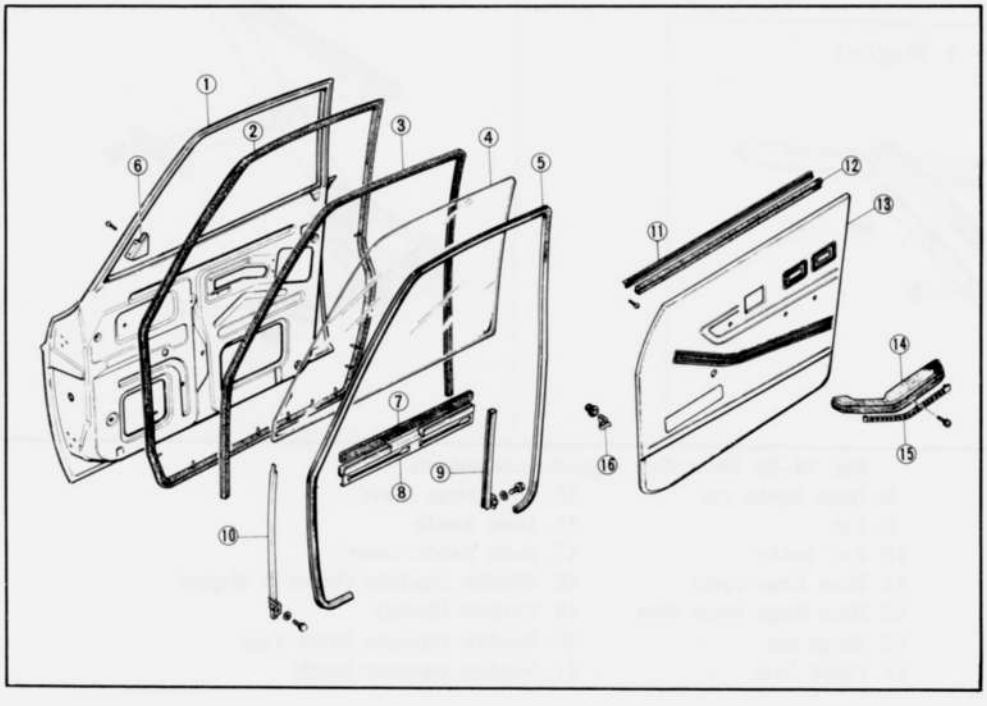

Fig. 14–57
Front door components (Sedan & Wagon)
1. Front door body
2. Weatherstrip
3. Glass run channel
4. Door glass
5. Seaming welt
6. Corner bracket
7. Door glass rubber strip
8. Door galss lift bracket
9. Glass guide "B"
10. Glass guide "A"
11. Weatherstrip outer
12. Weatherstrip inner
13. Door trim
14. Arm rest
15. Arm rest garnish
16. Trim fastener

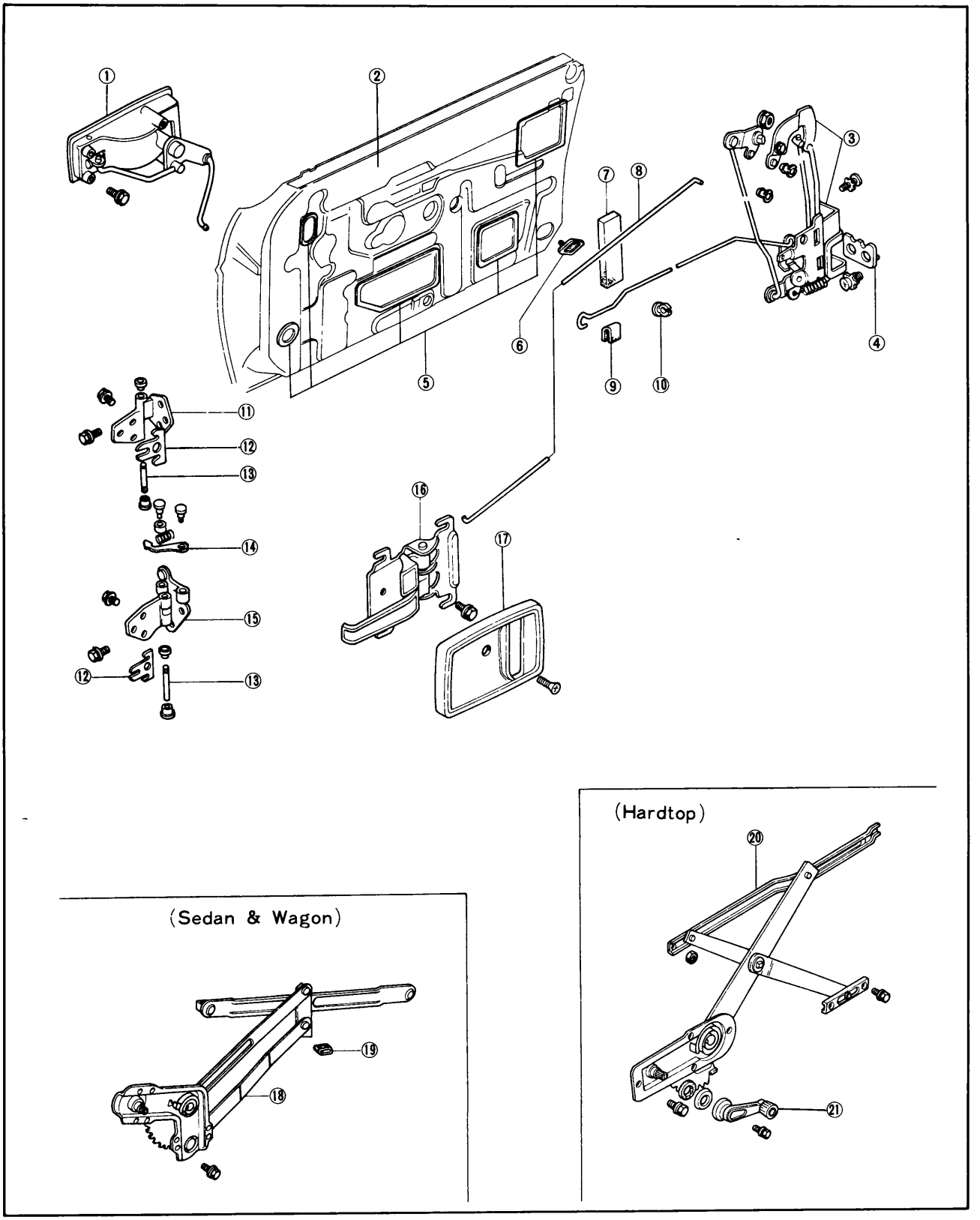

Fig. 14–58 Front door regulator components

1. Outer handle
2. Door body
3. Door lock
4. Rack
5. Watershield
6. Door cushion
7. Insulator
8. Inner handle rod
9. Pad
10. Rod holder
11. Door hinge upper
12. Door hinge lower shim
13. Hinge pin
14. Check lever
15. Door hinge lower
16. Inner handle
17. Inner handle cover
18. Window regulator (Sedan & Wagon)
19. Cushion (Sedan)
20. Window regulator (Hard Top)
21. Window regulator handle

14–K. FRONT DOOR (Hard Top)

14–K–1. Door Window Regulator and Glass

a. Removing door window regulator and glass
1. Remove the regulator handle.
2. Remove the inner handle cover.
3. Remove the garnish and arm rest.
4. Remove the door trim.
5. Fully open the window glass.
6. Remove the belt line mould.
7. Remove the door screen.
8. Remove the nuts.
9. Remove the window glass assembly from the regulator and take it upward.
10. Remove the nut and take out the regulator from the service hole.

b. Checking door window regulator
1. Inspect the regulator gear and spring for wear and damage. If defective, replace the regulator assembly.
2. If necessary, apply grease to each operation portion.

c. Installing door window regulator and glass
Follow the removal procedures in the reverse order.

Note:
Adjust the regulator and check the operation of the regulator.

14–K–2. Inner Handle, Door Latch and Outer Handle

a. Removing inner handle
1. Remove the door trim.
2. Remove the door screen.
3. Remove the bolt joint.
4. Remove the rod from rod holder and remove the inner handle.

b. Installing inner handle
Follow the removal procedures in the reverse order.

Note:
Adjust the inner handle and inner lock lower with bolt and nut in order to prevent the free play of them.

c. Removing door latch
1. Remove the door window glass. (Refer to 14–K–1)
2. Remove the inner handle.
3. Incline forward the glass guide by removing the bolts and loosening the nuts.
4. Take out the door latch from the service hole by removing the nuts, joints, bolts and screens.

d. Installing door latch
Follow the removal procedures in the reverse order.

e. Removing outer handle
1. Remove the door window glass. (Refer to 14–K–1)

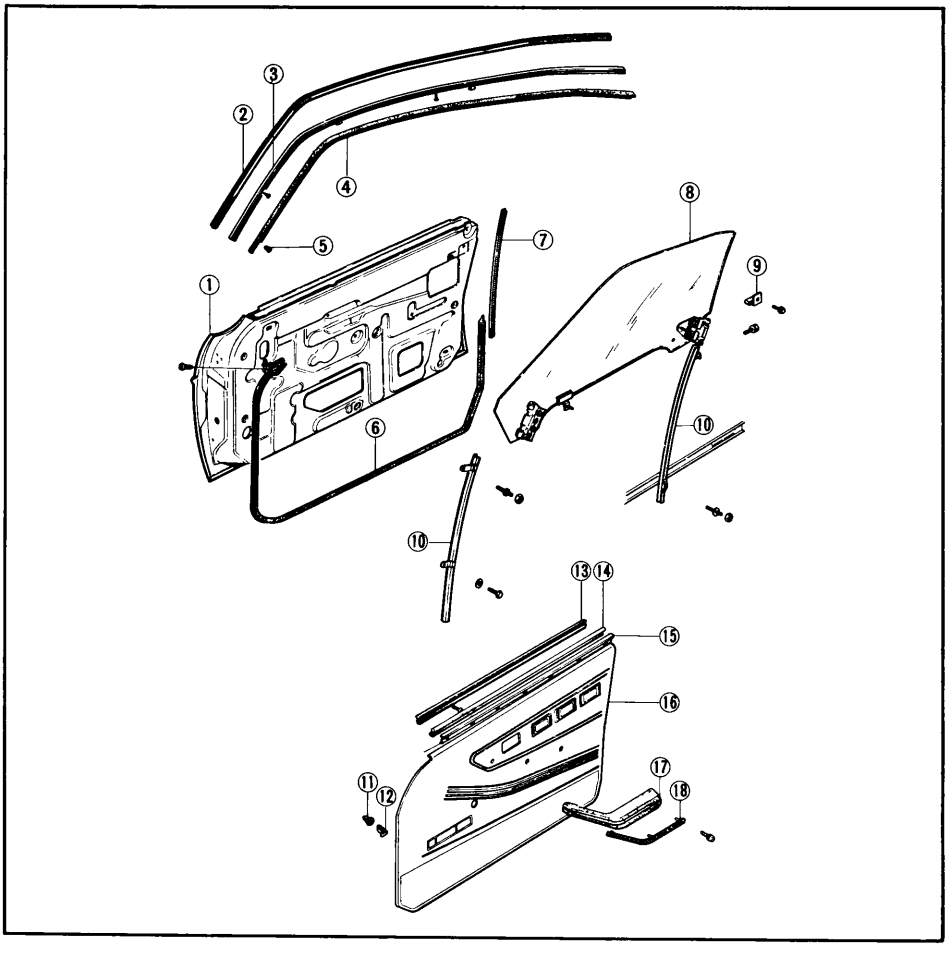

Fig. 14–59
Front door components (Hard Top)
1. Door body
2. Seaming welt (Roof side)
3. Weatherstrip retainer
4. Weatherstrip roof side
5. Weatherstrip fastener
6. Door body weatherstrip
7. Seaming welt (Door body rear)
8. Door glass
9. Glass stopper
10. Glass guide
11. Fastener cap
12. Trim fastener
13. Outer weatherstrip
14. Weatherstrip
15. Mould
16. Door trim
17. Arm rest
18. Arm rest garnish

2. Remove the joint and bolt.
3. Remove the bolt and take out the outer handle.

f. Installing outer handle
Follow the removal procedures in the reversr order after adjusting the joint not to play.

Note:
When removing or installing the door lock, nylon bush and joint should be changed.

14–K–3. Front Door Glass Regulator Adjustment

a. Horizontal adjustment of the window
1. Raise the window to full up position.
2. Make the horizontal adjustment of the glass by moving regulator guide No. 2 up and down and tighten it.
3. Make sure that the regulator guide No. 2 is parallel with the standard line.
4. Make sure that the glass moves smoothly.

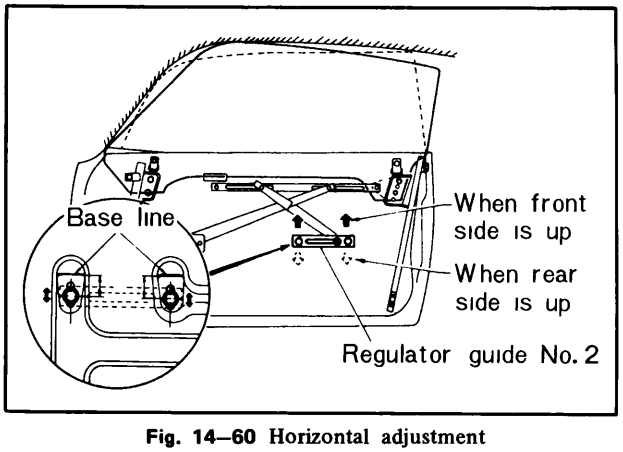

Fig. 14–60 Horizontal adjustment

b. The fore and aft adjustment of the window
1. Tighten the upper bolt of the glass guide B at the center of the long hole.
2. Push rearwards the glass guide A as shown in Fig. 14–61 and tighten the upper bolt.

Note:
Make sure that the glass does not play back and forth.

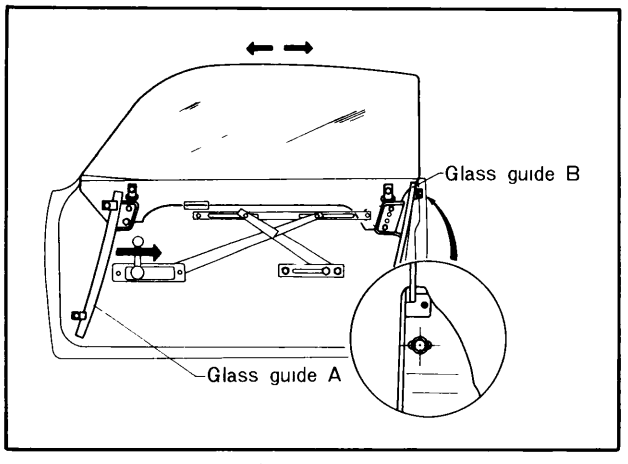

Fig. 14–61 Fore and aft adjustment

c. Vertical adjustment of the window
With the window glass raised to full up position, adjust the up stoppers (Front and Rear) and tighten the up stopper bolts.

Note:
Make sure that the regulator touches both up stoppers. The clearance between the top of glass and weather-strip is **0 ~ 2 mm (0 ~ 0.08 in)**, when door is opened and closed.

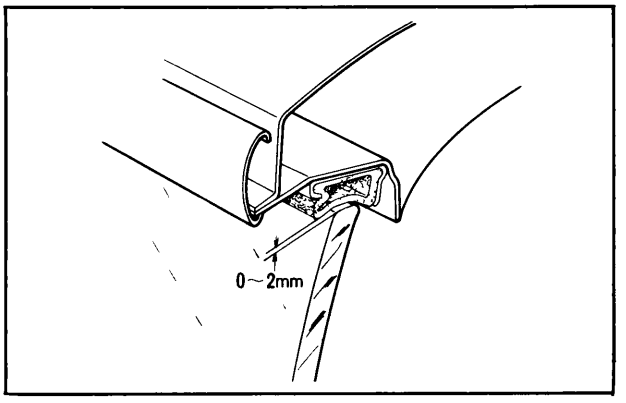

Fig. 14–62 Vertical adjustment

d. The in and out adjustment of the window
With the window raised adjust the glass guide lower adjusting bolts so that the glass circumference touches cab side weatherstrip evenly.

Note:
Make sure there is no space between the inner panel and the brim of the adjust bolt.

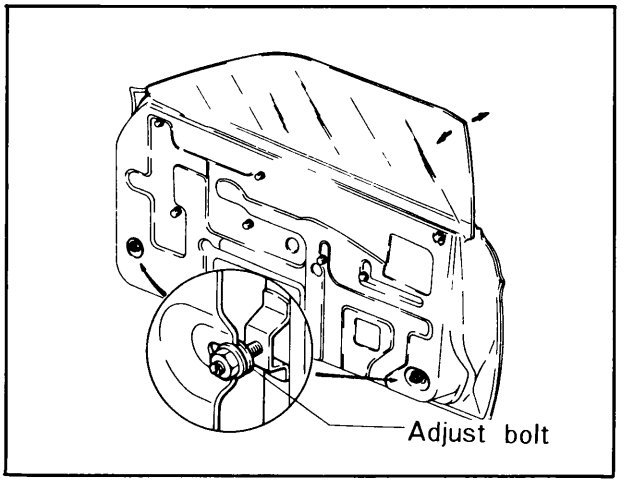

Fig. 14–63 In and out adjustment

e. Final check
1. If it is impossible to adjust the glass by using glass guide lower adjusting bolts only, adjust it by the upper bolt of the glass guide B.
Check the glass contact with the outer weatherstrip.
2. Adjust hte lower glass guide to prevent the glass from playing back and forth and tighten it.
In principle, it is advisable to tighten the glass guide B (lower) at the center of the long hole and adjust the glass guide A.

Note:
After adjusting, apply the putty to the bolt, nut and long hole and paste the door screen.

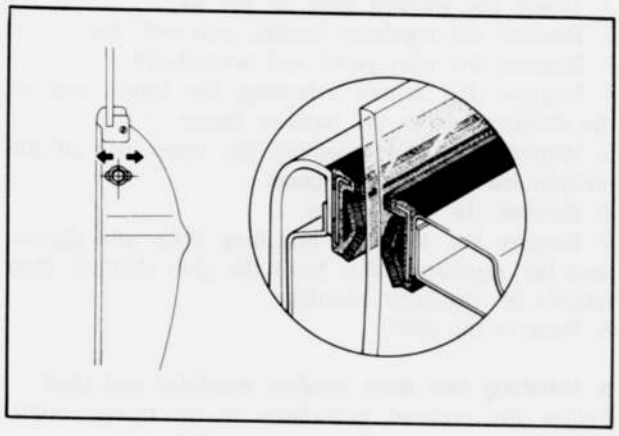

Fig. 14–64 Adjusting bolt

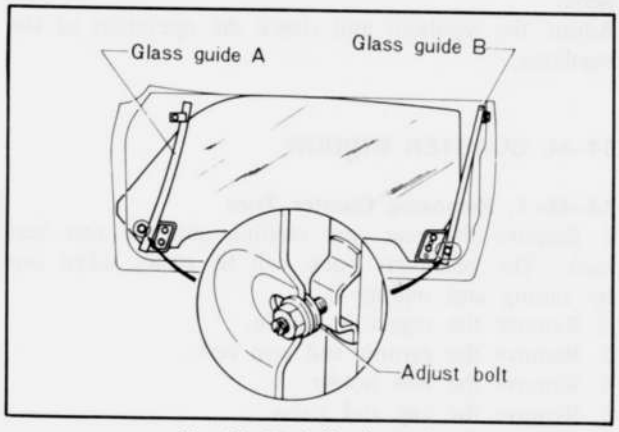

Fig. 14–65 Adjusting bolts

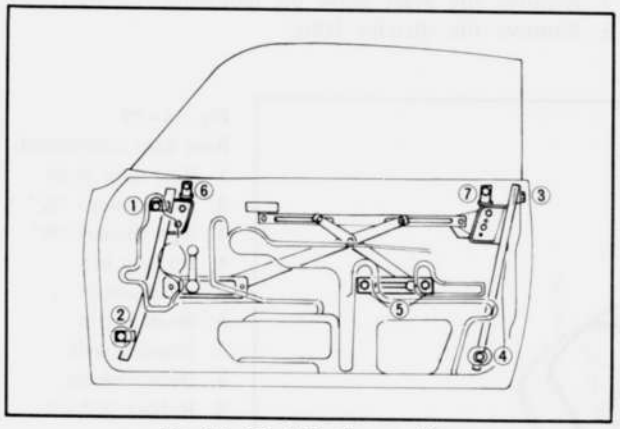

Fig. 14–66 Adjusting position

Horizontal adjustment	**5**
Fore and aft adjustment	**1, 2, 4**
Vertical adjustment	**6, 7**
In and out adjustment	**2, 4, 3**

14–L. REAR DOOR

14–L–1. Stationary Glass

a. Removing stationary glass

1. Lower the window glass all the way.
2. Remove the trim panel and watershield.

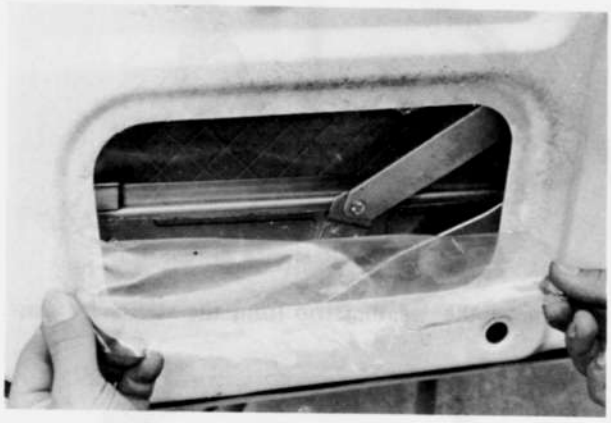

Fig. 14–67 Removing watershield

3. Remove the screws attaching the upper end of the division bar to the window frame.



Fig. 14–68 Removing upper end attaching screws

4. Remove the bolt attaching the lower end of the division bar to the door panel.

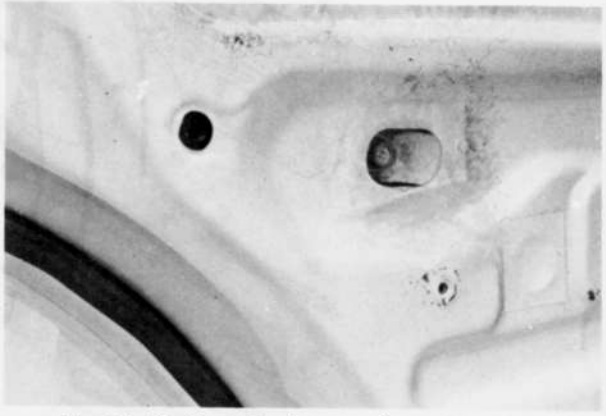

Fig. 14–69 Removing lower end attaching bolts

5. Pull the division bar off the stationary glass and

remove the stationary glass.

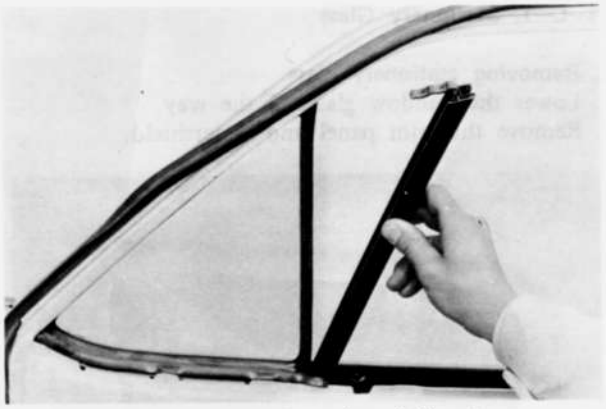

Fig. 14–70 Removing division bar

6. Remove the weatherstrip from the stationary glass.



Fig. 14–71 Removing weatherstrip

b. Installing stationary glass
Follow the removal procedures in the reverse order.

14–L–2. Rear Door Window Regulator and Glass

a. Removing rear door window regulator and glass
1. Lower the window glass all the way.
2. Remove the regulator handle, arm rest, etc.
3. Remove the trim panel and watershield.
4. Remove the screws attaching the upper end of the division bar to the window frame.
5. Remove the bolt attaching the lower end of the division bar to the door panel.
6. Remove the division bar.
7. Remove the regulator attaching bolts and disconnect the regulator roller from the glass channel, then remove the regulator assembly.
8. Remove the glass.

b. Installing rear door window regulator and glass
Follow the removal procedures in the reverse order.

Note:
Adjust the regulator and check the operation of the regulator.

14–M. QUARTER WINDOW

14–M–1. Removing Quarter Trim
1. Remove the rear seat cushion and the rear seat back. The rear seat back will be easily taken out by raising and pulling it.
2. Remove the regulator handle.
3. Remove the garnish and arm rest.
4. Remove the belt holder.
5. Remove the cap and screw.
6. Remove the corner cover.
7. Remove the scarf plate by removing the bolt.
8. Remove the quarter trim.

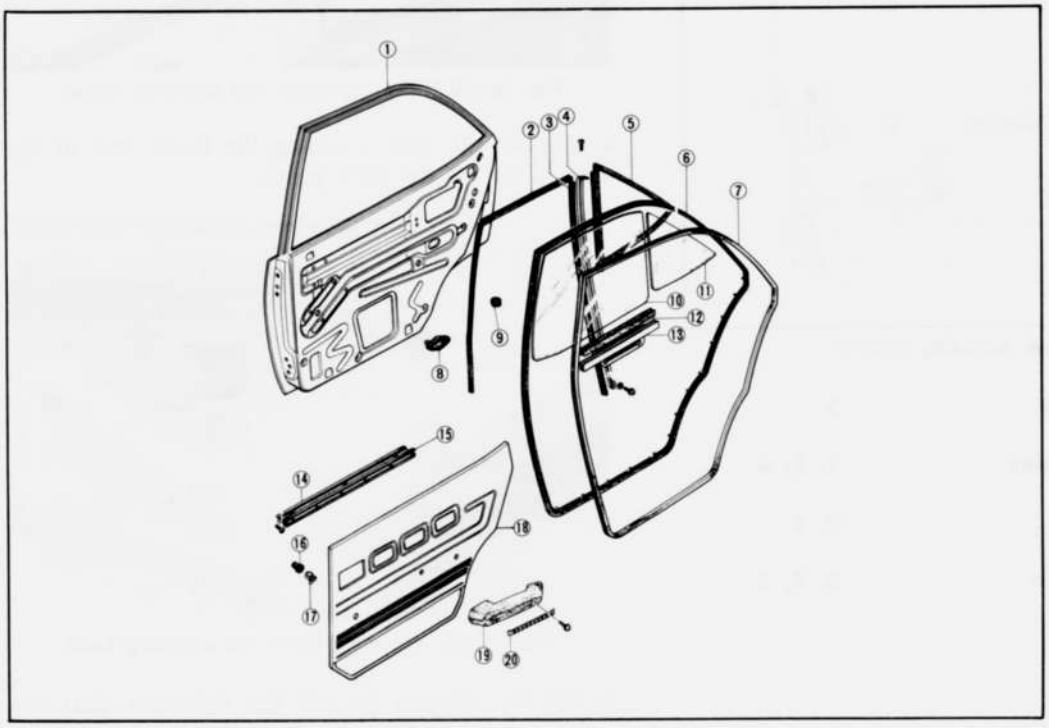

Fig. 14–72
Rear door components
1. Rear door body
2. Run channel "A"
3. Run channel "B"
4. Division bar
5. Weatherstrip
6. Weatherstrip
7. Seaming welt
8. Door cushion
9. Rubber cushion
10. Door glass
11. Window glass
12. Rubber strip
13. Lift bracket
14. Weatherstrip (outer)
15. Weatherstrip (inner)
16. Fastener cap
17. Trim fastener
18. Door trim
19. Arm rest
20. Arm rest garnish

14–M–2. Installing Quarter Trim
Follow the removal procedures in the reverse order.

14–M–3. Removing Quarter Window Glass
1. Remove the quarter trim. (Refer to 14–M–1)
2. Remove the door screen.
3. With the window glass raised to 150 mm high, remove the belt line mould.
4. With the window glass riased to full up position remove the bolt (1). And with the window glass lowered to full down position remove the bolts (2) and nuts (3).
5. Move the glass guide B rearwards by loosening the bolts (4).
6. Take out the quarter window glass.

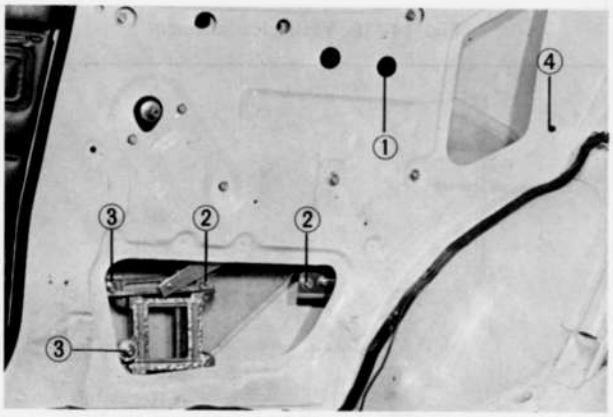

Fig. 14–73 Removing quarter window



Fig. 14–74 Removing quarter window glass

14–M–4. Installing Quarter Window Glass
Follow the removal procedures in the reverse order.

14–M–5. Removing Regulator
1. Remove the quarter trim. (Refer to 14–M–1)
2. Remove the door screen.
3. With the window glass riased to full up position remove the bolt (1) and with the glass lowered to full down position remove the bolts (2) and nuts (3).
4. Remove the regulator from the service hole by removing the bolts (4).

14–M–6. Installing Regulator
Follow the removal procedures in the reverse order.

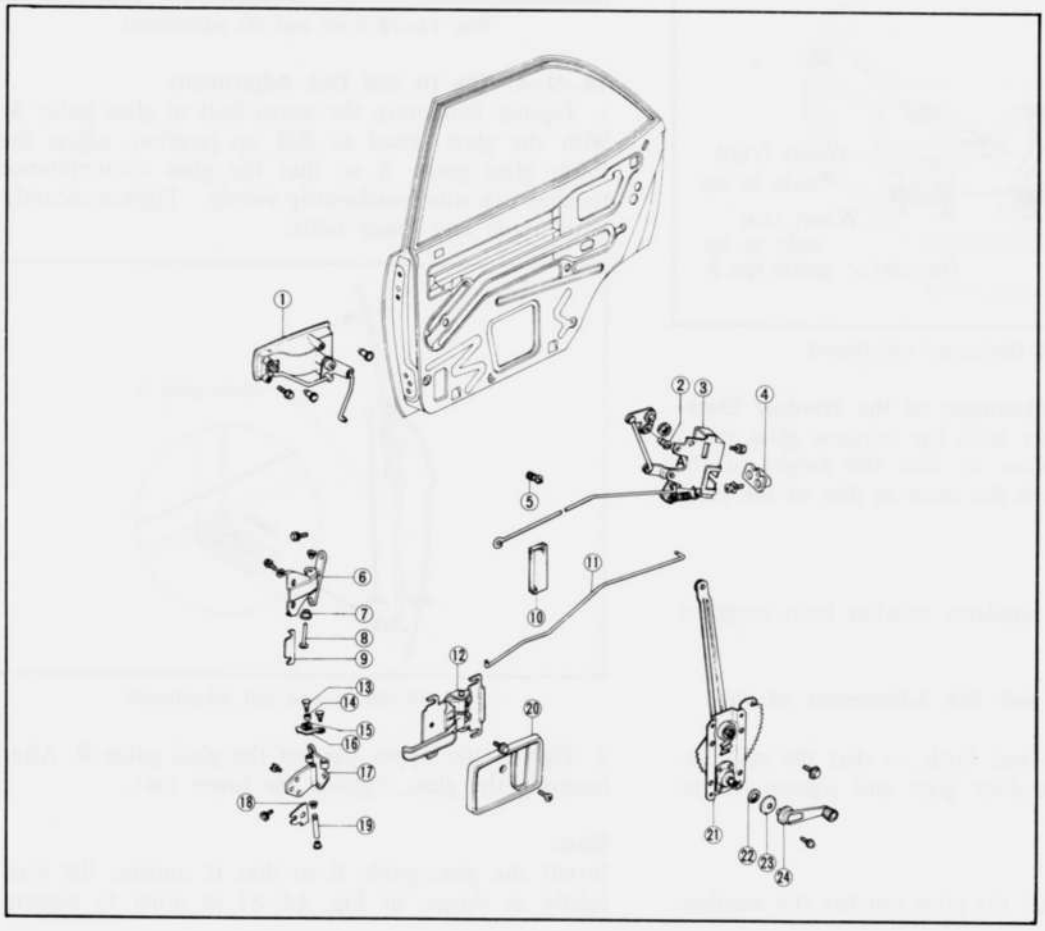

Fig. 14–75
Rear doow regulator components
1. Outer handle
2. Bush
3. Door lock
4. Rack
5. Rod holder
6. Hinge
7. Bush
8. Hinge pin
9. Shim
10. Rod cushion
11. Rod
12. Inner handle
13. Pin
14. Roller
15. Check spring
16. Check lever
17. Hinge
18. Shim
19. Hinge pin
20. Inner handle cover
21. Regulator
22. Gasket
23. Escutcheon
24. Regulator handle

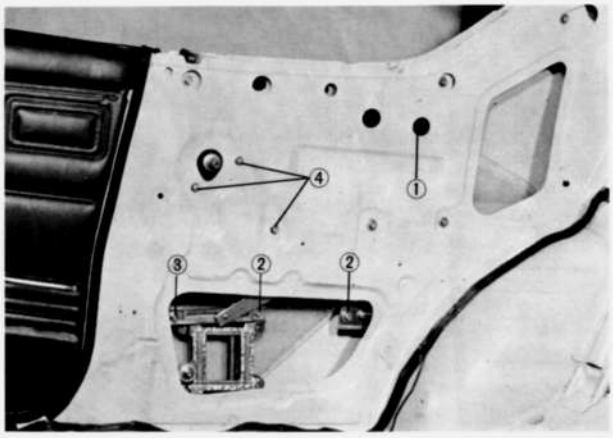

Fig. 14–76 Removing regulator

14–N. QUARTER WINDOW ADJUSTMENT

14–N–1. Horizontal Adjustment of the Window Glass

1. Raise the window glass to full up position.
2. Adjust the window glass so that the glass touches cab side weatherstrip evenly by moving the regulator guide No. 2 up and down. And tighten the regulator guide.
3. Move the regulator guide parallel with the standard line, and adjust the position of the glass.

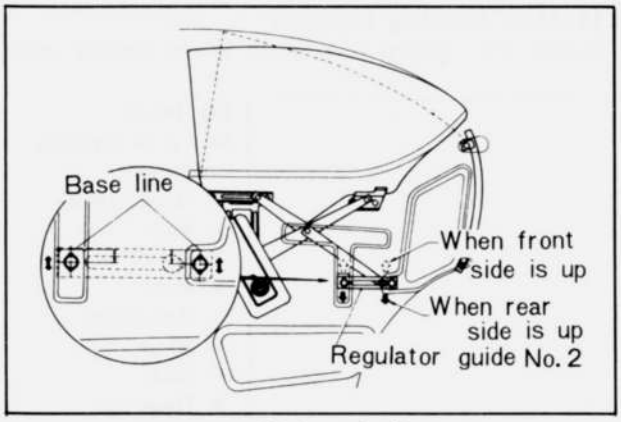

Fig. 14–77 Horizontal adjustment

14–N–2. Vertical Adjustment of the Window Glass

Adjust the up stopper with the window glass raised to the full up position so that the height of the quarter window glass is the same as that of the front door glass.

Note:
Make sure that the regulator touches both stoppers. (Front and Rear)

14–N–3. The Fore and Aft Adjustment of the Window

Move the glass back and forth so that the glass accords with the front door glass and tighten the regulator guide No. 4.

Note:
After making sure that the glass touches the weatherstrip evenly tighten the regulator guide No. 4.

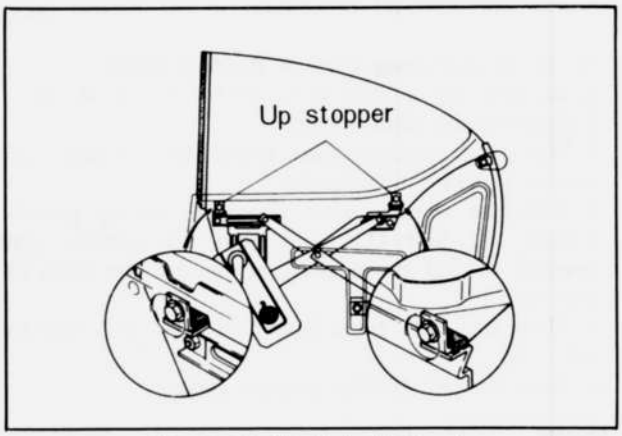

Fig. 14–78 Vertical adjustment

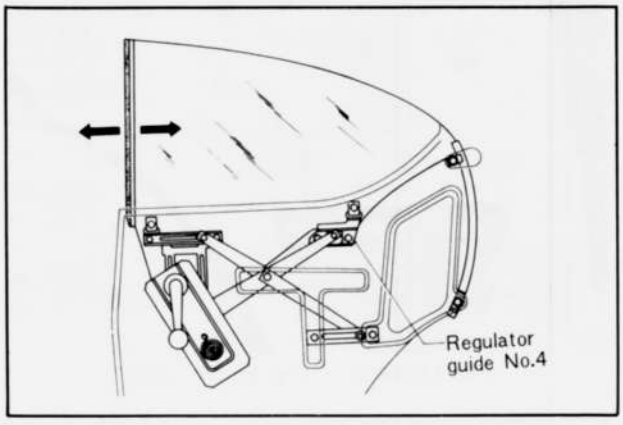

Fig. 14–79 Fore and aft adjustment

14–N–4. The In and Out Adjustment

1. Tighten temporary the upper bolt of glass guide A. With the glass raised to full up position, adjust the lower glass guide A so that the glass circumference touches cab side weatherstrip evenly. Tighten securely both upper and lower bolts.

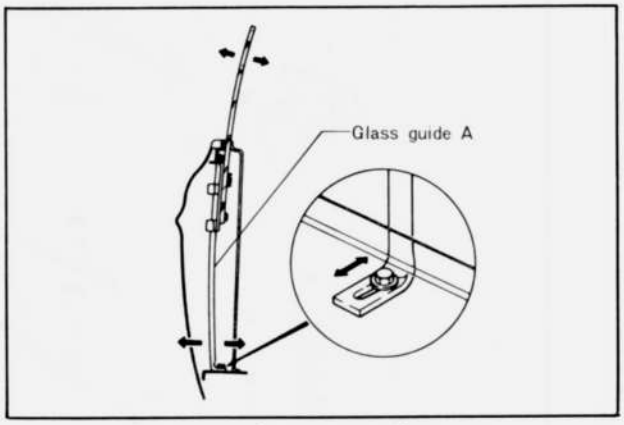

Fig. 14–80 In and out adjustment

2. Tighten the upper part of the glass guide B. After lowering the glass, tighten the lower part.

Note:
Install the glass guide B so that it touches the glass lightly as shown in Fig. 14–81 in order to prevent

the weatherstrip from tearing off or biting when moving the glass up and down.

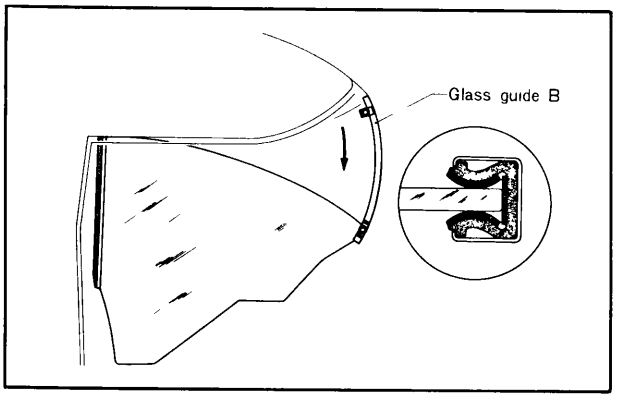

Fig. 14–81 Installing glass guide B

3. Check the relative position of the door window glass and the quarter window glass.

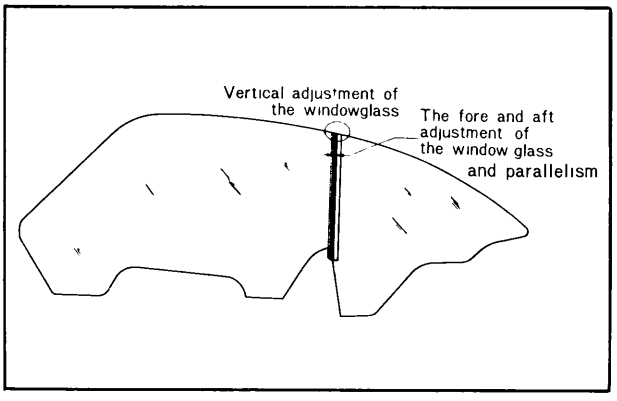

Fig. 14–82 Checking relative position

- The top of the quarter window glass must be in alignment with that of the door window glass.
- The clrarance between the door window glass and the quarter window glass must be within 1.5 mm (0.059 in) (The glass and the rubber should not interfere with each other).
- Parallelism ..... within 1 mm (0.039 in)

The horizontal adjustment	**2**
The vertical adjustment	**4, 5**
The fore and aft adjustment	**3, 6, 7**
The in and out adjustment	**1**

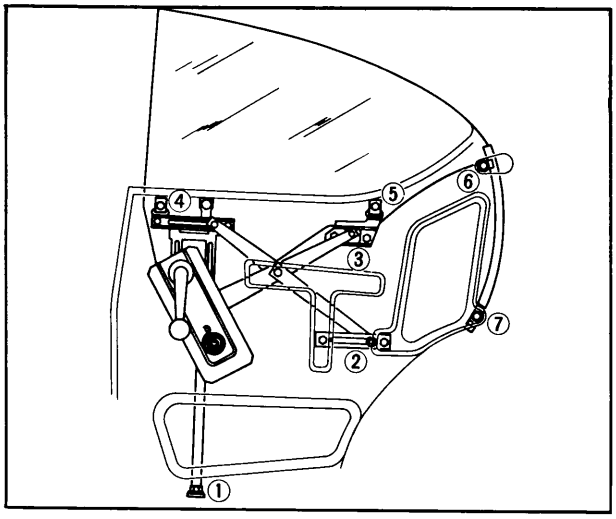

Fig. 14–83 Adjusting position

Note:
After adjustment, putty the bolts and nuts as they were before.

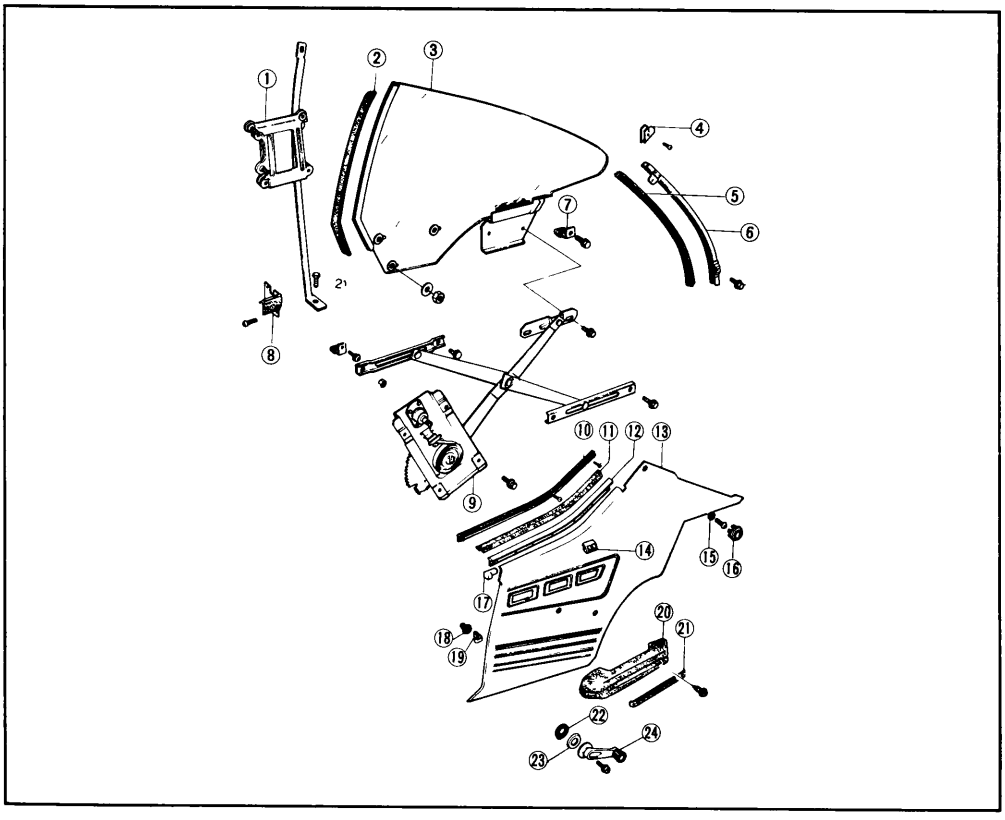

Fig. 14–84 Rear quarter window components
1. Glass guide
2. Weatherstrip
3. Window glass
4. Corner cover
5. Glass run channel
6. Glass guide
7. Glass stopper
8. Rubber garnish
9. Window regulator
10. Weatherstrip
11. Weatherstrip
12. Mould
13. Trim
14. Trim spacer
15. Trim spacer
16. Trim cap
17. Corner cap
18. Fastener cap
19. Trim fastener
20. Arm rest
21. Garnish
22. Seal rubber
23. Escutcheon
24. Regulator handle

14–O. TOP CEILING

14–O–1. Removing Top Ceiling

1. Remove the sun visors, interior mirror, interior lamp, assist straps, overhead console (if equipped), etc.



Fig. 14–85 Removing interior lamp

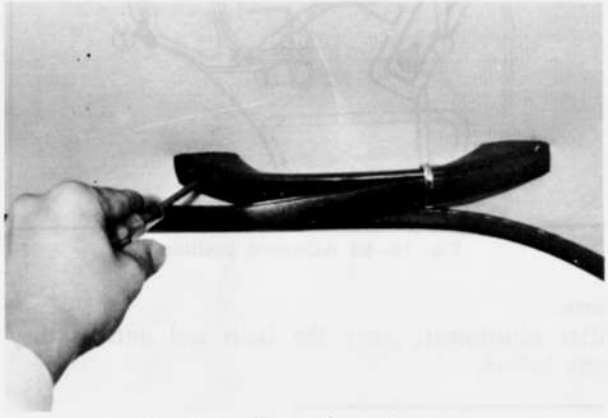

Fig. 14–86 Removing assist strap

2. Remove the front pillar trims and rear package tray trim panel.



Fig. 14–87 Removing piller trim

3. Strip off the seaming welts from the body flange and tear the cemented surface of the top ceiling from the outside of the flange.
4. Remove the polyethylene plates of the top ceiling from the inserting points of the body.
5. Remove the listing wires and top ceiling.

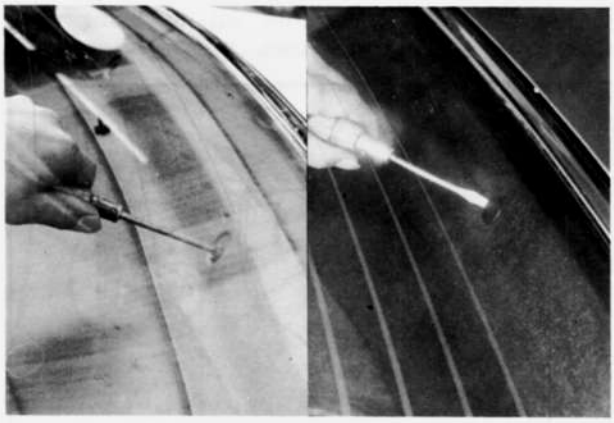

Fig. 14–88 Removing package trim panel



Fig. 14–89 Removing seaming welt



Fig. 14–90 Tearing of ceiling cemented surface

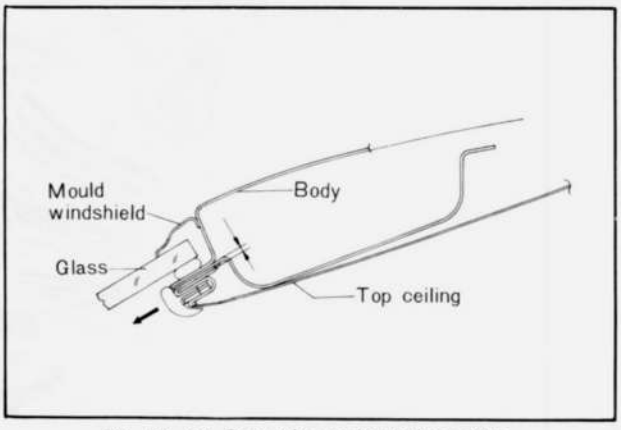

Fig. 14–91 Removing polyethylene plate

14–O–2. Installing Top Ceiling

1. Affix the head linings (top insulations) onto the body ceiling with adhesive cement.
2. Heat up the top ceiling to a temperature of 30°C to 50°C (86°F to 122°F).
3. Insert both ends of the listing wires to their proper positions in successive order beginning from the rear as shown in Fig. 14–92.
When doing so, be careful that the wires do not swing down.

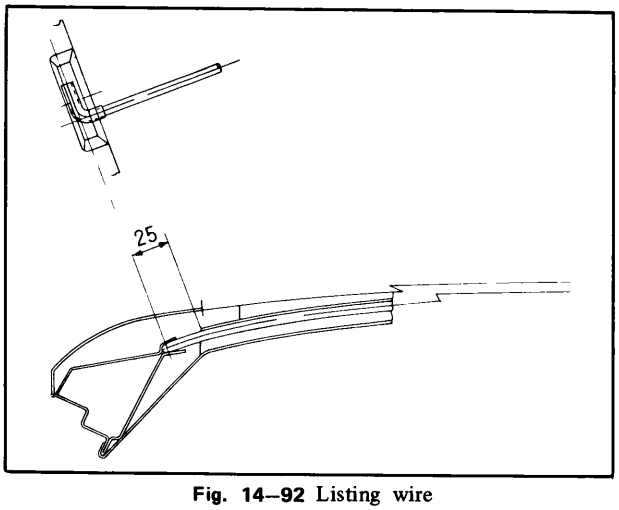

Fig. 14–92 Listing wire

4. Insert the front and rear polyethylene plates of the top ceiling to the inserting point of the body.

Note:
When inserting the top ceiling, if the guide made of plastic plate is used, you can insert it without touching the weaving point.

5. Apply neoprene adhesive cement to the outside of the body flange.

6. After one or two minutes, pull the top ceiling from both side to avoid any slackening and glue both side onto the body flange.
7. After the top ceiling is properly attached to the body flange, clip off the all protruding edges.
8. Install the seaming welts, rear view mirror, sun visors, interior lamp, assist handles, front pillar trims, rear package tray trim, overhead console (if equipped), etc.

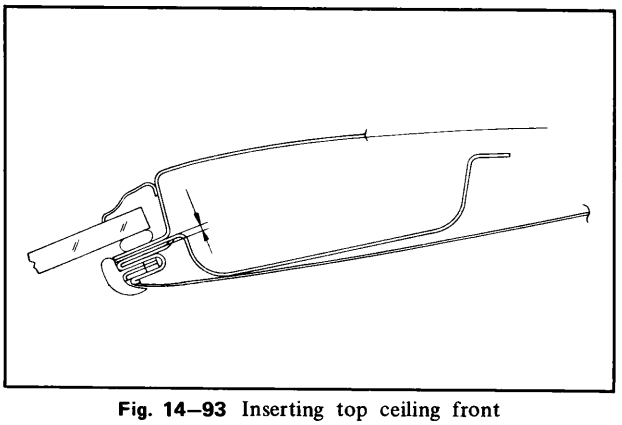

Fig. 14–93 Inserting top ceiling front

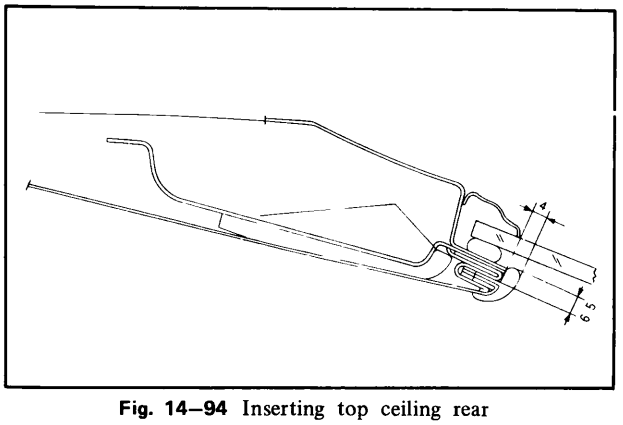

Fig. 14–94 Inserting top ceiling rear

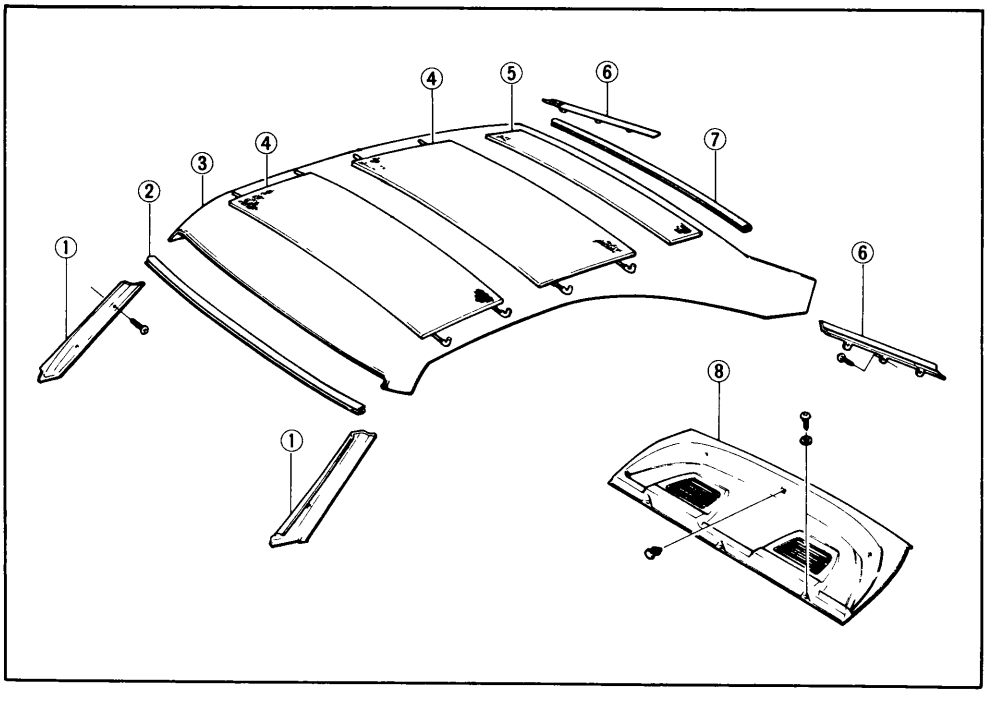

Fig. 14–95
Top ceiling (Hard top)
1. Front pillar trim
2. Front polyethylene plate
3. Top ceiling
4. Head lining
5. Rear head lining
6. Rear fixing plate
7. Rear polyethylene plate
8. Rear package tray trim

14–P. INSTRUMENT PANEL

14–P–1. Removing Instrument Panel Assembly

1. Pull the console pad upward and remove the console pad. Please note that the attaching clips give a little resistance when pulling the console pad out.



Fig. 14–96 Removing console pad

2. Loosen the center console attaching screws and move the console rearward.
3. Remove the screws attaching the left and right side garnishes to the instrument panel and remove the garnishes.
4. Remove the steering wheel and column cover as described in **Par 15–B–2**.

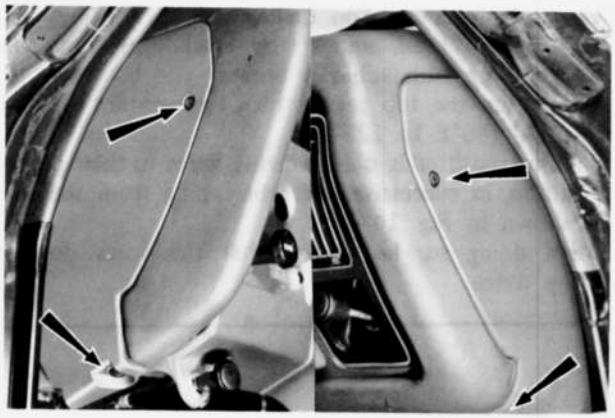

Fig. 14–97 Removing side garnish

5. Remove the bolts attaching the instrument frame junction and remove the junction.
6. Remove the steering shaft bracket attaching nuts and disconnect the steering shaft from the instrument panel.
7. Remove the screw attaching the ventilator knob and screw out the knob from the shaft.
Remove the nut attaching the ventilator to the decoration panel. Then, remove the ventilator cable away from the decoration panel.
8. Remove the glove box attaching screws and fasteners. Pull the glove box out and disconnect the wirings to the glove box light.
Then, remove the glove box.

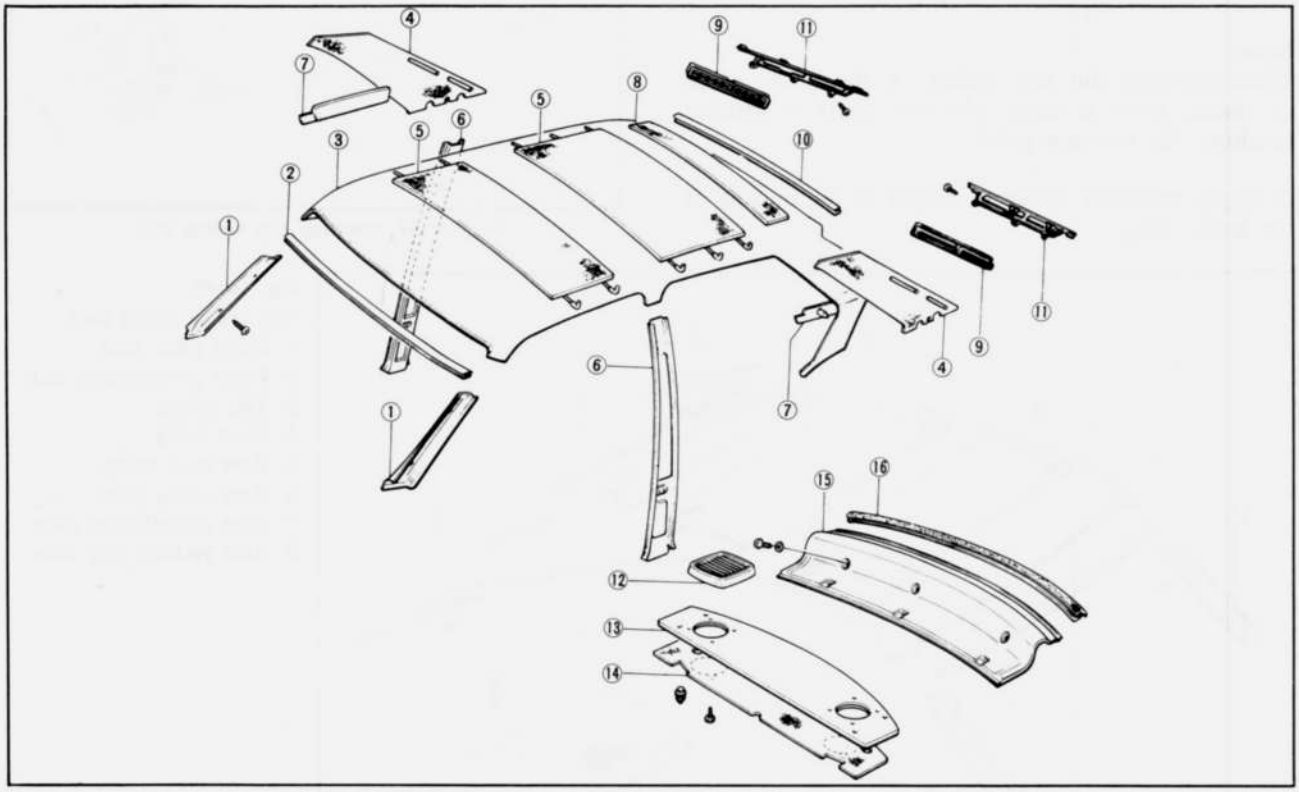

Fig. 14–98 Top ceiling (Sedan)

1. Front pillar trim
2. Front polyethylene plate
3. Top ceiling
4. Rear pillar pad
5. Head lining
6. Center pillar trim
7. Ceiling end
8. Rear head lining
9. Air grille
10. Rear polyethylene plate
11. Rear fixing plate
12. Speaker grille
13. Rear package tray trim
14. Insulator
15. Rear package trim back
16. Back trim brim

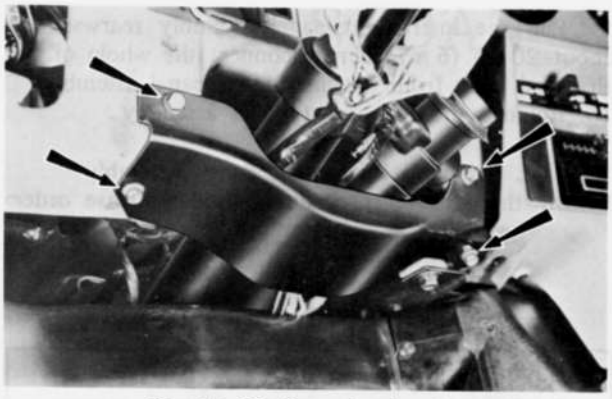

Fig. 14–99 Removing junction

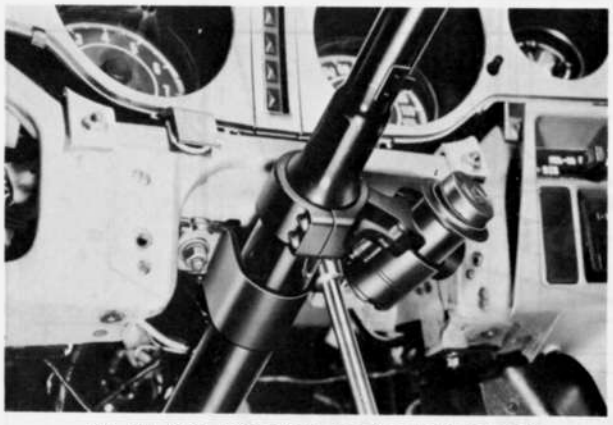

Fig. 14–100 Removing steering shaft bracket

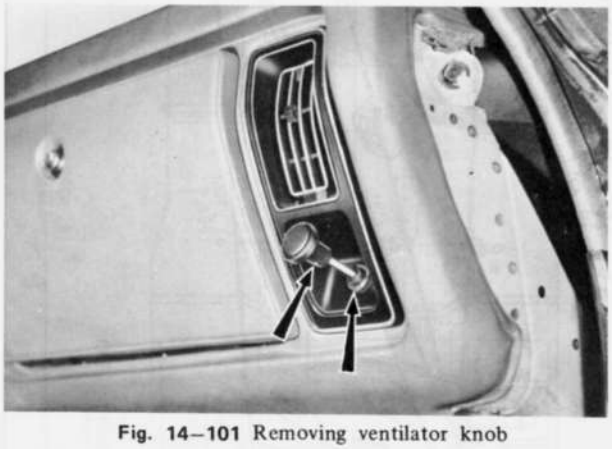

Fig. 14–101 Removing ventilator knob

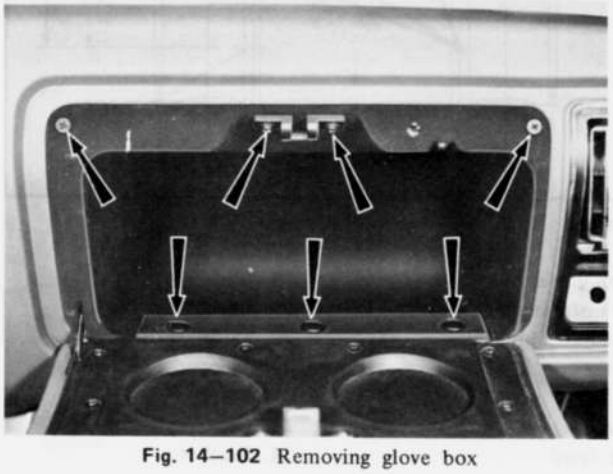

Fig. 14–102 Removing glove box

9. Disconnect the speedometer cable from the instrument and three heater control wires from the heater.

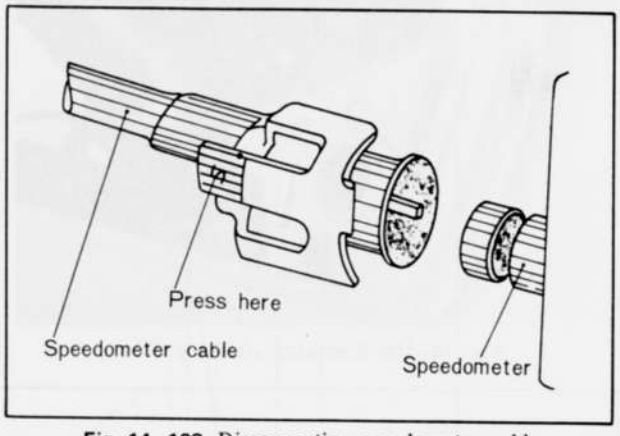

Fig. 14–103 Disconnecting speedometer cable

10. Remove the upper garnish attaching screw.



Fig. 14–104 Removing attaching screw

11. Remove the instrument panel attaching bolt on each side of the instrument panel.

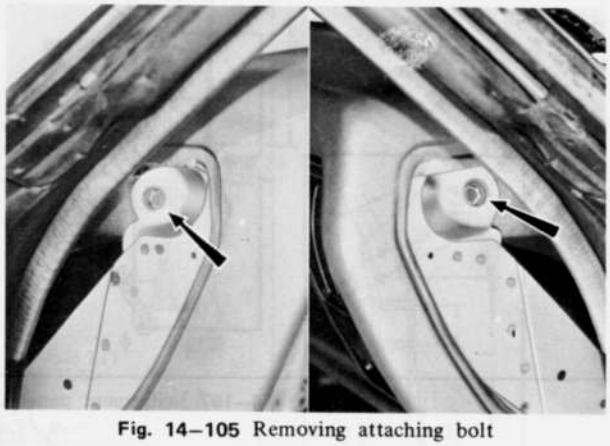

Fig. 14–105 Removing attaching bolt

12. Remove the two instrument panel attaching nuts on each side of the instrument panel lower.
13. Remove the two instrument panel attaching bolts located near the steering shaft bracket.
14. Remove the two instrument panel attaching bolts through the glove box hole.

BODY

(ROTARY WAGON)

14A–A. BACK DOOR ..... 14A : 1
14A–A–1. Removing Back Door ..... 14A : 1
14A–A–2. Installing Back Door ..... 14A : 1
14A–A–3. Adjusting Back Door ..... 14A : 1
14A–B. BACK DOOR HINGE ..... 14A : 2
14A–B–1. Removing Back Door Hinge ..... 14A : 2
14A–B–2. Installing Back Door Hinge ..... 14A : 3
14A–C. BALANCE SPRING ..... 14A : 3
14A–C–1. Removing Balance Spring ..... 14A : 3
14A–C–2. Installing Balance Spring ..... 14A : 3
14A–D. BACK DOOR LOCK ..... 14A : 3
14A–D–1. Removing Back Door Lock ..... 14A : 3
14A–D–2. Installing Back Door Lock ..... 14A : 3
14A–D–3. Adjusting Back Door Lock ..... 14A : 4
14A–E. BACK DOOR GLASS ..... 14A : 4
14A–E–1. Removing Back Door Glass ..... 14A : 4
14A–E–2. Installing Back Door Glass ..... 14A : 4
14A–F. STATIONARY GLASS (Rear Side Glass) ..... 14A : 5
14A–F–1. Removing Stationary Glass ..... 14A : 5
14A–F–2. Installing Stationary Glass ..... 14A : 5
14A–G. TOP CEILING ..... 14A : 6
14A–H. HEATABLE WINDOW ..... 14A : 6
SPECIAL TOOL ..... 14A : 6
BODY CHECKING DIMENSION, ROTARY WAGON .... 14A : 8

14A–A. BACK DOOR

14A–A–1. Removing Back Door

1. Open the back door.
2. Remove the trim fasteners with the driver as shown in Fig. 14A–1, and remove the back door trim.

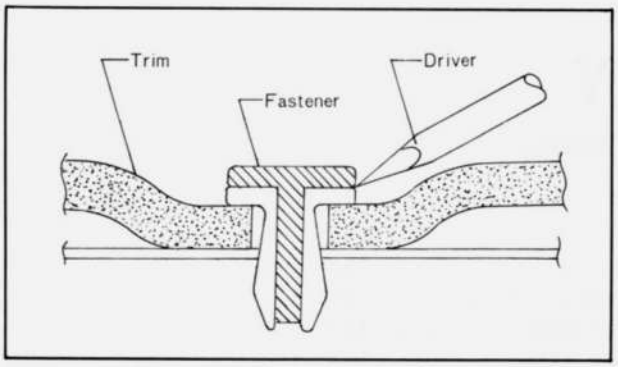

Fig. 14A–1 Removing trim fastener

3. Remove the hinge arm link covers.



Fig. 14A–2. Removing link cover

4. Disconnect the wiring connectors for the rear combination light, licence plate light and heatable window (if equipped).
Pull out the wiring harness from the hole (A) of the back door as shown in Fig. 14A–3.



Fig. 14A–3 Disconnecting wiring connector

5. Remove the back door and hinge arm tightening bolts, and remove the back door.

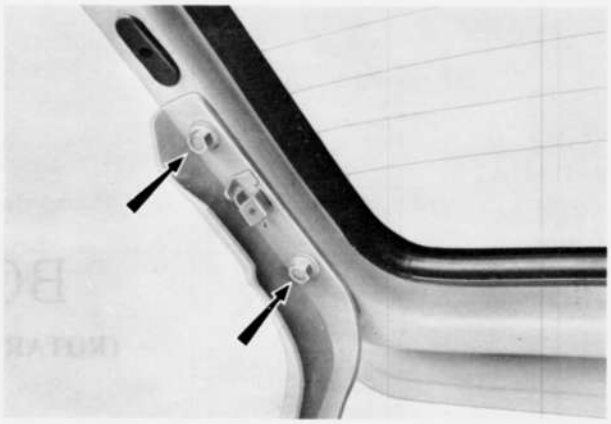

Fig. 14A–4 Removing back door

14A–A–2. Installing Back Door

Follow the removal procedures in the reverse order.

14A–A–3. Adjusting Back Door

1. To adjust the back door for **to-and-fro** position, loosen the back door hinge bracket attaching bolts on the body side and the dovetail attaching screws on the door side.

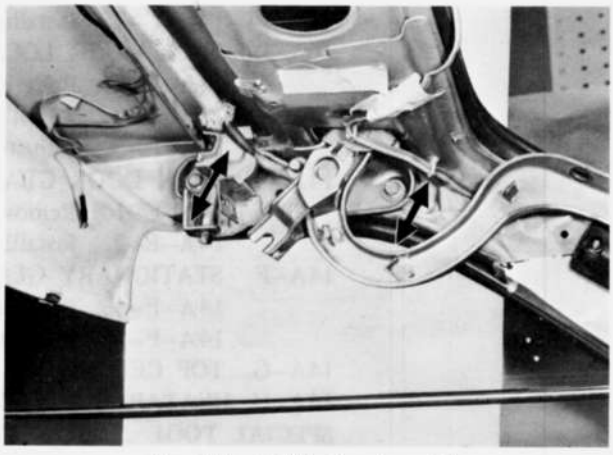

Fig. 14A–5 Adjusting to-and-fro

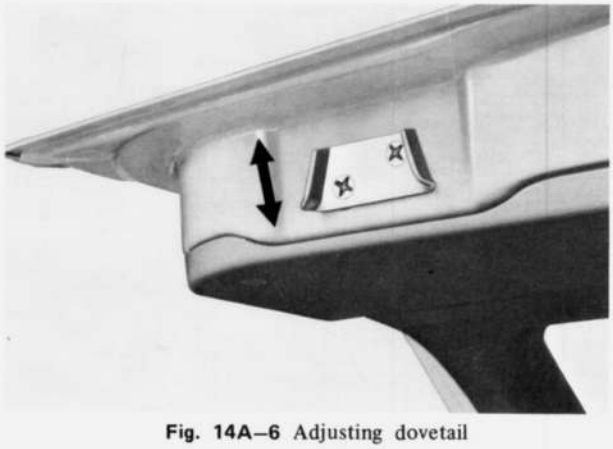

Fig. 14A–6 Adjusting dovetail

2. To adjust the back door for **up-and-down** position, loosen the back door hinge arm tightening bolts on the back door side.
When the up-and-down adjustment is made, the striker also should be adjusted by using the shims.

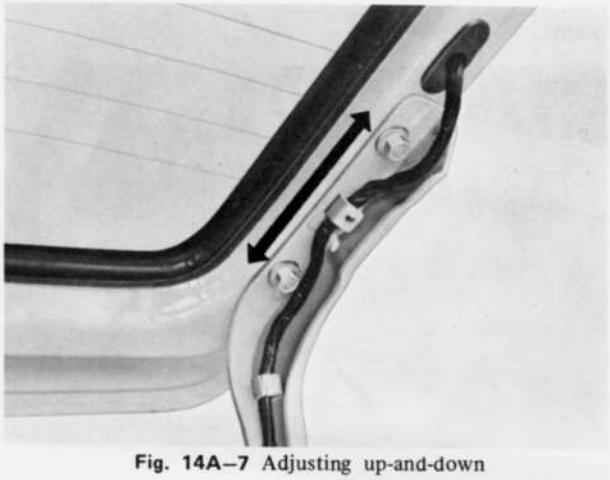

Fig. 14A–7 Adjusting up-and-down

3. Adjust the back door for closing, by moving the back door lock striker as shown in Fig. 14A–8, or inserting the shims of proper thickness between the striker and the body.
The adjusting shims are of 1.0 mm (0.039 in) and 2.0 mm (0.079 in) in thickness.



Fig. 14A–8 Adjusting striker

4. The back door can be shifted from **side to side** by moving the upper wedge to fore-and-aft.

Note:
Care should be taken not to distort the back door or mar the surrounding body.

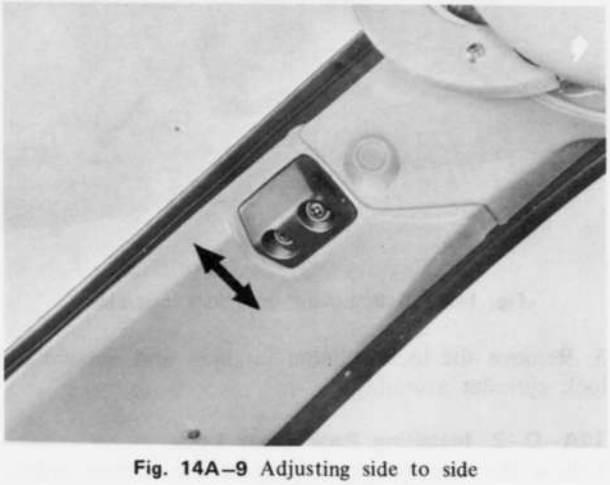

Fig. 14A–9 Adjusting side to side

14A–B. BACK DOOR HINGE

14A–B–1. Removing Back Door Hinge

1. Remove the back door as described in **Par. 14A–A–1.**
2. Remove the hinge cover fasteners and disconnect the wiring connectors. Then remove the hinge cover.

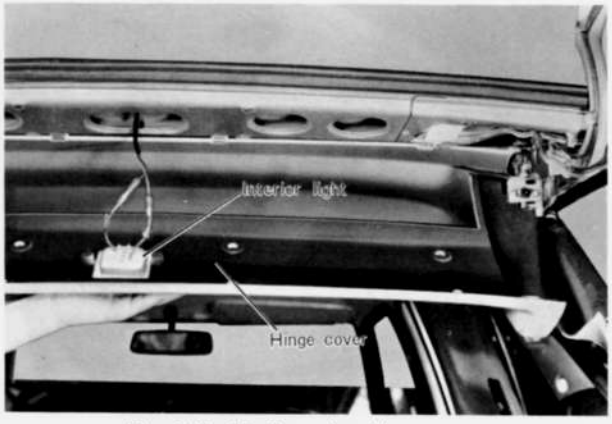

Fig. 14A–10 Removing hinge cover

3. Remove the wiring harness from the right side hinge arm link.
4. Remove the top ceiling from the top ceiling clips.
5. Disconnect the wiring to the interior light switch at the right side hinge.
6. Loosen but do not remove the hinge attaching bolts to ease removing the balance springs.

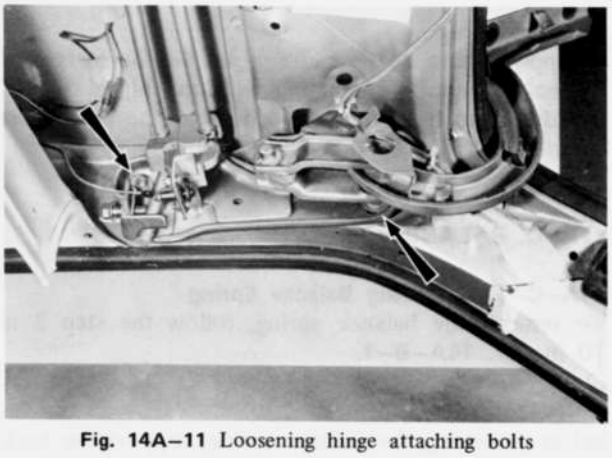

Fig. 14A–11 Loosening hinge attaching bolts

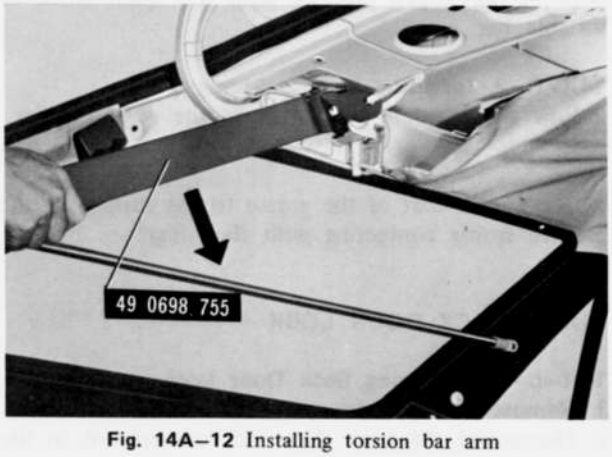

Fig. 14A–12 Installing torsion bar arm

7. Install the **torsion bar arm** (49 0698 755) to the left side balance spring as shown in Fig. 14A–12.
8. Push the torsion bar arm downward and disconnect the balance spring from the hinge arm link.
9. Position the hinge arm link upward.
Depress and pull the torsion bar arm and remove the balance spring from the hinge bracket.

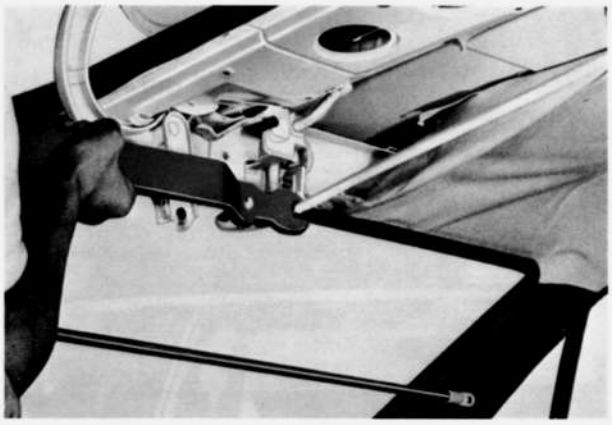

Fig. 14A–13 Removing balance spring

10. Remove the right side balance spring in the same manner as the left side balance spring.
11. Remove the both hinge attaching bolts and remove the hinge brackets.

14A–B–2. Installing Back Door Hinge

Follow the removal procedures in the reverse order.

Note:
a) Apply a thin coat of the grease to the surface of the balance spring contacting with the hinge.
b) Adjust the back door according to the procedures described in Par. 14A–A–3.

14A–C. BALANCE SPRING

14A–C–1. Removing Balance Spring

To remove the balance spring, follow the step 2 to 10 in **Par. 14A–B–1.**

Note:
Before removing the balance spring, support the back door at fully open position with the chain block or suitable bar.

14A–C–2. Installing Balance Spring

Follow the removal procedures in the reverse order.

Note:
Apply a thin coat of the grease to the surface of the balance spring contacting with the hinge.

14A–D. BACK DOOR LOCK

14A–D–1. Removing Back Door Lock

1. Remove the back door trim board and watershield.
2. Disconnect the back door lock control link at the joint.

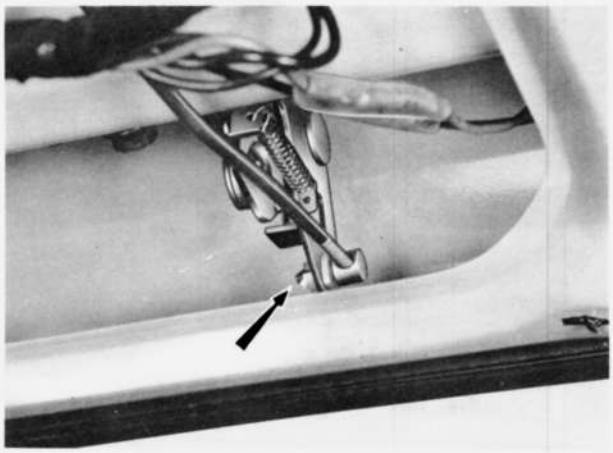

Fig. 14A–14 Disconnecting door lock control link

3. Remove the two back door lock control attaching nuts and remove the back door lock control assembly.

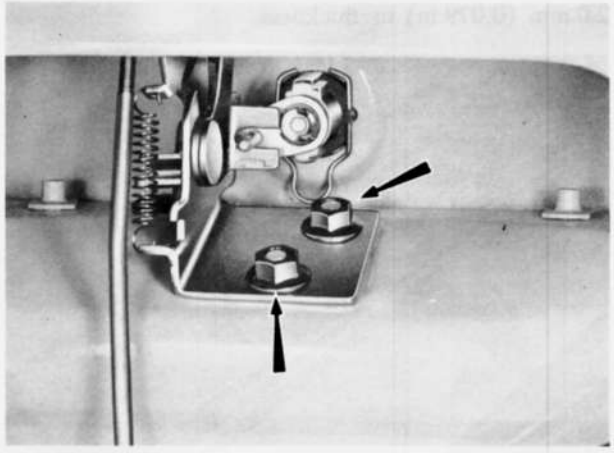

Fig. 14A–15 Removing door lock control assembly

4. Remove the two back door lock attaching bolts, and remove the back door lock assembly.

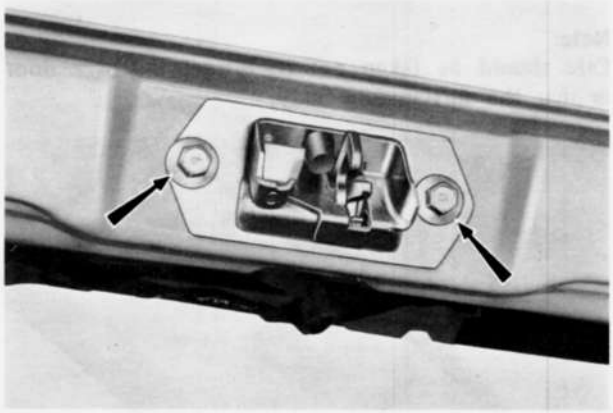

Fig. 14A–16 Removing door lock assembly

5. Remove the lock cylinder retainer, and remove the lock cylinder assembly.

14A–D–2. Installing Back Door Lock

Follow the removal procedures in the reverse order.

14A–D–3. Adjusting Back Door Lock

1. To adjust the back door lock, loosen the back door lock control assembly attaching screws and move the lock control assembly so as to give the specified clearance between the outer handle and push lever. The specified clearance should be **1.0 mm (0.04 in).** Tighten the screws attaching the back door lock control assembly and apply lubricant to the assembly.

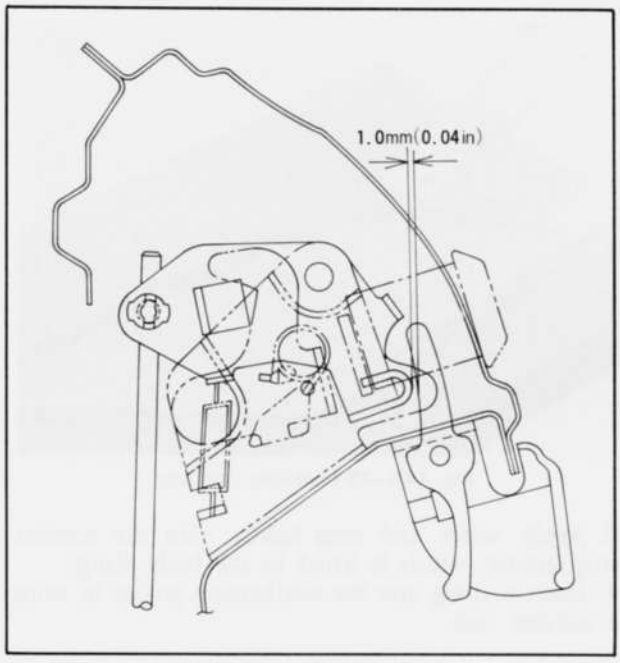

Fig. 14A–17 Adjusting door lock control assembly

2. To adjust the back door lock striker, refer to the step 3 **Par. 14A–A–3.**

14A–E. BACK DOOR GLASS

14A–E–1. Removing Back Door Glass

1. Remove the back door trim board and disconnect the heatable window wirings from the wiring harness.
2. Tear the weatherstrip cemented surface from the body with a wooden spatula.
3. Drive out the inner lip of the weatherstrip with a suitable tool from the inside of the vehicle while pushing the back door glass outwards.

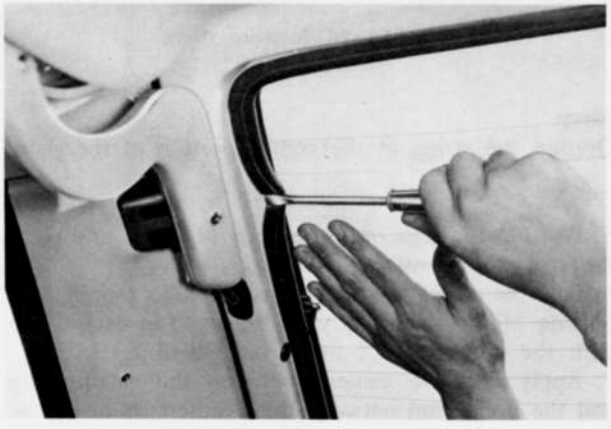

Fig. 14A–18 Drive out weatherstrip

4. Remove the back door glass together with the weatherstrip.
5. Remove the moulding and glass from the weatherstrip.

Note:
When removing the heatable window, be careful not to damage the filament surface.

14A–E–2. Installing Back Door Glass

Before installing the back door glass, clean off the old adhesive cement around the glass and body thoroughly.
1. Install the weatherstrip onto the back door glass and align the corners of the weatherstrip and glass.

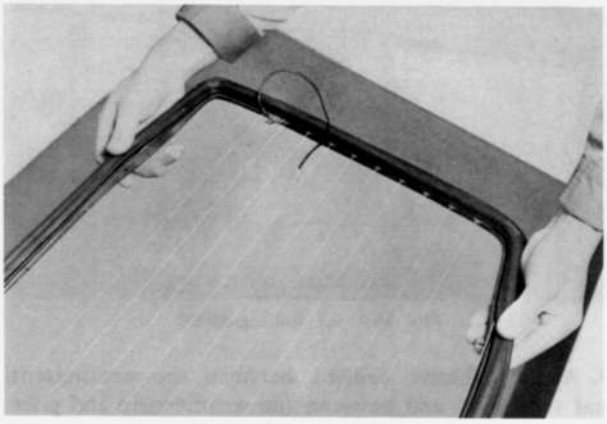

Fig. 14A–19 Installing weatherstrip

2. Fit a string of 4 mm (0.16 in) in diameter into the mould fitting groove of the weatherstrip with a suitable tool.
3. Apply water and soap lightly onto the weatherstrip groove.
4. Connect the right, left, upper and lower mouldings with four joints. Push the moulding against the groove of the weatherstrip and pull the string to fit the moulding.
5. Apply water and soap lightly onto the weatherstrip groove, which is fitted to the body flange.
6. Insert a string into the weatherstrip groove by using a suitable tool.

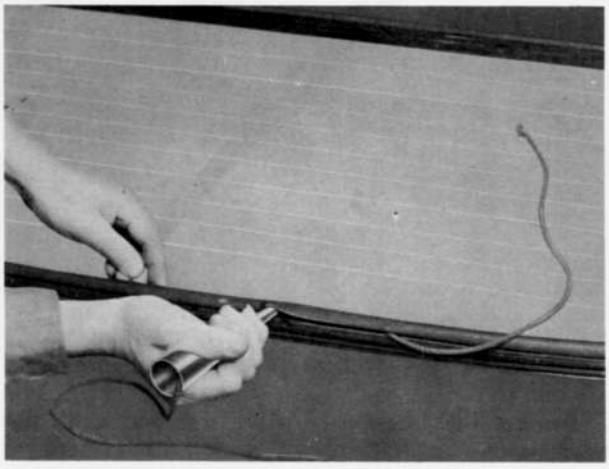

Fig. 14A–20 Inserting string

Note:
Overlap the string at the center portion of the glass.

7. Position the glass onto the body properly, and place the string ends inside the body. To facilitate the procedure, apply water and soap lightly onto the body flange.
8. Pull the string from the inside while tapping the outside of the glass lightly with a hand in accordance with the movement of the string pulled.



Fig. 14A–21 Pulling string

9. Apply adhesive cement between the weatherstrip and the body, and between the weatherstrip and glass. To facilitate cleaning after applying the cement, attach a suitable tape onto the glass and body.
10. Clean off the excessive adhesive cement together with the tape.

14A–F. STATIONARY GLASS (Rear Side Glass)

14A–F–1. Removing Stationary Glass

1. Dirve out the inner lip of the weatherstrip with a suitable tool from the inside of the vehicle while pushing the stationary glass.

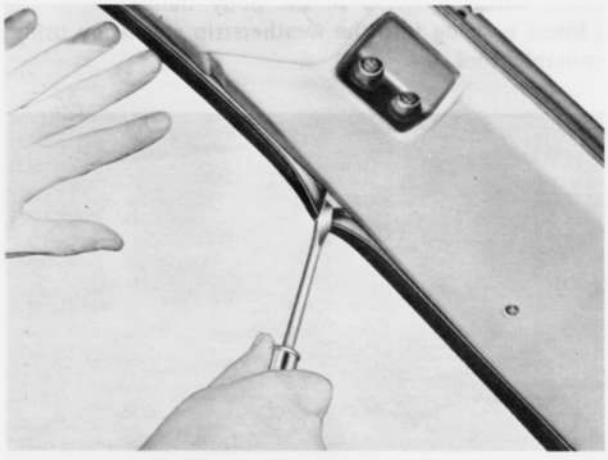

Fig. 14A–22 Drive out weatherstrip

2. Remove the stationary glass together with the weatherstrip.
3. Remove the mould and glass from the weatherstrip.

14A–F–2. Installing Stationary Glass

Before installing the stationary glass, clean off the old adhesive cement around the glass and body thoroughly.
1. Install the weatherstrip onto the stationary glass.
2. Install the moulding onto the weatherstrip using a string.

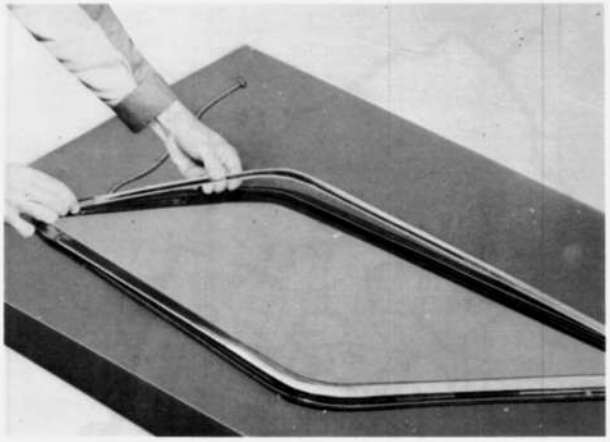

Fig. 14A–23 Installing moulding

3. Apply water and soap lightly onto the weatherstrip groove, which is fitted to the body flange.
4. Insert a string into the weatherstrip groove by using a suitable tool.

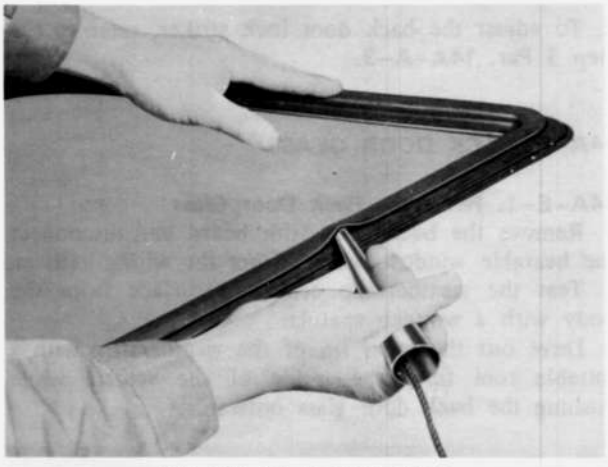

Fig. 14A–24 Inserting string

Note:
Overlap the string at the center portion of the glass.

5. Position the glass onto the body properly, and place the string ends inside the body.
6. Pull the string from the inside while tapping the outside of the glass lightly with a hand in accordance with the movement of the string pulled.
7. Apply adhesive cement between the weatherstrip and the body, and between the weatherstrip and glass.
8. Clean off the excessive adhesive cement.

14A–G. TOP CEILING

To remove and install the top ceiling, refer to **Par. 14–O.**

14A–H. HEATABLE WINDOW

Servicing the heatable window is explained in **Par. 15–I.**

SPCIAL TOOL

49 0698 755	Torsion bar arm

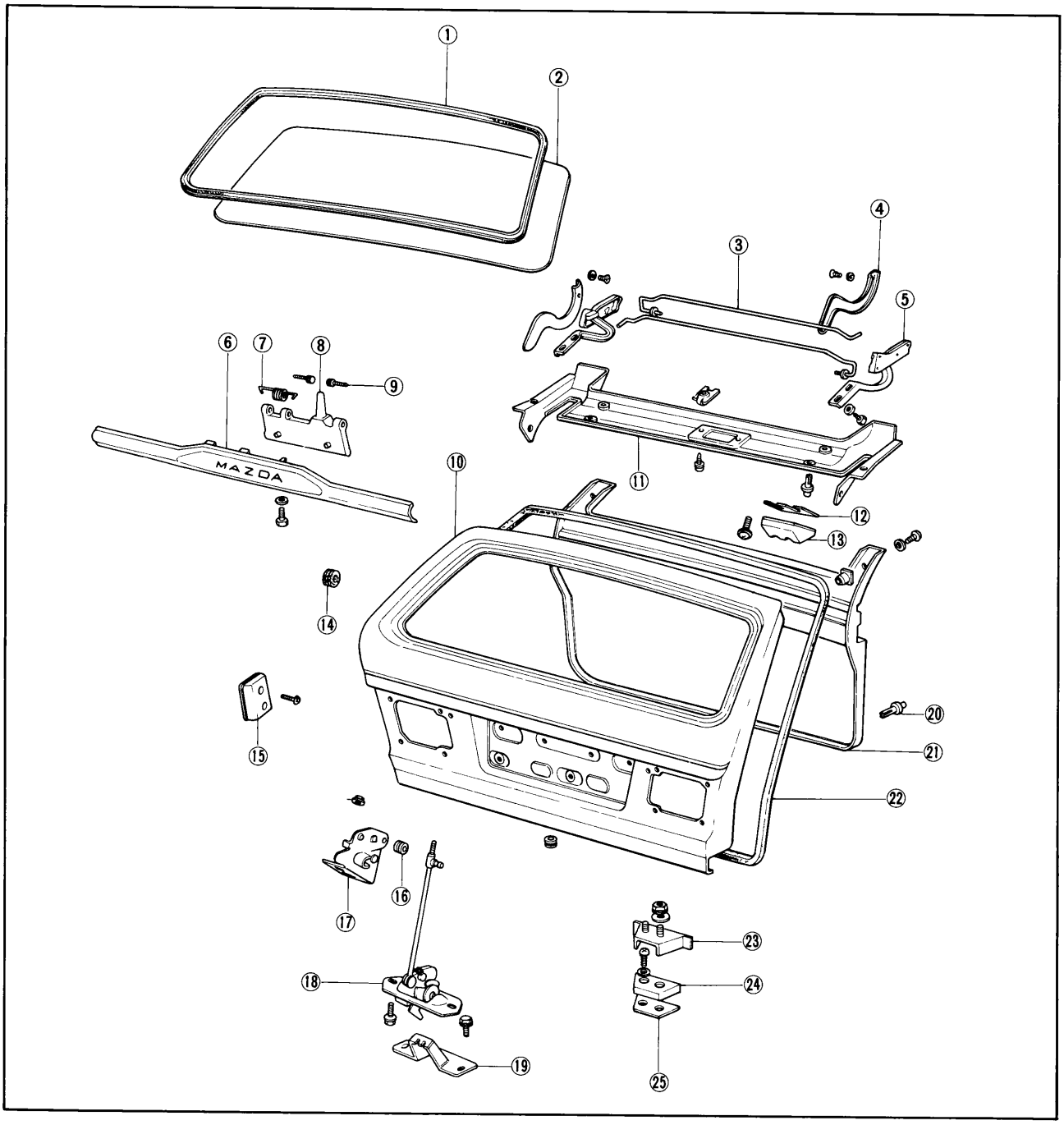

Fig. 14A–25 Back door components

1. Weatherstrip
2. Back window glass
3. Balance spring
4. Hinge arm cover
5. Hinge
6. Outer handle
7. Spring
8. Lever
9. Pin
10. Back door body
11. Hinge cover
12. Shim
13. Upper wedge
14. Protector
15. Side wedge
16. Bush
17. Door lock control assembly
18. Door lock assembly
19. Striker
20. Fastener
21. Back door trim
22. Weatherstrip
23. Dovetail
24. Wedge
25. Shim

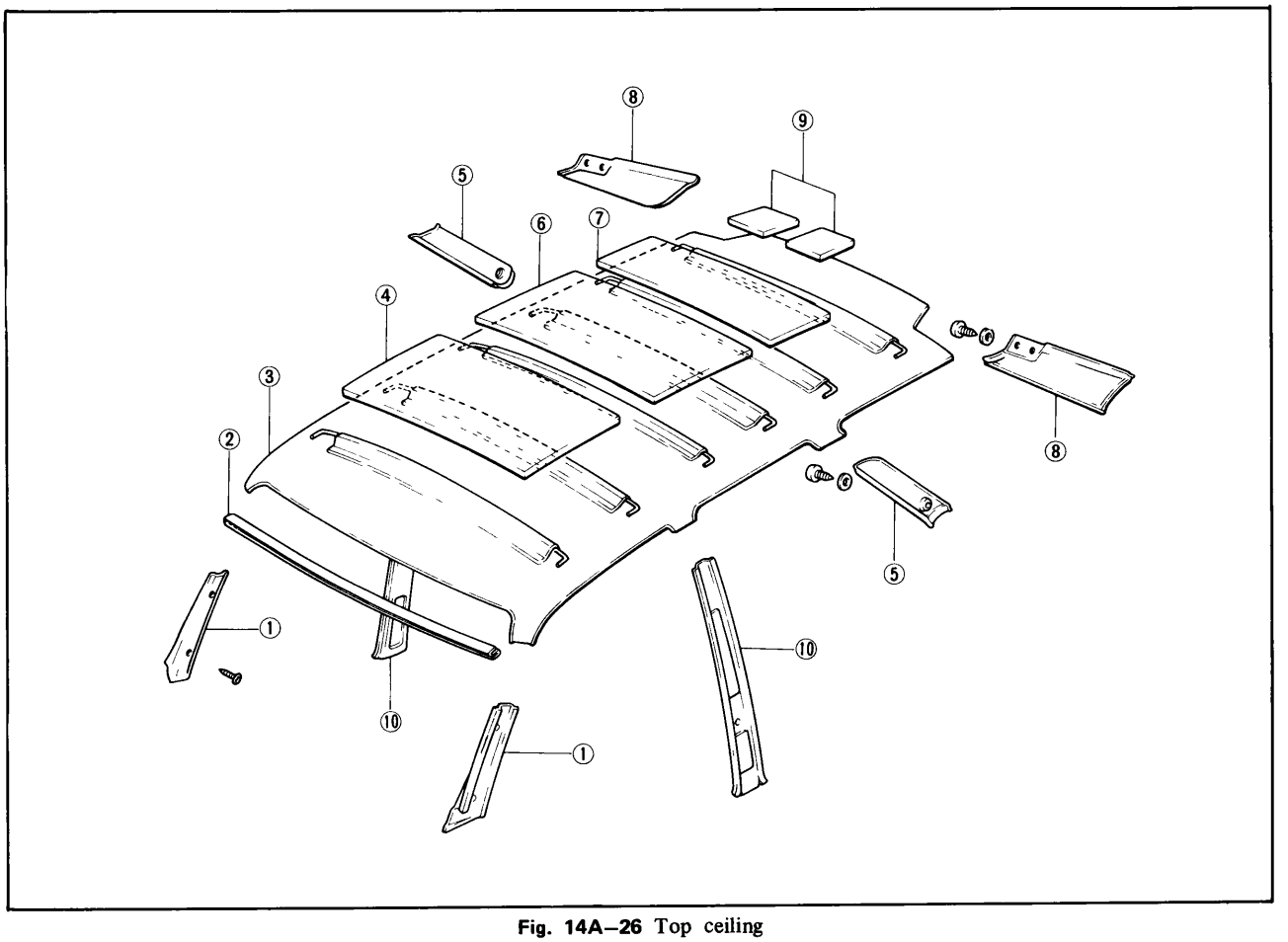

Fig. 14A–26 Top ceiling

1. Front pillar trim
2. Front polyethylen plate
3. Top ceiling
4. Head lining
5. Quarter pillar trim
6. Roof insulator
7. Head lining
8. Rear pillar trim
9. Wire cushion
10. Center pillar trim

BODY CHECKING DIMENSION
ROTARY WAGON

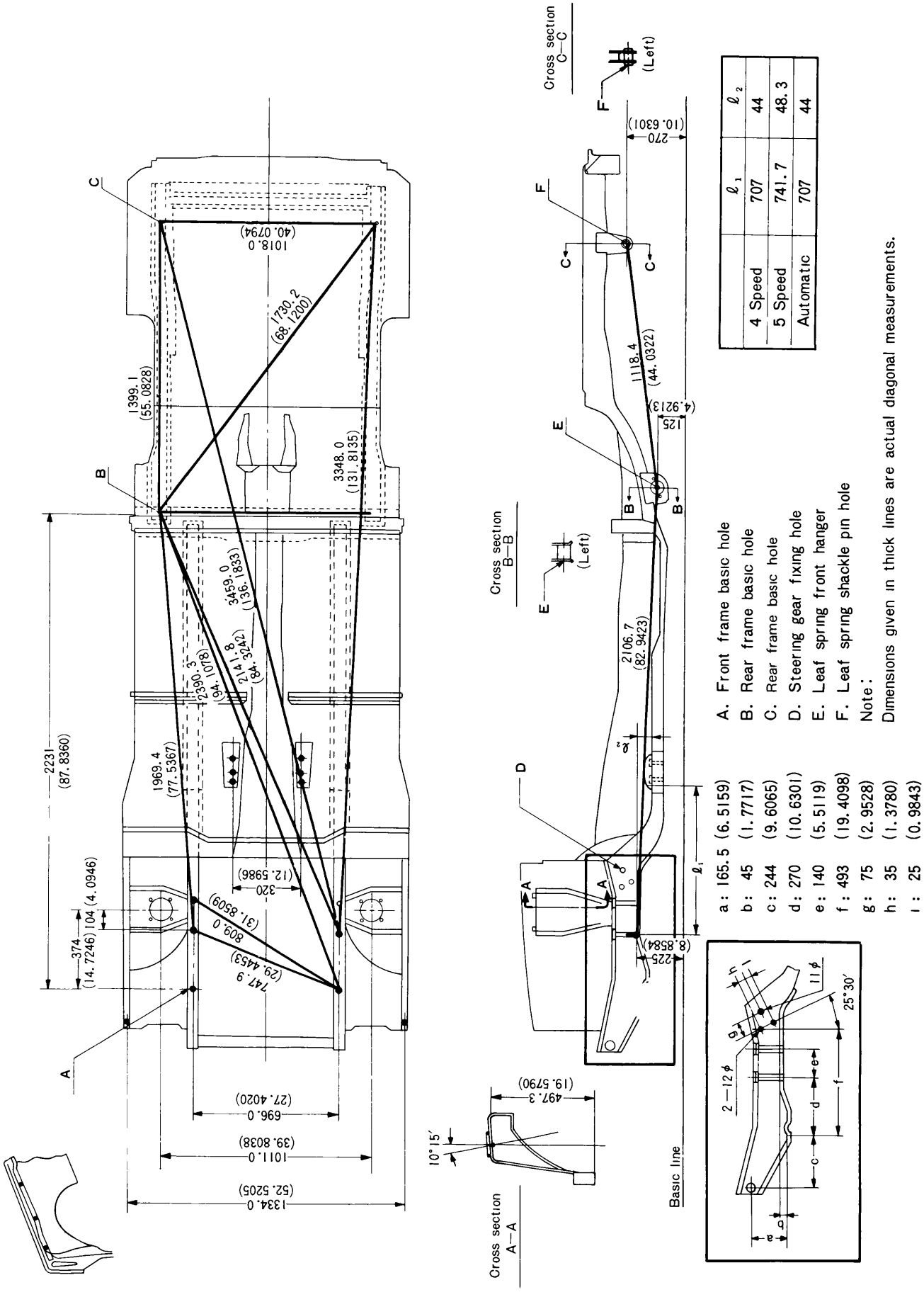

	ℓ_1	ℓ_2
4 Speed	707	44
5 Speed	741.7	48.3
Automatic	707	44

ELECTRICAL SYSTEM (BODY)

15–A. LIGHTING SYSTEM ..... 15 : 1
15–A–1. Adjusting Head Light ..... 15 : 1
15–A–2. Bulb Capacity ..... 15 : 1
15–B. FUEL AND WATER TEMPERATURE GAUGE ..... 15 : 1
15–B–1. Checking Fuel and Water Temperature Gauge ..... 15 : 1
a. Fuel and water temperature gauge ..... 15 : 1
b. Fuel gauge unit ..... 15 : 3
c. Water temperature gauge unit ..... 15 : 3
15–B–2. Removing Fuel and Water Temperature Gauge ..... 15 : 4
15–B–3. Installing Fuel and Water Temperature Gauge ..... 15 : 5
15–C. COMBINATION SWITCH ..... 15 : 6
15–C–1. Checking Combination Switch ..... 15 : 6
15–C–2. Removing Combination Switch ..... 15 : 7
15–C–3. Installing Combination Switch ..... 15 : 7
15–D. IGNITION SWITCH & STEERING LOCK ..... 15 : 7
15–D–1. Removing Ignition Switch Contact Housing ..... 15 : 7
15–D–2. Checking Ignition Switch .... 15 : 7
15–D–3. Installing Ignition Switch Contact Housing ..... 15 : 7
15–D–4. Removing Key Cylinder ..... 15 : 7
15–D–5. Installing Key Cylinder ..... 15 : 8
15–D–6. Replacing Steering Lock ..... 15 : 8
15–E. INHIBITOR SWITCH ..... 15 : 8
15–E–1. Checking Inhibitor Switch ... 15 : 8
15–F. WIPER MOTOR ..... 15 : 8
15–F–1. Removing Wiper Motor ..... 15 : 8
15–F–2. Checking Wiper Motor ..... 15 : 9
15–F–3. Installing Wiper Motor ..... 15 : 9
15–G. HORN ..... 15 : 9
15–G–1. Removing Horn ..... 15 : 9
15–G–2. Adjusting Horn ..... 15 : 10
15–G–3. Installing Horn ..... 15 : 10
15–H. METER ..... 15 : 10
15–H–1. Checking Meter Set ..... Print Panel ..... 15 : 10
15–I. CENTRAL CONTROL UNIT ..... 15 : 11
15–I–1. Checking Central Control Unit ..... 15 : 11
15–I–2. Removing Central Control Unit ..... 15 : 12
15–I–3. Installing Central Control Unit ..... 15 : 12
15–J. STOP LIGHT CHECKER RELAY ..... 15 : 12
15–J–1. Checking Stop Light Checker Relay ..... 15 : 12
15–J–2. Removing Stop Light Checker Relay ..... 15 : 12
15–J–3. Installing Stop Light Checker Relay ..... 15 : 12
15–K. HEATABLE WINDOW ..... 15 : 12
15–K–1. Checking Heatable Window ... 15 : 12
15–K–2. Repairing Printed Filament ..... 15 : 12
15–L. HEATER FAN SWITCH ..... 15 : 13
15–L–1. Checking Heater Fan Switch ..... 15 : 13
SPECIAL TOOL ..... 15 : 13

15–A. LIGHTING SYSTEM

The wiring of the lighting systems is shown in the wiring diagrams. The wires in the various circuits are of different colors to aid when checking individual circuits.

15–A–1. Adjusting Head Light

Before adjusting the headlights, make sure that the tires are inflated uniformly to recommended pressure and the vehicle is on the level ground without load. Adjust the headlight to meet the regulation of each country.

To adjust the headlight, turn the three spring loaded screws of the sealed beam unit until the headlights are properly aimed.



Fig. 15–1 Adjusting head light

15–A–2. Bulb Capacity

When replacing the bulb, conform to the following table.

15–B. FUEL AND WATER TEMPERATURE GAUGE

The fuel gauge indicates the quantity of gasoline in the tank only when the ignition switch is turned on. The fuel gauge circuit is composed of the fuel gauge, mounted on the instrument panel, and the fuel tank unit, connected by a single wire through the ignition switch.

The water temperature gauge electrically operated like the fuel gauge, consists of the water temperature gauge in the instrument panel and sending unit installed on the rear housing.

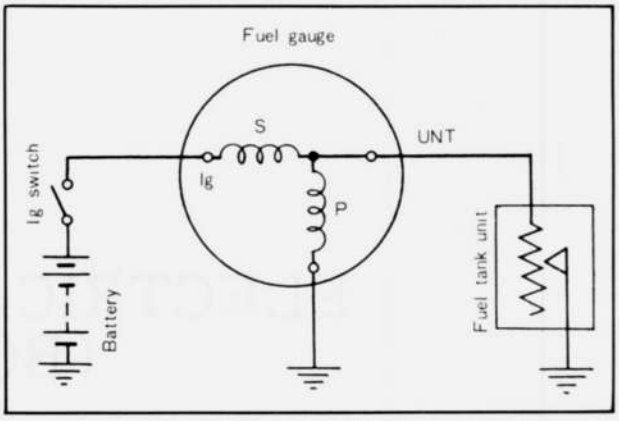

Fig. 15–2 Diagram of fuel gauge

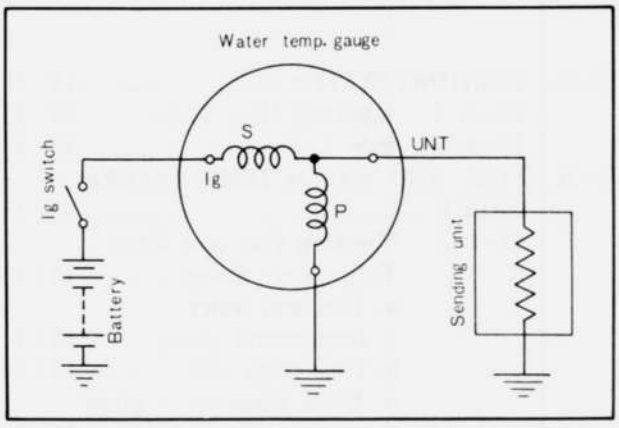

Fig. 15–3 Diagram of water temp. gauge

15–B–1. Checking Fuel and Water Temperature Gauge

a. Fuel and water temperature gauge

If the checker (49 0839 285) is available, use it according to the following procedure to confirm whether the trouble lies in the meter or in the unit.

1. Disconnect wiring connector from unit.
2. Connect this wiring connector to red lead of checker.
3. Connect black lead of checker to earth connection on vehicle body.

Note:

Make this earth connection at position close to unit.

Head light lower beam	60/37.5W	Combination meter illumination light	3.4W
Head light upper beam	37.5W	Glove box light	5W
Front turn signal light	8/27W	Step light	3.4W
Front side light	8W	Cigar lighter light	3W (24V)
Tail and stop light	8/27W	Exhaust system over heat warning light	3.4W
Rear turn signal light	27W	Decoration panel light	3.4W
Reverse light		Air conditioner light	3.4W
Sedan	12W	Interior light	5W
Hardtop	27W	Trunk room light	5W
Wagon	27W	Over head console	
License light		Indicator light	3.4W
Sedan and Hardtop	7.5W	Spot light	6W
Wagon	8W	Interior light	10W
Rear side light	8W		

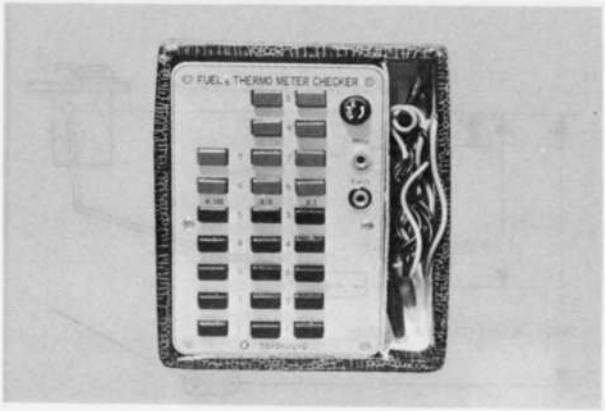

Fig. 15–4 Checker

4. Turn engine key on (in ignition position).
5. Set checker to the specified resistance value according to the following resistance figure.

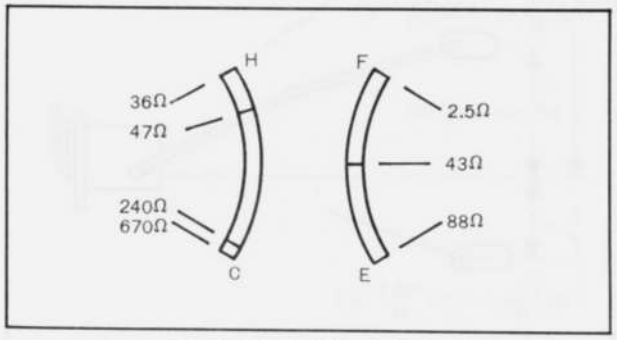

Fig. 15–5 Resistance figure

Example:
If specified resistance value of temperature gauge C is 671,

671 = 600 + 70 + 1

Therefore, push 6 of column x 100
7 of column x 10
1 of column x 1

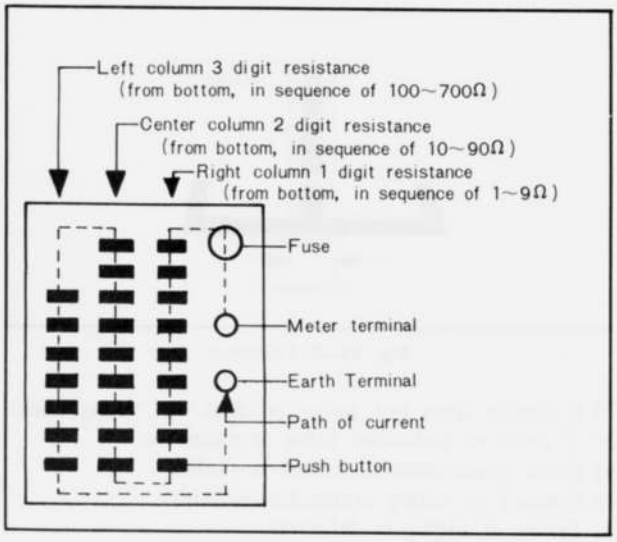

Fig. 15–6 Setting checker

Note:
a) To return button to its original position, push another button in same column half-way down.
b) When setting checker, push buttons in sequence starting from the largest value.

6. Check and see whether indicated value on meter concurs with set value on checker.

Note:
When making judgement, wait for about 20 secs before making judgement.

Judgement:
1) If indicated value on meter concurs with set value on checker, the operation of meter is satisfactory. The unit or wiring is defective.
2) If there is error in indicated value of meter, use following standard to checker error. Tolerance is roughly ± 2 widths of needle (± 1/16 of one graduation).

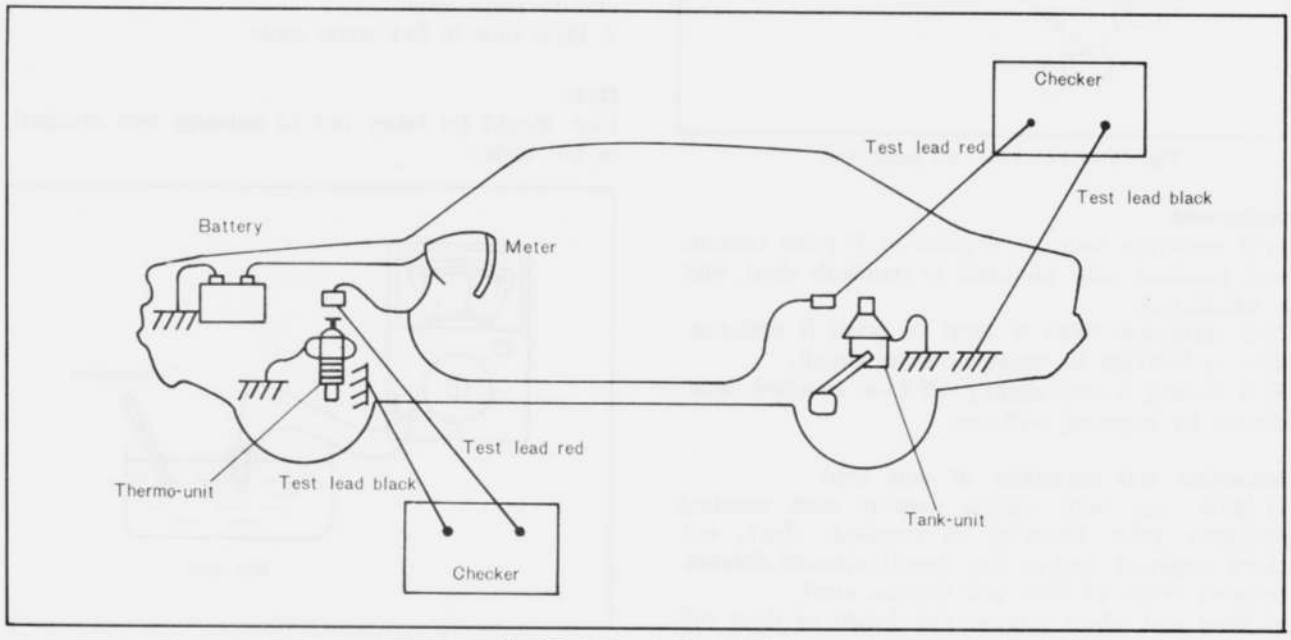

Fig. 15–7 Connecting checker

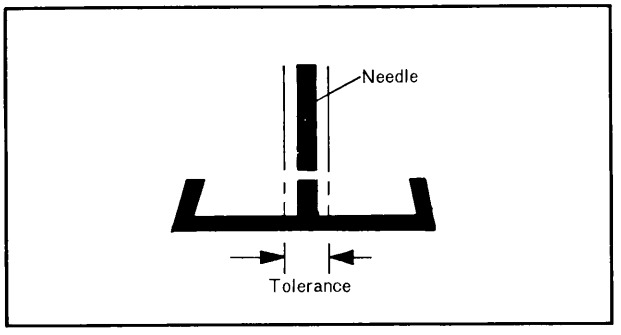

Fig. 15–8 Tolerance

3) If needle does not move or does not swing back, or if error in indicated value is excessive:
a) Earth connection of meter is fault.
b) Contact in wiring connector is fault.
c) Inside of meter is defective.

b. Fuel gauge unit

For inspecting the fuel gauge unit, proceed as follows.
1. Remove unit, and connect terminal and body of unit to radio tester.
2. Slowly move unit arm to E point or F point and take reading of resistance value of tester at that time.

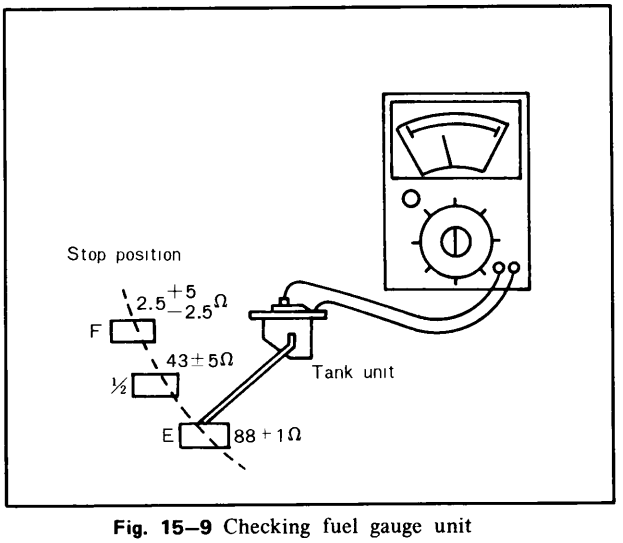

Fig. 15–9 Checking fuel gauge unit

Judgement:

1) If resistance value at E point or F point concurs with standard value indicated in standards chart, unit is satisfactory.
2) If resistance value is great or small it indicates there is breakage in wiring or short circuit.
3) If reading is only slightly off from standard value, correct by adjusting unit arm.

Inspection and correction of unit arm:

a) Move arm until reading concurs with standard resistance value indicated in standards chart, and check height of float at that time (horizontal distance between center of float and fulcrum arm).
b) Bend and adjust arm so that height of float will be of standard height as shown in figure.

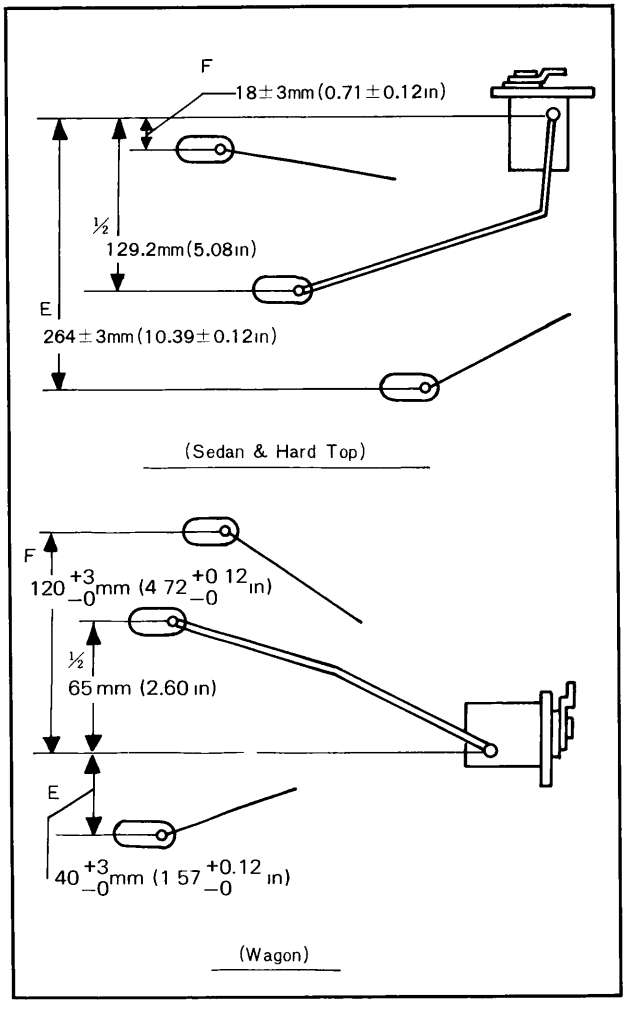

Fig. 15–10 Adjusting unit arm

c. Water temperature gauge unit

For inspecting the water temperature gauge unit, proceed as follows.
1. Remove unit, and connect terminal and body of unit to radio tester.
2. Place unit in hot water tank.

Note:

Care should be taken not to immerge unit terminal in hot water.

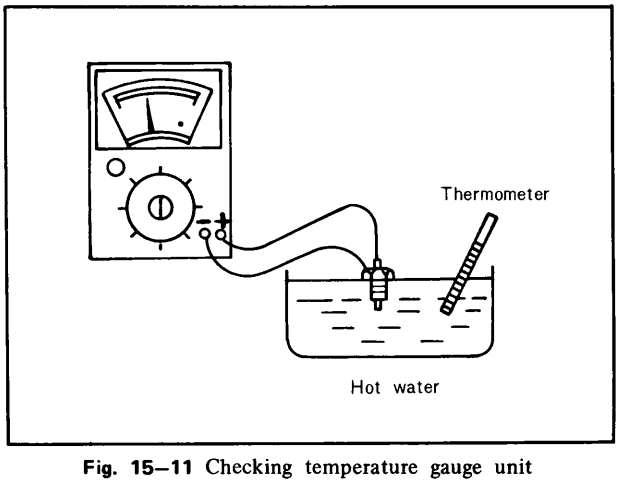

Fig. 15–11 Checking temperature gauge unit

3. Place thermometer in hot water tank.
4. Take rading of thermometer and at the same time reading of resistance value on tester.

Note:
a) Water should be hot (about 80°C) when inspection is being made.
b) Change temperature of hot water and make another inspection.

Judgement:
1) If temperature and resistance value at that temperature are within range of tolerance, unit is satisfactory. Range of tolerance is ±20% of resistance value shown in standards chart (including measuring errors).
2) If unit is outside of range of tolerance replace with new unit.

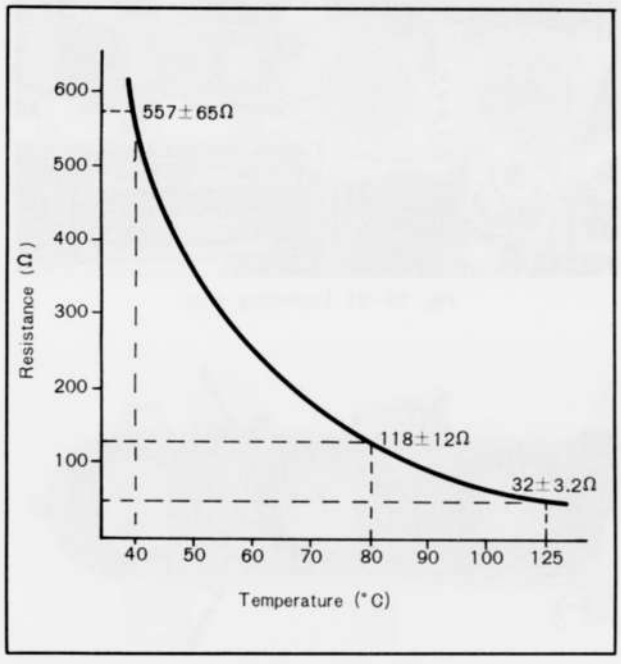

Fig. 15–12 Characteristic of thermister

15–B–2. Removing Fuel and Water Temperature Gauge

1. Pull the center cap out from the steering wheel.
2. Loosen the steering wheel attaching nut and remove the steering wheel.
3. Loosen the nut attaching the ventilator knob and move the knob away from the panel.

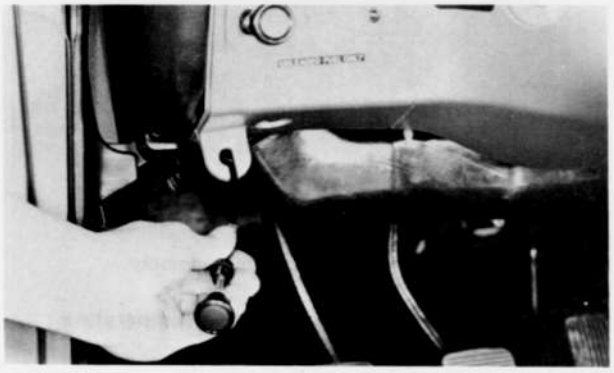

Fig. 15–13 Removing ventilator knob

4. Loosen the screw attaching the choke knob and remove the choke knob.
Remove the nut attaching the choke and move the choke away from the panel.
5. Loosen the screws attaching the column cover and remove the column cover.

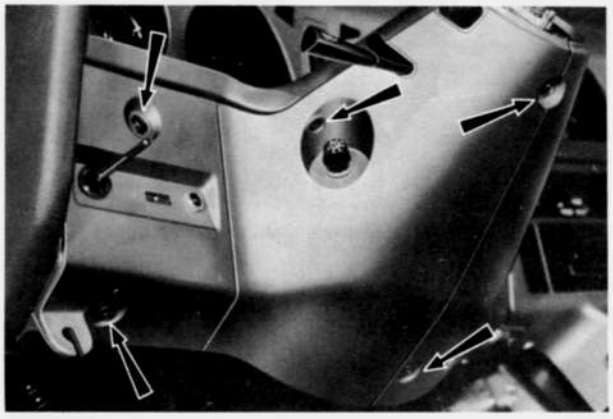

Fig. 15–14 Column cover attaching screw

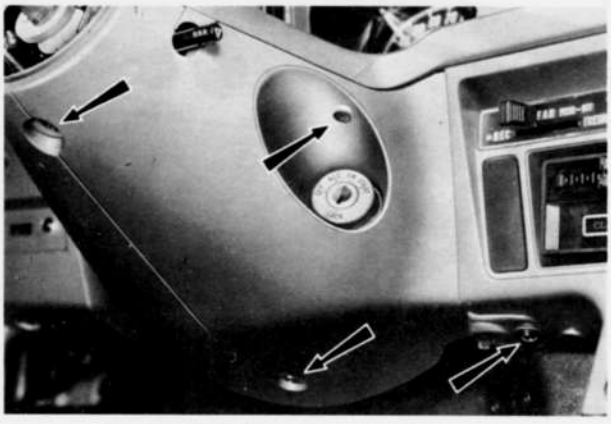

Fig. 15–15 Column cover attaching screw

6. Disconnect the wirings from the panel light resister by loosening the attaching screws.
7. Disconnect the wirings to the exhaust system over heat warning light.
8. Loosen but do not remove the two screws shown in the Fig. 15–16 and pull the column cover out from the instrument panel.
Note that the attaching clips give a little resistance when pulling column cover out.

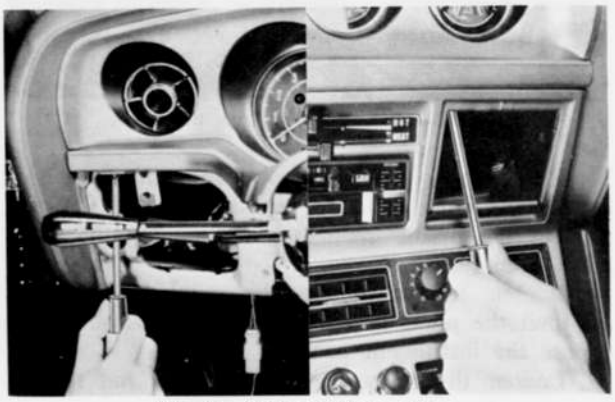

Fig. 15–16 Loosening screws



Fig. 15–17 Removing column cover upper

9. Loosen the meter cover attaching nuts and pull the cover out from the combination meter.

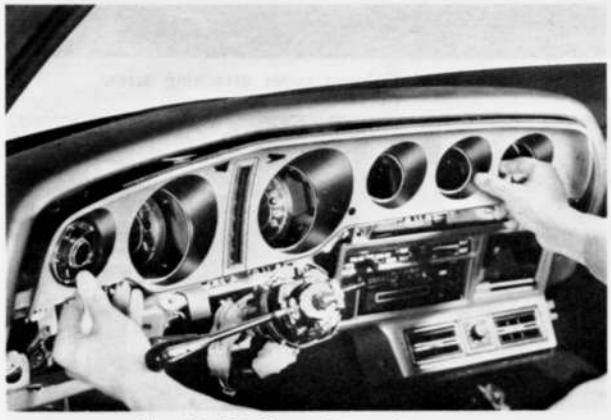

Fig. 15–18 Removing meter cover

10. Disconnect the wiring connectors from the combination meter.

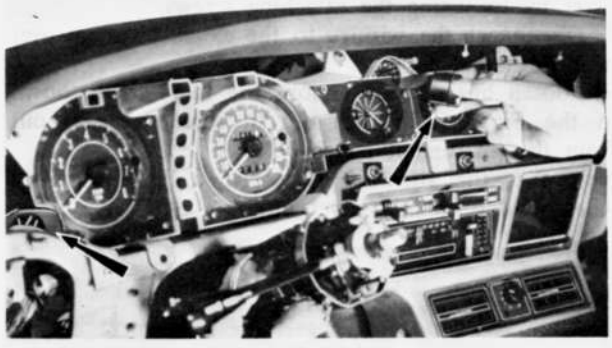

Fig. 15–19 Removing wiring connector

11. Reach under the instrument panel and disconnect the speedometer cable by pressing on the flat surface of the plastic connector and pulling the cable away from the head.
12. Loosen nuts attaching the combination meter and pull the meter top away from the dashboard to expose the instrument panel.
13. Loosen the screws attaching cover and remove the cover from the combination meter.

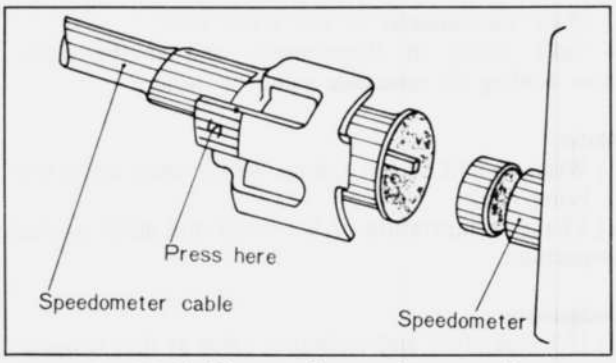

Fig. 15–20 Disconnecting speedometer cable



Fig. 15–21 Loosening nuts

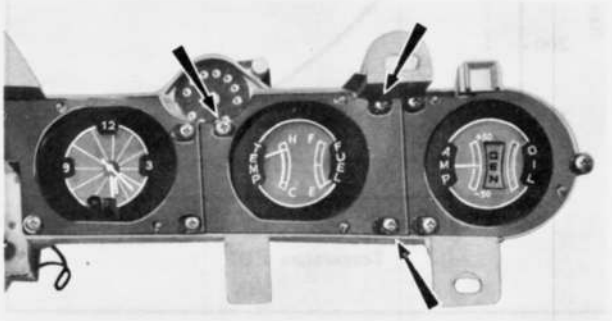

Fig. 15–22 Removing cover

14. Loosen the nuts attaching fuel and water temperature gauge assembly and remove gauge assembly from the combination meter.

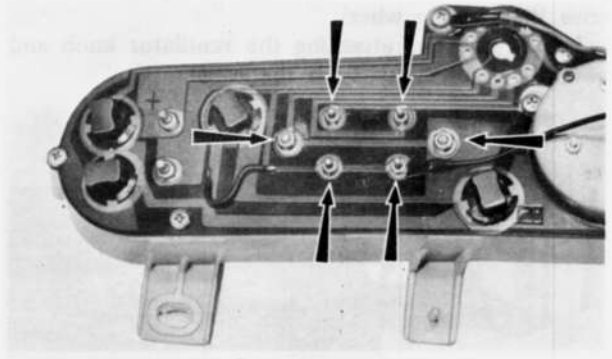

Fig. 15–23 Removing gauge assembly

15–B–3. Installing Fuel and Water Temperature Gauge

Follow the removal procedures in the reverse order.

15–C. COMBINATION SWITCH

15–C–1. Checking Combination Swtich

Check the continuity between the coupler terminals using the circuit tester according to the following switch interconnection diagram.

1. Turn Signal and Hazard Switch

Terminal / Switch Position	TIG	TFB	HBA	HFB	FU	TR	TL	
Right Turn	●	●				●		Turn Signal
Neutral	●	●						
Left Turn	●	●					●	
OFF	●	●						Hazard
ON			●	●	●	●	●	

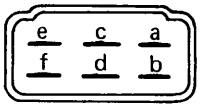

a : TIG ..... Turn signal switch power pource (GY)
b : TFB ..... Turn signal flasher power source (GL)
c : TL ..... Turn signal left (GB)
d : HFB ..... Hazard flasher power source (WG)
e : HBA ..... Hazard switch power source (WL)
f : TR ..... Turn signal right (GW)

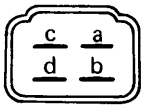

a : FU ..... Flasher unit (GR)
b : E ..... Earth (B)
c : Vacant
d : HO ..... Horn switch power source (G)

Fig. 15–24 Turn signal and hazard switch interconnection diagram

2. Light, Dimmer and Passing Switch

Terminal / Switch Position	BA	PH	TNS	HB	HU	HL	
OFF	●	●					Light
Tail, license, side	●	●	●				
Head Lamp	●	●	●	●			
High				●	●		Dimmer
Low				●	●	●	
OFF		●					passing
ON		●	●	●	●		

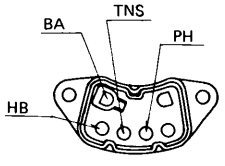

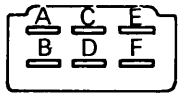

A : BA ..... Power source (R)
B : Tail, license and side light (RG)
C : Vacant
D : Vacant
E : HU ..... Head light upper (RW)
F : HL ..... Head light lower (RB)

Note:
The terminals PH and HB are connected inside the light switch and are not on the coupler. So, please refer to the following diagram.

Fig. 15–25 Light, dimmer and passing switch interconncetion diagram

3. Wiper and Washer Swtich

Switch position \ Terminal	E	SWL	SWH	INT	SW	
INTERMITTENT	●			●		Wiper
OFF	●					
LOW	●	●				
HIGH	●		●			
OFF	●					Washer
ON	●				●	

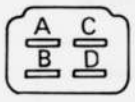

A : SW ... Washer switch (L)
B : SWL ... Wiper low (W)
C : SWH ... Wiper high (R)
D : INT ... Wiper intermit (G)

E : ... Earth (B) Refer to Fig. 15 – 24

Fig. 15–26 Wiper and washer switch interconnection diagram

15–C–2. Removing Combination Switch

1. Refer to the step **1** to **8** in **Par. 15–B–3** and remove the column cover.
2. Disconnect the wiring connectors.
3. Remove the stop ring from the column shaft.
4. Loosen the screw attaching the combination switch and remove the combination switch.

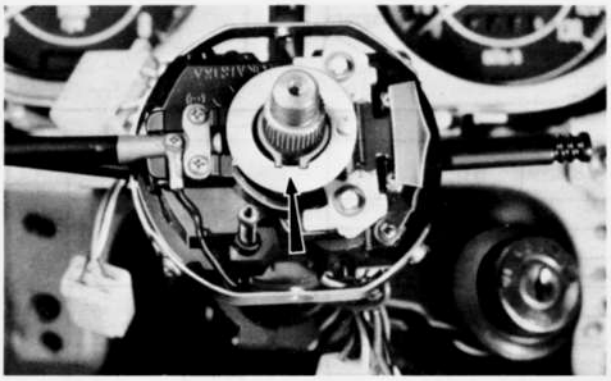

Fig. 15–27 Removing stop ring

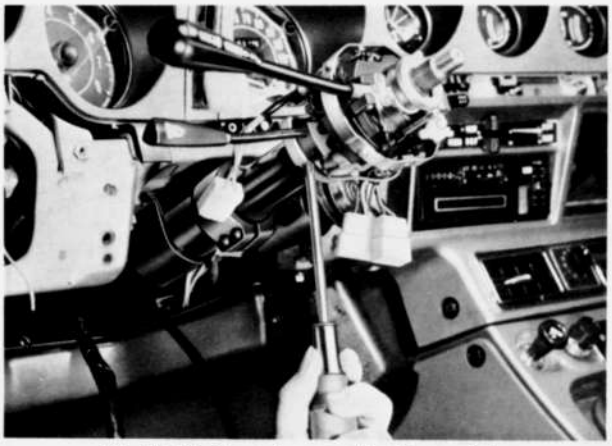

Fig. 15-28 Removing combination switch

15–C–3. Installing Combination Switch

Follow the removal procedures in the reverse order.

15–D. IGNITION SWITCH & STEERING LOCK

15–D–1. Removing Ignition Switch Contact Housing

1. Refer to the **Par. 15–B–2** and remove the lower column cover.
2. Remove the bolts attaching the instrument frame junction and remove the junction.
3. Disconnect the wiring connector.
4. Loosen the screw attaching the contact housing to the steering lock body and remove the contact housing.

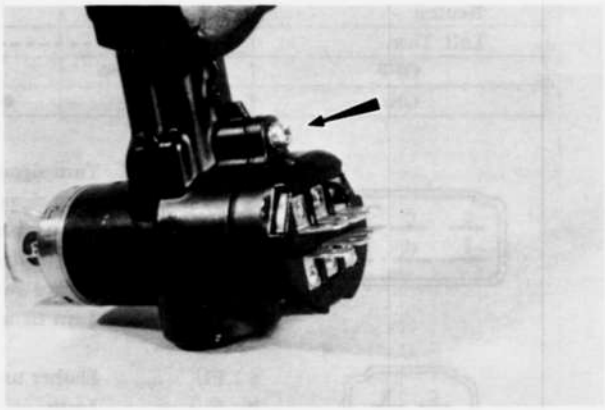

Fig. 15–29 Removing contact housing

15–D–2. Checking Ignition Switch

Check the continuity between the switch terminals using the circuit tester according to Fig. 15–30, interconnecting diagram.

Switch position \ Terminal	B	IG	ST	ACC	P	R
LOCK	●				●	
OFF						
ACC	●			●		
ON	●	●		●		
START	●	●	●			●

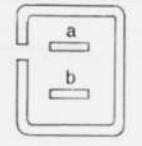

a ... Main fuse ~ Ignition switch (B)
b ... Ignition switch (IG) ~ Fuse box IG

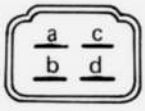

a ... Ignition switch (AC) ~ Stereo AC
b ... Long parking switch (Not used)
c ... Ignition swtich (ST) ~ Starter relay
d ... Ignition swtich (R) ~ Ignition coil

Fig. 15–30 Ignition switch interconnection diagram

15–D–3. Installing Ignition Switch Contact Housing

Follow the removal procedures in the reverse order.

15–D–4. Removing Key Cylinder

1. Refer to the **Par. 15–B–2** and remove the lower column cover.
2. Loosen the key cylinder setting screw.
3. Insert the key into the key cylinder and turn it to **"ON" position.**
4. Push in the lock button and pulling out the key

with key cylinder.

15–D–5. Installing Key Cylinder

Follow the removal procedures in the reverse order.

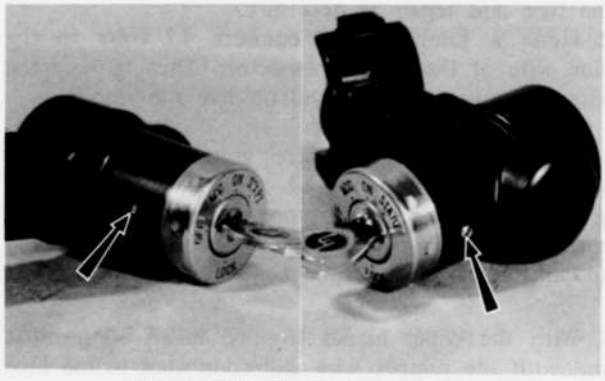

Fig. 15–31 Lock button and set screw

15–D–6. Replacing Steering Lock

1. Refer to the **Par. 15–C–2** and remove the combination switch.
2. Remove the bolts attaching the instrument frame junction and remove the junction.
3. Loosen the two nuts attaching the column shaft bracket to dash panel and remove the bracket.
4. Move the column shaft approximately 3 cm (1 in) from the dash board.
5. Make a groove on the head of the bolts attaching the steering lock body to the column shaft by using a saw so that the screw driver can be used to loosen the screws.



Fig. 15–32 Making groove

6. Loosen the steering lock attaching bolts and remove the steering lock.
7. Position a new steering lock to the column shaft and tighten the bolts until the head of bolts snaps-off.

15–E. INHIBITOR SWITCH

15–E–1. Checking Inhibitor Switch

Check the continuity between the coupler terminals using the circuit tester according to the following diagram.

Switch Position \ Terminal	B	S	IG	R	1	2	D	N	P	W
P	●	●	●						●	
R			●	●						●
N	●	●	●						●	
D			●				●			●
1			●					●		●
2			●		●					●

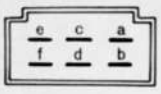

a : B ... Inhibitor switch power source(BY)
b : S ... Starter switch (BY)
c : IG ... Fuse box. IG (GY)
d : R ... Indicator light R (RY)
e : W ... for E.I.S. (LO)
f : Vacant



A : P ... Indicator light P (GL)
B : Vacant
C : D ... Indicator light D (GR)
D : N ... Indicator light N (GB)
E : 1 ... Indicator light 1 (G)
F : 2 ... Indicator light 2 (GW)

Note:
a. Solid lines show the connection for indicator light circuit.
b. Dotted lines show the connection for starting circuit.

Fig. 15–33 Inhibitor switch interconnection diagram

15–F. WIPER MOTOR

15–F–1. Removing Wiper Motor

1. Loosen the wiper arm attaching screw and remove the wiper arms.

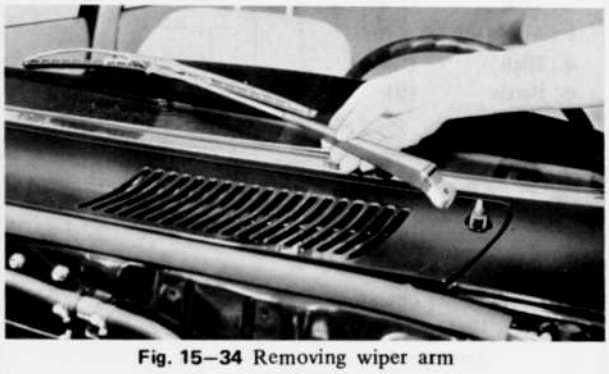

Fig. 15–34 Removing wiper arm

2. Loosen the screws attaching the cowl plate and



Fig. 15–35 Removing cowl plate

move the front side of the cowl plate up and disconnect the hose for the washer at the nozzle. Then remove the cowl plate.
3. Disconnect the wiring at the wiper motor.
4. Loosen bolts attaching the wiper motor and remove the wiper motor.



Fig. 15–36 Motor attaching bolts

15–F–2. Checking Wiper Motor

Connect the wiper motor, ammeter and battery according to the following diagram, and check the number of wiping revolutions and amperage.

	Wiping rpm	Amperage
LOW	45 – 55	Less than 2.5A
HIGH	62 – 88	Less than 2.5A

Note:
a. The difference in number of revolutions between LOW and HIGH should be more than **15 RPM**.
b. The Auto Stop does not work in the case of faulty wiper motor earth.

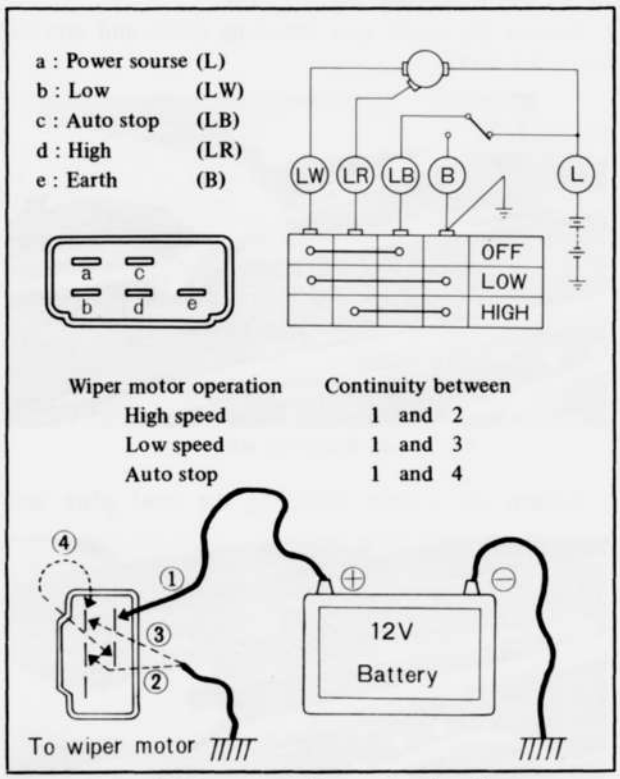

Fig. 15–37 Wiper motor interconnection diagram

1. Use a 12 volt test light and test for power at the blue wire of the main wiring harness connector with ignition switch ON.
If no power is present, trace the blue wire back to the fuse and repair as necessary.
2. Using a jumper wire, connect 12 volts to the blue wire of the motor connector. Then, ground the wires as outlined below and observe the results.

a. With the blue-white wire grounded, the wipers should operate at low speed.
b. With the blue-red wire grounded, the wipers should operate at high speed. Stop the wiper blades in an up position so that Step 3 can be performed.

3. With the wiper blades stopped in an up position and with the jumper wire still connected to the blue wire as in Step 2, connect another jumper wire between the blue-black and the blue-white wires. The wipers should move to the park position and stop.
4. If the motor does not operate, check the ground before replacing it.

15–F–3. Installing Wiper Motor

To install the wiper motor, follow the removal procedure in the reverse order.

Note:
Tighten the bolts attaching the wiper motor assembly in numerical order as shown in Fig. 15–38.

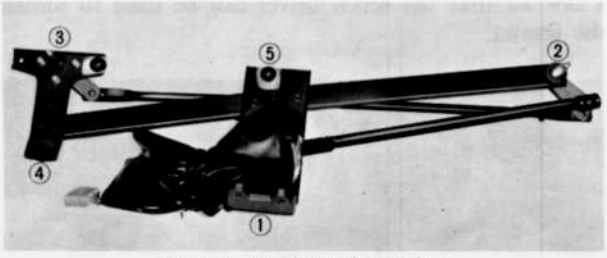

Fig. 15–38 Tightening order

15–G. HORN

15–G–1. Removing Horn

1. Loosen the screws attaching the front grille and remove the front grille.

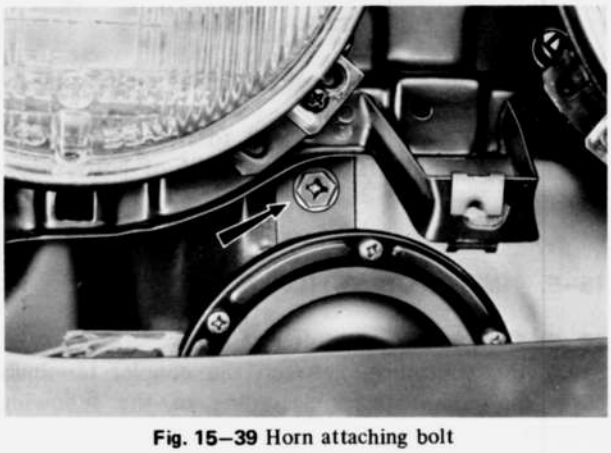

Fig. 15–39 Horn attaching bolt

2. Disconnect the wiring at the horn.
3. Loosen the bolt attaching the horn and remove the horn.

15–G–2. Adjusting Horn

1. Refer to the Par. 15–G–1 and remove the horn.
2. Connect the ammeter and volt-meter as shown in Fig. 15–40. Turn the adjusting screw until the current draw is 1.5 ~ 2.5 amperes at 12 volts.
3. Tighten the lock nut and apply locking agent on the lock nut.

Note:
Do not stuff rags or other materials in the horn protector to muffle the sound while adjusting, as this changes the vibration frequency and would give a false current setting. When adjusting a set of horns, each horn should be connected and adjusted separately, then checked for tone by operating as a pair.

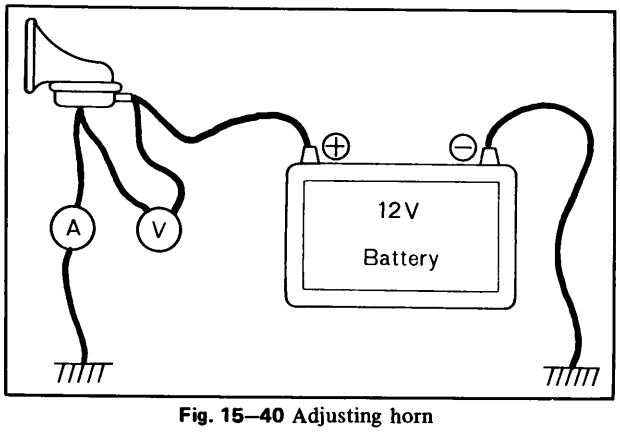

Fig. 15–40 Adjusting horn

15–G–3. Installing Horn

Follow the removal procedures in the reverse order.

15–H. METER

15–H–1. Checking Meter Set Print Panel

Check the continuity between connector pin and lamp, and that between connector pin and meter using the circuit tester according to the interconnection diagram below.

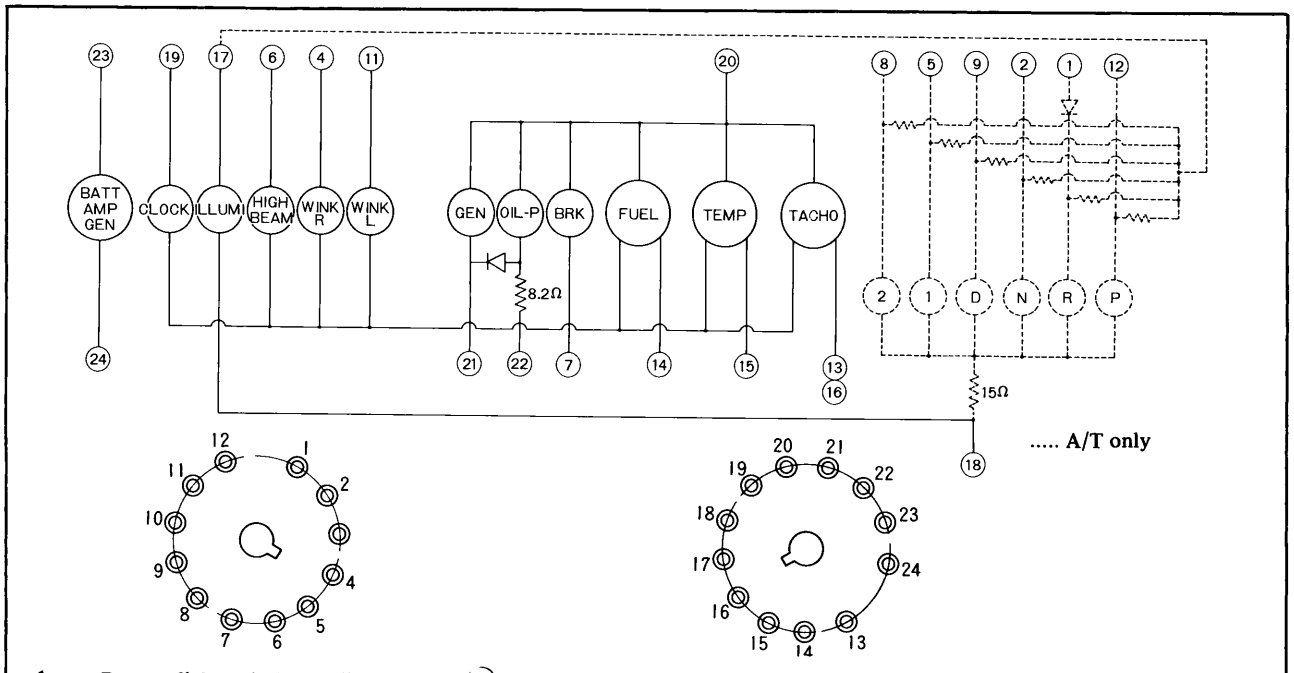

1 .... Reverse light switch ~ Indicator light (R)
2 .... Inhibitor switch ~ Indicator light (N)
3 .... Vacant
4 .... C.C unit (Turn signal relay) ~ Turn signal indicator light
5 .... Inhibitor switch (1) ~ Indicator light (1)
6 .... Fuse box ~ Meter
7 .... Parking brake switch ~ Brake warning light
8 .... Inhibitor switch (2) ~ Indicator light (2)
9 .... Inhibitor switch (D) ~ Indicator light (D)
10 .... Ignition coil ~ Tachometer
11 .... C.C unit (Turn signal relay) ~ Turn signal indicator light
12 .... Inhibitor switch (P) ~ Indicator light (P)
13 .... Meter earth
14 .... Fuel tank ~ Fuel meter
15 .... Water thermo unit ~ Water temperature
16 .... Dash panel earth ~ Meter earth
17 .... Fuse box ~ Illumination light
18 .... Panel light resister ~ Illumination light
19 .... Fuse box B ~ Clock
20 .... Fuse box ~ Meter IG
21 .... Regulator B ~ Generator warning light
22 .... Coolant lever warning light (COOLANT) ~ Coolant lever senser
23 .... Main fuse ~ Ammeter (+)
24 .... Ammeter ~ Main fuse (–)

Fig. 15–41 Print panel interconnection diagram

15–I. CENTRAL CONTROL UNIT

The central control unit is composed of wiper relay (R1 and R2), flasher relay (R3), horn relay (R4) and flasher unit (U1), each of which is a plug-socket connection type. Each relay and unit are easy to repalce. In repalcing the flasher unit, care should be taken that its capacity differs depending upon area. Also, the "multi-grade relay" has been prepared which is applicable as repalcement of any of the relays.

15–I–1. Checking Central Control Unit

Check the central control unit using the battery and circuit tester as follows:

1. Wiper Relay (R1)

When the battery ⊕ is connected to the WIG termianl and the battery ⊖ to the S2 terminal, LOW terminal and unit body should be in continuity with each other.

2. Wiper Relay (R2)

(a) When the battery ⊕ is connected to the WIG terminal and the battery ⊖ to the S2 and S3 terminals, H1 terminal and unit body should be in continuity with each other.

(b) AS terminal and LOW terminal should be in continuity with each other without connecting the battery to them.

3. Horn Relay (R4)

When the battery⊕ is connected to the HZB terminal and the battery ⊖ to the HNS terminal, HZB terminal and HON terminal should be in continuity with each other.

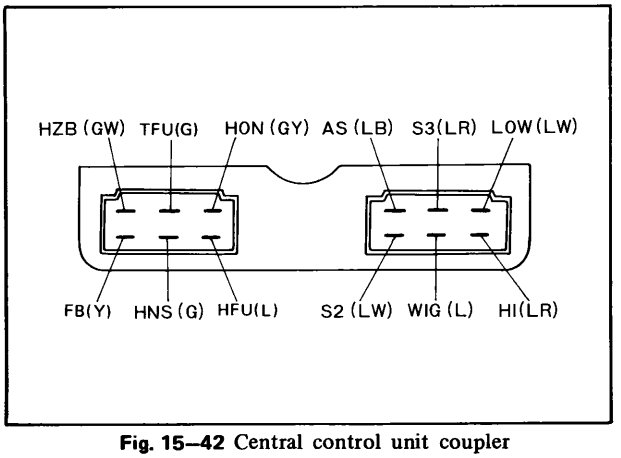

Fig. 15–42 Central control unit coupler

4. Flasher Unit (U1)

In checking the flasher unit, connect a prescribed lamp as indicated on the central control unit cover between the unit (with the flasher relay R3) and battery as shown in Fig. 15–43.

(a) Turn signal

When the battery ⊕ is connected to the FB terminal and a prescribed lamp between the battery ⊖ and TFU terminal, the lamp must turn on and off **90 ± 10** times per minute with interval between flasher under **1.5** second.

(b) Hazard

When the battery ⊕ is connected to the HFU terminal and a prescribed lamp between the battery – and TFU terminal, the lamp must turn on and off **90 ± 10** times per minute with the interval between flasehr under **1.5** second.

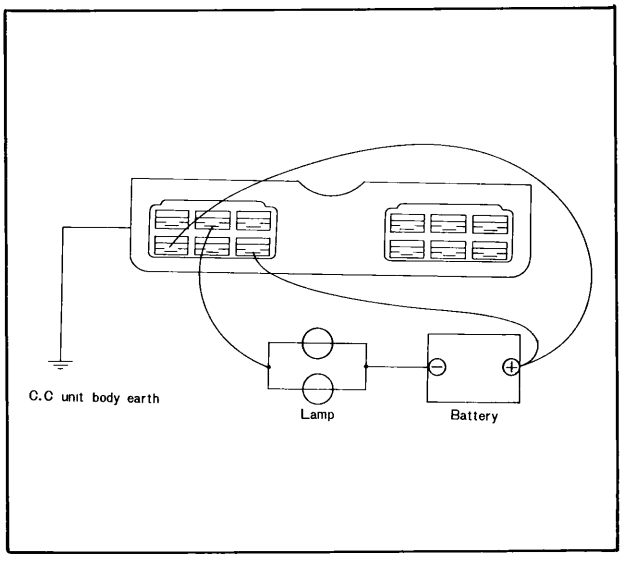

Fig. 15–43 Hazard and flasher unit interconnection diagram

Note:

The flashing on and off of the lamp varies depending upon the lamp capacity and the central control unit earth condition as follows:

Flasher

Faulty unit earth	Lamp remains lighted
Lamp capacity decreased	Flash becomes slower or lamp remains lighted
Lamp capacity increased	Number of flashes remains unchanged

Hazard

Faulty unit earth	Lamp remains lighted
Lamp capacity decreased	Number of flashes remains unchanged
Lamp capacity increased	Number of flashes remains unchanged

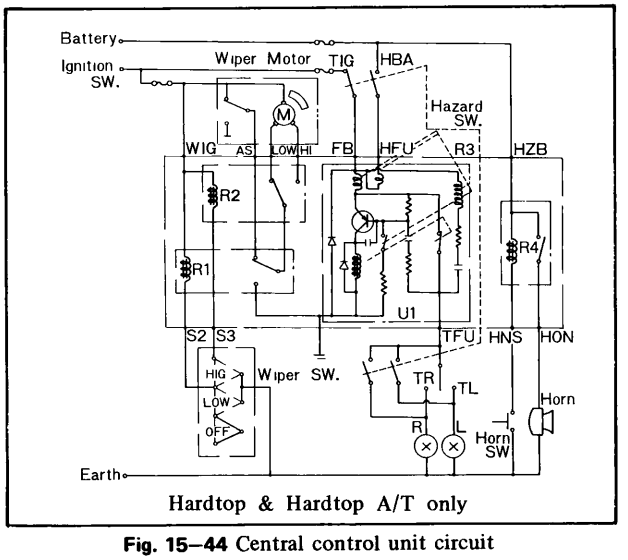

Fig. 15–44 Central control unit circuit

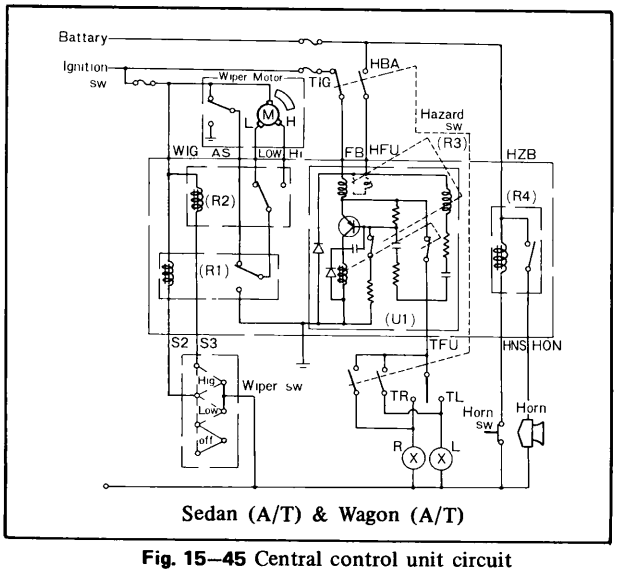

Sedan (A/T) & Wagon (A/T)

Fig. 15–45 Central control unit circuit

15–I–2. Removing Central Control Unit

1. Reach under the instrument panel and disconnect the wiring connectors.
2. Loosen the nuts attaching the central control unit and remove the unit

15–I–3. Installing Central Control Unit

Follow the removal procedures in the reverse order.

15–J. STOP LIGHT CHECKER RELAY

15–J–1. Checking Stop Light Checker Relay

1. Disconnect the stop light connector in the trunk compartment.
2. Check to see whether buzzer actuates when brake pedal is depressed. If the buzzer actuates, the relay is satisfactory.

If the buzzer does not actuate, disconnect the wiring connector from the realy prongs.

3. Connect the B terminal of relay to power source (from fuse box) with lead line, and check whether buzzer will actuate. If the buzzer actuates, the stop switch is defective or wirirng of stop switch is faulty. If buzzer does not actuate, remove and replace checker relay.

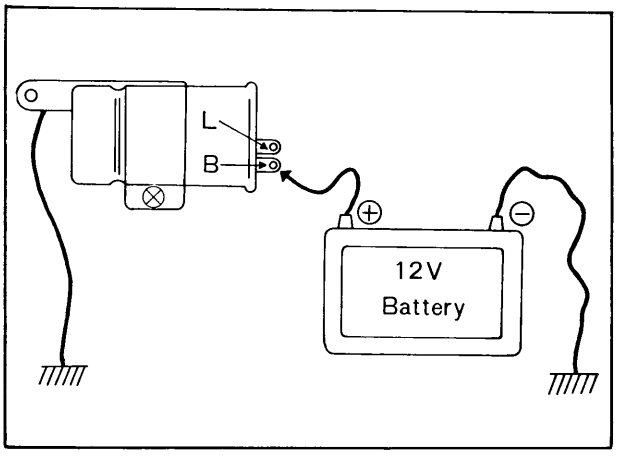

Fig. 15–46 Checking checker relay

15–J–2. Removing Stop Light Checker Relay

1. Reach under the instrument panel and disconnect the wiring connector.
2. Loosen the checker attaching nut and remove the chekcer relay.

12–J–3. Installing Stop Light Checker Relay

Follow the removal procedures in the reverse order.

15–K. HEATABLE WINDOW

15–K–1. Checking Heatable Window

1. Turned on the heater switch.
2. Ground the negative terminal of the voltmeter on the body and touch the positive terminal on the center of each filament to measure the voltage. Normal filament registers approximately 6 volts at the center. A high voltage on the order of 12 volts shows that breakage is on the negative side from the center (grounded side) and a voltage close to zero volt shown that breakage is on the positive side.
3. Move the positive terminal to the side where breakage is known to exist, and you will note sudden change in voltage at a portion. That portion is where the filament is broken.

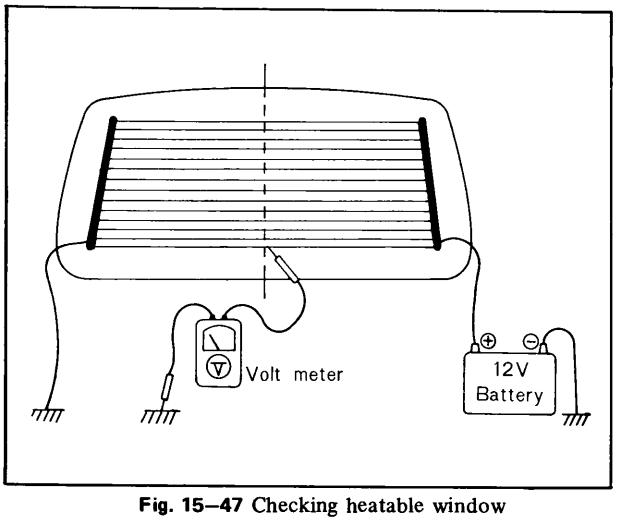

Fig. 15–47 Checking heatable window

15–K–2. Repairing Printed Filament

1. Clean the broken portion with solvent.
2. By using a small brush or a drawing pen, apply conductive silver paint (Parts No. 2835 77 6000), i.e., Dupont No. 4817 to the broken section.
3. Completely dry the painted section by leaving it intact for 24 hours in the case of 20°C (68°F) (for 30 minutes when the painted section is heated up to 60°C (140°F) with a dryer).

Note:

a) Never turn on the heater before the paint has completely dried.

b) Do not use any alkaline chemical cleanser to clean the section thus repaired.

c) The life of Dupont No. 4817. conductive silver paint, is one year and must be kept at a dry place having a temperature of less than 20°C (68°F).

15–L. HEATER FAN SWITCH

15–L–1. Checking Heater Fan Switch

Check the continuity between the coupler terminals using the circuit tester according to Fig. 15–48.

Switch position \ Terminal	BA	L	M	H
OFF	●			
HIGH	●			●
MED	●		●	
LOW	●	●		

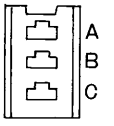

A : H ... Heater high (LR)
B : M ... Heater medium (LY)
C : L ... Heater low (LW)



a : BA ... Power source (LG)

Fig. 15–48 Heater fan switch interconnection diagram

SPECIAL TOOL

49 0839 285	Checker

TECHNICAL DATA

T

ENGINE

Type	Rotary piston engine, 2 rotors in line, water cooled
Displacement	654 cc (40.0 cu-in) x 2 rotors
Compression ratio	9.2 : 1
Compression pressure	
Limit	6 kg/cm² (85 lb/in²) at 250 rpm
Max. permissible difference between chambers	0.5 kg/cm² (7 lb/in²)
Port timing	
Intake opens	32° ATDC
Intake closes	50° ABDC
Exhaust opens	75° BBDC
Exhaust closes	38° ATDC
Side housing (Front, intermediate and rear housing)	
Limit of distortion	0.04 mm (0.0016 in)
Limit of wear (sliding surface)	0.10 mm (0.0039 in)
Rotor housing	
Width	80 mm (3.150 in)
Max. permissible difference in width	0.06 mm (0.0024 in)
Rotor	
Width	79.85 mm (3.144 in)
Clearance of side housing and rotor (ΔR)	0.10 ~ 0.21 mm (0.0039 ~ 0.0083 in)
Apex seal	
Length	79.85 mm (3.144 in)
Width	3.0 mm (0.118 in)
Height	over 7.0 mm (0.276 in)
Clearance of apex seal and side housing (ΔS)	0.13 ~ 0.30 mm (0.0051 ~ 0.0118 in)
Clearance of apex seal and rotor groove (ΔG)	0.05 ~ 0.15 mm (0.0020 ~ 0.0059 in)
Apex seal spring	more than 3.8 mm
Free height	(0.150 in)
Side seal	
Thickness	1.0 mm (0.039 in)
Height	3.5 mm (0.138 in)
Clearance of side seal and rotor groove (ΔW)	0.04 ~ 0.10 mm (0.0016 ~ 0.0040 in)
Clearance of side seal and corner seal (ΔE)	
Standard	0.05 ~ 0.15 mm (0.0020 ~ 0.0059 in)
Limit	0.40 mm (0.0157 in)
Side seal protrusion	more than 0.5 mm (0.020 in)
Oil seal	
Height	5.6 mm (0.220 in)
Contact width of oil seal lip	less than 0.8 mm (0.031 in)
Oil seal protrusion	more than 0.5 mm (0.020 in)
Corner seal	
Outer diameter (standard)	11.0 mm (0.433 in)
Height (standard)	7.0 mm (0.276 in)
Corner seal protrusion	more than 0.5 mm (0.020 in)
Eccentric shaft	
Eccentricity of rotor journal	15.0 mm (0.591 in)
Main journal diameter	43 mm (1.692 in)
Rotor journal diameter	74 mm (2.913 in)
Max. permissible run-out	0.06 mm (0.0024 in)
End play	0.04 ~ 0.09 mm (0.0016 ~ 0.0035 in)
Bearing clearance	
Clearance of main journal and main bearing	0.04 ~ 0.10 mm (0.0016 ~ 0.0039 in)
Clearance of rotor journal and rotor bearing	0.04 ~ 0.10 mm (0.0016 ~ 0.0039 in)
Alternator belt tension (Slack)	
Without cooler	
(Between alternator and eccentric shaft)	
New belt	12 ~15 mm (0.47~ 0.59 in)
Used belt	14 ~17 mm (0.55~ 0.67 in)
With cooler	
(Between alternator and water pump)	
New belt	7 ~ 9 mm (0.28 ~ 0.35 in)
Used belt	8 ~ 10 mm (0.32 ~ 0.39 in)
Air pump belt tension (Slack)	
(Between air pump and water pump)	
New belt	8 ~ 10 mm (0.32 ~ 0.39 in)
Used belt	9 ~ 11 mm (0.35 ~ 0.43 in)

LUBRICATING SYSTEM

Oil pump	
Type	Rotor
Feeding capacity at 1,000 rpm of engine	6 liter/min (1.59 U.S. gal/min)
Oil pump driven by	Chain and sprockets
Limit of chain adjuster protrusion	12 mm (0.47 in)
Outer rotor and body clearance	0.20 ~ 0.30 mm (0.008 ~ 0.012 in)
Clearance between rotor lobes	0.01 ~ 0.15 mm (0.0004 ~ 0.006 in)
Rotor end float	0.03 ~ 0.15 mm (0.001 ~ 0.006 in)
Oil pressure at 3,000 rpm of engine	5.0 kg/cm² (71.1 lb/in²)
Oil pressure at idling	2.5 kg/cm² (35.6 lb/in²)
Pressure regulator valve	
(Rear housing)	
Operating pressure	5.0 kg/cm² (71.1 lb/in²)
Free length of spring	46.4 mm (1.83 in)
Pressure control valve	
(Front cover)	
Operating pressure	11.0 kg/cm² (156 lb/in²)
Free length of spring	73.0 mm (2.874 in)
By-pass valve	
(Oil cooler)	
Starts to close	60 ~ 65°C (140 ~ 149°F)
Fully closes	70 ~ 75°C (158 ~ 167°F)
Opening pressure	3.56 kg/cm² at 70°C (50.7 lb/in² at 158°F)
Oil filter	
Type	Full flow, cartridge
Relief valve opens at	0.8 ~ 1.2 kg/cm² (11 ~ 17 lb/in²)
Oil metering pump	
Feeding capacity at 2,000 rpm of engine	2.0 ~2.5 cc/6 min (0.068 ~ 0.085 U.S. oz/6 min)

Lubricant	
−10°C ~ 50°C (15°F ~ 120°F)	MS, SAE 20W-50
−10°C ~ 40°C (15°F ~ 100°F)	MS, SAE 20W-40
−18°C ~ 50°C (0°F ~ 120°F)	MS, SAE 10W-50
−18°C ~ 40°C (0°F ~ 100°F)	MS, SAE 10W-40
−18°C ~ 30°C (0°F ~ 85°F)	MS, SAE 10W-30
Below −18°C (0°F)	MS, SAE 5W-30
Below −18°C (0°F)	MS, SAE 5W-20
Oil capacity	
Oil pan	5.0 liters (5.3 U.S. quarts)
Full capacity	6.4 liters (6.8 U.S. quarts)

COOLING SYSTEM

Water pump	
Type	Centrifugal impeller
Feeding capacity at 6,500 rpm of engine	160 ~ 170 liters/min (42 ~ 45 U.S. gal/min)
Pump driven by	"V" belt
Pulley ratio of eccentric shaft and pump	1 : 1.18
Fan	
Fan diameter	410 mm (16.1 in)
Number of fan blades	7
Fan drive	
Standard revolution of fan	1,500 ± 200 rpm at 4,200 rpm of engine
Thermostat	
Type	Wax pellet
Starts to open	82 ± 1.5°C (180 ± 2.7°F)
Fully opens at	95°C (203°F)
Lift	More than 8 mm (0.315 in)
Radiator	
Type	Corrugated fin, with expansion tank
Pressure cap opens at	0.9 kg/cm² (13 lb/in²)
Vacuum release valve opens at	−0.1 kg/cm² (−1.4 lb/in²)
Cooling capacity	
With heater	9.5 liters (10.0 U.S. quarts)

FUEL SYSTEM

Fuel tank capacity	Sedan & Coupe 65 liters (17.2 U.S. gal)
	Wagon 67 liters (17.7 U.S. gal)
Fuel pump	
Type	Electrical, plunger
Fuel pressure	0.3 ~ 0.38 kg/cm² (4.26 ~ 5.41 lb/in²)
Feeding capacity	more than 1,150 cc/min (1.2 U.S. quart/min)
Fuel filter	Cartridge, paper element
Carburetor	
Type	Down draft, 2 stage 4 barrel
Throat diameter	
Primary	28 mm (1.10 in)
Secondary	34 mm (1.34 in)
Venturi diameter	
Primary	22 x 13 x 6.5 mm (0.87 x 0.51 x 0.26 in)
Secondary	28 x 10 mm (1.10 x 0.39 in)

	Manual transmission	Automatic transmission
Main jet		
Primary	# 106	# 106
Secondary	# 130	# 125
Main air bleed		
Primary	# 70	# 70
Secondary	# 90	# 90
Slow jet		
Primary	# 45	# 45
Secondary	# 80	# 80
Slow air bleed		
Primary	# 200	# 200
Secondary	# 100	# 100
Richer jet	# 80	—
Richer air bleed (No. 1)	# 190	—
(No. 2)	# 140	—
Power jet		# 40
Vacuum jet	# 80	# 80
Vacuum diaphragm stroke	3.3 ± 0.1 mm (0.130 ± 0.004 in)	3.9 ± 0.1 mm (0.154 ± 0.004 in)

Fast idle adjustment (Clearance between primary throttle valve and bore when choke lever is fully pulled)	1.75 ~ 2.15 mm (0.069 ~ 0.085 in)
Float level (from surface of gasket)	10 mm (0.39 in)
Float drop (from surface of gasket)	52 ± 0.5 mm (2.05 ± 0.02 in)
Idle speed	
Manual transmission	800^{+50}_{-0} rpm
Automatic transmission ("D" range)	750^{+50}_{-0} rpm
Fast idle speed	3,000 ~ 3,500 rpm
Sub-zero starting assist fluid	Anti-freeze 90% Water 10%

ELECTRICAL SYSTEM

Battery	
Type	N70Z
Voltage	12 Volt
Capacity (20 hour rate)	70 amp-hr
Terminal ground	Negative
Specific gravity at 20°C (68°F)	
Fully charged	1.28
Recharge at	1.22
Distributor	
Breaker point	
Number	3
Dwell angle	58 ± 3°
Point gap	0.45 ± 0.05 mm (0.018 ± 0.002 in)
Arm spring tension	0.5 ~ 0.65 kg (1.1 ~ 1.4 lb)

Centrifugal advance	
Leading	Starts: 0 ± 1° at 500 rpm Maximum: 10 ± 1° at 1,750 rpm
Trailing	Starts: 0 ± 1.5° at 500 rpm Maximum: 10 ± 1.5° at 1,750 rpm
Condenser capacity	0.24 ~ 0.30 μF
Firing order	1–2
ignition timing	
Leading	Normal 0 ± 1° TDC Retarded 20 ± 2° ATDC
Trailing	15 ± 2° ATDC
Timing mark location	Eccentric shaft pulley
Spark plug initial gap	0.65 ± 0.05 mm (0.026 ± 0.002 in)
Alternator	
Ground	Negative
Rated output	12V 63A
Number of poles	12
No load test	
Voltage	14V
Current	0 amp
Revolution	less than 950 rpm
Load test	
Voltage	14V
Current	56 amp
Revolution	less than 2,500 rpm
Number of brushes	2
Brush length	16 mm (0.63 in)
Wear limit	10 mm (0.39 in)
Brush spring pressure	330 ~ 450 gr (12 ~ 16 oz)
Pulley ratio of eccentric shaft and alternator	1 : 2.08
Regulator	
Constant voltage relay	
Air gap	0.7 ~ 1.3 mm (0.028 ~ 0.051 in)
Point gap	0.3 ~ 0.45 mm (0.012 ~ 0.018 in)
Back gap	0.7 ~ 1.5 mm (0.028 ~ 0.059 in)
Regulated voltage without load at 4,000 rpm of alternator	14.5 ± 0.5V
Pilot lamp relay	
Air gap	0.9 ~ 1.4 mm (0.035 ~ 0.055 in)
Point gap	0.7 ~ 1.1 mm (0.028 ~ 0.043 in)
Back gap	0.7 ~ 1.5 mm (0.028 ~ 0.059 in)
Pilot lamp lights on	0.5 ~ 3.0 V
Pilot lamp lights out	4.2 ~ 5.2 V
Ignition coil (Leading)	
Type	HP5-13J
Primary resistance	1.35Ω at 20°C (68°F)
External resistance	1.4Ω at 20°C (68°F)
Ignition coil (Trailing)	
Type	HP5-13E
Primary resistance	1.5Ω at 20°C (68°F)
External resistance	1.6Ω at 20°C (68°F)

	1.2KW	2.0KW
Starting motor		
Capacity		
Lock test		
Voltage	5.0 volt	5.0 volt
Current	less than 780 amp	less than 1,100 amp
Torque	1.1 m-kg (8.0 ft-lb)	2.4 m-kg (17.4 ft-lb)
Free running test		
Voltage	11.5 volt	11.5 volt
Current	less than 75 amp	less than 100 amp
Speed	more than 4,900 rpm	more than 7,800 rpm
Number of brushes	4	4
Brush length	18.5 mm (0.73 in)	18.5 mm (0.73 in)
Wear limit	11.5 mm (0.45 in)	11.5 mm (0.45 in)
Brush spring pressure	1.4 ~ 1.8 kg (49 ~ 63 oz)	1.4 ~ 1.8 kg (49 ~ 63 oz)
Control switch	Solenoid	Solenoid
Voltage required to close solenoid contacts	less than 8 volt	less than 8 volt
Undercutting mica	0.5 ~ 0.8 mm (0.020 ~ 0.032 in)	0.5 ~ 0.8 mm (0.020 ~ 0.032 in)
Clearance between armature shaft and brush	less than 0.2 mm (0.008 in)	less than 0.2 mm (0.008 in)
Armature shaft end play	0.1 ~ 0.4 mm (0.004 ~ 0.016 in)	0.1 ~ 0.4 mm (0.004 ~ 0.016 in)
Clearance between pinion and stop collar	0.5 ~ 2.0 mm (0.020 ~ 0.079 in)	0.5 ~ 2.0 mm (0.020 ~ 0.079 in)

CLUTCH

Type	Single dry plate, diaphragm spring
Pressure plate	
Permissible lateral run-out	0.05 mm (0.0020 in)
Clutch disc	
Lateral run-out of clutch disc	
Limit	1.0 mm (0.039 in)
Clutch release mechanism	Hydraulic
Clutch pedal free play	0.5 ~ 3.0 mm (0.02 ~ 0.12 in)
(Before push rod contacts with piston)	
Master cylinder bore	15.87 mm (5/8 in)
Clearance between piston and master cylinder bore	
New	0.032 ~ 0.102 mm (0.0013 ~ 0.0040 in)
Wear limit	0.15 mm (0.006 in)
Release cylinder bore	19.05 mm (3/4 in)
Clearance between piston and release cylinder bore	
New	0.040 ~ 0.125 mm (0.0016 ~ 0.0049 in)
Wear limit	0.15 mm (0.006 in)

MANUAL TRANSMISSION

Type	4-Speed manual transmission
Gear ratio	
First	3.683
Second	2.263
Third	1.397
Top	1.000
Reverse	3.692
Oil capacity	1.7 liters (1.8 U.S. quarts)
Main shaft	
Max. permissible run-out	0.03 mm (0.0012 in)
Clearance between main shaft and gear (or bush)	
Wear limit	0.15 mm (0.006 in)
Reverse idle gear	
Clearance between reverse idle gear bush and shaft	
Wear limit	0.15 mm (0.006 in)
Shift fork and rod	
Clearance between shift fork and clutch sleeve	
Wear limit	0.5 mm (0.020 in)
Clearance between shift fork and reverse idle gear	
Wear limit	0.5 mm (0.020 in)
Clearance between shift rod gate and control lever	
Wear limit	0.8 mm (0.031 in)
Synchronizer ring	
Clearance between synchronizer ring and side of gear when fitted	
New	1.5 mm (0.059 in)
Wear limit	0.8 mm (0.031 in)
Lubricant	
Above −18°C (0°F)	EP. SAE 90
Below − 18°C (0°F)	EP. SAE 80

AUTOMATIC TRANSMISSION

Model	JATCO R3A
Gear ratio	
Low	2.458
Second	1.458
Top	1.000
Reverse	2.181
Torque converter	
Type	Symmetrical 3-element 1-stage 2-phase torque converter coupling
Stall torque ratio	2.0 : 1
Fluid type	M2C33F (Type F)
Fluid capacity	6.2 liters (6.6 U.S. quarts / 5.5 Imp. quarts)
Drive plate run-out	
New	Less than 0.3 mm (0.012 in)
Limit	0.5 mm (0.020 in)
Oil pump	
Side play of inner gear and outer gear	
New	0.02 ~ 0.04 mm (0.001 ~ 0.002 in)
Limit	0.08 mm (0.003 in)
Clearance between outer gear and crest	
New	0.14 ~ 0.21 mm (0.006 ~ 0.008 in)
Limit	0.25 mm (0.010 in)
Clearance between outer gear and housing	
New	0.05 ~ 0.20 mm (0.002 ~ 0.008 in)
Limit	0.25 mm (0.010 in)
Side clearance between oil seal ring and groove on oil pump cover	0.04 ~ 0.16 mm (0.002 ~ 0.006 in)
Front clutch	
Number of drive plates or driven plates	4
Thickness of drive plate	1.60 mm (0.063 in)
Total clearance measured between retaining plate and stopper	1.6 ~ 1.8 mm (0.063 ~ 0.071 in)
End play of front clutch drum	0.5 ~ 0.8 mm (0.020 ~ 0.031 in)
Governor	
Type	38 type
Rear clutch	
Number of drive plates or driven plates	5
Thickness of drive plate	1.6 mm (0.063 in)
Total clearance measured between retaining plate and stopper	0.8 ~ 1.5 mm (0.031 ~ 0.059 in)

Low and reverse brake	
Number of friction paltes or steel plates	4
Thickness of friction plate	2.0 mm (0.079 in)
Total clearance measured between retaining plate and stopper	0.8 ~ 1.05 mm (0.031 ~ 0.041 in)
Gear assembly	
Total end play	0.25 ~ 0.50 mm (0.010 ~ 0.020 in)
Planetary gear side play	
New	0.2 ~ 0.7 mm (0.008 ~ 0.028 in)
Limit	0.8 mm (0.031 in)
Engine stall speed	
In break-in period	2,400 ~ 2,650 rpm
After break-in period	2,450 ~ 2,700 rpm

Shift speed

Throttle condition (Manifold vacuum)		mph
Kickdown (0 ~ 100 mm-Hg / 0 ~ 3.94 in-Hg)	$D_1 \rightarrow D_2$	33 ~ 46
	$D_2 \rightarrow D_3$	62 ~ 80
	$D_3 \rightarrow D_2$	53 ~ 68
	$D_2 \rightarrow D_1$	25 ~ 33
Half throttle (200 ± 10 mm-Hg / 7.87 ± 0.39 in-Hg)	$D_1 \rightarrow D_2$	8 ~ 19
	$D_2 \rightarrow D_3$	19 ~ 41
Fully closed throttle	$D_3 \rightarrow D_1$	7 ~ 12
Manual 1	$1_1 \rightarrow 1_1$	25 ~ 33

Governor pressure

Driving speed	Output shaft speed	Governor pressure	
mph	rpm	kg/cm²	lb/in²
20	1,030 ~ 1,130	0.8 ~ 1.3	11 ~ 18
35	1,830 ~ 1,960	1.5 ~ 2.2	21 ~ 31
55	2,900 ~ 3,050	3.0 ~ 3.9	43 ~ 55

Line pressure

Manual range	Engine idling condition		Engine stall condition	
	kg/cm²	lb/in²	kg/cm²	lb/in²
R	4.0 ~ 7.0	57 ~ 100	15.5 ~ 19.0	220 ~ 270
D	3.0 ~ 4.0	43 ~ 57	9.5 ~ 11.0	135 ~ 156
2	10.0 ~ 12.0	142 ~ 171	10.0 ~ 12.0	142 ~ 171
1	3.0 ~ 4.0	43 ~ 57	9.5 ~ 11.0	135 ~ 156

PROPELLER SHAFT

Max. permissible run-out	0.4 mm (0.016 in)
Max. permissible unbalance at 4,000 rpm	
At front	20 cm-gr (0.28 in-oz)
At center	12.5 cm-gr (0.17 in-oz)
At rear	20 cm-gr (0.28 in-oz)
Universal joint	
Spider diameter	
Wear limit	16.439 mm (0.6472 in)

REAR AXLE

Type	Semi-floating hypoid gears
Reduction ratio	3.900
Number of gear teeth	39 : 10
Backlash of ring gear and pinion	0.17 ~ 0.19 mm (0.0067 ~ 0.0075 in)
Max. allowable variation of backlash	0.07 mm (0.0028 in)
Pinion bearing preload (Without pinion oil seal)	9 ~ 14 cm-kg (7.8 ~ 12.2 in-lb)
Differential side bearing preload (Without pinion)	6 ~ 16 cm-kg (5.2 ~ 13.9 in-lb)
Backlash of side gear and pinion gear	0 ~ 0.1 mm (0 ~ 0.004 in)
Rear wheel bearing end play	0 ~ 0.1 mm (0 ~ 0.004 in)
Lubricant	
Above −18°C (0°F)	HP. SAE 90
Below −18°C (0°F)	HP. SAE 80
Oil capacity	1.3 liters (1.4 U.S. quarts)

STEERING

Type	Recirculating ball nut
Reduction ratio	18 ~ 20 : 1
(Power steering)	(17.8 : 1)
Free play of steering wheel (Turning direction)	
New	5 ~ 20 mm (0.2 ~ 0.8 in)
Limit	30 mm (1.2 in)
Backlash between rack and sector gear	0 ~ 0.1 mm (0 ~ 0.004 in)
Worm bearing preload	
Without sector shaft and column bush	1 ~ 4 cm-kg (0.9 ~ 3.5 in-lb)
With sector shaft and column bush	9 ~ 12 cm-kg (5.2 ~ 6.9 in-lb)
(Power steering)	12.5 ~ 22.5 cm-kg (10.8 ~ 19.5 in-lb)
Clearance between sector shaft and housing (or bush)	
New	0.028 ~ 0.049 mm (0.0011 ~ 0.0019 in)
(Power steering)	0.007 ~ 0.049 mm (0.0003 ~ 0.0019 in)
Wear limit	0.20 mm (0.008 in)
End clearance of adjusting screw and sector shaft	0 ~ 0.1 mm (0 ~ 0.004 in)
Lubricant	EP. SAE 90

End play of ball stud of center link and tie rods	
New	0 ~ 0.25 mm (0 ~ 0.010 in)
Limit	1.0 mm (0.039 in)
Max. wheel angle on full lock	
Wheel on inside of curve	37°10′
Wheel on outside of curve	29°11′
Minimum turning radius	5 0 m (16 ft 5 in)
Steering geometry	
King pin inclination	9°45′
Camber	1°00′ ± 1°
Max. permissible difference in camber between sides	30′
Camber offset	45 mm (1 77 in)
Caster	2°00′ ± 45′
Max. permissible difference in caster between sides	40′
Caster trail	10 mm (0.39 in)
Toe-in	0 ~ 6 mm (0 ~ 0.24 in)

BRAKES

Brake pedal free travel	
Before push rod contacts with piston	7 ~ 9 mm (0.28 ~ 0.35 in)
Master cylinder	
Type	Tandem
Bore	22.22 mm (7/8 in)
Clearance between piston and bore	
New	0.040 ~ 0.125 mm (0.0016 ~ 0.0049 in)
Wear limit	0.15 mm (0.006 in)
Front disc brake	
Brake disc outer diameter	230 mm (9.055 in)
Thickness of brake disc	
New	12 mm (0.4724 in)
Limit	11 mm (0.4331 in)
Max. allowable lateral run-out of brake disc	0.10 mm (0.0039 in)
Thickness of lining and shoe	
New	14 mm (0.551 in)
Wear limit	7 mm (0.276 in)
Wheel cylinder bore	53.97 mm (2.1248 in)
Rear drum brake	
Type	Leading-and-trailing shoes
Drum diameter	
New	228.6 mm (9.000 in)
Max. permissible diameter	229.6 mm (9.0395 in)
Thickness of lining	
New	5.5 mm (0.217 in)
Limit	1.0 mm (0.039 in)
Rear wheel cylinder	
Bore	17.46 mm (11/16 in)
Clearance between piston and bore	
New	0.032 ~ 0.102 mm (0.0013 ~ 0.0040 in)
Wear limit	0.15 mm (0.006 in)

Parking brake	
Type	Mechanical
Operate at	Rear wheels

WHEELS AND TIRES

Wheel disc	
Front	5 1/2J x 13 WDC
Rear	5 1/2J x 13 WDC
Tire	
Front	BR70-13 175SR13, 195SR13
Rear	BR70-13 175SR13, 195SR13

Inflation pressure	Sedan & Hard top	Wagon
Front	26 psi	24 psi
Rear	26 psi	30 psi

FRONT SUSPENSION

Type	Strut, coil spring
Coil spring	
Spring constant	2.05 kg/mm (115 lb/in)
Wire diameter	12.5 mm (0.49 in)
Coil diameter	124 mm (4.88 in)
Free length	375 mm (14.76 in)
Fitting length	203 mm (7.99 in)
Fitting load	340.5 ~ 367.5 kg (751 ~ 810 lb)

REAR SUSPENSION (Sedan & Hard top)

Type	Leaf spring
Leaf spring	
Spring constant	2.3 kg/mm (129 lb/in)
Number of leaves	5
Length	1,150 mm (45.28 in)
Width	50 mm (1.97 in)
Thickness	6 mm (0.24 in)

REAR SUSPENSION (Rotary Wagon)

Type	Leaf spring
Leaf spring	
Spring constant	2.4 ~ 4.5 kg/mm (134 ~ 252 lb/in)
Number of leaves	6
Length	1,150 mm (45.28 in)
Width	60 mm (2.36 in)
Thickness	
No.1	6 mm (0.24 in)
No.2, 3, 4 & 5	5 mm (0.20 in)
No.6	12 mm (0.47 in)

DIMENSIONS

Sedan

Overall length	4,553 mm (180 in)
Overall width	1,660 mm (65 in)
Overall height	1,410 mm (56 in)
Wheel base	2,510 mm (99 in)
Tread	
Front	1,380 mm (54 in)
Rear	1,370 mm (54 in)
Min. road clearance	150 mm (6 in)
Min. turning radius	5.0 m (16 ft 5 in)
Seating capacity	4

Hard top

Overall length	4,490 mm (179 in)
Overall width	1,665 mm (66 in)
Overall height	1,380 mm (54 in)
Wheel base	2,510 mm (99 in)
Tread	
Front	1,380 mm (54 in)
Rear	1,370 mm (54 in)
Min. road clearance	150 mm (6 in)
Min. turning radius	5.0 m (16 ft 5 in)
Seating capacity	4 m

Rotary wagon

Overall length	4,645 mm (183 in)
Overall width	1,660 mm (65 in)
Overall height	1,420 mm (56 in)
Wheel base	2,510 mm (99 in)
Tread	
Front	1,380 mm (54 in)
Rear	1,370 mm (54 in)
Min. road clearance	150 mm (6 in)
Min. turning radius	5.0 m (16 ft 5 in)
Seating capacity	4

TIGHTENING TORQUE

	m-kg	ft-lb
Engine		
Oil pump sprocket	3.0 ~ 3.5	22 ~ 25
Oil pan	0.7 ~ 1.0	5 ~ 7
Inlet manifold	1.6 ~ 2.3	12 ~ 17
Thermal reactor	3.0 ~ 5.5	22 ~ 40
Spark plugs	1.3 ~ 1.8	9 ~ 13
Eccentric shaft pulley	7.5 ~ 9.5	54 ~ 69
Oil pressure switch	1.2 ~ 1.8	9 ~ 13
Temperature gauge unit	0.7 ~ 0.8	5 ~ 6
Tension bolts	3.2 ~ 3.8	23 ~ 27
Water temperature switch	1.0 ~ 1.8	7 ~ 13
Clutch		
Flywheel	40.0 ~ 50.0	289 ~ 362
Clutch cover	1.8 ~ 2.7	13 ~ 20
Transmission		
Shift lock spring cap	4.5 ~ 5.5	33 ~ 40
Plug for interlock pin hole	1.0 ~ 1.5	7 ~ 11
Reverse lock spring cap	4.5 ~ 5.5	33 ~ 40
Control lever to control rod end	2.8 ~ 3.4	20 ~ 25
Shift fork set bolts	0.8 ~ 1.2	6 ~ 9
Main shaft lock nut	20.0 ~ 28.0	145 ~ 203
Under cover	0.6 ~ 0.9	4 ~ 7
Reverse lamp switch	2.8 ~ 4.5	20 ~ 33
Automatic transmission		
Drive plate to crankshaft	3.7 ~ 5.5	27 ~ 40
Drive plate to torque converter	3.7 ~ 5.5	27 ~ 40
Converter housing to engine	3.2 ~ 4.7	23 ~ 34
Converter housing to transmission case	4.5 ~ 5.5	33 ~ 40
Extension housing to transmission case	2.0 ~ 2.5	14 ~ 18
Oil pan	0.5 ~ 0.7	3.6 ~ 5.1
Piston stem (when adjusting band brake)	1.2 ~ 1.5	9 ~ 11
Piston stem lock nut	1.5 ~ 4.0	11 ~ 29
Servo piston retainer	1.0 ~ 1.5	7.2 ~ 11
Servo cover	0.5 ~ 0.7	3.6 ~ 5.1
One-way clutch inner race	1.3 ~ 1.8	9 ~ 13
Control valve body to transmission case	0.55 ~ 0.75	4.0 ~ 5.4
Lower valve body to upper valve body	0.25 ~ 0.35	1.8 ~ 2.5
Side plate to control valve body	0.25 ~ 0.35	1.8 ~ 2.5
Reamer bolt of control valve body	0.5 ~ 0.7	3.6 ~ 5.1
Oil strainer	0.25 ~ 0.35	1.8 ~ 2.5
Governor valve body to oil distributor	0.5 ~ 0.7	3.6 ~ 5.1
Oil pump cover	0.6 ~ 0.8	4.3 ~ 5.8
Inhibitor switch	0.5 ~ 0.7	3.6 ~ 5.1
Manual shaft lock nut	3.0 ~ 4.0	22 ~ 29
Oil cooler pipe set bolt	1.6 ~ 2.4	12 ~ 17
Oil pressure test plug	0.5 ~ 1.0	3.6 ~ 7.2
Actuator for parking rod to extension housing	0.8 ~ 1.1	5.8 ~ 8.0
Propeller shaft		
Yoke to rear axle companion flange	3.5 ~ 3.8	25 ~ 27
Yoke to front propeller shaft	16.0 ~ 18.0	116 ~ 130
Center bearing support	3.2 ~ 4.7	23 ~ 34
Rear axle		
Ring gear	9.0 ~ 11.0	65 ~ 80
Differential side bearing caps	3.2 ~ 4.7	23 ~ 34