Mazda RX-4

1977 Workshop Manual

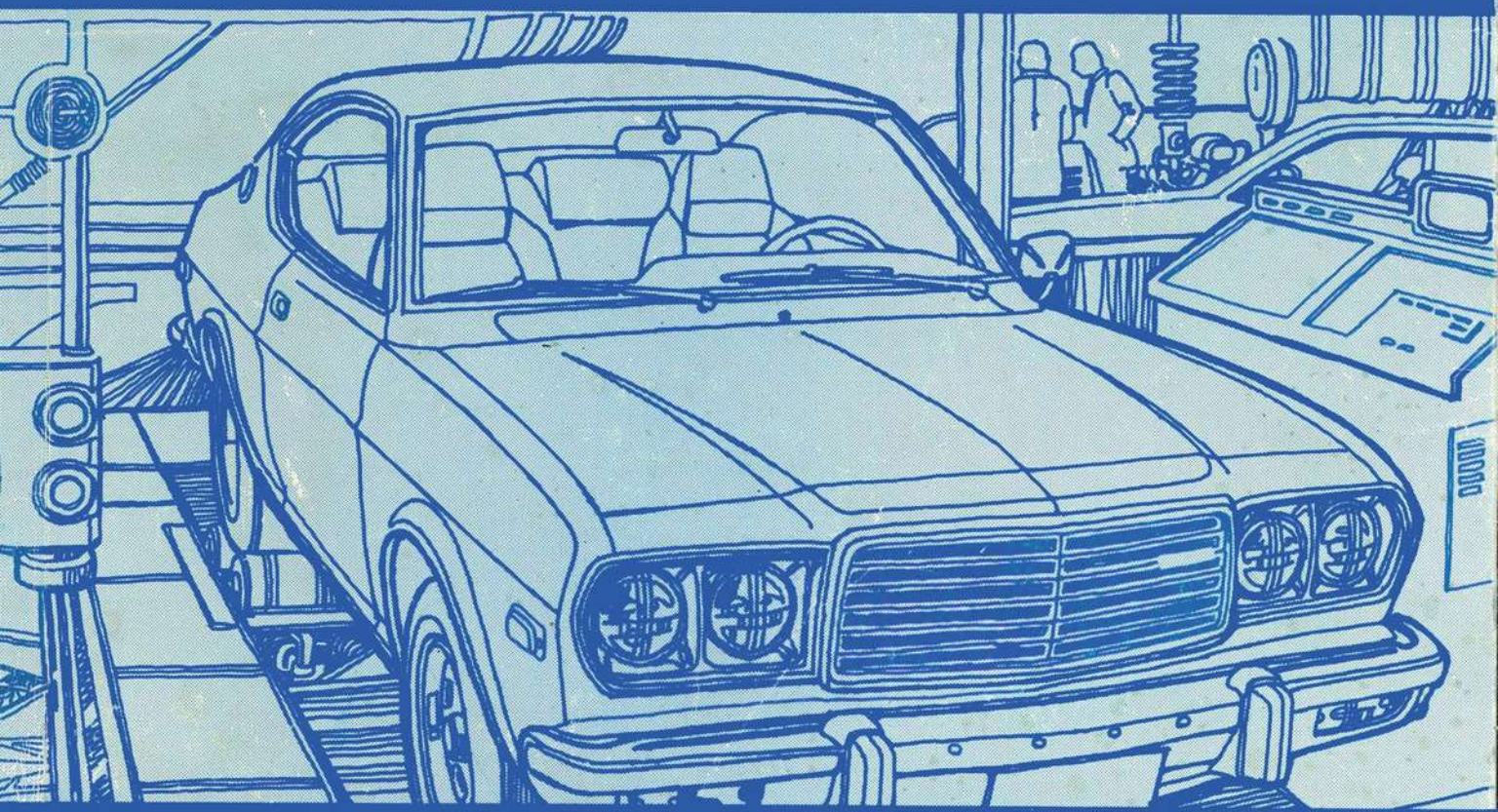

mazda

1977 Mazda RX-4 Workshop Manual

SECTION INDEX	
Name	Section
Engine	1
Emission Control System	1A
Lubricating System	2
Cooling System	3
Fuel System	4
Electrical System (Engine)	5
Clutch	6
Manual Transmission (Four-speed)	7
Manual Transmission (Five-speed)	7A
Automatic Transmission	7B
Propeller Shaft	8
Rear Axle	9
Manual Steering	10
Power Steering	10A
Brakes	11
Wheels and Tires	12
Suspension	13
Body	14
Body (Rotary Wagon)	14A
Electrical System (Body)	15
Technical Data	T

FOREWORD

This workshop manual was prepared as reference material of the service personnel of authorized Mazda dealers to enable them to correctly carry out the task of rendering services and maintenance on Mazda vehicles.

In order to ensure that the customers are satisfied with Mazda products, proper servicing and maintenance must be provided. For this purpose, the service personnel must fully same time, are recommended to keep the manual in a place where reference can readily be made.

The information, photographs, drawings and specifications entered in this manual were the best available at the time of printing this manual. All alterations to this manual occurring as the result of modifications will be notified by the issuance of Service Informations or supplementary volumes. It is, therefore, requested that the manual be kept up to date by carefully maintaining a follow-up of these materials.

Toyo Kogyo reserves the right to alter the specifications and contents of this manual without any obligation and advance notice.

All rights reserved. No part of this book may be reproduced or utilized in any form or by any means, electronic or mechanical, including photocopying, recording, or by any informational storage and retrieval system, without permission in writing.

Toyo Kogyo Co.,Ltd.
HIROSHIMA JAPAN

© 1976 TOYO KOGYO CO., LTD.
PRINTED IN JAPAN SEPT., '76
MAZDA ROTARY ENGINE;
LICENSE NSU-WANKEL

IMPORTANT SAFETY NOTICE

The service procedures described in this workshop manual are effective for carrying out the safe and reliable service operations.
This manual contains the General Service Instructions as mentioned below and various Notes. It is important to read these instructions and notes carefully in order to minimize the risk of personal injury to service personnel or the possibility that improper service methods will be followed which may damage the vehicle or render it unsafe. It is also important to understand that these instructions and notes do not cover all such risks.
Accordingly, anyone who performs service operations must make sure thoroughly prior to commencing service that neither his and his partner's safety nor vehicle safety will be jeopardized by the service method and tools selected.

General Service Instructions

1. If the vehicle is to be jacked up only at the front or rear end, be sure to block the wheels in order to ensure safety.
2. After the vehicle is jacked up, do not fail to support it with stand.
   Front ..... Under crossmember, or cross-points between torque box and front side frame. (See figure)
   Do not position under suspension lower arms.
   Rear ..... Under rear axle casing, or cross-points between rear side frame and crossmember. (See figure)

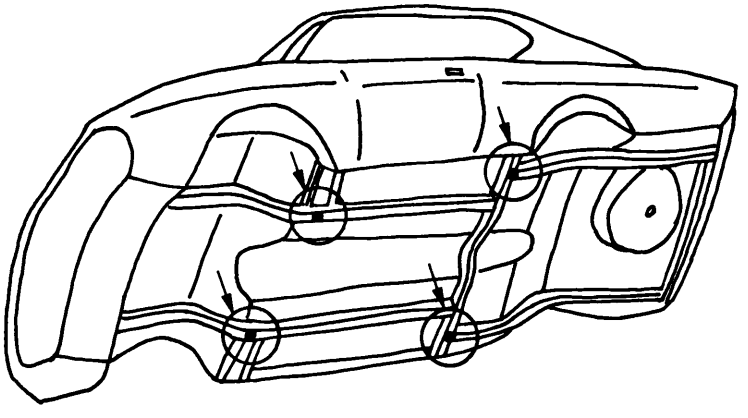

3. Use the fender cover, seat cover and floor cover to keep the car clean and prevent any damage.
4. Before servicing the electrical equipment, disconnect the negative cable at the battery.
5. Always replace gaskets and "O" rings with new ones.
6. Apply sealer to gaskets to prevent leakage.
7. Tighten the bolts and nuts to specified torque using a torque wrench.
8. Some of the service operations require the special tool. Be sure to use the special tool where specified and follow the proper work procedure.

ENGINE

1-A. ENGINE REMOVAL ..... 1 : 1
1-B. ENGINE DISASSEBMLY ..... 1 : 2
1-B-1. Removing Deceleration Control Valve .... 1 : 2
1-B-2. Removing Vacuum Control Valve (California) ..... 1 : 2
1-B-3. Removing EGR Valve and EGR Solenoid (With automatic transmission, except for Canada) ..... 1 : 2
1-B-4. Removing Air Pump and Drive Belt ..... 1 : 2
1-B-5. Removing Alternator ..... 1 : 2
1-B-6. Removing Inlet Manifold and Carburetor Assembly ..... 1 : 2
1-B-7. Removing Thermal Reactor ..... 1 : 2
1-B-8. Removing Distributor ..... 1 : 2
1-B-9. Removing Engine Mount ..... 1 : 3
1-B-10. Removing Oil Filter and Cover ..... 1 : 3
1-B-11. Removing Water Pump ..... 1 : 3
1-B-12. Removing Oil Pan and Oil Strainer ..... 1 : 3
1-B-13. Removing Eccentric Shaft Pulley ..... 1 : 3
1-B-14. Removing Front Cover ..... 1 : 3
1-B-15. Removing Oil Pump Drive ..... 1 : 3
1-B-16. Removing Balance Weight and Bearing Housing ..... 1 : 3
1-B-17. Removing Oil Pump ..... 1 : 4
1-B-18. Removing Clutch and Flywheel (Manual transmission) ..... 1 : 4
1-B-19. Removing Drive Plate and Counter Weight (Automatic transmission) ..... 1 : 4
1-B-20. Removing Rear Housing ..... 1 : 4
1-B-21. Removing Rear Rotor Housing ..... 1 : 5
1-B-22. Removing Rear Rotor ..... 1 : 5
1-B-23. Removing Intermediate Housing ..... 1 : 6
1-B-24. Removing Eccentric Shaft ..... 1 : 6
1-B-25. Removing Front Rotor Housing and Front Rotor ..... 1 : 6
1-C. INSPECTION AND REPAIR ..... 1 : 7
1-C-1. Cleaning ..... 1 : 7
1-C-2. Inspecting Front, Intermediate and Rear Housings ..... 1 : 7
1-C-3. Inspecting Front Stationary Gear and Main Bearing ..... 1 : 8
1-C-4. Replacing Front Main Bearing ..... 1 : 8
1-C-5. Inspecting Rear Stationary Gear and Main Bearing ..... 1 : 8
1-C-6. Replacing Rear Main Bearing ..... 1 : 9
1-C-7. Inspecting Rotor Housing ..... 1 : 9
1-C-8. Inspecting Rotor ..... 1 : 9
1-C-9. Inspecting Rotor Bearing ..... 1 : 10
1-C-10. Replacing Rotor Bearing ..... 1 : 10
1-C-11. Inspecting Rotor Oil Seal and Spring ..... 1 : 11
1-C-12. Inspecting Apex Seal, Side Piece and Spring ..... 1 : 11
1-C-13. Inspecting Side Seal and Spring ..... 1 : 12
1-C-14. Inspecting Corner Seal and Spring ..... 1 : 12
1-C-15. Inspecting Eccentric Shaft ..... 1 : 12
1-C-16. Inspecting Needle Bearing ..... 1 : 12
1-C-17. Inspecting Eccentric Shaft Front and Rear Oil Seals ..... 1 : 12
1-C-18. Checking Oil Pump Drive Chain and Sprockets ..... 1 : 13
1-C-19. Checking Chain Adjuster ..... 1 : 13
1-D. ENGINE ASSEMBLY ..... 1 : 14
1-D-1. Installing Oil Seal ..... 1 : 14
1-D-2. Installing Front Side Seals ..... 1 : 14
1-D-3. Installing Front Rotor ..... 1 : 15
1-D-4. Installing Eccentric Shaft ..... 1 : 15
1-D-5. Installing Front Rotor Housing ..... 1 : 15
1-D-6. Installing Rear Side Seals ..... 1 : 16
1-D-7. Installing Intermediater Housing ..... 1 : 17
1-D-8. Installing Rear Rotor and Rear Rotor Housing ..... 1 : 17
1-D-9. Installing Rear Housing ..... 1 : 17
1-D-10. Tightening Tension Bolts ..... 1 : 18
1-D-11. Installing Flywheel (Manual transmission) ..... 1 : 18
1-D-12. Installing Counter Weight (Automatic transmission) ..... 1 : 18
1-D-13. Adjusting Eccentric Shaft End Play ..... 1 : 19
1-D-14. Installing Oil Pump Chain Adjuster ..... 1 : 20
1-D-15. Installing Oil Strainer and Oil Pan ..... 1 : 21
1-D-16. Installing Water Pump ..... 1 : 21
1-D-17. Installing Distributor ..... 1 : 21
1-D-18. Installing Thermal Reactor ..... 1 : 22
1-D-19. Installing Inlet Manifold and Carburetor Assembly ..... 1 : 22
1-D-20. Installing Alternator and Drive Belt ..... 1 : 22
1-D-21. Installing Air Pump and Drive Belt ..... 1 : 22
1-D-22. Installing Oil Filter and Cover ..... 1 : 22
1-D-23. Installing EGR Valve and EGR Solenoid (With automatic transmission, except for Canada) ..... 1 : 23
1-D-24. Installing Vacuum Control Valve ..... 1 : 23
1-D-25. Installing Deceleration Control Valve ..... 1 : 23
1-E. ENGINE INSTALLATION ..... 1 : 23
SPECIAL TOOLS ..... 1 : 23

1

1–A. ENGINE REMOVAL

The procedures for removing the engine from the vehicle for overhauling are as follows:

1. Disconnect the negative cable at the battery.
2. Drain the cooling water by opening the drain plugs.
3. Drain the engine oil.
4. Disconnect the primary wiring couplers and the high tension cords at the ignition coils.
5. Disconnect the wire at the "B" terminal of the alternator and pull off the wiring coupler from the rear of the alternator.
6. On the California vehicle, disconnect the coupler from the vacuum control valve.
7. Disconnect the bullet connector from the choke heater lead of the carburetor.
8. Disconnect the coupler from the water temperature switch.
9. The 49 states except California, equipped with automatic transmission and California vehicles: Disconnect the coupler from No.1 vacuum switch.
10. On the vehicle equipped with air conditioning, disconnect the coupler from the air conditioning solenoid valve.
11. Disconnect the bullet connectors from the deceleration control valve and air vent valve.
12. On the vehicle equipped with automatic transmission, disconnect the bullet connector from EGR solenoid (except for Canada vehicles).
13. Disconnect the coupler to the transmission at the rear end of the engine.
14. Disconnect the coupler from the oil thermo sensor (except California vehicles).
15. Disconnect the coupler from the oil level sensor lead.
16. Disconnect the connector from the water temperature gauge unit.
17. Disconnect the positive cable from the "B" terminal and ignition switch wire from the "S" terminal on the starting motor.
18. Remove the nuts attaching the air cleaner body and remove the air cleaner assembly.
19. Disconnect the couplers from the idle switch and air control valve.
20. Disconnect the coupler from the richer solenoid (manual transmission only).
21. The 49 states except California, equipped with automatic transmission and California vehicles: Disconnect the coupler from the power solenoid valve (except for Canada vehicles).
22. Remove the fuel pipe and fuel return pipe at the carburetor.
23. Disconnect the accelerator cable and the choke cable at the carburetor.
24. Remove the sub-zero starting assist hose at the carburetor (except California vehicles).
25. On the California vehicle, disconnect the vacuum sensing tube from No.2 vacuum switch.
26. Disconnect the vacuum sensing tube from the vacuum pipe (automatic transmission).
27. Disconnect the vacuum sensing pipe for power brake unit from the inlet manifold.
28. Disconnect the air hose to the heat exchanger at inlet manifold.
29. Remove the air conditioning compressor, if equipped.
30. Remove the oil pump for power steering, if equipped.
31. Remove the cooling fan and fan drive assembly.
32. Remove the upper and lower radiator hoses. On the vehicle equipped with automatic transmission, disconnect the automatic transmission fluid pipes from the radiator.
33. Loosen the hose bands and disconnect the heater hoses from the radiator and rear housing.
34. Disconnect the hoses from the oil cooler.
35. Remove the expansion tank cap.
36. Remove the radiator attaching bolts and remove the radiator.
37. Remove the secondary air pipe (heat exchanger ~ thermal reactor).
38. Disconnect the pipe (heat exchanger ~ inlet manifold) at the heat exchanger.
39. Disconnect the exhaust pipe from the thermal reactor. Remove the gasket.
40. Remove the exhaust pipe hanger from the bracket on the transmission.
41. Remove the clutch release cylinder from the clutch housing.
42. Remove the starting motor.
43. Remove the bolts supporting the transmission to the engine.
44. Support the transmission with a suitable jack.
45. Remove the nuts from the right and left engine mountings.
46. Install a suitable lifting sling on the engine hanger brackets. Attach the sling to a hoist or other lifting device and take up all slack.
47. Pull the engine forward until it clears the clutch shaft. Then, lift the engine from the vehicle.
48. Install the **hanger** (49 1114 005) to the **engine stand** (49 0107 680A or 49 0839 000) and mount the engine on the engine stand.

1–B. ENGINE DISASSEMBLY

1–B–1. Removing Deceleration Control Valve

1. Disconnect the air outlet hoses from the inlet manifold.
2. Disconnect the vacuum sensing tube from the carburetor.
3. Remove the deceleration control valve.

1–B–2. Removing Vacuum Control Valve (California)

1. Disconnect the vacuum sensing tube at the carburetor.
2. Disconnect the vacuum sensing tube from the vacuum control unit on the distributor.
3. Remove the vacuum control valve.

1–B–3. Removing EGR Valve and EGR Solenoid (With automatic transmission, except for Canada)

1. Disconnect the vacuum sensing tube (EGR solenoid ~ carburetor) from the carburetor.
2. Remove the EGR solenoid by removing the bolts.
3. Remove the EGR valve from the intermediate housing.

1–B–4. Removing Air Pump and Drive Belt

1. Disconnect the air outlet hose from the air pump.
2. Remove the air pump mounting and strap bolts.
3. Remove the air pump and disengage the air pump drive belt.

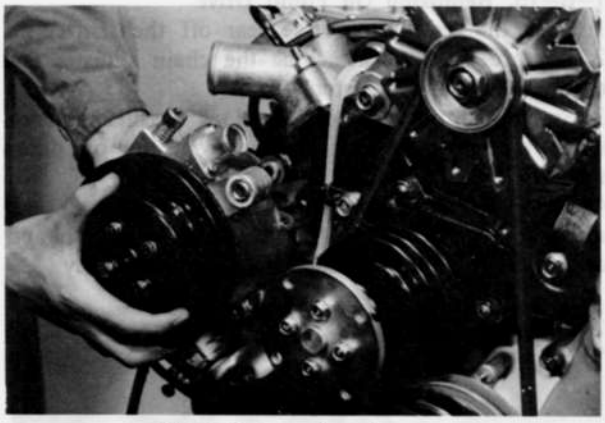

Fig. 1–1 Removing air pump

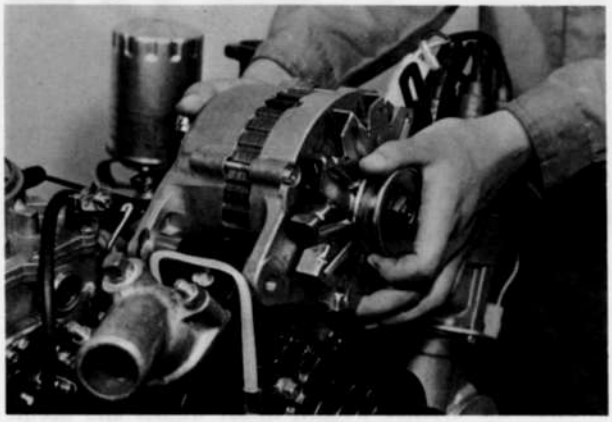

Fig. 1–2 Removing alternator

1–B–5. Removing Alternator

1. Remove the alternator mounting and strap bolts.
2. Remove the alternator and disengage the air pump drive belt.

1–B–6. Removing Inlet Manifold and Carburetor Assembly

1. Disconnect the vacuum sensing tube from the vacuum control unit on the distributor.
2. Disconnect the connecting rod at the metering oil pump lever and remove the washer.
3. Disconnect the oil hoses at the metering oil pump outlets.
4. Disconnect the air outlet hose (thermal reactor ~ air control valve) at the air control valve.
5. Remove the bolts and nuts attaching the thermal reactor cover to the engine, and remove the reactor covers.
6. Remove the nuts attaching the inlet manifold to the engine, and remove the inlet manifold and carburetor assembly.
7. Remove the manifold gasket and "O" rings.

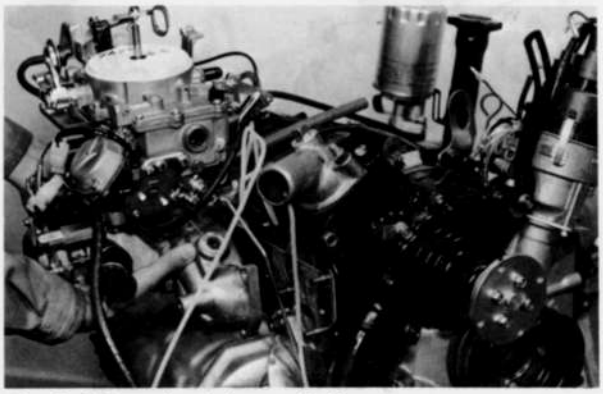

Fig. 1–3 Removing inlet manifold and carburetor assembly

1–B–7. Removing Thermal Reactor

1. Remove the thermal reactor attaching nuts and remove the reactor from the engine.
2. Remove the gasket.

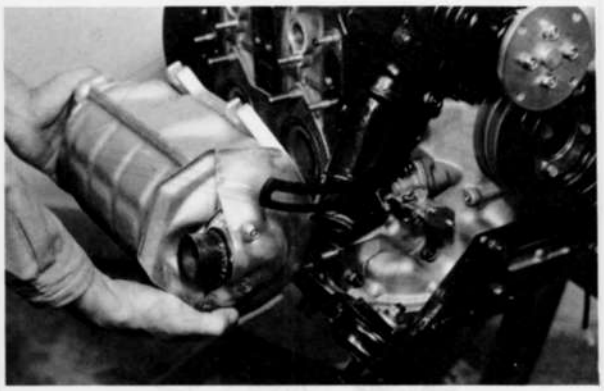

Fig. 1–4 Removing thermal reactor

1–B–8. Removing Distributor

1. Disconnect the high tension cords from each spark plug.
2. Remove the distributor attaching nut and pull the distributor out of the front cover.

1–B–9. Removing Engine Mount

1. Remove the nuts attaching the engine mount to the front cover.
2. Remove the engine mount from the front cover.

1–B–10. Removing Oil Filter and Cover

1. Remove the nuts attaching the oil filter cover to the rear housing.
2. Remove the oil filter and cover assembly.
3. Remove the "O" rings from the cover.

1–B–11. Removing Water Pump

1. Remove the pulley for power steering oil pump by removing the attaching bolts (if equipped).
2. Remove the nuts and bolts that attach the water pump to the front housing.
3. Remove the alternator and air pump straps, and then water pump.

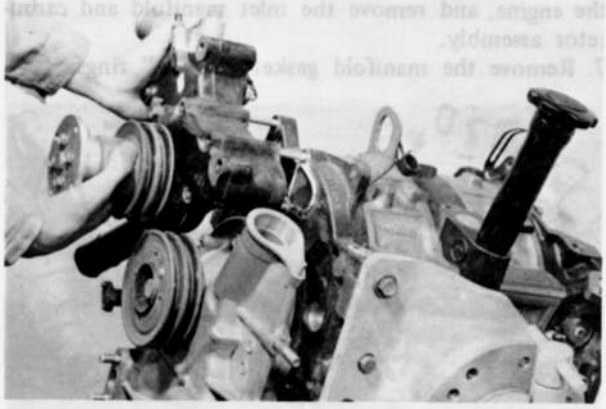

Fig. 1–5 Removing water pump

1–B–12. Removing Oil Pan and Oil Strainer

1. Invert the engine on the engine stand.
2. Remove the bolts attaching the oil pan, and remove the oil pan.
3. Remove the bolts attaching the oil strainer, and remove the oil strainer and gasket.

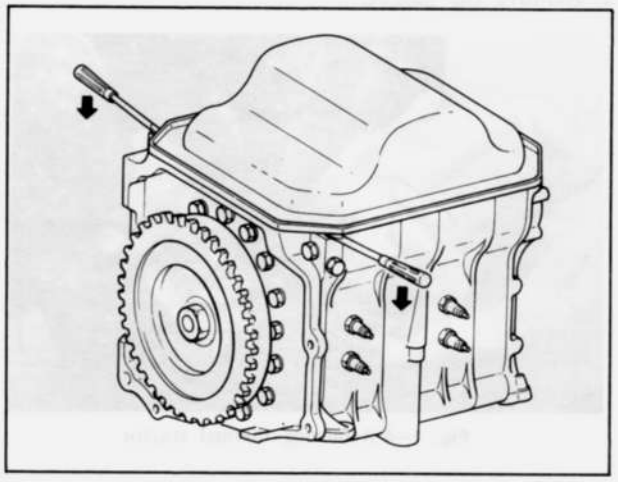

Fig. 1–6 Removing oil pan

1–B–13. Removing Eccentric Shaft Pulley

1. Turn the engine on the engine stand so that the top of the engine is up.
2. On the engine equipped with manual transmission, attach the **brake** (49 1881 060) to the flywheel. On the engine equipped with automatic transmission, attach the **stopper** (49 1881 055) to the counter weight.
3. Remove the eccentric shaft pulley bolt and remove the pulley.

1–B–14. Removing Front Cover

1. Turn the engine on the engine stand so that the front end of the engine is up.
2. Remove the front cover attaching bolts, and remove the front cover and gasket.
3. Remove the "O" ring from the oil passage on the front housing.

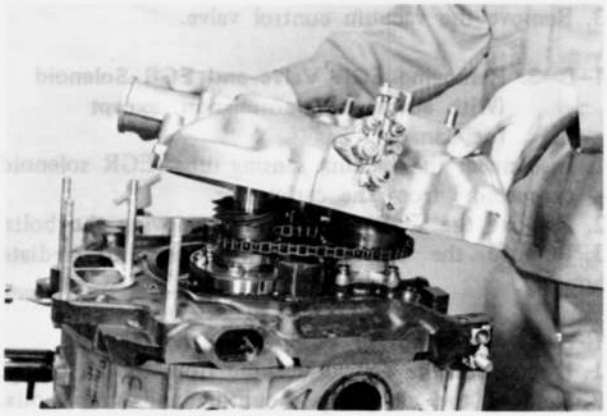

Fig. 1–7 Removing front cover

1–B–15. Removing Oil Pump Drive

1. Slide the distributor drive gear off the shaft.
2. Remove the nuts attaching the chain adjuster and remove the chain adjuster.
3. Straighten the tab of the lock washer and remove the nut and lock washer from the oil pump sprocket.
4. Slide the oil pump sprocket and eccentric shaft sprocket together with the drive chain off the eccentric shaft and oil pump shaft simultaneously.

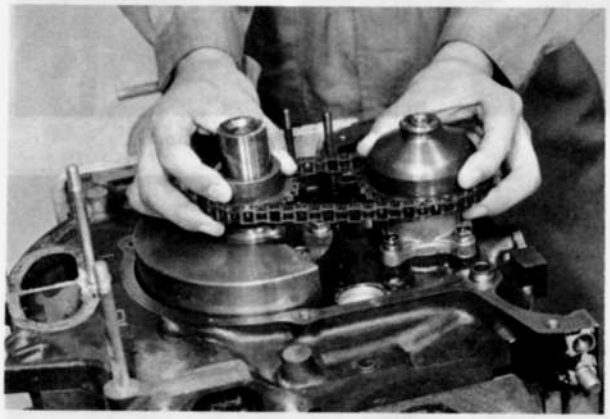

Fig. 1–8 Removing oil pump drive

1–B–16. Removing Balance Weight and Bearing Housing

1. Remove the key on the eccentric shaft.
2. Slide the balance weight, thrust washer and needle bearing off the shaft.

3. Remove the bolts attaching the bearing housing, and slide the bearing housing, needle bearing, spacer and thrust plate off the shaft.

1–B–17. Removing Oil Pump

1. Remove the key on the oil pump shaft.
2. Remove the oil pump attaching bolts, and remove the oil pump.

1–B–18. Removing Clutch and Flywheel (Manual transmission)

1. Turn the engine on the engine stand so that the top of the engine is up.
2. Attach the **brake** (49 1881 060) to the flywheel.
3. Remove the clutch cover attaching bolts, and remove the clutch cover assembly and clutch disc.
4. Straighten the tab of the lock washer and remove the flywheel nut, using the **box wrench** (49 0820 035).



Fig. 1–9 Removing flywheel nut

5. Remove the flywheel by using the **puller** (49 0839 305A), turning the handle of the puller and lightly hitting the head of the puller.
6. Remove the key from the eccentric shaft.

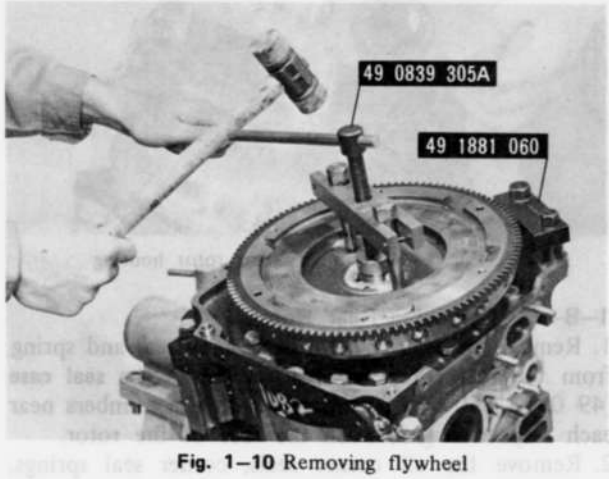

Fig. 1–10 Removing flywheel

1–B–19. Removing Drive Plate and Counter Weight (Automatic transmission)

1. Attach the **stopper** (49 1881 055) to the rear housing.

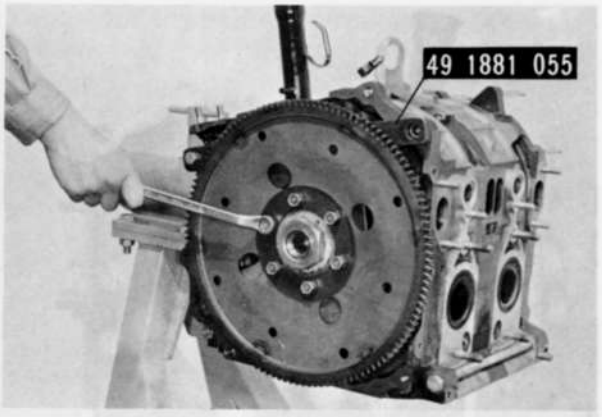

Fig. 1–11 Removing drive plate

2. Remove the drive plate attaching bolts and remove the drive plate.
3. Straighten the tab of the lock washer and remove the counter weight nut using the **box wrench** (49 0820 035).

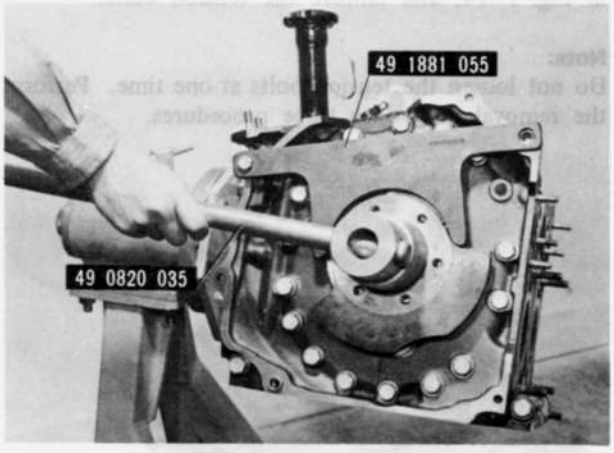

Fig. 1–12 Removing counter weight nut

4. Remove the counter weight by using the **puller** (49 0839 305A), turning the handle of the puller and lightly hitting the head of the puller.
5. Remove the key from the eccentric shaft.

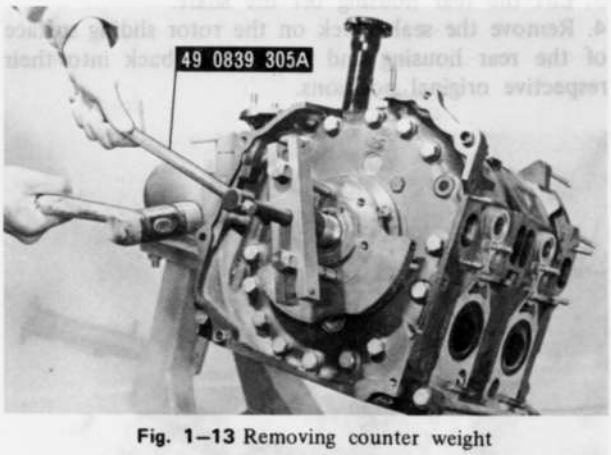

Fig. 1–13 Removing counter weight

1–B–20. Removing Rear Housing

1. Turn the engine on the engine stand so that the rear of the engine is up.

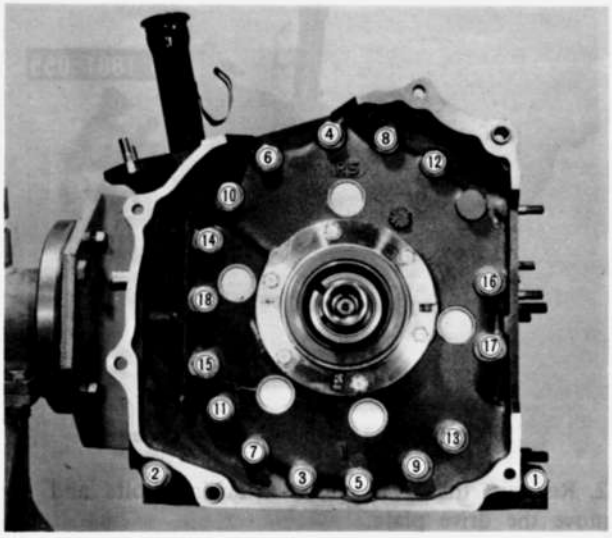

Fig. 1–14 Tension bolts loosening order

2. Loosen the tension bolts in the sequence shown in Fig. 1–14, and remove the tension bolts.

Note:
Do not loosen the tension bolts at one time. Perform the removal in two or three procedures.

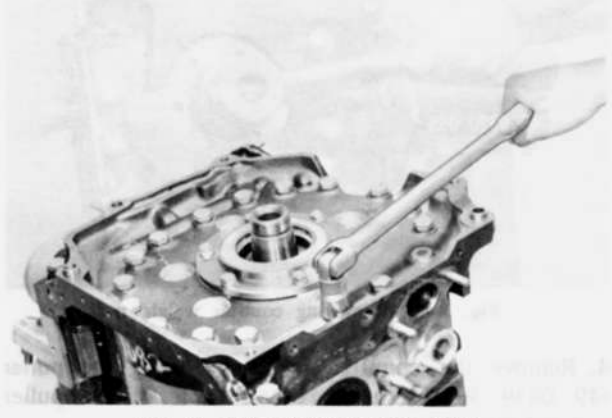

Fig. 1–15 Loosening tension bolts

3. Lift the rear housing off the shaft.
4. Remove the seals stuck on the rotor sliding surface of the rear housing and place them back into their respective original positions.



Fig. 1–16 Removing rear housing

1–B–21. Removing Rear Rotor Housing

1. Remove the two sealing rubbers and "O" ring from the rear side of the rear rotor housing.
2. Attach the **puller** (49 0813 215A), and pull the tubular dowels off the rear rotor housing while holding the rotor housing down by hand to prevent it from moving up.

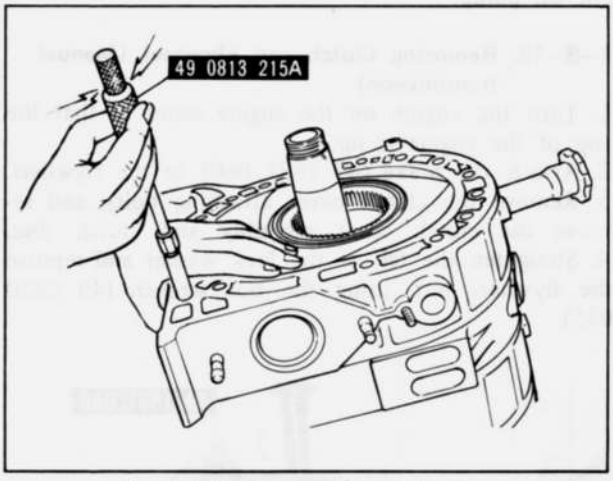

Fig. 1–17 Removing tubular dowel

3. Lift the rear rotor housing away from the rotor, being careful not to drop the apex seals on the rear rotor. Remove the two sealing rubbers and "O" ring from the front side of the rear rotor housing.

Note:
Discard the used sealing rubbers and "O" ring, then use new sealing rubbers and "O" ring.

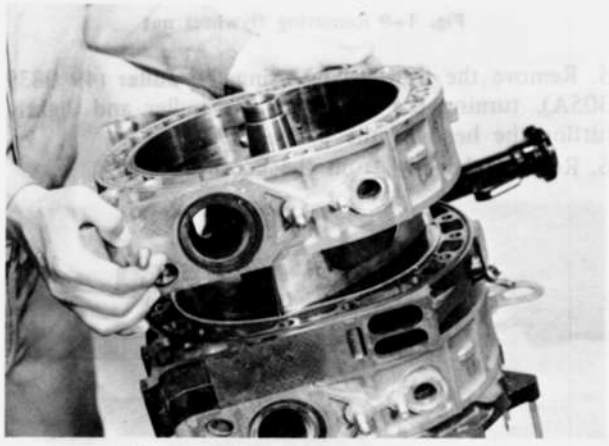

Fig. 1–18 Removing rear rotor housing

1–B–22. Removing Rear Rotor

1. Remove the side pieces, each apex seal and spring from the rear rotor and place them in the **seal case** (49 0813 250), in accordance with the numbers near each respective groove on the face of the rotor.
2. Remove the all corner seals, corner seal springs, side seals and side seal springs from the rear side of the rotor, and place them in the seal case.
3. Remove the rear rotor away from the eccentric shaft and place it internal gear side down on a clean rubber pad or cloth.

4. Remove each seal and spring on the other side of the rear rotor, and place them in the seal case, as shown in Fig. 1–19.

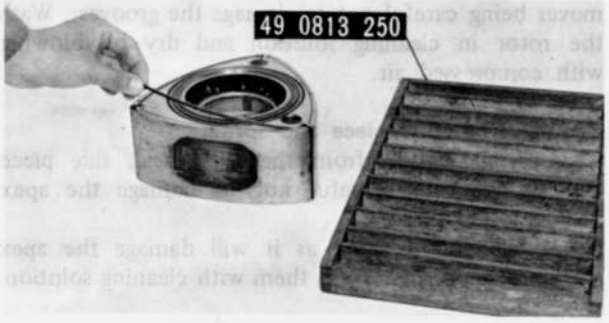

Fig. 1–19 Removing side seal

5. Place a suitable protector onto the inner oil seal lip to protect the oil seal lip and remove the outer oil seal with **remover** (49 0813 225), as shown in Fig. 1–20. **Do not** exert strong pressure at only one place to prevent deformation of the oil seal.



Fig. 1–20 Removing oil seal

6. Remove the inner oil seal with oil seal remover.

Note: Discard the used "O" rings and use a new "O" rings when the engine is reassembled.

7. Remove the oil seal springs from the each respective groove.
8. Remove the oil seals and springs on the other side of the rear rotor.

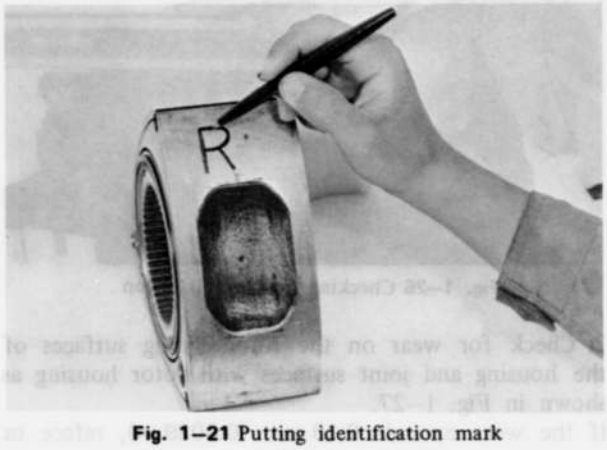

Fig. 1–21 Putting identification mark

9. Apply identification mark onto the rear rotor, so that when reassembling the engine the rotor can be installed in its original position.

1–B–23. Removing Intermediate Housing

1. Holding the intermediate housing down by hand, pull the tubular dowel off the intermediate housing using the **puller** (49 0813 215A).

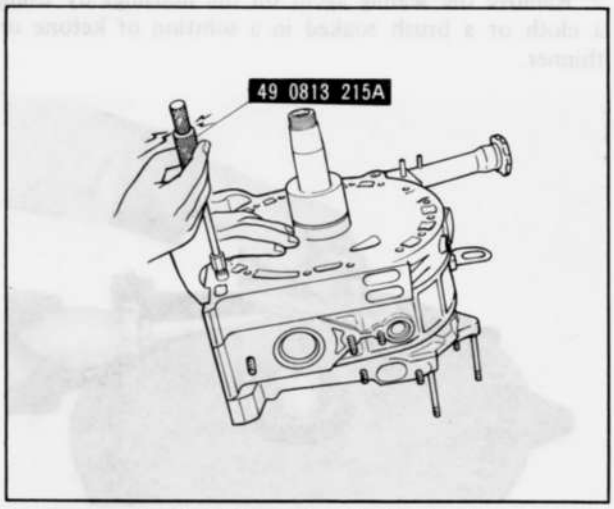

Fig. 1–22 Removing tubular dowel

2. Lift the intermediate housing off the shaft, being careful not to damage the shaft. The intermediate housing should be removed by sliding it beyond the rear rotor journal on the eccentric shaft while holding the intermediate housing up and at the same time pushing up the eccentric shaft.

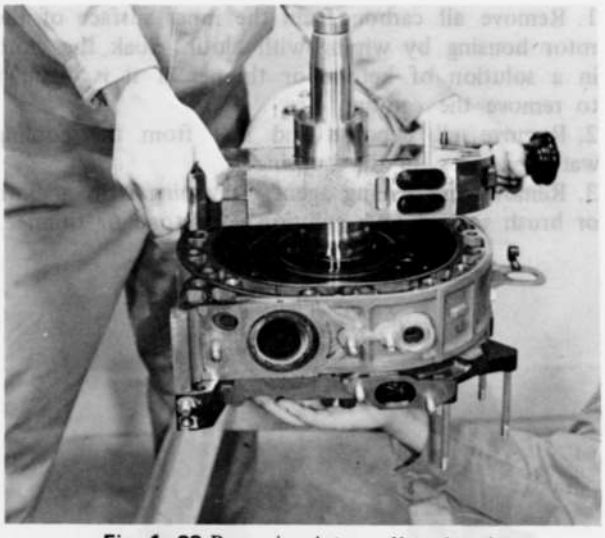

Fig. 1–23 Removing intermediate housing

1–B–24. Removing Eccentric Shaft

Remove the eccentric shaft being careful not to damage the rotor bearing and main bearing.

1–B–25. Removing Front Rotor Housing and Front Rotor

Remove the front rotor housing and the front rotor assembly refering to Par. 1–B–21 and 1–B–22.

1–C. INSPECTION AND REPAIR

1–C–1. Cleaning

a. Front, intermediate and rear housings

1. Remove all carbon on the housings with an extra-fine emery paper. If using a carbon scraper, be careful not to damage the finished surfaces of the housings.
2. Remove the sealing agent on the housings by using a cloth or a brush soaked in a solution of ketone or thinner.

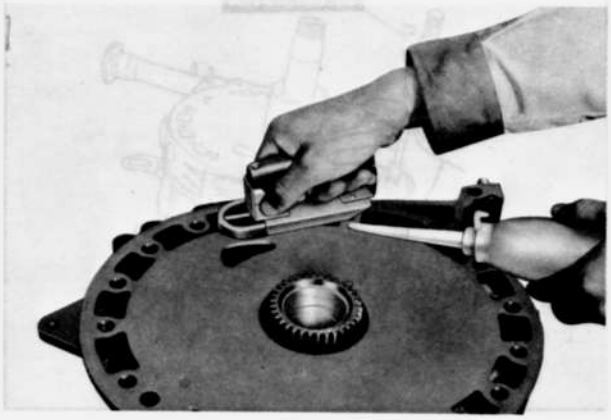

Fig. 1–24 Cleaning front housing

b. Rotor housing

Note:
Before cleaning, check for traces of gas or water leakage along the inner margin of each side face of the rotor housing.

1. Remove all carbon from the inner surface of the rotor housing by wiping with cloth. Soak the cloth in a solution of ketone or thinner if it is difficult to remove the carbon.
2. Remove all deposits and rust from the cooling water passages on the housing.
3. Remove the sealing agent by wiping with a cloth or brush soaked in a solution of ketone or thinner.

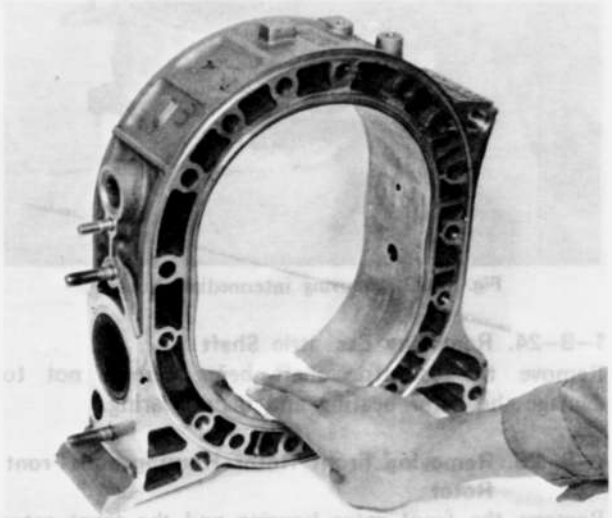

Fig. 1–25 Cleaning rotor housing

c. Rotor

Remove the carbon on the rotor by using a carbon remover or emery paper. Carbon in the seal grooves of the rotor should be removed with a carbon remover being careful not to damage the grooves. Wash the rotor in cleaning solution and dry by blowing with compressed air.

d. Apex seal, side piece and spring

Remove all carbon from the apex seal, side piece and spring, being careful not to damage the apex seal and side piece.
Never use emery paper as it will damage the apex seal and side piece. Wash them with cleaning solution.

e. Side seal and spring

Remove all carbon from the side seal and spring with a carbon remover.

f. Corner seal and spring

Remove the carbon from the corner seal and spring.

1–C–2. Inspecting Front, Intermediate and Rear Housings

1. Check for housing distortion by placing a straight edge on the housing surface. Measure the clearance between the straight edge and the housing surface with a feeler gauge, as shown in Fig. 1–26. If the distortion exceeds **0.04 mm (0.0016 in)**, reface or replace the housing.

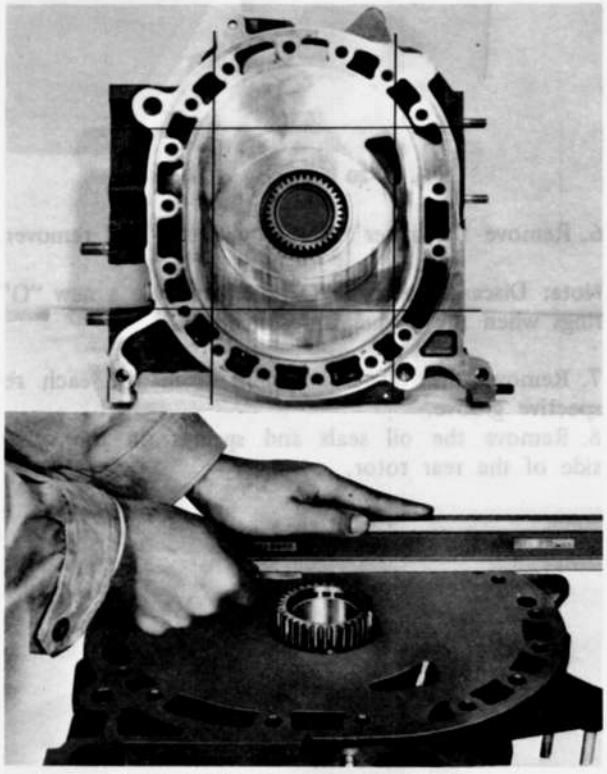

Fig. 1–26 Checking housing distortion

2. Check for wear on the rotor sliding surfaces of the housing and joint surfaces with rotor housing as shown in Fig. 1–27.
If the wear exceeds **0.10 mm (0.0039 in)**, reface or

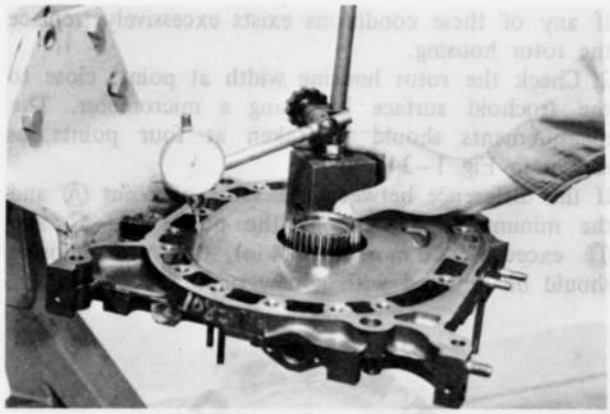

Fig. 1–27 Checking housing for wear

replace the housing.

Note:
The side housings (front housing, intermediate housing and rear housing) can be reused by grinding them if the required finish can be maintained.

1–C–3. Inspecting Front Stationary Gear and Main Bearing

1. Check the stationary gear for cracked, scored, worn or chipped teeth.
2. Check the main bearing for wear, scratching, flaking or any damage.
3. Check the main bearing clearance by measuring the inner diameter of the main bearing and outer diameter of the eccentric shaft main journal.
The standard clearance is 0.04 ~ 0.07 mm (0.0016 ~ 0.0028 in). If the bearing clearance exceeds **0.10 mm (0.0039 in)**, replace the main bearing.

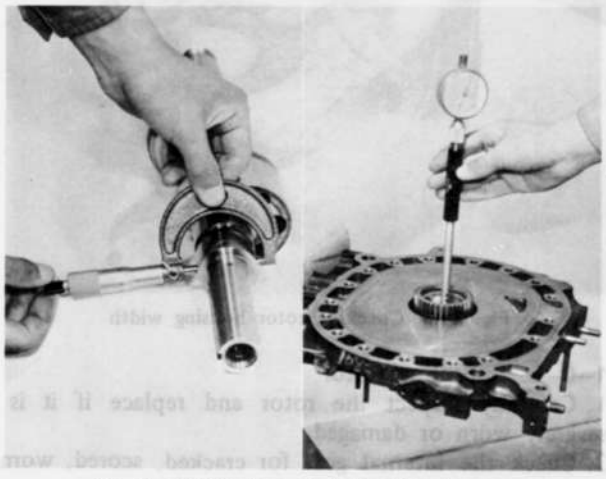

Fig. 1–28 Checking main bearing clearance

1–C–4. Replacing Front Main Bearing

1. Remove the stationary gear and main bearing assembly from the front housing, using the **Puller & installer** (49 0813 235), as shown in Fig. 1–29.
2. Using the main bearing replacer without adaptor ring, press the main bearing out of the stationary gear.
3. Using the main bearing replacer with adaptor ring, and aligning the tang of the bearing and the slot of the stationary gear, press fit the main bearing

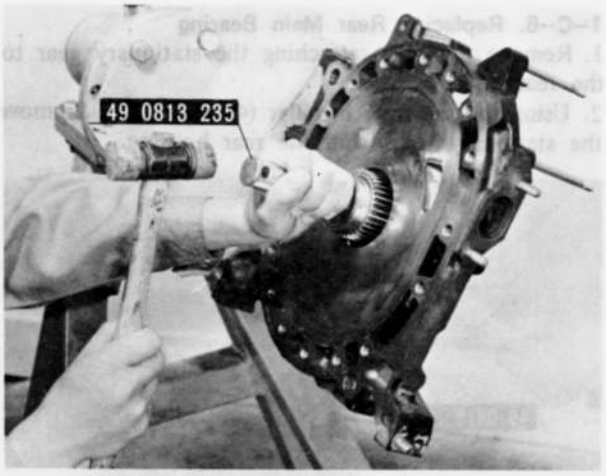

Fig. 1–29 Removing front stationary gear

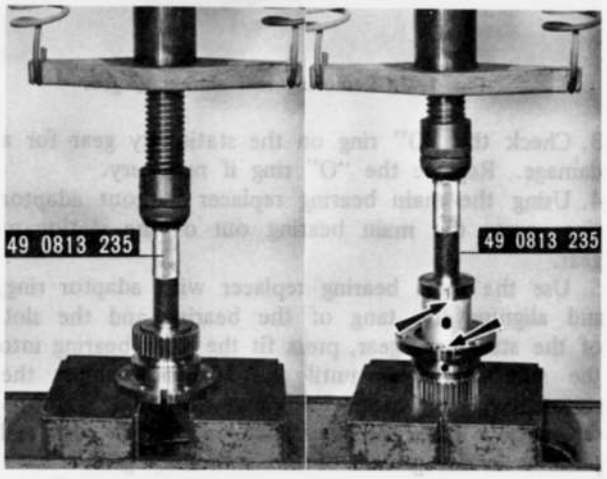

Fig. 1–30 Removing and installing main bearing

into the stationary gear until the adaptor touches the stationary gear flange.
4. Press in the stationary gear to the front housing with the main bearing replacer, aligning the slot of the stationary gear flange and the dowel pin on the housing, as shown in Fig. 1–31.

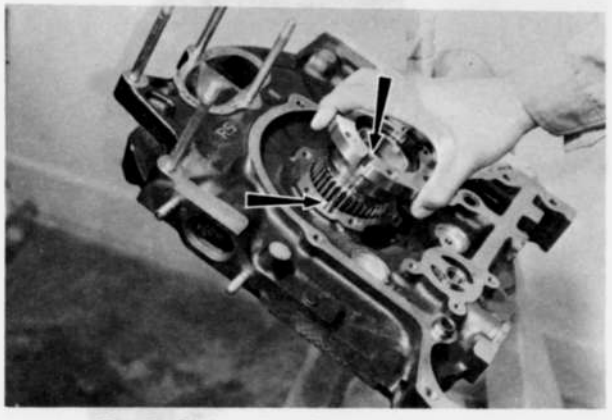

Fig. 1–31 Installing front stationary gear

1–C–5. Inspecting Rear Stationary Gear and Main Bearing

Check the rear stationary gear and main bearing according to Par. 1–C–3.

1–C–6. Replacing Rear Main Bearing

1. Remove the bolts attaching the stationary gear to the rear housing.
2. Using the **puller & installer** (49 0813 235), remove the stationary gear from the rear housing.

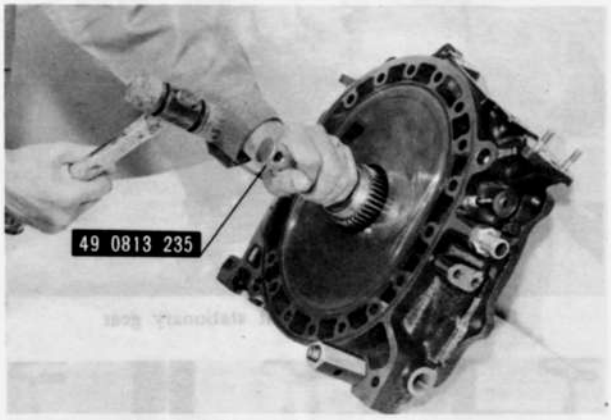

Fig. 1–32 Removing rear stationary gear

3. Check the "O" ring on the stationary gear for a damage. Replace the "O" ring if necessary.
4. Using the main bearing replacer without adaptor ring, press the main bearing out of the stationary gear.
5. Use the main bearing replacer with adaptor ring, and aligning the tang of the bearing and the slot of the stationary gear, press fit the main bearing into the stationary gear until the adaptor touches the stationary gear flange.
6. Apply a thin coat of vaseline on the "O" ring and place it in the groove of the stationary gear.
7. Apply sealing agent onto the stationary gear flange.
8. Install the stationary gear to the rear housing, being careful not to damage the "O" ring and aligning the slot of the stationary gear with the dowel pin on the rear housing.
9. Tighten the bolts attaching the stationary gear.

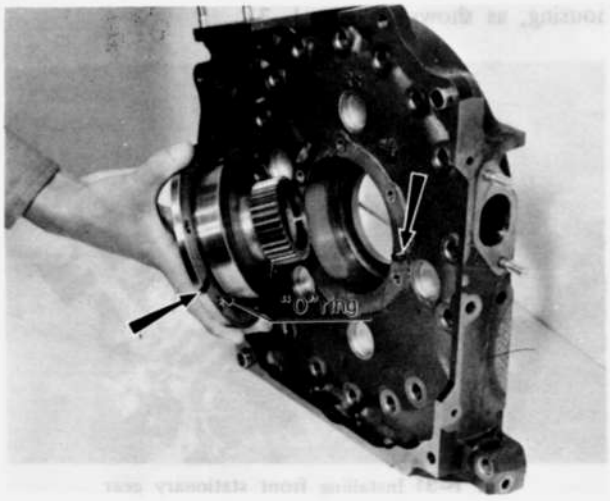

Fig. 1–33 Installing rear stationary gear

1–C–7. Inspecting Rotor Housing

1. Check the chrominum plated surface on the rotor housing for scoring, flaking or any damage.

If any of these conditions exists excessively, replace the rotor housing.

2. Check the rotor housing width at points close to the trochoid surface by using a micrometer. The measurements should be taken at four points, as shown in Fig. 1–34.

If the difference between the value of point Ⓐ and the minimum value among the points Ⓑ, Ⓒ and Ⓓ exceeds **0.06 mm (0.0024 in)**, the rotor housing should be replaced with a new one.

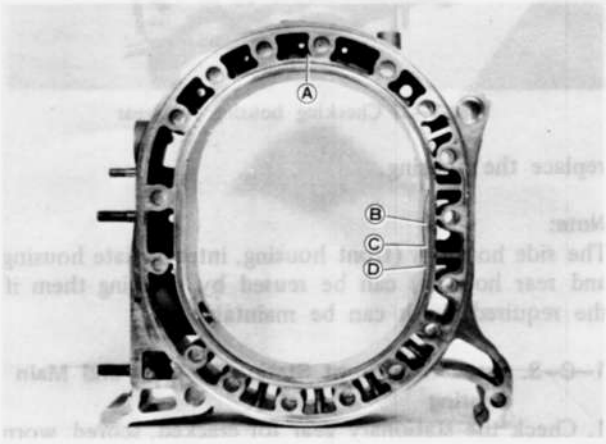

Fig. 1–34 Checking rotor housing width points

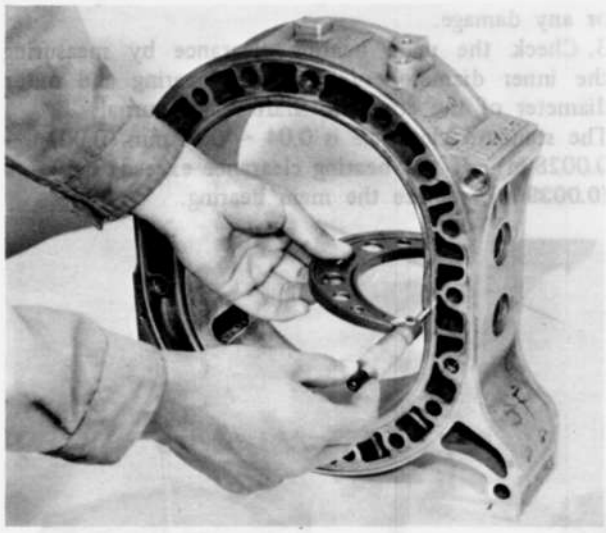

Fig. 1–35 Checking rotor housing width

1–C–8. Inspecting Rotor

1. Carefully inspect the rotor and replace if it is severely worn or damaged.
2. Check the internal gear for cracked, scored, worn or chipped teeth.
3. Check the clearance between the side housing and the rotor by measuring the rotor housing width and rotor width. The rotor width should be measured at three points, as shown in Fig. 1–36.

The difference between the maximum width of the rotor and the width of the point Ⓐ of the rotor housing (see Fig. 1–34) should be within 0.10 ~ 0.21 mm (0.0039 ~ 0.0083 in).

If the clearance is more than the specification, replace the rotor assembly. If the clearance is less than the

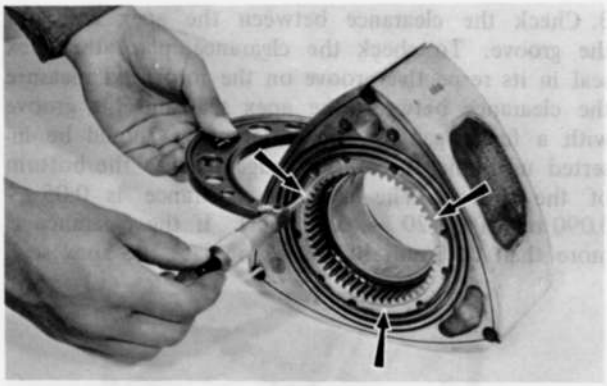

Fig. 1–36 Checking rotor width

specification, it indicates that the internal gear has come out, so strike the internal gear lightly with plastic hammer, being careful not to damage and re-check the clearance between the side housing and the rotor.

4. Check the corner seal bores for wear with the **gauge** (49 0839 165).

a) If neither end of the gauge go into the bore, use the original corner seal.

b) If the not-go-end of the gauge does not go into the bore while the go-end do, replace with a new corner seal.

c) If both ends of the gauge go into the bore, replace the rotor.

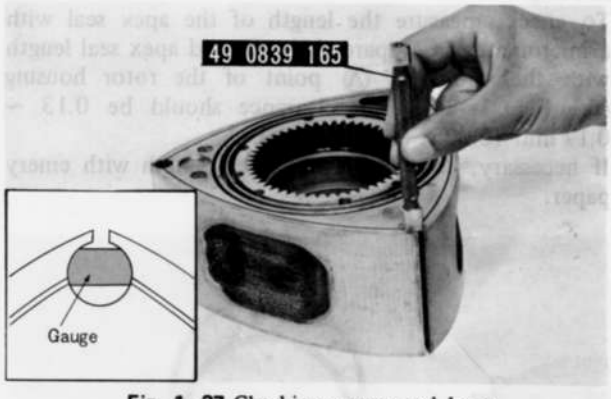

Fig. 1–37 Checking corner seal bore

1–C–9. Inspecting Rotor Bearing

1. Check the rotor bearing for wear, flaking, scoring or any damage. If any of these conditions is found, replace the bearing.

2. Check the rotor bearing clearance by measuring the inner diameter of the rotor bearing and outer diameter of the eccentric shaft rotor journal, as shown in Fig. 1–38.

The standard clearance is 0.04 ~ 0.08 mm (0.0016 ~ 0.0031 in). Replace the bearing if it is more than **0.10 mm (0.0039 in)**.

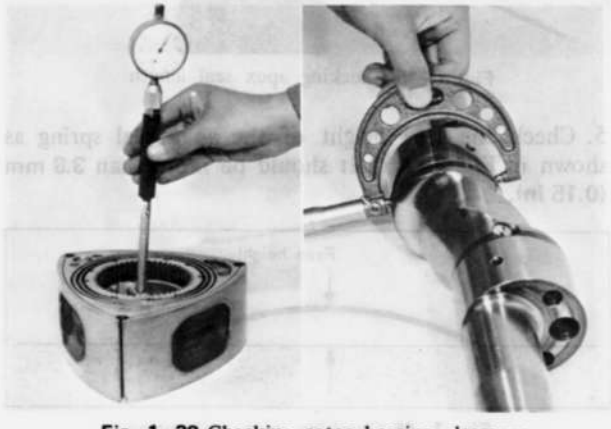

Fig. 1–38 Checking rotor bearing clearance

1–C–10. Replacing Rotor Bearing

1. Place the rotor on the support so that the internal gear is facing downward. Using the **puller & installer** (49 0813 240) without adaptor ring, press the bearing out of the rotor, being careful not to damage the internal gear.

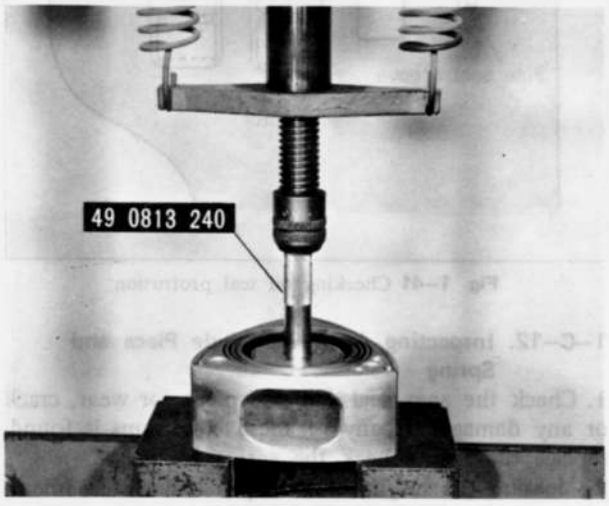

Fig. 1–39 Removing rotor bearing

2. Place the rotor on the support with internal gear faced upward. And place the new rotor bearing on the rotor so that the bearing lug is in line with the slot of the rotor bore.

3. Remove the screws attaching the adaptor ring to the replacer. Using the replacer and adaptor, press fit the new bearing until the bearing is flush with the rotor boss.



Fig. 1–40 Installing rotor bearing

1–C–11. Inspecting Rotor Oil Seal and Spring

1. Check the oil seal for wear or any damage. If the lip width of the oil seal is more than **0.8 mm (0.031 in)**, replace the oil seal.
2. Check the free movement of the oil seal in the rotor groove by pressing with finger.
3. Check the oil seal protrusion as shown in Fig. 1–41 and replace the oil seal spring if the protrusion is less than **0.5 mm (0.02 in)**.

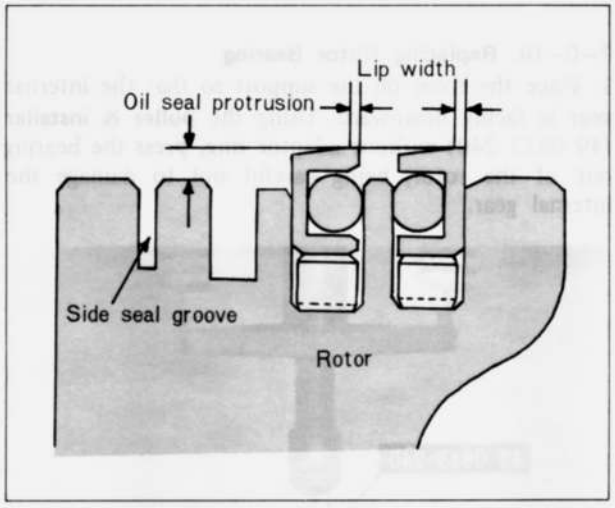

Fig. 1–41 Checking oil seal protrusion

1–C–12. Inspecting Apex Seal, Side Piece and Spring

1. Check the apex seal and side piece for wear, crack or any damage. If any of these conditions is found, replace the seal. Check the spring for wear.
2. Measure the height of the apex seal with a micrometer at two positions shown in Fig. 1–42. Replace if the height is less than **7.0 mm (0.276 in)**.

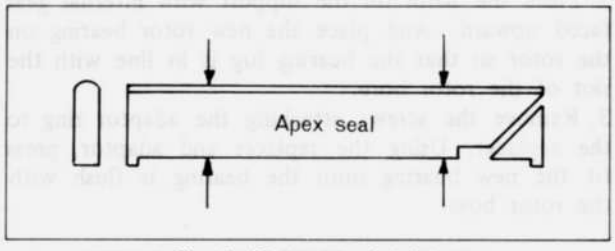

Fig. 1–42 Apex seal height



Fig. 1–43 Checking apex seal height

3. Check the clearance between the apex seal and the groove. To check the clearance, place the apex seal in its respective groove on the rotor and measure the clearance between the apex seal and the groove with a feeler gauge. The feeler gauge should be inserted until the tip of the gauge reaches the bottom of the groove. The standard clearance is 0.05 ~ 0.090 mm (0.0020 ~ 0.0035 in). If the clearance is more than **0.15 mm (0.006 in)**, replace the apex seal.



Fig. 1–44 Checking apex seal and groove

4. When the apex seal is replaced with a new one, check the clearance between the apex seal and side housing.
To check, measure the length of the apex seal with a micrometer. Compare the measured apex seal length with the width of Ⓐ point of the rotor housing (see Fig. 1–34). The clearance should be 0.13 ~ 0.17 mm (0.0051 ~ 0.0067 in).
If necessary, correct the apex seal length with emery paper.

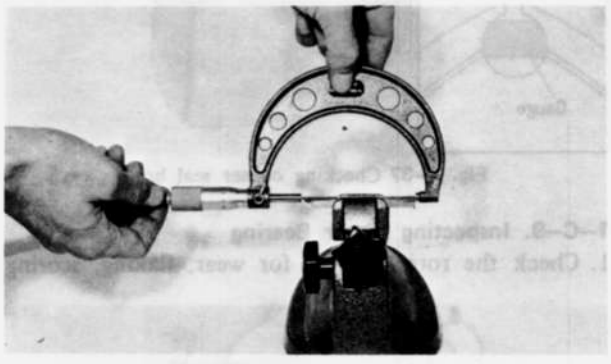

Fig. 1–45 Checking apex seal length

5. Check the free height of the apex seal spring as shown in Fig. 1–46. It should be more than **3.8 mm (0.15 in)**.

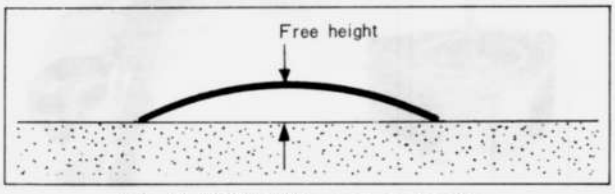

Fig. 1–46 Checking apex seal spring

1–C–13. Inspecting Side Seal and Spring

1. Check the free movement of the side seal in the rotor groove by pressing with finger.
2. Check the side seal protrusion from the rotor surface and replace the side seal spring if the protrusion is less than **0.5 mm (0.02 in).**
3. Check the clearance between the side seal and the groove with a feeler gauge, as shown in Fig. 1–47. The standard clearance is 0.03 ~ 0.07 mm (0.0012 ~ 0.0028 in). If the clearance exceeds **0.10 mm (0.0040 in),** replace the side seal.

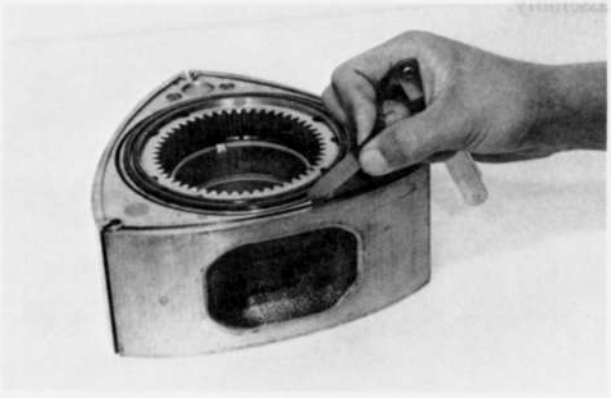

Fig. 1–47 Checking side seal clearance

4. Using a feeler gauge, check the clearance between the side seal and the corner seal with these seals installed on the rotor, as shown in Fig. 1–48. If the clearance exceeds **0.4 mm (0.016 in),** replace the side seal.

When the side seal is replaced, adjust the clearance between the side seal and the corner seal by grinding the one end of the side seal along the round shape of the corner seal with a fine file so that the clearance will be **0.05 ~ 0.15 mm (0.002 ~ 0.006 in).**

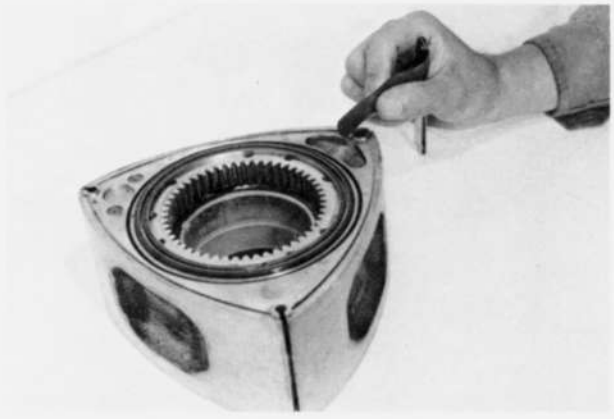

Fig. 1–48 Checking seal clearance

1–C–14. Inspecting Corner Seal and Spring

1. Check the corner seal for wear, crack or any damage. If any of these conditions is found, replace the seal. Check the spring for wear.
2. Check the free movement of the corner seal in the rotor groove by pressing with finger.
3. Check the corner seal protrusion from the rotor surface and replace the corner seal spring if the protrusion is less than **0.5 mm (0.02 in).**

1–C–15. Inspecting Eccentric Shaft

1. Check the shaft for cracks, scratches, wear or any damage. Be sure that the oil passages are open.
2. Check the shaft for run-out. To check, mount the shaft on "V"-blocks and apply a dial indicator. Slowly rotate the shaft and note the reading on the indicator. If the run-out is more than **0.06 mm (0.0024 in),** replace the shaft with a new one.

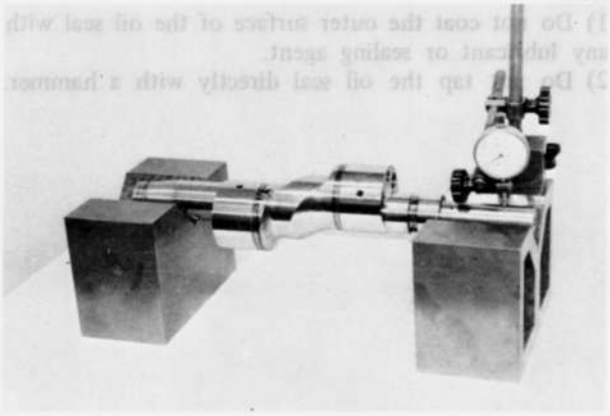

Fig. 1–49 Checking eccentric shaft for run-out

3. Check the blind plug in the shaft end for oil leakage or looseness. If any oil leakage is found, remove the blind plug with a hexagonal Allen key and replace the "O" ring.
4. The oil jets are installed in the eccentric shaft. The oil jets open when the number of engine revolutions increases and the oil pressure rises. Check for spring weakness, stick or damage of the steel ball.

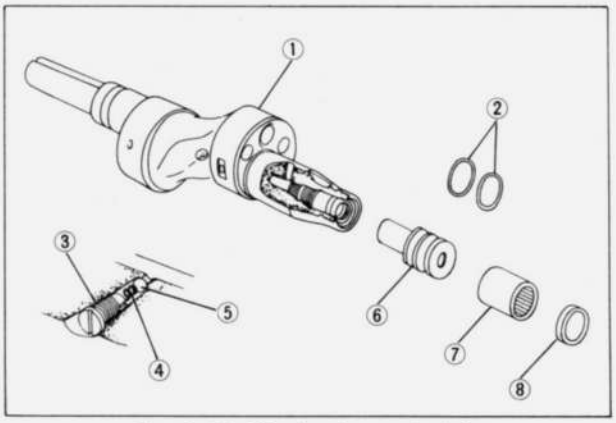

Fig. 1–50 Pilot bearing and oil jet

1. Eccentric shaft	5. Steel ball
2. "O" ring	6. Blind plug
3. Plug	7. Pilot bearing
4. Spring	8. Oil seal

1–C–16. Inspecting Needle Bearing

Check the needle bearing for wear or damage.
Inspect the bearing housing and thrust plate for wear or any damage.

1–C–17. Inspecting Eccentric Shaft Front and Rear Oil Seals

Check the front oil seal fitted into the front cover and the rear oil seal fitted into the rear stationary gear.

If it is worn or damaged, replace the oil seal as follows:
1. Remove the oil seal by using a suitable tool.
2. Clean the oil seal mounting bore.
3. Position a new oil seal on its mounting bore and place a hardwood on the oil seal.
Then, install the oil seal while tapping the hardwood with a hammer until it is firmly seated.

Note:
1) Do not coat the outer surface of the oil seal with any lubricant or sealing agent.
2) Do not tap the oil seal directly with a hammer.

1–C–18. Checking Oil Pump Drive Chain and Sprockets

Check the oil pump drive chain for broken links. Check the eccentric shaft sprocket and oil pump sprocket for cracks and worn or damaged teeth. If any defects are found, replace with new parts.

1–C–19. Checking Chain Adjuster

Check the rubber pad on the chain adjuster for wear or damage and the adjuster spring for loss of tension. If they are defective, replace with a new adjuster assembly.

1–D. ENGINE ASSEMBLY

The procedures for assembling the engine when the engine is to be completely overhauled are as follows:

1–D–1. Installing Oil Seal

1. Place the rotor on a rubber pad or cloth.
2. Install the oil seal springs in their respective grooves on the rotor with each round edge of the spring fitted in the stopper hole in the oil seal grooves as shown in Fig. 1–51.

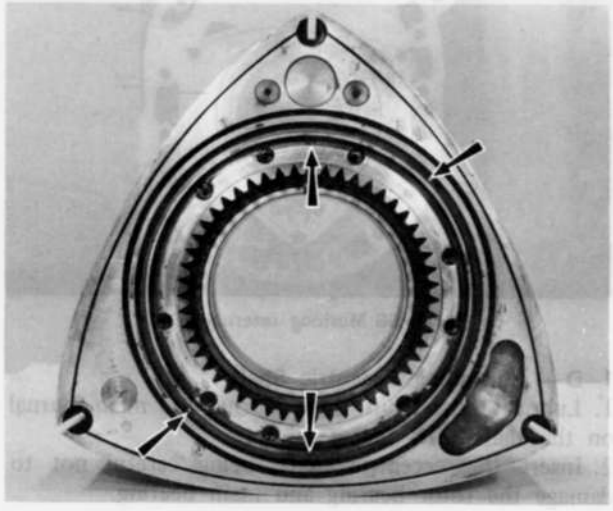

Fig. 1–51 Stopper hole of oil seal spring

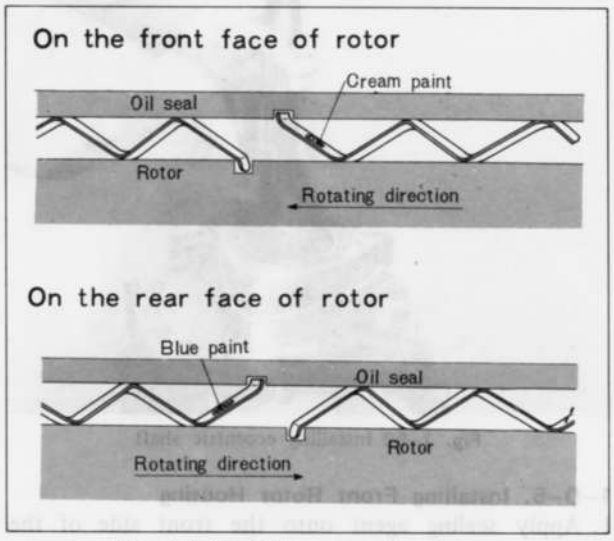

Fig. 1–52 Installing oil seal springs

The oil seal springs have been painted in cream or blue color. The **cream-painted** springs should be fitted on the front faces of both front and rear rotors. While the **blue-painted** springs should be fitted on the rear faces.

3. Install a new "O" ring in each oil seal.
4. Place the inner oil seal to the oil seal groove so that the square edge of the spring fits in the stopper notch of the oil seal.
5. Press the inner oil seal by using a used inner oil seal so that the lip surface of the oil seal sinks into a position approximately 0.4 mm (0.016 in) below the surface of the rotor, as shown in Fig. 1–53.

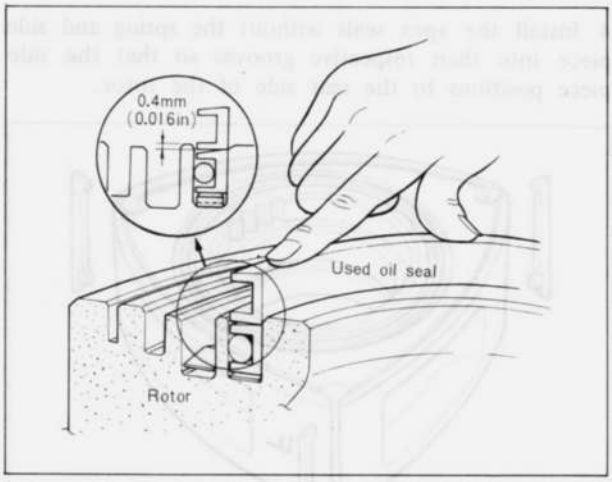

Fig. 1–53 Installing inner oil seal

6. Place the outer oil seal to the oil seal groove so that the square edge of the spring fits in the stopper notch of the oil seal.
7. Push the oil seal slowly with fingers.

Note:

1) When replacing the oil seal, confirm the smooth movement of oil seal by placing the oil seal on the oil seal spring in the groove before inserting the "O" ring.
2) Be careful not to deform the lip of the oil seal.

8. Apply sufficient engine oil onto each oil seal, and confirm the smooth movement of each oil seal by pressing the oil seal.
9. Install the oil seal springs and oil seals on the other side of the rotor.

1–D–2. Installing Front Side Seals

1. Place the front rotor on the rubber pad or cloth with the internal gear upward.
2. Cut the assist piece with a knife so that its length becomes to 2.0 ~ 2.8 mm (0.08 ~ 0.10 in).
3. Peel the paper stuck on the assist piece and stick the assist piece on the apex seal, as shown in Fig. 1–54.

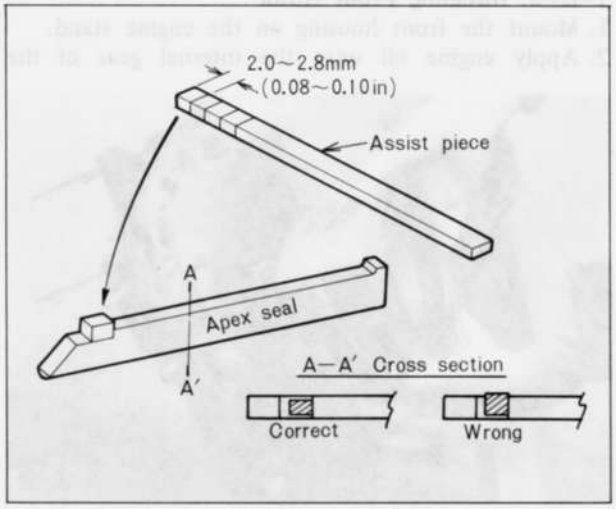

Fig. 1–54 Sticking assist piece

4. Install the apex seals without the spring and side piece into their respective grooves so that the side piece positions to the rear side of the rotor.

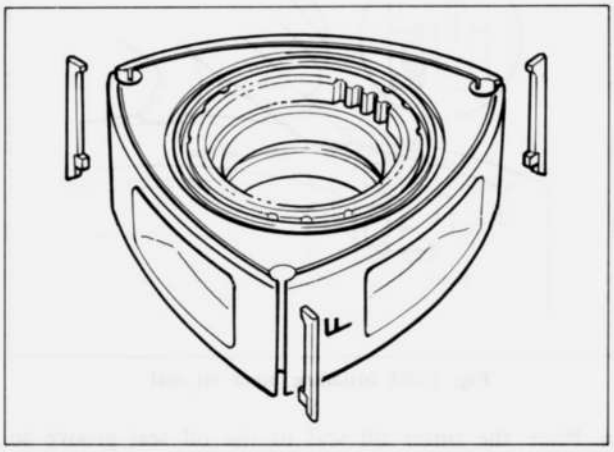

Fig. 1–55 Installing apex seal

5. Place the corner seal springs and corner seals into their respective grooves.
6. Fit the side seal springs and side seals into their respective grooves, as shown in Fig. 1–56.
7. Apply engine oil onto each seal, and confirm the smooth movement of each seal by pressing its head.



Fig. 1–56 Installing side seal

1–D–3. Installing Front Rotor

1. Mount the front housing on the engine stand.
2. Apply engine oil onto the internal gear of the rotor.
3. Place the front rotor assembly on the front housing taking care not to drop the seals into the port.
4. Mesh the internal gear and stationary gear so that one of the rotor apexes is set to any one of the four places shown in Fig. 1–58.

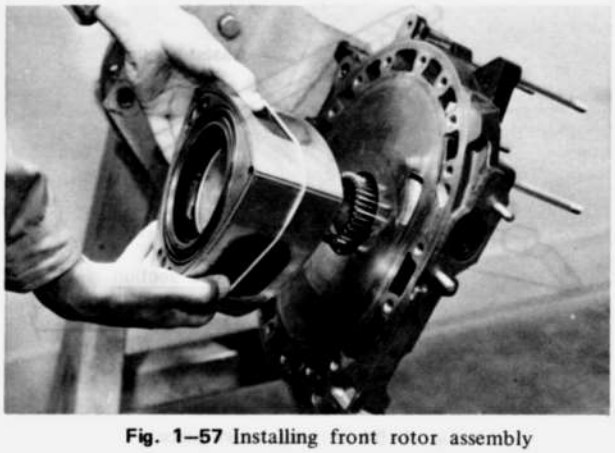

Fig. 1–57 Installing front rotor assembly

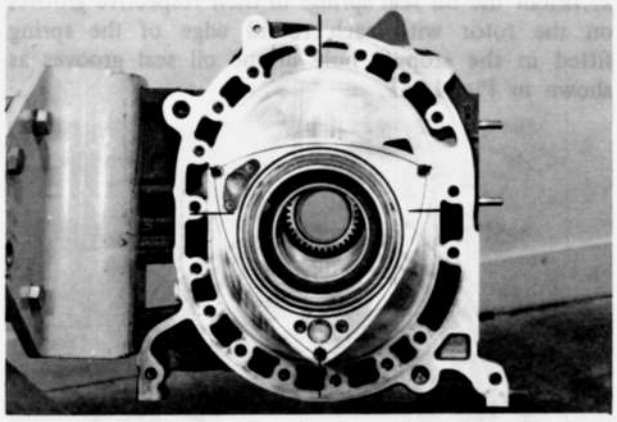

Fig. 1–58 Meshing internal gear

1–D–4. Installing Eccentric Shaft

1. Lubricate the front rotor journal and main journal on the shaft with engine oil.
2. Insert the eccentric shaft, being careful not to damage the rotor bearing and main bearing.

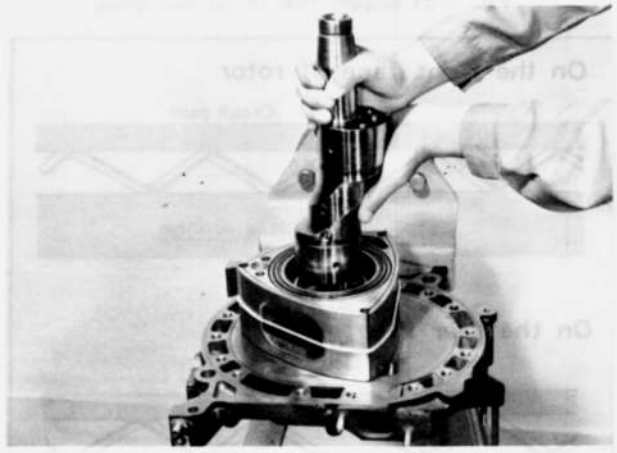

Fig. 1–59 Installing eccentric shaft

1–D–5. Installing Front Rotor Housing

1. Apply sealing agent onto the front side of the

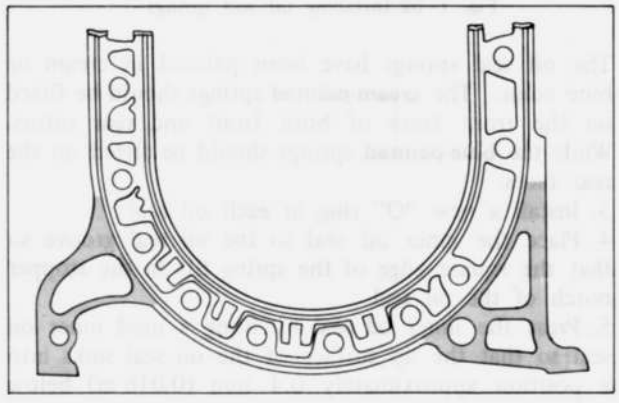

Fig. 1–60 Applying area of sealing agent

front rotor housing, as shown in Fig. 1–60.

Note: The front and rear rotor housings are not interchangeable. Install the rotor housings as shown in Fig. 1–61.

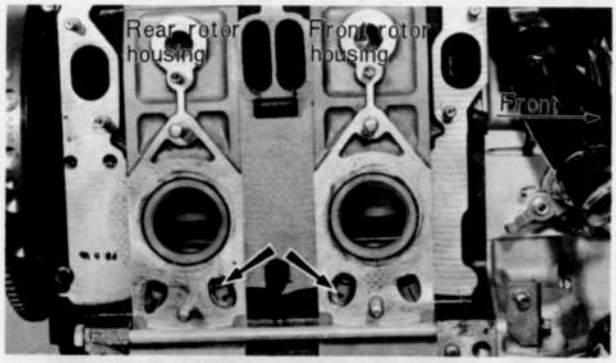

Fig. 1–61 Front and rear rotor housing

2. Slightly apply vaseline onto new "O" ring and sealing rubbers to prevent them from coming off, and place the "O" ring and sealing rubbers on the front side of the front rotor housing.

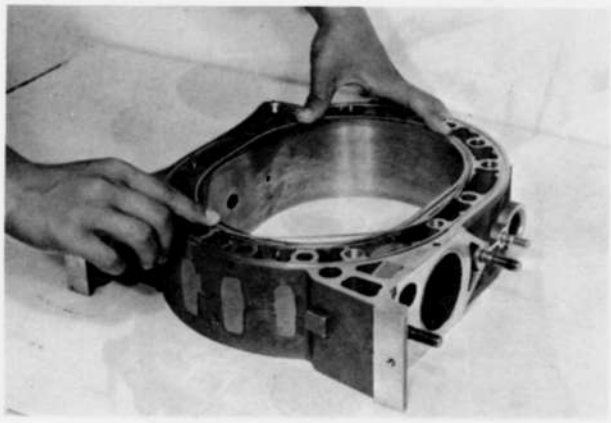

Fig. 1–62 Installing sealing rubber

Note:
1) The wider white line of the inner sealing rubber should face to combustion chamber and the seam of the sealing rubber should be placed at the position as shown in Fig. 1–63.
Do not stretch the sealing rubbers.

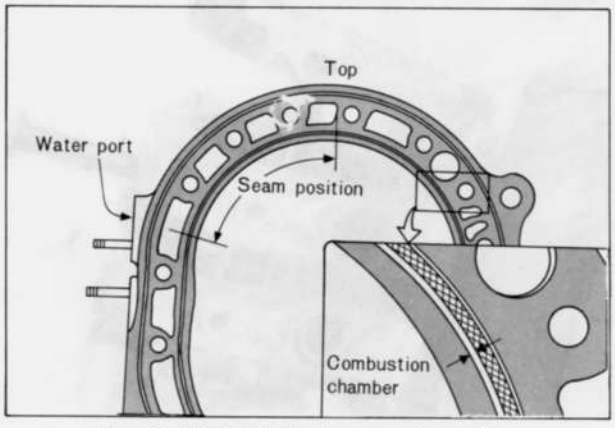

Fig. 1–63 Positioning inner sealing rubber

2) When engine overhauling, install the protector to behind of the inner sealing rubber, as shown in Fig. 1–64, to improve the durability of the sealing rubber.

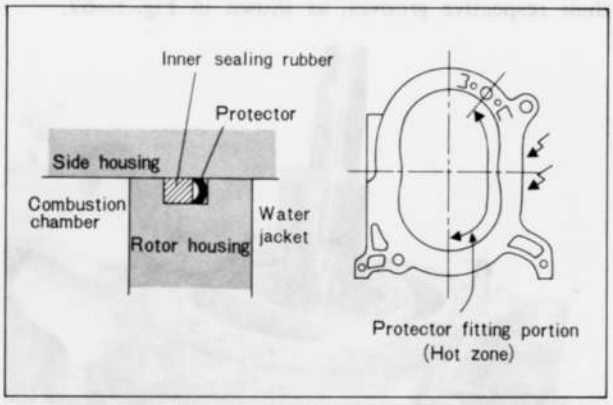

Fig. 1–64 Installing sealing rubber protector

3. Invert the front rotor housing and install it onto the front housing, being careful not to drop the sealing rubbers and "O" ring out of the grooves.
4. Apply engine oil onto the tubular dowels and insert the tubular dowels through the front rotor housing holes into the front housing holes, as shown in Fig. 1–65.

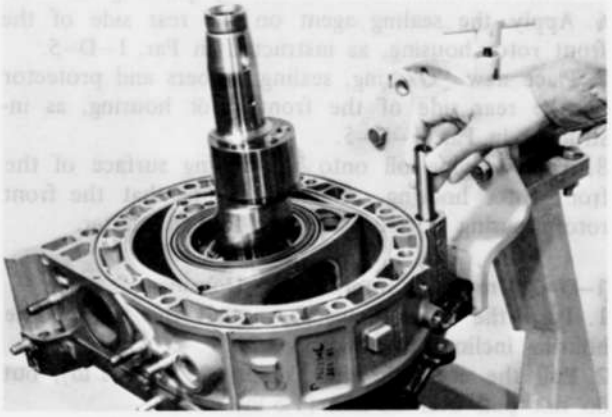

Fig. 1–65 Installing tubular dowel

1–D–6. Installing Rear Side Seals

1. Insert the each apex seal spring confirming the spring direction as shown in Fig. 1–66.

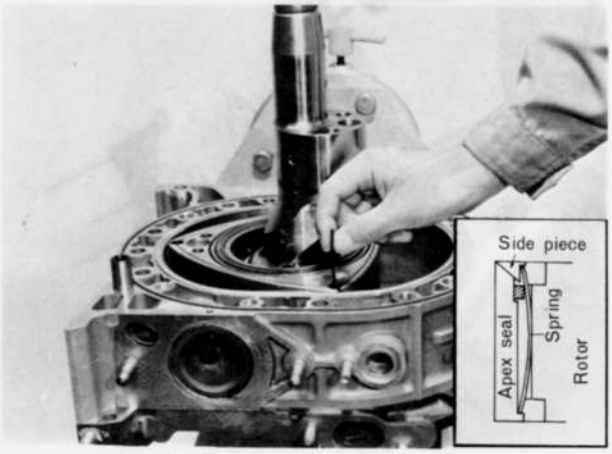

Fig. 1–66 Installing apex seal spring

2. Install the corner seal springs and corner seals into their respective grooves.
3. Install the side seal springs and side seals into their respective grooves, as shown in Fig. 1–67.

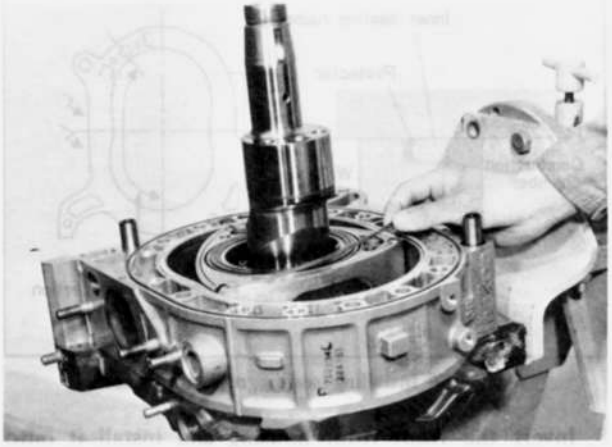

Fig. 1–67 Installing side seal

4. Fit the each side piece to its original position. And confirm that the spring should be set correctly on the side piece.
5. Apply engine oil onto each seal, and confirm the smooth movement of each seal by pressing its head.
6. Apply the sealing agent on the rear side of the front rotor housing, as instructed in Par. 1–D–5.
7. Place new "O" ring, sealing rubbers and protector on the rear side of the front rotor housing, as instructed in Par. 1–D–5.
8. Apply engine oil onto the sliding surface of the front rotor housing. And make sure that the front rotor housing is free from any foreign matter.

1–D–7. Installing Intermediate Housing

1. Turn the front housing so that the top of the housing inclines to upward.
2. Pull the eccentric shaft about 25 mm (1 in), but do not pull over 35 mm (1.5 in).
3. Install the intermediate housing through the eccentric shaft on the front rotor housing.

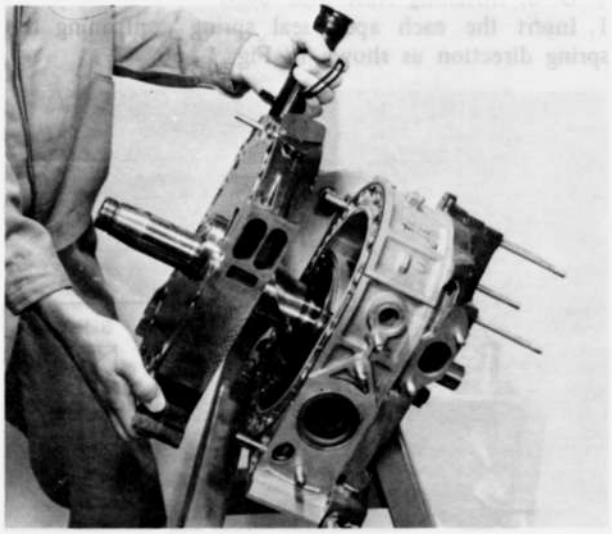

Fig. 1–68 Installing intermediate housing

1–D–8. Installing Rear Rotor and Rear Rotor Housing

1. Turn the engine on the engine stand so that the rear of the engine is up.
2. Install the rear rotor and rear rotor housing, referring to Par. 1–D–3, 1–D–5 and 1–D–6.

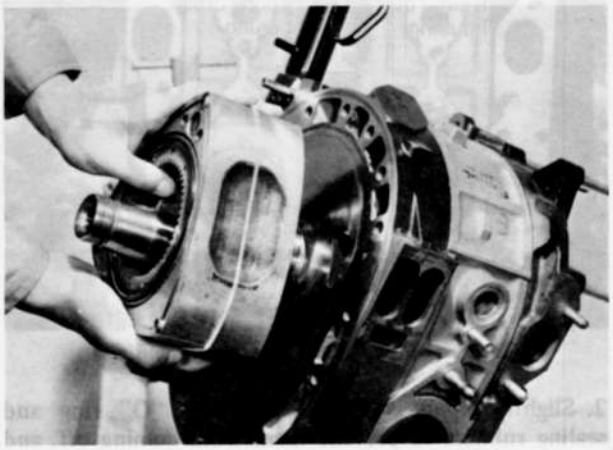

Fig. 1–69 Installing rear rotor assembly

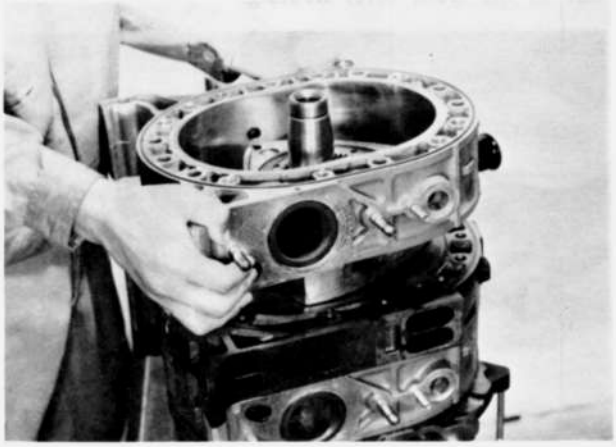

Fig. 1–70 Installing rear rotor housing

1–D–9. Installing Rear Housing

1. Apply sufficient engine oil onto the stationary gear and main bearing.
2. Install the rear housing on the rear rotor housing.

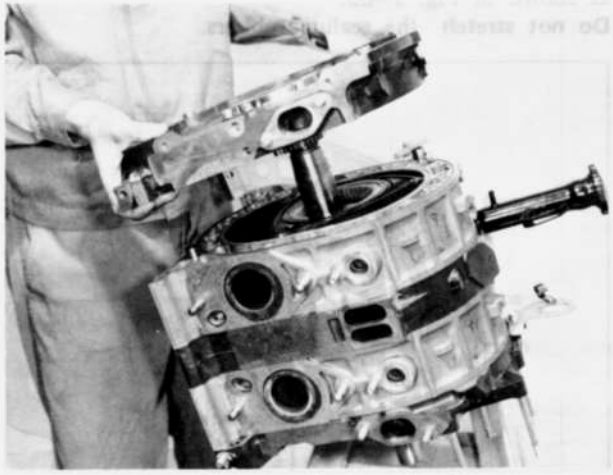

Fig. 1–71 Installing rear housing

1–D–10. Tightening Tension Bolts

1. Install a new sealing washer to each tension bolt.
2. Apply engine oil onto the thread of the bolt.
3. Fit the tension bolts and tighten the bolts in the order shown in Fig. 1–72. The specified torque is **3.2 ~ 3.8 m-kg (23 ~ 27 ft-lb).** Do not tighten the tension bolts at one time.
4. Turn the eccentric shaft and make sure that the rotation is light and smooth.

Note:
Replace the sealing washer in the tension bolt when the engine is overhauled.

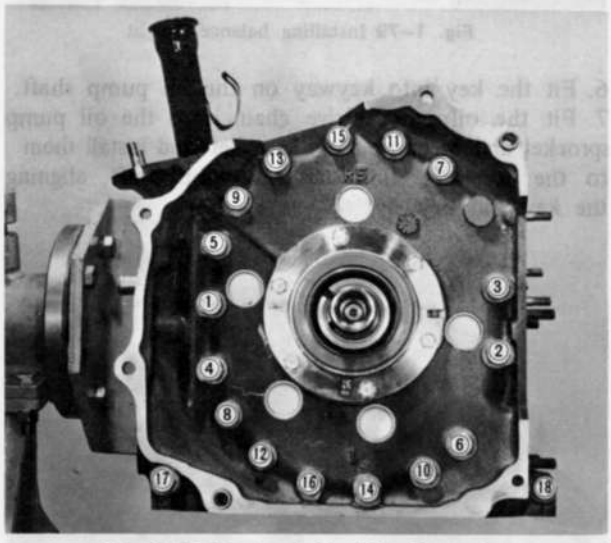

Fig. 1–72 Tension bolt tightening order

1–D–11. Installing Flywheel (Manual transmission)

1. Turn the engine so that the top of the engine is up.
2. Apply engine oil to the oil seal in the rear housing.
3. Fit the key into keyway on the eccentric shaft.
4. Install the flywheel to the rear end of the eccentric shaft, aligning the keyway of the flywheel with the key.

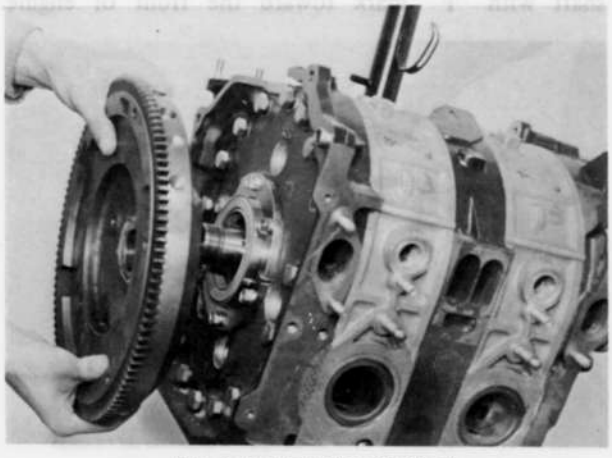

Fig. 1–73 Installing flywheel

5. Apply sealing agent to both sides of the flywheel lock washer and place it in position. Install the nut.
6. Install the **brake** (49 1881 060) and with the **box wrench** (49 0820 035) tighten the nut to 40.0 ~ 50.0 m-kg (289 ~ 362 ft-lb).
7. Bend the tab of the lockwasher.
8. Install the clutch disc and clutch cover assembly on the flywheel, as described in Par. 6–D.

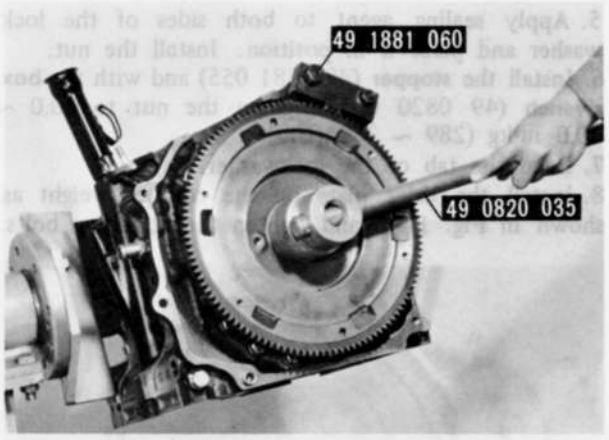

Fig. 1–74 Tightening flywheel nut

1–D–12. Installing Counter Weight (Automatic transmission)

1. Turn the engine so that the top of the engine is up.
2. Apply engine oil to the oil seal in the rear housing.
3. Fit the key into keyway on the eccentric shaft.
4. Install counter weight to the rear end of the eccentric shaft, aligning the keyway of the counter weight with the key.

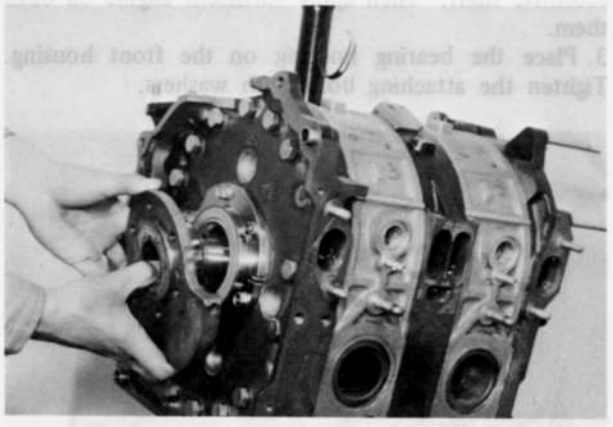

Fig. 1–75 Installing counter weight

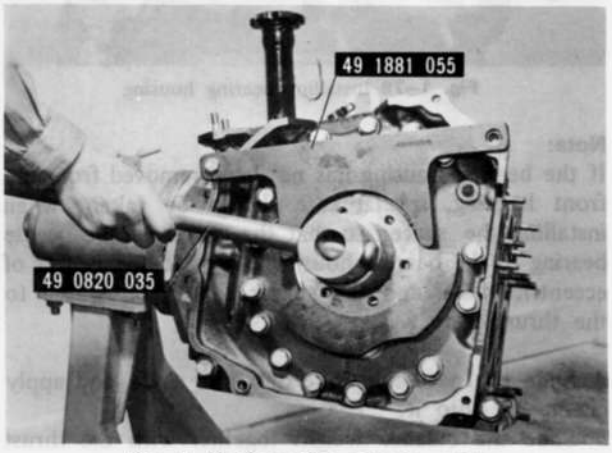

Fig. 1–76 Tightening counter weight nut

5. Apply sealing agent to both sides of the lock washer and place it in position. Install the nut.
6. Install the **stopper** (49 1881 055) and with the **box wrench** (49 0820 035) tighten the nut to 40.0 ~ 50.0 m-kg (289 ~ 362 ft-lb).
7. Bend the tab of the lockwasher.
8. Install the drive plate on the counter weight as shown in Fig. 1–77 and tighten the attaching bolts.

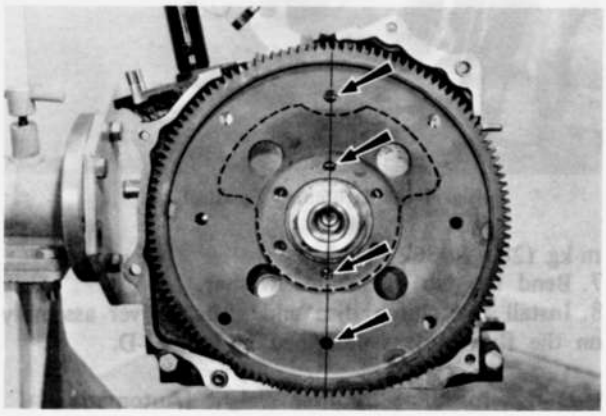

Fig. 1–77 Installing drive plate

1–D–13. Adjusting Eccentric Shaft End Play

1. Turn the engine on the engine stand so that the front of the engine is up.
2. Fit the thrust plate with the chamfer downward, and slide the spacer and needle bearing onto the eccentric shaft. Then apply sufficient engine oil onto them.
3. Place the bearing housing on the front housing. Tighten the attaching bolts with washers.

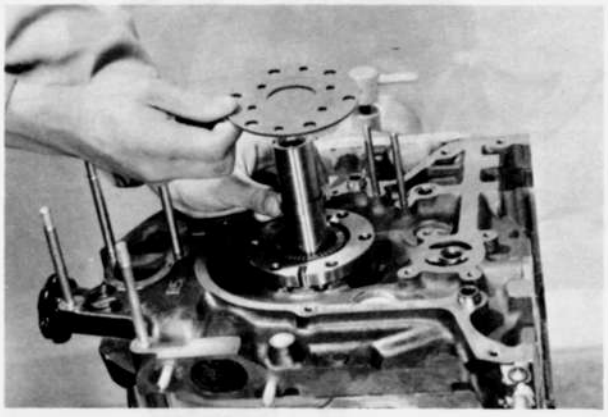

Fig. 1–78 Installing bearing housing

Note:
If the bearing housing has not been removed from the front housing, special care should be taken, when installing the spacer, so that the center of the needle bearing in the bearing housing comes to the center of eccentric shaft, and the spacer should be seated to the thrust plate.

4. Slide the needle bearing onto the shaft, and apply engine oil onto it.
5. Slide the balance weight together with the thrust washer onto the shaft.

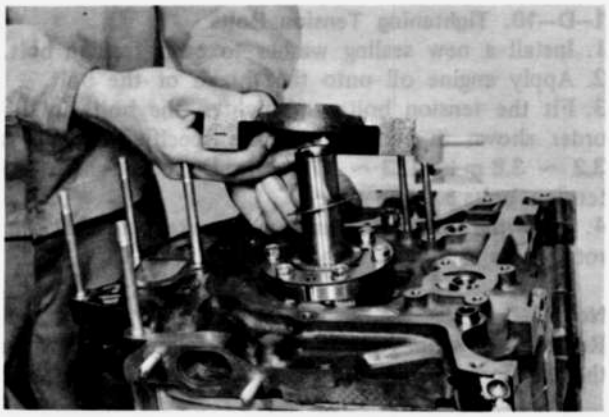

Fig. 1–79 Installing balance weight

6. Fit the key into keyway on the oil pump shaft.
7. Fit the oil pump drive chain onto the oil pump sprocket and eccentric shaft sprocket, and install them to the eccentric shaft and oil pump shaft, aligning the key and keyway.

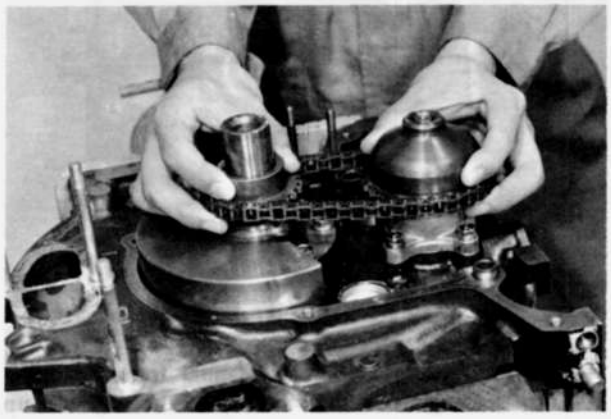

Fig. 1–80 Installing oil pump drive chain and sprockets

8. Aligning the keyways of the eccentric shaft sprocket and balance weight, and install the key.
9. Slide the distributor drive gear onto the eccentric shaft with "F" mark toward the front of engine.

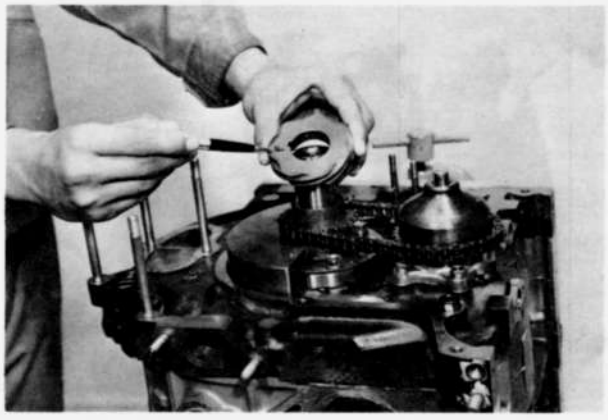

Fig. 1–81 Installing distributor drive gear

10. Install the eccentric shaft pulley onto the shaft aligning the keyway of the pulley with the key.
11. Install the pulley bolt and washer. Tighten the bolt to **10 ~ 12 m-kg (72 ~ 87 ft-lb).**

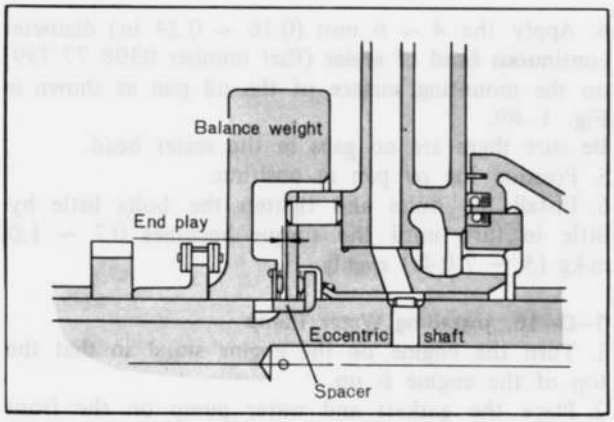

Fig. 1–82 Eccentric shaft end play

12. Turn the engine on the engine stand so that the top of the engine is up.
13. To check the eccentric shaft end play, position a dial indicator on the rear housing so as to contact the feeler with the flywheel or the counter weight as shown in Fig.1–83.
Move the flywheel fore and aft, and note the reading of the indicator. The standard end play is 0.04 ~ 0.07 mm (0.0016 ~ 0.0028 in).

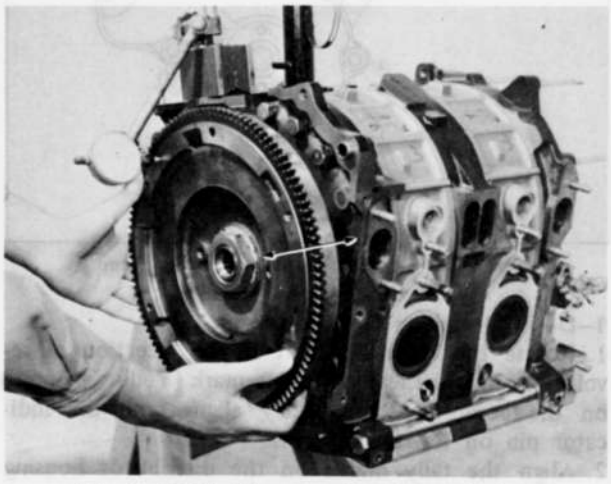

Fig. 1–83 Checking eccentric shaft end play

If the end play is more than **0.09 mm (0.0035 in)**, adjust it by grinding the spacer on a surface plate using an emery paper or by replacing the spacer with a thinner one.



Fig. 1–84 Adjusting spacer

If the end play is less than 0.04 mm (0.0016 in), replace with a thicker spacer.
The spacers are available in the following thicknesses:

Identification Mark	Thickness
X	8.08 ± 0.01 mm (0.3181 ± 0.004 in)
Y	8.04 ± 0.01 mm (0.3165 ± 0.004 in)
V	8.02 ± 0.01 mm (0.3158 ± 0.004 in)
Z	8.00 ± 0.01 mm (0.3150 ± 0.004 in)

14. If the end play is 0.04 ~ 0.09 mm (0.0016 ~ 0.0035 in), proceed as follows to install the oil pump chain adjuster.

1–D–14. Installing Oil Pump Chain Adjuster
1. Turn the engine on the engine stand so that the front of the engine is up.
2. Remove the eccentric shaft pulley.
3. Tighten the oil pump sprocket nut and bend the tab of the lock washer.
4. Place the chain adjuster in position and tighten the attaching nuts, then check the amount of protrusion of the chain adjuster as shown in Fig. 1–85. If the protrusion exceeds 12 mm (0.47 in), replace the adjuster or chain.

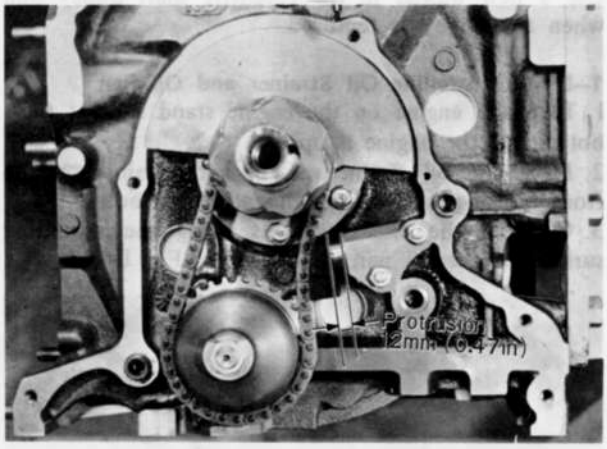

Fig. 1–85 Checking chain adjuster protrusion

5. Loosen the adjuster attaching nuts and install the guide plate. Tighten the attaching nuts securely.
6. Place a new "O" ring on the oil passage of the front housing.

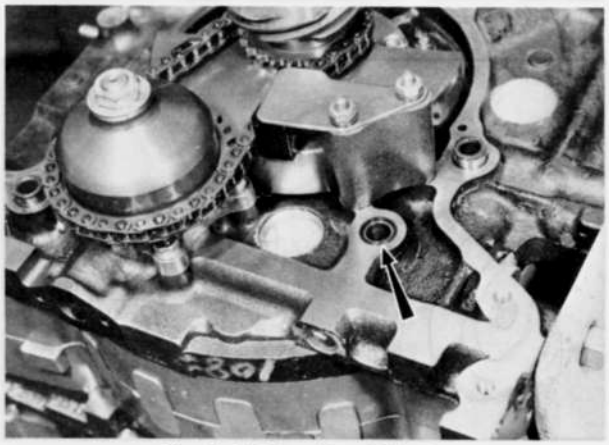

Fig. 1–86 Installing "O" ring

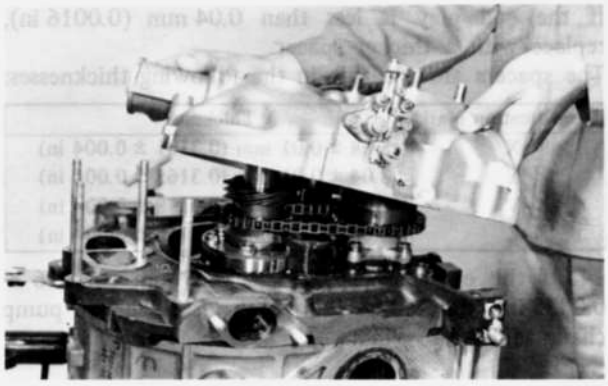

Fig. 1–87 Installing front cover

7. Place the gasket and front cover on the front housing, and tighten the attaching bolts.
8. Apply engine oil onto the oil seal in the front cover.
9. Install the eccentric shaft pulley onto the shaft and tighten the pulley bolt to **10 ~ 12 m-kg (72 ~ 87 ft-lb)**.

Note:
Use a new washer in the eccentric shaft pulley bolt when the pulley is removed.

1–D–15. Installing Oil Strainer and Oil Pan

1. Turn the engine on the engine stand so that the bottom of the engine is up.
2. Place the oil strainer gasket and strainer on the front housing and tighten the attaching bolts.
3. Cut off the excess gaskets along the mounting surface of the oil pan, as shown in Fig. 1–88.

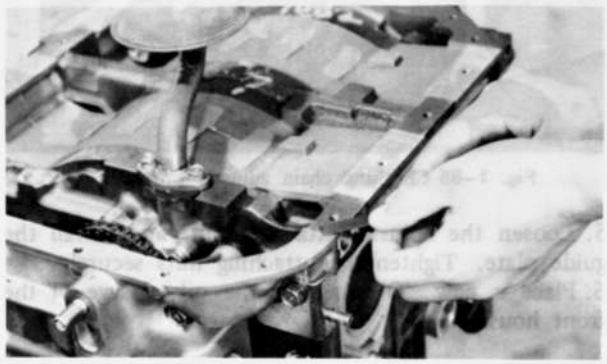

Fig. 1–88 Cutting off excess gasket

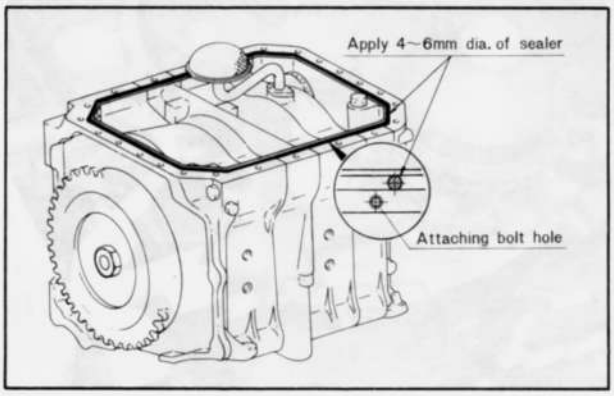

Fig. 1–89 Applying sealing agent

4. Apply the 4 ~ 6 mm (0.16 ~ 0.24 in) diameter continuous bead of **sealer** (Part number 0398 77 739) on the mounting surface of the oil pan as shown in Fig. 1–89.
Be sure there are no gaps in the sealer bead.
5. Position the oil pan in position.
6. Install the bolts and tighten the bolts little by little in turn until the torque becomes 0.7 ~ 1.0 m-kg (5 ~ 7 ft-lb) evenly.

1–D–16. Installing Water Pump

1. Turn the engine on the engine stand so that the top of the engine is up.
2. Place the gaskets and water pump on the front housing, and tighten the attaching nuts evenly to 1.8 ~ 2.7 m-kg (13 ~ 20 ft-lb) in the sequence shown in Fig. 1–90.
3. Install the pulley for power steering oil pump and tighten the attaching bolts (if equipped).

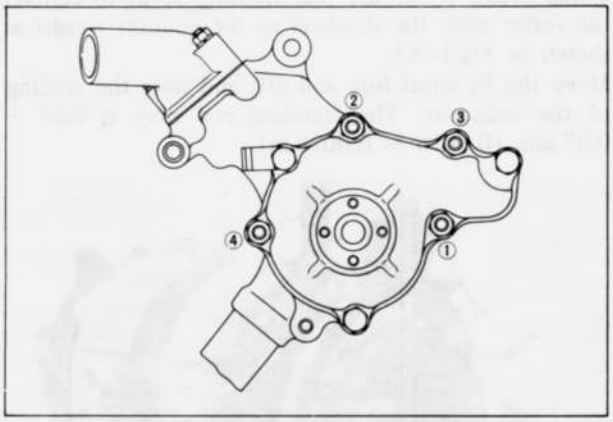

Fig. 1–90 Tightening order of water pump

1–D–17. Installing Distributor

1. Rotate the eccentric shaft in the direction of revolution until the leading timing mark (Yellow painted) on the eccentric shaft pulley aligns with the indicator pin on the front cover.
2. Align the tally marks on the distributor housing and driven gear as shown in Fig. 1–91.

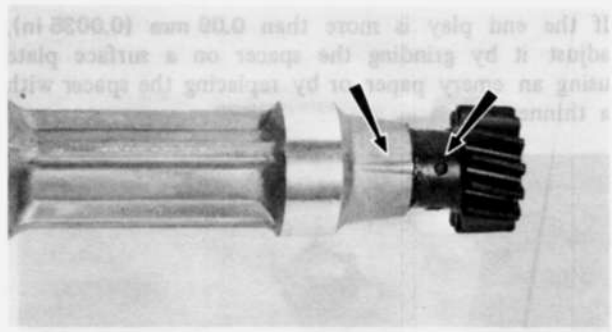

Fig. 1–91 Aligning tally marks

3. Install the distributor and lock nut.
4. Turn the distributor housing to the left until the contact points close. Then, turn it to the right and stop it when the leading contact points just start to separate. Tighten the lock nut.
5. Install the distributor rotor and cap.

1–D–18. Installing Thermal Reactor

1. Place the gasket in position.
2. Install the thermal reactor and tighten the attaching nuts to 3.0 ~ 5.5 m-kg (22 ~ 40 ft-lb).

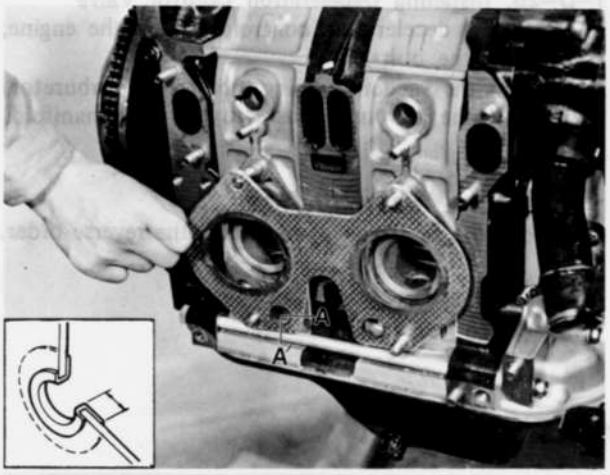

Fig. 1–92 Installing thermal reactor gasket

1–D–19. Installing Inlet Manifold and Carburetor Assembly

1. Place the "O" rings and gasket in position.
2. Install the inlet manifold and carburetor assembly and tighten the attaching nuts.



Fig. 1–93 Installing "O" ring

3. Install the thermal reactor covers and tighten the attaching bolts and nuts.
4. Connect the air outlet hose (thermal reactor ~ air control valve) to the air control valve.
5. Connect the oil hoses at the metering oil pump outlets.
6. Connect the metering oil pump connecting rod to the metering oil pump lever with washer and cotter pin.
7. Connect the vacuum sensing tube to the vacuum control unit on the distributor.

1–D–20. Installing Alternator and Drive Belt

1. Place the alternator to the bracket with the bolt, and check the clearance as shown in Fig. 1–94.

If the clearance is more than 0.15 mm (0.0059 in), adjust it by using the following adjust shim.



Fig. 1–94 Adjusting alternator fitting

0.15 mm	(0.0059 in)
0.3 mm	(0.0118 in)
0.5 mm	(0.0197 in)

2. Place the drive belt on the alternator pulley and install the alternator strap bolt.
3. Move the alternator toward or away from the engine until the correct tension is obtained.

Correct adjustment will permit the belt to flex **15 ± 2 mm (0.59 ± 0.08 in)** by pressing with thumb (10 kg : 22 lb) midway between the alternator pulley and eccentric shaft pulley.

4. Tighten the alternator mounting bolt.

1–D–21. Installing Air Pump and Drive Belt

1. Position the air pump to the mounting bracket and install the mounting bolt. Do not tighten.
2. Place the drive belt on the air pump and install the air pump strap bolt.
3. Move the air pump toward or away from the engine until the correct tension is obtained.

Correct adjustment will permit the belt to flex **12 ± 1 mm (0.47 ± 0.04 in)** by pressing with thumb (10 kg : 22 lb) midway between the water pump pulley and air pump pulley.

4. Tighten the air pump mounting bolt.

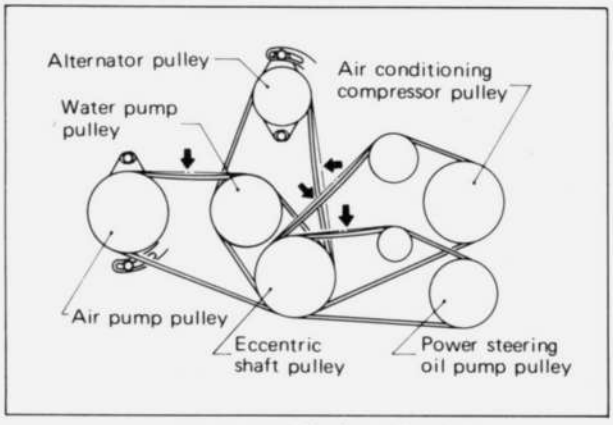

Fig. 1–95 Adjusting drive belts

1–D–22. Installing Oil Filter and Cover

1. Position the "O" rings to the cover.
2. Install the oil filter and cover assembly on to the rear housing and tighten the attaching nuts.

1–D–23. Installing EGR Valve and EGR Solenoid (With automatic transmission, except for Canada)

1. Install the EGR valve to the intermediate hausing and tighten the bolts.
2. Install the EGR solenoid to the bracket and tighten the bolts.
3. Connect the vacuum sensing tube (EGR solenoid ~ carburetor) to the carburetor.

1–D–24. Installing Vacuum Control Valve

1. Install the vacuum control valve to the engine, and tighten the bolts.
2. Connect the vacuum sensing tube to the vacuum control unit on the distributor.
3. Connect the vacuum sensing tube to the carburetor.

1–D–25. Installing Deceleration Control Valve

1. Install the deceleration control valve to the engine, and tighten the bolts.
2. Connect the vacuum sensing tube to the carburetor.
3. Connect the air outlet hoses to the inlet manifold.

1–E. ENGINE INSTALLATION

Carry out the removing operation in the reverse order.

SPECIAL TOOLS

49 0107 680A	Engine stand	49 0813 250	Seal case
49 0839 000	Engine stand (Simplified type)	49 0813 215A	Puller, tubular dowel
49 1114 005	Hanger, engine stand	49 0813 225	Remover, oil seal
49 1881 060	Brake, ring gear	49 0813 235	Puller & Installer, main bearing
49 1881 055	Stopper, counter weight	49 0813 240	Puller & Installer, rotor bush
49 0820 035	Box wrench, flywheel	49 0839 165	Gauge, corner seal
49 0839 305A	Puller, counter weight		

EMISSION CONTROL SYSTEM

1A–A. AIR INJECTION AND THERMAL REACTOR SYSTEM ..... 1A : 1
1A–A–1. Air Pump ..... 1A : 1
1A–A–2. Air Pump Drive Belt ..... 1A : 1
1A–A–3. Check Valve ..... 1A : 1
1A–A–4. Air Control Valve ..... 1A : 2
1A–A–5. Thermal Reactor ..... 1A : 3
1A–B. IGNITION CONTROL SYSTEM (California) ..... 1A : 3
1A–B–1. Checking Trailing Ignition Operation ..... 1A : 3
1A–B–2. Checking Leading Operation ..... 1A : 4
1A–B–3. Vacuum Control Valve ..... 1A : 4
1A–B–4. Idle Switch ..... 1A : 5
1A–B–5. Relays ..... 1A : 5
1A–C. IGNITION CONTROL SYSTEM (Except for California) ..... 1A : 6
1A–C–1. Checking Ignition Control System ..... 1A : 6
1A–C–2. Idle Switch ..... 1A : 6
1A–C–3. Relays ..... 1A : 6
1A–D. EXHAUST GAS RECIRCULATION (EGR) SYSTEM (Automatic transmission for USA) ..... 1A : 6
1A–D–1. Checking EGR Valve and EGR Solenoid ..... 1A : 6
1A–D–2. Vacuum Switch and No.1 Delay Valve ..... 1A : 6
1A–D–3. EGR Relay ..... 1A : 6
1A–D–4. EGR Maintenance Warning System ..... 1A : 7
1A–E. DECELERATION CONTROL SYSTEM ..... 1A : 7
1A–E–1. Deceleration Control Valve ..... 1A : 7
1A–F. AUTOMATIC THROTTLE RELEASE SYSTEM ..... 1A : 8
1A–F–1. Checking Automatic Throttle Release System ..... 1A : 8
1A–F–2. Water Temperature Switch ..... 1A : 8
1A–F–3. No.2 Vacuum Switch and No.2 Delay Valve (California) ..... 1A : 8
1A–F–4. Choke Switch and Full choke Switch ..... 1A : 9
1A–F–5. Choke Relay ..... 1A : 9
1A–G. HEAT HAZARD PROTECTIVE AND WARNING SYSTEM ..... 1A : 9
1A–G–1. Checking Heat Hazard Protective and Warning System ..... 1A : 9
1A–G–2. Heat Hazard Sensor ..... 1A : 9
1A–H. KICK-DOWN CONTROL SYSTEM (Automatic transmission) ..... 1A : 10
1A–H–1. Checking Kick-down Control System ..... 1A : 10
1A–H–2. Checking Kick-down Relay ..... 1A : 10
1A–I. EVAPORATIVE CONTROL SYSTEM ..... 1A : 10
1A–I–1. Ventilation Valve ..... 1A : 10
1A–I–2. Charcoal Canister ..... 1A : 11
1A–I–3. Evaporative Line ..... 1A : 11
1A–I–4. Condense Tank ..... 1A : 11
1A–I–5. Check and Cut Valve (Evaporative Line) ..... 1A : 12
1A–I–6. Hoses and Connections (All system) ..... 1A : 12
SPECIAL TOOLS ..... 1A : 12

1A–A. AIR INJECTION AND THERMAL REACTOR SYSTEM

1A–A–1. Air Pump

a. Checking air pump

1. Warm up the engine until it reaches normal operating temperature. Inspect hoses and connections for leaks. Correct, if necessary, before checking air pump.
2. Check the pump for noise, If excessive, replace the air pump.
3. Check air pump belt tension. Adjust to specification, if necessary.
4. Disconnect air hose (air pump ~ air control valve) at the air control valve.
5. Connect the **air pump gauge set** (49 2113 010B) to the air hose as shown in Fig. 1A–1, and clamp hose securely to gauge.
6. Install a tachometer to the engine.
7. Start the engine and run it at idle speed.
8. Observe pressure reading on test gauge.

The pressure reading should be more than 0.115 kg/cm² (1.64 lb/in²) at 800 rpm.

9. If the air pump pressure does not meet minimum specifications, replace the air pump and repeat test.

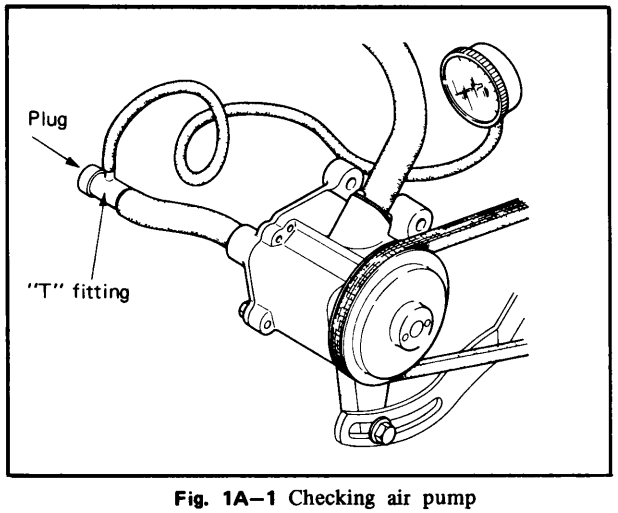

Fig. 1A–1 Checking air pump

b. Replacing air pump

1. Remove the air cleaner.
2. Disconnect the air inlet hose and outlet hose from the air pump.
3. Remove the air pump mounting and strap bolts.
4. Remove the air pump and disengage the air pump drive belt.
5. Install the air pump in the reverse order of removing and adjust the belt tension as instructed in Par. 1A–A–2.

1A–A–2. Air Pump Drive Belt

a. Checking drive belt

If the belt is broken, glazed, or worn, replace the belt with a new one. If the belt is stretched so that it cannot be tightened sufficiently, install a new belt. If the belt is noisy, check the tension of the belt. Also, check for misaligned pulleys.

b. Adjusting drive belt

1. Loosen the air pump strap bolt and mounting bolt.
2. Move the air pump toward or away from the engine until the correct tension is obtained.

Correct adjustment will permit the belt to flex **12 ± 1mm (0.47 ± 0.04 in)** by pressing with thumb (10 kg : 22 lb) midway between the water pump pulley and air pump pulley.

3. Tighten the pump mounting and strap bolts.

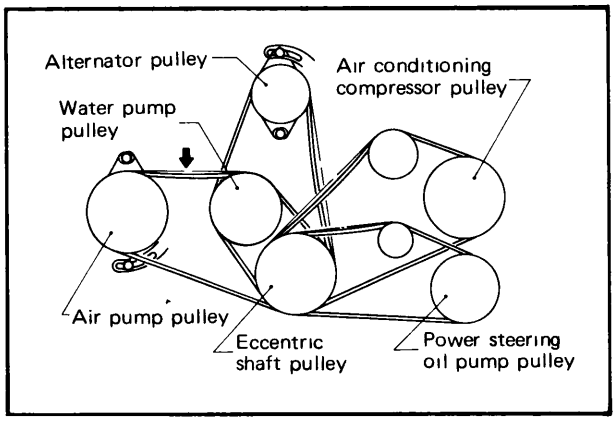

Fig. 1A–2 Adjusting drive belt

c. Replacing drive belt

1. Screw out the adjusting bolts on the idler pulleys of power steering oil pump and air conditioning compressor until the drive belts can be removed. (if equipped)
2. Loosen the air pump strap bolt and mounting bolt, then move the air pump until the drive belt can be removed.
3. Install a new belt and adjust the belt tension as instracted in Par. 1A–A–2.
4. Install the power steering oil pump and air conditioning compressor drive belts and adjust the belts tension as specified value.

1A–A–3. Check Valve

a. Checking check valve

1. Warm up the engine until it reaches normal operating temperature.

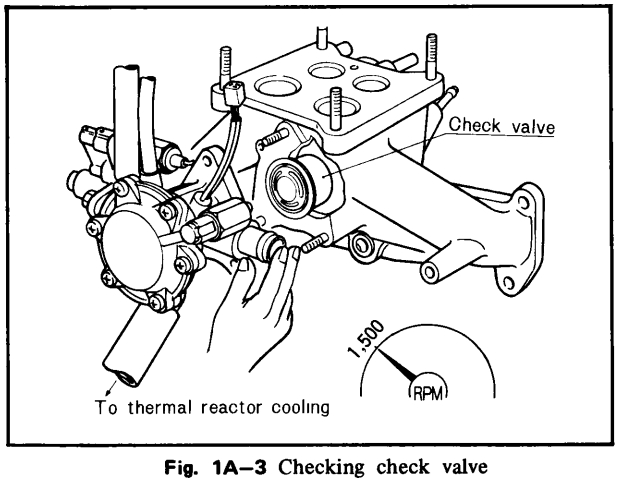

Fig. 1A–3 Checking check valve

2. Disconnect air hose (air pump ~ air control valve) at the air control valve.
3. Start the engine. Slowly increase engine speed to 1,500 rpm and watch for exhaust gas leakage at the air inlet fitting on the air control valve. If there is exhaust leakage, replace the check valve.

b. Replacing check valve
1. Remove the air control valve, as described in Par. 1A–A–4.
2. Remove the gasket and check valve.
3. Install the check valve in the reverse order of removing.

1A–A–4. Air Control Valve

a. Checking air control valve
1. Disconnect the coupler of the solenoids on the air control valve.
2. To check each solenoid for operation, connect each terminal in the coupler (to solenoids) to the battery as shown in Fig. 1A–4.
When the current is applied, the solenoid valve is operating properly if the clicking sound is audible from the solenoid.
If the solenoid valve does not operate properly, replace the solenoid.

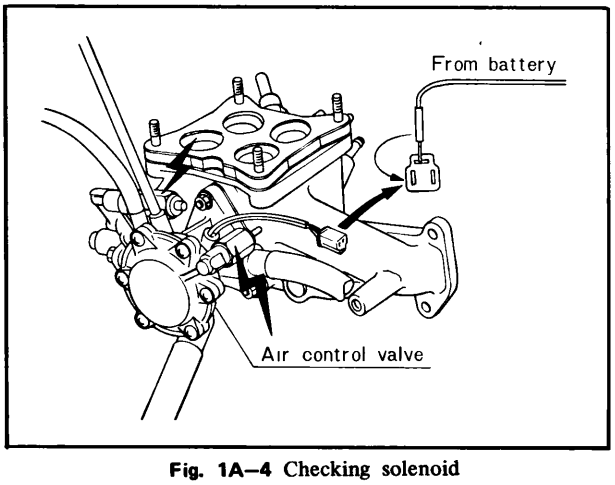

Fig. 1A–4 Checking solenoid

3. Disconnect air pipe (thermal reactor ~ air control valve) at the thermal reactor.
4. Disconnect air hose (air cleaner ~ air control valve) at the air cleaner.
5. Connect a tachometer to the engine.
6. Start the engine and run it at idle.
7. Check to see that the air hardly flows out from the air outlets (thermal reactor ~ air control valve and air cleaner ~ air control valve).
8. Set the engine speed to approx. 2,000 rpm with throttle, connect Ⓐ terminal (to solenoid ⓐ) to the battery and check to see that the air flows out of the air outlet (thermal reactor ~ air control valve).
9. Connect Ⓑ terminal (to solenoid ⓑ) to the battery and check to see that the air flows out of the air outlet (air cleaner ~ air control valve) as shown in Fig. 1A–5. If any defects are found, replace the air control valve.

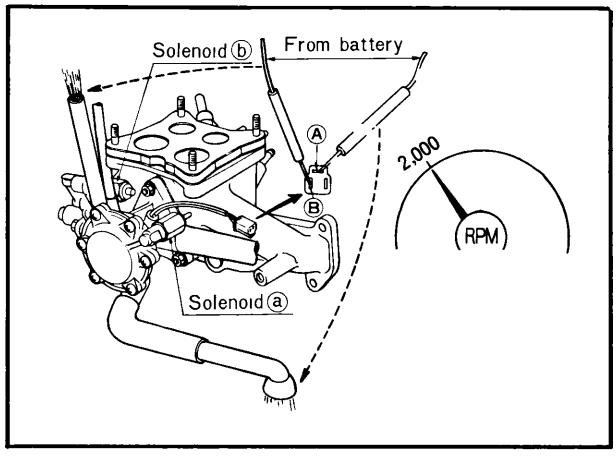

Fig. 1A–5 Checking air control valve

10. Disconnect the coupler of the water temperature switch and connect a jumper wire to both terminals in the coupler (from control unit) as shown in Fig. 1A–6.

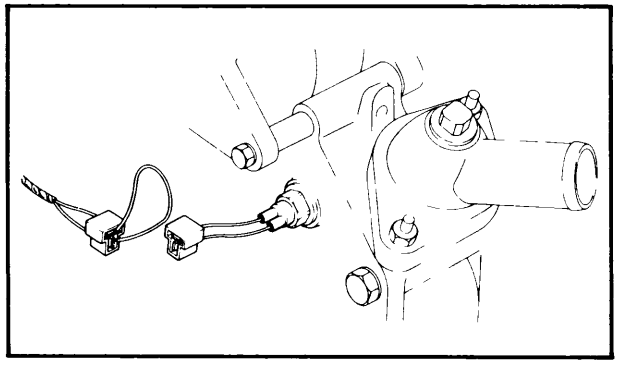

Fig. 1A–6 Connecting jumper wire

11. Connect a voltmeter to Ⓐ terminal in the coupler (from control unit). Increase the engine speed and check to see that the current flows to Ⓐ terminal when the engine speed is more than **4,000 ± 400 rpm.**

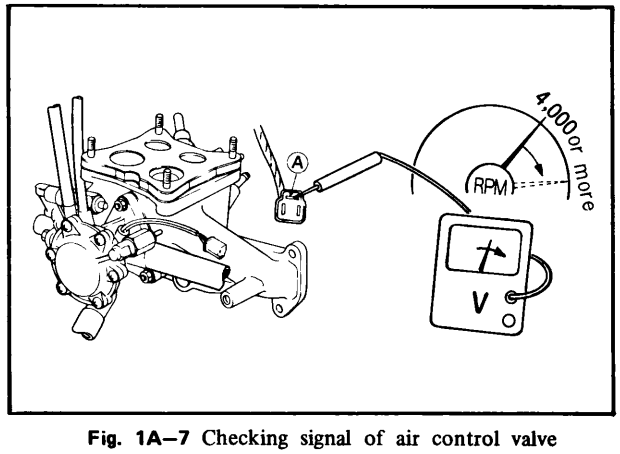

Fig. 1A–7 Checking signal of air control valve

12. In Step 11, fully push the idle switch lever toward the idle position and check to see that the current stops flowing to Ⓐ terminal.
13. On the 49 states except for California and Canada vehicles, set the engine speed to 2,000 rpm with choke knob and check to see that the current flows to

Ⓐ terminal when the engine speed is more than **4,600 ± 400 rpm.**
14. On the California vehicles, conduct the following tests from Step 15 to 17.
15. Stop the engine to cancel the timer operation.
16. Start the engine and set the engine speed to 2,000 rpm with choke knob. Make sure that the current does not flow to Ⓐ terminal when the engine speed is less than **4,600 ± 400 rpm for 130 ± 26 seconds** after the choke knob has been pulled.
17. Past 130 ± 26 seconds after the choke knob has been pulled, the current should flow to Ⓐ terminal when the engine speed is more than **2,200 ± 400 rpm.**

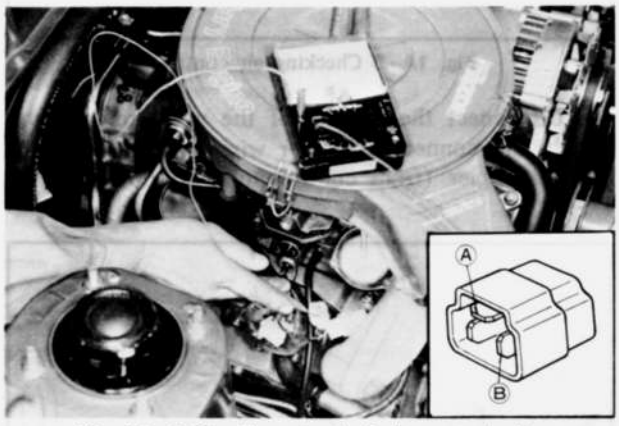

Fig. 1A–8 Checking signal of air control valve

18. Connect a voltmeter to Ⓑ terminal.
19. On the California vehicles, set the engine speed to 2,000 rpm with choke knob. Check to see that the current does not flow to Ⓑ terminal and current flows after **130 ± 26** seconds from engine starting.
20. Increase the engine speed to 2,000 rpm with throttle. Slowly decrease the engine speed and record the engine speed at which the current stops flowing to Ⓑ terminal. The engine speed should be at **1,150 ± 100 rpm.**
21. Slowly increase the engine speed from idle and check the engine speed at which the current begins flowing to Ⓑ terminal.
The difference between the engine speeds recorded in Step 20 and 21 should be **150 ± 70 rpm.**

b. Replacing air control valve
1. Remove the air cleaner.
2. Disconnect the coupler of the solenoid on the air control valve.
3. Disconnect the inlet and outlet hoses, and vacuum sensing tube from the air control valve.
4. Loosen the air control valve attaching nuts and remove the air control valve.
5. Install the air control valve in the reverse order of removing.

1A–A–5. Thermal Reactor

a. Checking thermal reactor
1. Visually inspect the thermal reactor for damage or crack.
2. Disconnect the air pipe (thermal reactor ~ air control valve) at the thermal reactor.
3. Check to see that the non-return valve operates properly.

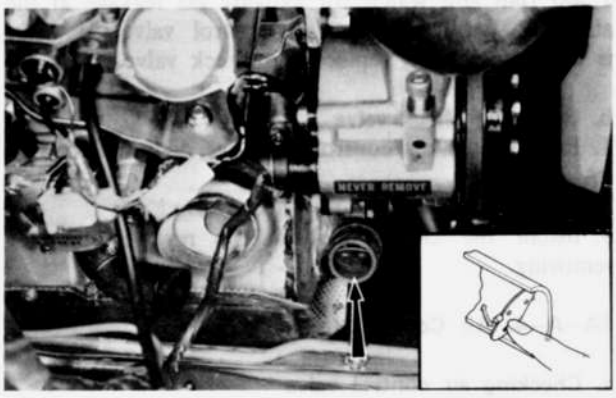

Fig. 1A–9 Checking non-return valve

4. Connect the air pipe to the thermal reactor.
5. Start the engine and run it at idle.
6. Check the exhaust gas leaking from the cooling air pipe.
If the exhaust gas leaks excessively, replace the thermal reactor.

b. Replacing thermal reactor
1. Disconnect the battery cable from the negative terminal.
2. Drain the cooling system.
3. Remove the air cleaner.
4. Remove the air pump, as described in Par. 1A–A–1.
5. Remove the air control valve.
6. Remove the inlet manifold and carburetor assembly from the engine.
7. Remove the reactor cover by removing the nuts.
8. Disconnect the secondary air pipe at the reactor.
9. Disconnect the exhaust pipe from the reactor.
10. Remove the nuts attaching the thermal reactor to the engine.
Use a **remover** (49 8501 125) to remove the upper nuts.
11. Remove the thermal reactor.
12. Install the thermal reactor in the reverse order of removing.

1A–B. IGNITION CONTROL SYSTEM (California)

1A–B–1. Checking Trailing Ignition Operation
1. Connect a tachometer to the engine.
2. Connect a timing light to the high tension cord for trailing spark plug on the front rotor housing.
3. Disconnect the coupler of the water temperature switch and connect a jumper wire to both terminals in the coupler (from control unit) as shown in Fig. 1A–6.
4. Start the engine and set the engine speed to 2,000 rpm with choke knob.
5. Slowly increase the engine speed and check to see that the timing light flashes when the engine speed is

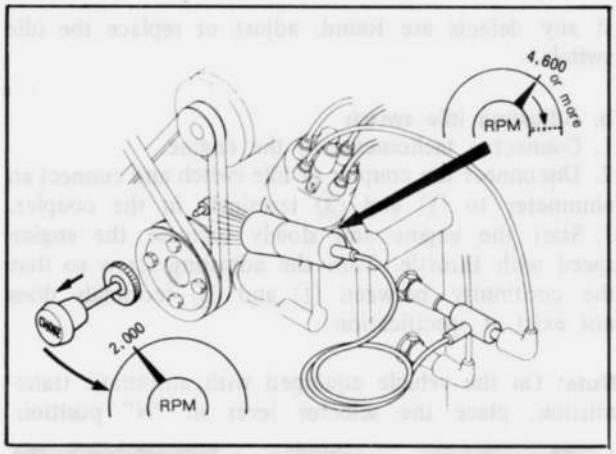

Fig. 1A–10 Checking trailing ignition operation

more than **4,600 ± 400 rpm** then, push the choke knob back completely.
Slowly increase the engine speed and check to see that the timing light flashes when the engine speed is more than **4,000 ± 400 rpm for 130 ± 26 seconds** after the choke knob has been pulled in Step. 4.
6. Past 130 ± 26 seconds after the choke knob has been pulled, gradually increase the engine speed.
The timing light should start flashing at **3,000 ± 300 rpm** for manual transmission and **2,500 ± 200 rpm** for automatic transmission.
7. Increase the engine speed to 2,000 rpm and slowly decrease the engine speed.
Record the engine speed at which the timing light starts flushing. The engine speed should be at **1,150 ± 100 rpm.**
8. Slowly increase the engine speed again and record the engine speed at which the timing light stops flushing.
The difference between the engine speeds recorded in Step 7 and 8 should be **150 ± 70** rpm.
9. Run the engine at 2,000 rpm.
Check to see that the timing light flashes when the idle switch lever is fully pushed toward idle position.
10. On the vehicle equipped with manual transmission, set the engine speed to 2,000 rpm with throttle. Depress the clutch pedal and check to see the timing light flashes when shifting the shift lever to 5th position.

1A–B–2. Checking Leading Ignition Operation

1. Connect a tachometer to the engine.
2. Connect a timing light to the high tension cord for the leading spark plug on the front rotor housing.

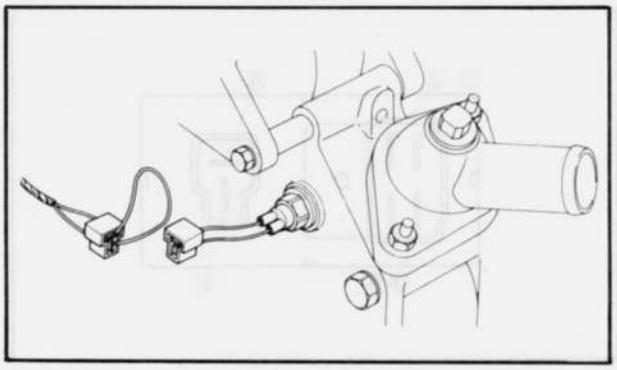

Fig. 1A–11 Connecting jumper wire

3. Disconnect the coupler of the water temperature switch and connect a jumper wire to both terminals in the coupler (from control unit) as shown in Fig. 1A–11.
4. Start the engine and set the engine speed to 2,000 rpm with choke knob.
Observe the timing mark on the eccentric shaft pulley using the timing light.
The timing indicator pin should point between the YELLOW (leading mark) and RED (trailing mark) marks on the pulley (mark ①).
5. At **130 ± 26** seconds after engine was started, the timing should be advanced quickly (mark ②).

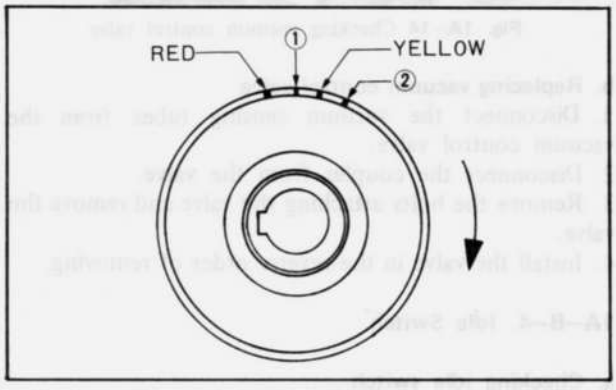

Fig. 1A–12 Checking leading ignition operation

6. Connect a voltmeter to positive terminal of the ignition coil for leading. Slowly increase the engine speed to more than 4,000 ± 400 rpm and check to see the voltage increases by 1 ~ 2 volts.

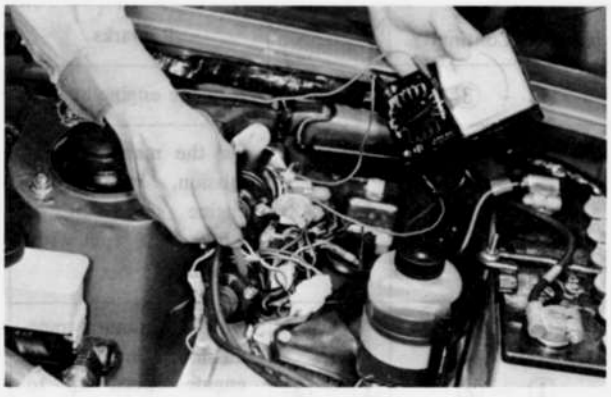

Fig. 1A–13 Checking ignition coil voltage

1A–B–3. Vacuum Control Valve

a. Checking vacuum control valve

1. Disconnect the vacuum sensing tube from the vacuum control unit of the trailing on the distributor.
2. Disconnect the coupler of the water temperature switch and connect a jumper wire to both terminals in the coupler as shown in Fig. 1A–11.
3. Start the engine and set the engine speed to 2,000 rpm with choke knob. Check to see that the air is not sucked into the vacuum sensing tube.
4. Past **130 ± 26** seconds after the engine has been started, the air should be sucked into the vacuum sensing tube.

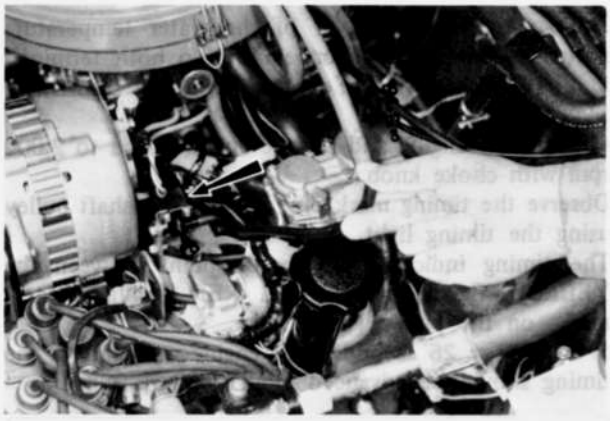

Fig. 1A–14 Checking vacuum control valve

b. Replacing vacuum control valve

1. Disconnect the vacuum sensing tubes from the vacuum control valve.
2. Disconnect the coupler from the valve.
3. Remove the bolts attaching the valve and remove the valve.
4. Install the valve in the reverse order of removing.

1A–B–4. Idle Switch

a. Checking idle switch

1. Disconnect the idle switch coupler.
2. Check the continuity between the numbered terminals in the coupler using an ohmmeter.

Note: On the vehicle equipped with automatic transmission, place the selector lever in "N" position.

Numbers-Continuity	Numbers-No continuity	Remarks
① – ③	① – ②	Run the engine at idle.
① – ②	① – ③	On the manual transmission, increase the engine speed up to 1,000 ± 50 rpm with throttle.
① – ②	① – ③	On the automatic transmission, increase the engine speed up to 1,200 ± 50 rpm with throttle.

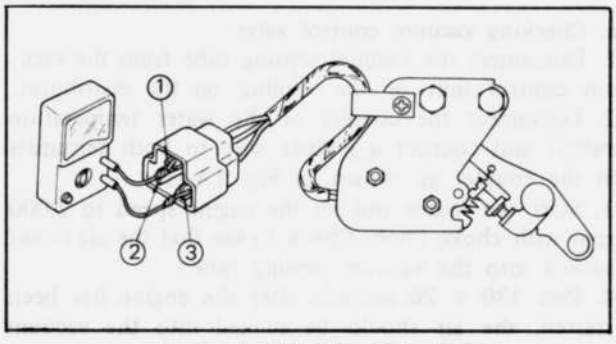

Fig. 1A–15 Checking idle switch

If any defects are found, adjust or replace the idle switch.

b. Adjusting idle switch

1. Connect a tachometer to the engine.
2. Disconnect the coupler of idle switch and connect an ohmmeter to ① and ③ terminals in the coupler.
3. Start the engine and slowly increase the engine speed with throttle. Turn the adjusting screw so that the continuity between ① and ③ terminals does not exist at specification.

Note: On the vehicle equipped with automatic transmission, place the selector lever in "N" position.

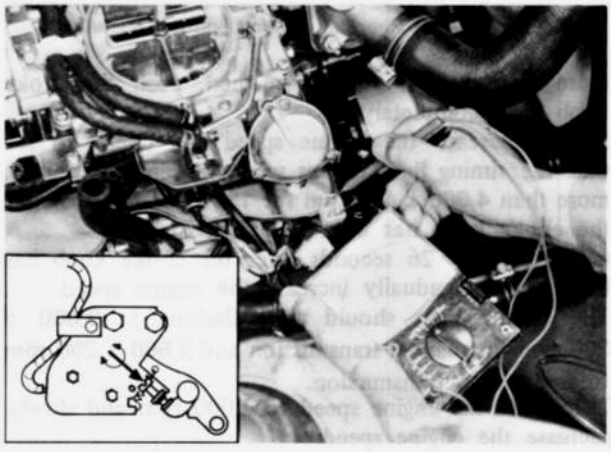

Fig. 1A–16 Adjusting idle switch

c. Replacing idle switch

1. Remove the air cleaner.
2. Disconnect the coupler of the idle switch.
3. Remove the bolts attaching the idle switch and remove the idle switch.
4. Install the idle switch in the reverse order of removing.

Adjust the idle switch.

1A–B–5. Relays

This paragrahp explains checking the retard relay, short relay, trailing ignition relay, EGR relay, choke relay and kick-down relay.

a. Checking relays

1. Disconnect the coupler from the relay.
2. Check the continuity, referring to the following table.

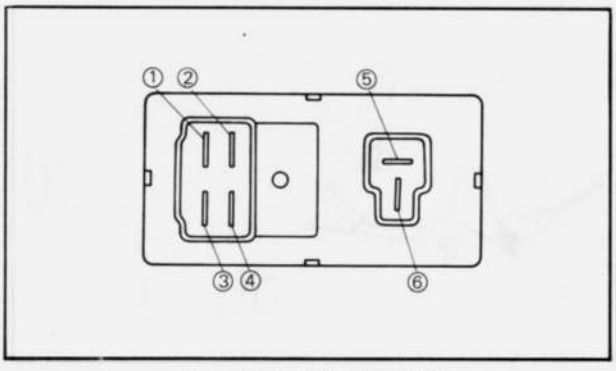

Fig. 1A–17 Checking relay

Numbers – Continuity	Numbers – No continuity	Remarks
① – ④	③ – ④	
③ – ④	① – ④	Connect the battery positive to terminal ② and negative to ⑥ and or, connect the battery positive to terminal ⑤ and negative to ⑥.

If any defects are found, replace the relay.

1A–C. IGNITION CONTROL SYSTEM (Except for California)

Both leading and trailing spark plugs are always ignite.

1A–C–1. Checking Ignition Control System

1. Connect a voltmeter to positive terminal of the ignition coil for leading.
2. Slowly increase the engine speed to more than **4,000 ± 400** rpm and check to see the voltage increases by 1 ~ 2 volts.

1A–C–2. Idle Switch

To check and adjust the idle switch, see Par. 1A–B–4.

1A–C–3. Relays

To check the short relay, EGR relay, choke relay and kick-down relay, see Par. 1A–B–5.

1A–D. EXHAUST GAS RECIRCULATION (EGR) SYSTEM (Automatic transmission for USA)

1A–D–1. Checking EGR Valve and EGR Solenoid

1. Disconnect the connector of the EGR solenoid and connect the solenoid terminal to the battery.
The solenoid valve is operating properly if the clicking sound is audible from the solenoid.
2. Warm up the engine sufficiently and stop the engine.
3. Disconnect the vacuum sensing tube (EGR solenoid ~ carburetor) from the carburetor.
4. Disconnect the vacuum sensing tube (No.1 vacuum switch ~ inlet manifold) from the inlet manifold and connect the disconnected vacuum sensing tube in Step 3 to the inlet manifold.
5. Start the engine and run it at idle.
The engine should operate smoothly.
6. Connect the EGR solenoid terminal to the battery and make sure the engine stalls.
7. If the engine does not stall, remove the EGR valve from the housing.
Clean the valve, valve seat and passage of the housing.
8. Apply the vacuum of 200 mm-Hg (7.9 in-Hg) to the EGR valve and check to see the valve opens.
If not, replace the valve.

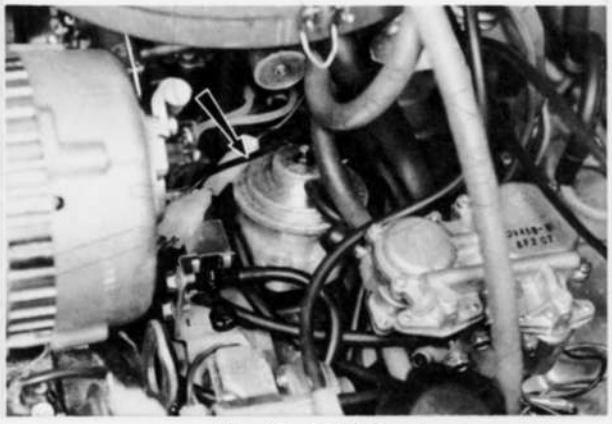

Fig. 1A–18 EGR valve

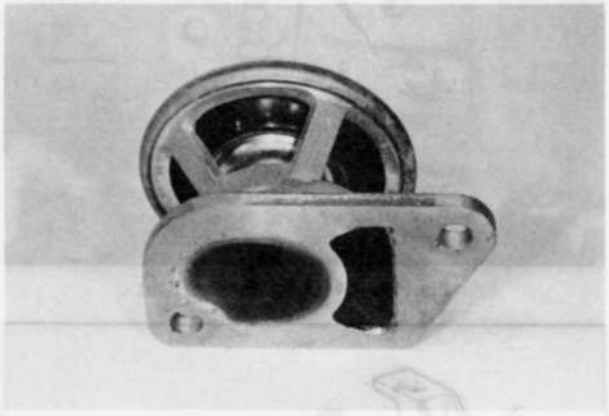

Fig. 1A–19 EGR valve

1A–D–2. No.1 Vacuum Switch and No.1 Delay Valve

To check the No.1 vacuum switch and No.1 delay valve, proceed as follows:
1. Disconnect the bullet connector from the power valve solenoid and connect a voltmeter to the connector (from control unit).
2. On the vehicle equipped with manual transmission, disconnect the air hose (air cleaner ~ deceleration control valve) from the air cleaner and blind the air hose.
3. Increase the engine speed to 3,500 rpm with throttle. Then, quickly decrease the engine speed and check to see that the current flows to power valve solenoid connector. The current should flows at **3 ~ 25 seconds.**
If it is not within the specification, install a new No.1 delay valve and repeat the above test.

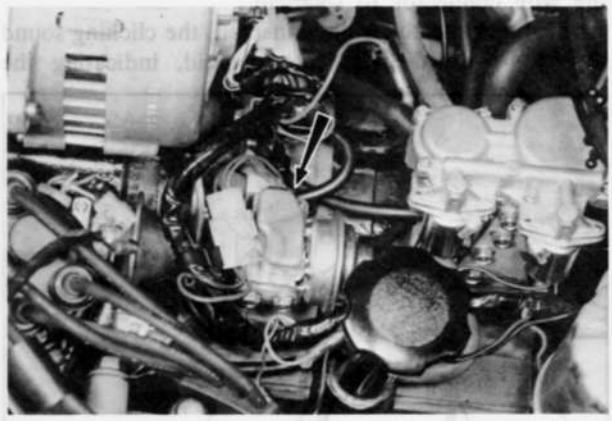

Fig. 1A–20 No.1 vacuum switch and No.1 delay valve

1A–D–3. EGR Relay

To check the EGR relay, see Par. 1A–B–5.

1A–D–4. EGR Maintenance Warning System

This system is provided to give a notice to a vehicle driver to perform the EGR maintenance every 12,500 miles.

After the maintenance service has been done, disconnect the coupler and connect them oppositely for resetting the system.

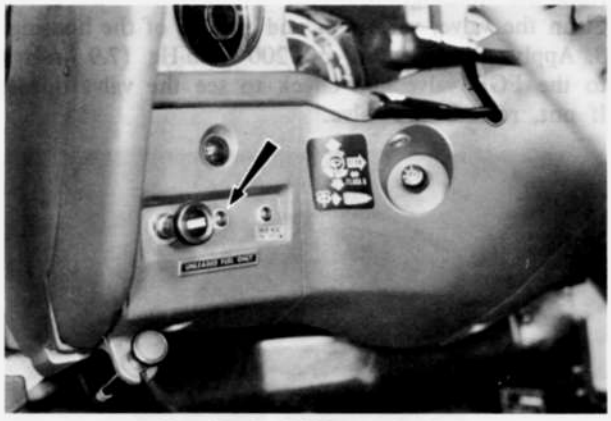

Fig. 1A–21 EGR warning light

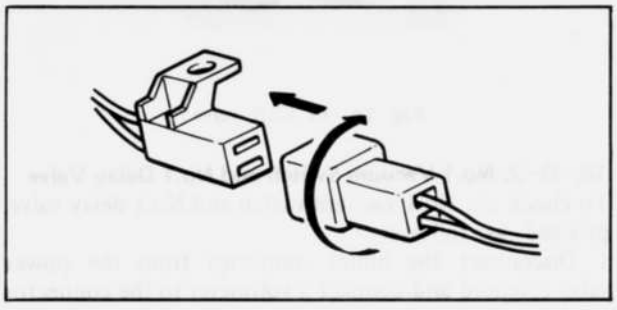

Fig. 1A–22 Connecting coupler oppositely

1A–E. DECELERATION CONTROL SYSTEM

1A–E–1. Deceleration Control Valve

a. Checking deceleration control valve

1. Turn the ignition switch on.
2. To check the solenoid for operation, disconnect the wire connector to solenoid.

When the connector is disconnected, the clicking sound should be heard from the solenoid, indicating the solenoid valve operates properly.

If the solenoid valve does not operate properly, replace the solenoid.

3. Connect a tachometer to the engine.
4. Start the engine and run it at idle.
5. Disconnect the air hose (air cleaner ~ deceleration control valve) at the air cleaner.
6. Close the air hose opening with fingers and make sure that the engine speed hardly varies.
7. On the vehicle equipped with manual transmission, close the air hose opening with fingers and disconnect the wire connector of the solenoid for the coasting valve. The air should be sucked into the air hose.

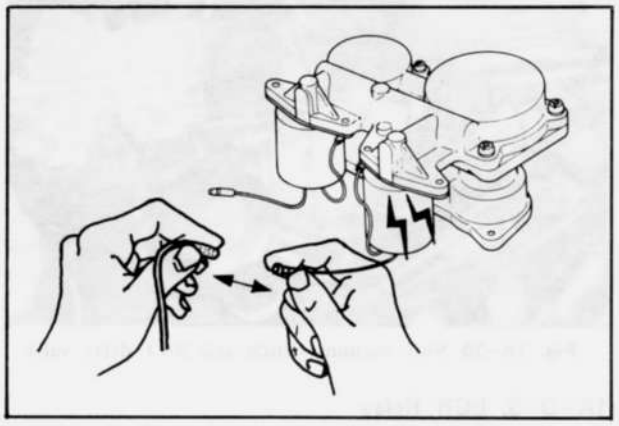

Fig. 1A–23 Checking solenoid

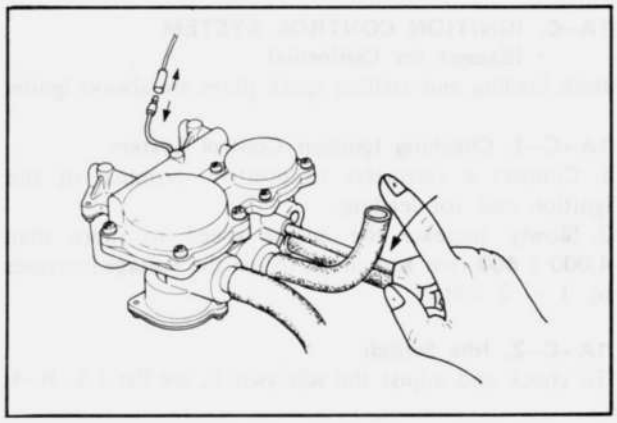

Fig. 1A–24 Checking deceleration control valve

8. On the vehicle equipped with manual transmission, connect the wire connector for the coasting valve.
9. Close the air hose opening with fingers and disconnect the wire connector of the solenoid for the anti-afterburn valve.

The air should be sucked into the air hose.

10. Connect the solenoid lead for the anti-afterburn valve.
11. On the vehicle equipped with manual transmission, disconnect the air hose (coasting valve ~ intake manifold) at the deceleration control valve and then blind the hose and air outlet of the valve.
12. Increase the engine speed to about 4,000 rpm and quickly release the accelerator. The excessive air should be sucked into the air hose after releasing

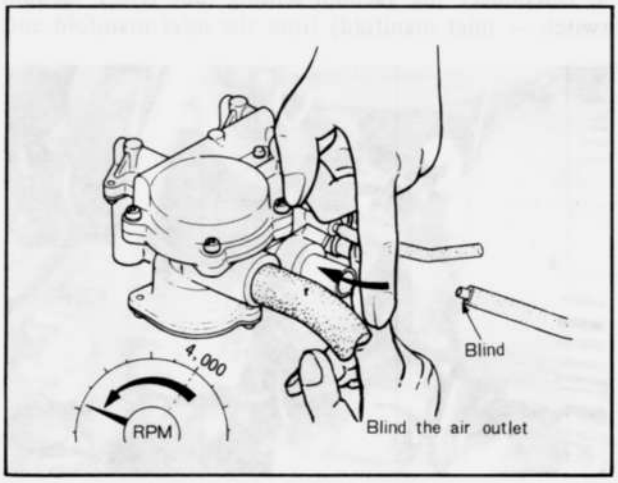

Fig. 1A–25 Checking deceleration control valve

the accelerator.
If any defects are found replace the deceleration control valve.
On the vehicle equipped with manual transmission, conduct the following tests:
13. Disconnect the coupler of the idle switch.
14. Disconnect the bullet connector of the solenoid for the coasting valve and connect the solenoid lead to the battery.
15. Connect a voltmeter to the coasting valve lead from the control unit as shown in Fig. 1A–26.
16. Increase the engine speed to 2,000 rpm.
Slowly decrease the engine speed and record the engine speed at which the current flows. The current should start to flow at **1,150 ± 100 rpm** and continue to flow until the idle speed.

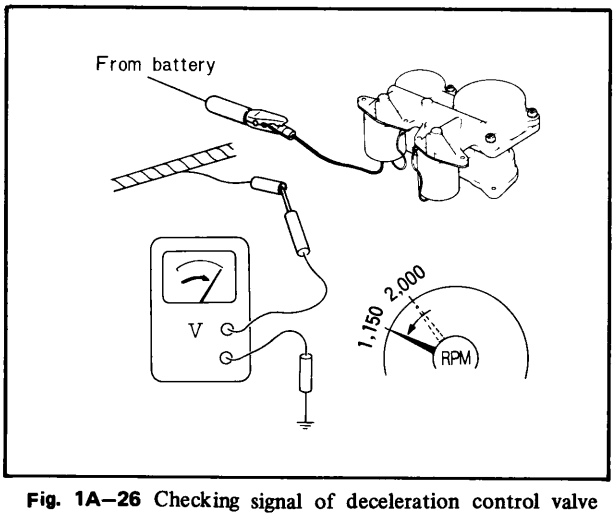

Fig. 1A–26 Checking signal of deceleration control valve

17. Slowly increase the engine speed from idle and check the engine speed at which the current stops flowing. The difference between the engine speeds recorded in Step 16 and 17 should be **150 ± 70** rpm.
18. Connect the coupler of the idle switch. Increase the engine speed to 2,000 rpm. Fully push the idle switch lever toward the idle position and make sure that the current stops flowing.

b. Replacing deceleration control valve
1. Disconnect the bullet connectors from the deceleration control valve.
2. Disconnect the inlet and outlet hoses, and vacuum sensing tube from the valve.
3. Remove the bolts attaching the valve and remove the valve.
4. Install the deceleration control valve in the reverse order of removing.

1A–F. AUTOMATIC THROTTLE RELEASE SYSTEM

1A–F–1. Checking Automatic Throttle Release System
1. When the engine is cold, pull the choke knob fully with the ignition switch off, and check to see the choke knob returns automatically.
2. Connect a tachometer to the engine.
3. On the California vehicles, start the engine with the choke knob fully pulled and check to see that the choke knob returns automatically in 20 ~ 60 seconds from engine starting.
4. Set the engine speed to 2,000 rpm with choke knob.
5. Leave the engine running and check to see that the choke knob returns automatically when the water temperature gauge is indicated the range shown in Fig. 1A–27.

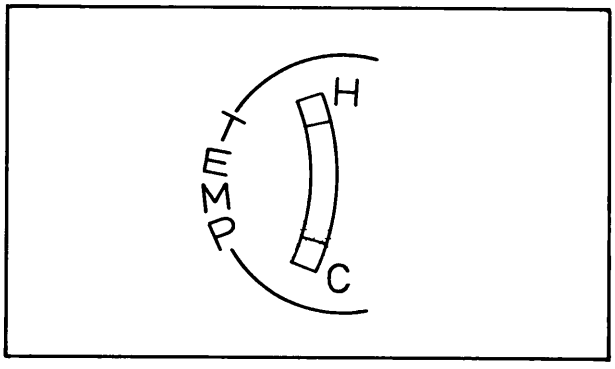

Fig. 1A–27 Water temperature gauge

1A–F–2. Water Temperature Switch

a. Checking water temperature switch
Disconnect the coupler and remove the water temperature switch from the water pump housing.
Place the water temperature switch in water with a thermometer and heat up the water gradually.
Check the temperature at which the continuity does not exist between both terminals in the coupler. The specified temperature is 60 ± 6.5°C (140 ± 11.7°F).
If it is not within specification, replace the switch.

b. Replacing water temperature switch
1. Remove the air cleaner.
2. Drain the cooling system.
3. Disconnect the coupler from the water temperature switch.
4. Remove the water temperature switch.
5. Install the water temperature switch in the reverse order of removing.
6. Fill the cooling system. Operate the engine and check for leaks.
Add coolant as necessary to the specified level.

1A–F–3. No.2 Vacuum Switch and No.2 Delay Valve (California)

To check the No.2 vacuum switch and No.2 delay valve, proceed as follows:
1. Disconnect the coupler from the No.2 vacuum switch.
2. Connect an ohmmeter to both terminals in the coupler (from the No.2 vacuum switch).
3. Start the engine without choke knob and run it at idle.
Check to see the continuity does not exist to terminals after 20 ~ 60 seconds from the engine starting.
If it is not within the specification, install a new No.2 delay valve and repeat the above test.



Fig. 1A–28 Checking No.2 vacuum switch

1A–F–4. Choke Switch and Full Choke Switch

a. Checking choke switch and full choke switch

1. Warm up the engine until it reaches normal operating temperature.
2. Disconnect the coupler of the water temperature switch.
3. Disconnect the choke heater lead of the carburetor at the bullet connector and connect a voltmeter to the choke heater lead (from control unit) as shown in Fig. 1A–29.

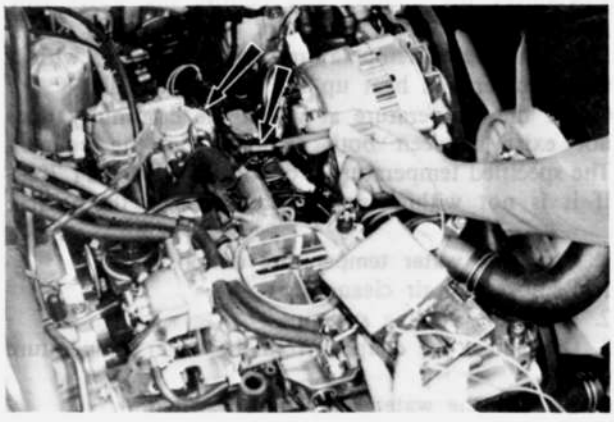

Fig. 1A–29 Checking choke heater signal

4. Connect a tachometer to the engine.
5. On the California vehicles, start the engine with the choke knob fully pulled and check to see the current flows to choke heater lead.

The choke knob should be held the pulled position and return automatically after 20 ~ 60 seconds from the engine starting.

6. Connect a jumper wire to both terminals of the disconnected coupler in Step 2 (from control unit).
7. Set the engine speed to 2,000 rpm with choke knob and check to see the current flows to choke heater lead while it does not when the choke knob is pushed back completely.

b. Replacing choke switch and full choke switch

1. Disconnect the choke wire from the caburetor.
2. Remove the choke knob by removing the knob set screw.
3. Remove the nut attaching the choke switch to the instrument panel.
4. Disconnect the coupler to the choke switch and remove the choke switch.
5. Install the choke switch in the reverse order of removing.

1A–F–5. Choke Relay

To check the choke relay, see par. 1A–B–5.

1A–G. HEAT HAZARD PROTECTIVE AND WARNING SYSTEM

1A–G–1. Checking Heat Hazard Protective and Warning System

1. Connect a tachometer to the engine.
2. Turn the ignition switch on. The heat hazard warning light comes on.
3. Start the engine and the warning light should go off.
4. Disconnect the heat hazard sensor coupler and connect a jumper wire to both terminals in the coupler (from control unit) as shown in Fig. 1A–30.
5. The warning light should come on.
6. Disconnect the coupler of the solenoid on the air control valve.

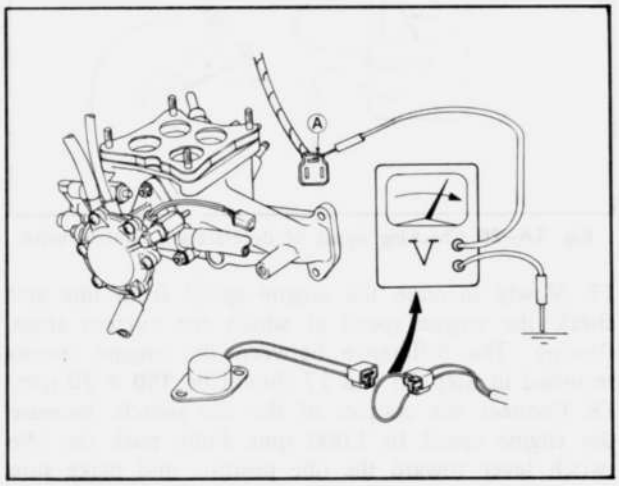

Fig. 1A–30

7. Connect a voltmeter to Ⓐ terminal in the coupler and check to see the current flows.
8. Remove the voltmeter and reconnect the coupler.

1A–G–2. Heat Hazard Sensor

a. Checking heat hazard sensor

To check the heat hazard sensor for operation, proceed as follows:

1. Remove the sensor.
2. Wrap the sensor and thermometer with aluminum foil to prevent the oil penetration and place it in oil.
3. Connect the test lamp and battery to the sensor terminals in the coupler as shown in Fig. 1A–31.
4. Gradually heat up the oil.

The test lamp should be ON when the temperature in aluminum foil is reached to **120 ± 10°C (248 ± 18°F).**

If the sensor does not operate within the specifi-

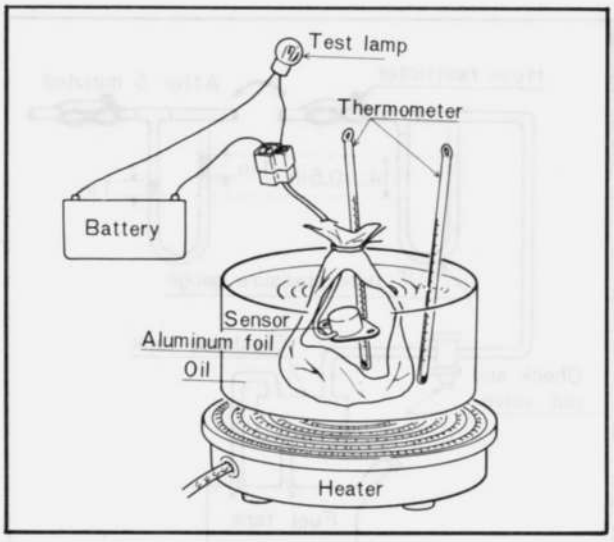

Fig. 1A–31 Checking heat hazard sensor

cation, replace the sensor.

Note: Do not heat up the oil more than 200°C (392°F).

b. Replacing heat hazard sensor (Sedan, hardtop)

1. Open the trunk lid and remove the mat.
2. Disconnect the coupler from the heat hazard sensor.
3. Remove the screws attaching the heat hazard sensor and remove the sensor.
4. Install the sensor in the reverse order of removing.

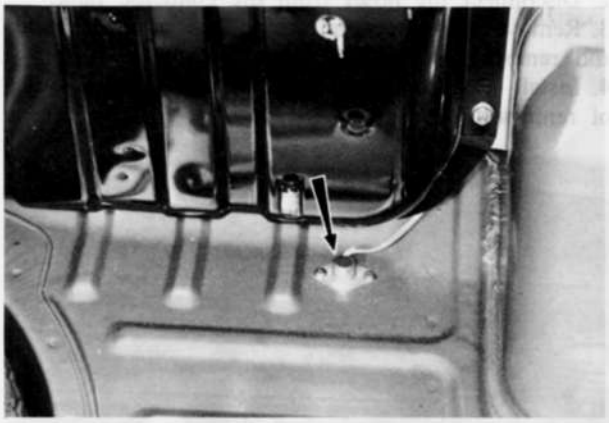

Fig. 1A–32 Heat hazard sensor

c. Replacing heat hazard sensor (Rotary wagon)

1. Remove the rear seat cushion.
2. Disconnect the coupler from the heat hazard sensor.
3. Remove the screws attaching the heat hazard sensor and remove the sensor.
4. Install the sensor in the reverse order of removing.

1A–H. KICK-DOWN CONTROL SYSTEM (Automatic transmission)

1A–H–1. Checking Kick-down Control System

1. Raise the rear of the vehicle and position safety stand. Place the selector lever to "P" position.
2. Disconnect the kick-down solenoid lead at the bullet connector.
3. Connect a voltmeter to the lead wire.
4. Start the engine and run it at idle.
5. Set the engine speed to 2,000 rpm with choke knob and check to see the current flows.

1A–H–2. Checking Kick-down Relay

To check the kick-down relay, see Par. 1A–B–5.

1A–I. EVAPORATIVE CONTROL SYSTEM

1A–I–1. Ventilation Valve

a. Checking ventilation valve

1. Start the engine and run it at idle.
2. Disconnect the ventilation hose at the oil filler pipe.
3. Hold a finger over the end of the ventilation hose and pinch off the evaporative line hose as shown in Fig. 1A–33. The engine should roughen and engine speed should drop.

If the engine stalls, replace the ventilation valve.

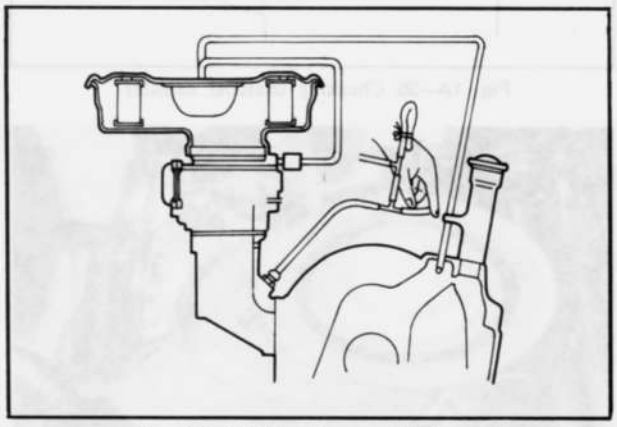

Fig. 1A–33 Checking ventilation valve

b. Replacing ventilation valve

1. Remove the air cleaner.
2. Disconnect the ventilation hose at the ventilation valve.
3. Remove the ventilation valve with the **remover** (49 1011 120).
4. Install the ventilation valve in the reverse order of removing.

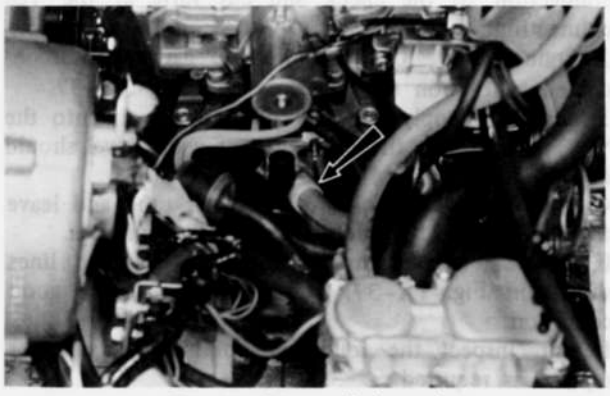

Fig. 1A–34 ventilation valve

1A–I–2. Charcoal Canister

a. Checking charcoal canister

1. Visually check the canister for stains of oil and leakage of active carbon.
2. To check the canister for clogging, connect a vacuum gauge at position shown in Fig. 1A–35.

The vacuum reading should be –60 ~ 0 mm-Hg (–2.36 ~ 0 in-Hg) at 2,500 rpm.

If not, replace the canister and air cleaner cover as an assembly.

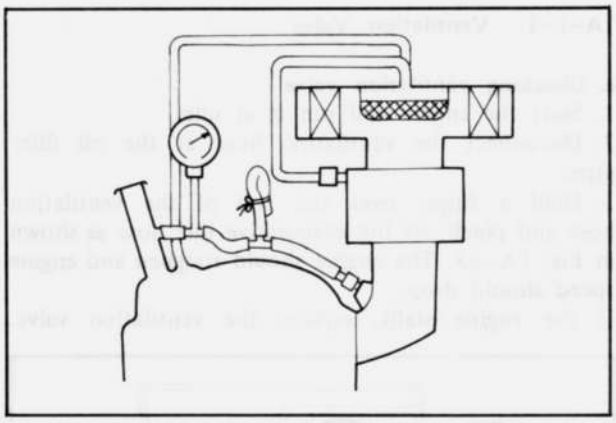

Fig. 1A–35 Checking charcoal canister



Fig. 1A–36 Charcoal canister

1A–I–3. Evaporative Line

a. Checking evaporative line

1. Disconnect the ventilation hose connecting the Tee connection to the check and cut valve at the Tee connection.
2. Connect the "U" tube pressure gauge to disconnected ventilation hose as shown in Fig. 1A–37.
3. Gradually apply the low compressed air into the "U" tube so that the difference of water level should be **356 ± 12 mm (14 ± 0.5 in).**
4. Then, blind the inlet of the "U" tube and leave the "U" tube with inlet blind for five minutes.

If the water level drops within the hatched lines shown in Fig. 1A–37, evaporative line is in good condition.

If not, inspect the following points and rapair or replace as required.

a) Leaky or loose

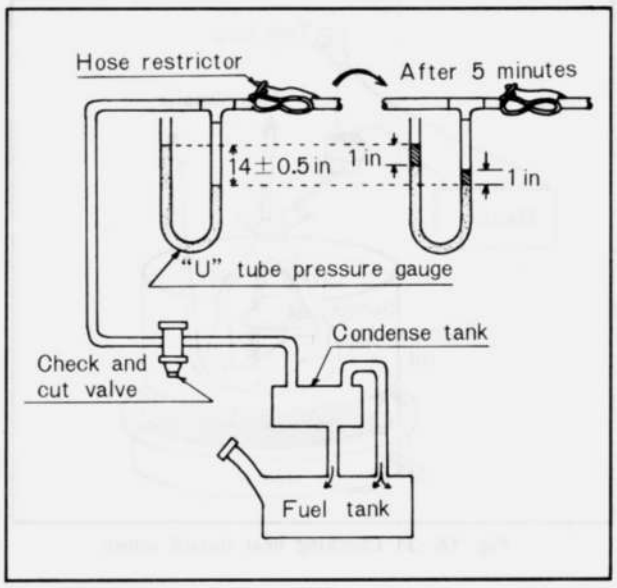

Fig. 1A–37 Checking evaporative line

b) Leaky condense tank
c) Leaky fuel tank
d) Leaky or loose fuel line
e) Leaky filler cap

1A–I–4. Condense Tank

a. Replacing condense tank (Sedan, hardtop)

1. Remove the partition board.
2. Disconnect the hoses from the condense tank.
3. Remove the screws attaching the condense tank and remove the condense tank.
4. Install the condense tank in the reverse order of removing.

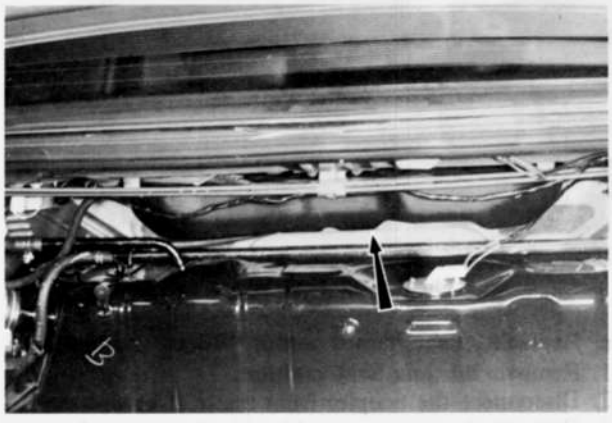

Fig. 1A–38 Condense tank (sedan)

b. Replacing condense tank (Rotary wagon)

1. Open the glove box lid and remove the service hole cover.
2. Remove the rear side trim by removing the fasteners and screws.
3. Disconnect the hoses from the condense tank.
4. Remove the screws attaching the condense tank and remove the condense tank.
5. Install the condense tank in the reverse order of removing.



Fig. 1A–39 Removing condense tank (rotary wagon)

1A–I–5. Check and Cut Valve (Evaporative line)

a. Checking check and cut valve

1. Remove the check and cut valve.
2. As shown in Fig. 1A–40, connect a pressure gauge to the passage to the condense tank and blind the other end by finger.
3. Blow through the valve. The valve should open

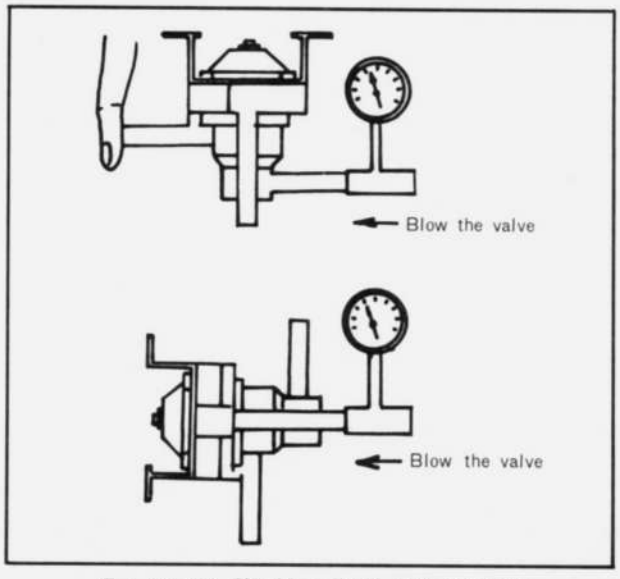

Fig. 1A–40 Checking check and cut valve

with the pressure of more than 0.04 kg/cm² (0.57 lb/in²).

4. Remove the pressure gauge and connect it to the passage to atomosphere.
5. Blow through the valve and if the valve opens with the pressure of more than 0.01 kg/cm² (0.14 lb/in²), the valve is normal.

If the valve does not operate properly, replace the valve.

Note:

The test should be performed with the valve located horizontally. Otherwise the weight of the valve will move out of the position and cut the line.

b. Replacing check and cut valve (Sedan, hardtop)

1. Remove the partition boad.
2. Disconnect the hoses from the check and cut valve.
3. Remove the nuts attaching the check and cut valve and remove the check and cut valve.
4. Install the check and cut valve in the reverse order of removing.

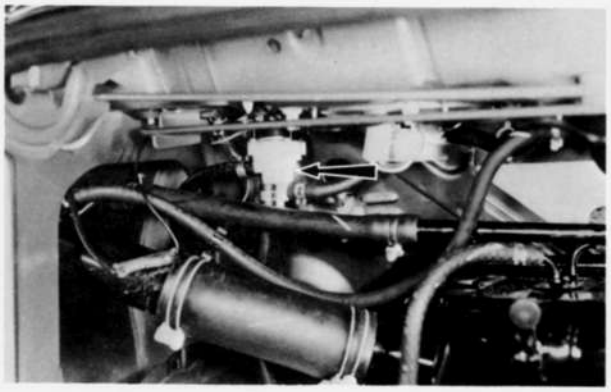

Fig. 1A–41 Check and cut valve (sedan)

c. Replacing check and cut valve (Rotary wagon)

1. Open the glove box lid and remove the service hole cover.
2. Disconnect the hoses from the check and cut valve.
3. Remove the nuts attaching the check and cut valve and remove the check and cut valve.
4. Install the check and cut valve in the reverse order of removing.

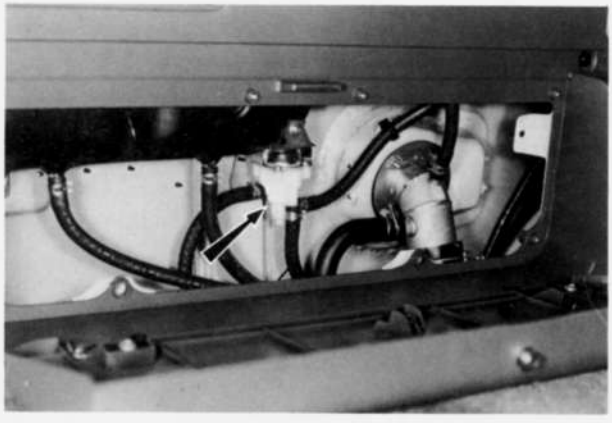

Fig. 1A–42 Check and cut valve (rotary wagon)

1A–I–6. Hoses and Connections (All systems)

A hose should be replaced if it shows signs of softening, cracking, of other damage. Check all hoses for improper connection.

SPECIAL TOOLS

49 2113 010B	Air pump gauge set
49 8501 125	Remover (reactor)
49 1011 120	Remover (ventilation valve)

LUBRICATING SYSTEM

DESCRIPTION ..... 2 : 1
2–A. LUBRICATING CIRCUIT ..... 2 : 1
2–B. OIL PRESSURE REGULATOR ..... 2 : 1
2–C. OIL LEVEL SENSOR ..... 2 : 2
2–C–1. Removing Oil Level Sensor ..... 2 : 2
2–C–2. Checking Oil Level Sensor ..... 2 : 2
2–C–3. Installing Oil Level Sensor ..... 2 : 2
2–D. CHECKING OIL PRESSURE ..... 2 : 2
2–E. OIL PRESSURE CONTROL VALVE ..... 2 : 2
2–E–1. Checking Oil Pressure Control Valve ..... 2 : 3
2–F. OIL COOLER ..... 2 : 3
2–F–1. Checking Oil Cooler ..... 2 : 3
2–F–2. Checking By-pass Valve (Except for California) ..... 2 : 3
2–G. OIL PUMP ..... 2 : 3
2–G–1. Disassembling Oil Pump ..... 2 : 3
2–G–2. Checking Oil Pump ..... 2 : 3
2–G–3. Assembling Oil Pump ..... 2 : 4
2–H. OIL FILTER ..... 2 : 5
2–H–1. Replacing Oil Filter ..... 2 : 5
2–I. METERING OIL PUMP ..... 2 : 5
2–I–1. Measuring Oil Discharge ..... 2 : 5
2–I–2. Adjusting Metering Oil Pump ..... 2 : 6
2–J. OIL PAN ..... 2 : 6
2–J–1. Removing Oil Pan ..... 2 : 6
2–J–2. Checking Oil Pan ..... 2 : 6
2–J–3. Installing Oil Pan ..... 2 : 6
SPECIAL TOOL ..... 2 : 6

DESCRIPTION

Oil is circulated under pressure by a rotor type pump. The pump is mounted on the front housing and driven by the chain via eccentric shaft.
A full flow type oil filter is mounted on the rear housing.
The oil capacity is 6.4 liters (6.8 U. S. quart, 5.6 Imp. quart).

2–A. LUBRICATING CIRCUIT

1. The oil pump which is driven by the eccentric shaft, draws up the oil from the oil pan through the strainer and sends it to the oil cooler through the pressure control valve.
2. The oil from the oil cooler is forced to the oil filter through the oil pressure regulator.
3. The oil that has been filtered by the oil filter is forced to the front main bearing through the tubular dowel and to the rear main bearing through the passage of the rear housing.
4. The oil that has passed through the oil holes of the bearings, lubricate the front and rear main bearings and enters the oil passage provided in the eccentric shaft.
5. The oil passing through the eccentric shaft passage lubricates the rotor bearings.
6. Needle bearings which are provided in front of the front housing are lubricated by the oil forced through the little hole led to the oil passage of the eccentric shaft and the oil coming after lubricating the front main bearing.
7. The eccentric shaft is equipped with two oil jets. The oil in the passage of the eccentric shaft is injected through the oil jets into the front and rear rotors and cools the rotors.
8. Stationary gears and internal gears are lubricated by the oil coming after cooling the rotors and after lubricating the main bearings.
9. The oil passing through the tubular dowel is sent to the front cover and led to the metering oil pump.
10. From the metering oil pump, the oil is forced to the carburetor and is supplied into the combustion chambers together with the air-fuel mixture to lubricate the apex seals, corner seals, side seals and housings.

2–B. OIL PRESSURE REGULATOR

The oil pressure regulator is provided on the rear housing. When the engine revolution becomes high and excessive oil pressure develops in the system, the pressure regulator opens to relieve the pressure and to send the excess oil to the oil pan. Thus, the oil pressure is maintained within the maximum pressure of 5.0 kg/cm² (71.1 lb/in²).

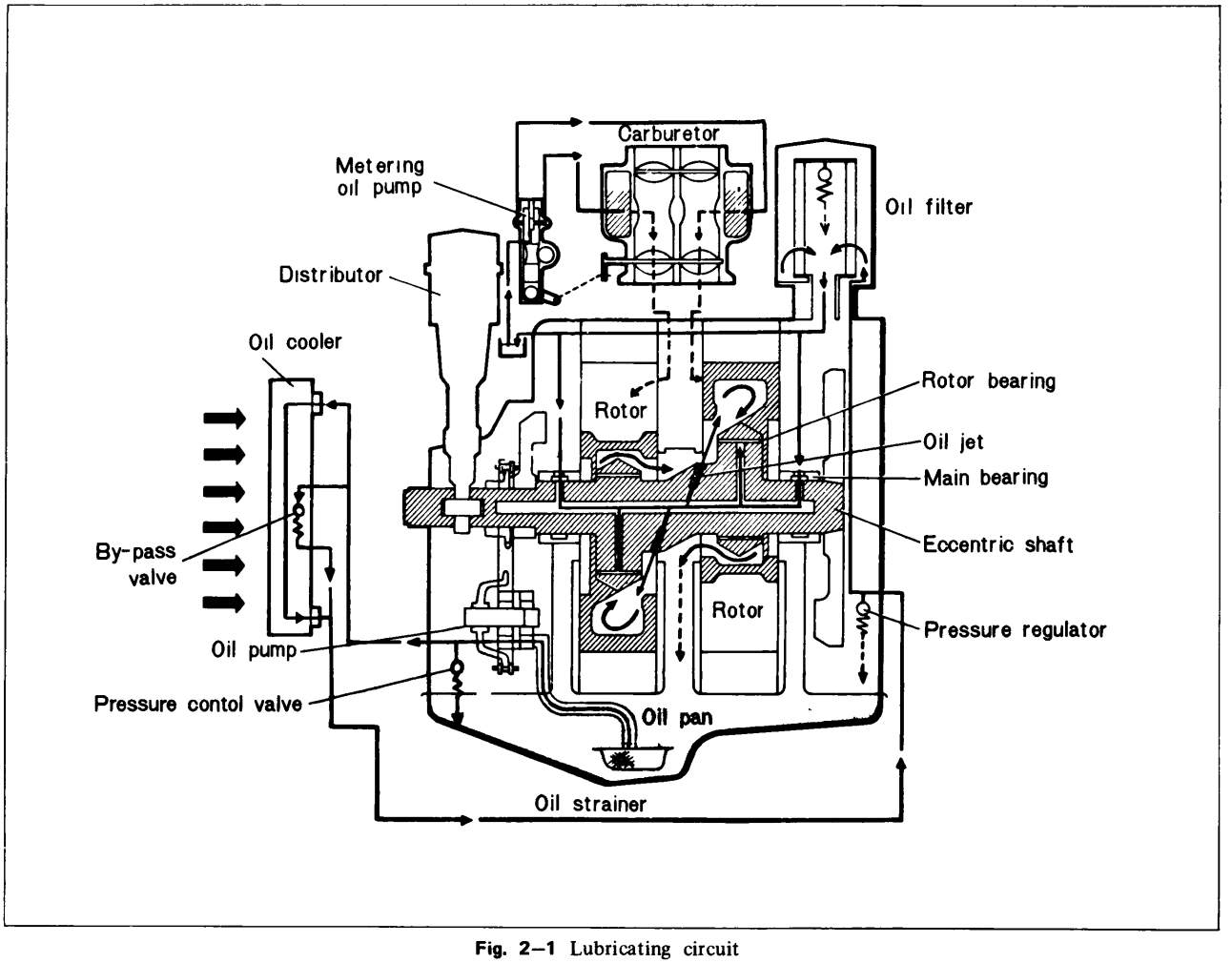

Fig. 2–1 Lubricating circuit

2–C. OIL LEVEL SENSOR

The oil level sensor which is fitted to the oil pan is connected to the oil level warning lamp with the wiring. While the engine is running, if the engine oil level goes down to around "L" mark of the dipstick gauge, the warning lamp lights up to warn necessity of the engine oil replenishment.
Therefore, when the warning lamp goes on, immediate check should be made.

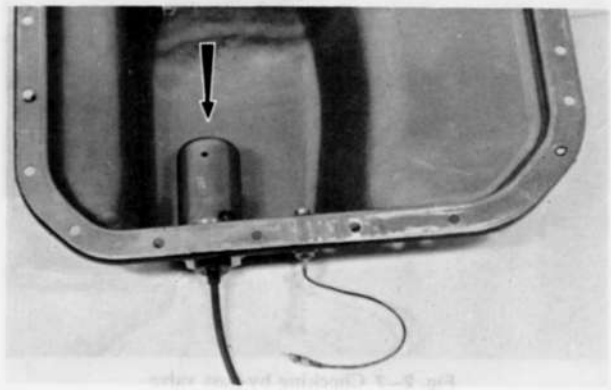

Fig. 2–2 Oil level sensor

2–C–1. Removing Oil Level Sensor

1. Remove the drain plug, and drain the engine oil from the oil pan. Refit the drain plug after draining.
2. Disconnect the coupler from the oil level sensor.
3. Remove the screws attaching the oil level sensor to the oil pan, and remove the oil level sensor.

2–C–2. Checking Oil Level Sensor

1. Clean the oil chamber.
2. Check the oil chamber with finger that deposits aren't piled up and the oil hole isn't clogged.
3. Connect the circuit tester to the level sensor as shown in Fig. 2–3, and check the continuity by moving the float up and down.

When the float is on the upper side, the circuit tester should not show any continuity, and when moved to the lower side, it should show a continuity of the circuit. If it is found not to be so, replace the oil level sensor.

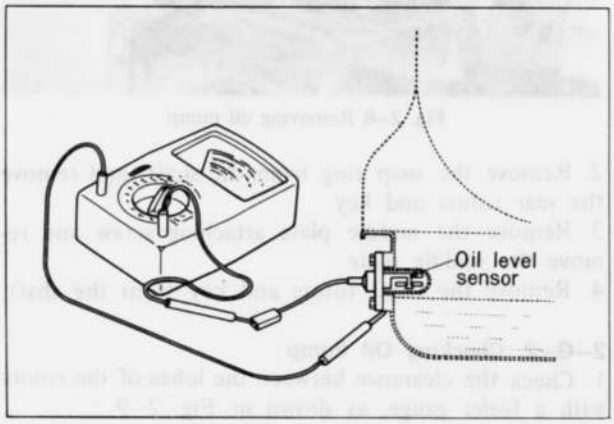

Fig. 2–3 Checking oil level sensor

2–C–3. Installing Oil Level Sensor

Follow the removal procedures in the reverse order. Fill the oil in the engine. Run the engine and check to see that the oil is not leaking from the joining faces of the level sensor.

2–D. CHECKING OIL PRESSURE

1. Remove the blind plug on the rear housing and connect the **oil pressure gauge** (49 0187 280) instead.
2. Warm up the engine to the normal operating temperature.
3. Run the engine **at 3,000** rpm and take a reading of the gauge.

If the reading of the gauge is **4.5 to 5.5** kg/cm² (64 ~ 79 lb/in²) the oil pressure is normal.

4. Run the engine at idle speed and take a reading of the gauge.

The normal oil pressure at idle is about 1.0 ~ 3.8 kg/cm² (14 ~ 54 1b/in²).

If the oil pressure is less than **1.0 kg/cm² (14 lb/in²)**, check the following points.

1) Ensure that the oil level is between the "F" and "L" of the dipstick gauge.
2) Check the oil filter for clog. If it exists, replace the filter cartridge, referring to Par. 2–H–1.
3) Check the oil pump, as described in Par. 2–G–2.

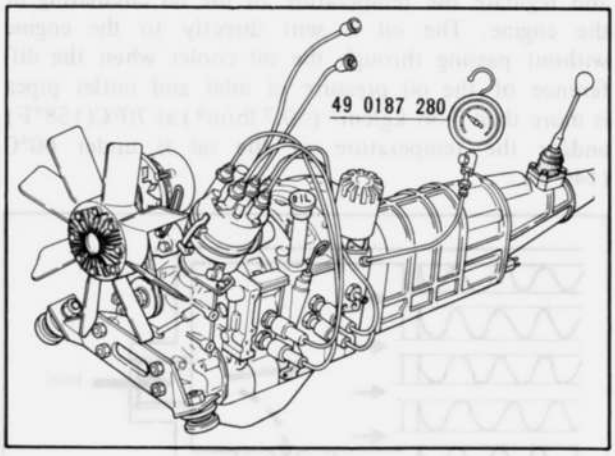

Fig. 2–4 Checking oil pressure

2–E. OIL PRESSURE CONTROL VALVE

The oil pressure control valve mounted on the front cover sends the surplus oil back to the oil pan when

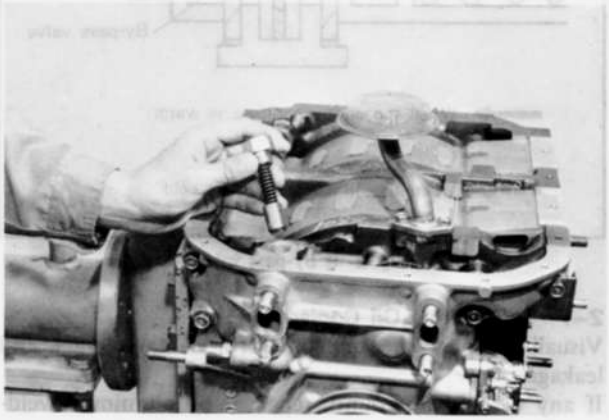

Fig. 2–5 Oil pressure control valve

the pressure exceeds 11 kg/cm² (156 lb/in²) in order to prevent the oil cooler and the oil hose from damage by the exceeding pressure which is generated at the starting in the very cold weather.

2–E–1. Checking Oil Pressure Control Valve

Remove the cap of the pressure control valve from the front cover as shown in Fig. 2–5.
Examine the spring and the plunger for corrosion or any damage. If it is severe, replace with new ones. Measure the free length and replace with new spring if these are not in the specification.
The free length of the spring is 73 mm (2.874 in).

2–F. OIL COOLER

The rotor is cooled by the lubricating oil, and the oil cooler is employed to cool the oil.
The oil cooler is of the corrugated fin type like a water radiator and it mounted under the radiator through insulation rubber. The oil cooler is made of aluminum which has outstanding cooling efficiency.
The by-pass valve is provided in the oil cooler in order to prevent drop of oil supply which is caused by the resistance of the oil cooler in the cold weather and regulate the temperature of the oil circulating in the engine. The oil is sent directly to the engine without passing through the oil cooler when the difference of the oil pressure of inlet and outlet pipes is more than 3.56 kg/cm² (50.7 lb/in²) at 70°C(158°F) and/or the temperature of the oil is under 60°C (140°F).

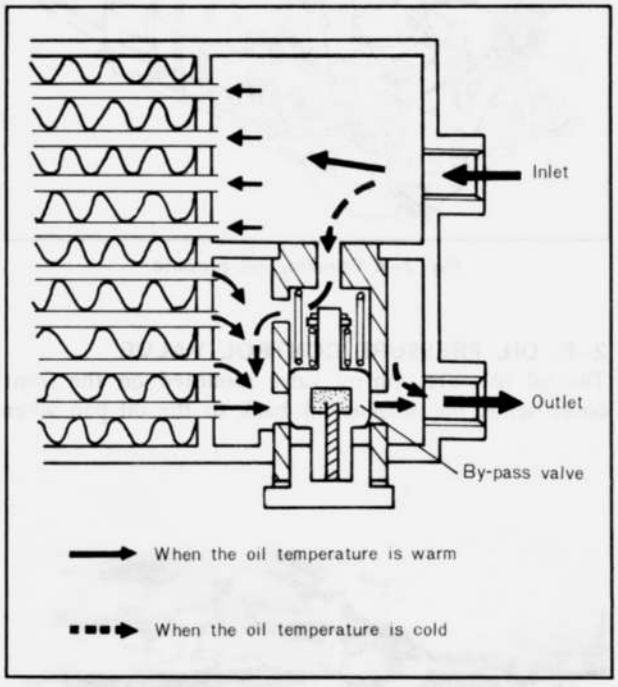

Fig. 2–6 By-pass valve

2–F–1. Checking Oil Cooler

Visually inspect the oil cooler for damage, crack and leakage.
If any defects are found, repair it by aluminum welding.

2–F–2. Checking By-pass Valve (Except for California)

1. Remove the cap nut and pull out the by-pass valve.
2. Soak the by-pass valve in hot oil of 75°C ~ 80°C (167°F ~ 176°F). If the protrusion of piston is more than 5 mm (0.2 in), the by-pass valve is normal. (Fig. 2–7)

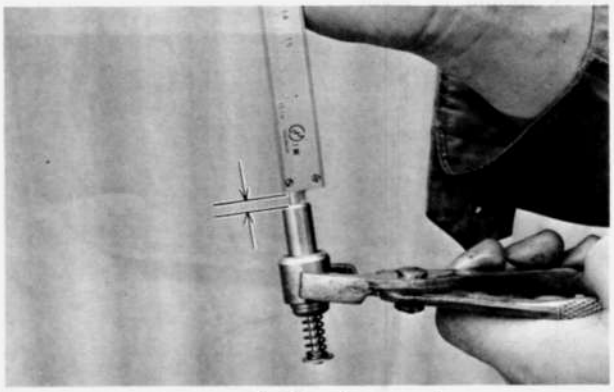

Fig. 2–7 Checking by-pass valve

2–G. OIL PUMP

The oil pump is of a rotor type based on the trochoid curve and consists of the parts as shown in Fig. 2–12. The feeding capacity is 5.0 liters/min. (5.3 U.S. quarts /min, 4.4 Imp. quarts/min.) at 1,000 rpm of engine revolution.

2–G–1. Disassembling Oil Pump

1. Remove the oil pump from the front housing.

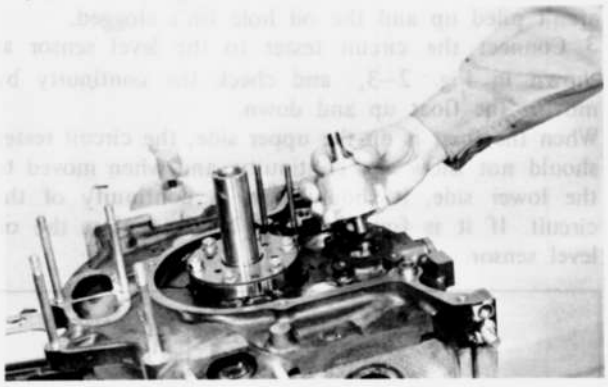

Fig. 2–8 Removing oil pump

2. Remove the snap ring from the shaft, and remove the rear rotors and key.
3. Remove the middle plate attaching screw and remove the middle plate.
4. Remove the front rotors and key from the shaft.

2–G–2. Checking Oil Pump

1. Check the clearance between the lobes of the rotors with a feeler gauge, as shown in Fig. 2–9.
If the clearance is **more than 0.15 mm (0.006 in)**, replace both rotors.
The standard clearance is 0.01 ~ 0.09 mm (0.0004 ~ 0.0035 in).

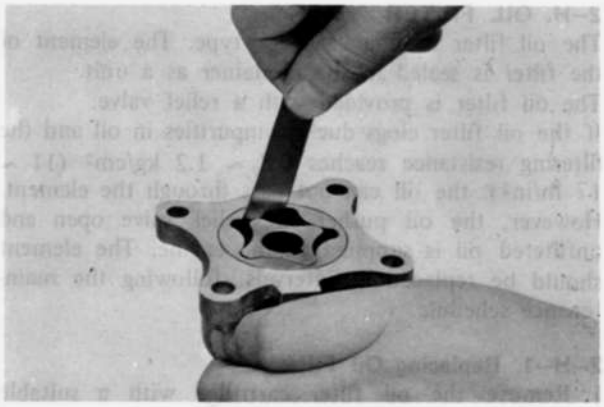

Fig. 2–9 Checking rotor clearance

2. Check the clearance between the outer rotor and the pump body with a feeler gauge, as shown in Fig. 2–10.
If the clearance is **more than 0.30 mm (0.012 in),** replace the rotor or body. The standard clearance is 0.20 ~ 0.25 mm (0.008 ~ 0.010 in).

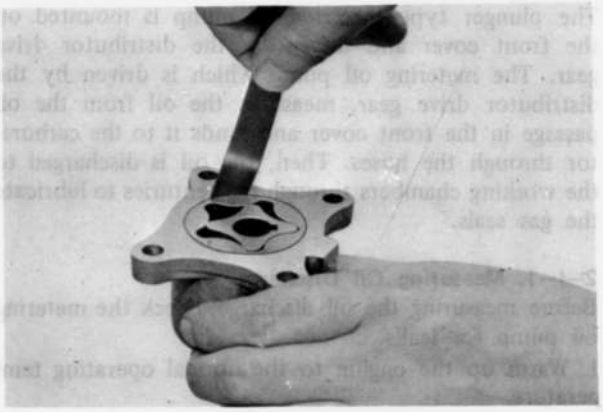

Fig. 2–10 Checking outer rotor clearance

3. Check the end float of the rotors. Place a straight edge across the pump body and measure the clearance between the rotor and the straight edge with a feeler gauge, as shown in Fig. 2–11.

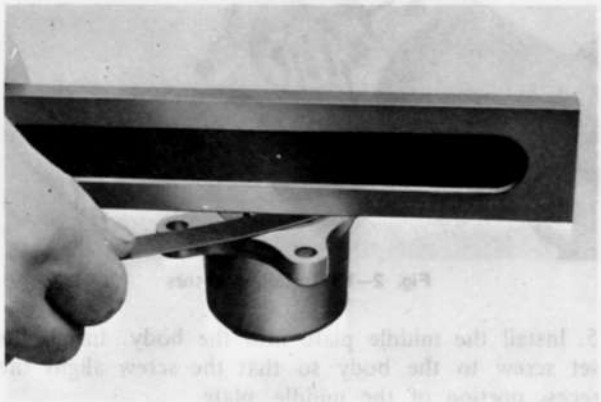

Fig. 2–11 Checking end float

Then place a straight edge across the mating surface of the front housing and measure the clearance between the straight edge and the front housing.
If the end float is **0.15 mm (0.006 in) or more,** correct the pump cover by grinding.
The standard end float is 0.03 ~ 0.13 mm (0.001 ~ 0.005 in).

2–G–3. Assembling Oil Pump

1. Clean all parts thoroughly.
2. Attach the key of the front side rotor to the shaft.
3. Install the front side inner rotor to the shaft so as to align the key groove of the inner rotor with the key on the shaft.
4. Install the inner rotor and shaft assembly and the outer rotor into the body so that the tally marks on the rotors go toward the front housing.

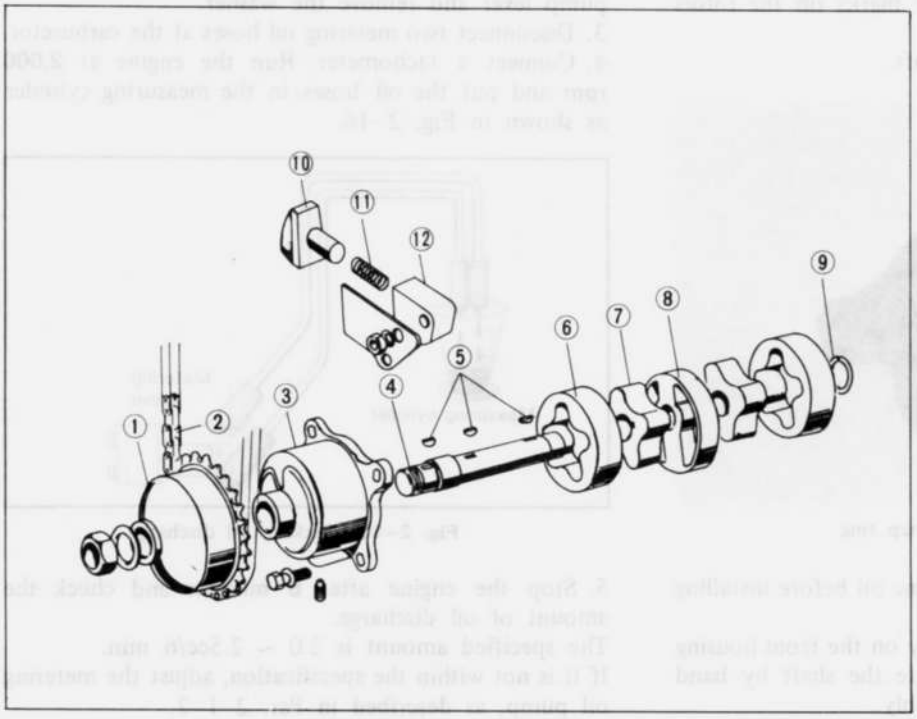

Fig. 2–12 Oil pump components
1. Oil pump sprocket
2. Oil pump drive chain
3. Pump body
4. Shaft
5. Keys
6. Outer rotor
7. Inner rotor
8. Middle plate
9. Snap ring
10. Chain adjuster
11. Spring
12. Body



Fig. 2–13 Installing rotors

5. Install the middle plate into the body. Install the set screw to the body so that the screw aligns the recess portion of the middle plate.

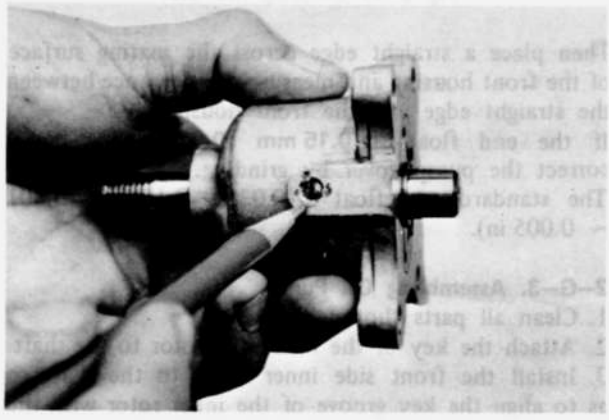

Fig. 2–14 Tightening middle plate

6. Attach the key of the rear side rotor to the shaft.
7. Install the rear side inner rotor and outer rotor into the body so that the tally marks on the rotors go toward the front housing.
8. Fit the snap ring on the shaft.

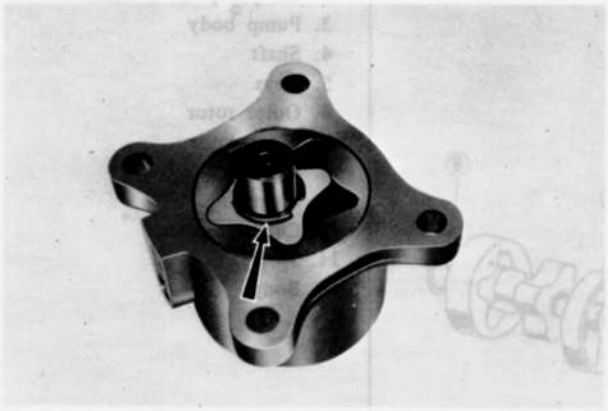

Fig. 2–15 Fitting snap ring

9. Prime the oil pump with engine oil before installing it on the engine.
10. Mount the oil pump assembly on the front housing and fix it with the bolts. Rotate the shaft by hand to see whether it rotates smoothly.

2–H. OIL FILTER

The oil filter is of a cartridge type. The element of the filter is sealed in the container as a unit.
The oil filter is provided with a relief valve.
If the oil filter clogs due to impurities in oil and the filtering resistance reaches 0.8 ~ 1.2 kg/cm² (11 ~ 17 lb/in²), the oil can not pass through the element. However, the oil pusher the relief valve open and unfiltered oil is supplied to the engine. The element should be replaced at intervals, following the maintenance schedule.

2–H–1. Replacing Oil Filter

1. Remove the oil filter cartridge with a suitable wrench.
2. **Apply oil onto the oil seal** on a new filter cartridge.
3. Install the cartridge onto the cover and tighten the cartridge **fully by hand.**
4. Start the engine and check that the joints are not leaking. Top up with oil if necessary.

2–I. METERING OIL PUMP

The plunger type metering oil pump is mounted on the front cover and driven by the distributor drive gear. The metering oil pump which is driven by the distributor drive gear, measures the oil from the oil passage in the front cover and sends it to the carburetor through the hoses. Then, the oil is discharged to the working chambers through the venturies to lubricate the gas seals.

2–I–1. Measuring Oil Discharge

Before measuring the oil discharge, check the metering oil pump for leaks.
1. Warm up the engine to the normal operating temperature.
2. Disconnect the connecting rod at the metering oil pump lever and remove the washer.
3. Disconnect two metering oil hoses at the carburetor.
4. Connect a tachometer. Run the engine at **2,000 rpm** and put the oil hoses in the measuring cylinder as shown in Fig. 2–16.

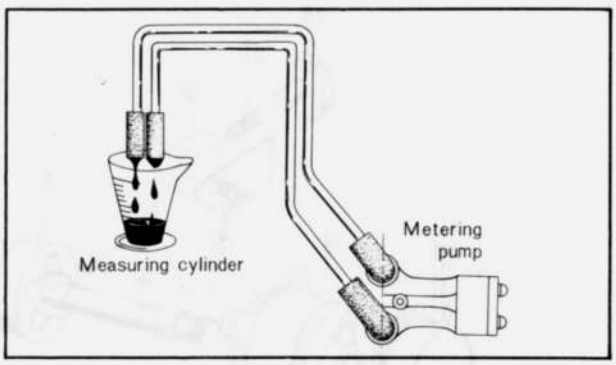

Fig. 2–16 Checking oil discharge

5. Stop the engine after **6 minutes** and check the amount of oil discharge.
The specified amount is 2.0 ~ 2.5cc/6 min.
If it is not within the specification, adjust the metering oil pump, as described in Par. 2–I–2.

Note:
As lubricating oil is not being supplied to the gas seals while the measurements are being taken, a proper amount of clean engine oil should be added into the carburetor.

5. Disconnect a tachometer. Connect the rod to the metering oil pump lever with a cotter pin.
6. Connect the two metering oil hoses to the carburetor.

2–I–2. Adjusting Metering Oil Pump

If the adjustment is necessary, proceed as follows:
1. Loosen the lock nut of the adjusting screw.
2. Adjust the adjusting screw until the proper oil discharge is obtained. When the adjusting screw is screwed in, the amount of oil discharge increases while the amount of oil discharge decreases when the screw is screwed out. The amount of oil discharge alters by approx. 0.2 ~ 0.3 cc/6 min./2,000 rpm per one turn of the adjusting screw.

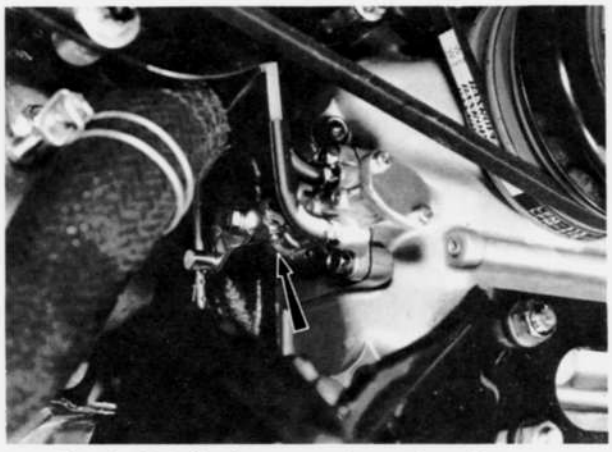

Fig. 2–17 Adjusting screw of metering oil pump

3. After adjusting is completed, tighten the lock nut.
4. Check the clearance between the pump lever and the washer as shown in Fig. 2–18.
The clearance should be **0 ~ 1.0 mm (0 ~ 0.04 in).** If necessary, adjust it by using a suitable washer.

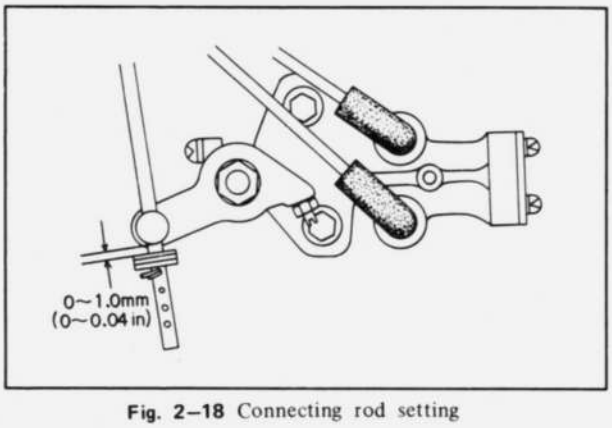

Fig. 2–18 Connecting rod setting

2–J. OIL PAN

When servicing the oil pan on the car, proceed as follows:

2–J–1. Removing Oil Pan

1. Raise the vehicle on the hoist.
2. Drain the engine oil.
3. Remove the bolts attaching the engine under cover, and remove the engine under cover.
4. Disconnect the coupler at the oil level sensor.
5. Disconnect the coupler from the oil thermo unit (Except for California).
6. Remove the bolts attaching the oil pan, and remove the oil pan (See Fig. 1–6).

2–J–2. Checking Oil Pan

Scrape any dirt or metal particles from the inside of the oil pan. Wash the oil pan in a solvent and dry it with compressed air.
Check the oil pan for cracks, damaged drain plug threads. Inspect for damage (uneven surface) at the bolt holes caused by over torqueing the bolts.
Straighten surfaces as required. Repair any damage, or replace the oil pan if repairs can not be made satisfactorily.

2–J–3. Installing Oil Pan

1. Clean the mounting surfaces of the oil pan and housing.
2. Apply the 4 ~ 6 mm (0.16 ~ 0.24 in) diameter continuous bead of sealer (Part number 0398 77 739) to the mounting surface of the oil pan and place the gasket on it.
Be sure there are no gaps in the sealer bead.
3. Apply the sealer onto the gasket as instructed in above.

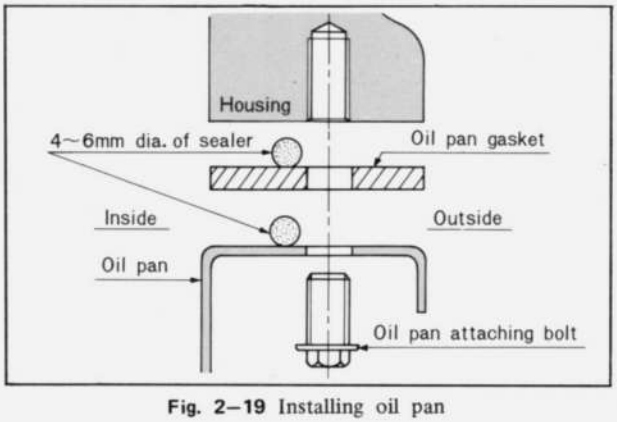

Fig. 2–19 Installing oil pan

4. Install the oil pan and gasket assembly in position.
5. Install the oil pan attaching bolts and tighten the bolts little by little in turn until the torque becomes 0.7 ~ 1.0 m-kg (5 ~ 7 ft-lb) evenly.
6. Fill the oil in the engine.
7. Run the engine and check to see that the oil is not leaking from the joining faces of the oil pan.

SPECIAL TOOL

49 0187 280	Oil pressure gauge

COOLING SYSTEM

DESCRIPTION ..... 3 : 1
3–A. COOLANT CIRCUIT ..... 3 : 1
3–B. ANTI-FREEZE SOLUTION ..... 3 : 1
3–C. CLEANING COOLING SYSTEM ..... 3 : 1
3–D. COOLING SYSTEM PRESSURE TEST ..... 3 : 2
3–E. RADIATOR ..... 3 : 2
3–E–1. Checking Radiator ..... 3 : 2
3–E–2. Removing Radiator ..... 3 : 2
3–E–3. Installing Radiator ..... 3 : 2
3–F. EXPANSION TANK ..... 3 : 3
3–F–1. Replacing Expansion Tank ..... 3 : 3
3–G. THERMOSTAT ..... 3 : 3
3–G–1. Removing Thermostat ..... 3 : 3
3–G–2. Checking Thermostat ..... 3 : 3
3–G–3. Installing Thermostat ..... 3 : 3
3–H. WATER PUMP ..... 3 : 3
3–H–1. Checking Water Pump on Car ..... 3 : 3
3–H–2. Removing Water Pump ..... 3 : 3
3–H–3. Disassembling Water Pump ..... 3 : 4
3–H–4. Inspecting Water Pump ..... 3 : 4
3–H–5. Assembling Water Pump ..... 3 : 4
3–H–6. Installing Water Pump ..... 3 : 5
3–I. "V" BELT TENSION ..... 3 : 5
3–J. FAN DRIVE ..... 3 : 5
3–J–1. Fan Drive Test ..... 3 : 5
3–J–2. Replacing Fan Drive Clutch ..... 3 : 6
3–K. COOLANT LEVEL SENSOR ..... 3 : 6
3–K–1. Checking Coolant Level Sensor ..... 3 : 6
3–K–2. Replacing Coolant Level Sensor ..... 3 : 6
SPECIAL TOOL ..... 3 : 6

3

DESCRIPTION

The cooling system consists of a corrugated fin type radiator, expansion tank, centrifugal water pump, wax pellet type thermostat and a seven-blade fan.
The radiator and the expansion tank are connected by hose. When engine is overheated, the coolant in the radiator flows out and led into the expansion tank through the hose. The coolant is then returned to the radiator by negative pressure which builds up in the cooling system when the engine cools down. The coolant should be replaced at intervals, following the maintenance schedule.

3–A. COOLANT CIRCUIT

The water pump, which is driven by a belt from the eccentric shaft, delivers the coolant from the radiator to the front housing.
The coolant circulates from the front housing through the water passages provided in each housing to the rear housing. From the rear housing, the coolant is returned to the front housing.
When the engine is cold, the thermostat is closed and the coolant in the housing does not circulate back into the radiator. As the coolant circulates only between the housings, this enables the engine to warm up quickly.
Once the engine is warmed up, this opens the thermostat and the coolant is then circulated to the radiator through the thermostat.
The coolant in the radiator is cooled by the fan and the air stream caused by the travel of the vehicle and is then circulated to the housings.

3–B. ANTI-FREEZE SOLUTION

The high quality ethylene glycol anti-freeze which is suitable for aluminum engine is used in the cooling system.
Use recommended mixture of 50% anti-freeze solution (Ethylene glycol base for aluminum engine) and 50% water.
For proper system protection in regions where the temperature goes below 20°F, add the amount of ethylene glycol base coolant recommended by the coolant manufacturer. However, be careful so that the proportion of ethylene glycol anti-freeze contained in the coolant may not exceed 60%; higher proportion than that only has a bad effect upon the engine.

Note:
Always use soft water (demineralized water) in the cooling system.

3–C. CLEANING COOLING SYSTEM

The cooling system should be flushed at intervals, following the maintenance schedule.

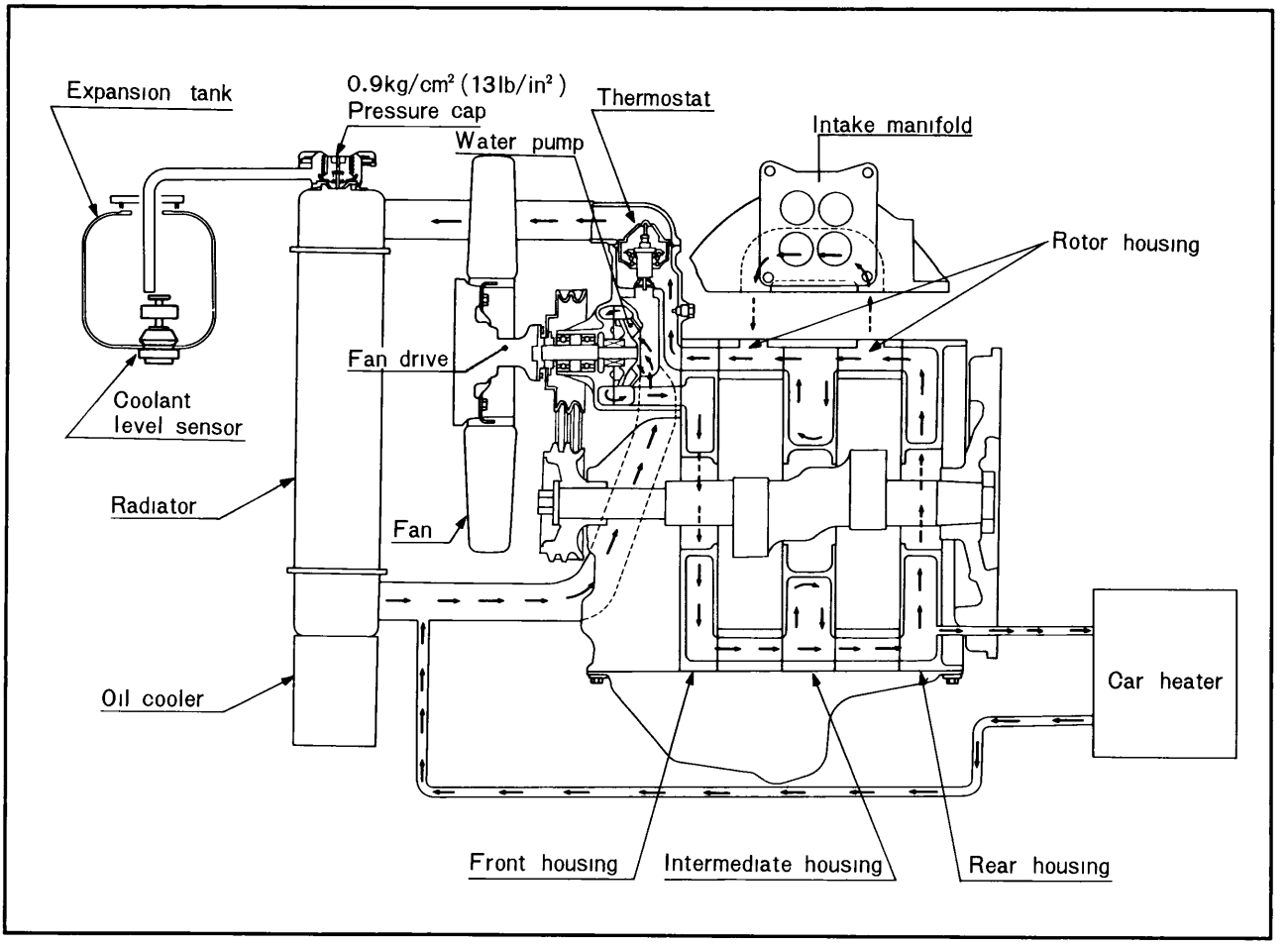

Fig. 3–1 Cooling circuit

The flushing procedures are as follows:
1. Remove the radiator cap. Open the drain plugs and drain the coolant.
2. Close the drain plugs and supply clean soft water (demineralized water).

Note:
If necessary, use cleaning solution to loosen the rust and scale, according to the instructions given by the maker of the cleaning solution.

3. Run the engine for about one hour, keeping the normal operating temperature.
4. Drain the coolant completely and flush clean water through the cooling system in the direction opposite to the normal coolant flow. This action causes the water to get behind the corrosive deposits and force them out.
5. Fill the cooling system with a mixture of clean soft water (demineralized water) and anti-freeze solution or anti-corrosive solution according to the season and maker's instruction.

Note:
During a complete refill of the cooling system, always operate the engine until it reaches normal operating temperature to bleed air from the system. Then, let the system cool, check the coolant level, and add coolant as necessary to the specified level.

3–D. COOLING SYSTEM PRESSURE TEST

Carefully check the radiator and cooling system for leaks by using a radiator cap tester.
Refill the coolant full in the radiator and "FULL" mark in the expansion tank.
Run the engine until it reaches normal operating temperature. With the engine running and tester installed, pump up the system to approximately 0.9 kg/cm² (13 lb/in²) and observe the gauge.

Note:
Never allow the pressure to build up to more than 1.0 kg/cm² (14 lb/in²).

If pressure drops rapidly, visually inspect all external parts for leaks. If no external leaks appear and pressure continues to drop, inspect the engine oil to determine whether or not coolant is leaking into the rotor housing due to a cracked rotor housing or leaking sealing rubbers.

3–E. RADIATOR

The radiator is of the corrugated fin type and the pressure cap is provided on the radiator.
The expansion tank and the radiator are connected by the hose.
The pressure in the cooling system increases the boiling point of the coolant and prevents overheating and reduces overflow losses.
When the pressure in the cooling system exceeds 0.9 kg/cm² (13 lb/in²), the pressure valve opens.
A vacuum release valve is employed to prevent undesirable vacuum build-up when the system cools down.

Note:
To remove the radiator pressure cap when the coolant temperature is high or boiling, place a cloth on the pressure cap and turn counter-clockwise one step. Keep it in this position until all pressure is released. Then, turn the cap further until it can be removed. To install the cap, place in position and turn it clockwise as far as it will go.

3–E–1. Checking Radiator

1. Examine the radiator carefully for leaks. If any leakage should be discovered, however small it may be, repair completely by soldering, etc.
2. Clean the exterior of the radiator core by blowing out with compressed air.
3. Check the pressure cap rubber gasket. Replace the pressure cap if the rubber gasket is damage.
4. Check the pressure cap function. To check, first wet the cap rubber gasket to insure an air tight seal and then attach a tester to the cap. The specified pressure is 0.9 kg/cm² (13 lb/in²).



Fig. 3–2 Checking radiator pressure cap

3–E–2. Removing Radiator

1. Drain the cooling system.
2. Remove the cooling fan and fan drive attaching bolts, and remove the fan and fan drive as an assembly.
3. Loosen the hose clamps and disconnect the radiator upper hose and radiator lower hose from the radiator. Disconnect the heater hose at the radiator.
4. On the vehicle equipped with automatic transmission, disconnect the oil hoses for cooling at the radiator.
5. Remove the brackets holding the oil cooler to the radiator.
6. Remove the radiator shroud attaching bolts and remove the radiator shroud from the radiator.
7. Remove the radiator mounting bolts. Carefully remove the radiator.

3–E–3. Installing Radiator

Follow the removal procedures in the reverse order. Fill the cooling system with a mixture of clean soft water (demineralized water) and anti-freeze solution or anti-corrosive solution according to the

season and maker's instruction.

3–F. EXPANSION TANK

3–F–1. Replacing Expansion Tank

Check the expansion tank for crack, damage and leakage.

To replace, proceed as follows:

1. Disconnect the water hose (radiator to expansion tank) at the expansion tank cap.
2. Remove the expansion tank from the bracket.
3. Install the expansion tank in the reverse order of removing.

3–G. THERMOSTAT

The cooling system is designed to provide adequate cooling. However, the thermostat is necessary to provide quick warming up and to prevent over cooling.

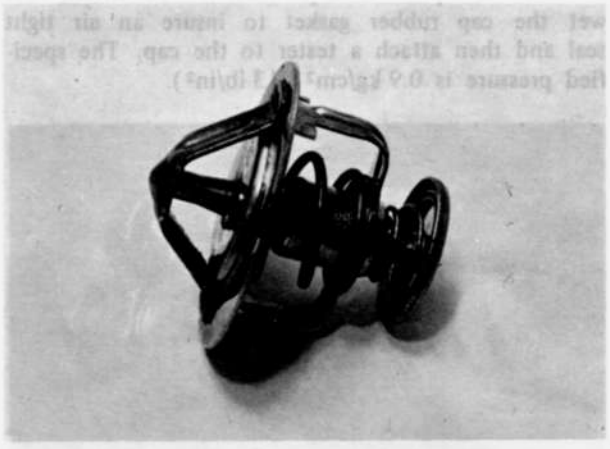

Fig. 3–3 Thermostat

3–G–1. Removing Thermostat

1. Drain the cooling system.
2. Remove the air cleaner.
3. Loosen the hose clamp and disconnect the radiator upper hose from the thermostat cover.
4. Remove the nuts attaching the thermostat cover to the water pump and remove the cover.
5. Lift out the thermostat from the water pump.

3–G–2. Checking Thermostat

To test the thermostat, place it in water with a thermometer and heat up the water gradually and check the temperature when the thermostat starts to open and when it opens fully. And also, measure the lift height when the thermostat is fully opened. If the reading shows a large difference from the standard specifications, replace with a new thermostat.

The specifications of the thermostat are shown in the following table.

Starts to open	82°C ± 1.5°C (180°F ± 2.7°F)
Fully opens at	95°C (203°F)
Lift	8 ~ 10 mm (0.315 ~ 0.394 in)

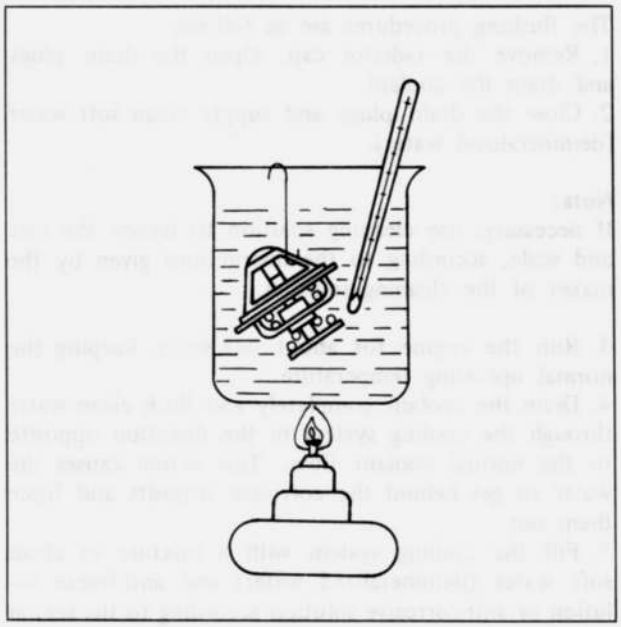

Fig. 3–4 Checking thermostat

3–G–3. Installing Thermostat

Follow the removal procedures in the reverse order. Fill the cooling system with a mixture of clean soft water (demineralized water) and anti-freeze solution or anti-corrosive solution according to the season and maker's instruction.

3–H. WATER PUMP

The water pump employs a centrifugal impeller. In the pump body, the shaft is supported with two bearings. The impeller is fitted to the rear end of the shaft. The seal assembly prevents water leakage.

3–H–1. Checking Water Pump on Car

Check the water pump for leaks and excessive end play or looseness of the shaft and bearings. If there is evidence of excessive play when the fan blades are manually moved up and down, it shows that the bearings are rough.

If water leaks from the hole located on the pump body, it indicates defective seal necessitating overhaul of the pump.

3–H–2. Removing Water Pump

1. Drain the cooling system.
2. Remove the air cleaner.
3. Remove the alternator and disengage the "V" belt.
4. Disconnect the coupler from the water temperature switch.
5. Remove the air pump and disengage the "V" belt.
6. Loosen the hose clamp and disconnect the radiator upper hose from the thermostat cover.
7. Remove the radiator upper shroud from the radiator.
8. Remove the cooling fan and fan drive attaching bolts, and remove the fan and fan drive as an assembly.
9. Remove the nuts attaching the water pump and remove the water pump assembly.

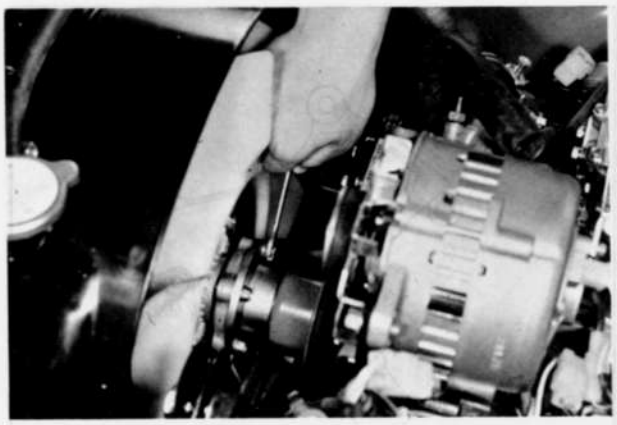

Fig. 3–5 Removing fan drive assembly



Fig. 3–6 Removing pump body attaching nuts

3–H–3. Disassembling Water Pump

1. Attach the **adapter** (49 1975 145) on to the pulley boss and tighten the four bolts firmly.
2. Support the water pump pulley adapter on the press. Press the water pump shaft slowly and remove the pulley boss from the water pump shaft.

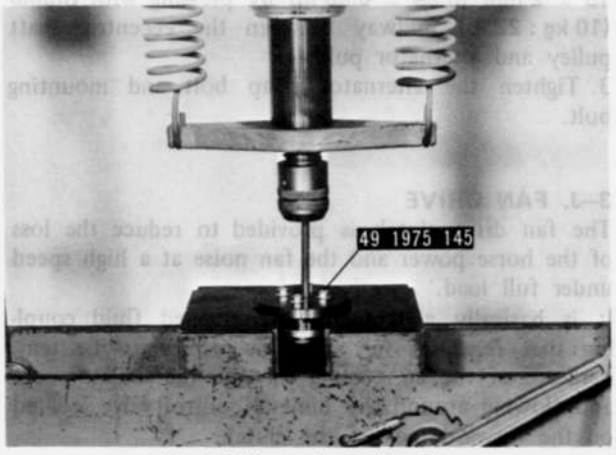

Fig. 3–7 Removing pulley boss

3. Remove the snap ring.
4. Support the pump body and apply pressure to the rear end of the shaft to press the shaft, spacer and bearing assembly out through the front of the pump body.
5. Remove the impeller.
6. Remove the seal assembly from the pump body.
7. Remove the bearings and spacer from the shaft with a suitable puller.

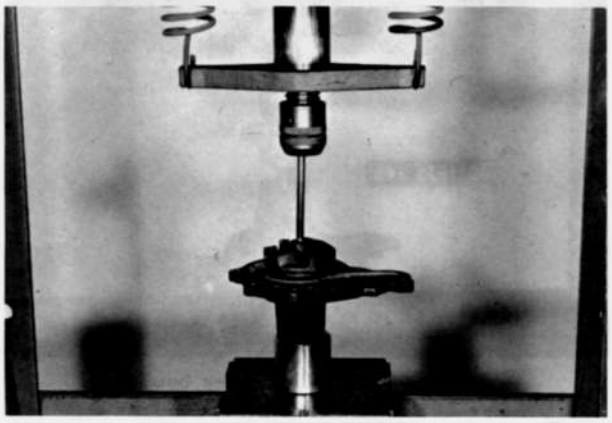

Fig. 3–8 Removing impeller

3–H–4. Inspecting Water Pump

1. Inspect the bearing for roughness or excessive end play. Remove any rust or scale from the bearing shaft with an emery cloth.
The bearing should be wrapped in cloth while removing the rust or scale to prevent emery dust from entering the bearing.
2. Inspect the seat for seal on the impeller for pit marks or scoring. If the seat for the seal is scored or pitted, the impeller should be replaced.
3. Inspect the water pump body and the impeller for cracks and wear. Replace if defective.

3–H–5. Assembling Water Pump

1. Install the stop ring into the groove on the shaft.
2. Place the dust seal plate on the shaft.
3. Drive the baffle plate onto the taper of the shaft.
4. Install the shaft into the body.
5. Press in the bearing with the sealed side rearward.
6. Place the spacer on the bearing and fill grease.
7. Install the bearing with the sealed side forward until the snap ring can be installed.
8. Install the snap ring.

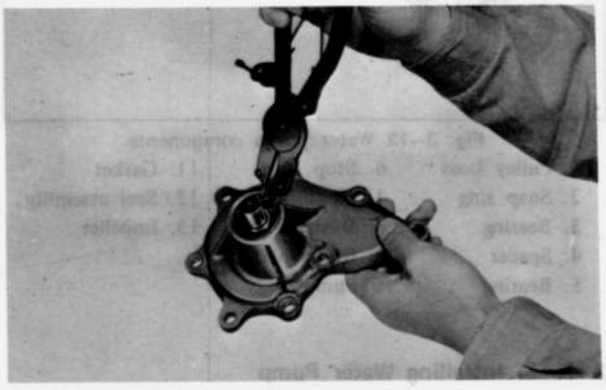

Fig. 3–9 Installing snap ring

9. Press the water pump pulley adapter and pulley boss onto the pump shaft until it contacts with the bearing inner race as shown in Fig. 3–10.
10. Install the seal assembly into the body.
11. Press the impeller onto the shaft until it is flush with the end of the shaft as shown in Fig. 3–11.

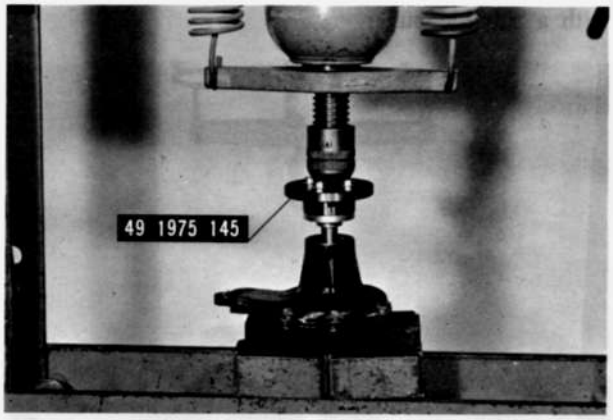

Fig. 3–10 Installing pulley boss

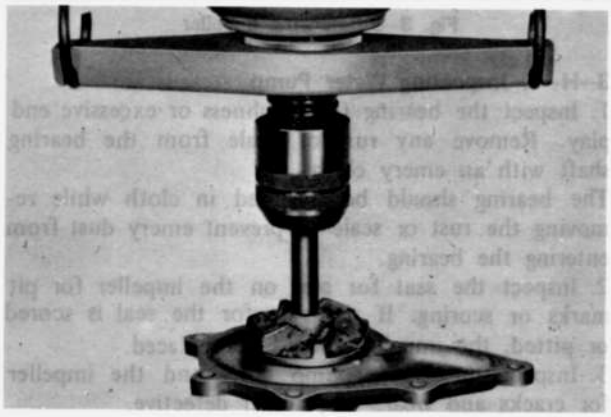

Fig. 3–11 Installing impeller

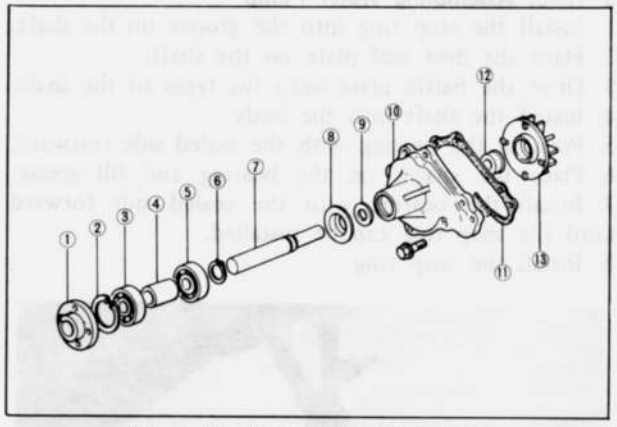

Fig. 3–12 Water pump components

1. Pulley boss	6. Stop ring	11. Gasket
2. Snap ring	7. Shaft	12. Seal assembly
3. Bearing	8. Dust seal	13. Impeller
4. Spacer	9. Baffle plate	
5. Bearing	10. Pump body	

3–H–6. Installing Water Pump

Install the water pump in the reverse order of removing, noting the following points

1. Tighten the water pump attaching nuts evenly to 1.8 ~ 2.7 m-kg (13 ~ 20 ft-lb) sequence shown in Fig. 3–13.
2. Adjust the alternator and air pump "V" belts tension, as described in Par. 1–D–20 and 1–D–21.
3. Fill the cooling system with a mixture of clean soft water (demineralized water) and anti-freeze solution or anti-corrosive solution according to the season and maker's instruction.

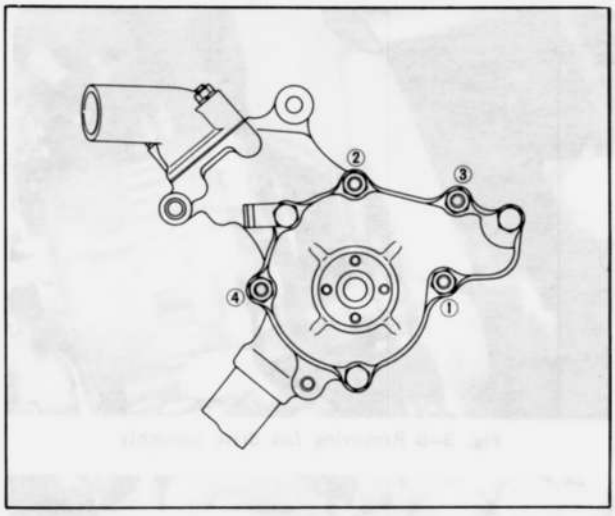

Fig. 3–13 Tightening order of water pump attaching nuts

3–I. "V" BELT TENSION

If the belt is broken, glazed, or worn, replace the belt with a new one. If the belt is stretched so that it cannot be tightened sufficiently, install a new belt.

If the belt is noisy, check the tension of the belt. Also, check for misaligned pulleys.

1. Loosen the alternator strap bolt and mounting bolt.
2. Move the alternator toward or away from the engine until the correct tension is obtained.

Correct adjustment will permit the belt **to flex 15 ± 2 mm (0.59 ± 0.08 in)** by pressing with thumb **(10 kg : 22 lb)** midway between the eccentric shaft pulley and alternator pulley.

3. Tighten the alternator strap bolt and mounting bolt.

3–J. FAN DRIVE

The fan drive clutch is provided to reduce the loss of the horse power and the fan noise at a high speed under full load.

It is basically a temperature-controlled fluid coupling that regulates fan speed according to the temperature of the air coming through the radiator core and flowing around the bimetal control valve located on the forward face of the clutch.

3–J–1. Fan Drive Test

1. Using a suitable marker, mark the cooling fan.
2. Connect a tachometer to the engine.
3. Worm up the engine until it reaches the normal operating temperature.
4. Adjust the engine speed to 4,200 rpm.
5. Using a stroboscope in accordance with the manufacturer's instruction, read the fan speed.

The standard revolution is 1,400 ± 200 rpm.

If the fan speed is not within the specification, replace the fan drive clutch with a new one and perform the test again.

3–J–2. Replacing Fan Drive Clutch

1. Remove the attaching bolts and remove the fan and fan drive as an assembly as shown in Fig. 3–5.
2. Remove the attaching bolts and separate the fan from the fan drive.
3. Assemble the fan and fan drive, and install the fan and fan drive assembly in the reverse order of removing.

3–K. COOLANT LEVEL SENSOR

The coolant level sensor which is fitted to the expansion tank is connected to the coolant level warning lamp with the wiring.
While the engine is running, if the coolant level in the expansion tank goes down lower than "LOW" mark, the warning lamp lights up to warn necessity of the engine coolant replenishment.

3–K–1. Checking Coolant Level Sensor

1. Disconnect the coupler of the sensor.
2. Connect the circuit tester to the coupler and check the continuity by moving the float up and down as shown in Fig 3–14.
When the float is below "LOW" mark, the tester should show a continuity while the tester should not show any continuity when the float is above "LOW" mark.
If it is found not to be so, replace the coolant level sensor.

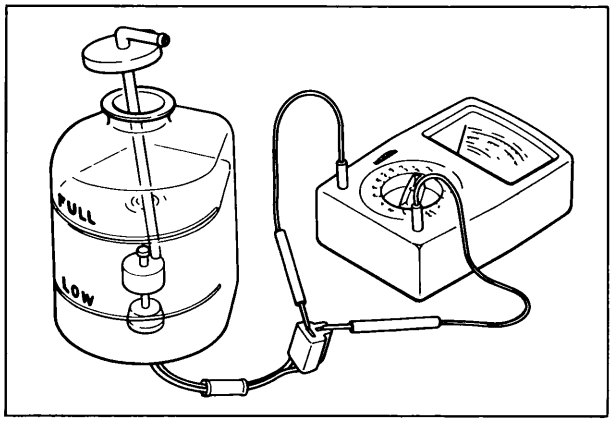

Fig. 3–14 Checking coolant level sensor

3–K–2. Replacing Coolant Level Sensor

1. Remove the expansion tank, as described in Par. 3–F–1.
2. Drain the coolant in the expansion tank and replace the coolant level sensor.
3. Install the expansion tank in the reverse order of removing.
4. Fill the coolant in the expansion tank until the "FULL" mark.

SPECIAL TOOL

49 1975 145	Adaptor, water pump pulley

FUEL SYSTEM

4–A. CARBURETOR ..... 4 : 1
4–A–1. Adjustment ..... 4 : 1
4–A–2. Removing Carburetor ..... 4 : 3
4–A–3. Disassembling Carburetor ..... 4 : 3
4–A–4. Inspecting Carburetor ..... 4 : 6
4–A–5. Assembling Carburetor ..... 4 : 6
4–A–6. Installing Carburetor ..... 4 : 6
4–B. CARBURETOR LINKAGE ..... 4 : 6
4–B–1. Carburetor Linkage ..... 4 : 6
4–B–2. Accelerator Linkage ..... 4 : 7
4–C. ENRICHMENT SYSTEM ..... 4 : 7
4–C–1. Richer Solenoid (Manual transmission) ..... 4 : 7
4–C–2. Power Valve ..... 4 : 7
4–D. THROTTLE OPENER SYSTEM (AIR CONDITIONER) ..... 4 : 8
4–D–1. Checking Throttle Opener ..... 4 : 8
4–E. SUB-ZERO STARTING ASSIST DEVICE (Except for California) ..... 4 : 8
4–E–1. Sub-zero Starting Assist Fluid ..... 4 : 8
4–E–2. Checking Sub-zero Starting Assist Device ..... 4 : 8
4–E–3. Checking Oil Thermo Unit ..... 4 : 8
4–F. FUEL PUMP ..... 4 : 8
4–F–1. Testing Fuel Pump ..... 4 : 8
4–F–2. Replacing fuel pump ..... 4 : 9
4–G. FUEL FILTER ..... 4 : 9
4–H. FUEL LINE ..... 4 : 9
4–I. FUEL TANK ..... 4 : 9
4–J. AIR CLEANER ..... 4 : 9
4–K. INTAKE AIR TEMPERATURE CONTROL SYSTEM ..... 4 : 9
4–L. IDLE COMPENSATOR ..... 4 : 10
4–M. FUEL CUT VALVE ..... 4 : 10
4–N. FUEL CHECK VALVE ..... 4 : 10
4–O. MODIFICATION PROCEDURE INTO HIGH ALTITUDE VEHICLE (Except for California vehicles) ..... 4 : 11
4–P. MODIFICATION PROCEDURE INTO LOW ALTITUDE VEHICLE (Except for California vehicles) ..... 4 : 12
SPECIAL TOOL ..... 4 : 12

4–A. CARBURETOR

4–A–1. Adjustment

a. Idle adjustment

Pre-check

Be sure the ignition timing, spark plug, carburetor float level and etc., are in normal condition.
Blow the engine room with the additional cooling fan if available.

Pre-conditions for idle adjustment

1. Set the parking brake and block the wheels.
2. Switch off the accessaries such as an air conditioner, etc.
3. Remove the fuel filler cap.
4. Disconnect the tube at the idle compensator in the air cleaner and plug the end of the tube.
5. Connect an accurate reading tachometer to the engine. Do not use the tachometer on the vehicle.
6. Warm up the engine to the normal operating temperature and run it three minutes at 2,000 rpm in neutral.
7. Connect an exhaust gas analyzer to the vehicle.

Idle speed

1. Adjust the idle speed to **750 rpm** by turning the air adjust screw.

On the vehicle equipped with automatic transmission, place the selector lever to "D" position.

2. If the CO concentration is less than 0.1% and engine operation is stable after adjusting the idle speed, the idle mixture adjustment is not required.

If not, adjust the idle mixture as follows:

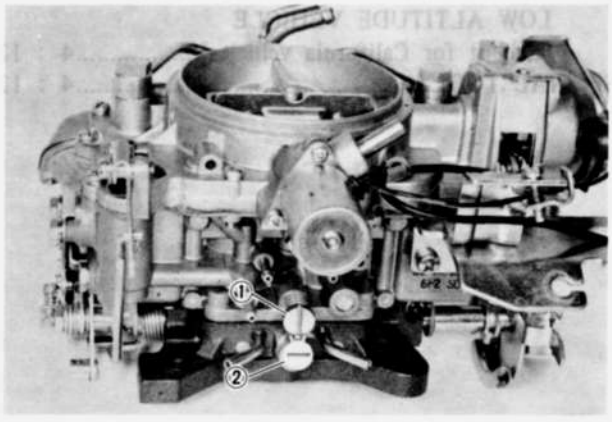

Fig. 4–1 Adjusting idle speed
1. Air adjust screw 2. Limiter cap and mixture adjust screw

Idle mixture

1. Remove the idle limiter cap (plastic cap) from the mixture adjust screw.
2. Turn the mixture adjust screw clockwise until the engine hunts severely.
3. Then, turn the mixture adjust screw counter-clockwise in small steps until CO decreases to 0.1%. (Do not overturn the mixture adjust screw to get CO less than 0.1%.)
4. From that position, turn the mixture adjust screw counter-clockwise 1/4 turn. (The idle CO should be less than 0.1% after these adjustments.)

CO concentration	Less than 0.1%

5. If the idle speed shifts from the specified rpm as the result of the above procedure, adjust the idle speed and repeat the procedure 2 ~ 4.
6. Install a limiter cap with the cap stopper positioned at the stopper pin as shown in Fig. 4–2.

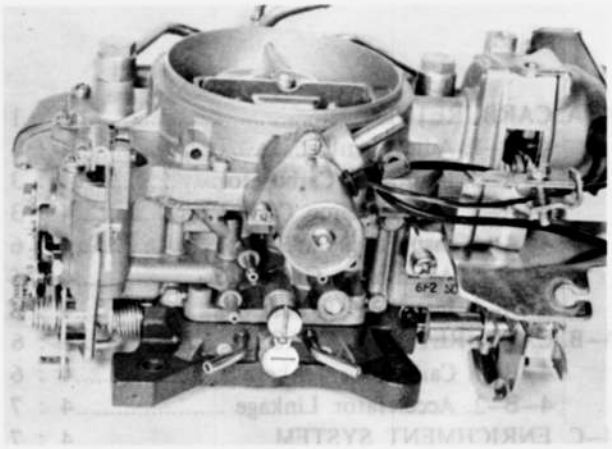

Fig. 4–2 Position of limiter cap

b. Fast idle adjustment

To check the fast idle speed, proceed as follows:
1. Connect a tachometer to the engine.
2. Warm up the engine to the normal operating temperature and stop the engine.

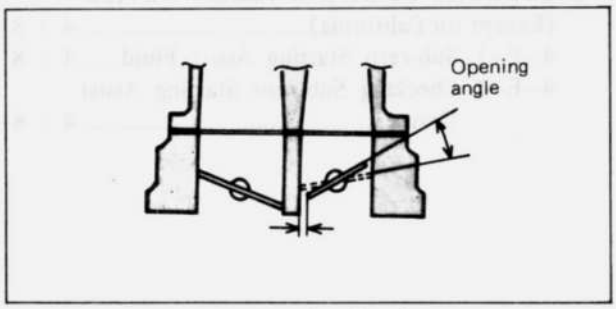

Fig. 4–3 Throttle valve clearance

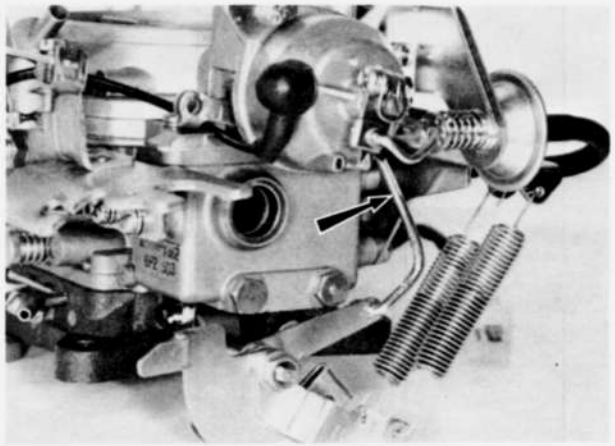

Fig. 4–4 Adjusting fast idle

3. With the choke knob fully pulled, start the engine. If the engine speed reaches 3,000 ~ 3,500 rpm within about 10 seconds after starting, the fast idle is satisfactory.

If it is not within the specification, adjust the fast idle as follows:

1. Remove the carburetor from the engine.
2. With the choke valve fully closed, measure the clearance between the primary throttle valve and the wall of the throttle. The specified clearance is as follows:

Calif.	1.37 ± 0.1 mm (0.054 ± 0.004 in)
All except Calif.	1.05 ± 0.1 mm (0.041 ± 0.004 in)

3. If the clearance is not within specification, bend the fast idle rod until the proper clearance is obtained.

c. Float level adjustment

1. With engine operating, check the fuel level in each fuel bowl sight glass.
2. If the fuel level is not within the specified mark in the sight glass, remove the air horn from the carburetor.

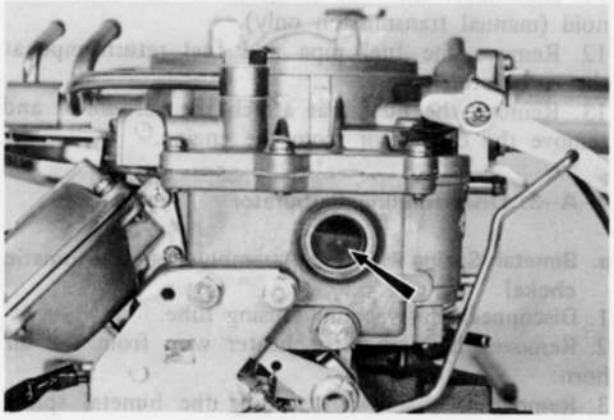

Fig. 4–5 Fuel sight glass

3. Invert the air horn on a stand and allow the float to lower by its own weight.
4. Measure the clearance (H) between the float and the air horn gasket. This clearance should be **2.5 ± 1 mm (0.10 ± 0.04 in).** If the clearance is not within specifications, bend the float seat lip until the proper clearance is obtained.

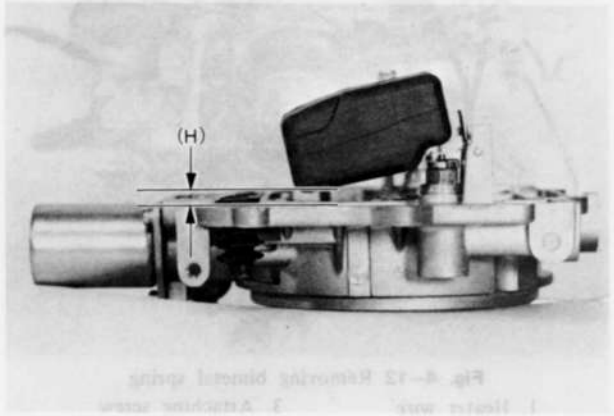

Fig. 4–6 Checking float level

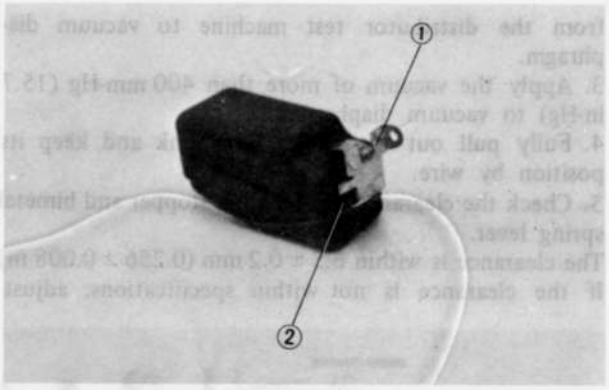

Fig. 4–7 Float
1. Float seat lip 2. Float stopper

5. Turn the air horn to the normal position and allow the float to lower by its own weight.
6. Measure the distance (L) between the bottom of float and the air horn gasket. The distance should be **52 ± 0.5 mm (2.05 ± 0.02 in).**
If the distance is not within specifications, bend the float stopper until the proper distance is obtained.

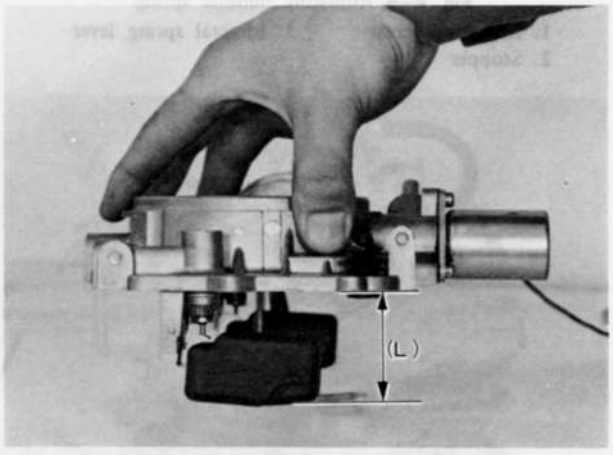

Fig. 4–8 Checking float drop

7. Install the air horn to the carburetor.
8. Operate the engine and make sure that the fuel level is to the specified mark in each sight glass.

d. Accelerator pump inspection

1. Place the vehicle on a level ground.
2. Remove the air cleaner.
3. Start the engine and check if the fuel level is to the specified mark in the sight glass.
4. Stop the engine. Operate the throttle valve and check to see that the fuel is discharged from the nozzles of the pump. If not, remove the carburetor air horn and check the diaphragm, check balls and etc.

e. Adjustment of choke valve opening angle

1. Remove the air cleaner.
2. Disconnect the vacuum sensing tube from the vacuum diaphragm and connect the vacuum sensing tube

from the distributor test machine to vacuum diaphragm.
3. Apply the vacuum of more than 400 mm-Hg (15.7 in-Hg) to vacuum diaphragm.
4. Fully pull out the choke lever link and keep its position by wire.
5. Check the clearance between the stopper and bimetal spring lever.
The clearance is within 6.5 ± 0.2 mm (0.256 ± 0.008 in). If the clearance is not within specifications, adjust the adjusting screw until the proper clearance is obtained.
6. After the choke clearance is adjusted, check the clearance (R) as shown in Fig. 4–10
7. Measure the temperature around the bimetal and compare with the specifications shown in Fig. 4–11.

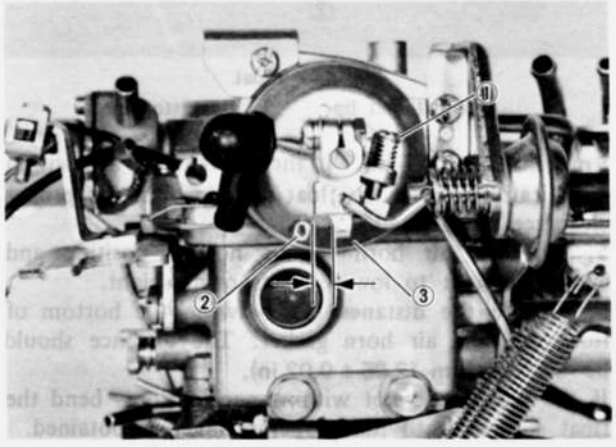

Fig. 4–9 Adjusting bimetal spring
1. Adjusting screw
2. Stopper
3. Bimetal spring lever

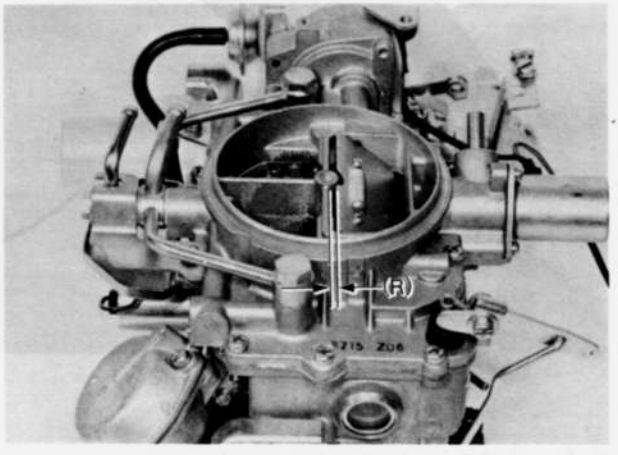

Fig. 4–10 Choke valve clearance (R)

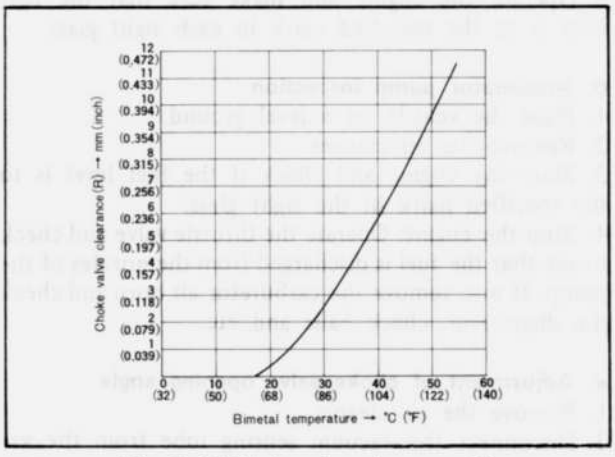

Fig. 4–11 Choke valve clearance (R)

4–A–2. Removing Carburetor

1. Disconnect the negative cable at the battery.
2. Disconnect all hoses from the air cleaner. Remove the air cleaner.
3. Disconnect the accelerator cable and the choke cable at the carburetor.
4. Disconnect the bullet connector of the carburetor heater and air vent solenoid.
5. Remove the vacuum tubes from the carburetor.
6. Remove the sub-zero starting assist hose at the carburetor (Except for California).
7. Remove the metering oil pump hoses at the carburetor.
8. Disconnect the metering oil pump rod at the connecting lever.
9. Disconnect the coupler of the idle switch.
10. Disconnect the wire connector of the power valve solenoid (49 states except Calif., with automatic transmission and Calif. vehicles).
11. Disconnect the wire connector of the richer solenoid (manual transmission only).
12. Remove the fuel pipe and fuel return pipe at the carburetor.
13. Remove the nuts that attach the carburetor and remove the carburetor from the engine.

4–A–3. Disassembling Carburetor

a. Bimetal Spring Housing Assembly (Semi-automatic choke)

1. Disconnect the vacuum sensing tube.
2. Remove the carburetor heater wire from the air horn.
3. Remove two screws attaching the bimetal spring housing to the air horn and remove the bimetal housing.

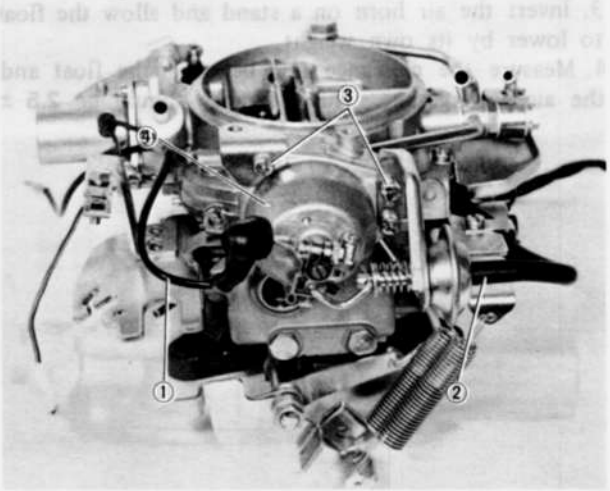

Fig. 4–12 Removing bimetal spring
1. Heater wire
2. Vacuum tube
3. Attaching screw
4. Bimetal spring housing

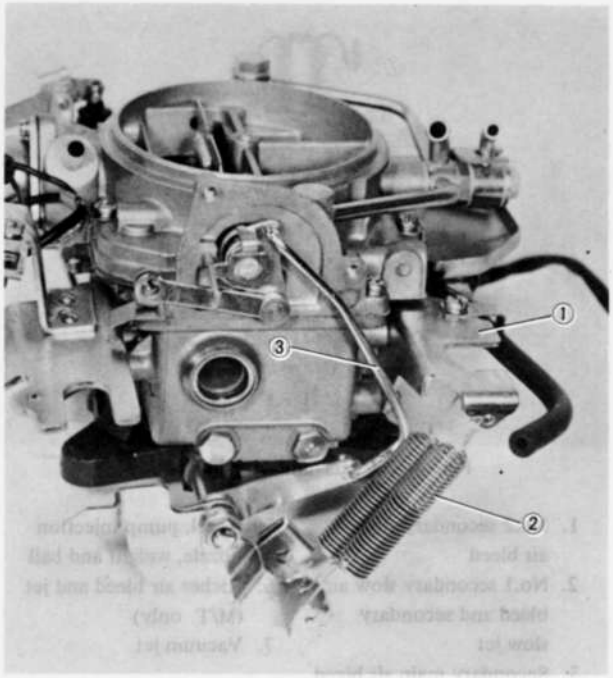

Fig. 4–13 Removing throttle return spring
1. Spring bracket
2. Throttle return spring
3. Choke connecting rod

b. Air Horn

1. Remove the spring bracket attaching screws, and remove the bracket and throttle return springs.
2. Disconnect the choke connecting rod by removing the split pin, washer and spring.
3. Disconnect the accelerating pump connecting rod from the accelerating pump lever.

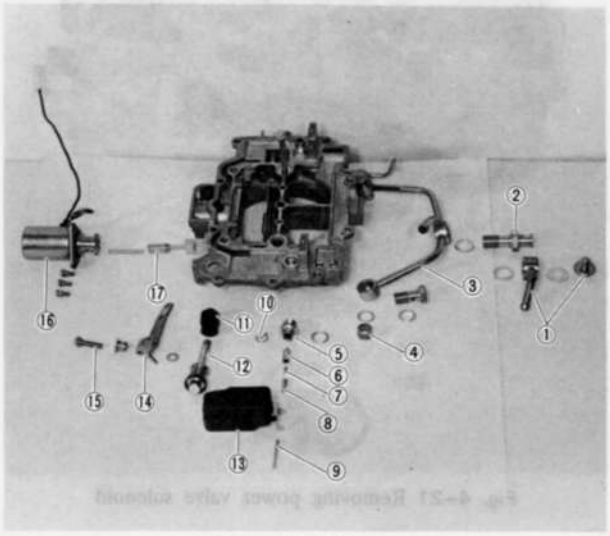

Fig. 4–14 Air horn
1. Fuel fitting and bolt
2. Inlet fitting
3. Fuel supply pipe
4. Filter
5. Valve body
6. Needle valve
7. Spring
8. Valve stem
9. Retaining pin
10. Clip
11. Boot
12. Accel. pump piston ass'y
13. Float
14. Accel. pump lever
15. Attaching screw
16. Air vent solenoid
17. Air vent valve

4. Remove the fuel inlet fitting attaching bolt and remove the fuel inlet fitting, fuel supply pipe, filter and packings.
5. Remove the screws that attaches the air horn to the main body and lift the air horn off the main body.
6. Remove the screws attaching the air vent solenoid and remove the air vent solenoid.
7. Invert the air horn, pull the float retaining pin and remove the float.
8. Remove the hair clip that retains the needle valve assembly, and remove the needle valve assembly, packing and filter.
9. Remove the accelerating pump lever attaching screw and remove the accelerating pump lever.
Remove the accelerating pump piston and spring assembly.
10. Remove the primary slow air bleeds.

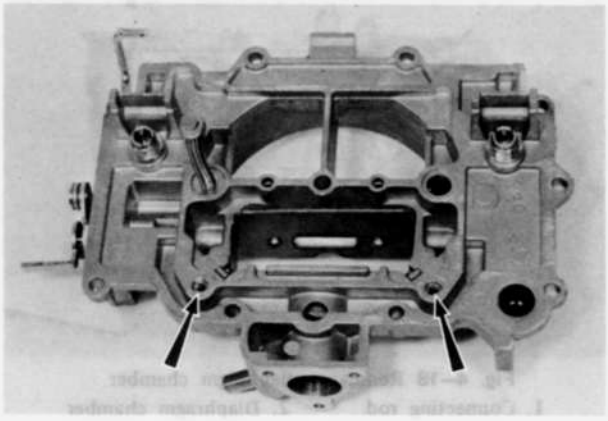

Fig. 4–15 Primary slow air bleeds

c. Main Body

1. Turn the main body upside down and catch the spring, retainer and accelerating pump dischange ball.

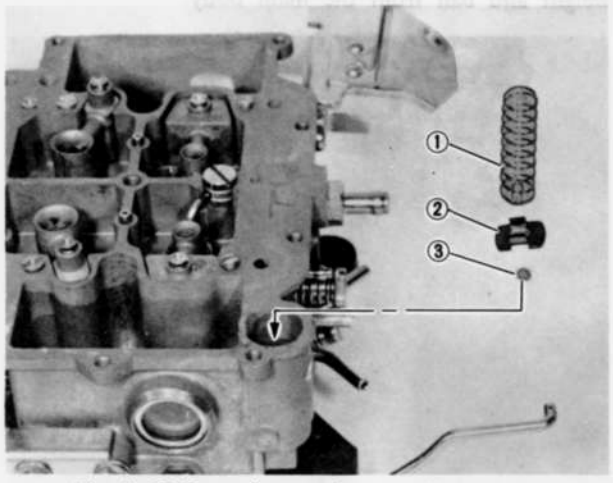

Fig. 4–16 Removing accel. pump discharge ball
1. Spring
2. Retainer
3. Ball

2. Remove the bolts attaching the idle switch to the main body and remove the idle switch.
3. Disconnect the diaphragm connecting rod at the throttle lever.
Remove the diaphragm chamber attaching screws and remove the diaphragm chamber.

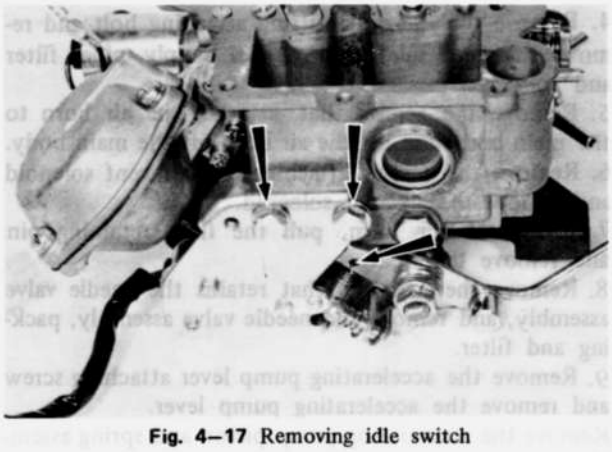

Fig. 4–17 Removing idle switch

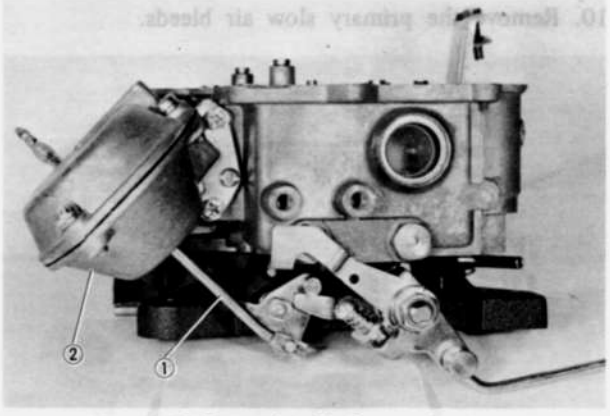

Fig. 4–18 Removing diaphragm chamber
1. Connecting rod 2. Diaphragm chamber

4. Remove the throttle body to main body screws from the bottom of the throttle body and separate the two bodies.
5. Remove the accelerating pump injection nozzle, weight and ball from the main body.

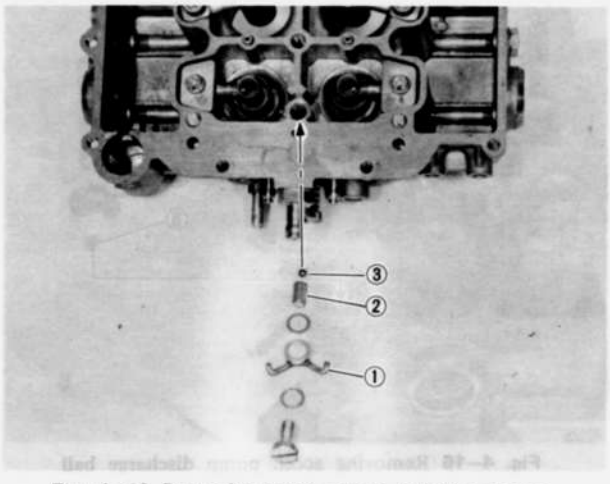

Fig. 4–19 Removing accel. pump injection nozzle
1. Nozzle 2. Weight 3. Ball

6. Remove the all jets and air bleeds from the main body.

Note the size of all jets and air bleeds so they may be installed in the correct position.

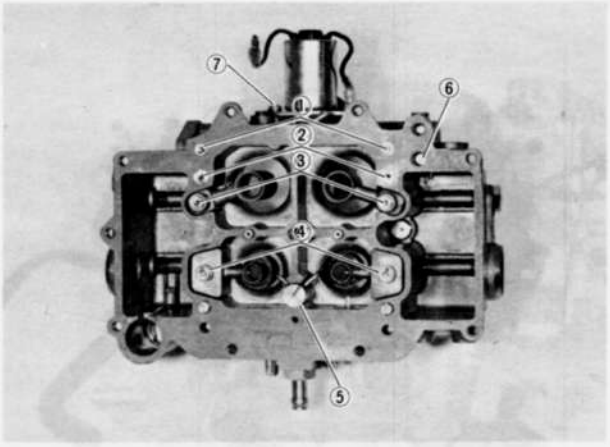

Fig. 4–20 Jets and Air bleeds

1. No.2 secondary slow air bleed
2. No.1 secondary slow air bleed and secondary slow jet
3. Secondary main air bleed
4. Primary main air bleed
5. Accel. pump injection nozzle, weight and ball
6. Richer air bleed and jet (M/T only)
7. Vacuum jet

7. Car with automatic transmission only:
Remove the power jet with a **driver** (49 0118 870A).
8. 49 states except Calif., with automatic transmission, and Calif. vehicles:
Remove the power valve solenoid from the main body.

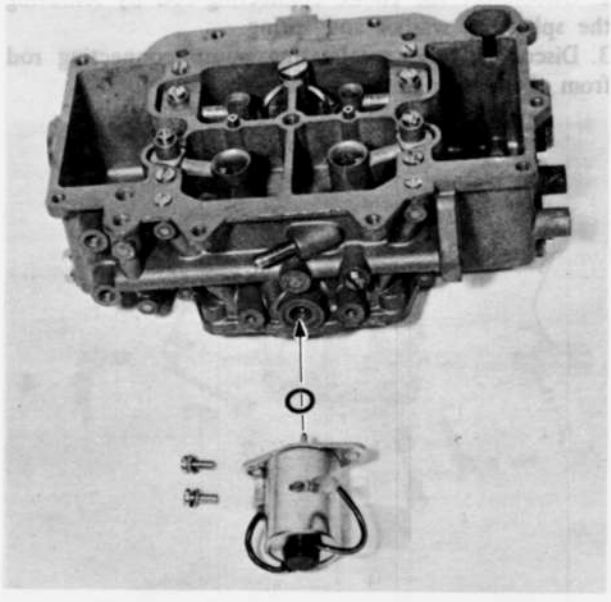

Fig. 4–21 Removing power valve solenoid

d. Throttle Body

1. Car with manual transmission only:
Remove the richer solenoid from the throttle body.
2. Remove the attaching screws of the throttle valves and remove the throttle valves and shaft.
3. Tap the venturi from the bottom of the throttle body and remove the venturi.

Note: Do not remove the throttle valve and shaft, venturi and choke valve and shaft.

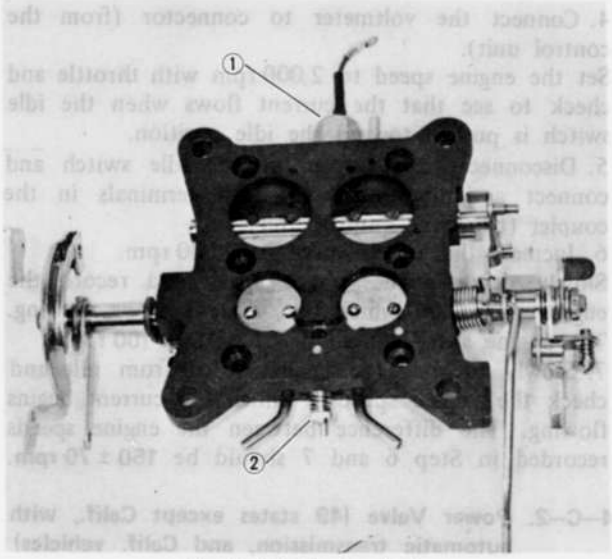

Fig. 4–22 Throttle body
1. Richer solenoid (M/T only) 2. Mixture adjust screw

4–A–4. Inspecting Carburetor

1. Thoroughly clean all parts in clean solvent and dry with compressed air. Especially, blow out all passages of the carburetor carefully.
2. Inspect the air horn, main body and throttle body for cracks and breakage.
3. Inspect the choke shaft and the throttle shaft for wear. Worn throttle shaft allows air to enter into the combustion chamber and the mixture at low speed becomes lean.
4. Examine all jets and air bleeds for clog. If it exists, clean in solvent and blow with compressed air. **Never use a wire.** A wire may enlarge the hole or passage, changing the calibration of the carburetor.
5. Inspect the pump plunger cup. Replace the plunger if it is worn or damaged.
6. Inspect the valves for accelerator pump if they operate properly.
7. Check the float needle and seat for wear.
8. Check the float for damage.
9. Inspect the air adjust screw and mixture adjust screw for burres or ridges
10. Check the diaphragm for damage.
11. 49 states except Calif., with automatic transmission, and Calif. vehicles:
Check the power valve solenoid for operation. To check, connect the solenoid lead to the battery. When current is applied to the solenoid, the valve stem should be come out from the valve body.
12. On the vehicle equipped with manual transmission, check the richer solenoid for operation.
To check, connect the solenoid lead to the battery. When current is applied to the solenoid, the valve stem should be pulled into the valve body.
13. Check the air vent solenoid for operation. To check, connect the solenoid lead to the battery. When the current is applied to the solenoid, the valve should be pulled into the valve body.
14. Discard the old gaskets and use new gaskets when reassembling.
15. Check the throttle return springs for damage.

4–A–5. Assembling Carburetor

To assemble, follow the disassembly procedures in the reverse order with the following cautions.
1. Discard the old gaskets and use new ones.
2. Make sure that all parts are in good condition and clean.
3. Both the primary and secondary systems have their respective parts which are of a shape. Therefore, when installing, care should be taken so as not to mistake one for the other.
4. When connecting the accelerator pump rod to lever, use the specified hole as shown in Fig. 4–23.

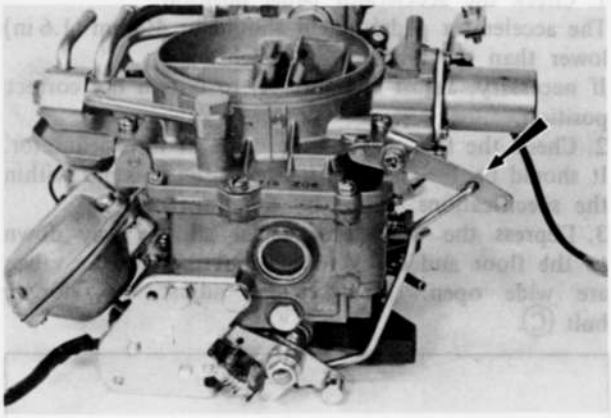

Fig. 4–23 Specified hole of accel. pump lever

5. When installing the bimetal spring housing to the main body, fit the choke shaft lever to the bimetal spring and accurately by means of closing the choke valve and pulling the vacuum diaphragm shaft.

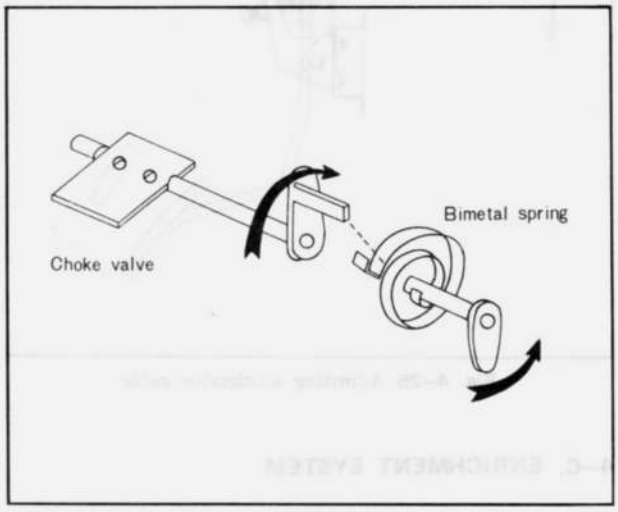

Fig. 4–24 Installing diaphragm housing

4–A–6 Installing Carburetor

Install the carburetor in the reverse order of removing.

4–B. CABURETOR LINKAGE

4–B–1. Carburetor Linkage

Check the secondary system linkage, accelerator pump linkage and choke linkage for operation.
Examine the choke control for free operation.

4–B–2. Accelerator Linkage

a. Checking accelerator linkage

Inspect the accelerator linkage for proper installation.
Remove the air cleaner and, with the accelerator fully depressed, observe the position of the carburetor throttle valves. They should be vertical (wide open position).
Check the accelerator to ensure there is sticking or binding and for full return.

b. Adjusting accelerator cable

1. Check the accelerator pedal position.
The accelerator pedal height should be 40 mm (1.6 in) lower than the brake pedal height.
If necessary, adjust the nut Ⓐ to obtain the correct position.
2. Check the free play of the cable at the carburetor. It should be 1 ~ 3 mm. If the free play is not within the specifications, adjust by the nut Ⓑ.
3. Depress the accelerator pedal all the way down to the floor and check to see that the throttle valves are wide open. If necessary, adjust the stopper bolt Ⓒ.

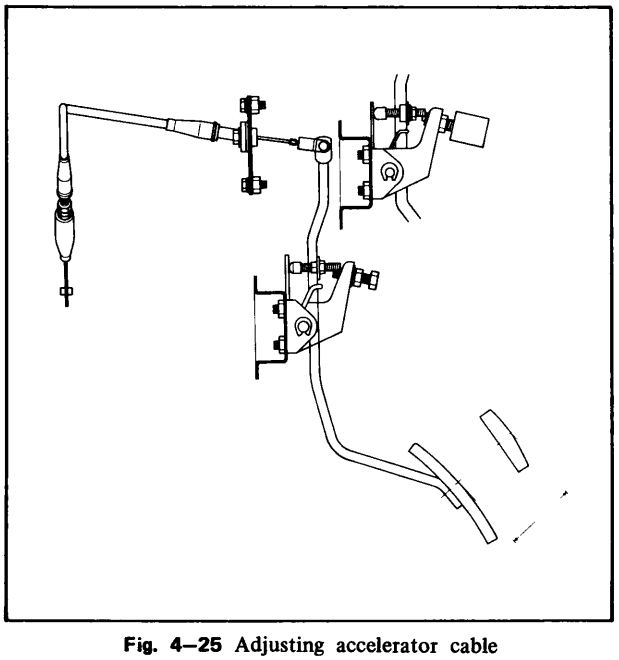

Fig. 4–25 Adjusting accelerator cable

4–C. ENRICHMENT SYSTEM

4–C–1. Richer Solenoid (Manual transmission)

a. Checking richer solenoid

1. Connect a tachometer to the engine.
2. Warm up the engine and keep it idling.

Note: Check to see the engine does not hunt.

3. Disconnect the bullet connector from the richer solenoid.
Connect the solenoid lead to the battery and check to see the engine hunts.
4. Connect the voltmeter to connector (from the control unit).
Set the engine speed to 2,000 rpm with throttle and check to see that the current flows when the idle switch is pushed toward the idle position.
5. Disconnect the coupler of the idle switch and connect a jumper wire to both terminals in the coupler (from the control unit).
6. Increase the engine speed to 2,000 rpm.
Slowly decrease the engine speed and record the engine speed at which the current stops flowing. The engine speed should be at **1,150 ± 100 rpm**.
7. Slowly increase the engine speed from idle and check the engine speed at which the current begins flowing. The difference between the engine speeds recorded in Step 6 and 7 should be **150 ± 70 rpm**.

4–C–2. Power Valve (49 states except Calif., with automatic transmission, and Calif. vehicles)

a. Checking power valve solenoid

1. Connect a tachometer to the engine.
2. Connect an exhaust gas analyzer to the vehicle.
3. Disconnect the coupler of the air control valve and connect Ⓐ terminal (to solenoid ⓐ) to the battery.
Connect a jumper wire to the ends of separated couplers as shown in Fig. 4–26.

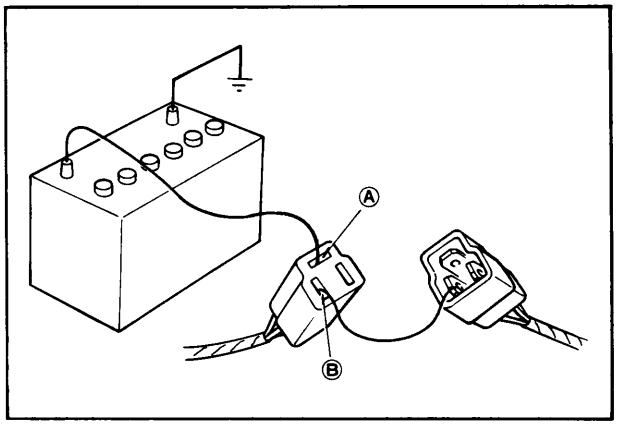

Fig. 4–26

4. Disconnect the bullet connector from the power valve solenoid.
5. Start the engine and set the engine speed to 2,000 rpm with throttle.
Connect the power valve solenoid lead to the battery and check to see the CO density varies.
6. Stop the engine.
Connect a voltmeter to the power valve solenoid connector (from the control unit).
7. With the choke knob fully pulled, start the engine and check to see that the current flows for 130 ± 26 seconds after engine has been started (California vehicles).
8. On the vehicle equipped with manual transmission, disconnect the air hose (air cleaner ~ deceleration control valve) from the air cleaner and blind the air hose.
9. Increase the engine speed to 3,500 rpm with throttle. Then, quickly decrease the engine speed and check

to see that the current flows to power valve solenoid connector.
The current should flows at 3 ~ 25 seconds.

b. No.1 vacuum switch and No.1 delay valve

To check the No.1 vacuum switch and No.1 delay valve, see Par. 1A–D–2.

4–D. THROTTLE OPENER SYSTEM (AIR CONDITIONING)

4–D–1. Checking Throttle Opener

1. Connect a tachometer to the engine.
2. Warm up the engine and run it at idle.
3. Disconnect the connector from the air conditioning solenoid valve.
4. Connect the solenoid valve lead to the battery and make sure that the engine speed increases to 1,200 ± 50 rpm.
5. If the engine speed does not increase to 1,200 ± 50 rpm, loosen the nuts of the throttle opener and adjust it until the specified engine speed is obtained.

4–D–2. Air Conditioning Relay

To check the air conditioning relay, proceed as follows;
1. Disconnect the coupler from the relay.
2. Check the continuity, referring to the following table.

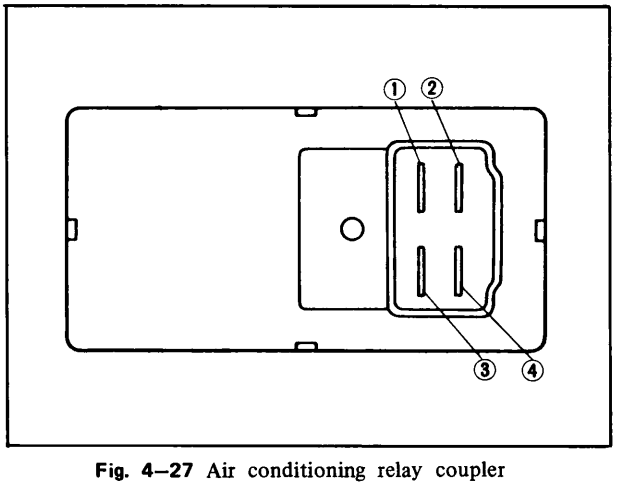

Fig. 4–27 Air conditioning relay coupler

Numbers – Continuity	Numbers – No continuity	Remarks
	② – ④	
② – ④		Connect the battery positive to terminal ③ and negative to ①.

If any defects are found, replace the relay.

4–E. SUB-ZERO STARTING ASSIST DEVICE (Except for California)

This is the device for increasing the starting ability of the engine in extreme cold. When the ignition key is turned to the position of "START" under the circumstances where the temperature is below –18°C (0°F), a certain amount of starting assist fluid is supplied into the carburetor by a pump.

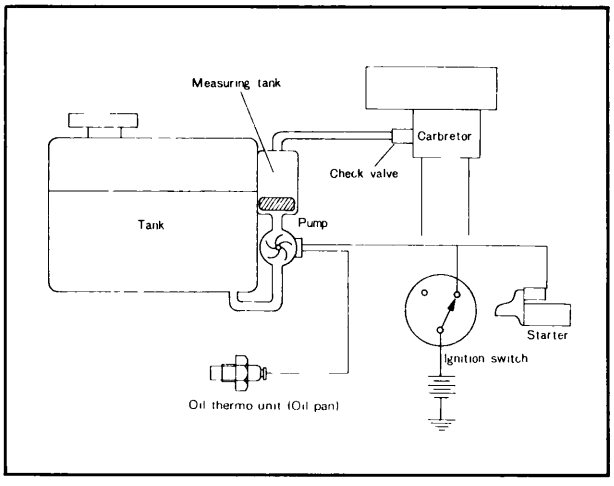

Fig. 4–28 Sub-zero starting assist system

4–E–1. Sub-zero Starting Assist Fluid

The mixture proportion of starting assist fluid should be 90% of high quality ethylene glycole anti-freeze solution plus 10% of water.

4–E–2. Checking Sub-zero Starting Assist Device

1. Make sure that there is sufficient starting assist fluid in the tank. Replenish if necessary.
2. Disconnect the coupler of Ⓢ terminal connected to the starter magnetic switch. This is to prevent the engine from revolving when the ignition key is turned to "START".
3. Remove the air cleaner cover.
4. Turn the ignition key to the position of "START" and make sure that the starting assist fluid does not spouts out from the nozzle of the carburetor. [Ambient temperature should be above –18°C (0°F)]
5. Disconnect the lead wire at the oil thermo unit on the oil pan and earth the disconnected lead wire to the body.
6. Turn the ignition key to the position of "START" with the air bleeding button of the tank kept pushed and make sure that the starting assist fluid spouts out from the nozzles of the carburetor.

4–E–3. Checking Oil Thermo Unit

The oil thermo unit is in normal condition if it is energized below –18°C (0°F) and is not above it.

4–F. FUEL PUMP

4–F–1. Testing Fuel Pump

To determine that the fuel pump is in satisfactory operating condition, the following tests should be made. The tests are perfomed with the pump installed on the car.
Before the tests, make sure the fuel filter has been changed within the recommended maintenance mileage interval. When in doubt, install a new filter.

a. Pressure test

1. Remove the air cleaner assembly. Disconnect the fuel inlet line at the carburetor.
Use care to prevent combustion due to fuel spillage.
2. Connect a pressure gauge, a restrictor and flexible hoses between the fuel line and the carburetor.
3. Position the flexible hose and restrictor so that the fuel can be dischaged into a suitable, graduated container.
4. Before taking a pressure reading, turn the ignition switch on and vent the system into the container by opening the hose restrictor momentarily.
5. Close the hose restrictor, allow the pressure to stabilize, and note the reading.
If the reading is not within 0.30 ~ 0.38 kg/cm^2 (4.3 ~ 5.4 lb/in^2), and the fuel lines and filter are in satisfactory condition, the pump is damaged and should be replaced.
If the pump pressure is within the specifications, perform the test for volume.

b. Volume test

Turn the ignition switch on, open the hose restrictor and expel the fuel into the container, while observing the time required to expel 1,150 cc (2.4 U.S. pints, 2.0 Imp. pints). Close the restrictor. 1,150 cc (2.4 U.S. pints, 2.0 Imp. pints) or more of fuel should be expelled within one minute.

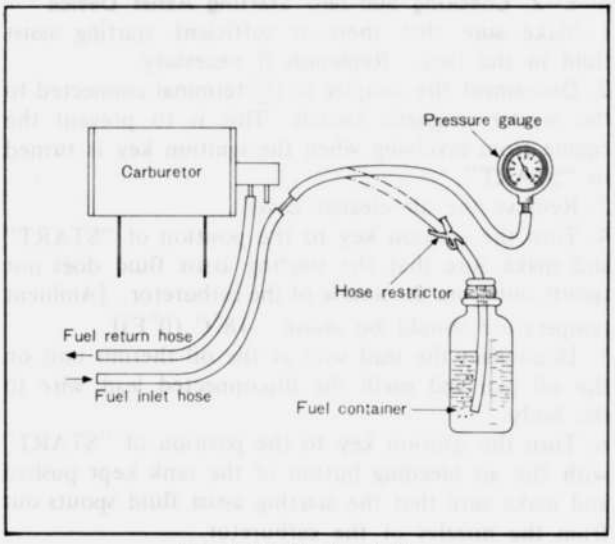

Fig. 4–29 Testing fuel pump

4–F–2. Replacing Fuel Pump

1. Open the trunk lid and remove the floor mat.
2. Disconnect the bullet connector of the pump lead.
3. Raise the rear end of the vehicle and support with stands.
4. Remove the fuel pump cover attaching bolts and remove the cover.
5. Disconnect the inlet and outlet hoses from the fuel pump.
6. Remove the nuts attaching the pump to the body and remove the pump.
7. Install the new fuel pump by following the removal procedures in the reverse order.

4–G. FUEL FILTER

The fuel filter is of a cartridge type, and is located in the fuel line between the fuel tank and the fuel pump. The fuel filter should be replaced at intervals, following the maintenance schedule.
To replace the fuel filter, proceed as follows:
1. Open the trunk lid and remove the partition board.
2. Loosen the clamp at both ends of the filter and disconnect the fuel pipes.
3. Disconnect the fuel filter from the retainar.
4. Install a new filter and connect the fuel pipes.

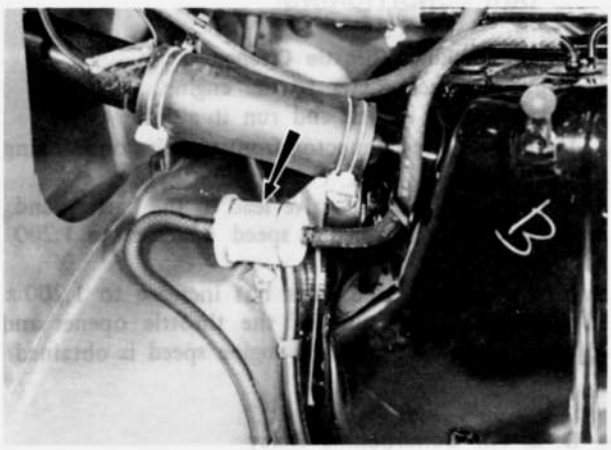

Fig. 4–30 Fuel filter

4–H. FUEL LINE

Inspect the fuel lines for leaks and tighten the fuel line connections to prevent leakage. It is important to keep the fuel system clean and free from water. If an excessive amount of dirt or water is found, drain the fuel tank and blow out the fuel lines with compressed air.

4–I. FUEL TANK

Inspect the fuel tank for cracks and corrosion.
If any defect is present, repair or replace as necessary.

Note: When repairing the fuel tank, clean the fuel tank thoroughly with steam to remove all explosive gas.

4–J. AIR CLEANER

The air cleaner is of a paper filter. The element should be serviced the maintenance schedule.
To replace the element, proceed as follows:
1. Remove the clip and remove the air cleaner cover.
2. Take out the element and install a new element.
3. Install the air cleaner cover and tighten the wing nut.
To clean the element, remove the element as instructed above and blow out the dust with a low compressed air.

4–K. INTAKE AIR TEMPERATURE CONTROL VALVE

Intake air temperature control system consists of a

control valve and a bimetal.
The intake of fresh air and hot air is automatically controlled over by means of the bimetal and control valve installed in the air cleaner.
Move the control valve up and down inside the air cleaner and if there is no difficulty to move and also the spring force of the bimetal is felt, it is in good order.

4–L. IDLE COMPENSATOR

1. Check the valve is in closed position when bi-metal temperature is lower than operating temperature.

Opening temperature	65 ± 4°C (149 ± 7.2°F)

To check, suck air into the tube. If excessive air leakage is found, replace the idle compansator as an assembly.
2. When the bi-metal temperature is more than approx. 69°C (154°F), check to see the valve is in open position.
If the valve is not open, replace the idle compensator as an assembly.

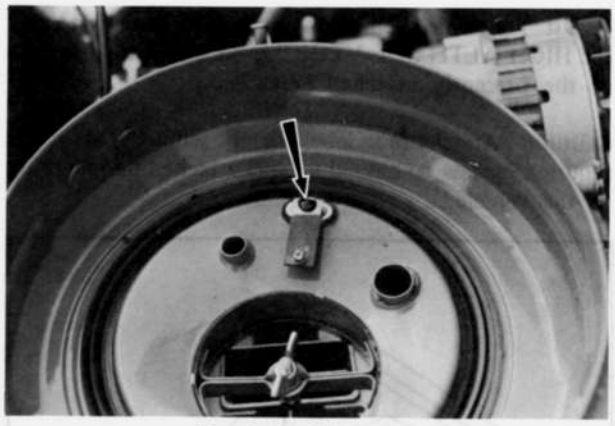

Fig. 4–31 Idle compensator

4–M. FUEL CUT VALVE

The fuel cut valve is fitted in the fuel line between the fuel pump and the carburetor.
When the valve body is inclined more than 60° laterally, the fuel cut valve is operated and the fuel supply to the carburetor is cut.
To set back the check balls in the valve to the original position, disconnect the hoses at the valve and blow in air from the outlet port of the valve. Then, blow in air from the inlet port to confirm that the passage is open.
To replace the fuel cut valve, proceed as follows:
1. Disconnect the hoses at the fuel cut valve.
2. Remove the attaching bolts and remove the fuel cut valve and bracket assembly. **Do not** separate the fuel cut valve and the bracket.
3. Install the fuel cut valve in the reverse order of removing.

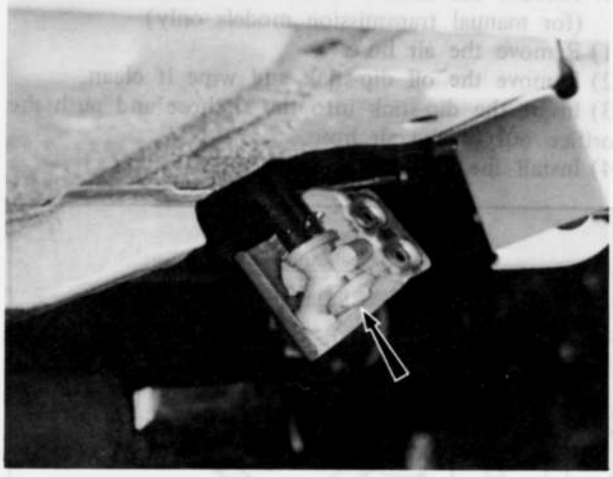

Fig. 4–32 Fuel cut valve

Note:
When installing, confirm that the passage is open.

4–N. FUEL CHECK VALVE

The fuel check valve is fitted in the fuel return line between the carburetor and the fuel tank.
Check the fuel check valve for cracks or damages.
To replace the fuel check valve, proceed as follows:
1. Disconnect the hoses from the valve and remove the valve.
2. Install the valve by following the removal procedures in the reverse order.

Note:
When installing, make sure that the arrow mark on the valve is directed as shown in Fig. 4–33.

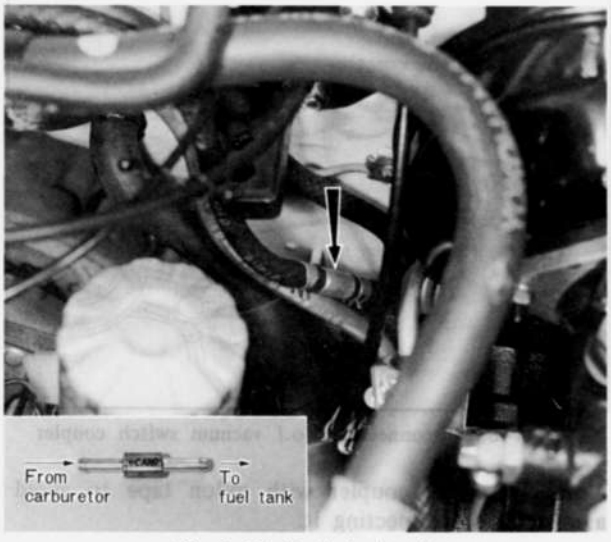

Fig. 4–33 Fuel check valve

4–O. MODIFICATION PROCEDURE INTO HIGH ALTITUDE VEHICLE

1. Remove the orifice from the air hose.
(for manual transmission models only)
1) Remove the air hose.
2) Remove the oil dip-stick and wipe it clean.
3) Insert the dip-stick into the air hose and push the orifice out of the air hose.
4) Install the dip-stick and air hose.

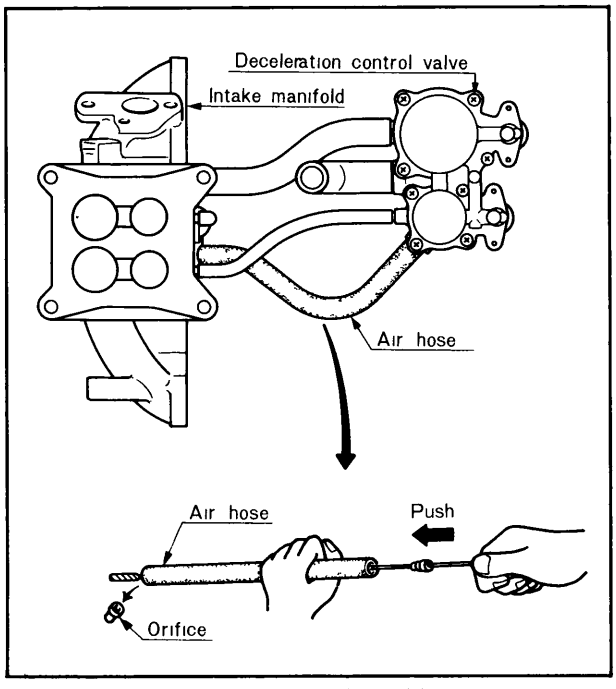

Fig. 4–34 Removing orifice

2. Disconnect the coupler of the No.1 vacuum switch. (for automatic transmission models only)

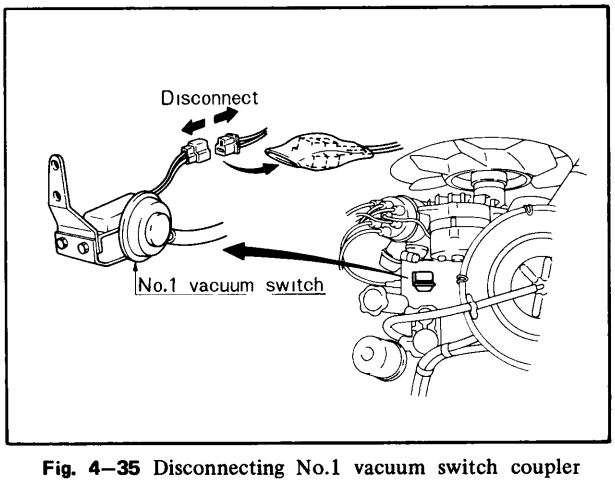

Fig. 4–35 Disconnecting No.1 vacuum switch coupler

Note: Wrap the coupler with nylon tape to avoid a mistake of connecting it.

3. Disconnect the reset connector of the EGR maintenance warning system.
(for automatic transmission models only)

Note: Wrap the coupler with nylon tape to avoid a mistake of connecting it.

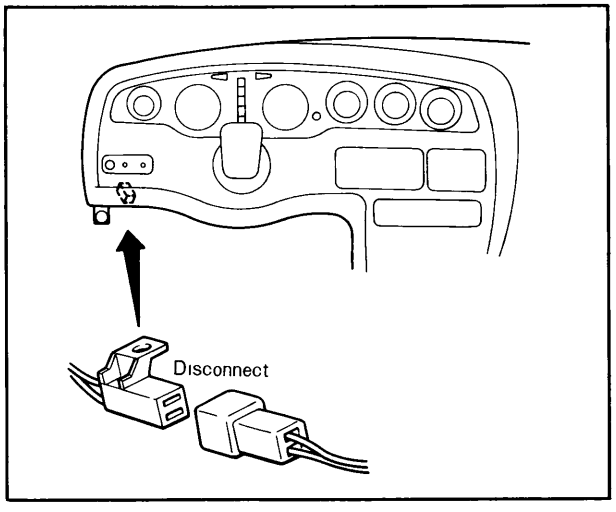

Fig. 4–36 Disconnecting reset connector

4. Put the vehicle emission control information label for HIGH ALTITUDE VEHICLE on the cleaned surface of the presently attached label.

Caution: Attach this label firmly enough as it is required by law to have this label attached permanently to the vehicle.

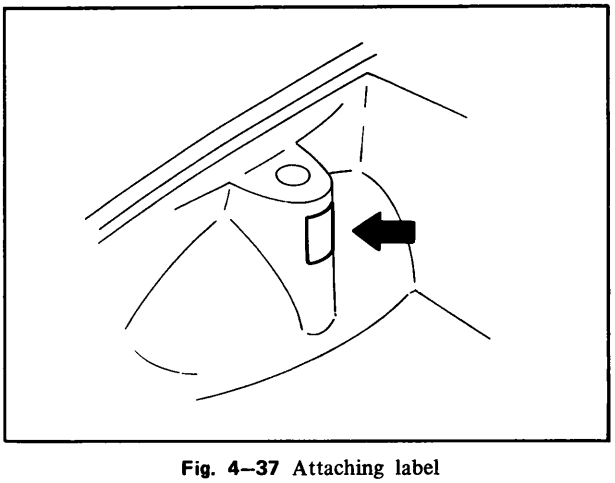

Fig. 4–37 Attaching label

5. Adjust the idle speed to the specified RPM following the procedure described on the emission label.
The adjustment procedure is described in Par. 4–A–1.

Note: The idle speed and the idle speed setting procedure for low altitude vehicles and high altitude vehicles are quite the same.

4–P. MODIFICATION PROCEDURE INTO LOW ALTITUDE VEHICLE

1. Install the orifice into the air hose.
(for manual transmission models only)
1) Remove the air hose from the intake manifold.

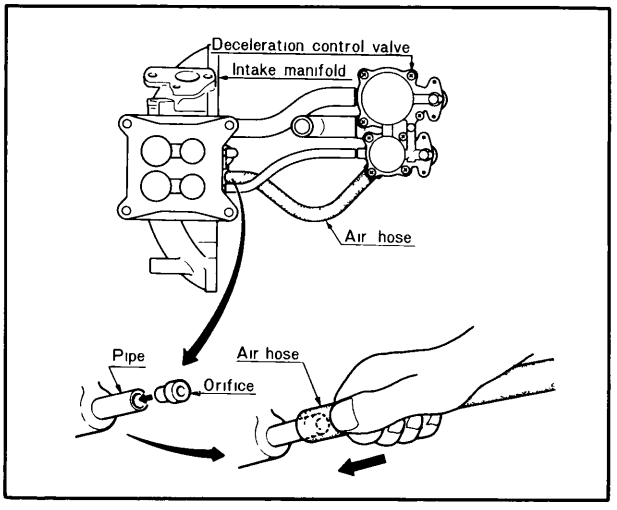

Fig. 4–38 Installing orifice

2) Fix the orifice in the mouth of the pipe of the intake manifold, as shown in Fig. 4–38.
3) Install the air hose to the pipe.

2. Connect the coupler of the No.1 vacuum switch. (for automatic transmission models only) (See Fig. 4–35)
3. Connect the reset connector of the EGR maintenance warning system. (for automatic transmission models only) (See Fig. 4–36)
4. Put the vehicle emission control information label for LOW ALTITUDE VEHICLE on the cleaned surface of the presently attached label. (See Fig. 4–37)

Caution: Attach this label firmly enough as it is required by law to have this label permanently to the vehicle.

5. Adjust the idle speed to the specified RPM following the procedure described on the emission label.
The adjustment procedure is described in Par. 4–A–1.

Note: The idle speed and the idle speed setting procedure for low altitude vehicles and high altitude vehicles are quite the same.

List of the difference between low altitude vehicle and high altitude vehicle.

	Low Altitude Vehicle		High Altitude Vehicle	
	with manual transmission	with automatic transmission	with manual transmission	with automatic transmission
1. Orifice in the air hose of the coasting valve of the deceleration control valve	Yes	None	None	None
2. EGR valve, EGR maintenance warning lamp and power valve solenoid	None	Operative	None	Not operative
(1) Coupler of No.1 vacuum switch	None	Connected	None	Disconnected
(2) Reset connector	None	Connected	None	Disconnected

Note: The underlined portions are different from LOW ALTITUDE VEHICLE

SPECIAL TOOL

49 0118 870A	Driver, power valve

ELECTRICAL SYSTEM (ENGINE)

DESCRIPTION ..... 5 : 1
5–A. BATTERY ..... 5 : 1
5–A–1. Checking Battery ..... 5 : 1
5–A–2. Charging Battery ..... 5 : 1
5–B. ALTERNATOR ..... 5 : 1
5–B–1. Precautions on Service ..... 5 : 1
5–B–2. Checking Charging System on Car ..... 5 : 1
5–B–3. Removing Alternator ..... 5 : 2
5–B–4. Disassembling Alternator ..... 5 : 2
5–B–5. Inspecting Alternator ..... 5 : 3
5–B–6. Assembling Alternator ..... 5 : 4
5–B–7. Installing Alternator ..... 5 : 4
5–C. REGULATOR ..... 5 : 4
5–C–1. Checking Constant Voltage Relay ..... 5 : 5
5–C–2. Checking Pilot Lamp Relay ..... 5 : 5
5–C–3. Adjusting Regulator ..... 5 : 5
5–C–4. Replacing Regulator ..... 5 : 5
5–D. STARTING MOTOR ..... 5 : 6
5–D–1. Checking Starting Circuit ..... 5 : 6
5–D–2. Testing Starting Motor ..... 5 : 6
5–D–3. Removing Starting Motor ..... 5 : 6
5–D–4. Disassembling Starting Motor ..... 5 : 6
5–D–5. Inspecting Starting Motor ..... 5 : 7
5–D–6. Magnetic Switch Test ..... 5 : 8
5–D–7. Assembling Starting Motor ..... 5 : 9
5–D–8. Installing Starting Motor ..... 5 : 9
5–E. SPARK PLUG ..... 5 : 9
5–E–1. Removing Spark Plug ..... 5 : 9
5–E–2. Checking Spark Plug ..... 5 : 9
5–E–3. Installing Spark Plug ..... 5 : 9
5–F. DISTRIBUTOR ..... 5 : 9
5–F–1. Testing Distributor ..... 5 : 9
5–F–2. Adjusting Point Gap ..... 5 : 10
5–F–3. Adjusting Ignition Timing ..... 5 : 10
5–F–4. Removing Distributor ..... 5 : 11
5–F–5. Disassembling Distributor ..... 5 : 11
5–F–6. Distributor Inspection ..... 5 : 12
5–F–7. Assembling Distributor ..... 5 : 12
5–F–8. Installing Distributor ..... 5 : 12
5–G. IGNITION COIL ..... 5 : 12
5–G–1. Checking Ignition Coil ..... 5 : 12
5–G–2. Replacing Ignition Coil ..... 5 : 12
5–H. HIGH TENSION CORD ..... 5 : 13

5

DESCRIPTION

The engine electrical systems are the starting system, ignition system, charging system, battery and the electrical instruments. Service information for these systems are included in this section.

5–A. BATTERY

5–A–1. Checking Battery

As the battery has many important functions to engine start, ignition and lighting, check the following points periodically and always keep the battery in perfect condition.

1. Check the electrolyte level in each cell of the battery, and add distilled water to the **upper level line** marked on the battery. **Do not** overfill.
2. Check the specific gravity of the electrolyte with a hydrometer.

If the reading is below the specification, the battery requires recharging.



Fig. 5–1 Checking specific gravity

3. Check the tightness of the terminals to ensure good electrical connections. Clean the terminals and coat the terminals with grease.
4. Inspect for corroded or frayed battery cables.

5–A–2. Charging Battery

a. Constant current charge

1. If the exterior of the battery is dirty with sulphuric acid or dust and dirt, wash these off with clean water and dry thoroughly before charging the battery.
2. Check the electrolyte level and add distilled water if necessary.

Note:

If addition of distilled water is neglected, the plates and separators will become exposed to air, causing a sulphation to occur on the plates.

Do not add dilute sulphuric acid unless the electrolyte has overflowed or leaked out.

3. Connect the battery to the charger, ensuring that the polarities are correct.
4. To charge, apply an electric current of approximately 5 amperes until the specific gravity of the electrolyte reaches 1.26 ~ 1.28.

b. Fast charge

As a fast charge causes both the temperature and the level of the electrolyte to rise suddenly, it does not have a favorable effect on the battery. Therefore, this should not be performed unless in the case of an emergency.

To charge with a fast charger, follow the instructions of the manufacturer.

Note:

1. Ensure that the cables are removed from the battery terminals before the charge is applied. If this is neglected, it could cause a damage to the diodes on the alternator.
2. The battery should be kept cool by the use of cooling water to prevent the temperature of the electrolyte from exceeding 55°C (131°F), otherwise the charging should be discontinued temporarily when the temperature rises above this point.

5–B. ALTERNATOR

5–B–1. Precautions on Service

When servicing the charging system, observe the following precaution. If not followed, the result will be in serious damage of the system.

1. **Do not** short across or ground any of the terminals on the alternator.
2. **Never** operate the alternator on an open circuit (with the field terminal connected and the armature terminal disconnected).
3. When installing the battery, always make sure that the negative post of the battery is attached securely to the negative cable.
4. **Never** reverse battery cables, even for an instant, as the reverse polarity current flow will damage the diodes in the alternator.
5. When charging the battery with a fast charger, disconnect the positive cable at the battery.
6. Check the "V" belt tension and adjust it to specification if necessary.

5–B–2. Checking Charging System on Car

If the electrical system is not charging properly, it is advisable to determine whether the trouble is in the alternator or regulator prior to removing the alternator.

1. Disconnect the wire from "B" terminal of the alternator and connect the ammeter with the negative lead of the ammeter to the wire and the positive lead to the "B" terminal, as shown in Fig. 5–2.

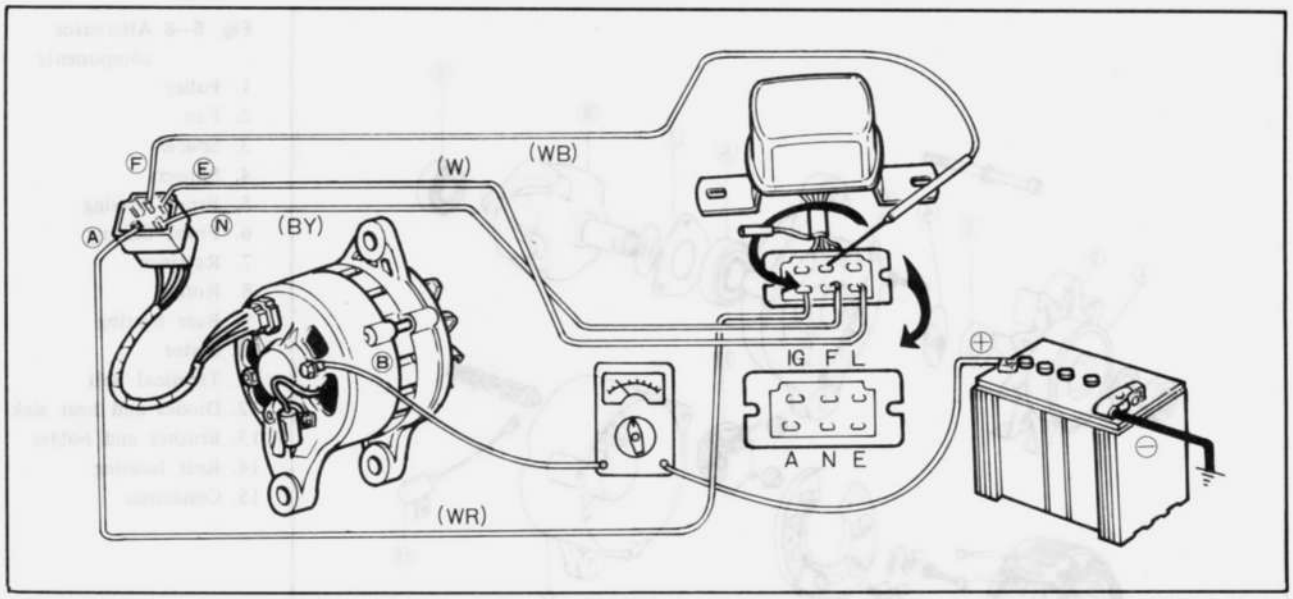

Fig. 5–2 Checking charging system

2. Disconnect the coupler from the regulator. Connect the disconnected couplers with the suitable wires.
3. Start the engine and take a reading of the ammeter, holding the engine speed to 2,000 rpm.
4. Disconnect the wire from the "F" terminal and short-circuit the wire to the "A" terminal for a moment.
5. If the meter reading increases remarkably, the trouble is in the regulator and if there is no change in current, it is in the alternator.

5–B–3. Removing Alternator

1. Open the bonnet and disconnect the negative cable at the battery.
2. Remove the air cleaner.
3. Disconnect the wires at the alternator "B" terminal by removing the nut. Pull the multiple connector from the rear of the alternator.
4. Remove the alternator strap bolt.
5. Remove the alternator mounting bolt, and remove the alternator from the vehicle.

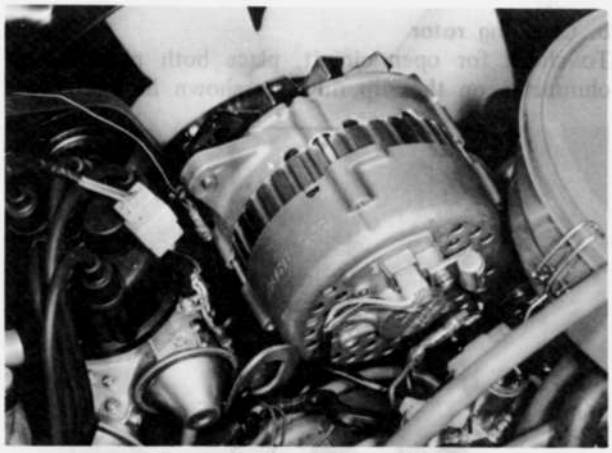

Fig. 5–3 Alternator installed

5–B–4. Disassembling Alternator

1. Remove the radio noise suppression condenser from the rear of the alternator.
2. Remove the through bolts.
3. Separate the front housing assembly by prying apart with a screwdriver at the slots of the front housing.
4. Place the front housing and rotor assembly in a vise. Clamp the assembly on the rotor.
5. Remove the nut and washer attaching the pulley to the shaft. Remove the pulley, fan, spacer and front slinger.

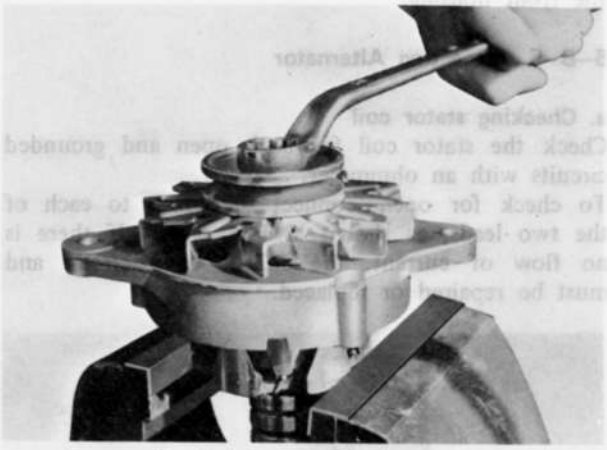

Fig. 5–4 Loosening pulley nut

6. Remove the front housing with bearing from the rotor. Remove the rear slinger.
7. Remove the nut, washers and insulator from the "B" terminal at the rear of the alternator.
8. Remove the screws attaching the heat sink to the rear housing and remove two screws attaching brush holder and heat sink.
9. Carefully remove the stator, heat sink and brush holder assembly from the rear housing. Use care to keep the brush holder assembly intact during removal from the rear housing.
10. Remove the brush holder assembly.
11. Unsolder the stator leads from the heat sink.
12. If bearing replacement is necessary, remove the

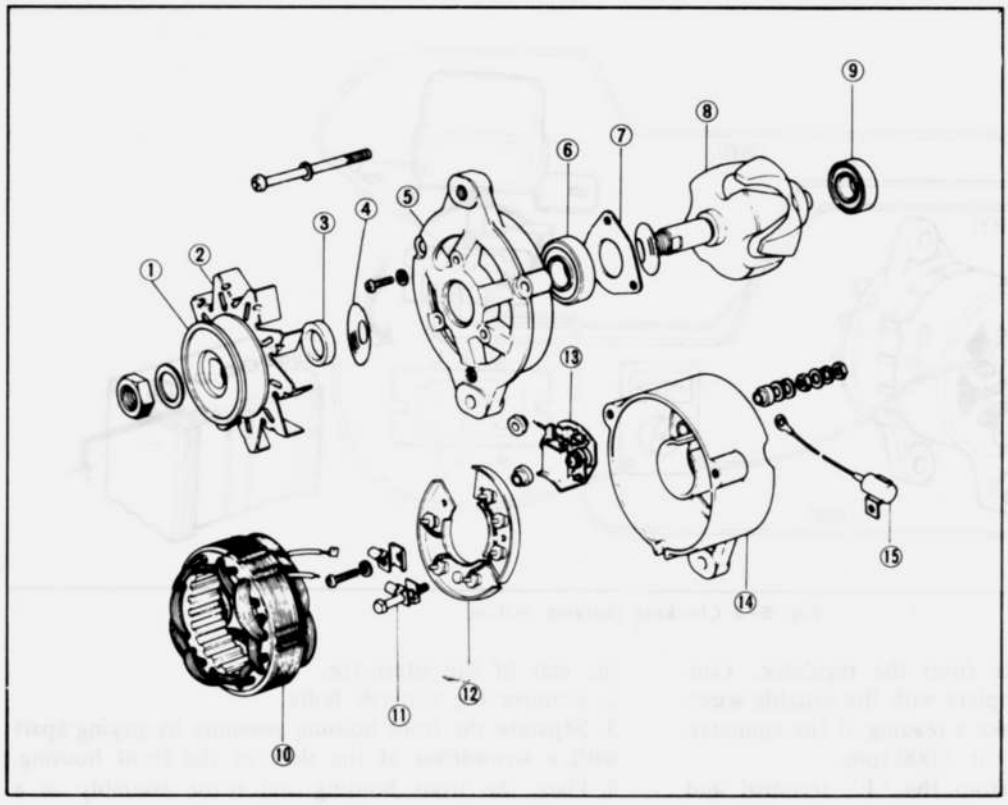

Fig. 5–6 Alternator components

1. Pulley
2. Fan
3. Spacer
4. Slinger
5. Front housing
6. Front bearing
7. Retainer
8. Rotor
9. Rear bearing
10. Stator
11. Terminal bolt
12. Diodes and heat sink
13. Brushes and holder
14. Rear housing
15. Condenser

rear bearing from the rotor shaft with a pulley. To replace the front bearing, remove the bearing retainer attaching screws, and press the bearing from the front housing.

5–B–5. Inspecting Alternator

a. Checking stator coil

Check the stator coil for both open and grounded circuits with an ohmmeter.

To check for open, connect the prods to each of the two leads, as shown in Fig. 5–5. If there is no flow of current, the coil is open circuit and must be repaired or replaced.



Fig. 5–5 Checking stator coil for open

To check for ground, connect one prod to the core and the other to each lead wire, as shown in Fig. 5–7. If a ground is present, the current will flow and the stator coil must be repaired or replaced.

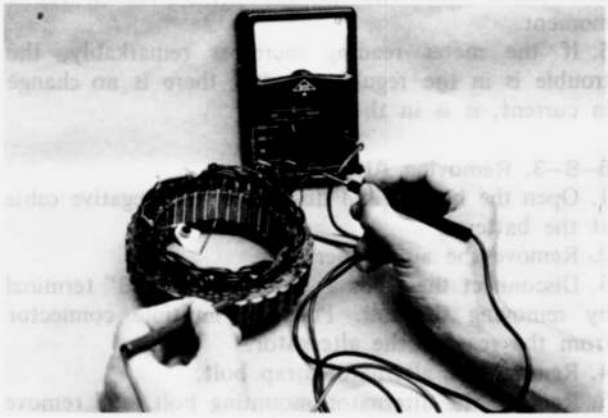

Fig. 5–7 Checking stator coil for ground

b. Checking rotor

To check for open circuit, place both prods of an ohmmeter on the slip rings, as shown in Fig. 5–8.

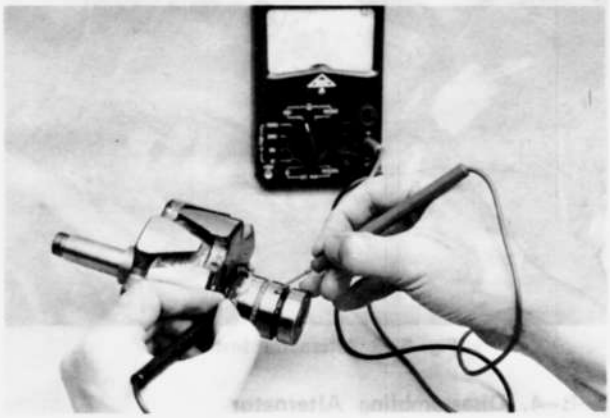

Fig. 5–8 Checking rotor for open

If the reading is 4 to 6 ohms, there is no trouble in the rotor.
To check for ground, connect one prod to the slip ring and other prod to the core. If the current flows, the rotor must be repaired or replaced.

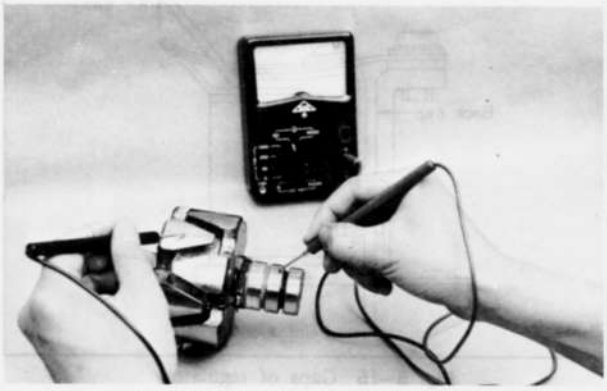

Fig. 5–9 Checking rotor for ground

c. Checking diodes
Diodes for use in the alternator are avilable in two different types, the positive diode which allows current to flow from the lead wire to the case but not from the case to the lead wire and the negative diode which has the opposite properties.
To check, read the resistance between the lead wire and case with a tester. Then reverse the tester leads and note the reading.
If both readings are very low or high, the diode is defective. A good diode will give one low reading and one high reading.

Note: The diode and heat sink are serviced as an assembly only.

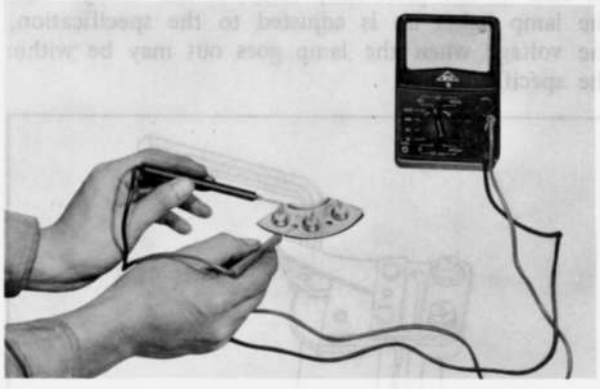

Fig. 5–10 Checking diode

d. Checking brushes and springs
The brushes should be replaced when one-third of the original length is worn away. This is indicated by a wear limit line on the side surface of each brush. Check the brush spring tension. The tension should be between 330 and 450 gr (12 and 16 oz). Replace the springs if the tension is less than 330 gr (12 oz) or if excessive corrosion exists.

e. Checking bearings
There is no need of lubricating as the bearing is pre-

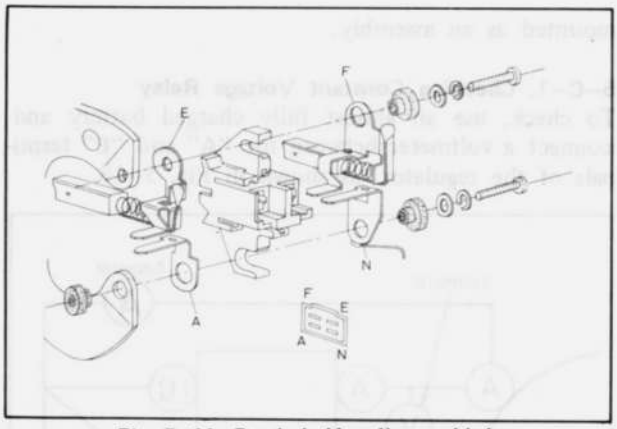

Fig. 5–11 Brush holder disassembled

lubricated. In a long spell of use, when the bearing is worn or damaged, replace it with a new one.

5–B–6. Assembling Alternator
Assemble the alternator in the reverse order of disassembling, noting the following points.
1. When installing the rotor assembly to the rear housing and stator assembly, hold the brushes in position by inserting a piece of stiff wire into the hole of the brush through the rear housing as shown in Fig. 5–12.

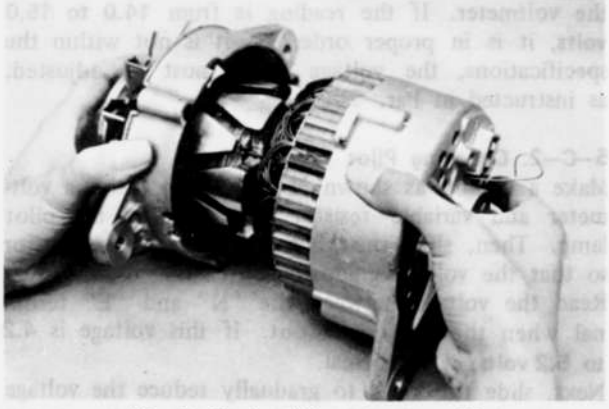

Fig. 5–12 Installing rotor assembly

2. The soldering of the diode leads should be performed in **less than twenty seconds** as the excessive heat may damage the diode.

5–B–7. Installing Alternator
1. Position the alternator to the mounting bracket and install the mounting bolt. **Do not** tighten.
2. Place the "V" belt on the alternator pulley and install the alternator strap bolt. Adjust the "V" belt tension. Tighten the alternator mounting bolt.
3. Connect the multiple connector to the rear of the alternator.
4. Attach the wires to the alternator "B" terminal.
5. Attach the air cleaner.
6. Connect the battery negative cable.

5–C. REGULATOR
The regulator is composed of two control units, a constant voltage relay and a pilot lamp relay,

mounted as an assembly.

5–C–1. Checking Constant Voltage Relay

To check, use an almost fully charged battery and connect a voltmeter between the **"A"** and **"E"** terminals of the regulator, as shown in Fig. 5–13.

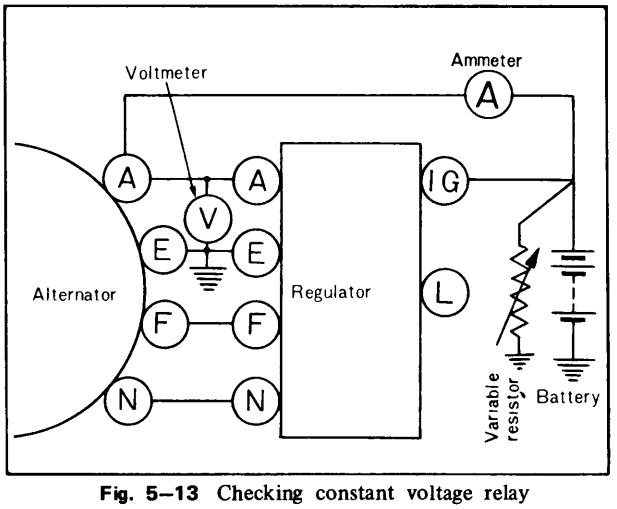

Fig. 5–13 Checking constant voltage relay

Then, hold the alternator revolution to 4,000 rpm (engine revolution 2,000 rpm) and take a reading of the voltmeter. If the reading is from **14.0 to 15.0 volts,** it is in proper order. If it is not within the specifications, the voltage relay must be adjusted, as instructed in Par. 5–C–3.

5–C–2. Checking Pilot Lamp Relay

Make a circuit, as shown in Fig. 5–14, using a voltmeter and variable resistor, and light up the pilot lamp. Then, slide the knob of the variable resistor so that the voltage gradually increases.

Read the voltage between the "N" and "E" terminal when the lamp goes out. If this voltage is **4.2 to 5.2 volts,** it is normal.

Next, slide the knob to gradually reduce the voltage and the lamp will light again. If the reading is **0.5 ~ 3.0 volts** at this time, it is proper.

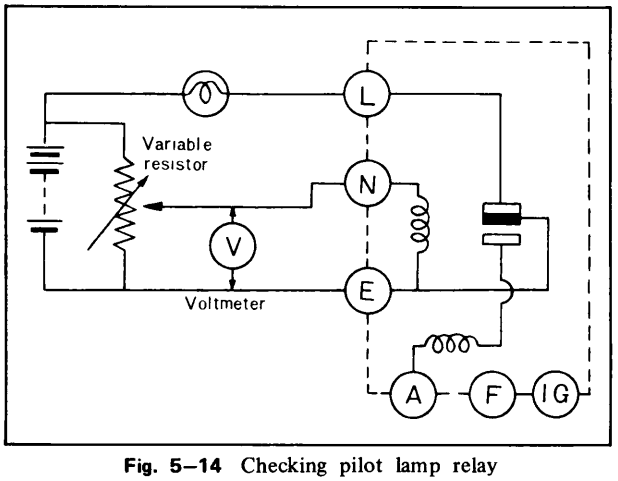

Fig. 5–14 Checking pilot lamp relay

5–C–3. Adjusting Regulator

First, check the air gap, back gap and point gap with a wire gauge. If they are not within the specifications, adjust by bending the stationary contact bracket.

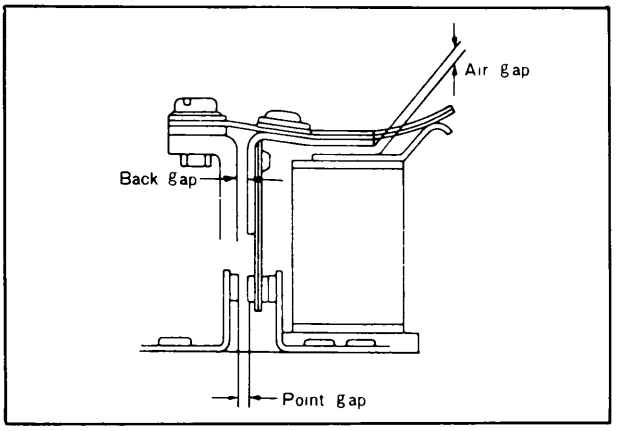

Fig. 5–15 Gaps of regulator

Constant voltage relay

Air gap	0.7 ~ 1.3 mm (0.028 ~ 0.051 in)
Point gap	0.3 ~ 0.45 mm (0.012 ~ 0.018 in)
Back gap	0.7 ~ 1.5 mm (0.028 ~ 0.059 in)

Pilot lamp relay

Air gap	0.9 ~ 1.4 mm (0.035 ~ 0.055 in)
Point gap	0.7 ~ 1.1 mm (0.028 ~ 0.043 in)
Back gap	0.7 ~ 1.5 mm (0.028 ~ 0.059 in)

After correct gaps are obtained, adjust the voltage setting. Bend the upper plate down to decrease the voltage setting, up to increase the voltage setting. In case of the pilot lamp relay, if the voltage when the lamp lights up is adjusted to the specification, the voltage when the lamp goes out may be within the specification.

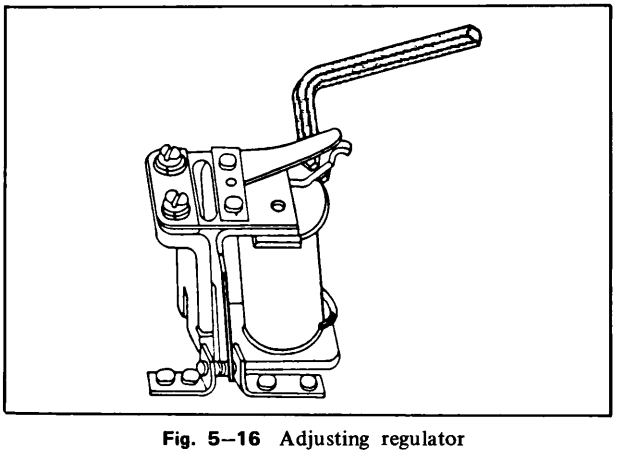

Fig. 5–16 Adjusting regulator

5–C–4. Replacing Regulater

1. Disconnect the regulator wires at the multiple connector.
2. Remove the two regulator attaching screws and remove the regulator.
3. Position the regulator to the body and install the

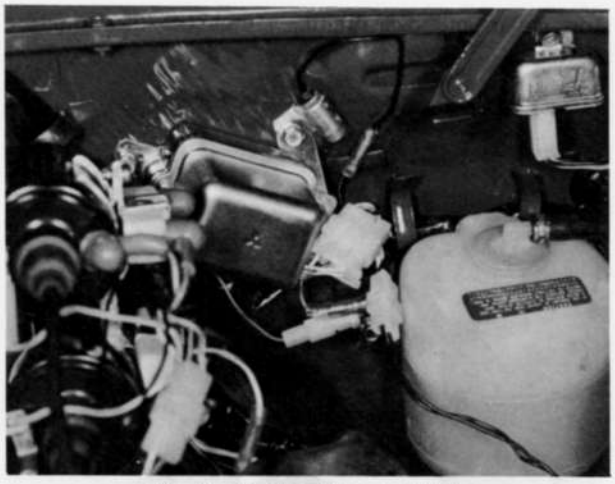

Fig. 5–17 Regulator installed

two attaching screws.
4. Connector the regulator wires at multiple connector, and check the charging system operation.

5–D. STARTING MOTOR

5–D–1. Checking Starting Circuit

When the starting motor fails to operate or does not satisfactorily operate, check the following points before removing the starting motor:
1. Weak battery
2. Corroded or loose battery terminal
3. Loose starting motor terminal
4. Broken or loose wires of the starting circuit
5. Faulty ignition switch

5–D–2. Testing Starting Motor

a. Free running test

1. Place the starting motor in a vise equipped with soft jaws and apply the battery voltage adjusted to **11.5 volts** to the starting motor.
2. Connect an ammeter between the "B" terminal of the starting motor and the battery.
3. Operate the starting motor and take a reading. The current flow should be **50 amperes minimum at 5,600 rpm** for manual transmission and **100 ampers minimum at 6,600 rpm** for automatic transmission.

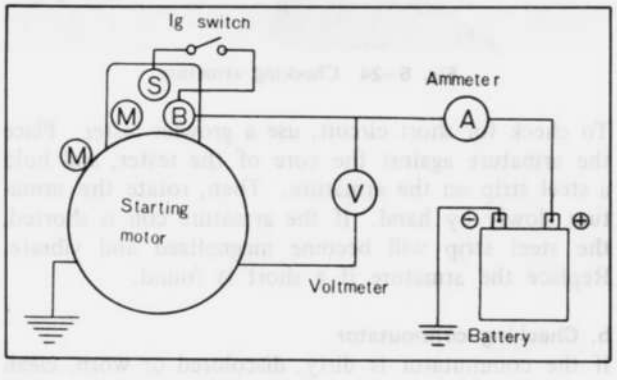

Fig. 5–18 Free running test

b. Lock resistance test

1. Install the starting motor on a test bench.
2. Test the lock resistance of the starting motor, following the instructions of the test equipment manufacturer.
3. With applied battery voltage adjusted to 5.0 volts, the current should flow less than **600 amp.** and the torque should more than **0.96 m-kg (6.9 ft-lb)** for manual transmission, while the current flow **less than 1,050 amp.** and the torque is more than **2.2 m-kg (15.9 ft-lb)** for automatic transmission.

If the starting motor does not perform to the above test requirements, repair it referring to the following list.

1) Starter rotates slowly with a large current at free running.
   a) Worn, dirty or defective bearings
   b) Short circuit of armature
   c) Grounded armature and field coil
2) Starter does not rotate with a large current.
   a) Defective field circuit
   b) Defective armature circuit
   c) Burnt commutator
3) Low torque and low current flow. Low free running speed.
   a) Breakage of field circuit
   b) Excessive internal resistance
4) Low torque. High free running speed.
   a) Short circuit of field coil

5–D–3. Removing Starting Motor

1. Disconnect the negative cable from the battery.
2. Disconnect the battery cable from the magnetic switch **"B"** terminal, and ignition switch wire from the magnetic switch **"S"** terminal.
3. On the vehicle equipped **automatic transmission,** remove the two bolts attaching the starting motor bracket to the automatic transmission.
4. Remove the bolts attaching the starting motor, and remove the starting motor.

5–D–4. Disassembling Starting Motor

1. Remove the starting motor bracket from the rear end of starting motor. (automatic transmission only)
2. Disconnect the field strap from the terminal on the magnetic switch.
3. Remove the magnetic switch attaching screws and remove the magnetic switch, spring and washers from the driving housing.

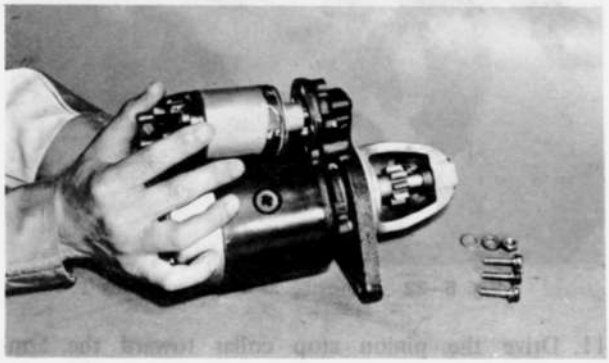

Fig. 5–19 Removing magnetic switch

4. Remove the plunger from the driving lever.
5. Remove the through bolts and brush holder attaching screws. Then, remove the rear cover.



Fig. 5–20 Removing rear cover

6. Remove the insulator and washers from the rear end of the armature shaft.
7. Remove the brush holder.
8. Separate the yoke from the driving housing.



Fig. 5–21 Removing yoke assembly

9. Remove the rubber packing, spring and spring seat.
10. Remove the armature, driving lever and overrunning clutch assembly from the driving housing.

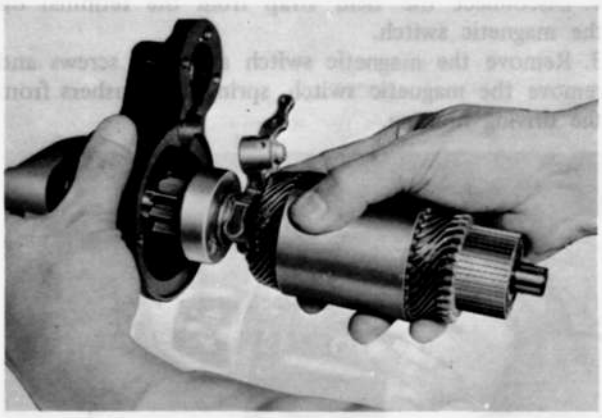

Fig. 5–22 Removing armature assembly

11. Drive the pinion stop collar toward the armature, and remove the stop ring. Then, slide the stop collar and over-running clutch off the armature shaft.

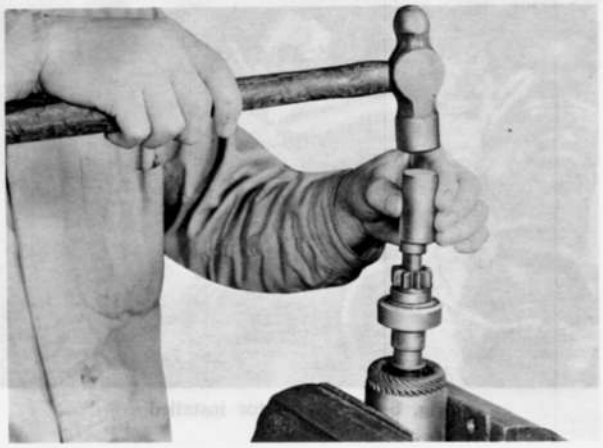

Fig. 5–23 Removing pinion stop collar

12. If the field coil removal is necessary, remove the shoe retaining screws. Then, remove the pole shoes and field coil from the yoke.

5–D–5. Inspecting Starting Motor

a. Checking armature

Check the armature for both ground and short circuit. To check for ground, touch one prod of an ohmmeter to each segment and the other prod to the core or shaft.

An infinite reading should be obtained for each segment. If the meter reading is not infinite, the armature windings are shorted to the core or shaft and the armature must be replaced.

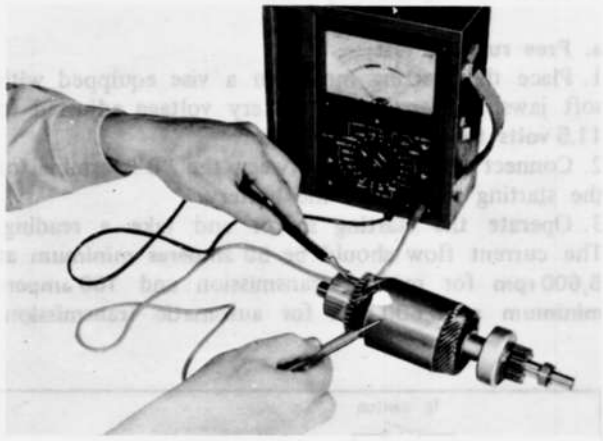

Fig. 5–24 Checking armature

To check for short circuit, use a growler tester. Place the armature against the core of the tester, and hold a steel strip on the armature. Then, rotate the armature slowly by hand. If the armature coil is shorted, the steel strip will become magnetized and vibrate. Replace the armature if a short is found.

b. Checking commutator

If the commutator is dirty, discolored or worn, clean it with emery paper and wash with clean solvent.

After cleaning, undercut the mica between the segments to the depth of **0.5 ~ 0.8 mm (0.020 ~ 0.031 in)**, as shown in Fig. 5–26.

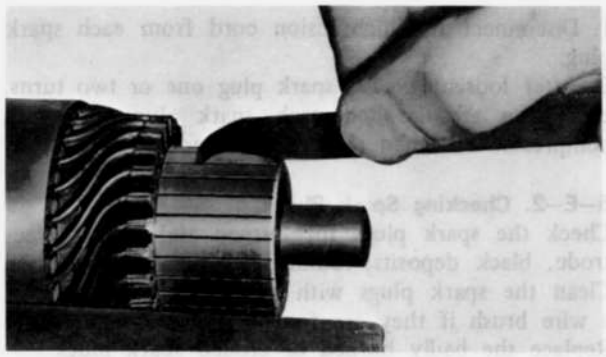

Fig. 5–25 Undercutting mica

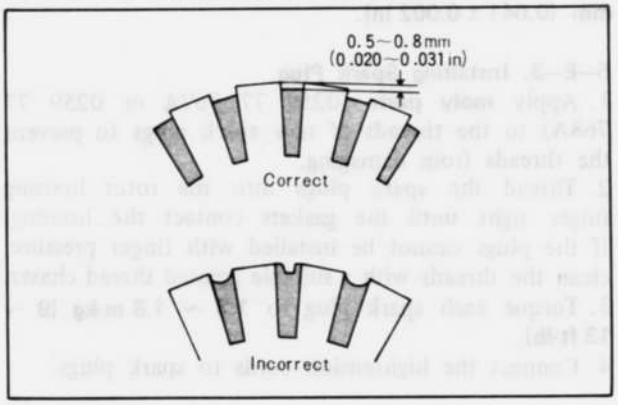

Fig. 5–26 Commutator mica depth

c. Checking field coil

To test the field coil for ground with an ohmmeter, place one prod on the yoke or pole core and the other prod to the field terminal. An infinite meter reading should be obtained. If a reading other than infinite is found, replace the field windings.



Fig. 5–27 Checking field coil for ground

To check for open, connect the prods to each of the two leads. If there is no flow of current, the coil is open circuit and must be repaired or replaced.

d. Checking brush holder

Check the brush holder for ground. Touch one prod of an ohmmeter to the insulated brush holder and the other prod to the brush holder frame.

If the meter reading is other than infinite, the brush holder assembly is shorted and must be replaced. Repeat this test for the other insulated brush holder. **Do not** use this test on the two grounded brush holders.

e. Checking brushes and brush springs

Check the brushes and replace if they are worn down more than one third of their original length. Otherwise, the brush spring tension will be reduced, leading to an increase in the brush-commutator contact resistance. This will lower the torque and cause the burnt commutator surface.

The spring tension is 1.4 ~ 1.8 kg (49 ~ 63 oz). If the tension is too low, replace the springs.

f. Checking bushes

Check the clearance between the armature shaft and the bush. If it exceeds 0.2 mm (0.008 in), replace the bush.

5–D–6. Magnetic Switch Test

a. Pull-in coil test

Apply the specified voltage (12V) between the "S" terminal and "M" terminal. If the magnetic switch is forcefully attracted, the pull-in coil is in good condition.

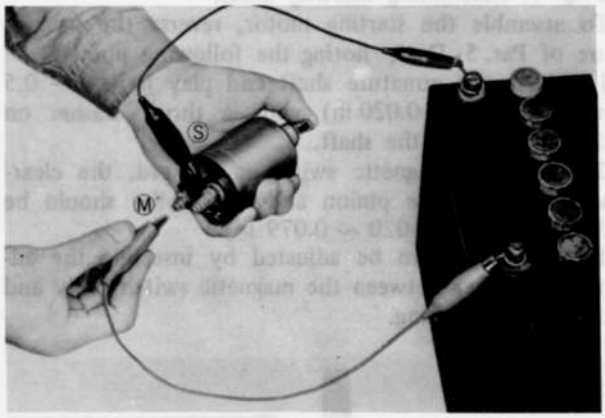

Fig. 5–28 Pull-in coil test

b. Holding coil test

Ground the "M" terminal to the magnetic switch body with a lead and impose the specified voltage (12V)

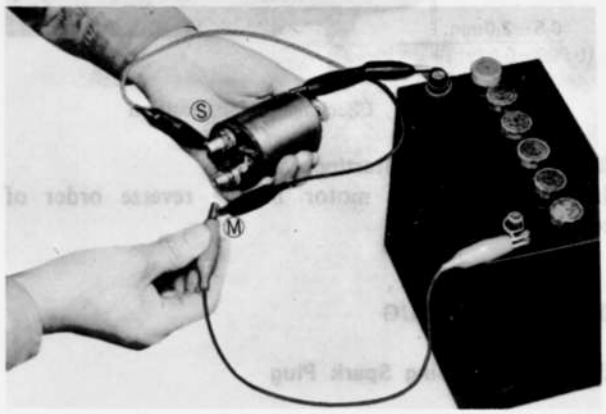

Fig. 5–29 Holding coil test

upon the "S" terminal to pull in the plunger. If the plunger remains attracted after disconnecting the lead from the "M" terminal, there is no trouble with the holding coil.

c. Return test

Push in the plunger by hand and apply the specified voltage (12V) between the "M" terminal and the magnetic switch body. If the plunger is not attracted, there is no trouble.

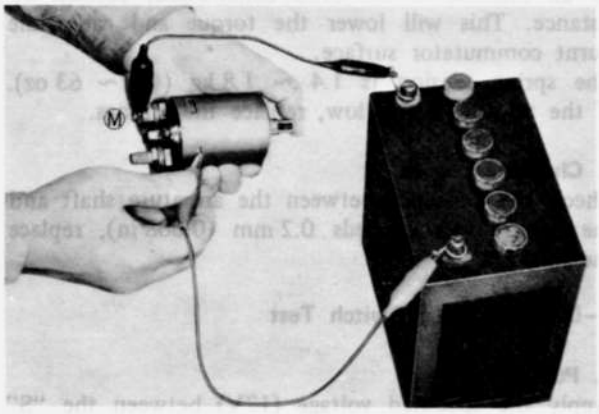

Fig. 5–30 Return test

5–D–7. Assembling Starting Motor

To assemble the starting motor, reverse the procedure of Par. 5–D–4, noting the following points.

1. Adjust the armature shaft end play to 0.1 ~ 0.5 mm (0.008 ~ 0.020 in) with a thrust washer on the rear end of the shaft.
2. When the magnetic switch is engaged, the clearance between the pinion and stop collar should be 0.5 ~ 2.0 mm (0.020 ~ 0.079 in).

This clearance can be adjusted by inserting the adjusting washer between the magnetic switch body and the driving housing.

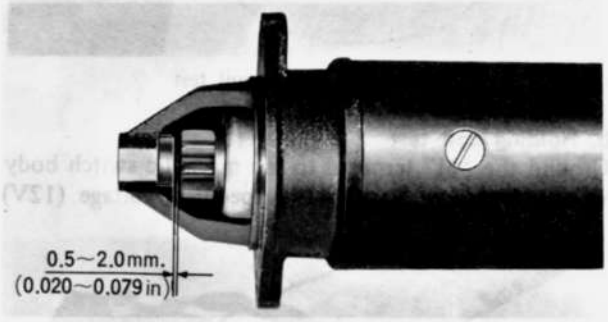

Fig. 5–31 Checking pinion position

5–D–8. Installing Starting Motor

Install the starting motor in the reverse order of removing.

5–E. SPARK PLUG

5–E–1. Removing Spark Plug

Note: When removing the hightension cords from the spark plugs, grasp, twist and pull the moulded cap only. **Do not pull on the wire** because the wire connection inside the cap may become separated.

1. Disconnect the hightension cord from each spark plug.
2. After loosening each spark plug one or two turns, clean the area around each spark plug port with compressed air, then remove the spark plugs.

5–E–2. Checking Spark Plug

Check the spark plugs for burned and eroded electrode, black deposits, fouling, and cracked porcelain. Clean the spark plugs with a spark plug cleaner or a wire brush if they are fouled.

Replace the badly burned or eroded spark plugs.

The standard spark plug gap (initial) is **1.05 ± 0.05 mm (0.041 ± 0.002 in).**

5–E–3. Installing Spark Plug

1. Apply **moly paste** (0259 77 767A or 0259 77 768A) to the threads of new spark plugs to prevent the threads from damaging.
2. Thread the spark plugs into the rotor housing finger tight until the gaskets contact the housing. If the plugs cannot be installed with finger pressure, clean the threads with a suitable greased thread chaser.
3. Torque each spark plug to **1.3 ~ 1.8 m-kg (9 ~ 13 ft-lb).**
4. Connect the hightension cords to spark plugs.

5–F. DISTRIBUTOR

5–F–1. Testing Distributor

a. Dwell angle test

The dwell angle is degrees of rotation through which the contact point remain closed.

To test the dwell angle, use a distributor tester following the instructions of the manufacturer.

The specifications are as follows:

	Dwell angle
Trailing	58° ± 3°
Leading	58° ± 3°

If the reading is not within the specifications, it indicates the following troubles:

1. Incorrect point gap
2. Worn cam
3. Worn rubbing block
4. Distorted contact arm

b. Advance test

To test the ignition advancing characteristic of the distributor, use a distributor tester following the instructions of the manufacturer.

The advancing characteristic of distributor should be **within the range** as shown in Fig. 5–32.

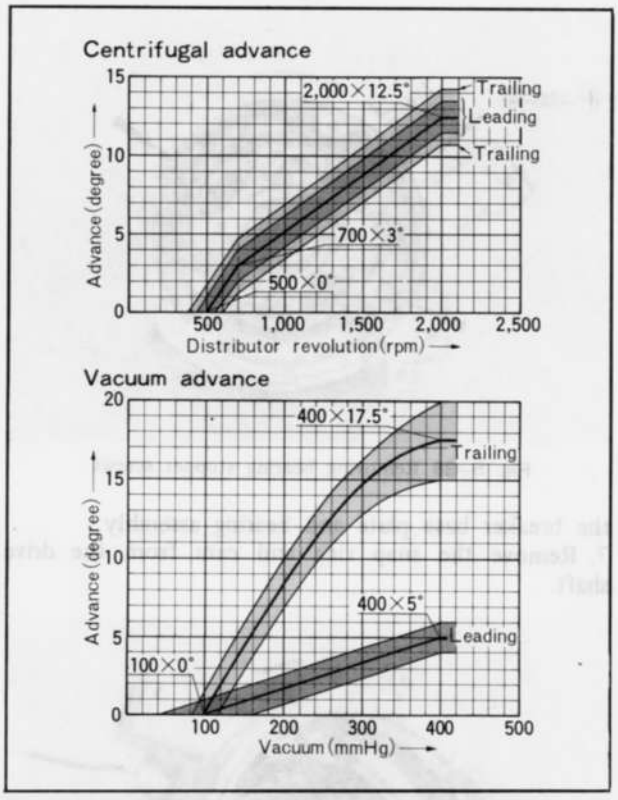

Fig. 5–32 Advance characteristics

5–F–2. Adjusting Point Gap

Adjust the point gap as follows:

1. Check the contact points alignment. If necessary, bend the stationary contact bracket so as to obtain contact in the center of the contact points.
2. Crank the engine and stop when the rubbing block on the contact arm just rests on the highest point of the cam.
3. Insert a feeler gauge of **0.45 mm (0.018 in)** between the contact points, loosen the set screw and move the stationary point until the correct gap is obtained.
4. Tighten the set screw and recheck the point gap.

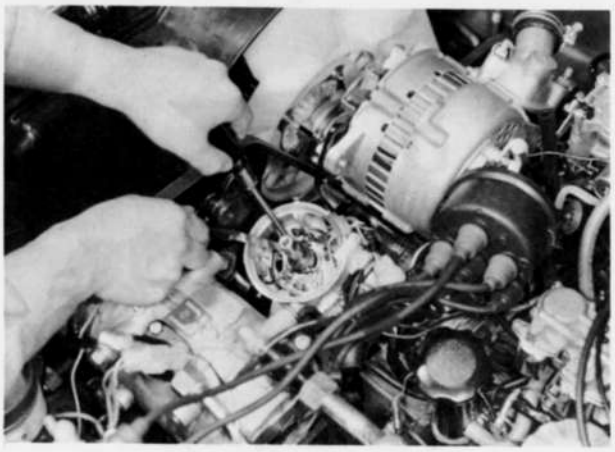

Fig. 5–33 Adjusting point gap

5–F–3. Adjusting Ignition Timing

The timing mark and its location is illustrated in Fig. 5–34.

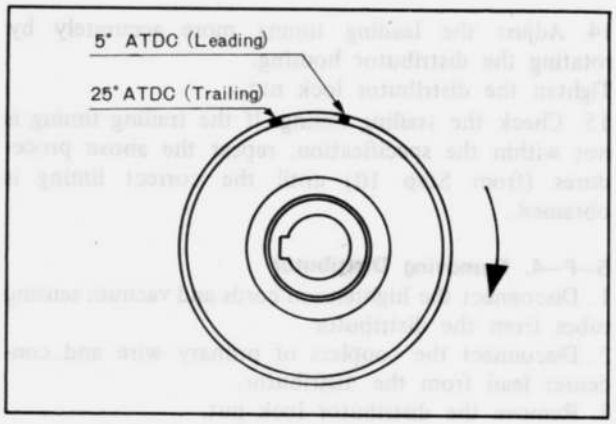

Fig. 5–34 Timing marks

1. Warm up the engine to the normal operating temperature.
2. Connect a tachometer to the engine.
3. Connect a timing light to the hightension cord for leading spark plug on the front rotor housing.
4. Start the engine and run it at specified idle speed. On the vehicle equipped with automatic transmission, place the selector lever to "D" position and block the wheels.
5. Aim the timing light at the timing indicator pin on the front cover.
6. If the leading timing is not correct, loosen the distributor lock nut and rotate the distributor housing until the leading timing mark on the pulley aligns with the indicator pin.
7. Tighten the distributor lock nut, and recheck the leading timing.
8. Connect the timing light to the hightension cord for trailing spark plug on the front housing.

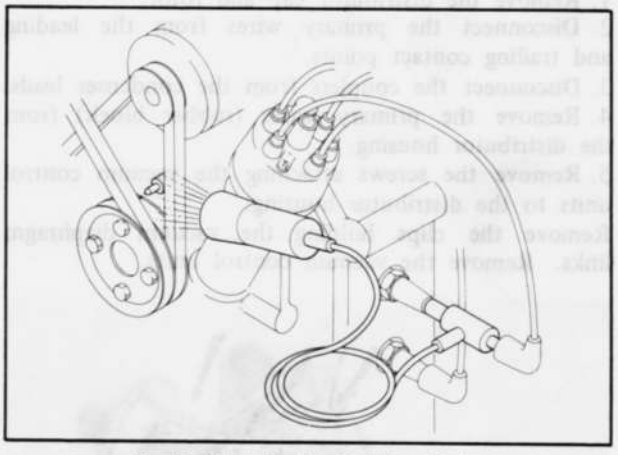

Fig. 5–35 Adjusting ignition timing

9. Start the engine and check the trailing timing, using the timing light.
10. If the trailing timing is not correct, loosen the distributor lock nut and adjust the trailing timing by rotating the distributor housing.
11. Stop the engine, and remove the distributor cap and rotor.
12. **Slightly loosen** the breaker base set screws of the leading side and turn the base plate as required.
13. Install the distributor rotor and cap.

14. Adjust the leading timing more accurately by rotating the distributor housing.
Tighten the distributor lock nut.
15. Check the trailing timing. If the trailing timing is not within the specification, repeat the above procedures (from Step 10) until the correct timing is obtained.

5–F–4. Removing Distributor

1. Disconnect the hightension cords and vacuum sensing tubes from the distributor.
2. Disconnect the couplers of primary wire and condenser lead from the distributor.
3. Remove the distributor lock nut.
4. Disconnect the vacuum sensing tubes from the vacuum control unit of the distributor.
5. Pull the distributor out of the front cover.



Fig. 5–36 Removing distributor

5–F–5. Disassembling Distributor

1. Remove the distributor cap and rotor.
2. Disconnect the primary wires from the leading and trailing contact points.
3. Disconnect the couplers from the condenser leads.
4. Remove the primary wires (rubber block) from the distributor housing.
5. Remove the screws attaching the vacuum control units to the distributor housing.
Remove the clips holding the vacuum diaphragm links. Remove the vacuum control units.

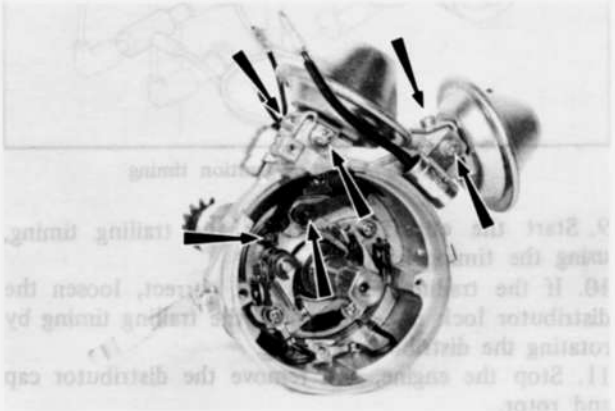

Fig. 5–37 Removing vacuum control unit

6. Remove the bearing stopper set screws and remove the breaker base plate and bearing assembly.

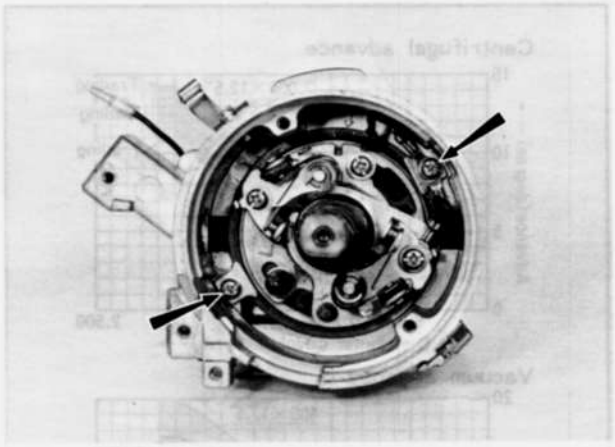

Fig. 5–38 Removing bearing stopper screws

7. Remove the snap ring and cam from the drive shaft.

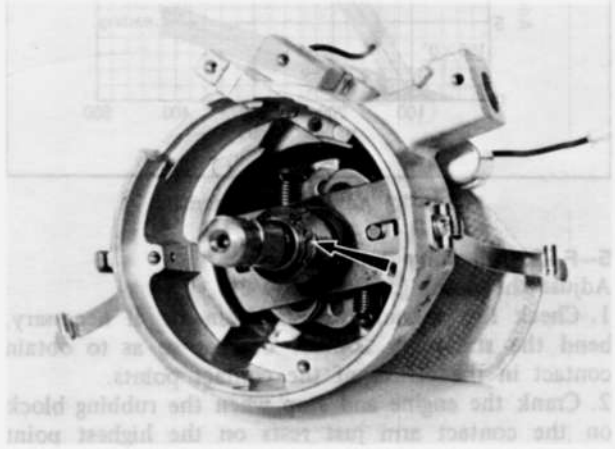

Fig. 5–39 Rmoving snap ring and cam

8. Drive the lock pin out of the driven gear with a small drift and remove the gear and washers.

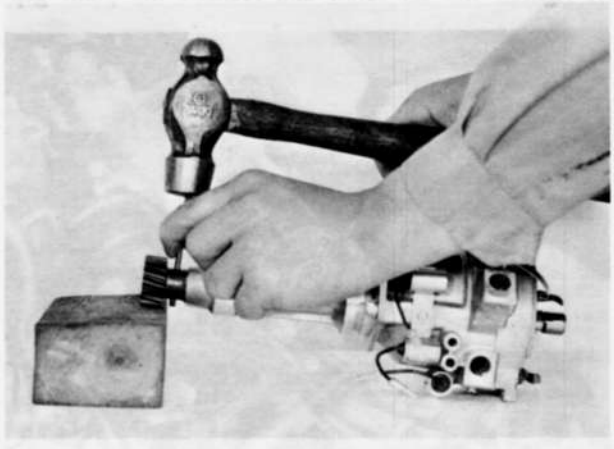

Fig. 5–40 Removing lock pin

9. Remove the shaft through the top of the distributor housing.
10. Remove the governors by removing the springs.
11. Remove the condensers from the distributor housing.

5–F–6. Distributor Inspection

a. Checking cap
Inspect the distributor cap for cracks, carbon runners and evidence of arcing. If any of these conditions exists, the cap should be replaced. Clean any corroded hightension terminals.

b. Checking rotor
Inspect the rotor for cracks or evidence of excessive burning at the end of the metal strip. If any of these conditions exists, the rotor should be replaced.

c. Checking contact points
Inspect the points for wear, burning, transferred metal and pitting. If they are slight, the points can be cleaned with a stiff bristled brush or oil stone. If they are severe, replace with new ones.

d. Checking tension of contact arm spring
For inspection, hook a spring scale on the contact arm as close as possible to the movable breaker point and pull the spring scale at a right angle to the contact arm. Take a reading when the contact points start to separate. The reading should be between **0.5 ~ 0.65 kg (1.1 ~ 1.4 lb).**

e. Checking bearing
Inspect the bearing for roughness.
This can be determined by slowly turning the outer race by hand.

f. Checking condenser
If the condenser is leaky, it will cause a weak spark or burned contact points.
Check the capacity of the condenser with a condenser tester. The capacity is **0.27 ± 0.03 microfarads.**
In the absence of a tester check by substituting a new condenser.

5–F–7. Assembling Distributor
Assembling the distributor in the reverse order of disassembling.

5–F–8. Installing Distributor
1. Turn the eccentric shaft until the leading timing mark on the eccentric shaft pulley aligns with the indicator pin on the front cover.

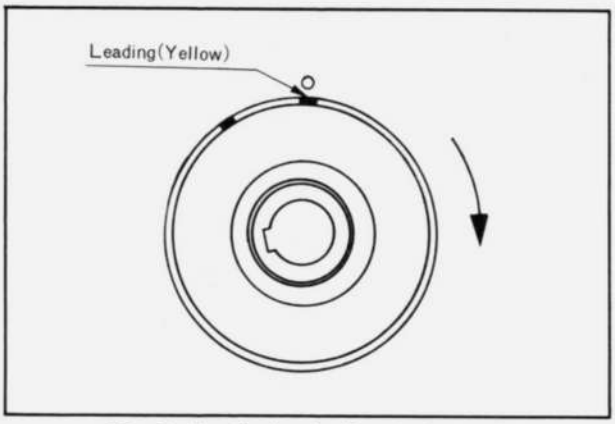

Fig. 5–41 Aligning leading timing mark

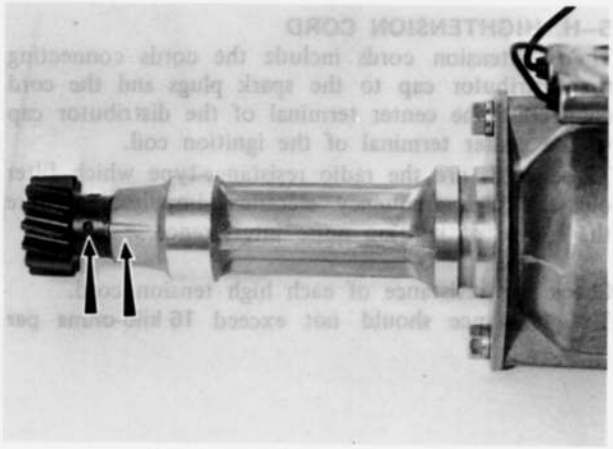

Fig. 5–42 Aligning tally marks

2. Align the tally marks on the distributor housing and driven gear as shown in Fig. 5–42.
3. Insert the distributor so that the distributor lock bolt is located in the center of the slit, and engage the gears.
4. Rotate the distributor clockwise until the leading contact point starts to separate, and tighten the distributor lock nut.
5. Install the hightension cords and connect the primary wire coupler.
6. Adjust the ignition timing, as described in Par. 5–F–3.
7. Connect the vacuum tubes to the vacuum control units.

5–G. IGNITION COIL

5–G–1. Checking Ignition Coil
Before testing the coil, always heat the coil to normal operating temperature.
1. Check the primary resistance with an ohmmeter. It shoud be **1.4 ohms** on the leading ignition coil and **1.5 ohms** on the trailing one.
2. Check the resistance of the external resistor with an ohmmeter. The resistance should be **1.4 ohms** on the leading side and **1.6 ohms** on the trailing side.

5–G–2. Replacing Ignition Coil
1. Disconnect the negative wire from the battery.
2. Disconnect the coupler from the negative terminal of the trailing ignition coil. Loosen the nut from the positive terminal and remove the wire terminal.
3. Disconnect the couplers from the negative terminal of the leading ignition coil. Loosen the nut from the positive terminal and remove the wire terminal.
4. Remove the hightension cords from the leading and trailing ignition coils.
5. Remove the bracket attaching bolt and remove the coils.
6. Install the coil by following the removal procedures in the reverse order.

5–H. HIGHTENSION CORD

The hightension cords include the cords connecting the distributor cap to the spark plugs and the cord connecting the center terminal of the distributor cap to the center terminal of the ignition coil.
These cords are the radio resistance-type which filter out the high frequency electrical impulses that are the source of ignition noise interference.

Check the resistance of each high tension cord.
The resistance should not exceed **16 kilo-ohms per 1 m (39.37 in).**

Note:
1) When checking the resistance of the cords or setting ignition timing, **do not** puncture the cords with a probe. The probe may cause a separation in the conductor.
2) When removing the cords from the spark plugs, grasp and twist the moulded cap, then pull the cap off the spark plug. **Do not** pull on the cord because the wire connection inside the cap may become separated or the insulator may be damaged.

CLUTCH

DESCRIPTION ..... 6 : 1
6–A. CLUTCH PEDAL ADJUSTMENT ..... 6 : 2
6–B. CLUTCH REMOVAL ..... 6 : 2
6–C. CLUTCH INSPECTION ..... 6 : 2
6–C–1. Checking Release Bearing and Fork ..... 6 : 2
6–C–2. Checking Pressure Plate and Cover Assembly ..... 6 : 2
6–C–3. Checking Clutch Disc ..... 6 : 3
6–C–4. Flywheel Inspection ..... 6 : 3
6–C–5. Ring Gear Replacement ..... 6 : 3
6–C–6. Checking Pilot Bearing ..... 6 : 3
6–C–7. Replacing Pilot Bearing ..... 6 : 3
6–C–8. Checking Eccentric Shaft Rear Oil Seal ..... 6 : 4
6–D. CLUTCH INSTALLATION ..... 6 : 4
6–E. CLUTCH MASTER CYLINDER ..... 6 : 4
6–E–1. Removing Clutch Master Cylinder ..... 6 : 4
6–E–2. Disassembling Clutch Master Cylinder ..... 6 : 4
6–E–3. Checking Clutch Master Cylinder ..... 6 : 4
6–E–4. Assembling Clutch Master Cylinder ..... 6 : 5
6–E–5. Installing Clutch Master Cylinder ..... 6 : 5
6–F. CLUTCH RELEASE CYLINDER ..... 6 : 5
6–F–1. Removing Clutch Release Cylinder ..... 6 : 5
6–F–2. Disassembling Clutch Release Cylinder ..... 6 : 5
6–F–3. Checking Clutch Release Cylinder ..... 6 : 5
6–F–4. Assembling Clutch Release Cylinder ..... 6 : 5
6–F–5. Installing Clutch Release Cylinder ..... 6 : 5
6–G. AIR BLEEDING ..... 6 : 5
SPECIAL TOOLS ..... 6 : 6

6

DESCRIPTION

The clutch is of the single dry disc type. The clutch assembly consists of the clutch disc assembly, clutch cover and pressure plate assembly and clutch release mechanism.

The clutch operating mechanism is of the hydraulic type, consisting of a master cylinder mounted on the dash and a clutch release cylinder mounted on the clutch housing.

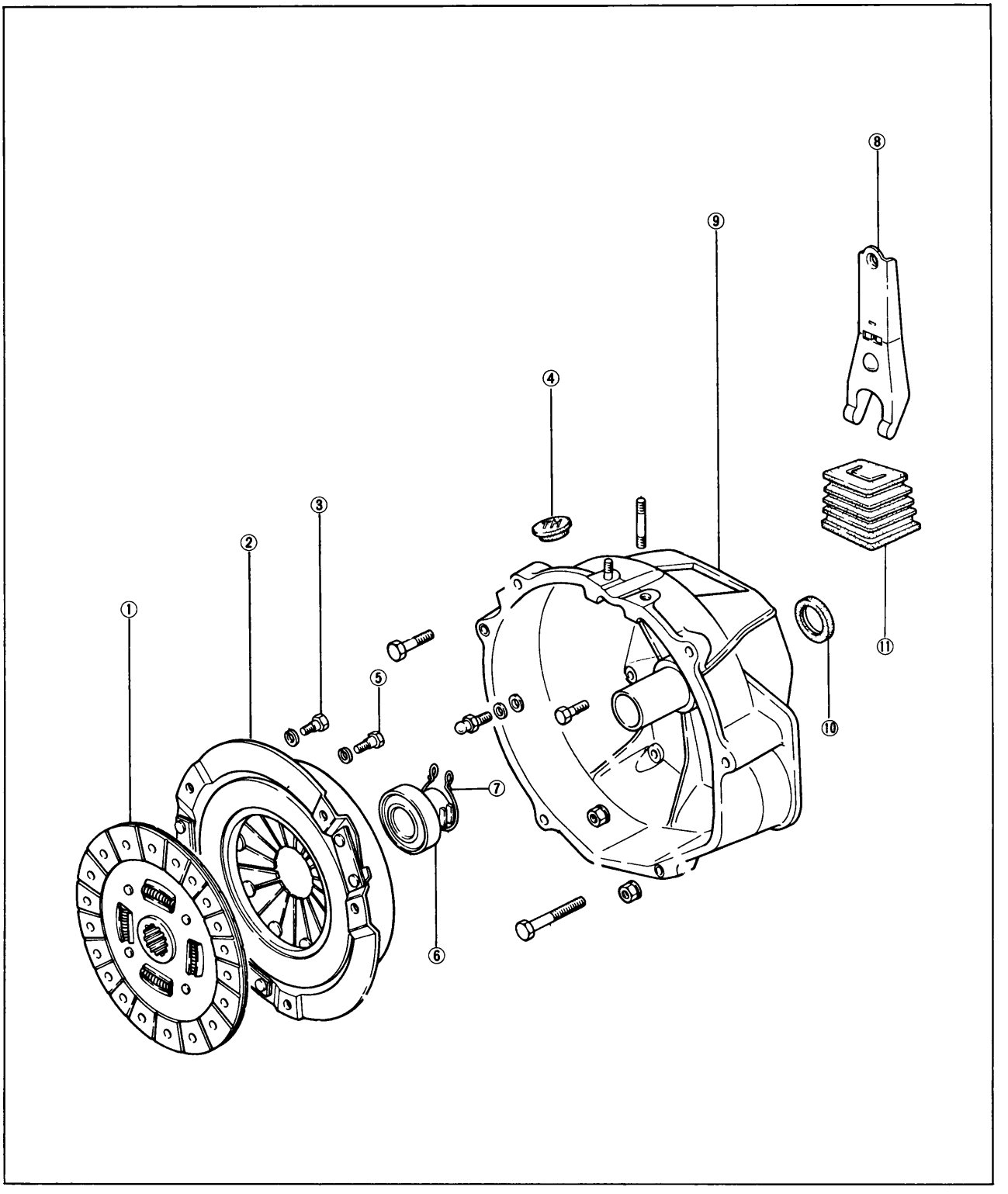

Fig. 6–1 Clutch components

1. Clutch disc
2. Clutch cover
3. Bolt
4. Service hole cover
5. Reamer bolt
6. Release bearing
7. Spring
8. Release fork
9. Clutch housing
10. Oil seal
11. Dust boot

6–A. CLUTCH PEDAL ADJUSTMENT

The free travel of the clutch pedal before the push rod contacts with the piston should be **0.6 ~ 3.0 mm (0.02 ~ 0.12 in).**

To adjust the free travel, loosen the lock nut and turn the push rod until the proper adjustment is made. Tighten the lock nut after adjustment is completed.

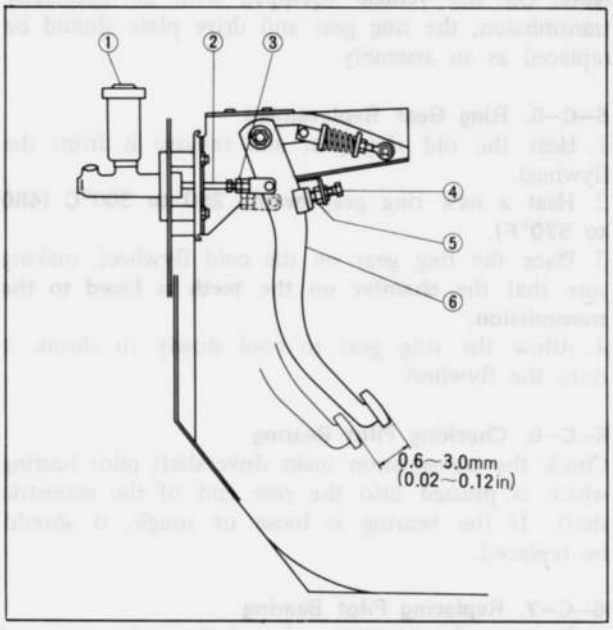

Fig. 6–2 Clutch pedal

1. Master cylinder
2. Push rod
3. Lock nut
4. Stopper
5. Lock nut
6. Pedal

6–B. CLUTCH REMOVAL

To remove the clutch from the vehicle, proceed as follows:

1. Remove the transmission, as described in Par. 7–A and 7A–A.
2. Install the **brake** (49 0820 060A).
3. Remove the 4 standard bolts and 2 reamer bolts holding the clutch cover assembly to the flywheel, and remove the clutch cover assembly and the clutch disc.
4. Straighten the tab of the lockwasher. With the **box wrench** (49 0820 035), loosen the nut that attaches the flywheel to the eccentric shaft and remove the nut.

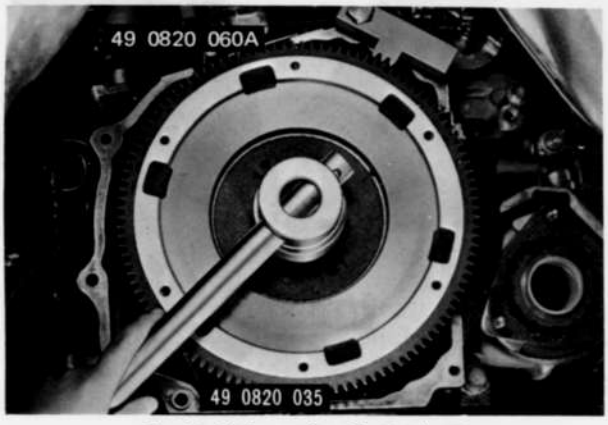

Fig. 6–3 Loosening flywheel nut

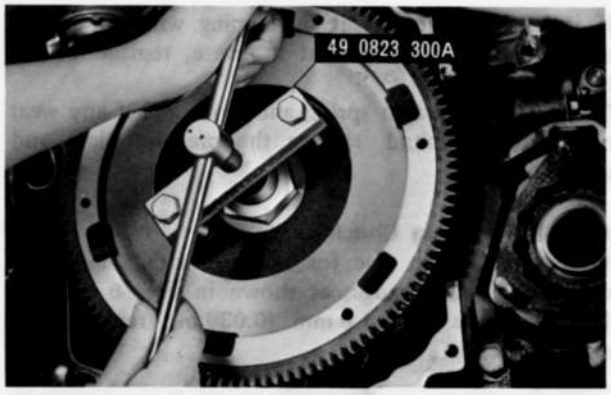

Fig. 6–4 Removing flywheel

5. Using the **puller** (49 0823 300A), remove the flywheel from the eccentric shaft.

Note: After removing the flywheel, inspect for oil leaking through the eccentric shaft rear oil seal.

6. Pull the release fork outward until the spring clip of the fork releases from the ball pivot. Remove the fork and release bearing from the clutch housing.

6–C. CLUTCH INSPECTION

6–C–1. Checking Release Bearing and Fork

Note: The release bearing is packed with lubricant which is intended to last the whole life time of the bearing. Therefore, the bearing must not be washed in gasoline or any other solvent.

Check the release bearing by pressing and turning the front race slowly by hand. Replace if the bearing feels rough or seems noisy when turning.



Fig. 6–5 Checking release bearing

Examine the clutch housing carefully to be certain there are no burrs on the outer surface of the clutch housing which pilots the release bearing.

Check the release fork for crack or bend. If necessary, replace the fork.

6–C–2. Checking Pressure Plate and Cover Assembly

Check the contact surfaces of the pressure plate with the clutch facing for wear, damage or warpage.

If it is slight, correct it by lapping with compound or by turning a lathe. But if severe, replace with a new one.
Check the diaphragm spring and cover and if any wear or damage is found, replace the pressure plate and cover assembly.

6–C–3. Checking Clutch Disc

Inspect the clutch disc for warpage with a dial indicator or a feeler gauge, as shown in Fig. 6–6.
If it is **more than 1.0 mm (0.039 in)**, replace with a new one.



Fig. 6–6 Checking clutch disc

Replace excessively worn facing as it will cause slippage or score the pressure plate and flywheel due to the projected heads of rivets.
Check the depth between the facing surface and the rivet using a depth gauge, as shown in Fig. 6–7. If the reading is **less than 0.30 mm (0.012 in)**, replace the clutch disc.

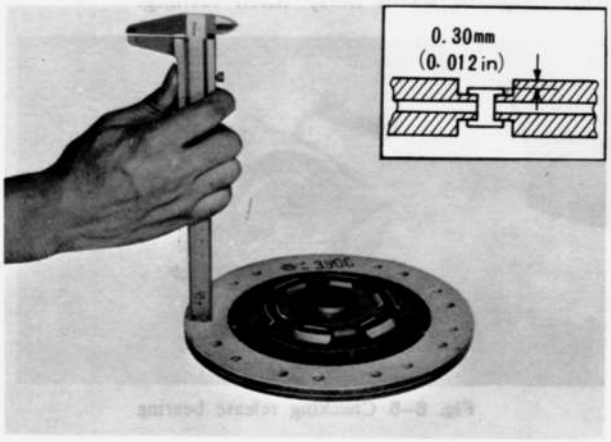

Fig. 6–7 Checking clutch disc

If oil is evident on the facing, clean or replace the facing and eliminate the cause of oil leakage.
Make certain that the clutch disc slides easily on the main drive shaft without any excessive play.

6–C–4. Flywheel Inspection

Inspect the contact surface of the flywheel with the clutch facing for burnt surface, scored surface or rivet grooves.
If it is slight, it can be reconditioned by grinding in a lathe. If the damage is deep, the flywheel should be replaced.
Check the ring gear teeth and replace if the ring gear teeth are broken, cracked or seriously burred.

Note: On the vehicle equipped with an automatic transmission, the ring gear and drive plate should be replaced as an assembly.

6–C–5. Ring Gear Replacement

1. Heat the old ring gear and remove it from the flywheel.
2. Heat a new ring gear **evenly 250 to 300°C (480 to 570°F)**.
3. Place the ring gear on the cold flywheel, making sure that the **chamfer on the teeth is faced to the transmission.**
4. Allow the ring gear to cool slowly to shrink it onto the flywheel.

6–C–6. Checking Pilot Bearing

Check the transmission main drive shaft pilot bearing which is pressed into the rear end of the eccentric shaft. If the bearing is loose or rough, it should be replaced.

6–C–7. Replacing Pilot Bearing

1. Remove the bearing and seal from the rear end

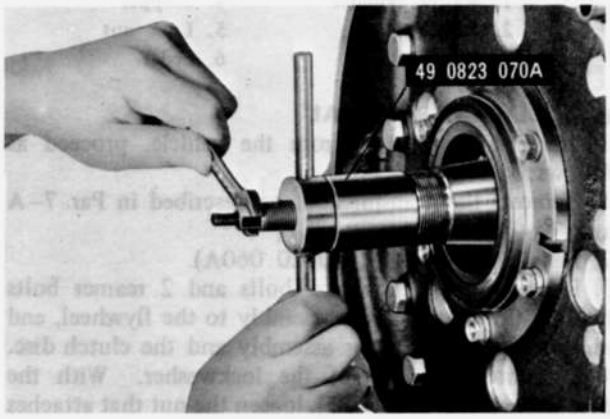

Fig. 6–8 Removing rollar bearing

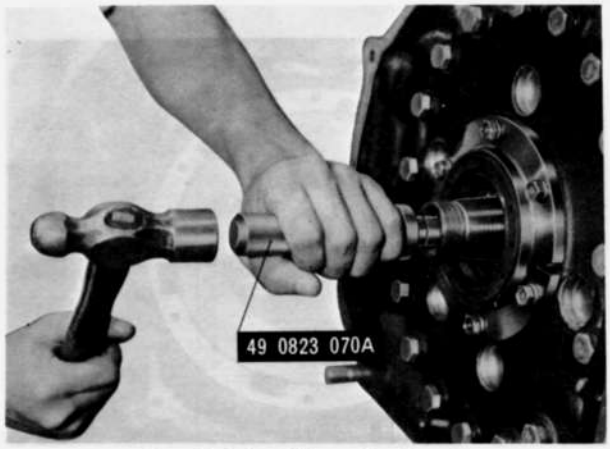

Fig. 6–9 Installing rollar bearing

of the eccentric shaft with the **remover** (49 0823 070A).
2. Install a new bearing with the **installer** (49 0823 070A).
3. Install the seal.

6–C–8. Checking Eccentric Shaft Rear Oil Seal
Check the oil seal fitted into the rear stationary gear for wear or damage. If traces of oil leakage are found, replace the oil seal.

6–D. CLUTCH INSTALLATION

1. Clean the contact surfaces of the flywheel, pressure plate and disc thoroughly with fine sandpaper or crocus cloth.

Note: Avoid touching the clutch disc facing, dropping the parts or contaminating them with oil or grease as a clutch chatter may result.

2. Fit the key into the keyway on the eccentric shaft.
3. Install the flywheel onto the rear end of the eccentric shaft, aligning the keyway of the flywheel with the key.
4. Apply sealer on both sides of the lockwasher and place it in position. Install the nut.

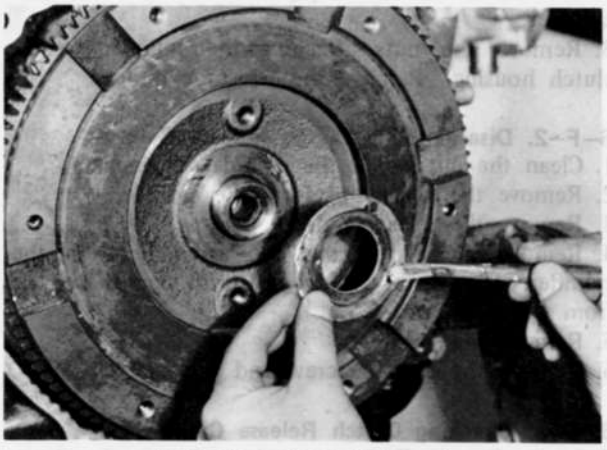

Fig. 6–10 Installing lock washer

5. Install the **brake** (49 0820 060A) and tighten the nut to **40 ~ 50 m-kg (289 ~ 362 ft-lb)** with the **box wrench** (49 0820 035).
6. Bend the tab of the lockwasher to prevent loosening.
7. Hold the clutch disc in its mounting position with the **centering tool** (49 0813 310).
If the tool is not available, use a spare main drive shaft.
8. Install the clutch cover and pressure plate assembly, **aligning the "O" marks** of the clutch cover and flywheel and install the 4 standard and 2 reamer bolts finger tight. To avoid pressure plate cover distortion, tighten the bolts a few turns at a time until they are all tight.
9. Torque the bolts to **1.8 ~ 2.7 m-kg (13 ~ 20 ft-lb)**.
10. Remove the disc centering tool and ring gear brake.
11. Apply a light film of grease to the face of the



Fig. 6–11 Installing clutch cover assembly

release bearing and the bearing retainer of the clutch housing. Install the release bearing to the release fork.
12. Apply grease to the pivot pin. Insert the release fork and release bearing assembly through the dust boot and press it inward so that the spring clip of the fork fits to the ball pivot.
Operate the release fork to ensure that the bearing slides on the retainer back and forth smoothly.
13. Install the transmission and propeller shaft. Care should be taken in order not to bend the clutch disc by allowing the transmission to hang.

6–E. CLUTCH MASTER CYLINDER

6–E–1. Removing Clutch Master Cylinder
If it becomes necessary to remove the master cylinder for repair or overhaul, proceed as follows:
1. With the **spanner** (49 0259 770A), loosen the nut connecting the fluid pipe to the master cylinder outlet and disconnect the fluid pipe.
2. Remove the nuts that attach the master cylinder to the dash panel.
3. Pull the master cylinder straight out and away from the dash panel.

Note: Never allow the fluid to drop on any painted surface.

6–E–2. Disassembling Clutch Master Cylinder
The procedures for disassembling the master cylinder after removing the master cylinder are as follows:
1. Clean the outside of the master cylinder thoroughly and drain the brake fluid.
2. Remove the piston stop ring with a screwdriver and remove the stop washer.
3. Remove the piston assembly, primary cup and return spring from the cylinder.
4. Remove the reservoir from the cylinder.

6–E–3. Checking Clutch Master Cylinder
1. Wash the parts in clean alcohol or brake fluid. **Never** use gosoline or kerosene. Blow the parts dry with compressed air.
2. Check the piston cups and replace if they are damaged, worn, softened, or swelled.

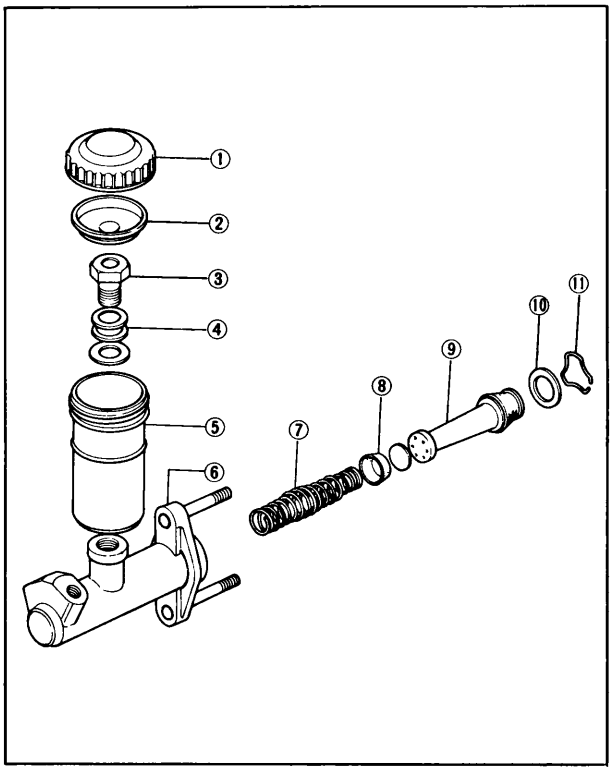

Fig. 6–12 Clutch master cylinder

1. Cap
2. Fluid baffle
3. Bolt
4. Washer
5. Reservoir
6. Cylinder
7. Spring
8. Primary piston cup
9. Piston and secondary cup assembly
10. Piston stop washer
11. Piston stop ring

3. Examine the cylinder bore and piston for wear, roughness or scoring.
4. Check the clearance between the cylinder bore and the piston. If it is **more than 0.15 mm (0.006 in)**, replace the cylinder or piston.
5. Ensure that the compensating port on the cylinder is open.

6–E–4. Assembling Clutch Master Cylinder

1. Before assembling, dip the piston and cups in clean brake fluid.
2. Install the reservoir to the cylinder.
3. Insert the return spring into the cylinder.
4. Install the primary cup so that the flat side of the cup goes toward the piston.
5. Fit the secondary cup onto the piston and install them into the cylinder.
6. Install the stop washer and stop ring.
7. Fill with brake fluid and operate the piston with a screwdriver until the fluid is ejected at the outlet.

6–E–5. Installing Clutch Master Cylinder

1. Install the clutch master cylinder assembly onto the dash panel and tighten the nuts.
2. Connect the fluid pipe to the cylinder and tighten the nut securely, using the **spanner** (49 0259 770A).
3. Fill with brake fluid.
4. Bleed the clutch hydraulic system, as described in Par. 6–G.

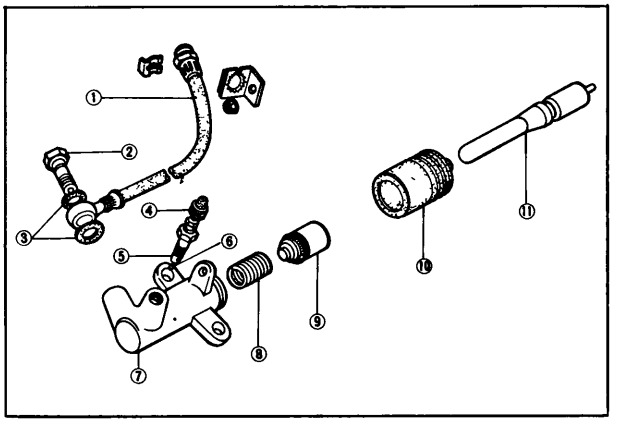

Fig. 6–13 Clutch release cylinder

1. Flexible hose
2. Connecting bolt
3. Gasket
4. Rubber cap
5. Bleeder screw
6. Valve (steel ball)
7. Cylinder
8. Spring
9. Piston assembly
10. Boot
11. Release rod

6–F. CLUTCH RELEASE CYLINDER

6–F–1. Removing Clutch Release Cylinder

1. Raise the vehicle and support with stands.
2. Disconnect the fluid pipe at the clutch release cylinder.
3. Remove the nuts attaching the cylinder to the clutch housing. Remove the release cylinder.

6–F–2. Disassembling Clutch Release Cylinder

1. Clean the outside of the cylinder thoroughly.
2. Remove the dust boot from the cylinder.
3. Remove the release rod.
4. Remove the piston and cup assembly from the cylinder. If necessary, blow out with compressed air from the fluid passage.
5. Remove the spring.
6. Remove the bleeder screw and valve (steel ball).

6–F–3. Checking Clutch Release Cylinder

Refer to Par. 6–E–3 and inspect the clutch release cylinder.

6–F–4. Assembling Clutch Release Cylinder

1. Install the spring into the cylinder.
2. Fit the piston cup to the piston and install them into the cylinder.
3. Install the clutch release rod into the cylinder.
4. Install the dust boot.
5. Install the valve (steel ball) and bleeder screw into the bleeder hole. Fit the cap.

6–G. AIR BLEEDING

The clutch hydraulic system must be bled whenever a fluid line has been disconnected or air enters the system. To bleed the clutch system, proceed as follows:

Note:
a) During bleeding operation, the reservoir of the master cylinder must be kept at least 3/4 full of the brake fluid.
b) Never re-use the brake fluid which has been drained from the clutch hydraulic system.
c) Do not mix low temperature brake fluid with the specified fluid during the bleeding operation.

1. Remove the rubber cap from the bleeder screw and attach a vinyl tube to the bleeder screw.
2. Place the end of the tube in the glass jar and submerge in brake fluid.
3. Open the bleeder valve. Depress the clutch pedal and allow it to return slowly. Continue this pumping action and watch the flow of fluid in the jar.
4. When air bubbles cease to appear, close the bleeder valve, remove the vinyl tube and fit the cap to the bleeder screw.
5. Fill the reservoir and fit the filler cap.

SPECIAL TOOLS

49 0820 060A	Brake, ring gear
49 0820 035	Box wrench, flywheel
49 0823 300A	Puller, flywheel
49 0823 070A	Puller, pilot bearing
49 0813 310	Centering tool, clutch disc
49 0259 770A	Spanner, flare nut

MANUAL TRANSMISSION

(Four-speed)

DESCRIPTION ..... 7 : 1
7–A. TRANSMISSION REMOVAL ..... 7 : 1
7–B. TRANSMISSION DISASSEMBLY ..... 7 : 1
7–C. TRANSMISSION INSPECTION ..... 7 : 4
- 7–C–1. Cleaning ..... 7 : 4
- 7–C–2. Checking Transmission Case and Housing ..... 7 : 4
- 7–C–3. Checking Bearings ..... 7 : 4
- 7–C–4. Checking Gears ..... 7 : 4
- 7–C–5. Checking Main Shaft and Main Drive Shaft ..... 7 : 4
- 7–C–6. Checking Counter Shaft ..... 7 : 5
- 7–C–7. Checking Reverse Idle Gear and Shaft ..... 7 : 5
- 7–C–8. Checking Synchronizer Mechanism ..... 7 : 5
- 7–C–9. Checking Control Lever, Shift Forks and Rods ..... 7 : 5

7–D. TRANSMISSION ASSEMBLY ..... 7 : 5
7–E. TRANSMISSION INSTALLATION ..... 7 : 10
SPECIAL TOOLS ..... 7 : 10

7

DESCRIPTION

This model is equipped with a four speed manual transmission which is of the fully synchronized type with all gears except the reverse gear being in selective sliding mesh.
The gearshift mechanism is a direct control with a floor-shift type.

7–A. TRANSMISSION REMOVAL

When removing the transmission from the vehicle, proceed as follows:
1. Open the hood and disconnect the negative cable from the battery.
2. Remove the drain plug and drain the lubricant. Clean the drain plug and reinstall it after all lubricant is out.
3. Remove the gearshift lever knob.
4. Remove the screws attaching the console box and remove the console box.
5. Remove the screws attaching the gearshift lever boot to the body floor and remove the gear shift lever boot.
6. Remove the bolts attaching the cover plate to the gearshift lever retainer. Remove the cover plate and gasket.
7. Pull the gearshift lever, shim and bush straight up and away from the gearshift lever retainer.
8. Remove the nuts attaching the clutch release cylinder and remove the clutch release cylinder.
9. Disconnect the connector of the back-up lamp switch near the clutch release cylinder.
10. Remove the bolt attaching the power brake vacuum pipe clip to the clutch housing.
11. Remove the bolts attaching the wiring harness holder to the wiring harness backet near the starting motor.
12. Remove the one upper bolt securing the starting motor, then remove the three upper bolts securing the transmission to the engine rear end.
13. Raise the vehicle and support with stands.
14. Remove the bolts and screws attaching the heat insulators to the exhaust front pipe, and remove the heat insulators.
15. Disconnect the exhaust front pipe flange from the exhaust manifold by removing the nuts. Disconnect the exhaust front pipe from the brackets by removing the bolts and nuts. Remove the bolts and nuts attaching the front pipe flange to the main silencer, and remove the exhaust front pipe.
16. Remove the bolts attaching the heat insulator to the underbody and remove the heat insulator.
17 Remove the propeller shaft, as described in Par. 8–A–1, and insert the **turning & holder** (49 0259 440) into the extension housing.
18. Disconnect the speedometer cable from the extention housing.
19. Remove the lower bolt securing the starting motor to the clutch housing and remove the starting motor. Disconnect the wire at the starting motor.
20. Place a jack under the front side of the transmission and support the transmission with the jack.



Fig. 7–1 Installing main shaft holder

21. Remove the bolts securing the transmission support to the body.
22. Remove the two lower bolts securing the transmission to the engine rear end.
23. Slide the transmission rearward until the main drive shaft clears the clutch disc and carefully withdraw it downward from the vehicle.

7–B. TRANSMISSION DISASSEMBLY

The procedures for disassembling the transmission after removing the transmission from the vehicle are as follows:
1. Pull the release fork outward until the spring clip of the fork releases from the ball pivot. Remove the fork and release bearing from the clutch housing.
2. Remove the nuts attaching the clutch housing to the transmission case and remove the clutch housing, shim and gasket.

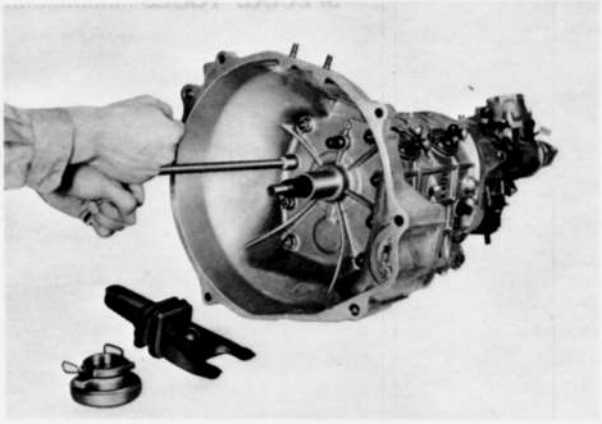

Fig. 7–2 Removing clutch housing

3. Remove the bolts attaching the gearshift lever retainer to the extension housing and remove the retainer and gasket.
4. Remove the spring cap bolt and remove the spring and steel ball, select lock spindle and spring from the gearshift lever retainer.
5. Remove the nuts that attach the extension housing to the transmission case. Slide the extension housing off the main shaft, with the control lever end laid down to the left as far as it will go.

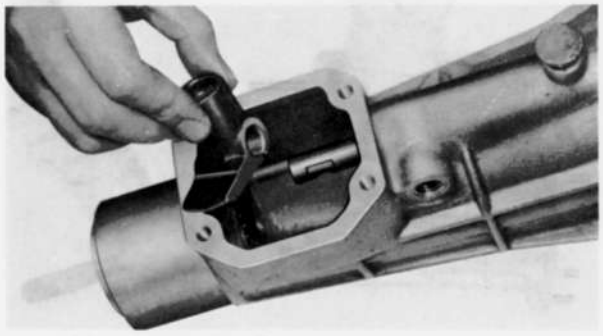

Fig. 7–3 Removing control lever end

6. Remove the bolt attaching the control lever end to the control rod and remove the control lever end, key and control rod.
7. Remove the ball seat from the control lever end.
8. Remove the lock plate and remove the speedometer driven gear assembly from the extension housing.
9. Remove the reverse lamp switch from the extension housing.
10. Remove the snap ring that secures the speedometer drive gear to the main shaft. Slide the speedometer drive gear off the main shaft and remove the steel ball.
11. Evenly loosen the bolts attaching the under cover to the transmission case and remove the under cover and gasket.
12. Remove the three spring cap bolts and remove the springs and detent balls.

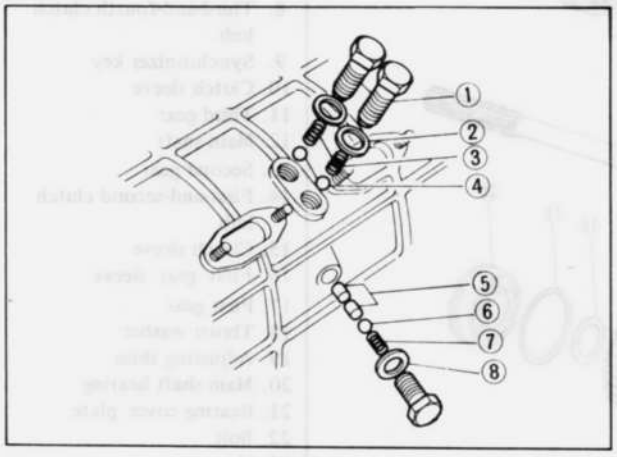

Fig. 7–4 Spring cap bolts

1. Spring cap bolt
2. Washer
3. Detent spring
4. Detent ball
5. Inter-lock pin
6. Detent ball
7. Detent spring
8. Washer

13. Remove the nuts attaching the two blind covers to the transmission case and remove the blind covers and gaskets.
14. Remove the bolt attaching the reverse shift fork to the rod, and remove the fork and reverse idle gear. Remove the reverse shift rod and interlock pin.
15. Remove the bolts attaching the first-and-second shift fork and third-and-fourth shift fork to their respective rods using the socket wrench through the openings of the case. Remove the shift rods and interlock pin.

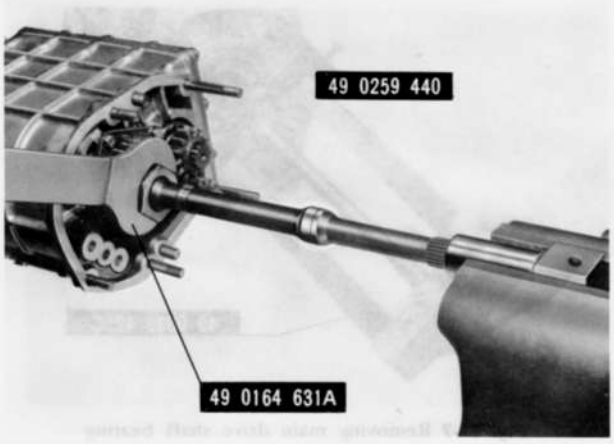

Fig. 7–5 Removing main shaft lock nut

16. Straighten the tab of the lockwasher, hold the main shaft with the **turning & holder** (49 0259 440), as shown in Fig. 7–5, and loosen the lock nut by using the **spanner** (49 0164 631A). Remove the reverse gear and key from the main shaft.
17. Remove the snap ring from the rear end of the counter shaft and slide off the counter reverse gear.
18. Remove the bolts attaching the bearing cover plate to the transmission case and remove the bearing cover plate.
19. Remove the reverse idler gear shaft from the transmission case.
20. Remove the snap ring from the front end of the counter shaft.
21. Install the **holder** (49 0839 445) between the fourth synchronizer ring and the synchromesh gear on the main drive shaft, as shown in Fig. 7–6.
22. Using the **puller** (49 0839 425C) as shown in Fig. 7–6, remove the counter shaft front bearing.

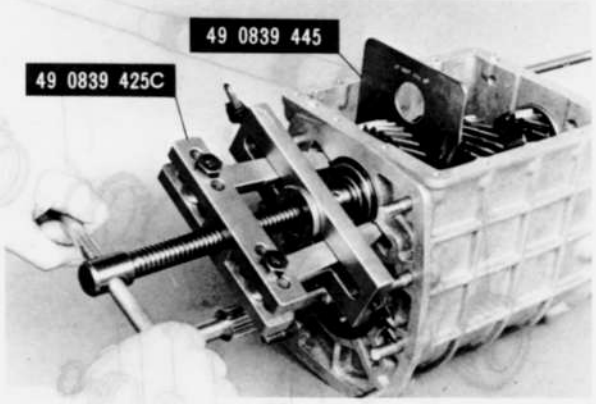

Fig. 7–6 Removing counter shaft front bearing

23. Remove the adjusting shim from the counter shaft front bearing bore of the transmission case.
24. Remove the rear bearing from the counter shaft with the **puller** (49 0839 425C).
25. Using the **puller** (49 0839 425C), remove the main shaft bearing.
26. Remove the adjusting shim from the main shaft bearing bore of the transmission case.
27. Remove the snap ring that secures the bearing to

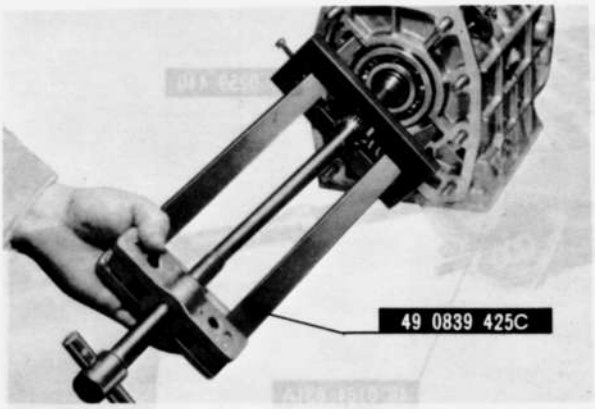

Fig. 7–7 Removing main drive shaft bearing

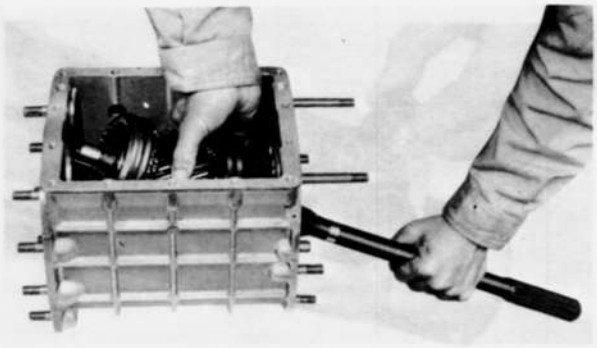

Fig. 7–8 Removing main shaft and gear assembly

the main drive shaft. Remove the main drive shaft bearing with the **puller** (49 0839 425C).

28. Take out the counter shaft and gear from the transmission case.
29. Separate the main drive shaft from the main shaft and remove the main drive shaft from the case.

Remove the synchronizer ring and needle bearing from the main drive shaft.

30. Take out the main shaft and gears assembly from the case, as shown in Fig. 7–8.
31. Remove the first-and-second shift fork and third-and-fourth shift fork from the case.
32. Using the snap ring pliers, remove the snap ring from the front of the main shaft.

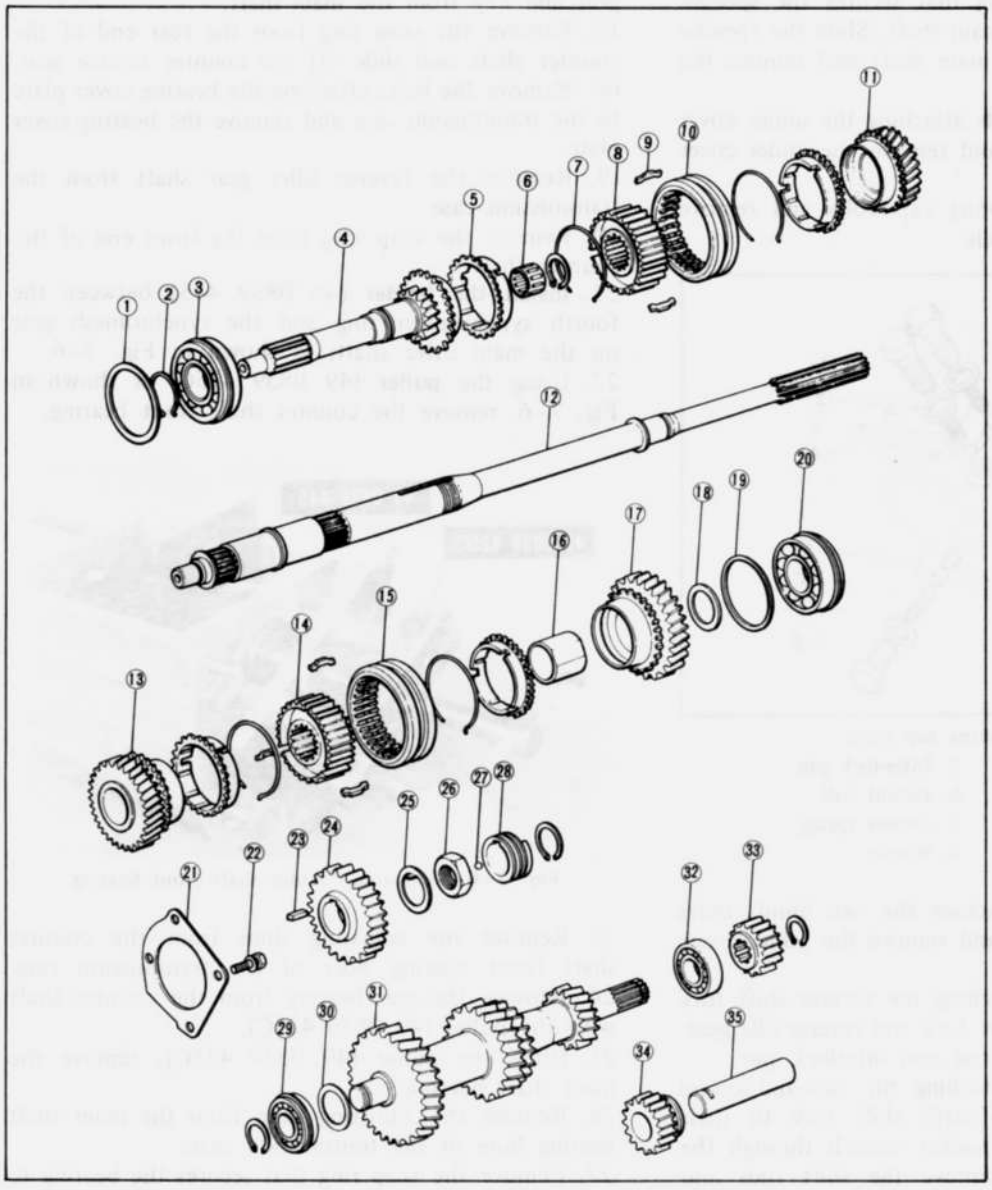

Fig. 7–9 Shafts and gears

1. Adjusting shim
2. Snap ring
3. Main drive shaft bearing
4. Main drive shaft
5. Synchronizer ring
6. Needle bearing
7. Synchronizer key spring
8. Third-and-fourth clutch hub
9. Synchronizer key
10. Clutch sleeve
11. Third gear
12. Main shaft
13. Second gear
14. First-and-second clutch hub
15. Clutch sleeve
16. First gear sleeve
17. First gear
18. Thrust washer
19. Adjusting shim
20. Main shaft bearing
21. Bearing cover plate
22. Bolt
23. Key
24. Reverse gear
25. Lock washer
26. Lock nut
27. Lock ball
28. Speedometer drive gear
29. Counter shaft front bearing
30. Adjusting shim
31. Counter shaft
32. Counter shaft rear bearing
33. Counter reverse gear
34. Reverse idler gear
35. Reverse idler gear shaft

33. Slide the third-and-fourth clutch hub and sleeve assembly, synchronizer ring, third gear off the main shaft.
34. Remove the thrust washer, first gear and sleeve, synchronizer ring, first-and-second clutch hub and sleeve assembly, synchronizer ring and second gear from the rear of the main shaft in sequence.

7–C. TRANSMISSION INSPECTION

7–C–1. Cleaning

1. Wash all parts, except the ball bearings and seals in a suitable cleaning solvent. Dry all parts with compressed air.
2. Rotate the ball bearings in a cleaning solvent until all lubricant is removed. Hold the bearing to prevent it from rotating and dry it with compressed air.
3. Lubricate the bearings with lubricant and wrap them in a clean, lint-free cloth or paper until ready for use.

7–C–2. Checking Transmission Case and Housings

1. Inspect the transmission case and extension housing for cracks and machined mating surfaces for burrs, nicks or any damages.
2. Check the bush and oil seal in the extension housing. Replace the bush and oil seal if they are worn or damaged.

7–C–3. Checking Bearings

1. Inspect each bearing for roughness. This can be determined by slowly turning the outer race by hand.
2. Check the needle bearing for wear or any damage. The rollers should have a uniformly good appearance and roll freely.

7–C–4. Checking Gears

Inspect the teeth of each gear. If excessively worn, broken or chipped, replace with new gear. Excessive wear of the gears causes increase of backlash, which results in producing noises or may cause the gear to work off while running.

7–C–5. Checking Main Shaft and Main Drive Shaft

1. Inspect the main shaft for run-out by applying a dial indicator to several places along the shaft. The reading of the indicator for run-out should be **less than 0.03 mm (0.0012 in)**. If it is not within the specification, correct with a press or replace with a new one.
2. Replace the main shaft if there is any evidence of wear or any of the spline is damaged.
3. Check the fit of the main shaft and gear bores. The standard fit is 0.03 ~ 0.08 mm (0.0012 ~ 0.0031 in). If this clearance increases **beyond 0.15 mm (0.006 in)** due to wear, replace the gear.
4. Replace the main drive shaft if the spline is damaged or the teeth are chipped, worn or broken.

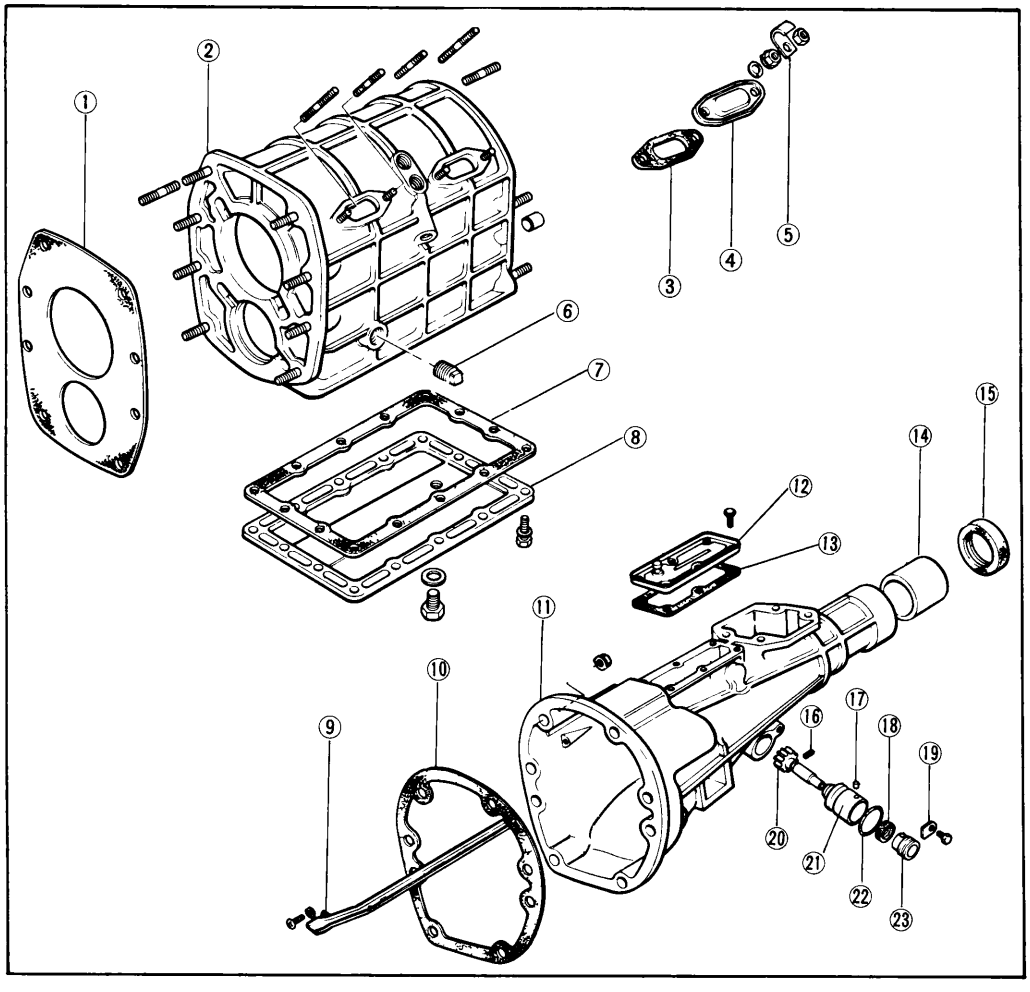

Fig. 7–10 Transmission case and extension housing

1. Gasket
2. Transmission case
3. Gasket
4. Blind cover
5. Clip
6. Plug
7. Gasket
8. Transmission under cover
9. Oil pass
10. Gasket
11. Extension housing
12. Cover
13. Gasket
14. Bush
15. Main shaft oil seal
16. Pin
17. Pin
18. Oil seal
19. Lock plate
20. Speedometer driven gear
21. Sleeve
22. "O" ring
23. Cable joint

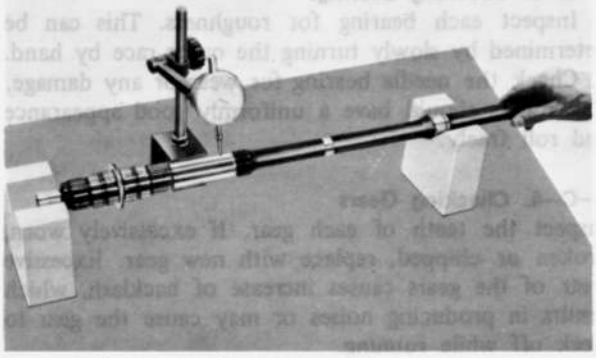

Fig. 7–11 Checking main shaft run-out

7–C–6. Checking Counter Shaft

Check the counter gears for chipped, worn or broken teeth. Replace the counter shaft if it is bent, scored or worn.

7–C–7. Checking Reverse Idle Gear and Shaft

1. Check the reverse idle gear for chipped, worn or broken teeth. Replace the idle gear shaft if it is bent, worn or scored.
2. The standard fit of the reverse idle gear bush and shaft is 0.02 ~ 0.06 mm (0.0008 ~ 0.0024 in). If this clearance increases **beyond 0.15 mm (0.006 in)** due to wear, replace the reverse idle gear.

7–C–8. Checking Synchronizer Mechanism

1. Inspect the gear teeth on the synchronizer ring. If there is evidence of chipping or excessively worn teeth, replace with new parts.
2. Inspect the synchronizer ring for wear. To check the wear of the synchronizer ring, fit the synchronizer ring evenly to the gear cone and measure the clearance between the side faces of the synchronizer ring and the gear with a feeler gauge, as shown in Fig. 7–12. If it is **less than 0.8 mm (0.031 in),** replace the synchronizer ring or gear. The standard clearance is 1.5 mm (0.059 in).

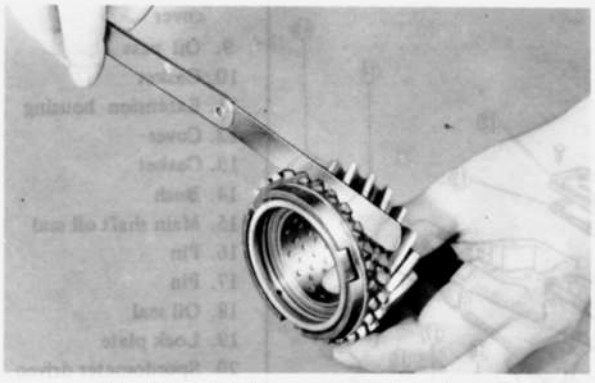

Fig. 7–12 Checking synchronizer ring

3. Inspect the contact between the inner surface of the synchronizer ring and the cone surface of the gear. To inspect, apply a thin coat of "Prussion Blue" on the cone surface of the gear and fit it into the ring. If the contact pattern is poor, correct this by applying the compound and lapping the surfaces together.
4. See if the clutch sleeve slides easily on the clutch hub.
5. Check the synchronizer key, the inner surface of the clutch sleeve, and the key groove on the clutch hub for wear.
6. Check the synchronizer key spring for tension.

7–C–9. Checking Control Lever, Shift Forks and Rods

1. Check the condition of the control lever, shift forks and rods, and replace if they are worn or damaged.
2. Check the clearance between the control lever and the gate of the shift rod, as shown in Fig. 7–13. If this clearance exceeds **0.8 mm (0.031 in),** replace the control lever or the shift rod.

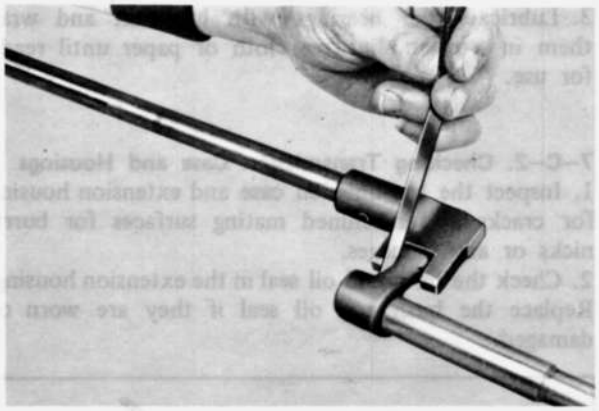

Fig. 7–13 Checking control rod

3. Check the clearances between the shift fork and clutch sleeve and between the shift fork and reverse idle gear. If these clearances exceed **0.5 mm (0.020 in),** replace the shift fork, clutch sleeve or reverse idle gear.

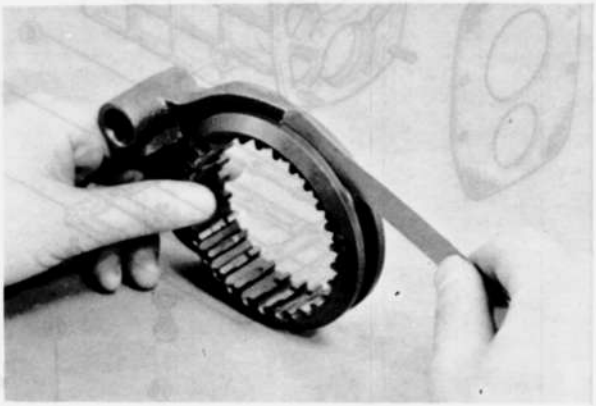

Fig. 7–14 Checking shift fork

7–D. TRANSMISSION ASSEMBLY

1. Assemble the third-and-fourth clutch by installing the clutch hub into the sleeve, placing the three keys into the clutch hub slots and installing the springs onto the hub, as shown in Fig. 7–16.
2. Assemble the first-and-second clutch hub and sleeve in the same manner as described in Step 1.

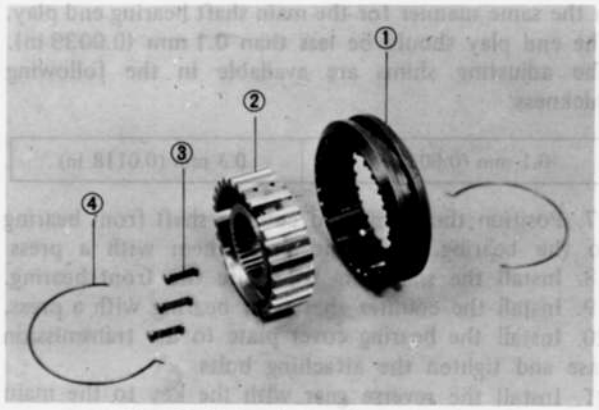

Fig. 7–15 Synchromesh mechanism
1. Clutch sleeve
2. Clutch hub
3. Synchronizer key
4. Key spring



Fig. 7–16 Installing synchronizer key spring

3. Install the second gear, synchronizer ring, first-and -second clutch assembly, synchronizer ring, first gear with sleeve, and thrust washer in this sequence to the rear section of the main shaft.

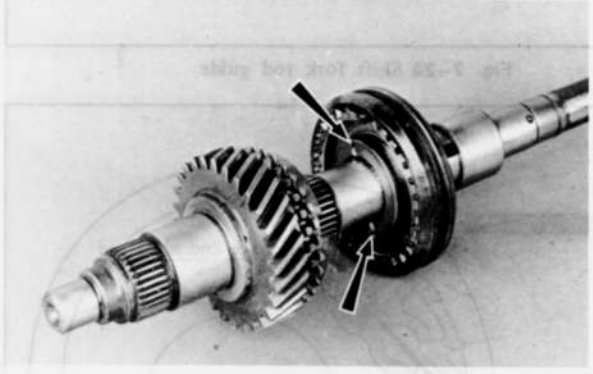

Fig. 7–17 Installing clutch assembly (1st & 2nd)

4. Install the third gear and synchronizer ring onto the front section of the main shaft.
5. Install the third-and-fourth clutch assembly onto the main shaft.

Note: The direction of the clutch assembly is as shown in Fig. 7–19.

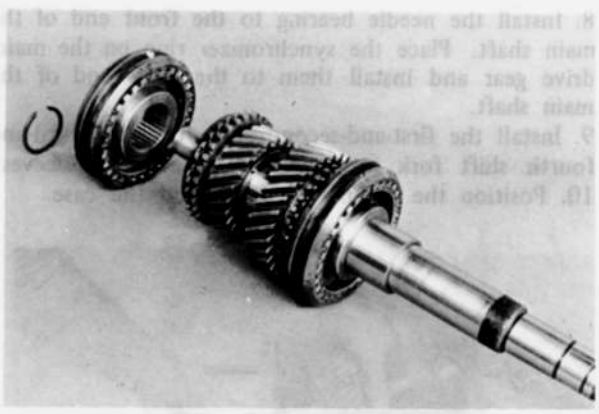

Fig. 7–18 Installing clutch assembly (3rd & 4th)

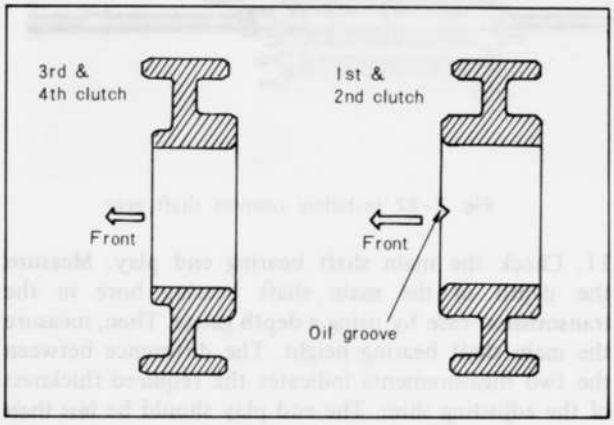

Fig. 7–19 Direction of clutch hub

6. Fit the snap ring on the main shaft.
7. Position the main shaft assembly in the case.

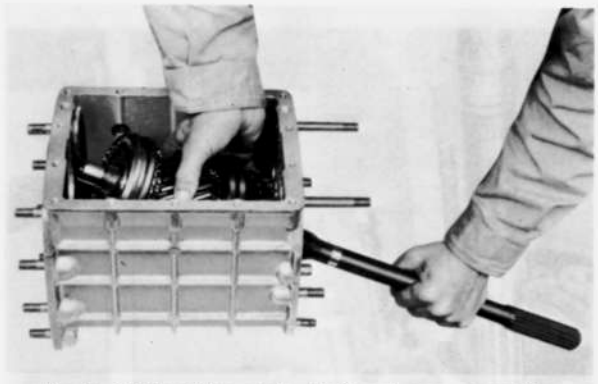

Fig. 7–20 Installing main shaft and gear assembly



Fig. 7–21 Installing shift forks

8. Install the needle bearing to the front end of the main shaft. Place the synchronizer ring on the main drive gear and install them to the front end of the main shaft.
9. Install the first-and-second shift fork and third-and fourth shift fork to their respective clutch sleeves.
10. Position the counter shaft gear in the case.

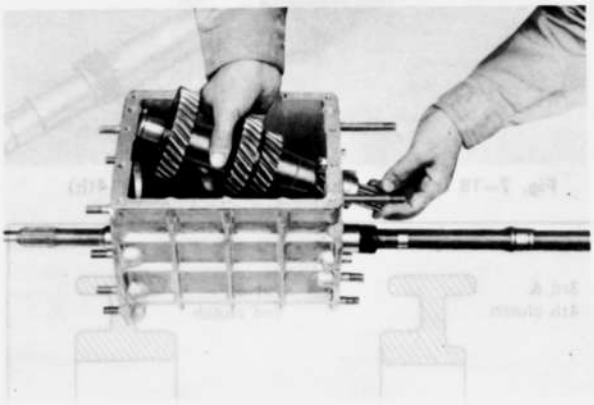

Fig. 7–22 Installing counter shaft gear

11. Check the main shaft bearing end play. Measure the depth of the main shaft bearing bore in the transmission case by using a depth gauge. Then, measure the main shaft bearing height. The difference between the two measurements indicates the required thickness of the adjusting shim. The end play should be **less than 0.1 mm (0.0039 in).** The adjusting shims are available in the following thickness:

0.1 mm (0.0039 in)	0.3 mm (0.0118 in)

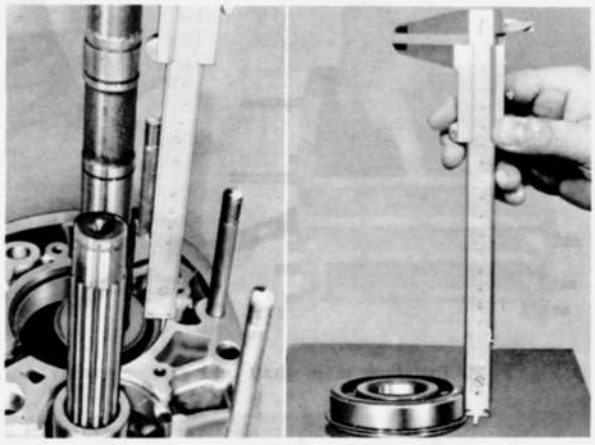

Fig. 7–23 Checking end play

12. Install the **holder** (49 0839 445) between the fourth synchronizer ring and the synchromesh gear on the main drive shaft.
13. Position the shims and main shaft bearing in the bearing bore, and press the bearing by using a press.
14. Position the main drive shaft bearing in the bearing bore, and press it with a press.
15. Install the snap ring to secure the main drive shaft bearing.
16. Check the counter shaft front bearing end play in the same manner for the main shaft bearing end play. The end play should be **less than 0.1 mm (0.0039 in).** The adjusting shims are available in the following thickness:

0.1 mm (0.0039 in)	0.3 mm (0.0118 in)

17. Position the shims and counter shaft front bearing to the bearing bore, and press them with a press.
18. Install the snap ring to secure the front bearing.
19. Install the counter shaft rear bearing with a press.
20. Install the bearing cover plate to the transmission case and tighten the attaching bolts.
21. Install the reverse gear with the key to the main shaft and tighten the lock nut to **20.0 ~ 28.0 m-kg (145 ~ 203 ft-lb)** by using the **turning & holder** (49 0259 440) and **spanner** (49 0164 631A). Bend the tab of the lock washer.
22. Install the counter reverse gear to the rear end of the counter shaft and secure it with the snap ring.
23. Install the reverse idler gear shaft to the transmission case.
24. Install the first-and-second shift rod through the holes of the case and fork.
25. Using the **guide** (49 0862 350) and **guide** (49 0187 451A), insert the interlock pin, as shown in Fig. 7–25.
26. Remove the tools and install the third-and-fourth shift rod through the holes of the case and fork.

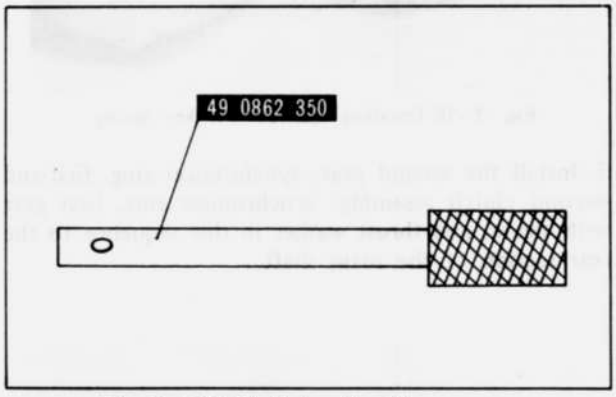

Fig. 7–24 Shift fork rod guide

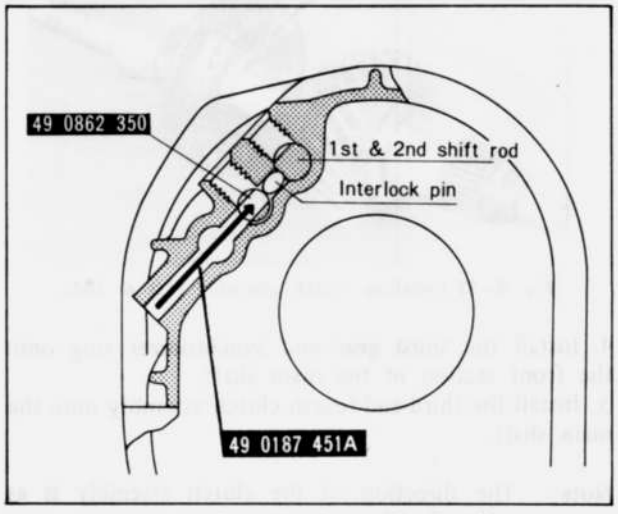

Fig. 7–25 Installing inter-lock pin (1)

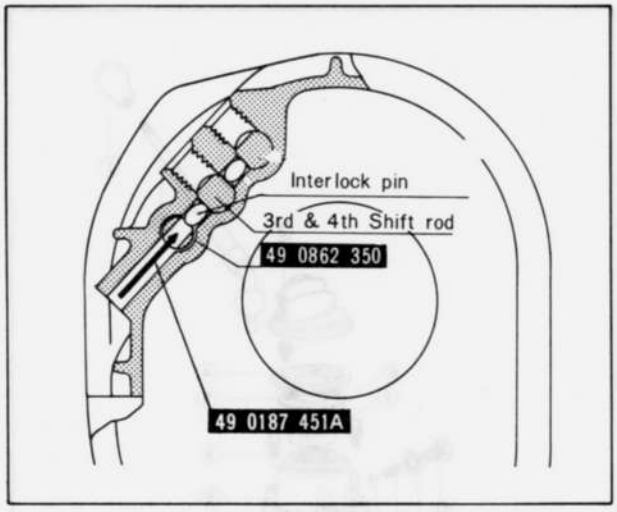

Fig. 7–26 Installing interlock pin (2)

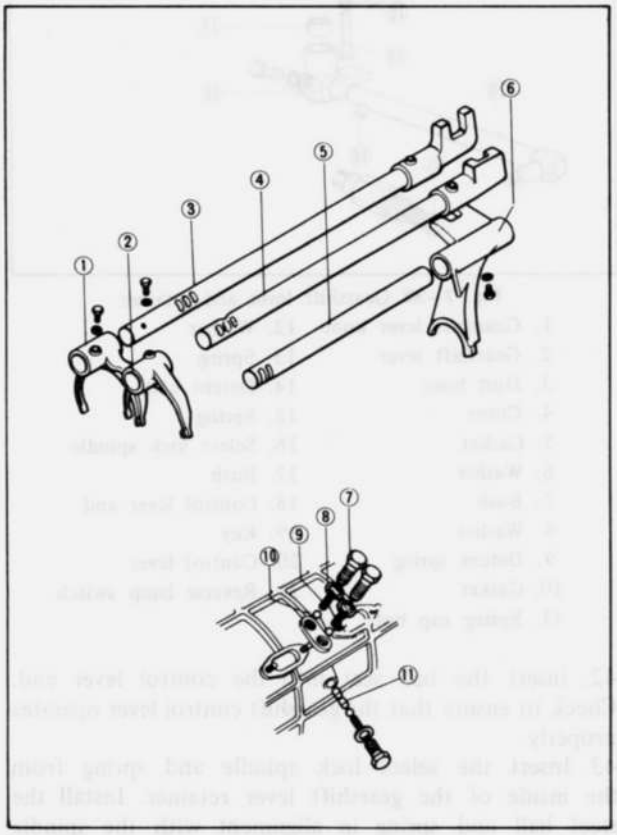

Fig. 7–27 Shift forks and rods

1. Third-and-fourth shift fork
2. First-and-second shift fork
3. Third-and-fourth shift rod
4. First-and-second shift rod
5. Reverse shift rod
6. Reverse shift fork
7. Spring cap bolt
8. Washer
9. Detent spring
10. Detent ball
11. Interlock pin

27. Through the opening of the case, align the lock bolt holes of each shift fork and rod. Install and tighten the lock bolts.
28. With the same tools that were used in Step 25, install the interlock pin.
29. Install the reverse shift fork to the rod and tighten the lock bolt.
30. Install the reverse shift rod and shift fork assembly together with the reverse idle gear.

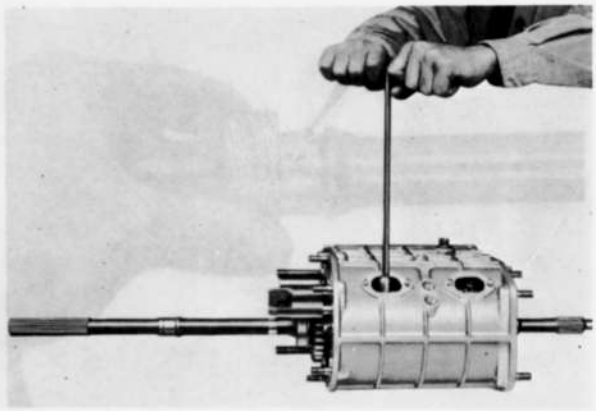

Fig. 7–28 Securing shift fork

31. Position the three shift locking balls and springs into their respective positions and install the spring cap bolts.
32. Place the third-and-fourth clutch sleeve in the third gear.
33. Check the clearance between the synchronizer key and the exposed edge of the synchronizer ring with a feeler gauge. This measurement should be **0.66 ~ 2.0 mm (0.026 ~ 0.079 in).** If the measurement is greater than 2.0 mm (0.079 in), the synchronizer key could pop out of position.
If the measurement exceeds **2.0 mm (0.079 in),** exchange the thrust washer (selective fit). The thrust washers are available as in the following table.

2.5 mm (0.098 in)	3.5 mm (0.138 in)
3.0 mm (0.118 in)	

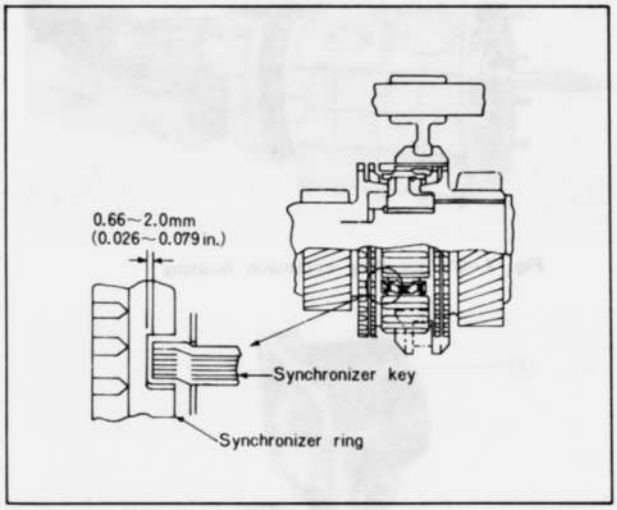

Fig. 7–29 Checking clearance

34. Install the two blind covers and gaskets to the case and tighten the attaching nuts.
35. Place the gasket on the case and install the under cover. Tighten the bolts to **0.6 ~ 0.9 m-kg (4 ~ 7 ft-lb).**
36. Install the speedometer drive gear with the steel ball onto the main shaft, as shown in Fig. 7–30, and secure it with the snap ring.

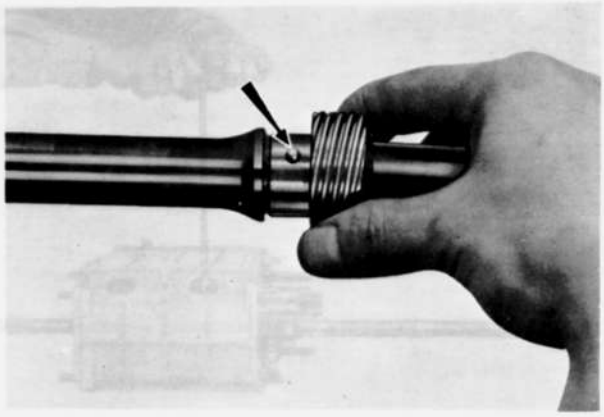

Fig. 7–30 Installing speedometer drive gear

37. Insert the speedometer driven gear assembly to the extension housing and secure it with the bolt and lock plate.
38. Insert the control rod through the holes from the front side of the extension housing.
39. Align the key and insert the control lever end to the control rod. Install the bolt and tighten it to **2.8 ~ 3.4 m-kg (20 ~ 25 ft-lb).**
40. Install the reverse lamp switch to the extension housing and tighten the switch to **2.5 ~ 3.5 m-kg (18 ~ 25 ft-lb).**
41. Place the gasket on the case and install the extension housing with the control lever end laid down to the left as far as it will go. Tighten the attaching nuts.

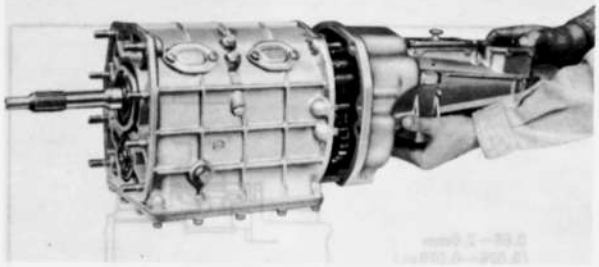

Fig. 7–31 Installing extension housing

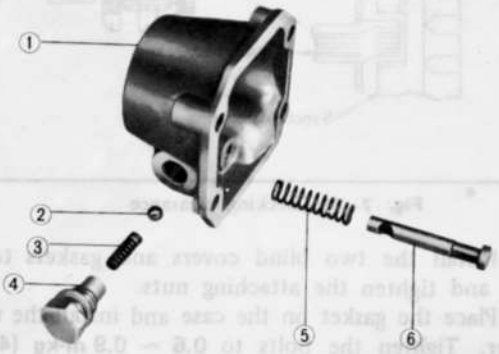

Fig 7–32 Gearshift lever retainer

1. Retainer
2. Locking ball
3. Spring
4. Spring cap bolt
5. Spring
6. Select lock spindle

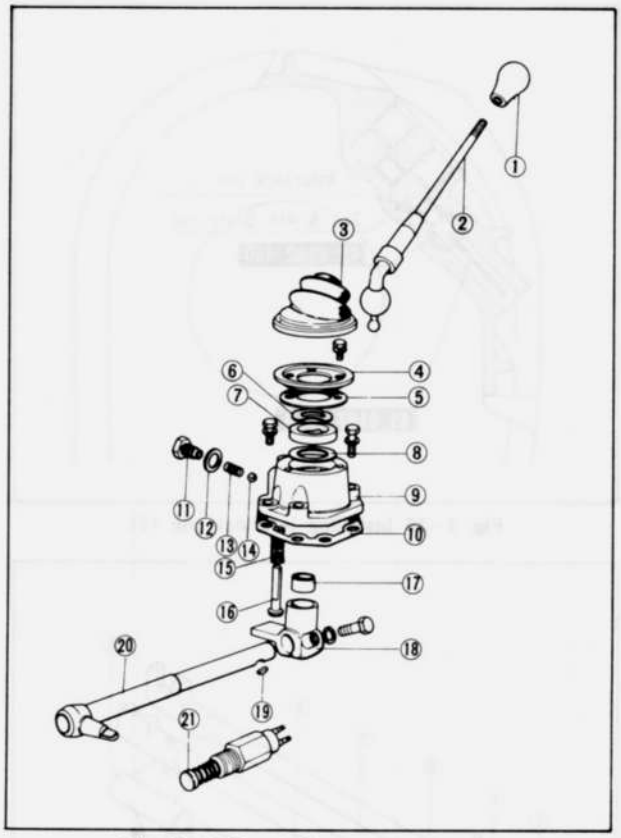

Fig. 7–33 Gearshift lever and retainer

1. Gearshift lever knob
2. Gearshift lever
3. Dust boot
4. Cover
5. Gasket
6. Washer
7. Bush
8. Washer
9. Detent spring
10. Gasket
11. Spring cap bolt
12. Washer
13. Spring
14. Detent ball
15. Spring
16. Select lock spindle
17. Bush
18. Control lever end
19. Key
20. Control lever
21. Reverse lamp switch

42. Insert the ball seat into the control lever end. Check to ensure that the gearshift control lever operates properly.
43. Insert the select lock spindle and spring from the inside of the gearshift lever retainer. Install the steel ball and spring in alignment with the spindle groove and install the spring cap bolt.
44. Install the gearshift lever retainer and gasket to the extension housing.
45. Check the bearing end play. Measure the depth of the bearing bore in the clutch housing using a depth gauge. Then, measure the bearing protrusion, as shown in Fig. 7–34. The difference between two measurements indicates the required thickness of the adjusting shim. The end play should be **less than 0.1 mm (0.0039 in).** The shims are available in the following thickness:

0.1 mm (0.0039 in)	0.3 mm (0.0118 in)

46. Place the gasket on the front side of the case. Apply lubricant to the lip of the oil seal and install

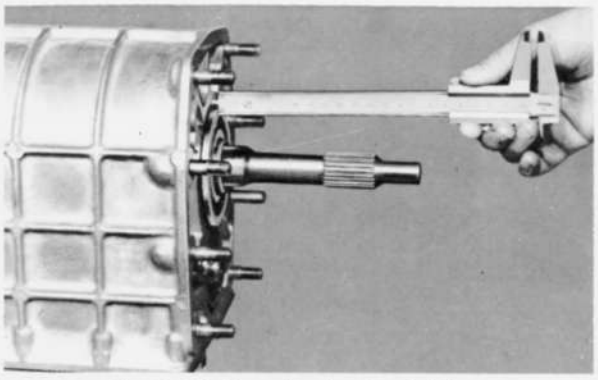

Fig. 7–34 Measuring bearing height



Fig. 7–35 Measuring bearing bore depth

the clutch housing to the case. Tighten the attaching nuts.

47. Install the release bearing and release fork to the clutch housing.

7–E. TRANSMISSION INSTALLATION

Carry out the removing operations in the reverse order.

Note:

a) Apply a thin coast of grease onto the splines of the main drive shaft.

b) Use the **turning & holder** (49 0259 440) to align the splines of the main drive shaft and clutch disc.

c) Fill the transmission with the correct grade and quantity of lubricant.

SPECIAL TOOLS

49 0829 425C	Puller set, bearing
49 0259 440	Turning & holder, mainshaft
49 0839 445	Holder, synchronizer ring
49 0862 350	Guide, shift fork
49 0187 451A	Guide, interlock pin
49 0164 631A	Spanner, mainshaft lock nut

MANUAL TRANSMISSION

(Five-speed)

DESCRIPTION ..... 7A : 1
7A–A. TRANSMISSION REMOVAL ..... 7A : 1
7A–B. TRANSMISSION DISASSEMBLY ..... 7A : 1
7A–C. TRANSMISSION INSPECTION ..... 7A : 7
7A–C–1. Cleaning ..... 7A : 7
7A–C–2. Checking Transmission Case and Housing ..... 7A : 7
7A–C–3. Checking Bearings ..... 7A : 7
7A–C–4. Checking Gears ..... 7A : 7
7A–C–5. Checking Main Shaft and Main Drive Shaft ..... 7A : 7
7A–C–6. Checking Counter Shaft ..... 7A : 7
7A–C–7. Checking Reverse Idle Gear and Shaft ..... 7A : 7
7A–C–8. Checking Synchronizer Mechanism ..... 7A : 9
7A–C–9. Checking Control Lever, Shift Forks and Rods ..... 7A : 9
7A–D. TRANSMISSION ASSEMBLY ..... 7A : 9
7A–E. TRANSMISSION INSTALLATION ..... 7A : 18
SPECIAL TOOLS ..... 7A : 18

DESCRIPTION

This model is equipped with a five-speed manual transmission which is of the fully synchronized type with all gears.

The gearshift mechanism is a direct control with a floor-shift type.

7A–A. TRANSMISSION REMOVAL

When removing the transmission from the vehicle, proceed as follows :

1. Remove the gearshift lever knob from the gearshift lever.
2. Remove the screws attaching the console box and remove the console box.
3. Remove the screws attaching the gearshift lever boot to the body floor and remove the gearshift lever boot.
4. Remove the bolts attaching the retainer cover to the gearshift lever retainer.
5. Pull the gearshift lever, shim and bush straight up and away from the gearshift lever retainer.
6. Open the hood and disconnect the negative battery cable from the battery terminal.
7. Remove the nuts attaching the clutch release cylinder and remove the clutch release cylinder.
8. Disconnect the connector of the back-up lamp switch near the clutch release cylinder.
9. Remove the one upper bolt securing the starting motor, then remove the three upper bolts and nuts securing the transmission to the engine rear end.
10. Raise the vehicle and support with stands.
11. Drain the lubricant from the transmission.
12. Remove the bolts and screws attaching the heat insulators to the exhaust front pipe, and remove the heat insulators.
13. Disconnect the exhaust front pipe flange from the exhaust manifold by removing the bolts and nuts. Remove the bolts and nuts attaching the front pipe flange to the main silencer, and remove the exhaust front pipe.
14. Remove the bolts attaching the heat insulator to the underbody and remove the heat insulator.
15. Disconnect the propeller shaft at the rear axle companion flange.
16. Remove the propeller shaft center bearing support attaching nuts, washers and lock washers.
17. Lower the propeller shaft and withdraw it from the transmission.
18. Disconnect the speedometer cable from the extension housing.
19. Remove the lower bolt securing the starting motor to the clutch housing and remove the starting motor. Disconnect the wire at the starting motor.
20. Place a jack under the front side of the transmission and support the transmission with the jack.
21. Remove the bolts securing the transmission support to the body.
22. Remove the two lower bolts securing the transmission to the engine rear end.
23. Slide the transmission rearward until the main drive shaft clears the clutch disc and carefully withdraw it downward from the vehicle.

7A–B. TRANSMISSION DISASSEMBLY

The procedures for disassembling the transmission after removing the transmission from the vehicle are as follows:

1. Pull the release fork outward until the spring clip of the fork releases from the ball pivot. Remove the fork and release bearing from the clutch housing.

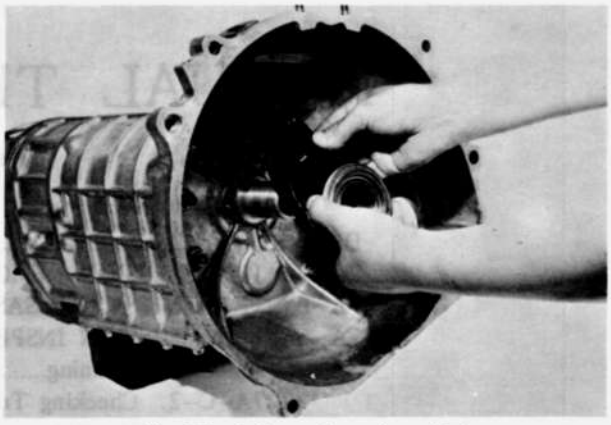

Fig. 7A–1 Removing release fork

2. Remove the nuts attaching the clutch housing to the transmission case and remove the clutch housing, shim and gasket.

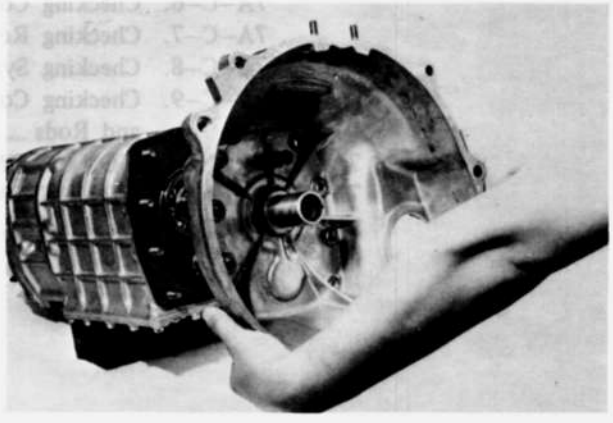

Fig. 7A–2 Removing clutch housing

3. Remove the bolts attaching the gearshift lever retainer to the extension housing and remove the retainer and gasket.

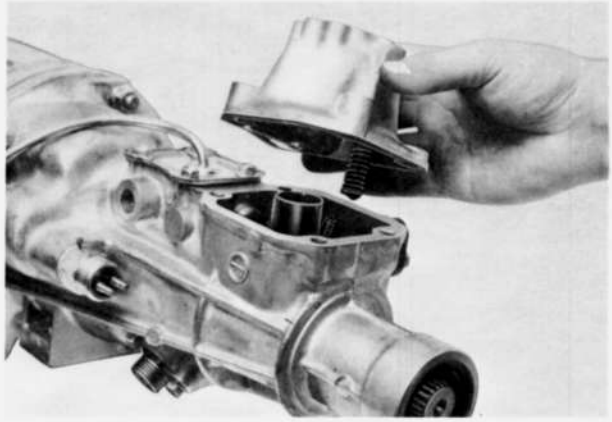

Fig. 7A–3 Removing shift lever retainer

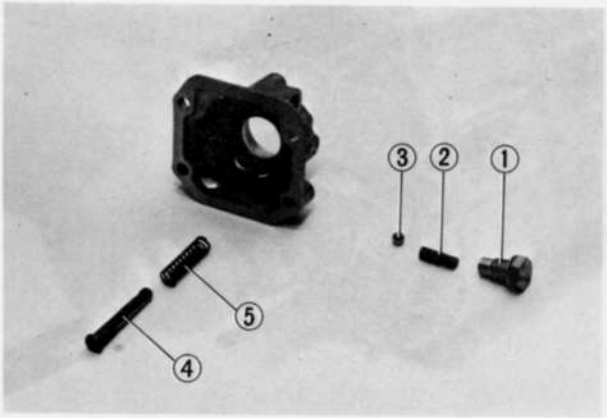

Fig. 7A–4 Shift lever retainer
1. Spring cap bolt
2. Spring
3. Steel ball
4. Select lock spindle
5. Spring

4. Remove the spring cap bolt and remove the spring and steel ball, select lock spindle and spring from the gearshift lever retainer.
5. Remove the nuts that attach the extension housing to the transmission case. Slide the extension housing off the main shaft, with the control lever end laid down to the left as far as it will go.

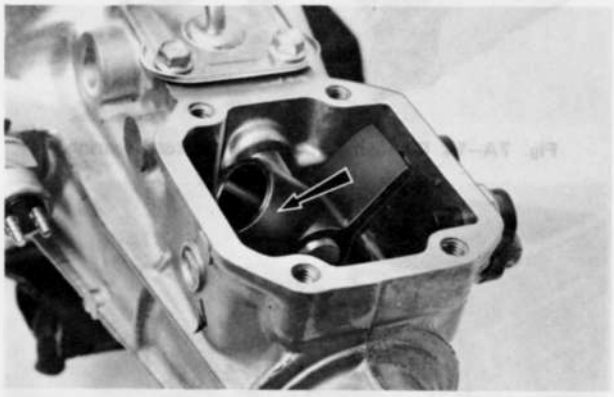

Fig. 7A–5 Position of control lever end

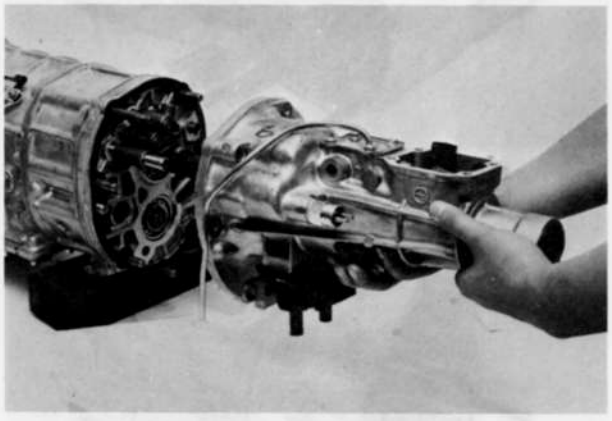

Fig. 7A–6 Removing extension housing

6. Remove the bolt attaching the control lever end to the control rod and remove the control lever end, key and control rod.
7. Remove the lock plate and remove the speedometer driven gear assembly from the extension housing.

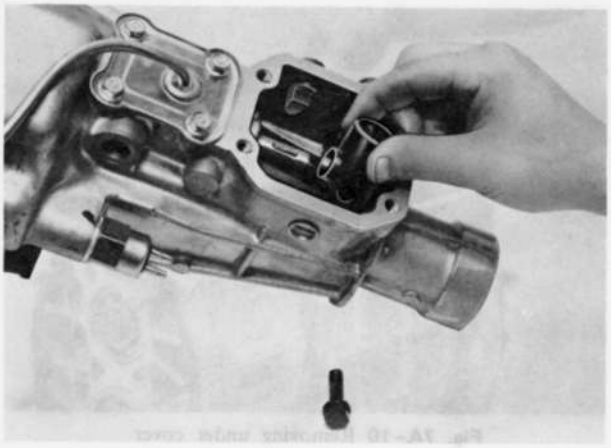

Fig. 7A–7 Removing control rod
1. Control lever end
2. Control rod

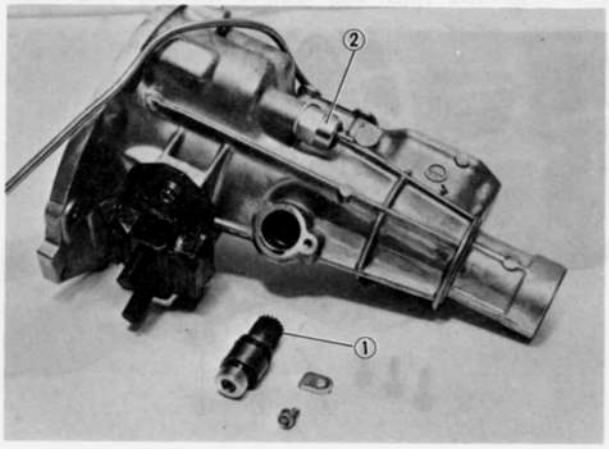

Fig. 7A–8 Removing speedometer driven gear
1. Speedometer driven gear
2. Reverse lamp switch

8. Remove the reverse lamp switch from the extension housing.
9. Remove the snap ring that secures the speedometer drive gear to the main shaft. Slide the speedometer drive gear off the main shaft and remove the steel ball.



Fig. 7A–9 Removing speedometer drive gear

10. Evenly loosen the bolts attaching the under cover to the transmission case and remove the under cover and gasket.

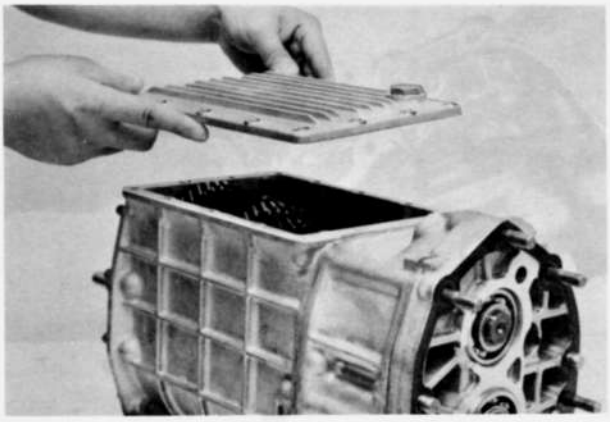

Fig. 7A–10 Removing under cover

11. Remove the bolts attaching the shift rod ends to their respective rods, and remove the shift rod ends.

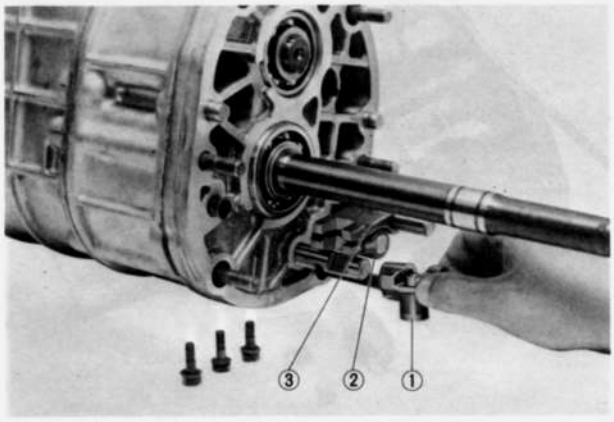

Fig. 7A–11 Removing shift rod end
1. Rod end (Rev. & 5th) 3. Rod end (1st & 2nd)
2. Rod end (3rd & 4th)

12. Remove the rear bearing housing from the intermediate housing.

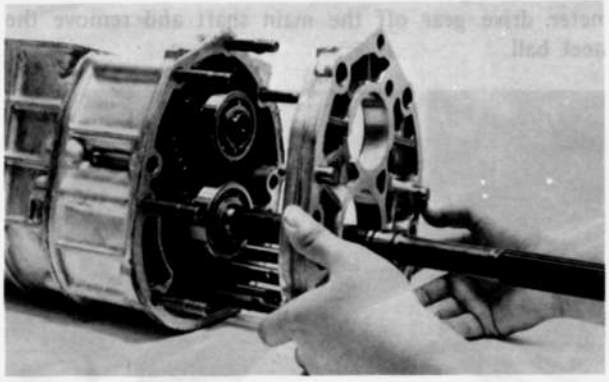

Fig. 7A–12 Removing rear bearing housing

13. Remove the snap ring that secures the main shaft rear bearing to the main shaft. Remove the bearing, thrust washer and bearing inner race with the **puller** (49 0839 425C), as shown in Fig. 7A–13.
14. Remove the snap ring from the rear of the counter shaft. Using the **puller** (49 0839 425C), remove the washer and counter shaft rear bearing. Remove the counter fifth gear.

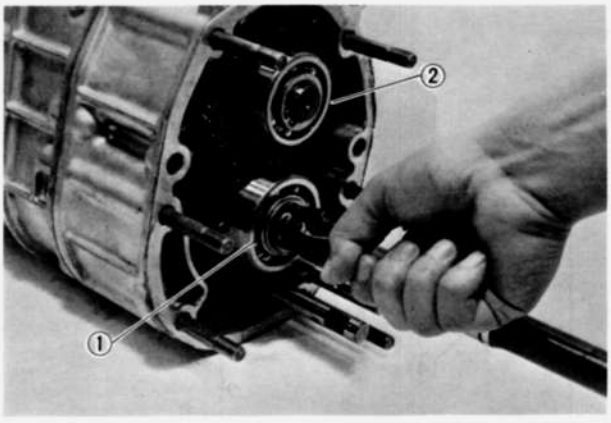

Fig. 7A–13 Removing snap ring
1. Main shaft rear bearing 2. Counter shaft rear bearing



Fig. 7A–14 Removing counter shaft rear bearing

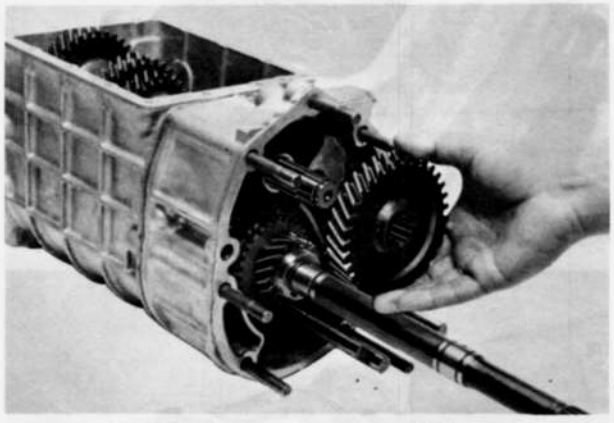

Fig. 7A–15 Removing counter fifth gear

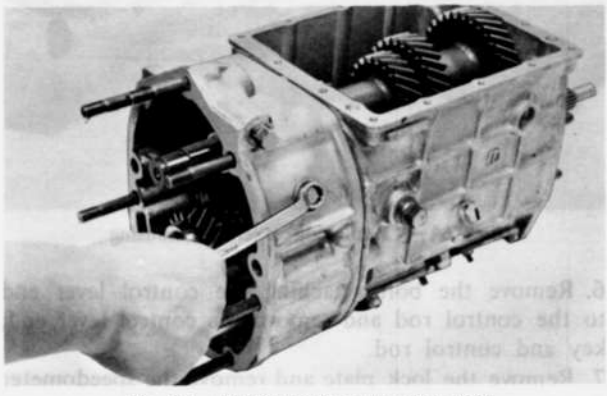

Fig. 7A–16 Removing attaching bolt

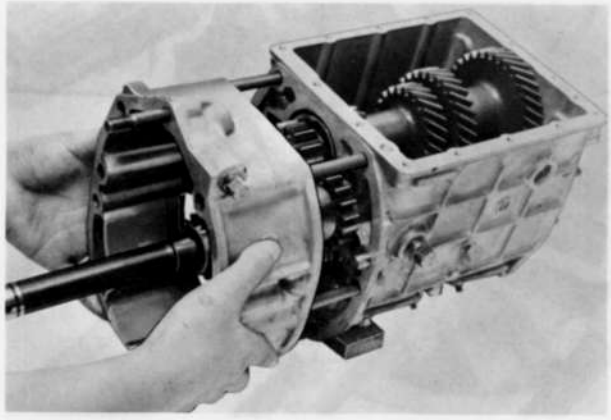

Fig. 7A–17 Removing intermediate housing

15. Remove the intermediate housing attaching bolt shown in Fig. 7A–16, and remove the intermediate housing from the transmission case.
16. Remove the three spring cap bolts and remove the springs and shift locking balls.
17. Remove the nuts attaching the two blind covers to the transmission case and remove the blind covers and gaskets.

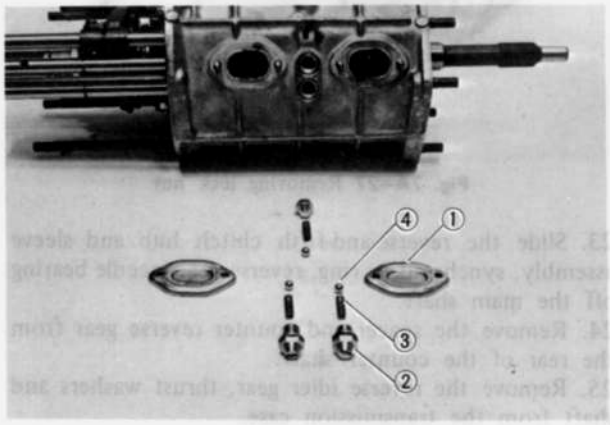

Fig. 7A–18 Removing shift locking ball
1. Blind cover
2. Spring cap bolt
3. Spring
4. Locking ball

18. Remove the bolt attaching the reverse-and-fifth shift fork to the rod. Remove the reverse-and-fifth shift rod, fork and interlock pin.

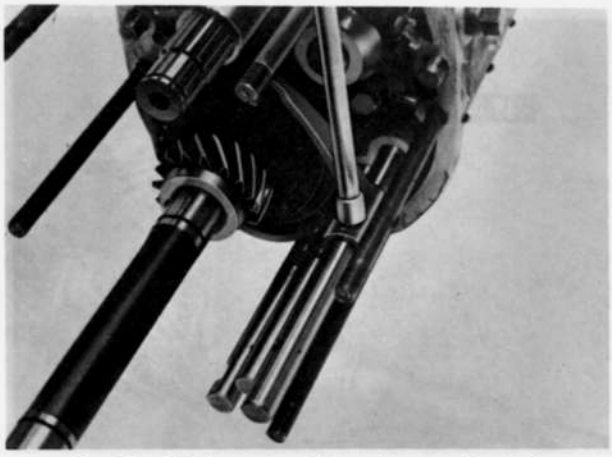

Fig. 7A–19 Removing shift fork attaching bolt

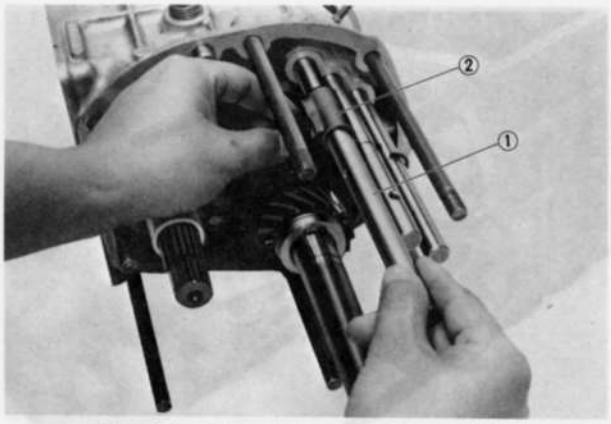

Fig. 7A–20 Removing shift fork and rod
1. Shift rod
2. Shift fork

19. Remove the bolts attaching the first-and-second shift fork and third-and-fourth shift fork to their respective rods using the socket wrench through the openings of the case. Remove the shift rods and interlock pin.

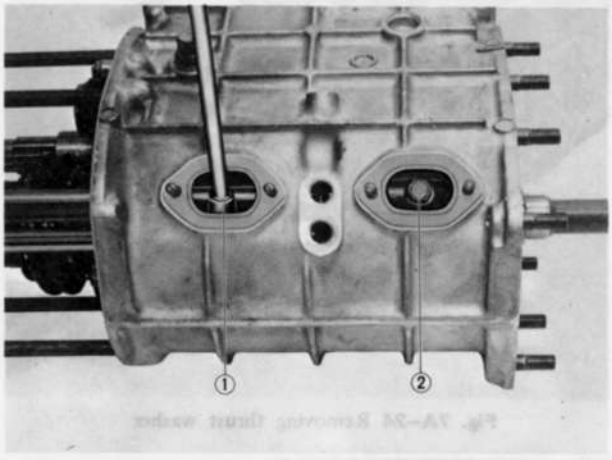

Fig. 7A–21 Removing shift fork attaching bolt
1. For 1st & 2nd
2. For 3rd & 4th

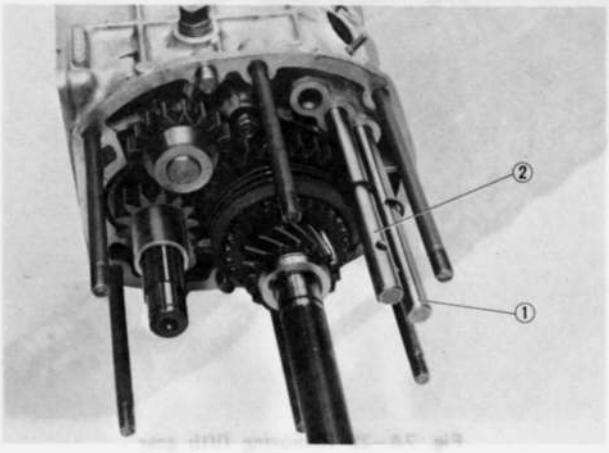

Fig. 7A–22 Removing shift rod
1. For 1st & 2nd
2. For 3rd & 4th

20. Remove the snap ring that secures the fifth gear to the main shaft. Slide the thrust washer, fifth gear, synchronizer ring off the main shaft, and remove the steel ball and the needle bearing.

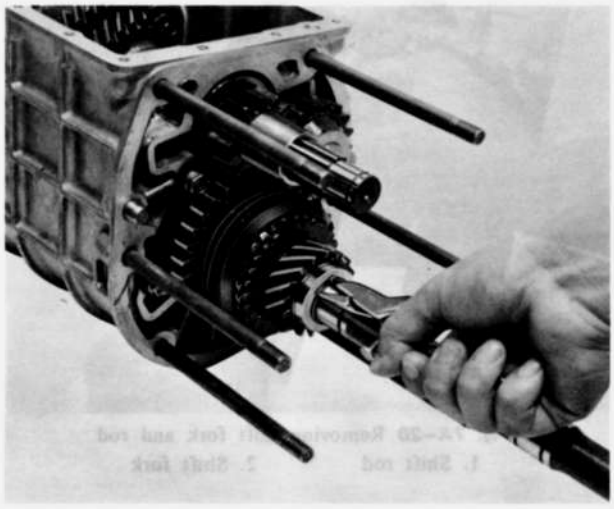

Fig. 7A–23 Removing snap ring

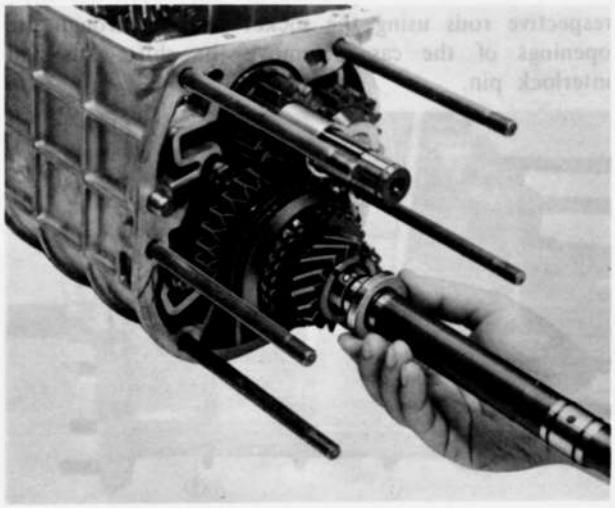

Fig. 7A–24 Removing thrust washer

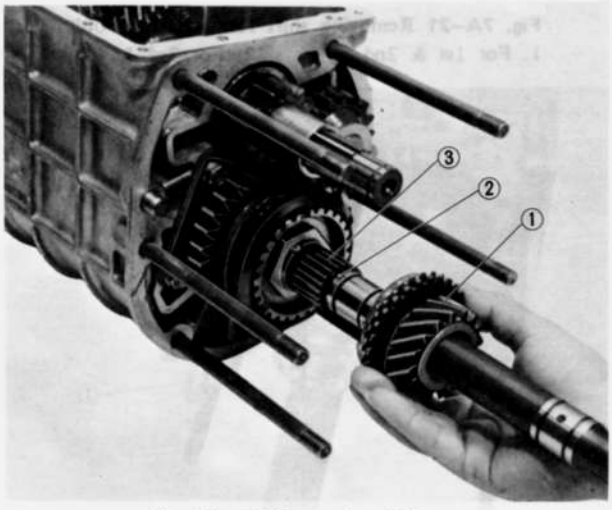

Fig. 7A–25 Removing fifth gear
1. Fifth gear 2. Ball 3. Bearing

21. Shift into the second gear and the reverse gear to lock the rotation of the main shaft.
22. Straighten the tab of the nut. Remove the lock nut with the **wrench** (49 1243 465), as shown in Fig. 7A–27. Discard the lock nut.

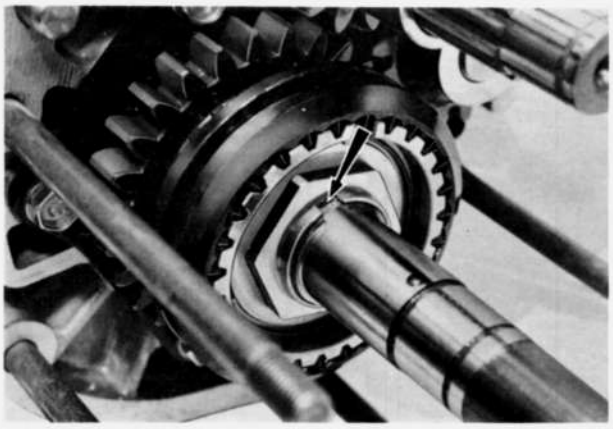

Fig. 7A–26 Main shaft lock nut tab

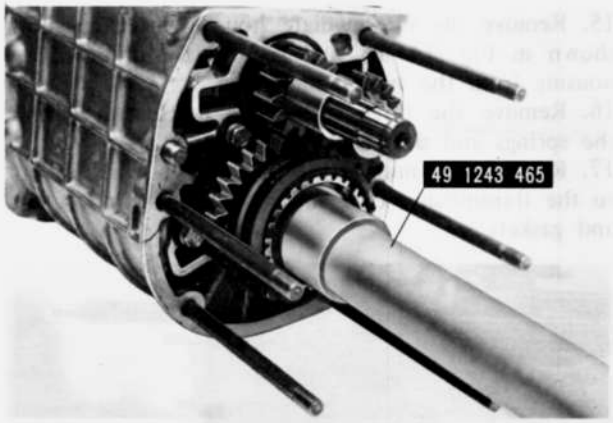

Fig. 7A–27 Removing lock nut

23. Slide the reverse-and-fifth clutch hub and sleeve assembly, synchronizer ring, reverse gear, needle bearing off the main shaft.
24. Remove the spacer and counter reverse gear from the rear of the counter shaft.
25. Remove the reverse idler gear, thrust washers and shaft from the transmission case.
26. Remove the bolts attaching the bearing cover plate to the transmission case and remove the bearing cover plate.
27. Remove the snap ring from the front end of the counter shaft.
28. Install the **holder** (49 0839 445) between the fourth synchronizer ring and thesychromesh gear

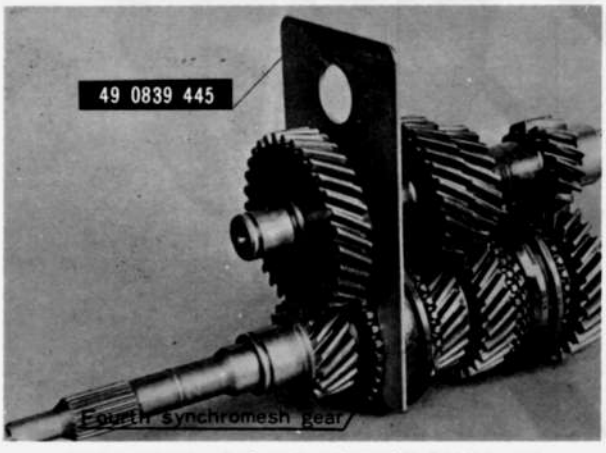

Fig. 7A–28 Synchronizer ring holder

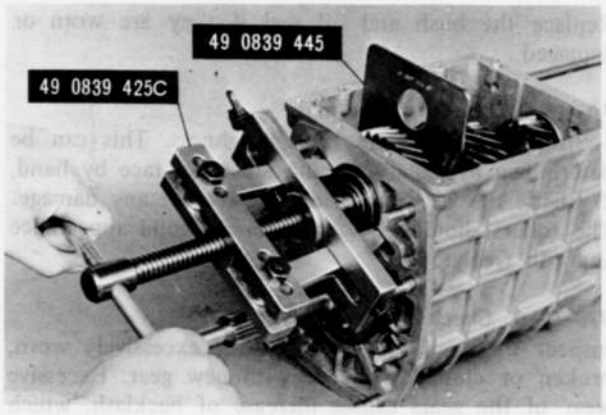

Fig. 7A–29 Removing counter shaft front bearing

on the main drive shaft, as shown in Fig. 7A–28.

29. Using the **puller** (49 0839 425C) as shown in Fig. 7A–29, remove the counter shaft front bearing.

30. Remove the adjusting shim from the counter shaft front bearing bore of the transmission case.

31. Remove the counter shaft center bearing outer race with the **puller** (49 0839 425C).

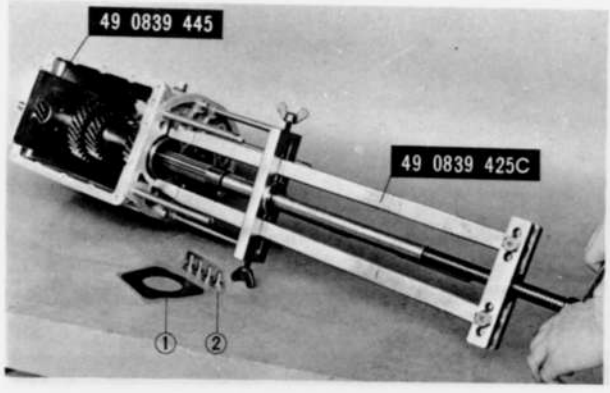

Fig. 7A–30 Removing counter shaft center bearing
1. Bearing cover 2. Bolt

32. Using the **puller** (49 0839 425C) and **attachment** (49 0862 426) as shown in Fig. 7A–31, remove the main shaft front bearing, thrust washer and bearing inner race.

33. Remove the adjusting shim from the main shaft front bearing bore of the transmission case.

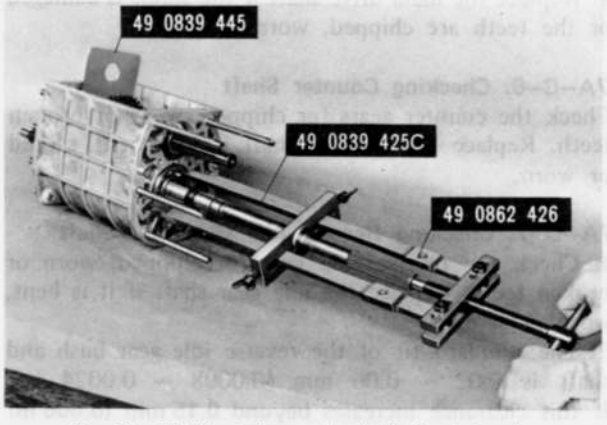

Fig. 7A–31 Removing main shaft front bearing

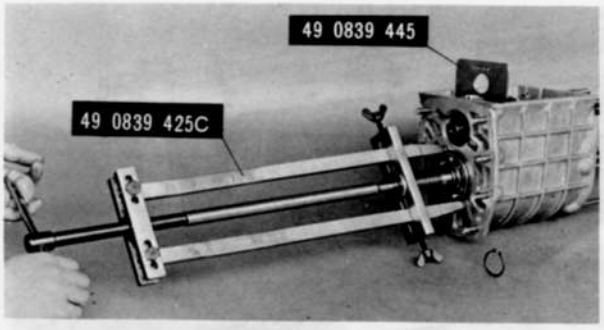

Fig. 7A–32 Removing main drive shaft bearing

34. Remove the snap ring that secures the bearing to the main drive shaft. Remove the main drive shaft bearing with the **puller** (49 0839 425C).

35. Take out the counter shaft from the transmission case.

36. Remove the counter shaft center bearing inner race with the **puller** (49 0710 520).

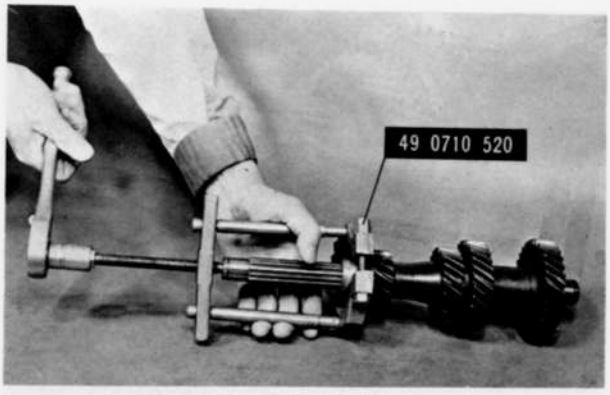

Fig. 7A–33 Removing bearing inner race

37. Separate the main drive shaft from the main shaft and remove the main drive shaft from the case. Remove the synchronizer ring and needle bearing from the main drive shaft.

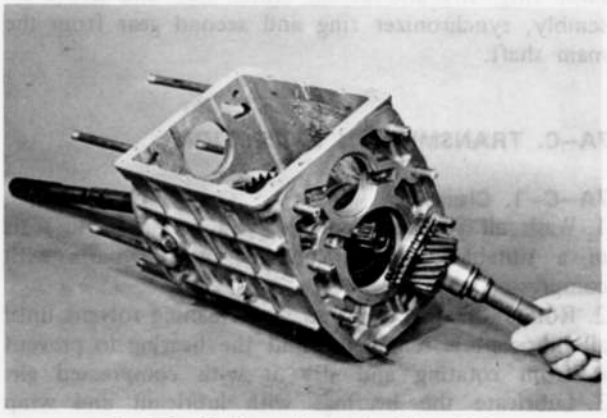

Fig. 7A–34 Removing main drive shaft

38. Take out the main shaft and gears assembly from the case, as shown in Fig. 7A–35.

39. Remove the first-and-second shift fork and third-and-fourth shift fork from the case.

40. Using the snap ring pliers, remove the snap ring from the front of the main shaft.

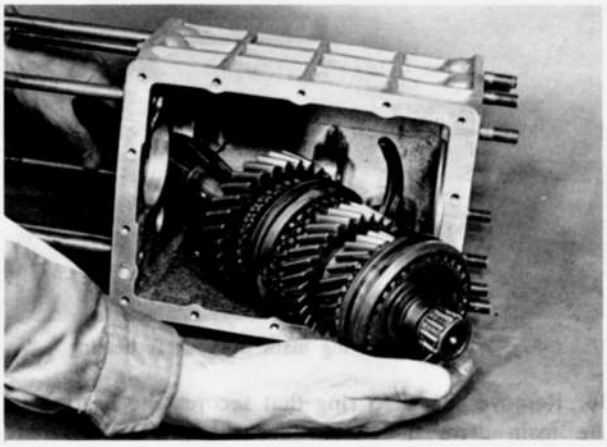

Fig. 7A–35 Removing main shaft and gear assembly

41. Slide the third-and-fourth clutch hub and sleeve assembly, synchronizer ring, third gear off the main shaft.

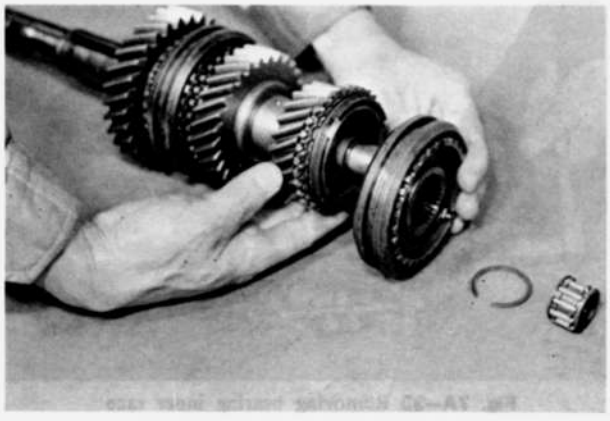

Fig. 7A–36 Removing third gear

42. Remove the thrust washer, first gear and needle bearing from the rear of the main shaft.
43. Press out the needle bearing inner race, synchronizer ring, first-and-second clutch hub and sleeve assembly, synchronizer ring and second gear from the main shaft.

7A–C. TRANSMISSION INSPECTION

7A–C–1. Cleaning

1. Wash all parts, except the ball bearings and seals in a suitable cleaning solvent. Dry all parts with compressed air.
2. Rotate the ball bearings in a cleaning solvent until all lubricant is removed. Hold the bearing to prevent it from rotating and dry it with compressed air.
3. Lubricate the bearings with lubricant and wrap them in a clean, lint-free cloth or paper until ready for use.

7A–C–2. Checking Transmission Case and Housings

1. Inspect the transmission case and extension housing for cracks and machined mating surfaces for burrs, nicks or any damages.
2. Check the bush and oil seal in the extension housing. Replace the bush and oil seal if they are worn or damaged.

7A–C–3. Checking Bearings

1. Inspect each bearing for roughness. This can be determined by slowly turning the outer race by hand.
2. Check the needle bearing for wear or any damage. The rollers should have a uniformly good appearance and roll freely.

7A–C–4. Checking Gears

Inspect the teeth of each gear. If excessively worn, broken or chipped, replace with new gear. Excessive wear of the gears causes increase of backlash, which results in producing noises or may cause the gear to work off while running.

7A–C–5. Checking Main Shaft and Main Drive Shaft

1. Inspect the main shaft for run-out by applying a dial indicator to several places along the shaft. The reading of the indicator for run-out should be **less than 0.03 mm (0.0012 in)**. If it is not within the specification, correct with a press or replace with a new one.

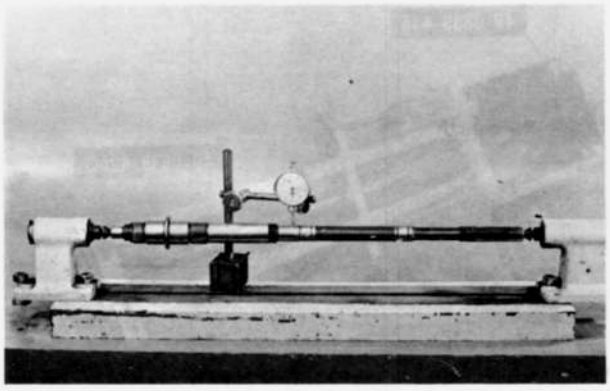

Fig. 7A–37 Checking main shaft run-out

2. Replace the main shaft if there is any evidence of wear or any of the spline is damaged.
3. Check the fit of the main shaft and gear bores. The standard fit is 0.03 ~ 0.08 mm (0.0012 ~ 0.0031 in). If this clearance increases **beyond 0.15 mm (0.006 in)** due to wear, replace the gear.
4. Replace the main drive shaft if the spline is damaged or the teeth are chipped, worn or broken.

7A–C–6. Checking Counter Shaft

Check the counter gears for chipped, worn or broken teeth. Replace the counter shaft if it is bent, scored or worn.

7A–C–7. Checking Reverse Idle Gear and Shaft

1. Check the reverse idle gear for chipped, worn or broken teeth. Replace the idle gear shaft if it is bent, worn or scored.
2. The standard fit of the reverse idle gear bush and shaft is 0.02 ~ 0.06 mm (0.0008 ~ 0.0024 in). If this clearance increases **beyond 0.15 mm (0.006 in)** due to wear, replace the reverse idle gear.

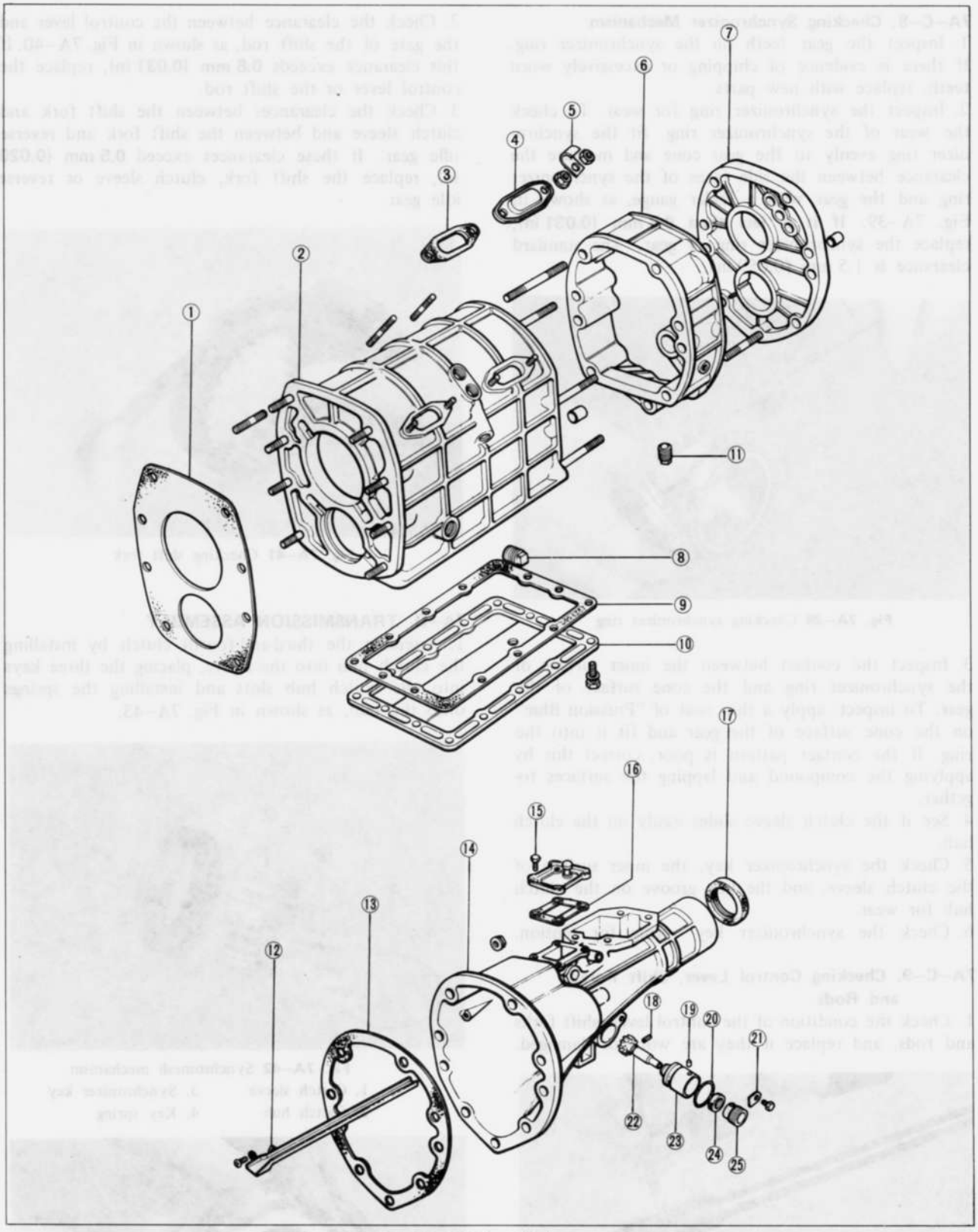

Fig. 7A–38 Transmission case

1. Gasket
2. Transmission case
3. Gasket
4. Blind cover
5. Clip
6. Intermediate housing
7. Rear bearing housing
8. Oil plug
9. Gasket
10. Under cover
11. Oil plug
12. Oil pass
13. Gasket
14. Extension housing
15. Blind cover
16. Gasket
17. Oil seal
18. Pin
19. Pin
20. O ring
21. Lock plate
22. Speedometer driven gear
23. Sleeve
24. Oil seal
25. Cable joint

7A–C–8. Checking Synchronizer Mechanism

1. Inspect the gear teeth on the synchronizer ring. If there is evidence of chipping or excessively worn teeth, replace with new parts.
2. Inspect the synchronizer ring for wear. To check the wear of the synchronizer ring, fit the synchronizer ring evenly to the gear cone and measure the clearance between the side faces of the synchronizer ring and the gear with a feeler gauge, as shown in Fig. 7A–39. If it is **less than 0.8 mm (0.031 in),** replace the synchronizer ring or gear. The standard clearance is 1.5 mm (0.059 in).



Fig. 7A–39 Checking synchronizer ring

3. Inspect the contact between the inner surface of the synchronizer ring and the cone surface of the gear. To inspect, apply a thin coat of "Prussion Blue" on the cone surface of the gear and fit it into the ring. If the contact pattern is poor, correct this by applying the compound and lapping the surfaces together.
4. See if the clutch sleeve slides easily on the clutch hub.
5. Check the synchronizer key, the inner surface of the clutch sleeve, and the key groove on the clutch hub for wear.
6. Check the synchronizer key spring for tension.

7A–C–9. Checking Control Lever, Shift Forks and Rods

1. Check the condition of the control lever, shift forks and rods, and replace if they are worn or damaged.

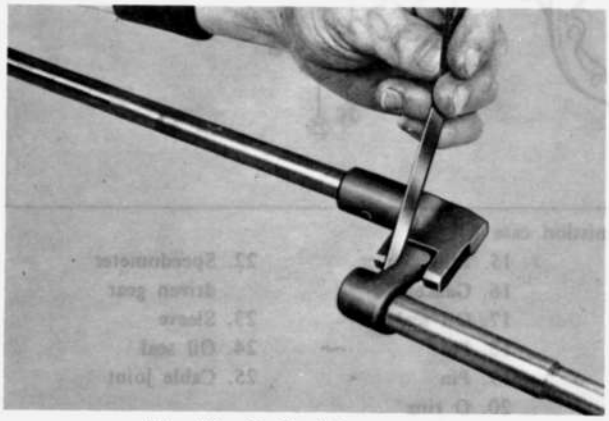

Fig. 7A–40 Checking control lever

2. Check the clearance between the control lever and the gate of the shift rod, as shown in Fig. 7A–40. If this clearance exceeds **0.8 mm (0.031 in),** replace the control lever or the shift rod.
3. Check the clearances between the shift fork and clutch sleeve and between the shift fork and reverse idle gear. If these clearances exceed **0.5 mm (0.020 in),** replace the shift fork, clutch sleeve or reverse idle gear.

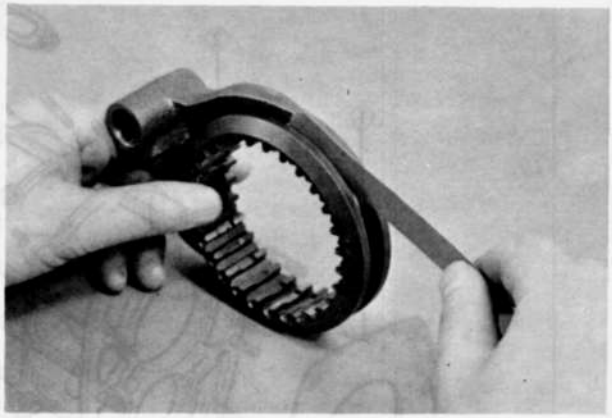

Fig. 7A–41 Checking shift fork

7A–D. TRANSMISSION ASSEMBLY

1. Assemble the third-and-fourth clutch by installing the clutch hub into the sleeve, placing the three keys into the clutch hub slots and installing the springs onto the hub, as shown in Fig. 7A–43.

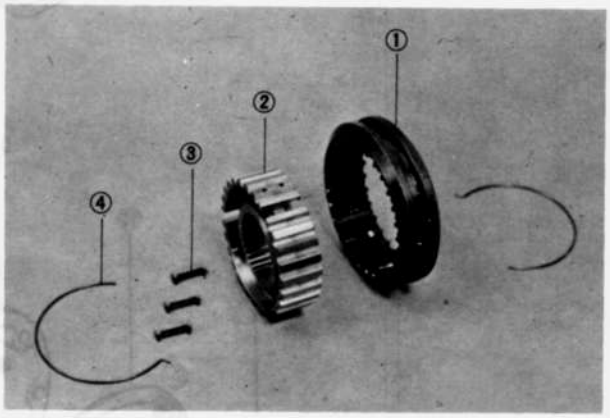

Fig. 7A–42 Synchromesh mechanism
1. Clutch sleeve
2. Clutch hub
3. Synchronizer key
4. Key spring



Fig. 7A–43 Assembling clutch hub

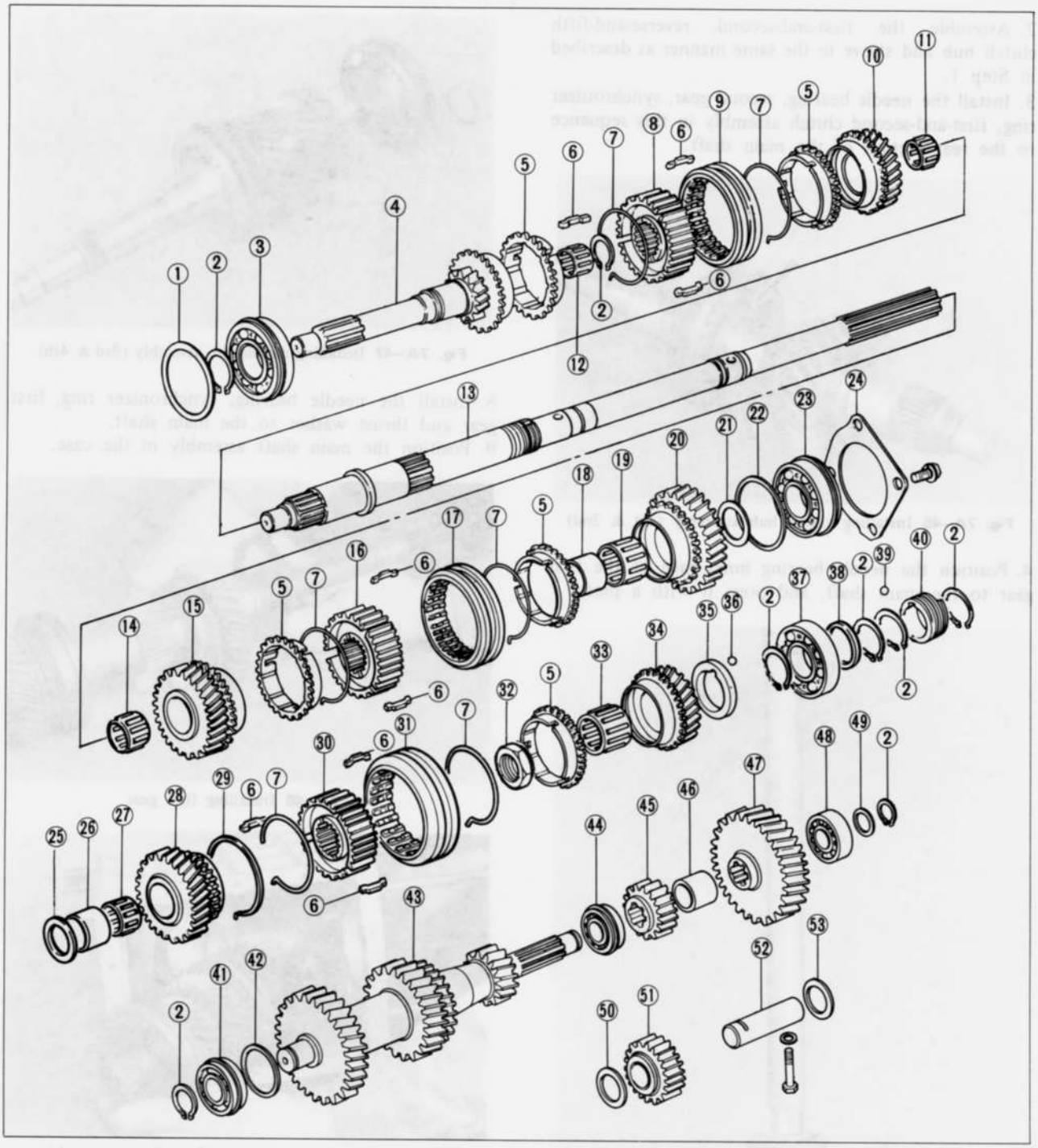

Fig. 7A–44 Transmission gears

1. Shim
2. Snap ring
3. Main drive shaft bearing
4. Main drive shaft gear
5. Synchronizer ring
6. Synchronizer key
7. Synchronizer key spring
8. 3rd-and-4th clutch hub
9. Clutch sleeve
10. 3rd gear
11. Needle bearing
12. Needle bearing
13. Main shaft
14. Needle bearing
15. 2nd gear
16. 1st-and-2nd clutch hub
17. Clutch sleeve
18. Bearing inner race
19. Needle bearing
20. 1st gear
21. Thrust washer
22. Shim
23. Main shaft front bearing
24. Bearing cover
25. Thrust washer
26. Bearing inner race
27. Needle bearing
28. Reverse gear
29. Stop ring
30. Rev.-and-5th clutch hub
31. Clutch sleeve
32. Main shaft lock nut
33. Needle bearing
34. 5th gear
35. Thrust washer
36. Lock ball
37. Main shaft rear bearing
38. Thrust washer
39. Lock ball
40. Speedometer drive gear
41. Counter shaft front bearing
42. Shim
43. Counter shaft
44. Counter shaft center bearing
45. Counter reverse gear
46. Spacer
47. Reverse gear
48. Counter shaft rear bearing
49. Thrust washer
50. Thrust washer
51. Reverse idler gear
52. Idler gear shaft
53. Thrust washer

2. Assemble the first-and-second, reverse-and-fifth clutch hub and sleeve in the same manner as described in Step 1.
3. Install the needle bearing, second gear, synchronizer ring, first-and-second clutch assembly in this sequence to the rear section of the main shaft.

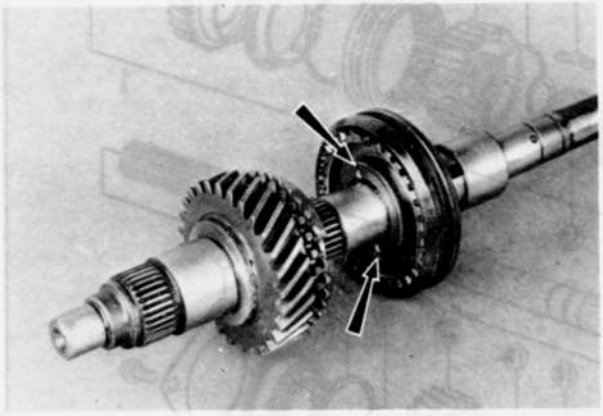

Fig. 7A–45 Installing clutch hub assembly (1st & 2nd)

4. Position the needle bearing inner race of the first gear to the main shaft, and press it with a press.

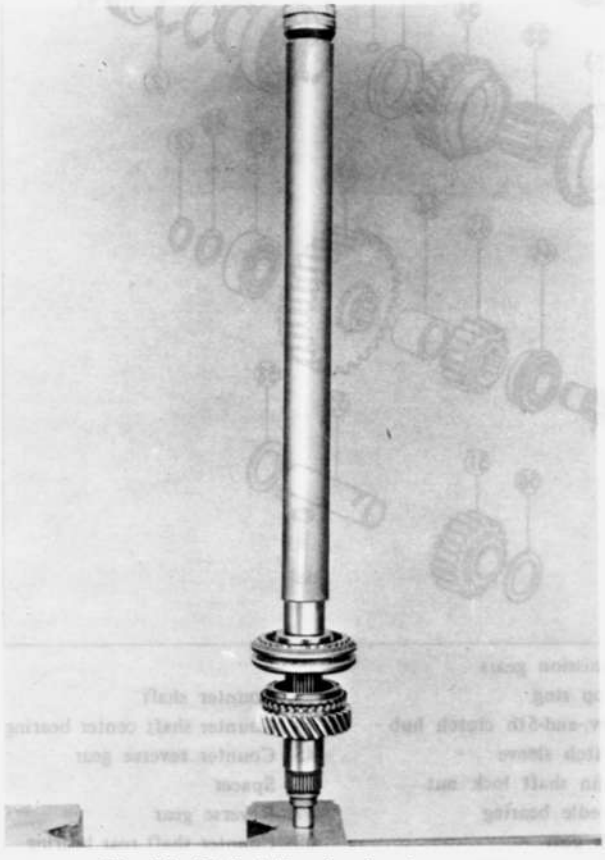

Fig. 7A–46 Installing bearing inner race

5. Install the third gear and synchronizer ring onto the front section of the main shaft.
6. Install the third-and-fourth clutch assembly onto the main shaft.
7. Fit the snap ring on the main shaft.

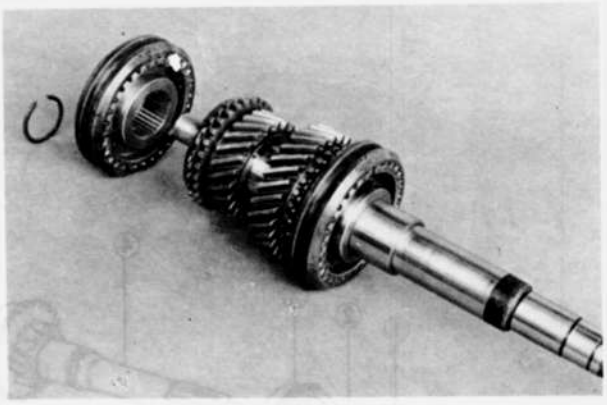

Fig. 7A–47 Installing clutch hub assembly (3rd & 4th)

8. Install the needle bearing, synchronizer ring, first gear and thrust washer to the main shaft.
9. Position the main shaft assembly in the case.

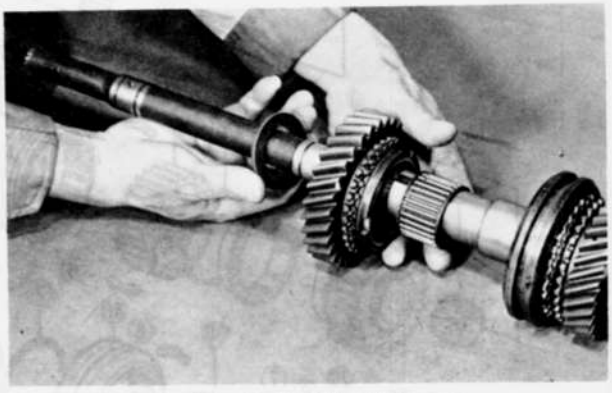

Fig. 7A–48 Installing first gear



Fig. 7A–49 Installing main shaft and gear assembly

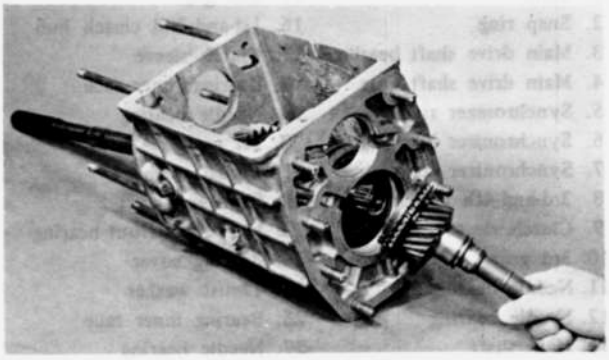

Fig. 7A–50 Installing main drive shaft gear

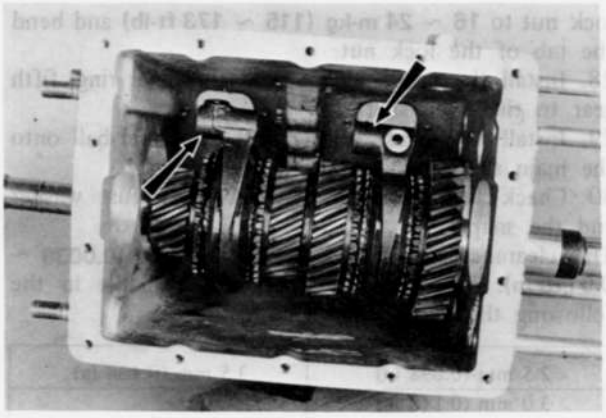

Fig. 7A–51 Installing shift fork

10. Install the needle bearing to the front end of the the main shaft. Place the synchronizer ring on the main drive gear and install them to the front end of the main shaft.
11. Install the first-and-second shift fork and third-and-fourth shift fork to their respective clutch sleeves.
12. Press the counter shaft center bearing inner race to the counter shaft.
Position the counter shaft gear in the case.

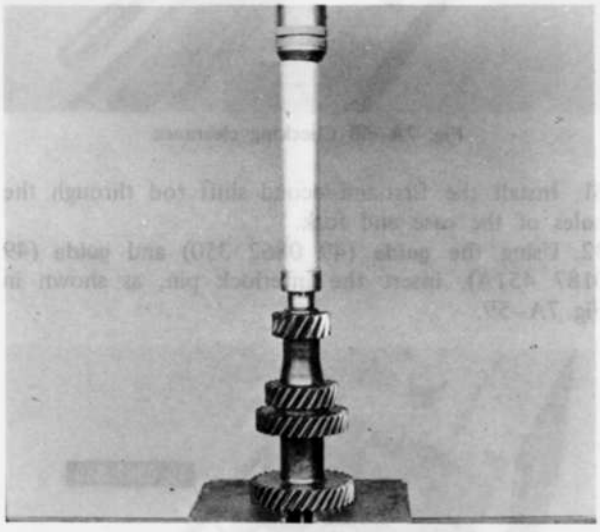

Fig. 7A–52 Installing bearing inner race

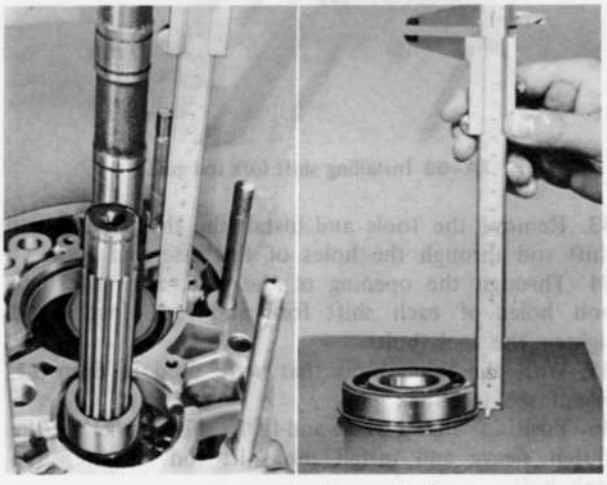

Fig. 7A–53 Checking end play

13. Check the main shaft bearing end play. Measure the depth of the main shaft bearing bore in the transmission case by using a depth gauge. Then, measure the main shaft bearing height. The difference between the two measurements indicates the required thickness of the adjusting shim. The end play should be **less than 0.1 mm (0.0039 in).** The adjusting shims are available in the following thickness:

0.1 mm (0.0039 in)	0.3 mm (0.0118 in)

14. Install the **holder** (49 0839 445) between the fourth synchronizer ring and the synchromesh gear on the main drive shaft.
15. Position the shims and main shaft bearing in the bearing bore, and press the bearing by using a press.

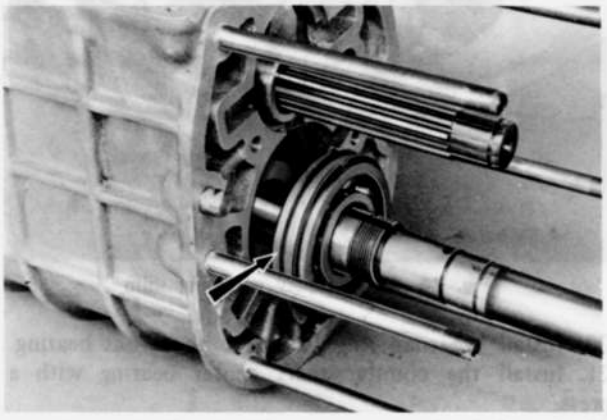

Fig. 7A–54 End play adjusting shim

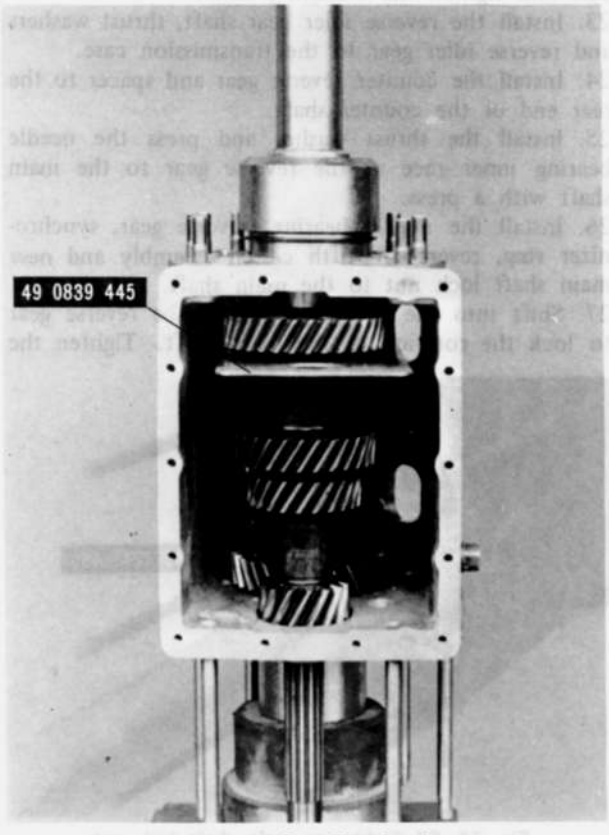

Fig. 7A–55 Installing bearing

16. Position the main drive shaft bearing in the bearing bore, and press it with a press.
17. Install the snap ring to secure the main drive shaft bearing.
18. Check the counter shaft front bearing end play in the same manner for the main shaft bearing end play. The end play should be **less than 0.1 mm (0.0039 in)**. The adjusting shims are available in the following thickness:

0.1 mm (0.0039in)	0.3 mm (0.0118in)

19. Position the shims and counter shaft front bearing to the bearing bore, and press them with a press.

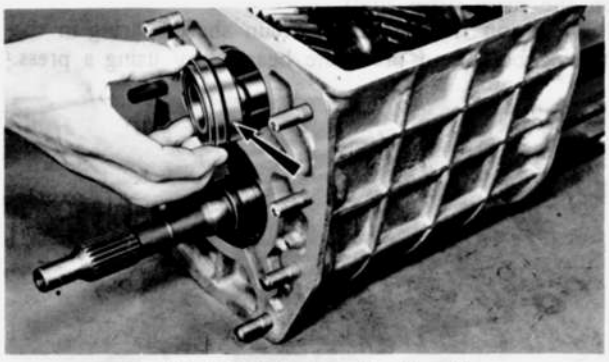

Fig. 7A–56 End play adjusting shim

20. Install the snap ring to secure the front bearing.
21. Install the counter shaft center bearing with a press.
22. Install the bearing cover plate to the transmission case and tighten the attaching bolts.
23. Install the reverse idler gear shaft, thrust washers and reverse idler gear to the transmission case.
24. Install the counter reverse gear and spacer to the rear end of the counter shaft.
25. Install the thrust washer and press the needle bearing inner race of the reverse gear to the main shaft with a press.
26. Install the needle bearing, reverse gear, synchronizer ring, reverse-and-fifth clutch assembly and **new** main shaft lock nut to the main shaft.
27. Shift into the second gear and the reverse gear to lock the rotation of the main shaft. Tighten the lock nut to **16 ~ 24 m-kg (115 ~ 173 ft-lb)** and bend the tab of the lock nut.
28. Install the needle bearing, synchronizer ring, fifth gear to the main shaft.
29. Install the thrust washer with the steel ball onto the main shaft, and install the snap ring.
30. Check the clearance between the thrust washer and the snap ring.
The clearance should be **0.1 ~ 0.3 mm (0.0039 ~ 0.0118 in)**. The thrust washers are available in the following thickness:

2.5 mm (0.098 in)	3.5 mm (0.138 in)
3.0 mm (0.118 in)	

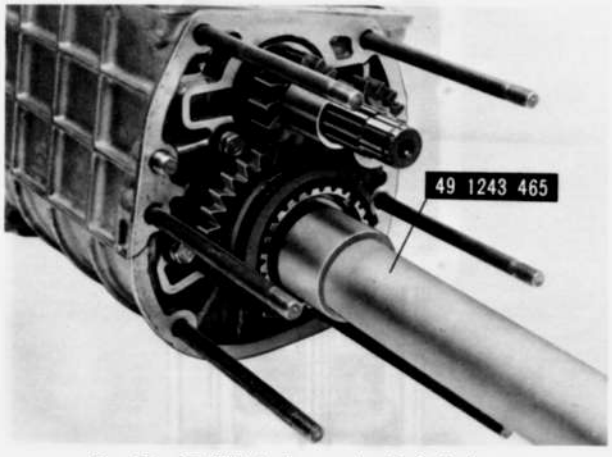

Fig. 7A–57 Tightening main shaft lock nut

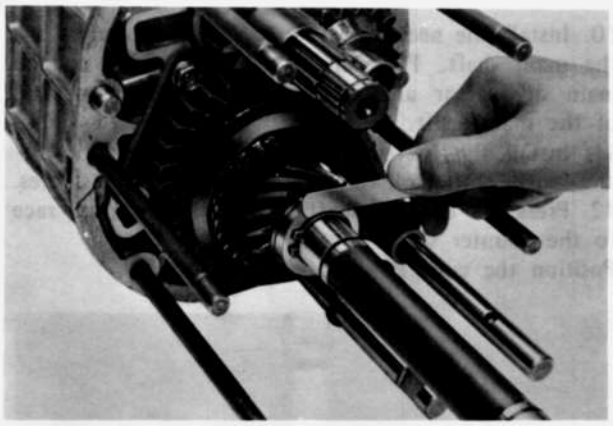

Fig. 7A–58 Checking clearance

31. Install the first-and-second shift rod through the holes of the case and fork.
32. Using the **guide** (49 0862 350) and **guide** (49 0187 451A), insert the interlock pin, as shown in Fig. 7A–59.

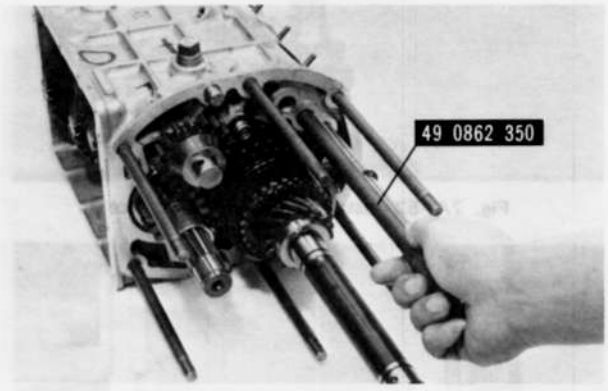

Fig. 7A–59 Installing shift fork rod guide

33. Remove the tools and install the third-and-fourth shift rod through the holes of the case and fork.
34. Through the opening of the case, align the lock bolt holes of each shift fork and rod. Install and tighten the lock bolts.
35. With the same tools that were used in Step 32, install the interlock pin.
36. Position the reverse-and-fifth shift fork to the clutch sleeve and install the shift rod. Tighten the lock bolt.

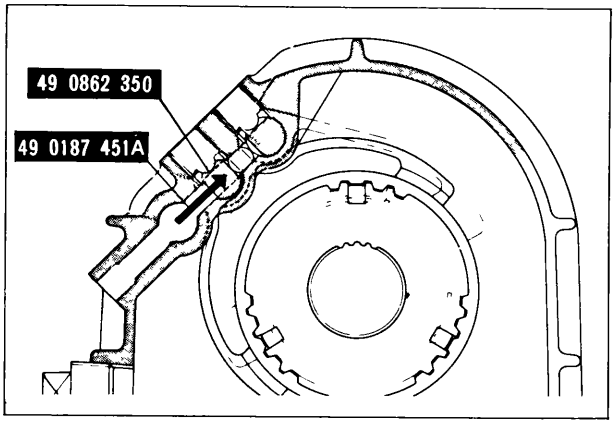

Fig. 7A–60 Installing interlock pin (1)

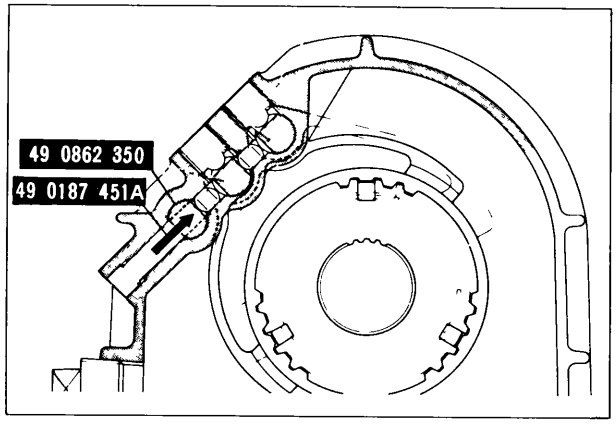

Fig. 7A–61 Installing interlock pin (2)

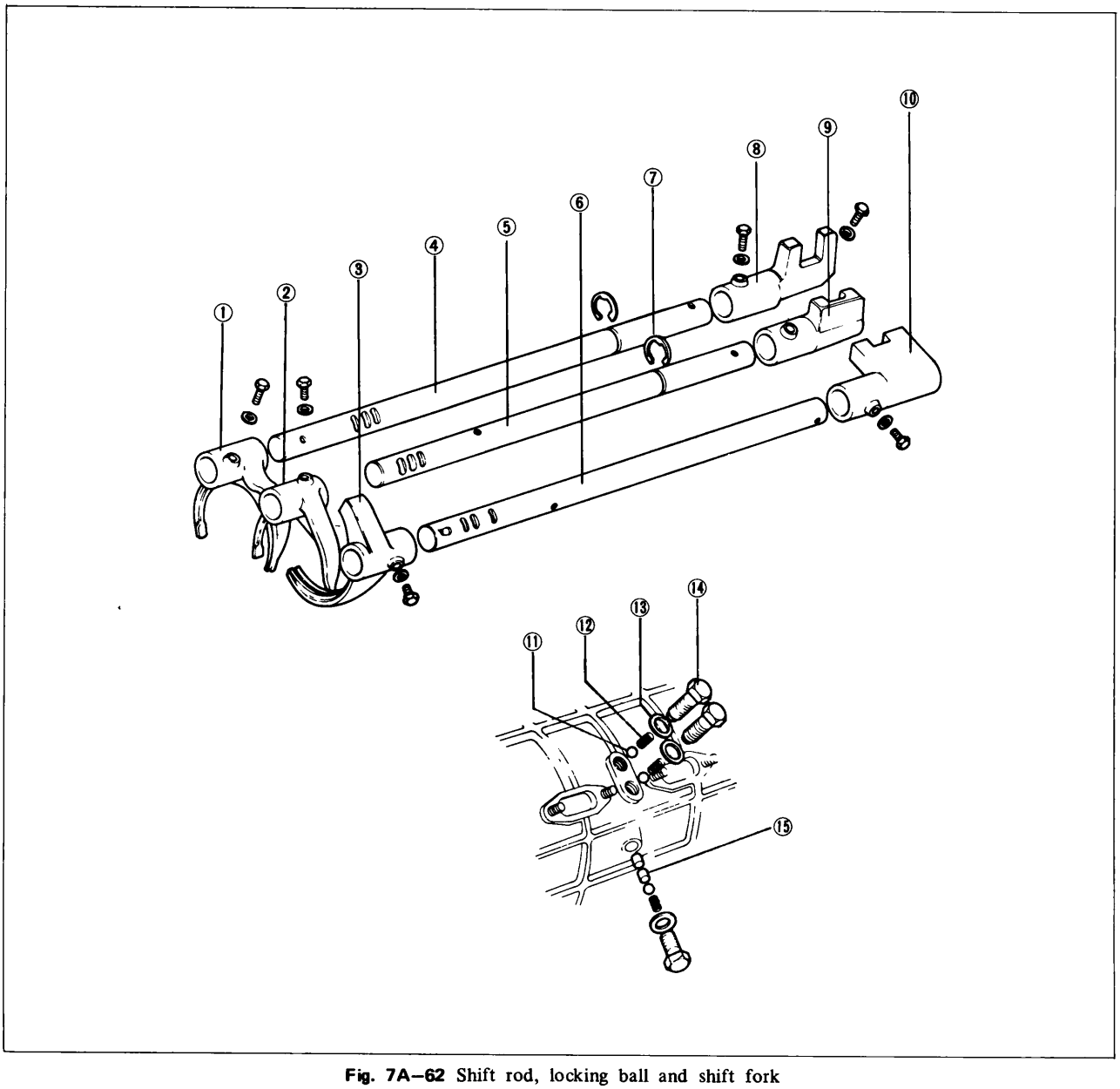

Fig. 7A–62 Shift rod, locking ball and shift fork

1. Shift fork
2. Shift fork
3. Shift fork
4. 3rd-and-4th shift rod
5. 1st-and-2nd shift rod
6. Rev.-and-5th shift rod
7. Stop ring
8. Shift rod end
9. Shift rod end
10. Shift rod end
11. Detent ball
12. Detent spring
13. Washer
14. Spring cap bolt
15. Interlock pin

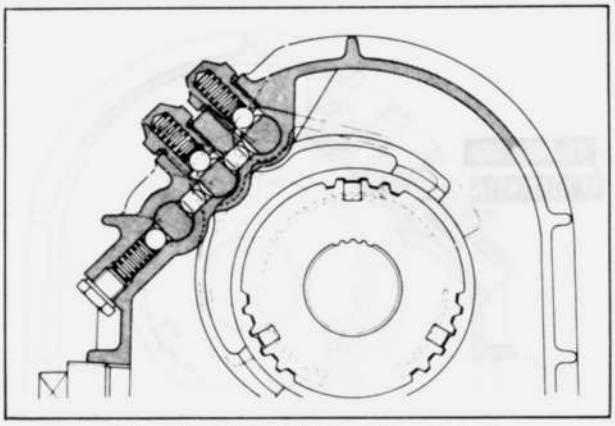

Fig. 7A–63 Installing spring cap bolt

37. Position the three shift locking balls and springs into their respective positions and install the spring cap bolts.
38. Place the third-and-fourth clutch sleeve in the third gear.
39. Check the clearance between the synchronizer key and the exposed edge of the synchronizer ring with a feeler gauge. This measurement should be **0.66 ~ 2.0 mm (0.026 ~ 0.079 in).** If the measurement is greater than 2.0 mm (0.079 in), the synchronizer key could pop out of position.
If the measurement exceeds **2.0 mm (0.079 in),** exchange the thrust washer (selective fit). The thrust washers are available as in the following table.

2.5 mm (0.098 in)	3.5 mm (0.138 in)
3.0 mm (0.118 in)	

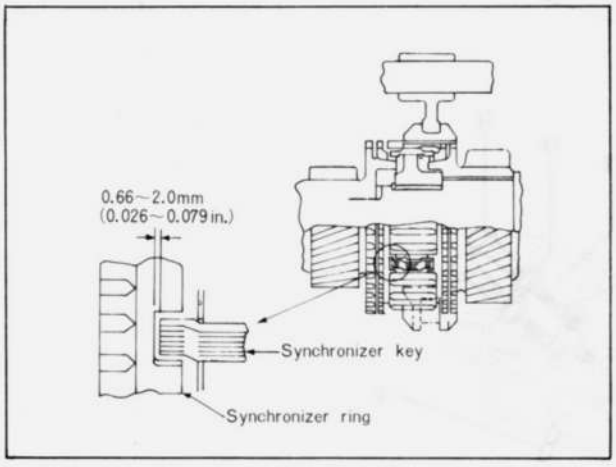

Fig. 7A–64 Checking clearance

40. Install the two blind covers and gaskets to the case and tighten the attaching nuts.
41. Place the gasket on the case and install the under cover. Tighten the bolts to **0.6 ~ 0.9 m-kg (4 ~ 7 ft-lb).**
42. Apply a thin coat of sealing agent on the contacting surface of the intermediate housing.
43. Install the intermedaite housing to the transmission case and align the lock bolt holes of the housing and reverse idler gear shaft.
Install and tighten the lock bolt.

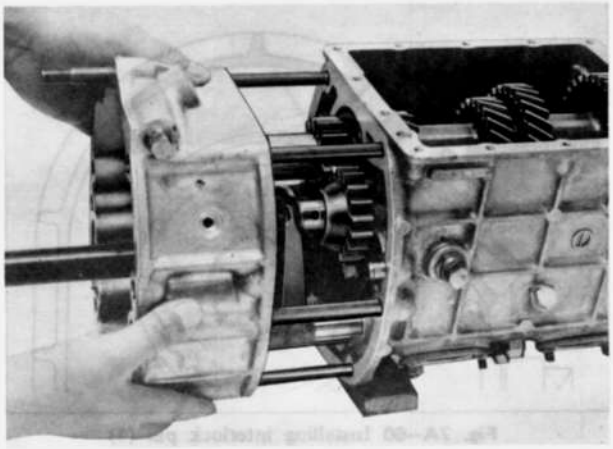

Fig. 7A–65 Installing intermediate housing

44. Position the counter fifth gear and bearing to the rear end of the counter shaft, and press them with a press.
45. Install the thrust washer and secure the counter shaft rear bearing with the snap ring.
46. Check the clearance between the thrust washer and the snap ring.
The clearance should be less than **0.1 mm (0.0039 in).** The thrust washers are available in the following thickness:

2.5 mm (0.098 in)	3.5 mm (0.138 in)
3.0 mm (0.118 in)	

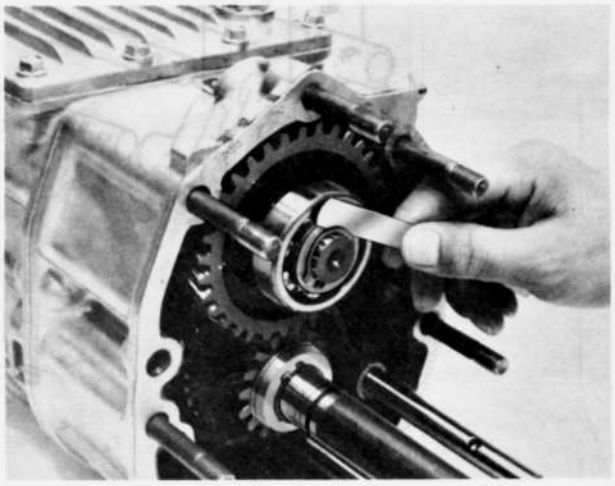

Fig. 7A–66 Checking clearance

47. Position the main shaft rear bearing to the main shaft, and press it with a press.
48. Install the thrust washer and secure the bearing with the snap ring.
49. Check the clearance between the thrust washer and the snap ring.
The clearance should be **less than 0.15 mm (0.0059 in),** The thrust washers are available in the following thickness:

2.5 mm (0.098 in)	3.5 mm (0.138 in)
3.0 mm (0.118 in)	

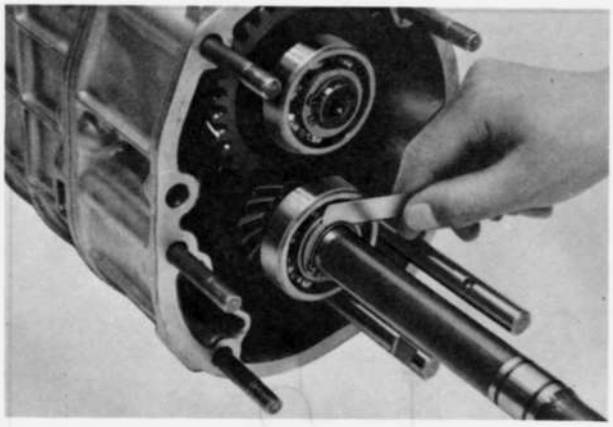

Fig. 7A–67 Checking clearance

50. Apply a thin coat of sealing agent on both contact surfaces of the rear bearing housing.
51. Install the bearing housing to the intermediate housing.

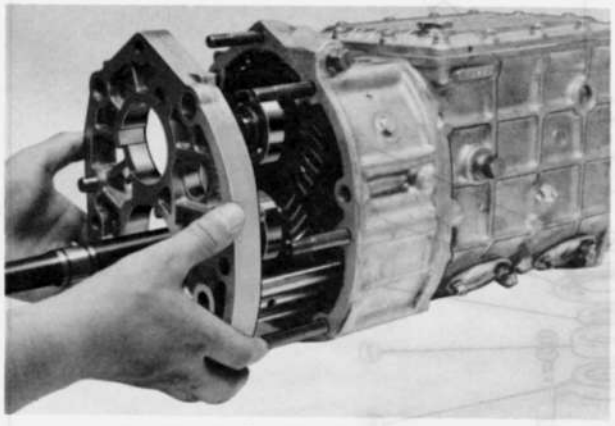

Fig. 7A–68 Installing bearing housing

52. Install the shift rod ends to their respective shift rods and tighten the bolts.

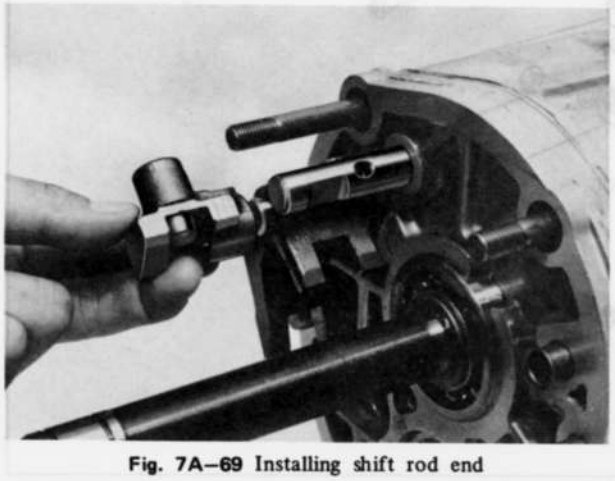

Fig. 7A–69 Installing shift rod end

53. Install the speedometer drive gear with the steel ball onto the main shaft, as shown in Fig. 7A–70. and secure it with the snap ring.
54. Insert the speedometer driven gear assembly to the extension housing and secure it with the bolt and lock plate.

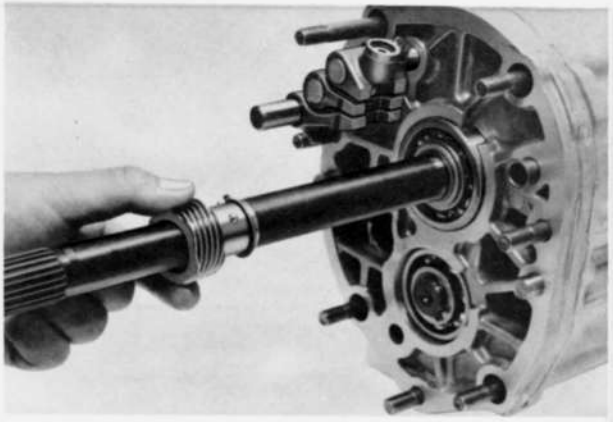

Fig. 7A–70 Installing speedometer driven gear

55. Insert the control rod through the holes from the front side of the extension housing.
56. Align the key and insert the control lever end to the control rod. Install the bolt and tighten it to **2.8 ~ 3.4 m-kg (20 ~ 25 ft-lb).**
57. Install the reverse lamp switch to the extension housing and tighten the switch to **2.8 ~ 4.5 m-kg (20 ~ 33 ft-lb).**
58. Place the gasket on the case and install the extension housing with the control lever end laid down to the left as far as it will go. Tighten the attaching nuts.

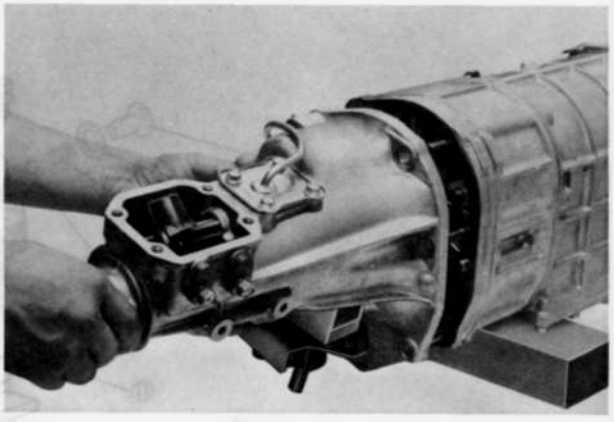

Fig. 7A–71 Installing extension housing

59. Check to ensure that the gearshift control lever operates properly.

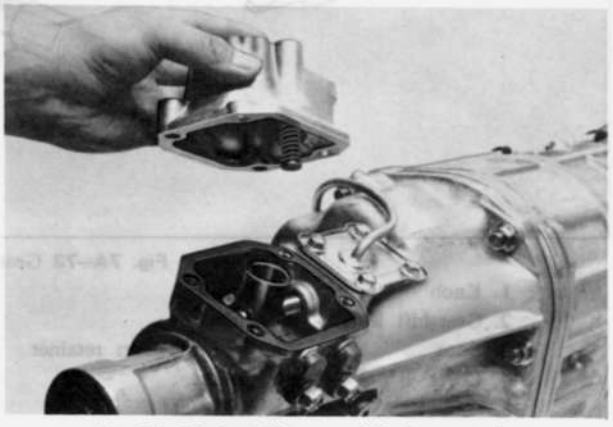

Fig. 7A–72 Installing gearshift lever retainer

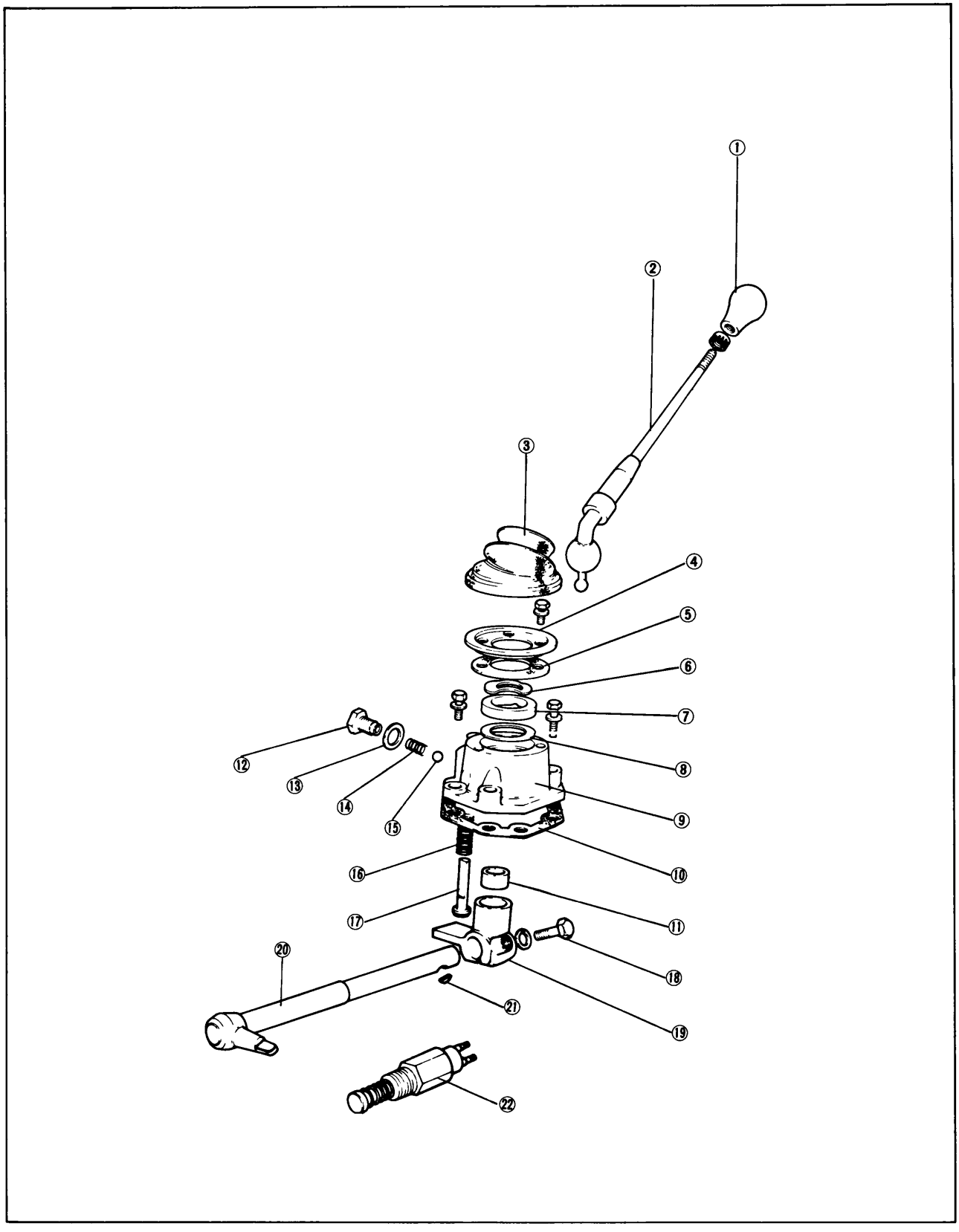

Fig. 7A–73 Gearshift lever and retainer

1. Knob
2. Gearshift lever
3. Boot
4. Cover
5. Gasket
6. Spring
7. Bush
8. Shim
9. Gearshift lever retainer
10. Gasket
11. Ball seat
12. Spring cap bolt
13. Washer
14. Spring
15. Ball
16. Spring
17. Select lock spindle
18. Reamer bolt
19. Control lever end
20. Control lever
21. Key
22. Reverse lamp switch

60. Insert the select lock spindle and spring from the inside of the gearshift lever retainer. Install the steel ball and spring in alignment with the spindle groove and install the spring cap bolt.
61. Install the gearshift lever retainer and gasket to the extension housing.
62. Check the bearing end play. Measure the depth of the bearing bore in the clutch housing using a depth gauge. Then, measure the bearing protrusion, as shown in Fig. 7A–74. The difference between two measurements indicates the required thickness of the adjusting shim. The end play should be **less than 0.1 mm (0.0039 in).**
The shims are available in the following thickness:

0.1 mm (0.0039 in)	0.3 mm (0.0118 in)

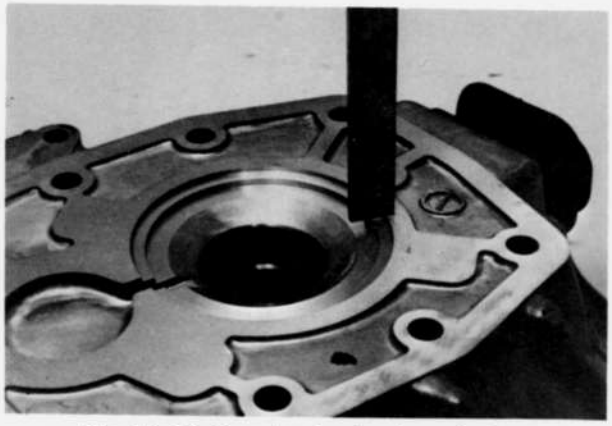

Fig. 7A–74 Measuring bearing bore depth

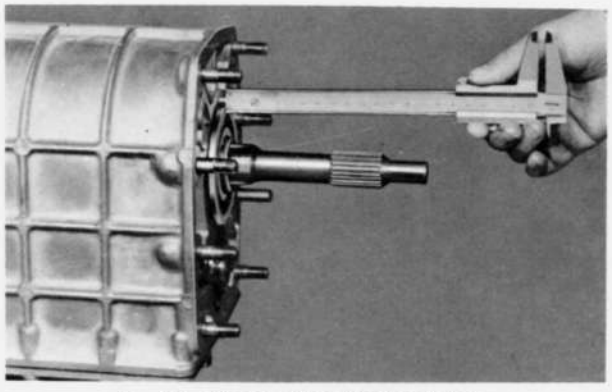

Fig. 7A–75 Measuring bearing height

63. Place the shims on the bearing bore.

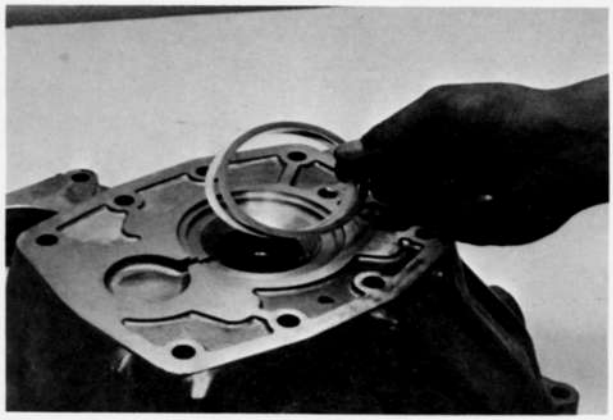

Fig. 7A–76 Installing shim

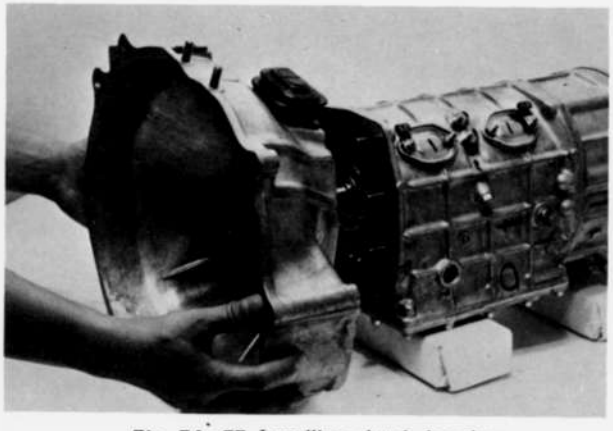

Fig. 7A–77 Installing clutch housing

64. Place the gasket on the front side of the case. Apply lubricant to the lip of the oil seal and install the clutch housing to the case. Tighten the attaching nuts.
65. Install the release bearing and release fork to the clutch housing.

7A–E. TRANSMISSION INSTALLATION

Carry out the removing operations in the reverse order.

Note:
a) Apply a thin coat of grease onto the splines of the main drive shaft.
b) Use the **turning & holder** (49 0259 440) to align the splines of the main drive shaft and clutch disc.
c) Fill the transmission with the correct grade and quantity of lubricant.

SPECIAL TOOLS

49 0259 440	Turning & holder, mainshaft
49 0839 425C	Puller, bearing
49 0839 445	Holder, synchronizer ring
49 0862 350	Guide, shift fork
49 0187 451A	Guide, interlock pin
49 1243 465	Wrench, mainshaft lock nut

AUTOMATIC TRANSMISSION

7B–A. GENERAL TRANSMISSION SERVICE ..... 7B : 1
7B–A–1. Manual Linkage Check ..... 7B : 1
7B–A–2. Transmission Fluid Level Check ..... 7B : 1
7B–A–3. Fluid Aeration Check ..... 7B : 1
7B–A–4. Transmission Fluid Leakage Check ..... 7B : 1
7B–A–5. Engine Idle Speed Check ..... 7B : 1
7B–A–6. Control Pressure Check ..... 7B : 1
7B–A–7. Stall Test ..... 7B : 2
7B–A–8. Shift Point Check ..... 7B : 2
7B–A–9. Air Pressure Checks ..... 7B : 3
7B–B. SHIFT CONTROL LINKAGE ..... 7B : 3
7B–B–1. Manual Linkage ..... 7B : 3
7B–B–2. Selector Lever Knob Adjustment ..... 7B : 3
7B–B–3. Throttle Linkage Adjustment ..... 7B : 4
7B–B–4. Kick-down Switch Adjustment ..... 7B : 4
7B–B–5. Inhibitor Switch Adjustment ..... 7B : 4
7B–B–6. Kick-down Switch ..... 7B : 5
7B–B–7. Inhibitor Switch ..... 7B : 5
7B–B–8. Selector Lever ..... 7B : 5
7B–C. TRANSMISSION REMOVAL ..... 7B : 5
7B–D. TRANSMISSION DISASSEMBLY ..... 7B : 6
7B–E. OVERHAUL OF MAIN COMPONENTS ..... 7B : 8
7B–E–1. Front Clutch ..... 7B : 8
7B–E–2. Rear Clutch ..... 7B : 9
7B–E–3. Low and Reverse Brake ..... 7B : 11
7B–E–4. Servo ..... 7B : 12
7B–E–5. Governor ..... 7B : 12
7B–E–6. Oil Pump ..... 7B : 13
7B–E–7. Control Valve Body ..... 7B : 14
7B–E–8. Connecting Shell and Sun Gear ..... 7B : 15
7B–E–9. Internal Drive Flange ..... 7B : 16
7B–E–10. Planet Carrier ..... 7B : 16
7B–E–11. One-way Clutch ..... 7B : 16
7B–F. TRANSMISSION ASSEMBLY ..... 7B : 16
7B–G. TRANSMISSION INSTALLATION ..... 7B : 19

7B

7B–A. GENERAL TRANSMISSION SERVICE

7B–A–1. Manual Linkage Check

Correct manual linkage adjustment is necessary to position the manual valve for proper pressure direction to the different transmission components. Improperly adjusted manual linkage may cause crossleakage and subsequent transmission failure. Refer to the linkage adjustments in Par. 7B–B–1 for detailed manual linkage adjustment procedures.

7B–A–2. Transmission Fluid Level Check

1. Make sure the vehicle is standing level. Then firmly apply the parking brake.
2. Run the engine at normal idle speed. If the transmission fluid is cold, run the engine at fast idle speed (about 1200 rpm) for several minutes. When the fluid is warm, slow the engine down to normal idle speed.
3. Shift the selector lever through all positions, and place the lever at N or P. Do not turn off the engine during the fluid level checks.
4. Clean all dirt from the transmission fluid dipstick cap before removing the dipstick from the filler tube.
5. Pull the dipstick out of the tube, wipe it clean, and push it all the way back into the tube. Be sure it is properly seated.
6. Pull the dipstick out of the tube again, and check the fluid level.

Observe the level on the dipstick.
The fluid level should be between the L and F marks (Fig. 7B–1). If necessary add enough fluid to the transmission through the filler tube to bring the level between the L and F marks on the dipstick. Do not overfill the transmission. Install the dipstick, making sure it is fully seated in the tube.

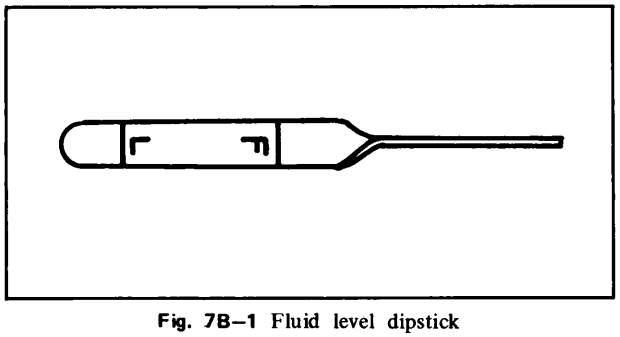

Fig. 7B–1 Fluid level dipstick

7B–A–3. Fluid Aeration Check

A fluid level that is too high will cause the fluid to become aerated:
Aerated fluid will cause low control pressure, and the aerated fluid may be forced out the vent.
Check the transmission fluid level. Low fluid level can affect the operation of the transmission, and may indicate fluid leaks that could cause transmission damage.

7B–A–4 Transmission Fluid Leakage Check

Check the speedometer cable connection at the transmission. Replace the rubber seal if necessary.
Leakage at the oil pan gasket often can be stopped by tightening the attaching bolts to the proper torque. If necessary, replace the gasket.
Check the fluid filler tube connection at the transmission case. If leakage is found here, install a new O-ring.
Check the fluid lines and fittings between the transmission and the cooler for looseness, wear, or damage. If leakage cannot be stopped by tightening a fitting, replace the damaged parts.
If leakage is found at the manual lever shaft, replace the seals.
Inspect the two pipe plugs on the left side of the transmission case and the one plug on the right side of the case at the rear. If the plugs show leakage, torque them to specifications. If tightening does not stop the lead, replace the plug.
Oil-soluble aniline or fluorescent dyes premixed at the rate of 1/2 teaspoon of dye powder to 1/2 pint of transmission fluid have proved helpful in locating the source of the fluid leakage. Such dyes may be used to determine whether an engine oil or transmission fluid leak is present or if the fluid in the oil cooler leaks into the engine coolant system. A black light, however, must be used with the fluorescent dye solution.

7B–A–5. Engine Idle Speed Check

Check and, if necessary, adjust the engine idle speed, using the procedure given in Par. 4–A–1.
If the idle speed is too low, the engine will run roughly. An idle speed that is too high will cause the vehicle to creep, have harsh engagements and harsh closed-throttle downshifts.

7B–A–6. Control Pressure Check

If the shifts do not occur within limits or the transmission slips during shift point, the line pressure and governor pressure must be checked.

a. Line pressure test

1. If the transmission fluid is cold, run the engine until the fluid reaches its normal operating temperature (60 ~ 100°C=140 ~ 212°F).
2. Line pressure for the R, D, 2, and 1 ranges is taken by connecting a **pressure gauge** (49 0378 400A) to the pressure outlet at the right rear of the transmission case. (Fig. 7B–2).

Be sure to place the gauge where it is visible-from the driver's seat.

3. Chock the front and rear wheels and apply the parking brake.
4. With the selector lever in the range to be checked, run the engine at engine idle speed and read the pressure gauge.
5. With the service brakes firmly applied, depress the accelerator pedal gradually to the wide open position. While checking whether the pressure rises smoothly, read the pressure gauge at the stall condition. The test time from starting accelerator depression to its release must not exceed 5 seconds.
6. Measure line pressure for each of the ranges in the same manner. Be sure to allow at least one

minute cooling time between tests at 1200 rpm with the transmission in the P or N position.



Fig. 7B–2 Control pressure check
A : For line pressure in whole ranges
B : For governor pressure

Line Pressure

Manual Range	Line Pressure	
	Engine Idling	Stall
"R"	4.0 ~ 7.0 kg/cm^2 (57 ~ 100 lb/in^2)	15.5 ~ 19.0 kg/cm^2 (220 ~ 270 lb/in^2)
"D"	3.0 ~ 4.0 kg/cm^2 (43 ~ 57 lb/in^2)	9.5 ~ 11.0 kg/cm^2 (135 ~ 156 lb/in^2)
"2"	8.0 ~ 12.0 kg/cm^2 (114 ~ 171 lb/in^2)	10.0 ~ 12.0 kg/cm^2 (142 ~ 171 lb/in^2)
"1"	3.0 ~ 4.0 kg/cm^2 (43 ~ 57 kg/cm^2)	9.5 ~ 11.0 kg/cm^2 (135 ~ 156 lb/in^2)

b. Governor pressure test

The governor pressure is tested when the shift points are different than those listed in the specifications.
1. Connect a **pressure gauge** (49 0378 400A) to the pressure outlet port on the left side of the transmission (Fig. 7B–2).
2. Read the pressure with the vehicle running at the speeds specified in the specification section. If pressures are not within specifications, disassemble and check the governor valve.

Governor Pressure (1)

Driving speed	Output shaft speed	Standard governor pressure	
	rpm	kg/cm^2	lb/in^2
20 mile/h	970 ~ 1,070	0.8 ~ 1.3	12 ~ 18
35 mile/h	1,730 ~ 1,850	1.4 ~ 2.1	20 ~ 29
55 mile/h	2,730 ~ 2,850	2.6 ~ 3.6	36 ~ 51

Governor Pressure (2)

Break point	at 1,000 rpm	at 2,000 rpm	at 3,000 rpm
400~600 rpm	0.9~1.3 kg/cm^2 (13~18 lb/in^2)	1.6~2.2 kg/cm^2 (23~28 lb/in^2)	3.0~3.8 kg/cm^2 (43~54 lb/in^2)

7B–A–7. Stall Test

Start the engine to allow it to reach its normal operating temperature. Apply both the parking and service brakes while making this test. The stall test is made in D, 2, 1 or R, at full throttle to check engine performance, converter clutch operation or installation and the holding ability of the clutches, band, low and reverse brake, and one-way clutch. While making this test, do not hold the throttle open for more than five seconds at a time. Then move the selector lever to N or P and run engine at 1200 rpm for about one minute to cool the converter before making the next test. If the engine speed recorded by the tachometer exceeds the maximum limits shown in the Specifications, release the accelerator immediately because clutch, brake or band slippage is indicated.

Stall revolution	
Before break in	After break in
2,000 ~ 2,250 rpm	2,050 ~ 2,300 rpm

7B–A–8. Shift Point Checks

Check the minimum throttle upshift in D. The transmission should start in first gear, shift to second, and then shift to third, within the shift points specified in the Specifications.
While the transmission is in third gear, depress the accelerator pedal through the detent (to the floor). The transmission should shift from third to second or third to first, depending on the vehicle speed.
Check the closed throttle downshift from third to first by coasting down from about 45 mph in third gear. The shift should occur within the limits specified in the Specifications.
When the selector lever is at 2, the transmission can operate only in second gear.
With the transmission in third gear and road speed over 45 mph, the transmission should shift to second gear when the selector lever is moved from D to 2 to 1. The transmission will downshift from second or third to first gear when this same manual shift is made below approximately 45 mph.

Shift Speed

Throttle condition	Gear shift	Shift speed (miles/h)
Kick-down (0 ~ 100 mm-Hg / 0 ~ 3.94 in-Hg)	$D_1 \rightarrow D_2$	33 ~49
	$D_2 \rightarrow D_3$	63 ~ 85
	$D_3 \rightarrow D_2$	56 ~ 72
	$D_2 \rightarrow D_1$	15 ~ 31
Half throttle (200 ± 10 mm-Hg / 7.87 ± 0.39 in-Hg)	$D_1 \rightarrow D_2$	10 ~ 23
	$D_2 \rightarrow D_3$	19 ~ 44
Fully closed throttle	$D_3 \rightarrow D_1$	6 ~ 13
Manual 1	$1_2 \rightarrow 1_1$	27 ~ 36

7B–A–9. Air Pressure Checks

A NO DRIVE condition can exist, even with correct transmission fluid pressure, because of inoperative clutches or bands. On automatic transmission, an erratic shift could be caused by a stuck governor valve. The inoperative units can be located through a series of checks by substituting air pressure for the fluid pressure to determine the location of the malfunction.

To make the air pressure checks, drain the transmission fluid and remove the oil pan and the control valve body assembly. The inoperative units can be located by introducing air pressure into the various transmission case passages (Fig. 7B–3).

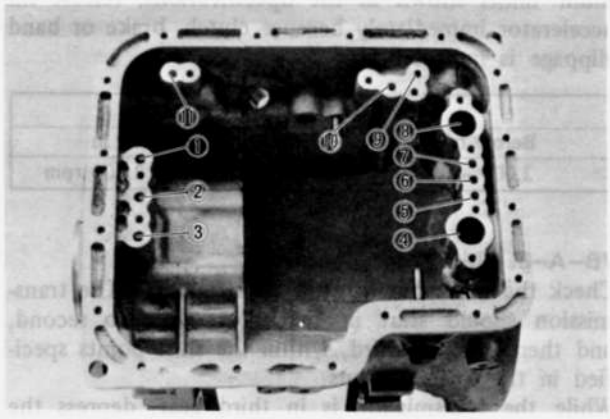

Fig. 7B–3 Case fluid passage hole identification

1. Low & reverse brake pressure
2. Governor feed pressure
3. Governor pressure
4. Pump out
5. Torque converter pressure
6. Rear clutch pressure
7. Front clutch pressure
8. Pump in
9. Servo apply
10. Servo release
11. Line pressure

7B–B. SHIFT CONTROL LINKAGE

The transmission control linkage adjustment should be performed in the order in which they appear in this section of the manual. Before the linkage is adjusted, be sure the engine idle speed is properly adjusted. Refer to Par. 4–A–1 for the procedure.

7B–B–1. Manual Linkage Adjustments

1. Place the transmission selector lever in the N position.
2. Raise the vehicle and disconnect the clevis from the lower end of the selector lever operating arm (Fig. 7B–4).
3. Move the transmission manual lever to the N position, third detent position from the back of the transmission.
4. Loosen the two clevis retaining nuts and adjust the clevis so that it freely enters the hole of the lever. Tighten the retaining nuts to secure the adjustment.
5. Connect the clevis to the lever and secure with the spring washer, flat washer and retaining clip (Fig. 7B–4).
6. Lower the vehicle and check the operation of the transmission in each selector lever postion.

7B–B–2. Selector Lever Knob Adjustment

When the select lever knob is removed, it should be adjusted properly in the following manner.

1. Position the select lever at N or D range.
2. Loosen the lock nut and screw the select lever knob in until there is no play of the push button.
3. Screw back the select lever knob within one turn to the position where the push button is on the driver's side.
4. Push the push button and confirm that the select lever can be shifted to P range.

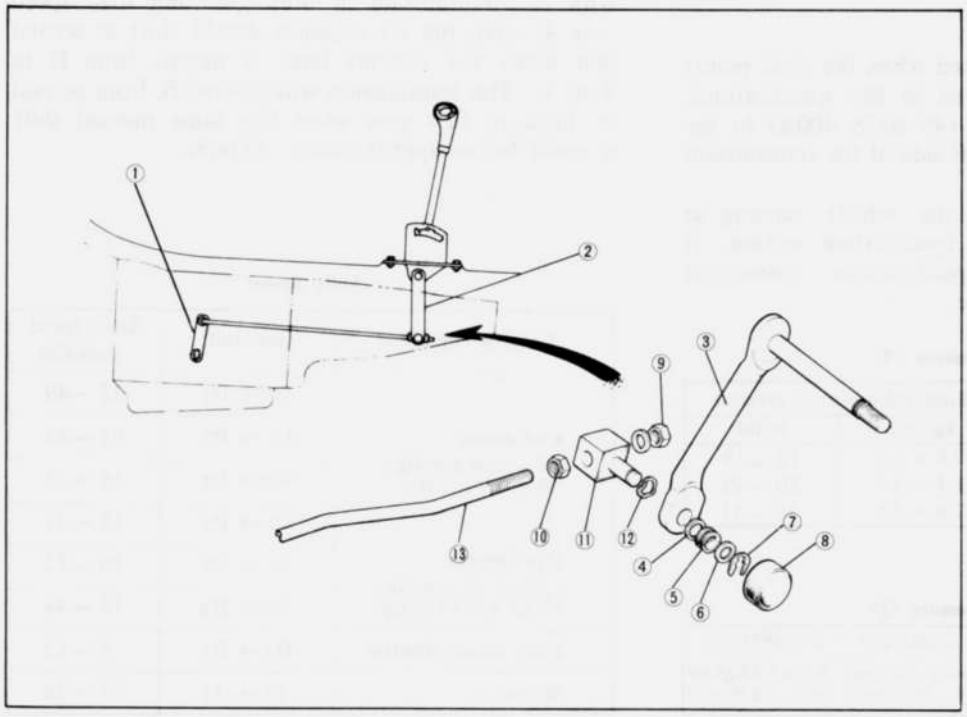

Fig. 7B–4 Manual linkage

1. Manual lever
2. Selector lever operating arm
3. Selector lever operating arm
4. Washer
5. Bush
6. Washer
7. Retaining ring
8. Dust cover
9. Nut
10. Nut
11. T joint
12. Wave washer
13. Shift rod

5. In case the select lever cannot be shifted to P range, screw in the select lever knob by one turn.
6. Repeat items (4) and (5) until the select lever can be shifted to P range smoothly.
7. Confirm that the select lever cannot, without pushing the push button, be shifted from N to R or from D to 2 range.
8. In case, in item (7), the select lever can be shifted to R or 2 range without pushing the push button, it means that the select lever knob is excessively screwed in and so screw back the knob.
After the adjustment is completed, check the push button protrusion (A) as shown in Fig. 7B–5.
The protrusion should be 6.0 ± 1.5 mm (0.24 ± 0.06 in) at N or P range.

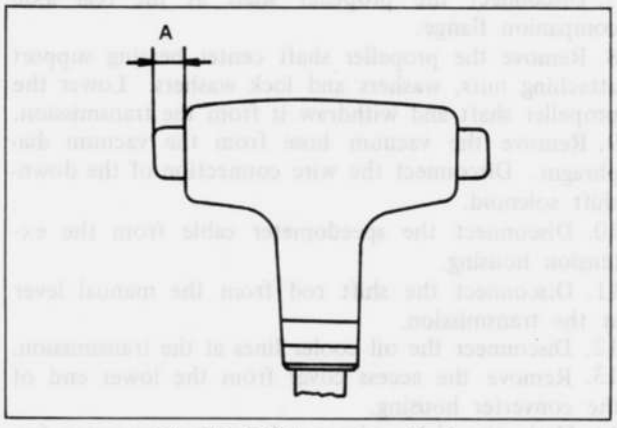

Fig. 7B–5 Selector lever knob

9. Make final confirmation on whether the function of the push button is perfect when shifting the select lever to each range.
10. Finally lock the lever by the lock nut under the select lever knob. Tightening torque is 1.5 ~ 2.0 kg-m (10.8 ~ 14.5 ft-lb).

7B–B–3. Throttle Linkage Adjustment

Adjusting the throttle linkage is important to be certain the throttle and downshift systems are properly adjusted. Refer to Section 4 for throttle linkage adjustment procedures.

7B–B–4. Kick-down Switch Adjustment

1. Move the ignition switch to the ON position.

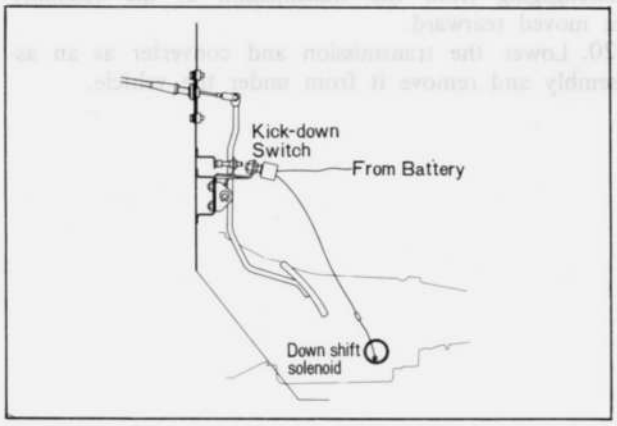

Fig. 7B–6 Kick-down switch adjustment

2. Loosen the kick-down switch attaching nut and adjust the switch to engage when the accelerator pedal is between 7/8 ~ 15/16 of full pedal travel. The down shift solenoid will click when the switch engages (Fig. 7B–6).
3. Tighten the attaching nut and check for proper switch operation.

7B–B–5. Inhibitor Switch Adjustment

The inhibitor switch permits the reverse lamp to light up only when R range is selected and the starter motor to revolve only when the lever is in N or P position, so that when D, 2 or 1 is selected, the reverse lamp does not light up and the starter motor cannot revolve.
If any abnormality is found in any range, check and adjust the manual linkage; if the manual linkage is found normal, then check the inhibitor switch.
Engage the manual lever in each range and check the connection of the inhibitor switch with a tester, as described in Par. 15–H.
Move the range select lever to both sides from the center position of each range (R, P and N), and it is normal if the electricity is on while the lever is within an angle of about 3° on the both sides from each lever set line.
If anything wrong is revealed as a result of the conductivity check of the inhibitor switch, make adjustments in the following procedures.
1. Remove the nut that holds the range select lever and bolts holding the inhibitor switch body, then remove the screw.
2. Correctly position the manual shaft in N position by adjusting the range select lever.
The proper N position is where the slot of the manual shaft is positioned vertically and detent works to position in the shaft correctly with a click sound.
3. Move the switch slightly aside so that the screw hole will be aligned with the pin hole of the sliding plate when the range select lever is in N position by inserting a 2.0 mm (0.079 in) diameter pin into the holes.
4. If the alignment is made correct, tighten the switch body with the bolts, pull out the pin and tighten up the screw again into the hole, and tighten the range select lever as before.
5. Check over again the continuity with the tester. If the malfunction still remains, replace the inhibitor switch.



Fig. 7B–7 Inhibitor switch adjustment

7B–B–6. Kick-down Switch

a. Removal and Installation

1. Disconnect the wire connector at the kick-down switch.
2. Remove the nut securing the kick-down switch to the bracket and remove the switch.
3. Install the kick-down switch to the bracket and adjust the switch to engage when the accelerator pedal is between 7/8 ~ 15/16 of full pedal travel.
4. Tighten the attaching nut.
5. Connect the wire connector and check for proper switch operaion.

7B–B–7. Inhibitor Switch

a. Removal

1. Place the transmission selector lever in the N position.
2. Remove the console box.
3. Disconnect the multiple wire connectors.
4. Remove the two inhibitor switch retaining screws and remove the switch.

b. Installation

1. Position the inhibitor switch to the selector lever bracket and install the two retaining screws.
2. Check the operation of the switch in each detent position.

The engine should start only with the transmission selector lever in N or P position.

3. Install the console box.

7B–B–8. Selector Lever

a. Removal and installation

1. Raise the vehicle and remove the nut and lock washer securing the selector lever to the lower selector lever operating arm.
2. Lower the vehicle and remove the console box.
3. Remove the inhibitor switch and lift the selector lever assembly from the floor pan housing.
4. Unscrew the selector lever knob and remove the detent rod, plunger and spring from the lever.
5. Place the spring, plunger and detent rod in the selector lever and install the knob.
6. Place the selector lever assembly through the floor pan housing and raise the vehicle.
7. Position the selector lever assemnly to the lower selector lever operating arm and secure with the lock washer and nut.
8. Lower the vehicle.
9. Adjust the selector lever knob as described in Par. 7B–B–2, and tighten the lock nut.
10. Install the console box.

7B–C. TRANSMISSION REMOVAL

1. Disconnect the battery.
2. Raise the vehicle on a hoist or jack stands.
3. Place a drain pan under the transmission. Starting at the rear of the transmission oil pan and working toward the front, loosen the attaching bolts and allow the fluid to drain. Finally remove all of the pan attaching bolts except two at the front to allow the fluid to futher drain.

After the fluid has drained, install two bolts on the rear side of the pan to temporarily hold it in place.

4. Remove the screws attaching the heat insulator to the exhaust pipe and remove the heat insulator.
5. Remove the bolt and nut attaching the exhaust front pipe to the exhaust pipe bracket. Disconnect the exhaust front pipe flange from the exhaust manifold by removing the nuts. Remove the bolts and nuts attaching the exhaust front pipe flange to the main silencer, and remove the exhaust front pipe.
6. Remove the bolts attaching the heat insulator to the underbody and remove the heat insulator.
7. Disconnect the propeller shaft at the rear axle companion flange.
8. Remove the propeller shaft center bearing support attaching nuts, washers and lock washers. Lower the propeller shaft and withdraw it from the transmission.
9. Remove the vacuum hose from the vacuum diaphragm. Disconnect the wire connection of the downshift solenoid.
10. Disconnect the speedometer cable from the extension housing.
11. Disconnect the shift rod from the manual lever at the transmission.
12. Disconnect the oil cooler lines at the transmission.
13. Remove the access cover from the lower end of the converter housing.
14. Mark the drive plate and torque converter for correct realignment during reassembly, then remove the four bolts that attach the torque converter to the drive plate.
15. Remove the transmission rear support to crossmember bolts and nuts.
16. Support the transmission with a transmission jack, then remove the crossmember-to-frame attaching bolts and remove the crossmember.
17. Secure the transmission to the jack with safety chain.
18. Lower the transmission enough to loosen the attaching bolts.

Then, remove the converter housing-to-engine attaching bolts. Remove the transmission fluid filler tube.

19. With a pry bar, exert pressure between the flex plate and converter to prevent the converter from disengaging from the transmission as the assembly is moved rearward.
20. Lower the transmission and converter as an assembly and remove it from under the vehicle.

7B–D. TRANSMISSION DISASSEMBLY

1. Mount the transmission on the **stand** (49 0378 320).
2. Remove the converter from the transmission front pump and converter housing.
3. Remove the bolts attaching the converter housing to the transmission case and remove the converter housing.

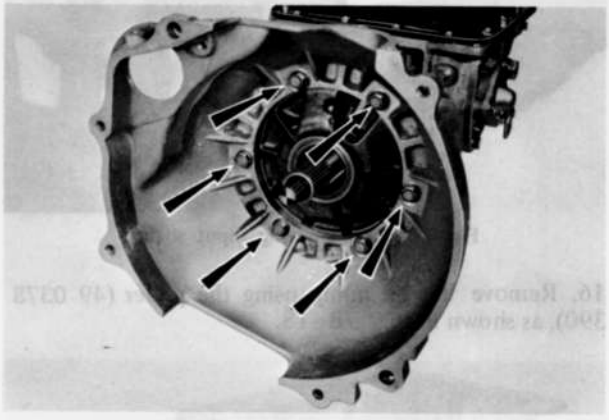

Fig. 7B–8 Bolts on converter housing

4. Remove the bolts attaching the extension housing to the case. Remove the extension housing and gasket from the case.

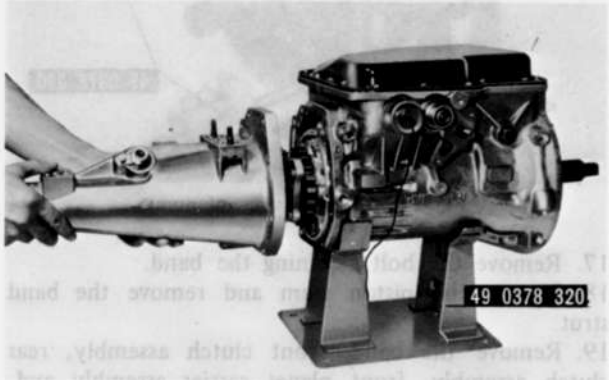

Fig. 7B–9 Removing extension housing

5. Remove the parking pawl, spring and washer from the extension housing.
6. Remove the bolts and remove the retaining plate, actuator support, balls, retainer and springs from the extension housing.
7. Remove the oil pan attaching bolts, and remove the oil pan and gasket from the case.
8. Unscrew and remove the downshift solenoid and vacuum diaphragm unit. Remove the vacuum diaphragm rod from the case.

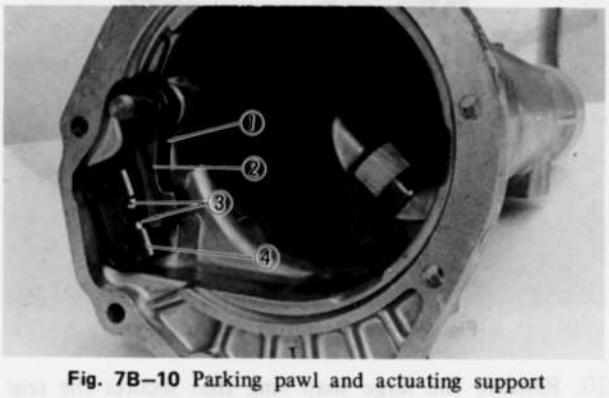

Fig. 7B–10 Parking pawl and actuating support
1. Parking pawl
2. Spring
3. Ball
4. Retaining plate

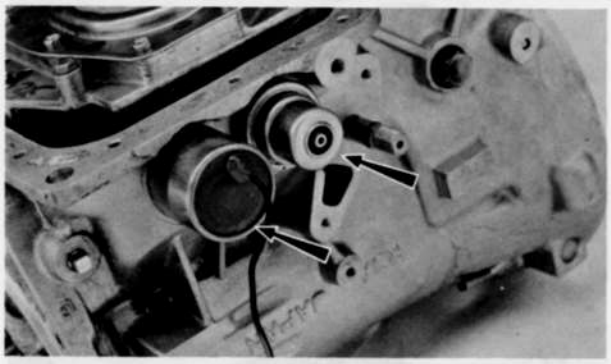

Fig. 7B–11 Downshift solenoid and vacuum diaphragm unit

9. Remove the control valve body attaching bolts and remove the control valve body from the case.

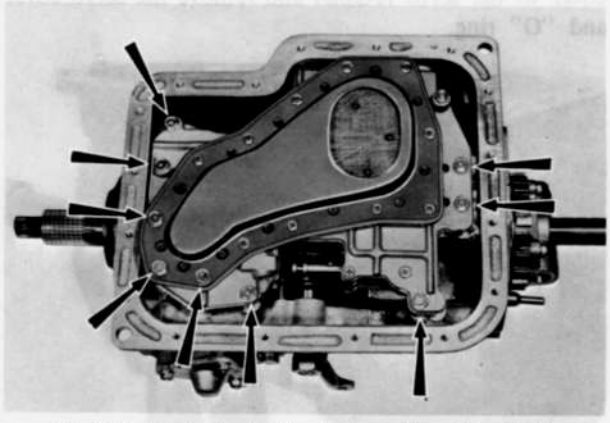

Fig. 7B–12 Control valve body ass'y setting bolts

10. Remove the nut and washer attaching the range select lever to the manual shaft and remove the range select lever.

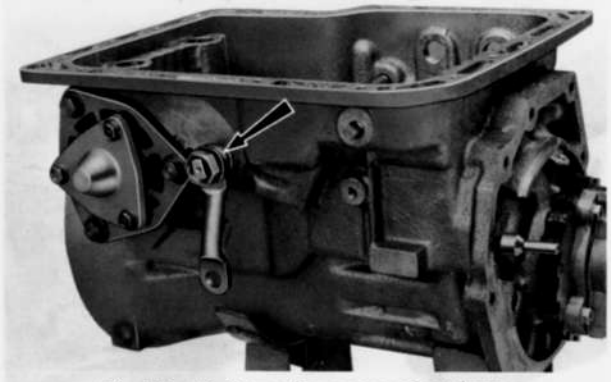

Fig. 7B–13 Removing range select lever

11. Loosen the nut attaching the manual plate to the manual shaft and remove the manual shaft from

the case, tapping the manual shaft with a suitable drift and hammer. Remove the manual plate and spacer.

12. Remove the retaining rings from the end of the parking brake lever. Then, remove the parking brake lever and rod.

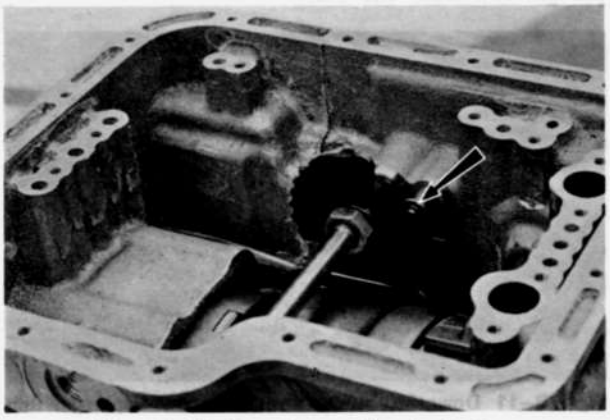

Fig. 7B–14 Removing parking brake lever

13. Remove the bolts that attach the band servo cover to the servo retainer and remove the servo cover and "O" ring.

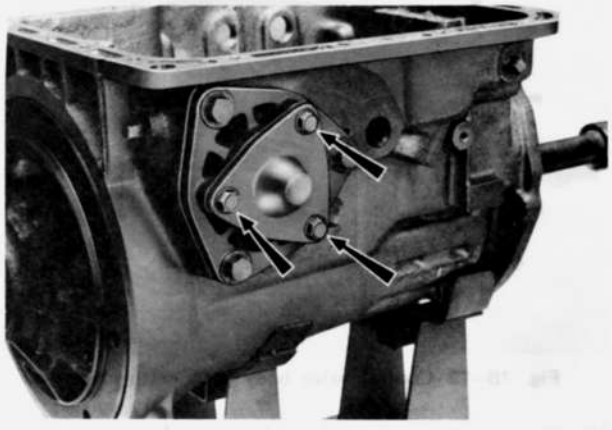

Fig. 7B–15 Removing band servo cover

14. Loosen the brake band piston stem lock nut and tighten the piston stem to prevent the front clutch drum from falling when the oil pump is removed.

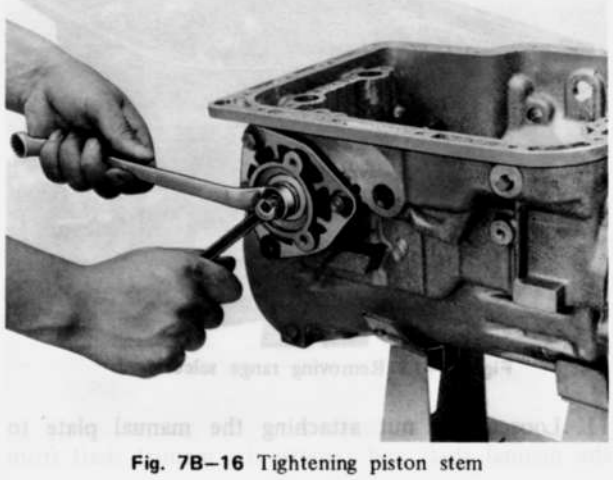

Fig. 7B–16 Tightening piston stem

15. Pull the input shaft out of the front pump.

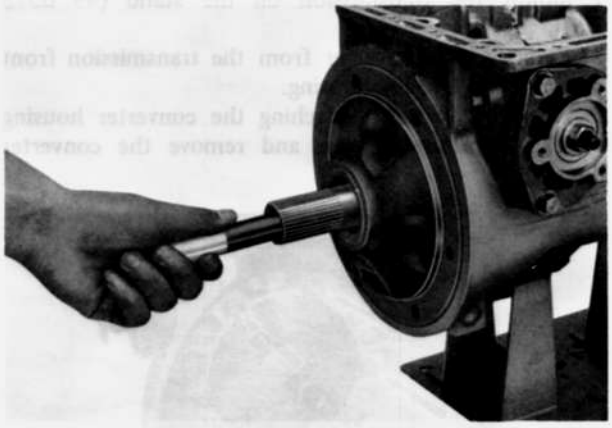

Fig. 7B–17 Removing input shaft

16. Remove the oil pump using the **puller** (49 0378 390), as shown in Fig. 7B–18.

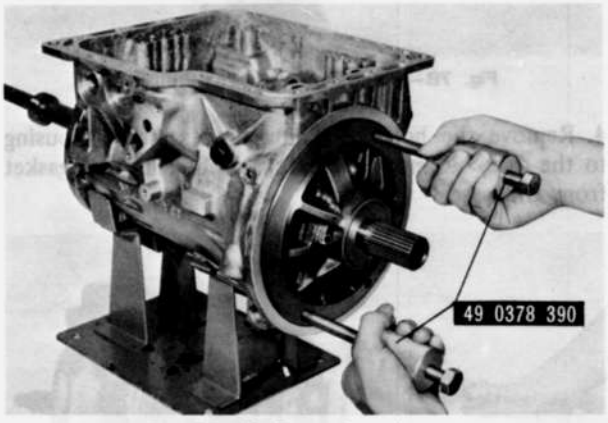

Fig. 7B–18 Removing oil pump

17. Remove the bolt retaining the band.

18. Loosen the piston stem and remove the band strut.

19. Remove the band, front clutch assembly, rear clutch assembly, front planet carrier assembly and sun gear as an assembly, as shown in Fig. 7B–19.

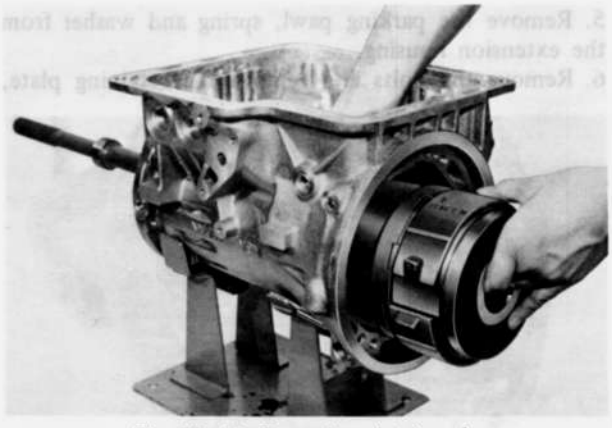

Fig. 7B–19 Removing clutch ass'y

20. Remove the large snap ring that secures the rear planet carrier to the connecting drum. Remove the rear planet carrier from the drum.

21. Remove the output shaft snap ring, using the **pliers** (49 8000 015) as shown in Fig. 7B–20, and remove the internal drive flange.



Fig. 7B–20 Removing snap ring

22. Turn the connecting drum counter-clockwise as far as it will go. Then, turn the connecting drum clockwise and remove the drum and one-way clutch from the case as an assembly.

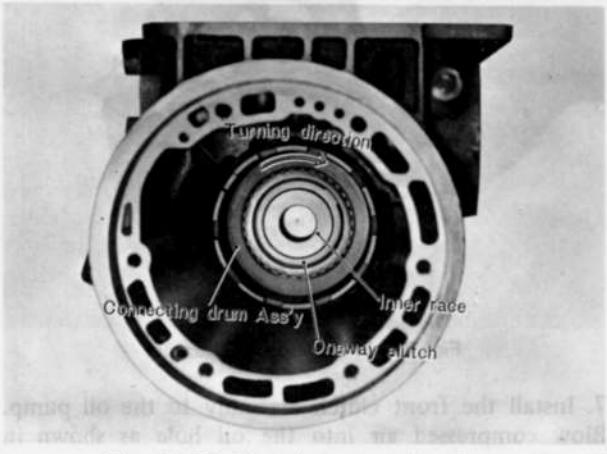

Fig. 7B–21 Removing connecting drum

23. Slide the output shaft assembly from the transmission case.
24. Remove the governor and oil distributor from the case.

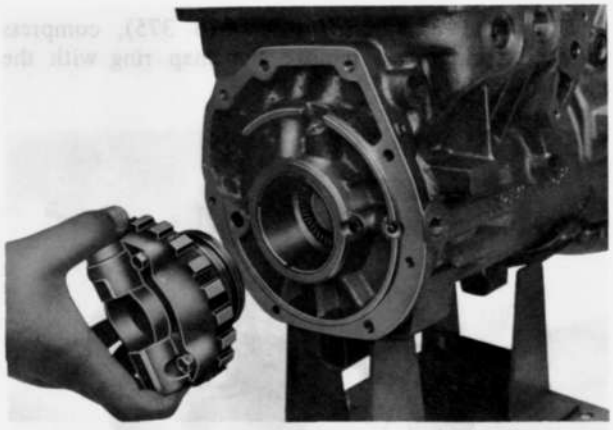

Fig. 7B–22 Removing governor and oil distributor

25. Remove the oil distributor needle bearing and race from inside the transmission.

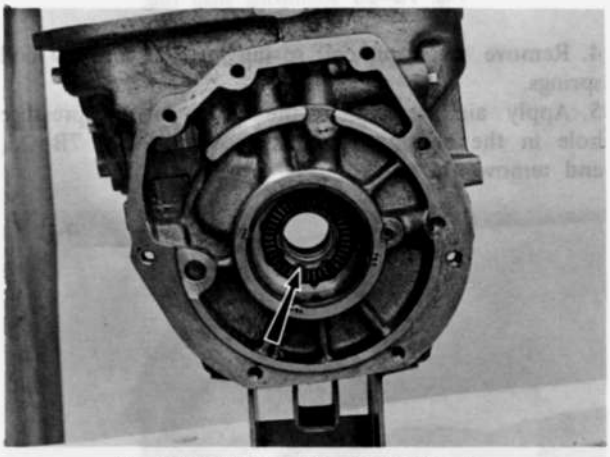

Fig. 7B–23 Removing needle bearing

7B–E. OVERHAUL OF MAIN COMPONENTS

7B–E–1. Front Clutch

a. Disassembly

1. Remove the clutch retaining plate snap ring.
2. Remove the retaining plate, inner plates, outer plates and dished plate from the clutch drum.

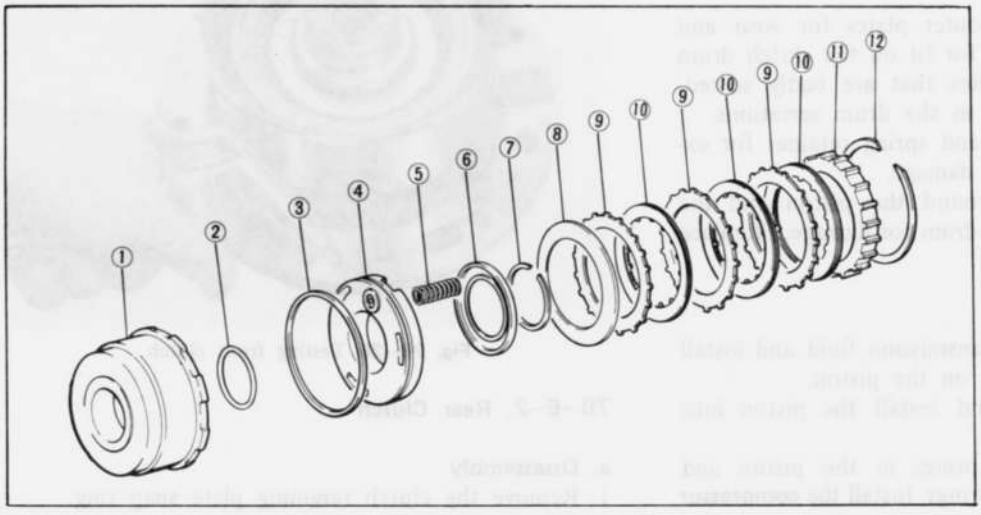

Fig. 7B–24 Front clutch disassembled

1. Clutch drum
2. Inner seal
3. Outer seal
4. Piston
5. Spring
6. Spring retainer
7. Snap ring
8. Dished plate
9. Outer plate
10. Inner plate
11. Retaining plate
12. Snap ring

3. Using the **compressor** (49 0378 375), compress the coil springs and remove the snap ring with the **pliers** (49 800 025).



Fig. 7B–25 Removing snap ring

4. Remove the tool, coil spring retainer and 10 coil springs.
5. Apply air pressure to the clutch piston pressure hole in the clutch drum, as shown in Fig. 7B–26, and remove the piston.



Fig. 7B–26 Blowing out piston

6. Remove the piston outer seal from the piston and the inner seal from the clutch drum.

b. Checking

1. Inspect the inner and outer plates for wear and scoring. Check the plates for fit on the clutch drum serrations. Replace all plates that are badly scored, worn or do not fit freely in the drum serrations.
2. Check the coil springs and spring retainer for excessive wear, distortion or damage.
3. Check the seal ring around the piston and the "O" ring inside the clutch drum for damage. Replace the seals that are damaged.

c. Assembly

1. Dip the new seals in transmission fluid and install one on the drum and one on the piston.
2. Lubricate the piston and install the piston into the clutch drum.
3. Position the 10 coil springs in the piston and the spring retainer on the springs. Install the **compressor** (49 0378 375) and compress the springs. Install the snap ring with the **pliers** (49 8000 025). Remove the tool.
4. Dip the clutch plates in clean transmission fluid. Install the dished plate. Install the inner and outer plates alternately starting with an outer plate.
5. After all clutch plates have been installed, position the retaining plate in the clutch drum. Install the snap ring.
6. With a feeler gauge, check the clearance between the retaining plate and snap ring, as shown in Fig. 7B–27. This clearance should be **1.6 ~ 1.8 mm (0.062 ~ 0.071 in)**. If it is not within the specifications, select and install the correct size retaining plate. The retaining plates are available in the following six thicknesses.

7.2 mm (0.283 in)	7.8 mm (0.307 in)
7.4 mm (0.291 in)	8.0 mm (0.315 in)
7.6 mm (0.299 in)	8.2 mm (0.323 in)



Fig. 7B–27 Measuring clearance

7. Install the front clutch assembly to the oil pump. Blow compressed air into the oil hole as shown in Fig. 7B–28 and check the clutch operation.

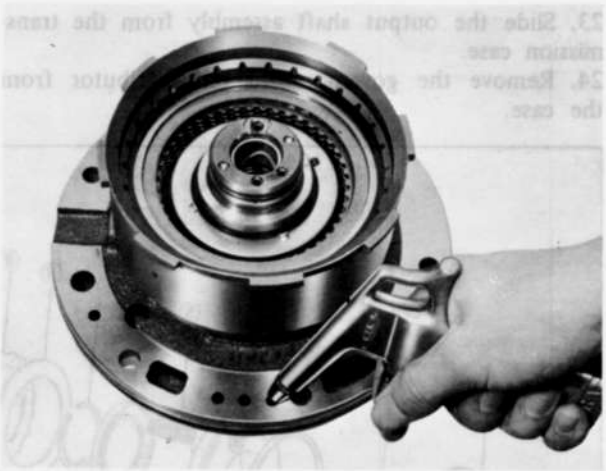

Fig. 7B–28 Testing front clutch

7B–E–2. Rear Clutch

a. Disassembly

1. Remove the clutch retaining plate snap ring.

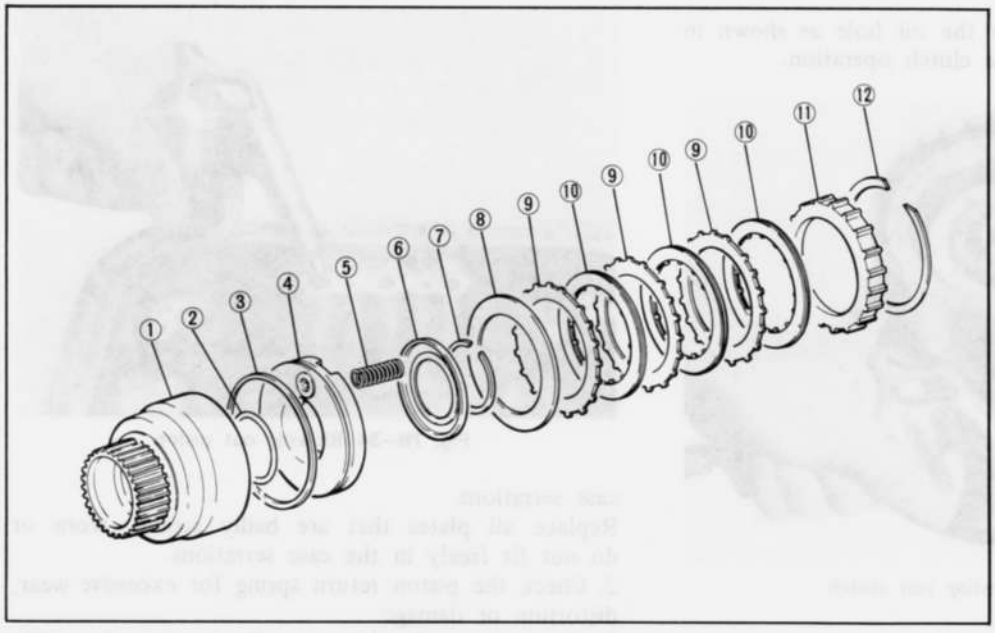

Fig. 7B–31 Rear clutch disassembled
1. Clutch drum
2. Inner seal
3. Outer seal
4. Piston
5. Spring
6. Spring retainer
7. Snap ring
8. Dished plate
9. Outer plate
10. Inner plate
11. Retaining plate
12. Snap ring

2. Remove the retaining plate, inner plates, outer plates and dished plate from the clutch drum.
3. Using the **compressor** (49 0378 375), compress the coil springs and remove the snap ring with the **pliers** (49 8000 025).

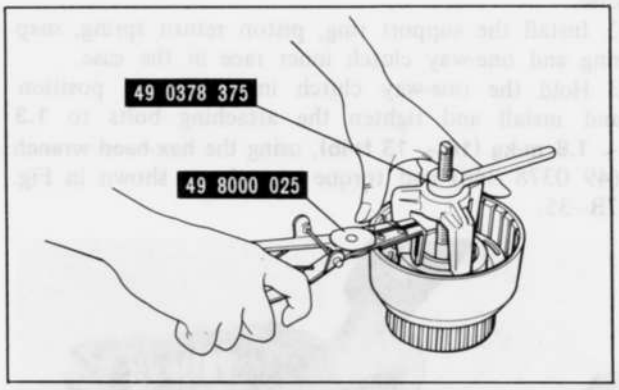

Fig. 7B–29 Removing snap ring

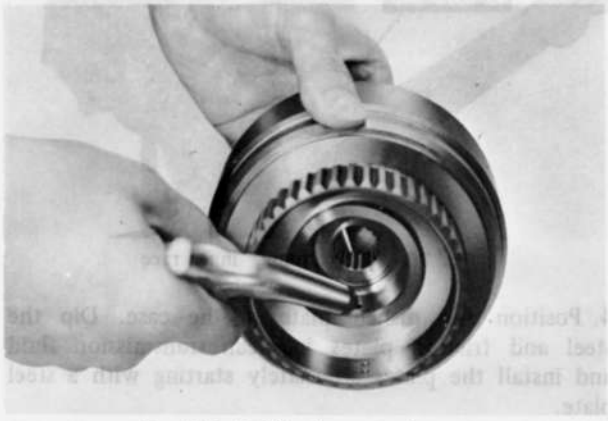

Fig. 7B–30 Blowing out piston

4. Remove the tool, coil spring retainer and 10 coil springs.
5. Apply air pressure to the clutch piston pressure hole in the clutch drum, as shown in Fig. 7B–30, and remove the piston.
6. Remove the piston outer seal from the piston and the inner seal from the clutch drum.

b. Checking
1. Inspect the inner and outer plates for wear and scoring. Check the plates for fit on the clutch drum serrations. Replace all plates that are badly scored, worn or do not fit freely in the drum serrations.
2. Check the coil springs and spring retainer for excessive wear, distortion or damage.
3. Check the seal ring around the piston and the "O" ring inside the clutch drum for damage. Replace the seals that are damaged.

c. Assembly
1. Dip the new seals in transmission fluid and install one on the drum and one on the piston.
2. Lubricate the piston and install the piston into the clutch drum.
3. Position the 10 coil springs in the piston and the spring retainer on the springs. Install **compressor** (49 0378 375) and compress the springs.
Install the snap ring with the **pliers** (49 8000 025). Remove the tool.
4. Dip the clutch plates in clean transmission fluid. Install the dished plate. Install the inner and outer plates alternately starting with an outer plate.
5. After all clutch plates have been installed, position the retaining plate in the clutch drum. Install the snap ring.
6. Install the rear clutch assembly to the oil pump.

Blow compressed air into the oil hole as shown in Fig. 7B–32 and check the clutch operation.

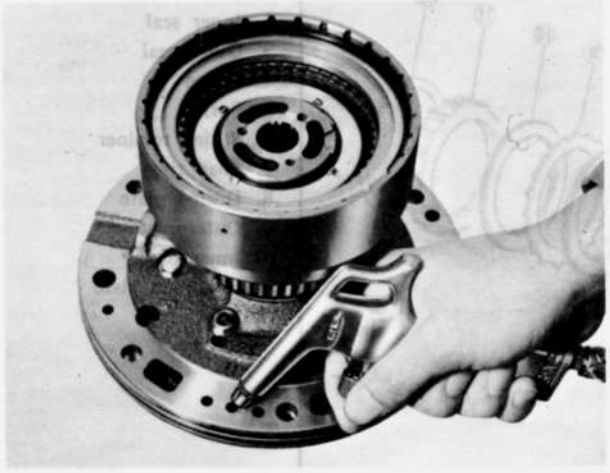

Fig. 7B–32 Testing rear clutch

7B–E–3. Low and Reverse Brake

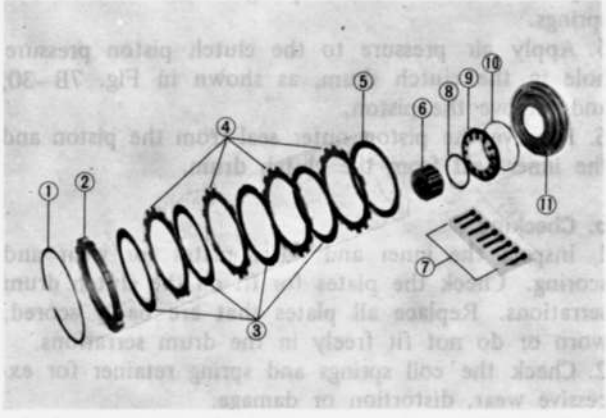

Fig. 7B–33 Fig. 7B–33 Low and reverse brake

1. Snap ring
2. Retaining plate
3. Friction plate
4. Steel plate
5. Dished plate
6. Inner race
7. Bolt
8. Snap ring
9. Piston return spring
10. Spring ring
11. Piston

a. Disassembly

1. Remove the snap ring securing the low and reverse brake assembly to the case. Then, remove the retaining plate, steel and friction plates and dished plate from the case.
2. With the **hex-head wrench** (49 0378 346), remove the eight one-way clutch inner race attaching bolts from the rear of the case. Remove the inner race, snap ring, piston return spring and support ring from inside the case.
3. Remove the low and reverse brake piston from the case by blowing compressed air into the port located at the rear of the case, as shown in Fig. 7B–34.

b. Checking

1. Check the friction and steel plates for wear and scoring. Check the plates for fit on the transmission case serrations.
Replace all plates that are badly scored, worn or do not fit freely in the case serrations.
2. Check the piston return spring for excessive wear, distortion or damage.
3. Check the seal rubbers on the inside and outside of the piston for wear and any damages.

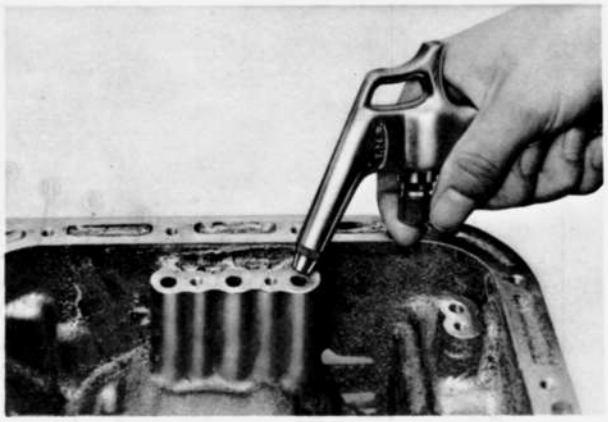

Fig. 7B–34 Blowing out piston

c. Assembly

1. Lubricate the low and reverse brake piston with transmission fluid and install it into the transmission case.
2. Install the support ring, piston return spring, snap ring and one-way clutch inner race in the case.
3. Hold the one-way clutch inner race in position and install and tighten the attaching bolts to **1.3 ~ 1.8 m-kg (10 ~ 13 ft-lb)**, using the **hex-head wrench** (49 0378 346) and torque wrench, as shown in Fig. 7B–35.

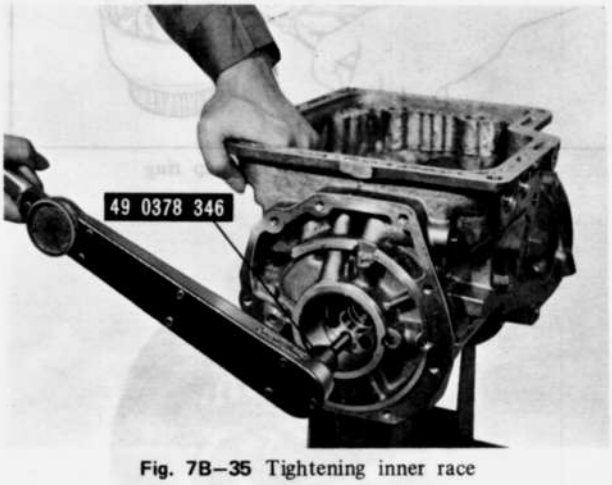

Fig. 7B–35 Tightening inner race

4. Position the dished plate in the case. Dip the steel and friction plates in clean transmission fluid and install the plates alternately starting with a steel plate.
5. Position the retaining plate in the case and install the snap ring.
6. With a feeler gauge, check the clearance between the retaining plate and snap ring, as shown in Fig. 7B–36. The clearance should be **0.8 ~ 1.05 mm (0.031 ~ 0.042 in)**. If it is not within the specifi-

cation, adjustment can be made with selective retaining plate.
The retaining plates are available in the following six thicknesses:

7.8 mm (0.307 in)	8.4 mm (0.331 in)
8.0 mm (0.315 in)	8.6 mm (0.339 in)
8.2 mm (0.323 in)	8.8 mm (0.346 in)

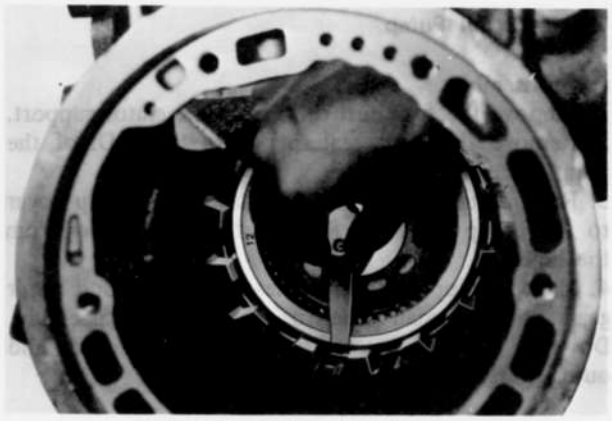

Fig. 7B–36 Measuring clearance

7B–E–4. Servo

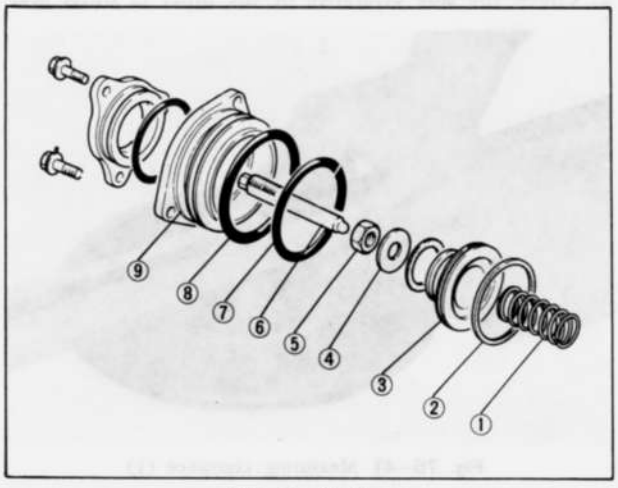

Fig. 7B–37 Servo

1. Return spring
2. Piston seal
3. Piston
4. Washer
5. Nut
6. Piston stem
7. Seal
8. Seal
9. Servo retainer

a. Disassembly

Remove the bolts attaching the cover to the servo retainer and remove the cover.
1. Remove the bolts that attach the servo retainer to the transmission case. Remove the servo retainer and piston from the case. If it is difficult to remove the servo retainer assembly from the case, apply air pressure from the fluid passage.
2. Remove the return spring from the case.
3. Apply air pressure to the port in the servo retainer to remove the piston.
4. Remove the seals from the retainer.
5. Remove the seals from the piston.



Fig. 7B–38 Blowing out piston

b. Checking

1. Inspect the servo bore for cracks and the piston bore and piston stem for scores. Check fluid passages for obstructions.
2. Check the piston stem for free movement and wear. Inspect the adjusting screw threads for damage.
3. Check the servo spring for distortion.
4. Inspect the retainer seals and gasket sealing surface for damage.
5. Inspect the piston seal ring for damage.
6. Inspect the band lining for excessive wear and damage.
7. Replace seals that are damaged.

c. Assembly

1. Dip the seals in transmission fluid.
2. Install the seals on the servo retainer and piston.
3. Apply transmission fluid to the piston and install the piston in the retainer.
4. Place the return spring and install the retainer assembly to the case and tighten the bolts to 1.0 ~ 1.5 m-kg (7 ~ 11 ft-lb).

7B–E–5. Governor

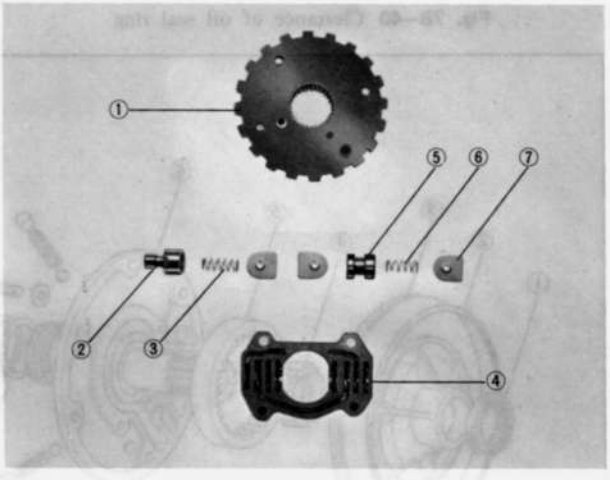

Fig. 7B–39 Governor valve

1. Oil distributor
2. Secondary valve
3. Spring
4. Valve body
5. Primary valve
6. Spring
7. Retaining plate

a. Disassembly

1. Remove the bolts attaching the governor body to the oil distributor and remove the governor body.
2. Remove the secondary governor valve retainer plate and remove the secondary governor valve and spring from the body.
3. Remove the primary governor valve retainer plates and remove the primary governor valve spring and valve from the body.

b. Checking

1. Inspect the governor valves and bores for scores. Minor scores may be removed from the valves with crocus cloth. Replace the governor if the valves or body is deeply scored.
2. Check for free movement of the valves to the bores. The valves should slide freely of their own weight in the bores when dry. Inspect fluid passages in the valve body for obstructions. All fluid passages must be clean.
3. Check the spring for proper tension and the retainer plates for warping.
4. Check the side clearance between the seal ring and groove, as shown in Fig. 7B–40. This clearance should be **0.04 ~ 0.16 mm (0.002 ~ 0.006 in).** To remove the seal ring, squeeze it up so that its joint will rise above the groove and disconnect the joint.

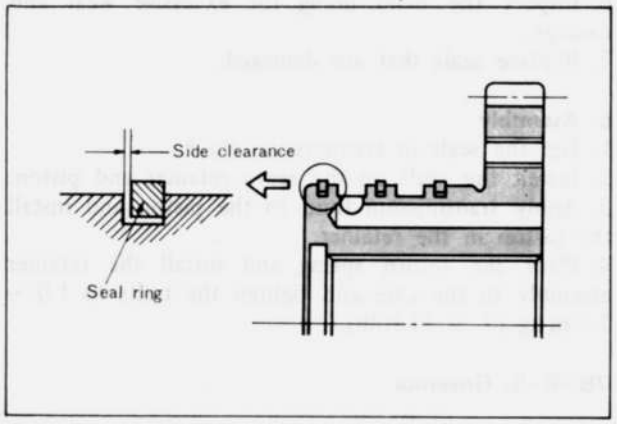

Fig. 7B–40 Clearance of oil seal ring

c. Assembly

1. Install the primary governor valve and spring in the body and install the retainer plate.
2. Install the secondary governor valve spring and valve in the body and install the retainer plate.
3. Install the governor body assembly to the oil distributor and tighten the bolts to **0.5 ~ 0.7 m-kg (3.6 ~ 5.1 ft-lb).**

7B–E–6. Oil Pump

a. Disassembly

1. Remove the four seal rings from the stator support.
2. Remove the large seal ring from the O.D. of the pump housing.
3. Remove the five bolts that attach the pump cover to the pump housing. Remove the pump cover from the housing.
4. Mark the top surface of the pump inner and outer gears with prussian blue to assure correct assembly. Do not scratch the gears. Remove the inner and outer gears from the pump housing.

b. Checking

1. Inspect the inner and outer gears for worn or damaged teeth.
2. Check the side clearance of the inner or outer gear



Fig. 7B–41 Measuring clearance (1)

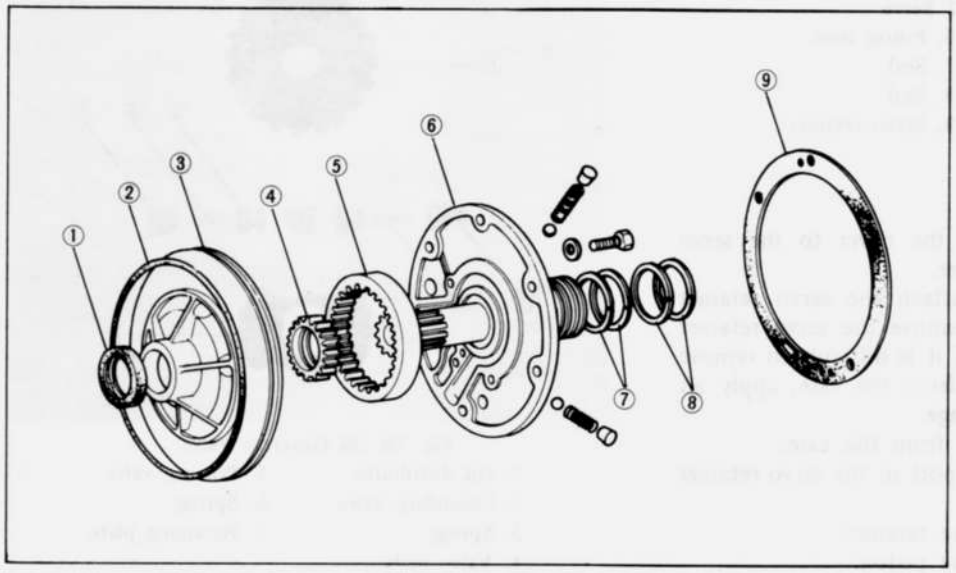

Fig. 7B–42 Oil pump disassembled

1. Seal
2. Large seal ring
3. Pump housing
4. Inner gear
5. Outer gear
6. Pump cover
7. Seal ring
8. Seal ring
9. Gasket

by using a straight edge and feeler gauge, as shown in Fig. 7B–41. The clearance should be 0.02 ~ 0.04 mm (0.001 ~ 0.002 in). If the clearance exceeds **0.08 mm (0.003 in)**, replace the gears. Make sure that the inner and outer gears are replaced as a set.

3. Check the clearance between the outer gear teeth and crescent. The clearance should be 0.14 ~ 0.21 mm (0.006 ~ 0.008 in). If the clearance exceeds **0.25 mm (0.010 in)**, replace the outer and inner gears.



Fig. 7B–43 Measuring clearance (2)

4. Check the clearance between the outer gear and housing, as shown in Fig. 7B–44. The clearance should be 0.05 ~ 0.20 mm (0.002 ~ 0.008 in). If the clearance exceeds **0.25 mm (0.010 in)**, replace the outer and inner gears.



Fig. 7B–44 Measuring clearance (3)

5. Inspect the large seal ring groove on the pump housing for damage.

6. Inspect the pump housing and cover for damage. Minor burrs or scores may be removed with crocus cloth.

c. Assembly

1. Install the inner and outer gears in the pump housing. Align the mating marks made during disassembly.

2. Lubricate the gears with clean transmission fluid. Install the pump housing on the **assembling guide** (49 2113 025A). Position the pump cover and gasket to the pump housing and temporarily tighten the attaching bolts. Set the runout of oil pump cover within 0.07 mm (0.0028 in) total indicator reading. Torque the bolts to **0.6 ~ 0.8 m-kg (4.3 ~ 5.8 ft-lb)** and remove the oil pump assembly from the guide.

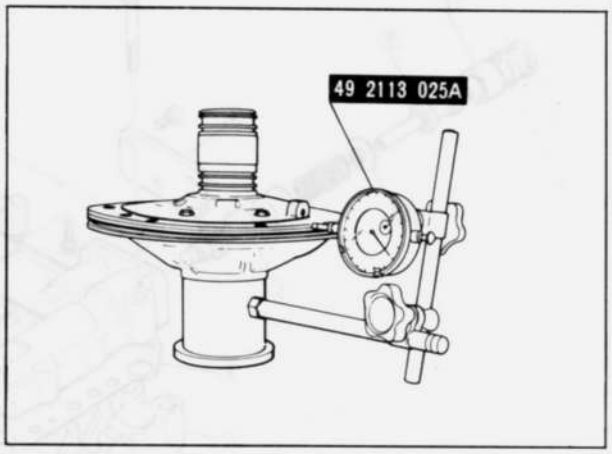

Fig. 7B–45 Assembling oil pump

3. Carefully install four new seal rings on the stator support. Install a new seal ring on the O.D. of the pump housing.

4. If the front pump seal must be replaced, use a suitable tool and remove it from the housing. Install a new seal.

7B–E–7. Control Valve Body

a. Disassembly

1. Remove the bolts attaching the oil strainer to the control valve body and remove the oil strainer.

2. Remove the bolts attaching the upper and lower valve bodies. Separate the lower valve body and separator plate from the upper valve body. Be careful not to lose the check valve and springs in the lower valve body when separating the upper and lower valve bodies.

3. Slide the manual valve out of the upper valve body.

4. Remove the cover plate for the 1–2 shift valve and 2–3 shift valve from the body.

5. Remove the 1–2 shift valve and spring from the body.

6. Remove the 2–3 shift valve, spring and plug from the body.

7. Remove the pressure modifier valve and spring from the body.

8. Remove the downshift valve cover plate from the body.

9. Remove the downshift valve and spring from the body.

10. Remove the throttle back-up valve spring and valve from the body.

11. Remove the vacuum throttle valve from the body.

12. Remove the pressure regulator valve cover plate from the body.

13. Remove the pressure regulator valve sleeve, plug, spring seat, spring and pressure regulator valve.

14. Remove the second lock valve and spring from the body.

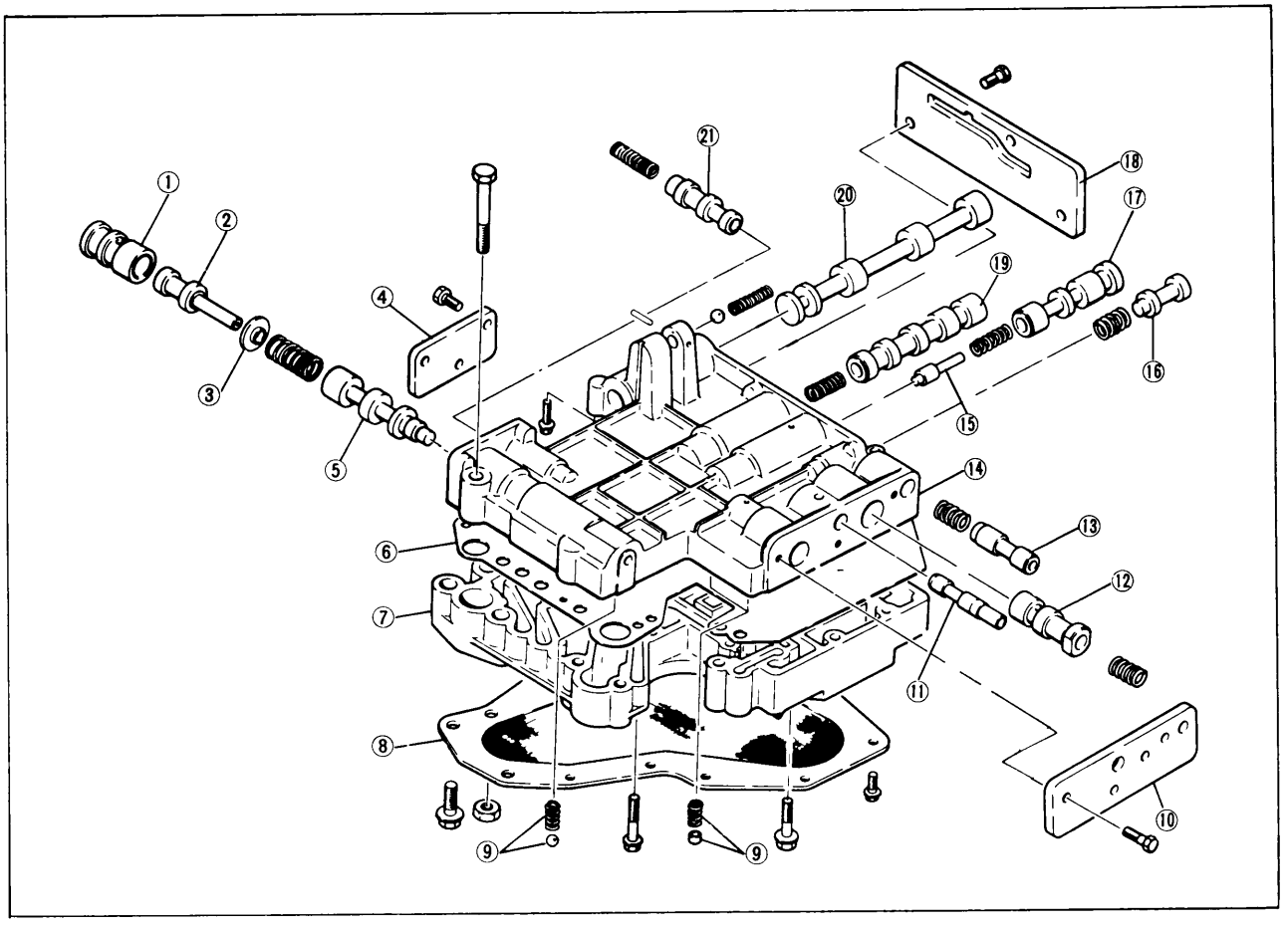

Fig. 7B–46 Control valve body disassembled

1. Pressure regulator sleeve
2. Pressure regulator plug
3. Spring seat
4. Plate
5. Pressure regulator valve
6. Separator plate
7. Lower valve body
8. Oil screen
9. Check valve and spring
10. Plate
11. Throttle valve
12. Throttle back-up valve
13. Downshift valve
14. Upper valve body
15. 2–3 shift plug
16. Modulator valve
17. 2–3 shift valve
18. Plate
19. 1–2 shift valve
20. Manual valve
21. Second lock valve

b. Checking

1. Clean all parts thoroughly in clean solvent, and then blow them dry with moisture-free compressed air.
2. Inspect all valve and plug bores for scores. Check all fluid passages for obstructions. Inspect the check valve for free movement. Inspect all mating surfaces for burrs or distortion. Inspect all plugs and valves for burrs and scores.
Crocus cloth can be used to polish valves and plugs if care is taken to avoid rounding the sharp edges of the valves and plugs.
3. Inspect all springs for distortion. Check all valves and plugs for free movement in their respective bores. Valves and plugs, when dry, must fall from their own weight in their respective bores.
4. Roll the manual valve on a flat surface to check it for a bent condition.

c. Assembly

Assemble the control valve body in the reverse order of disassembling.

Note:

1. Before installing, lubricate all valves, plugs and springs with transmission fluid.
2. The tightening torque of the following screws is **0.25 ~ 0.35 m-kg (1.8 ~ 2.5 ft-lb).** Use the **torque screw driver** (49 8000 021).
   Cover plate to body
   Lower valve body to upper valve body
   Oil strainer to lower valve body

7B–E–8. Connecting Shell and Sun Gear

a. Disassembly

1. Remove the external snap ring from the sun gear.
2. Remove the thrust washer from the connecting shell and sun gear.
3. From inside the connecting shell, remove the sun gear. Remove the internal snap ring from the sun gear.

b. Assembly

1. Install the internal snap ring on the sun gear. Install

the sun gear in the connecting shell.
2. Install the thrust washer on the sun gear and connecting shell.
3. Install the external snap ring on the sun gear.

7B–E–9. Internal Drive Flange

a. Disassembly
1. Remove the drive flange retaining snap ring from the flange.
2. Lift the drive flange from the internal gear.

b. Assebmly
1. Position the drive flange in the internal gear.
2. Secure the drive flange with the snap ring. Make sure that the snap ring is fully engaged in the groove.

7B–E–10. Planet Carrier

a. Checking
The planetary carrier cannot be divided into its individual components.
If any part or component is defective, replace the carrier as a unit.
Check the clearance between pinion washer and planetary carrier with a feeler.
The standard clearance is **0.20 ~ 0.70 mm (0.008 ~ 0.027 in).**

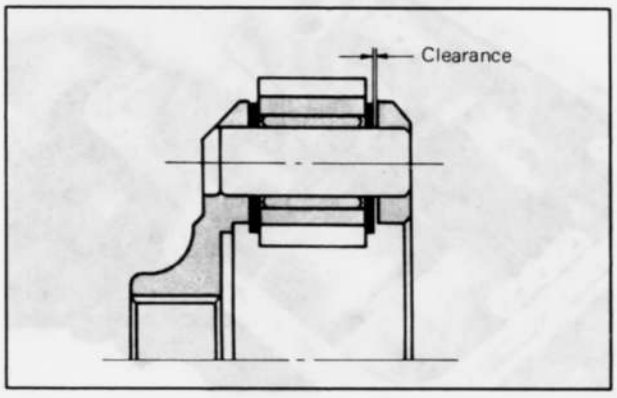

Fig. 7B–47 Clearance of planetary gear

If the clearance exceeds **0.80 mm (0.032 in)**, replace with new one.

7B–E–11. One-way Clutch

a. Disassembly
1. Remove the snap ring from each end of the one-way clutch and remove the clutch.
2. Remove the snap ring securing the outer race to the connecting drum and remove the outer race.

b. Checking
1. Inspect the outer and inner races for scores or damaged surface area where the rollers contact the races.
2. Inspect the rollers for excessive wear or damage.

c. Assembly
1. Position the outer race in the connecting drum.

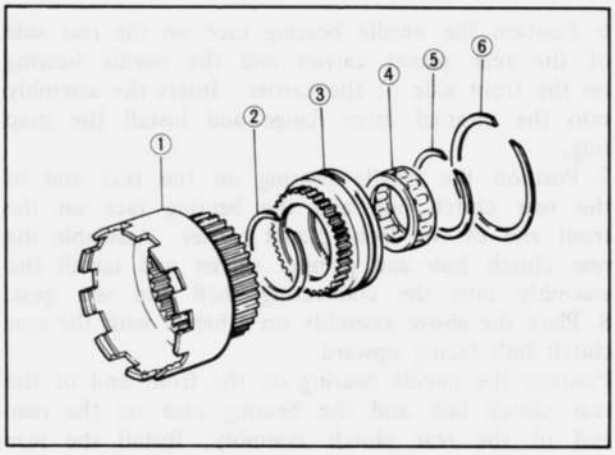

Fig. 7B–48 One-way clutch disassembled
1. Connecting drum
2. Snap ring
3. Outer race
4. One-way clutch
5. Snap ring
6. Snap ring

2. Secure the outer race with the snap ring. Make sure the snap ring is fully seated in the groove.
3. Install a snap ring in the forward snap ring groove of the connecting drum.
4. Install the one-way clutch on top of the snap ring. Be sure the arrow stamped on the one-way clutch is pointed toward the front of the vehicle.



Fig. 7B–49 Mark on the one-way clutch

5. Install the remaining snap ring at the rear of one-way clutch to secure the assembly.

7B–F. TRANSMISSION ASSEMBLY

1. Install the low and reverse brake in the transmission case, as described in Par. 7B–E–3.
2. While applying pressure, rotate the connecting drum clockwise to mesh the low and reverse brake plates with the splines of the drum.
3. Install the oil distributor needle bearing and race in the case. Then, install the governor and oil distributor assembly in the case, taking care not to damage the seal rings.
4. Install the output shaft.
5. Position the needle bearings on the front and rear sides of the internal drive flange. Retain the bearings with vaseline and install the flange on the output shaft. Install the snap ring.

6. Position the needle bearing race on the rear side of the rear planet carrier and the needle bearing on the front side of the carrier. Insert the assembly into the internal drive flange and install the snap ring.
7. Position the needle bearing on the rear end of the rear clutch hub and the bearing race on the front end of the front planet carrier. Assemble the rear clutch hub and plannet carrier and install the assembly into the connecting shell and sun gear.
8. Place the above assembly on a bench with the rear clutch hub facing upward.
Position the needle bearing on the front end of the rear clutch hub and the bearing race on the rear end of the rear clutch assembly. Install the rear clutch assembly on the rear clutch hub by rotating the units to mesh the rear clutch plates with the splines of the rear clutch hub, as shown in Fig. 7B–50.



Fig. 7B–50 Assembling clutches

9. Install the front clutch assembly on the rear clutch assembly by rotating the units to mesh the front clutch plates with the splines of the rear clutch.
10. Install the front clutch, rear clutch, front planet carrier and connecting shell and sun gear as an assembly into the transmission case.
11. Insert the brake band into the case around the front clutch drum.
12. Install the bolt retaining the band and tighten the bolt to **5.6 ~ 8.2 m-kg (41 ~ 59 ft-lb).**
13. Install the strut and tighten the servo piston stem sufficiently to retain the band.
14. Place a selective thickness thrust washer and bearing race on the rear end of the oil pump cover and retain them with vaseline.
15. Install the oil pump and gasket to the transmission case.
16. Apply sealant (0118 77 723A) on the converter housing and three attaching bolt flanges, as shown in Fig. 7B–51.
17. Place the converter housing on the case and install the six attaching bolts. Tighten the bolts to **4.5 ~ 5.5 m-kg (33 ~ 39 ft-lb).**
18. Install the input shaft.
19. To check the end play of the front clutch drum, use a feeler gauge and check the clearance between the front clutch drum and connecting shell. The

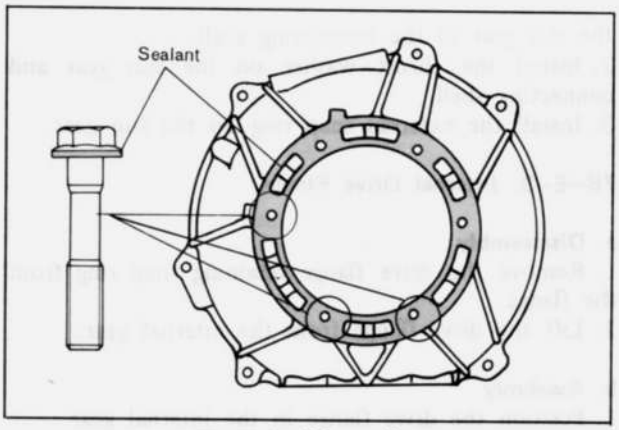

Fig. 7B–51 Applying sealant

end play should be **0.5 ~ 0.8 mm (0.020 ~ 0.031 in).** If the end play is not within the specifications, select and install the correct thrust washer.
The thrust washers are available in the following seven thicknesses:

1.5 mm (0.059 in)	2.3 mm (0.091 in)
1.7 mm (0.067 in)	2.5 mm (0.098 in)
1.9 mm (0.075 in)	2.7 mm (0.106 in)
2.1 mm (0.083 in)	

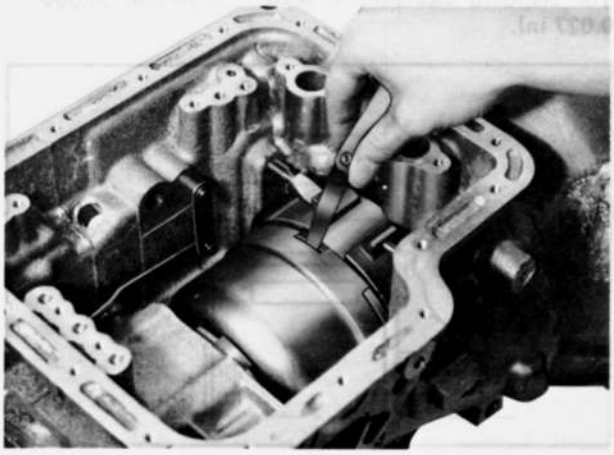

Fig. 7B–52 Checking end play

20. Using a dial indicator as shown in Fig. 7B–53, check the transmission total end play.
With the dial indicator contacting the end of the

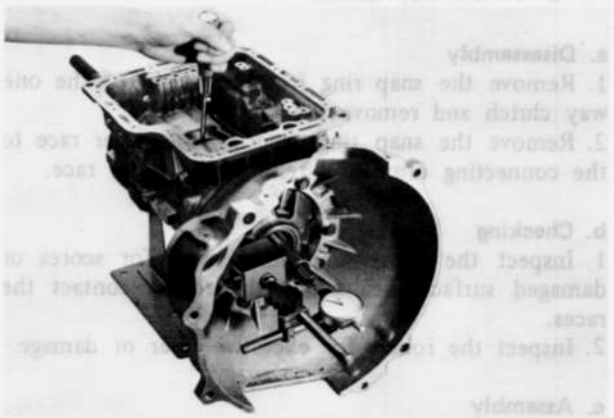

Fig. 7B–53 Checking end play

input shaft, set the dial indicator at Zero. Insert a screwdriver behind the connecting shell and move the connecting shell and the front part of the gear train forward. Record the dial indicator reading.
The end play should be **0.25 ~ 0.50 mm (0.010 ~ 0.020 in).** If it is not within the specifications, adjust the end play by selecting the proper race.
The bearing races are available in the following six thicknesses:

1.2 mm (0.047 in)	1.8 mm (0.071 in)
1.4 mm (0.055 in)	2.0 mm (0.079 in)
1.6 mm (0.063 in)	2.2 mm (0.087 in)

21. Adjust the band brake. To adjust tighten the servo piston stem using the **socket** (49 0378 345) to **1.2 ~ 1.5 m-kg (9 ~ 11 ft-lb)** and then back off the stem two turns. Hold the stem stationary and tighten the lock nut to **1.5 ~ 4.0 m-kg (11 ~ 29 ft-lb).**
22. Install the servo cover and tighten the bolts.
23. Install the parking brake lever and rod into the case and secure with the retaining ring.
24. Install the manual shaft in the case. Install the manual plate, washer and nut. Torque the nut to 3.0 ~ 4.0 m-kg (22 ~ 29 ft-lb).
25. Install the range select lever to the manual shaft with the washer and nut. Tighten the nut.

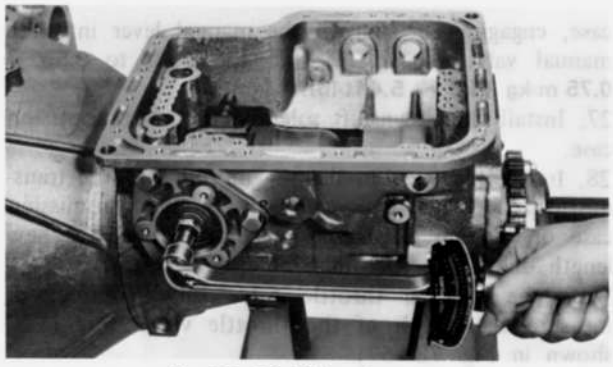

Fig. 7B–54 Tightening stem

26. Install the control valve body to the transmission

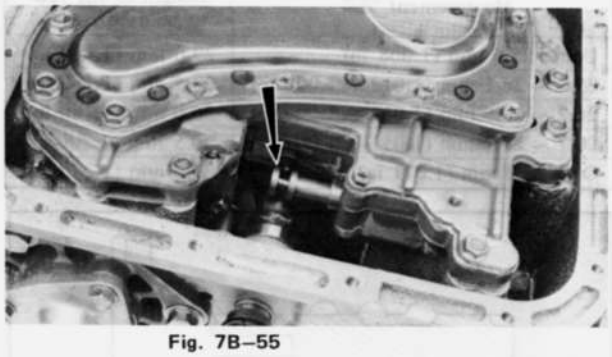

Fig. 7B–55

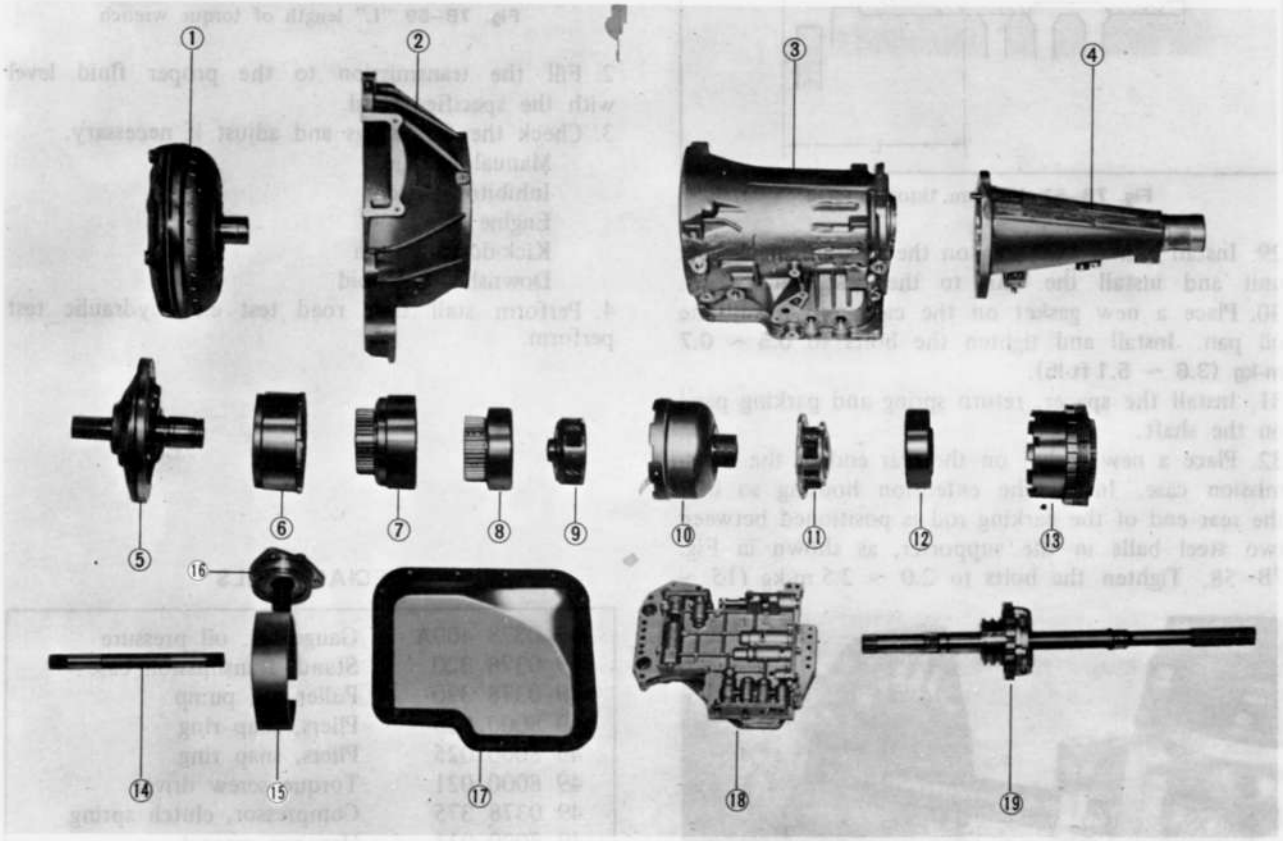

Fig. 7B–56 Main components of transmission

1. Torque converter
2. Converter housing
3. Case
4. Extension housing
5. Oil pump ass'y
6. Front clutch ass'y
7. Rear clutch ass'y
8. Rear clutch hub ass'y
9. Front planet carrier ass'y
10. Shell & sun gear ass'y
11. Rear planet carrier ass'y
12. Drive flange ass'y
13. Low & reverse brake ass'y
14. Input shaft
15. Brake band
16. Servo piston ass'y
17. Oil pan
18. Control valve ass'y
19. Governor valve ass'y and output shaft

case, engaging the pin on the manual lever into the manual valve groove. Tighten the bolts to **0.55 ~ 0.75 m-kg (4.0 ~ 5.4 ft-lb).**

27. Install the downshift solenoid to the transmission case.

28. Install the vacuum diaphragm rod into the transmission case. If the control valve body, transmission case or vacuum diaphragm unit was replaced, a new length diaphragm rod must be used.

With the vacuum throttle valve fully compressed, measure the depth of the throttle valve bore ("L" shown in Fig. 7B–57).

According to this measurement "L" and the following table, select the correct diaphragm rod.

Measurement "L"	Length of the rod to be used
Under 25.6 mm (1.008 in)	29.0 mm (1.140 in)
25.7 ~ 26.1 mm (1.012 ~ 1.028 in)	29.5 mm (1.160 in)
26.2 ~ 26.6 mm (1.032 ~ 1.047 in)	30.0 mm (1.180 in)
26.7 ~ 27.1 mm (1.051 ~ 1.067 in)	30.5 mm (1.200 in)
Over 27.2 mm (1.071 in)	31.0 mm (1.220 in)

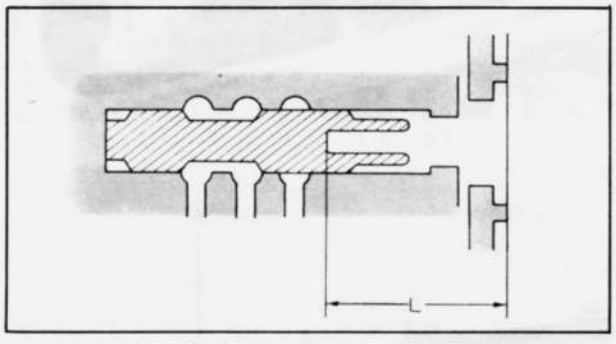

Fig. 7B–57 Vacuum throttle valve

29. Install a new "O" ring on the vacuum diaphragm unit and install the unit to the case hand tight.

30. Place a new gasket on the case and install the oil pan. Install and tighten the bolts to **0.5 ~ 0.7 m-kg (3.6 ~ 5.1 ft-lb).**

31. Install the spacer, return spring and parking pawl on the shaft.

32. Place a new gasket on the rear end of the transmission case. Install the extension housing so that the rear end of the parking rod is positioned between two steel balls in the supporter, as shown in Fig. 7B–58. Tighten the bolts to 2.0 ~ 2.5 m-kg (15 ~ 18 ft-lb).

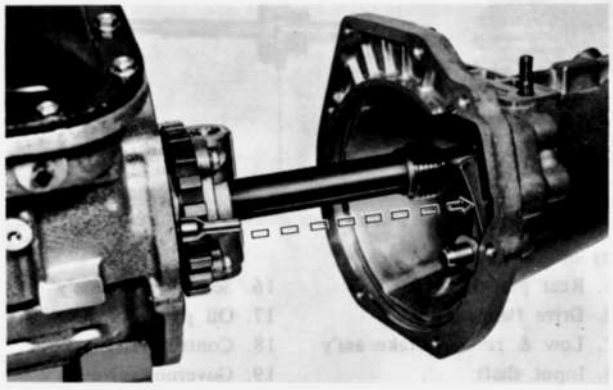

Fig. 7B–58 Installing extension housing

33. Install the converter to the oil pump.

7B–G. TRANSMISSION INSTALLATION

Install the transmission in the reverse order of removing.

Note:

1. Tighten the bolts attaching the converter to the drive plate to 3.7 ~ 5.5 m-kg (27 ~ 40 ft-lb).

To tighten to the specification, use the **wrench** (49 0877 435) and install a torque wrench to the center hole of the wrench. Then, tighten the bolts until the reading on the torque wrench comes to the value to be obtained by the undermentioned formula.

$$\frac{5L\ cm}{10+L\ cm}\ m\text{-}kg\left(\frac{35L\ in}{4+L\ in}\ ft\text{-}lb\right)$$

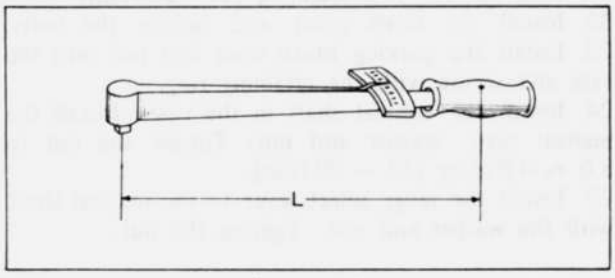

Fig. 7B–59 "L" length of torque wrench

2. Fill the transmission to the proper fluid level with the specified fluid.
3. Check the followings and adjust if necessary.
   - Manual linkage
   - Inhibitor switch
   - Engine idle
   - Kick-down switch
   - Downshift solenoid
4. Perform stall test, road test and hydraulic test perform.

SPECIAL TOOLS

49 0378 400A	Gauge set, oil pressure
49 0378 320	Stand, transmission case
49 0378 390	Puller, oil pump
49 8000 015	Pliers, snap ring
49 8000 025	Pliers, snap ring
49 8000 021	Torque screw driver
49 0378 375	Compressor, clutch spring
49 8000 031	Hexagon wrench
49 8000 035	Spinner handle
49 0378 345	Socket
49 0378 346	Hex.-head wrench
49 0877 435	Wrench
49 2113 025A	Assembling guide, oil pump

PROPELLER SHAFT

DESCRIPTION ..... 8 : 1
8–A. REMOVING PROPELLER SHAFT ..... 8 : 1
8–B. CHECKING PROPELLER SHAFT ..... 8 : 3
8–C. DISASSEMBLING UNIVERSAL JOINT ..... 8 : 3
8–D. CHECKING UNIVERSAL JOINT ..... 8 : 4
8–E. ASSEMBLING UNIVERSAL JOINT ..... 8 : 4
8–F. INSTALLING PROPELLER SHAFT ..... 8 : 5
SPECIAL TOOLS ..... 8 : 5

DESCRIPTION

The propeller shaft assembly consists of the front propeller shaft, rear propeller shaft, center support bearing, universal joints and yokes. The rear end of the propeller shaft is attached to the companion flange of the rear axle through the universal joint and the front end is attached to the main shaft of the transmission by means of the splined slip yoke, which permits fore and aft movement of the propeller shaft when the rear axle moves up and down.
The center of the propeller shaft is supported by the bearing attached to the under body.
The universal joints are lubricated for life, so do not require lubricating.

8–A. REMOVING PROPELLER SHAFT

1. Raise the rear end of the vehicle and support with stands.
2. Remove the bolts and screws attaching the heat insulators to the exhaust front pipe, and remove the heat insulators.
3. Disconnect the exhaust front pipe flange from the exhaust manifold by removing the nuts.
Disconnect the exhaust front pipe from the brackets by removing the bolts and nuts.
Remove the bolts and nuts attaching the front pipe flange to the main silencer, and remove the exhaust front pipe.
4. Remove the bolts attaching the heat insulator to the underbody and remove the heat insulator.
5. To maintain drive line balance, mark the mating parts of the companion flange, yokes and the propeller shaft so they may be reinstalled in their original positions.
6. Remove the bolts that attach the propeller shaft to the companion flange of the rear axle.

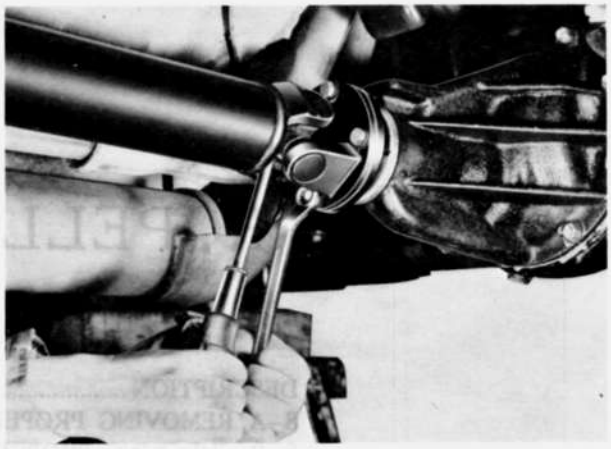

Fig. 8–1 Removing propeller shaft attaching bolts

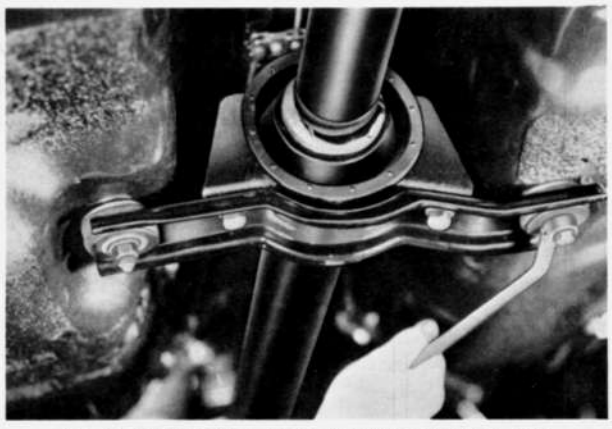

Fig. 8–2 Removing center bearing attaching nuts

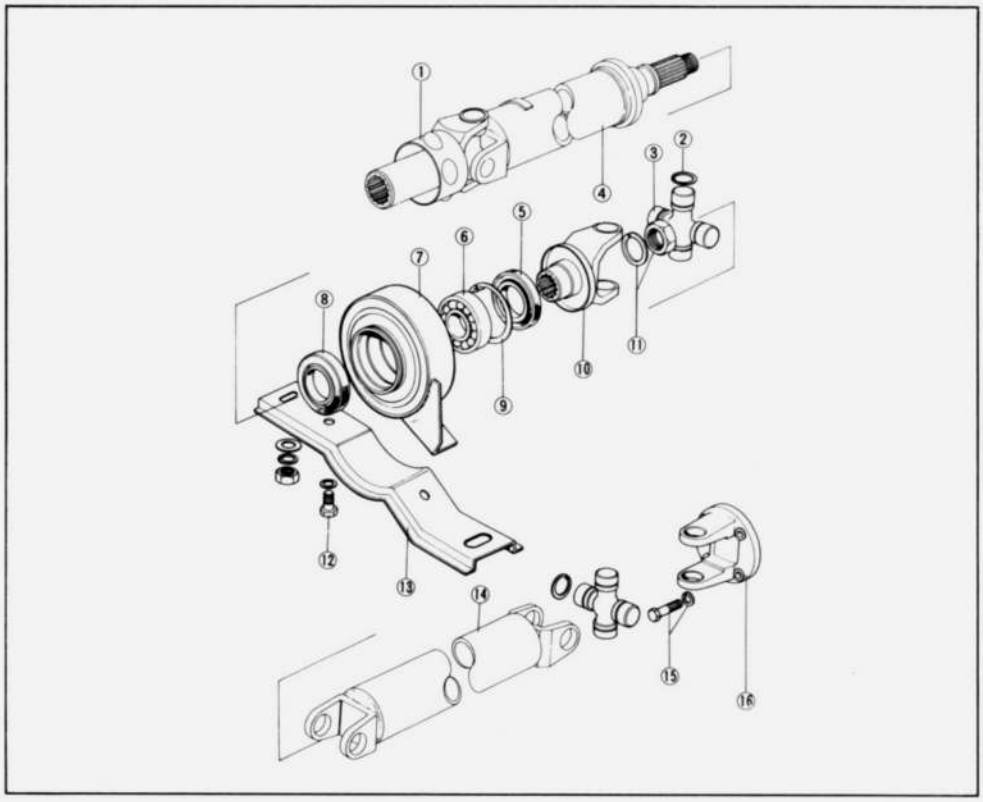

Fig. 8–3 Propeller shaft component

1. Sliding yoke
2. Snap ring
3. Spider
4. Front shaft
5. Grease seal
6. Center bearing
7. Center bearing support
8. Grease seal
9. Snap ring
10. Yoke (Center)
11. Nut and Washer
12. Bolt
13. Bracket
14. Rear shaft
15. Bolt and washer
16. Yoke (Rear)

7. Remove the center bearing bracket from the under body.
8. Pull the propeller shaft assembly rearward and remove from the transmission.
9. Install the **turning & holder** (49 0259 440) into the extension housing to prevent lubricant from leaking out of the housing.
10. Remove the bolts attaching the bracket to the center bearing support and remove the bracket.



Fig. 8–4 Main shaft holder

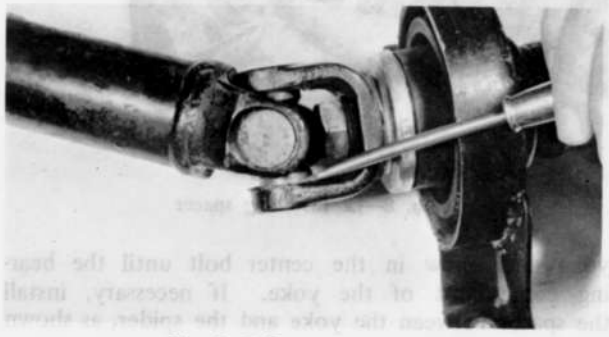

Fig. 8–5 Removing snap ring

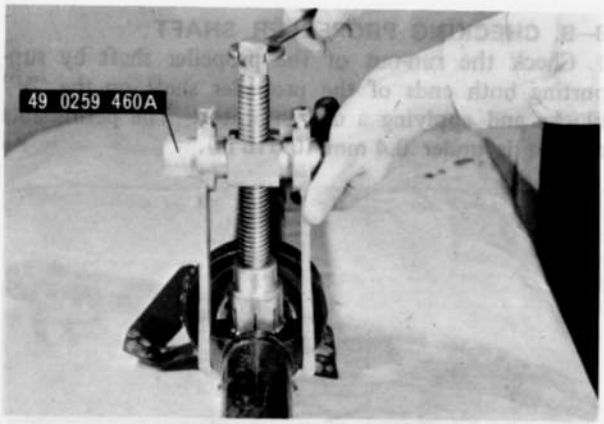

Fig. 8–6 Removing bearing cup

11. Remove the universal joints, as described in Par. 8–C.
12. Remove the nut attaching the yoke and bearing to the front propeller shaft. Remove the yoke and bearing support.

Note: Do not remove the oil seals and bearing from the support unless they are defective.

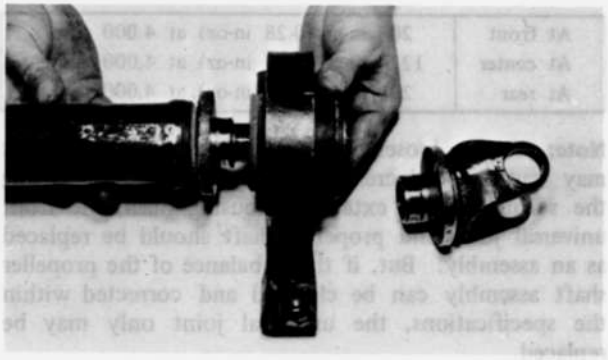

Fig. 8–7 Removing center bearing support

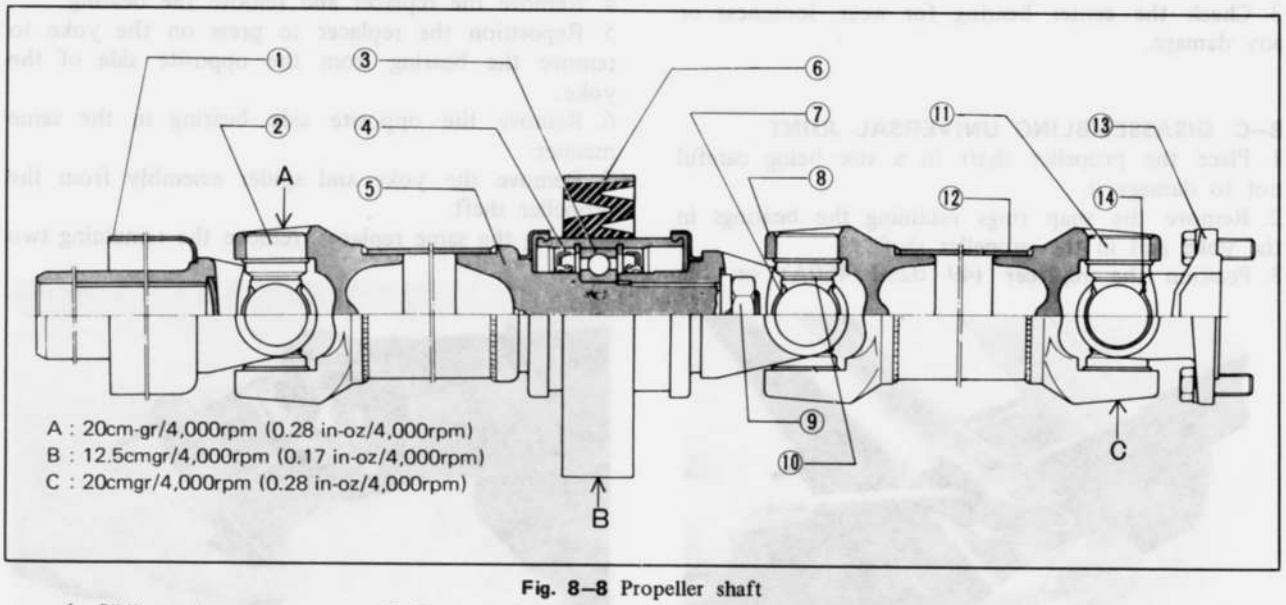

Fig. 8–8 Propeller shaft

1. Sliding yoke
2. Front universal joint
3. Bearing
4. Grease seal
5. Front shaft
6. Center bearing support
7. Snap ring
8. Yoke (Center)
9. Nut
10. Center universal joint
11. Rear universal joint
12. Rear shaft
13. Yoke (Rear)
14. Snap ring

8–B. CHECKING PROPELLER SHAFT

1. Check the run-out of the propeller shaft by supporting both ends of the propeller shaft on the "V" blocks and applying a dial indicator. The permissible run-out is **under 0.4 mm (0.016 in).**

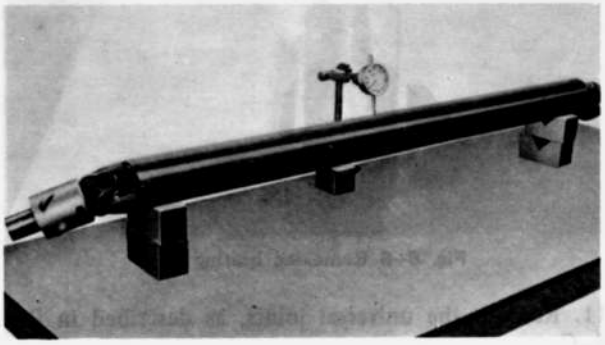

Fig. 8–9 Checking propeller shaft run-out

2. Check the propeller shaft for dynamic unbalance. The maximum permissible unbalance is shown in the following table. If the unbalance is not within the specifications, correct or replace the propeller shaft assembly.

At front	20 cm-gr (0.28 in-oz) at 4,000 rpm
At center	12.5 cm-gr (0.17 in-oz) at 4,000 rpm
At rear	20 cm-gr (0.28 in-oz) at 4,000 rpm

Note: As the looseness on the front universal joint may cause the increase of the unbalance, resulting the seizure of the extension housing bush, the front universal joint and propeller shaft should be replaced as an assembly. But, if the unbalance of the propeller shaft assembly can be checked and corrected within the specifications, the universal joint only may be replaced.

3. Check the center bearing for wear, looseness or any damage.

8–C. DISASSEMBLING UNIVERSAL JOINT

1. Place the propeller shaft in a vise being careful not to damage it.
2. Remove the snap rings retaining the bearings in the yoke and in the propeller shaft.
3. Position the **replacer** (49 0259 460A) on the



Fig. 8–10 Removing snap ring

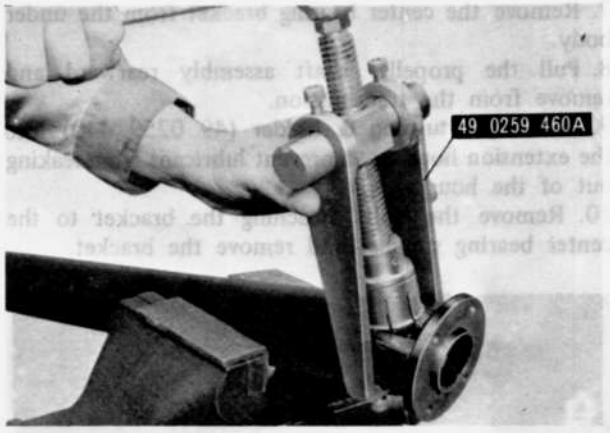

Fig. 8–11 Removing bearing cap

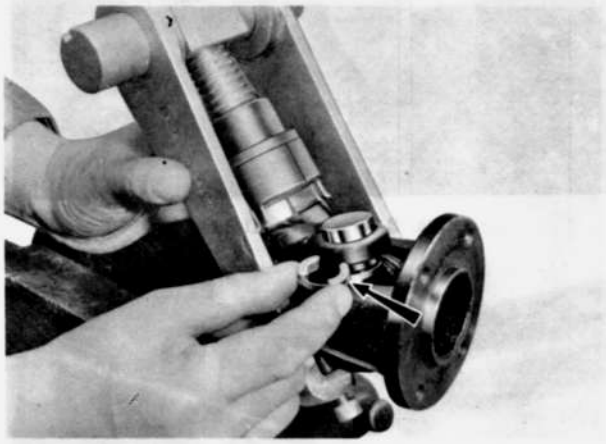

Fig. 8–12 Installing spacer

yoke and screw in the center bolt until the bearing comes out of the yoke. If necessary, install the spacer between the yoke and the spider, as shown in Fig. 8–12.
4. Remove the replacer and remove the bearing.
5. Reposition the replacer to press on the yoke to remove the bearing from the opposite side of the yoke.
6. Remove the opposite side bearing in the same manner.
7. Remove the yoke and spider assembly from the propeller shaft.
8. Using the same replacer, remove the remaining two

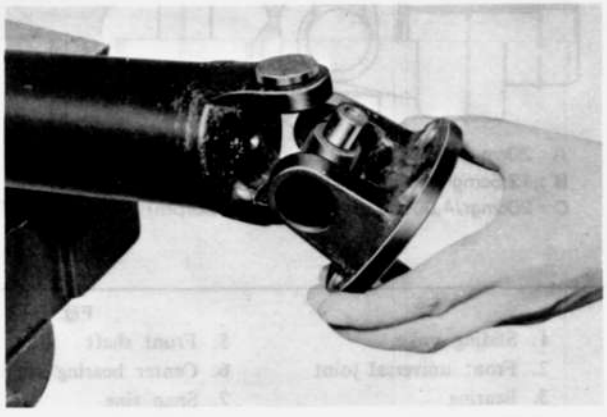

Fig. 8–13 Removing yoke and spider assembly



Fig. 8–14 Removing bearing cap

bearings in the same manner.
9. Remove the spider from the yoke.

8–D. CHECKING UNIVERSAL JOINT

1. Examine the bearing surfaces of the spider. They should be smooth and free from pits.
2. Measure the diameter of the spider. If it is under **16.439 mm (0.6472 in)**, replace with a new universal joint assembly.

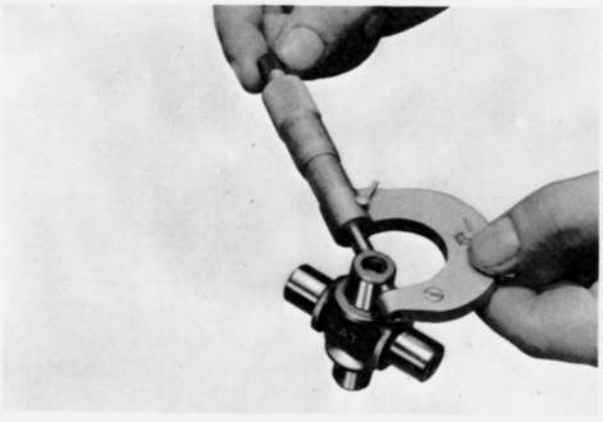

Fig. 8–15 Measuring spider diameter

3. Check the needle rollers for wear or any damage. The rollers should have a uniformly good appearance and roll freely inside the bearing cup.

8–E. ASSEMBLING UNIVERSAL JOINT

1. Place the bearing into the yoke at the end of the propeller shaft.
2. Position the spider in the yoke.
3. Position the replacer and press the bearing, while guiding the spider into the bearing, until the snap ring can be installed.
4. Remove the replacer and install the snap ring.
5. Place the bearing into the opposite side of the yoke.
6. Install the replacer and press on the bearing until the snap ring can be installed.
7. Remove the replacer and install the snap ring.

Note: Select the snap rings so as to place the spider



Fig. 8–16 Installing bearing cup assembly

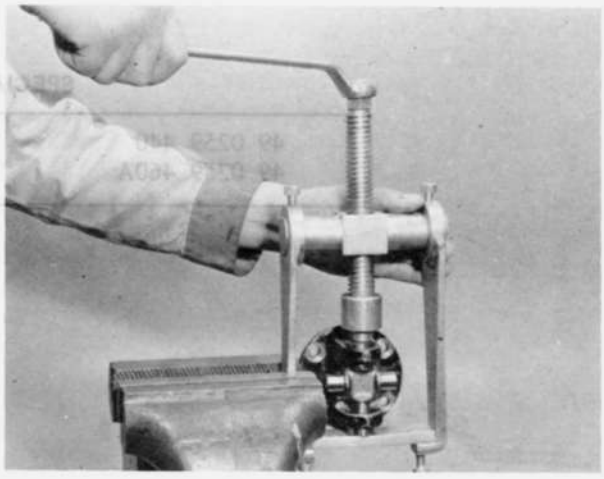

Fig. 8–17 Installing bearing cap

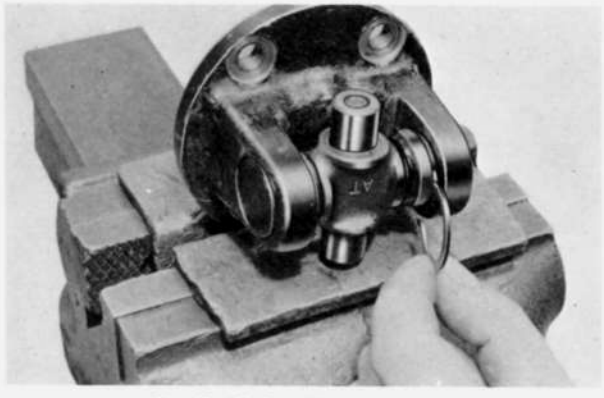

Fig. 8–18 Installing snap ring

in the center of the yoke and to give a suitable slight drag fit (not binding).
Be sure to use same sized snap rings to both sides of the yoke.
Snap rings are available in the following thickness:

1.22 mm (0.0480 in)	1.32 mm (0.0520 in)
1.24 mm (0.0488 in)	1.34 mm (0.0528 in)
1.26 mm (0.0496 in)	1.36 mm (0.0535 in)
1.28 mm (0.0504 in)	1.38 mm (0.0543 in)
1.30 mm (0.0512 in)	

8. Position the yoke on the spider and install two bearings and snap rings in the same manner as instructed above.



Fig. 8–19 Installing bearing cup

8–F. INSTALLING PROPELLER SHAFT

Install the propeller shaft in the reverse order of removing, noting the following points.

1. Be sure to observe location marks on the companion flange, yokes and propeller shaft for correct assembly.
2. Torque the nut attaching the yoke and center bearing to the front shaft to **16 ~ 18 m-kg (116 ~ 130 ft-lb).**
3. The tightening torque of the nuts attaching the center bearing support is **3.8 ~ 5.3 m-kg (27 ~ 38 ft-lb).**
4. The tightening torque of the bolts attaching the yoke to companion flange is **3.5 ~ 3.8 m-kg (25 ~ 27 ft-lb).**

SPECIAL TOOLS

49 0259 440	Turning & holder, mainshaft
49 0259 460A	Replacer, universal joint

REAR AXLE

DESCRIPTION ..... 9 : 1
9–A. REAR AXLE SHAFT ..... 9 : 1
9–A–1. Removing Rear Axle Shaft ..... 9 : 1
9–A–2. Replacing Axle Shaft Bearing ..... 9 : 1
9–A–3. Installing Rear Axle Shaft ..... 9 : 2
9–B. REAR AXLE REMOVAL ..... 9 : 2
9–C. REAR AXLE DISASSEMBLY ..... 9 : 3
9–C–1. Removing Differential ..... 9 : 3
9–C–2. Disassembling Differential ..... 9 : 3
9–C–3. Removing Drive Pinion ..... 9 : 5
9–D. REAR AXLE INSPECTION ..... 9 : 5
9–D–1. Checking Drive Pinion and Ring Gear ..... 9 : 5
9–D–2. Checking Differential Gears ..... 9 : 5
9–D–3. Checking Bearings ..... 9 : 5
9–D–4. Replacing Pinion Bearing Outer Race ..... 9 : 5
9–D–5. Checking Collapsible Spacer ..... 9 : 5
9–D–6. Checking Oil Seal ..... 9 : 5
9–D–7. Checking Companion Flange ..... 9 : 5
9–E. REAR AXLE ASSEMBLY ..... 9 : 5
9–E–1. Adjusting Drive Pinion ..... 9 : 5
9–E–2. Adjusting Pinion Bearing Preload ..... 9 : 6
9–E–3. Assembling Differential ..... 9 : 7
9–E–4. Installing Differential ..... 9 : 8
9–E–5. Adjusting Backlash ..... 9 : 8
9–F. REAR AXLE INSTALLATION ..... 9 : 9
SPECIAL TOOLS ..... 9 : 9

DESCRIPTION

MAZDA RX-4 is equipped with a semi-floating type rear axle with a hypoid ring gear and pinion set. The final reduction ratio is 3.636.

9–A. REAR AXLE SHAFT

9–A–1. Removing Rear Axle Shaft

1. Raise the rear end of the vehicle and support the rear axle housing with stands.
2. Remove the rear wheel and brake drum.
3. Remove the brake shoe assembly, as detailed in Par. 11–G–1.
4. Remove the bolts holding the brake backing plate and bearing retainer to the axle housing.
5. Remove the wheel cap adapter from the axle shaft flange.
6. Extract the axle shaft assembly using the **puller** (49 0223 630A) and **attachment** (49 8501 631).

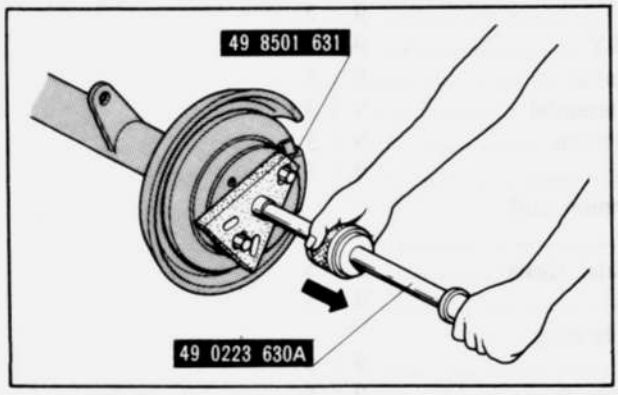

Fig. 9–1 Removing rear axle shaft

7. Remove the oil seal from the axle housing, if necessary.

9–A–2. Replacing Axle Shaft Bearing

1. Remove the rear axle shaft assembly, as described in Par. 9–A–1.
2. Using the **replacer** (49 1011 745), support the spacer and press the axle shaft out of the collar and bearing,

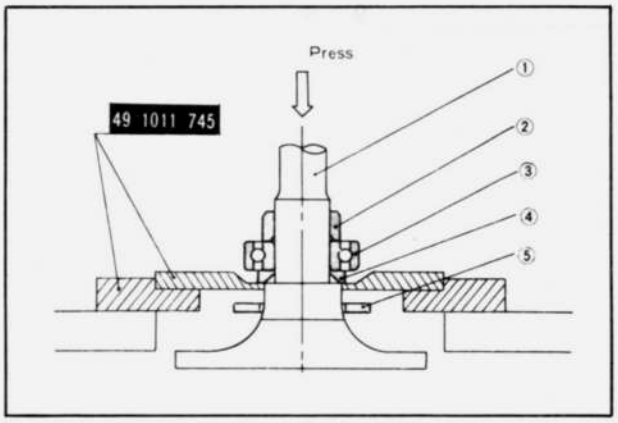

Fig. 9–2 Bearing replacer

1. Rear axle shaft
2. Collar
3. Bearing
4. Spacer
5. Retainer

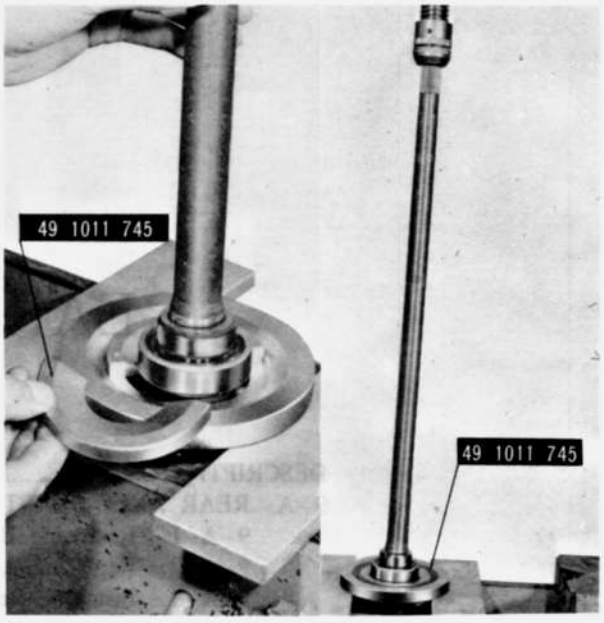

Fig. 9–3 Removing bearing and collar

as shown in Fig. 9–3.

Note: In case the pressure necessary to press out the axle shaft exceeds 10 tons (22,000 lb) or if the bearing replacer is not available, grind off the part of bearing retaining collar and cut it with the use of a chisel, as shown in Fig. 9–4, taking care not to damage the axle shaft.



Fig. 9–4 Cutting bearing retaining

3. Remove the bearing retainer from the axle shaft.
4. Clean all parts and check the condition of the collar, spacer and axle shaft.
5. Install the bearing retainer and spacer onto the axle shaft.
6. Position the bearing on the axle shaft with the sealed side toward the axle shaft flange, and press it on until the spacer comes in contact with the shoulder of the shaft.
7. Press the bearing retaining collar onto the axle shaft using the **replacer** (49 1011 745) until it is firm contact with the bearing inner race.

Note: If the bearing retaining collar is press-fitted with less than 2.5 tons (5,500 lb), replace the collar with a new one.

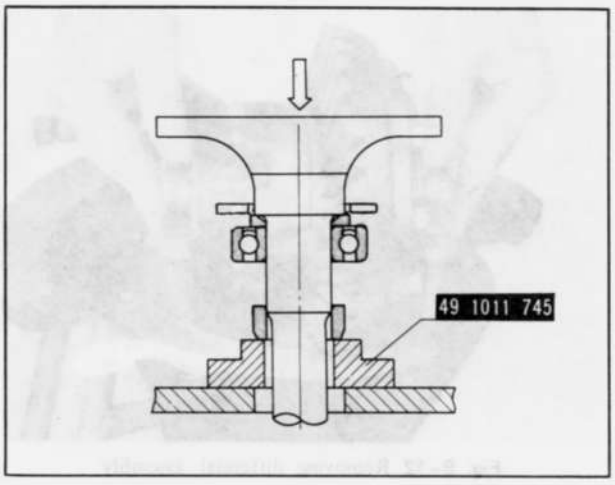

Fig. 9–5 Installing bearing retaining collar

9–A–3. Installing Rear Axle Shaft

1. Apply grease to the oil seal located in the axle housing.
2. Check the rear axle shaft end play as follows: Install the backing plate and gasket temporarily, and measure the depth of the bearing seat in the axle housing, using a depth gauge as shown in Fig. 9–6. Then, measure the width of bearing outer race. The difference between the two measurements indicates the required thickness of the shims.

The maximum permissible end play is **0.1 mm (0.004 in).** Shims are available in thickness of 0.1 mm and 0.4 mm (0.004 in and 0.016 in).

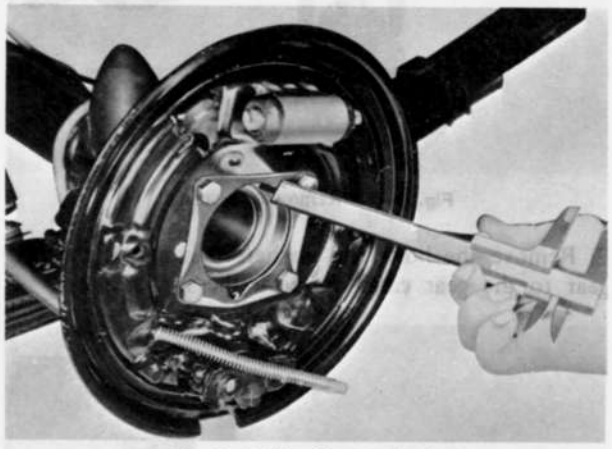

Fig. 9–6 Checking end play

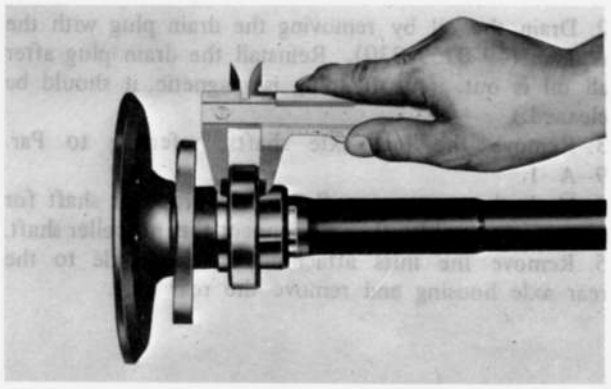

Fig. 9–7 Measuring width of bearing outer race

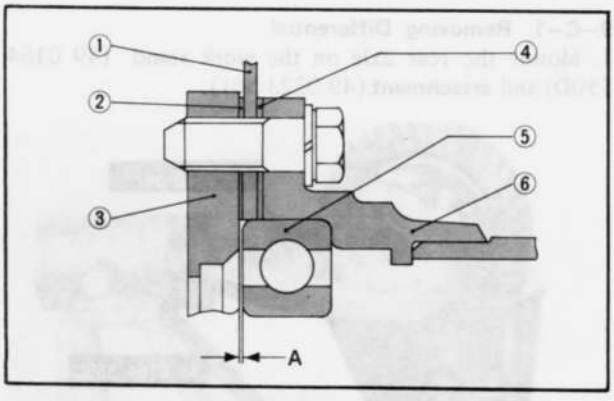

Fig. 9–8 End play

A: Bearing end play
1. Brake backing plate
2. Gasket
3. Bearing retainer
4. Adjusting shim
5. Bearing
6. Rear axle housing

3. Remove the brake backing plate.
4. Apply a thin coat of sealer to both sides of the shims.
5. Position the shims and brake backing plate in place. Then, install the rear axle shaft assembly, bearing retainer and gasket. Tighten the bolts.
6. Install the brake shoe assembly.
7. Install the brake drum, center cap adapter and wheel.

9–B. REAR AXLE REMOVAL

1. Raise the rear end of the vehicle and support with stands.

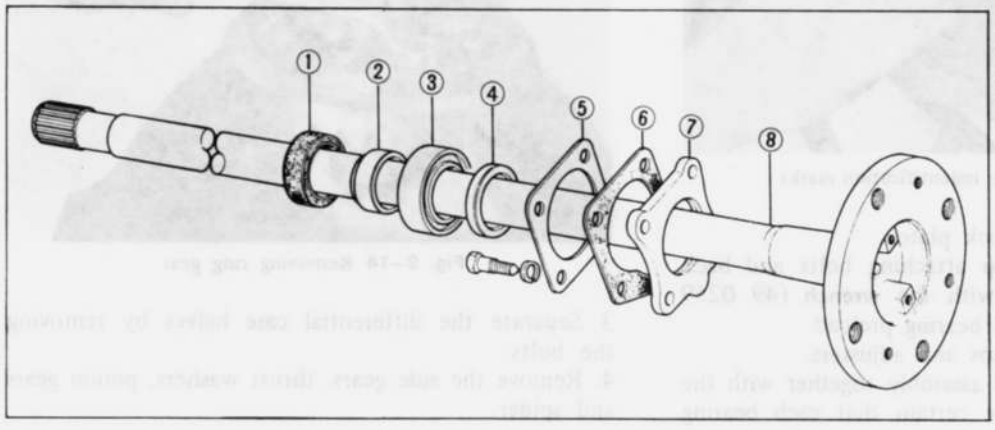

Fig. 9–9 Rear axle shaft
1. Oil seal
2. Bearing collar
3. Rear axle bearing
4. Bearing spacer
5. Adjusting shim
6. Gasket
7. Bearing retainer
8. Rear axle shaft

2. Drain the oil by removing the drain plug with the **wrench** (49 0259 730). Reinstall the drain plug after all oil is out. (As the plug is magnetic, it should be cleaned.)
3. Remove the rear axle shafts, referring to Par. 9–A–1.
4. Mark the companion flange and propeller shaft for correct reassembly, then disconnect the propeller shaft.
5. Remove the nuts attaching the rear axle to the rear axle housing and remove the rear axle.

9–C. REAR AXLE DISASSEMBLY

9–C–1. Removing Differential

1. Mount the rear axle on the **work stand** (49 0164 550D) and **attachment** (49 0223 561).

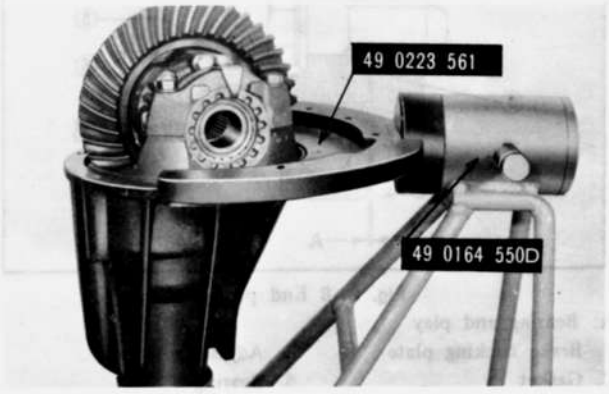

Fig. 9–10 Stand for rear axle

2. Apply identification punch marks on the carrier, differential bearing cap and adjuster for reassembly purpose.

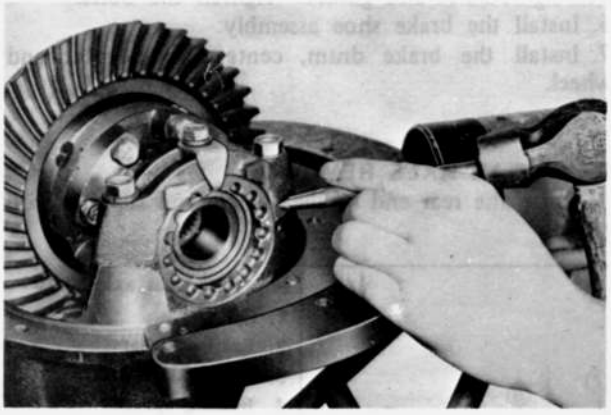

Fig. 9–11 Applying indentification marks

3. Remove the adjuster lock plate.
4. Loosen the bearing cap attaching bolts and back off the adjuster slightly with the **wrench** (49 0259 720) to relieve differential bearing preload.
5. Remove the bearing caps and adjusters.
6. Remove the differential assembly together with the bearing outer races. Make certain that each bearing outer race remains with its respective bearing.

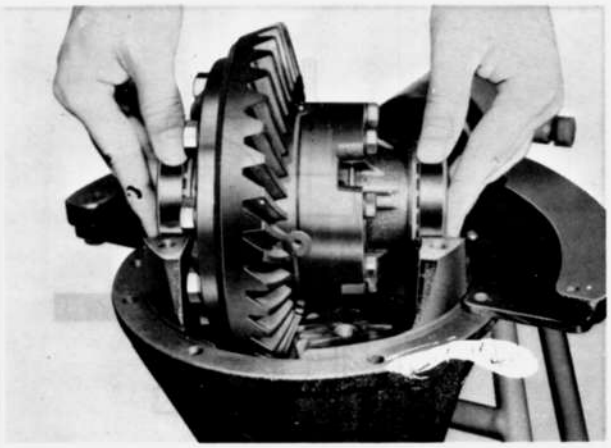

Fig. 9–12 Removing differeial assembly

9–C–2. Disassembling Differential

1. If the bearing replacement is necessary, remove the bearings from the differential gear case with a suitable puller.

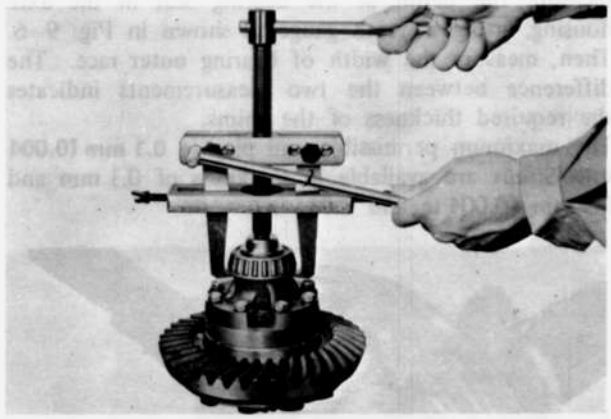

Fig. 9–13 Removing bearing

2. Remove the bolts and washers that attach the ring gear to the gear case. Remove the ring gear.

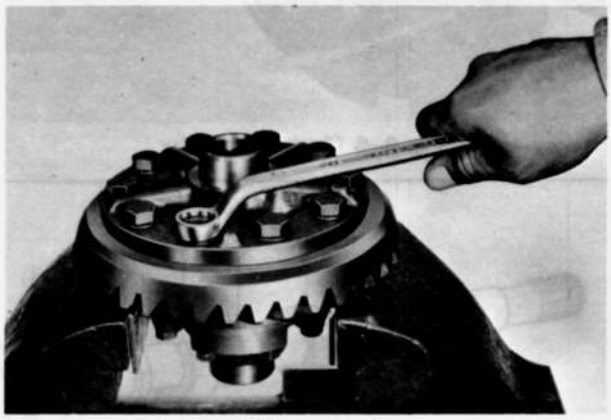

Fig. 9–14 Removing ring gear

3. Separate the differential case halves by removing the bolts.
4. Remove the side gears, thrust washers, pinion gears and spider.

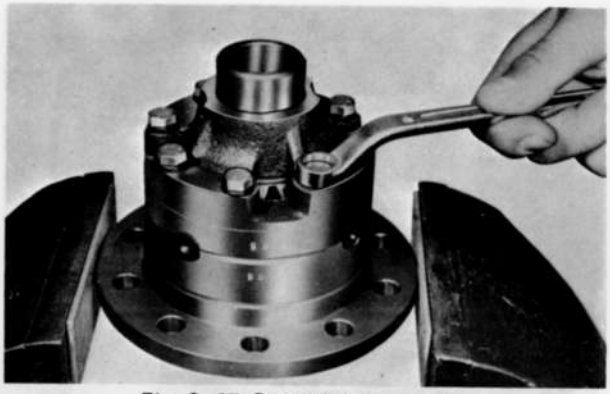

Fig. 9–15 Separating case halves

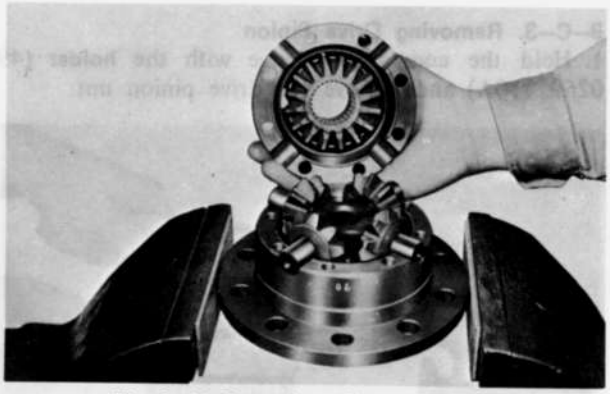

Fig. 9–16 Removing differential gears

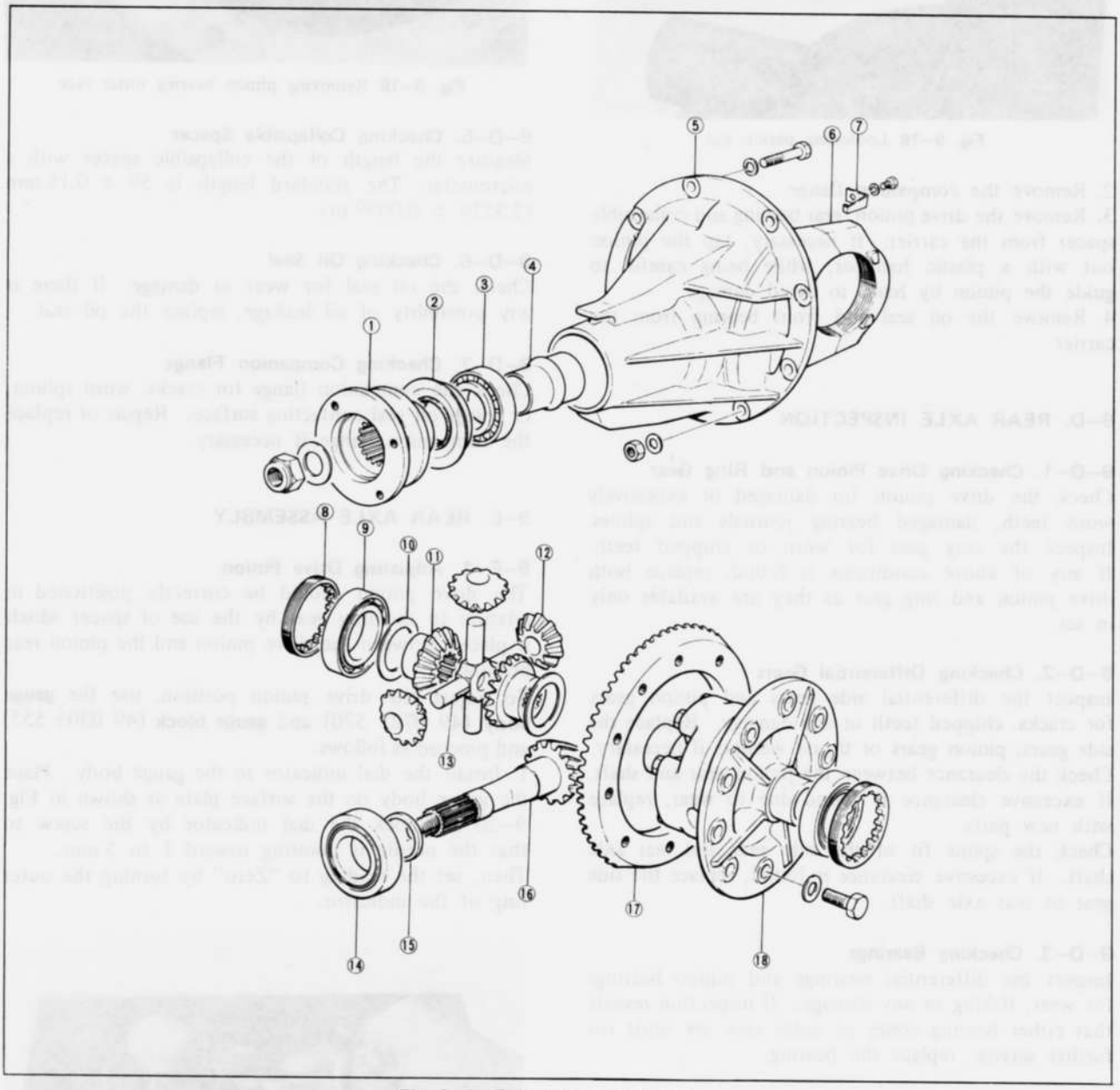

Fig. 9–17 Rear axle components

1. Companion flange
2. Oil seal
3. Front bearing
4. Collapsible spacer
5. Carrier
6. Bearing cap
7. Adjuster lock plate
8. Adjuster
9. Differential bearing
10. Thrust washer
11. Side gear
12. Pinion gear
13. Spider
14. Rear bearing
15. Spacer
16. Drive pinion
17. Ring gear
18. Gear case

9–C–3. Removing Drive Pinion

1. Hold the companion flange with the **holder** (49 0259 710A) and remove the drive pinion nut.

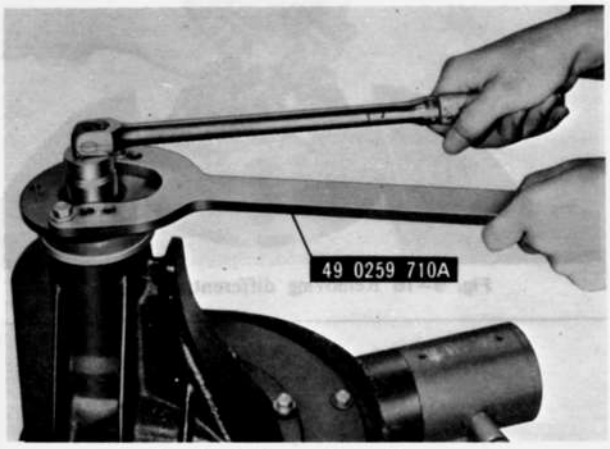

Fig. 9–18 Loosening pinion nut

2. Remove the companion flange.
3. Remove the drive pinion, rear bearing and collapsible spacer from the carrier. If necessary, tap the pinion out with a plastic hammer, while being careful to guide the pinion by hand to avoid damage.
4. Remove the oil seal and front bearing from the carrier.

9–D. REAR AXLE INSPECTION

9–D–1. Checking Drive Pinion and Ring Gear

Check the drive pinion for damaged or excessively worn teeth, damaged bearing journals and splines. Inspect the ring gear for worn or chipped teeth. If any of above conditions is found, replace both drive pinion and ring gear as they are available only in set.

9–D–2. Checking Differential Gears

Inspect the differential side gears and pinion gears for cracks, chipped teeth or any damage. Replace the side gears, pinion gears or thrust washers if necessary. Check the clearance between the pinion gear and shaft. If excessive clearance is found due to wear, replace with new parts.

Check the spline fit of the side gear and rear axle shaft. If excessive clearance is found, replace the side gear or rear axle shaft.

9–D–3. Checking Bearings

Inspect the differential bearings and pinion bearings for wear, flaking or any damage. If inspection reveals that either bearing cones or outer race are unfit for further service, replace the bearing.

9–D–4. Replacing Pinion Bearing Outer Race

If it becomes necessary to replace the pinion bearing outer race(s), proceed as follows:

1. Remove the old outer race from the carrier by using a drift in slots provided for this purpose.
2. Install a new outer race into the carrier.

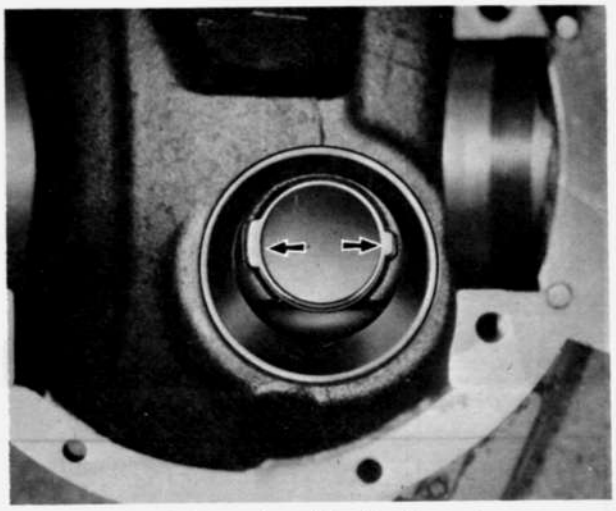

Fig. 9–19 Removing pinion bearing outer race

9–D–5. Checking Collapsible Spacer

Measure the length of the collapsible spacer with a micrometer. The standard length is 59 ± 0.15 mm (2.3229 ± 0.0059 in).

9–D–6. Checking Oil Seal

Check the oil seal for wear or damage. If there is any possibility of oil leakage, replace the oil seal.

9–D–7. Checking Companion Flange

Check the companion flange for cracks, worn splines, or rough oil seal contacting surface. Repair or replace the companion flange if necessary.

9–E. REAR AXLE ASSEMBLY

9–E–1. Adjusting Drive Pinion

The drive pinion should be correctly positioned in relation to the ring gear by the use of spacer which is placed between the drive pinion and the pinion rear bearing.

To adjust the drive pinion position, use the **gauge body** (49 0727 570) and **gauge block** (49 0305 555) and proceed as follows:

1. Install the dial indicator to the gauge body. Place the gauge body on the surface plate as shown in Fig. 9–20 and lock the dial indicator by the screw so that the needle is pointing toward 1 to 3 mm.

Then, set the reading to "Zero" by turning the outer ring of the indicator.



Fig. 9–20 ZERO setting

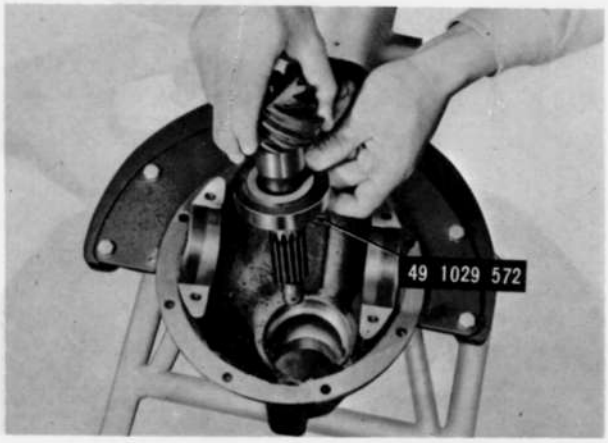

Fig. 9–21 Installing pinion and bearing model

2. Make certain that the differential bearing support bores are free of dirt and burrs.
3. Install the pinion and **bearing model** (49 1029 572) together with a spacer into the carrier.
4. Place the gauge block on the pinion and carefully place the gauge body adjusted in Step 1 on the gauge block so that the feeler of the indicator comes in contact with the lowest portion of the differential bearing support bore.

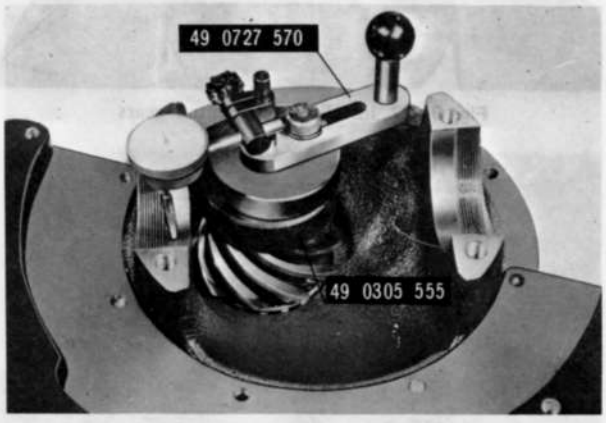

Fig. 9–22 Measuring pinion height

5. Record the number of hundredths dial indicator moves in a "+" (plus) or "–" (minus) direction from zero.
(a) If the dial indicator shows "+" (plus), add the amount equivalent to the reading.
(b) If the dial indicator shows "–" (minus), subtract the amount equivalent to the reading.
6. Remove the gauge body and dial indicator from the carrier and check zero setting on the surface plate to make sure this setting was not disturbed by handling.
7. In order to compensate for all of the machining variables, the pinion has a plus or minus reading recorded in hundredth millimeters on the rear face of the pinion.

Example:
M + 2 = + 0.02 mm
M – 1 = – 0.01 mm

(a) If the pinion is marked "+" (plus), subtract the amount specified on the pinion.
(b) If the pinion is marked "–" (minus), add the amount specified on the pinion.
8. Place the bearing model and the rear pinion bearing on the surface plate and compare their heights as shown in Fig. 9–23.
(a) If the bearing is higher than the model, subtract the amount equivalent to the difference.
(b) If the bearing is lower than the model, add the amount equivalent to the difference.

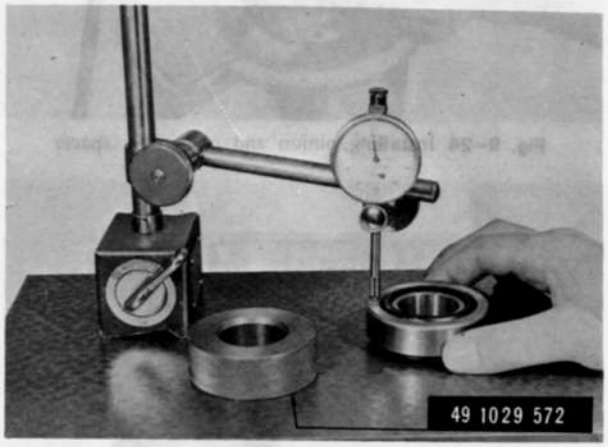

Fig. 9–23 Measuring bearing height

9. Finally select the correct pinion spacer to be used during pinion assembly by adding or subtracting the amount determined in Step 5, 7 and 8 from the thickness of the spacer used in Step 3.
The spacers are available in the following thickness:

Identification mark	Thickness
52	3.52 mm (0.1386 in)
55	3.55 mm (0.1398 in)
58	3.58 mm (0.1409 in)
61	3.61 mm (0.1421 in)
64	3.64 mm (0.1433 in)
67	3.67 mm (0.1445 in)
70	3.70 mm (0.1457 in)
73	3.73 mm (0.1469 in)

10. Position the correct spacer on the pinion and install the rear pinion bearing.

9–E–2. Adjusting Pinion Bearing Preload

1. Install the collapsible spacer onto the drive pinion and install them in the carrier, as shown in Fig. 9–24.
2. Place the front pinion bearing in position on the pinion. Hold the pinion fully forward and drive the pinion bearing over the pinion until seated.
3. Apply gear lubricant to the lip of the pinion oil seal and install the pinion oil seal into the carrier.
4. Install the companion flange on the pinion by tapping with a plastic hammer.
5. Install the pinion washer and nut. Before tightening the nut (When the pinion preload is Zero), check the drag by the oil seal by using a torque wrench.
6. Tighten the pinion nut to **14 m-kg (101 ft-lb)** and check the preload as shown in Fig. 9–25.



Fig. 9–24 Installing pinion and collapsible spacer

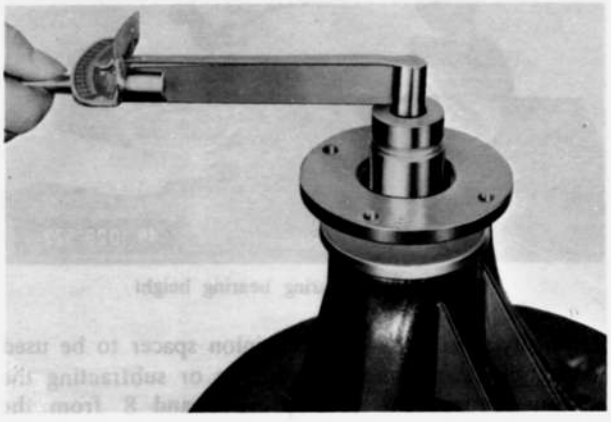

Fig. 9–25 Checking pinion bearing preload

Note: After preload has been checked, final tightening should be done very cautiously.
The pinion nut should be further tightened only a little at a time and preload should be checked after each slight amount of tightening. Exceeding preload specifications will compress the collapsible spacer too far and requires its replacement. The maximum tightening torque of the nut is 20 m-kg (145 ft-lb).
If the specified preload is not obtained after tightening the nut to the maximum torque of 20 m-kg (145 ft-lb), replace the collapsible spacer with a new one.

7. While observing the proceeding caution, carefully set the preload drag at **9 to 14 cm-kg (7.8 to 12.2 in-lb)** plus the oil seal drag determined in Step 5.

Note: If the preload is measured by using a spring scale at the bolt hole of the companion flange, the preload drage is **2.1 ~ 3.3 kg (4.6 ~ 7.3 lb).**

9–E–3. Assembling Differential

1. Install the thrust washer on each differential side gears and install these in the gear case.
2. Fit the pinion gears onto the spider and install the spider into the differential case.
3. Align the identification marks as shown in Fig. 9–28 and secure the case halves together with bolts. Torque the bolts to **2.5 ~ 3.0 m-kg (18 ~ 21 ft-lb).**
4. Check the backalsh of the side gear and the pinion gear. The backlash should be **0 to 0.1 mm (0 to 0.004 in).**
If it is **more than 0.1 mm (0.004 in),** adjustment can be made with the side gear thrust washers.
The following thrust washers are available:

Identification mark	Thickness
9	1.9 mm (0.0751 in)
0	2.0 mm (0.0787 in)
1	2.1 mm (0.0827 in)
2	2.2 mm (0.0866 in)
3	2.3 mm (0.0905 in)

5. Install the ring gear to the case and torque the bolts to **9.0 ~ 11.0 m-kg (65 ~ 80 ft-lb).**
6. Install each differential bearing to the gear case.

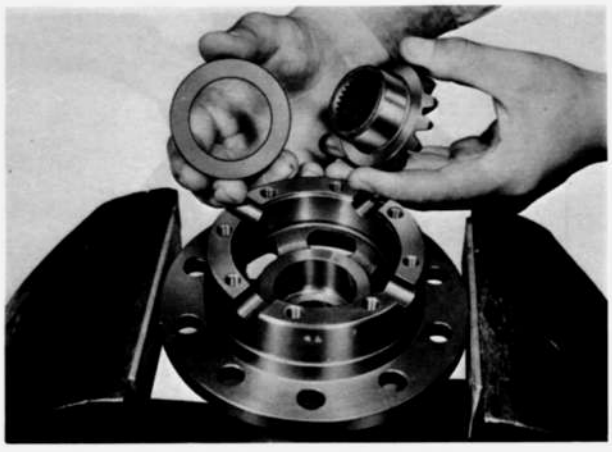

Fig. 9–26 Installing thrust washer

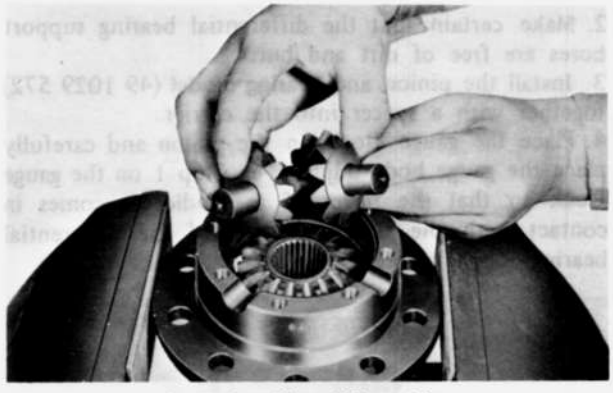

Fig. 9–27 Installing differential gears

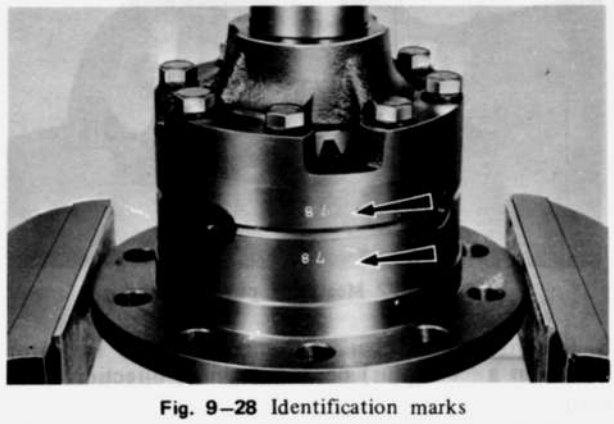

Fig. 9–28 Identification marks

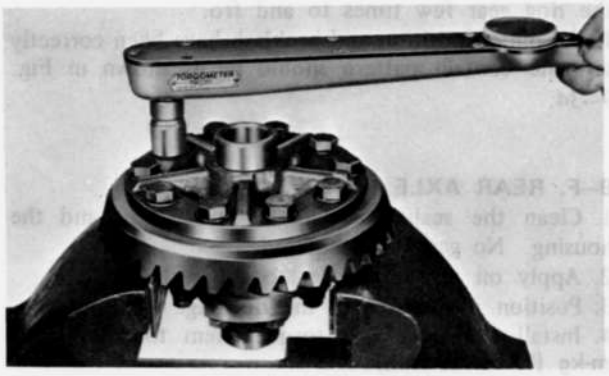

Fig. 9–29 Tightening ring gear bolts

7. Install the differential bearing outer races to their respective bearings.

9–E–4. Installing Differential

1. Place the differential gear assembly in the carrier, making ensure that the marks on the face of the pinion and ring gear tooth are in alignment.

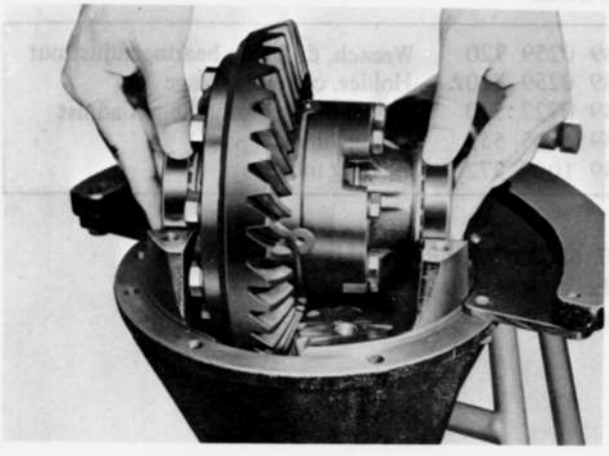

Fig. 9–30 Installing differential assembly

2. Note the identification marks on the adjusters and install each to its respective side.

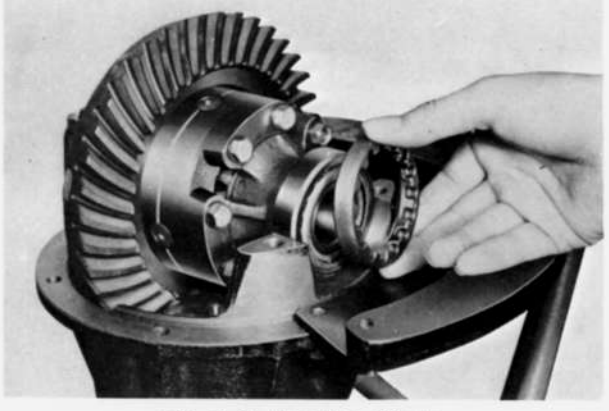

Fig. 9–31 Installing adjuster

3. Install the differential bearing caps making sure that the identification marks on the caps correspond with those on the carrier and install the attaching bolts.
4. Turn the adjusters with the **wrench** (49 0259 720) until the bearings are properly positioned in their respective outer races and the end play is eliminated with some backlash existing between the ring gear and drive pinion.
5. Slightly tighten one of the bearing cap bolts on each side and adjust the backlash, as instructed in the following paragraph.

9–E–5. Adjusting Backlash

1. Secure a dial indicator to the carrier flange so that the feeler comes in conatct at right angles with one of the ring gear teeth.
2. Check the backlash between the ring gear and drive pinion. With the **wrench** (49 0259 720), turn both bearing adjusters equally until the backlash becomes **0.17 to 0.19 mm (0.0067 to 0.0075 in)**.

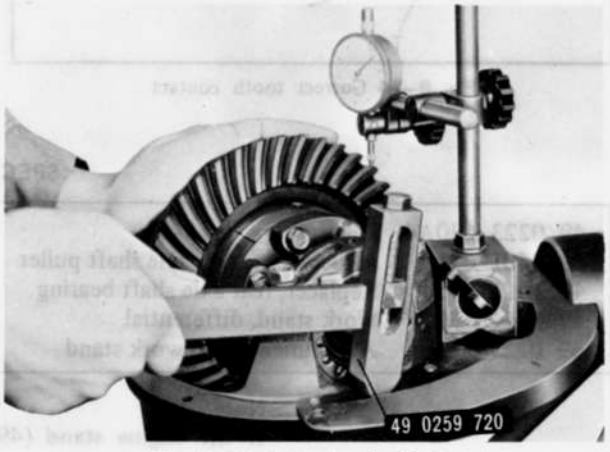

Fig. 9–32 Adjusting backlash

3. The preload on the differential bearings is obtained by tightening the adjusters. Tighten the adjusters until the distance between both pilot sections on the bearing caps becomes **185.428 ~ 185.5 mm (7.3004 ~ 7.3033 in)**, as shown in Fig. 9–33.

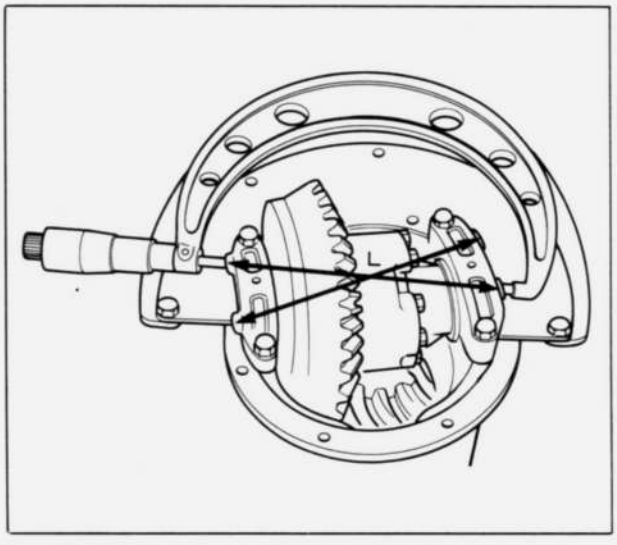

Fig. 9–33 Adjusting bearing preload (case spread)

Note: When adjusting the preload, care must be taken not to affect the backlash of the drive pinion and ring gear.

4. Tighten the bearing cap bolts to a torque of **3.2 ~ 4.7 m-kg (23 ~ 34 ft-lb)**.
5. Install the adjuster lock plates on the bearing caps to prevent the adjusters from loosening.
6. Check the tooth contact of the ring gear and pinion by applying a thin coat of red lead on both sides of about six or eight of ring gear teeth and rotating the ring gear few times to and fro.
If the pinion position and backlash have been correctly set, the contact pattern should be as shown in Fig. 9–34.

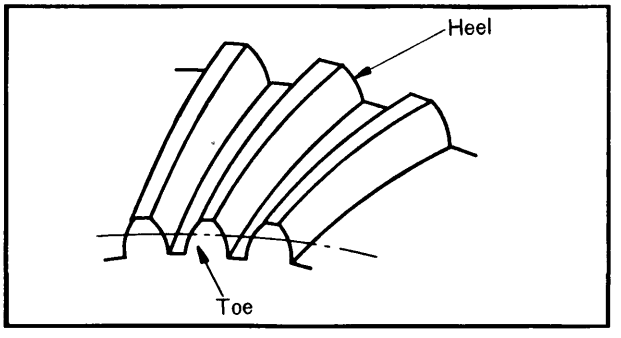

Fig. 9–34 Correct tooth contact

9–F. REAR AXLE INSTALLATION

1. Clean the sealing surface of the carrier and the housing. No gasket is required.
2. Apply oil resistant sealer to the surfaces.
3. Position the carrier to the housing.
4. Install the nuts and torque them to **2.3 ~ 2.7 m-kg (17 ~ 19 ft-lb)**.
5. Connect the propeller shaft following the markings closely to prevent any out of balance condition. Torque the bolts to **3.5 ~ 3.8 m-kg (25 ~ 27 ft-lb)**.
6. Install the axle shafts, drums and wheels.
7. Fill the axle with the correct grade and quantity of lubricant.
8. Lower the vehicle.

SPECIAL TOOLS

49 0223 630A	Puller, rear axle shaft	49 0259 720	Wrench, diff. side bearing adjust nut
49 8501 631	Attachment, rear axle shaft puller	49 0259 710A	Holder, coupling flange
49 1011 745	Replacer, rear axle shaft bearing	49 0727 570	Gauge body, pinion height adjust
49 0164 550D	Work stand, differential	49 0305 555	Gauge block
49 0223 561	Attachment, diff. work stand	49 1029 572	Bearing model

Note:
If the **engine stand** (49 0107 680A) is available, this can be used together with the **attachments** (49 0419 561 and 49 0223 561) as a rear axle stand.

MANUAL STEERING

DESCRIPTION ..... 10 : 1
10–A. CHECKING STEERING WHEEL FREE PLAY ..... 10 : 1
10–B. STEERING GEAR REMOVAL ..... 10 : 1
10–C. STEERING GEAR DISASSEMBLY ..... 10 : 1
10–D. STEERING GEAR INSPECTION ..... 10 : 2
10–E. STEERING GEAR ASSEMBLY ..... 10 : 3
10–F. STEERING GEAR ADJUSTMENT ..... 10 : 4
10–F–1. Adjusting Worm Bearing Preload ..... 10 : 4
10–F–2. Adjusting Sector Gear and Ball Nut Backlash ..... 10 : 5
10–G. STEERING GEAR INSTALLATION ..... 10 : 5
10–H. STEERING LINKAGE ..... 10 : 5
10–H–1. Checking Ball Joints ..... 10 : 5
10–H–2. Replacing Idler Arm ..... 10 : 6
10–H–3. Replacing Pitman Arm ..... 10 : 6
10–H–4. Replacing Tie-rod ..... 10 : 6
10–H–5. Replacing Center Link ..... 10 : 7
10–H–6. Lubrication of Ider Arm ..... 10 : 7
10–H–7. Lubrication of Ball Joints ..... 10 : 7
10–I. FRONT WHEEL ALIGNMENT ..... 10 : 7
10–I–1. Inspection Before Checking Front Wheel Alignment ..... 10 : 7
10–I–2. Toe-in ..... 10 : 7
10–I–3. Camber, Caster and King Pin Inclination ..... 10 : 7
10–I–4. Adjusting Turning Angle ..... 10 : 9
SPECIAL TOOLS ..... 10 : 9

10

DESCRIPTION

The steering system consists of the steering gear, steering column, steering wheel and steering linkage. This steering gear provides easy steering with the minimum of friction in the steering gear.

10–A. CHECKING STEERING WHEEL FREE PLAY

The standard free play at the outer circumference of the steering wheel is **5 ~ 20 mm (0.2 ~ 0.8 in).**
To check the free play of the steering wheel, place the front wheels straight ahead and turn the steering wheel slowly. The value of the free play is taken when the front wheel begins to move.
If excessive play is found, the following points should be carefully checked, because this could cause steering instability in driving.

1. Fit of the ball joints of the center link and those of the tie rods
2. Looseness of the idler arm bushes
3. Looseness of the wheel bearings
4. Backlash between the sector gear and ball nut

10–B. STEERING GEAR REMOVAL

1. Raise the front end of the vehicle and support with stands.
2. Remove the front wheel.
3. Remove the cotter pin and castellated nut attaching the center link to the pitman arm.
4. Disconnect the center link from the pitman arm with the **puller** (49 0118 850C).



Fig. 10–1 Removing bolt



Fig. 10–2 Removing steering gear housing

5. Remove the bolt securing the flexible coupling yoke to the worm shaft.
6. Remove the speedometer cable from the clips attached to the steering gear housing and the power brake unit.
7. Remove the bolts and nuts retaining the steering gear housing to the body.
8. Remove the gear housing assembly and lower the vehicle.

10–C. STEERING GEAR DISASSEMBLY

Before disassembling, thoroughly clean the outside surface of the steering gear housing.

1. Drain lubricant from the gear housing by removing the filler plug.
2. Hold the steering gear housing in a vise.
3. Remove the nut holding the pitman arm and remove the pitman arm with the **puller** (49 0223 695D), as shown in Fig. 10–3.

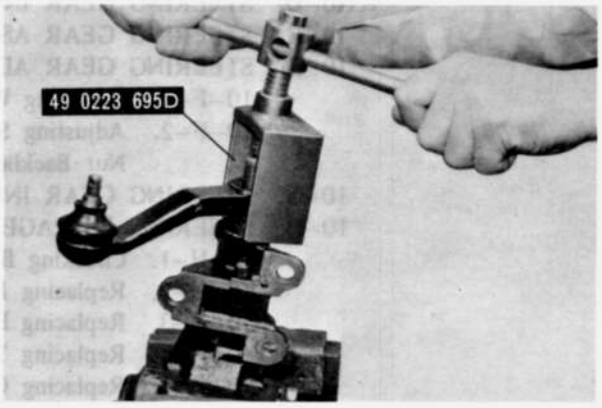

Fig. 10–3 Removing pitman arm

4. Remove the sector shaft adjusting screw lock nut.
5. Remove the side cover attaching bolts, and remove the side cover and gasket by turning the adjusting screw clockwise through the cover.

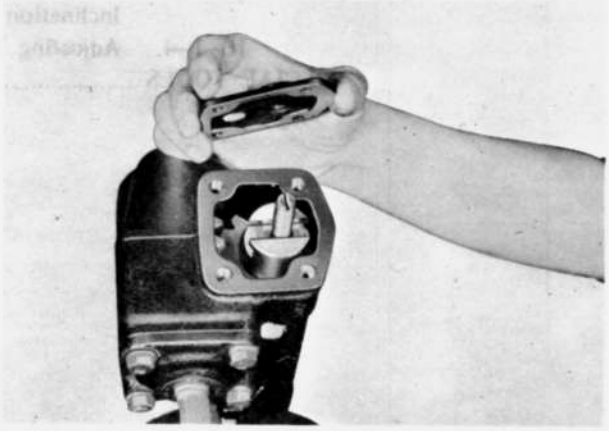

Fig. 10–4 Removing side cover

6. Remove the adjusting screw and shim from the slot at the end of the sector shaft.
7. Carefully remove the sector shaft from the gear housing so as not to damage the bushes and oil seal.

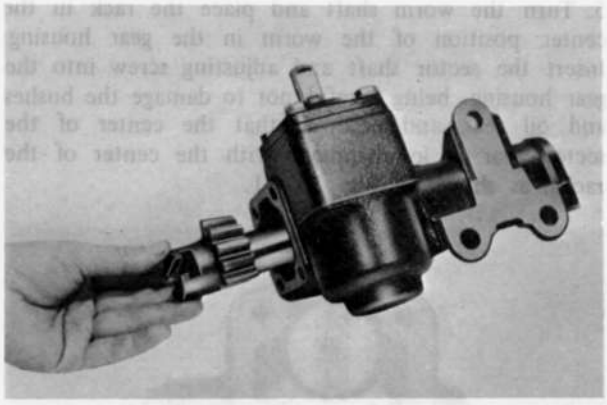

Fig. 10–5 Removing sector shaft

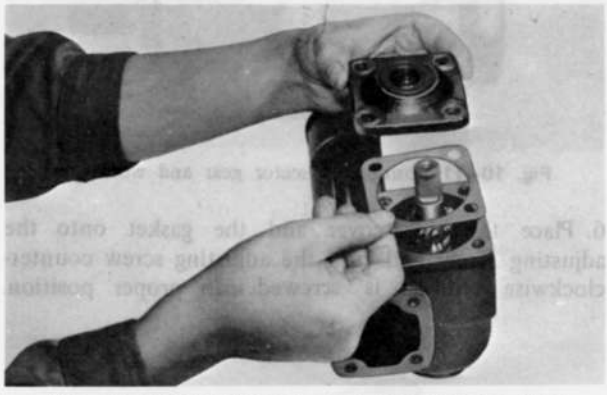

Fig. 10–6 Removing end cover and adjusting shim

8. Remove the bolts that attach the end cover to the gear housing and remove the end cover and shims.
9. Remove the worm shaft and ball nut assembly from the gear housing.
10. Remove the oil seal from the gear housing, if necessary.

10–D. STEERING INSPECTION

1. Check the operation of the ball nut assembly on the worm shaft. If the ball nut does not travel smoothly and freely on the worm shaft and there is roughness, the ball nut and worm shaft assembly should be replaced.

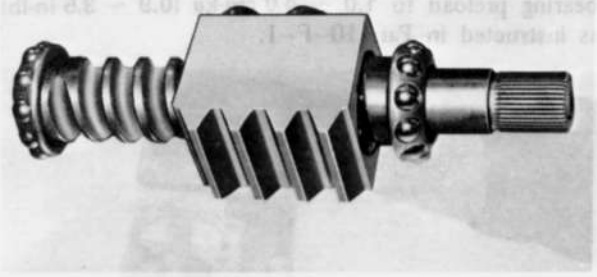

Fig. 10–7 Worm shaft and ball nut assembly

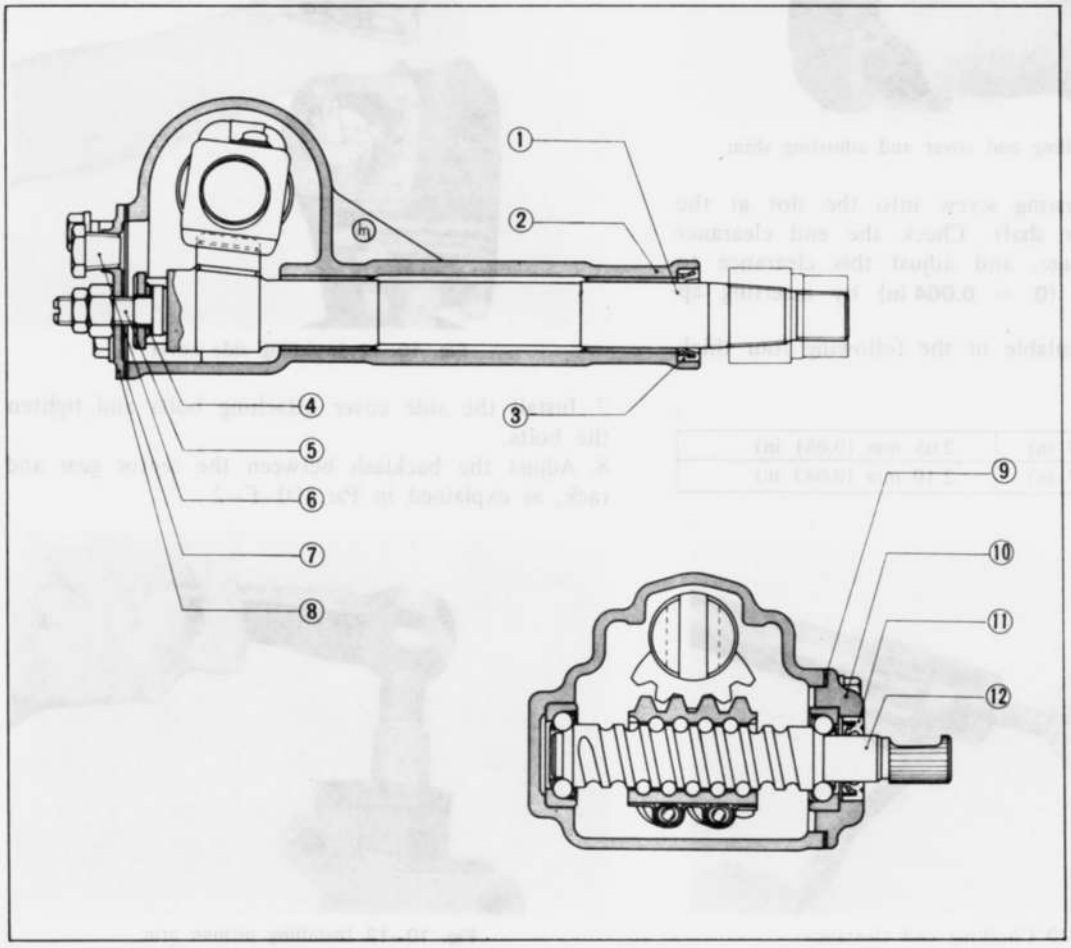

Fig. 10–8 Steering gear
1. Sector shaft
2. Steering gear housing
3. Oil seal
4. Thrust washer
5. Adjusting screw
6. Plug
7. Gasket
8. Side cover
9. Adjusting shim
10. End cover
11. Oil seal
12. Worm shaft and ball nut assembly

Note: The worm shaft and ball nut are serviced as an assembly only.

2. Check the worm bearings and cups for wear or any damage. If defective, replace with new ones.
3. Check the clearance between the sector shaft and the bores in the housing. If it **exceeds 0.20 mm (0.008 in),** replace the gear housing with new one.
4. Check the oil seal for wear, flaw, or any damage. If there is any possibility of oil leakage, replace the oil seal.

10–E. STEERING GEAR ASSEMBLY

1. Install the oil seal to the gear housing.
2. Insert the worm shaft and ball nut assembly into the gear housing.
3. Install the end cover and the preload adjusting shims to the gear housing, and adjust the worm bearing preload to **1.0 ~ 4.0 cm-kg (0.9 ~ 3.5 in-lb),** as instructed in Par. 10–F–1.



Fig. 10–9 Installing end cover and adjusting shim

4. Install the adjusting screw into the slot at the end of the sector shaft. Check the end clearance with a feeler gauge, and adjust this clearance to be **0 ~ 0.1 mm (0 ~ 0.004 in)** by inserting appropriate shims.
The shims are available in the following four thicknesses:

1.95 mm (0.077 in)	2.05 mm (0.081 in)
2.00 mm (0.079 in)	2.10 mm (0.083 in)

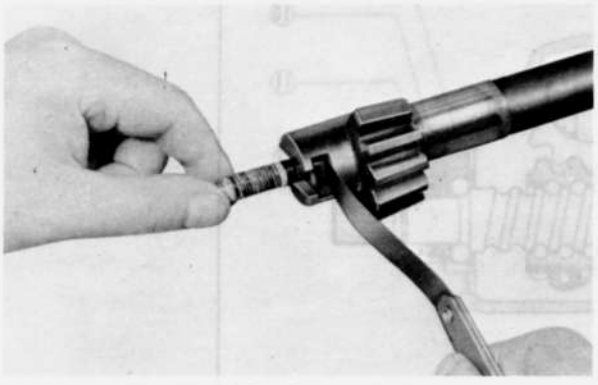

Fig. 10–10 Checking end clearance

5. Turn the worm shaft and place the rack in the center position of the worm in the gear housing. Insert the sector shaft and adjusting screw into the gear housing, being careful not to damage the bushes and oil seal, and ensuring that the center of the sector gear is in alignment with the center of the racks, as shown in Fig. 10–11.

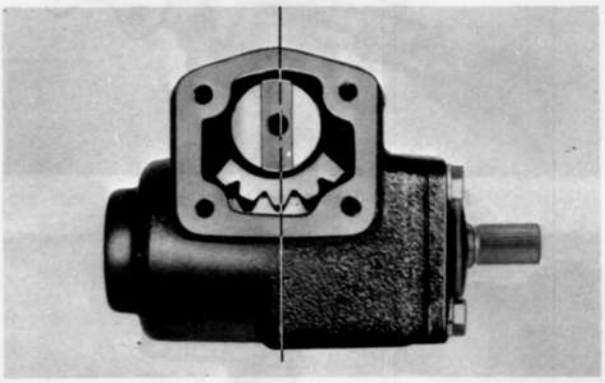

Fig. 10–11 Position of sector gear and worm gear

6. Place the side cover and the gasket onto the adjusting screw and turn the adjusting screw counterclockwise until it is screwed into proper position.

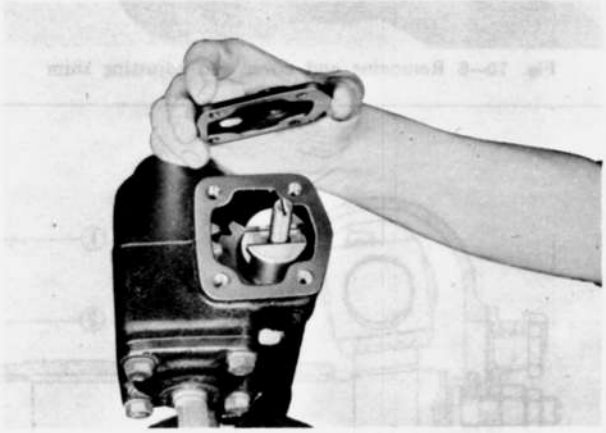

Fig. 10–12 Installing side cover

7. Install the side cover attaching bolts and tighten the bolts.
8. Adjust the backlash between the sector gear and rack, as explained in Par. 10–F–2.

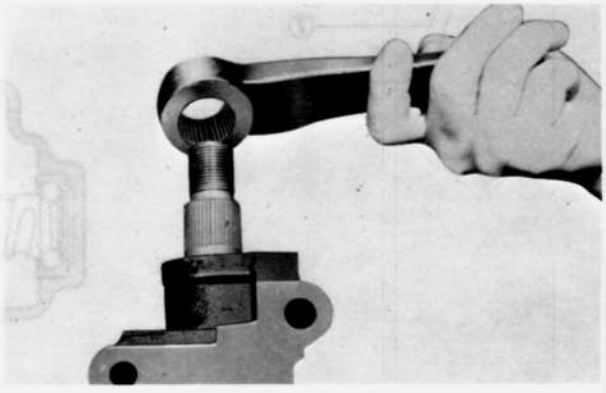

Fig. 10–13 Installing pitman arm

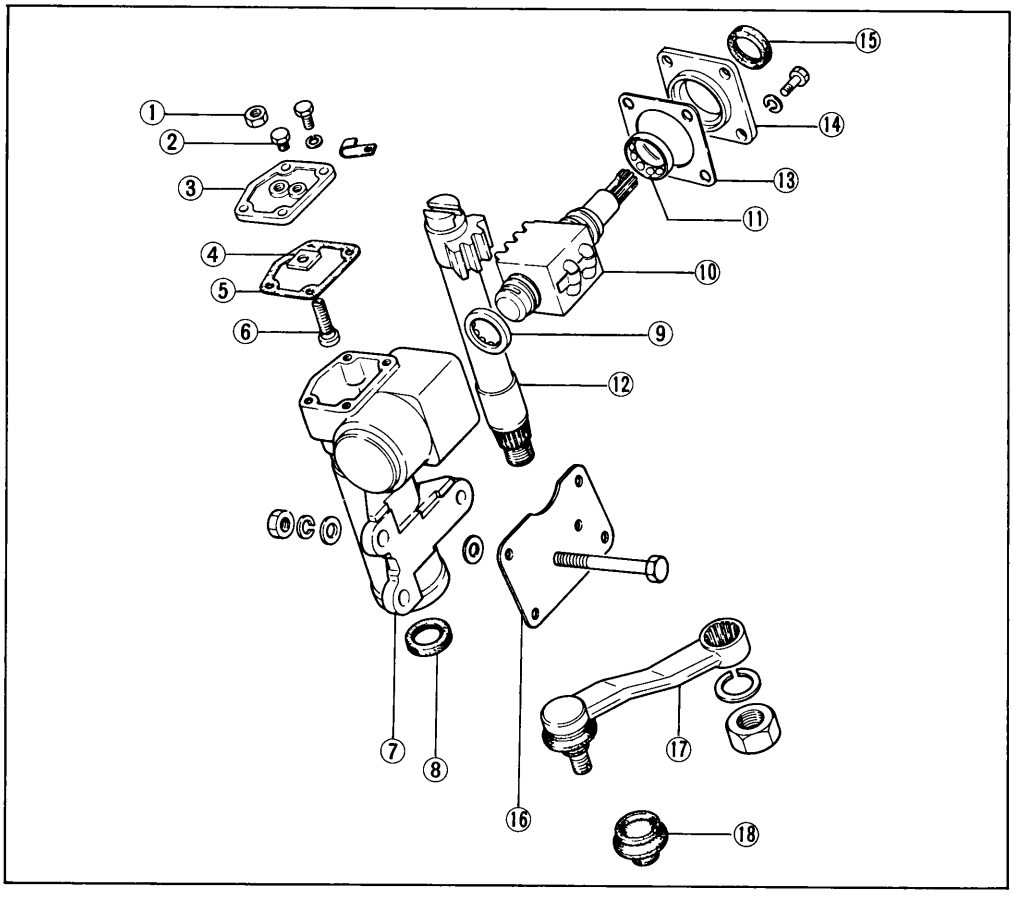

Fig. 10–15 Steering gear

1. Lock nut
2. Oil plug
3. Side cover
4. Thrust washer
5. Gasket
6. Adjusting shim
7. Steering gear housing
8. Oil seal
9. Bearing
10. Worm shaft and ball nut assembly
11. Bearing
12. Sector shaft
13. Adjusting shim
14. End cover
15. Oil seal
16. Gear housing plate
17. Pitman arm
18. Ball joint dust seal

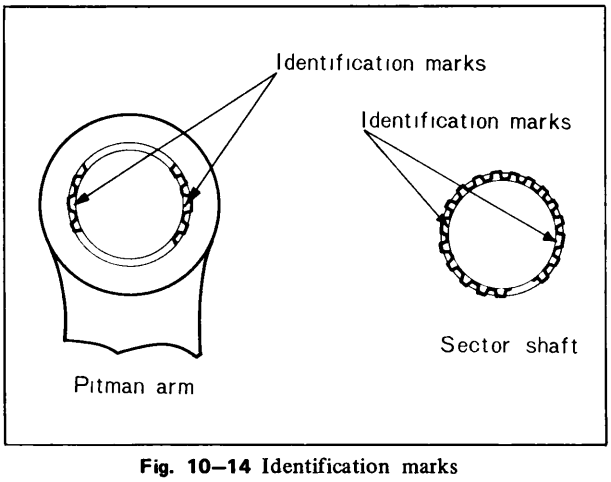

Fig. 10–14 Identification marks

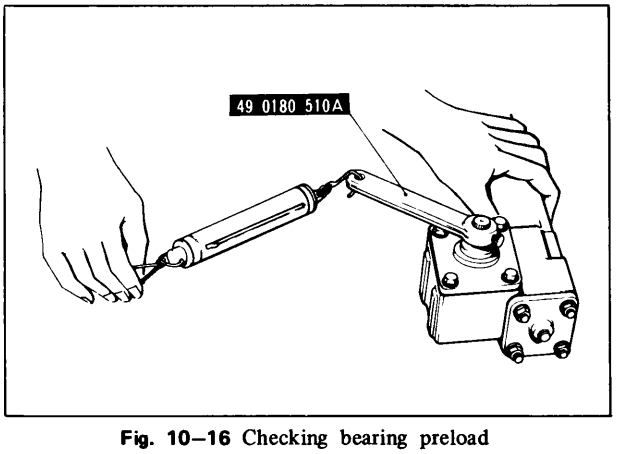

Fig. 10–16 Checking bearing preload

9. Install the pitman arm onto the sector shaft, aligning the identification marks of the pitman arm and sector shaft. Install the pitman arm attaching nut and tighten the nut to **15.0 ~ 18.0 m-kg (108.0 ~ 130.0 ft-lb).**

10–F. STEERING GEAR ADJUSTMENT

10–F–1. Adjusting Worm Bearing Preload

To adjust the worm bearing preload, remove the steering gear from the vehicle. With a torque wrench, rotate the worm shaft and check the rotating torque. The rotating torque (preload) should be between **9 ~ 12 cm-kg (7.9 ~ 10.4 in-lb).**

If the reading is not within the specifications, adjust the preload as follows:

1. Remove the column jacket attaching bolts and the end cover together with the shims.
2. If the preload is **less than 9 cm-kg (7.9 in-lb),** reduce the shim, and add the shim if the preload is **more than 12 cm-kg (10.4 in-lb).**

The following shims are available:

0.050 mm (0.002 in)	0.100 mm (0.004 in)
0.075 mm (0.003 in)	0.200 mm (0.008 in)

3. Install the end cover and recheck the worm bearing preload.

Note: The preload before installing the sector shaft should be between 1.0 to 4.0 cm-kg (0.9 to 3.5 in-lb). If the preload is checked with a spring scale and **10 cm length of attachment** (49 0180 510A), as shown in Fig. 10–16, the reading should be **0.1 ~ 0.4 kg (0.22 ~ 0.88 lb).**

10–F–2. Adjusting Sector Gear and Ball Nut Backlash

The sector shaft adjusting screw, installed in the side cover, raises or lowers the sector shaft to provide proper mesh between the tapered teeth of the sector gear and the rack of the ball nut.

This adjustment can be accurately made only after proper worm bearing preload has been established. Adjust the backlash as follows:

1. Turn the worm shaft gently and stop it at the center position.
2. Loosen the lock nut of the adjusting screw and screw in or out the adjusting screw until the correct adjustment is obtained. The standard backlash is 0 ~ 0.1 mm (0 ~ 0.004 in). This is equivalent to a movement of about 3 degrees of the worm shaft.

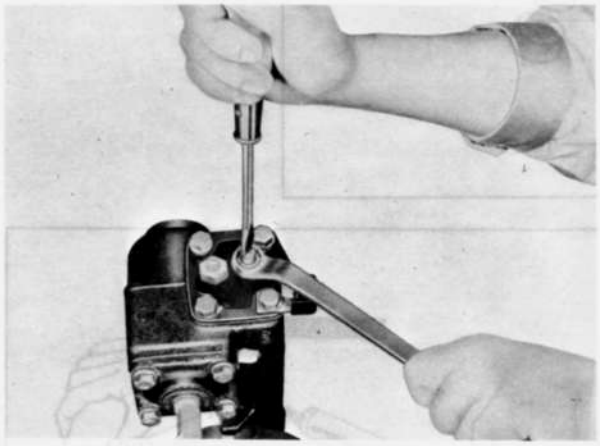

Fig. 10–17 Adjusting backlash

3. Tighten the adjusting screw lock nut securely.
4. Rotate the worm shaft and check to ensure that the sector shaft turns 40° smoothly to the right and left.

10–G. STEERING GEAR INSTALLATION

To install the steering gear assembly, reverse the procedure in Par. 10–B.

Note:

a) The tightening torque for the bolts and nuts attaching the gear housing to the frame is **4.4 ~ 5.5 m-kg (32 ~ 40 ft-lb).**

b) When installing the steering wheel, align the marks on the steering wheel and column shaft, and tighten the steering wheel nut to **3.0 ~ 4.0 m-kg (22 ~ 29 ft-lb).**

c) Fill the gear housing with lubricant (A.P.I. Service GL-4 SAE 90) up to the level hole.

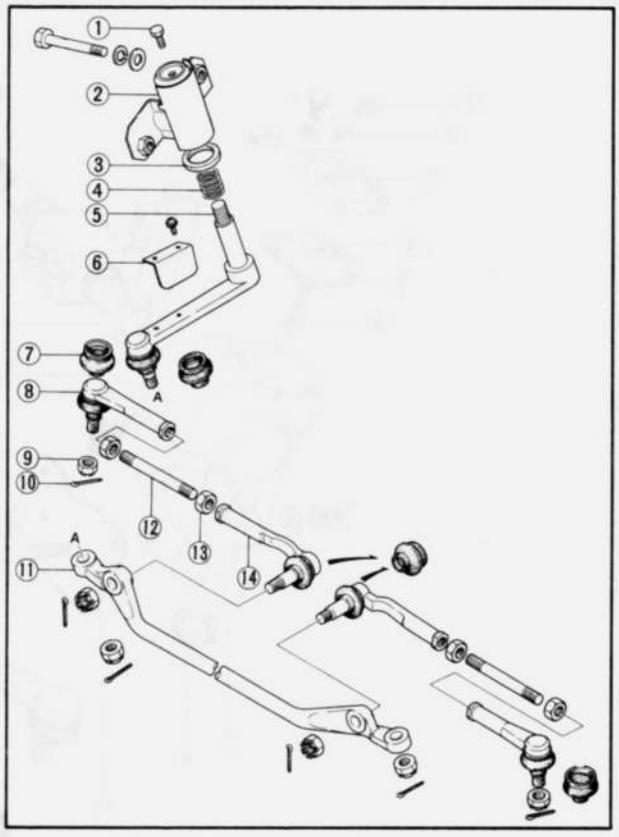

Fig. 10–18 Steering linkage

1. Plug	8. Tie-rod end socket
2. Idler arm bracket	9. Nut
3. Grease seal	10. Pin
4. Spring	11. Center link
5. Idler arm	12. Tie-rod
6. Insulator	13. Lock nut
7. Ball joint dust seal	14. Tie-rod end socket

10–H. STEERING LINKAGE

10–H–1. Checking Ball Joints

1. Check the dust seal for wear, flaw or any damage.

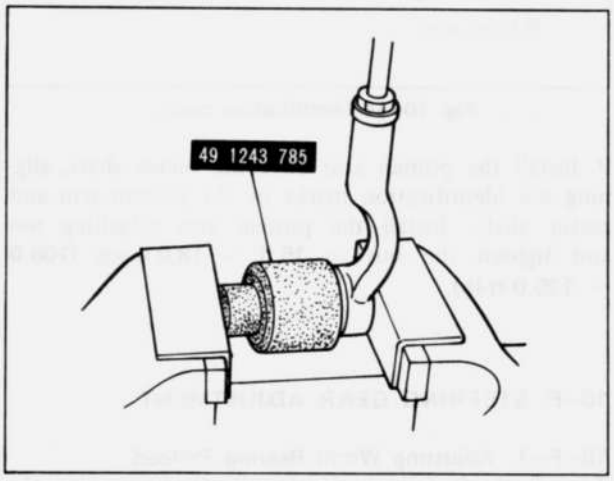

Fig. 10–19 Replacing dust seal

If the dust seal is defective, replace it with the **dust seal installer** (49 1243 785).
2. Inspect the ball joint wear.
If defective, replace the ball joint in its assembled form.

10–H–2. Replacing Idler Arm

1. Raise the front end of the vehicle and support with stands. Remove the front wheel.
2. Disconnect the center link from the idler arm by removing the split pin and nut and by using the **puller**(49 0118 850C).
3. Remove the bolts attaching the idler arm bracket to the frame and remove the idler arm and bracket assembly.
4. Hold the assembly in a vise.
5. Remove the idler arm from the bracket by turning the arm counter-clockwise.
6. Clean the disassembled parts with solvent to remove all old grease.
7. Check the spring for fatigue. Replace the idler arm or bush if it is worn. Check the end play of the stud and replace the idler arm assembly if necessary.
8. Insert the spring into the bracket.
9. Screw the idler arm into the bracket until the distance "A" between the idler arm edge and the bracket, as shown in Fig. 10–20, becomes **6.0 mm (0.236 in).**
Then, check the revolving torque of the idler arm by using a spring scale. The reading should be **0.1 ~ 3.0 kg (0.2 ~ 6.6 lb).**
If it is **less than 0.1 kg (0.2 lb),** screw in the idler arm until the correct reading is obtained.
If the specified reading is not obtained even the distance "A" becomes **4.0 mm (0.157 in),** replace the spring.
10. Remove the plug, install a grease nipple in its stead, and supply Multi–purpose grease (lithium soap based grease N. L. G. I No.2 with more than 5% of molybdenum disulphide).
11. Remove the grease nipple and reinstall the plug.
12. Install the idler arm and bracket assembly to the frame and tighten the bolts to **4.4 ~ 5.5 m-kg (32 ~ 40 ft-lb).**
13. Connect the idler arm to the center link. Tighten the nut to **2.5 ~ 3.5 m-kg (18 ~ 25 ft-lb)** and install a new split pin.

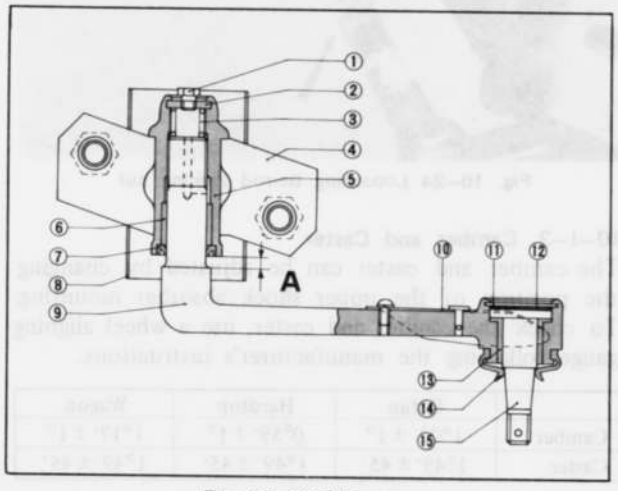

Fig 10–20 Idler arm

1. Grease plug
2. Plug
3. Spring
4. Bracket
5. Idler housing
6. Bush
7. Oil seal
8. Insulator
9. Idler arm
10. Insulator
11. End plate
12. Shim
13. Bush
14. Dust seal
15. Idler pin

10–H–3. Replacing Pitman Arm

1. Raise the front end of the vehicle and support with stands. Remove the front wheel.
2. Disconnect the center link at the pitman arm.
3. Remove the nut attaching the pitman arm to the sector shaft and remove the pitman arm with the **puller** (49 0223 695D).



Fig. 10–21 Disconnecting pitman arm

4. Install the pitman arm onto the sector shaft, aligning the identification marks of the pitman arm and sector shaft. Tighten the nut to **15.0 ~ 18.0 m-kg (108.0 ~ 130.0 ft-lb).**
5. Connect the center link to the pitman arm and tighten the nut to **3.0 ~ 4.5 m-kg (22 ~ 32 ft-lb).** Install new split pin.

10–H–4. Replacing Tie-rod

1. Raise the front end of the vehicle and support with stands. Remove the front wheel.
2. Disconnect the tie-rod from the center link and knuckle arm by removing the split pins and nuts and by using the **puller** (49 0118 850C).

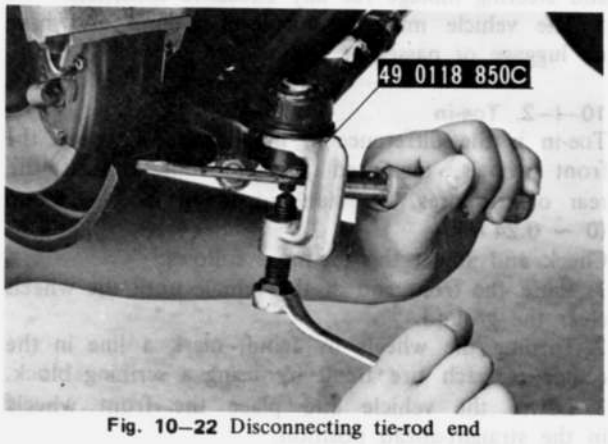

Fig. 10–22 Disconnecting tie-rod end

3. Install the tie-rod to the center link and knuckle arm.
4. Tighten the nuts to **3.0 ~ 4.5 m-kg (22 ~ 32 ft-lb)** and install new split pins.

Note: Whenever the tie-rod or ball joint is replaced, the toe-in must be reset.

10–H–5. Replacing Center Link

1. Raise the front end of the vehicle and support with stands. Remove the front wheels.
2. Remove the center link from both tie rods, pitman arm and idler arm by removing the split pins and nuts and by using the **puller** (49 0118 850C).
3. Install the center link to the pitman arm, idler arm and tie rods.
4. Tighten the nuts to **3.0 ~ 4.5 m-kg (22 ~ 32 ft-lb)** (center link to idler arm : 2.5 ~ 3.5 m-kg = 18 ~ 25 ft-lb) and install new split pins.

10–H–6. Lubrication of Idler Arm

The idler arm should be lubricated at intervals, following the maintenance schedule. When lubrication becomes necessary, refer to Par. 10–H–2 and supply lithium grease.

10–H–7. Lubrication on Ball Joints

The ball joints for the steering linkage are filled with lithium grease and are completed sealed which require no lubrication service.

10–I. FRONT WHEEL ALIGNMENT

10–I–1. Inspection Before Checking Front Wheel Alignment

Proper alignment of the front wheels must be maintained in order to ensure steering stability and satisfactory tire life. Before checking or correcting the front wheel alignment, the following points which will affect steering should be inspected.
1. Check the tire inflation and bring to recommended pressure.
2. Inspect the front wheel bearing adjustment and correct if necessary.
3. Inspect the wheel and tire run-out and balance.
4. Inspect the ball joints of the front suspension and steering linkage for any excessive looseness.
5. The vehicle must be on level ground and have no luggage or passenger load.

10–I–2. Toe-in

Toe-in is the difference in the distance between the front wheels, measured at the front and at the rear of the tires, the standard toe-in is **0 ~ 6 mm (0 ~ 0.24 in).**
Check and adjust the toe-in as follows:
1. Raise the front end of the vehicle until the wheels clear the ground.
2. Turning the wheels by hand, mark a line in the center of each tire tread by using a scribing block.
3. Lower the vehicle and place the front wheels in the straight-ahead position.

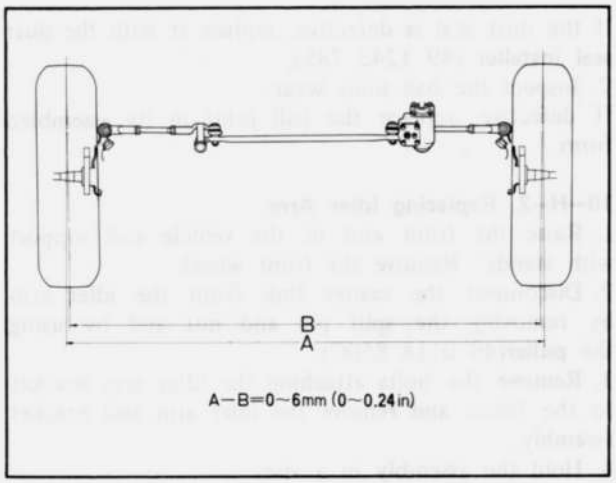

Fig. 10–23 Toe-in

4. Measure the distance between the marked lines at the front and rear of the wheels. Both measurements must be taken at equal distances from the ground.
If the distance between the wheels at the rear is greater than that at the front by **0 ~ 6 mm (0 ~ 0.24 in),** it is correct.
If it is found to be incorrect, adjust the toe-in by loosening the lock nuts and turning the tie rods.



Fig. 10–24 Loosening tie-rod locking nut

10–I–3. Camber and Caster

The camber and caster can be adjusted by changing the position of the upper shock absorber mounting. To check the camber and caster, use a wheel aligning gauge following the manufacturer's instructions.

	Sedan	Hardtop	Wagon
Camber	1°02′ ± 1°	0°59′ ± 1°	1°17′ ± 1°
Caster	1°49′ ± 45′	1°49′ ± 45′	1°49′ ± 45′

If it is found to be incorrect, adjust the camber and caster as follows:
1. Open the hood.
2. Remove the four nuts that attach the shock absorber mounting rubber to the fender apron.
3. Raise the front end of the vehicle and support with stands.
4. Remove the wheel cap and front wheel.

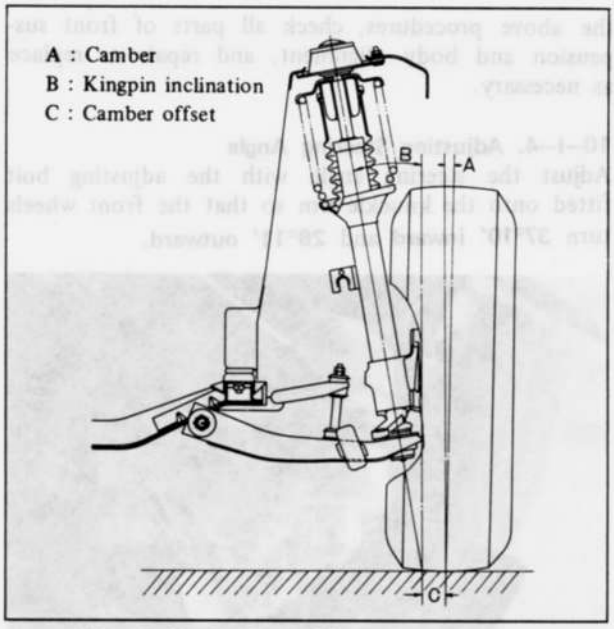

Fig. 10–25 Camber and king pin inclination

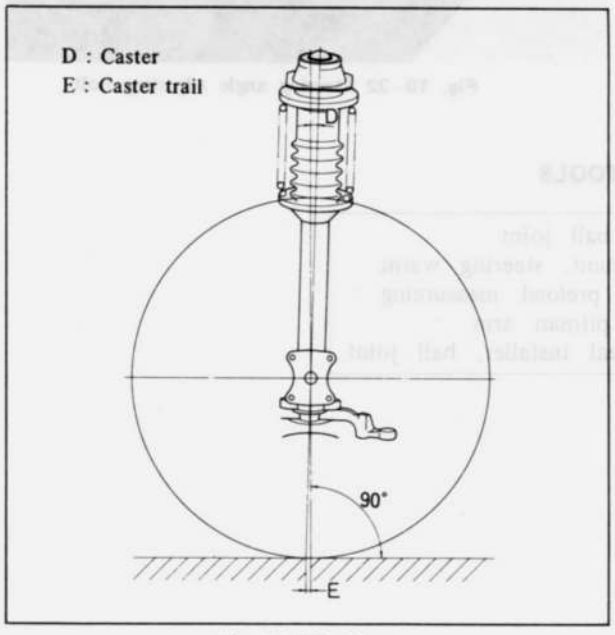

Fig. 10–26 Caster

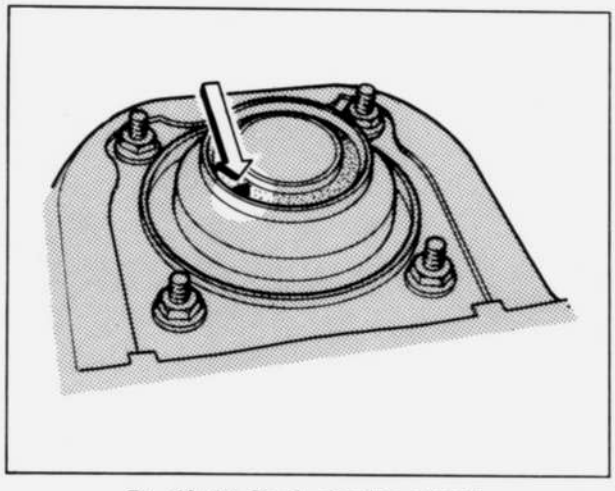

Fig. 10–27 Shock absorber support

5. Press the shock absorber downward and change the position of the mounting rubber according to the following table and Fig. 10–28, 10–29, 10–30 and 10–31.

Fig. No	Position of shock absorber mounting	Variation	
		Camber	Caster
10–27 (A)	0°	0	0
10–28 (B)	90°	0	+28′
10–29 (C)	180°	+28′	+28′
10–30 (D)	−90°	+28′	0

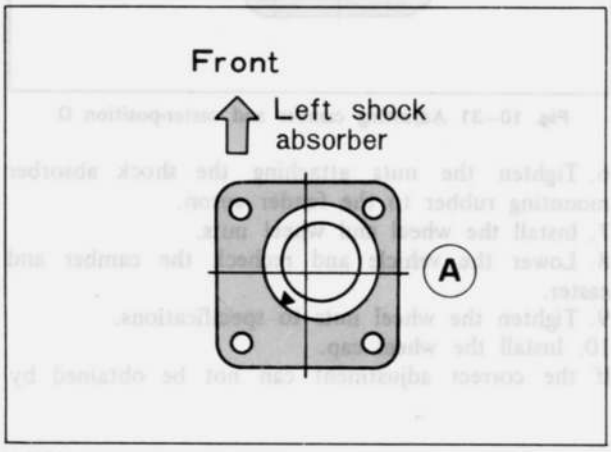

Fig. 10–28 Adjusting camber and caster-position A

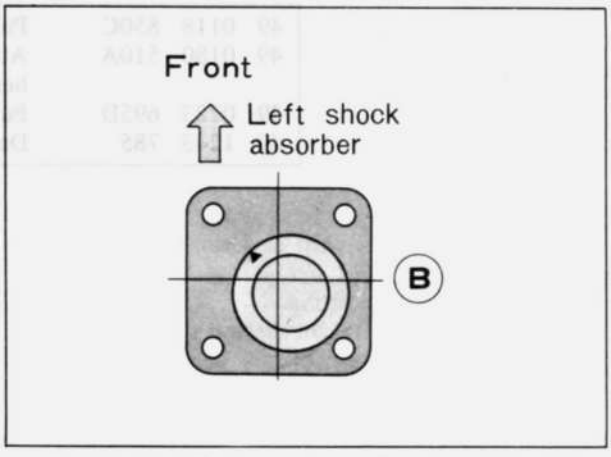

Fig. 10–29 Adjusting camber and caster-position B

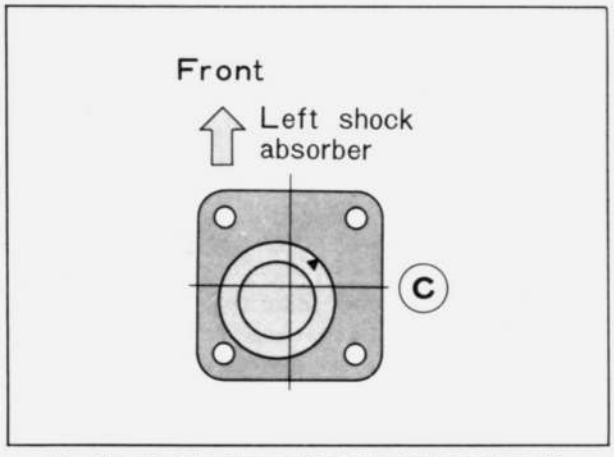

Fig. 10–30 Adjusting camber and caster-position C

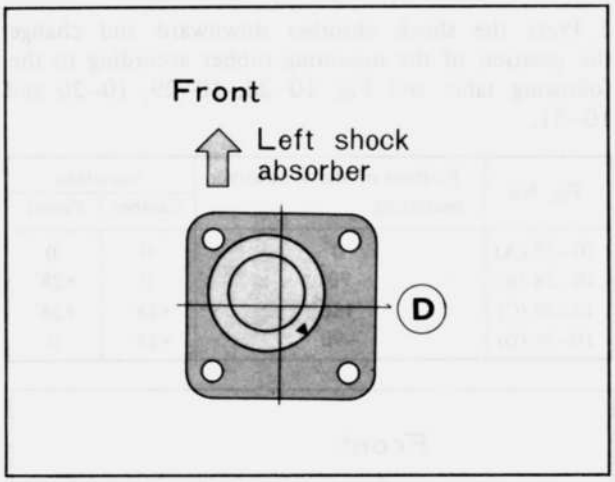

Fig. 10–31 Adjusting camber and caster-position D

6. Tighten the nuts attaching the shock absorber mounting rubber to the fender apron.
7. Install the wheel and wheel nuts.
8. Lower the vehicle and recheck the camber and caster.
9. Tighten the wheel nuts to specifications.
10. Install the wheel cap.

If the correct adjustment can not be obtained by the above procedures, check all parts of front suspension and body alignment, and repair or replace as necessary.

10–I–4. Adjusting Steering Angle

Adjust the steering angle with the adjusting bolt fitted onto the knuckle arm so that the front wheels turn **37°10′ inward** and **29°11′ outward.**

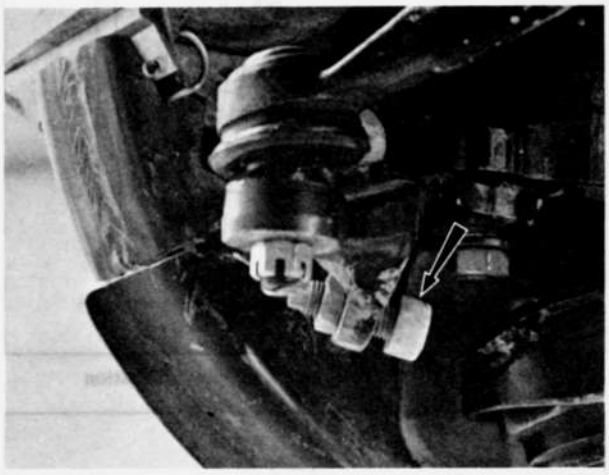

Fig. 10–32 Steering angle adjusting bolt

SPECIAL TOOLS

49 0118 850C	Puller, ball joint
49 0180 510A	Attachment, steering warm bearing preload measureing
49 0223 695D	Puller, pitman arm
49 1243 785	Dust seal installer, ball joint

POWER STEERING

DESCRIPTION ..... 10A : 1
10A–A. GENERAL STEERING SERVICE ..... 10A : 2
10A–A–1. Air Bleeding ..... 10A : 2
10A–A–2. Fluid Level Check ..... 10A : 2
10A–A–3. Pump Belt Check ..... 10A : 2
10A–A–4. Fluid Leak Check ..... 10A : 2
10A–A–5. Pump Fluid Pressure Check ..... 10A : 2
10A–B. STEERING GEAR REMOVAL ..... 10A : 2
10A–C. STEERING GEAR DISASSEMBLY ..... 10A : 4
10A–D. OVERHAUL OF MAIN COMPONENTS ..... 10A : 5
10A–D–1. Steering Gear Housing ..... 10A : 5
10A–D–2. Valve Housing, Worm Shaft and Valve ..... 10A : 5
10A–D–3. Piston and Ball Nut ..... 10A : 6
10A–E. STEERING GEAR ASSEMBLY ..... 10A : 6
10A–F. STEERING GEAR INSTALLATION ..... 10A : 9
10A–G. POWER STEERING PUMP DISASSEMBLY ..... 10A : 9
10A–H. PUMP STEERING PUMP INSPECTION ..... 10A : 11
10A–I. POWER STEERING PUMP ASSEMBLY ..... 10A : 11

10A

DESCRIPTION

The steering unit is a torsion-bar type of hydraulic assisted system. The system furnishes power to reduce the amount of effort required to turn the steering wheel. It also reduces road shock and vibration.

The torsion bar power steering unit includes a worm and one-piece rack piston which is meshed to the gear teeth on the steering sector shaft. The unit also includes a hydraulic valve, valve actuator, stub shaft and torsion bar which is mounted on the end of the worm shaft and operated by the twisting action of the torsion bar.

Note: Servicing except the power steering gear is explained in Section 10 (Manual Steering).

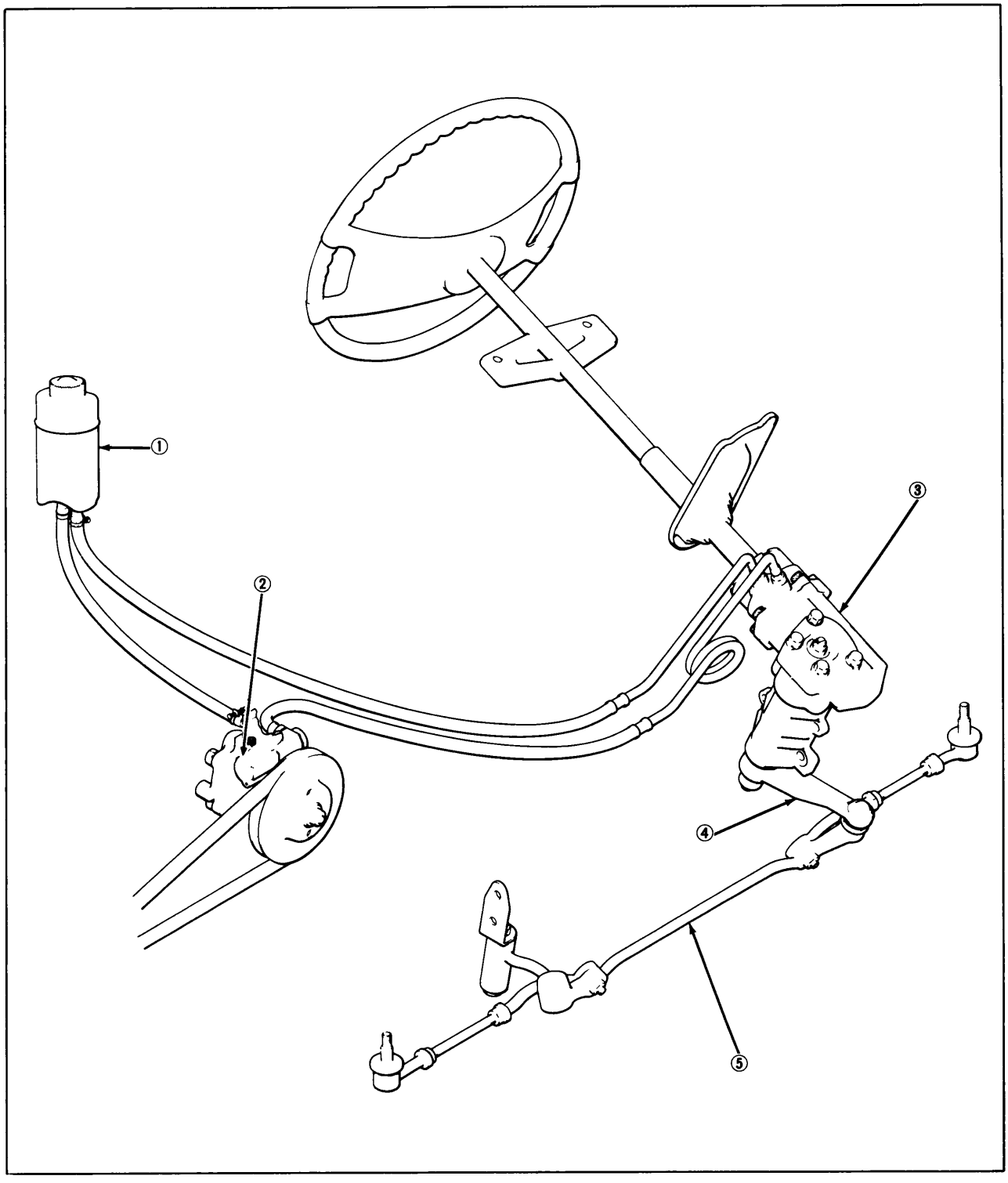

Fig. 10A–1 Power steering connection

1. Reservoir
2. Fluid pump
3. Steering gear
4. Pitman arm
5. Steering linkage

10A–A. GENERAL STEERING SERVICE

10A–A–1. Air Bleeding

If bubbles are present in the power steering fluid, bleed the system as follows:
1. Fill the reservoir to "FULL" level mark.
2. To minimize aeration and forming, install a stick (Fig. 10A–2) in the reservoir with the short end down into the fluid return port on the bottom of the reservoir.

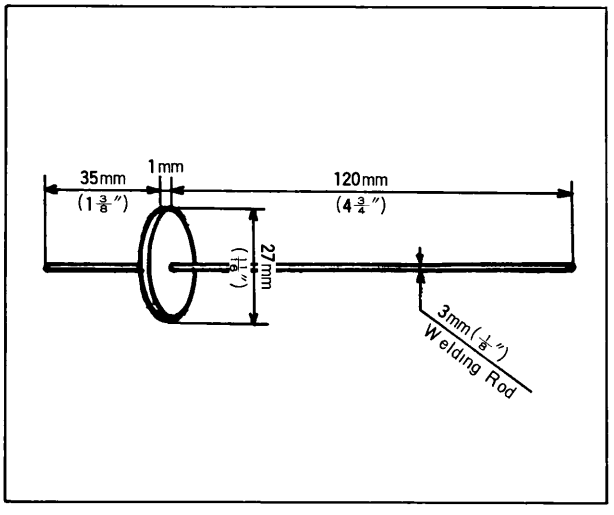

Fig. 10A–2 Stick

3. Raise the front wheels off the ground.
4. Hold a stick in the reservoir and turn the steering wheel from lock to lock at least ten times.
5. Check the fluid level. Add fluid, if necessary. **Do not** overfill the reservoir.
6. Attach a vinyl tube to the bleeder screw on the power steering gear.
7. Insert the free end of the vinyl tube into a suitable container while bleeding the power steering system.
8. Start the engine and turn the steering wheel to the far left position.
9. Open the bleeder screw.
Run the engine until air bubbles cease to appear at the free end of the vinyl tube. During bleeding operation, **do not** allow the reservoir to run dry.
10. Turn the steering wheel to the right and repeat the bleeding. Close the bleeder screw.
11. Fill the reservoir between "FULL" and "LOW" level marks.

10A–A–2. Fluid Level Check

Check the fluid level in the power steering reservoir. The level must show between the "FULL" and "LOW" level marks on the reservoir. Add fluid meeting specifications if necessary. **Do not** overfill.

10A–A–3. Pump Belt Check

Replace and adjust broken, glazed, or worn pump belt.
To adjust the belt tension, proceed as follows:
1. Turn the adjusting bolt on the idler pulley until the correct tension is obtained.
Deflection should be **9 ± 1 mm (0.35 ± 0.04 in)** when thumb pressure of about 10 kg (22 lb) is applied midway between pulleys.

10A–A–4. Fluid Leak Check

1. With the engine idling, turn the steering wheel left to right several times. Check all possible leakage points.
2. Torque all loose fittings to specification. Replace damaged lines and seats.

10A–A–5. Pump Fluid Pressure Check

1. Place a thermometer in the reservoir and maintain the fluid temperature at 50 ~ 60°C (122 ~ 140°F).

Note: The fluid temperature rises rapidly when the steering wheel is held at either lock position.

2. Start the engine and set the engine speed to 600 ~ 700 rpm.
3. Connect a pressure gauge in series with the pressure hose.
4. Close the shut-off valve and check to see that the pressure is **55 ~ 63 kg/cm² (782 ~ 896 lb/in²)**.
If the pressure is below 55 kg/cm² (782 lb/in²), it means wear of the pump parts, or a stuck flow control valve.
If the pressure is 55 ~ 63 kg/cm² (782 ~ 896 lb/in²), it is necessary to follow the two steps below:
a) When the shut-off valve is opened, the pressure should drop at least 5 kg/cm² (71 lb/in²).
If it drops more, the cause can be : (1) A hose bent or kinked, (2) a mixture of dust and/or contamination in the circuit.
b) If the pressure drops more than 5 kg/cm² (71 lb/in²) when the driver lets go of the steering wheel after turning it to a full lock position with the shut-off valve opened, the cause is poor actuation of the valve in the power steering gear.
5. If the pressure is below 55 kg/cm² (782 lb/in²) when the steering wheel is turned to the right or left lock position, the cause is excessive internal leakage in the power steering gear, due to an increase of valve clearances or broken seals.

10A–B. STEERING GEAR REMOVAL

1. Disconnect the negative battery cable from the battery.
2. Remove the oil filter cartridge with the suitable wrench, to provide clearance for removing the fluid lines.
3. Tag the pressure and return lines for future identification.
4. Disconnect the pressure and return lines from the steering gear. Plug the lines and ports in the gear to prevent entry of dirt.
5. Raise the vehicle on a hoist and disconnect the center link at the pitman arm.
6. Remove the bolts and nuts that secure the steering gear housing to the frame.
7. Remove the clamp bolt that holds the flexible coupling to the steering gear. Slide the gear off of the coupling and remove.

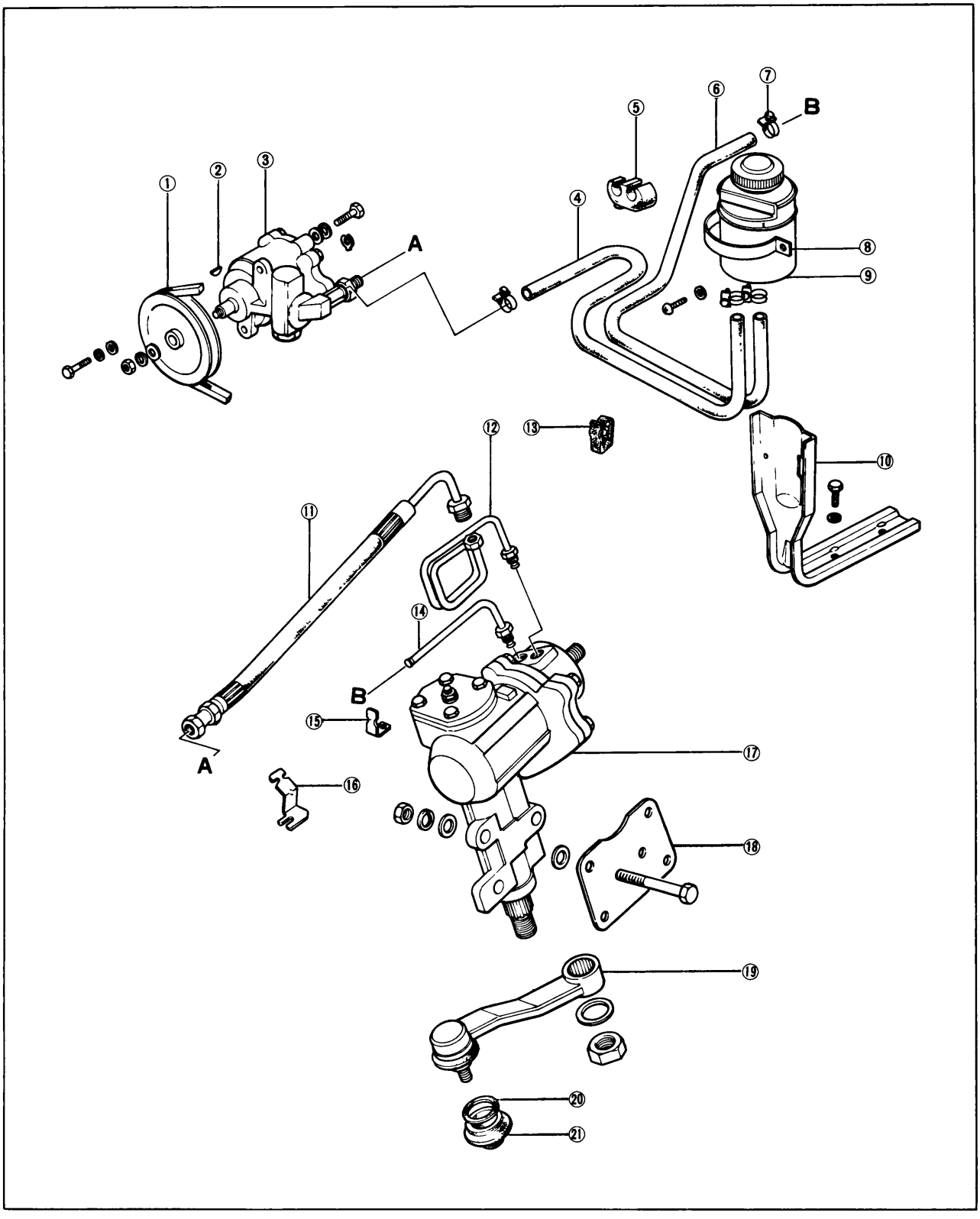

Fig. 10A–3 Power steering gear, pump and reservoir

1. Pulley
2. Key
3. Power steering pump
4. Hose
5. Hose holder
6. Return hose
7. Hose clamp
8. Reservoir holder
9. Reservoir
10. Bracket
11. Pressure hose
12. Pressure pipe
13. Protector
14. Return pipe
15. Clip
16. Hose clip
17. Power steering gear
18. Steering gear plate
19. Pitman arm
20. Dust seal set ring
21. Dust seal

10A–C. STEERING GEAR DISASSEMBLY

Note:
Take the following precautions when servicing the steering gear.
a) Thoroughly clean the exterior of the unit with solvent. Drain all excess hydraulic oil, if necessary.
b) Handle all parts carefully to avoid nicks, burrs, scratches and dirt.
c) **Do not** use solvent on seals.

1. Hold the steering gear upside down over a drain pan and turn the worm shaft from left to right several times to drain the fluid from the gear.
2. Secure the gear on the work stand.
3. Remove the nut holding the pitman arm and remove the pitman arm with the **puller** (49 0223 695D).
4. Remove the sector shaft adjusting screw lock nut. Discard the rubber seal inside the nut.

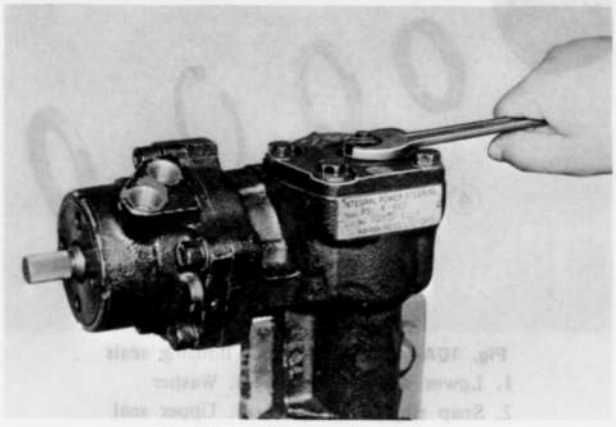

Fig. 10A–4 Removing lock nut

5. To center the gear, turn the worm shaft until the identification mark is positioned as shown in Fig. 10A–5.

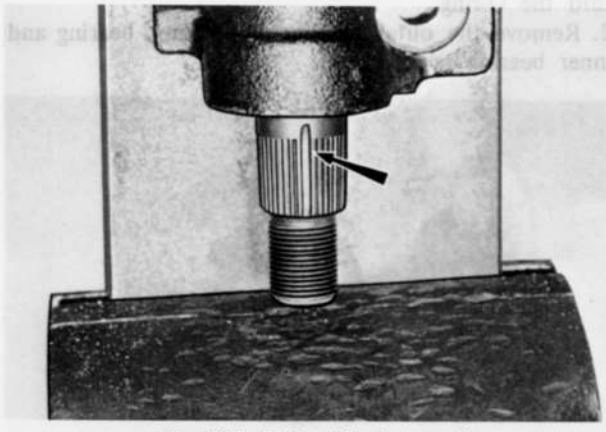

Fig. 10A–5 Identification mark

6. Remove the side cover attaching bolts.
7. Tap the lower end of the sector shaft with a soft-hammer to loosen it, then lift the cover and shaft as an assembly from the housing. Discard the O-ring.
8. Turn the side cover counterclockwise to remove the cover from the adjusting screw.

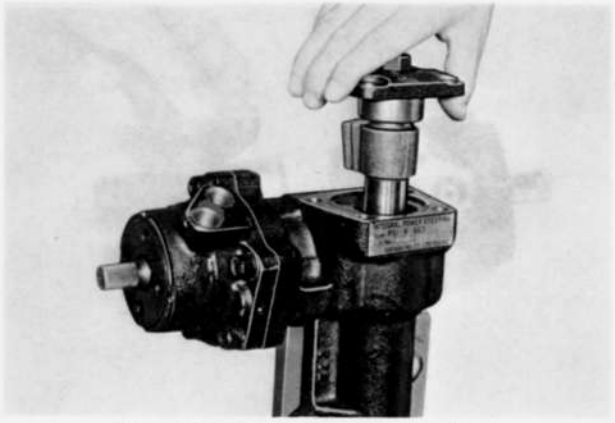

Fig. 10A–6 Removing sector shaft

9. Remove the adjuster plug lock nut. Loosen but do not remove the adjuster plug.

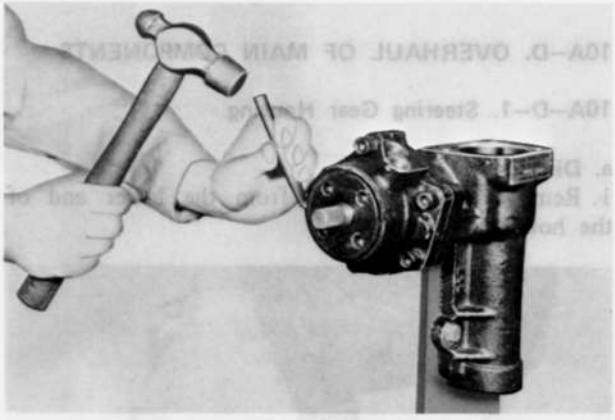

Fig. 10A–7 Removing adjuster plug lock nut

10. Remove the valve housing attaching bolts and separate the valve housing and worm shaft as an assembly from the steering gear housing.
Discard the O-ring.

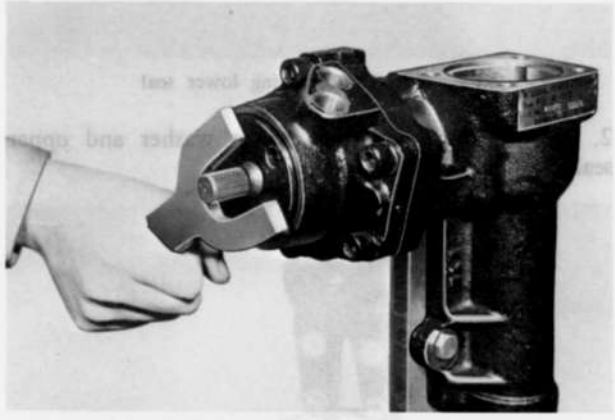

Fig. 10A–8 Loosening adjuster plug

11. Stand the valve body and piston on end with the piston end down. Rotate the worm shaft counterclockwise out of the piston allowing the ball bearings to drop into the piston.
12. Place a cloth over the open end of the piston and turn it upside down to remove twenty-six balls.
13. Remove the screws that attach the ball guide

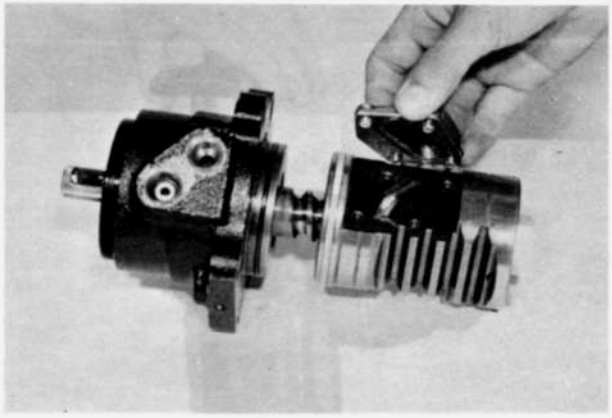

Fig. 10A–9 Removing ball guide cover

cover to the ball nut. Remove the ball guide cover and guides. Discard the O-ring.

10A–D. OVERHAUL OF MAIN COMPONENTS

10A–D–1. Steering Gear Housing

a. Disassembly

1. Remove the lower seal from the lower end of the housing.



Fig. 10A–10 Removing lower seal

2. Remove the snap ring, spacer washer and upper seal.

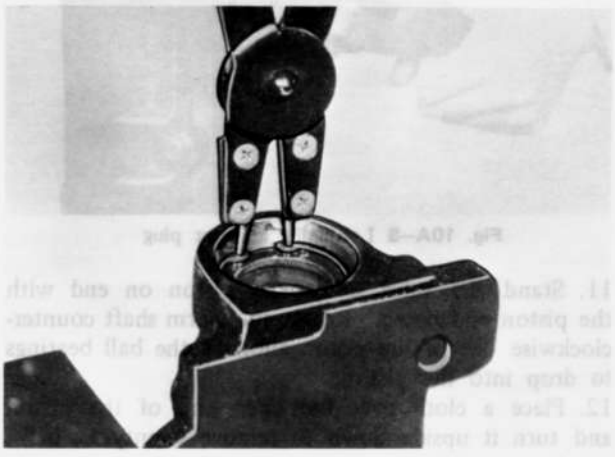

Fig. 10A–11 Removing snap ring

b. Checking

1. Clean the housing thoroughly in clean solvent, and then blow it dry with moisture-free compressed air.
2. Inspect the housing for scores in the area where the ball nut and seal moves.

c. Assembly

1. Dip both sector shaft seals in gear lubricant.
2. Apply lubricant to the sector shaft seal bore of the housing and place the sector shaft inner seal in the housing with the lip facing inward.
3. Install the spacer washer and snap ring in the housing. Seat the snap ring in the groove.
4. Place the outer seal in the housing with the rubber side facing out, and press into place.

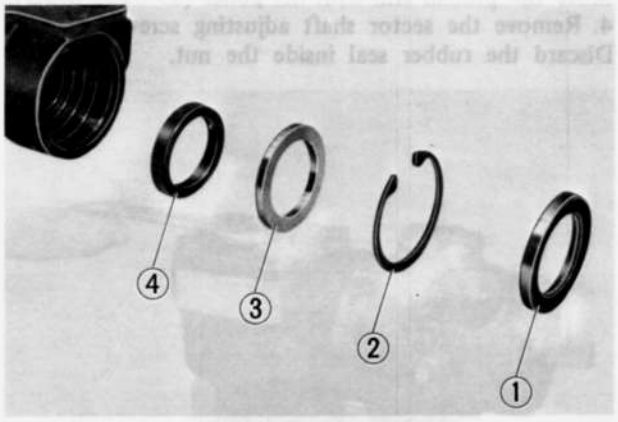

Fig. 10A–12 Steering gear housing seals

1. Lower seal
2. Snap ring
3. Washer
4. Upper seal

10A–D–2. Valve Housing, Worm Shaft and Valve

a. Disassembly

1. Remove the adjuster plug from the housing. Discard the O-ring.
2. Remove the outer bearing race, thrust bearing and inner bearing race.

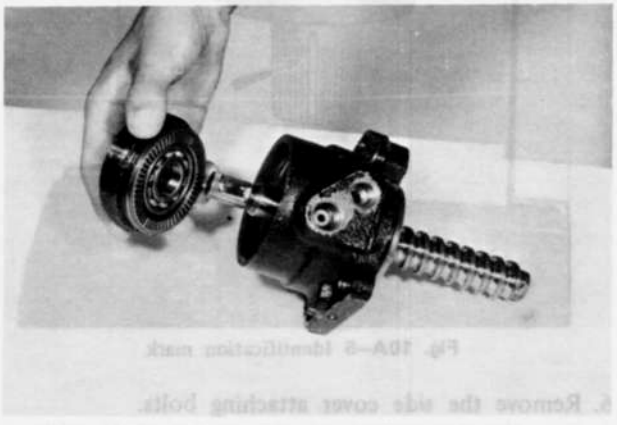

Fig. 10A–13 Removing adjuster plug

3. Remove the valve and worm shaft assembly, bearing races and thrust bearing from the housing. Discard the Teflon ring and O-ring.
4. Remove the worm shaft bearing, and pry oil seal

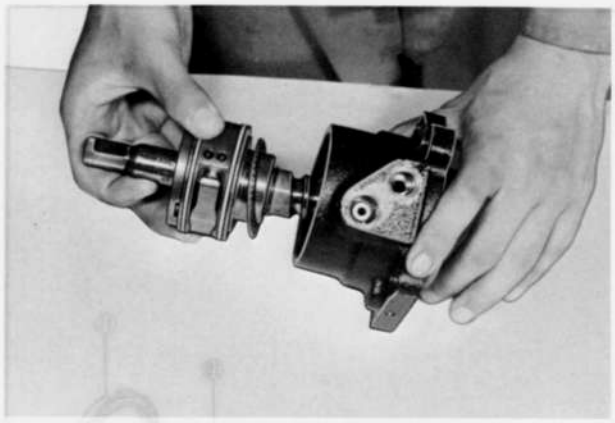

Fig. 10A–14 Removing valve and worm shaft assembly

and dust seal from the adjuster plug with a screwdriver.

b. Assembly

1. Install the **new** Teflon ring and the O-ring in the valve housing.
2. Dip the **new** Teflon rings and the O-rings in gear lubricant and install them on the valve body and worm shaft.
3. Dip the bearing races and needle bearing in power steering fluid and position the bearing and races on the worm.
4. Lubricate the Teflon ring and O-ring with power steering fluid. Carefully install the worm and valve in the housing.
5. Lubricate the **new** dust seal and oil seal with power steering fluid.
6. Install the dust seal with rubber side facing out on the adjuster plug.
7. Install the oil seal with the lip facing inward on the adjuster plug.
8. Drive the worm shaft bearing into the plug until it is seated on the bottom surface of the bearing bore.
9. Dip the bearing races and thrust bearing in power steering fluid.
10. Position the thrust bearing inner race with the grooves on the race align with the pins, thrust bearing and thrust bearing outer race on the valve body.

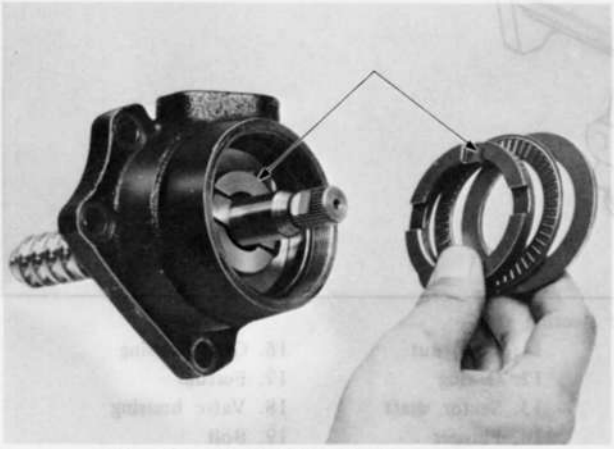

Fig. 10A–15 Installing bearing and race

11. Lubricate a **new** adjuster plug O-ring with power steering fluid and install it in the adjuster plug groove.
12. Install the adjuster plug over the end of the stub shaft and tighten it just enough to be sure all parts are properly seated.
13. Tighten the adjuster plug until the preload is **10 ~ 46 cm-kg (9 ~ 12 in-lb).**



Fig. 10A–16 Tightening adjuster plug

14. Install but do not tighten the adjuster plug lock nut.

10A–D–3. Piston and Ball Nut

a. Disassembly and Assembly

1. Remove and discard the Teflon ring and the O-ring from the piston and ball nut.
2. Dip a **new** O-ring in gear lubricant and install it on the piston and ball nut.
3. Install a **new** Teflon ring on the piston and ball nut. **Do not** stretch the ring any more than necessary.

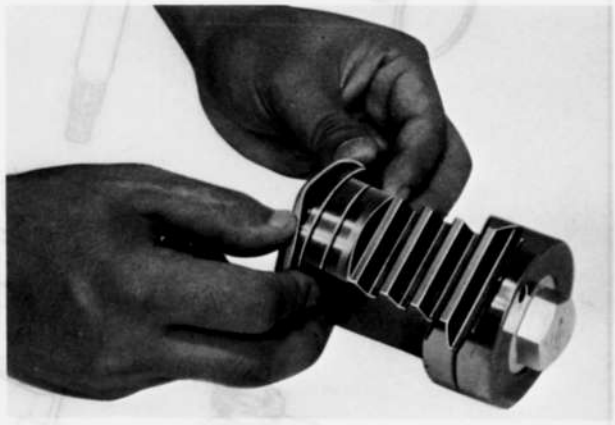

Fig. 10A–17 Installing Teflon ring

10A–E. STEERING GEAR ASSEMBLY

1. Dip a **new** O-ring in gear lubricant and install it on the valve housing.
2. Insert the worm shaft into the piston so that the about three grooves are visible between the valve housing and ball nut.
3. Insert nineteen balls into the hole that is closed to the Teflon ring, while turning the worm clockwise.
4. Install the remaining seven balls into one side

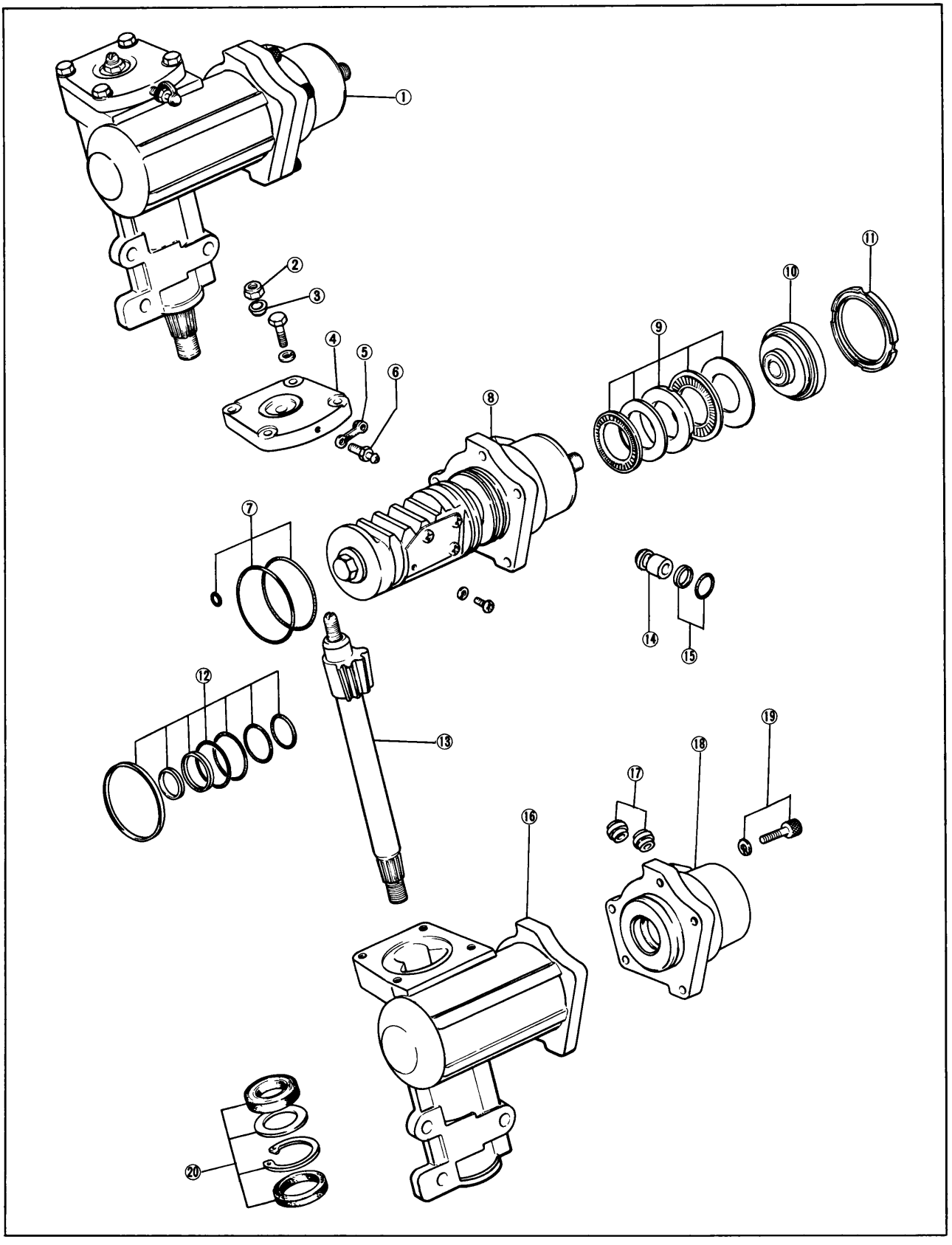

Fig. 10A–18 Power steering gear

1. Steering gear
2. Lock nut
3. Rubber seal
4. Side cover
5. Bleeder cap
6. Bleeder
7. O ring
8. Valve housing and piston
9. Bearing and race
10. Adjuster plug
11. Lock nut
12. O ring
13. Sector shaft
14. Plunger
15. Seal
16. Gear housing
17. Ferrule
18. Valve housing
19. Bolt
20. Seal

of the ball guide and hold them in place with Vaseline. Position the other half of the ball guide over them.
5. Place the ball guides in the piston.
6. Apply Vaseline to a **new** O-ring and install it on the cover.
7. Be sure the neoprene pad is in the cover and position the ball guide cover on the ball nut. Torque the cover attaching screws to **40 ~ 65 cm-kg (35 ~ 57 in-lb).**
After torquing the attaching screws, use a straight edge and confirm that the guide cover head is not higher than the Teflon ring. Any high spots must be filed off.

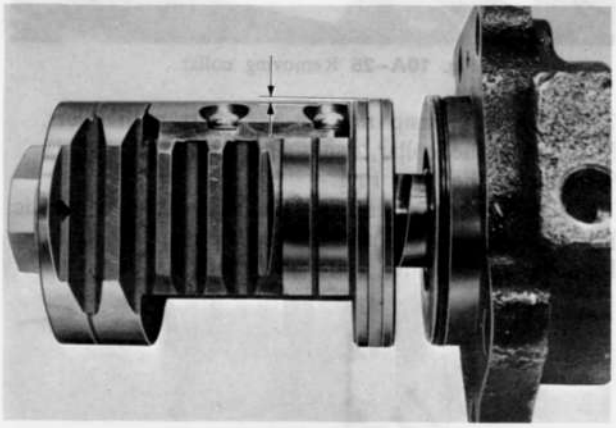

Fig. 10A–19 Checking guide cover height

Note: Once the balls are inserted, do not rotate the stub shaft or piston more than necessary, or the balls will fall out of the circuit.

8. Secure the gear housing on the work stand.
9. Apply Vaseline to a **new** O-ring and place it on the pressure port of the gear housing.
10. Apply Vaseline to the Teflon seal on the piston.
11. Slide the piston and valve into the gear housing. **Do not** damage the seal.

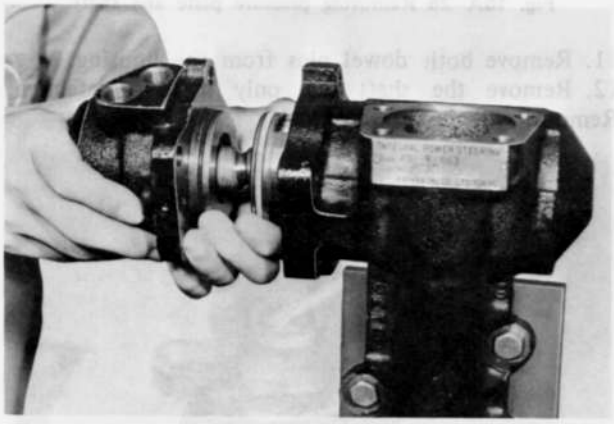

Fig. 10A–20 Installing piston and valve

12. Align the lube passage in the valve housing with the passage in the gear housing. Install but do not tighten the attaching bolts.
13. Rotate the ball nut so the teeth are in the same plane as the sector teeth. Torque the valve housing bolts to **3.8 ~ 5.0 m-kg (29 ~ 36 ft-lb).**
14. Install the side cover O-ring in the steering gear housing. Turn the stub shaft to center the piston.
15. Thread the side cover on the adjusting screw until it bottoms, then loosen it one and one-half turns.
16. Apply Vaseline to the sector shaft bearing and journal. Install the sector shaft so the center gear tooth meshes with the center groove in the rack-piston. Be sure the cover O-ring is in place before pushing the cover down on the housing.
17. Install the side cover attaching bolts and lock washers. Torque to **2.76 to 4.15 m-kg (25 to 30 ft-lb).**
18. Turn the stub shaft all the way to the left or right; then turn it back in 90 degrees.
19. Rotate the stub shaft and measure drag as described in Par. 10A–D–2. Adjust the sector shaft adjusting screw so preload is **10 ~ 16 cm-kg (9 ~ 14 in-lb).**

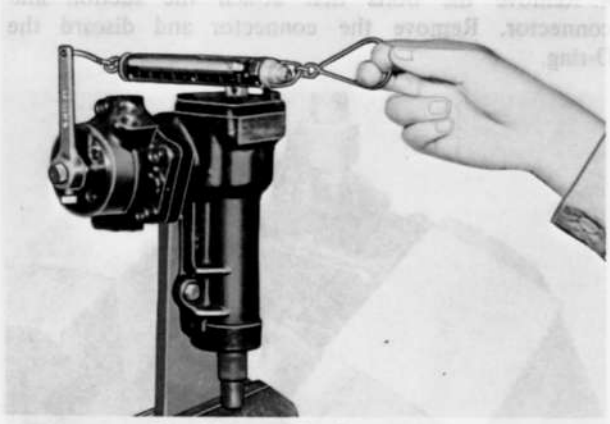

Fig. 10A–21 Checking preload

20. After obtaining proper preload, install a new rubber seal and sector shaft adjusting screw lock nut. Torque the lock nut to **18 to 30 cm-kg (16 ~ 26 in-lb).**
21. Tighten the adjuster plug lock nut.

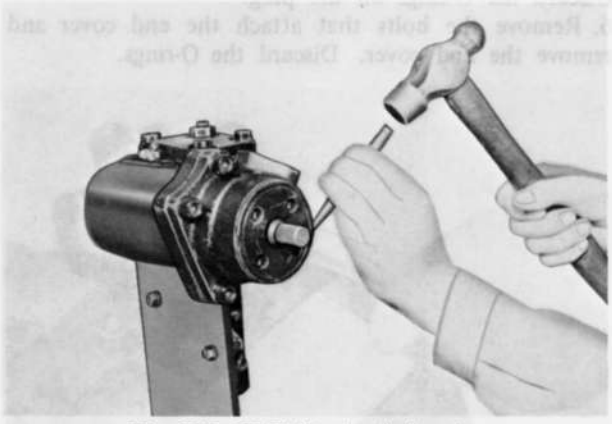

Fig. 10A–22 Tightening lock nut

22. Install the pitman arm onto the sector shaft, aligning the identification marks of the pitman arm and sector shaft. Tighten the nut to **15 ~ 18 m-kg (108 ~ 130 ft-lb).**

10A–F. STEERING GEAR INSTALLATION

Install the steering gear in the reverse order of removing.

Note:

a) Fill the reservoir and bleed the system as described in Par. 10A–A–1.

b) Start the engine and turn the steering wheel from left to right. Inspect for fluid leaks.

10A–G. POWER STEERING PUMP DISASSEMBLY

Take the following precautions when servicing the power steering pump:

a) Clean the exterior of the unit with solvent. Drain as much fluid as possible.

b) **Do not** use solvent on seals.

1. Mount the pump in a vise with soft jaws.
2. Remove the pulley from the pump.
3. Remove the woodruff key from the shaft.
4. Remove the bolts that attach the suction line connector. Remove the connector and discard the O-ring.

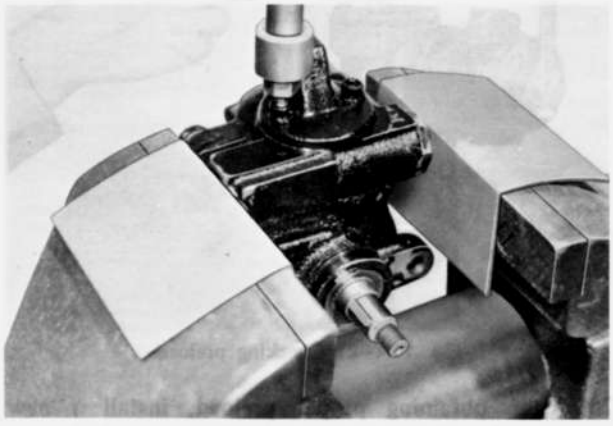

Fig. 10A–23 Removing suction line connector

5. Remove the flow-control valve plug. Remove the flow-control valve and spring from the pump housing. Discard the O-rings on the plug.
6. Remove the bolts that attach the end cover and remove the end cover. Discard the O-rings.

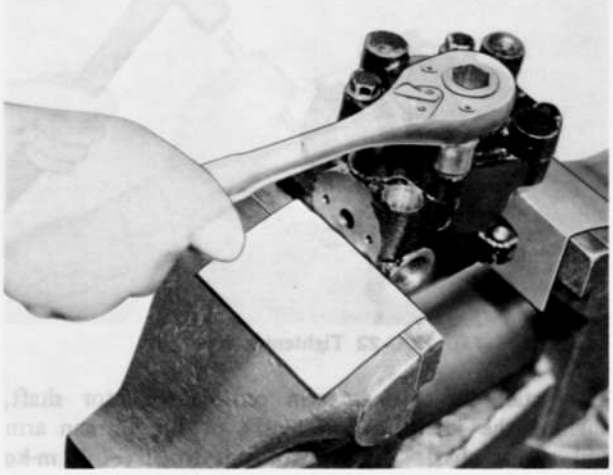

Fig. 10A–24 Removing end cover

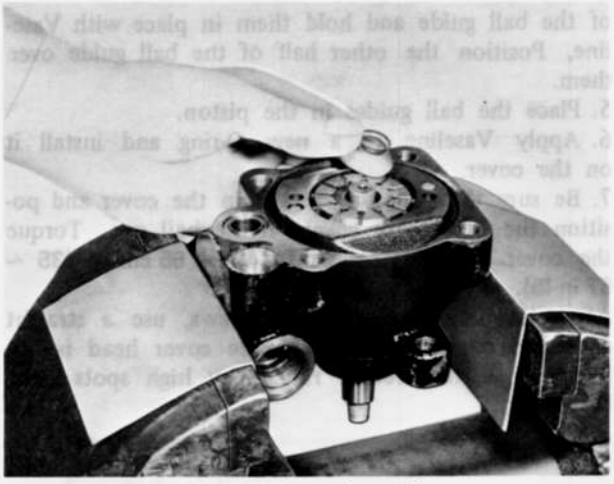

Fig. 10A–25 Removing collar

7. Remove the snap ring on the shaft with pilers.
8. Remove the collar, vanes and rotor.
9. Remove the cam ring.
10. Tap the drive end of the shaft with a plastic hammer to push the pressure plate out of the housing. Remove the pressure plate and shaft.

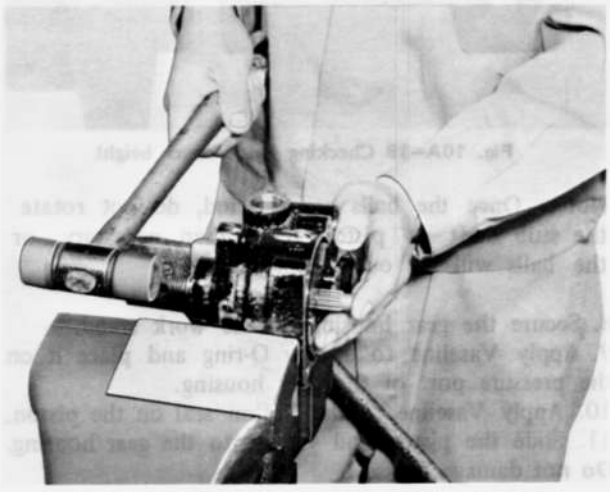

Fig. 10A–26 Removing pressure plate and shaft

11. Remove both dowel pins from the housing.
12. Remove the shaft seal only if it is defective. Removal will destroy the seal.

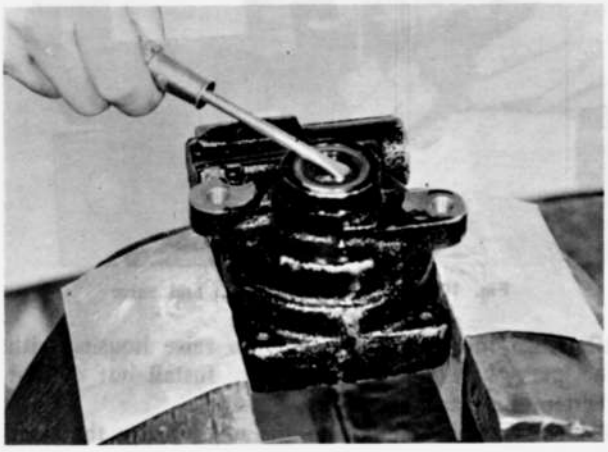

Fig. 10A–27 Removing shaft seal

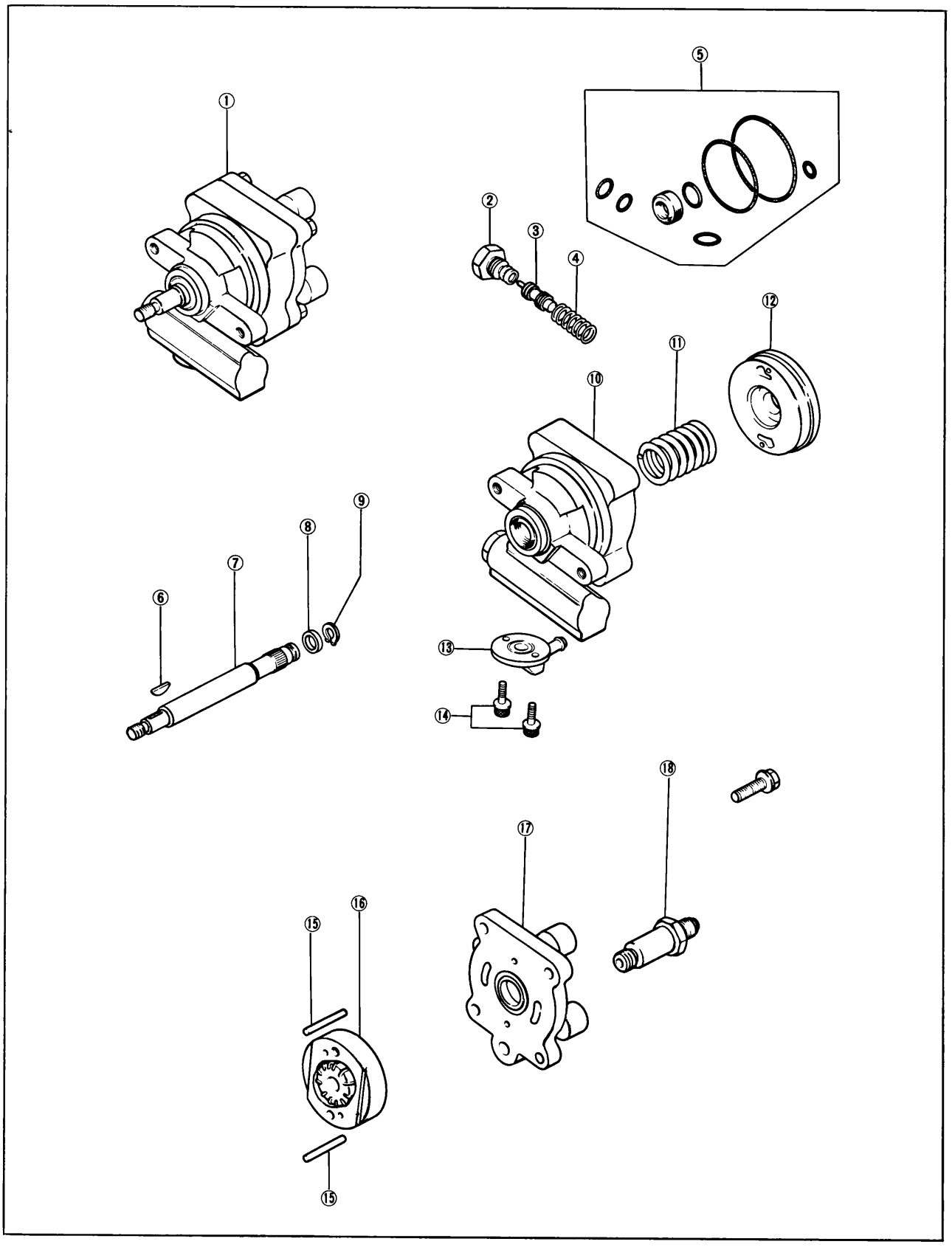

Fig. 10A–28 Power steering pump

1. Steering pump
2. Plug
3. Flow-control valve
4. Spring
5. O ring and seal
6. Key
7. Shaft
8. Collar
9. Snap ring
10. Pump housing
11. Spring
12. Pressure plate
13. Suction line connector
14. Bolt
15. Dowel pin
16. Cam ring and rotor
17. End cover
18. Pressure connector

10A–H. POWER STEERING PUMP INSPECTION

1. Clean all parts thoroughly in clean solvent, and then blow it dry with moisture-free compressed air.
2. Inspect the pump housing for cracks and wear.
3. Inspect the rotor, vanes, and ring for scratches, burned areas, or scores. These parts must be replaced as a package, if any are defective.
4. Inspect the pressure plate and cover for scratches or grooves.
5. Inspect the flow-control valve for scratches or wear. Check the two orifices in the plug to be sure they are open.



Fig. 10A–29 Checking orifices in plug

10A–I. POWER STEERING PUMP ASSEMBLY

1. If the shaft seal was removed, install a new seal with the metal backing facing the pump end of the shaft, using shaft seal installer Tool. Tap the tool lightly with a small hammer until the seal is properly seated in the shaft hub.

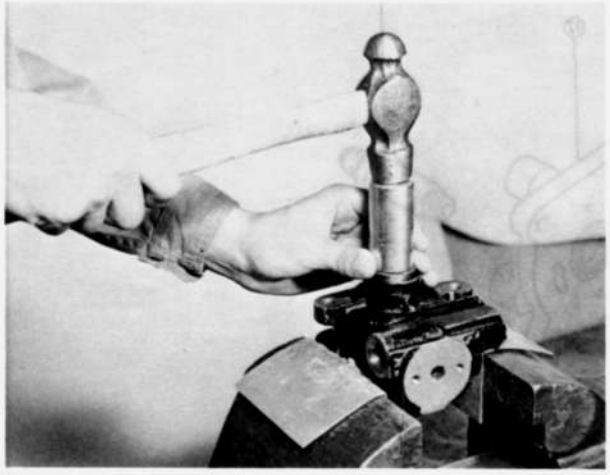

Fig. 10A–30 Installing shaft seal

2. Lubricate a **new** O-ring with power steering fluid and install it in the groove on the pump body.
3. Install both dowel pins and spring.
4. Insert the shaft in the housing.
5. Place a **new** O-ring on the pressure plate and lubricate the pressure plate and O-ring with power steering fluid to prevent damage to the pressure plate O-ring.

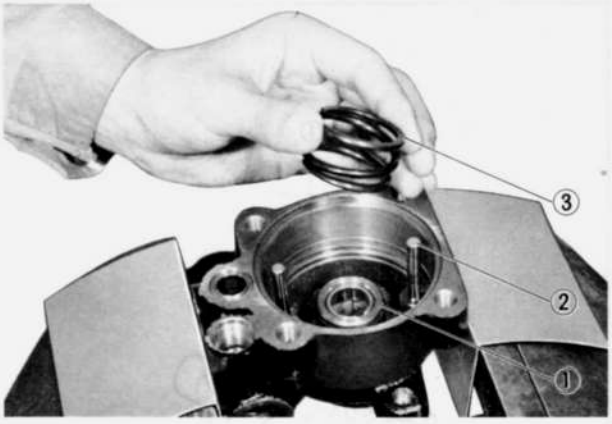

Fig. 10A–31 Installing dowel pin and spring
1. O ring
2. Dowel pin
3. Spring

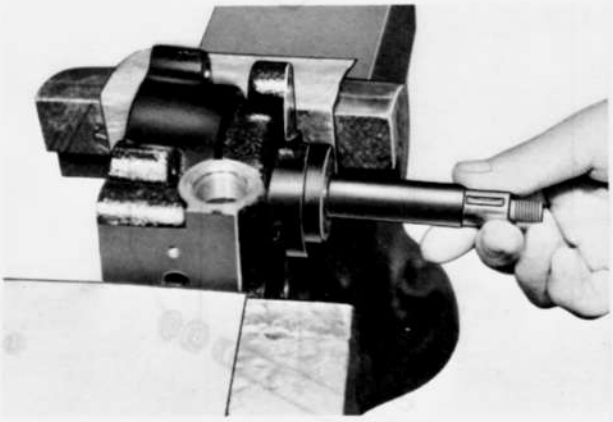

Fig. 10A–32 Installing shaft



Fig. 10A–33 Installing pressure plate

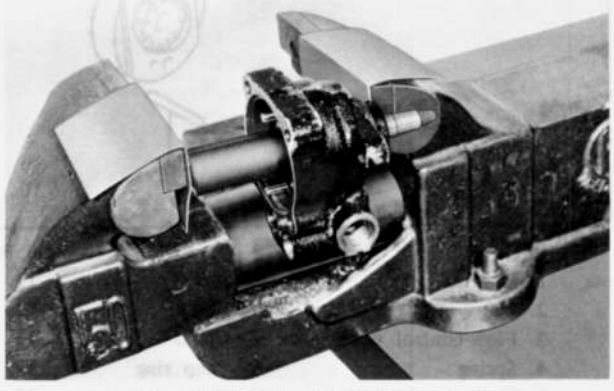

Fig. 10A–34 Pressing pressure plate

6. Install the pressure plate on the dowel pins with the recess area facing out. To seat pressure plate press it using tool, as shown in Fig. 10A–34.
7. Install the cam ring on the dowel pins with the rotation arrow toward the pressure plate.



Fig. 10A–35 Arrow mark on cam ring



Fig. 10A–36 Installing cam ring

8. Dip the rotor in gear lubricant and install the rotor on the shaft with the recessed-chamfer side of the bore toward the pressure plate.



Fig. 10A–37 Installing rotor

9. Install the vanes in the rotor slots with the rounded edge of the vanes outward. Be sure the vanes slide freely.
10. Install the collar, and the snap ring on the splined end of the shaft by prying the ring open and sliding it down over the shaft until it seats in the ring groove.



Fig. 10A–38 Installing vanes

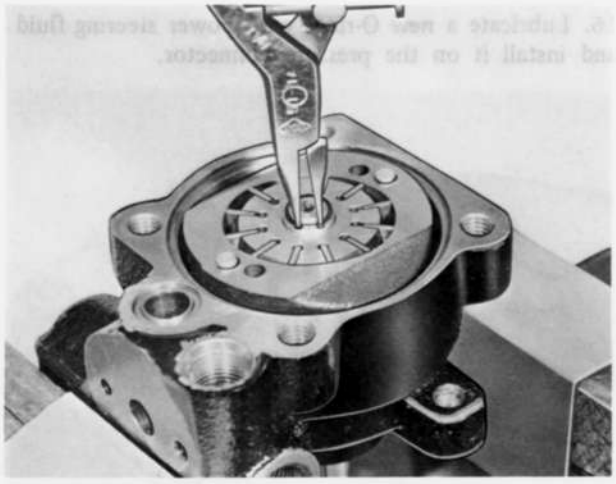

Fig. 10A–39 Installing collar

11. Lubricate the **new** O-rings with power steering fluid and install them on the housing.
12. Install the end cover and attaching bolts. Torque the bolts to **3 to 4 m-kg (22 to 29 ft-lb).**

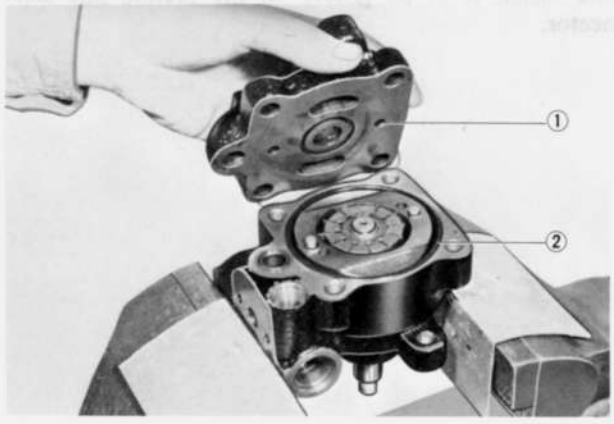

Fig. 10A–40 Installing end cover
1. End cover 2. O ring

13. Place the flow-control valve spring in its hole and insert the flow-control valve with the pin end toward the plug.
14. Lubricate the **new** O-rings with power steering fluid and install them on the plug.
15. Install the control valve plug on the housing and torque it to **7 to 10 m-kg (50 to 72 ft-lb).**

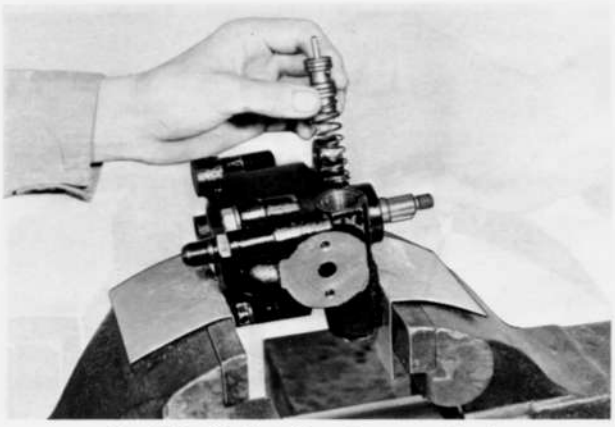

Fig. 10A–41 Installing flow-control valve

16. Lubricate a **new** O-rings with power steering fluid and install it on the pressure connector.



Fig. 10A–42 Installing O ring

17. Install the pressure connector on the housing and torque it to **7 to 10 m-kg (50 to 72 ft-lb).**
18. Lubricate a **new** O-ring with power steering fluid and install it in its groove on the suction line connector.



Fig. 10A–43 Installing suction line connector

19. Install the connector on the housing and torque the attaching bolts to **0.7 to 1.0 m-kg (5 ~ 7 ft-lb).**
20. Lightly tap the woodruff key into place on the shaft with a plastic hammer.
21. Attach the pulley to the pump.

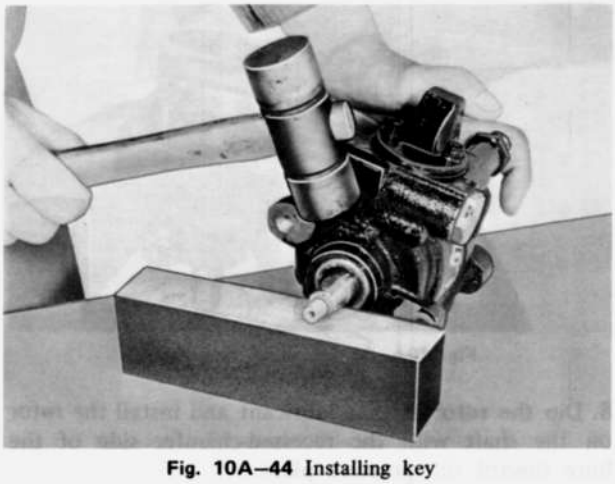

Fig. 10A–44 Installing key

BRAKES

DESCRIPTION ..... 11 : 1
11–A. BRAKE PEDAL ADJUSTMENT ..... 11 : 1
11–A–1, Pedal Height Adjustment ..... 11 : 1
11–A–2. Free Travel Adjustment ..... 11 : 1
11–B. REAR BRAKE ADJUSTMENT ..... 11 : 1
11–C. AIR BLEEDING ..... 11 : 2
11–D. BRAKE FLUID LEVEL SENSOR ..... 11 : 2
11–D–1. Checking Fluid Level Sensor ..... 11 : 2
11–D–2. Replacing Fluid Level Sensor ..... 11 : 2
11–E. BRAKE MASTER CYLINDER ..... 11 : 3
11–E–1. Removing Brake Master Cylinder ..... 11 : 3
11–E–2. Disassembling Brake Master Cylinder .. 11 : 3
11–E–3. Checking Brake Master Cylinder ..... 11 : 3
11–E–4. Assembling Brake Master Cylinder ..... 11 : 4
11–E–5. Installing Brake Master Cylinder ..... 11 : 5
11–F. POWER BRAKE UNIT ..... 11 : 5
11–F–1. Checking Power Brake Unit on Car ... 11 : 5
11–F–2. Removing Power Brake Unit ..... 11 : 5
11–F–3. Disassembling Power Brake Unit ..... 11 : 5
11–F–4. Checking Power Brake Unit ..... 11 : 6
11–F–5. Assembling Power Brake Unit ..... 11 : 7
11–F–6. Installing Power Brake Unit ..... 11 : 7
11–G. BRAKE FAIL INDICATOR ..... 11 : 8
11–H. DIFFERENTIAL PROPORTIONING VALVE .... 11 : 8
11–I. HYDRAULIC LINES ..... 11 : 8
11–J. FRONT BRAKE ..... 11 : 8
11–J–1. Replacing Disc Brake Shoes ..... 11 : 8
11–J–2. Removing Caliper ..... 11 : 9
11–J–3. Disassembling Caliper ..... 11 : 9
11–J–4. Checking Caliper ..... 11 : 10
11–J–5. Assembling Caliper ..... 11 : 10
11–J–6. Installing Caliper ..... 11 : 10
11–J–7. Checking Brake Disc ..... 11 : 10
11–J–8. Removing Brake Disc ..... 11 : 11
11–J–9. Installing Brake Disc ..... 11 : 11
11–K. BEAR BRAKE ..... 11 : 11
11–K–1. Removing Rear Brake Shoes ..... 11 : 11
11–K–2. Inspecting Rear Brake ..... 11 : 12
11–K–3. Installing Rear Brake Shoes ..... 11 : 12
11–K–4. Removing and Disassembling Rear Wheel Cylinder ..... 11 : 12
11–K–5. Checking Rear Wheel Cylinder ..... 11 : 13
11–K–6. Assembling and Installing Rear Wheel Cylinder ..... 11 : 13
11–L. PARKING BRAKE ADJUSTMENT ..... 11 : 13
SPECIAL TOOLS ..... 11 : 13

DESCRIPTION

The brakes consist of two systems, the foot brake, and the parking brake. The front brakes are of a disc brake type.
The rear brakes are of a drum type with leading and trailing shoes. The brake pedal is of a pendant type.
The parking brake operates the brake shoes of the rear wheels through the wire linkage.

11–A. BRAKE PEDAL ADJUSTMENT

11–A–1. Pedal Height Adjustment

The pedal height from the floor, as shown in Fig. 11–1, should be **195.0 mm (7.68 in).** To adjust the pedal height, proceed as follows:
1. Disconnect the wires from the stop lamp switch.
2. Loosen the lock nut and turn the stop lamp switch until the correct pedal height is obtained.
3. Tighten the lock nut.

11–A–2. Free Travel Adjustment

There should always be a free pedal travel **from 7.0 to 9.0 mm (0.28 to 0.35 in)** before the piston in the power brake unit operates. To adjust the free travel, proceed as follows:
1. Loosen the lock nut and turn the push rod connected to the brake pedal until the specified free travel is obtained.
2. Tighten the lock nut.

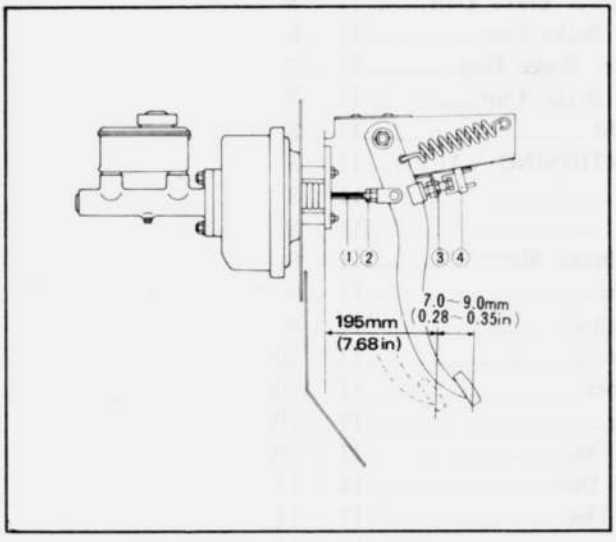

Fig. 11–1 Brake pedal adjustment
1. Push rod
2. Lock nut
3. Lock nut
4. Stop light switch

11–B. REAR BRAKE ADJUSTMENT

Canada spec:
1. Jack up the rear end of the vehicle until the wheels are free to turn. Then, support with stands.
2. Make sure that the parking brake is fully released.
3. Remove the shoe adjusting hole plug from the back of the backing plate.

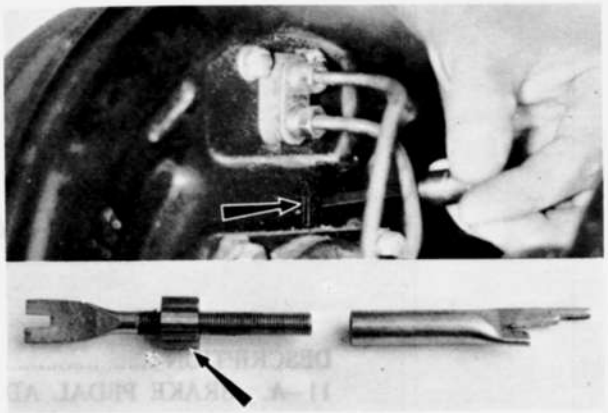

Fig. 11–2 Rear brake adjustment

4. Insert a screwdriver into the star wheel of the adjuster and turn the star wheel toward the arrow direction (⇐) marked on the backing plate until the wheel is locked.
5. Then, back off the star wheel about 4 ~ 5 notches so that the drum rotates freely without drag.
6. Install the adjusting hole plug onto the backing plate.
7. Repeat the above adjustment on the other side rear wheel. The adjustments must be the same on both rear wheels.

U.S.A. spec:
The rear brakes are self-adjusting and require a manual adjustment only after the brake shoes have been replaced, or when the length of the adjusting rod has been changed while performing some other service operation.
To adjust the rear brake shoes, proceed as follows:
1. Jack up the rear end of the vehicle until the wheels are free to turn. Then, support with stands.
2. Make sure that the parking brake is fully released.
3. Remove three shoe adjusting hole plugs from the back of the backing plate, as shown in Fig. 11–3.



Fig. 11–3 Removing adjusting hole plugs

4. Insert a screwdriver into the star wheel of the adjuster through the hole Ⓒ and turn the star wheel toward the arrow direction (⇐) marked on the backing plate until the wheel is locked.
5. Through the hole Ⓐ, hold the pole lever of the self-adjuster with a suitable drift and back off the star wheel about **3 ~ 4 notches** so that the drum

rotates freely without drag.
6. Repeat the above adjustment on the other side rear wheel. The adjustments must be the same on both rear wheels.
7. Adjust the parking brake, as described in Par. 11–L.
8. After adjustments are completed, check the clearance between the parking brake operating lever and shoe through the hole Ⓑ, as shown in Fig. 11–4. The clearance should be **0 ~ 2.5 mm (0 ~ 0.1 in).**

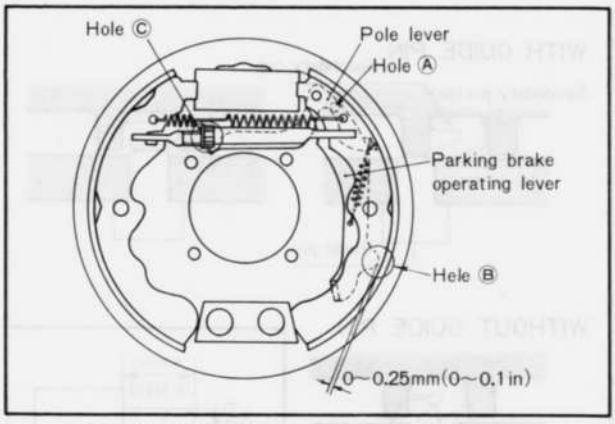

Fig. 11–4 Checking operating lever clearance

9. Install the adjusting hole plugs onto the backing plate.

11–C. AIR BLEEDING

Whenever the fluid line is disconnected, the wheel cylinder or master cylinder is overhauled, or air enters the system, air bleeding must be carried out.
If a pressure bleeding equipment is available, it would be easier to use. The front and rear hydraulic brake systems are individual systems and are bled separately.

Note:
a) During bleeding operation, the reservoir of the master cylinder must be kept at least 3/4 full of the brake fluid.
b) Do not mix low temperature brake fluid with the specified fluid during the bleeding operation.
c) Never re-use brake fluid which has been drained from the hydraulic system.
d) Do not use the secondary piston stop bolt, located on the side of the master cylinder to bleed the brake system.
Loosening or removing this bolt could result in damage to the secondary piston or stop bolt.

1. Remove the rubber cap from the bleeder screw and attach a vinyl tube to the bleeder screw.
2. Place the end of the vinyl tube in the glass jar and submerge in brake fluid.
3. Open the bleeder valve. Depress the brake pedal a full stroke and allow it to return slowly. Continue this pumping action until air bubbles cease to appear in the jar.
4. When bleeding operation is completed, close the bleeder valve, remove the vinyl tube and fit the cap to the bleeder screw.

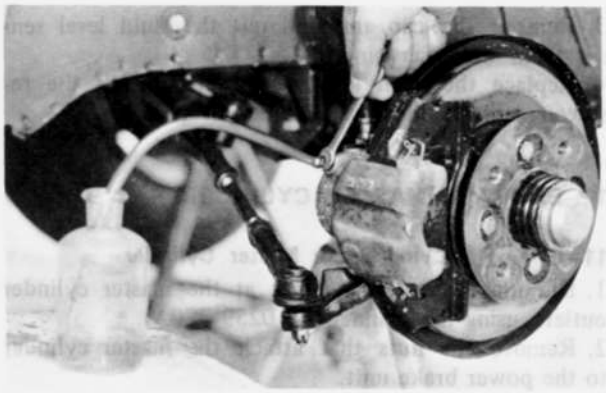

Fig. 11–5 Air bleeding

5. Centralize the brake fail indicator as described in Par. 11–G. (Canada spec only)

11–D. BRAKE FLUID LEVEL SENSOR (U.S.A. spec only)

The brake fluid level sensor which is fitted to the reservoir tank is connected to the brake system warning lamp with the wiring.
The warning lamp is common to the parking brake warning lamp. When the fluid level is low, the warning lamp lights up to warn necessity of the brake fluid replenishment.

11–D–1. Checking Fluid Level Sensor

1. Disconnect the coupler of the sensor.
2. Connect the circuit tester to the coupler and check the continuity by moving the float up and down as shown in Fig. 11–6.

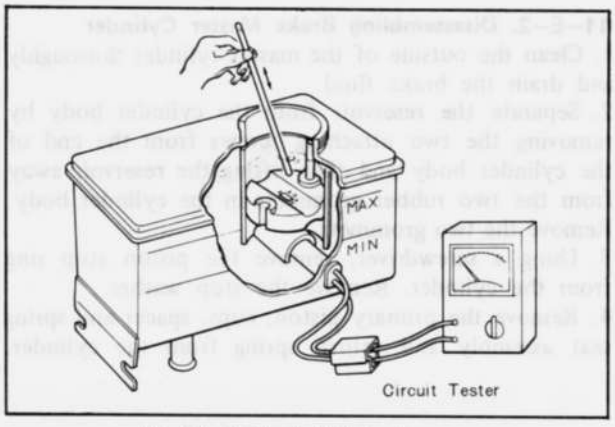

Fig. 11–6 Check fluid level sensor

When the float is below "MIN" mark, the tester should show a continuity while the tester should not show any continuity when the float is above "MIN" mark.
If it is found not to be so, replace the fluid level sensor.

11–D–2. Replacing Fluid Level Sensor

1. Disconnect the coupler of the sensor.
2. Remove the screws attaching the reservoir tank and remove the reservoir tank. **Do not** remove the fluid pipes.

3. Remove the cap and pull out the fluid level sensor from the reservoir tank.
4. Replace the fluid level sensor and install the reservoir tank in the reverse order of removing.

11–E. BRAKE MASTER CYLINDER

11–E–1. Removing Brake Master Cylinder

1. Disconnect the fluid pipes at the master cylinder outlets, using the spanner (49 0259 770A).
2. Remove the nuts that attach the master cylinder to the power brake unit.
3. Remove the master cylinder assembly from the power brake unit.

Note: Never allow the brake fluid to drop on any painted surface.

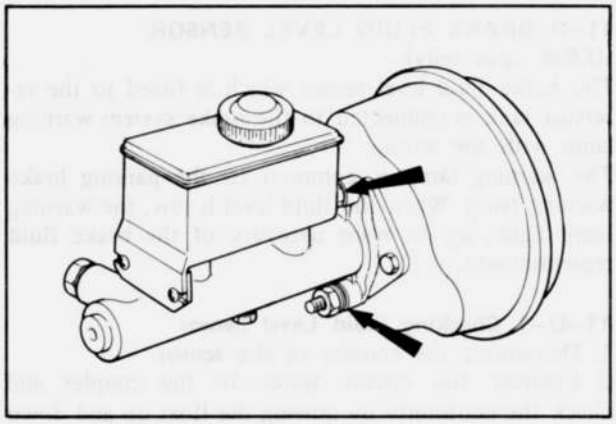

Fig. 11–7 Rmoving brake master cylinder

11–E–2. Disassembling Brake Master Cylinder

1. Clean the outside of the master cylinder thoroughly and drain the brake fluid.
2. Separate the reservoir from the cylinder body by removing the two attaching screws from the end of the cylinder body and then lifting the reservoir away from the two rubber grommets in the cylinder body. Remove the two grommets.
3. Using a screwdriver, remove the piston stop ring from the cylinder. Remove the stop washer.
4. Remove the primary piston, cups, spacer and spring seat assembly and return spring from the cylinder.



Fig. 11–8 Removing primary piston

5. Loosen the secondary piston stop bolt. **Do not remove it.**
6. Pushing in the secondary piston with a screwdriver, remove the stop bolt and insert the guide pin in its place. Then, gradually take out the screwdriver and remove the secondary piston and cups assembly and return spring from the cylinder.
If necessary, blow out with compressed air from the outlet hole.

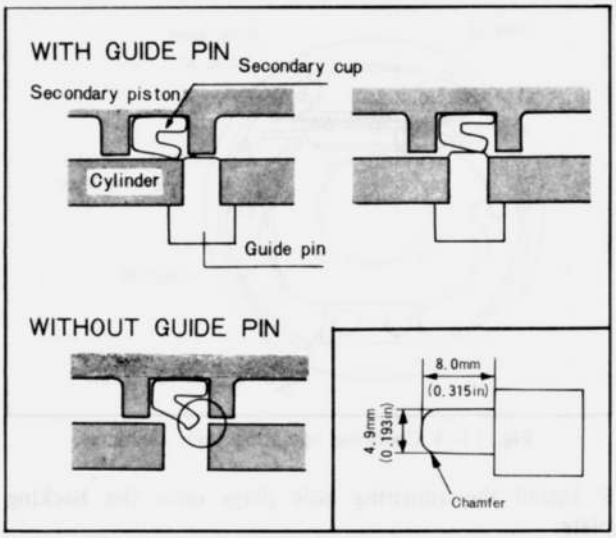

Fig. 11–9 Piston guide pin



Fig. 11–10 Removing secondary piston

7. Remove the fluid pipe fittings and gaskets from the cylinder, and then remove the check valves and springs.

11–E–3. Checking Brake Master Cylinder

1. Wash the parts in clean alcohol or brake fluid. **Never use gasoline or kerosene.** Blow the parts dry with compressed air.
2. Check the piston cups and replace if they are damaged, worn, softened, or swelled.
3. Examine the cylinder bore and pistons for wear, roughness or scoring.
4. Check the clearance of the cylinder bore and pistons. If it is **more than 0.15 mm (0.006 in),** replace the cylinder or piston.
5. Ensure that the compensating ports on the cylinder are open.



Fig. 11–11 Checking piston clearance

11–E–4. Assembling Brake Master Cylinder

1. Dip the pistons and cups in clean brake fluid.
2. Fit the check valve springs and check valves into the outlet holes. Install the pipe fittings and gaskets to the outlet holes. Tighten the fittings to **6.0 ~ 7.0 m-kg (43 ~ 51 ft-lb).**

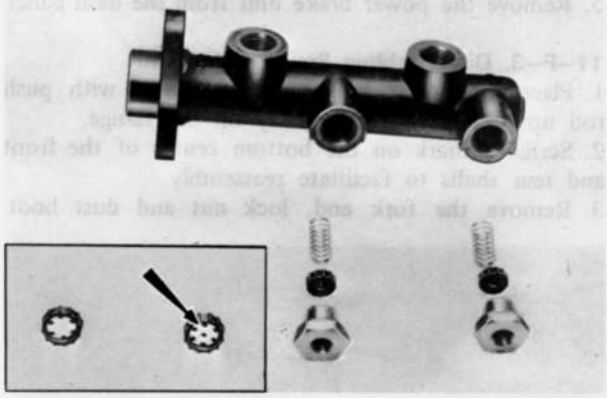

Fig. 11–12 Check valves and fluid pipe fittings

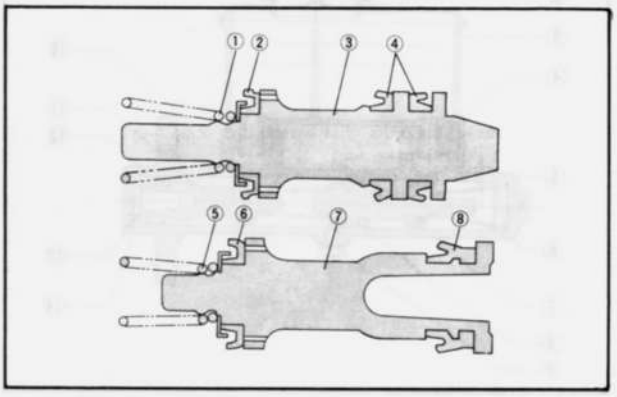

Fig. 11–13 Pistons ans cups

1. Secondary return spring
2. Primary cup
3. Secondary piston
4. Secondary cups
5. Primary return spring
6. Primary cup
7. Primary piston
8. Secondary cup

Note: Be sure to fit the valve which has a hole in the center of it to the front side outlet hole (disc brake).

3. Fit the secondary cup and primary cup onto the piston, as shown in Fig. 11–13.
4. Fit the guide pin, as shwon in Fig. 11–9, into the stop bolt hole and insert the piston assembly and return spring into the cylinder. With a screwdriver push the piston as far as it will go, remove the guide pin, and install the stop bolt and washer.
5. Fit the primary cup and secondary cup onto the primary piston, as shown in Fig. 11–13.

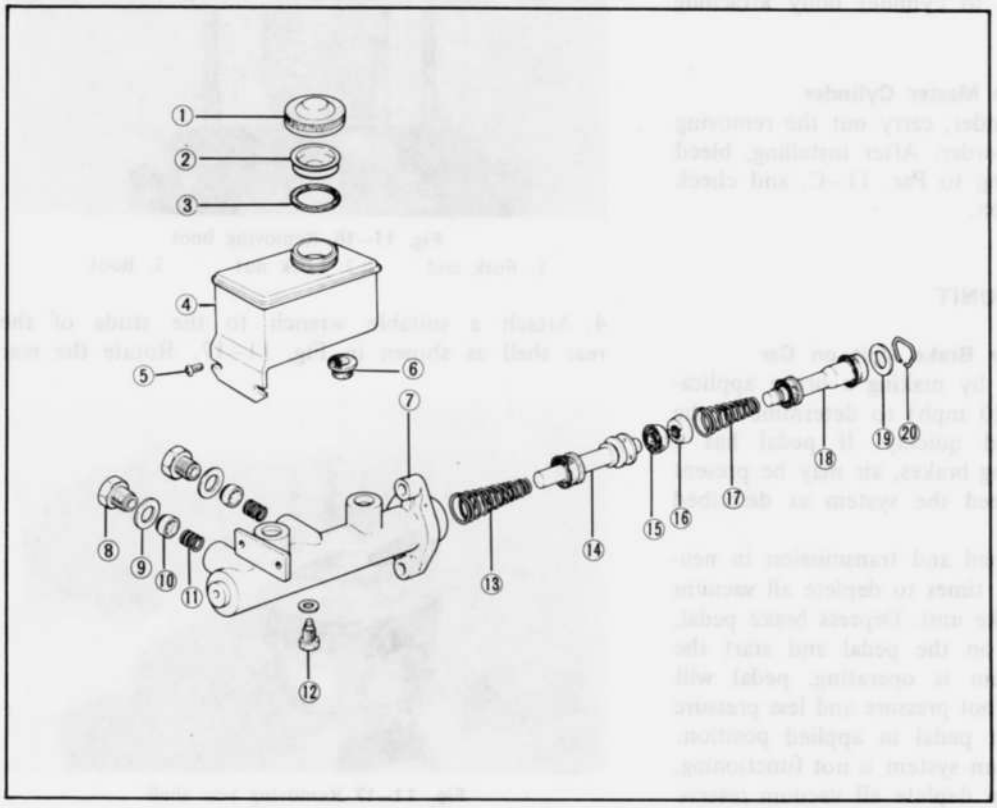

Fig.11–14
Brake master cylinder components

1. Reservoir cap
2. Fluid baffle
3. Rubber packing
4. Reservoir tank
5. Screw
6. Grommet
7. Cylinder
8. Fluid pipe fitting
9. Gasket
10. Check valve
11. Spring
12. Secondary piston stop bolt
13. Secondary spring
14. Secondary piston
15. Secondary piston cup
16. Secondary piston cup
17. Primary spring
18. Primary piston
19. Stop washer
20. Stop ring

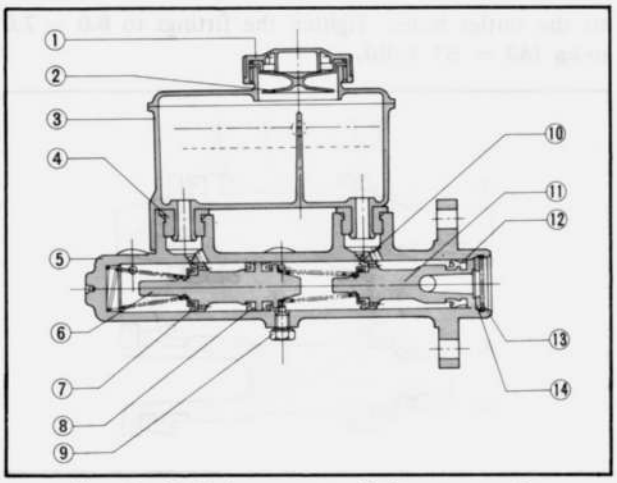

Fig. 11–15 Brake master cylinder cross section

1. Reservoir cap
2. Fluid baffle
3. Reservoir
4. Grommet
5. Cylinder
6. Secondary piston
7. Primary cup
8. Secondary cup
9. Stop bolt
10. Primary cup
11. Primary piston
12. Secondary cup
13. Stop ring
14. Stop washer

6. Insert the return spring and the primary piston assembly.
7. Install the stop washer and piston stop ring.

Note: Make sure that the piston cups do not cover the compensating ports.

8. Install the two grommets in the cylinder body.
9. Position the reservoir on the cylinder body so that the reservoir outlet tubes are seated in the grommets and install the reservoir to cylinder body attaching screws.

11–E–5. Installing Brake Master Cylinder

To install the master cylinder, carry out the removing operation in the reverse order. After installing, bleed the brake system, referring to Par. 11–C, and check for proper brake operation.

11–F. POWER BRAKE UNIT

11–F–1. Checking Power Brake Unit on Car

1. Road test the brakes by making a brake application at about 30 kph (20 mph) to determine if the vehicle stops evenly and quickly. If pedal has a spongy feel when applying brakes, air may be present in hydraulic system. Bleed the system as described in Par. 11–C.
2. With the engine stopped and transmission in neutral, apply brakes several times to deplete all vacuum reserve in the power brake unit. Depress brake pedal, hold light-foot pressure on the pedal and start the engine. If vacuum system is operating, pedal will tend to fall away under foot pressure and less pressure will be required to hold pedal in applied position. If no action is felt, vacuum system is not functioning.
3. Stop the engine. Again deplete all vacuum reserve in system. Depress the brake pedal and hold foot pressure on the pedal. If pedal gradually falls away under foot pressure, hydraulic system is leaking internally or externally.
4. Start the engine with brakes off and transmission in neutral. Run the engine to medium speed and turn off ignition switch. Immediately close throttle. This builds up vacuum. Wait no less than 90 seconds, then try brake action. If not vacuum-assisted for two or more applications, vacuum check valve is faulty or there is a leak in vacuum system.

11–F–2. Removing Power Brake Unit

1. Remove the brake master cylinder, as described in Par. 11–E–1.
2. Disconnect the vacuum hose at the power brake unit.
3. Disconnect the push rod from the brake pedal by removing the cotter pin at the fork end.
4. Remove the nuts that attach the power brake unit to the dash panel.
5. Remove the power brake unit from the dash panel.

11–F–3. Disassembling Power Brake Unit

1. Place the power brake unit in a vice with push rod up. Clamp the unit firmly on the flange.
2. Scribe a mark on the bottom center of the front and rear shells to facilitate reassembly.
3. Remove the fork end, lock nut and dust boot.

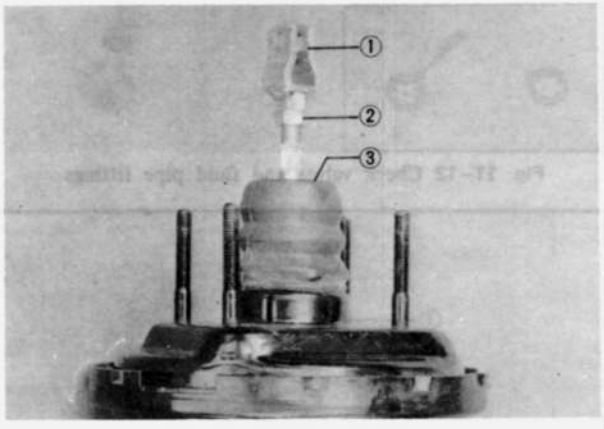

Fig. 11–16 Removing boot

1. Fork end
2. Lock nut
3. Boot

4. Attach a suitable wrench to the studs of the rear shell as shown in Fig. 11–17. Rotate the rear

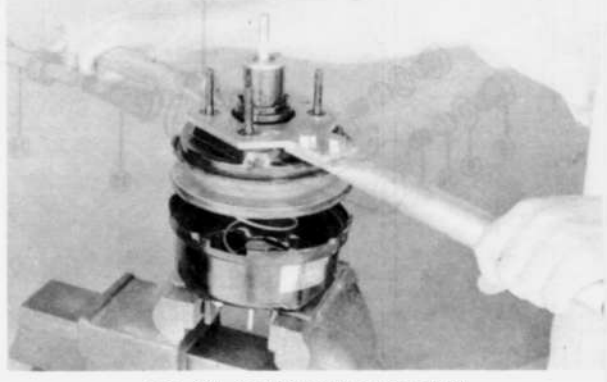

Fig. 11–17 Removing rear shell

shell clockwise to unlocked position.

Note: Loosen the rear shell carefully as it is spring-loaded.

5. Lift the rear shell, diaphragm and power piston assembly, valve rod and plunger assembly from the unit. Then, remove the return spring.
6. Remove the diaphragm and power piston assembly, valve rod and plunger assembly from the rear shell.

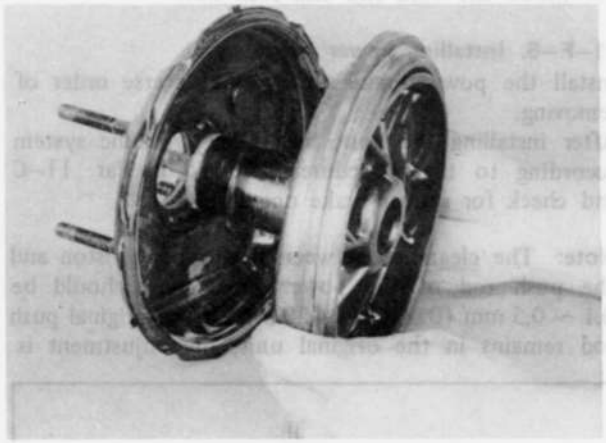

Fig. 11–18 Removing power piston assembly

Note: Do not remove the rear seal from the rear shell unless the seal is defective and a new seal is available. To remove the rear seal, support the rear shell and drive out the rear seal with a punch or a screwdriver.

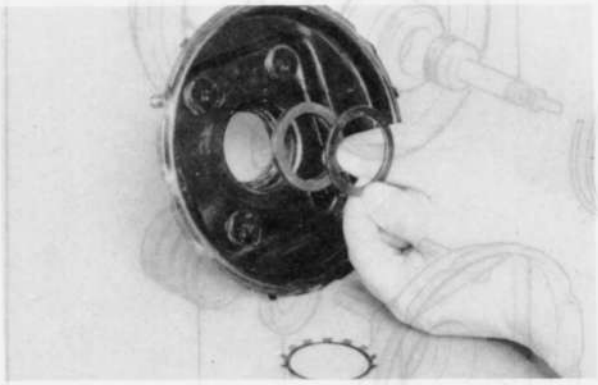

Fig. 11–19 Removing rear seal

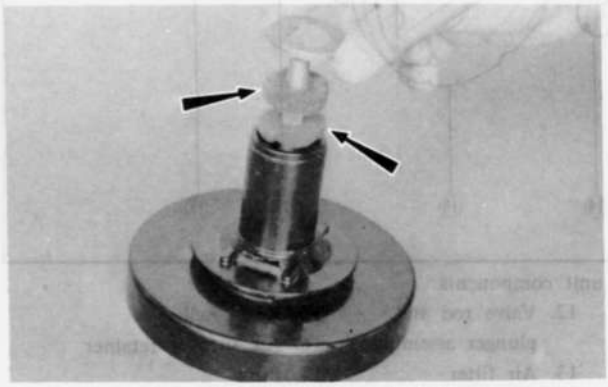

Fig. 11–20 Removing air filter

7. Remove the diaphragm from the power piston.
8. Remove the air silencer with the air filter from the power piston, being careful not to chip plastic.
9. Press in on the valve rod to remove the valve retainer key. Remove the valve rod and plunger assembly.

Note: The valve rod and plunger are serviced as an assembly only.

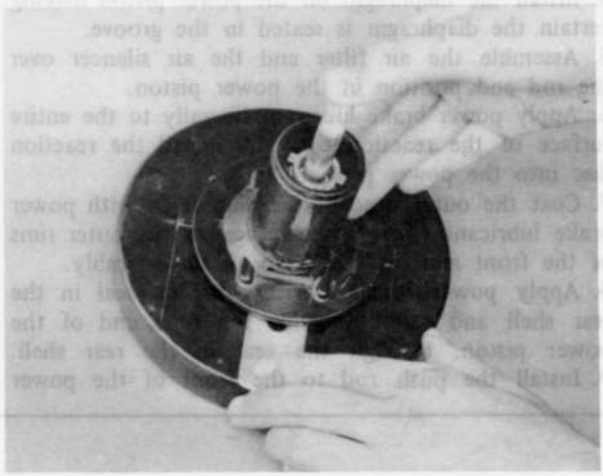

Fig. 11–21 Removing retainer key

10. Press the reaction disc out of the power piston.
11. Remove the push rod from the front shell.
12. Remove the front seal from the front shell if necessary.

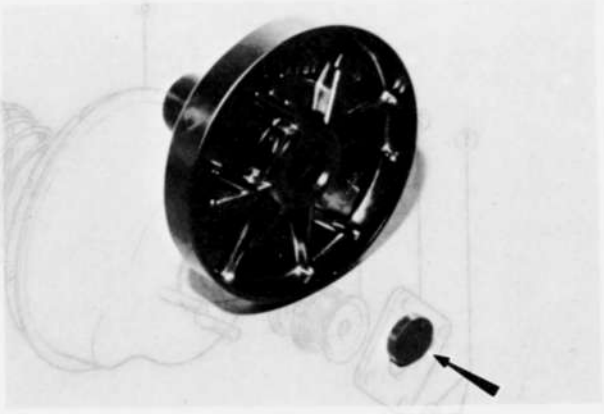

Fig. 11–22 Reaction disc

11–F–4. Checking Power Brake Unit

1. Inspect all rubber parts. Wipe free of fluid and carefully inspect each rubber part for cuts, nicks or other damage.
2. Check the power piston for cracks, distortion, chipping and damaged seats.
3. Inspect the reaction disc for deterioration of rubber.
4. Check the valve rod and plunger for all seats to be smooth and free of nicks and dents. Replace with a new one if defective.
5. Inspect the front and rear shells for scratches, scores, pits, dents or other damage.
6. Check the diaphragm for cuts, or other damage.

11–F–5. Assembling Power Brake Unit

1. Apply power brake lubricant to the inner surface of the tube section of the power piston and to the surfaces of the valve rod and plunger.
2. Insert the valve rod and plunger assembly into the tube section of the power piston.
3. Press down on the valve rod and align the groove in the valve plunger with the slot of the power piston. Insert the valve retainer key.
4. Install the diaphragm on the power piston making certain the diaphragm is seated in the groove.
5. Assemble the air filter and the air silencer over the rod and position in the power piston.
6. Apply power brake lubricant liberally to the entire surface of the reaction disc and install the reaction disc into the power piston.
7. Coat the outer bead of the diaphragm with power brake lubricant where it bears against the outer rims of the front and rear shells to aid in assembly.
8. Apply power brake lubricant to the seal in the rear shell and carefully guide the tube end of the power piston, through the seal in the rear shell.
9. Install the push rod to the front of the power piston.
10. Install the return spring on the front shell.
11. Install the rear shell assembly onto the front shell by using the wrench to rotate the rear shell counter-clockwise until scribe marks align.

Note: Press the rear shell down firmly, maintaining a pressure until the shell flanges are fully locked.

12. Install the dust boot down against the rear shell.
13. Install the fork end and lock nut.

11–F–6. Installing Power Brake Unit

Install the power brake unit in the reverse order of removing.
After installing the unit, bleed the hydraulic system according to the procedure described in Par. 11–C and check for proper brake operation.

Note: The clearance between the primary piston and the push rod of the power brake unit should be 0.1 ~ 0.5 mm (0.004 ~ 0.020 in). If the original push rod remains in the original unit, the adjustment is

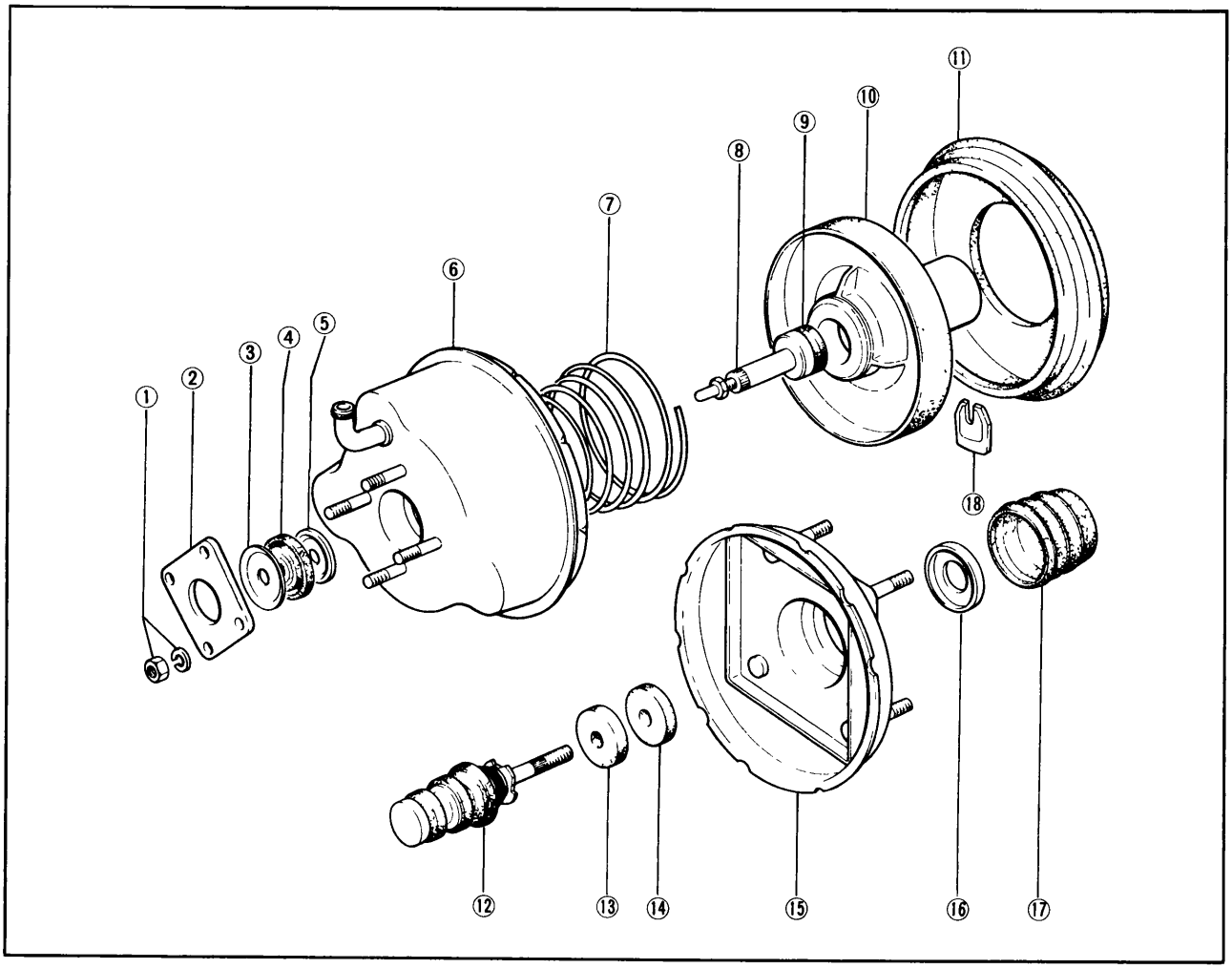

Fig. 11–23 Power brake unit components

1. Nut and washer
2. Flange
3. Retainer
4. Front seal
5. Support plate
6. Front shell
7. Return spring
8. Push rod
9. Reaction disc
10. Power piston
11. Diaphragm
12. Valve rod and plunger assembly
13. Air filter
14. Air silencer
15. Rear shell
16. Air silencer retainer
17. Boot
18. Retainer key

required. If the parts are replaced with new ones, adjust the clearance by loosening the lock nut and turning the push rod.

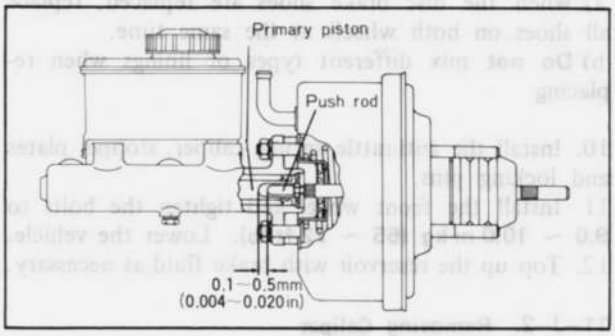

Fig. 11–24 Clearance between piston and rod

11–G. BRAKE FAIL INDICATOR

Canada spec:

The brake fail indicator lamp switch is mounted at the center of the valve body with the spring-loaded plunger fitting into a tapered shoulder groove in the center of the piston. With the piston in a centralized position the switch contacts remain open. Should there be a loss of pressure in either the front or rear brake system, the valve will move off center, closing the switch contacts and turning on the warning lamp.

11–H. DIFFERENTIAL PROPORTIONING VALVE

U.S.A. spec:

The proportioning valve regulates the rear brake system hydraulic pressure and is located between the rear brake system inlet and outlet ports as shown in Fig. 11–25.

When the brake pedal is applied, the full rear brake fluid pressure passes through the proportioning valve to the rear brakes until the valve split point is attained. Above the split point, the proportioning valve reduces hydraulic pressure to the rear brakes for balanced braking.

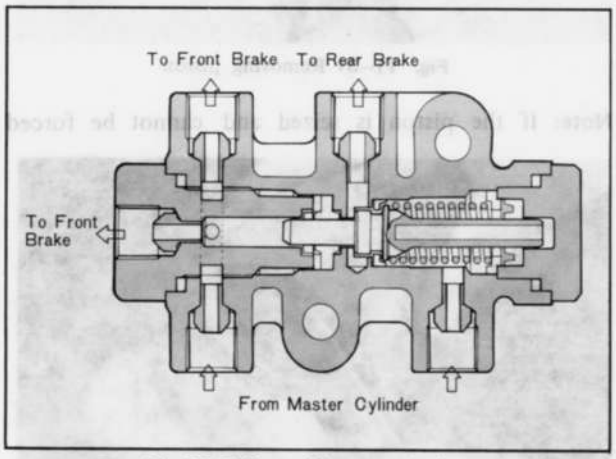

Fig. 11–25 Differential proportioning valve

Valve can be removed easily by the attaching bolts. When installing, however, note the following: connect brake lines with "F" mark toward front brake side and with arrow mark toward the rear brake side.

Note: Identification for inlet and outlet is facilitated by an arrow mark.

11–I. HYDRAULIC LINES

Inspect all brake lines for any leakage with the foot brakes applied. Check all brake pipes, hoses and connections for signs of chafing, deterioration or any other damage.

11–J. FRONT BRAKE

11–J–1. Replacing Disc Brake Shoes

The lining should be inspected at intervals following the maintenance schedule. The shoe and lining assembly should be replaced, if the thickness of the shoe and lining is **7.0 mm (0.276 in) or less** due to wear. To replace the disc brake shoes, proceed as follows:

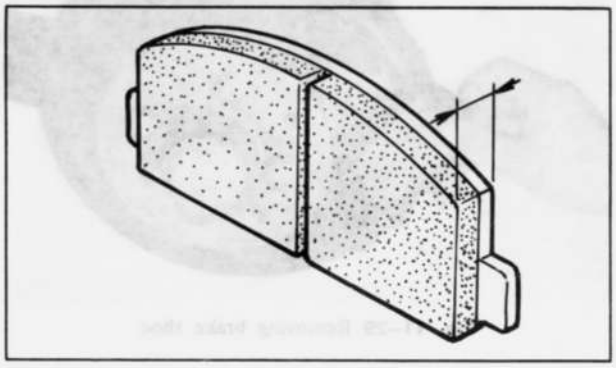

Fig. 11–26 Checking lining thickness

1. Raise the front end of the vehicle and support with stands.
2. Remove the front wheel.
3. Remove the locking clips and pull out the stopper plates.

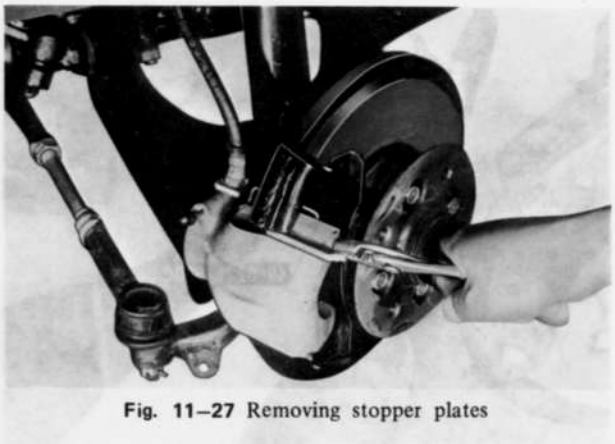

Fig. 11–27 Removing stopper plates

4. Remove the caliper and anti-rattle spring.

Note: It is not necessary to remove the brake pipe when replacing the brake shoe. But do not allow the

caliper to hang from the brake pipe, as damage may occur.

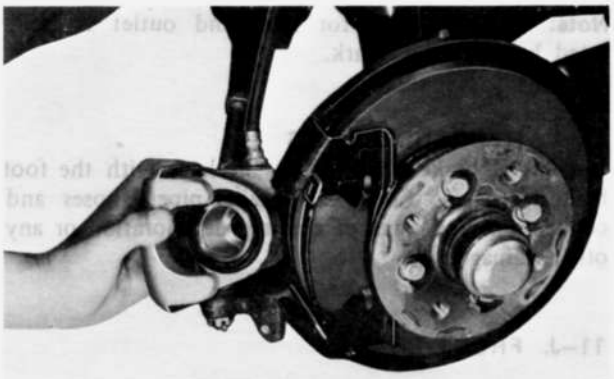

Fig. 11–28 Removing caliper

5. Remove the brake shoes and shims.

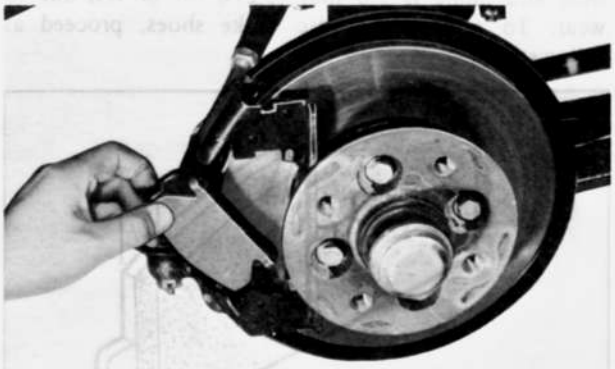

Fig. 11–29 Removing brake shoe

6. Remove the rubber cap from the bleeder screw, and connect a vinyl tube to the bleeder screw. Submerge the other end of the vinyl tube into a suitable container.
7. Open the bleeder valve and press the piston into the cylinder with the **expand tool** (49 0221 600C).



Fig. 11–30 Piston retracting tool

8. Tighten the bleeder screw and remove the vinyl tube and expand tool.
9. Install new brake shoes and shims.

Note:
a) When the disc brake shoes are replaced, replace all shoes on both wheels at the same time.
b) **Do not** mix different types of linings when replacing

10. Install the anti-rattle spring, caliper, stopper plates and locking pins.
11. Install the front wheel and tighten the bolts to **9.0 ~ 10.0 m-kg (65 ~ 72 ft-lb).** Lower the vehicle.
12. Top up the reservoir with brake fluid as necessary.

11–J–2. Removing Caliper

1. Raise the front end of the vehicle and support with stands.
2. Remove the front wheel.
3. Disconnect the brake fluid pipes at the fender apron. Plug the end of the fluid pipe to prevent entrance of dirt and loss of fluid.
4. Remove the clip and disconnect the brake fluid pipe at the front shock absorber.
5. Remove the caliper, as described in Par. 11–J–1.

11–J–3. Disassembling Caliper

1. Clean the outside of the caliper.
2. Remove the retainer and dust boot from the caliper.
3. Place a hardwood in the caliper pit in order to avoid damage, gradually blow compressed air from the fluid pipe hole and remove the piston.



Fig. 11–31 Removing piston

Note: If the piston is seized and cannot be forced



Fig. 11–32 Removing piston seal

from the caliper, tap lightly around the piston while applying air pressure.

4. Remove the piston seal from the caliper bore.
5. Remove the bleeder screw, if necessary.

11–J–4. Checking Cliper

1. Clean the disassembled parts in clean brake fluid or alcohol. **Never use gasoline or kerosene.** Blow the parts dry with compressed air.
2. Inspect the caliper bore and piston for scoring, scratches or rust. If any of these conditions is found, replace with new piston or caliper. Minor damage can be eliminated by means of polishing with crocus cloth.
3. The piston seal and dust boot should be replaced with new ones every time repair work is carried out on the brake caliper.

11–J–5. Assembling Caliper

1. Apply brake fluid to the piston seal and install it into the groove of the caliper bore.

Note: Be sure that the piston seal does not become twisted and it is seated fully in the groove.

2. Lubricate the piston and caliper bore with brake fluid.
3. Insert the piston into the caliper bore.
4. Install the dust boot by setting the flange squarely in the inner groove of the caliper bore. Install the dust boot retainer.

11–J–6. Installing Caliper

Install the caliper in the reverse order of removing and bleed the hydraulic system, referring to Par. 11–C.

11–J–7. Checking Brake Disc

1. Inspect the friction surfaces of the disc and recondition if they are scored, scratched or rusted.
2. Check the lateral run-out of the disc with a dial indicator, as shown in Fig. 11–34.

If the run-out is **more than 0.10 mm (0.0039 in),** reface the disc.



Fig. 11–33 Installing dust boot retainer

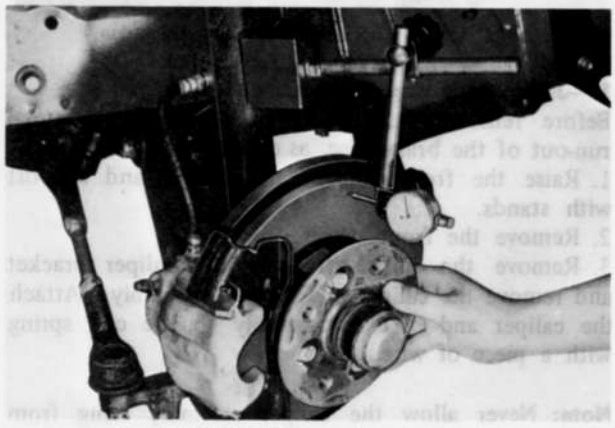

Fig. 11–34 Checking brake disc run-out

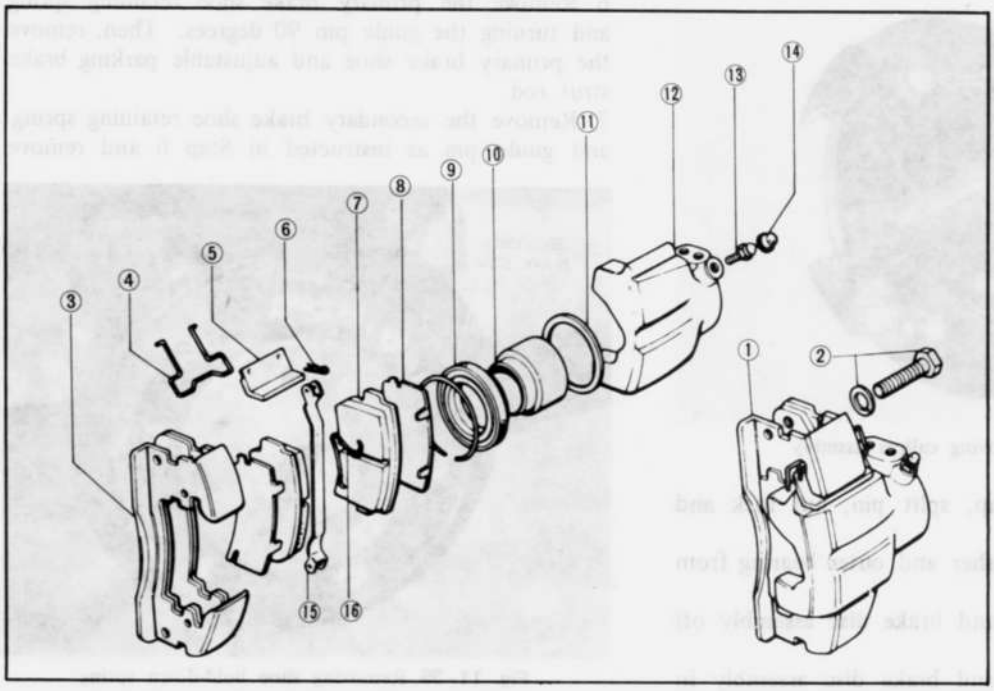

Fig. 11–35
Caliper components

1. Caliper assembly
2. Bolt and washer
3. Caliper bracket
4. Spring
5. Stopper plate
6. Hair pin retainer
7. Brake shoe and lining assembly
8. Shim
9. Dust boot
10. Piston
11. Piston seal
12. Caliper body
13. Bleeder screw
14. Bleeder cap
15. Anti-rattle spring clip
16. Anti-rattle spring

Note: Make certain that the wheel bearings are correctly adjusted and the disc is fitted securely on the hub, before checking the run-out of the disc.
When refacing the disc, remove only so much material as is necessary to clean up the disc.
The thickness of the disc after refacing must not be **less than 11 mm (0.433 in).**

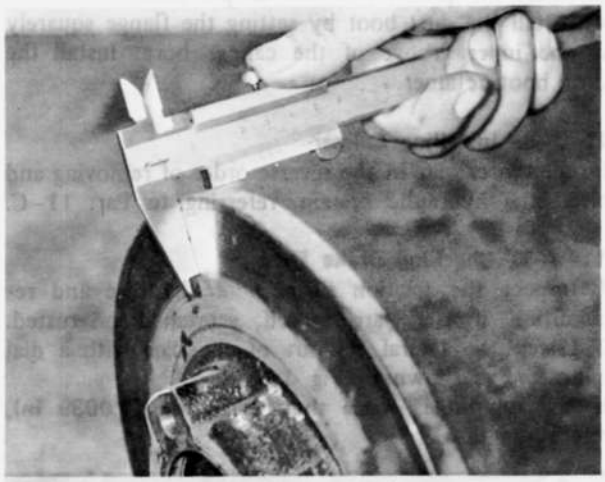

Fig. 11–36 Checking brake disc thickness

11–J–8. Removing Brake Disc

Before removing the brake disc, check the lateral run-out of the brake disc, as detailed in Par. 11–J–7.
1. Raise the front end of the vehicle and support with stands.
2. Remove the front wheel.
3. Remove the bolts attaching the caliper bracket and remove the caliper and bracket assembly. Attach the caliper and bracket assembly to the coil spring with a piece of wire.

Note: Never allow the caliper assembly hang from the brake pipe as damage may occur.

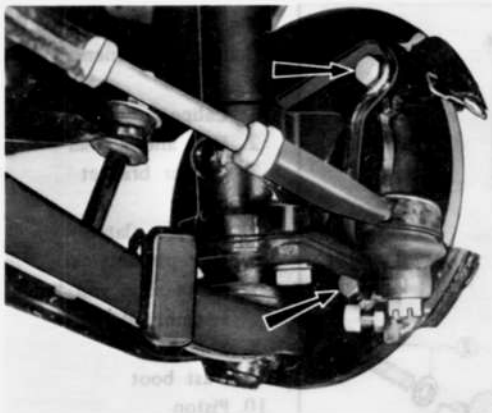

Fig. 11–37 Removing caliper assmbly

4. Remove the grease cap, split pin, nut lock and bearing adjusting nut.
5. Remove the thrust washer and outer bearing from the wheel hub.
6. Slide the wheel hub and brake disc assembly off the spindle.
7. Place the wheel hub and brake disc assembly in the vise equipped with soft jaws.
8. Mark the postion of brake disc and wheel hub.
9. Remove the attaching bolts and separate the brake disc from the wheel hub. **Do not** drive it off.

11–J–9. Installing Brake Disc

Carry out the removing operation in the reverse order. After installing, adjust the bearing preload, as instructed in Par. 12–F–5.

11–K. REAR BRAKE

11–K–1. Removing Rear Brake Shoes

1. Raise the rear end of the vehicle and support with stands.
2. Remove the rear wheel.
3. Make sure that the parking brake is fully released.
4. Remove the drum attaching screws and fit them into the tapped holes and screw them in evenly to force the drum away from the axle shaft flange.

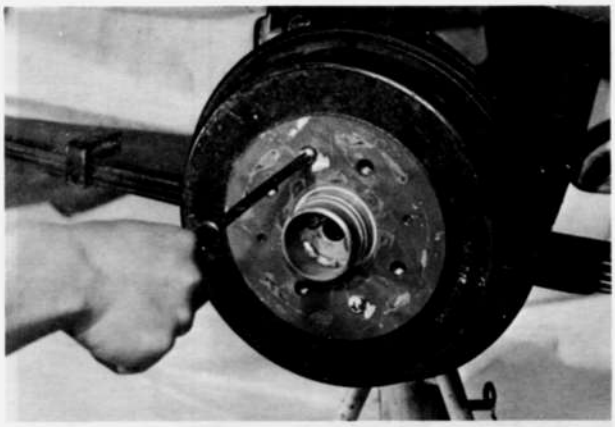

Fig. 11–38 Removing brake drum

5. Remove the brake shoe return springs.
6. Remove the primary brake shoe retaining spring and turning the guide pin 90 degrees. Then, remove the primary brake shoe and adjustable parking brake strut rod.
7. Remove the secondary brake shoe retaining spring and guide pin as instructed in Step 6 and remove

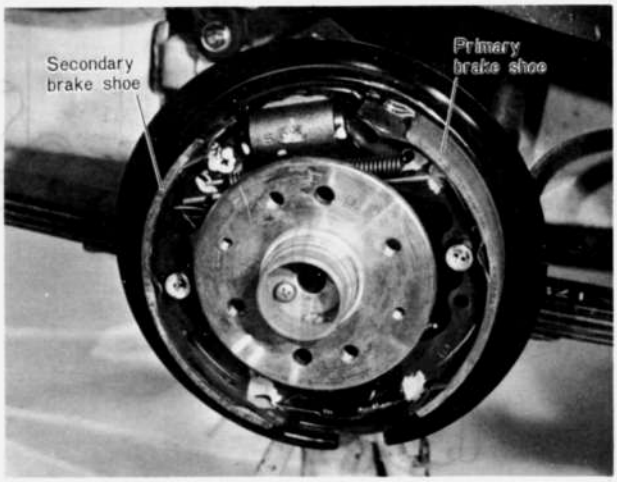

Fig. 11–39 Removing shoe hold-down spring

the secondary brake shoe.
8. Disengage the parking brake cable from the operating lever on the secondary brake shoe.

11–K–2. Inspecting Rear Brake

a. Inspecting brake drum
Inspect the brake drum and recondition if it is rough or scored.
Check the out of roundness with a dial indicator. If it is **0.15 mm (0.0059 in) or more,** reface the drum. When refacing the drum, remove only so much material as is necessary to obtain a smooth surface on the drum.
The inner diameter of the drum after refacing must not be **more than 229.6 mm (9.0395 in).**

b. Inspecting brake linings
1. Check the brake linings and replace with new parts if the linings are badly burned or worn.
2. Examine the lining contact pattern. For inspection, chalk the entire inner surface of the drum and slide the lining along the chalked surface.
The lining should show a uniform contact across the entire width, extending from toe to heel. Shoes having sufficient lining but improper contact should be reground to obtain proper contact.
3. If oil or grease is evident on the lining, wash off the oil or grease with a suitable solvent. Then, correct the cause of the leakage. However, if the lining is saturated with oil or grease, replace it.

c. Inspecting wheel cylinders
Examine whether the exterior of the wheel cylinder boots is wet with brake fluid. Excessive amounts of fluid at this point indicate leakage past the piston cups. Therefore, the wheel cylinder must be overhauled.

d. Inspecting brake lines
Inspect all brake lines for leakage with the foot brake applied. Check all brake pipes, hoses, and connections for signs of chafing, deterioration, or other damage.

11–K–3. Installing Rear Brake Shoes
Follow the removal procedure in the reverse order.

Note: Adjust the brake shoe clearance as described in Par. 11–B.

11–K–4. Removing and Disassembling Rear Wheel Cylinder
1. Remove the rear brake shoes, as described in Par. 11–K–1.

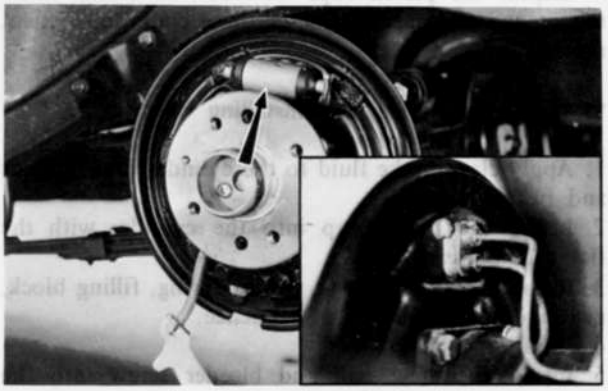

Fig. 11–40 Removing wheel cylinder

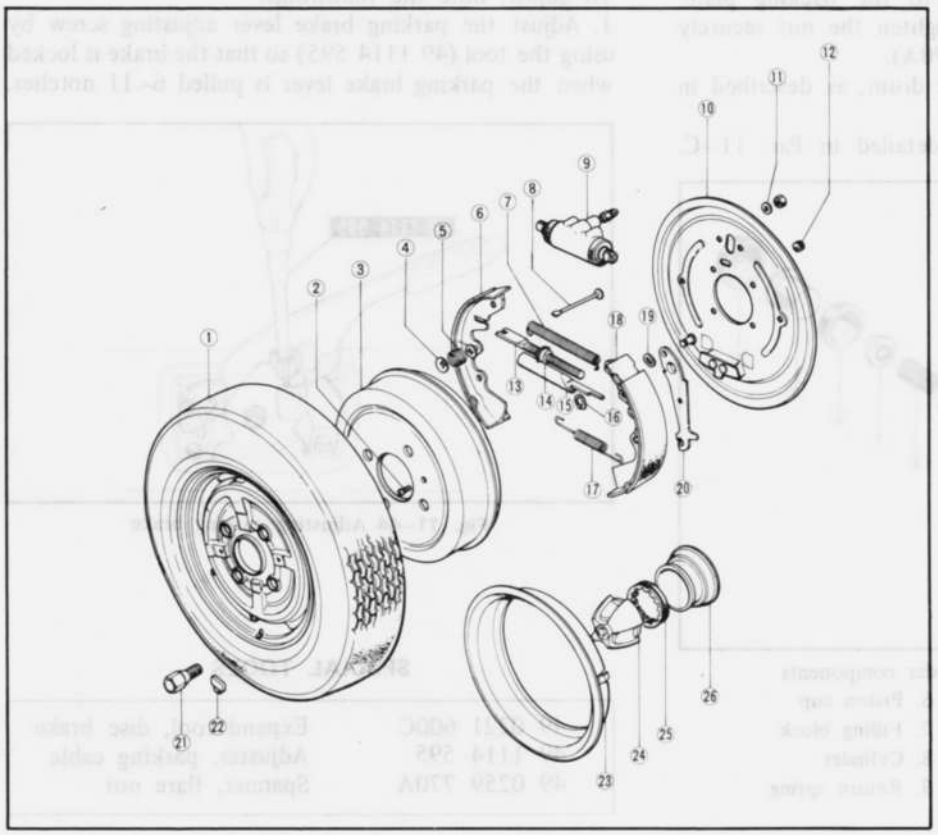

Fig. 11–41
Rear brake components
1. Rear wheel
2. Drum attaching bolt
3. Drum
4. Spring cap
5. Shoe hold-down spring
6. Primary brake shoe
7. Shoe return spring
8. Guide pin
9. Wheel cylinder
10. Backing plate
11. Nut and washer
12. Plug
13 & 15. Parking brake strut rod
14. Star wheel
16. Retaining clip
17. Shoe return spring
18. Secondary brake shoe
19. Wave washer
20. Parking brake operating lever
21. Wheel bolt
22. Balance weight
23. Wheel ring
24. Wheel center cap
25. Set rubber
26. Wheel center cap adaptor

2. Disconnect the brake fluid pipe at the rear wheel cylinder, using the **spanner** (49 0259 770A). Plug the end of the brake fluid pipe.
3. Remove the nuts attaching the rear wheel cylinder to the backing plate. Remove the rear wheel cylinder.
4. Remove the dust boots and pistons from both ends of the cylinder.
5. Press in the piston cup and force out the piston cups, filling blocks and return spring.
6. Remove the bleeder screw and steel ball, if necessary.

11–K–5. Checking Rear Wheel Cylinder

1. Wash all parts in clean alcohol or brake fluid. **Never use gasoline or kerosene.**
2. Examine the cylinder bore and piston for wear, roughness or scoring.
3. Check the clearance between the cylinder and the piston. If it is **more than 0.15 mm (0.006 in),** replace with new parts.
4. Inspect the piston cups for wear, softening, swelling or any damage. If any of these conditions exists, replace the cups.

11–K–6. Assembling and Installing Rear Wheel Cylinder

1. Apply clean brake fluid to the cylinder bore, pistons and piston cups.
2. Install the piston cup into the cylinder with the flat side outward.
3. Install the filling block, return spring, filling block, piston cup and pistons in sequence.
4. Install the dust boots.
5. Install the steel ball and bleeder screw into the bleeder hole.
6. Install the wheel cylinder to the backing plate. Connect the fluid pipe and tighten the nut securely with the **spanner** (49 0259 770A).
7. Install the brake shoes and drum, as described in Par. 11–K–3.
8. Bleed the brake lines as detailed in Par. 11–C.

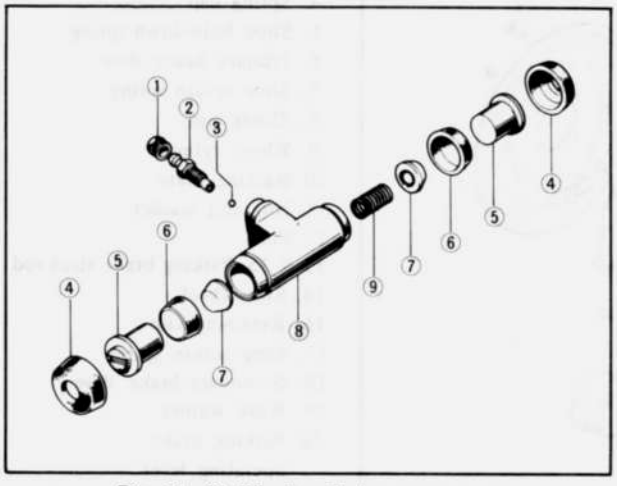

Fig. 11–42 Wheel cylinder components

1. Rubber cap
2. Bleeder screw
3. Steel ball
4. Boot
5. Piston
6. Piston cup
7. Filling block
8. Cylinder
9. Return spring

11–L. PARKING BRAKE ADJUSTMENT

When the parking brake requires adjustment, proceed as follows:
1. Make sure that the parking brake is fully released.
2. Jack up the rear end of the vehicle until the wheels are free to turn. Then, support with stands.
3. Adjust the parking brake lever adjusting screw so that the rear brakes are locked when the parking brake lever is pulled 3 ~ 7 notches.
4. After adjustment is completed, apply the parking brake several times, then release and make sure that the rear wheels rotate freely without dragging.
5. Lower the vehicle.

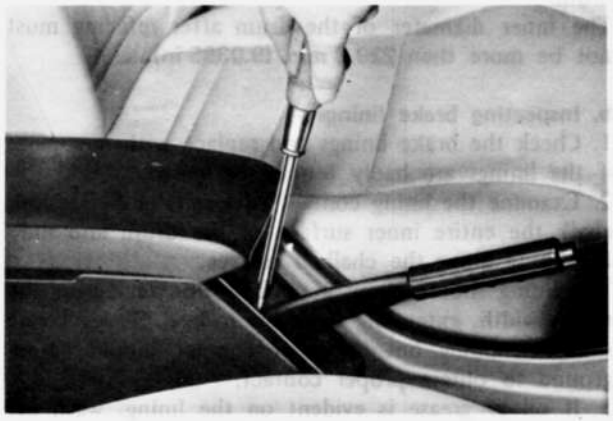

Fig. 11–43 Adjusting parking brake

Note: On the U.S.A. vehicle, the rear brakes are self-adjusting and require a adjustment only after the parking brake cables have been removed or replaced.

To adjust, note the followings:
1. Adjust the parking brake lever adjusting screw by using the tool (49 1114 595) so that the brake is locked when the parking brake lever is pulled 6~11 notches.

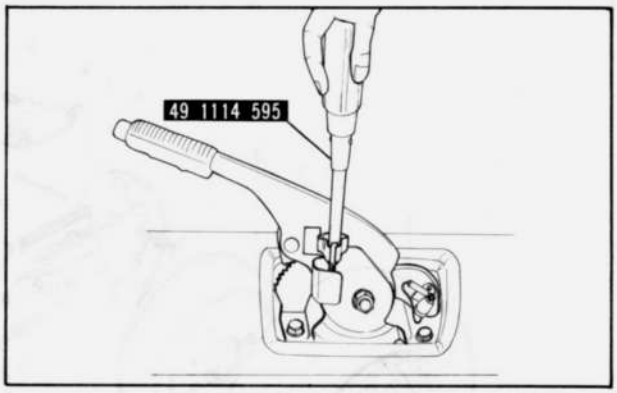

Fig. 11–44 Adjusting parking brake

SPECIAL TOOLS

49 0221 600C	Expand tool, disc brake
49 1114 595	Adjuster, parking cable
49 0259 770A	Spanner, flare nut

WHEELS AND TIRES

12–A. INFLATION OF TIRES ..... 12 : 1
12–B. TIRE ROTATION ..... 12 : 1
12–C. CHANGING WHEELS ..... 12 : 1
12–D. WHEEL AND TIRE RUN-OUT ..... 12 : 1
12–E. WHEEL BALANCING ..... 12 : 1
12–F. FRONT WHEEL HUB AND BEARINGS ..... 12 : 1
12–F–1. Checking Front Wheel Bearing on Car ..... 12 : 1
12–F–2. Removing Front Wheel Hub and Bearings ..... 12 : 1
12–F–3. Inspecting Front Wheel Hub and Bearings ..... 12 : 2
12–F–4. Installing Front Wheel Hub and Bearings ..... 12 : 2
12–F–5. Adjusting Front Wheel Bearings ..... 12 : 2
12–G. REAR WHEEL BEARING ..... 12 : 3

12

12–A. INFLATION OF TIRES

Maintenance of correct inflation pressure is one of the most important elements of tire care.
Excessive inflation pressure will cause:
1. Hard rides
2. Damage to tire carcass
3. Poor traction
4. Premature tread wear in center of tire

Low inflation pressure will cause:
1. Hard steering
2. Rapid and uneven wear on the edges of tire tread
3. Increased cord fatigue or broken tire cords
4. High tire temperature
5. Blow outs

Check the inflation pressure with a reliable gauge when the tires are cold.
The standard pressure is as follows:

	Sedan, Hard top		Wagon	
	Front	Rear	Front	Rear
BR70-13 (Tubeless)	26 psi	26 psi	24 psi	30 psi

The snow tires should always be inflated 4 psi above the recommended pressures shown on the tire pressure chart.

After checking or inflating the pressure, place the valve cap back on and tighten by hand. It helps to maintain the air pressure in the tires in case of any valve leak and keeps dust and water out of the valve.

12–B. TIRE ROTATION

To equalize wear and make a set of tires last longer, it is recommended that the tires be rotated periodically, as shown in Fig. 12–1.
When rotating the tires, check for signs of abnormal wear and bulging and any stone, nail, glass, etc. should be removed.

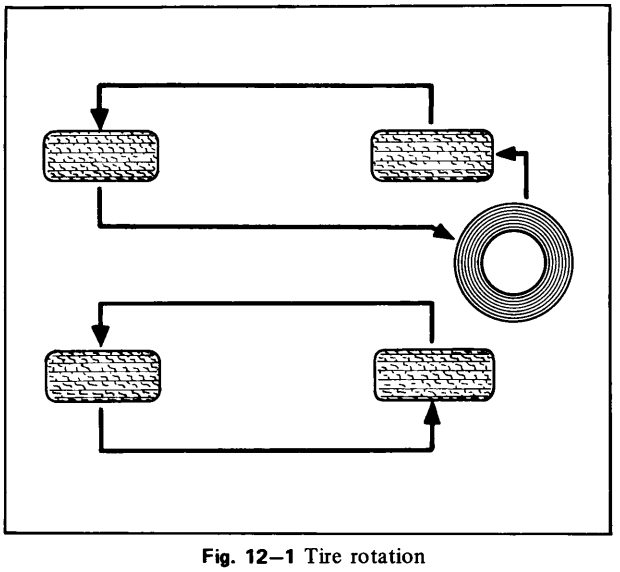

Fig. 12–1 Tire rotation

12–C. CHANGING WHEEL

1. Remove the center cap. Loosen, but do not remove the wheel bolts.
2. Jack up the vehicle until the wheel clears the ground.
3. Remove the wheel bolts and change the wheel.
4. Install the wheel bolts and alternately tighten the diametrically opposite bolts until the wheel closely touches the hub flange or axle shaft flange.
5. Lower the vehicle and firmly tighten the bolts to **9.0 ~ 10.0 m-kg (65 ~ 72 ft-lb).**
6. Refit the center cap.

12–D. WHEEL AND TIRE RUN-OUT

Wheel and tire should be measured for both radial and lateral run-out. The radial run-out is the difference between the high and low points on the tread of tire; while the lateral run-out is the wobble of the wheel.
To measure the radial run-out, apply a dial indicator against the center rib of the tire tread and rotate the wheel slowly. This measurement should not exceed **2.0 mm (0.08 in).**
To measure the laternal run-out, position a dial indicator against the side of the tire. The reading of the indicator should be within **2.5 mm (0.10 in).**

12–E. WHEEL BALANCING

The allowable unbalance is 360 cm-gr (5.0 in-oz), which is less than 20 gr (0.7 oz) at the rim.
Excessive wheel unbalance causes shimmy at high speed. If unbalance exceeds **360 cm-gr (5.0 in-oz)** or when a tire is disassembled for repair, the tire and wheel assembly should be statically and dynamically balanced with a wheel balancer in accordance with the manufacture's instructions.

12–F. FRONT WHEEL HUB AND BEARING

12–F–1. Checking Front Wheel Bearings on Car

To check the front wheel bearings, raise the vehicle with a jack until the wheels clear the ground.
Grip the tire and shake it sideways. If considerable play is noticed, this indicates that the bearings are rough.

12–F–2. Removing Front Wheel Hub and Bearings

1. Raise the front end of the vehicle and support with stands.
2. Remove the center cap and wheel.
3. Remove the bolts that attach the caliper bracket and remove the caliper and bracket assembly. Attach the caliper and bracket assembly to the coil spring with a piece of wire.

Note: Never allow the caliper assembly hang from the brake pipe, as damage may occur.

4. Remove the grease cap, split pin, nut lock and adjusting nut.

5. Remove the thrust washer and outer bearing from the wheel hub.
6. Slide the wheel hub and brake disc assembly off the spindle.



Fig. 12–2 Removing hub and disc assembly

7. Remove the grease seal and inner bearing from the wheel hub.
8. If it becomes necessary to separate the wheel hub and brake disc, refer to Par. 11–J–8.

12–F–3. Inspecting Front wheel Hub and Bearings
1. Clean the lubricant off the inner and outer bearing outer races with solvent and inspect the outer races for scratches, pits ,excessive wear and other damage. If the outer race replacement is necessary, drive out the outer race, using a suitable drift in the slots provided for this purpose. Install a new outer race into the hub with a suitable tool. Be sure to seat the outer race properly in the hub.
2. Thoroughly clean the inner and outer bearing cones and rollers with solvent and dry them thoroughly.

Note: Do not spin the bearings with compressed air, otherwise the cone and rollers will be damaged.

3. Inspect the cones and rollers for cracks, nicks, brinelling or seized rollers and replace them if necessary.

Note: The cone and roller assembly and outer race should be replaced as a unit.

4. Clean the spindle and inside of the hub with solvent to remove all old grease.

12–F–4. Installing Front Wheel Hub and Bearings
Install the front wheel hub and bearings in the reverse order of removing, with care taken on the following points:
1. Clean the bearings thoroughly and repack them with lithium grease. **Do not** overpack.
2. Fill the hub cavity with lithium grease.
3. Adjust the bearing preload, as instructed in the following paragraph.

12–F–5. Adjusting Front Wheel Bearings
The wheel bearing preload is adjusted by the adjusting nut. Adjusting procedure is as follows:
1. Check the bearing preload by hooking a spring scale on the hub bolt.

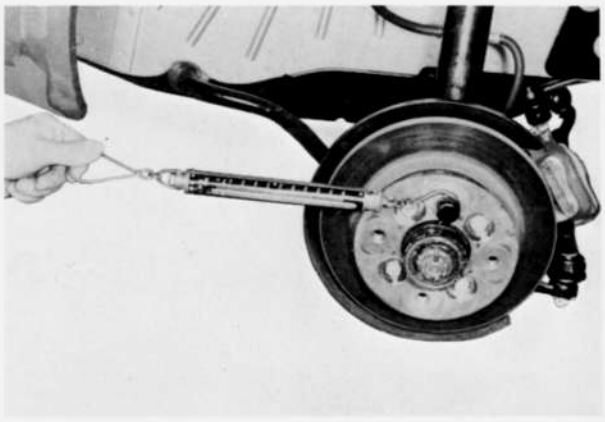

Fig. 12–3 Checking wheel bearing preload

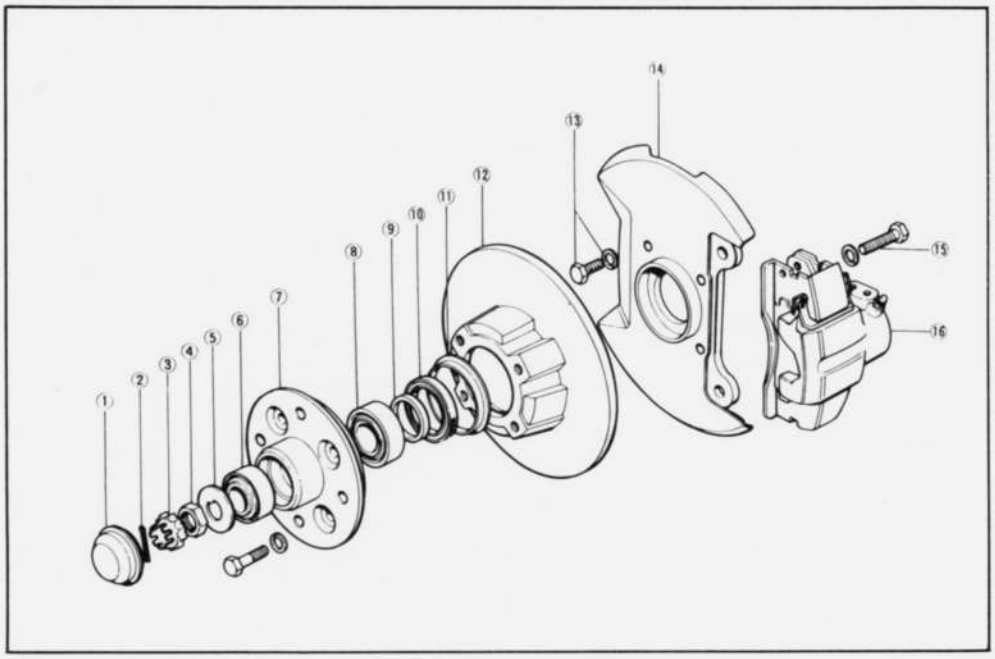

Fig. 12–4 Front wheel hub components

1. Grease cap
2. Cotter pin
3. Nut lock
4. Adjusting nut
5. Flat washer
6. Outer bearing
7. Hub
8. Inner bearing
9. Spacer
10. Grease seal
11. Dust ring
12. Brake disc
13. Bolt and washer
14. Caliper mounting adaptor
15. Bolt and washer
16. Caliper

2. Pull the spring scale squarely and take a reading on the scale when the hub starts to turn. This reading should be **0.4 to 1.0 kg (0.88 to 2.20 lb).**
3. Tighten the adjusting nut until the correct reading is obtained.
4. Fit the nut lock onto the adjusting nut and align the slots of the nut lock with the hole of the spindle. Install the split pin.

Note: If a spring scale is not available, adjust as follows:

Rotate the hub and tighten the adjusting nut until the hub binds.
Then, back off the adjusting nut about one-sixth of a turn, making sure that the hub rotates freely without any sidewise stroke.

12–G. REAR WHEEL BEARING

Servicing the rear wheel bearings is explained in Par. 9–A.

SUSPENSION

DESCRIPTION ..... 13 : 1
13–A. FRONT SHOCK ABSORBER ..... 13 : 2
13–A–1. Removing Front Shock Absorber ..... 13 : 2
13–A–2. Inspecting before Disassembling Front Shock Absorber ..... 13 : 3
13–A–3. Disassembling Front Shock Absorber ..... 13 : 3
13–A–4. Checking Front Shock Absorber ..... 13 : 4
13–A–5. Assembling Front Shock Absorber ..... 13 : 4
13–A–6. Installing Front Shock Absorber ..... 13 : 4
13–B. SUSPENSION ARM ..... 13 : 4
13–B–1. Removing Suspension Arm ..... 13 : 4
13–B–2. Checking Suspension Arm ..... 13 : 5
13–B–3. Installing Suspension Arm ..... 13 : 5
13–C. BALL JOINT ..... 13 : 5
13–C–1. Lubricating Ball Joint ..... 13 : 5
13–C–2. Checking Ball Joint ..... 13 : 5
13–C–3. Replacing Ball Joint ..... 13 : 6
13–D. REAR SHOCK ABSORBER ..... 13 : 6
13–D–1. Removing Rear Shock Absorber ..... 13 : 6
13–D–2. Installing Rear Shock Absorber ..... 13 : 6
13–E. REAR SPRING ..... 13 : 6
13–E–1. Removing Rear Spring ..... 13 : 6
13–E–2. Checking Rear Spring ..... 13 : 7
13–E–3. Installing Rear Spring ..... 13 : 7
SPECIAL TOOLS ..... 13 : 7

DESCRIPTION

The front suspension consists mainly of the vertical shock absorbers integrally made with each steering knuckle, suspension arms and stabilizer bar. This front suspension **does not require lubrication, except the lower ball joints** which are provided with plugs to attaching the grease fittings when required.

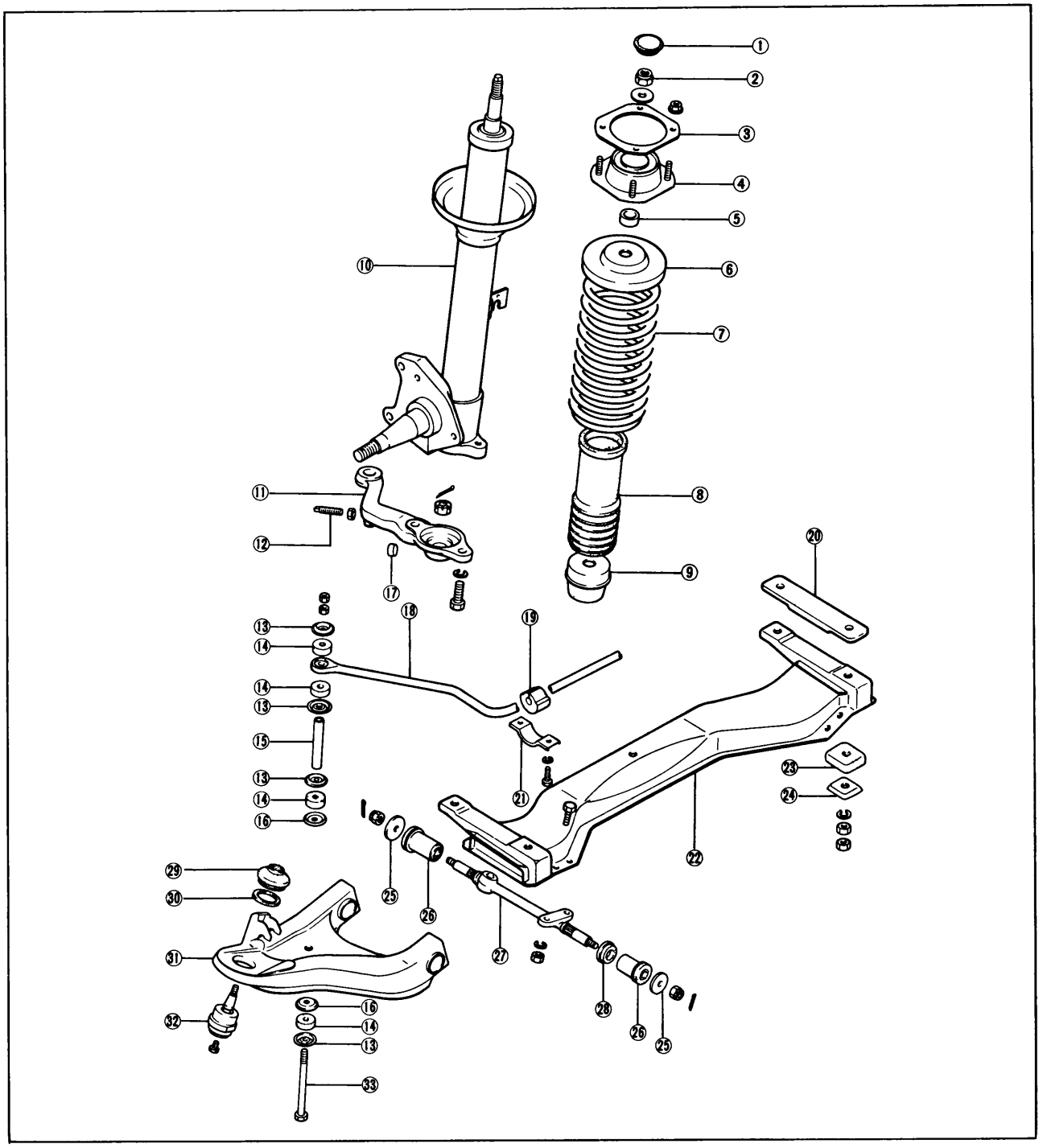

Fig. 13–1 Front suspension

1. Cap
2. Nut
3. Adjusting plate
4. Shock absorber support
5. Spacer
6. Spring seat
7. Coil spring
8. Dust cover
9. Bound bumper
10. Front shock absorber
11. Knuckle arm
12. Stopper bolt
13. Retainer
14. Rubber bush
15. Stabitizer spacer
16. Centering washer
17. Steering stopper
18. Stabilizer
19. Rubber bush
20. Spring cushion
21. Stabilizer plate
22. Cross member
23. Lower cushion
24. Washer
25. Washer
26. Rubber bush
27. Lower arm spindle
28. Side stopper
29. Dust seal
30. Dust seal ring
31. Lower arm
32. Ball joint set
33. Stabilizer bolt

The rear suspension consists mainly of leaf springs and gas sealed type shock absorbers.

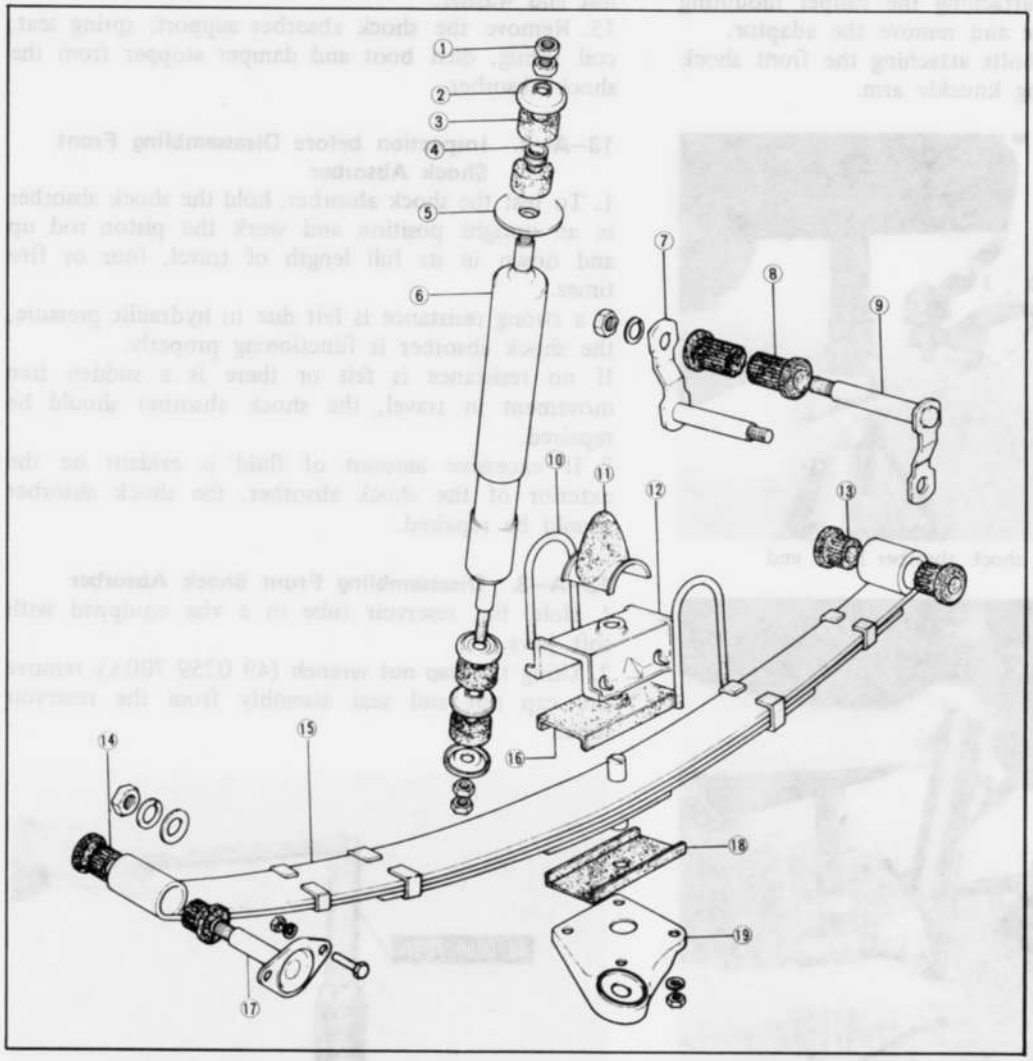

Fig. 13–2
Rear suspension components

1. Nut
2. Washer
3. Bush
4. Bush
5. Washer
6. Rear shock absorber
7. Shackle plate
8. Bush
9. Shackle
10. "U" bolt
11. Bound bumper
12. Holder
13. Bush
14. Bush
15. Rear spring
16. Rubber pad
17. Spring pin
18. Rubber pad
19. Spring clamp

13–A. FRONT SHOCK ABSORBER

The inner components such as piston, piston rod, piston rod guide, "O" ring, capnut, pressure tube and base valve are available only in set, and should be handled together as an assembly.
When replacing them, be sure to replace the inner components as an assembly.

13–A–1. Removing Front Shock Abosrber

1. Open the hood and remove the four nuts attaching the shock absorber mounting rubber to the front fender apron.
2. Raise the front end of the vehicle and support with stands.
3. Remove the front wheel.
4. Remove the clip attaching the brake pipe to the shock absorber and remove the brake pipe.
5. Remove the bolts attaching the caliper bracket and remove the caliper assembly off the brake disc.

Note: Never allow the caliper assembly hang from the brake pipe, as damage may occur.

6. Remove the hub grease cap, split pin, nut lock and bearing adjusting nut from the steering knuckle spindle.
7. Remove the thrust washer and outer bearing from the hub.
8. Remove the wheel hub and brake disc assembly



Fig. 13–3 Removing brake fluid pipe

from the steering knuckle spindle.
9. Remove the bolts attaching the caliper mounting adaptor to the knuckle and remove the adaptor.
10. Remove the two bolts attaching the front shock absorber to the steering knuckle arm.

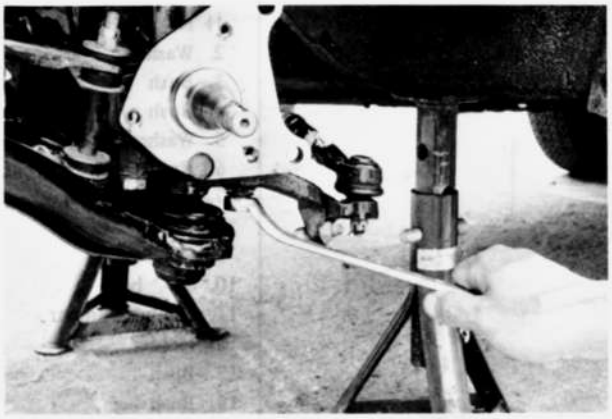

Fig. 13–4 Removing shock absorber lower end



Fig. 13–5 Removing shock absorber

11. Lower the suspension arm and remove the shock absorber and coil spring assembly.
12. Hold the shock absorber and coil spring assembly in a vise.
13. Using the coil **spring compressor** (49 0223 640A and 49 0370 641), compress the coil spring.
14. Hold the upper end of the piston rod with a spanner and loosen the lock nut. Remove the lock nut and washer.
15. Remove the shock absorber support, spring seat, coil spring, dust boot and damper stopper from the shock absorber.

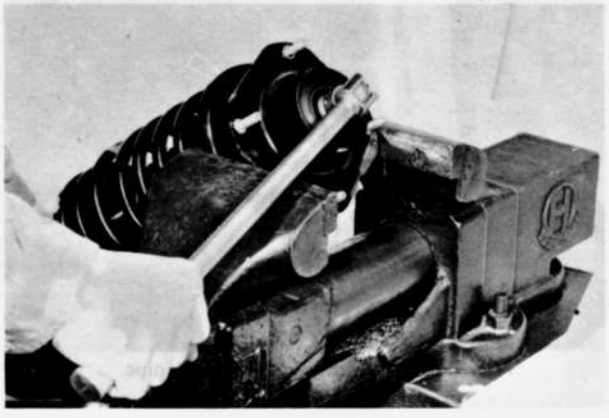

Fig. 13–6 Removing shock absorber support

13–A–2. Inspection before Disassembling Front Shock Absorber

1. To test the shock absorber, hold the shock absorber in an upright position and work the piston rod up and down in its full length of travel, four or five times.
If a strong resistance is felt due to hydraulic pressure, the shock absorber is functioning properly.
If no resistance is felt or there is a sudden free movement in travel, the shock absorber should be repaired.
2. If excessive amount of fluid is evident on the exterior of the shock absorber, the shock absorber should be repaired.

13–A–3. Disassembling Front Shock Absorber

1. Hold the reservoir tube in a vise equipped with soft jaws.
2. Using the **cap nut wrench** (49 0259 700A), remove the cap nut and seal assembly from the reservoir tube.



Fig. 13–7 Removing cap nut and seal assembly

3. Remove the "O" ring installed on the piston rod guide with a suitable tool.

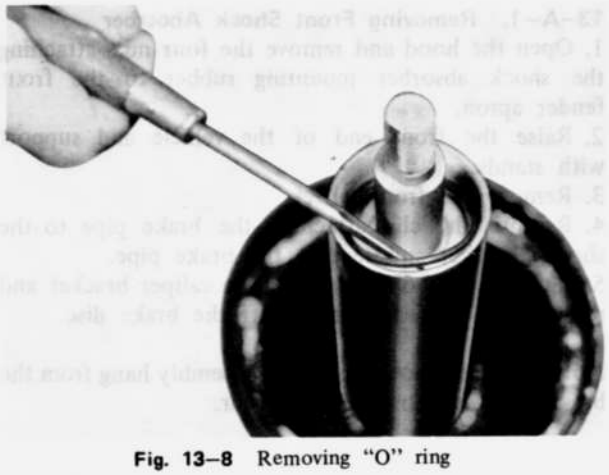

Fig. 13–8 Removing "O" ring

4. Pull out the piston rod, guide, base valve and pressure tube assembly from the reservoir tube.

Note: Do not remove the piston rod, guide and base valve from the pressure tube as they are available only in set.
Thus, they should be handled as an assembly.

5. Remove the reservoir tube from the vise and drain the shock absorber fluid.

13–A–4. Checking Shock Absorber

1. Check the reservoir tube and replace, if deformed, cracked or damage.
2. Check the spindle for hair crack on the base and damaged threaded portion. Replace the reservoir assembly, if faulty condition exists.
3. Check the mounting rubber. Replace if rubber and metal joint is melted or cracked.
Replace rubber parts if they are deteriorated.
4. Check the coil spring for signs of fatigue, cracks or any damaged. Replace, if faulty condition exists.
5. Check the mounting bearing. If unusual sound occurs during rotation or slackness toward the axial direction is excessive, the mounting rubber and bearing should be replaced as an assembly.

13–A–5. Assembling Front Shock Absorber

Before assembling, thoroughly clean all inner component parts.

1. Hold the reservoir tube in a vise.
2. Insert the pressure tube, piston rod and base valve assembly into the reservoir tube.
3. Fill the reservoir tube with correct amount of shock absorber fluid. The capacity of fluid should be **270 cc (16.5 cu-in).**
4. Install the piston rod guide into the pressure tube.
5. Fit a new "O" ring in position between rod guide and reservoir tube.
6. Install the **pilot** (49 0370 590) over the threads of the piston rod.
7. Apply grease to the lip of the oil seal, and insert the cap nut carefully through the pilot and onto the piston rod.
8. Tighten the cap nut temporarily, ensuring that the piston rod is extended to its maximum length, with the **cap nut wrench** (49 0259 702), as shown in Fig. 13–10.



Fig. 13–9 Inserting cap nut and seal assembly

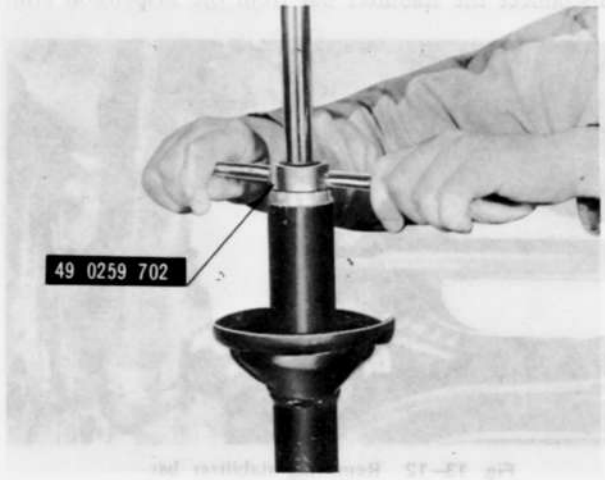

Fig. 13–10 Tightening cap nut temporarily

9. Fully lower the piston rod and tighten the cap nut to **5.0 ~ 6.0 m-kg (36.0 ~ 43.0 ft-lb),** with the **cap nut wrench** (49 0259 700A).



Fig. 13–11 Tightening cap nut

13–A–6. Installing Front Shock Absorber

Install the front shock absorber in the reverse order of removing.

Note: When replacing the coil spring, install a suitable coil spring and adjusting plate to get equal road clearance both on the right and left. **Do not** use more than two adjusting plates at one side.

13–B. SUSPENSION ARM

13–B–1. Removing Suspension Arm

1. Raise the front end of the vehicle and support with stands.
2. Remove the front wheel.
3. Disconnect the tie-rod from the knuckle arm by removing the split pin and nut and using the **puller** (49 0118 850C).
4. Remove the two bolts attaching the knuckle arm to

the shock absorber.
5. Remove the nuts, bolt, washers and rubber bushes holding the stabilizer bar to the suspension arm, and disconnect the stabilizer bar from the suspension arm.



Fig. 13–12 Removing stabilizer bar

6. Remove the nuts and bolts supporting the suspension arm to the cross member. Remove the suspension arm, knuckle arm and suspension arm shaft.

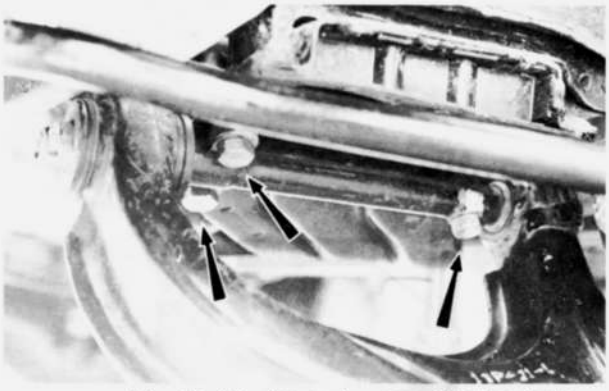

Fig 13–13 Suspension arm attaching bolts



Fig. 13–4 Removing suspension arm

7. Hold the suspension arm in a vise. Check the suspension arm, knuckle arm and ball joint as instructed in Par. 13–B–2 and 13–C–2.
8. Remove the split pin and nut, and disconnect the knuckle arm from the suspension arm with the **puller** (49 0727 575).

Note: Do not remove the ball joint unless it must be replaced.

13–B–2. Inspecting Suspension Arm

1. Check the suspension arm and knuckle arm for any crack or damage.
2. Check the rubber bushes for weakness, wear or damage. If necessary, replace with new ones.

13–B–3. Installing Suspension Arm

Install the suspension arm in the reverse order of removing.

Note:
a) The tightening torque of the bolts attaching the knuckle arm to the shock absorber is **6.4 ~ 9.5 m-kg (46 ~ 69 ft-lb)**.
b) The tightening torque of the nut holding suspension arm to the cross member is **4.0 ~ 5.5 m-kg (29 ~ 40 ft-lb)**.
c) Tighten the stabilizer bar nut until the dimension between the nut and bolt end is **8 mm (0.315 in)**.

13–C. BALL JOINT

13–C–1. Lubricating Ball Joint

When greasing becomes necessary on the ball joint for the suspension arm, supply **molybdenum disulfide lithium grease** to the ball joints, proceeding as follows:
1. Remove the set ring from the groove on the dust boot and turn the dust boot inside out.
2. Remove the plug and fit the grease nipple in its stead.
3. Remove all of the used grease in the socket and the dust boot by gradually supplying new grease through the nipple.
4. When the used grease is thoroughly removed, fit the dust boot and secure it in place with the set ring.
5. Add new grease until the dust boot begins to balloon. Then, depress the dust boot with the fingers so that about half of the grease remains in the dust boot.
6. Wipe off excess grease around the ball joint.
7. Remove the grease nipple and ift the plug.

13–C–2. Checking Ball Joint

1. Check the dust boot for wear, flaw or any damage. If the dust boot is defective, replace it with the **dust seal installer** (49 1243 785) referring to Par. 10–H–1.
2. To check the ball joint for wear, raise the vehicle

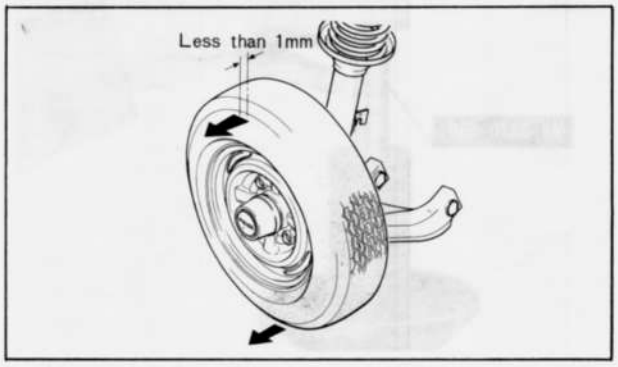

Fig. 13–15 Checking ball joint

until the wheels clear the ground.
Grip the tire and shake it as shown in Fig. 13–15. If the play is more than 1.0 mm (0.04 in), replace the ball joint in its assembled form.

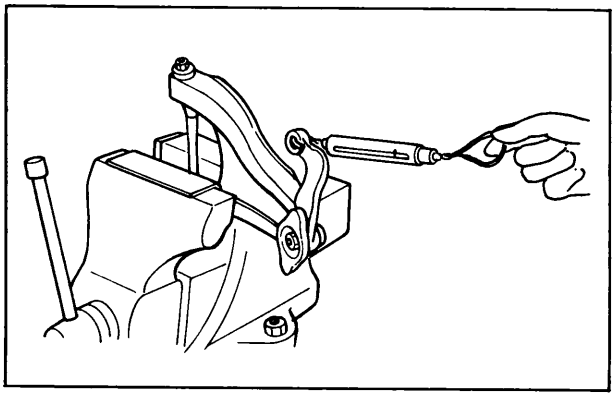

Fig. 13–16 Checking ball joint

Note: When checking the revolving torque of the ball joint, hook the spring scale on the knuckle arm and pull the scale until the knuckle arm sharts to turn. The reading should be **8 ~ 14 kg (17.6 ~ 30.8 lb).**

13–C–3. Replacing Ball Joint

If it becomes necessary to replace the ball joint, proceed as follows:
1. Remove the suspension arm assembly, as described in Par. 13–B–1.
2. Remove the set ring and dust boot from the ball joint.
3. Using the **remover and installer** (49 1243 736), press the ball joint out of the suspension arm.

Note: Before pressing out the ball joint, clean the ball joint and suspension arm so as not to damage the mounting bore of the suspension arm.

4. Clean the mounting bore of the suspension arm and apply kerosene.
5. Using the **remover and installer** (49 1243 736), tighten the ball joint to the suspension arm until the

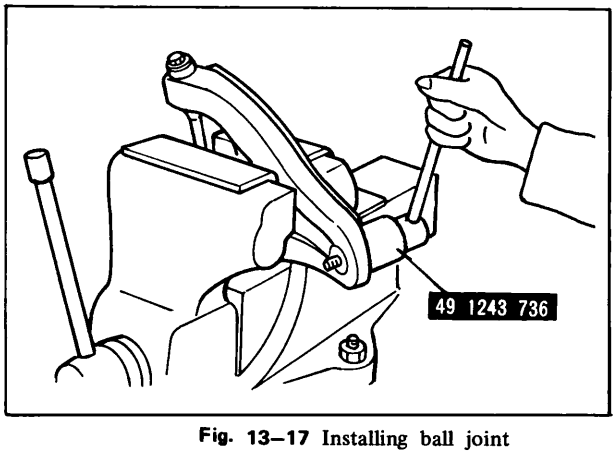

Fig. 13–17 Installing ball joint

ball joint flange touches to the suspension arm. The tightening torque before touching to the suspension arm should be **6 to 18 m-kg (43 to 130 ft-lb).**

If the torque necessary to tighten the ball joint is **less than 6 m-kg (43 ft-lb),** the suspension arm should be replaced.
6. Further tighten the ball joint to **25 to 40 m-kg (180 ~ 289 ft-lb).**
7. Install the ball joint and suspension arm to the knuckle arm.

13–D. REAR SHOCK ABSORBER

The gas sealed type shock absorbers **should not be disassembled** as it contains a highly compressed gas. If it is found to be defective, replace it as assembly.

13–D–1. Removing Rear Shock Absorber

1. Raise the vehicle on a hoist.
2. Remove the rear seat, as described in Par. 14–H–I.
3. Remove the fasteners and remove the fuel tank partition board.
4. Remove the nuts, washers and rubber bushes from both the upper and lower ends of the shock absorber.
5. Compress the shock absorber with the **lifter** (49 0223 740A) and remove it from the vehicle.

13–D–2. Installing Rear Shock Absorber

Install the rear shock absorber in the reverse order of removing.

Note: Tighten the shock absorber nuts to the dimension shown in Fig. 13–18.

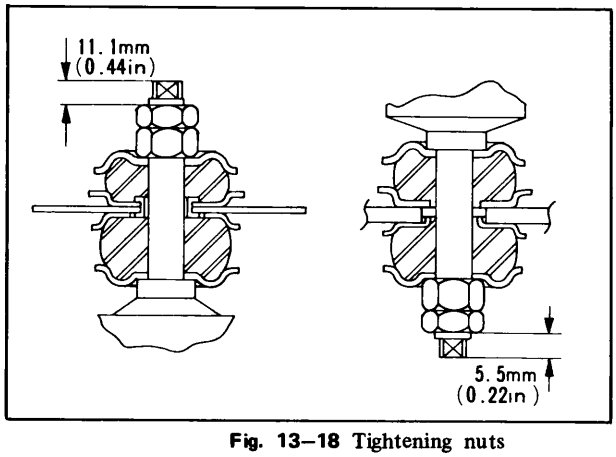

Fig. 13–18 Tightening nuts

13–E. REAR SPRING

13–E–1. Removing Rear Spring

1. Raise the rear end of the vehicle and place a stand under the frame side rail, permitting the spring to hand free.
2. Support the rear axle in this position with the jack.
3. Remove the rear wheel.
4. Disconnect the rear shock absorber at the lower mounting point.
5. Remove the "U" bolt nuts and the spring clamp.
6. Remove the spring pin nut and remove two bolts and nuts attaching the spring pin plate to the frame bracket.
7. Remove the spring pin and remove the front end



Fig. 13–31 Removing "U"-bolt attaching nuts

of the spring from the vehicle. Remove the rubber bushes.

8. Remove the shackle pin nuts and shackle plate and remove the rear end of the spring from the vehicle. Remove the rubber bushes.

13–E–2. Checking Rear Spring

1. Check the spring for corrosion, fatigue, or any damage. If any of these conditions exists, replace the spring.
2. Check the looseness of the spring center bolt.
3. Check the shackle pin, spring pin and rubber bushes for wear or any damage.

13–E–3. Installing Rear Spring

1. Install the rubber bushes into the front eye of the spring and position it in the frame bracket so as to align the hole of the rubber bushes with the hole of the frame bracket.
2. Insert the spring pin from the outside through the rubber bushes.
3. Tighten the nuts and bolts attaching the spring pin plate to the frame bracket to **1.6 ~ 2.3 m-kg (12 ~ 17 ft-lb)**. **Do not** tighten the spring pin nut.
4. Fit the rubber bushes to the rear eye of the spring and the shackle pin. Install the spring and the shackle pin to the frame bracket. **Do not** tighten the nuts.
5. Lower the rear axle and place the center hole of the axle spring seat over the head of the spring center bolt.
6. Place the spring clamp under the spring and install the "U" bolts. Tighten the nuts to **3.8 ~ 4.6 m-kg (27 ~ 33 ft-lb)** (Wagon: 6.5 ~ 8.2 m-kg = 47 ~ 59 ft-lb).
7. Remove the stand and lower the vehicle.
8. Jounce the vehicle several times, and tighten the spring pin nut and shackle pin nuts to **3.2 ~ 4.7 m-kg (23 ~ 34 ft-lb)** (Wagon: 5.6 ~ 8.2 m-kg = 41 ~ 59 ft-lb).

SPECIAL TOOLS

49 1243 736	Remover & installer, ball joint
49 0223 640A	Arm, coil spring compressor
49 0370 641	Screw, coil spring compressor
49 0259 700A	Cap nut wrench, shock absorber
49 0259 702	Cap nut wrench, shock absorber
49 0370 590	Pilot, oil seal
49 0118 850C	Puller, ball joint
49 0727 575	Puller, knuckle arm
49 1243 625	Puller & installer, lower arm bush
49 0223 740A	Lifter, rear shock absorber



BODY

14–A. BONNET ..... 14 : 1
14–A–1. Removing Bonnet ..... 14 : 1
14–A–2. Installing Bonnet ..... 14 : 1
14–A–3. Adjusting Bonnet ..... 14 : 1
14–A–4. Adjusting Bonnet Lock ..... 14 : 2
14–B. TRUNK LID ..... 14 : 2
14–B–1. Removing Trunk Lid ..... 14 : 2
14–B–2. Installing Trunk Lid ..... 14 : 2
14–B–3. Adjusting Trunk Lid ..... 14 : 2
14–B–4. Adjusting Trunk Lid Lock ... 14 : 3
14–C. FRONT BUMPER ..... 14 : 3
14–C–1. Removing Front Bumper ..... 14 : 3
14–C–2. Checking Shock Absorber .... 14 : 4
14–C–3. Installing Front Bumper ..... 14 : 4
14–D. REAR BUMPER ..... 14 : 4
14–D–1. Removing Rear Bumper ..... 14 : 4
14–D–2. Checking Shock Absorber .... 14 : 5
14–D–3. Installing Rear Bumper ..... 14 : 6
14–E. WINDSHIELD GLASS ..... 14 : 6
14–E–1. Removing Windshield Glass . 14 : 6
14–E–2. Installing Windshield Glass ... 14 : 7
14–F. REAR WINDOW GLASS ..... 14 : 9
14–F–1. Removing and Installing Rear Window Glass ..... 14 : 9
14–F–2. Heatable Window ..... 14 : 9
14–G. FRONT SEAT ..... 14 : 10
14–G–1. Front Seat Replacement ..... 14 : 10
14–G–2. Seat Adjuster Inspection ..... 14 : 10
14–G–3. Reclining Knuckle Repalcement ..... 14 : 10
14–H. REAR SEAT ..... 14 : 10
14–H–1. Removing Rear Seat ..... 14 : 10
14–H–2. Installing Rear Seat ..... 14 : 10
14–I. DOOR ..... 14 : 10
14–I–1. Door Adjustment ..... 14 : 10
14–I–2. Door Hinge Replacement ..... 14 : 11
14–I–3. Door Weatherstrip Replacement (Sedan & Wagon) ..... 14 : 11
14–I–4. Door Weatherstrip Replacement (Hardtop) ..... 14 : 12
14–J. FRONT DOOR (Sedan & Wagon) ..... 14 : 12
14–J–1. Door Window Regulator and Glass ..... 14 : 12
14–J–2. Door Lock, Lock Cylinder and Outer Handle ..... 14 : 12
14–K. FRONT DOOR (Hard Top) ..... 14 : 15
14–K–1. Door Window Regulator and Glass ..... 14 : 15
14–K–2. Inner Handle, Door Lock and Outer Handle ..... 14 : 15
14–K–3. Front Door Glass Regulator Adjustment ..... 14 : 16
14–L. REAR DOOR ..... 14 : 17
14–L–1. Stationary Glass ..... 14 : 17
14–L–2. Rear Door Window Regulator and Glass ..... 14 : 18
14–M. QUARTER WINDOW ..... 14 : 18
14–M–1. Removing Quarter Trim ... 14 : 18
14–M–2. Installing Quarter Trim ..... 14 : 19
14–M–3. Removing Quarter Window Glass ..... 14 : 19
14–M–4. Installing Quarter Window Glass ..... 14 : 19
14–M–5. Removing Regulator ..... 14 : 19
14–M–6. Installing Regulator ..... 14 : 19
14–N. QUARTER WINDOW ADJUSTMENT 14 : 20
14–N–1. Horizontal Adjustment of the Window Glass ..... 14 : 20
14–N–2. Vertical Adjustment of the window Glass ..... 14 : 20
14–N–3. The Fore and Aft Adjustment of the Window ..... 14 : 20
14–N–4. The In and Out Adjustment 14 : 20
14–O. TOP CEILING ..... 14 : 22
14–O–1. Removing Top Ceiling ..... 14 : 22
14–O–2. Installing Top Ceiling ..... 14 : 23
14–P. INSTRUMENT PANEL ..... 14 : 24
14–P–1. Removing Instrument Panel Assembly ..... 14 : 24
14–P–2. Installing Instrument Panel Assembly ..... 14 : 26
SPECIAL TOOLS ..... 14 : 26
BODY CHECKING DIMENSION SEDAN AND HARDTOP ..... 14 : 27

14–A. BONNET

14–A–1. Removing Bonnet

1. Open the bonnet and support the bonnet in the open position. Mark the bonnet hinge locations on the bonnet.
2. Remove the bonnet support from the bonnet.

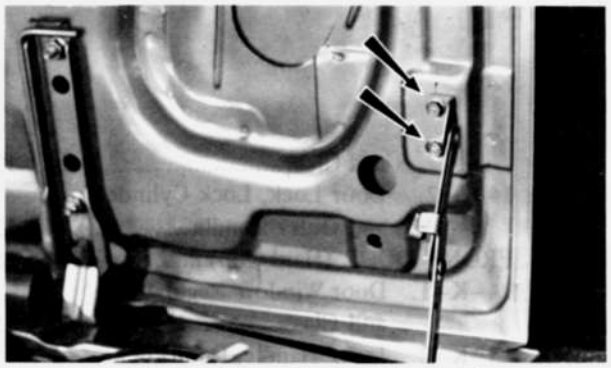

Fig. 14–1 Removing bonnet support

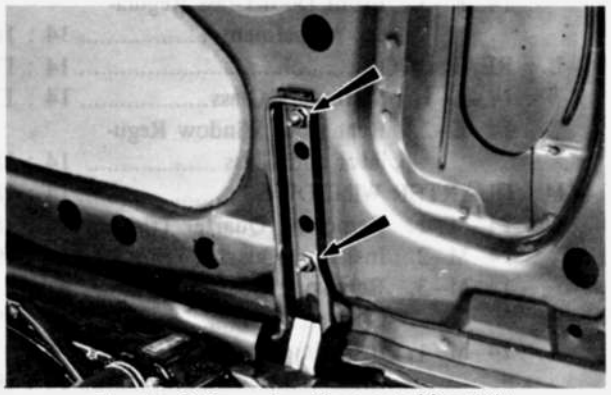

Fig. 14–2 Removing hinge attaching nuts

3. Remove two nuts attaching each hinge to the bonnet.
4. Remove the bonnet from the vehicle.

14–A–2. Installing Bonnet

Follow the removal procedures in the reverse order and adjust the bonnet by applying the procedures explained in the following paragraph.

14–A–3. Adjusting Bonnet

The bonnet is provided with to-and-fro, up-and-down and side-to-side adjustments.

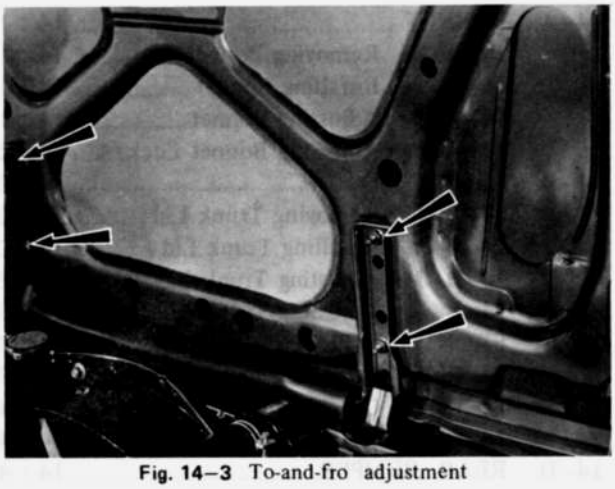

Fig. 14–3 To-and-fro adjustment

To make the to-and-fro and side-to-side adjustments, loosen the bonnet attaching bolts and move the bonnet to the proper position, then tighten the attaching bolts.

To make the up-and-down adjustment at the rear

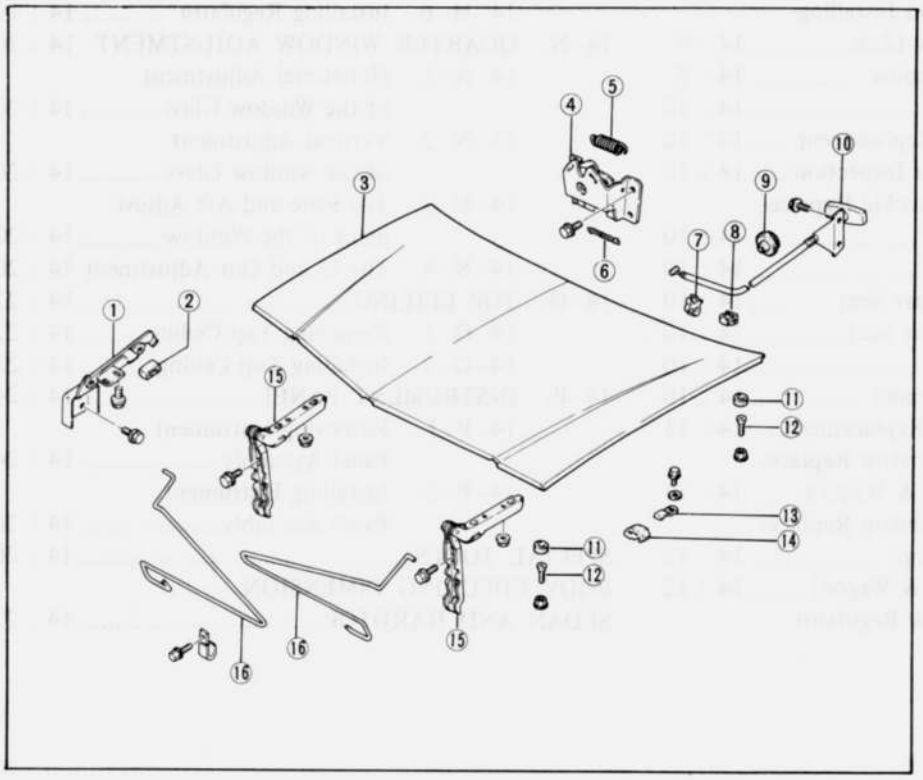

Fig. 14–4 Bonnet components

1. Bonnet support
2. Cushion rubber
3. Bonnet
4. Bonnet lock
5. Spring
6. Spring
7. Release wire clip
8. Release wire clamp
9. Grommet
10. Release wire
11. Cushion rubber
12. Screw
13. Set plate
14. Cushion rubber
15. Bonnet hinge
16. Balance spring

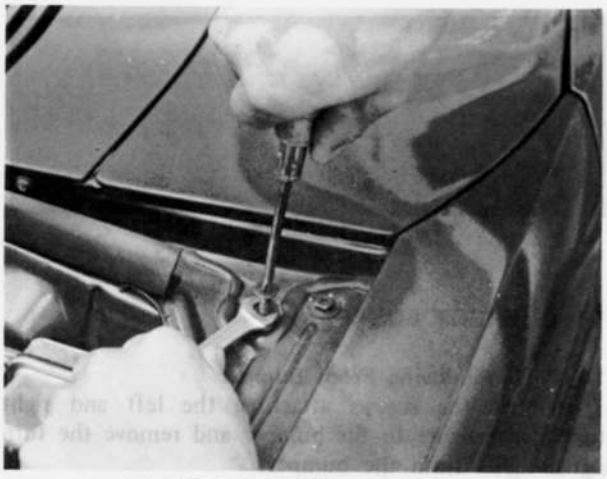

Fig. 14–5 Up-and-down adjustment

edge of the bonnet, loosen the lock nut and screw both bonnet stop bolts in or out until the bonnet flashers with the body.
After adjustment is completed, tighten the lock nut.

14–A–4. Adjusting Bonnet Lock
1. Make certain that it is properly aligned.

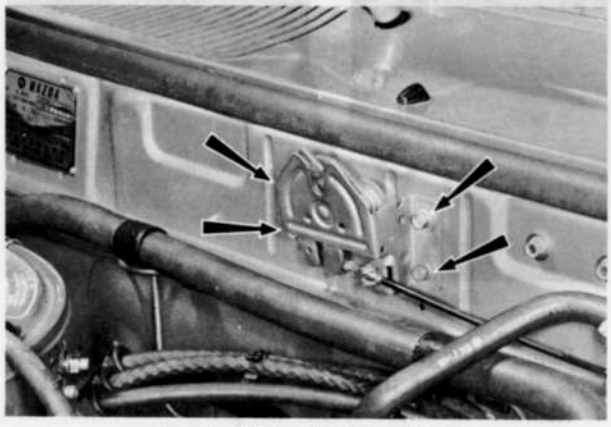

Fig. 14–6 Adjusting bonnet lock

2. Loosen the bonnet lock attaching bolts. Then move the bonnet lock as required to align with the bonnet striker.
3. Remove the attaching bolts on the bonnet lock, and adjust the position of the bonnet. The proper height of the bonnet is when it flushes with the fender.

14–B. TRUNK LID

14–B–1. Removing Trunk Lid
1. Open the trunk lid and support the lid in the trunk lid.
2. Remove the two bolts attaching the hinge to the trunk lid.
3. Remove the trunk lid from the vehicle.

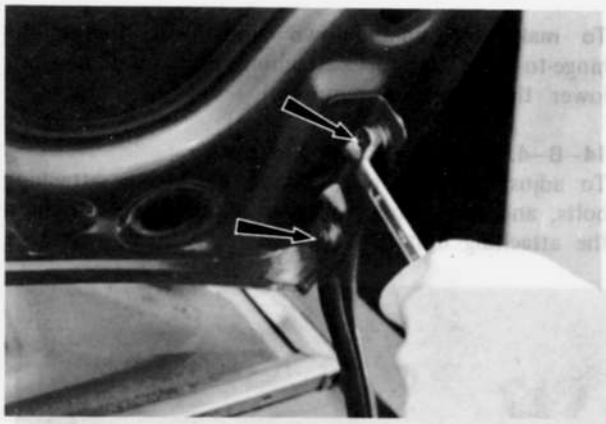

Fig. 14–7 Removing trunk lid

14–B–2. Installing Trunk Lid
Follow the removal procedures in the reverse order and adjust the trunk lid by applying procedures explained in the following paragraph.

14–B–3. Adjusting Trunk Lid
To make the to-and-fro or side-to-side adjustment, loosen the trunk lid attaching bolts, and move the

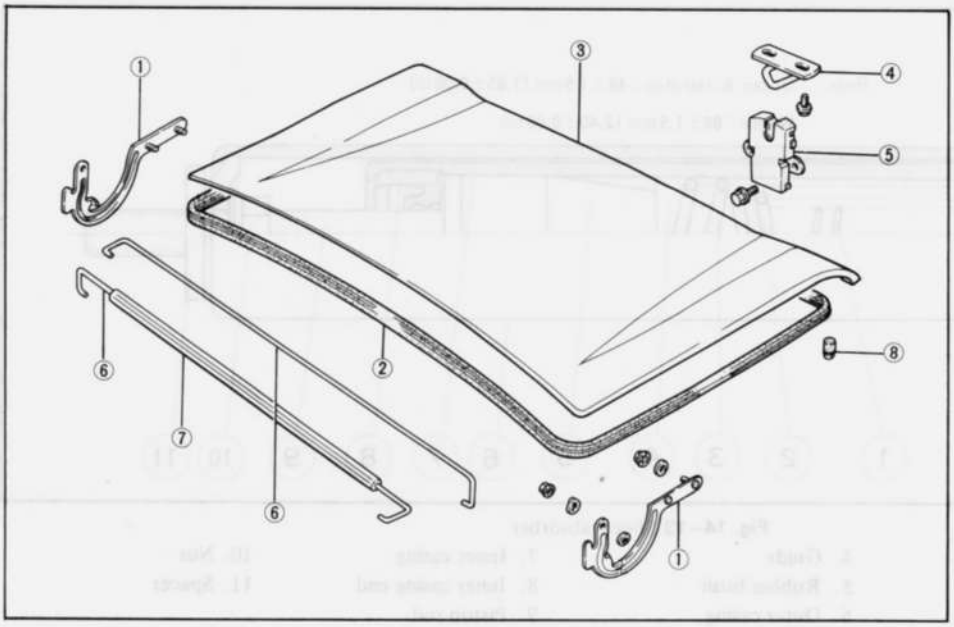

Fig. 14–8 Trunk lid components

1. Hinge
2. Weatherstrip
3. Trunk lid
4. Striker
5. Lid lock
6. Balance spring
7. Balance spring protecter
8. Cushion rubber

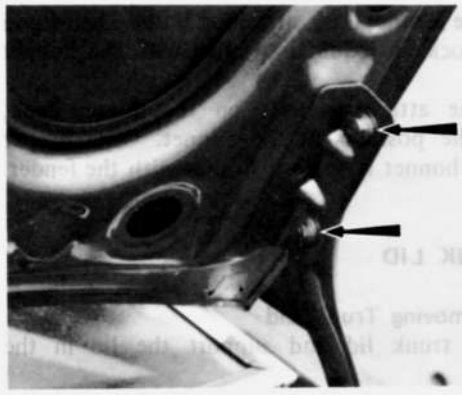

Fig. 14–9 Up-and-down adjustment

lid as required.

To make the up-and-down adjustment, loosen the hinge-to-hinge support attaching bolts and raise or lower the hinge as required.

14–B–4. Adjusting Trunk Lid Lock

To adjust the lid lock, loosen the striker attaching bolts, and move the striker as required, then tighten the attaching bolts.



Fig. 14–10 Adjusting lid striker

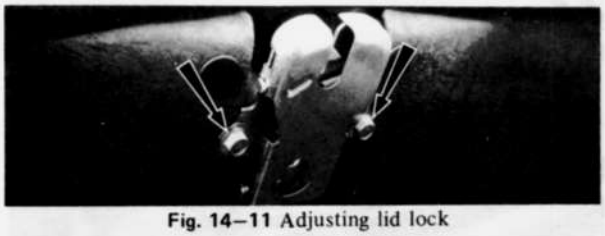

Fig. 14–11 Adjusting lid lock

14–C. FRONT BUMPER

14–C–1. Removing Front Bumper

1. Remove the screws attaching the left and right turn signal lights to the bumper and remove the turn signal lights from the bumper.
2. Remove the bolts and nuts attaching the shock absorber bracket to the front frame.

Then remove the shock absorber bracket and bumper assembly.

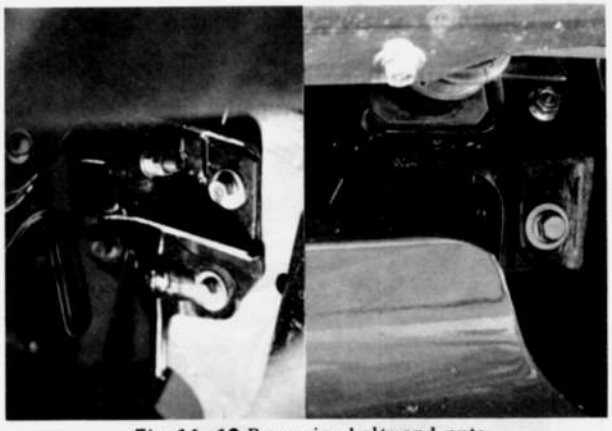

Fig. 14–12 Removing bolts and nuts

3. Remove the nuts attaching the bumper. Then separates the bumber from the reinforcement.
4. Remove the nuts from the piston rod end, then separates shock absorber from the bracket.

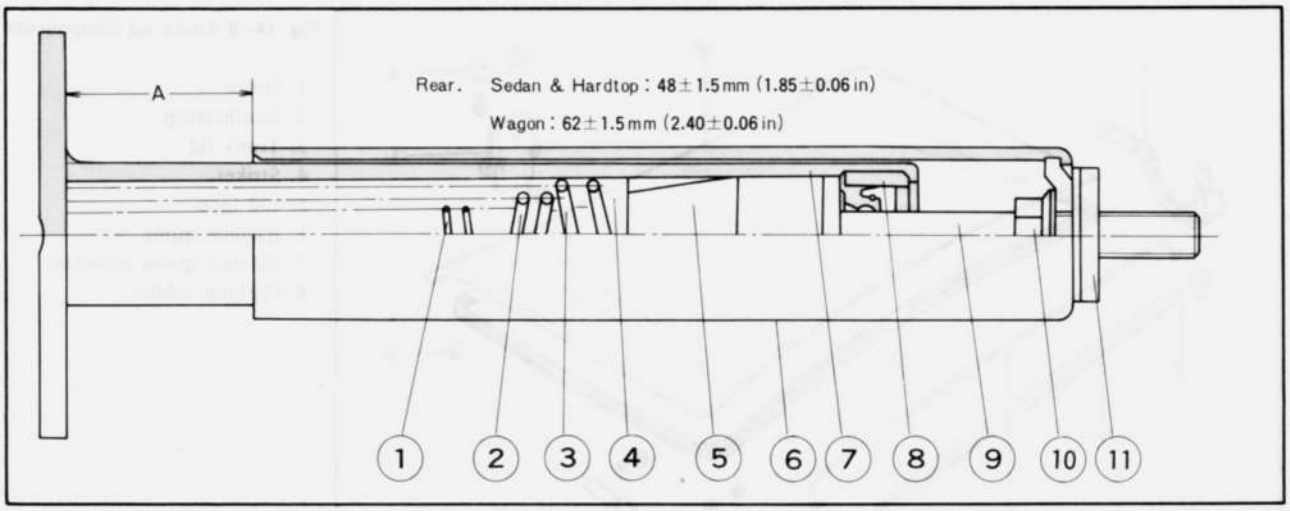

Fig. 14–13 Shock absorber

1. Coil spring
2. Coil spring
3. Coil spring
4. Guide
5. Rubber bush
6. Outer casing
7. Inner casing
8. Inner casing end
9. Piston rod
10. Nut
11. Spacer

14–C–2. Checking Shock Absorber

To check the chock absorber measure the dimension (A) shown in Fig. 14–13.
This measurement should be **42 ± 1.5 mm (1.61 ± 0.06 in)**. If this measurement is not within the specification, replace the shock absorber with a new one.

14–C–3. Installing Front Bumper

Follow the removal procedures in the reverse order and align the bumper for good fit and appearance.

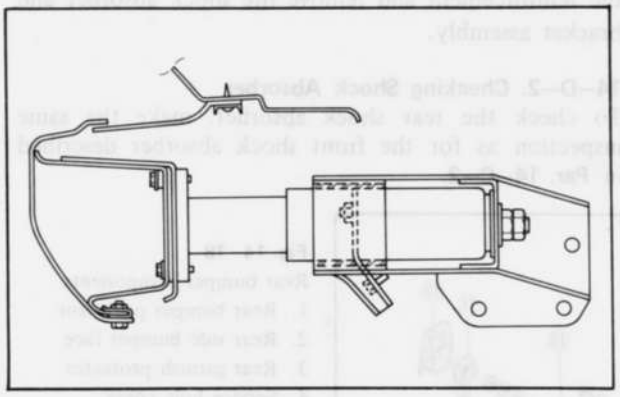

Fig. 14–14 Front bumper

Note:
(a) Tighten the bumper attaching bolt to **1.6 ~ 2.3 m-kg (12 ~ 17 ft-lb)**.
(b) Tighten the shock absorber bracket attaching bolt to **1.8 ~ 2.7 m-kg (13 ~ 19 ft-lb)**.

14–D. REAR BUMPER

14–D–1. Removing Rear Bumper

(a) Sedan & Hardtop

1. Remove the bolts attaching the shock absorber bracket to the rear frame

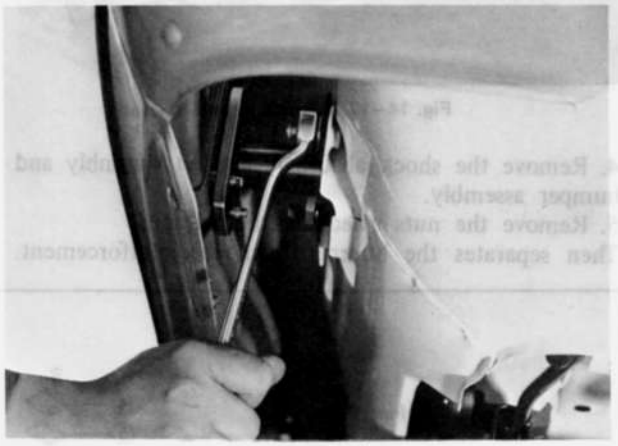

Fig. 14–16 Removing bolt

2. Open the trunk lid. Remove the screws attaching the service hole cover and remove the service hole covers.
3. Remove the nuts attaching the shock absorber bracket to the rear frame and the nuts attaching the piston rod end.

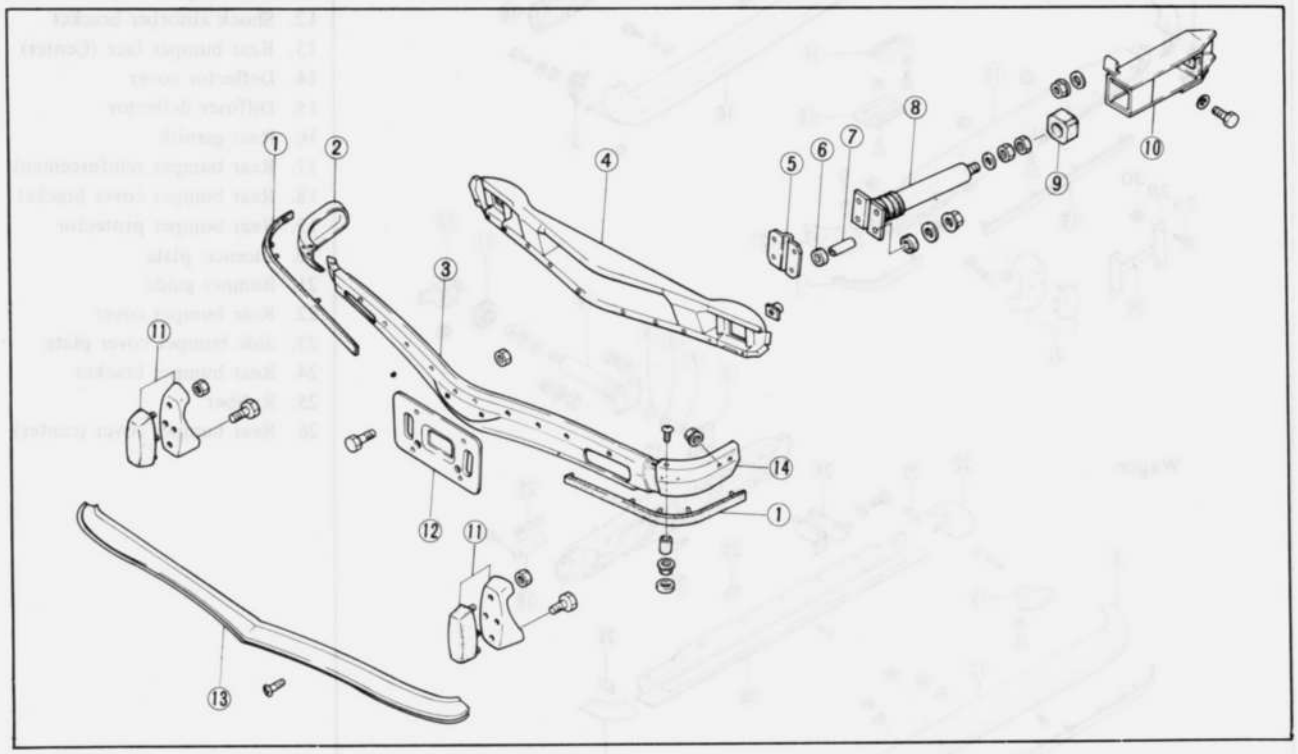

Fig. 14–15 Front bumper components

1. Front bumper side protector
2. Front bumper face (Right)
3. Front bumper face (Center)
4. Front bumper reinforcement
5. Hinge plate
6. Hinge rubber
7. Boss
8. Shock absorber
9. Mounting rubber
10. Shock absorber bracket
11. Bumper guard
12. Licence plate
13. Front bumper cover
14. Front bumper face (Left)



Fig. 14–17 Removing bolt & nut

4. Remove the shock absorber, bracket assembly and bumper assembly.
5. Remove the nuts attaching the bumper.
Then separates the bumper from the reinforcement.

(b) Wagon

1. Disconnect the reverse light wirings from the wiring harness.
2. Remove the nuts attaching the shock absorber bracket to the rear frame.
3. Remove the nuts attaching shock absorber end.
4. Remove the bumper and shock absorber assembly.
5. Remove the nuts and separate the bumper from the reinforcement.
6. Remove the bolts attaching the shock absorber to the reinforcement and remove the shock absorber and bracket assembly.

14–D–2. Checking Shock Absorber

To check the rear shock absorber, make the same inspection as for the front shock absorber described in **Par. 14–C–2.**

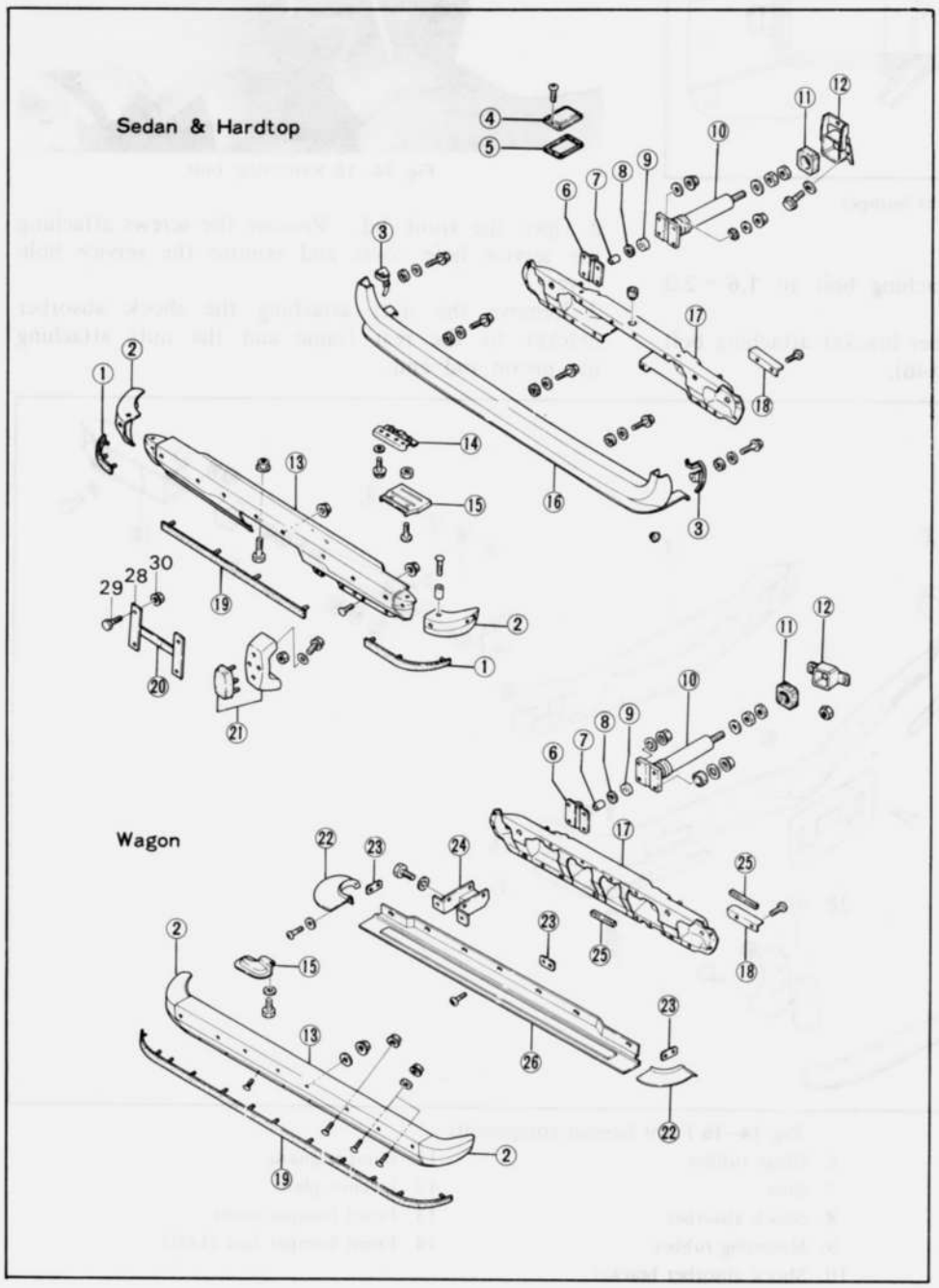

Fig. 14–18
Rear bumper components
1. Rear bumper protector
2. Rear side bumper face
3. Rear garnish protector
4. Service hole cover
5. Gasket
6. Hinge plate
7. Boss
8. Hinge rubber
9. Spacer
10. Shock absorber
11. Mounting rubber
12. Shock absorber bracket
13. Rear bumper face (Center)
14. Deflector cover
15. Diffuser deflector
16. Rear garnish
17. Rear bumper reinforcement
18. Rear bumper cover bracket
19. Rear bumper protector
20. Licence plate
21. Bumper guide
22. Rear bumper cover
23. Side bumper cover plate
24. Rear bumper bracket
25. Rubber
26. Rear bumper cover (center)

14–D–3. Installing Rear Bumper

Follow the removal procedures in the reverse order and align the bumper for the good fit and appearance.

Note:

(a) Tighten the bumper attaching bolt to **1.6 ~ 2.3 m-kg (13 ~ 17 ft-lb).**

(b) Tighten the shock absorber bracket attaching bolt to **1.8 ~ 2.7 m-kg (13 ~ 19 ft-lb).**

14–E. WINDSHIELD GLASS

14–E–1. Removing Windshield Glass

To replace the windshield glass, use the **window service tool set** (49 0305 870K) shown in Fig. 14–22.

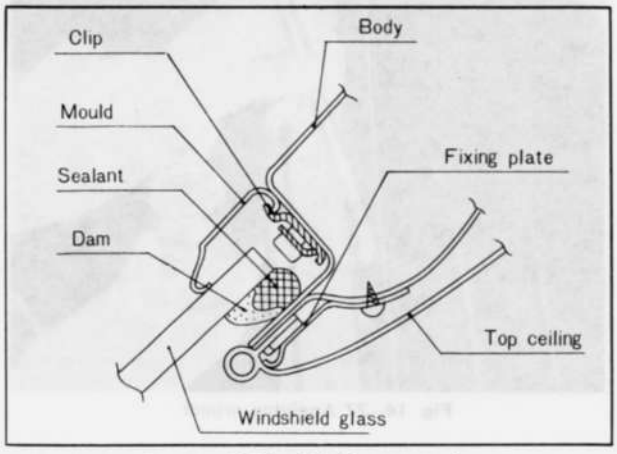

Fig. 14–19 Windshield cross section

1. Remove the interior mirror and also right and left front pillar tirms from the interior of the vehicle.
2. Remove the windshield wiper arms and blades.
3. Insert the mould remover between the mould and the glass and pull the retaining clip to remove the mould upward. Remove the mould.
4. Remove the mould retaining clips.
5. Pierce the needle between the glass and the sealant and insert the 500 mm (20 in) length of piano wire into the pierced hole. Wrap each end of the wire around the bars.

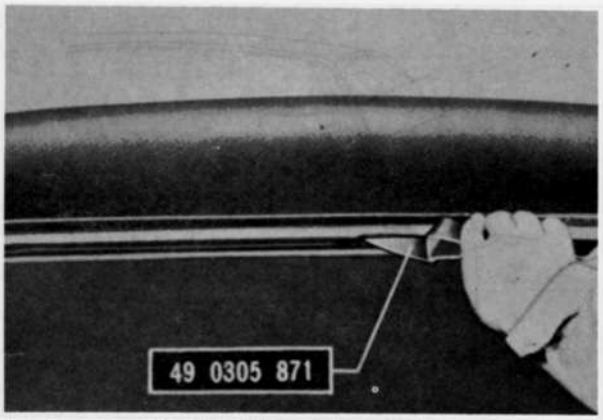

Fig. 14–20 Removing mould

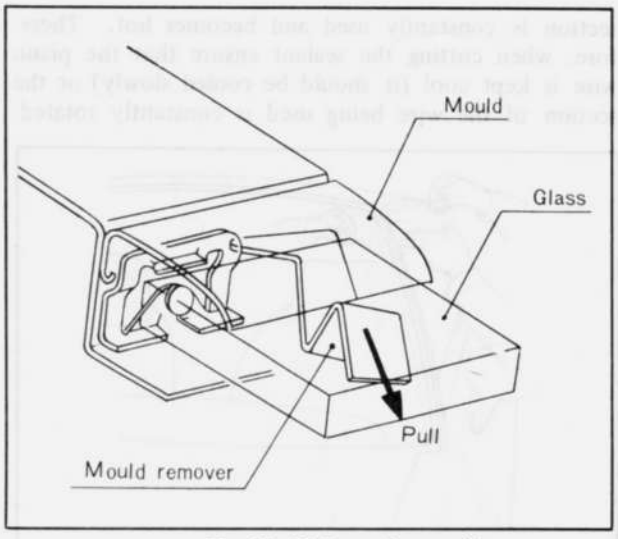

Fig. 14–21 Removing mould

6. with the aid of an assistant, cut the sealant all the way around the glass with a sawing motion and remove the glass

Note:

(a) When cutting the sealant with the piano wire, cut it along the border between the window glass and the sealant.

(b) The piano wire is liable to snap if only a certain

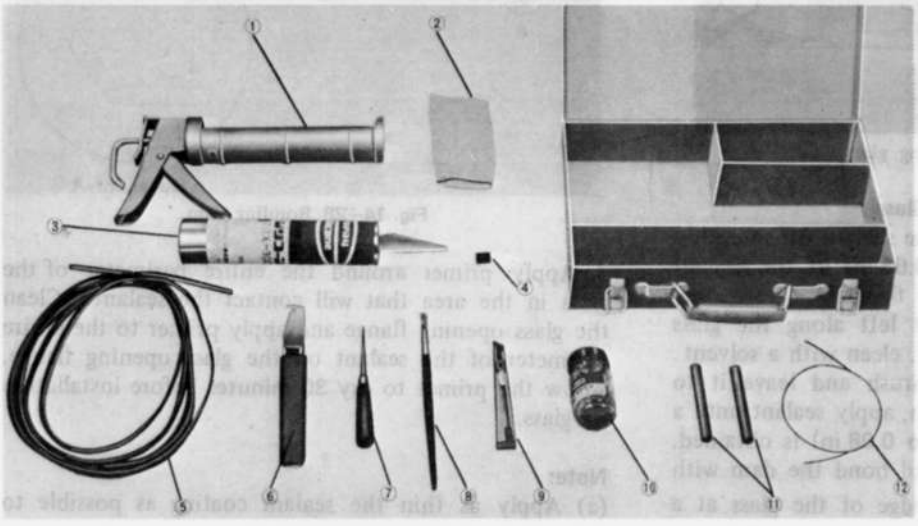

Fig. 14–22
Window service tool set
(49 0305 870K)

1. Sealant gun
2. Gauze
3. Sealant
4. Spacer
5. Dam
6. Mould remover
7. Needle
8. Brush
9. Cutting knife
10. Primer
11. Bar
12. Piano wire

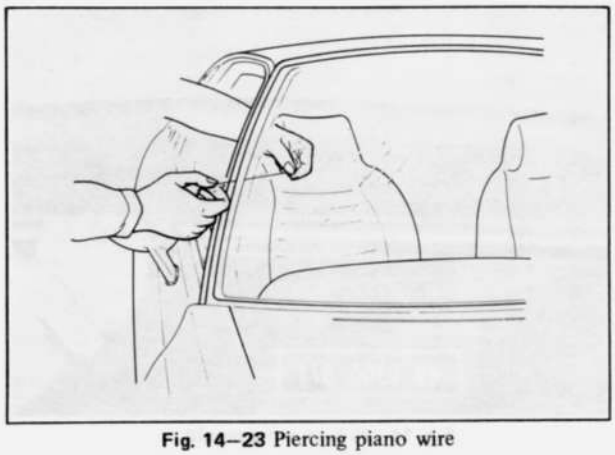

Fig. 14–23 Piercing piano wire

section is constantly used and becomes hot. Therefore, when cutting the sealant ensure that the piano wire is kept cool (it should be cooled slowly) or the section of the wire being used is constantly rotated.



Fig. 14–24 Cutting sealant

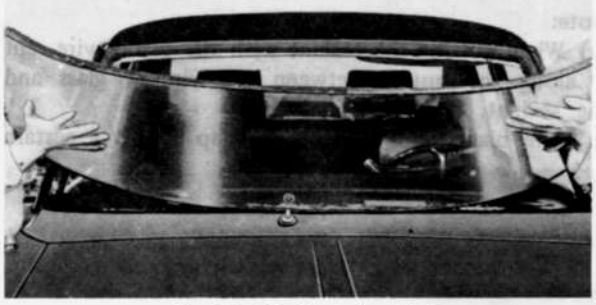

Fig. 14–25 Removing glass

14–E–2. Installing Windshield Glass

1. Using the cutting knife, cut the sealant off smoothly so that **1 to 2 mm (0.04 to 0.08 in)** of the sealant remains along the glass opening flange.
If the thickness of the sealant left along the glass opening flange is too small, first, clean with a solvent. Then, apply primer with the brush and leave it to dry for **20 to 30 minutes.** Then, apply sealant until a thickness of **1 to 2 mm (0.04 to 0.08 in)** is obtained.
2. Clean the glass thoroughly and bond the dam with bonding agent parallel to the edge of the glass at a

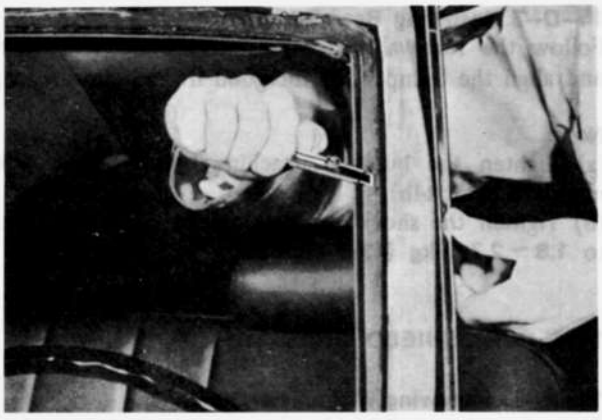

Fig. 14–26 Cutting Sealant

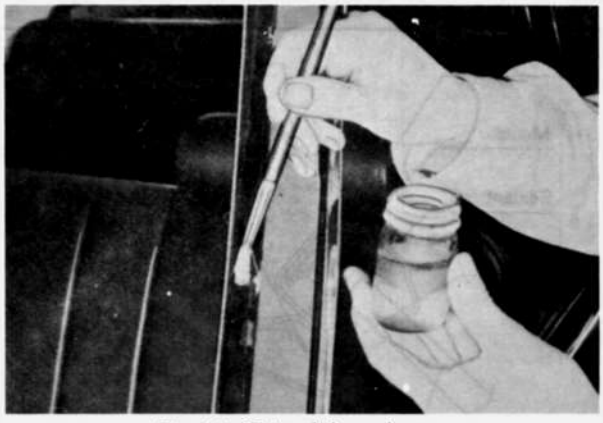

Fig. 14–27 Applying primer

position **7 mm (0.28 in)** away from it. Bond the dam in the direction shown in Fig. 14–28.

Note:
Securely bond the dam so that it is straight and will not come apart.

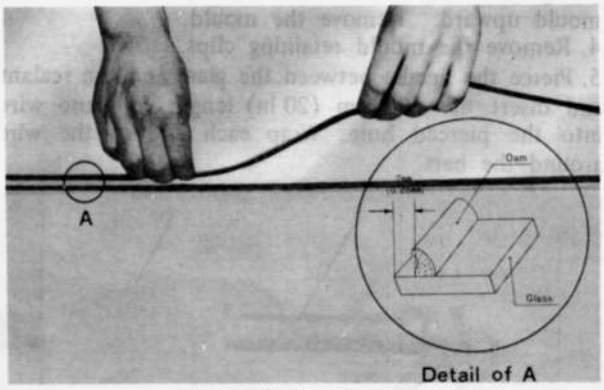

Fig. 14–28 Bonding dam

3. Apply primer around the entire perimeter of the glass in the area that will contact the sealant. Clean the glass opening flange and apply primer to the entire perimeter of the sealant on the glass opening flange. Allow the primer to dry **30 minutes** before installation of glass.

Note:
(a) Apply as thin the sealant coating as possible to

the glass.
(b) **Do not** allow any dust, water, oil, etc. to get on the coating surface and also **do not** touch the coating surface with hand.

4. Bond each spacer to the glass opening flange with bonding agent. Fig. 14–29 shows the directions and positions of each spacer. There are two kinds of spacer.

Part Nos.	Name of Part	Color
0305 70 448A	Spacer	Gray
0305 70 447B	Spacer	Black

Although the spacer is bonded on both the right and the left hand sides of the windshield glass in Fig. 14–29, the spacer on only one side of the glass should be sufficient.

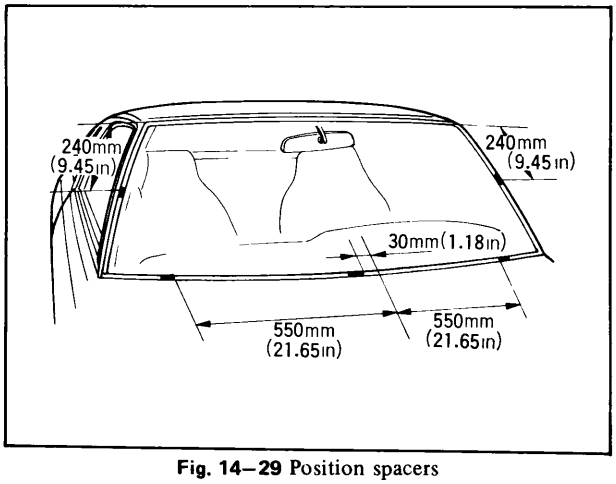

Fig. 14–29 Position spacers

5. Insert each mould retaining clip to the clip insertion portion in the manner shown in Fig. 14–30 Replace the retaining clips as required to insure adequate mould retention.

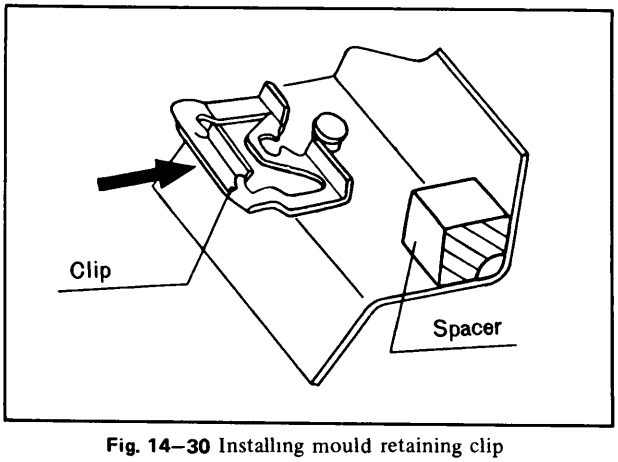

Fig. 14–30 Installing mould retaining clip

6. After the primer is dry, apply the sealant so that it is **8 mm (0.31 in)** high along the entire perimeter of the glass with the sealant gun fitted with the sealant cartridge. If the sealant comes apart from the painted surface on the body side, use the remainder of the sealant for rectification.

Note:
(a) Shape the nozzle of the sealant cartridge with the cutting knife as shown in Fig. 14–31. Then break the film of the sealant with a piece of wire and it is ready for application.
(b) If the application is unsatisfactory, rectify it with a wooden spatula.
(c) If any seal adheres to your hand, it should be removed immediately.

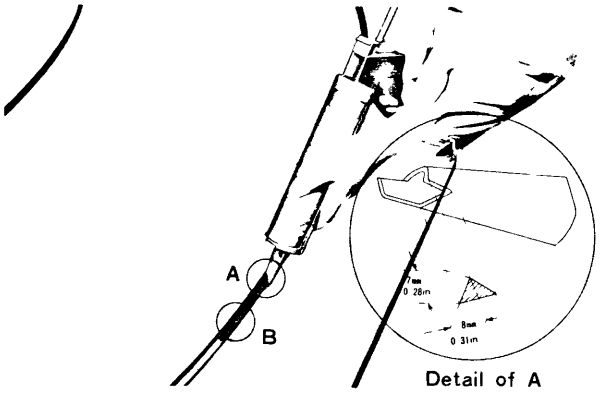

Fig. 14–31 Applying sealant

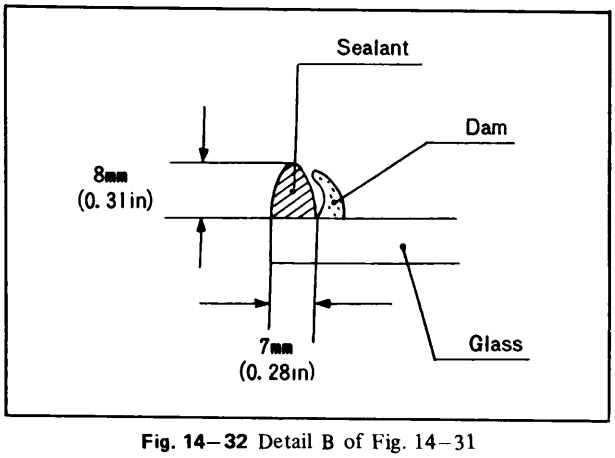

Fig. 14–32 Detail B of Fig. 14–31

7. Place the glass in the opening flange, locating the best position for equal sealant contact.
8. Firmly press the glass agianst the sealant with hand pressure. Then, inspect the appearance of the sealant through the glass. A dull sport indicates an area where the sealant does not contact glass surface Additional hand pressure will seal most areas. When installing the galss, **5.8 mm (0.23 in)** clearance should exist between the body and the glass. Check the clearance at the four positions shown in Fig. 14–33.

Note:
If possible, **do not** apply any force to the glass until the sealant has hardened. Time required for the seal to harden after it is applied.

Summer (20°C or 68°F)	5 hours
Winter (5°C or 41°F)	24 hours

9. Remove any excess primer from the glass with a wooden spatula and wipe with a clean solvent.

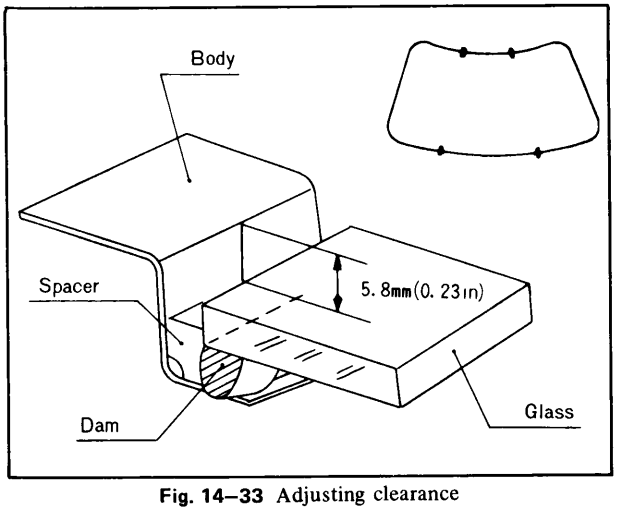

Fig. 14–33 Adjusting clearance

10. Water test the installation around the entire perimeter of the glass. Repair any leaks by applying the sealant around the edge of the glass.
11. Install the moulds, interior mirror, front pillar trims, windshield wiper arms, etc.

Note:
(a) Keep the door windows open until the sealant has hardened to some extent.
(b) If the vehicle is to be repainted, remove all the sealant from the body and then after baking the paint on, apply the sealant so that it is **10 mm (0.4 in)** high. **Never apply** air setting paint to the surface on which the sealant is to be applied.

14–F. REAR WINDOW GLASS

14–F–1. Removing and Installing Rear Window Glass

The removal and installation of the rear window glass can be made in the same way as those of the windshield glass. But care should be taken to the following points:
1. Rear window mould lower can be installed only by inserting it into the body panel because clip is sub-assembled. When removing the mould, push part A of the clip with the driver through the bottom hole.

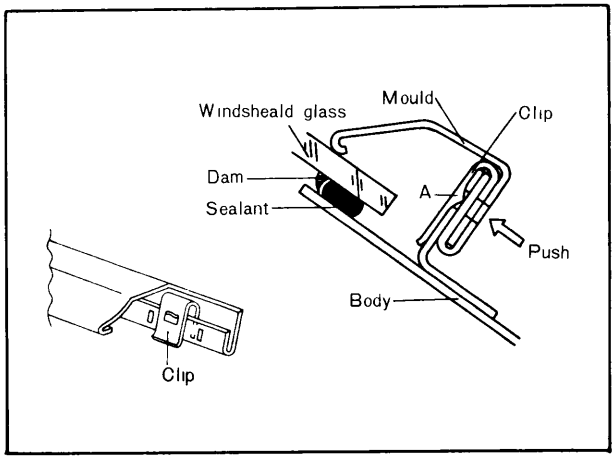

Fig. 14–34 Rear window mould lower

2. In the case of a vehicle equipped with a heatable window, perform the works of disconnection and connection of the relevant wiring.
3. The directions and positions each spacer to be bonded are shown in Fig. 14–35.

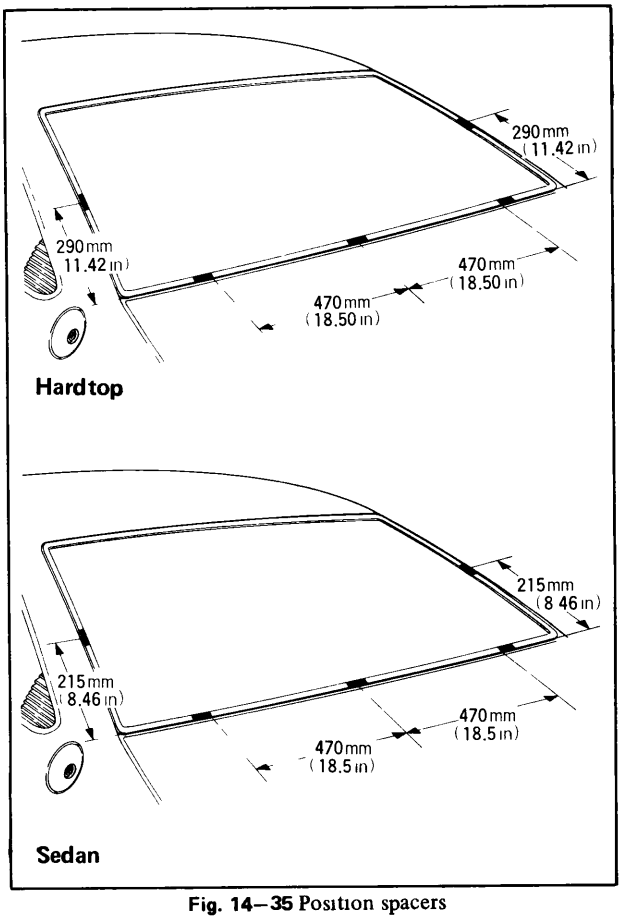

Fig. 14–35 Position spacers

4. When installing the glass, **7.8 mm (0.31 in)** clearance should exist between the body and the glass. Check the clearance at the four portions shown in Fig. 14–36.

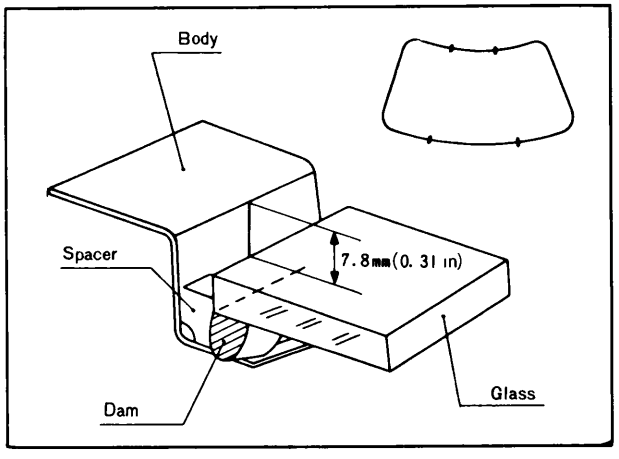

Fig. 14–36 Adjusting clearance

14–F–2. Heatable Window

Servicing the heatable window is expalined in **par. 15–J.**

14–G. FRONT SEAT

14–G–1. Front Seat Replacement

1. Remove the front seat by removing the two attaching bolts and two attaching nuts.
2. To install, reverse the removal procedures.

14–G–2. Seat Adjuster Inspection

1. Inspect the seat adjuster for smooth operation by moving the seat back and forth. If necessary, apply grease to the seat adjuster.
2. Inspect the seat adjusting lever for wear. If defective, repair or replace it.

14–G–3. Reclining Knuckle Replacement

To replace the reclining knuckle, **use the tool** (49 0259 855).



Fig. 14–37 Removing reclining knuckle

14–H. REAR SEAT

14–H–1. Removing Rear Seat

1. Remove the two bolts attaching the seat cushion and remove the seat cushion.
2. Remove the rear seat back attaching bolts.
3. Raise the seat to full up position and pull it in the B direction shown in Fig. 14–38.

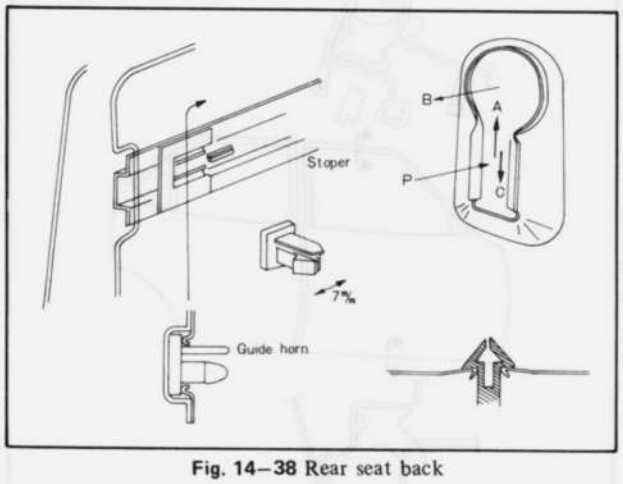

Fig. 14–38 Rear seat back

14–H–2. Installing Rear Seat

1. Tighten temporarily the rear seat back to tire housing.
2. Push the rear seat back attaching fastener in P direction and press it down into the catch of the body as shown in Fig. 14–38.

Note:
Make sure that the seat is inserted by pulling the upper end of the seat back.



Fig. 14–39 Installing seat back

3. Further tighten the bolt which has been tightened temporarily.
4. Place the seat cushion and tighten the two bolts attaching the seat cushion.

14–I. DOOR

14–I–1. Door Adjustment

a. Adjusting door striker

The striker can be adjusted laterally and vertically as well as fore and aft. The striker should not be adjusted to correct door sag.

1. Remove the striker attaching screws and move the striker as required.
2. Tighten the attaching screws and check the door fit.

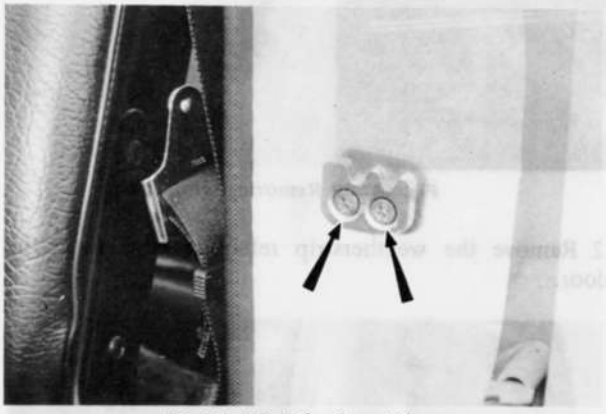

Fig. 14–40 Adjusting striker

b. Adjusting door alignment

The door hinges provide sufficient adjustment latitude to correct most door misalignment conditions. **Do not** cover up a poor door alignment with the door lock striker adjustment.

1. Remove the hinge attaching bolts and move the hinge as required.
2. Tighten the attaching bolts and check the door fit.

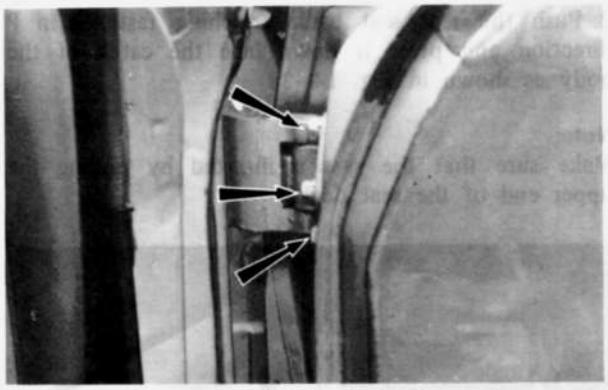

Fig. 14–41 Adjusting door alignment

14–I–2. Door Hinge Replacement

1. Support the door.
2. Remove the hinge-to-body attaching bolts.
3. Remove the hinge-to-door attaching bolts and remove the hinge.
4. Position the hinge to the door and body, and install the attaching bolts.
5. Adjust the door as described in **Par. 14–I–1** and tighten the attaching bolts.

14–I–3. Door Weatherstrip Replacement (Sedan & Wagon)

1. Pull the weatherstrip from the retaining clips, and remove the weatherstrip without damaging the rubber if the weatherstrip is to be used again.

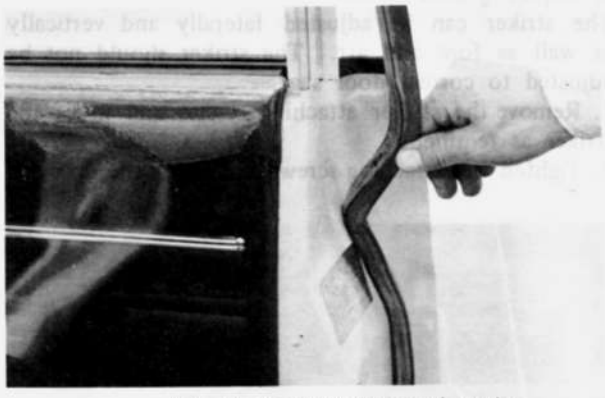

Fig. 14–42 Removing weatherstrip

2. Remove the weatherstrip retaining clips form the door.

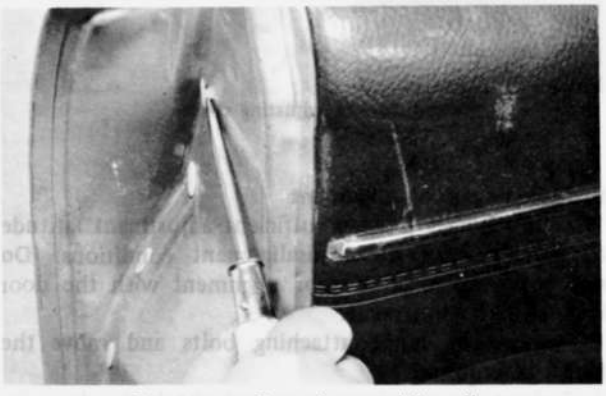

Fig. 14–43 Removing retaining clip

3. Inspect the weatherstrip for crack, deformation and damage. If defective, replace it.
4. Fit the retaining clips to the weatherstrip with a plier.

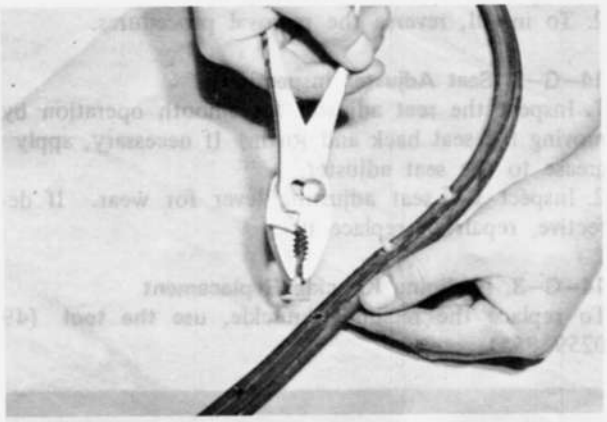

Fig. 14–44 Fitting retaining clip

5. Position the weatherstrip to the door and fit the retaining clips into place.

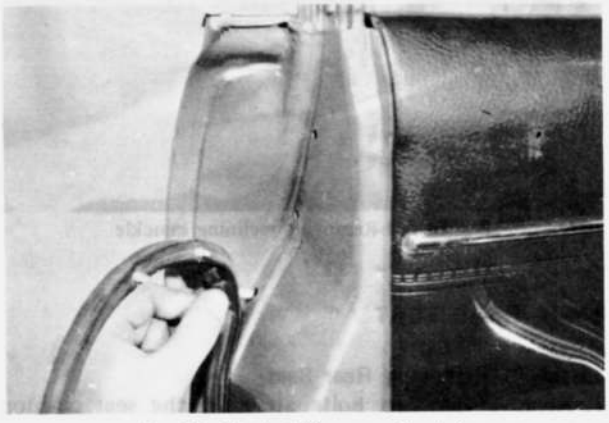

Fig. 14–45 Installing weatherstrip

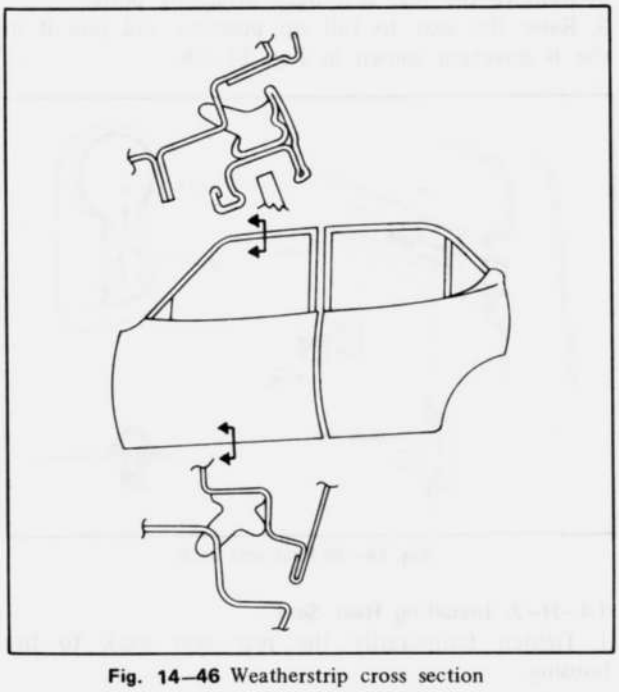

Fig. 14–46 Weatherstrip cross section

14–I–4. Door Weatherstrip Replacement (Hard Top)

1. Refer to the **Par. 14–K–1** and remove the door trim.
2. Remove the screws attaching the both ends of the weatherstrip to the door.
3. Pull the weatherstrip from the retaining clips, and remove the weatherstrip without damaging the rubber if the weatherstrip is to be used again.
4. Remove the weatherstrip retaining clips from the door.
5. Inspect the weatherstrip for crack, deformation and damage. If defective, replace it.
6. Fit the retaining clips to the weatherstrip with a plier.
7. Position the weatherstrip to the door and fit the retaining clips into place.
8. Install the door trim to the door.

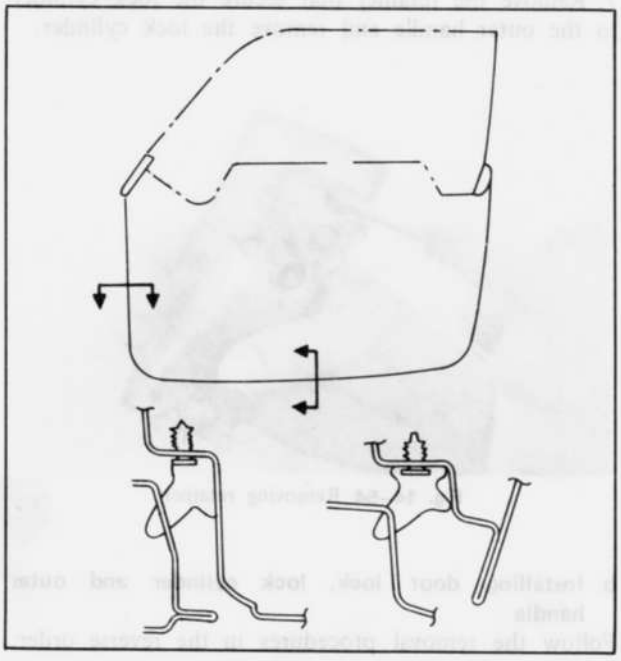

Fig. 14–47 Weatherstrip corss section

14–J. FRONT DOOR (Sedan & Wagon)

14–J–1. Door Window Regulator and Glass

a. Removing door window regulator and glass

1. Remove the regualtor handle by removing the attaching bolt.
2. Remove the arm rest by removing the attaching screws.
3. Remove the inner handle cover by removing the attaching screw.
4. Remove the trim panel and watershield.
5. Remove the regulator attaching bolts, and lower the regulator to disconnect the regualtor roller from the glass channel, then remove the reuglator assembly.
6. Remove the glass.

b. Checking door window regulator

1. Inspect the regulator gear and spring for wear and damage. If defective, replace the reuglator assembly.
2. If necessary, apply grease to each operation portion.



Fig. 14–48 Removing regulator handle

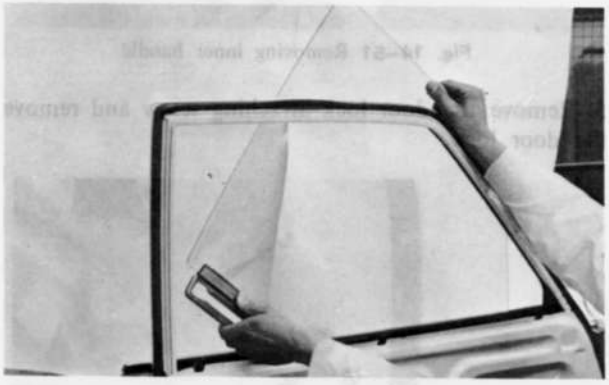

Fig. 14–49 Removing glass



Fig. 14–50 Removing regulator

c. Installing door window regulator and glass

Follow the removal procedures in the reverse order.

Note:

Adjust the regualtor and check the operation of the regualtor.

14–J–2. Door Lock, Lock Cylinder and Outer Handle

a. Removing door lock, lock cylinder and outer handle

1. Remove the regualtor handle, arm rest, etc.
2. Remove the trim panel and watershield.
3. Remove the bolts attaching the inner handle and remove the inner handle.
4. Raise the glass fully and disconnect the remote

control rod from the lock cylinder.

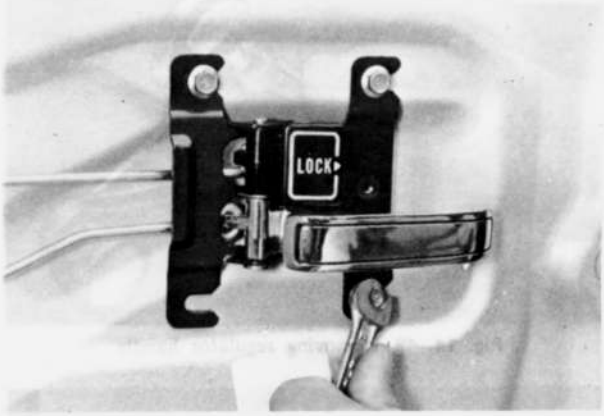

Fig. 14–51 Removing inner handle

5. Remove the door lock attaching screw and remove the door lock.

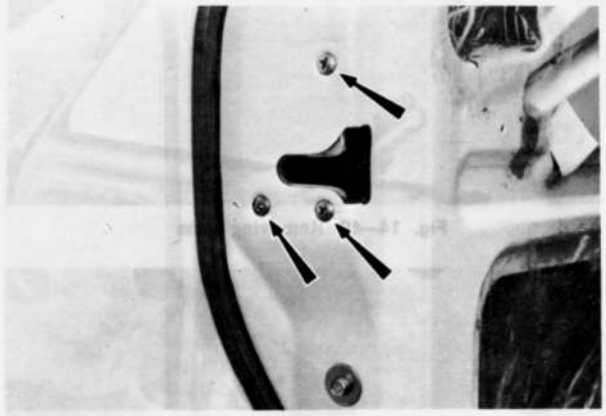

Fig. 14–52 Removing door lock attaching screws

6. Remove the outer handle by removing the attaching bolts.

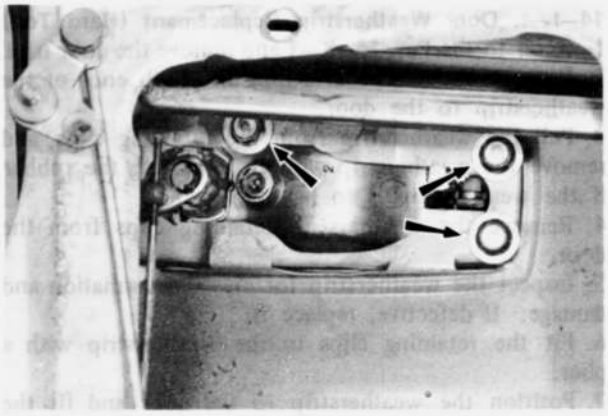

Fig. 14–53 Removing outer handle attaching bolts

7. Remove the retainer that secure the lock cylinder to the outer handle and remove the lock cylinder.

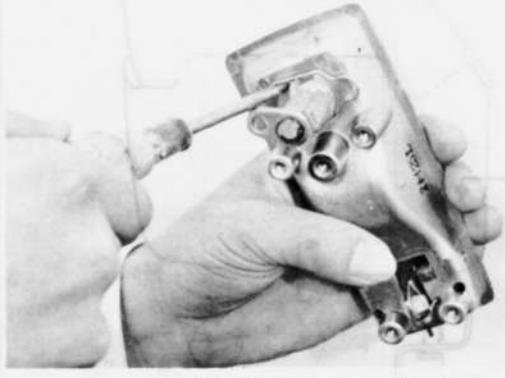

Fig. 14–54 Removing retainer

b. Installing door lock, lock cylinder and outer handle

Follow the removal procedures in the reverse order.

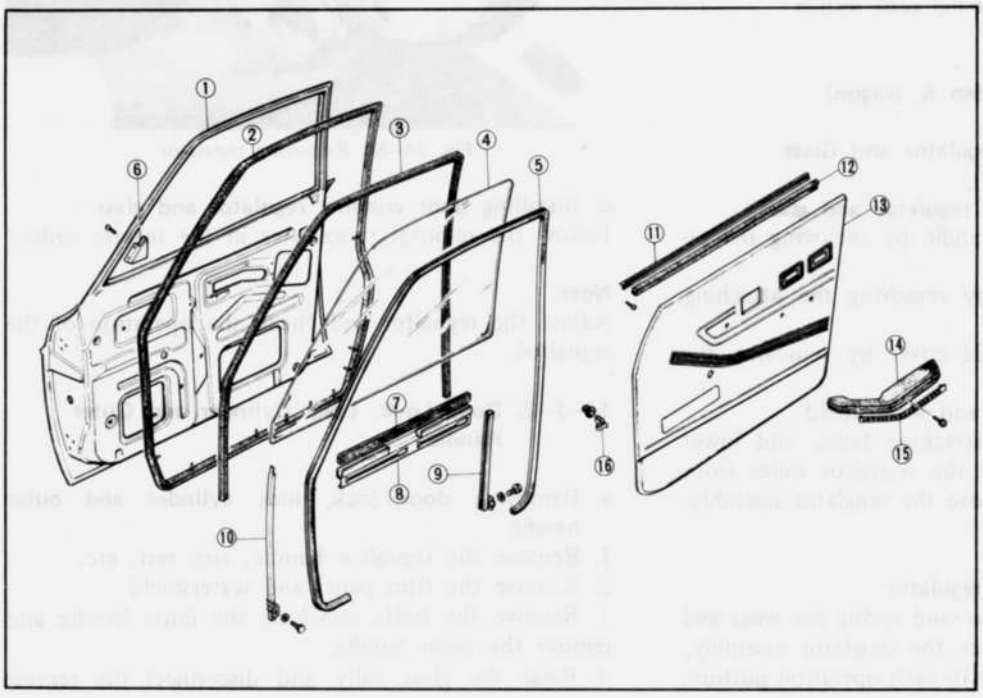

Fig. 14–55
Front door components (Sedan & Wagon)

1. Front door body
2. Weatherstrip
3. Glass run channel
4. Door glass
5. Seaming welt
6. Corner bracket
7. Door glass rubber strip
8. Door galss lift bracket
9. Glass guide "B"
10. Glass guide "A"
11. Weatherstrip outer
12. Weatherstrip inner
13. Door trim
14. Arm rest
15. Arm rest garnish
16. Trim fastener

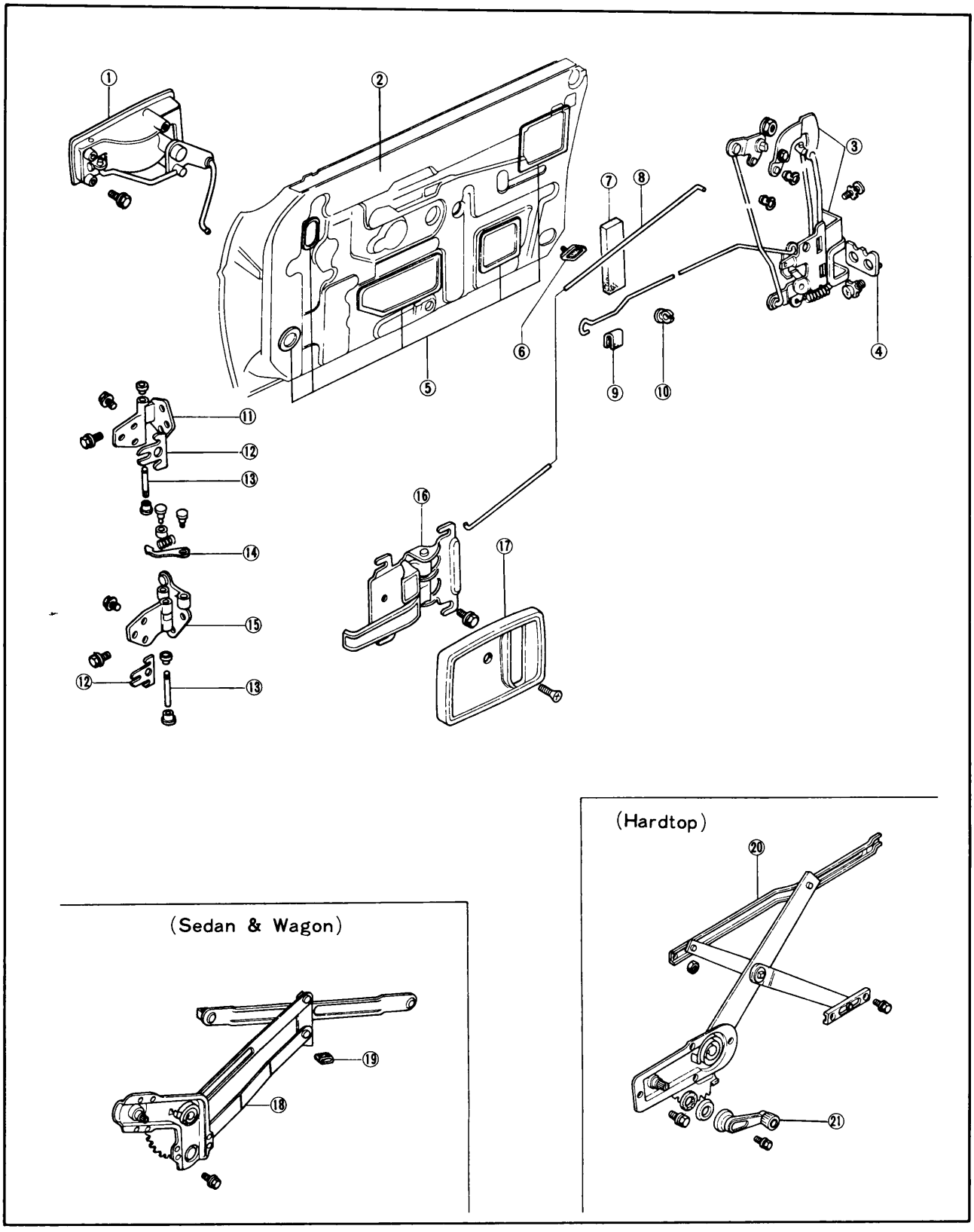

Fig. 14–56 Front door regulator components

1. Outer handle
2. Door body
3. Door lock
4. Striker
5. Watershield
6. Door cushion
7. Insulator
8. Inner handle rod
9. Pad
10. Rod holder
11. Door hinge upper
12. Door hinge lower shim
13. Hinge pin
14. Check lever
15. Door hinge lower
16. Inner handle
17. Inner handle cover
18. Window regulator (Sedan & Wagon)
19. Cushion (Sedan)
20. Window regulator (Hard Top)
21. Window regulator handle

14–K. FRONT DOOR (Hard Top)

14–K–1. Door Window Regulator and Glass

a. Removing door window regulator and glass
1. Remove the regulator handle.
2. Remove the inner handle cover.
3. Remove the garnish and arm rest.
4. Remove the door trim.
5. Fully open the window glass.
6. Remove the belt line mould.
7. Remove the door screen.
8. Remove the nuts.
9. Remove the window glass assembly from the regulator and take it upward.
10. Remove the nut and take out the regulator from the service hole.

b. Checking door window regulator
1. Inspect the regulator gear and spring for wear and damage. If defective, replace the regulator assembly.
2. If necessary, apply grease to each operation portion.

c. Installing door window regulator and glass
Follow the removal procedures in the reverse order.

Note:
Adjust the regulator and check the operation of the regulator.

14–K–2. Inner Handle, Door Lock and Outer Handle

a. Removing inner handle
1. Remove the door trim.
2. Remove the door screen.
3. Remove the bolt joint.
4. Remove the rod from rod holder and remove the inner handle.

b. Installing inner handle
Follow the removal procedures in the reverse order.

Note:
Adjust the inner handle and inner lock lower with bolt and nut in order to prevent the free play of them.

c. Removing door lock
1. Remove the door window glass. (Refer to 14–K–1)
2. Remove the inner handle.
3. Incline forward the glass guide by removing the bolts and loosening the nuts.
4. Take out the door lock from the service hole by removing the nuts, joints, bolts and screens.

d. Installing door lock
Follow the removal procedures in the reverse order.

e. Removing outer handle
1. Remove the door window glass. (Refer to 14–K–1)

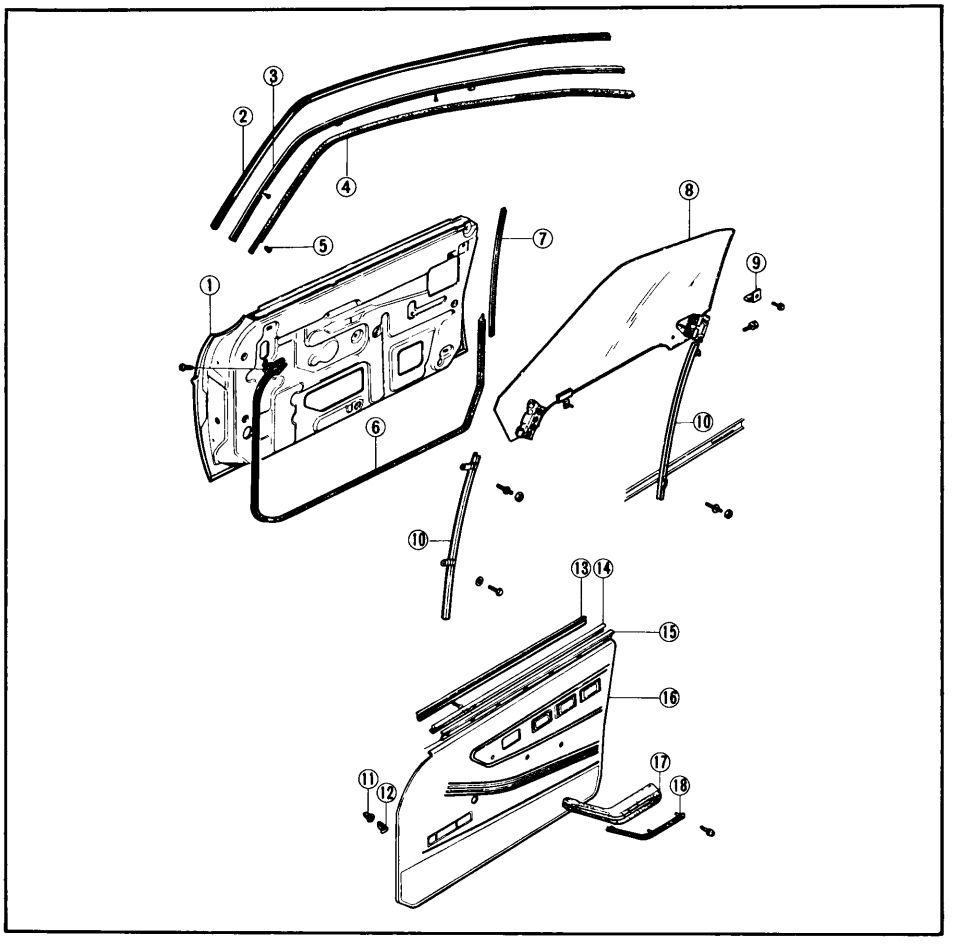

Fig. 14–57
Front door components (Hard Top)
1. Door body
2. Seaming welt (Roof side)
3. Weatherstrip retainer
4. Weatherstrip roof side
5. Weatherstrip fastener
6. Door body weatherstrip
7. Seaming welt (Door body rear)
8. Door glass
9. Glass stopper
10. Glass guide
11. Fastener cap
12. Trim fastener
13. Outer weatherstrip
14. Weatherstrip
15. Mould
16. Door trim
17. Arm rest
18. Arm rest garnish

2. Remove the joint and bolt.
3. Remove the bolt and take out the outer handle.

f. Installing outer handle
Follow the removal procedures in the reversr order after adjusting the joint not to play.

Note:
When removing or installing the door lock, nylon bush and joint should be changed.

14–K–3. Front Door Glass Regulator Adjustment

a. Horizontal adjustment of the window
1. Raise the window to full up position.
2. Make the horizontal adjustment of the glass by moving the regulator guide No. 2 up and down and tighten it.
3. Make sure that the regulator guide No. 2 is parallel with the standard line.
4. Make sure that the glass moves smoothly.

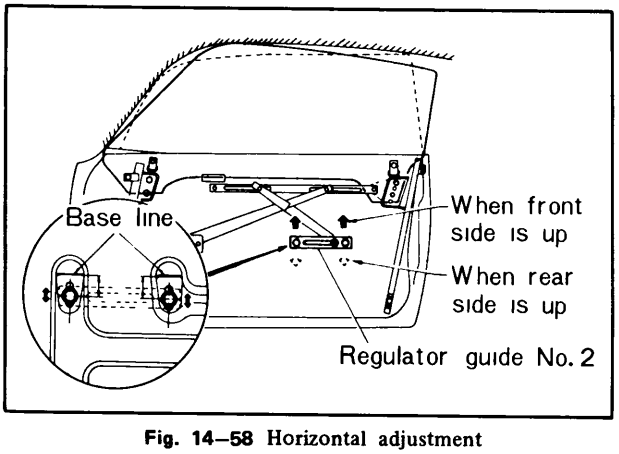

Fig. 14–58 Horizontal adjustment

b. The fore and aft adjustment of the window
1. Tighten the upper bolt of the glass guide B at the center of the long hole.
2. Push rearwards the glass guide A as shown in Fig. 14–59 and tighten the upper bolt.

Note:
Make sure that the glass does not play back and forth.

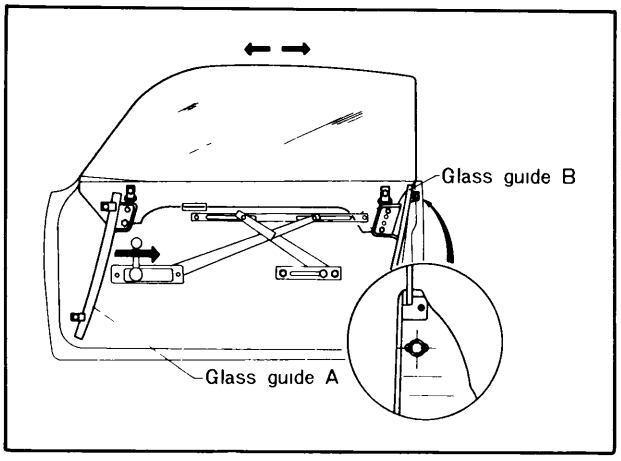

Fig. 14–59 Fore and aft adjustment

c. Vertical adjustment of the window
With the window glass raised to full up position, adjust the up stoppers (Front and Rear) and tighten the up stopper bolts.

Note:
Make sure that the regulator touches both up stoppers. The clearance between the top of glass and weather-strip is **0 ~ 2 mm (0 ~ 0.08 in)**, when door is opened and closed.

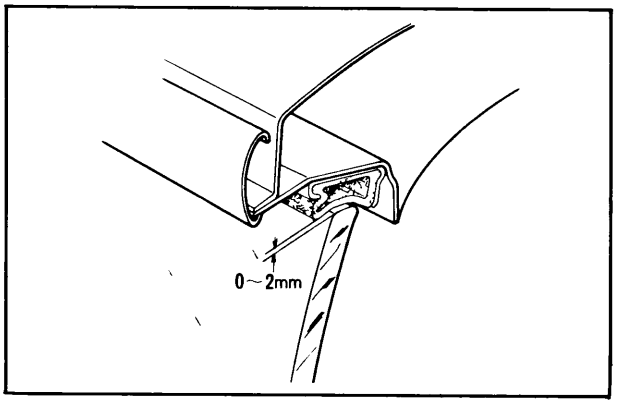

Fig. 14–60 Vertical adjustment

d. The in and out adjustment of the window
With the window raised adjust the glass guide lower adjusting bolts so that the glass circumference touches cab side weatherstrip evenly.

Note:
Make sure there is no space between the inner panel and the brim of the adjust bolt.

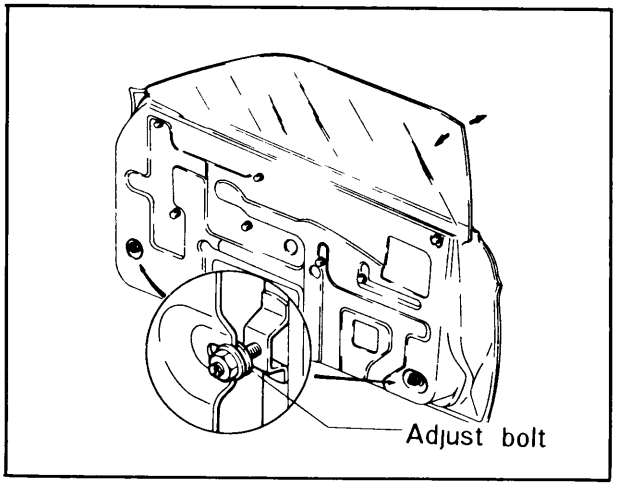

Fig. 14–61 In and out adjustment

e. Final check
1. If it is impossible to adjust the glass by using glass guide lower adjusting bolts only, adjust it by the upper bolt of the glass guide B.
Check the glass contact with the outer weatherstrip.
2. Adjust hte lower glass guide to prevent the glass from playing back and forth and tighten it.
In principle, it is advisable to tighten the glass guide B (lower) at the center of the long hole and adjust the glass guide A.

Note:
After adjusting, apply the putty to the bolt, nut and long hole and paste the door screen.

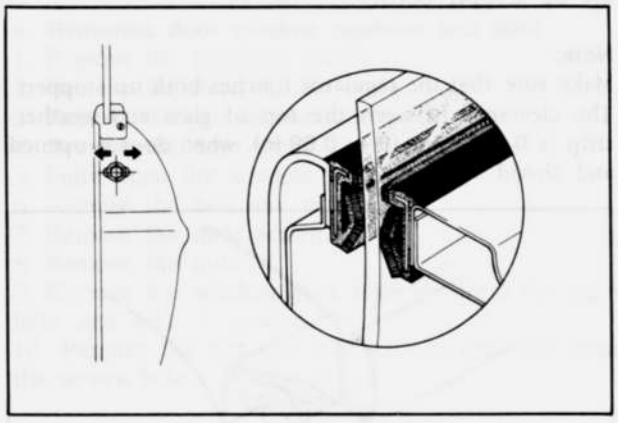

Fig. 14–62 Adjusting bolt

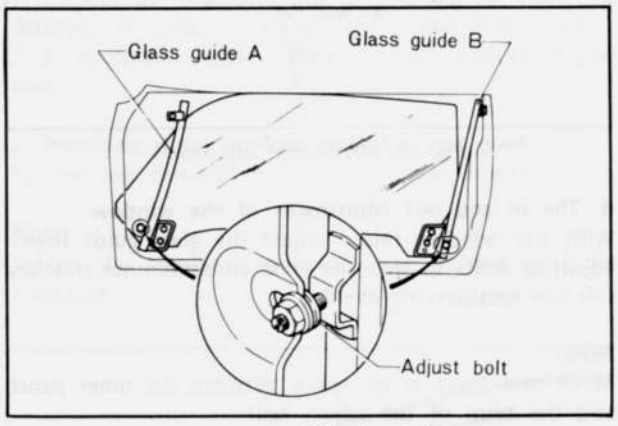

Fig. 14–63 Adjusting bolts

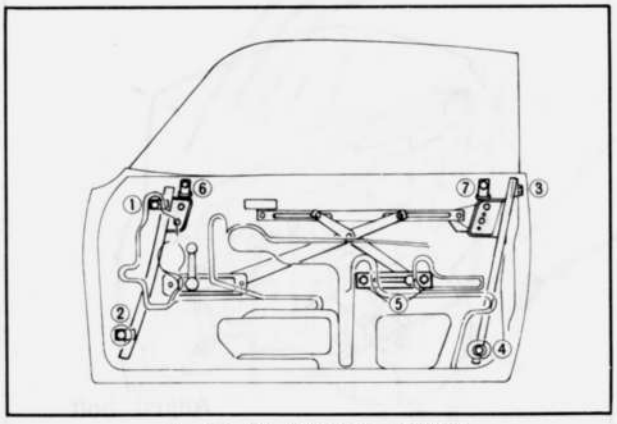

Fig. 14–64 Adjusting position

Horizontal adjustment	**5**
Fore and aft adjustment	**1, 2, 4**
Vertical adjustment	**6, 7**
In and out adjustment	**2, 4, 3**

14–L. REAR DOOR

14–L–1. Stationary Glass

a. Removing stationary glass

1. Lower the window glass all the way.
2. Remove the trim panel and watershield.

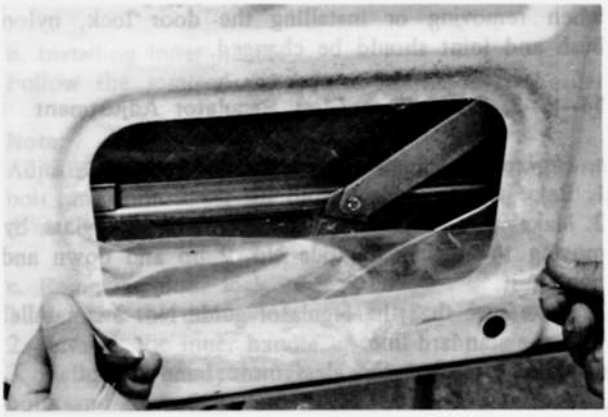

Fig. 14–65 Removing watershield

3. Remove the screws attaching the upper end of the division bar to the window frame.



Fig. 14–66 Removing upper end attaching screws

4. Remove the bolt attaching the lower end of the division bar to the door panel.

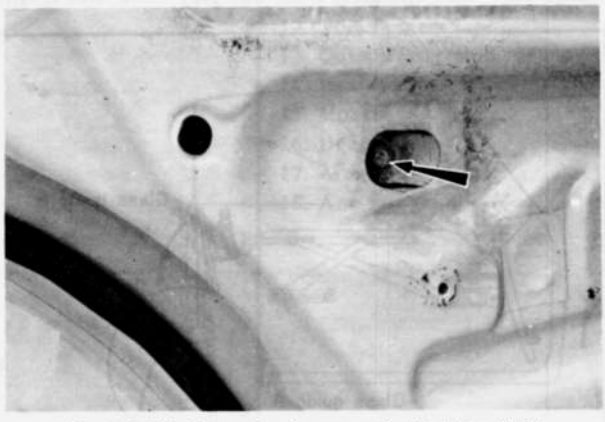

Fig. 14–67 Removing lower end attaching bolts

5. Pull the division bar off the stationary glass and

remove the stationary glass.

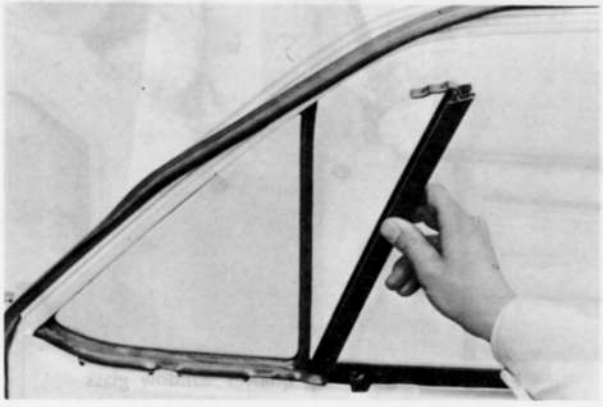

Fig. 14–68 Removing division bar

6. Remove the weatherstrip from the stationary glass.

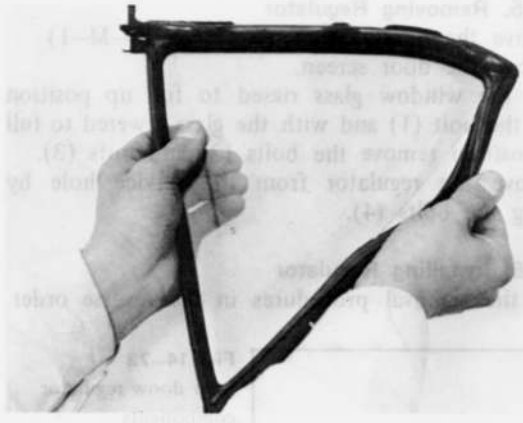

Fig. 14–69 Removing weatherstrip

b. Installing stationary glass
Follow the removal procedures in the reverse order.

14–L–2. Rear Door Window Regulator and Glass

a. Removing rear door window regulator and glass
1. Lower the window glass all the way.
2. Remove the regulator handle, arm rest, etc.
3. Remove the trim panel and watershield.
4. Remove the screws attaching the upper end of the division bar to the window frame.
5. Remove the bolt attaching the lower end of the division bar to the door panel.
6. Remove the division bar.
7. Remove the regulator attaching bolts and disconnect the regulator roller from the glass channel, then remove the regulator assembly.
8. Remove the glass.

b. Installing rear door window regulator and glass
Follow the removal procedures in the reverse order.

Note:
Adjust the regulator and check the operation of the regulator.

14–M. QUARTER WINDOW

14–M–1. Removing Quarter Trim

1. Remove the rear seat cushion and the rear seat back. The rear seat back will be easily taken out by raising and pulling it.
2. Remove the regulator handle.
3. Remove the garnish and arm rest.
4. Remove the belt holder.
5. Remove the cap and screw.
6. Remove the corner cover.
7. Remove the scarf plate by removing the bolt.
8. Remove the quarter trim.

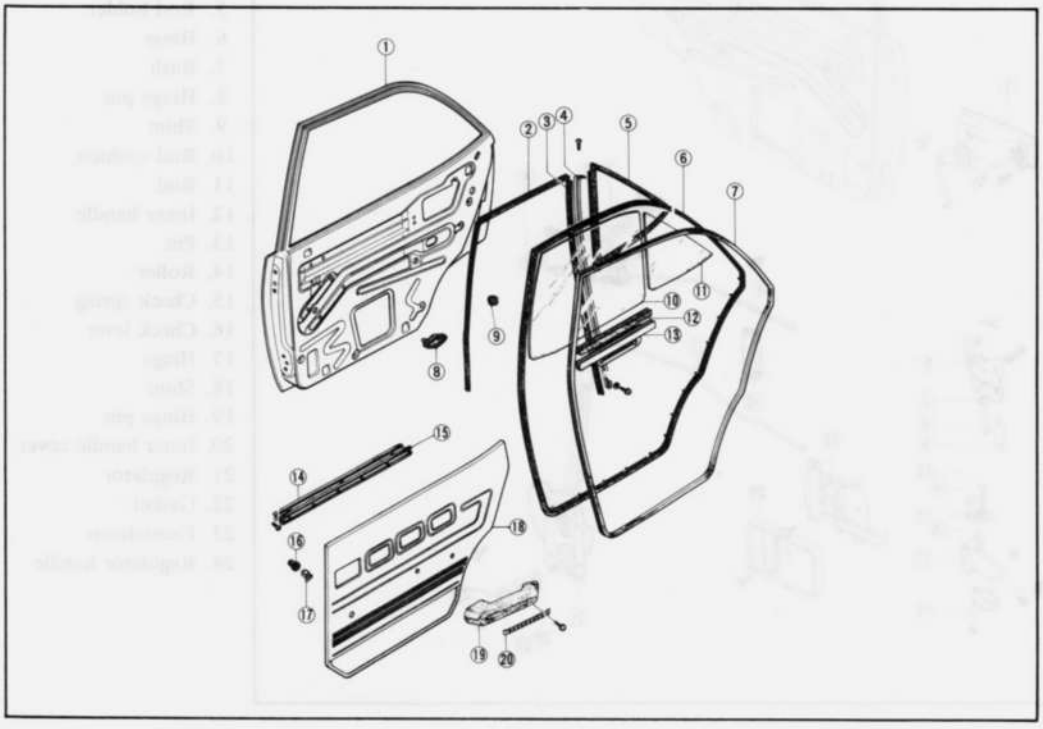

Fig. 14–70
Rear door components
1. Rear door body
2. Run channel "A"
3. Run channel "B"
4. Division bar
5. Weatherstrip
6. Weatherstrip
7. Seaming welt
8. Door cushion
9. Rubber cushion
10. Door glass
11. Window glass
12. Rubber strip
13. Lift bracket
14. Weatherstrip (outer)
15. Weatherstrip (inner)
16. Fastener cap
17. Trim fastener
18. Door trim
19. Arm rest
20. Arm rest garnish

14–M–2. Installing Quarter Trim
Follow the removal procedures in the reverse order.

14–M–3. Removing Quarter Window Glass
1. Remove the quarter trim. (Refer to 14–M–1)
2. Remove the door screen.
3. With the window glass raised to 150 mm high, remove the belt line mould.
4. With the window glass riased to full up position remove the bolt (1). And with the window glass lowered to full down position remove the bolts (2) and nuts (3).
5. Move the glass guide B rearwards by loosening the bolts (4).
6. Take out the quarter window glass.

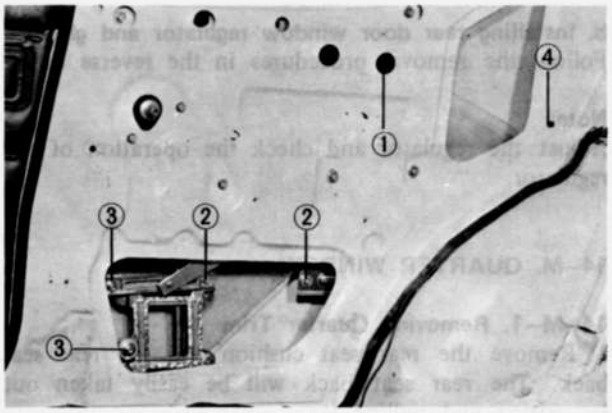

Fig. 14–71 Removing quarter window

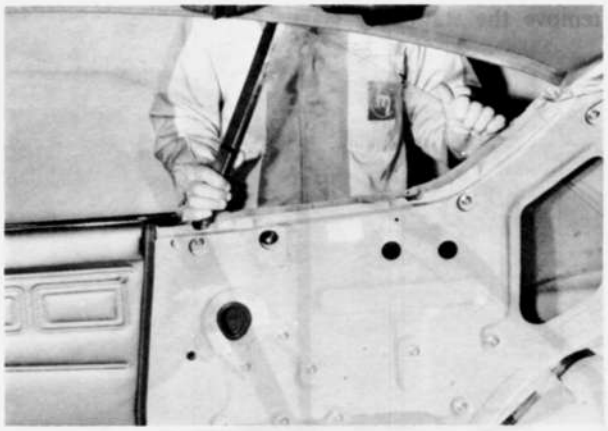

Fig. 14–72 Removing quarter window glass

14–M–4. Installing Quarter Window Glass
Follow the removal procedures in the reverse order.

14–M–5. Removing Regulator
1. Remove the quarter trim. (Refer to 14–M–1)
2. Remove the door screen.
3. With the window glass riased to full up position remove the bolt (1) and with the glass lowered to full down position remove the bolts (2) and nuts (3).
4. Remove the regulator from the service hole by removing the bolts (4).

14–M–6. Installing Regulator
Follow the removal procedures in the reverse order.

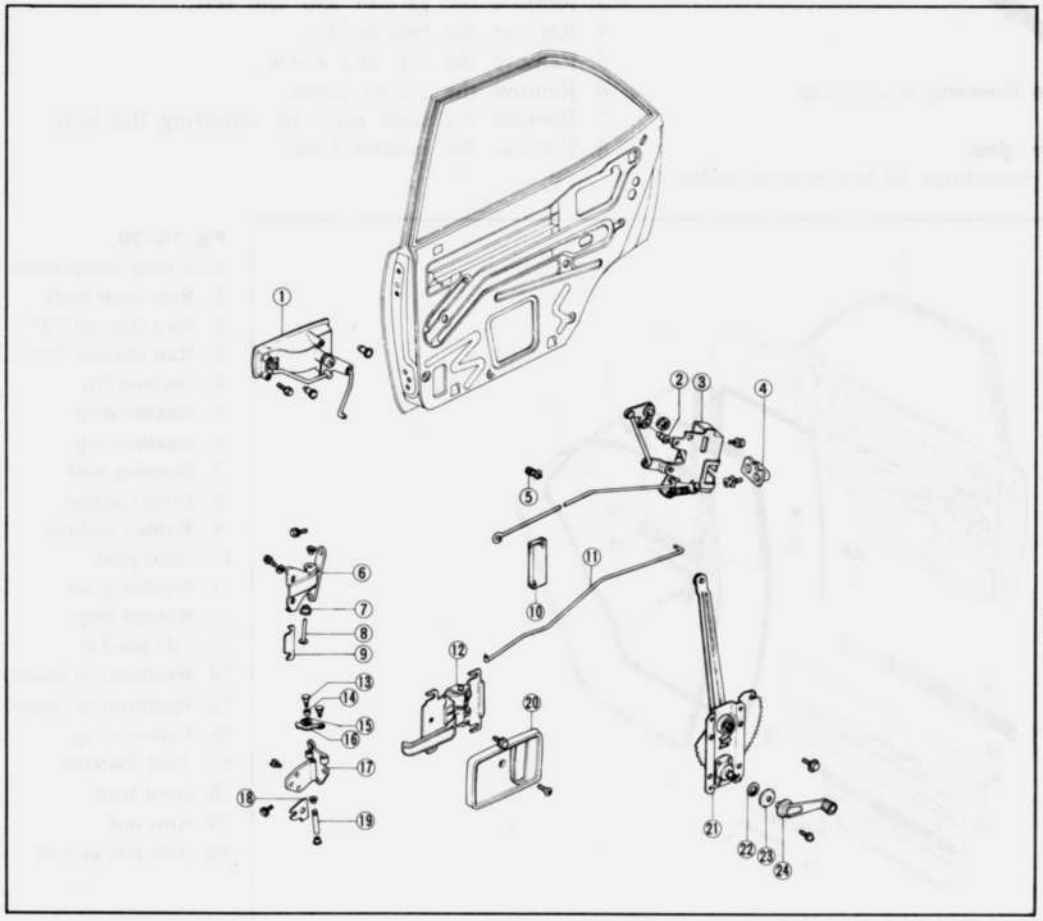

Fig. 14–73
Rear doow regulator components
1. Outer handle
2. Bush
3. Door lock
4. Rack
5. Rod holder
6. Hinge
7. Bush
8. Hinge pin
9. Shim
10. Rod cushion
11. Rod
12. Inner handle
13. Pin
14. Roller
15. Check spring
16. Check lever
17. Hinge
18. Shim
19. Hinge pin
20. Inner handle cover
21. Regulator
22. Gasket
23. Escutcheon
24. Regulator handle

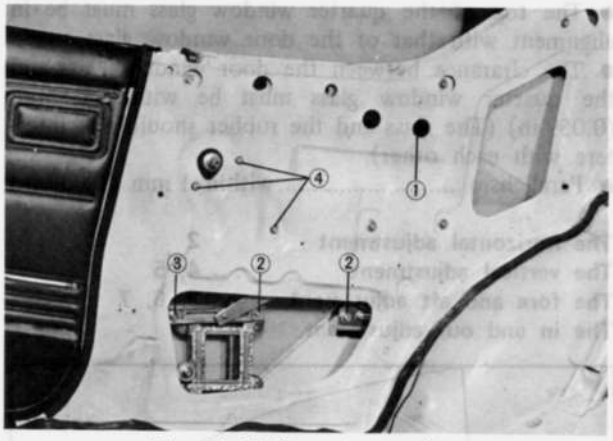

Fig. 14–74 Removing regulator

14–N. QUARTER WINDOW ADJUSTMENT

14–N–1. Horizontal Adjustment of the Window Glass

1. Raise the window glass to full up position.
2. Adjust the window glass so that the glass touches cab side weatherstrip evenly by moving the regulator guide No. 2 up and down. And tighten the regulator guide.
3. Move the regulator guide parallel with the standard line, and adjust the position of the glass.

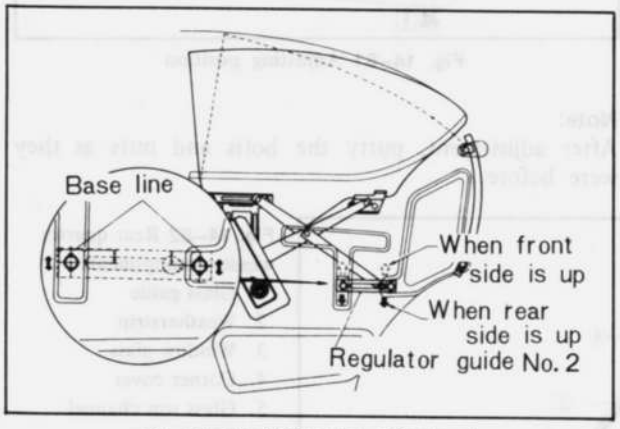

Fig. 14–75 Horizontal adjustment

14–N–2. Vertical Adjustment of the Window Glass

Adjust the up stopper with the window glass raised to the full up position so that the height of the quarter window glass is the same as that of the front door glass.

Note:
Make sure that the regulator touches both stoppers. (Front and Rear)

14–N–3. The Fore and Aft Adjustment of the Window

Move the glass back and forth so that the glass accords with the front door glass and tighten the regulator guide No. 4.

Note:
After making sure that the glass touches the weatherstrip evenly tighten the regulator guide No. 4.

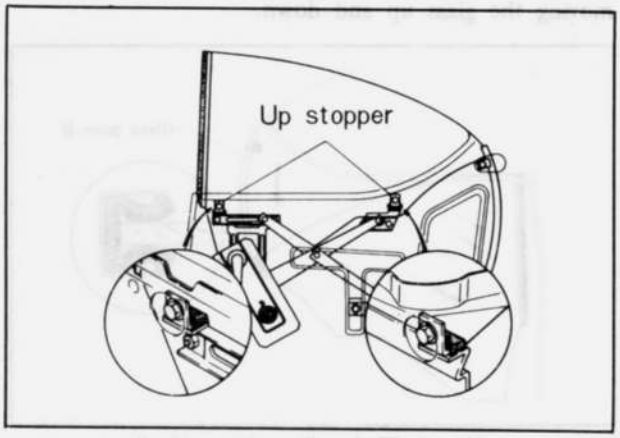

Fig. 14–76 Vertical adjustment

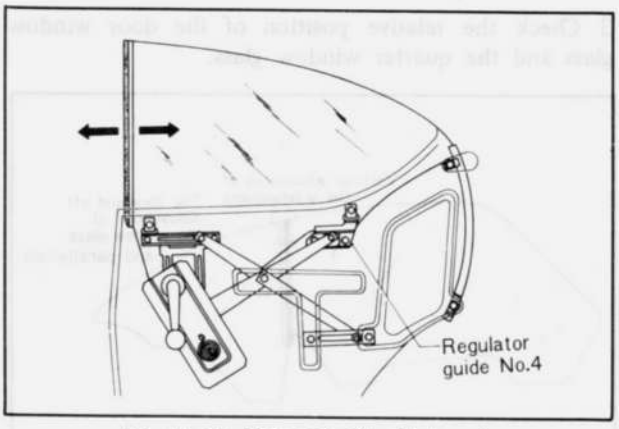

Fig. 14–77 Fore and aft adjustment

14–N–4. The In and Out Adjustment

1. Tighten temporary the upper bolt of glass guide A. With the glass raised to full up position, adjust the lower glass guide A so that the glass circumference touches cab side weatherstrip evenly. Tighten securely both upper and lower bolts.

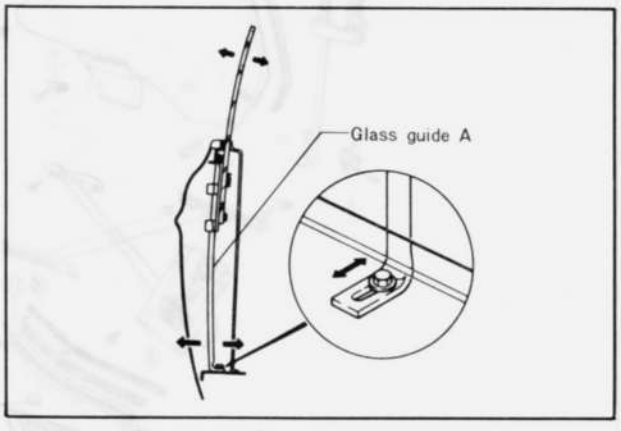

Fig. 14–78 In and out adjustment

2. Tighten the upper part of the glass guide B. After lowering the glass, tighten the lower part.

Note:
Install the glass guide B so that it touches the glass lightly as shown in Fig. 14–79 in order to prevent

the weatherstrip from tearing off or biting when moving the glass up and down.

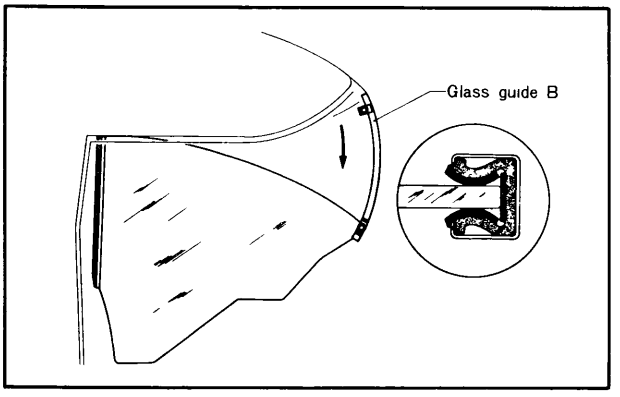

Fig. 14–79 Installing glass guide B

3. Check the relative position of the door window glass and the quarter window glass.

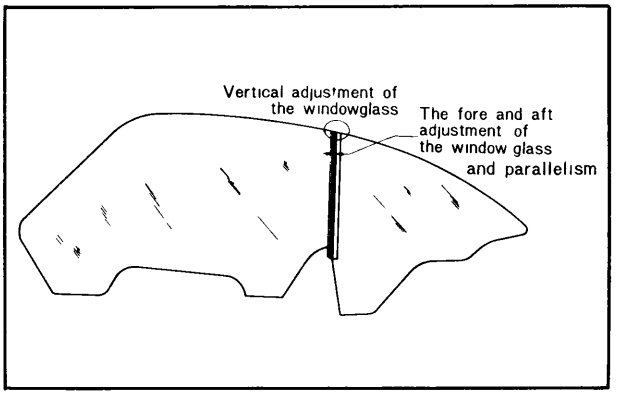

Fig. 14–80 Checking relative position

- The top of the quarter window glass must be in alignment with that of the door window glass.
- The clrarance between the door window glass and the quarter window glass must be within 1.5 mm (0.059 in) (The glass and the rubber should not interfere with each other).
- Parallelism ..... within 1 mm (0.039 in)

The horizontal adjustment	**2**
The vertical adjustment	**4, 5**
The fore and aft adjustment	**3, 6, 7**
The in and out adjustment	**1**

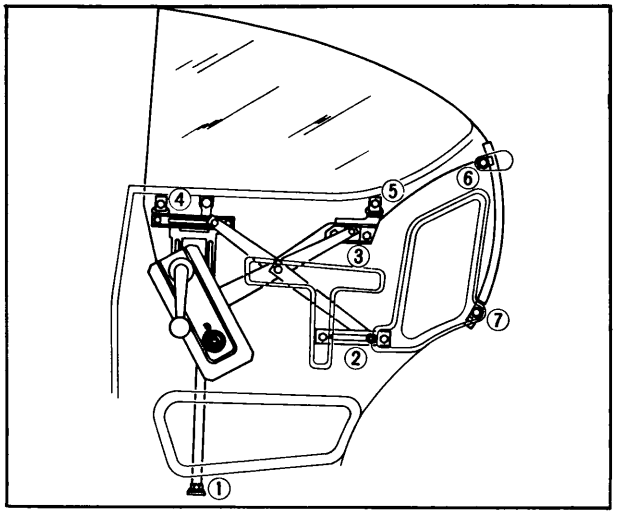

Fig. 14–81 Adjusting position

Note:
After adjustment, putty the bolts and nuts as they were before.

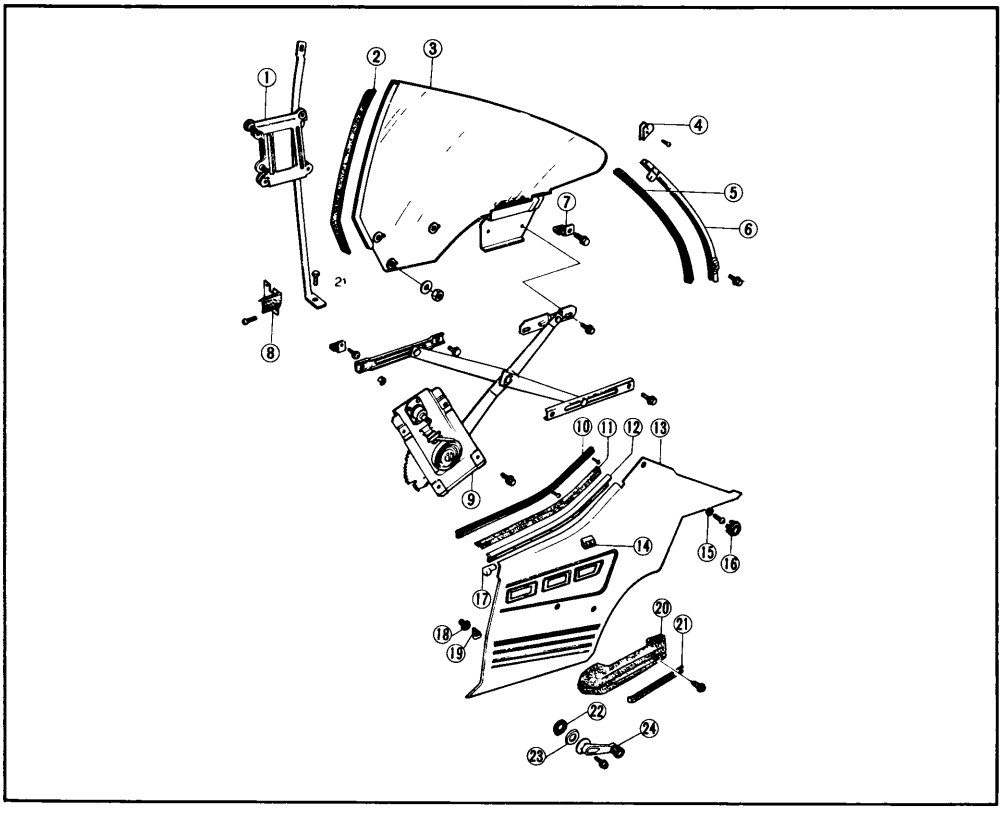

Fig. 14–82 Rear quarter window components
1. Glass guide
2. Weatherstrip
3. Window glass
4. Corner cover
5. Glass run channel
6. Glass guide
7. Glass stopper
8. Rubber garnish
9. Window regulator
10. Weatherstrip
11. Weatherstrip
12. Mould
13. Trim
14. Trim spacer
15. Trim spacer
16. Trim cap
17. Corner cap
18. Fastener cap
19. Trim fastener
20. Arm rest
21. Garnish
22. Seal rubber
23. Escutcheon
24. Regulator handle

14–O. TOP CEILING

14–O–1. Removing Top Ceiling

1. Remove the sun visors, interior mirror, interior lamp, assist straps, overhead console (if equipped), etc.



Fig. 14–83 Removing interior lamp

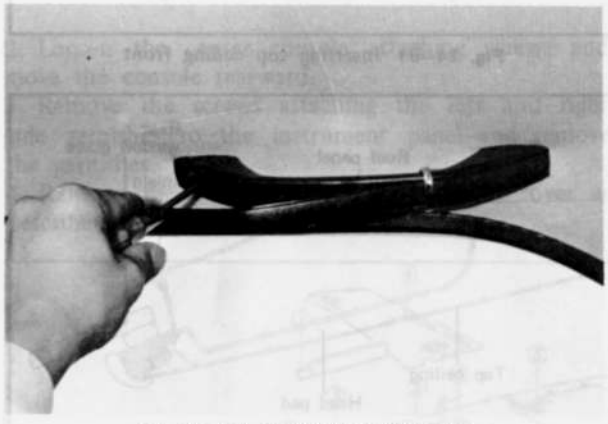

Fig. 14–84 Removing assist strap

2. Remove the front pillar trims and rear package tray trim panel.

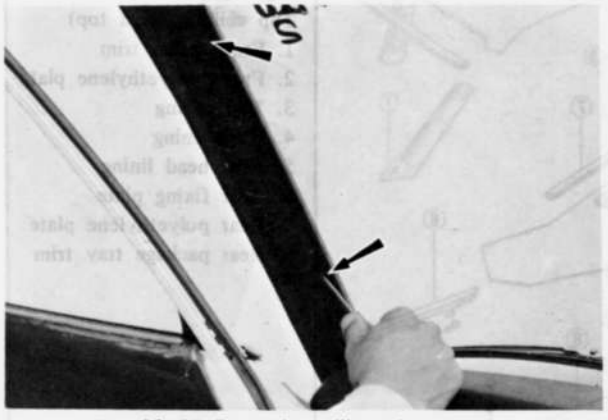

Fig. 14–85 Removing piller trim

3. Strip off the seaming welts from the body flange and tear the cemented surface of the top ceiling from the outside of the flange.
4. Remove the polyethylene plates of the top ceiling from the inserting points of the body.
5. Remove the listing wires and top ceiling.

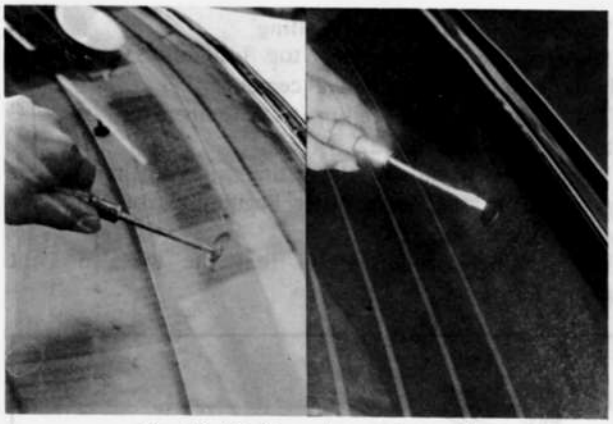

Fig. 14–86 Removing package trim panel

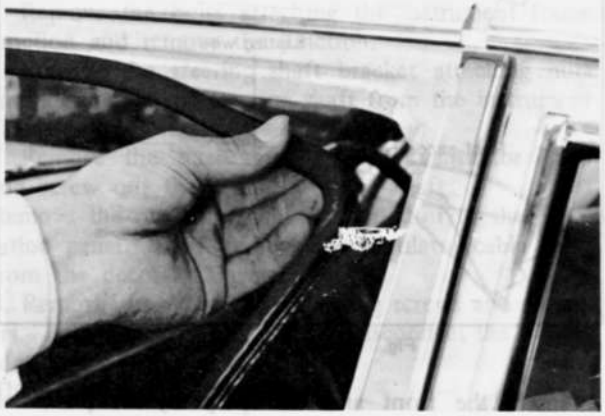

Fig. 14–87 Removing seaming welt



Fig. 14–88 Tearing of ceiling cemented surface

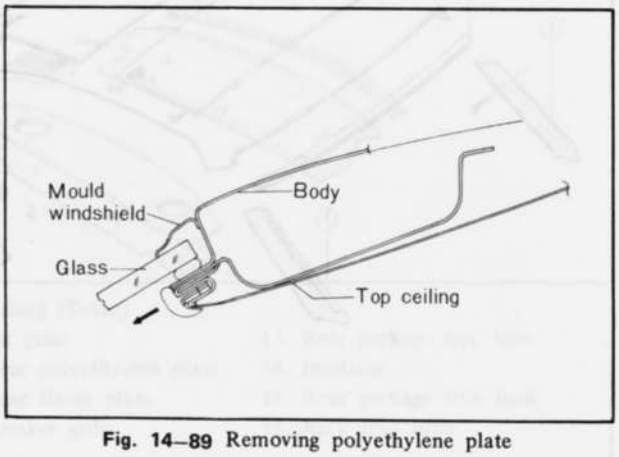

Fig. 14–89 Removing polyethylene plate

14–O–2. Installing Top Ceiling

1. Affix the head linings (top insulations) onto the body ceiling with adhesive cement.
2. Heat up the top ceiling to a temperature of 30°C to 50°C (86°F to 122°F).
3. Insert both ends of the listing wires to their proper positions in successive order beginning from the rear as shown in Fig. 14–90.
When doing so, be careful that the wires do not swing down.

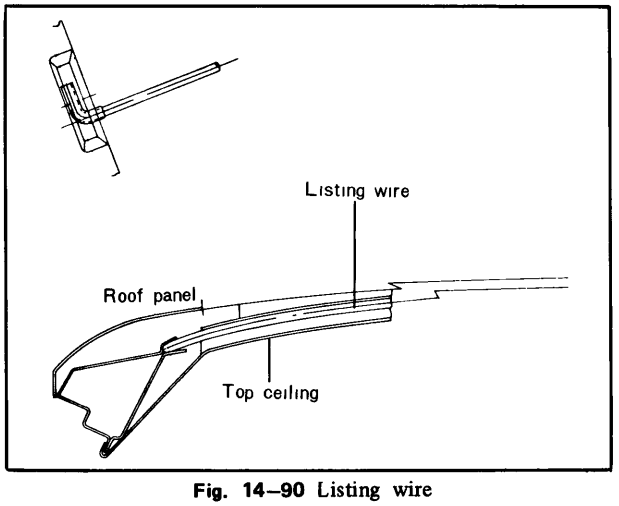

Fig. 14–90 Listing wire

4. Insert the front and rear polyethylene plates of the top ceiling to the inserting point of the body.

Note:
When inserting the top ceiling, if the guide made of plastic plate is used, you can insert it without touching the weaving point.

5. Apply neoprene adhesive cement to the outside of the body flange.
6. After one or two minutes, pull the top ceiling from both side to avoid any slackening and glue both side onto the body flange.
7. After the top ceiling is properly attached to the body flange, clip off the all protruding edges.
8. Install the seaming welts, rear view mirror, sun visors, interior lamp, assist handles, front pillar trims, rear package tray trim, overhead console (if equipped), etc.

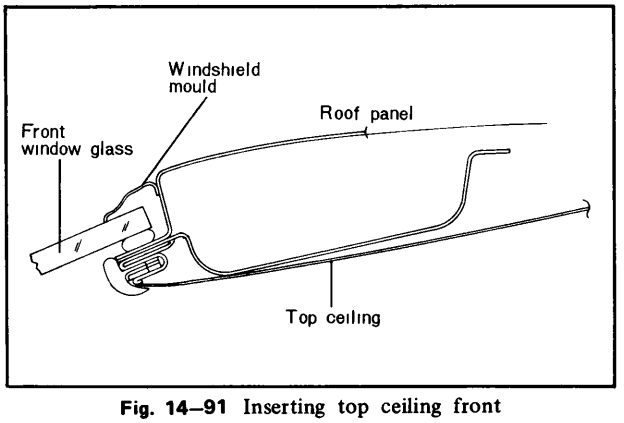

Fig. 14–91 Inserting top ceiling front

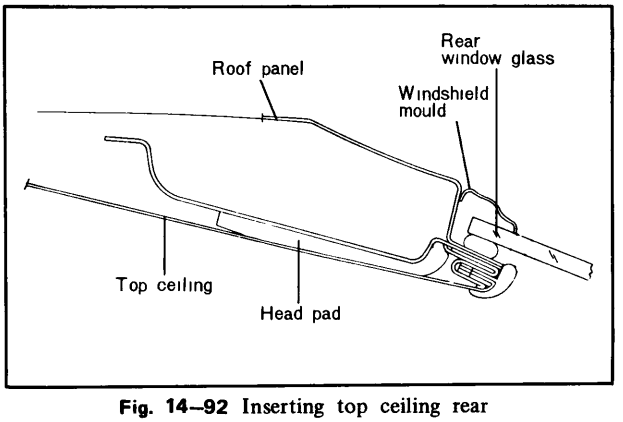

Fig. 14–92 Inserting top ceiling rear

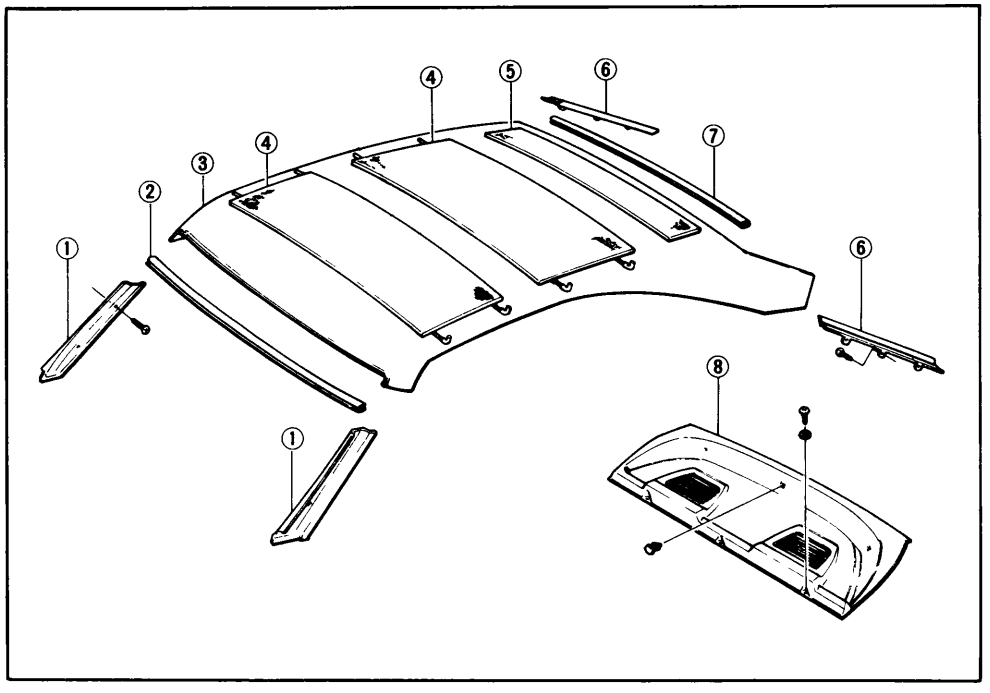

Fig. 14–93
Top ceiling (Hard top)
1. Front pillar trim
2. Front polyethylene plate
3. Top ceiling
4. Head lining
5. Rear head lining
6. Rear fixing plate
7. Rear polyethylene plate
8. Rear package tray trim

14–P. INSTRUMENT PANEL

14–P–1. Removing Instrument Panel Assembly

1. Pull the console pad upward and remove the console pad. Please note that the attaching clips give a little resistance when pulling the console pad out.

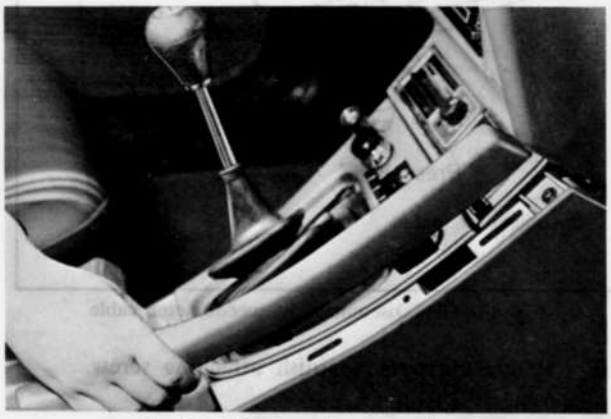

Fig. 14–94 Removing console pad

2. Loosen the center console attaching screws and move the console rearward.
3. Remove the screws attaching the left and right side garnishes to the instrument panel and remove the garnishes.
4. Remove the steering wheel and column cover as described in **Par 15–C–2.**

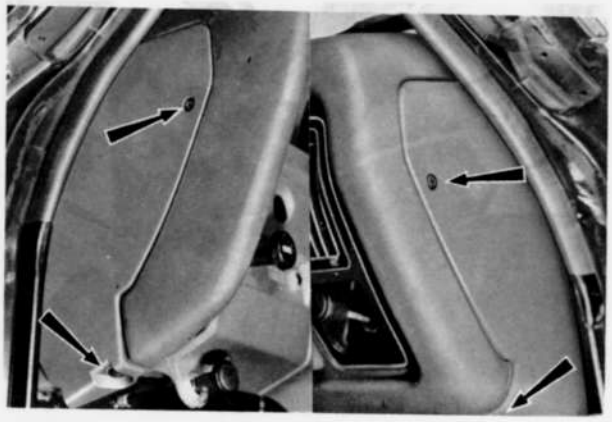

Fig. 14–95 Removing side garnish

5. Remove the bolts attaching the instrument frame junction and remove the junction.
6. Remove the steering shaft bracket attaching nuts and disconnect the steering shaft from the instrument panel.
7. Remove the screw attaching the ventilator knob and screw out the knob from the shaft.
Remove the nut attaching the ventilator to the decoration panel. Then, remove the ventilator cable away from the decoration panel.
8. Remove the glove box attaching screws and fasteners. Pull the glove box out and disconnect the wirings to the glove box light.
Then, remove the glove box.

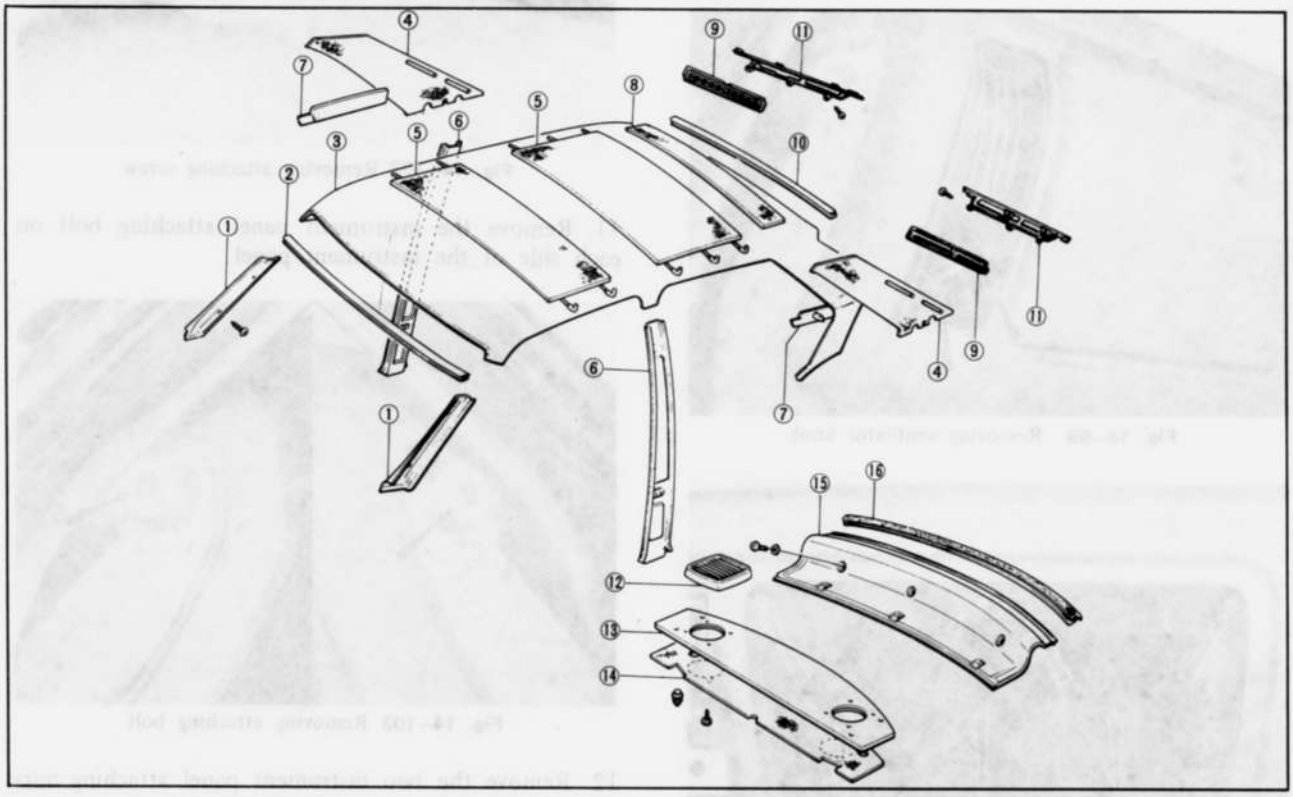

Fig. 14–96 Top ceiling (Sedan)

1. Front pillar trim
2. Front polyethylene plate
3. Top ceiling
4. Rear pillar pad
5. Head lining
6. Center pillar trim
7. Ceiling end
8. Rear head lining
9. Air grille
10. Rear polyethylene plate
11. Rear fixing plate
12. Speaker grille
13. Rear package tray trim
14. Insulator
15. Rear package trim back
16. Back trim brim

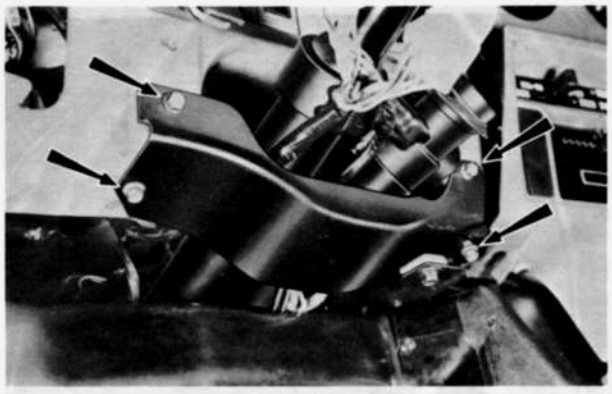

Fig. 14–97 Removing junction

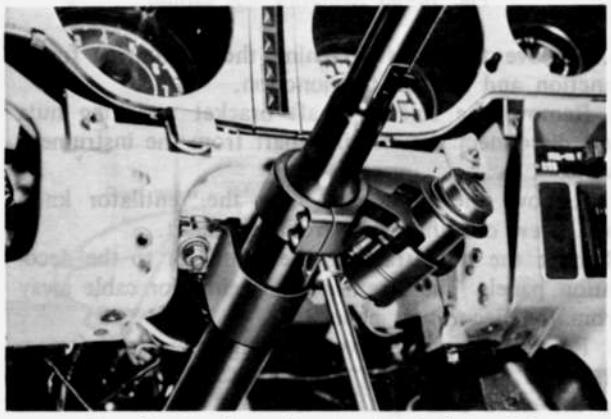

Fig. 14–98 Removing steering shaft bracket



Fig. 14–99 Removing ventilator knob

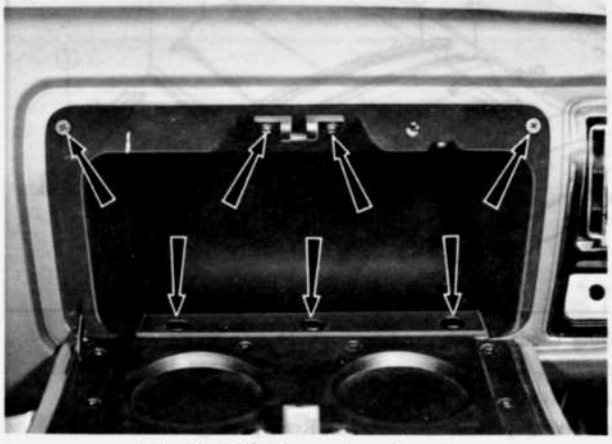

Fig. 14–100 Removing glove box

9. Disconnect the speedometer cable from the instrument and three heater control wires from the heater.

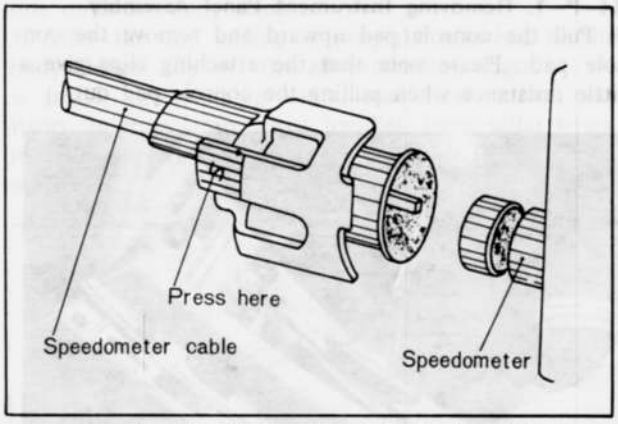

Fig. 14–101 Disconnecting speedometer cable

10. Remove the upper garnish attaching screw.

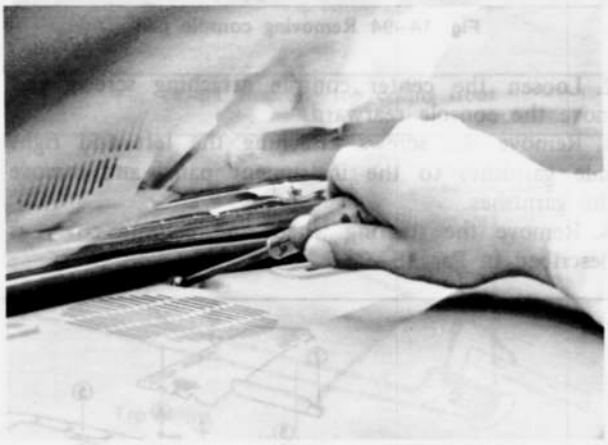

Fig. 14–102 Removing attaching screw

11. Remove the instrument panel attaching bolt on each side of the instrument panel.

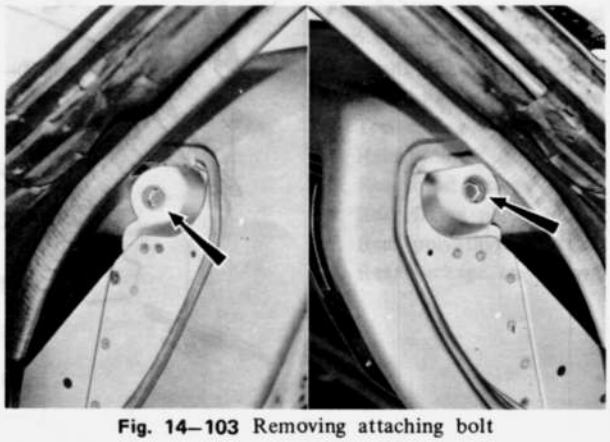

Fig. 14–103 Removing attaching bolt

12. Remove the two instrument panel attaching nuts on each side of the instrument panel lower.
13. Remove the two instrument panel attaching bolts located near the steering shaft bracket.
14. Remove the two instrument panel attaching bolts through the glove box hole.



Fig. 14–104 Removing attaching bolts

15. Pull the instrument panel assembly rearward by about 20 cm (6 in), then disconnect the whole of the electrical leads from the instrument panel assembly.
16. Remove the instrument panel assembly.

14–P–2. Installing Instrument Panel Assembly

Follow the removal procedures in the reverse order.

SPECIAL TOOLS

49 0305 870K	Window service tool set
49 0259 855	Seat reclining knuckle remover

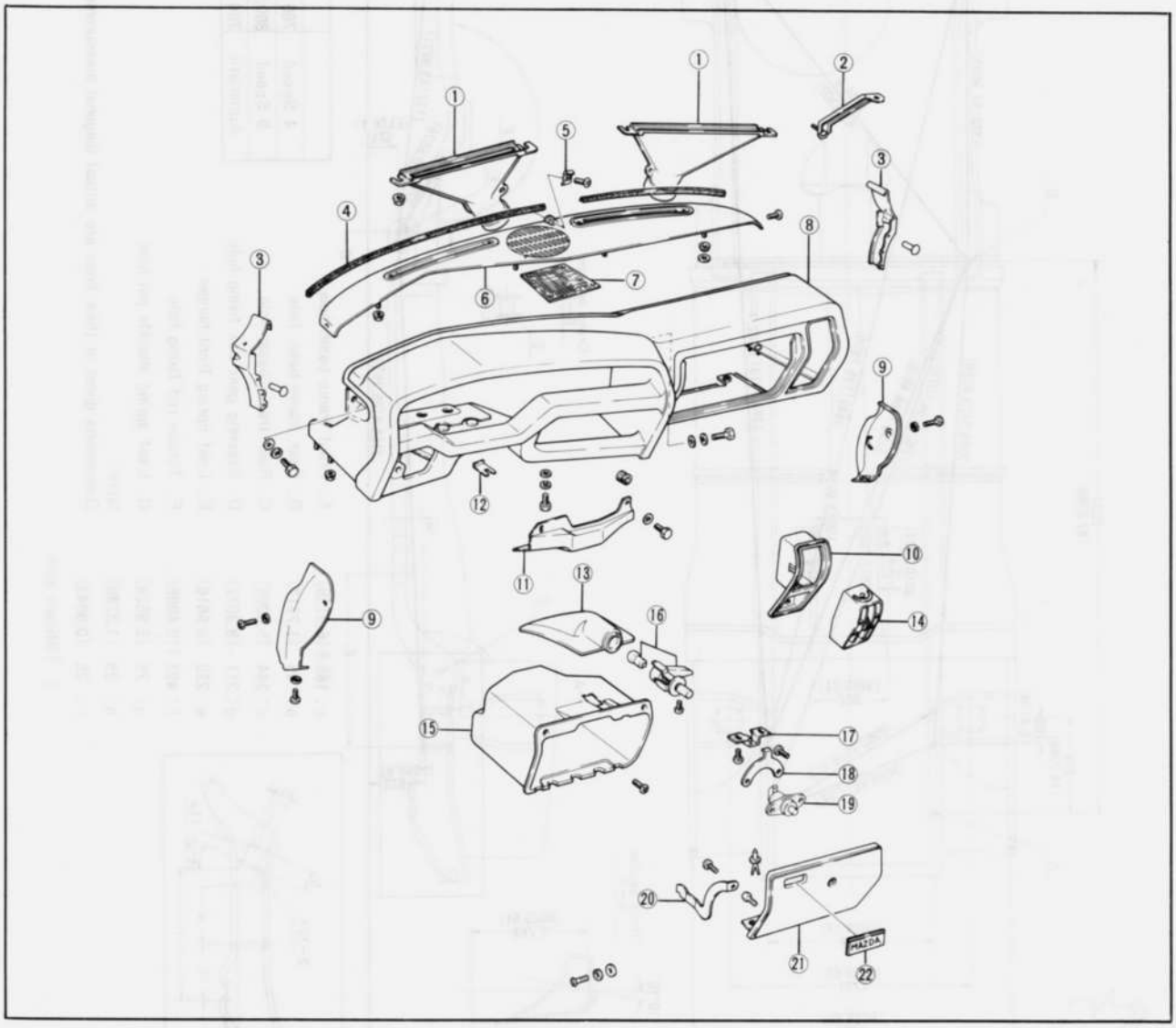

Fig. 14–105 Instrument panel components

1. Defroster nozzle
2. Defroster nozzle bracket
3. Cover
4. Seaming rubber
5. Garnish spring rubber
6. Upper garnish
7. Cloth cover
8. Crush pad
9. Garnish
10. Decoration panel
11. Junction instrument frame
12. Steering adjust shim
13. Lamp cover
14. Louver
15. Glove tray
16. Switch & lamp
17. Striker
18. Lock guide
19. Lock
20. Stopper
21. Lid
22. Ornament

14 BODY CHECKING DIMENSION SEDAN & HARDTOP

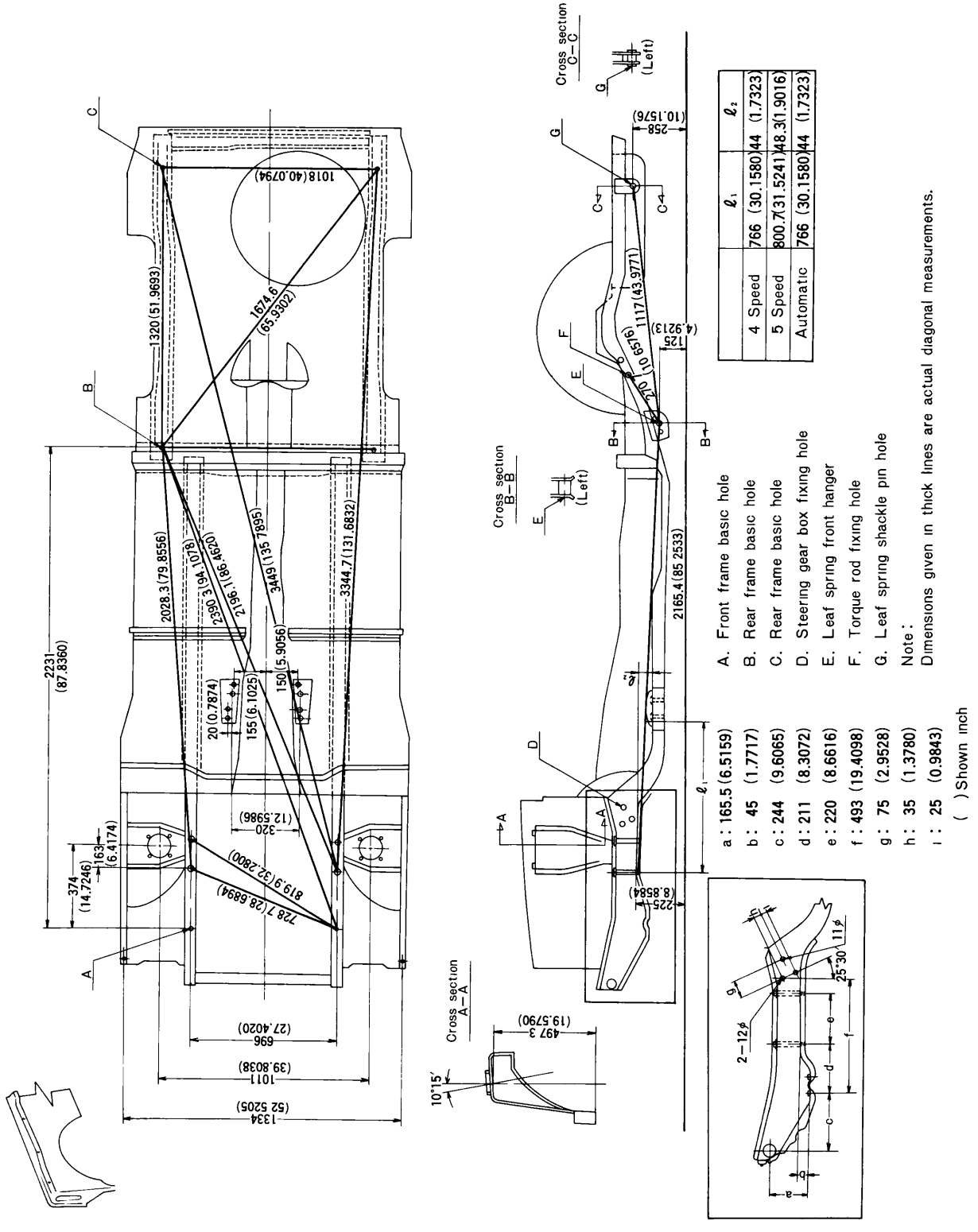

	ℓ_1	ℓ_2
4 Speed	766 (30.1580)	44 (1.7323)
5 Speed	800.7 (31.5241)	48.3 (1.9016)
Automatic	766 (30.1580)	44 (1.7323)

A. Front frame basic hole
B. Rear frame basic hole
C. Rear frame basic hole
D. Steering gear box fixing hole
E. Leaf spring front hanger
F. Torque rod fixing hole
G. Leaf spring shackle pin hole

Note:
Dimensions given in thick lines are actual diagonal measurements.
( ) Shown inch

a : 165.5 (6.5159)
b : 45 (1.7717)
c : 244 (9.6065)
d : 211 (8.3072)
e : 220 (8.6616)
f : 493 (19.4098)
g : 75 (2.9528)
h : 35 (1.3780)
ı : 25 (0.9843)

BODY

(ROTARY WAGON)

14A–A. BACK DOOR ..... 14A : 1
14A–A–1. Removing Back Door ..... 14A : 1
14A–A–2. Installing Back Door ..... 14A : 1
14A–A–3. Adjusting Back Door ..... 14A : 1
14A–B. BACK DOOR HINGE ..... 14A : 2
14A–B–1. Removing Back Door Hinge ..... 14A : 2
14A–B–2. Installing Back Door Hinge ..... 14A : 3
14A–C. BALANCE SPRING ..... 14A : 3
14A–C–1. Removing Balance Spring ..... 14A : 3
14A–C–2. Installing Balance Spring ..... 14A : 3
14A–D. BACK DOOR LOCK ..... 14A : 3
14A–D–1. Removing Back Door Lock ..... 14A : 3
14A–D–2. Installing Back Door Lock ..... 14A : 3
14A–D–3. Adjusting Back Door Lock ..... 14A : 4
14A–E. BACK DOOR GLASS ..... 14A : 4
14A–E–1. Removing Back Door Glass ..... 14A : 4
14A–E–2. Installing Back Door Glass ..... 14A : 4
14A–F. STATIONARY GLASS (Rear Side Glass) ..... 14A : 5
14A–F–1. Removing Stationary Glass ..... 14A : 5
14A–F–2. Installing Stationary Glass ..... 14A : 5
14A–G. TOP CEILING ..... 14A : 5
14A–H. HEATABLE WINDOW ..... 14A : 5
SPECIAL TOOL ..... 14A : 5
BODY CHECKING DIMENSION, ROTARY WAGON .... 14A : 8

14A–A. BACK DOOR

14A–A–1. Removing Back Door

1. Open the back door.
2. Remove the trim fasteners with the driver as shown in Fig. 14A–1, and remove the back door trim.

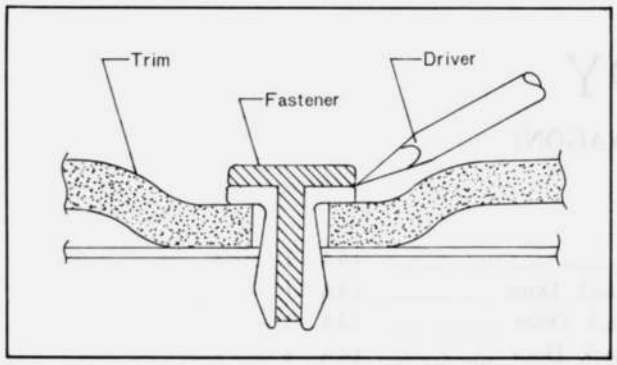

Fig. 14A–1 Removing trim fastener

3. Remove the hinge arm link covers.



Fig. 14A–2. Removing link cover

4. Disconnect the wiring connectors for the rear combination light, licence plate light and heatable window (if equipped).
Pull out the wiring harness from the hole (A) of the back door as shown in Fig. 14A–3.

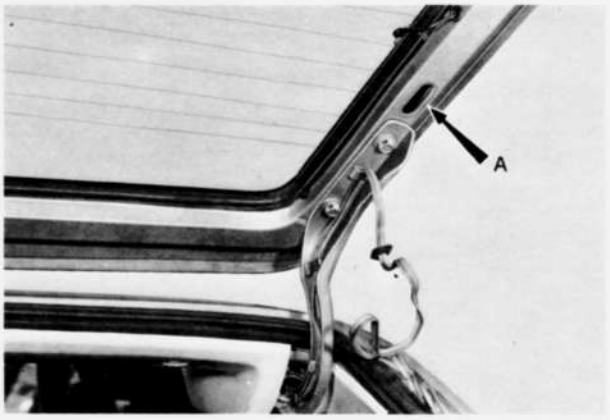

Fig. 14A–3 Disconnecting wiring connector

5. Remove the back door and hinge arm tightening bolts, and remove the back door.

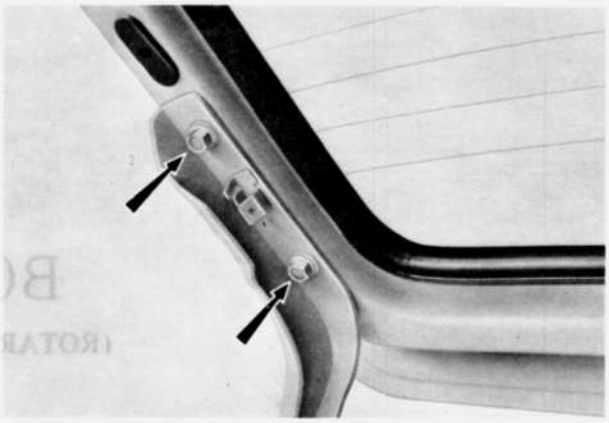

Fig. 14A–4 Removing back door

14A–A–2. Installing Back Door

Follow the removal procedures in the reverse order.

14A–A–3. Adjusting Back Door

1. To adjust the back door for **to-and-fro** position, loosen the back door hinge bracket attaching bolts on the body side and the dovetail attaching screws on the door side.

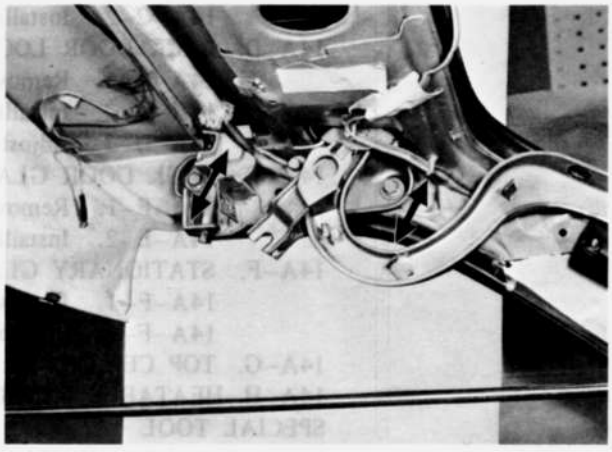

Fig. 14A–5 Adjusting to-and-fro

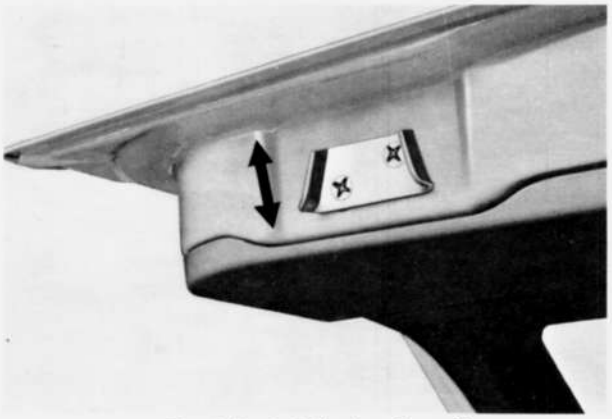

Fig. 14A–6 Adjusting dovetail

2. To adjust the back door for **up-and-down** position, loosen the back door hinge arm tightening bolts on the back door side.
When the up-and-down adjustment is made, the striker also should be adjusted by using the shims.

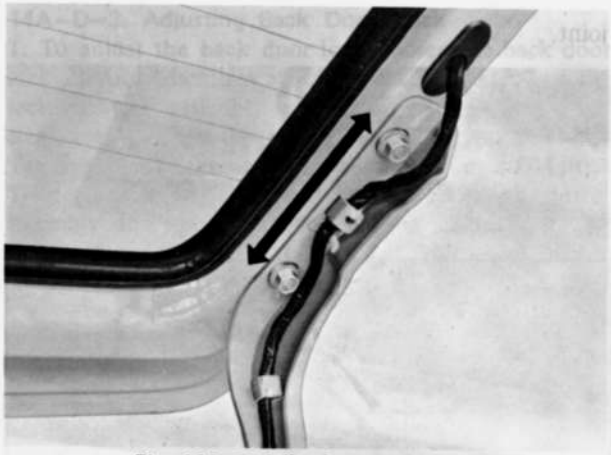

Fig. 14A–7 Adjusting up-and-down

3. Adjust the back door for closing, by moving the back door lock striker as shown in Fig. 14A–8, or inserting the shims of proper thickness between the striker and the body.
The adjusting shims are of 1.0 mm (0.039 in) and 2.0 mm (0.079 in) in thickness.



Fig. 14A–8 Adjusting striker

4. The back door can be shifted from **side to side** by moving the upper wedge to fore-and-aft.

Note:
Care should be taken not to distort the back door or mar the surrounding body.

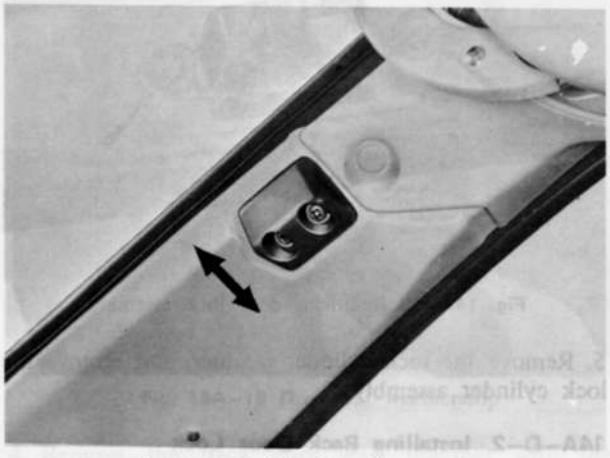

Fig. 14A–9 Adjusting side to side

14A–B. BACK DOOR HINGE

14A–B–1. Removing Back Door Hinge

1. Remove the back door as described in **Par. 14A–A–1.**
2. Remove the hinge cover fasteners and disconnect the wiring connectors. Then remove the hinge cover.

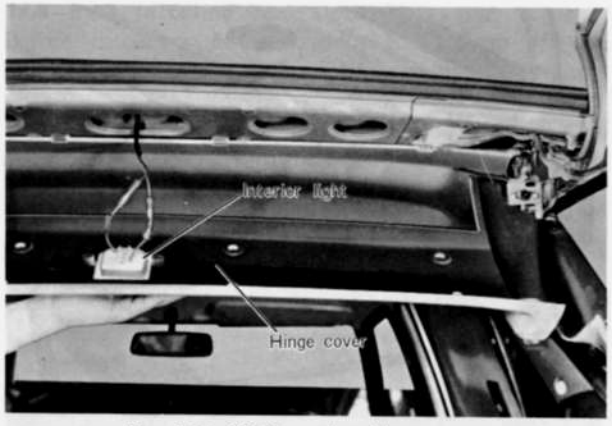

Fig. 14A–10 Removing hinge cover

3. Remove the wiring harness from the right side hinge arm link.
4. Remove the top ceiling from the top ceiling clips.
5. Disconnect the wiring to the interior light switch at the right side hinge.
6. Loosen but do not remove the hinge attaching bolts to ease removing the balance springs.

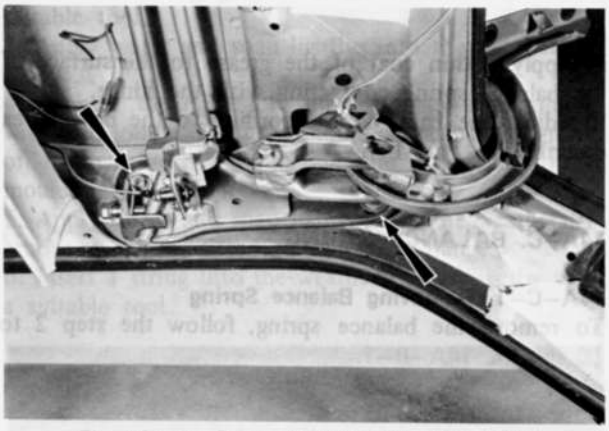

Fig. 14A–11 Loosening hinge attaching bolts

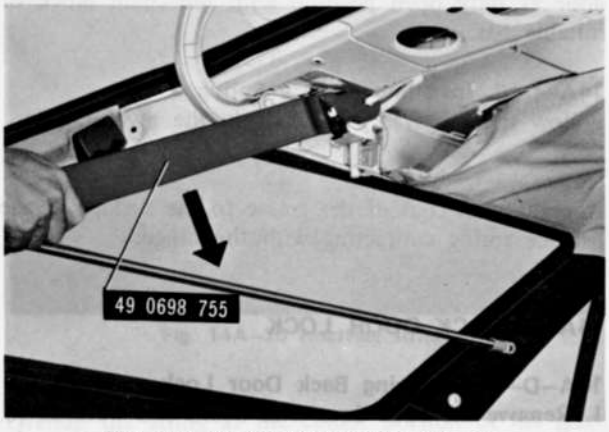

Fig. 14A–12 Installing torsion bar arm

7. Install the **torsion bar arm** (49 0698 755) to the left side balance spring as shown in Fig. 14A–12.
8. Push the torsion bar arm downward and disconnect the balance spring from the hinge arm link.
9. Position the hinge arm link upward.
Depress and pull the torsion bar arm and remove the balance spring from the hinge bracket.

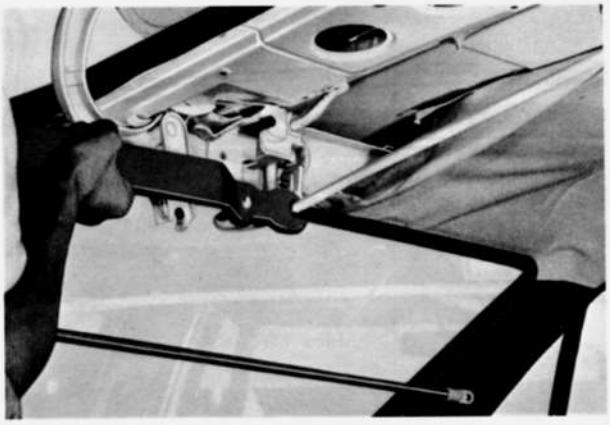

Fig. 14A–13 Removing balance spring

10. Remove the right side balance spring in the same manner as the left side balance spring.
11. Remove the both hinge attaching bolts and remove the hinge brackets.

14A–B–2. Installing Back Door Hinge

Follow the removal procedures in the reverse order.

Note:
a) Apply a thin coat of the grease to the surface of the balance spring contacting with the hinge.
b) Adjust the back door according to the procedures described in Par. 14A–A–3.

14A–C. BALANCE SPRING

14A–C–1. Removing Balance Spring

To remove the balance spring, follow the step 2 to 10 in **Par. 14A–B–1.**

Note:
Before removing the balance spring, support the back door at fully open position with the chain block or suitable bar.

14A–C–2. Installing Balance Spring

Follow the removal procedures in the reverse order.

Note:
Apply a thin coat of the grease to the surface of the balance spring contacting with the hinge.

14A–D. BACK DOOR LOCK

14A–D–1. Removing Back Door Lock

1. Remove the back door trim board and watershield.
2. Disconnect the back door lock control link at the joint.

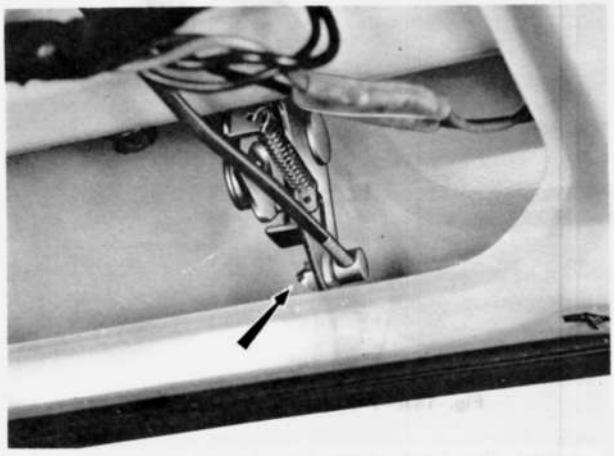

Fig. 14A–14 Disconnecting door lock control link

3. Remove the two back door lock control attaching nuts and remove the back door lock control assembly.

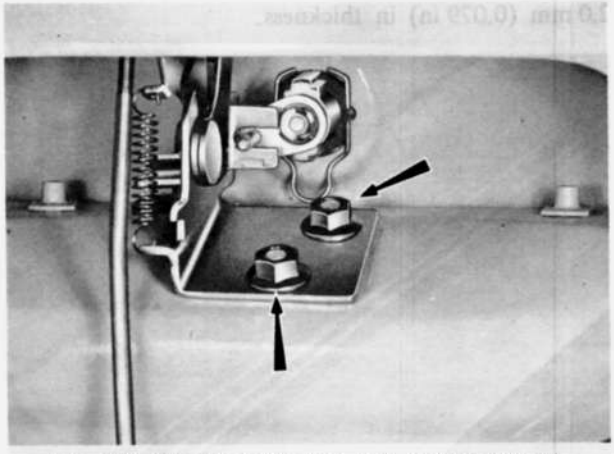

Fig. 14A–15 Removing door lock control assembly

4. Remove the two back door lock attaching bolts, and remove the back door lock assembly.

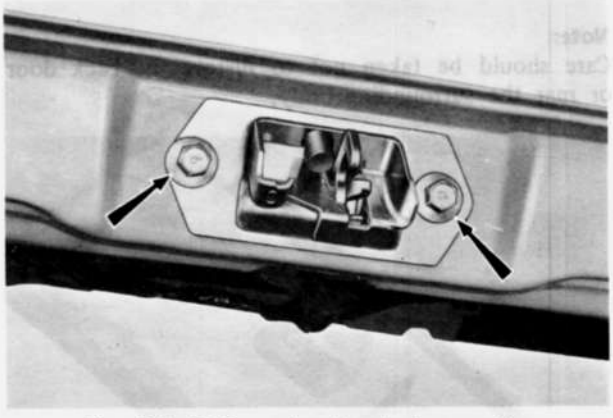

Fig. 14A–16 Removing door lock assembly

5. Remove the lock cylinder retainer, and remove the lock cylinder assembly.

14A–D–2. Installing Back Door Lock

Follow the removal procedures in the reverse order.

14A–D–3. Adjusting Back Door Lock

1. To adjust the back door lock, loosen the back door lock control assembly attaching screws and move the lock control assembly so as to give the specified clearance between the outer handle and push lever. The specified clearance should be **1.0 mm (0.04 in).** Tighten the screws attaching the back door lock control assembly and apply lubricant to the assembly.

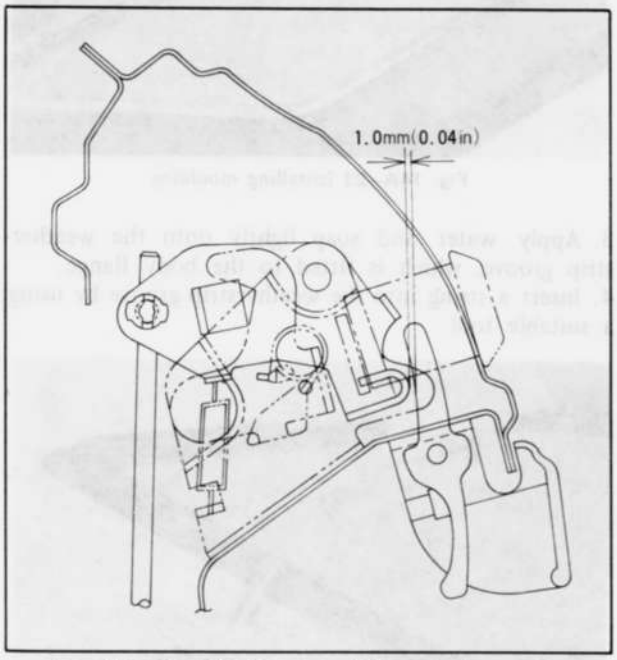

Fig. 14A–17 Adjusting door lock control assembly

2. To adjust the back door lock striker, refer to the step 3 **Par. 14A–A–3.**

14A–E. BACK DOOR GLASS

14A–E–1. Removing Back Door Glass

1. Remove the back door trim board and disconnect the heatable window wirings from the wiring harness.
2. Tear the weatherstrip cemented surface from the body with a wooden spatula.
3. Drive out the inner lip of the weatherstrip with a suitable tool from the inside of the vehicle while pushing the back door glass outwards.



Fig. 14A–18 Drive out weatherstrip

4. Remove the back door glass together with the weatherstrip.
5. Remove the moulding and glass from the weatherstrip.

Note:
When removing the heatable window, be careful not to damage the filament surface.

14A–E–2. Installing Back Door Glass

Before installing the back door glass, clean off the old adhesive cement around the glass and body thoroughly.
1. Install the weatherstrip onto the back door glass and align the corners of the weatherstrip and glass.

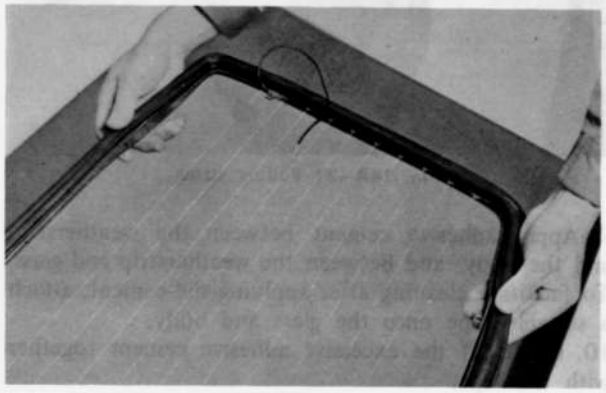

Fig. 14A–19 Installing weatherstrip

2. Fit a string of 4 mm (0.16 in) in diameter into the mould fitting groove of the weatherstrip with a suitable tool.
3. Apply water and soap lightly onto the weatherstrip groove.
4. Connect the right, left, upper and lower mouldings with four joints. Push the moulding against the groove of the weatherstrip and pull the string to fit the moulding.
5. Apply water and soap lightly onto the weatherstrip groove, which is fitted to the body flange.
6. Insert a string into the weatherstrip groove by using a suitable tool.

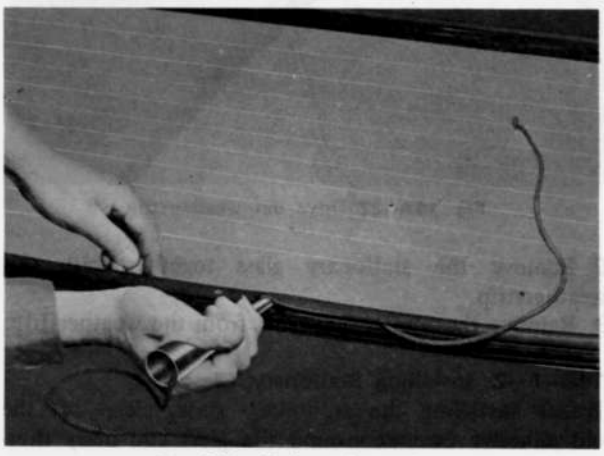

Fig. 14A–20 Inserting string

Note:
Overlap the string at the center portion of the glass.

7. Position the glass onto the body properly, and place the string ends inside the body. To facilitate the procedure, apply water and soap lightly onto the body flange.
8. Pull the string from the inside while tapping the outside of the glass lightly with a hand in accordance with the movement of the string pulled.



Fig. 14A–21 Pulling string

9. Apply adhesive cement between the weatherstrip and the body, and between the weatherstrip and glass. To facilitate cleaning after applying the cement, attach a suitable tape onto the glass and body.
10. Clean off the excessive adhesive cement together with the tape.

14A–F. STATIONARY GLASS (Rear Side Glass)

14A–F–1. Removing Stationary Glass

1. Dirve out the inner lip of the weatherstrip with a suitable tool from the inside of the vehicle while pushing the stationary glass.

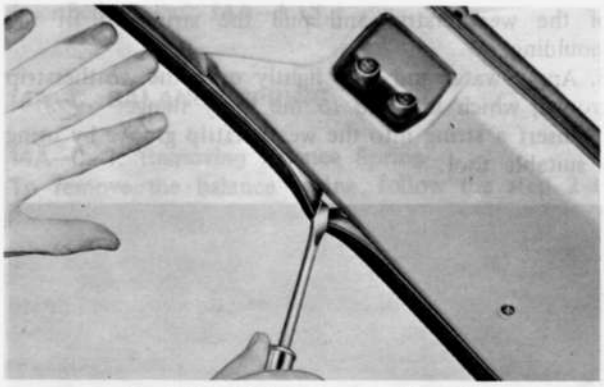

Fig. 14A–22 Drive out weatherstrip

2. Remove the stationary glass together with the weatherstrip.
3. Remove the mould and glass from the weatherstrip.

14A–F–2. Installing Stationary Glass

Before installing the stationary glass, clean off the old adhesive cement around the glass and body thoroughly.
1. Install the weatherstrip onto the stationary glass.
2. Install the moulding onto the weatherstrip using a string.

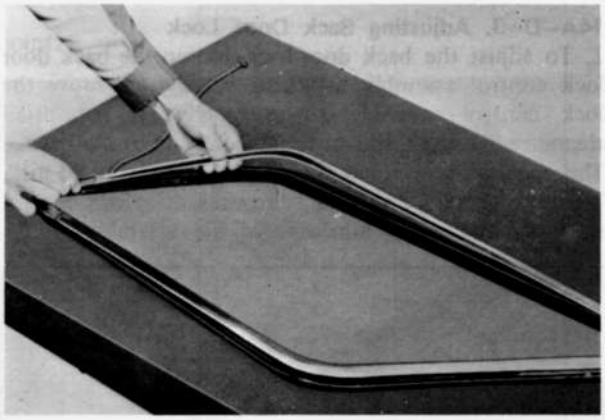

Fig. 14A–23 Installing moulding

3. Apply water and soap lightly onto the weatherstrip groove, which is fitted to the body flange.
4. Insert a string into the weatherstrip groove by using a suitable tool.

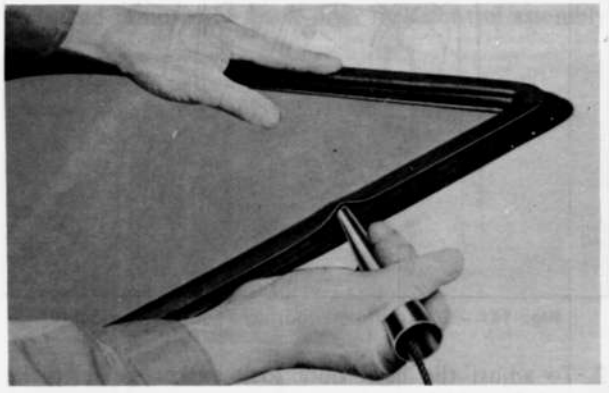

Fig. 14A–24 Inserting string

Note:
Overlap the string at the center portion of the glass.

5. Position the glass onto the body properly, and place the string ends inside the body.
6. Pull the string from the inside while tapping the outside of the glass lightly with a hand in accordance with the movement of the string pulled.
7. Apply adhesive cement between the weatherstrip and the body, and between the weatherstrip and glass.
8. Clean off the excessive adhesive cement.

14A–G. TOP CEILING

To remove and install the top ceiling, refer to **Par. 14–O.**

14A–H. HEATABLE WINDOW

Servicing the heatable window is explained in **Par. 15–J.**

SPCIAL TOOL

49 0698 755	Torsion bar arm

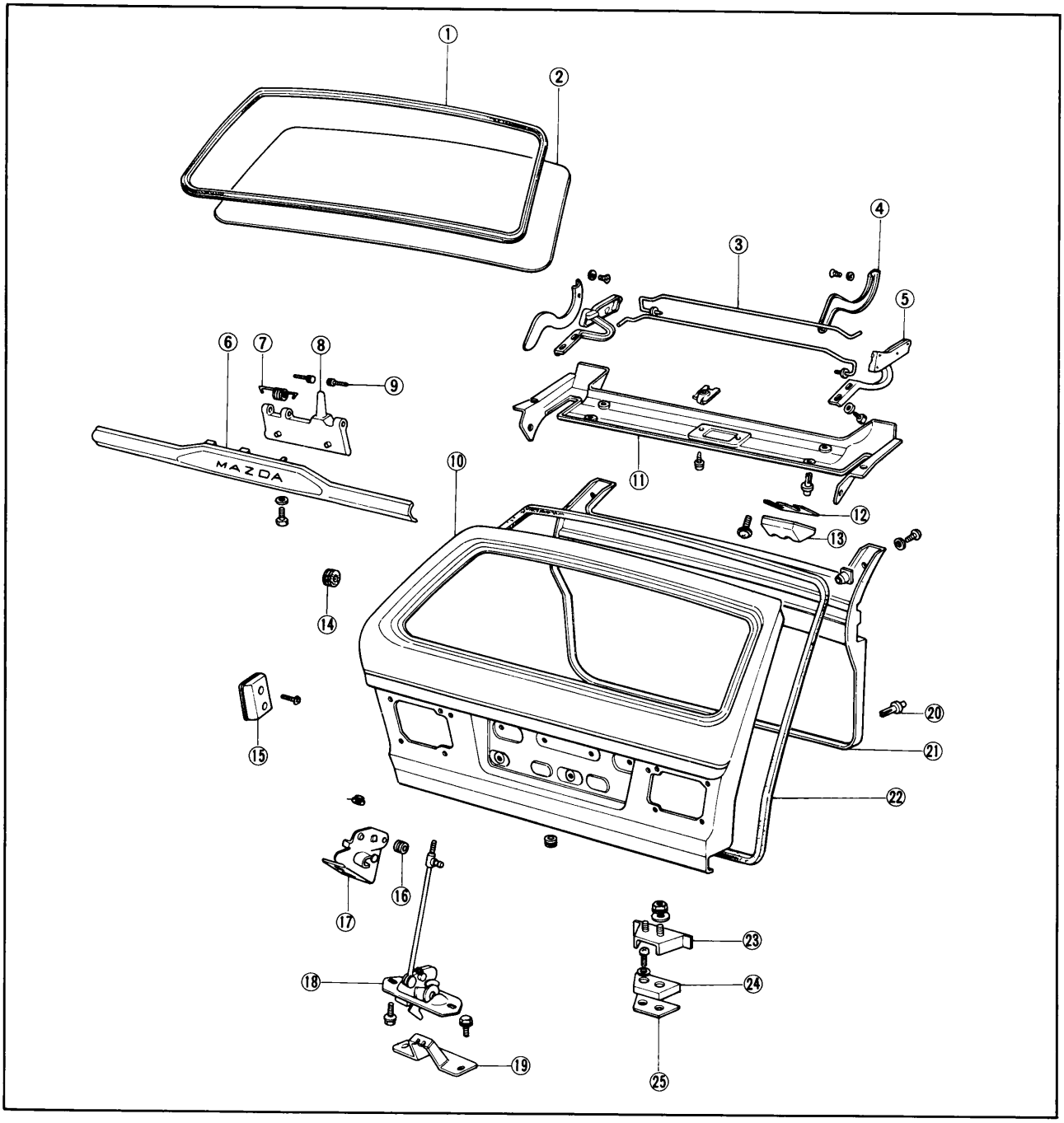

Fig. 14A–25 Back door components

1. Weatherstrip
2. Back window glass
3. Balance spring
4. Hinge arm cover
5. Hinge
6. Outer handle
7. Spring
8. Lever
9. Pin
10. Back door body
11. Hinge cover
12. Shim
13. Upper wedge
14. Protector
15. Side wedge
16. Bush
17. Door lock control assembly
18. Door lock assembly
19. Striker
20. Fastener
21. Back door trim
22. Weatherstrip
23. Dovetail
24. Wedge
25. Shim

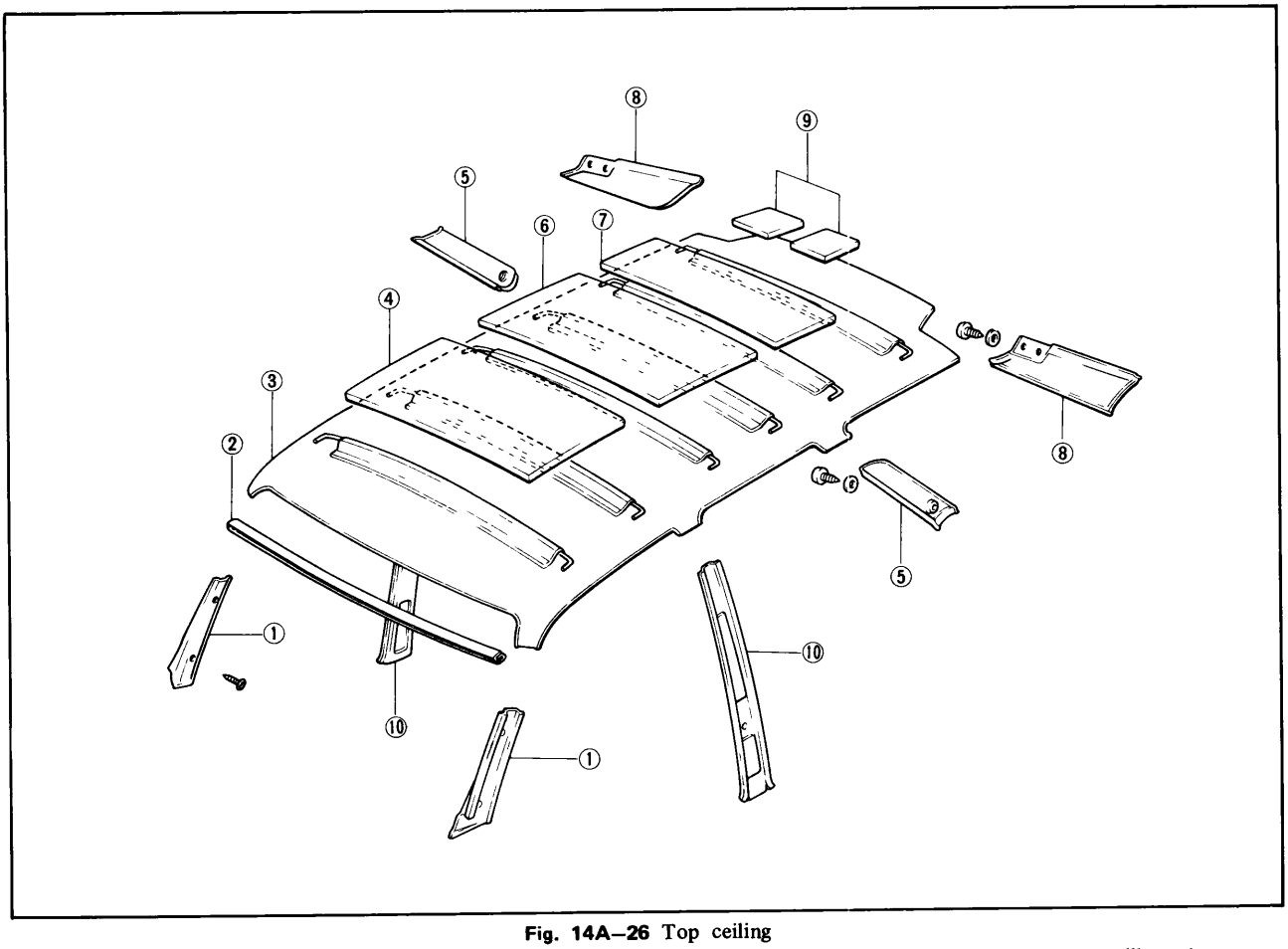

Fig. 14A–26 Top ceiling

1. Front pillar trim
2. Front polyethylen plate
3. Top ceiling
4. Head lining
5. Quarter pillar trim
6. Roof insulator
7. Head lining
8. Rear pillar trim
9. Wire cushion
10. Center pillar trim

BODY CHECKING DIMENSION
ROTARY WAGON

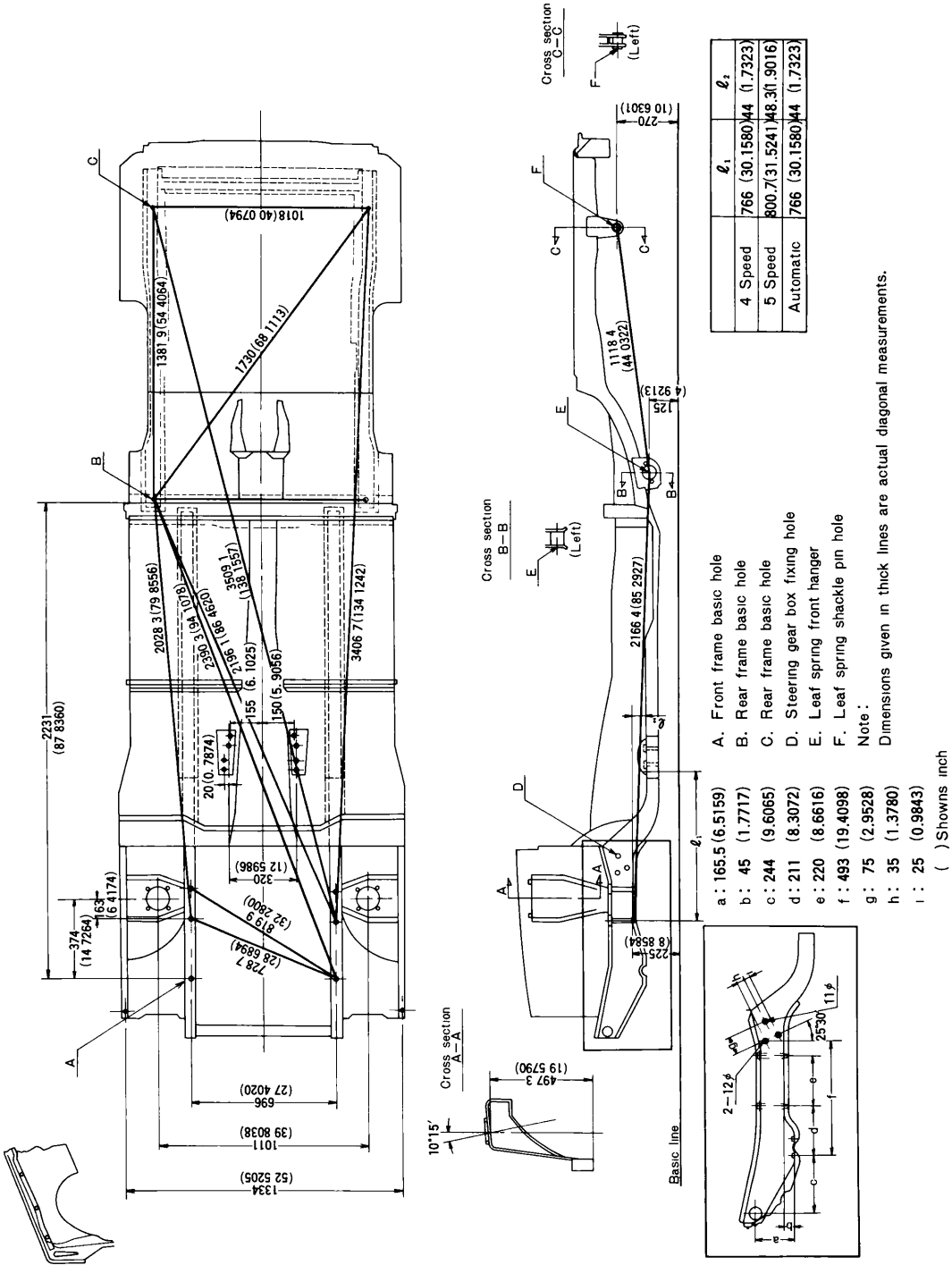

	ℓ_1	ℓ_2
4 Speed	766 (30.1580)	744 (1.7323)
5 Speed	800.7 (31.5241)	748.3 (1.9016)
Automatic	766 (30.1580)	744 (1.7323)

a : 165.5	(6.5159)
b : 45	(1.7717)
c : 244	(9.6065)
d : 211	(8.3072)
e : 220	(8.6616)
f : 493	(19.4098)
g : 75	(2.9528)
h : 35	(1.3780)
ı : 25	(0.9843)

ELECTRICAL SYSTEM

(BODY)

15–A. LIGHTING SYSTEM ..... 15 : 1
15–A–1. Adjusting Head Light ..... 15 : 1
15–A–2. Bulb Capacity ..... 15 : 1
15–B. FUEL AND WATER TEMPERATURE GAUGE ..... 15 : 1
15–B–1. Checking Fuel and Water Temperature Gauge ..... 15 : 1
a. Fuel and water temperature gauge ..... 15 : 1
b. Fuel gauge unit ..... 15 : 2
c. Water temperature gauge unit ..... 15 : 3
15–B–2. Removing Fuel and Water Temperature Gauge ..... 15 : 4
15–B–3. Installing Fuel and Water Temperature Gauge ..... 15 : 5
15–C. COMBINATION SWITCH ..... 15 : 6
15–C–1. Checking Combination Switch ..... 15 : 6
15–C–2. Removing Combination Switch ..... 15 : 8
15–C–3. Installing Combiantion Switch ..... 15 : 8
15–D. IGNITION SWITCH & STEERING LOCK ..... 15 : 8
15–D–1. Removing Ignition Switch Contact Housing ..... 15 : 8
15–D–2. Checking Ignition Switch ... 15 : 8
15–D–3. Installing Ignition Switch Contact Housing ..... 15 : 9
15–D–4. Removing Key Cylinder ..... 15 : 9
15–D–5. Installing Key Cylinder ..... 15 : 9
15–D–6. Replacing Steering Lock ..... 15 : 9
15–E. WIPER MOTOR ..... 15 : 9
15–E–1. Removing Wiper Motor ..... 15 : 9
15–E–2. Checking Wiper Motor ..... 15 : 9
15–E–3. Installing Wiper Motor ..... 15 : 10
15–F. HORN ..... 15 : 10
15–F–1. Removing Horn ..... 15 : 10
15–F–2. Adjusting Horn ..... 15 : 10
15–F–3. Installing Horn ..... 15 : 10
15–G. CENTRAL CONTROL LNIT ..... 15 : 10
15–G–1. Checking Central Control Unit ..... 15 : 10
15–G–2. Removing Central Control Unit ..... 15 : 11
15–G–3. Installing Central Control Unit ..... 15 : 11
15–H. INHIBITOR SWITCH ..... 15 : 12
15–H–1. Checking Inhibitor Switch ..... 15 : 12
15–I. HEATER FAN SWITCH ..... 15 : 12
15–I–1. Checking Heater Fan Switch ..... 15 : 12
15–J. HEATABLE WINDOW ..... 15 : 12
15–J–1. Checking Heatable Window . 15 : 12
15–J–2. Repairing Printed Filament ..... 15 : 13
15–K. METER ..... 15 : 13
15–K–1. Checking Meter Set Print Panel ..... 15 : 13

15

15–A. LIGHTING SYSTEM

The wiring of the lighting systems is shown in the wiring diagrams. The wires in the various circuits are of different colors to aid when checking individual circuits.

15–A–1. Adjusting Head Light

Before adjusting the headlights, make sure that the tires are inflated uniformly to recommended pressure and the vehicle is on the level ground without load. Adjust the headlight to meet the regulation of each country.

To adjust the headlight, turn the two spring loaded screws of the sealed beam unit until the headlights are properly aimed.

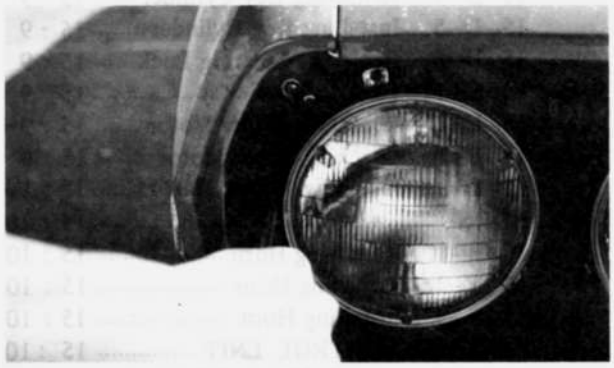

Fig. 15–1. Adjusting head light

15–A–2. Bulb Capacity

When replacing the bulb, conform to the following table.

15–B. FUEL AND WATER TEMPERATURE GAUGE

The fuel gauge indicates the quantity of gasoline in the tank only when the ignition switch is turned on. The fuel gauge circuit is composed fo the fuel gauge, mounted on the instrument panel, and the fuel tank unit, connected by a single wire through the ignition switch.

The water temperature gauge electrically operated like the fuel gauge, consists of the water temperature gauge in the instrument panel and sending unit installed on the rear housing.

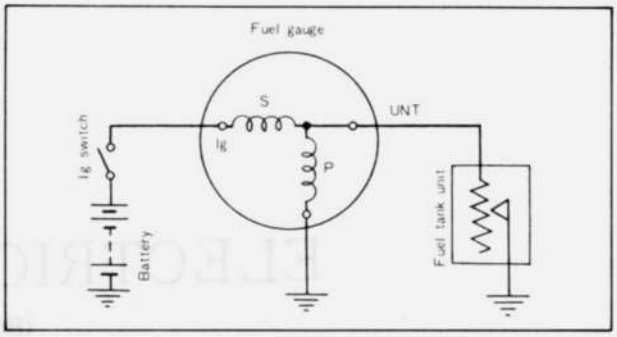

Fig. 15–2. Diagram of fuel gauge

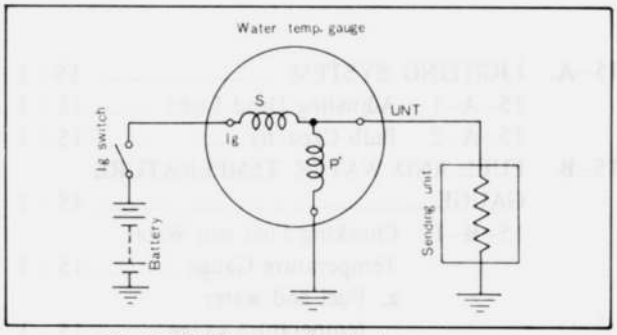

Fig. 15–3. Diagram of water temp. gauge

15–B–1. Checking Fuel and Water Temperature Gauge

a. Fuel and water temperature gauge

If the checker (49 0839 285) is available, use it according to the following procedure to confirm whether the trouble lies in the meter or in the unit.



Fig. 15–4. Chekcer

Headlight – Type 1	37.5 W	Combination meter illumination light	3.4 W
– Type 2	37.5/50 W	Glove box light	3.4 W
Front parking and turn signal light	8/27 W	Step light	3.4 W
Front side marker light	8W	Cigar lighter light	3 W (24 V)
Tail and stop light	8/27 W	Exhaust system over heat warning light	3.4 W
Rear turn signal light	27 W	Decoration panel light	1.4 W
Back-up light		Interior light	5 W
Sedan and Hardtop	12 W	Trank component light	5 W
Wagon	27 W	Seat belt warning light	
License light		Sedan and Wagon	5 W
Sedan and Hardtop	7.5 W	Over head console	
Wagon	8 W	Indicator light	3.4 W
Rear side marker light	8 W	Spot (map) light	6 W
		Interior light	5 W

1. Disconnect wiring connector from unit.
2. Connect this wiring connector to red lead of checker.
3. Connect black lead of checker to earth connection on vehicle body.

Note: Make this earth connection at position close to unit.

4. Set checker to the specified resistance value according to the following resistance figure.

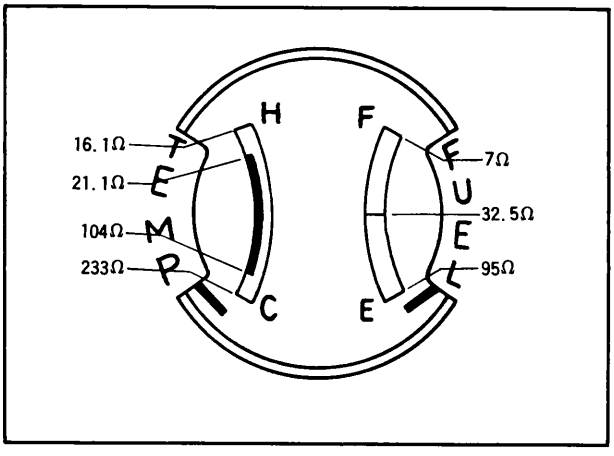

Fig. 15–5. Resistance figure

Example:
If specified resistance value of temperature gauge C is 671,

671 = 600 + 70 + 1

Therefore, push 6 of column x 100
7 of column x 10
1 of column x 1

Note:
a) To return the button to its original position, push another button in same column half-way down.

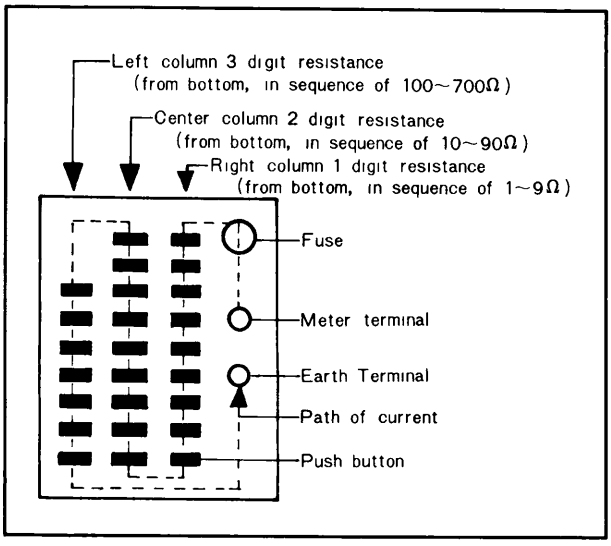

Fig. 15–6 Setting checker

b) When setting checker, push buttons in sequence starting from the largest value.

5. Turn the ignition switch on and check whether the gauge points properly.

Note: Wait for about 20 seconds before judgement.

Judgement:
1) If there is error in indicated value of meter, use following standard to checker error. Tolerance is roughly ± 2 widths of needle (± 1/16 of one graduation).
2) If the gauge points properly, the trouble lies in the sending unit while the trouble lies in the meter if the gauge indication is inaccurate.

b. Fuel gauge unit
For inspecting the fuel gauge unit, proceed as follows.
1. Remove unit, and connect terminal and body of

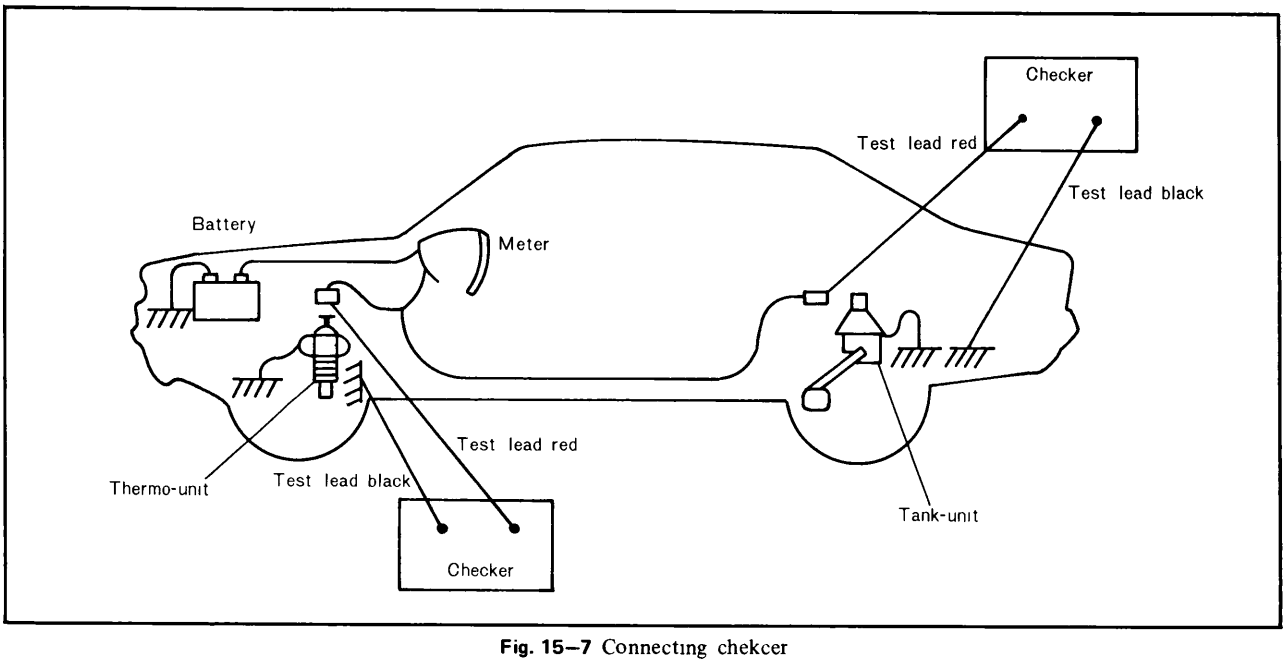

Fig. 15–7 Connecting chekcer

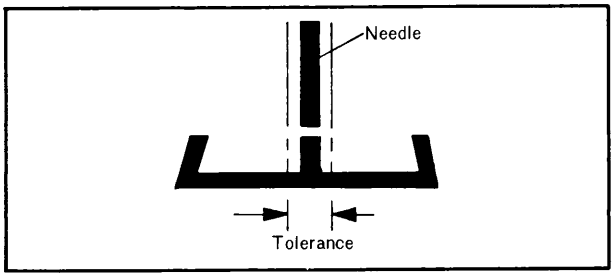

Fig. 15–8 Tolerance

unit to radio tester.
2. Slowly move unit arm to E point or F point and take reading of resistance value of tester at that time.

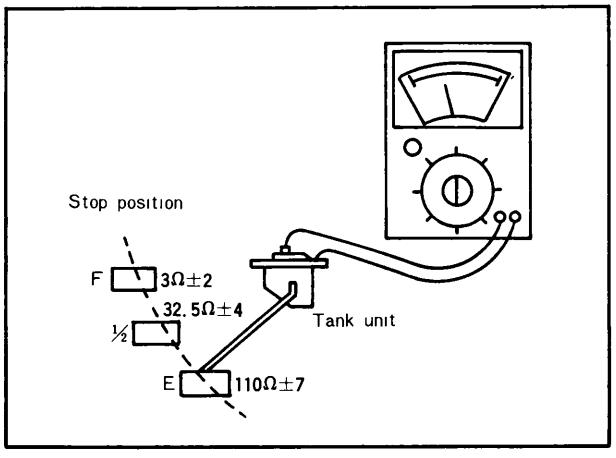

Fig. 15–9 Checking fuel gauge unit

Judgement:
1) If resistance value at E point or F point concurs with standard value indicated in Fig. 15–9 unit is satisfactory.
2) If resistance value is great or small it indicates there is breakage in wiring or short circuit.
3) If reading is only slightly off from standard value, correct by adjusting unit arm.

Inspection and correction of unit arm:
a) Move arm until reading concurs with standard resistance value indicated in Fig. 15–10 or 11, and check height of float at that time (horizontal distance between center of float and fulcrum arm).
b) Bend and adjust arm so that height of float will be of standard height as shown in figure.

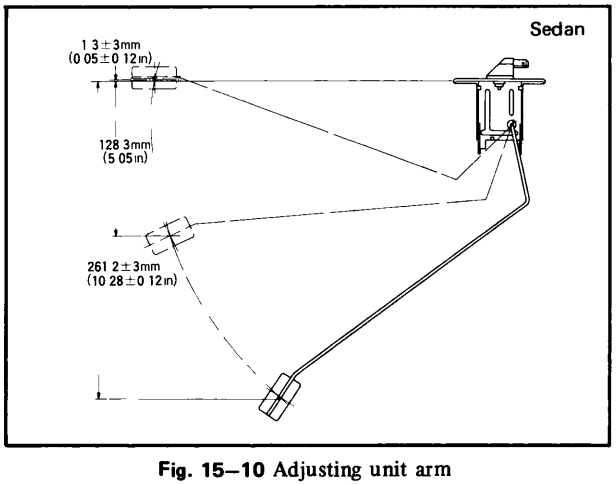

Fig. 15–10 Adjusting unit arm

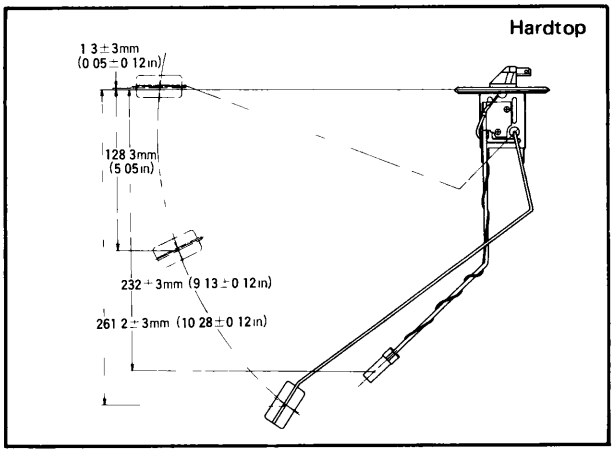

Fig. 15–11 Adjusting unit arm

c. Water temperature gauge unit
For inspecting the water temperature gauge unit, proceed as follows.
1. Remove unit, and connect terminal and body of unit to radio tester.
2. Place unit in hot water tank.

Note: Care should be taken not to immerge unit terminal in hot water.

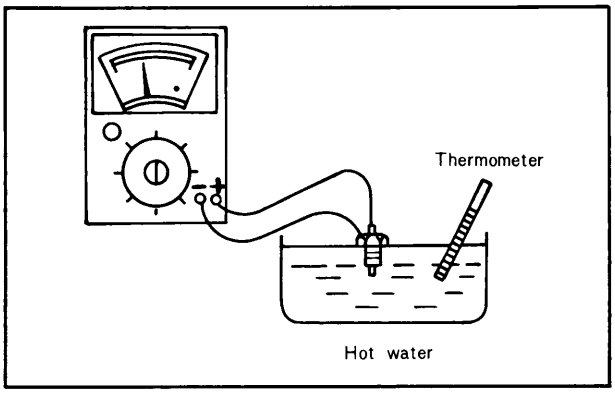

Fig. 15–12 Checking temperature gauge unit

3. Place thermometer in hot water tank.
4. Take rading of thermometer and at the same time reading of resistance value on tester.

Note:
a) Water should be hot (about 80°C) when inspection is being made.
b) Change temperature of hot water and make another inspection.

Judgement:
1) If temperature and resistance value at that temperature are within range of tolerance, unit is satisfactory. Range of tolerance is ±20% of resistance value shown in Fig. 15–13 (including measuring errors).
2) If unit is outside of range of tolerance replace with new unit.

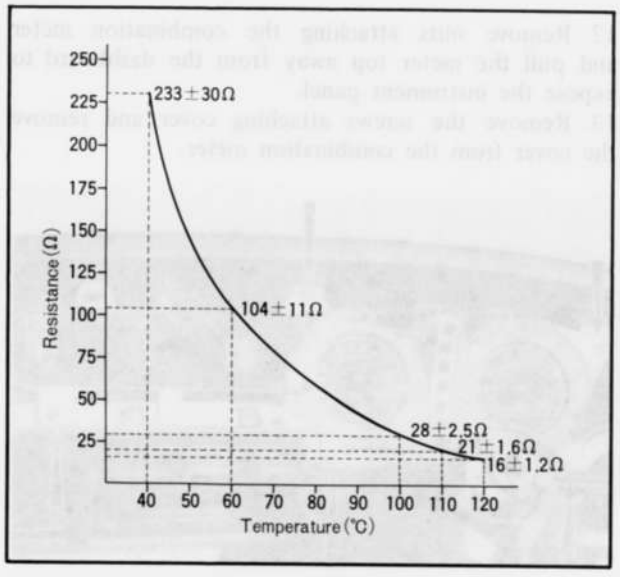

Fig. 15–13 Characteristic of thermister

15–B–2. Removing Fuel and Water Temperature Gauge

1. Pull the center cap out from the steering wheel.
2. Remove the steering wheel attaching nut and remove the steering wheel.
3. Remove the nut attaching the ventilator knob and move the knob away from the panel.

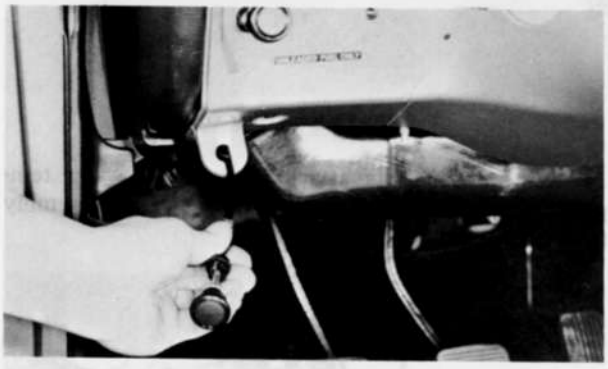

Fig. 15–14 Removing ventilator knob

4. Remove the screw attaching the choke knob and remove the choke knob.
Remove the nut attaching the choke and move the choke away from the panel.

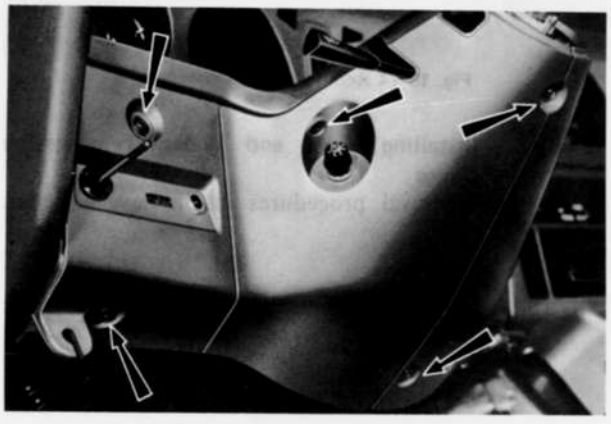

Fig. 15–15 Column cover attaching screw

5. Remove the screws attaching the column cover and remove the column cover.



Fig. 15–16 Column cover attaching screw

6. Disconnect the wirings from the panel light resister by loosening the attaching screws.
7. Disconnect the wirings to the exhaust system over heat warning light.
8. Loosen but do not remove the two screws shown in the Fig. 15–17 and pull the column cover out from the instrument panel.
Note that the attaching clips give a little resistance when pulling column cover out.

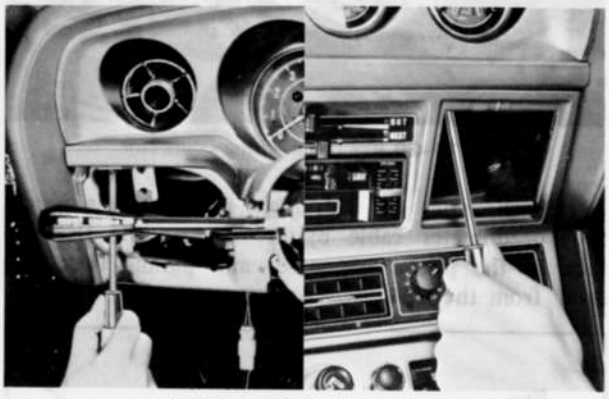

Fig. 15–17 Removing screws



Fig. 15–18 Removing column cover upper

9. Remove the meter cover attaching nuts and pull the cover out from the combination meter.



Fig. 15–19 Removing meter cover

10. Disconnect the wiring connectors from the combination meter.

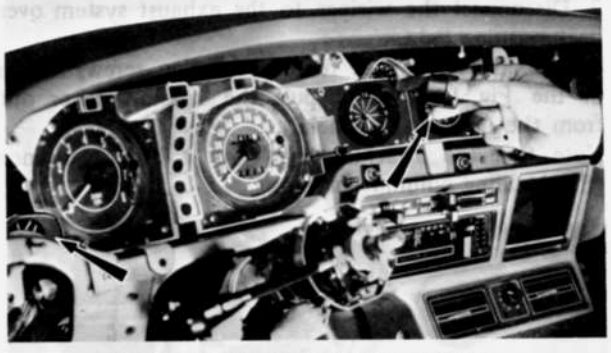

Fig. 15–20 Removing wiring connector

11. Reach under the instrument panel and disconnect the speedometer cable by pressing on the flat surface of the plastic connector and pulling the cable away from the head.

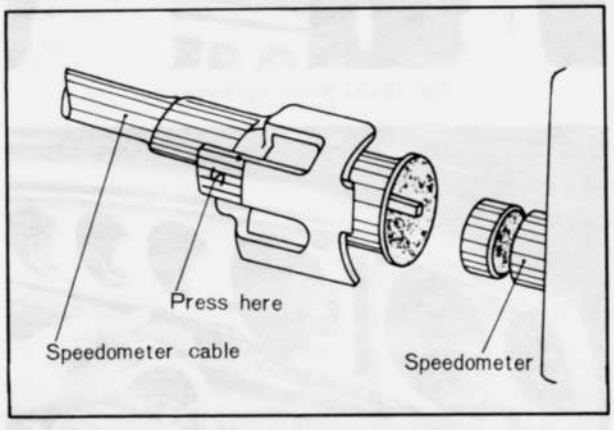

Fig. 15–21 Disconnecting speedometer cable

12. Remove nuts attaching the combination meter and pull the meter top away from the dashboard to expose the instrument panel.
13. Remove the screws attaching cover and remove the cover from the combination meter.



Fig. 15–22 Removing nuts

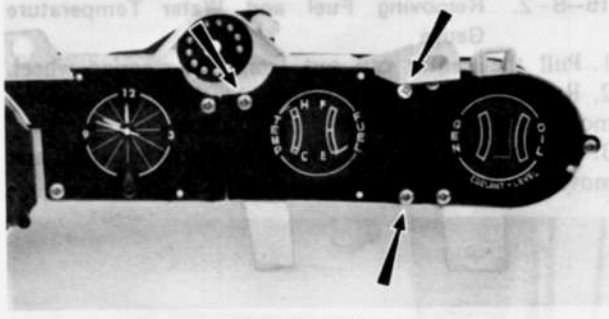

Fig. 15–23 Removing cover

14. Remove the nuts attaching fuel and water temperature gauge assembly and remove gauge assembly from the combination meter.

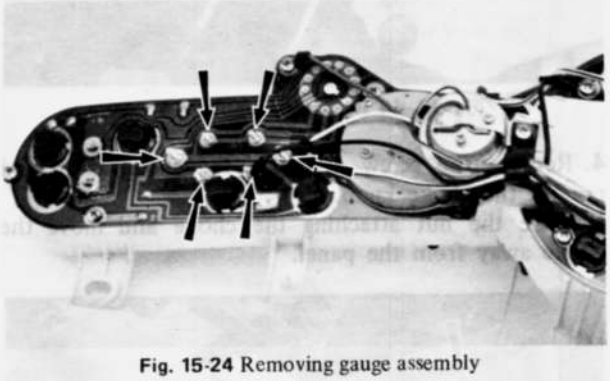

Fig. 15-24 Removing gauge assembly

15–B–3. Installing Fuel and Water Temperature Gauge

Follow the removal procedures in the reverse order.

15–C. COMBINATION SWITCH

15–C–1. Checking Combination Switch

Check the continuity between the coupler terminals using the circuit tester according to the following switch interconnection diagram.

1. Turn Signal and Hazard Switch

Terminal / Switch Position	TIG	TFB	HBA	HFB	FU	TR	TL	HW	
Right Turn	●	●			●	●			Turn Signal
Neutral	●	●							
Left Turn	●	●			●		●		
OFF	●	●							
ON			●	●	●	●	●	●	Hazard





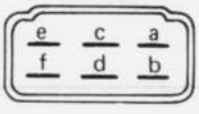

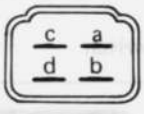

a : TIG ..... Turn signal switch power source (GY)
b : TFB ..... Turn signal flasher power source (GL)
c : TL ..... Turn signal left (GB)
d : HFB ..... Hazard flasher power source (WG)
e : HBA ..... Hazard switch power source (WL)
f : TR ..... Turn signal right (GW)

a : FU ..... Flasher unit (GR)
b : E ..... Earth (B)
c : Vacant
d : HO ..... Horn switch power source (G)

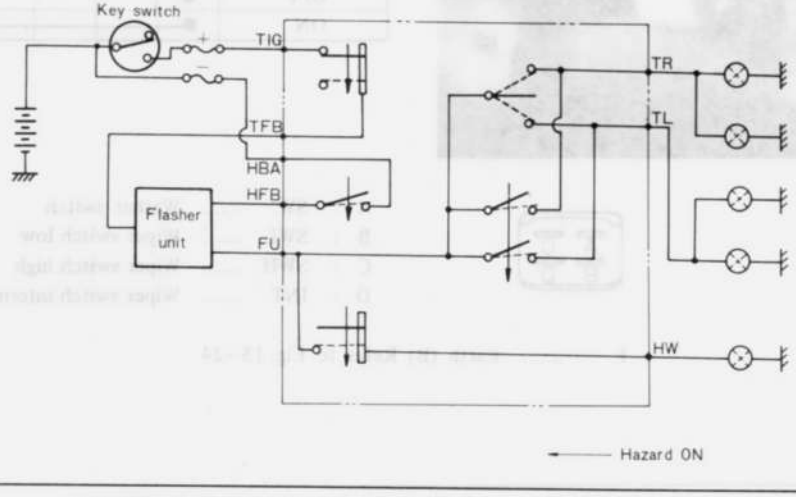

Fig. 15–25 Turn signal and hazard switch interconnection diagram

2. Light, Dimmer and Passing Switch

Switch Position \ Terminal	BA	PH	TNS	HB	HU	HL	
OFF	●	●					
Tail, Side, Number	●	●	●				Light
Head Lamp	●		●	●			
Upper				●	●		Dimmer
Lower				●		●	
OFF		●					Passing
ON		●			●		



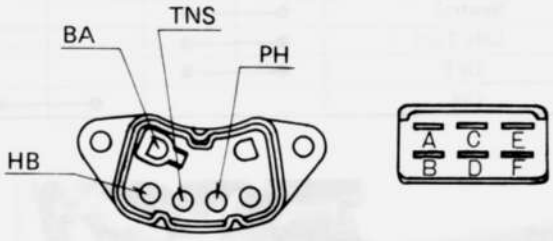

A : BA ..... Power source (R)
B : TNS ..... Tail, license and side light (RG)
C : Vacant
D : HW ..... Hazard warning (Lg)
E : HU ..... Head light upper (RW)
F : HL ..... Head light lower (RB)

Note:
The terminals PH and HB are connected inside the light switch and are not on the coupler. So, please refer to the following diagram.

Fig. 15–26 Light, dimmer and passing switch interconnection diagram

3. Wiper and washer switch



Switch Position \ Terminal	E	SWL	SWH	INT	SW	
INTERMITTENT	●			●		
OFF	●					
LOW	●	●				Wiper
High	●	●	●			
OFF	●					Washer
ON	●				●	

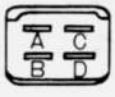

A : SW ..... Washer switch (L)
B : SWL ..... Wiper switch low (W)
C : SWH ..... Wiper switch high (R)
D : INT ..... Wiper switch intermit (G)

E : ..... Earth (B) Refer to Fig. 15–24

Fig. 15–27 Wiper and washer switch interconnection diagram

15–C–2. Removing Combination Switch

1. Refer to the step **1** to **8** in **Par. 15–B–2** and remove the column cover.
2. Disconnect the wiring connectors.
3. Remove the stop ring from the column shaft.

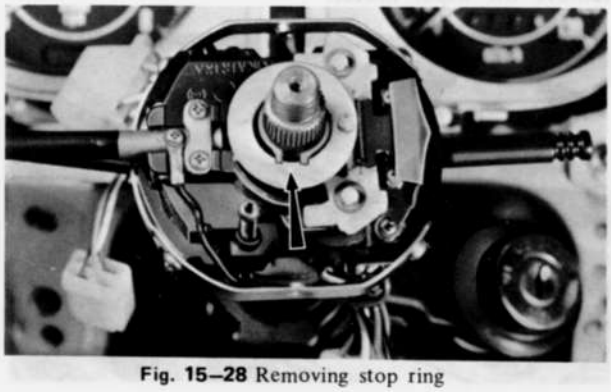

Fig. 15–28 Removing stop ring

4. Remove the screw attaching the combination switch and remove the combination switch.

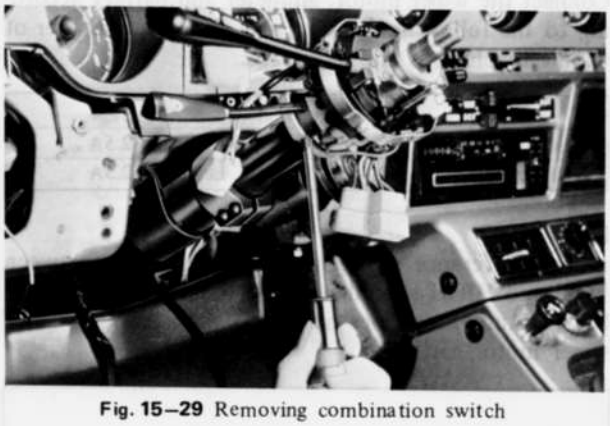

Fig. 15–29 Removing combination switch

15–C–3. Installing Combination Switch

Follow the removal procedures in the reverse order.

15–D. IGNITION SWITCH & STEERING LOCK

15–D–1. Removing Ignition Switch Contact Housing

1. Refer to the **Par. 15–B–2** and remove the lower column cover.
2. Remove the bolts attaching the instrument frame junction and remove the junction.
3. Disconnect the wiring connector.
4. Remove the screw attaching the contact housing to the steering lock body and remove the contact housing.

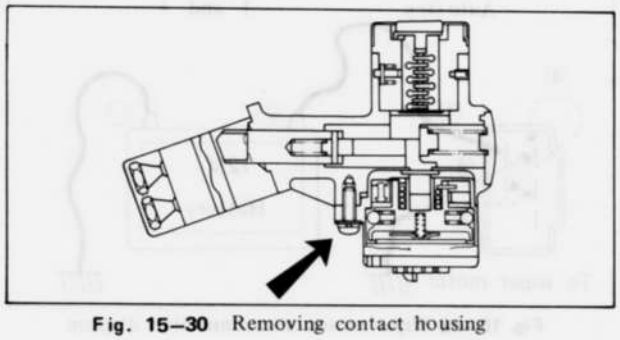

Fig. 15–30 Removing contact housing

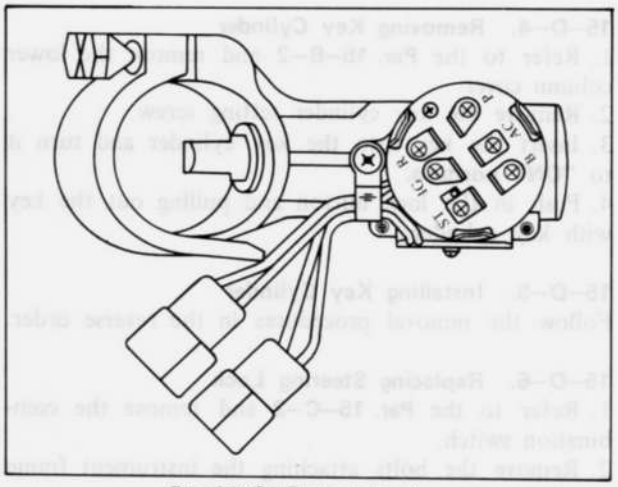

Fig. 15–31 Contact housing

15–D–2. Checking Ignition Switch

Check the continuity between the switch terminals using the circuit tester according to Fig. 15–32, interconnecting diagram.

Terminal / Switch Position	B	P	AC	IG	R	ST
LOCK	●	●				
OFF	●					
ACC	●		●			
ON	●		●	●		
START	●			●	●	●



a a : Ignition switch ACC ~ Stereo ACC

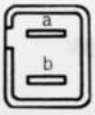

a : Main fuse ~ Ignition switch B WB
b : Ignition switch IG ~ Fuse box IG BW



a : Vacant
b : Ignition switch R ~ Ignition coil YB
c : Ignition switch ACC ~ Wiper motor L
d : Ignition switch S ~ Inhibitor switch BY



a : Ignition switch L ~ Parking brake warning light RG
b : Ignition switch E ~ Dash panel earth B
c : Ignition switch W ~ Parking brake switch RB



a : Ignition switch ~ Fuse box B LB
b : Ignition switch ~ Key reminder buzzer G

Fig. 15–32 Ignition switch interconnection diagram

15–D–3. Installing Ignition Switch Contact Housing
Follow the removal procedures in the reverse order.

15–D–4. Removing Key Cylinder
1. Refer to the **Par. 15–B–2** and remove the lower column cover.
2. Remove the key cylinder setting screw.
3. Insert the key into the key cylinder and turn it to **"ON" position.**
4. Push in the lock button and pulling out the key with key cylinder.

15–D–5. Installing Key Cylinder
Follow the removal procedures in the reverse order.

15–D–6. Replacing Steering Lock
1. Refer to the **Par. 15–C–2** and remove the combination switch.
2. Remove the bolts attaching the instrument frame junction and remove the junction.
3. Remove the two nuts attaching the column shaft bracket to dash panel.
4. Move the column shaft approximately 3 cm (1 in) from the dash board.
5. Make a groove on the head of the bolts attaching the steering lock body to the column shaft by using a saw so that the screw driver can be used to loosen the screws.
6. Remove the steering lock attaching bolts and remove the steering lock.
7. Position a new steering lock to the column shaft and tighten the bolts until the head of bolts snaps-off.

15–E. WIPER MOTOR

15–E–1. Removing Wiper Motor
1. Remove the wiper arm attaching screw and remove the wiper arm.



Fig. 15–33 Removing wiper arm

2. Remove the screws attaching the cowl plate and



Fig. 15–34 Removing cowl plate

move the front side of the cowl plate up and disconnect the hose for the washer at the nozzle. Then remove the cowl plate.
3. Disconnect the wiring at the wiper motor.
4. Remove the bolts attaching the wiper motor and remove the wiper motor.

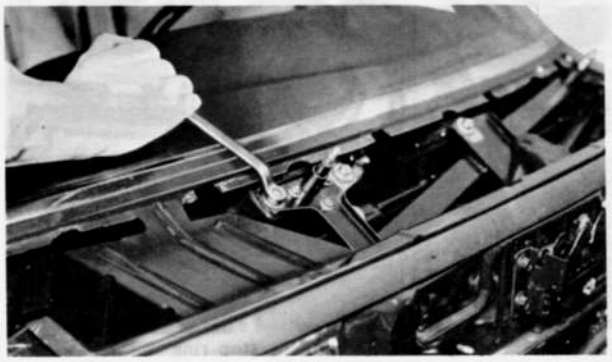

Fig. 15–35 Motor attaching bolts

15–E–2. Checking Wiper Motor
Connect the wiper motor, ammeter and battery according to the following diagram, and check the number of wiping revolutions and amperage.

	Wiping rpm	Amperage
LOW	45 – 55	Less than 2.5A
HIGH	62 – 88	Less than 2.5A

Note:
a. The difference in number of revolutions between LOW and HIGH should be more than **15 RPM.**
b. The Auto Stop does not work in the case of faulty wiper motor earth.

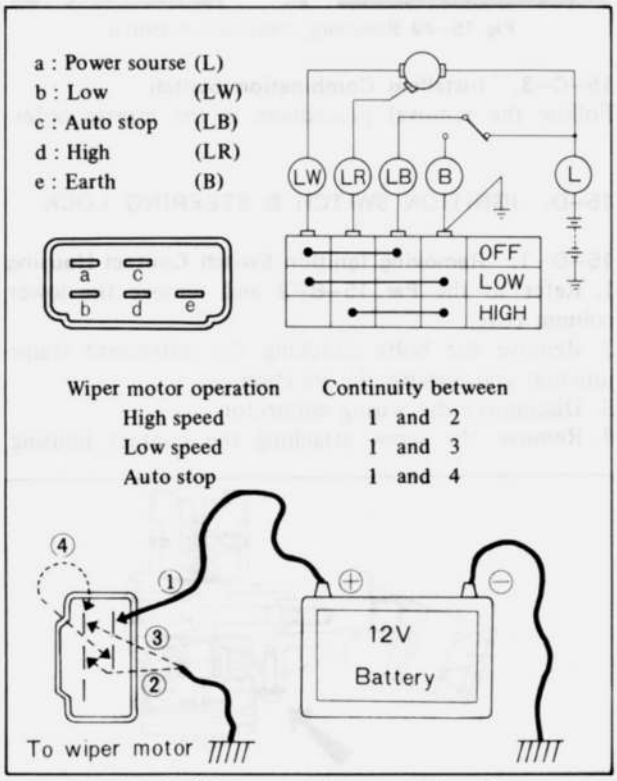

Fig. 15–36 Wiper motor interconnection diagram

1. Use a 12 volt test light and test for power at the blue wire of the main wiring harness connector with ignition switch ON.
if no power is present, trace the blue wire back to the fuse and repair as necessary.
2. Using a jumper wire, connect 12 volts to the blue wire of the motor connector. Then, ground the wires as outlined below and observe the results.

a. With the blue-white wire grounded, the wipers should operate at low speed.
b. With the blue-red wire grounded, the wipers should operate at high speed. Stop the wiper blades in an up position so that Step 3 can be performed.

3. With the wiper blades stopped in an up position and with the jumper wire still connected to the blue wire as in Step 2, connect another jumper wire between the blue-black and the blue-white wires. The wipers should move to the park position and stop.
4. If the motor does not operate, check the ground before replacing it.

15–E–3. Installing Wiper Motor

To install the wiper motor, follow the removal procedure in the reverse order.

Note:
Tighten the bolts attaching the wiper motor assembly in numerical order as shown in Fig. 15–37.

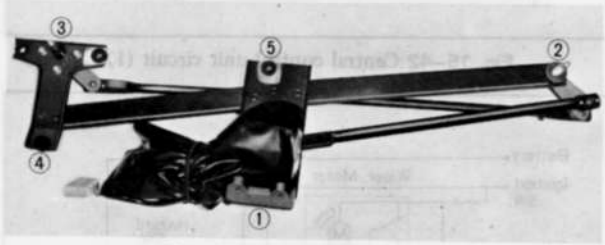

Fig. 15–37 Tightening order

15–F. HORN

15–F–1. Removing Horn

1. Remove the screws attaching the lamp bezel and remove the lamp bezel.
2. Disconnect the wiring at the horn.



Fig. 15–38 Horn attaching bolt

3. Remove the bolt attaching the horn and remove the horn.

15–F–2. Adjusting Horn

1. Refer to the Par. 15–F–1 and remove the horn.
2. Connect the ammeter and volt-meter as shown in Fig. 15–39. Turn the adjusting screw until the current flow is 1.5 ~ 2.5 amperes at 12 volts.
3. Tighten the lock nut and apply locking agent on the lock nut.

Note:
Do not stuff rags or other materials in the horn protector to muffle the sound while adjusting, as this changes the vibration frequency and would give a false current setting. When adjusting a set of horns, each horn should be connected and adjusted separately, then checked for tone by operating as a pair.

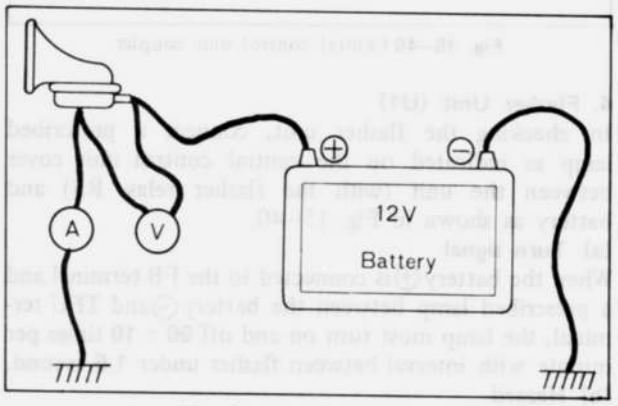

Fig. 15–39 Adjusting horn

15–F–3. Installing Horn

Follow the removal procedures in the reverse order.

15–G. CENTRAL CONTROL UNIT

The central control unit is composed of wiper relay (R1 and R2), flasher relay (R3), horn relay (R4) and flasher unit (U1), each of which is a plug-socket connection type. Each relay and unit are easy to replace. In replacing the flasher unit, care should be taken that its capacity differs depending upon area. Also, the "multi-grade relay" has been prepared which is applicable as replacement of any of the relays.

15–G–1. Checking Central Control Unit

Check the central control unit using the battery and circuit tester as follows:

1. Wiper Relay (R1)
When the battery ⊕ is connected to the WIG terminal and the battery ⊖ to the S2 terminal, LOW terminal and unit body should be in continuity with each other.

2. Wiper Relay (R2)
(a) When the battery ⊕ is connected to the WIG terminal and the battery ⊖ to the S2 and S3 terminals, H1 terminal and unit body should be in continuity

with each other.
(b) AS terminal and LOW terminal sholud be in continuity with each other without connecting the battery to them.

3. Horn Relay (R4)
When the battery ⊕ is connected to the HZB terminal and the battery ⊖ to the HNS terminal, HZB terminal and HON terminal should be in continuity with each other.

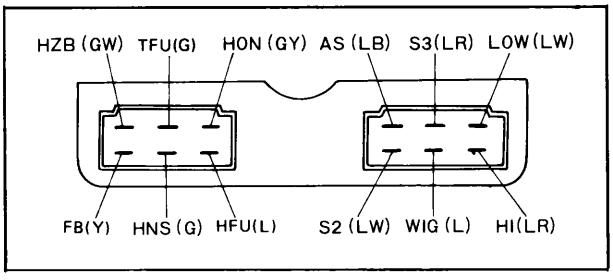

Fig. 15–40 Central control unit coupler

4. Flasher Unit (U1)
In checking the flasher unit, connect a prescribed lamp as indicated on the central control unit cover between the unit (with the flasher relay R3) and battery as shown in Fig. 15–40.
(a) Turn signal
When the battery ⊕ is connected to the FB terminal and a prescribed lamp between the battery ⊖ and TFU terminal, the lamp must turn on and off **90 ± 10** times per minute with interval between flasher under **1.5** second.
(b) Hazard
When the battery ⊕ is connected to the HFU terminal and a prescribed lamp between the battery ⊖ and TFU terminal, the lamp must turn on and off **90 ± 10** times per minute with the interval between flasher under **1.5** second.

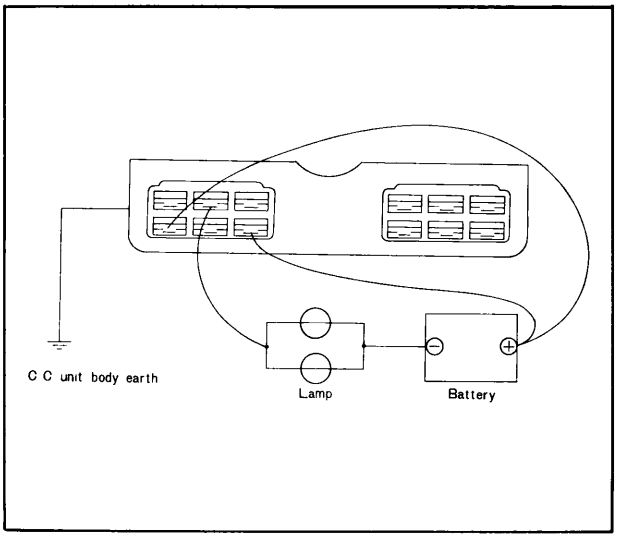

Fig. 15–41 Hazard and flasher unit interconnection diagram

Note:
The flashing on and off of the lamp varies depending upon the lamp capacity and the central control unit earth condition as follows:

Flasher

Faulty unit earth	Lamp remains lighted
Lamp capacity decreased	Flash becomes slower or lamp remains lighted
Lamp capacity increased	Number of flashes remains unchanged

Hazard

Faulty unit earth	Lamp remains lighted
Lamp capacity decreased	Number of flashes remains unchanged
Lamp capacity increased	Number of flashes remains unchanged

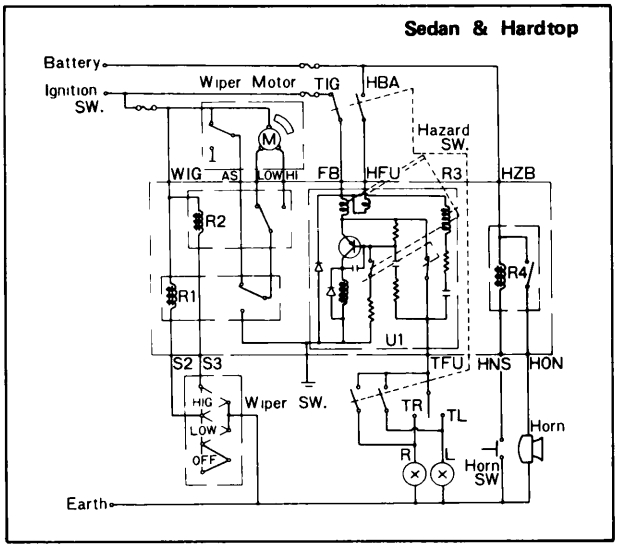

Fig. 15–42 Central control unit circuit (1)

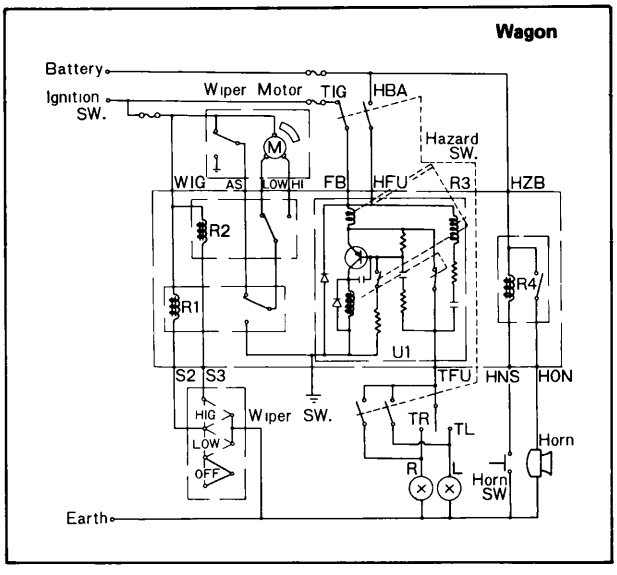

Fig. 15–43 Central control unit circuit (2)

15–G–2. Removing Central Control Unit
1. Reach under the instrument panel and disconnect the wiring connectors.
2. Remove the nuts attaching the central control unit and remove the unit.

15–G–3. Installing Central Control Unit
Follow the removal procedures in the reverse order.

15–H. INHIBITOR SWITCH

15–H–1. Checking Inhibitor Switch

Check the continuity between the coupler terminals using the circuit tester according to the following diagram.

Switch Position \ Terminal	B	S	IG	R	1	2	D	N	P	W
P	●	●							●	
R			●	●						●
N	●	●	●						●	
D			●				●			●
1			●					●		●
2			●		●					●

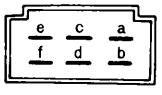

a : B ... Inhibitor switch power source(BY
b : S ... Starter switch (BY)
c : IG ... Fuse box. IG (GY)
d : R ... Indicator light R (RY)
e : W ... for E.I.S. (LO)
f : Vacant

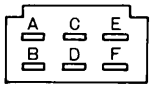

A : P ... Indicator light P (GL)
B : Vacant
C : D ... Indicator light D (GR)
D : N ... Indicator light N (GB)
E : 1 ... Indicator light 1 (G)
F : 2 ... Indicator light 2 (GW)

Note:
a. Solid lines show the connection for indicator light circuit.
b. Dotted lines show the connection for starting circuit.

Fig. 15–44 Inhibitor switch interconnection diagram

15–I. HEATER FAN SWITCH

15–I–1. Checking Heater Fan Switch

Check the continuity between the coupler terminals using the circuit tester according to Fig. 15–45.

Switch position \ Terminal	BA	L	M	H
OFF	●			
HIGH	●			●
MED	●		●	
LOW	●	●		

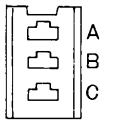

A : H ... Heater high (LR)
B : M ... Heater medium (LY)
C : L ... Heater low (LW)



a : BA ... Power source (LG)

Fig. 15–45 Heater fan switch interconnection diagram

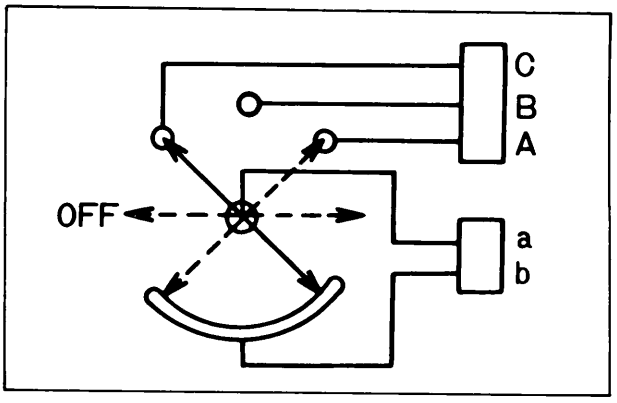

Fig. 15–46 Heater fan switch circuit

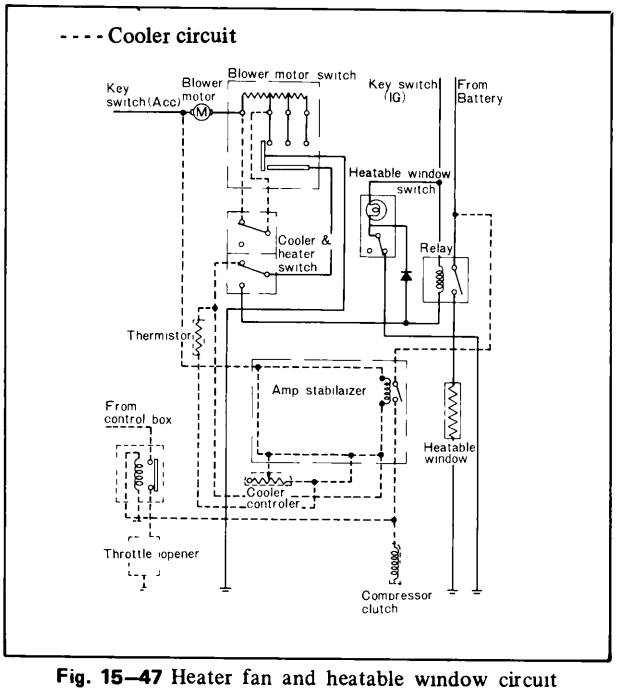

Fig. 15–47 Heater fan and heatable window circuit

15–J. HEATABLE WINDOW

15–J–1. Checking Heatable Window

1. Turned on the heater switch.
2. Ground the negative terminal of the voltmeter on the body and touch the positive terminal on the center of each filament to measure the voltage. Nor-

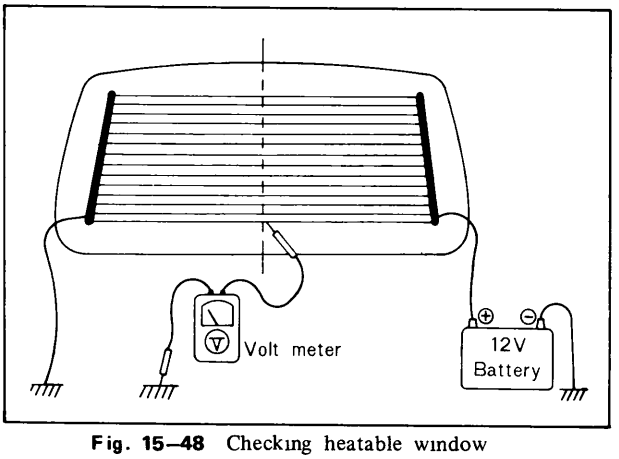

Fig. 15–48 Checking heatable window

mal filament registers approximately 6 volts at the center. A high voltage on the order of 12 volts shows that breakage is on the negative side from the center (grounded side) and a voltage close to zero volt shown that breakage is on the positive side.
3. Move the positive terminal to the side where breakage is known to exist, and you will note sudden change in voltage at a portion. That portion is where the filament is broken.

15–J–2. Repairing Printed Filament

1. Clean the broken portion with solvent.
2. By using a small brush or a drawing pen, apply conductive silver paint (Parts No. 2835 77 6000), ie., Dupont No. 4817 to the broken section.
3. Completely dry the painted section by leaving it intact for 24 hours in the caes of 20°C (68°F) (for 30 minutes when the painted section is heated up to 60°C (140°F) with a dryer).

Note:
a) Never turn on the heater before the paint has completely dried.
b) Do not use any alkaline chemical cleanser to clean the section thus repaired.
c) The life of Dupont No. 4817. conductive silver paint, is one year and must be kept at a dry place having a temperature of less than 20°C (68°F).

15–K. METER

15–K–1. Checking Meter Set Print Panel

Check the continuity between connector pin and lamp, and that between connector pin and meter using the circuit tester according to the interconnection diagram below.

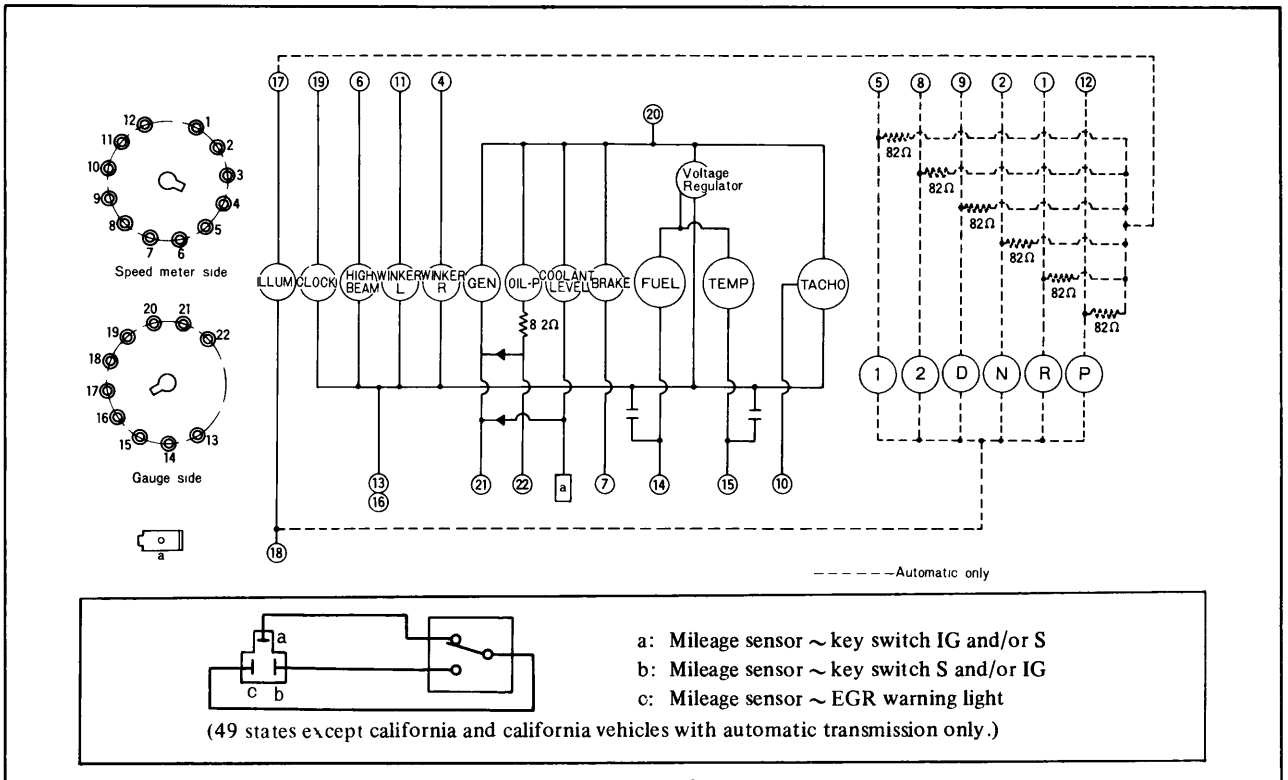

a Coolant level warning light (COOLANT)~Coolant level sensor
1 Reverse light switch ~ Indicator light R
2 Inhibitor switch N ~ Indicator light N
3 Vacant
4 C.C. unit (Turn signal relay) ~ Turn signal indicator light
5 Inhibitor switch 1 ~ Inhibitor light 1
6 Fuse box ~ High beam
7 Parking brake switch ~ Brake warning light
8 Inhibitor switch 2 ~ Indicator light 2
9 Inhibitor switch D ~ Indicator light D
10 Ignition coil ⊖ ~ Tachometer
11 C.C. unit (Turn signal relay) ~ Turn signal indicator light
12 Inhibitor switch P ~ Indicator light P
13 Meter earth
14 Fuel tank ~ Fuel meter
15 Water thermo unit ~ Water temperature meter
16 Dash panel earth ~ Meter earth
17 Fuse box ~ Illumination light
18 Panel light resistor ~ Illumination light
19 Fuse box B ~ Clock
20 Fuse box ~ Meter IG ⊕
21 Regulator ~ Generator warning light
22 Oil pressure switch ~ Oil pressure warning light
23 Vacant
24 Vacant

Fig. 15–49 Print panel interconnection diagram

TECHNICAL DATA

ENGINE

Type	Rotary piston engine, 2 rotors in line, water cooled
Displacement	654 cc (40.0 cu-in) x 2 rotors
Compression ratio	9.2 : 1
Compression pressure	
Limit	6.0 kg/cm² (85 lb/in²) at 250 rpm
Max. permissible difference between chambers	1.0 kg/cm² (14 lb/in²)
Port timing	
Intake opens	32° ATDC
Intake closes	40° ABDC
Exhaust opens	75° BBDC
Exhaust closes	38° ATDC
Side housings (Front, intermediate and rear housings)	
Limit of distortion	0.04 mm (0.0016 in)
Limit of wear	
Sliding surface	0.10 mm (0.0039 in)
Rotor housing	
Width	80 mm (3.150 in)
Max. permissible difference in width	0.06 mm (0.0024 in)
Rotor	
Width	79.85 mm (3.144 in)
Clearance of side housing and rotor (△R)	0.10 ~ 0.21 mm (0.0039 ~ 0.0083 in)
Apex seal	
Length	79.85 mm (3.144 in)
Width	3.0 mm (0.118 in)
Height	
New	8.5 mm (0.335 in)
Limit	7.0 mm (0.276 in)
Clearance of apex seal and side housing (△S)	
New	0.13 ~ 0.17 mm (0.0051 ~ 0.0067 in)
Clearance of apex seal and rotor groove (△G)	
New	0.05 ~ 0.09 mm (0.0020 ~ 0.0035 in)
Limit	0.15 mm (0.006 in)
Apex seal spring	
Free height	
New	4.7 mm (0.185 in) or more
Limit	3.8 mm (0.150 in)
Side seal	
Thickness	1.0 mm (0.039 in)
Height	3.5 mm (0.138 in)
Clearance of side seal and rotor groove (△W)	
New	0.03 ~ 0.07 mm (0.0012 ~ 0.0028 in)
Limit	0.10 mm (0.004 in)
Clearance of side seal and corner seal (△E)	
New	0.05 ~ 0.15 mm (0.0020 ~ 0.0059 in)
Limit	0.40 mm (0.0157 in)
Side seal protrusion	More than 0.5 mm (0.020 in)
Oil seal	
Height	5.6 mm (0.220 in)
Contact width of oil seal lip	Less than 0.8 mm (0.031 in)
Oil seal protrusion	More than 0.5 mm (0.020 in)
Corner seal	
Outer diameter	11.0 mm (0.433 in)
Height	7.0 mm (0.276 in)
Corner seal protrusion	More than 0.5 mm (0.020 in)
Main bearing clearance	
New	0.04 ~ 0.07 mm (0.0016 ~ 0.0028 in)
Wear limit	0.10 mm (0.0039 in)
Rotor bearing clearance	
New	0.04 ~ 0.08 mm (0.0016 ~ 0.0031 in)
Wear limit	0.10 mm (0.0039 in)
Eccentric shaft	
Eccentricity of rotor journal	15.0 mm (0.591 in)
Main journal diameter	43 mm (1.692 in)
Rotor journal diameter	74 mm (2.913 in)
Max. permissible run-out	0.06 mm (0.0024 in)
End play	
New	0.04 ~ 0.07 mm (0.0016 ~ 0.0028 in)
Limit	0.09 mm (0.0035 in)
Alternator belt tension (slack) (Between alternator and eccentric shaft pulleys)	
Belt deflection	15 ± 2 mm (0.59 ± 0.08 in)
Air pump belt tension (slack) (Between air pump and water pump pullys)	
Belt deflection	12 ± 1 mm (0.47 ± 0.04 in)

LUBRICATING SYSTEM

Oil pump	
Type	Rotor
Feeding capacity at 1,000 rpm of engine	5.0 liters/min. (5.3 U.S.quarts/min. 4.4 Imp. quarts/min.)
Oil pump driven by	Chain and sprockets
Limit of chain adjuster protrusion	12 mm (0.47 in)
Outer rotor and body clearance	
New	0.20 ~ 0.25 mm (0.008 ~ 0.010 in)
Wear limit	0.30 mm (0.012 in)
Clearance between rotor lobes	
New	0.01 ~ 0.09 mm (0.0004 ~ 0.0035 in)
Wear limit	0.15 mm(0.006 in)
Rotor end float	
New	0.03 ~ 0.13 mm (0.001 ~ 0.005 in)
Wear limit	0.15 mm (0.006 in)
Oil pressure at 3,000 rpm of engine	4.5 ~ 5.5 kg/ cm² (64 ~ 79 lb/in²)
Oil pressure at idle speed of engine	1.0 ~ 3.8 kg/cm² (14 ~ 54 lb/in²)
Pressure regulator valve (Rear housing)	
Operating pressure	5.0 kg/cm² (71.1 lb/in²)

Free length of spring	46.4 mm (1.830 in)
Pressure control valve (Front cover)	
Operating pressure	11.0 kg/cm² (156 lb/in²)
Free length of spring	73.0 mm (2.874 in)
By-pass valve (Oil cooler) (Except for California)	
Starts to close	60 ~ 65°C (140 ~ 149°F)
Fully closes	70 ~ 75°C (158 ~ 167°F)
Opening pressure	3.56 kg/cm² at 70°C (50.7 lb/in² at 158°F)
Oil filter	
Type	Full flow, cartridge
Relief valve opens at	0.8 ~ 1.2 kg/cm² (11 ~ 17 lb/in²)
Oil metering pump	
Feeding capacity of 2,000 rpm of engine	2.0 ~ 2.5 cc/6 min. (0.068~ 0.085 U.S. oz/6 min.)
Lubricant	
Classification	A.P.I. Service SD or SE
−10°C ~ 40°C (15°F ~ 100°F)	SAE 20W-40 or 20W-50
−18°C ~ 50°C (0°F ~ 120°F)	SAE 10W-50
−18°C ~ 40°C (0°F ~ 100°F)	SAE 10W-40
−18°C ~ 30°C (0°F ~ 85°F)	SAE 10W-30
Below −18°C (0°F)	SAE 5W-20 or 5W-30
Oil capacity	
Oil pan	5.0 liters (5.3 U.S. quarts, 4.4 Imp. quarts)
Full capacity	6.4 liters (6.8 U.S. quarts, 5.6 Imp. quarts)

COOLING SYSTEM

Water pump	
Type	Centrifugal impeller
Feeding capacity at 6,500 rpm of engine	150 ~ 160 liters/min. (39.6 ~ 42.3 U.S. gal/min., 33.0 ~ 35.2 Imp. gal/min.)
Pump driven by	"V" belt
Pulley ratio of eccentric shaft and pump	1 : 1.18
Fan	
Fan diameter	410 mm (16.1 in)
Number of fan blades	7
Fan drive	
Standard revolution of fan	1,400 ± 200 rpm at 4,200 rpm of engine
Thermostat	
Type	Wax pellet
Starts to open	82 ± 1.5°C (180 ± 2.7°F)
Fully opens at	95°C (203°F)
Lift	8 ~ 10 mm (0.315 ~ 0.394 in)
Radiator	
Type	Corrugated fin, with expansion tank
Pressure cap opens at	0.9 kg/cm² (13.0 lb/in²)
Cooling capacity	
With heater	9.5 liters (10.0 U.S. quarts, 8.4 Imp. quarts)

FUEL SYSTEM

Fuel tank capacity	Sedan & Hardtop 65 liters (17.2 U.S. gal, 14.3 Imp. gal) Rotary Wagon 67 liters (17.7 U.S. gal, 14.7 Imp. gal)	
Fuel pump		
Type	Electrical, plunger	
Fuel pressure	0.3 ~ 0.38 kg/cm² (4.26 ~ 5.41 lb/in²)	
Feeding capacity	More than 1,150 cc/min. (1.2 U.S. quarts/min., 1.0 Imp. quart/min.)	
Fuel filter	Cartridge, paper element	
Carburetor		
Type	Down draft, 2 stage 4 barrel	
Throat diameter		
Primary	28 mm (1.10 in)	
Secondary	34 mm (1.34 in)	
Venturi diameter		
Primary	22 × 13 × 6.5 mm (0.87 × 0.51 × 0.26 in)	
Secondary	28 × 10 mm (1.10 × 0.39 in)	
	Manual transmission	Automatic transmission
Main jet		
Primary	#91	#91
Secondary	#145	#145
Main air bleed		
Primary	#65	#65
Secondary	#100	#100
Slow jet		
Primary	#42	#42
Secondary	#80	#80
Slow air bleed		
Primary No.1	#200	#200
No.2	——	——
Secondary No.1	#120	#120
No.2	#80	#80
Richer jet	#45	——
Richer air bleed	#120	——
Power jet		
California	#45	#45
Except for Canada	——	#45
Vacuum jet		
Primary	2.2 mm (0.087 in)	2.2 mm (0.087 in)
Secondary	#110	#110
Fast idle adjustment (Clearance between primary throttle valve and bore when choke knob is fully pulled)	California 1.37 ± 0.10 mm (0.054 ± 0.004 in) Except for California 1.05 ± 0.10 mm (0.041 ± 0.004 in)	
Float level (from surface of gasket)	2.5 ± 1.0 mm (0.10 ± 0.04 in)	
Float drop (from surface of gasket)	52 ± 0.5 mm (2.05 ± 0.02 in)	
Idle speed		
Manual transmission	750 ± 25 rpm	
Automatic transmission ("D" range)	750 ± 25 rpm	

Fast idle speed	3,000 ~ 3,500 rpm
Sub-zero starting assist fluid	Anti-freeze 90% Water 10%

ELECTRICAL SYSTEM

Battery		
Type		
49 states except Calif.		
Manual transmission	N50Z	
Automatic transmission	N70Z	
California	N50Z	
Canada	N70Z	
Capacity (20 hour rate)	60 amp. (N50Z) 70 amp. (N70Z)	
Voltage	12 Volt	
Terminal ground	Nagative	
Specific gravity at 20°C (68°F)	N50Z	N70Z
Fully charged	1.260	1.280
Recharge at	1.200	1.220
Distributor		
Breaker point		
Number	2	
Dwell angle	Leading, Trailing 58 ± 3°	
Point gap	0.45 ± 0.05 mm (0.018 ± 0.002 in)	
Arm spring tension	0.5 ~ 0.65 kg (1.10 ~ 1.4 lb)	
Centrifugal advance		
Leading	Starts: 0° at 500 rpm Maximum: 12.5° at 2,000 rpm	
Trailing	Starts: 0° at 500 rpm Maximum: 12.5° at 2,000 rpm	
Vacuum advance		
Leading	Starts: 0° at −100 mm-Hg Maximum: 5° at −400 mm-Hg	
Trailing	Starts: 0° at −100 mm-Hg Maximum: 17.5° at −400 mm-Hg	
Condenser capacity	0.24 ~ 0.30μF	
Firing order	1−2	
Ignition timing		
Leading	5 ± 1° ATDC	
Trailing	25 ± 4°ATDC	
Timing mark location	Eccentric shaft pulley	
Spark plug		
Type	NGK: B6ET, B7ET, B8ET BR6ET, BR7ET, BR8ET NIPPON DENSO: W20EB, W20EBR W22EB, W22EBR W25EB, W25EBR CHAMPION: N-278B, RN-278B N-280B, RN-280B N-282B, RN-282B	
Initial gap	1.05 ± 0.05 mm (0.041 ± 0.002 in)	

Alternator	
Ground	Negative
Rated output	12V 63A
Number of poles	12
No load test	
Voltage	14V
Current	0 amp.
Revolution	Less than 950 rpm
Load test	
Voltage	14V
Current	56 amp.
Revolution	Less than 2,500 rpm
Number of brushes	2
Brush length	16 mm (0.63 in)
Wear limit	10 mm (0.39 in)
Brush spring pressure	330 ~ 450 gr (12 ~ 16 oz)
Pulley ratio of eccentric shaft and alternator	1 : 2.08
Regulator	
Constant voltage relay	
Air gap	0.7 ~ 1.3 mm (0.028 ~ 0.051 in)
Point gap	0.3 ~ 0.45 mm (0.012 ~ 0.018 in)
Back gap	0.7 ~ 1.5 mm (0.028 ~ 0.059 in)
Regulated voltage without load at 4,000 rpm of alternator	14.5 ± 0.5V
Pilot lamp relay	
Air gap	0.9 ~ 1.4 mm (0.035 ~ 0.055 in)
Point gap	0.7 ~ 1.1 mm (0.028 ~ 0.043 in)
Back gap	0.7 ~ 1.5 mm (0.028 ~ 0.059 in)
Pilot lamp lights on	0.5 ~ 3.0V
Pilot lamp lights out	4.2 ~ 5.2V
Ignition coil (Leading)	
Type	HP5-13J
Primary resistance	1.4Ω at 20°C (68°F)
External resistance	0.7Ω × 2 at 20°C (68°F)
Ignition coil (Trailing)	
Type	HP5-13E
Primary resistance	1.5Ω at 20°C (68°F)
External resistance	1.6Ω at 20°C (68°F)

	Manual transmission	Automatic transmission
Starting motor		
Capacity	1.2KW	2.0KW
Lock test		
Voltage	5.0 volt	5.0 volt
Current	Less than 600 amp.	Less than 1,050 amp.
Torque	0.96 m-kg (6.9 ft-lb)	2.2 m-kg (15.9 ft-lb)
Free running test		
Voltage	11.5 volt	11.5 volt
Current	Less than 50 amp.	Less than 100 amp.
Speed	More than 5,600 rpm	More than 6,600 rpm
Number of brushes	4	4
Brush length	18.5 mm (0.73 in)	18.5 mm (0.73 in)
Wear limit	11.5 mm (0.45 in)	11.5 mm (0.45 in)

Brush spring pressure	1.4 ~ 1.8 kg (49 ~ 63 oz)	1.4 ~ 1.8 kg (49 ~ 63 oz)	Clearance between armature shaft and brush	Less than 0.2 mm (0.008 in)	Less than 0.2 mm (0.008 in)
Control switch	Solenoid	Solenoid			
Voltage required to close solenoid contacts	Less than 8 volt	Less than 8 volt	Armature shaft end play	0.1 ~ 0.4 mm (0.004 ~ 0.016 in)	0.1 ~ 0.4 mm (0.004 ~ 0.016 in)
Undercutting mica	0.5 ~ 0.8 mm (0.020 ~ 0.032 in)	0.5 ~ 0.8 mm (0.020 ~ 0.032 in)	Clearance between pinion and stop collar	0.5 ~ 2.0 mm (0.020 ~ 0.079 in)	0.5 ~ 2.0 mm (0.020 ~ 0.079 in)

CLUTCH

Type	Single dry plate, diaphragm spring
Pressure plate	
Permissible lateral run-out	0.05 mm (0.0020 in)
Clutch disc	
Lateral run-out of clutch disc	
Limit	1.0 mm (0.039 in)
Clutch release mechanism	Hydraulic
Clutch pedal free play (Before push rod contacts with piston)	0.6 ~ 3.0 mm (0.02 ~ 0.12 in)
Master cylinder bore	15.87 mm (5/8 in)
Clearance between piston and master cylinder bore	
New	0.032 ~ 0.102 mm (0.0013 ~ 0.0040 in)
Wear limit	0.15 mm (0.006 in)
Release cylinder bore	19.05 mm (3/4 in)
Clearance between piston and release cylinder bore	
New	0.040 ~ 0.125 mm (0.0016 ~ 0.0049 in)
Wear limit	0.15 mm (0.006 in)

MANUAL TRANSMISSION

Type	4-Speed or 5-speed transmission
Gear ratio	
First	3.380
Second	2.002
Third	1.390
Fourth	1.000
Reverse	3.389
Fifth (5-speed only)	0.791
Oil capacity	
4-speed	1.4 liters (1.5 U.S. quarts / 1.2 Imp quarts)
5-speed	1.7 liters (1.8 U.S. quarts / 1.5 Imp quarts)
Main shaft	
Max. permissible run-out	0.03 mm (0.0012 in)
Clearance between main shaft and gear (or bush)	
Wear limit	0.15 mm (0.006 in)
Reverse idle gear	
Clearance between reverse idle gear bush and shaft	
Wear limit	0.15 mm (0.006 in)
Shift fork and rod	
Clearance between shift fork and clutch sleeve	
Wear limit	0.5 mm (0.020 in)
Clearance between shift rod gate and control lever	
Wear limit	0.8 mm (0.031 in)
Synchronizer ring	
Clearance between synchronizer ring and side of gear when fitted	
New	1.5 mm (0.059 in)
Wear limit	0.8 mm (0.031 in)
Lubricant	
Above −18°C (0°F)	A.P.I. Service GL-4 or GL-5 SAE 90
Below −18°C (0°F)	A.P.I. Service GL-4 or GL-5 SAE 80

AUTOMATIC TRANSMISSION

Model	JATCO R3A
Gear ratio	
Low	2.458
Second	1.458
Top	1.000
Reverse	2.181
Torque converter	
Type	Symmetrical 3-element 1-stage 2-phase torque converter coupling
Stall torque ratio	2.0 : 1
Fluid type	M2C33F (Type F)
Fluid capacity	6.2 liters (6.6 U.S. quarts / 5.5 Imp. quarts)
Drive plate run-out	
New	Less than 0.3 mm (0.012 in)
Limit	0.5 mm (0.020 in)
Oil pump	
Side play of inner gear and outer gear	
New	0.02 ~ 0.04 mm (0.001 ~ 0.002 in)
Limit	0.08 mm (0.003 in)
Clearance between outer gear and crest	
New	0.14 ~ 0.21 mm (0.006 ~ 0.008 in)
Limit	0.25 mm (0.010 in)
Clearance between outer gear and housing	
New	0.05 ~ 0.20 mm (0.002 ~ 0.008 in)
Limit	0.25 mm (0.010 in)
Side clearance between oil seal ring and groove on oil pump cover	0.04 ~ 0.16 mm (0.002 ~ 0.006 in)
Front clutch	
Number of drive plates or driven plates	4
Thickness of drive plate	1.60 mm (0.063 in)
Total clearance measured between retaining plate and stopper	1.6 ~ 1.8 mm (0.063 ~ 0.071 in)
End play of front clutch drum	0.5 ~ 0.8 mm (0.020 ~ 0.031 in)
Governor	
Type	38 type
Rear clutch	
Number of drive plates or driven plates	5
Thickness of drive plate	1.6 mm (0.063 in)
Total clearance measured between retaining plate and stopper	0.8 ~ 1.5 mm (0.031 ~ 0.059 in)
Low and reverse brake	
Number of friction plates or steel plates	4
Thickness of friction plate	2.0 mm (0.079 in)
Total clearance measured between retaining plate and stopper	0.8 ~ 1.05 mm (0.031 ~ 0.041 in)
Gear assembly	
Total end play	0.25 ~ 0.50 mm (0.010 ~ 0.020 in)

Planetary gear side play	
New	0.2 ~ 0.7 mm (0.008 ~ 0.028 in)
Limit	0.8 mm (0.031 in)
Engine stall speed	
In break-in period	2,000 ~ 2,250 rpm
After break-in period	2,050 ~ 2,300 rpm

Shift speed

Throttle condition (Manifold vacuum)		mph
Kick-down (0 ~ 100 mm-Hg / 0 ~ 3.94 in-Hg)	D1 → D2	33 ~ 49
	D2 → D3	63 ~ 85
	D3 → D2	56 ~ 72
	D2 → D1	15 ~ 31
Half throttle (200 ± 10 mm-Hg / 7.87 ± 0.39 in-Hg)	D1 → D2	10 ~ 23
	D2 → D3	19 ~ 44
Fully closed throttle	D3 → D1	6 ~ 13
Manual 1	12 → 11	27 ~ 36

Governor pressure

Driving speed	Output shaft speed	Governor pressure	
mph	rpm	kg/cm2	lb/in2
20	970 ~ 1,070	0.8 ~ 1.3	12 ~ 18
35	1,730 ~ 1,850	1.4 ~ 2.1	20 ~ 29
55	2,730 ~ 2,850	2.6 ~ 3.6	36 ~ 51

Line pressure

Manual range	Engine idling condition		Engine stall condition	
	kg/cm2	lb/in2	kg/cm2	lb/in2
R	4.0 ~ 7.0	57 ~ 100	15.5 ~ 19.0	220 ~ 270
D	3.0 ~ 4.0	43 ~ 57	9.5 ~ 11.0	135 ~ 156
2	8.0 ~ 12.0	114 ~ 171	10.0 ~ 12.0	142 ~ 171
1	3.0 ~ 4.0	43 ~ 57	9.5 ~ 11.0	135 ~ 156

PROPELLER SHAFT

Max. permissible run-out	0.4 mm (0.016 in)
Max. permissible unbalance at 4,000 rpm	
At front	20 cm-gr (0.28 in-oz)
At center	12.5 cm-gr (0.17 in-oz)
At rear	20 cm-gr (0.28 in-oz)
Universal joint	
Spider diameter	
Wear limit	16.439 mm (0.6472 in)

REAR AXLE

Type	Semi-floating hypoid gears
Reduction ratio	3.636
Number of gear teeth	40 : 11
Backlash of ring gear and pinion	0.17 ~ 0.19 mm (0.0067 ~ 0.0075 in)
Max. allowable variation of backlash	0.07 mm (0.0028 in)
Pinion bearing preload (Without pinion oil seal)	9 ~ 14 cm-kg (7.8 ~ 12.2 in-lb)
Differential side bearing preload (Without pinion)	6 ~ 16 cm-kg (5.2 ~ 13.9 in-lb)
Backlash of side gear and pinion gear	0 ~ 0.1 mm (0 ~ 0.004 in)
Rear wheel bearing end play	0 ~ 0.1 mm (0 ~ 0.004 in)
Lubricant	
Above −18°C (0°F)	A.P.I. Service GL-5 SAE 90
Below −18°C (0°F)	A.P.I. Service GL-5 SAE 80
Oil capacity	1.2 liters (1.3 U.S. quarts / 1.1 Imp. quarts)

STEERING

Type	Recirculating ball nut
Reduction ratio	18 ~ 20 : 1 (Power steering: 17.8 : 1)
Free play of steering wheel (Turning direction)	
New	5 ~ 20 mm (0.2 ~ 0.8 in)
Limit	30 mm (1.2 in)
Backlash between rack and sector gear	0 ~ 0.1 mm (0 ~ 0.004 in)
Worm bearing preload	
Without sector shaft and column bush	1 ~ 4 cm-kg (0.9 ~ 3.5 in-lb)
With sector shaft and column bush	9 ~ 12 cm-kg (7.9 ~ 10.4 in-lb)
	Power steering: 12 ~ 15 cm-kg (10.4 ~ 13.0 in-lb)
Clearance between sector shaft and housing bush	
New	0.007 ~ 0.049 mm (0.0003 ~ 0.0019 in)
Wear limit	0.20 mm (0.008 in)
End clearance of adjusting screw and sector shaft	0 ~ 0.1 mm (0 ~ 0.004 in)
Lubricant	A.P.I. Service GL-4 SAE 90
End play of ball stud of center link and tie rods	
New	0 ~ 0.03 mm (0 ~ 0.001 in)
Limit	0.2 mm (0.008 in)
Max. wheel angle on full lock	
Wheel on inside of curve	41°40′ ± 2°
Wheel on outside of cruve	30°30′ ± 2°
Minimum turning radius	5.0 m (16 ft 5 in)

Steering geometry	Sedan	Hardtop	Wagon
King pin inclination	9°43′	9°46′	9°28′
Camber	1°02′ ± 1°	0°59′ ± 1°	1°17′ ± 1°
Max. permissible difference in camber between sides	30′	30′	30′
Camber offset	45 mm (1 77 in)	45 mm (1.77 in)	45 mm (1.77 in)
Caster	1°49′ ± 45′	1°49′ ± 45′	1°49′ ± 45′
Max. permissible difference in caster between sides	30′	30′	30′
Caster trail			
Power steering	11 mm (0.43 in)		
Manual steering	9.0 mm (0.35 in)		
Toe-in	0 ~ 6 mm (0 ~ 0.24 in)		

BRAKES

Brake pedal free travel	
Before push rod contacts with piston	7 ~ 9 mm (0.28 ~ 0.35 in)
Master cylinder	
Type	Tandem
Bore	22.22 mm (7/8 in)
Clearance between piston and bore	
New	0.040 ~ 0.125 mm (0.0016 ~ 0.0049 in)
Wear limit	0.15 mm (0.006 in)
Front disc brake	
Brake disc outer diameter	230 mm (9.055 in)
Thickness of brake disc	
New	12 mm (0.4724 in)
Limit	11 mm (0.4331 in)
Max. allowable lateral run-out of brake disc	0.10 mm (0.0039 in)
Thickness of lining and shoe	
New	14 mm (0.551 in)
Wear limit	7 mm (0.276 in)
Wheel cylinder bore	53.97 mm (2.1248 in)
Rear drum brake	
Type	Leading-and-trailing shoes
Drum diameter	
New	228.6 mm (9.000 in)
Max permissible diameter	229.6 mm (9 0395 in)
Thickness of lining	
New	4.8 mm (0.189 in)
Limit	1 0 mm (0.039 in)
Rear wheel cylinder	
Bore	17.46 mm (11/16 in)
Clearance between piston and bore	
New	0.032 ~ 0.102 mm (0.0013 ~ 0.0040 in)
Wear limit	0.15 mm (0.006 in)
Parking brake	
Type	Mechanical
Operate at	Rear wheels

WHEELS AND TIRES

Wheel disc		
Front	5 1/2J x 13 WDC	
Rear	5 1/2J x 13 WDC	
Tire		
Front	BR70-13	
Rear	BR70-13	
Inflation pressure	Sedan & Hard top	Wagon
Front	26 psi	24 psi
Rear	26 psi	30 psi

FRONT SUSPENSION

Type	Strut, coil spring
Coil spring	
Spring constant	2.05 kg/mm (115 lb/in)
Wire diameter	12 5 mm (0.49 in)
Coil diameter	124 mm (4 88 in)
Free length	375 mm (14 76 in)
Fitting length	203 mm (7 99 in)
Fitting load	340.5 ~ 367 5 kg (751 ~ 810 lb)

REAR SUSPENSION (Sedan & Hard top)

Type	Leaf spring
Leaf spring	
Spring constant	2 3 kg/mm (129 lb/in)
Number of leaves	5
Length	1,150 mm (45.28 in)
Width	50 mm (1.97 in)
Thickness	6 mm (0.24 in)

REAR SUSPENSION (Rotary Wagon)

Type	Leaf spring
Leaf spring	
Spring constant	2.5 ~ 4.5 kg/mm (140 ~ 252 lb/in)
Number of leaves	5
Length	1,150 mm (45.28 in)
Width	60 mm (2 36 in)
Thickness	
No. 1, 2, 3	6 mm (0.24 in)
No. 4	5 mm (0.20 in)
No. 5	12 mm (0.47 in)

DIMENSIONS

Sedan

Overall length	4,534 mm (179 in)
Overall width	1,660 mm (65 in)
Overall height	1,410 mm (56 in)
Wheel base	2,510 mm (99 in)
Tread	
Front	1,380 mm (54 in)
Rear	1,370 mm (54 in)
Min. road clearance	160 mm (6 in)
Min. turning radius	5.0 m (16 ft 5 in)
Seating capacity	4

Hard top

Overall length	4,534 mm (179 in)
Overall width	1,665 mm (66 in)
Overall height	1,380 mm (54 in)
Wheel base	2,510 mm (99 in)
Tread	
Front	1,380 mm (54 in)
Rear	1,370 mm (54 in)
Min road clearance	160 mm (6 in)
Min turning radius	5.0 m (16 ft 5 in)
Seating capacity	4

Rotary wagon

Overall length	4,643 mm (183 in)
Overall width	1,660 mm (65 in)
Overall height	1,420 mm (56 in)
Wheel base	2,510 mm (99 in)
Tread	
Front	1,380 mm (54 in)
Rear	1,370 mm (54 in)
Min road clearance	160 mm (6 in)
Min turning radius	5.0 m (16 ft 5 in)
Seating capacity	4

TIGHTENING TORQUE

	m-kg	ft-lb
Engine		
Oil pump sprocket	3.0 ~ 3.5	22 ~ 25
Oil pan	0.7 ~ 1.0	5 ~ 7
Inlet manifold	1.6 ~ 2.3	12 ~ 17
Thermal reactor	3.0 ~ 5.5	22 ~ 40
Spark plugs	1.3 ~ 1.8	9 ~ 13
Eccentric shaft pulley	10 ~ 12	72 ~ 87
Oil pressure switch	1.2 ~ 1.8	9 ~ 13
Temperature gauge unit	0.7 ~ 0.8	5 ~ 6
Tension bolts	3.2 ~ 3.8	23 ~ 27
Water temperature switch	1.0 ~ 1.8	7 ~ 13
Clutch		
Flywheel	40.0 ~ 50.0	289 ~ 362
Clutch cover	1.8 ~ 2.7	13 ~ 20
Transmission		
Shift lock spring cap	4.5 ~ 5.5	33 ~ 40
Plug for interlock pin hole	1.0 ~ 1.5	7 ~ 11
Reverse lock spring cap	4.5 ~ 5.5	33 ~ 40
Control lever to control rod end	2.8 ~ 3.4	20 ~ 25
Shift fork set bolts	0.8 ~ 1.2	6 ~ 9
Main shaft lock nut	20.0 ~ 28.0	145 ~ 203
Under cover	0.6 ~ 0.9	4 ~ 7
Reverse lamp switch		
4-speed	2.5 ~ 3.5	18 ~ 25
5-speed	3.0 ~ 4.0	22 ~ 29
Automatic transmission		
Drive plate to crankshaft	3.7 ~ 5.5	27 ~ 40
Drive plate to torque converter	3.5 ~ 5.0	25 ~ 36
Converter housing to engine	3.2 ~ 4.7	23 ~ 34
Converter housing to transmission case	4.5 ~ 5.5	33 ~ 40
Extension housing to transmission case	2.0 ~ 2.5	14 ~ 18

	m-kg	ft-lb
Oil pan	0.5 ~ 0.7	3.6 ~ 5.1
Piston stem (when adjusting band brake)	1.2 ~ 1.5	9 ~ 11
Piston stem lock nut	1.5 ~ 4.0	11 ~ 29
Servo piston retainer	1.0 ~ 1.5	7.2 ~ 11
Servo cover	0.5 ~ 0.7	3.6 ~ 5.1
One-way clutch inner race	1.3 ~ 1.8	9 ~ 13
Control valve body to transmission case	0.55 ~ 0.75	4.0 ~ 5.4
Lower valve body to upper valve body	0.3 ~ 0.4	2.2 ~ 2.9
Side plate to control valve body	0.25 ~ 0.35	1.8 ~ 2.5
Reamer bolt of control valve body	0.5 ~ 0.7	3.6 ~ 5.1
Oil strainer	0.3 ~ 0.4	2.2 ~ 2.9
Governor valve body to oil distributor	0.5 ~ 0.7	3.6 ~ 5.1
Oil pump cover	0.6 ~ 0.8	4.3 ~ 5.8
Inhibitor switch	0.5 ~ 0.7	3.6 ~ 5.1
Manual shaft lock nut	3.0 ~ 4.0	22 ~ 29
Oil cooler pipe set bolt	1.6 ~ 2.4	12 ~ 17
Oil pressure test plug	0.5 ~ 1.0	3.6 ~ 7.2
Actuator for parking rod to extension housing	0.8 ~ 1.1	5.8 ~ 8.0
Propeller shaft		
Yoke to rear axle companion flange	3.5 ~ 3.8	25 ~ 27
Yoke to front propeller shaft	16.0 ~18.0	116 ~130
Center bearing support	3.8 ~ 5.3	27 ~ 38
Rear axle		
Ring gear	9.0 ~11.0	65 ~ 80
Differential side bearing caps	3.2 ~ 4.7	23 ~ 34

	m-kg	ft-lb
Companion flange to pinion	14 ~ 20	101 ~ 145
Steering		
Steering wheel nut	3.0 ~ 4.0	22 ~ 29
Steering gear housing to frame	4.4 ~ 5 5	32 ~ 40
Pitman arm to sector shaft	15 ~ 18	108 ~ 130
Idler arm bracket to frame	4 4 ~ 5.5	32 ~ 40
Idler arm to center link	2 5 ~ 3 5	18 ~ 25
Pitman arm to center link	3.0 ~ 4.5	22 ~ 32
Tie rod to center link	3.0 ~ 4.5	22 ~ 32
Tie rod to knuckle arm	3.0 ~ 4.5	22 ~ 32
Tie rod lock nut	7 0 ~ 8.0	51 ~ 58
Wheels		
Wheel bolts	9.0 ~ 10 0	65 ~ 72
Suspension		
Suspension arm to cross member	7.5 ~ 9.5	54 ~ 69
Knuckle arm to shock absorber	10.4 ~ 14.0	75 ~ 101
Suspension arm ball joint to knuckle arm	3.5 ~ 5.0	25 ~ 36
Front shock absorber		
Piston rod to mounting block	3.5 ~ 5.0	25 ~ 36
Seal cap nut	5 0 ~ 6 0	36 ~ 43
Piston rod nut	1 35 ~ 1 65	10 ~ 12
Base valve nut	0 15	1 0
"U" bolts		
Sedan & Hard top	3 8 ~ 4 6	27 ~ 33
Rotary wagon	6 5 ~ 8.2	47 ~ 59
Spring pin nuts		
Sedan & Hard top	3.2 ~ 4 7	23 ~ 34
Rotary wagon	5 6 ~ 8.2	41 ~ 59
Spring pin to flame bracket	1 6 ~ 2.3	12 ~ 17
Shackle pin nuts		
Sedan & Hard top	3 2 ~ 4 7	23 ~ 34
Rotary wagon	5.6 ~ 8.2	41 ~ 59
Unless otherwise specified		
6T		
6 mm bolt/nut	0 7 ~ 1 0	5 ~ 7
8 mm bolt/nut	1 6 ~ 2.3	12 ~ 17
10 mm bolt/nut	3 2 ~ 4.7	23 ~ 34
12 mm bolt/nut	5 6 ~ 8.2	41 ~ 59
14 mm bolt/nut	7 7 ~ 10.5	56 ~ 76
8T		
6 mm bolt/nut	0 8 ~ 1 2	6 ~ 9
8 mm bolt/nut	1 8 ~ 2.7	13 ~ 20
10 mm bolt/nut	3.7 ~ 5 5	27 ~ 40
12 mm bolt/nut	6 4 ~ 9.5	46 ~ 69
14 mm bolt/nut	10.4 ~ 14.0	75 ~ 101

Toyo Kogyo Co.,Ltd.
©1976 Printed in Japan
1008-10-76H LE-FUC

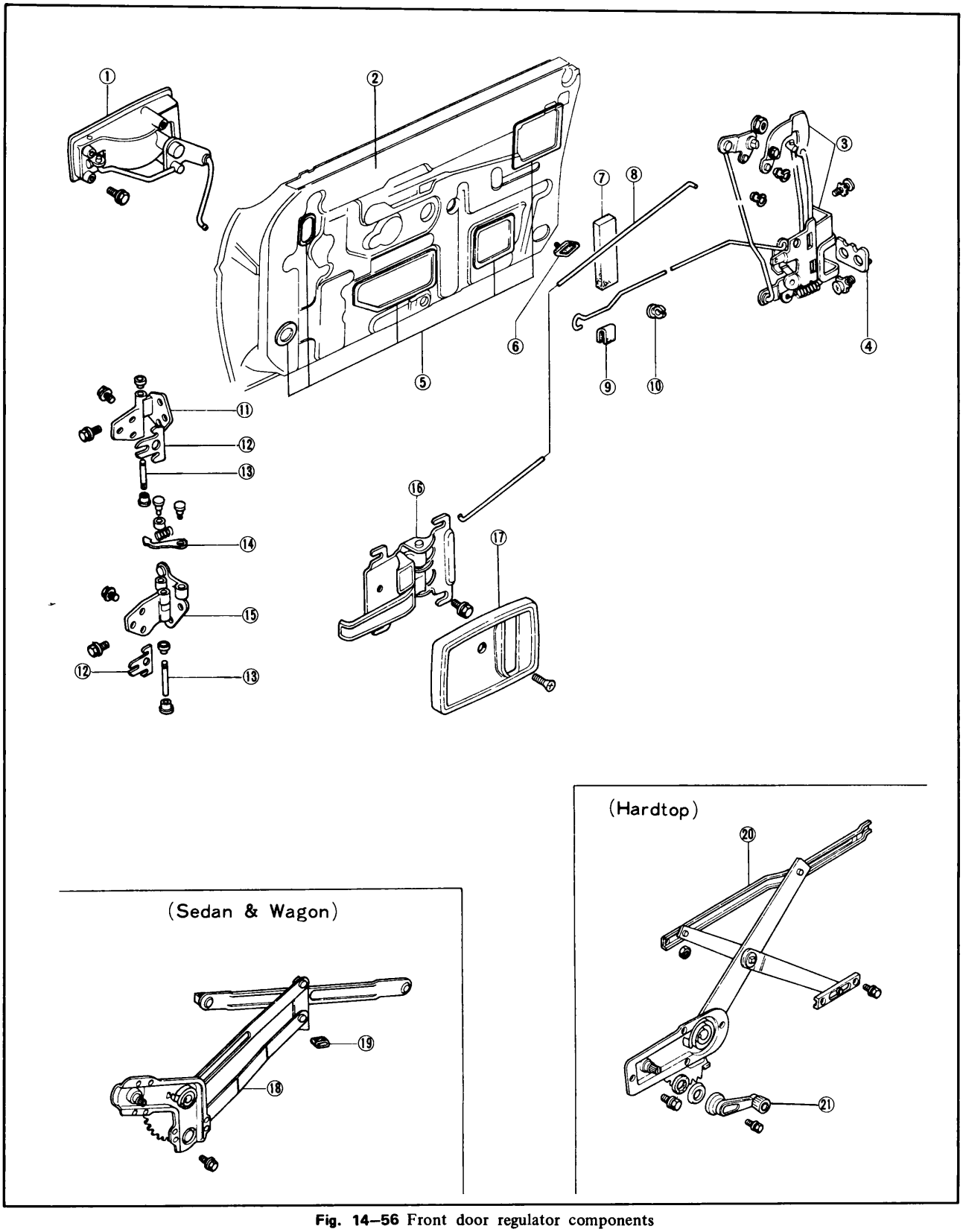

Fig. 14–56 Front door regulator components

1. Outer handle
2. Door body
3. Door lock
4. Striker
5. Watershield
6. Door cushion
7. Insulator
8. Inner handle rod
9. Pad
10. Rod holder
11. Door hinge upper
12. Door hinge lower shim
13. Hinge pin
14. Check lever
15. Door hinge lower
16. Inner handle
17. Inner handle cover
18. Window regulator (Sedan & Wagon)
19. Cushion (Sedan)
20. Window regulator (Hard Top)
21. Window regulator handle

14–K. FRONT DOOR (Hard Top)

14–K–1. Door Window Regulator and Glass

a. Removing door window regulator and glass
1. Remove the regulator handle.
2. Remove the inner handle cover.
3. Remove the garnish and arm rest.
4. Remove the door trim.
5. Fully open the window glass.
6. Remove the belt line mould.
7. Remove the door screen.
8. Remove the nuts.
9. Remove the window glass assembly from the regulator and take it upward.
10. Remove the nut and take out the regulator from the service hole.

b. Checking door window regulator
1. Inspect the regulator gear and spring for wear and damage. If defective, replace the regulator assembly.
2. If necessary, apply grease to each operation portion.

c. Installing door window regulator and glass
Follow the removal procedures in the reverse order.

Note:
Adjust the regulator and check the operation of the regulator.

14–K–2. Inner Handle, Door Lock and Outer Handle

a. Removing inner handle
1. Remove the door trim.
2. Remove the door screen.
3. Remove the bolt joint.
4. Remove the rod from rod holder and remove the inner handle.

b. Installing inner handle
Follow the removal procedures in the reverse order.

Note:
Adjust the inner handle and inner lock lower with bolt and nut in order to prevent the free play of them.

c. Removing door lock
1. Remove the door window glass. (Refer to 14–K–1)
2. Remove the inner handle.
3. Incline forward the glass guide by removing the bolts and loosening the nuts.
4. Take out the door lock from the service hole by removing the nuts, joints, bolts and screens.

d. Installing door lock
Follow the removal procedures in the reverse order.

e. Removing outer handle
1. Remove the door window glass. (Refer to 14–K–1)

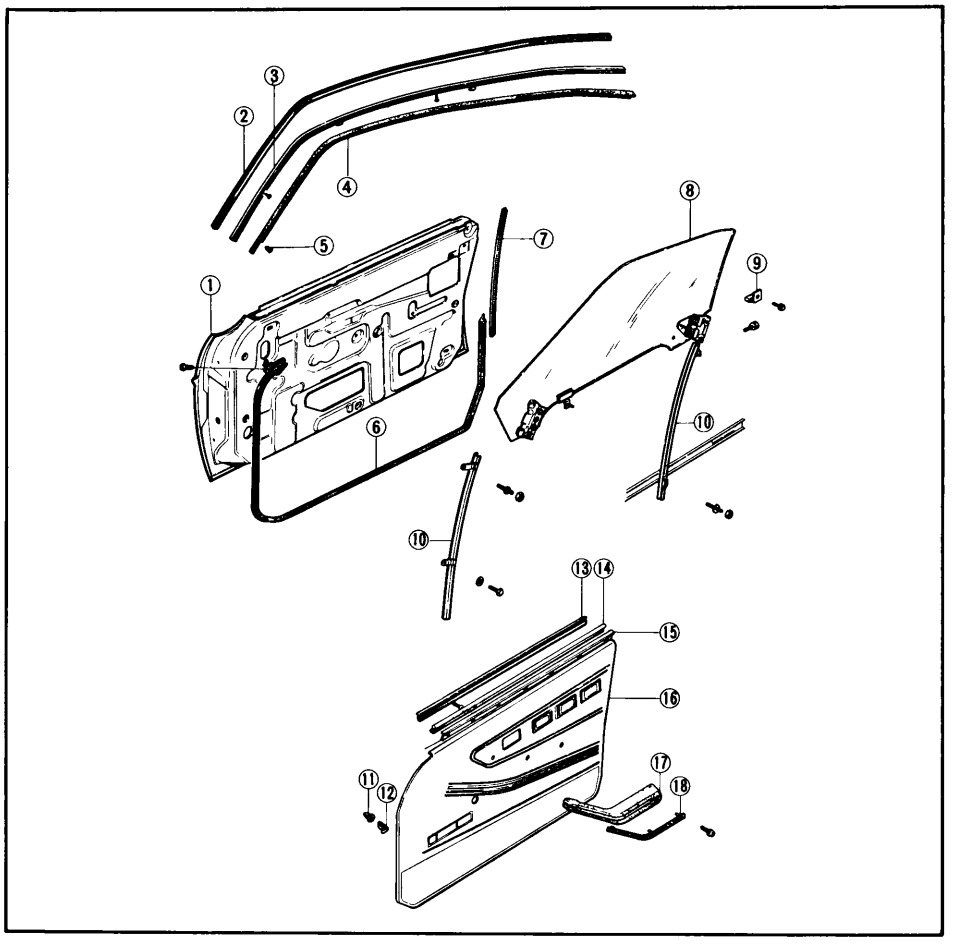

Fig. 14–57
Front door components (Hard Top)
1. Door body
2. Seaming welt (Roof side)
3. Weatherstrip retainer
4. Weatherstrip roof side
5. Weatherstrip fastener
6. Door body weatherstrip
7. Seaming welt (Door body rear)
8. Door glass
9. Glass stopper
10. Glass guide
11. Fastener cap
12. Trim fastener
13. Outer weatherstrip
14. Weatherstrip
15. Mould
16. Door trim
17. Arm rest
18. Arm rest garnish

2. Remove the joint and bolt.
3. Remove the bolt and take out the outer handle.

f. Installing outer handle
Follow the removal procedures in the reversr order after adjusting the joint not to play.

Note:
When removing or installing the door lock, nylon bush and joint should be changed.

14–K–3. Front Door Glass Regulator Adjustment

a. Horizontal adjustment of the window
1. Raise the window to full up position.
2. Make the horizontal adjustment of the glass by moving the regulator guide No. 2 up and down and tighten it.
3. Make sure that the regulator guide No. 2 is parallel with the standard line.
4. Make sure that the glass moves smoothly.

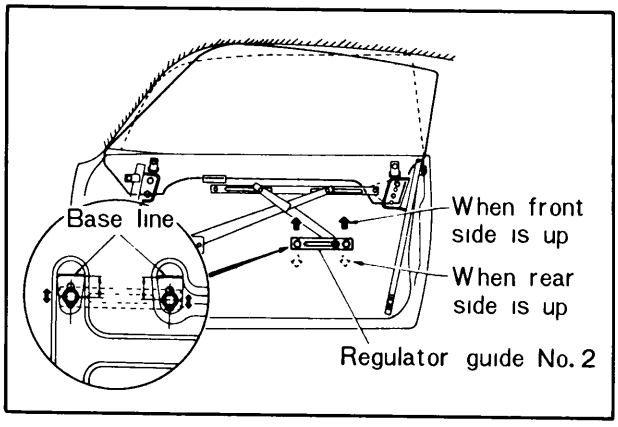

Fig. 14–58 Horizontal adjustment

b. The fore and aft adjustment of the window
1. Tighten the upper bolt of the glass guide B at the center of the long hole.
2. Push rearwards the glass guide A as shown in Fig. 14–59 and tighten the upper bolt.

Note:
Make sure that the glass does not play back and forth.

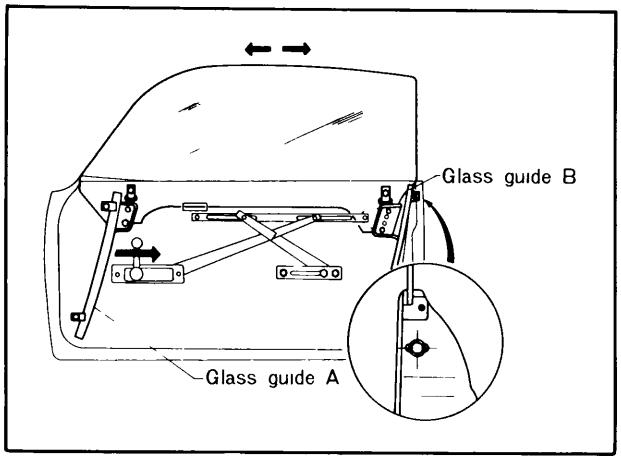

Fig. 14–59 Fore and aft adjustment

c. Vertical adjustment of the window
With the window glass raised to full up position, adjust the up stoppers (Front and Rear) and tighten the up stopper bolts.

Note:
Make sure that the regulator touches both up stoppers. The clearance between the top of glass and weatherstrip is **0 ~ 2 mm (0 ~ 0.08 in)**, when door is opened and closed.

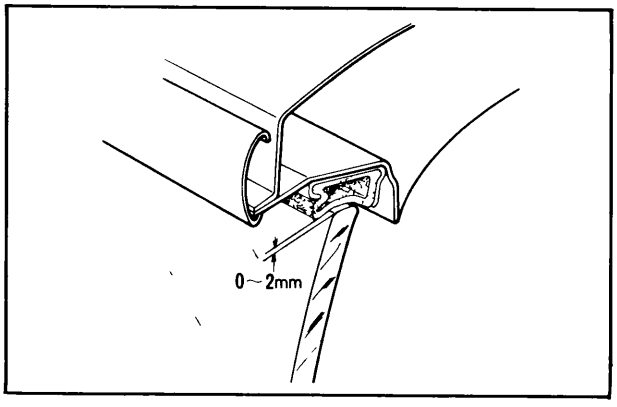

Fig. 14–60 Vertical adjustment

d. The in and out adjustment of the window
With the window raised adjust the glass guide lower adjusting bolts so that the glass circumference touches cab side weatherstrip evenly.

Note:
Make sure there is no space between the inner panel and the brim of the adjust bolt.

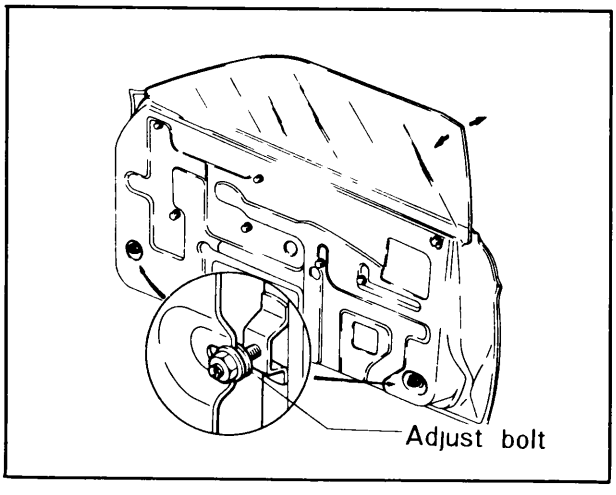

Fig. 14–61 In and out adjustment

e. Final check
1. If it is impossible to adjust the glass by using glass guide lower adjusting bolts only, adjust it by the upper bolt of the glass guide B.
Check the glass contact with the outer weatherstrip.
2. Adjust hte lower glass guide to prevent the glass from playing back and forth and tighten it.
In principle, it is advisable to tighten the glass guide B (lower) at the center of the long hole and adjust the glass guide A.

Note:
After adjusting, apply the putty to the bolt, nut and long hole and paste the door screen.

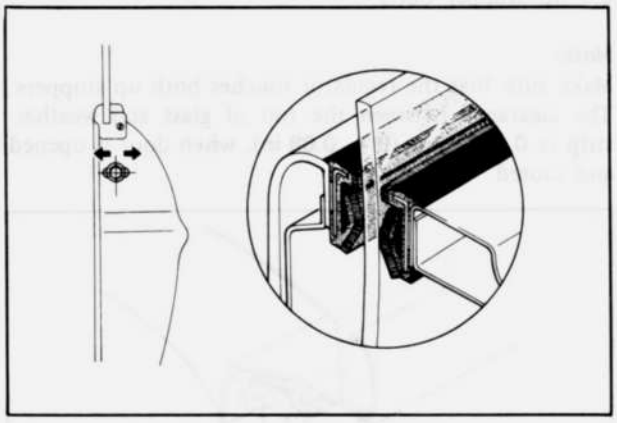

Fig. 14–62 Adjusting bolt

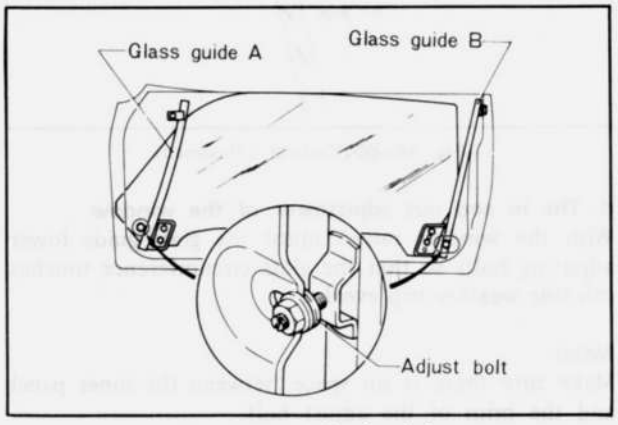

Fig. 14–63 Adjusting bolts

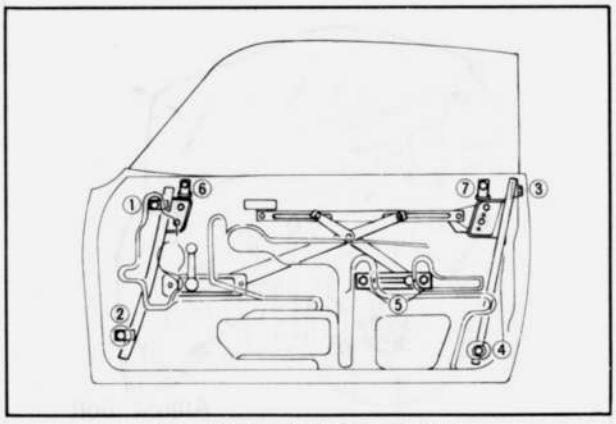

Fig. 14–64 Adjusting position

Horizontal adjustment	**5**
Fore and aft adjustment	**1, 2, 4**
Vertical adjustment	**6, 7**
In and out adjustment	**2, 4, 3**

14–L. REAR DOOR

14–L–1. Stationary Glass

a. Removing stationary glass

1. Lower the window glass all the way.
2. Remove the trim panel and watershield.

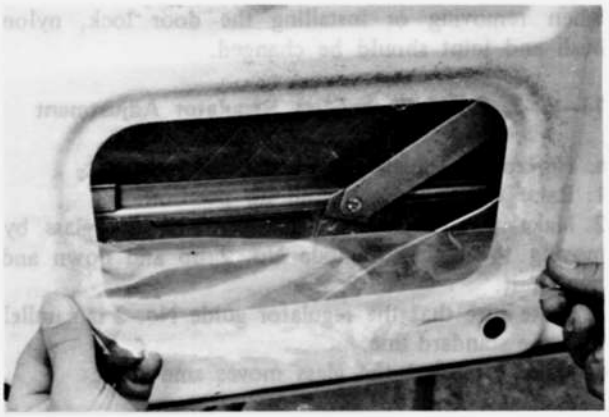

Fig. 14–65 Removing watershield

3. Remove the screws attaching the upper end of the division bar to the window frame.



Fig. 14–66 Removing upper end attaching screws

4. Remove the bolt attaching the lower end of the division bar to the door panel.

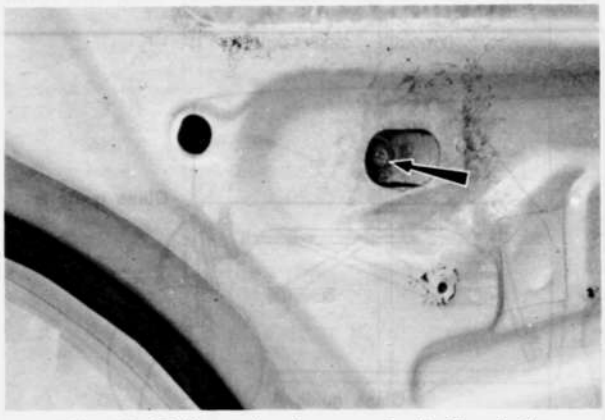

Fig. 14–67 Removing lower end attaching bolts

5. Pull the division bar off the stationary glass and

14–O. TOP CEILING

14–O–1. Removing Top Ceiling

1. Remove the sun visors, interior mirror, interior lamp, assist straps, overhead console (if equipped), etc.



Fig. 14–83 Removing interior lamp

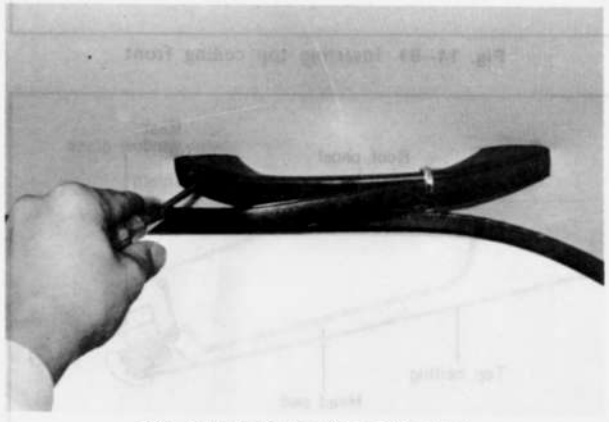

Fig. 14–84 Removing assist strap

2. Remove the front pillar trims and rear package tray trim panel.

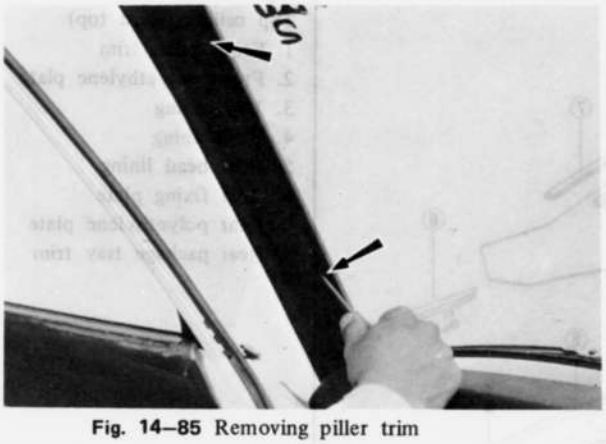

Fig. 14–85 Removing piller trim

3. Strip off the seaming welts from the body flange and tear the cemented surface of the top ceiling from the outside of the flange.
4. Remove the polyethylene plates of the top ceiling from the inserting points of the body.
5. Remove the listing wires and top ceiling.

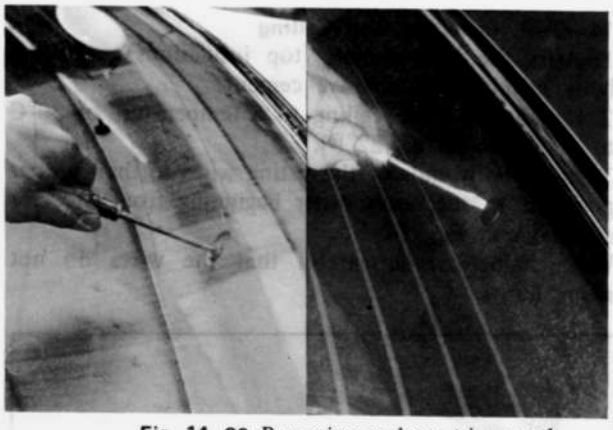

Fig. 14–86 Removing package trim panel



Fig. 14–87 Removing seaming welt



Fig. 14–88 Tearing of ceiling cemented surface

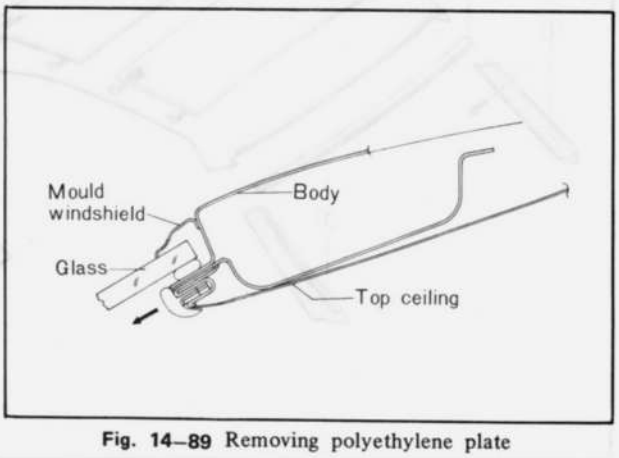

Fig. 14–89 Removing polyethylene plate

14–O–2. Installing Top Ceiling

1. Affix the head linings (top insulations) onto the body ceiling with adhesive cement.
2. Heat up the top ceiling to a temperature of 30°C to 50°C (86°F to 122°F).
3. Insert both ends of the listing wires to their proper positions in successive order beginning from the rear as shown in Fig. 14–90.
When doing so, be careful that the wires do not swing down.

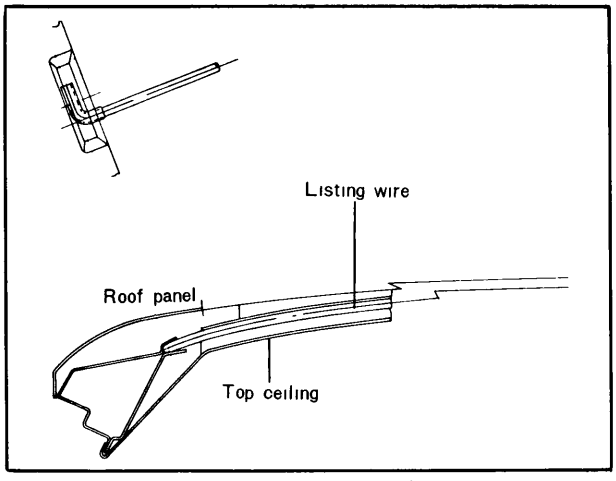

Fig. 14–90 Listing wire

4. Insert the front and rear polyethylene plates of the top ceiling to the inserting point of the body.

Note:
When inserting the top ceiling, if the guide made of plastic plate is used, you can insert it without touching the weaving point.

5. Apply neoprene adhesive cement to the outside of the body flange.

6. After one or two minutes, pull the top ceiling from both side to avoid any slackening and glue both side onto the body flange.
7. After the top ceiling is properly attached to the body flange, clip off the all protruding edges.
8. Install the seaming welts, rear view mirror, sun visors, interior lamp, assist handles, front pillar trims, rear package tray trim, overhead console (if equipped), etc.

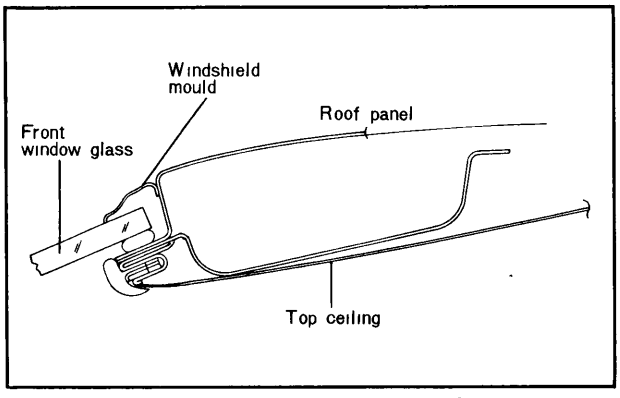

Fig. 14–91 Inserting top ceiling front

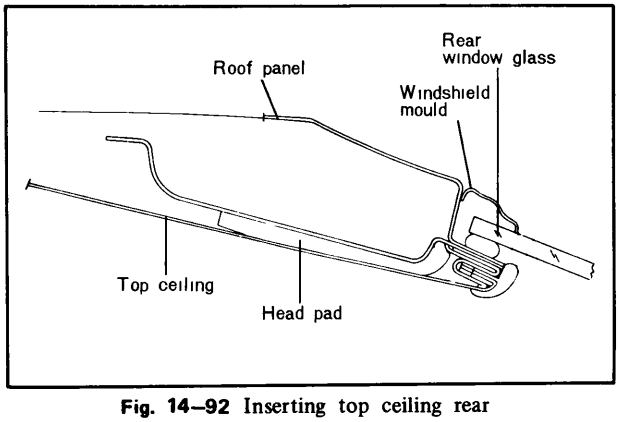

Fig. 14–92 Inserting top ceiling rear

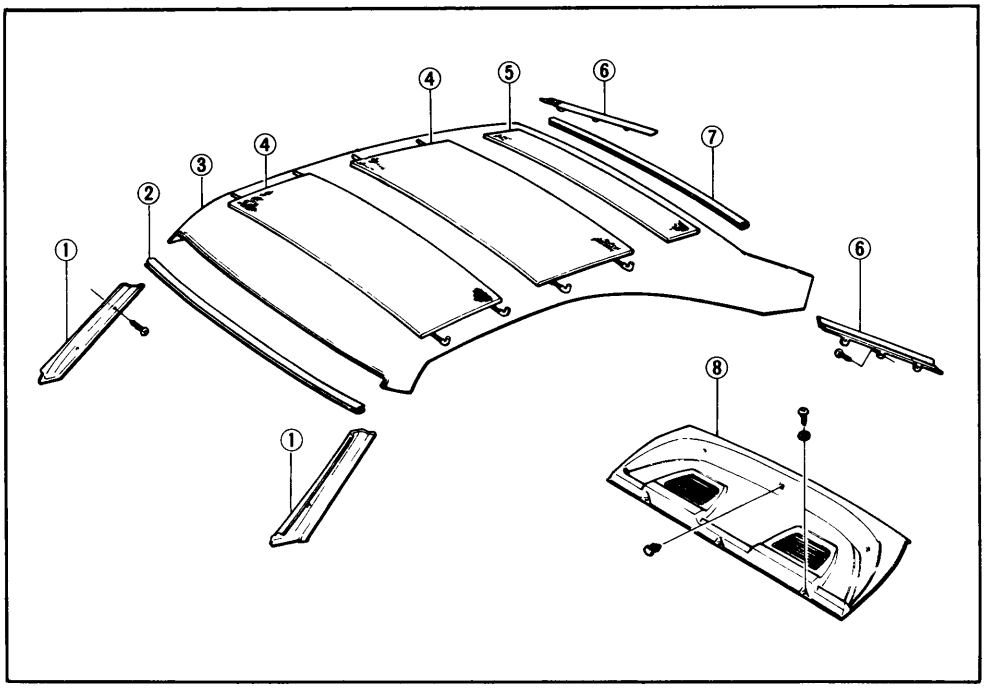

Fig. 14–93
Top ceiling (Hard top)
1. Front pillar trim
2. Front polyethylene plate
3. Top ceiling
4. Head lining
5. Rear head lining
6. Rear fixing plate
7. Rear polyethylene plate
8. Rear package tray trim

14–P. INSTRUMENT PANEL

14–P–1. Removing Instrument Panel Assembly

1. Pull the console pad upward and remove the console pad. Please note that the attaching clips give a little resistance when pulling the console pad out.



Fig. 14–94 Removing console pad

2. Loosen the center console attaching screws and move the console rearward.
3. Remove the screws attaching the left and right side garnishes to the instrument panel and remove the garnishes.
4. Remove the steering wheel and column cover as described in **Par 15–C–2.**

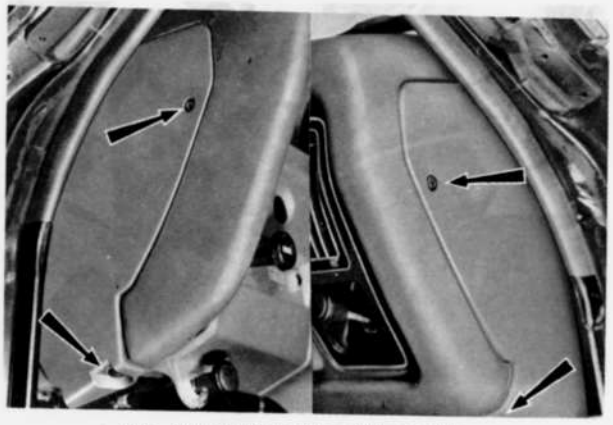

Fig. 14–95 Removing side garnish

5. Remove the bolts attaching the instrument frame junction and remove the junction.
6. Remove the steering shaft bracket attaching nuts and disconnect the steering shaft from the instrument panel.
7. Remove the screw attaching the ventilator knob and screw out the knob from the shaft.
Remove the nut attaching the ventilator to the decoration panel. Then, remove the ventilator cable away from the decoration panel.
8. Remove the glove box attaching screws and fasteners. Pull the glove box out and disconnect the wirings to the glove box light.
Then, remove the glove box.

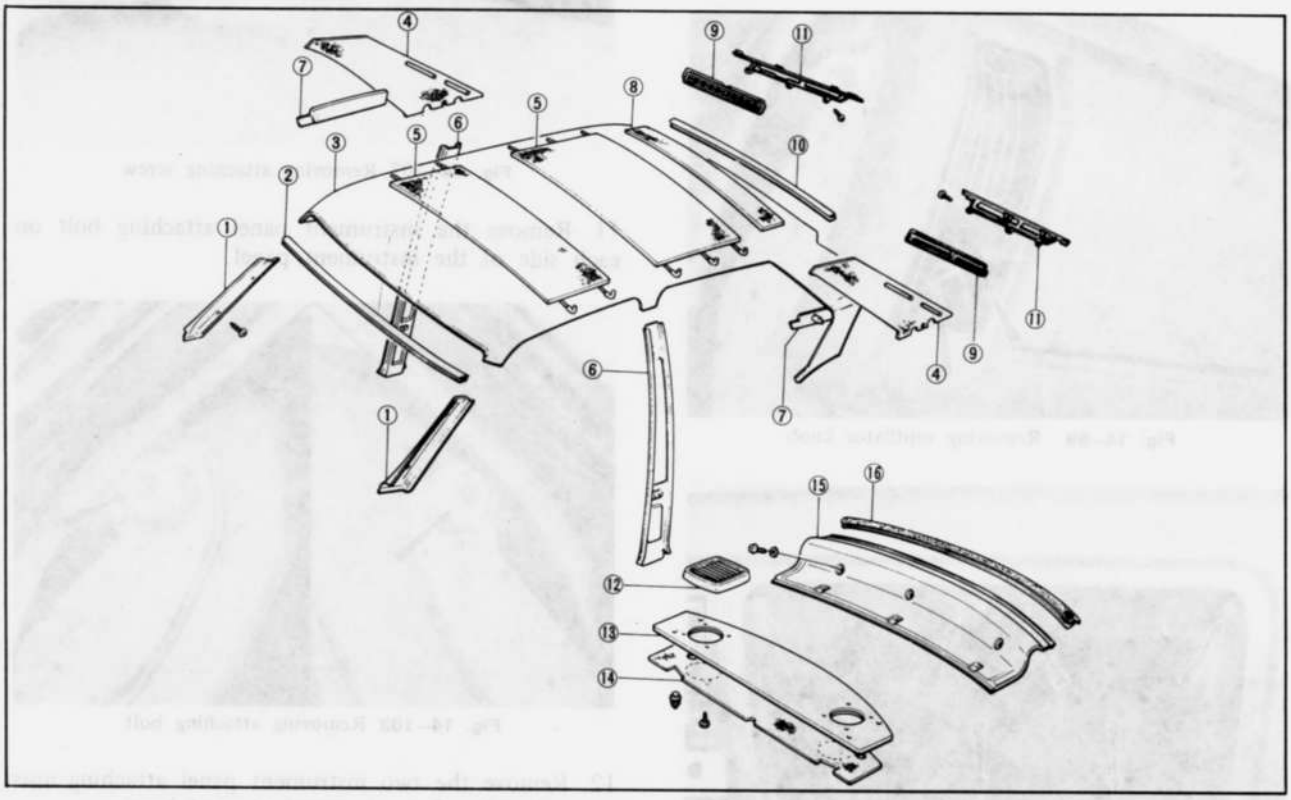

Fig. 14–96 Top ceiling (Sedan)

1. Front pillar trim
2. Front polyethylene plate
3. Top ceiling
4. Rear pillar pad
5. Head lining
6. Center pillar trim
7. Ceiling end
8. Rear head lining
9. Air grille
10. Rear polyethylene plate
11. Rear fixing plate
12. Speaker grille
13. Rear package tray trim
14. Insulator
15. Rear package trim back
16. Back trim brim

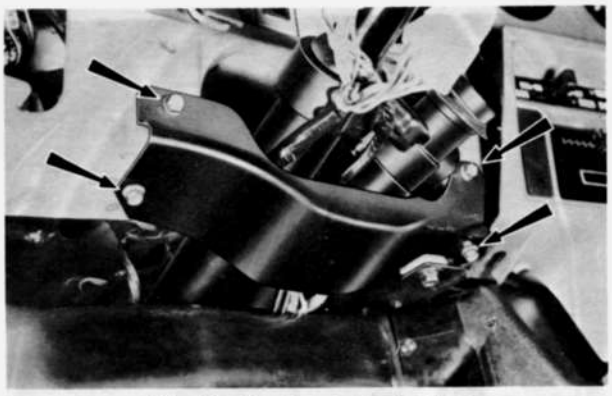

Fig. 14–97 Removing junction



Fig. 14–98 Removing steering shaft bracket



Fig. 14–99 Removing ventilator knob

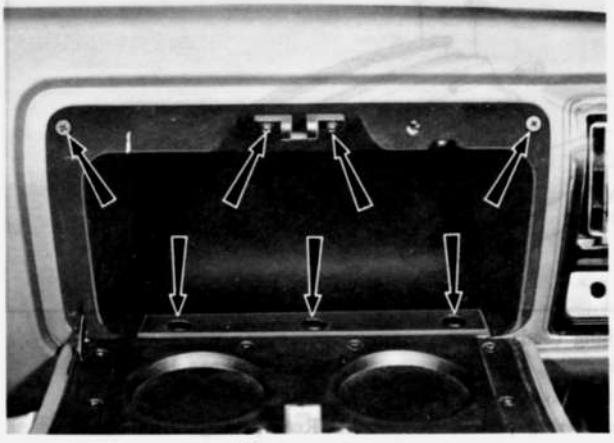

Fig. 14–100 Removing glove box

9. Disconnect the speedometer cable from the instrument and three heater control wires from the heater.

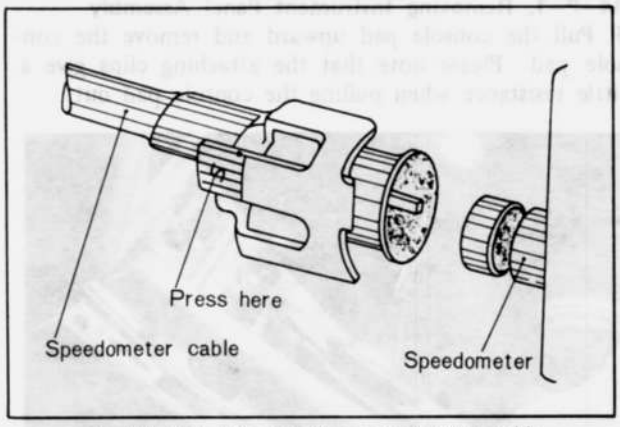

Fig. 14–101 Disconnecting speedometer cable

10. Remove the upper garnish attaching screw.

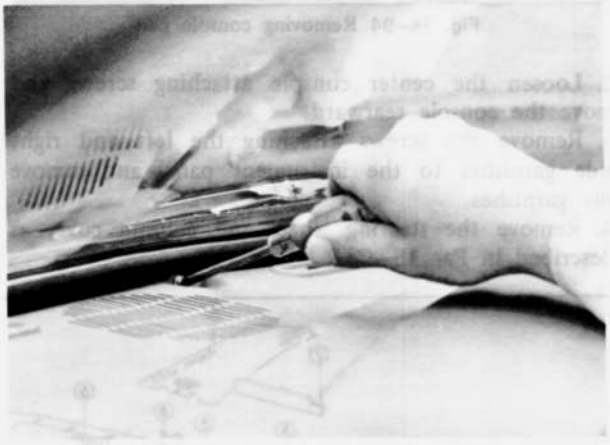

Fig. 14–102 Removing attaching screw

11. Remove the instrument panel attaching bolt on each side of the instrument panel.

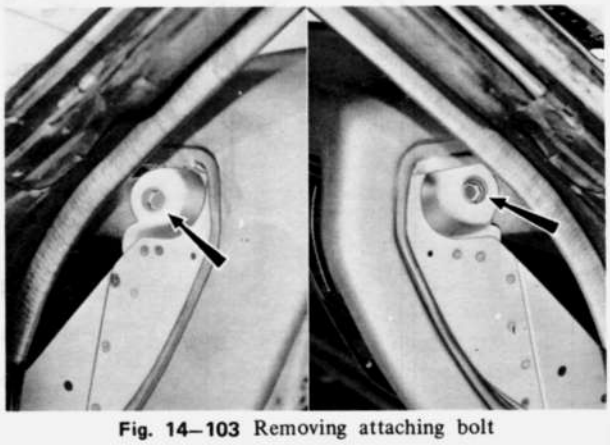

Fig. 14–103 Removing attaching bolt

12. Remove the two instrument panel attaching nuts on each side of the instrument panel lower.
13. Remove the two instrument panel attaching bolts located near the steering shaft bracket.
14. Remove the two instrument panel attaching bolts through the glove box hole.