Parts Catalog

RX-7 U.S.A.&Canada ('79 ► '80)

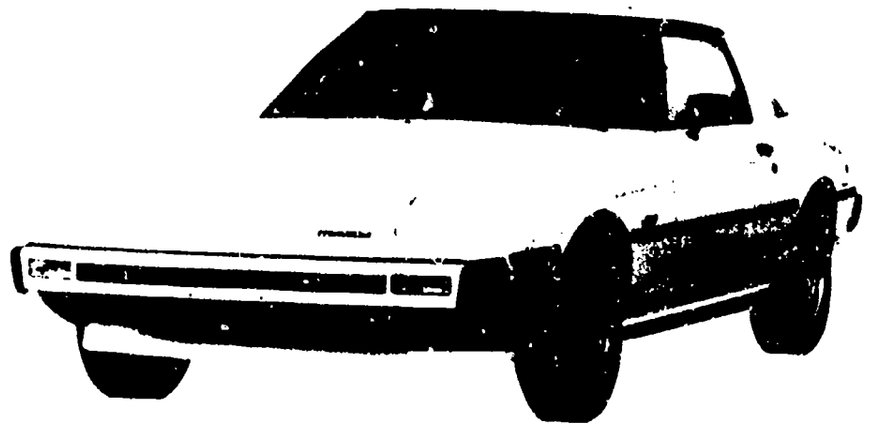

SA22C-500001~650000

CONTENTS

The following charts provide you with the general layout and contents location of Mazda parts catalogs, but some sections may vary slightly in detail.

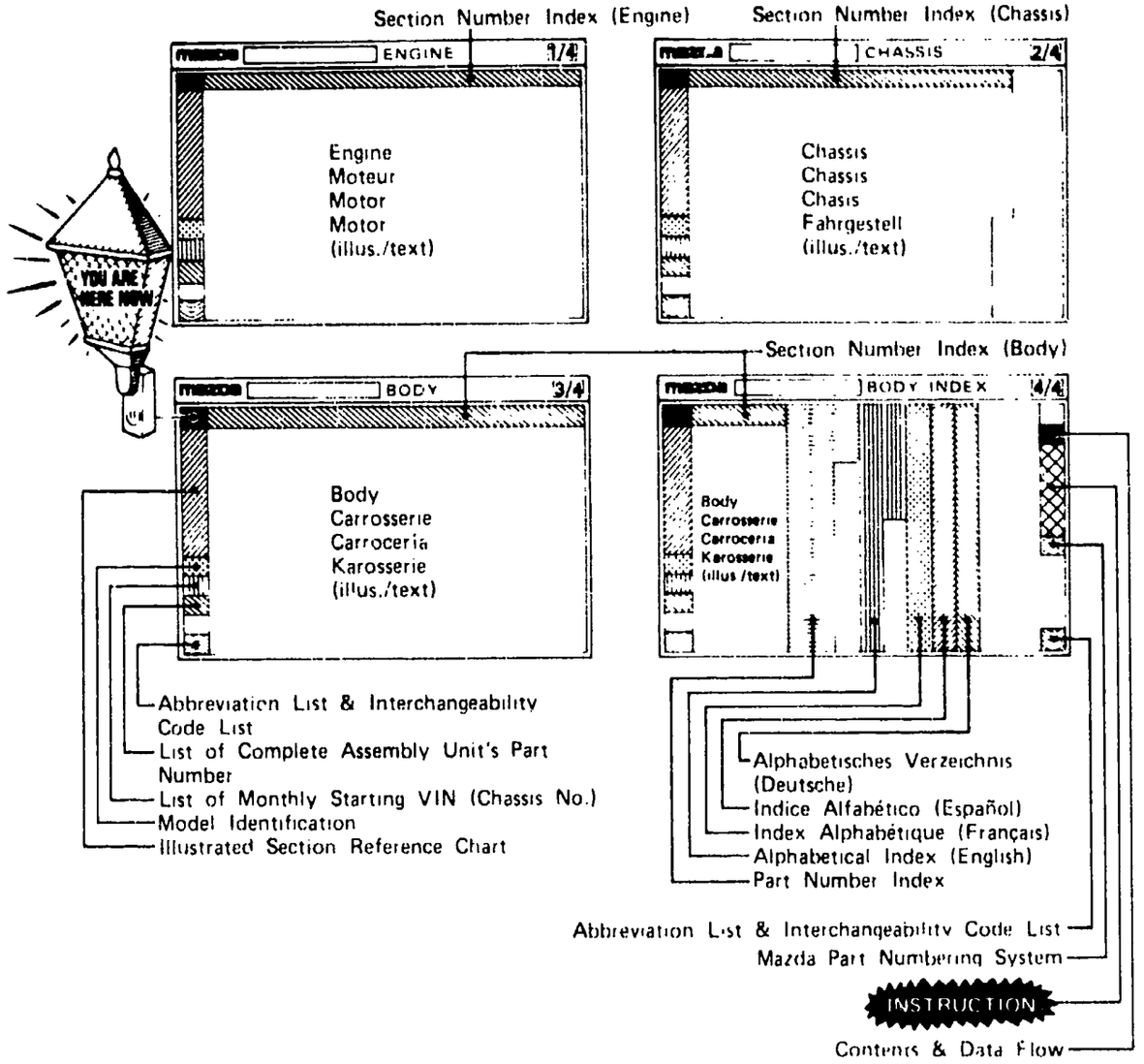

May '83 (FINAL)

Catalog NO. 1111-MF-USAA-03

mazda

© 1983 Toyo Kogyo Co., Ltd.

ILLUSTRATED SECTION REFERENCE CHART

ROTARY ENGINE (1/2)

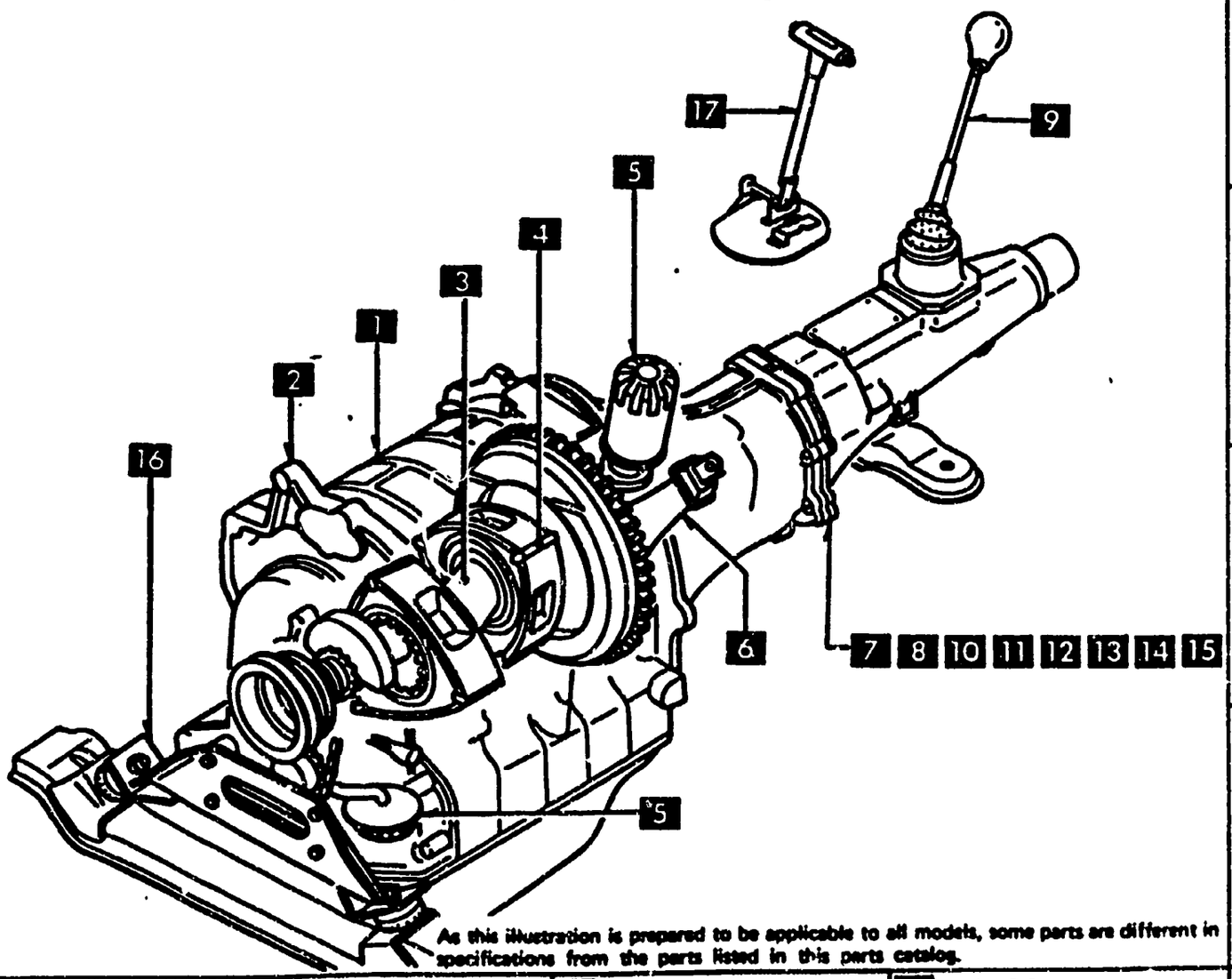

As this illustration is prepared to be applicable to all models, some parts are different in specifications from the parts listed in this parts catalog.

1000A

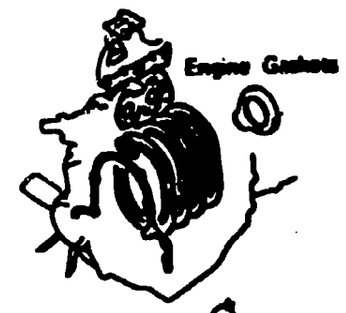

SHORT ENGINE & GASKET SETS

1 1030A

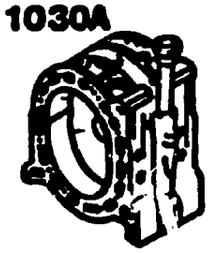

ROTOR HOUSING

2 1040A



OIL PAN & FRONT & REAR HOUSINGS

3 1100A

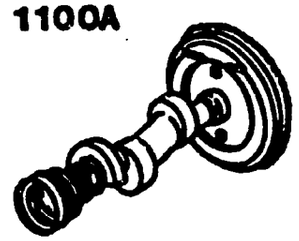

ECCENTRIC SHAFT & FLYWHEEL

4 1110A



ROTOR & RELATED

5 1400A

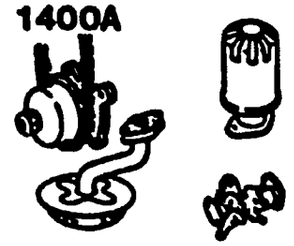

OIL PUMP & FILTER

6 1600A

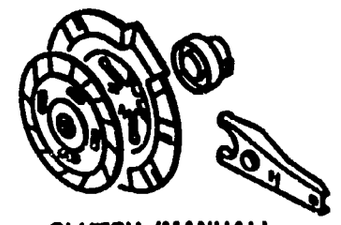

CLUTCH (MANUAL)

7 1700A

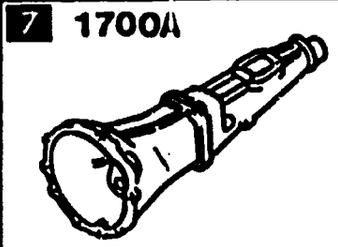

T/MISSION CASE (MANUAL)

8 1710A

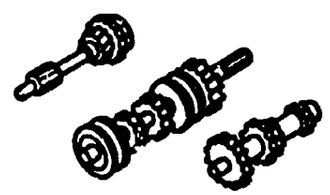

T/MISSION GEARS (MANUAL)

9 1720A

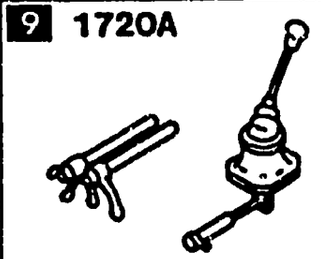

CHANGE CONTROLS (MANUAL)

10 1900A



TORQUE GLIDE (MANUAL)

11 1910A

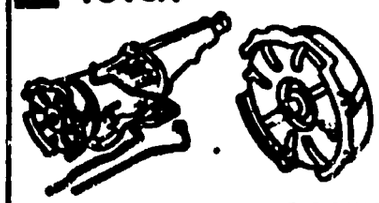

CONVERTER, OIL PUMP & PIPING (AUTOMATIC T/MISSION)

12 1920A

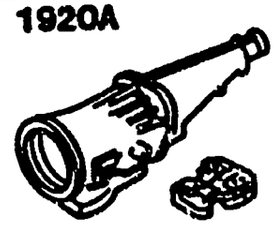

CASE & MAIN CONTROLS (AUTOMATIC T/MISSION)

13 1930A

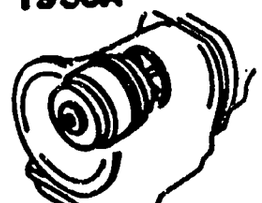

CLUTCH & PLANETARY GEARS (AUTOMATIC T/MISSION)

14 1940A

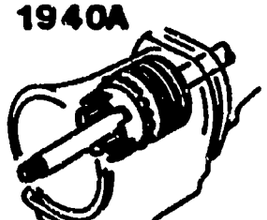

LOW, REVERSE & GOVERNOR (AUTOMATIC T/MISSION)

15 1950A



MANUAL LINKAGE (AUTOMATIC T/MISSION)

16 3900A

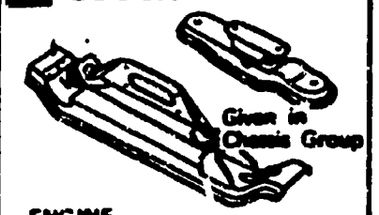

ENGINE & T/MISSION MOUNTINGS

17 4600A

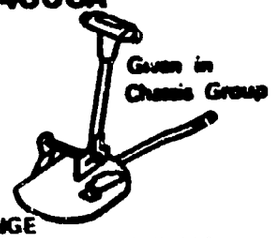

CHANGE CONTROLS (MANUAL)

ILLUSTRATED SECTION REFERENCE CHART

1 1300A



IN. MANIFOLD

2 1310A

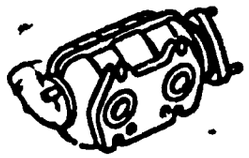

THERMAL REACTOR

3 1320A

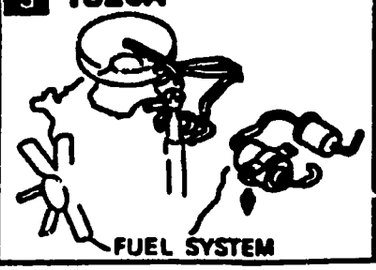

FUEL SYSTEM

4 1330A

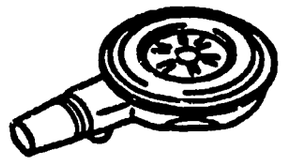

AIR CLEANER

5 1350A



STARTING ASSIST SYSTEM

6 1360A



CARBURETOR

ROTARY ENGINE (2/2)

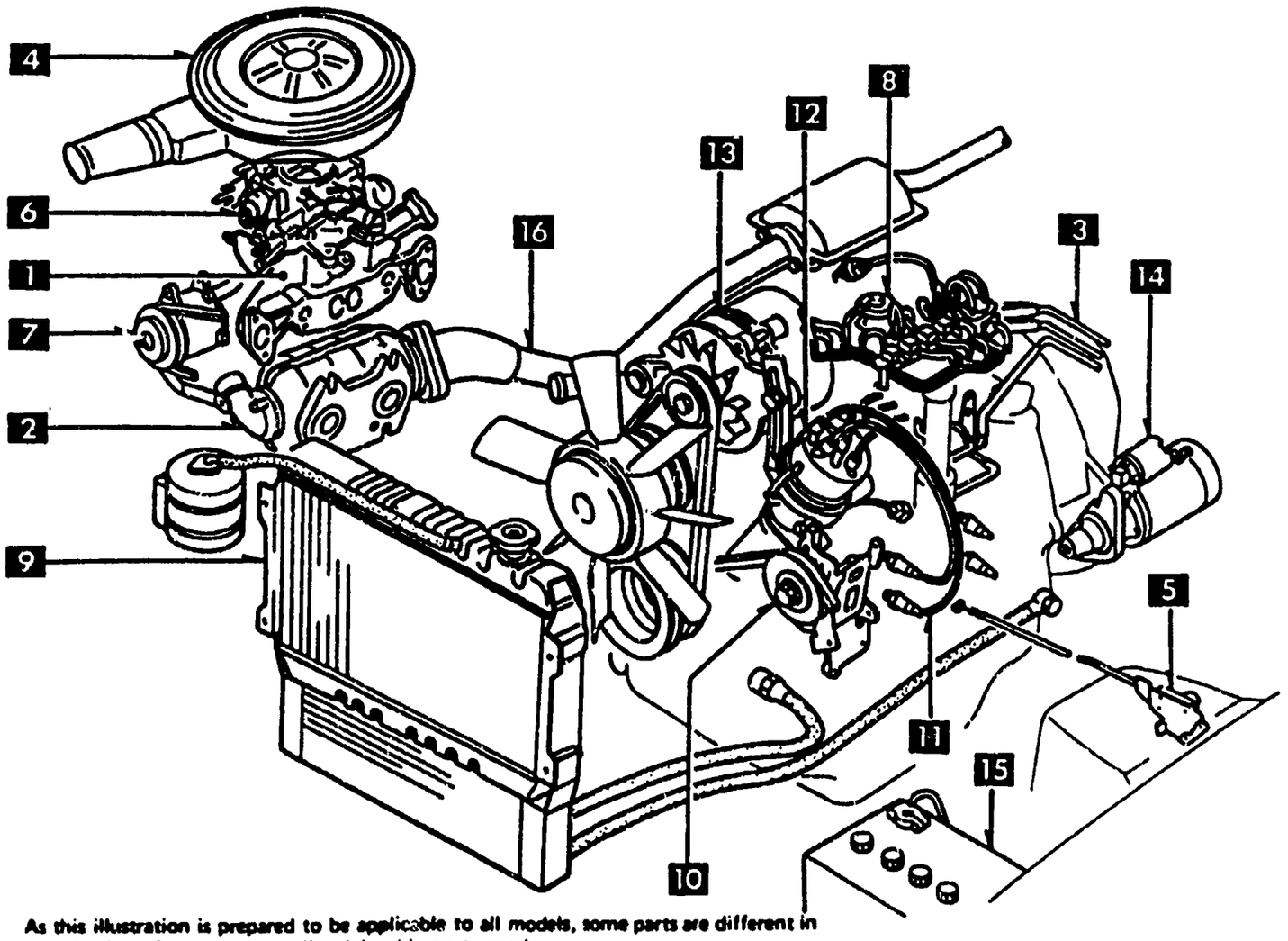

As this illustration is prepared to be applicable to all models, some parts are different in specifications from the parts listed in this parts catalog.

7 1371A

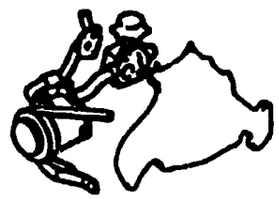

EMISSION CONTROLS (AIR PUMP & CONTROL VALVE)

8 1380A

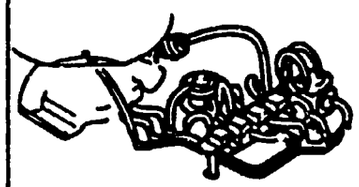

EMISSION CONTROLS (EX. SIDE)

9 1500A

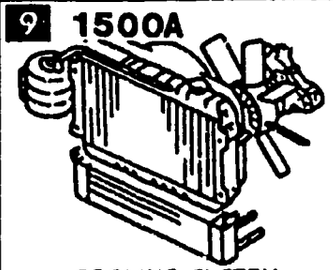

COOLING SYSTEM

10 1580A

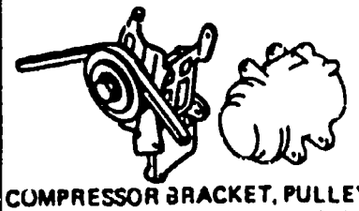

COMPRESSOR BRACKET, PULLEY & BELT (AIR CONDITIONER)

16 4000A

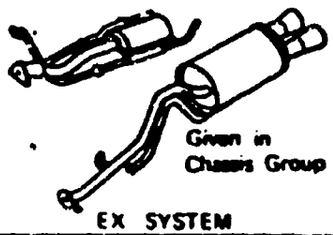

EX SYSTEM

15 1850A

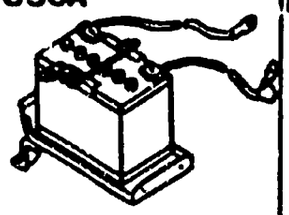

BATTERY & CABLES

14 1840A

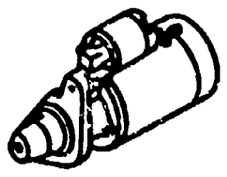

STARTER

13 1830A



ALTERNATOR

12 1820A



DISTRIBUTOR

11 1800A

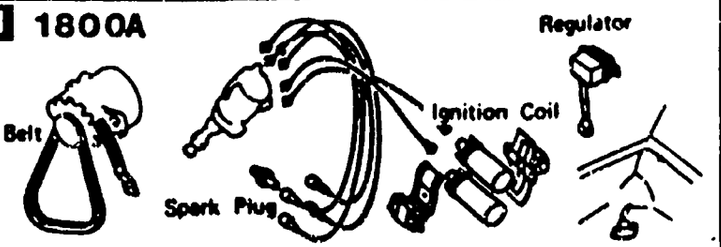

ELECTRICAL SYSTEM (ENGINE)

ILLUSTRATED SECTION REFERENCE CHART

CHASSIS (1/2)

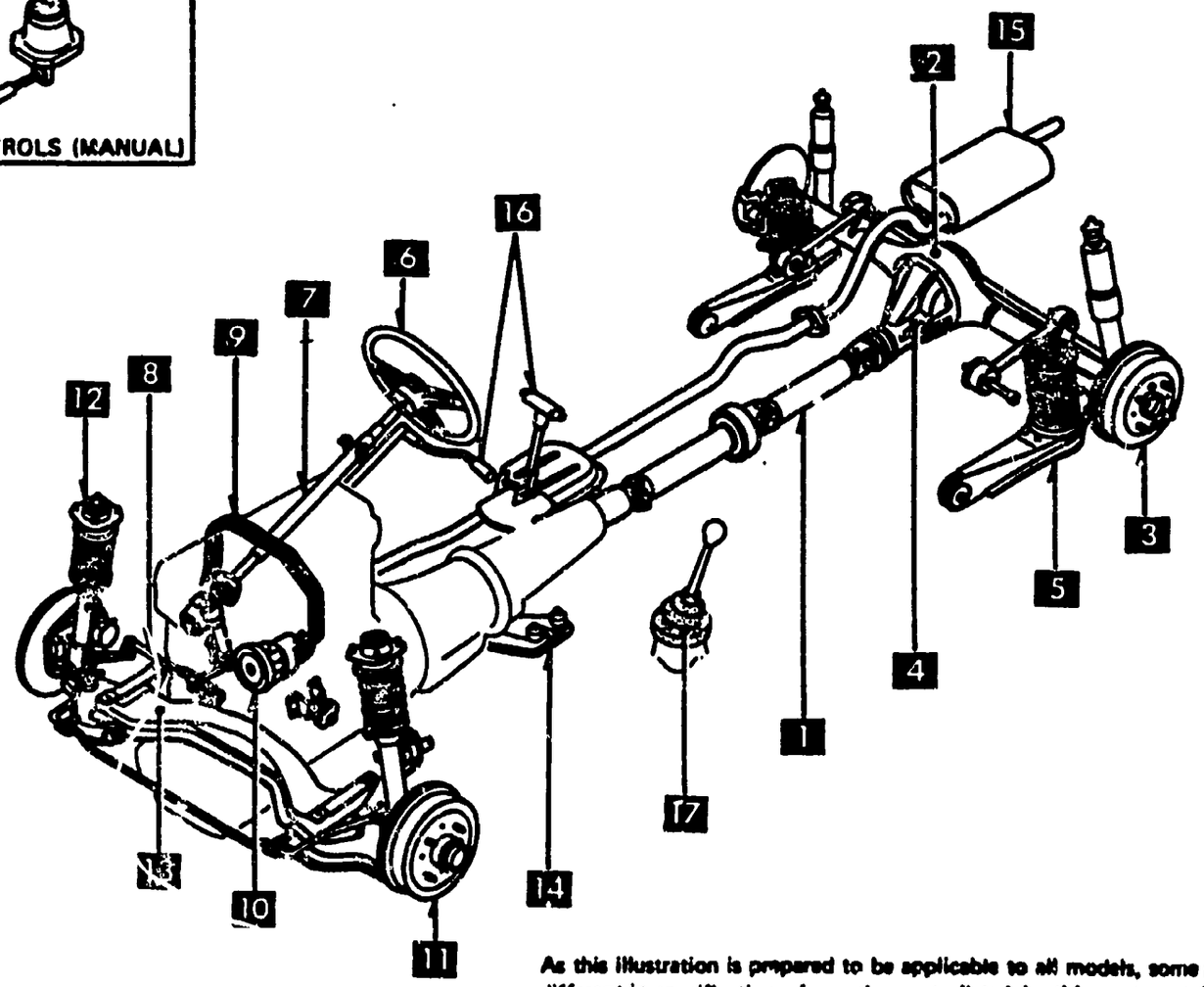

As this illustration is prepared to be applicable to all models, some parts are different in specifications from the parts listed in this parts catalog.

1 2500A

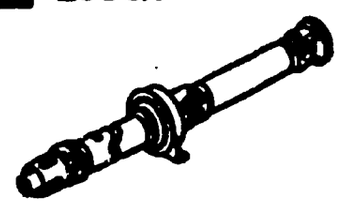

PROPELLER SHAFT

2 2600A



REAR AXLE

3 2610A



REAR BRAKES

4 2700A

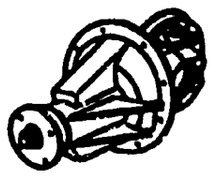

DIFFERENTIAL

5 2800A

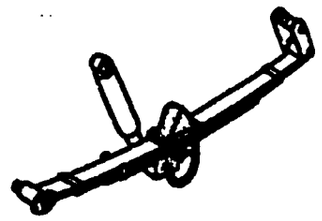

REAR SUSPENSION

6 3200A



STEERING WHEEL

7 3210A

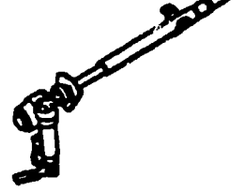

STEERING GEAR & COLUMN

8 3230A

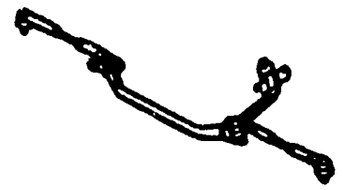

STEERING LINKAGE

9 3240A



POWER STEERING SYSTEM

10 3260A



VANE PUMP (POWER STEERING)

11 3300A



FRONT AXLE & BRAKES

12 3400A



FRONT SUSPENSION

13 3410A

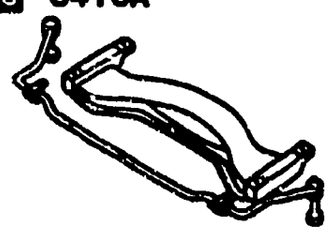

CROSSMEMBER & STABILIZER

14 3900A

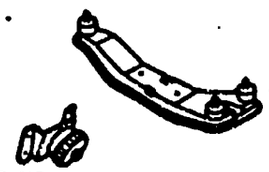

ENGINE & T/MISSION MOUNTINGS

15 4000A

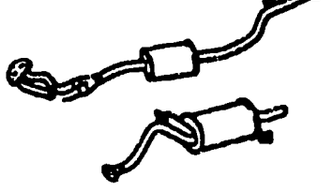

EX. SYSTEM

16 4600A

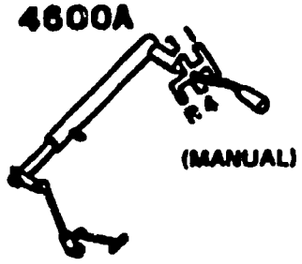

CHANGE CONTROLS

17 1720A

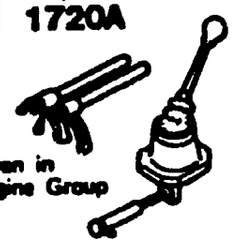

CHANGE CONTROLS (MANUAL)

ILLUSTRATED SECTION REFERENCE CHART

1 3700A

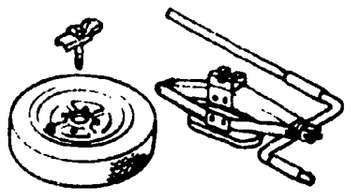

TIRE & JACK

2 4140A

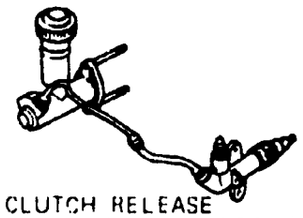

CLUTCH RELEASE & MASTER CYLINDERS

3 4160A

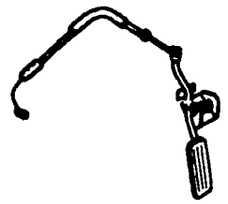

ACCELERATOR CONTROLS

4 4200A

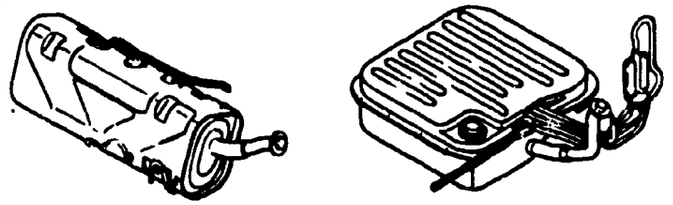

FUEL TANK

5 4300A

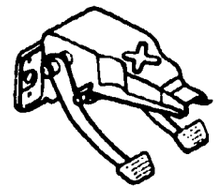

CLUTCH & BRAKE

CHASSIS (2/2)

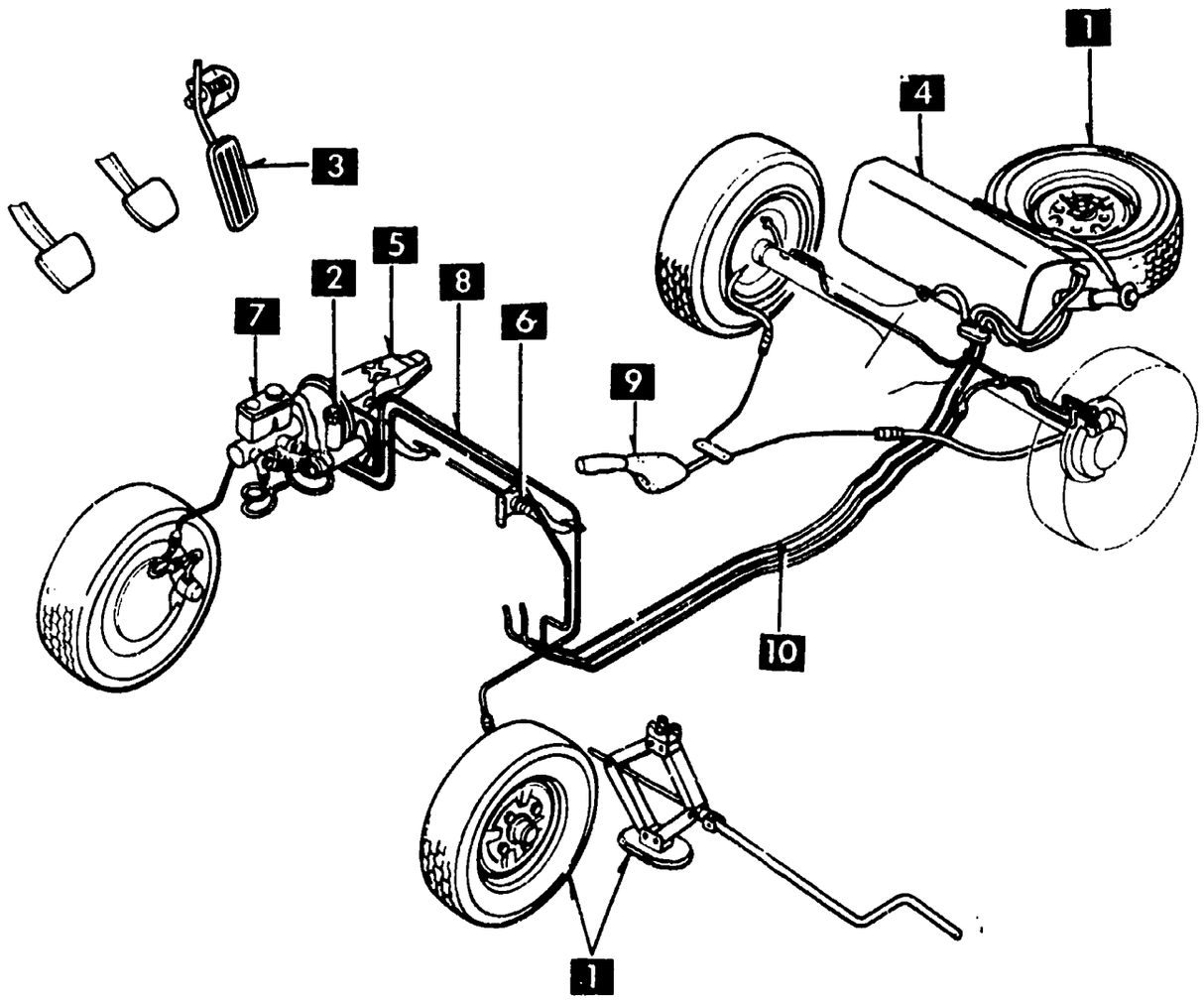

As this illustration is prepared to be applicable to all models, some parts are different in specifications from the parts listed in this parts catalog.

6 4310A

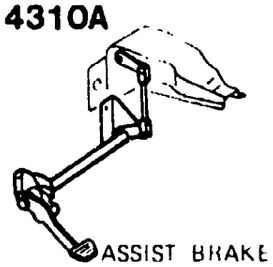

ASSIST BRAKE (FOR DRIVING SCHOOL)

7 4340A

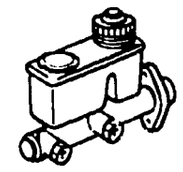

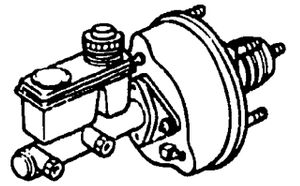

TANDEM MASTER CYL. & VACUUM POWER ASSIST SYSTEM

8 4360A

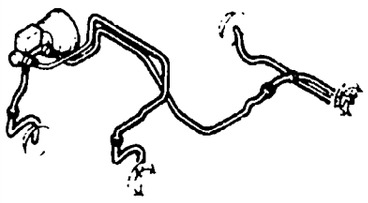

BRAKE PIPING

10 4500A

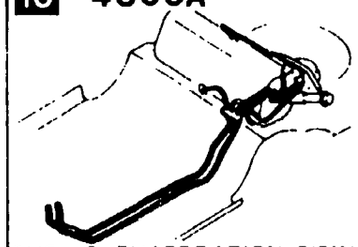

FUEL & EVAPORATION PIPINGS

9 4400A

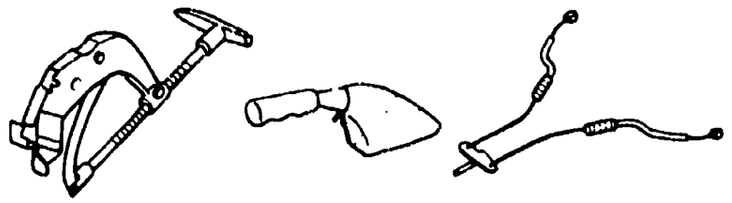

PARKING BRAKE SYSTEM

ILLUSTRATED SECTION REFERENCE CHART

1 0900A

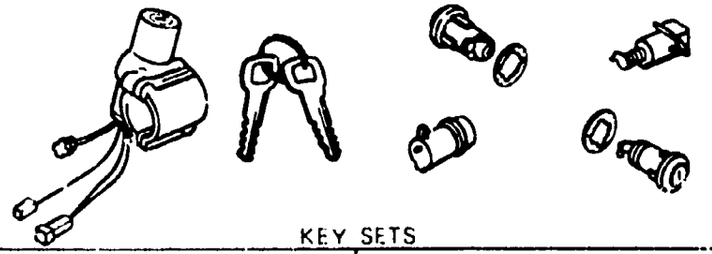

KEY SETS

2 5020A

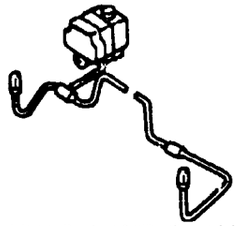

HEAD LAMP CLEANER

3 5100A

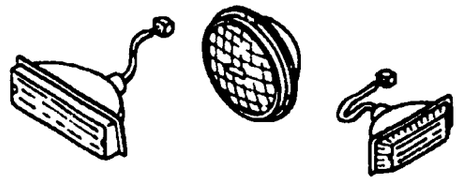

LAMPS (FRONT & SIDE)

4 5110A

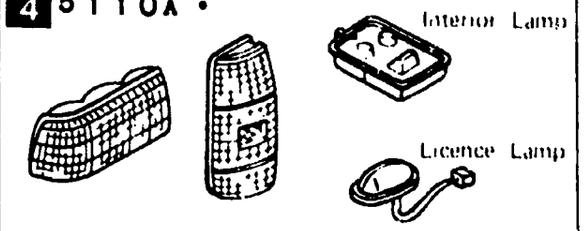

LAMPS (REAR & INTERIOR)

BODY(1/3)

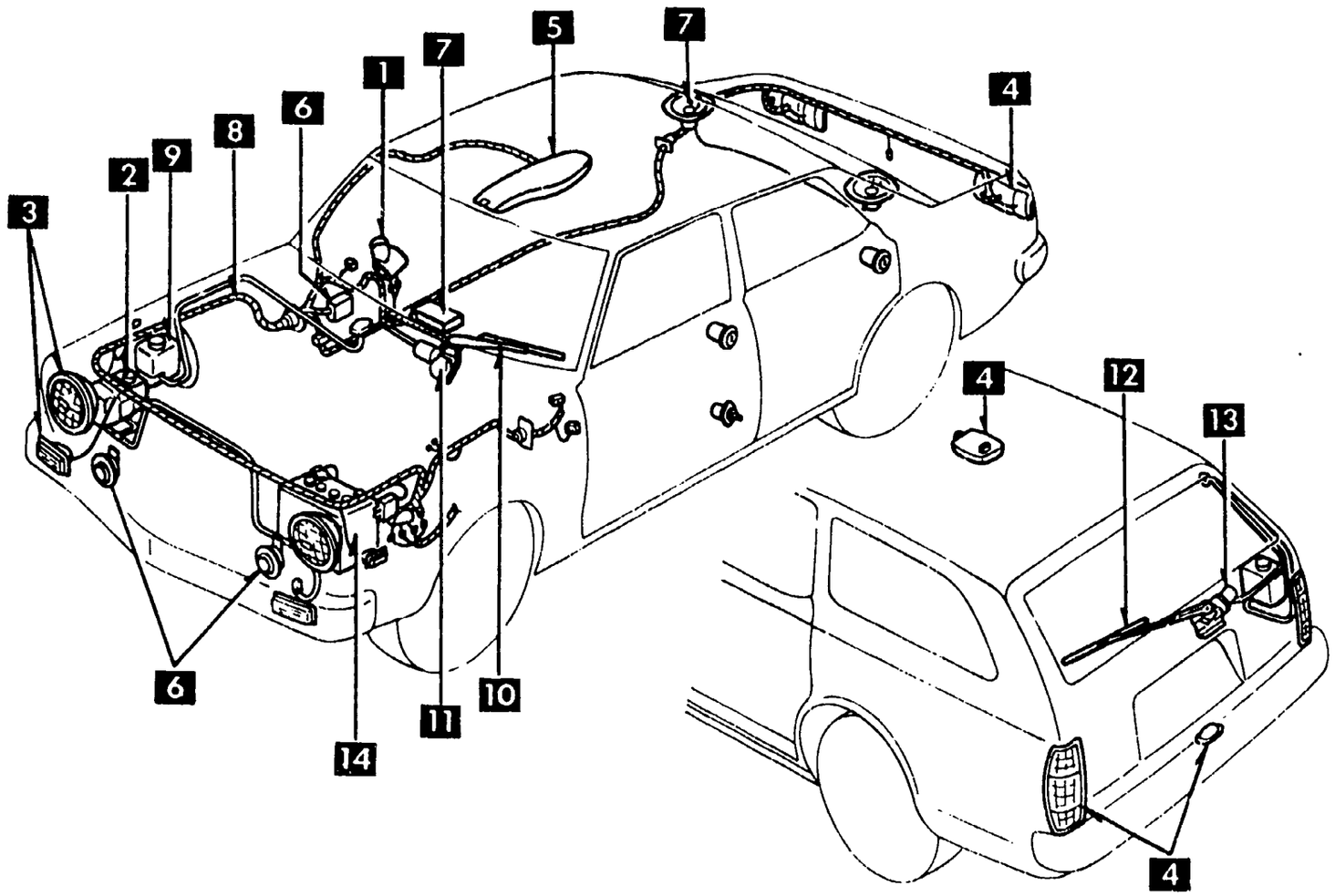

As this illustration is prepared to be applicable to all models, some parts are different in specifications from the parts listed in this parts catalog.

5 5130A

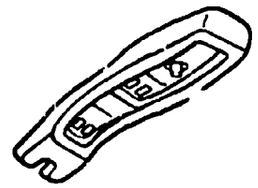

OVERHEAD CONSOLE

6 6600A

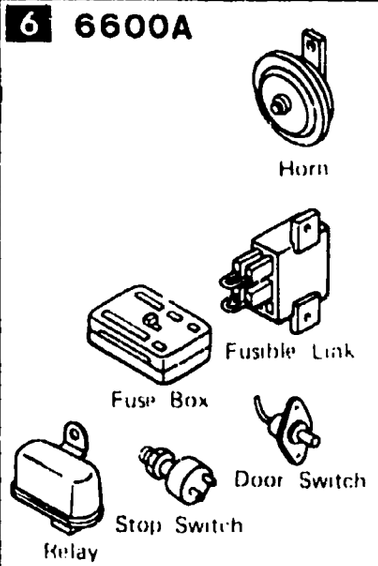

ELECTRIC EQUIPMENT (BODY)

7 6680A

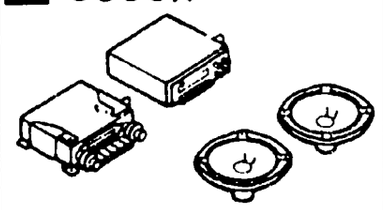

RADIO & STEREO SYSTEMS

8 6700A

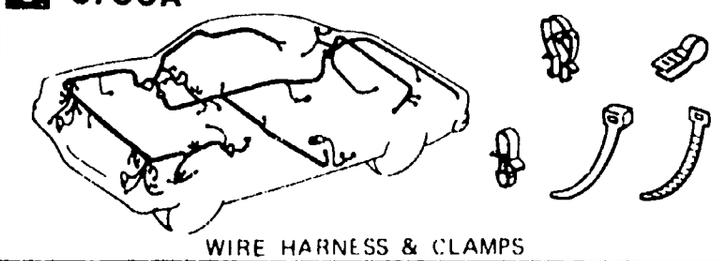

WIRE HARNESS & CLAMPS

9 6720A

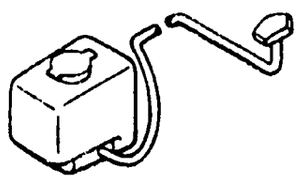

WINDSHIELD WASHER

10 6730A

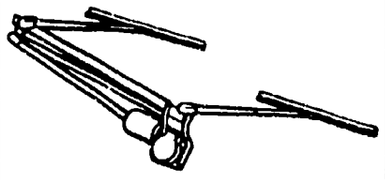

WINDSHIELD WIPER

11 6740A

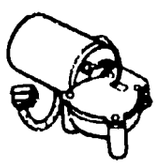

WIPER MOTOR (COMPONENTS ONLY)

12 6750A

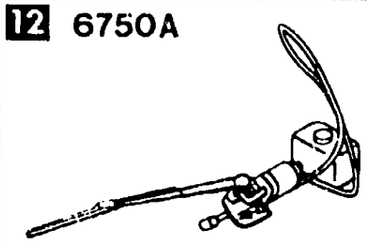

REAR WINDOW WIPER & WASHER

13 6760A



REAR WINDOW WIPER MOTOR (COMPONENTS ONLY)

14 1850A

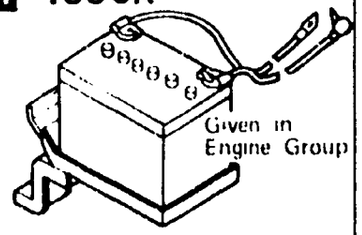

BATTERY & CABLES

ILLUSTRATED SECTION REFERENCE CHART

1 5000A

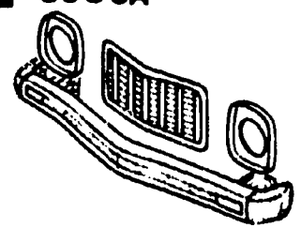

FRONT BUMPER & GRILLE

2 5010A

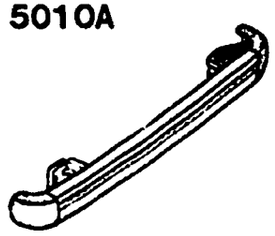

REAR BUMPER

3 5030A

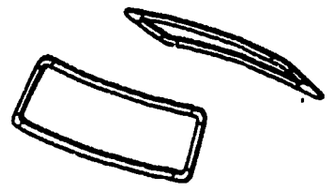

WINDOW MOULDINGS

4 5040A

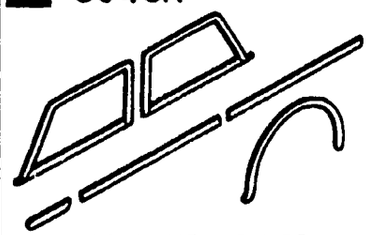

BODY MOULDINGS

5 5170A

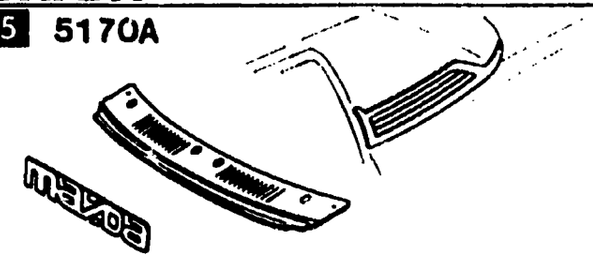

COWL & EXTRACTOR GRILLES & ORNAMENTS

18 7250A

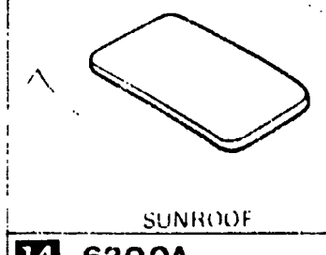

(2 DOOR TYPE)

REAR WINDOW GLASS & TRIM

17 7230A

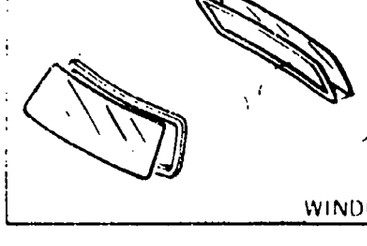

REAR DOOR MECHANISMS

16 7200A REAR DOOR

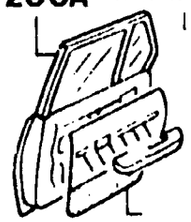

15 6330A

SUNROOF

BODY(2/3)

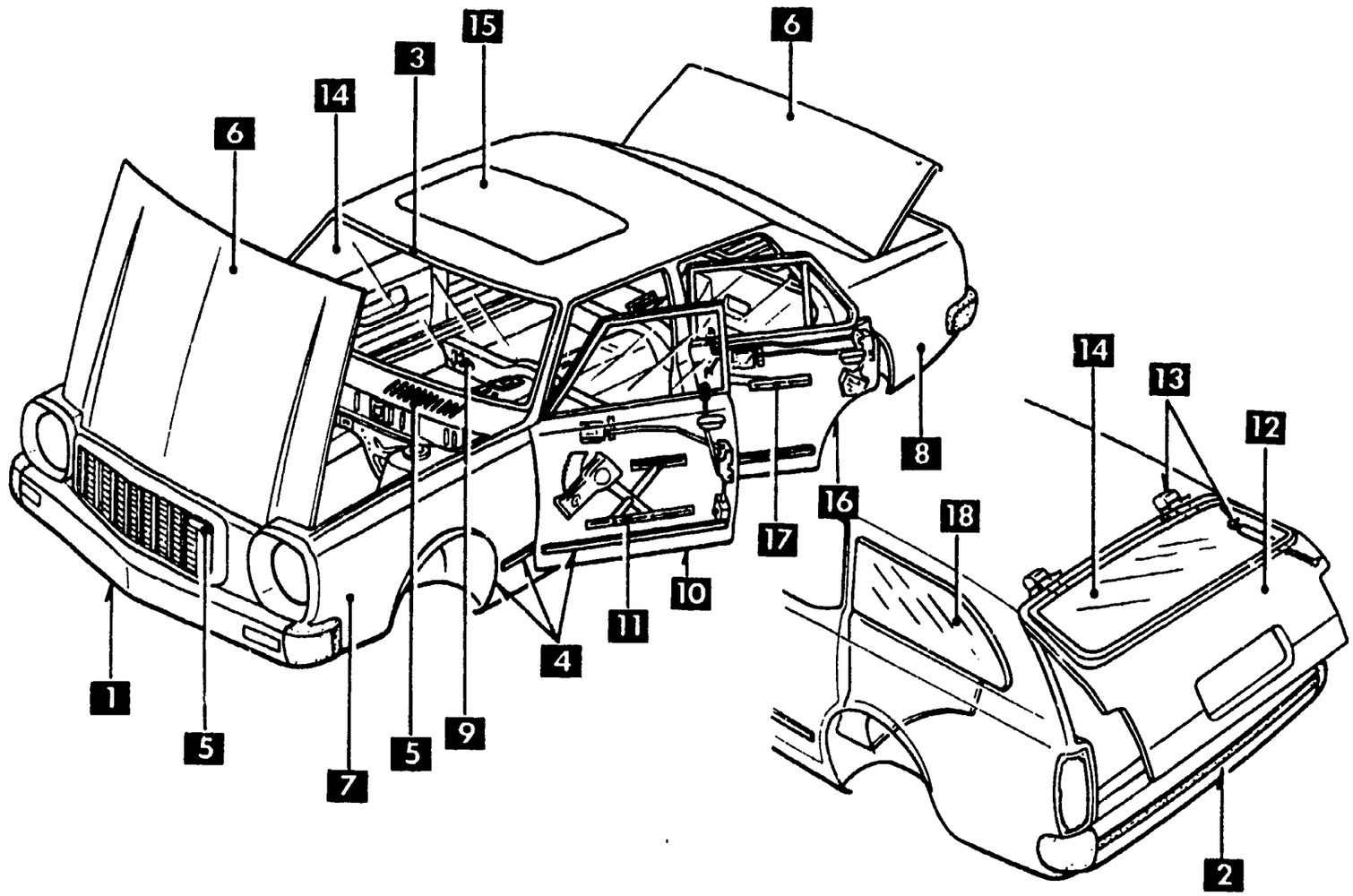

As this illustration is prepared to be applicable to all models, some parts are different in specifications from the parts listed in this parts catalog.

6 5230A

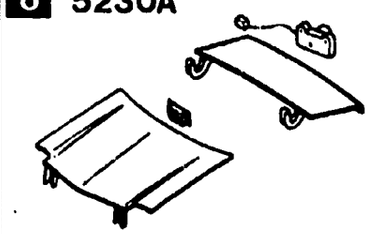

BONNET & TRUNK LID

7 5310A

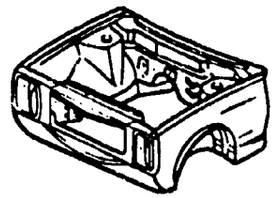

BODY PANELS (FRONT)

8 5340A

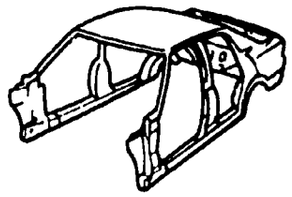

BODY PANELS (SIDE & ROOF)

9 5360A

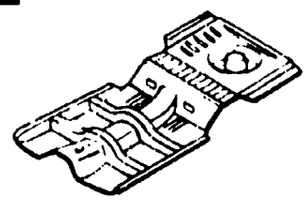

FLOOR ATTACHMENT

BODY PANELS (FLOOR)

14 6300A

WINDOW GLASSES

13 6230A

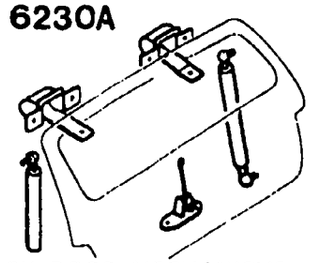

BACK DOOR MECHANISMS

12 6200A

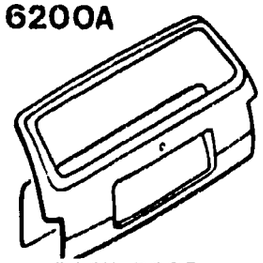

BACK DOOR

11 5830A

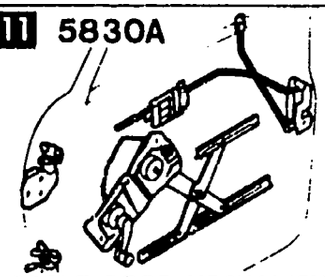

FRONT DOOR MECHANISMS

10 5800A

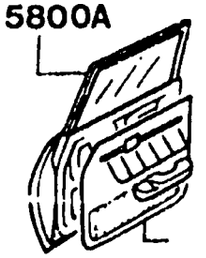

ILLUSTRATED SECTION REFERENCE CHART

1 5500A

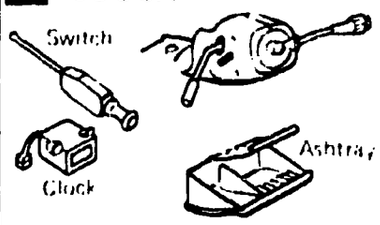

DASHBOARD EQUIPMENT

2 5540A

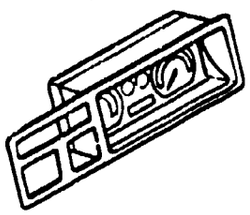

METERS

3 5560A

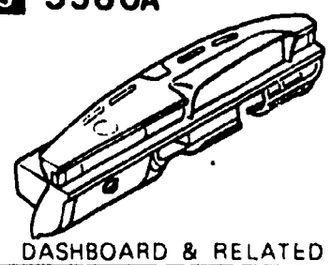

DASHBOARD & RELATED

4 5570A

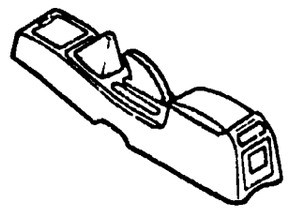

CONSOLE

5 5580A

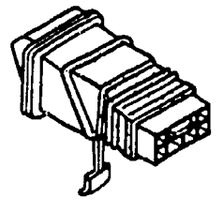

VENTILATOR

6 5700A
5710A

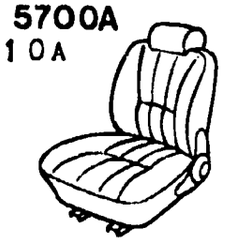

FRONT SEAT

17 6930A

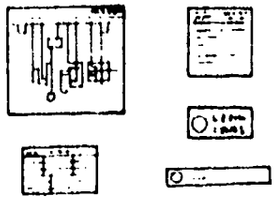

CAUTION PLATES

BODY(3/3)

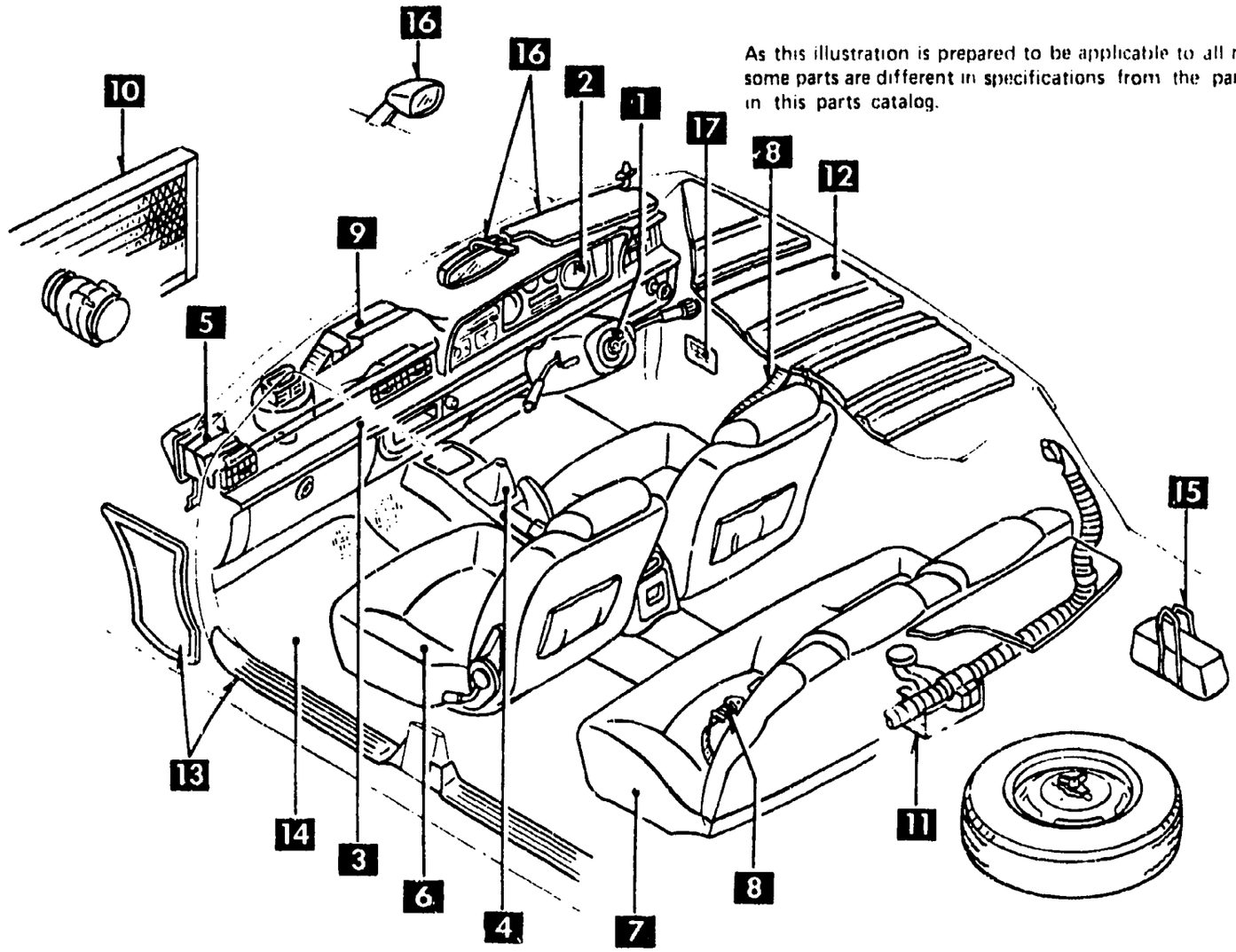

As this illustration is prepared to be applicable to all models, some parts are different in specifications from the parts listed in this parts catalog.

8 5760A

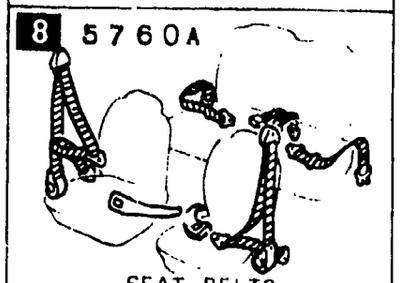

SEAT BELTS

16 6900A

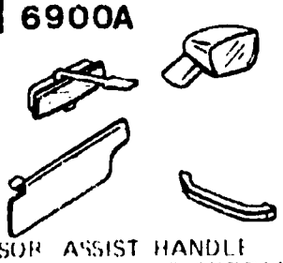

VISOR ASSIST HANDLE & MIRRORS

15 6870A

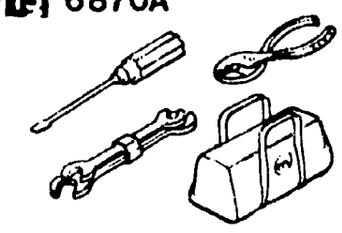

SERVICE TOOLS

9 6100A

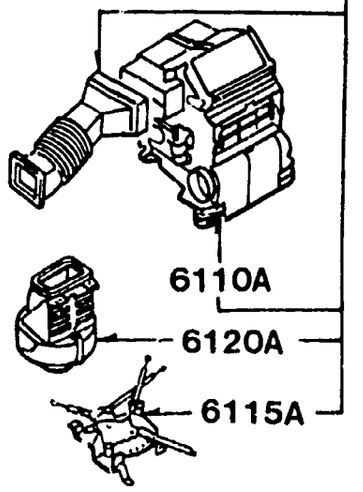

HEATER

14 6860A

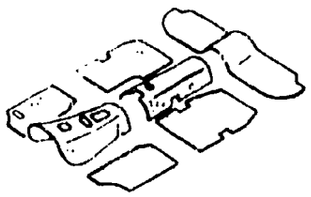

FLOOR MATS & PADS

13 6840A

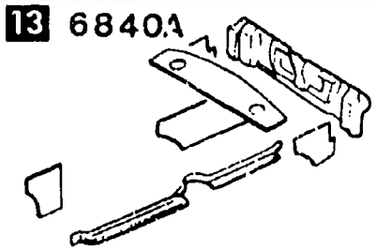

TRIM & SCUFF PLATE

12 6800A

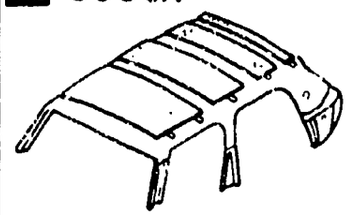

CEILING TRIM

11 6180A

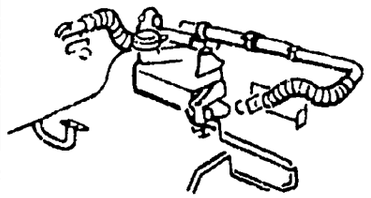

REAR COOLER

10 6130A

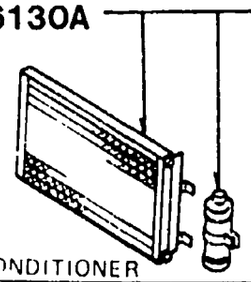

AIR CONDITIONER

(ENGINE GROUP)

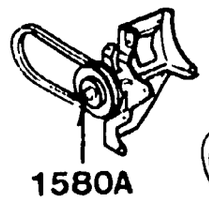



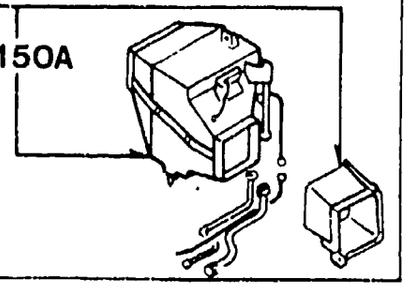

MODEL IDENTIFICATION

This parts catalog has been compiled to cover the following models.
MAZDA RX-7, 1979 Year Model for U.S.A. and Canada (Manuf. From March 1978)
MAZDA RX-7, 1980 Year Model for U.S.A. and Canada (Manuf. From June 1979)

Model No.	Model/Type	Country			Roof Type		Engine (Rotary 12A)	Trans-mission			Model Year		V. I. N. (Chassis No.)
		U.S.A. California (CF)	U.S.A. Federal (FD)	Canada (CN)	Sunroof (SUN)	Std. Roof (STD)	(12A)	Manual 4-Speed (4S)	Manual 5-Speed (5S)	Automatic (A/T)	1979	1980	
8867	SA22C	CF				STD	12A	4S			●		SA22C-500001 ~ 568500
8868	SA22C-P	CF				STD	12A		5S		●		SA22C-500001 ~ 568500
8869	SA22C-T	CF				STD	12A			A/T	●		SA22C-500001 ~ 568500
8970	SA22C-RP	CF			SUN		12A		5S		●		SA22C-500001 ~ 568500
8971	SA22C-RT	CF			SUN		12A			A/T	●		SA22C-500001 ~ 568500
8870	SA22C		FD	CN		STD	12A	4S			●		SA22C-500001 ~ 568500
8871	SA22C-P		FD	CN		STD	12A		5S		●		SA22C-500001 ~ 568500
8872	SA22C-T		FD	CN		STD	12A			A/T	●		SA22C-500001 ~ 568500
8973	SA22C-RP		FD	CN	SUN		12A		5S		●		SA22C-500001 ~ 568500
8974	SA22C-RT		FD	CN	SUN		12A			A/T	●		SA22C-500001 ~ 568500
8343	SA22C	CF				STD	12A	4S				●	SA22C-568501 ~ 650000
8344	SA22C-P	CF				STD	12A		5S			●	SA22C-568501 ~ 650000
8345	SA22C-T	CF				STD	12A			A/T		●	SA22C-568501 ~ 650000
8348	SA22C-RP	CF			SUN		12A		5S			●	SA22C-568501 ~ 650000
8349	SA22C-RT	CF			SUN		12A			A/T		●	SA22C-568501 ~ 650000

Model No.	Model/Type	Country			Roof Type		Engine (Rotary 12A)	Trans-mission			Model Year		V. I. N. (Chassis No.)
		U.S.A. California (CF)	U.S.A. Federal (FD)	Canada (CN)	Sunroof (SUN)	Std. Roof (STD)	(12A)	Manual 4-Speed (4S)	Manual 5-Speed (5S)	Automatic (A/T)	1979	1980	
8340	SA22C		FD			STD	12A	4S				●	SA22C-568501 ~ 650000
8341	SA22C-P		FD			STD	12A		5S			●	SA22C-568501 ~ 650000
8342	SA22C-T		FD			STD	12A			A/T		●	SA22C-568501 ~ 650000
8346	SA22C-RP		FD		SUN		12A		5S			●	SA22C-568501 ~ 650000
8347	SA22-RT		FD		SUN		12A			A/T		●	SA22C-568501 ~ 650000
8484	SA22C			CN		STD	12A	4S				●	SA22C-568501 ~ 650000
8485	SA22C-P			CN		STD	12A		5S			●	SA22C-568501 ~ 650000
8486	SA22C-T			CN		STD	12A			A/T		●	SA22C-568501 ~ 650000
8487	SA22C-RP			CN	SUN		12A		5S			●	SA22C-568501 ~ 650000
8488	SA22C-RT			CN	SUN		12A			A/T		●	SA22C-568501 ~ 650000

LIST OF MONTHLY STARTING VIN (CHASSIS No.)

Year/Month	JAN.	FEB.	MAR.	APR.	MAY	JUN.	JUL.	AUG.	SEP.	OCT.	NOV.	DEC.
Model	78/1	78/2	78/3	78/4	78/5	78/6	78/7	78/8	78/9	78/10	78/11	78/12
RX-7	–	–	500001	502999	504977	508587	510189	512943	516625	520638	525594	531149

Year/Month	JAN.	FEB.	MAR.	APR.	MAY	JUN.	JUL.	AUG.	SEP.	OCT.	NOV.	DEC.
Model	79/1	79/2	79/3	79/4	79/5	79/6	79/7	79/8	79/9	79/10	79/11	79/12
RX-7	536458	541117	547089	554325	559740	566641	569399	574180	578961	583527	588207	592950

Year/Month	JAN.	FEB.	MAR.	APR.	MAY	JUN.	JUL.	AUG.	SEP.	OCT.	NOV.	DEC.
Model	80/1	80/2	80/3	80/4	80/5	80/6	80/7	80/8	80/9	80/10	80/11	80/12
RX-7	597273	602250	606775	611388	615692	619393	624203	629533	629954	–	–	–

LIST OF COMPLETE ASSEMBLY UNIT'S PART NUMBER

Model No.	Cpt. Engine cpt.	T/mission cpt.	Rear Axle cpt.	Cabin cpt.	Remarks
8340	8340 02 000	8867 03 000	8871 05 000	8341 07 010	Fed. 4-Speed Std. Roof
8341	8340 02 000	8868 03 000	8871 05 000	8341 07 010	Fed. 5-Speed Std Roof
8342	8342 02 000	8872 19 090	8871 05 000	8341 07 010	Fed. A/T Std. Roof
8343	8344 02 000	8867 03 000	8871 05 000	8341 07 010	Calif. 4-Speed Std. Roof
8344	8344 02 000	8868 03 000	8871 05 000	8341 07 010	Calif. 5-Speed Std. Roof
8345	8345 02 000	8872 19 090	8871 05 000	8341 07 010	Calif. A/T Std. Roof
8346	8340 02 000	8868 03 000	8871 05 000	8346 07 010	Fed. 5-Speed Sunroof
8347	8342 02 000	8872 19 090	8871 05 000	8346 07 010	Fed. A/T Sunroof
8348	8344 02 000	8868 03 000	8871 05 000	8346 07 010	Calif. 5 Speed Sunroof
8349	8345 02 000	8872 19 090	8871 05 000	8346 07 010	Calif A/T Sunroof
8484	8485 02 000	8484 03 000	8871 05 000	8341 07 010	Canada 4-Speed Std. Roof
8485	8485 02 000	8485 03 000	8871 05 000	8341 07 010	Canada 5-Speed Std. Roof
8486	8486 02 000	8872 19 090	8871 05 000	8341 07 010	Canada A/T Std. Roof
8487	8485 02 000	8485 03 000	8871 05 000	8346 07 010	Canada 5-Speed Sunroof
8488	8486 02 000	8872 19 090	8871 05 000	8346 07 010	Canada A/T Sunroof

Note: Complete assemblies are available manufactured in accordance with current production specifications only.

ABBREVIATION LIST (English)

Abbreviation	Definiton	Abbreviation	Definiton
1 ST	First	..F	Feet
2 ND	Second	FED.	Federal
3 D.	3-Door	FIX.	Fixing
3 RD	Third	FOLD.	Folding
4-SPD	4-Speed	FRT. or F.	Front
4 TH	Fourth	F/SHIFT	Floor Shift
5 D.	5-Door		
5 SPD	5 Speed		
14-FT	14-Feet Box		
		..G	Grams
		GAS.	Gasoline
		GEN.	General
..A	Ampere		
ACCEL.	Accelerator		
ADJ.	Adjust		
A.D.R.	Australia Design Rule	HARN	Harness
AIR CON.	Air Conditioner	HEAT. or HEA.	Heater
ALUMI	Aluminum	HIGHT.	High-Tension
A/REST	Arm Rest	H/LAMP	Headlamp
ASS'Y.	Assembly	H.B.RE.	Hatchback Release
ATT.	Attachment	H/TOP or H/T	Hardtop
A/T	Automatic Transmission		
AUST.	Australia		
AUTO.	Automatic		
		IG. or IGN.	Ignition
		IN.	Inlet
		IND.	Indicator
BAL.	Balance	INJ.	Injection
B/DOOR	Back Door	INN.	Inner
BDY.	Body	INS.	Insulation
BELT.	Beltline	INST.	Instrument
BRG.	Bearing	INT.	Interior
BRKT.	Bracket	INTMT.	Intermittant
BRT.	Britain (=The United Kingdom)		
BUMP.	Bumper		
		..L	Liters
		L=	Length
		(L) or L	Left
(C), C or CTR.	Center	L/BODY	Long Body
CABN.	Cabin	L/BOX	Long Box
CALIF.	California	LH. SIDE	Left Hand Side
CARB	Carburettor	L.H.D.	Left Hand Drive
CE	Conventional Engine (=Reciprocating Engine)	LWR.	Lower
		L/VAN	Light Van
CLG.	Ceiling		
COMB	Combination		
COMP.	Companion		
CONN.	Connector or Connecting	MA. CYL.	Master Cylinder
CONS	Consols	MAINT.	Maintain
COVR	Cover	MLD. or MLDG.	Moulding
CPT	Complete Assembly	MPX.	Multiplex
C/SHIFT	Column Shift	MT.	Mounting
CYL.	Cylinder	M/T	Manual Transmission
D.	Door	NO.	Number
D=	Diameter	NON T/CABIN	Non Tilt Cabin
DAY & NIGHT AJST	Day & Night Adjust Table	NOR. ROOF	Normal Roof
D/CABIN	Double Cabin	NOZ.	Nozzle
DEF	Defroster		
DIAPH.	Diaphragm		
DIFF.	Differential		
DISC/B	Disc Brake	ORD. BY	Order By
DIST.	Distributor	O.S.	Oversize
DR.	Door	OUT.	Outer
DRUM/B	Drum Brake		
D. TIRE	Dual Tires		
DX	Deluxe		
DUMP	Dump Truck		
		P.	Panel
		(P)	Primary
		PARK. or PARKG.	Parking
		PASS.	Passenger
E.G.R	Exhaust Gas Recirculation	P. BOARD	Partition Board
ELEC	Electric	P.C.V.	Positive Crankcase Ventilation
EM	Emission Control System		The Philippines
ENGY or ENGY	Energy	PHLPPNS	Pillar
	Engine	PILR.	Package
	Equipment	PKG	Panel
	Exhaust	PNL	Positive
	Except.	POSIT	Polypropylene
EXTRACT	Extractor	P.P	Power Steering
		P.S	Power Steering
		P/S	

Abbreviation	Definition	Abbreviation	Definition
P.T.O.	Power Take Off	SW.	Switch
P/VAN	Panel Van	S. WASHER	Screen Washer
P/W or P. WINDOW	Power Window	SWD.	Swedan
		SYNC.	Synchronizer
QTR.	Quarter		
		..T	Tons
		T=	Thickness
		T/CABIN	Tilt Cabin
(R) or R	Right	T/CEILING	Top Ceiling
RAD.	Radiator	TH.	Throttle
RE.	Rotary Engine	THERM.	Thermostat
RECIPRO	Reciprocating Engine (=Conventional Engine)	THROT.	Throttle
		T/MISSION	Transmission
REGUL.	Regulator	T/L	Tubeless
REG. CABN	Regular Cabin	T/STEERING	Tilt Steering
REL.	Release		
REM. CON. or REMO. CON.	Remote Controlled		
RET.	Return	U.K.	The United Kingdom
RETAIN.	Retaining	UP	Upper
REV.	Reverse	URETANE	Urethane Rubber
R. H. SIDE	Right Hand Side	U.S.	Undersize
R.H.D.	Right Hand Drive		
RR. or R.	Rear		
		..V	Volts
		V.	Valve
(S)	Secondary	VAC.	Vacuum
SAFE.	Safety	Vent.	Ventilator, Ventilation
S/BODY	Short Body		
S/BOX	Short Box		
SELECT	Selective use		
SET. TYPE	Separate Type	..W	Watts
SIG.	Signal	W=	Width
SILVER M.	Silver Metallic	W/...	With
SNGL TIRE	Single Tire	W/CHASSIS	Windshield Chassis
SOL.	Solenoid	W/GER. or W. GERMANY	West Germany
SPEC.	Specification	WIND.	Window
SPEEDO	Speedometer	W/O	Without
SPL. TYPE	Split Type	W. PUMP	Water Pump
SPG.	Spring	WSHLD	Windshield
SPK.	Speaker	WSTR. or WTHSTP.	Weatherstrip
ST.	Steering	W/T	With Tube
STA. WAGON	Station Wagon		
STAB.	Stabilizer		
SUB T/MISSION	Sub Transmission		
STD	Standard		
S/TIRE	Single Tire		

INTERCHANGEABILITY CODE LIST

Code	Definition	
AN	⟷ (Both Ways)	A new part and the former part are fully interchangeable.
A	→ (One Way)	A new part can be used in place of the former part, but the former part cannot be used in place of a new part.
C	Plus	A new part with some additional part(s) can be used in place of the former part.
G	Plus	Some modification work is required to use a new part in place of the former part.
S	← (One Way Backward)	The former part can be used in place of a new part, but a new part cannot be used in place of the former part.

SECTION NUMBER INDEX (BODY)

STARTING LOCATION	SECTION No.	SECTION NAME
3–C2	0900A	KEY SETS
3–C3	5000A	FRONT BUMPER & GRILLE
3–E3	5010A	REAR BUMPER
3–G3	5030A	WINDOW MOULDINGS
3–I3	5040A	BODY MOULDINGS
3–C4	5100A	LAMPS (FRONT & SIDE)
3–G4	5110A	LAMPS (REAR)
3–I4	5130A	OVERHEAD CONSOLE (1979 STANDARD ROOF MODEL)
3–J4	5170A	COWL & EXTRACTOR GRILLES & ORNAMENTS
3–C5	5230A	BONNET
3–E5	5310A	BODY PANELS (FRONT)
3–K5	5340A	BODY PANELS (SIDE & ROOF)
3–I6	5360A	BODY PANELS (FLOOR)
3–C7	5500A	DASHBOARD EQUIPMENT
3–L7	5540A	METERS
3–D8	5560A	DASHBOARD & RELATED
3–L8	5570A	CONSOLE
3–K9	5580A	VENTILATOR
3–C10	5700A	SEAT (EXCEPT LEATHER TRIM)
3–N10	5710A	SEAT TRIM (LEATHER – ANNIVERSARY EDITION)
3–G11	5760A	SEAT BELTS
3–C12	5800A	FRONT DOOR
3–C13	5930A	FRONT DOOR MECHANISMS
3–C14	6100A	HEATER
3–E14	6110A	HEATER UNIT
3–H14	6115A	HEATER CONTROLS
3–J14	6120A	HEATER BLOWER
3–C15	6230A	BACK DOOR MECHANISMS
3–F15	6300A	WINDOW GLASSES
3–I15	6330A	SUNROOF
3–C16	6600A	ELECTRIC EQUIPMENT
3–G16	6680A	RADIO & STEREO SYSTEMS
4–C2	6700A	WIRE HARNESS & CLAMPS
4–G2	6720A	WINDSHIELD WASHER
4–H2	6730A	WINDSHIELD WIPER
4–J2	6740A	WIPER MOTOR (COMPONENTS ONLY)
4–C3	6800A	CEILING TRIM
4–J3	6840A	TRIM & SCUFF PLATE
4–F4	6860A	FLOOR MAT & PADS
4–L4	6870A	SERVICE TOOLS
4–M4	6900A	VISOR, ASSIST HANDLE & MIRRORS
4–G5	6930A	CAUTION PLATES

THE FRAMES IN THIS COLUMN INDICATE :

3–C2 0900A KEY SETS

© 1983 Toyo Kogyo Co., Ltd.
MAY 1983

0900A KEY SETS



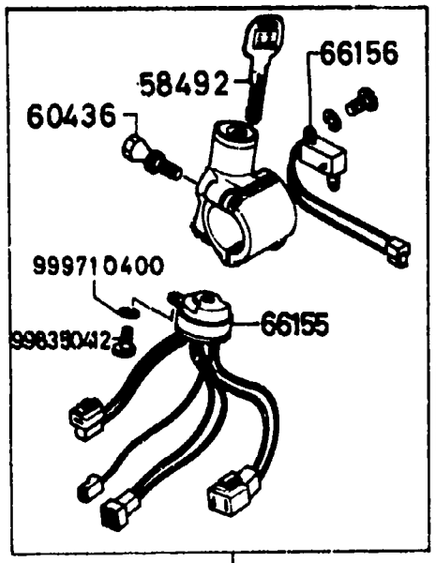

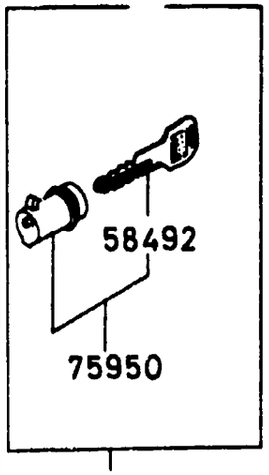

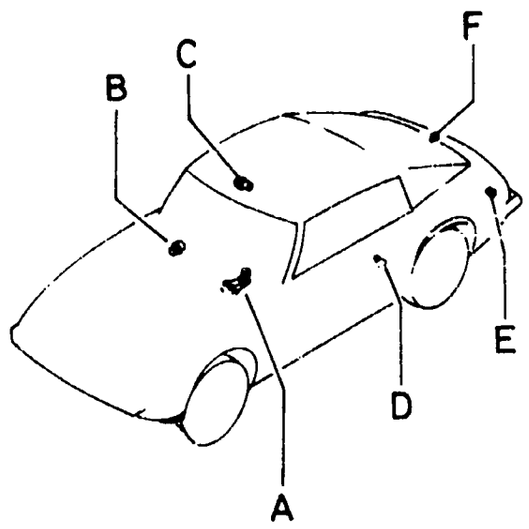

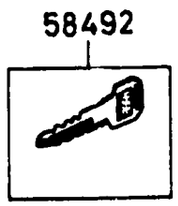

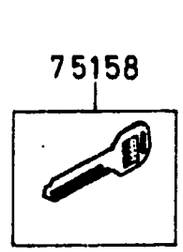

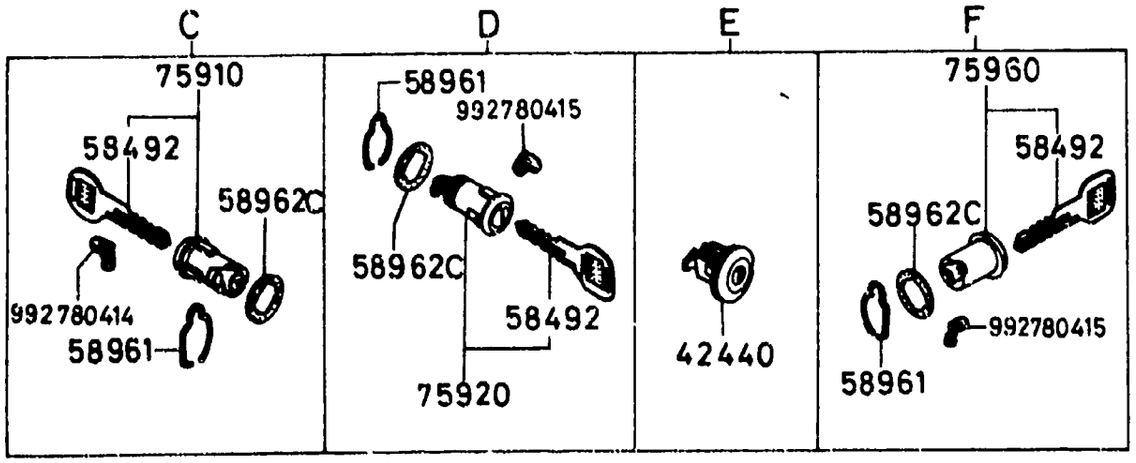

0900A-1 KEY SETS

D-CODE (Key No.)	PART NAME	PART No.	Qty.	MODEL / DESCRIPTION	VIN (Chassis No.)
09010	KEY SET JEU DE BARILLET JUEGO DE LLAVES	8871-09-010	1		
	BLACK	00			
42440	LOCK,FILLER LID BARILLET, TRAPPE ESSENCE CERRADURA DE TAPA DE TANQ	0866-42-440	1		SA22C .. 500001 -578960
		8218-42-440	1		SA22C .. 578961-
58492	KEY,PRIMARY CLEF, PRIMAIRE CUNA,PRIMARIA	8531-58-492	2		
58961	FASTENER,KEY CYL. ATTACHE, BARILLET TRABA DEL CILINDRO DEL LL	0223-58-961	3		
58962C	GASKET,KEY CYLINDER JOINT DE SERRURE	0223-58-962	3		
60436	BOLT,SET BOULON,JEU PERNOS,JUEGO	8218-66-143	2		
66155	SWITCH,IGNITION CONTACT DE DEMARREUR INTERRUPTOR,ENCENDIDO	8871-66-151	1		
66156	CONTACT, STARTER CONTACT DE DEMARREUR INTERRUPTOR,ENCENDIDO	8871-66-156	1		
75158	KEY,BLANK CLEF VIERGE	8531-75-901	1		
75910	KEY SUB SET(R),DOOR JEU DE BARILLET (D), PORT JGO DE LLVS.DE RMPLZO,PTA	8531-75-910	1		
75920	KEY SUB SET(L),DOOR JEU DE BARILLET (G), PORT JGO DE LLVS.DE RMPLZO,PTA	8531-75-920	1		
75950	KEY SUB SET,GLOVE JEU DE BARILLET, BOITE A JGO DE LLVS.DE RMPLZO,GTR	8545-75-950	1		
	BLACK	00			

0900A KEY SETS



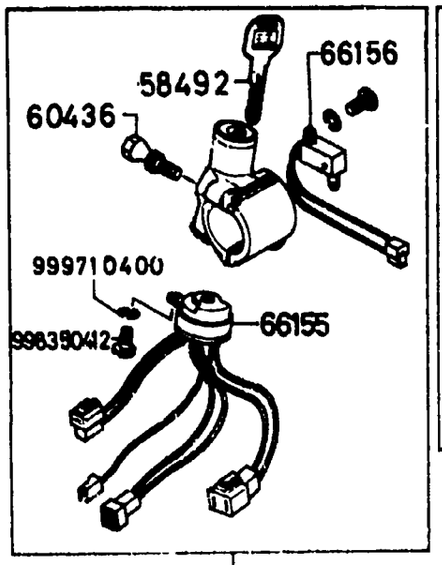

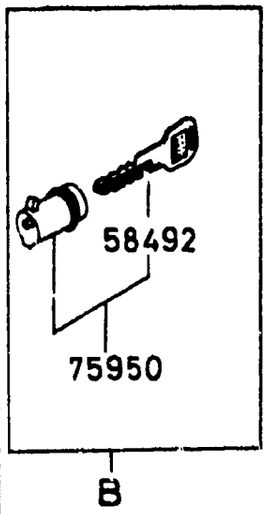

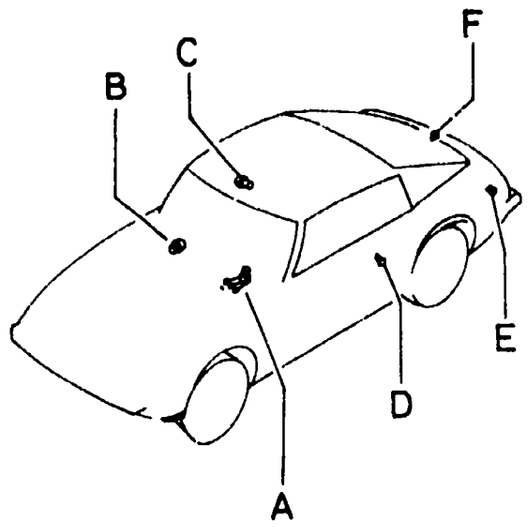

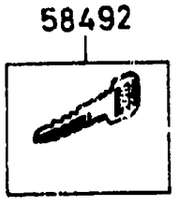

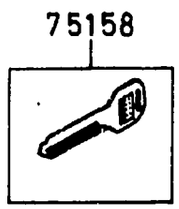

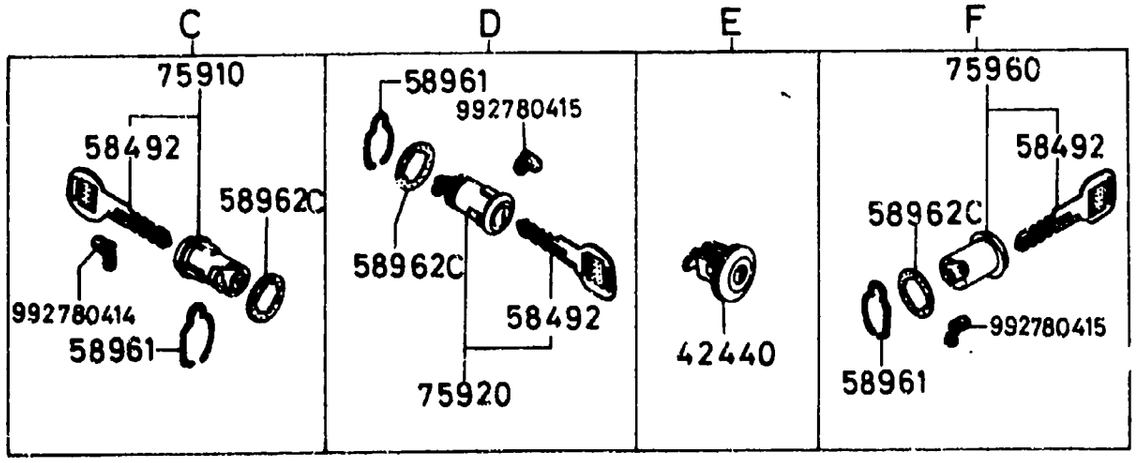

0900A-2* KEY SETS

D-CODE (Key No.)	PART NAME	PART No.	Qty.	MODEL/DESCRIPTION	VIN (Chassis No.)
75960	KEY SUB SET,B/DOOR JEU DE BARILLET,PORTE DE JGO.DE LLVS.DE RMPLZO,P.T	8871-75-960	1		
75990	KEY SUB SET,ST.LOCK ANTIVOL	8871-75-990	1		

SECTION NUMBER INDEX (BODY)

STARTING LOCATION	SECTION No.	SECTION NAME
3–C2	0900A	KEY SETS
3–C3	5000A	FRONT BUMPER & GRILLE
3–E3	5010A	REAR BUMPER
3–G3	5030A	WINDOW MOULDINGS
3–I3	5040A	BODY MOULDINGS
3–C4	5100A	LAMPS (FRONT & SIDE)
3–G4	5110A	LAMPS (REAR)
3–I4	5130A	OVERHEAD CONSOLE (1979 STANDARD ROOF MODEL)
3–J4	5170A	COWL & EXTRACTOR GRILLES & ORNAMENTS
3–C5	5230A	BONNET
3–E5	5310A	BODY PANELS (FRONT)
3–K5	5340A	BODY PANELS (SIDE & ROOF)
3–I6	5360A	BODY PANELS (FLOOR)
3–C7	5500A	DASHBOARD EQUIPMENT
3–L7	5540A	METERS
3–D8	5560A	DASHBOARD & RELATED
3–L8	5570A	CONSOLE
3–K9	5580A	VENTILATOR
3–C10	5700A	SEAT (EXCEPT LEATHER TRIM)
3–N10	5710A	SEAT TRIM (LEATHER – ANNIVERSARY EDITION)
3–G11	5760A	SEAT BELTS
3–C12	5800A	FRONT DOOR
3–C13	5830A	FRONT DOOR MECHANISMS
3–C14	6100A	HEATER
3–E14	6110A	HEATER UNIT
3–H14	6115A	HEATER CONTROLS
3–J14	6120A	HEATER BLOWER
3–C15	6230A	BACK DOOR MECHANISMS
3–F15	6300A	WINDOW GLASSES
3–I15	6330A	SUNROOF
3–C16	6600A	ELECTRIC EQUIPMENT
3–G16	6680A	RADIO & STEREO SYSTEMS
4–C2	6700A	WIRE HARNESS & CLAMPS
4–G2	6720A	WINDSHIELD WASHER
4–H2	6730A	WINDSHIELD WIPER
4–J2	6740A	WIPER MOTOR (COMPONENTS ONLY)
4–C3	6800A	CEILING TRIM
4–J3	6840A	TRIM & SCUFF PLATE
4–F4	6860A	FLOOR MAT & PADS
4–L4	6870A	SERVICE TOOLS
4–M4	6900A	VISOR, ASSIST HANDLE & MIRRORS
4–G5	6930A	CAUTION PLATES

THE FRAMES IN THIS COLUMN INDICATE :

3–C3	5000A	FRONT BUMPER & GRILLE
3–E3	5010A	REAR BUMPER
3–G3	5030A	WINDOW MOULDINGS
3–I3	5040A	BODY MOULDINGS

© 1983 Toyo Kogyo Co., Ltd.
MAY 1983

5000A FRONT BUMPER & GRILLE

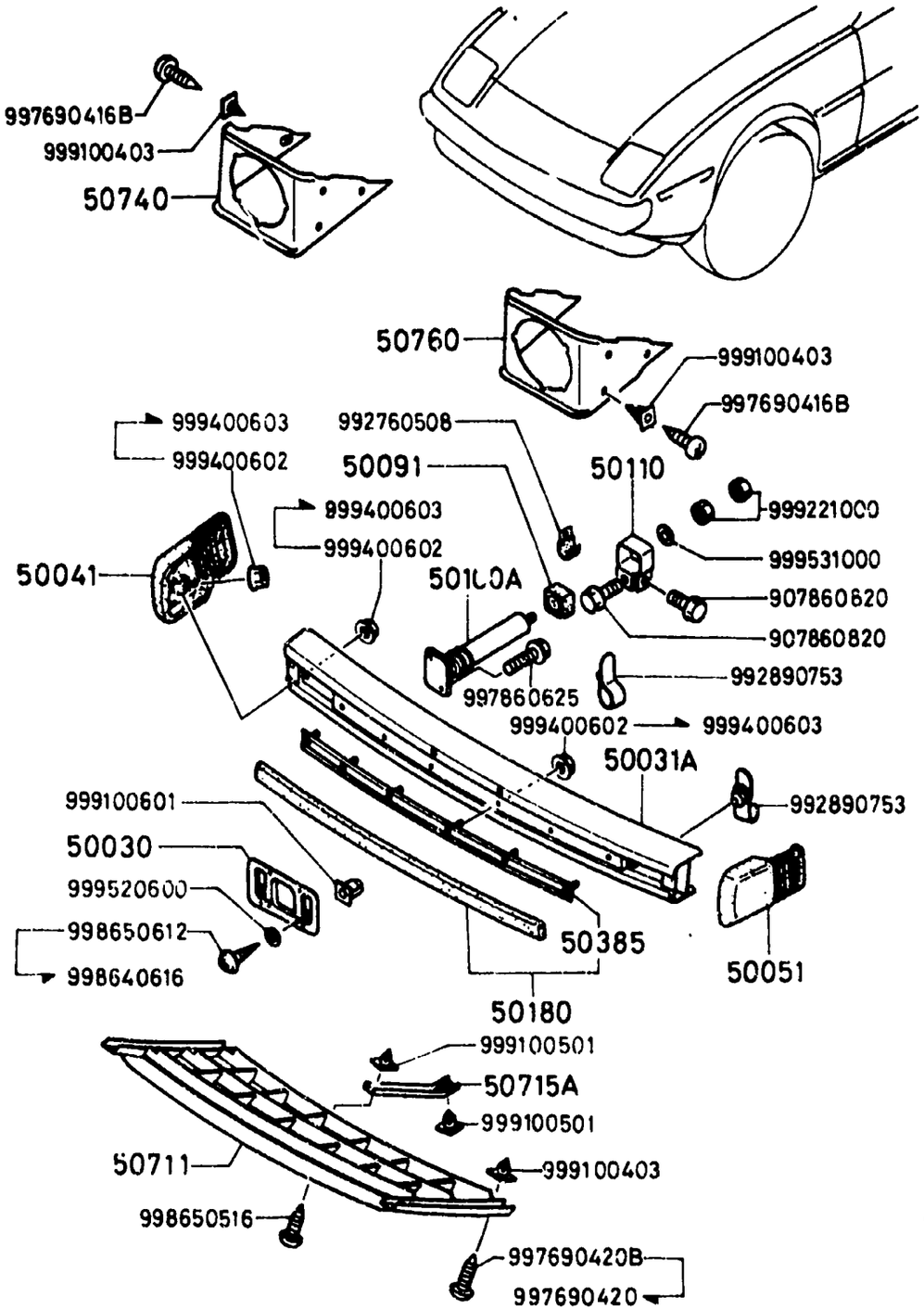

5000A-1 FRONT BUMPER & GRILLE

D-CODE (Key No.)	PART NAME	PART No.	Qty.	MODEL / DESCRIPTION	VIN (Chassis No.)
50030	HOLDER,NO. PLATE SUPPORT PLAQUE SOSTEN, NO. PLACA	8871-50-180	1		SA22C .. 500001 -554324
		8871-50-180A	1		SA22C .. 554325-
50031A	BUMPER(C),FRONT PARE-CHOCS (C), AV PARA-GOLPES (C),DELANTERO	8341-50-030	1	80 MODEL	SA22C .. 568501 -576263
		8341-50-030A	1	80 MODEL	SA22C .. 576264-
		8871-50-030	1	79 MODEL	SA22C .. 500001 -516624
	<A >	8871-50-030A	1	79 MODEL	SA22C .. 516625 -568500
50041	BUMPER(R),FRONT PARE-CHOCS (D), AV PARA-GOLPES (DR),DELANTER	8871-50-032	1		
50051	BUMPER(L),FRONT PARE-CHOCS (G), AV PARA-GOLPES (IZ),DELANTER	8871-50-033	1		
50091	RUBBER,MOUNTING SUPPORT GOMA,SOPORTE	1756-50-091	2		
50100A	ABSORBER,SHOCK AMORTISSEUR AMORTIGUADOR	8341-50-100	2		SA22C .. 576264-
		8871-50-100	2		SA22C .. 500001 -576263
50110	BRACKET(R),ABSORBER ATTACHE (D), AMORTISSEUR SOPORTE (DR),AMORTIGUADOR	8871-50-111	1		
50110	BRACKET(L),ABSORBER ATTACHE (G), AMORTISSEUR SOPORTE (IZ),AMORTIGUADOR	8871-50-131	1		
50180	PROTECTER,FRT.BUMPER PROTECTION PARE-CHOC AV.	8871-50-120A	1		
50385	HOLDER(C),PROTECTOR RAIL DE FIXATION(C)	8871-50-125B	1		

5000A FRONT BUMPER & GRILLE

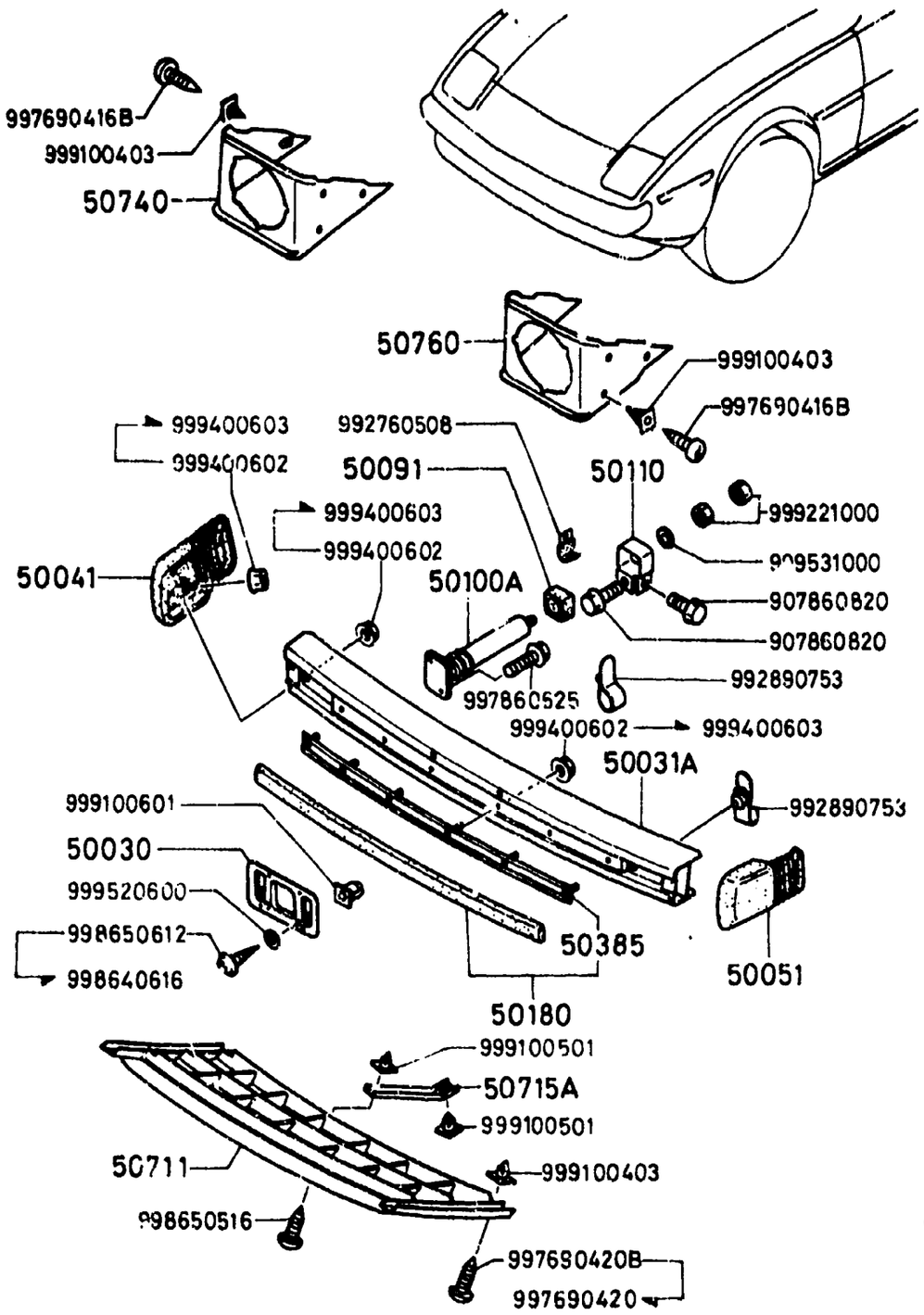

5000A-2* FRONT BUMPER & GRILLE

D-CODE (Key No.)	PART NAME	PART No.	Qty.	MODEL/DESCRIPTION	VIN (Chassis No.)
50711	GRILLE,RADIATOR GRILLE DE CALANDRE PARRILLA, RADIADOR	8871-50-710A	1		
50715A	BRACKET,RAD.GRILLE ATTACHE, GRILLE DE CALAND	8871-50-720	1		
50740	BEZEL(R),LAMP LUNETTE DE PHARE(D)	8871-50-741	1		
50760	BEZEL(L),LAMP LUNETTE DE PHARE(G)	8871-50-761	1		

5010A REAR BUMPER

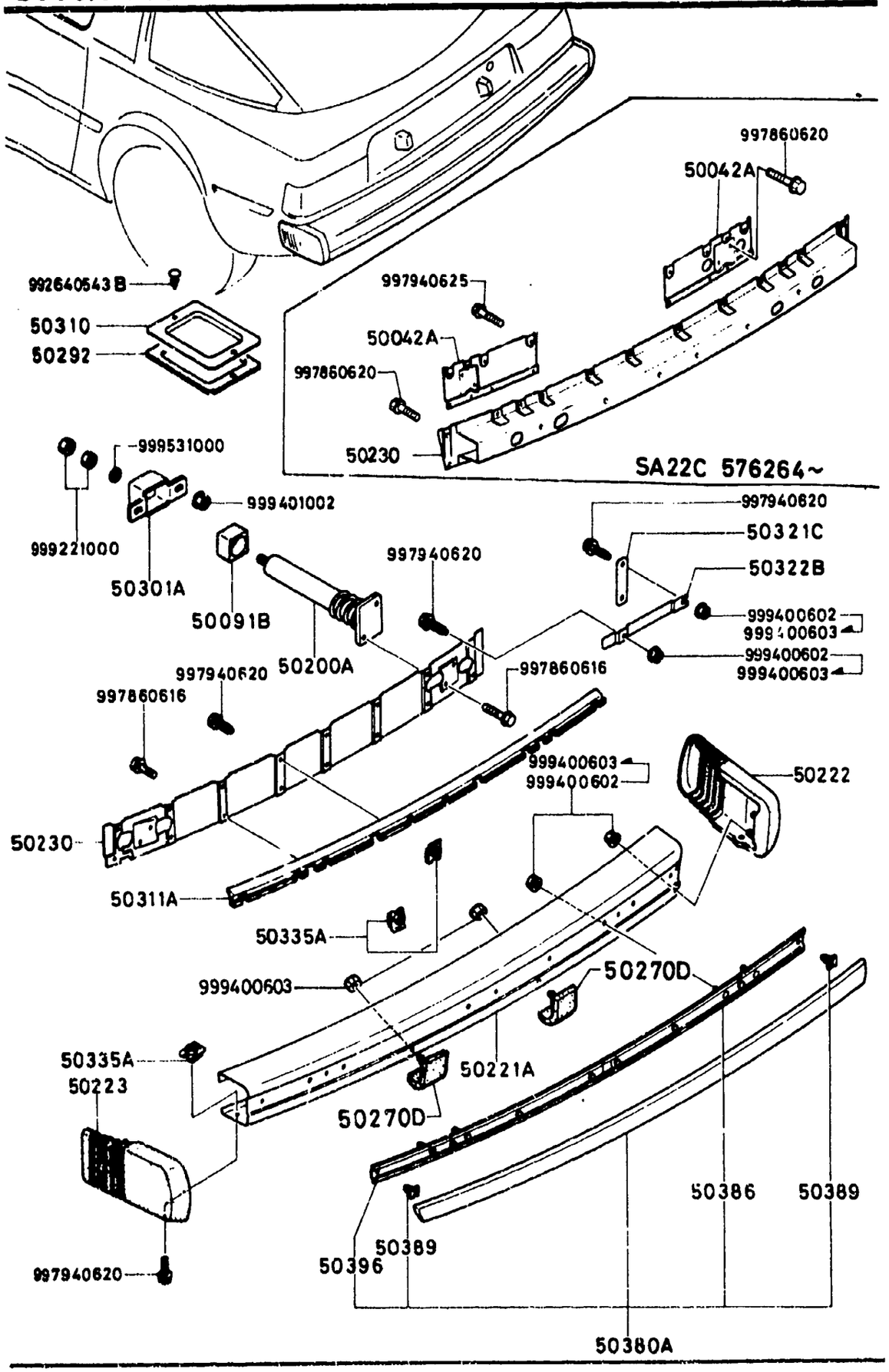

5010A-1 REAR BUMPER

D-CODE (Key No.)	PART NAME	PART No.	Qty.	MODEL / DESCRIPTION	VIN (Chassis No.)
50042A	PLATE(R),ABSORBER PLAQUE D AMORTISSEUR.	8341-50-242	1		SA22C .. 576264-
50042A	PLATE(L)ABSORBER PLAQUE(G). AMORTISSEUR	8341-50-262	1		SA22C .. 576264-
50091B	RUBBER,MOUNTING SUPPORT GOMA,SOPORTE	1756-50-091	2		
50200A	ABSORBER,SHOCK RR. AMORTISSEUR.ARR.	8341-50-290	2		SA22C .. 576264-
		8871-50-290	2		SA22C .. 500001 -576263
50221A	BUMPER(C),REAR PARE-CHOCS (C), AR PARA-GOLPES (C),TRASERO	8341-50-220A	1	80 MODEL	SA22C .. 568501 -576263
		8341-50-220B	1	80 MODEL	SA22C .. 576264-
		8871-50-220A	1	79 MODEL	SA22C .. 500001 -500902
		8871-50-220B	1	79 MODEL	SA22C .. 500903 -568500
50222	BUMPER(R),REAR PARE-CHOC ARR.(D)	8871-50-222	1		
50223	BUMPER(L),REAR PARE-CHOC ARR.(G)	8871-50-223	1		
50230	REINFORCEMENT,BUMPER PARE-CHOCS (D), AR PARA-GOLPES (DR),TRASERO	8341-50-230	1		SA22C .. 576264-
		8871-50-224B	1		SA22C .. 500001 -576263
50270D	GUARD,REAR BUMPER BOUTOIR PARE-CHOC ARR.	8341-50-350	2	80 MODEL	SA22C .. 568501-
50292	GASKET,HOLE COVER JOINT, BOUCHON EVPAQUE, ORIFICIO DE CUBI	8871-50-232	2		

5010A REAR BUMPER

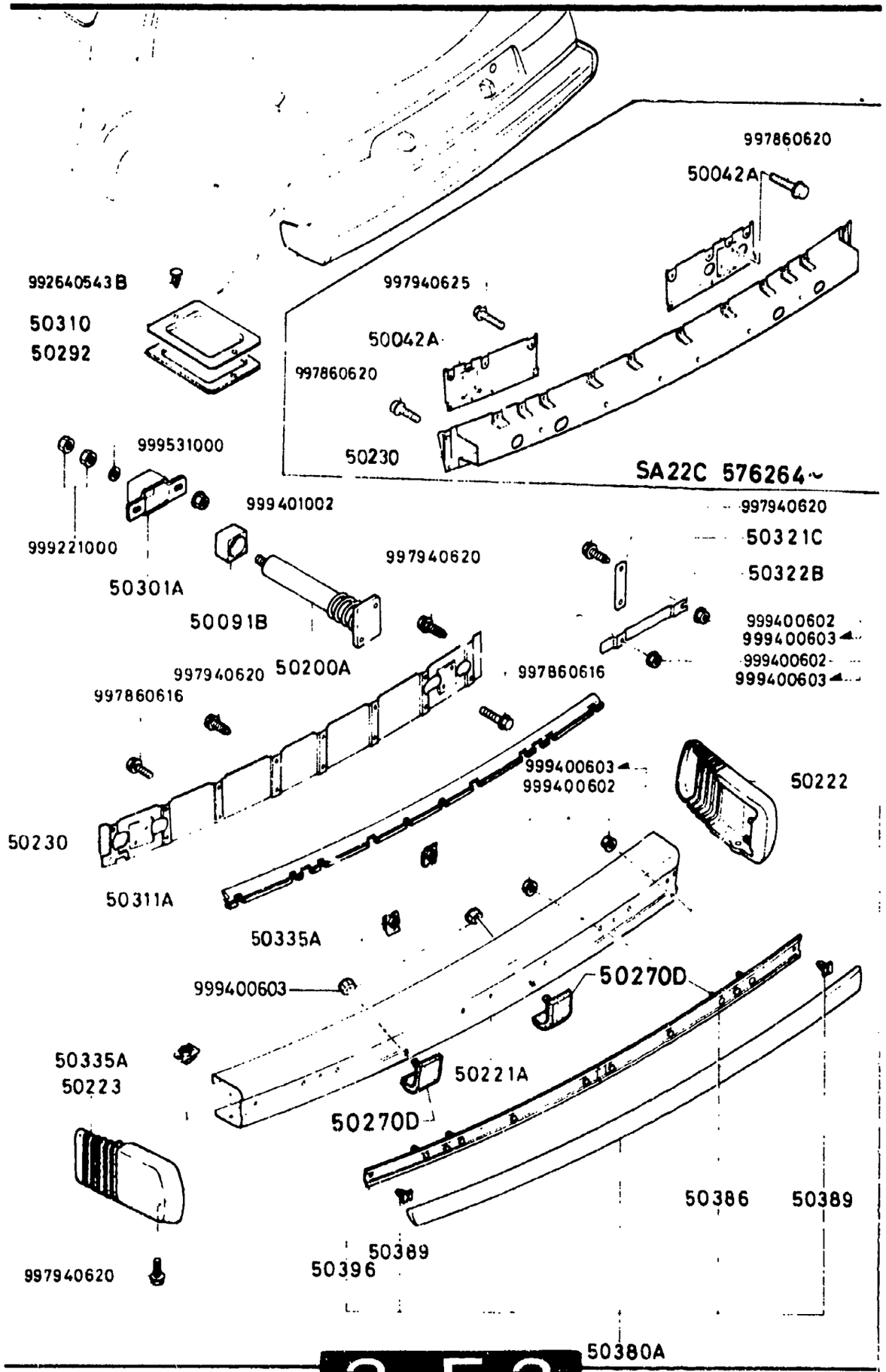

5010A-2* REAR BUMPER

D-CODE (Key No.)	PART NAME	PART No.	Qty.	MODEL DESCRIPTION	VIN (Chassis No.)
50301A	BRACKET,ABSORBER ATTACHE,AMORTISSEUR SOPORTE,AMORTIGUADOR	3571-50-301	2		
50310	COVER,SERVICE HOLE CHAPEAU,ORIFICE DE COBERTOR PARA HUECO	8871-50-231	2		
50311A	FILLER,REAR BUMPER REMPLISSEUR	8871-50-311A	1		SA22C .. 500001 -576263
	<A>	8871-50-311B	1		SA22C .. 576264-
50321C	PLATE,JUNCTION ATTACHE DE LIAISON	8871-50-321	2		SA22C .. 500001 -576263
50322B	PLATE PLAQUE PLATO	8871-50-322A	2		SA22C .. 500001 -576263
50335A	NUT,CLIP ECROU	8871-50-335	18		SA22C .. 500001 -500134
		8871-50-335A	18		SA22C .. 500135-
50380A	PROTECTOR,RR. BUMPER PROTECTION PARE-CHOC ARR.	8871-50-380B	1		
50386	HOLDER(C,R)PROTECTOR RAIL DE FIXATION(C.D.)	8871-50-386B	1		
50389	FASTENER,PROTECTOR ATTACHE	8871-50-389	8		
50396	HOLDER(C,L)PROTECTOR RAIL DE FIXATION(C.G.)	8871-50-396B	1		

5030A WINDOW MOULDINGS

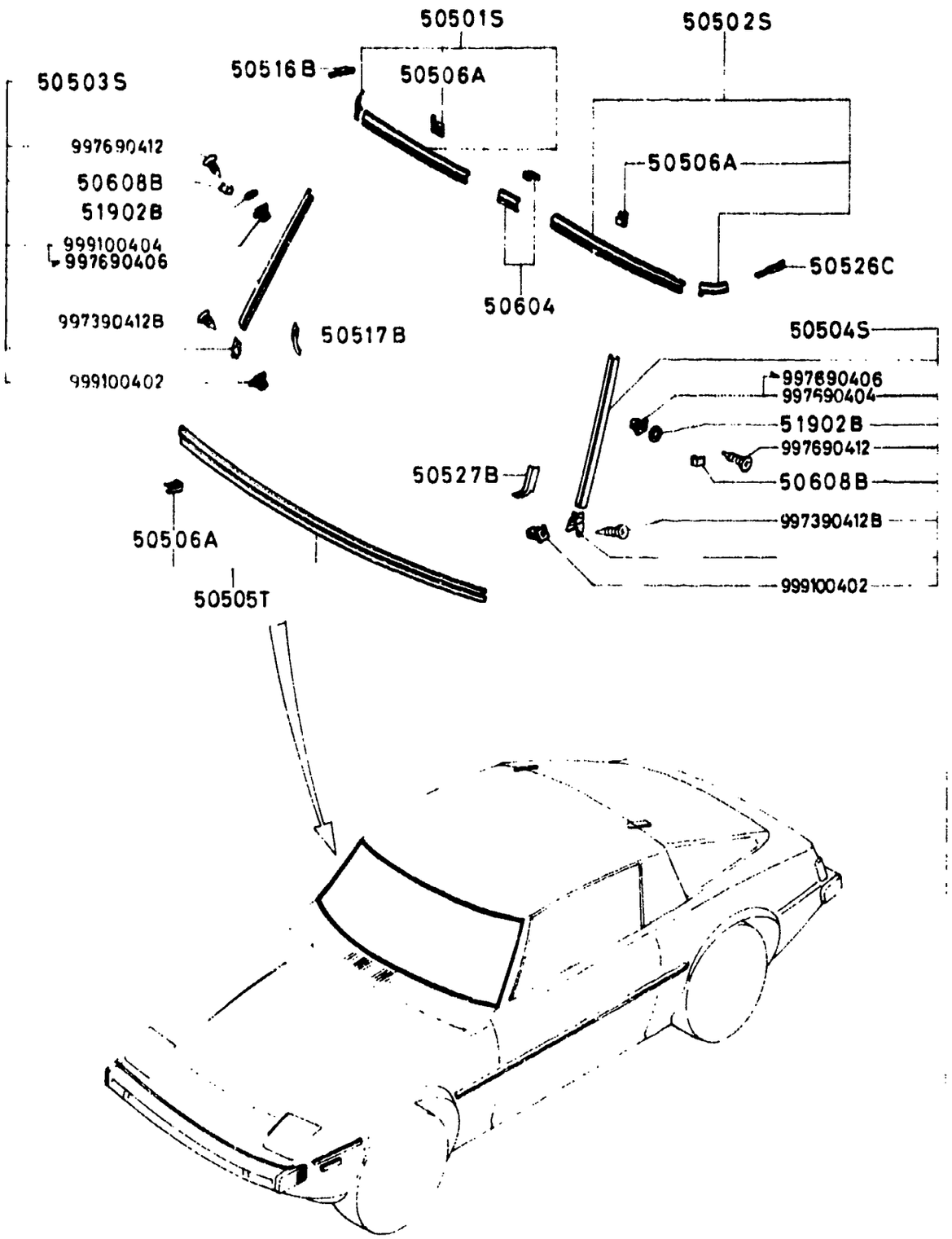

5030A-1 WINDOW MOULDINGS

D-CODE (Key No.)	PART NAME	PART No.	Qty.	MODEL DESCRIPTION	VIN (Chassis No.)
50501S	MOULD SET(R),F.UPPER JEU MOULURES AV. SUP.(D)	8871-99-741	1		SA22C .. 500001 -569398
		8871-99-741A	1		SA22C .. 569399-
50502S	MOULD SET(L),F.UPPER JEU MOULURES AV. SUP.(G)	8871-99-742	1		SA22C .. 500001 -569398
		8871-99-742A	1		SA22C .. 569399-
50503S	MOULD SET(R),F.SIDE JEU MOULURES AV.(D)	8871-99-743	1		SA22C .. 500001 -569398
		8871-99-743A	1		SA22C .. 569399-
50504S	MOULD SET(L),F.SIDE JEU MOULURES AV.(G)	8871-99-744	1		SA22C .. 500001 -569398
		8871-99-744A	1		SA22C .. 569399-
50505T	MOULD SET,F.LOWER JEU MOULURES INF. AV.	8871-99-745	1		SA22C .. 500001 -569398
		8871-99-745A	1		SA22C .. 569399-
50506A	CLIP ATTACHE PRENSA TRABA GAZA	1243-50-609	14		
50516B	DUM'A'(R) JOINT'A'(D)	8871-50-516	1		
50517B	DUM'B'(R) JOINT'B'(D)	8871-50-517	1		
50526C	DUM'A'(L) JOINT'A'(G)	8871-50-526	1		
50527B	DUM'B'(L) JOINT'B'(G)	8871-50-527	1		
50604	JOINT,MOULD UPPER JOINT MOULURE SUP.	8871-50-950A	1		SA22C .. 500001 -569398

5030A WINDOW MOULDINGS

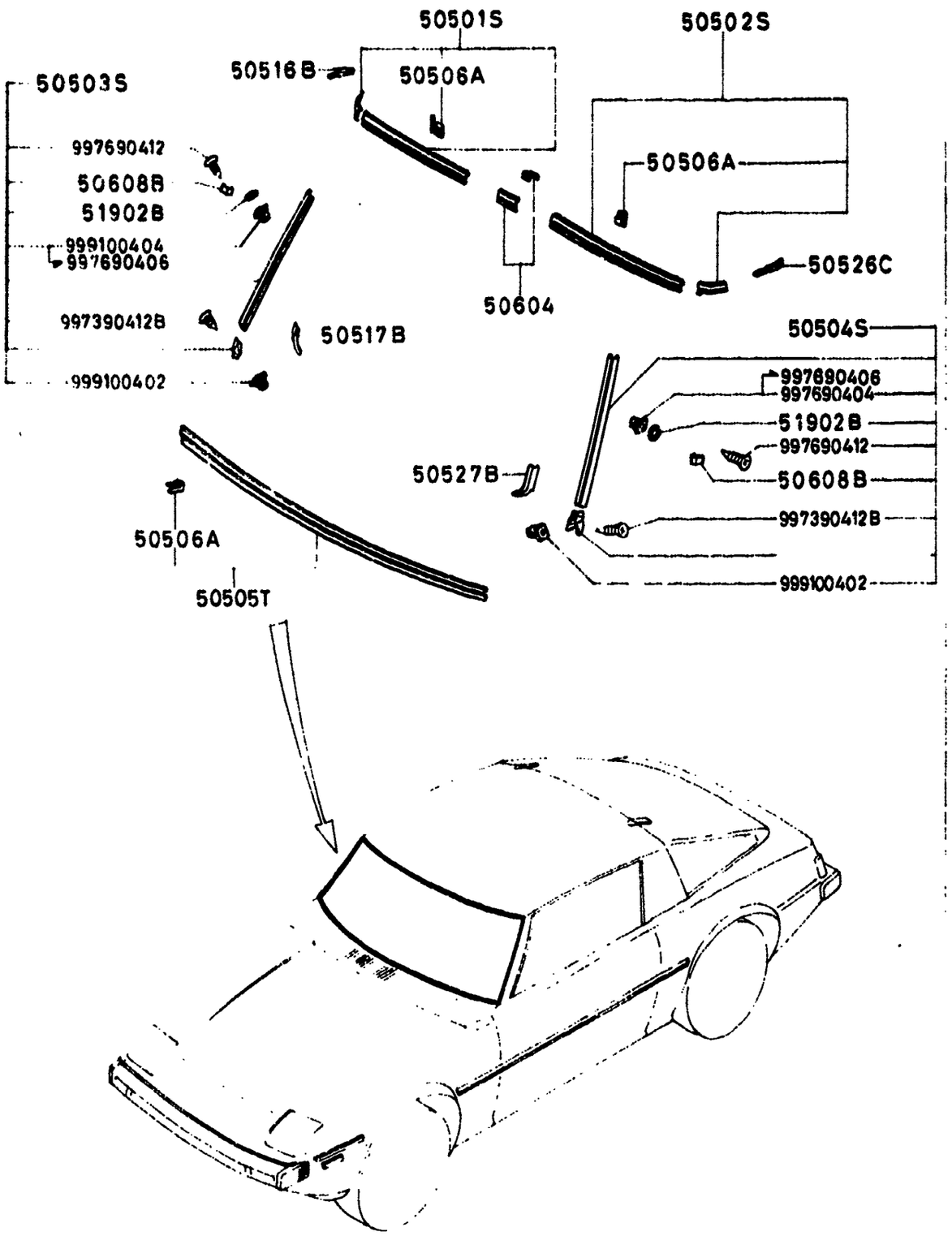

5030A-2* WINDOW MOULDINGS

D-CODE (Key No.)	PART NAME	PART No.	Qty.	MODEL DESCRIPTION	VIN (Chassis No.)
50604 CONT'D		8871-50-950B	1		SA22C .. 569399-
50608B	FASTENER,F.WIND.MLD. ATTACHE DE MOULURE	8871-50-608	6		
51902B	PACKING JOINT JUNTA	1029-51-902	6	79 MODEL	SA22C .. 500001 -568500

5040A BODY MOULDINGS

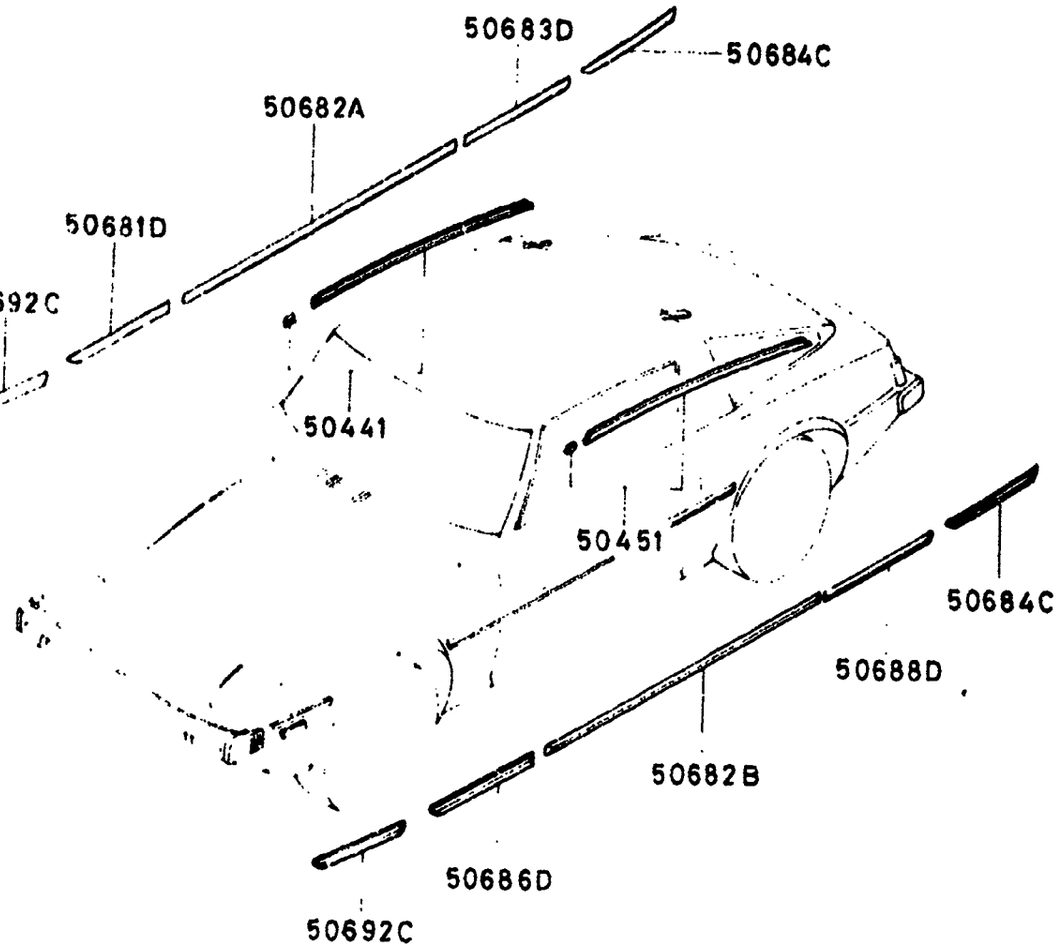

5040A-1* BODY MOULDINGS

D-CODE (Key No.)	PART NAME	PART No.	Qty.	MODEL DESCRIPTION	VIN (Chassis No.)
50441	MOULD(R),DRIP MOULURE DE GOUTTIERE (D) MOLDURA(D),ESCURRIDERA	8871-50-510B	1		SA22C .. 500001 -569398
		8871-50-510C	1		SA22C .. 569399-
50451	MOULD(L),DRIP MOULURE DE GOUTTIERE (G) MOLDURA IZQUIERDA	8871-50-520B	1		SA22C .. 500001 -569398
		8871-50-520C	1		SA22C .. 569399-
50681D	PROTECTOR'B'(R),SIDE PROTECTION'B'(D)COTE	8871-50-642	1		
50682A	PROTECTOR'C'(R),SIDE PROTECTEUR'C'.(D)COTE	8871-50-643	1		
50682B	PROTECTOR'C'(L),SIDE PROTECTION'C'.(G)COTE	8671-50-653	1		
50683D	PROTECTOR'D'(R),SIDE PROTECTEUR'D'.(D)COTE	8871-50-644	1		
50684C	PROTECTOR"E",SIDE PROTECTEUR"E".COTE	8871-50-645	2		SA22C .. 500001 -592955
			1	(R SIDE)	SA22C .. 592956-
		8981-50-645	1	(L SIDE)	SA22C .. 592956-
50686D	PROTECTOR'b'(L),SIDE PROTECTION'B'.(G)COTE	8671-50-652	1		
50688D	PROTECTOR'D'(L),SIDE PROTECTEUR'D'.(G)COTE	8871-50-654	1		
50692C	PROTECTOR'A',SIDE PROTECTION'A'COTE	8871-50-641	2		

SECTION NUMBER INDEX (BODY)

STARTING LOCATION	SECTION No.	SECTION NAME
3–C2	0900A	KEY SETS
3–C3	5000A	FRONT BUMPER & GRILLE
3–E3	5010A	REAR BUMPER
3–G3	5030A	WINDOW MOULDINGS
3–I3	5040A	BODY MOULDINGS
3–C4	5100A	LAMPS (FRONT & SIDE)
3–G4	5110A	LAMPS (REAR)
3–I4	5130A	OVERHEAD CONSOLE (1979 STANDARD ROOF MODEL)
3–J4	5170A	COWL & EXTRACTOR GRILLES & ORNAMENTS
3–C5	5230A	BONNET
3–E5	5310A	BODY PANELS (FRONT)
3–K5	5340A	BODY PANELS (SIDE & ROOF)
3–I6	5360A	BODY PANELS (FLOOR)
3–C7	5500A	DASHBOARD EQUIPMENT
3–L7	5540A	METERS
3–D8	5560A	DASHBOARD & RELATED
3–L8	5570A	CONSOLE
3–K9	5580A	VENTILATOR
3–C10	5700A	SEAT (EXCEPT LEATHER TRIM)
3–N10	5710A	SEAT TRIM (LEATHER – ANNIVERSARY EDITION)
3–G11	5760A	SEAT BELTS

STARTING LOCATION	SECTION No.	SECTION NAME
3–C12	5800A	FRONT DOOR
3–C13	5830A	FRONT DOOR MECHANISMS
3–C14	6100A	HEATER
3–E14	6110A	HEATER UNIT
3–H14	6115A	HEATER CONTROLS
3–J14	6120A	HEATER BLOWER
3–C15	6230A	BACK DOOR MECHANISMS
3–F15	6300A	WINDOW GLASSES
3–I15	6330A	SUNROOF
3–C16	6600A	ELECTRIC EQUIPMENT
3–G16	6680A	RADIO & STEREO SYSTEMS
4–C2	6700A	WIRE HARNESS & CLAMPS
4–G2	6720A	WINDSHIELD WASHER
4–H2	6730A	WINDSHIELD WIPER
4–J2	6740A	WIPER MOTOR (COMPONENTS ONLY)
4–C3	6800A	CEILING TRIM
4–J3	6840A	TRIM & SCUFF PLATE
4–F4	6860A	FLOOR MAT & PADS
4–L4	6870A	SERVICE TOOLS
4–M4	6900A	VISOR, ASSIST HANDLE & MIRRORS
4–G5	6930A	CAUTION PLATES

THE FRAMES IN THIS COLUMN INDICATE :

3---C4	5100A	LAMPS (FRONT & SIDE)
3---G4	5110A	LAMPS (REAR)
3---I4	5130A	OVERHEAD CONSOLE (1979 STANDARD ROOF MODEL)
3---J4	5170A	COWL & EXTRACTOR GRILLES & ORNAMENTS

© 1983 Toyo Kogyo Co., Ltd.
MAY 1983

5100A LAMPS (FRONT & SIDE)

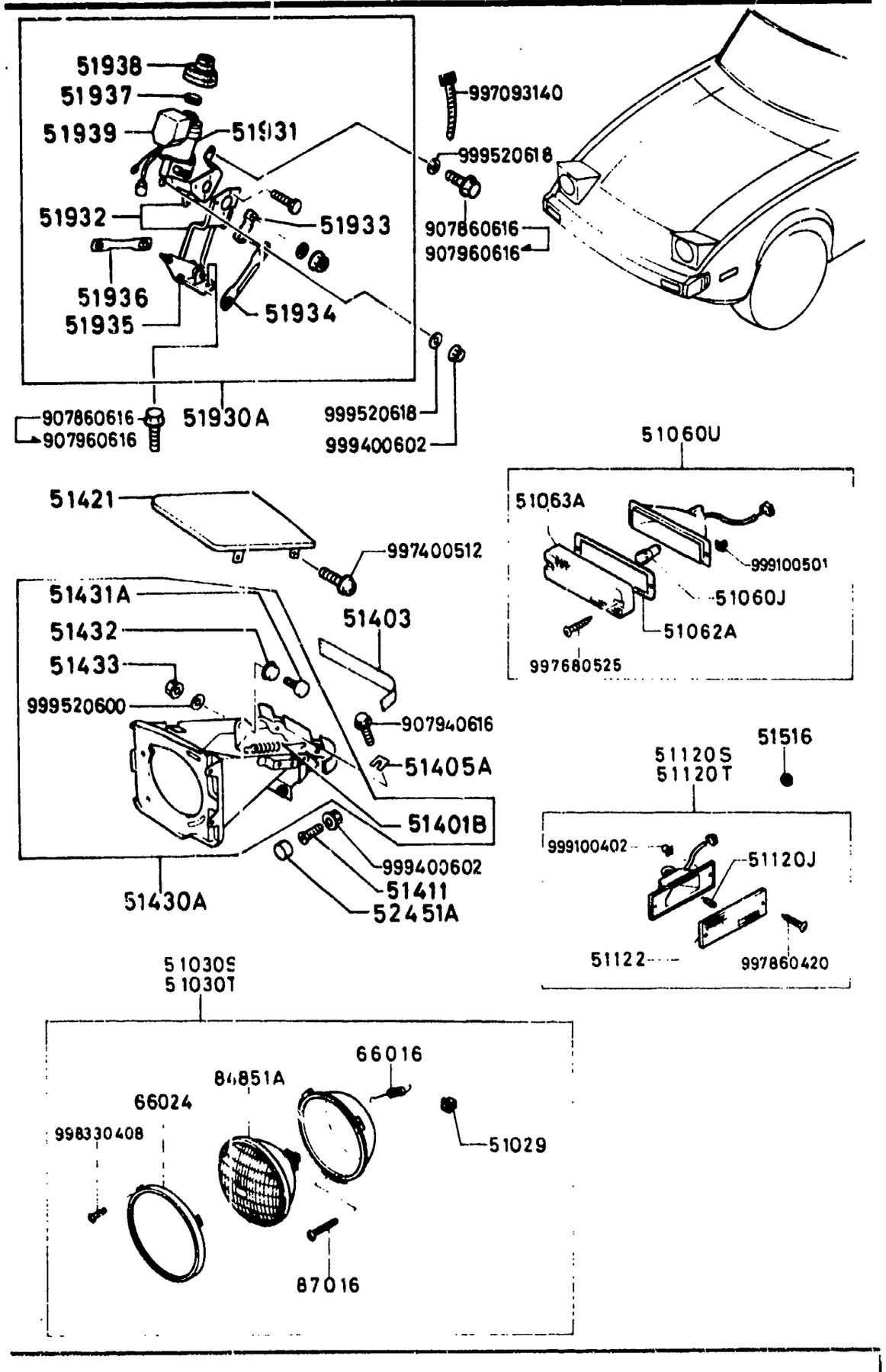

5100A-1 LAMPS (FRONT & SIDE)

D-CODE (Key No.)	PART NAME	PART No.	Qty.	MODEL/ DESCRIPTION	VIN (Chassis No.)
51029	GROMMET,SCREW PROTECTEUR, VIS PROTECTOR DE TORNILLO	0483-66-061A	4		
51030S	LAMP SET(R),HEAD JEU PHARES(D)	8871-89-661	1	(A12V 50/40W)	
51030T	LAMP SET(L),HEAD PHARE AV.(G)	8871-89-666	1	(A12V 50/40W)	
51060J	BULB AMPOULE FOCO	9970-14-270	2	(A12V 27/8W)	
51060U	LAMP SET,F.COMB. JEU FEUX AV.	8871-89-662	2		
51062A	GASKET,F.COMB. JOINT EMPAQUE	8871-51-063	2		
51063A	LENS,F.COMB. VERRE FEU AV.	8871-51-061	2		
51120J	BULB AMPOULE FOCO	9970-16-040	2	(A12V 3.8W)	
51120S	LAMP SET(R)SIDE TURN JEU CLIGNOTEUR(D)	8871-89-663	1		
51120T	LAMP SET(L)SIDE TURN FEU CLIGNOTEUR(G)	8871-89-668	1		
51122	LENS(R),SIDE TURN VERRE (D) CRISTAL(DERECHO)	8871-51-121	1		
51122	LENS(L),SIDE TURN VERRE (G) CRISTAL(IZQUEIRDO)	8871-51-131	1		
51401B	SPRING,LID-LAMP RESSORT LAMPE	8871-51-401	2		
51403	PROTECTOR PROTECTEUR PROTECTOR	8871-51-403	2		
51405A	SHIM,TILTING HINGE CALE D'EPAISSEUR	8871-51-405	6		

5100A LAMPS (FRONT & SIDE)

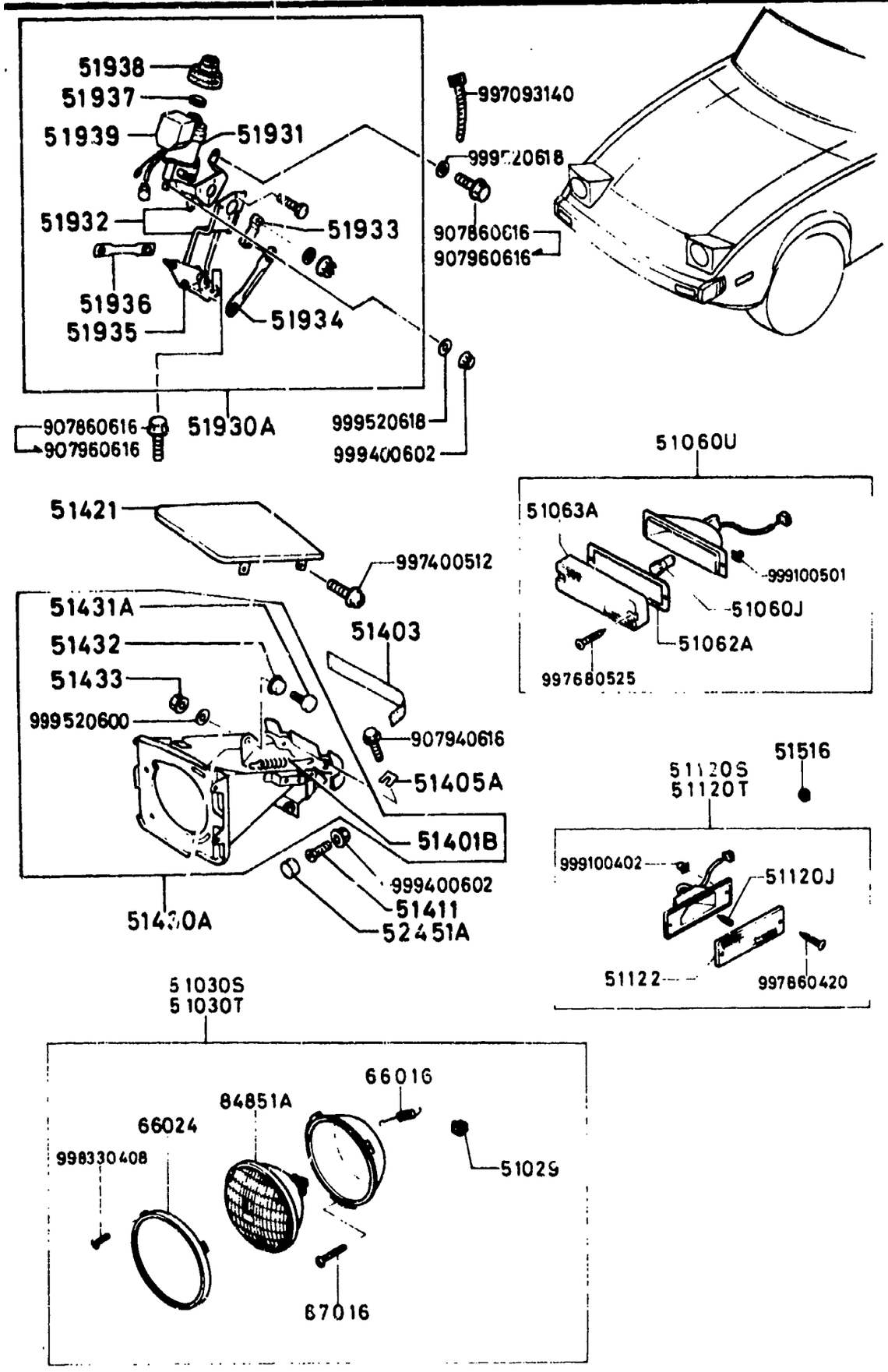

5100A-2 LAMPS (FRONT & SIDE)

D-CODE (Key No.)	PART NAME	PART No.	Qty.	MODEL / DESCRIPTION	VIN (Chassis No.)
51411	SCREW,STOPPER VIS	8871-51-411	2		
51421	LID(R),LAMP COUVERCLE LAMPE(D)	8871-51-421	1		SA22C .. 500001 -627592
		<AN> *8871-51-421A	1		SA22C .. 627593-
51421	LID(L),LAMP COUVER. LAMPE(G)	8871-51-621	1		SA22C .. 500001 -627592
		<AN> *8871-51-621A	1		SA22C .. 627593-
51430A	HINGE(R),LID-LAMP CHARNIERE(D)	8871-51-430B	1		SA22C .. 500001 -540410
		8871-51-430C	1		SA22C .. 540411-
51430A	HINGE(L),LID-LAMP CHARNIERE(G)	8871-51-630B	1		SA22C .. 500001 -540410
		8871-51-630C	1		SA22C .. 540411-
51431A	BOLT,HINGE BOULON DE CHARNIERE	8871-51-431	4		
51432	BUSH,HINGE BOLT BUSELURE BOULON CHARNIERE	8871-51-432	4		
51433	NUT,HINGE ECROU DE CHARNIERE	8871-51-433	4		
51516	PROTECTOR,CORD OEILLET, FIL PROTECTOR HILO	8545-51-516	2		
51930A	MOTOR & LINK(R) MOTEUR & LEVIER(D)	8562-51-930	1		SA22C .. 569399-
		8871-51-930A	1		SA22C .. 500001 -569398
51930A	MOTOR & LINK(L) MOTEUR & LEVIER(G)	8562-51-940	1		SA22C .. 569399-

5100A LAMPS (FRONT & SIDE)

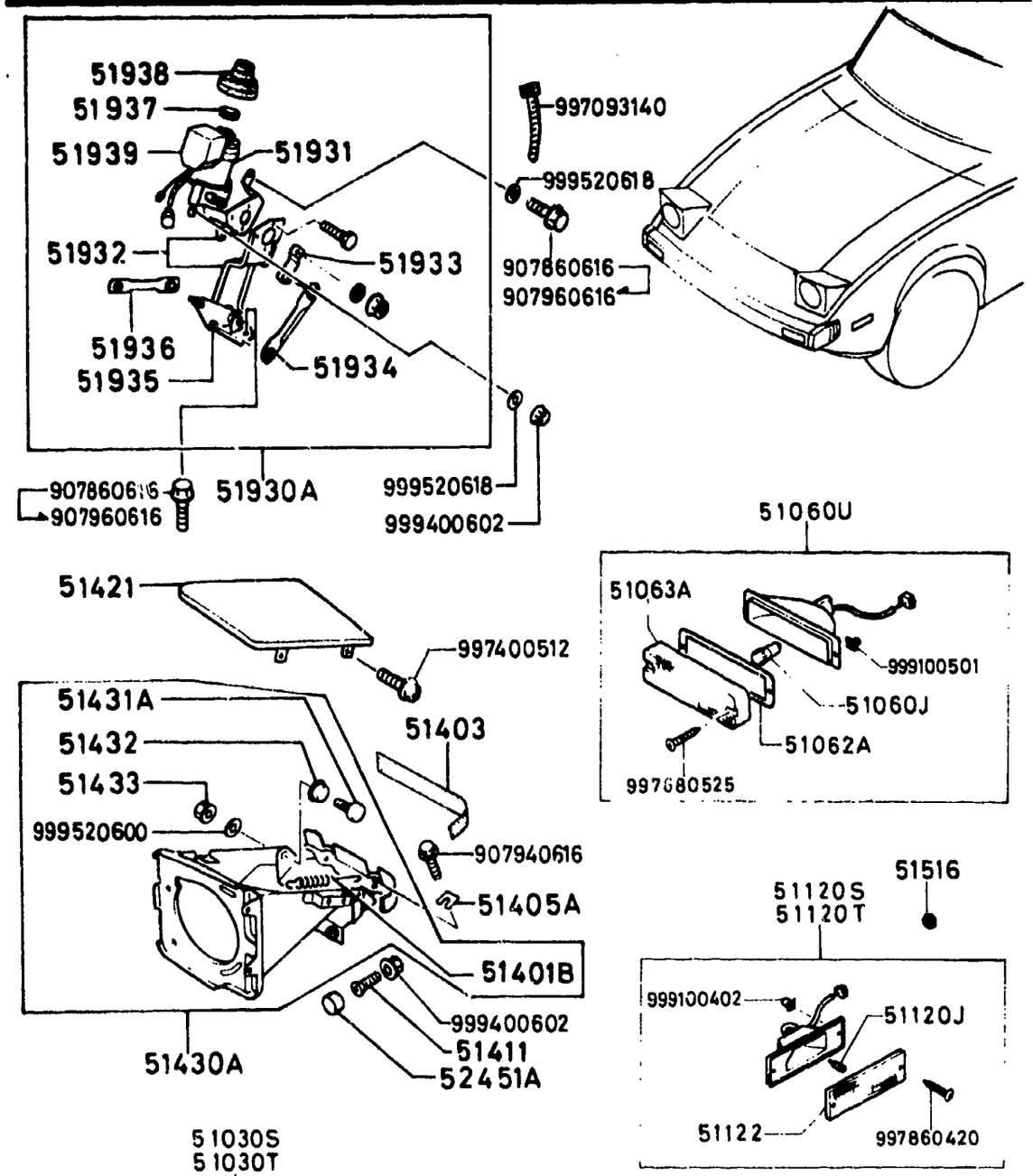

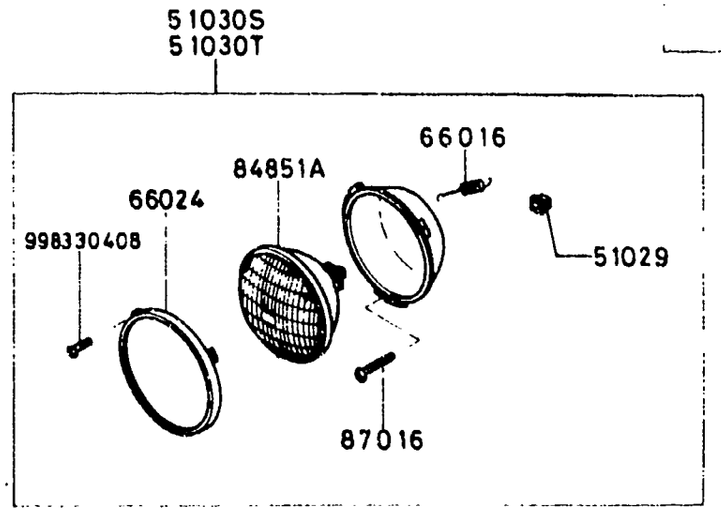

5100A-3 LAMPS (FRONT & SIDE)

D-CODE (Key No.)	PART NAME	PART No.	Qty.	MODEL/DESCRIPTION	VIN (Chassis No.)
51930A CONT'D		8871-51-940A	1		SA22C .. 500001 -569398
51931	MOTOR(R) MOTEUR(D)	8562-51-931	1		SA22C .. 569399-
		8871-51-931	1		SA22C .. 500001 -569398
51931	MOTOR(L) MOTEUR(G)	8562-51-941	1		SA22C .. 569399-
		8871-51-941	1		SA22C .. 500001 -569398
51932	BRACKET(R) ATTACHE (D) SOPORTE (DR),MUNON	8871-51-932	1		
51932	BRACKET(L) SUPPORT SOPORTE (IZ)	8871-51-942	1		
51933	ROD,MOTOR TIGE MOTEUR	8871-51-933	2		
51934	ROD'A' TIGE'A'	8871-51-934	2		
51935	LEVER(R),LINK MAILLON DE LEVIER(D)	8871-51-935	1		
51935	LEVER(L),LINK MAILLON DE LEVIER(G)	8871-51-945	1		
51936	ROD'B' TIGE'B'	8871-51-936	2		
51937	KNOB BOUTON PERILLA	8871-51-937	2		
51938	BOOT COIFFE FUNDA	8871-51-938	2		
51939	RELAY RELAIS	8871-51-939	2		

5100A LAMPS (FRONT & SIDE)

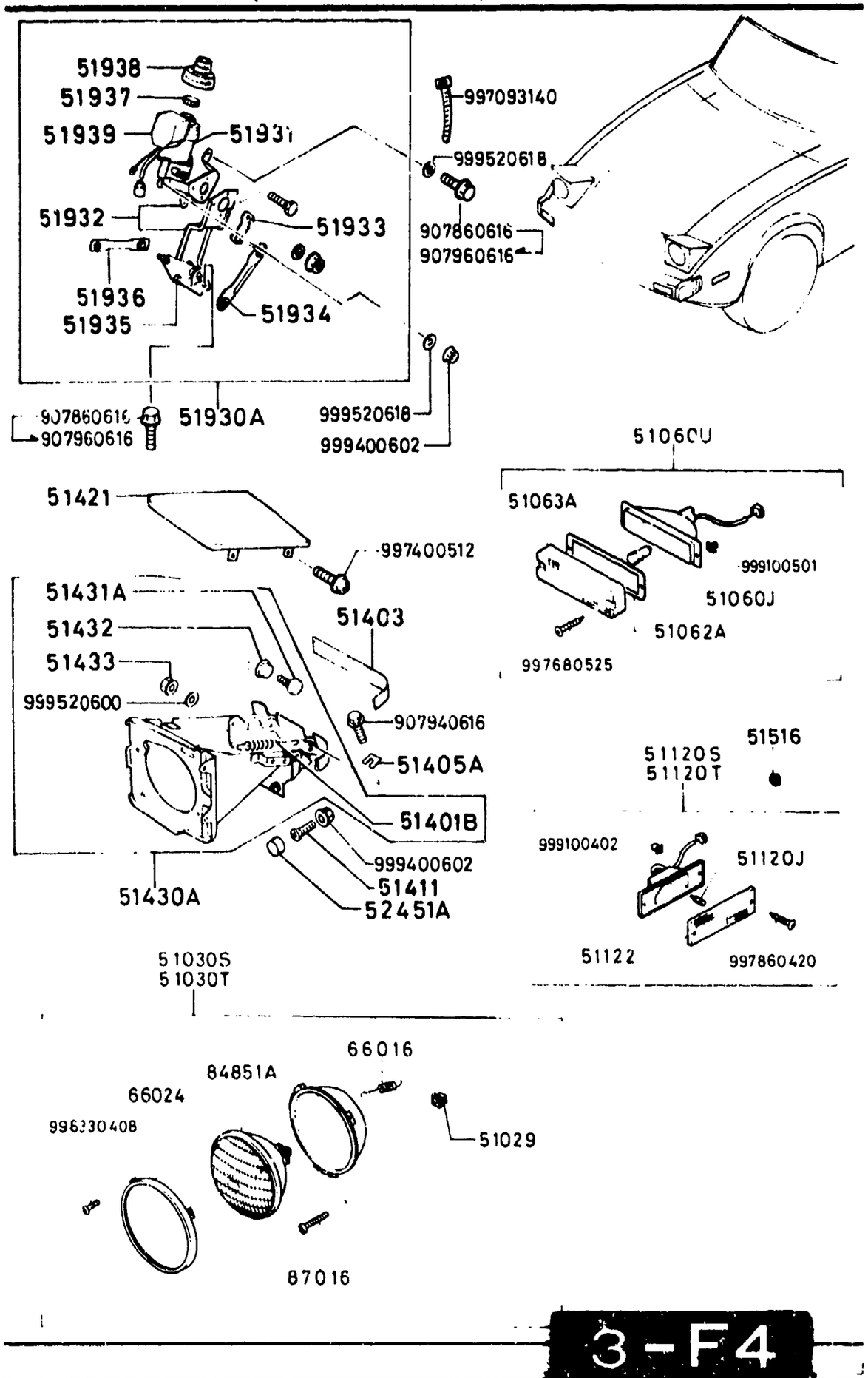

5100A-4* LAMPS (FRONT & SIDE)

D-CODE (Key No.)	PART NAME	PART No.	Qty.	MODEL DESCRIPTION	VIN (Chassis No.)
52451A	RUBBER,CUSHION SILENT BLOC GOMA,TOPE	0866-52-451	2		
66016	SPRING,ADJUST RESSORT DE REGLAGE RESORTE,AJUSTE	8871-51-021	2		
66024	RING,RETAINING CERCLE D'ARRET ANILLO,RETENTOR	8871-51-033	2		
84851A	BEAM,SEALED BLOC OPTIQUE CLOS	8871-51-031	2	(A12V 50/40W)	
87016	SCREW,ADJUST VIS DE REGLAGE TORNILLO,AJUSTE	3958-51-021	4		

5110A LAMPS (REAR)

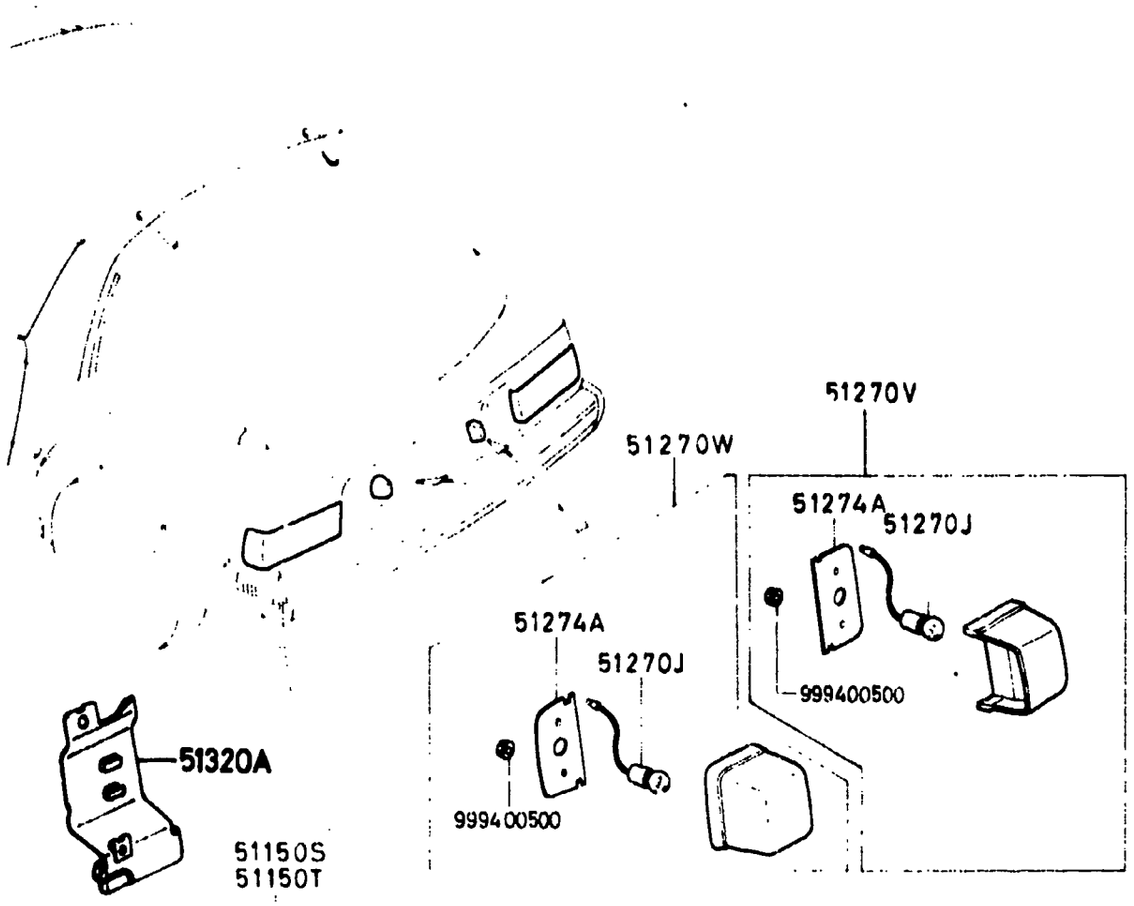

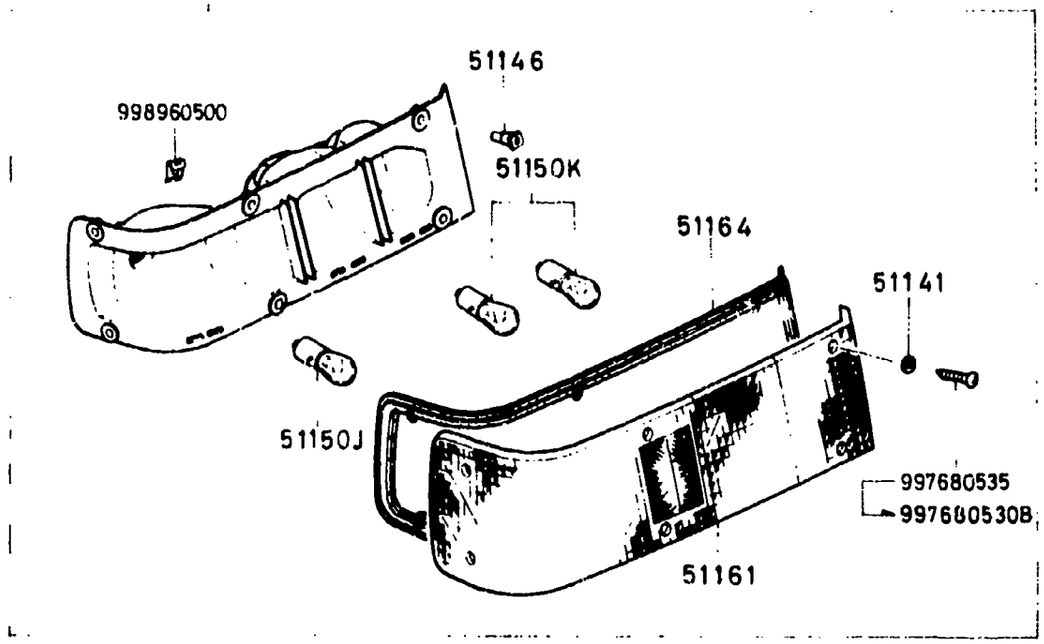

5110A-1 LAMPS (REAR)

D-CODE (Key No.)	PART NAME	PART No.	Qty.	MODEL DESCRIPTION	VIN (Chassis No.)
51141	WASHER,RR.COMB. RONDELLE FEU ARR.	8871-51-147	12		
51146	GROMMET,SCREW-R.COMB BAGUE & VIS	8871-51-146	4		SA22C .. 500001 -502144
		8871-51-146A	4		SA22C .. 502145-
51150J	BULB AMPOULE FOCO	9970-14-278	2	(A12V 27/8W)	
51150K	BULB AMPOULE FOCO	9970-13-270	4	(A12V 27W)	
51150S	LAMP SET(R),RR.COMB. JEU FEUX ARR.(D)	8871-89-664	1		
51150T	LAMP SET(L),RR.COMB. JEU FEUX ARR.(G)	8871-89-669	1		
51161	LENS(R),RR.COMB. VERRE FEU ARR.(D)	8871-51-151	1		
51161	LENS(L),RR.COMB. VERRE (G) CRISTAL(IZQUEIRDO)	8871-51-161	1		
51164	GASKET(R),RR.COMB. JOINT (D) EMPAQUE DERECHO	8871-51-153	1		
51164	GASKET(L),RR.COMB. POCHETTE (G) EMPAQUE IZQUIERDO	8871-51-163	1		
51270J	BULB AMPOULE FOCO	9970-12-080	2	(A12V 8W)	
51270V	LAMP SET(R),LICENSE LAMPE PLAQUE(D)	8871-89-675	1		
51270W	LAMP SET(L),LICENSE LAMPE PLAQUE(G)	8871-89-685	1		
51274A	GASKET(R),LICENSE JOINT PLAQUE(D)	8871-51-272	1		

5110A LAMPS (REAR)

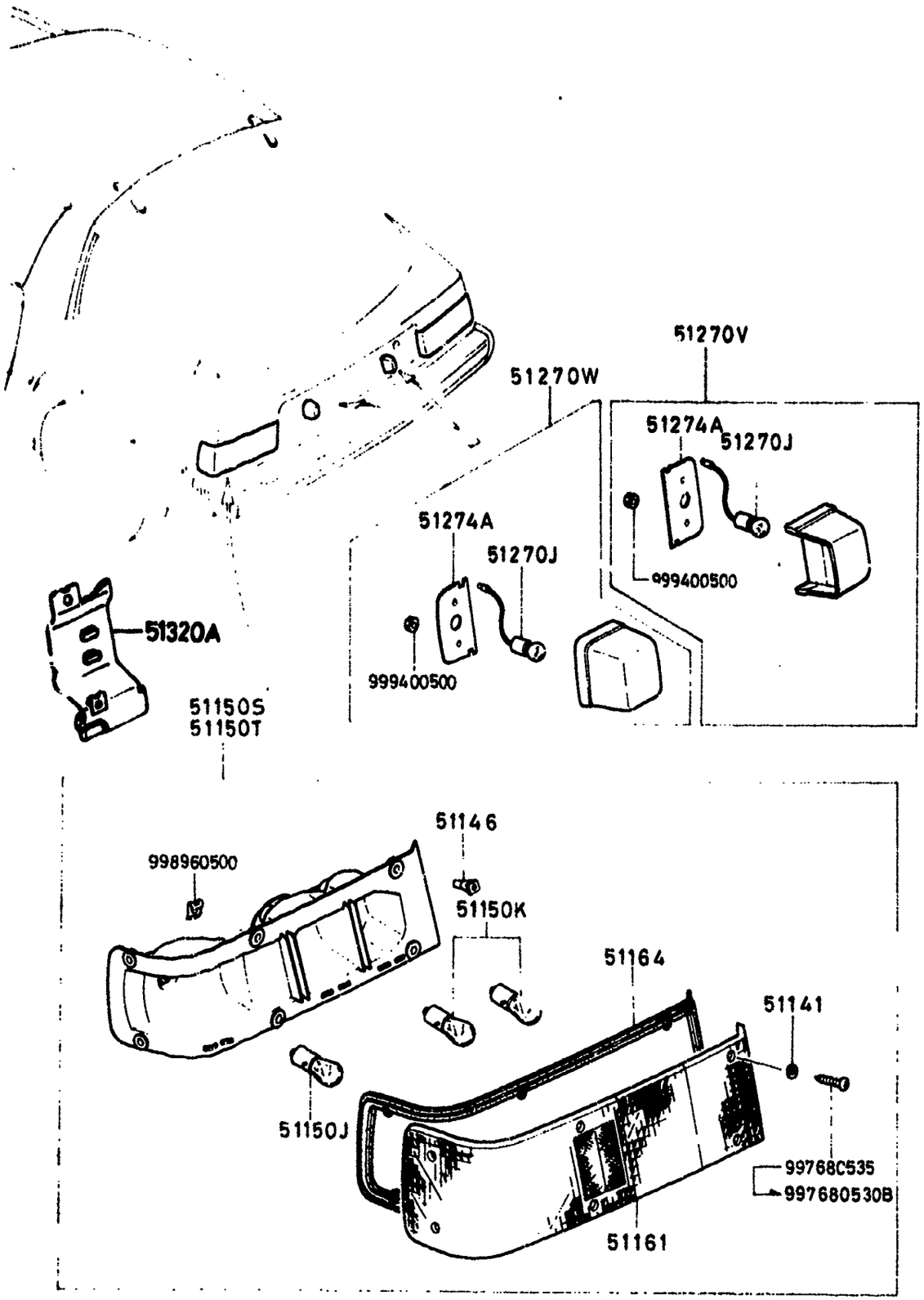

5110A-2* LAMPS (REAR)

D·CODE (Key No.)	PART NAME	PART No.	Qty.	MODEL DESCRIPTION	VIN (Chassis No.)
51274A	GASKET(L),LICENSE JOINT PLAQUE(G)	8871-51-282	1		
51320A	BRACKET(R),RR.COMB.	*8871-51-320A	1		SA22C .. 626629-
51320A	BRACKET(L),RR.COMB.	*8871-51-330A	1		SA22C .. 626629-

5130A OVERHEAD CONSOLE (1979 STANDARD ROOF MODEL)

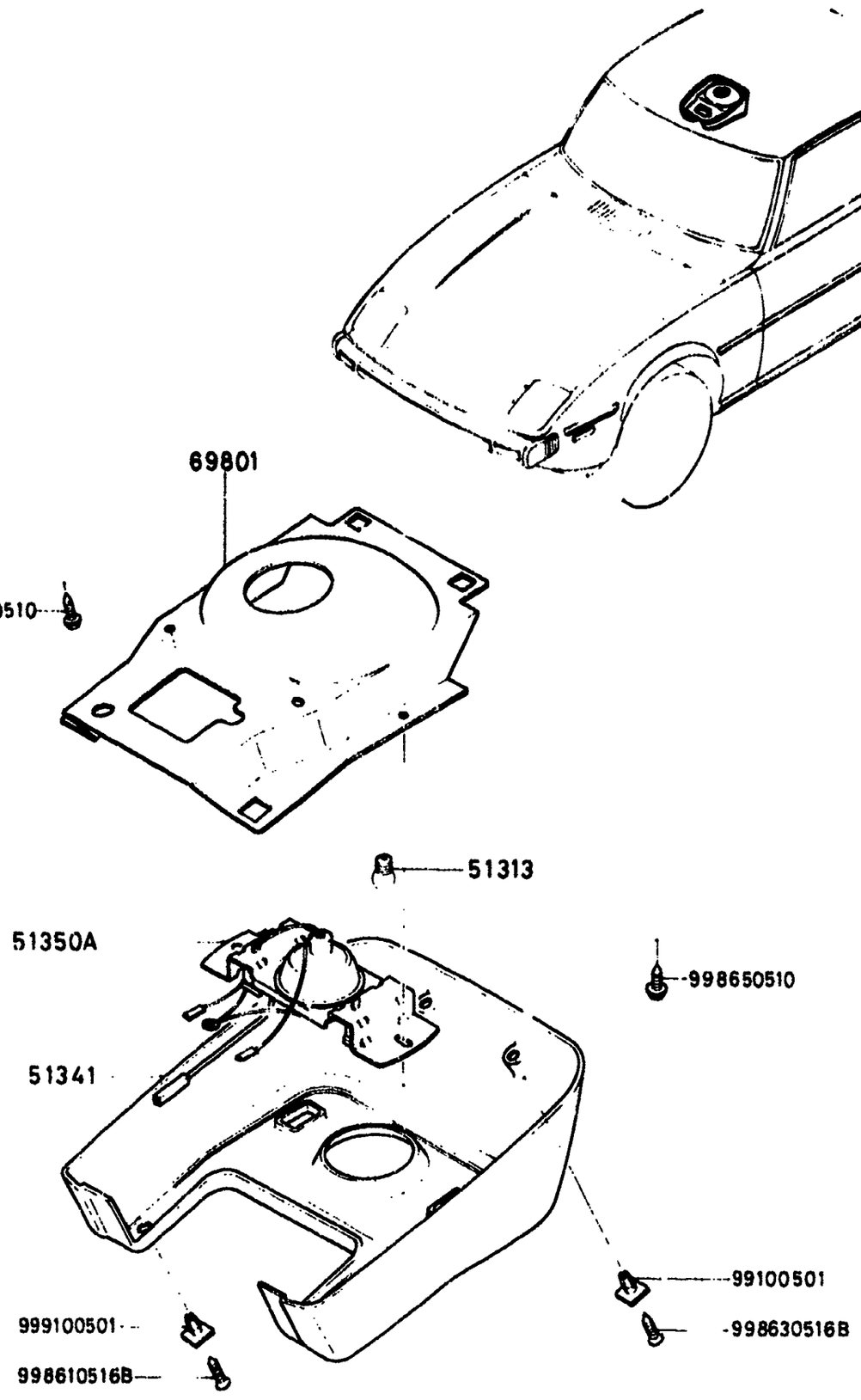

5130A-1* OVERHEAD CONSOLE (1979 STANDARD ROOF MODEL)

D-CODE (Key No.)	PART NAME	PART No.	Qty.	MODEL DESCRIPTION	VIN (Chassis No.)
51313	BULB,MAP LAMP AMPOULE, LAMPE DE LECTURE FOCO,LAMPARA DE MAPAS	9970-03-060	1	(A12V 6W)	
51341	HEAD CONSOLE RENFORT CONSOLE	8871-51-341	1		
	BLACK	00			
	WINE	10			
	BROWN (SA22C 500001-535838)	20			
	BROWN (SA22C 535839-)	23			
51350A	LAMP,MAP LAMPE DE LECTURE	8871-51-350	1		
69801	BRACKET,HEAD CONSOLE ATTACHE, CONSOLE	8871-51-345	1		

5170A COWL & EXTRACTOR GRILLES & ORNAMENTS

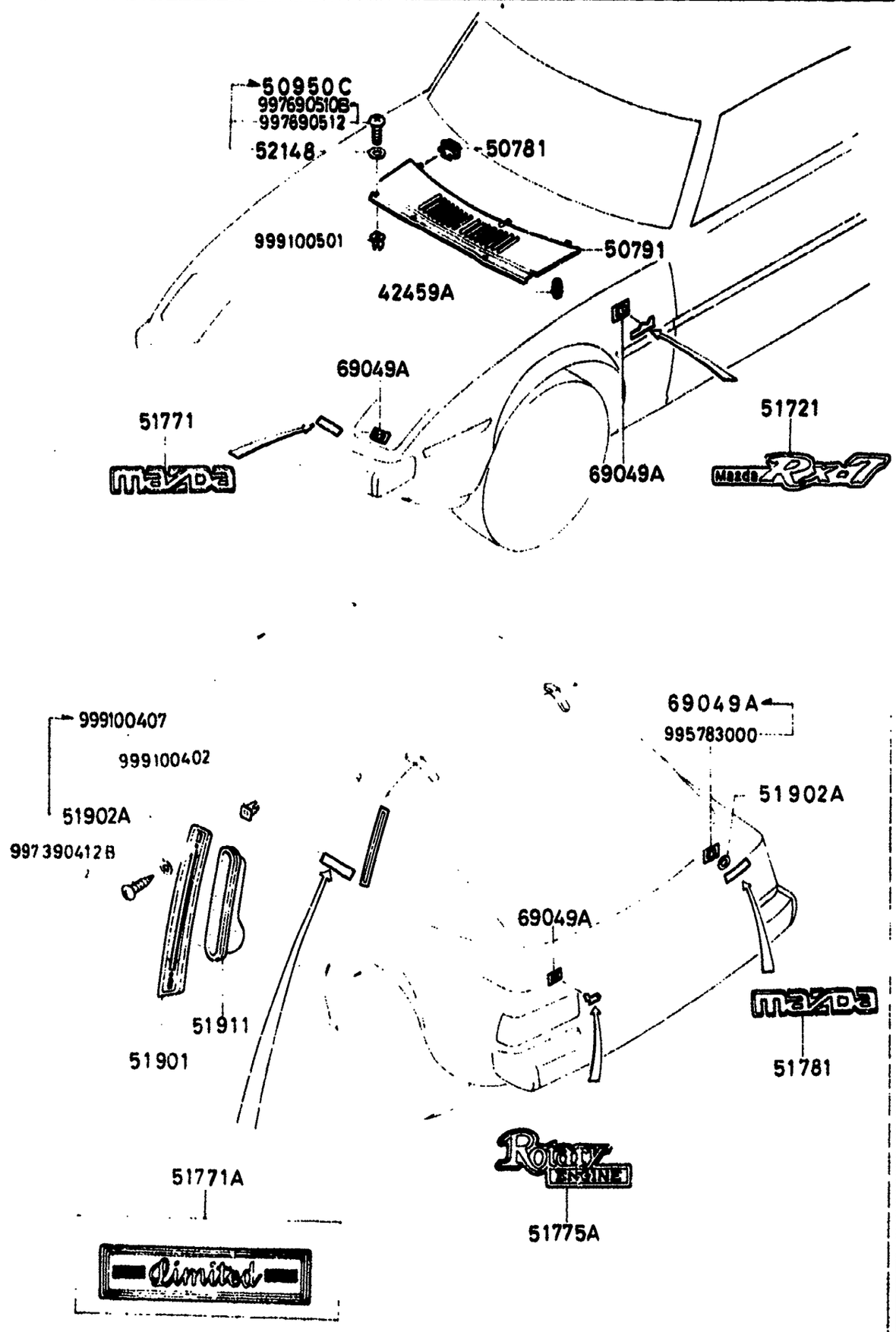

5170A-1 COWL & EXTRACTOR GRILLES & ORNAMENTS

D·CODE (Key No.)	PART NAME	PART No.	Qty.	MODEL DESCRIPTION	VIN (Chassis No.)
42459A	RUBBER,CUSHION SILENT BLOC	0259-42-459	4		
50781	PROTECTOR,COWL GRILL PROTECTION TOLE RADIATEUR	8531-50-792	3		
50791	GRILLE,COWL PROTECTION, RADIATEUR PARRILLA, CUPULA	8871-50-791	1		
50950C	SCREW	8545-50-950	4		SA22C .. 547039-
51721	NAME,SIDE MONOGRAMME,LATERAL NOMBRE,LATERAL	8871-51-721	2	(MAZDA RX-7)	
51771	ORNAMENT,FRONT ORNEMENT,AV.	8871-51-771A	1	(MAZDA)	SA22C .. 500001 -533063
	<AN>	8871-51-771B	1	(MAZDA)	SA22C .. 533207-
		8980-51-771	1	(MAZDA)	SA22C .. 533064 -533206
51771A	MARK,REAR SIGLE ARR.	8973-51-761P	1	(LIMITED) (ORD.BY.897351761P01	
51775A	MARK,RE-REAR SIGLE, RE-AR. MARCADOR TRASERO	3743-69-085	1	(ROTARY ENGINE)	
51781	ORNAMENT,REAR ORNEMENT ARR.	8870-51-781	1	(MAZDA)	SA22C .. 500001 -533063
	<AN>	8870-51-781A	1	(MAZDA)	SA22C .. 533207-
		8980-51-781	1	(MAZDA)	SA22C .. 533064 -533206
51901	GRILLE(R),EXTRACTOR GRILLE (D)	8871-51-901B	1		SA22C .. 500001

5170A COWL & EXTRACTOR GRILLES & ORNAMENTS

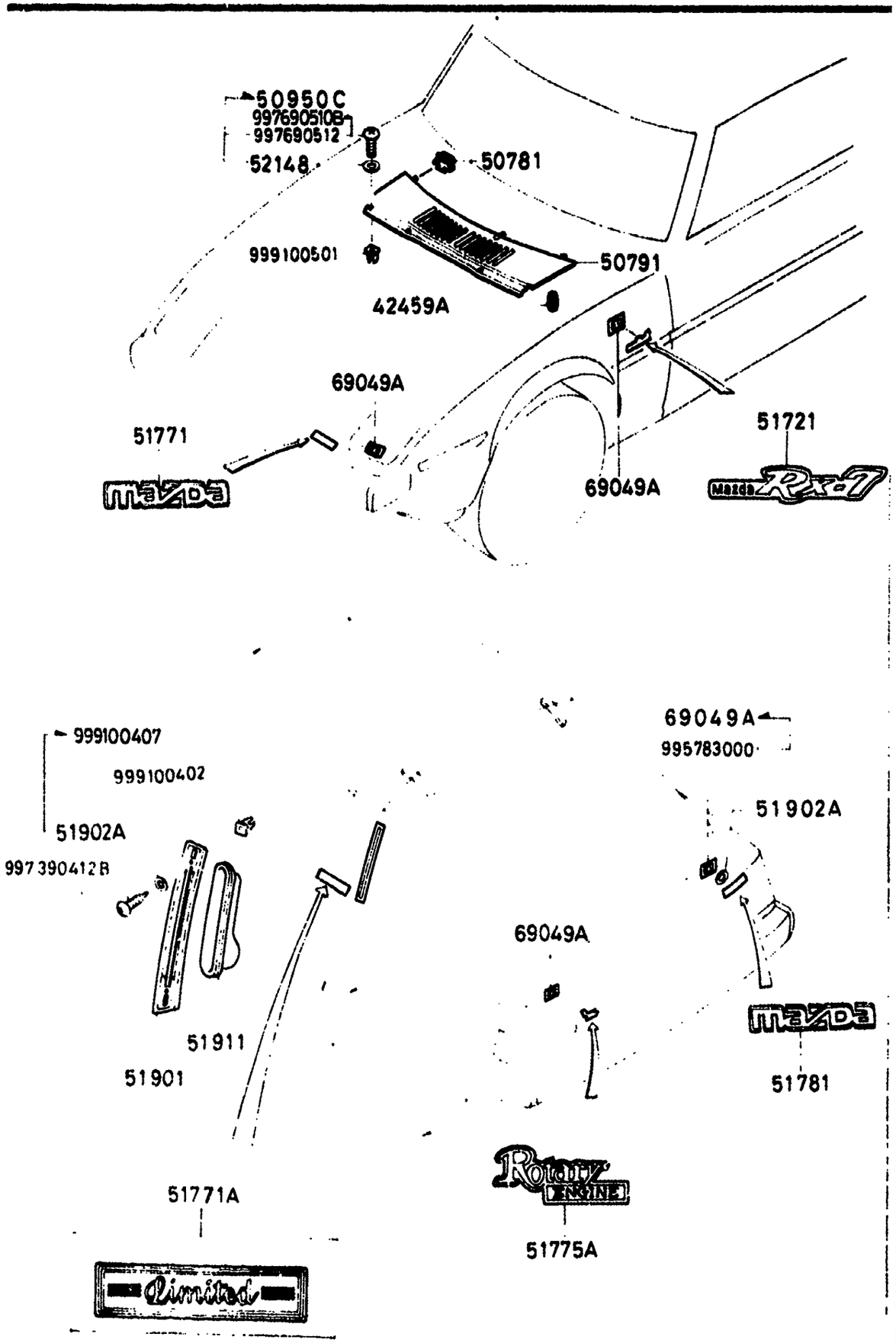

5170A-2★ COWL & EXTRACTOR GRILLES & ORNAMENTS

D-CODE (Key No.)	PART NAME	PART No.	Qty.	MODEL DESCRIPTION	VIN (Chassis No.)
51901 CONT'D	PARRILLA EXTRACTO DER.	8871-51-901B			-559739
		8871-51-901C	1		SA22C .. 559740-
51901	GRILLE(L),EXTRACTOR GRILLE (G) PARRILLA EXTRACTOR IZQ.	8871-51-951B	1		SA22C .. 500001 -559739
		8871-51-951C	1		SA22C .. 559740-
51902A	GASKET,EXTRACTOR EXTRACTEUR JOINT	1029-51-902	4		SA22C .. 500001 -574960
51911	EXTRACTOR(R) EXTRACTEUR (D) EXTRACTOR DERECHO	8871-51-911A	1		
51911	EXTRACTOR(L) EXTRACTEUR (G) EXTRACTOR IZQUIERDO	8871-51-961A	1		
52148	WASHER RONDELLE ARANDELA	0633-52-148	4		SA22C .. 500001 -547083
69049A	NUT,SPEED ECROU PLANCHUELA,SEGURO	0187-69-049A	10		

SECTION NUMBER INDEX (BODY)

STARTING LOCATION	SECTION No.	SECTION NAME
3–C2	0900A	KEY SETS
3–C3	5000A	FRONT BUMPER & GRILLE
3–E3	5010A	REAR BUMPER
3–G3	5030A	WINDOW MOULDINGS
3–I3	5040A	BODY MOULDINGS
3–C4	5100A	LAMPS (FRONT & SIDE)
3–G4	5110A	LAMPS (REAR)
3–I4	5130A	OVERHEAD CONSOLE (1979 STANDARD ROOF MODEL)
3–J4	5170A	COWL & EXTRACTOR GRILLES & ORNAMENTS
3–C5	5230A	BONNET
3–E5	5310A	BODY PANELS (FRONT)
3–K5	5340A	BODY PANELS (SIDE & ROOF)
3–I6	5360A	BODY PANELS (FLOOR)
3–C7	5500A	DASHBOARD EQUIPMENT
3–L7	5540A	METERS
3–D8	5560A	DASHBOARD & RELATED
3–L8	5570A	CONSOLE
3–K9	5580A	VENTILATOR
3–C10	5700A	SEAT (EXCEPT LEATHER TRIM)
3–N10	5710A	SEAT TRIM (LEATHER – ANNIVERSARY EDITION)
3–G11	5760A	SEAT BELTS

STARTING LOCATION	SECTION No.	SECTION NAME
3–C12	5800A	FRONT DOOR
3–C13	5830A	FRONT DOOR MECHANISMS
3–C14	6100A	HEATER
3–E14	6110A	HEATER UNIT
3–H14	6115A	HEATER CONTROLS
3–J14	6120A	HEATER BLOWER
3–C15	6230A	BACK DOOR MECHANISMS
3–F15	6300A	WINDOW GLASSES
3–I15	6330A	SUNROOF
3–C16	6600A	ELECTRIC EQUIPMENT
3–G16	6680A	RADIO & STEREO SYSTEMS
4–C2	6700A	WIRE HARNESS & CLAMPS
4–G2	6720A	WINDSHIELD WASHER
4–H2	6730A	WINDSHIELD WIPER
4–J2	6740A	WIPER MOTOR (COMPONENTS ONLY)
4–C3	6800A	CEILING TRIM
4–J3	6840A	TRIM & SCUFF PLATE
4–F4	6860A	FLOOR MAT & PADS
4–L4	6870A	SERVICE TOOLS
4–M4	6900A	VISOR, ASSIST HANDLE & MIRRORS
4–G5	6930A	CAUTION PLATES

THE FRAMES IN THIS COLUMN INDICATE :

3–C5	5230A	BONNET
3–E5	5310A	BODY PANELS (FRONT)
3–K5	5340A	BODY PANELS (SIDE & ROOF, STANDARD ROOF)

© 1983 Toyo Kogyo Co., Ltd.
MAY 1983

5230A BONNET

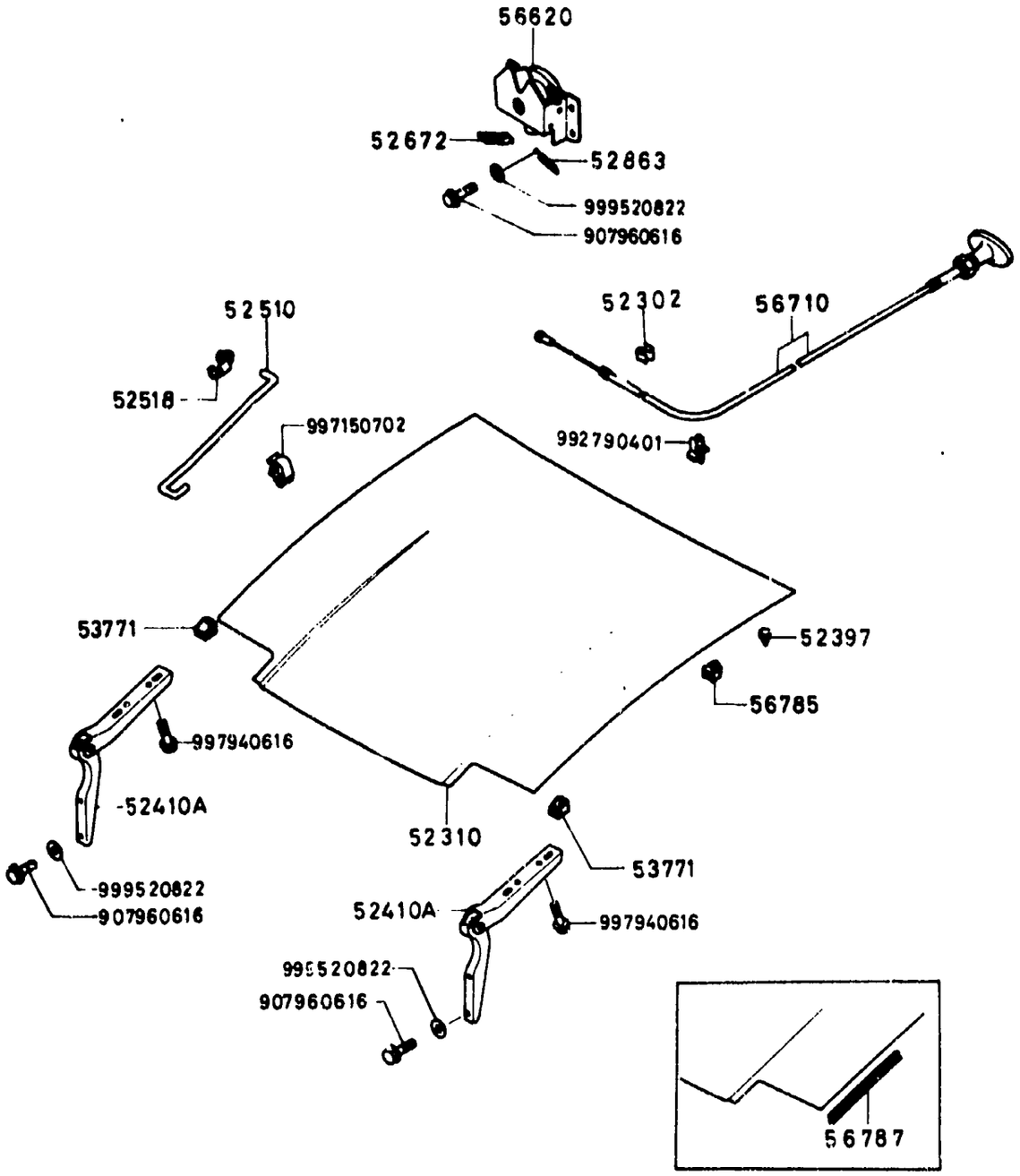

5230A-1 BONNET

D-CODE (Key No.)	PART NAME	PART No.	Qty.	MODEL/DESCRIPTION	VIN (Chassis No.)
52302	CLAMP,RELEASE WIRE FIXATION, CABLE PRENSA,ALAMBRE DE DESCARG	0223-52-302	1		
52310	BONNET CAPOT, AV CAPO	8871-52-310B	1		SA22C .. 500001 -500134
		8871-52-310C	1		SA22C .. 500135 -501799
	<A >	8871-52-310D	1		SA22C .. 501800 -531148
		8871-52-310E	1		SA22C .. 531149-
52397	RUBBER,CUSHION SILENT BLOC GOMA,TOPE	0187-52-231	2		
52410A	HINGE,BONNET CHARNIERE CAPOT	8871-52-410	2		
52510	STAY,BONNET FERRURE, CAPOT TIRANTE,CAPO	8871-52-511A	1		SA22C .. 500001 -531148
		8871-52-511B	1		SA22C .. 531149-
52518	HOLDER,BONNET STAY SUPPORT,FERRURE DE CAPOT TENEDOR,SOSTEN DE CAPU	8871-52-518	1		SA22C .. 531149-
52672	SPRING,RETURN RESSORT DE RAPPEL RESORTE,RETORNO	1011-56-672A	1		
52863	SPRING,RETURN RESSORT DE RAPPEL RESORTE,RETORNO	0305-52-863B	1		
53771	RUBBER,CUSHION SILENT BLOC GOMA,TOPE	8545-56-801A	2		
56620	LOCK,BONNET VERROUILLAGE CAPOT CERRADURA DE GUANTERA	1708-56-620D	1		
56710	WIRE,RELEASE-BONNET CABLE DE DECLENCHEMENT CABLE,SOLTADOR	8871-56-710A	1		

5230A BONNET

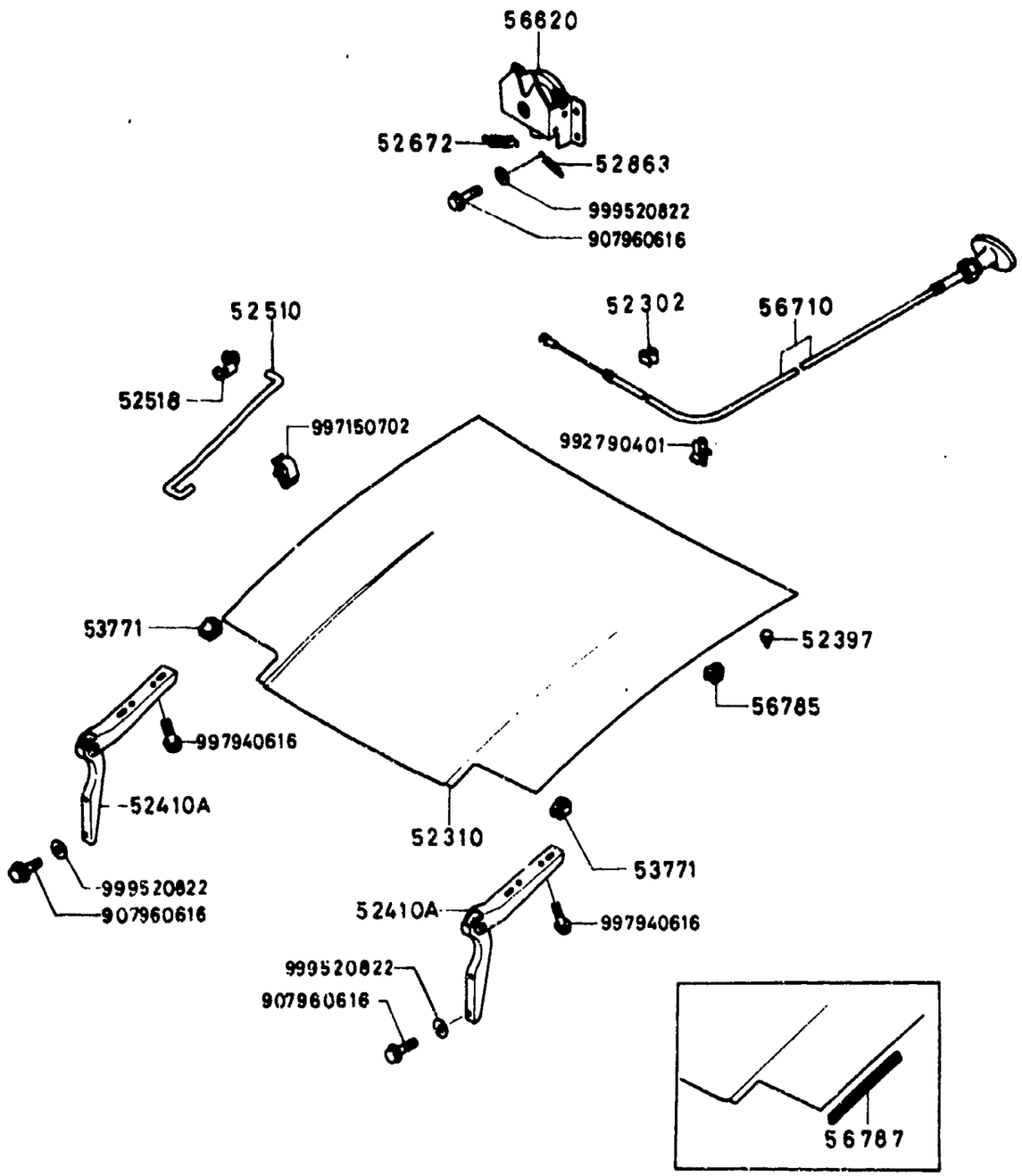

5230A-2* BONNET

D-CODE (Key No.)	PART NAME	PART No.	Qty.	MODEL / DESCRIPTION	VIN (Chassis No.)
56785	CUSHION HOUSSE ALMOHADA	8871-56-785	2		
56787	WEATHERSTRIP,BONNET JOINT C.T.C.CAPOT	8871-56-787	1		SA22C .. 500001 -502144
	<A >	8871-56-787A	1		SA22C .. 502145-

5310A BODY PANELS (FRONT)

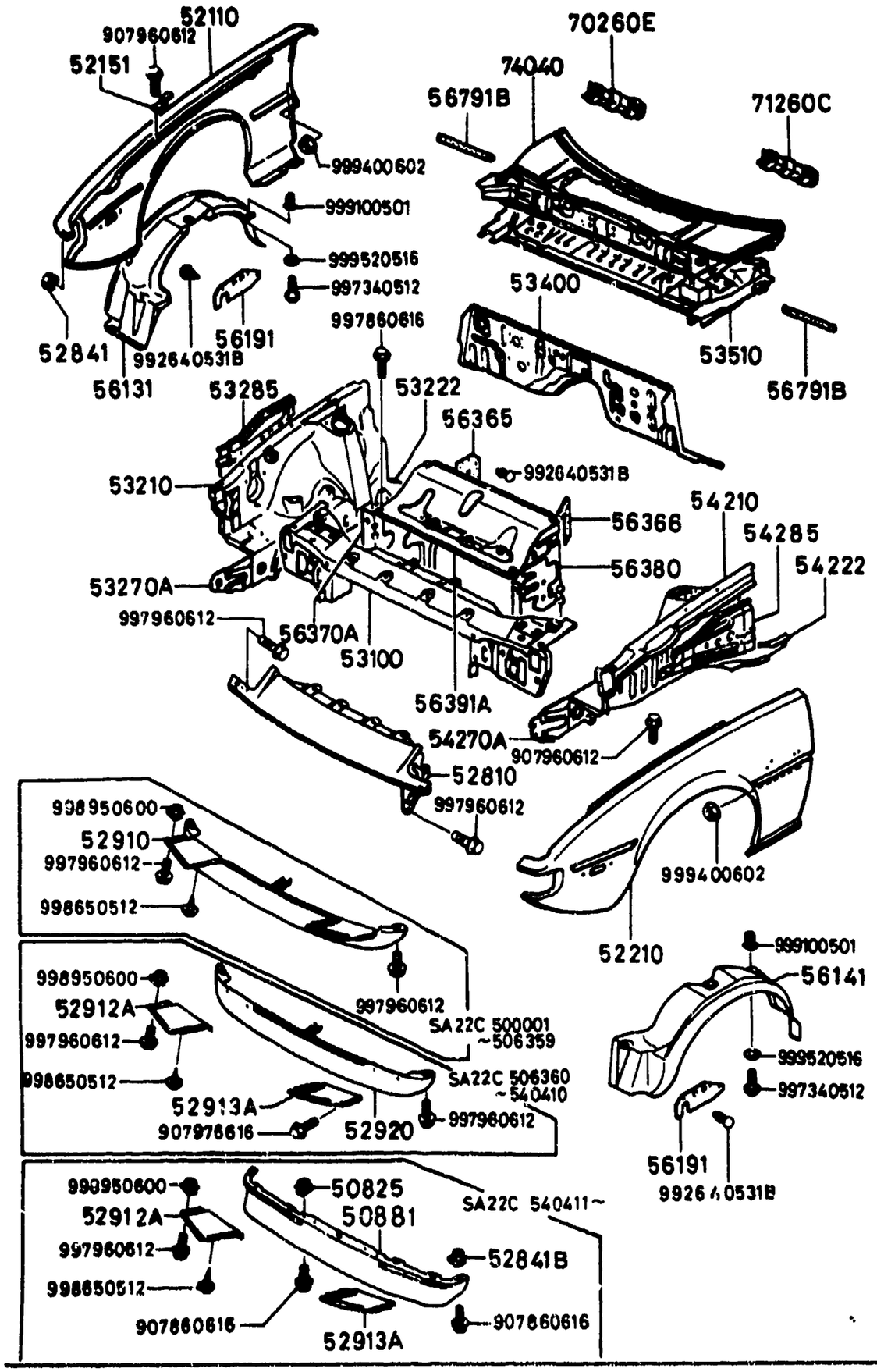

5310A-1 BODY PANELS (FRONT)

D-CODE (Key No.)	PART NAME	PART No.	Qty.	MODEL/DESCRIPTION	VIN (Chassis No.)
50825	NUT,CLIP	8871-50-825	4		SA22C .. 541117-
50881	SPOILER,FRONT SPOILER AV.	8871-50-830	1	(NOT PAINTED)	SA22C .. 540411-
52110	PANEL(R),FENDER-FRT. AILE AVANT (D)	8871-52-111C	1		SA22C .. 500001 -509552
	<AN>	8871-52-111D	1		SA22C .. 509553-
52151	PLATE,SET-FENDER JEU DE PLAQUES AILE	8871-52-151	1		
52210	PANEL(L),FENDER-FRT. AILE AVANT (G) PANEL GUARDABARRO DEL.IZQ	8871-52-211C	1		SA22C .. 500001 -509552
	<AN>	8871-52-211D	1		SA22C .. 509553-
52810	PANEL,NOSE PANNEAU AV.	8562-52-810B	1		SA22C .. 500001 -531148
		8871-52-810A	1		SA22C .. 531149 -541116
	<A >	8871-52-810B	1		SA22C .. 541117 -627592
	<A >	*8871-52-810C	1		SA22C .. 627593-
52841	NUT,CLIP-F.FENDER ECROU AILE AV.	8545-52-841	2		
52841B	NUT,CLIP	8545-52-841	2		SA22C . 541117-
52910	PANEL,FRONT SKIRT JUPE AVANT PANEL, FALDILLA DEL.	8871-52-910A	1		SA22C .. 500001 -506359
52912A	PANEL(R),FRONT SKIRT JUPE AV.(D)	8871-52-910D	1		SA22C .. 540411-
		8871-52-960	1		SA22C .. 506360 -540410
52913A	PANEL(L),FRONT SKIRT	8871-52-950D	1		SA22C ..

5310A BODY PANELS (FRONT)

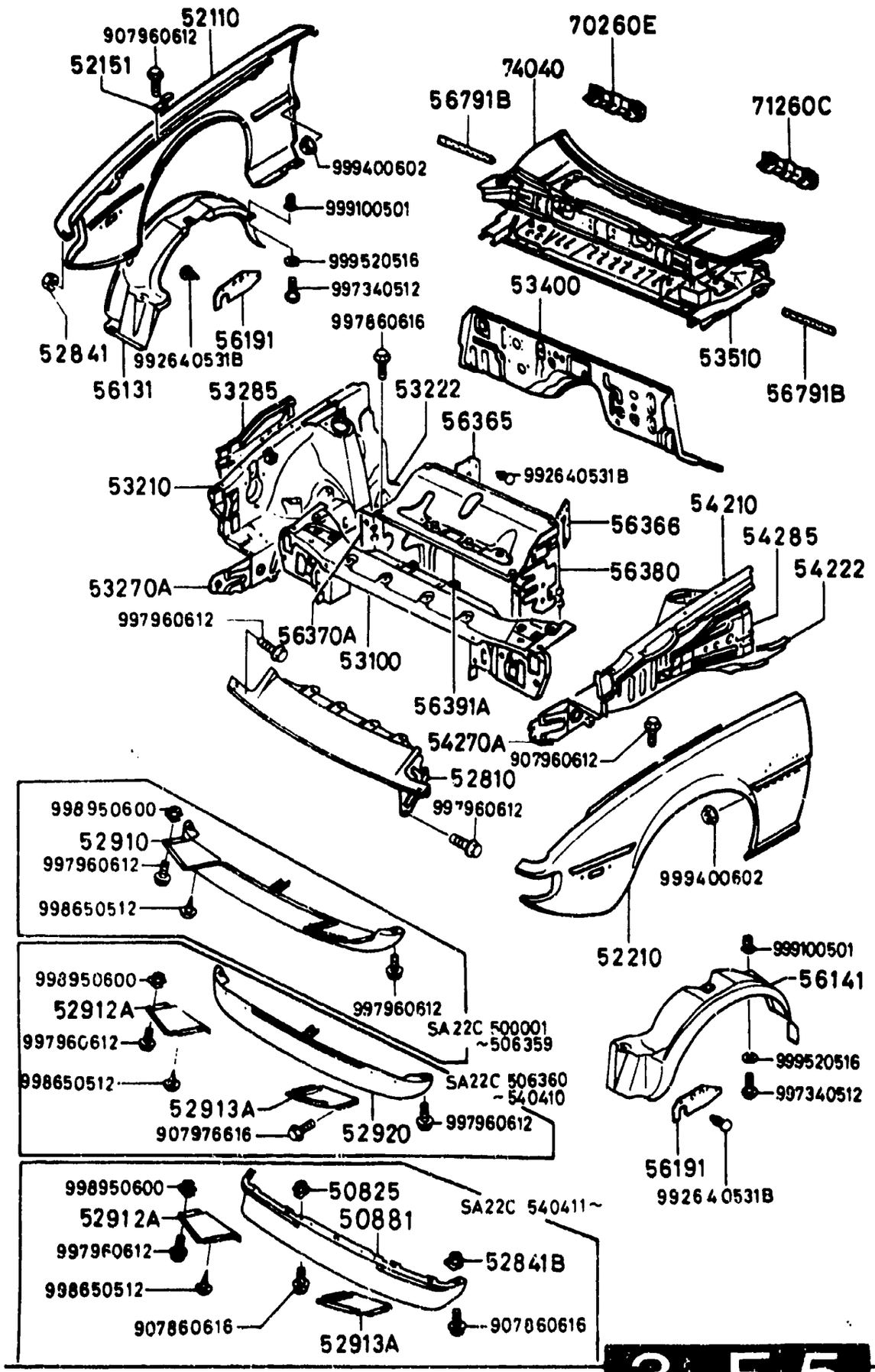

5310A-2 BODY PANELS (FRONT)

D-CODE (Key No.)	PART NAME	PART No.	Qty.	MODEL DESCRIPTION	VIN (Chassis No.)
52913A CONT'D	JUPE AV.(G)	8871-52-950D			540411-
		8871-52-990	1		SA22C .. 506360 -540410
52920	DAM,AIR DEFLECTEUR AIR	8871-52-920D	1		SA22C .. 506360 -540410
53100	PANEL,RAD.SHROUD TOLE DE RADIATEUR PANEL SOPORTE RADIADOR	8871-53-100A	1		SA22C .. 500001 -502556
		8871-53-100B	1		SA22C .. 502557 -516524
	<A >	8871-53-100C	1		SA22C .. 516525 -540410
	<C >	8871-53-100D	1		SA22C .. 540411-
53210	PANEL(R),WHEEL APRON PASSAGE DE ROUE (D) PANEL IZQ. ARCO RUEDA	8871-53-210B	1		SA22C .. 500001 -500902
	<A >	8871-53-210C	1		SA22C .. 500903 -531148
		8871-53-210F	1		SA22C .. 531149-
53222	PLATE(RR.,R),CLOSING PLAQUE ARR.(D)	8871-53-222	1		SA22C .. 500001 -500902
		8871-53-222B	1		SA22C .. 500903 -531148
		8871-53-240	1		SA22C .. 531149-
53270A	PLATE(R),CLOSING PLAQUE(D) <AN>	*FA01-53-270	1		SA22C .. 611383-
		8871-53-270	1		SA22C .. 500001 -569398
	<A >	8871-53-270A	1		SA22C .. 569399

5310A BODY PANELS (FRONT)

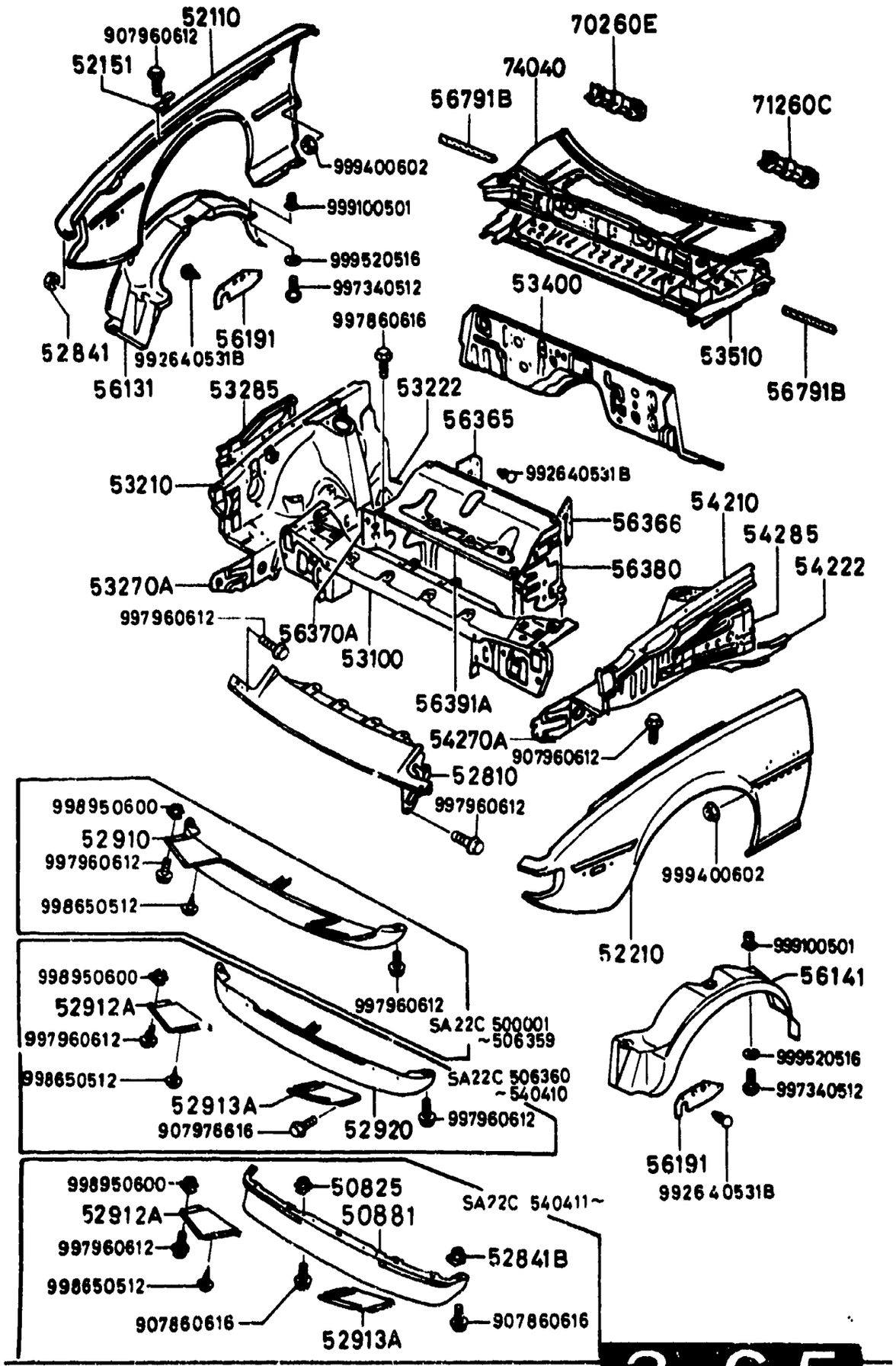

D-CODE (Key No.)	PART NAME	PART No.	Qty.	MODEL DESCRIPTION	VIN (Chassis No.)
53270A CONT'D		8871-53-270A			-611387
53285	REINF.(R),WHL. APRON RENFORT(D)TABLIER ROUE	8871-53-285	1		SA22C .. 500001 -627592
	<AN>	*8871-53-285A	1		SA22C .. 627593-
53400	PANEL,DASH-LOWER TRAVERSE INFERIEURE SALPICADERO INFERIOR	8671-53-400C	1		SA22C .. 500001 -500134
	<A >	8871-53-400D	1		SA22C .. 500135 -503193
	<A >	8871-53-400E	1		SA22C .. 503194 -619392
		*8871-53-400F	1		SA22C .. 619393-
53510	PANEL,DASH-UPPER TRAVERSE SUPERIEURE SALPICADERO SUPERIOR	*FA01-53-510	1		SA22C .. 611388-
		8871-53-510B	1		SA22C .. 500001 -500047
	<A >	8871-53-510C	1		SA22C .. 500048 -500134
	<A >	8871-53-510D	1		SA22C .. 500135 -508586
	<A >	8871-53-510E	1		SA22C .. 508587 -547088
	<A >	8871-53-510F	1		SA22C .. 547089 -611387
54210	PANEL(L),WHEEL APRON <AN> PASSAGE DE ROUE (G) PANEL IZQ. ARCO RUEDA	*F001-54-210	1		SA22C .. 624203-
		8871-54-210A	1		SA22C .. 500001 -500902
		8871-54-210C	1		SA22C .. 500903

5310A BODY PANELS (FRONT)

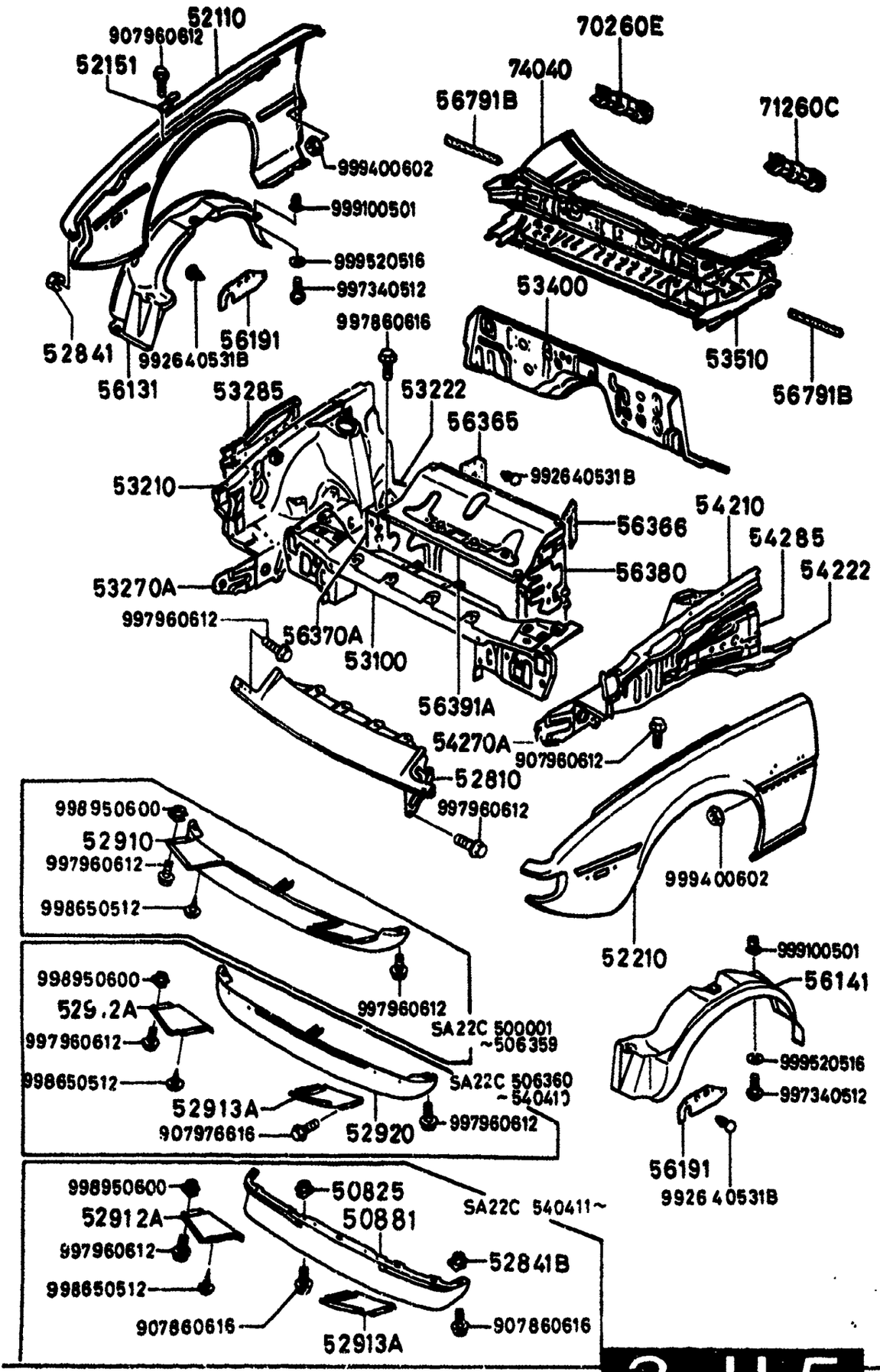

5310A-4 BODY PANELS (FRONT)

D-CODE (Key No.)	PART NAME		PART No.	Qty.	MODEL DESCRIPTION	VIN (Chassis No.)
54210 CONT'D			8871-54-210C			-531148
		<C >	8871-54-210G	1		SA22C .. 531149 -624202
54222	PLATE(RR.,L),CLOSING PLAQUE ARR.(G)		8871-54-222	1		SA22C .. 500001 -500902
			8871-54-222B	1		SA22C .. 500903 -531148
			8871-54-240	1		SA22C .. 531149-
54270A	PLATE(L),CLOSING PLAQUE(G)	<AN>	*FA01-54-270	1		SA22C .. 611388-
			8871-54-270	1		SA22C .. 500001 -569398
		<A >	*8871-54-270A	1		SA22C .. 569399 -611387
54285	REINF.(L),WHL. APRON RENFORT(G)TABLIER ROUE		8871-54-285	1		SA22C .. 500001 -627592
		<AN>	*8871-54-285A	1		SA22C .. 627593-
56131	SHIELD(R),SPLASH BOUCLIER (D) PROTECTOR(D),SALPICADO		8871-56-130	1		SA22C .. 500001 -540410
		<A >	8871-56-130A	1		SA22C .. 540411-
56141	SHIELD(L),SPLASH BOUCLIER (G) PROTECTOR(I),SALPICADO		8871-56-140	1		SA22C .. 500001 -540410
		<A >	8871-56-140A	1		SA22C .. 540411-
56191	SHIELD,SPLASH BOUCLIER		8871-56-191	2		SA22C .. 500001 -500902
		<A >	8871-56-191A	2		SA22C .. 500903 -531148

5310A BODY PANELS (FRONT)

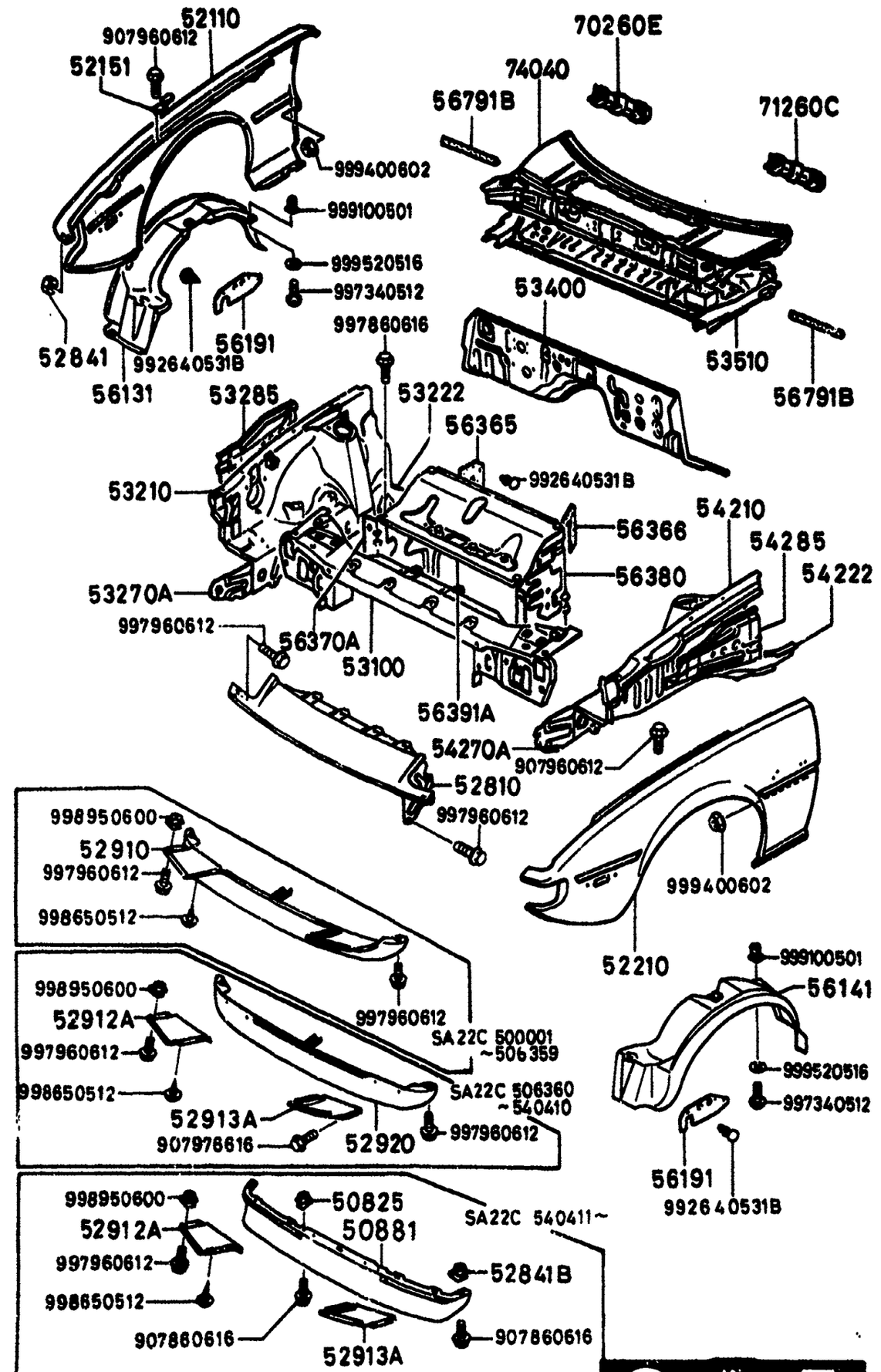

5310A-5 BODY PANELS (FRONT)

D-CODE (Key No.)	PART NAME	PART No.	Qty.	MODEL / DESCRIPTION	VIN (Chassis No.)
56191 CONT'D	<A>	8871-56-191B	2		SA22C .. 531149-
56365	PLATE(R),SEAL PLAQUE D'ETANCHEITE PLACA DE SELLAR DER.	8871-56-365	1		
56366	PLATE(L),SEAL PLAQUE D'ETANCHEITE GAUCH PLACA DE SELLAR IZQ.	8871-56-366	1		
56370A	PANEL(R),SIDE PANNEAU COTE(D)	8871-56-370A	1		SA22C .. 500001 -602249
	<A>	8871-56-370B	1		SA22C .. 602250-
56380	PANEL(L),SIDE LONGERON EXT.(G)	8871-56-380A	1		SA22C .. 500001 -512942
	<A>	8871-56-380B	1		SA22C .. 512943 -602249
	<A>	8871-56-380C	1		SA22C .. 602250-
56391A	PANEL,COWLING UP PANNEAU RENFORT SUP.	8871-56-391	1		
56791B	RUBBER(R),SEAL JOINT CAOUTCHOUC(D)	8871-56-791	1		
56791B	RUBBER(L),SEAL JOINT CAOUTCHOUC(G)	8871-56-791	1		SA22C .. 500001 -502998
		8871-56-792	1		SA22C .. 502999-
70260E	BRKT.(R),INST. SUPPORT INSTRUM.(D)	8871-70-260	1		
71260C	BRKT.(L),INST. SUPPORT TABLEAU(G)	8871-71-260	1		
74040	PANEL,COWL ARMATURE AV. CARCAZA	*FA01-74-040	1		SA22C .. 615592-

5310A BODY PANELS (FRONT)

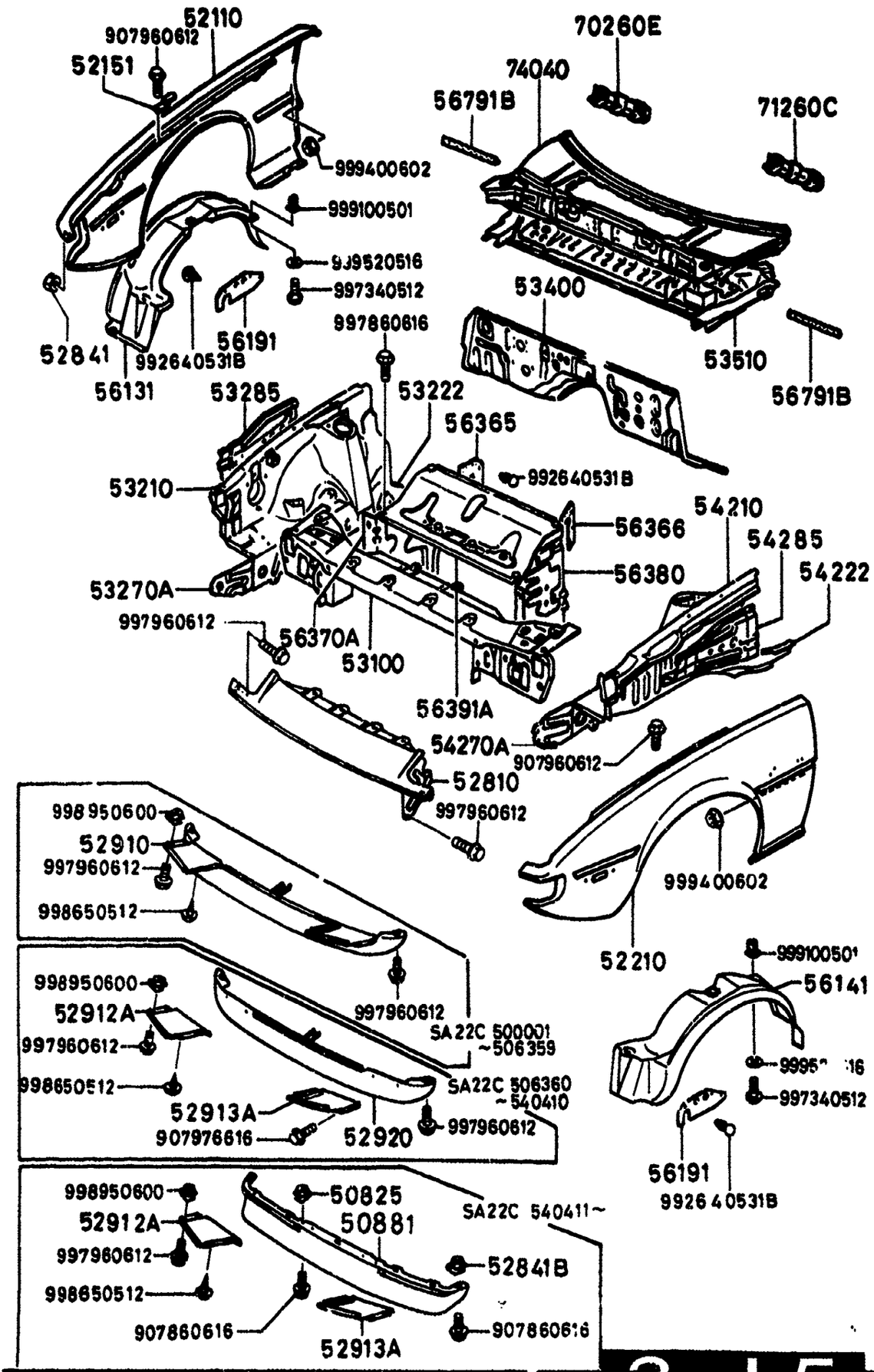

5310A-6* BODY PANELS (FRONT)

D·CODE (Key No.)	PART NAME	PART No.	Qty.	MODEL DESCRIPTION	VIN (Chassis No.)
74040 CONT'D		8871-74-040	1		SA22C .. 500001 -538206
	<A>	8871-74-040A	1		SA22C .. 538207 -615691

5340A BODY PANELS (SIDE & ROOF, STANDARD ROOF)

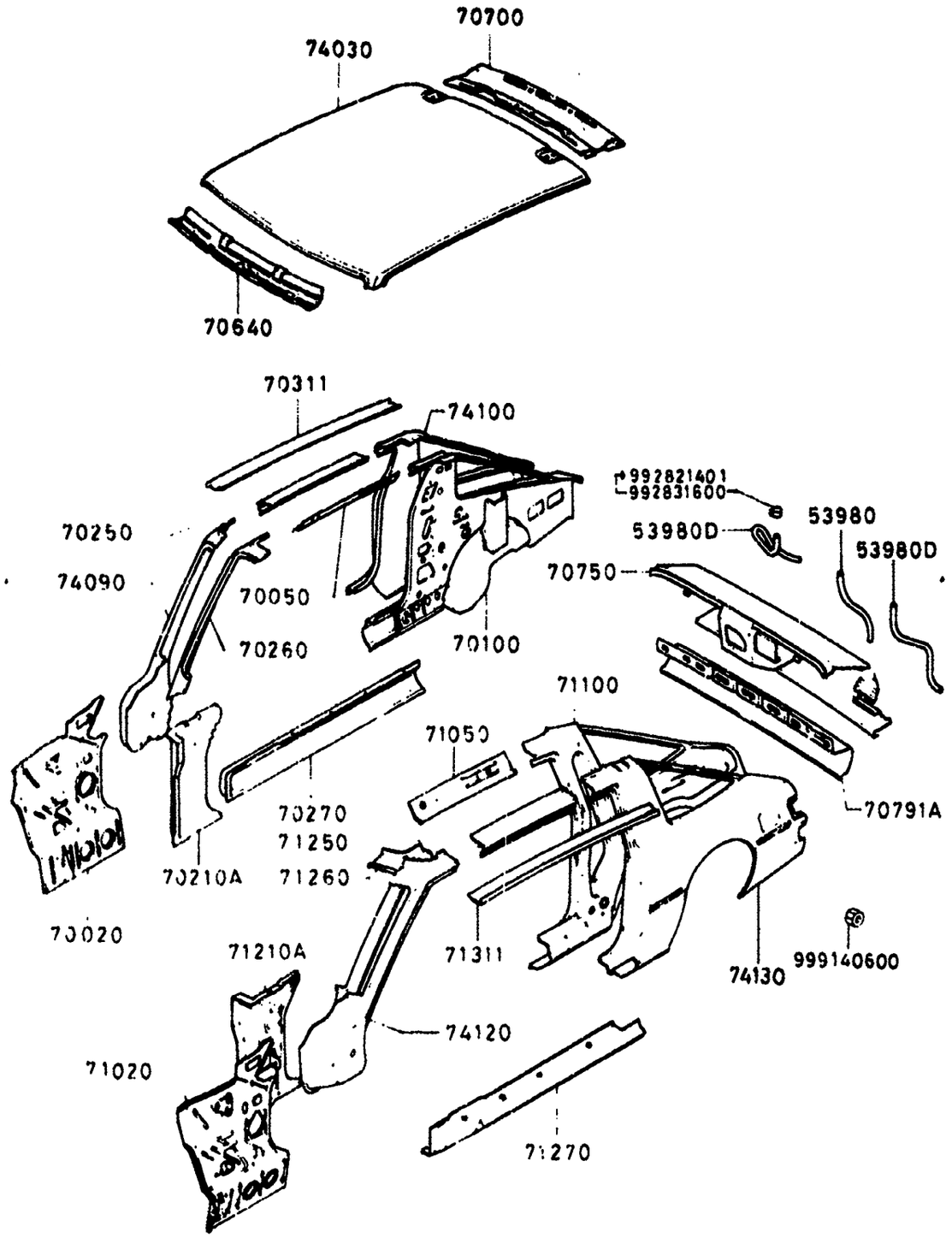

D·CODE (Key No.)	PART NAME		PART No.	Qty.	MODEL DESCRIPTION	VIN (Chassis No.)
53980	HOSE,DRAIN-REAR TUYAU ARR.	<AN>	8871-56-752	1		SA22C .. 500135-
			9934-61-0370	1		SA22C .. 500001 -500134
53980D	HOSE,DRAIN-REAR TUYAU ARR.		8871-56-751	2		SA22C .. 500135 -583526
		<A >	8871-56-751A	1		SA22C .. 583527-
			9934-61-0530	2		SA22C .. 500001 -500134
70020	PANEL(R),COWL SIDE ARMATURE DE COTE (D) PANEL DER. CARCAZA LAT.		8871-70-020A	1		SA22C .. 500001 -504976
		<A >	8871-70-020B	1		SA22C .. 504977-
70050	RAIL(R),ROOF-INNER GOUTTIERE (D),INTERIEUR T CANAL(D),TECHO-INTERIOR		8871-70-051A	1		SA22C .. 500001 -536457
		<AN>	8871-70-051B	1		SA22C .. 536458 -619392
		<A >	*8871-70-051C	1		SA22C .. 619393-
70100	PANEL(R),QUARTER MONTANT (D) ARR. PANEL ZOCALO DER.		8871-70-100D	1		SA22C .. 500001 -531148
		<A >	8871-70-100E	1		SA22C .. 531149 -541116
		<AN>	8871-70-100F	1		SA22C .. 541117 -559739
		<A >	8871-70-100G	1		SA22C .. 559740 -611387
		<A >	*8871-70-100H	1		SA22C .. 611388-
70210A	PILLAR(R),HINGE		8871-70-210C	1		

5340A BODY PANELS (SIDE & ROOF, STANDARD ROOF)

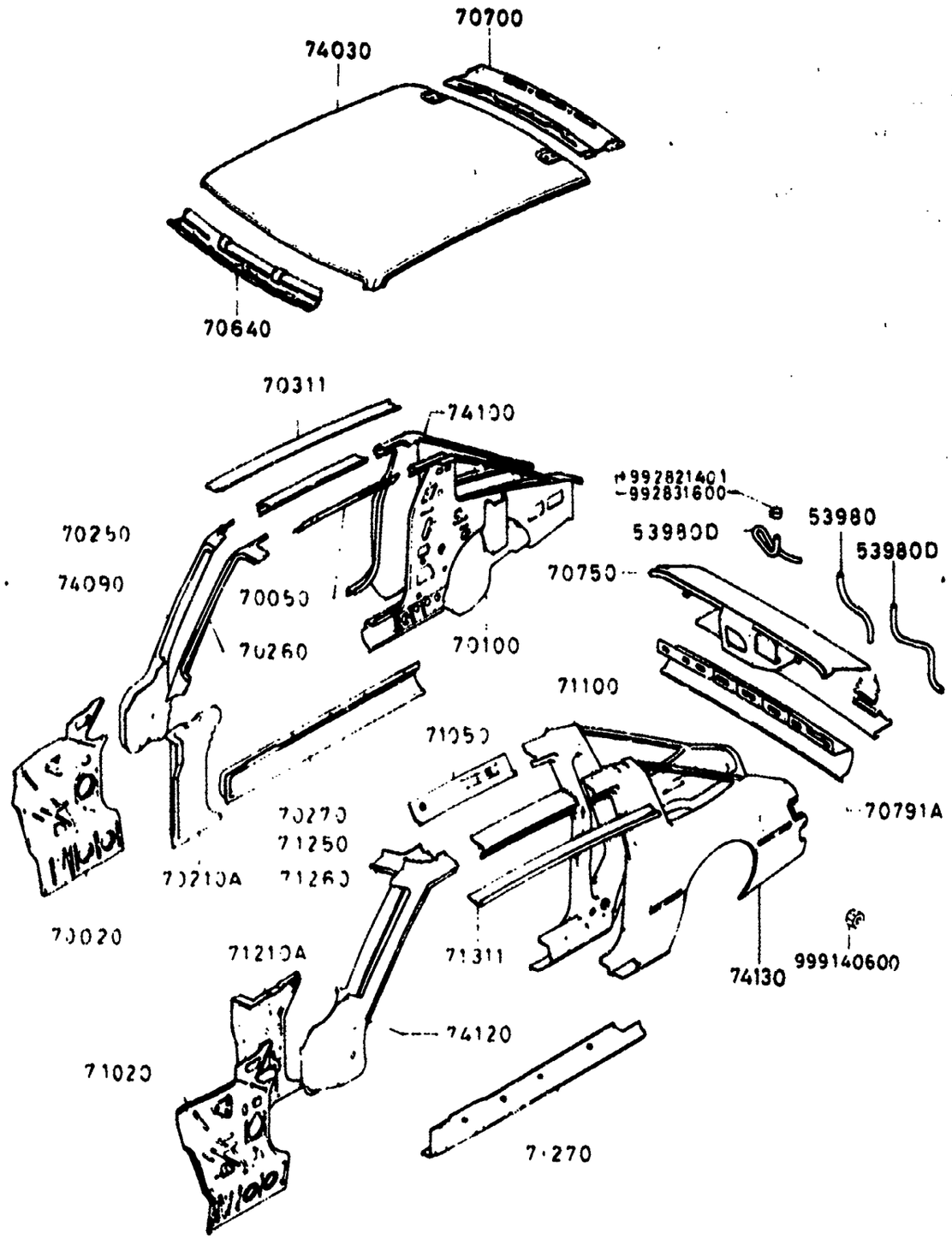

D·CODE (Key No.)	PART NAME	PART No.	Qty.	MODEL/DESCRIPTION	VIN (Chassis No.)
70210A CONT'D	MONTANT (D), CHARNIERE COLUMNA DER. BISAGRA	8871-70-210C			
70250	RAIL(R),ROOF-OUTER GOUTTIERE (D),EXTERIEUR T CANAL(D),TECHO-EXTERIOR	8871-70-251	1		
70260	PILLAR(R),FRT.-INNER MONTANT (D), AVANT INTERI COLUMNA DER. INTERIOR DEL	8871-70-240B	1		SA22C .. 500001 -619392
	<G>	*8871-70-240C	1		SA22C .. 619393-
70270	PANEL(R),SIDE SILL LONGERON EXT. (D) PANEL DER. SELLO LATERAL	8871-70-271	1		SA22C .. 500001 -627592
	<AN>	*8871-70-271A	1		SA22C .. 627593-
70311	RAIL(R),RAIN GOUTTIERE (D) CANAL(D),LLUVIA	8871-70-311A	1		
70640	HEADER,FRONT RENFORT,AVT. COLECTOR DELANTERO	8871-70-640	1		SA22C .. 500001 -536457
	<AN>	8871-70-640A	1		SA22C .. 536458-
70700	HEADER,REAR RENFORT,ARR. COLECTOR TRAS.	<AN> *FA01-70-700	1	3D MODEL	SA22C .. 611383-
		1480-70-700	1	4D MODEL	SA22C .. 500001 -536526
		<AN> 1480-70-700A	1	4D MODEL	SA22C .. 536527 -611382
		8871-70-700	1	5D MODEL	SA22C .. 500001 -536457
		<AN> 8871-70-700A	1	5D MODEL	SA22C .. 536458 -566500
70750	PANEL,REAR END JUPE ARRIERE PANEL POSTERIOR	8341-70-750	1		SA22C .. 536772-
		8871-70-750B	1		SA22C .. 500001

5340A BODY PANELS (SIDE & ROOF, STANDARD ROOF)

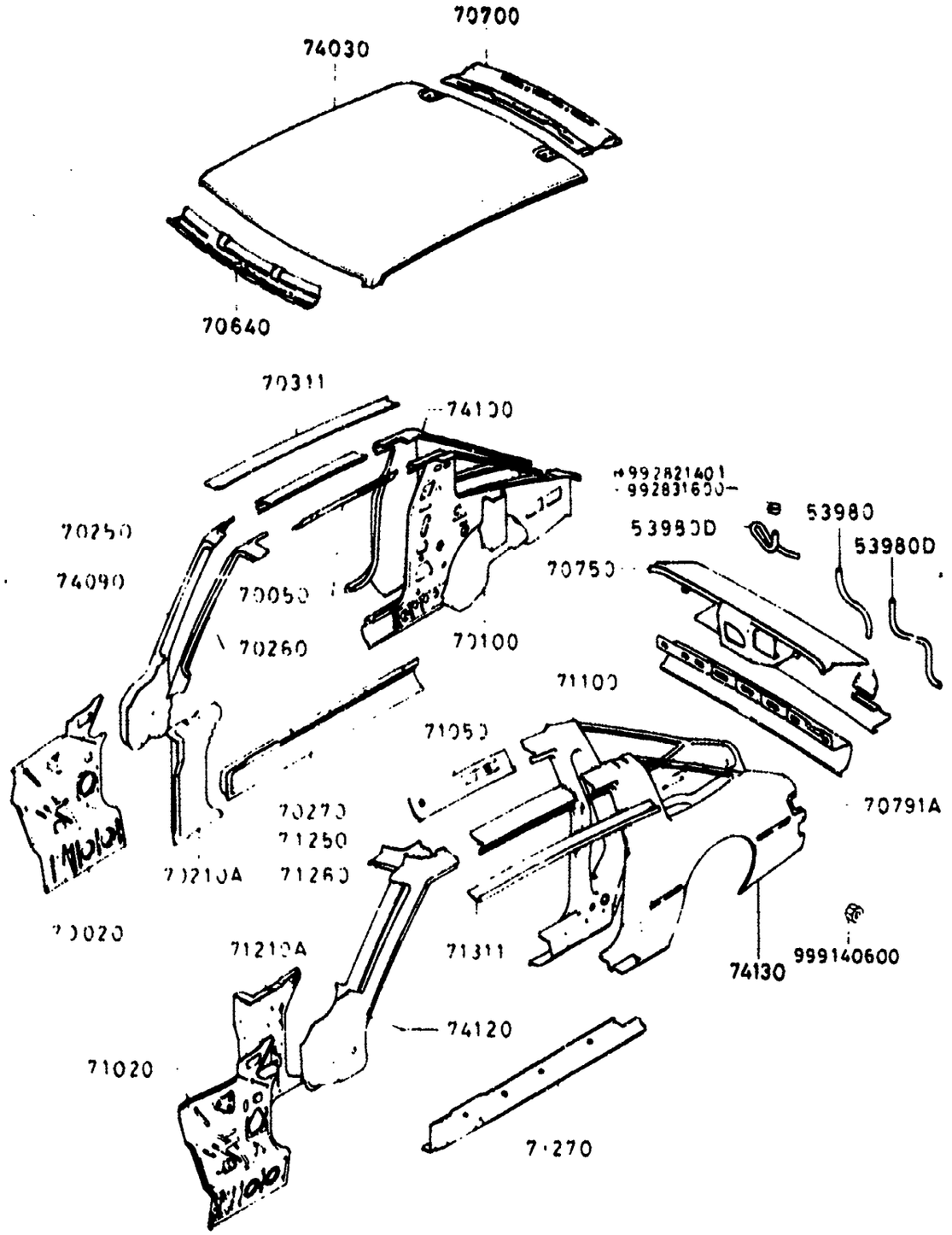

5340A-3 BODY PANELS (SIDE & ROOF, STANDARD ROOF)

D-CODE (Key No.)	PART NAME	PART No.	Qty.	MODEL DESCRIPTION	VIN (Chassis No.)
70750 CONT'D		8871-70-750B			-500902
	<A >	8871-70-750C	1		SA22C .. 500903 -556771
70791A	PANEL,SKIRT-RR. PANNEAU JUPE ARR.	8562-70-791	1		SA22C .. 500001 -559739
		8671-70-791A	1		SA22C .. 559740-
71020	PANEL(L),COWL SIDE <A > ARMATURE DE COTE (G) PANEL IZQ. CARCAZA LAT.	*FA16-71-020	1		SA22C .. 624203-
		8871-71-020A	1		SA22C .. 500001 -504976
	<A >	8871-71-020B	1		SA22C .. 504977 -624202
71050	RAIL(L),ROOF-INNER GOUTTIERE (G),INTERIEUR T CANAL(I),TECHO INTERIOR	8871-71-051A	1		SA22C .. 500001 -536457
	<AN>	8871-71-051B	1		SA22C .. 536458 -619392
	<A >*	8871-71-051C	1		SA22C .. 619393-
71100	PANEL(L),QUARTER MONTANT (G) ARR PANEL ZOCALO IZq.	8871-71-100D	1		SA22C .. 500001 -531148
	<A >	8871-71-100E	1		SA22C .. 531149 -541116
	<AN>	8871-71-100F	1		SA22C .. 541117 -559739
		8871-71-100H	1		SA22C .. 559740 -611387
	<A >*	8871-71-100I	1		SA22C .. 611388-
71210A	PILLAR(L),HINGE MONTANT DE CHARNIERE	8871-71-210C	1		

5340A BODY PANELS (SIDE & ROOF, STANDARD ROOF)

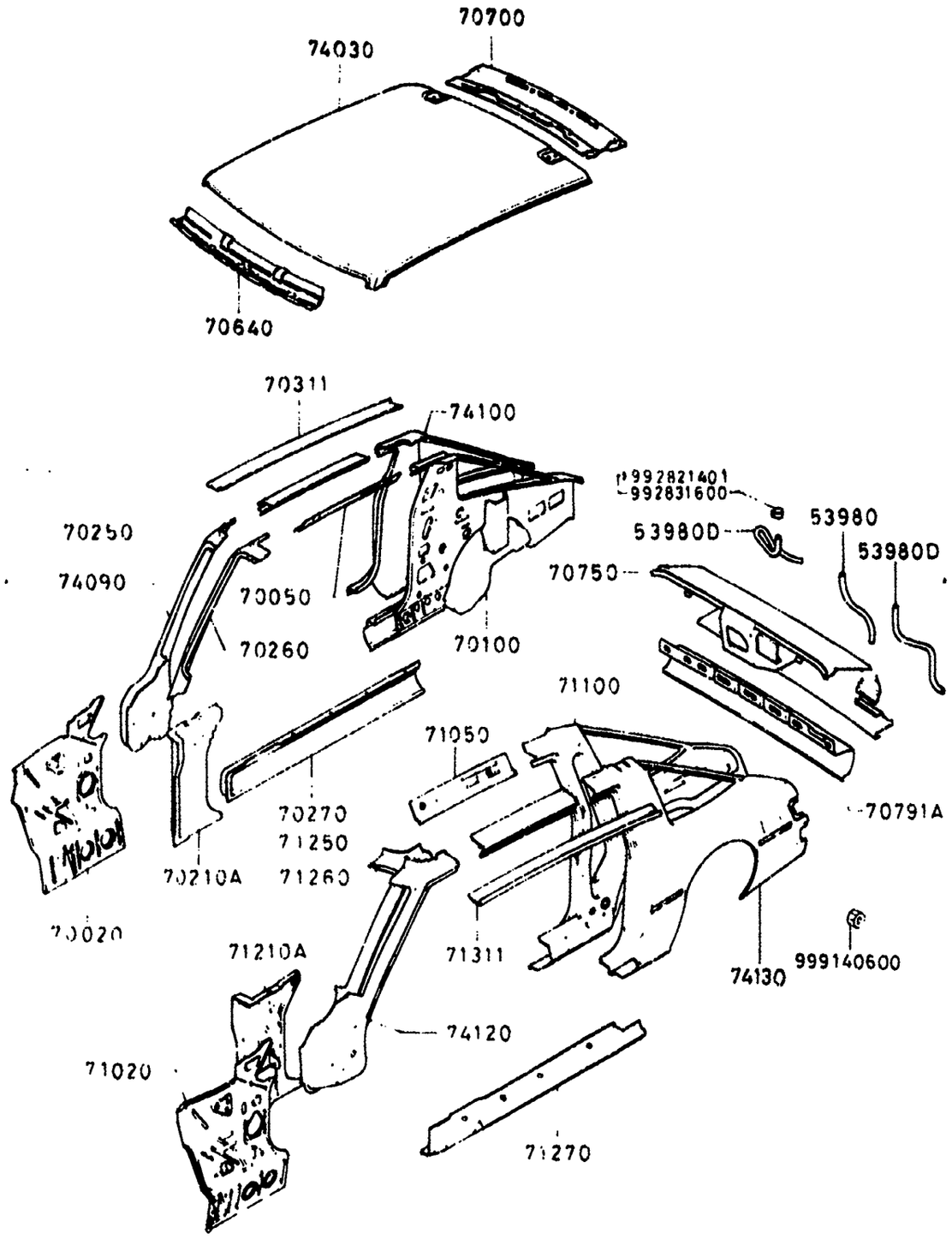

D-CODE (Key No.)	PART NAME	PART No.	Qty.	MODEL DESCRIPTION	VIN (Chassis No.)
71210A CONT'D	COLUMNA IZQ. BISAGRA	8871-71-210C			
71250	RAIL(L),ROOF-OUTER GOUTTIERE (G),EXTERIEUR T CANAL(I),TECHO EXTERIOR	8871-71-251	1		
71260	PILLAR(L),FRT.-INNER MONTANT INTERIEUR (G), AV COLUMNA IZQ. INTERIOR DEL	8871-71-240B	1		SA22C .. 500001 -619392
	<G>	*8871-71-240C	1		SA22C .. 619393-
71270	PANEL(L),SIDE SILL LONGERON EXT.(G)	8871-71-271	1		SA22C .. 500001 -627592
	<AN>	*8871-71-271A	1		SA22C .. 627593-
71311	RAIL(L),RAIN GOUTTIERE (G) CANAL(I),LLUVIA	8871-71-311A	1		
74030	PANEL,ROOF PAVILLON TECHO	8871-74-030	1		
74090	PILLAR(R),HINGE-OUT. MONTANT D,CHARNIERE-EXT.	8871-70-220C	1		
74100	PANEL(R),FENDER-REAR AILE ARRIERE (D) PANEL GUARDABARROS TRAS.	8871-70-400F	1		SA22C .. 500001 -583526
	<AN>	8871-70-400H	1		SA22C .. 583527 -626622
	<C >	*8871-70-400J	1		SA22C .. 626623-
74120	PILLAR(L),HINGE-OUT. MONTANT G. EXT.-CHARNIERE	8871-71-220C	1		
74130	PANEL(L),FENDER-REAR AILE ARRIERE (G) PANEL GUARDABARROS TRAS I	8871-71-400E	1		SA22C .. 500001 -583637
	<C >	8871-71-400F	1		SA22C .. 583638 -626593
	<A >	8871-71-400G	1		SA22C .. 626594 -583526

SECTION NUMBER INDEX (BODY)

STARTING LOCATION	SECTION No.	SECTION NAME
3–C2	0900A	KEY SETS
3–C3	5000A	FRONT BUMPER & GRILLE
3–E3	5010A	REAR BUMPER
3–G3	5030A	WINDOW MOULDINGS
3–I3	5040A	BODY MOULDINGS
3–C4	5100A	LAMPS (FRONT & SIDE)
3–G4	5110A	LAMPS (REAR)
3–I4	5130A	OVERHEAD CONSOLE (1979 STANDARD ROOF MODEL)
3–J4	5170A	COWL & EXTRACTOR GRILLES & ORNAMENTS
3–C5	5230A	BONNET
3–E5	5310A	BODY PANELS (FRONT)
3–K5	5340A	BODY PANELS (SIDE & ROOF)
3–I6	5360A	BODY PANELS (FLOOR)
3–C7	5500A	DASHBOARD EQUIPMENT
3–L7	5540A	METERS
3–D8	5560A	DASHBOARD & RELATED
3–L8	5570A	CONSOLE
3–K9	5580A	VENTILATOR
3–C10	5700A	SEAT (EXCEPT LEATHER TRIM)
3–N10	5710A	SEAT TRIM (LEATHER – ANNIVERSARY EDITION)
3–G11	5760A	SEAT BELTS
3–C12	5800A	FRONT DOOR
3–C13	5830A	FRONT DOOR MECHANISMS
3–C14	6100A	HEATER
3–E14	6110A	HEATER UNIT
3–H14	6115A	HEATER CONTROLS
3–J14	6120A	HEATER BLOWER
3–C15	6230A	BACK DOOR MECHANISMS
3–F15	6300A	WINDOW GLASSES
3–I15	6330A	SUNROOF
3–C16	6600A	ELECTRIC EQUIPMENT
3–G16	6680A	RADIO & STEREO SYSTEMS
4–C2	6700A	WIRE HARNESS & CLAMPS
4–G2	6720A	WINDSHIELD WASHER
4–H2	6730A	WINDSHIELD WIPER
4–J2	6740A	WIPER MOTOR (COMPONENTS ONLY)
4–C3	6800A	CEILING TRIM
4–J3	6840A	TRIM & SCUFF PLATE
4–F4	6860A	FLOOR MAT & PADS
4–L4	6870A	SERVICE TOOLS
4–M4	6900A	VISOR, ASSIST HANDLE & MIRRORS
4–G5	6930A	CAUTION PLATES

THE FRAMES IN THIS COLUMN INDICATE :

3---K5	5340A	BODY PANELS (SIDE & ROOF, STANDARD ROOF)
3---D6	5340AA	BODY PANELS (SIDE & ROOF, SUNROOF)
3---I6	5360A	BODY PANELS (FLOOR)

© 1983 Toyo Kogyo Co., Ltd.
MAY 1983

5340A BODY PANELS (SIDE & ROOF, STANDARD ROOF)

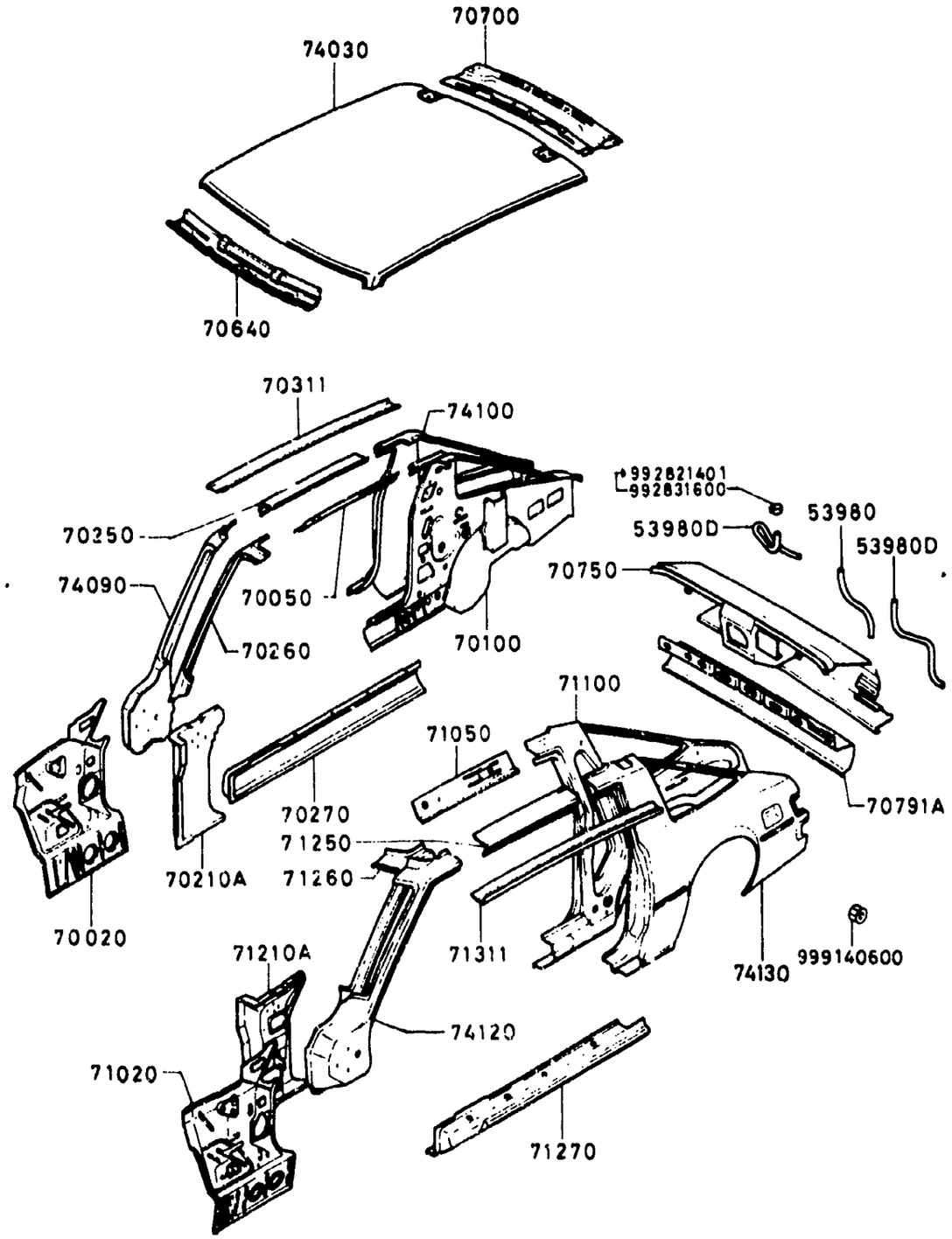

5340A-5* BODY PANELS (SIDE & ROOF, STANDARD ROOF)

D-CODE (Key No.)	PART NAME	PART No.	Qty.	MODEL/DESCRIPTION	VIN (Chassis No.)
74130 CONT'D	<AN>	8871-71-400I	1		SA22C .. 583527 -626628
	<C >	*8871-71-400K	1		SA22C .. 626629-

5340AA BODY PANELS (SIDE & ROOF, SUNROOF)

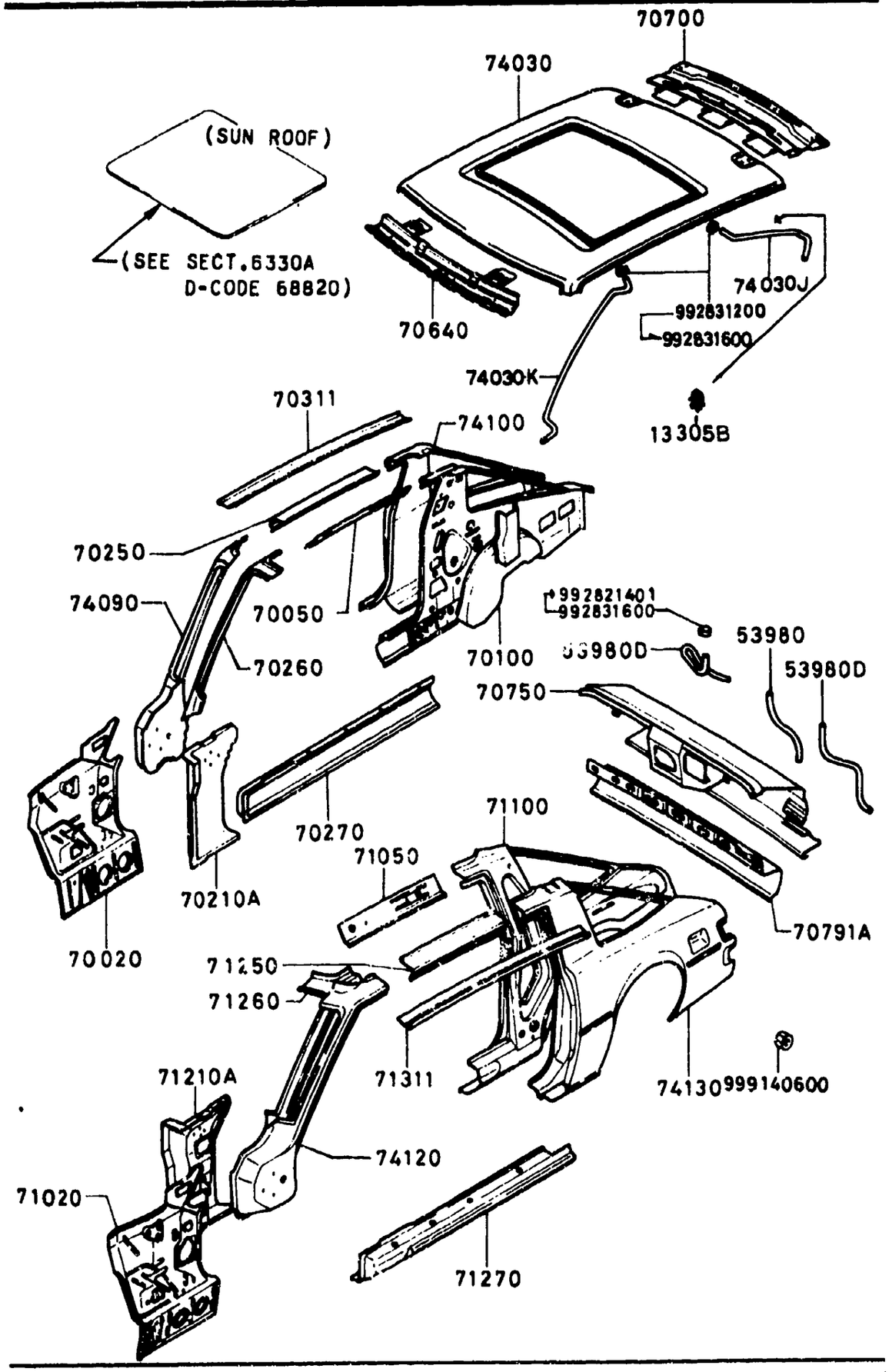

5340AA-1 BODY PANELS (SIDE & ROOF, SUNROOF)

D-CODE (Key No.)	PART NAME	PART No.	Qty.	MODEL/DESCRIPTION	VIN (Chassis No.)
13305B	CLIP,DRAIN HOSE COLLIER TUYAU DRAINAGE CLIP,CABLE	8871-13-305	2		
53980	HOSE,DRAIN-REAR <AN> TUYAU ARR.	8871-56-752	1		SA22C .. 500135-
		9934-61-0370	1		SA22C .. 500001 -500134
53980D	HOSE,DRAIN-REAR TUYAU ARR.	8871-56-751	2		SA22C .. 500135 -583526
	<A >	8871-56-751A	1		SA22C .. 583527-
		9934-61-0530	2		SA22C .. 500001 -500134
70020	PANEL(R),COWL SIDE ARMATURE DE COTE (D) PANEL DER. CARCAZA LAT.	8871-70-020A	1		SA22C .. 500001 -504976
	<A >	8871-70-020B	1		SA22C .. 504977-
70050	RAIL(R),ROOF-INNER GOUTTIERE (D),INTERIEUR T CANAL(D),TECHO-INTERIOR	8871-70-051A	1		SA22C .. 500001 -536457
	<AN>	8871-70-051B	1		SA22C .. 536458 -619392
	<A >	*8871-70-051C	1		SA22C .. 619393-
70100	PANEL(R),QUARTER MONTANT (D) ARR. PANEL ZOCALO DER.	8871-70-100D	1		SA22C .. 500001 -531148
	<A >	8871-70-100E	1		SA22C .. 531149 -541116
	<AN>	8871-70-100F	1		SA22C .. 541117 -559739
	<A >	8871-70-100G	1		SA22C .. 559740 -611387
	<A >	*8871-70-100H	1		SA22C ..

5340AA BODY PANELS (SIDE & ROOF, SUNROOF)

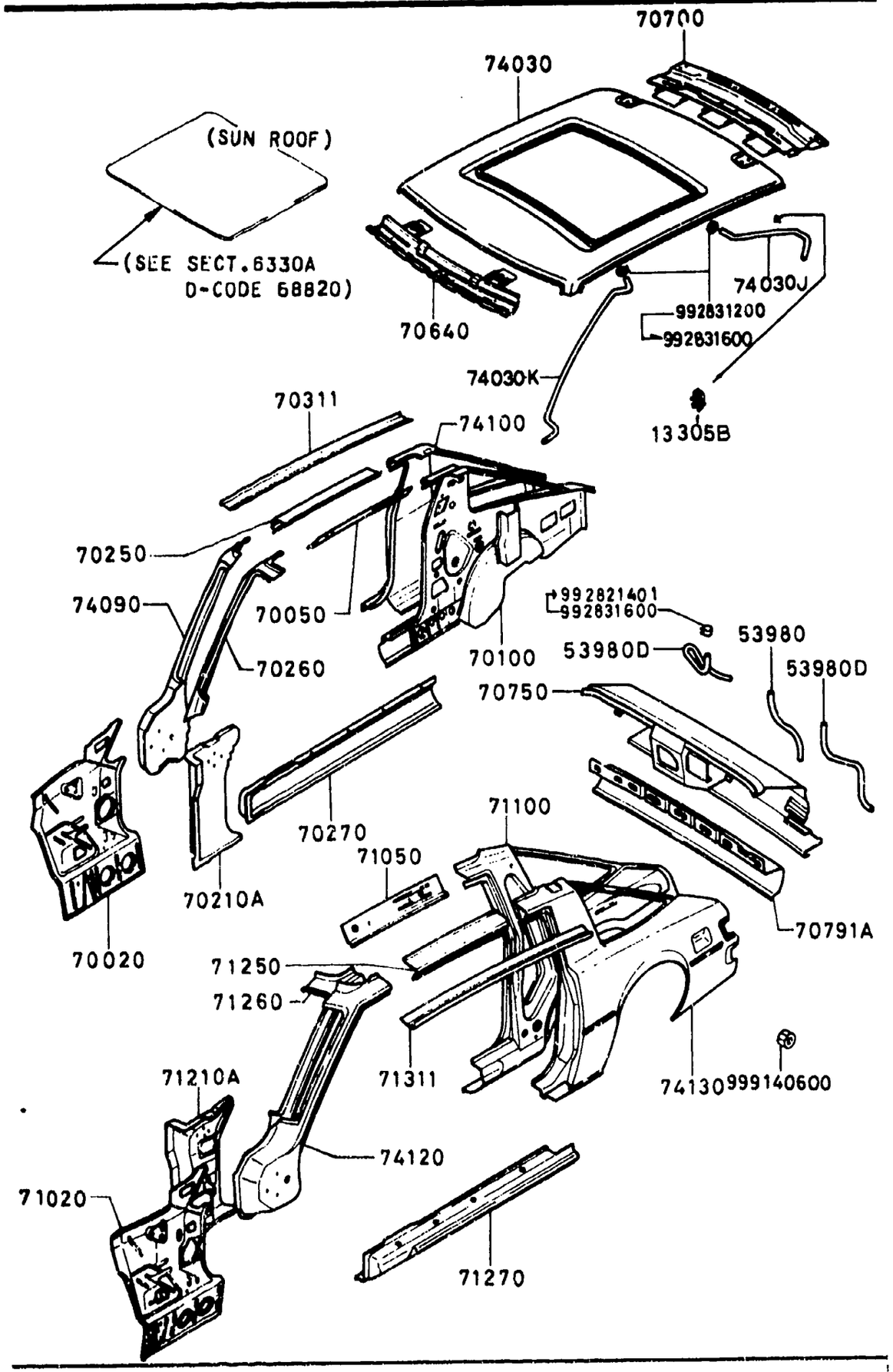

5340AA-2 BODY PANELS (SIDE & ROOF, SUNROOF)

D-CODE (Key No.)	PART NAME		PART No.	Qty.	MODEL/DESCRIPTION	VIN (Chassis No.)
70100 CONT'D			8871-70-100H			611388-
70210A	PILLAR(R),HINGE MONTANT (D), CHARNIERE COLUMNA DER. BISAGRA		8871-70-210C	1		
70250	RAIL(R),ROOF-OUTER GOUTTIERE (D),EXTERIEUR T CANAL(D),TECHO-EXTERIOR		8871-70-251	1		
70260	PILLAR(R),FRT.-INNER MONTANT (D), AVANT INTERI COLUMNA DER. INTERIOR DEL		8871-70-240B	1		SA22C .. 500001 -619392
		<G>	*8871-70-240C	1		SA22C .. 619393-
70270	PANEL(R),SIDE SILL LONGERON EXT. (D) PANEL DER. SELLO LATERAL		8871-70-271	1		SA22C .. 500001 -627592
		<AN>	*8871-70-271A	1		SA22C .. 627593-
70311	RAIL(R),RAIN GOUTTIERE (D) CANAL(D),LLUVIA		8871-70-311A	1		
70640	HEADER,FRONT RENFORT,AVT. COLECTOR DELANTERO		8973-70-640	1		SA22C .. 500001 -536457
		<AN>	8973-70-640A	1		SA22C .. 536458-
70700	HEADER,REAR RENFORT,ARR. COLECTOR TRAS.	<AN>	*FA04-70-700	1	80 MODEL	SA22C .. 611388-
			1482-70-700	1	80 MODEL	SA22C .. 568501 -583526
		<AN>	*1482-70-700A	1	80 MODEL	SA22C .. 583527 -611387
			8973-70-700A	1	79 MODEL	SA22C .. 500001 -536457
		<AN>	8973-70-700B	1	79 MODEL	SA22C .. 536458 -568500
70750	PANEL,REAR END JUPE ARRIERE		8341-70-750	1		SA22C .. 556772-

5340AA BODY PANELS (SIDE & ROOF, SUNROOF)

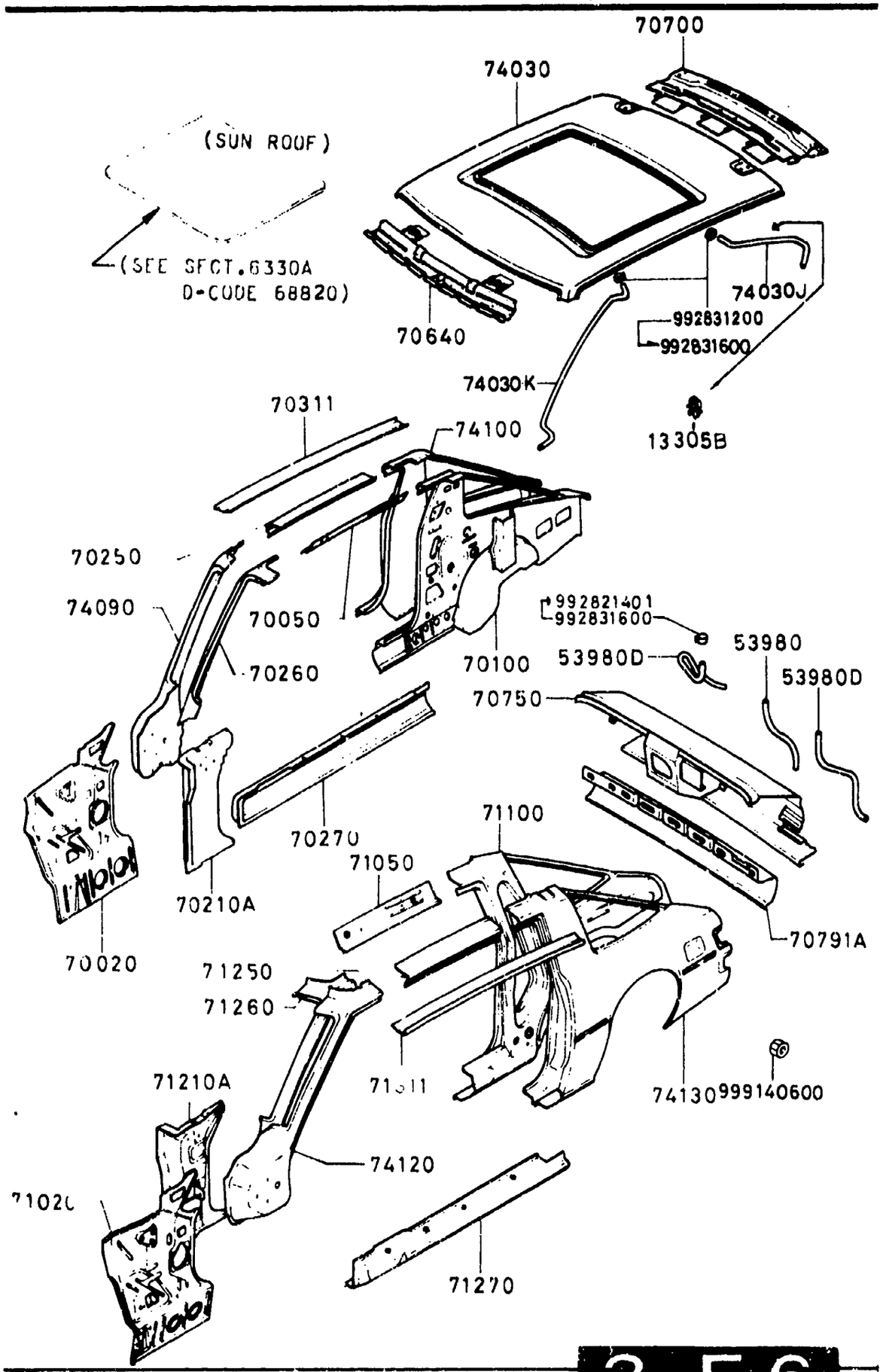

5340AA-3 BODY PANELS (SIDE & ROOF, SUNROOF)

D-CODE (Key No.)	PART NAME		PART No.	Qty.	MODEL DESCRIPTION	VIN (Chassis No.)
70750 CONT'D	PANEL POSTERIOR		8341-70-750			
			8871-70-750B	1		SA22C .. 500001 -500902
		<A >	8871-70-750C	1		SA22C .. 500903 -556771
70791A	PANEL,SKIRT-RR. PANNEAU JUPE ARR.		8562-70-791	1		SA22C .. 500001 -559739
			8871-70-791A	1		SA22C .. 559740-
71020	PANEL(L),COWL SIDE ARMATURE DE COTE (G) PANEL IZQ. CARCAZA LAT.	<A >	*FA16-71-020	1		SA22C .. 624203-
			8871-71-020A	1		SA22C .. 500001 -504976
		<A >	8871-71-020B	1		SA22C .. 504977 -624202
71050	RAIL(L),ROOF-INNER GOUTTIERE (G),INTERIEUR T CANAL(I),TECHO INTERIOR		8871-71-051A	1		SA22C .. 500001 -536457
		<AN>	8871-71-051B	1		SA22C .. 536458 -619392
		<A >	*8871-71-051C	1		SA22C .. 619393-
71100	PANEL(L),QUARTER MONTANT (G) ARR PANEL ZOCALO IZQ.		8871-71-100D	1		SA22C .. 500001 -531148
		<A >	8871-71-100E	1		SA22C .. 531149 -541116
		<AN>	8871-71-100F	1		SA22C .. 541117 -559739
			8871-71-100H	1		SA22C .. 559740 -611387
		<A >	*8871-71-100I	1		SA22C .. 611388-

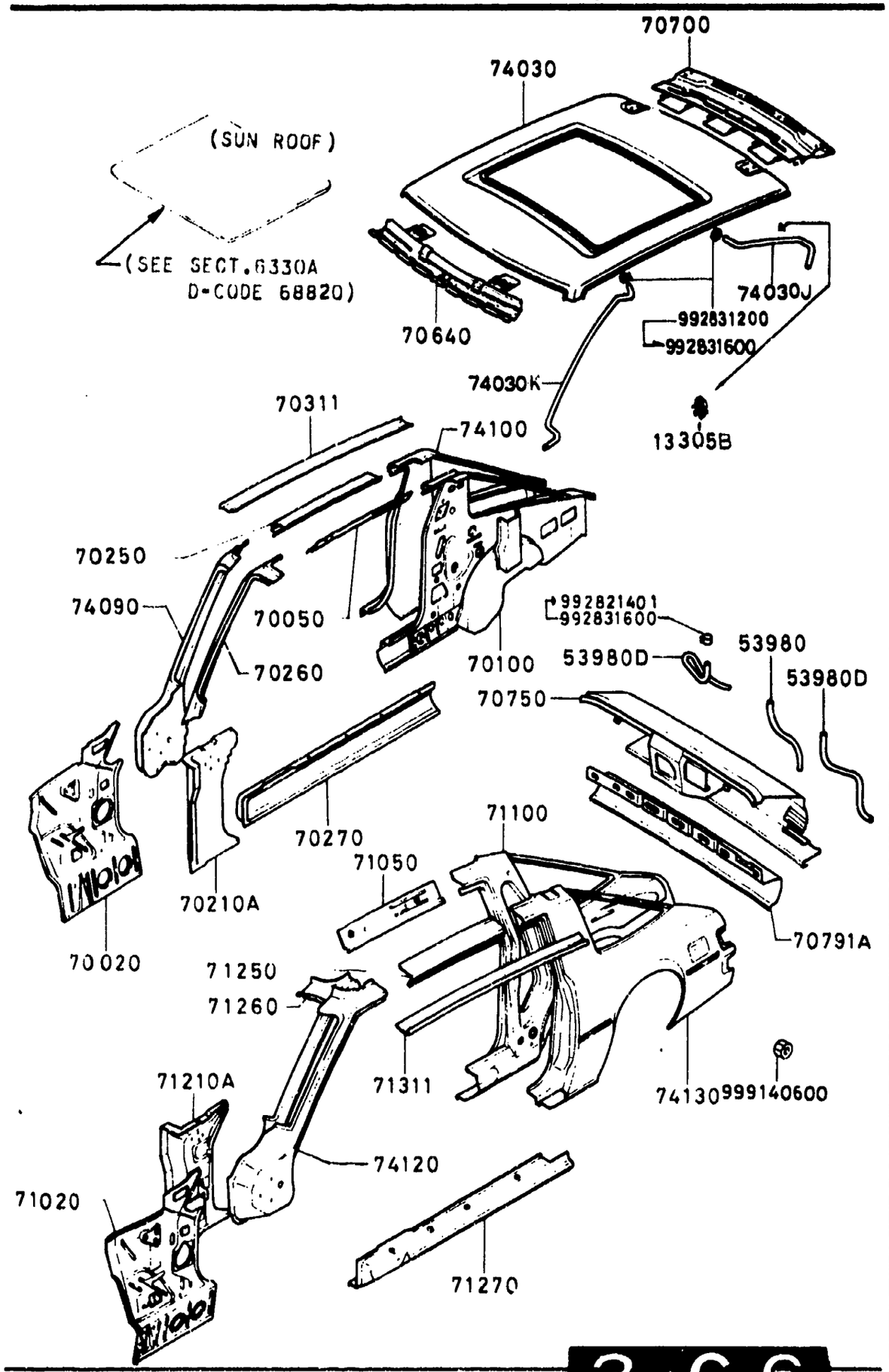

D-CODE (Key No.)	PART NAME	PART No.	Qty.	MODEL DESCRIPTION	VIN (Chassis No.)
71210A	PILLAR(L),HINGE MONTANT DE CHARNIERE COLUMNA IZQ. BISAGRA	8871-71-210C	1		
71250	RAIL(L),ROOF-OUTER GOUTTIERE (G),EXTERIEUR T CANAL(I),TECHO EXTERIOR	8871-71-251	1		
71260	PILLAR(L),FRT.-INNER MONTANT INTERIEUR (G), AV COLUMNA IZQ. INTERIOR DEL	8871-71-240B	1		SA22C .. 500001 -619392
	<G >	*8871-71-240C	1		SA22C .. 619393-
71270	PANEL(L),SIDE SILL LONGERON EXT.(G)	8871-71-271	1		SA22C .. 500001 -627592
	<AN>	*8871-71-271A	1		SA22C .. 627593-
71311	RAIL(L),RAIN GOUTTIERE (G) CANAL(I),LLUVIA	8871-71-311A	1		
74030	PANEL,ROOF PAVILLON TECHO	1482-74-030	1	80 MODEL	SA22C .. 568501-
		8973-74-030	1	79 MODEL	SA22C .. 500001 -504976
	<A >	8973-74-030A	1	79 MODEL	SA22C .. 504977 -568500
74030J	PIPE,VINYLE <AN> TUYAU VINYL	8973-56-066	2		SA22C .. 569399-
		9934-61-0470	2		SA22C .. 500001 -569398
74030K	HOSE,DRAIN TUYAU VIDANGEUR	8973-56-065A	2		SA22C .. 500001 -569398
	<A >	8973-56-065B	2		SA22C .. 569399-
74090	PILLAR(R),HINGE-OUT. MONTANT D,CHARNIERE-EXT.	8871-70-220C	1		

5340AA BODY PANELS (SIDE & ROOF, SUNROOF)

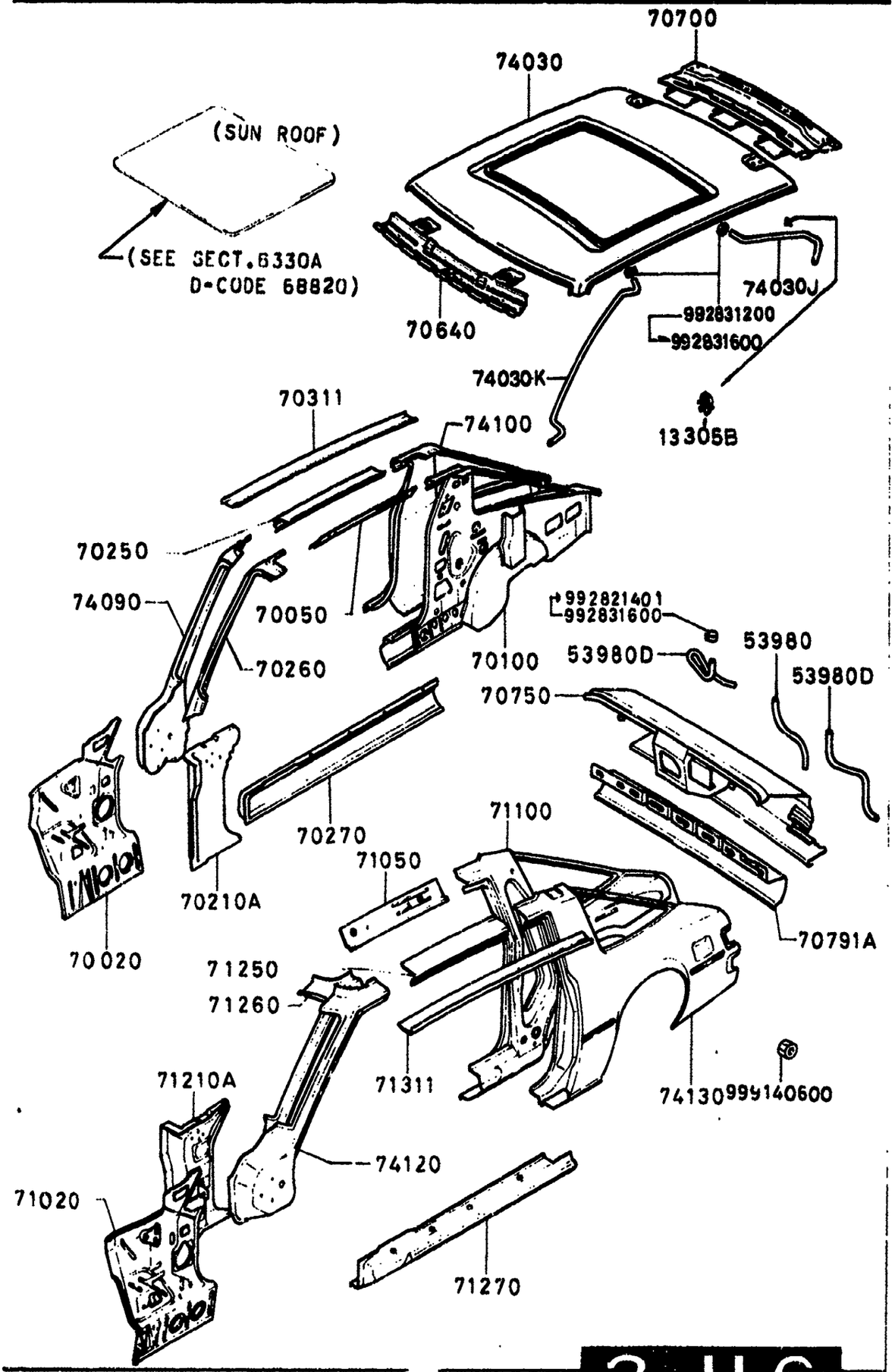

5340AA-5* BODY PANELS (SIDE & ROOF, SUNROOF)

D-CODE (Key No.)	PART NAME	PART No.	Qty.	MODEL DESCRIPTION	VIN (Chassis No.)
74100	PANEL(R),FENDER-REAR AILE ARRIERE (D) PANEL GUARDABARROS TRAS.	8871-70-400F	1		SA22C .. 500001 -583526
	<AN>	8871-70-400H	1		SA22C .. 583527 -626628
	<C >	*8871-70-400J	1		SA22C .. 626629-
74120	PILLAR(L),HINGE-OUT. MONTANT G. EXT.-CHARNIERE	8871-71-220C	1		
74130	PANEL(L),FENDER-REAR AILE ARRIERE (G) PANEL GUARDABARROS TRAS I	8871-71-400E	1		SA22C .. 500001 -520637
	<C >	8871-71-400F	1		SA22C .. 520638 -525593
	<A >	8871-71-400G	1		SA22C .. 525594 -583526
	<AN>	8871-71-400I	1		SA22C .. 583527 -626628
	<C >	*8871-71-400K	1		SA22C .. 626629-

5360A BODY PANELS (FLOOR)

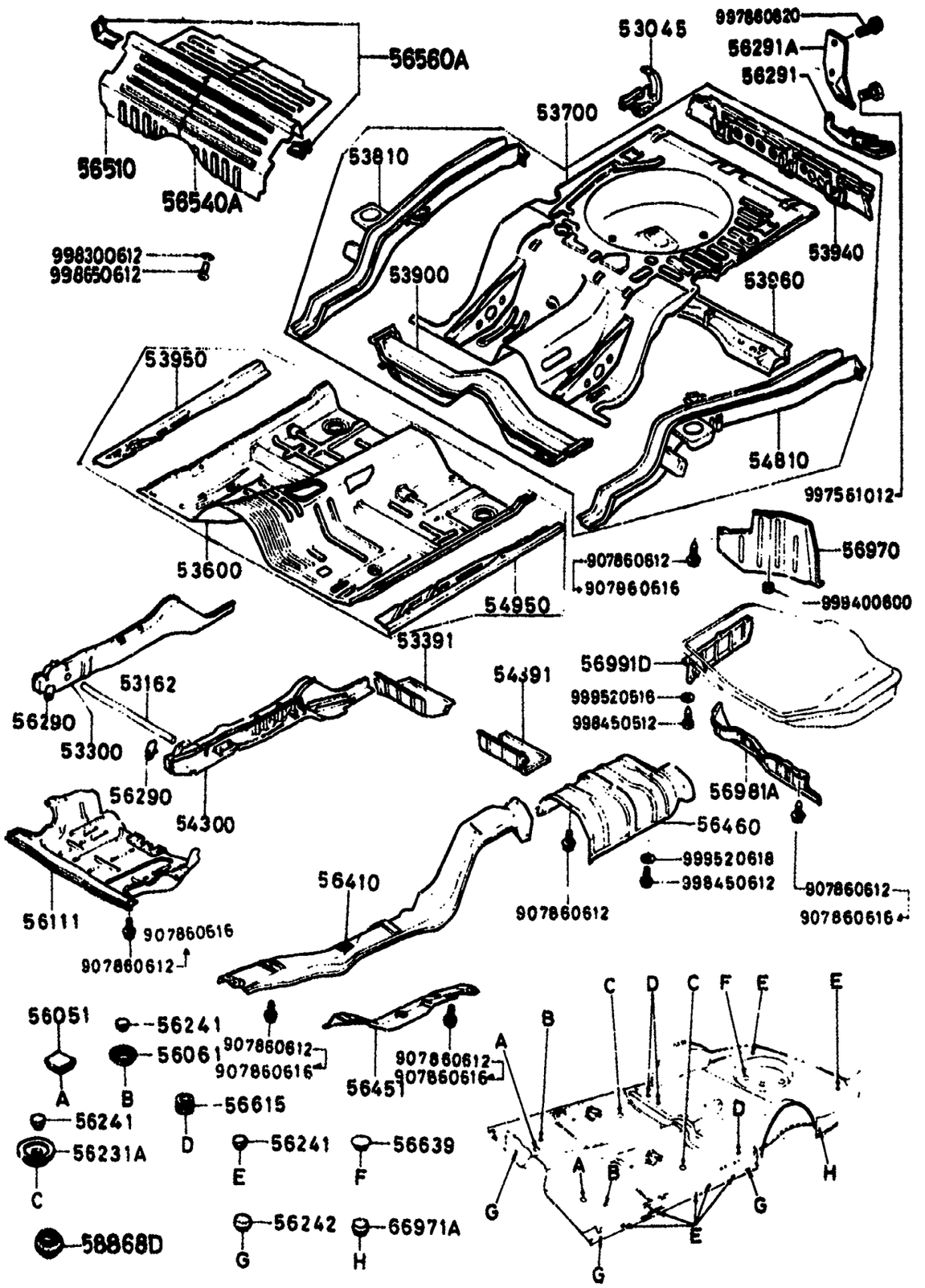

5360A-1 BODY PANELS (FLOOR)

D-CODE (Key No.)	PART NAME		PART No.	Qty.	MODEL DESCRIPTION	VIN (Chassis No.)
53045	BRKT.,JACK ATTACHE CRIC		8871-53-045B	1		SA22C .. 500001 -551460
			8871-53-050	1		SA22C .. 551461 -556256
		<A >	8871-53-050A	1		SA22C .. 556257-
53162	MEMBER,CROSS TRAVERSE MIEMBRO DE CHASSIS		8871-53-161	1		
53300	FRAME(R),SIDE-FRONT ARMATURE AV.(D)	<A >	8341-53-310	1		SA22C .. 576264 -627592
		<A >	*8341-53-310A	1		SA22C .. 627593-
			8871-53-310	1		SA22C .. 500001 -516624
			8871-53-310A	1		SA22C .. 516625 -576263
53391	BOX(R),TORQUE BOITIER (D), COUPLE MOTEU CAJA (DR),TORSION	<AN>	*FA01-53-391	1		SA22C .. 624203-
			8871-53-391	1		SA22C .. 500001 -624202
53600	PAN,FLOOR-FRONT PLANCHER AVANT PANEL PISO DEL.	<CG>	1480-53-600	1		SA22C .. 576762 -617318
		<A >	*1480-53-600A	1		SA22C .. 617319-
			8871-53-600B	1		SA22C .. 500001 -505155
		<A >	8871-53-600C	1		SA22C .. 505156 -576761
53700	PAN,FLOOR-REAR PLANCHER ARRIERE PANEL PISO TRASERO		8871-53-700F	1	79 MODEL	SA22C .. 500001 -508586

5360A BODY PANELS (FLOOR)

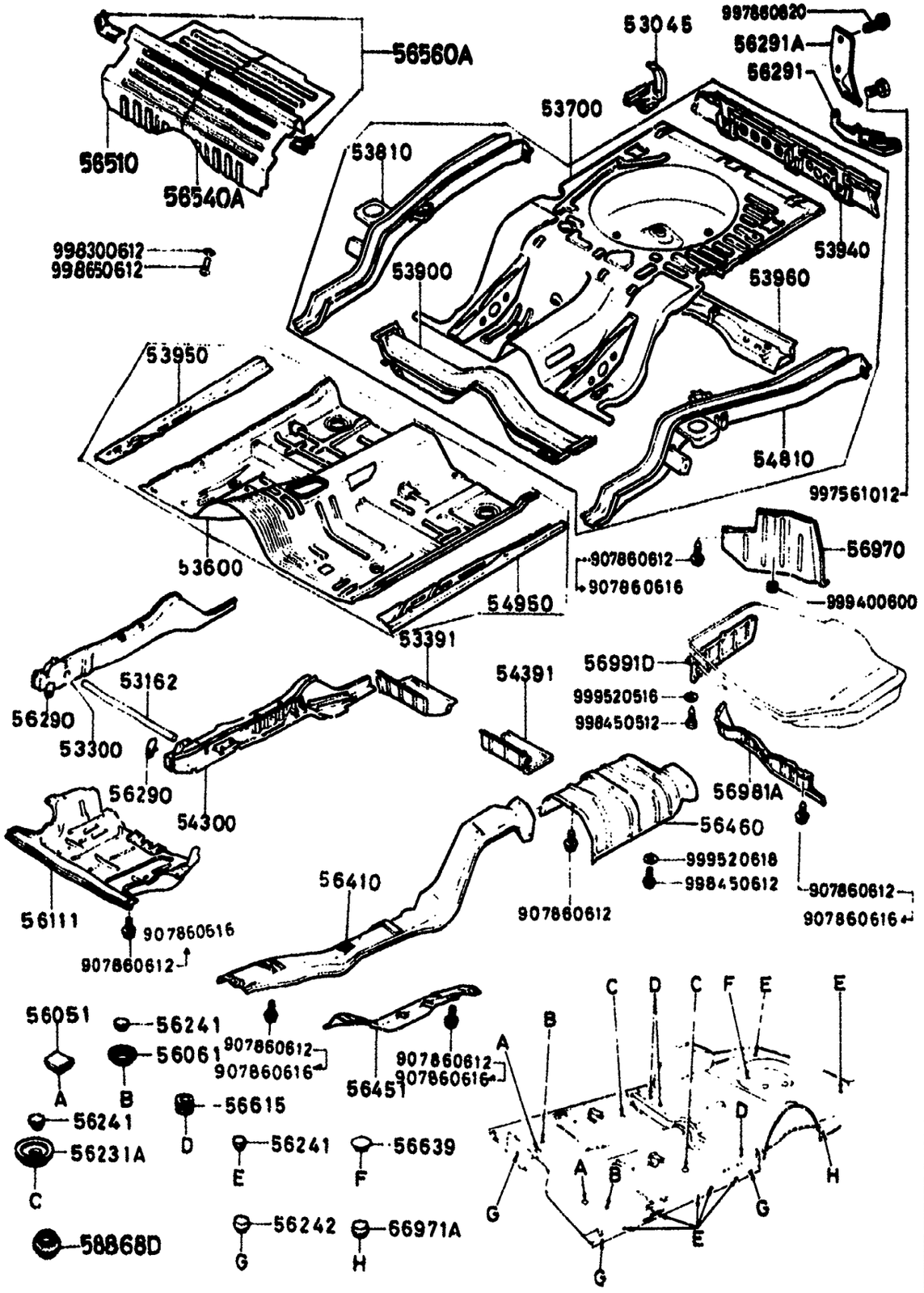

5360A-2 BODY PANELS (FLOOR)

D-CODE (Key No.)	PART NAME		PART No.	Qty.	MODEL DESCRIPTION	VIN (Chassis No.)
53700 CONT'D		<A >	8871-53-700G	1	79 MODEL	SA22C .. 508587 -531148
		<A >	8871-53-700H	1	79 MODEL	SA22C .. 531149 -568500
		<A >	8871-53-700I	1	80 MODEL	SA22C .. 568501 -627592
			*8871-53-700J	1	80 MODEL	SA22C .. 627593-
53810	FRAME(R),REAR SIDE ARMATURE (D), COTE AR. CHASIS LADO TRASERO DEREC		8871-53-810B	1	79 MODEL	SA22C .. 500001 -508586
		<A >	8871-53-810C	1	79 MODEL	SA22C .. 508587 -568500
			8871-53-810D	1	80 MODEL	SA22C .. 568501 -627592
			*8871-53-810E	1	80 MODEL	SA22C .. 627593-
53900	MEMBER NO.3,CROSS TRAVERSE NO 3 MIEMBRO NO.3 DE CHASSIS	<AN>	*FA01-53-900	1		SA22C .. 615692-
			8871-53-900	1		SA22C .. 500001 -615691
53940	MEMBER NO.4,CROSS TRAVERSE NO 4 MIEMBRO NO.4 DE CHASSIS	<AN>	*FC01-53-940	1		SA22C .. 615692 -627592
		<A >	*FC01-53-940A	1		SA22C .. 627593-
			8871-53-940A	1		SA22C .. 500001 -615691
53950	PANEL(R),SIDE SILL LONGERON EXT. (D) PANEL DER. SELLO LATERAL		8871-53-951	1		SA22C .. 500001 -576761
			8871-53-951A	1		SA22C .. 576762 -627592

5360A BODY PANELS (FLOOR)

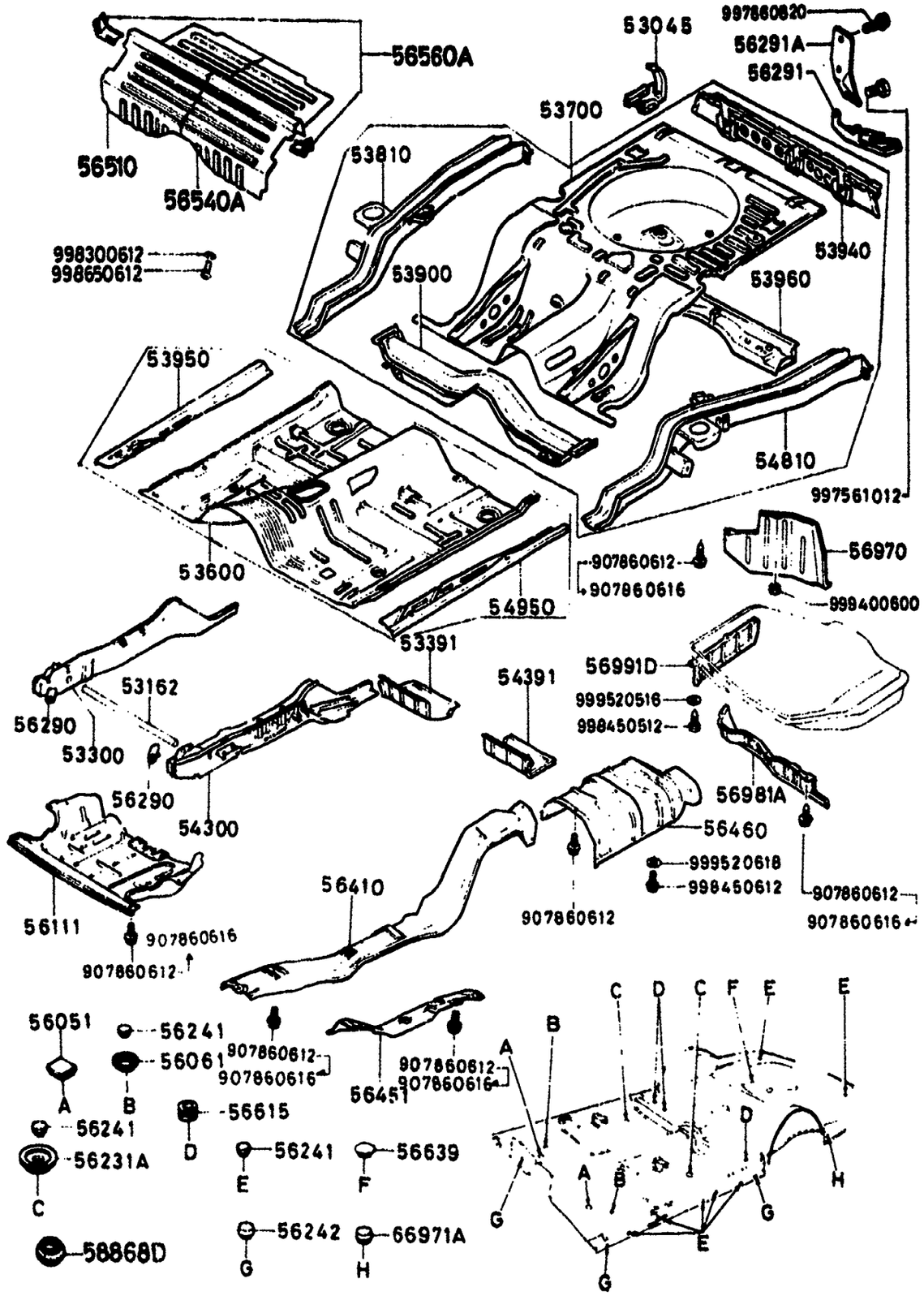

5360A-3 BODY PANELS (FLOOR)

D-CODE (Key No.)	PART NAME	PART No.	Qty.	MODEL / DESCRIPTION	VIN (Chassis No.)
53950 CONT'D	<AN>	*8871-53-951E	1		SA22C .. 627593-
53960	MEMBER NO.5,CROSS TRAVERSE NO 5 MIEMBRO NO.5 DE CHASSIS	8871-53-930	1		SA 2C .. 500001 -500400
		8871-53-930A	1		SA22C .. 500401 -516624
	<A >	8871-53-930B	1		SA22C .. 516625 -570045
	<A >	8871-53-930D	1		SA22C .. 570046-
54300	FRAME(L),SIDE-FRONT <A > ARMATURE (G), COTE AV. CHASIS LADO TRASERO IZQ.	8341-54-310	1		SA22C .. 576264 -627592
	<A >	*8341-54-310A	1		SA22C .. 627593-
		8871-54-310A	1		SA22C .. 500001 -516624
		8871-54-310B	1		SA22C .. 516625 -569398
		8871-54-310C	1		SA22C .. 569399 -576263
54391	BOX(L),TORQUE BOITIER (G), COUPLE MOTEU CAJA (IZ),TORSION	8871-54-391	1		SA22C .. 500001 -627592
	<AN>	*8871-54-391A	1		SA22C .. 627593-
54810	FRAME(L),REAR SIDE ARMATURE (G), COTE AR. CHASIS LADO TRASERO IZQUI	8871-54-810D	1	79 MODEL	SA22C .. 500001 -503586
	<A >	8871-54-810E	1	79 MODEL	SA22C .. 503587 -568500
	<A >	8871-54-810F	1	80 MODEL	SA22C .. 568501 -627592
		*8871-54-810G	1	80 MODEL	SA22C ..

5360A BODY PANELS (FLOOR)

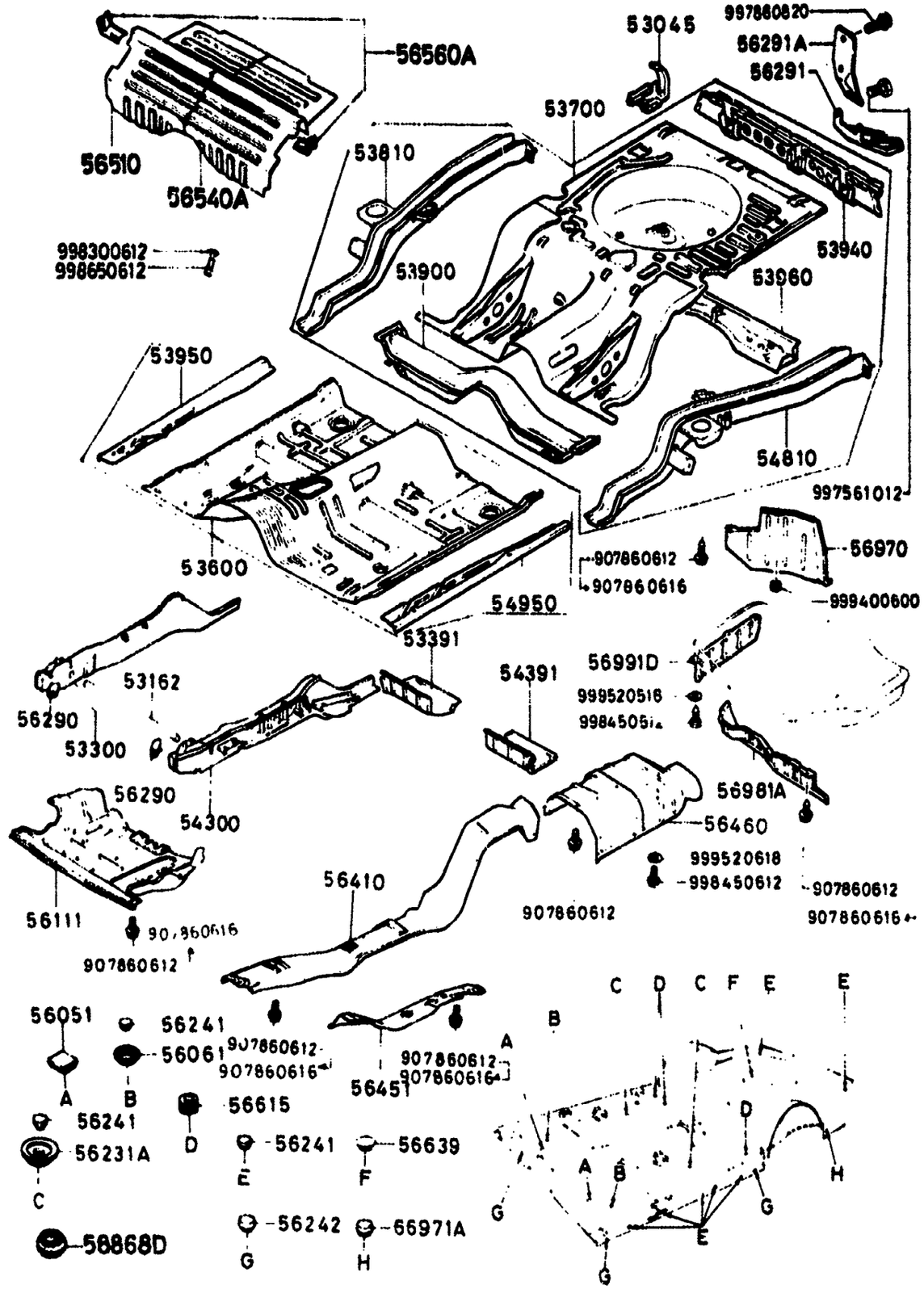

5360A-4 BODY PANELS (FLOOR)

D-CODE (Key No.)	PART NAME	PART No.	Qty.	MODEL DESCRIPTION	VIN (Chassis No.)
54810 CONT'D		8871-54-810G			627593-
54950	PANEL(L),SIDE SEAL LONGERON EXT. (G) PANEL IZQ. SELLO LATERAL	8871-54-951	1		SA2?C .. 500001 -627592
	<AN>	*8871-54-951A	1		SA2?C .. 627593-
56051	COVER,HOLE BOUCHON COBERTOR DEL HUECO	1011-56-051	2		
56061	COVER,SERVICE HOLE CHAPEAU, ORIFICE DE VISIT COBERTOR PARA HUECO	8545-56-052	2		
56111	COVER,UNDER <AN> COUVERCLE, INF. COBERTOR DE ABAJO	*FA01-56-111	1		SA?2C .. 624203-
		8871-56-111B	1		SA2?C .. 500001 -631143
		8871-56-111C	1		SA?2C .. 631149 -643413
	<A >	8871-56-111D	1		SA2?C .. 643411 -[illegible]202
56231A	COVER,SERVICE HOLE CHAPEAU, ORIFICE DE VISIT COBERTOR PARA HUECO	8545-56-053	2		
56241	PLUG,DRAIN BOUCHON DE VIDANGE TAPON DRENAJE	0118-56-241	18		
56242	PLUG,DRAIN BOUCHON DE VIDANGE TAPON DRENAJE	0118-56-242B	5		
56290	HOOK(R),FRONT CROCHET,AVANT BROCHE DEL.	8871-53-170	1		SA?2C .. 500001 -505953
	<A >	8871-53-170A	1		SA?2C .. 505954-
56290	HOOK(L),FRONT CROCHET AVANT (G)	8871-54-170	1		SA?2C .. 500001 -505953
	<A >	8871-54-170A	1		SA?2C ..

5360A BODY PANELS (FLOOR)

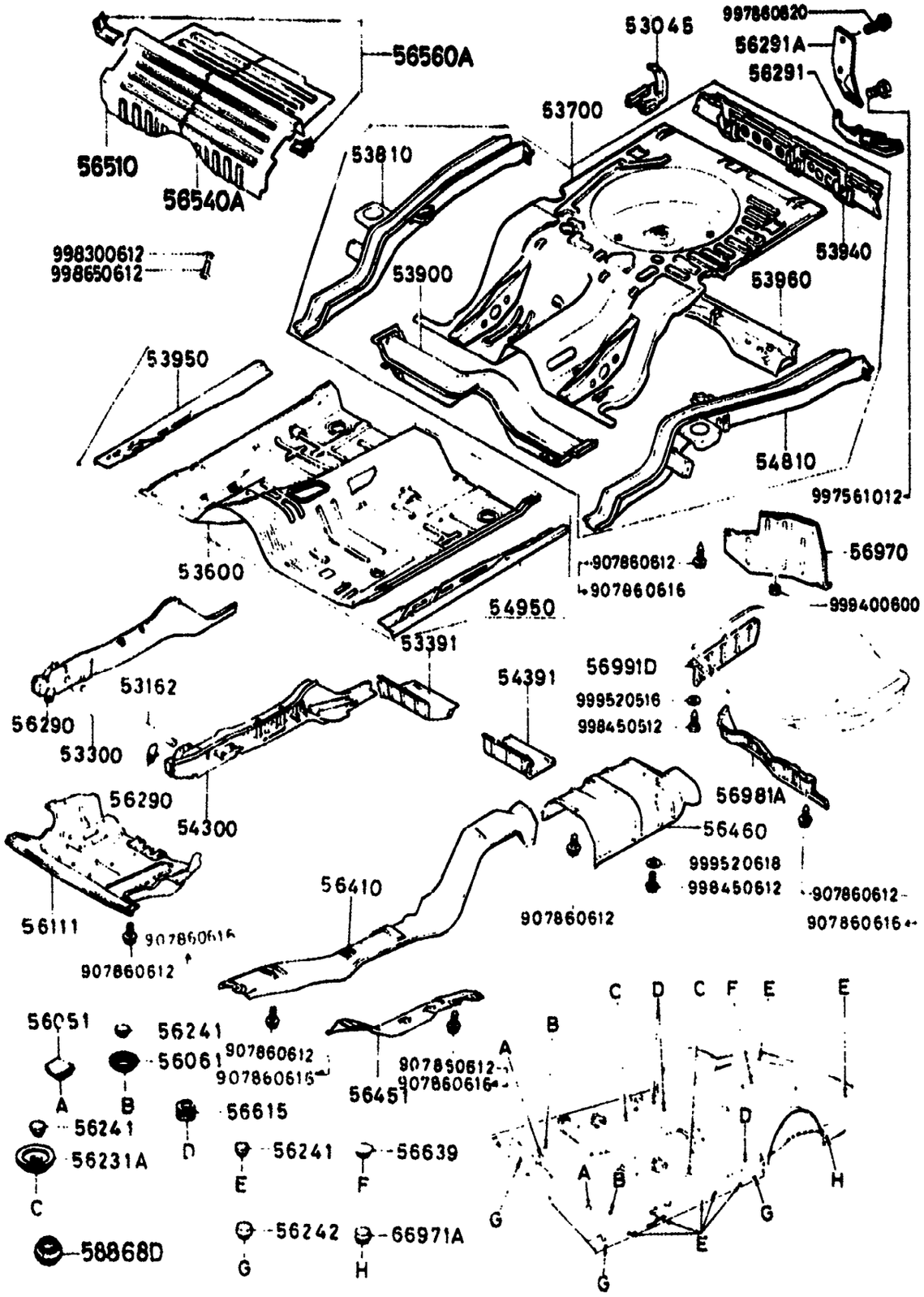

5360A-5 BODY PANELS (FLOOR)

D-CODE (Key No.)	PART NAME	PART No.	Qty.	MODEL DESCRIPTION	VIN (Chassis No.)
56290 CONT'D		8871-54-170A			505954-
56291	HOOK,REAR CROCHET,ARRIERE BROCHE TRAS.	8871-56-270B	1		SA22C .. 500001 -510838
	<AN>	8871-56-270C	1		SA22C .. 510839 -578960
	<AN>	8871-56-271D	1		SA22C .. 578961-
56291A	HOOK,TIE DOWN CROCHET FIXATION	8871-56-281A	2		SA22C .. 500001 -520637
	<AN>	8871-56-281B	2		SA22C .. 520638-
56410	INSULATOR,HEAT-FRONT ISOLATEUR DE CHALEUR AV.	8871-56-410A	1		SA22C .. 500001 -511942
	<A >	8871-56-410B	1		SA22C .. 511943 -575761
	<G >	8871-56-410C	1		SA22C .. 575762-
56451	INSULATOR ISOLATEUR AISLADOR SOPORTE	8871-56-450D	1		SA22C .. 500001 -575761
	<G >	8871-56-450E	1		SA22C .. 575762-
56460	INSULATOR NO.4,REAR ISOLATEUR NO4 ARR.	8871-56-420A	1		SA22C .. 500001 -511942
	<A >	8871-56-420C	1		SA22C .. 511943 -568599
		8871-56-420E	1		SA22C .. 568599-
56510	DECK(R),FLOOR PLATE-FORME PLANCHER(D)	8871-56-510B	1		
56540A	DECK(L),FLOOR PLATE-FORME PLANCHER(G)	8871-56-540B	1		
56560A	BRKT.,DECK	8871-56-560A	2		

5360A BODY PANELS (FLOOR)

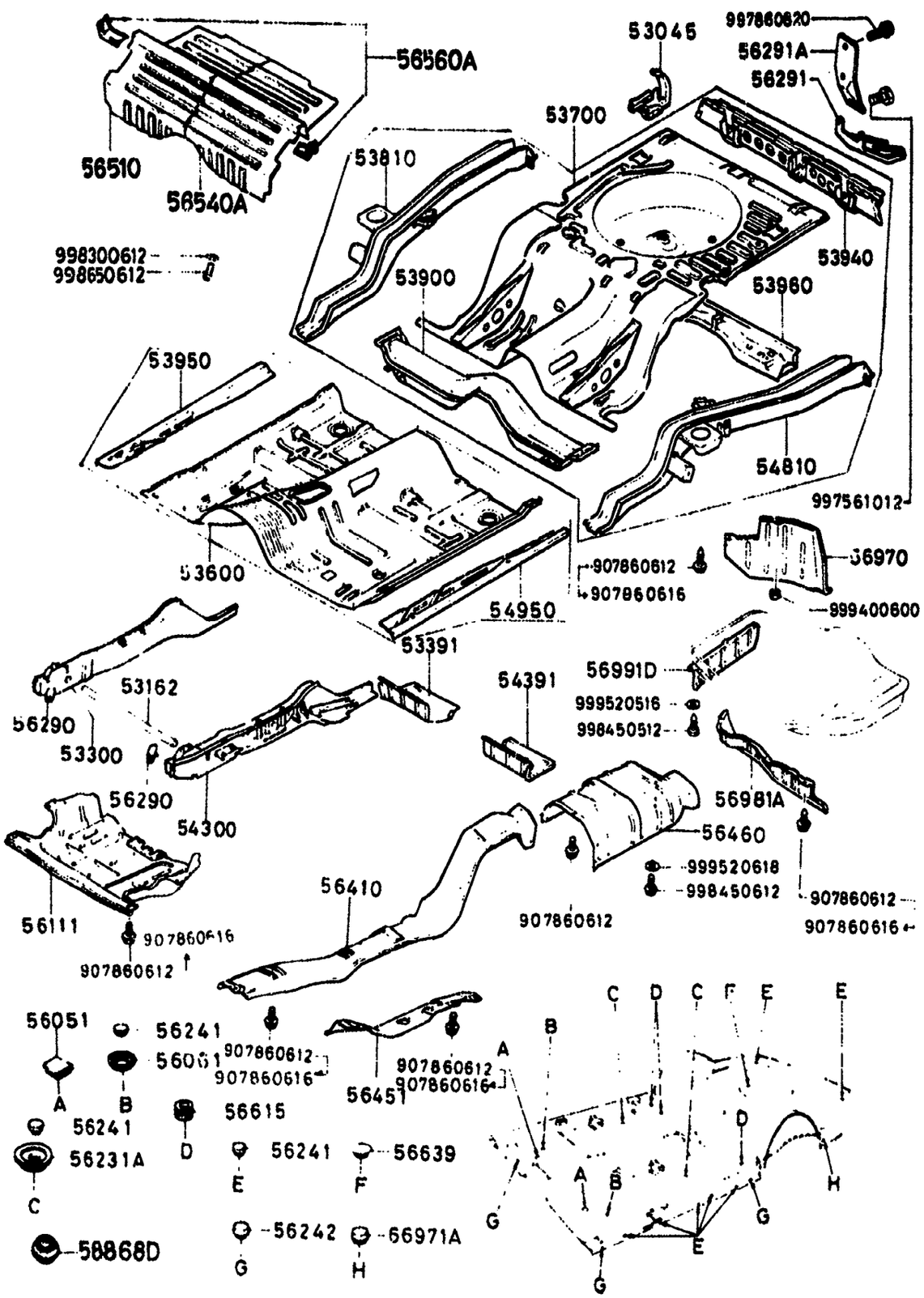

5360A-6* BODY PANELS (FLOOR)

D-CODE (Key No.)	PART NAME	PART No.	Qty.	MODEL DESCRIPTION	VIN (Chassis No.)
56560A CONT'D	SUPPORT PONT	8871-56-560A			
56615	PLUG,DRAIN BOUCHON DE VIDANGE TAPON DRENAJE	0208-56-615	3		
56639	COVER,SERVICE HOLE CHAPEAU, ORIFICE DE VISIT COBERTOR PARA HUECO	0810-56-639	3		
56970	PROTECTOR,FUEL TANK PROTECTION RESERV.ESSENCE	8871-56-970	1		SA22C .. 500001 -500400
		8871-56-970A	1		SA22C .. 500401 -531148
	<AN>	8871-56-970B	1		SA22C .. 531149 -541603
	<AN>	8871-56-970C	1		SA22C .. 541604 -569398
		8871-56-971D	1		SA22C .. 569399-
56981A	INSULATOR ISOLATEUR AISLADOR SOPORTE	8871-56-981	1		SA22C .. 500001 -500902
		8871-56-981A	1		SA22C .. 500903 -569398
	<A >	8871-56-981C	1		SA22C .. 569399-
56991D	INSULATOR,TANK-FUEL ISOLATEUR RESERV. ESSENC	8871-56-991A	1		
58868D	PLUG,HOLE PASTILLE	0559-58-368	1		SA22C .. 576762-
66971A	RUBBER,SEAL JOINT CAOUTCHOUC GOMA,SELLO	0222-66-971	2		

SECTION NUMBER INDEX (BODY)

STARTING LOCATION	SECTION No.	SECTION NAME
3–C2	0900A	KEY SETS
3–C3	5000A	FRONT BUMPER & GRILLE
3–E3	5010A	REAR BUMPER
3–G3	5030A	WINDOW MOULDINGS
3–I3	5040A	BODY MOULDINGS
3–C4	5100A	LAMPS (FRONT & SIDE)
3–G4	5110A	LAMPS (REAR)
3–I4	5130A	OVERHEAD CONSOLE (1979 STANDARD ROOF MODEL)
3–J4	5170A	COWL & EXTRACTOR GRILLES & ORNAMENTS
3–C5	5230A	BONNET
3–E5	5310A	BODY PANELS (FRONT)
3–K5	5340A	BODY PANELS (SIDE & ROOF)
3–I6	5360A	BODY PANELS (FLOOR)
3–C7	5500A	DASHBOARD EQUIPMENT
3–L7	5540A	METERS
3–D8	5560A	DASHBOARD & RELATED
3–L8	5570A	CONSOLE
3–K9	5580A	VENTILATOR
3–C10	5700A	SEAT (EXCEPT LEATHER TRIM)
3–N10	5710A	SEAT TRIM (LEATHER – ANNIVERSARY EDITION)
3–G11	5760A	SEAT BELTS
3–C12	5800A	FRONT DOOR
3–C13	5830A	FRONT DOOR MECHANISMS
3–C14	6100A	HEATER
3–E14	6110A	HEATER UNIT
3–H14	6115A	HEATER CONTROLS
3–J14	6120A	HEATER BLOWER
3–C15	6230A	BACK DOOR MECHANISMS
3–F15	6300A	WINDOW GLASSES
3–I15	6330A	SUNROOF
3–C16	6600A	ELECTRIC EQUIPMENT
3–G16	6680A	RADIO & STEREO SYSTEMS
4–C2	6700A	WIRE HARNESS & CLAMPS
4–G2	6720A	WINDSHIELD WASHER
4–H2	6730A	WINDSHIELD WIPER
4–J2	6740A	WIPER MOTOR (COMPONENTS ONLY)
4–C3	6800A	CEILING TRIM
4–J3	6840A	TRIM & SCUFF PLATE
4–F4	6860A	FLOOR MAT & PADS
4–L4	6870A	SERVICE TOOLS
4–M4	6900A	VISOR, ASSIST HANDLE & MIRRORS
4–G5	6930A	CAUTION PLATES

THE FRAMES IN THIS COLUMN INDICATE :

3---C7	5500A	DASHBOARD EQUIPMENT (1979 MODEL)
3---H7	5500AA	DASHBOARD EQUIPMENT (1980 MODEL)
3---L7	5540A	METERS

© 1983 Toyo Kogyo Co., Ltd.
MAY 1983

5500A DASHBOARD EQUIPMENT (1979 MODEL)

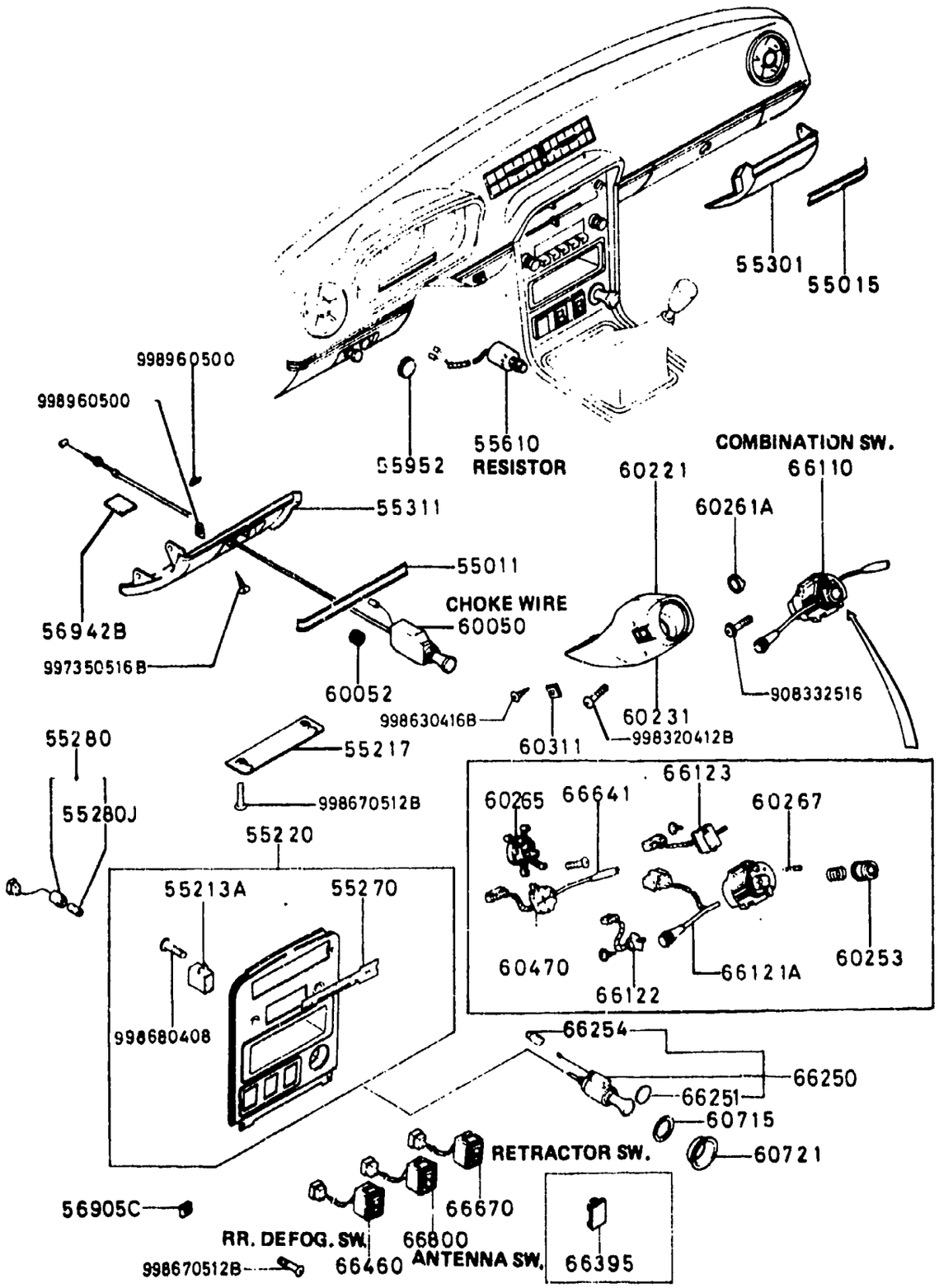

5500A-1 DASHBOARD EQUIPMENT (1979 MODEL)

D-CODE (Key No.)	PART NAME	PART No.	Qty.	MODEL/DESCRIPTION	VIN (Chassis No.)
55011	MOULD,SWITCH PANEL MOULURE PANNEAU INTERRUP.	8871-55-011	1		SA22C .. 500001 -535838
		8671-55-011B	1		SA22C .. 535839-
	BLACK	02			
	BROWN	28			
55015	MOULD,SIDE PANEL MOULURE PANNEAU LAT.	8871-55-015	1		SA22C .. 500001 -535838
		8871-55-015B	1		SA22C .. 535839-
	BLACK	02			
	BROWN	28			
55213A	CASE,LAMP BOITIER DE LAMPE	8871-55-213	1		
55217	SET PLATE,CENTER JEU DE PLAQUES CENTRALES	8871-55-217	1		
55220	PANEL,CENTER MONTANT CENTRAL PANEL CENTRAL	8871-55-210A	1		SA22C .. 500001 -540410
		8871-55-210B	1		SA22C .. 540411-
	00				
		8973-55-210P	1	(ORD.BY 897355210P01) (LIMITED)	
55270	PANEL,DECORATION PANNEAU DE DECORATION PANEL DECORACION	8871-55-212A	1		SA22C .. 500001 -528644
		8871-55-212B	1		SA22C .. 528645 -540410
		8871-55-212C	1		SA22C .. 540411-

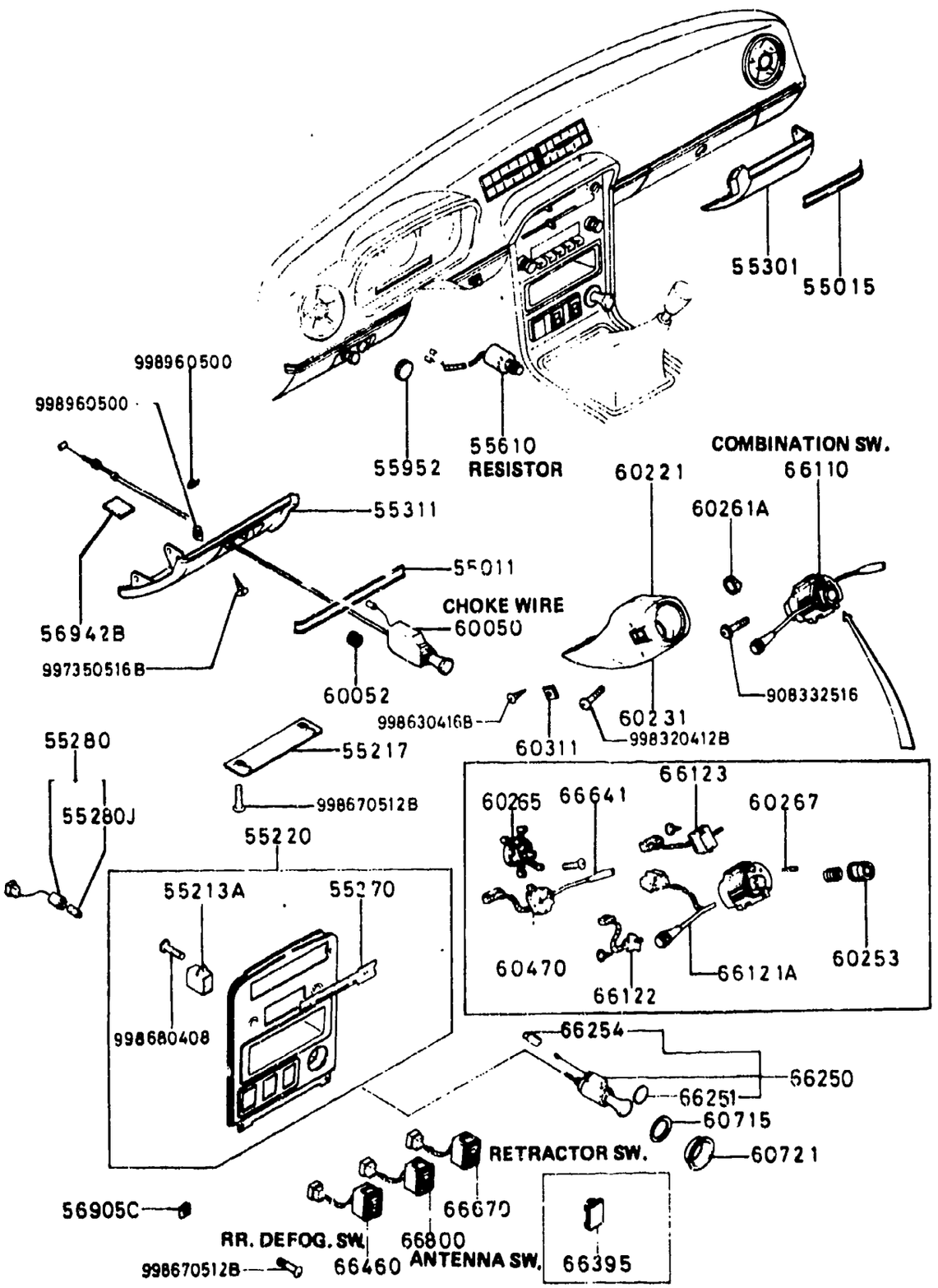

D-CODE (Key No.)	PART NAME	PART No.	Qty.	MODEL/DESCRIPTION	VIN (Chassis No.)
55280	BULB & SOCKET AMPOULE ET DOUILLE FOCO Y PORTA-FOCO	8871-55-280	1		
55280J	BULB AMPOULE FOCO	3625-75-139	1	(1.4W)	
55301	PANEL,GLOVE SIDE PANNEAU	8871-55-301	1		
	BLACK (SA22C 500001-540410)	00			
	BLACK (SA22C 540411-)	02			
	WINE (SA22C 500001-540410)	10			
	WINE (SA22C 540411-)	12			
	BROWN (SA22C 500001-540410)	23			
	BEIGE (SA22C 500001-540410)	24			
	RED (SA22C 500001-540410)	25			
	BROWN (SA22C 540411-)	28			
	RED (SA22C 540411-)	29			
55311	PANEL,SWITCH PANNEAU INTERRUPTEUR	8871-55-302	1		SA22C .. 500001 -592955
	BLACK (SA22C 500001-540410)	00			
	BLACK (SA22C 540411-592955)	02			
	WINE (SA22C 500001-540410)	10			
	WINE (SA22C 540411-592955)	12			
	BROWN (SA22C 500001-540410)	23			

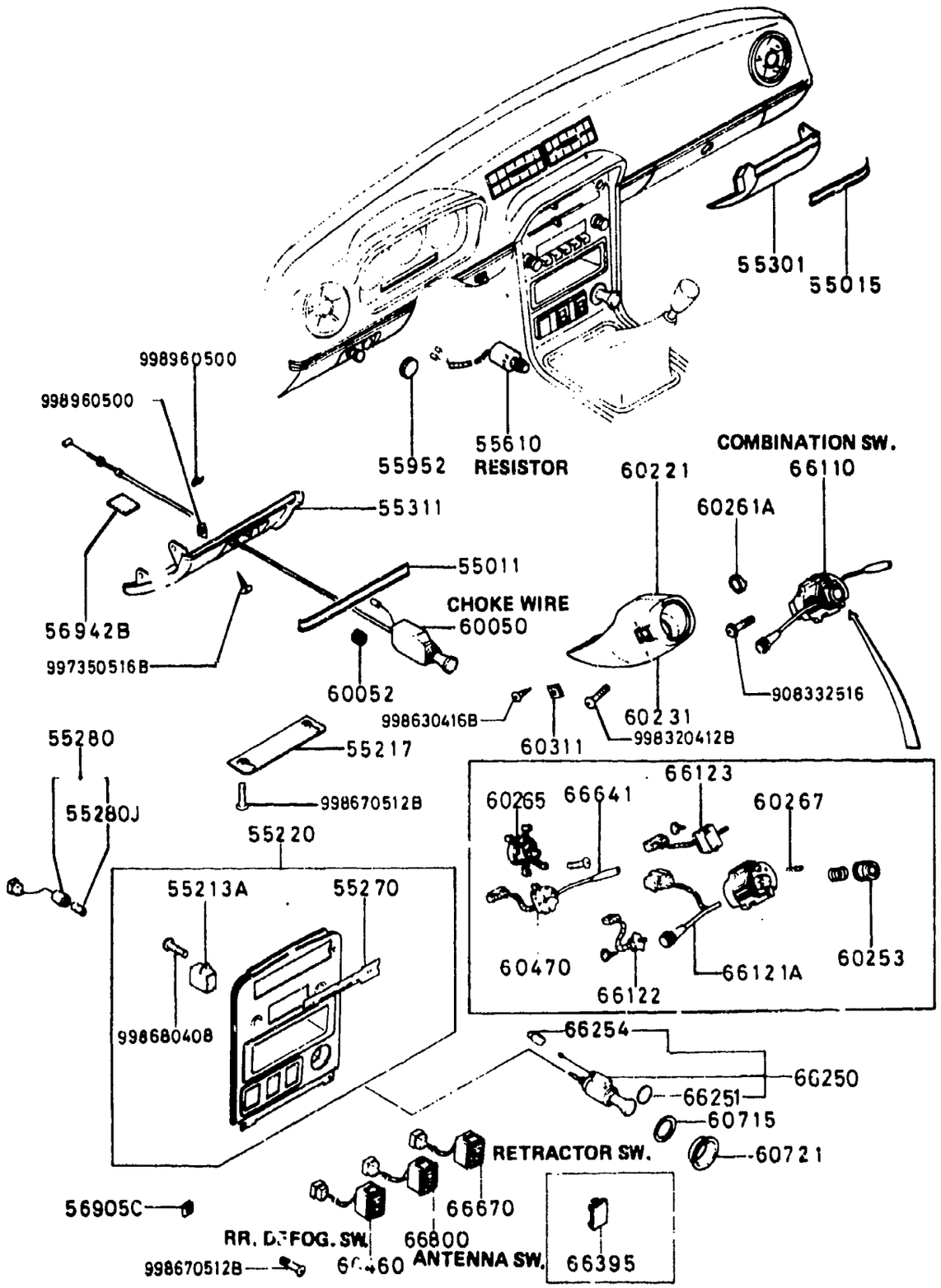

5500A-3 DASHBOARD EQUIPMENT (1979 MODEL)

D-CODE (Key No.)	PART NAME	PART No.	Qty.	MODEL/DESCRIPTION	VIN (Chassis No.)
55311 CONT'D		8871-55-302			
	BEIGE (SA22C 500001-540410)	24			
	RED (SA22C 500001-540410)	25			
	BROWN (SA22C 540411-592955)	28			
	RED (SA22C 540411-592955)	29			
55610	RESISTOR RHEOSTAT RESISTENCIA	8872-55-490	1		
55952	COVER,HOLE BOUCHON COBERTOR DEL HUECO	2399-55-952	1	(USE W/O BACK DOOR OPENER SWITCH)	
56905C	NUT,SPRING ECROU	0820-56-905	2		
56942B	PAD,CHOKE WIRE COUSSINET,CABLE CDE GAZ	0223-56-942	1		
60050	WIRE,CHOKE CABLE DE STARTER CABLE,ESTRANGUL.	8868-60-050A	1	CALIF.	
		8871-60-050A	1	FED. & CANADA	
60052	GROMMET,CHOKE WIRE PROTECTEUR CABLE STARTER PROTECTOR CABLE APAGADOR	0305-60-052A	1		
60221	COVER(R),COLUMN GAINE DE DIRECTION (D) COBERTOR DER.COLUMNA DIRE	8871-60-221	1		SA22C .. 500001 -540410
	<A>	8871-60-221A	1		SA22C .. 540411-
60231	COVER(L),COLUMN GAINE DE DIRECTION (G) COBERTOR IZQ.COLUMNA DE D	8871-60-231	1		SA22C .. 500001 -540410
	<A>	8871-60-231A	1		SA22C .. 540411-
60253	CAM,CANCEL EXCENTRIQUE SEGURO ARBOL DE LEVA	1391-66-126	1		

5500A DASHBOARD EQUIPMENT (1979 MODEL)

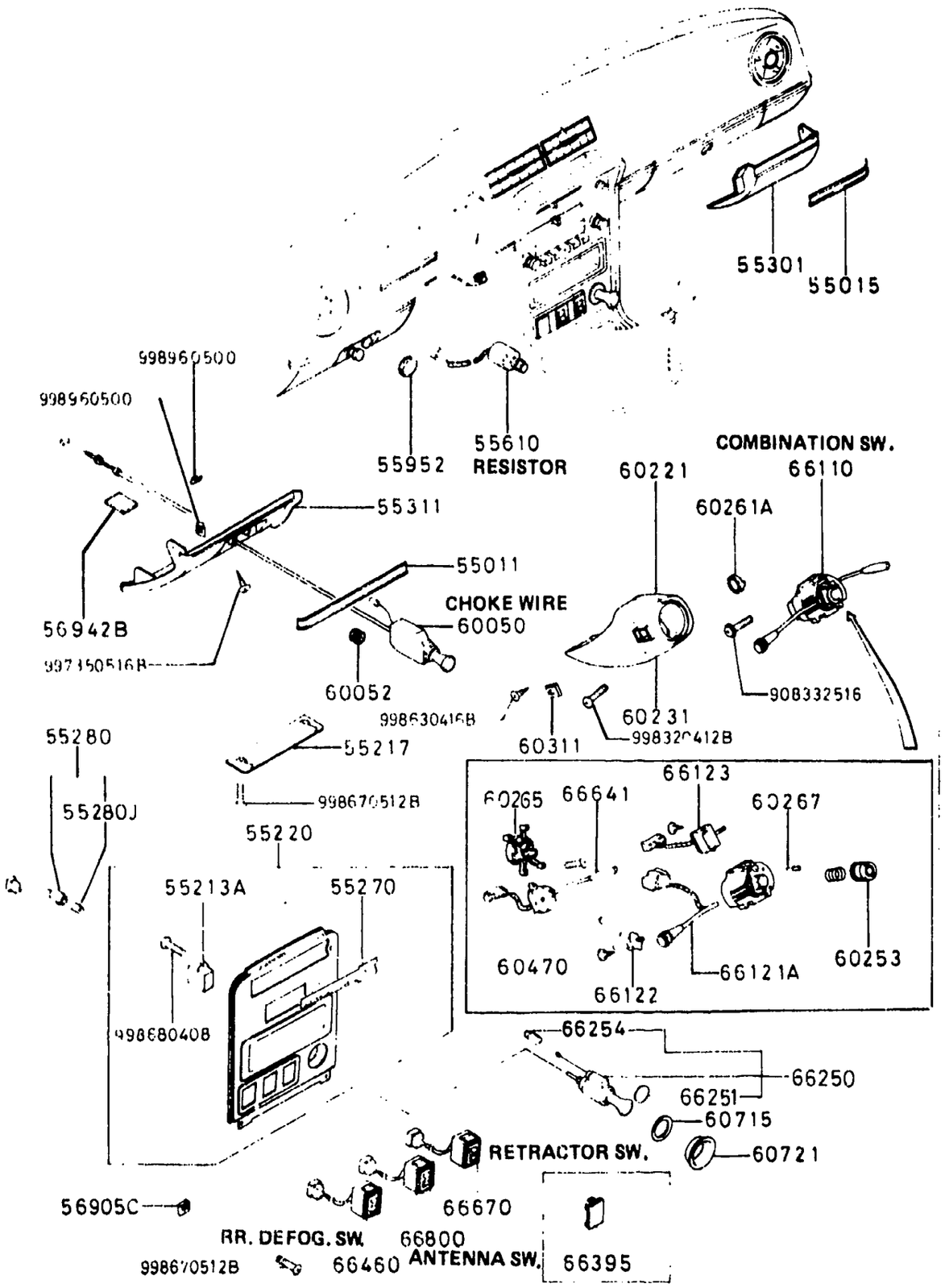

5500A-4 DASHBOARD EQUIPMENT (1979 MODEL)

D-CODE (Key No.)	PART NAME	PART No.	Qty.	MODEL DESCRIPTION	VIN (Chassis No.)
60261A	HOLDER,KEY CYLINDER FIXATEUR DE BARILLET PORTA CERRADURA	1243-60-261	1		
60265	HOLDER,BAND COLLIER A VIS SOSTEN, BANDA	8545-66-140	1		
60267	CONTACT,HORN CONTACT, AVERTISSEUR CONTACTO DE LA BOCINA	1391-66-127	1		
60311	PLATE,COMB.NAME PLAQUE	8871-60-225	1		
60470	SWITCH,LIGHT COMMUTATEUR ECLAIRAGE INTERRUPTOR,LUZ	8872-66-124	1		
60715	SHIELD,HEAT ISOLANT PROTECTOR,CALOR	8871-66-242	1		
60721	PROTECTOR PROTECTEUR PROTECTOR	8871-66-241	1		
66110	SWITCH,COMBINATION COMMUTATEUR, COMBINE INTERRUPTOR,COMBINACION	8872-66-110A	1		
66121A	SW.,WIPER & WASHER INTERRUPTEUR ESSUIE-GLACE	8872-66-121	1		
66122	SWITCH,DIMMER INTERRUPTEUR FEUX CODE	8562-66-122	1		
66123	SWITCH,TURN & HAZARD INTERRUPTEUR CLIGNOTEUR	8872-66-123	1		
66250	LIGHTER,CIGAR ALLUME-CIGARE ENCENDEDOR DE CIGARRILLOS	8871-66-250	1		SA22C .. 500001 -516624
	<A >	8871-66-250A	1		SA22C .. 516625-
66251	RING,ILLUMINATION CERCLE ECLAIRAGE	8871-66-251	1		
66254	BULB,CIGAR LIGHTER AMPOULE ALLUME CIGARES FOCO,ENCENDEDOR CIGARROS	9970-11-030	1	(A12V 3.4W)	

5500A DASHBOARD EQUIPMENT (1979 MODEL)

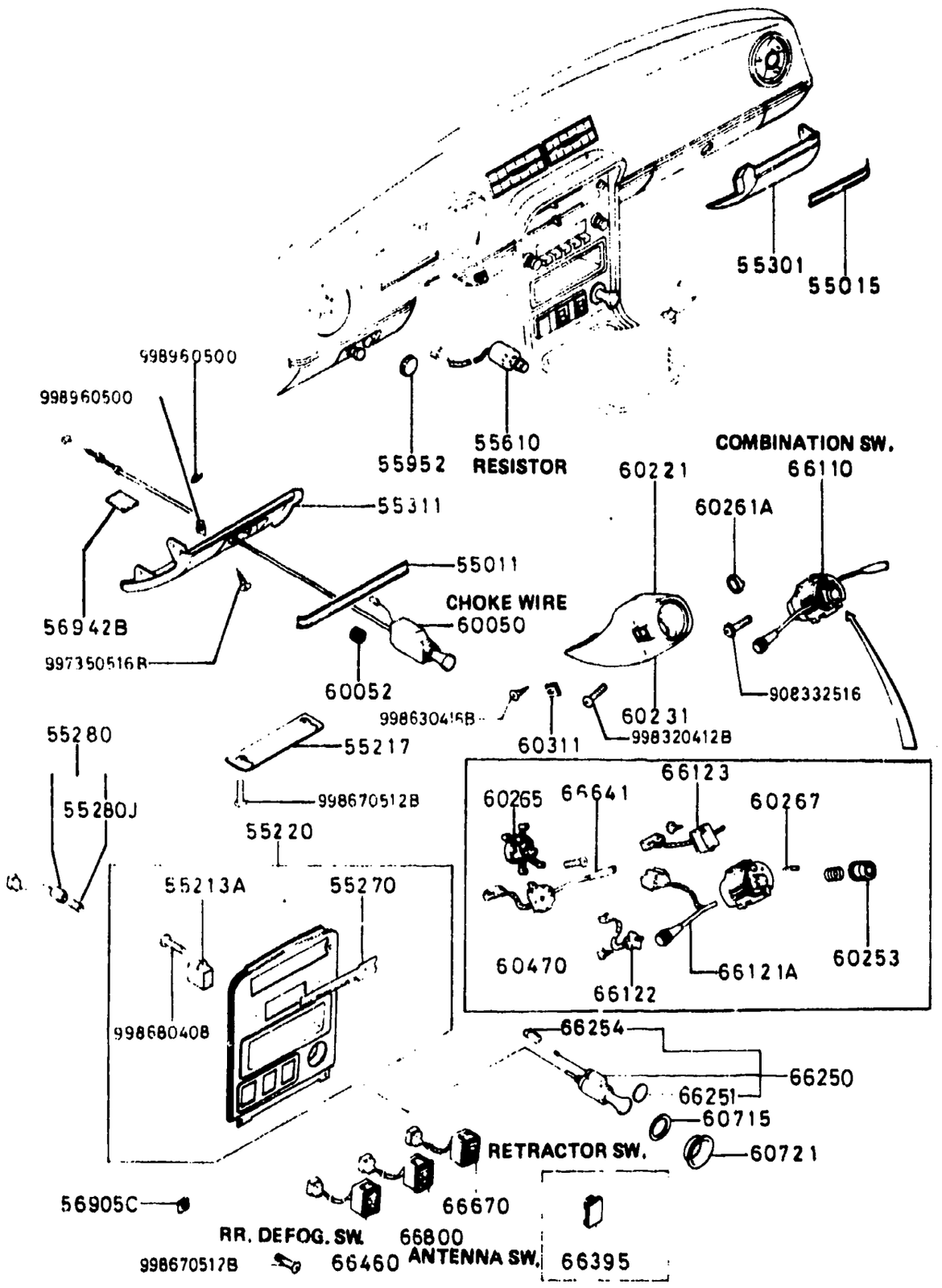

5500A-5★ DASHBOARD EQUIPMENT (1979 MODEL)

D-CODE (Key No.)	PART NAME	PART No.	Qty.	MODEL DESCRIPTION	VIN (Chassis No.)
66395	COVER,HOLE CACHE, FEU ANTIBROUILLARD COBERTOR PARA FOCOS DE NE	8871-66-395	1	(W/O MOTOR ANTENNA)	
66460	SWITCH,RR.DEF. INTERRUPTEUR DESAMBUAGE	8871-66-460	1		
66641	KNOB,LIGHT SWITCH BOUTON INTERRUPT LUMIERE	8239-66-128	1		SA22C .. 516625-
		8872-66-128	1		SA22C .. 500001 -516624
66670	SWITCH,RETRACTOR INTERRUPTEUR	8871-66-670	1		
66800	SWITCH,MOTOR ANTENNA INTERRUPT.MOTEUR ANTENNE	8869-66-800	1		

5500AA DASHBOARD EQUIPMENT (1980 MODEL)

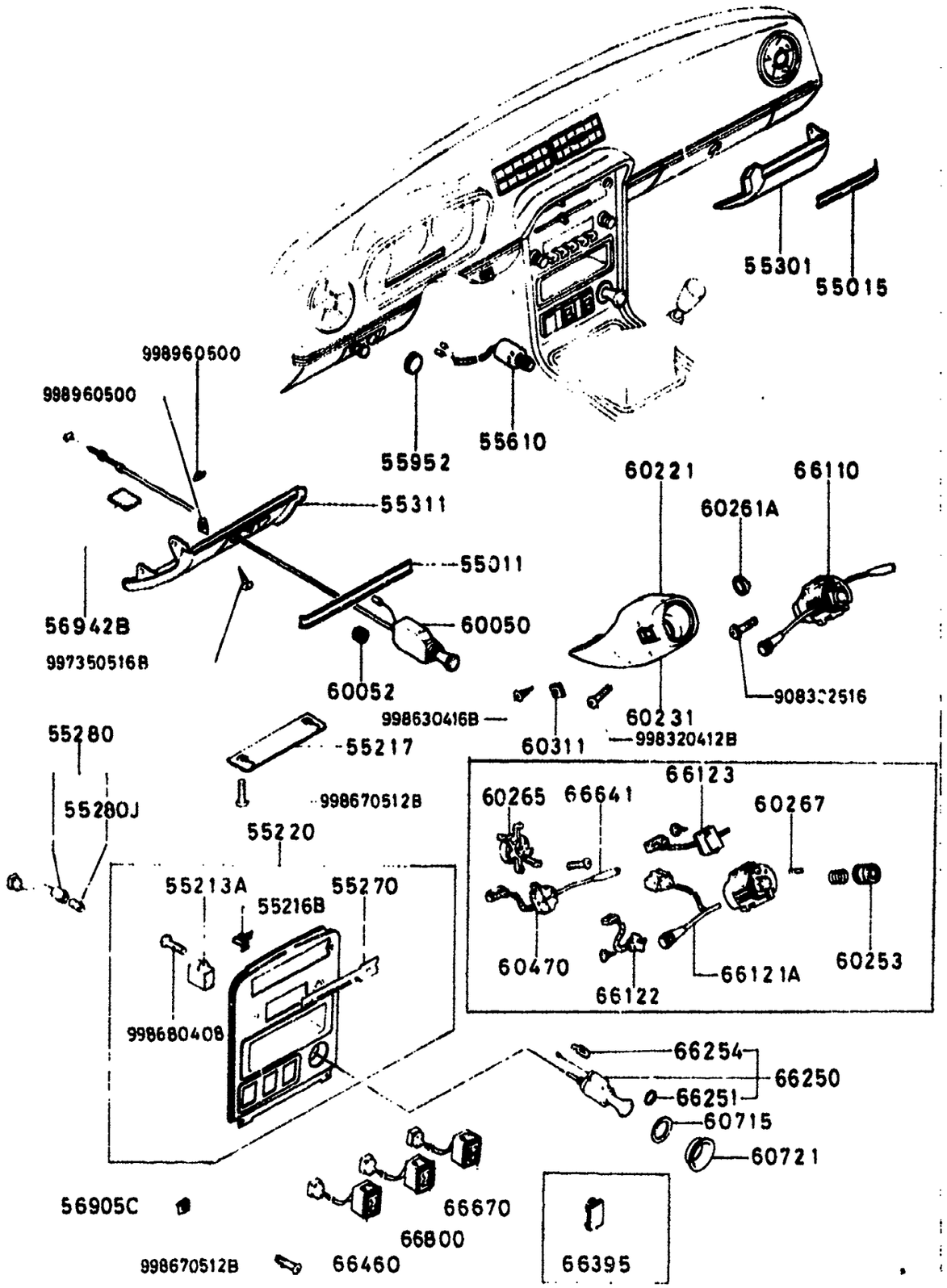

5500AA-1 DASHBOARD EQUIPMENT (1980 MODEL)

D-CODE (Key No.)	PART NAME	PART No.	Qty.	MODEL/ DESCRIPTION	VIN (Chassis No.)
55011	MOULD,SWITCH PANEL MOULURE PANNEAU INTERRUP.	8871-55-011B	1		
	BLACK	02			
	BROWN	28			
55015	MOULD,SIDE PANEL MOULURE PANNEAU LAT.	8871-55-015B	1		
	BLACK	02			
	BROWN	28			
55213A	CASE,LAMP <AN> BOITIER DE LAMPE	8249-55-213	1		SA22C .. 598754-
		8871-55-213	1		SA22C .. 568501 -598753
55216B	SPRING,CENTER PANEL RESSORT PANNEAU CENTRAL	8871-55-216	1		SA22C .. 573961-
55217	SET PLATE,CENTER JEU DE PLAQUES CENTRALES	8871-55-217	1		
55220	PANEL,CENTER MONTANT CENTRAL PANEL CENTRAL	8342-55-210	1	(USE W/ MAIN AMP)	
	SILVER METALLIC	04			
		8871-55-210B	1	(USE W/O MAIN AMP)	
	SILVER METALLIC	04			
55270	PANEL,DECORATION PANNEAU DE DECORATION PANEL DECORACION	8871-55-212C	1		
55280	BULB & SOCKET AMPOULE ET DOUILLE FOCO Y PORTA-FOCO	8871-55-280	1		
55280J	BULB AMPOULE	3625-75-139	1	(1.4W)	

5500AA DASHBOARD EQUIPMENT (1980 MODEL)

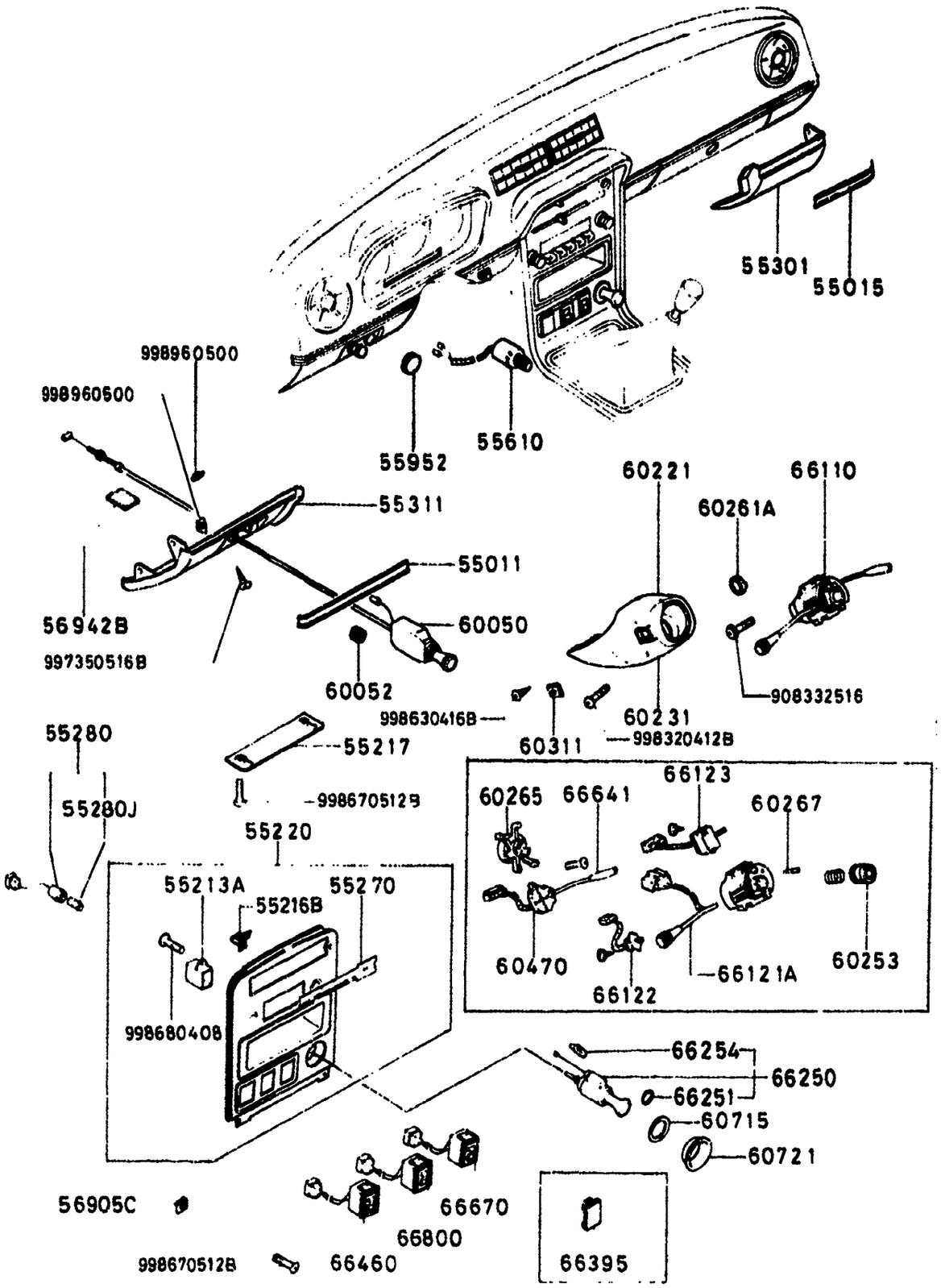

5500AA-2 DASHBOARD EQUIPMENT (1980 MODEL)

D-CODE (Key No.)	PART NAME	PART No.	Qty.	MODEL DESCRIPTION	VIN (Chassis No.)
55280J CONT'D	FOCO	3625-75-139			
55301	PANEL, GLOVE SIDE PANNEAU	8871-55-301	1		
	BLACK	02			
	WINE	12			
	BROWN	28			
	RED	29			
	BROWN (SA22C 606775-)	70		(SUNROOF ONLY)	
55311	PANEL, SWITCH PANNEAU INTERRUPTEUR	8871-55-302	1		SA22C .. 568501 -592955
	BLACK	02			
	WINE	12			
	BROWN	28			
	RED	29			
		8871-55-302A	1		SA22C .. 592956-
	BLACK	02			
	WINE	12			
	BROWN	28			
	RED	29			
	BROWN (SA22C 606775-)	70		(SUNROOF ONLY)	
55610	RESISTOR RHEOSTAT RESISTENCIA	8872-55-490	1		

5500AA DASHBOARD EQUIPMENT (1980 MODEL)

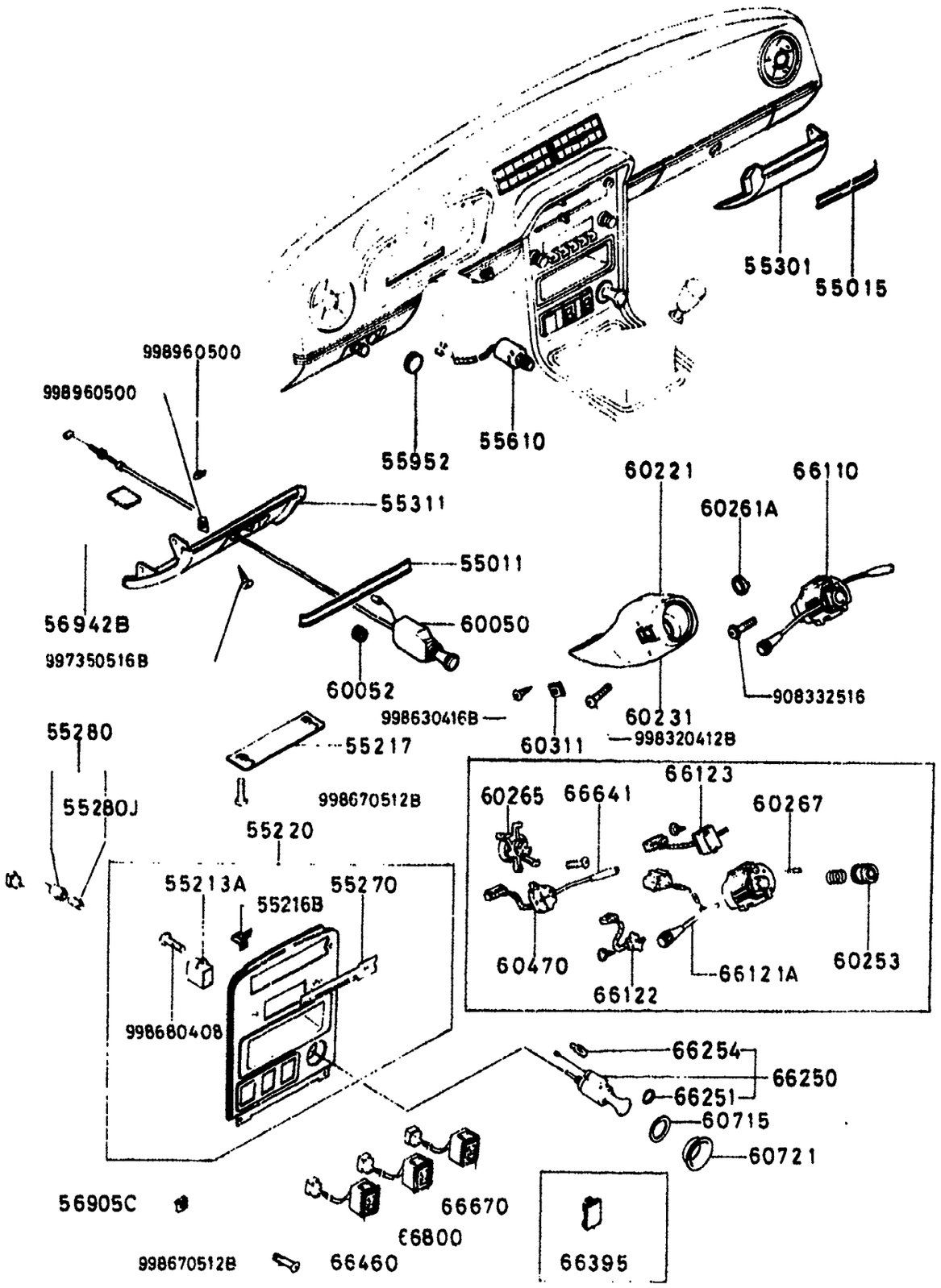

5500AA-3 DASHBOARD EQUIPMENT (1980 MODEL)

D-CODE (Key No.)	PART NAME	PART No.	Qty.	MODEL DESCRIPTION	VIN (Chassis No.)
55952	COVER,HOLE BOUCHON COBERTOR DEL HUECO	2399-55-952	1	(USE W/O BACK DOOR OPENER SWITCH)	
56905C	NUT,SPRING ECROU	0820-56-905	2		
56942B	PAD,CHOKE WIRE COUSSINET,CABLE CDE GAZ	0223-56-942	1		
60050	WIRE,CHOKE CABLE DE STARTER CABLE,ESTRANGUL.	8868-60-050A	1	FED. CALIF.	
		8871-60-050A	1	CANADA	
60052	GROMMET,CHOKE WIRE PROTECTEUR CABLE STARTER PROTECTOR CABLE APAGADOR	0305-60-052A	1		
60221	COVER(R),COLUMN GAINE DE DIRECTION (D) COBERTOR DER.COLUMNA DIRE	8871-60-221A	1		
60231	COVER(L),COLUMN GAINE DE DIRECTION (G) COBERTOR IZQ.COLUMNA DE D	8871-60-231A	1		
60253	CAM,CANCEL EXCENTRIQUE SEGURO ARBOL DE LEVA	1391-66-126	1		
60261A	HOLDER,KEY CYLINDER FIXATEUR DE BARILLET PORTA CERRADURA	1243-60-261	1		
60265	HOLDER,BAND COLLIER A VIS SOSTEN, BANDA	8545-66-140	1		
60267	CONTACT,HORN CONTACT, AVERTISSEUR CONTACTO DE LA BOCINA	1391-66-127	1		
60311	PLATE,COMB.NAME PLAQUE	8871-60-225	1		
60470	SWITCH,LIGHT COMMUTATEUR ECLAIRAGE INTERRUPTOR,LUZ	8872-66-124	1		
60715	SHIELD,HEAT ISOLANT	8871-66-242	1		

5500AA DASHBOARD EQUIPMENT (1980 MODEL)

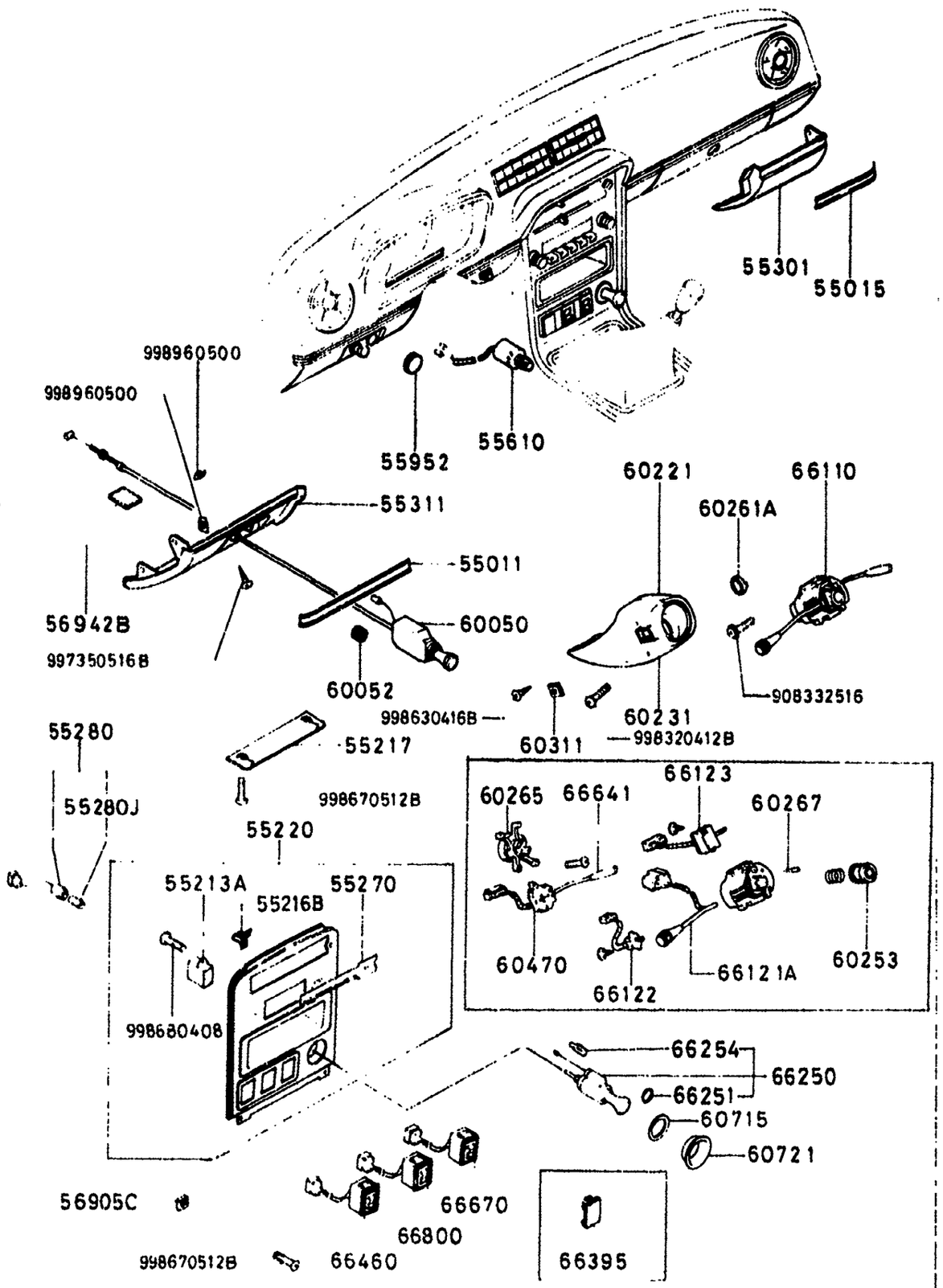

5500AA-4* DASHBOARD EQUIPMENT (1980 MODEL)

D-CODE (Key No.)	PART NAME	PART No.	Qty.	MODEL DESCRIPTION	VIN (Chassis No.)
60715 CONT'D	PROTECTOR,CALOR	8871-66-242			
60721	PROTECTOR PROTECTEUR PROTECTOR	8871-66-241	1		
66110	SWITCH,COMBINATION COMMUTATEUR, COMBINE INTERRUPTOR,COMBINACION	8872-66-110A	1		
66121A	SW.,WIPER & WASHER INTERRUPTEUR ESSUIE-GLACE	8872-66-121	1		
66122	SWITCH,DIMMER INTERRUPTEUR FEUX CODE	8562-66-122	1		
66123	SWITCH,TURN & HAZARD INTERRUPTEUR CLIGNOTEUR	8872-66-123	1		
66250	LIGHTER,CIGAR ALLUME-CIGARE ENCENDEDOR DE CIGARRILLOS	8871-66-250A	1		
66251	RING,ILLUMINATION CERCLE ECLAIRAGE	8871-66-251	1		
66254	BULB,CIGAR LIGHTER AMPOULE ALLUME CIGARES FOCO,ENCENDEDOR CIGARROS	9970-11-030	1	(A12V 3.4W)	
66395	COVER,HOLE CACHE, FEU ANTIBROUILLARD CUBERTOR PARA FOCOS DE NE	8871-66-395	1	(W/O MOTOR ANTENNA)	
66460	SWITCH,RR.DEF. INTERRUPTEUR DESAMBUAGE	8871-66-460	1		
66641	KNOB,LIGHT SWITCH BOUTON INTERRUPT LUMIERE	8239-66-128	1		
66670	SWITCH,RETRACTOR INTERRUPTEUR	8871-66-670	1		
66800	SWITCH,MOTOR ANTENNA INTERRUPT.MOTEUR ANTENNE	8869-66-800	1		

5540A METERS

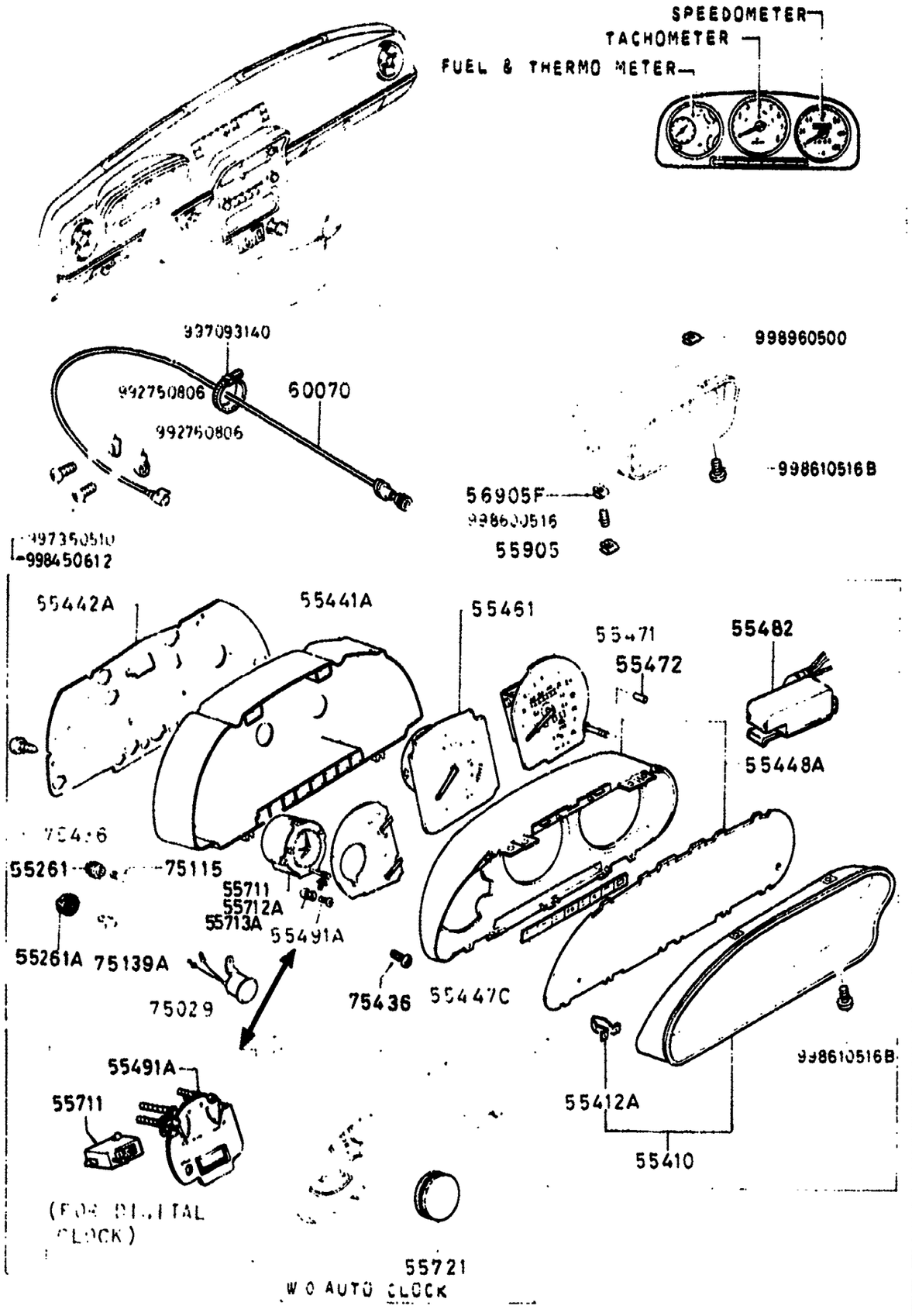

5540A-1 METERS

D-CODE (Key No.)	PART NAME	PART No.	Qty.	MODEL/DESCRIPTION	VIN (Chassis No.)
55261	SOCKET DOUILLE PORTADOR	1316-55-261	8		
55261A	SOCKET DOUILLE PORTADOR	3625-55-261	6		
55410	HOOD,METER VISIERE,COMPTEUR CUBRE INDICADOR	8871-55-420	1	79 MODEL	SA22C .. 500001 -540410
		8871-55-420A	1		SA22C .. 540411-
55412A	SPRING,METER HOOD <AN> RESSORT VISIERE COMPTEUR	8531-55-412	2		SA22C .. 512943-
		8871-55-422	2	79 MODEL	SA22C .. 500001 -512942
55441A	CASE,METER BOITIER COMPTEUR	8570-55-441	1	(FOR DIGITAL CLOCK)	
		8871-55-441	1	(FOR ANALOGUE CLOCK)	
55442A	PLATE,PRINT CIRCUIT IMPRIME	8341-55-442	1	(FOR DIGITAL CLOCK)	
		8570-55-442A	1	(LIMITED)	
		8871-55-442A	1	(FOR ANALOGUE CLOCK)	SA22C .. 500001 -504718
		*8871-55-442B	1	(FOR ANALOGUE CLOCK)	SA22C .. 504719-
55447C	LENS,WARNING VERRE LAMPE TEMOIN	8671-55-447	1		
55448A	LENS,FRONT VERRE AV.	8341-55-488	1	(FOR DIGITAL CLOCK)	

5540A METERS

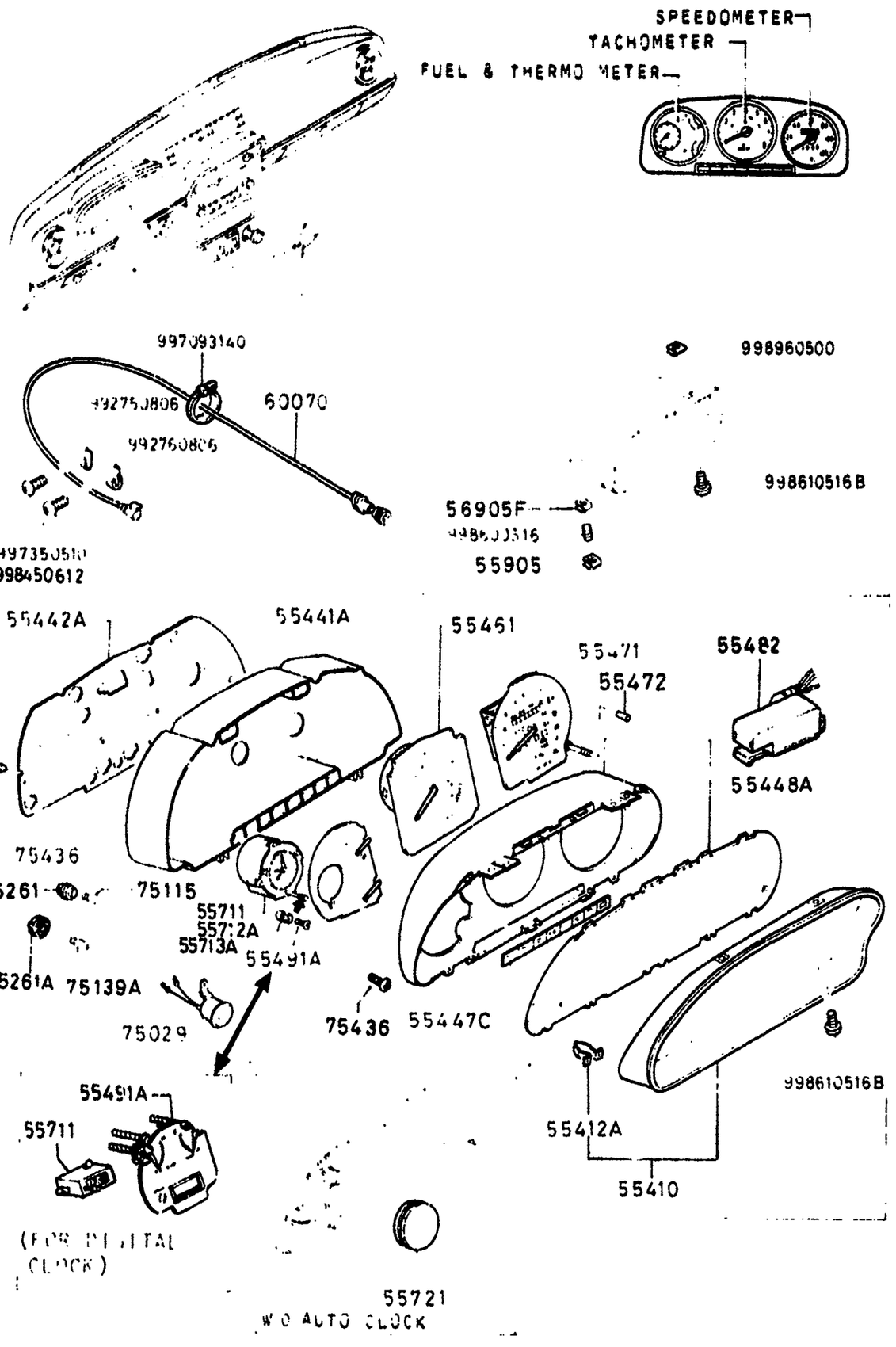

5540A-2 METERS

D-CODE (Key No.)	PART NAME	PART No.	Qty.	MODEL DESCRIPTION	VIN (Chassis No.)
55448A CONT'D		8871-55-488	1	(FOR ANALOGUE CLOCK)	
		8872-55-488	1	(USE W/O CLOCK)	
55461	TACHOMETER TACHYMETRE, COMPTE-TOURS TAQUIMETRO	1480-55-461	1	80 MODEL	SA22C .. 568501-
		8871-55-461	1	79 MODEL M/T	SA22C .. 500001 -563500
		8872-55-461	1	79 MODEL A/T	SA22C .. 500001 -563500
55471	SPEEDOMETER COMPTEUR VELOCIMETRO	8342-55-471A	1	(MILE / KM) 80 MODEL FED. 80 MODEL CALIF.	SA22C .. 568501-
		8485-55-471	1	(KM / MILE) 80 MODEL CANADA	SA22C .. 568501-
		8871-55-471	1	(MILE / KM) 79 MODEL FED. 79 MODEL CALIF.	SA22C .. 500001 -516624
	<A>	8871-55-471A	1	(MILE / KM) 79 MODEL FED. 79 MODEL CALIF.	SA22C .. 516625 -563500
		8970-55-471	1	(KM / MILE) 79 MODEL CANADA	SA22C .. 500001 -516624
	<A>	8970-55-471A	1	(KM / MILE) 79 MODEL CANADA	SA22C .. 516625 -563500
55472	KNOB, TRIPMETER BOUTON, INDICATEUR DE PARC PERILLA DE MEDIDOR DE VIA	1907-75-102A	1		
55482	REGULATOR MECANISME REGULADOR	8341-55-482	1	(FOR DIGITAL CLOCK)	
		8871-55-482	1	(FOR ANALOGUR CLOCK)	SA22C .. 504179-

5540A METERS

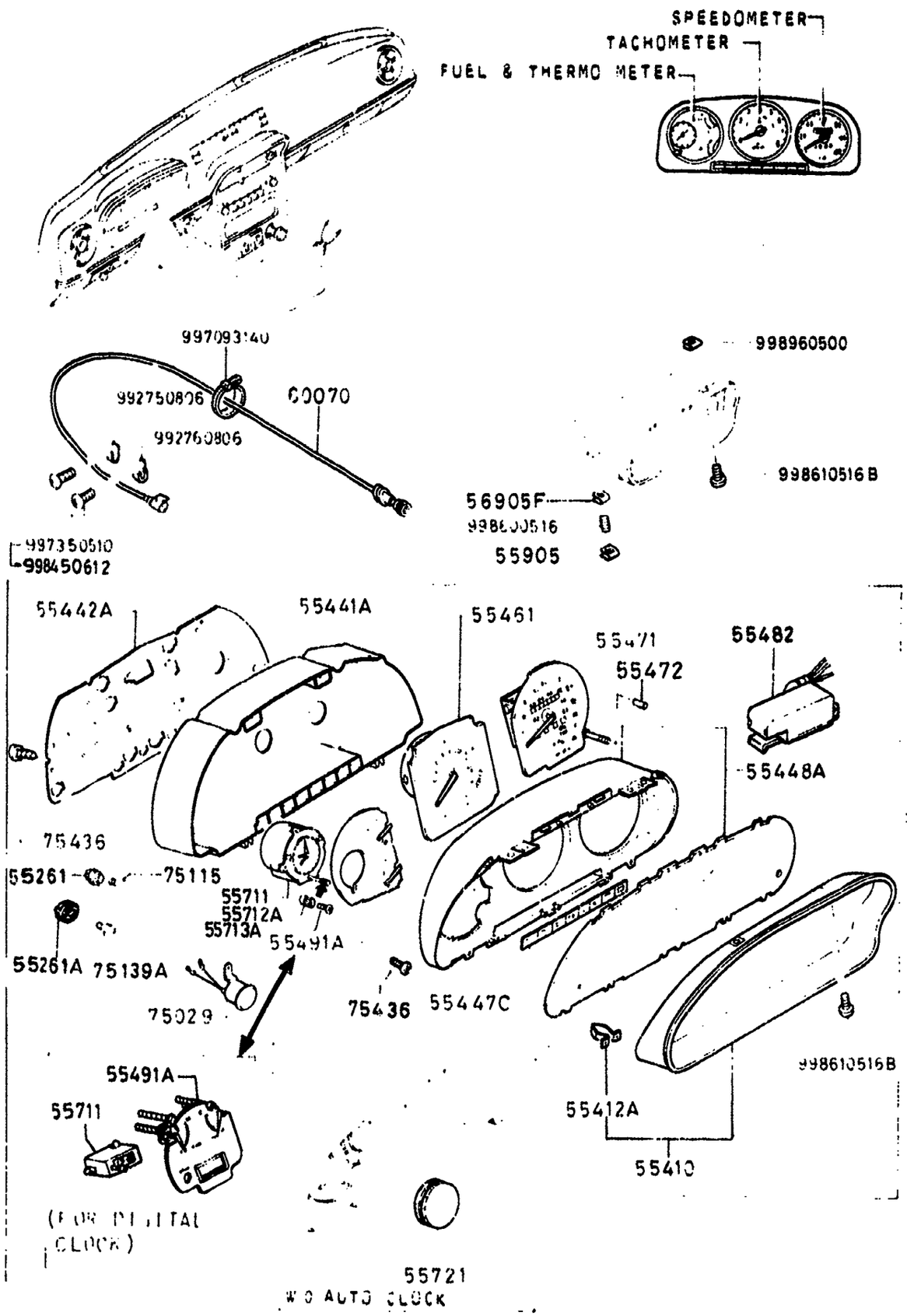

D-CODE (Key No.)	PART NAME	PART No.	Qty.	MODEL DESCRIPTION	VIN (Chassis No.)
55482 CONT'D		8871-76-382	1	(FOR ANALOGUE CLOCK)	SA22C .. 500001 -504718
55491A	METER,FUEL & THERMO INDICATEUR ESSENCE ET THE MEDIDOR DE NAFTA & TEMP.	8562-55-481	1	(FOR ANALOGUE CLOCK)	SA22C .. 504719-
		8570-55-481A	1	(FOR DIGITAL CLOCK)	
		8871-55-481A	1	(FOR ANALOGUE CLOCK)	SA22C .. 500001 -504718
55711	CLOCK,AUTO MONTRE DE VOITURE RELOJ AUTOMATICO	1482-55-711	1	(ANALOGUE TYPE)	SA22C .. 568538-
		8570-55-711	1	(DIGITAL TYPE) (LIMITED)	
		8871-55-711	1	(ANALOGUE TYPE)	SA22C .. 500001 -568537
55712A	KNOB,RESET	•8117-55-712	1		
55713A	SCREW,RESET KNOB	•8117-55-713	1		
55721	COVER,HOLE-CLOCK COUVERCLE MONTRE	1481-55-711	1	(USE W/O CLOCK)	SA22C .. 568538-
		8872-55-711	1	(USE W/O CLOCK)	SA22C .. 500001 -568537
55905	NUT,SPRING ECROU	8371-55-425	2		
56905F	NUT,SPRING ECROU	0820-56-905	2 4	80 MODEL 77 MODEL	
60070	CABLE,SPEEDOMETER CABLE, COMPTEUR EJE FLEXIBLE PARA VELOCIM	8871-60-070	1		
75029	BUZZER AVERTISSEUR	1568-75-029	1	79 MODEL M/T	SA22C .. 500001

SECTION NUMBER INDEX (BODY)

STARTING LOCATION	SECTION No.	SECTION NAME
3–C2	0900A	KEY SETS
3–C3	5000A	FRONT BUMPER & GRILLE
3–E3	5010A	REAR BUMPER
3–J3	5030A	WINDOW MOULDINGS
3–I3	5040A	BODY MOULDINGS
3–C4	5100A	LAMPS (FRONT & SIDE)
3–G4	5110A	LAMPS (REAR)
3–I4	5130A	OVERHEAD CONSOLE (1979 STANDARD ROOF MODEL)
3–J4	5170A	COWL & EXTRACTOR GRILLES & ORNAMENTS
3–C5	5230A	BONNET
3–E5	5310A	BODY PANELS (FRONT)
3–K5	5340A	BODY PANELS (SIDE & ROOF)
3–I6	5360A	BODY PANELS (FLOOR)
3–C7	5500A	DASHBOARD EQUIPMENT
3–L7	5540A	METERS
3–D8	5560A	DASHBOARD & RELATED
3–L8	5570A	CONSOLE
3–K9	5580A	VENTILATOR
3–C10	5700A	SEAT (EXCEPT LEATHER TRIM)
3–N10	5710A	SEAT TRIM (LEATHER – ANNIVERSARY EDITION)
3–G11	5760A	SEAT BELTS
3–C12	5800A	FRONT DOOR
3–C13	5830A	FRONT DOOR MECHANISMS
3–C14	6100A	HEATER
3–E14	6110A	HEATER UNIT
3–H14	6115A	HEATER CONTROLS
3–J14	6120A	HEATER BLOWER
3–C15	6230A	BACK DOOR MECHANISMS
3–F15	6300A	WINDOW GLASSES
3–I15	6330A	SUNROOF
3–C16	6600A	ELECTRIC EQUIPMENT
3–G16	6680A	RADIO & STEREO SYSTEMS
4–C2	6700A	WIRE HARNESS & CLAMPS
4–G2	6720A	WINDSHIELD WASHER
4–H2	6730A	WINDSHIELD WIPER
4–J2	6740A	WIPER MOTOR (COMPONENTS ONLY)
4–C3	6800A	CEILING TRIM
4–J3	6840A	TRIM & SCUFF PLATE
4–F4	6860A	FLOOR MAT & PADS
4–L4	6870A	SERVICE TOOLS
4–M4	6900A	VISOR, ASSIST HANDLE & MIRRORS
4–G5	6930A	CAUTION PLATES

THE FRAMES IN THIS COLUMN INDICATE :

3---L7	5540A	METERS
3---D8	5560A	DASHBOARD & RELATED (1979 MODEL)
3---H8	5560AA	DASHBOARD & RELATED (1980 MODEL)
3---L8	5570A	CONSOLE (1979 MODEL)

© 1983 Toyo Kogyo Co., Ltd.
MAY 1983

5540A METERS

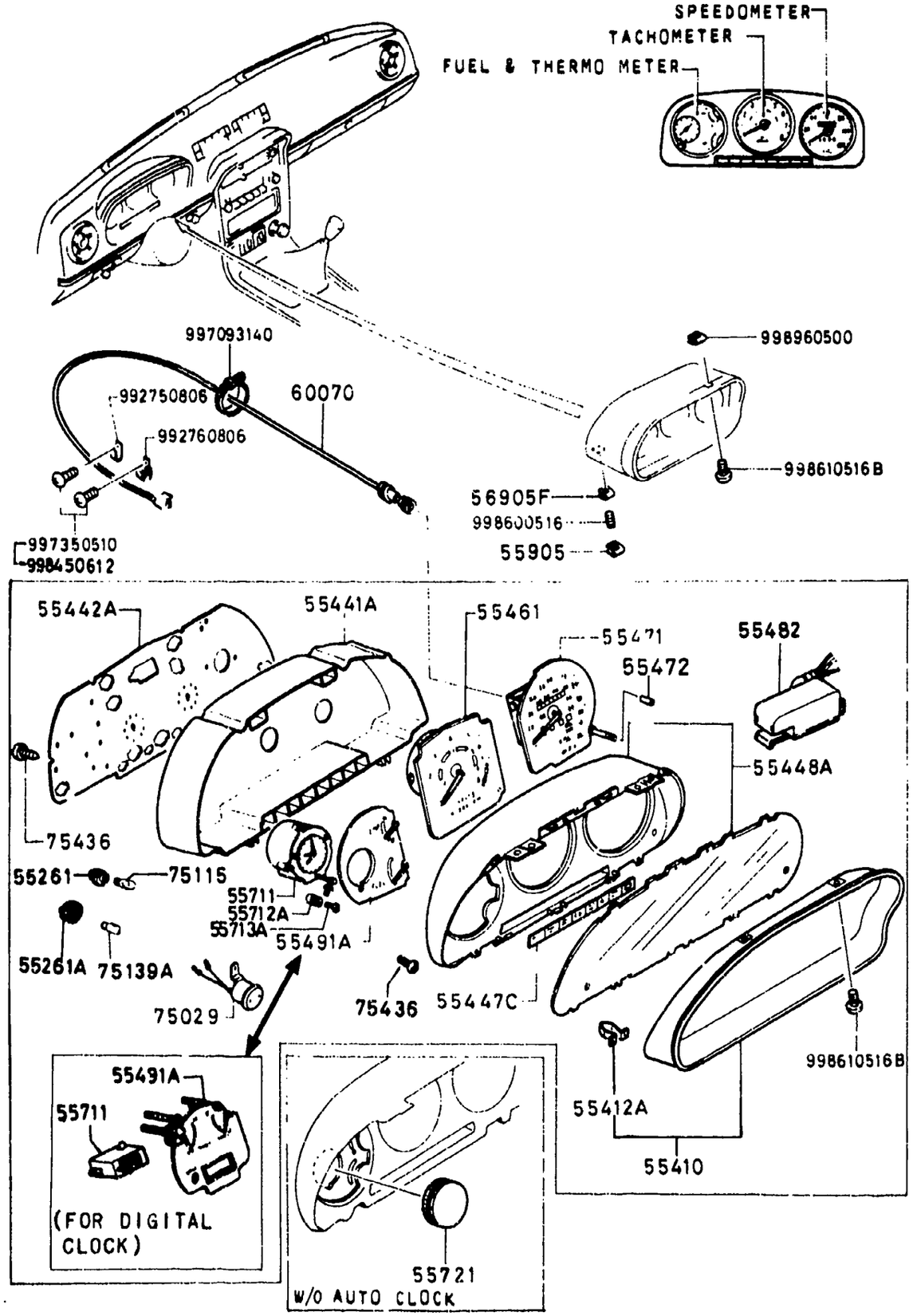

5540A-4* METERS

D-CODE (Key No.)	PART NAME	PART No.	Qty.	MODEL/DESCRIPTION	VIN (Chassis No.)
75029 CONT'D	VIBRADOR	1568-75-029			-568537
75115	BULB AMPOULE FOCO	9970-16-030	8	(A12V 3W)	
75139A	BULB AMPOULE FOCO	3625-75-139	6	(1.4W)	
75436	SCREW VIS TORNILLO	0710-75-436	10 11	79 MODEL A/T 80 MODEL 79 MODEL M/T	

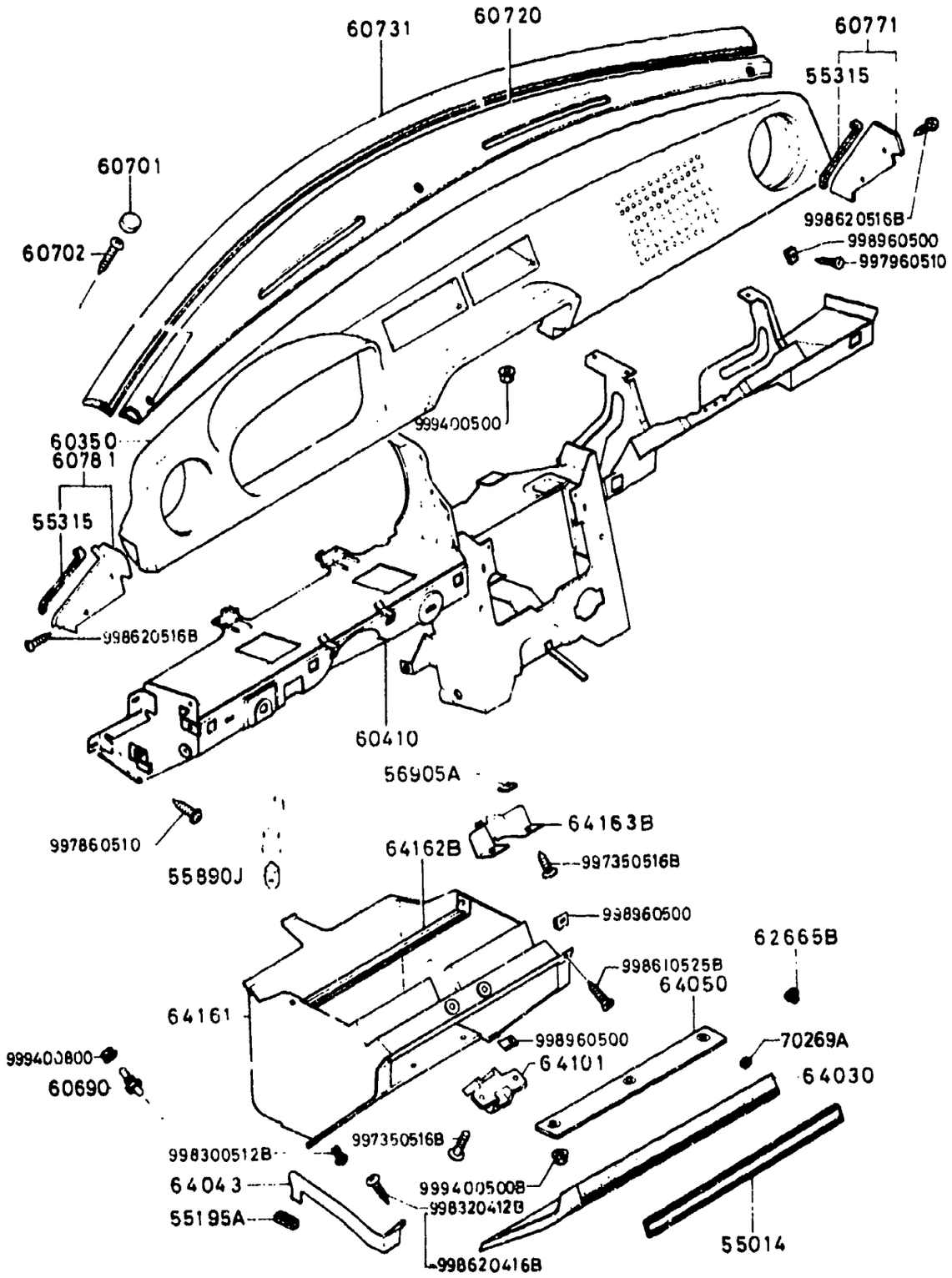

5560A-1 DASHBOARD & RELATED (1979 MODEL)

D-CODE (Key No.)	PART NAME	PART No.	Qty.	MODEL/DESCRIPTION	VIN (Chassis No.)
55014	MOLD,GLOVE LID MOULURE COUVERCLE	8871-55-014	1		SA22C .. 500001 -535838
		8871-55-014B	1		SA22C .. 535839-
	BLACK	02			
	BROWN	28			
55195A	RUBBER,STOPPER	0275-55-195A	1		
55315	PAD	8871-55-315	2		
55890J	BULB AMPOULE FOCO	9970-16-030	1	(A12V 3W,FOR GLOVE BOX)	
56905A	NUT,SPRING ECROU	0820-56-905	2		
60350	PAD,CRUSH TABLEAU DE BORD TACO DE GOMA PANEL SUPERI	8871-60-350	1		SA22C .. 500001 -540410
	BLACK	00			
	WINE	10			
	BROWN	23			
		8871-60-350B	1		SA22C .. 540411-
	BLACK	00			
	WINE	10			
	BROWN	23			
60410	FRAME,INST.PANEL ARMATURE, TABLEAU DE BORD MARCO DEL TABLERO INSTRUM	8871-60-400	1		SA22C .. 500001 -592955
60690	SWITCH COMMUTATEUR INTERRUPTJR	0305-60-690	1	(FOR GLOVE BOX)	
60701	CAP,GARNISH COUVERCLE	8871-60-701	3		
	BLACK	00			

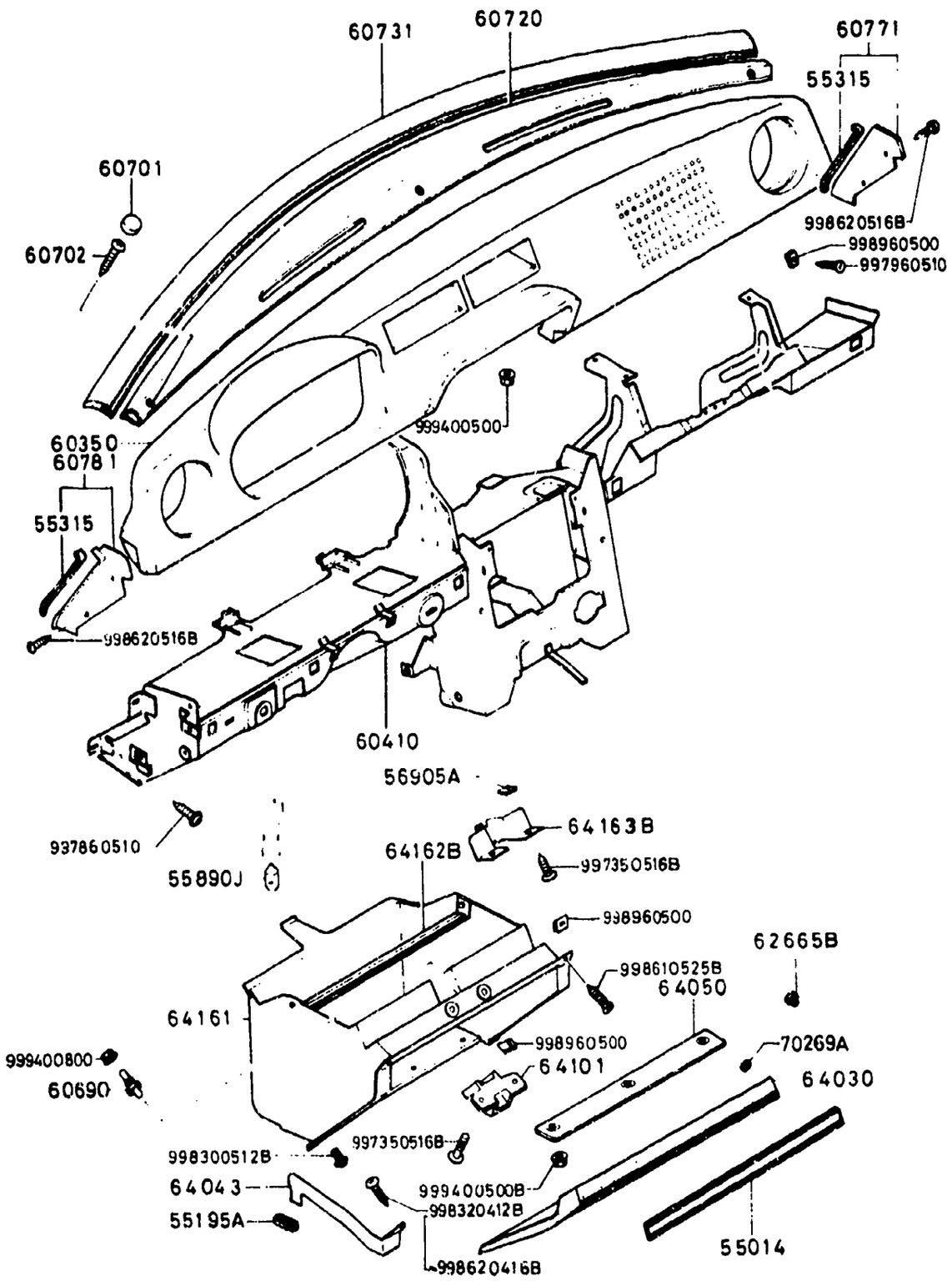

D-CODE (Key No.)	PART NAME	PART No.	Qty.	MODEL/DESCRIPTION	VIN (Chassis No.)
60701 CONT'D		8871-60-701			
	WINE	10			
	BROWN	23			
60702	SCREW,GARNISH VIS GARNITURE	8871-60-702	3		
60720	GARNISH,UPPER GARNITURE, SUP. ADORNO, SUPERIOR	8871-60-720	1		
	BLACK	01			
	WINE	11			
	BROWN	23			
60731	RUBBER,SEAMING CAOUTCHOUC DE PORTE GOMA,COSTURAS	8871-60-712	1		
60771	GARNISH(R) GARNITURE (D) ADORNO DERECHO	8871-55-311	1		
	BLACK (SA22C 500001-540410)	00			
	BLACK (SA22C 540411-)	02			
	WINE (SA22C 500001-540410)	10			
	WINE (SA22C 540411-)	12			
	BROWN (SA22C 500001-540410)	23			
	BEIGE (SA22C 500001-540410)	24			
	RED (SA22C 500001-540410)	25			
	BROWN (SA22C 540411-)	28			
	RED (SA22C 540411-)	29			

5560A DASHBOARD & RELATED (1979 MODEL)

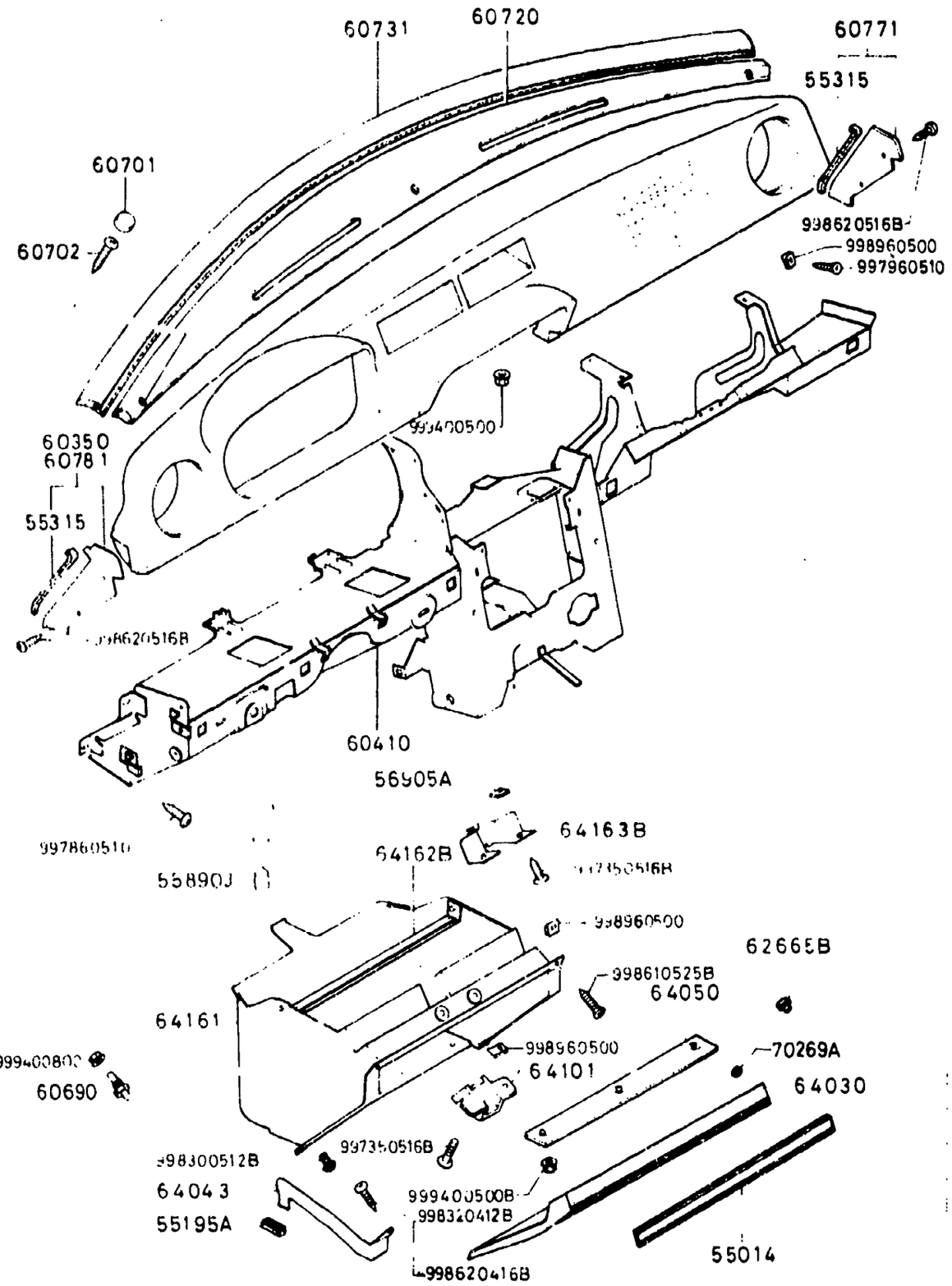

5560A-3 DASHBOARD & RELATED (1979 MODEL)

D-CODE (Key No.)	PART NAME	PART No.	Qty.	MODEL DESCRIPTION	VIN (Chassis No.)
60781	GARNISH(L) GARNITURE (G) ADORNO IZQUIERDO	8871-55-312	1		
	BLACK (SA22C 500001-540410)	00			
	BLACK (SA22C 540411-)	02			
	WINE (SA22C 500001-540410)	10			
	WINE (SA22C 540411-)	12			
	BROWN (SA22C 500001-540410)	23			
	BEIGE (SA22C 500001-540410)	24			
	RED (SA22C 500001-540410)	25			
	BROWN (SA22C 540411-)	28			
	RED (SA22C 540411-)	29			
62665B	RUBBER,CUSHION SILENT BLOC GOMA,TOPE	0633-62-879	2		
64030	LID,GLOVE POCKET COUVERCLE, BOITE A GANTS TAPA DE GUANTERA	8871-64-030	1		SA22C 500001-554324
	BLACK (SA22C 500001-540410)	00			
	BLACK (SA22C 540411-554324)	02			
	WINE (SA22C 500001-540410)	10			
	WINE (SA22C 540411-554324)	12			
	BROWN (SA22C 500001-540410)	23			
	BEIGE (SA22C 500001-540410)	24			
	RED (SA22C 500001-540410)	25			

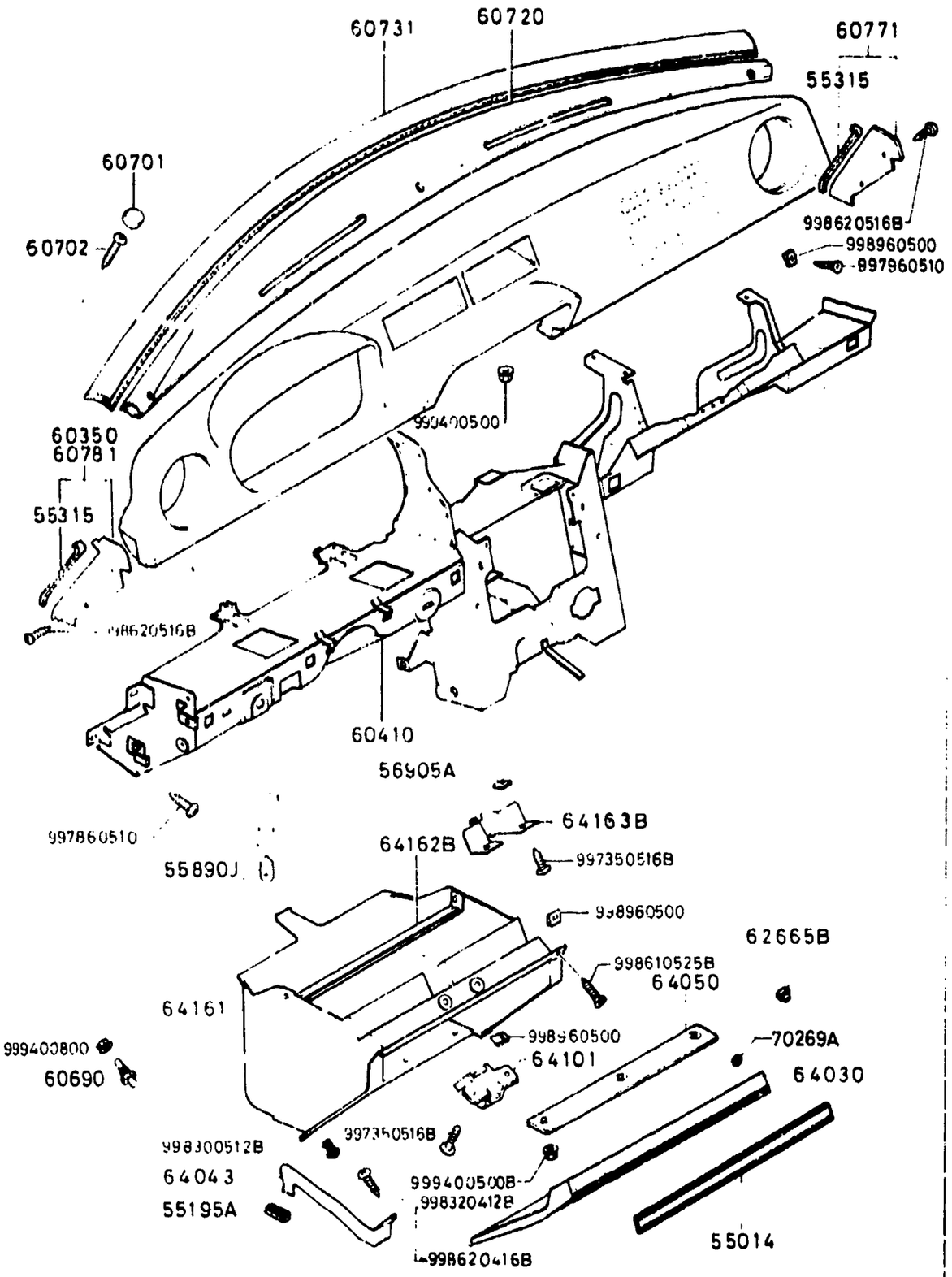

D-CODE (Key No.)	PART NAME	PART No.	Qty.	MODEL DESCRIPTION	VIN (Chassis No.)
64030 CONT'D		8871-64-030			
	BROWN (SA22C 540411-554324)	28			
	RED (SA22C 540411-554324)	29			
		8871-64-030A	1		SA22C .. 554325-
	BLACK	02			
	WINE	12			
	BROWN	28			
	RED	29			
64043	STOPPER ARRETOIR TAPON	8871-64-043	1		
64050	SET PLATE,GLOVE LID JEU DE PLAQUES COUVERCLE	8871-64-050A	1		
64101	STRIKER GACHE CERROJO	8871-64-101	1		
64161	TRAY,GLOVE BOITE A GANTS BANDEJA,GUANTERA	8871-64-161A	1		SA22C .. 500001 -554324
		8871-64-161B	1		SA22C .. 554325-
64162B	STAY,GLOVE TRAY APPUI BOITE A GANTS	8871-64-162	1		SA22C .. 500001 -554324
		8871-64-162A	1		SA22C .. 554325-
64163B	PANEL,GLOVE TRAY PANNEAU BOITE A GANTS	8871-64-163	1		SA22C .. 500001 -554324
70269A	CUSHION HOUSSE ALMOHADA	8871-64-015	2		

5560AA DASHBOARD & RELATED (1980 MODEL)

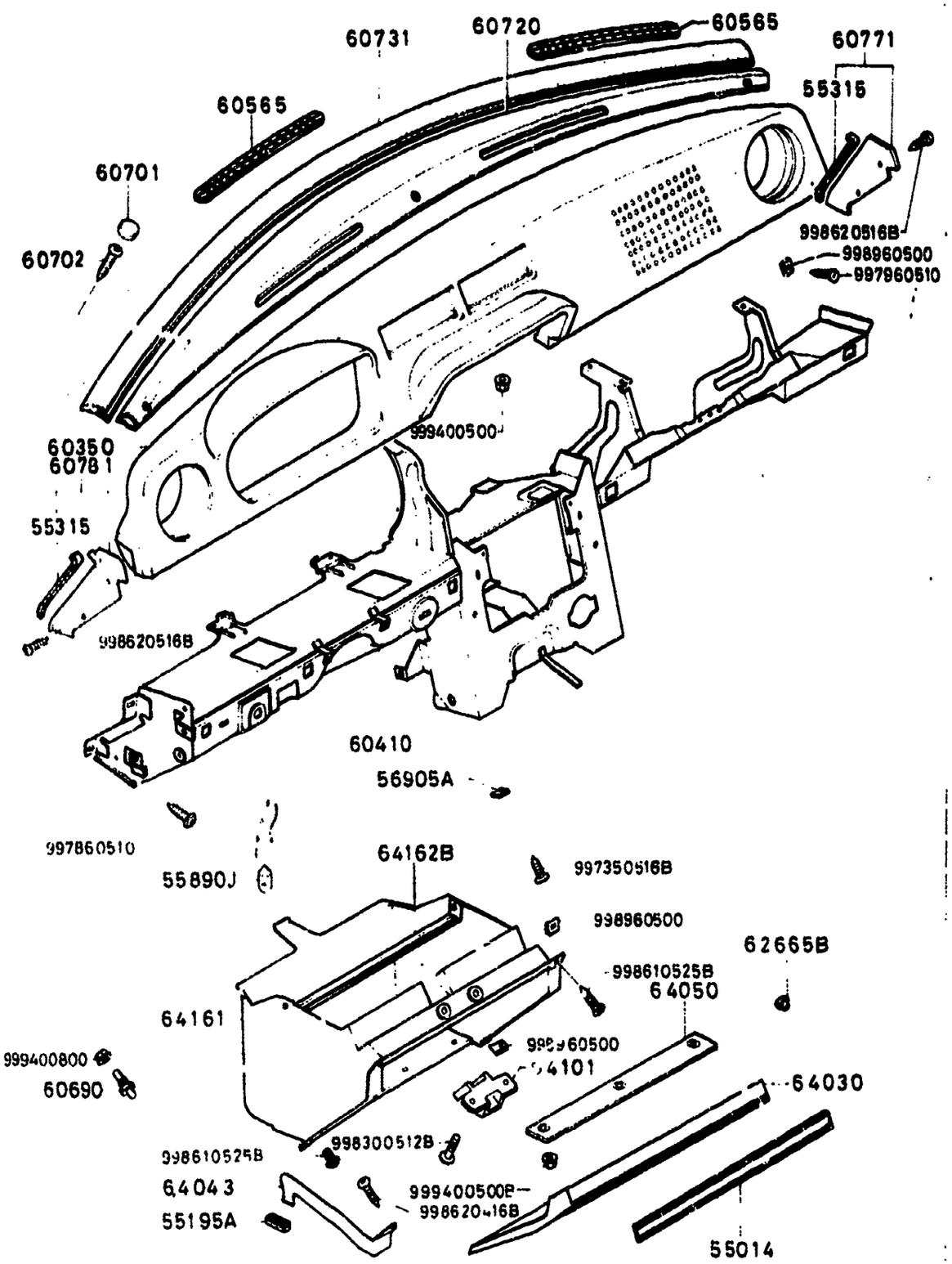

5560AA-1 DASHBOARD & RELATED (1980 MODEL)

D·CODE (Key No.)	PART NAME	PART No.	Qty.	MODEL / DESCRIPTION	VIN (Chassis No.)
55014	MOULD,GLOVE LID MOULURE COUVERCLE	8871-55-014B	1		
	BLACK	02			
	BROWN	28			
55195A	RUBBER,STOPPER BUTTOIR,C.T.C. GOMA,PARANTE	0275-55-195A	1		
55315	PAD FIBRANNE	8871-55-315	2		
55890J	BULB AMPOULE FOCO	9970-16-030	1	(A12V 3W,FOR GLOVE BOX)	
56905A	NUT,SPRING ECROU	0820-56-905	2		
60350	PAD,CRUSH TABLEAU DE BORD TACO DE GOMA PANEL SUPERI	8341-60-350	1		
	BLACK	00			
	WINE	10			
	BROWN	23			
	BROWN (SA22C 606775-)	28		(SUNROOF ONLY)	
60410	FRAME,INST.PANEL ARMATURE, TABLEAU DE BORD MARCO DEL TABLERO INSTRUM	8871-60-400	1		SA22C .. 566501 -592955
		8871-60-400A	1		SA22C .. 592956 -629532
	<A>	*8871-60-400B	1		SA22C .. 629533-
60565	GRILLE GRILLE PARRILLA	8341-60-713	2		
	BLACK	01			

5560AA DASHBOARD & RELATED (1980 MODEL)

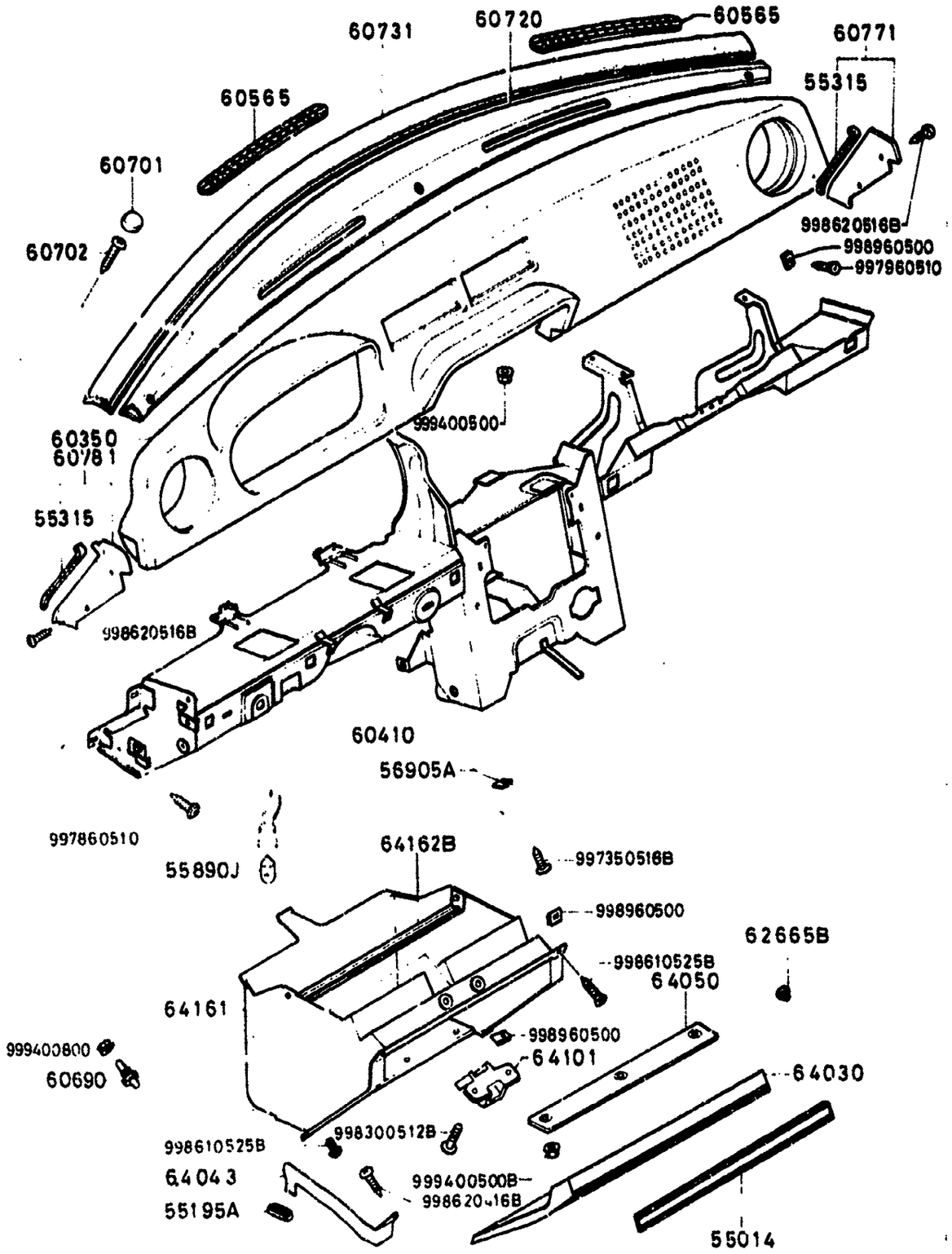

5560AA-2 DASHBOARD & RELATED (1980 MODEL)

D-CODE (Key No.)	PART NAME	PART No.	Qty.	MODEL DESCRIPTION	VIN (Chassis No.)
60565 CONT'D		8341-60-713			
	WINE	11			
	BROWN	23			
	BROWN (SA22C 606775-)	28		(SUNROOF ONLY)	
60690	SWITCH COMMUTATEUR INTERRUPTOR	0305-60-690	1	(USE W/GLOVE BOX LAMP)	
60701	CAP,GARNISH COUVERCLE	8871-60-701	3		
	BLACK	00			
	WINE	10			
	BROWN	23			
	BROWN (SA22C 606775-)	28		(SUNROOF ONLY)	
60702	SCREW,GARNISH VIS GARNITURE	8871-60-702	3		
60720	GARNISH,UPPER GARNITURE, SUP. ADORNO, SUPERIOR	8341-60-710	1		SA22C .. 568501 -583206
	BLACK	01			
	WINE	11			
	BROWN	23			
		8341-60-710A	1		SA22C .. 588207-
	BLACK	01			
	WINE	11			
	BROWN	23			

5560AA DASHBOARD & RELATED (1980 MODEL)

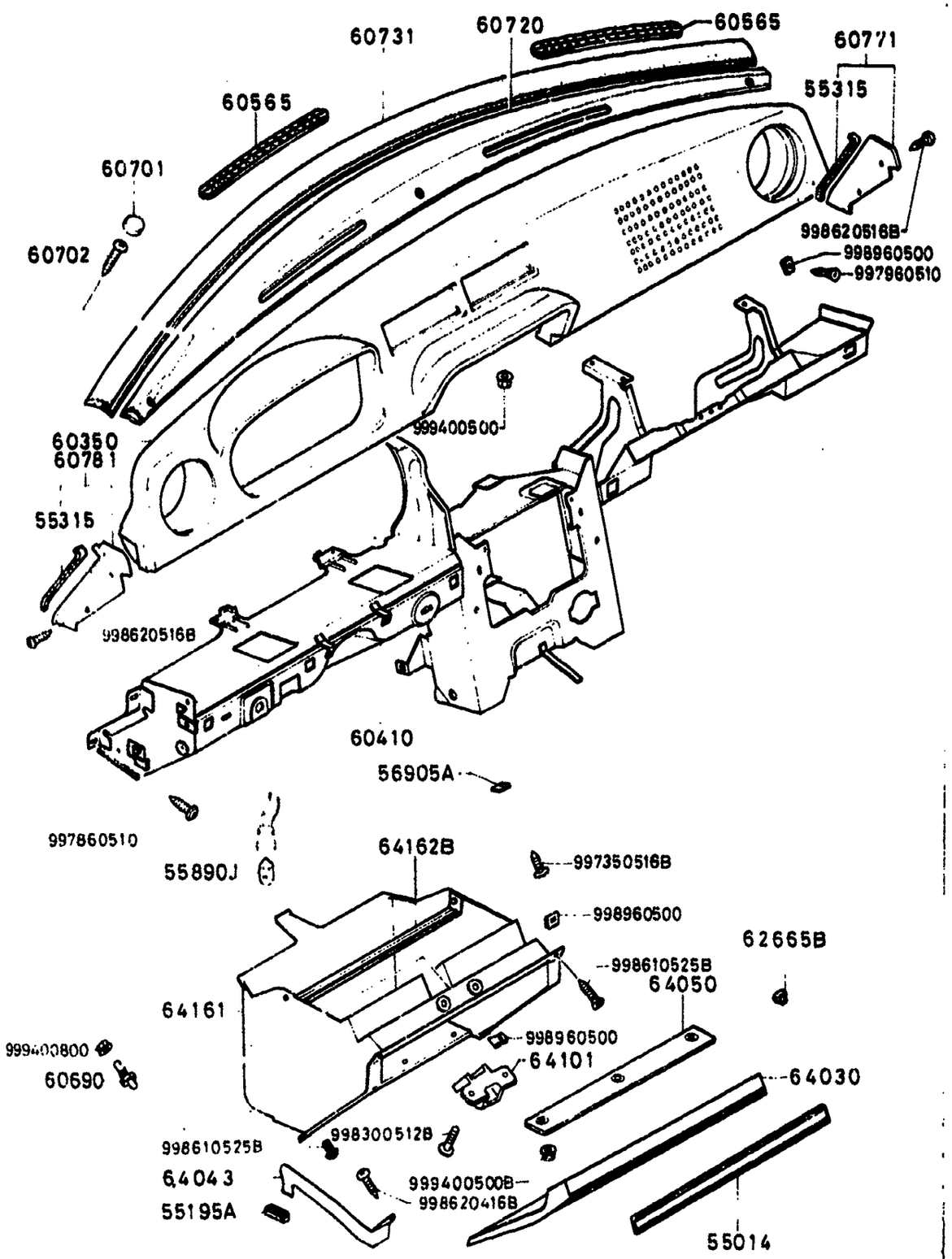

5560AA-3 DASHBOARD & RELATED (1980 MODEL)

D-CODE (Key No.)	PART NAME	PART No.	Qty.	MODEL DESCRIPTION	VIN (Chassis No.)
60720 CONT'D		8341-60-710A			
	BROWN (SA22C 606775-)	28		(SUNROOF ONLY)	
60731	RUBBER,SEAMING CAOUTCHOUC DE PORTE GOMA,COSTURAS	8562-60-712	1		SA22C .. 588207-
		8871-60-712	1		SA22C .. 568501 -588206
60771	GARNISH(R) GARNITURE (D) ADORNO DERECHO	8871-55-311	1		
	BLACK	02			
	WINE	12			
	BROWN	28			
	RED	29			
	BROWN (SA22C 606775-)	70		(SUNROOF ONLY)	
60781	GARNISH(L) GARNITURE (G) ADORNO IZQUIERDO	8871-55-312	1		
	BLACK	02			
	WINE	12			
	BROWN	26			
	RED	29			
	BROWN (SA22C 606775-)	70		(SUNROOF ONLY)	
62665B	RUBBER,CUSHION SILENT BLOC GOMA,TOPE	0633-62-879	2		
64030	LID,GLOVE POCKET COUVERCLE, BOITE A GANTS TAPA DE GUANTERA	8871-64-030A	1		

5560AA DASHBOARD & RELATED (1980 MODEL)

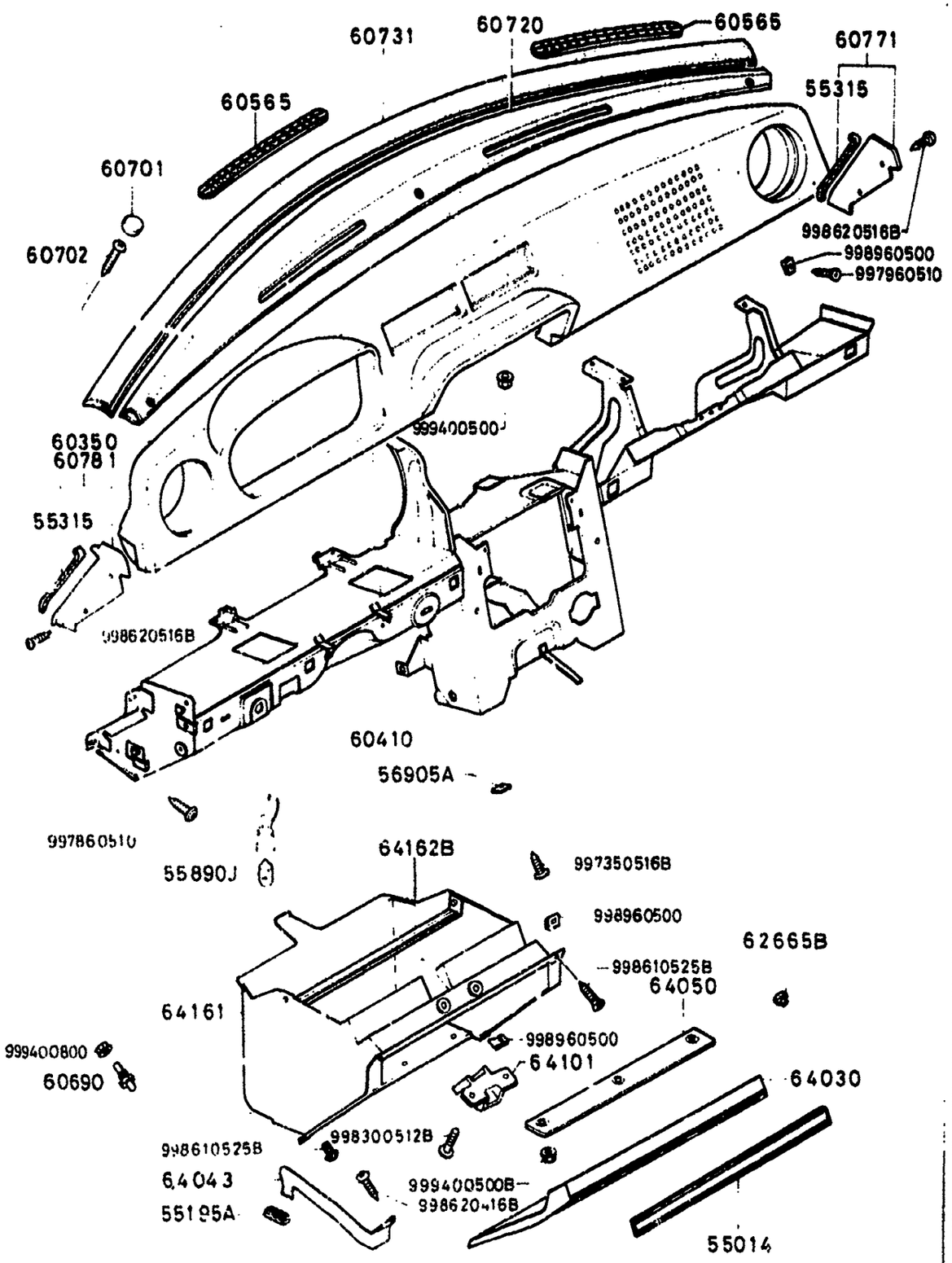

5560AA-4* DASHBOARD & RELATED (1980 MODEL)

D-CODE (Key No.)	PART NAME	PART No.	Qty.	MODEL DESCRIPTION	VIN (Chassis No.)
64030 CONT'D		8871-64-030A			
	BLACK	02			
	WINE	12			
	BROWN	28			
	RED	29			
	BROWN (SA22C 606775-)	70		(SUNROOF ONLY)	
64043	STOPPER ARRETOIR TAPON	8871-64-043	1		
64050	SET PLATE, GLOVE LID JEU DE PLAQUES COUVERCLE	8871-64-050A	1		
64101	STRIKER GACHE CERROJO	8871-64-101	1		
64161	TRAY, GLOVE BOITE A GANTS BANDEJA, GUANTERA	8871-64-161B	1		
64162B	STAY, GLOVE TRAY APPUI BOITE A GANTS	8871-64-162A	1		

5570A CONSOLE (1979 MODEL)

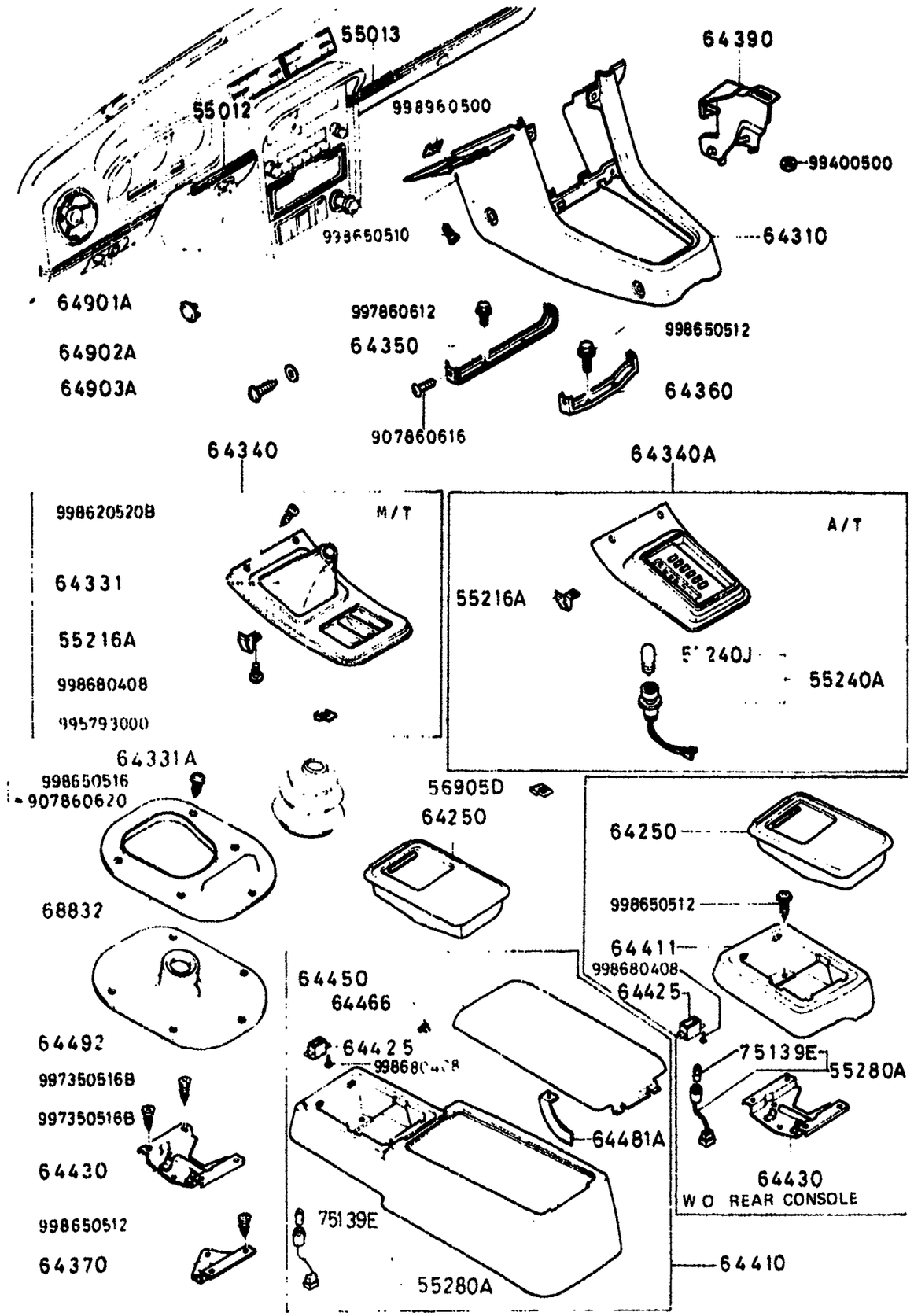

5570A-1 CONSOLE (1979 MODEL)

D-CODE (Key No.)	PART NAME	PART No.	Qty.	MODEL DESCRIPTION	VIN (Chassis No.)
55012	MOULD,FRONT CONSOLE MOULURE CONSOLE AV.	8871-55-012	1		SA22C .. 500001 -535838
		8871-55-012B	1	(L=173MM)	SA22C .. 535839-
	BLACK	02			
	BROWN	28			
55013	MOULD,FRONT CONSOLE MOULURE CONSOLE AV.	8871-55-013	1		SA22C .. 500001 -535838
		8871-55-013B	1	(L=46.5MM)	SA22C .. 535839-
	BLACK	02			
	BROWN	28			
55216A	SPRING,BOOT PANEL RESSORT	8871-55-216	2		
55240A	BULB & SOCKET AMPOULE ET DOUILLE FOCO Y PORTA-FOCO	0305-66-580A	1	A/T	
55240J	BULB AMPOULE FOCO	9970-16-030	1	(A12V 3W) A/T	
55280A	BULB & SOCKET	8871-55-280	1		SA22C .. 540411-
56905D	NUT,SPRING ECROU	0820-56-905	2		
64250	TRAY,ASH CENDRIER CENICERO	8871-64-610	1		SA22C .. 500001 -540410
		8871-64-610B	1		SA22C .. 540411-
	BLACK	00			
64310	CONSOLE,FRONT CONSOLE, AV	8871-64-321	1		

5570A CONSOLE (1979 MODEL)

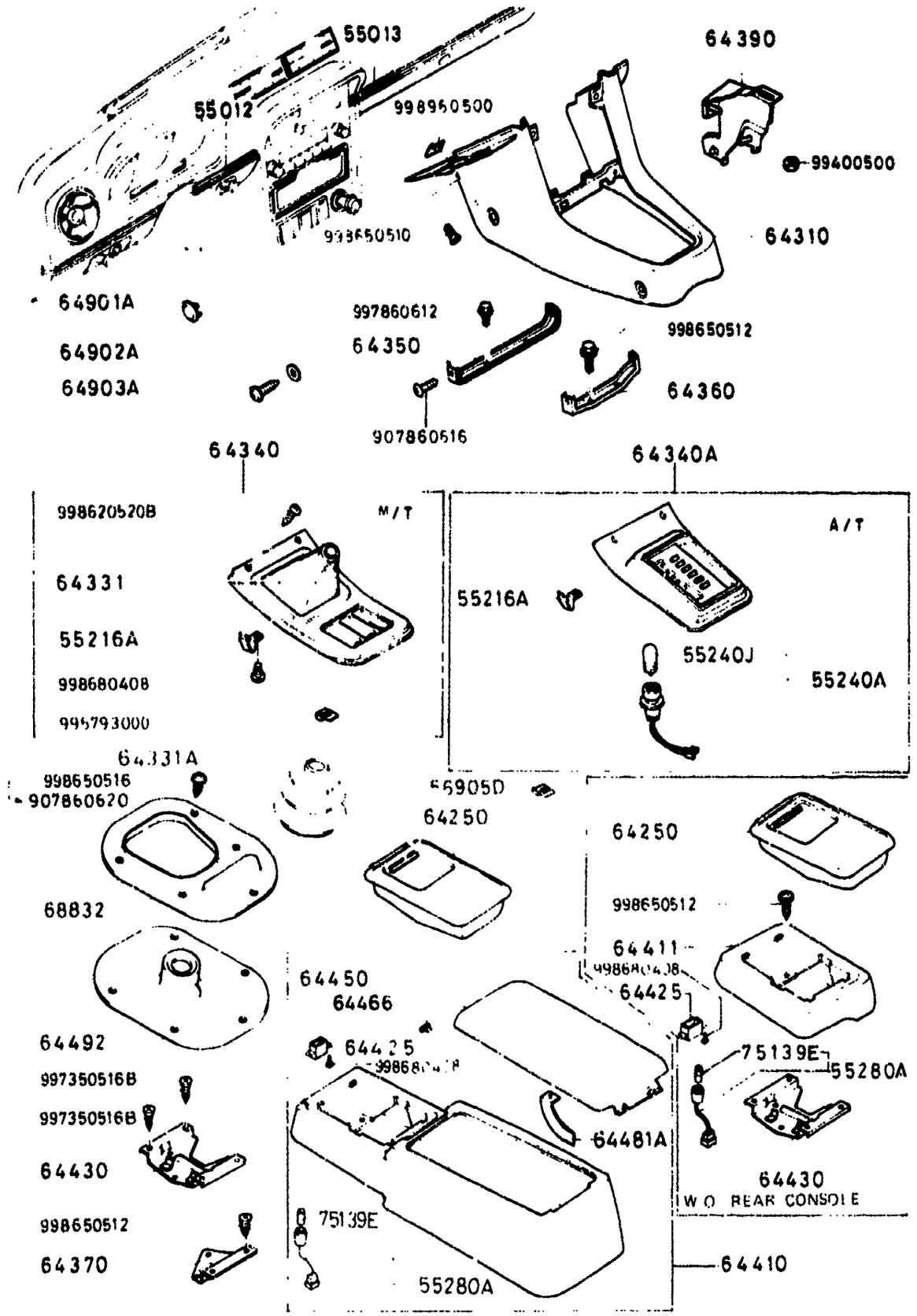

5570A-2 CONSOLE (1979 MODEL)

D-CODE (Key No.)	PART NAME	PART No.	Qty	MODEL DESCRIPTION	VIN (Chassis No.)
64310 CONT'D	FRENTE DE LA CONSOLA	8871-64-321			
	BLACK (SA22C 500001-540410)	00			
	BLACK (SA22C 540411-)	02			
	WINE (SA22C 500001-540410)	10			
	WINE (SA22C 540411-)	12			
	BROWN (SA22C 500001-540410)	23			
	BEIGE (SA22C 500001-540410)	24			
	RED (SA22C 500001-540410)	25			
	BROWN (SA22C 540411-)	28			
	RED (SA22C 540411-)	29			
64331	BOOT,CHANGE COIFFE, LEVIER DE VITESSE FUNDA,CAMBIO	8868-64-351	1	(RUBBER) CANADA M/T	
		8871-64-351	1	(VINYL) FED. M/T CALIF. M/T	SA22C .. 500001 -510188
		8871-64-351A	1	(VINYL) FED. M/T CALIF. M/T	SA22C .. 510189-
64331A	BOOT COIFFE FUNDA	0247-56-275	1	M/T	
64340	PLATE,UPPER PLAQUETTE, SUP. PLACA SUPERIOR	8868-64-350	1	CANADA M/T	
		8871-64-350	1	FED. M/T CALIF. M/T	SA22C .. 500001 -510188
		8871-64-350A	1	FED. M/T CALIF. M/T	SA22C .. 510189-
	BLACK	00			

5570A CONSOLE (1979 MODEL)

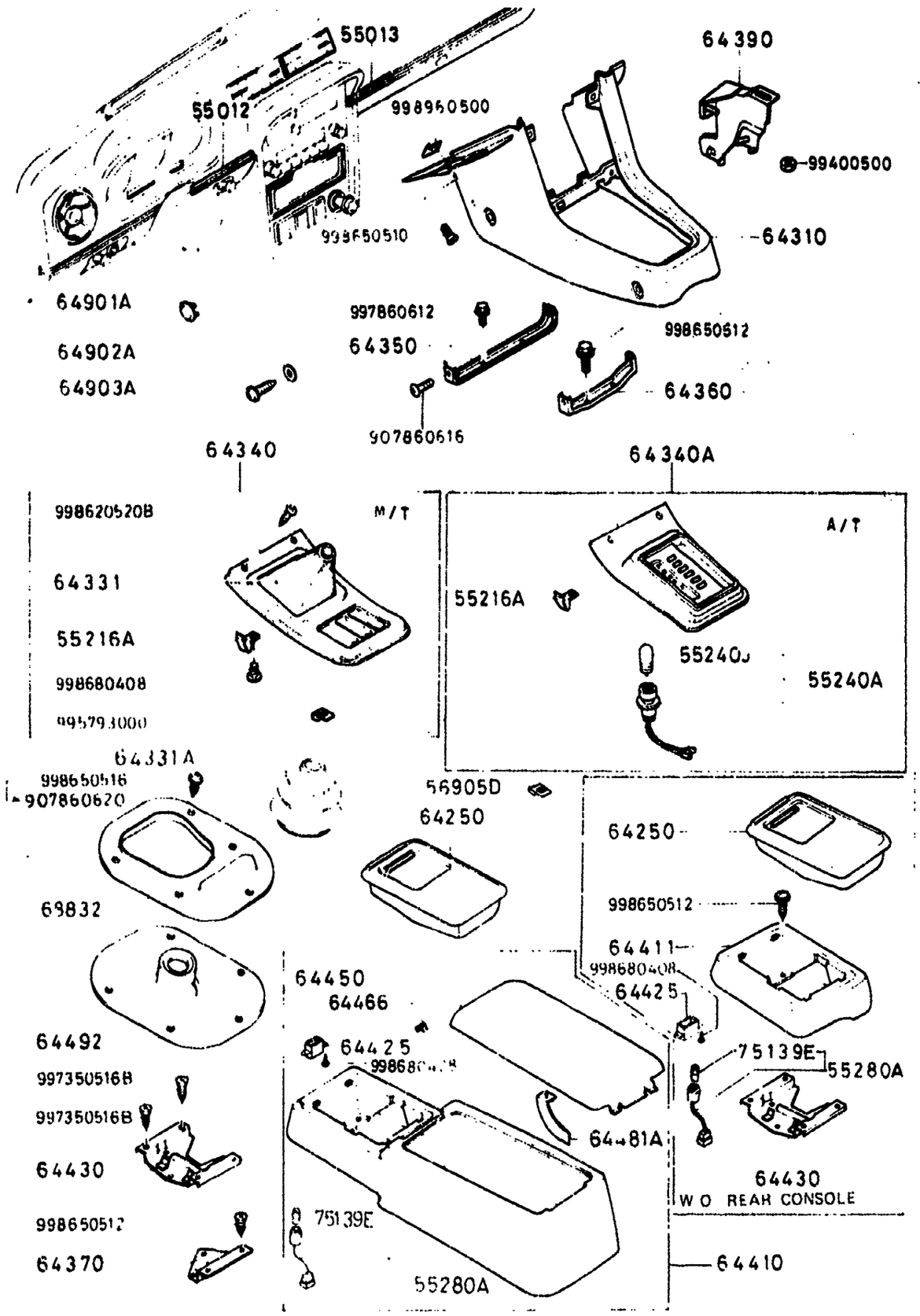

5570A-3 CONSOLE (1979 MODEL)

D-CODE (Key No.)	PART NAME	PART No.	Qty.	MODEL DESCRIPTION	VIN (Chassis No.)
64340A CONT'D		8973-64-350P		(ORD.BY 897364350P01) (LIMITED)	
			1	M/T	
64340A	INDICATOR INDICATEUR INDICADOR	8872-64-350A	1	A/T	SA22C .. 500001 -540410
		8872-64-350B	1	A/T	SA22C .. 540411-
	BLACK	00			
		8974-64-350P		(ORD.BY 897464350P01) (LIMITED)	
			1	A/T	
64350	BRACKET,FRONT ATTACHE, AV SOPORTE,DEL.	8871-64-370	1		
64360	BRACKET,CENTER ATTACHE, AV SOPORTE,DEL.	8871-64-381	1		
64370	BRACKET,REAR ATTACHE, AR SOPORTE,TRAS.	8871-64-415	1		
64390	BRACKET,RELAY SUPPORT DE RELAIS	8871-64-390	1		
64410	CONSOLE,REAR CONSOLE, AR PARTE TRASERA DE LA CONSO	8871-64-410	1		SA22C .. 500001 -540410
	BLACK	00			
	WINE	10			
	BROWN	23			
	BEIGE	24			
	RED	25			
	<A>	8871-64-410A	1		SA22C .. 540411-
	BLACK	02			
	WINE	12			
	BROWN	28			

SECTION NUMBER INDEX (BODY)

STARTING LOCATION	SECTION No	SECTION NAME
3–C2	0900A	KEY SETS
3–C3	5000A	FRONT BUMPER & GRILLE
3–E3	5010A	REAR BUMPER
3–G3	5030A	WINDOW MOULDINGS
3–I3	5040A	BODY MOULDINGS
3–C4	5100A	LAMPS (FRONT & SIDE)
3–G4	5110A	LAMPS (REAR)
3–I4	5130A	OVERHEAD CONSOLE (1979 STANDARD ROOF MODEL)
3–J4	5170A	COWL & EXTRACTOR GRILLES & ORNAMENTS
3–C5	5230A	BONNET
3–E5	5310A	BODY PANELS (FRONT)
3–K5	5340A	BODY PANELS (SIDE & ROOF)
3–I6	5360A	BODY PANELS (FLOOR)
3–C7	5500A	DASHBOARD EQUIPMENT
3–L7	5540A	METERS
3–D8	5560A	DASHBOARD & RELATED
3–L8	5570A	CONSOLE
3–K9	5580A	VENTILATOR
3–C10	5700A	SEAT (EXCEPT LEATHER TRIM)
3–N10	5710A	SEAT TRIM (LEATHER – ANNIVERSARY EDITION)
3–G11	5760A	SEAT BELTS

STARTING LOCATION	SECTION No.	SECTION NAME
3–C12	5800A	FRONT DOOR
3–C13	5830A	FRONT DOOR MECHANISMS
3–C14	6100A	HEATER
3–E14	6110A	HEATER UNIT
3–H14	6115A	HEATER CONTROLS
3–J14	6120A	HEATER BLOWER
3–C15	6230A	BACK DOOR MECHANISMS
3–F15	6300A	WINDOW GLASSES
3–I15	6330A	SUNROOF
3–C16	6600A	ELECTRIC EQUIPMENT
3–G16	6680A	RADIO & STEREO SYSTEMS
4–C2	6700A	WIRE HARNESS & CLAMPS
4–G2	6720A	WINDSHIELD WASHER
4–H2	6730A	WINDSHIELD WIPER
4–J2	6740A	WIPER MOTOR (COMPONENTS ONLY)
4–C3	6800A	CEILING TRIM
4–J3	6840A	TRIM & SCUFF PLATE
4–F4	6860A	FLOOR MAT & PADS
4–L4	6870A	SERVICE TOOLS
4–M4	6900A	VISOR, ASSIST HANDLE & MIRRORS
4–G5	6930A	CAUTION PLATES

THE FRAMES IN THIS COLUMN INDICATE :

3–L8	5570A	CONSOLE (1979 MODEL)
3–F9	5570AA	CONSOLE (1980 MODEL)
3–K9	5580A	VENTILATOR

© 1983 Toyo Kogyo Co., Ltd.
MAY 1983

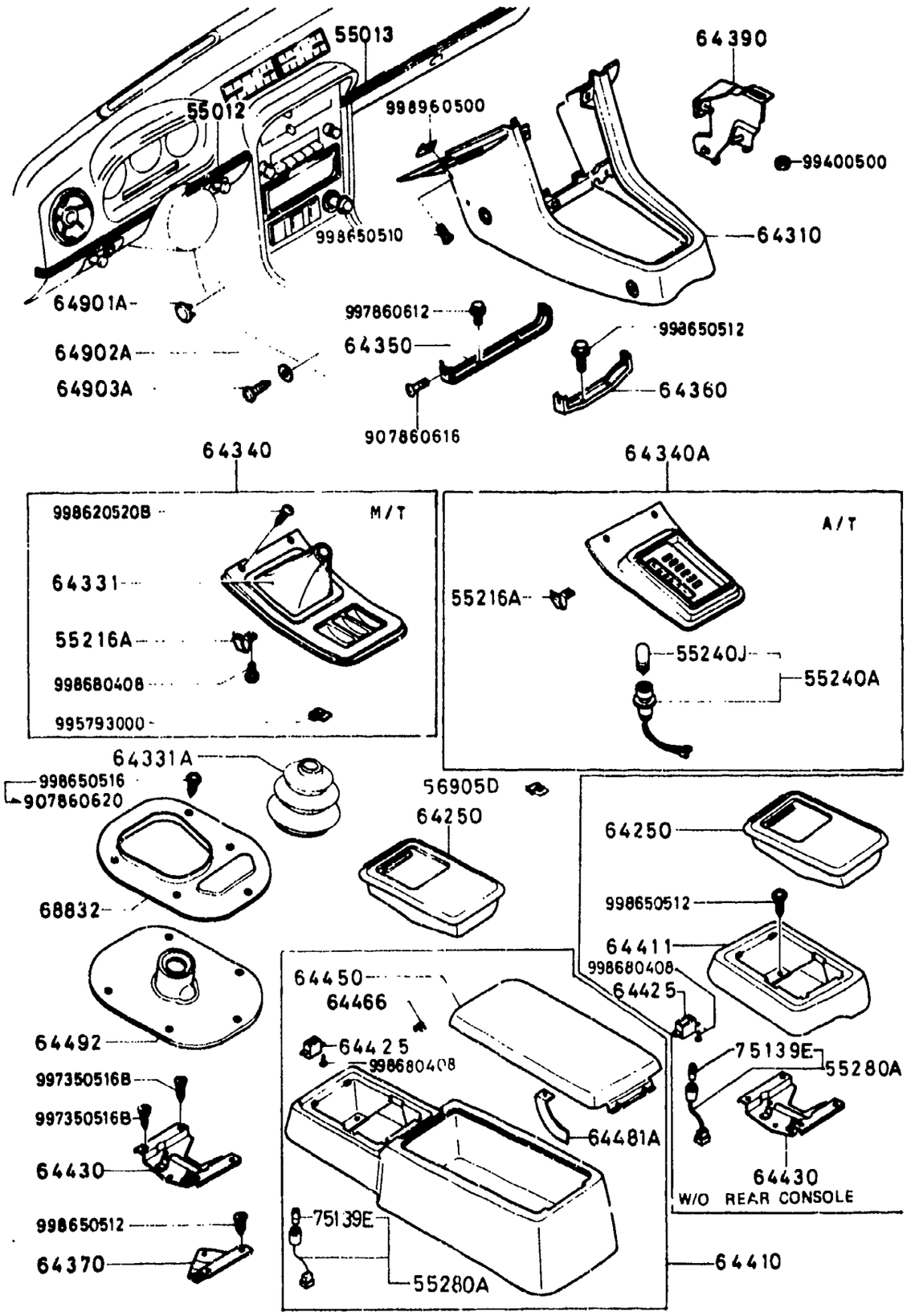

5570A-4 CONSOLE (1979 MODEL)

D-CODE (Key No.)	PART NAME	PART No.	Qty.	MODEL/DESCRIPTION	VIN (Chassis No.)
64410 CONT'D		8871-64-410B			
	RED	29			
64411	CASE,ASH TRAY BOITE DE CENDRIER	8872-64-411	1		SA22C .. 500001 -540410
	BLACK	00			
	WINE	10			
	BROWN	23			
	BEIGE	24			
	RED	25			
		8872-64-411B	1		SA22C .. 540411-
	BLACK	02			
	WINE	12			
	BROWN	28			
	RED	29			
64425	CASE,LAMP	8871-64-425	1		SA22C .. 540411-
64430	BRACKET,CTR.-REAR SUPPORT ARR.CENTRE	8871-64-430	1		
64450	LID,CONSOLE COUVERCLE CONSOLE	8871-64-420	1		
	BLACK (SA22C 500001-540410)	00			
	BLACK (SA22C 540411-)	02			
	WINE (SA22C 500001-540410)	10			

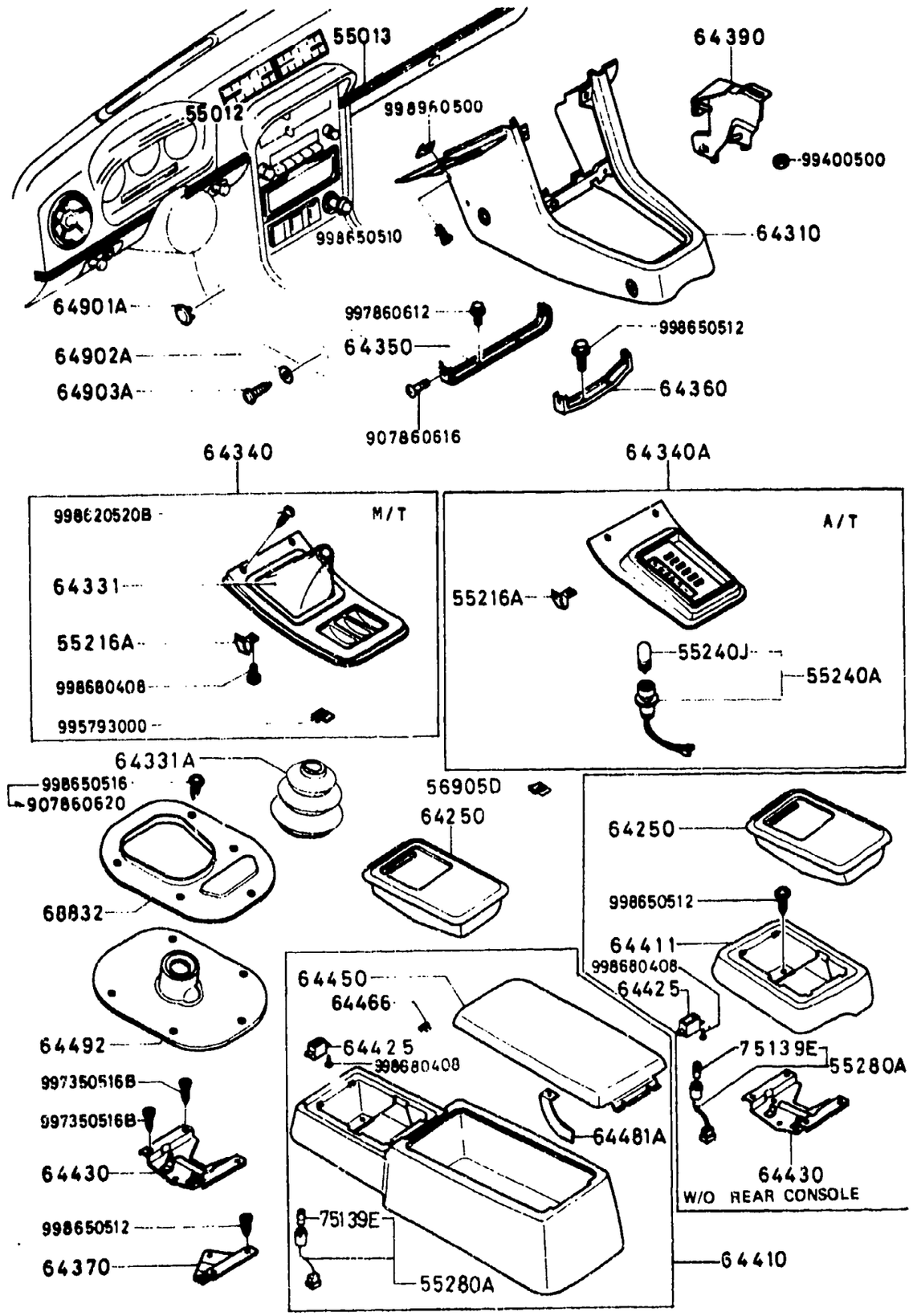

D-CODE (Key No.)	PART NAME	PART No.	Qty.	MODEL/DESCRIPTION	VIN (Chassis No.)
64450 CONT'D		8871-64-420			
	WINE (SA22C 540411-)	12			
	BROWN (SA22C 500001-540410)	23			
	BEIGE (SA22C 500001-540410)	24			
	RED (SA22C 500001-540410)	25			
	BROWN (SA22C 540411-)	28			
	RED (SA22C 540411-)	29			
64466	SPRING,HINGE RESSORT CHARNIERE	8871-64-413	1		
64481A	STOPPER,CONSOLE LID	8871-64-412	1		
64492	INSULATOR ISOLATEUR AISLADOR SOPORTE	8871-64-492	1	M/T	SA22C .. 500001 -547088
		8871-64-492A	1	M/T	SA22C .. 547089-
64901A	CAP,FRONT CONSOLE COUVERCLE CONSOLE AV.	8871-64-901	2		
	BLACK	00			
	WINE	10			
	BROWN	23			
	BEIGE (SA22C 500001-540410)	24			
	RED	25			
64902A	WASHER,FRONT CONSOLE RONDELLE CONSOLE AV.	8871-64-902	2		

5570A CONSOLE (1979 MODEL)

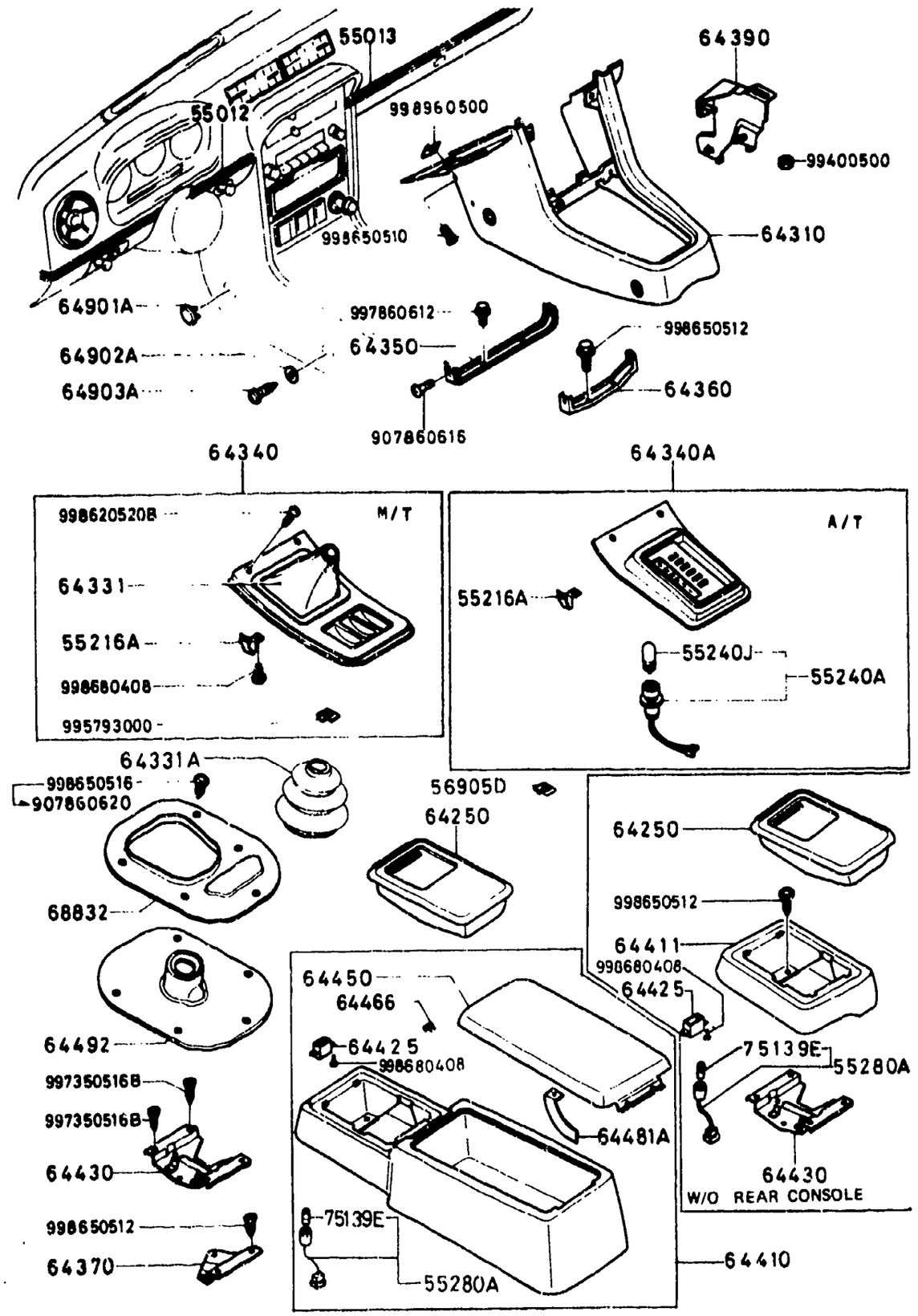

5570A-6* CONSOLE (1979 MODEL)

D-CODE (Key No.)	PART NAME	PART No.	Qty.	MODEL/DESCRIPTION	VIN (Chassis No.)
64902A CONT'D		8871-64-902			
	BLACK	00			
	WINE	10			
	BROWN	23			
	BEIGE	24			
	(SA22C 500001-540410)				
	RED	26			
64903A	SCREW,FRONT CONSOLE VIS CONSOLE AV.	8871-64-903	2		
	BLACK	00			
	WINE	10			
	BROWN	23			
	BEIGE	24			
	(SA22C 500001-540410)				
	RED	26			
68832	SEAT,BOOT BASE ASIENTO,GUARDAPOLVO	8871-64-491	1	M/T	SA22C .. 500001 -508586
	<A>	8871-64-491A	1	M/T	SA22C .. 508587 -547088
		8871-64-491B	1	M/T	SA22C .. 547089-
75139E	BULB	3625-75-139	1	(1.4W)	

5570AA CONSOLE (1980 MODEL)

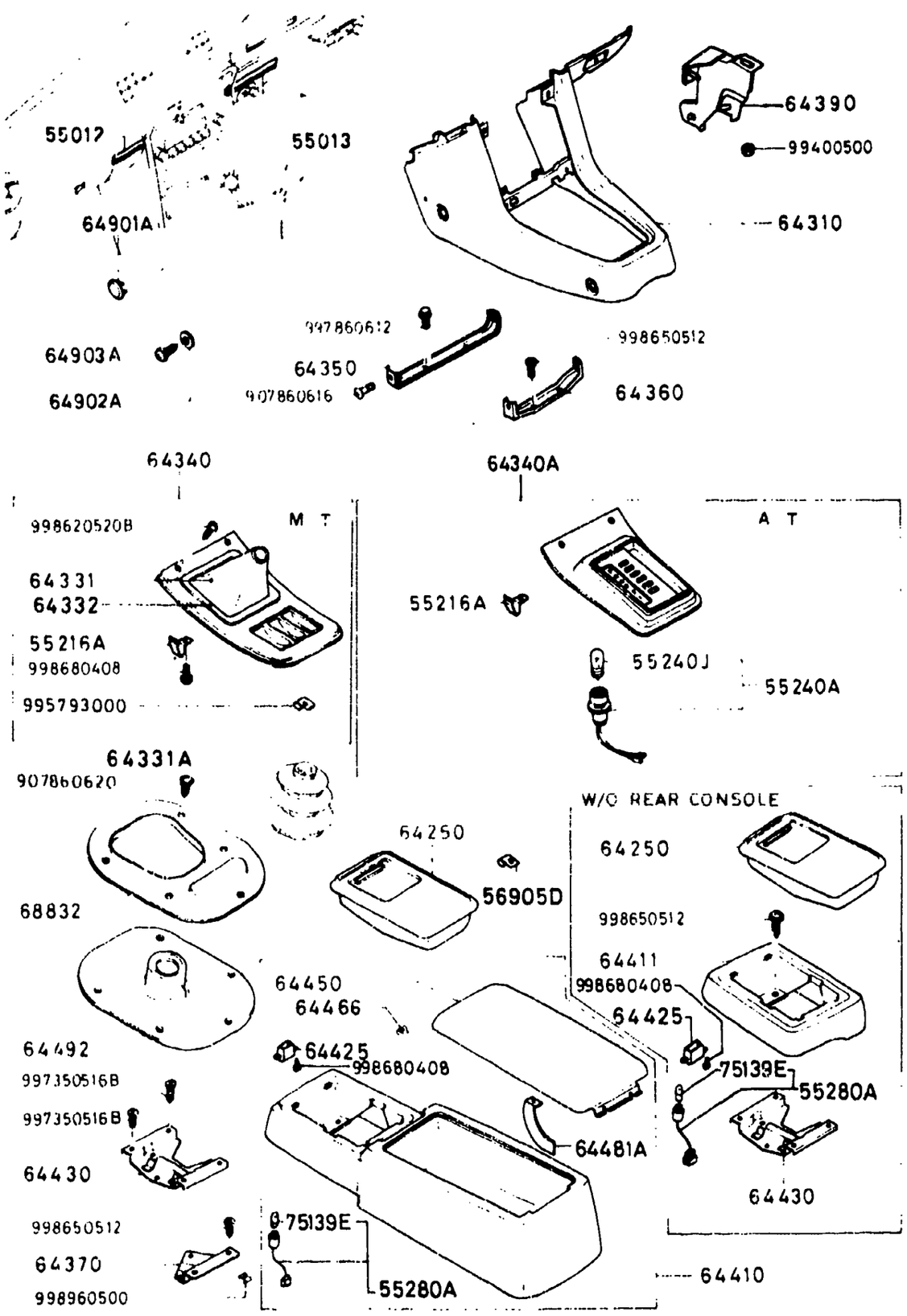

5570AA-1 CONSOLE (1980 MODEL)

D-CODE (Key No.)	PART NAME	PART No.	Qty.	MODEL DESCRIPTION	VIN Chassis No.)
55012	MOULD,FRONT CONSOLE MOULURE CONSOLE AV.	8871-55-012B	1	(L=173MM)	
	BLACK	02			
	BROWN	28			
55013	MOULD,FRONT CONSOLE MOULURE CONSOLE AV.	8871-55-013B	1	(L=46.5MM)	
	BLACK	02			
	BROWN	28			
55216A	SPRING,BOOT PANEL RESSORT	8871-55-216	2		
55240A	BULB & SOCKET AMPOULE ET DOUILLE FOCO Y PORTA-FOCO	0305-66-580A	1	A/T	
55240J	BULB AMPOULE FOCO	9970-16-030	1	(A12V 3W) A/T	
55280A	BULB & SOCKET	8871-55-280	1		
56905D	NUT,SPRING ECROU	0320-56-905	2		
64250	TRAY,ASH CENDRIER CENICERO	8871-64-610B	1		
	BLACK	00			
64310	CONSOLE,FRONT CONSOLE, AV FRENTE DE LA CONSOLA	8871-64-321	1		
	BLACK	02			
	WINE	12			
	BROWN	28			

5570AA CONSOLE (1980 MODEL)

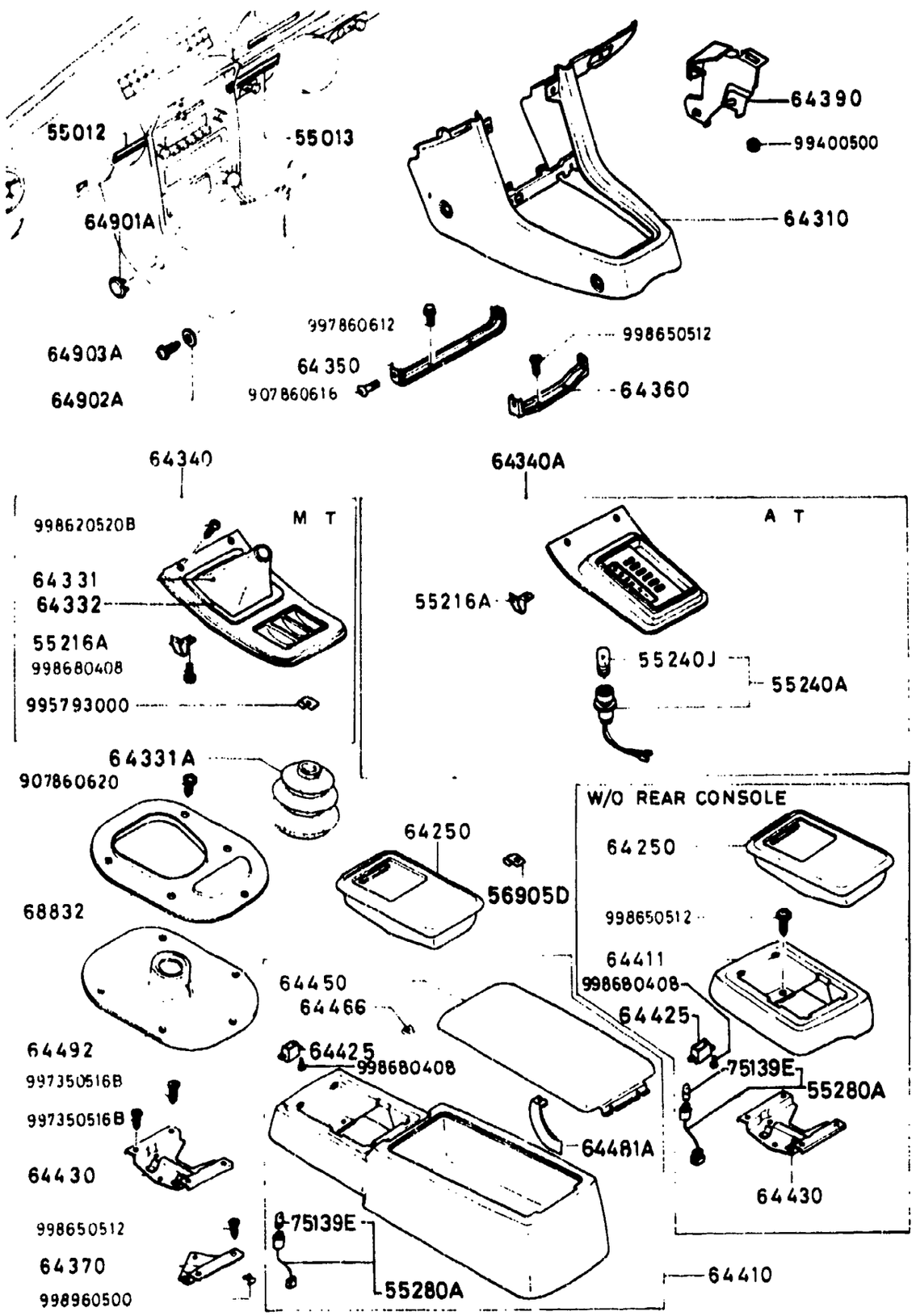

5570AA-2 CONSOLE (1980 MODEL)

D-CODE (Key No.)	PART NAME	PART No.	Qty.	MODEL DESCRIPTION	VIN (Chassis No.)
64310 CONT'D		8871-64-321			
	RED	29			
	BROWN (SA22C 606775-)	70		(SUNROOF ONLY)	
64331	BOOT,CHANGE COIFFE, LEVIER DE VITESSE FUNDA,CAMBIO	8868-64-351	1	(RUBBER) CANADA M/T	
		8871-64-351A	1	(VINYA) FED. M/T CALIF. M/T	
64331A	BOOT COIFFE FUNDA	0247-56-275	1	M/T	
64332	MOULD,CHANGE BOOT MOULURE GAINE	8341-64-355	1	M/T	
64340	PLATE,UPPER PLAQUETTE, SUP. PLACA SUPERIOR	8341-64-350	1	FED. M/T CALIF. M/T	
	SILVER	04			
		8485-64-350	1	CANADA M/T	
	SILVER	04			
64340A	INDICATOR INDICATEUR INDICADOR	8672-64-350B	1	A/T	
	SILVER	04			
64350	BRACKET,FRONT ATTACHE, AV SOPORTE,DEL.	8871-64-370	1		SA22C .. 563501 -629532
	<A>	*8871-64-370A	1		SA22C .. 629533-
64360	BRACKET,CENTER ATTACHE, AV SOPORTE,DEL.	8871-64-381	1		
64370	BRACKET,REAR ATTACHE, AR SOPORTE,TRAS.	8871-64-415	1		

5570AA CONSOLE (1980 MODEL)

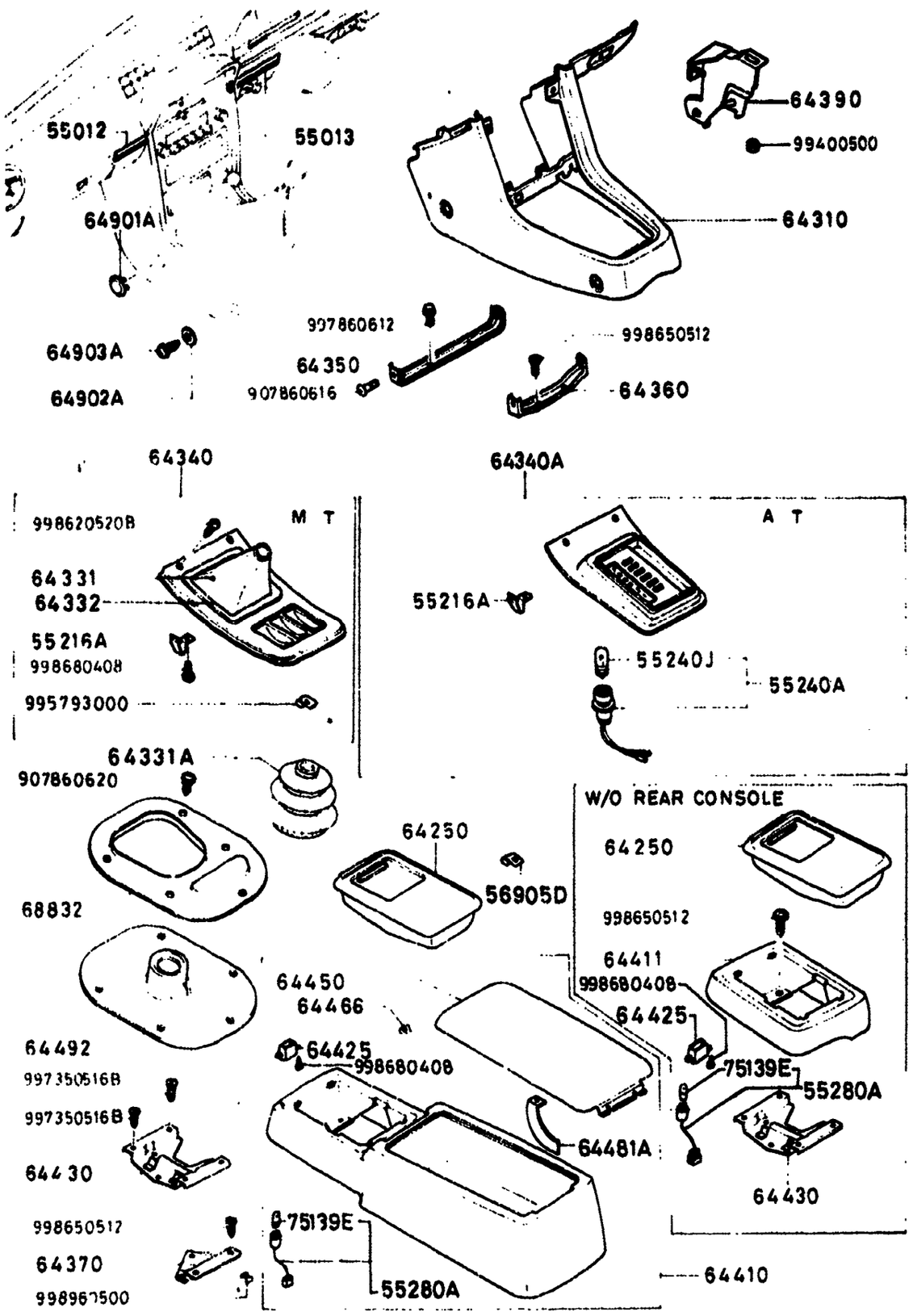

5570AA-3 CONSOLE (1980 MODEL)

D-CODE (Key No.)	PART NAME	PART No.	Qty.	MODEL / DESCRIPTION	VIN (Chassis No.)
64390	BRACKET,RELAY SUPPORT DE RELAIS	8248-64-391	1		
64410	CONSOLE,REAR CONSOLE, AR PARTE TRASERA DE LA CONSO	8871-64-410B	1		
	BLACK	02			
	WINE	12			
	BROWN	28			
	RED	29			
	BROWN (SA22C 606775-)	70		(SUNROOF ONLY)	
64411	CASE,ASH TRAY BOITE DE CENDRIER	8872-64-411B	1		
	BLACK	02			
	WINE	12			
	BROWN	28			
	RED	29			
	BROWN (SA22C 606775-)	70		(SUNROOF ONLY)	
64425	CASE,LAMP	8871-64-425	1		
64430	BRACKET,CTR.-REAR SUPPORT ARR.CENTRE	8871-64-430	1		
64450	LID,CONSOLE COUVERCLE CONSOLE	8871-64-420	1		
	BLACK	02			
	WINE	12			

5570AA CONSOLE (1980 MODEL)

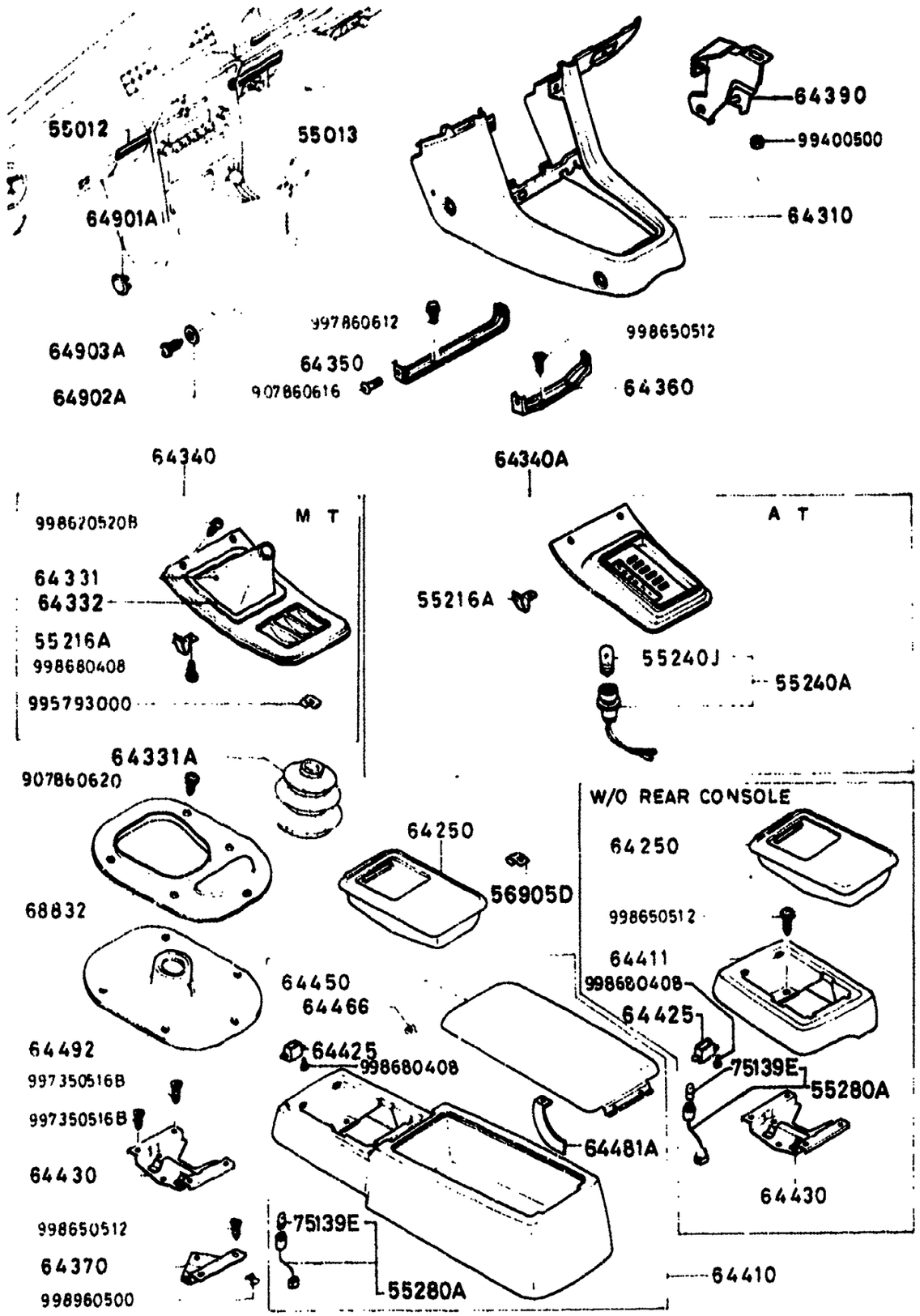

5570AA-4 CONSOLE (1980 MODEL)

D-CODE (Key No.)	PART NAME	PART No.	Qty.	MODEL DESCRIPTION	VIN (Chassis No.)
64450 CONT'D		8871-64-420			
	BROWN	28			
	RED	29			
	BROWN (SA22C 606775-)	70		(SUNROOF ONLY)	
64466	SPRING,HINGE RESSORT CHARNIERE	8871-64-413	1		
64481A	STOPPER,CONSOLE LID	8871-64-412	1		
64492	INSULATOR ISOLATEUR AISLADOR SOPORTE	8871-64-492A	1	M/T	
64901A	CAP,FRONT CONSOLE COUVERCLE CONSOLE AV.	8871-64-901	2		
	BLACK	00			
	WINE	10			
	BROWN	23			
	RED	25			
	BROWN (SA22C 606775-)	28		(SUNROOF ONLY)	
64902A	WASHER,FRONT CONSOLE RONDELLE CONSOLE AV.	8871-64-902	2		
	BLACK	00			
	WINE	10			
	BROWN	23			
	RED	26			

5570AA CONSOLE (1980 MODEL)

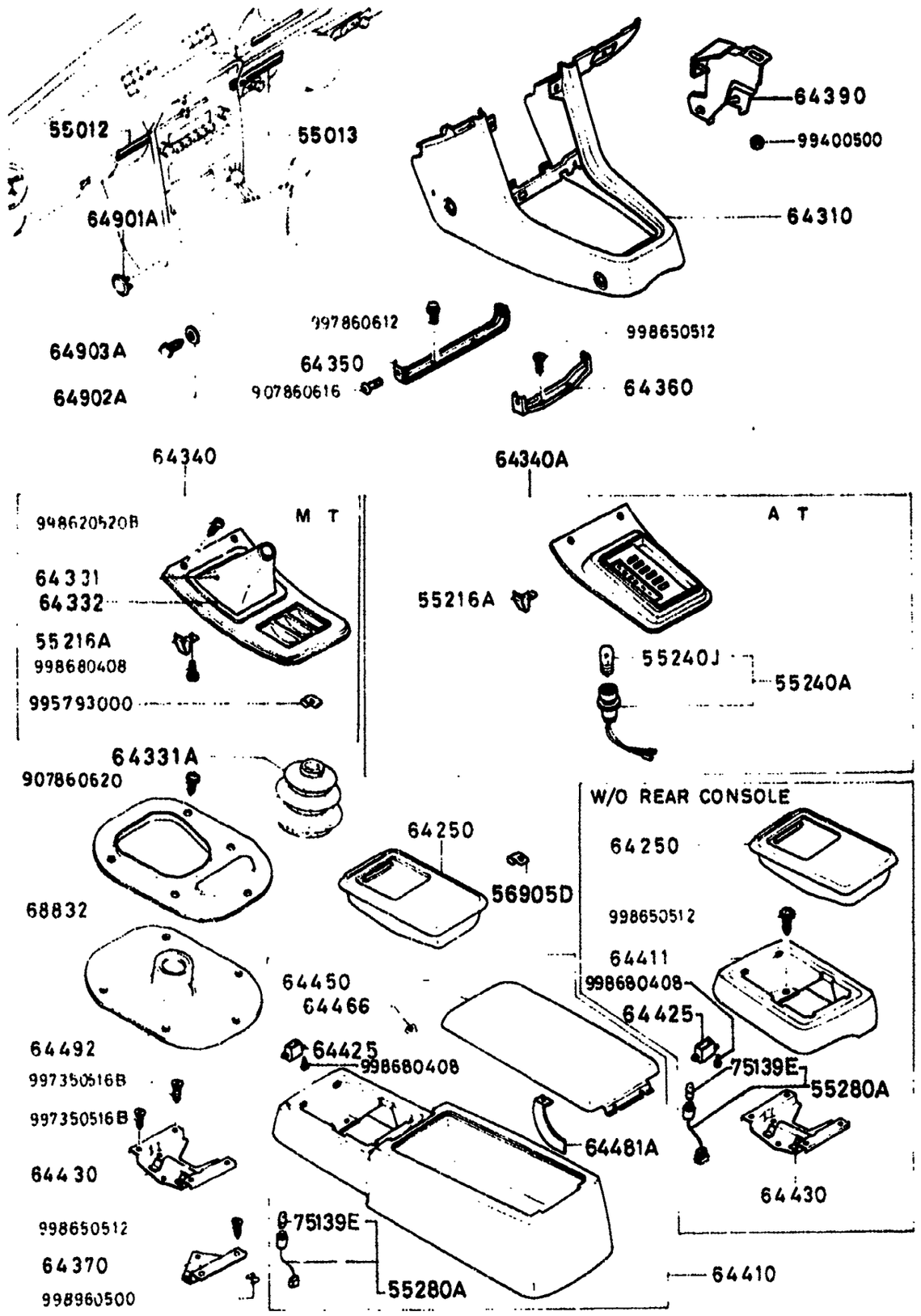

5570AA-5* CONSOLE (1980 MODEL)

D-CODE (Key No.)	PART NAME	PART No.	Qty.	MODEL/DESCRIPTION	VIN (Chassis No.)
64902A CONT'D		8871-64-902			
	BROWN (SA22C 606775-)	28		(SUNROOF ONLY)	
64903A	SCREW,FRONT CONSOLE VIS CONSOLE AV.	8871-64-903	2		
	BLACK	00			
	WINE	10			
	BROWN	23			
	RED	26			
	BROWN (SA22C 606775-)	28		(SUNROOF ONLY)	
68832	SEAT,BOOT BASE ASIENTO,GUARDAPOLVO	8871-64-491B	1	M/T	
75139E	BULB	3625-75-139	1	(1.4W)	

5580A VENTILATOR

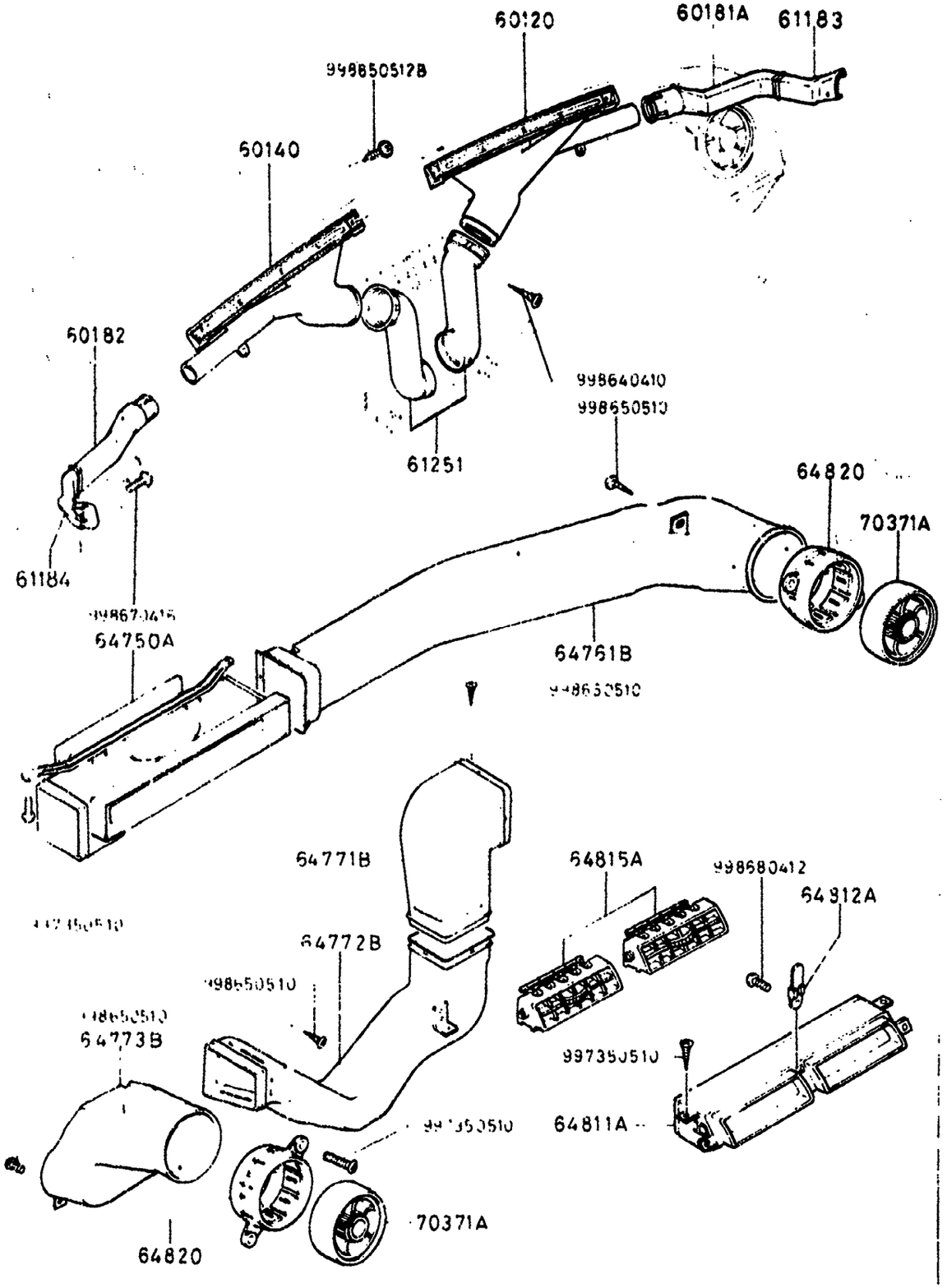

5580A-1 VENTILATOR

D·CODE (Key No.)	PART NAME	PART No.	Qty.	MODEL DESCRIPTION	VIN (Chassis No.)
60120	NOZZLE(R),DEFROSTER BOUCHE,DEGIVRAGE (D) BOQUILLA(D),DESCONGELADOR	8871-60-121	1		
60140	NOZZLE(L),DEFROSTER BOUCHE DE DEGIVRAGE (G) BOQUILLA(I),DESCONGELADOR	8871-60-141	1		
60181A	DUCT(R),SIDE DEMIST. CONDUIT ANTI-BUEE(D)	8871-60-181	1		SA22C .. 500001 -541116
		8871-61-181	1		SA22C .. 541117-
60182	DUCT(L),SIDE DEMIST. CONDUIT ANTI-BUEE(G)	8871-60-182	1		SA22C .. 500001 -541116
		8871-61-182	1		SA22C .. 541117-
61183	DUCT (R),SIDE DEMIST.	8871-61-183	1		SA22C .. 541117 -626846
	<A >	*8871-61-183A	1		SA22C .. 626347-
61184	DUCT (L),SIDE DEMIST.	8871-61-184	1		SA22C .. 541117 -626846
	<A >	*8871-61-184A	1		SA22C .. 626347-
61251	HOSE,DEFROSTER DURITE DE DEGIVRAGE MANGUERA, DESCARCHADORA	8871-61-251A	2		
64750A	DUCT,CENTER CONDUIT CENTRAL	8871-64-750	1		
64761B	DUCT(R) CONDUIT (D) CONDUCTO DERECHO	8871-64-761	1		
64771B	DUCT NO.1(L) CONDUIT NO1(G)	8871-64-771	1		
64772B	DUCT NO.2(L) CONDUIT NO2(G)	8871-64-780	1		
64773B	DUCT NO.3(L) CONDUIT NO3(G)	8871-64-773	1		

5580A VENTILATOR

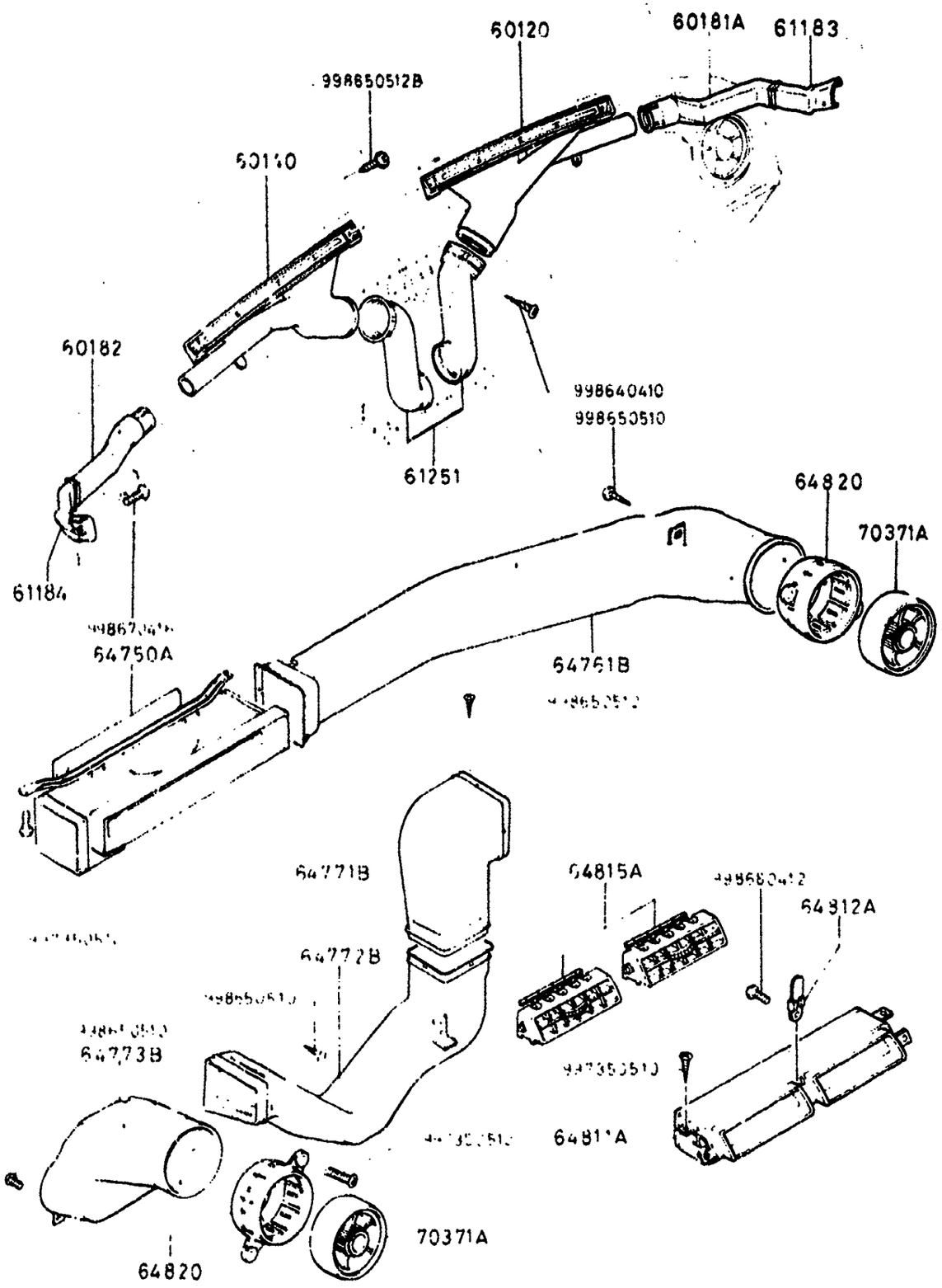

5580A-2* VENTILATOR

D-CODE (Key No.)	PART NAME	PART No.	Qty.	MODEL DESCRIPTION	VIN (Chassis No.)
64811A	GUIDE,CTR.LOUVER GUIDE AUVENT CENTRAL	8871-64-811	1		
	<A >*8871-64-811A		1		SA22C .. 629533-
64812A	HOLDER,CTR.LOUVER SUPPORT VOLET AERATION	8871-64-812	1		
64815A	LOUVER,CENTER AUVENT D'AERATION CENTRAL	8570-64-815	2		SA22C .. 540411-
	<A >*8570-64-815A		1		SA22C .. 629533-
		8871-64-815	2		SA22C .. 500001 -540410
64820	GUIDE,LOUVER GUIDE AUVENT	8871-64-820	2		
70371A	LOUVER,VENTILATOR AUVENT PENTILADOR	0370-70-371	2		SA22C .. 500001 -568500
		8341-64-825	2		SA22C .. 568501-

SECTION NUMBER INDEX (BODY)

STARTING LOCATION	SECTION No.	SECTION NAME
3–C2	0900A	KEY SETS
3–C3	5000A	FRONT BUMPER & GRILLE
3–E3	5010A	REAR BUMPER
3–G3	5030A	WINDOW MOULDINGS
3–I3	5040A	BODY MOULDINGS
3–C4	5100A	LAMPS (FRONT & SIDE)
3–G4	5110A	LAMPS (REAR)
3–I4	5130A	O' 'RHEAD CONSOLE (1979 STANDARD ROOF MODEL)
3–J4	5170A	COWL & EXTRACTOR GRILLES & ORNAMENTS
3–C5	5230A	BONNET
3–E5	5310A	BODY PANELS (FRONT)
3–K5	5340A	BODY PANELS (SIDE & ROOF)
3–I6	5360A	BODY PANELS (FLOOR)
3–C7	5500A	DASHBOARD EQUIPMENT
3–L7	5540A	METERS
3–D8	5560A	DASHBOARD & RELATED
3–L8	5570A	CONSOLE
3–K9	5580A	VENTILATOR
3–C10	5700A	SEAT (EXCEPT LEATHER TRIM)
3–N10	5710A	SEAT TRIM (LEATHER – ANNIVERSARY EDITION)
3–G11	5760A	SEAT BELTS

STARTING LOCATION	SECTION No.	SECTION NAME
3–C12	5800A	FRONT DOOR
3–C13	5830A	FRONT DOOR MECHANISMS
3–C14	6100A	HEATER
3–E14	6110A	HEATER UNIT
3–H14	6115A	HEATER CONTROLS
3–J14	6120A	HEATER BLOWER
3–C15	6230A	BACK DOOR MECHANISMS
3–F15	6300A	WINDOW GLASSES
3–I15	6330A	SUNROOF
3–C16	6600A	ELECTRIC EQUIPMENT
3–G16	6680A	RADIO & STEREO SYSTEMS
4–C2	6700A	WIRE HARNESS & CLAMPS
4–G2	6720A	WINDSHIELD WASHER
4–H2	6730A	WINDSHIELD WIPER
4–J2	6740A	WIPER MOTOR (COMPONENTS ONLY)
4–C3	6800A	CEILING TRIM
4–J3	6840A	TRIM & SCUFF PLATE
4–F4	6860A	FLOOR MAT & PADS
4–L4	6870A	SERVICE TOOLS
4–M4	6900A	VISOR, ASSIST HANDLE & MIRRORS
4–G5	6930A	CAUTION PLATES

THE FRAMES IN THIS COLUMN INDICATE :

3–C10 5700A SEAT (EXCEPT LEATHER TRIM)
3–N10 5710A SEAT TRIM (LEATHER-ANNIVERSARY EDITION)

© 1983 Toyo Kogyo Co., Ltd.
MAY 1983

5700A SEAT (EXCEPT LEATHER TRIM)

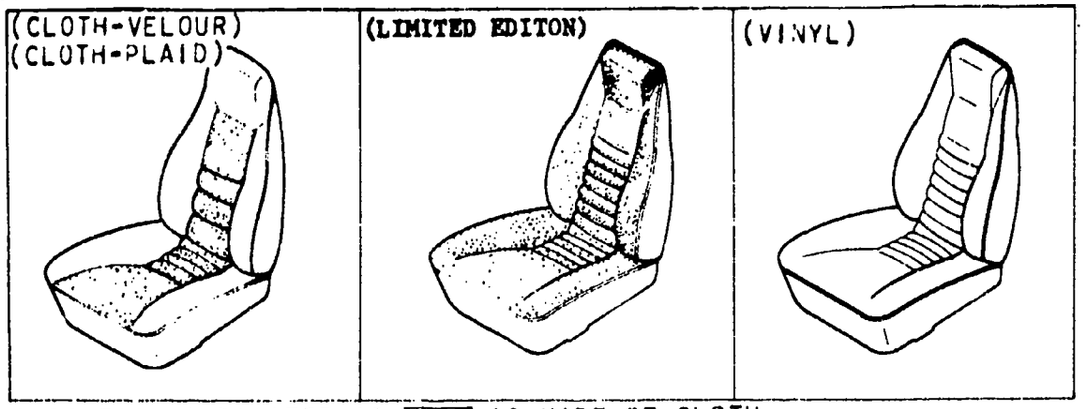

A PORTION INDICATED AS [ ] IS MADE OF CLOTH.

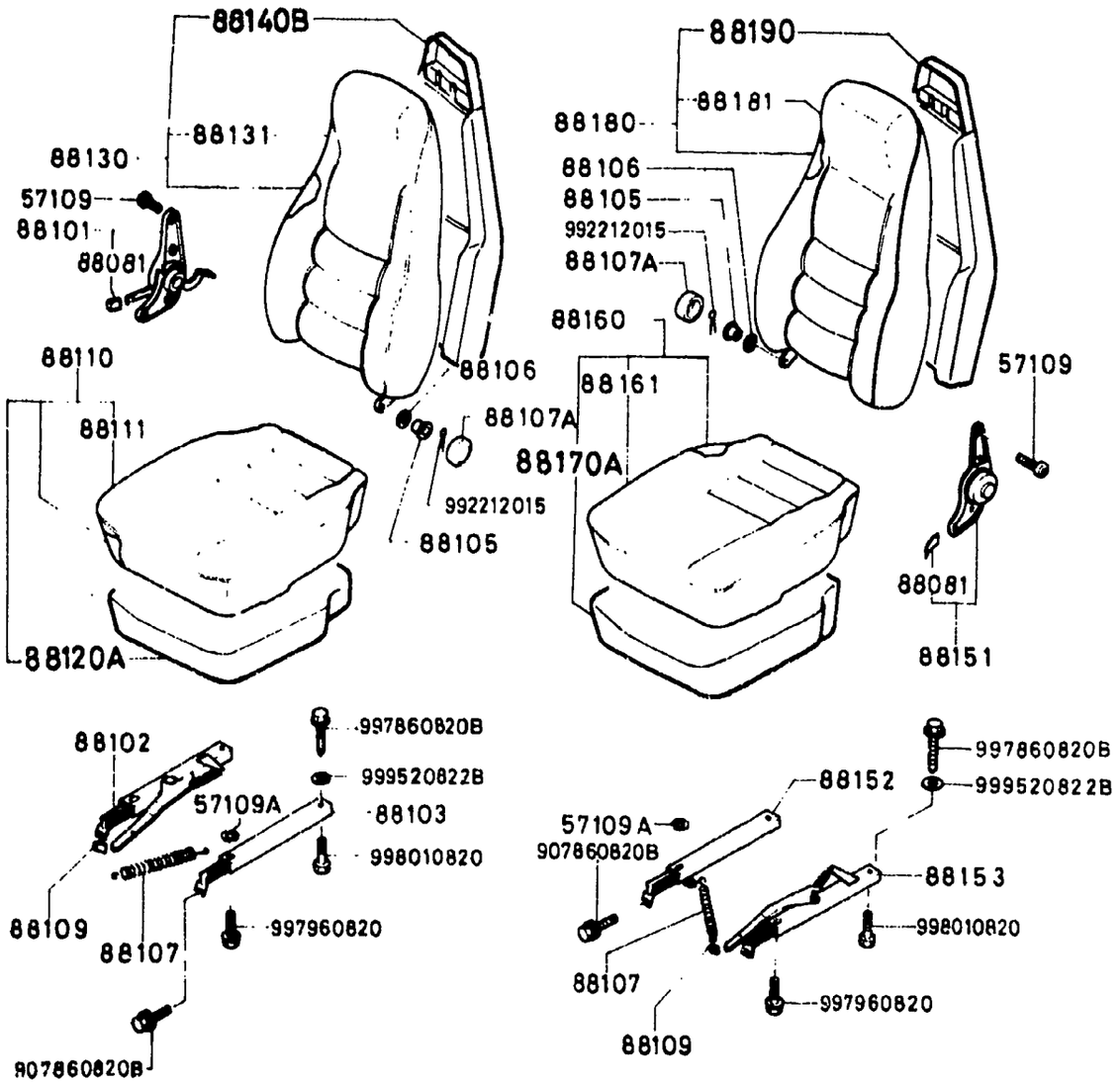

5700A-1 SEAT (EXCEPT LEATHER TRIM)

D-CODE (Key No.)	PART NAME	PART No.	Qty.	MODEL / DESCRIPTION	VIN (Chassis No.)
57109	SCREW,KNUCKLE VIS TORNILLO	0259-57-109	8		SA22C .. 500135-
		2155-57-109	8		SA22C .. 500001 -500134
57109A	WASHER RONDELLE ARANDELA	0820-57-109	2		SA22C .. 500001 -568500
88081	KNOB,KNUCKLE BOUTON PERILLA	0305-57-081	2		
88101	KNUCKLE(R),RECLINING CHARNIERE D'INCLINAISON (PUNTA EJES(DERECHO)RECLIN	8531-88-101	1		
88102	ADJUSTER NO.1 REGLAGE NO 1 AJUSTADOR NO.1	1243-88-102B	1		
88103	ADJUSTER NO.2 REGLAGE NO 2 AJUSTADOR NO.2	8562-88-103	1		
88105	BUSH BUSELURE BUJE	8531-88-106	2		
88106	WASHER RONDELLE ARANDELA	8531-88-105	2		
88107	SPRING,RETURN RESSORT DE RAPPEL RESORTE,RETORNO	3490-88-107	2		
88107A	COVER,HINGE CACHE DE CHARNIERE COBERTOR DE LA BISAGRA	8531-88-107	2		
88109	KNOB,ADJUSTER BOUTON PERILLA	8038-88-109	2		
88110	CUSHION(R),FRT.SEAT HOUSSE DE SIEGE (D) ALMOHADON ASIENTO DERECHO	8867-88-110	1	(CLOTH-VELOUR)	SA22C .. 535939-
	BLACK	03			
	WINE	13			

5700A SEAT (EXCEPT LEATHER TRIM)



A PORTION INDICATED AS ▭ IS MADE OF CLOTH.

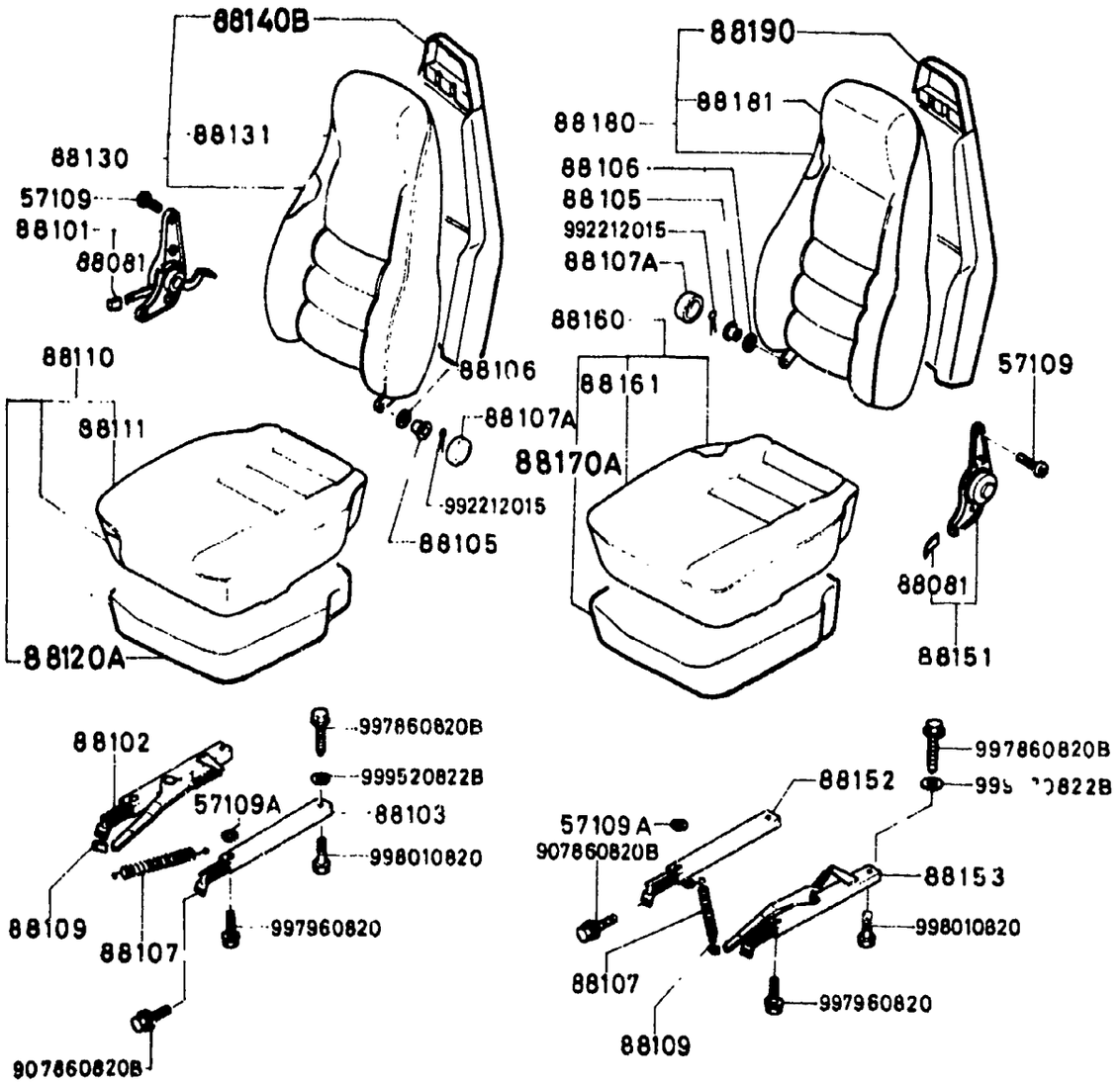

D-CODE (Key No.)	PART NAME	PART No.	Qty.	MODEL/DESCRIPTION	VIN (Chassis No.)
88110 CONT'D		8867-88-110			
	BROWN	23			
		8871-88-110	1	(CLOTH-PLAID)	SA22C .. 500001 -569398
	BLACK (SA22C 500001-535838)	01			
	BRONZE (SA22C 500001-535838)	10			
	RED (SA22C 535839-569398)	14			
	BEIGE (SA22C 500001-535838)	20			
		8871-88-110A	1	(CLOTH-PLAID)	SA22C .. 569399-
	RED	14			
		8872-88-110	1	(VINYL)	SA22C .. 500001 -569398
	BLACK (SA22C 500001-535838)	00			
	BLACK (SA22C 535839-569398)	03			
	BEIGE (SA22C 500001-535838)	22			
	BEIGE (SA22C 535839-569398)	24			
		8872-88-110A	1	(VINYL) 80 MODEL	SA22C .. 569399-
	BLACK	06			
	BROWN	26			
		8973-88-110P		(LIMITED EDITION) (ORD. BY 897388110P01	

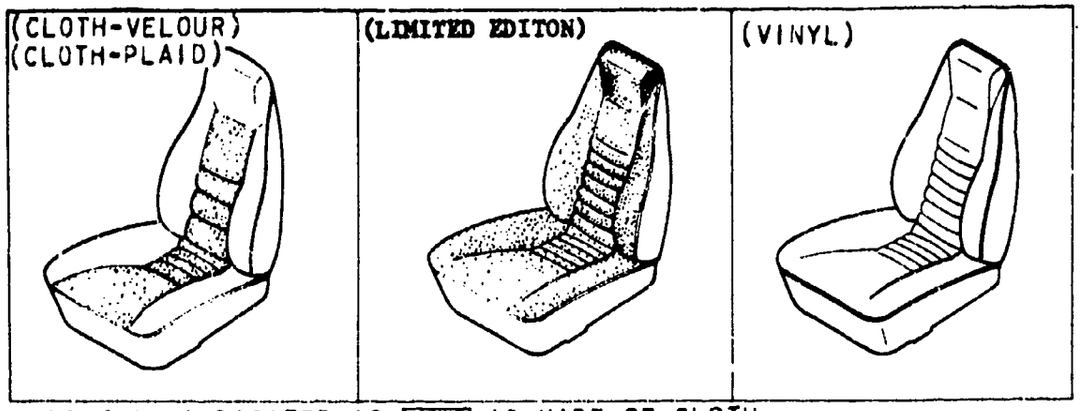

A PORTION INDICATED AS [ ] IS MADE OF CLOTH.

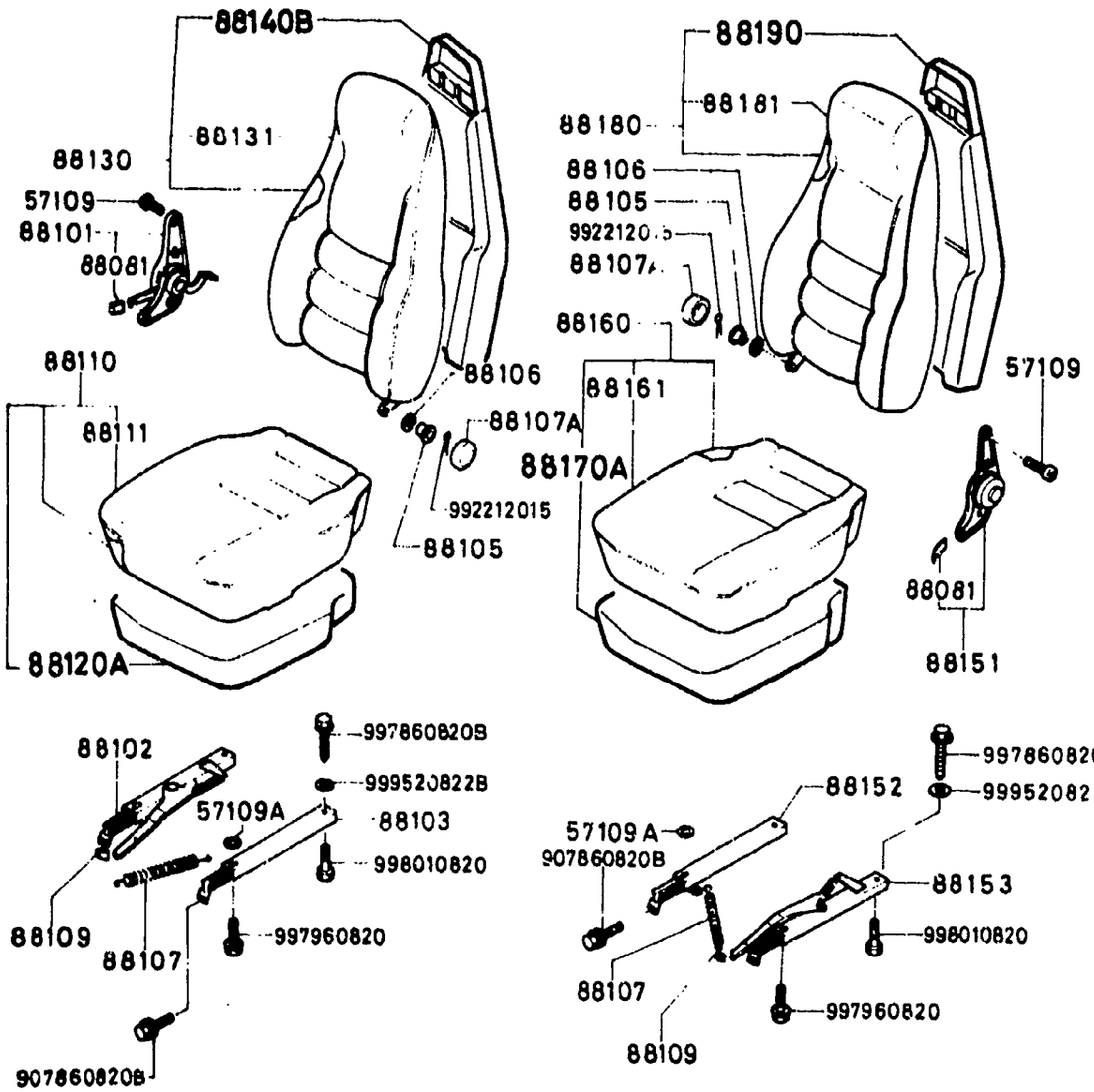

D-CODE (Key No.)	PART NAME	PART No.	Qty.	MODEL/DESCRIPTION	VIN (Chassis No.)
88110 CONT'D		8973-88-110P	1		
88111	TRIM(R),SEAT CUSHION HOUSSE DE SIEGE (D) MOLDURA(DER)COJIN	8867-88-111	1	(CLOTH-VELOUR)	SA22C .. 535839-
	BLACK	C3			
	WINE	13			
	BROWN	23			
		8871-88-111	1	(CLOTH-PLAID)	SA22C .. 500001 -569398
	BLACK (SA22C 500001-535838)	01			
	BRONZE (SA22C 500001-535838)	10			
	RED (SA22C 535839-569398)	14			
	BEIGE (SA22C 500001-535838)	20			
		8871-88-111A	1	(CLOTH-PLAID)	SA22C .. 569399-
	RED	14			
		8872-88-111	1	(VINYL)	SA22C .. 500001 -569398
	BLACK (SA22C 500001-535838)	00			
	BLACK (SA22C 535839-569398)	03			
	BEIGE (SA22C 500001-535838)	22			
	BEIGE (SA22C 535839-569398)	24			
		8872-88-111A	1	(VINYL)	SA22C ..

5700A SEAT (EXCEPT LEATHER TRIM)



A PORTION INDICATED AS [ ] IS MADE OF CLOTH.

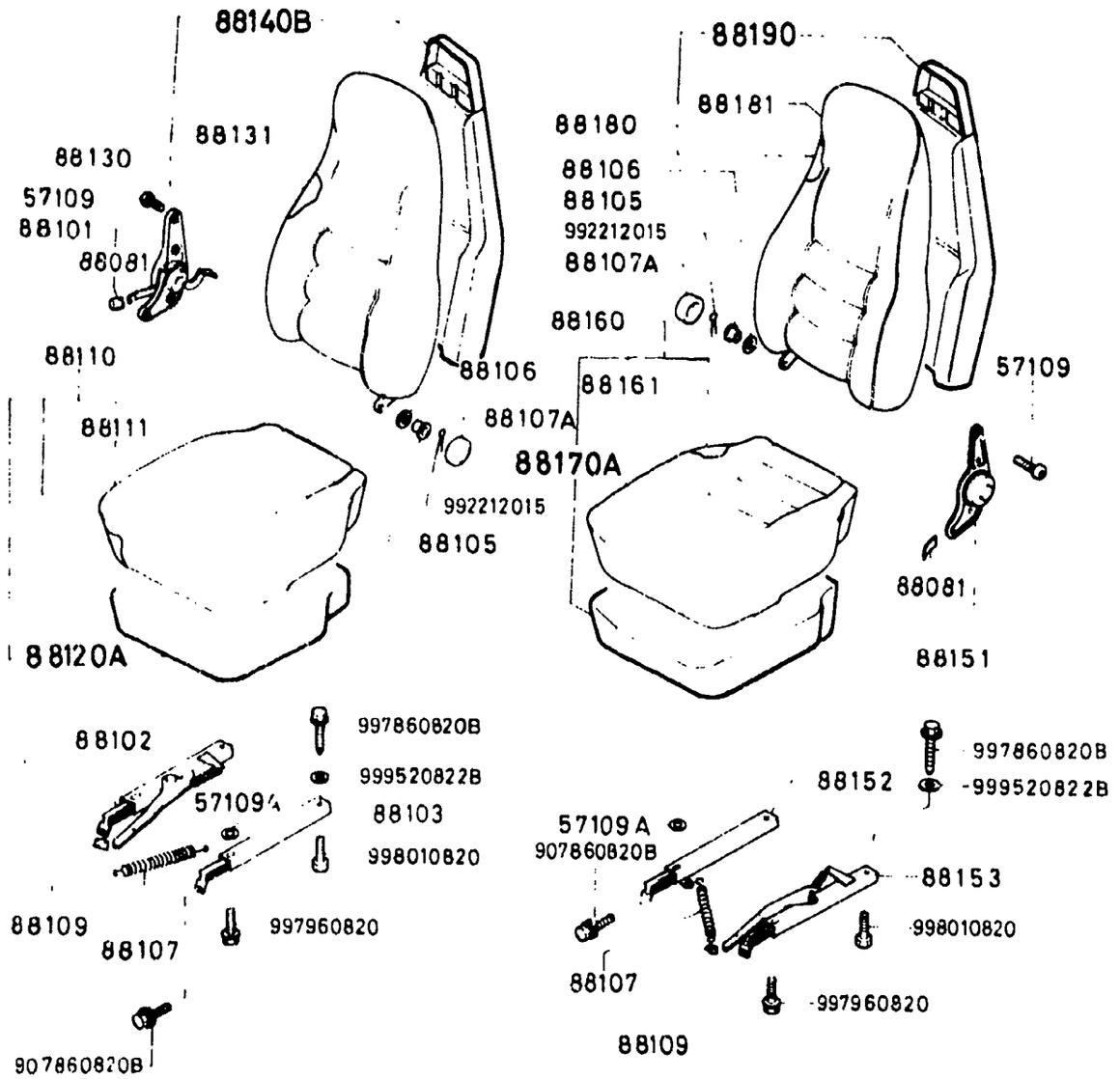

5700A-4 SEAT (EXCEPT LEATHER TRIM)

D-CODE (Key No.)	PART NAME	PART No.	Qty.	MODEL DESCRIPTION	VIN Chassis No.
88111 CONT'D		8872-88-111A			569399-
	BLACK	06			
	BROWN	26			
		8973-88-111P	1	(LIMITED EDITION) (ORD.BY 897388111P01)	
88120A	FRAME & PAD(R), CUSH.	8871-88-120	1		
88130	BACK(R),FRT.SEAT SIEGE(D), ARRIERE ASIENTO(D),TRASERO	8867-88-130	1	(CLOTH-VELOUR)	SA22C .. 535839-
	BLACK	03			
	WINE	13			
	BROWN	23			
		8871-88-130	1	(CLOTH-PLAID)	SA22C .. 500001 -569398
	BLACK (SA22C 500001-535838)	01			
	BRONZE (SA22C 500001-535838)	10			
	RED (SA22C 535839-569398)	14			
	BEIGE (SA22C 500001-535838)	20			
		8871-88-130A	1	(CLOTH-PLAID)	SA22C .. 569399-
	RED	14			
		8872-88-130	1	(VINYL)	SA22C .. 500001 -569398

5700A SEAT (EXCEPT LEATHER TRIM)



A PORTION INDICATED AS [▭] IS MADE OF CLOTH.

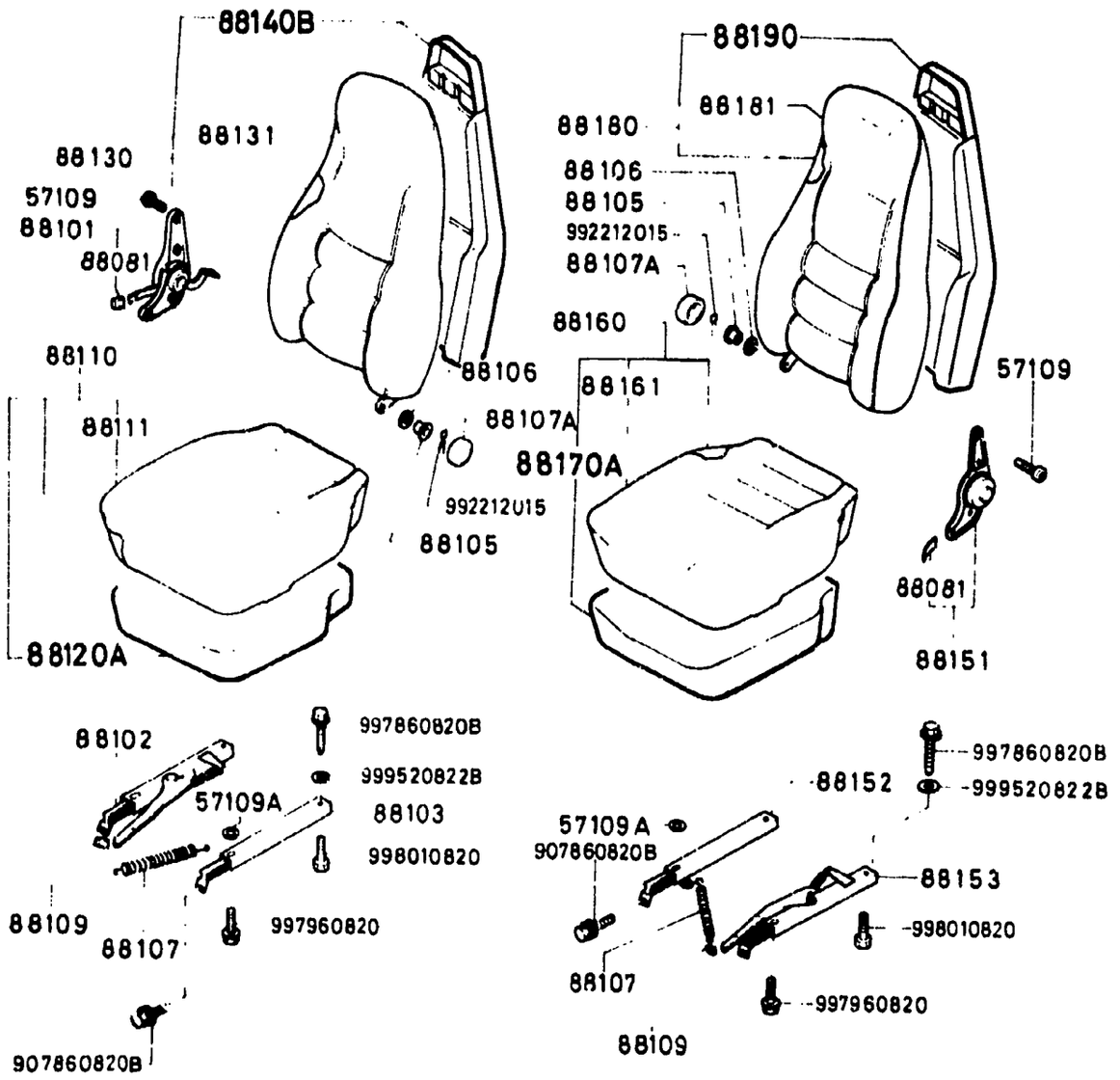

5700A-5 SEAT (EXCEPT LEATHER TRIM)

D-CODE (Key No.)	PART NAME	PART No.	Qty.	MODEL DESCRIPTION	VIN (Chassis No.)
88130 CONT'D		8872-88-130			
	BLACK	00			
	(SA22C 500001-535838)				
	BLACK	03			
	(SA22C 535839-569398)				
	BEIGE	22			
	(SA22C 500001-535838)				
	BEIGE	24			
	(SA22C 535839-569398)				
		8872-88-130A	1	(VINYL)	SA22C .. 569399-
	BLACK	06			
	BROWN	26			
		8873-88-130P	1	(LIMITED EDITION) (ORD. BY 897388130P01	
88131	TRIM(R),SEAT BACK GARNITURE (D), SIEGE ARR MOLDURA(DER),ASIENTO TRAS	8867-88-131	1	(CLOTH-VELOUR)	SA22C .. 535839-
	BLACK	03			
	WINE	13			
	BROWN	23			
		8871-88-131	1	(CLOTH-PLAID)	SA22C .. 500001 -569398
	BLACK	01			
	(SA22C 500001-535838)				
	BRONZE	10			
	(SA22C 500001-535838)				
	RED	14			
	(SA22C 535839-569398)				
	BEIGE	20			
	(SA22C 500001-535838)				

5700A SEAT (EXCEPT LEATHER TRIM)

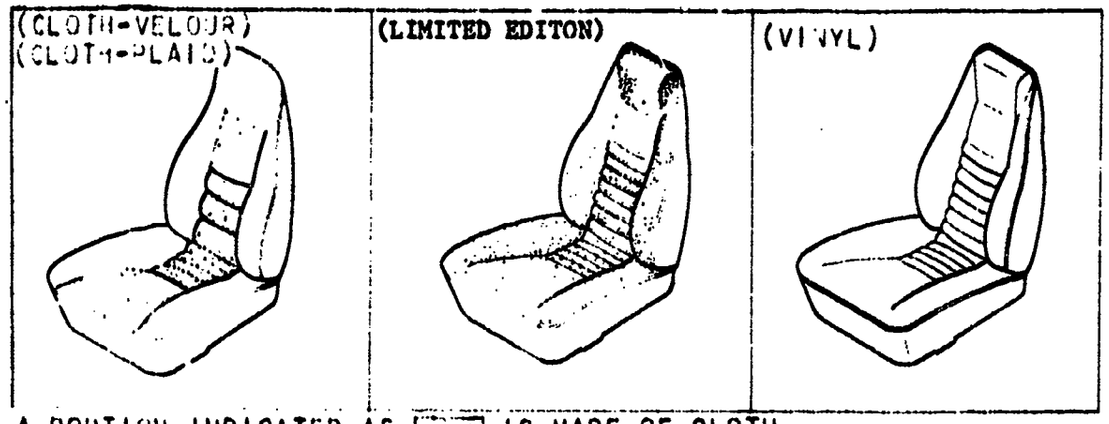

A PORTION INDICATED AS [ ] IS MADE OF CLOTH.

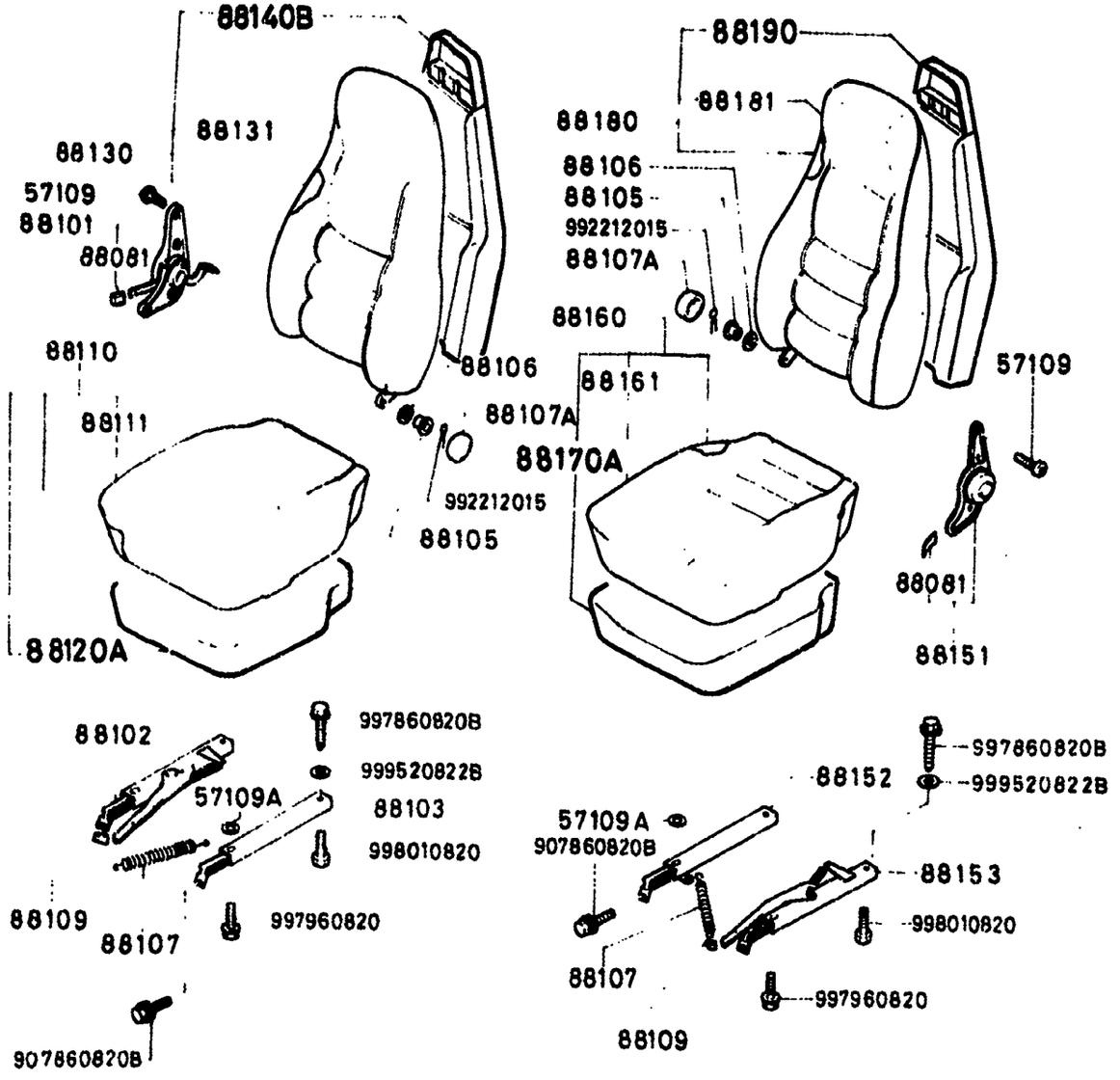

5700A-6 SEAT (EXCEPT LEATHER TRIM)

D·CODE (Key No.)	PART NAME	PART No.	Qty.	MODEL/DESCRIPTION	VIN (Chassis No.)
88131 CONT'D		8871-88-131A	1	(CLOTH-PLAID)	SA22C .. 569399-
	RED	14			
		8872-88-131	1	(VINYL)	SA22C .. 500001 -569398
	BLACK	00			
	(SA22C 500001-535838)				
	BLACK	03			
	(SA22C 535839-569398)				
	BEIGE	22			
	(SA22C 500001-535838)				
	BEIGE	24			
	(SA22C 535839-569398)				
		8872-88-131A	1	(VINYL)	SA22C .. 569399-
	BLACK	06			
	BROWN	26			
		8973-88-131P	1	(LIMITED EDITION) (ORD.BY 897388131P01)	
88140B	FRAME & PAD(R),BACK	8871-88-140	1		
88151	KNUCKLE(L),RECLINING CHARNIERE D'INCLINAISON (PUNTA EJES(IZ.) RECLINADO	8532-88-151	1		
88152	ADJUSTER NO.3 REGLAGE NO 3 AJUSTADOR NO.3	8562-88-152	1		
88153	ADJUSTER NO.4 REGLAGE NO 4 AJUSTADOR NO.4	1244-88-153B	1		
88160	CUSHION(L),FRT.SEAT HOUSSE DE SIEGE (G) ALMOHADON ASIENTO IZQUIER	8867-88-160	1	(CLOTH-VELOUR)	SA22C .. 535339-

5700A SEAT (EXCEPT LEATHER TRIM)

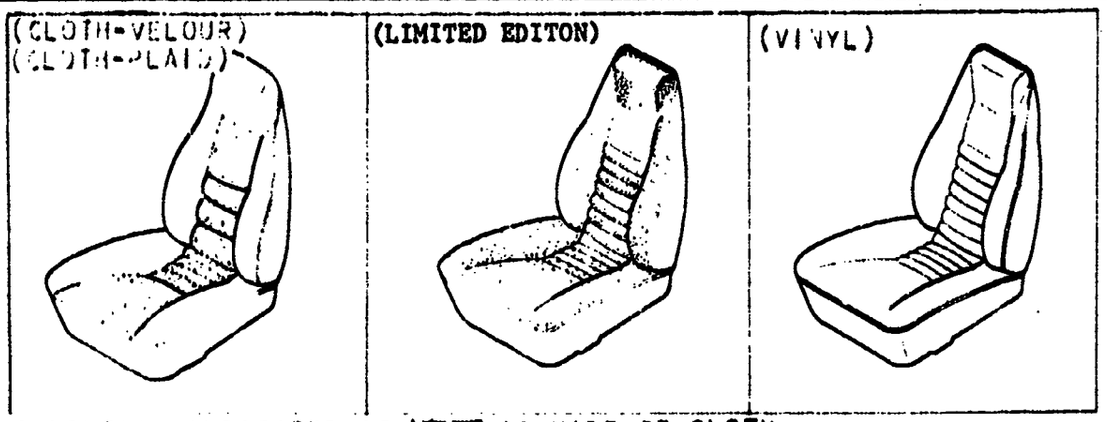

A PORTION INDICATED AS [ ] IS MADE OF CLOTH.

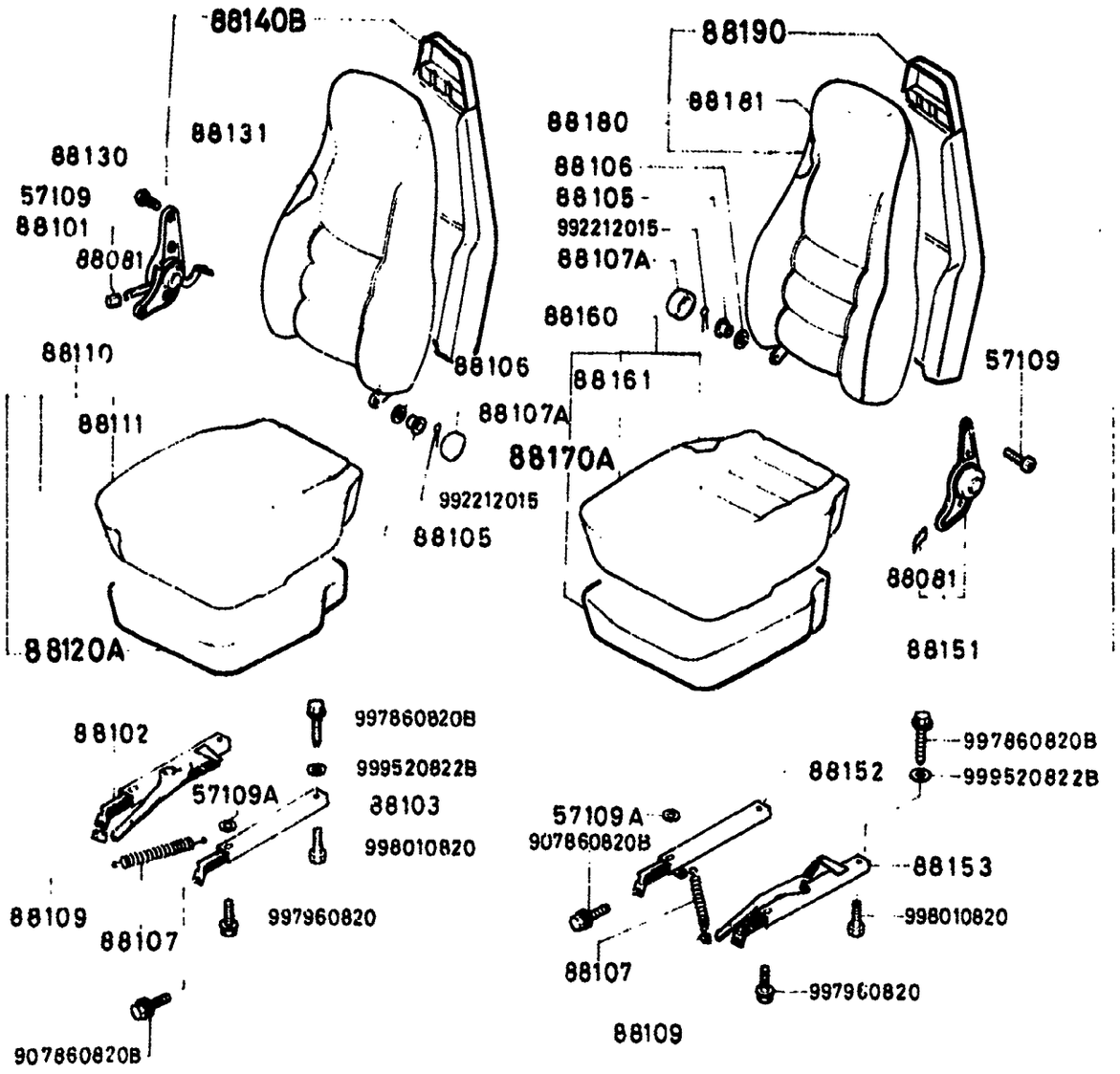

5700A-7 SEAT (EXCEPT LEATHER TRIM)

D-CODE (Key No.)	PART NAME	PART No.	Qty.	MODEL DESCRIPTION	VIN (Chassis No.)
88160 CONT'D		8867-88-160			
	BLACK	03			
	WINE	13			
	BROWN	23			
		8871-88-160	1	(CLOTH-PLAID)	SA22C .. 500001 -569398
	BLACK (SA22C 500001-535838)	01			
	BRONZE (SA22C 500001-535838)	10			
	RED (SA22C 535839-569398)	14			
	BEIGE (SA22C 500001-535838)	20			
		8871-88-160A	1	(CLOTH-PLAID)	SA22C .. 569399-
	RED	14			
		8872-88-160	1	(VINYL)	SA22C .. 500001 -569398
	BLACK (SA22C 500001-535838)	00			
	BLACK (SA22C 535839-569398)	03			
	BEIGE (SA22C 500001-535838)	22			
	BEIGE (SA22C 535839-569398)	24			
		8872-88-160A	1	(VINYL)	SA22C .. 569399-
	BLACK	06			

5700A SEAT (EXCEPT LEATHER TRIM)

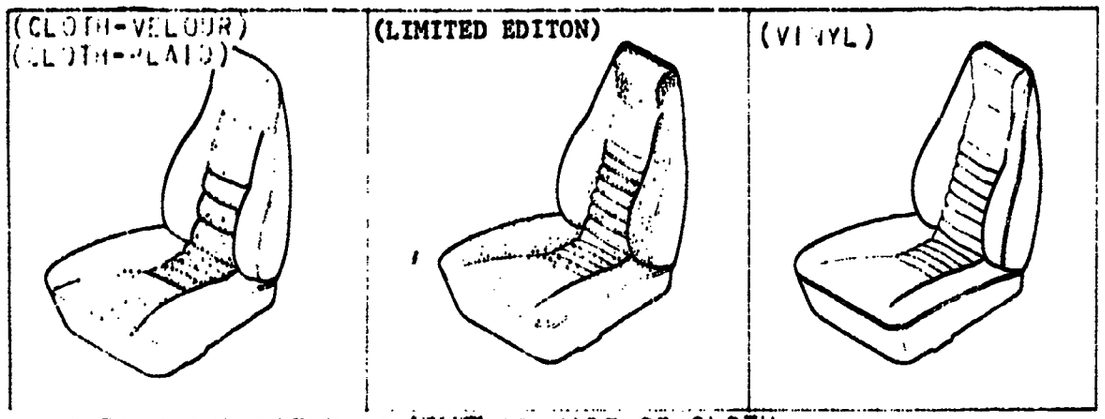

A PORTION INDICATED AS [ ] IS MADE OF CLOTH.

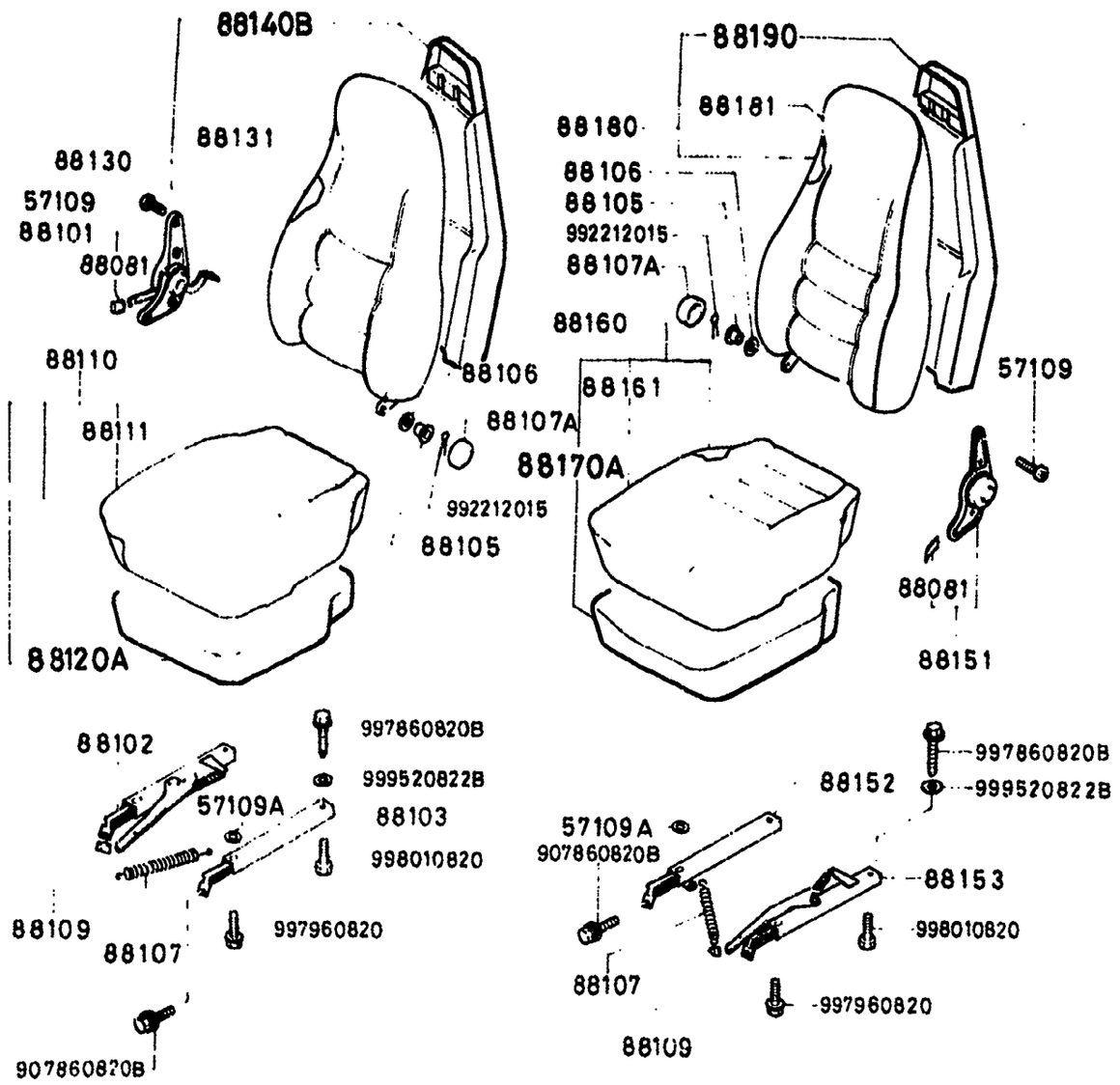

5700A-8 SEAT (EXCEPT LEATHER TRIM)

D-CODE (Key No.)	PART NAME	PART No.	Qty.	MODEL DESCRIPTION	VIN (Chassis No.)
88160 CONT'D		8872-88-160A			
	BROWN	26			
		8973-88-160P	1	(LIMITED EDITION) (ORD.BY 897388160P01	
88161	TRIM(L),SEAT CUSHION HOUSSE DE SIEGE (G) MOLDURA(IZQ),COJIN	8867-88-161	1	(CLOTH-VELOUR)	SA22C .. 535839-
	BLACK	03			
	WINE	13			
	BROWN	23			
		8871-88-161	1	(CLOTH-PLAID)	SA22C .. 500001 -569398
	BLACK (SA22C 500001-535838)	01			
	BRONZE (SA22C 500001-535838)	10			
	RED (SA22C 535839-569398)	14			
	BEIGE (SA22C 500001-535838)	20			
		8871-88-161A	1	(CLOTH-PLAID)	SA22C .. 569399-
	RED	14			
		8872-88-161	1	(VINYL)	SA22C .. 500001 -569398
	BLACK (SA22C 500001-535838)	00			
	BLACK (SA22C 535839-569398)	03			
	BEIGE (SA22C 500001-535838)	22			

5700A SEAT (EXCEPT LEATHER TRIM)

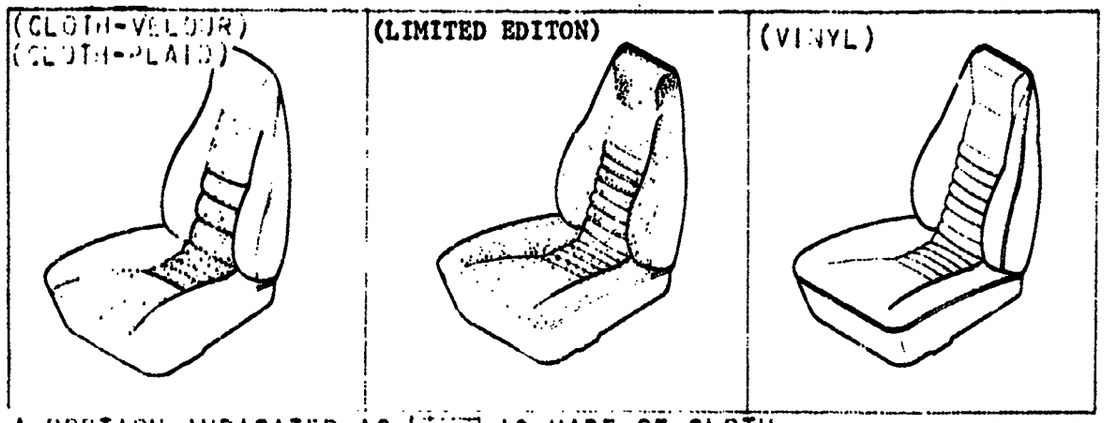

A PORTION INDICATED AS [...] IS MADE OF CLOTH.

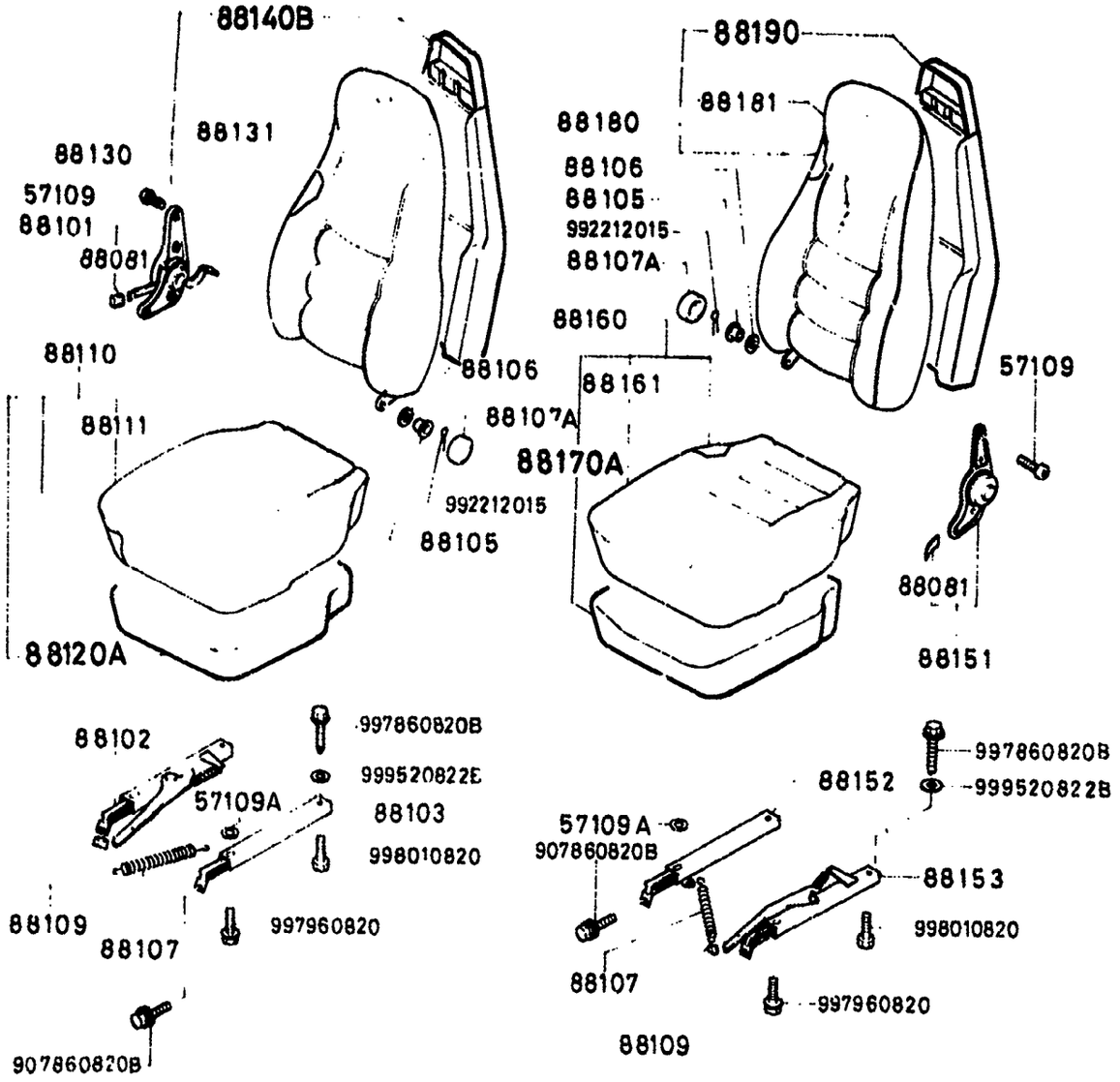

5700A-9 SEAT (EXCEPT LEATHER TRIM)

D-CODE (Key No.)	PART NAME	PART No.	Qty.	MODEL DESCRIPTION	VIN (Chassis No.)
88161 CONT'D		8872-88-161			
	BEIGE (SA22C 535839-569398)	24			
		8872-88-161A	1	(VINYL)	SA22C .. 569399-
	BLACK	06			
	BROWN	26			
		8973-88-161P	1	(LIMITED EDITION) ORD. BY 897388161P01	
88170A	FRAME & PAD(L),CUSHI	8871-88-170	1		
88180	BACK(L),FRT.SEAT SIEGE(G), ARRIERE ASIENTO(I),POSTERIOR	8867-88-180	1	(CLOTH-VELOUR)	SA22C .. 535839-
	BLACK	03			
	WINE	13			
	BROWN	23			
		8871-88-180	1	(CLOTH-PLAID)	SA22C .. 569399-
	BLACK (SA22C 500001-535838)	01			
	BRONZE (SA22C 500001-535838)	10			
	RED (SA22C 535839-569398)	14			
	BEIGE (SA22C 500001-535838)	20			
		8871-88-180A	1	(CLOTH-PLAID)	SA22C .. 569399-
	RED	14			

5700A SEAT (EXCEPT LEATHER TRIM)



A PORTION INDICATED AS [...] IS MADE OF CLOTH.

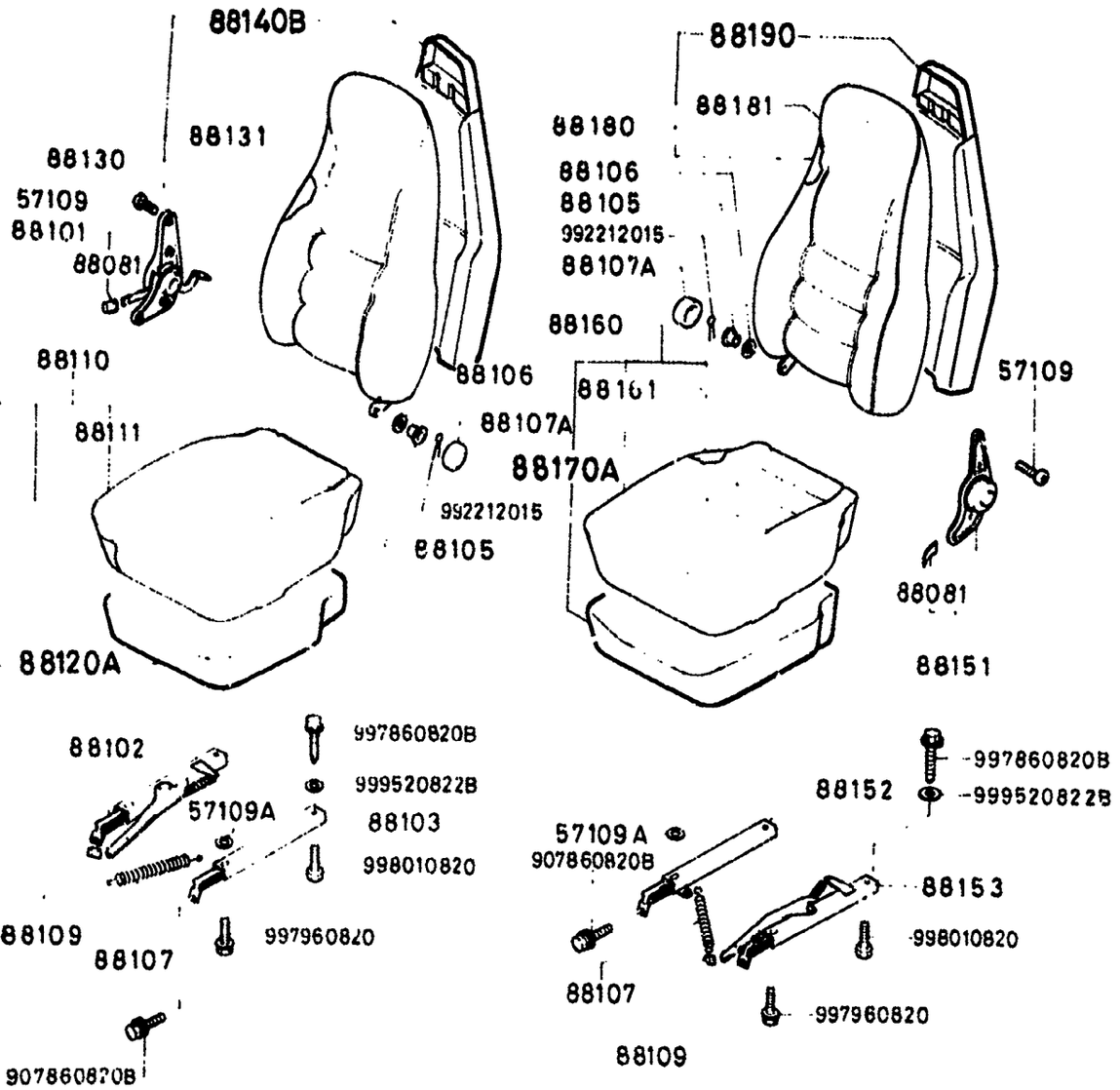

5700A-10 SEAT (EXCEPT LEATHER TRIM)

D-CODE (Key No.)	PART NAME	PART No.	Qty.	MODEL / DESCRIPTION	VIN (Chassis No.)
88180 CONT'D		8872-88-180	1	(VINYL)	SA22C .. 500001 -569398
	BLACK	00			
	(SA22C 500001-535838)				
	BLACK	03			
	(SA22C 535839-569398)				
	BEIGE	22			
	(SA22C 500001-535838)				
	BEIGE	24			
	(SA22C 535839-569398)				
		8872-88-180A	1	(VINYL)	SA22C .. 569399-
	BLACK	06			
	BROWN	26			
		8873-88-180P	1	(LIMITED EDITION) (ORD. BY 897388180P01	
88181	TRIM(L),SEAT BACK HOUSSE (G), SIEGE AR. MOLDURA (IZQ),ASIENTO TRA	8867-88-131	1	(CLOTH-VELOUR)	SA22C .. 535839-
	BLACK	03			
	WINE	13			
	BROWN	23			
		8871-88-131	1	(CLOTH-PLAID)	SA22C .. 500001 -569398
	BLACK	01			
	(SA22C 500001-535838)				

5700A SEAT (EXCEPT LEATHER TRIM)



A PORTION INDICATED AS [ ] IS MADE OF CLOTH.

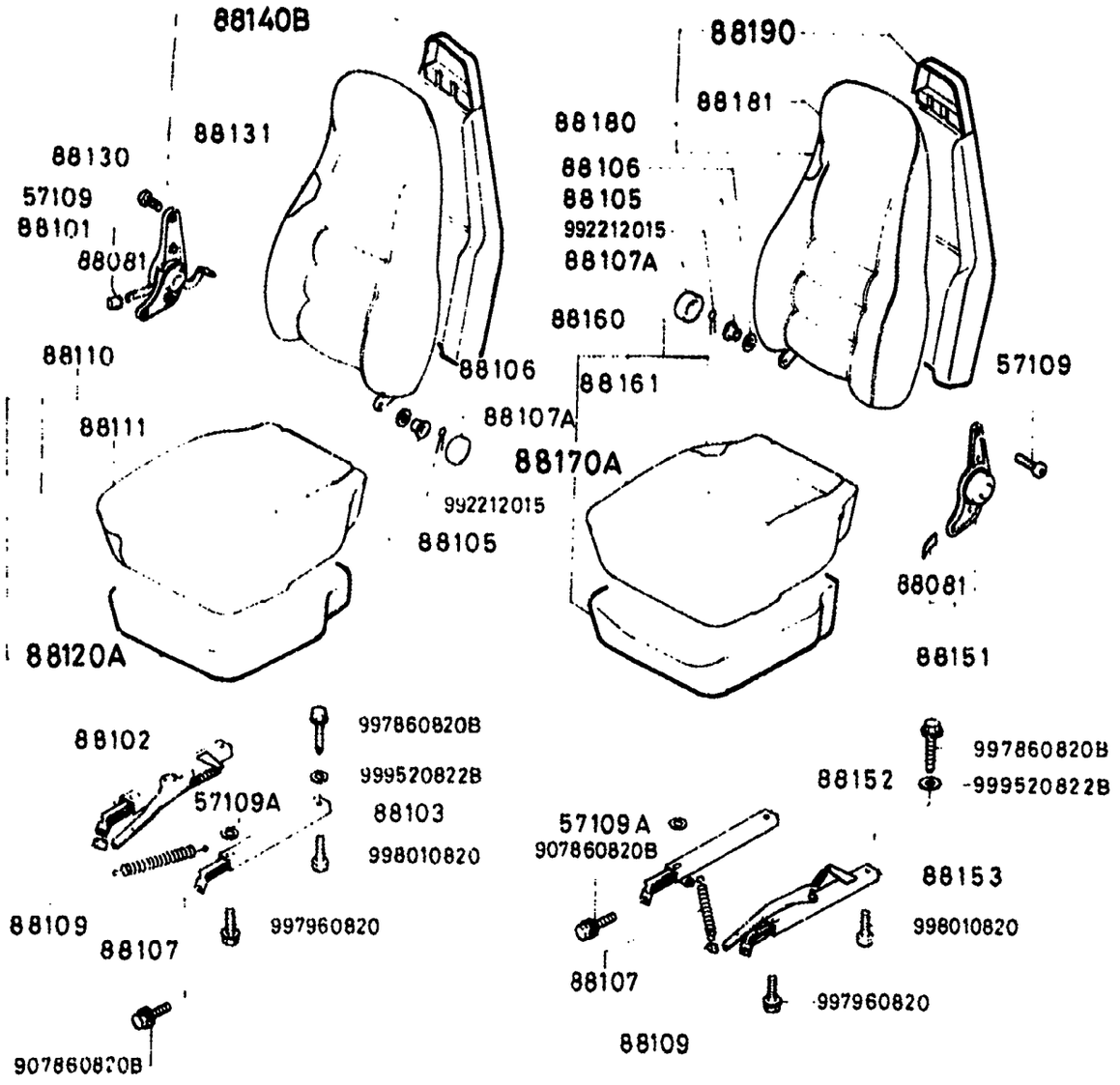

5700A-11* SEAT (EXCEPT LEATHER TRIM)

D-CODE (Key No.)	PART NAME	PART No.	Qty.	MODEL DESCRIPTION	VIN Chassis No.
88181 CONT'D		8871-88-131			
	BRONZE	10			
	(SA22C 500001-535838)				
	RED	14			
	(SA22C 535839-569398)				
	BEIGE	20			
	(SA22C 500001-535838)				
		8871-88-131A	1	(CLOTH-PLAID)	SA22C .. 569399-
	RED	14			
		8872-88-131	1	(VINYL)	SA22C .. 500001 -569398
	BLACK	00			
	(SA22C 500001-535838)				
	BLACK	03			
	(SA22C 535839-569398)				
	BEIGE	22			
	(SA22C 500001-535838)				
	BEIGE	24			
	(SA22C 535839-569398)				
		8872-88-131A	1	(VINYL)	SA22C .. 569399-
	BLACK	06			
	BROWN	26			
		8973-88-131P	1	(LIMITED EDITION) (ORD. BY 897388131P01	
88190	FRAME & PAD(L),BACK	8871-88-190	1		

5710A SEAT TRIM (LEATHER – ANNIVERSARY EDITION)

TRIM(R),CUSHION

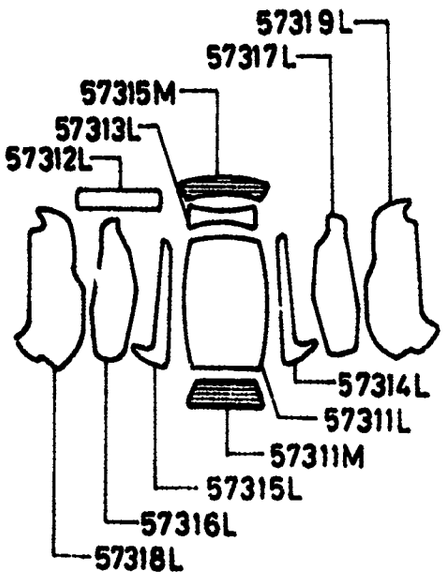

TRIM(L),CUSHION

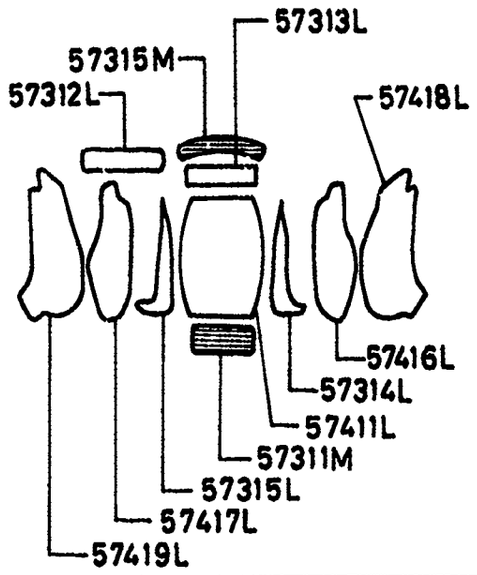

TRIM(R&L),HEAD REST

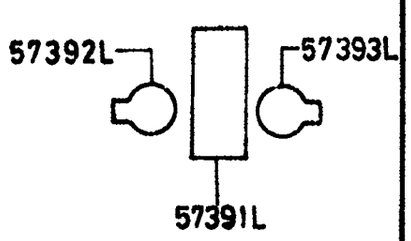

NOTE:
A. PARTS INDICATE AS ▤ ARE MADE OF VINYL.
B. ALL THE LEATHER TRIMS SHOWN IN THIS PAGE ARE SUPPLIED FROM "GARDEN STATE TANNING CO." IN U.S.A. (NOT FROM TOYO KOGYO CO.,LTD. IN JAPAN).

TRIM(R),BACK

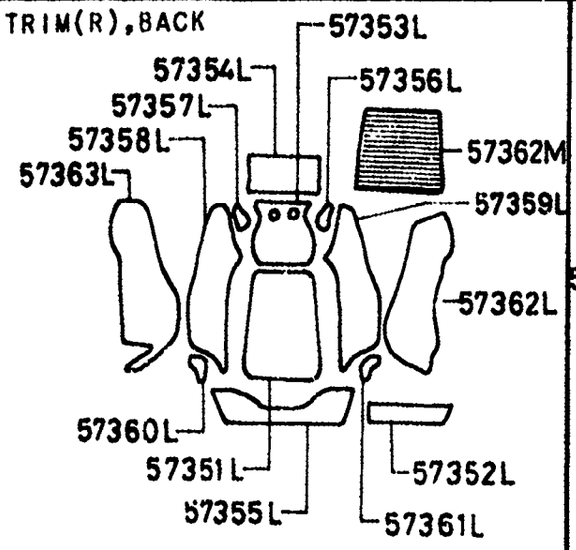

TRIM(L),BACK

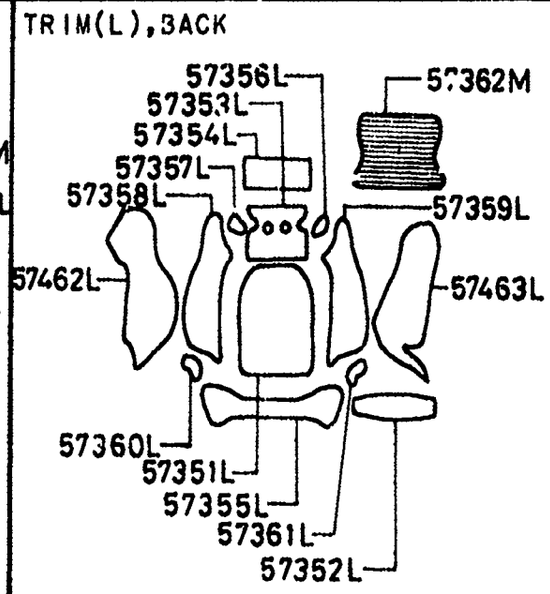

5710A-1 SEAT TRIM (LEATHER - ANNIVERSARY EDITION)

D·CODE (Key No.)	PART NAME	PART No.	Qty.	MODEL DESCRIPTION	VIN (Chassis No.)
57311L	TRIM NO.1,CUSHION	*8346-57-311	1	(635MM X 425MM)	
	BROWN	70			
57311M	TRIM NO.12,CUSHION	*8346-57-311X	2	(476MM X 140MM)	
	BROWN	70			
57312L	TRIM NO.2,CUSHION	*8346-57-312	2	(392MM X 125MM)	
	BROWN	70			
57313L	TRIM NO.3,CUSHION	*8346-57-313	2	(390MM X 155MM)	
	BROWN	70			
57314L	TRIM NO.4,CUSHION	*8346-57-314	2	(530MM X 190MM)	
	BROWN	70			
57315L	TRIM NO.5,CUSHION	*8346-57-315	2	(530MM X 190MM)	
	BROWN	70			
57315M	TRIM NO.10,CUSHION	*8346-57-315X	2	(420MM X 165MM)	
	BROWN	70			
57316L	TRIM NO.6,CUSHION	*8346-57-316	1	(585MM X 230MM)	
	BROWN	70			
57317L	TRIM NO.7,CUSHION	*8346-57-317	1	(585MM X 230MM)	

SECTION NUMBER INDEX (BODY)

STARTING LOCATION	SECTION No.	SECTION NAME
3–C2	0900A	KEY SETS
3–C3	5000A	FRONT BUMPER & GRILLE
3–E3	5010A	REAR BUMPER
3–G3	5030A	WINDOW MOULDINGS
3–I3	5040A	BODY MOULDINGS
3–C4	5100A	LAMPS (FRONT & SIDE)
3–G4	5110A	LAMPS (REAR)
3–I4	5130A	OVERHEAD CONSOLE (1979 STANDARD ROOF MODEL)
3–J4	5170A	COWL & EXTRACTOR GRILLES & ORNAMENTS
3–C5	5230A	BONNET
3–E5	5310A	BODY PANELS (FRONT)
3–K5	5340A	BODY PANELS (SIDE & ROOF)
3–I6	5360A	BODY PANELS (FLOOR)
3–C7	5500A	DASHBOARD EQUIPMENT
3–L7	5540A	METERS
3–D8	5560A	DASHBOARD & RELATED
3–L8	5570A	CONSOLE
3–K9	5580A	VENTILATOR
3–C10	5700A	SEAT (EXCEPT LEATHER TRIM)
3–N10	5710A	SEAT TRIM (LEATHER – ANNIVERSARY EDITION)
3–G11	5760A	SEAT BELTS

STARTING LOCATION	SECTION No.	SECTION NAME
3–C12	5800A	FRONT DOOR
3–C13	5830A	FRONT DOOR MECHANISMS
3–C14	6100A	HEATER
3–E1·	6110A	HEATER UNIT
3–H14	6115A	HEATER CONTROLS
3–J14	6120A	HEATER BLOWER
3–C15	6230A	BACK DOOR MECHANISMS
3–F15	6300A	WINDOW GLASSES
3–I15	6330A	SUNROOF
3–C16	6600A	ELECTRIC EQUIPMENT
3–G16	6680A	RADIO & STEREO SYSTEMS
4–C2	6700A	WIRE HARNESS & CLAMPS
4–G2	6720A	WINDSHIELD WASHER
4–H2	6730A	WINDSHIELD WIPER
4–J2	6740A	WIPER MOTOR (COMPONENTS ONLY)
4–C3	6800A	CEILING TRIM
4–J3	6840A	TRIM & SCUFF PLATE
4–F4	6860A	FLOOR MAT & PADS
4–L4	6870A	SERVICE TOOLS
4–M4	6900A	VISOR, ASSIST HANDLE & MIRRORS
4–G5	6930A	CAUTION PLATES

THE FRAMES IN THIS COLUMN INDICATE :

3–N10	5710A	SEAT TRIM (LEATHER-ANNIVERSARY EDITION)
3–G11	5760A	SEAT BELTS

© 1983 Toyo Kogyo Co., Ltd.
MAY 1983

5710A . SEAT TRIM (LEATHER – ANNIVERSARY EDITION)

TRIM(R),CUSHION

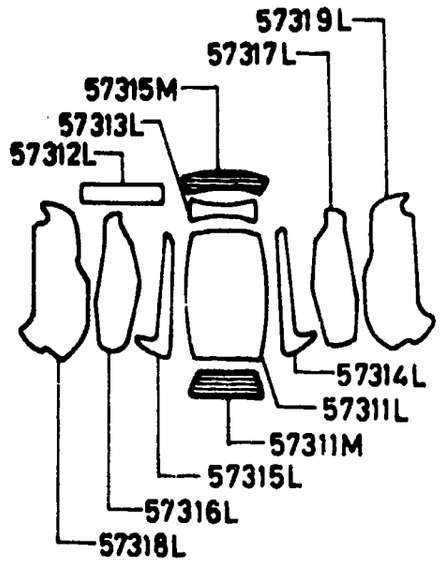

TRIM(L),CUSHION

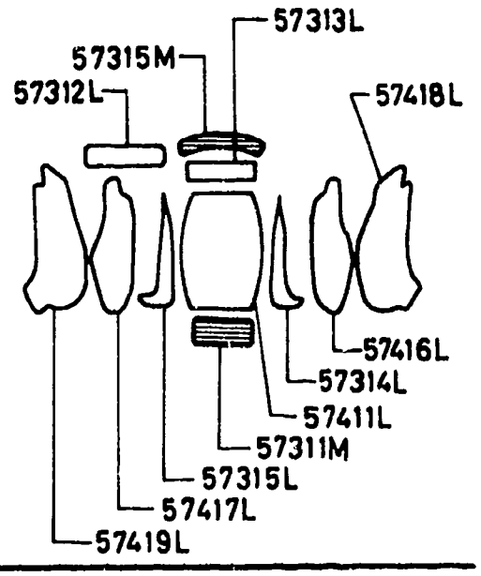

TRIM(R&L),HEAD REST

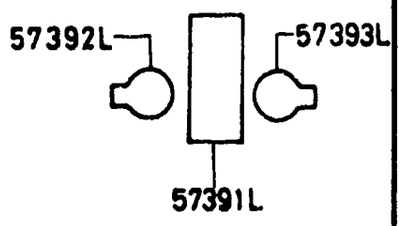

NOTE:
A. PARTS INDICATE AS ▤ ARE MADE OF VINYL.
B. ALL THE LEATHER TRIMS SHOWN IN THIS PAGE ARE SUPPLIED FROM "GARDEN STATE TANNING CO." IN U.S.A. (NOT FROM TOYO KOGYO CO.,LTD. IN JAPAN).

TRIM(R),BACK

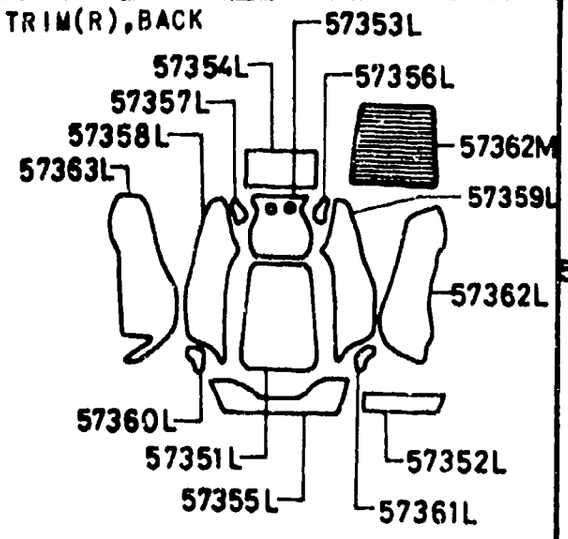

TRIM(L),BACK

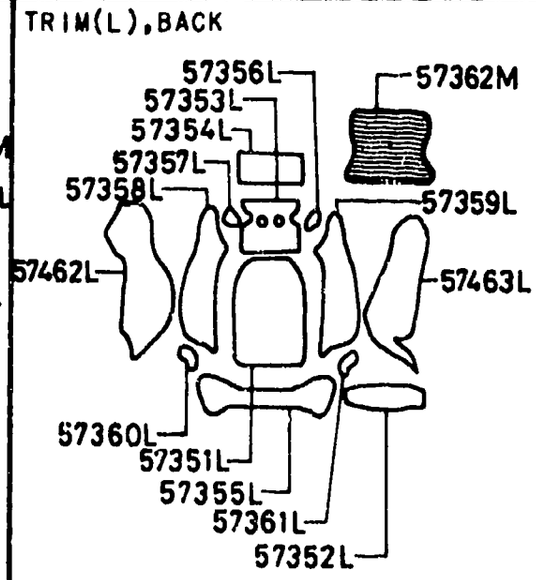

5710A-2 SEAT TRIM (LEATHER - ANNIVERSARY EDITION)

D-CODE (Key No.)	PART NAME	PART No.	Qty.	MODEL / DESCRIPTION	VIN (Chassis No.)
57317L CONT'D		8346-57-317			
	BROWN	70			
57318L	TRIM NO.8,CUSHION	*8346-57-318	1	(670MM X 330MM)	
	BROWN	70			
57319L	TRIM NO.9,CUSHION	*8346-57-319	1	(670MM X 330MM)	
	BROWN	70			
57351L	TRIM NO.1,BACK	*8346-57-351	2	(570MM X 413MM)	
	BROWN	70			
57352L	TRIM NO.2,BACK	*8346-57-352	2	(360MM X 125MM)	
	BROWN	70			
57353L	TRIM NO.3,BACK	*8346-57-353	2	(320MM X 290MM)	
	BROWN	70			
57354L	TRIM NO.4,BACK	*8346-57-354	2	(280MM X 380MM)	
	BROWN	70			
57355L	TRIM NO.5,BACK	*8346-57-355	2	(160MM X 630MM)	
	BROWN	70			
57356L	TRIM NO.6,BACK	*8346-57-356	2	(145MM X 120MM)	

5710A . SEAT TRIM (LEATHER – ANNIVERSARY EDITION)

TRIM(R),CUSHION

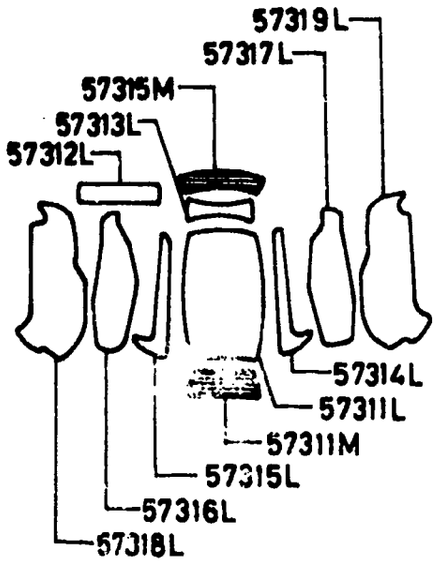

TRIM(L),CUSHION

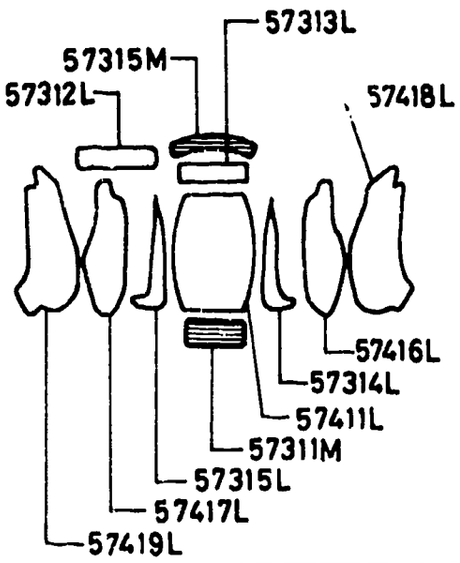

TRIM(R&L),HEAD REST

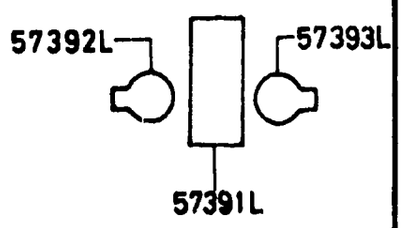

NOTE:
A. PARTS INDICATE AS ▤ ARE MADE OF VINYL.
B. ALL THE LEATHER TRIMS SHOWN IN THIS PAGE ARE SUPPLIED FROM "GARDEN STATE TANNING CO." IN U.S.A. (NOT FROM TOYO KOGYO CO.,LTD. IN JAPAN).

TRIM(R),BACK

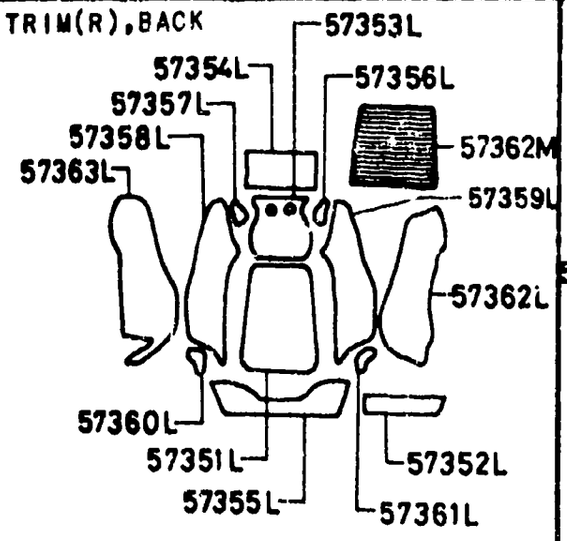

TRIM(L),BACK

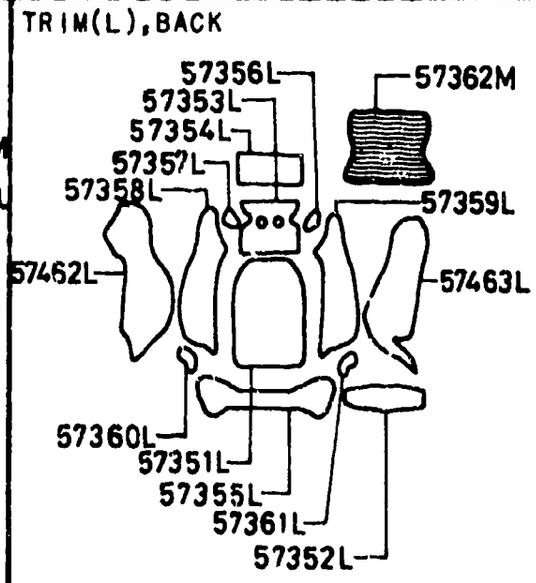

D-CODE (Key No.)	PART NAME	PART No.	Qty.	MODEL/DESCRIPTION	VIN (Chassis No.)
57356L CONT'D		8346-57-356			
	BROWN	70			
57357L	TRIM NO.7,BACK	*8346-57-357	2	(145MM X 120MM)	
	BROWN	70			
57358L	TRIM NO.8,BACK	*8346-57-358	2	(725MM X 210MM)	
	BROWN	70			
57359L	TRIM NO.9,BACK	*8346-57-359	2	(725MM X 210MM)	
	BROWN	70			
57360L	TRIM NO.10,BACK	*8346-57-360	2	(145MM X 120MM)	
	BROWN	70			
57361L	TRIM NO.11,BACK	*8346-57-361	2	(145MM X 120MM)	
	BROWN	70			
57362L	TRIM NO.12,BACK	*8346-57-362	1	(760MM X 280MM)	
	BROWN	70			
57362M	TRIM NO.14,BACK	*8346-57-362X	2	(490MM X 490MM)	
	BROWN	70			
57363L	TRIM NO.13,BACK	*8346-57-363	1	(765MM X 280MM)	

5710A . SEAT TRIM (LEATHER – ANNIVERSARY EDITION)

TRIM(R),CUSHION

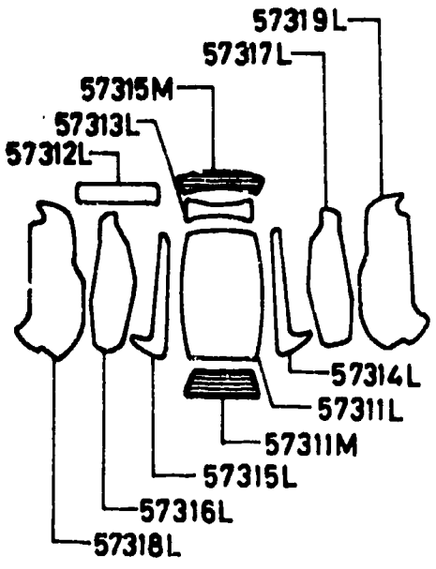

TRIM(L),CUSHION

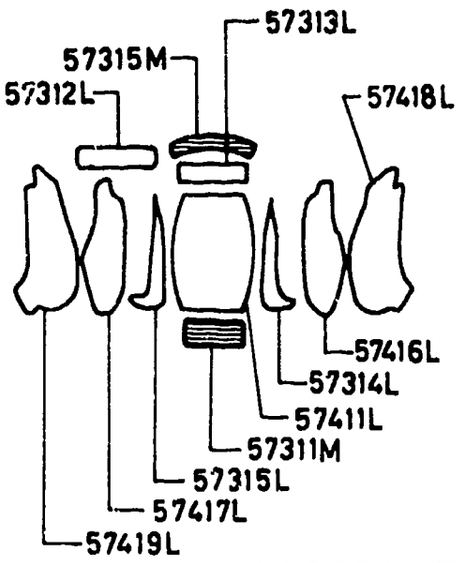

TRIM(R&L),HEAD REST

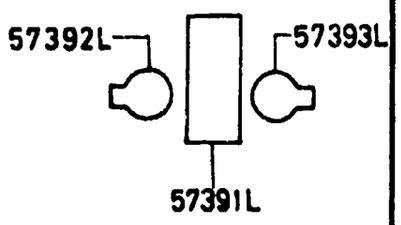

NOTE:
A. PARTS INDICATE AS ▤ ARE MADE OF VINYL.
B. ALL THE LEATHER TRIMS SHOWN IN THIS PAGE ARE SUPPLIED FROM "GARDEN STATE TANNING CO." IN U.S.A. (NOT FROM TOYO KOGYO CO.,LTD. IN JAPAN).

TRIM(R),BACK

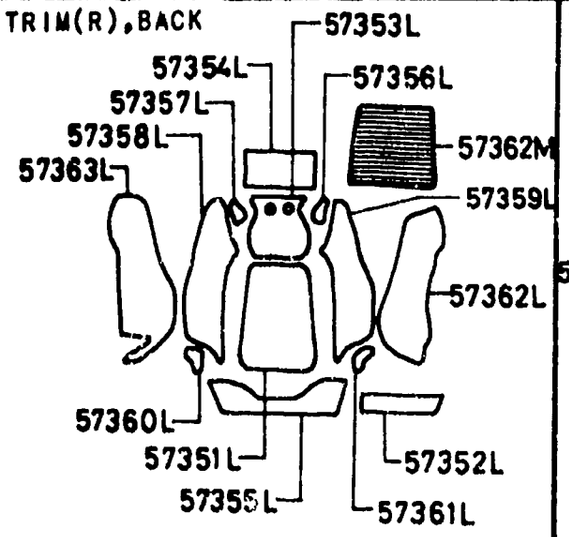

TRIM(L),BACK

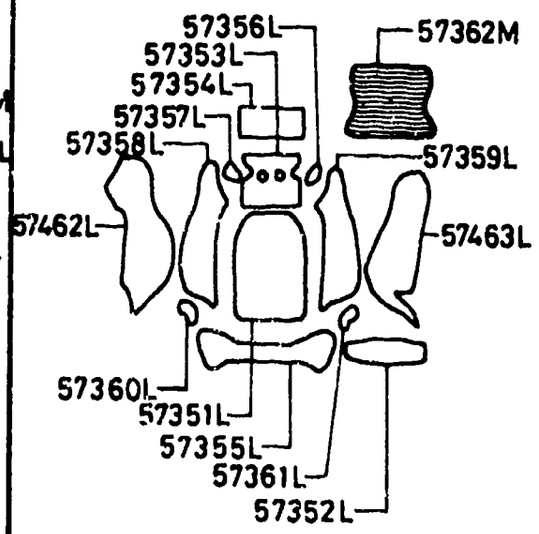

D-CODE (Key No.)	PART NAME	PART No.	Qty.	MODEL / DESCRIPTION	VIN (Chassis No.)
57363L CONT'D		8346-57-363			
	BROWN	70			
57391L	TRIM NO.1,HEAD REST	*8346-57-391	2	(480MM X 280MM)	
	BROWN	70			
57392L	TRIM NO.2,HEAD REST	*8346-57-392	2	(170MM X 225MM)	
	BROWN	70			
57393L	TRIM NO.3,HEAD REST	*8346-57-393	2	(170MM X 225MM)	
	BROWN	70			
57411L	TRIM NO.11,CUSHION	*8346-57-411	1	(635MM X 425MM)	
	BROWN	70			
57416L	TRIM NO.16,CUSHION	*8346-57-416	1	(585MM X 230MM)	
	BROWN	70			
57417L	TRIM NO.17,CUSHION	*8346-57-417	1	(585MM X 230MM)	
	BROWN	70			
57418L	TRIM NO.18,CUSHION	*8346-57-418	1	(670MM X 330MM)	
	BROWN	70			
57419L	TRIM NO.19,CUSHION	*8346-57-419	1	(670MM X 330MM)	

5710A SEAT TRIM (LEATHER – ANNIVERSARY EDITION)

TRIM(R),CUSHION

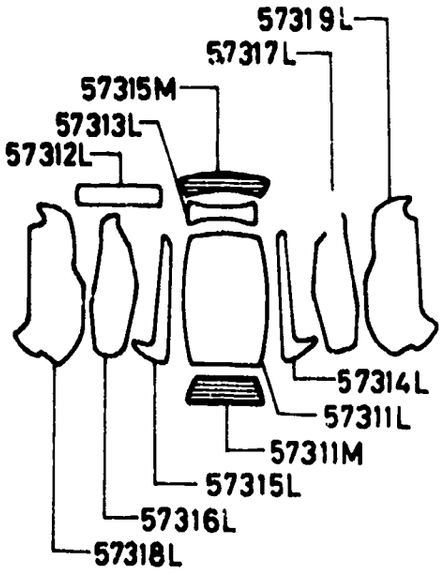

TRIM(L),CUSHION

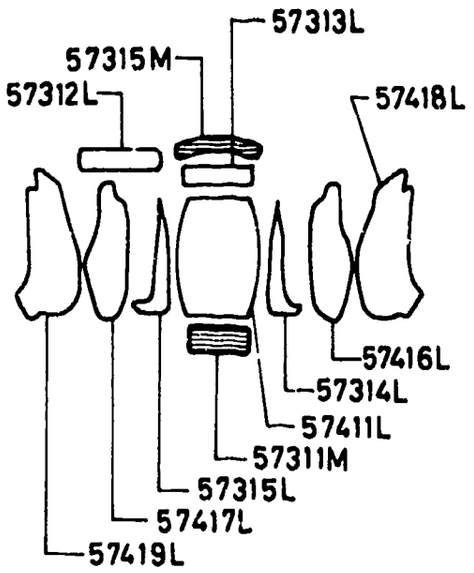

TRIM(R&L),HEAD REST

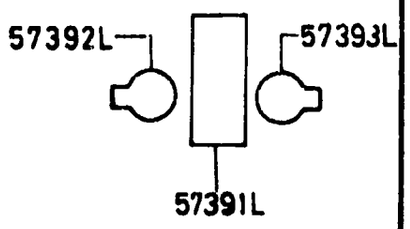

NOTE:
A. PARTS INDICATE AS ▤ ARE MADE OF VINYL.
B. ALL THE LEATHER TRIMS SHOWN IN THIS PAGE ARE SUPPLIED FROM "GARDEN STATE TANNING CO." IN U.S.A. (NOT FROM TOYO KOGYO CO.,LTD. IN JAPAN).

TRIM(R),BACK

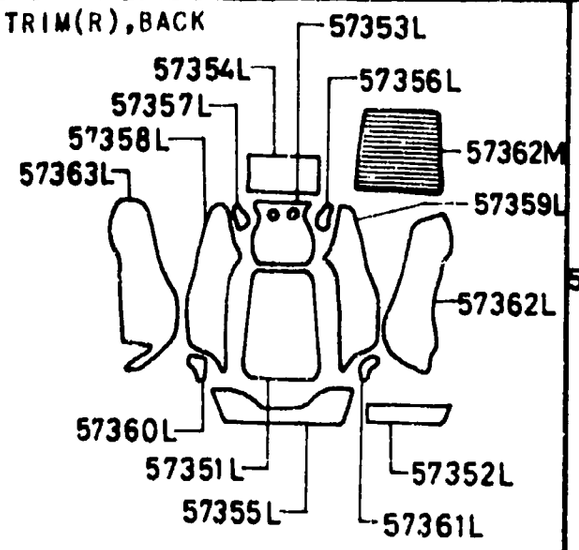

TRIM(L),BACK

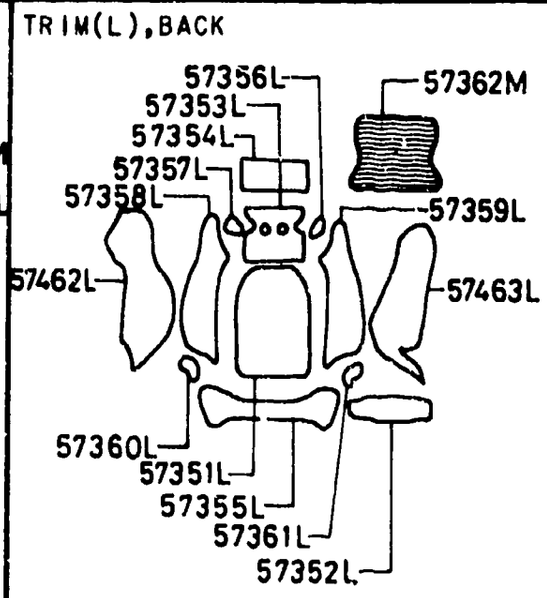

5710A-5★ SEAT TRIM (LEATHER - ANNIVERSARY EDITION)

D-CODE (Key No.)	PART NAME	PART No.	Qty.	MODEL DESCRIPTION	VIN Chassis No.
57419L CONT'D		8346-57-419			
	BROWN	70			
57462L	TRIM NO.22,BACK	★8346-57-462	1	(760MM X 280MM)	
	BROWN	70			
57463L	TRIM NO.23,BACK	★8346-57-463	1	(765MM X 280MM)	
	BROWN	70			

5760A SEAT BELTS

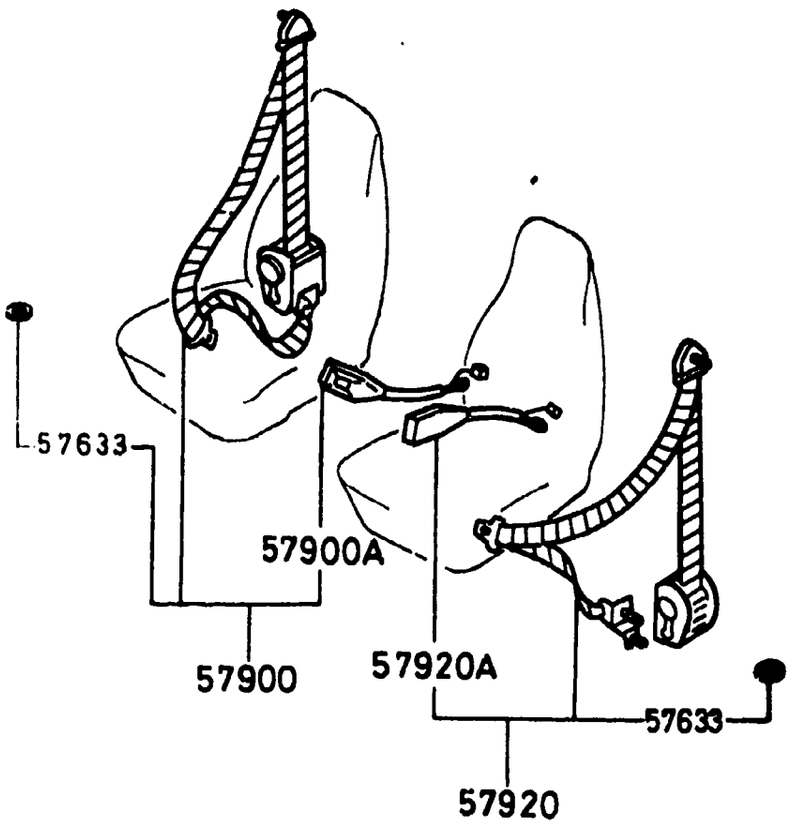

5760A-1 SEAT BELTS

D-CODE (Key No.)	PART NAME	PART No.	Qty.	MODEL DESCRIPTION	VIN (Chassis No.)
57633	BUSH BUSELURE CARBON	8872-57-633	2		
57900	BELT(R),FRONT SEAT CEINTURE DE SECURITE (D) CORREA (DR),ASIENTO DELAN	8872-57-610	1		SA22C .. 500001 -559739
	BLACK	00			
	WINE	11			
	BROWN	20			
		8872-57-610A	1		SA22C .. 559740-
	BLACK	00			
	WINE	11			
	BROWN	20			
57900A	BELT'A'(R),FRT.SEAT CEINTURE 'A'(D)AV.	8872-57-620	1		SA22C .. 500001 -559739
	BLACK	00			
	WINE	11			
	BROWN	20			
		8872-57-620A	1		SA22C .. 559740-
	BLACK	00			
	WINE	11			
	BROWN	20			
57920	BELT(L),FRONT SEAT CEINTURE DE SECURITE (G) CORREA (IZ),ASIENTO DELAN	8872-57-670	1		SA22C .. 500001 -559739

5760A SEAT BELTS

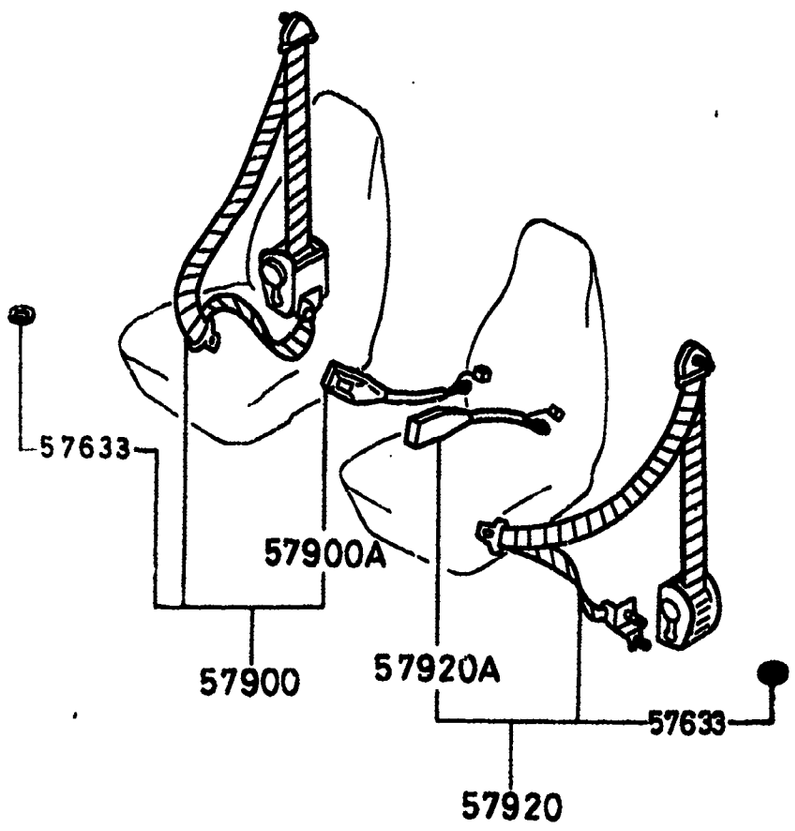

5760A-2* SEAT BELTS

D-CODE (Key No.)	PART NAME	PART No.	Qty.	MODEL DESCRIPTION	VIN (Chassis No.)
57920 CONT'D		8872-57-670			
	BLACK	00			
	WINE	11			
	BROWN	20			
		8072-57-670A	1		SA22C .. 559740-
	BLACK	00			
	WINE	11			
	BROWN	20			
57920A	BELT'A'(L),FRT.SEAT CEINTURE 'A'(G)AV.	6672-57-680	1		SA22C .. 500001 -559739
	BLACK	00			
	WINE	11			
	BROWN	20			
		8872-57-680A	1		SA22C .. 559740-
	BLACK	00			
	WINE	11			
	BROWN	20			

SECTION NUMBER INDEX (BODY)

STARTING LOCATION	SECTION No.	SECTION NAME
3–C2	0900A	KEY SETS
3–C3	5000A	FRONT BUMPER & GRILLE
3–E3	5010A	REAR BUMPER
3–G3	5030A	WINDOW MOULDINGS
3–I3	5040A	BODY MOULDINGS
3–C4	5100A	LAMPS (FRONT & SIDE)
3–G4	5110A	LAMPS (REAR)
3–I4	5130A	OVERHEAD CONSOLE (1979 STANDARD ROOF MODEL)
3–J4	5170A	COWL & EXTRACTOR GRILLES & ORNAMENTS
3–C5	5230A	BONNET
3–E5	5310A	BODY PANELS (FRONT)
3–K5	5340A	BODY PANELS (SIDE & ROOF)
3–I6	5360A	BODY PANELS (FLOOR)
3–C7	5500A	DASHBOARD EQUIPMENT
3–L7	5540A	METERS
3–D8	5560A	DASHBOARD & RELATED
3–L8	5570A	CONSOLE
3–K9	5580A	VENTILATOR
3–C10	5700A	SEAT (EXCEPT LEATHER TRIM)
3–N10	5710A	SEAT TRIM (LEATHER – ANNIVERSARY EDITION)
3–G11	5760A	SEAT BELTS
3–C12	5800A	FRONT DOOR
3–C13	5830A	FRONT DOOR MECHANISMS
3–C14	6100A	HEATER
3–E14	6110A	HEATER UNIT
3–H14	6115A	HEATER CONTROLS
3–J14	6120A	HEATER BLOWER
3–C15	6230A	BACK DOOR MECHANISMS
3–F15	6300A	WINDOW GLASSES
3–I15	6330A	SUNROOF
3–C16	6600A	ELECTRIC EQUIPMENT
3–G16	6680A	RADIO & STEREO SYSTEMS
4–C2	6700A	WIRE HARNESS & CLAMPS
4–G2	6720A	WINDSHIELD WASHER
4–H2	6730A	WINDSHIELD WIPER
4–J2	6740A	WIPER MOTOR (COMPONENTS ONLY)
4–C3	6800A	CEILING TRIM
4–J3	6840A	TRIM & SCUFF PLATE
4–F4	6860A	FLOOR MAT & PADS
4–L4	6870A	SERVICE TOOLS
4–M4	6900A	VISOR, ASSIST HANDLE & MIRRORS
4–G5	6930A	CAUTION PLATES

THE FRAMES IN THIS COLUMN INDICATE :

3–C12 5800A FRONT DOOR

© 1983 Toyo Kogyo Co., Ltd.
MAY 1983

5800A FRONT DOOR

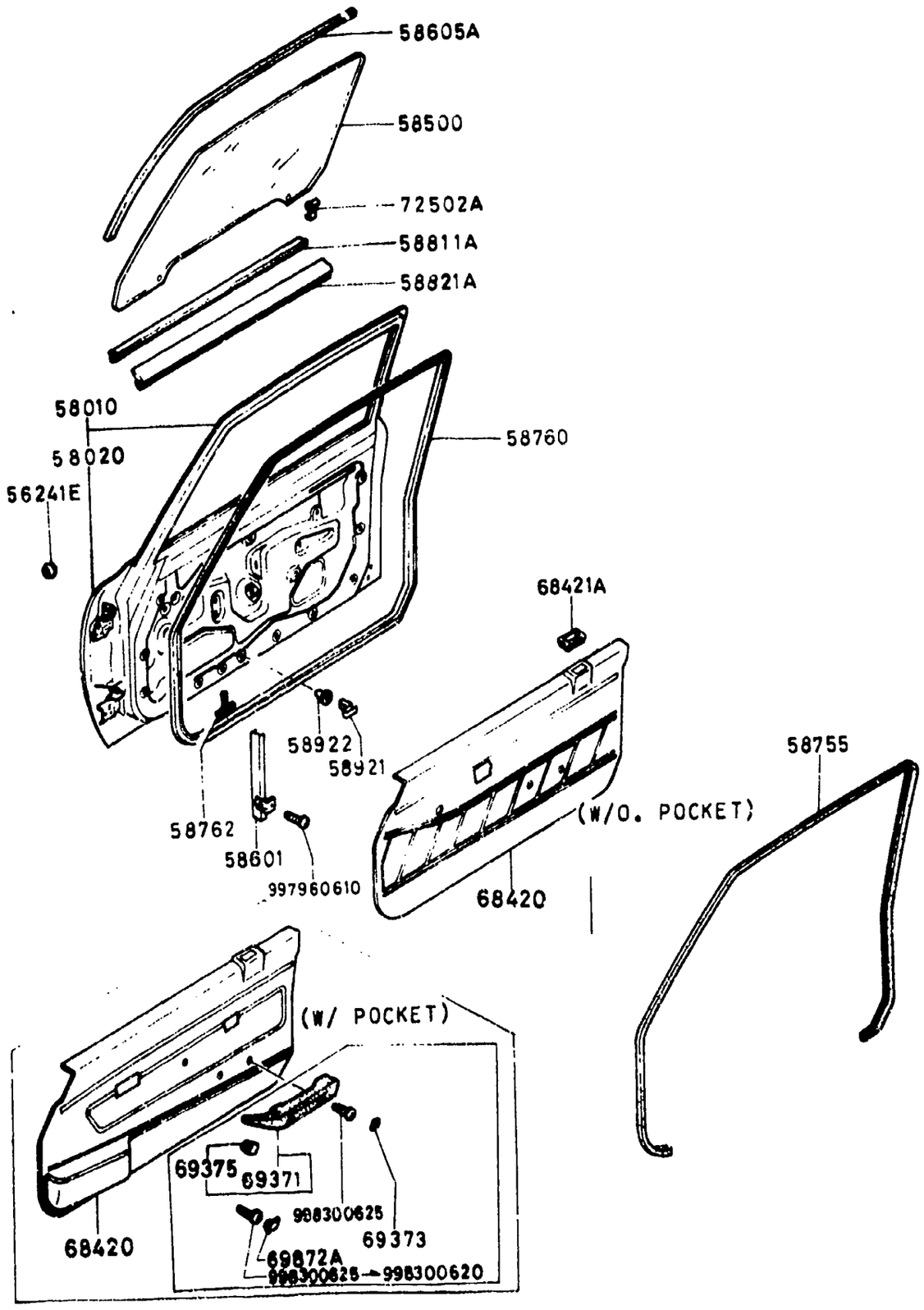

5800A-1 FRONT DOOR

D-CODE (Key No.)	PART NAME	PART No.	Qty.	MODEL / DESCRIPTION	VIN (Chassis No.)
56241E	PLUG,DRAIN BOUCHON DE VIDANGE TAPON DRENAJE	0118-56-241	4		
58010	BODY(R),FRONT DOOR PORTE AV,(D) CUERPO (DR),PUERTA DELANT	8871-58-010B	1		SA22C .. 500001 -525593
		8981-58-010	1		SA22C .. 525594 -592955
		8981-58-010A	1		SA22C .. 592956 -612589
	<A >	*8981-58-010B	1		SA22C .. 612590 -624202
		*8981-58-010D	1		SA22C .. 624203-
58010	BODY(L),FRONT DOOR PORTE AV,(G) CUERPO (IZ),PUERTA DELANT	8871-59-010B	1		SA22C .. 500001 -592955
		8871-59-010C	1		SA22C .. 592956 -612589
	<A >	*8871-59-010D	1		SA22C .. 612590 -624202
		*8871-59-010F	1		SA22C .. 624203-
58020	PANEL(R),OUTER PANNEAU PORTE (D) PANEL EXT. DER.	8871-58-020	1		SA22C .. 500001 -525593
		8981-58-020	1		SA22C .. 525594 -592955
		8981-58-020A	1		SA22C .. 592956 -624202
	<AN>	*8981-58-020B	1		SA22C .. 624203-
58020	PANEL(L),OUTER PANNEAU PORTE (G) PANEL EXTERIOR IZQ.	8871-59-020	1		SA22C .. 500001 -592955
		8871-59-020A	1		SA22C ..

5800A FRONT DOOR

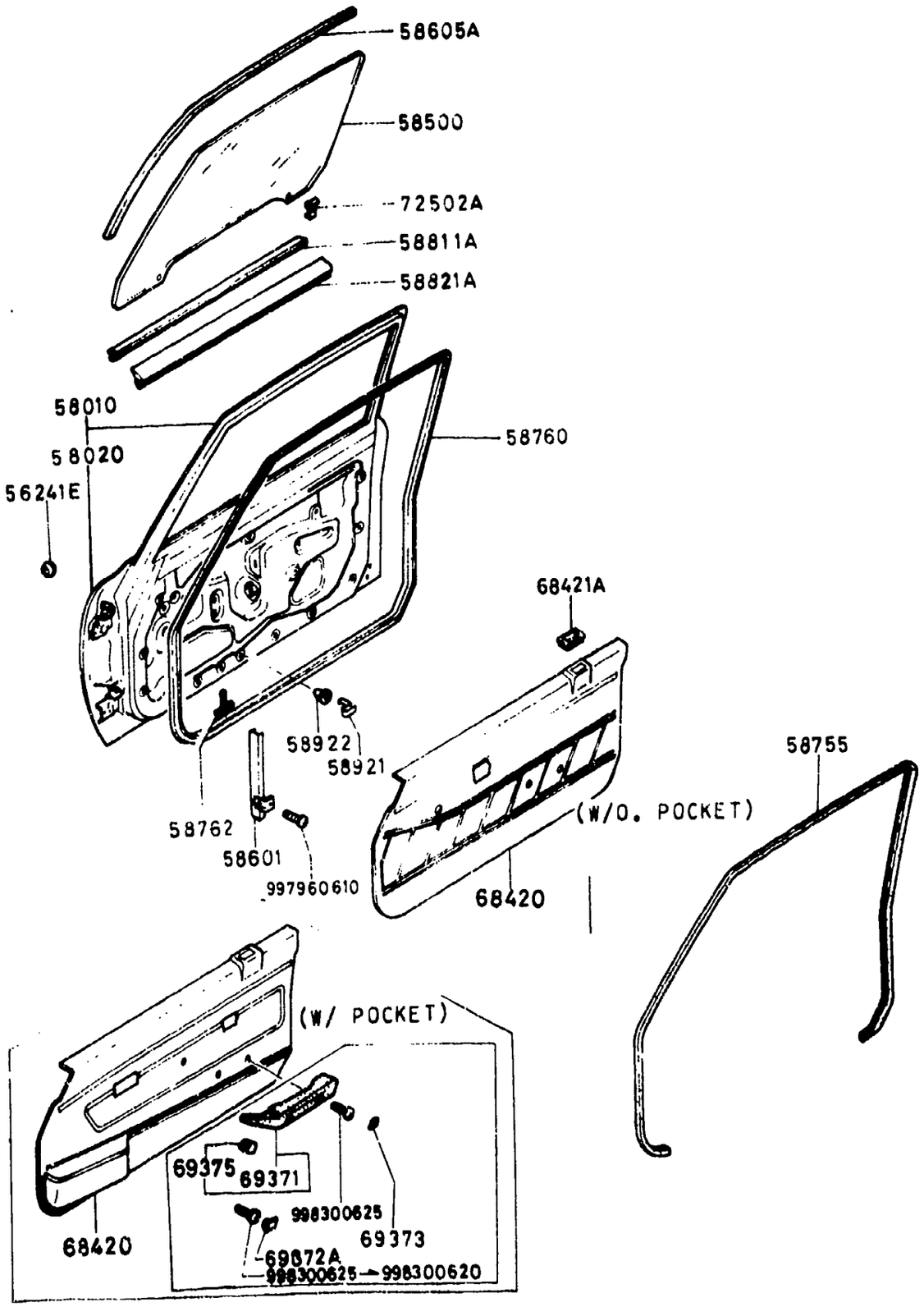

5800A-2 FRONT DOOR

D-CODE (Key No.)	PART NAME	PART No.	Qty.	MODEL/DESCRIPTION	VIN (Chassis No.)
58020 CONT'D		8871-59-020A			592956 -624202
	<AN>	*8871-59-020B	1		SA22C .. 624203-
58500	GLASS(R),DOOR GLACE DE PORTE (D) VIDRIO (DER), PUERTA	8871-58-501	1		SA22C .. 500001 -547088
		8871-58-501A	1		SA22C .. 547089 -618736
	<AN>	*8871-58-501B	1		SA22C .. 618737-
58500	GLASS(L),DOOR GLACE DE PORTE (G) VIDRIO (IZQ), PUERTA	8871-59-501	1		SA22C .. 500001 -547088
		8871-59-501A	1		SA22C .. 547089 -618953
	<AN>	*8871-59-501B	1		SA22C .. 618954-
58601	GUIDE'A'(R),GLASS GUIDE A (D), GLACE GUIA DE VIDRIO DER. 'A'	8871-58-603	1		
58601	GUIDE'A'(L),GLASS GUIDE A (G), GLACE GUIA DE VIDRIO IZQ. 'A'	8871-59-603	1		
58605A	CHANNEL,GLASS GLISSIERE VITRE	*8871-58-605A	2		
58755	WELT,SEAMING JOINT IN. DE PORTE COSTURA,SOLDADURA	8544-68-911A	2		SA22C .. 500001 -502998
	BLACK	01			
	WINE	10			
	BROWN	20			
		8544-68-911B	2		SA22C .. 502999-
	BLACK	01			

5800A FRONT DOOR

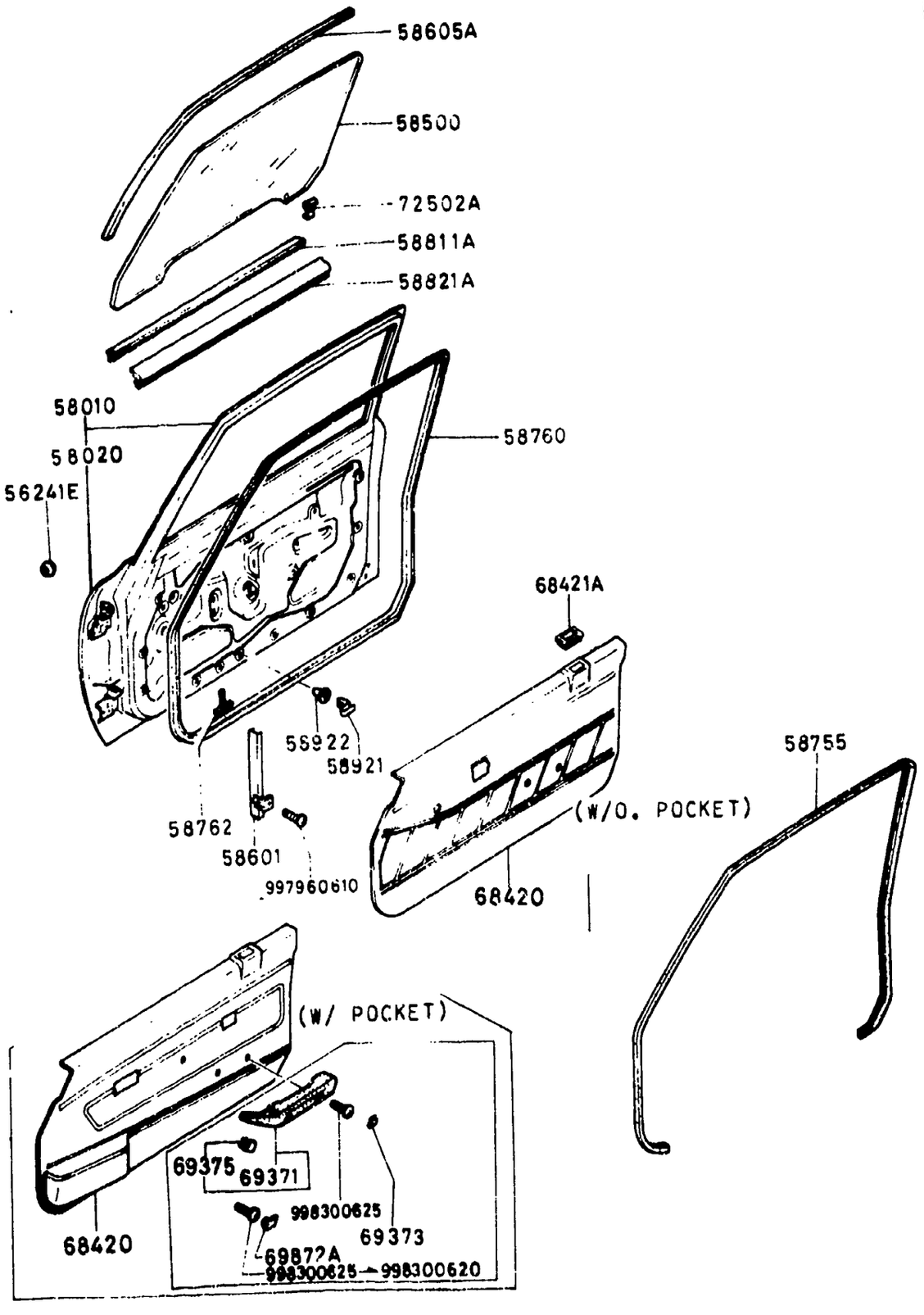

5800A-3 FRONT DOOR

D-CODE (Key No.)	PART NAME	PART No.	Qty.	MODEL DESCRIPTION	VIN (Chassis No.)
58755 CONT'D		8544-68-911B			
	WINE	10			
	BROWN	20			
58760	WEATHERSTRIP(R),DOOR JOINT C.T.C. (D),PAVILLON GOMA IMPERMEAB.(DER),PUER	8871-58-760	1		
58760	WEATHERSTRIP(L),DOOR JOINT CAOUTCHOUC (G), POR GOMA IMPERMEAB.(IZQ),PUER	8871-59-760	1		
58762	FASTENER AGRAFE SOPORTE	0305-58-702	42		
58811A	WEATHERSTRIP,OUTER JOINT CAOUTCHOUC,EXT. GOMA IMPERMEAB.,EXT.	8871-58-781	2		
58821A	WEATHERSTRIP,INN. JOINT CAOUTCHOUC,INT. GOMA IMPERMEAB.,INT.	8871-58-791	2		
58921	FASTENER AGRAFE, GARNITURE FIJADOR,DECORACION	0208-58-921	22		
58922	CAP,FASTENER CACHE, AGRAFE CIERRE DE TAPA	0187-58-922	22		
68420	TRIM(R),DOOR GARNITURE (D), PORTE MOLDURA(DER),PUERTA	8871-68-420A	1	(COMBINATION COLUR) (W/O POCKET)	SA22C .. 500001 -510188
	WINE/RED	12			
	BROWN/BEIGE	22			
		8871-68-420B	1	(COMBINATION COLOR) (W/O POCKET)	SA22C .. 510189 -525593
	WINE/RED	12			
	BROWN/BEIGE	22			

5800A FRONT DOOR

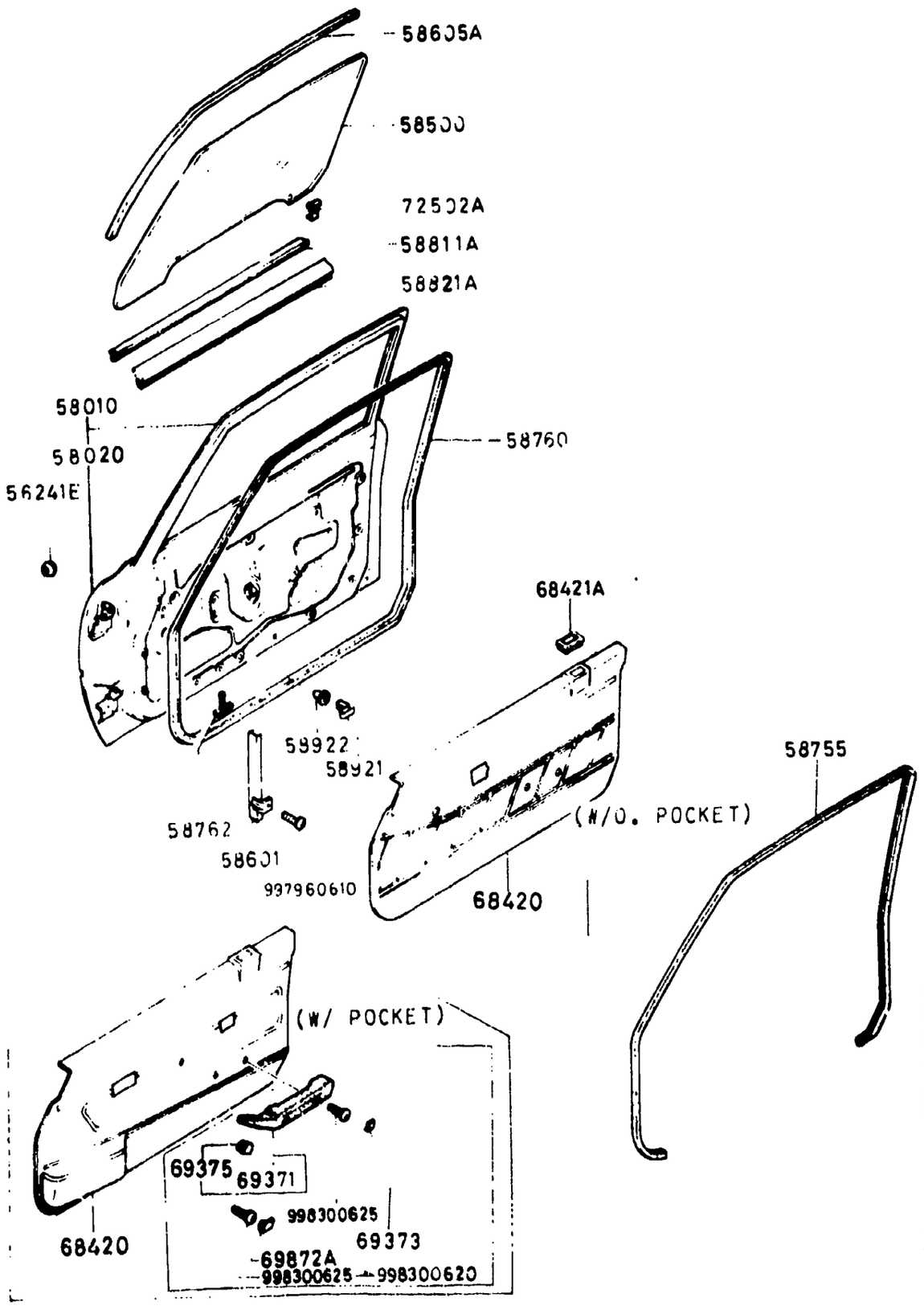

D-CODE (Key No.)	PART NAME	PART No.	Qty.	MODEL DESCRIPTION	VIN Chassis No.
68420 CONT'D		8871-68-420D	1	(COMBINATION COLOR) (W/O POCKET)	SA22C .. 525594 -535838
	WINE/RED	12			
	BROWN/BEIGE	22			
		8871-68-420F	1	(COMBINATION COLOR) (W/O POCKET)	SA22C .. 535839 -563500
	WINE/RED	14			
		8872-68-420A	1	(W/O POCKET)	SA22C .. 500001 -51 188
	BLACK	00			
		8872-68-420B	1	(W/O POCKET)	SA22C .. 510139 -526593
	BLACK	00			
		8872-68-420D	1	(W/O POCKET)	SA22C .. 525594 -535838
	BLACK	00			
		8872-68-420F	1	(W/O POCKET)	SA22C .. 535839-
	BLACK	04			
	WINE	14			
	BROWN	24			

5800A FRONT DOOR

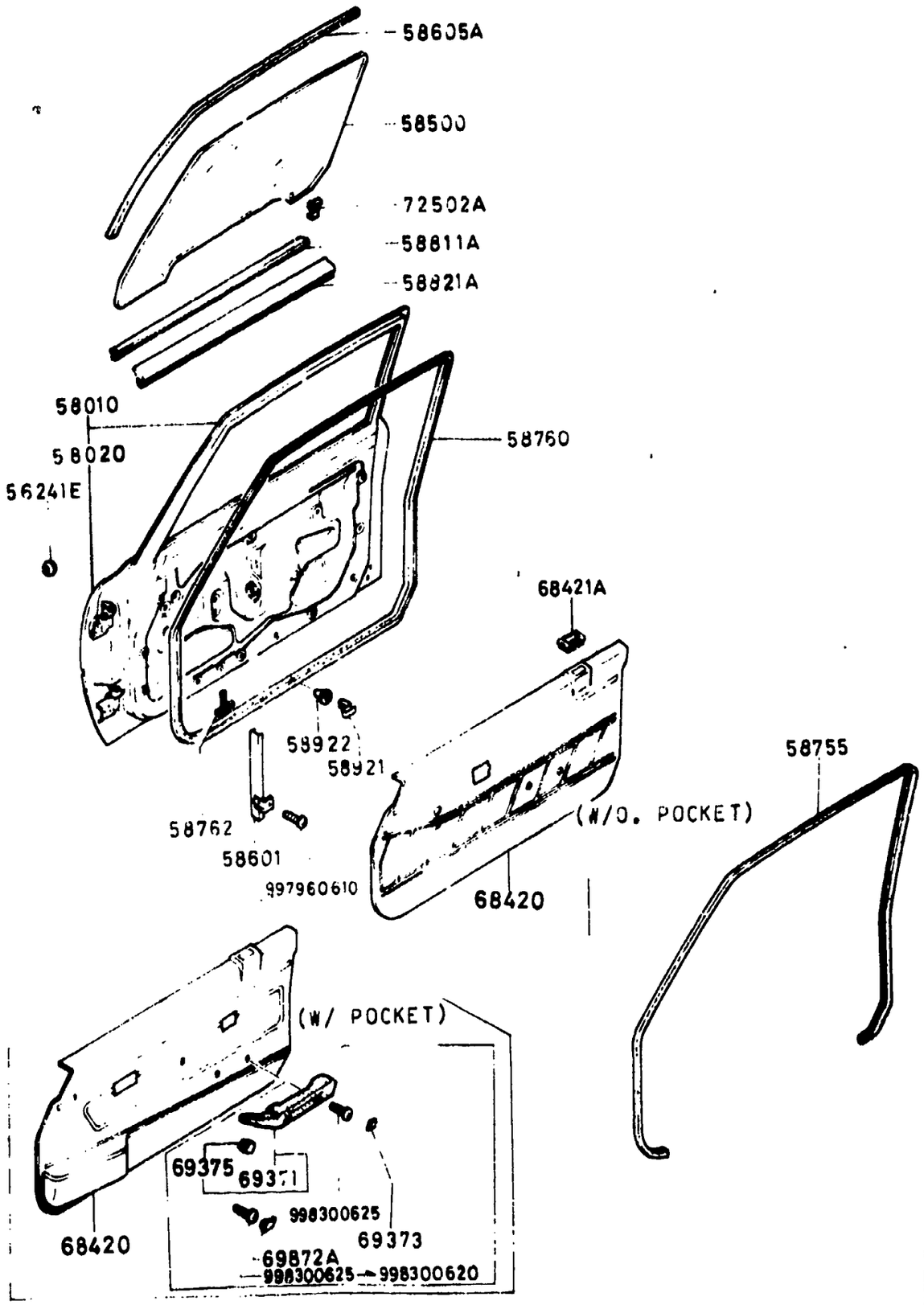

5800A-5 FRONT DOOR

D-CODE (Key No.)	PART NAME	PART No.	Qty.	MODEL DESCRIPTION	VIN (Chassis No.)
68420 CONT'D		8872-68-420F			
	BEIGE	25			
	BROWN (SA22C 606775-)	70		(SUNROOF ONLY)	
		8973-68-420	1	(COMBINATION COLOR) (WITH POCKET)	SA22C .. 525594 -532506
	WINE/RED	13			
	BROWN/BEIGE	23			
		8973-68-420A	1	(COMBINATION COLOR) (WITH POCKET)	SA22C .. 532507 -535838
	WINE/RED	13			
	BROWN/BEIGE	23			
		8973-68-420C	1	(COMBINATION COLOR) (WITH POCKET)	SA22C .. 535339 -568500
	WINE/RED	14			
		8973-68-420P	1	(ORD.BY 897368420P01) (LIMITED)	
		8974-68-420	1	(WITH POCKET)	SA22C .. 525594 -532506
	BLACK	00			
		8974-68-420A	1	(WITH POCKET)	SA22C ..

5800A FRONT DOOR

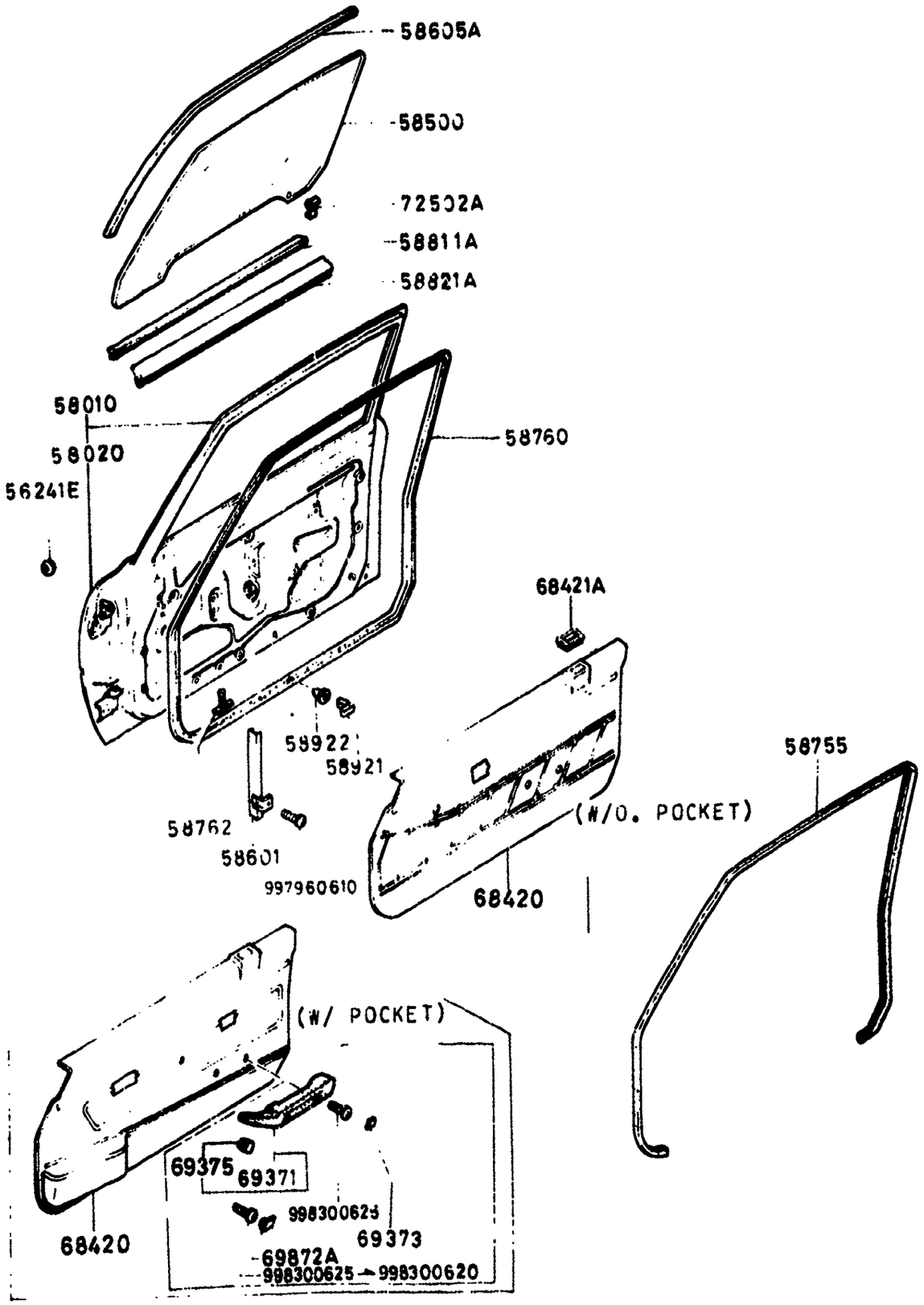

D-CODE (Key No.)	PART NAME	PART No.	Qty.	MODEL / DESCRIPTION	VIN (Chassis No.)
68420 CONT'D		8974-68-420A			532507 -535838
	BLACK	00			
		8974-68-420C	1	(WITH POCKET)	SA22C .. 535839-
	BLACK	04			
	WINE	14			
	BROWN	24			
	BEIGE/BROWN	25			
	BROWN (SA22C 606775-)	70		(SUNROOF ONLY)	
68420	TRIM(L),DOOR GARNITURE (G), PORTE MOLDURA(IZQ),PUERTA	8871-68-450A	1	(COMBINATION COLOR) (W/O POCKET)	SA22C .. 500001 -510188
	WINE/RED	12			
	BROWN/BEIGE	22			
		8871-68-450B	1	(COMBINATION COLOR) (W/O POCKET)	SA22C .. 510189 -525593
	WINE/RED	12			
	BROWN/BEIGE	22			
		8871-68-450D	1	(COMBINATION COLOR) (W/O POCKET)	SA22C .. 525594 -535838
	WINE/RED	12			

5800A FRONT DOOR

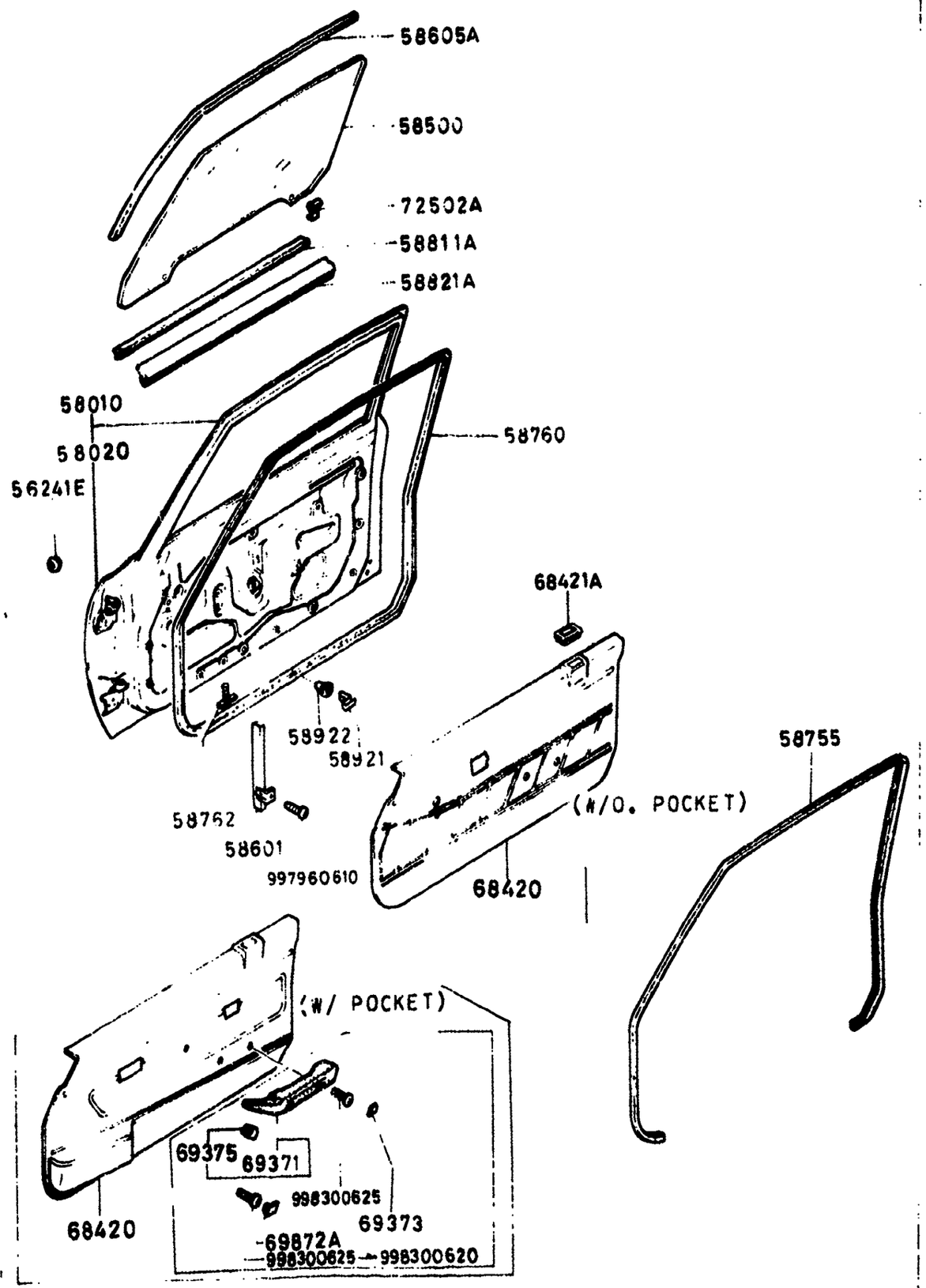

5800A-7 FRONT DOOR

D-CODE (Key No.)	PART NAME	PART No.	Qty.	MODEL DESCRIPTION	VIN (Chassis No.)
68420 CONT' D		8871-68-450D			
	BROWN/BEIGE	22			
		8871-68-450F	1	(COMBINATION COLOR) (W/O POCKET)	SA22C .. 535839 -563500
	WINE/RED	14			
		8872-68-450A	1	(W/O POCKET)	SA22C .. 500001 -510188
	BLACK	00			
		8872-68-450B	1	(W/O POCKET)	SA22C .. 510189 -525593
	BLACK	00			
		8872-68-450D	1	(W/O POCKET)	SA22C .. 525594 -535838
	BLACK	00			
		8872-68-450F	1	(W/O POCKET)	SA22C .. 535839-
	BLACK	04			
	WINE	14			
	BROWN	24			
	BEIGE	25			
	BROWN (SA22C 606775-)	70		(SUNROOF ONLY)	
		8973-68-450		(COMBINATION COLOR)	

5800A FRONT DOOR

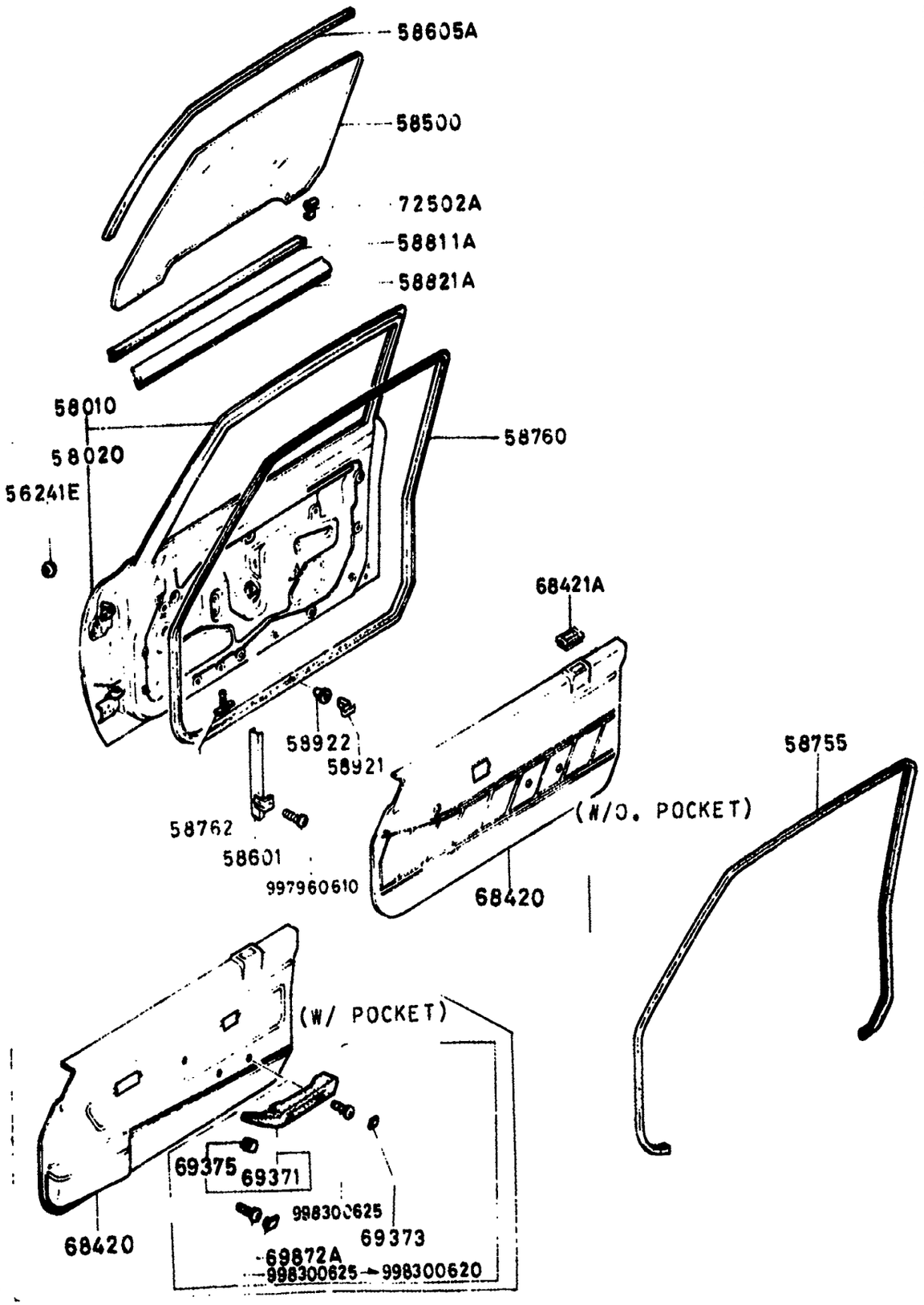

5800A-8 FRONT DOOR

D-CODE (Key No.)	PART NAME	PART No.	Qty.	MODEL/DESCRIPTION	VIN (Chassis No.)
68420 CONT'D		8973-68-450	1	(WITH POCKET)	SA22C .. 525594 -532506
	WINE/RED	13			
	BROWN/BEIGE	23			
		8973-68-450A	1	(COMBINATION COLOR) (WITH POCKET)	SA22C .. 532507 -535838
	WINE/RED	13			
	BROWN/BEIGE	23			
		8973-68-450C	1	(COMBINATION COLOR) (WITH POCKET)	SA22C .. 535839 -563500
	WINE/RED	14			
		8973-68-450P	1	(ORD.BY 897368450P01) (LIMITED)	
		8974-68-450	1	(WITH POCKET)	SA22C .. 525594 -532506
	BLACK	00			
		8974-68-450A	1	(WITH POCKET)	SA22C .. 532507 -535838
	BLACK	00			
		8974-68-450C	1	(WITH POCKET)	SA22C .. 535839-

5800A FRONT DOOR

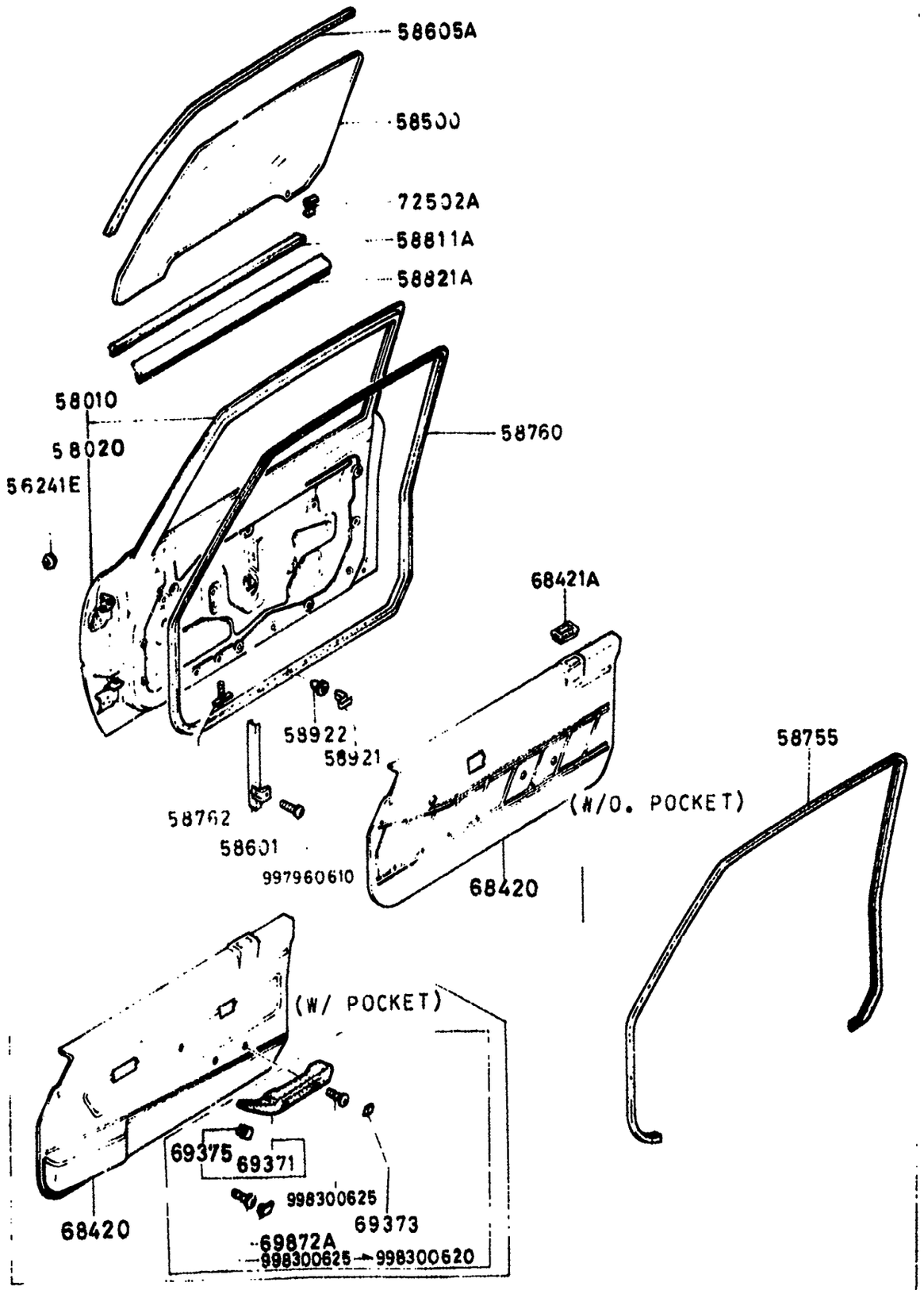

5800A-9 FRONT DOOR

D-CODE (Key No.)	PART NAME	PART No.	Qty.	MODEL DESCRIPTION	VIN (Chassis No.)
68420 CONT'D		8974-68-450C			
	BLACK	04			
	WINE	14			
	BROWN	24			
	BEIGE/BROWN	25			
	BROWN (SA22C 606775-)	70		(SUNROOF ONLY)	
68421A	VESSEL,IN.LOCK BOUTON VERROUILLAGE INT. APOYO DE BRAZO(D)	8545-68-421	2		
69371	REST(R),ARM ACCOUDOIR (D)	8341-69-370	1	80 MODEL	SA22C .. 508501-
	BLACK	04			
	WINE	12			
	BROWN	75			
	BROWN (SA22C 606775-)	79		(SUNROOF ONLY)	
		8871-69-370	1	79 MODEL	SA22C .. 500001 ->520637
	BLACK	00			
	WINE	10			
	BROWN	23			
		8871-69-370A	1	79 MODEL	SA22C .. 520638 ->568500
	BLACK (SA22C 520638-540410)	00			
	BLACK (SA22C 540411-568500)	04			

5800A FRONT DOOR

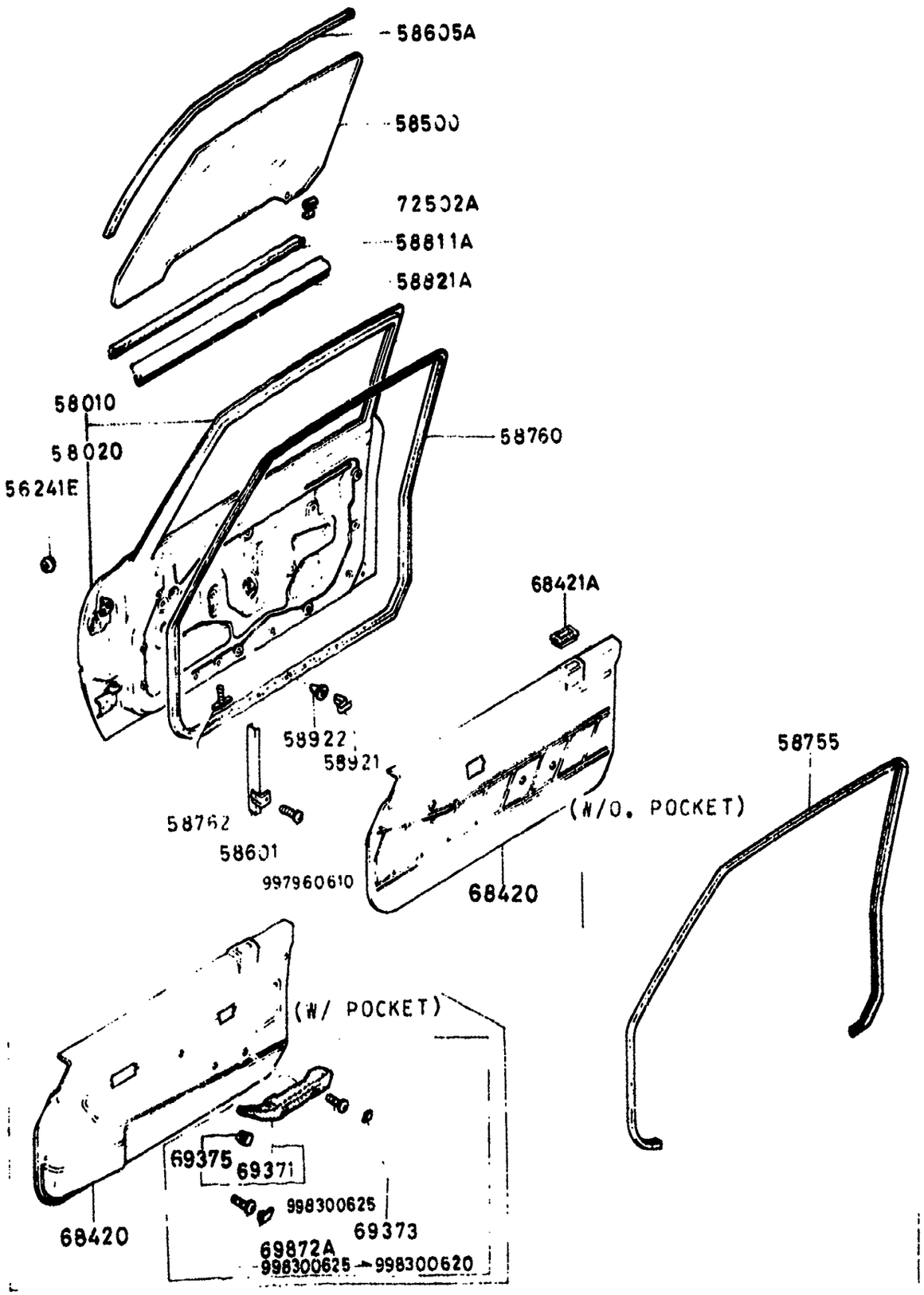

5800A-10 FRONT DOOR

D-CODE (Key No.)	PART NAME	PART No.	Qty.	MODEL / DESCRIPTION	VIN (Chassis No.)
69371 CONT'D		8871-69-370A			
	WINE (SA22C 520638-540410)	10			
	WINE (SA22C 540411-568500)	12			
	BROWN (SA22C 520638-535838)	23			
	BROWN (SA22C 535839-540410)	72			
	BROWN (SA22C 540411-568500)	75			
69371	REST(L),ARM ACCOLDOIR (G) APOYO DE BRAZO(I)	8341-69-390	1	80 MODEL	SA22C .. 508501-
	BLACK	04			
	WINE	12			
	BROWN	75			
	BROWN (SA22C 606775-)	79		(SUNROOF ONLY)	
		8871-69-390	1	79 MODEL	SA22C .. 500001 -520637
	BLACK	00			
	WINE	10			
	BROWN	23			
		8871-69-390A	1	79 MODEL	SA22C .. 520638 -563500
	BLACK (SA22C 520638-540410)	00			
	BLACK (SA22C 540411-568500)	04			
	WINE (SA22C 520638-540410)	10			

5800A FRONT DOOR

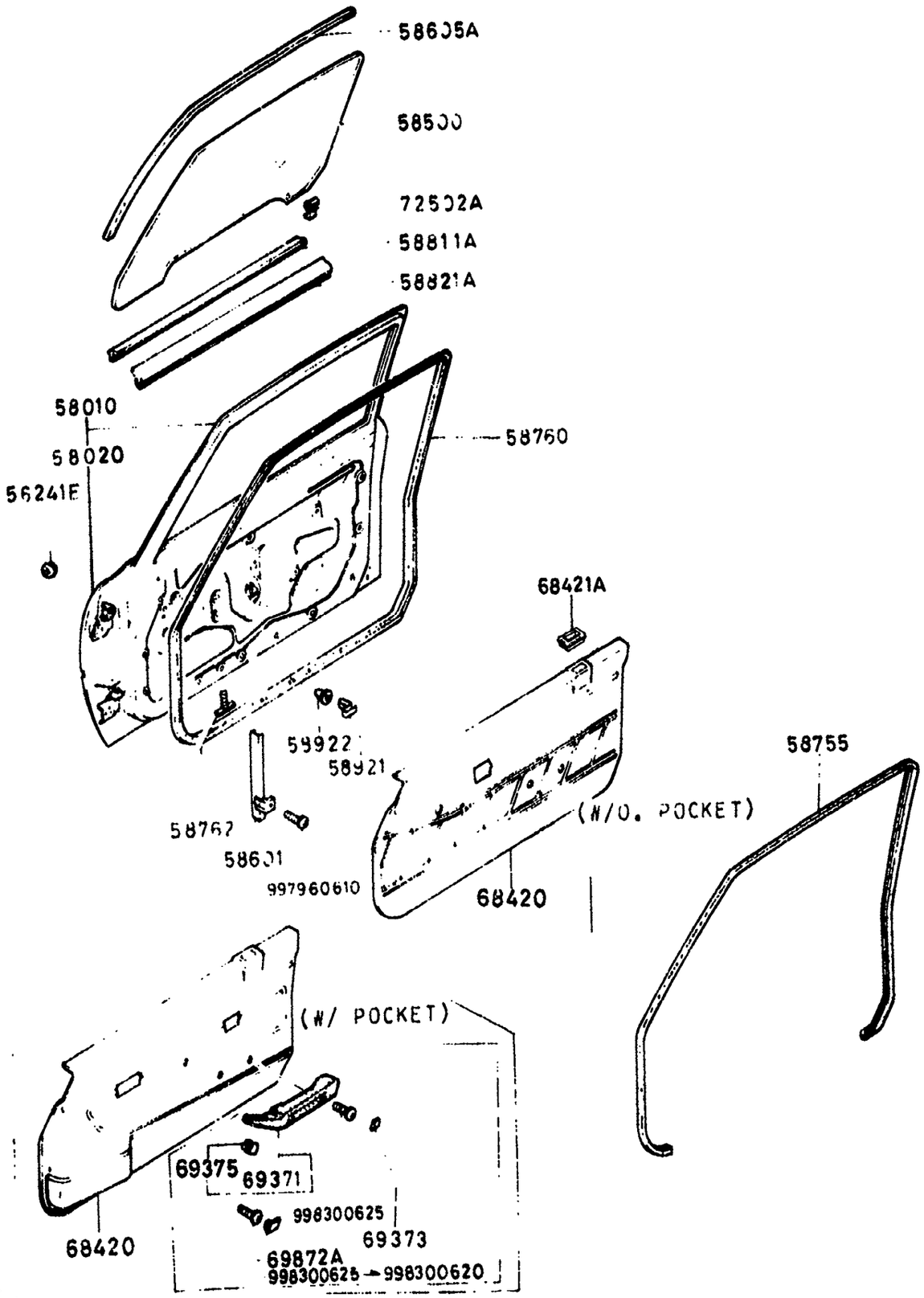

5800A-11 FRONT DOOR

D-CODE (Key No.)	PART NAME	PART No.	Qty.	MODEL DESCRIPTION	VIN (Chassis No.)
69371 CONT'D		3871-69-390A			
	WINE (SA22C 540411-568500)	12			
	BROWN (SA22C 520638-535838)	23			
	BROWN (SA22C 535839-540410)	72			
	BROWN (SA22C 540411-568500)	75			
69373	CAP, ARM REST BOUCHON ACCOUDOIR	1243-69-373	4		
	BLACK (SA22C 500001-540410)	00			
	BLACK (SA22C 540411-)	04			
	WINE (SA22C 500001-540410)	10			
	WINE (SA22C 540411-)	12			
	BROWN (SA22C 500001-535838)	23			
	BROWN (SA22C 535839-540410)	72			
	BROWN (SA22C 540411-)	75			
	BROWN (SA22C 606775-)	79		(SUNROOF ONLY)	
69375	CAP, ARM REST	8341-69-375	1	60 MODEL	SA22C .. 500001-
69872A	CAP, PULL HANDLE BOUCHON	8545-69-872	2		
	BLACK (SA22C 500001-540410)	00			
	BLACK (SA22C 540411-)	04			
	WINE (SA22C 500001-540410)	10			

5800A FRONT DOOR

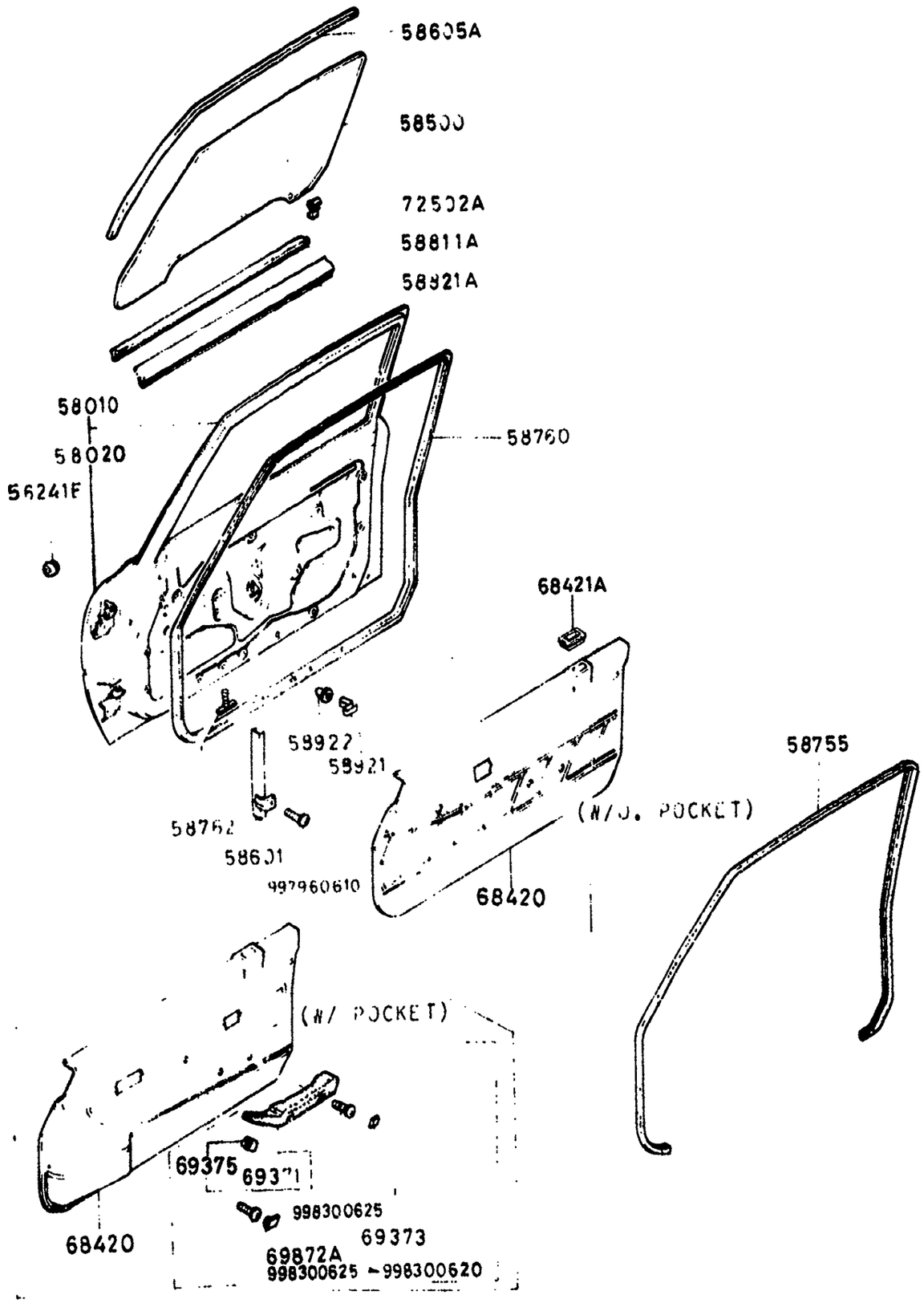

5800A-12* FRONT DOOR

D-CODE (Key No.)	PART NAME	PART No.	Qty.	MODEL DESCRIPTION	VIN (Chassis No.)
69872A CONT' D		8545-69-872			
	WINE	12			
	BROWN	23			
	BROWN	72			
	BROWN	75			
72502A	GROMMET, SCREW PROTECTEUR, VIS PROTECTOR DE TORNILLO	8544-72-502	4		

SECTION NUMBER INDEX (BODY)

STARTING LOCATION	SECTION No.	SECTION NAME
3–C2	0900A	KEY SETS
3–C3	5000A	FRONT BUMPER & GRILLE
3–E3	5010A	REAR BUMPER
3–G3	5030A	WINDOW MOULDINGS
3–I3	5040A	BODY MOULDINGS
3–C4	5100A	LAMPS (FRONT & SIDE)
3–G4	5110A	LAMPS (REAR)
3–I4	5130A	OVERHEAD CONSOLE (1979 STANDARD ROOF MODEL)
3–J4	5170A	COWL & EXTRACTOR GRILLES & ORNAMENTS
3–C5	5230A	BONNET
3–E5	5310A	BODY PANELS (FRONT)
3–K5	5340A	BODY PANELS (SIDE & ROOF)
3–I6	5360A	BODY PANELS (FLOOR)
3–C7	5500A	DASHBOARD EQUIPMENT
3–L7	5540A	METERS
3–D8	5560A	DASHBOARD & RELATED
3–L8	5570A	CONSOLE
3–K9	5580A	VENTILATOR
3–C10	5700A	SEAT (EXCEPT LEATHER TRIM)
3–N10	5710A	SEAT TRIM (LEATHER – ANNIVERSARY EDITION)
3–G11	5760A	SEAT BELTS

STARTING LOCATION	SECTION No.	SECTION NAME
3–C12	5800A	FRONT DOOR
3–C13	5830A	FRONT DOOR MECHANISMS
3–C14	6100A	HEATER
3–E14	6110A	HEATER UNIT
3–H14	6115A	HEATER CONTROLS
3–J14	6120A	HEATER BLOWER
3–C15	6230A	BACK DOOR MECHANISMS
3–F15	6300A	WINDOW GLASSES
3–I15	6330A	SUNROOF
3–C16	6600A	ELECTRIC EQUIPMENT
3–G16	6680A	RADIO & STEREO SYSTEMS
4–C2	6700A	WIRE HARNESS & CLAMPS
4–G2	6720A	WINDSHIELD WASHER
4–H2	6730A	WINDSHIELD WIPER
4–J2	6740A	WIPER MOTOR (COMPONENTS ONLY)
4–C3	6800A	CEILING TRIM
4–J3	6840A	TRIM & CUFF PLATE
4–F4	6860A	FLOOR MAT & PADS
4–L4	6870A	SERVICE TOOLS
4–M4	6900A	VISOR, ASSIST HANDLE & MIRRORS
4–G5	6930A	CAUTION PLATES

THE FRAMES IN THIS COLUMN INDICATE :

3–C13 5830A FRONT DOOR MECHANISMS

© 1983 Toyo Kogyo Co., Ltd.
MAY 1983

5830A FRONT DOOR MECHANISMS

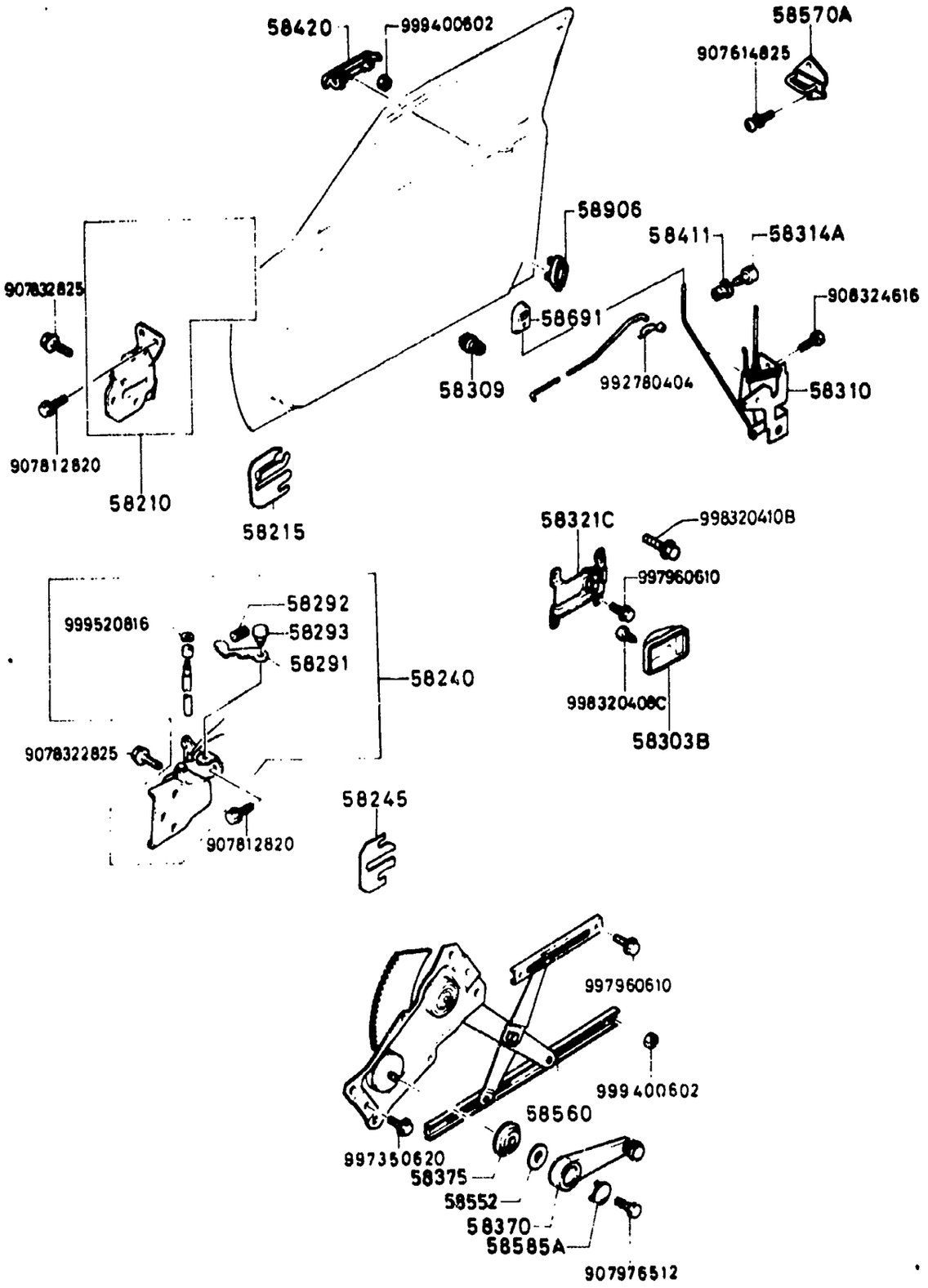

5830A-1 FRONT DOOR MECHANISMS

D-CODE (Key No.)	PART NAME	PART No.	Qty.	MODEL DESCRIPTION	VIN (Chassis No.)
58210	HINGE(R),DOOR-UPPER CHARNIERE SUPERIEURE,PORT BISAGRA SUPERIOR, PUERTA	8871-58-210	1		
58210	HINGE(L),DOOR-UPPER CHARNIERE SUPERIEURE (G) BISAGRA SUPERIOR IZQ.	8871-59-210	1		
58215	SPACER,HINGE-UPPER EPAISSEUR DE CHARNIERE SU ESPACIADOR,BISAGRA SUPERI	1011-58-231	2		
58240	HINGE(R),DOOR-LOWER CHARNIERE PORTE INF.(D)	8531-58-240	1		
58240	HINGE(L),DOOR-LOWER CHARNIERE (G),PORTE INFER BISAGRA INFERIOR PUERTA I	8531-59-240	1		
58245	SPACER,HINGE-LOWER EPAISSEUR DE CHARNIERE IN ESPACIADOR,BISAGRA INFERI	8531-58-231A	2		
58291	LEVER,CHECK LEVIER DE SURETE PALANCA DE CHEQUEO	1011-58-291	2		
58292	SPRING,CHECK RESSORT DE RETIENT RESORTE,TOPE	8531-58-292	2		
58293	PIN'B' CALE 'B' PASADOR 'B'	8531-58-293	2		
58303B	COVER,INNER HANDLE COUVERCLE POIGNEE INTER.	*8116-58-303	2		SA22C .. 611388-
	BROWN	70			
		8531-58-303	2		SA22C .. 500001 -611387
	BLACK	00			
	WINE	11			
	BROWN (SA22C 500001-535838)	23			
	BROWN (SA22C 535839-611387)	72			

5830A FRONT DOOR MECHANISMS

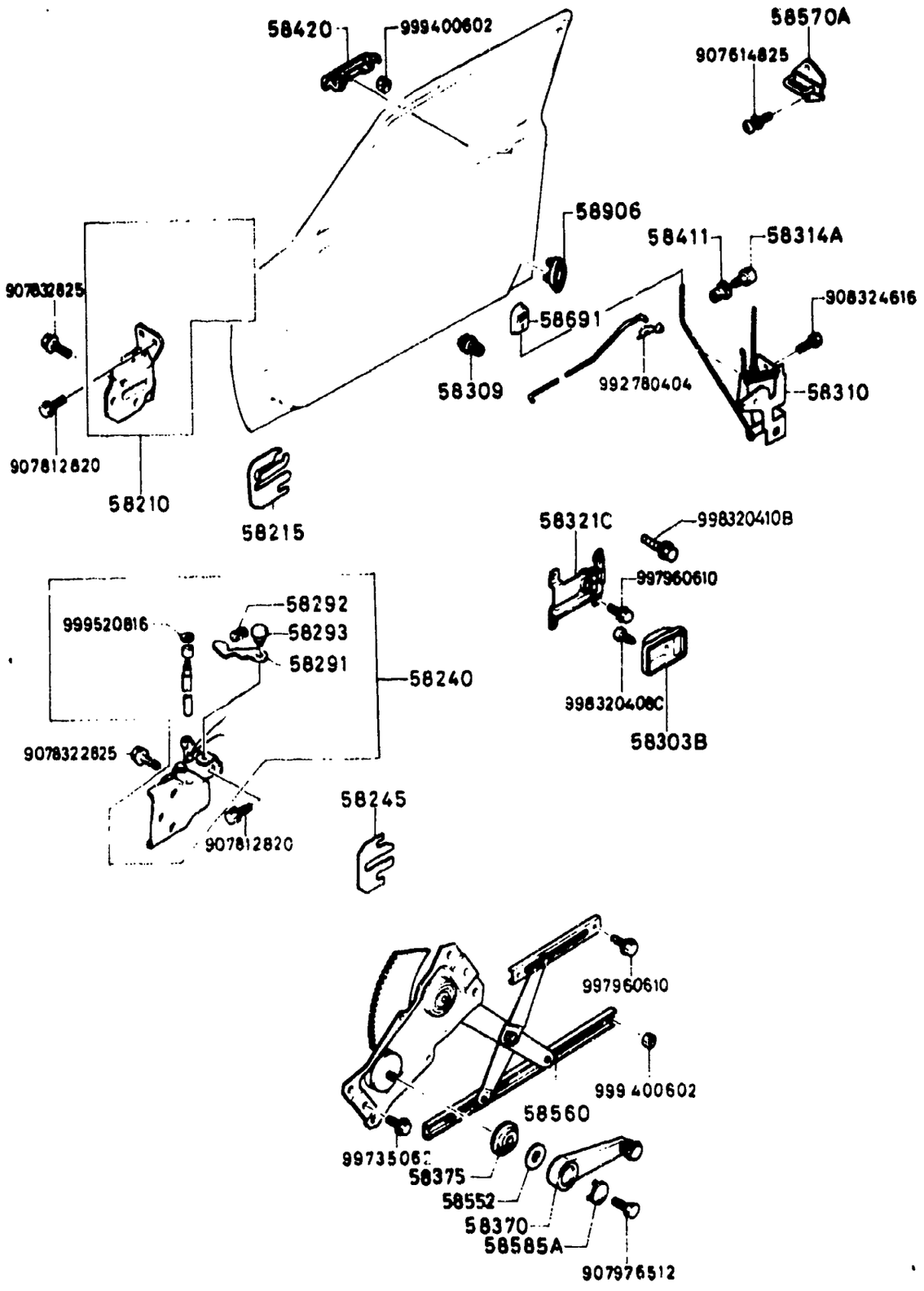

5830A-2 FRONT DOOR MECHANISMS

D-CODE (Key No.)	PART NAME	PART No.	Qty.	MODEL/DESCRIPTION	VIN (Chassis No.)
58309	HOLDER,ROD SUPPORT,TRINGLE PORTA VARILLA	0305-58-309	4		
58310	LOCK(R),DOOR SERRURE, PORTE (D) CERRADURA DERECHA DE PUER	8871-58-310A	1	79 MODEL	SA22C .. 500001 -502590
		8871-58-310B	1	79 MODEL	SA22C .. 502591 -509826
		8871-58-310C	1	79 MODEL	SA22C .. 509827 -568500
		8871-58-310D	1	80 MODEL	SA22C .. 568501-
58310	LOCK(L),DOOR SERRURE, PORTE (G) CERRADURA IZQUIERDA DE PU	8871-59-310A	1	79 MODEL	SA22C .. 500001 -502590
		8871-59-310B	1	79 MODEL	SA22C .. 502591 -509826
		8871-59-310C	1	79 MODEL	SA22C .. 509827 -568500
		8871-59-310D	1	80 MODEL	SA22C .. 568501-
58314A	JOINT RACCORD JUNTA	1243-58-314	2		
58321C	HANDLE,INNER POIGNEE INTER.	8531-58-330A	2	79 MODEL	SA22C .. 500001 -568500
	BLACK	00			
	WINE	11			
	BROWN (SA22C 500001-535838)	23			
	BROWN (SA22C 535839-568500)	72			
		8545-58-330	2	80 MODEL	SA22C .. 568501-
58370	HANDLE,REGULATOR	8037-58-580A	2	79 MODEL	SA22C ..

5830A FRONT DOOR MECHANISMS

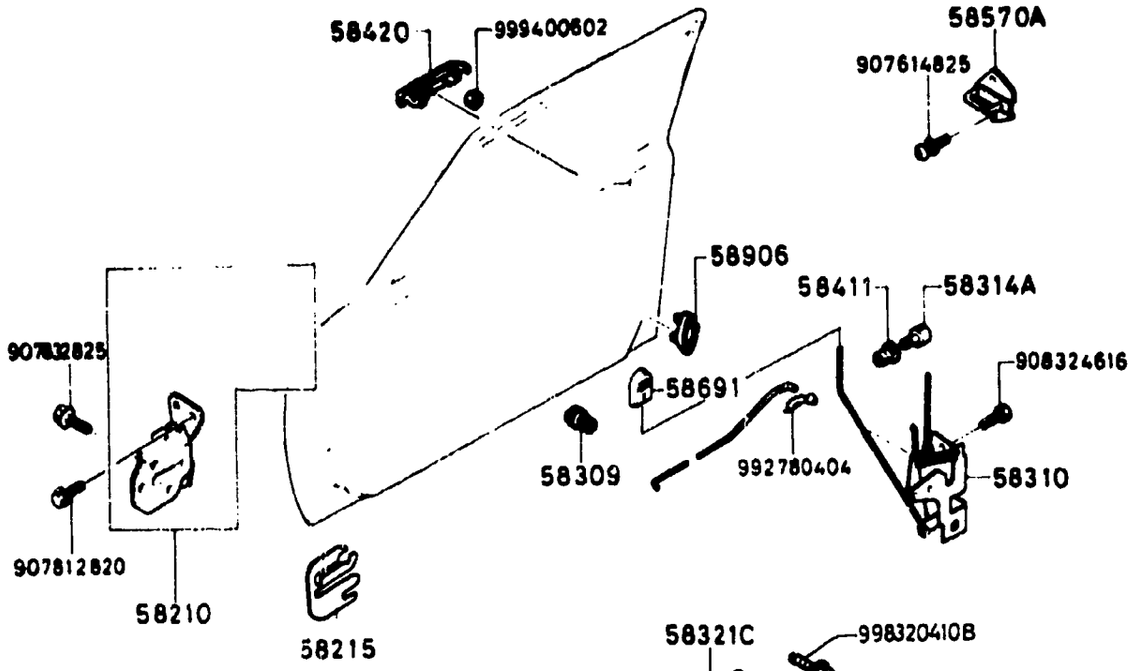

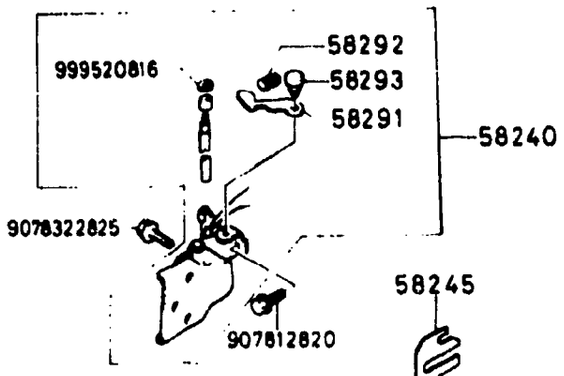

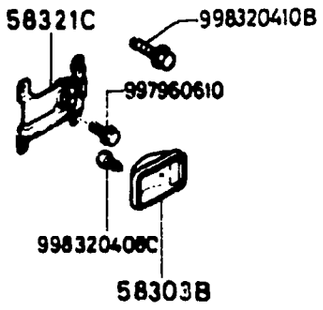

58245

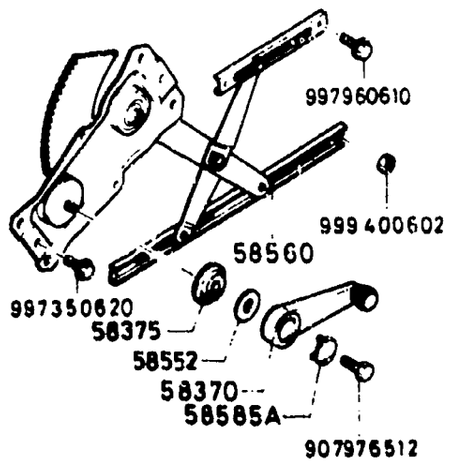

D-CODE (Key No.)	PART NAME	PART No.	Qty.	MODEL/DESCRIPTION	VIN (Chassis No.)
58370 CONT'D	MANIV. DE LEVE-GLACE MANECILLA DE ASCENSOR	8037-58-580A			500001 -568500
	BLACK	02			
	WINE	11			
	BROWN (SA22C 500001-535838)	23			
	BROWN (SA22C 535839-568500)	72			
		8038-58-580A	2	80 MODEL	SA .. 500501-
	BLACK	00			
	WINE	11			
	BROWN (SA22C 606775-)	70		(SUNROOF ONLY)	
	BROWN	72			
58375	ESCUSTCHEON ECUSSON PLATO	0223-58-375A	2		
	BLACK	00			
	WINE	11			
	BROWN (SA22C 500001-535838)	23			
	BROWN (SA22C 606775-)	70		(SUNROOF ONLY)	
	BROWN (SA22C 535839-)	72			
58411	BUSH BUSELURE BUJE	1243-58-411	2		
58420	HANDLE(R),OUTER POIGNEE EXTERIEURE (D) MANECILLA EXTERIOR DER.	8871-58-410B	1	79 MODEL	SA22C .. 500001 -568500
		8871-58-410C	1	80 MODEL	SA22C ..

5830A FRONT DOOR MECHANISMS

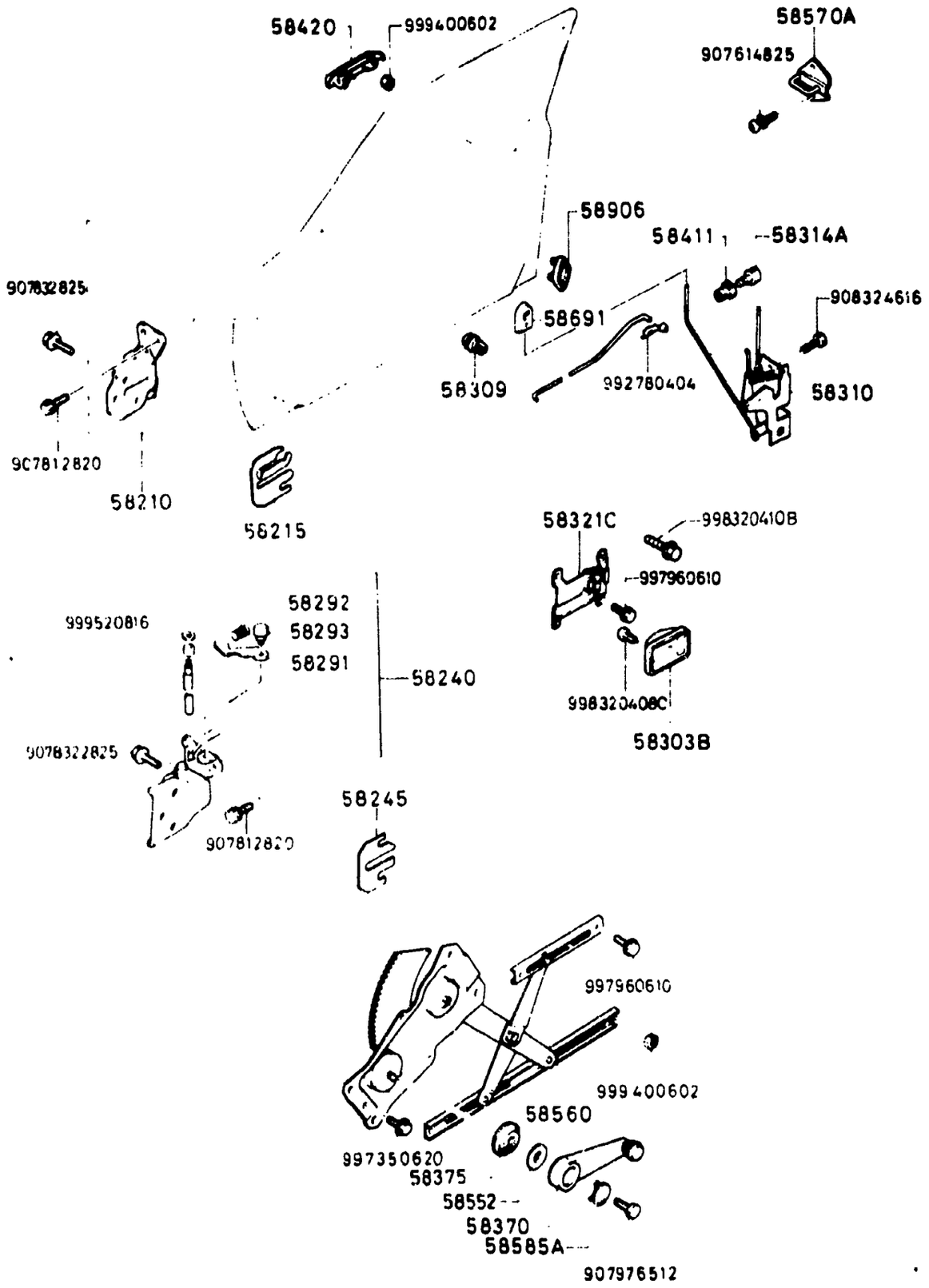

5830A-4* FRONT DOOR MECHANISMS

D-CODE ('Key No.)	PART NAME	PART No.	Qty.	MODEL DESCRIPTION	VIN Chassis No.)
58420 CONT'D		8871-58-410C			568501-
58420	HANDLE(L),OUTER POIGNEE EXTERIEURE (G MANECILLA EXTERIOR IZQ.	8871-59-410B	1	79 MODEL	SA22C .. 500001 -568500
		8871-59-410C	1	80 MODEL	SA22C .. 568501-
58552	GASKET,REGUL.HANDLE JOINT, POIGNEE REGUL. EMPAQUE, MANECILLA	0259-58-305B	2		
58560	REGULATOR(R),WINDOW MECANISME,LEVE-VITRE (D) REGULADOR(D),VENTANA	8871-58-560A	1		
58560	REGULATOR(L),WINDOW MECANISME,LEVE-VITRE (G) REGULADOR(I),VENTANA	8871-59-560A	1		
58570A	STRIKER GACHE CERROJO	8531-58-361	2		
58585A	CAP,REGULATOR HANDLE BOUCHON MANIVELLE	8037-58-585	2		
	BLACK (SA22C 500001-568500)	00			
	BLACK (SA22C 568501-)	02			
	WINE	11			
	BROWN (SA22C 500001-535838)	23			
	BROWN (SA22C 506775-)	70		(SUNROOF ONLY)	
	BROWN (SA22C 535839-)	72			
58691	KNOB,DOOR LOCK BOUTON PERILLA	8173-58-316	2		SA22C .. 509327-
		8545-58-316A	2	79 MODEL	SA22C .. 500001 -509326
58906	CUSHION,DOOR PROTECTION, PORTE ALMOHADON DE LA PUERTA	0259-58-906	2		

SECTION NUMBER INDEX (BODY)

STARTING LOCATION	SECTION No.	SECTION NAME
3–C2	0900A	KEY SETS
3–C3	5000A	FRONT BUMPER & GRILLE
3–E3	5010A	REAR BUMPER
3–G3	5030A	WINDOW MOULDINGS
3–I3	5040A	BODY MOULDINGS
3–C4	5100A	LAMPS (FRONT & SIDE)
3–G4	5110A	LAMPS (REAR)
3–I4	5130A	OVERHEAD CONSOLE (1979 STANDARD ROOF MODEL)
3–J4	5170A	COWL & EXTRACTOR GRILLES & ORNAMENTS
3–C5	5230A	BONNET
3–E5	5310A	BODY PANELS (FRONT)
3–K5	5340A	BODY PANELS (SIDE & ROOF)
3–I6	5360A	BODY PANELS (FLOOR)
3–C7	5500A	DASHBOARD EQUIPMENT
3–L7	5540A	METERS
3–D8	5560A	DASHBOARD & RELATED
3–L8	5570A	CONSOLE
3–K9	5580A	VENTILATOR
3–C10	5700A	SEAT (EXCEPT LEATHER TRIM)
3–N10	5710A	SEAT TRIM (LEATHER – ANNIVERSARY EDITION)
3–G11	5760A	SEAT BELTS
3–C12	5800A	FRONT DOOR
3–C13	5830A	FRONT DOOR MECHANISMS
3–C14	6100A	HEATER
3–E14	6110A	HEATER UNIT
3–H14	6115A	HEATER CONTROLS
3–J14	6120A	HEATER BLOWER
3–C15	6230A	BACK DOOR MECHANISMS
3–F15	6300A	WINDOW GLASSES
3–I15	6330A	SUNROOF
3–C16	6600A	ELECTRIC EQUIPMENT
3–G16	6680A	RADIO & STEREO SYSTEMS
4–C2	6700A	WIRE HARNESS & CLAMPS
4–G2	6720A	WINDSHIELD WASHER
4–H2	6730A	WINDSHIELD WIPER
4–J2	6740A	WIPER MOTOR (COMPONENTS ONLY)
4–C3	6800A	CEILING TRIM
4–J3	6840A	TRIM & SCUFF PLATE
4–F4	6860A	FLOOR MAT & PADS
4–L4	6870A	SERVICE TOOLS
4–M4	6900A	VISOR, ASSIST HANDLE & MIRRORS
4–G5	6930A	CAUTION PLATES

THE FRAMES IN THIS COLUMN INDICATE :

3---C14	6100A	HEATER
3---E14	6110A	HEATER UNIT
3---H14	6115A	HEATER CONTROLS
3---J14	6120A	HEATER BLOWER

© 1983 Toyo Kogyo Co., Ltd.
MAY 1983

6100A HEATER

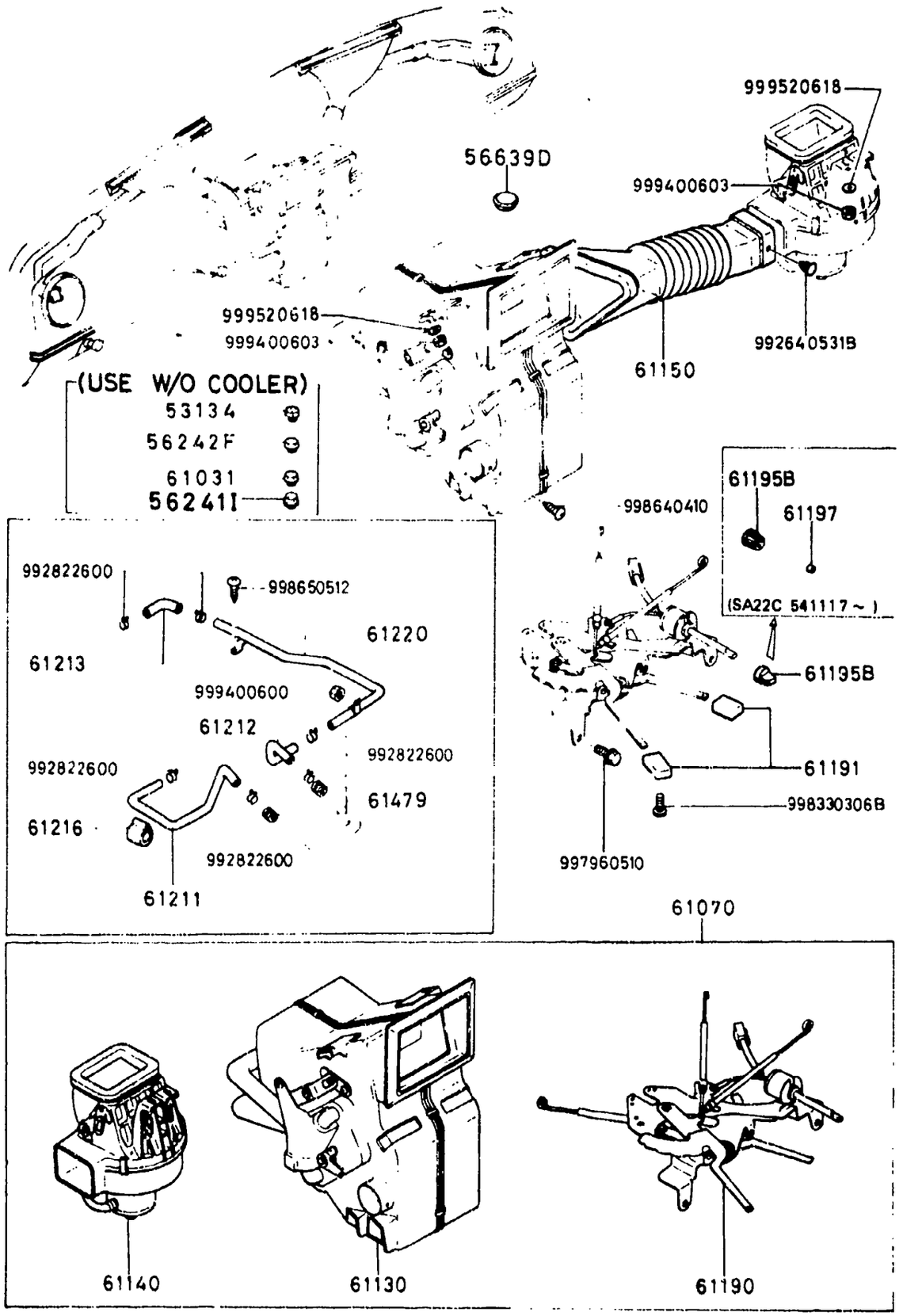

6100A-1 HEATER

D-CODE (Key No.)	PART NAME		PART No.	Qty.	MODEL DESCRIPTION	VIN (Chassis No.)
53134	PLUG,DRAIN BOUCHON DE VIDANGE TAPON DRENAJE		0187-53-134	3	(USE W/O COOLER)	
56241I	PLUG,DRAIN		0118-56-241	1	(USE W/O COOLER)	
56242F	PLUG BOUCHON TAPON		0118-56-241	1	(USE W/O COOLER)	
56639D	COVER,SERVICE HOLE		0810-56-639	1		
61031	PLUG,HOLE BOUCHON D'ORIFICE AGUJERO DE TAPON		1708-61-031	1	(USE W/O COOLER)	
61070	HEATER SET CHAUFFAGE COMPLET JGO. CALEFACCION		8870-61-080	1		SA22C .. 540411 -578960
		<A >	8870-61-080A	1		SA22C .. 578961-
			8871-61-080	1		SA22C .. 500001 -512942
		<A >	8871-61-080A	1		SA22C .. 512943 -540410
		<A >	8871-61-080A	1		SA22C .. 512943 -540410
61130	HEATER UNIT CHAUFFAGE CALEFACTOR		8871-61-130	1		SA22C .. 500001 -578960
		<A >	8871-61-130A	1		SA22C .. 578961-
61140	BLOWER SOUFFLERIE SOPLADOR		8871-61-140	1		SA22C .. 500001 -512942
		<AN>	8871-61-140A	1		SA22C .. 512943-
61150	DUCT CONDUIT CONDUCTO		8871-61-150	1		
61190	CONTROL,HEATER COMMANDE DE CHAUFFAGE CONTROL DEL CALENTADOR		8870-61-190	1		SA22C .. 540411 -541116
		<AN>	8870-61-190A	1		SA22C ..

6100A HEATER

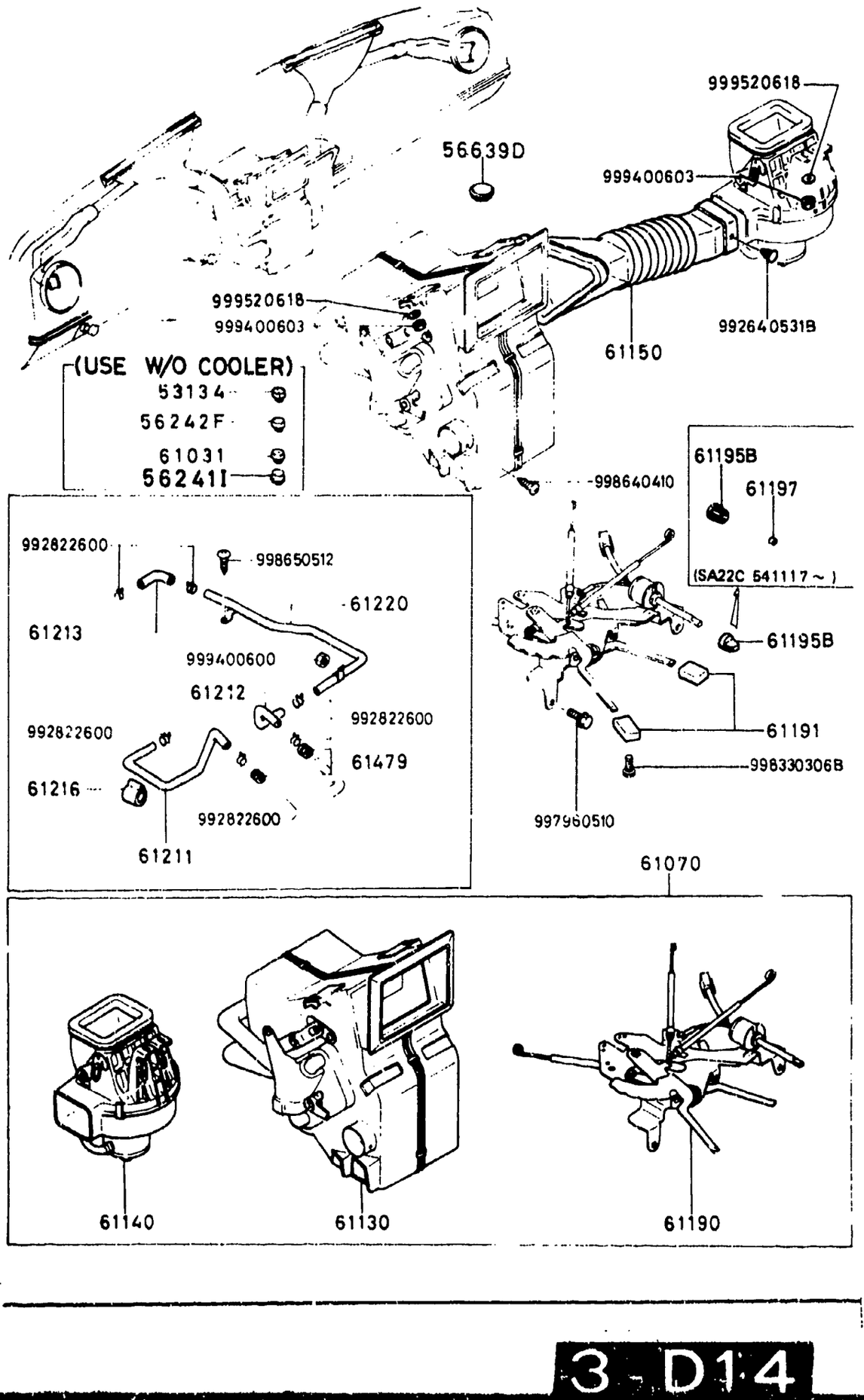

6100A-2* HEATER

D-CODE (Key No.)	PART NAME	PART No.	Qty.	MODEL./DESCRIPTION	VIN (Chassis No.)
61190 CONT D		8870-61-190A			541117-
		8871-61-190	1		SA22C .. 500001 -540410
61191	KNOB NO.1 BOUTON NO 1 PERILLA NO.1	1690-76-411A	2		SA22C .. 500001 -547088
	<A >	8171-61-192A	2		SA22C .. 547089-
61195B	KNOB BOUTON PERILLA	8545-61-195	1		SA22C .. 500001 -540410
		8563-61-195	1		SA22C .. 540411 -541116
		8563-61-196A	1		SA22C .. 541117-
61197	KNOB,AIR-CON.	8563-61-197A	1		SA22C .. 541117 -588206
		8563-61-197B	1		SA22C .. 588207-
61211	HOSE NO.1,WATER DURITE D'EAU NO 1 MANGUERA NO. 1, AGUA	8871-61-211A	1		SA22C .. 500001 -592955
	<A >	8871-61-230	1		SA22C .. 592956-
61212	HOSE NO.2,WATER DURITE D'EAU NO 2 MANGUERA NO. 2, AGUA	8871-61-212	1		
61213	HOSE NO.3,WATER DURITE D'EAU MANGUERA, AGUA	8871-61-213	1		
61216	PROTECTOR PROTECTEUR PROTECTOR	1011-61-216	1		
61220	PIPE CONDUIT TUBO	8871-61-220	1		
61479	GROMMET PROTECTEUR ANILLO PROTECTOR	8871-61-219	2		

6110A HEATER UNIT

Components of 88716113O
88716113OA

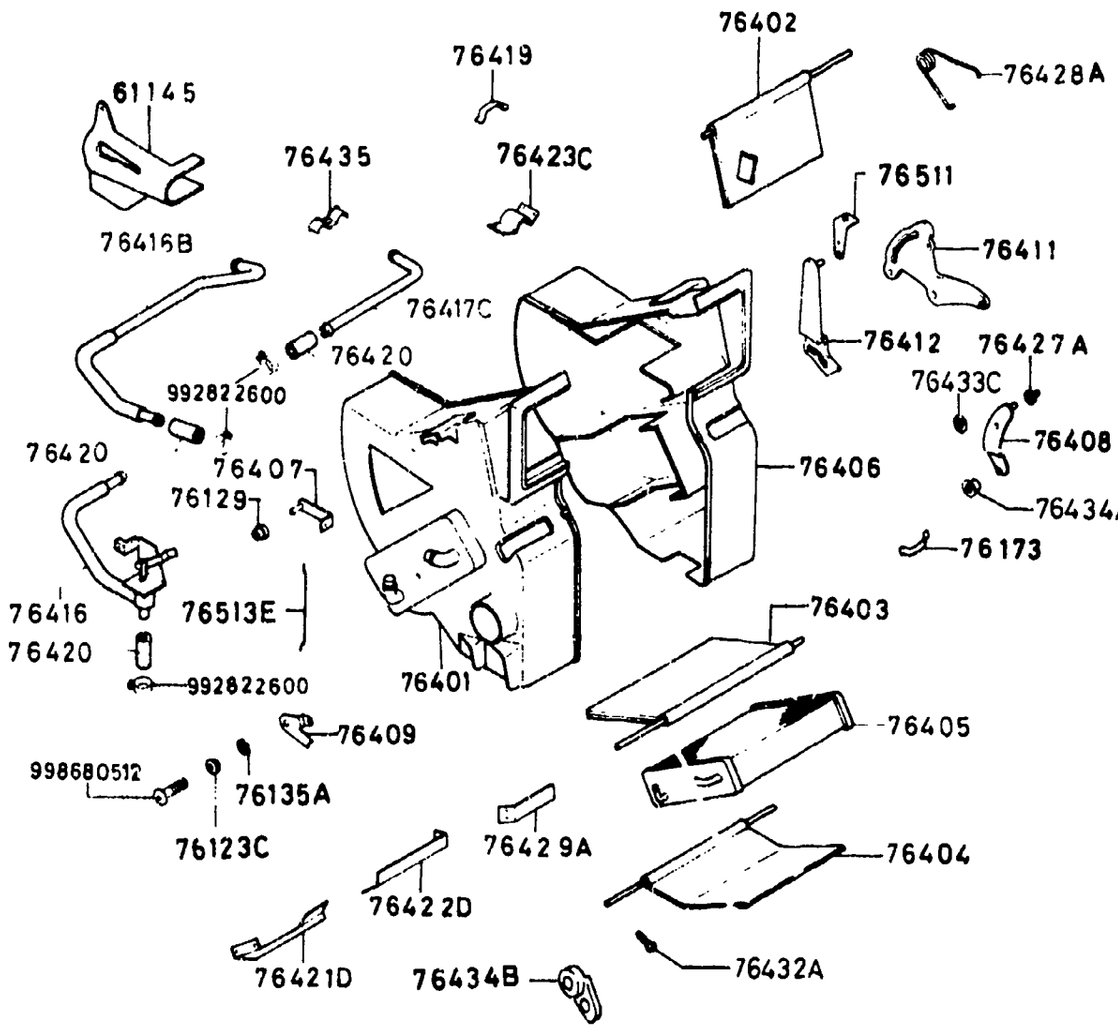

6110A-1 HEATER UNIT

D-CODE (Key No.)	PART NAME	PART No.	Qty.	MODEL / DESCRIPTION	VIN (Chassis No.)
61145	COVER,HEATER COUVERCLE RECHAUFFEUR	8871-76-418	1		
76123C	BUSH BALAIS CARBON	8871-76-414	3		
76129	BUSH BALAIS CARBON	8871-76-426	1		
76135A	SPRING RESSORT RESORTE	8871-76-415	3		
76173	CLAMP CRAMPON PRENSA	8871-76-423	6		
76401	CASE,HEATER BOITIER, CHAUFFAGE CAJA PARA CALENTADOR	8871-76-401	1		
76402	SHUTTER NO.1 VOLET NO 1 OPTURADOR NO.1	8871-76-403	1		
76403	SHUTTER NO.2 VOLET NO 2 OPTURADOR NO.2	8871-76-405	1		
76404	SHUTTER NO.3 VOLET NO 3 OPTURADOR NO.3	8871-76-410	1		SA22C .. 500001 -547088
		8871-76-410A	1		SA22C .. 547089-
76405	CORE,HEATER RADIATEUR DE CHAUFFAGE UNIDAD DEL CALENTADOR	8871-76-402	1		
76406	CASE,HEATER BOITIER, CHAUFFAGE CAJA PARA CALENTADOR	8871-76-400	1		
76407	LEVER NO.1,CONTROL LEVIER DE COMMANDE NO 1 PALANCA NO.1 DE CONTROL	8871-76-406	1		
76408	LEVER,CONTROL LEVIER DE CONTROLE PALANCA DE CONTROL	8871-76-413	1		
76409	LEVER NO.2,CONTROL LEVIER DE COMMANDE NO 2 PALANCA NO.2 DE CONTROL	8871-76-407	1		

6110A HEATER UNIT

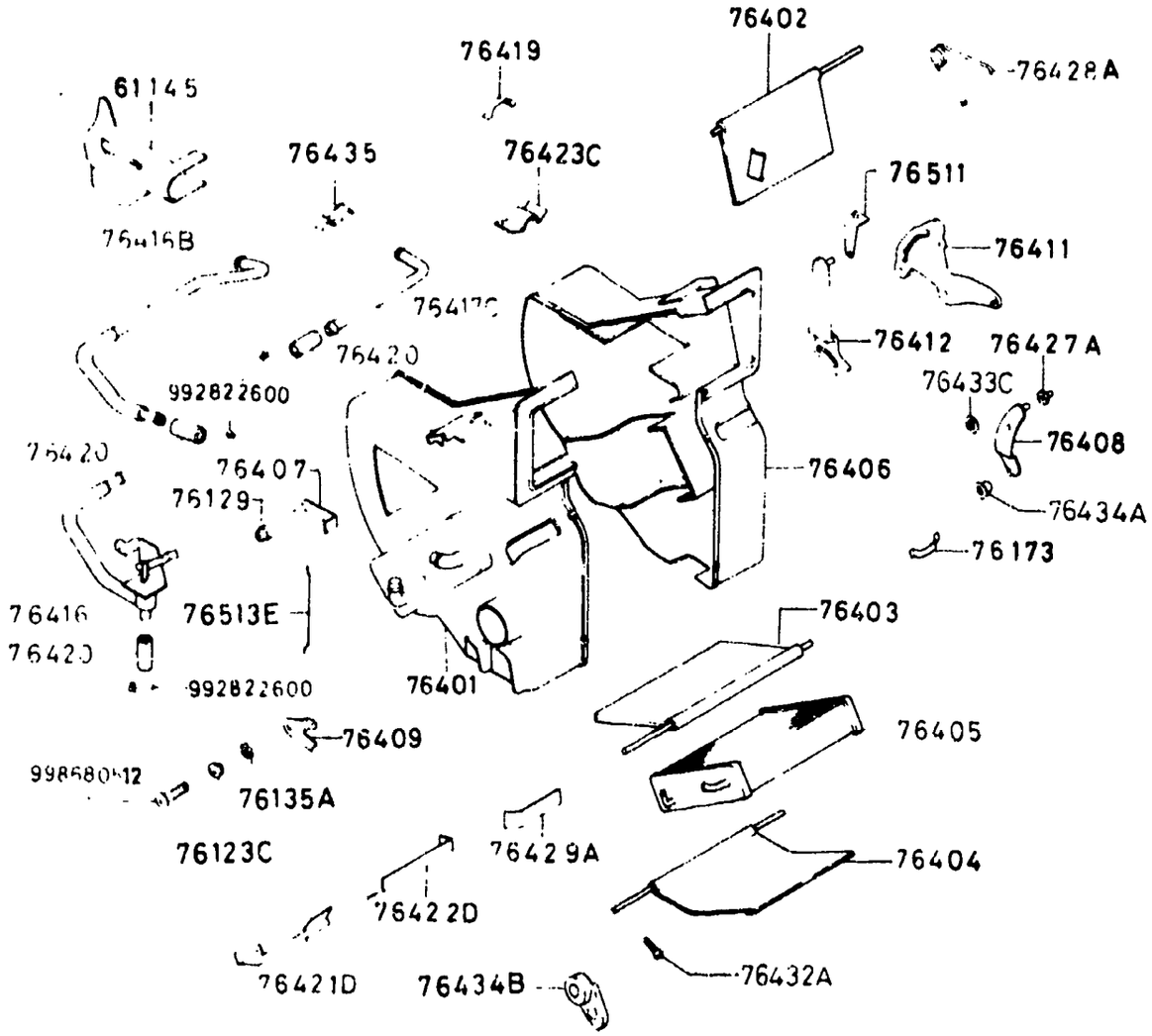

6110A-2 HEATER UNIT

D-CODE (Key No.)	PART NAME	PART No.	Qty.	MODEL DESCPIPTION	VIN Chassis No.)
76411	LEVER,CONTROL LEVIER DE CONTROLE PALANCA DE CONTROL	8871-76-411	1		SA22C .. 500001 -547088
		8871-76-411A	1		SA22C .. 547089-
76412	LEVER,CONTROL LEVIER DE CONTROLE PALANCA DE CONTROL	8871-76-412	1		SA22C .. 500001 -547088
		8871-76-412A	1		SA22C .. 547089-
76416	VALVE,WATER SOUPAPE EAU	8871-76-409	1		
76416B	PIPE CONDUIT TUBO	8871-76-416	1		
76417C	PIPE CONDUIT TUBO	8871-76-417	1		
76419	CLIP ATTACHE PRENSA TRABA GAZA	8871-76-424	1		
76420	HOSE DURITE MANGUERA	8871-76-420	3		
76421D	GUIDE	8871-76-421	1		
76422D	GUIDE	8871-76-422	1		
76423C	BAND,HOSE COLLIER,DURITE ABRAZADERA,MANGUERA	8871-76-425	2		
76427A	BUSH	8871-76-427	1		
76428A	SPRING RESSORT RESORTE	8871-76-428	1		
76429A	GUIDE	8871-76-429	1		

6110A HEATER UNIT

Components of 8871-6113
8871-6113A

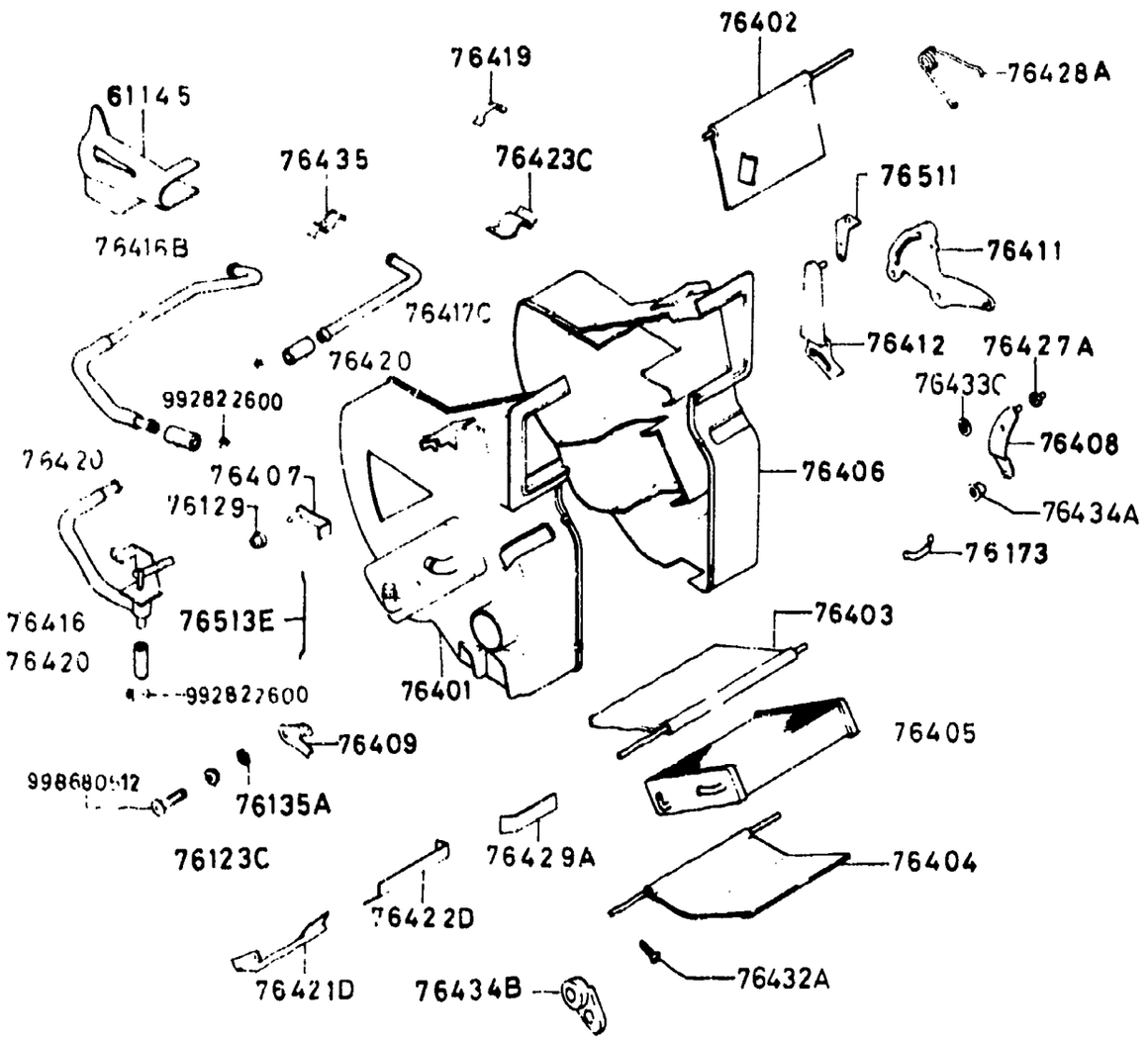

6110A-3* HEATER UNIT

D-CODE (Key No.)	PART NAME	PART No.	Qty.	MODEL DESCRIPTION	VIN (Chassis No.)
76432A	WASHER & SCREW	8871-76-432	1		SA22C .. 547089-
76433C	WASHER	8871-76-433	1		SA22C .. 547089-
76434A	BUSHING,STEPPED	8871-76-434	1		SA22C .. 547089-
76434B	PLATE PLAQUE PLATO	8871-76-430	1		SA22C .. 500001 -547088
		8871-76-430A	1		SA22C .. 547089-
76435	CLIP ATTACHE PRENSA TRABA GAZA	8871-76-419	2		
76511	PLATE,HEATER UNIT PLAQUE CHAUFFAGE	8871-76-404	2		
76513E	SHAFT ARBRE EJE	8871-76-408	1		

6115A HEATER CONTROLS

Components of 887061190
887061190A
887161190

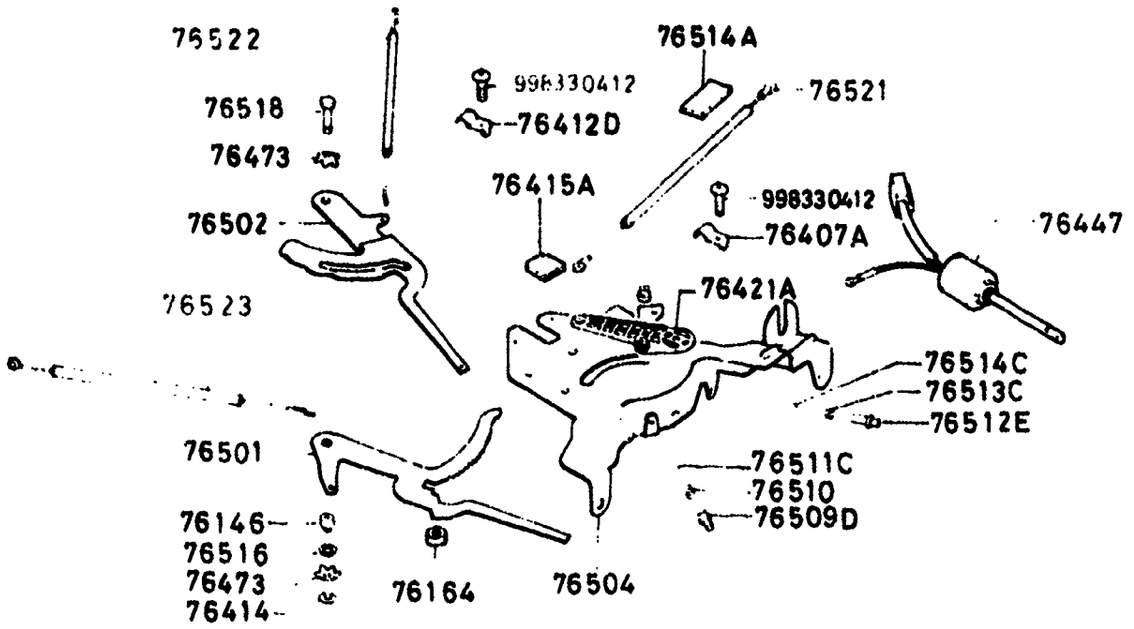

6115A-1 HEATER CONTROLS

D-CODE (Key No.)	PART NAME	PART No.	Qty.	MODEL DESCRIPTION	VIN (Chassis No.)
76146	BUSH . . BUSELURE BUJE	8871-76-516	1		
76164	BUSH BUSELURE BUJE	8871-76-518	1		
76407A	CLAMP,CABLE FIXATION DE CABLE	8562-76-508	1		
76412D	CLAMP,CABLE FIXATION DE CABLE	8871-76-508	2		
76414	RING,SNAP CALE ANILLO,SEGURO	0259-71-158	1		
76415A	BUSH BALAIS CARBON	8531-76-415	1		
76421A	PLATE PLAQUE PLATO	8871-76-503	1		SA22C . . 500001 -540410
		8871-76-503A	1		SA22C . . 540411-
76447	SWITCH COMMUTATEUR INTERRUPTOR	8563-76-504	1		SA22C . . 540411-
		8871-76-504	1		SA22C . . 500001 -540410
76473	WASHER RONDELLE ARANDELA	0315-76-028	2		
76501	LEVER,CONTROL LEVIER DE CONTROLE PALANCA DE CONTROL	8871-76-502	1		
76502	LEVER,CONTROL LEVIER DE CONTROLE PALANCA DE CONTROL	8871-76-501	1		
76504	BRACKET SUPPORT SOPORTE	8871-76-500	1		SA22C . . 500001 -540410
		8871-76-500A	1		SA22C . . 540411-

6115A HEATER CONTROLS

Components of 887061190
887061190A
887161190

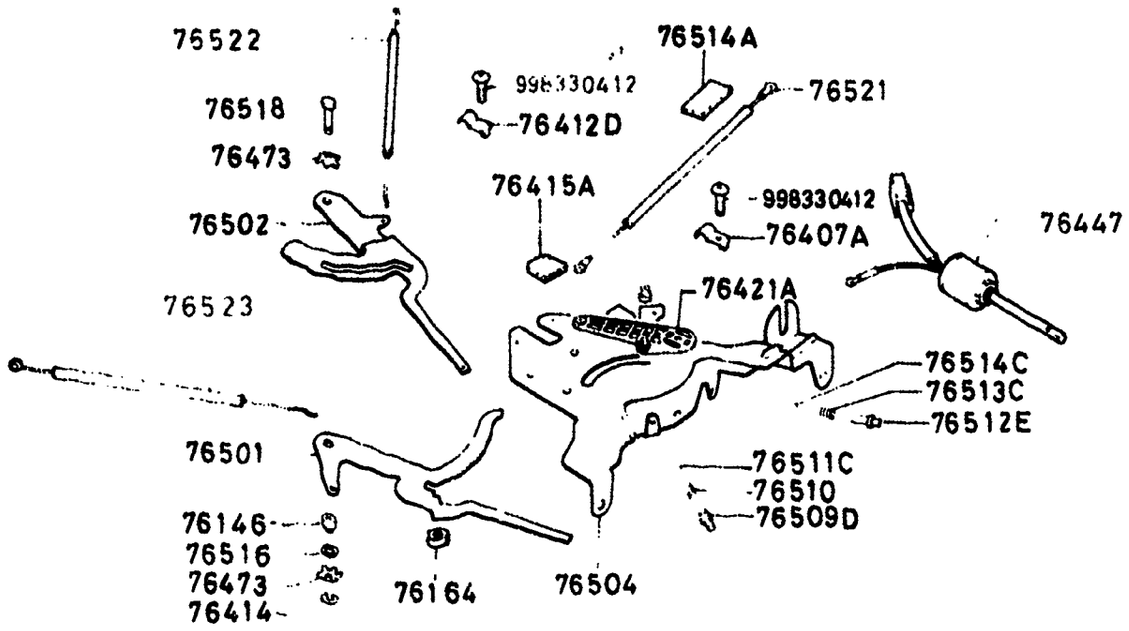

6115A-2* HEATER CONTROLS

D-CODE (Key No.)	PART NAME	PART No.	Qty.	MODEL DESCRIPTION	VIN (Chassis No.)
76509D	COVER,BEARING	8871-76-509	1		
76510	SPRING	8871-76-510	1		
76511C	BALL,STEEL	8871-76-511	1		
76512E	COVER,BEARING	8871-76-512	1		
76513C	SPRING	8871-76-513	1		
76514A	PACKING JOINT JUNTA	8871-76-519	1		SA22C .. 500001 -531680
76514C	BALL,STEEL	8871-76-514	1		
76516	WASHER RONDELLE ARANDELA	8871-76-517	1		
76518	PIN CLAVETTE PASADOR	8871-76-515	1		
76521	WIRE,HEATER CONTROL CABLE DE CHAUFFAGE	8871-76-505	1		
76522	WIRE,HEATER CONTROL CABLE DE CHAUFFAGE	8871-76-506	1		
76523	WIRE,HEATER CONTROL CABLE DE CHAUFFAGE	8871-76-507	1		

6120A HEATER BLOWER

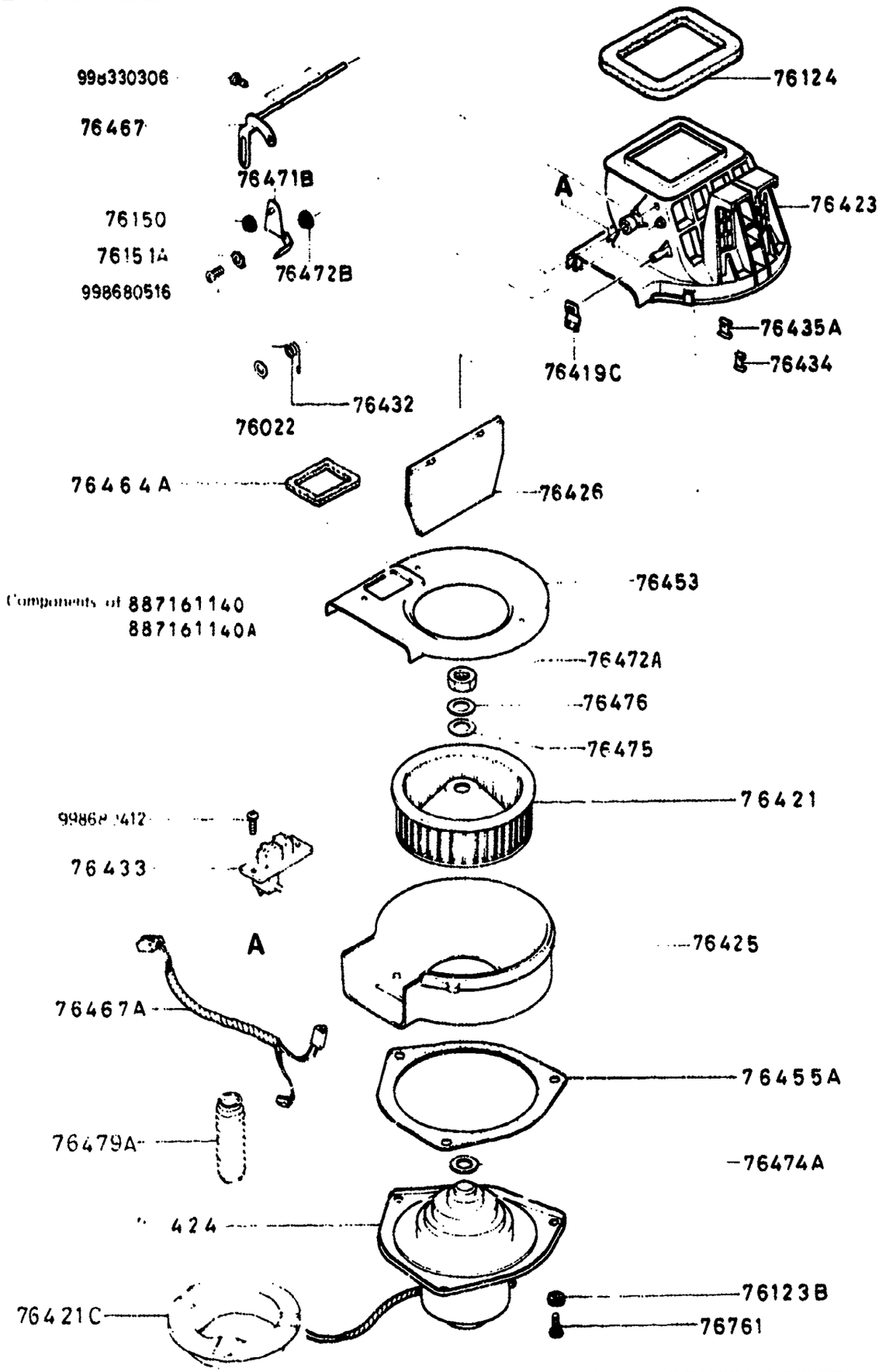

6120A-1 HEATER BLOWER

D-CODE (Key No.)	PART NAME	PART No.	Qty.	MODEL DESCRIPTION	VIN (Chassis No.)
76022	WASHER RONDELLE ARANDELA	8871-76-469	1		
76123B	BUSH BALAIS CARBON	8871-76-472	3		SA22C .. 500001 -512942
76124	PACKING RESSORT RESORTE	8871-76-465	1		
76150	GROMMET PROTECTEUR ANILLO PROTECTOR	8871-76-470	1		
76151A	SPRING RESSORT RESORTE	8871-76-461	1		
76419C	CLIP ATTACHE PRENSA TRABA GAZA	8871-76-464	1		
76421	FAN VENTILLATEUR ABANICO	8871-76-456	1		
76421C	COVER,MOTOR COUVERCLE MOTEUR	8871-76-478	1		SA22C .. 512943-
76423	CASE,FAN BOITIER, VENTILLATEUR CAJA PARA EL CAMBIO	8871-76-450	1		
76424	MOTOR,FAN MOTEUR DE SOUFFLERIE VENTILADOR DEL MOTOR	8871-76-453	1		SA22C .. 500001 -512942
	<A>	8871-76-453A	1		SA22C .. 512943-
76425	CASE BOITIER RECIPTENTE	8871-76-451	1		
76426	SHUTTER VOLET OPTURADOR	8871-76-459	1		
76432	SPRING,CONTROL LEVER RESSORT, LEVIER DE COMMAN RESURTE,PALANCA DE CONTRO	8871-76-463	1		
76433	RESISTOR RHEUSTAT RESISTENCIA	8871-76-457	1		

6120A HEATER BLOWER

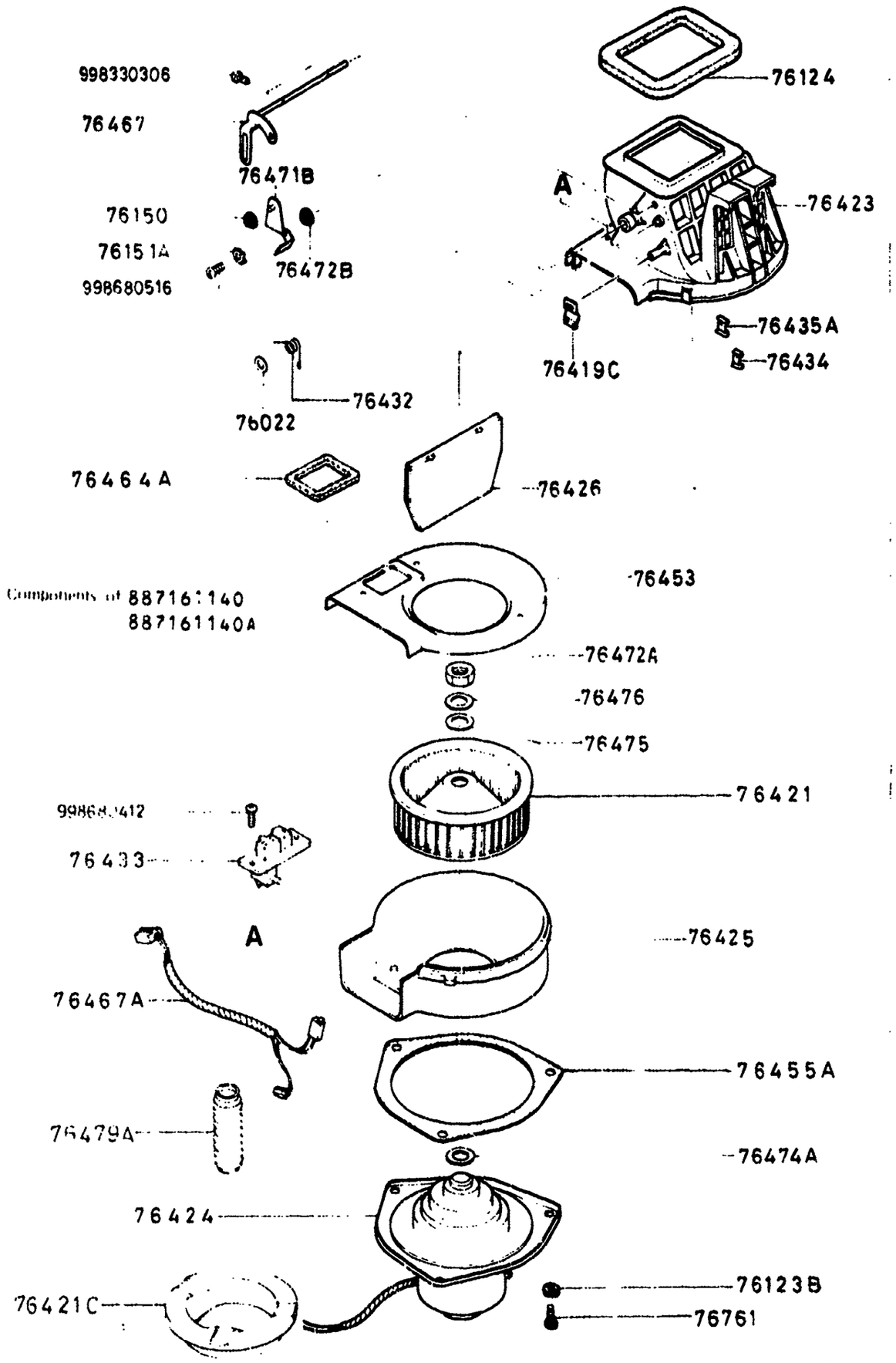

6120A-2 HEATER BLOWER

D·CODE (Key No.)	PART NAME	PART No.	Qty.	MODEL DESCRIPTION	VIN (Chassis No.)
76434	CLIP ATTACHE PRENSA TRABA GAZA	8871-76-466	4		
76435A	CLIP ATTACHE PRENSA TRABA GAZA	8871-76-471	1		
76453	FLANGE BRIDE REBURDE	8871-76-452	1		
76455A	GASKET JOINT EMPAQUE	8871-76-454	1		
76464A	GASKET JOINT EMPAQUE	8871-76-458	1		
76467	SHAFT ARBRE EJE	8871-76-468	1		
76467A	WIRING,BLOWER CABLAGE SOUFFLEUR	8871-76-467	1		SA22C .. 500001 -512942
	<A>	8871-76-467A	1		SA22C .. 512943-
76471B	LEVER,CONTROL LEVIER DE CONTROLE PALANCA DE CONTROL	8871-76-460	1		
76472A	NUT ECROU TUERCA	3794-76-426	1		
76472B	COLLAR BAGUE COLLAR	8871-76-462	1		
76474A	WASHER,PLAIN RONDELLE ARANDELA,SIMPLE	0866-76-474	1		
76475	WASHER,PLAIN RONDELLE ARANDELA,SIMPLE	0866-76-475	1		
76476	WASHER,PLAIN RONDELLE ARANDELA,SIMPLE	0866-76-476	1		
76479A	HOSE	8871-76-479	1		SA22C .. 512943-

6120A HEATER BLOWER

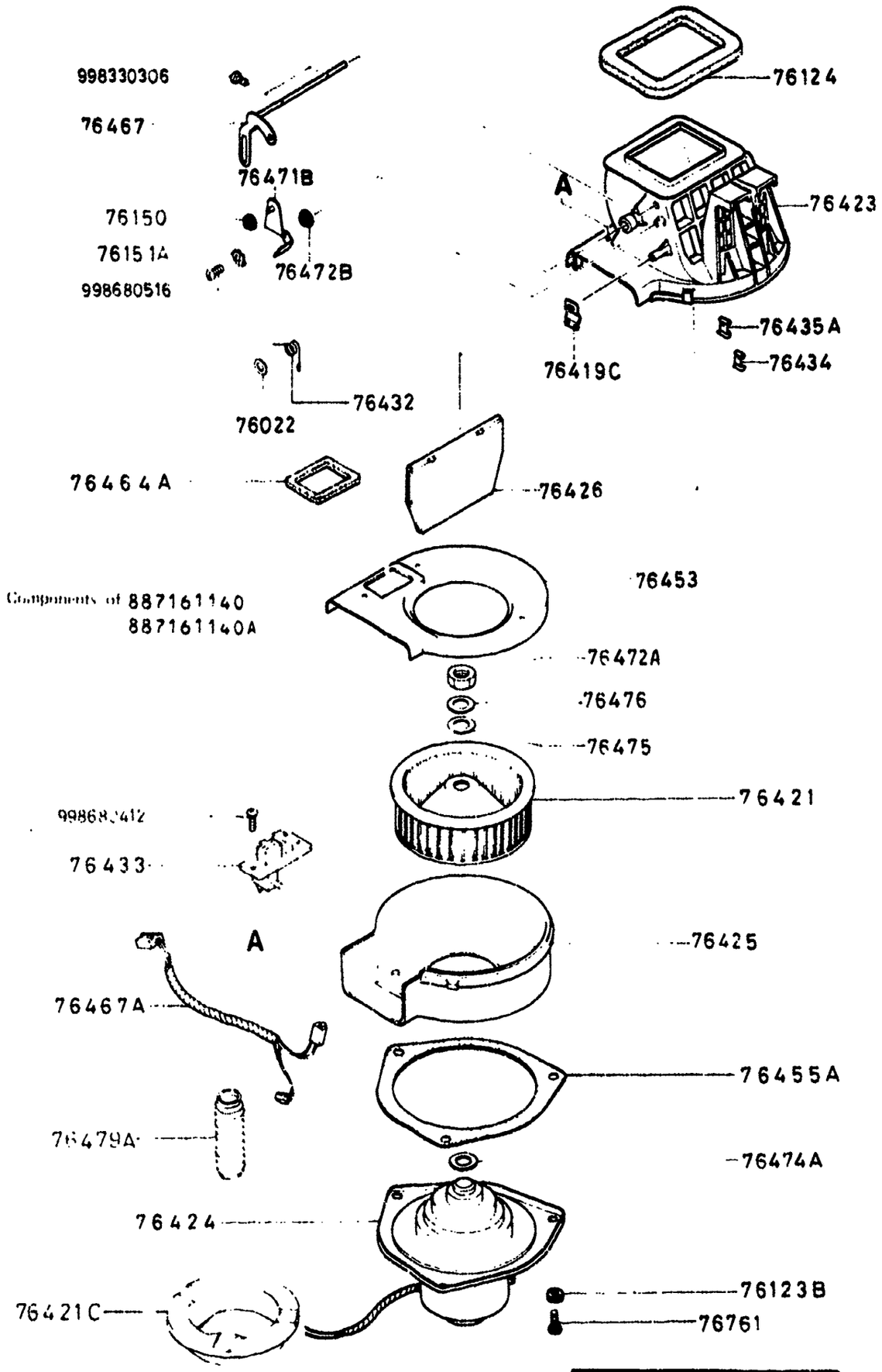

6120A-3* HEATER BLOWER

D-CODE (Key No.)	PART NAME	PART No.	Qty.	MODEL / DESCRIPTION	VIN (Chassis No.)
76761	SCREW VIS TORNILLO	8871-76-455	3		

SECTION NUMBER INDEX (BODY)

STARTING LOCATION	SECTION No.	SECTION NAME
3–C2	0900A	KEY SETS
3–C3	5000A	FRONT BUMPER & GRILLE
3–E3	5010A	REAR BUMPER
3–G3	5030A	WINDOW MOULDINGS
3–I3	5040A	BODY MOULDINGS
3–C4	5100A	LAMPS (FRONT & SIDE)
3–G4	5110A	LAMPS (REAR)
3–I4	5130A	OVERHEAD CONSOLE (1979 STANDARD ROOF MODEL)
3–J4	5170A	COWL & EXTRACTOR GRILLES & ORNAMENTS
3–C5	5230A	BONNET
3–E5	5310A	BODY PANELS (FRONT)
3–K5	5340A	BODY PANELS (SIDE & ROOF)
3–I6	5360A	BODY PANELS (FLOOR)
3–C7	5500A	DASHBOARD EQUIPMENT
3–L7	5540A	METERS
3–D8	5560A	DASHBOARD & RELATED
3–L8	5570A	CONSOLE
3–K9	5580A	VENTILATOR
3–C10	5700A	SEAT (EXCEPT LEATHER TRIM)
3–N10	5710A	SEAT TRIM (LEATHER – ANNIVERSARY EDITION)
3–G11	5760A	SEAT BELTS

STARTING LOCATION	SECTION No.	SECTION NAME
3–C12	5800A	FRONT DOOR
3–C13	5830A	FRONT DOOR MECHANISMS
3–C14	6100A	HEATER
3–E14	6110A	HEATER UNIT
3–H14	6115A	HEATER CONTROLS
3–J14	6120A	HEATER BLOWER
3–C15	6230A	BACK DOOR MECHANISMS
3–F15	6300A	WINDOW GLASSES
3–I15	6330A	SUNROOF
3–C16	6600A	ELECTRIC EQUIPMENT
3–G16	6680A	RADIO & STEREO SYSTEMS
4–C2	6700A	WIRE HARNESS & CLAMPS
4–G2	6720A	WINDSHIELD WASHER
4–H2	6730A	WINDSHIELD WIPER
4–J2	6740A	WIPER MOTOR (COMPONENTS ONLY)
4–C3	6800A	CEILING TRIM
4–J3	6840A	TRIM & SCUFF PLATE
4–F4	6860A	FLOOR MAT & PADS
4–L4	6870A	SERVICE TOOLS
4–M4	6900A	VISOR, ASSIST HANDLE & MIRRORS
4–G5	6930A	CAUTION PLATES

THE FRAMES IN THIS COLUMN INDICATE :

3---C15	6230A	BACK DOOR MECHANISMS
3---F15	6300A	WINDOW GLASSES
3---I15	6330A	SUNROOF (1979 MODEL)
3---K15	6330AA	SUNROOF (1980 MODEL)

© 1982 Toyo Kogyo Co., Ltd.
MAY 1983

6230A BACK DOOR MECHANISMS

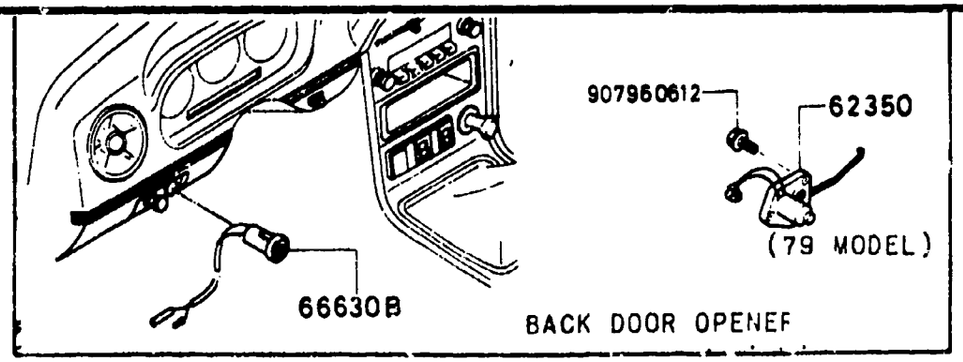

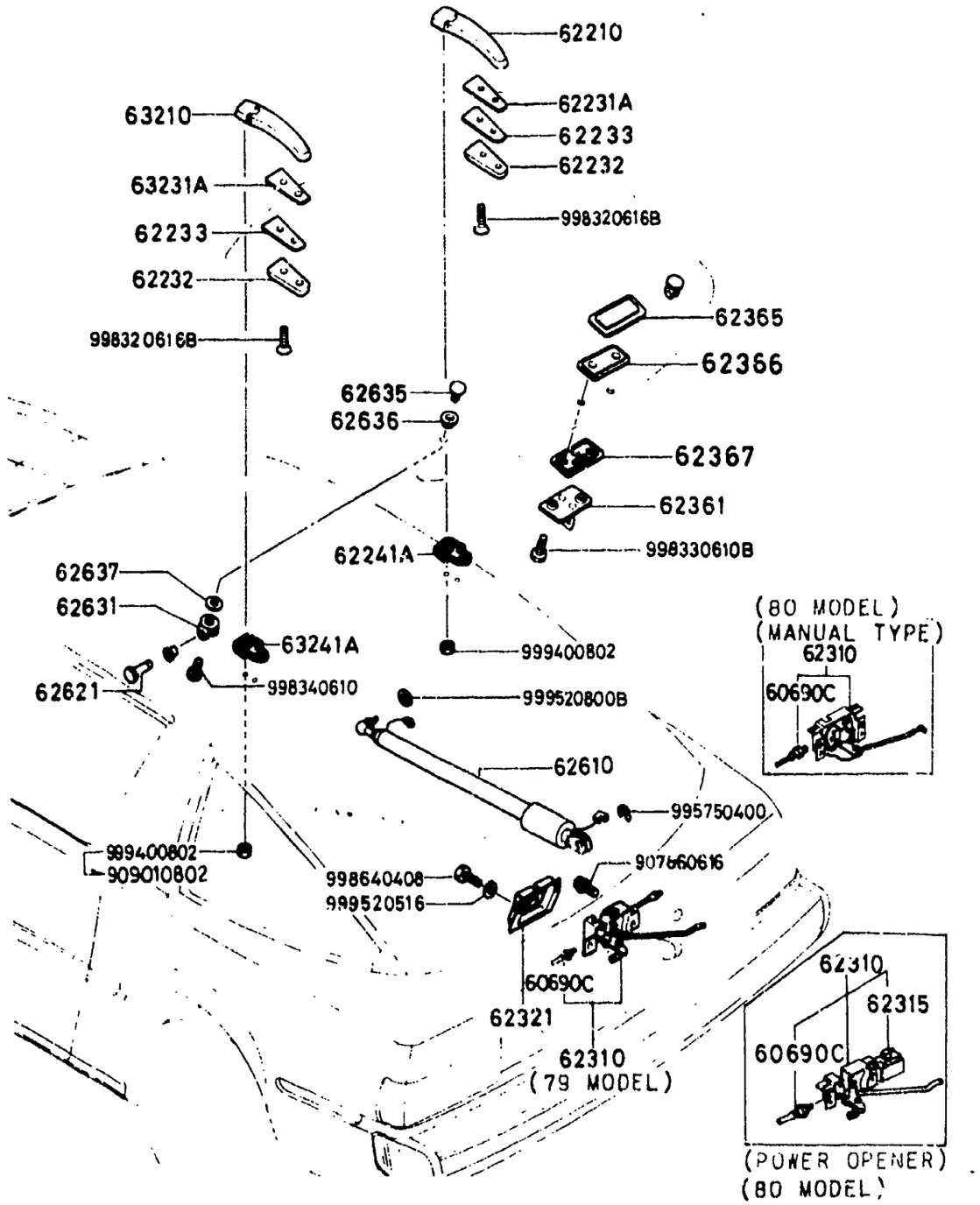

6230A-1 BACK DOOR MECHANISMS

D-CODE (Key No.)	PART NAME	PART No.	Qty.	MODEL / DESCRIPTION	VIN (Chassis No.)
60690C	SWITCH,ROOM LAMP	0305-60-690	1		
62210	HINGE(R) CHARNIERE (D) BISAGRA DERECHA	8871-62-210A	1		SA22C .. 500001 -559739
		8871-62-210B	1		SA22C .. 559740-
62231A	SHIM'A'(R),HINGE CALE D'EPAISSEUR'A'	8871-62-231	1		
62232	SHIM'B',HINGE CALE D'EPAISSEUR'B'	8871-62-232A	2		
62233	SHIM'D',HINGE CALE D'EPAISSEUR'D'	8871-62-233	2		
62241A	SHIM'C'(R),HINGE CALE D'EPAISSEUR'C'(D)	8871-62-241A	1		
62310	LOCK,BACK DOOR SERRURE, PORTE DE HAYON CERRADURA DE PUERTA TRASE	8341-62-310		(POWER OPENER)	
			1	80 MODEL	SA22C .. 568501-
		8346-62-310		(MANUAL TYPE)	
			1	80 MODEL	SA22C .. 568501-
		8871-62-310B	1	79 MODEL	SA22C .. 500001 -568500
62315	OPENER ,REMO.CONTROL	8341-62-315		(FOR POWER OPENER)	
			1	80 MODEL	SA22C .. 568501-
62321	COVER,DOOR LOCK COUVERCLE	8871-62-321A	1		
	BLACK	00			
	WINE	11			
	BROWN (SA22C 500001-535838)	23			
	BROWN (SA22C 535839-)	24			
	BROWN (SA22C 606719-)	70		(SUNROOF ONLY)	

6230A BACK DOOR MECHANISMS

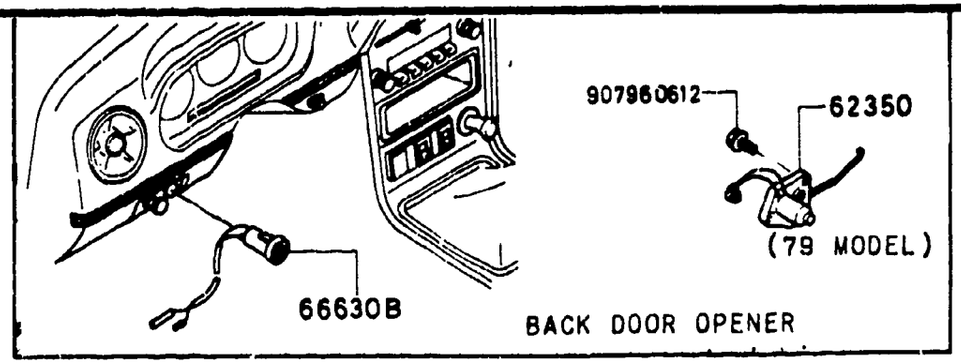

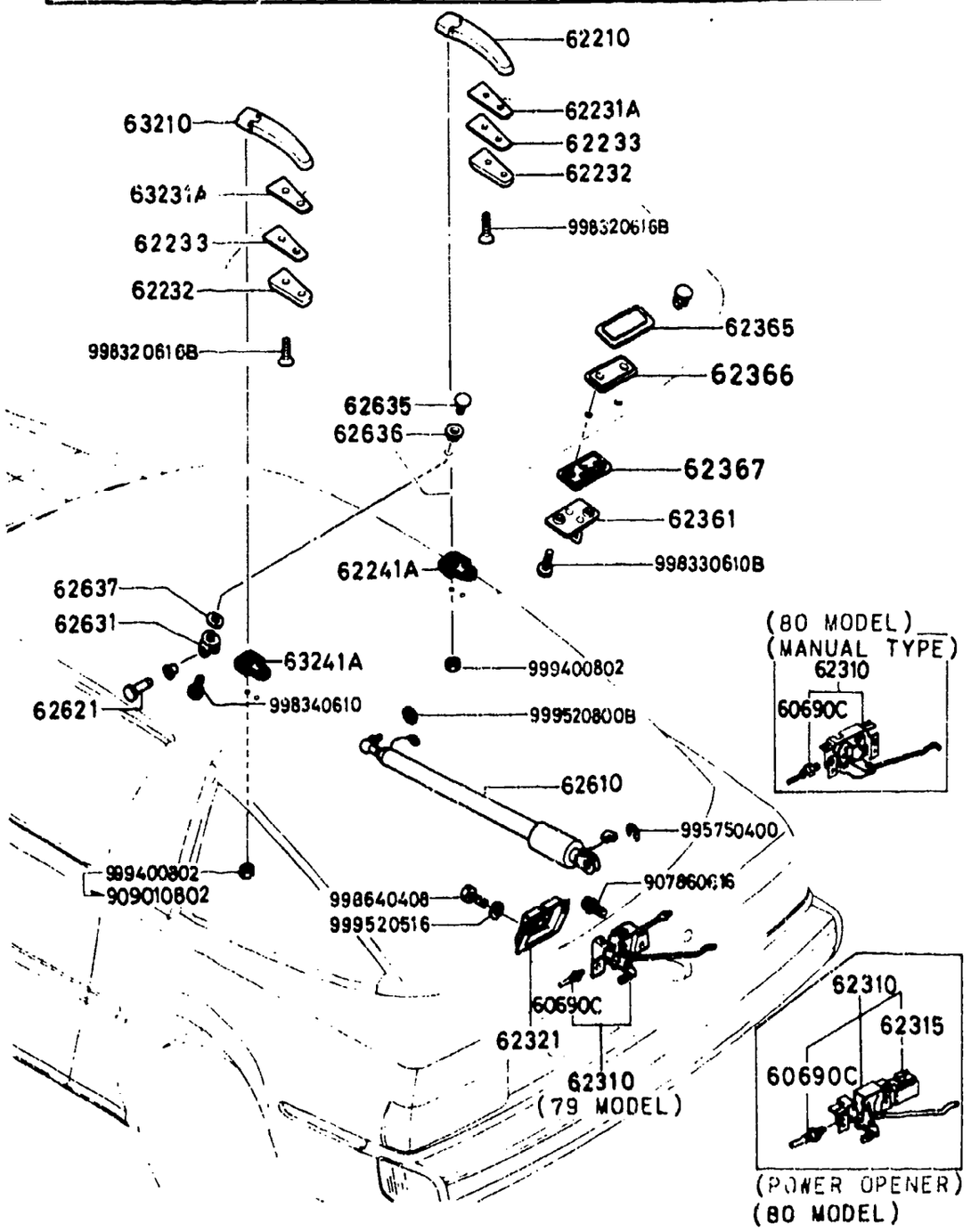

6230A-2 BACK DOOR MECHANISMS

D-CODE (Key No.)	PART NAME	PART No.	Qty.	MODEL/DESCRIPTION	VIN (Chassis No.)
62350	RELEASE,REMO.CON.H.B COMMANDE A DISTANCE	8871-62-350B	1	79 MODEL	SA22C .. 500001 -568500
62361	STRIKER,LOCK GACHE DE VERROU CERROJO,SEGURO	8871-62-361	1		
62365	NUT,STRIKER ECROU	8871-62-365A	1		
62366	SHIM'A',STRIKER CALE D'EPAISSEUR'A'	8871-62-366	1		
62367	SHIM'B',STRIKER CALE D'EPAISSEUR'B'	8871-62-367	1		
62610	STAY,DAMPER SUPPORT AMORTISSEUR	8341-62-610	2	80 MODEL	SA22C .. 568501-
		8871-75-800	2	79 MODEL	SA22C .. 500001 -568500
62621	PIN,DAMPER AXE D'AMORTISSEUR	8871-62-621	2		
62631	BRACKET,DAMPER ATTACHE D'AMORTISSEUR	8871-62-631	2		
62635	NUT,DAMPER ECROU AMORTISSEUR	8871-62-635A	2		
62636	SHIM'A',DAMPER CALE D'EPAISSEUR'A'	8871-62-636	2		SA22C .. 500001 -520637
	<A>	8871-62-636A	2		SA22C .. 520638-
62637	SHIM'B',DAMPER CALE D'EPAISSEUR'B'	8871-62-637	2		
63210	HINGE(L) CHARNIERE (G) BISAGRA IZQ.	8871-63-210A	1		SA22C .. 500001 -559739
		8871-63-210B	1		SA22C .. 559740-

6230A BACK DOOR MECHANISMS

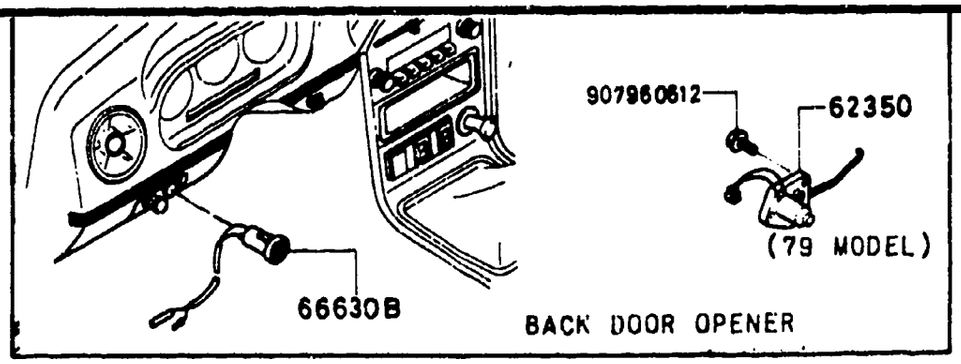

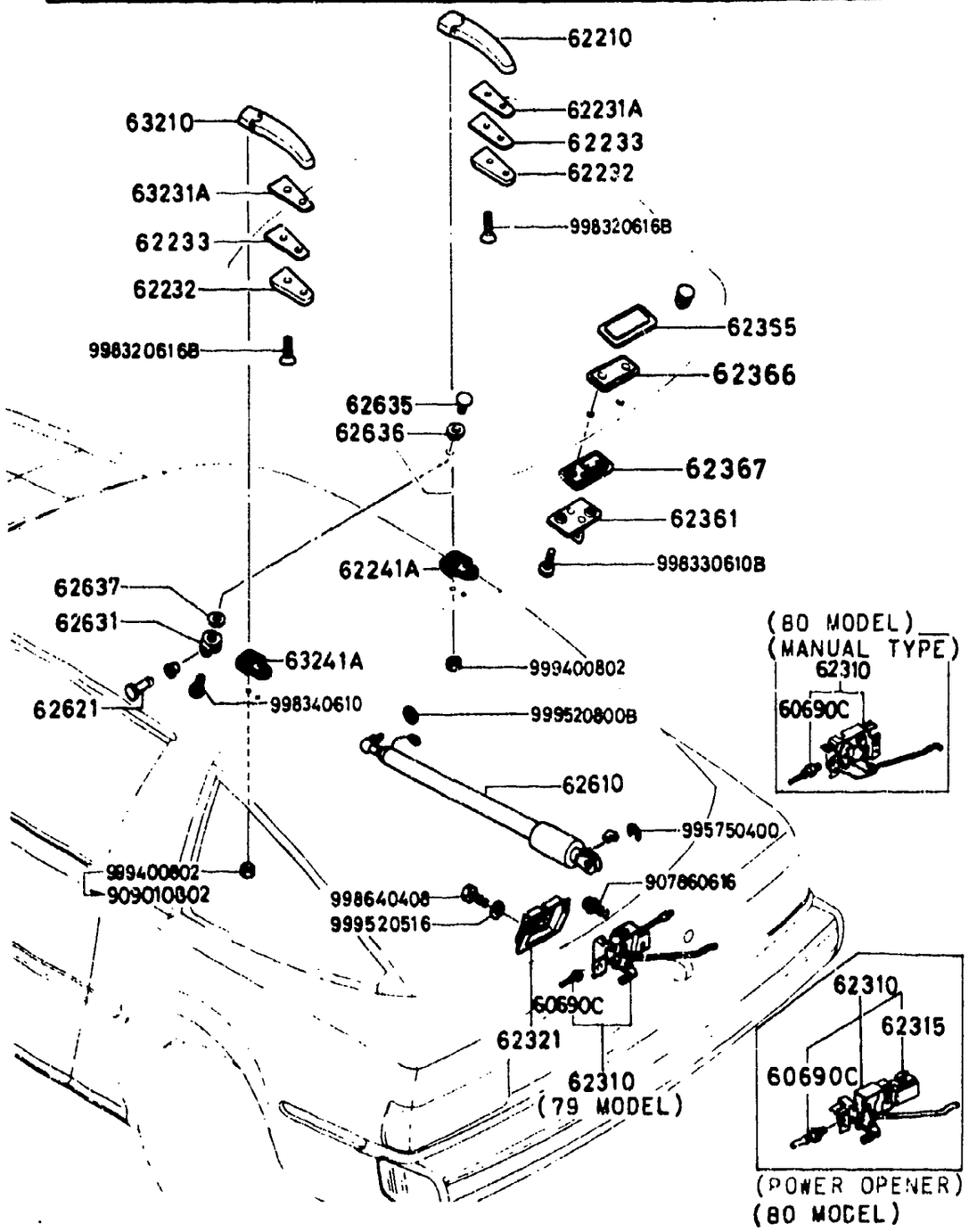

6230A-3* BACK DOOR MECHANISMS

D-CODE (Key No.)	PART NAME	PART No.	Qty.	MODEL / DESCRIPTION	VIN (Chassis No.)
63231A	SHIM'A'(L),HINGE CALE D'EPAISSEUR'A'	8871-63-231	1		
63241A	SHIM'C'(L),HINGE CALE D'EPAISSEUR'C'(G)	8871-63-241A	1		
66630B	SWITCH,REMO.CON.SW. INTERRUPTEUR CDE DISTANCE	8532-66-630	1		

6300A WINDOW GLASSES

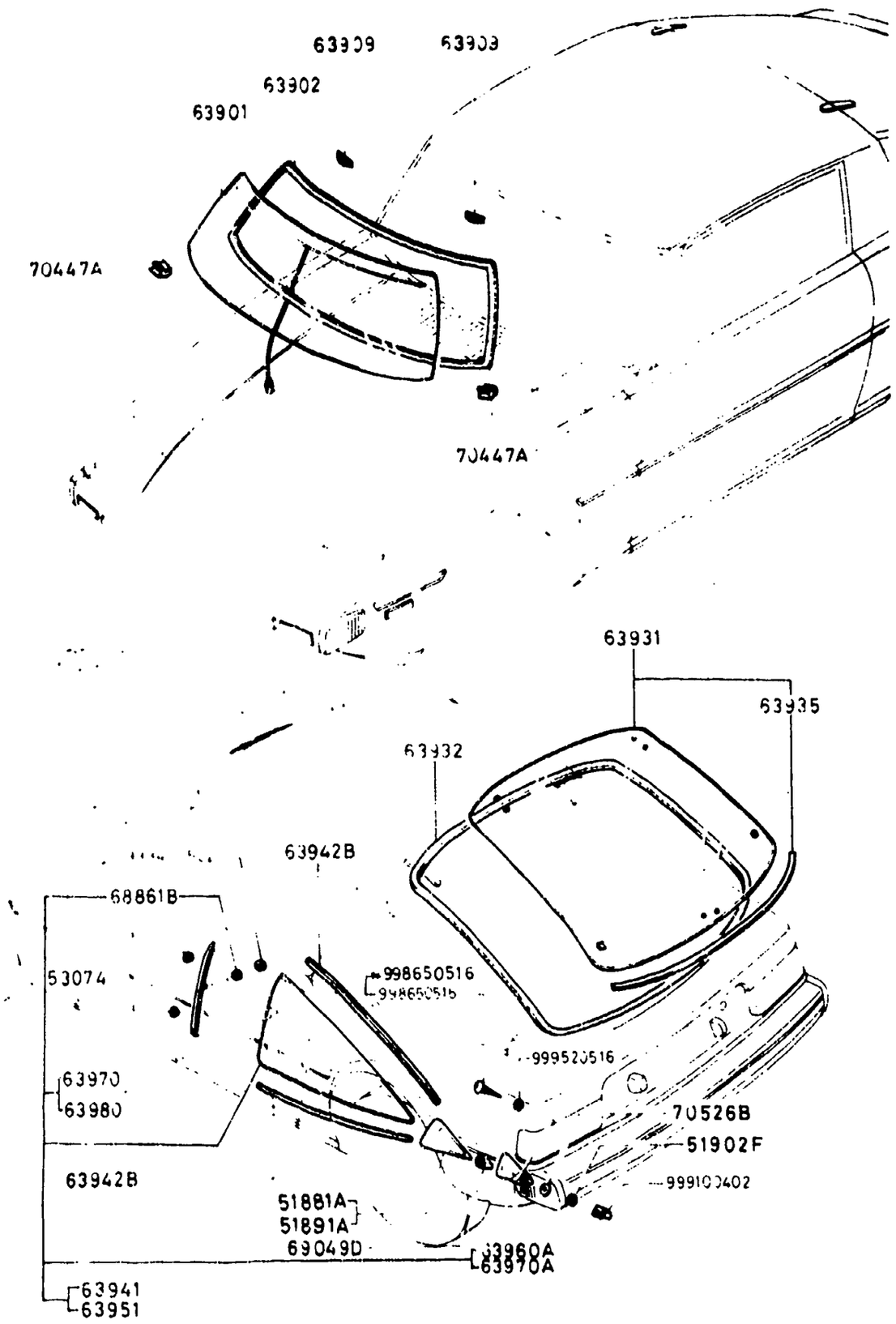

6300A-1 WINDOW GLASSES

D-CODE (Key No.)	PART NAME	PART No.	Qty.	MODEL DESCRIPTION	VIN Chassis No
51881A	GARNISH(R),SIDE WIND	*8871-51-881B	1		SA22C .. 500001 -557577
		8871-51-881C	1		SA22C .. 557578-
51891A	GARNISH(L),SIDE WIND	8871-51-891B	1		SA22C .. 500001 -557577
		*8871-51-891C	1		SA22C .. 557578-
51902F	PACKING JOINT JUNTA	1029-51-902	2		
53074	RUBBER,STOP ARRET,C.T.C. GOMA,TOPE	0183-53-074	4		
63901	GLASS,WINDSHIELD PARE-BRISE VIDRIO, VENTANA DELANTERA	8671-63-901	1	(SHADED)	
		8872-63-901	1	(NON-SHADED)	SA22C .. 500001 -547083
		8872-63-901A	1	(NON-SHADED)	SA22C .. 547084 -557577
	<A>	*8872-63-901B	1	(NON-SHADED)	SA22C .. 557578-
63902	DAM,FRT.WSHLD GLASS JOINT, PAREBRISE AV. PARABRISAS DELANTERO	1243-63-902	1		
63909	SPACER RONDELLE ESPACIADOR	0839-70-449	3		
63931	GLASS,REAR WINDOW GLACE DE LUNETTE AR.	8341-75-890	1	80 MODEL	SA22C .. 568501-
		8871-75-890	1	79 MODEL	SA22C .. 500001 -568500
63932	WEATHERSTRIP,RR.WIND JOINT CAOUTCHOUC GOMA IMPERMEAB.	8871-62-761	1		SA22C .. 500001 -504529
	<A>	8871-62-761B	1		SA22C ..

6300A WINDOW GLASSES

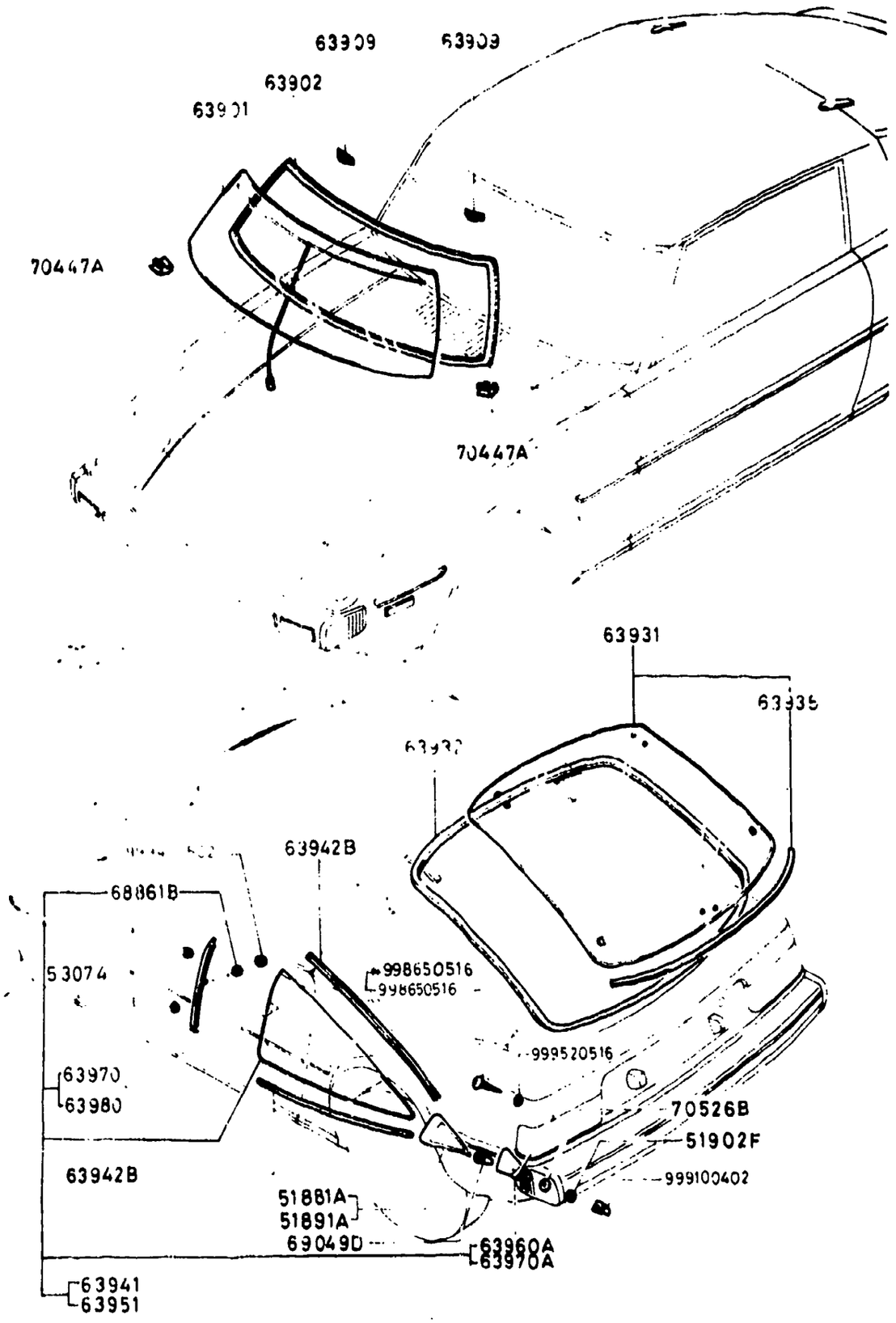

D-CODE (Key No.)	PART NAME	PART No.	Qty.	MODEL DESCRIPTION	VIN (Chassis No.)
63932 CONT'D		8871-62-761B			504530 -525593
		8871-62-761C	1		SA22C .. 525594 -551460
		8871-62-761D	1		SA22C .. 551461-
63935	MOULD,REAR WINDOW MOULURE FENETRE ARR.	8871-63-935A	1		
63941	GLASS(R),SIDE WINDOW GLACE DE COTE (D) VIDRIO (DER), VENTANA LAT	8871-62-950B	1		SA22C .. 500001 -511892
	<A >	8871-62-950C	1		SA22C .. 511393 -617116
	<A >	*8871-62-950D	1		SA22C .. 617117-
63942B	DAM,SIDE WINDOW DEFLECTEUR,FENETRE COTE	8871-63-942	4		
63951	GLASS(L),SIDE WINDOW GLACE DE COTE (G) VIDRIO (IZQ), VENTANA LAT	8871-63-950B	1		SA22C .. 500001 -511892
	<A >	8871-63-950C	1		SA22C .. 511393 -617116
	<A >	*8871-63-950D	1		SA22C .. 617117-
63960A	PLATE(R),GLASS PLAQUE(D). GLACE	8871-62-970A	1		
63970	MOULD(R),GLASS MOULURE GLACE(D)	8871-62-960A	1		
63970A	PLATE(L),GLASS PLAQUE(G). GLACE	8871-63-970A	1		
63980	MOULD(L),GLASS MOULURE(G),GLACE	8871-63-960A	1		
68861B	SPACER RONDELLE	8871-62-960A	2		

6300A WINDOW GLASSES

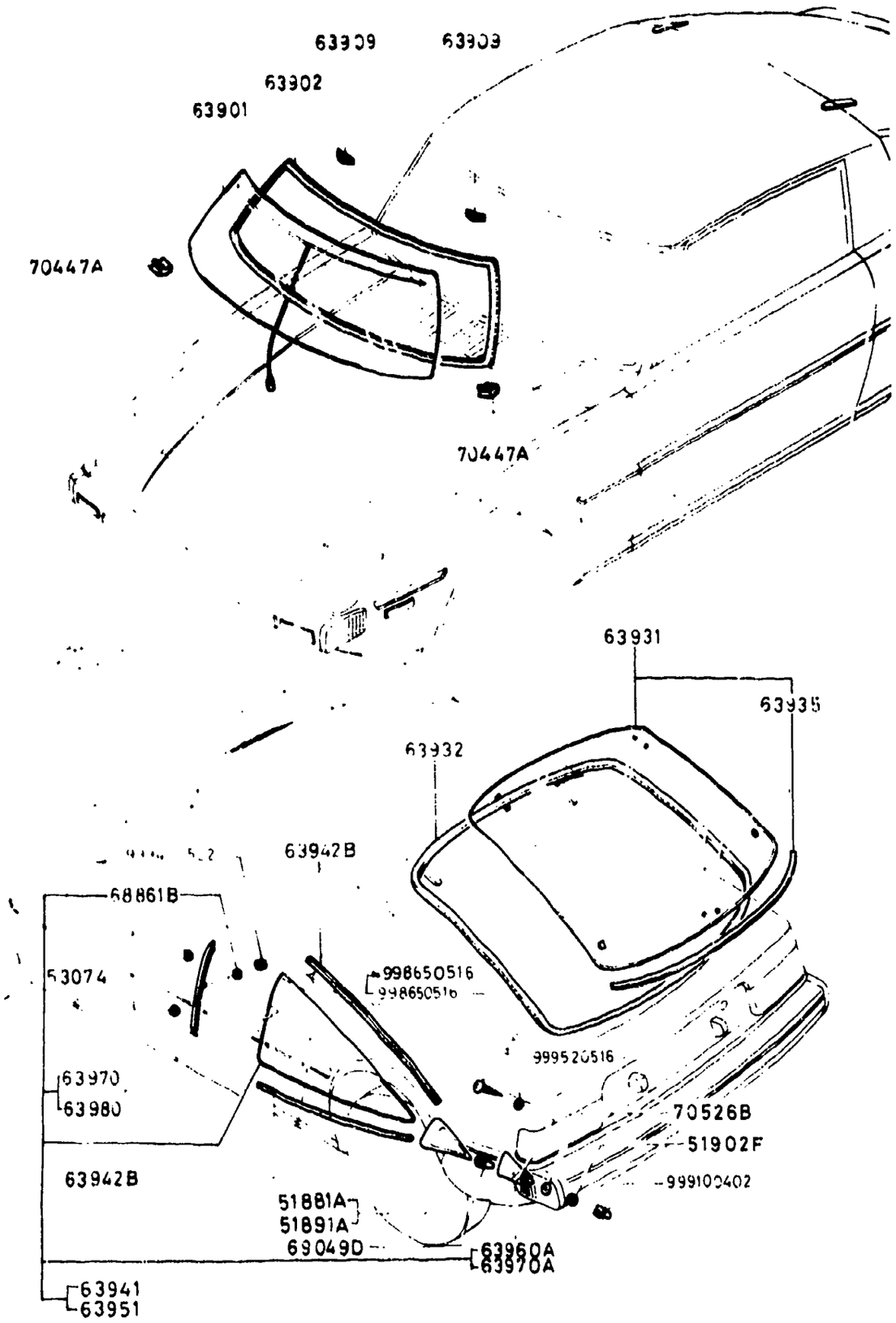

6300A-3* WINDOW GLASSES

D-CODE (Key No.)	PART NAME	PART No.	Qty.	MODEL DESCRIPTION	VIN (Chassis No.)
68861B	ESPACIADOR	8871-62-966A			
CONT'D					
69049D	NUT,SPEED ECROU PLANCHUELA,SEGURO	0187-69-049A	4		
70447A	SPACER'A' EPAISSEUR'A' ESPACIADOR 'A'	0305-70-447B	2		
70526B	SHEET'A',SIDE WINDOW TÔLE'A'FENETRE LATERALE	0256-70-526A	2		

6330A SUNROOF (1979 MODEL)

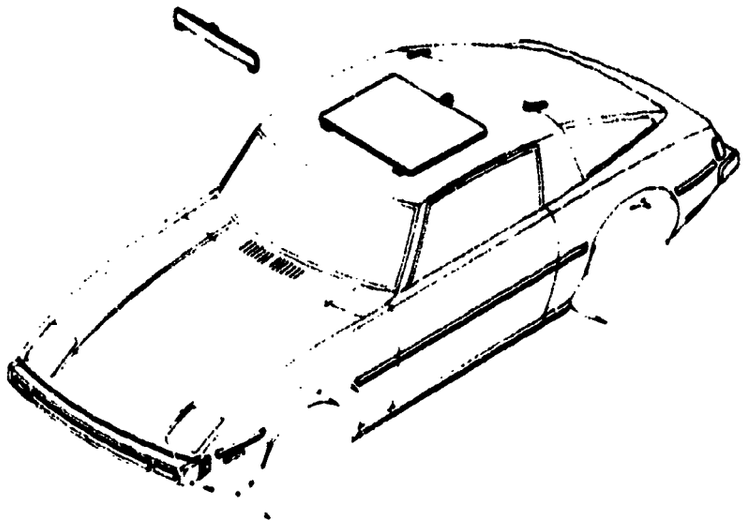

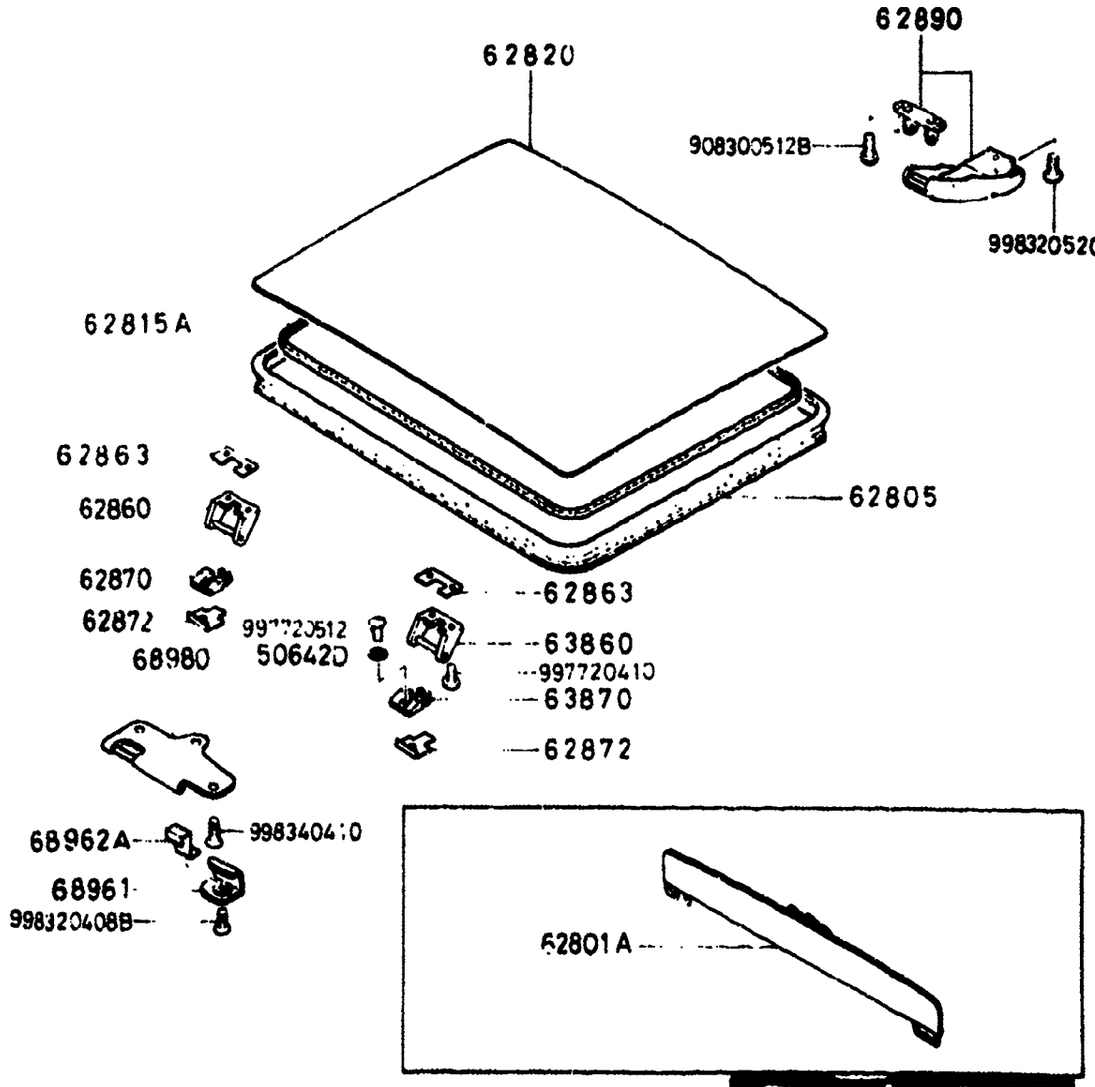

6330A-1 SUNROOF (1979 MODEL)

D-CODE (Key No.)	PART NAME	PART No.	Qty.	MODEL DESCRIPTION	VIN (Chassis No.)
50642D	WASHER RONDELLE ARANDELA	8501-50-642	1		
62801A	DEFLECTOR DEFLECTEUR	8970-62-801B	1		SA22C .. 500001 -504976
		8970-62-801C	1		SA22C .. 504977-
		8974-62-801	1	(FOR CANADA)	
62805	WEATHERSTRIP,R.TOP JOINT C.T.C.(D)SUP.	8970-62-805A	1		
62815A	PROTECTOR,D.TOP PROTECTION	8970-62-815A	1		SA22C .. 500001 -512026
		8970-62-815B	1		SA22C .. 512027-
62820	HATCH,R.TOP PANNEAU SUP.	8970-62-820C	1		
62860	HINGE'A'(R),R.TOP CHARNIERE'A'SUP.(D)	8970-62-860A	1		
62863	WASHER,HINGE FEMALE RONDELLE DE CHARNIERE	8970-62-863	2		
62870	HINGE'B'(R),R.TOP CHARNIERE'B'SUP(D)	8970-62-871D	1		SA22C .. 500001 -506586
	<A>	8970-62-871E	1		SA22C .. 506587 -522378
	<A>	8970-62-871F	1		SA22C .. 522379-
62872	SHIM,HINGE'B'-R.TOP CALE D'EPAISSEUR	8970-62-872B	2		
62890	LOCK,R.TOP VERROUILLAGE SUP.(D)	8970-62-890D	1		SA22C .. 500001 -522637

6330A SUNROOF (1979 MODEL)

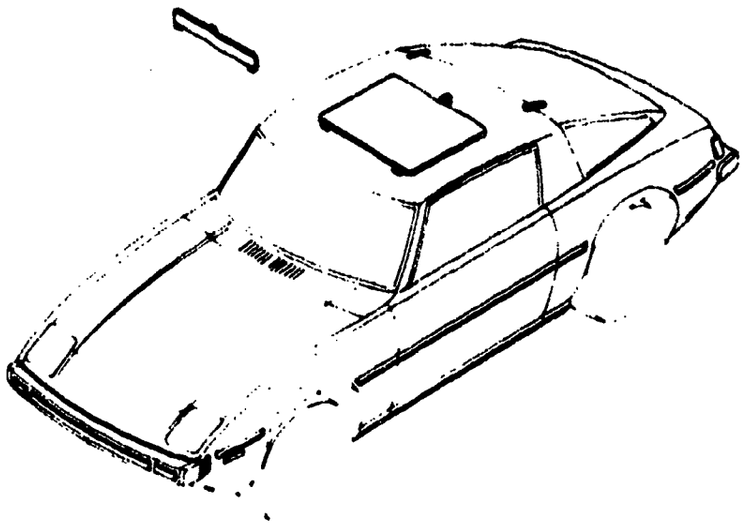

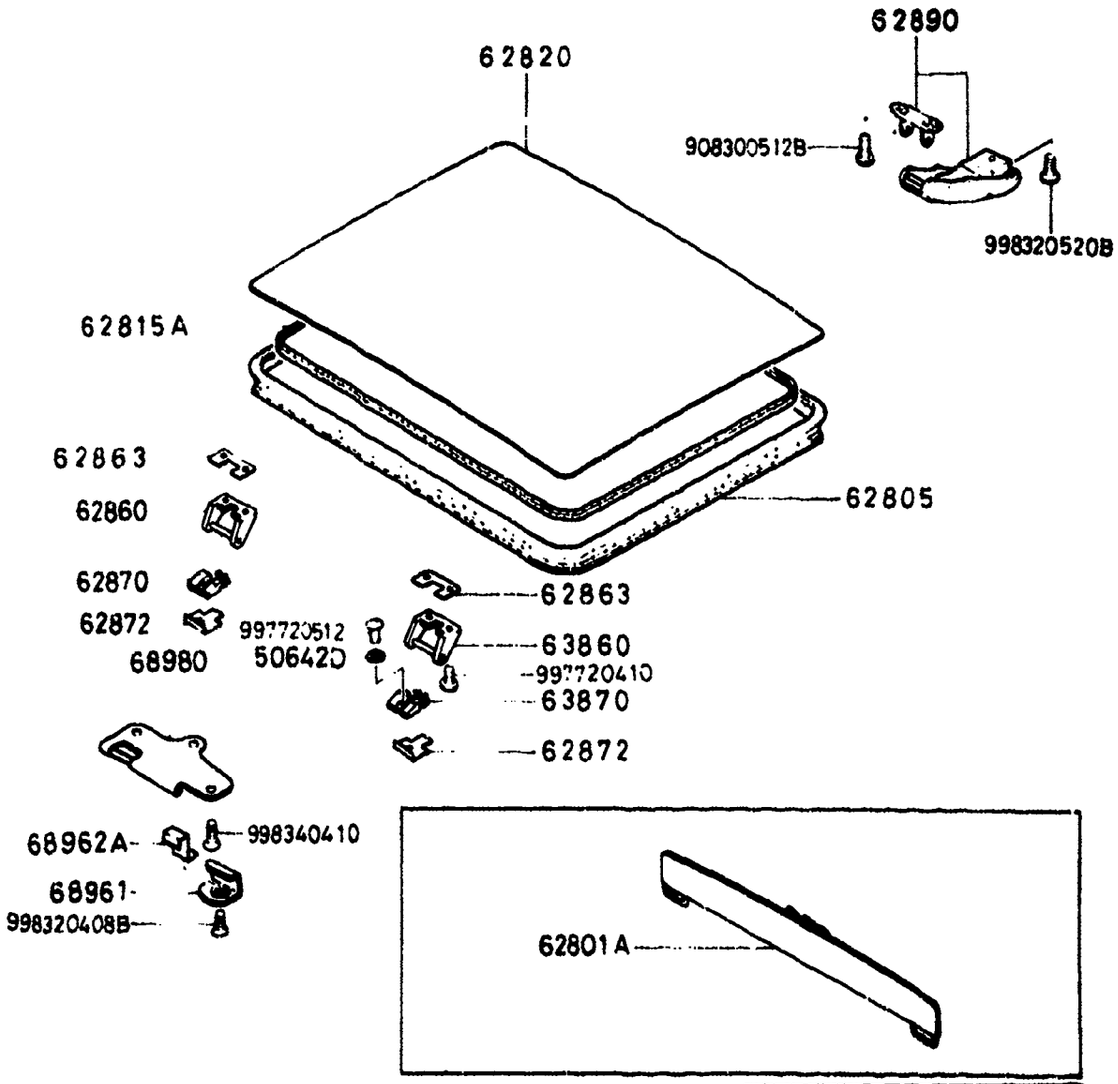

6330A-2* SUNROOF (1979 MODEL)

D-CODE (Key No.)	PART NAME	PART No.	Qty.	MODEL DESCRIPTION	VIN (Chassis No.)
62890 CONT'D		8970-62-890E	1		SA22C .. 520638-
63860	HINGE'A'(L),R.TOP CHARNIERE'A'SUP.(G)	8970-63-860A	1		
63870	HINGE'B'(L),R.TOP CHARNIERE'B'SUP(G)	8970-63-871D	1		SA22C .. 500001 -522378
	<A >	8970-63-871F	1		SA22C .. 522379-
68961	PLATE,CATCH LOWER PLAQUE DISPOSITIF D'ARRET	8973-68-961A	1		
68962A	PLATE,CATCH UPPER PLAQUE DISPOSITIF D'ARRET	8973-68-962A	1		
68980	PIN,LOCK AXE DE VERROUILLAGE	8973-68-980A	1		SA22C .. 500001 -510959
		8973-68-980C	1		SA22C .. 510960 -563500

6330AA SUNROOF (1980 MODEL)

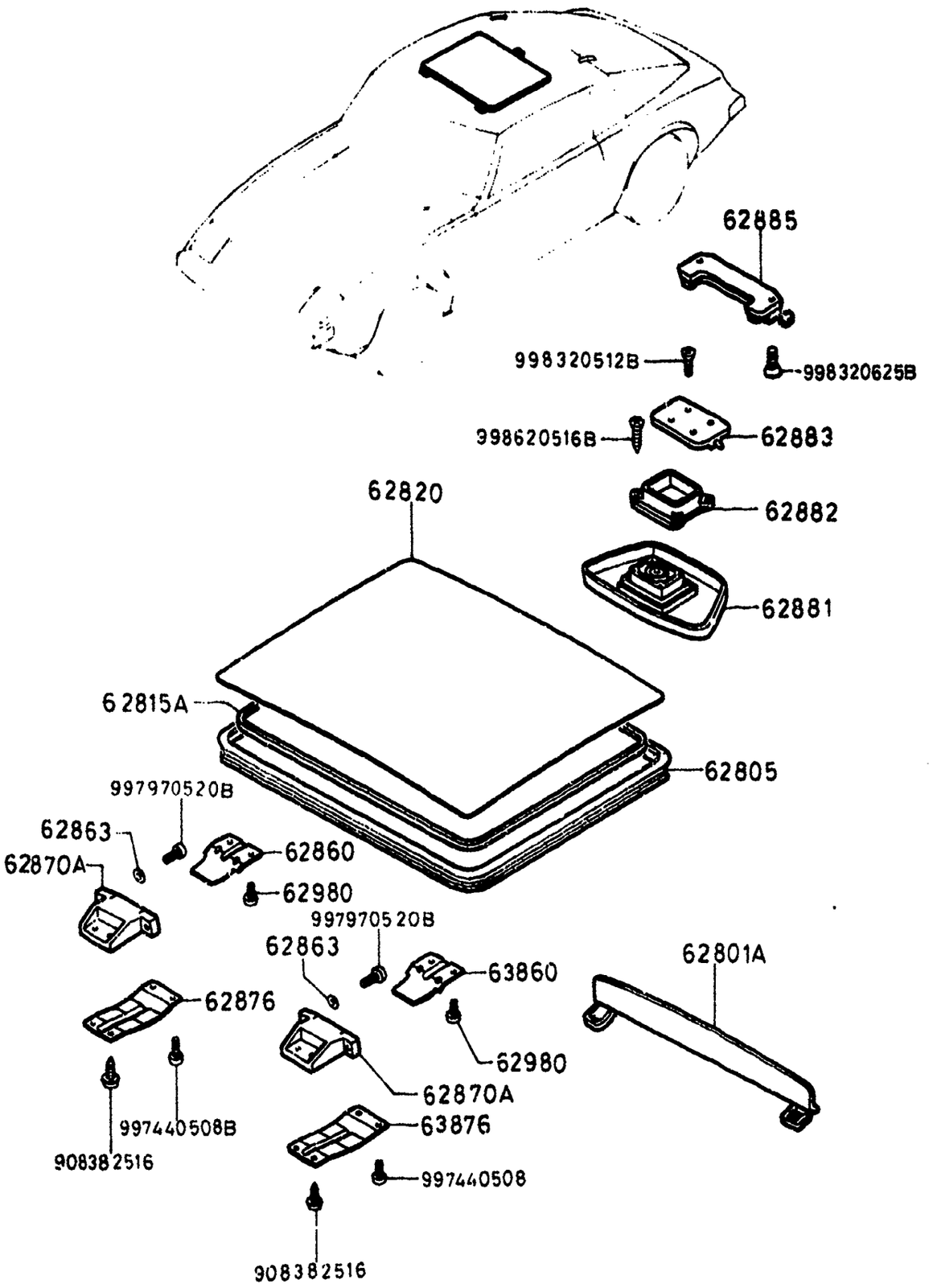

6330AA-1 SUNROOF (1980 MODEL)

D-CODE (Key No.)	PART NAME	PART No.	Qty.	MODEL DESCRIPTION	VIN (Chassis No.)
62801A	DEFLECTOR DEFLECTEUR	8346-62-801C	1		
	BLACK	00			
	WINE	10			
	BROWN (SA22C 568501-606774)	20			
	BROWN (SA22C 606775-)	88			
62805	WEATHERSTRIP,R.TOP JOINT C.T.C.(D)SUP.	8970-62-805A	1		
62815A	PROTECTOR,D.TOP PROTECTION	8970-62-815B	1		
62820	HATCH,R.TOP PANNEAU SUP.	8346-62-820A	1		
62860	HINGE'A'(R),R.TOP CHARNIERE'A'SUP.(D)	8340-62-875A	1		
62863	WASHER,HINGE FEMALE RONDELLE DE CHARNIERE	8346-62-87[illegible]	4		
62870A	HINGE'B',R.TOP	8346-62-871A	2		
62876	REINF.(R),HINGE	8346-62-876	1		
62881	LATCH,ROTARY	8346-62-861A	1		
	BLACK	00			
	WINE	10			
	BROWN (SA22C 568501-606774)	20			
	BROWN (SA22C 606775-)	70			

6330AA SUNROOF (1980 MODEL)

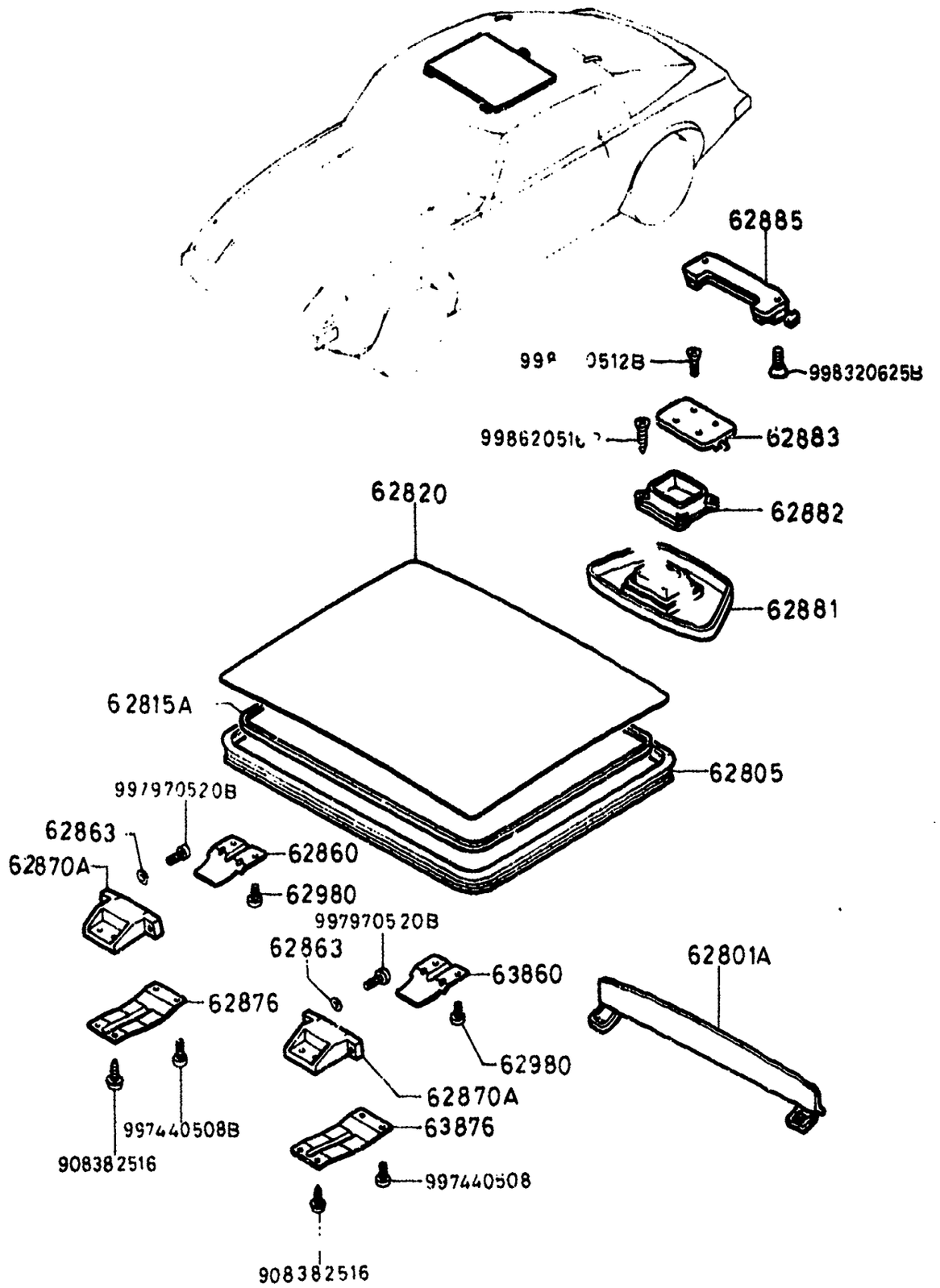

6330AA-2* SUNROOF (1980 MODEL)

D-CODE (Key No.)	PART NAME	PART No.	Qty.	MODEL DESCRIPTION	VIN (Chassis No.)
62882	COVER LATCH	8346-62-882	1		
62883	PLATE LOCK	8346-62-883	1		
62885	HOOK SLIDE	8346-62-885	1		
62980	SCREW	8346-62-980	4		
63860	HINGE'A'(L),R.TOP CHARNIERE'A'SUP.(G)	8346-63-875A	1		
63876	REINF.(L),HINGE	8346-63-876	1		

SECTION NUMBER INDEX (BODY)

STARTING LOCATION	SECTION No.	SECTION NAME
3–C2	0900A	KEY SETS
3–C3	5000A	FRONT BUMPER & GRILLE
3–E3	5010A	REAR BUMPER
3–G3	5030A	WINDOW MOULDINGS
3–I3	5040A	BODY MOULDINGS
3–C4	5100A	LAMPS (FRONT & SIDE)
3–G4	5110A	LAMPS (REAR)
3–I4	5130A	OVERHEAD CONSOLE (1979 STANDARD ROOF MODEL)
3–J4	5170A	COWL & EXTRACTOR GRILLES & ORNAMENTS
3–C5	5230A	BONNET
3–E5	5310A	BODY PANELS (FRONT)
3–K5	5340A	BODY PANELS (SIDE & ROOF)
3–I6	5360A	BODY PANELS (FLOOR)
3–C7	5500A	DASHBOARD EQUIPMENT
3–L7	5540A	METERS
3–D8	5560A	DASHBOARD & RELATED
3–L8	5570A	CONSOLE
3–K9	5580A	VENTILATOR
3–C10	5700A	SEAT (EXCEPT LEATHER TRIM)
3–N10	5710A	SEAT TRIM (LEATHER – ANNIVERSARY EDITION)
3–G11	5760A	SEAT BELTS
3–C12	5800A	FRONT DOOR
3–C13	5830A	FRONT DOOR MECHANISMS
3–C14	6100A	HEATER
3–E14	6110A	HEATER UNIT
3–H14	6115A	HEATER CONTROLS
3–J14	6120A	HEATER BLOWER
3–C15	6230A	BACK DOOR MECHANISMS
3–F15	6300A	WINDOW GLASSES
3–I15	6330A	SUNROOF
3–C16	6600A	ELECTRIC EQUIPMENT
3–G16	6680A	RADIO & STEREO SYSTEMS
4–C2	6700A	WIRE HARNESS & CLAMPS
4–G2	6720A	WINDSHIELD WASHER
4–H2	6730A	WINDSHIELD WIPER
4–J2	6740A	WIPER MOTOR (COMPONENTS ONLY)
4–C3	6800A	CEILING TRIM
4–J3	6840A	TRIM & SCUFF PLATE
4–F4	6860A	FLOOR MAT & PADS
4–L4	6870A	SERVICE TOOLS
4–M4	6900A	VISOR, ASSIST HANDLE & MIRRORS
4–G5	6930A	CAUTION PLATES

THE FRAMES IN THIS COLUMN INDICATE :

3–C16	6600A	ELECTRIC EQUIPMENT
3–G16	6680A	RADIO & STEREO SYSTEMS (1979 MODEL)
3–I16	6680AA	RADIO & STEREO SYSTEMS (1980 MODEL)

© 1983 Toyo Kogyo Co., Ltd.
MAY 1983

6600A ELECTRIC EQUIPMENT

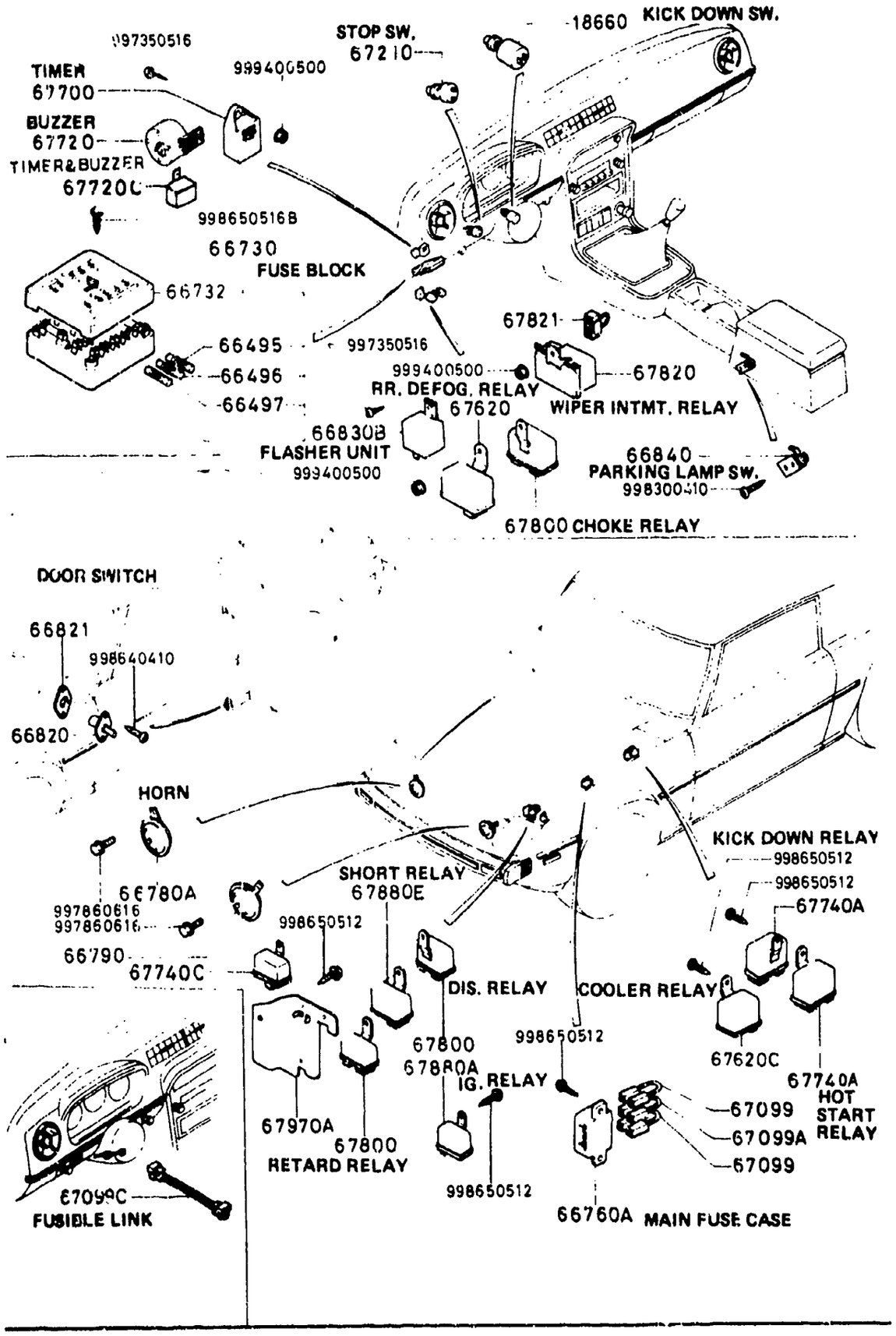

6600A-1 ELECTRIC EQUIPMENT

D-CODE (Key No.)	PART NAME	PART No.	Qty.	MODEL DESCRIPTION	VIN (Chassis No.)
18660	SWITCH,KICK DOWN INTERRUPTEUR	2691-18-660	1	A/T	
66495	FUSE(10A) FUSIBLE (10A) FUSIBLE 10 AMPERIOS	9970-60-110	5	79 MODEL	SA22C .. 500001 -568500
		9970-61-110	3	80 MODEL	SA22C .. 568501-
66496	FUSE(15A) FUSIBLE (15A) FUSIBLE 15 AMPERIOS	9970-60-115	4	79 MODEL	SA22C .. 500001 -568500
		9970-61-115	6	80 MODEL	SA22C .. 568501-
66497	FUSE(20A) FUSIBLE 20A	9970-60-120	3		
66730	BLOCK,FUSE BOITE A,FUSIBLE BLOQUE DE FUSIBLE	8342-66-730A		(INCLUDED IN FRONT HARNESS,67010A OF 6700A)	
			1	80 MODEL	SA22C .. 568501-
	SIDE VIEW YAZAKI / FURUKAWA 15A 10A / 15A 10A 10A ↓ 20A / 10A A 20A 15A 9816 10A / 15A 8871 10A 15A 15A / 15A 15A 15A 20A / 15A 20A TOP VIEW	8871-66-730		(INCLUDED IN FRONT HARNESS,67010A OF 6700A)	
			1	79 MODEL	SA22C .. 500001 -540410
		8871-66-730A		(INCLUDED IN FRONT HARNESS,67010A OF 6700A)	
			1	79 MODEL	SA22C .. 540411 -568500
66732	COVER CACHE COBERTOR	8342-66-731A		(FURUKAWA MAKE)	
			1	80 MODEL	SA22C .. 568501-
		8342-66-732A		(YAZAKI MAKE)	
			1	80 MODEL	SA22C .. 568501-
		8871-66-731		(FURUKAWA MAKE)	
			1	79 MODEL	SA22C .. 500001 -540410
		8871-66-731A		(FURUKAWA MAKE)	
			1	79 MODEL	SA22C .. 540411 -568500
		8871-66-732		(YAZAKI MAKE)	

6600A ELECTRIC EQUIPMENT

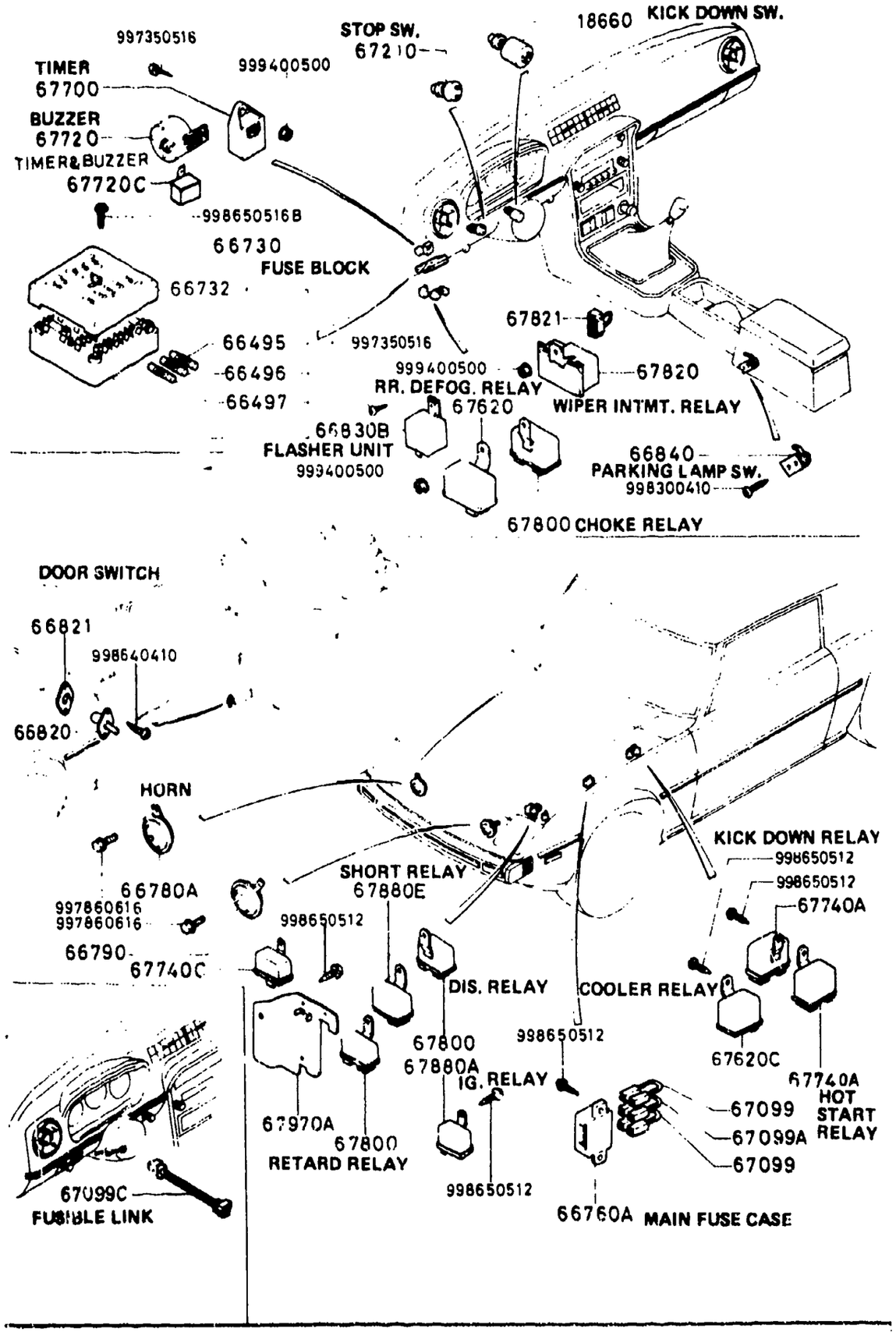

6600A-2 ELECTRIC EQUIPMENT

D-CODE (Key No.)	PART NAME	PART No.	Qty.	MODEL DESCRIPTION	VIN (Chassis No.)
66732 CONT'D		8871-66-732	1	79 MODEL	SA22C .. 500001 -540410
		8871-66-732A	1	(YAZAKI MAKE) 79 MODEL	SA22C .. 540411 -568500
66760A	CASE,MAIN FUSE BOITIER DE FUSIBLES	8871-66-760	1	(INCLUDED IN FRONT HARNESS,67010A OF 6700A)	
66780A	HORN,HIGH TONE AVERTISSEUR AIGU	8531-66-780C	1		
66790	HORN,LOW TONE KLAXON,GRAVE PITOS TONO BAJO	8531-66-790C	1		
66820	SWITCH,DOOR RUPTEUR, PORTE INTERRUPTOR,PUERTA	0209-66-820A	2		
66821	WASHER,ADJUST EPAISSEUR ARANDELA,AJUSTAR	0209-66-821	2		
66830B	UNIT,FLASHER CENTRALE DE CLIGNOTEMENT	3992-66-830A	1		
66840	SWITCH,PARKING LAMP INTE., TEMOIN FREIN A MAI INTERRUPTOR,LAMPARA PARQU	8871-66-450	1		
67099	LINK,FUSIBLE FUSIBLE ESLABON FUSIBLE	8871-67-099	2	(10M OHM)	
67099A	LINK,FUSIBLE FUSIBLE ESLABON FUSIBLE	3777-67-099	1	(7M OHM)	
67099C	LINK,FUSIBLE FUSIBLE ESLABON FUSIBLE	1175-66-710A	1	(INCLUDED IN FRONT HARNESS,67010A OF 6700A) 79 MODEL	SA22C .. 500001 -568500
		8130-66-710	1	(INCLUDED IN FRONT HARNESS,67010A OF 6700A) 80 MODEL	SA22C .. 568501-
67210	SWITCH,STOP RUPTEUR, STOP	0233-66-790	1		

6600A ELECTRIC EQUIPMENT

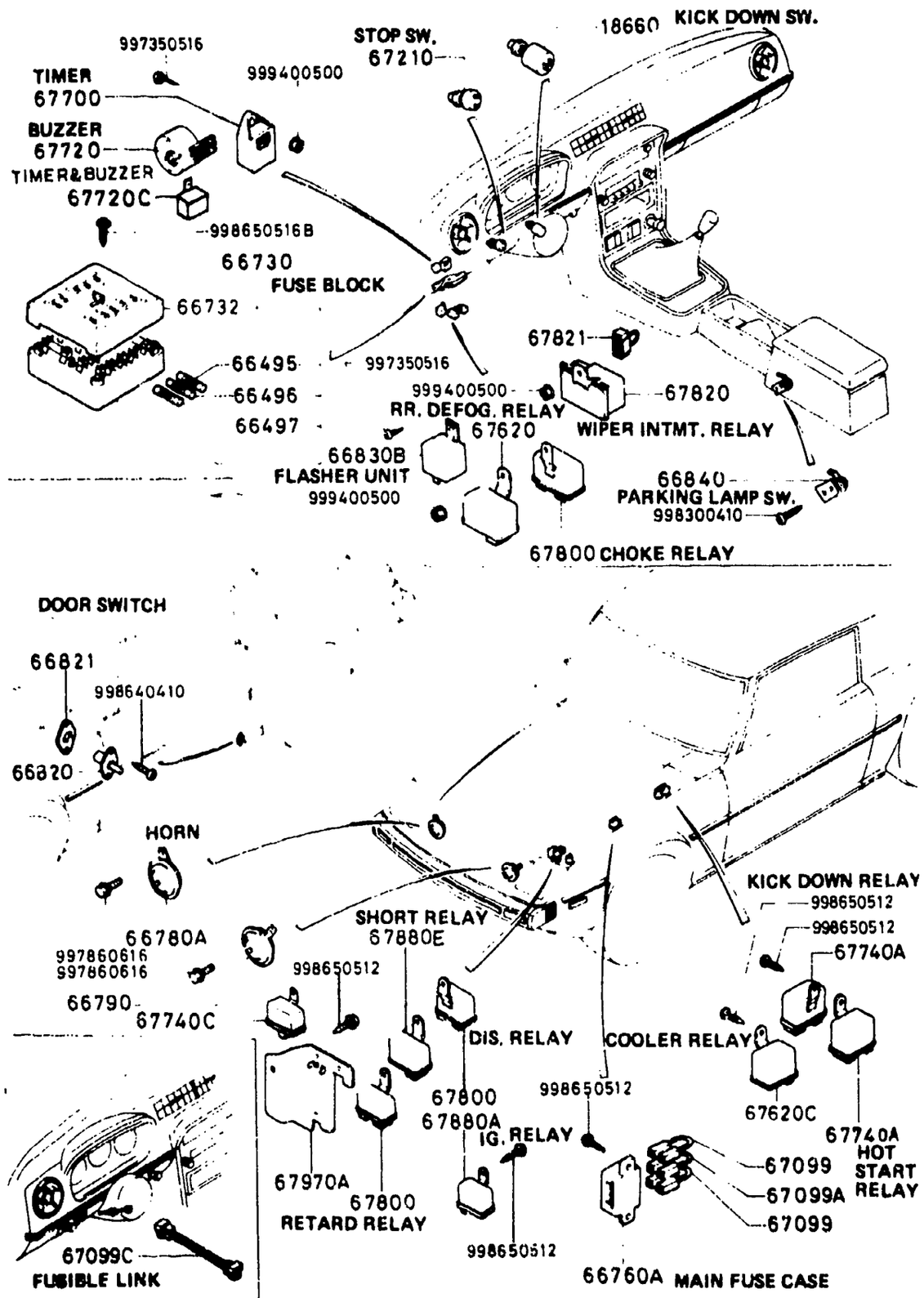

D-CODE (Key No.)	PART NAME	PART No.	Qty.	MODEL DESCRIPTION	VIN (Chassis No.)
67210	INTERRUPTOR,PARADA	0233-66-790			
CONT'D					
67620	RELAY,RR.DEFOGGER RELAIS ANTI-BUEE ARR.	1016-67-620	1	79 MODEL	SA22C .. 500001 -568500
67620C	RELAY RELAIS	1016-67-620		(FOR COOLER)	
			1	79 MODEL	SA22C .. 500001 -568500
67700	TIMER RELAIS AJUSTADOR DISTRIBUCION	3564-67-700	1	79 MODEL	SA22C .. 500001 -568500
67720	BUZZER AVERTISSEUR VIBRADUR	8792-67-720	1	79 MODEL	SA22C .. 500001 -563500
67720C	TIMER & BUZZER MINUTERIE	8914-67-720	1	80 MODEL	SA22C .. 568501-
67740A	RELAY RELAIS	1220-67-740	1	79 MODEL M/T	
			2	79 MODEL A/T	
67740C	RELAY,CHOKE & CHECK RELAIS,VOLET D'AIR & SECU DISYUNTOR,ESTRANGULADOR &	8173-67-740A	1	80 MODEL	SA22C .. 568501-
67800	RELAY,3 POINT RELAIS,'3 POINTS' DISYUNTOR,3 PLATINOS	1078-67-800	1	79 MODEL FED.	SA22C .. 500001 -568500
			3	79 MODEL CALIF.	SA22C .. 500001 -568500
		8341-67-740	2	80 MODEL FED.	SA22C .. 568501-
			3	CANADA 80 MODEL CALIF.	SA22C .. 500001-
67820	RELAY,WIPER INTMT. RELAIS ESSUIE-GLACE	1011-67-820A		(FOR W/ INTMT.WIPER)	
			1		SA22C .. 500001 -541116
		1011-67-820B		(FOR W/ INTMT.WIPER)	
	<A>		1		SA22C .. 541117-
67821	CONNECTOR,SHORT RACCORD, COURT UNION CORTA	1244-67-821		(FOR W/O INTMT.WIPER	
			1		SA22C .. 500001 -597272
		1244-67-821A		(FOR W/O INTMT.WIPER	

6600A ELECTRIC EQUIPMENT

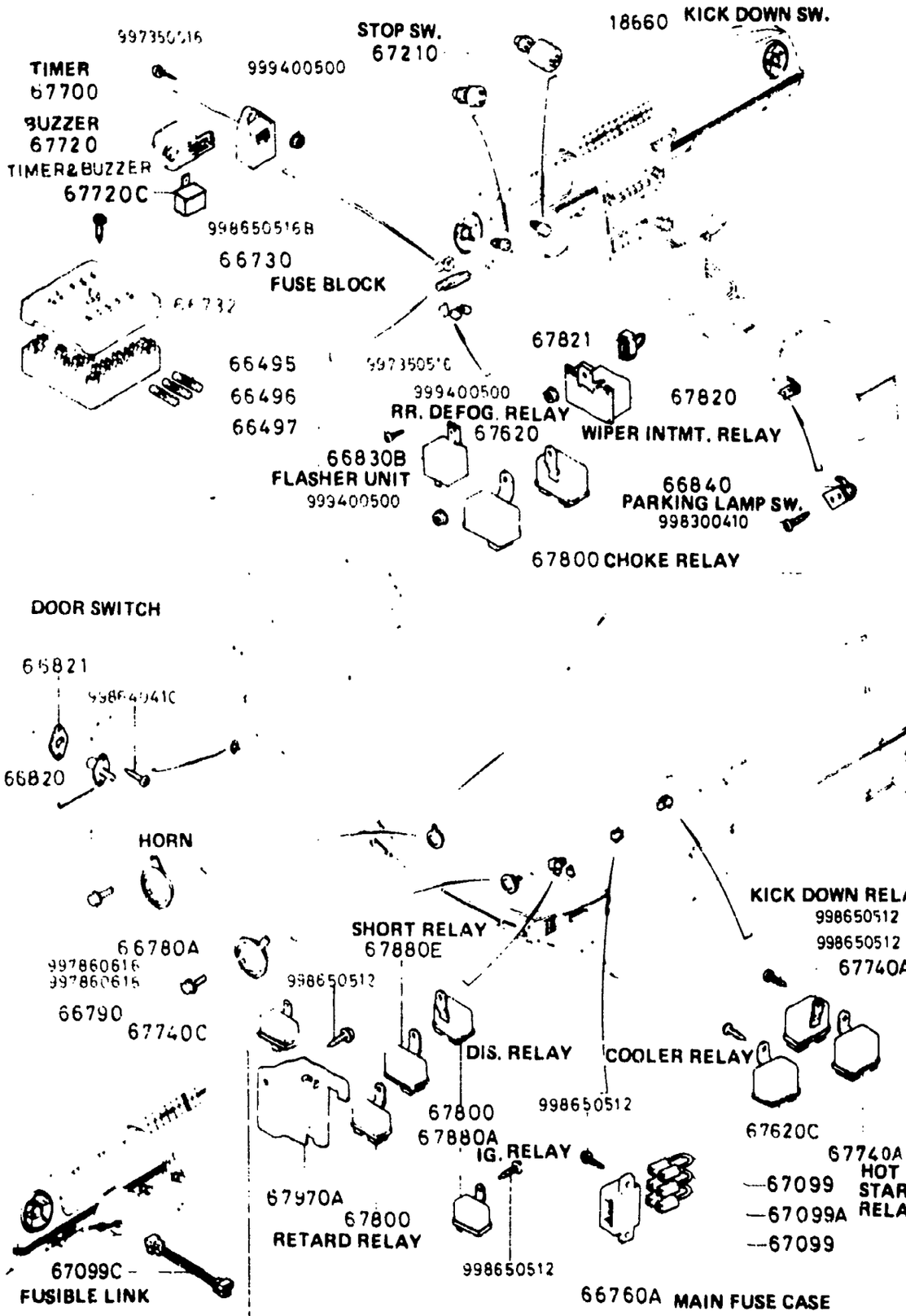

6600A-4* ELECTRIC EQUIPMENT

D-CODE Key No.	PART NAME	PART No.	Qty	MODEL DESCRIPTION	VIN Chassis No
67821 CONT'D	<A>	1244-67-821A	1		SA22C .. 597273-
67880A	RELAY,IGNITION RELAIS D'ALLUMAGE DISYUNTOR,ENCENDIDO	0839-67-880	1	79 MODEL	SA22C .. 500001 -563500
67880E	RELAY,SHORT RELAIS	0862-67-880	1	79 MODEL	SA22C .. 500001 -563500
67970A	BRACKET,EMISSION REL SUPPORT	8871-67-972	1	79 MODEL	SA22C .. 500001 -563500

6680A RADIO & STEREO SYSTEMS (1979 MODEL)

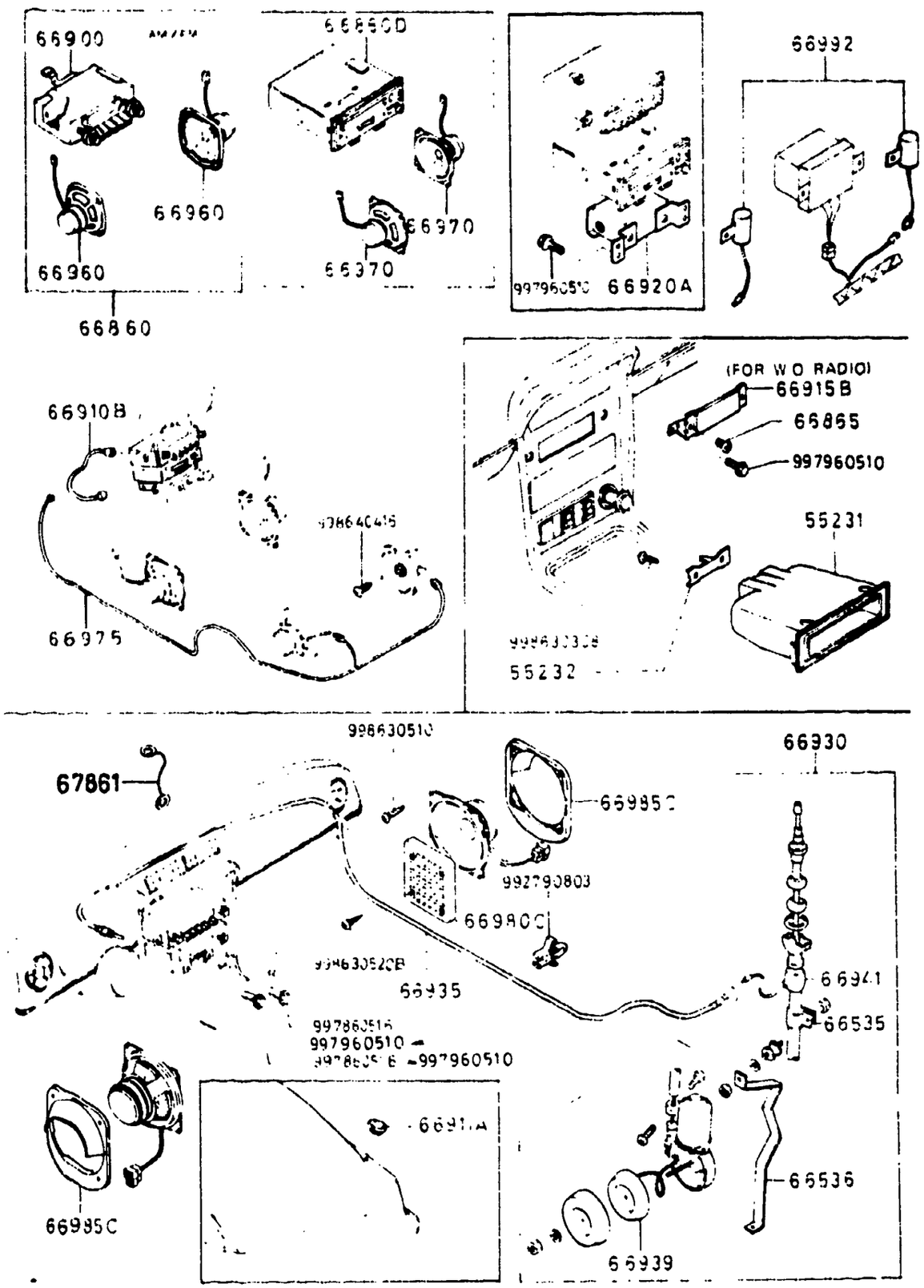

6680A-1 RADIO & STEREO SYSTEMS (1979 MODEL)

D-CODE Key No.	PART NAME	PART No.	Qty	MODEL DESCRIPTION	VIN Chassis No.
55231	ORNAMENT,STEREO SIGLE,STEREO EMBLEMA STEREO	1363-55-231B	1	(USE W/O STEREO)	SA22C .. 500001 -521429
	BLACK	00			
		1363-55-231C	1	(USE W/O STEREO)	SA22C .. 521430-
	BLACK	00			
55232	TERMINAL,PLATE BORNE	8118-55-232	1		
66535	BRACKET,ANTENNA NO.1 SUPPORT ANTENNE NO1	8870-66-941	1		SA22C .. 512943-
66536	BRACKET,ANTENNA NO.2 SUPPORT ANTENNE NO2	8870-66-942	1		SA22C .. 512943 -566500
66860	RADIO,AUTO AUTO RADIO RADIO	8869-66-870	1	(AM/FM MPX.)	
66860D	DECK,TAPE-CASSETE CASSETTE	8671-66-870A	1	(USE w/ FINE ADJUST. (USE w/ MAIN AMP) (LIMITED)	
66865	SCREW VIS TORNILLO	0222-06-065A	2	(USE W/O RADIO)	
	BLACK	00			
66900	TUNER TUNER RADIO	8569-66-900	1	(AM/FM MPX.)	
		8973-66-900P	1	(ORD.BY 8973669OOP01) (LIMITED)	
66910B	CORD,DIN FIL	8551-66-910A	1	(LIMITED)	

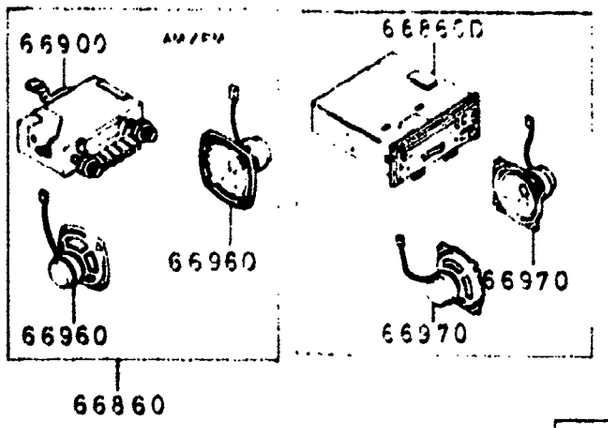

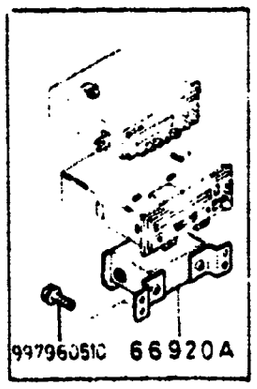

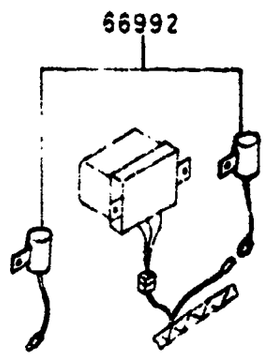

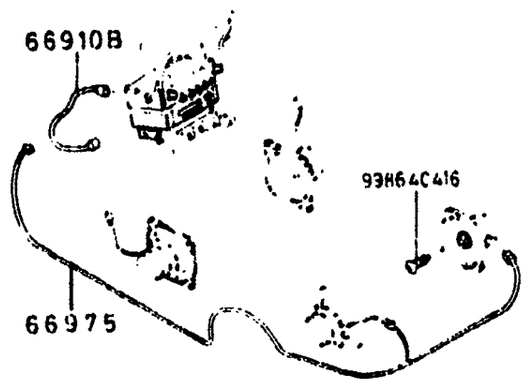

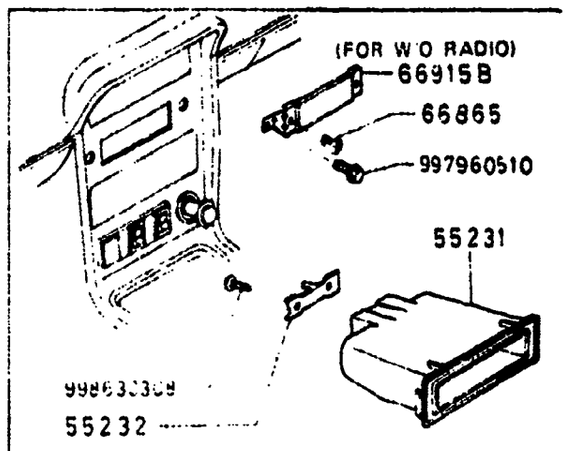

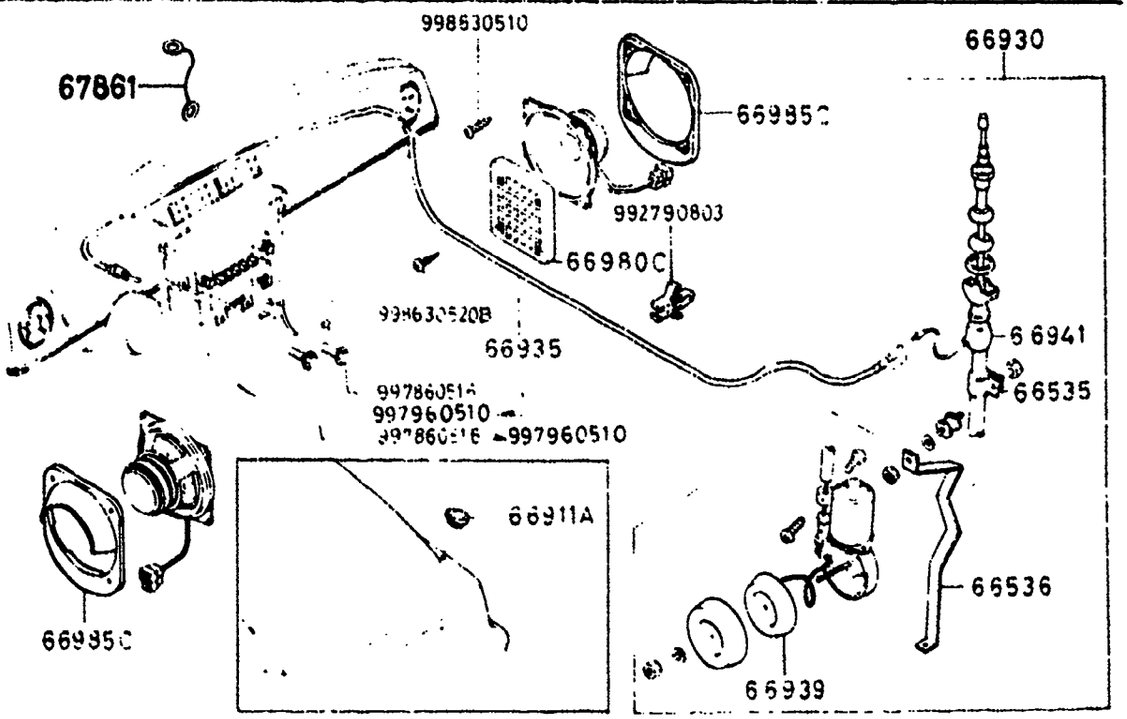

D-CODE (Key No.)	PART NAME	PART No.	Qty.	MODEL DESCRIPTION	VIN (Chassis No.)
66911A	COVER,HOLE ANTENNA BOUCHON TROU ANTENNE	0222-66-911	1	(USE W/O ANTENNA)	
66915B	ORNAMENT,TUNER SIGLE,TUNER EMBLEMA SINTONIZADOR	8871-66-900A	1	(USE W/O RADIO)	
66920A	AMP.,MAIN AMPEREMETRE PRINCIPAL	8973-66-920P	1	(ORD.BY 897366920P01) (LIMITED)	
66930	ANTENNA ANTENNE ANTENA	8869-66-940B	1		
66935	FEEDER-ANTENNA ALIMENTATEUR D'ANTENNE	8869-66-936	1		
		8973-66-936P	1	(ORD.BY 897366936P01) (LIMITED)	
66939	DRIVE,MECHANISM ENTRAINEMENT MECANISMO DE IMPULSO	8870-66-949	1		
66941	POLE,ANTENNA POTEAU,ANTENNE PERTIGA,ANTENA	8869-66-941	1		
66960	SPEAKER,LOUD-FRONT HAUT PARLEUR PARLANTE BAJO	8869-66-960	2		
66970	SPEAKER,LOUD-REAR HAUT-PARLEUR ARR.	8951-66-960	2	(2 WAY) (LIMITED)	
66975	CORD,LOUD SPEAKER FAISCEAU, HAUT PARLEUR CABLE DEL PARLANTE	8973-66-961P	1	(ORD.BY 897366961P01) (LIMITED)	
66980C	GRILLE, SPEAKER GRILLE DE HAUT-PARLEUR	1247-66-980	2	(LIMITED)	
66985C	SPACER,SPEAKER EPAISSEUR HAUT-PARLEUR	1247-66-985A	2		
66992	CONDENSER CONDENSATEUR CONDENSADOR	0820-66-992	2		
67861	WIRE,RADIO EARTH CABLE DE TERRE RADIO	0710-66-868A	1		

6680AA RADIO & STEREO SYSTEMS (1980 MODEL)

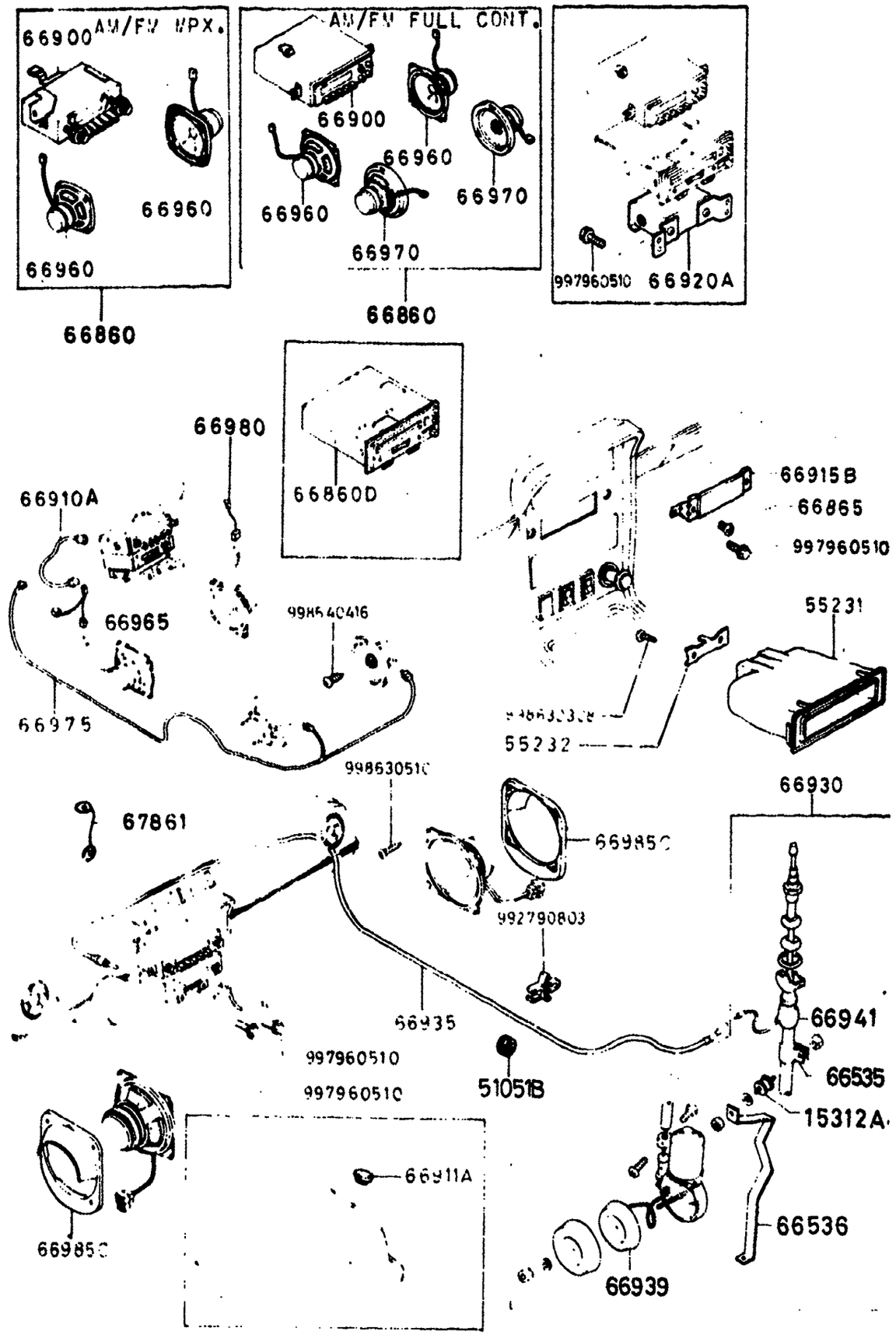

6680AA-1 RADIO & STEREO SYSTEMS (1980 MODEL)

D-CODE (Key No.)	PART NAME	PART No.	Qty.	MODEL DESCRIPTION	VIN (Chassis No.)
15312A	RUBBER,INSULATION CAOUTCHOUC ISOLANT GOMA,AISLADORA	1757-15-312	1		
51051B	PROTECTOR	*8572-51-051	1		SA22C .. 606775-
55231	ORNAMENT,STEREO SIGLE,STEREO EMBLEMA STEREO	1363-55-231C	1	(USE W/O STEREO)	
	BLACK	00			
55232	TERMINAL,PLATE BORNE	8118-55-232	1		
66535	BRACKET,ANTENNA NO.1 SUPPORT ANTENNE NO1	8342-66-941	1		
66536	BRACKET,ANTENNA NO.2 SUPPORT ANTENNE NO2	8342-66-942	1		
66860	RADIO,AUTO AUTO RADIO RADIO	1460-66-870	1	(AM/FM MPX.) (USE W/ 4 SPEAKERS)	
		8341-66-870A	1	(AM/FM MPX.) (USE W/ 2 SPEAKERS)	
		8344-66-870A	1	(AM/FM FULL CONTROL) (USE W/ 4 SPEAKERS) (INCLUDING DUAL 2WAY	
		8488-66-870	1	(AM/FM FULL CONTROL) (USE W/ 2 SPEAKERS)	SA22C .. 57[illegible]51-
66860D	DECK,TAPE-CASSETE CASSETTE	8871-66-870A	1	(USE W/ FINE ADJUST. (USE W/ MAIN AMP)	
		8872-66-870A	1	(USE W/O MAIN AMP)	SA22C .. 56[illegible]01 -56[illegible]3

6680AA RADIO & STEREO SYSTEMS (1980 MODEL)

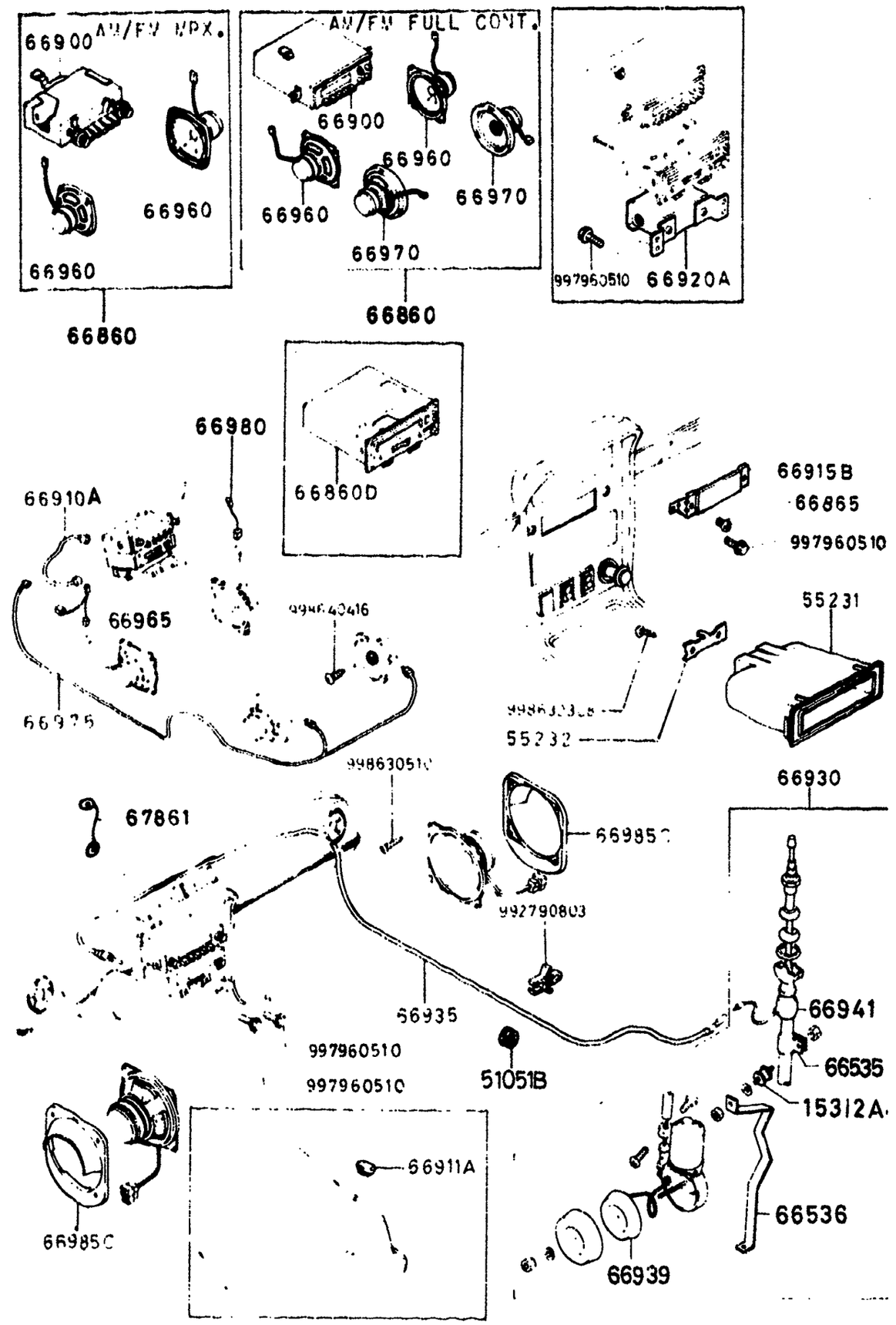

6680AA-2 RADIO & STEREO SYSTEMS (1980 MODEL)

D-CODE (Key No.)	PART NAME	PART No.	Qty.	MODEL DESCRIPTION	VIN (Chassis No.)
66865	SCREW VIS TORNILLO	0222-66-865A	2	(USE W/O RADIO)	
	BLACK	00			
66900	TUNER TUNER RADIO	8341-66-900A	1	(AM/FM MPX.)	
		8344-66-900A	1	(AM/FM FULL CONTROL)	
66910A	CORD,DIN FIL	8561-66-910	1	(USE W/ MAIN AMP)	SA22C .. [illegible] -597212
66911A	COVER,HOLE ANTENNA BOUCHON TROU ANTENNE	0222-66-911	1	(USE W/O ANTENNA)	
66915B	ORNAMENT,TUNER SIGLE,TUNER EMBLEMA SINTONIZADOR	8871-66-900A	1	(USE W/O RADIO)	
66920A	AMP.,MAIN AMPEREMETRE PRINCIPAL	8344-66-920	1	(20W X 2)	SA22C .. 597273-
		8551-66-920A	1	(5W X 2)	SA22C .. [illegible] -597272
66930	ANTENNA ANTENNE ANTENA	8341-66-940B	1		
66935	FEEDER-ANTENNA ALIMENTATEUR D'ANTENNE	8869-66-936	1		SA[illegible] .. [illegible] -[illegible]7[illegible]2
	<A >*	8869-66-936A	1		SA[illegible] .. [illegible]7[illegible]-
66939	DRIVE,MECHANISM ENTRAINEMENT MECANISMO DE IMPULSO	8870-66-949	1		
66941	POLE,ANTENNA POTEAU,ANTENNE PERTIGA,ANTENA	8341-66-941	1		
66960	SPEAKER,LOUD-FRONT HAUT PARLEUR PARLANTE BAJO	8869-66-960	2		

6680AA RADIO & STEREO SYSTEMS (1980 MODEL)

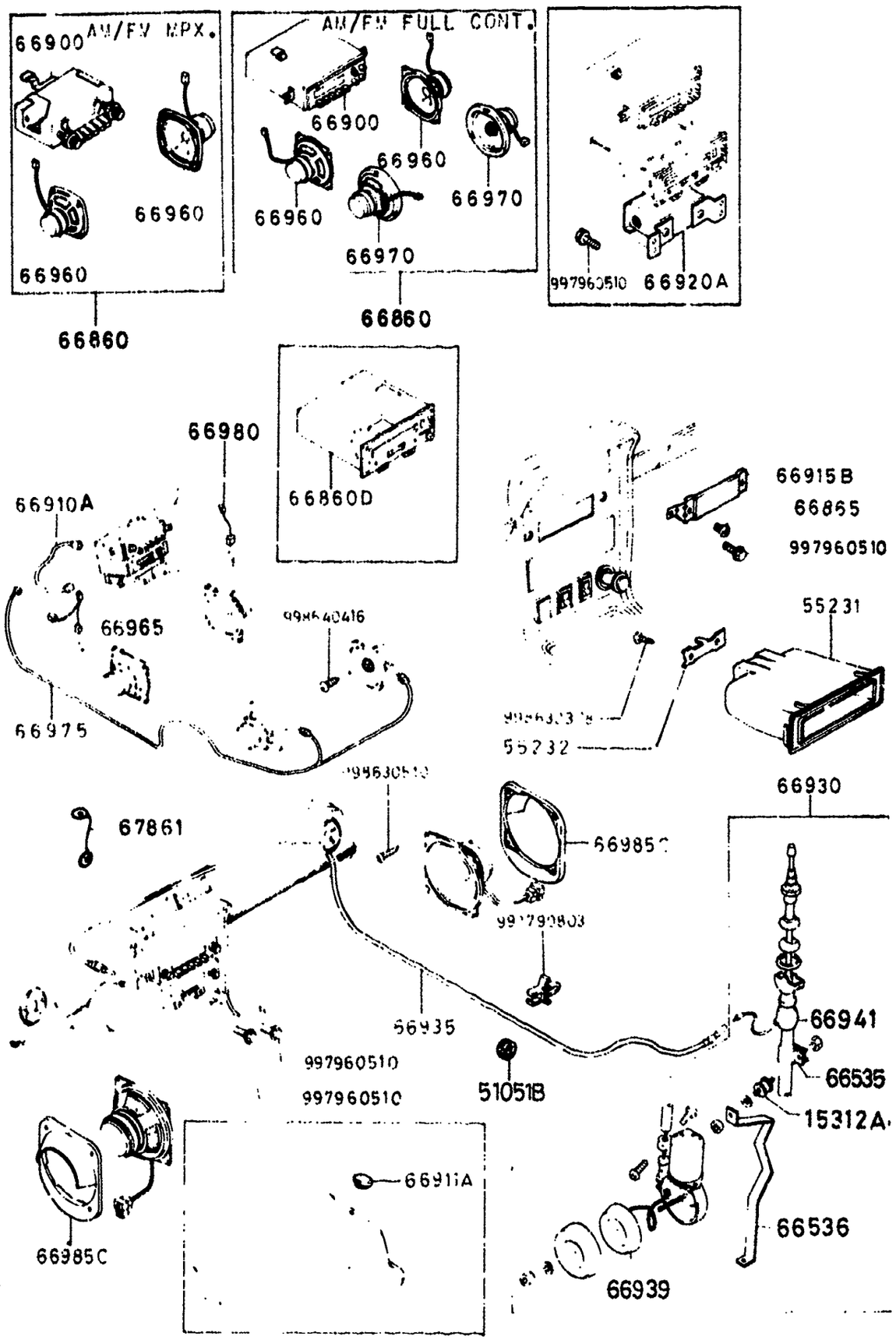

6680AA-3* RADIO & STEREO SYSTEMS (1980 MODEL)

D-CODE (Key No.)	PART NAME	PART No.	Qty.	MODEL DESCRIPTION	VIN Chassis No.
66965	CORD,SPEAKER(FRONT) FAISCEAU CABLE	8980-66-985	1	(USE W/ 4 SPEAKERS) (USE W/O MAIN AMP)	
66970	SPEAKER,LOUD-REAR HAUT-PARLEUR ARR.	0870-66-970B	2	(13CM)	
		8551-66-960	2	(2 WAY)	
66975	CORD,LOUD SPEAKER FAISCEAU, HAUT PARLEUR CABLE DEL PARLANTE	8561-66-965	1	(USE W/ 4 SPEAKERS)	SA22C .. 568501 -578960
		8980-66-961	1	(USE W/ 4 SPEAKERS)	SA22C .. 578961-
66980	CORD,SHORT FAISCEAU, COURT CABLE CORTO	8484-66-985	1	(USE W/ 4 SPEAKERS) (USE W/O MAIN AMP)	SA22C .. 568501 -578960
66985C	SPACER,SPEAKER EPAISSEUR HAUT-PARLEUR	1247-66-985A	2		
67861	WIRE,RADIO EARTH CABLE DE TERRE RADIO	0710-66-868A	1		