# Parts Catalog

## RX-7 U.S.A.&Canada ('79 ► '80)

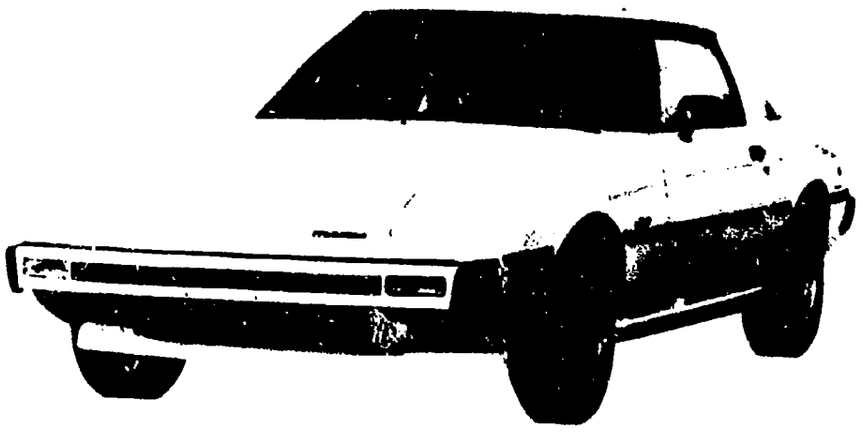

SA22C-500001~650000

## CONTENTS

The following charts provide you with the general layout and contents location of Mazda parts catalogs, but some sections may vary slightly in detail.

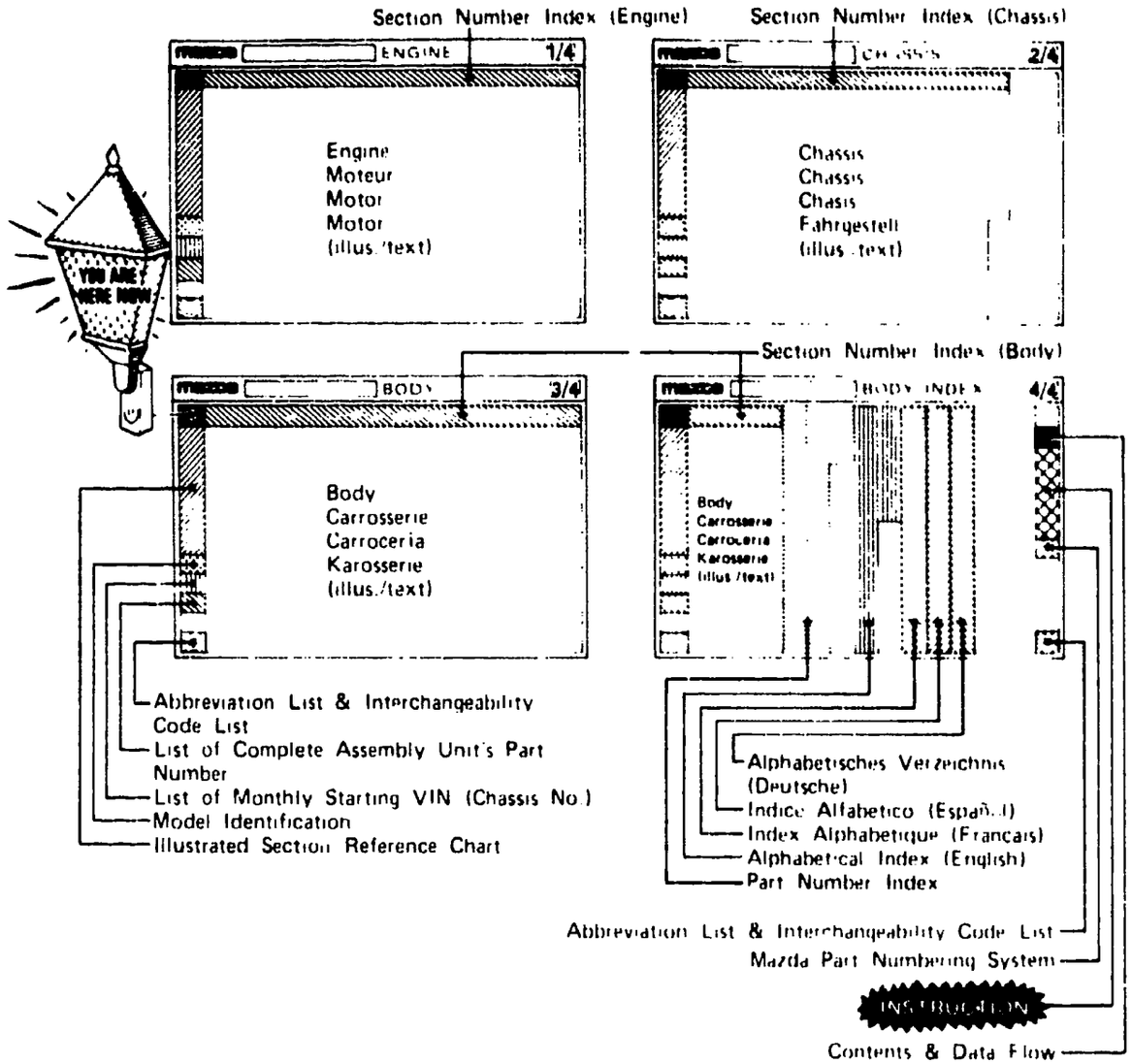



**May '83 (FINAL)**
Catalog NO. 1111-MF-USAA-03


mazda


© 1983 Toyo Kogyo Co., Ltd.

# ILLUSTRATED SECTION REFERENCE CHART

## 1000A







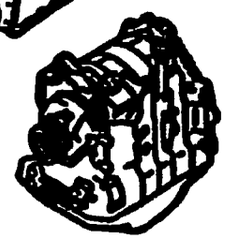

SHORT ENGINE & GASKET SETS

## 1 1030A

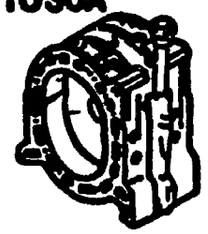

ROTOR HOUSING

## 2 1040A



OIL PAN & FRONT & REAR HOUSINGS

## 3 1100A

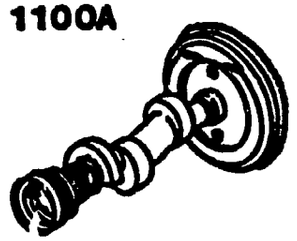

ECCENTRIC SHAFT & FLYWHEEL

## 4 1110A



ROTOR & RELATED

## 5 1400A

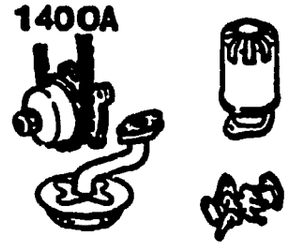

OIL PUMP & FILTER

## ROTARY ENGINE (1/2)

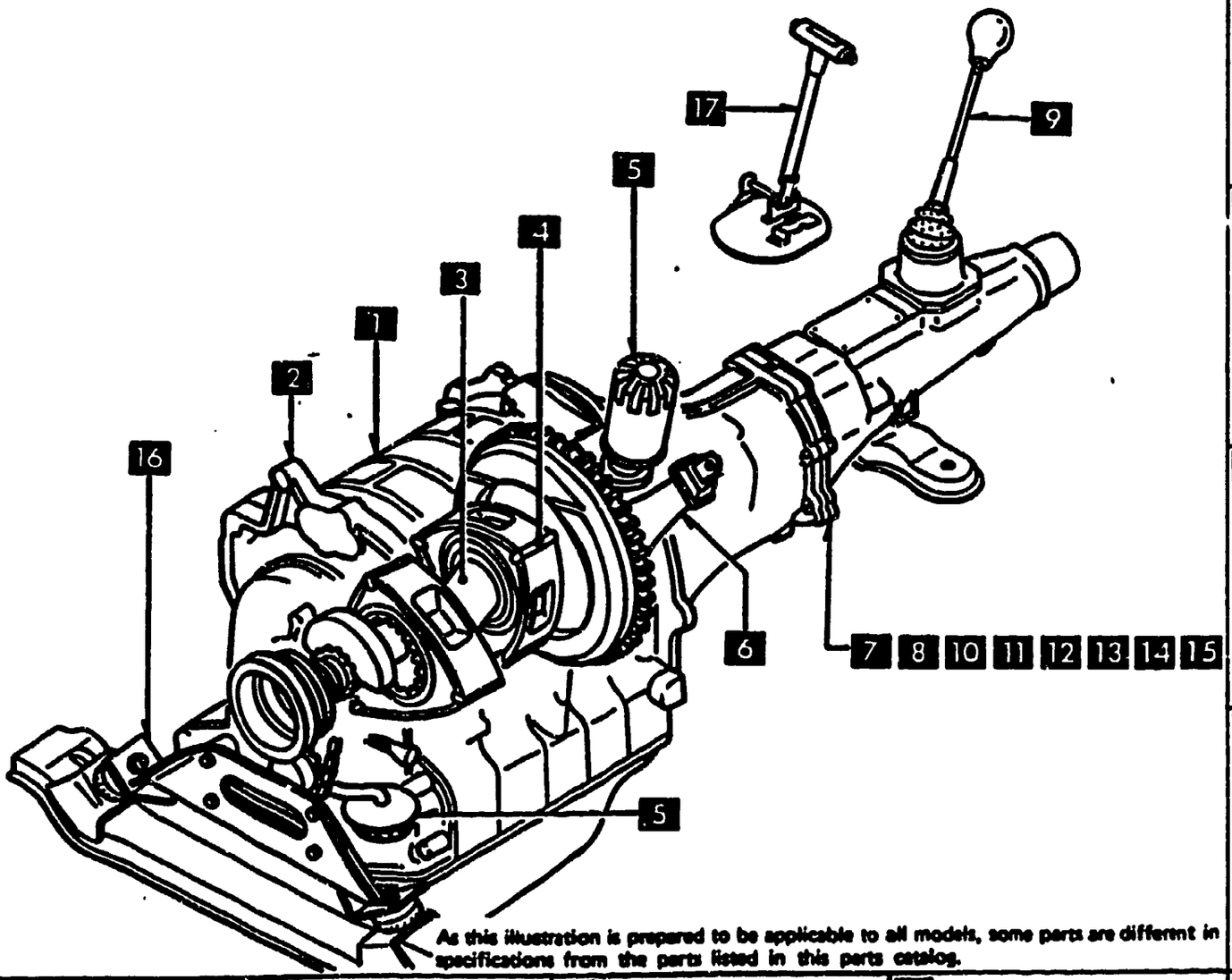


As this illustration is prepared to be applicable to all models, some parts are different in specifications from the parts listed in this parts catalog.

## 6 1600A

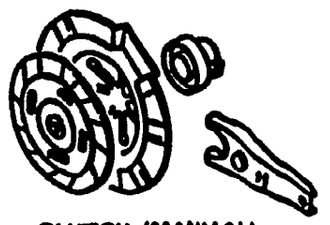

CLUTCH (MANUAL)

## 7 1700A

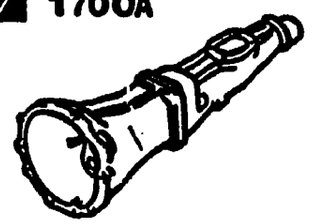

T/MISSION CASE (MANUAL)

## 8 1710A

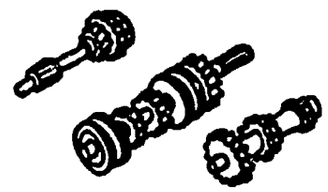

T/MISSION GEARS (MANUAL)

## 9 1720A

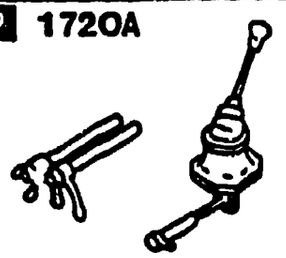

CHANGE CONTROLS (MANUAL)

## 10 1900A



TORQUE GLIDE (MANUAL)

## 11 1910A

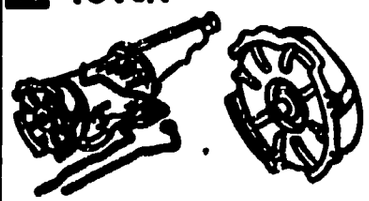

CONVERTER, OIL PUMP & PIPING (AUTOMATIC T/MISSION)

## 12 1920A

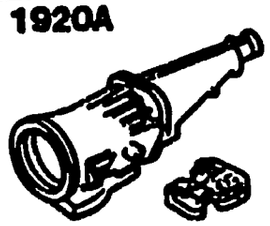

CASE & MAIN CONTROLS (AUTOMATIC T/MISSION)

## 13 1930A

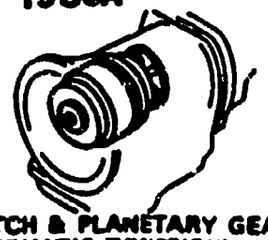

CLUTCH & PLANETARY GEARS (AUTOMATIC T/MISSION)

## 14 1940A

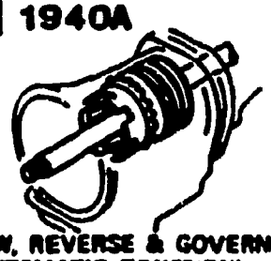

LOW, REVERSE & GOVERNOR (AUTOMATIC T/MISSION)

## 15 1950A



MANUAL LINKAGE (AUTOMATIC T/MISSION)

## 16 3900A

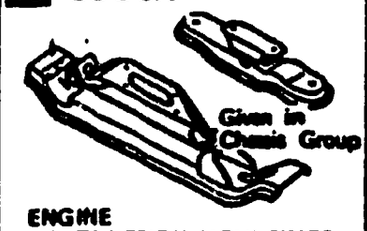


ENGINE & T/MISSION MOUNTINGS

## 17 4600A

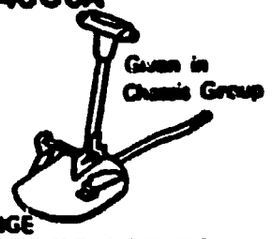


CHANGE CONTROLS (MANUAL)

# ILLUSTRATED SECTION REFERENCE CHART

**1 1300A**



IN. MANIFOLD

**2 1310A**

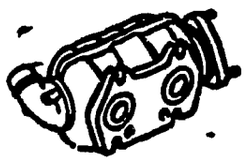

THERMAL REACTOR

**3 1320A**

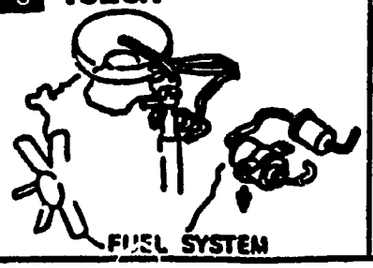

FUEL SYSTEM

**4 1330A**

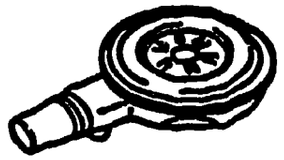

AIR CLEANER

**5 1350A**



STARTING ASSIST SYSTEM

**6 1360A**



CARBURETOR

## ROTARY ENGINE (2/2)

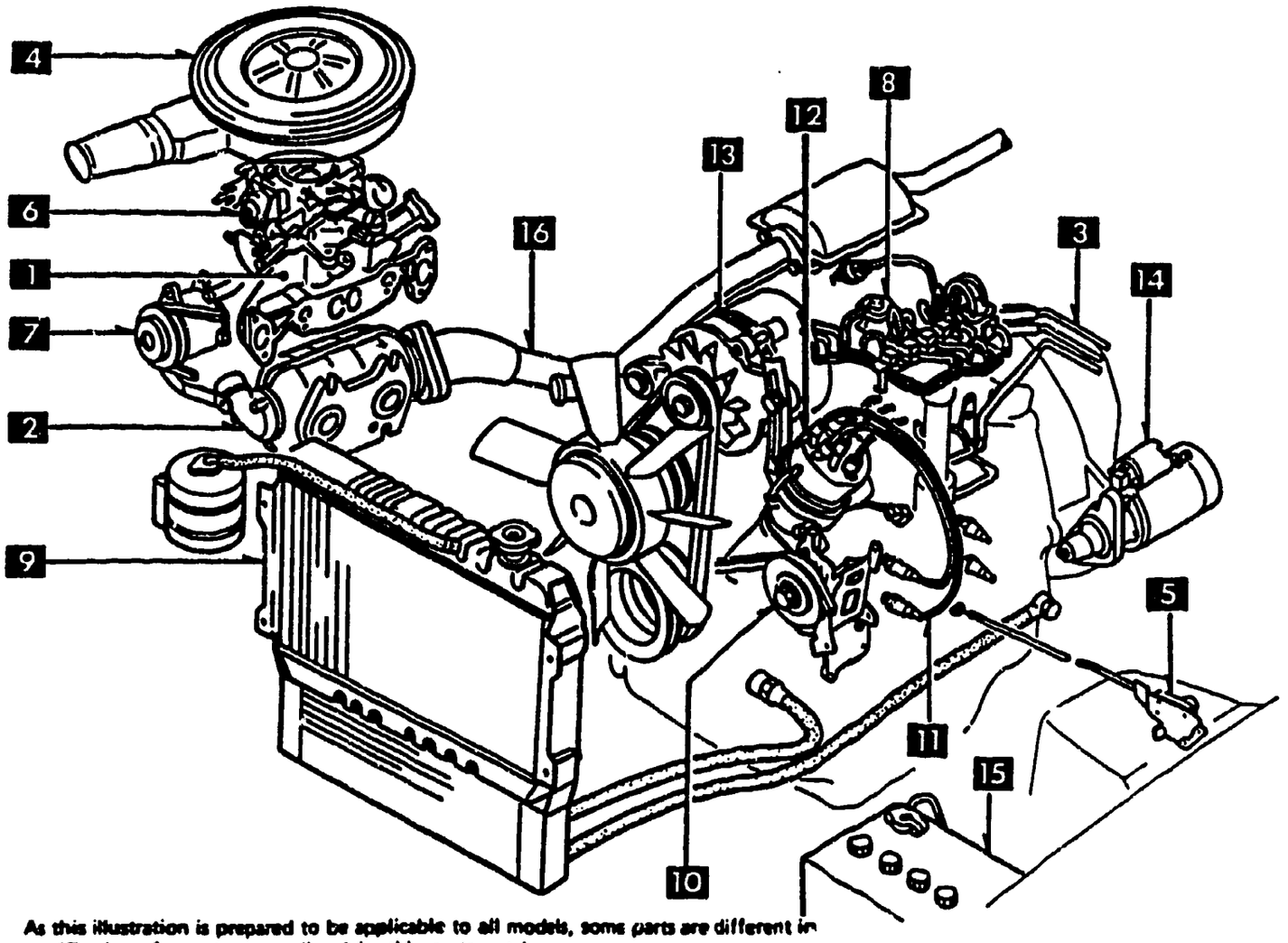


As this illustration is prepared to be applicable to all models, some parts are different in specifications from the parts listed in this parts catalog.

**7 1371A**



EMISSION CONTROLS (AIR PUMP & CONTROL VALVE)

**8 1380A**



EMISSION CONTROLS (EX. SIDE)

**9 1500A**

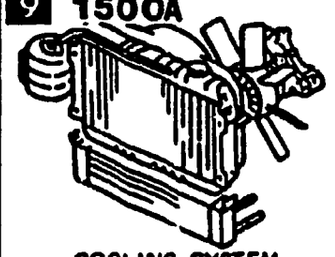

COOLING SYSTEM

**10 1580A**

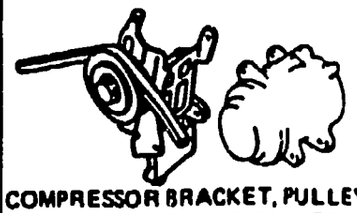

COMPRESSOR BRACKET, PULLEY & BELT (AIR CONDITIONER)

**16 4000A**

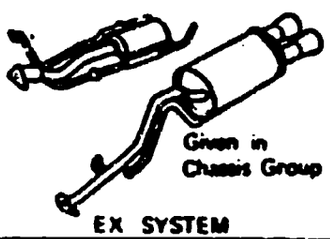


EX SYSTEM

**15 1850A**

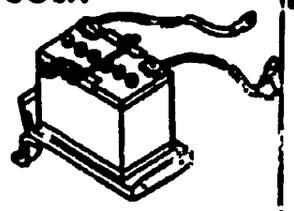

BATTERY & CABLES

**14 1840A**

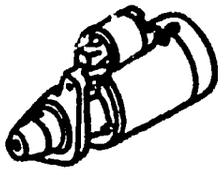

STARTER

**13 1830A**



ALTERNATOR

**12 1820A**



DISTRIBUTOR

**11 1800A**

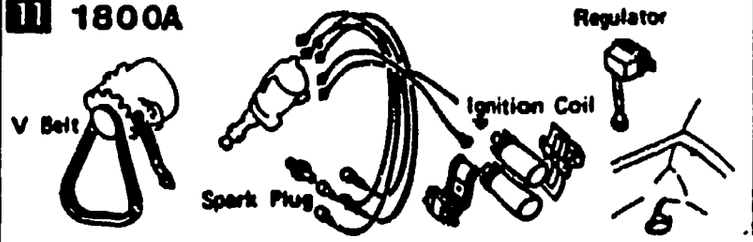


ELECTRICAL SYSTEM (ENGINE)

# ILLUSTRATED SECTION REFERENCE CHART

## CHASSIS (1/2)

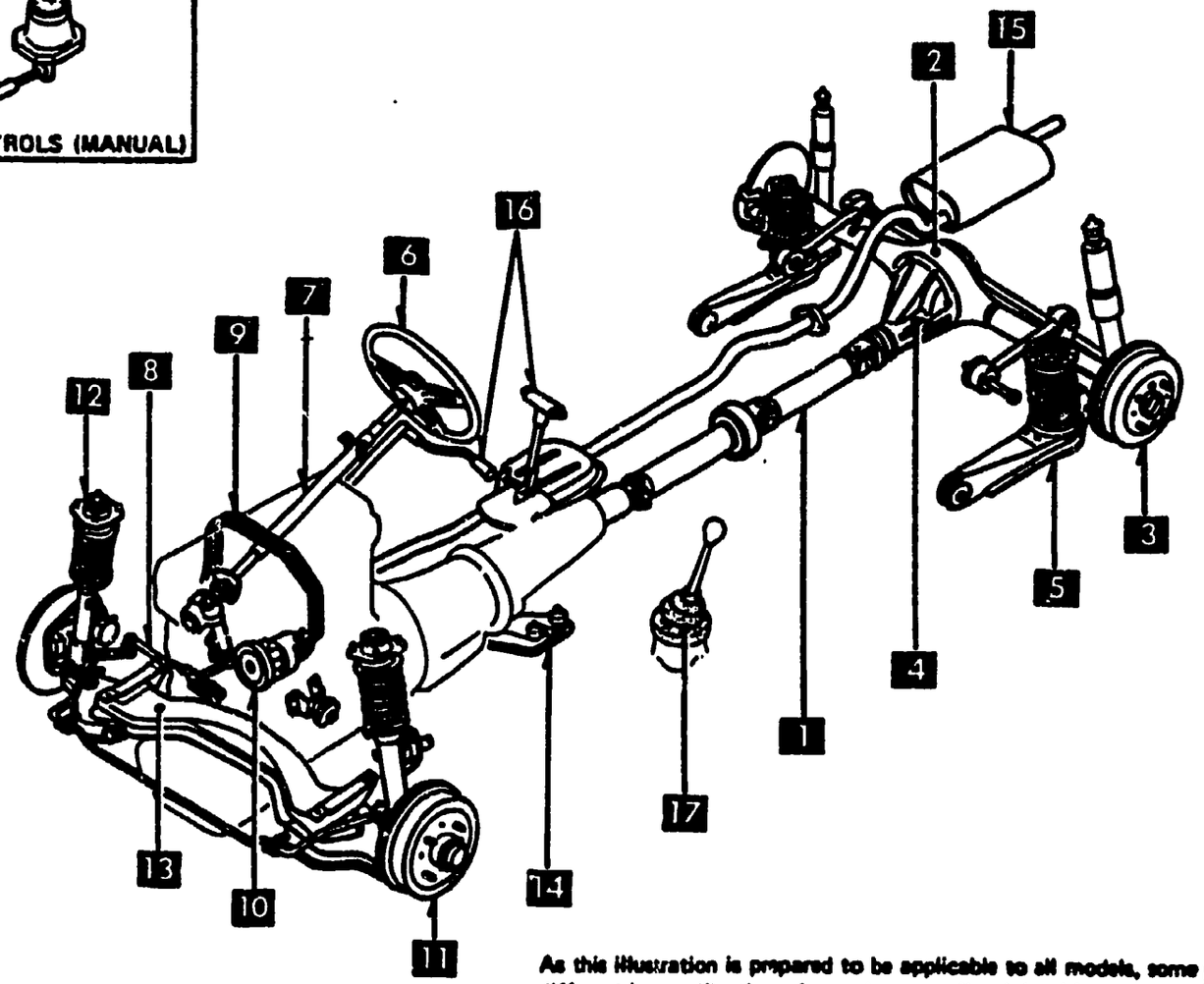


As this illustration is prepared to be applicable to all models, some parts are different in specifications from the parts listed in this parts catalog.

**1 2500A**

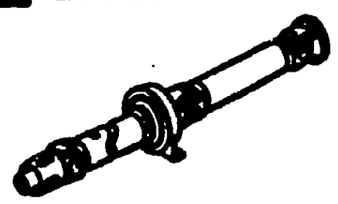

PROPELLER SHAFT

**2 2600A**

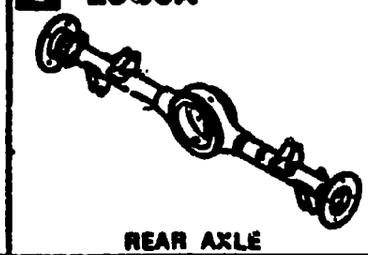

REAR AXLE

**3 2610A**

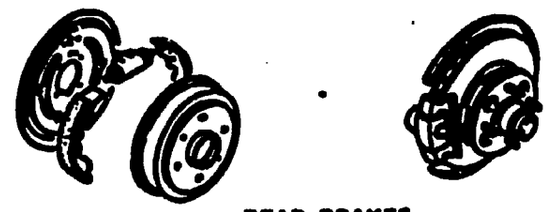

REAR BRAKES

**4 2700A**

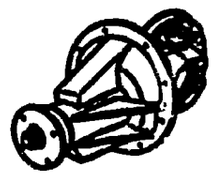

DIFFERENTIAL

**5 2800A**

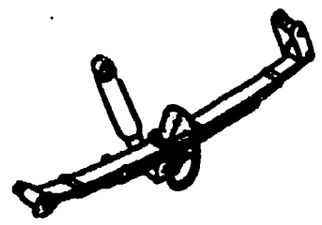

REAR SUSPENSION

**6 3200A**



STEERING WHEEL

**7 3210A**

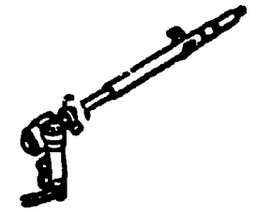

STEERING GEAR & COLUMN

**8 3230A**

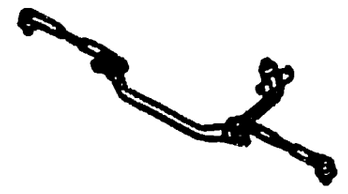

STEERING LINKAGE

**9 3240A**



POWER STEERING SYSTEM

**10 3260A**



VANE PUMP (POWER STEERING)

**11 3300A**



FRONT AXLE & BRAKES

**12 3400A**



FRONT SUSPENSION

**13 3410A**

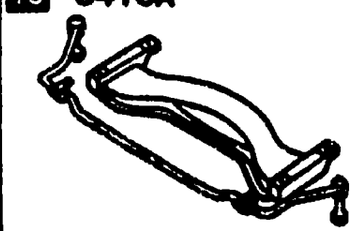

CROSSMEMBER & STABILIZER

**14 3900A**

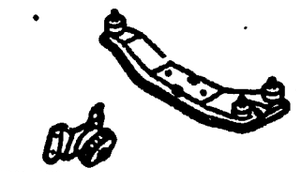

ENGINE & T/MISSION MOUNTINGS

**15 4000A**

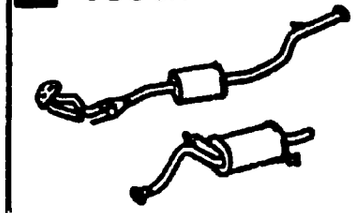

EX. SYSTEM

**16 4600A**

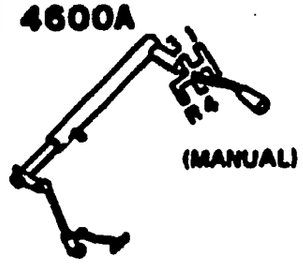


CHANGE CONTROLS

**17 1720A**

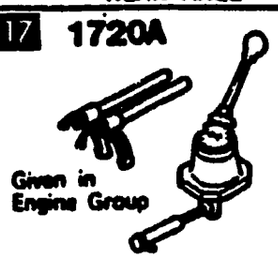


CHANGE CONTROLS (MANUAL)

# ILLUSTRATED SECTION REFERENCE CHART

**1 3700A**

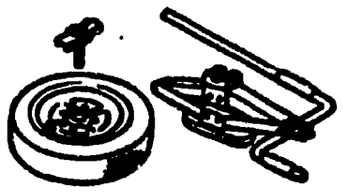

TIRE & JACK

**2 4140A**



CLUTCH RELEASE & MASTER CYLINDERS

**3 4160A**



ACCELERATOR CONTROLS

**4 4200A**

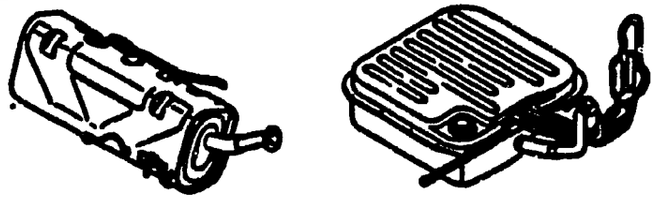

FUEL TANK

**5 4300A**



CLUTCH & BRAKE

## CHASSIS (2/2)

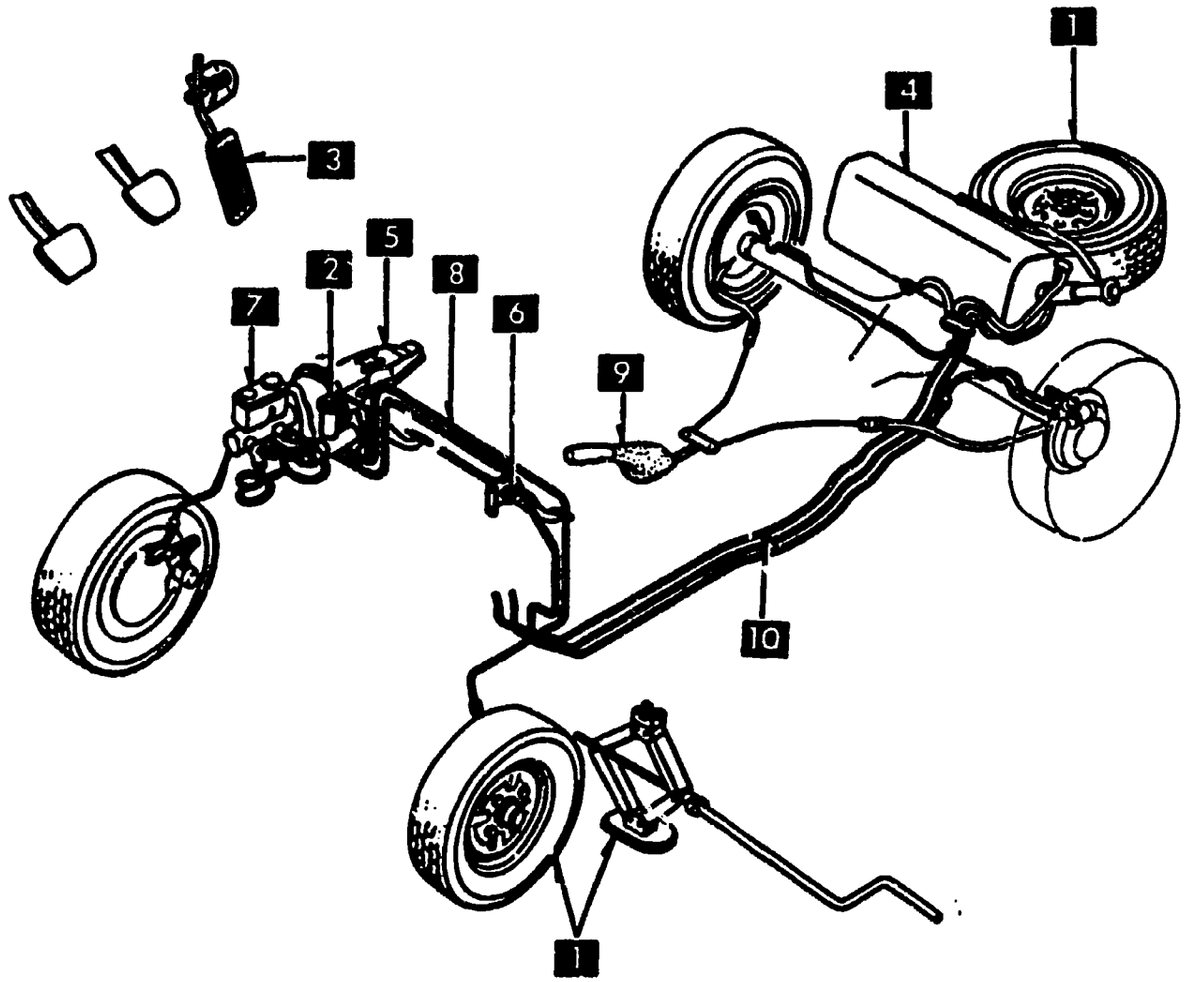


As this illustration is prepared to be applicable to all models, some parts are different in specifications from the parts listed in this parts catalog.

**6 4310A**



ASSIST BRAKE (FOR DRIVING SCHOOL)

**7 4340A**

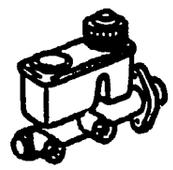

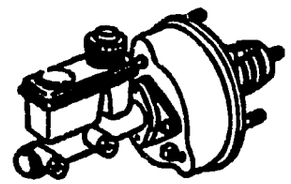

TANDEM MASTER CYL. & VACUUM POWER ASSIST SYSTEM

**8 4360A**



BRAKE PIPING

**10 4500A**

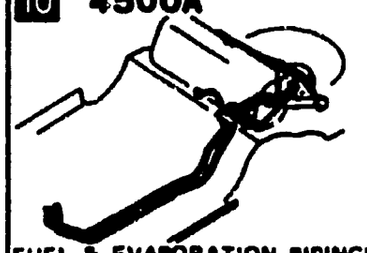

FUEL & EVAPORATION PIPINGS

**9 4400A**

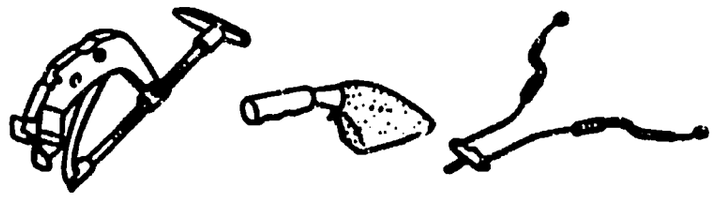

PARKING BRAKE SYSTEM

# ILLUSTRATED SECTION REFERENCE CHART

**1 0900A**

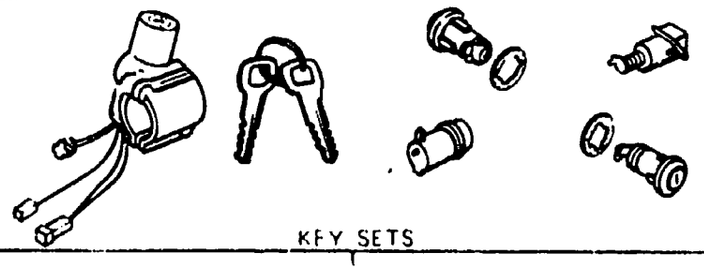

KEY SETS

**2 5020A**

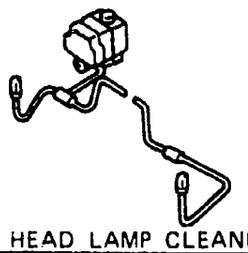

HEAD LAMP CLEANER

**3 5100A**

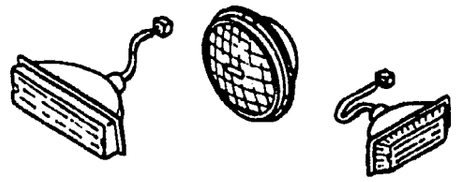

LAMPS (FRONT & SIDE)

**4 5110A**

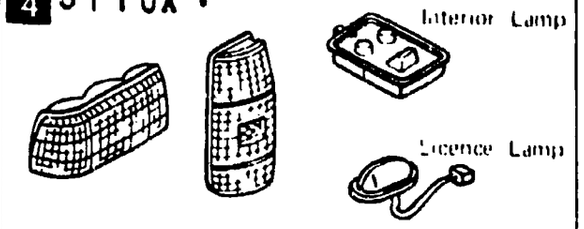


LAMPS (REAR & INTERIOR)

## BODY(1/3)

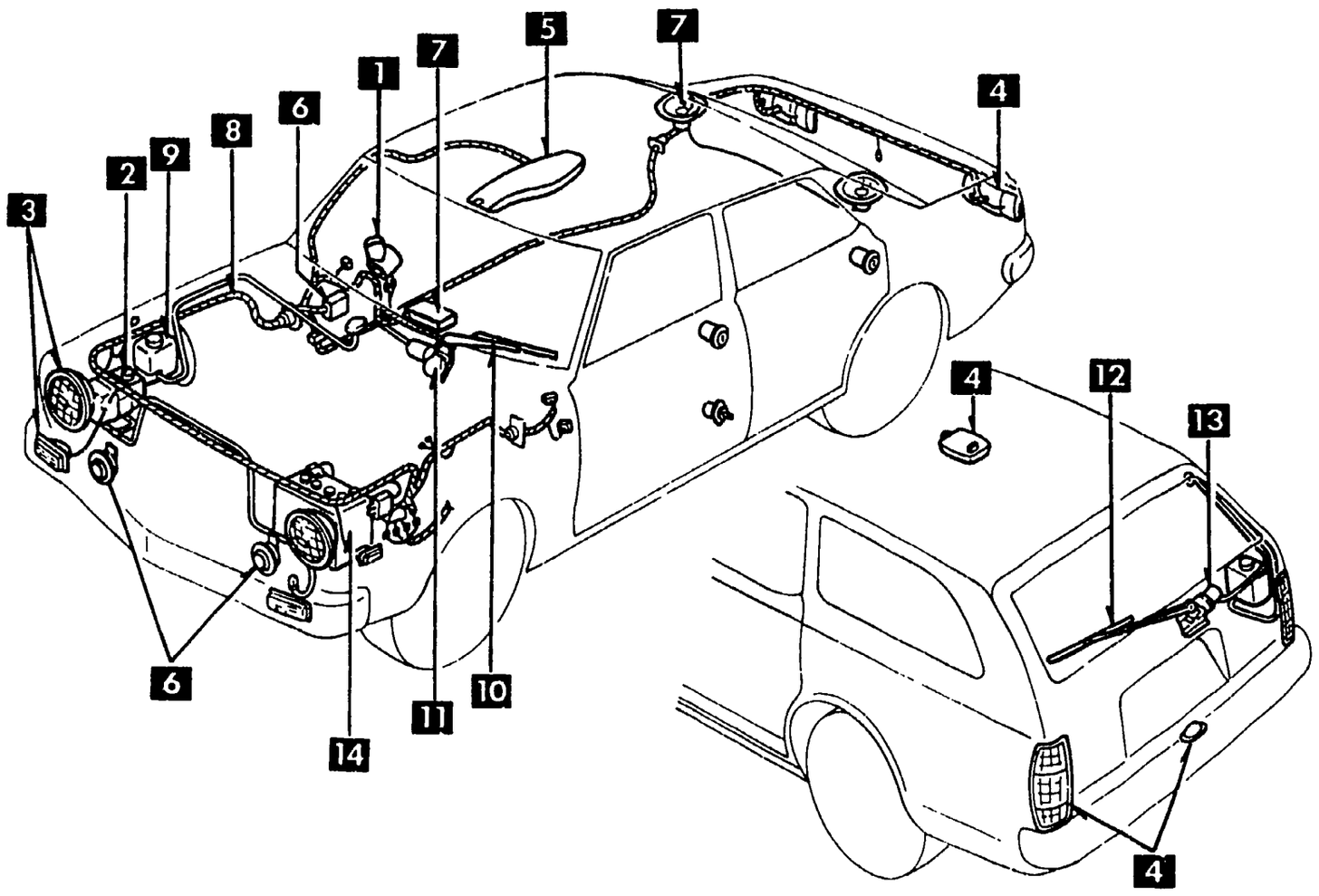


As this illustration is prepared to be applicable to all models, some parts are different in specifications from the parts listed in this parts catalog.

**5 5130A**

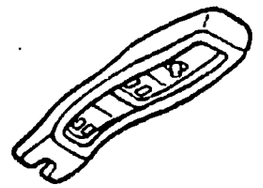

OVERHEAD CONSOLE

**6 6600A**

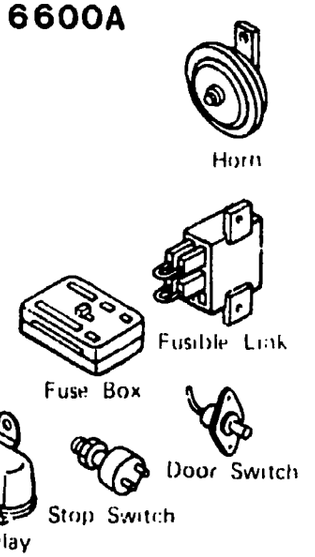


ELECTRIC EQUIPMENT (BODY)

**7 6680A**

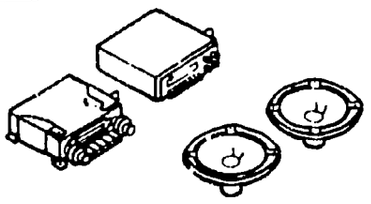

RADIO & STEREO SYSTEMS

**14 1850A**

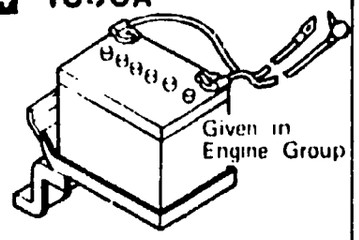


BATTERY & CABLES

**13 6760A**

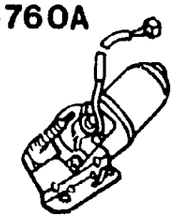

REAR WINDOW WIPER MOTOR (COMPONENTS ONLY)

**12 6750A**

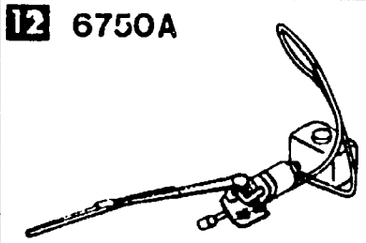

REAR WINDOW WIPER & WASHER

**11 6740A**

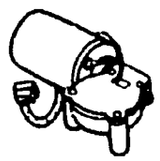

WIPER MOTOR (COMPONENTS ONLY)

**10 6730A**

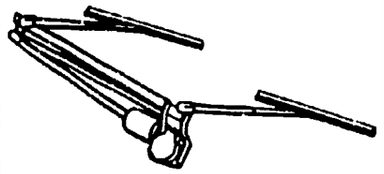

WINDSHIELD WIPER

**9 6720A**

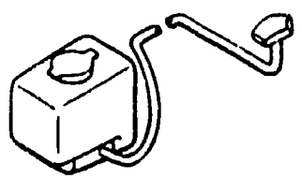

WINDSHIELD WASHER

**8 6700A**

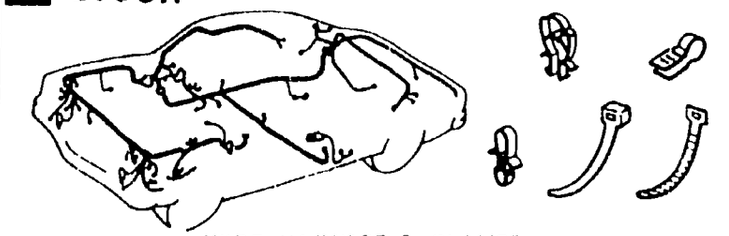

WIRE HARNESS & CLAMPS

# ILLUSTRATED SECTION REFERENCE CHART

**1** 5000A

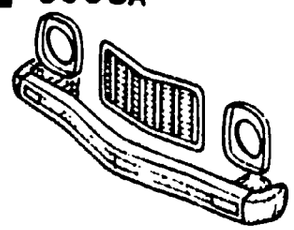

FRONT BUMPER & GRILLE

**2** 5010A

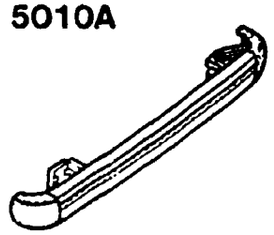

REAR BUMPER

**3** 5030A

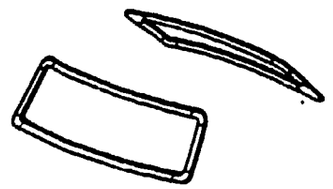

WINDOW MOULDINGS

**4** 5040A

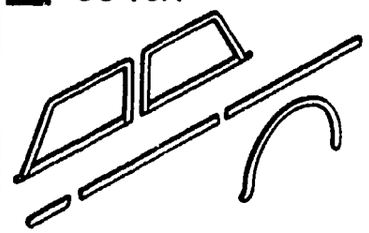

BODY MOULDINGS

**5** 5170A

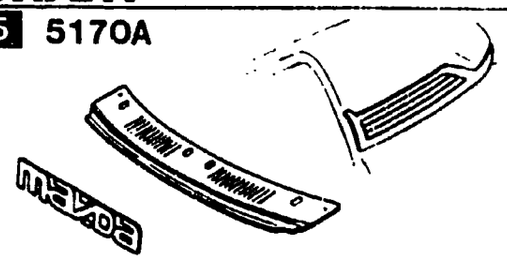


COWL & EXTRACTOR GRILLES & ORNAMENTS

**18** 7250A

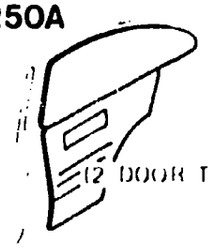

(2 DOOR TYPE)

REAR WINDOW GLASS & TRIM

**17** 7230A

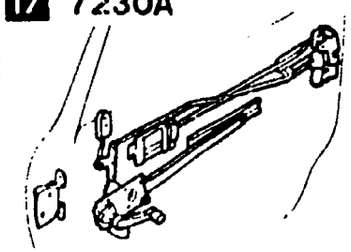

REAR DOOR MECHANISMS

**16** 7200A REAR DOOR

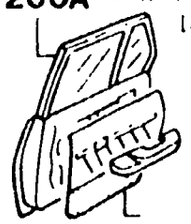

**15** 6330A

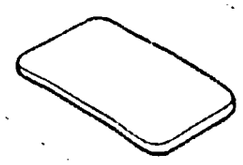

SUNROOF

## BODY(2/3)

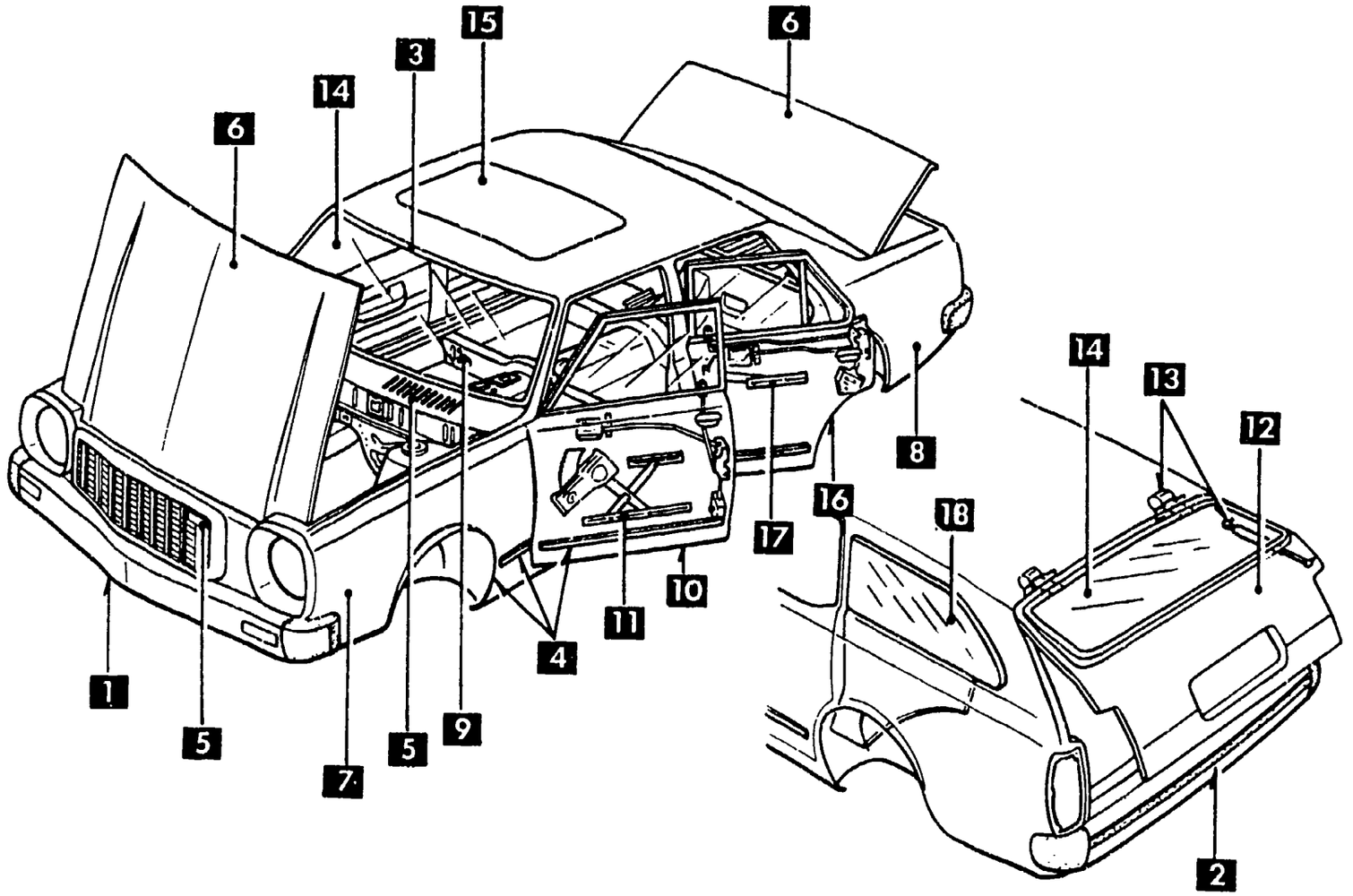


As this illustration is prepared to be applicable to all models, some parts are different in specifications from the parts listed in this parts catalog

**6** 5230A

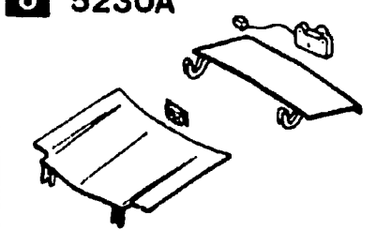

BONNET & TRUNK LID

**7** 5310A

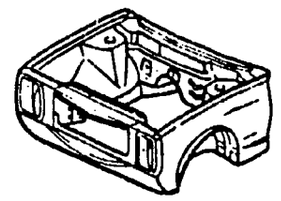

BODY PANELS (FRONT)

**8** 5340A

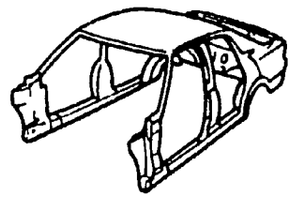

BODY PANELS (SIDE & ROOF)

**9** 5360A

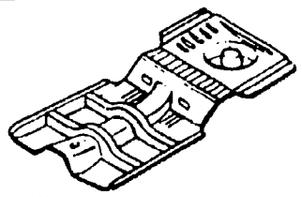

FLOOR ATTACHMENT

BODY PANELS (FLOOR)

**14** 6300A

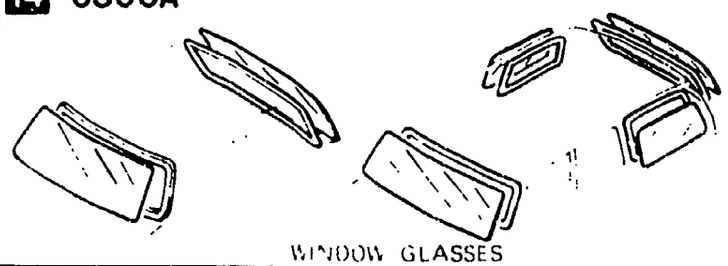

WINDOW GLASSES

**13** 6230A

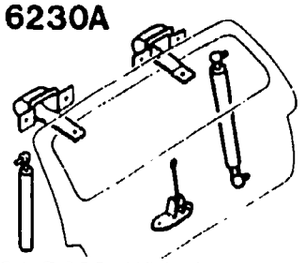

BACK DOOR MECHANISMS

**12** 6200A

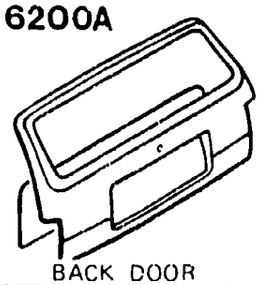

BACK DOOR

**11** 5830A

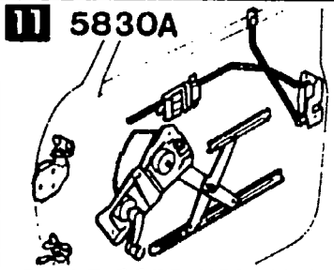

FRONT DOOR MECHANISMS

**10** 5800A

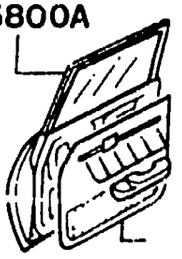

# ILLUSTRATED SECTION REFERENCE CHART

**1** 5500A

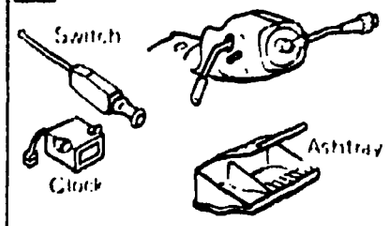


DASHBOARD EQUIPMENT

**2** 5540A

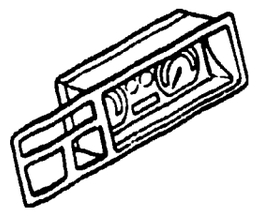

METERS

**3** 5560A

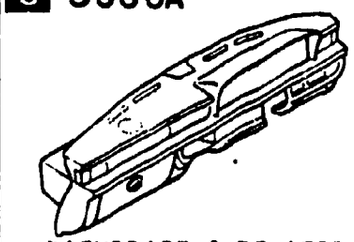

DASHBOARD & RELATED

**4** 5570A

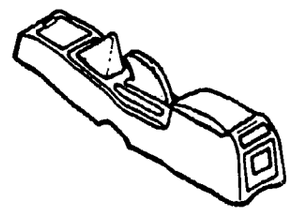

CONSOLE

**5** 5580A

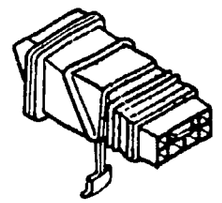

VENTILATOR

**6** 5700A
5710A

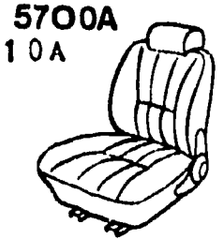

FRONT SEAT

**17** 6930A

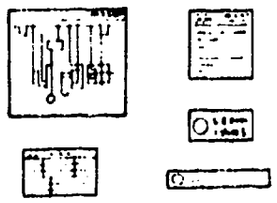

CAUTION PLATES

# BODY(3/3)

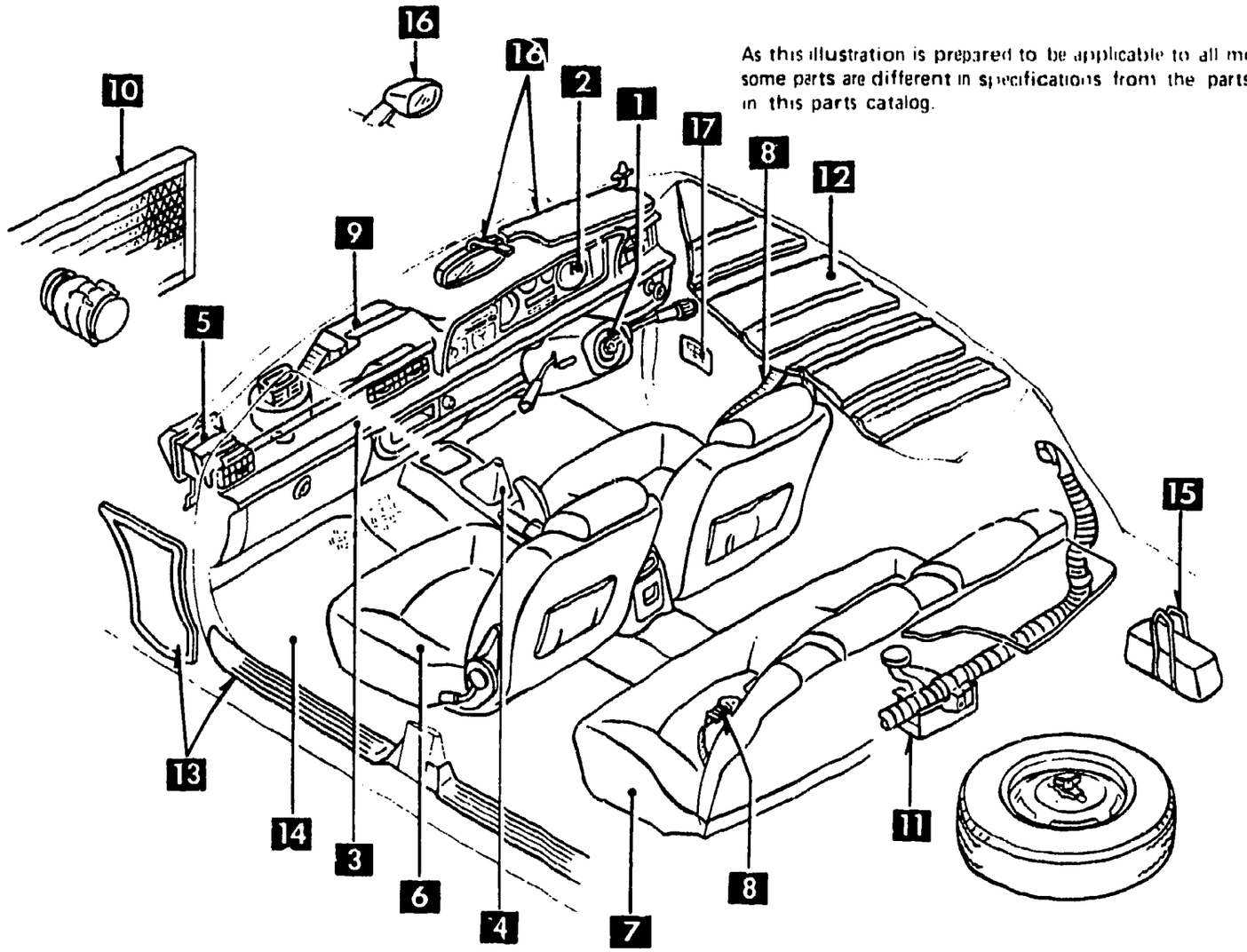


As this illustration is prepared to be applicable to all models, some parts are different in specifications from the parts listed in this parts catalog.

**8** 5760A

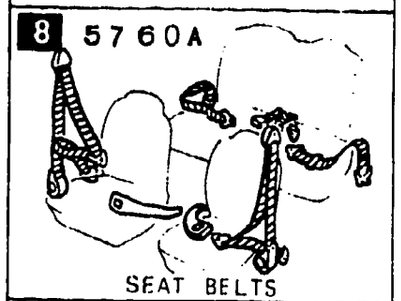

SEAT BELTS

**16** 6900A



VISOR, ASSIST HANDLE & MIRRORS

**9** 6100A

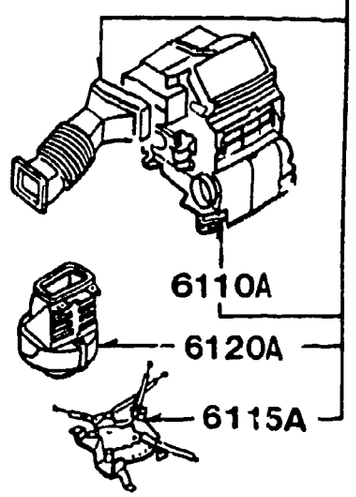


HEATER

**15** 6870A

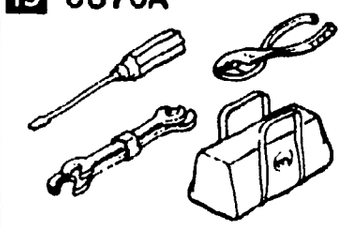

SERVICE TOOLS

**14** 6860A

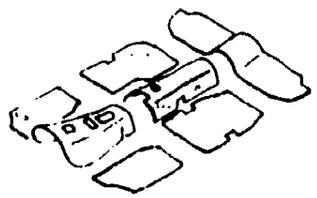

FLOOR MATS & PADS

**13** 6840A

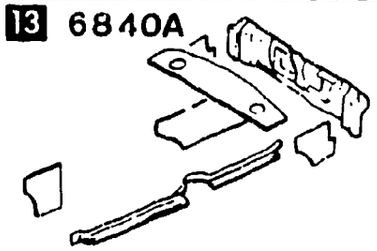

TRIM & SCUFF PLATE

**12** 6800A

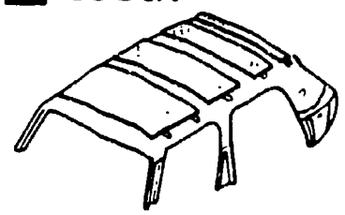

CEILING TRIM

**11** 6180A

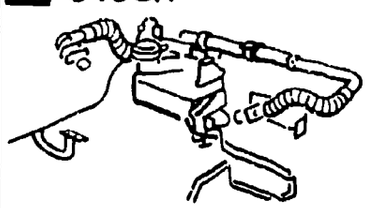

REAR COOLER

**10** 6130A

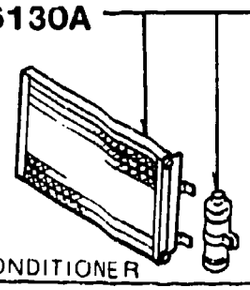

AIR CONDITIONER

(ENGINE GROUP)

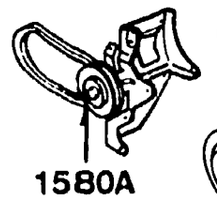


6140A

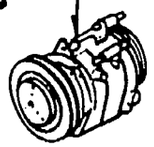

6150A

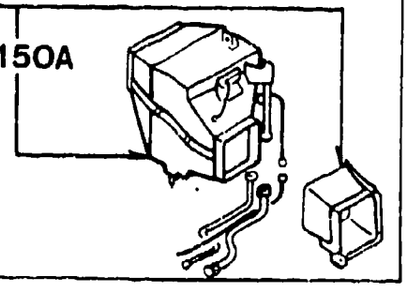

# MODEL IDENTIFICATION

This parts catalog has been compiled to cover the following models.
MAZDA RX-7, 1979 Year Model for U.S.A. and Canada (Manuf. From March 1978)
MAZDA RX-7, 1980 Year Model for U.S.A. and Canada (Manuf. From June 1979)

| Model No. | Model/Type | Country | | | Roof Type | | Engine (Rotary 12A) | Trans-mission | | | Model Year | | V. I. N. (Chassis No.) |
|---|---|---|---|---|---|---|---|---|---|---|---|---|---|
| | | U.S.A. California (CF) | U.S.A. Federal (FD) | Canada (CN) | Sunroof (SUN) | Std. Roof (STD) | (12A) | Manual 4-Speed (4S) | Manual 5-Speed (5S) | Automatic (A/T) | 1979 | 1980 | |
| 8867 | SA22C | CF | | | | STD | 12A | 4S | | | ● | | SA22C-500001 ~ 568500 |
| 8868 | SA22C-P | CF | | | | STD | 12A | | 5S | | ● | | SA22C-500001 ~ 568500 |
| 8869 | SA22C-T | CF | | | | STD | 12A | | | A/T | ● | | SA22C-500001 ~ 568500 |
| 8970 | SA22C-RP | CF | | | SUN | | 12A | | 5S | | ● | | SA22C-500001 ~ 568500 |
| 8971 | SA22C-RT | CF | | | SUN | | 12A | | | A/T | ● | | SA22C-500001 ~ 568500 |
| 8870 | SA22C | | FD | CN | | STD | 12A | 4S | | | ● | | SA22C-500001 ~ 568500 |
| 8871 | SA22C-P | | FD | CN | | STD | 12A | | 5S | | ● | | SA22C-500001 ~ 568500 |
| 8872 | SA22C-T | | FD | CN | | STD | 12A | | | A/T | ● | | SA22C-500001 ~ 568500 |
| 8973 | SA22C-RP | | FD | CN | SUN | | 12A | | 5S | | ● | | SA22C-500001 ~ 568500 |
| 8974 | SA22C-RT | | FD | CN | SUN | | 12A | | | A/T | ● | | SA22C-500001 ~ 568500 |
| 8343 | SA22C | CF | | | | STD | 12A | 4S | | | | ● | SA22C-568501 ~ 650000 |
| 8344 | SA22C-P | CF | | | | STD | 12A | | 5S | | | ● | SA22C-568501 ~ 650000 |
| 8345 | SA22C-T | CF | | | | STD | 12A | | | A/T | | ● | SA22C-568501 ~ 650000 |
| 8348 | SA22C-RP | CF | | | SUN | | 12A | | 5S | | | ● | SA22C-568501 ~ 650000 |
| 8349 | SA22C-RT | CF | | | SUN | | 12A | | | A/T | | ● | SA22C-568501 ~ 650000 |

| Model No. | Model/Type | Country | | | Roof Type | | Engine (Rotary 12A) | Trans-mission | | | Model Year | | V. I. N. (Chassis No.) |
|---|---|---|---|---|---|---|---|---|---|---|---|---|---|
| | | U.S.A. California (CF) | U.S.A. Federal (FD) | Canada (CN) | Sunroof (SUN) | Std. Roof (STD) | (12A) | Manual 4-Speed (4S) | Manual 5-Speed (5S) | Automatic (A/T) | 1979 | 1980 | |
| 8340 | SA22C | | FD | | | STD | 12A | 4S | | | | ● | SA22C-568501 ~ 650000 |
| 8341 | SA22C-P | | FD | | | STD | 12A | | 5S | | | ● | SA22C-568501 ~ 650000 |
| 8342 | SA22C-T | | FD | | | STD | 12A | | | A/T | | ● | SA22C-568501 ~ 650000 |
| 8346 | SA22C-RP | | FD | | SUN | | 12A | | 5S | | | ● | SA22C-568501 ~ 650000 |
| 8347 | SA22-RT | | FD | | SUN | | 12A | | | A/T | | ● | SA22C-568501 ~ 650000 |
| 8484 | SA22C | | | CN | | STD | 12A | 4S | | | | ● | SA22C-568501 ~ 650000 |
| 8485 | SA22C-P | | | CN | | STD | 12A | | 5S | | | ● | SA22C-568501 ~ 650000 |
| 8486 | SA22C-T | | | CN | | STD | 12A | | | A/T | | ● | SA22C-568501 ~ 650000 |
| 8487 | SA22C-RP | | | CN | SUN | | 12A | | 5S | | | ● | SA22C-568501 ~ 650000 |
| 8488 | SA22C-RT | | | CN | SUN | | 12A | | | A/T | | ● | SA22C-568501 ~ 650000 |

# LIST OF MONTHLY STARTING VIN (CHASSIS No.)

| Year/Month | JAN. | FEB. | MAR. | APR. | MAY | JUN. | JUL. | AUG. | SEP. | OCT. | NOV. | DEC. |
|---|---|---|---|---|---|---|---|---|---|---|---|---|
| Model | 78/1 | 78/2 | 78/3 | 78/4 | 78/5 | 78/6 | 78/7 | 78/8 | 78/9 | 78/10 | 78/11 | 78/12 |
| RX-7 | – | – | 500001 | 502999 | 504977 | 508587 | 510189 | 512943 | 516625 | 520638 | 525594 | 531149 |

| Year/Month | JAN. | FEB. | MAR. | APR. | MAY | JUN. | JUL. | AUG. | SEP. | OCT. | NOV. | DEC. |
|---|---|---|---|---|---|---|---|---|---|---|---|---|
| Mor' | 79/1 | 79/2 | 79/3 | 79/4 | 79/5 | 79/6 | 79/7 | 79/8 | 79/9 | 79/10 | 79/11 | 79/12 |
| RX-7 | 536458 | 541117 | 547089 | 554325 | 559740 | 566641 | 569399 | 574180 | 578961 | 583527 | 588207 | 592950 |

| Year/Month | JAN. | FEB. | MAR. | APR. | MAY | JUN. | JUL. | AUG. | SEP. | OCT. | NOV. | DEC. |
|---|---|---|---|---|---|---|---|---|---|---|---|---|
| Model | 80/1 | 80/2 | 80/3 | 80/4 | 80/5 | 80/6 | 80/7 | 80/8 | 80/9 | 80/10 | 80/11 | 80/12 |
| RX-7 | 597273 | 602250 | 606775 | 611388 | 615692 | 619393 | 624203 | 629533 | 629954 | – | – | – |

# LIST OF COMPLETE ASSEMBLY UNIT'S PART NUMBER

| Model No. | Cpt. Engine cpt. | T/mission cpt. | Rear Axle cpt. | Cabin cpt. | Remarks |
|---|---|---|---|---|---|
| 8340 | 8340 02 000 | 8867 03 000 | 8871 05 000 | 8341 07 010 | Fed. 4-Speed Std. Roof |
| 8341 | 8340 02 000 | 8868 03 000 | 8871 05 000 | 8341 07 010 | Fed. 5-Speed Std Roof |
| 8342 | 8342 02 000 | 8872 19 090 | 8871 05 000 | 8341 07 010 | Fed. A/T Std. Roof |
| 8343 | 8344 02 000 | 8867 03 000 | 8871 05 000 | 8341 07 010 | Calif. 4-Speed Std. Roof |
| 8344 | 8344 02 000 | 8868 03 000 | 8871 05 000 | 8341 07 010 | Calif. 5-Speed Std. Roof |
| 8345 | 8345 02 000 | 8872 19 090 | 8871 05 000 | 8341 07 010 | Calif. A/T Std. Roof |
| 8346 | 8340 02 000 | 8868 03 000 | 8871 05 000 | 8346 07 010 | Fed. 5-Speed Sunroof |
| 8347 | 8342 02 000 | 8872 19 090 | 8871 05 000 | 8346 07 010 | Fed. A/T Sunroof |
| 8348 | 8344 02 000 | 8868 03 000 | 8871 05 000 | 8346 07 010 | Calif. 5-Speed Sunroof |
| 8349 | 8345 02 000 | 8872 19 090 | 8871 05 000 | 8346 07 010 | Calif A/T Sunroof |
| 8484 | 8485 02 000 | 8484 03 000 | 8871 05 000 | 8341 07 010 | Canada 4-Speed Std. Roof |
| 8485 | 8485 02 000 | 8485 03 000 | 8871 05 000 | 8341 07 010 | Canada 5-Speed Std. Roof |
| 8486 | 8486 02 000 | 8872 19 090 | 8871 05 000 | 8341 07 010 | Canada A/T Std. Roof |
| 8487 | 8485 02 000 | 8485 03 000 | 8871 05 000 | 8346 07 010 | Canada 5-Speed Sunroof |
| 8488 | 8486 02 000 | 8872 19 090 | 8871 05 000 | 8346 07 010 | Canada A/T Sunroof |

Note: Complete assemblies are available manufactured in accordance with current production specifications only.

# ABBREVIATION LIST (English)



| Abbreviation | Definiton | Abbreviation | Definiton |
|---|---|---|---|
| 1 ST | First | ..F | Feet |
| 2 ND | Second | FED. | Federal |
| 3 D. | 3-Door | FIX. | Fixing |
| 3 RD | Third | FOLD. | Folding |
| 4-SPD | 4-Speed | FRT. or F. | Front |
| 4 TH | Fourth | F/SHIFT | Floor Shift |
| 5 D. | 5-Door | | |
| 5 SPD | 5 Speed | | |
| 14-FT | 14-Feet Box | | |
| | | ..G | Grams |
| | | GAS. | Gasoline |
| | | GEN. | General |
| ..A | Ampere | | |
| ACCEL. | Accelerator | | |
| ADJ. | Adjust | | |
| A.D.R. | Australia Design Rule | HARN | Harness |
| AIR CON. | Air Conditioner | HEAT. or HEA. | Heater |
| ALUMI | Aluminum | HIGHT. | High-Tension |
| A/REST | Arm Rest | H/LAMP | Headlamp |
| ASS'Y | Assembly | H.B.RE. | Hatchback Release |
| ATT. | Attachment | H/TOP or H/T | Hardtop |
| A/T | Automatic Transmission | | |
| AUST. | Australia | | |
| AUTO. | Automatic | | |
| | | IG. or IGN. | Ignition |
| | | IN. | Inlet |
| | | IND. | Indicator |
| BAL. | Balance | INJ. | Injection |
| B/DOOR | Back Door | INN. | Inner |
| BDY. | Body | INS. | Insulation |
| BELT. | Beltline | INST. | Instrument |
| BRG. | Bearing | INT. | Interior |
| BRKT. | Bracket | INTMT. | Intermittent |
| BRT. | Britain (=The United Kingdom) | | |
| BUMP. | Bumper | | |
| | | ..L | Liters |
| | | L= | Length |
| (C), C. or CTR. | Center | (L) or L | Left |
| CABN. | Cabin | L/BODY | Long Body |
| CALIF. | California | L/BOX | Long Box |
| CARB. | Carburetor | LH. SIDE | Left Hand Side |
| CE | Conventional Engine (=Reciprocating Engine) | L.H.D. | Left Hand Drive |
| | | LWR. | Lower |
| CLG. | Ceiling | L/VAN | Light Van |
| COMB. | Combination | | |
| COMP. | Companion | | |
| CONN. | Connector or Connecting | MA. CYL. | Master Cylinder |
| CONS. | Console | MAINT. | Maintain |
| COVR. | Cover | MLD. or MLDG. | Moulding |
| CPT. | Complete Assembly | MPX. | Multiplex |
| C/SHIFT | Column Shift | MT. | Mounting |
| CYL. | Cylinder | M/T | Manual Transmission |
| | | | |
| D. | Door | NO. | Number |
| D= | Diameter | NON T/CABIN | Non Tilt Cabin |
| DAY & NIGHT AJST. | Day & Night Adjust Table | NOR. ROOF | Normal Roof |
| D/CABIN | Double Cabin | NOZ. | Nozzle |
| DEF | Defroster | | |
| DIAPH. | Diaphragm | | |
| DIFF. | Differential | | |
| DISC/B | Disc Brake | ORD. BY | Order By |
| DIST. | Distributor | O.S. | Oversize |
| DR. | Door | OUT. | Outer |
| DRUM/B | Drum Brake | | |
| D/TIRE | Dual Tires | | |
| DX. | Deluxe | | |
| DUMP. | Dump Truck | | |
| | | P. | Panel |
| | | (P) | Primary |
| | | PARK. or PARKG. | Parking |
| | | PASS. | Passenger |
| E.G.R. | Exhaust Gas Recirculation | P. BOARD | Partition Board |
| ELEC. | Electric | P.C.V. | Positive Crankcase Ventilation |
| EM. | Emission Control System | | |
| ENEGY or ENGY. | Energy | PHLPPNS | The Philipines |
| ENG | Engine | PILR. | Pillar |
| EQUIP | Equipment | PKG. | Package |
| EX. | Exhaust | PNL. | Panel |
| EXC. | Except. | POSIT. | Positive |
| EXTRACT. | Extractor | P.P. | Polypropylene |
| | | P.S. | Power Steering |
| | | P/S | Power Steering |

| Abbreviation | Definition | Abbreviation | Definition |
|---|---|---|---|
| P.T.O. | Power Take Off | SW. | Switch |
| P/VAN | Panel Van | S. WASHER | Screen Washer |
| P/W or P. WINDOW | Power Window | SWD. | Sweden |
| | | SYNC. | Synchronizer |
| QTR. | Quarter | | |
| | | ..T | Tons |
| | | T= | Thickness |
| | | T/CABIN | Tilt Cabin |
| (R) or R | Right | T/CEILING | Top Ceiling |
| RAD. | Radiator | TH. | Throttle |
| RE. | Rotary Engine | THERM. | Thermostat |
| RECIPRO | Reciprocating Engine (=Conventional Engine) | THROT. | Throttle |
| | | T/MISSION | Transmission |
| REGUL. | Regulator | T/L | Tubeless |
| REG. CABN | Regular Cabin | T/STEERING | Tilt Steering |
| REL. | Release | | |
| REM. CON. or REMO. CON. | Remote Controlled | | |
| RET. | Return | U.K. | The United Kingdom |
| RETAIN. | Retaining | UP | Upper |
| REV. | Reverse | URETANE | Urethane Rubber |
| R. H. SIDE | Right Hand Side | U.S. | Undersize |
| R.H.D. | Right Hand Drive | | |
| RR. or R. | Rear | | |
| | | ..V | Volts |
| | | V. | Valve |
| (S) | Secondary | VAC. | Vacuum |
| SAFE. | Safety | Vent. | Ventilator, Ventilation |
| S/BODY | Short Body | | |
| S/BOX | Short Box | | |
| SELECT | Selective use | | |
| SET. TYPE | Separate Type | ..W | Watts |
| SIG. | Signal | W= | Width |
| SILVER M. | Silver Metallic | W/... | With |
| SNGL TIRE | Single Tire | W/CHASSIS | Windshield Chassis |
| SOL. | Solenoid | W/GER. | West Germany |
| SPEC | Specification | or W. GERMANY | |
| SPEEDO | Speedometer | WIND. | Window |
| SPL. TYPE | Split Type | W/O | Without |
| SPG. | Spring | W. PUMP | Water Pump |
| SPK. | Speaker | WSHLD | Windshield |
| ST. | Steering | WSTR. or WTHSTP. | Weatherstrip |
| STA. WAGON | Station Wagon | W/T | With Tube |
| STAB. | Stabilizer | | |
| SUB T/MISSION | Sub Transmission | | |
| STD. | Standard | | |
| S/TIRE | Single Tire | | |

# INTERCHANGEABILITY CODE LIST

| Code | Definition | |
|---|---|---|
| AN | ⟷ (Both Ways) | A new part and the former part are fully interchangeable. |
| A | → (One Way) | A new part can be used in place of the former part, but the former part cannot be used in place of a new part. |
| C | Plus  | A new part with some additional part(s) can be used in place of the former part. |
| C | Plus  | Some modification work is required to use a new part in place of the former part. |
| S | ← (One Way Backward) | The former part can be used in place of a new part, but a new part cannot be used in place of the former part. |

# SECTION NUMBER INDEX (BODY)

| STARTING LOCATION | SECTION No. | SECTION NAME |
|---|---|---|
| 3–C2 | 0900A | KEY SETS |
| 3–C3 | 5000A | FRONT BUMPER & GRILLE |
| 3–E3 | 5010A | REAR BUMPER |
| 3–G3 | 5030A | WINDOW MOULDINGS |
| 3–I3 | 5040A | BODY MOULDINGS |
| 3–C4 | 5100A | LAMPS (FRONT & SIDE) |
| 3–G4 | 5110A | LAMPS (REAR) |
| 3–I4 | 5130A | OVERHEAD CONSOLE (1979 STANDARD ROOF MODEL) |
| 3–J4 | 5170A | COWL & EXTRACTOR GRILLES & ORNAMENTS |
| 3–C5 | 5230A | BONNET |
| 3–E5 | 5310A | BODY PANELS (FRONT) |
| 3–K5 | 5340A | BODY PANELS (SIDE & ROOF) |
| 3–I6 | 5360A | BODY PANELS (FLOOR) |
| 3–C7 | 5500A | DASHBOARD EQUIPMENT |
| 3–L7 | 5540A | METERS |
| 3–D8 | 5560A | DASHBOARD & RELATED |
| 3–L8 | 5570A | CONSOLE |
| 3–K9 | 5580A | VENTILATOR |
| 3–C10 | 5700A | SEAT (EXCEPT LEATHER TRIM) |
| 3–N10 | 5710A | SEAT TRIM (LEATHER – ANNIVERSARY EDITION) |
| 3–G11 | 5760A | SEAT BELTS |
| 3–C12 | 5800A | FRONT DOOR |
| 3–C13 | 5830A | FRONT DOOR MECHANISMS |
| 3–C14 | 6100A | HEATER |
| 3–E14 | 6110A | HEATER UNIT |
| 3–H14 | 6115A | HEATER CONTROLS |
| 3–I14 | 6120A | HEATER BLOWER |
| 3–C15 | 6230A | BACK DOOR MECHANISMS |
| 3–F15 | 6300A | WINDOW GLASSES |
| 3–I15 | 6330A | SUNROOF |
| 3–C16 | 6600A | ELECTRIC EQUIPMENT |
| 3–G16 | 6680A | RADIO & STEREO SYSTEMS |
| 4–C2 | 6700A | WIRE HARNESS & CLAMPS |
| 4–G2 | 6720A | WINDSHIELD WASHER |
| 4–H2 | 6730A | WINDSHIELD WIPER |
| 4–J2 | 6740A | WIPER MOTOR (COMPONENTS ONLY) |
| 4–C3 | 6800A | CEILING TRIM |
| 4–J3 | 6840A | TRIM & SCUFF PLATE |
| 4–F4 | 6860A | FLOOR MAT & PADS |
| 4–L4 | 6870A | SERVICE TOOLS |
| 4–M4 | 6900A | VISOR, ASSIST HANDLE & MIRRORS |
| 4–G5 | 6930A | CAUTION PLATES |

THE FRAMES IN THIS COLUMN INDICATE :

| | | |
|---|---|---|
| 4–C2 | 6700A | WIRE HARNESS & CLAMPS |
| 4–G2 | 6720A | WINDSHIELD WASHER |
| 4–H2 | 6730A | WINDSHIELD WIPER |
| 4–J2 | 6740A | WIPER MOTOR (COMPONENTS ONLY) |

© 1983 Toyo Kogyo Co., Ltd.
MAY 1983

# 6700A WIRE HARNESS & CLAMPS

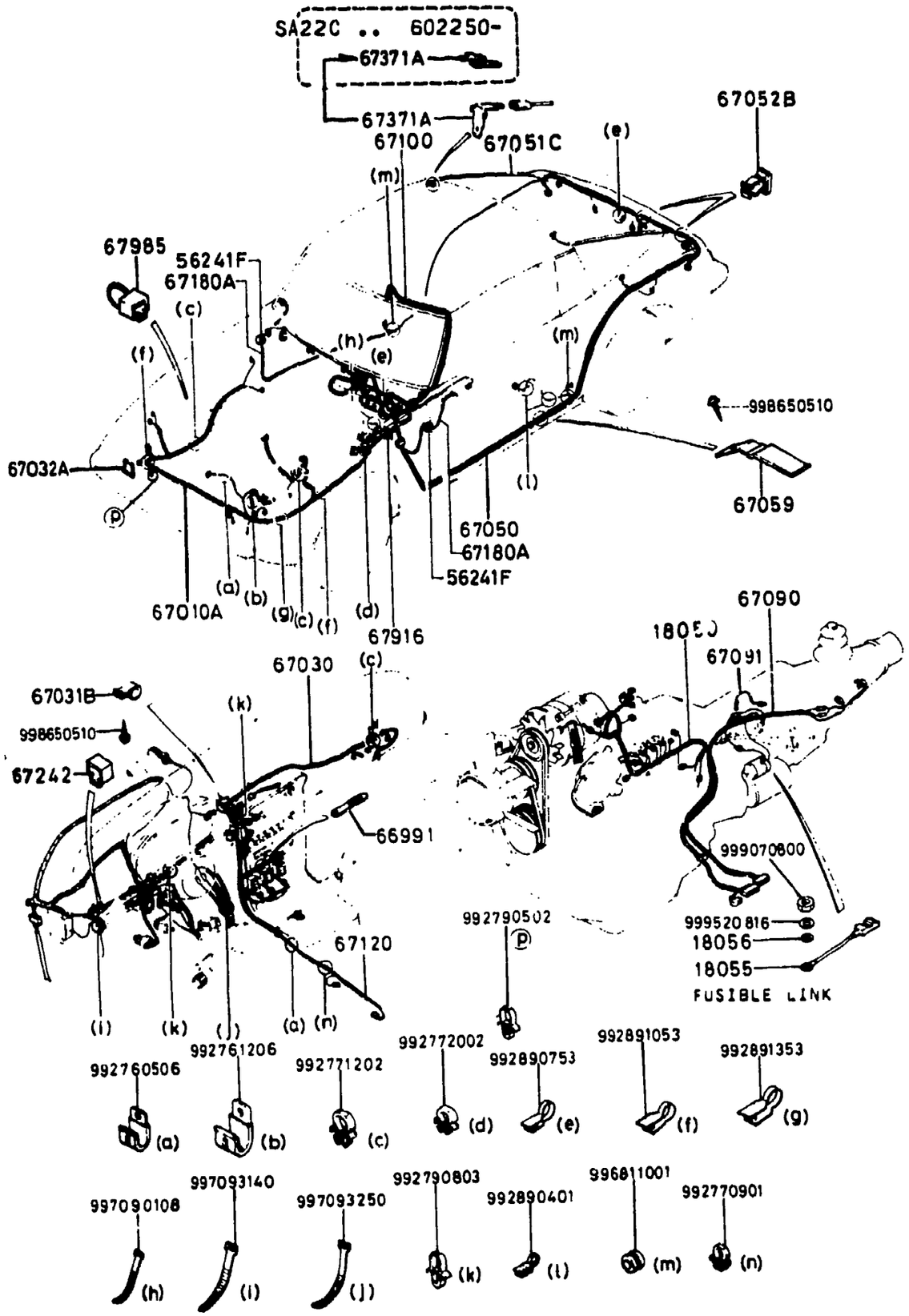


6700A-1 WIRE HARNESS & CLAMPS

| D-CODE (Key No.) | PART NAME | PART No. | Qty. | MODEL/DESCRIPTION | VIN (Chassis No.) |
|---|---|---|---|---|---|
| 18050 | WIRING,ENGINE<br>CABLE,MOTEUR<br>CABLE,MOTOR | 8341-18-050B | 1 | 80 MODEL FED. M/T<br>80 MODEL CALIF. M/T | SA22C ..<br>568501- |
| | | 8342-18-050B | 1 | 80 MODEL FED. A/T<br>80 MODEL CALIF.A/T | SA22C ..<br>568501- |
| | | 8485-18-050C | 1 | 80 MODEL CANADA | SA22C ..<br>568501- |
| | | 8871-18-050F | 1 | 79 MODEL M/T | SA22C ..<br>500001<br>-541116 |
| | | 8871-18-050G | 1 | 79 MODEL M/T | SA22C ..<br>541117<br>-568500 |
| | | 8872-18-050E | 1 | 79 MODEL A/T | SA22C ..<br>500001<br>-541116 |
| | | 8872-18-050F | 1 | 79 MODEL A/T | SA22C ..<br>541117<br>-568500 |
| 18055 | LINK,FUSIBLE<br>FUSIBLE | 8341-18-055 | 1 | 80 MODEL | SA22C ..<br>568501- |
| | | 8871-18-055 | 1 | 79 MODEL | SA22C ..<br>500001<br>-568500 |
| 18056 | WASHER,LOCK<br>RONDELLE, BLOCAGE<br>ARANDELA,CIERRE | 8872-18-056 | 1 | A/T | |
| 56241F | PLUG,DRAIN | 0118-56-241 | | (USE W/O REMOT.CONT. MIRROR) | |
| | | | 4 | 80 MODEL | SA22C ..<br>592956- |
| 66991 | CLIP<br>ATTACHE<br>PRENSA TRABA GAZA | 0187-66-991 | 1 | | |
| 67010A | HARNESS,FRONT<br>FAISCEAU AVANT | 8341-67-010B | 1 | 80 MODEL FED.<br>80 MODEL CALIF. | SA22C ..<br>568501<br>-578960 |
| | | 8341-67-010C | 1 | 80 MODEL FED.<br>80 MODEL CALIF. | SA22C ..<br>578961<br>-592955 |
| | <A> | 8341-67-010E | 1 | 80 MODEL FED.<br>80 MODEL CALIF. | SA22C ..<br>592956<br>-619392 |

# 6700A WIRE HARNESS & CLAMPS

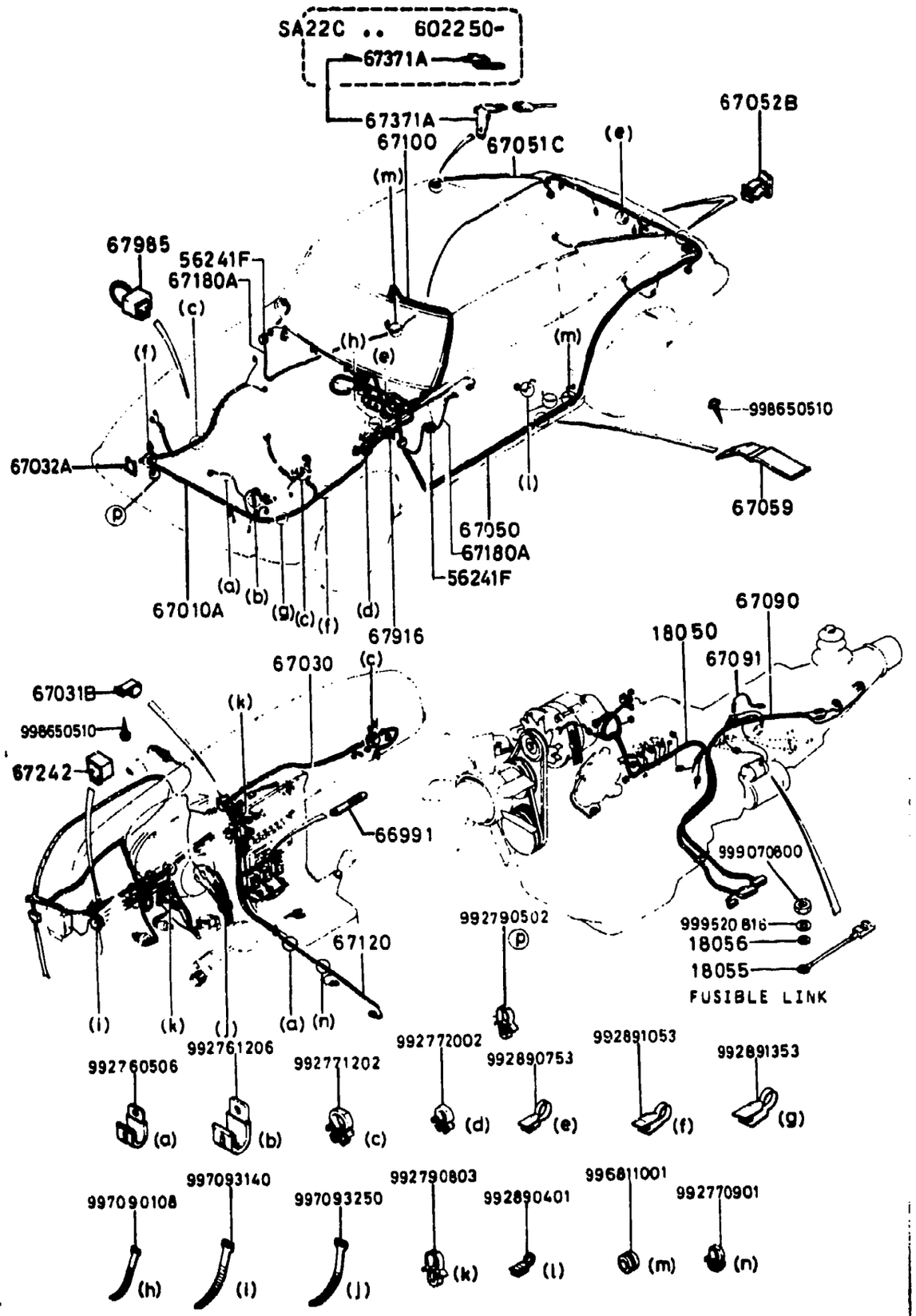




| D-CODE (Key No.) | PART NAME | | PART No. | Qty. | MODEL/DESCRIPTION | VIN (Chassis No.) |
|---|---|---|---|---|---|---|
| 67010A CONT'D | | | *8341-67-010G | 1 | 80 MODEL FED.<br>80 MODEL CALIF. | SA22C ..<br>619393- |
| | | | 8485-67-010B | 1 | 80 MODEL CANADA | SA22C ..<br>568501<br>-578960 |
| | | | 8485-67-010C | 1 | 80 MODEL CANADA | SA22C ..<br>578961<br>-592955 |
| | | <A> | 8485-67-010E | 1 | 80 MODEL CANADA | SA22C ..<br>592956<br>-619392 |
| | | | *8485-67-010G | 1 | 80 MODEL CANADA | SA22C ..<br>619393- |
| | | | 8868-67-010D | 1 | 79 MODEL CALIF. | SA22C ..<br>500001<br>-516624 |
| | | | *8868-67-010E | 1 | 79 MODEL CALIF. | SA22C ..<br>516625<br>-540410 |
| | | | 8868-67-010G | 1 | 79 MODEL CALIF. | SA22C ..<br>540411<br>-568500 |
| | | | 8872-67-010C | 1 | 79 MODEL FED.<br>79 MODEL CANADA | SA22C ..<br>500001<br>-516624 |
| | | | *8872-67-010D | 1 | 79 MODEL FED.<br>79 MODEL CANADA | SA22C ..<br>516625<br>-540410 |
| | | | 8872-67-010F | 1 | 79 MODEL FED.<br>79 MODEL CANADA | SA22C ..<br>540411<br>-568500 |
| 67030 | HARNESS,INSTRUMENT<br>FAISCEAU DE TABLEAU DE BU<br>SUJETADOR, INSTRUMENTOS | | 8341-67-030A | 1 | 80 MODEL | SA22C ..<br>568501<br>-592955 |
| | | <A> | 8341-67-030E | 1 | 80 MODEL | SA22C ..<br>592956- |
| | | | 8871-67-030A | 1 | 79 MODEL | SA22C ..<br>500001<br>-540410 |
| | | | 8871-67-030C | 1 | 79 MODEL | SA22C ..<br>540411<br>-568500 |
| | | | 8973-67-030P | | (ORD.BY 897367030P01)<br>(LIMITED) | |
| | | | | 1 | 79 MODEL | |

# 6700A WIRE HARNESS & CLAMPS

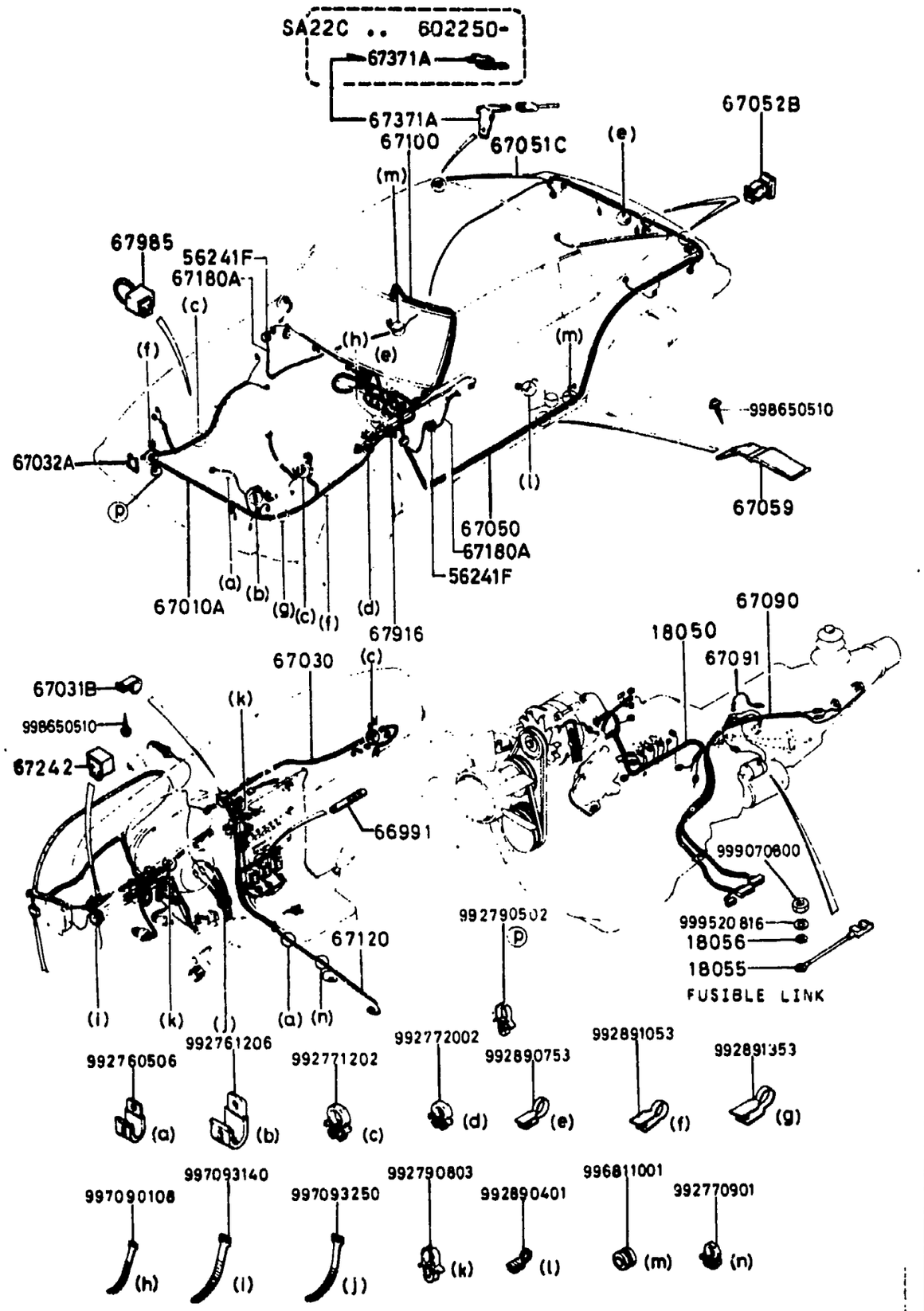


6700A-3 WIRE HARNESS & CLAMPS

| D-CODE (Key No.) | PART NAME | PART No. | Qty. | MODEL DESCRIPTION | VIN (Chassis No.) |
|---|---|---|---|---|---|
| 67031B | CLIP<br>ATTACHE<br>PRENSA TRABA GAZA | 8871-67-031 | 1 | | |
| 67032A | PROTECTOR<br>PROTECTEUR<br>PROTECTOR | 8871-67-012 | 1 | 79 MODEL | SA22C ..<br>500001<br>-568500 |
| | | | 2 | 80 MODEL | SA22C ..<br>568501<br>-576263 |
| 67050 | HARNESS,REAR<br>FAISCEAU RR. | 8341-67-050B | 1 | 80 MODEL | SA22C ..<br>568501- |
| | | 8871-67-050A | 1 | 79 MODEL | SA22C ..<br>500001<br>-559739 |
| | | 8871-67-050B | 1 | 79 MODEL | SA22C ..<br>559740<br>-568500 |
| 67051C | CORD,RR.DEF. | 8341-67-051 | 2 | 80 MODEL | SA22C ..<br>568501- |
| 67052B | CLIP<br>ATTACHE<br>PRENSA TRABA GAZA | 8565-67-051 | 4 | 79 MODEL | SA22C ..<br>500001<br>-502998 |
| | | 9927-91-112 | 4 | 79 MODEL | SA22C ..<br>502999- |
| 67059 | CLIP<br>ATTACHE<br>PRENSA TRABA GAZA | 8871-67-053 | 3 | | |
| 67090 | HARNESS,T/MISSION<br>FAISCEAU DE TRANSMISSION<br>SUJETADOR, TRASMISION | 8341-67-090 | 1 | 80 MODEL M/T | SA22C ..<br>568501- |
| | | 8342-67-090 | 1 | 80 MODEL A/T | SA22C ..<br>568501- |
| | | 8871-67-090B | 1 | 79 MODEL M/T | SA22C ..<br>500001<br>-568500 |
| | | 8872-67-090B | 1 | 79 MODEL A/T | SA22C ..<br>500001<br>-568500 |
| 67091 | CORD,SHORT<br>FIL COURT<br>CABLE CORTO | 8867-67-091 | 1 | M/T | |
| 67100 | HARNESS,INT.LAMP<br>FAISCEAU DE PLAFONNIER<br>SUJETADOR, LAMPARA INTERI | 8871-67-100 | 1 | | SA22C ..<br>500001<br>-556771 |
| | | 8871-67-100A | 1 | | SA22C ..<br>556772- |

# 6700A WIRE HARNESS & CLAMPS

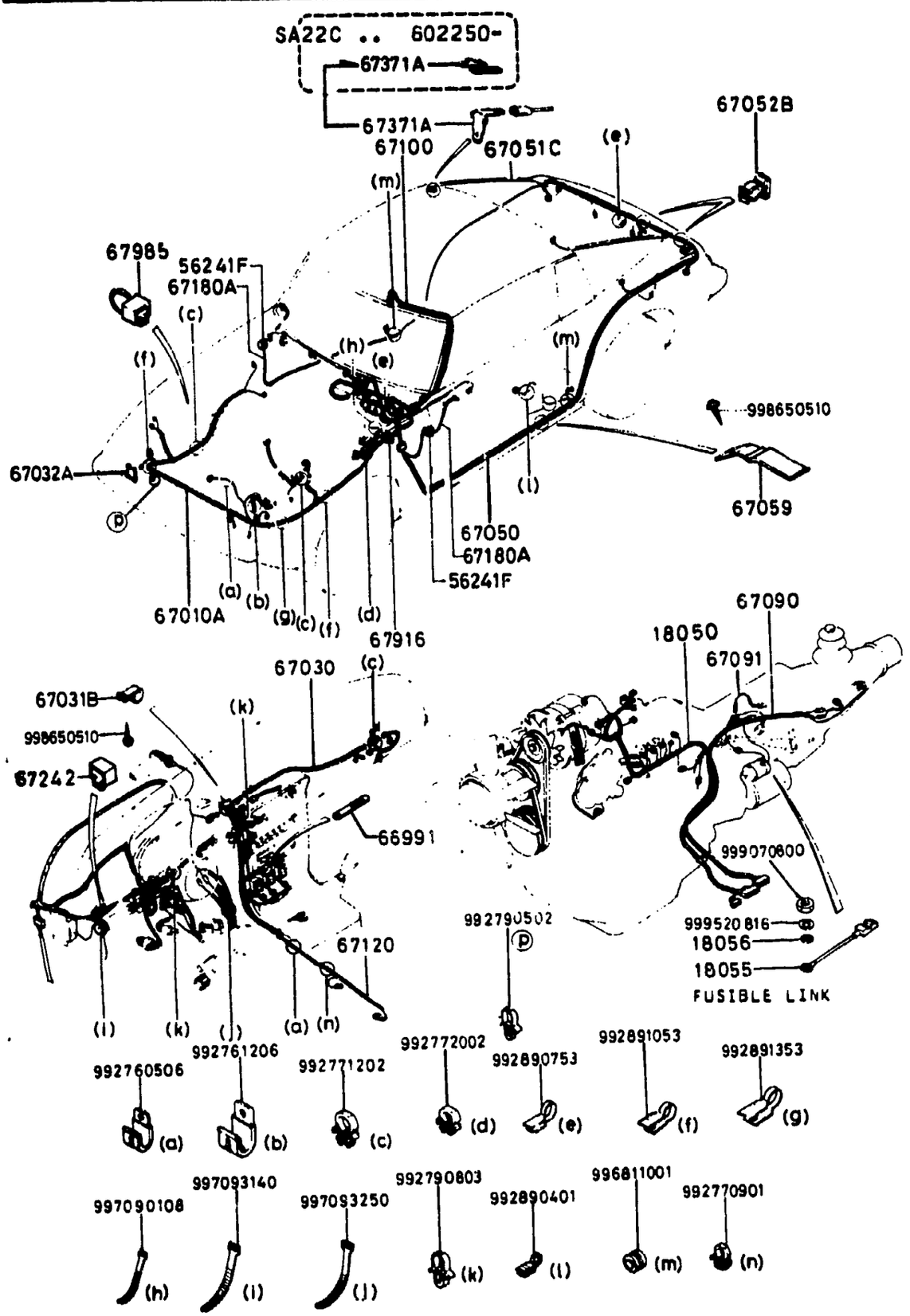


6700A-4* WIRE HARNESS & CLAMPS

| D-CODE (Key No.) | PART NAME | | PART No. | Qty. | MODEL/DESCRIPTION | VIN (Chassis No.) |
|---|---|---|---|---|---|---|
| 67120 | HARNESS,PARKG.BRAKE<br>FAISCEAU DE FREIN A MAIN<br>SUJETADOR, BREQUE EMERGEN | | 8871-67-120A | 1 | | SA22C ..<br>500001<br>-587603 |
| | | <A > | 8871-67-120B | 1 | | SA22C ..<br>587604<br>-606774 |
| | | <A > | *8871-67-120C | 1 | | SA22C ..<br>606775- |
| 67180A | HARNESS,DOOR MIRROR<br>FAISCEAU RETROVIS. EXT. | <A > | 8341-67-190A | 2 | | SA22C ..<br>592956<br>-598995 |
| | | <A > | 8341-67-190B | 2 | | SA22C ..<br>598996<br>-605680 |
| | | <A > | *8341-67-190C | 2 | | SA22C ..<br>605681- |
| 67242 | RECTIFIER<br>REDRESSEUR<br>RECTIFICADOR | | 8871-67-242 | 1 | | |
| 67371A | TERMINAL<br>BORNE<br>TERMINAL | | 8871-67-371 | 2 | | SA22C ..<br>500001<br>-602249 |
| | | | •FA01-75-899 | 2 | 80 MODEL | SA22C ..<br>602250- |
| 67916 | GROMMET<br>PROTECTEUR<br>ANILLO PROTECTOR | <AN> | 8545-67-915 | 1 | | SA22C ..<br>510189- |
| | | | 8871-67-915 | 1 | | SA22C ..<br>500001<br>-510188 |
| 67985 | CONNECTOR,SHORT<br>RACCORD,COURT<br>UNION CORTA | | 8342-67-985 | 1 | 80 MODEL FED. A/T<br>80 MODEL CALIF. A/T | SA22C ..<br>568501- |
| | | | 8344-67-985 | 1 | 80 MODEL CALIF. M/T | SA22C ..<br>568501- |

# 6720A WINDSHIELD WASHER

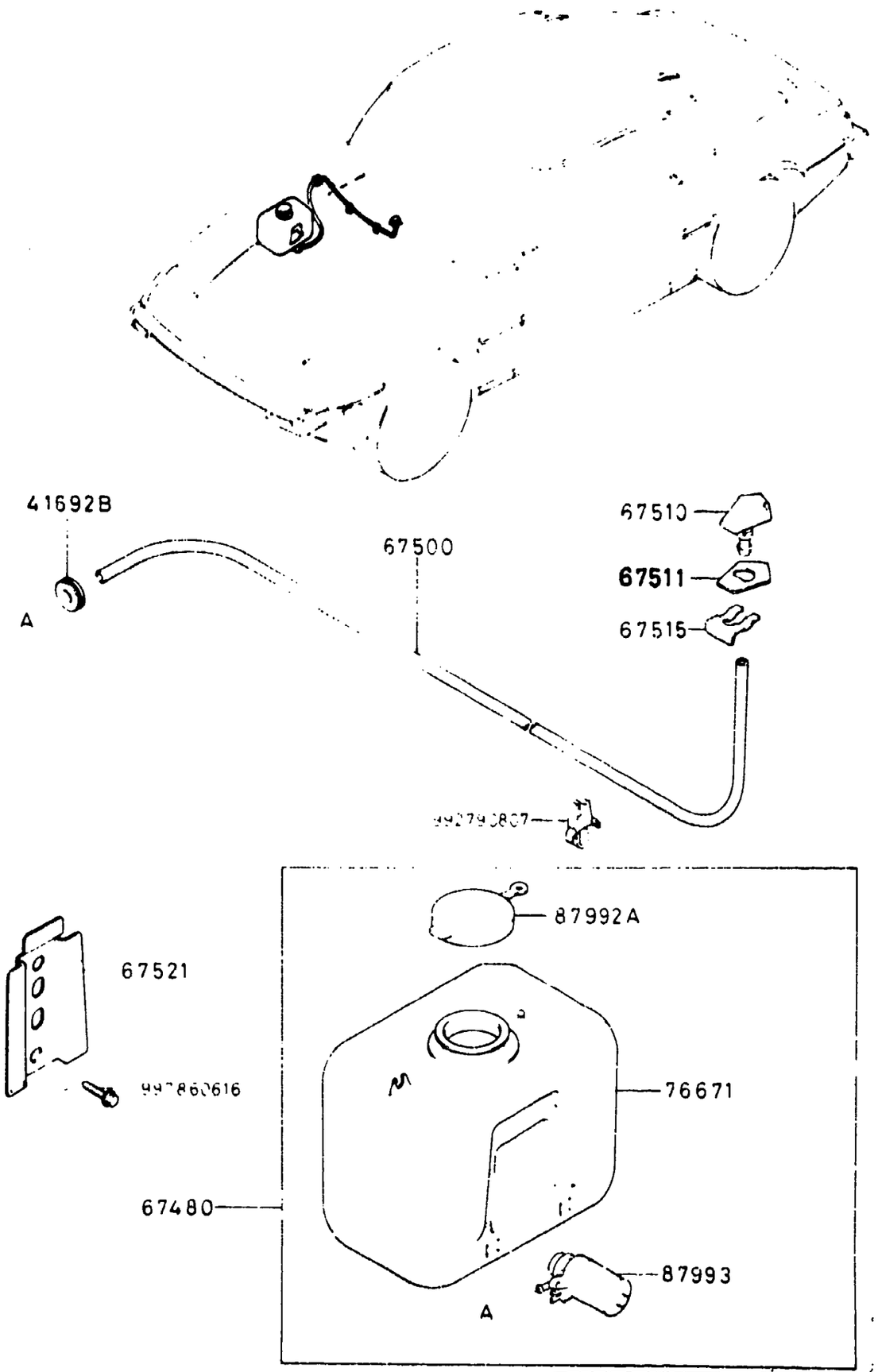


6720A-1* WINDSHIELD WASHER

| D-CODE (Key No.) | PART NAME | PART No. | Qty | MODEL DESCRIPTION | VIN Chassis No. |
|---|---|---|---|---|---|
| 41692B | PROTECTOR<br>PROTECTEUR<br>PROTECTOR | 0111-41-692 | 1 | | |
| 67480 | TANK,WASHER<br>RESERVOIR DE LAVE-GLACE<br>DEPOSITO,LAVA | 0317-67-480A | 1 | | |
| 67500 | PIPE<br>CONDUIT<br>TUBO | 8871-67-500 | 1 | | |
| 67510 | NOZZLE,WASHER<br>GICLEUR,LAVE-GLACE<br>BOQUILLA,VOLANDA | 1011-67-510 | 1 | | SA22C ..<br>500001<br>-516624 |
| | | 1011-67-510A | 1 | | SA22C ..<br>516625- |
| 67511 | PACKING<br>JOINT<br>JUNTA | 1011-67-511A | 1 | | SA22C ..<br>500001<br>-516624 |
| | | 1011-67-511B | 1 | | SA22C ..<br>516625- |
| 67515 | CLIP<br>ATTACHE<br>PRENSA TRABA GAZA | 1011-67-515A | 1 | | SA22C ..<br>500001<br>-525593 |
| | | 1011-67-515B | 1 | | SA22C ..<br>525594- |
| 67521 | BRACKET,WASHER TANK<br>ATTACHE, RESERVOIR<br>SOPORTE,TANQUE | *8545-53-225 | 1 | | |
| 76671 | TANK<br>RESERVOIR DE LAVE-GLACE<br>DEPOSITO,LAVAPARABRISAS | 0317-67-511A | 1 | | |
| 87992A | CAP TANK<br>BOUCHON DE RESERVOIR<br>TAPON PARA TANQUE DEL GAS | 1391-76-673 | 1 | | |
| 87993 | PUMP KIT<br>NECESSAIRE DE POMPE<br>BOMBA, JUEGO | 8532-76-672 | 1 | | |

# 6730A WINDSHIELD WIPER

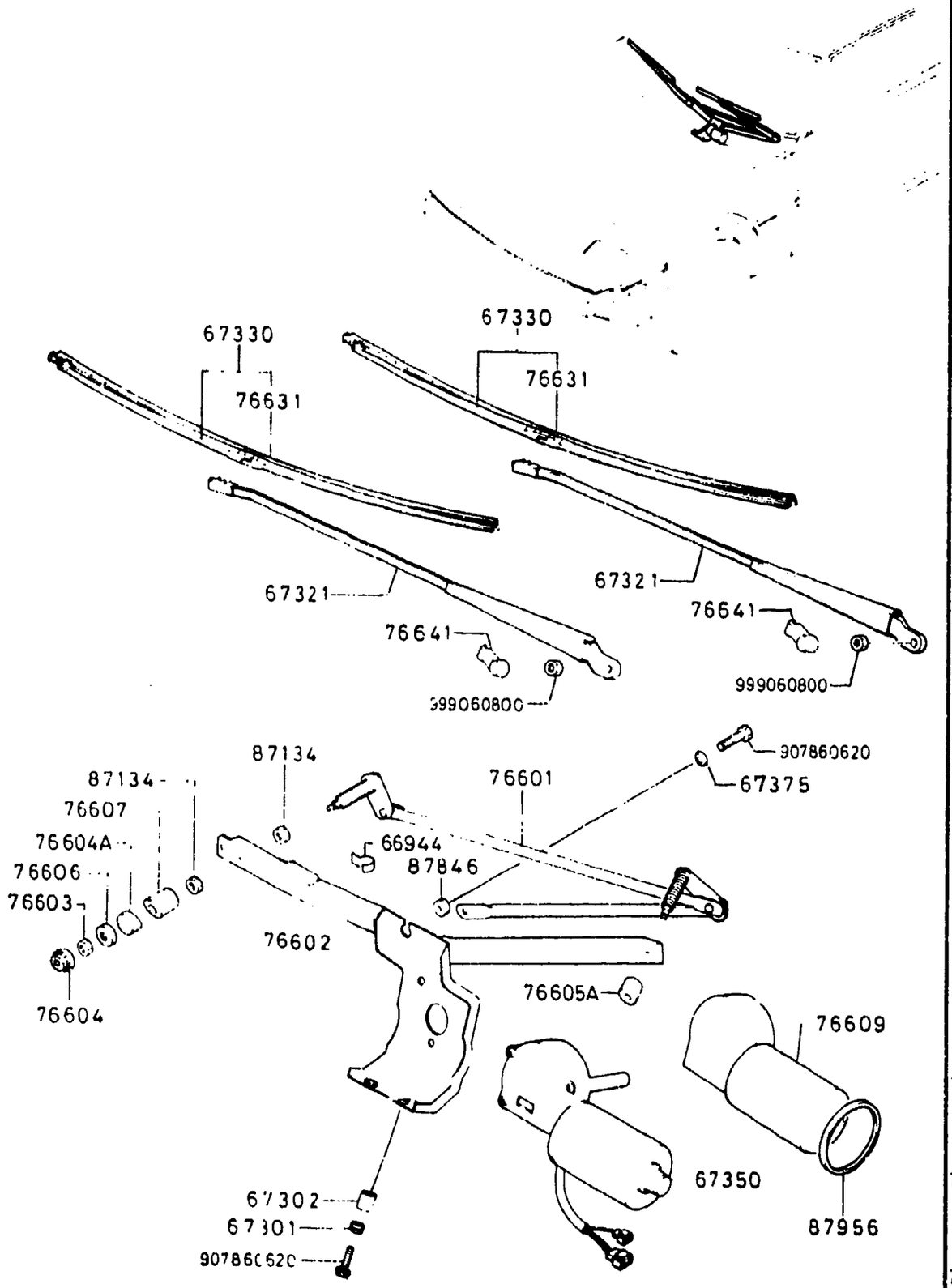


6730A-1 WINDSHIELD WIPER

| D-CODE (Key No.) | PART NAME | PART No. | Qty. | MODEL DESCRIPTION | VIN Chassis No. |
|---|---|---|---|---|---|
| 66944 | CLIP<br>ATTACHE<br>PRENSA TRABA GAZA | 0208-66-944 | 1 | | SA22C ..<br>500001<br>-563500 |
| | | 0208-66-944A | 1 | | SA22C ..<br>563501- |
| 67301 | WASHER,RUBBER<br>BAGUE CAOUTCHOUC | 0866-67-301A | 2 | | |
| 67302 | SPACER<br>RONDELLE<br>ESPACIADOR | 0866-67-302 | 2 | | |
| 67321 | ARM,WIPER<br>BALAIS D'ESSUIE GLACE<br>BRAZO,LIMPIADOR | 8871-67-321A | 2 | | SA22C ..<br>500001<br>-525593 |
| | | 8872-67-321 | 2 | | SA22C ..<br>525594- |
| 67330 | BLADE,WIPER<br>BALAIS,ESSUIE-GLACE<br>ESCOBILLA LIMPIA-PARABRIZ | 8562-67-330 | 2 | | |
| 67350 | MOTOR,WIPER<br>MOTEUR ESSUIE-GLACE<br>MOTOR DE LIMPIAPARABRISAS | 8871-67-350B | 1 | | SA22C ..<br>500001<br>-525593 |
| | | 8872-67-350 | 1 | | SA22C ..<br>525594- |
| 67375 | WASHER,CAP<br>RONDELLE | 1011-67-375 | 2 | | |
| 76601 | LINK,WIPER<br>TRINGLE D'ESSUIE-GLACE<br>ESLABON LIMPIADOR | 8871-76-601A | 1 | | |
| 76602 | FRAME<br>CHASSIS<br>CHASIS | 8871-76-602A | 1 | | |
| 76603 | NUT,CAP<br>BOUCHON<br>TUERCA,TAPA | 8871-76-657 | 2 | | |
| 76604 | CAP,SEAL<br>BOUCHON D'ETANCHEITE<br>EMPAQUE PARA TAPA | 8871-76-655A | 1 | | |
| 76604A | BUSH,OUTER<br>BUSELURE EXT. | 8871-76-604A | 2 | | |
| 76605A | BUSH,INNER | 8871-76-605A | 1 | | |

# 6730A WINDSHIELD WIPER

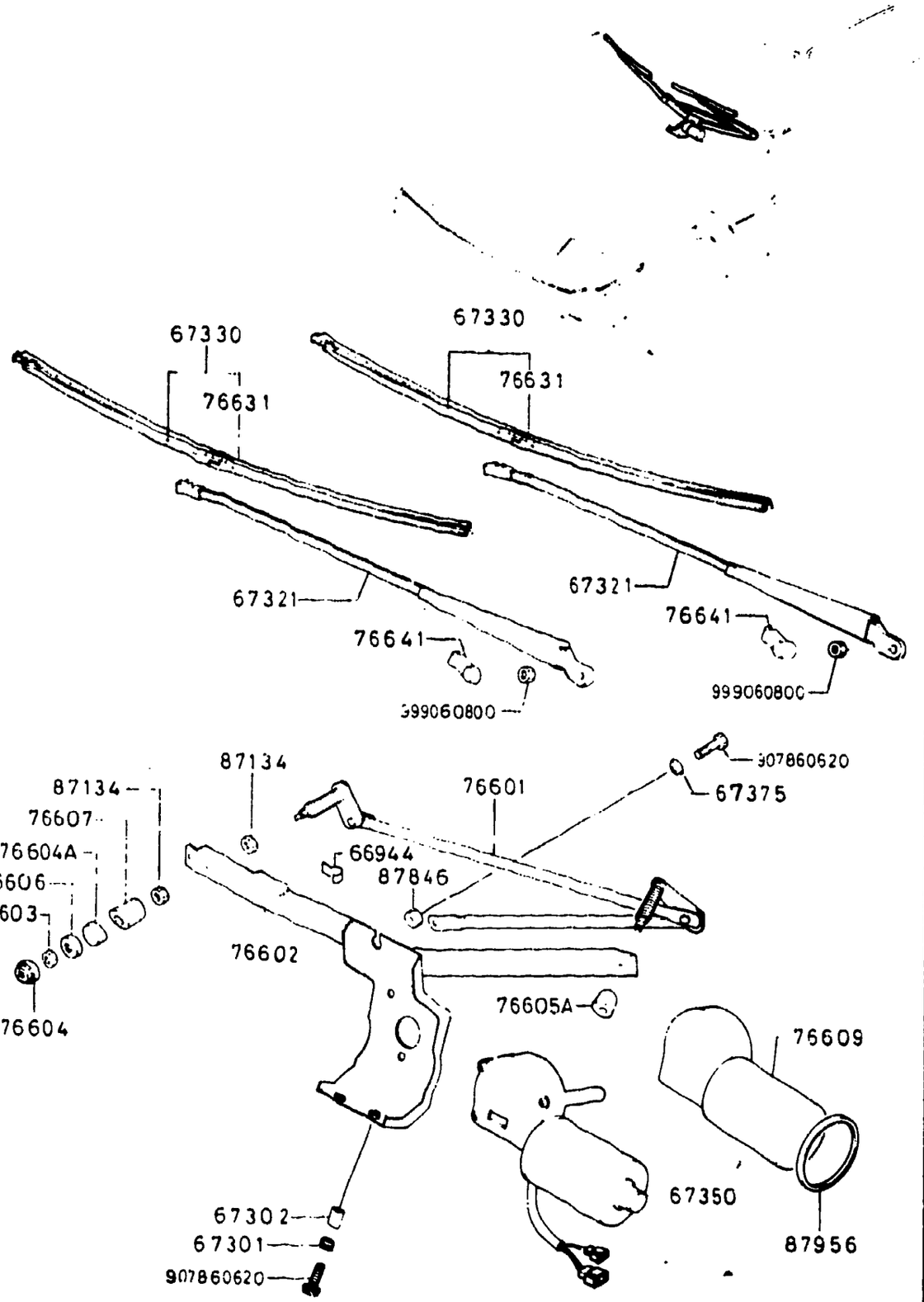


6730A-2* WINDSHIELD WIPER

| D-CODE (Key No.) | PART NAME | PART No. | Qty. | MODEL DESCRIPTION | VIN (Chassis No.) |
|---|---|---|---|---|---|
| 76605A CONT'D | ARTICULATION INT | 8871-76-605A | | | |
| 76606 | WASHER,CUP<br>RONDELLE<br>ARANDELA,TASA | 8871-76-606A | 2 | | |
| 76607 | BUSH,INNER<br>ARTICULATION INT<br>BUJE,INTERIOR | 8871-76-603A | 1 | | |
| 76609 | COVER<br>CACHE<br>COBERTUR | 1175-76-609 | 1 | | |
| 76631 | BLADE<br>BALAIS<br>ESCOBILLA | 1175-76-631A | 2 | | SA..C .. 500301 -525593 |
| | | 8562-76-631 | 2 | | SA..C .. 525594- |
| 76641 | COVER,WIPER ARM<br>COUVERCLE BRAS ESSUI-GLAC | 8871-76-641 | 2 | | |
| 87134 | NUT<br>ECROU<br>TUERCA | 0727-87-844 | 4 | | |
| 87846 | GROMMET<br>PROTECTEUR<br>ANILLO PROTECTOR | 0824-87-846 | 2 | | |
| 87956 | BAND<br>COLLIER DE SERRAGE<br>BANDA | 0305-87-956 | 1 | | |

# 6740A WIPER MOTOR (COMPONENTS ONLY)

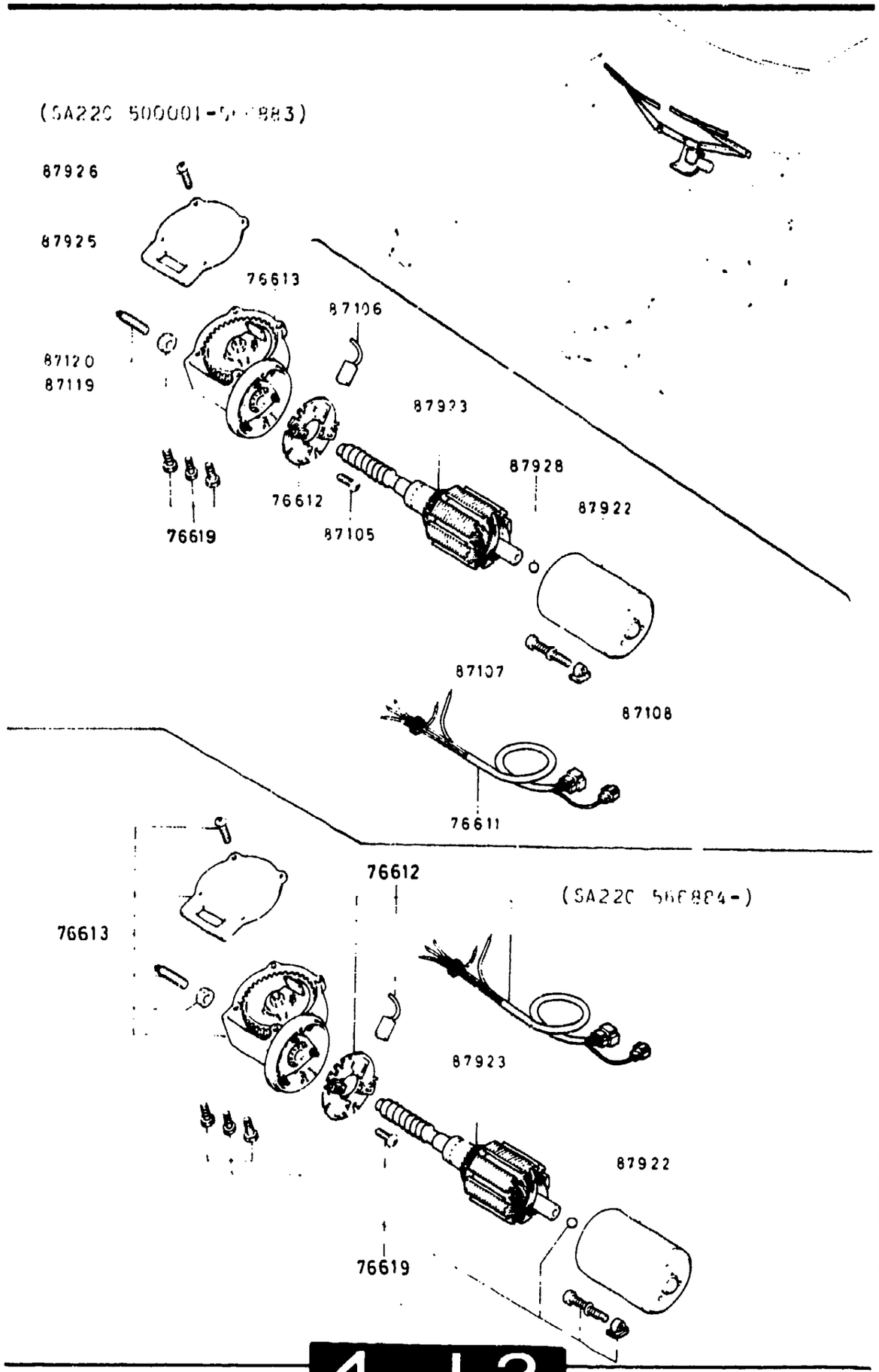


6740A-1 WIPER MOTOR (COMPONENTS ONLY)

| D-CODE Key No. | PART NAME | PART No. | Qty | MODEL DESCRIPTION | VIN Chassis No. |
|---|---|---|---|---|---|
| 76611 | WIRE,WIPER MOTOR<br>FIL DE CONTACT<br>CABLE,PRINCIPAL | 8871-76-611 | 1 | | SA22C ..<br>500001<br>-566883 |
| 76612 | HOLDER,BRUSH<br>PORTE CHARBON<br>PORTA CARBON | 1011-76-612A | 1 | | SA22C ..<br>500001<br>-566883 |
| | | 8872-76-612 | 1 | | SA22C ..<br>566884- |
| 76613 | BOX,GEAR<br>BOITE DE VITESSES<br>CAJA,ENGRANAJE | 8871-76-613 | 1 | | SA22C ..<br>500001<br>-566883 |
| | | 8872-76-613 | 1 | | SA22C ..<br>566884- |
| | | 8872-76-613 | 1 | | SA22C ..<br>565884<br>-566883 |
| 76619 | PARTS SET<br>JEU DE PIECE<br>APARATO DE PIEZA | 8236-76-619 | 1 | | SA22C ..<br>566884- |
| 87105 | SCREW<br>VIS<br>TORNILLO | 0259-87-105 | 3 | | SA22C ..<br>500001<br>-566883 |
| 87106 | BRUSH<br>BALAIS<br>CARBON | 0259-87-106 | 3 | | SA22C ..<br>500001<br>-566883 |
| 87107 | SCREW<br>VIS<br>TORNILLO | 0257-87-107 | 2 | | SA22C ..<br>500001<br>-566883 |
| 87108 | NUT<br>ECROU<br>TUERCA | 0257-87-108 | 2 | | SA22C ..<br>500001<br>-566883 |
| 87119 | NUT<br>ECROU<br>TUERCA | 0259-87-119 | 1 | | SA22C ..<br>500001<br>-566883 |
| 87120 | SCREW<br>VIS<br>TORNILLO | 0259-87-120 | 1 | | SA22C ..<br>500001<br>-566883 |
| 87922 | YOKE,STATOR<br>MANCHON DE STATOR<br>CULATA,ESTATOR | 2835-87-922 | 1 | | SA22C ..<br>565884<br>-566883 |
| | | 8236-76-614 | 1 | | SA22C ..<br>566884- |
| | | 8871-87-922 | 1 | | SA22C .. |

# 6740A WIPER MOTOR (COMPONENTS ONLY)

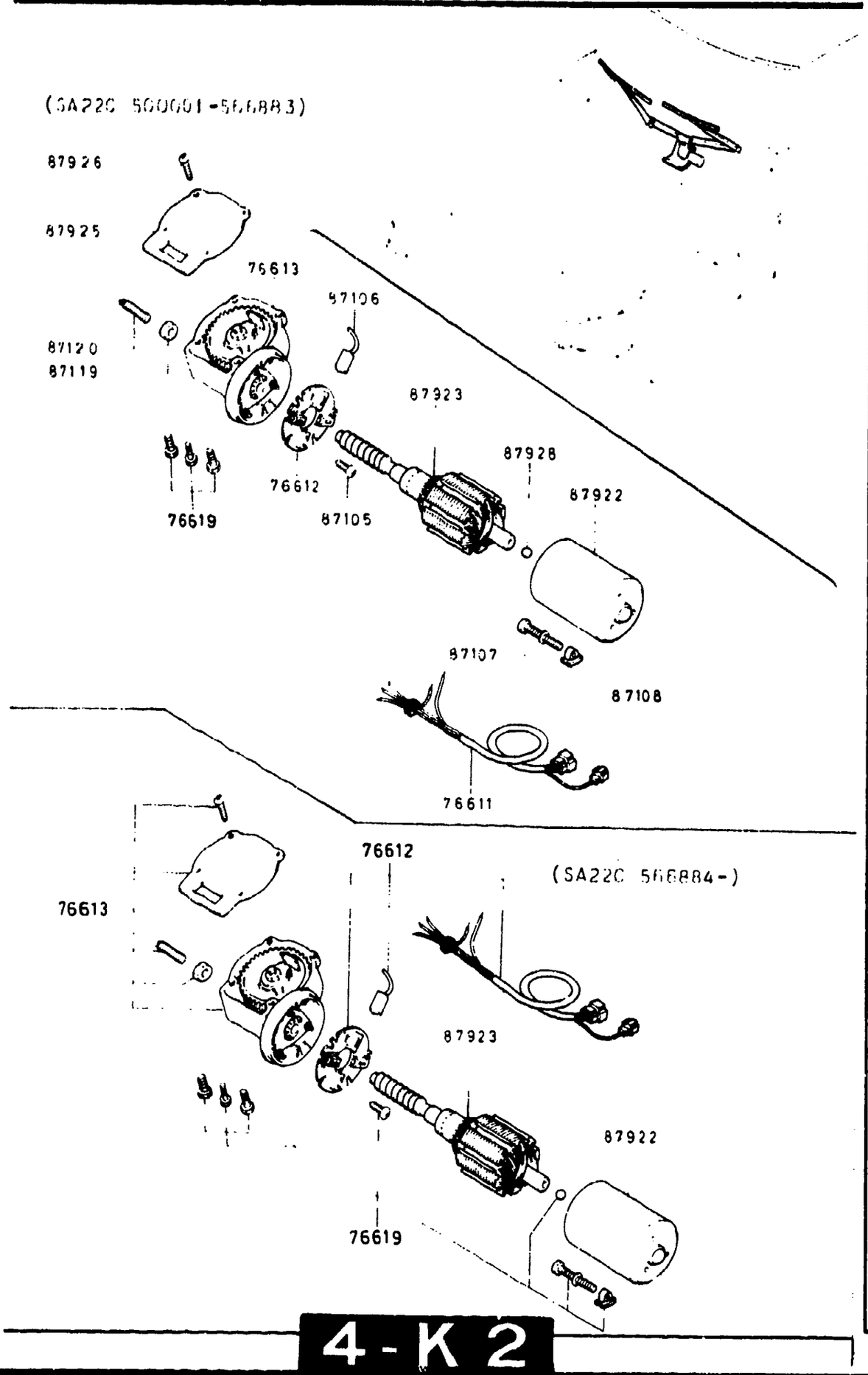


6740A-2* WIPER MOTOR (COMPONENTS ONLY)

| D-CODE (Key No.) | PART NAME | PART No. | Qty. | MODEL DESCRIPTION | VIN Chassis No. |
|---|---|---|---|---|---|
| 87922 CONT'D | | 8871-87-922 | | | 500001 -525593 |
| 87923 | ROTOR<br>ROTOR<br>ROTOR | 8230-76-613 | 1 | | SA22C .. 566884- |
| | | 8562-87-923 | 1 | | SA22C .. 525594 -566883 |
| | | 8871-87-923 | 1 | | SA22C .. 500001 -525593 |
| 87925 | PLATE,END<br>PLAQUE EN BOUT<br>PLACA FINAL | 2835-87-925 | 1 | | SA22C .. 500001 -566883 |
| 87926 | SCREW<br>VIS<br>TORNILLO | 2835-87-926 | 4 | | SA22C .. 500001 -566883 |
| 87928 | BALL<br>BILLE<br>BOLA | 2835-87-928 | 2 | | SA22C .. 500001 -566883 |

# SECTION NUMBER INDEX (BODY)

| STARTING LOCATION | SECTION No | SECTION NAME |
|---|---|---|
| 3–C2 | 0900A | KEY SETS |
| 3–C3 | 5000A | FRONT BUMPER & GRILLE |
| 3–E3 | 5010A | REAR BUMPER |
| 3–G3 | 5030A | WINDOW MOULDINGS |
| 3–I3 | 5040A | BODY MOULDINGS |
| 3–C4 | 5100A | LAMPS (FRONT & SIDE) |
| 3–G4 | 5110A | LAMPS (REAR) |
| 3–I4 | 5130A | OVERHEAD CONSOLE (1979 STANDARD ROOF MODEL) |
| 3–J4 | 5170A | COWL & EXTRACTOR GRILLES & ORNAMENTS |
| 3–C5 | 5230A | BONNET |
| 3–E5 | 5310A | BODY PANELS (FRONT) |
| 3–K5 | 5340A | BODY PANELS (SIDE & ROOF) |
| 3–I6 | 5360A | BODY PANELS (FLOOR) |
| 3–C7 | 5500A | DASHBOARD EQUIPMENT |
| 3–L7 | 5540A | METERS |
| 3–D8 | 5560A | DASHBOARD & RELATED |
| 3–L8 | 5570A | CONSOLE |
| 3–K9 | 5580A | VENTILATOR |
| 3–C10 | 5700A | SEAT (EXCEPT LEATHER TRIM) |
| 3–N10 | 5710A | SEAT TRIM (LEATHER – ANNIVERSARY EDITION) |
| 3–G11 | 5760A | SEAT BELTS |
| 3–C12 | 5800A | FRONT DOOR |
| 3–C13 | 5830A | FRONT DOOR MECHANISMS |
| 3–C14 | 6100A | HEATER |
| 3–E14 | 6110A | HEATER UNIT |
| 3–H14 | 6115A | HEATER CONTROLS |
| 3–J14 | 6120A | HEATER BLOWER |
| 3–C15 | 6230A | BACK DOOR MECHANISMS |
| 3–F15 | 6300A | WINDOW GLASSES |
| 3–I15 | 6330A | SUNROOF |
| 3–C16 | 6600A | ELECTRIC EQUIPMENT |
| 3–G16 | 6680A | RADIO & STEREO SYSTEMS |
| 4–C2 | 6700A | WIRE HARNESS & CLAMPS |
| 4–G2 | 6720A | WINDSHIELD WASHER |
| 4–H2 | 6730A | WINDSHIELD WIPER |
| 4–J2 | 6740A | WIPER MOTOR (COMPONENTS ONLY) |
| 4–C3 | 6800A | CEILING TRIM |
| 4–J3 | 6840A | TRIM & SCUFF PLATE |
| 4–F4 | 6860A | FLOOR MAT & PADS |
| 4–L4 | 6870A | SERVICE TOOLS |
| 4–N4 | 6900A | VISOR, ASSIST HANDLE & MIRRORS |
| 4–G5 | 6930A | CAUTION PLATES |

THE FRAMES IN THIS COLUMN INDICATE :

| | | |
|---|---|---|
| 4–C3 | 6800A | CEILING TRIM |
| 4–J3 | 6840A | TRIM & SCUFF PLATE |

© 1983 Toyo Kogyo Co., Ltd.
MAY 1983

## 6800A CEILING TRIM

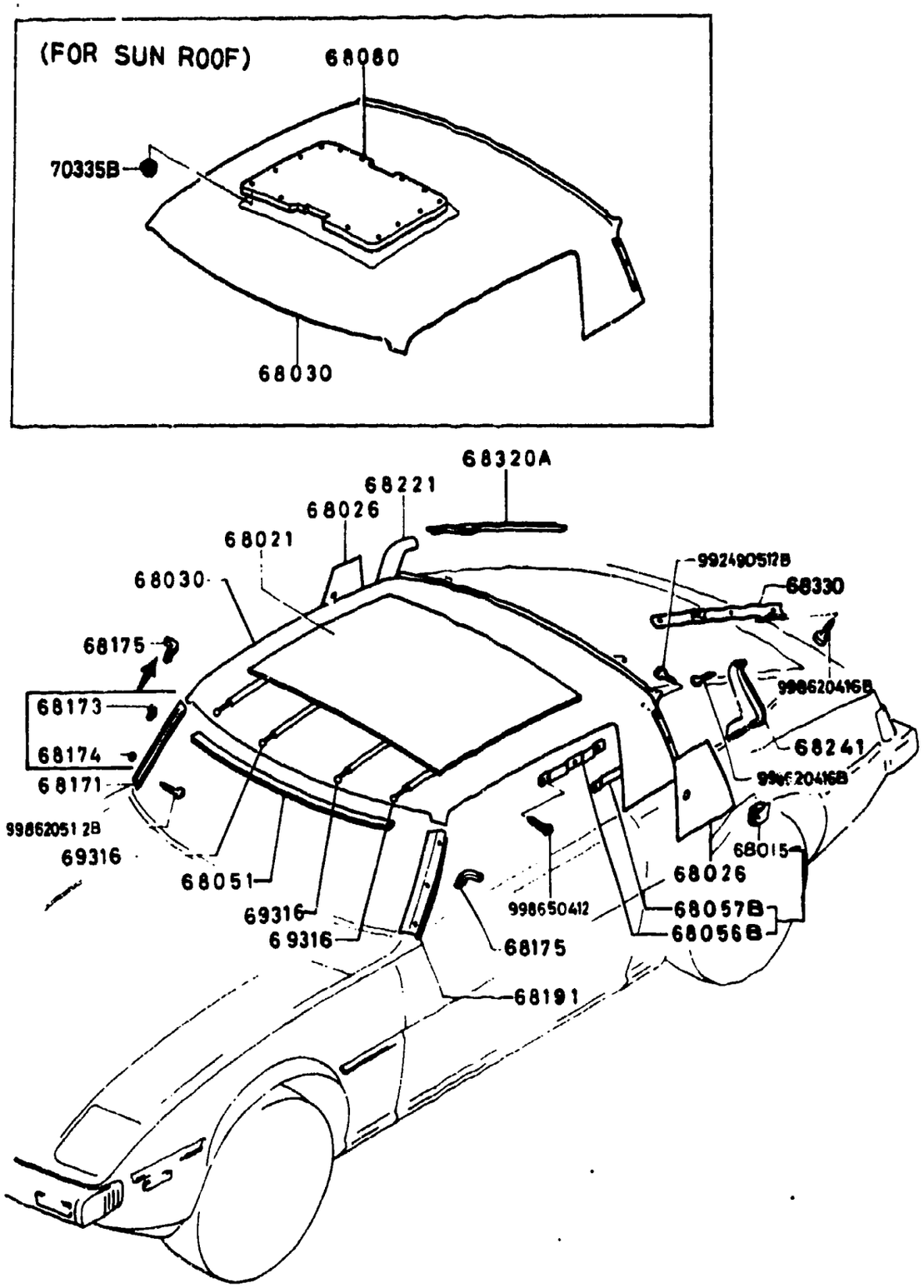


6800A-1 CEILING TRIM

| D-CODE (Key No.) | PART NAME | PART No. | Qty. | MODEL/DESCRIPTION | VIN (Chassis No.) |
|---|---|---|---|---|---|
| 68015 | CLIP<br>ATTACHE<br>PRENSA TRABA GAZA | 8531-68-015 | 4 | | SA22C ..<br>588207- |
| 68021 | LINING,HEAD<br>DOUBLURE, TOIT<br>FIBRA PRINCIPAL | 8531-68-021 | 1 | STANDARD ROOF | |
| 68026 | PAD'B',PILLAR<br>REMBOURRAGE'B'MONTANT | 8871-68-026 | 2 | | |
| 68030 | CEILING,TOP<br>CIEL DE PAVILLON<br>CIELO INTERIOR DEL TECHO | 8346-68-040B | 1 | 80 MODEL-SUNROOF | SA22C ..<br>568501- |
| | BLACK | 01 | | | |
| | WINE | 15 | | | |
| | BROWN<br>(SA22C 568501-606774) | 73 | | | |
| | BROWN<br>(SA22C 606775-) | 88 | | | |
| | | 8871-68-030 | 1 | STANDARD ROOF | |
| | BLACK | 01 | | | |
| | WINE | 15 | | | |
| | BROWN<br>(SA22C 500001-535838) | 21 | | | |
| | BROWN<br>(SA22C 535839-) | 73 | | | |
| | | 8973-68-040 | 1 | 79 MODEL-SUNROOF | SA22C ..<br>500001<br>-568500 |
| | BLACK | 01 | | | |
| | WINE | 15 | | | |

# 6800A CEILING TRIM

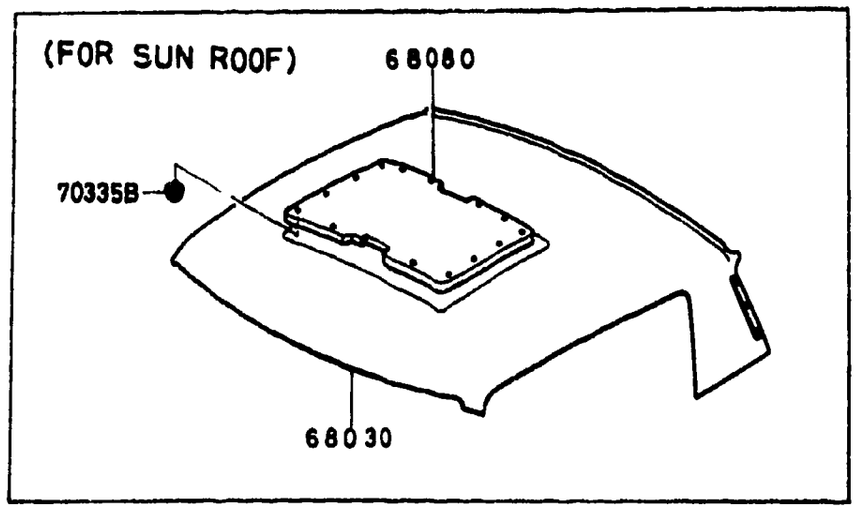


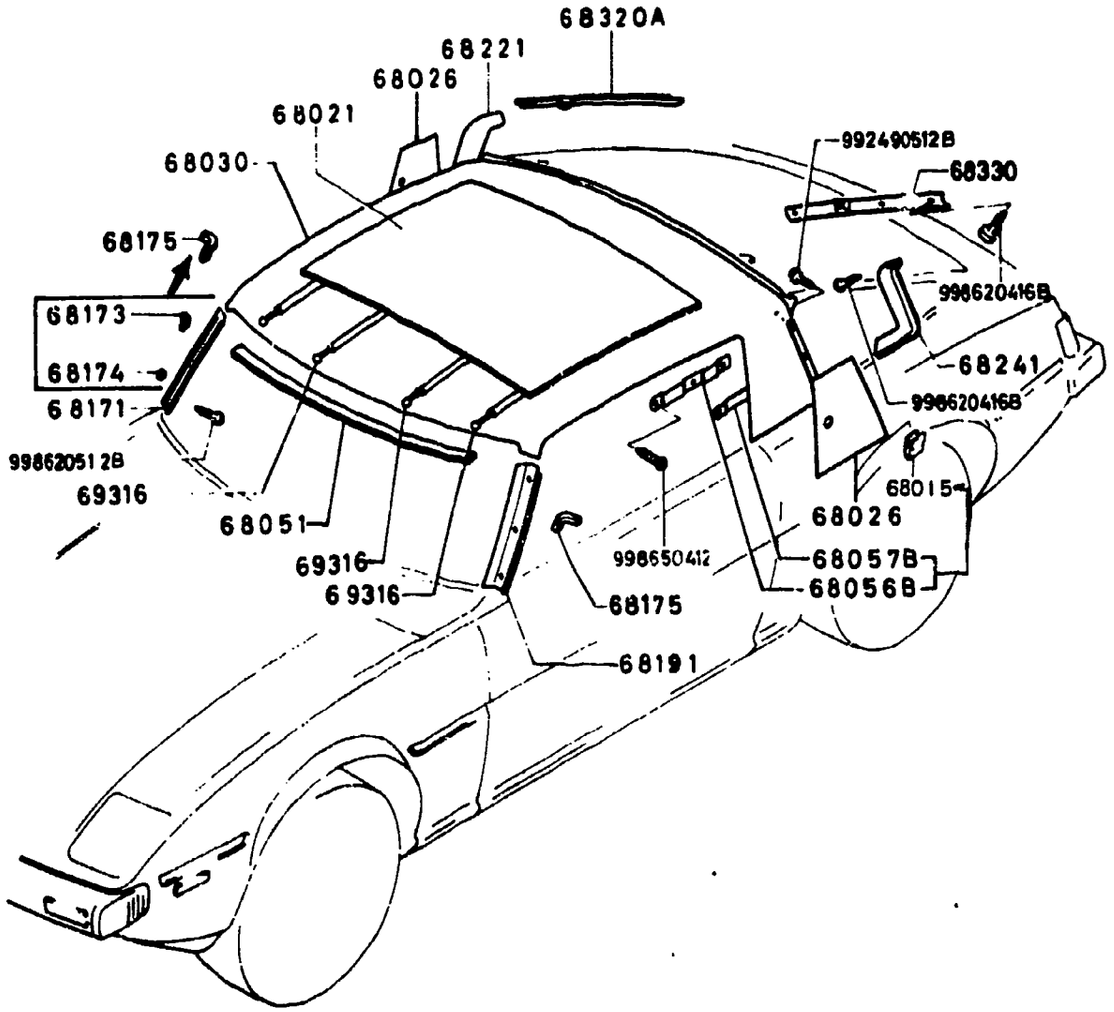


6800A-2 CEILING TRIM

| D-CODE (Key No.) | PART NAME | PART No. | Qty. | MODEL / DESCRIPTION | VIN (Chassis No.) |
|---|---|---|---|---|---|
| 68030 CONT'D | | 8973-68-040 | | | |
| | BROWN (SA22C 500001-535838) | 21 | | | |
| | BROWN (SA22C 535839-568500) | 73 | | | |
| 68051 | PLATE,T/CEILING-FRT. PLAQUE CIEL.AV. | 8871-53-041 | 1 | | |
| 68056B | PLATE(R),SET JEU DE PLAQUES(D) | 8871-68-056 | 1 | | SA22C .. 500001 -588206 |
| 68057B | PLATE(L),SET JEU DE PLAQUES(G) | 8871-68-056 | 1 | | SA22C .. 512943 -588206 |
| | | 8871-68-057 | 1 | | SA22C .. 500001 -512942 |
| 68080 | CEILING,R.TOP CIEL | 8346-68-080A | 1 | 80 MODEL-SUNROOF | SA22C .. 568501- |
| | BLACK | 01 | | | |
| | WINE | 15 | | | |
| | BROWN (SA22C 568501-606774) | 73 | | | |
| | BROWN (SA22C 606775-) | 88 | | | |
| | | 8973-68-080A | 1 | 79 MODEL-SUNROOF | SA22C .. 500001 -568500 |
| | BLACK | 01 | | | |
| | WINE | 15 | | | |
| | BROWN (SA22C 500001-535838) | 21 | | | |
| | BROWN (SA22C 535839-568500) | 73 | | | |
| 68171 | TRIM(R),FRT.PILLAR GARNITURE (D), MONTANT AV | 8871-68-171A | 1 | | SA22C .. 500001 |

## 6800A CEILING TRIM

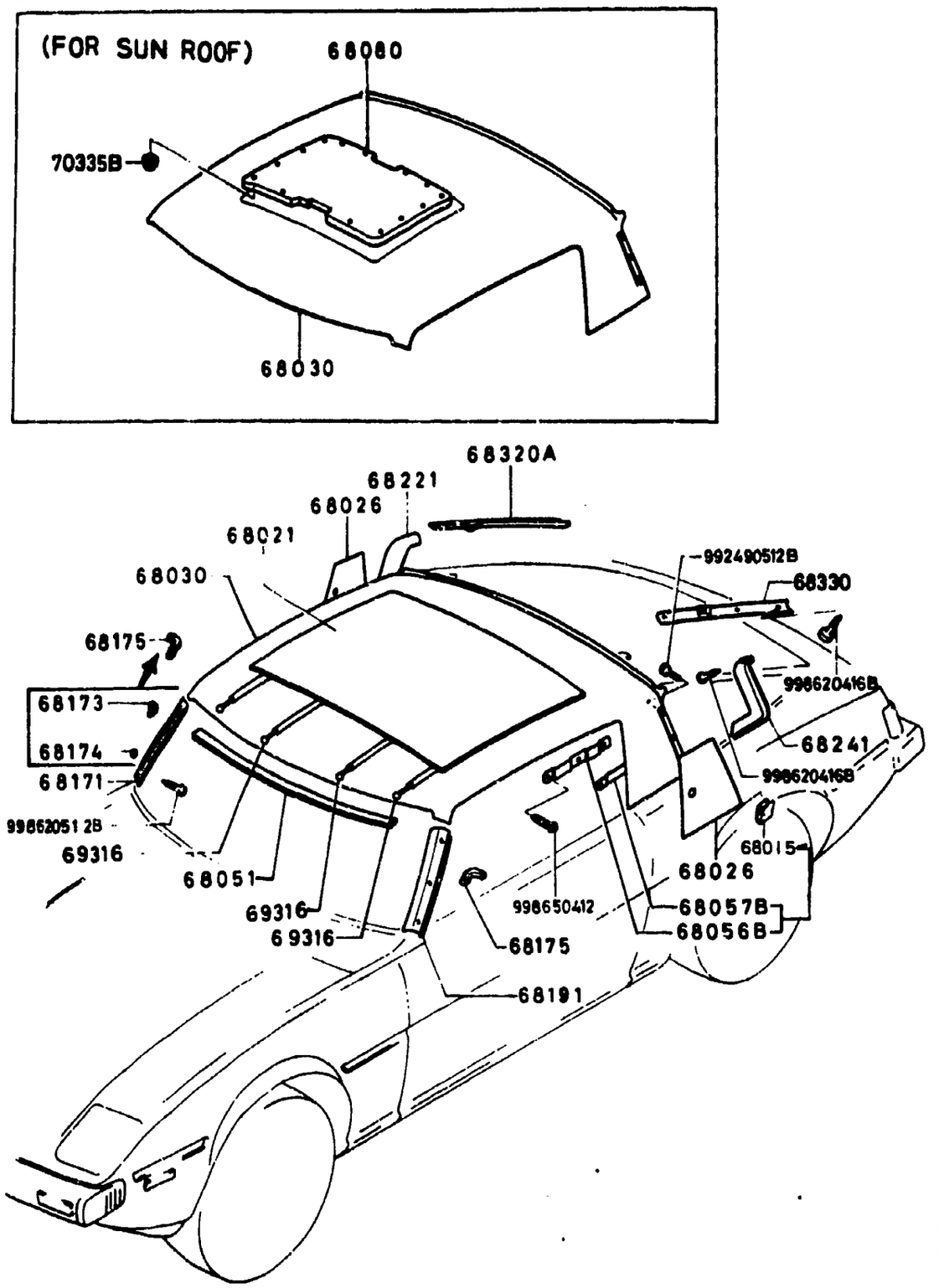


6800A-3 CEILING TRIM

| D-CODE (Key No.) | PART NAME | PART No. | Qty. | MODEL / DESCRIPTION | VIN (Chassis No.) |
|---|---|---|---|---|---|
| 68171 CONT'D | MOLDURA(DER),PILAR DELANT | 8871-68-171A | | | -531148 |
| | BLACK | 00 | | | |
| | WINE | 10 | | | |
| | BROWN | 20 | | | |
| | | 8871-68-171B | 1 | | SA22C .. 531149 -554324 |
| | BLACK | 00 | | | |
| | WINE | 10 | | | |
| | BROWN (SA22C 531149-535838) | 20 | | | |
| | BROWN (SA22C 535839-554324) | 21 | | | |
| | | 8871-68-171C | 1 | | SA22C .. 554325 -619392 |
| | BLACK | 00 | | | |
| | WINE | 10 | | | |
| | BROWN | 21 | | | |
| | BROWN (SA22C 606775-) | 70 | | (SUNROOF ONLY) | |
| | | *8871-68-171D | 1 | | SA22C .. 619393- |
| | BLACK | 00 | | | |
| | WINE | 10 | | | |
| | BROWN | 21 | | | |
| | BROWN | 70 | | (SUNROOF ONLY) | |
| 68173 | SEALER,UPPER | 8871-68-173 | 2 | | SA22C .. |

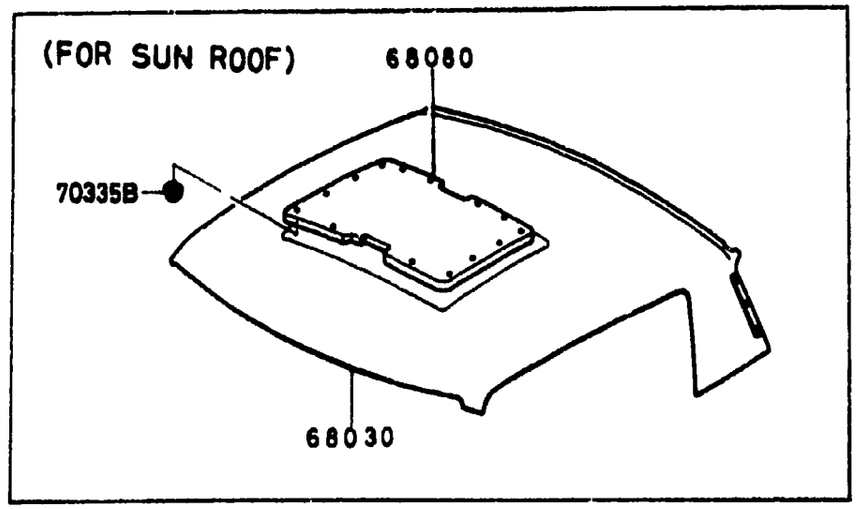


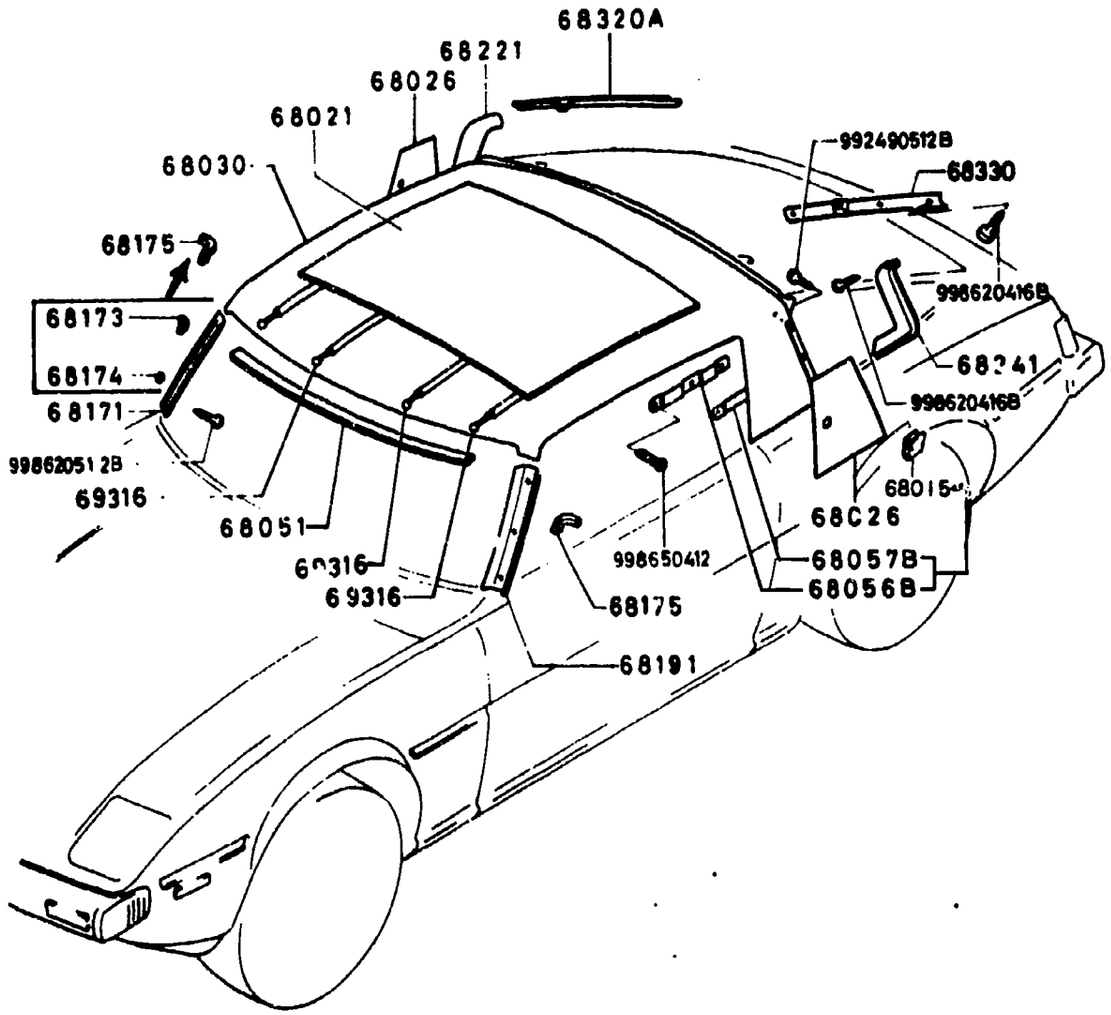


6800A-4 CEILING TRIM

| D-CODE (Key No.) | PART NAME | PART No. | Qty. | MODEL/DESCRIPTION | VIN (Chassis No.) |
|---|---|---|---|---|---|
| 68173 CONT'D | JOINT D'ETANCHEITE SUP. | 8871-68-173 | | | 500001 -520859 |
| 68174 | SEALER,LOWER<br>JOINT D'ETANCHEITE INF. | 8871-68-174 | 2 | | SA22C .. 500001 -520859 |
| 68175 | SEALER | 8871-68-175 | 2 | | SA22C .. 520860- |
| 68191 | TRIM(L),FRT.PILLAR<br>GARNITURE (G), MONTANT AV<br>MOLDURA(IZQ),PILAR DELANT | 8871-68-191A | 1 | | SA22C .. 500001 -531148 |
| | BLACK | 00 | | | |
| | WINE | 10 | | | |
| | BROWN | 20 | | | |
| | | 8871-68-191B | 1 | | SA22C .. 531149 -554324 |
| | BLACK | 00 | | | |
| | WINE | 10 | | | |
| | BROWN<br>(SA22C 531149-535838) | 20 | | | |
| | BROWN<br>(SA22C 535839-554324) | 21 | | | |
| | | 8871-68-191C | 1 | | SA22C .. 554325 -619392 |
| | BLACK | 00 | | | |
| | WINE | 10 | | | |
| | BROWN | 21 | | | |
| | BROWN<br>(SA22C 606775-) | 70 | | (SUNROOF ONLY) | |
| | | *8871-68-191D | 1 | | SA22C .. 619393- |

# 6800A CEILING TRIM

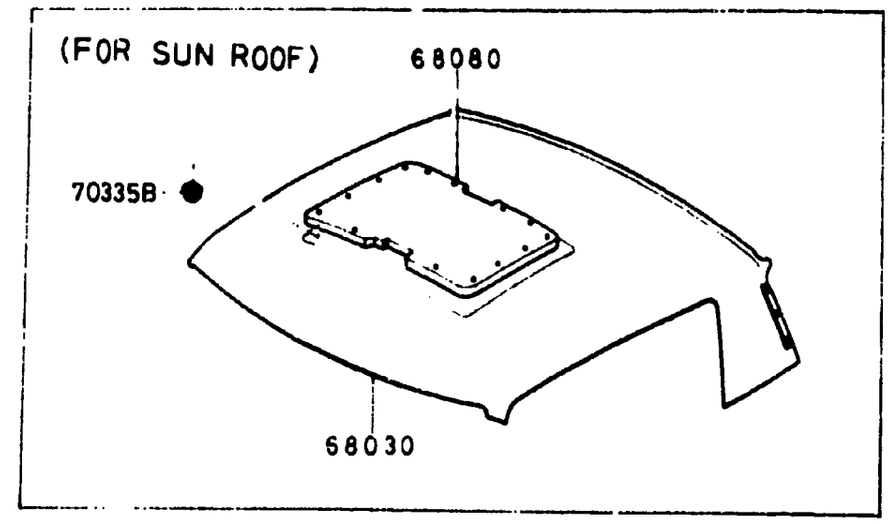


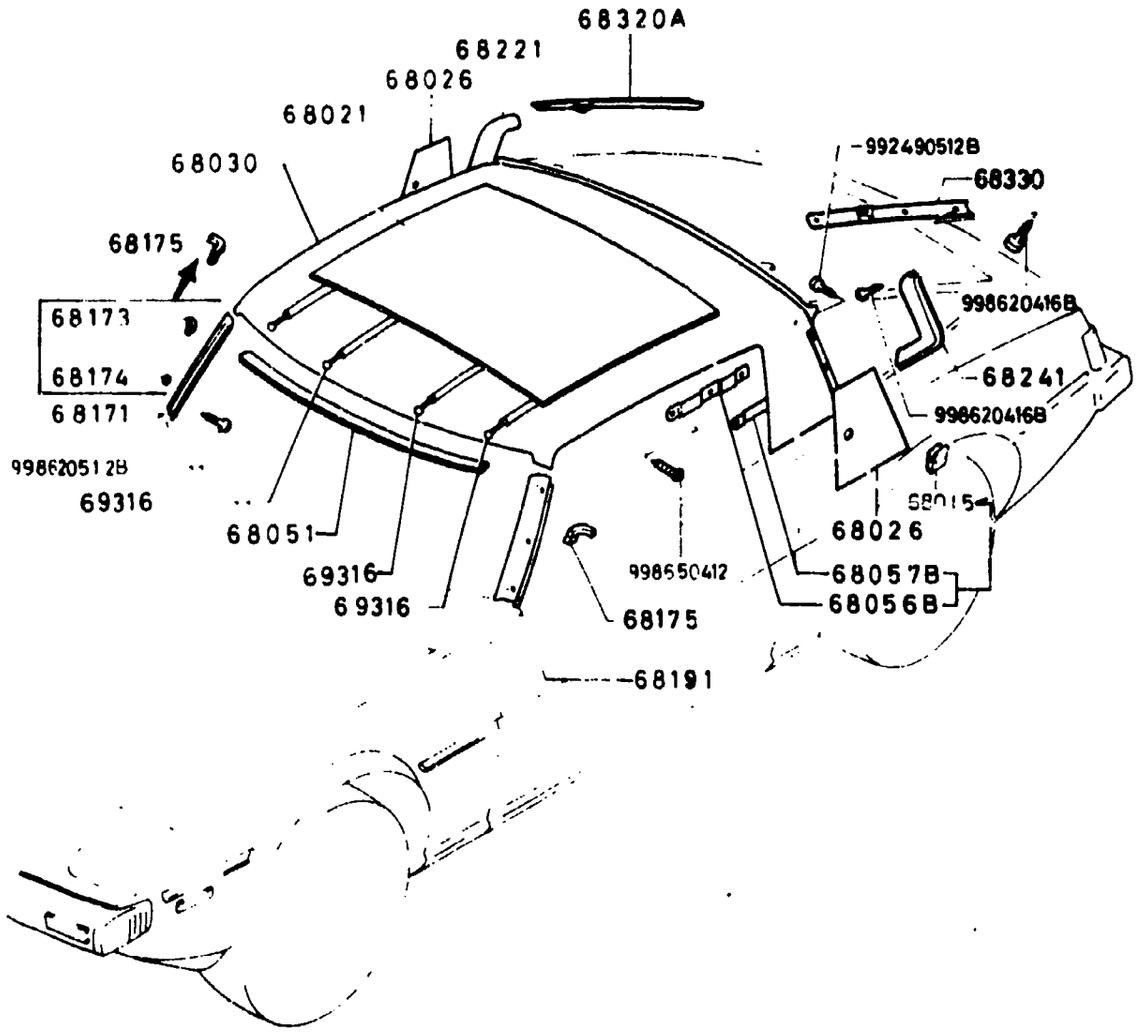


6800A-5 CEILING TRIM

| D-CODE (Key No.) | PART NAME | PART No. | Qty. | MODEL DESCRIPTION | VIN Chassis No. |
|---|---|---|---|---|---|
| 68191 CONT'D | | 8871-68-191D | | | |
| | BLACK | 00 | | | |
| | WINE | 10 | | | |
| | BROWN | 21 | | | |
| | BROWN | 70 | | (SUNROOF ONLY) | |
| 68221 | TRIM(R),CTR.PILLAR GARNITURE (D), MONTANT C. MOLDURA(DER),(CENTRO)PIL.A | 8871-68-221 | 1 | | SA22C .. 500001 -559739 |
| | BLACK | 00 | | | |
| | WINE | 10 | | | |
| | BROWN (SA22C 500001-535838) | 20 | | | |
| | BROWN (SA22C 535839-559739) | 21 | | | |
| | | 8871-68-221A | 1 | | SA22C .. 559740- |
| | BLACK | 00 | | | |
| | WINE | 10 | | | |
| | BROWN | 21 | | | |
| | BROWN (SA22C 606775-) | 70 | | (SUNROOF ONLY) | |
| 68241 | TRIM(L),CTR.PILLAR GARNITURE (G), MONTANT C. MOLDURA (IZQ),(CENTRO)PIL | 8871-68-241 | 1 | | SA22C .. 500001 -559739 |
| | BLACK | 00 | | | |
| | WINE | 10 | | | |
| | BROWN (SA22C 500001-535838) | 20 | | | |

# 6800A CEILING TRIM

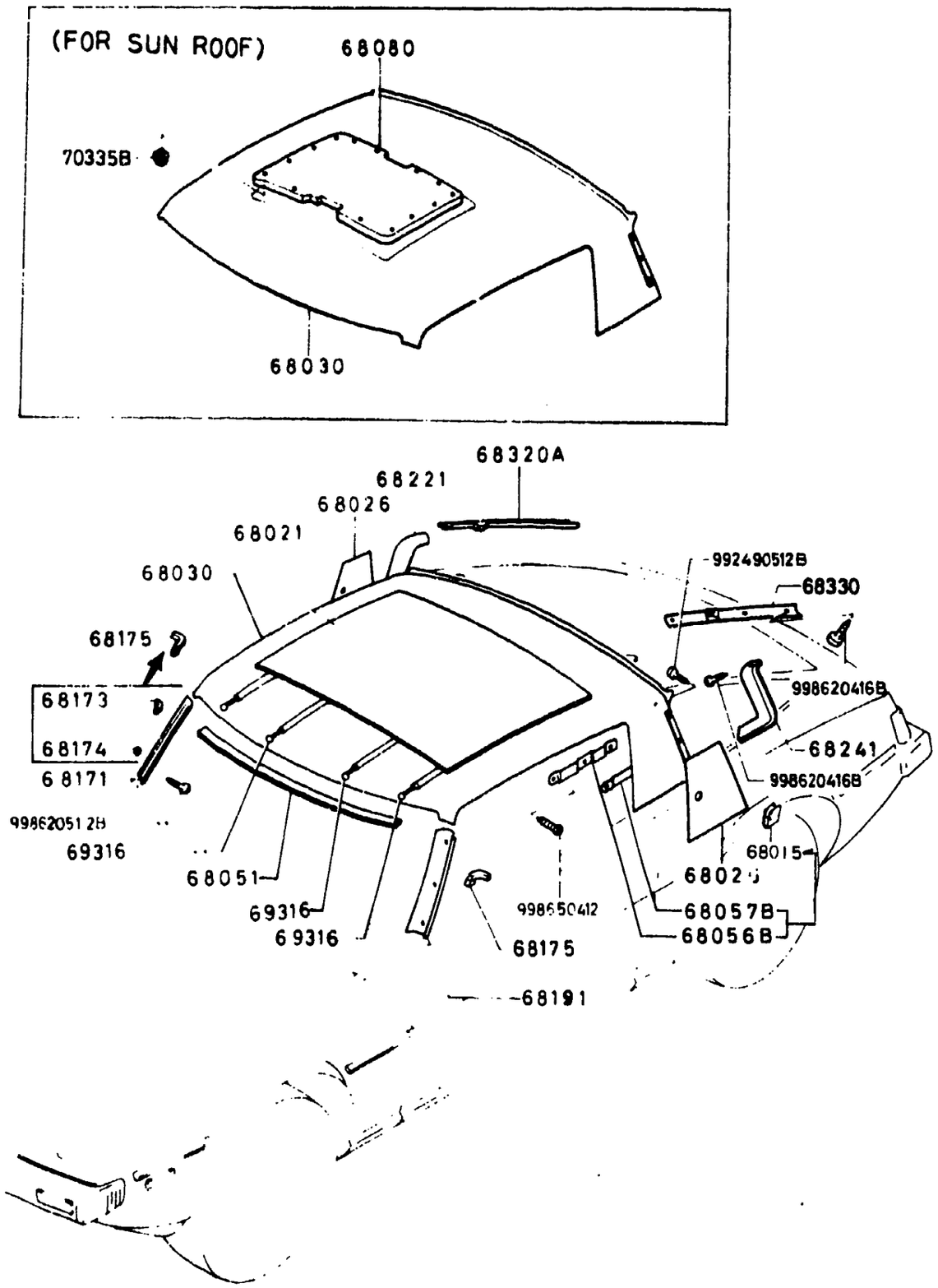


6800A-6 CEILING TRIM

| D-CODE (Key No.) | PART NAME | PART No. | Qty. | MODEL DESCRIPTION | VIN (Chassis No.) |
|---|---|---|---|---|---|
| 68241 CONT'D | | 8871-68-241 | | | |
| | BROWN (SA22C 535839-559739) | 21 | | | |
| | | 8871-68-241A | 1 | | SA22C .. 559740- |
| | BLACK | 00 | | | |
| | WINE | 10 | | | |
| | BROWN | 21 | | | |
| | BROWN (SA22C 606775-) | 70 | | (SUNROOF ONLY) | |
| 68320A | TRIM(R),REAR PILLAR GARNITURE (D), MONTANT AR MOLDURA(DER),LUNETA TRAS. | 8871-68-271 | 1 | | SA22C .. 500001 -559739 |
| | BLACK | 00 | | | |
| | WINE | 10 | | | |
| | BROWN (SA22C 500001-535838) | 20 | | | |
| | BROWN (SA22C 535839-559739) | 21 | | | |
| | | 8871-68-271A | 1 | | SA22C .. 559740- |
| | BLACK | 00 | | | |
| | WINE | 10 | | | |
| | BROWN | 21 | | | |
| | BROWN (SA22C 606775-) | 70 | | (SUNROOF ONLY) | |
| 68330 | TRIM(L),REAR PILLAR GARNITURE (G), MONTANT AR MOLDURA(IZQ),PILAR TRASER | 8871-68-291 | 1 | | SA22C .. 500001 -559739 |
| | BLACK | 00 | | | |

# 6800A CEILING TRIM

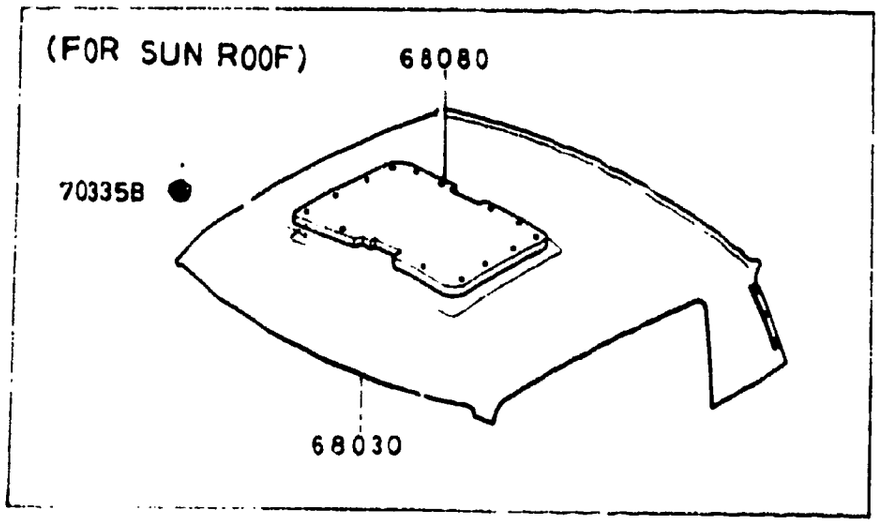


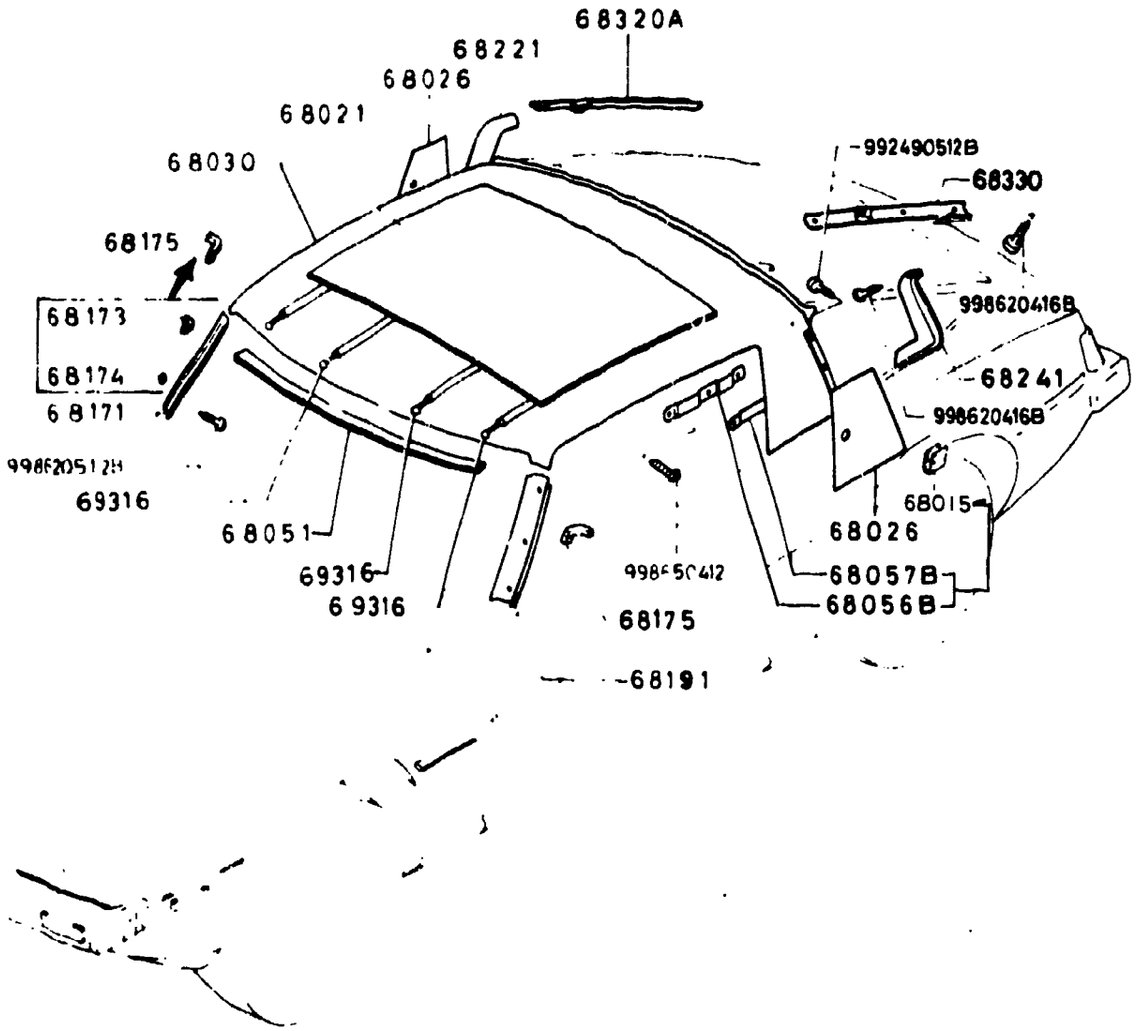


6800A-7* CEILING TRIM

| D-CODE (Key No.) | PART NAME | PART No. | Qty. | MODEL DESCRIPTION | VIN Chassis No. |
|---|---|---|---|---|---|
| 68330 CONT'D | | 8871-68-291 | | | |
| | WINE | 10 | | | |
| | BROWN (SA22C 500001-535838) | 20 | | | |
| | BROWN (SA22C 535839-559739) | 21 | | | |
| | | 8871-68-291A | 1 | | SA22C .. 559740- |
| | BLACK | 00 | | | |
| | WINE | 10 | | | |
| | BROWN | 21 | | | |
| | BROWN (SA22C 606775-) | 70 | | (SUNROOF ONLY) | |
| 69316 | RUBBER,LISTING WIRE CAOUTCHOUC | 0203-69-316 | 4 | STANDARD ROOF | |
| 70335B | CLIP,D.TOP CEILING CLIPS | 0305-70-335 | 17 | SUNROOF | |

# 6840A TRIM & SCUFF PLATE

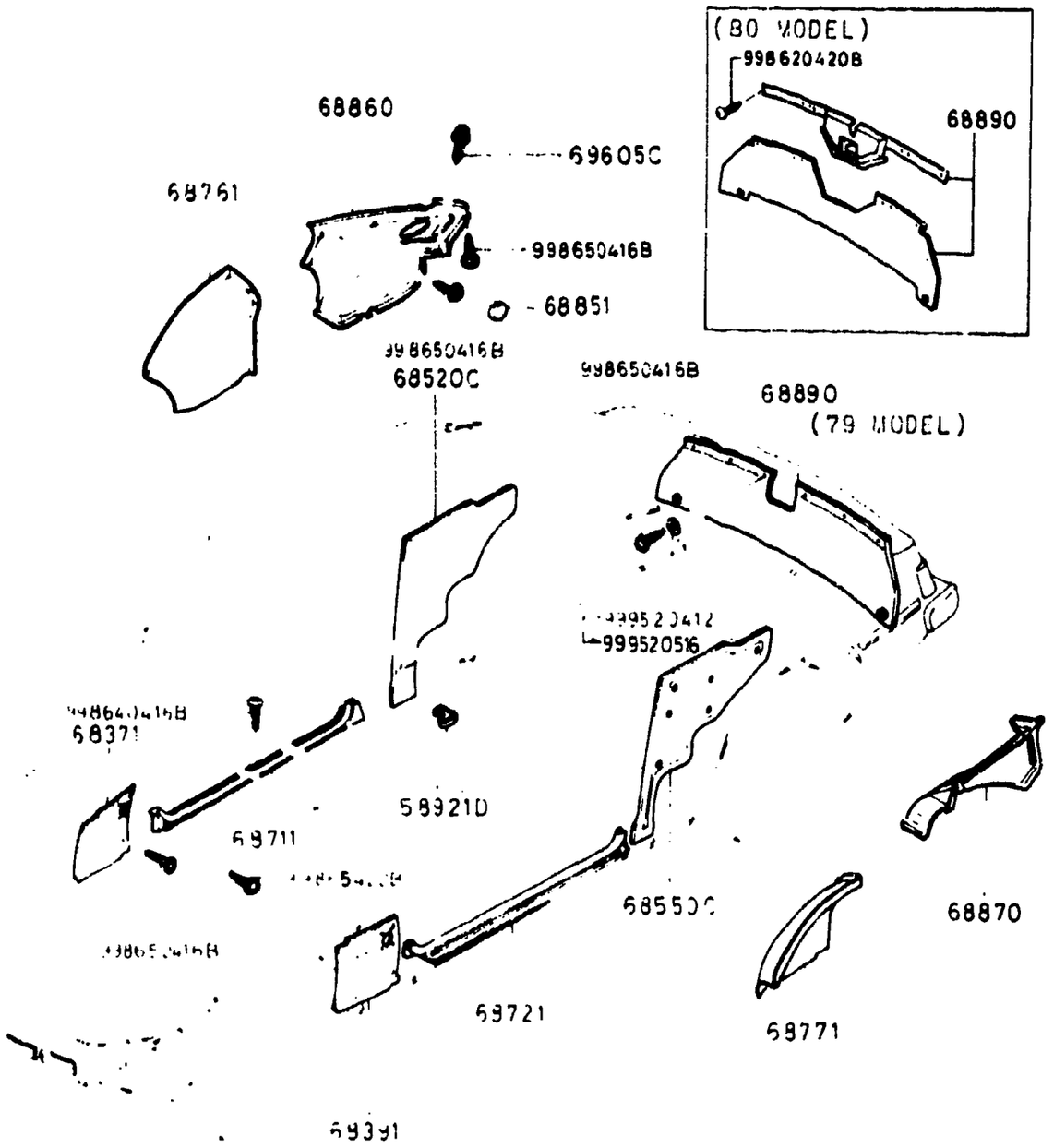


6840A-1 TRIM & SCUFF PLATE

| D-CODE (Key No.) | PART NAME | PART No. | Qty. | MODEL DESCRIPTION | VIN Chassis No. |
|---|---|---|---|---|---|
| 58921D | FASTENER<br>AGRAFE<br>SOPORTE | 0208-58-921 | 12 | | |
| 68371 | TRIM(R),FRONT SIDE<br>GARNITURE (D), COTE AV.<br>MOLDURA(DER),LADO DELANT. | 8871-68-370 | 1 | (USE W/SPEAKER) | SA22C ..<br>500001<br>-525593 |
| | BLACK | 00 | | | |
| | WINE | 10 | | | |
| | BROWN | 20 | | | |
| | | 8871-68-370B | 1 | (USE W/SPEAKER) | SA22C ..<br>525594<br>-559739 |
| | BLACK | 00 | | | |
| | WINE | 10 | | | |
| | BROWN<br>(SA22C 525594-535838) | 20 | | | |
| | BROWN<br>(SA22C 535839-559739) | 21 | | | |
| | | 8871-68-370C | 1 | (USE W/SPEAKER) | SA22C ..<br>559740- |
| | BLACK | 00 | | | |
| | WINE | 10 | | | |
| | BROWN | 21 | | | |
| | BROWN<br>(SA22C 606775-) | 70 | | (SUNROOF ONLY) | |
| | | 8872-68-370 | 1 | (USE W/O SPEAKER) | SA22C ..<br>500001<br>-525593 |
| | BLACK | 00 | | | |

# 6840A TRIM & SCUFF PLATE

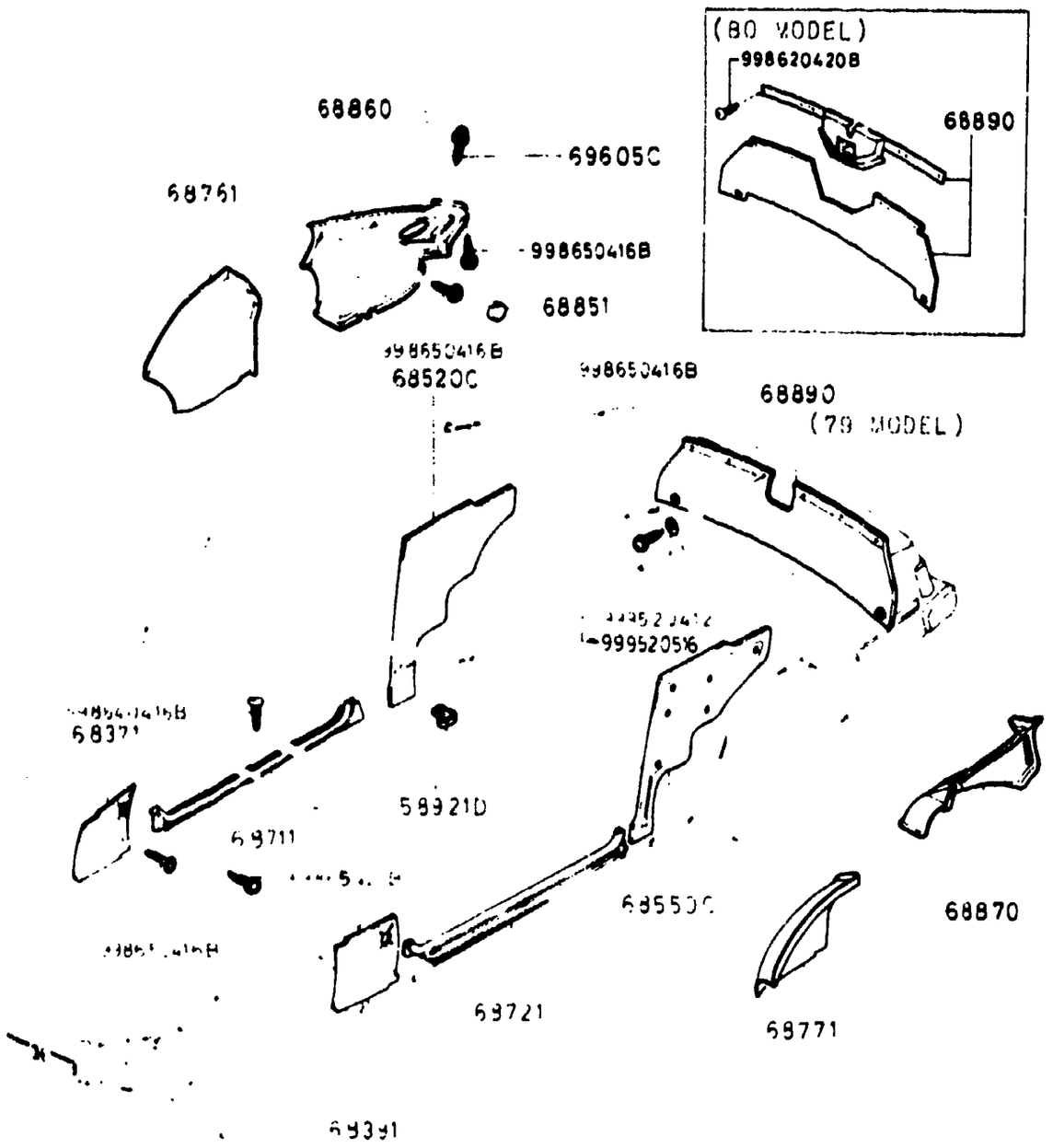


6840A-2 TRIM & SCUFF PLATE

| D·CODE (Key No.) | PART NAME | PART No. | Qty. | MODEL DESCRIPTION | VIN (Chassis No.) |
|---|---|---|---|---|---|
| 68371 CONT'D | | 8872-68-370 | | | |
| | WINE | 10 | | | |
| | BROWN | 20 | | | |
| | | 8872-68-370B | 1 | (USE W/O SPEAKER) | SA22C .. 525594 -559739 |
| | BLACK | 00 | | | |
| | WINE | 10 | | | |
| | BROWN (SA22C 525594-535838) | 20 | | | |
| | BROWN (SA22C 535839-559739) | 21 | | | |
| | | 8872-68-370C | 1 | (USE W/O SPEAKER) | SA22C .. 525594- |
| | BLACK | 00 | | | |
| | WINE | 10 | | | |
| | BROWN | 21 | | | |
| | BROWN (SA22C 606775-) | 70 | | (SUNROOF ONLY) | |
| 68391 | TRIM(L),FRONT SIDE GARNITURE (G), COTE AV. MOLDURA(IZQ),LADO DELANT. | 8871-68-390 | 1 | (USE w/SPEAKER) | SA22C .. 525594 -559739 |
| | BLACK | 00 | | | |
| | WINE | 10 | | | |
| | BROWN | 20 | | | |
| | | 8871-68-390B | 1 | (USE w/SPEAKER) | SA22C .. 525594 |

# 6840A TRIM & SCUFF PLATE

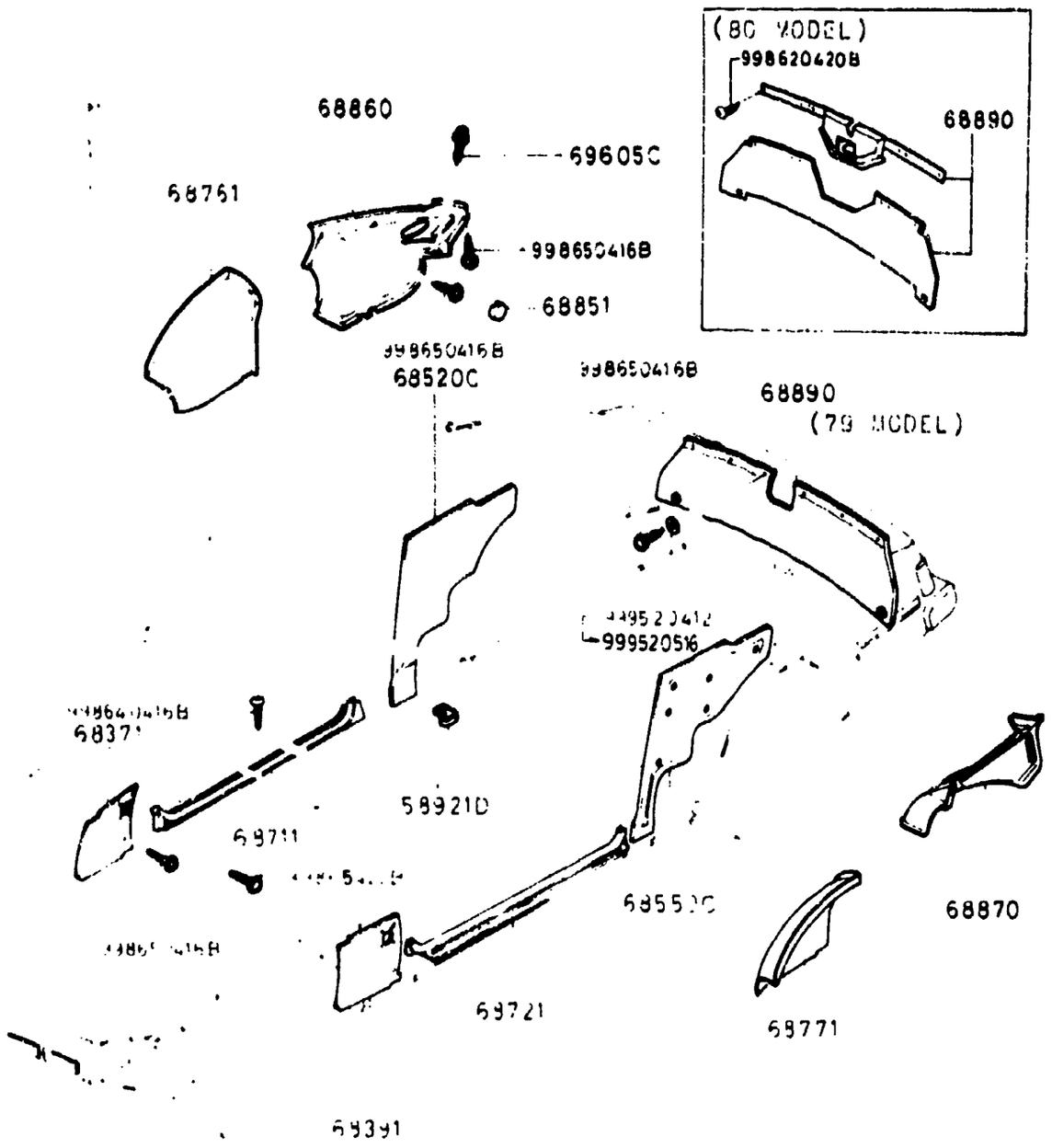


6840A-3 TRIM & SCUFF PLATE

| D-CODE (Key No.) | PART NAME | PART No. | Qty. | MODEL DESCRIPTION | VIN Chassis No. |
|---|---|---|---|---|---|
| 68391 CONT'D | | 8871-68-390B | | | -624202 |
| | BLACK | 00 | | | |
| | WINE | 10 | | | |
| | BROWN (SA22C 525594-535838) | 20 | | | |
| | BROWN (SA22C 535839-624202) | 21 | | | |
| | BROWN (SA22C 606775-624202) | 70 | | (SUNROOF ONLY) | |
| | <A>* | 8871-68-390C | 1 | (USE W/SPEAKER) | SA22C .. 624203- |
| | BLACK | 00 | | | |
| | WINE | 10 | | | |
| | BROWN | 21 | | | |
| | BROWN | 70 | | (SUNROOF ONLY) | |
| | | 8872-68-390 | 1 | (USE W/O SPEAKER) | SA .. 1 - |
| | BLACK | 00 | | | |
| | WINE | 10 | | | |
| | BROWN | 20 | | | |
| | | 8872-68-390B | 1 | (USE W/O SPEAKER) | SA .. 624202 |
| | BLACK | 00 | | | |
| | WINE | 10 | | | |

# 6840A TRIM & SCUFF PLATE

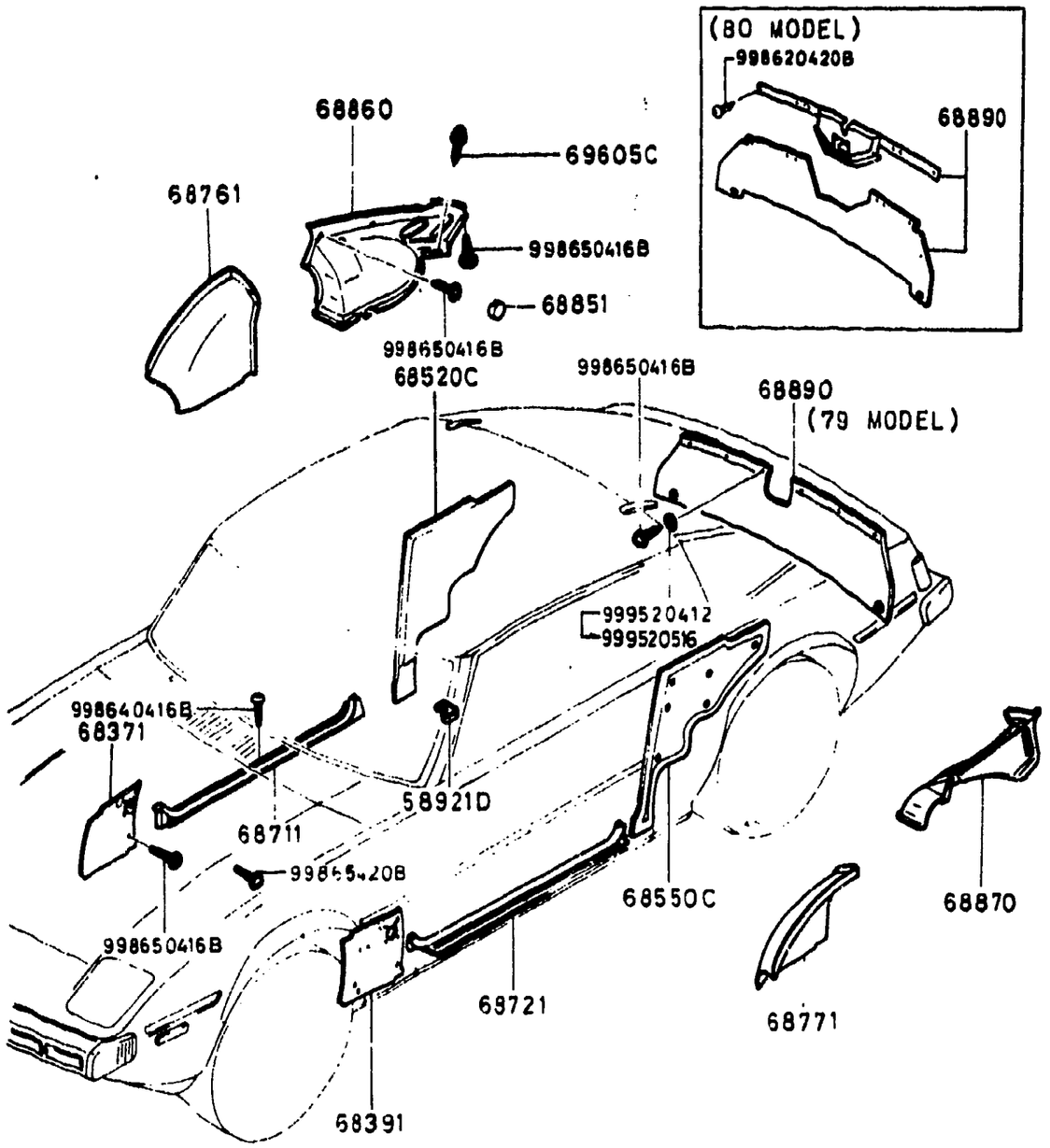


6840A-4 TRIM & SCUFF PLATE

| D-CODE (Key No.) | PART NAME | PART No. | Qty. | MODEL/DESCRIPTION | VIN (Chassis No.) |
|---|---|---|---|---|---|
| 68391 CONT'D | | 8872-68-390B | | | |
| | BROWN (SA22C 525594-535838) | 20 | | | |
| | BROWN (SA22C 535839-624202) | 21 | | | |
| | BROWN (SA22C 606775-624202) | 70 | | (SUNROOF ONLY) | |
| | <A> | *8872-68-390C | 1 | (USE W/O SPEAKER) | SA22C .. 624203- |
| | BLACK | 00 | | | |
| | WINE | 10 | | | |
| | BROWN | 21 | | | |
| | BROWN | 70 | | (SUNROOF ONLY) | |
| 68520C | TRIM(R),QUARTER GARNITURE D DEFLECTEUR | 8871-68-520 | 1 | | SA22C .. 500001 -611387 |
| | BLACK (SA22C 500001-535838) | 00 | | | |
| | BLACK (SA22C 535839-611387) | 04 | | | |
| | WINE (SA22C 500001-535838) | 12 | | | |
| | WINE (SA22C 535839-611387) | 14 | | | |
| | BROWN (SA22C 500001-535838) | 22 | | | |
| | BROWN (SA22C 535839-611387) | 24 | | | |
| | BROWN (SA22C 606775-611387) | 70 | | (SUNROOF ONLY) | |
| | <A> | *8871-68-520A | 1 | | SA22C .. 611388- |
| | BLACK | 04 | | | |

# 6840A TRIM & SCUFF PLATE

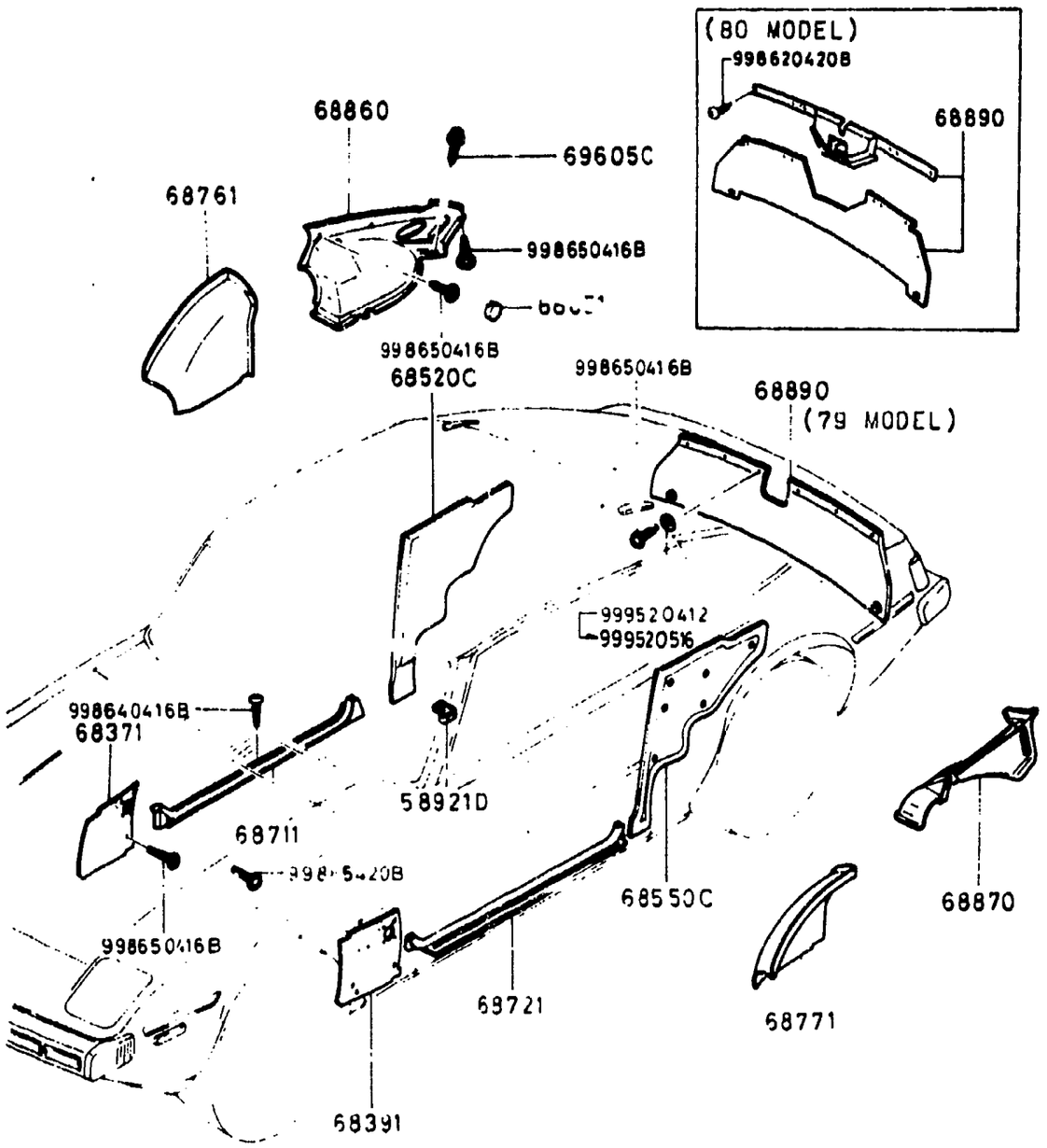


6840A-5 TRIM & SCUFF PLATE

| D-CODE (Key No.) | PART NAME | PART No. | Qty. | MODEL / DESCRIPTION | VIN (Chassis No.) |
|---|---|---|---|---|---|
| 68520C CONT'D | | 8871-68-520A | | | |
| | WINE | 14 | | | |
| | BROWN | 24 | | | |
| | BROWN | 70 | | (SUNROOF ONLY) | |
| 68550C | TRIM(L),QUARTER GARNITURE G DEFLECTEUR | 8871-68-550 | 1 | | SA22C .. 500001 -611387 |
| | BLACK (SA22C 500001-535838) | 00 | | | |
| | BLACK (SA22C 535839-611387) | 04 | | | |
| | WINE (SA22C 500001-535838) | 12 | | | |
| | WINE (SA22C 535839-611387) | 14 | | | |
| | BROWN (SA22C 500001-535838) | 22 | | | |
| | BROWN (SA22C 535839-611387) | 24 | | | |
| | BROWN (SA22C 606775-611387) | 70 | | (SUNROOF ONLY) | |
| | <A>*8871-68-550A | | 1 | | SA22C .. 611388- |
| | BLACK | 04 | | | |
| | WINE | 14 | | | |
| | BROWN | 24 | | | |
| | BROWN | 70 | | (SUNROOF ONLY) | |
| 68711 | PLATE(R),FRONT SCUFF PROTECTEUR AV.(D),BAS DE PLACA BISELADA DELANTERA | 8871-68-711 | 1 | | |
| | BLACK | 00 | | | |

# SECTION NUMBER INDEX (BODY)

| STARTING LOCATION | SECTION No. | SECTION NAME |
|---|---|---|
| 3–C2 | 0900A | KEY SETS |
| 3–C3 | 5000A | FRONT BUMPER & GRILLE |
| 3–E3 | 5010A | REAR BUMPER |
| 3–G3 | 5030A | WINDOW MOULDINGS |
| 3–I3 | 5040A | BODY MOULDINGS |
| 3–C4 | 5100A | LAMPS (FRONT & SIDE) |
| 3–G4 | 5110A | LAMPS (REAR) |
| 3–I4 | 5130A | OVERHEAD CONSOLE (1979 STANDARD ROOF MODEL) |
| 3–J4 | 5170A | COWL & EXTRACTOR GRILLES & ORNAMENTS |
| 3–C5 | 5230A | BONNET |
| 3–E5 | 5310A | BODY PANELS (FRONT) |
| 3–K5 | 5340A | BODY PANELS (SIDE & ROOF) |
| 3–I6 | 5360A | BODY PANELS (FLOOR) |
| 3–C7 | 5500A | DASHBOARD EQUIPMENT |
| 3–L7 | 5540A | METERS |
| 3–D8 | 5560A | DASHBOARD & RELATED |
| 3–L8 | 5570A | CONSOLE |
| 3–K9 | 5580A | VENTILATOR |
| 3–C10 | 5700A | SEAT (EXCEPT LEATHER TRIM) |
| 3–N10 | 5710A | SEAT TRIM (LEATHER – ANNIVERSARY EDITION) |
| 3–G11 | 5760A | SEAT BELTS |
| 3–C12 | 5800A | FRONT DOOR |
| 3–C13 | 5830A | FRONT DOOR MECHANISMS |
| 3–C14 | 6100A | HEATER |
| 3–E14 | 6110A | HEATER UNIT |
| 3–H14 | 6115A | HEATER CONTROLS |
| 3–J14 | 6120A | HEATER BLOWER |
| 3–C15 | 6230A | BACK DOOR MECHANISMS |
| 3–F15 | 6300A | WINDOW GLASSES |
| 3–I15 | 6330A | SUNROOF |
| 3–C16 | 6600A | ELECTRIC EQUIPMENT |
| 3–G16 | 6680A | RADIO & STEREO SYSTEMS |
| 4–C2 | 6700A | WIRE HARNESS & CLAMPS |
| 4–G2 | 6720A | WINDSHIELD WASHER |
| 4–H2 | 6730A | WINDSHIELD WIPER |
| 4–J2 | 6740A | WIPER MOTOR (COMPONENTS ONLY) |
| 4–C3 | 6800A | CEILING TRIM |
| 4–J3 | 6840A | TRIM & SCUFF PLATE |
| 4–F4 | 6860A | FLOOR MAT & PADS |
| 4–L4 | 6870A | SERVICE TOOLS |
| 4–M4 | 6900A | VISOR, ASSIST HANDLE & MIRRORS |
| 4–G5 | 6930A | CAUTION PLATES |

THE FRAMES IN THIS COLUMN INDICATE :

| | | |
|---|---|---|
| 4---J3 | 6840A | TRIM & SCUFF PLATE |
| 4---F4 | 6860A | FLOOR MAT & PADS |
| 4---L4 | 6870A | SERVICE TOOLS |
| 4---M4 | 6900A | VISOR, ASSIST HANDLE & MIRRORS |

© 1983 Toyo Kogyo Co., Ltd.
MAY 1983

# 6840A TRIM & SCUFF PLATE

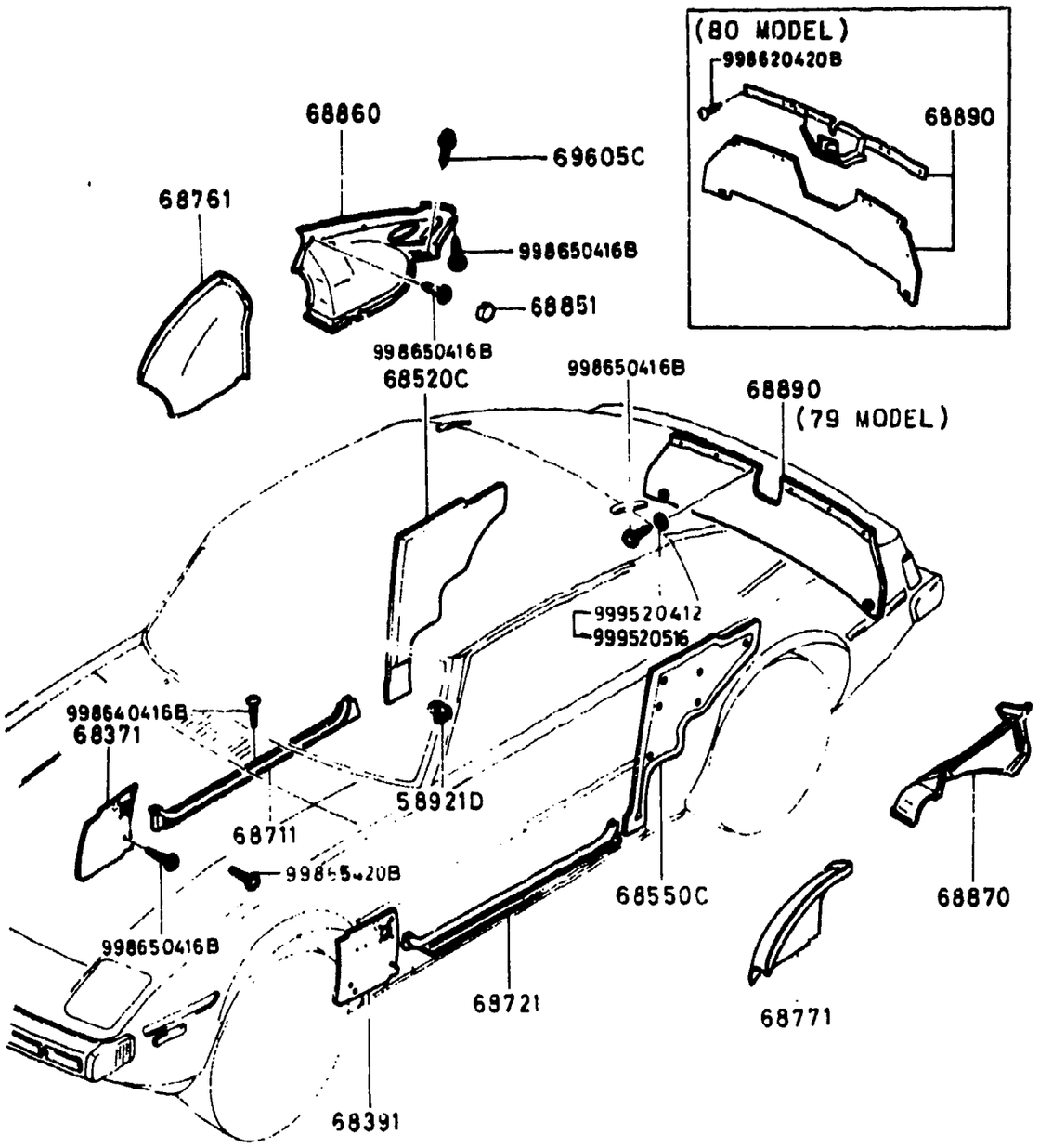


6840A-6 TRIM & SCUFF PLATE

| D-CODE (Key No.) | PART NAME | PART No. | Qty. | MODEL / DESCRIPTION | VIN (Chassis No.) |
|---|---|---|---|---|---|
| 68721 | PLATE(L),FRONT SCUFF<br>PROTECTEUR AV.(G),BAS DE<br>PLACA BISELADA DELANTERA | 8871-68-721 | 1 | | |
| | BLACK | 00 | | | |
| 68761 | TRIM(R),TIRE HOUSE<br>GARNITURE D | 8871-68-770 | 1 | | |
| | BLACK | 00 | | | |
| | WINE | 10 | | | |
| | BROWN<br>(SA22C 500001-535838) | 20 | | | |
| | BROWN<br>(SA22C 535839-) | 21 | | | |
| | BROWN<br>(SA22C 606775-) | 70 | | (SUNROOF ONLY) | |
| 68771 | TRIM(L),TIRE HOUSE<br>GARNITURE G | 8871-68-790 | 1 | | |
| | BLACK | 00 | | | |
| | WINE | 10 | | | |
| | BROWN<br>(SA22C 500001-535838) | 20 | | | |
| | BROWN<br>(SA22C 535839-) | 21 | | (SUNROOF ONLY) | |
| | BROWN<br>(SA22C 606775-) | 70 | | | |
| 68851 | CAP,TRUNK SIDE<br>BOUCHON | 8871-68-851 | 4 | | |
| | BLACK | 00 | | | |
| | WINE | 10 | | | |
| | BROWN<br>(SA22C 500001-535838) | 20 | | | |

# 6840A TRIM & SCUFF PLATE

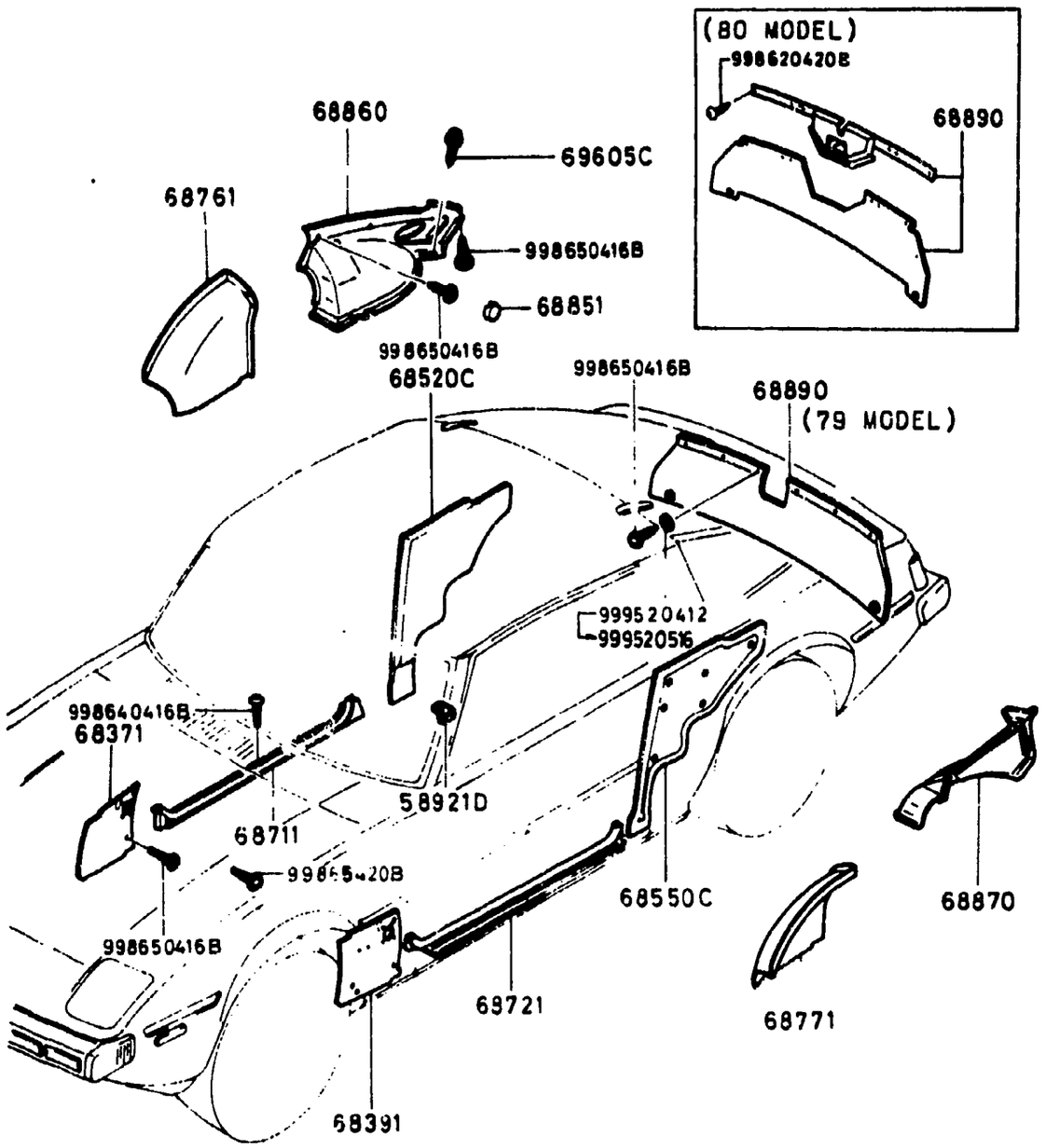


6840A-7 TRIM & SCUFF PLATE

| D-CODE (Key No.) | PART NAME | PART No. | Qty. | MODEL/DESCRIPTION | VIN (Chassis No.) |
|---|---|---|---|---|---|
| 68851 CONT'D | | 8871-68-851 | | | |
| | BROWN (SA22C 535839-) | 23 | | | |
| | BROWN (SA22C 606775-) | 70 | | (SUNROOF ONLY) | |
| 68860 | TRIM(R),TRUNK SIDE GARNITURE (D), COTE COFFR MOLDURA(DER),LADO MALETER | 8871-68-861 | 1 | | |
| | BLACK | 00 | | | |
| | WINE | 10 | | | |
| | BROWN (SA22C 500001-535838) | 20 | | | |
| | BROWN (SA22C 535839-) | 23 | | | |
| | BROWN (SA22C 606775-) | 70 | | (SUNROOF ONLY) | |
| 68870 | TRIM(L),TRUNK SIDE GARNITURE (G), COTE COFFR MOLDURA(IZQ),LADO MALETER | 8871-68-871 | 1 | | |
| | BLACK | 00 | | | |
| | WINE | 10 | | | |
| | BROWN (SA22C 500001-535838) | 20 | | | |
| | BROWN (SA22C 535839-) | 23 | | | |
| | BROWN (SA22C 606775-) | 70 | | (SUNROOF ONLY) | |
| 68890 | TRIM,TRUNK END GARNITURE DE COIN, COFFRE MOLDURA,FINAL MALETERO | 8341-68-890 | 1 | 80 MODEL | SA22C ... 568501- |
| | BLACK | 00 | | | |
| | WINE | 10 | | | |
| | BROWN | 20 | | | |

# 6840A TRIM & SCUFF PLATE

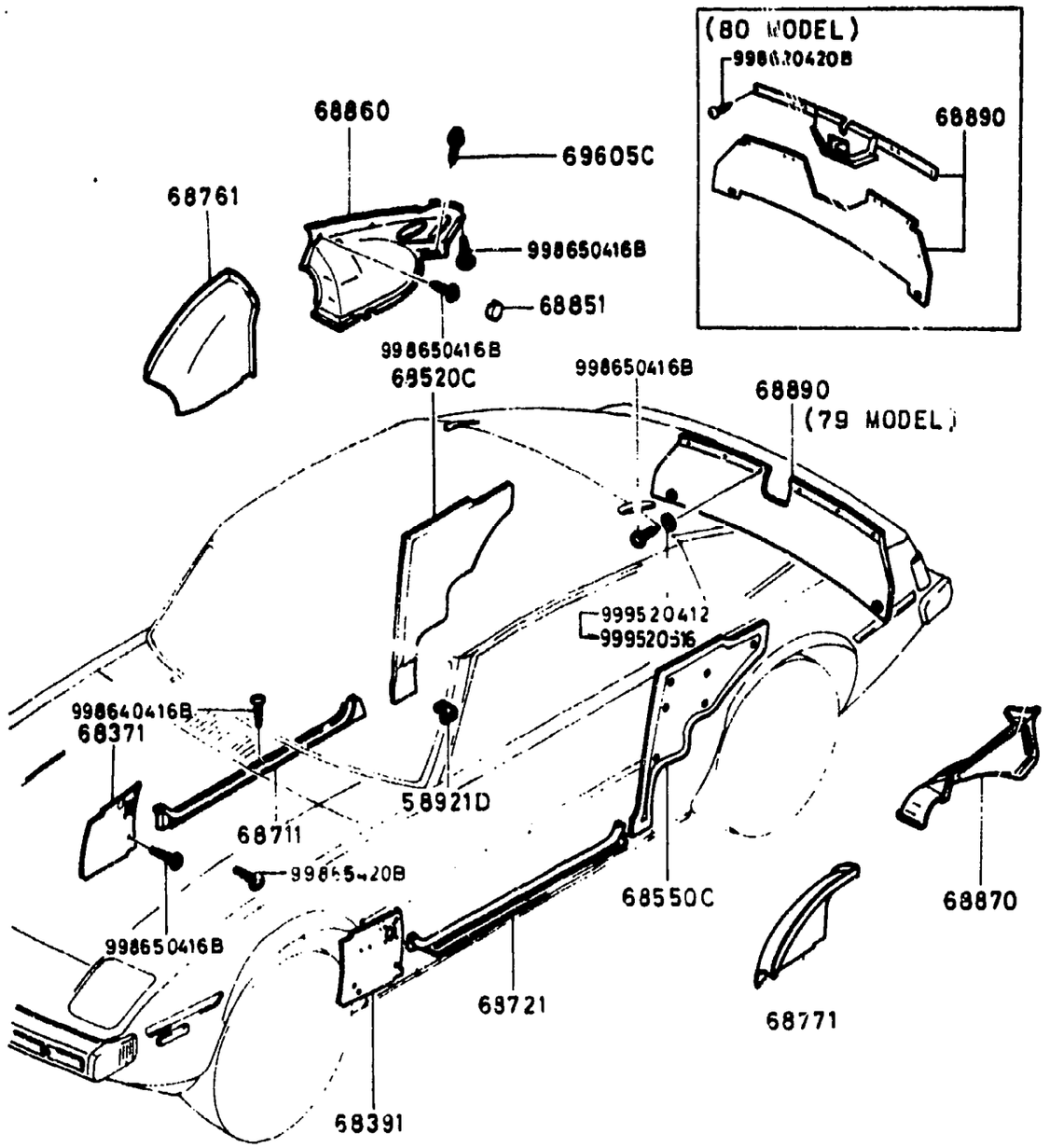


6840A-8★ TRIM & SCUFF PLATE

| D-CODE (Key No.) | PART NAME | PART No. | Qty. | MODEL/DESCRIPTION | VIN (Chassis No.) |
|---|---|---|---|---|---|
| 68890 CONT'D | | 8341-68-890 | | | |
| | BROWN (SA22C 606775-) | 70 | | (SUNROOF ONLY) | |
| | | 8871-68-891A | 1 | 79 MODEL | SA22C .. 500001 -501213 |
| | BLACK | 77 | | | |
| | WINE | 81 | | | |
| | BROWN | 85 | | | |
| | | 8871-68-891B | 1 | 79 MODEL | SA22C .. 501214 -568500 |
| | BLACK (SA22C 535839-568500) | 00 | | | |
| | WINE (SA22C 535839-568500) | 10 | | | |
| | BROWN (SA22C 535839-568500) | 20 | | | |
| | BLACK (SA22C 501214-535838) | 77 | | | |
| | WINE (SA22C 501214-535838) | 81 | | | |
| | BROWN (SA22C 501214-535838) | 85 | | | |
| 69605C | HOOK, TRIM AGRAFE GARNITURE | 0187-69-605 | 2 | | SA22C .. 500001 -589267 |
| | | 8871-68-855 | 2 | | SA22C .. 589268- |

## 6860A FLOOR MAT & PADS

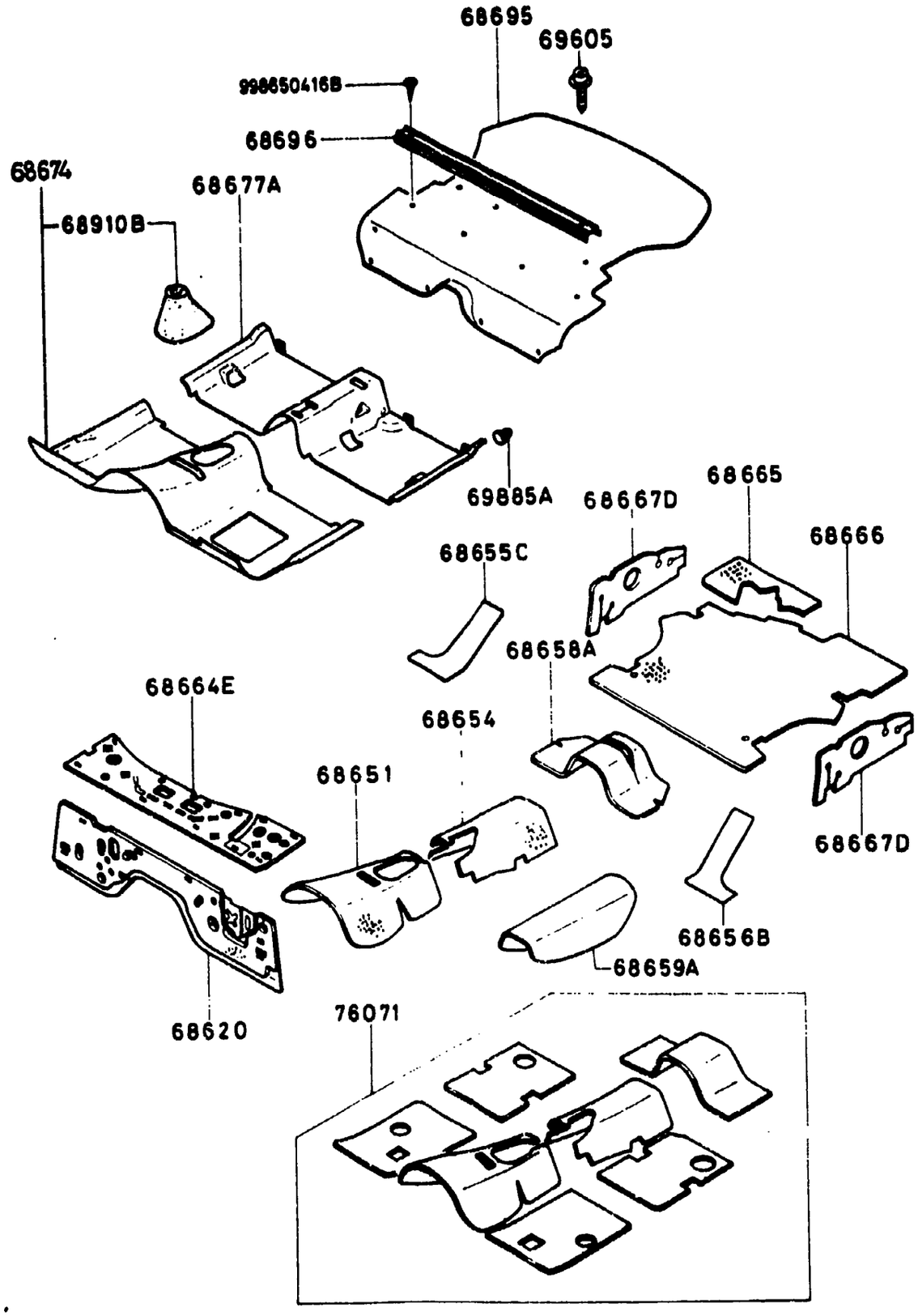


6860A-1 FLOOR MAT & PADS

| D-CODE (Key No.) | PART NAME | PART No. | Qty. | MODEL/DESCRIPTION | VIN (Chassis No.) |
|---|---|---|---|---|---|
| 68620 | INSULATOR,DASHBOARD<br>ISOLATEUR, TABLEAU DE BOR<br>AISLAD. TABLERO INSTRUMEN | 8871-68-620 | 1 | | SA22C ..<br>500001<br>-520637 |
| | <A > | 8871-68-620A | 1 | | SA22C ..<br>520638- |
| 68651 | PAD(C),FLOOR-FRONT<br>FIBRANNE (C) DE PLANCHER<br>TACO DE GOMA PISO DELANTE | 8871-68-651 | 1 | | |
| 68654 | PAD(C),FLOOR-REAR<br>FIBRANNE (C) DE PLANCHER<br>TACO DE GOMA PISO TRAS. ( | 8871-68-654 | 1 | | |
| 68655C | PAD(R),STRAGE SIDE<br>PANNEAU(D) | 8871-68-655 | 1 | | |
| 68656B | PAD(L),STRAGE SIDE<br>PANNEAU(G) | 8871-68-656 | 1 | | |
| 68658A | PAD,STRAGE BOX<br>TAMPON | 8871-68-658 | 1 | | |
| 68659A | PAD,KICK UP REINF.<br>TAMPON | 8871-68-659 | 2 | | |
| 68664E | INSULATOR,DASH UP.<br>ISOLANT | 8871-68-664 | 1 | | SA22C ..<br>500001<br>-547088 |
| | | 8871-68-664A | 1 | | SA22C ..<br>547089<br>-624202 |
| | <A > | *8871-68-664B | 1 | | SA22C ..<br>624203- |
| 68665 | PAD(R),FLOOR-TRUNK<br>FIBRANNE DE PLANCHER (D)<br>TACO DE GOMA PISO DERECHO | 8871-68-665 | 1 | | SA22C ..<br>500001<br>-547088 |
| 68666 | PAD(L),FLOOR-TRUNK<br>FIBRANNE DE PLANCHER (G)<br>TACO DE GOMA PISO (C) | 8871-68-666 | 1 | | |
| 68667D | PAD,TRUNK SIDE<br>FIBRANNE COFFRE | 8871-68-667 | 2 | | |
| 68674 | MAT,FRONT FLOOR<br>TAPIS AVANT<br>ALFOMBRA DELANTERA | 8871-68-671 | 1 | | SA22C ..<br>500001<br>-525593 |

# 6860A FLOOR MAT & PADS

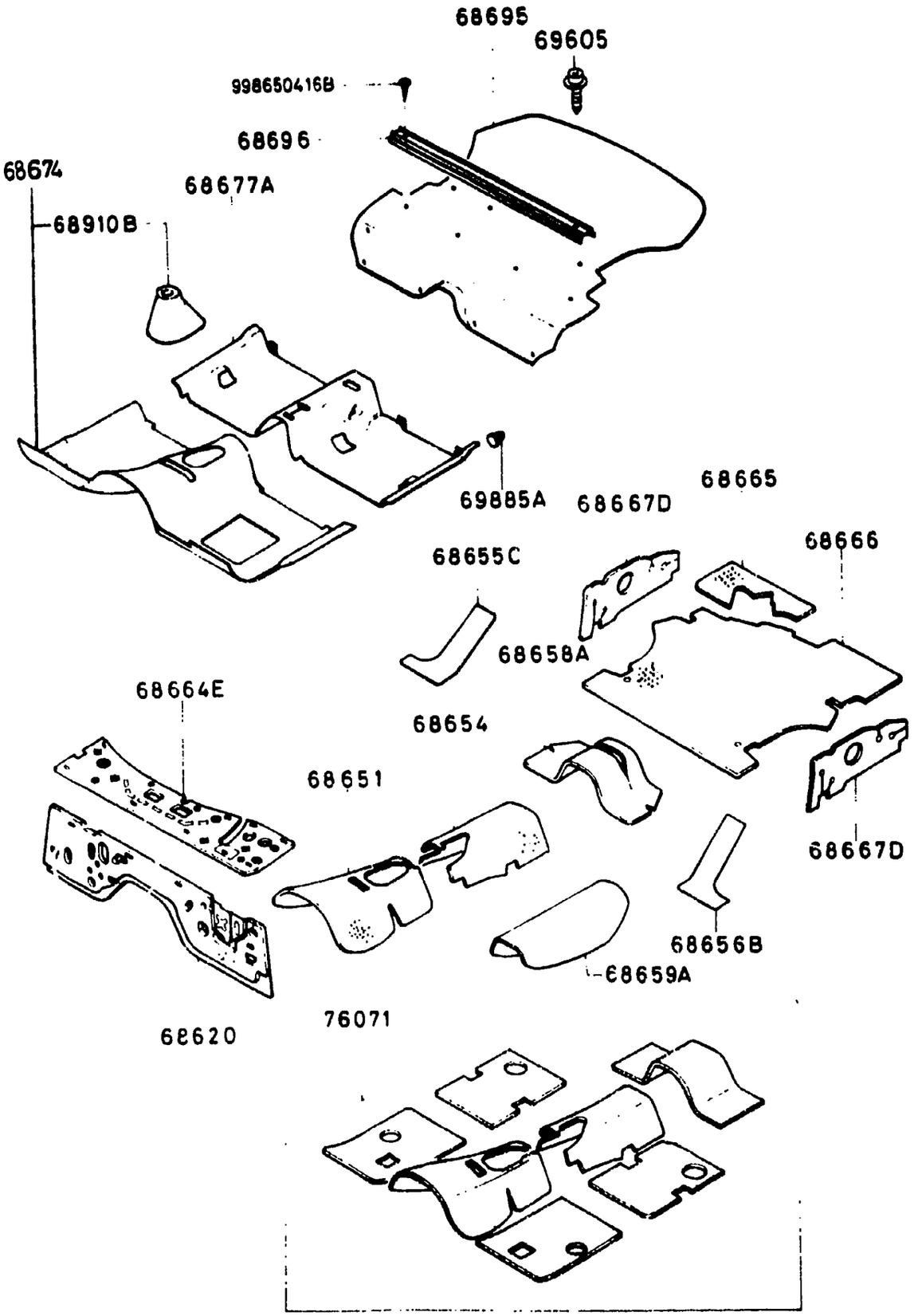


6860A-2 FLOOR MAT & PADS

| D-CODE (Key No.) | PART NAME | PART No. | Qty. | MODEL DESCRIPTION | VIN (Chassis No.) |
|---|---|---|---|---|---|
| 68674 CONT'D | | 8871-68-671 | | | |
| | WINE | 17 | | | |
| | BROWN | 24 | | | |
| | BLACK | 75 | | | |
| | | 8871-68-671A | 1 | | SA22C .. 525594 -576261 |
| | WINE (SA22C 525594-535838) | 17 | | | |
| | BROWN (SA22C 525594-535838) | 24 | | | |
| | BROWN (SA22C 535839-576261) | 25 | | | |
| | BLACK (SA22C 525594-535838) | 75 | | | |
| | BLACK (SA22C 535839-576261) | 76 | | | |
| | WINE (SA22C 535839-576261) | 80 | | | |
| | | 8871-68-671B | 1 | | SA22C .. 576262 -617318 |
| | BROWN | 25 | | | |
| | BLACK | 76 | | | |
| | WINE | 80 | | | |
| | | *8871-68-671C | 1 | | SA22C .. 617319- |
| | BROWN | 25 | | | |
| | BLACK | 76 | | | |
| | WINE | 80 | | | |

# 6860A FLOOR MAT & PADS

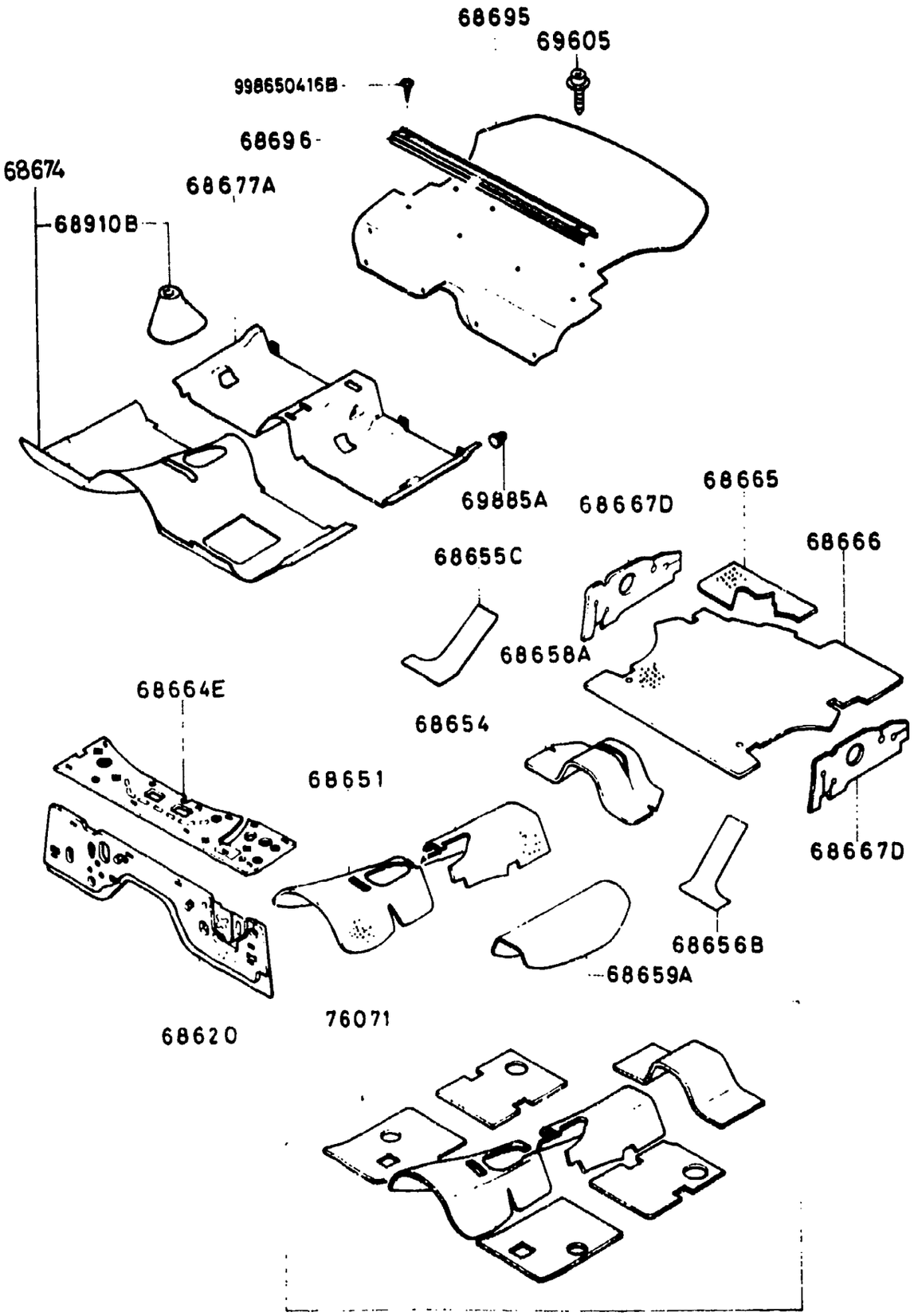


6860A-3 FLOOR MAT & PADS

| D-CODE (Key No.) | PART NAME | PART No. | Qty. | MODEL DESCRIPTION | VIN (Chassis No.) |
|---|---|---|---|---|---|
| 68677A | MAT, REAR FLOOR<br>TAPIS PLANCHER ARR. | 8871-68-677A | 1 | (USE W/REAR CONSOLE) | SA22C ..<br>500001<br>-510188 |
| | WINE | 17 | | | |
| | BROWN | 24 | | | |
| | BLACK | 75 | | | |
| | | 8871-68-677B | 1 | (USE W/REAR CONSOLE) | SA22C ..<br>510189<br>-525593 |
| | WINE | 17 | | | |
| | BROWN | 24 | | | |
| | BLACK | 75 | | | |
| | | 8871-68-677C | 1 | (USE W/REAR CONSOLE) | SA22C ..<br>525594<br>-576761 |
| | WINE<br>(SA22C 525594-535838) | 17 | | | |
| | BROWN<br>(SA22C 525594-535838) | 24 | | | |
| | BROWN<br>(SA22C 535839-576761) | 25 | | | |
| | BLACK<br>(SA22C 525594-535838) | 75 | | | |
| | BLACK<br>(SA22C 535839-576761) | 76 | | | |
| | WINE<br>(SA22C 535839-576761) | 80 | | | |
| | | 8871-68-677D | 1 | (USE W/REAR CONSOLE) | SA22C ..<br>576761- |
| | BROWN | 25 | | | |

# 6860A FLOOR MAT & PADS

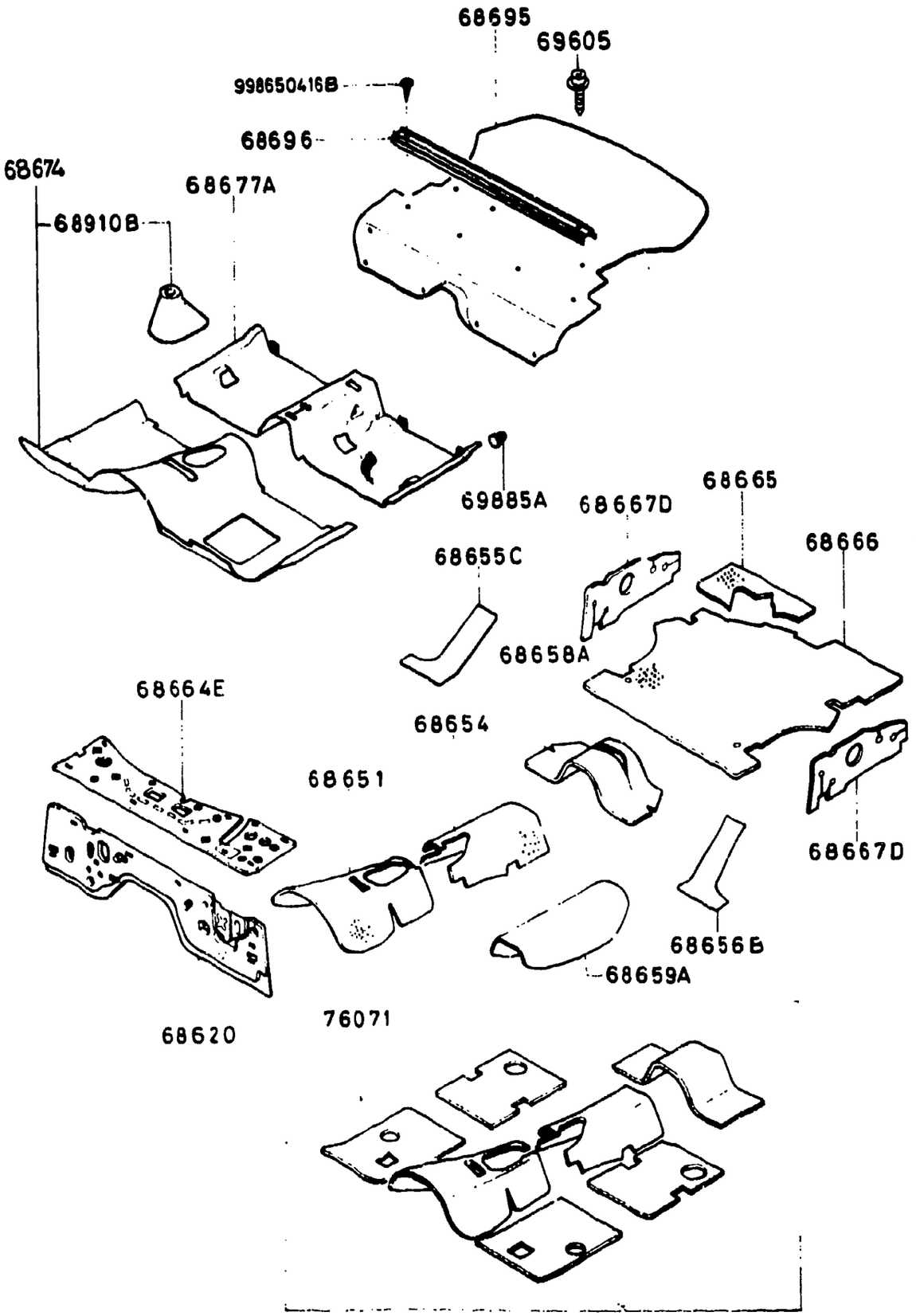


6860A-4 FLOOR MAT & PADS

| D-CODE (Key No.) | PART NAME | PART No. | Qty | MODEL DESCRIPTION | VIN (Chassis No.) |
|---|---|---|---|---|---|
| 68677A CONT'D | | 8871-68-677D | | | |
| | BLACK | 76 | | | |
| | WINE | 80 | | | |
| | | 8872-68-677A | 1 | (USE W/O REAR CONSOLE) | SA22C .. 500001 -510188 |
| | WINE | 17 | | | |
| | BROWN | 24 | | | |
| | BLACK | 75 | | | |
| | | 8872-68-677B | 1 | (USE W/O REAR CONSOLE) | SA22C .. 510139 -525593 |
| | WINE | 17 | | | |
| | BROWN | 24 | | | |
| | BLACK | 75 | | | |
| | | 8872-68-677C | 1 | (USE W/O REAR CONSOLE) | SA22C .. 525594 -576261 |
| | WINE (SA22C 525594-535838) | 17 | | | |
| | BROWN (SA22C 525594-535838) | 24 | | | |
| | BROWN (SA22C 535839-576261) | 25 | | | |
| | BLACK (SA22C 525594-535838) | 75 | | | |
| | BLACK (SA22C 535839-576261) | 76 | | | |
| | WINE (SA22C 535839-576261) | 80 | | | |

# 6860A FLOOR MAT & PADS

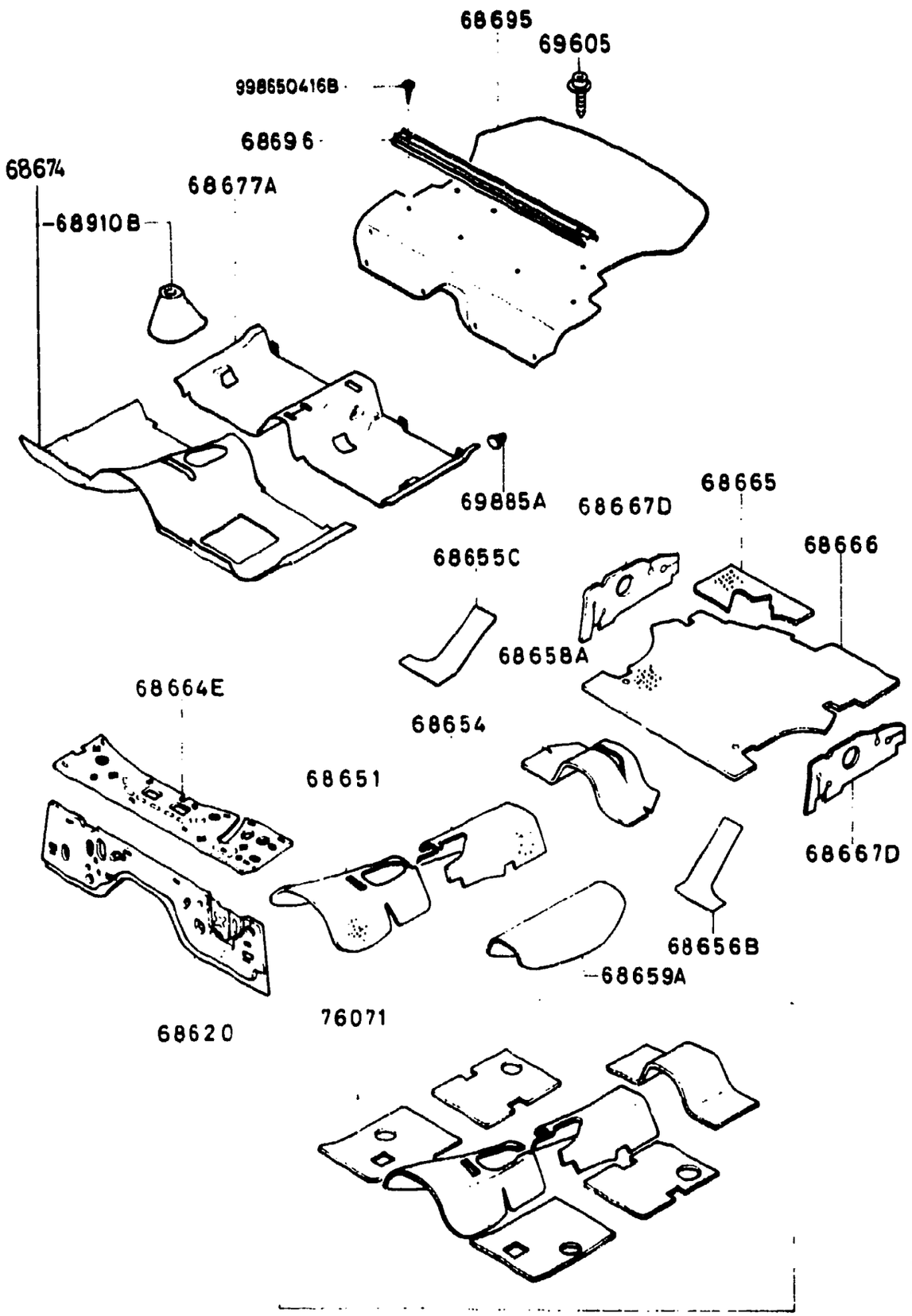


6860A-5 FLOOR MAT & PADS

| D-CODE (Key No.) | PART NAME | PART No. | Qty. | MODEL DESCRIPTION | VIN (Chassis No.) |
|---|---|---|---|---|---|
| 68677A CONT'D | | 8872-68-677D | 1 | (USE W/O REAR CONSOLE) | SA22C .. 576262- |
| | BROWN | 25 | | | |
| | BLACK | 76 | | | |
| | WINE | 80 | | | |
| | | 8873-68-677P | 1 | (ORD.BY 89736867 7P01) (LIMITED) 79 MODEL | |
| 68695 | MAT,TRUNK RCOM<br>TAPIS, COFFRE ARRIERE<br>ALFOMBRA DEL BAUL | 8871-68-695 | 1 | 79 MODEL | SA22C .. 500001 -554324 |
| | BLACK | 77 | | | |
| | WINE | 81 | | | |
| | BROWN | 85 | | | |
| | | 8871-68-695A | 1 | | SA22C .. 554325- |
| | BLACK | 77 | | | |
| | WINE | 81 | | | |
| | BROWN | 85 | | | |
| 68696 | PLATE,MAT SET<br>MOULURE DOSSIER ARR<br>PLATO- JUEGO DE ALFOMBRAS | 8871-68-696A | 1 | | |
| 68910B | BOOT,BRAKE | 8869-75-011 | 1 | | SA22C .. 561877- |
| | BLACK | 77 | | | |
| | | 8871-75-011 | 1 | | SA22C .. 500001 -561876 |
| 69605 | HOOK,TRUNK ROOM MAT<br>AGRAFE,TAPIS COFFRE AR. | 0187-69-605 | 2 | | SA22C .. 500001 |

# 6860A FLOOR MAT & PADS

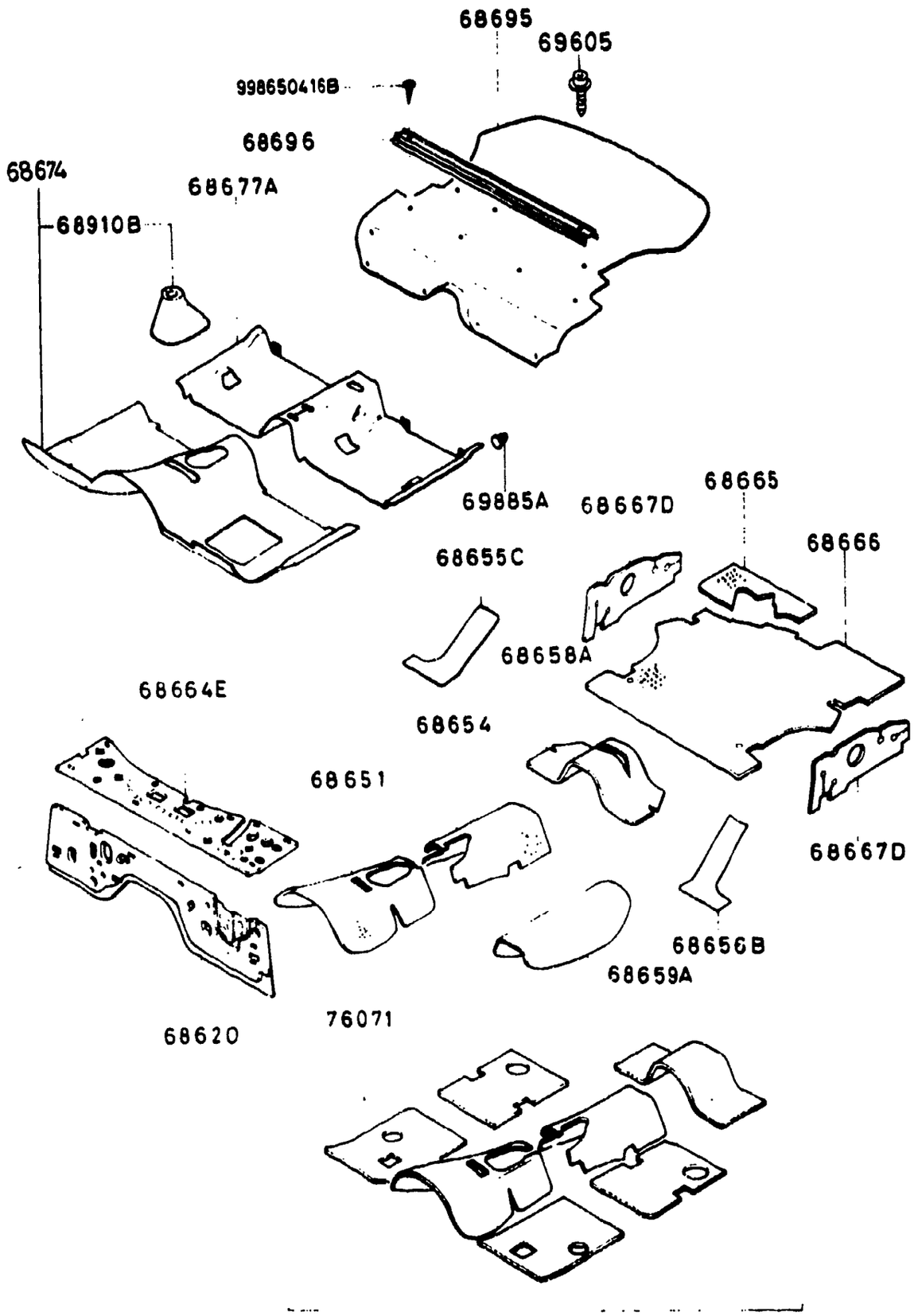


6860A-6* FLOOR MAT & PADS

| D-CODE (Key No.) | PART NAME | PART No. | Qty. | MODEL DESCRIPTION | VIN (Chassis No.) |
|---|---|---|---|---|---|
| 69605 CONT'D | BROCHE ALFOMBRA BALIJERO | 0187-69-605 | | | -589267 |
| 69885A | FASTENER<br>AGRAFE<br>SOPORTE | 0866-69-885 | 8 | | SA22C ..<br>500001<br>-573960 |
| | BLACK | 00 | | | |
| | BROWN | 05 | | | |
| | | *0866-69-885A | 7 | | SA22C ..<br>573961- |
| | BLACK | 00 | | | |
| | BROWN | 05 | | | |
| 76071 | SILENCER, FLOOR<br>INSONORISATEUR PLANCHER<br>SILENCIADOR, PISO | 0208-76-071 | 1 | (30CM X 30CM) | |

# 6870A SERVICE TOOLS

68660A

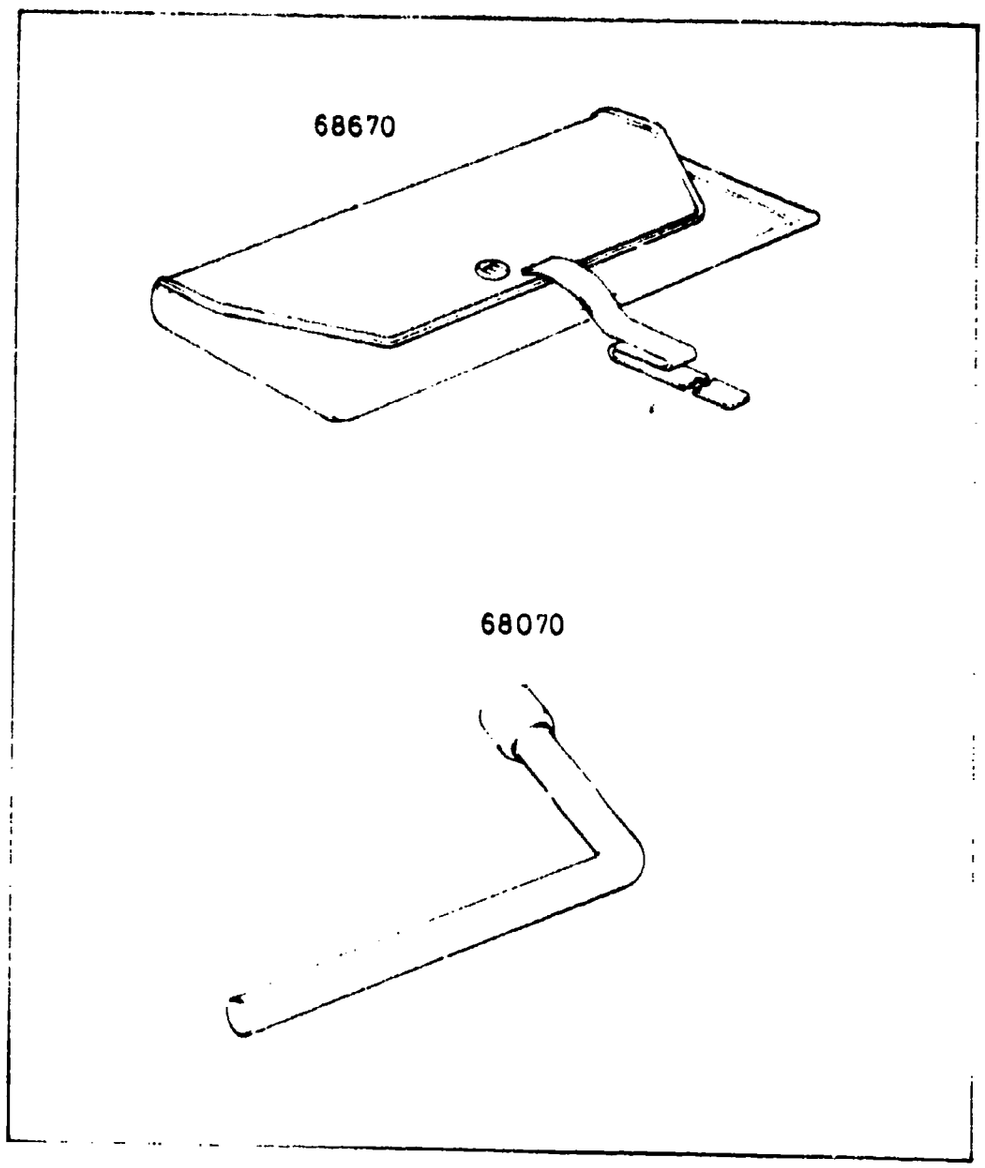


6870A-1* SERVICE TOOLS

| D-CODE (Key No.) | PART NAME | PART No. | Qty. | MODEL DESCRIPTION | VIN Chassis No. |
|---|---|---|---|---|---|
| 68070 | WRENCH, HUB NUT<br>CLEF DE MOYEU<br>LLAVE, TUERCA SOPORTE | 0810-68-070A | 1 | | SA22C ..<br>500001<br>-627592 |
| | | *0810-68-070C | 1 | 50 MODEL | SA22C ..<br>627593- |
| 68660A | TOOL SET<br>TROUSSE A OUTILS<br>JUEGO HERRAMIENTAS | 3781-69-650 | 1 | | |
| 68670 | BAG, TOOL<br>SAC, OUTIL<br>BOLSA, HERRAMIENTAS | 3731-69-670 | 1 | | SA22C ..<br>500001<br>-554324 |
| | | 8173-69-670 | 1 | | SA22C ..<br>554325- |

# 6900A VISOR, ASSIST HANDLE & MIRRORS

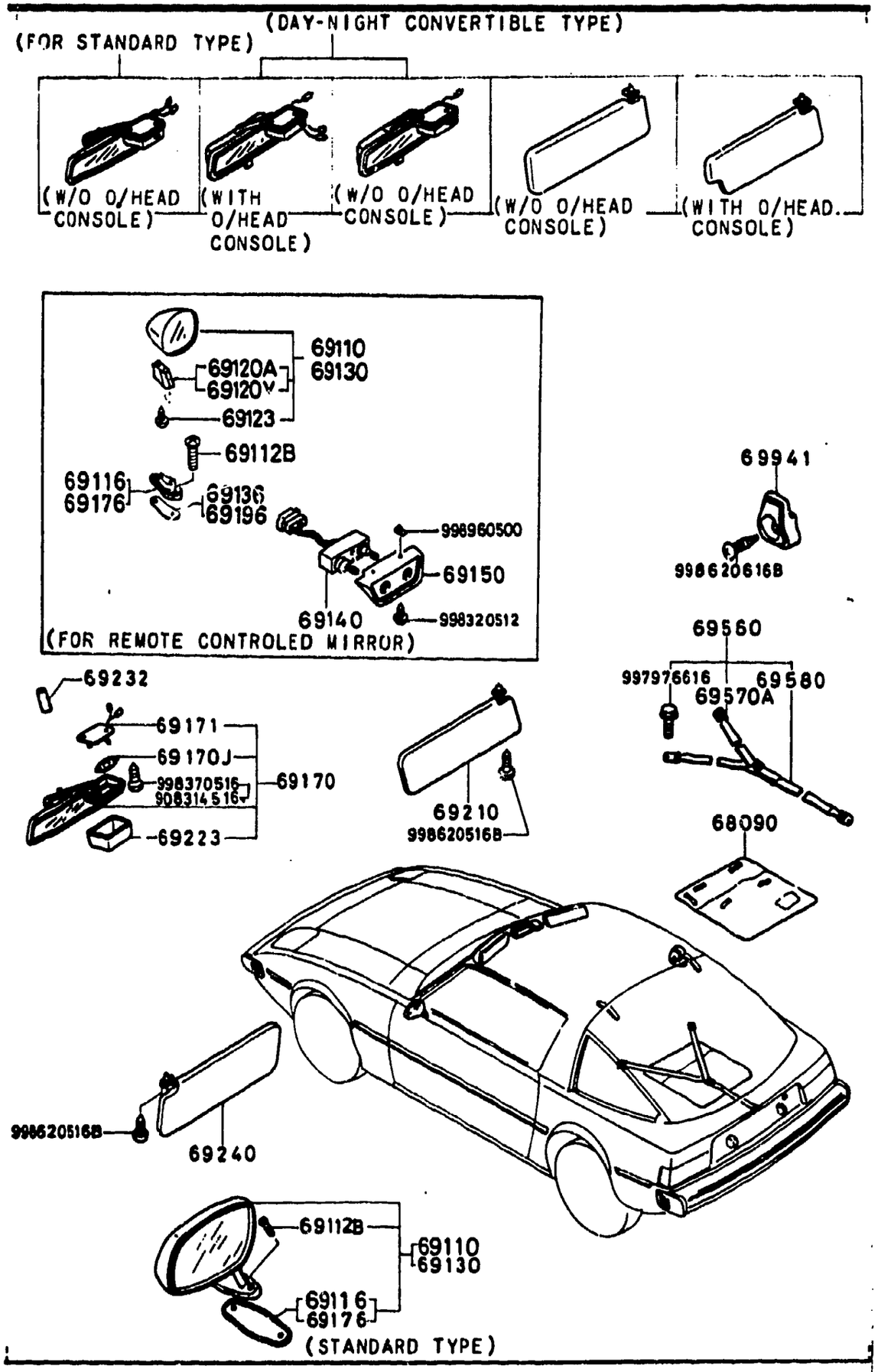


6900A-1 VISOR, ASSIST HANDLE & MIRRORS

| D-CODE (Key No.) | PART NAME | PART No. | Qty. | MODEL/DESCRIPTION | VIN (Chassis No.) |
|---|---|---|---|---|---|
| 68090 | BAG, SUNROOF | 8973-68-090A | 1 | (FOR SUNROOF) 79 MODEL USA | SA22C .. 500001 -525593 |
| | | 8973-68-090B | 1 | (FOR SUNROOF) 79 MOSEL USA | SA22C .. 525594 -568500 |
| | | 8973-68-090C | 1 | (FOR SUNROOF) 80 MODEL USA | SA22C .. 568501- |
| | | 8974-68-090 | 1 | (FOR SUNROOF) CANADA | SA22C .. 510189- |
| 69110 | MIRROR(R), REAR VIEW MIROIR (D) ESPEJO DERECHO | 8341-69-120 | 1 | (REMOTE CONTROL TYPE 80 MODEL | SA22C .. 592956- |
| | | 8871-69-110 | 1 | (STANDARD TYPE) 79 MODEL | SA22C .. 525594 -568500 |
| | | 8871-69-110A | 1 | (STANDARD TYPE) 80 MODEL | SA22C .. 568501- |
| 69112B | SCREW, MIRROR VIS, MIROIR TORNILLO, ESPEJO | 8341-69-178 | 4 | (REMOTE CONTROL TYPE 80 MODEL | SA22C .. 592956- |
| | | 8871-69-178 | 4 | (STANDARD TYPE) | |
| 69116 | BASE(R), MIRROR SOCLE(D)MIRROIR <A> | 8341-69-131 | 1 | (REMOTE CONTROL TYPE 80 MODEL | SA22C .. 592956- |
| | | 8871-69-117 | 1 | (STANDARD TYPE) | |
| 69120A | STAY(R) | •8341-69-122 | 1 | (REMOTE CONTROL TYPE) 80 MODEL | |
| 69120Y | STAY(L) | •8341-69-182 | 1 | (REMOTE CONTROL TYPE) 80 MODEL | |
| 69123 | SCREW | •8341-69-123 | 1 | (REMOTE CONTROL TYPE) 80 MODEL | |
| 69130 | MIRROR(L), REAR VIEW MIROIR (G) | 8341-69-180 | 1 | (REMOTE CONTROL TYPE 80 MODEL | SA22C .. 592956- |
| | | 8871-69-170 | 1 | (STANDARD TYPE) 79 MODEL | SA22C .. |

# 6900A VISOR, ASSIST HANDLE & MIRRORS

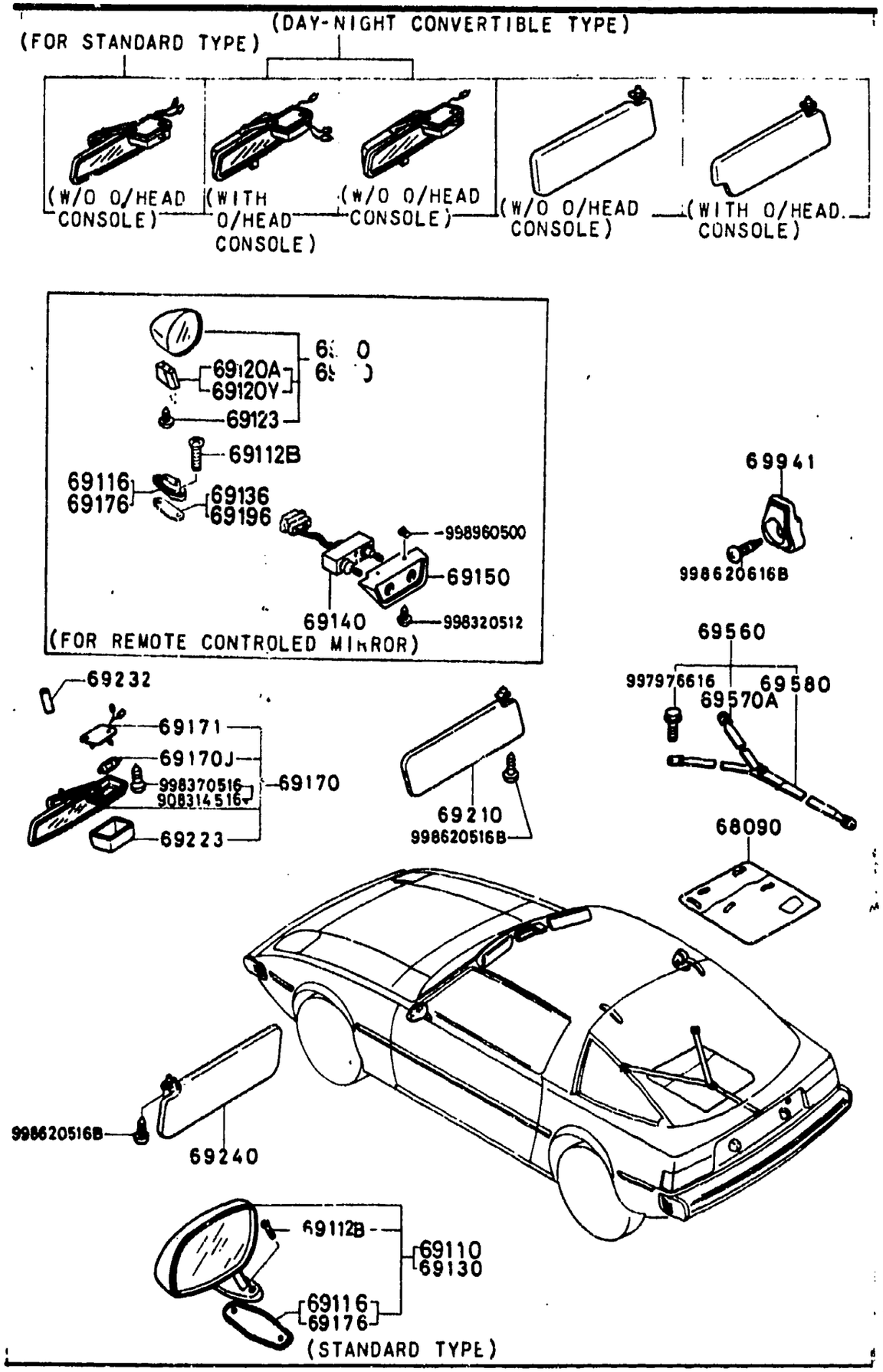


6900A-2 VISOR, ASSIST HANDLE & MIRRORS

| D-CODE (Key No.) | PART NAME | PART No. | Qty. | MODEL DESCRIPTION | VIN (Chassis No.) |
|---|---|---|---|---|---|
| 69130 CONT'D | | 8871-69-170 | | | 500001 -568500 |
| | | 8871-69-170A | 1 | (STANDARD TYPE) 80 MODEL | SA22C .. 568501- |
| 69136 | GASKET(R),MIRROR<br>JOINT MIRROIR(D) | *8341-69-115 | 1 | (FOR REMO.CON.MIRROR) 80 MODEL | SA22C .. 592956- |
| 69140 | SWITCH,MIRROR<br>INTERRUPTEUR RETROVISEUR | 8561-69-140 | 1 | (FOR REMO.CON.MIRROR 80 MODEL | SA22C .. 592956- |
| 69150 | PANEL,SWITCH<br>PANNEAU INTERRUPTEUR | 8561-69-151 | 1 | (FOR REMO.CON.MIRROR 80 MODEL | SA22C .. 592956- |
| | BROWN | 28 | | | |
| 69170 | MIRROR,INTERIOR<br>MIROIR INTERIEUR<br>ESPEJO INTERIOR | 8870-69-220 | 1 | (DAY-NIGHT ADJUSTABLE) | SA22C .. 500001 -540410 |
| | | 8870-69-220A | 1 | (DAY-NIGHT ADJUSTABLE) | SA22C .. 540411- |
| | | 8871-69-220 | 1 | (WITH O/HEAD CONSOLE) (DAY-NIGHT ADJUSTABLE) STD. ROOF | SA22C .. 500001 -540410 |
| | | 8871-69-220A | 1 | (WITH O/HEAD CONSOLE) (DAY-NIGHT ADJUSTABLE) STD. ROOF | SA22C .. 540411 -568500 |
| | | 8872-69-220 | 1 | (STANDARD TYPE) (NON DAY/NIGHT TYPE) | SA22C .. 500001 -540410 |
| | | 8872-69-220A | 1 | (STANDARD TYPE) (NON DAY/NIGHT TYPE) | SA22C .. 540411 -568500 |
| 69170J | BULB<br>AMPOULE<br>FOCO | 9970-05-100 | 1 | (A12V 10W) | |
| 69171 | BASE,MIRROR<br>SOCLE MIRROIR | 8371-69-240 | 1 | | |
| 69176 | BASE(L),MIRROR | 8341-69-191 | | (REMOTE CONTROL TYPE | |

# SECTION NUMBER INDEX (BODY)

| STARTING LOCATION | SECTION No | SECTION NAME |
|---|---|---|
| 3–C2 | 0900A | KEY SETS |
| 3–C3 | 5000A | FRONT BUMPER & GRILLE |
| 3–E3 | 5010A | REAR BUMPER |
| 3–G3 | 5030A | WINDOW MOULDINGS |
| 3–I3 | 5040A | BODY MOULDINGS |
| 3–C4 | 5100A | LAMPS (FRONT & SIDE) |
| 3–G4 | 5110A | LAMPS (REAR) |
| 3–I4 | 5130A | OVERHEAD CONSOLE (1979 STANDARD ROOF MODEL) |
| 3–J4 | 5170A | COWL & EXTRACTOR GRILLES & ORNAMENTS |
| 3–C5 | 5230A | BONNET |
| 3–E5 | 5310A | BODY PANELS (FRONT) |
| 3–K5 | 5340A | BODY PANELS (SIDE & ROOF) |
| 3–I6 | 5360A | BODY PANELS (FLOOR) |
| 3–C7 | 5500A | DASHBOARD EQUIPMENT |
| 3–L7 | 5540A | METERS |
| 3–D8 | 5560A | DASHBOARD & RELATED |
| 3–L8 | 5570A | CONSOLE |
| 3–K9 | 5580A | VENTILATOR |
| 3–C10 | 5700A | SEAT (EXCEPT LEATHER TRIM) |
| 3–N10 | 5710A | SEAT TRIM (LEATHER – ANNIVERSARY EDITION) |
| 3–G11 | 5760A | SEAT BELTS |
| 3–C12 | 5800A | FRONT DOOR |
| 3–C13 | 5830A | FRONT DOOR MECHANISMS |
| 3–C14 | 6100A | HEATER |
| 3–E14 | 6110A | HEATER UNIT |
| 3–H14 | 6115A | HEATER CONTROLS |
| 3–J14 | 6120A | HEATER BLOWER |
| 3–C15 | 6230A | BACK DOOR MECHANISMS |
| 3–F15 | 6300A | WINDOW GLASSES |
| 3–I15 | 6330A | SUNROOF |
| 3–C16 | 6600A | ELECTRIC EQUIPMENT |
| 3–G16 | 6680A | RADIO & STEREO SYSTEMS |
| 4–C2 | 6700A | WIRE HARNESS & CLAMPS |
| 4–G2 | 6720A | WINDSHIELD WASHER |
| 4–H2 | 6730A | WINDSHIELD WIPER |
| 4–J2 | 6740A | WIPER MOTOR (COMPONENTS ONLY) |
| 4–C3 | 6800A | CEILING TRIM |
| 4–J3 | 6840A | TRIM & SCUFF PLATE |
| 4–F4 | 6860A | FLOOR MAT & PADS |
| 4–L4 | 6870A | SERVICE TOOLS |
| 4–M4 | 6900A | VISOR, ASSIST HANDLE & MIRRORS |
| 4–G5 | 6930A | CAUTION PLATES |

THE FRAMES IN THIS COLUMN INDICATE :

| | | |
|---|---|---|
| 4–M4 | 6900A | VISOR, ASSIST HANDLE & MIRRORS |
| 4–G5 | 6930A | CAUTION PLATES |

© 1983 Toyo Kogyo Co., Ltd.
MAY 1983

# 6900A VISOR, ASSIST HANDLE & MIRRORS

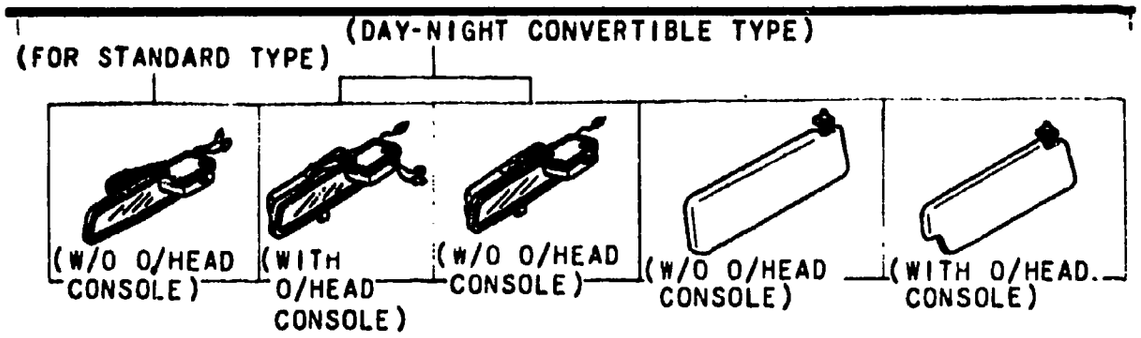


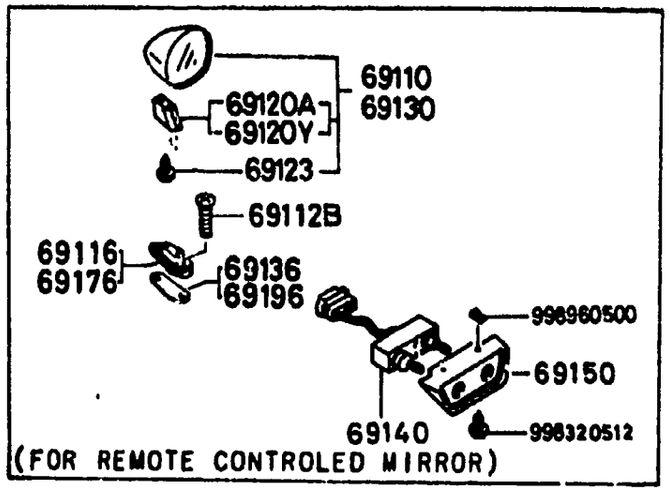





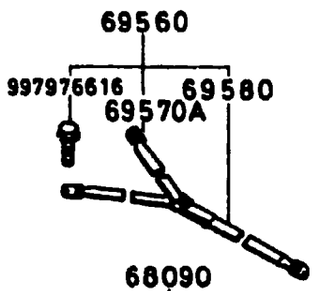


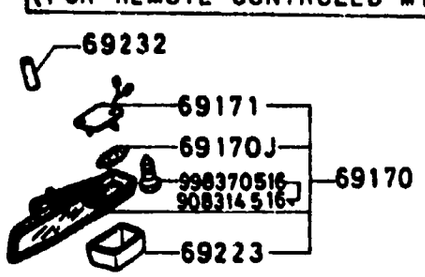





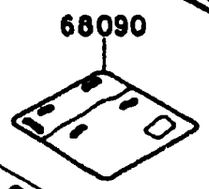








6900A-3 VISOR, ASSIST HANDLE & MIRRORS

| D-CODE (Key No.) | PART NAME | PART No. | Qty. | MODEL / DESCRIPTION | VIN (Chassis No.) |
|---|---|---|---|---|---|
| 69176 CONT'D | SOCLE(G)MIRROIR <A> | 8341-69-191 | 1 | 80 MODEL | SA22C .. 592956- |
| | | 8871-69-177 | 1 | (STANDARD TYPE) | |
| 69196 | GASKET(L),MIRROR JOINT MIRROIR(G) | *8341-69-116 | 1 | (FOR REMO.CON.MIRROR) 80 MODEL | SA22C .. 592956- |
| 69210 | SUN VISOR(R) PARE-SOLEIL (D) VISERA(D) | 8347-69-270 | 1 | (W/MIRROR) (FOR W/O O/HEAD CONSOLE) 80 MODEL | SA22C .. 568501- |
| | BLACK | 01 | | | |
| | WINE | 15 | | | |
| | BROWN | 73 | | | |
| | BROWN (SA22C 606775-) | 88 | | (SUNROOF ONLY) | |
| | | 8871-69-270 | 1 | (FOR O/HEAD CONSOLE) 79 MODEL STD.ROOF | SA22C .. 500001 -568500 |
| | BLACK | 01 | | | |
| | WINE | 15 | | | |
| | BROWN (SA22C 500001-535838) | 21 | | | |
| | BROWN (SA22C 535839-568500) | 73 | | | |
| | | 8872-69-270 | 1 | (W/O MIRROR) (FOR W/O O/HEAD CONSOLE) | |
| | BLACK | 01 | | | |
| | WINE | 15 | | | |
| | BROWN (SA22C 500001-535838) | 21 | | | |
| | BROWN (SA22C 535839-) | 73 | | | |

# 6900A VISOR, ASSIST HANDLE & MIRRORS

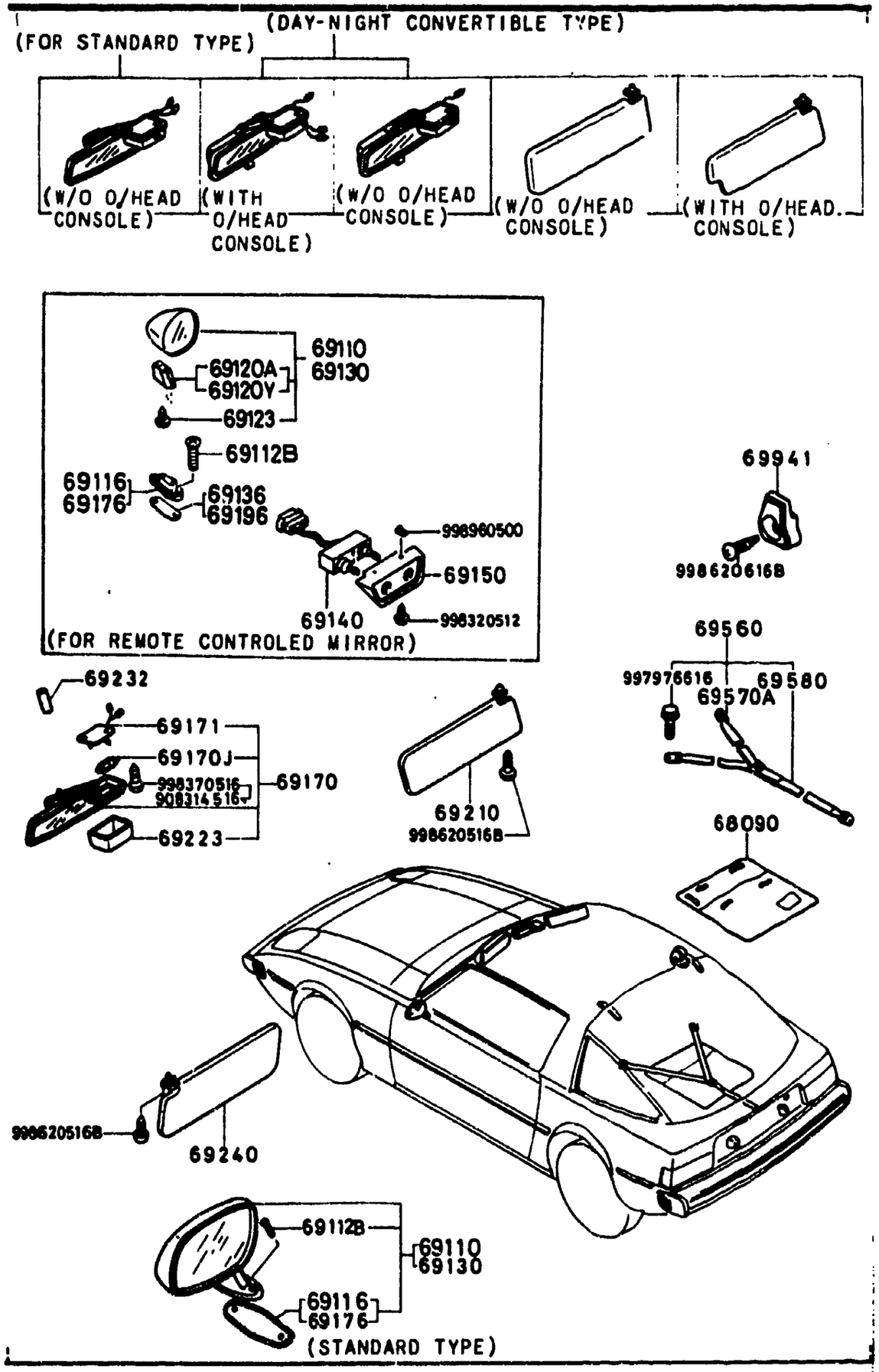


6900A-4 VISOR, ASSIST HANDLE & MIRRORS

| D-CODE (Key No.) | PART NAME | PART No. | Qty. | MODEL/DESCRIPTION | VIN (Chassis No.) |
|---|---|---|---|---|---|
| 69210 CONT'D | | 8872-69-270 | | | |
| | BROWN (SA22C 606775-) | 88 | | (SUNROOF ONLY) • | |
| 69223 | LENS<br>VERRE<br>CRISTAL | 8871-69-233 | 1 | | SA22C .. 500001 -540410 |
| | | 8871-69-233A | 1 | | SA22C .. 540411 -541116 |
| | | 8872-69-233 | 1 | | SA22C .. 541117- |
| 69232 | STOPPER, RUBBER<br>ARRET C.T.C. | 8871-69-232 | 1 | | |
| 69240 | SUN VISOR(L)<br>PARE-SOLEIL (G)<br>VISERA(I) | 8342-69-320 | 1 | 80 MODEL STD.ROOF | SA22C .. 568501- |
| | BLACK | 01 | | | |
| | WINE | 15 | | | |
| | BROWN | 73 | | | |
| | | 8346-69-320A | 1 | 80 MODEL SUNROOF | SA22C .. 568501- |
| | BLACK | 01 | | | |
| | WINE | 15 | | | |
| | BROWN (SA22C 568501-606774) | 73 | | | |
| | BROWN (SA22C 606775-) | 88 | | | |
| | | 8871-69-320 | 1 | (FOR W/ O/HEAD CONSOLE) 7S MODEL STD.ROOF | SA22C .. 500001 -568500 |
| | BLACK | 01 | | | |
| | WINE | 15 | | | |

# 6900A VISOR, ASSIST HANDLE & MIRRORS

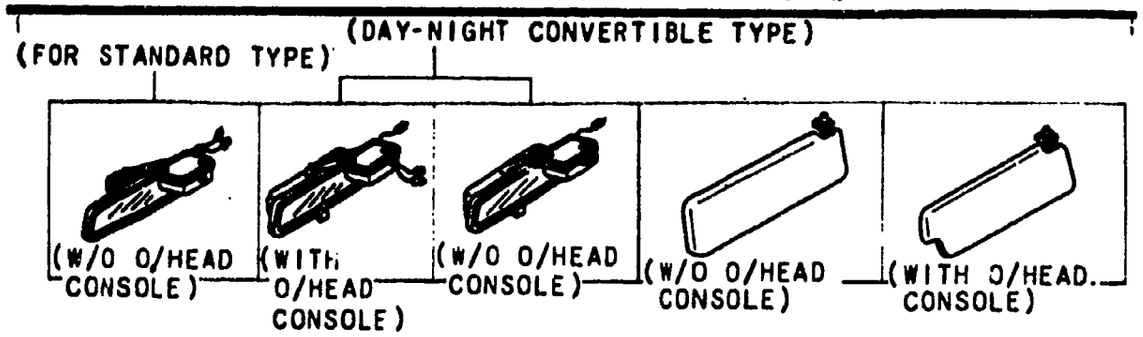


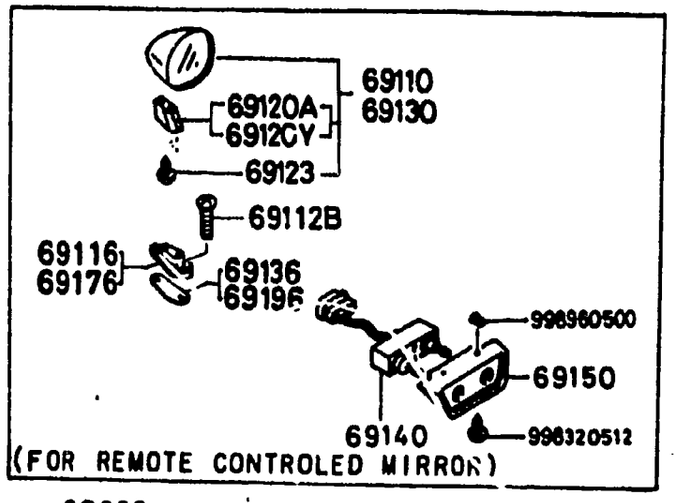


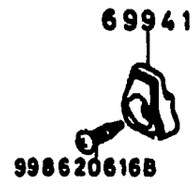


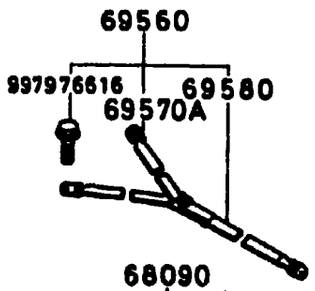


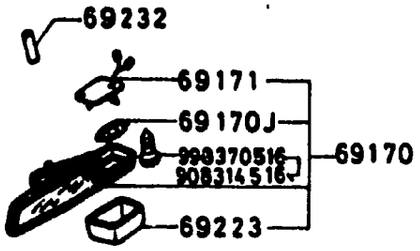





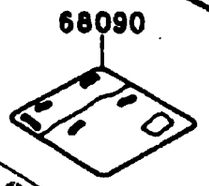





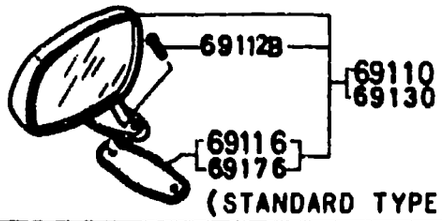


6900A-5 VISOR, ASSIST HANDLE & MIRRORS

| D-CODE (Key No.) | PART NAME | PART No. | Qty. | MODEL / DESCRIPTION | VIN (Chassis No.) |
|---|---|---|---|---|---|
| 69240 CONT'D | | 8871-69-320 | | | |
| | BROWN (SA22C 500001-535838) | 21 | | | |
| | BROWN (SA22C 535839-568500) | 73 | | | |
| | | 8872-69-320 | 1 | (FOR W/O O/HEAD CONSOLE) 79 MODEL STD.ROOF | SA22C .. 500001 -568500 |
| | BLACK | 01 | | | |
| | WINE | 15 | | | |
| | BROWN (SA22C 500001-535838) | 21 | | | |
| | BROWN (SA22C 535839-568500) | 73 | | | |
| | | 8973-69-320 | 1 | 79 MODEL SUNROOF | SA22C .. 520638 -568500 |
| | BLACK | 01 | | | |
| | WINE | 15 | | | |
| | BROWN (SA22C 500001-535838) | 21 | | | |
| | BROWN (SA22C 535839-568500) | 73 | | | |
| 69560 | STRAP,CARGOROOM COURROIE FIXATION | 8341-69-560 | 1 | 80 MODEL | SA22C .. 568501- |
| | BLACK | 00 | | | |
| | WINE | 10 | | | |
| | BROWN | 20 | | | |
| | | 8871-69-560 | 1 | 79 MODEL | SA22C .. 500001 -568500 |
| 69570A | STRAP'A', CARGOROOM | 8341-69-570 | 1 | 80 MODEL | SA22C .. |

# 6900A VISOR, ASSIST HANDLE & MIRRORS

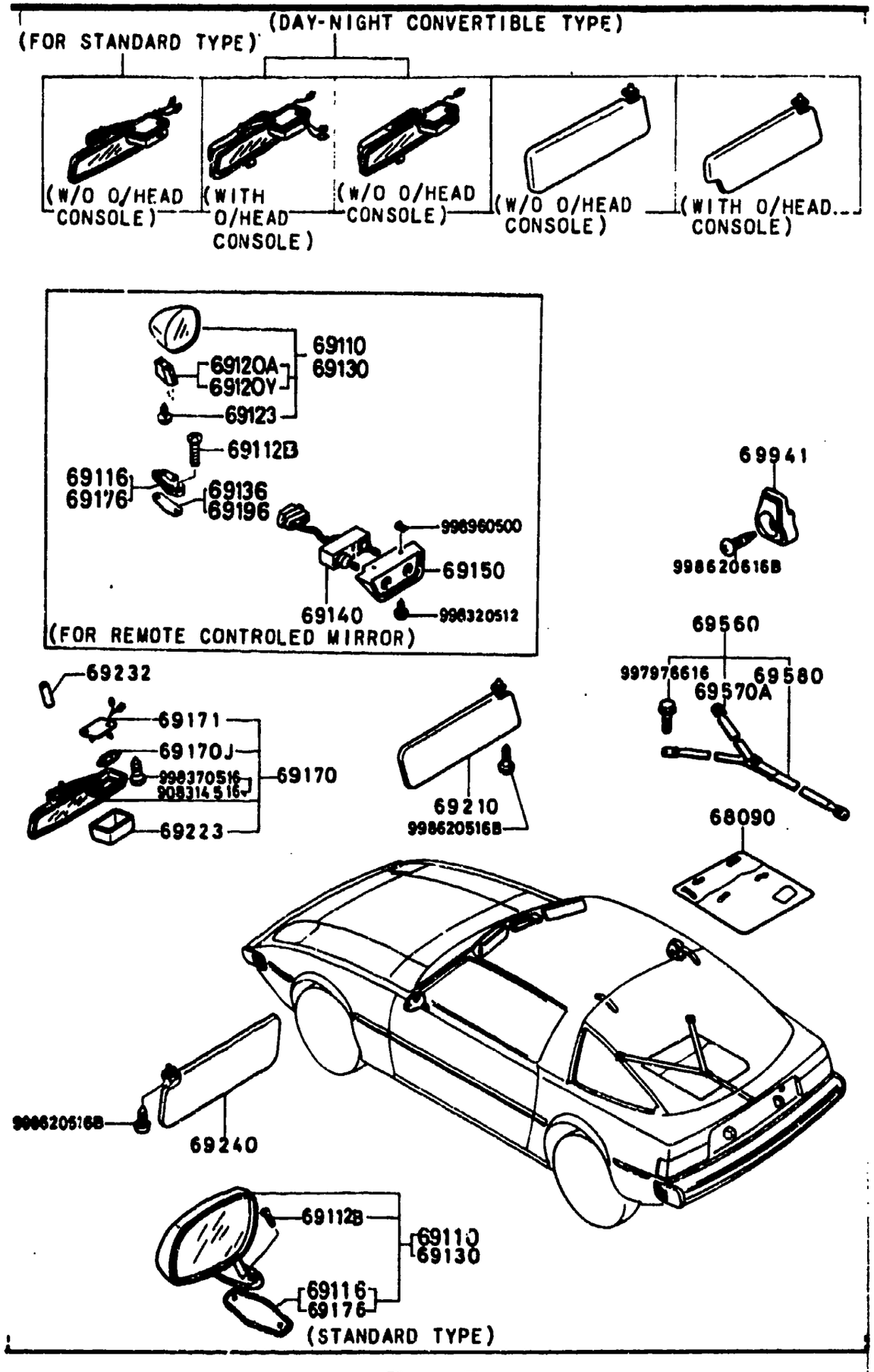


6900A-6* VISOR, ASSIST HANDLE & MIRRORS

| D-CODE (Key No.) | PART NAME | PART No. | Qty. | MODEL/DESCRIPTION | VIN (Chassis No.) |
|---|---|---|---|---|---|
| 69570A CONT'D | | 8341-69-570 | | | 568501- |
| | BLACK | 00 | | | |
| | WINE | 10 | | | |
| | BROWN | 20 | | | |
| 69580 | STRAP'B',CARGOROOM COURROIE FIXATION'B' | 8341-69-580 | 1 | 80 MODEL | SA22C .. 568501- |
| | BLACK | 00 | | | |
| | WINE | 10 | | | |
| | BROWN | 20 | | | |
| | | 8871-69-580 | 1 | 79 MODEL | SA22C .. 500001 -568500 |
| 69941 | COAT HOOK CROCHET | 0376-69-941 | 2 | | |
| | BLACK | 01 | | | |

# 6930A CAUTION PLATES

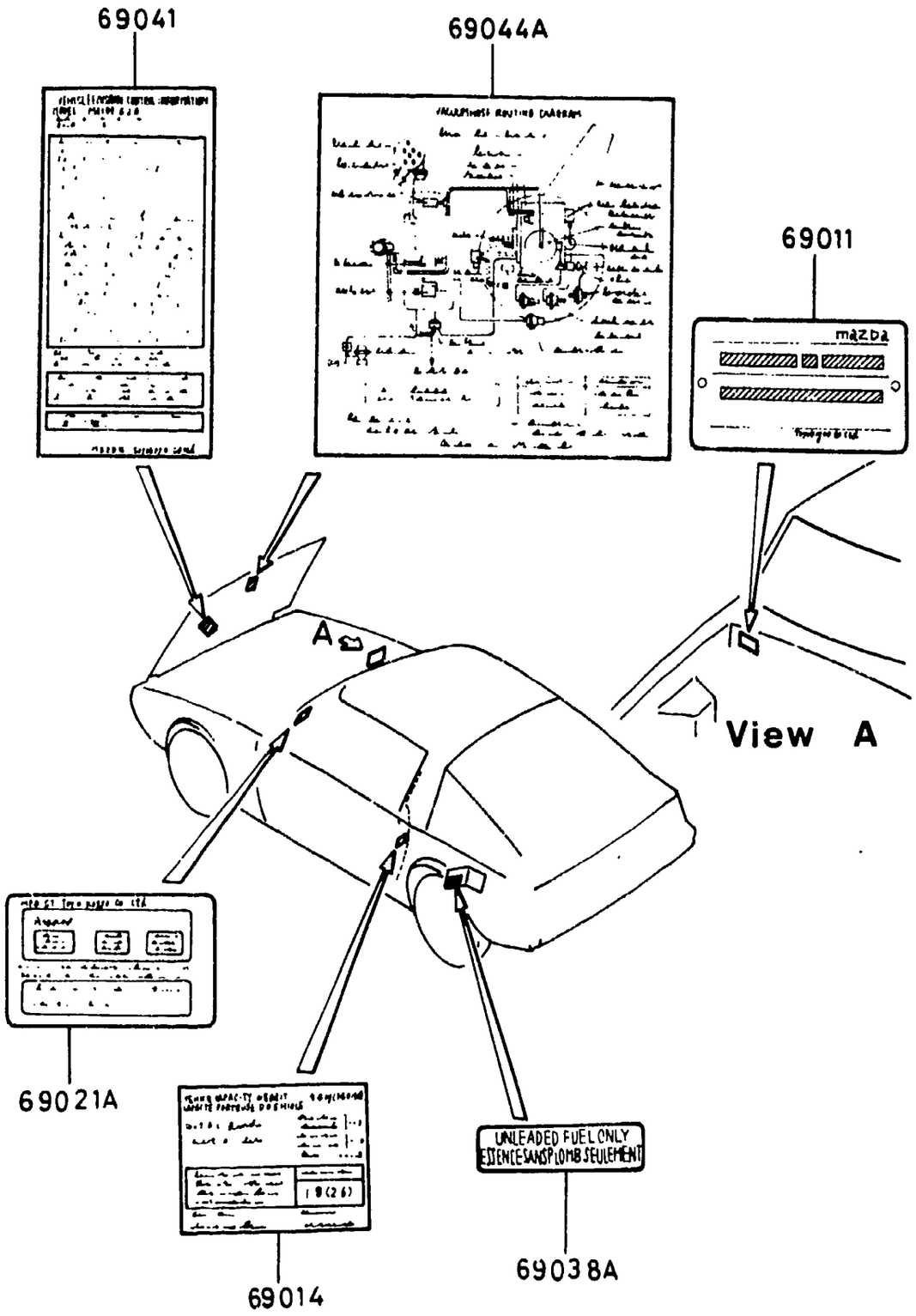


6930A-1★ CAUTION PLATES

| D-CODE (Key No.) | PART NAME | PART No. | Qty | MODEL DESCRIPTION | VIN (Chassis No.) |
|---|---|---|---|---|---|
| 69011 | PLATE MODEL | 8595-69-011 | 1 | | |
| 69014 | LABEL,TIRE<br>ETIQUETTE DES PNEUS | 8871-69-014C | 1 | 80 MODEL | |
| 69021A | PLATE,CAUTION(MVSS)<br>PLAQUE, MODE-D'EMPLOI<br>PLACA PRECAUCION | 8240-69-034 | 1 | 79 MODEL | |
| 69038A | LABEL,GASOLINE | 3906-69-038 | 1 | FED.<br>CALIF. | |
| | | 8750-69-038 | 1 | CANADA | |
| 69041 | LABEL,EMISSION<br>ETIQUETTE | 8341-69-036 | 1 | FED. | |
| | | 8344-69-036 | 1 | CALIF. | |
| | | 8485-69-036 | 1 | (ENGLISH)<br>CANADA | |
| | | 8486-69-036 | 1 | (FRENCH)<br>CANADA | |
| 69044A | LABEL,VAC.DIAPHRAGM | 8341-69-044 | 1 | FED. | |
| | | 8344-69-044 | 1 | CALIF. | |

# PART NUMBER INDEX

This index is listed in the following sequence.

## GENERAL PARTS

EXAMPLE

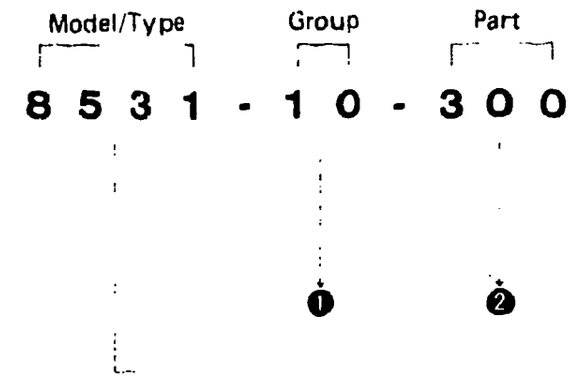


❶ first, in the sequenece of group (5th & 6th digits)
❷ second, in the sequence of part (7th–9th digits)
❸ third, in the sequence of model/type (1st–4th digits)

## STANDARD PARTS

Standard Parts are listed in numerical sequence after General Parts.
(Note: Those parts which do not have D-Code are not listed in the index.)

# PART NUMBER INDEX

| PART NUMBER | LOCATION | PART NUMBER | LOCATION | PART NUMBER | LOCATION | PART NUMBER | LOCATION | PART NUMBER | LOCATION | PART NUMBER | LOCATION |
|---|---|---|---|---|---|---|---|---|---|---|---|
| 8871-09-010 | 3-C2 | 1480-10-600 | 1-I2 | 0820-11-705 | 1-D3 | 3597-13-240A | 1-K6 | 0839-13-614 | 1-D4 | 8871-13-781B | 1-G7 |
| 8871-09-010 00 | 3-C2 | 1757-10-600B | 1-I2 | 0810-11-711 | 1-D3 | 3597-13-240A | 1-N6 | 8341-13-650A | 1-C7 | 8871-13-781B | 1-J6 |
| 8341-10-100 | 1-D2 | 3523-10-600 | 1-I2 | 0820-11-712 | 1-D3 | 8553-13-240A | 1-E7 | 8341-13-650A | 1-F7 | 8871-13-781B | 1-M6 |
| 8344-10-100 | 1-D2 | 0820-10-605 | 1-H2 | 1883-11-750 | 1-D3 | 8553-13-240A | 1-H6 | 8344-13-650B | 1-C7 | 8871-13-785C | 1-F4 |
| 8871-10-100 | 1-D2 | 1757-10-609 | 1-I2 | 1883-11-751A | 1-E3 | 8553-13-240A | 1-K6 | 8344-13-650B | 1-F7 | 8871-13-793A | 1-F4 |
| 8980-10-100 | 1-D2 | 0820-10-631B | 1-H2 | 8871-13-081B | 1-H4 | 8553-13-240A | 1-N6 | 8344-13-650C | 1-C7 | 8344-13-800 | 1-D4 |
| 0839-10-105 | 1-D2 | 8871-10-631 | 1-H2 | 8341-13-085 | 1-H4 | 8735-13-240A | 1-E7 | 8344-13-650C | 1-F7 | 8871-13-800B | 1-D4 |
| 0839-10-111B | 1-D2 | 8527-10-641 | 1-I2 | 8871-13-085B | 1-H4 | 8735-13-240A | 1-H6 | 8868-13-650C | 1-I6 | 1757-13-857 | 1-D4 |
| 8341-10-150 | 1-D2 | 0839-10-711 | 1-H2 | 8871-13-086B | 1-H4 | 8735-13-240A | 1-K6 | 8868-13-650D | 1-I6 | 2329-13-876 | 1-D4 |
| 8344-10-150 | 1-D2 | 8341-10-730A | 1-I2 | 8871-13-087A | 1-H4 | 8735-13-240A | 1-N6 | 8868-13-650E | 1-I6 | 2329-13-882 | 1-D4 |
| 8871-10-150 | 1-D2 | 8553-10-730D | 1-I2 | 8871-13-100A | 1-C4 | 8341-13-241 | 1-F7 | 8871-13-650C | 1-I6 | 3743-13-889A | 1-D4 |
| 8980-10-150 | 1-D2 | 3565-10-830 | 1-E2 | 8871-13-100B | 1-C4 | 8341-13-241 | 1-N6 | 8871-13-650D | 1-I6 | 8562-13-889A | 1-D4 |
| 1757-10-171A | 1-D2 | 8555-10-845 | 1-I2 | 1010-13-104 | 1-H6 | 8344-13-241 | 1-C7 | 8871-13-650F | 1-I6 | 8871-13-891 | 1-D4 |
| 1480-10-172 | 1-D2 | 3565-10-860B | 1-I2 | 1010-13-104 | 1-K6 | 8344-13-241 | 1-F7 | 8871-13-650F | 1-L6 | 8871-13-911B | 1-J6 |
| 1757-10-172 | 1-D2 | 3565-10-861A | 1-I2 | 1010-13-104 | 1-N6 | 8871-13-241B | 1-H6 | 8872-13-650B | 1-L6 | 1700-13-945A | 1-M6 |
| 0813-10-173 | 1-D2 | 8871-10-862 | 1-I2 | 1010-13-104 | 1-E7 | 8871-13-241B | 1-L6 | 8872-13-650C | 1-L6 | 1700-13-945A | [illegible] |
| 8527-10-174 | 1-G2 | 1011-11-111 | 1-F3 | 3743-13-111A | 1-C4 | 8871-13-247A | 1-I6 | 8871-13-670B | 1-F4 | 1700-13-945A | [illegible] |
| 8871-10-200A | 1-G2 | 1056-11-300A | 1-F3 | 8527-13-113 | 1-C4 | 8871-13-247A | 1-L6 | 1757-13-710A | 1-G6 | 1700-13-945A | 1-J6 |
| 8981-10-200 | 1-G2 | 8562-11-300 | 1-F3 | 8527-13-135A | 1-E7 | 3648-13-270 | 1-E4 | 1757-13-714 | 1-F6 | 8344-13-950 | 1-D7 |
| 0820-10-203 | 1-G2 | 1202-11-302 | 1-F3 | 8527-13-135A | 1-H6 | 3648-13-270A | 1-E4 | 1757-13-715 | 1-F6 | 8344-13-950 | 1-G7 |
| 0839-10-203 | 1-G2 | 1011-11-304A | 1-F3 | 8527-13-135A | 1-K6 | 3648-13-290 | 1-C7 | 1757-13-717 | 1-F6 | 8503-13-951 | 1-D7 |
| 8562-10-205 | 1-G2 | 1056-11-307A | 1-F3 | 8527-13-135A | 1-N6 | 3648-13-290 | 1-F7 | 8871-13-718 | 1-F6 | 8503-13-951 | 1-G7 |
| 1757-10-206A | 1-G2 | 0820-11-317 | 1-F3 | 8527-13-135A | 2-C7 | 3648-13-290 | 1-I6 | 8342-13-720 | 1-F6 | 8712-13-980 | 1-D7 |
| 1757-10-207A | 1-G2 | 1202-11-321 | 1-F3 | 8735-13-150 | 1-E7 | 3648-13-290 | 1-L6 | 8871-13-720B | 1-F6 | 8712-13-980 | 1-G7 |
| 1757-10-208 | 1-G2 | 1202-11-323 | 1-F3 | 8735-13-150 | 1-H6 | 8871-13-291A | 1-F7 | 8871-13-724A | 1-F6 | 8712-13-980 | 1-J6 |
| 0453-10-250 | 1-D2 | 0820-11-341 | 1-F3 | 8735-13-150 | 1-K6 | 8871-13-291A | 1-H6 | 8868-13-725 | 1-F6 | 8712-13-980 | 1-M6 |
| 8871-10-250 | 1-E2 | 1202-11-343 | 1-F3 | 8735-13-150 | 1-N6 | 8871-13-291A | 1-L6 | 8871-13-725 | 1-F6 | 8868-13-980B | 1-D7 |
| 0324-10-252 | 1-E2 | 8341-11-343 | 1-F3 | 8868-13-151 | 1-H6 | 8871-13-291A | 1-N6 | 2329-13-726 | 1-F6 | 8868-13-980B | 1-G7 |
| 8871-10-252 | 1-E2 | 1011-11-351 | 1-F3 | 8868-13-151 | 1-K6 | 8871-13-296B | 1-C7 | 8501-13-730B | 1-F6 | 8868-13-980B | 1-J6 |
| 1029-10-305 | 1-G2 | 1011-11-353A | 1-F3 | 8868-13-151A | 1-E7 | 8871-13-296B | 1-F7 | 8871-13-744 | 1-F6 | 8868-13-980B | 1-M6 |
| 1480-10-305 | 1-G2 | 1011-11-361 | 1-F3 | 8868-13-151A | 1-H6 | 8871-13-296B | 1-I6 | 8871-13-744A | 1-F6 | 8868-13-982 | 1-J6 |
| 1481-10-305 | 1-G2 | 1011-11-363A | 1-G3 | 8868-13-151A | 1-K6 | 8871-13-296B | 1-L6 | 8871-13-745 | 1-G6 | 8868-13-982 | 1-M6 |
| 1757-10-305 | 1-H2 | 1881-11-400A | 1-C3 | 8868-13-151A | 1-N6 | 8341-13-300 | 1-G4 | 8871-13-746A | 1-G6 | 8501-14-100 | 1-C8 |
| 1757-10-309 | 1-G2 | 1883-11-400A | 1-C3 | 8341-13-200A | 1-C5 | 8871-13-300C | 1-G4 | 8871-13-746B | 1-G6 | 8501-14-110 | 1-E8 |
| 1757-10-309 | 1-H2 | 1881-11-403 | 1-C3 | 8342-13-200A | 1-C5 | 8871-13-305 | 1-G4 | 8871-13-746C | 1-G6 | 1757-14-112 | 1-C8 |
| 0866-10-320A | 1-H2 | 1881-11-404 | 1-C3 | 8344-13-200A | 1-H5 | 8871-13-305 | 3-D6 | 8871-13-749 | 1-G6 | 0810-14-113 | 1-C8 |
| 1758-10-351 | 1-H2 | 0813-11-405 | 1-C3 | 8345-13-200A | 1-H5 | 8871-13-311B | 1-G4 | 8341-13-760A | 1-C7 | 0839-14-115 | 1-I2 |
| 8341-10-400 | 1-E2 | 0839-11-411A | 1-C3 | 8485-13-200 | 1-M5 | 8871-13-330B | 1-D4 | 8871-13-760 | 1-I6 | 0839-14-117 | 1-C8 |
| 8344-10-400 | 1-E2 | 0839-11-412 | 1-C3 | 8868-13-200F | 1-I4 | 2850-13-331 | 1-C13 | 8761-13-770 | 1-C7 | 8501-14-118 | 1-C8 |
| 8871-10-400 | 1-E2 | 1011-11-501 | 1-C3 | 8868-13-200G | 1-I4 | 8871-13-341A | 1-G4 | 8761-13-770 | 1-I6 | 0839-14-119B | 1-C8 |
| 8871-10-410A | 1-E2 | 0839-11-502 | 1-C3 | 8869-13-200G | 1-I4 | 1757-13-351A | 1-G4 | 8761-13-770 | 1-L6 | 8553-14-125 | 1-C8 |
| 8562-10-417 | 1-E2 | 1011-11-504 | 1-D3 | 8871-13-200F | 1-I4 | 8871-13-371 | 1-D4 | 8761-13-770 | 1-F7 | 0839-14-141A | 1-C8 |
| 1015-10-451B | 1-H2 | 0813-11-505B | 1-D3 | 8871-13-200G | 1-I4 | 8871-13-380A | 1-D4 | 8871-13-775 | 1-C7 | 0839-14-142 | 1-C8 |
| 1015-10-452A | 1-H2 | 0839-11-506 | 1-D3 | 8872-13-200G | 1-M5 | 3565-13-390 | 1-D4 | 8871-13-775 | 1-F7 | 8871-14-160 | 1-C8 |
| 0839-10-455 | 1-H2 | 1011-11-507 | 1-D3 | 8872-13-200G | 1-I4 | 8871-13-400B | 1-E4 | 8871-13-775 | 1-J6 | 0810-14-171 | 1-C8 |
| 2306-10-481 | 1-E7 | 0839-11-508 | 1-D3 | 8871-13-201A | 1-E4 | 8871-13-407 | 1-E4 | 8871-13-775 | 1-L6 | 3648-14-250 | 1-C8 |
| 2306-10-481 | 1-K6 | 0839-11-509 | 1-D3 | 8527-13-205 | 1-F4 | 1570-13-447 | 2-E10 | 8871-13-780 | 1-D7 | 0839-14-273A | 1-I2 |
| 3743-10-500 | 1-E2 | 1881-11-511 | 1-D3 | 8527-13-205 | 1-E4 | 1570-13-447 | 1-E4 | 8871-13-780 | 1-G7 | 0839-14-274 | 1-I2 |
| 8341-10-500 | 1-E2 | 8519-11-517 | 1-D3 | 8341-13-215 | 1-C5 | 8871-13-447 | 1-F4 | 8871-13-780 | 1-J6 | 0730-14-296 | 1-C8 |
| 0820-10-502B | 1-E2 | 0839-11-531 | 1-D3 | 8341-13-215 | 1-H5 | 0222-13-470B | 1-F4 | 8871-13-780 | 1-M6 | 8341-14-310 | 1-C8 |
| 0839-10-504 | 1-E2 | 0839-11-551A | 1-D3 | 8341-13-215 | 1-M5 | 0381-13-481 | 1-F4 | 0107-13-781 | 1-C5 | 1757-14-600 | 1-D8 |
| 3743-10-550A | 1-E2 | 8649-11-600 | 1-C3 | 8871-13-220B | 1-E4 | 1881-13-510E | 1-H4 | 0107-13-781 | 1-H5 | 1757-14-611 | 1-D8 |
| 0813-10-555A | 1-E2 | 0820-11-611B | 1-C3 | 8872-13-220A | 1-E4 | 1757-13-515A | 1-H4 | 0107-13-781 | 1-I4 | 0820-14-620A | 1-D8 |
| 1668-10-556A | 1-F2 | 1881-11-700 | 1-C3 | 3597-13-240A | 1-E7 | 8871-13-527 | 1-H4 | 0107-13-781 | 1-M5 | 0813-14-623 | 1-D8 |
| 1668-10-556A | 1-E2 | 0866-11-702 | 1-C3 | 3597-13-240A | 1-H6 | 8712-13-531 | 1-H4 | 8871-13-781B | 1-D7 | 0820-14-625A | 1-D8 |

# PART NUMBER INDEX

| PART NUMBER | LOCATION | PART NUMBER | LOCATION | PART NUMBER | LOCATION | PART NUMBER | LOCATION | PART NUMBER | LOCATION | PART NUMBER | LOCATION |
|---|---|---|---|---|---|---|---|---|---|---|---|
| 8871-14-651 | 1-D8 | 8872-15-310A | 1-I8 | 8540-17-231A | 1-K9 | 8086-17-302A | 1-M9 | 8562-17-402 | 1-E10 | 8057-17-441 | 1-E9 |
| 1757-14-652 | 1-D8 | 8872-15-310B | 1-I8 | 0862-17-241A | 1-G9 | 8086-17-304 | 1-M9 | 8562-17-402 | 1-I10 | 8057-17-441A | 1-G13 |
| 1757-14-653 | 1-D8 | 1128-15-312A | 1-I8 | 0862-17-241A | 1-K9 | 0603-17-305 | 1-I9 | 1650-17-404 | 1-E10 | 8057-17-441A | 1-C9 |
| 8871-14-660 | 1-D8 | 1757-15-312 | 3-I16 | 0187-17-243 | 1-G9 | 0839-17-305B | 1-M9 | 1650-17-404 | 1-I10 | 8057-17-441A | 1-E9 |
| 8871-14-660A | 1-D8 | 8871-15-312 | 1-I8 | 0187-17-243 | 1-K9 | 8540-17-308A | 1-M9 | 8562-17-404 | 1-E10 | 8057-17-441B | 1-H13 |
| 3565-14-662A | 1-F8 | 8871-15-331 | 1-I8 | 0103-17-244A | 1-K9 | 8540-17-308B | 1-N9 | 8562-17-404 | 1-I10 | 8057-17-441B | 1-C9 |
| 8871-14-670 | 1-D8 | 8871-15-332 | 1-I8 | 0371-17-245A | 1-N9 | 8086-17-310 | 1-I9 | 8868-17-404 | 1-E10 | 8057-17-441B | 1-F9 |
| 8871-14-670A | 1-D8 | 8871-15-350 | 1-J8 | 0862-17-245A | 1-N9 | 8086-17-310 | 1-N9 | 8868-17-404 | 1-I10 | 0862-17-442 | 1-D9 |
| 8871-14-700 | 1-F8 | 8871-15-351A | 1-J8 | 0881-17-245C | 1-K9 | 0118-17-313 | 1-I10 | 8970-17-404 | 1-E10 | 0862-17-442 | 1-F9 |
| 0813-14-716 | 1-F8 | 1052-15-355 | 1-J8 | 0881-17-245C | 1-G9 | 0118-17-313 | 1-E10 | 8970-17-404 | 1-I10 | 0862-17-442 | 1-H13 |
| 0813-14-716 | 1-J2 | 8871-15-401A | 1-I8 | 8540-17-251 | 1-G9 | 0118-17-313A | 1-I10 | 3648-17-406 | 1-E10 | 1011-17-442 | 1-D9 |
| 1011-14-720 | 1-F8 | 8871-15-511 | 1-H8 | 8540-17-251 | 1-L9 | 0118-17-313A | 1-E10 | 3648-17-406 | 1-I10 | 1011-17-442 | 1-F9 |
| 8871-14-730 | 1-F8 | 8871-15-521 | 1-H8 | 0437-17-261 | 1-H9 | 4069-17-313 | 1-I9 | 8134-17-406 | 1-E10 | 1011-17-442 | 1-H13 |
| 8871-14-742 | 1-F8 | 8553-15-610A | 1-J8 | 0437-17-261 | 1-L9 | 4069-17-313 | 1-N9 | 8134-17-406 | 1-I10 | 1011-17-443 | 1-H13 |
| 0839-14-745 | 1-F8 | 8553-15-611 | 1-J8 | 0862-17-262B | 1-H9 | 4077-17-314A | 1-I9 | 8134-17-410A | 1-J10 | 1011-17-443 | 1-D9 |
| 8871-14-810 | 1-F8 | 8553-15-620D | 1-J8 | 0862-17-262B | 1-L9 | 4077-17-314A | 1-N9 | 8601-17-410 | 1-J10 | 1011-17-443 | 1-F9 |
| 1757-14-821 | 1-F8 | 0603-16-102B | 1-K8 | 0862-17-262C | 1-H9 | 4077-17-315A | 1-I9 | 0014-17-411 | 1-F10 | 8540-17-450 | 1-G10 |
| 1757-14-822 | 1-F8 | 0603-16-103 | 1-K8 | 0862-17-262C | 1-L9 | 4077-17-315A | 1-N9 | 0014-17-411 | 1-J10 | 8540-17-450 | 1-K10 |
| 1757-14-823 | 1-F8 | 3975-16-214 | 1-K8 | 8540-17-271 | 1-H9 | 4077-17-316 | 1-I9 | 0103-17-411 | 1-F10 | 8531-17-461 | 1-G10 |
| 8553-15-010F | 1-F8 | 8540-16-220A | 1-K8 | 8540-17-271 | 1-L9 | 4077-17-316 | 1-N9 | 0103-17-411 | 1-J10 | 8601-17-461 | 1-K10 |
| 8872-15-010 | 1-F8 | 8540-16-225 | 1-K8 | 0259-17-274A | 1-H9 | 8086-17-316 | 1-I10 | 8086-17-411 | 1-E10 | 8601-17-461A | 1-G10 |
| 8872-15-010A | 1-G8 | 8540-16-241A | 1-K8 | 0259-17-274A | 1-L9 | 8367-17-316 | 1-E10 | 8086-17-411 | 1-I10 | 8601-17-461A | 1-K10 |
| 8872-15-010B | 1-G8 | 0839-16-410B | 1-K8 | 8540-17-275 | 1-H9 | 0600-17-324 | 1-J9 | 8562-17-411A | 1-E10 | 0398-17-462A | 1-G10 |
| 8872-15-103 | 1-G8 | 0839-16-432 | 1-K8 | 8540-17-275 | 1-L9 | 0600-17-324 | 1-N9 | 8562-17-411A | 1-I10 | 0398-17-462A | 1-K10 |
| 2090-15-104 | 1-G8 | 0862-16-460C | 1-K8 | 0259-17-276 | 1-H9 | 8086-17-326 | 1-C9 | 8134-17-412A | 1-F10 | 3648-17-463A | 1-K10 |
| 8872-15-104 | 1-G8 | 0862-16-460D | 1-K8 | 0259-17-276 | 1-L9 | 8086-17-326 | 1-E9 | 8601-17-412 | 1-F10 | 3648-17-463B | 1-K10 |
| 1757-15-105A | 1-G8 | 8540-16-510B | 1-K8 | 0259-17-277 | 1-H9 | 0305-17-327 | 1-J9 | 3648-17-414 | 1-J10 | 3648-17-464 | 1-K10 |
| 1757-15-106 | 1-G8 | 8540-16-520A | 1-K8 | 0259-17-277 | 1-L9 | 0305-17-327 | 1-N9 | 3648-17-415 | 1-J10 | 3648-17-464A | 1-L10 |
| 1757-15-114 | 1-G8 | 8540-17-100F | 1-E9 | 0259-17-278 | 1-H9 | 0305-17-328 | 1-J9 | 3648-17-416 | 1-J10 | 8867-17-470 | 1-G10 |
| 1757-15-118 | 1-G8 | 8540-17-100G | 1-C9 | 0259-17-278 | 1-L9 | 0305-17-328 | 1-N9 | 8086-17-421 | 1-F10 | 8867-17-470A | 1-G10 |
| 1757-15-120 | 1-G8 | 8540-17-100G | 1-E9 | 0259-17-279 | 1-H9 | 8540-17-330B | 1-E9 | 8086-17-421 | 1-J10 | 8871-17-470 | 1-[illegible] |
| 8871-15-121A | 1-G8 | 8540-17-100G | 1-C9 | 0259-17-279 | 1-L9 | 8867-17-330A | 1-C9 | 8562-17-421 | 1-F10 | 8871-17-470A | 1-L10 |
| 0118-15-125 | 1-G8 | 8540-17-100H | 1-E9 | 8118-17-281 | 1-H9 | 8871-17-330A | 1-E9 | 8562-17-421 | 1-J10 | 0647-17-473 | 1-G10 |
| 3648-15-130D | 1-G8 | 8540-17-100H | 1-C9 | 8118-17-281 | 1-L9 | 0437-17-335 | 1-F13 | 8134-17-422 | 1-F10 | 0647-17-473 | 1-L10 |
| 3648-15-130E | 1-H8 | 8868-17-100 | 1-E9 | 4069-17-283A | 1-H9 | 0437-17-335 | 1-C9 | 8134-17-422 | 1-J10 | 0303-17-474 | 1-G10 |
| 1757-15-132 | 1-G8 | 8868-17-100 | 1-C9 | 4069-17-283A | 1-L9 | 0437-17-335 | 1-E9 | 8601-17-422 | 1-F10 | 0303-17-474 | 1-L10 |
| 1757-15-151B | 1-H8 | 8868-17-100A | 1-E9 | 4069-17-284D | 1-H9 | 3728-17-341 | 1-D14 | 8601-17-422 | 1-J10 | 8531-17-475 | 1-H10 |
| 1757-15-152B | 1-G8 | 8868-17-100A | 1-C9 | 4069-17-284D | 1-L9 | 3728-17-341 | 1-J9 | 8134-17-431 | 1-F10 | 8531-17-475 | 1-L10 |
| 8872-15-170 | 1-H8 | 8868-17-100B | 1-E9 | 0419-17-288 | 1-L9 | 3728-17-341 | 1-N9 | 8134-17-431 | 1-J10 | 0271-17-478 | 1-H10 |
| 8553-15-171 | 1-H8 | 8868-17-100B | 1-C9 | 0419-17-291 | 1-L9 | 3728-17-341A | 1-D14 | 8134-17-431A | 1-F10 | 0271-17-478 | 1-L10 |
| 8519-15-172A | 1-H8 | 0810-17-121 | 1-C9 | 0419-17-292 | 1-M9 | 3728-17-341A | 1-J9 | 8134-17-431A | 1-J10 | 0303-17-482 | 1-H10 |
| 8519-15-172B | 1-H8 | 0810-17-121 | 1-E9 | 0419-17-293 | 1-M9 | 3728-17-341A | 1-N9 | 8601-17-431A | 1-F10 | 0303-17-482 | 1-L10 |
| 1757-15-173 | 1-H8 | 8086-17-140 | 1-J9 | 0821-17-297 | 1-I9 | 0114-17-351 | 1-E10 | 8601-17-431A | 1-K10 | 8871-17-510 | 1-H10 |
| 3648-15-200 | 1-H8 | 8086-17-140 | 1-N9 | 0821-17-297 | 1-M9 | 0114-17-351 | 1-I10 | 8540-17-432A | 1-F10 | 8871-17-510 | 1-L10 |
| | | | | 8086-17-297 | 1-I9 | | | | | | |
| 3648-15-200A | 1-H8 | 8540-17-201 | 1-G9 | 8086-17-297 | 1-M9 | 1011-17-351 | 1-C9 | 8540-17-432A | 1-K10 | 1931-17-520 | 1-H10 |
| 0488-15-205 | 1-I8 | 8540-17-201 | 1-K9 | 8540-17-301A | 1-M9 | 1011-17-351 | 1-E9 | 8540-17-432B | 1-G10 | 1931-17-520A | 1-H10 |
| 8871-15-205 | 1-I8 | 8540-17-201A | 1-G9 | 8540-17-301B | 1-M9 | 1011-17-351 | 1-F13 | 8540-17-432B | 1-K10 | 8562-17-520 | 1-L10 |
| 1202-15-210 | 1-I8 | 8540-17-201A | 1-K9 | 8540-17-301C | 1-M9 | 0187-17-352 | 1-F13 | 8540-17-432C | 1-G10 | 8562-17-520A | 1-L10 |
| 1907-15-211A | 1-I8 | 0603-17-210 | 1-G9 | 8540-17-301D | 1-M9 | 0187-17-352 | 1-C9 | 8540-17-432C | 1-K10 | 8562-17-520B | 1-L10 |
| 8872-15-211 | 1-I8 | 0603-17-210 | 1-K9 | 8867-17-301A | 1-I9 | 0187-17-352 | 1-E9 | 0821-17-435 | 1-G10 | 8562-17-520B00 | 1-M10 |
| 3648-15-250 | 1-I8 | 8086-17-221A | 1-G9 | 8867-17-301B | 1-I9 | 0111-17-354 | 1-C9 | 0821-17-435 | 1-K10 | 8562-17-520B23 | 1-M10 |
| 3648-15-250A | 1-I8 | 8086-17-221A | 1-K9 | 8867-17-301C | 1-I9 | 0111-17-354 | 1-E9 | 0259-17-441 | 1-G10 | 8871-17-520 | 1-M10 |
| 8341-15-310 | 1-H8 | 0317-17-225 | 1-K9 | 8086-17-302 | 1-I9 | 0111-17-354 | 1-F13 | 0259-17-441 | 1-K10 | 8871-17-520A | 1-M10 |
| 8342-15-310A | 1-H8 | 0317-17-225 | 1-G9 | 8086-17-302 | 1-M9 | 0290-17-402 | 1-E10 | 8057-17-441 | 1-G13 | 8540-17-523 | 1-D9 |
| 8871-15-310B | 1-I8 | 8540-17-231A | 1-G9 | 8086-17-302A | 1-I9 | 0290-17-402 | 1-I10 | 8057-17-441 | 1-C9 | 8540-17-523 | 1-F9 |

# PART NUMBER INDEX

| PART NUMBER | LOCATION |
|---|---|
| 0271-17-524 | 1-D9 |
| 0271-17-524 | 1-F9 |
| 0884-17-530 | 1-D9 |
| 0884-17-530 | 1-F9 |
| 8086-17-540 | 1-F9 |
| 8867-17-540 | 1-D9 |
| 8540-17-611 | 1-C10 |
| 8540-17-612 | 1-C10 |
| 8540-17-613 | 1-C10 |
| 8601-17-621 | 1-C10 |
| 8601-17-621 | 1-J9 |
| 3648-17-622A | 1-C10 |
| 3648-17-622A | 1-J9 |
| 3648-17-622B | 1-C10 |
| 3648-17-622B | 1-J9 |
| 3648-17-626 | 1-C10 |
| 8601-17-629 | 1-C10 |
| 8601-17-629 | 1-J9 |
| 0884-17-632A | 1-C10 |
| 0884-17-633A | 1-C10 |
| 0884-17-634A | 1-C10 |
| 0884-17-635A | 1-C10 |
| 0884-17-636A | 1-C10 |
| 0376-17-640A | 1-M10 |
| 1391-17-640 | 1-H10 |
| 1391-17-640 | 1-M10 |
| 1391-17-640 | 1-H10 |
| 1391-17-640 | 1-M10 |
| 0862-17-641 | 1-C10 |
| 0862-17-642 | 1-C10 |
| 0862-17-643 | 1-D10 |
| 0862-17-644 | 1-D10 |
| 8341-18-050B | 3-L16 |
| 8342-18-050B | 3-L16 |
| 8485-18-050C | 3-L16 |
| 8871-18-050F | 3-L16 |
| 8871-18-050G | 3-L16 |
| 8872-18-050E | 3-L16 |
| 8872-18-050F | 3-L16 |
| 8341-18-055 | 3-L16 |
| 8871-18-055 | 3-L16 |
| 8872-18-056 | 3-L16 |
| 8245-18-100 | 1-C11 |
| 0866-18-101 | 1-C11 |
| 8872-18-101A | 1-C11 |
| 8871-18-106 | 1-F11 |
| 8871-18-106A | 1-F11 |
| 8871-18-106B | 1-F11 |
| 8871-18-106C | 1-F11 |
| 0823-18-107 | 1-C11 |
| 8245-18-107 | 1-C11 |
| 8871-18-110A | 1-C11 |
| 8871-18-110B | 1-C11 |
| 3648-18-111 | 1-C11 |
| 3648-18-111A | 1-D11 |
| 8871-18-111 | 1-D11 |
| 8871-18-111A | 1-D11 |
| 0820-18-114 | 1-D11 |
| 1480-18-120A | 1-D11 |
| 8871-18-120A | 1-D11 |
| 1480-18-130A | 1-D11 |
| 1480-18-130B | 1-D11 |
| 8248-18-130 | 1-D11 |
| 8871-18-130 | 1-D11 |
| 8248-18-140 | 1-D11 |
| 8248-18-140A | 1-D11 |
| 8871-18-140 | 1-D11 |
| 8248-18-150 | 1-D11 |
| 8248-18-150A | 1-D11 |
| 8871-18-150A | 1-D11 |
| 1480-18-160A | 1-E11 |
| 8871-18-160A | 1-E11 |
| 1480-18-170A | 1-E11 |
| 1480-18-170B | 1-E11 |
| 8248-18-170 | 1-E11 |
| 8871-18-170A | 1-E11 |
| 8871-18-180 | 1-E11 |
| 8341-18-200 | 1-J11 |
| 8342-18-200 | 1-J11 |
| 8826-18-200A | 1-H11 |
| 8827-18-200A | 1-H11 |
| 0107-18-216A | 1-H11 |
| 0107-18-216A | 1-J11 |
| 8182-18-250 | 1-G11 |
| 8245-18-250 | 1-G11 |
| 8341-18-250 | 1-G11 |
| 8248-18-260A | 1-E11 |
| 0810-18-276 | 1-D8 |
| 0810-18-277 | 1-D8 |
| 8341-18-300 | 1-N11 |
| 8871-18-300 | 1-L11 |
| 1757-18-311 | 1-E11 |
| 0114-18-327 | 1-L11 |
| 0114-18-327 | 1-N11 |
| 1881-18-361A | 1-E11 |
| 0222-18-375 | 1-E11 |
| 0222-18-376 | 1-F11 |
| 0222-18-377 | 1-F11 |
| 8871-18-381 | 1-F11 |
| 0453-18-391 | 1-F11 |
| 1757-18-400D | 1-D12 |
| 8872-18-400A | 1-F12 |
| 8712-18-510 | 1-F11 |
| 0504-18-520B | 1-H12 |
| 8715-18-520 | 1-H12 |
| 8871-18-590A | 1-F11 |
| 3648-18-600 | 1-C11 |
| 3649-18-600 | 1-C11 |
| 3743-18-600 | 1-C11 |
| 8344-18-600 | 1-C11 |
| 8345-18-600 | 1-C11 |
| 2691-18-660 | 3-C16 |
| 8871-18-810A | 1-E11 |
| 8871-18-820A | 1-F11 |
| 8341-18-861A | 1-F11 |
| 8871-18-861 | 1-F11 |
| 8156-18-863A | 1-F11 |
| 8156-18-863A | 1-J8 |
| 1881-18-880A | 1-F11 |
| 8341-18-880 | 1-F11 |
| 8871-18-920 | 1-C11 |
| 8341-18-940 | 1-G11 |
| 8344-18-940 | 1-G11 |
| 8345-18-940 | 1-G11 |
| 8553-18-940C | 1-G11 |
| 8868-18-940D | 1-G11 |
| 8871-18-940A | 1-G11 |
| 8341-18-970 | 1-G11 |
| 1820-18-994 | 1-G11 |
| 1820-18-994A | 1-G11 |
| 1758-19-020 | 1-C13 |
| 0842-19-025 | 1-C13 |
| 1908-19-027 | 1-C13 |
| 0454-19-028A | 1-C13 |
| 1758-19-028 | 1-C13 |
| 8872-19-031 | 1-G14 |
| 1758-19-036A | 1-G14 |
| 1758-19-055 | 1-G14 |
| 3649-19-064 | 1-C13 |
| 8872-19-090 | 1-C13 |
| 1758-19-100 | 1-C13 |
| 1758-19-211C | 1-C13 |
| 1758-19-215 | 1-C13 |
| 0338-19-216 | 1-C13 |
| 1758-19-220 | 1-C13 |
| 0338-19-223 | 1-C13 |
| 0338-19-223A | 1-C13 |
| 1758-19-240 | 1-D13 |
| 0338-19-255 | 1-D13 |
| 0338-19-256 | 1-D13 |
| 0338-19-257 | 1-D13 |
| 0338-19-258 | 1-D13 |
| 1758-19-310B | 1-F13 |
| 1758-19-310C | 1-F13 |
| 0338-19-331A | 1-F13 |
| 0338-19-336 | 1-F13 |
| 0338-19-337 | 1-F13 |
| 0338-19-338 | 1-F13 |
| 1758-19-341 | 1-F13 |
| 0378-19-344 | 1-F13 |
| 0338-19-360A | 1-K13 |
| 0338-19-360B | 1-K13 |
| 0338-19-361 | 1-F13 |
| 0338-19-361B | 1-F13 |
| 0338-19-363 | 1-F13 |
| 0842-19-381 | 1-F13 |
| 0338-19-384 | 1-G13 |
| 0842-19-385 | 1-G13 |
| 1758-19-386 | 1-G13 |
| 0338-19-388A | 1-G13 |
| 0338-19-389 | 1-G13 |
| 1758-19-391A | 1-G13 |
| 1758-19-392A | 1-G13 |
| 0842-19-394 | 1-G13 |
| 1758-19-394A | 1-G13 |
| 0338-19-395 | 1-G13 |
| 0338-19-397 | 1-D14 |
| 0338-19-397 | 1-G13 |
| 1758-19-397 | 1-G13 |
| 1758-19-431A | 1-G14 |
| 1758-19-434 | 1-G14 |
| 1758-19-440A | 1-G14 |
| 1758-19-443 | 1-G14 |
| 8872-19-444A | 1-G14 |
| 8872-19-445A | 1-D13 |
| 0338-19-449 | 1-G14 |
| 1758-19-450 | 1-G14 |
| 1758-19-455A | 1-G14 |
| 3959-19-460 | 1-K13 |
| 3959-19-460A | 1-K13 |
| 3959-19-470 | 1-K13 |
| 3959-19-470A | 1-K13 |
| 0338-19-475 | 1-K13 |
| 0338-19-476 | 1-K13 |
| 0338-19-480 | 1-K13 |
| 0338-19-486 | 1-K13 |
| 0338-19-487 | 1-K13 |
| 0338-19-488 | 1-K13 |
| 0338-19-498 | 1-K13 |
| 0338-19-499 | 1-K13 |
| 0338-19-500A | 1-K13 |
| 1758-19-503 | 1-K13 |
| 3959-19-503 | 1-L13 |
| 1758-19-504 | 1-L13 |
| 3959-19-504 | 1-L13 |
| 1758-19-505 | 1-L13 |
| 3959-19-505 | 1-L13 |
| 1758-19-506 | 1-L13 |
| 3959-19-506 | 1-L13 |
| 1758-19-507 | 1-L13 |
| 3959-19-507 | 1-L13 |
| 1758-19-508 | 1-L13 |
| 3959-19-508 | 1-L13 |
| 0338-19-509 | 1-L13 |
| 3959-19-509 | 1-L13 |
| 0338-19-510 | 1-M13 |
| 0338-19-511 | 1-M13 |
| 0338-19-515 | 1-M13 |
| 0338-19-530 | 1-M13 |
| 0338-19-531 | 1-M13 |
| 0338-19-534 | 1-M13 |
| 0338-19-540 | 1-M13 |
| 0338-19-550 | 1-M13 |
| 0338-19-560 | 1-M13 |
| 0338-19-565 | 1-M13 |
| 0338-19-566 | 1-M13 |
| 0338-19-567 | 1-M13 |
| 0338-19-570 | 1-M13 |
| 0338-19-580 | 1-D14 |
| 0338-19-581 | 1-D14 |
| 0338-19-590 | 1-D14 |
| 0338-19-591 | 1-D14 |
| 0338-19-593 | 1-D14 |
| 0338-19-594 | 1-D14 |
| 0338-19-595 | 1-D14 |
| 0338-19-596 | 1-D14 |
| 0338-19-598 | 1-M13 |
| 0338-19-601 | 1-D14 |
| 0338-19-603 | 1-D14 |
| 0338-19-604 | 1-D14 |
| 0338-19-605 | 1-E14 |
| 0338-19-606 | 1-E14 |
| 0338-19-607 | 1-E14 |
| 0338-19-608 | 1-E14 |
| 0338-19-609 | 1-E14 |
| 0338-19-610A | 1-E14 |
| 1758-19-613 | 1-E14 |
| 1758-19-614 | 1-E14 |
| 1758-19-615 | 1-E14 |
| 1758-19-616 | 1-E14 |
| 1758-19-617 | 1-E14 |
| 1758-19-618 | 1-E14 |
| 0338-19-619 | 1-E14 |
| 0338-19-621 | 1-N13 |
| 0338-19-622 | 1-N13 |
| 0338-19-623 | 1-N13 |
| 0338-19-624 | 1-N13 |
| 0338-19-631 | 1-N13 |
| 0338-19-632 | 1-N13 |
| 0338-19-633 | 1-N13 |
| 0338-19-634 | 1-N13 |
| 0338-19-635 | 1-N13 |
| 0338-19-636 | 1-N13 |
| 0338-19-639 | 1-M13 |
| 0338-19-641 | 1-N13 |
| 0338-19-642 | 1-N13 |
| 0338-19-643 | 1-N13 |
| 0338-19-644 | 1-N13 |
| 0338-19-645 | 1-N13 |
| 0338-19-646 | 1-C14 |
| 0338-19-647 | 1-C14 |
| 0338-19-648 | 1-C14 |
| 0842-19-650 | 1-E14 |
| 0338-19-655 | 1-E14 |
| 0436-19-656 | 1-N13 |
| 0842-19-660 | 1-E14 |
| 0338-19-663 | 1-F14 |
| 0338-19-664 | 1-F14 |
| 0842-19-665 | 1-F14 |
| 0338-19-666 | 1-F14 |
| 0338-19-667 | 1-F14 |
| 0338-19-670A | 1-F14 |
| 0338-19-676 | 1-F14 |
| 0338-19-678 | 1-D13 |
| 0338-19-701A | 1-G14 |
| 0338-19-702A | 1-G14 |
| 0338-19-703 | 1-H14 |
| 0338-19-704 | 1-H14 |
| 0338-19-706 | 1-H14 |
| 1840-19-710 | 1-H13 |
| 0338-19-731 | 1-H14 |
| 0338-19-732 | 1-H14 |
| 0338-19-733C | 1-H14 |
| 0338-19-734A | 1-H14 |
| 0338-19-735 | 1-H13 |
| 0338-19-737 | 1-H13 |
| 0338-19-739 | 1-H13 |
| 3649-19-750 | 1-H13 |
| 0338-19-768 | 1-H13 |
| 1758-19-815 | 1-H13 |
| 1675-19-821 | 1-H13 |
| 0338-19-822 | 1-I13 |
| 1758-19-823 | 1-I13 |
| 0338-19-825 | 1-I13 |
| 0338-19-826 | 1-I13 |
| 0338-19-827 | 1-I13 |
| 0338-19-828 | 1-I13 |
| 0338-19-829 | 1-I13 |
| 0338-19-831 | 1-I13 |
| 0338-19-832 | 1-I13 |
| 0338-19-833 | 1-I13 |
| 1758-19-835 | 1-I13 |
| 1758-19-836 | 1-I13 |
| 0338-19-837 | 1-I13 |
| 1758-19-838 | 1-H14 |
| 8872-19-838A | 1-H14 |
| 8872-19-870A | 1-I13 |
| 8872-19-880 | 1-I13 |
| 0338-19-904A | 1-D13 |
| 8872-19-911 | 1-D13 |
| 0842-19-915A | 1-D13 |
| 3879-19-916 | 1-J13 |
| 8872-19-920 | 1-D13 |
| 8872-19-930 | 1-D13 |
| 8872-19-930A | 1-D13 |
| 1840-19-933 | 1-D13 |
| 3954-19-933 | 1-E13 |
| 2579-19-989 | 1-E13 |
| 8871-20-740 | 1-F6 |
| 8871-20-740A | 1-F6 |

# PART NUMBER INDEX

| PART NUMBER | LOCATION |
|---|---|
| 8341-20-770 | 1-G11 |
| 0397-22-100 | 1-C14 |
| 0397-22-200 | 1-C14 |
| 0398-22-333 | 1-D9 |
| 0398-22-333 | 1-F9 |
| 1757-23-040B | 1-C2 |
| 8871-23-075 | 1-H2 |
| 8341-23-095 | 1-G2 |
| 8871-23-095 | 1-G2 |
| 3743-23-103 | 1-G3 |
| 3743-23-113 | 1-G3 |
| 1011-23-151A | 1-G3 |
| 8871-23-180 | 1-G3 |
| 8341-23-200 | 1-C2 |
| 8342-23-200 | 1-C2 |
| 8344-23-200 | 1-C2 |
| 8345-23-200 | 1-C2 |
| 8871-23-200 | 1-C2 |
| 8872-23-200 | 1-C2 |
| 8341-23-310 | 1-C5 |
| 8344-23-310 | 1-H5 |
| 8485-23-310 | 1-M5 |
| 8868-23-310 | 1-I4 |
| 8869-23-310 | 1-I4 |
| 8871-23-310 | 1-I4 |
| 8872-23-310 | 1-I4 |
| 8872-23-310 | 1-M5 |
| 0730-23-318 | 1-C5 |
| 0730-23-318 | 1-H5 |
| 0730-23-318 | 1-I4 |
| 0730-23-318 | 1-M5 |
| 8871-23-321 | 1-C6 |
| 8871-23-321 | 1-E5 |
| 8871-23-321 | 1-J5 |
| 8871-23-321 | 1-K4 |
| 8341-23-327 | 1-D5 |
| 8341-23-327 | 1-I5 |
| 8341-23-327 | 1-N5 |
| 8871-23-327 | 1-J4 |
| 8871-23-328 | 1-C5 |
| 8871-23-328 | 1-H5 |
| 8871-23-328 | 1-J4 |
| 8871-23-328 | 1-M5 |
| 8871-23-329 | 1-D5 |
| 8871-23-329 | 1-I5 |
| 8871-23-329 | 1-J4 |
| 8871-23-329 | 1-N5 |
| 8341-23-330 | 1-C5 |
| 8342-23-330 | 1-C5 |
| 8344-23-330 | 1-H5 |
| 8345-23-330 | 1-H5 |
| 8868-23-330 | 1-I4 |
| 8869-23-330 | 1-J4 |
| 8871-23-330 | 1-J4 |
| 8871-23-330 | 1-M5 |
| 8872-23-330 | 1-J4 |
| 8872-23-330 | 1-M5 |
| 8826-23-338 | 1-D5 |
| 8826-23-338 | 1-I5 |
| 8826-23-338 | 1-J4 |
| 8826-23-338 | 1-N5 |
| 1663-23-340A | 1-D5 |
| 1663-23-340A | 1-I5 |
| 1663-23-340A | 1-J4 |
| 1663-23-340A | 1-N5 |
| 8341-23-349 | 1-D5 |
| 8341-23-349 | 1-I5 |
| 8341-23-349 | 1-N5 |
| 8649-23-349 | 1-J4 |
| 8341-23-350 | 1-C5 |
| 8871-23-350 | 1-H5 |
| 8871-23-350 | 1-I4 |
| 8871-23-350 | 1-M5 |
| 1668-23-354 | 1-J4 |
| 1668-23-354 | 1-N5 |
| 8980-23-354 | 1-D5 |
| 8980-23-354 | 1-I5 |
| 8980-23-354 | 1-N5 |
| 0222-23-355B | 1-C6 |
| 0222-23-355B | 1-E5 |
| 0222-23-355B | 1-J5 |
| 0222-23-355B | 1-K4 |
| 0305-23-356 | 1-D5 |
| 0305-23-356 | 1-I5 |
| 0305-23-356 | 1-J4 |
| 0305-23-356 | 1-N5 |
| 8980-23-357 | 1-D5 |
| 8980-23-357 | 1-I5 |
| 8980-23-357 | 1-N5 |
| 1480-23-360 | 1-D5 |
| 1480-23-360 | 1-I5 |
| 1480-23-360 | 1-N5 |
| 8826-23-360 | 1-D5 |
| 8826-23-360 | 1-I5 |
| 8826-23-360 | 1-J4 |
| 8826-23-360 | 1-N5 |
| 1663-23-361A | 1-D5 |
| 1663-23-361A | 1-I5 |
| 1663-23-361A | 1-J4 |
| 1663-23-361A | 1-N5 |
| 8341-23-370 | 1-C6 |
| 8341-23-370 | 1-E5 |
| 8341-23-370 | 1-J5 |
| 8871-23-370 | 1-K4 |
| 8872-23-370 | 1-C6 |
| 8872-23-370 | 1-E5 |
| 8872-23-370 | 1-J5 |
| 8872-23-370 | 1-K4 |
| 8341-23-371 | 1-D5 |
| 8868-23-371 | 1-J5 |
| 8868-23-371 | 1-K4 |
| 8871-23-371 | 1-C6 |
| 8871-23-371 | 1-K4 |
| 8871-23-380 | 1-C5 |
| 8871-23-380 | 1-H5 |
| 8871-23-380 | 1-J4 |
| 8871-23-380 | 1-M5 |
| 8826-23-390 | 1-C6 |
| 8826-23-390 | 1-E5 |
| 8826-23-390 | 1-J5 |
| 8826-23-390 | 1-K4 |
| 3744-23-391 | 1-D6 |
| 3744-23-391 | 1-F5 |
| 3744-23-391 | 1-K5 |
| 3744-23-391 | 1-L4 |
| 1663-23-392 | 1-C5 |
| 1663-23-392 | 1-H5 |
| 1663-23-392 | 1-I4 |
| 1663-23-392 | 1-M5 |
| 0823-23-394 | 1-D6 |
| 0823-23-394 | 1-F5 |
| 0823-23-394 | 1-L5 |
| 0823-23-394 | 1-M4 |
| 8755-23-401 | 1-I5 |
| 8871-23-401 | 1-C5 |
| 8871-23-401 | 1-H5 |
| 8871-23-401 | 1-I4 |
| 8871-23-401 | 1-M5 |
| 0823-23-402A | 1-C6 |
| 0823-23-402A | 1-E5 |
| 0823-23-402A | 1-J5 |
| 0823-23-402A | 1-K4 |
| 8871-23-409A | 1-C6 |
| 8871-23-409A | 1-E5 |
| 8871-23-409A | 1-J5 |
| 8871-23-409A | 1-K4 |
| 8871-23-411 | 1-D5 |
| 8871-23-411 | 1-I5 |
| 8871-23-411 | 1-J4 |
| 8871-23-411 | 1-N5 |
| 8872-23-413 | 1-L4 |
| 8871-23-420 | 1-C6 |
| 8871-23-420 | 1-E5 |
| 8871-23-420 | 1-J5 |
| 8871-23-420 | 1-L4 |
| 8872-23-420 | 1-C6 |
| 8872-23-420 | 1-E5 |
| 8872-23-420 | 1-J5 |
| 8872-23-420 | 1-L4 |
| 1881-23-421 | 1-I5 |
| 1881-23-421 | 1-J4 |
| 8871-23-421 | 1-D5 |
| 8871-23-421 | 1-J4 |
| 8871-23-421 | 1-N5 |
| 8342-23-423 | 1-E5 |
| 8342-23-423 | 1-K5 |
| 8871-23-423 | 1-D6 |
| 8871-23-423 | 1-F5 |
| 8871-23-423 | 1-K5 |
| 8871-23-423 | 1-L4 |
| 1669-23-424A | 1-F5 |
| 1669-23-424A | 1-K5 |
| 8871-23-424 | 1-D6 |
| 8871-23-424 | 1-L4 |
| 3743-23-425 | 1-C6 |
| 3743-23-425 | 1-E5 |
| 3743-23-425 | 1-J5 |
| 3743-23-425 | 1-K4 |
| 8341-23-425 | 1-E5 |
| 8341-23-426 | 1-E5 |
| 8344-23-426 | 1-J5 |
| 8555-23-426 | 1-C6 |
| 8555-23-426 | 1-K4 |
| 8341-23-430 | 1-F5 |
| 8342-23-430 | 1-F5 |
| 8344-23-430 | 1-K5 |
| 8345-23-430 | 1-K5 |
| 8871-23-430 | 1-D6 |
| 8871-23-430 | 1-L4 |
| 8872-23-430 | 1-D6 |
| 8872-23-430 | 1-L4 |
| 8649-23-434 | 1-D6 |
| 8649-23-434 | 1-F5 |
| 8649-23-434 | 1-K5 |
| 8649-23-434 | 1-L4 |
| 3743-23-440 | 1-D6 |
| 3743-23-440 | 1-L4 |
| 8341-23-440 | 1-F5 |
| 8341-23-440 | 1-K5 |
| 8871-23-450 | 1-D6 |
| 8871-23-450 | 1-F5 |
| 8871-23-450 | 1-K5 |
| 8871-23-450 | 1-L4 |
| 2090-23-452 | 1-F5 |
| 1663-23-455 | 1-F5 |
| 1663-23-455 | 1-D6 |
| 1663-23-455 | 1-K5 |
| 1663-23-455 | 1-L4 |
| 8344-23-460 | 1-J5 |
| 8649-23-460 | 1-K4 |
| 8871-23-460 | 1-C6 |
| 8871-23-460 | 1-E5 |
| 8871-23-460 | 1-K4 |
| 1668-23-462 | 1-D6 |
| 1668-23-462 | 1-F5 |
| 1668-23-462 | 1-L4 |
| 8980-23-462 | 1-K5 |
| 8344-23-463 | 1-K5 |
| 8344-23-464 | 1-K5 |
| 8871-23-470 | 1-K5 |
| 8871-23-470 | 1-D6 |
| 8871-23-470 | 1-F5 |
| 8871-23-470 | 1-L4 |
| 8871-23-472 | 1-D6 |
| 8871-23-472 | 1-F5 |
| 8871-23-472 | 1-K5 |
| 8871-23-472 | 1-L4 |
| 8871-23-480 | 1-D6 |
| 8871-23-480 | 1-M4 |
| 3743-23-488 | 1-C5 |
| 3743-23-488 | 1-H5 |
| 3743-23-488 | 1-I4 |
| 3743-23-488 | 1-M5 |
| 8341-23-490 | 1-G5 |
| 8341-23-490 | 1-L5 |
| 8871-23-490 | 1-D6 |
| 8871-23-490 | 1-M4 |
| 8871-23-491 | 1-C6 |
| 8871-23-491 | 1-E5 |
| 8871-23-491 | 1-J5 |
| 8871-23-491 | 1-L4 |
| 8341-23-500 | 1-G5 |
| 8344-23-500 | 1-L5 |
| 8871-23-500 | 1-E6 |
| 8871-23-500 | 1-M4 |
| 8871-23-501 | 1-E6 |
| 8871-23-501 | 1-G5 |
| 8871-23-501 | 1-L5 |
| 8871-23-501 | 1-M4 |
| 8341-23-502 | 1-G5 |
| 8344-23-502 | 1-L5 |
| 8871-23-502 | 1-E6 |
| 8871-23-502 | 1-M4 |
| 8341-23-503 | 1-G5 |
| 1570-23-507 | 1-E6 |
| 1570-23-507 | 1-G5 |
| 1570-23-507 | 1-M4 |
| 2183-23-508 | 1-L5 |
| 2183-23-508 | 1-M4 |
| 8341-23-509 | 1-G5 |
| 8868-23-509 | 1-L5 |
| 8868-23-509 | 1-M4 |
| 8871-23-509 | 1-E6 |
| 8871-23-509 | 1-M4 |
| 8341-23-510 | 1-E6 |
| 8341-23-510 | 1-G5 |
| 8344-23-510 | 1-L5 |
| 8345-23-510 | 1-L5 |
| 8871-23-510 | 1-E6 |
| 8871-23-510 | 1-M4 |
| 8871-23-530 | 1-C5 |
| 8871-23-530 | 1-H5 |
| 8871-23-530 | 1-I4 |
| 8871-23-530 | 1-M5 |
| 8868-23-534 | 1-G5 |
| 8868-23-534 | 1-L5 |
| 8868-23-534 | 1-M4 |
| 8341-23-540 | 1-C6 |
| 8341-23-540 | 1-E5 |
| 8341-23-540 | 1-J5 |
| 8871-23-540 | 1-K4 |
| 8563-23-541 | 1-L5 |
| 8649-23-541 | 1-G5 |
| 8649-23-541 | 1-M4 |
| 8649-23-541 | 1-E6 |
| 8341-23-652 | 1-D5 |
| 8871-23-652 | 1-I5 |
| 8871-23-652 | 1-K4 |
| 8871-23-652 | 1-N5 |
| 0107-23-657 | 1-E6 |
| 0107-23-657 | 1-G5 |
| 0107-23-657 | 1-L5 |
| 0107-23-657 | 1-M4 |
| 1757-23-672 | 1-G4 |
| 8341-23-672 | 1-G4 |
| 8871-23-673 | 1-G4 |
| 1757-23-680 | 1-G4 |
| 3648-23-693A | 1-G4 |
| 1757-23-713A | 1-G6 |
| 0839-23-801 | 1-D8 |
| 0370-23-802 | 1-E8 |
| 0866-23-802 | 1-E8 |
| 0813-23-803 | 1-E8 |
| 0730-23-837 | 1-E8 |
| 1757-23-844 | 1-E8 |
| 0820-23-845A | 1-E8 |
| 0820-23-847A | 1-E8 |
| 8871-23-980 | 1-M4 |
| 8871-24-190 | 1-N4 |
| 1757-24-302 | 1-K11 |
| 1757-24-302 | 1-I11 |
| 3648-24-303 | 1-H11 |
| 8245-24-303A | 1-J11 |
| 3648-24-304 | 1-H11 |
| 8245-24-304 | 1-J11 |
| 3648-24-305 | 1-H11 |
| 8245-24-305 | 1-J11 |
| 8245-24-308 | 1-J11 |
| 8555-24-308 | 1-H11 |
| 1757-24-310 | 1-H11 |
| 8245-24-310B | 1-J11 |
| 1757-24-311 | 1-H11 |
| 1757-24-314 | 1-H11 |
| 8341-24-314 | 1-J11 |
| 8245-24-316 | 1-J11 |
| 1757-24-317 | 1-H11 |
| 8555-24-319 | 1-H11 |
| 1757-24-322 | 1-H11 |
| 8761-24-323 | 1-H11 |

# PART NUMBER INDEX

| PART NUMBER | LOCATION | PART NUMBER | LOCATION | PART NUMBER | LOCATION | PART NUMBER | LOCATION | PART NUMBER | LOCATION | PART NUMBER | LOCATION |
|---|---|---|---|---|---|---|---|---|---|---|---|
| 8872-24-323 | 1-H11 | 0426-24-712 | 1-F12 | 8569-26-280C | 2-E2 | 0223-27-406A | 2-E3 | 8871-32-182 | 2-G4 | 0259-33-042 | 2-C5 |
| 8341-24-330 | 1-J11 | 0426-24-715A | 1-D12 | 8531-26-290D | 2-E2 | 0223-27-407A | 2-E3 | 0208-32-188 | 2-G4 | 8531-33-043 | 2-C5 |
| 8826-24-330 | 1-I11 | 0426-24-715A | 1-F12 | 8569-26-290C | 2-E2 | 0223-27-408A | 2-E3 | 1757-32-220 | 2-G4 | 8531-33-043 | 2-E5 |
| 1757-24-334 | 1-I11 | 0866-24-716 | 1-F12 | 3960-26-310 | 2-E2 | 0223-27-409A | 2-E3 | 1757-32-220A | 2-G4 | 8545-33-047 | 2-C5 |
| 1757-24-334 | 1-J11 | 0845-24-720 | 1-F12 | 0187-26-341 | 2-E2 | 0223-27-411A | 2-E3 | 8871-32-261 | 2-H4 | 8545-33-047 | 2-E5 |
| 3648-24-340 | 1-I11 | 8872-24-725 | 1-D12 | 0118-26-342 | 2-E2 | 0223-27-412A | 2-E3 | 8545-32-278 | 2-G4 | 0259-33-049 | 2-C5 |
| 3648-24-340 | 1-J11 | 8872-24-725 | 1-F12 | 0110-26-345 | 2-E2 | 0223-27-413A | 2-E3 | 8021-32-279 | 2-H4 | 0259-33-049 | 2-E5 |
| 8245-24-350 | 1-J11 | 0426-24-726 | 1-D12 | 8531-26-610 | 2-F2 | 0223-27-414A | 2-E3 | 8531-32-279 | 2-H4 | 0398-33-065 | 2-C5 |
| 8826-24-350 | 1-I11 | 1758-24-726 | 1-F12 | 0208-26-671 | 2-F2 | 0223-27-415A | 2-E3 | 8871-32-301 | 2-H5 | 0398-33-065 | 2-F5 |
| 8827-24-350 | 1-I11 | 0222-24-730 | 1-D12 | 8565-26-710 | 2-F2 | 8871-28-011 | 2-F3 | 8871-32-301B | 2-H5 | 0419-33-071 | 2-C5 |
| 8827-24-350 | 1-J11 | 1757-24-730A | 1-D12 | 0305-26-800A | 2-F2 | 8871-28-011B | 2-F3 | 8871-32-301C | 2-H5 | 0419-33-071 | 2-E5 |
| 8245-24-351 | 1-K11 | 8872-24-730 | 1-F12 | 0305-26-810A | 2-F2 | 8871-28-013 | 2-F3 | 8871-32-311 | 2-H5 | 8531-33-075 | 2-C5 |
| 8826-24-351 | 1-I11 | 0426-24-731 | 1-D12 | 0187-26-821 | 2-F2 | 8871-28-013A | 2-F3 | 8871-32-311B | 2-H5 | 8531-33-075 | 2-E5 |
| 8245-24-360 | 1-K11 | 8872-24-731 | 1-F12 | 0118-26-834 | 2-F2 | 8871-28-013B | 2-F3 | 8871-32-311C | 2-H5 | 1029-33-165 | 2-C6 |
| 8761-24-360 | 1-I11 | 8872-24-736 | 1-G12 | 0118-26-897 | 2-F2 | 0305-28-111B | 2-F3 | 0603-32-315 | 2-H5 | 8341-33-231 | 2-E5 |
| 8245-24-368A | 1-K11 | 0222-24-740 | 1-D12 | 0187-26-921 | 2-F2 | 1243-28-111 | 2-F3 | 8871-32-320 | 2-H4 | 8341-33-232 | 2-F5 |
| 8086-24-501A | 1-L11 | 0222-24-741 | 1-D12 | 0613-26-922 | 2-F2 | 8871-28-120B | 2-F3 | 0866-32-329B | 2-H4 | 8341-33-233 | 2-E5 |
| 8173-24-501A | 1-N11 | 0222-24-741 | 1-F12 | 0613-26-922 | 2-F9 | 8871-28-151A | 2-F3 | 0866-32-329C | 2-H4 | 8341-33-234 | 2-F5 |
| 0820-24-503 | 1-L11 | 1758-24-750 | 1-D12 | 0223-27-012 | 2-C3 | 8980-28-151 | 2-F3 | 0866-32-341 | 2-H4 | 8341-33-235 | 2-E5 |
| 0820-24-503 | 1-N11 | 1758-24-750 | 1-G12 | 0223-27-018 | 2-C3 | 8871-28-155 | 2-F3 | 2113-32-365 | 2-H4 | 8871-33-235 | 2-C5 |
| 8086-24-510 | 1-L11 | 0222-24-753 | 1-D12 | 0223-27-020B | 2-C3 | 8173-28-156 | 2-F3 | 8871-32-411 | 2-G4 | 8871-33-251A | 2-C5 |
| 8173-24-510 | 1-N11 | 0426-24-753 | 1-G12 | 0223-27-030 | 2-C3 | 8871-28-156 | 2-F3 | 8871-32-412 | 2-G4 | 8871-33-251A | 2-E5 |
| | | | | | | | | 8871-32-420 | 2-G4 | | |
| 8173-24-520 | 1-N11 | 0426-24-754 | 1-E12 | 8051-27-100B | 2-C3 | 8980-28-156 | 2-F3 | 8173-32-429 | 2-G4 | 8871-33-260A | 2-C5 |
| 8173-24-521 | 1-N11 | 0426-24-754 | 1-G12 | 8051-27-100C | 2-C3 | 8871-28-157 | 2-F3 | 8871-32-429 | 2-G4 | 8871-33-260A | 2-E5 |
| 8173-24-522 | 1-N11 | 1757-24-760 | 1-E12 | 8871-27-100 | 2-C3 | 8871-28-160 | 2-G3 | 8532-32-740 | 2-C4 | 8871-33-270A | 2-C5 |
| 1757-24-526 | 1-N11 | 8173-24-910 | 1-G11 | 8051-27-110B | 2-C3 | 8871-28-170 | 2-G3 | 8871-32-740 | 2-C4 | 8871-33-270A | 2-E5 |
| 1757-24-526 | 1-L11 | 8182-24-910 | 1-G11 | 8051-27-110C | 2-C3 | 8871-28-180 | 2-G3 | 8532-32-750 | 2-C4 | 8871-33-280A | 2-C5 |
| 8871-24-530 | 1-L11 | 0259-25-021B | 2-C2 | 8871-27-110 | 2-C3 | 8871-28-200 | 2-G3 | 8871-32-750 | 2-C4 | 8341-33-281 | 2-F5 |
| 8871-24-530 | 1-N11 | 0259-25-071A | 2-C2 | 0221-27-141 | 2-C3 | 8871-28-300A | 2-G3 | 8531-32-800 | 2-C4 | 8341-33-291 | 2-F5 |
| 0483-24-533 | 1-L11 | 0259-25-072A | 2-C2 | 0755-27-141 | 2-C3 | 8871-28-320 | 2-G3 | 8531-32-800 01 | 2-C4 | 0187-33-391A | 2-E2 |
| 8028-24-533 | 1-N11 | 0259-25-073A | 2-C2 | 8051-27-142 | 2-C3 | 0710-28-775 | 2-G3 | 8871-32-800 | 2-C4 | 0118-33-513 | 2-E2 |
| 1757-24-534 | 1-L11 | 0259-25-074A | 2-C2 | 0820-27-150B | 2-C3 | 8871-28-775 | 2-G3 | 8871-32-800 01 | 2-C4 | 3648-33-626A | 2-F5 |
| 8028-24-535 | 1-N11 | 0259-25-075A | 2-C2 | 0820-27-150C | 2-C3 | 0223-28-776 | 2-G3 | 8531-32-811 | 2-C4 | 3648-33-626A | 2-C5 |
| 8028-24-535 | 1-L11 | 0259-25-076A | 2-C2 | 0305-27-171 | 2-C3 | 0710-28-776 | 2-G3 | 8871-32-862 | 2-F4 | 8871-33-626 | 2-C5 |
| 8086-24-537 | 1-L11 | 0259-25-077A | 2-C2 | 0290-27-231B | 2-D3 | 0259-28-778 | 2-G3 | 8180-32-980 | 2-C4 | 1243-33-636 | 2-C5 |
| 8086-24-540A | 1-L11 | 0259-25-078A | 2-C2 | 8051-27-235 | 2-D3 | 8532-32-018 | 2-C4 | 8180-32-980 00 | 2-C4 | 1243-33-636 | 2-F5 |
| 8086-24-540A | 1-N11 | 0259-25-079A | 2-C2 | 8051-27-236 | 2-D3 | 8871-32-018 | 2-C4 | 8344-32-980 | 2-C4 | 1243-33-651 | 2-D5 |
| 1011-24-541 | 1-L11 | 8871-25-100 | 2-C2 | 0820-27-251A | 2-D3 | 8532-32-049 | 2-C4 | 8344-32-980 00 | 2-D4 | 8341-33-651 | 2-F5 |
| 8066-24-550 | 1-L11 | 1393-25-123 | 2-C2 | 0290-27-252 | 2-D3 | 8532-32-049 00 | 2-C4 | 8349-32-980 | 2-D4 | 0613-33-681 | 2-F2 |
| 8173-24-550 | 1-N11 | 0425-25-130 | 2-C2 | 0290-27-253 | 2-D3 | 8871-32-049 | 2-C4 | 8349-32-980 00 | 2-D4 | 8341-33-681 | 2-F5 |
| 8086-24-560 | 1-L11 | 8871-26-020C | 2-D2 | 0290-27-254 | 2-D3 | 8871-32-049 00 | 2-C4 | 8532-32-980 | 2-D4 | 1243-33-685 | 2-D5 |
| 8173-24-560 | 1-N11 | 0259-26-041A | 2-D2 | 0221-27-255B | 2-D3 | 0820-32-058A | 2-F4 | 8532-32-980 00 | 2-D4 | 8341-33-685 | 2-F5 |
| 1011-24-563 | 1-M11 | 0259-26-051 | 2-D2 | 0221-27-255C | 2-D3 | 0208-32-059 | 2-F4 | 8532-32-980A | 2-D4 | 0233-33-691 | 2-D5 |
| 8066-24-581 | 1-M11 | 0866-26-060 | 2-D2 | 0290-27-256 | 2-D3 | 0259-32-071 | 2-F4 | 8532-32-980A00 | 2-D4 | 0233-33-691 | 2-F5 |
| 8086-24-581 | 1-C12 | 8871-26-111A | 2-D2 | 0290-27-259 | 2-D3 | 8173-32-071 | 2-F4 | 8571-32-980 | 2-D4 | 0259-33-691 | 2-C8 |
| 8173-24-590 | 1-C12 | 0259-26-132 | 2-D2 | 0305-27-261 | 2-D3 | 8340-32-110 | 2-F4 | 8571-32-980 00 | 2-D4 | 0259-33-691 | 2-F2 |
| 0866-24-704 | 1-F12 | 8871-26-151 | 2-D2 | 0114-27-262 | 2-D3 | 8871-32-110 | 2-F4 | 8571-32-980A | 2-D4 | 8341-33-692 | 2-F5 |
| 1758-24-705 | 1-F12 | 8871-26-151A | 2-D2 | 0290-27-301 | 2-E3 | 8871-32-120 | 2-F4 | 8571-32-980A00 | 2-D4 | 0259-33-693 | 2-E9 |
| 3648-24-705 | 1-D12 | 8531-26-152 | 2-D2 | 0290-27-302 | 2-E3 | 8340-32-130 | 2-F4 | 8871-32-980 | 2-D4 | 0259-33-693 | 2-C8 |
| 1758-24-706 | 1-F12 | 0187-26-154 | 2-D2 | 0221-27-305A | 2-E3 | 8180-32-140 | 2-F4 | 8871-32-980 00 | 2-D4 | 0259-33-693 | 2-F2 |
| 1757-24-709 | 1-F12 | 0259-26-155 | 2-D2 | 0223-27-401A | 2-E3 | 8871-32-141 | 2-F4 | 8871-32-980A | 2-D4 | 0600-33-693 | 2-F5 |
| 3648-24-709 | 1-D12 | 8871-26-251B | 2-E2 | 0223-27-402A | 2-E3 | 8871-32-150 | 2-F4 | 8871-32-980A00 | 2-D4 | 0600-33-693 | 2-D5 |
| 1757-24-710C | 1-D12 | 8872-26-251A | 2-E2 | 0223-27-403A | 2-E3 | 8871-32-163 | 2-F4 | 8532-32-984 | 2-D4 | 8341-33-694 | 2-F5 |
| 8872-24-710 | 1-F12 | 8940-26-251A | 2-E2 | 0223-27-404A | 2-E3 | 8871-32-170 | 2-F4 | 8871-32-984 | 2-E4 | 8871-33-695 | 2-D5 |
| 0426-24-712 | 1-D12 | 8531-26-280D | 2-E2 | 0223-27-405A | 2-E3 | 8340-32-180 | 2-F4 | 0259-33-042 | 2-E5 | 8871-33-696 | 2-D5 |

# PART NUMBER INDEX

| PART NUMBER | LOCATION | PART NUMBER | LOCATION | PART NUMBER | LOCATION | PART NUMBER | LOCATION | PART NUMBER | LOCATION | PART NUMBER | LOCATION |
|---|---|---|---|---|---|---|---|---|---|---|---|
| 0305-33-698A | 2-D5 | 1011-37-182C | 2-C6 | 3648-40-437 | 2-D7 | 8871-42-250B | 2-F8 | 8871-43-650B | 2-H9 | 8871-45-126A | 2-E10 |
| 8341-33-698 | 2-F5 | 8871-37-190 | 2-C6 | 8871-40-500A | 2-D7 | 0223-42-307 | 1-D7 | 8871-43-660B | 2-H9 | 8871-45-126B | 2-E10 |
| 8341-33-699 | 2-F5 | 8872-37-190 | 2-C6 | 8871-40-500B | 2-D7 | 0223-42-307 | 1-J6 | 1570-43-694A | 2-E9 | 8871-45-126C | 2-E10 |
| 8341-33-980 | 2-F5 | 1242-37-191 | 2-C6 | 8871-40-500C | 2-D7 | 0223-42-307 | 2-F8 | 8871-43-750 | 2-H9 | 8871-45-131A | 2-E10 |
| 8871-33-980B | 2-D5 | 8531-37-192 | 2-C6 | 2090-40-508A | 2-D7 | 8871-42-365 | 2-G8 | 8980-43-750 | 2-H9 | 8871-45-151 | 2-E10 |
| 8341-33-990 | 2-F5 | 8871-37-192 | 2-C6 | 8871-40-551 | 2-E7 | 0866-42-366A | 2-F8 | 0233-43-770 | 2-E9 | 8871-45-160 | 2-E10 |
| 8871-33-990B | 2-D5 | 1219-37-193 | 2-C6 | 8871-40-560 | 2-E7 | 8871-42-410A | 2-G8 | 8871-43-785A | 2-H9 | 3919-45-170 | 2-E10 |
| 8562-34-011A | 2-H5 | 8531-37-193C | 2-C6 | 8871-40-610 | 2-E7 | 0866-42-440 | 3-C2 | 8871-43-800A | 2-E9 | 3919-45-170A | 2-F10 |
| 8871-34-011B | 2-H5 | 8531-37-790 | 2-F6 | 8871-40-620A | 2-E7 | 8218-42-440 | 3-C2 | 8980-43-800 | 2-E9 | 8871-45-280B | 2-I9 |
| 1011-34-013 | 2-H5 | 8871-37-790A | 2-F6 | 8545-40-660 | 2-E7 | 8531-42-451 | 2-G8 | 0304-43-820 | 2-C8 | 8871-45-280C | 2-I9 |
| 0866-34-015 | 2-H5 | 8871-39-020 | 2-G6 | 1259-40-668A | 2-E7 | 0259-42-459 | 3-J4 | 1758-43-820 | 2-H9 | 8871-45-280D | 2-I9 |
| 1011-34-019 | 2-H5 | 8871-39-020A | 2-G6 | 1259-40-669B | 2-E7 | 8871-42-571 | 2-G8 | 8871-43-830A | 2-E9 | 8871-45-320 | 2-I9 |
| 8871-34-111A | 2-H5 | 8871-39-021A | 2-G6 | 1259-40-698 | 2-E7 | 8871-42-571A | 2-G8 | 2192-43-835 | 2-E9 | 8871-45-320A | 2-I9 |
| 8871-34-131A | 2-K5 | 1668-39-040D | 2-G6 | 8871-40-710 | 2-E7 | 8871-42-710A | 2-G8 | 8871-43-836 | 2-E9 | 8980-45-320 | 2-I9 |
| 8871-34-133A | 2-K5 | 8545-39-040 | 2-G6 | 8871-40-740 | 2-E7 | 3870-42-720A | 2-H8 | 8871-43-840 | 2-F9 | 8871-45-330 | 2-I9 |
| 8871-34-134 | 2-K5 | 1668-39-045B | 2-G6 | 8871-40-811 | 2-E7 | 8871-42-720 | 2-G8 | 2067-43-842A | 2-E9 | 8871-45-330A | 2-I9 |
| 8871-34-134A | 2-K5 | 8788-39-055 | 2-G6 | 8545-40-813 | 2-E7 | 3870-42-725 | 2-G8 | 3591-43-900 | 2-H9 | 8980-45-330 | 2-I9 |
| 8871-34-135A | 2-K5 | 1011-39-340A | 2-G6 | 8545-40-815 | 2-E7 | 8871-42-745 | 2-G8 | 8341-43-900 | 2-H9 | 8871-45-360 | 2-I9 |
| 8871-34-136B | 2-K5 | 1391-39-349 | 2-L5 | 0727-41-023 | 2-C9 | 8531-42-761 | 2-G8 | 3958-43-980 | 2-H9 | 8871-45-360A | 2-I9 |
| 8871-34-137A | 2-K5 | 1480-39-380A | 2-G6 | 8871-41-030 | 2-C9 | 8871-42-761 | 2-G8 | 8871-44-010B | 2-C10 | 8871-45-370A | 2-I9 |
| 8871-34-151 | 2-K5 | 1481-39-380B | 2-G6 | 0727-41-131 | 2-C9 | 8341-42-910 | 2-H8 | 8871-44-010C | 2-C10 | 8871-45-370B | 2-I9 |
| 8871-34-152 | 2-K5 | 1480-39-381 | 2-G6 | 0613-41-308 | 2-D10 | 8767-42-910 | 2-H8 | 8871-44-010D | 2-C10 | 8980-45-370 | 2-I9 |
| 1243-34-153 | 2-K5 | 1481-39-381A | 2-G6 | 0603-41-331 | 2-C8 | 8871-42-920 | 2-H8 | 8871-44-010D00 | 2-C10 | 8871-45-510A | 2-C8 |
| 8871-34-155 | 2-K5 | 8871-39-381A | 2-G6 | 4084-41-341 | 2-C8 | 0225-43-028A | 2-C9 | 8871-44-010E | 2-C10 | 8871-45-510B | 2-C8 |
| 8871-34-156A | 2-K5 | 8872-39-381 | 2-G6 | 0088-41-352A | 2-D9 | 8871-43-028 | 2-C9 | 8871-44-010E00 | 2-C10 | 8871-45-611A | 2-F10 |
| 0603-34-157A | 2-K5 | 1013-39-382A | 2-H6 | 0088-41-352A | 2-C9 | 8871-43-028A | 2-C9 | 0813-44-031A | 2-C10 | 8871-45-611C | 2-F10 |
| 0603-34-158 | 2-K5 | 0884-39-383A | 2-H6 | 8871-41-370 | 2-C8 | 0187-43-029 | 2-C9 | 8871-44-032 | 2-C10 | 8871-45-711D | 2-F10 |
| 0866-34-158 | 2-G3 | 0884-39-384 | 2-H6 | 8871-41-400A | 2-D8 | 1308-43-030A | 2-C9 | 0221-44-033 | 2-C10 | 8871-45-711F | 2-F10 |
| 1243-34-159 | 2-H5 | 0884-39-385A | 2-H6 | 8980-41-400A | 2-D8 | 8872-43-030 | 2-C9 | 0221-44-033 00 | 2-C10 | 8871-45-715 | 2-F10 |
| 8871-34-222 | 2-K5 | 0884-39-386 | 2-H6 | 8173-41-432 | 2-D8 | 8871-43-041 | 2-C9 | 8218-44-034A | 2-C10 | 0866-45-903A | 1-E13 |
| 0866-34-313A | 2-L5 | 8871-40-010 | 2-C7 | 8871-41-610 | 2-E8 | 8871-43-041A | 2-C9 | 8218-44-034A00 | 2-C10 | 0866-45-903A | 2-G10 |
| 8871-34-340A | 2-H5 | 8545-40-015 | 2-C7 | 8871-41-610A | 2-E8 | 8871-43-042 | 2-D9 | 8871-44-034 | 2-C10 | 0866-45-903A | 2-I9 |
| 0866-34-381A | 2-I5 | 8871-40-080 | 2-C7 | 0824-41-619 | 2-E8 | 0866-43-062 | 2-C9 | 8871-44-034A | 2-C10 | 8173-45-903 | 2-I9 |
| 0866-34-382 | 2-I5 | 1114-40-108B | 2-C7 | 8239-41-619 | 2-E8 | 0866-43-063 | 2-C9 | 1243-44-044 | 2-C10 | 8871-45-903 | 2-G10 |
| 8871-34-390 | 2-I5 | 1114-40-160 | 2-C7 | 0259-41-644 | 2-E8 | 8871-43-070A | 2-D9 | 1243-44-044A | 2-C10 | 8871-45-903A | 2-G10 |
| 0866-34-460 | 2-I5 | 0820-40-166 | 2-C7 | 3597-41-650A | 2-E8 | 8871-43-070B | 2-D9 | 8871-44-051 | 2-C10 | 1481-46-010 | 2-H10 |
| 8173-34-460A | 2-I5 | 8871-40-180 | 2-C7 | 3743-41-660C | 2-E8 | 1011-43-082 | 2-D9 | 8871-44-053 | 2-C10 | 8872-46-010A | 2-H10 |
| 8531-34-565 | 2-I5 | 8871-40-200A | 2-C7 | 0118-41-681 | 2-E8 | 1011-43-082A | 2-D9 | 8871-44-150 | 2-D10 | 1481-46-019 | 2-H10 |
| 0259-34-719A | 2-I5 | 8871-40-200B | 2-C7 | 0118-41-682 | 2-E8 | 8871-43-090 | 2-D9 | 8871-44-160 | 2-D10 | 8872-46-021A | 2-H10 |
| 0183-34-731 | 2-I5 | 8871-40-200C | 2-C7 | 0111-41-692 | 4-G2 | 0259-43-140 | 2-C9 | 8871-44-170 | 2-D10 | 1840-46-022 | 2-H10 |
| 8171-34-731 | 2-I5 | 8712-40-320 | 2-C7 | 8871-41-711 | 2-E8 | 0305-43-140 | 2-D9 | 0866-44-187A | 2-D10 | 8174-46-022 | 2-H10 |
| 0866-34-738A | 2-I5 | 1259-40-325A | 2-C7 | 8871-41-711A | 2-E8 | 1524-43-140 | 2-D9 | 0866-44-189 | 2-D10 | 8872-46-030A | 2-H10 |
| 0866-34-760 | 2-I5 | 1259-40-355 | 2-C7 | 8541-41-920 | 2-D8 | 8871-43-400A | 2-F9 | 0118-44-375 | 2-D10 | 8872-46-030B | 2-H10 |
| 8171-34-760 | 2-I5 | 2158-40-355 | 2-C7 | 8973-42-110C | 2-F8 | 8980-43-400 | 2-F9 | 8871-44-410 | 2-D10 | 8872-46-030B00 | 2-H10 |
| 0187-34-776 | 2-I5 | 2158-40-355 | 1-D4 | 8871-42-210 | 2-F8 | 0111-43-432 | 2-D8 | 8871-44-420 | 2-D10 | 8872-46-032 | 2-H10 |
| 0187-34-776 | 2-L5 | 1757-40-356 | 2-D7 | 8871-42-210A | 2-F8 | 0111-43-433 | 2-C8 | 1011-44-439 | 2-D10 | 1244-46-035 | 2-H10 |
| 8871-34-800 | 2-L5 | 1259-40-398 | 2-D7 | 8871-42-210B | 2-F8 | 3597-43-540 | 2-E9 | 8871-44-439 | 2-D10 | 1244-46-038 | 2-H10 |
| 8871-34-800A | 2-L5 | 8871-40-401 | 2-D7 | 8871-42-235 | 2-F8 | 8531-43-542 | 2-E9 | 0305-44-471 | 2-D10 | 1244-46-055 | 2-H10 |
| 8871-34-800B | 2-L5 | 8871-40-405 | 2-D7 | 8344-42-241 | 2-F8 | 3597-43-549 | 2-E9 | 8871-45-111A | 2-E10 | 2375-46-061 | 2-H10 |
| 8871-34-850D | 2-L5 | 8871-40-405A | 2-D7 | 8871-42-241 | 2-F8 | 8871-43-608 | 2-H9 | 8871-45-112 | 2-E10 | 8202-46-061 | 2-H10 |
| 8871-34-860D | 2-L5 | 8501-40-425 | 2-D7 | 8871-42-242A | 2-F8 | 8595-43-609 | 2-H9 | 8344-45-123 | 2-F10 | 2375-46-062 | 2-H10 |
| 8562-34-910A | 2-J5 | 3501-40-429 | 2-D7 | 8344-42-245 | 2-G8 | 8912-43-609 | 2-H9 | 8545-45-123 | 2-F10 | 0308-46-081 | 2-I10 |
| 8871-34-910A | 2-J5 | 8871-40-430 | 2-D7 | 8545-42-245 | 2-F8 | 0136-43-635 | 2-D8 | 8344-45-125 | 2-E10 | 1481-46-081 | 2-I10 |
| 8171-34-970 | 2-I5 | 3648-40-433A | 2-D7 | 8871-42-245 | 2-H8 | 0136-43-635 | 2-H9 | 8871-45-125A | 2-E10 | 1481-46-081A | 2-I10 |
| 8871-37-165 | 2-C6 | 3743-40-436A | 2-D7 | 8871-42-250A | 2-F8 | 0305-43-635 | 2-H9 | 8344-45-126 | 2-E10 | 1481-46-083A | 2-I10 |

# PART NUMBER INDEX

| PART NUMBER | LOCATION |
|---|---|
| 8872-46-083 | 2-I10 |
| 8872-46-083A | 2-I10 |
| 1481-46-084A | 2-I10 |
| 1015-46-085 | 2-I10 |
| 1015-46-085 | 2-C9 |
| 1481-46-110A | 2-I10 |
| 1481-46-110B | 2-I10 |
| 8872-46-110 | 2-I10 |
| 8872-46-110A | 2-I10 |
| 1481-46-150A | 2-I10 |
| 8872-46-150 | 2-I10 |
| 1481-46-160 | 2-I10 |
| 1481-46-571A | 2-J10 |
| 8872-46-571 | 2-J10 |
| 0223-46-683 | 2-D9 |
| 1015-46-684 | 2-J10 |
| 1481-46-684 | 2-J10 |
| 8872-46-684 | 2-J10 |
| 8872-46-685 | 2-J10 |
| 8872-46-691 | 2-J10 |
| 1243-49-240 | 2-D5 |
| 8341-49-240 | 2-G5 |
| 0296-49-246 | 2-G5 |
| 1243-49-246 | 2-D5 |
| 8341-49-248 | 2-G5 |
| 8341-49-250 | 2-G5 |
| 8341-49-270 | 2-G5 |
| 8871-49-280 | 2-D5 |
| 8871-49-280 | 2-G5 |
| 8341-49-290 | 2-G5 |
| 8871-49-290 | 2-D5 |
| 8871-49-310 | 2-J5 |
| 8871-49-320 | 2-J5 |
| 8562-49-610 | 2-F9 |
| 1128-49-625 | 2-F9 |
| 1128-49-626 | 2-F9 |
| 1128-49-635 | 2-F9 |
| 0305-49-638 | 2-F9 |
| 0512-49-652 | 2-F9 |
| 0305-49-656 | 2-F9 |
| 0305-49-666 | 2-F9 |
| 0512-49-667 | 2-F9 |
| 0512-49-668 | 2-F9 |
| 8871-49-669 | 2-F9 |
| 0512-49-676 | 2-F9 |
| 1363-49-676 | 2-G9 |
| 0512-49-677 | 2-G9 |
| 1363-49-677 | 2-G9 |
| 0512-49-678 | 2-G9 |
| 1363-49-678 | 2-G9 |
| 8871-49-679 | 2-G9 |
| 0305-49-686B | 2-G9 |
| 0391-49-692 | 2-G9 |
| 0421-49-693 | 2-G9 |
| 0512-49-696 | 2-G9 |
| 8056-49-720 | 2-G9 |
| 8980-49-720 | 2-G9 |
| 8562-49-790 | 2-J5 |
| 8871-49-790 | 2-J5 |
| 8341-50-030 | 3-C3 |
| 8341-50-030A | 3-C3 |
| 8871-50-030 | 3-C3 |
| 8871-50-030A | 3-C3 |
| 8871-50-032 | 3-C3 |
| 8871-50-033 | 3-C3 |
| 1756-50-091 | 3-E3 |
| 1756-50-091 | 3-C3 |
| 8341-50-100 | 3-C3 |
| 8871-50-100 | 3-C3 |
| 8871-50-111 | 3-C3 |
| 8871-50-120A | 3-C3 |
| 8871-50-125B | 3-C3 |
| 8871-50-131 | 3-C3 |
| 8871-50-180 | 3-C3 |
| 8871-50-180A | 3-C3 |
| 8341-50-220A | 3-E3 |
| 8341-50-220B | 3-E3 |
| 8871-50-220A | 3-E3 |
| 8871-50-220B | 3-E3 |
| 8871-50-222 | 3-E3 |
| 8871-50-223 | 3-E3 |
| 8871-50-224B | 3-E3 |
| 8341-50-230 | 3-E3 |
| 8871-50-231 | 3-F3 |
| 8871-50-232 | 3-E3 |
| 8341-50-242 | 3-E3 |
| 8341-50-262 | 3-E3 |
| 8341-50-290 | 3-E3 |
| 8871-50-290 | 3-E3 |
| 3571-50-301 | 3-F3 |
| 8871-50-311A | 3-F3 |
| 8871-50-311B | 3-F3 |
| 8871-50-321 | 3-F3 |
| 8871-50-322A | 3-F3 |
| 8871-50-335 | 3-F3 |
| 8871-50-335A | 3-F3 |
| 8341-50-350 | 3-E3 |
| 8871-50-380B | 3-F3 |
| 8871-50-386B | 3-F3 |
| 8871-50-389 | 3-F3 |
| 8871-50-396B | 3-F3 |
| 8871-50-510B | 3-I3 |
| 8871-50-510C | 3-I3 |
| 8871-50-516 | 3-G3 |
| 8871-50-517 | 3-G3 |
| 8871-50-520B | 3-I3 |
| 8871-50-520C | 3-I3 |
| 8871-50-526 | 3-G3 |
| 8871-50-527 | 3-G3 |
| 8871-50-608 | 3-H3 |
| 1243-50-609 | 3-G3 |
| 8871-50-641 | 3-I3 |
| 8501-50-642 | 3-I15 |
| 8871-50-642 | 3-I3 |
| 8871-50-643 | 3-I3 |
| 8871-50-644 | 3-I3 |
| 8871-50-645 | 3-I3 |
| 8981-50-645 | 3-I3 |
| 8871-50-652 | 3-I3 |
| 8871-50-653 | 3-I3 |
| 8871-50-654 | 3-I3 |
| 8871-50-710A | 3-D3 |
| 8871-50-720 | 3-D3 |
| 8871-50-741 | 3-D3 |
| 8871-50-761 | 3-D3 |
| 8871-50-791 | 3-J4 |
| 8531-50-792 | 3-J4 |
| 8871-50-825 | 3-E5 |
| 8871-50-830 | 3-E5 |
| 8545-50-950 | 3-J4 |
| 8871-50-950A | 3-G3 |
| 8871-50-950B | 3-H3 |
| 3953-51-021 | 3-F4 |
| 8871-51-021 | 3-F4 |
| 8871-51-031 | 3-F4 |
| 8871-51-033 | 3-F4 |
| 8572-51-051 | 3-I16 |
| 8871-51-061 | 3-C4 |
| 8871-51-063 | 3-C4 |
| 8871-51-121 | 3-C4 |
| 8871-51-131 | 3-C4 |
| 8871-51-146 | 3-G4 |
| 8871-51-146A | 3-G4 |
| 8871-51-147 | 3-G4 |
| 8871-51-151 | 3-G4 |
| 8871-51-153 | 3-G4 |
| 8871-51-161 | 3-G4 |
| 8871-51-163 | 3-G4 |
| 8871-51-272 | 3-G4 |
| 8871-51-282 | 3-H4 |
| 8871-51-320A | 3-H4 |
| 8871-51-330A | 3-H4 |
| 8871-51-341 | 3-I4 |
| 8871-51-341 00 | 3-I4 |
| 8871-51-341 10 | 3-I4 |
| 8871-51-341 20 | 3-I4 |
| 8871-51-341 23 | 3-I4 |
| 8871-51-345 | 3-I4 |
| 8871-51-350 | 3-I4 |
| 8871-51-401 | 3-C4 |
| 3972-51-402 | 1-F4 |
| 8871-51-403 | 3-C4 |
| 8871-51-405 | 3-C4 |
| 8871-51-411 | 3-D4 |
| 8871-51-421 | 3-D4 |
| 8871-51-421A | 3-D4 |
| 8871-51-430B | 3-D4 |
| 8871-51-430C | 3-D4 |
| 8871-51-431 | 3-D4 |
| 8871-51-432 | 3-D4 |
| 8871-51-433 | 3-D4 |
| 8545-51-516 | 3-D4 |
| 8871-51-621 | 3-D4 |
| 8871-51-621A | 3-D4 |
| 8871-51-630B | 3-D4 |
| 8871-51-630C | 3-D4 |
| 8871-51-721 | 3-J4 |
| 8973-51-761P | 3-J4 |
| 8871-51-771A | 3-J4 |
| 8871-51-771B | 3-J4 |
| 8980-51-771 | 3-J4 |
| 8870-51-781 | 3-J4 |
| 8870-51-781A | 3-J4 |
| 8960-51-781 | 3-J4 |
| 8871-51-881B | 3-F15 |
| 8871-51-881C | 3-F15 |
| 8871-51-891B | 3-F15 |
| 8871-51-891C | 3-F15 |
| 8871-51-901B | 3-J4 |
| 8871-51-901C | 3-K4 |
| 1029-51-902 | 3-F15 |
| 1029-51-902 | 3-H3 |
| 1029-51-902 | 3-K4 |
| 8871-51-911A | 3-K4 |
| 8562-51-930 | 3-D4 |
| 8871-51-930A | 3-D4 |
| 8562-51-931 | 3-E4 |
| 8871-51-931 | 3-E4 |
| 8871-51-932 | 3-E4 |
| 8871-51-933 | 3-E4 |
| 8871-51-934 | 3-E4 |
| 8871-51-935 | 3-E4 |
| 8871-51-936 | 3-E4 |
| 8871-51-937 | 3-E4 |
| 8871-51-938 | 3-E4 |
| 8871-51-939 | 3-E4 |
| 8562-51-940 | 3-D4 |
| 8871-51-940A | 3-E4 |
| 8562-51-941 | 3-E4 |
| 8871-51-941 | 3-E4 |
| 8871-51-942 | 3-E4 |
| 8871-51-945 | 3-E4 |
| 8871-51-951B | 3-K4 |
| 8871-51-951C | 3-K4 |
| 8871-51-961A | 3-K4 |
| 8871-52-111C | 3-E5 |
| 8871-52-111D | 3-E5 |
| 0633-52-148 | 3-K4 |
| 8871-52-151 | 3-E5 |
| 8871-52-211C | 3-E5 |
| 8871-52-211D | 3-E5 |
| 0187-52-231 | 3-C5 |
| 0223-52-302 | 3-C5 |
| 8871-52-310B | 3-C5 |
| 8871-52-310C | 3-C5 |
| 8871-52-310D | 3-C5 |
| 8871-52-310E | 3-C5 |
| 8871-52-410 | 3-C5 |
| 0866-52-451 | 3-F4 |
| 8871-52-511A | 3-C5 |
| 8871-52-511B | 3-C5 |
| 8871-52-518 | 3-C5 |
| 8562-52-810B | 3-E5 |
| 8871-52-810A | 3-E5 |
| 8871-52-810B | 3-E5 |
| 8871-52-810C | 3-E5 |
| 8545-52-841 | 3-E5 |
| 0305-52-863B | 3-C5 |
| 8871-52-910A | 3-E5 |
| 8871-52-910D | 3-E5 |
| 8871-52-920D | 3-F5 |
| 8871-52-950D | 3-E5 |
| 8871-52-960 | 3-E5 |
| 8871-52-990 | 3-F5 |
| 8871-53-041 | 4-D3 |
| 8871-53-045B | 3-I6 |
| 8871-53-050 | 3-I6 |
| 8871-53-050A | 3-I6 |
| 0183-53-074 | 3-F15 |
| 8871-53-100A | 3-F5 |
| 8871-53-100B | 3-F5 |
| 8871-53-100C | 3-F5 |
| 8871-53-100D | 3-F5 |
| 0187-53-134 | 3-C14 |
| 8871-53-161 | 3-I6 |
| 8871-53-170 | 3-L6 |
| 8871-53-170A | 3-L6 |
| 8871-53-210B | 3-F5 |
| 8871-53-210C | 3-F5 |
| 8871-53-210F | 3-F5 |
| 8871-53-222 | 3-F5 |
| 8871-53-222B | 3-F5 |
| 8545-53-225 | 4-G2 |
| 8871-53-240 | 3-F5 |
| FA01-53-270 | 3-F5 |
| 8871-53-270 | 3-F5 |
| 8871-53-270A | 3-F5 |
| 8871-53-285 | 3-G5 |
| 8871-53-285A | 3-G5 |
| 8341-53-310 | 3-I6 |
| 8341-53-310A | 3-I6 |
| 8871-53-310 | 3-I6 |
| 8871-53-310A | 3-I6 |
| FA01-53-391 | 3-I6 |
| 8871-53-391 | 3-I6 |
| 8871-53-400C | 3-G5 |
| 8871-53-400D | 3-G5 |
| 8871-53-400E | 3-G5 |
| 8871-53-400F | 3-G5 |
| FA01-53-510 | 3-G5 |
| 8871-53-510B | 3-G5 |
| 8871-53-510C | 3-G5 |
| 8871-53-510D | 3-G5 |
| 8871-53-510E | 3-G5 |
| 8871-53-510F | 3-G5 |
| 1480-53-600 | 3-I6 |
| 1480-53-600A | 3-I6 |
| 8871-53-600B | 3-I6 |
| 8871-53-600C | 3-I6 |
| 8871-53-700F | 3-I6 |
| 8871-53-700G | 3-J6 |
| 8871-53-700H | 3-J6 |
| 8871-53-700I | 3-J6 |
| 8871-53-700J | 3-J6 |
| 0127-53-751 | 1-D7 |
| 0127-53-751 | 1-G7 |
| 0127-53-751 | 1-J6 |
| 0127-53-751 | 1-M6 |
| 8871-53-810B | 3-J6 |
| 8871-53-810C | 3-J6 |
| 8871-53-810D | 3-J6 |
| 8871-53-810E | 3-J6 |
| FA01-53-900 | 3-J6 |
| 8871-53-900 | 3-J6 |
| 8871-53-930 | 3-K6 |
| 8871-53-930A | 3-K6 |
| 8871-53-930B | 3-K6 |
| 8871-53-930D | 3-K6 |
| F001-53-940 | 3-J6 |
| F001-53-940A | 3-J6 |
| 8871-53-94CA | 3-J6 |
| 8871-53-951 | 3-J6 |
| 8871-53-951A | 3-J |
| 8871-53-951B | 3-K6 |
| 8871-54-170 | 3-L6 |
| 8871-54-170A | 3-L6 |
| F001-54-210 | 3-G5 |
| 8871-54-210A | 3-G5 |
| 8871-54-210C | 3-G5 |
| 8871-54-210G | 3-H5 |
| 8871-54-222 | 3-H5 |
| 8871-54-222B | 3-H5 |
| 8871-54-240 | 3-H5 |
| 8871-54-260 | 1-H12 |
| 8871-54-260A | 1-H12 |
| 8871-54-260B | 1-H12 |
| FA01-54-270 | 3-H5 |
| 8871-54-270 | 3-H5 |
| 8871-54-270A | 3-H5 |
| 8871-54-285 | 3-H5 |

# PART NUMBER INDEX

| PART NUMBER | LOCATION |
|---|---|
| 8871-54-285A | 3-H5 |
| 2113-54-295 | 1-H12 |
| 8341-54-310 | 3-K6 |
| 8341-54-310A | 3-K6 |
| 8871-54-310A | 3-K6 |
| 8871-54-310B | 3-K6 |
| 8871-54-310C | 3-K6 |
| 8871-54-391 | 3-K6 |
| 8871-54-391A | 3-K6 |
| 8871-54-810D | 3-K6 |
| 8871-54-810E | 3-K6 |
| 8871-54-810F | 3-K6 |
| 8871-54-810G | 3-K6 |
| 8871-54-951 | 3-L6 |
| 8871-54-951A | 3-L6 |
| 8871-55-011 | 3-C7 |
| 8871-55-011B | 3-C7 |
| 8871-55-011B | 3-H7 |
| 8871-55-011B02 | 3-C7 |
| 8871-55-011B02 | 3-H7 |
| 8871-55-011B28 | 3-C7 |
| 8871-55-011B28 | 3-H7 |
| 8871-55-012 | 3-L8 |
| 8871-55-012B | 3-F9 |
| 8871-55-012B | 3-L8 |
| 8871-55-012B02 | 3-F9 |
| 8871-55-012B02 | 3-L8 |
| 8871-55-012B28 | 3-F9 |
| 8871-55-012B28 | 3-L8 |
| 8871-55-013 | 3-L8 |
| 8871-55-013B | 3-F9 |
| 8871-55-013B | 3-L8 |
| 8871-55-013B02 | 3-F9 |
| 8871-55-013B02 | 3-L8 |
| 8871-55-013B28 | 3-F9 |
| 8871-55-013B28 | 3-L8 |
| 8871-55-014 | 3-D8 |
| 8871-55-014B | 3-D8 |
| 8871-55-014B | 3-H8 |
| 8871-55-014B02 | 3-D8 |
| 8871-55-014B02 | 3-H8 |
| 8871-55-014B28 | 3-D8 |
| 8871-55-014B28 | 3-H8 |
| 8871-55-015 | 3-C7 |
| 8871-55-015B | 3-C7 |
| 8871-55-015B | 3-H7 |
| 8871-55-015B02 | 3-C7 |
| 8871-55-015B02 | 3-H7 |
| 8871-55-015B28 | 3-C7 |
| 8871-55-015B28 | 3-H7 |
| 0275-55-195A | 3-D8 |
| 0275-55-195A | 3-H8 |
| 8342-55-210 | 3-H7 |
| 8342-55-210 C4 | 3-H7 |
| 8871-55-210A | 3-C7 |
| 8871-55-210B | 3-C7 |
| 8871-55-210B | 3-H7 |
| 8871-55-210B00 | 3-C7 |
| 8871-55-210B04 | 3-H7 |
| 8973-55-210P | 3-C7 |
| 8871-55-212A | 3-C7 |
| 8871-55-212B | 3-C7 |
| 8871-55-212C | 3-C7 |
| 8871-55-212C | 3-H7 |
| 8249-55-213 | 3-H7 |
| 8871-55-213 | 3-C7 |
| 8871-55-213 | 3-H7 |
| 8871-55-216 | 3-F9 |
| 8871-55-216 | 3-H7 |
| 8871-55-216 | 3-L8 |
| 8871-55-217 | 3-C7 |
| 8871-55-217 | 3-H7 |
| 1363-55-231B | 3-G16 |
| 1363-55-231B0C | 3-G16 |
| 1363-55-231C | 3-G16 |
| 1363-55-231C | 3-I16 |
| 1363-55-231C0C | 3-G16 |
| 1363-55-231C0C | 3-I16 |
| 8118-55-232 | 3-G16 |
| 8118-55-232 | 3-I16 |
| 1316-55-261 | 3-L7 |
| 3625-55-261 | 3-L7 |
| 8871-55-280 | 3-F9 |
| 8871-55-280 | 3-L8 |
| 8871-55-280 | 3-D7 |
| 8871-55-280 | 3-H7 |
| 8871-55-301 | 3-D7 |
| 8871-55-301 | 3-I7 |
| 8871-55-301 0C | 3-D7 |
| 8871-55-301 02 | 3-D7 |
| 8871-55-301 02 | 3-I7 |
| 8871-55-301 1C | 3-D7 |
| 8871-55-301 12 | 3-D7 |
| 8871-55-301 12 | 3-I7 |
| 8871-55-301 23 | 3-D7 |
| 8871-55-301 24 | 3-D7 |
| 8871-55-301 25 | 3-D7 |
| 8871-55-301 28 | 3-D7 |
| 8871-55-301 28 | 3-I7 |
| 8871-55-301 29 | 3-D7 |
| 8871-55-301 29 | 3-I7 |
| 8871-55-301 7C | 3-I7 |
| 8871-55-302 | 3-D7 |
| 8871-55-302 | 3-I7 |
| 8871-55-302 0C | 3-D7 |
| 8871-55-302 02 | 3-D7 |
| 8871-55-302 02 | 3-I7 |
| 8871-55-302 1C | 3-D7 |
| 8871-55-302 12 | 3-D7 |
| 8871-55-302 12 | 3-I7 |
| 8871-55-302 23 | 3-D7 |
| 8871-55-302 24 | 3-E7 |
| 8871-55-302 25 | 3-E7 |
| 8871-55-302 28 | 3-E7 |
| 8871-55-302 28 | 3-I7 |
| 8871-55-302 29 | 3-E7 |
| 8871-55-302 29 | 3-I7 |
| 8871-55-302A | 3-I7 |
| 8871-55-302A02 | 3-I7 |
| 8871-55-302A12 | 3-I7 |
| 8871-55-302A28 | 3-I7 |
| 8871-55-302A29 | 3-I7 |
| 8871-55-302A70 | 3-I7 |
| 8871-55-311 | 3-E8 |
| 8871-55-311 | 3-J8 |
| 8871-55-311 00 | 3-E8 |
| 8871-55-311 02 | 3-E8 |
| 8871-55-311 02 | 3-J8 |
| 8871-55-311 10 | 3-E8 |
| 8871-55-311 12 | 3-E8 |
| 8871-55-311 12 | 3-J8 |
| 8871-55-311 23 | 3-E8 |
| 8871-55-311 24 | 3-E8 |
| 8871-55-311 25 | 3-E8 |
| 8871-55-311 28 | 3-E8 |
| 8871-55-311 28 | 3-J8 |
| 8871-55-311 29 | 3-E8 |
| 8871-55-311 29 | 3-J8 |
| 8871-55-311 70 | 3-J8 |
| 8871-55-312 | 3-F8 |
| 8871-55-312 | 3-J8 |
| 8871-55-312 00 | 3-F8 |
| 8871-55-312 02 | 3-F8 |
| 8871-55-312 02 | 3-J8 |
| 8871-55-312 10 | 3-F8 |
| 8871-55-312 12 | 3-F8 |
| 8871-55-312 12 | 3-J8 |
| 8871-55-312 23 | 3-F8 |
| 8871-55-312 24 | 3-F8 |
| 8871-55-312 25 | 3-F8 |
| 8871-55-312 28 | 3-F8 |
| 8871-55-312 28 | 3-J8 |
| 8871-55-312 29 | 3-F8 |
| 8871-55-312 29 | 3-J8 |
| 8871-55-312 70 | 3-J8 |
| 8871-55-315 | 3-D8 |
| 8871-55-315 | 3-H8 |
| 8531-55-412 | 3-L7 |
| 8871-55-420 | 3-L7 |
| 8871-55-420A | 3-L7 |
| 8871-55-422 | 3-L7 |
| 8871-55-425 | 3-N7 |
| 8570-55-441 | 3-L7 |
| 8871-55-441 | 3-L7 |
| 8341-55-442 | 3-L7 |
| 8570-55-442A | 3-L7 |
| 8871-55-442A | 3-L7 |
| 8871-55-442B | 3-L7 |
| 8871-55-447 | 3-L7 |
| 1480-55-461 | 3-M7 |
| 8871-55-461 | 3-M7 |
| 8872-55-461 | 3-M7 |
| 8342-55-471A | 3-M7 |
| 8485-55-471 | 3-M7 |
| 8871-55-471 | 3-M7 |
| 8871-55-471A | 3-M7 |
| 8970-55-471 | 3-M7 |
| 8970-55-471A | 3-M7 |
| 8562-55-481 | 3-N7 |
| 8570-55-481A | 3-N7 |
| 8871-55-481A | 3-N7 |
| 8341-55-482 | 3-M7 |
| 8871-55-482 | 3-M7 |
| 8341-55-488 | 3-L7 |
| 8871-55-488 | 3-M7 |
| 8872-55-488 | 3-M7 |
| 8872-55-490 | 3-E7 |
| 8872-55-490 | 3-I7 |
| 1481-55-711 | 3-N7 |
| 1482-55-711 | 3-N7 |
| 8570-55-711 | 3-N7 |
| 8871-55-711 | 3-N7 |
| 8872-55-711 | 3-N7 |
| 8117-55-712 | 3-N7 |
| 8117-55-713 | 3-N7 |
| 2399-55-952 | 3-E7 |
| 2399-55-952 | 3-J7 |
| 8871-56-030 | 1-H12 |
| 1011-56-051 | 3-L6 |
| 8545-56-052 | 3-L6 |
| 8545-56-053 | 3-L6 |
| 8973-56-065A | 3-G6 |
| 8973-56-065B | 3-G6 |
| 8[illegible]-56-066 | 3-G6 |
| [illegible]1-56-111 | 3-L6 |
| 8871-56-111B | 3-L6 |
| 8871-56-111C | 3-L6 |
| 8871-56-111D | 3-L6 |
| 8871-56-130 | 3-H5 |
| 8871-56-130A | 3-H5 |
| 8871-56-140 | 3-H5 |
| 8871-56-140A | 3-H5 |
| 8871-56-191 | 3-H5 |
| 8871-56-191A | 3-H5 |
| 8871-56-191B | 3-I5 |
| 0118-56-241 | 3-C12 |
| 0118-56-241 | 3-C14 |
| 0118-56-241 | 3-L6 |
| 0118-56-241 | 3-C14 |
| 0118-56-241 | 3-L16 |
| 0118-56-242B | 3-L6 |
| 8871-56-270B | 3-M6 |
| 8871-56-270C | 3-M6 |
| 8871-56-271D | 3-M6 |
| 0247-56-275 | 3-G9 |
| 0247-56-275 | 3-M8 |
| 8871-56-281A | 3-M6 |
| 8871-56-281B | 3-M6 |
| 8871-56-365 | 3-I5 |
| 8871-56-366 | 3-I5 |
| 8871-56-370A | 3-I5 |
| 8871-56-370B | 3-I5 |
| 8871-56-380A | 3-I5 |
| 8871-56-380B | 3-I5 |
| 8871-56-380C | 3-I5 |
| 8871-56-391 | 3-I5 |
| 8871-56-410A | 3-M6 |
| 8871-56-410B | 3-M6 |
| 8871-56-410C | 3-M6 |
| 8871-56-420A | 3-M6 |
| 8871-56-420C | 3-M6 |
| 8871-56-420E | 3-M6 |
| 8871-56-450D | 3-M6 |
| 8871-56-450E | 3-M6 |
| 8871-56-510B | 3-M6 |
| 8871-56-540B | 3-M6 |
| 8871-56-540A | 3-M6 |
| 0208-56-615 | 3-N6 |
| 1708-56-620D | 3-C5 |
| 0810-56-639 | 3-C14 |
| 0810-56-639 | 3-N6 |
| 1011-56-672A | 3-C5 |
| 8871-56-710A | 3-C5 |
| 8871-56-751 | 3-D6 |
| 8871-56-751 | 3-K5 |
| 8871-56-751A | 3-D6 |
| 8871-56-751A | 3-K5 |
| 8871-56-752 | 3-D6 |
| 8871-56-752 | 3-K5 |
| 8871-56-785 | 3-D5 |
| 8871-56-787 | 3-D5 |
| 8871-56-787A | 3-D5 |
| 8871-56-791 | 3-I5 |
| 8871-56-792 | 3-I5 |
| 8545-56-801A | 3-C5 |
| 0820-56-905 | 3-D8 |
| 0820-56-905 | 3-F9 |
| 0820-56-905 | 3-H8 |
| 0820-56-905 | 3-L8 |
| 0820-56-905 | 3-N7 |
| 0820-56-905 | 3-E7 |
| 0820-56-905 | 3-J7 |
| 0223-56-942 | 3-E7 |
| 0223-56-942 | 3-J7 |
| 8531-56-961 | 2-F6 |
| 8871-56-961 | 2-F6 |
| 8871-56-970 | 3-N6 |
| 8871-56-970A | 3-N6 |
| 8871-56-970B | 3-N6 |
| 8871-56-970C | 3-N6 |
| 8871-56-971D | 3-N6 |
| 8871-56-981 | 3-N6 |
| 8871-56-981A | 3-N6 |
| 8871-56-981C | 3-N6 |
| 8871-56-991A | 3-N6 |
| 0305-57-081 | 3-C10 |
| 0259-57-109 | 3-C10 |
| 0820-57-109 | 3-C10 |
| 2155-57-109 | 3-C10 |
| 8346-57-311 | 3-N10 |
| 8346-57-311 70 | 3-N10 |
| 8346-57-311X | 3-N10 |
| 8346-57-311X70 | 3-N10 |
| 8346-57-312 | 3-N10 |
| 8346-57-312 70 | 3-N10 |
| 8346-57-313 | 3-N10 |
| 8346-57-313 70 | 3-N10 |
| 8346-57-314 | 3-N10 |
| 8346-57-314 70 | 3-N10 |
| 8346-57-315 | 3-N10 |
| 8346-57-315 70 | 3-N10 |
| 8346-57-315X | 3-N10 |
| 8346-57-315X70 | 3-N10 |
| 8346-57-316 | 3-N10 |
| 8346-57-316 70 | 3-N10 |
| 8346-57-317 | 3-N10 |
| 8346-57-317 70 | 3-C11 |
| 8346-57-318 | 3-C11 |
| 8346-57-318 70 | 3-C11 |
| 8346-57-319 | 3-C11 |
| 8346-57-319 70 | 3-C11 |
| 8346-57-351 | 3-C11 |
| 8346-57-351 70 | 3-C11 |
| 8346-57-352 | 3-C11 |
| 8346-57-352 70 | 3-C11 |
| 8346-57-353 | 3-C11 |
| 8346-57-353 70 | 3-C11 |
| 8346-57-354 | 3-C11 |
| 8346-57-354 70 | 3-C11 |
| 8346-57-355 | 3-C11 |
| 8346-57-355 70 | 3-C11 |
| 8346-57-356 | 3-C11 |
| 8346-57-356 70 | 3-D11 |
| 8346-57-357 | 3-D11 |
| 8346-57-357 70 | 3-D11 |
| 8346-57-358 | 3-D11 |
| 8346-57-358 70 | 3-D11 |
| 8346-57-359 | 3-D11 |
| 8346-57-359 70 | 3-D11 |
| 8346-57-360 | 3-D11 |
| 8346-57-360 70 | 3-D11 |
| 8346-57-361 | 3-D11 |
| 8346-57-361 70 | 3-D11 |

# PART NUMBER INDEX

| PART NUMBER | LOCATION |
|---|---|
| 8346-57-362 | 3-D11 |
| 8346-57-362 70 | 3-D11 |
| 8346-57-362X | 3-D11 |
| 8346-57-362X70 | 3-D11 |
| 8346-57-363 | 3-D11 |
| 8346-57-363 70 | 3-E11 |
| 8346-57-391 | 3-E11 |
| 8346-57-391 70 | 3-E11 |
| 8346-57-392 | 3-E11 |
| 8346-57-392 70 | 3-E11 |
| 8346-57-393 | 3-E11 |
| 8346-57-393 70 | 3-E11 |
| 8346-57-411 | 3-E11 |
| 8346-57-411 70 | 3-E11 |
| 8346-57-416 | 3-E11 |
| 8346-57-416 70 | 3-E11 |
| 8346-57-417 | 3-E11 |
| 8346-57-417 70 | 3-E11 |
| 8346-57-418 | 3-E11 |
| 8346-57-418 70 | 3-E11 |
| 8346-57-419 | 3-E11 |
| 8346-57-419 70 | 3-F11 |
| 8346-57-462 | 3-F11 |
| 8346-57-462 70 | 3-F11 |
| 8346-57-463 | 3-F11 |
| 8346-57-463 70 | 3-F11 |
| 8872-57-610 | 3-G11 |
| 8872-57-610 00 | 3-G11 |
| 8872-57-610 11 | 3-G11 |
| 8872-57-610 20 | 3-G11 |
| 8872-57-610A | 3-G11 |
| 8872-57-610A00 | 3-G11 |
| 8872-57-610A11 | 3-G11 |
| 8872-57-610A20 | 3-G11 |
| 8872-57-620 | 3-G11 |
| 8872-57-620 00 | 3-G11 |
| 8872-57-620 11 | 3-G11 |
| 8872-57-620 20 | 3-G11 |
| 8872-57-620A | 3-G11 |
| 8872-57-620A00 | 3-G11 |
| 8872-57-620A11 | 3-G11 |
| 8872-57-620A20 | 3-G11 |
| 8872-57-633 | 3-G11 |
| 8872-57-670 | 3-G11 |
| 8872-57-670 00 | 3-H11 |
| 8872-57-670 11 | 3-H11 |
| 8872-57-670 20 | 3-H11 |
| 8872-57-670A | 3-H11 |
| 8872-57-670A00 | 3-H11 |
| 8872-57-670A11 | 3-H11 |
| 8872-57-670A20 | 3-H11 |
| 8872-57-680 | 3-H11 |
| 8872-57-680 00 | 3-H11 |
| 8872-57-680 11 | 3-H11 |
| 8872-57-680 20 | 3-H11 |
| 8872-57-680A | 3-H11 |
| 8872-57-680A00 | 3-H11 |
| 8872-57-680A11 | 3-H11 |
| 8872-57-680A20 | 3-H11 |
| 8871-58-010B | 3-C12 |
| 8981-58-010C | 3-C12 |
| 8981-58-010A | 3-C12 |
| 8981-58-C10B | 3-C12 |
| 8981-58-010D | 3-C12 |
| 8871-58-02C | 3-C12 |
| 8981-58-C2C | 3-C12 |
| 8981-58-020A | 3-C12 |
| 8981-58-020B | 3-C12 |
| 8871-58-210 | 3-C13 |
| 1011-58-231 | 3-C13 |
| 8531-58-231A | 3-C13 |
| 8531-58-24C | 3-C13 |
| 1011-58-291 | 3-C13 |
| 8531-58-292 | 3-C13 |
| 8531-58-293 | 3-C13 |
| 8116-58-303 | 3-C13 |
| 8116-58-303 70 | 3-C13 |
| 8531-58-303 | 3-C13 |
| 8531-58-303 00 | 3-C13 |
| 8531-58-303 11 | 3-C13 |
| 8531-58-303 23 | 3-C13 |
| 8531-58-303 72 | 3-C13 |
| 0259-58-305B | 3-F13 |
| 0305-58-309 | 3-D13 |
| 8871-58-31CA | 3-D13 |
| 8871-58-31CB | 3-D13 |
| 8871-58-31CC | 3-D13 |
| 8871-58-31CD | 3-D13 |
| 1243-58-314 | 3-D13 |
| 8173-58-316 | 3-F13 |
| 8545-58-316A | 3-F13 |
| 8531-58-330A | 3-D13 |
| 8531-58-330ACC | 3-D13 |
| 8531-58-330A11 | 3-D13 |
| 8531-58-330A23 | 3-D13 |
| 8531-58-330A72 | 3-D13 |
| 8545-58-33C | 3-D13 |
| 8531-58-361 | 3-F13 |
| 0223-58-375A | 3-E13 |
| 0223-58-375A0C | 3-E13 |
| 0223-58-375A11 | 3-E13 |
| 0223-58-375A23 | 3-E13 |
| 0223-58-375A7C | 3-E13 |
| 0223-58-375A72 | 3-E13 |
| 8871-58-410B | 3-E13 |
| 8871-58-41CC | 3-E13 |
| 1243-58-411 | 3-E13 |
| 8531-58-492 | 3-C2 |
| 8871-58-501 | 3-D12 |
| 8871-58-501A | 3-D12 |
| 8871-58-501B | 3-D12 |
| 8871-58-560A | 3-F13 |
| 8037-58-580A | 3-D13 |
| 8037-58-580A02 | 3-E13 |
| 8037-58-580A11 | 3-E13 |
| 8037-58-580A23 | 3-E13 |
| 8037-58-580A72 | 3-E13 |
| 8038-58-580A | 3-E13 |
| 8038-58-580A00 | 3-E13 |
| 8038-58-580A11 | 3-E13 |
| 8038-58-580A70 | 3-E13 |
| 8038-58-580A72 | 3-E13 |
| 8037-58-585 | 3-F13 |
| 8037-58-585 00 | 3-F13 |
| 8037-58-585 02 | 3-F13 |
| 8037-58-585 11 | 3-F13 |
| 8037-58-585 23 | 3-F13 |
| 8037-58-585 70 | 3-F13 |
| 8037-58-585 72 | 3-F13 |
| 8871-58-603 | 3-D12 |
| 8871-58-605A | 3-D12 |
| 8871-58-760 | 3-E12 |
| 0305-58-762 | 3-E12 |
| 8871-58-781 | 3-E12 |
| 8871-58-791 | 3-E12 |
| 0559-58-868 | 2-E7 |
| 0559-58-868 | 3-N6 |
| 0259-58-906 | 3-F13 |
| 0208-58-921 | 4-J3 |
| 0208-58-921 | 3-E12 |
| 0187-58-922 | 3-E12 |
| 0223-58-961 | 3-C2 |
| 0223-58-962 | 3-C2 |
| 8871-59-010B | 3-C12 |
| 8871-59-010C | 3-C12 |
| 8871-59-010D | 3-C12 |
| 8871-59-010F | 3-C12 |
| 8871-59-020 | 3-C12 |
| 8871-59-020A | 3-C12 |
| 8871-59-020B | 3-D12 |
| 8871-59-210 | 3-C13 |
| 8531-59-240 | 3-C13 |
| 8871-59-310A | 3-D13 |
| 8871-59-310B | 3-D13 |
| 8871-59-310C | 3-D13 |
| 8871-59-310D | 3-D13 |
| 8871-59-410B | 3-F13 |
| 8871-59-410C | 3-F13 |
| 8871-59-501 | 3-D12 |
| 8871-59-501A | 3-D12 |
| 8871-59-501B | 3-D12 |
| 8871-59-560A | 3-F13 |
| 8871-59-603 | 3-D12 |
| 8871-59-760 | 3-E12 |
| 8868-60-050A | 3-E7 |
| 8868-60-050A | 3-J7 |
| 8871-60-050A | 3-E7 |
| 8871-60-050A | 3-J7 |
| 0305-60-052A | 3-E7 |
| 0305-60-052A | 3-J7 |
| 8871-60-070 | 3-N7 |
| 8871-60-121 | 3-K9 |
| 8871-60-141 | 3-K9 |
| 8871-60-181 | 3-K9 |
| 8871-60-182 | 3-K9 |
| 8871-60-221 | 3-E7 |
| 8871-60-221A | 3-E7 |
| 8871-60-221A | 3-J7 |
| 8871-60-225 | 3-F7 |
| 8871-60-225 | 3-J7 |
| 8871-60-231 | 3-E7 |
| 8871-60-231A | 3-E7 |
| 8871-60-231A | 3-J7 |
| 1243-60-261 | 3-F7 |
| 1243-60-261 | 3-J7 |
| 8341-60-350 | 3-H8 |
| 8341-60-350 00 | 3-H8 |
| 8341-60-350 10 | 3-H8 |
| 8341-60-350 23 | 3-H8 |
| 8341-60-350 28 | 3-H8 |
| 8871-60-350 | 3-D8 |
| 8871-60-350 00 | 3-D8 |
| 8871-60-350 10 | 3-D8 |
| 8871-60-350 23 | 3-D8 |
| 8871-60-350B | 3-D8 |
| 8871-60-350B00 | 3-D8 |
| 8871-60-350B10 | 3-D8 |
| 8871-60-350B23 | 3-D8 |
| 8871-60-400 | 3-D8 |
| 8871-60-400 | 3-H8 |
| 8871-60-400A | 3-H8 |
| 8871-60-400B | 3-H8 |
| 0305-60-690 | 3-C15 |
| 0305-60-690 | 3-I8 |
| 0305-60-690 | 3-D8 |
| 8871-60-701 | 3-D8 |
| 8871-60-701 | 3-I8 |
| 8871-60-701 00 | 3-D8 |
| 8871-60-701 00 | 3-I8 |
| 8871-60-701 10 | 3-E8 |
| 8871-60-701 10 | 3-I8 |
| 8871-60-701 23 | 3-E8 |
| 8871-60-701 23 | 3-I8 |
| 8871-60-701 28 | 3-I8 |
| 8871-60-702 | 3-E8 |
| 8871-60-702 | 3-I8 |
| 8341-60-710 | 3-I8 |
| 8341-60-710 01 | 3-I8 |
| 8341-60-710 11 | 3-I8 |
| 8341-60-710 23 | 3-I8 |
| 8341-60-710A | 3-I8 |
| 8341-60-710A01 | 3-I8 |
| 8341-60-710A11 | 3-I8 |
| 8341-60-710A23 | 3-I8 |
| 8341-60-710A28 | 3-J8 |
| 8562-60-712 | 3-J8 |
| 8871-60-712 | 3-E8 |
| 8871-60-712 | 3-J8 |
| 8341-60-713 | 3-H8 |
| 8341-60-713 01 | 3-H8 |
| 8341-60-713 11 | 3-I8 |
| 8341-60-713 23 | 3-I8 |
| 8341-60-713 28 | 3-I8 |
| 8871-60-720 | 3-E8 |
| 8871-60-720 01 | 3-E8 |
| 8871-60-720 11 | 3-E8 |
| 8871-60-720 23 | 3-E8 |
| 8871-60-960 | 2-H8 |
| 8871-60-960A | 2-H8 |
| 8871-60-962 | 2-H8 |
| 8871-60-962A | 2-H8 |
| 1708-61-031 | 3-C14 |
| 8870-61-080 | 3-C14 |
| 8870-61-080A | 3-C14 |
| 8871-61-080 | 3-C14 |
| 8871-61-080A | 3-C14 |
| 8871-61-130 | 3-C14 |
| 8871-61-130A | 3-C14 |
| 8871-61-140 | 3-C14 |
| 8871-61-140A | 3-C14 |
| 8871-61-150 | 3-C14 |
| 8871-61-181 | 3-K9 |
| 8871-61-182 | 3-K9 |
| 8871-61-183 | 3-K9 |
| 8871-61-183A | 3-K9 |
| 8871-61-184 | 3-K9 |
| 8871-61-184A | 3-K9 |
| 8870-61-190 | 3-C14 |
| 8870-61-190A | 3-C14 |
| 8871-61-190 | 3-D14 |
| 8171-61-192A | 3-D14 |
| 8545-61-195 | 3-D14 |
| 8563-61-195 | 3-D14 |
| 8563-61-196A | 3-D14 |
| 8563-61-197A | 3-D14 |
| 8563-61-197B | 3-D14 |
| 8871-61-211A | 3-D14 |
| 8871-61-212 | 3-D14 |
| 8871-61-213 | 3-D14 |
| 1011-61-216 | 3-D14 |
| 8871-61-219 | 3-D14 |
| 8871-61-220 | 3-D14 |
| 8871-61-230 | 3-D14 |
| 8871-61-251A | 3-K9 |
| 8871-62-210A | 3-C15 |
| 8871-62-210B | 3-C15 |
| 8871-62-231 | 3-C15 |
| 8871-62-232A | 3-C15 |
| 8871-62-233 | 3-C15 |
| 8871-62-241A | 3-C15 |
| 8341-62-310 | 3-C15 |
| 8346-62-310 | 3-C15 |
| 8871-62-310B | 3-C15 |
| 8341-62-315 | 3-C15 |
| 8871-62-321A | 3-C15 |
| 8871-62-321A00 | 3-C15 |
| 8871-62-321A11 | 3-C15 |
| 8871-62-321A23 | 3-C15 |
| 8871-62-321A24 | 3-C15 |
| 8871-62-350B | 3-D15 |
| 8871-62-361 | 3-D15 |
| 8871-62-365A | 3-D15 |
| 8871-62-366 | 3-D15 |
| 8871-62-367 | 3-D15 |
| 8341-62-610 | 3-D15 |
| 8871-62-621 | 3-D15 |
| 8871-62-631 | 3-D15 |
| 8871-62-635A | 3-D15 |
| 8871-62-636 | 3-D15 |
| 8871-62-636A | 3-D15 |
| 8871-62-637 | 3-D15 |
| 8871-62-761 | 3-F15 |
| 8871-62-761B | 3-F15 |
| 8871-62-761C | 3-G15 |
| 8871-62-761D | 3-G15 |
| 8346-62-801C | 3-K15 |
| 8346-62-801C00 | 3-K15 |
| 8346-62-801C10 | 3-K15 |
| 8346-62-801C20 | 3-K15 |
| 8346-62-801C88 | 3-K15 |
| 8970-62-801B | 3-I15 |
| 8970-62-801C | 3-I15 |
| 8974-62-801 | 3-I15 |
| 8970-62-805A | 3-I15 |
| 8970-62-805A | 3-K15 |
| 8970-62-815A | 3-I15 |
| 8970-62-815B | 3-I15 |
| 8970-62-815B | 3-K15 |
| 8346-62-820A | 3-K15 |
| 8970-62-820C | 3-I15 |
| 8970-62-860A | 3-I15 |
| 8970-62-863 | 3-I15 |
| 8346-62-871A | 3-K15 |
| 8970-62-871D | 3-I15 |
| 8970-62-871E | 3-I15 |
| 8970-62-871F | 3-I15 |
| 8970-62-872B | 3-I15 |
| 8346-62-873 | 3-K15 |
| 8346-62-875A | 3-K15 |
| 8346-62-876 | 3-K15 |

# PART NUMBER INDEX

| PART NUMBER | LOCATION |
|---|---|
| 0633-62-879 | 3-F8 |
| 0633-62-879 | 3-J8 |
| 8346-62-881A | 3-K15 |
| 8346-62-881ACO | 3-K15 |
| 8346-62-881A1C | 3-K15 |
| 8346-62-881A20 | 3-K15 |
| 8346-62-881A7C | 3-K15 |
| 8346-62-882 | 3-L15 |
| 8346-62-883 | 3-L15 |
| 8346-62-885 | 3-L15 |
| 8970-62-890D | 3-I15 |
| 8970-62-890E | 3-J15 |
| 8871-62-950B | 3-G15 |
| 8871-62-950C | 3-G15 |
| 8871-62-950D | 3-G15 |
| 8871-62-960A | 3-G15 |
| 8871-62-966A | 3-G15 |
| 8871-62-970A | 3-G15 |
| 8346-62-980 | 3-L15 |
| 8871-63-210A | 3-D15 |
| 8871-63-210B | 3-D15 |
| 8871-63-231 | 3-E15 |
| 8871-63-241A | 3-E15 |
| 8970-63-860A | 3-J15 |
| 8970-63-871D | 3-J15 |
| 8970-63-871F | 3-J15 |
| 8346-63-875A | 3-L15 |
| 8346-63-876 | 3-L15 |
| 8871-63-901 | 3-F15 |
| 8872-63-901 | 3-F15 |
| 8872-63-901A | 3-F15 |
| 8872-63-901B | 3-F15 |
| 1243-63-902 | 3-F15 |
| 8871-63-935A | 3-G15 |
| 8871-63-940 | 3-G15 |
| 8871-63-950B | 3-G15 |
| 8871-63-950C | 3-G15 |
| 8871-63-950D | 3-G15 |
| 8871-63-960A | 3-G15 |
| 8871-63-970A | 3-G15 |
| 8871-64-010 | 3-G8 |
| 8871-64-030 | 3-F8 |
| 8871-64-030 00 | 3-F8 |
| 8871-64-030 02 | 3-F8 |
| 8871-64-030 10 | 3-F8 |
| 8871-64-030 12 | 3-F8 |
| 8871-64-030 23 | 3-F8 |
| 8871-64-030 24 | 3-F8 |
| 8871-64-030 25 | 3-F8 |
| 8871-64-030 28 | 3-G8 |
| 8871-64-030 29 | 3-G8 |
| 8871-64-030A | 3-G8 |
| 8871-64-030A | 3-J8 |
| 8871-64-030A02 | 3-G8 |
| 8871-64-030A02 | 3-K8 |
| 8871-64-030A12 | 3-G8 |
| 8871-64-C3CA12 | 3-K8 |
| 8871-64-03CA28 | 3-G8 |
| 8871-64-030A28 | 3-K8 |
| 8871-64-C30A29 | 3-G8 |
| 8871-64-030A29 | 3-K8 |
| 8871-64-030A7C | 3-K8 |
| 8871-64-C43 | 3-G8 |
| 8871-64-C43 | 3-K8 |
| 8871-64-050A | 3-G8 |
| 8871-64-C5CA | 3-K8 |
| 8871-64-101 | 3-G8 |
| 8871-64-101 | 3-K8 |
| 8871-64-161A | 3-G8 |
| 8871-64-161B | 3-G8 |
| 8871-64-161B | 3-K8 |
| 8871-64-162 | 3-G8 |
| 8871-64-162A | 3-G8 |
| 8871-64-162A | 3-K8 |
| 8871-64-163 | 3-G8 |
| 8871-64-321 | 3-F9 |
| 8871-64-321 | 3-L8 |
| 8871-64-321 CC | 3-M8 |
| 8871-64-321 02 | 3-F9 |
| 8871-64-321 C2 | 3-M8 |
| 8871-64-321 10 | 3-M8 |
| 8871-64-321 12 | 3-F9 |
| 8871-64-321 12 | 3-M8 |
| 8871-64-321 23 | 3-M8 |
| 8871-64-321 24 | 3-M8 |
| 8871-64-321 25 | 3-M8 |
| 8871-64-321 28 | 3-F9 |
| 8871-64-321 28 | 3-M8 |
| 8871-64-321 29 | 3-G9 |
| 8871-64-321 29 | 3-M8 |
| 8871-64-321 7C | 3-G9 |
| 8341-64-35C | 3-G9 |
| 8341-64-35C 04 | 3-G9 |
| 8485-64-35C | 3-G9 |
| 8485-64-35C 04 | 3-G9 |
| 8868-64-35C | 3-M8 |
| 8871-64-35C | 3-M8 |
| 8871-64-35CA | 3-M8 |
| 8871-64-350ACC | 3-M8 |
| 8872-64-35CA | 3-N8 |
| 8872-64-350B | 3-G9 |
| 8872-64-35CB | 3-N8 |
| 8872-64-350B0C | 3-N8 |
| 8872-64-350B04 | 3-G9 |
| 8973-64-350P | 3-N8 |
| 8974-64-350P | 3-N8 |
| 8868-64-351 | 3-G9 |
| 8868-64-351 | 3-M8 |
| 8871-64-351 | 3-M8 |
| 8871-64-351A | 3-G9 |
| 8871-64-351A | 3-M8 |
| 8341-64-355 | 3-G9 |
| 8871-64-370 | 3-G9 |
| 8871-64-370 | 3-N8 |
| 8871-64-370A | 3-G9 |
| 8871-64-381 | 3-G9 |
| 8871-64-381 | 3-N8 |
| 8871-64-390 | 3-N8 |
| 8248-64-391 | 3-H9 |
| 8871-64-410 | 3-N8 |
| 8871-64-410 00 | 3-N8 |
| 8871-64-410 10 | 3-N8 |
| 8871-64-410 23 | 3-N8 |
| 8871-64-410 24 | 3-N8 |
| 8871-64-410 25 | 3-N8 |
| 8871-64-410B | 3-H9 |
| 8871-64-410B | 3-N8 |
| 8871-64-410B02 | 3-H9 |
| 8871-64-410B02 | 3-N8 |
| 8871-64-410B12 | 3-H9 |
| 8871-64-410B12 | 3-N8 |
| 8871-64-410B28 | 3-H9 |
| 8871-64-410B28 | 3-N8 |
| 8871-64-410B29 | 3-C9 |
| 8871-64-410B29 | 3-H9 |
| 8871-64-410B70 | 3-H9 |
| 8872-64-411 | 3-C9 |
| 8872-64-411 00 | 3-C9 |
| 8872-64-411 10 | 3-C9 |
| 8872-64-411 23 | 3-C9 |
| 8872-64-411 24 | 3-C9 |
| 8872-64-411 25 | 3-C9 |
| 8872-64-411B | 3-C9 |
| 8872-64-411B | 3-H9 |
| 8872-64-411B02 | 3-C9 |
| 8872-64-411B02 | 3-H9 |
| 8872-64-411B12 | 3-C9 |
| 8872-64-411B12 | 3-H9 |
| 8872-64-411B28 | 3-C9 |
| 8872-64-411B28 | 3-H9 |
| 8872-64-411B29 | 3-C9 |
| 8872-64-411B29 | 3-H9 |
| 8872-64-411B70 | 3-H9 |
| 8871-64-412 | 3-D9 |
| 8871-64-412 | 3-I9 |
| 8871-64-413 | 3-D9 |
| 8871-64-413 | 3-I9 |
| 8871-64-415 | 3-G9 |
| 8871-64-415 | 3-N8 |
| 8871-64-420 | 3-C9 |
| 8871-64-420 | 3-H9 |
| 8871-64-420 00 | 3-C9 |
| 8871-64-420 02 | 3-C9 |
| 8871-64-420 02 | 3-H9 |
| 8871-64-420 10 | 3-C9 |
| 8871-64-420 12 | 3-D9 |
| 8871-64-420 12 | 3-H9 |
| 8871-64-420 23 | 3-D9 |
| 8871-64-420 24 | 3-D9 |
| 8871-64-420 25 | 3-D9 |
| 8871-64-420 28 | 3-D9 |
| 8871-64-420 28 | 3-I9 |
| 8871-64-420 29 | 3-D9 |
| 8871-64-420 29 | 3-I9 |
| 8871-64-420 70 | 3-I9 |
| 8871-64-425 | 3-C9 |
| 8871-64-425 | 3-H9 |
| 8871-64-430 | 3-C9 |
| 8871-64-430 | 3-H9 |
| 8871-64-491 | 3-E9 |
| 8871-64-491A | 3-E9 |
| 8871-64-491B | 3-E9 |
| 8871-64-491B | 3-J9 |
| 8871-64-492 | 3-D9 |
| 8871-64-492A | 3-D9 |
| 8871-64-492A | 3-I9 |
| 8871-64-610 | 3-L8 |
| 8871-64-610B | 3-F9 |
| 8871-64-610B | 3-L8 |
| 8871-64-610B00 | 3-F9 |
| 8871-64-610B00 | 3-L8 |
| 8871-64-750 | 3-K9 |
| 8871-64-761 | 3-K9 |
| 8871-64-771 | 3-K9 |
| 8871-64-773 | 3-K9 |
| 8871-64-780 | 3-K9 |
| 8871-64-811 | 3-L9 |
| 8871-64-811A | 3-L9 |
| 8871-64-812 | 3-L9 |
| 8570-64-815 | 3-L9 |
| 8570-64-815A | 3-L9 |
| 8871-64-815 | 3-L9 |
| 8871-64-820 | 3-L9 |
| 8341-64-825 | 3-L9 |
| 8871-64-901 | 3-D9 |
| 8871-64-901 | 3-I9 |
| 8871-64-901 00 | 3-D9 |
| 8871-64-901 00 | 3-I9 |
| 8871-64-901 10 | 3-D9 |
| 8871-64-901 10 | 3-I9 |
| 8871-64-901 23 | 3-D9 |
| 8871-64-901 23 | 3-I9 |
| 8871-64-901 24 | 3-D9 |
| 8871-64-901 25 | 3-D9 |
| 8871-64-901 25 | 3-I9 |
| 8871-64-901 28 | 3-I9 |
| 8871-64-902 | 3-D9 |
| 8871-64-902 | 3-I9 |
| 8871-64-902 00 | 3-E9 |
| 8871-64-902 00 | 3-I9 |
| 8871-64-902 10 | 3-E9 |
| 8871-64-902 10 | 3-I9 |
| 8871-64-902 23 | 3-F9 |
| 8871-64-902 23 | 3-I9 |
| 8871-64-902 24 | 3-E9 |
| 8871-64-902 26 | 3-E9 |
| 8871-64-902 26 | 3-I9 |
| 8871-64-902 28 | 3-J9 |
| 8871-64-903 | 3-E9 |
| 8871-64-903 | 3-J9 |
| 8871-64-903 00 | 3-E9 |
| 8871-64-903 00 | 3-J9 |
| 8871-64-903 10 | 3-E9 |
| 8871-64-903 10 | 3-J9 |
| 8871-64-903 23 | 3-E9 |
| 8871-64-903 23 | 3-J9 |
| 8871-64-903 24 | 3-E9 |
| 8871-64-903 26 | 3-E9 |
| 8871-64-903 26 | 3-J9 |
| 8871-64-903 28 | 3-J9 |
| 0613-65-857 | 1-I12 |
| 0613-65-857A | 1-I12 |
| 0483-66-061A | 3-C4 |
| 8872-66-110A | 3-F7 |
| 8872-66-110A | 3-K7 |
| 8872-66-121 | 3-F7 |
| 8872-66-121 | 3-K7 |
| 8562-66-122 | 3-F7 |
| 8562-66-122 | 3-K7 |
| 8872-66-123 | 3-F7 |
| 8872-66-123 | 3-K7 |
| 8872-66-124 | 3-F7 |
| 8872-66-124 | 3-J7 |
| 1391-66-126 | 3-E7 |
| 1391-66-126 | 3-J7 |
| 1391-66-127 | 3-F7 |
| 1391-66-127 | 3-J7 |
| 8239-66-128 | 3-G7 |
| 8239-66-128 | 3-K7 |
| 8872-66-128 | 3-G7 |
| 8545-66-140 | 3-F7 |
| 8545-66-140 | 3-J7 |
| 8218-66-143 | 3-C2 |
| 8871-66-151 | 3-C2 |
| 8871-66-156 | 3-C2 |
| 8871-66-241 | 3-F7 |
| 8871-66-241 | 3-K7 |
| 8871-66-242 | 3-F7 |
| 8871-66-242 | 3-J7 |
| 8871-66-250 | 3-F7 |
| 8871-66-250A | 3-F7 |
| 8871-66-250A | 3-K7 |
| 8871-66-251 | 3-F7 |
| 8871-66-251 | 3-K7 |
| 8871-66-395 | 3-G7 |
| 8871-66-395 | 3-K7 |
| 9871-66-450 | 3-D16 |
| 8871-66-460 | 3-G7 |
| 8871-66-460 | 3-K7 |
| 0305-66-580A | 3-F9 |
| 0305-66-580A | 3-L8 |
| 8532-66-630 | 3-E15 |
| 8871-66-670 | 3-G7 |
| 8871-66-670 | 3-K7 |
| 1175-66-710A | 3-D16 |
| 8130-66-710 | 3-D16 |
| 8342-66-730A | 3-C16 |
| 8871-66-730 | 3-C16 |
| 8871-66-730A | 3-C16 |
| 8342-66-731A | 3-C16 |
| 8871-66-731 | 3-C16 |
| 8871-66-731A | 3-C16 |
| 8342-66-732A | 3-C16 |
| 8871-66-732 | 3-C16 |
| 8871-66-732A | 3-D16 |
| 8871-66-760 | 3-D16 |
| 8531-66-780C | 3-D16 |
| 0233-66-790 | 3-D16 |
| 8531-66-790C | 3-D16 |
| 8869-66-800 | 3-G7 |
| 8869-66-900 | 3-K7 |
| 0209-66-820A | 3-D16 |
| 0209-66-821 | 3-D16 |
| 3992-66-830A | 3-D16 |
| 0222-66-865A | 3-G16 |
| 0222-66-865A | 3-J16 |
| 0222-66-865A00 | 3-G16 |
| 0222-66-865A00 | 3-J16 |
| 0710-66-868A | 3-H16 |
| 0710-66-868A | 3-K16 |
| 1480-66-870 | 3-I16 |
| 8341-66-870A | 3-I16 |
| 8344-66-870A | 3-I16 |
| 8488-66-870 | 3-I16 |
| 8869-66-870 | 3-G16 |
| 8871-66-870A | 3-G16 |
| 8871-66-870A | 3-I16 |
| 8872-66-870A | 3-I16 |
| 8341-66-900A | 3-J16 |
| 8344-66-900A | 3-J16 |
| 8869-66-900 | 3-G16 |
| 8871-66-900A | 3-H16 |
| 8871-66-900A | 3-J16 |
| 8973-66-900P | 3-G16 |
| 8551-66-910A | 3-G16 |
| 8561-66-910 | 3-J16 |
| 0222-66-911 | 3-H16 |
| 0222-66-911 | 3-J16 |
| 8344-66-920 | 3-J16 |
| 8551-66-920A | 3-J16 |

# PART NUMBER INDEX

| PART NUMBER | LOCATION | PART NUMBER | LOCATION | PART NUMBER | LOCATION | PART NUMBER | LOCATION | PART NUMBER | LOCATION | PART NUMBER | LOCATION |
|---|---|---|---|---|---|---|---|---|---|---|---|
| 8973-66-920P | 3-M16 | 8341-67-051 | 3-N16 | 1011-67-820B | 3-E16 | 8871-68-171C | 4-E3 | 8871-68-271 20 | 4-H3 | 8871-68-390C | 4-L3 |
| 8869-66-936 | 3-H16 | 8565-67-051 | 3-N16 | 1244-67-821 | 3-E16 | 8871-68-171C00 | 4-E3 | 8871-68-271 21 | 4-H3 | 8871-68-390C00 | 4-L3 |
| 8869-66-936 | 3-J16 | 8871-67-053 | 3-N16 | 1244-67-821A | 3-E16 | 8871-68-171C10 | 4-E3 | 8871-68-271A | 4-H3 | 8871-68-390C10 | 4-L3 |
| 8869-66-936A | 3-J16 | 8341-67-090 | 3-N16 | 0839-67-880 | 3-F16 | 8871-68-171C21 | 4-E3 | 8871-68-271A00 | 4-H3 | 8871-68-390C21 | 4-L3 |
| 8973-66-936P | 3-H16 | 8342-67-090 | 3-N16 | 0862-67-880 | 3-F16 | 8871-68-171C70 | 4-E3 | 8871-68-271A10 | 4-H3 | 8871-68-390C70 | 4-L3 |
| 8341-66-940B | 3-J16 | 8871-67-090B | 3-N16 | 8545-67-915 | 4-F2 | 8871-68-171D | 4-E3 | 8871-68-271A21 | 4-H3 | 8872-68-390 | 4-L3 |
| 8869-66-940B | 3-H16 | 8872-67-090B | 3-N16 | 8871-67-915 | 4-F2 | 8871-68-171D00 | 4-E3 | 8871-68-271A70 | 4-H3 | 8872-68-390 00 | 4-L3 |
| 8341-66-941 | 3-J16 | 8867-67-091 | 3-N16 | 8871-67-972 | 3-F16 | 8871-68-171D10 | 4-E3 | 8871-68-291 | 4-H3 | 8872-68-390 10 | 4-L3 |
| 8342-66-941 | 3-I16 | 3777-67-099 | 3-D16 | 8342-67-985 | 4-F2 | 8871-68-171D21 | 4-E3 | 8871-68-291 00 | 4-H3 | 8872-68-390 20 | 4-L3 |
| 8869-66-941 | 3-H16 | 8871-67-099 | 3-D16 | 8344-67-985 | 4-F2 | 8871-68-171D70 | 4-E3 | 8871-68-291 10 | 4-I3 | 8872-68-390B | 4-L3 |
| 8870-66-941 | 3-G16 | 8871-67-100 | 3-N16 | 8531-68-015 | 4-C3 | 8871-68-173 | 4-E3 | 8871-68-291 20 | 4-I3 | 8872-68-390B00 | 4-L3 |
| 8342-66-942 | 3-I16 | 8871-67-100A | 3-N16 | 8531-68-021 | 4-C3 | 8871-68-174 | 4-F3 | 8871-68-291 21 | 4-I3 | 8872-68-390B10 | 4-L3 |
| 8870-66-942 | 3-G16 | 8871-67-120A | 4-F2 | 8871-68-026 | 4-C3 | 8871-68-175 | 4-F3 | 8871-68-291A | 4-I3 | 8872-68-390B20 | 4-M3 |
| 0208-66-944 | 4-H2 | 8871-67-120B | 4-F2 | 8871-68-030 | 4-C3 | 8871-68-191A | 4-F3 | 8871-68-291A00 | 4-I3 | 8872-68-390B21 | 4-M3 |
| 0208-66-944A | 4-H2 | 8871-67-120C | 4-F2 | 8871-68-030 01 | 4-C3 | 8871-68-191A00 | 4-F3 | 8871-68-291A10 | 4-I3 | 8872-68-390B70 | 4-M3 |
| 8870-66-949 | 3-H16 | 8341-67-190A | 4-F2 | 8871-68-030 15 | 4-C3 | 8871-68-191A10 | 4-F3 | 8871-68-291A21 | 4-I3 | 8872-68-390C | 4-M3 |
| 8870-66-949 | 3-J16 | 8341-67-190B | 4-F2 | 8871-68-030 21 | 4-C3 | 8871-68-191A20 | 4-F3 | 8871-68-291A70 | 4-I3 | 8872-68-390C00 | 4-M3 |
| 8551-66-960 | 3-K16 | 8341-67-190C | 4-F2 | 8871-68-030 73 | 4-C3 | 8871-68-191B | 4-F3 | 8871-68-370 | 4-J3 | 8872-68-390C10 | 4-M3 |
| 8551-66-960 | 3-H16 | 8871-67-242 | 4-F2 | 8346-68-040B | 4-C3 | 8871-68-191B00 | 4-F3 | 8871-68-370 00 | 4-J3 | 8872-68-390C21 | 4-M3 |
| 8869-66-960 | 3-H16 | 8871-67-250 | 1-H12 | 8346-68-040B01 | 4-C3 | 8871-68-191B10 | 4-F3 | 8871-68-370 10 | 4-J3 | 8872-68-390C70 | 4-M3 |
| 8869-66-960 | 3-J16 | 8871-67-250A | 1-H12 | 8346-68-040B15 | 4-C3 | 8871-68-191B20 | 4-F3 | 8871-68-370 20 | 4-J3 | 8871-68-420A | 3-E12 |
| 8973-66-961P | 3-H16 | 8872-67-250 | 1-H12 | 8346-68-040B73 | 4-C3 | 8871-68-191B21 | 4-F3 | 8871-68-370B | 4-J3 | 8871-68-420A12 | 3-E12 |
| 8980-66-961 | 3-K16 | 8872-67-250A | 1-H12 | 8346-68-040B88 | 4-C3 | 8871-68-191C | 4-F3 | 8871-68-370B00 | 4-J3 | 8871-68-420A22 | 3-E12 |
| 8561-66-965 | 3-K16 | 8871-67-260 | 1-H12 | 8973-68-040 | 4-C3 | 8871-68-191C00 | 4-F3 | 8871-68-370B10 | 4-J3 | 8871-68-420B | 3-E12 |
| 0870-66-970B | 3-K16 | 8871-67-260A | 1-H12 | 8973-68-040 01 | 4-C3 | 8871-68-191C10 | 4-F3 | 8871-68-370B20 | 4-J3 | 8871-68-420B12 | 3-E12 |
| 0222-66-971 | 3-N6 | 1011-67-291A | 1-H12 | 8973-68-040 15 | 4-C3 | 8871-68-191C21 | 4-F3 | 8871-68-370B21 | 4-J3 | 8871-68-420B22 | 3-E12 |
| 1247-66-980 | 3-H16 | 1011-67-293 | 1-H12 | 8973-68-040 21 | 4-D3 | 8871-68-191C70 | 4-F3 | 8871-68-370C | 4-J3 | 8871-68-420D | 3-F12 |
| 1247-66-985A | 3-H16 | 0866-67-301A | 4-H2 | 8973-68-040 73 | 4-D3 | 8871-68-191D | 4-F3 | 8871-68-370C00 | 4-J3 | 8871-68-420D12 | 3-F12 |
| 1247-66-985A | 3-K16 | 0866-67-302 | 4-H2 | 8871-68-056 | 4-D3 | 8871-68-191D00 | 4-G3 | 8871-68-370C10 | 4-J3 | 8871-68-420D22 | 3-F12 |
| 8484-66-985 | 3-K16 | 8871-67-321A | 4-H2 | 8871-68-057 | 4-D3 | 8871-68-191D10 | 4-G3 | 8871-68-370C21 | 4-J3 | 8871-68-420F | 3-F12 |
| 8980-66-985 | 3-K16 | 8872-67-321 | 4-H2 | 0810-68-070A | 4-L4 | 8871-68-191D21 | 4-G3 | 8871-68-370C70 | 4-J3 | 8871-68-420F14 | 3-F12 |
| 0187-66-991 | 3-L16 | 8562-67-330 | 4-H2 | 0810-68-070C | 4-L4 | 8871-68-191D70 | 4-G3 | 8872-68-370 | 4-J3 | 8872-68-420A | 3-F12 |
| 0820-66-992 | 3-H16 | 8871-67-350B | 4-H2 | 8346-68-080A | 4-D3 | 8871-68-221 | 4-G3 | 8872-68-370 00 | 4-J3 | 8872-68-420A00 | 3-F12 |
| 8341-67-010B | 3-L16 | 8872-67-350 | 4-H2 | 8346-68-080A01 | 4-D3 | 8871-68-221 00 | 4-G3 | 8872-68-370 10 | 4-K3 | 8872-68-420B | 3-F12 |
| 8341-67-010C | 3-L16 | 8871-67-371 | 4-F2 | 8346-68-080A15 | 4-D3 | 8871-68-221 10 | 4-G3 | 8872-68-370 20 | 4-K3 | 8872-68-420B00 | 3-F12 |
| 8341-67-010E | 3-L16 | 1011-67-375 | 4-H2 | 8346-68-080A73 | 4-D3 | 8871-68-221 20 | 4-G3 | 8872-68-370B | 4-K3 | 8872-68-420D | 3-F12 |
| 8341-67-010G | 3-M16 | 0317-67-480A | 4-G2 | 8346-68-080A88 | 4-D3 | 8871-68-221 21 | 4-G3 | 8872-68-370B00 | 4-K3 | 8872-68-420D00 | 3-F12 |
| 8485-67-010B | 3-M16 | 8871-67-500 | 4-G2 | 8973-68-080A | 4-D3 | 8871-68-221A | 4-G3 | 8872-68-370B10 | 4-K3 | 8872-68-420F | 3-F12 |
| 8485-67-010C | 3-M16 | 1011-67-510 | 4-G2 | 8973-68-080A01 | 4-D3 | 8871-68-221A00 | 4-G3 | 8872-68-370B20 | 4-K3 | 8872-68-420F04 | 3-F12 |
| 8485-67-010E | 3-M16 | 1011-67-510A | 4-G2 | 8973-68-080A15 | 4-D3 | 8871-68-221A10 | 4-G3 | 8872-68-370B21 | 4-K3 | 8872-68-420F14 | 3-F12 |
| 8485-67-010G | 3-M16 | 0317-67-511A | 4-G2 | 8973-68-080A21 | 4-D3 | 8871-68-221A21 | 4-G3 | 8872-68-370C | 4-K3 | 8872-68-420F24 | 3-F12 |
| 8868-67-010D | 3-M16 | 1011-67-511A | 4-G2 | 8973-68-080A73 | 4-D3 | 8871-68-221A70 | 4-G3 | 8872-68-370C00 | 4-K3 | 8872-68-420F25 | 3-G12 |
| 8868-67-010G | 3-M16 | 1011-67-511B | 4-G2 | 8973-68-090A | 4-M4 | 8871-68-241 | 4-G3 | 8872-68-370C10 | 4-K3 | 8872-68-420F70 | 3-G12 |
| 8872-67-010C | 3-M16 | 1011-67-515A | 4-G2 | 8973-68-090B | 4-M4 | 8871-68-241 00 | 4-G3 | 8872-68-370C21 | 4-K3 | 8973-68-420 | 3-G12 |
| 8872-67-010F | 3-M16 | 1011-67-515B | 4-G2 | 8973-68-090C | 4-M4 | 8871-68-241 10 | 4-G3 | 8872-68-370C70 | 4-K3 | 8973-68-420 13 | 3-G12 |
| 8871-67-012 | 3-M16 | 0866-67-521 | 1-I8 | 8974-68-090 | 4-M4 | 8871-68-241 20 | 4-G3 | 8871-68-390 | 4-K3 | 8973-68-420 23 | 3-G12 |
| 8341-67-030A | 3-M16 | 1016-67-620 | 3-E16 | 8871-68-171A | 4-D3 | 8871-68-241 21 | 4-H3 | 8871-68-390 00 | 4-K3 | 8973-68-420A | 3-G12 |
| 8341-67-030E | 3-M16 | 3564-67-700 | 3-E16 | 8871-68-171A00 | 4-E3 | 8871-68-241A | 4-H3 | 8871-68-390 10 | 4-K3 | 8973-68-420A13 | 3-G12 |
| 8871-67-030A | 3-M16 | 8792-67-720 | 3-E16 | 8871-68-171A10 | 4-E3 | 8871-68-241A00 | 4-H3 | 8871-68-390 20 | 4-K3 | 8973-68-420A23 | 3-G12 |
| 8871-67-030C | 3-M16 | 8914-67-720 | 3-E16 | 8871-68-171A20 | 4-E3 | 8871-68-241A10 | 4-H3 | 8871-68-390B | 4-K3 | 8973-68-420C | 3-G12 |
| 8973-67-030P | 3-M16 | 1220-67-740 | 3-E16 | 8871-68-171B | 4-E3 | 8871-68-241A21 | 4-H3 | 8871-68-390B00 | 4-L3 | 8973-68-420C14 | 3-G12 |
| 8871-67-031 | 3-M16 | 8173-67-740A | 3-E16 | 8871-68-171B00 | 4-E3 | 8871-68-241A70 | 4-H3 | 8871-68-390B10 | 4-L3 | 8973-68-420P | 3-G12 |
| 8341-67-050B | 3-N16 | 8341-67-740 | 3-E16 | 8871-68-171B10 | 4-E3 | 8871-68-271 | 4-H3 | 8871-68-390B20 | 4-L3 | 8974-68-420 | 3-G12 |
| 8871-67-050A | 3-N16 | 1078-67-800 | 3-E16 | 8871-68-171B20 | 4-E3 | 8871-68-271 00 | 4-H3 | 8871-68-390B21 | 4-L3 | 8974-68-420 00 | 3-G12 |
| 8871-67-050B | 3-N16 | 1011-67-820A | 3-E16 | 8871-68-171B21 | 4-E3 | 8871-68-271 10 | 4-H3 | 8871-68-390B70 | 4-L3 | 8974-68-420A | 3-G12 |

# PART NUMBER INDEX

| PART NUMBER | LOCATION |
|---|---|
| 8974-68-420A00 | 3-H12 |
| 8974-68-420C | 3-H12 |
| 8974-68-420C04 | 3-H12 |
| 8974-68-420C14 | 3-H12 |
| 8974-68-420C24 | 3-H12 |
| 8974-68-420C25 | 3-H12 |
| 8974-68-420C70 | 3-H12 |
| 8545-68-421 | 3-K12 |
| 8871-68-450A | 3-H12 |
| 8871-68-450A12 | 3-H12 |
| 8871-68-450A22 | 3-H12 |
| 8871-68-450B | 3-H12 |
| 8871-68-450B12 | 3-H12 |
| 8871-68-450B22 | 3-H12 |
| 8871-68-450D | 3-H12 |
| 8871-68-450D12 | 3-H12 |
| 8871-68-450D22 | 3-I12 |
| 8871-68-450F | 3-I12 |
| 8871-68-450F14 | 3-I12 |
| 8872-68-450A | 3-I12 |
| 8872-68-450A00 | 3-I12 |
| 8872-68-450B | 3-I12 |
| 8872-68-450B00 | 3-I12 |
| 8872-68-450D | 3-I12 |
| 8872-68-450D00 | 3-I12 |
| 8872-68-450F | 3-I12 |
| 8872-68-450F04 | 3-I12 |
| 8872-68-450F14 | 3-I12 |
| 8872-68-450F24 | 3-I12 |
| 8872-68-450F25 | 3-I12 |
| 8872-68-450F70 | 3-I12 |
| 8973-68-450 | 3-I12 |
| 8973-68-450 13 | 3-J12 |
| 8973-68-450 23 | 3-J12 |
| 8973-68-450A | 3-J12 |
| 8973-68-450A13 | 3-J12 |
| 8973-68-450A23 | 3-J12 |
| 8973-68-450C | 3-J12 |
| 8973-68-450C14 | 3-J12 |
| 8973-68-450P | 3-J12 |
| 8974-68-450 | 3-J12 |
| 8974-68-450 00 | 3-J12 |
| 8974-68-450A | 3-J12 |
| 8974-68-450A00 | 3-J12 |
| 8974-68-450C | 3-J12 |
| 8974-68-450C04 | 3-K12 |
| 8974-68-450C14 | 3-K12 |
| 8974-68-450C24 | 3-K12 |
| 8974-68-450C25 | 3-K12 |
| 8974-68-450C70 | 3-K12 |
| 8871-68-520 | 4-M3 |
| 8871-68-520 00 | 4-M3 |
| 8871-68-520 04 | 4-M3 |
| 8871-68-520 12 | 4-M3 |
| 8871-68-520 14 | 4-M3 |
| 8871-68-520 22 | 4-M3 |
| 8871-68-520 24 | 4-M3 |
| 8871-68-520 70 | 4-M3 |
| 8871-68-520A | 4-M3 |
| 8871-68-520A04 | 4-M3 |
| 8871-68-520A14 | 4-N3 |
| 8871-68-520A24 | 4-N3 |
| 8871-68-520A70 | 4-N3 |
| 8871-68-550 | 4-N3 |
| 8871-68-550 00 | 4-N3 |
| 8871-68-550 04 | 4-N3 |
| 8871-68-550 12 | 4-N3 |
| 8871-68-550 14 | 4-N3 |
| 8871-68-550 22 | 4-N3 |
| 8871-68-550 24 | 4-N3 |
| 8871-68-550 70 | 4-N3 |
| 8871-68-550A | 4-N3 |
| 8871-68-550A04 | 4-N3 |
| 8871-68-550A14 | 4-N3 |
| 8871-68-550A24 | 4-N3 |
| 8871-68-550A70 | 4-N3 |
| 8871-68-620 | 4-F4 |
| 8871-68-620A | 4-F4 |
| 8871-68-651 | 4-F4 |
| 8871-68-654 | 4-F4 |
| 8871-68-655 | 4-F4 |
| 8871-68-656 | 4-F4 |
| 8871-68-658 | 4-F4 |
| 8871-68-659 | 4-F4 |
| 8871-68-664 | 4-F4 |
| 8871-68-664A | 4-F4 |
| 8871-68-664B | 4-F4 |
| 8871-68-665 | 4-F4 |
| 8871-68-666 | 4-F4 |
| 8871-68-667 | 4-F4 |
| 8871-68-671 | 4-F4 |
| 8871-68-671 17 | 4-G4 |
| 8871-68-671 24 | 4-G4 |
| 8871-68-671 75 | 4-G4 |
| 8871-68-671A | 4-G4 |
| 8871-68-671A17 | 4-G4 |
| 8871-68-671A24 | 4-G4 |
| 8871-68-671A25 | 4-G4 |
| 8871-68-671A75 | 4-G4 |
| 8871-68-671A76 | 4-G4 |
| 8871-68-671A80 | 4-G4 |
| 8871-68-671B | 4-G4 |
| 8871-68-671B25 | 4-G4 |
| 8871-68-671B76 | 4-G4 |
| 8871-68-671B80 | 4-G4 |
| 8871-68-671C | 4-G4 |
| 8871-68-671C25 | 4-G4 |
| 8871-68-671C76 | 4-G4 |
| 8871-68-671C80 | 4-G4 |
| 8871-68-677A | 4-H4 |
| 8871-68-677A17 | 4-H4 |
| 8871-68-677A24 | 4-H4 |
| 8871-68-677A75 | 4-H4 |
| 8871-68-677B | 4-H4 |
| 8871-68-677B17 | 4-H4 |
| 8871-68-677B24 | 4-H4 |
| 8871-68-677B75 | 4-H4 |
| 8871-68-677C | 4-H4 |
| 8871-68-677C17 | 4-H4 |
| 8871-68-677C24 | 4-H4 |
| 8871-68-677C25 | 4-H4 |
| 8871-68-677C75 | 4-H4 |
| 8871-68-677C76 | 4-H4 |
| 8871-68-677C80 | 4-H4 |
| 8871-68-677D | 4-H4 |
| 8871-68-677D25 | 4-H4 |
| 8871-68-677D76 | 4-I4 |
| 8871-68-677D80 | 4-I4 |
| 8872-68-677A | 4-I4 |
| 8872-68-677A17 | 4-I4 |
| 8872-68-677A24 | 4-I4 |
| 8872-68-677A75 | 4-I4 |
| 8872-68-677B | 4-I4 |
| 8872-68-677B17 | 4-I4 |
| 8872-68-677B24 | 4-I4 |
| 8872-68-677B75 | 4-I4 |
| 8872-68-677C | 4-I4 |
| 8872-68-677C17 | 4-I4 |
| 8872-68-677C24 | 4-I4 |
| 8872-68-677C25 | 4-I4 |
| 8872-68-677C75 | 4-I4 |
| 8872-68-677C76 | 4-I4 |
| 8872-68-677C80 | 4-I4 |
| 8872-68-677D | 4-J4 |
| 8872-68-677D25 | 4-J4 |
| 8872-68-677D76 | 4-J4 |
| 8872-68-677D80 | 4-J4 |
| 8973-68-677P | 4-J4 |
| 8871-68-695 | 4-J4 |
| 8871-68-695 77 | 4-J4 |
| 8871-68-695 81 | 4-J4 |
| 8871-68-695 85 | 4-J4 |
| 8871-68-695A | 4-J4 |
| 8871-68-695A77 | 4-J4 |
| 8871-68-695A81 | 4-J4 |
| 8871-68-695A85 | 4-J4 |
| 8871-68-696A | 4-J4 |
| 8871-68-711 | 4-N3 |
| 8871-68-711 00 | 4-N3 |
| 8871-68-721 | 4-C4 |
| 8871-68-721 00 | 4-C4 |
| 8871-68-770 | 4-C4 |
| 8871-68-770 00 | 4-C4 |
| 8871-68-770 10 | 4-C4 |
| 8871-68-770 20 | 4-C4 |
| 8871-68-770 21 | 4-C4 |
| 8871-68-770 70 | 4-C4 |
| 8871-68-790 | 4-C4 |
| 8871-68-790 00 | 4-C4 |
| 8871-68-790 10 | 4-C4 |
| 8871-68-790 20 | 4-C4 |
| 8871-68-790 21 | 4-C4 |
| 8871-68-790 70 | 4-C4 |
| 0305-68-810A | 2-F6 |
| 8871-68-851 | 4-C4 |
| 8871-68-851 00 | 4-C4 |
| 8871-68-851 10 | 4-C4 |
| 8871-68-851 20 | 4-C4 |
| 8871-68-851 23 | 4-D4 |
| 8871-68-851 70 | 4-D4 |
| 8871-68-855 | 4-E4 |
| 8871-68-861 | 4-D4 |
| 8871-68-861 00 | 4-D4 |
| 8871-68-861 10 | 4-D4 |
| 8871-68-861 20 | 4-D4 |
| 8871-68-861 23 | 4-D4 |
| 8871-68-861 70 | 4-D4 |
| 8871-68-871 | 4-D4 |
| 8871-68-871 00 | 4-D4 |
| 8871-68-871 10 | 4-D4 |
| 8871-68-871 20 | 4-D4 |
| 8871-68-871 23 | 4-D4 |
| 8871-68-871 70 | 4-D4 |
| 8341-68-890 | 4-D4 |
| 8341-68-890 00 | 4-D4 |
| 8341-68-890 10 | 4-D4 |
| 8341-68-890 20 | 4-D4 |
| 8341-68-890 70 | 4-E4 |
| 8871-68-891A | 4-E4 |
| 8871-68-891A77 | 4-E4 |
| 8871-68-891A81 | 4-E4 |
| 8871-68-891A85 | 4-E4 |
| 8871-68-891P | 4-E4 |
| 8871-68-891B00 | 4-E4 |
| 8871-68-891B10 | 4-E4 |
| 8871-68-891B20 | 4-E4 |
| 8871-68-891B77 | 4-E4 |
| 8871-68-891B81 | 4-E4 |
| 8871-68-891B85 | 4-E4 |
| 8544-68-911A | 3-D12 |
| 8544-68-911A01 | 3-D12 |
| 8544-68-911A10 | 3-D12 |
| 8544-68-911A20 | 3-D12 |
| 8544-68-911B | 3-D12 |
| 8544-68-911B01 | 3-D12 |
| 8544-68-911B10 | 3-E12 |
| 8544-68-911B20 | 3-E12 |
| 8973-68-961A | 3-J15 |
| 8973-68-962A | 3-J15 |
| 8973-68-980A | 3-J15 |
| 8973-68-980C | 3-J15 |
| 8595-69-011 | 4-G5 |
| 8871-69-014C | 4-G5 |
| 8240-69-034 | 4-G5 |
| 8341-69-036 | 4-G5 |
| 8344-69-036 | 4-G5 |
| 8485-69-036 | 4-G5 |
| 8486-69-036 | 4-G5 |
| 3906-69-038 | 4-G5 |
| 8570-69-038 | 4-G5 |
| 8341-69-044 | 4-G5 |
| 8344-69-044 | 4-G5 |
| 0187-69-049A | 3-H15 |
| 0187-69-C49A | 3-K4 |
| 3743-69-085 | 3-J4 |
| 8871-69-110 | 4-M4 |
| 8871-69-110A | 4-M4 |
| 8341-69-115 | 4-N4 |
| 8341-69-116 | 4-C5 |
| 8871-69-117 | 4-M4 |
| 8341-69-120 | 4-M4 |
| 8341-69-131 | 4-M4 |
| 8561-69-140 | 4-N4 |
| 8561-69-1?1 | 4-N4 |
| 8561-69-151 28 | 4-N4 |
| 8871-69-170 | 4-M4 |
| 8871-69-170A | 4-M4 |
| 8871-69-177 | 4-C5 |
| 8341-69-178 | 4-M4 |
| 8871-69-178 | 4-M4 |
| 8341-69-180 | 4-M4 |
| 8341-69-191 | 4-N4 |
| 8870-69-220 | 4-N4 |
| 8870-69-220A | 4-N4 |
| 8871-69-220 | 4-N4 |
| 8871-69-220A | 4-N4 |
| 8872-69-220 | 4-N4 |
| 8872-69-220A | 4-N4 |
| 8871-69-232 | 4-D5 |
| 8871-69-233 | 4-D5 |
| 8871-69-233A | 4-D5 |
| 8872-69-233 | 4-D5 |
| 8871-69-240 | 4-N4 |
| 8347-69-270 | 4-C5 |
| 8347-69-270 01 | 4-C5 |
| 8347-69-270 15 | 4-C5 |
| 8347-69-270 73 | 4-C5 |
| 8347-69-270 88 | 4-C5 |
| 8871-69-270 | 4-C5 |
| 8871-69-270 01 | 4-C5 |
| 8871-69-270 15 | 4-C5 |
| 8871-69-270 21 | 4-C5 |
| 8871-69-270 73 | 4-C5 |
| 8872-69-270 | 4-C5 |
| 8872-69-270 01 | 4-C5 |
| 8872-69-270 15 | 4-C5 |
| 8872-69-270 21 | 4-C5 |
| 8872-69-270 73 | 4-C5 |
| 8872-69-270 88 | 4-D5 |
| 0208-69-316 | 4-I3 |
| 8342-69-320 | 4-D5 |
| 8342-69-320 01 | 4-D5 |
| 8342-69-320 15 | 4-D5 |
| 8342-69-320 73 | 4-D5 |
| 8346-69-320A | 4-D5 |
| 8346-69-320A01 | 4-D5 |
| 8346-69-320A15 | 4-D5 |
| 8346-69-320A73 | 4-D5 |
| 8346-69-320A88 | 4-D5 |
| 8871-69-320 | 4-D5 |
| 8871-69-320 01 | 4-D5 |
| 8871-69-320 15 | 4-D5 |
| 8871-69-320 21 | 4-E5 |
| 8871-69-320 73 | 4-E5 |
| 8872-69-320 | 4-E5 |
| 8872-69-320 01 | 4-E5 |
| 8872-69-320 15 | 4-E5 |
| 8872-69-320 21 | 4-E5 |
| 8872-69-320 73 | 4-E5 |
| 8973-69-320 | 4-E5 |
| 8973-69-320 01 | 4-E5 |
| 8973-69-320 15 | 4-E5 |
| 8973-69-320 21 | 4-E5 |
| 8973-69-320 73 | 4-E5 |
| 8341-69-370 | 3-K12 |
| 8341-69-370 04 | 3-K12 |
| 8341-69-370 12 | 3-K12 |
| 8341-69-370 75 | 3-K12 |
| 8341-69-370 79 | 3-K12 |
| 8871-69-370 | 3-K12 |
| 8871-69-370 00 | 3-K12 |
| 8871-69-370 10 | 3-K12 |
| 8871-69-370 23 | 3-K12 |
| 8871-69-370A | 3-K12 |
| 8871-69-370A00 | 3-K12 |
| 8871-69-370A04 | 3-K12 |
| 8871-69-370A10 | 3-L12 |
| 8871-69-370A12 | 3-L12 |
| 8871-69-370A23 | 3-L12 |
| 8871-69-370A72 | 3-L12 |
| 8871-69-370A75 | 3-L12 |
| 1243-69-373 | 3-M12 |
| 1243-69-373 00 | 3-M12 |
| 1243-69-373 04 | 3-M12 |
| 1243-69-373 10 | 3-M12 |
| 1243-69-373 12 | 3-M12 |
| 1243-69-373 23 | 3-M12 |
| 1243-69-373 72 | 3-M12 |
| 1243-69-373 75 | 3-M12 |
| 1243-69-373 79 | 3-M12 |

# PART NUMBER INDEX

| PART NUMBER | LOCATION | PART NUMBER | LOCATION | PART NUMBER | LOCATION | PART NUMBER | LOCATION | PART NUMBER | LOCATION | PART NUMBER | LOCATION |
|---|---|---|---|---|---|---|---|---|---|---|---|
| 8341-69-375 | 3-M12 | 8871-70-020B | 3-D6 | 1482-70-700 | 3-E6 | 8871-71-311A | 3-N5 | 1690-76-411A | 3-D14 | 0866-76-475 | 3-K14 |
| 8341-69-390 | 3-L12 | 8871-70-020B | 3-K5 | 1482-70-700A | 3-E6 | 8871-71-400E | 3-H6 | 8871-76-411 | 3-F14 | 0866-76-476 | 3-K14 |
| 8341-69-390 C4 | 3-L12 | 8871-70-051A | 3-D6 | 8871-70-700 | 3-L5 | 8871-71-400E | 3-N5 | 8871-76-411A | 3-F14 | 8871-76-478 | 3-J14 |
| 8341-69-390 12 | 3-L12 | 8871-70-051A | 3-K5 | 8871-70-700A | 3-L5 | 8871-71-400F | 3-H6 | 8871-76-412 | 3-F14 | 8871-76-479 | 3-K14 |
| 8341-69-390 75 | 3-L12 | 8871-70-051B | 3-D6 | 8973-70-700A | 3-E6 | 8871-71-400F | 3-N5 | 8871-76-412A | 3-F14 | 8871-76-500 | 3-H14 |
| 8341-69-390 79 | 3-L12 | 8871-70-051B | 3-K5 | 8973-70-700B | 3-E6 | 8871-71-400G | 3-H6 | 8871-76-413 | 3-F14 | 8871-76-500A | 3-H14 |
| 8871-69-390 | 3-L12 | 8871-70-051C | 3-D6 | 8341-70-750 | 3-E6 | 8871-71-400G | 3-N5 | 8871-76-414 | 3-E14 | 8871-76-501 | 3-H14 |
| 8871-69-390 00 | 3-L12 | 8871-70-051C | 3-K5 | 8341-70-750 | 3-L5 | 8871-71-400I | 3-C6 | 8531-76-415 | 3-H14 | 8871-76-502 | 3-H14 |
| 8871-69-390 10 | 3-L12 | 8871-70-100D | 3-D6 | 8871-70-750B | 3-F6 | 8871-71-400I | 3-H6 | 8871-76-415 | 3-E14 | 8871-76-503 | 3-H14 |
| 8871-69-390 23 | 3-L12 | 8871-70-100D | 3-K5 | 8871-70-750B | 3-L5 | 8871-71-400K | 3-C6 | 8871-76-416 | 3-F14 | 8871-76-503A | 3-H14 |
| 8871-69-390A | 3-L12 | 8871-70-100E | 3-D6 | 8871-70-750C | 3-F6 | 8871-71-400K | 3-H6 | 8871-76-417 | 3-F14 | 8563-76-504 | 3-H14 |
| 8871-69-390A00 | 3-L12 | 8871-70-100E | 3-K5 | 8871-70-750C | 3-M5 | 8544-72-502 | 3-N12 | 8871-76-418 | 3-E14 | 8871-76-504 | 3-H14 |
| 8871-69-390A04 | 3-L12 | 8871-70-100F | 3-D6 | 8562-70-791 | 3-F6 | 1482-74-030 | 3-G6 | 8871-76-419 | 3-G14 | 8871-76-505 | 3-I14 |
| 8871-69-390A10 | 3-L12 | 8871-70-100F | 3-K5 | 8562-70-791 | 3-M5 | 8871-74-030 | 3-N5 | 8871-76-420 | 3-F14 | 8871-76-506 | 3-I14 |
| 8871-69-390A12 | 3-M12 | 8871-70-100G | 3-D6 | 8871-70-791A | 3-F6 | 8973-74-030 | 3-G6 | 8871-76-421 | 3-F14 | 8871-76-507 | 3-I14 |
| 8871-69-390A23 | 3-M12 | 8871-70-100G | 3-K5 | 8871-70-791A | 3-M5 | 8973-74-030A | 3-G6 | 8871-76-422 | 3-F14 | 8562-76-508 | 3-H14 |
| 8871-69-390A72 | 3-M12 | 8871-70-100H | 3-D6 | FA16-71-020 | 3-F6 | FA01-74-040 | 3-I5 | 8871-76-423 | 3-E14 | 8871-76-508 | 3-H14 |
| 8871-69-390A75 | 3-M12 | 8871-70-100H | 3-K5 | FA16-71-020 | 3-M5 | 8871-74-040 | 3-J5 | 8871-76-424 | 3-F14 | 8871-76-509 | 3-I14 |
| 8341-69-560 | 4-E5 | 8871-70-210C | 3-E6 | 8871-71-020A | 3-F6 | 8871-74-040A | 3-J5 | 8871-76-425 | 3-F14 | 8871-76-510 | 3-I14 |
| 8341-69-560 00 | 4-E5 | 8871-70-210C | 3-K5 | 8871-71-020A | 3-M5 | 8369-75-011 | 4-J4 | 3794-76-426 | 3-K14 | 8871-76-511 | 3-I14 |
| 8341-69-560 10 | 4-E5 | 8871-70-220C | 3-G6 | 8871-71-020B | 3-F6 | 8369-75-011 77 | 4-J4 | 8871-76-426 | 3-E14 | 8871-76-512 | 3-I14 |
| 8341-69-560 20 | 4-E5 | 8871-70-220C | 3-N5 | 8871-71-020B | 3-M5 | 8871-75-011 | 4-J4 | 8871-76-427 | 3-F14 | 8871-76-513 | 3-I14 |
| 8871-69-560 | 4-E5 | 8871-70-240B | 3-E6 | 8871-71-051A | 3-F6 | 1568-75-029 | 3-N7 | 8871-76-428 | 3-F14 | 8871-76-514 | 3-I14 |
| 8341-69-570 | 4-F5 | 8871-70-240B | 3-L5 | 8871-71-051A | 3-M5 | 1907-75-102A | 3-M7 | 8871-76-429 | 3-F14 | 8871-76-515 | 3-I14 |
| 8341-69-570 C0 | 4-F5 | 8871-70-240C | 3-E6 | 8871-71-051B | 3-F6 | 3625-75-139 | 3-C8 | 8871-76-430 | 3-G14 | 8871-76-516 | 3-H14 |
| 8341-69-570 10 | 4-F5 | 8871-70-240C | 3-L5 | 8871-71-051B | 3-M5 | 3625-75-139 | 3-D7 | 8871-76-430A | 3-G14 | 8871-76-517 | 3-I14 |
| 8341-69-570 20 | 4-F5 | 8871-70-251 | 3-E6 | 8871-71-051C | 3-F6 | 3625-75-139 | 3-H7 | 8871-76-432 | 3-G14 | 8871-76-518 | 3-H14 |
| 8341-69-580 | 4-F5 | 8871-70-251 | 3-L5 | 8871-71-051C | 3-M5 | 3625-75-139 | 3-E9 | 8871-76-433 | 3-G14 | 8871-76-519 | 3-I14 |
| 8341-69-580 00 | 4-F5 | 8871-70-260 | 3-I5 | 8871-71-100D | 3-F6 | 3625-75-139 | 3-J9 | 8871-76-434 | 3-G14 | 8871-76-601A | 4-H2 |
| 8341-69-580 10 | 4-F5 | 8871-70-271 | 3-E6 | 8871-71-100D | 3-M5 | 0710-75-436 | 3-C8 | 8871-76-450 | 3-J14 | 8871-76-602A | 4-H2 |
| 8341-69-580 20 | 4-F5 | 8871-70-271 | 3-L5 | 8871-71-100E | 3-F6 | 8871-75-800 | 3-D15 | 8871-76-451 | 3-J14 | 8871-76-603A | 4-I2 |
| 8871-69-580 | 4-F5 | 8871-70-271A | 3-E6 | 8871-71-100E | 3-M5 | 8341-75-890 | 3-F15 | 8871-76-452 | 3-K14 | 8871-76-604A | 4-H2 |
| 0187-69-605 | 4-J4 | 8871-70-271A | 3-L5 | 8871-71-100F | 3-F6 | 8871-75-890 | 3-F15 | 8871-76-453 | 3-J14 | 8871-76-605A | 4-H2 |
| 0187-69-605 | 4-E4 | 8871-70-311A | 3-E6 | 8871-71-100F | 3-M5 | 8531-75-901 | 3-C2 | 8871-76-453A | 3-J14 | 1175-76-609 | 4-I2 |
| 8781-69-650 | 4-L4 | 8871-70-311A | 3-L5 | 8871-71-100H | 3-F6 | 8531-75-910 | 3-C2 | 8871-76-454 | 3-K14 | 8872-76-610 | 4-J2 |
| 8781-69-670 | 4-L4 | 0305-70-335 | 4-I3 | 8871-71-100H | 3-M5 | 8531-75-920 | 3-C2 | 8871-76-455 | 3-L14 | 8871-76-611 | 4-J2 |
| 8173-69-670 | 4-L4 | 0370-70-371 | 3-L9 | 8871-71-100I | 3-F6 | 8545-75-950 | 3-C2 | 8871-76-456 | 3-J14 | 1011-76-612A | 4-J2 |
| 8545-69-872 | 3-M12 | 8871-70-40CF | 3-H6 | 8871-71-100I | 3-M5 | 8545-75-950 00 | 3-C2 | 8871-76-457 | 3-J14 | 8872-76-612 | 4-J2 |
| 8545-69-872 00 | 3-M12 | 8871-70-40CF | 3-N5 | 0259-71-158 | 3-H14 | 8871-75-960 | 3-D2 | 8871-76-458 | 3-K14 | 8871-76-613 | 4-J2 |
| 8545-69-872 04 | 3-M12 | 8871-70-40CH | 3-H6 | 8871-71-210C | 3-G6 | 8871-75-990 | 3-D2 | 8871-76-459 | 3-J14 | 8872-76-613 | 4-J2 |
| 8545-69-872 10 | 3-M12 | 8871-70-400H | 3-N5 | 8871-71-210C | 3-M5 | 0315-76-028 | 3-H14 | 8871-76-460 | 3-K14 | 8236-76-614 | 4-J2 |
| 8545-69-872 12 | 3-N12 | 8871-70-40CJ | 3-H6 | 8871-71-220C | 3-H6 | 0208-76-071 | 4-K4 | 8871-76-461 | 3-J14 | 8236-76-618 | 4-K2 |
| 8545-69-872 23 | 3-N12 | 8871-70-40CJ | 3-N5 | 8871-71-220C | 3-N5 | 8871-76-382 | 3-N7 | 8871-76-462 | 3-K14 | 8236-76-619 | 4-J2 |
| 8545-69-872 72 | 3-N12 | 0305-70-447B | 3-H15 | 8871-71-240B | 3-G6 | 8871-76-400 | 3-E14 | 8871-76-463 | 3-J14 | 1175-76-631A | 4-I2 |
| 8545-69-872 75 | 3-N12 | 0839-70-449 | 3-F15 | 8871-71-240B | 3-N5 | 8871-76-401 | 3-E14 | 8871-76-464 | 3-J14 | 8562-76-631 | 4-I2 |
| 0866-69-885 | 4-K4 | 8871-70-491 | 2-G8 | 8871-71-240C | 3-G6 | 8871-76-402 | 3-E14 | 8871-76-465 | 3-J14 | 8871-76-641 | 4-I2 |
| 0866-69-885 C0 | 4-K4 | 0258-70-526A | 3-H15 | 8871-71-240C | 3-N5 | 8871-76-403 | 3-E14 | 8871-76-466 | 3-K14 | 8871-76-655A | 4-H2 |
| 0866-69-885 05 | 4-K4 | 8871-70-640 | 3-L5 | 8871-71-251 | 3-G6 | 8871-76-404 | 3-G14 | 8871-76-467 | 3-K14 | 8871-76-656A | 4-I2 |
| 0866-69-885A | 4-K4 | 8871-70-640A | 3-L5 | 8871-71-251 | 3-N5 | 8871-76-405 | 3-E14 | 8871-76-467A | 3-K14 | 8871-76-657 | 4-H2 |
| 0866-69-885A00 | 4-K4 | 8973-70-640 | 3-E6 | 8871-71-260 | 3-I5 | 8871-76-406 | 3-E14 | 8871-76-468 | 3-K14 | 8532-76-672 | 4-G2 |
| 0866-69-885A05 | 4-K4 | 8973-70-640A | 3-E6 | 8871-71-271 | 3-G6 | 8871-76-407 | 3-E14 | 8871-76-469 | 3-J14 | 1391-76-673 | 4-G2 |
| 0376-69-941 | 4-F5 | FAC1-70-700 | 3-L5 | 8871-71-271 | 3-N5 | 8871-76-408 | 3-G14 | 8871-76-470 | 3-J14 | 8527-77-739 | 1-J2 |
| 0376-69-941 01 | 4-F5 | FAC4-70-700 | 3-E6 | 8871-71-271A | 3-G6 | 8871-76-409 | 3-F14 | 8871-76-471 | 3-K14 | 1243-86-202 | 2-D9 |
| 8871-70-020A | 3-D6 | 1480-70-70C | 3-L5 | 8871-71-271A | 3-N5 | 8871-76-410 | 3-E14 | 8871-76-472 | 3-J14 | 0259-87-105 | 4-J2 |
| 8871-70-020A | 3-K5 | 1480-70-700A | 3-L5 | 8871-71-311A | 3-G6 | 8871-76-410A | 3-E14 | 0866-76-474 | 3-K14 | 0259-87-106 | 4-J2 |

# PART NUMBER INDEX

| PART NUMBER | LOCATION |
|---|---|
| 0257-87-107 | 4-J2 |
| 0257-87-108 | 4-J2 |
| 0259-87-119 | 4-J2 |
| 0259-87-120 | 4-J2 |
| 0727-87-844 | 4-I2 |
| 0824-87-846 | 4-I2 |
| 2835-87-922 | 4-J2 |
| 8871-87-922 | 4-J2 |
| 8562-87-923 | 4-K2 |
| 8871-87-923 | 4-K2 |
| 2835-87-925 | 4-K2 |
| 2835-87-926 | 4-K2 |
| 2835-87-928 | 4-K2 |
| 0305-87-956 | 4-I2 |
| 8531-88-101 | 3-C10 |
| 1243-88-102B | 3-C10 |
| 8562-88-103 | 3-C10 |
| 8531-88-105 | 3-C10 |
| 8531-88-106 | 3-C10 |
| 3490-88-107 | 3-C10 |
| 8531-88-107 | 3-C10 |
| 8038-88-109 | 3-C10 |
| 8867-88-110 | 3-C10 |
| 8867-88-110 03 | 3-C10 |
| 8867-88-110 13 | 3-C10 |
| 8867-88-110 23 | 3-D10 |
| 8871-88-110 | 3-D10 |
| 8871-88-110 01 | 3-D10 |
| 8871-88-110 10 | 3-D10 |
| 8871-88-110 14 | 3-D10 |
| 8871-88-110 20 | 3-D10 |
| 8871-88-110A | 3-D10 |
| 8871-88-110A14 | 3-D10 |
| 8872-88-110 | 3-D10 |
| 8872-88-110 00 | 3-D10 |
| 8872-88-110 03 | 3-D10 |
| 8872-88-110 22 | 3-D10 |
| 8872-88-110 24 | 3-D10 |
| 8872-88-110A | 3-D10 |
| 8872-88-110A06 | 3-D10 |
| 8872-88-110A26 | 3-D10 |
| 8973-88-110P | 3-D10 |
| 8867-88-111 | 3-E10 |
| 8867-88-111 03 | 3-E10 |
| 8867-88-111 13 | 3-E10 |
| 8867-88-111 23 | 3-E10 |
| 8871-88-111 | 3-E10 |
| 8871-88-111 01 | 3-E10 |
| 8871-88-111 10 | 3-E10 |
| 8871-88-111 14 | 3-E10 |
| 8871-88-111 20 | 3-E10 |
| 8871-88-111A | 3-E10 |
| 8871-88-111A14 | 3-E10 |
| 8872-88-111 | 3-E10 |
| 8872-88-111 00 | 3-E10 |

| PART NUMBER | LOCATION |
|---|---|
| 8872-88-111 03 | 3-E10 |
| 8872-88-111 22 | 3-E10 |
| 8872-88-111 24 | 3-E10 |
| 8872-88-111A | 3-E10 |
| 8872-88-111A06 | 3-F10 |
| 8872-88-111A26 | 3-F10 |
| 8973-88-111P | 3-F10 |
| 8871-88-120 | 3-F10 |
| 8867-88-130 | 3-F10 |
| 8867-88-130 03 | 3-F10 |
| 8867-88-130 13 | 3-F10 |
| 8867-88-130 23 | 3-F10 |
| 8871-88-130 | 3-F10 |
| 8871-88-130 01 | 3-F10 |
| 8871-88-130 10 | 3-F10 |
| 8871-88-130 14 | 3-F10 |
| 8871-88-130 20 | 3-F10 |
| 8871-88-130A | 3-F10 |
| 8871-88-130A14 | 3-F10 |
| 8872-88-130 | 3-F10 |
| 8872-88-130 00 | 3-G10 |
| 8872-88-130 03 | 3-G10 |
| 8872-88-130 22 | 3-G10 |
| 8872-88-130 24 | 3-G10 |
| 8872-88-130A | 3-G10 |
| 8872-88-130A06 | 3-G10 |
| 8872-88-130A26 | 3-G10 |
| 8973-88-130P | 3-G10 |
| 8867-88-131 | 3-L10 |
| 8867-88-131 | 3-G10 |
| 8867-88-131 03 | 3-L10 |
| 8867-88-131 03 | 3-G10 |
| 8867-88-131 13 | 3-L10 |
| 8867-88-131 13 | 3-G10 |
| 8867-88-131 23 | 3-L10 |
| 8867-88-131 23 | 3-G10 |
| 8871-88-131 | 3-L10 |
| 8871-88-131 | 3-G10 |
| 8871-88-131 01 | 3-L10 |
| 8871-88-131 01 | 3-G10 |
| 8871-88-131 10 | 3-M10 |
| 8871-88-131 10 | 3-G10 |
| 8871-88-131 14 | 3-M10 |
| 8871-88-131 14 | 3-G10 |
| 8871-88-131 20 | 3-M10 |
| 8871-88-131 20 | 3-G10 |
| 8871-88-131A | 3-M10 |
| 8871-88-131A | 3-H10 |
| 8871-88-131A14 | 3-M10 |
| 8871-88-131A14 | 3-H10 |
| 8872-88-131 | 3-M10 |
| 8872-88-131 | 3-H10 |
| 8872-88-131 00 | 3-M10 |
| 8872-88-131 00 | 3-H10 |
| 8872-88-131 03 | 3-M10 |

| PART NUMBER | LOCATION |
|---|---|
| 8872-88-131 03 | 3-H10 |
| 8872-88-131 22 | 3-M10 |
| 8872-88-131 22 | 3-H10 |
| 8872-88-131 24 | 3-M10 |
| 8872-88-131 24 | 3-H10 |
| 8872-88-131A | 3-M10 |
| 8872-88-131A | 3-H10 |
| 8872-88-131A06 | 3-M10 |
| 8872-88-131A06 | 3-H10 |
| 8872-88-131A26 | 3-M10 |
| 8872-88-131A26 | 3-H10 |
| 8973-88-131P | 3-M10 |
| 8973-88-131P | 3-H10 |
| 8871-88-140 | 3-H10 |
| 8532-88-151 | 3-H10 |
| 8562-88-152 | 3-H10 |
| 1244-88-153B | 3-H10 |
| 8867-88-160 | 3-H10 |
| 8867-88-160 03 | 3-I10 |
| 8867-88-160 13 | 3-I10 |
| 8867-88-160 23 | 3-I10 |
| 8871-88-160 | 3-I10 |
| 8871-88-160 01 | 3-I10 |
| 8871-88-160 10 | 3-I10 |
| 8871-88-160 14 | 3-I10 |
| 8871-88-160 20 | 3-I10 |
| 8871-88-160A | 3-I10 |
| 8871-88-160A14 | 3-I10 |
| 8872-88-160 | 3-I10 |
| 8872-88-160 00 | 3-I10 |
| 8872-88-160 03 | 3-I10 |
| 8872-88-160 22 | 3-I10 |
| 8872-88-160 24 | 3-I10 |
| 8872-88-160A | 3-I10 |
| 8872-88-160A06 | 3-I10 |
| 8872-88-160A26 | 3-J10 |
| 8973-88-160P | 3-J10 |
| 8867-88-161 | 3-J10 |
| 8867-88-161 03 | 3-J10 |
| 8867-88-161 13 | 3-J10 |
| 8867-88-161 23 | 3-J10 |
| 8871-88-161 | 3-J10 |
| 8871-88-161 01 | 3-J10 |
| 8871-88-161 10 | 3-J10 |
| 8871-88-161 14 | 3-J10 |
| 8871-88-161 20 | 3-J10 |
| 8871-88-161A | 3-J10 |
| 8871-88-161A14 | 3-J10 |
| 8872-88-161 | 3-J10 |
| 8872-88-161 00 | 3-J10 |
| 8872-88-161 03 | 3-J10 |
| 8872-88-161 22 | 3-J10 |
| 8872-88-161 24 | 3-K10 |
| 8872-88-161A | 3-K10 |
| 8872-88-161A06 | 3-K10 |

| PART NUMBER | LOCATION |
|---|---|
| 8872-88-161A26 | 3-K10 |
| 8973-88-161P | 3-K10 |
| 8871-88-170 | 3-K10 |
| 8867-88-180 | 3-K10 |
| 8867-88-180 03 | 3-K10 |
| 8867-88-180 13 | 3-K10 |
| 8867-88-180 23 | 3-K10 |
| 8871-88-180 | 3-K10 |
| 8871-88-180 01 | 3-K10 |
| 8871-88-180 10 | 3-K10 |
| 8871-88-180 14 | 3-K10 |
| 8871-88-180 20 | 3-K10 |
| 8871-88-180A | 3-K10 |
| 8871-88-180A14 | 3-K10 |
| 8872-88-180 | 3-L10 |
| 8872-88-180 00 | 3-L10 |
| 8872-88-180 03 | 3-L10 |
| 8872-88-180 22 | 3-L10 |
| 8872-88-180 24 | 3-L10 |
| 8872-88-180A | 3-L10 |
| 8872-88-180A06 | 3-L10 |
| 8872-88-180A26 | 3-L10 |
| 8973-88-180P | 3-L10 |
| 8871-88-190 | 3-M10 |
| 8540-89-175 | 1-C2 |
| 0259-89-251 | 2-C2 |
| 0701-89-334 | 2-F2 |
| 1052-89-411A | 2-C8 |
| 0839-89-431B | 2-C8 |
| 8173-89-431 | 2-C8 |
| 0317-89-435B | 2-C8 |
| 3597-89-435 | 2-E9 |
| 3597-89-435A | 2-E9 |
| 8173-89-435 | 2-C8 |
| 0317-89-436A | 2-C8 |
| 0317-89-436A | 2-E9 |
| 1363-89-436 | 2-C8 |
| 8871-89-661 | 3-C4 |
| 8871-89-662 | 3-C4 |
| 8871-89-663 | 3-C4 |
| 8871-89-664 | 3-G4 |
| 8871-89-666 | 3-C4 |
| 8871-89-668 | 3-C4 |
| 8871-89-669 | 3-G4 |
| 8871-89-675 | 3-G4 |
| 8871-89-685 | 3-G4 |
| 8344-99-100 | 1-C2 |
| 8871-99-100 | 1-C2 |
| 0305-99-178 | 1-H10 |
| 0305-99-178 | 1-L10 |
| 8871-99-281 | 2-G3 |
| 8531-99-322 | 2-H4 |
| 8531-99-322A | 2-H4 |
| 8021-99-324 | 2-H4 |
| 8531-99-331 | 2-E2 |
| 8531-99-331A | 2-E2 |

| PART NUMBER | LOCATION |
|---|---|
| 8545-99-361 | 2-I5 |
| 0881-99-362A | 2-I5 |
| 8871-99-741 | 3-G3 |
| 8871-99-741A | 3-G3 |
| 8871-99-742 | 3-G3 |
| 8871-99-742A | 3-G3 |
| 8871-99-743 | 3-G3 |
| 8871-99-743A | 3-G3 |
| 8871-99-744 | 3-G3 |
| 8871-99-744A | 3-G3 |
| 8871-99-745 | 3-G3 |
| 8871-99-745A | 3-G3 |
| 9062-21-7683 | 2-D6 |
| 9062-36-7683 | 2-D6 |
| 9922-20-610 | 1-D3 |
| 9923-60-571 | 1-D3 |
| 9927-91-112 | 3-N16 |
| 9928-91-353 | 1-D7 |
| 9928-91-353 | 1-G7 |
| 9934-60-6350 | 2-F8 |
| 9934-60-6420 | 2-G8 |
| 9934-61-0370 | 3-D6 |
| 9934-61-0370 | 3-K5 |
| 9934-61-0470 | 3-G6 |
| 9934-61-0530 | 3-D6 |
| 9934-61-0530 | 3-K5 |
| 9934-80-6080 | 1-E4 |
| 9934-80-6250 | 1-E4 |
| 9934-80-6250 | 2-F10 |
| 9934-80-6260 | 2-F10 |
| 9934-80-8190 | 2-E10 |
| 9934-80-8260 | 2-F10 |
| 9934-80-8270 | 2-F10 |
| 9934-80-8280 | 1-E4 |
| 9935-10-4040 | 1-E7 |
| 9935-10-4040 | 1-K6 |
| 9935-10-4040 | 1-N6 |
| 9935-10-4040 | 1-H6 |
| 9935-10-4060 | 1-H6 |
| 9935-10-4060 | 1-K6 |
| 9935-10-4060 | 1-E7 |
| 9935-10-4060 | 1-N6 |
| 9935-10-4075 | 1-I6 |
| 9935-10-4075 | 1-L6 |
| 9935-10-4075 | 1-D7 |
| 9935-10-4075 | 1-F7 |
| 9935-10-4075 | 1-J6 |
| 9935-10-4075 | 1-M6 |
| 9935-10-4095 | 1-C7 |
| 9935-10-4095 | 1-F7 |
| 9935-10-4095 | 1-H6 |
| 9935-10-4095 | 1-K6 |
| 9935-10-4130 | 1-C7 |
| 9935-10-4130 | 1-F7 |
| 9935-10-4130 | 1-I6 |

| PART NUMBER | LOCATION |
|---|---|
| 9935-10-4130 | 1-L6 |
| 9935-10-4130 | 1-E11 |
| 9935-10-4190 | 1-G6 |
| 9935-10-4380 | 1-D7 |
| 9935-10-4380 | 1-G7 |
| 9935-10-4380 | 1-J6 |
| 9935-10-4380 | 1-M6 |
| 9935-10-6280 | 1-E7 |
| 9935-10-6280 | 1-K6 |
| 9935-10-6300 | 1-K6 |
| 9935-10-8080 | 1-J6 |
| 9935-10-8080 | 1-M6 |
| 9935-10-8080 | 1-F4 |
| 9935-10-8080 | 1-J6 |
| 9935-10-8080 | 1-L6 |
| 9935-10-8120 | 1-H6 |
| 9935-10-8120 | 1-C7 |
| 9935-10-8120 | 1-F7 |
| 9935-10-8120 | 1-I6 |
| 9935-10-8120 | 1-L6 |
| 9935-10-8120 | 1-C7 |
| 9935-10-8150 | 1-C7 |
| 9935-10-8150 | 1-J6 |
| 9935-10-8150 | 1-M6 |
| 9935-10-8190 | 1-F4 |
| 9935-10-8280 | 1-H6 |
| 9935-10-8280 | 1-K6 |
| 9935-10-8370 | 1-C7 |
| 9935-10-8370 | 1-F7 |
| 9935-10-8370 | 1-I6 |
| 9935-10-8370 | 1-L6 |
| 9935-70-6350 | 2-F8 |
| 9935-70-6420 | 2-G8 |
| 9935-80-6070 | 1-E4 |
| 9935-80-6260 | 2-F10 |
| 9935-80-6280 | 1-E4 |
| 9935-80-8190 | 2-E10 |
| 9935-80-8270 | 2-F10 |
| 9935-80-8280 | 1-E4 |
| 9938-10-800 | 1-D13 |
| 9938-11-400 | 1-F8 |
| 9938-41-200 | 1-I2 |
| 9938-41-200F | 1-F8 |
| 9951-01-000 | 1-G10 |
| 9951-01-000 | 1-K10 |
| 9951-11-400 | 1-H2 |
| 9954-10-0603 | 2-G9 |
| 9954-10-0901 | 1-G14 |
| 9954-10-1101 | 1-C3 |
| 9954-10-1201 | 1-G14 |
| 9954-10-1601 | 1-I13 |
| 9954-10-1601 | 1-C8 |
| 9954-10-2211 | 1-H13 |
| 9954-10-2211 | 1-D9 |
| 9954-10-2211 | 1-F9 |

# PART NUMBER INDEX

| PART NUMBER | LOCATION |
|---|---|
| 9954-10-350 | 1-E11 |
| 9956-21-400 | 1-H2 |
| 9956-41-400 | 1-H2 |
| 9958-60-8166 | 1-H13 |
| 9958-60-8166 | 1-D9 |
| 9958-60-8166 | 1-F9 |
| 9958-61-0207 | 1-H13 |
| 9958-61-0207 | 1-D9 |
| 9958-61-0207 | 1-F9 |
| 9960-63-3063 | 1-G9 |
| 9960-63-3063 | 1-K9 |
| 9960-66-3043 | 1-M9 |
| 9960-66-3053 | 1-K9 |
| 9960-66-3063 | 1-G9 |
| 9960-66-3063 | 1-K9 |
| 9961-11-500 | 2-D8 |
| 9961-11-500 | 1-D14 |
| 9961-11-500 | 2-F2 |
| 9961-11-500 | 1-J9 |
| 9961-11-500 | 1-N9 |
| 9961-12-000 | 1-C3 |
| 9961-12-500 | 1-F10 |
| 9961-12-500 | 1-K10 |
| 9961-12-750 | 1-H14 |
| 9962-39-1653 | 2-D6 |
| 9963-60-4130 | 2-D6 |
| 9965-11-5030 | 2-C6 |
| 9965-11-5030K3 | 2-C6 |
| 9965-11-503008 | 2-C6 |
| 9965-18-5530 | 2-C6 |
| 9965-21-5530 | 2-D6 |
| 9965-22-5530 | 2-D6 |
| 9965-23-5530 | 2-D6 |
| 9965-53-0010 | 2-D6 |
| 9965-53-0015 | 2-D6 |
| 9965-53-0020 | 2-D6 |
| 9965-53-0025 | 2-D6 |
| 9965-53-0030 | 2-D6 |
| 9965-53-0035 | 2-D6 |
| 9965-53-0040 | 2-D6 |
| 9965-53-0045 | 2-E6 |
| 9965-53-0050 | 2-E6 |
| 9965-53-0060 | 2-E6 |
| 9965-59-0010 | 2-E6 |
| 9965-59-0015 | 2-E6 |
| 9965-59-0020 | 2-E6 |
| 9965-59-0025 | 2-E6 |
| 9965-59-0030 | 2-E6 |
| 9965-59-0035 | 2-E6 |
| 9965-59-0040 | 2-E6 |
| 9965-59-0045 | 2-E6 |
| 9965-59-0050 | 2-E6 |
| 9965-59-0060 | 2-E6 |
| 9965-60-0010 | 2-E6 |
| 9965-60-0015 | 2-E6 |
| 9965-60-0020 | 2-E6 |
| 9965-60-0025 | 2-E6 |
| 9965-60-0030 | 2-F6 |
| 9965-60-0035 | 2-F6 |
| 9965-60-0040 | 2-F6 |
| 9970-03-060 | 3-I4 |
| 9970-05-100 | 4-N4 |
| 9970-11-030 | 3-F7 |
| 9970-11-030 | 3-K7 |
| 9970-12-080 | 3-G4 |
| 9970-13-270 | 3-G4 |
| 9970-14-270 | 3-C4 |
| 9970-14-278 | 3-G4 |
| 9970-16-030 | 3-C8 |
| 9970-16-030 | 3-D8 |
| 9970-16-030 | 3-H8 |
| 9970-16-030 | 3-F9 |
| 9970-16-030 | 3-L8 |
| 9970-16-040 | 3-C4 |
| 9970-60-110 | 3-C16 |
| 9970-60-115 | 3-C16 |
| 9970-60-120 | 3-C16 |
| 9970-61-110 | 3-C16 |
| 9970-61-115 | 3-C16 |
| 9975-42-1022 | 2-D3 |
| 9975-46-1022 | 2-D3 |
| 9996-33-310 | 1-G10 |
| 9996-33-310 | 1-L10 |
| 9996-33-330 | 1-H10 |
| 9996-33-330 | 1-L10 |
| 9996-36-310 | 1-H9 |
| 9996-36-310 | 1-M9 |
| 9996-36-315 | 1-G9 |
| 9996-36-315 | 1-K9 |
| 9996-36-330 | 1-I9 |
| 9996-36-330 | 1-M9 |
| 9996-36-330 | 1-G9 |
| 9996-36-330 | 1-K9 |

| PART NUMBER | LOCATION |
|---|---|

| PART NUMBER | LOCATION |
|---|---|

| PART NUMBER | LOCATION |
|---|---|

| PART NUMBER | LOCATION |
|---|---|

# ALPHABETICAL INDEX (ENGLISH)


| PART NAME | D-CODE | LOCATION |
|---|---|---|
| ** A ** | | |
| ABSORBER,SHOCK | 50100A | 3-C3 |
| ABSORBER,SHOCK RR | 50200A | 3-E3 |
| ACTUATOR | 13290 | 1-C7 |
| | | 1-F7 |
| | | 1-I6 |
| | | 1-L6 |
| ADAPTER | 19025A | 1-C13 |
| ADAPTER(L),MOUNTING | 33260 | 2-C5 |
| | | 2-E5 |
| ADAPTER(R),MOUNTING | 33260 | 2-C5 |
| | | 2-E5 |
| ADJUSTER NO.1 | 88102 | 3-C10 |
| ADJUSTER NO.2 | 88103 | 3-C10 |
| ADJUSTER NO.3 | 88152 | 3-H10 |
| ADJUSTER NO.4 | 88153 | 3-H10 |
| ALTERNATOR | 18300 | 1-L11 |
| | | 1-N11 |
| AMP.,MAIN | 66920A | 3-H16 |
| | | 3-J16 |
| ANCHOR PIN SET | 26501S | 2-E2 |
| ANTENNA | 66930 | 3-H16 |
| | | 3-J16 |
| ARM & BALL JOINT(L) | 49310A | 2-J5 |
| ARM & BALL JOINT(R) | 49310A | 2-J5 |
| ARM(L),KNUCKLE | 32301A | 2-H5 |
| ARM(R),KNUCKLE | 32301A | 2-H5 |
| ARM,IDLER | 32320 | 2-H4 |
| ARM,PITMAN | 32220 | 2-G4 |
| ARM,WIPER | 67321 | 4-H2 |
| ARMATURE | 24720 | 1-D12 |
| | | 1-F12 |
| ATTACHMENT-PAD | 49290B | 2-D5 |
| | | 2-G5 |
| ** B ** | | |
| BACK(L),FRT.SEAT | 88180 | 3-L10 |
| BACK(R),FRT.SEAT | 88130 | 3-G10 |
| BAG,SUNROOF | 68090 | 4-M4 |
| BAG,TOOL | 68670 | 4-L4 |
| BALL | 87928 | 4-K2 |
| BALL NUT,WORM | 32130 | 2-F4 |
| BALL,STEEL | 11411J | 1-C3 |
| | 13781 | 1-C5 |
| | | 1-H5 |
| | | 1-I4 |
| | | 1-M5 |
| | 17341J | 1-J9 |
| | | 1-N9 |
| | 17431J | 1-F10 |
| | | 1-K10 |
| | 19704J | 1-H14 |
| | 41920J | 2-D8 |
| | 76511C | 3-I14 |
| | 76514C | 3-I14 |
| | 26610J | 2-F2 |
| | 19341J | 1-D14 |

| PART NAME | D-CODE | LOCATION |
|---|---|---|
| BAND | 137451 | 1-G6 |
| | 87956 | 4-I2 |
| BAND(L),TANK FIX | 42420A | 2-G8 |
| BAND(R),TANK FIX | 42410C | 2-G8 |
| BAND,BRAKE | 19360 | 1-K13 |
| BAND,HOSE | 76423C | 3-F14 |
| BASE(L),MIRROR | 69176 | 4-C5 |
| BASE(R),MIRROR | 69116 | 4-M4 |
| BASE,BREAKER | 24313 | 1-H11 |
| BASE,MIRROR | 69171 | 4-N4 |
| BATTERY | 18520 | 1-H12 |
| BEAM,SEALED | 84851A | 3-F4 |
| BEARING | 27305 | 2-E3 |
| | 32182 | 2-G4 |
| | 26151 | 2-D2 |
| BEARING,BALL | 15010J | 1-G8 |
| | 17204 | 1-G9 |
| | | 1-K9 |
| | 17221J | 1-K9 |
| | 17297 | 1-I9 |
| | | 1-M9 |
| | 17297A | 1-I9 |
| | | 1-M9 |
| | 17306 | 1-M9 |
| | 24503 | 1-L11 |
| | | 1-N11 |
| | 24514 | 1-L11 |
| | | 1-N11 |
| | 17201J | 1-G9 |
| | | 1-K9 |
| BEARING,FRONT WHEEL | 33047 | 2-C5 |
| | | 2-E5 |
| | 33075 | 2-C5 |
| | | 2-E5 |
| BEARING,MAIN | 105021 | 1-E2 |
| BEARING,NEEDLE | 114031 | 1-C3 |
| | 115051 | 1-D3 |
| | 19621 | 1-N13 |
| | 19622A | 1-N13 |
| | 19623 | 1-N13 |
| | 19624 | 1-N13 |
| | 17274 | 1-H9 |
| | | 1-L9 |
| | 17612 | 1-C10 |
| BEARING,PINION-FRONT | 27141 | 2-C3 |
| BEARING,PINION-REAR | 27141A | 2-C3 |
| BEARING,ROLLER | 17205 | 1-G9 |
| | | 1-K9 |
| BEARING,ROTOR | 111111 | 1-F3 |
| BEARING,THRUST | 34381 | 2-I5 |
| BELT(L),FRONT SEAT | 57920 | 3-H11 |
| BELT(R),FRONT SEAT | 57900 | 3-G11 |
| BELT,'V' | 18381 | 1-F11 |
| BELT'A'(L),FRT.SEAT | 57920A | 3-H11 |
| BELT'A'(R),FRT.SEAT | 57900A | 3-G11 |
| BELT'V' | 137151 | 1-F6 |
| BEZEL(L),LAMP | 50760 | 3-D3 |
| BEZEL(R),LAMP | 50740 | 3-D3 |
| BIMETAL SET | 23502 | 1-E6 |
| | | 1-G5 |

| PART NAME | D-CODE | LOCATION |
|---|---|---|
| | | 1-L5 |
| | | 1-M4 |
| BLADE | 76631 | 4-I2 |
| BLADE,WIPER | 67330 | 4-H2 |
| BLOCK,FUSE | 66730 | 3-C16 |
| BLOCK,MOUNTING | 34380 | 2-I5 |
| BLOWER | 61140 | 3-C14 |
| BODY(L),FRONT DOOR | 58010 | 3-C12 |
| BODY(R),FRONT DOOR | 58010 | 3-C12 |
| BODY,HEAT EXHAUST | 40320 | 2-C7 |
| BODY,OIL FILTER | 14310A | 1-C8 |
| BOLT | 108451 | 1-I2 |
| | 19064 | 1-C13 |
| | 19255 | 1-D13 |
| | 19338 | 1-F13 |
| | 19397 | 1-G13 |
| | 19397A | 1-D14 |
| | 19398 | 1-G13 |
| | 19706 | 1-H14 |
| | 19737 | 1-H13 |
| | 19838 | 1-H14 |
| | 19838B | 1-H14 |
| | 25123 | 2-C2 |
| | 26132 | 2-D2 |
| | 28111 | 2-F3 |
| | 28113A | 2-F3 |
| | 32429 | 2-G4 |
| | 34157A | 2-K5 |
| | 39055 | 2-G6 |
| | 40015 | 2-C7 |
| | 19216 | 1-C13 |
| BOLT SET | 24731 | 1-D12 |
| | | 1-F12 |
| BOLT,AIR CLEANER | 13201 | 1-E4 |
| BOLT,ANCHOR END | 19341 | 1-F13 |
| BOLT,ARM | 34313 | 2-L5 |
| BOLT,CLAMP | 70985A | 1-I12 |
| BOLT,CONNECTOR | 19930J | 1-D13 |
| | 43694 | 2-E9 |
| BOLT,CONTROL VALVE | 19831 | 1-I13 |
| | 19832 | 1-I13 |
| | 19833 | 1-I13 |
| BOLT,HINGE | 51431A | 3-D4 |
| BOLT,JOINT | 49652 | 2-F9 |
| BOLT,LOCK | 141171 | 1-C8 |
| BOLT,OIL PAN | 19837 | 1-I13 |
| BOLT,PULLEY | 11376 | 1-C3 |
| BOLT,REAMER | 16432 | 1-K8 |
| | 27235A | 2-D3 |
| BOLT,SET | 14125 | 1-C8 |
| | 49676 | 2-G9 |
| | 60436 | 3-C2 |
| BOLT,STOPPER | 32315A | 2-H5 |
| BOLT,TANK SET | 49692 | 2-G9 |
| BOLT,TENSION | 104511 | 1-H2 |
| | 104521 | 1-H2 |
| BOLT,TENSION ROD | 34134A | 2-K5 |
| BOLT,WHEEL SET | 33165 | 2-C6 |
| BONNET | 52310 | 3-C5 |
| BOOT | 26681 | 2-F2 |

# ALPHABETICAL INDEX (ENGLISH)


| PART NAME | D-CODE | LOCATION |
|---|---|---|
| BOOT | 33681 | 2-F5 |
| | 41331 | 2-C8 |
| | 46081 | 2-I10 |
| | 51938 | 3-E4 |
| | 64331A | 3-G9 |
| | | 3-M8 |
| BOOT KIT | 49250B | 2-G5 |
| BOOT SET | 26681S | 2-F2 |
| BOOT,BRAKE | 68910B | 4-J4 |
| BOOT,CHANGE | 64331 | 3-G9 |
| | | 3-M8 |
| BOOT,DUST | 17475 | 1-H10 |
| | | 1-L10 |
| BOOT,GUIDE PIN | 33692 | 2-F5 |
| BOOT,LOCK PIN | 33698C | 2-F5 |
| BOSS,STEERING WHEEL | 32980 | 2-D4 |
| BOSS,W.PUMP PULLEY | 15117 | 1-G8 |
| BOX(L),TORQUE | 54391 | 3-K6 |
| BOX(R),TORQUE | 53391 | 3-I6 |
| BOX,GEAR | 76613 | 4-J2 |
| BRACKET | 13081 | 1-H4 |
| | 13153 | 1-E7 |
| | | 1-H6 |
| | | 1-K6 |
| | | 1-N6 |
| | 132411 | 1-C7 |
| | | 1-F7 |
| | | 1-H6 |
| | | 1-L6 |
| | 40070B | 2-C7 |
| | 40081 | 2-C7 |
| | 40710D | 2-E7 |
| | 76504 | 3-H14 |
| BRACKET SET | 23377A | 1-C6 |
| | | 1-E5 |
| | | 1-J5 |
| | | 1-K4 |
| BRACKET(L) | 51932 | 3-E4 |
| BRACKET(L),ABSORBER | 50110 | 3-C3 |
| BRACKET(L),RR.COMB. | 51320A | 3-H4 |
| BRACKET(R) | 51932 | 3-E4 |
| BRACKET(R),ABSORBER | 50110 | 3-C3 |
| BRACKET(R),RR.COMB. | 51320A | 3-H4 |
| BRACKET,ABSORBER | 50301A | 3-F3 |
| | 133901 | 1-D4 |
| BRACKET,ACTUATOR | 13241 | 1-F7 |
| | | 1-H6 |
| | | 1-L6 |
| | | 1-N6 |
| BRACKET,ALTERNATOR | 18371 | 1-E11 |
| BRACKET,ANTENNA NO.1 | 66535 | 3-G16 |
| | | 3-I16 |
| BRACKET,ANTENNA NO.2 | 66536 | 3-G16 |
| | | 3-I16 |
| BRACKET,CENTER | 24706 | 1-F12 |
| | 64360 | 3-G9 |
| | | 3-N8 |
| BRACKET,CHECK VALVE | 42750 | 2-H8 |
| BRACKET,CONTROL UNIT | 188201 | 1-F11 |
| BRACKET,CTR.-REAR | 64430 | 3-C9 |
| | | 3-H9 |
| BRACKET,DAMPER | 62631 | 3-D15 |
| BRACKET,E.C. VALVE | 139111 | 1-J6 |
| BRACKET,EMISSION REL | 67970A | 3-F16 |
| BRACKET,ENGINE MOUNT | 39020 | 2-G6 |
| BRACKET,FIXING | 32420A | 2-G4 |
| BRACKET,FRONT | 24550 | 1-N11 |
| | 24710 | 1-D12 |
| | | 1-F12 |
| | 64350 | 3-G9 |
| | | 3-N8 |
| | 24550 | 1-L11 |
| BRACKET,FUEL PUMP | 45121 | 2-E10 |
| BRACKET,HEAD CONSOLE | 69801 | 3-I4 |
| BRACKET,IGNITION | 18810 | 1-F11 |
| BRACKET,LEVER | 46110 | 2-I10 |
| BRACKET,MASTER CYL. | 43070 | 2-D9 |
| BRACKET,OIL HOSE | 147401 | 1-F8 |
| BRACKET,RAD.GRILLE | 50715A | 3-D3 |
| BRACKET,REAR | 24560 | 1-L11 |
| | | 1-N11 |
| | 24740 | 1-D12 |
| | | 1-F12 |
| | 64370 | 3-G9 |
| | | 3-N8 |
| BRACKET,RELAY | 64390 | 3-H9 |
| | | 3-N8 |
| BRACKET,RESISTOR | 18590 | 1-F11 |
| BRACKET,STARTER | 19445A | 1-D13 |
| BRACKET,SUB TANK | 15251 | 1-I8 |
| BRACKET,TANK | 135151 | 1-H4 |
| BRACKET,WASHER TANK | 67521 | 4-G2 |
| BRAKE(L),CALIPER | 33980 | 2-D5 |
| | | 2-F5 |
| BRAKE(R),CALIPER | 33980 | 2-D5 |
| | | 2-F5 |
| BREATHER | 26060 | 2-D2 |
| BREATHER,AIR | 17530 | 1-D9 |
| | | 1-F9 |
| | 19344 | 1-F13 |
| BRKT.(L),INST. | 71260C | 3-I5 |
| BRKT.(L),TENSION ROD | 34850A | 2-L5 |
| BRKT.(R),INST. | 70260E | 3-I5 |
| BRKT.,CONTROL LINK | 28120 | 2-F3 |
| BRKT.,CUT VALVE | 45131A | 2-E10 |
| BRKT.,DECK | 56560A | 3-M6 |
| BRKT.,IGNITER | 18260 | 1-E11 |
| BRKT.,IGNITION COIL | 181901 | 1-E11 |
| BRKT.,JACK | 53045 | 3-I6 |
| BRKT.,STAB. SUPPORT | 28155 | 2-F3 |
| BRKT.,WATT. LINK | 28180A | 2-G3 |
| BRKT(R),TENSION ROD | 34850A | 2-L5 |
| BRUSH | 24522 | 1-N11 |
| | 87106 | 4-J2 |
| BRUSH & HOLDER | 24541 | 1-L11 |
| BRUSH,SPRING | 24521 | 1-N11 |
| BRUSH,YOKE | 24753 | 1-D12 |
| | | 1-G12 |
| BULB | 51060J | 3-C4 |
| | 51120J | 3-C4 |
| | 51150J | 3-G4 |
| | 51150K | 3-G4 |
| | 51270J | 3-G4 |
| | 55240J | 3-F9 |
| | | 3-L8 |
| | 55280J | 3-D7 |
| | | 3-H7 |
| | 55890J | 3-D8 |
| | | 3-H8 |
| | 69170J | 4-N4 |
| | 75115 | 3-C8 |
| | 75139A | 3-C8 |
| | 75139E | 3-E9 |
| | | 3-J9 |
| BULB & SOCKET | 55240A | 3-F9 |
| | | 3-L8 |
| | 55280 | 3-D7 |
| | | 3-H7 |
| | 55280A | 3-F9 |
| | | 3-L8 |
| BULB,CIGAR LIGHTER | 66254 | 3-F7 |
| | | 3-K7 |
| BULB,MAP LAMP | 51313 | 3-I4 |
| BUMPER(C),FRONT | 50031A | 3-C3 |
| BUMPER(C),REAR | 50221A | 3-E3 |
| BUMPER(L),FRONT | 50051 | 3-C3 |
| BUMPER(L),REAR | 50223 | 3-E3 |
| BUMPER(R),FRONT | 50041 | 3-C3 |
| BUMPER(R),REAR | 50222 | 3-E3 |
| BUMPER,BOUND | 34111 | 2-H5 |
| BUSH | 22333 | 1-D9 |
| | | 1-F9 |
| | 32071 | 2-F4 |
| | 32329 | 2-H4 |
| | 34153A | 2-K5 |
| | 34156 | 2-K5 |
| | 41644 | 2-E8 |
| | 46085 | 2-I10 |
| | 46684 | 2-J10 |
| | 57633 | 3-G11 |
| | 58411 | 3-E13 |
| | 76123B | 3-J14 |
| | 76123C | 3-E14 |
| | 76129 | 3-E14 |
| | 76146 | 3-H14 |
| | 76164 | 3-H14 |
| | 76415A | 3-H14 |
| | 76427A | 3-F14 |
| | 88105 | 3-C10 |
| BUSH SET, CHANGE LEVER | 17481S | 1-H10 |
| | | 1-L10 |
| BUSH,ARM | 34460 | 2-I5 |
| BUSH,CLUTCH PEDAL | 41023 | 2-C9 |
| BUSH,COUNTER LEVER | 46684A | 2-J10 |
| BUSH,ELBOW JOINT | 49686B | 2-G9 |
| BUSH,HINGE BOLT | 51432 | 3-D4 |
| BUSH,INNER | 76605A | 4-H2 |
| | 76607 | 4-I2 |
| BUSH,JOINT | 46691A | 2-J10 |
| BUSH,OUTER | 76604A | 4-H2 |

# ALPHABETICAL INDEX (ENGLISH)


| PART NAME | D-CODE | LOCATION |
|---|---|---|
| BUSH,PEDAL | 43022 | 2-C9 |
| BUSH,RUBBER | 28102 | 2-F3 |
| | 28775 | 2-G3 |
| BUSH,RUBBER-STAB | 28775A | 2-G3 |
| BUSHING,STEPPED | 76434A | 3-G14 |
| BUTTON,PUSH | 46032 | 2-H10 |
| BUTTON,RELEASE | 44033 | 2-C10 |
| BUZZER | 75029 | 3-N7 |
| | 67720 | 3-E16 |
| ** C ** CARTRIDGE, DAMPER | 49790A | 2-J5 |
| CABLE(L),R.-PARK | 44410A | 2-D10 |
| CABLE(R),R.-PARK | 44410 | 2-D10 |
| CABLE,EARTH-BATTERY | 67260 | 1-H12 |
| CABLE,F.-PARK.BRAKE | 44150 | 2-D10 |
| CABLE,POSIT.-BATTERY | 67250 | 1-H12 |
| CABLE,SPEEDOMETER | 60070 | 3-N7 |
| CAM,CANCEL | 60253 | 3-E7 |
| | | 3-J7 |
| CAP | 10481 | 1-E7 |
| | | 1-K6 |
| | 13104B | 1-E7 |
| | | 1-H6 |
| | | 1-K6 |
| | | 1-N6 |
| | 234631 | 1-K5 |
| | 24310 | 1-H11 |
| | | 1-J11 |
| | 34738 | 2-I5 |
| | 42307 | 2-F8 |
| | 42307A | 1-D7 |
| | | 1-J6 |
| | 44034 | 2-C10 |
| CAP SET,RESERVE TANK | 43552S | 2-C8 |
| | 43552S | 2-E9 |
| CAP TANK | 87992A | 4-G2 |
| CAP,ARM REST | 69373 | 3-M12 |
| | 69375 | 3-M12 |
| CAP,BLEEDER | 33693B | 2-C8 |
| CAP,BLEEDER SCREW | 33693A | 2-F2 |
| | 33693C | 2-E9 |
| CAP,CENTER | 37190 | 2-C6 |
| CAP,DAMPER | 34019 | 2-H5 |
| CAP,FASTENER | 58922 | 3-E12 |
| CAP,FILLER | 42250 | 2-F8 |
| CAP,FRONT CONSOLE | 64901A | 3-D9 |
| | | 3-I9 |
| CAP,GARNISH | 60701 | 3-E8 |
| | | 3-I8 |
| CAP,HORN | 32800 | 2-C4 |
| CAP,HUB | 33071 | 2-C5 |
| | | 2-E5 |
| CAP,IDLE LIMITER | 23436 | 1-F4 |
| CAP,IDLE SWITCH | 13205B | 1-E4 |
| CAP,OIL FILLER | 102501 | 1-E2 |
| CAP,PULL HANDLE | 69872A | 3-N12 |
| CAP,RADIATOR | 15205 | 1-I8 |
| CAP,REGULATOR HANDLE | 58585A | 3-F13 |
| CAP,RESERVE TANK | 43549 | 2-E9 |

| PART NAME | D-CODE | LOCATION |
|---|---|---|
| CAP,RUBBER | 24311B | 1-H11 |
| | 33693 | 2-D5 |
| | | 2-F5 |
| CAP,SEAL | 76604 | 4-H2 |
| CAP,SUB TANK | 15355A | 1-J8 |
| CAP,TRUNK SIDE | 68851 | 4-D4 |
| CARBURETOR | 13600 | 1-C5 |
| | | 1-H5 |
| | | 1-I4 |
| | | 1-M5 |
| CARRIER,BATTERY | 53260 | 1-H12 |
| CARRIER,DIFFERENTIAL | 27150 | 2-C3 |
| CARRIER,FRONT | 19540 | 1-M13 |
| CARRIER,REAR | 19570 | 1-M13 |
| CARTRIDGE,OIL FILTER | 23802 | 1-E8 |
| CASE | 27230 | 2-D3 |
| | 76425 | 3-J14 |
| CASE,ASH TRAY | 64411 | 3-C9 |
| | | 3-H9 |
| CASE,CHANGE CONTROL | 17470 | 1-G10 |
| | | 1-L10 |
| CASE,FAN | 76423 | 3-J14 |
| CASE,HEATER | 76401 | 3-E14 |
| | 76406 | 3-E14 |
| CASE,LAMP | 55213A | 3-C7 |
| | | 3-H7 |
| | 64425 | 3-C9 |
| | | 3-H9 |
| CASE,MAIN FUSE | 66760A | 3-D16 |
| CASE,METER | 55441A | 3-L7 |
| CASE,T/MISSION | 17100 | 1-E9 |
| | 19310 | 1-F13 |
| | 17100 | 1-C9 |
| CASING,REAR AXLE | 26010 | 2-D2 |
| CASING,STOPPER | 39045 | 2-G6 |
| CEILING,R.TOP | 68080 | 4-D3 |
| CEILING,TOP | 68030 | 4-D3 |
| CHAIN,OIL PUMP | 14151 | 1-C8 |
| CHAMBER SET,DIAPH | 23271 | 1-C5 |
| | | 1-H5 |
| | | 1-I4 |
| | | 1-M5 |
| CHAMBER,CHOKE RETURN | 235031 | 1-G5 |
| CHAMBER,THROTTLE | 23311 | 1-C5 |
| | | 1-H5 |
| | | 1-J4 |
| | | 1-M5 |
| CHANNEL,GLASS | 58605A | 3-D12 |
| CHOKE SET,RETURN | 23534 | 1-G5 |
| | | 1-L5 |
| | | 1-M4 |
| CHOKE SET,SEMI AUTO | 23500 | 1-E6 |
| | | 1-G5 |
| | | 1-L5 |
| | | 1-M4 |
| CHUSION | 34136 | 2-K5 |
| CLAMP | 24304 | 1-H11 |
| | | 1-J11 |
| | 24305 | 1-H11 |
| | | 1-J11 |

| PART NAME | D-CODE | LOCATION |
|---|---|---|
| | 76173 | 3-E14 |
| CLAMP,BATTERY | 56030 | 1-H12 |
| CLAMP,CABLE | 76407A | 3-H14 |
| | 76412D | 3-H14 |
| CLAMP,FUEL FILTER | 13481 | 1-F4 |
| CLAMP,MAIN JET PLUG | 23357A | 1-D5 |
| | | 1-I5 |
| | | 1-N5 |
| CLAMP,RELEASE WIRE | 52302 | 3-C5 |
| CLAMP,SPARE TIRE | 56210B | 2-F6 |
| CLEANER,AIR | 13320 | 1-G4 |
| CLIP | 13447A | 2-E10 |
| | 13781A | 1-D7 |
| | | 1-G7 |
| | | 1-J6 |
| | | 1-M6 |
| | 13982A | 1-D7 |
| | | 1-G7 |
| | | 1-J6 |
| | | 1-M6 |
| | 18863B | 1-F11 |
| | 18863C | 1-J8 |
| | 19915 | 1-D13 |
| | 19989 | 1-E13 |
| | 32107 | 2-F4 |
| | 33235 | 2-E5 |
| | 40437 | 2-D7 |
| | 44173 | 2-D10 |
| | 44189 | 2-D10 |
| | 44436 | 2-D10 |
| | 44471 | 2-D10 |
| | 45903A | 2-I9 |
| | 45903B | 1-E13 |
| | 50506A | 3-G3 |
| | 66944 | 4-H2 |
| | 66991 | 3-L16 |
| | 67052B | 3-N16 |
| | 67059 | 3-N16 |
| | 67515 | 4-G2 |
| | 68015 | 4-C3 |
| | 76419 | 3-F14 |
| | 76419C | 3-J14 |
| | 76434 | 3-K14 |
| | 76435 | 3-G14 |
| | 76435A | 3-K14 |
| | 33235 | 2-C5 |
| | 146621 | 1-F8 |
| | 51402A | 1-F4 |
| | 19916 | 1-J13 |
| | 13447 | 1-F4 |
| | 67031B | 3-M16 |
| CLIP A,PAD LH | 33232 | 2-E5 |
| CLIP A,PAD RH | 33232 | 2-E5 |
| CLIP B,PAD LH | 33234 | 2-E5 |
| CLIP B,PAD RH | 33234 | 2-E5 |
| CLIP,AIR HOSE | 13726 | 1-F6 |
| | 137461 | 1-G6 |
| | 147451 | 1-F8 |
| CLIP,CABLE | 44439 | 2-D10 |
| | 67293 | 1-H12 |

# ALPHABETICAL INDEX (ENGLISH)


| PART NAME | D-CODE | LOCATION |
|---|---|---|
| CLIP,CABLE | 67290 | 1-H12 |
| CLIP,D.TOP CEILING | 70335B | 4-I3 |
| CLIP,DRAIN HOSE | 13305B | 3-D6 |
| CLIP,ENGINE HARNESS | 18994A | 1-G11 |
| CLIP,FLEXIBLE HOSE | 43635B | 2-H9 |
| | 43635A | 2-D8 |
| | 43635 | 2-H9 |
| CLIP,HOSE | 43635C | 2-H9 |
| CLIP,OIL TUBE | 14296 | 1-C8 |
| CLIP,PIPE | 133051 | 1-G4 |
| | 45903 | 2-G10 |
| | 45903D | 2-G10 |
| CLIP,VALVE WIRING | 18861 | 1-F11 |
| CLOCK,AUTO | 55711 | 3-N7 |
| CLUTCH,FRONT | 19460 | 1-K13 |
| CLUTCH,ONE WAY | 19595 | 1-D14 |
| CLUTCH,OVER RUNNING | 24722 | 1-D12 |
| | | 1-F12 |
| CLUTCH,REAR | 19510 | 1-M13 |
| COAT HOOK | 69941 | 4-F5 |
| COIL,IGNITION | 18100 | 1-C11 |
| COLLAR | 76472B | 3-K14 |
| COLLAR,BEARING | 26152 | 2-D2 |
| COLLAR,CLUTCH REL | 16510 | 1-K8 |
| COMPENSATOR | 236931 | 1-G4 |
| COMPENSATOR,ALTITUDE | 13770 | 1-C7 |
| | | 1-F7 |
| | | 1-I6 |
| | | 1-L6 |
| CONDENSER | 24334 | 1-I11 |
| | | 1-J11 |
| | 24581 | 1-C12 |
| | | 1-M11 |
| | 66992 | 3-H16 |
| CONDENSER | 24322 | 1-H11 |
| CONNECTOR | 14730J | 1-F8 |
| CONNECTOR SET,FUEL | 234091 | 1-C6 |
| | | 1-E5 |
| | | 1-J5 |
| | | 1-K4 |
| CONNECTOR,HOSE | 103201 | 1-H2 |
| CONNECTOR,SHORT | 67821 | 3-E16 |
| | 67985 | 4-F2 |
| CONNECTOR,TUBE | 13945 | 1-D7 |
| | | 1-G7 |
| | | 1-J6 |
| | | 1-M6 |
| CONSOLE,FRONT | 64310 | 3-G9 |
| | | 3-M8 |
| CONSOLE,REAR | 64410 | 3-C9 |
| | | 3-H9 |
| CONTACT | 24496 | 1-I11 |
| | | 1-K11 |
| CONTACT,STARTER | 66156 | 3-C2 |
| CONTACT,HORN | 60267 | 3-F7 |
| | | 3-J7 |
| CONTROL UNIT | 189401 | 1-G11 |
| CONTROL,HEATER | 61190 | 3-D14 |
| CONVERTER,TORQUE | 19100A | 1-C13 |
| COOLER,OIL | 147001 | 1-F8 |
| CORD,DIN | 66910A | 3-J16 |
| | 66910B | 3-G16 |
| CORD,HIGH TENSION | 18110A | 1-C11 |
| | 181201 | 1-D11 |
| | 181301 | 1-D11 |
| | 181401 | 1-D11 |
| | 18150 | 1-D11 |
| | 181601 | 1-E11 |
| | 181701 | 1-E11 |
| | 181801 | 1-E11 |
| CORD,LOUD SPEAKER | 66975 | 3-H16 |
| | | 3-K16 |
| CORD,RR.DEF | 67051C | 3-N16 |
| CORD,SHORT | 66980 | 3-K16 |
| | 67091 | 3-N16 |
| CORD,SPEAKER(FRONT) | 66965 | 3-K16 |
| CORE,HEATER | 76405 | 3-E14 |
| COUPLING SET | 24340 | 1-I11 |
| | | 1-J11 |
| COVER | 19240 | 1-D13 |
| | 236731 | 1-G4 |
| | 23801 | 1-D8 |
| | 24368 | 1-K11 |
| | 40551 | 2-E7 |
| | 66732 | 3-D16 |
| | 76609 | 4-I2 |
| COVER KIT,END | 32150 | 2-F4 |
| COVER KIT,SIDE | 32170A | 2-F4 |
| COVER LATCH | 62882 | 3-L15 |
| COVER SET,LEV.GAUGE | 23340 | 1-D5 |
| | | 1-I5 |
| | | 1-J4 |
| | | 1-N5 |
| COVER(L),COLUMN | 60231 | 3-E7 |
| | | 3-J7 |
| COVER(R),COLUMN | 60221 | 3-E7 |
| | | 3-J7 |
| COVER,BEARING | 76509D | 3-I14 |
| | 76512E | 3-I14 |
| | 17325 | 1-C9 |
| | | 1-E9 |
| COVER,BLIND | 17534 | 1-D9 |
| | | 1-F9 |
| COVER,CLUTCH | 16410 | 1-K8 |
| COVER,DOOR LOCK | 62321 | 3-C15 |
| COVER,DUST | 103051 | 1-H2 |
| | 10351 | 1-H2 |
| | 16214 | 1-K8 |
| | 32411 | 2-G4 |
| | 34015 | 2-H5 |
| COVER,FRONT | 106001 | 1-I2 |
| | 16220 | 1-K8 |
| COVER,HEATER | 61145 | 3-E14 |
| COVER,HINGE | 88107A | 3-C10 |
| COVER,HOLE | 55952 | 3-E7 |
| | | 3-J7 |
| | 56051 | 3-L6 |
| | 66395 | 3-G7 |
| | | 3-K7 |
| COVER,HOLE ANTENNA | 66911A | 3-H16 |
| | | 3-J16 |
| COVER,HOLE-CLOCK | 55721 | 3-N7 |
| COVER,INNER HANDLE | 58303B | 3-C13 |
| COVER,MOTOR | 76421C | 3-J14 |
| COVER,SERVICE HOLE | 50310 | 3-F3 |
| | 56061 | 3-L6 |
| | 56231A | 3-L6 |
| | 56639 | 3-N6 |
| | 56639D | 3-C14 |
| COVER,SERVO | 19392 | 1-G13 |
| COVER,SET | 33049 | 2-C5 |
| | | 2-E5 |
| COVER,SIDE | 19028A | 1-C13 |
| COVER,THERMOSTAT | 15172 | 1-H8 |
| COVER,TOP | 19029 | 1-C13 |
| COVER,UNDER | 19027A | 1-C13 |
| | 56111 | 3-L6 |
| COVER,WATER PUMP | 15130 | 1-H8 |
| COVER,WHEEL CORE | 32049 | 2-C4 |
| COVER,WIPER ARM | 76641 | 4-I2 |
| COWLING,RADIATOR | 15210A | 1-I8 |
| CUP,FLOATING | 49635 | 2-F9 |
| CUP,PISTON | 26671 | 2-F2 |
| CUP,PRIMARY | 49626 | 2-F9 |
| CUP,SECONDARY | 49625 | 2-F9 |
| CUSHION | 56785 | 3-D5 |
| | 70269A | 3-G8 |
| CUSHION(L),FRT.SEAT | 88160 | 3-J10 |
| CUSHION(R),FRT.SEAT | 88110 | 3-D10 |
| CUSHION,DOOR | 58906 | 3-F13 |
| CYL.,CLUTCH MASTER | 41990 | 2-D8 |
| CYL.,CLUTCH RELEASE | 41920 | 2-D8 |
| CYL.,TANDEM MASTER | 43990 | 2-F9 |
| CYLINDER(L),WHEEL | 26610A | 2-F2 |
| CYLINDER(R),WHEEL | 26610A | 2-F2 |
| ** D ** | | |
| DAM,AIR | 52920 | 3-F5 |
| DAM,FRT.WSHLD GLASS | 63902 | 3-F15 |
| DAM,SIDE WINDOW | 63942B | 3-G15 |
| DAMPER | 34910A | 2-J5 |
| DAMPER SET,REAR | 28700S | 2-G3 |
| DAMPER SUB SET,FR. | 49790 | 2-J5 |
| DASH POT | 20190A | 1-C5 |
| | | 1-H5 |
| | | 1-M5 |
| | 24190 | 1-N4 |
| DECK(L),FLOOR | 56540A | 3-M6 |
| DECK(R),FLOOR | 56510 | 3-M6 |
| DECK,TAPE-CASSETE | 66860D | 3-G16 |
| | | 3-I16 |
| DEFLECTOR | 62801A | 3-I15 |
| | | 3-K15 |
| DIAPHRAGM,CARBURETOR | 23322 | 1-D5 |
| | | 1-I5 |
| | | 1-J4 |
| | | 1-N5 |
| DIAPHRAGM,VACUUM | 19823 | 1-I13 |
| DISC,CLUTCH | 16460 | 1-K8 |

# ALPHABETICAL INDEX (ENGLISH)


| PART NAME | D-CODE | LOCATION |
|---|---|---|
| DISTRIBUTOR | 18200 | 1-H11 |
| | | 1-J11 |
| DISTRIBUTOR,OIL | 19650 | 1-E14 |
| DOWEL,TUBULAR | 101111 | 1-D2 |
| | 102041 | 1-G2 |
| DRIVE,MECHANISM | 66939 | 3-H16 |
| | | 3-J16 |
| DRIVING & DIFF | 27100 | 2-C3 |
| DRUM,BRAKE | 26251 | 2-E2 |
| DRUM,CLUTCH | 19470 | 1-K13 |
| DRUM,CONNECTING | 19590 | 1-D14 |
| | 19591 | 1-D14 |
| DRUM,REAR CLUTCH | 19511 | 1-M13 |
| DUCT | 61150 | 3-C14 |
| DUCT (L),SIDE DEMIST | 61184 | 3-K9 |
| DUCT (R),SIDE DEMIST | 61183 | 3-K9 |
| DUCT NO.1(L) | 64771B | 3-K9 |
| DUCT NO.2(L) | 64772B | 3-K9 |
| DUCT NO.3(L) | 64773B | 3-K9 |
| DUCT(L),SIDE DEMIST | 60182 | 3-K9 |
| DUCT(R) | 64761B | 3-K9 |
| DUCT(R),SIDE DEMIST | 60181A | 3-K9 |
| DUCT,AIR | 40620 | 2-E7 |
| DUCT,CENTER | 64750A | 3-K9 |
| DUCT,HOT AIR | 13390 | 1-D4 |
| DUM'A'(L) | 50526C | 3-G3 |
| DUM'A'(R) | 50516B | 3-G3 |
| DUM'B'(L) | 50527B | 3-G3 |
| DUM'B'(R) | 50517B | 3-G3 |
| ** E ** | | |
| ELEMENT,AIR CLEANER | 23603 | 1-G4 |
| EMBLEM | 32811 | 2-C4 |
| | 37192 | 2-C6 |
| END,CONTROL ROD | 17461A | 1-G10 |
| | | 1-K10 |
| END,S/ROD(1ST&2ND) | 17410A | 1-F10 |
| | | 1-J10 |
| END,S/ROD(3RD&4TH) | 17422A | 1-F10 |
| | | 1-J10 |
| END,SHIFT | 17432 | 1-G10 |
| | | 1-K10 |
| ENGINE,SHORT | 23800 | 1-C2 |
| ESCUSTCHEON | 58375 | 3-E13 |
| EXTRACTOR(L) | 51911 | 3-K4 |
| EXTRACTOR(R) | 51911 | 3-K4 |
| ** F ** | | |
| FAN | 76421 | 3-J14 |
| FAN & FAN DRIVE | 152501 | 1-I8 |
| FAN DRIVE | 152101 | 1-I8 |
| FAN,COOLING | 15140 | 1-H8 |
| FASTENER | 58921 | 3-E12 |
| | 58921D | 4-J3 |
| | 58762 | 3-E12 |
| | 69885A | 4-K4 |
| FASTENER,F.WIND.MLD | 50608B | 3-H3 |
| FASTENER,KEY CYL | 58961 | 3-C2 |

| PART NAME | D-CODE | LOCATION |
|---|---|---|
| FASTENER,PROTECTOR | 50389 | 3-F3 |
| FEEDER-ANTENNA | 66935 | 3-H16 |
| | | 3-J16 |
| FILLER,REAR BUMPER | 50311A | 3-F3 |
| FILTER,FUEL | 13470 | 1-F4 |
| FLANGE | 19580 | 1-D14 |
| | 76453 | 3-K14 |
| FLANGE,COMPANION | 27020 | 2-C3 |
| FLANGE,DRIVE | 19581 | 1-D14 |
| FLOAT, FRONT | 23316 | 1-C5 |
| | | 1-H5 |
| | | 1-J4 |
| | | 1-M5 |
| | 43542 | 2-E9 |
| FORK,BRAKE | 43140 | 2-D9 |
| FORK,CLUTCH | 41140 | 2-C9 |
| FORK,CLUTCH RELEASE | 16520 | 1-K8 |
| FORK,SHIFT | 17406 | 1-E10 |
| | | 1-I10 |
| FORK,SHIFT(1ST&2ND) | 17402 | 1-E10 |
| | | 1-I10 |
| FORK,SHIFT(3RD&4TH) | 17404 | 1-E10 |
| | | 1-I10 |
| FRAME | 76602 | 4-H2 |
| FRAME & PAD(L),BACK | 88190 | 3-M10 |
| FRAME & PAD(L), CUSH. | 88170A | 3-K10 |
| FRAME & PAD(R),BACK | 88140B | 3-H10 |
| FRAME & PAD(R), CUSH. | 88120A | 3-F10 |
| FRAME(L),REAR SIDE | 54810 | 3-K6 |
| FRAME(L),SIDE-FRONT | 54300 | 3-K6 |
| FRAME(R),REAR SIDE | 53810 | 3-J6 |
| FRAME(R),SIDE-FRONT | 53300 | 3-I6 |
| FRAME,INST.PANEL | 60410 | 3-D8 |
| | | 3-H8 |
| FLOAT, REAR | 23329A | 1-D5 |
| | | 1-I5 |
| | | 1-J4 |
| | | 1-N5 |
| FUNNEL | 40560 | 2-E7 |
| FUSE(10A) | 66495 | 3-C16 |
| FUSE(15A) | 66496 | 3-C16 |
| FUSE(20A) | 66497 | 3-C16 |
| ** G ** | | |
| GARNISH(L) | 60781 | 3-F8 |
| | | 3-J8 |
| GARNISH(L),SIDE WIND | 51891A | 3-F15 |
| GARNISH(R) | 60771 | 3-E8 |
| | | 3-J8 |
| GARNISH(R),SIDE WIND | 51881A | 3-F15 |
| GARNISH,UPPER | 60720 | 3-E8 |
| | | 3-J8 |
| GASKET | 13135 | 1-E7 |
| | | 1-H6 |
| | | 1-K6 |
| | | 1-N6 |
| | 13135A | 2-C7 |
| | 148231 | 1-F8 |
| | 15081 | 1-G8 |

| PART NAME | D-CODE | LOCATION |
|---|---|---|
| | 15082 | 1-G8 |
| | 15173 | 1-H8 |
| | 15611 | 1-J8 |
| | 23303A | 1-C5 |
| | | 1-H5 |
| | | 1-I4 |
| | | 1-M5 |
| | 23481 | 1-D6 |
| | | 1-F5 |
| | | 1-L5 |
| | | 1-M4 |
| | 40325 | 2-C7 |
| | 40356 | 2-D7 |
| | 40429 | 2-D7 |
| | 40436 | 2-D7 |
| | 40668 | 2-E7 |
| | 40698 | 2-E7 |
| | 76455A | 3-K14 |
| | 76464A | 3-K14 |
| | 23803A | 1-E8 |
| | 137491 | 1-G6 |
| GASKET SET | 23510 | 1-E6 |
| | | 1-G5 |
| | | 1-L5 |
| | | 1-M4 |
| | 236801 | 1-G4 |
| GASKET SET,ENGINE | 10271S | 1-C2 |
| GASKET(L),LICENSE | 51274A | 3-H4 |
| GASKET(L),MIRROR | 69196 | 4-C5 |
| GASKET(L),RR.COMB | 51164 | 3-G4 |
| GASKET(R),LICENSE | 51274A | 3-G4 |
| GASKET(R),MIRROR | 69136 | 4-N4 |
| GASKET(R),RR.COMB | 51164 | 3-G4 |
| GASKET,A.C.VALVE | 137241 | 1-F6 |
| GASKET,BLIND COVER | 17535 | 1-D9 |
| | | 1-F9 |
| GASKET,CAP | 42462 | 2-G8 |
| GASKET,CONTROL CASE | 17478 | 1-H10 |
| | | 1-L10 |
| GASKET,COVER PLATE | 17474 | 1-G10 |
| | | 1-L10 |
| GASKET,DRAIN PLUG | 10405 | 1-H2 |
| GASKET,E.G.R.VALVE | 203051 | 1-D7 |
| | | 1-G7 |
| GASKET,EXHAUST PIPE | 20920 | 1-D4 |
| GASKET,EXTENSION | 19735 | 1-H13 |
| GASKET,EXTRACTOR | 51902A | 3-K4 |
| GASKET,F.COMB | 51062A | 3-C4 |
| GASKET,FILLER PIPE | 42241 | 2-F8 |
| GASKET,FLANGE | 23358 | 1-D5 |
| | | 1-I5 |
| | | 1-J4 |
| | | 1-N5 |
| GASKET,FLOAT CHAMBER | 23321 | 1-D5 |
| | | 1-I5 |
| | | 1-J4 |
| | | 1-N5 |
| GASKET,FRONT COVER | 10641 | 1-I2 |
| | 16225 | 1-K8 |
| GASKET,GAUGE | 66773A | 2-H8 |

# ALPHABETICAL INDEX (ENGLISH)


| PART NANE | D-CODE | LOCATION |
|---|---|---|
| GASKET,HOLE COVER | 5C292 | 3-E3 |
| GASKET,IN.MANIFOLD | 13111 | 1-C4 |
| GASKET,JOINT BOLT | 49656 | 2-F9 |
| GASKET,KEY CYLINDER | 58962C | 3-C2 |
| GASKET,METERING OIL | 146111 | 1-D8 |
| GASKET,OIL CAP | 1C2521 | 1-E2 |
| GASKET,OIL PAN | 1C431 | 1-H2 |
| | 19835 | 1-I13 |
| GASKET,OIL PUMP | 19215 | 1-C13 |
| GASKET,OIL STRAINER | 141711 | 1-C8 |
| GASKET,REACTOR | 20910 | 1-D4 |
| GASKET,REGUL.HANDLE | 58552 | 3-F13 |
| GASKET,SET BOLT | 49696 | 2-G9 |
| GASKET,SIDE COVER | 32163 | 2-F4 |
| GASKET,WATER PUMP | 15116 | 1-G8 |
| GAUGE,FUEL TANK | 60960A | 2-H8 |
| GAUGE,OIL LEVEL | 10450 | 1-E2 |
| | 19880 | 1-I13 |
| GEAR SET,FINAL | 27110 | 2-C3 |
| GEAR,COUNTER | 17308 | 1-N9 |
| GEAR,COUNTER REVERSE | 173C2 | 1-I9 |
| | | 1-M9 |
| GEAR,COUNTER SHAFT | 17301 | 1-I9 |
| | | 1-M9 |
| GEAR,DIFF.SIDE | 27251 | 2-D3 |
| GEAR,DRIVE | 115311 | 1-D3 |
| | 17341 | 1-J9 |
| | | 1-N9 |
| GEAR,DRIVE-OIL PUMP | 115511 | 1-D3 |
| GEAR,DRIVEN | 146251 | 1-D8 |
| | 17441 | 1-C9 |
| | | 1-F9 |
| | 19441 | 1-H13 |
| GEAR,MAIN DRIVE | 17201 | 1-G9 |
| | | 1-K9 |
| GEAR,OVER TOP | 17611 | 1-C10 |
| GEAR,REVERSE | 17281 | 1-H9 |
| | | 1-L9 |
| GEAR,REVERSE IDLE | 17310 | 1-I9 |
| | | 1-N9 |
| GEAR,RING | 11502 | 1-C3 |
| GEAR,SHELL & SUN | 19550 | 1-M13 |
| GEAR,SPEEDO.DRIVE | 17341A | 1-D14 |
| GEAR,STATIONARY-FRT | 105001 | 1-E2 |
| GEAR,STATIONARY-RR. | 105501 | 1-E2 |
| GEAR,STEERING | 32110 | 2-F4 |
| GEAR,SUN | 19560 | 1-M13 |
| GEAR,1ST | 17271 | 1-H9 |
| | | 1-L9 |
| GEAR,2ND | 17250 | 1-G9 |
| | | 1-L9 |
| GEAR,3RD | 17230 | 1-G9 |
| | | 1-K9 |
| GLASS(L),DOOR | 58500 | 3-D12 |
| GLASS(L),SIDE WINDOW | 63951 | 3-G15 |
| GLASS(R),DOOR | 58500 | 3-D12 |
| GLASS(R),SIDE WINDOW | 63941 | 3-G15 |
| GLASS,REAR WINDOW | 63931 | 3-F15 |
| GLASS,WINDSHIELD | 63901 | 3-F15 |
| GOVERNOR | 19660 | 1-E14 |
| GOVERNOR SET | 24330 | 1-I11 |
| | | 1-J11 |
| GREASE | 49246 | 2-D5 |
| | | 2-G5 |
| | 49246C | 2-G5 |
| GRILLE | 60565 | 3-I8 |
| GRILLE(L),EXTRACTOR | 51901 | 3-K4 |
| GRILLE(R),EXTRACTOR | 51901 | 3-K4 |
| GRILLE, SPEAKER | 66980C | 3-H16 |
| GRILLE,COWL | 50791 | 3-J4 |
| GRILLE,RADIATOR | 50711 | 3-D3 |
| GROMMET | 28778 | 2-G3 |
| | 42348 | 2-G8 |
| | 61479 | 3-D14 |
| | 67916 | 4-F2 |
| | 76150 | 3-J14 |
| | 87846 | 4-I2 |
| GROMMET,CHOKE WIRE | 60052 | 3-E7 |
| | | 3-J7 |
| GROMMET,SCREW | 51029 | 3-C4 |
| | 72502A | 3-N12 |
| GROMMET,SCREW-R.COMB | 51146 | 3-G4 |
| GUARD,REAR BUMPER | 50270D | 3-E3 |
| GUIDE | 76421D | 3-F14 |
| | 76422D | 3-F14 |
| | 76429A | 3-F14 |
| GUIDE,CTR.LOUVER | 64811A | 3-L9 |
| GUIDE,LOUVER | 64820 | 3-L9 |
| GUIDE'A'(L),GLASS | 58601 | 3-D12 |
| GUIDE'A'(R),GLASS | 58601 | 3-D12 |
| ** h ** | | |
| HANDLE(L),OUTER | 58420 | 3-F13 |
| HANDLE(R),OUTER | 58420 | 3-E13 |
| HANDLE,INNER | 58321C | 3-D13 |
| HANDLE,JACK | 68810A | 2-F6 |
| HANDLE,REGULATOR | 58370 | 3-E13 |
| HANGER,ENGINE | 108611 | 1-I2 |
| | 108621 | 1-I2 |
| HANGER,SILENCER | 40160 | 2-C7 |
| HARNESS,DOOR MIRROR | 67180A | 4-F2 |
| HARNESS,FRONT | 67010A | 3-M16 |
| HARNESS,INSTRUMENT | 67030 | 3-M16 |
| HARNESS,INT.LAMP | 67100 | 3-N16 |
| HARNESS,PARKG.BRAKE | 67120 | 4-F2 |
| HARNESS,REAR | 67050 | 3-N16 |
| HARNESS,T/MISSION | 67090 | 3-N16 |
| HATCH,R.TOP | 62820 | 3-I15 |
| | | 3-K15 |
| HEAD CONSOLE | 51341 | 3-I4 |
| HEADER,FRONT | 70640 | 3-E6 |
| | | 3-L5 |
| HEADER,REAR | 70700 | 3-E6 |
| | | 3-L5 |
| HEATER SET | 61070 | 3-C14 |
| HEATER UNIT | 61130 | 3-C14 |
| HINGE(L) | 63210 | 3-D15 |
| HINGE(L),DOOR-LOWER | 58240 | 3-C13 |
| HINGE(L),DOOR-UPPER | 58210 | 3-C13 |
| HINGE(L),LID-LAMP | 51430A | 3-D4 |
| HINGE(R) | 62210 | 3-C15 |
| HINGE(R),DOOR-LOWER | 58240 | 3-C13 |
| HINGE(R),DOOR-UPPER | 58210 | 3-C13 |
| HINGE(R),LID-LAMP | 51430A | 3-D4 |
| HINGE,BONNET | 52410A | 3-C5 |
| HINGE'A'(L),R.TOP | 63860 | 3-J15 |
| | | 3-L15 |
| HINGE'A'(R),R.TOP | 62860 | 3-I15 |
| | | 3-K15 |
| HINGE'B'(L),R.TOP | 63870 | 3-J15 |
| HINGE'B'(R),R.TOP | 62870 | 3-I15 |
| HINGE'B',R.TOP | 62870A | 3-K15 |
| HOLDER | 26897 | 2-F2 |
| | 41360A | 2-C8 |
| HOLDER SET,RETURN | 23371A | 1-C6 |
| | | 1-D5 |
| | | 1-J5 |
| | | 1-K4 |
| HOLDER(C),PROTECTOR | 50385 | 3-C3 |
| HOLDER(C,L)PROTECTOR | 50396 | 3-F3 |
| HOLDER(C,R)PROTECTOR | 50386 | 3-F3 |
| HOLDER,BAND | 60265 | 3-F7 |
| | | 3-J7 |
| HOLDER,BIMETAL | 23501 | 1-F6 |
| | | 1-G5 |
| | | 1-L5 |
| | | 1-M4 |
| HOLDER,BONNET STAY | 52518 | 3-C5 |
| HOLDER,BRUSH | 24750 | 1-D12 |
| | | 1-G12 |
| | 76612 | 4-J2 |
| HOLDER,CTR.LOUVER | 64812A | 3-L9 |
| HOLDER,KEY CYLINDER | 60261A | 3-F7 |
| | | 3-J7 |
| HOLDER,NO. PLATE | 50030 | 3-C3 |
| HOLDER,P.B.V | 43750A | 2-H9 |
| HOLDER,ROD | 58309 | 3-D13 |
| HOOD-METER | 55410 | 3-L7 |
| HOOK SLIDE | 62885 | 3-L15 |
| HOOK(L),FRONT | 56290 | 3-L6 |
| HOOK(R),FRONT | 56290 | 3-L6 |
| HOOK,REAR | 56291 | 3-M6 |
| HOOK,TIE DOWN | 56291A | 3-M6 |
| HOOK,TRIM | 69605C | 4-E4 |
| HOOK,TRUNK ROOM MAT | 69605 | 4-J4 |
| HORN,AIR | 23310 | 1-C5 |
| | | 1-H5 |
| | | 1-I4 |
| | | 1-M5 |
| HORN,HIGH TONE | 66780A | 3-D16 |
| HORN,LOW TONE | 66790 | 3-D16 |
| HOSE | 135271 | 1-H4 |
| | 76420 | 3-F14 |
| | 76479A | 3-K14 |
| HOSE NO.1,FLEXIBLE | 43810B | 2-H9 |
| HOSE NO.1,WATER | 61211 | 3-D14 |
| HOSE NO.2,WATER | 61212 | 3-D14 |
| HOSE NO.3,WATER | 61213 | 3-D14 |
| HOSE,AIR | 13296 | 1-C7 |

# ALPHABETICAL INDEX (ENGLISH)


| PART NAME | D-CODE | LOCATION |
|---|---|---|
| HOSE,AIR | 13296 | 1-F7 |
| | | 1-I6 |
| | | 1-L6 |
| | 13650A | 1-C7 |
| | | 1-F7 |
| | | 1-I6 |
| | | 1-L6 |
| | 13650B | 1-C7 |
| | | 1-F7 |
| | 13650J | 1-C7 |
| | | 1-F7 |
| | 137171 | 1-F6 |
| | 137181 | 1-F6 |
| | 13760J | 1-C7 |
| | | 1-I6 |
| | | 1-L6 |
| | 137751 | 1-C7 |
| | | 1-F7 |
| | | 1-J6 |
| | | 1-L6 |
| | 137761 | 1-C7 |
| | | 1-J6 |
| | | 1-M6 |
| | 137251 | 1-F6 |
| HOSE,BREATHER | 42581 | 2-G8 |
| HOSE,DEFROSTER | 61251 | 3-K9 |
| HOSE,DRAIN | 74030K | 3-G6 |
| HOSE,DRAIN-REAR | 53980 | 3-D6 |
| | | 3-K5 |
| | 53980D | 3-D6 |
| | | 3-K5 |
| HOSE,EVAPORATION | 13780J | 1-F4 |
| | 13972 | 1-F4 |
| HOSE,FILLER | 42221 | 2-F8 |
| HOSE,FLEXIBLE | 41380 | 2-C8 |
| | 43980 | 2-H9 |
| HOSE,FUEL | F1040B | 1-H6 |
| | | 1-K6 |
| | F1050B | 1-H6 |
| | | 1-K6 |
| | F1130B | 1-H6 |
| | | 1-K6 |
| | F1230B | 1-H6 |
| | 13270J | 1-E4 |
| | 45126 | 2-E10 |
| | 45613 | 2-F10 |
| | 45612 | 2-F10 |
| | 45125 | 2-E10 |
| HOSE,FUEL MAIN | 13421 | 1-E4 |
| | 45127 | 2-E10 |
| HOSE,FUEL RETURN | 13422 | 1-E4 |
| | 45611J | 2-F10 |
| HOSE,HOT AIR | 13344 | 1-G4 |
| HOSE,OIL | 147201 | 1-F8 |
| | 147301 | 1-F8 |
| | 19933 | 1-E13 |
| HOSE,VACUUM | F1280B | 1-H6 |
| | | 1-K6 |
| | F1300A | 1-K6 |
| | 13100K | 1-E7 |

| PART NAME | D-CODE | LOCATION |
|---|---|---|
| | 132421 | 1-C7 |
| | | 1-F7 |
| | | 1-I6 |
| | | 1-L6 |
| | 132471 | 1-I6 |
| | | 1-L6 |
| | 19904 | 1-D13 |
| | 43836 | 2-E9 |
| | 43842 | 2-E9 |
| | 43842A | 2-E9 |
| HOSE,VENT | 42316 | 2-F8 |
| | 42588 | 2-H8 |
| | 42571 | 2-G8 |
| HOSE,VENTILATION | 13786A | 1-J6 |
| | | 1-M6 |
| | 137851 | 1-F4 |
| | 13971 | 1-F4 |
| HOSE,WATER | 15185 | 1-H8 |
| | 15186 | 1-H8 |
| | 15351 | 1-J8 |
| HOUSING,CONVERTER | 19211 | 1-C13 |
| HOUSING,EXTENSION | 17330 | 1-C9 |
| | | 1-E9 |
| | 19710 | 1-H13 |
| HOUSING,FRONT | 102001 | 1-G2 |
| HOUSING,GEAR | 32120 | 2-F4 |
| HOUSING,INTERMEDIATE | 104001 | 1-E2 |
| HOUSING,REAR | 103001 | 1-G2 |
| HOUSING,ROTOR-FRONT | 101001 | 1-D2 |
| HOUSING,ROTOR-REAR | 101501 | 1-D2 |
| HUB,CLUTCH | 17621 | 1-C10 |
| | | 1-J9 |
| | 17241 | 1-G9 |
| | | 1-K9 |
| | 17261 | 1-H9 |
| | | 1-L9 |
| HUB,REAR CLUTCH | 19530 | 1-M13 |
| | 19531 | 1-M13 |
| ** I ** | | |
| IGNITER | 24910B | 1-G11 |
| IGNITER SET | 24910 | 1-G11 |
| INDICATOR | 64340A | 3-G9 |
| | | 3-N8 |
| | | 3-G9 |
| | | 3-N8 |
| INDICATOR,LEVEL | 43540 | 2-E9 |
| INSULATOR | 13315 | 1-E4 |
| | 40401 | 2-D7 |
| | 40405 | 2-D7 |
| | 40433 | 2-D7 |
| | 40669 | 2-E7 |
| | 56451 | 3-M6 |
| | 56981A | 3-N6 |
| | 64492 | 3-D9 |
| | | 3-I9 |
| INSULATOR NO.4,REAR | 56460 | 3-M6 |
| INSULATOR,DASH UP | 68664E | 4-F4 |
| INSULATOR,DASHBOARD | 68620 | 4-F4 |

| PART NAME | D-CODE | LOCATION |
|---|---|---|
| INSULATOR,HEAT | 133711 | 1-D4 |
| INSULATOR,HEAT-FRONT | 56410 | 3-M6 |
| INSULATOR,LOWER | 39384 | 2-H6 |
| INSULATOR,TANK-FUEL | 56991D | 3-N6 |
| INSULATOR,UPPER | 39385 | 2-H6 |
| ** J ** | | |
| JACK | 68800A | 2-F6 |
| JET SET,MAIN 1ST | 23353 | 1-D5 |
| | | 1-I5 |
| | | 1-J4 |
| | | 1-N5 |
| JET SET,MAIN 2ND | 23402A | 1-C6 |
| | | 1-E5 |
| | | 1-J5 |
| | | 1-K4 |
| JET SET,SLOW | 23407 | 1-C6 |
| | | 1-E5 |
| | | 1-J5 |
| | | 1-K4 |
| JET,AIR BLEED NO.1 | 234241 | 1-D6 |
| | | 1-F5 |
| | | 1-K5 |
| | | 1-L4 |
| JET,AIR BLEED NO.2 | 234331 | 1-D6 |
| | | 1-F5 |
| | | 1-K5 |
| | | 1-L4 |
| JET,COASTING | 23416 | 1-C6 |
| | | 1-E5 |
| | | 1-J5 |
| | | 1-L4 |
| JET,POWER VALVE | 23541 | 1-E6 |
| | | 1-G5 |
| | | 1-L5 |
| | | 1-M4 |
| JET,SLOW AIR BLEED-S | 234251 | 1-D6 |
| | | 1-F5 |
| | | 1-K5 |
| | | 1-L4 |
| JET,STEP | 23397 | 1-C6 |
| | | 1-E5 |
| | | 1-J5 |
| | | 1-K4 |
| JET,SLOW AIR BLEED | 23434B | 1-D6 |
| | | 1-F5 |
| | | 1-K5 |
| | | 1-L4 |
| JOINT | 58314A | 3-D13 |
| JOINT SET,BALL | 32240S | 2-H4 |
| | 32280S | 2-H4 |
| JOINT SET,UNIVERSAL | 25060S | 2-C2 |
| JOINT,CABLE | 17351 | 1-C9 |
| | | 1-E9 |
| JOINT,MOULD UPPER | 50604 | 3-H3 |
| JOINT,PIPE | 104171 | 1-E2 |
| JOINT,SPEEDOMETER | 19351 | 1-F13 |
| JOINT,UNION | 10600J | 1-I2 |
| | 14720J | 1-F8 |

# ALPHABETICAL INDEX (ENGLISH)


| PART NAME | D-CODE | LOCATION |
|---|---|---|
| JOINT'T'..... | 46691 | 2-J10 |
| ** K ** | | |
| KEY..... | 115121 | 1-D3 |
| | 141191 | 1-C8 |
| KEY SET..... | 09010 | 3-C2 |
| KEY SUB SET(L),DOOR ... | 75920 | 3-C2 |
| KEY SUB SET(R),DOOR ... | 75910 | 3-C2 |
| KEY SUB SET,B/DOOR..... | 75960 | 3-D2 |
| KEY SUB SET,GLOVE..... | 75950 | 3-C2 |
| KEY SUB SET,ST.LOCK ... | 75990 | 3-D2 |
| KEY,BLANK..... | 75158 | 3-C2 |
| KEY,FLY WHEEL..... | 117051 | 1-D3 |
| KEY,PRIMARY..... | 58492 | 3-C2 |
| KEY,SYNCHRONIZER..... | 17243 | 1-G9 |
| | | 1-K9 |
| KNOB..... | 51937 | 3-E4 |
| | 611958 | 3-D14 |
| KNOB NO.1..... | 61191 | 3-D14 |
| KNOB,ADJUSTER..... | 88109 | 3-C10 |
| KNOB,AIR-CON..... | 61197 | 3-D14 |
| KNOB,CHANGE LEVER..... | 17520 | 1-H10 |
| | | 1-M10 |
| | 46030 | 2-H10 |
| KNOB,DOOR LOCK..... | 58691 | 3-F13 |
| KNOB,KNUCKLE..... | 88081 | 3-C10 |
| KNOB,LIGHT SWITCH..... | 66641 | 3-G7 |
| | | 3-K7 |
| KNOB,TRIPMETER..... | 55472 | 3-M7 |
| KNUCKLE(L),RECLINING... | 88151 | 3-H10 |
| KNUCKLE(R),RECLINING... | 88101 | 3-C10 |
| ** L ** | | |
| LABEL,EMISSION..... | 69041 | 4-G5 |
| LABEL,GASOLINE..... | 69038A | 4-G5 |
| LABEL,TIRE..... | 69014 | 4-G5 |
| LABEL,VAL.DIAPHRAGM ... | 69044A | 4-G5 |
| LAMP SET(L),HEAD..... | 51030T | 3-C4 |
| LAMP SET(L),LICENSE ... | 51270W | 3-G4 |
| LAMP SET(L),RR.COMB.... | 51150T | 3-G4 |
| LAMP SET(L)SIDE TURN... | 51120T | 3-C4 |
| LAMP SET(R),HEAD..... | 51030S | 3-C4 |
| LAMP SET(R),LICENSE ... | 51270V | 3-G4 |
| LAMP SET(R),RR.COMB.... | 51150S | 3-G4 |
| LAMP SET(R)SIDE TURN... | 51120S | 3-C4 |
| LAMP SET,F.COMB..... | 51060U | 3-C4 |
| LAMP,MAP..... | 51350A | 3-I4 |
| LATCH,ROTARY..... | 62881 | 3-K15 |
| LENS..... | 69223 | 4-D5 |
| LENS(L),RR.COMB..... | 51161 | 3-G4 |
| LENS(L),SIDE TURN..... | 51122 | 3-C4 |
| LENS(R),RR.COMB..... | 51161 | 3-G4 |
| LENS(R),SIDE TURN..... | 51122 | 3-C4 |
| LENS,F.COMB..... | 51063A | 3-C4 |
| LENS,FRONT..... | 55448A | 3-M7 |
| LENS,WARNING..... | 55447C | 3-L7 |
| LEVER..... | 24730 | 1-D12 |
| | | 1-F12 |
| | 46055 | 2-H10 |
| | 46150 | 2-I10 |
| LEVER NO.1,CONTROL..... | 76407 | 3-E14 |
| LEVER NO.2,CONTROL..... | 76409 | 3-E14 |
| LEVER SET,FRONT..... | 234201 | 1-C6 |
| | | 1-E5 |
| | | 1-J5 |
| | | 1-L4 |
| LEVER SET,REAR..... | 234301 | 1-D6 |
| | | 1-F5 |
| | | 1-K5 |
| | | 1-L4 |
| LEVER(L),LINK..... | 51935 | 3-E4 |
| LEVER(L),OPERATING..... | 26800 | 2-F2 |
| LEVER(R),LINK..... | 51935 | 3-E4 |
| LEVER(R),OPERATING..... | 26800 | 2-F2 |
| LEVER,ADJUST..... | 46160 | 2-I10 |
| LEVER,CHANGE..... | 17510 | 1-H10 |
| | | 1-L10 |
| LEVER,CHECK..... | 58291 | 3-C13 |
| LEVER,CONTROL..... | 17461 | 1-G10 |
| | | 1-K10 |
| | 238441 | 1-E8 |
| | 76412 | 3-F14 |
| | 76471B | 3-K14 |
| | 76501 | 3-H14 |
| | 76502 | 3-H14 |
| | 76408 | 3-E14 |
| | 76411 | 3-F14 |
| LEVER,PARKING BRAKE ... | 44010 | 2-C10 |
| LEVER,SELECT..... | 19031 | 1-G14 |
| | 46010 | 2-H10 |
| LID(L),LAMP..... | 51421 | 3-D4 |
| LID(R),LAMP..... | 51421 | 3-D4 |
| LID,CONSOLE..... | 64450 | 3-D9 |
| | | 3-I9 |
| LID,FUEL FILLER..... | 42410 | 2-G8 |
| LID,GLOVE POCKET..... | 64030 | 3-G8 |
| | | 3-K8 |
| LIGHTER,CIGAR..... | 66250 | 3-F7 |
| | | 3-K7 |
| LINING,HEAD..... | 68021 | 4-C3 |
| LINK..... | 28200A | 2-G3 |
| LINK.CENTER..... | 32261 | 2-H4 |
| LINK(L),WATT..... | 28170A | 2-G3 |
| LINK(R),WATT..... | 28160A | 2-G3 |
| LINK,FUSIBLE..... | 18055 | 3-L16 |
| | 67099A | 3-D16 |
| | 67099C | 3-D16 |
| | 67099 | 3-D16 |
| LINK,LOWER..... | 28300B | 2-G3 |
| LINK,WIPER..... | 76601 | 4-H2 |
| LOCK(L),DOOR..... | 58310 | 3-D13 |
| LOCK(R),DOOR..... | 58310 | 3-D13 |
| LOCK,BACK DOOR..... | 62310 | 3-C15 |
| LOCK,BONNET..... | 56620 | 3-C5 |
| LOCK,FILLER LID..... | 42440 | 3-C2 |
| LOCK,R.TOP..... | 62890 | 3-J15 |
| LOUVER,CENTER..... | 64815A | 3-L9 |
| LOUVER,VENTILATOR..... | 70371A | 3-L9 |
| ** M ** | | |
| MANIFOLD,INLET..... | 13100 | 1-C4 |
| MARK,RE-REAR..... | 51775A | 3-J4 |
| MARK,REAR..... | 51771A | 3-J4 |
| MAT,FRONT FLOOR..... | 68674 | 4-G4 |
| MAT,REAR FLOOR..... | 68677A | 4-J4 |
| MAT,TRUNK ROOM..... | 68695 | 4-J4 |
| MEMBER NO.3,CROSS..... | 53900 | 3-J6 |
| MEMBER NO.4,CROSS..... | 53940 | 3-J6 |
| MEMBER NO.5,CROSS..... | 53960 | 3-K6 |
| MEMBER,CROSS..... | 34800 | 2-L5 |
| | 53162 | 3-I6 |
| MEMBER,T/MISSION MT.... | 39380 | 2-G6 |
| METER,FUEL & THERMO ... | 55491A | 3-N7 |
| MIRROR(L),REAR VIEW ... | 69130 | 4-M4 |
| MIRROR(R),REAR VIEW ... | 69110 | 4-M4 |
| MIRROR,INTERIOR..... | 69170 | 4-N4 |
| MOTOR..... | 13083 | 1-H4 |
| MOTOR & LINK(L)..... | 51930A | 3-E4 |
| MOTOR & LINK(R)..... | 51930A | 3-D4 |
| MOTOR(L)..... | 51931 | 3-E4 |
| MOTOR(R)..... | 51931 | 3-E4 |
| MOTOR,FAN..... | 76424 | 3-J14 |
| MOTOR,WIPER..... | 67350 | 4-H2 |
| MOULD..... | 24363 | 1-M11 |
| MOULD SET(L),F.SIDE ... | 50504S | 3-G3 |
| MOULD SET(L),F.UPPER... | 50502S | 3-G3 |
| MOULD SET(R),F.SIDE ... | 50503S | 3-G3 |
| MOULD SET(R),F.UPPER... | 50501S | 3-G3 |
| MOULD SET,F.LOWER..... | 50505T | 3-G3 |
| MOULD(L),DRIP..... | 50451 | 3-I3 |
| MOULD(L),GLASS..... | 63980 | 3-G15 |
| MOULD(R),DRIP..... | 50441 | 3-I3 |
| MOULD(R),GLASS..... | 63970 | 3-G15 |
| MOULD,CHANGE BOOT..... | 64332 | 3-G9 |
| MOULD,FRONT CONSOLE ... | 55012 | 3-F9 |
| | | 3-L8 |
| | 55013 | 3-F9 |
| | | 3-L8 |
| MOULD,GLOVE LID..... | 55014 | 3-D8 |
| | | 3-H8 |
| | | 3-D8 |
| MOULD,REAR WINDOW..... | 63935 | 3-G15 |
| MOULD,SIDE PANEL..... | 55015 | 3-C7 |
| | | 3-H7 |
| MOULD,SWITCH PANEL..... | 55011 | 3-C7 |
| | | 3-H7 |
| ** N ** | | |
| NAME,SIDE..... | 51721 | 3-J4 |
| NOZZLE SET,ACCEL..... | 234901 | 1-D6 |
| | | 1-G5 |
| | | 1-L5 |
| | | 1-M4 |
| NOZZLE(L),DEFROSTER ... | 60140 | 3-K9 |
| NOZZLE(R),DEFROSTER ... | 60120 | 3-K9 |
| NOZZLE,WASHER..... | 67510 | 4-G2 |

# ALPHABETICAL INDEX (ENGLISH)

| PART NANE | D-CODE | LOCATION |
|---|---|---|
| NUT | 13461 | 1-D4 |
| | 19389 | 1-G13 |
| | 238471 | 1-E8 |
| | 33042 | 2-C5 |
| | | 2-E5 |
| | 34222 | 2-K5 |
| | 40355A | 2-C7 |
| | 40425 | 2-D7 |
| | 46061 | 2-H10 |
| | 76472A | 3-K14 |
| | 87108 | 4-J2 |
| | 87119 | 4-J2 |
| | 87134 | 4-I2 |
| NUT SET | 24533 | 1-L11 |
| | | 1-N11 |
| | 24537 | 1-L11 |
| NUT,CAP | 76603 | 4-H2 |
| NUT,CLIP | 50335A | 3-F3 |
| | 50825 | 3-E5 |
| | 52841B | 3-E5 |
| NUT,CLIP-F.FENDER | 52841 | 3-E5 |
| NUT,CROSS MEMBER | 39349A | 2-L5 |
| NUT,DAMPER | 62635 | 3-D15 |
| NUT,FLANGE | 40355 | 2-C7 |
| NUT,HEXAGON | 234521 | 1-F5 |
| NUT,HINGE | 51433 | 3-D4 |
| NUT,LOCK | 117111 | 1-D3 |
| | 17629 | 1-C10 |
| | | 1-J9 |
| | 27030 | 2-C3 |
| NUT,SHAFT | 19443 | 1-G14 |
| NUT,SPEED | 69049A | 3-K4 |
| | 69049D | 3-H15 |
| NUT,SPRING | 55905 | 3-N7 |
| | 56905A | 3-D8 |
| | | 3-H8 |
| | 56905C | 3-E7 |
| | | 3-J7 |
| | 56905D | 3-F9 |
| | | 3-L8 |
| | 56905F | 3-N7 |
| NUT,STOPPER | 148221 | 1-F8 |
| NUT,STRIKER | 62365 | 3-D15 |
| NUT,TENSION ROR | 34133A | 2-K5 |
| ** C ** | | |
| OPENER,REMO.CONTROL | 62315 | 3-C15 |
| ORNAMENT,FRONT | 51771 | 3-J4 |
| ORNAMENT,REAR | 51781 | 3-J4 |
| ORNAMENT,STEREO | 55231 | 3-G16 |
| | | 3-I16 |
| ORNAMENT,TUNER | 66915B | 3-H16 |
| | | 3-J16 |
| ** P ** | | |
| PACKING | 51902F | 3-F15 |
| | 67511 | 4-G2 |
| | 76124 | 3-J14 |

| PART NANE | D-CODE | LOCATION |
|---|---|---|
| | 76514A | 3-I14 |
| PAD | 55315 | 3-D8 |
| | | 3-H8 |
| PAD SUB SET,F | 49280B | 2-D5 |
| | | 2-G5 |
| PAD(C),FLOOR-FRONT | 68651 | 4-F4 |
| PAD(C),FLOOR-REAR | 68654 | 4-F4 |
| PAD(L),FLOOR-TRUNK | 68666 | 4-F4 |
| PAD(L),STRAGE SIDE | 68656B | 4-F4 |
| PAD(R),FLOOR-TRUNK | 68665 | 4-F4 |
| PAD(R),STRAGE SIDE | 68655C | 4-F4 |
| PAD,ACCEL.PEDAL | 41711A | 2-E8 |
| PAD,CHOKE WIRE | 56942B | 3-E7 |
| | | 3-J7 |
| PAD,CRUSH | 60350 | 3-D8 |
| | | 3-H8 |
| PAD,FOOT REST | 86202 | 2-D9 |
| PAD,FUEL TANK | 42523 | 2-G8 |
| PAD,KICK UP REINF | 68659A | 4-F4 |
| PAD,PEDAL | 43028 | 2-C9 |
| PAD,STRAGE BOX | 68658A | 4-F4 |
| PAD,TRUNK SIDE | 68667D | 4-F4 |
| PAD'B',PILLAR | 68026 | 4-C3 |
| PAN,FLOOR-FRONT | 53600 | 3-I6 |
| PAN,FLOOR-REAR | 53700 | 3-J6 |
| PAN,OIL | 10400 | 1-H2 |
| | 19836 | 1-I13 |
| PANEL(L),COWL SIDE | 71020 | 3-F6 |
| | | 3-M5 |
| PANEL(L),FENDER-FRT | 52210 | 3-E5 |
| PANEL(L),FENDER-REAR | 74130 | 3-C6 |
| | | 3-H6 |
| PANEL(L),FRONT SKIRT | 52913A | 3-F5 |
| PANEL(L),OUTER | 58020 | 3-D12 |
| PANEL(L),QUARTER | 71100 | 3-F6 |
| | | 3-M5 |
| PANEL(L),SIDE | 56380 | 3-I5 |
| PANEL(L),SIDE SEAL | 54950 | 3-L6 |
| PANEL(L),SIDE SILL | 71270 | 3-G6 |
| | | 3-N5 |
| PANEL(L),WHEEL APRON | 54210 | 3-H5 |
| PANEL(R),COWL SIDE | 70020 | 3-D6 |
| | | 3-K5 |
| PANEL(R),FENDER-FRT | 52110 | 3-E5 |
| PANEL(R),FENDER-REAR | 74100 | 3-H6 |
| | | 3-N5 |
| PANEL(R),FRONT SKIRT | 52912A | 3-E5 |
| PANEL(R),OUTER | 58020 | 3-C12 |
| PANEL(R),QUARTER | 70100 | 3-D6 |
| | | 3-K5 |
| PANEL(R),SIDE | 56370A | 3-I5 |
| PANEL(R),SIDE SILL | 70270 | 3-E6 |
| | | 3-L5 |
| | 53950 | 3-K6 |
| PANEL(R),WHEEL APRON | 53210 | 3-F5 |
| PANEL,CENTER | 55220 | 3-C7 |
| | | 3-H7 |
| PANEL,COWL | 74040 | 3-J5 |
| PANEL,COWLING UP | 56391A | 3-I5 |
| PANEL,DASH-LOWER | 53400 | 3-G5 |

| PART NANE | D-CODE | LOCATION |
|---|---|---|
| PANEL,DASH-UPPER | 53510 | 3-G5 |
| PANEL,DECORATION | 55270 | 3-C7 |
| | | 3-H7 |
| PANEL,FRONT SKIRT | 52910 | 3-E5 |
| PANEL,GLOVE SIDE | 55301 | 3-D7 |
| | | 3-I7 |
| PANEL,GLOVE TRAY | 64163B | 3-G8 |
| PANEL,NOSE | 52810 | 3-E5 |
| PANEL,RAD.SHROUD | 53100 | 3-F5 |
| PANEL,REAR END | 70750 | 3-F6 |
| | | 3-M5 |
| PANEL,ROOF | 74030 | 3-G6 |
| | | 3-N5 |
| PANEL,SKIRT-RR | 70791A | 3-F6 |
| | | 3-M5 |
| PANEL,SWITCH | 55311 | 3-E7 |
| | | 3-I7 |
| | 69150 | 4-N4 |
| PART SET,BRAKE CYL. | 49610 | 2-F9 |
| PART SET,CLUTCH CYL | 41440S | 2-C8 |
| PART SET,REL.CYL | 41320S | 2-C8 |
| PARTS SET | 76619 | 4-J2 |
| PASS,OIL | 17540 | 1-D9 |
| | | 1-F9 |
| PAWL,PARKING | 19732 | 1-H14 |
| PEDAL & ARM | 41610B | 2-E8 |
| PEDAL,BRAKE | 43030 | 2-C9 |
| PEDAL,CLUTCH | 41030 | 2-C9 |
| PELLET,THERMO | 148101 | 1-F8 |
| PICK UP SET | 24314A | 1-J11 |
| PIECE,ASSIST | 113071 | 1-F3 |
| PIECE,DISTANCE | 27171 | 2-C3 |
| PIECE,SIDE | 113021 | 1-F3 |
| PILLAR(L),FRT.-INNER | 71260 | 3-G6 |
| | | 3-N5 |
| PILLAR(L),HINGE | 71210A | 3-G6 |
| | | 3-M5 |
| PILLAR(L),HINGE-OUT | 74120 | 3-H6 |
| | | 3-N5 |
| PILLAR(R),FRT.-INNER | 70260 | 3-E6 |
| | | 3-L5 |
| PILLAR(R),HINGE | 70210A | 3-F6 |
| | | 3-K5 |
| PILLAR(R),HINGE-OUT | 74090 | 3-G6 |
| | | 3-N5 |
| PIN | 19434 | 1-G14 |
| | 33698A | 2-D5 |
| | | 2-F5 |
| | 46035A | 2-H10 |
| | 46683A | 2-D9 |
| | 76518 | 3-I14 |
| | 117031 | 1-D3 |
| | 27262 | 2-D3 |
| PIN & WASHER SET | 13717A | 1-C5 |
| | | 1-H5 |
| | | 1-I4 |
| | | 1-M5 |
| PIN,BRAKE SHOE | 26391 | 2-E2 |
| PIN,BUSH | 17414 | 1-J10 |
| PIN,COTTER | 13717 | 1-C5 |

# ALPHABETICAL INDEX (ENGLISH)


| PART NANE | D-CODE | LOCATION |
|---|---|---|
| PIN,COTTER | 13717 | 1-H5 |
| | | 1-I4 |
| | | 1-M5 |
| PIN,DAMPER | 62621 | 3-D15 |
| PIN,DOWEL | 10203A | 1-G2 |
| | 102031 | 1-G2 |
| | 17352 | 1-C9 |
| | | 1-E9 |
| | 19352 | 1-F13 |
| PIN,DRIVEN GEAR | 146231 | 1-D8 |
| PIN,GUIDE | 33694 | 2-F5 |
| | 46022B | 2-H10 |
| PIN,INTER LOCK | 17351A | 1-E10 |
| | | 1-I10 |
| PIN,KNOCK | 105041 | 1-E2 |
| PIN,LOCK | 68980 | 3-J15 |
| PIN,PIVOT | 16102 | 1-K8 |
| PIN,SPRING | 106091 | 1-I2 |
| PIN,STOPPER | 17463A | 1-K10 |
| | 17464 | 1-L10 |
| PIN,TOP INDICATOR | 10503 | 1-H2 |
| PIN,TUBULAR | 103091 | 1-H2 |
| PIN'B' | 58293 | 3-C13 |
| PINION,DIFFERENTIAL | 27255 | 2-D3 |
| PIPE | 18107 | 1-C11 |
| | 40070 | 2-C7 |
| | 61220 | 3-D14 |
| | 67500 | 4-G2 |
| | 76416B | 3-F14 |
| | 76417C | 3-F14 |
| PIPE(L),BRAKE-FRONT | 45320 | 2-I9 |
| PIPE(L),BRAKE-REAR | 43650A | 2-H9 |
| PIPE(R),BRAKE-FRONT | 45280 | 2-I9 |
| PIPE(R),BRAKE-REAR | 43660A | 2-H9 |
| PIPE,AIR | 137401 | 1-F6 |
| | 13744A | 1-F6 |
| | 40420 | 2-D7 |
| | 40610 | 2-E7 |
| | 40720 | 2-E7 |
| PIPE,AIR INTAKE | 23615 | 1-G4 |
| PIPE,BRAKE-FRONT | 45250 | 2-I9 |
| PIPE,BRAKE-REAR | 45360A | 2-I9 |
| | 45350 | 2-I9 |
| PIPE,CLUTCH | 41370 | 2-C8 |
| PIPE, EVAPORATION | 13670B | 1-F4 |
| PIPE, EVAPORATION | 45711 | 2-F10 |
| PIPE,FILLER | 42210 | 2-F8 |
| PIPE, UEL MAIN | 45111 | 2-E10 |
| | 45112 | 2-E10 |
| PIPE,FUEL RETURN | 45611 | 2-F10 |
| PIPE,OIL | 19920 | 1-D13 |
| | 19930 | 1-D13 |
| PIPE,OIL FILLER | 10410 | 1-E2 |
| PIPE,PEDAL | 43061A | 2-C9 |
| PIPE,VACUUM | 13650 | 1-C7 |
| | | 1-F7 |
| | | 1-I6 |
| | | 1-L6 |
| | 19910 | 1-D13 |
| | 23509 | 1-L5 |

| PART NANE | D-CODE | LOCATION |
|---|---|---|
| | 43830 | 2-E9 |
| | 43850 | 2-F9 |
| | 23509 | 1-E6 |
| | | 1-G5 |
| | | 1-M4 |
| PIPE,VINYLE | 74030J | 3-G6 |
| PISTON | 33651 | 2-D5 |
| | | 2-F5 |
| PISTON SET | 34701S | 2-I5 |
| PISTON,BAND SERVO | 19381 | 1-F13 |
| PISTON,CLUTCH | 19480 | 1-K13 |
| PISTON,LOW & REVERSE | 19601 | 1-D14 |
| PLATE | 115011 | 1-C3 |
| | 40170 | 2-C7 |
| | 43090 | 2-D9 |
| | 50322B | 3-F3 |
| | 76421A | 3-H14 |
| | 76434B | 3-G14 |
| PLATE LOCK | 62883 | 3-L15 |
| PLATE MODEL | 69011 | 4-G5 |
| PLATE(L),BRAKE BACK | 26280 | 2-E2 |
| PLATE(L),CLOSING | 54270A | 3-H5 |
| PLATE(L),FRONT SCUFF | 68721 | 4-C4 |
| PLATE(L),GLASS | 63970A | 3-G15 |
| PLATE(L),SEAL | 56366 | 3-I5 |
| PLATE(L),SET | 68057B | 4-D3 |
| PLATE(L)ABSORBER | 50042A | 3-E3 |
| PLATE(R),ABSORBER | 50042A | 3-E3 |
| PLATE(R),BRAKE BACK | 26280 | 2-E2 |
| PLATE(R),CLOSING | 53270A | 3-F5 |
| PLATE(R),FRONT SCUFF | 68711 | 4-N3 |
| PLATE(R),GLASS | 63960A | 3-G15 |
| PLATE(R),SEAL | 56365 | 3-I5 |
| PLATE(R),SET | 68056B | 4-D3 |
| PLATE(RR.,L),CLOSING | 54222 | 3-H5 |
| PLATE(RR.,R),CLOSING | 53222 | 3-F5 |
| PLATE,ABSORBER | 133801 | 1-D4 |
| PLATE,ADJUST | 34013 | 2-H5 |
| PLATE,CATCH LOWER | 68961 | 3-J15 |
| PLATE,CATCH UPPER | 68962A | 3-J15 |
| PLATE,CAUTION | 69021A | 4-G5 |
| PLATE,COMB.NAME | 60311 | 3-F7 |
| | | 3-J7 |
| PLATE,COVER | 17473 | 1-G10 |
| | | 1-L10 |
| PLATE,DISHED | 19498 | 1-K13 |
| | 19608 | 1-E14 |
| PLATE,DRIVE | 19020 | 1-C13 |
| | 19500 | 1-K13 |
| | 19610 | 1-E14 |
| PLATE,DRIVEN | 19499 | 1-K13 |
| | 19609 | 1-E14 |
| PLATE,DUST SEAL | 15118' | 1-G8 |
| PLATE,END | 87925 | 4-K2 |
| PLATE,EXTRACTOR | 519023 | 3-H3 |
| PLATE,HEATER UNIT | 76511 | 3-G14 |
| PLATE,HUB/DISK | 33251B | 2-C5 |
| | | 2-E5 |
| PLATE,JUNCTION | 50321C | 3-F3 |
| PLATE,LOCK | 17354 | 1-C9 |

| PART NANE | D-CODE | LOCATION |
|---|---|---|
| | | 1-E9 |
| | 19354 | 1-F13 |
| | 27302 | 2-E3 |
| | 42376 | 2-G8 |
| PLATE,MANUAL | 19440 | 1-G14 |
| PLATE,MAT SET | 68696 | 4-J4 |
| PLATE,MIDDLE | 141181 | 1-C8 |
| PLATE,PRINT | 55442A | 3-L7 |
| PLATE,RETAINER | 19667 | 1-F14 |
| PLATE,RETAINING | 19503 | 1-L13 |
| | 19613 | 1-E14 |
| | 19702 | 1-G14 |
| | 19515 | 1-M13 |
| PLATE,SET-FENDER | 52151 | 3-E5 |
| PLATE,STABILIZER | 34155 | 2-K5 |
| PLATE,T/CEILING-FRT | 68051 | 4-D3 |
| PLATE,THRUST | 115041 | 1-D3 |
| PLATE,UPPER | 64340 | 3-G9 |
| | | 3-N8 |
| | | 3-G9 |
| PLATE,WATER BAFFLE | 15125 | 1-G8 |
| PLUG | 142741 | 1-I2 |
| | 235411 | 1-L5 |
| | | 1-M4 |
| | 56242F | 3-C14 |
| PLUG SET | 23354 | 1-D5 |
| | | 1-I5 |
| | | 1-J4 |
| | | 1-N5 |
| PLUG,BLIND | 10205A | 1-G2 |
| | 102061 | 1-G2 |
| | 102071 | 1-G2 |
| | 114051 | 1-C3 |
| | 23657 | 1-E6 |
| | | 1-G5 |
| | | 1-L5 |
| | | 1-M4 |
| | 16241 | 1-K8 |
| PLUG,CAP | 17442A | 1-G10 |
| | | 1-K10 |
| PLUG,CHECK BALL | 23338 | 1-D5 |
| | | 1-I5 |
| | | 1-J4 |
| | | 1-N5 |
| PLUG,DRAIN | 10404 | 1-H2 |
| | 56241 | 3-L6 |
| | 56241E | 3-C12 |
| | 56241F | 3-L16 |
| | 56241I | 3-C14 |
| | 56242 | 3-L6 |
| | 56615 | 3-N6 |
| | 53134 | 3-C14 |
| PLUG,HOLE | 61031 | 3-C14 |
| PLUG,HOLE | 58868D | 3-N6 |
| PLUG,MAGNET DRAIN | 17121 | 1-C9 |
| | | 1-E9 |
| | 26051 | 2-D2 |
| PLUG,OIL JET | 114111 | 1-C3 |
| PLUG,OIL LEVEL | 26041 | 2-D2 |
| PLUG,SERVICE COVER | 58868C | 2-E7 |

# ALPHABETICAL INDEX (ENGLISH)


| PART NAME | D-CODE | LOCATION |
|---|---|---|
| PLUG,SPARK | 18110 | 1-C11 |
| PLUG,SQUARE HEAD | 19331 | 1-F13 |
| PLUG,SUPPORT | 33695 | 2-D5 |
| PLUNGER,CONTROL | 142751 | 1-I2 |
| POLE,ANTENNA | 66941 | 3-H16 |
| | | 3-J16 |
| PROTECTER,FRT.BUMPER | 50180 | 3-C3 |
| PROTECTOR | 14716 | 1-J2 |
| | 34152 | 2-K5 |
| | 41692B | 4-G2 |
| | 51051B | 3-I16 |
| | 51403 | 3-C4 |
| | 60721 | 3-F7 |
| | | 3-K7 |
| | 61216 | 3-D14 |
| | 67032A | 3-M16 |
| PROTECTOR NO.1 | 40810 | 2-E7 |
| PROTECTOR,BRAKE PIPE | 43605 | 2-H9 |
| | 43609A | 2-H9 |
| PROTECTOR,CORD | 51516 | 3-D4 |
| PROTECTOR,COWL GRILL | 50781 | 3-J4 |
| PROTECTOR,D.TOP | 62815A | 3-I15 |
| | | 3-K15 |
| PROTECTOR,FUEL PUMP | 45151 | 2-E10 |
| PROTECTOR,FUEL TANK | 56970 | 3-N6 |
| PROTECTOR,OIL HOSE | 147161 | 1-F8 |
| PROTECTOR,PIPE | 45715 | 2-F10 |
| PROTECTOR,RR. BUMPER | 50380A | 3-F3 |
| PROTECTOR,SPRING | 43082 | 2-D9 |
| PROTECTOR'A',SIDE | 50692C | 3-I3 |
| PROTECTOR'B'(L),SIDE | 50686D | 3-I3 |
| PROTECTOR'B'(R),SIDE | 50681D | 3-I3 |
| PROTECTOR'C'(L),SIDE | 50682B | 3-I3 |
| PROTECTOR'C'(R),SIDE | 50682A | 3-I3 |
| PROTECTOR'D'(L),SIDE | 50688D | 3-I3 |
| PROTECTOR'D'(R),SIDE | 50683D | 3-I3 |
| PROTECTOR'E',SIDE | 50684C | 3-I3 |
| PULLEY | 11371 | 1-C3 |
| | 24530 | 1-L11 |
| | | 1-N11 |
| | 15131 | 1-H8 |
| PULLEY,AIR PUMP | 237131 | 1-G6 |
| PUMP KIT | 87993 | 4-G2 |
| PUMP SET,ACCEL | 23360B | 1-D5 |
| | | 1-I5 |
| | | 1-J4 |
| | | 1-N5 |
| PUMP,AIR | 13810 | 1-G6 |
| PUMP,FUEL | 13350 | 1-E4 |
| PUMP,METERING OIL | 146001 | 1-D8 |
| PUMP,OIL | 14100 | 1-C8 |
| | 19220 | 1-C13 |
| PUMP,WATER | 15010 | 1-G8 |
| ** R ** | | |
| RACE,BEARING | 19639 | 1-N13 |
| RACE,BRG.PUMP COVER | 19631 | 1-N13 |
| RACE,BRG.RR.CLUTCH | 19638 | 1-N13 |
| RACE,INNER | 17275 | 1-H9 |

| PART NAME | D-CODE | LOCATION |
|---|---|---|
| | | 1-L9 |
| | 17275B | 1-H9 |
| | | 1-L9 |
| | 19336 | 1-F13 |
| RACE,OUTER | 19593 | 1-D14 |
| RACE,SHELL BEARING | 19566 | 1-M13 |
| RADIATOR | 15200 | 1-I8 |
| RADIO,AUTO | 66860 | 3-G16 |
| | | 3-I16 |
| RAIL(L),RAIN | 71311 | 3-G6 |
| | | 3-N5 |
| RAIL(L),ROOF-INNER | 71050 | 3-F6 |
| | | 3-M5 |
| RAIL(L),ROOF-OUTER | 71250 | 3-G6 |
| | | 3-N5 |
| RAIL(R),RAIN | 70311 | 3-E6 |
| | | 3-L5 |
| RAIL(R),ROOF-INNER | 70050 | 3-D6 |
| | | 3-K5 |
| RAIL(R),ROOF-OUTER | 70250 | 3-E6 |
| | | 3-L5 |
| RATCHET | 44044 | 2-C10 |
| REACTOR,THERMAL | 20800 | 1-D4 |
| RECTIFIER | 24510 | 1-L11 |
| | | 1-N11 |
| | 67242 | 4-F2 |
| REGULATOR | 18391 | 1-F11 |
| | 24520 | 1-N11 |
| | 55482 | 3-N7 |
| REGULATOR(L),WINDOW | 58560 | 3-F13 |
| REGULATOR(R),WINDOW | 58560 | 3-F13 |
| REGULATOR,PRESSURE | 142501 | 1-C8 |
| REINF.(L),HINGE | 63876 | 3-L15 |
| REINF.(L),WHL. APRON | 54285 | 3-H5 |
| REINF.(R),HINGE | 62876 | 3-K15 |
| REINF.(R),WHL. APRON | 53285 | 3-G5 |
| REINFORCEMENT,BUMPER | 50230 | 3-E3 |
| RELAY | 51939 | 3-E4 |
| RELAY,CHOKE & CHECK | 67740C | 3-E16 |
| RELAY,EMISSION | 67740A | 3-E16 |
| RELAY,IGNITION | 67880A | 3-F16 |
| RELAY,POW.WINDOW | 67620C | 3-E16 |
| RELAY,RR.DEFOGGER | 67620 | 3-E16 |
| RELAY,SHORT | 67880E | 3-F16 |
| RELAY,WIPER INTMT | 67820 | 3-E16 |
| RELAY,3 POINT | 67800 | 3-E16 |
| RELEASE,REMO.CON.H.B | 62350 | 3-D15 |
| REPAIR KIT | 49720 | 2-G9 |
| | 23410A | 1-C6 |
| | | 1-E5 |
| | | 1-J5 |
| | | 1-K4 |
| RESISTOR | 18101 | 1-C11 |
| | 18102 | 1-C11 |
| | 55610 | 3-E7 |
| | | 3-I7 |
| | 76433 | 3-J14 |
| REST(L),ARM | 69371 | 3-M12 |
| REST(R),ARM | 69371 | 3-L12 |
| REST,FOOT | 43041 | 2-C9 |

| PART NAME | D-CODE | LOCATION |
|---|---|---|
| RETAINER | 28776 | 2-G3 |
| | 34137 | 2-K5 |
| | 34776 | 2-I5 |
| | 34776C | 2-L5 |
| | 19704 | 1-H14 |
| RETAINER,ROD | 41640 | 2-E8 |
| RETAINER,SERVO | 19391 | 1-G13 |
| RETAINER,SPRING | 19487 | 1-K13 |
| RETAINER,STAB | 28776A | 2-G3 |
| RING | 19676 | 1-F14 |
| RING SET,'O' | 230401 | 1-C2 |
| RING,'O' | 101731 | 1-D2 |
| | 101741 | 1-G2 |
| | 11400J | 1-C3 |
| | 13100J | 1-C4 |
| | 17442J | 1-D9 |
| | | 1-F9 |
| | 18201 | 1-E11 |
| | 19395 | 1-G13 |
| | 19396 | 1-G13 |
| | 19432 | 1-G14 |
| | 19442J | 1-H13 |
| | 19446 | 1-G14 |
| | 19870J | 1-I13 |
| | 238371 | 1-E8 |
| | 34731 | 2-I5 |
| | 14300J | 1-C8 |
| | 105551 | 1-E2 |
| RING,'O'-INNER | 113411 | 1-F3 |
| RING,'O'-OUTER | 113431 | 1-F3 |
| RING,BOOT | 33685 | 2-D5 |
| | | 2-F5 |
| RING,ILLUMINATION | 66251 | 3-F7 |
| | | 3-K7 |
| RING,PISTON | 34719 | 2-I5 |
| RING,RETAINING | 17415 | 1-J10 |
| | 17613 | 1-C10 |
| | 17626A | 1-C10 |
| | 66024 | 3-F4 |
| RING,SEAL | 19256 | 1-D13 |
| | 19257 | 1-D13 |
| | 19655 | 1-E14 |
| RING,SNAP | 141131 | 1-C8 |
| | 15114 | 1-G8 |
| | 17225 | 1-G9 |
| | | 1-K9 |
| | 17305 | 1-M9 |
| | 17435 | 1-G10 |
| | | 1-K10 |
| | 19449 | 1-G14 |
| | 19488 | 1-K13 |
| | 19509 | 1-L13 |
| | 19594 | 1-D14 |
| | 19596 | 1-D14 |
| | 19598 | 1-M13 |
| | 19607 | 1-E14 |
| | 19619 | 1-E14 |
| | 25071 | 2-C2 |
| | 76414 | 3-H14 |
| | 17305 | 1-I9 |

# ALPHABETICAL INDEX (ENGLISH)


| PART NAME | D-CODE | LOCATION |
|---|---|---|
| RING,SNAP | 19567 | 1-M13 |
| | 19534 | 1-M13 |
| RING,SQUARE | 101711 | 1-D2 |
| RING,SQUARE-OUTER | 10172A | 1-D2 |
| RING,STOP | 32059 | 2-F4 |
| RING,SYNCHRONIZER | 17245 | 1-K9 |
| | 17325A | 1-N9 |
| | 17245 | 1-G9 |
| RING,THRUST SPRING | 19605 | 1-E14 |
| RING,WHEEL | 37180 | 2-C6 |
| RIVET | 44053B | 2-C10 |
| ROD | 41341 | 2-C8 |
| | 46021 | 2-H10 |
| | 46571 | 2-J10 |
| ROD & LINK SET | 23480 | 1-D6 |
| | | 1-F5 |
| | | 1-L5 |
| | | 1-M4 |
| ROD,CONNECTING | 146511 | 1-D8 |
| ROD,DIAPHRAGM | 19825 | 1-I13 |
| ROD,MOTOR | 51933 | 3-E4 |
| ROD,PARKING | 19450 | 1-G14 |
| ROD,PUSH | 41131 | 2-C9 |
| ROD,RELEASE | 44032 | 2-C10 |
| ROD,SHIFT | 17431 | 1-F10 |
| | | 1-K10 |
| ROD,SHIFT(1ST&2ND) | 17410 | 1-E10 |
| | | 1-I10 |
| ROD,SHIFT(3RD&4TH) | 17420 | 1-F10 |
| | | 1-J10 |
| ROD,TENSION | 34131 | 2-K5 |
| ROD,TIE | 32365 | 2-H4 |
| ROD'A' | 51934 | 3-E4 |
| ROD'B' | 51936 | 3-E4 |
| ROTOR | 24312 | 1-H11 |
| | | 1-J11 |
| | 24540 | 1-L11 |
| | | 1-N11 |
| | 87923 | 4-K2 |
| ROTOR SET,OIL PUMP | 238821 | 1-E8 |
| ROTOR SET,SIGNAL | 24316A | 1-J11 |
| ROTOR,FRONT | 231021 | 1-G3 |
| ROTOR,REAR | 231121 | 1-G3 |
| RUBBER(L),ENGINE MT | 39050 | 2-G6 |
| RUBBER(L),SEAL | 56791B | 3-I5 |
| RUBBER(R),ENGINE MT | 39040 | 2-G6 |
| RUBBER(R),SEAL | 56791B | 3-I5 |
| RUBBER,CUSHION | 42459A | 3-J4 |
| | 52397 | 3-C5 |
| | 52451A | 3-F4 |
| | 53771 | 3-C5 |
| | 62665B | 3-F8 |
| | | 3-J8 |
| RUBBER,INSULATION | 13363 | 1-E4 |
| | 15312 | 1-I8 |
| | 15312A | 3-I16 |
| | 153121 | 1-I8 |
| RUBBER,JOINT | 40560 | 2-D7 |
| RUBBER,LISTING WIRE | 69316 | 4-I3 |
| RUBBER,MOUNTING | 50091B | 3-E3 |
| | 50091 | 3-C3 |
| RUBBER,SEAL | 46083 | 2-I10 |
| | 66971A | 3-N6 |
| | 42242 | 2-F8 |
| RUBBER,SEAMING | 60731 | 3-E8 |
| | | 3-J8 |
| RUBBER,SET | 37192A | 2-C6 |
| RUBBER,STOP | 40108 | 2-C7 |
| | 41682 | 2-E8 |
| | 53074 | 3-F15 |
| RUBBER,STOPPER | 43029 | 2-C9 |
| | 55195A | 3-D8 |
| | | 3-H8 |
| RUBBER,T/MISSION MT | 39340 | 2-G6 |
| ** S ** | | |
| SCREW | 24705 | 1-F12 |
| | 44187 | 2-D10 |
| | 50950C | 3-J4 |
| | 62980 | 3-L15 |
| | 66865 | 3-G16 |
| | | 3-J16 |
| | 75436 | 3-C8 |
| | 76761 | 3-L14 |
| | 87105 | 4-J2 |
| | 87107 | 4-J2 |
| | 87120 | 4-J2 |
| | 87926 | 4-K2 |
| SCREW SET | 17313A | 1-E10 |
| | 23371 | 1-D5 |
| | | 1-I5 |
| | | 1-K4 |
| | | 1-N5 |
| | 234641 | 1-K5 |
| | 24360 | 1-I11 |
| | | 1-K11 |
| | 24526 | 1-L11 |
| | | 1-N11 |
| | 24534 | 1-L11 |
| | 24535 | 1-L11 |
| | | 1-N11 |
| | 24725 | 1-D12 |
| | | 1-F12 |
| | 17313A | 1-I10 |
| SCREW SET,ADJUST | 234701 | 1-D6 |
| | | 1-F5 |
| | | 1-K5 |
| | | 1-L4 |
| SCREW SET,IDLE ADJ. | 23374 | 1-C6 |
| | | 1-E5 |
| | | 1-J5 |
| | | 1-K4 |
| SCREW SET,TH. ADJUST | 23440 | 1-D6 |
| | | 1-F5 |
| | | 1-K5 |
| | | 1-L4 |
| SCREW,ADJUST | 238451 | 1-E8 |
| | 27301A | 2-E3 |
| | 87016 | 3-F4 |
| SCREW,BLEEDER | 33691 | 2-D5 |
| | | 2-F5 |
| | 33691A | 2-F2 |
| | 33691B | 2-C8 |
| SCREW,FRONT CONSOLE | 64903A | 3-E9 |
| | | 3-J9 |
| SCREW,GARNISH | 60702 | 3-E8 |
| | | 3-I8 |
| SCREW,KNUCKLE | 57109 | 3-C10 |
| SCREW,MIRROR | 69112B | 4-M4 |
| SCREW,RUBBER | 43608A | 2-H9 |
| SCREW,STOPPER | 51411 | 3-D4 |
| SEAL KIT | 32180A | 2-F4 |
| | 49240C | 2-D5 |
| | | 2-G5 |
| SEAL SET | 34730S | 2-I5 |
| SEAL SET,DAMPER | 34760S | 2-I5 |
| SEAL SET,OIL | 231801 | 1-G3 |
| SEAL,'O'RING | 19475 | 1-K13 |
| | 19604 | 1-D14 |
| | 19822 | 1-I13 |
| SEAL,AIR | 153311 | 1-I8 |
| | 15332 | 1-I8 |
| SEAL,APEX | 113011 | 1-F3 |
| SEAL,CORNER | 113211 | 1-F3 |
| SEAL,CUT RING | 19258 | 1-D13 |
| SEAL,DUST | 19036 | 1-G14 |
| | 32279 | 2-H4 |
| | 32279A | 2-H4 |
| | 34565 | 2-I5 |
| SEAL,DUST-PITMAN | 32278B | 2-G4 |
| SEAL,LEATHER CUT | 19394 | 1-G13 |
| | 19476 | 1-K13 |
| SEAL,OIL | 105561 | 1-E2 |
| | 114041 | 1-C3 |
| | 16103 | 1-K8 |
| | 17335 | 1-C9 |
| | | 1-E9 |
| | 17442K | 1-D9 |
| | | 1-F9 |
| | 18216 | 1-H11 |
| | | 1-J11 |
| | 19223A | 1-C13 |
| | 19442K | 1-H13 |
| | 26154 | 2-D2 |
| | 27018 | 2-C3 |
| | 33065 | 2-C5 |
| | | 2-E5 |
| | 34760 | 2-I5 |
| | 105561 | 1-F2 |
| | 10507 | 1-H2 |
| | 19335 | 1-F13 |
| SEAL,PISTON | 19385 | 1-G13 |
| | 19603 | 1-D14 |
| | 19384 | 1-G13 |
| SEAL,SIDE | 23151A | 1-G3 |
| SEAL,WATER | 15120 | 1-G8 |
| SEALER | 68175 | 4-F3 |
| SEALER,LOWER | 68174 | 4-F3 |
| SEALER,UPPER | 68173 | 4-E3 |

# ALPHABETICAL INDEX (ENGLISH)


| PART NAME | D-CODE | LOCATION |
|---|---|---|
| SEAT | 34383A | 2-I5 |
| | 42331 | 2-G8 |
| | 42413 | 2-G8 |
| SEAT-TUBE | 43922 | 2-F9 |
| SEAT,BOOT | 68832 | 3-E9 |
| | | 3-J9 |
| SEAT,RUBBER | 28013A | 2-F3 |
| | 53751B | 1-D7 |
| | | 1-G7 |
| | | 1-J6 |
| | | 1-M6 |
| SEAT,SPRING | 17462 | 1-G10 |
| | | 1-K10 |
| SEAT,SPRING-UPPER | 34340 | 2-H5 |
| SEAT,TUBE | 26922 | 2-F2 |
| SECTOR | 44051 | 2-C10 |
| SENSOR, OIL LEVEL | 107301 | 1-I2 |
| SENSOR,WATER LEVEL | 15610 | 1-J8 |
| SET PLATE,CENTER | 55217 | 3-C7 |
| | | 3-H7 |
| SET PLATE,GLOVE LID | 64050 | 3-G8 |
| | | 3-K8 |
| SET-CUP | 32984 | 2-E4 |
| SET-HORN | 32750A | 2-C4 |
| SET-SCREW | 32740A | 2-C4 |
| SHAFT | 19670 | 1-F14 |
| | 76467 | 3-K14 |
| | 76513E | 3-G14 |
| SHAFT,DIFF. PINION | 27261 | 2-D3 |
| SHAFT,DRIVEN GEAR | 146201 | 1-D8 |
| SHAFT,ECCENTRIC | 114001 | 1-C3 |
| SHAFT,INPUT | 19678 | 1-D13 |
| SHAFT,MAIN | 17221 | 1-G9 |
| | | 1-K9 |
| SHAFT,MANUAL | 19431 | 1-G14 |
| SHAFT,OIL PUMP | 141121 | 1-C8 |
| SHAFT,PARKING PAWL | 19731 | 1-H14 |
| SHAFT,PROPELLER | 25100A | 2-C2 |
| SHAFT,REAR AXLE | 26111A | 2-D2 |
| SHAFT,REV. IDLE GEAR | 17315 | 1-J9 |
| | | 1-N9 |
| SHAFT,SECTOR | 32141 | 2-F4 |
| SHEET'A',SIDE WINDOW | 70526B | 3-H15 |
| SHELL,CONNECTING | 19565 | 1-M13 |
| SHIELD(L),SPLASH | 56141 | 3-H5 |
| SHIELD(R),SPLASH | 56131 | 3-H5 |
| SHIELD,HEAT | 60715 | 3-F7 |
| | | 3-J7 |
| SHIELD,SPLASH | 56191 | 3-I5 |
| SHIM | 18375 | 1-F11 |
| | 33626A | 2-C5 |
| | | 2-F5 |
| SHIM KIT,ADJUST | 32140A | 2-F4 |
| SHIM,ADJUST | 146521 | 1-D8 |
| | 17207 | 1-G9 |
| | | 1-K9 |
| | 17287 | 1-M9 |
| | 17287J | 1-I9 |
| | | 1-M9 |
| | 17327 | 1-N9 |
| | 182761 | 1-D8 |
| | 32188 | 2-G4 |
| | 17287 | 1-L9 |
| | 17327 | 1-J9 |
| | 17474J | 1-H10 |
| | | 1-L10 |
| SHIM,HINGE'B'-R.TOP | 62872 | 3-I15 |
| SHIM,TILTING HINGE | 51405A | 3-C4 |
| SHIM'A'(L),HINGE | 63231A | 3-E15 |
| SHIM'A'(R),HINGE | 62231A | 3-C15 |
| SHIM'A',DAMPER | 62636 | 3-D15 |
| SHIM'A',STRIKER | 62366 | 3-D15 |
| SHIM'B',DAMPER | 62637 | 3-D15 |
| SHIM'B',HINGE | 62232 | 3-C15 |
| SHIM'B',STRIKER | 62367 | 3-D15 |
| SHIM'C'(L),HINGE | 63241A | 3-E15 |
| SHIM'C'(R),HINGE | 62241A | 3-C15 |
| SHIM'D',HINGE | 62233 | 3-C15 |
| SHOE,BRAKE | 26310 | 2-E2 |
| SHUTTER | 76426 | 3-J14 |
| SHUTTER NO.1 | 76402 | 3-E14 |
| SHUTTER NO.2 | 76403 | 3-E14 |
| SHUTTER NO.3 | 76404 | 3-E14 |
| SILENCER,FLOOR | 76071 | 4-K4 |
| SILENCER,MAIN | 40500 | 2-D7 |
| SLEEVE | 19455 | 1-G14 |
| SLEEVE,BEARING | 24715 | 1-D12 |
| | | 1-F12 |
| | 24741 | 1-D12 |
| | | 1-F12 |
| SLEEVE,CLUTCH | 17622 | 1-C10 |
| | | 1-J9 |
| SLEEVE,CLUTCH HUB | 17262 | 1-H9 |
| | | 1-L9 |
| SLEEVE,SPEEDO GEAR | 19442 | 1-H13 |
| SLEEVE,SPEEDOMETER | 17442 | 1-D9 |
| | | 1-F9 |
| SOCKET | 55261 | 3-L7 |
| | 55261A | 3-L7 |
| SOLENOID | 23327 | 1-D5 |
| | | 1-I5 |
| | | 1-J4 |
| | | 1-N5 |
| SOLENOID,DOWN SHIFT | 19821 | 1-H13 |
| SPACER | 115021 | 1-D3 |
| | 15103 | 1-G8 |
| | 27401 | 2-E3 |
| | 34135A | 2-K5 |
| | 34158 | 2-K5 |
| | 40813 | 2-E7 |
| | 43063 | 2-C9 |
| | 46084A | 2-I10 |
| | 63909 | 3-F15 |
| | 67302 | 4-H2 |
| | 68861B | 3-G15 |
| | 76513C | 3-I14 |
| | 17304 | 1-M9 |
| SPACER,ADJUST | 17316B | 1-E10 |
| | | 1-I10 |
| SPACER,BEARING | 26155 | 2-D2 |
| SPACER,DOWEL | 19734 | 1-H14 |
| SPACER,HINGE-LOWER | 58245 | 3-C13 |
| SPACER,HINGE-UPPER | 58215 | 3-C13 |
| SPACER,OIL PIPE | 13331B | 1-C13 |
| SPACER,PULLEY | 152111 | 1-I8 |
| SPACER,SPEAKER | 66985C | 3-H16 |
| | | 3-K16 |
| SPACER'A' | 70447A | 3-H15 |
| SPEAKER,LOUD-FRONT | 66960 | 3-H16 |
| | | 3-J16 |
| SPEAKER,LOUD-REAR | 66970 | 3-H16 |
| | | 3-K16 |
| SPACER, STAB | 28157 | 2-F3 |
| SPEEDOMETER | 55471 | 3-M7 |
| SPOILER,FRONT | 50881 | 3-E5 |
| SPRING | 13087 | 1-H4 |
| | 142731 | 1-I2 |
| | 17411 | 1-F10 |
| | | 1-J10 |
| | 17411A | 1-F10 |
| | | 1-J10 |
| | 17416 | 1-J10 |
| | 19664 | 1-F14 |
| | 23446B | 1-D6 |
| | | 1-F5 |
| | | 1-K5 |
| | | 1-L4 |
| | 33696 | 2-D5 |
| | 46038 | 2-H10 |
| | 46062 | 2-H10 |
| | 76135A | 3-E14 |
| | 76151A | 3-J14 |
| | 76428A | 3-F14 |
| | 76510 | 3-I14 |
| | 44031 | 2-C10 |
| | 114121 | 1-C3 |
| SPRING SET | 24308 | 1-H11 |
| | | 1-J11 |
| | 24754 | 1-E12 |
| | | 1-G12 |
| SPRING SET,RETURN | 23320 | 1-C5 |
| | | 1-H5 |
| | | 1-J4 |
| | | 1-M5 |
| SPRING(L),COIL | 34011B | 2-H5 |
| SPRING(R),COIL | 34011B | 2-H5 |
| SPRING,ADJUST | 66016 | 3-F4 |
| SPRING,ADJUST SCREW | 23446A | 1-D6 |
| | | 1-F5 |
| | | 1-K5 |
| | | 1-L4 |
| SPRING,APEX SEAL | 113041 | 1-F3 |
| SPRING,BALL PARK | 19703 | 1-H14 |
| SPRING,BOOTS PANEL | 55216A | 3-F9 |
| | | 3-L8 |
| SPRING,BRAKE SHOE | 26345 | 2-E2 |
| SPRING,CENTER PANEL | 55216B | 3-H7 |
| SPRING,CHECK | 58292 | 3-C13 |
| SPRING,COIL | 28010A | 2-F3 |
| SPRING,CONTROL LEVER | 76432 | 3-J14 |

# ALPHABETICAL INDEX (ENGLISH)


| PART NAME | D-CODE | LOCATION |
|---|---|---|
| SPRING,CORNER SEAL | 113231 | 1-F3 |
| SPRING,FRT.-INNER | 113511 | 1-F3 |
| SPRING,FRT.-OUTER | 113531 | 1-F3 |
| SPRING.GOVERNOR | 19666 | 1-F14 |
| SPRING.RANGE | 64466 | 3-D9 |
| | | 3-I9 |
| SPRING,LID-LAMP | 51401B | 3-C4 |
| SPRING,METER HOOD | 55412A | 3-L7 |
| SPRING,PAD | 33636A | 2-C5 |
| | | 2-F5 |
| SPRING,PAWL RETURN | 19733 | 1-H14 |
| SPRING,PELLET | 148211 | 1-F8 |
| SPRING,PISTON | 19606 | 1-E14 |
| SPRING,PISTON RETURN | 19363 | 1-F13 |
| | 19486 | 1-K13 |
| SPRING,REAR-INNER | 113611 | 1-E3 |
| SPRING,REAR-OUTER | 113631 | 1-G3 |
| SPRING,RETURN | 234551 | 1-F5 |
| | 41081A | 2-C9 |
| | 41619 | 2-E8 |
| | 44352 | 2-D10 |
| | 52863 | 3-C5 |
| | 88107 | 3-C10 |
| | 52672 | 3-C5 |
| | 234551 | 1-D6 |
| | | 1-K5 |
| | | 1-L4 |
| SPRING,RETURN-BRAKE | 43081A | 2-D9 |
| SPRING,RETURN-LOWER | 26342 | 2-E2 |
| SPRING,RETURN-UPPER | 26341 | 2-E2 |
| SPRING,SET | 37193 | 2-C6 |
| SPRING,SIDE SEAL | 113171 | 1-F3 |
| SPRING,SYNC.KEY | 17324 | 1-J9 |
| | | 1-N9 |
| SPRING,SYNCHRO. KEY | 17244 | 1-K9 |
| STABILIZER | 28101 | 2-F3 |
| | 34151 | 2-K5 |
| STARTER | 18400 | 1-D12 |
| | | 1-F12 |
| STATOR | 24501 | 1-L11 |
| | | 1-N11 |
| STAY,BONNET | 52510 | 3-C5 |
| STAY,DAMPER | 62610 | 3-D15 |
| STAY,GLOVE TRAY | 64162B | 3-G8 |
| | | 3-K8 |
| STEM,PISTON | 19386 | 1-G13 |
| STOPPER | 41681 | 2-E8 |
| | 64043 | 3-G8 |
| | | 3-K8 |
| STOPPER SET | 24712 | 1-D12 |
| | | 1-F12 |
| STOPPER,BUMP | 28320B | 2-G3 |
| STOPPER,CONSOLE LID | 64481A | 3-D9 |
| | | 3-I9 |
| STOPPER,FILLER LID | 42408 | 2-G8 |
| STOPPER,RUBBER | 69232 | 4-D5 |
| STOPPER,STEERING | 34159A | 2-H5 |
| STRAINER | 23304 | 1-C5 |
| | | 1-H5 |
| | | 1-I4 |
| | | 1-M5 |
| STRAINER,OIL | 14240 | 1-C8 |
| | 19815 | 1-H13 |
| STRAP,AIR PUMP | 137141 | 1-F6 |
| STRAP,ALTERNATOR | 18361 | 1-E11 |
| STRAP,CARGOROOM | 69560 | 4-E5 |
| STRAP'A',CARGOROOM | 69570A | 4-F5 |
| STRAP'B',CARGOROOM | 69580 | 4-F5 |
| STRIKER | 58570A | 3-F13 |
| | 64101 | 3-G8 |
| | | 3-K8 |
| STRIKER,LOCK | 62361 | 3-D15 |
| STRUT(L),OPERATING | 26821 | 2-F2 |
| STRUT(R),OPERATING | 26821 | 2-F2 |
| STRUT,BAND | 19361 | 1-F13 |
| STUD | 102081 | 1-G2 |
| | 40398 | 2-D7 |
| | 39382 | 2-H6 |
| STUD,COVER | 151041 | 1-G8 |
| STUD,REACTOR | 10105A | 1-D2 |
| STUD,THERMAL REACTOR | 138761 | 1-D4 |
| SUN VISOR(L) | 69240 | 4-E5 |
| SUN VISOR(R) | 69210 | 4-D5 |
| SUPPORT(L),MOUNTING | 33280B | 2-F5 |
| SUPPORT(R),MOUNTING | 33280B | 2-F5 |
| SUPPORT,AIR CLEANER | 13340 | 1-G4 |
| SUPPORT,ARM | 24314 | 1-H11 |
| SUPPORT,MOUNTING | 33280A | 2-C5 |
| SUPPORTER | 18111 | 1-D11 |
| | 18111H | 1-D11 |
| | 18114 | 1-D11 |
| | 40660 | 2-E7 |
| SUPPORTER,ACTUATOR | 19701 | 1-G14 |
| SW.,WIPER & WASHER | 66121A | 3-F7 |
| | | 3-K7 |
| SWITCH | 18970 | 1-G11 |
| | 24760 | 1-E12 |
| | | 1-C12 |
| | 60690 | 3-I8 |
| | 76447 | 3-H14 |
| | 17630 | 1-H10 |
| | | 1-M10 |
| | 60690 | 3-D8 |
| SWITCH SET,IDLE | 234501 | 1-D6 |
| | | 1-F5 |
| | | 1-K5 |
| | | 1-L4 |
| SWITCH,A.L.C | 20770A | 1-G11 |
| SWITCH,BACK UP LAMP | 17640 | 1-H10 |
| | | 1-M10 |
| SWITCH,COMBINATION | 66110 | 3-F7 |
| | | 3-K7 |
| SWITCH,DIMMER | 66122 | 3-F7 |
| | | 3-K7 |
| SWITCH,DOOR | 66820 | 3-D16 |
| SWITCH,IGNITION | 66155 | 3-C2 |
| SWITCH,INHIBITOR | 19444 | 1-G14 |
| SWITCH,KICK DOWN | 18660 | 3-C16 |
| SWITCH,LIGHT | 60470 | 3-F7 |
| | | 3-J7 |
| SWITCH,MIRROR | 69140 | 4-N4 |
| SWITCH,MOTOR ANTENNA | 66800 | 3-G7 |
| | | 3-K7 |
| SWITCH,PARKING LAMP | 66840 | 3-D16 |
| SWITCH,REMO.CON.SW. | 66630B | 3-E15 |
| SWITCH,RETRACTOR | 66670 | 3-G7 |
| | | 3-K7 |
| SWITCH,ROOM LAMP | 60690C | 3-C15 |
| SWITCH,RR.DEF | 66460 | 3-G7 |
| | | 3-K7 |
| SWITCH,STOP | 67210 | 3-D16 |
| SWITCH,TEMP | 18880 | 1-F11 |
| SWITCH,TURN & HAZARD | 66123 | 3-F7 |
| | | 3-K7 |
| SWITCH,VACUUM | 13150 | 1-E7 |
| | | 1-H6 |
| | | 1-K6 |
| | | 1-N6 |
| ** T ** | | |
| T/MISSION CPT | 19090A | 1-C13 |
| TACHOMETER | 55461 | 3-M7 |
| TANK | 76671 | 4-G2 |
| TANK SET,RESERVE | 41551S | 2-C8 |
| | 43550S | 2-E9 |
| TANK,FUEL | 42110 | 2-F8 |
| TANK,STARTING FLUID | 135101 | 1-H4 |
| TANK,SUB | 15350 | 1-J8 |
| TANK,WASHER | 67480 | 4-G2 |
| TERMINAL SET | 24590 | 1-C12 |
| TERMINAL | 32018 | 2-C4 |
| | 67371A | 4-F2 |
| TERMINAL,PLATE | 55232 | 3-G16 |
| | | 3-I16 |
| THERMO UNIT | 135311 | 1-H4 |
| THERMOSTAT | 15171 | 1-H8 |
| TIMER | 67700 | 3-E16 |
| TIMER & BUZZER | 67720C | 3-E16 |
| TIRE | 37600A | 2-D6 |
| TOOL SET | 68660A | 4-L4 |
| TRAY,ASH | 64250 | 3-F9 |
| | | 3-L8 |
| TRAY,BATTERY | 56863A | 1-H12 |
| TRAY,GLOVE | 64161 | 3-G8 |
| | | 3-K8 |
| TRIM NO.1,BACK | 57351L | 3-C11 |
| TRIM NO.1,CUSHION | 57311L | 3-N10 |
| TRIM NO.1,HEAD REST | 57391L | 3-E11 |
| TRIM NO.10,BACK | 57360L | 3-D11 |
| TRIM NO.10,CUSHION | 57315M | 3-N10 |
| TRIM NO.11,BACK | 57361L | 3-D11 |
| TRIM NO.11,CUSHION | 57411L | 3-E11 |
| TRIM NO.12,BACK | 57362L | 3-D11 |
| TRIM NO.12,CUSHION | 57311M | 3-N10 |
| TRIM NO.13,BACK | 57363L | 3-E11 |
| TRIM NO.14,BACK | 57362M | 3-D11 |
| TRIM NO.16,CUSHION | 57416L | 3-E11 |
| TRIM NO.17,CUSHION | 57417L | 3-E11 |
| TRIM NO.18,CUSHION | 57418L | 3-E11 |

# ALPHABETICAL INDEX (ENGLISH)


| PART NAME | D-CODE | LOCATION |
|---|---|---|
| TRIM NO.19,CUSHION | 57419L | 3-F11 |
| TRIM NO.2,BACK | 57352L | 3-C11 |
| TRIM NO.2,CUSHION | 57312L | 3-N10 |
| TRIM NO.2,HEAD REST | 57392L | 3-E11 |
| TRIM NO.22,BACK | 57462L | 3-F11 |
| TRIM NO.23,BACK | 57463L | 3-F11 |
| TRIM NO.3,BACK | 57353L | 3-C11 |
| TRIM NO.3,CUSHION | 57313L | 3-N10 |
| TRIM NO.3,HEAD REST | 57393L | 3-E11 |
| TRIM NO.4,BACK | 57354L | 3-C11 |
| TRIM NO.4,CUSHION | 57314L | 3-N10 |
| TRIM NO.5,BACK | 57355L | 3-C11 |
| TRIM NO.5,CUSHION | 57315L | 3-N10 |
| TRIM NO.6,BACK | 57356L | 3-D11 |
| TRIM NO.6,CUSHION | 57316L | 3-N10 |
| TRIM NO.7,BACK | 57357L | 3-D11 |
| TRIM NO.7,CUSHION | 57317L | 3-C11 |
| TRIM NO.8,BACK | 57358L | 3-D11 |
| TRIM NO.8,CUSHION | 57318L | 3-C11 |
| TRIM NO.9,BACK | 57359L | 3-D11 |
| TRIM NO.9,CUSHION | 57319L | 3-C11 |
| TRIM(L),CTR.PILLAR | 68241 | 4-H3 |
| TRIM(L),DOOR | 68420 | 3-K12 |
| TRIM(L),FRONT SIDE | 68391 | 4-M3 |
| TRIM(L),FRT.PILLAR | 68191 | 4-G3 |
| TRIM(L),QUARTER | 68550C | 4-N3 |
| TRIM(L),REAR PILLAR | 68330 | 4-I3 |
| TRIM(L),SEAT BACK | 88181 | 3-M10 |
| TRIM(L),SEAT CUSHION | 88161 | 3-K10 |
| TRIM(L),TIRE HOUSE | 68771 | 4-C4 |
| TRIM(L),TRUNK SIDE | 68870 | 4-D4 |
| TRIM(R),CTR.PILLAR | 68221 | 4-G3 |
| TRIM(R),DOOR | 68420 | 3-H12 |
| TRIM(R),FRONT SIDE | 68371 | 4-K3 |
| TRIM(R),FRT.PILLAR | 68171 | 4-E3 |
| TRIM(R),QUARTER | 68520C | 4-N3 |
| TRIM(R),REAR PILLAR | 68320A | 4-H3 |
| TRIM(R),SEAT BACK | 88131 | 3-H10 |
| TRIM(R),SEAT CUSHION | 88111 | 3-F10 |
| TRIM(R),TIRE HOUSE | 68761 | 4-C4 |
| TRIM(R),TRUNK SIDE | 68860 | 4-D4 |
| TRIM,TRUNK END | 68890 | 4-E4 |
| TUBE,BALANCE | 137551 | 1-G6 |
| TUBE,METERING OIL | 146401 | 1-D8 |
| | 146301 | 1-D8 |
| TUBE,OIL LEVEL | 19870 | 1-I13 |
| TUBE,SILICONE | 230451 | 1-J2 |
| TUBE,VACUUM | 13150J | 1-E7 |
| | | 1-N6 |
| | 13220J | 1-E7 |
| | | 1-N6 |
| | 137781 | 1-D7 |
| | | 1-F7 |
| | | 1-J6 |
| | | 1-M6 |
| | 13945J | 1-D7 |
| | | 1-G7 |
| | | 1-J6 |
| | | 1-M6 |
| | 18200K | 1-E11 |
| | 13220K | 1-E7 |
| | | 1-N6 |
| TUNER | 66900 | 3-G16 |
| | | 3-J16 |
| ** U ** | | |
| UNIT,FLASHER | 66830B | 3-D16 |
| UNIT,HEAT GAUGE | 18510 | 1-F11 |
| UNIT,W. LEVEL SENSOR | 15620 | 1-J8 |
| ** V ** | | |
| VACUUM POWER ASSIST | 43800 | 2-E9 |
| VACUUM SET | 24350 | 1-I11 |
| | | 1-J11 |
| | 24351 | 1-I11 |
| | | 1-K11 |
| | 24350 | 1-J11 |
| VALVE | 13780 | 1-D7 |
| | | 1-G7 |
| | | 1-J6 |
| | | 1-M6 |
| | 19663 | 1-F14 |
| | 19665 | 1-F14 |
| VALVE SET,CHECK | 23507 | 1-E6 |
| | | 1-G5 |
| | | 1-M4 |
| VALVE SET,FLOAT | 23390 | 1-C6 |
| | | 1-E5 |
| | | 1-J5 |
| | | 1-K4 |
| VALVE-FUEL CUT | 45160 | 2-F10 |
| VALVE-FUEL VAPOR | 42720 | 2-H8 |
| VALVE,AIR | 37600C | 2-D6 |
| VALVE,AIR CONTROL | 137201 | 1-F6 |
| VALVE,BLEEDER | 49693 | 2-G9 |
| VALVE,CHECK | 13270 | 1-E4 |
| | 42710 | 2-H8 |
| | 43770 | 2-E9 |
| | 137301 | 1-F6 |
| VALVE,COASTING,NO.2 | 137601 | 1-C7 |
| | | 1-I6 |
| VALVE,CONTROL | 19750 | 1-H13 |
| VALVE,DELAY | 13980B | 1-D7 |
| | | 1-G7 |
| | | 1-J6 |
| | | 1-M6 |
| | 139801 | 1-D7 |
| | | 1-G7 |
| | | 1-J6 |
| | | 1-M6 |
| | 23980 | 1-M4 |
| VALVE,E.G.R | 203001 | 1-D7 |
| | | 1-G7 |
| VALVE,MANUAL | 19768 | 1-H13 |
| VALVE,P.B | 43900A | 2-H9 |
| VALVE,SOLENOID | 23408 | 1-C6 |
| | | 1-E5 |
| | | 1-J5 |
| | | 1-K4 |
| VALVE,WATER | 76416 | 3-F14 |
| VALVE,3WAY | 13240 | 1-E7 |
| | | 1-H6 |
| | | 1-K6 |
| | | 1-N6 |
| | 13240A | 1-E7 |
| | | 1-H6 |
| | | 1-K6 |
| | | 1-N6 |
| | 13240B | 1-E7 |
| | | 1-H6 |
| | | 1-K6 |
| | | 1-N6 |
| VESSEL,IN.LOCK | 68421A | 3-K12 |
| ** W ** | | |
| WASHER | 19055 | 1-G14 |
| | 23366 | 1-D5 |
| | | 1-I5 |
| | | 1-J4 |
| | | 1-N5 |
| | 234081 | 1-C6 |
| | | 1-E5 |
| | | 1-J5 |
| | | 1-K4 |
| | 27012 | 2-C3 |
| | 32341 | 2-H4 |
| | 34158B | 2-G3 |
| | 39383 | 2-H6 |
| | 39386 | 2-H6 |
| | 40166 | 2-C7 |
| | 40815A | 2-E7 |
| | 50642D | 3-I15 |
| | 52148 | 3-K4 |
| | 57109A | 3-C10 |
| | 76022 | 3-J14 |
| | 76433C | 3-G14 |
| | 76473 | 3-H14 |
| | 76516 | 3-I14 |
| | 88106 | 3-C10 |
| | 27252 | 2-D3 |
| WASHER & SCREW | 76432A | 3-G14 |
| WASHER SET | 24726 | 1-D12 |
| | | 1-F12 |
| WASHER,ADJUST | 66821 | 3-D16 |
| | 17641 | 1-D10 |
| WASHER,CAP | 67375 | 4-H2 |
| WASHER,CUP | 76606 | 4-I2 |
| WASHER,FRONT CLUTCH | 19641 | 1-C14 |
| WASHER,FRONT CONSOLE | 64902A | 3-E9 |
| | | 3-J9 |
| WASHER,HINGE FEMALE | 62863 | 3-I15 |
| | | 3-K15 |
| WASHER,LOCK | 117121 | 1-D3 |
| | 18056 | 3-L16 |
| WASHER,PISTON STOP | 41433 | 2-C8 |
| WASHER,PLAIN | 136141 | 1-D4 |
| | 19337 | 1-F13 |

# ALPHABETICAL INDEX (ENGLISH)


| PART NAME | D-CODE | LOCATION |
|---|---|---|
| WASHER,PLAIN | 19388 | 1-G 13 |
| | 19739 | 1-H 13 |
| | 46019 | 2-H 10 |
| | 76474A | 3-K 14 |
| | 76475 | 3-K 14 |
| | 76476 | 3-K 14 |
| WASHER,RR.COMB | 51141 | 3-G 4 |
| WASHER,RUBBER | 67301 | 4-H 2 |
| WASHER,SEAL | 104551 | 1-H 2 |
| WASHER,SPRING | 26513 | 2-E 2 |
| | 138821 | 1-D 4 |
| WASHER,STOP | 32058 | 2-F 4 |
| | 49666 | 2-F 9 |
| WASHER,TAB | 33043 | 2-C 5 |
| | | 2-E 5 |
| WASHER,THRUST | 115C71 | 1-D 3 |
| | 17276 | 1-H 9 |
| | | 1-L 9 |
| | 17313B | 1-I 9 |
| | | 1-N 9 |
| | 17313 | 1-I 9 |
| | | 1-N 9 |
| WASHER,THRUST LOCK | 17631 | 1-C 10 |
| WASHER,WAVE | 17482 | 1-H 10 |
| | | 1-L 10 |
| | 26834 | 2-F 2 |
| WEATHERSTRIP(L),DOOR | 58760 | 3-E 12 |
| WEATHERSTRIP(R),DOOR | 58760 | 3-E 12 |
| WEATHERSTRIP,BONNET | 56787 | 3-D 5 |
| WEATHERSTRIP,INN | 58821A | 3-E 12 |
| WEATHERSTRIP,OUTER | 58811A | 3-E 12 |
| WEATHERSTRIP,R.TOP | 62805 | 3-I 15 |
| | | 3-K 15 |
| WEATHERSTRIP,RR.WIND | 63932 | 3-G 15 |
| WEIGHT,BALANCE | 115111 | 1-D 3 |
| WEIGHT,BALANCING | 37600E | 2-F 6 |
| WEIGHT,CONTROL | 117501 | 1-E 3 |
| WEIGHT,PUMP | 23301A | 1-C 5 |
| | | 1-H 5 |
| | | 1-I 4 |
| | | 1-M 5 |
| WELT,SEAMING | 58755 | 3-E 12 |
| WHEEL,DISC | 37600 | 2-D 6 |
| WHEEL,FLY | 11500 | 1-C 3 |
| WHEEL,SPROCKET | 14143 | 1-C 8 |
| WIRE | 13086 | 1-H 4 |
| WIRE,ACCELERATOR | 41660 | 2-E 8 |
| WIRE,CHOKE | 60050 | 3-E 7 |
| | | 3-J 7 |
| WIRE,HEATER CONTROL | 76521 | 3-I 14 |
| | 76522 | 3-I 14 |
| | 76523 | 3-I 14 |
| WIRE,LEAD-DIST | 24317 | 1-H 11 |
| | 24318 | 1-H 11 |
| WIRE,RADIO EARTH | 67861 | 3-H 16 |
| | | 3-K 16 |
| WIRE,RELEASE-BONNET | 56710 | 3-C 5 |
| WIRE,STOP | 49638A | 2-D 8 |
| WIRE,STOP-MA.CYL | 49638 | 2-F 9 |
| WIRE,WIPER MOTOR | 76611 | 4-J 2 |
| WIRING,BLOWER | 76467A | 3-K 14 |
| WIRING,ENGINE | 18050 | 3-L 16 |
| WRENCH,NUB NUT | 68070 | 4-L 4 |
| ** Y ** | | |
| YOKE | 24701 | 1-D 12 |
| | | 1-F 12 |
| | 25130 | 2-C 2 |
| YOKE,STATOR | 87922 | 4-J 2 |
| YOKE,UNIVERSAL JOINT | 25021 | 2-C 2 |

# INDEX ALPHABETIQUE (FRANÇAIS)


| DESIGNATION | D-CODE | PLACE |
|---|---|---|
| ** A ** | | |
| ACCOUDOIR (D) | 69371 | 3-L12 |
| ACCOUDOIR (G) | 69371 | 3-M12 |
| ADAPTATEUR DE SUPPORT G | 33260 | 2-C5 |
| | | 2-E5 |
| ADAPTEUR | 19C25A | 1-C13 |
| ADAPTEUR,SUPPORT | 33260 | 2-C5 |
| | | 2-E5 |
| AGRAFE | 58762 | 3-E12 |
| | 58921D | 4-J3 |
| | 69885A | 4-K4 |
| AGRAFE GARNITURE | 69605C | 4-E4 |
| AGRAFE, GARNITURE | 58921 | 3-E12 |
| AGRAFE,TAPIS COFFRE AR | 69605 | 4-J4 |
| AILE ARRIERE (D) | 74100 | 3-H6 |
| | | 3-N5 |
| AILE ARRIERE (G) | 74130 | 3-C6 |
| | | 3-H6 |
| AILE AVANT (D) | 52110 | 3-E5 |
| AILE AVANT (G) | 52210 | 3-E5 |
| ALIMENTATEUR D'ANTENNE | 66935 | 3-H16 |
| | | 3-J16 |
| ALLUME-CIGARE | 66250 | 3-F7 |
| | | 3-K7 |
| ALTERNATEUR | 18300 | 1-L11 |
| | | 1-N11 |
| AMORTISSEUR | 34910A | 2-J5 |
| | 50100A | 3-C3 |
| AMORTISSEUR ARR | 50200A | 3-E3 |
| AMPEREMETRE PRINCIPAL | 66920A | 3-H16 |
| | | 3-J16 |
| AMPOULE | 51060J | 3-C4 |
| | 51120J | 3-C4 |
| | 51150J | 3-G4 |
| | 5115CK | 3-G4 |
| | 5127CJ | 3-G4 |
| | 55240J | 3-F9 |
| | | 3-L8 |
| | 55280J | 3-D7 |
| | | 3-H7 |
| | 55890J | 3-D8 |
| | | 3-H8 |
| | 69170J | 4-N4 |
| | 75115 | 3-C8 |
| | 75139A | 3-C8 |
| AMPOULE ALLUME CIGARES | 66254 | 3-F7 |
| | | 3-K7 |
| AMPOULE ET DOUILLE | 55240A | 3-F9 |
| | | 3-L8 |
| | 55280 | 3-D7 |
| | | 3-H7 |
| AMPOULE, LAMPE DE LECTURE | 51313 | 3-I4 |
| ANTENNE | 66930 | 3-H16 |
| | | 3-J16 |
| ANTIVOL | 75990 | 3-D2 |
| APPUI BOITE A GANTS | 64162B | 3-G8 |
| | | 3-K8 |
| ARBRE | 19670 | 1-F14 |
| | 76467 | 3-K14 |
| | 76513E | 3-G14 |
| ARBRE DE PRISE | 19678 | 1-D13 |
| ARBRE MANUEL | 19431 | 1-G14 |
| ARBRE MOTEUR | 17201 | 1-G9 |
| | | 1-K9 |
| ARBRE RECEPTEUR | 17221 | 1-G9 |
| | | 1-K9 |
| ARBRE TRANSMISSION | 25100A | 2-C2 |
| ARBRE, PIGNON MARCHE ARR | 17315 | 1-J9 |
| | | 1-N9 |
| ARBRE, SECTEUR | 32141 | 2-F4 |
| ARMATURE (D), COTE AR | 53810 | 3-J6 |
| ARMATURE (G), COTE AR | 54810 | 3-K6 |
| | 5430J | 3-K6 |
| ARMATURE AV | 74040 | 3-J5 |
| ARMATURE AV.(D) | 53300 | 3-I6 |
| ARMATURE DE COTE (D) | 70020 | 3-D6 |
| | | 3-K5 |
| ARMATURE DE COTE (G) | 71020 | 3-F6 |
| | | 3-M5 |
| ARMATURE, TABLEAU DE BORD | 60410 | 3-D8 |
| | | 3-H8 |
| ARRET | 19704 | 1-H14 |
| | 28776 | 2-G3 |
| | 34137 | 2-K5 |
| | 34776 | 2-I5 |
| | 34776C | 2-L5 |
| ARRET C.T.C | 69232 | 4-D5 |
| ARRET D'HUILE | 10507 | 1-H2 |
| | 105561 | 1-E2 |
| | | 1-F2 |
| | 114041 | 1-C3 |
| | 16103 | 1-K8 |
| | 17335 | 1-C9 |
| | | 1-E9 |
| | 18216 | 1-H11 |
| | | 1-J11 |
| | 19223A | 1-C13 |
| | 19335 | 1-F13 |
| | 26154 | 2-D2 |
| | 27018 | 2-C3 |
| | 33065 | 2-C5 |
| | | 2-E5 |
| | 34760 | 2-I5 |
| ARRET DE RESSORT | 19487 | 1-K13 |
| ARRET DE ROULEMENT | 17325 | 1-C9 |
| | | 1-E9 |
| ARRET,C.T.C | 40108 | 2-C7 |
| | 41682 | 2-E8 |
| | 53074 | 3-F15 |
| ARRETOIR | 19503 | 1-L13 |
| | 19515 | 1-M13 |
| | 19613 | 1-E14 |
| | 19702 | 1-G14 |
| | 41681 | 2-E8 |
| | 64043 | 3-G8 |
| | | 3-K8 |
| ARRETOIR, JEU | 24712 | 1-D12 |
| | | 1-F12 |
| ARTICULATION INF | 28300B | 2-G3 |
| ARTICULATION INT | 76605A | 4-H2 |
| | 76607 | 4-I2 |
| ARTICULATION, PEDALE EMBR | 41023 | 2-C9 |
| ATTACHE | 13081 | 1-H4 |
| | 132411 | 1-C7 |
| | | 1-F7 |
| | | 1-H6 |
| | | 1-L6 |
| | 13447 | 1-F4 |
| | 13447A | 2-E10 |
| | 13781A | 1-D7 |
| | | 1-G7 |
| | | 1-J6 |
| | | 1-M6 |
| | 13982A | 1-D7 |
| | | 1-G7 |
| | | 1-J6 |
| | | 1-M6 |
| | 146621 | 1-F8 |
| | 18863B | 1-F11 |
| | 19915 | 1-D13 |
| | 19916 | 1-J13 |
| | 19989 | 1-E13 |
| | 32107 | 2-F4 |
| | 33235 | 2-C5 |
| | | 2-E5 |
| | 40437 | 2-D7 |
| | 40710D | 2-E7 |
| | 42750 | 2-H8 |
| | 44173 | 2-D10 |
| | 44189 | 2-D10 |
| | 44436 | 2-D10 |
| | 44471 | 2-D10 |
| | 45903A | 2-I9 |
| | 45903B | 1-E13 |
| | 50389 | 3-F3 |
| | 50506A | 3-G3 |
| | 51402A | 1-F4 |
| | 66944 | 4-H2 |
| | 66991 | 3-L16 |
| | 67031B | 3-M16 |
| | 67052B | 3-N16 |
| | 67059 | 3-N16 |
| | 67515 | 4-G2 |
| | 68015 | 4-C3 |
| | 76419 | 3-F14 |
| | 76419C | 3-J14 |
| | 76434 | 3-K14 |
| | 76435 | 3-G14 |
| | 76435A | 3-K14 |
| ATTACHE (D) | 51932 | 3-E4 |
| ATTACHE (D), AMORTISSEUR | 50110 | 3-C3 |
| ATTACHE (G), AMORTISSEUR | 50110 | 3-C3 |
| ATTACHE ALTERNATEUR | 18361 | 1-E11 |
| ATTACHE CRIC | 53045 | 3-I6 |
| ATTACHE D'AMORTISSEUR | 62631 | 3-D15 |
| ATTACHE DE FIXATION | 32420A | 2-G4 |
| ATTACHE DE LIAISON | 50321C | 3-F3 |
| ATTACHE DE MOULURE | 50608B | 3-H3 |

# INDEX ALPHABÉTIQUE (FRANÇAIS)


| DESIGNATION | D-CODE | PLACE |
|---|---|---|
| ATTACHE DU MILIEU | 24706 | 1-F12 |
| ATTACHE, ALTERNATEUR | 18371 | 1-E11 |
| ATTACHE, AR | 24560 | 1-L11 |
| | | 1-N11 |
| | 24740 | 1-D12 |
| | | 1-F12 |
| | 64370 | 3-G9 |
| | | 3-N8 |
| ATTACHE, AV | 24550 | 1-L11 |
| | | 1-N11 |
| | 24710 | 1-D12 |
| | | 1-F12 |
| | 64350 | 3-G9 |
| | | 3-N8 |
| | 64360 | 3-G9 |
| | | 3-N8 |
| ATTACHE, BARILLET | 58961 | 3-C2 |
| ATTACHE, CABLE | 44439 | 2-D10 |
| | 67290 | 1-H12 |
| | 67293 | 1-H12 |
| ATTACHE, CONDUIT | 133051 | 1-G4 |
| | 45903 | 2-G10 |
| ATTACHE, CONDUIT FLEXIBLE | 43635 | 2-H9 |
| | 43635A | 2-D8 |
| | 43635B | 2-H9 |
| ATTACHE, CONSOLE | 69801 | 3-I4 |
| ATTACHE, DURITE | 43635C | 2-H9 |
| ATTACHE, DURITE D'AIR | 13726 | 1-F6 |
| | 137461 | 1-G6 |
| | 147451 | 1-F8 |
| ATTACHE, DURITE HUILE | 147401 | 1-F8 |
| ATTACHE, GRILLE DE CALAND | 50715A | 3-D3 |
| ATTACHE, LEVIER | 46110 | 2-I10 |
| ATTACHE, MAITRE CYLINDRE | 43070 | 2-D9 |
| ATTACHE, POMPE A AIR | 137141 | 1-F6 |
| ATTACHE, POMPE A ESSENCE | 45121 | 2-E10 |
| ATTACHE, RESERVOIR | 135151 | 1-H4 |
| | 67521 | 4-G2 |
| ATTACHE, SOUPAPE E.C | 139111 | 1-J6 |
| ATTACHE, SUPPORT MOTEUR | 39020 | 2-G6 |
| ATTACHE, VASE D'EXPANSION | 15251 | 1-I8 |
| ATTACHE,AMORTISSEUR | 133901 | 1-D4 |
| | 50301A | 3-F3 |
| ATTACHE,CONDUIT D'HUILE | 14296 | 1-C8 |
| ATTACHE,DISPOSITIF D'ALLU | 18260 | 1-E11 |
| AUTO RADIO | 66860 | 3-G16 |
| | | 3-I16 |
| AUVENT | 70371A | 3-L9 |
| AUVENT D'AERATION CENTRAL | 64815A | 3-L9 |
| AVERTISSEUR | 67720 | 3-E16 |
| | 75029 | 3-N7 |
| AVERTISSEUR AIGU | 66780A | 3-D16 |
| AXE D'AMORTISSEUR | 62621 | 3-D15 |
| AXE DE REGLAGE(G) | 26821 | 2-F2 |
| AXE DE RESSORT | 106091 | 1-I2 |
| AXE DE VERROUILLAGE | 68980 | 3-J15 |
| AXE EXCENTRIQUE | 114001 | 1-C3 |
| AXE ROUE ARR | 26111A | 2-D2 |
| AXE, COUPLE CONIQUE | 27261 | 2-D3 |
| AXE, PIGNON ENTRAIN | 146201 | 1-D8 |
| AXE, POMPE A HUILE | 141121 | 1-C8 |
| ** B ** | | |
| BAC SUPPORT, BATTERIE | 53260 | 1-H12 |
| BAC, SUPPORT BATTERIE | 56863A | 1-H12 |
| BAGUE | 10172A | 1-D2 |
| | 17414 | 1-J10 |
| | 76472B | 3-K14 |
| BAGUE & VIS | 51146 | 3-G4 |
| BAGUE CAOUTCHOUC | 67301 | 4-H2 |
| BAGUE D'ARRET | 32059 | 2-F4 |
| BAGUE D'EMBRAYAGE | 17622 | 1-C10 |
| | | 1-J9 |
| BAGUE DE ROULEMENT | 19566 | 1-M13 |
| | 19639 | 1-N13 |
| | 24715 | 1-D12 |
| | | 1-F12 |
| | 24741 | 1-D12 |
| | | 1-F12 |
| | 26152 | 2-D2 |
| BAGUE DE ROULEMENT,EXTERI | 19593 | 1-D14 |
| BAGUE DE ROULEMENT,INTERI | 17275 | 1-H9 |
| | | 1-L9 |
| | 17275B | 1-H9 |
| | | 1-L9 |
| | 19336 | 1-F13 |
| BAGUE DE SYNCHRONISATION | 17245 | 1-G9 |
| | | 1-K9 |
| | 17325A | 1-N9 |
| BAGUE PIGNON COMPTEUR | 19442 | 1-H13 |
| BAGUE,RESSORT DE POUSSEE | 19605 | 1-E14 |
| BALAIS | 32329 | 2-H4 |
| | 76123B | 3-J14 |
| | 76123C | 3-E14 |
| | 76129 | 3-E14 |
| | 76415A | 3-H14 |
| | 76631 | 4-I2 |
| | 87106 | 4-J2 |
| BALAIS D'ESSUIE GLACE | 67321 | 4-H2 |
| BALAIS, CULASSE DEM | 24753 | 1-D12 |
| | | 1-G12 |
| BALAIS,ESSUIE-GLACE | 67330 | 4-H2 |
| BALAIS,RESSORT | 24521 | 1-N11 |
| BARILLET, TRAPPE ESSENCE | 42440 | 3-C2 |
| BARRE D'ACCOUPLEMENT | 32365 | 2-H4 |
| BASE | 68832 | 3-E9 |
| | | 3-J9 |
| BATTERIE | 18520 | 1-H12 |
| BIELLE | 146511 | 1-D8 |
| BILLE | 87928 | 4-K2 |
| BILLE D'ACIER | 11411J | 1-C3 |
| | 13781 | 1-C5 |
| | | 1-H5 |
| | | 1-I4 |
| | | 1-M5 |
| | 17341J | 1-J9 |
| | | 1-N9 |
| | 17431J | 1-F10 |
| | | 1-K10 |
| | 19341J | 1-D14 |
| | 19704J | 1-H14 |
| | 26610J | 2-F2 |
| | 41920J | 2-D8 |
| BIMETAL | 23502 | 1-E6 |
| | | 1-G5 |
| | | 1-L5 |
| | | 1-M4 |
| BLOC MOTEUR | 23800 | 1-C2 |
| BLOC OPTIQUE CLOS | 84851A | 3-F4 |
| BOBINE D'ALLUMAGE | 18100 | 1-C11 |
| BOITE A GANTS | 64161 | 3-G8 |
| | | 3-K8 |
| BOITE A,FUSIBLE | 66730 | 3-C16 |
| BOITE DE CENDRIER | 64411 | 3-C9 |
| | | 3-H9 |
| BOITE DE VITESSES | 32120 | 2-F4 |
| | 76613 | 4-J2 |
| BOITIER | 27230 | 2-D3 |
| | 76425 | 3-J14 |
| BOITIER (D), COUPLE MOTEU | 53391 | 3-I6 |
| BOITIER (G), COUPLE MOTEU | 54391 | 3-K6 |
| BOITIER COMPTEUR | 55441A | 3-L7 |
| BOITIER DE FUSIBLES | 66760A | 3-D16 |
| BOITIER DE LAMPE | 55213A | 3-C7 |
| | | 3-H7 |
| BOITIER, ARRET | 39045 | 2-G6 |
| BOITIER, CHAUFFAGE | 76401 | 3-E14 |
| | 76406 | 3-E14 |
| BOITIER, TRANSMISSION | 17100 | 1-C9 |
| | | 1-E9 |
| | 19310 | 1-F13 |
| BOITIER, VENTILLATEUR | 76423 | 3-J14 |
| BORNE | 32018 | 2-C4 |
| | 55232 | 3-G16 |
| | | 3-I16 |
| | 67371A | 4-F2 |
| BOUCHE DE DEGIVRAGE (G) | 60140 | 3-K9 |
| BOUCHE,DEGIVRAGE (D) | 60120 | 3-K9 |
| BOUCHON | 10205A | 1-G2 |
| | 102061 | 1-G2 |
| | 102071 | 1-G2 |
| | 10481 | 1-E7 |
| | | 1-K6 |
| | 13104B | 1-E7 |
| | | 1-H6 |
| | | 1-K6 |
| | | 1-N6 |
| | 142741 | 1-I2 |
| | 16241 | 1-K8 |
| | 23436 | 1-F4 |
| | 234631 | 1-K5 |
| | 235411 | 1-L5 |
| | | 1-M4 |
| | 23657 | 1-E6 |
| | | 1-G5 |
| | | 1-L5 |
| | | 1-M4 |
| | 24310 | 1-H11 |
| | | 1-J11 |

# INDEX ALPHABÉTIQUE (FRANÇAIS)


| DESIGNATION | D-CODE | PLACE |
|---|---|---|
| BOUCHON | 26060 | 2-D2 |
| | 34738 | 2-I5 |
| | 42307 | 2-F8 |
| | 42307A | 1-D7 |
| | | 1-J6 |
| | 44034 | 2-C10 |
| | 55952 | 3-E7 |
| | | 3-J7 |
| | 56051 | 3-L6 |
| | 56242F | 3-C14 |
| | 58868C | 2-E7 |
| | 68851 | 4-D4 |
| | 69872A | 3-N12 |
| | 76603 | 4-H2 |
| BOUCHON ACCOUDOIR | 69373 | 3-M12 |
| BOUCHON CARRE | 19331 | 1-F13 |
| BOUCHON D'ETANCHEITE | 76604 | 4-H2 |
| BOUCHON D'ORIFICE | 61031 | 3-C14 |
| BOUCHON DE CAOUTCHOUC | 24311B | 1-H11 |
| | 33693 | 2-D5 |
| | | 2-F5 |
| BOUCHON DE RADIATEUR | 15205 | 1-I8 |
| BOUCHON DE RESERVOIR | 87992A | 4-G2 |
| BOUCHON DE VERROUILLAGE | 17442A | 1-G10 |
| | | 1-K10 |
| BOUCHON DE VIDANGE | 10404 | 1-H2 |
| | 53134 | 3-C14 |
| | 56241 | 3-L6 |
| | 56241E | 3-C12 |
| | 56242 | 3-L6 |
| | 56615 | 3-N6 |
| BOUCHON DE VIDANGE AIMANT | 17121 | 1-C9 |
| | | 1-E9 |
| | 26051 | 2-D2 |
| BOUCHON MANIVELLE | 58585A | 3-F13 |
| BOUCHON PURGEUR | 33693A | 2-F2 |
| | 33693C | 2-E9 |
| BOUCHON RESERVOIR AUXIL. | 15355A | 1-J8 |
| | 43549 | 2-E9 |
| BOUCHON RESERVOIR RESERVE | 41552S | 2-C8 |
| | 43552S | 2-E9 |
| BOUCHON TROU ANTENNE | 66911A | 3-H16 |
| | | 3-J16 |
| BOUCHON, BRAS STAB | 34159A | 2-H5 |
| BOUCHON, HUILE | 114111 | 1-C3 |
| BOUCHON, MOYEN | 33071 | 2-C5 |
| | | 2-E5 |
| BOUCHON, REMPLIS. HUILE | 102501 | 1-E2 |
| | 42250 | 2-F8 |
| BOUCLIER | 56191 | 3-I5 |
| BOUCLIER (D) | 56131 | 3-H5 |
| BOUCLIER (G) | 56141 | 3-H5 |
| BOUGIE | 18110 | 1-C11 |
| BOULE DE LEVIER DE VITESS | 17520 | 1-H10 |
| | | 1-M10 |
| | 46030 | 2-H10 |
| BOULON | 104511 | 1-H2 |
| | 104521 | 1-H2 |
| | 108451 | 1-I2 |
| | 16432 | 1-K8 |
| | 19064 | 1-C13 |
| | 19216 | 1-C13 |
| | 19255 | 1-D13 |
| | 19338 | 1-F13 |
| | 19397 | 1-G13 |
| | 19397A | 1-D14 |
| | 19398 | 1-G13 |
| | 19706 | 1-H14 |
| | 19737 | 1-H13 |
| | 19838 | 1-H14 |
| | 19838B | 1-H14 |
| | 25123 | 2-C2 |
| | 27235A | 2-D3 |
| | 28111 | 2-F3 |
| | 28113A | 2-F3 |
| | 32315A | 2-H5 |
| | 32429 | 2-G4 |
| | 34157A | 2-K5 |
| | 39055 | 2-G6 |
| | 40015 | 2-C7 |
| | 46084A | 2-I10 |
| | 49652 | 2-F9 |
| BOULON DE BRAS | 34313 | 2-L5 |
| BOULON DE CHARNIERE | 51431A | 3-D4 |
| BOULON DE FIXATION | 141171 | 1-C8 |
| BOULON DE RACCORD | 19930J | 1-D13 |
| | 43694 | 2-E9 |
| BOULON DE SOUPAPE DE CONT | 19831 | 1-I13 |
| | 19832 | 1-I13 |
| | 19833 | 1-I13 |
| BOULON TIGE DE TENSION | 34134A | 2-K5 |
| BOULON,CARTER MOTEUR | 19837 | 1-I13 |
| BOULON,CRAMPON | 70985A | 1-I12 |
| BOULON,FILTRE A AIR | 13201 | 1-E4 |
| BOULON,FIXATION ROULEMENT | 26132 | 2-D2 |
| BOULON,JEU | 49676 | 2-G9 |
| | 60436 | 3-C2 |
| BOULON,POULIE | 11376 | 1-C3 |
| BOULON,RESERVOIR | 49692 | 2-G9 |
| BOULONS ET ECROUS,MOYEN | 33165 | 2-C6 |
| BOUTOIR PARE-CHOC ARR | 50270D | 3-E3 |
| BOUTON | 51937 | 3-E4 |
| | 58691 | 3-F13 |
| | 61195B | 3-D14 |
| | 88081 | 3-C10 |
| | 88109 | 3-C10 |
| BOUTON INTERRUPT LUMIERE | 66641 | 3-G7 |
| | | 3-K7 |
| BOUTON NO 1 | 61191 | 3-D14 |
| BOUTON POUSSOIR | 46032 | 2-H10 |
| BOUTON VERROUILLAGE INT. | 68421A | 3-K12 |
| BOUTON, DECLENCHEUR | 44033 | 2-C10 |
| BOUTON,INDICATEUR DE PARC | 55472 | 3-M7 |
| BRAS | 32320 | 2-H4 |
| BRAS D'ARTICULATION D | 32301A | 2-H5 |
| BRAS PITMAN | 32220 | 2-G4 |
| BRIDE | 19580 | 1-D14 |
| | 19581 | 1-D14 |
| | 27020 | 2-C3 |
| | 76453 | 3-K14 |
| BUSELURE | 22333 | 1-D9 |
| | | 1-F9 |
| | 32071 | 2-F4 |
| | 34153A | 2-K5 |
| | 34156 | 2-K5 |
| | 41644 | 2-E8 |
| | 46085 | 2-I10 |
| | 46684 | 2-J10 |
| | 46691 | 2-J10 |
| | 49686B | 2-G9 |
| | 57633 | 3-G11 |
| | 58411 | 3-E13 |
| | 76146 | 3-H14 |
| | 76164 | 3-H14 |
| | 88105 | 3-C10 |
| BUSELURE BOULON CHARNIERE | 51432 | 3-D4 |
| BUSELURE CAOUTCHOUC STAB | 28775A | 2-G3 |
| BUSELURE CTC | 28102 | 2-F3 |
| | 28775 | 2-G3 |
| BUSELURE DE LEVIER | 46684A | 2-J10 |
| BUSELURE DE RACCORDEMENT | 46691A | 2-J10 |
| BUSELURE DE SEPARATION | 27171 | 2-C3 |
| BUSELURE EXT | 76604A | 4-H2 |
| BUSELURE PEDALE | 43022 | 2-C9 |
| | 43061A | 2-C9 |
| BUSELURE, BRAS FUSEE | 34460 | 2-I5 |
| BUTEE | 16510 | 1-K8 |
| BUTEE DE TALONNAGE | 34111 | 2-H5 |
| BUTTOIR,C.T.C | 43029 | 2-C9 |
| | 55195A | 3-D8 |
| | | 3-H8 |
| ** C ** | | |
| C.T.C. PEDALE ACCEL | 41711A | 2-E8 |
| C.T.C.SUPPORT MOTEUR(D) | 39040 | 2-G6 |
| | 39050 | 2-G6 |
| CABLAGE SOUFFLEUR | 76467A | 3-K14 |
| CABLE | 13086 | 1-H4 |
| CABLE D'ACCELERATEUR | 41660 | 2-E8 |
| CABLE DE CHAUFFAGE | 76521 | 3-I14 |
| | 76522 | 3-I14 |
| | 76523 | 3-I14 |
| CABLE DE DECLENCHEMENT | 56710 | 3-C5 |
| CABLE DE STARTER | 60050 | 3-E7 |
| | | 3-J7 |
| CABLE DE TERRE RADIO | 67861 | 3-H16 |
| | | 3-K16 |
| CABLE FREIN A MAIN(G) | 44410A | 2-D10 |
| CABLE, ARRIERE | 44410 | 2-D10 |
| CABLE, AV | 44150 | 2-D10 |
| CABLE, COMPTEUR | 60070 | 3-N7 |
| CABLE, MASSE | 67260 | 1-H12 |
| CABLE, POSITIF | 67250 | 1-H12 |
| CABLE,MOTEUR | 18050 | 3-L16 |
| CACHE | 19240 | 1-D13 |
| | 236731 | 1-G4 |
| | 23801 | 1-D8 |
| | 24368 | 1-K11 |
| | 40551 | 2-E7 |

# INDEX ALPHABÉTIQUE (FRANÇAIS)


| DESIGNATION | D-CODE | PLACE |
|---|---|---|
| CACHE | 66732 | 3-D16 |
| | 76609 | 4-I2 |
| CACHE AV | 106001 | 1-I2 |
| | 16220 | 1-K8 |
| CACHE DE CHARNIERE | 88107A | 3-C10 |
| CACHE-POUSSIERE | 17475 | 1-H10 |
| | | 1-L10 |
| | 19036 | 1-G14 |
| | 32279 | 2-H4 |
| | 32279A | 2-H4 |
| | 34565 | 2-I5 |
| CACHE-POUSSIERE PITMAN | 32278B | 2-G4 |
| CACHE, AGRAFE | 58922 | 3-E12 |
| CACHE, FEU ANTIBROUILLARD | 66395 | 3-G7 |
| | | 3-K7 |
| CACHE, POMPE A EAU | 15130 | 1-H8 |
| CACHE, POUSSIERE | 16214 | 1-K8 |
| | 32411 | 2-G4 |
| | 34015 | 2-H5 |
| CACHE,POUSSIERE | 103051 | 1-H2 |
| | 10351 | 1-H2 |
| CAGE ROULEMENT | 19631 | 1-N13 |
| CAGE ROULEMENT EMBRAYAGE | 19638 | 1-N13 |
| CALE | 141131 | 1-C8 |
| | 15114 | 1-G8 |
| | 17225 | 1-G9 |
| | | 1-K9 |
| | 17305 | 1-I9 |
| | | 1-M9 |
| | 17435 | 1-G10 |
| | | 1-K10 |
| | 19449 | 1-G14 |
| | 19488 | 1-K13 |
| | 19509 | 1-L13 |
| | 19534 | 1-M13 |
| | 19567 | 1-M13 |
| | 19594 | 1-D14 |
| | 19596 | 1-D14 |
| | 19598 | 1-M13 |
| | 19607 | 1-E14 |
| | 19619 | 1-E14 |
| | 19667 | 1-F14 |
| | 25071 | 2-C2 |
| | 76414 | 3-H14 |
| CALE 'B' | 58293 | 3-C13 |
| CALE D'EPAISSEUR | 51105A | 3-C4 |
| | 62872 | 3-I15 |
| CALE D'EPAISSEUR'A' | 62231A | 3-C15 |
| | 62366 | 3-D15 |
| | 62636 | 3-D15 |
| | 63231A | 3-E15 |
| CALE D'EPAISSEUR'B' | 62232 | 3-C15 |
| | 62367 | 3-D15 |
| | 62637 | 3-D15 |
| CALE D'EPAISSEUR'C'(D) | 62241A | 3-C15 |
| | 63241A | 3-E15 |
| CALE D'EPAISSEUR'D' | 62233 | 3-C15 |
| CALE DE COGNEMENT | 105041 | 1-E2 |
| CALE DE PISTON | 49638 | 2-F9 |
| CALE DE SYNCHRONISATION | 17243 | 1-G9 |
| | | 1-K9 |
| CALE DU PIGNON D'ENTRAINE | 146231 | 1-D8 |
| CALE, LINGUET PARKING | 19731 | 1-H14 |
| CALE, VOLANT MOTEUR | 117051 | 1-D3 |
| CALES DE PLAQUETTES | 33695 | 2-D5 |
| CAOUTCHOUC | 69316 | 4-I3 |
| CAOUTCHOUC DE PORTE | 60731 | 3-E8 |
| | | 3-J8 |
| CAOUTCHOUC ISOLANT | 13363 | 1-E4 |
| | 15312 | 1-I8 |
| | 15312A | 3-I16 |
| | 153121 | 1-I8 |
| CAPOT, AV | 52310 | 3-C5 |
| CAPUCHON, AMORTISSEUR | 34019 | 2-H5 |
| CAPUCHON, VIS DE PURGE | 33693B | 2-C8 |
| CARBURATEUR | 13600 | 1-C5 |
| | | 1-H5 |
| | | 1-I4 |
| | | 1-M5 |
| CAROTTE D'HUILE | 26041 | 2-D2 |
| CARTER ARR | 103001 | 1-G2 |
| CARTER ARR. ROTOR | 101501 | 1-D2 |
| CARTER AV | 102001 | 1-G2 |
| CARTER AV. ROTOR | 101001 | 1-D2 |
| CARTER D'HUILE | 10400 | 1-H2 |
| | 19836 | 1-I13 |
| CARTER DE CONVERTISSEUR | 19211 | 1-C13 |
| CARTER PONT AV. ASSEMBLE | 27100 | 2-C3 |
| CASSETTE | 66860D | 3-G16 |
| | | 3-I16 |
| CEINTURE 'A'(D)AV | 57900A | 3-G11 |
| CEINTURE 'A'(G)AV | 57920A | 3-H11 |
| CEINTURE DE SECURITE (D) | 57900 | 3-G11 |
| | 57920 | 3-H11 |
| CENDRIER | 64250 | 3-F9 |
| | | 3-L8 |
| CENTRALE DE CLIGNOTEMENT | 66830B | 3-D16 |
| CERCLE | 19673 | 1-F14 |
| CERCLE D'ARRET | 17415 | 1-J10 |
| | 17613 | 1-C10 |
| | 17626A | 1-C10 |
| | 66024 | 3-F4 |
| CERCLE ECLAIRAGE | 66251 | 3-F7 |
| | | 3-K7 |
| CERCLE ETANCHE | 19256 | 1-D13 |
| | 19257 | 1-D13 |
| | 19655 | 1-E14 |
| CERCLE,ROUE | 37180 | 2-C6 |
| CHAINE, POMPE A HUILE | 14151 | 1-C8 |
| CHAMBRE | 23311 | 1-C5 |
| | | 1-H5 |
| | | 1-J4 |
| | | 1-M5 |
| CHAMBRE DIAPH | 23271 | 1-C5 |
| | | 1-H5 |
| | | 1-I4 |
| | | 1-M5 |
| CHANGEMENT (EMBOUT) | 17432 | 1-G10 |
| | | 1-K10 |
| CHAPEAU, ORIFICE DE VISIT | 56061 | 3-L6 |
| | 56231A | 3-L6 |
| | 56639 | 3-N6 |
| CHAPEAU, SERVO | 19392 | 1-G13 |
| CHAPEAU,ORIFICE DE | 50310 | 3-F3 |
| CHARNIERE (D) | 62210 | 3-C15 |
| CHARNIERE (G) | 63210 | 3-D15 |
| CHARNIERE (G),PORTE INFER | 58240 | 3-C13 |
| CHARNIERE CAPOT | 52410A | 3-C5 |
| CHARNIERE D'INCLINAISON ( | 88101 | 3-C10 |
| | 88151 | 3-H10 |
| CHARNIERE PORTE INF.(D) | 58240 | 3-C13 |
| CHARNIERE SUPERIEURE (G) | 58210 | 3-C13 |
| CHARNIERE(D) | 51430A | 3-D4 |
| CHARNIERE(G) | 51430A | 3-D4 |
| CHARNIERE'A'SUP.(D) | 62860 | 3-I15 |
| | | 3-K15 |
| CHARNIERE'A'SUP.(G) | 63860 | 3-J15 |
| | | 3-L15 |
| CHARNIERE'B'SUP(D) | 62870 | 3-I15 |
| CHARNIERE'B'SUP(G) | 63870 | 3-J15 |
| CHASSIS | 76602 | 4-H2 |
| CHAUFFAGE | 61130 | 3-C14 |
| CHAUFFAGE COMPLET | 61070 | 3-C14 |
| CIEL | 68080 | 4-D3 |
| CIEL DE PAVILLON | 68030 | 4-D3 |
| CIRCUIT IMPRIME | 55442A | 3-L7 |
| CLAVETTE | 117031 | 1-D3 |
| | 19434 | 1-G14 |
| | 27262 | 2-D3 |
| | 33698A | 2-D5 |
| | | 2-F5 |
| | 46022B | 2-H10 |
| | 46035A | 2-H10 |
| | 46683A | 2-D9 |
| | 76518 | 3-I14 |
| CLAVETTE D'INTERDICTION | 17351A | 1-E10 |
| | | 1-I10 |
| CLAVETTE, MACHOIRE DE FRE | 26391 | 2-E2 |
| CLEF | 115121 | 1-D3 |
| | 141191 | 1-C8 |
| CLEF DE MOYEU | 68070 | 4-L4 |
| CLEF VIERGE | 75158 | 3-C2 |
| CLEF, PRIMAIRE | 58492 | 3-C2 |
| CLIPS | 18861 | 1-F11 |
| | 70335B | 4-I3 |
| CLIPS CABLAGE MOTEUR | 18994A | 1-G11 |
| CLIQUET | 44044 | 2-C10 |
| CLIQUET, PARKING | 19732 | 1-H14 |
| COIFFE | 26681 | 2-F2 |
| | 33681 | 2-F5 |
| | 41331 | 2-C8 |
| | 46081 | 2-I10 |
| | 51938 | 3-E4 |
| | 64331A | 3-G9 |
| | | 3-M8 |
| COIFFE, LEVIER DE VITESSE | 64331 | 3-G9 |
| | | 3-M8 |
| COLLECTEUR, ADMISSION | 13100 | 1-C4 |
| COLLIER A VIS | 60265 | 3-F7 |
| | | 3-J7 |

# INDEX ALPHABÉTIQUE (FRANÇAIS)


| DESIGNATION | D-CODE | PLACE |
|---|---|---|
| COLLIER DE CACHE-LEVIER | 33685 | 2-D5 |
| | | 2-F5 |
| COLLIER DE SERRAGE | 137451 | 1-G6 |
| | 19360 | 1-K13 |
| | 87956 | 4-I2 |
| COLLIER TUYAU DRAINAGE | 13305B | 3-D6 |
| COLLIER(D)RESERVOIR | 42410C | 2-G8 |
| COLLIER(G)RESERVOIR | 42420A | 2-G8 |
| COLLIER,DURITE | 76423C | 3-F14 |
| COMMANDE | 13290 | 1-C7 |
| | | 1-F7 |
| | | 1-I6 |
| | | 1-L6 |
| COMMANDE A DISTANCE | 62350 | 3-D15 |
| COMMANDE D'AVERTISSEUR, V | 32800 | 2-C4 |
| COMMANDE DE CHAUFFAGE | 61190 | 3-D14 |
| COMMANDE(ENSEMBLE) | 189401 | 1-G11 |
| COMMUTATEUR | 17630 | 1-H10 |
| | | 1-M10 |
| | 18970 | 1-G11 |
| | 24760 | 1-E12 |
| | | 1-G12 |
| | 60690 | 3-D8 |
| | | 3-I8 |
| | 76447 | 3-H14 |
| COMMUTATEUR ECLAIRAGE | 60470 | 3-F7 |
| | | 3-J7 |
| COMMUTATEUR, COMBINE | 66110 | 3-F7 |
| | | 3-K7 |
| COMMUTATEUR, FEU DE RECUL | 17640 | 1-H10 |
| | | 1-M10 |
| COMPENSATEUR | 236931 | 1-G4 |
| COMPENSATEUR D'ALTITUDE | 13770 | 1-C7 |
| | | 1-F7 |
| | | 1-I6 |
| | | 1-L6 |
| COMPTEUR | 55471 | 3-M7 |
| CONDENSATEUR | 24322 | 1-H11 |
| | 24334 | 1-I11 |
| | | 1-J11 |
| | 24581 | 1-C12 |
| | | 1-M11 |
| | 66992 | 3-H16 |
| CONDUIT | 18107 | 1-C11 |
| | 40070 | 2-C7 |
| | 40560 | 2-E7 |
| | 61150 | 3-C14 |
| | 61220 | 3-D14 |
| | 67500 | 4-G2 |
| | 76416B | 3-F14 |
| | 76417C | 3-F14 |
| CONDUIT (D) | 64761B | 3-K9 |
| CONDUIT (D), FREIN ARRIER | 43660A | 2-H9 |
| | 45280 | 2-I9 |
| CONDUIT (G), FREIN ARRIER | 43650A | 2-H9 |
| | 45320 | 2-I9 |
| CONDUIT A VIDE | 13650 | 1-C7 |
| | | 1-F7 |
| | | 1-I6 |
| | | 1-L6 |
| | 19910 | 1-D13 |
| | 23509 | 1-E6 |
| | | 1-G5 |
| | | 1-L5 |
| | | 1-M4 |
| | 43830 | 2-E9 |
| | 43850 | 2-F9 |
| CONDUIT ANTI-BUEE(D) | 60181A | 3-K9 |
| CONDUIT ANTI-BUEE(G) | 60182 | 3-K9 |
| CONDUIT CENTRAL | 64750A | 3-K9 |
| CONDUIT D'AERATION | 137851 | 1-F4 |
| | 13971 | 1-F4 |
| CONDUIT NO1(G) | 64771B | 3-K9 |
| CONDUIT NO2(G) | 64772B | 3-K9 |
| CONDUIT NO3(G) | 64773B | 3-K9 |
| CONDUIT, AIR | 137401 | 1-F6 |
| | 13744A | 1-F6 |
| | 40420 | 2-D7 |
| | 40610 | 2-E7 |
| | 40620 | 2-E7 |
| | 40720 | 2-E7 |
| CONDUIT, AIR CHAUD | 13390 | 1-D4 |
| CONDUIT, ASPIRATION D'AIR | 23615 | 1-G4 |
| CONDUIT, DE FREIN AVANT | 45250 | 2-I9 |
| CONDUIT, EMBRAYAGE | 41370 | 2-C8 |
| CONDUIT, ESSENCE | 45111 | 2-E10 |
| | 45112 | 2-E10 |
| CONDUIT, ESSENCE RETOUR | 45611 | 2-F10 |
| CONDUIT, EVAPORATION | 45711 | 2-F10 |
| CONDUIT, FREIN ARRIERE | 45350 | 2-I9 |
| | 45360A | 2-I9 |
| CONDUIT, HUILE | 19920 | 1-D13 |
| | 19930 | 1-D13 |
| CONDUITE D,AIR | 13650A | 1-C7 |
| | | 1-F7 |
| | | 1-I6 |
| | | 1-L6 |
| | 13650J | 1-C7 |
| | | 1-F7 |
| CONDUITE D'AIR | 13296 | 1-C7 |
| | | 1-F7 |
| | | 1-I6 |
| | | 1-L6 |
| | 137171 | 1-F6 |
| | 137181 | 1-F6 |
| | 137251 | 1-F6 |
| | 137751 | 1-C7 |
| | | 1-F7 |
| | | 1-J6 |
| | | 1-L6 |
| | 137761 | 1-C7 |
| | | 1-J6 |
| | | 1-M6 |
| | 42316 | 2-F8 |
| | 42571 | 2-G8 |
| | 42588 | 2-H8 |
| CONSOLE, AR | 64410 | 3-C9 |
| | | 3-H9 |
| CONSOLE, AV | 64310 | 3-G9 |
| | | 3-M8 |
| CONTACT | 24496 | 1-I11 |
| | | 1-K11 |
| CONTACT DE DEMARREUR | 66155 | 3-C2 |
| | 66156 | 3-C2 |
| CONTACT NIVEAU EAU | 15610 | 1-J8 |
| | 15620 | 1-J8 |
| CONTACT NIVEAU HUILE | 107301 | 1-I2 |
| CONTACT, AVERTISSEUR | 60267 | 3-F7 |
| | | 3-J7 |
| CONTRE-POIDS | 115111 | 1-D3 |
| CONTROLE-POIDS | 117501 | 1-E3 |
| COQUILLE ET PIGNON SOLEIL | 19550 | 1-M13 |
| CORNIERE DE BATTERIE | 56030 | 1-H12 |
| CORPS,ECH.CHALEUR | 40320 | 2-C7 |
| COUPELLE, PISTON | 26671 | 2-F2 |
| COUPELLE, PRIMAIRE | 49626 | 2-F9 |
| COUPELLE, SECONDAIRE | 49625 | 2-F9 |
| COUPLE CONIQUE | 27110 | 2-C3 |
| COUPLEUR | 19100A | 1-C13 |
| COURONNE, VOLANT MOTEUR | 11502 | 1-C3 |
| COURROIE | 137151 | 1-F6 |
| | 18381 | 1-F11 |
| COURROIE FIXATION | 69560 | 4-E5 |
| COURROIE FIXATION'B' | 69580 | 4-F5 |
| COUSSINET | 105021 | 1-E2 |
| COUSSINET DE ROTOR | 111111 | 1-F3 |
| COUSSINET REPOSE-PIED | 86202 | 2-D9 |
| COUSSINET,CABLE CDE GAZ | 56942B | 3-E7 |
| | | 3-J7 |
| COUVER. LAMPE(G) | 51421 | 3-D4 |
| COUVERCLE | 19027A | 1-C13 |
| | 19565 | 1-M13 |
| | 23340 | 1-D5 |
| | | 1-I5 |
| | | 1-J4 |
| | | 1-N5 |
| | 60701 | 3-E8 |
| | | 3-I8 |
| | 62321 | 3-C15 |
| COUVERCLE BRAS ESSUI-GLAC | 76641 | 4-I2 |
| COUVERCLE CONSOLE | 64450 | 3-D9 |
| | | 3-I9 |
| COUVERCLE CONSOLE AV | 64901A | 3-D9 |
| | | 3-I9 |
| COUVERCLE DE NOYAU | 32049 | 2-C4 |
| COUVERCLE ESSENCE | 42410 | 2-G8 |
| COUVERCLE LAMPE(D) | 51421 | 3-D4 |
| COUVERCLE MONTE | 23310 | 1-C5 |
| | | 1-M5 |
| | | 1-I4 |
| | | 1-M5 |
| COUVERCLE MONTRE | 55721 | 3-N7 |
| COUVERCLE MOTEUR | 76421C | 3-J14 |
| COUVERCLE POIGNEE INTER. | 58303B | 3-C13 |
| COUVERCLE RECHAUFFEUR | 61145 | 3-E14 |
| COUVERCLE SUP | 19029 | 1-C13 |
| COUVERCLE THERMOSTAT | 15172 | 1-H8 |
| COUVERCLE, BOITE A GANTS | 64030 | 3-G8 |
| | | 3-K8 |
| COUVERCLE, COTE | 19028A | 1-C13 |

# INDEX ALPHABÉTIQUE (FRANÇAIS)


| DESIGNATION | D-CODE | PLACE |
|---|---|---|
| COUVERCLE, INF | 56111 | 3-L6 |
| COUVERCLE, PLATEAU | 17473 | 1-G10 |
| | | 1-L10 |
| CRAMPON | 24304 | 1-H11 |
| | | 1-J11 |
| | 24305 | 1-H11 |
| | | 1-J11 |
| | 76173 | 3-E14 |
| CRIC | 68800A | 2-F6 |
| CROCHET | 69941 | 4-F5 |
| CROCHET AVANT (G) | 56290 | 3-L6 |
| CROCHET FIXATION | 56291A | 3-M6 |
| CROCHET,ARRIERE | 56291 | 3-M6 |
| CROCHET,AVANT | 56290 | 3-L6 |
| CROCHET,MOTEUR | 108611 | 1-I2 |
| | 108621 | 1-I2 |
| CUVETTE | 49635 | 2-F9 |
| CYLINDRE RECEPTEUR, ROUE | 26610A | 2-F2 |
| CYLINDRE, RECEPTEUR, EMBR | 41920 | 2-D8 |
| ** D ** | | |
| DEFLECTEUR | 62801A | 3-I15 |
| | | 3-K15 |
| DEFLECTEUR AIR | 52920 | 3-F5 |
| DEFLECTEUR,FENETRE COTE | 63942B | 3-G15 |
| DEMARREUR | 18400 | 1-D12 |
| | | 1-F12 |
| DIAPHRAGME DE CARBURATEUR | 23322 | 1-D5 |
| | | 1-I5 |
| | | 1-J4 |
| | | 1-N5 |
| DIAPHRAGME DE DEPRESSION | 19823 | 1-I13 |
| DIFFERENTIEL, SUPPORT | 27150 | 2-C3 |
| DISPOSITIF D'ALLUMAGE | 24910 | 1-G11 |
| DISQUE (D), FREIN | 33980 | 2-D5 |
| | | 2-F5 |
| DISQUE (G), FREIN | 33980 | 2-D5 |
| | | 2-F5 |
| DISQUE D'EMBRAYAGE | 16460 | 1-K8 |
| DISQUE EXT., BTE AUTOM | 19499 | 1-K13 |
| | 19609 | 1-E14 |
| DISQUE, BOITE AUTOM | 19020 | 1-C13 |
| | 19500 | 1-K13 |
| | 19610 | 1-E14 |
| DISTRIBUTEUR | 18200 | 1-H11 |
| | | 1-J11 |
| DOUBLURE, TOIT | 68021 | 4-C3 |
| DOUILLE | 55261 | 3-L7 |
| | 55261A | 3-L7 |
| DOUILLE, CABLE KM | 17442 | 1-D9 |
| | | 1-F9 |
| DURITE | 135271 | 1-H4 |
| | 76420 | 3-F14 |
| DURITE D'AIR CHAUD | 13344 | 1-G4 |
| DURITE D'EAU | 15185 | 1-H8 |
| | 15186 | 1-H8 |
| | 15351 | 1-J8 |
| | 61213 | 3-D14 |
| DURITE D'EAU NO 1 | 61211 | 3-D14 |

| DESIGNATION | D-CODE | PLACE |
|---|---|---|
| DURITE D'EAU NO 2 | 61212 | 3-D14 |
| DURITE D'EVAPORATION | 13972 | 1-F4 |
| DURITE DE DEGIVRAGE | 61251 | 3-K9 |
| DURITE DE DEPRESSION | F1280B | 1-H6 |
| | | 1-K6 |
| | 132421 | 1-C7 |
| | | 1-F7 |
| | | 1-I6 |
| | | 1-L6 |
| | 132471 | 1-I6 |
| | | 1-L6 |
| | 19904 | 1-D13 |
| | 43836 | 2-E9 |
| | 43842 | 2-E9 |
| | 43842A | 2-E9 |
| DURITE DE REMPLISSAGE | 42221 | 2-F8 |
| DURITE FLEXIBLE | 41380 | 2-C8 |
| | 43980 | 2-H9 |
| DURITE FLEXIBLE NO 1 | 43810B | 2-H9 |
| ** E ** | | |
| ECROU | 13461 | 1-D4 |
| | 148221 | 1-F8 |
| | 19389 | 1-G13 |
| | 238471 | 1-E8 |
| | 33042 | 2-C5 |
| | | 2-E5 |
| | 34222 | 2-K5 |
| | 40355 | 2-C7 |
| | 40355A | 2-C7 |
| | 40425 | 2-D7 |
| | 46061 | 2-H10 |
| | 50335A | 3-F3 |
| | 55905 | 3-N7 |
| | 56905A | 3-D8 |
| | | 3-H8 |
| | 56905C | 3-E7 |
| | | 3-J7 |
| | 56905D | 3-F9 |
| | | 3-L8 |
| | 56905F | 3-N7 |
| | 62365 | 3-D15 |
| | 69049A | 3-K4 |
| | 69049D | 3-H15 |
| | 76472A | 3-K14 |
| | 87108 | 4-J2 |
| | 87119 | 4-J2 |
| | 87134 | 4-I2 |
| ECROU AILE AV | 52841 | 3-E5 |
| ECROU AMORTISSEUR | 62635 | 3-D15 |
| ECROU D'AXE | 19443 | 1-G14 |
| ECROU DE CHARNIERE | 51433 | 3-D4 |
| ECROU DE SERRAGE | 117111 | 1-D3 |
| | 17629 | 1-C10 |
| | | 1-J9 |
| | 27030 | 2-C3 |
| ECROU DE TRAVERSE | 39349A | 2-L5 |
| ECROU,TIGE TENSION | 34133A | 2-K5 |
| ECUSSON | 58375 | 3-E13 |

| DESIGNATION | D-CODE | PLACE |
|---|---|---|
| ELEMENT FILTRE A AIR | 23603 | 1-G4 |
| ELEMENT, FILTRE A HUILE | 23802 | 1-E8 |
| EMBLEME | 32811 | 2-C4 |
| | 37192 | 2-C6 |
| EMBRAYAGE | 19595 | 1-D14 |
| EMBRAYAGE ARR., BOITE AUT | 19510 | 1-M13 |
| EMBRAYAGE AV. BOITEAUT | 19460 | 1-K13 |
| ENJOLIVEUR DE MOYEU | 37190 | 2-C6 |
| ENSEMBLE DE DEPRESSION | 24350 | 1-I11 |
| | | 1-J11 |
| | 24351 | 1-I11 |
| | | 1-K11 |
| ENTRAINEMENT | 66939 | 3-H16 |
| | | 3-J16 |
| ENTRETOISE DE ROULEMENT | 26155 | 2-D2 |
| EPAISSEUR | 146521 | 1-D8 |
| | 17207 | 1-G9 |
| | | 1-K9 |
| | 17287 | 1-L9 |
| | | 1-M9 |
| | 17287J | 1-I9 |
| | | 1-M9 |
| | 17327 | 1-J9 |
| | | 1-N9 |
| | 17474J | 1-H10 |
| | | 1-L10 |
| | 17641 | 1-D10 |
| | 182761 | 1-D8 |
| | 18375 | 1-F11 |
| | 28157 | 2-F3 |
| | 32188 | 2-G4 |
| | 33626A | 2-C5 |
| | | 2-F5 |
| | 66821 | 3-D16 |
| EPAISSEUR DE CHARNIERE IN | 58245 | 3-C13 |
| | 58215 | 3-C13 |
| EPAISSEUR HAUT-PARLEUR | 66985C | 3-H16 |
| | | 3-K16 |
| EPAISSEUR TUYAU HUILE | 13331B | 1-C13 |
| EPAISSEUR, PIGNON MARCHE | 115071 | 1-D3 |
| | 17276 | 1-H9 |
| | | 1-L9 |
| | 17313 | 1-I9 |
| | | 1-N9 |
| | 17313B | 1-I9 |
| | | 1-N9 |
| EPAISSEUR'A' | 70447A | 3-H15 |
| ETIQUETTE | 69041 | 4-G5 |
| ETIQUETTE DES PNEUS | 69014 | 4-G5 |
| ETIQUETTE ESSENCE | 69038A | 4-G5 |
| EXCENTRIQUE | 60253 | 3-E7 |
| | | 3-J7 |
| EXTRACTEUR (D) | 51911 | 3-K4 |
| EXTRACTEUR (G) | 51911 | 3-K4 |
| EXTRACTEUR JOINT | 51902A | 3-K4 |
| ** F ** | | |
| FAISCEAU | 66965 | 3-K16 |
| FAISCEAU ARR | 67050 | 3-N16 |

# INDEX ALPHABÉTIQUE (FRANÇAIS)


| DESIGNATION | D-CODE | PLACE |
|---|---|---|
| FAISCEAU AVANT | 67010A | 3-M16 |
| FAISCEAU DE FREIN A MAIN | 67120 | 4-F2 |
| FAISCEAU DE PLAFONNIER | 67100 | 3-N16 |
| FAISCEAU DE TABLEAU DE BC | 67030 | 3-M16 |
| FAISCEAU DE TRANSMISSION | 67090 | 3-N16 |
| FAISCEAU RETROVIS. EXT | 67180A | 4-F2 |
| FAISCEAU, COURT | 66980 | 3-K16 |
| FAISCEAU, HAUT PARLEUR | 66975 | 3-H16 |
| | | 3-K16 |
| FAISCEAU, HAUTE TENSION | 181201 | 1-D11 |
| | 181301 | 1-D11 |
| | 181401 | 1-D11 |
| | 18150 | 1-D11 |
| | 181601 | 1-E11 |
| | 181701 | 1-E11 |
| | 181801 | 1-E11 |
| FAISCEAU,HAUTE TENSION | 18110A | 1-C11 |
| FERRURE, CAPOT | 52510 | 3-C5 |
| FEU CLIGNOTEUR(G) | 51120T | 3-C4 |
| FIBRANNE | 55315 | 3-D8 |
| | | 3-H8 |
| FIBRANNE (C) DE PLANCHER | 68654 | 4-F4 |
| | 68651 | 4-F4 |
| FIBRANNE COFFRE | 68667D | 4-F4 |
| FIBRANNE DE PLANCHER (D) | 68665 | 4-F4 |
| | 68666 | 4-F4 |
| FIL | 6691CA | 3-J16 |
| | 6691CB | 3-G16 |
| FIL ARRETOIR | 49638A | 2-D8 |
| FIL COURT | 67091 | 3-N16 |
| FIL DE CONTACT | 24317 | 1-H11 |
| | 24318 | 1-H11 |
| | 76611 | 4-J2 |
| FILTRE A AIR | 13320 | 1-G4 |
| FILTRE A ESSENCE | 13470 | 1-F4 |
| FIXATEUR DE BARILLET | 60261A | 3-F7 |
| | | 3-J7 |
| FIXATION DE CABLE | 76407A | 3-H14 |
| | 76412D | 3-H14 |
| FIXATION, BOBINE | 181901 | 1-E11 |
| | 1881C | 1-F11 |
| FIXATION, CABLE | 52302 | 3-C5 |
| FIXATION, FILTRE A ESSENC | 13481 | 1-F4 |
| FIXATION, ROUE DE SECOURS | 56210B | 2-F6 |
| FLASQUE | 34381 | 2-I5 |
| FLASQUE (D), FREIN | 26280 | 2-E2 |
| FLASQUE (G), FREIN ARR | 26280 | 2-E2 |
| FLASQUE POMPE A EAU | 15117 | 1-G8 |
| FLASQUE,INTERMEDIAIRE | 104001 | 1-E2 |
| FLEXIB.D'HUILE | 147201 | 1-F8 |
| | 147301 | 1-F8 |
| | 19933 | 1-E13 |
| FLEXIBLE ESSENCE | F1040B | 1-H6 |
| | | 1-K6 |
| | F1050B | 1-H6 |
| | | 1-K6 |
| | F1130B | 1-H6 |
| | | 1-K6 |
| | F1230B | 1-H6 |
| | 13270J | 1-E4 |
| | 45125 | 2-E10 |
| | 45126 | 2-E10 |
| | 45612 | 2-F10 |
| | 45613 | 2-F10 |
| FLEXIBLE RETOUR ESSENCE | 13422 | 1-E4 |
| | 45611J | 2-F10 |
| FLOTTEUR | 23316 | 1-C5 |
| | | 1-H5 |
| | | 1-J4 |
| | | 1-M5 |
| | 43542 | 2-E9 |
| FLOTTEUR,ARRIERE | 23329A | 1-D5 |
| | | 1-I5 |
| | | 1-J4 |
| | | 1-N5 |
| FOURCHETTE DE DEBRAYAGE | 16520 | 1-K8 |
| FOURCHETTE DE FREIN | 43140 | 2-D9 |
| FOURCHETTE, EMBRAYAGE | 41140 | 2-C9 |
| FOURCHETTE, VITESSE | 17402 | 1-E10 |
| | | 1-I10 |
| | 17404 | 1-E10 |
| | | 1-I10 |
| | 17406 | 1-E10 |
| | | 1-I10 |
| FUSIBLE | 18055 | 3-L16 |
| | 67099 | 3-D16 |
| | 67099A | 3-D16 |
| | 67099C | 3-D16 |
| FUSIBLE (10A) | 66495 | 3-C16 |
| FUSIBLE (15A) | 66496 | 3-C16 |
| FUSIBLE 20A | 66497 | 3-C16 |
| ** G ** | | |
| GACHE | 58570A | 3-F13 |
| | 64101 | 3-G8 |
| | | 3-K8 |
| GACHE DE VERROU | 62361 | 3-D15 |
| GAINE DE DIRECTION (D) | 60221 | 3-E7 |
| | | 3-J7 |
| | 60231 | 3-E7 |
| | | 3-J7 |
| GAINE, RESSORT | 43082 | 2-D9 |
| GARNITURE (D) | 60771 | 3-E8 |
| | | 3-J8 |
| GARNITURE (D), COTE AV | 68371 | 4-K3 |
| | 68860 | 4-D4 |
| GARNITURE (D), MONTANT AR | 68320A | 4-H3 |
| | 68171 | 4-E3 |
| | 68221 | 4-G3 |
| GARNITURE (D), PORTE | 68420 | 3-H12 |
| GARNITURE (D), SIEGE ARR | 88131 | 3-H10 |
| GARNITURE (G) | 60781 | 3-F8 |
| | | 3-J8 |
| GARNITURE (G), COTE AV | 68391 | 4-M3 |
| | 68870 | 4-D4 |
| GARNITURE (G), MONTANT AR | 68330 | 4-I3 |
| | 68191 | 4-G3 |
| | 68241 | 4-H3 |
| GARNITURE (G), PORTE | 68420 | 3-K12 |
| GARNITURE D | 68761 | 4-C4 |
| GARNITURE D DEFLECTEUR | 68520C | 4-N3 |
| GARNITURE DE COIN, COFFRE | 68890 | 4-E4 |
| GARNITURE G | 68771 | 4-C4 |
| GARNITURE G DEFLECTEUR | 68550C | 4-N3 |
| GARNITURE, SUP | 60720 | 3-E8 |
| | | 3-J8 |
| GICLEUR | 23397 | 1-C6 |
| | | 1-E5 |
| | | 1-J5 |
| | | 1-K4 |
| | 23416 | 1-C6 |
| | | 1-E5 |
| | | 1-J5 |
| | | 1-L4 |
| | 23541 | 1-E6 |
| | | 1-G5 |
| | | 1-L5 |
| | | 1-M4 |
| GICLEUR D'AIR | 23434B | 1-D6 |
| | | 1-F5 |
| | | 1-K5 |
| | | 1-L4 |
| GICLEUR,JEU,ACCELERATEUR | 234901 | 1-D6 |
| | | 1-G5 |
| | | 1-L5 |
| | | 1-M4 |
| GICLEUR,LAVE-GLACE | 67510 | 4-G2 |
| GLACE DE COTE (D) | 63941 | 3-G15 |
| GLACE DE COTE (G) | 63951 | 3-G15 |
| GLACE DE LUNETTE AR | 63931 | 3-F15 |
| GLACE DE PORTE (D) | 58500 | 3-D12 |
| GLACE DE PORTE (G) | 58500 | 3-D12 |
| GLISSIERE VITRE | 58605A | 3-D12 |
| GOUJON | 10203A | 1-G2 |
| | 102031 | 1-G2 |
| | 102081 | 1-G2 |
| | 17352 | 1-C9 |
| | | 1-E9 |
| | 17463A | 1-K10 |
| | 17464 | 1-L10 |
| | 19352 | 1-F13 |
| | 39382 | 2-H6 |
| | 40398 | 2-D7 |
| GOUJON DE CACHE | 151041 | 1-G8 |
| GOUJON, REACTEUR | 10105A | 1-D2 |
| GOUJON, REACTEUR THERM | 138761 | 1-D4 |
| GOUPILLE | 13717 | 1-C5 |
| | | 1-H5 |
| | | 1-I4 |
| | | 1-M5 |
| GOUTTIERE (D) | 70311 | 3-E6 |
| | | 3-L5 |
| GOUTTIERE (D),EXTERIEUR T | 70250 | 3-E6 |
| | | 3-L5 |
| GOUTTIERE (D),INTERIEUR T | 70050 | 3-D6 |
| | | 3-K5 |
| GOUTTIERE (G) | 71311 | 3-G6 |
| | | 3-N5 |
| GOUTTIERE (G),EXTERIEUR T | 71250 | 3-G6 |

# INDEX ALPHABÉTIQUE (FRANÇAIS)


| DESIGNATION | D-CODE | PLACE |
|---|---|---|
| GOUTTIERE (G),EXTERIEUR T... | 71250 | 3-N5 |
| GOUTTIERE (G),INTERIEUR T... | 71050 | 3-F6 |
| | | 3-M5 |
| GRAISSE... | 49246 | 2-D5 |
| | | 2-G5 |
| | 49246C | 2-G5 |
| GRILLE... | 60565 | 3-I8 |
| GRILLE (D)... | 51901 | 3-K4 |
| GRILLE (G)... | 51901 | 3-K4 |
| GRILLE DE CALANDRE... | 50711 | 3-D3 |
| GRILLE DE HAUT-PARLEUR... | 66980C | 3-H16 |
| GUIDE... | 19381 | 1-F13 |
| GUIDE A (D), GLACE... | 58601 | 3-D12 |
| GUIDE A (G), GLACE... | 58601 | 3-D12 |
| GUIDE AUVENT... | 64820 | 3-L9 |
| GUIDE AUVENT CENTRAL... | 64811A | 3-L9 |
| ** H ** | | |
| HAUT PARLEUR... | 66960 | 3-H16 |
| | | 3-J16 |
| HAUT-PARLEUR ARR... | 66970 | 3-H16 |
| | | 3-K16 |
| HOUSSE... | 34136 | 2-K5 |
| | 56785 | 3-D5 |
| | 70269A | 3-G8 |
| HOUSSE (G), SIEGE AR... | 88181 | 3-M10 |
| HOUSSE DE SIEGE (D)... | 88110 | 3-D10 |
| | 88111 | 3-F10 |
| HOUSSE DE SIEGE (G)... | 88160 | 3-J10 |
| | 88161 | 3-K10 |
| ** I ** | | |
| INDICATEUR... | 64340A | 3-G9 |
| | | 3-N8 |
| INDICATEUR DE NIVEAU... | 43540 | 2-E9 |
| INDICATEUR ESSENCE ET THE... | 55491A | 3-N7 |
| INDUIT... | 24720 | 1-D12 |
| | | 1-F12 |
| INDUIT FIXE... | 24501 | 1-L11 |
| | | 1-N11 |
| INSONORISATEUR PLANCHER... | 76071 | 4-K4 |
| INTE., TEMOIN FREIN A MAI... | 66840 | 3-D16 |
| INTERRUPT.MOTEUR ANTENNE ... | 66800 | 3-G7 |
| | | 3-K7 |
| INTERRUPTEUR... | 13150 | 1-E7 |
| | | 1-H6 |
| | | 1-K6 |
| | | 1-N6 |
| | 18660 | 3-C16 |
| | 66670 | 3-G7 |
| | | 3-K7 |
| INTERRUPTEUR CDE DISTANCE... | 66630B | 3-E15 |
| INTERRUPTEUR CLIGNOTEUR... | 66123 | 3-F7 |
| | | 3-K7 |
| INTERRUPTEUR DE RALENTI... | 234501 | 1-D6 |
| | | 1-F5 |
| | | 1-K5 |
| | | 1-L4 |

| DESIGNATION | D-CODE | PLACE |
|---|---|---|
| INTERRUPTEUR DESAMBUAGE... | 66460 | 3-G7 |
| | | 3-K7 |
| INTERRUPTEUR ESSUIE-GLACE... | 66121A | 3-F7 |
| | | 3-K7 |
| INTERRUPTEUR FEUX CODE... | 66122 | 3-F7 |
| | | 3-K7 |
| INTERRUPTEUR RETROVISEUR ... | 69140 | 4-N4 |
| INTERRUPTEUR, HUILE... | 18880 | 1-F11 |
| ISOLANT... | 60715 | 3-F7 |
| | | 3-J7 |
| | 68664E | 4-F4 |
| ISOLATEUR... | 13315 | 1-E4 |
| | 133711 | 1-D4 |
| | 40401 | 2-D7 |
| | 40405 | 2-D7 |
| | 40433 | 2-D7 |
| | 40669 | 2-E7 |
| | 56451 | 3-M6 |
| | 56981A | 3-N6 |
| | 64492 | 3-D9 |
| | | 3-I9 |
| ISOLATEUR DE CHALEUR AV. ... | 56410 | 3-M6 |
| ISOLATEUR INFERIEUR... | 39384 | 2-H6 |
| ISOLATEUR NO4 ARR... | 56460 | 3-M6 |
| ISOLATEUR RESERV. ESSENC ... | 56991D | 3-N6 |
| ISOLATEUR SUPERIEUR... | 39385 | 2-H6 |
| ISOLATEUR, TABLEAU DE BOR... | 68620 | 4-F4 |
| ISOLATEUR,RESERVOIR ESSEN... | 42523 | 2-G8 |
| ** J ** | | |
| JANTE... | 37600 | 2-D6 |
| JAUGE... | 18510 | 1-F11 |
| JAUGE DE TEMPERATURE... | 135311 | 1-H4 |
| JAUGE, NIVEAU D'HUILE... | 10450 | 1-E3 |
| | 19880 | 1-I13 |
| JAUGE, RESERVOIR ESSENCE ... | 60960A | 2-H8 |
| JEU AMORTISSEURS ARR.. ... | 28700S | 2-G3 |
| JEU AXE & RONDELLES FIXAT... | 26501S | 2-E2 |
| JEU AXES & RONDELLES... | 13717A | 1-C5 |
| | | 1-H5 |
| | | 1-I4 |
| | | 1-M5 |
| JEU BUSELURES... | 17481S | 1-H10 |
| | | 1-L10 |
| JEU CACHES... | 26681S | 2-F2 |
| JEU CAOUTCHOUC... | 37192A | 2-C6 |
| JEU CARDAN... | 25060S | 2-C2 |
| JEU CLIGNOTEUR(D)... | 51120S | 3-C4 |
| JEU D'ECROUS... | 24533 | 1-L11 |
| | | 1-N11 |
| | 24537 | 1-L11 |
| JEU DE BARILLET... | 09010 | 3-C2 |
| JEU DE BARILLET (D), PORT... | 75910 | 3-C2 |
| JEU DE BARILLET (G), PORT... | 75920 | 3-C2 |
| JEU DE BARILLET, BOITE A ... | 75950 | 3-C2 |
| JEU DE BARILLET,PORTE DE ... | 75960 | 3-D2 |
| JEU DE BOUCHONS... | 23354 | 1-D5 |
| | | 1-I5 |
| | | 1-J4 |

| DESIGNATION | D-CODE | PLACE |
|---|---|---|
| | | 1-N5 |
| JEU DE BOULONS... | 24731 | 1-D12 |
| | | 1-F12 |
| JEU DE CACHE... | 33049 | 2-C5 |
| | | 2-E5 |
| JEU DE GICLEUR, PRINCIPAL... | 23353 | 1-D5 |
| | | 1-I5 |
| | | 1-I4 |
| | | 1-N5 |
| | 23402A | 1-C6 |
| | | 1-E5 |
| | | 1-J5 |
| | | 1-K4 |
| JEU DE GICLEUR, RALENTI... | 23407 | 1-C6 |
| | | 1-E5 |
| | | 1-J5 |
| | | 1-K4 |
| JEU DE JOINTS... | 49240C | 2-D5 |
| | | 2-G5 |
| JEU DE JOINTS EN 'O'... | 230401 | 1-C2 |
| JEU DE PIECE... | 76619 | 4-J2 |
| JEU DE PIECES COMPOSANTES... | 23410A | 1-C6 |
| | | 1-E5 |
| | | 1-J5 |
| | | 1-K4 |
| JEU DE PIECES INTER... | 41320S | 2-C8 |
| | 41440S | 2-C8 |
| JEU DE PISTON... | 34701S | 2-I5 |
| JEU DE PLAQUES AILE... | 52151 | 3-E5 |
| JEU DE PLAQUES CENTRALES ... | 55217 | 3-C7 |
| | | 3-H7 |
| JEU DE PLAQUES COUVERCLE ... | 64050 | 3-G8 |
| | | 3-K8 |
| JEU DE PLAQUES(D)... | 68056B | 4-D3 |
| JEU DE PLAQUES(G)... | 68057B | 4-D3 |
| JEU DE RESSORTS... | 24308 | 1-H11 |
| | | 1-J11 |
| | 24754 | 1-E12 |
| | | 1-G12 |
| | 37193 | 2-C6 |
| JEU DE RONDELFES... | 24726 | 1-D12 |
| | | 1-F12 |
| JEU DE ROROR,POMPE A HUIL... | 238821 | 1-E8 |
| JEU DE ROTULES DIRECTION ... | 32240S | 2-H4 |
| | 32280S | 2-H4 |
| JEU DE SUPPORTS... | 23377A | 1-C6 |
| | | 1-E5 |
| | | 1-J5 |
| | | 1-K4 |
| JEU DE VI ... | 17313A | 1-E10 |
| | | 1-I10 |
| | 23371 | 1-D5 |
| | | 1-I5 |
| | | 1-K4 |
| | | 1-N5 |
| | 234641 | 1-K5 |
| | 24360 | 1-I11 |
| | | 1-K11 |
| | 24526 | 1-L11 |
| | | 1-N11 |

# INDEX ALPHABÉTIQUE (FRANÇAIS)


| DESIGNATION | D-CODE | PLACE |
|---|---|---|
| JEU DE VIS | 24534 | 1-L11 |
| | 24535 | 1-L11 |
| | | 1-N11 |
| | 24725 | 1-D12 |
| | | 1-F12 |
| JEU DE VIS DE REGLAGE | 234701 | 1-D6 |
| | | 1-F5 |
| | | 1-K5 |
| | | 1-L4 |
| JEU DE VIS REGLAGE ACCEL | 23440 | 1-D6 |
| | | 1-F5 |
| | | 1-K5 |
| | | 1-L4 |
| JEU DE VIS, RALENTI | 23374 | 1-C6 |
| | | 1-E5 |
| | | 1-J5 |
| | | 1-K4 |
| JEU FEUX ARR.(D) | 51150S | 3-G4 |
| JEU FEUX ARR.(G) | 51150T | 3-G4 |
| JEU FEUX AV | 51060U | 3-C4 |
| JEU JOINTS | 3473CS | 2-I5 |
| JEU JOINTS AMORTISSEUR | 34760S | 2-I5 |
| JEU MOULURES AV. SUP.(D) | 50501S | 3-G3 |
| | 50502S | 3-G3 |
| JEU MOULURES AV.(D) | 50503S | 3-G3 |
| JEU MOULURES AV.(G) | 50504S | 3-G3 |
| JEU MOULURES INF. AV | 50505T | 3-G3 |
| JEU PHARES(D) | 51030S | 3-C4 |
| JEU POINTEAUX | 23390 | 1-C6 |
| | | 1-E5 |
| | | 1-J5 |
| | | 1-K4 |
| JEU POMPE ACCEL | 23360B | 1-D5 |
| | | 1-I5 |
| | | 1-J4 |
| | | 1-N5 |
| JEU SEGMENT D'HUILE | 231801 | 1-G3 |
| JEU SOUPAPES SURETE | 23507 | 1-E6 |
| | | 1-G5 |
| | | 1-M4 |
| JEU TIGE & JOINT | 23480 | 1-D6 |
| | | 1-F5 |
| | | 1-L5 |
| | | 1-M4 |
| JEU, RESSORT DE RAPPEL | 23320 | 1-C5 |
| | | 1-H5 |
| | | 1-J4 |
| | | 1-M5 |
| JOINT | 113211 | 1-F3 |
| | 13135 | 1-E7 |
| | | 1-H6 |
| | | 1-K6 |
| | | 1-N6 |
| | 13135A | 2-C7 |
| | 137491 | 1-G6 |
| | 148231 | 1-F8 |
| | 15081 | 1-G8 |
| | 15082 | 1-G8 |
| | 15173 | 1-H8 |
| | 15611 | 1-J8 |
| | 17474 | 1-G10 |
| | | 1-L10 |
| | 17478 | 1-H10 |
| | | 1-L10 |
| | 19258 | 1-D13 |
| | 23303A | 1-C5 |
| | | 1-H5 |
| | | 1-I4 |
| | | 1-M5 |
| | 23481 | 1-D6 |
| | | 1-F5 |
| | | 1-L5 |
| | | 1-M4 |
| | 23803A | 1-E8 |
| | 40325 | 2-C7 |
| | 40356 | 2-D7 |
| | 40429 | 2-D7 |
| | 40436 | 2-D7 |
| | 40668 | 2-E7 |
| | 40698 | 2-E7 |
| | 49656 | 2-F9 |
| | 51062A | 3-C4 |
| | 51902F | 3-F15 |
| | 67511 | 4-G2 |
| | 76455A | 3-K14 |
| | 76464A | 3-K14 |
| | 76514A | 3-I14 |
| JOINT (D) | 51164 | 3-G4 |
| JOINT 'O' | 101731 | 1-D2 |
| | 101741 | 1-G2 |
| | 105551 | 1-E2 |
| | 11400J | 1-C3 |
| | 14300J | 1-C8 |
| | 17442K | 1-D9 |
| | | 1-F9 |
| | 18201 | 1-E11 |
| | 19395 | 1-G13 |
| | 19396 | 1-G13 |
| | 19432 | 1-G14 |
| | 19446 | 1-G14 |
| | 19475 | 1-K13 |
| | 19604 | 1-D14 |
| | 19822 | 1-I13 |
| | 238371 | 1-E8 |
| | 34731 | 2-I5 |
| JOINT 'O',EXTERIEUR | 113431 | 1-F3 |
| JOINT 'O',INTERIEUR | 113411 | 1-F3 |
| JOINT BOUCHON HUILE | 102521 | 1-E2 |
| JOINT C.T.C. (D),PAVILLON | 58760 | 3-E12 |
| JOINT C.T.C.(D)SUP | 62805 | 3-I15 |
| | | 3-K15 |
| JOINT C.T.C.CAPOT | 56787 | 3-D5 |
| JOINT CAOUTCHOUC | 40508 | 2-D7 |
| | 42242 | 2-F8 |
| | 46083 | 2-I10 |
| | 63932 | 3-G15 |
| | 66971A | 3-N6 |
| JOINT CAOUTCHOUC (G), POR | 58760 | 3-E12 |
| JOINT CAOUTCHOUC(D) | 56791B | 3-I5 |
| JOINT CAOUTCHOUC(G) | 56791B | 3-I5 |
| JOINT CAOUTCHOUC,EXT | 58811A | 3-E12 |
| JOINT CAOUTCHOUC,INT | 58821A | 3-E12 |
| JOINT CHAMBRE FLOTTEUR | 23321 | 1-D5 |
| | | 1-I5 |
| | | 1-J4 |
| | | 1-N5 |
| JOINT COMPTEUR D'HUILE | 146111 | 1-D8 |
| JOINT D'ETANCHEITE INF | 68174 | 4-F3 |
| JOINT D'ETANCHEITE SUP | 68173 | 4-E3 |
| JOINT DE BOUCHON | 42462 | 2-G8 |
| JOINT DE FLANGE | 23358 | 1-D5 |
| | | 1-I5 |
| | | 1-J4 |
| | | 1-N5 |
| JOINT DE JAUGE | 66773A | 2-H8 |
| JOINT DE PLAQUE INSPECTIO | 17535 | 1-D9 |
| | | 1-F9 |
| JOINT DE SERRURE | 58962C | 3-C2 |
| JOINT DE SOMMET | 113011 | 1-F3 |
| JOINT DE SOUPAPE E.G.R | 203051 | 1-D7 |
| | | 1-G7 |
| JOINT ETANCHE | 15120 | 1-G8 |
| JOINT HERMETIQUE | 153311 | 1-I8 |
| | 15332 | 1-I8 |
| JOINT IN. DE PORTE | 58755 | 3-E12 |
| JOINT JEU AXES | 49696 | 2-G9 |
| JOINT MIRROIR(D) | 69136 | 4-N4 |
| JOINT MIRROIR(G) | 69196 | 4-C5 |
| JOINT MOULURE SUP | 50604 | 3-H3 |
| JOINT PLAQUE(D) | 51274A | 3-G4 |
| JOINT PLAQUE(G) | 51274A | 3-H4 |
| JOINT POMPE A EAU | 15116 | 1-G8 |
| JOINT.TAMIS HUILE | 141711 | 1-C8 |
| JOINT, BOUCHON | 50292 | 3-E3 |
| JOINT, BOUCHON VIDANGE | 10405 | 1-H2 |
| JOINT, CARTER AV | 10641 | 1-I2 |
| | 16225 | 1-K8 |
| JOINT, CARTER HUILE | 10431 | 1-H2 |
| | 19835 | 1-I13 |
| JOINT, CLAPET | 137241 | 1-F6 |
| JOINT, COLLECTEUR AD | 13111 | 1-C4 |
| JOINT, CUIR | 19394 | 1-G13 |
| | 19476 | 1-K13 |
| JOINT, ECHAPPEMENT | 20920 | 1-D4 |
| JOINT, PAREBRISE AV | 63902 | 3-F15 |
| JOINT, PIPE DE REMPLIQSAG | 42241 | 2-F8 |
| JOINT, PISTON | 19384 | 1-G13 |
| | 19385 | 1-G13 |
| | 19603 | 1-D14 |
| JOINT, POIGNEE REGUL | 58552 | 3-F13 |
| JOINT, POMPE A HUILE | 19215 | 1-C13 |
| JOINT, RALLONGE | 19735 | 1-H13 |
| JOINT, REACTEUR | 20910 | 1-D4 |
| JOINT, TRAPPE | 32163 | 2-F4 |
| JOINT,CARRE | 101711 | 1-D2 |
| JOINT'A'(D) | 50516B | 3-G3 |
| JOINT'A'(G) | 50526C | 3-G3 |
| JOINT'B'(D) | 50517B | 3-G3 |
| JOINT'B'(G) | 50527B | 3-G3 |
| JOINT'O' | 13100J | 1-C4 |

# INDEX ALPHABÉTIQUE (FRANÇAIS)


| DESIGNATION | D-CODE | PLACE |
|---|---|---|
| JOINT'O'..... | 17442J | 1-D9 |
| | | 1-F9 |
| | 19442J | 1-H13 |
| | 19870J | 1-I13 |
| JUPE ARRIERE..... | 70750 | 3-F6 |
| | | 3-M5 |
| JUPE AV.(D)..... | 52912A | 3-E5 |
| JUPE AV.(G)..... | 52913A | 3-F5 |
| JUPE AVANT..... | 52910 | 3-E5 |
| ** K ** | | |
| KIT AMORTISSEURS AV..... | 49790 | 2-J5 |
| KLAXON,GRAVE..... | 66790 | 3-D16 |
| ** L ** | | |
| LAMPE DE LECTURE..... | 51350A | 3-I4 |
| LAMPE PLAQUE(D)..... | 51270V | 3-G4 |
| LAMPE PLAQUE(G)..... | 51270W | 3-G4 |
| LANCEUR DE DEMARREUR..... | 24722 | 1-D12 |
| | | 1-F12 |
| LEVIER..... | 24730 | 1-D12 |
| | | 1-F12 |
| | 46055 | 2-H10 |
| | 46150 | 2-I10 |
| LEVIER ASSEMBLE, ARRIERE ... | 234301 | 1-D6 |
| | | 1-F5 |
| | | 1-K5 |
| | | 1-L4 |
| LEVIER ASSEMBLE, AVANT..... | 234201 | 1-C6 |
| | | 1-E5 |
| | | 1-J5 |
| | | 1-L4 |
| LEVIER DE COMMANDE..... | 17461A | 1-G10 |
| | | 1-K10 |
| LEVIER DE COMMANDE (D)..... | 26800 | 2-F2 |
| LEVIER DE COMMANDE NO 1..... | 76407 | 3-E14 |
| | 76409 | 3-E14 |
| LEVIER DE CONTROLE..... | 17461 | 1-G10 |
| | | 1-K10 |
| | 238441 | 1-E8 |
| | 76408 | 3-E14 |
| | 76411 | 3-F14 |
| | 76412 | 3-F14 |
| | 76471B | 3-K14 |
| | 76501 | 3-H14 |
| | 76502 | 3-H14 |
| LEVIER DE CRIC..... | 6881CA | 2-F6 |
| LEVIER DE FREIN A MAIN..... | 44010 | 2-C10 |
| LEVIER DE SURETE..... | 58291 | 3-C13 |
| LEVIER DE VITESSES..... | 17510 | 1-H10 |
| | | 1-L10 |
| LEVIER EAU(D)..... | 28160A | 2-G3 |
| LEVIER SELECTEUR..... | 19031 | 1-G14 |
| | 46010 | 2-H10 |
| LEVIER,AJUSTEUR..... | 46160 | 2-I10 |
| LOGEMENT, LEVIER DE VITES... | 17470 | 1-G10 |
| | | 1-L10 |
| LONGERON EXT. (D)..... | 53950 | 3-K6 |
| | 70270 | 3-E6 |
| | | 3-L5 |
| LONGERON EXT. (G)..... | 54950 | 3-L6 |
| LONGERON EXT.(G)..... | 56380 | 3-I5 |
| | 71270 | 3-G6 |
| | | 3-N5 |
| LUNETTE DE PHARE(D)..... | 50740 | 3-D3 |
| LUNETTE DE PHARE(G)..... | 50760 | 3-D3 |
| ** M ** | | |
| MACHOIRE DE FREIN..... | 26310 | 2-E2 |
| MAILLON DE LEVIER(D)..... | 51935 | 3-E4 |
| MAILLON DE LEVIER(G)..... | 51935 | 3-E4 |
| MAITRE CYLINDRE, EMBRAYAG... | 41990 | 2-D8 |
| MAITRE CYLINDRE, SERVO..... | 43990 | 2-F9 |
| MANCHON..... | 19455 | 1-G14 |
| | 24701 | 1-D12 |
| | | 1-F12 |
| | 25130 | 2-C2 |
| MANCHON DE CROISILLON..... | 25021 | 2-C2 |
| MANCHON DE STATOR..... | 87922 | 4-J2 |
| MANIV. DE LEVE-GLACE..... | 58370 | 3-E13 |
| MECANISME..... | 18391 | 1-F11 |
| | 55482 | 3-N7 |
| MECANISME D'EMBRAYAGE..... | 16410 | 1-K8 |
| MECANISME DE DIRECTION..... | 32110 | 2-F4 |
| MECANISME DE VENTILLATEUR... | 152101 | 1-I8 |
| MECANISME,LEVE-VITRE (D) ... | 58560 | 3-F13 |
| MINUTERIE..... | 67720C | 3-E16 |
| MIROIR (D)..... | 69110 | 4-M4 |
| MIROIR (G)..... | 69130 | 4-M4 |
| MIROIR INTERIEUR..... | 69170 | 4-N4 |
| MODERATEUR VITESSE..... | 17611 | 1-C10 |
| MONOGRAMME,LATERAL..... | 51721 | 3-J4 |
| MONTANT..... | 19361 | 1-F13 |
| MONTANT (D) ARR..... | 70100 | 3-D6 |
| | | 3-K5 |
| MONTANT (D), AVANT INTERI... | 70260 | 3-E6 |
| | | 3-L5 |
| MONTANT (D), CHARNIERE..... | 70210A | 3-E6 |
| | | 3-K5 |
| MONTANT (G) ARR..... | 71100 | 3-F6 |
| | | 3-M5 |
| MONTANT CENTRAL..... | 55220 | 3-C7 |
| | | 3-H7 |
| MONTANT D,CHARNIERE-EXT. ... | 74090 | 3-G6 |
| | | 3-N5 |
| MONTANT DE CHARNIERE..... | 71210A | 3-G6 |
| | | 3-M5 |
| MONTANT G. EXT.-CHARNIERE... | 74120 | 3-H6 |
| | | 3-N5 |
| MONTANT INTERIEUR (G), AV... | 71260 | 3-G6 |
| | | 3-N5 |
| MONTRE DE VOITURE..... | 55711 | 3-N7 |
| MOTEUR..... | 13083 | 1-H4 |
| MOTEUR & LEVIER(D)..... | 51930A | 3-D4 |
| MOTEUR & LEVIER(G)..... | 51930A | 3-E4 |
| MOTEUR DE SOUFFLERIE..... | 76424 | 3-J14 |
| MOTEUR ESSUIE-GLACE..... | 67350 | 4-H2 |
| MOTEUR(D)..... | 51931 | 3-E4 |
| MOTEUR(G)..... | 51931 | 3-E4 |
| MOULURE..... | 24563 | 1-M11 |
| MOULURE CONSOLE AV..... | 55012 | 3-F9 |
| | | 3-L8 |
| | 55013 | 3-F9 |
| | | 3-L8 |
| MOULURE COUVERCLE..... | 55014 | 3-D8 |
| | | 3-H8 |
| MOULURE DE GOUTTIERE (D) ... | 50441 | 3-I3 |
| | 50451 | 3-I3 |
| MOULURE DOSSIER ARR..... | 68696 | 4-J4 |
| MOULURE FENETRE ARR..... | 63935 | 3-G15 |
| MOULURE GAINE..... | 64332 | 3-G9 |
| MOULURE GLACE(D)..... | 63970 | 3-G15 |
| MOULURE PANNEAU INTERRUP.... | 55011 | 3-C7 |
| | | 3-H7 |
| MOULURE PANNEAU LAT..... | 55015 | 3-C7 |
| | | 3-H7 |
| MOULURE(G),GLACE..... | 63980 | 3-G15 |
| ** N ** | | |
| NECESSAIRE DE POMPE..... | 87993 | 4-G2 |
| NECESSAIRE DE REPARATION ... | 49610 | 2-F9 |
| | 49720 | 2-G9 |
| NIPPLE, TUYAU HUILE..... | 26922 | 2-F2 |
| ** O ** | | |
| OEILLET, FIL..... | 51516 | 3-D4 |
| ORNEMENT ARR..... | 51781 | 3-J4 |
| ORNEMENT,AV..... | 51771 | 3-J4 |
| ** P ** | | |
| PANNEAU..... | 55301 | 3-D7 |
| | | 3-I7 |
| PANNEAU AV..... | 52810 | 3-E5 |
| PANNEAU BOITE A GANTS..... | 64163B | 3-G8 |
| PANNEAU COTE(D)..... | 56370A | 3-I5 |
| PANNEAU DE DECORATION..... | 55270 | 3-C7 |
| | | 3-H7 |
| PANNEAU INTERRUPTEUR..... | 55311 | 3-E7 |
| | | 3-I7 |
| | 69150 | 4-N4 |
| PANNEAU JUPE ARR..... | 70791A | 3-F6 |
| | | 3-M5 |
| PANNEAU PORTE (D)..... | 58020 | 3-C12 |
| PANNEAU PORTE (G)..... | 58020 | 3-D12 |
| PANNEAU RENFORT SUP..... | 56391A | 3-I5 |
| PANNEAU SUP..... | 62820 | 3-I15 |
| | | 3-K15 |
| PANNEAU(D)..... | 68655C | 4-F4 |
| PANNEAU(G)..... | 68656B | 4-F4 |
| PARE-CHOC ARR.(D)..... | 50222 | 3-E3 |
| PARE-CHOC ARR.(G)..... | 50223 | 3-E3 |
| PARE-CHOCS (C), AR..... | 50221A | 3-E3 |
| PARE-CHOCS (C), AV..... | 50031A | 3-C3 |
| PARE-CHOCS (D), AR..... | 50230 | 3-E3 |

# INDEX ALPHABÉTIQUE (FRANÇAIS)


| DESIGNATION | D-CODE | PLACE |
|---|---|---|
| PARE-CHOCS (D), AV..... | 50041 | 3-C3 |
| PARE-CHOCS (G), AV..... | 50051 | 3-C3 |
| PARE-SOLEIL (D)..... | 69210 | 4-D5 |
| PARE-SOLEIL (G)..... | 69240 | 4-E5 |
| PAREBRISE..... | 63901 | 3-F15 |
| PASSAGE D'HUILE..... | 17540 | 1-D9 |
| | | 1-F9 |
| PASSAGE DE ROUE (D)..... | 53210 | 3-F5 |
| PASSAGE DE ROUE (G)..... | 54210 | 3-H5 |
| PASTILLE..... | 114051 | 1-C3 |
| | 23338 | 1-D5 |
| | | 1-I5 |
| | | 1-J4 |
| | | 1-N5 |
| | 58867D | 3-N6 |
| PATIN,PEDALE..... | 43028 | 2-C9 |
| PAVILLON..... | 74030 | 3-G6 |
| | | 3-N5 |
| PEDALE & BRAS..... | 41610B | 2-E8 |
| PEDALE D'EMBRAYAGE..... | 41030 | 2-C9 |
| PEDALE DE FREIN..... | 43030 | 2-C9 |
| PHARE AV.(G)..... | 510301 | 3-C4 |
| PIECE DE COTE (MOTEUR RCT... | 113021 | 1-F3 |
| PIGNON..... | 14143 | 1-C8 |
| | 19560 | 1-M13 |
| PIGNON D'ENTRAINEMENT..... | 115311 | 1-D3 |
| | 146251 | 1-D8 |
| | 17341 | 1-J9 |
| | | 1-N9 |
| | 17441 | 1-C9 |
| | | 1-F9 |
| | 19441 | 1-H13 |
| PIGNON DE COMMANDE..... | 17302 | 1-I9 |
| | | 1-M9 |
| PIGNON DE DIFFERENTIEL..... | 27255 | 2-D3 |
| PIGNON DE DIRECTION..... | 32130 | 2-F4 |
| PIGNON DE RENVOI..... | 17310 | 1-I9 |
| | | 1-N9 |
| PIGNON DISTRIB..... | 24340 | 1-I11 |
| | | 1-J11 |
| PIGNON FIXE..... | 17241 | 1-G9 |
| | | 1-K9 |
| | 17261 | 1-H9 |
| | | 1-L9 |
| | 17621 | 1-C10 |
| | | 1-J9 |
| PIGNON FIXE DE RENVOI..... | 19530 | 1-M13 |
| | 19531 | 1-M13 |
| PIGNON MARCHE ARR..... | 17281 | 1-H9 |
| | | 1-L9 |
| PIGNON PLANETAIRE..... | 27251 | 2-D3 |
| PIGNON RECEPTEUR, 1ER..... | 17271 | 1-H9 |
| | | 1-L9 |
| PIGNON RECEPTEUR, 2EME..... | 17250 | 1-C9 |
| | | 1-L9 |
| PIGNON RECEPTEUR, 3EME..... | 17230 | 1-G9 |
| | | 1-K9 |
| PIGNON STATIONNEMENT ARR.... | 105501 | 1-E2 |
| | 105001 | 1-E2 |
| PIGNON, POMPE A HUILE..... | 115511 | 1-D3 |
| PIPE DE REMPLISSAGE..... | 42210 | 2-F8 |
| PISTON..... | 33651 | 2-D5 |
| | | 2-F5 |
| PISTON IERE & MARCHE ARR ... | 19601 | 1-D14 |
| PISTON,CYLINDRE EMBRAYAGE... | 19480 | 1-K13 |
| PIVOT D'APPUI..... | 16102 | 1-K8 |
| PIVOT DIAPHRAGME..... | 19825 | 1-I13 |
| PLANCHER ARRIERE..... | 53700 | 3-J6 |
| PLANCHER AVANT..... | 53600 | 3-I6 |
| PLAQUE..... | 115011 | 1-C3 |
| | 40170 | 2-C7 |
| | 43090 | 2-D9 |
| | 50322B | 3-F3 |
| | 51902B | 3-H3 |
| | 60311 | 3-F7 |
| | | 3-J7 |
| | 76421A | 3-H14 |
| | 76434B | 3-G14 |
| PLAQUE AMORTISSEUR..... | 133801 | 1-D4 |
| PLAQUE ARR.(D)..... | 53222 | 3-F5 |
| PLAQUE ARR.(G)..... | 54222 | 3-H5 |
| PLAQUE CHAUFFAGE..... | 76511 | 3-G14 |
| PLAQUE CIEL.AV..... | 68051 | 4-D3 |
| PLAQUE D AMORTISSEUR..... | 50042A | 3-E3 |
| PLAQUE D'ETANCHEITE..... | 56365 | 3-I5 |
| | 56366 | 3-I5 |
| PLAQUE DE COMMANDE T/MISS... | 19440 | 1-G14 |
| PLAQUE DE FIXATION..... | 17354 | 1-C9 |
| | | 1-E9 |
| | 19354 | 1-F13 |
| | 27302 | 2-E3 |
| | 42376 | 2-G8 |
| PLAQUE DISPOSITIF D'ARRET... | 68961 | 3-J15 |
| | 68962A | 3-J15 |
| PLAQUE EN BOUT..... | 87925 | 4-K2 |
| PLAQUE INSPECTION..... | 17534 | 1-D9 |
| | | 1-F9 |
| PLAQUE(D)..... | 53270A | 3-F5 |
| PLAQUE(D). GLACE..... | 63960A | 3-G15 |
| PLAQUE(G)..... | 54270A | 3-H5 |
| PLAQUE(G). AMORTISSEUR..... | 50042A | 3-E3 |
| PLAQUE(G). GLACE..... | 63970A | 3-G15 |
| PLAQUE, BARRE STABIL..... | 34155 | 2-K5 |
| PLAQUE, MODE-D'EMPLOI..... | 69021A | 4-G5 |
| PLAQUETTE..... | 115041 | 1-D3 |
| PLAQUETTE D'AJUSTAGE..... | 34013 | 2-H5 |
| PLAQUETTE, SUP..... | 64340 | 3-G9 |
| | | 3-N8 |
| PLATE-FORME PLANCHER(D)..... | 56510 | 3-M6 |
| | 56540A | 3-M6 |
| PLATEAU CENTRAL..... | 141181 | 1-C8 |
| PLATEAU MOYEU..... | 33251B | 2-C5 |
| | | 2-E5 |
| PLONGEUR DE SURETE..... | 142751 | 1-I2 |
| PNEU..... | 37600A | 2-D6 |
| POCHETTE (G)..... | 51164 | 3-G4 |
| POCHETTE DE JOINTS MOTEUR... | 10271S | 1-C2 |
| POCHETTE, JOINTS..... | 23510 | 1-E6 |
| | | 1-G5 |
| | | 1-L5 |
| | | 1-M4 |
| | 236801 | 1-G4 |
| POIDS DE COMPENSATION..... | 37600E | 2-F6 |
| POIDS POMPE CARB..... | 23301A | 1-C5 |
| | | 1-H5 |
| | | 1-I4 |
| | | 1-M5 |
| POIGNEE EXTERIEURE (D)..... | 58420 | 3-E13 |
| | | 3-F13 |
| POIGNEE INTER..... | 58321C | 3-D13 |
| POMPE A AIR..... | 13810 | 1-G6 |
| POMPE A EAU..... | 15010 | 1-G8 |
| POMPE A ESSENCE..... | 13350 | 1-E4 |
| POMPE A HUILE..... | 14100 | 1-C8 |
| | 19220 | 1-C13 |
| POMPE, DEBIT HUILE..... | 146001 | 1-D8 |
| PONT ARRIERE..... | 26010 | 2-D2 |
| PORTE AV,(D)..... | 58010 | 3-C12 |
| PORTE AV,(G)..... | 58010 | 3-C12 |
| PORTE CHARBON..... | 24750 | 1-D12 |
| | | 1-G12 |
| | 76612 | 4-J2 |
| PORTE-BALAIS ET BALAIS..... | 24541 | 1-L11 |
| POT D'ECHAPPEMENT..... | 40500 | 2-D7 |
| POTEAU,ANTENNE..... | 66941 | 3-H16 |
| | | 3-J16 |
| POULIE..... | 11371 | 1-C3 |
| | 15131 | 1-H8 |
| | 24530 | 1-L11 |
| | | 1-N11 |
| POULIE, POMPE A AIR..... | 237131 | 1-G6 |
| POUSSOIR..... | 41131 | 2-C9 |
| PROTECTEUR..... | 14716 | 1-J2 |
| | 28778 | 2-G3 |
| | 41692B | 4-G2 |
| | 42348 | 2-G8 |
| | 51403 | 3-C4 |
| | 60721 | 3-F7 |
| | | 3-K7 |
| | 61216 | 3-D14 |
| | 61479 | 3-D14 |
| | 67032A | 3-M16 |
| | 67916 | 4-F2 |
| | 76150 | 3-J14 |
| | 87846 | 4-I2 |
| PROTECTEUR AV.(D),BAS DE ... | 68711 | 4-N3 |
| PROTECTEUR AV.(G),BAS DE ... | 68721 | 4-C4 |
| PROTECTEUR CABLE STARTER ... | 60052 | 3-E7 |
| | | 3-J7 |
| PROTECTEUR NO 1..... | 40810 | 2-E7 |
| PROTECTEUR, CONDUIT FREIN... | 43605 | 2-H9 |
| | 43609A | 2-H9 |
| PROTECTEUR, DURITE HUILE ... | 147161 | 1-F8 |
| PROTECTEUR, VIS..... | 51029 | 3-C4 |
| | 72502A | 3-N12 |
| PROTECTEUR'C'.(D)COTE..... | 50682A | 3-I3 |
| PROTECTEUR'D'.(D)COTE..... | 50683D | 3-I3 |
| PROTECTEUR'D'.(G)COTE..... | 50688D | 3-I3 |
| PROTECTEUR'E'.COTE..... | 50684C | 3-I3 |
| PROTECTION..... | 34152 | 2-K5 |

# INDEX ALPHABÉTIQUE (FRANÇAIS)


| DESIGNATION | D-CODE | PLACE |
|---|---|---|
| PROTECTION | 62815A | 3-I15 |
| | | 3-K15 |
| PROTECTION PARE-CHOC ARR | 50380A | 3-F3 |
| | 50180 | 3-C3 |
| PROTECTION POMPE ESSENCE | 45151 | 2-E10 |
| PROTECTION RESERV.ESSENCE | 56970 | 3-N6 |
| PROTECTION TOLE RADIATEUR | 50781 | 3-J4 |
| PROTECTION, PORTE | 58906 | 3-F13 |
| PROTECTION, RADIATEUR | 50791 | 3-J4 |
| PROTECTION'A' COTE | 50692C | 3-I3 |
| PROTECTION'B'.(G)COTE | 50686D | 3-I3 |
| PROTECTION'B'(D)COTE | 50681D | 3-I3 |
| PROTECTION'C'.(G)COTE | 50682B | 3-I3 |
| PROTEGE TUYAU | 45715 | 2-F10 |
| PURGEUR AIR NO 1 | 234241 | 1-D6 |
| | | 1-F5 |
| | | 1-K5 |
| | | 1-L4 |
| PURGEUR AIR NO 2 | 234331 | 1-D6 |
| | | 1-F5 |
| | | 1-K5 |
| | | 1-L4 |
| PURGEUR DE RALENTI, SECON | 234251 | 1-D6 |
| | | 1-F5 |
| | | 1-K5 |
| | | 1-L4 |
| ** R ** | | |
| RACCORD | 101111 | 1-D2 |
| | 102041 | 1-G2 |
| | 104171 | 1-E2 |
| | 10600J | 1-I2 |
| | 14720J | 1-F8 |
| | 14730J | 1-F8 |
| | 58314A | 3-D13 |
| RACCORD COMPTEUR | 19351 | 1-F13 |
| RACCORD D'ESSENCE ASSEMBL | 234091 | 1-C6 |
| | | 1-E5 |
| | | 1-J5 |
| | | 1-K4 |
| RACCORD DE CABLE | 17351 | 1-C9 |
| | | 1-E9 |
| RACCORD DE DURITE | 103201 | 1-H2 |
| RACCORD DE TAMBOUR | 19590 | 1-D14 |
| | 19591 | 1-D14 |
| RACCORD EAU(G) | 28170A | 2-G3 |
| RACCORD, CAPSULE A DEPRES | 137781 | 1-D7 |
| | | 1-F7 |
| | | 1-J6 |
| | | 1-M6 |
| | 18200K | 1-E11 |
| RACCORD, COURT | 67821 | 3-E16 |
| RACCORD, TUBE | 13945 | 1-D7 |
| | | 1-G7 |
| | | 1-J6 |
| | | 1-M6 |
| RACCORD,COURT | 67985 | 4-F2 |
| RADIATEUR | 15200 | 1-I8 |
| RADIATEUR D'HUILE | 147001 | 1-F8 |
| RADIATEUR DE CHAUFFAGE | 76405 | 3-E14 |
| RAIL DE FIXATION(C.D.) | 50386 | 3-F3 |
| RAIL DE FIXATION(C.G.) | 50396 | 3-F3 |
| RAIL DE FIXATION(C) | 50385 | 3-C3 |
| RALLONGE DE BOITE | 17330 | 1-C9 |
| | | 1-E9 |
| | 19710 | 1-H13 |
| REACTEUR | 20800 | 1-D4 |
| REDRESSEUR | 24510 | 1-L11 |
| | | 1-N11 |
| | 67242 | 4-F2 |
| REGLAGE NO 1 | 88102 | 3-C10 |
| REGLAGE NO 2 | 88103 | 3-C10 |
| REGLAGE NO 3 | 88152 | 3-H10 |
| REGLAGE NO 4 | 88153 | 3-H10 |
| REGULATEUR | 19660 | 1-E14 |
| REGULATEUR DE PRESSION | 142501 | 1-C8 |
| REGULATEUR, JEU | 24330 | 1-I11 |
| | | 1-J11 |
| RELAIS | 19444 | 1-G14 |
| | 20190A | 1-C5 |
| | | 1-H5 |
| | | 1-M5 |
| | 51939 | 3-E4 |
| | 67700 | 3-E16 |
| | 67740A | 3-E16 |
| | 67880E | 3-F16 |
| RELAIS ANTI-BUEE ARR | 67620 | 3-E16 |
| RELAIS D'ALLUMAGE | 67880A | 3-F16 |
| RELAIS ESSUIE-GLACE | 67820 | 3-E16 |
| RELAIS MONTE-GLACE | 67620C | 3-E16 |
| RELAIS,'3 POINTS' | 67800 | 3-E16 |
| RELAIS,VOLET D'AIR & SECU | 67740C | 3-E16 |
| REMBOURRAGE'B'MONTANT | 68026 | 4-C3 |
| REMPLISSEUR | 50311A | 3-F3 |
| RENFORT | 113071 | 1-F3 |
| RENFORT CONSOLE | 51341 | 3-I4 |
| RENFORT(D)TABLIER ROUE | 53285 | 3-G5 |
| RENFORT(G)TABLIER ROUE | 54285 | 3-H5 |
| RENFORT,ARR | 70700 | 3-E6 |
| | | 3-L5 |
| RENFORT,AVT | 70640 | 3-E6 |
| | | 3-L5 |
| REPARTITEUR D'HUILE | 19650 | 1-E14 |
| REPOSE-PIED | 43041 | 2-C9 |
| RESERVOIR | 135101 | 1-H4 |
| RESERVOIR ASSEMBLE, RESER | 41551S | 2-C8 |
| | 43550S | 2-E9 |
| RESERVOIR D'ESSENCE | 42110 | 2-F8 |
| RESERVOIR DE LAVE-GLACE | 67480 | 4-G2 |
| | 76671 | 4-G2 |
| RESPIRATEUR, AIR | 17530 | 1-D9 |
| | | 1-F9 |
| | 19344 | 1-F13 |
| RESSORT | 114121 | 1-C3 |
| | 13087 | 1-H4 |
| | 142731 | 1-I2 |
| | 148211 | 1-F8 |
| | 17411 | 1-F10 |
| | | 1-J10 |
| | 17411A | 1-F10 |
| | | 1-J10 |
| | 17416 | 1-J10 |
| | 19664 | 1-F14 |
| | 23446B | 1-D6 |
| | | 1-F5 |
| | | 1-K5 |
| | | 1-L4 |
| | 33696 | 2-D5 |
| | 44031 | 2-C10 |
| | 46038 | 2-H10 |
| | 46062 | 2-H10 |
| | 55216A | 3-F9 |
| | | 3-L8 |
| | 76124 | 3-J14 |
| | 76135A | 3-E14 |
| | 76151A | 3-J14 |
| | 76428A | 3-F14 |
| RESSORT A BOUDIN(D) | 34011B | 2-H5 |
| RESSORT A BOUDIN(G) | 34011B | 2-H5 |
| RESSORT ARRIERE, EXTERIEU | 113631 | 1-G3 |
| RESSORT ARRIERE, INTERIEU | 113611 | 1-F3 |
| RESSORT AVANT, EXTERIEUR | 113531 | 1-F3 |
| RESSORT AVANT, INTERIEUR | 113511 | 1-F3 |
| RESSORT CHARNIERE | 64466 | 3-D9 |
| | | 3-I9 |
| RESSORT DE PISTON | 19606 | 1-E14 |
| RESSORT DE RAPPEL | 234551 | 1-D6 |
| | | 1-F5 |
| | | 1-K5 |
| | | 1-L4 |
| | 41081A | 2-C9 |
| | 41619 | 2-E8 |
| | 44352 | 2-D10 |
| | 52672 | 3-C5 |
| | 52863 | 3-C5 |
| | 88107 | 3-C10 |
| RESSORT DE RAPPEL FREIN | 43081A | 2-D9 |
| RESSORT DE RAPPEL INFERIE | 26342 | 2-E2 |
| RESSORT DE RAPPEL SUPERIE | 26341 | 2-E2 |
| RESSORT DE RAPPEL, PISTON | 19363 | 1-F13 |
| | 19486 | 1-K13 |
| RESSORT DE REGLAGE | 66016 | 3-F4 |
| RESSORT DE REGUL | 19666 | 1-F14 |
| RESSORT DE RETIENT | 58292 | 3-C13 |
| RESSORT DE SEGMENT | 113231 | 1-F3 |
| RESSORT LAMPE | 51401B | 3-C4 |
| RESSORT PANNEAU CENTRAL | 55216B | 3-H7 |
| RESSORT PLAQUETTE FREIN | 33636A | 2-C5 |
| | | 2-F5 |
| RESSORT VIS DE REGLAGE | 23446A | 1-D6 |
| | | 1-F5 |
| | | 1-K5 |
| | | 1-L4 |
| RESSORT VISIERE COMPTEUR | 55412A | 3-L7 |
| RESSORT, BAGUE SYNCHRO | 17244 | 1-K9 |
| | 17324 | 1-J9 |
| | | 1-N9 |
| RESSORT, BOITE AUTOM | 19703 | 1-H14 |
| RESSORT, HELICOIDAL | 28010A | 2-F3 |

# INDEX ALPHABÉTIQUE (FRANÇAIS)


| DESIGNATION | D-CODE | PLACE |
|---|---|---|
| RESSORT, LEVIER DE COMMAN... | 76432 | 3-J14 |
| RESSORT, LINGUET RAPPEL.... | 19733 | 1-H14 |
| RESSORT, MACHOIRE DE FREI... | 26345 | 2-E2 |
| RESSORT, SEGMENT DE SOMME... | 113041 | 1-F3 |
| RESSORT, SEGMENT MOTEUR R... | 113171 | 1-F3 |
| RETEN,ACEITE..... | 19442K | 1-H13 |
| RHEOSTAT..... | 18101 | 1-C11 |
| | 18102 | 1-C11 |
| | 55610 | 3-E7 |
| | | 3-I7 |
| | 76433 | 3-J14 |
| RIVET..... | 44053B | 2-C10 |
| RONDELLE..... | 115021 | 1-D3 |
| | 136141 | 1-D4 |
| | 17304 | 1-M9 |
| | 17631 | 1-C10 |
| | 19025 | 1-G14 |
| | 19337 | 1-F13 |
| | 19388 | 1-G13 |
| | 19734 | 1-H14 |
| | 23366 | 1-D5 |
| | | 1-I5 |
| | | 1-J4 |
| | | 1-N5 |
| | 234081 | 1-C6 |
| | | 1-E5 |
| | | 1-J5 |
| | | 1-K4 |
| | 27012 | 2-C3 |
| | 27252 | 2-D3 |
| | 27401 | 2-E3 |
| | 28776A | 2-G3 |
| | 32341 | 2-H4 |
| | 33043 | 2-C5 |
| | | 2-E5 |
| | 34135A | 2-K5 |
| | 34158 | 2-K5 |
| | 34158B | 2-G3 |
| | 39383 | 2-H6 |
| | 39386 | 2-H6 |
| | 40166 | 2-C7 |
| | 40813 | 2-E7 |
| | 40815A | 2-E7 |
| | 43063 | 2-C9 |
| | 46019 | 2-H10 |
| | 50642D | 3-I15 |
| | 52148 | 3-K4 |
| | 57109A | 3-C10 |
| | 63909 | 3-F15 |
| | 67302 | 4-H2 |
| | 67375 | 4-H2 |
| | 68861B | 3-G15 |
| | 76022 | 3-J14 |
| | 76473 | 3-H14 |
| | 76474A | 3-K14 |
| | 76475 | 3-K14 |
| | 76476 | 3-K14 |
| | 76513C | 3-I14 |
| | 76516 | 3-I14 |
| | 76606 | 4-I2 |
| | 88106 | 3-C10 |
| RONDELLE BOMBEE..... | 17482 | 1-H10 |
| | | 1-L10 |
| | 19498 | 1-K13 |
| | 19608 | 1-E14 |
| | 26834 | 2-F2 |
| RONDELLE CONSOLE AV..... | 64902A | 3-E9 |
| | | 3-J9 |
| RONDELLE D'ARRET..... | 32058 | 2-F4 |
| | 49666 | 2-F9 |
| RONDELLE D'ETANCHEITE..... | 104551 | 1-H2 |
| RONDELLE DE CHARNIERE..... | 62863 | 3-I15 |
| | | 3-K15 |
| RONDELLE DE PISTON FREIN ... | 41433 | 2-C8 |
| RONDELLE DE POULIE..... | 152111 | 1-I8 |
| RONDELLE DE REGLAGE..... | 17316B | 1-E10 |
| | | 1-I10 |
| RONDELLE EMBRAYAGE AV..... | 19641 | 1-C14 |
| RONDELLE FEU ARR..... | 51141 | 3-G4 |
| RONDELLE GROWER..... | 138821 | 1-D4 |
| | 26513 | 2-E2 |
| RONDELLE PLATE..... | 19739 | 1-H13 |
| RONDELLE TUBULAIRE..... | 103091 | 1-H2 |
| RONDELLE, BLOCAGE..... | 117121 | 1-D3 |
| | 18056 | 3-L16 |
| ROTOR..... | 24312 | 1-H11 |
| | | 1-J11 |
| | 24540 | 1-L11 |
| | | 1-N11 |
| | 87923 | 4-K2 |
| ROTOR ARR..... | 231121 | 1-G3 |
| ROTOR AV..... | 231021 | 1-G3 |
| ROULEMENT..... | 114031 | 1-C3 |
| | 115051 | 1-D3 |
| | 17205 | 1-G9 |
| | | 1-K9 |
| | 17274 | 1-H9 |
| | | 1-L9 |
| | 17297A | 1-I9 |
| | | 1-M9 |
| | 17612 | 1-C10 |
| | 19621 | 1-N13 |
| | 19622A | 1-N13 |
| | 19623 | 1-N13 |
| | 19624 | 1-N13 |
| | 26151 | 2-D2 |
| | 27305 | 2-E3 |
| | 32182 | 2-G4 |
| ROULEMENT (ARR.),PIGNON..... | 27141A | 2-C3 |
| ROULEMENT (AV.),PIGNON..... | 27141 | 2-C3 |
| ROULEMENT A BILLES..... | 15010J | 1-G8 |
| | 17201J | 1-G9 |
| | | 1-K9 |
| | 17204 | 1-G9 |
| | | 1-K9 |
| | 17221J | 1-K9 |
| | 17297 | 1-I9 |
| | | 1-M9 |
| | 17306 | 1-M9 |
| | 24503 | 1-L11 |
| | | 1-N11 |
| | 24514 | 1-L11 |
| | | 1-N11 |
| ROULEMENT ROUE AV..... | 33047 | 2-C5 |
| | | 2-E5 |
| | 33075 | 2-C5 |
| | | 2-E5 |
| RUPTEUR..... | 24314 | 1-H11 |
| RUPTEUR, PORTE..... | 66820 | 3-D16 |
| RUPTEUR, STOP..... | 67210 | 3-D16 |
| ** S ** | | |
| SAC,OUTIL..... | 68670 | 4-L4 |
| SECTEUR..... | 44051 | 2-C10 |
| SEGMENT..... | 23151A | 1-G3 |
| | 34719 | 2-I5 |
| SERRURE, PORTE (D)..... | 58310 | 3-D13 |
| SERRURE, PORTE (G)..... | 58310 | 3-D13 |
| SERRURE, PORTE DE HAYON..... | 62310 | 3-C15 |
| SERVO-FREIN..... | 43800 | 2-E9 |
| SIEGE..... | 34383A | 2-I5 |
| | 42331 | 2-G8 |
| | 42413 | 2-G8 |
| | 43922 | 2-F9 |
| SIEGE DE RESSORT..... | 17462 | 1-G10 |
| | | 1-K10 |
| SIEGE DE RESSORT, SUP..... | 34340 | 2-H5 |
| SIEGE(D), ARRIERE..... | 88130 | 3-G10 |
| SIEGE(G), ARRIERE..... | 88180 | 3-L10 |
| SIEGE, C.T.C..... | 28013A | 2-F3 |
| | 53751B | 1-D7 |
| | | 1-G7 |
| | | 1-J6 |
| | | 1-M6 |
| SIGLE ARR..... | 51771A | 3-J4 |
| SIGLE, RE-AR..... | 51775A | 3-J4 |
| SIGLE,STEREO..... | 55231 | 3-G16 |
| | | 3-I16 |
| SIGLE,TUNER..... | 66915B | 3-H16 |
| | | 3-J16 |
| SILENT BLOC..... | 42459A | 3-J4 |
| | 52397 | 3-C5 |
| | 52451A | 3-F4 |
| | 53771 | 3-C5 |
| | 62665B | 3-F8 |
| | | 3-J8 |
| SOCLE MIRROIR..... | 69171 | 4-N4 |
| SOCLE(D)MIRROIR..... | 69116 | 4-M4 |
| SOCLE(G)MIRROIR..... | 69176 | 4-C5 |
| SOLENOIDE..... | 23327 | 1-D5 |
| | | 1-I5 |
| | | 1-J4 |
| | | 1-N5 |
| SOLENOIDE, CONTROLE DE VI... | 19821 | 1-H13 |
| SOUFFLERIE..... | 61140 | 3-C14 |
| SOUPAPE..... | 137601 | 1-C7 |
| | | 1-I6 |
| | 13780 | 1-D7 |
| | | 1-G7 |

# INDEX ALPHABÉTIQUE (FRANÇAIS)


| DESIGNATION | D-CODE | PLACE |
|---|---|---|
| SOUPAPE | 13780 | 1-J6 |
| | | 1-M6 |
| | 19663 | 1-F14 |
| | 19665 | 1-F14 |
| SOUPAPE A RETARDEMENT | 139808 | 1-D7 |
| | | 1-G7 |
| | | 1-J6 |
| | | 1-M6 |
| | 139801 | 1-D7 |
| | | 1-G7 |
| | | 1-J6 |
| | | 1-M6 |
| SOUPAPE A TROIS VOIES | 13240 | 1-E7 |
| | | 1-H6 |
| | | 1-K6 |
| | | 1-N6 |
| | 13240A | 1-E7 |
| | | 1-H6 |
| | | 1-K6 |
| | | 1-N6 |
| | 13240B | 1-E7 |
| | | 1-H6 |
| | | 1-K6 |
| | | 1-N6 |
| SOUPAPE AIR | 376000 | 2-D6 |
| SOUPAPE COUPE ESSENCE | 4516C | 2-F10 |
| SOUPAPE DE PURGE | 49693 | 2-G9 |
| SOUPAPE DE RETENUE | 1327C | 1-E4 |
| | 137301 | 1-F6 |
| | 4271C | 2-H8 |
| | 4377C | 2-E9 |
| SOUPAPE DE SOLENOID | 23408 | 1-C6 |
| | | 1-E5 |
| | | 1-J5 |
| | | 1-K4 |
| SOUPAPE E.G.R | 203001 | 1-D7 |
| | | 1-G7 |
| SOUPAPE EAU | 76416 | 3-F14 |
| SOUPAPE VAPOR.ESSENCE | 4272C | 2-H8 |
| SOUPAPE, CONTROLE | 19750 | 1-H13 |
| SOUPAPE, MANUEL | 19768 | 1-H13 |
| SOUPAPE, REGLAGE AIR | 137201 | 1-F6 |
| SPOILER AV | 50881 | 3-E5 |
| STABILISATEUR | 28101 | 2-F3 |
| | 34151 | 2-K5 |
| STARTER SEMI-AUTOMATIQUE | 23500 | 1-E6 |
| | | 1-G5 |
| | | 1-L5 |
| | | 1-M4 |
| SUP. DEFLECTEUR D'EAU | 15125 | 1-G8 |
| SUPPORT | 13153 | 1-E7 |
| | | 1-H5 |
| | | 1-K6 |
| | | 1-N6 |
| | 13241 | 1-F7 |
| | | 1-H6 |
| | | 1-L6 |
| | | 1-N6 |
| | 18111 | 1-D11 |
| | 18111H | 1-D11 |
| | 13114 | 1-D11 |
| | 188201 | 1-F11 |
| | 26397 | 2-F2 |
| | 28120 | 2-F3 |
| | 28155 | 2-F3 |
| | 34380 | 2-I5 |
| | 40070B | 2-C7 |
| | 40081 | 2-C7 |
| | 40660 | 2-E7 |
| | 41360A | 2-C8 |
| | 45131A | 2-E10 |
| | 50091 | 3-C3 |
| | 50091B | 3-E3 |
| | 51932 | 3-E4 |
| | 67970A | 3-F16 |
| | 76504 | 3-H14 |
| SUPPORT & ROTULE SUSP.(D) | 49310A | 2-J5 |
| SUPPORT AMORTISSEUR | 62610 | 3-D15 |
| SUPPORT ANTENNE NO1 | 66535 | 3-G16 |
| | | 3-I16 |
| SUPPORT ANTENNE NO2 | 66536 | 3-G16 |
| | | 3-I16 |
| SUPPORT ARR | 19570 | 1-M13 |
| SUPPORT ARR.CENTRE | 64430 | 3-C9 |
| | | 3-H9 |
| SUPPORT AV | 19540 | 1-M13 |
| SUPPORT COMMANDE | 19701 | 1-G14 |
| SUPPORT DE DEMARREUR | 19445A | 1-D13 |
| SUPPORT DE FIXATION | 33280A | 2-C5 |
| SUPPORT DE JOINT | 15118 | 1-G8 |
| SUPPORT DE LEVIER | 41640 | 2-E8 |
| SUPPORT DE RELAIS | 64390 | 3-H9 |
| | | 3-N8 |
| SUPPORT DE SERVO | 19391 | 1-G13 |
| SUPPORT DE SOUPAPE | 43750A | 2-H9 |
| SUPPORT DE TIGE(G) | 34850A | 2-L5 |
| SUPPORT INSTRUM.(D) | 70260E | 3-I5 |
| SUPPORT PLAQUE | 50030 | 3-C3 |
| SUPPORT PONT | 56560A | 3-M6 |
| SUPPORT RACCORD EAU | 28180A | 2-G3 |
| SUPPORT RESISTANCE | 18590 | 1-F11 |
| SUPPORT TABLEAU(G) | 71260C | 3-I5 |
| SUPPORT TIGE TENSION(D) | 34850A | 2-L5 |
| SUPPORT VOLET AERATION | 64812A | 3-L9 |
| SUPPORT(D)MONTAGE | 33280B | 2-F5 |
| SUPPORT(G)MONTAGE | 33280B | 2-F5 |
| SUPPORT, FILTRE A AIR | 13340 | 1-G4 |
| SUPPORT,BOITE DE VITESSES | 39340 | 2-G6 |
| SUPPORT,ECHAPPEMENT | 40160 | 2-C7 |
| SUPPORT,FERRURE DE CAPOT | 52518 | 3-C5 |
| SUPPORT,RUPTEUR | 24313 | 1-H11 |
| SUPPORT,TRINGLE | 58309 | 3-D13 |
| SYNCHROMECHE | 17262 | 1-H9 |
| | | 1-L9 |
| ** T ** | | |
| TABLEAU DE BORD | 60350 | 3-D8 |
| | | 3-H8 |
| TACHYMETRE, COMPTE-TOURS | 55461 | 3-M7 |
| TAMBOUR D'EMBRAYAGE | 19470 | 1-K13 |
| | 19511 | 1-M13 |
| TAMBOUR DE FREIN | 26251 | 2-E2 |
| TAMIS | 23304 | 1-C5 |
| | | 1-H5 |
| | | 1-I4 |
| | | 1-M5 |
| TAMIS D'HUILE | 14240 | 1-C8 |
| | 19815 | 1-H13 |
| TAMPON | 68658A | 4-E4 |
| | 68659A | 4-F4 |
| TAMPON CAOUTCHOUC | 283208 | 2-G3 |
| TAMPON CTC COUVERCLE | 42408 | 2-G8 |
| TAPIS AVANT | 68674 | 4-G4 |
| TAPIS PLANCHER ARR | 68677A | 4-J4 |
| TAPIS, COFFRE ARRIERE | 68695 | 4-J4 |
| THERMOSTAT | 15171 | 1-H8 |
| TIGE | 41341 | 2-C8 |
| | 46021 | 2-H10 |
| | 46571 | 2-J10 |
| TIGE DE COMMANDE MALE | 26821 | 2-F2 |
| TIGE DE QUEUE | 17410A | 1-F10 |
| | | 1-J10 |
| | 17422A | 1-F10 |
| | | 1-J10 |
| TIGE DE TENSION | 34131 | 2-K5 |
| TIGE MOTEUR | 51933 | 3-E4 |
| TIGE, PISTON | 19386 | 1-G13 |
| TIGE, REPAIRE D'AVANCE | 10503 | 1-H2 |
| TIGE,CHANGEMENT VITESSES | 17410 | 1-E10 |
| | | 1-I10 |
| | 17420 | 1-F10 |
| | | 1-J10 |
| | 17431 | 1-F10 |
| | | 1-K10 |
| TIGE,DECLANCHEMENT | 44032 | 2-C10 |
| TIGE,FREIN AMAIN | 19450 | 1-G14 |
| TIGE'A' | 51934 | 3-E4 |
| TIGE'B' | 51936 | 3-E4 |
| TOLE DE RADIATEUR | 15210A | 1-I8 |
| | 53100 | 3-F5 |
| TOLE'A'FENETRE LATERALE | 70526B | 3-H15 |
| TRAIN FIXE | 17301 | 1-I9 |
| | | 1-M9 |
| | 17308 | 1-N9 |
| TRANSMISSION COMPLETE | 19090A | 1-C13 |
| TRAVERSE | 34800 | 2-L5 |
| | 53162 | 3-I6 |
| TRAVERSE INFERIEURE | 53400 | 3-G5 |
| TRAVERSE NO 3 | 53900 | 3-J6 |
| TRAVERSE NO 4 | 53940 | 3-J6 |
| TRAVERSE NO 5 | 53960 | 3-K6 |
| TRAVERSE SUPERIEURE | 53510 | 3-G5 |
| TRAVERSE SUPPORT TRANSMIS | 39380 | 2-G6 |
| TRINGLE | 28200A | 2-G3 |
| TRINGLE CENTR | 32261 | 2-H4 |
| TRINGLE D'ESSUIE-GLACE | 76601 | 4-H2 |
| TROUSSE A OUTILS | 68660A | 4-L4 |
| TUBE DE COMPENSATION | 137551 | 1-G6 |
| TUBE DE SILICONE | 230451 | 1-J2 |

# INDEX ALPHABÉTIQUE (FRANÇAIS)


| DESIGNATION | D-CODE | PLACE |
|---|---|---|
| TUBE, JAUGE D'HUILE | 19870 | 1-I13 |
| TUBE,DEPRESSION | 13150J | 1-E7 |
| | | 1-N6 |
| | 13220K | 1-E7 |
| | | 1-N6 |
| TUNER | 66900 | 3-G16 |
| | | 3-J16 |
| TUYAU A VIDE | 13100K | 1-E7 |
| TUYAU ARR. | 53980 | 3-D6 |
| | | 3-K5 |
| | 53980D | 3-D6 |
| | | 3-K5 |
| TUYAU D'ARRIVEE D'ESSENCE | 13421 | 1-E4 |
| | 45127 | 2-E10 |
| TUYAU D'EVAPORATION | 13220J | 1-E7 |
| | | 1-N6 |
| | 13780J | 1-F4 |
| TUYAU D'HUILE | 146301 | 1-D8 |
| | 146401 | 1-D8 |
| TUYAU EVAPORATION | 13670B | 1-F4 |
| TUYAU REMPLISSEUR D'HUILE | 10410 | 1-E2 |
| TUYAU RENIFLARD | 42581 | 2-G8 |
| TUYAU VIDANGEUR | 74030K | 3-G6 |
| TUYAU VINYL | 74030J | 3-G6 |
| ** V ** | | |
| VALVE P.B | 43900A | 2-H9 |
| VASE D'EXPANSION | 15350 | 1-J8 |
| VENTILLATEUR | 76421 | 3-J14 |
| VENTILLATEUR & MECANISME | 152501 | 1-I8 |
| VENTILLATEUR, REFROIDISSE | 15140 | 1-H8 |
| VERRE | 69223 | 4-D5 |
| VERRE (D) | 51122 | 3-C4 |
| VERRE (G) | 51122 | 3-C4 |
| | 51161 | 3-G4 |
| VERRE AV | 55448A | 3-M7 |
| VERRE FEU ARR.(D) | 51161 | 3-G4 |
| VERRE FEU AV | 51063A | 3-C4 |
| VERRE LAMPE TEMOIN | 55447C | 3-L7 |
| VERROU D'EXCENTRIQUE | 19341 | 1-F13 |
| VERROUILLAGE CAPOT | 56620 | 3-C5 |
| VERROUILLAGE SUP.(D) | 62890 | 3-J15 |
| VIS | 24705 | 1-F12 |
| | 43608A | 2-H9 |
| | 44187 | 2-D10 |
| | 51411 | 3-D4 |
| | 57109 | 3-C10 |
| | 66865 | 3-G16 |
| | | 3-J16 |
| | 75436 | 3-C8 |
| | 76761 | 3-L14 |
| | 87105 | 4-J2 |
| | 87107 | 4-J2 |
| | 87120 | 4-J2 |
| | 87926 | 4-K2 |
| VIS CONSOLE AV | 64903A | 3-E9 |
| | | 3-J9 |
| VIS DE COMMANDE COMPTEUR | 17341A | 1-D14 |
| VIS DE PURGE | 33691 | 2-D5 |
| | | 2-F5 |
| | 33691A | 2-F2 |
| | 33691B | 2-C8 |
| VIS DE REGLAGE | 238451 | 1-E8 |
| | 27301A | 2-E3 |
| | 87016 | 3-F4 |
| VIS GARNITURE | 60702 | 3-E8 |
| | | 3-I8 |
| VIS,MIROIR | 69112B | 4-M4 |
| VISIERE,COMPTEUR | 55410 | 3-L7 |
| VOLANT | 32980 | 2-D4 |
| VOLANT MOTEUR | 11500 | 1-C3 |
| VOLET | 76426 | 3-J14 |
| VOLET NO 1 | 76402 | 3-E14 |
| VOLET NO 2 | 76403 | 3-E14 |
| VOLET NO 3 | 76404 | 3-E14 |

# INDICE ALFABETICO (ESPAÑOL)


| DESCRIPCION | D-CODE | LOCAL |
|---|---|---|
| ** A ** | | |
| ABANICO | 76421 | 3-J14 |
| ABANICO & POLEA | 15250 1 | 1-I8 |
| ABANICO DELANTERO | 1514C | 1-H8 |
| ABRAZADERA,MANGUERA | 76423C | 3-F14 |
| ADAPTADOR | 19025A | 1-C13 |
| ADAPTADOR,MONTAJE | 33260 | 2-C5 |
| | | 2-E5 |
| ADORNO DERECHO | 60771 | 3-E8 |
| | | 3-J8 |
| ADORNO IZQUIERDO | 60781 | 3-F8 |
| | | 3-J8 |
| ADORNO, SUPERIOR | 6072C | 3-E8 |
| | | 3-J8 |
| AGUJERO DE TAPON | 61031 | 3-C14 |
| AISLAD. TABLERO INSTRUMEN | 6862C | 4-F4 |
| AISLADOR SOPORTE | 13315 | 1-E4 |
| | 404C1 | 2-D7 |
| | 40405 | 2-D7 |
| | 40433 | 2-D7 |
| | 40669 | 2-E7 |
| | 56451 | 3-M6 |
| | 56981A | 3-N6 |
| | 64492 | 3-D9 |
| | | 3-I9 |
| AISLADOR, CALEFACCION | 133711 | 1-D4 |
| AISLADOR, INFERIOR | 39384 | 2-H6 |
| AISLADOR, SUPERIOR | 39385 | 2-H6 |
| AJUSTADOR DISTRIBUCION | 6770C | 3-E16 |
| AJUSTADOR NO.1 | 88102 | 3-C10 |
| AJUSTADOR NO.2 | 88103 | 3-C10 |
| AJUSTADOR NO.3 | 88152 | 3-H10 |
| AJUSTADOR NO.4 | 88153 | 3-H10 |
| ALFOMBRA DEL BAUL | 68695 | 4-J4 |
| ALFOMBRA DELANTERA | 68674 | 4-G4 |
| ALINEADOR, EJE | 17352 | 1-C9 |
| | | 1-E9 |
| | 19352 | 1-F13 |
| ALMOHADA | 34136 | 2-K5 |
| | 56785 | 3-D5 |
| | 70269A | 3-G8 |
| ALMOHADON ASIENTO DERECHO | 88110 | 3-D10 |
| ALMOHADON ASIENTO IZQUIER | 8816C | 3-J10 |
| ALMOHADON DE LA PUERTA | 58906 | 3-F13 |
| ALTERNADOR | 183CC | 1-L11 |
| | | 1-N11 |
| AMORTIGUADOR | 34910A | 2-J5 |
| | 50100A | 3-C3 |
| ANILLO | 19676 | 1-F14 |
| ANILLO A ESCUADRA | 101711 | 1-D2 |
| ANILLO PROTECTOR | 28778 | 2-G3 |
| | 42348 | 2-G8 |
| | 61479 | 3-D14 |
| | 67916 | 4-F2 |
| | 7615C | 3-J14 |
| | 87846 | 4-I2 |
| ANILLO,PISTON | 34719 | 2-I5 |
| ANILLO,RETENTOR | 66024 | 3-F4 |
| ANILLO,SEGURO | 141131 | 1-C8 |
| | 15114 | 1-G8 |
| | 17225 | 1-G9 |
| | | 1-K9 |
| | 17305 | 1-I9 |
| | | 1-M9 |
| | 17435 | 1-G10 |
| | | 1-K10 |
| | 19449 | 1-G14 |
| | 19488 | 1-K13 |
| | 19509 | 1-L13 |
| | 19534 | 1-M13 |
| | 19567 | 1-M13 |
| | 19594 | 1-D14 |
| | 19596 | 1-D14 |
| | 19598 | 1-M13 |
| | 19607 | 1-E14 |
| | 19619 | 1-E14 |
| | 25071 | 2-C2 |
| | 76414 | 3-H14 |
| ANILLO,SELLO | 19256 | 1-D13 |
| | 19257 | 1-D13 |
| | 19655 | 1-E14 |
| ANTENA | 66930 | 3-H16 |
| | | 3-J16 |
| APARATO DE PIEZA | 76619 | 4-J2 |
| APOYO DE BRAZO(D) | 69371 | 3-L12 |
| APOYO DE BRAZO(I) | 69371 | 3-M12 |
| ARANDELA | 19055 | 1-G14 |
| | 23366 | 1-D5 |
| | | 1-I5 |
| | | 1-J4 |
| | | 1-N5 |
| | 234081 | 1-C6 |
| | | 1-E5 |
| | | 1-J5 |
| | | 1-K4 |
| | 27012 | 2-C3 |
| | 27252 | 2-D3 |
| | 32341 | 2-H4 |
| | 34158B | 2-G3 |
| | 39383 | 2-H6 |
| | 39380 | 2-H6 |
| | 40166 | 2-C7 |
| | 40815A | 2-E7 |
| | 50642D | 3-I15 |
| | 52148 | 3-K4 |
| | 57109A | 3-C10 |
| | 76022 | 3-J14 |
| | 76473 | 3-H14 |
| | 76516 | 3-I14 |
| | 88106 | 3-C10 |
| ARANDELA,AJUSTAR | 17641 | 1-D10 |
| | 66821 | 3-D16 |
| ARANDELA,ALETA | 33043 | 2-C5 |
| | | 2-E5 |
| ARANDELA,CIERRE | 117121 | 1-D3 |
| | 18056 | 3-L16 |
| ARANDELA,CIERRE EMPUJE | 17631 | 1-C10 |
| ARANDELA,EMPUJE | 115071 | 1-D3 |
| | 17276 | 1-H9 |
| | | 1-L9 |
| | 17313 | 1-I9 |
| | | 1-N9 |
| | 17313B | 1-I9 |
| | | 1-N9 |
| ARANDELA,MUELLE | 139821 | 1-D4 |
| | 26513 | 2-E2 |
| ARANDELA,ONDULADA | 1748? | 1-H10 |
| | | 1-L10 |
| | 26834 | 2-F2 |
| ARANDELA,SIMPLE | 136141 | 1-D4 |
| | 19337 | 1-F13 |
| | 19388 | 1-G13 |
| | 19739 | 1-?13 |
| | 46019 | 2-H10 |
| | 76474A | 3-K14 |
| | 76475 | 3-K14 |
| | 76476 | 3-K14 |
| ARANDELA,TASA | 76606 | 4-I2 |
| ARO,GUARDAPOLVO | 33685 | 2-D5 |
| | | 2-F5 |
| ARO,RESORTE PRICIPAL | 19505 | 1-F14 |
| ARO,RUEDA | 37180 | 2-C6 |
| ARO,SINCRONIZADOR | 17245 | 1-G9 |
| | | 1-K9 |
| | 17325A | 1-N9 |
| ARO,TOPE | 32059 | 2-F4 |
| ARRANQUE | 18400 | 1-D12 |
| | | 1-F12 |
| ASIENTO | 34383A | 2-I5 |
| | 42331 | 2-G8 |
| | 42413 | 2-G8 |
| ASIENTO(D),TRASERO | 88130 | 3-G10 |
| ASIENTO(I),POSTERIOR | 88180 | 3-L10 |
| ASIENTO,GOMA | 28013A | 2-F3 |
| | 53751B | 1-D7 |
| | | 1-G7 |
| | | 1-J6 |
| | | 1-M6 |
| ASIENTO,GUARDAPOLVO | 68832 | 3-E9 |
| | | 3-J9 |
| ASIENTO,RESORTE | 17462 | 1-G10 |
| | | 1-K10 |
| ASIENTO,RESORTE SUPERIOR | 34340 | 2-H5 |
| ASIENTO,TUBO | 26922 | 2-F2 |
| ** B ** | | |
| BANDA | 87956 | 4-I2 |
| BANDA,FRENO | 19360 | 1-K13 |
| BANDEJA,BATERIA | 56863A | 1-H12 |
| BANDEJA,GUANTERA | 64161 | 3-G8 |
| | | 3-K8 |
| BASE,INTERRUPTOR | 24313 | 1-H11 |
| BASTON DE MANDO | 17410 | 1-E10 |
| | | 1-I10 |
| | 17420 | 1-F10 |
| | | 1-J10 |
| | 17431 | 1-F10 |

# INDICE ALFABÉTICO (ESPAÑOL)


| DESCRIPCION | D-CODE | LOCAL |
|---|---|---|
| BASTON DE MANDO | 17431 | 1-K10 |
| BATERIA | 18520 | 1-H12 |
| BIELA | 146511 | 1-D8 |
| BILLE D'ACIER | 19704J | 1-H14 |
| | 26610J | 2-F2 |
| | 41920J | 2-D8 |
| BIMETAL | 23502 | 1-E6 |
| | | 1-G5 |
| | | 1-L5 |
| | | 1-M4 |
| BISAGRA DERECHA | 62210 | 3-C15 |
| BISAGRA INFERIOR PUERTA I | 58240 | 3-C13 |
| BISAGRA IZQ | 63210 | 3-D15 |
| BISAGRA SUPERIOR IZQ | 58210 | 3-C13 |
| BISAGRA SUPERIOR, PUERTA | 58210 | 3-C13 |
| BLOQUE DE FUSIBLE | 66730 | 3-C16 |
| BLOQUE MONTAJE | 34380 | 2-I5 |
| BOBINA | 18100 | 1-C11 |
| BOLA | 87928 | 4-K2 |
| BOLA,ACERO | 13781 | 1-C5 |
| | | 1-H5 |
| | | 1-I4 |
| | | 1-M5 |
| | 17341J | 1-J9 |
| | | 1-N9 |
| | 17431J | 1-F10 |
| | | 1-K10 |
| | 19341J | 1-D14 |
| BOLSA,HERRAMIENTAS | 68670 | 4-L4 |
| BOMBA - REGULADO ACEITE | 146001 | 1-D8 |
| BOMBA ACEITE | 14100 | 1-C8 |
| | 19220 | 1-C13 |
| BOMBA DE AGUA | 15010 | 1-G8 |
| BOMBA DE AIRE | 13810 | 1-G6 |
| BOMBA DE COMBUSTIBLE | 13350 | 1-E4 |
| BOMBA, JUEGO | 87993 | 4-G2 |
| BOQUILLA(D),DESCONGELADOR | 60120 | 3-K9 |
| BOQUILLA(I),DESCONGELADOR | 60140 | 3-K9 |
| BOQUILLA,VOLANDA | 67510 | 4-G2 |
| BOQUILLAS,JGO.ACELERADOR | 234901 | 1-D6 |
| | | 1-G5 |
| | | 1-L5 |
| | | 1-M4 |
| BOTON TUBULAR | 101111 | 1-D2 |
| | 102041 | 1-G2 |
| BOTON,DESENGANCHE | 44033 | 2-C10 |
| BRAZO (DR),ARTICULACION | 32301A | 2-H5 |
| BRAZO,AUXILIAR | 32320 | 2-H4 |
| BRAZO,LIMPIADOR | 67321 | 4-H2 |
| BRAZO,PITMAN | 32220 | 2-G4 |
| BRIDA,ACOMPANAMIENTO | 27020 | 2-C3 |
| BRIDA,PROPULSION | 19581 | 1-D14 |
| BROCHE ALFOMBRA BALIJERO | 69605 | 4-J4 |
| BROCHE DEL | 56290 | 3-L6 |
| BROCHE TRAS | 56291 | 3-M6 |
| BUJE | 22333 | 1-D9 |
| | | 1-F9 |
| | 32071 | 2-F4 |
| | 34153A | 2-K5 |
| | 34156 | 2-K5 |
| | 41644 | 2-E8 |
| | 46085 | 2-I10 |
| | 46684 | 2-J10 |
| | 46691 | 2-J10 |
| | 49686B | 2-G9 |
| | 58411 | 3-E13 |
| | 76146 | 3-H14 |
| | 76164 | 3-H14 |
| | 88105 | 3-C10 |
| BUJE,BRAZO | 34460 | 2-I5 |
| BUJE,GOMA | 28102 | 2-F3 |
| | 28775 | 2-G3 |
| BUJE,INTERIOR | 76607 | 4-I2 |
| BUJE,PEDAL EMBRAGUE | 41023 | 2-C9 |
| BUJIA | 18110 | 1-C11 |
| ** C ** | | |
| CABLE | 66965 | 3-K16 |
| CABLE ALTA TENSION | 18110A | 1-C11 |
| | 181201 | 1-D11 |
| | 181301 | 1-D11 |
| | 181401 | 1-D11 |
| | 18150 | 1-D11 |
| | 181601 | 1-E11 |
| | 181701 | 1-E11 |
| | 181801 | 1-E11 |
| CABLE CORTO | 66980 | 3-K16 |
| | 67091 | 3-N16 |
| CABLE DEL PARLANTE | 66975 | 3-H16 |
| | | 3-K16 |
| CABLE FRONTAL | 44150 | 2-D10 |
| CABLE NEGATIVO PARA BATER | 67260 | 1-H12 |
| CABLE POSITIVO | 67250 | 1-H12 |
| CABLE TRASERO | 44410 | 2-D10 |
| CABLE,ACELERADOR | 41660 | 2-E8 |
| CABLE,ESTRANGUL | 60050 | 3-E7 |
| | | 3-J7 |
| CABLE,MOTOR | 18050 | 3-L16 |
| CABLE,PRINCIPAL | 24317 | 1-H11 |
| | 24318 | 1-H11 |
| | 76611 | 4-J2 |
| CABLE,SOLTADOR | 56710 | 3-C5 |
| CABLE,STOP PISTON | 49638 | 2-F9 |
| CADENA PARA LA BOMBA DE A | 14151 | 1-C8 |
| CAJA (DR),TORSION | 53391 | 3-I6 |
| CAJA (IZ),TORSION | 54391 | 3-K6 |
| CAJA DE TRANSMISION | 17100 | 1-C9 |
| | | 1-E9 |
| | 19310 | 1-F13 |
| CAJA PARA CALENTADOR | 76401 | 3-E14 |
| | 76406 | 3-E14 |
| CAJA PARA EJES TRASEROS | 26010 | 2-D2 |
| CAJA PARA EL CAMBIO | 76423 | 3-J14 |
| CAJA,CONTROL CAMBIOS | 17470 | 1-G10 |
| | | 1-L10 |
| CAJA,ENGRANAJE | 76613 | 4-J2 |
| CALEFACTOR | 61130 | 3-C14 |
| CANAL(D),LLUVIA | 70311 | 3-E6 |
| | | 3-L5 |
| CANAL(D),TECHO-EXTERIOR | 70250 | 3-E6 |
| | | 3-L5 |
| CANAL(D),TECHO-INTERIOR | 70050 | 3-D6 |
| | | 3-K5 |
| CANAL(I),LLUVIA | 71311 | 3-G6 |
| | | 3-N5 |
| CANAL(I),TECHO EXTERIOR | 71250 | 3-G6 |
| | | 3-N5 |
| CANAL(I),TECHO INTERIOR | 71050 | 3-F6 |
| | | 3-M5 |
| CAPO | 52310 | 3-C5 |
| CARBON | 32329 | 2-H4 |
| | 57633 | 3-G11 |
| | 76123B | 3-J14 |
| | 76123C | 3-E14 |
| | 76129 | 3-E14 |
| | 76415A | 3-H14 |
| | 87106 | 4-J2 |
| CARBON Y PORTA-CARBON | 24541 | 1-L11 |
| CARBON,HORQUILLA | 24753 | 1-D12 |
| | | 1-G12 |
| CARBON,RESORTE | 24521 | 1-N11 |
| CARBURADOR | 13600 | 1-C5 |
| | | 1-H5 |
| | | 1-I4 |
| | | 1-M5 |
| CARCAZA | 74040 | 3-J5 |
| CARTER | 10400 | 1-H2 |
| | 19836 | 1-I13 |
| CARTUCHO FILTRO PARA ACEI | 23802 | 1-E8 |
| CASCO CONVERTIDOR | 19211 | 1-C13 |
| CASCO ENGRANAJE | 32120 | 2-F4 |
| CASCO EXTENSION | 17330 | 1-C9 |
| | | 1-E9 |
| | 19710 | 1-H13 |
| CASCO INTERMEDIO | 104001 | 1-E2 |
| CASCO Y PLANETARIO | 19550 | 1-M13 |
| CASCO,CONECCION | 19565 | 1-M13 |
| CEDAZO,ACEITE | 14240 | 1-C8 |
| | 19815 | 1-H13 |
| CENICERO | 64250 | 3-C9 |
| | | 3-L8 |
| CERRADURA DE GUANTERA | 56620 | 3-C5 |
| CERRADURA DE PUERTA TRASE | 62310 | 3-C15 |
| CERRADURA DE TAPA DE TANQ | 42440 | 3-C2 |
| CERRADURA DERECHA DE PUER | 58310 | 3-D13 |
| CERRADURA IZQUIERDA DE PU | 58310 | 3-D13 |
| CERROJO | 58570A | 3-F13 |
| | 64101 | 3-G8 |
| | | 3-K8 |
| CERROJO,SEGURO | 62361 | 3-D15 |
| CHASIS | 76602 | 4-H2 |
| CHASIS LADO TRASERO DEREC | 53810 | 3-J6 |
| | 54300 | 3-K6 |
| | 54810 | 3-K6 |
| CHAVETA | 13717 | 1-C5 |
| | | 1-H5 |
| | | 1-I4 |
| | | 1-M5 |
| CIELO INTERIOR DEL TECHO | 68030 | 4-D3 |

# INDICE ALFABÉTICO (ESPAÑOL)


| DESCRIPCION | D-CODE | LOCAL |
|---|---|---|
| CIERRE DE TAPA | 58922 | 3-E12 |
| CIL. DE MANDO DE EMBRAGUE | 41990 | 2-D8 |
| CILINDRO FRENOS RUEDA IZQ | 26610A | 2-F2 |
| CILINDRO MAESTRO | 43990 | 2-F9 |
| CLIP,CABLE | 13305B | 3-D6 |
| COBERTOR | 19240 | 1-D13 |
| | 236731 | 1-G4 |
| | 23801 | 1-D8 |
| | 24368 | 1-K11 |
| | 40551 | 2-E7 |
| | 66732 | 3-D16 |
| | 76609 | 4-I2 |
| COBERTOR CABLE DE PITO | 32049 | 2-C4 |
| COBERTOR DE ABAJO | 19027A | 1-C13 |
| | 56111 | 3-L6 |
| COBERTOR DE EMBRAGUE | 16410 | 1-K8 |
| COBERTOR DE LA BISAGRA | 88107A | 3-C10 |
| COBERTOR DE LA BOMBA DE A | 15130 | 1-H8 |
| COBERTOR DE SERVO | 19392 | 1-G13 |
| COBERTOR DEL HUECO | 55952 | 3-E7 |
| | | 3-J7 |
| | 56051 | 3-L6 |
| COBERTOR DELANTERO | 1060C1 | 1-I2 |
| | 16220 | 1-K8 |
| COBERTOR DER.COLUMNA DIRE | 60221 | 3-E7 |
| | | 3-J7 |
| COBERTOR IZQ.COLUMNA DE D | 60231 | 3-E7 |
| | | 3-J7 |
| COBERTOR LATERAL | 19028A | 1-C13 |
| COBERTOR PARA FOCOS DE NE | 66395 | 3-G7 |
| | | 3-K7 |
| COBERTOR PARA HUECO | 50310 | 3-F3 |
| | 56061 | 3-L6 |
| | 56231A | 3-L6 |
| | 56639 | 3-N6 |
| COBERTOR PARA POLVO | 103051 | 1-H2 |
| | 10351 | 1-H2 |
| | 16214 | 1-K8 |
| | 32411 | 2-G4 |
| | 34015 | 2-H5 |
| COBERTOR SUPEIOR | 19029 | 1-C13 |
| COBERTOR TRANSPARENTE | 17534 | 1-D9 |
| | | 1-F9 |
| COLECTOR DELANTERO | 70640 | 3-E6 |
| | | 3-L5 |
| COLECTOR TRAS | 7070C | 3-E6 |
| | | 3-L5 |
| COLLAR | 76472B | 3-K14 |
| COLLAR DEL EMBRAGUE | 16510 | 1-K8 |
| COLUMNA DER. BISAGRA | 70210A | 3-E6 |
| | | 3-K5 |
| COLUMNA DER. INTERIOR DEL | 70260 | 3-E6 |
| | | 3-L5 |
| COLUMNA IZQ. BISAGRA | 71210A | 3-G6 |
| | | 3-M5 |
| COLUMNA IZQ. INTERIOR DEL | 71260 | 3-G6 |
| | | 3-N5 |
| CONDENSADOR | 24322 | 1-H11 |
| | 24334 | 1-I11 |
| | | 1-J11 |
| | 24581 | 1-C12 |
| | | 1-M11 |
| | 66992 | 3-H16 |
| CONDUCTO | 61150 | 3-C14 |
| CONDUCTO DERECHO | 64761B | 3-K9 |
| CONDUCTO PARA AIRE | 40620 | 2-E7 |
| CONDUCTO PARA AIRE CALIEN | 13390 | 1-D4 |
| CONECTOR | 14730J | 1-F8 |
| CONECTOR PARA TUBO | 13945 | 1-D7 |
| | | 1-G7 |
| | | 1-J6 |
| | | 1-M6 |
| CONTACTO | 24496 | 1-I11 |
| | | 1-K11 |
| CONTACTO DE LA BOCINA | 60267 | 3-F7 |
| | | 3-J7 |
| CONTROL DEL CALENTADOR | 61190 | 3-D14 |
| CONVERTIDOR | 19100A | 1-C13 |
| COPA DEL PISTON | 26671 | 2-F2 |
| COPA PRIMARIA | 49626 | 2-F9 |
| COPA SECUNDARIA | 49625 | 2-F9 |
| CORREA (DR),ASIENTO DELAN | 57900 | 3-G11 |
| CORREA (IZ),ASIENTO DELAN | 57920 | 3-H11 |
| CORREA EN 'V' | 137151 | 1-F6 |
| | 18381 | 1-F11 |
| COSTURA,SOLDADURA | 58755 | 3-E12 |
| CRISTAL | 69223 | 4-D5 |
| CRISTAL(DERECHO) | 51122 | 3-C4 |
| CRISTAL(IZQUEIRDO) | 51122 | 3-C4 |
| | 51161 | 3-G4 |
| CUBRE INDICADOR | 55410 | 3-L7 |
| CUERPO (DR),PUERTA DELANT | 58010 | 3-C12 |
| CUERPO (IZ),PUERTA DELANT | 58010 | 3-C12 |
| CULATA | 24701 | 1-D12 |
| | | 1-F12 |
| | 25130 | 2-C2 |
| CULATA,ESTATOR | 87922 | 4-J2 |
| CULATA,JUNTA UNIVERSAL | 25021 | 2-C2 |
| CUNA DE SINCRONIZADOR | 17243 | 1-G9 |
| | | 1-K9 |
| CUNA,CONTROL | 117501 | 1-E3 |
| CUNA,CORONA VOLANTE | 117051 | 1-D3 |
| CUNA,EQUILIBRIO | 115111 | 1-D3 |
| CUNA,PRIMARIA | 58492 | 3-C2 |
| CYLINDRO FRENOS RUEDA DER | 26610A | 2-F2 |
| ** D ** | | |
| DEPOSITO,AUXILIAR | 15350 | 1-J8 |
| DEPOSITO,GASOLINA | 42110 | 2-F8 |
| DEPOSITO,LAVA | 67480 | 4-G2 |
| DEPOSITO,LAVAPARABRISAS | 76671 | 4-G2 |
| DEPOSITO,LIQUIDO ARRANCAD | 135101 | 1-H4 |
| DEPURADOR PARA AIRE | 13320 | 1-G4 |
| DIAFRAGMA DE VACIO | 19823 | 1-I13 |
| DISCO DEL CLUCHT | 16460 | 1-K8 |
| DISTRIBUIDOR | 18200 | 1-H11 |
| | | 1-J11 |
| DISTRIBUIDOR DE ACEITE | 19650 | 1-E14 |
| DISYUNTOR,ENCENDIDO | 67880A | 3-F16 |
| DISYUNTOR,ESTRANGULADOR & | 67740C | 3-E16 |
| DISYUNTOR,3 PLATINOS | 67800 | 3-E16 |
| ** E ** | | |
| EJE | 19670 | 1-F14 |
| | 76467 | 3-K14 |
| | 76513E | 3-G14 |
| EJE CENTRAL- PIVOTE | 16102 | 1-K8 |
| EJE FLEXIBLE PARA VELOCIM | 60070 | 3-N7 |
| EJE MARCADOR SUPERIOR | 10503 | 1-H2 |
| EJE, PINON LOCO | 146231 | 1-D8 |
| EJE, TUBULAR | 103091 | 1-H2 |
| EJE,BOMBA ACEITE | 141121 | 1-C8 |
| EJE,ENGRANAJE AUX.TRASERO | 17315 | 1-J9 |
| | | 1-N9 |
| EJE,ENGRANAJE TRANSMISOR | 146201 | 1-D8 |
| EJE,ENTRADA | 19678 | 1-D13 |
| EJE,EXCENTRICO | 114001 | 1-C3 |
| EJE,MANUAL | 19431 | 1-G14 |
| EJE,PINON DIFERENCIAL | 27261 | 2-D3 |
| EJE,PRINCIPAL | 17221 | 1-G9 |
| | | 1-K9 |
| EJE,SECTOR | 32141 | 2-F4 |
| EJE,TRINQUETE PARQUEO | 19731 | 1-H14 |
| EMBLEMA | 32811 | 2-C4 |
| | 37192 | 2-C6 |
| EMBLEMA SINTONIZADOR | 66915B | 3-H16 |
| | | 3-J16 |
| EMBLEMA STEREO | 55231 | 3-G16 |
| | | 3-I16 |
| EMBRAGUE DE UNA VIA | 19595 | 1-D14 |
| EMBRAGUE LIBRE | 24722 | 1-D12 |
| | | 1-F12 |
| EMBRAGUE TRASERO | 19510 | 1-M13 |
| EMFRIADOR DE ACEITE | 147001 | 1-F8 |
| EMPAQUE | 13135 | 1-E7 |
| | | 1-H6 |
| | | 1-K6 |
| | | 1-N6 |
| | 13135A | 2-C7 |
| | 137491 | 1-G6 |
| | 148231 | 1-F8 |
| | 15081 | 1-G8 |
| | 15082 | 1-G8 |
| | 15173 | 1-H8 |
| | 15611 | 1-J8 |
| | 23303A | 1-C5 |
| | | 1-H5 |
| | | 1-I4 |
| | | 1-M5 |
| | 23481 | 1-D6 |
| | | 1-F5 |
| | | 1-L5 |
| | | 1-M4 |
| | 23803A | 1-E8 |
| | 40325 | 2-C7 |
| | 40356 | 2-D7 |
| | 40429 | 2-D7 |
| | 40436 | 2-D7 |

# INDICE ALFABÉTICO (ESPAÑOL)


| DESCRIPCION | D-CODE | LOCAL |
|---|---|---|
| EMPAQUE | 40668 | 2-E7 |
| | 40698 | 2-E7 |
| | 51062A | 3-C4 |
| | 76455A | 3-K14 |
| | 76464A | 3-K14 |
| EMPAQUE DERECHO | 51164 | 3-G4 |
| EMPAQUE IZQUIERDO | 51164 | 3-G4 |
| EMPAQUE PARA TAPA | 76604 | 4-H2 |
| EMPAQUE TAPA DE TIEMPO | 17535 | 1-D9 |
| | | 1-F9 |
| EMPAQUE, BOMBA ACEITE | 19215 | 1-C13 |
| EMPAQUE, CARTER | 10431 | 1-H2 |
| | 19835 | 1-I13 |
| EMPAQUE, CUBIERTA DE CONT | 17478 | 1-H10 |
| | | 1-L10 |
| | 16225 | 1-K8 |
| EMPAQUE, EXTENSION | 19735 | 1-H13 |
| EMPAQUE, MANECILLA | 58552 | 3-F13 |
| EMPAQUE, MULTIPLE ADMISIO | 13111 | 1-C4 |
| EMPAQUE, PERNO DE UNION | 49656 | 2-F9 |
| EMPAQUE, PLACA DE TAPA | 17474 | 1-G10 |
| | | 1-L10 |
| EMPAQUE, REACTOR | 20910 | 1-D4 |
| EMPAQUE, TAPA | 42462 | 2-G8 |
| EMPAQUE, TAPA LATERAL | 32[illegible] | 2-F4 |
| EMPAQUE, TAPON DRENAJE | 10405 | 1-[illegible] |
| EMPAQUE, TUBO ESCAPE | 20920 | 1-D4 |
| EMPAQUE, TUBO LLENADOR | 42241 | 2-F8 |
| EMPAQUE, VALVULA A.C | 137241 | 1-F6 |
| ENCENDEDOR DE CIGARRILLOS | 66250 | 3-F7 |
| | | 3-K7 |
| ENGRANAJE, ANULADOR | 11502 | 1-C3 |
| ENGRANAJE, CONDUCTOR | 115311 | 1-D3 |
| | 17341 | 1-J9 |
| | | 1-N9 |
| ENGRANAJE, DESPLAZABLE | 17201 | 1-G9 |
| | | 1-K9 |
| ENGRANAJE, EJE FIJO | 17301 | 1-I9 |
| | | 1-M9 |
| ENGRANAJE, FIJO DELANTERO | 105001 | 1-E2 |
| ENGRANAJE, FIJO TRASERO | 105501 | 1-E2 |
| ENGRANAJE, IMPUL. VELOCIM | 17341A | 1-D14 |
| ENGRANAJE, IMPULSADOR | 146251 | 1-D8 |
| | 17441 | 1-C9 |
| | | 1-F9 |
| | 19441 | 1-H13 |
| ENGRANAJE, IMPULSOR DE AC | 115511 | 1-D3 |
| ENGRANAJE, LATERAL DIF | 27251 | 2-D3 |
| ENGRANAJE, MEDIO RETROCES | 17310 | 1-I9 |
| | | 1-N9 |
| ENGRANAJE, PLANETARIO | 19560 | 1-M13 |
| ENGRANAJE, PRIMERA MARCHA | 17271 | 1-N9 |
| | | 1-L9 |
| ENGRANAJE, RETROCESO FIJO | 17302 | 1-I9 |
| | | 1-M9 |
| ENGRANAJE, SEGUNDA MARCHA | 17250 | 1-G9 |
| | | 1-L9 |
| ENGRANAJE, SOBRE MARCHA | 17611 | 1-C10 |
| ENGRANAJE, TERCERA MARCHA | 17230 | 1-G9 |
| | | 1-K9 |

| DESCRIPCION | D-CODE | LOCAL |
|---|---|---|
| ENGRANAJE, TREN FIJO | 17308 | 1-N9 |
| ENVOLTURA,TAPON | 39045 | 2-G6 |
| ESCOBILLA | 76631 | 4-I2 |
| ESCOBILLA LIMPIA-PARABRIZ | 67330 | 4-N2 |
| ESLABON | 28200A | 2-G3 |
| ESLABON CENTRAL | 32261 | 2-H4 |
| ESLABON FUSIBLE | 67099 | 3-D16 |
| | 67099A | 3-D16 |
| | 67099C | 3-D16 |
| ESLABON LIMPIADOR | 76601 | 4-H2 |
| ESPACIADOR | 115021 | 1-D3 |
| | 17304 | 1-M9 |
| | 27401 | 2-E3 |
| | 34135A | 2-K5 |
| | 34158 | 2-K5 |
| | 40813 | 2-E7 |
| | 43063 | 2-C9 |
| | 63909 | 3-F15 |
| | 67302 | 4-H2 |
| | 68861B | 3-G15 |
| | 76513C | 3-I14 |
| ESPACIADOR 'A' | 70447A | 3-H15 |
| ESPACIADOR,BISAGRA INFERI | 58245 | 3-C12 |
| ESPACIADOR,BISAGRA SUPERI | 58215 | 3-C13 |
| ESPACIADOR,COJINETE | 26155 | 2-D2 |
| ESPACIADOR,ESPIGA | 19734 | 1-H14 |
| ESPACIADOR,POLEA | 152111 | 1-I8 |
| ESPEJO DERECHO | 69110 | 4-M4 |
| ESPEJO INTERIOR | 69170 | 4-N4 |
| ESTABILIZADOR | 28101 | 2-F3 |
| | 34151 | 2-K5 |
| ESTATOR | 24501 | 1-L11 |
| | | 1-N11 |
| EVPAQUE, ORIFICIO DE CUBI | 50292 | 3-E3 |
| EXTRACTOR DERECHO | 51911 | 3-K4 |
| EXTRACTOR IZQUIERDO | 51911 | 3-K4 |
| ** F ** | | |
| FIBRA PRINCIPAL | 68021 | 4-C3 |
| FIJADOR,DECORACION | 58921 | 3-E12 |
| FILTRO DEL COMBUSTIBLE | 13470 | 1-F4 |
| FLEJE,ALTERNADOR | 18361 | 1-E11 |
| FLEJE,BOMBA DE AIRE | 137141 | 1-F6 |
| FLOTADOR | 23316 | 1-C5 |
| | | 1-H5 |
| | | 1-J4 |
| | | 1-M5 |
| | 43542 | 2-E9 |
| FLOTTEUR,TRASERA | 23329A | 1-D5 |
| | | 1-I5 |
| | | 1-J4 |
| | | 1-N5 |
| FOCO | 51060J | 3-C4 |
| | 51120J | 3-C4 |
| | 51150J | 3-G4 |
| | 51150K | 3-G4 |
| | 51270J | 3-G4 |
| | 55240J | 3-F9 |
| | | 3-L8 |

| DESCRIPCION | D-CODE | LOCAL |
|---|---|---|
| | 55280J | 3-D7 |
| | | 3-H7 |
| | 55890J | 3-D8 |
| | | 3-H8 |
| | 69170J | 4-N4 |
| | 75115 | 3-C8 |
| | 75139A | 3-C8 |
| FOCO Y PORTA-FOCO | 55240A | 3-F9 |
| | | 3-L8 |
| | 55280 | 3-D7 |
| | | 3-H7 |
| FOCO,ENCENDEDOR CIGARROS | 66254 | 3-F7 |
| | | 3-K7 |
| FOCO,LAMPARA DE MAPAS | 51313 | 3-I4 |
| FRENO (DR),DISCO | 33980 | 2-D5 |
| | | 2-F5 |
| FRENO (IZ),DISCO | 33980 | 2-D5 |
| | | 2-F5 |
| FRENTE DE LA CONSOLA | 64310 | 3-G9 |
| | | 3-M8 |
| FRENTE EMBRAGUE | 19460 | 1-K13 |
| FUNDA | 26681 | 2-F2 |
| | 33681 | 2-F5 |
| | 41331 | 2-C8 |
| | 46081 | 2-I10 |
| | 51938 | 3-E4 |
| | 64331A | 3-G9 |
| | | 3-M8 |
| FUNDA,CAMBIO | 64331 | 3-G9 |
| | | 3-M8 |
| FUSIBLE 10 AMPERIOS | 66495 | 3-C16 |
| FUSIBLE 15 AMPERIOS | 66496 | 3-C16 |
| ** G ** | | |
| GATO | 68800A | 2-F6 |
| GAZA PARA MANGUERA DE AIR | 13726 | 1-F6 |
| | 137461 | 1-G6 |
| | 147451 | 1-F8 |
| GOMA CUBREPEDAL | 43028 | 2-C9 |
| GOMA IMPERMEAB | 63932 | 3-G15 |
| GOMA IMPERMEAB.(DER),PUER | 58760 | 3-E12 |
| GOMA IMPERMEAB.(IZQ),PUER | 58760 | 3-E12 |
| GOMA IMPERMEAB.,EXT | 58811A | 3-E12 |
| GOMA IMPERMEAB.,INT | 58821A | 3-E12 |
| GOMA,AISLADORA | 13363 | 1-E4 |
| | 15312 | 1-I8 |
| | 15312A | 3-I16 |
| | 153121 | 1-I8 |
| GOMA,COSTURAS | 60731 | 3-E8 |
| | | 3-J8 |
| GOMA,JUNTA | 40508 | 2-D7 |
| GOMA,PARANTE | 43029 | 2-C9 |
| | 55195A | 3-D8 |
| | | 3-H8 |
| GOMA,SELLO | 42242 | 2-F8 |
| | 46083 | 2-I10 |
| | 66971A | 3-N6 |
| GOMA,SOPORTE | 50091 | 3-C3 |
| | 50091B | 3-E3 |

# INDICE ALFABÉTICO (ESPAÑOL)


| DESCRIPCION | D-CODE | LOCAL |
|---|---|---|
| GOMA,SOPORTE TRANSMISION ... | 39340 | 2-G6 |
| GOMA,TOPE ... | 40108 | 2-C7 |
| | 41682 | 2-E8 |
| | 52397 | 3-C5 |
| | 52451A | 3-F4 |
| | 53074 | 3-F15 |
| | 53771 | 3-C5 |
| | 62665B | 3-F8 |
| | | 3-J8 |
| GOMAS JUEGO ... | 37192A | 2-C6 |
| GOVERNADOR ... | 19660 | 1-E14 |
| GRASA ... | 49246C | 2-G5 |
| GUARDAPOLVO ... | 17475 | 1-H10 |
| | | 1-L10 |
| GUIA DE VIDRIO DER. 'A' ... | 58601 | 3-D12 |
| GUIA DE VIDRIO IZQ. 'A' ... | 58601 | 3-D12 |
| ** H ** | | |
| HORQUILLA DE CAMBIO ... | 17402 | 1-E10 |
| | | 1-I10 |
| | 17404 | 1-E10 |
| | | 1-I10 |
| | 17406 | 1-E10 |
| | | 1-I10 |
| HORQUILLA DEL EMBRAGUE ... | 16520 | 1-K8 |
| | 41140 | 2-C9 |
| HORQUILLA PARA FRENO ... | 43140 | 2-D9 |
| ** I ** | | |
| INDICADOR ... | 64340A | 3-G9 |
| | | 3-N8 |
| INDUCIDO ... | 24720 | 1-D12 |
| | | 1-F12 |
| INTERRUPTOR ... | 17630 | 1-H10 |
| | | 1-M10 |
| | 18970 | 1-G11 |
| | 24760 | 1-E12 |
| | | 1-G12 |
| | 60690 | 3-D8 |
| | | 3-I8 |
| | 76447 | 3-H14 |
| INTERRUPTOR,ACEITE ... | 18880 | 1-F11 |
| INTERRUPTOR,COMBINACION ... | 66110 | 3-F7 |
| | | 3-K7 |
| INTERRUPTOR,ENCENDIDO ... | 66155 | 3-C2 |
| | 66156 | 3-C2 |
| INTERRUPTOR,LAMPARA PARQU... | 66840 | 3-D16 |
| | 17640 | 1-H10 |
| | | 1-M10 |
| INTERRUPTOR,LUZ ... | 60470 | 3-F7 |
| | | 3-J7 |
| INTERRUPTOR,PARADA ... | 67210 | 3-D16 |
| INTERRUPTOR,PUERTA ... | 66820 | 3-D16 |
| INYECTOR DE AVANCE ... | 23397 | 1-C6 |
| | | 1-E5 |
| | | 1-J5 |
| | | 1-K4 |
| INYR.,PGDR DE AIRE DE AVA... | 234348 | 1-D6 |
| | | 1-F5 |
| | | 1-K5 |
| | | 1-L4 |
| INYR.,PURGADOR DE AIRE-ML... | 234241 | 1-D6 |
| | | 1-F5 |
| | | 1-K5 |
| | | 1-L4 |
| | 234331 | 1-D6 |
| | | 1-F5 |
| | | 1-K5 |
| | | 1-L4 |
| INYR.PGDR.DE AIRE DE BAJA... | 234251 | 1-D6 |
| | | 1-F5 |
| | | 1-K5 |
| | | 1-L4 |
| ** J ** | | |
| JGO DE LLVS.DE RMPLZO,GTR... | 75950 | 3-C2 |
| | 75910 | 3-C2 |
| | 75920 | 3-C2 |
| JGO. CALEFACCION ... | 61070 | 3-C14 |
| JGO.DE INTERRUPTOR,AUX ... | 234501 | 1-D6 |
| | | 1-F5 |
| | | 1-K5 |
| | | 1-L4 |
| JGO.DE INYR.PRL.-PRMR ... | 23353 | 1-D5 |
| | | 1-I5 |
| | | 1-J4 |
| | | 1-N5 |
| JGO.DE INYR.PRL.-SEG ... | 23402A | 1-C6 |
| | | 1-E5 |
| | | 1-J5 |
| | | 1-K4 |
| JGO.DE LLVS.DE RMPLZO,P.T... | 75960 | 3-D2 |
| JGO.DE REPARACION ... | 23410A | 1-C6 |
| | | 1-E5 |
| | | 1-J5 |
| | | 1-K4 |
| | 49611 | 2-F9 |
| | 49720 | 2-G9 |
| JGO.DE ROTOR,BOMBA ACEITE... | 238821 | 1-E8 |
| JUEGO ARANDELA ... | 24726 | 1-D12 |
| | | 1-F12 |
| JUEGO DE CAMARA,DIAFRAGMA... | 23271 | 1-C5 |
| | | 1-H5 |
| | | 1-I4 |
| | | 1 M5 |
| JUEGO DE COBERTORES ... | 33049 | 2-C5 |
| | | 2-E5 |
| JUEGO DE EMPAGUE ... | 23510 | 1-E6 |
| | | 1-G5 |
| | | 1-L5 |
| | | 1-M4 |
| | 236801 | 1-G4 |
| JUEGO DE INYECTORES DE BA... | 23407 | 1-C6 |
| | | 1-E5 |
| | | 1-J5 |
| | | 1-K4 |
| JUEGO DE LLAVES ... | 09010 | 3-C2 |
| JUEGO DE PALANCAS,DELANTE... | 234201 | 1-C6 |
| | | 1-E5 |
| | | 1-J5 |
| | | 1-L4 |
| JUEGO DE PALANCAS,TRASERA... | 234301 | 1-D6 |
| | | 1-F5 |
| | | 1-K5 |
| | | 1-L4 |
| JUEGO DE PISTONES ... | 34701S | 2-I5 |
| JUEGO DE RESORTES ... | 24754 | 1-E12 |
| | | 1-G12 |
| JUEGO DE RESORTES,RETORNO... | 23320 | 1-C5 |
| | | 1-H5 |
| | | 1-J4 |
| | | 1-M5 |
| JUEGO DE TAPONES ... | 23354 | 1-D5 |
| | | 1-I5 |
| | | 1-J4 |
| | | 1-N5 |
| | 24712 | 1-D12 |
| | | 1-F12 |
| JUEGO DE UNIONES ... | 24340 | 1-I11 |
| | | 1-J11 |
| JUEGO DEL CONECTOR DEL CA... | 234091 | 1-C6 |
| | | 1-E5 |
| | | 1-J5 |
| | | 1-K4 |
| JUEGO ENGRANAJE, FINAL ... | 27110 | 2-C3 |
| JUEGO GOVERNADOR ... | 24330 | 1-I11 |
| | | 1-J11 |
| JUEGO HERRAMIENTAS ... | 68660A | 4-L4 |
| JUEGO RETENES,ACEITE ... | 231801 | 1-G3 |
| JUEGO VACIO ... | 24350 | 1-I11 |
| | | 1-J11 |
| | 24351 | 1-I11 |
| | | 1-K11 |
| JUEGO VALVULA,FLOTADOR ... | 23390 | 1-C6 |
| | | 1-E5 |
| | | 1-J5 |
| | | 1-K4 |
| JUEGO VALVULA,RETENCION ... | 23507 | 1-E6 |
| | | 1-G5 |
| | | 1-M4 |
| JUNTA ... | 51902F | 3-F15 |
| | 58314A | 3-D13 |
| | 67511 | 4-G2 |
| | 76514A | 3-I14 |
| JUNTA DE CABLE ... | 17351 | 1-C9 |
| | | 1-E9 |
| JUNTA DE CANO ... | 104171 | 1-E2 |
| ** L ** | | |
| LAINA ... | 18375 | 1-F11 |
| | 33626A | 2-C5 |
| | | 2-F5 |
| LAINA,AJUSTE ... | 146521 | 1-D8 |
| | 17207 | 1-G9 |
| | | 1-K9 |
| | 17287 | 1-L9 |

# INDICE ALFABÉTICO (ESPAÑOL)


| DESCRIPCION | D-CODE | LOCAL |
|---|---|---|
| LAINA,AJUSTE | 17287 | 1-M9 |
| | 17287J | 1-I9 |
| | | 1-M9 |
| | 17327 | 1-J9 |
| | | 1-N9 |
| | 17474J | 1-H10 |
| | | 1-L10 |
| | 182761 | 1-D8 |
| | 32188 | 2-G4 |
| LIBERADOR DEL CLUCHT | 41920 | 2-D8 |
| LLAVE | 115121 | 1-D3 |
| | 141191 | 1-C8 |
| LLAVE,TUERCA SOPORTE | 68070 | 4-L4 |
| ** M ** | | |
| MANECILLA DE ASCENSOR | 5837C | 3-E13 |
| MANECILLA EXTERIOR DER | 58420 | 3-E13 |
| MANECILLA EXTERIOR IZQ | 58420 | 3-F13 |
| MANERAL | 68810A | 2-F6 |
| MANGUERA | 135271 | 1-H4 |
| | 76420 | 3-F14 |
| MANGUERA NO. 1, AGUA | 61211 | 3-D14 |
| MANGUERA NO. 1, FLEXIBLE | 43810B | 2-H9 |
| MANGUERA NO. 2, AGUA | 61212 | 3-D14 |
| MANGUERA TANQUE PRINC | 13421 | 1-E4 |
| | 45127 | 2-E10 |
| MANGUERA, ACEITE | 147201 | 1-F8 |
| | 147301 | 1-F8 |
| | 19933 | 1-E13 |
| MANGUERA, AGUA | 15185 | 1-H8 |
| | 15186 | 1-H8 |
| | 15351 | 1-J8 |
| | 61213 | 3-D14 |
| MANGUERA, AIRE | 137171 | 1-F6 |
| | 137181 | 1-F6 |
| | 137251 | 1-F6 |
| | 137751 | 1-C7 |
| | | 1-F7 |
| | | 1-J6 |
| | | 1-L6 |
| | 137761 | 1-C7 |
| | | 1-J6 |
| | | 1-M6 |
| MANGUERA, AIRE CALIENTE | 13344 | 1-G4 |
| MANGUERA, DESCARCHADORA | 61251 | 3-K9 |
| MANGUERA, EVAPORACION | 13220J | 1-E7 |
| | | 1-N6 |
| | 13780J | 1-F4 |
| | 13972 | 1-F4 |
| MANGUERA, FLEXIBLE | 41380 | 2-C8 |
| | 43980 | 2-H9 |
| MANGUERA, LLENADORA | 42221 | 2-F8 |
| MANGUERA, RETORNO COMBUST | 13422 | 1-E4 |
| | 45611J | 2-F10 |
| MANGUERA, VACIO | 13100K | 1-E7 |
| | 19904 | 1-D13 |
| | 43836 | 2-E9 |
| | 43842 | 2-E9 |
| | 43842A | 2-E9 |
| MANGUERA, VENTILACION | 137851 | 1-F4 |
| | 13971 | 1-F4 |
| MANGUERA,AIRE | 13650A | 1-C7 |
| | | 1-F7 |
| | | 1-I6 |
| | | 1-L6 |
| | 13650J | 1-C7 |
| | | 1-F7 |
| MANGUITO,COJINETE | 24715 | 1-D12 |
| | | 1-F12 |
| | 24741 | 1-D12 |
| | | 1-F12 |
| MANGUITO,MACERO EMBRAGUE | 17262 | 1-H9 |
| | | 1-L9 |
| MANGUITO,VELOCIMETRO | 17442 | 1-D9 |
| | | 1-F9 |
| MANOMETRO, COMJMTO | 18510 | 1-F11 |
| MANOMETRO, NIVEL ACEITE | 10450 | 1-E2 |
| | 19880 | 1-I13 |
| MANOMETRO, TANQUE COMBUST | 609604 | 2-H8 |
| MARCADOR TRASERO | 51775A | 3-J4 |
| MARCHA FINAL | 17432 | 1-G10 |
| | | 1-K10 |
| MARCO DEL TABLERO INSTRUM | 60410 | 3-D8 |
| | | 3-H8 |
| MECANISMO DE IMPULSO | 66939 | 3-H16 |
| | | 3-J16 |
| MEDIDOR DE NAFTA & TEMP. | 55491A | 3-N7 |
| MIEMBRO DE CHASSIS | 34800 | 2-L5 |
| | 53162 | 3-I6 |
| MIEMBRO DE MONTAJE DE T/M | 39380 | 2-G6 |
| MIEMBRO NO.3 DE CHASSIS | 53900 | 3-J6 |
| MIEMBRO NO.4 DE CHASSIS | 53940 | 3-J6 |
| MIEMBRO NO.5 DE CHASSIS | 53960 | 3-K6 |
| MOLDURA | 24563 | 1-M11 |
| MOLDURA (IZQ),(CENTRO)PIL | 68241 | 4-H3 |
| MOLDURA (IZQ),ASIENTO TRA | 88181 | 3-M10 |
| MOLDURA IZQUIERDA | 50451 | 3-I3 |
| MOLDURA(D),ESCURRIDERA | 50441 | 3-I3 |
| MOLDURA(DER),(CENTRO)PILA | 68221 | 4-G3 |
| MOLDURA(DER),ASIENTO TRAS | 88131 | 3-H10 |
| MOLDURA(DER),LADO DELANT | 68371 | 4-K3 |
| MOLDURA(DER),LADO MALETER | 68860 | 4-D4 |
| MOLDURA(DER),LUNETA TRAS | 68320A | 4-H3 |
| MOLDURA(DER),PILAR DELANT | 68171 | 4-E3 |
| MOLDURA(DER),PUERTA | 68420 | 3-H12 |
| MOLDURA(DER)COJIN | 88111 | 3-F10 |
| MOLDURA(IZQ),COJIN | 88161 | 3-K10 |
| MOLDURA(IZQ),LADO DELANT | 68391 | 4-M3 |
| MOLDURA(IZQ),LADO MALETER | 68870 | 4-D4 |
| MOLDURA(IZQ),PILAR DELANT | 68191 | 4-G3 |
| MOLDURA(IZQ),PILAR TRASER | 68330 | 4-I3 |
| MOLDURA(IZQ),PUERTA | 68420 | 3-K12 |
| MOLDURA,FINAL MALETERO | 68890 | 4-E4 |
| MOTOR DE LIMPIAPARABRISAS | 67350 | 4-H2 |
| MULTIPLE DE ADMISION | 13100 | 1-C4 |
| ** N ** | | |
| NOMBRE,LATERAL | 51721 | 3-J4 |
| ** O ** | | |
| OPTURADOR | 76426 | 3-J14 |
| OPTURADOR NO.1 | 76402 | 3-E14 |
| OPTURADOR NO.2 | 76403 | 3-E14 |
| OPTURADOR NO.3 | 76404 | 3-E14 |
| ** P ** | | |
| PALANCA | 24730 | 1-D12 |
| | | 1-F12 |
| | 46055 | 2-H10 |
| | 46150 | 2-I10 |
| PALANCA DE CAMBIO | 17510 | 1-H10 |
| | | 1-L10 |
| PALANCA DE CHEQUEO | 58291 | 3-C13 |
| PALANCA DE CONTROL | 17461 | 1-G10 |
| | | 1-K10 |
| | 238441 | 1-E8 |
| | 76408 | 3-E14 |
| | 76411 | 3-F14 |
| | 76412 | 3-F14 |
| | 76471B | 3-K14 |
| | 76501 | 3-H14 |
| | 76502 | 3-H14 |
| PALANCA DE FRENO DE ESTAM | 44010 | 2-C10 |
| PALANCA DERECHA DE OPERAC | 26800 | 2-F2 |
| PALANCA IZQUIERDA DE OPER | 26800 | 2-F2 |
| PALANCA NO.1 DE CONTROL | 76407 | 3-F14 |
| PALANCA NO.2 DE CONTROL | 76409 | 3-E14 |
| PALANCA SELECTORA | 19031 | 1-G14 |
| | 46010 | 2-H10 |
| PALANCA,REGULADOR | 46160 | 2-I10 |
| PANEL CENTRAL | 55220 | 3-C7 |
| | | 3-H7 |
| PANEL DECORACION | 55270 | 3-C7 |
| | | 3-H7 |
| PANEL DER. CARCAZA LAT | 70020 | 3-D6 |
| | | 3-K5 |
| PANEL DER. SELLO LATERAL | 53950 | 3-K6 |
| | 70270 | 3-E6 |
| | | 3-L5 |
| PANEL EXT. DER | 58020 | 3-C12 |
| PANEL EXTERIOR IZQ | 58020 | 3-D12 |
| PANEL GUARDABARRO DEL.IZQ | 52210 | 3-E5 |
| PANEL GUARDABARROS DEL. D | 52110 | 3-E5 |
| PANEL GUARDABARROS TRAS I | 74130 | 3-C6 |
| | | 3-H6 |
| | 74100 | 3-H6 |
| | | 3-N5 |
| PANEL IZQ. ARCO RUEDA | 53210 | 3-F5 |
| | 54210 | 3-H5 |
| PANEL IZQ. CARCAZA LAT | 71020 | 3-F6 |
| | | 3-M5 |
| PANEL IZQ. SELLO LATERAL | 54950 | 3-L6 |
| PANEL PISO DEL | 53600 | 3-I6 |
| PANEL PISO TRASERO | 53700 | 3-J6 |
| PANEL POSTERIOR | 70750 | 3-F6 |
| | | 3-M5 |

# INDICE ALFABÉTICO (ESPAÑOL)


| DESCRIPCION | D-CODE | LOCAL |
|---|---|---|
| PANEL SOPORTE RADIADOR | 53100 | 3-F5 |
| PANEL ZOCALO DER | 70100 | 3-D6 |
| | | 3-K5 |
| PANEL ZOCALO IZQ | 71100 | 3-F6 |
| | | 3-M5 |
| PANEL, FALDILLA DEL | 52910 | 3-E5 |
| PARA-GOLPES (C),DELANTERO | 50031A | 3-C3 |
| PARA-GOLPES (C),TRASERO | 50221A | 3-E3 |
| PARA-GOLPES (DR),DELANTER | 50041 | 3-C3 |
| PARA-GOLPES (DR),TRASERO | 50230 | 3-E3 |
| PARA-GOLPES (IZ),DELANTER | 50051 | 3-C3 |
| PARA-GOLPES,TERMINAL | 34111 | 2-H5 |
| PARABRISAS DELANTERO | 63902 | 3-F15 |
| 'ARLANTE BAJO | 66960 | 3-H16 |
| | | 3-J16 |
| PARRILLA | 60565 | 3-I8 |
| PARRILLA EXTRACTO DER | 51901 | 3-K4 |
| PARRILLA EXTRACTOR IZQ | 51901 | 3-K4 |
| PARRILLA, CUPULA | 50791 | 3-J4 |
| PARRILLA, RADIADOR | 50711 | 3-D3 |
| PARTE TRASERA DE LA CONSO | 64410 | 3-C9 |
| | | 3-H9 |
| PASADOR | 117031 | 1-D3 |
| | 19434 | 1-G14 |
| | 27262 | 2-D3 |
| | 33698A | 2-D5 |
| | | 2-F5 |
| | 46022B | 2-H10 |
| | 46035A | 2-H10 |
| | 46683A | 2-D9 |
| | 76518 | 3-I14 |
| PASADOR 'B' | 58293 | 3-C13 |
| PASADOR A PRESION | 105041 | 1-E2 |
| PASADOR ZAPATA FRENO | 26391 | 2-E2 |
| PASADOR, SEGURO | 17351A | 1-E10 |
| | | 1-I10 |
| PASAJE ACEITE | 1754C | 1-D9 |
| | | 1-F9 |
| PATENTE DE EMBRAGUE | 17241 | 1-G9 |
| | | 1-K9 |
| | 17261 | 1-H9 |
| | | 1-L9 |
| | 17621 | 1-C10 |
| | | 1-J9 |
| PATENTE EMBRAGUE TRAS | 1953C | 1-M13 |
| | 19531 | 1-M13 |
| PEDAL EMBRAGUE | 41030 | 2-C9 |
| PEDAL FRENO | 43030 | 2-C9 |
| PENTILADOR | 70371A | 3-L9 |
| PERILLA | 51937 | 3-E4 |
| | 58691 | 3-F13 |
| | 61195B | 3-D14 |
| | 88081 | 3-C10 |
| | 88109 | 3-C10 |
| PERILLA DE MEDIDOR DE VIA | 55472 | 3-M7 |
| PERILLA DE PALANCA DE CAM | 17520 | 1-H10 |
| | | 1-M10 |
| | 46030 | 2-H10 |
| PERILLA NO.1 | 61191 | 3-D14 |
| PERNO | 108451 | 1-I2 |
| | 19064 | 1-C13 |
| | 19216 | 1-C13 |
| | 19255 | 1-D13 |
| | 19338 | 1-F13 |
| | 19397 | 1-G13 |
| | 19397A | 1-D14 |
| | 19398 | 1-G13 |
| | 19706 | 1-H14 |
| | 19737 | 1-H13 |
| | 19838 | 1-H14 |
| | 19838B | 1-H14 |
| | 28111 | 2-F3 |
| | 28113A | 2-F3 |
| | 32429 | 2-G4 |
| | 34157A | 2-K5 |
| | 39055 | 2-G6 |
| | 40015 | 2-C7 |
| | 46084A | 2-I10 |
| PERNO CONECTOR | 19930J | 1-D13 |
| | 43694 | 2-E9 |
| PERNO,ABRAZADERA | 70985A | 1-I12 |
| PERNO,ANCLAJE FINAL | 19341 | 1-F13 |
| PERNO,BRAZO | 34313 | 2-L5 |
| PERNO,DEPOSITO DE ACEITE | 19837 | 1-I13 |
| PERNO,ESCARIADOR | 16432 | 1-K8 |
| | 27235A | 2-D3 |
| PERNO,JUNTA | 49652 | 2-F9 |
| PERNO,POLEA | 11376 | 1-C3 |
| PERNO,PURIFICADOR DE AIRE | 13201 | 1-E4 |
| PERNO,RETEN DE COJINETE | 26132 | 2-D2 |
| PERNO,SEGURO | 141171 | 1-C8 |
| PERNO,TOPADOR | 32315A | 2-H5 |
| PERNO,VALVULA DE CONTROL | 19831 | 1-I13 |
| | 19832 | 1-I13 |
| | 19833 | 1-I13 |
| PERNOS,JUEGO | 24731 | 1-D12 |
| | | 1-F12 |
| | 49676 | 2-G9 |
| | 60436 | 3-C2 |
| PERNOS,JUEGO DE RUEDA | 33165 | 2-C6 |
| PERTIGA,ANTENA | 66941 | 3-H16 |
| | | 3-J16 |
| PIEZA LATERAL | 113021 | 1-F3 |
| PINON, DIFERENCIAL | 27255 | 2-D3 |
| PISTA,CUBIERTA DE RODAMIE | 19566 | 1-M13 |
| PISTA,EXTERIOR | 19593 | 1-D14 |
| PISTA,INTERIOR | 17275 | 1-H9 |
| | | 1-L9 |
| | 17275B | 1-H9 |
| | | 1-L9 |
| | 19336 | 1-F13 |
| PISTON | 33651 | 2-D5 |
| | | 2-F5 |
| PISTON BANDA DEL SERVO | 19381 | 1-F13 |
| PISTON CONTROL | 142751 | 1-I2 |
| PISTON, BAJA Y RETROCESO | 19601 | 1-D14 |
| PISTON, EMBRAGUE | 19480 | 1-K13 |
| PITOS AIRES | 23310 | 1-C5 |
| | | 1-H5 |
| | | 1-I4 |
| | | 1-M5 |
| PITOS TONO BAJO | 66790 | 3-D16 |
| PLACA - CIERRE | 17354 | 1-C9 |
| | | 1-E9 |
| | 19354 | 1-F13 |
| | 27302 | 2-E3 |
| | 42376 | 2-G8 |
| PLACA BISELADA DELANTERA | 68711 | 4-N3 |
| | 68721 | 4-C4 |
| PLACA CUBIERTA | 17473 | 1-G10 |
| | | 1-L10 |
| PLACA DE AJUSTE | 34013 | 2-H5 |
| PLACA DE RETENIDO | 19503 | 1-L13 |
| | 19515 | 1-M13 |
| | 19613 | 1-F14 |
| | 19702 | 1-G14 |
| PLACA DE SELLAR DER | 56365 | 3-I5 |
| PLACA DE SELLAR IZQ | 56366 | 3-I5 |
| PLACA DEFLECTORA AGUA | 15125 | 1-G8 |
| PLACA DER. FRENO TRASERA | 26280 | 2-E2 |
| PLACA FINAL | 87925 | 4-K2 |
| PLACA IZQ. FRENO TRASERO | 26280 | 2-E2 |
| PLACA PRECAUCION | 69021A | 4-G5 |
| PLACA SUPERIOR | 64340 | 3-G9 |
| | | 3-N8 |
| PLACA TRABAJO | 115041 | 1-D3 |
| PLACA-CUBREPOLVO | 15118 | 1-G8 |
| PLANCHUELA,SEGURO | 69049A | 3-K4 |
| | 69049D | 3-H15 |
| PLATO | 115011 | 1-C3 |
| | 40170 | 2-C7 |
| | 43090 | 2-D9 |
| | 50322B | 3-F3 |
| | 58375 | 3-E13 |
| | 76421A | 3-H14 |
| | 76434B | 3-G14 |
| PLATO - MEDIO | 141181 | 1-C8 |
| PLATO AHONDADO | 19498 | 1-K13 |
| | 19608 | 1-E14 |
| PLATO EMPUJADO | 19499 | 1-K13 |
| | 19609 | 1-E14 |
| PLATO EMPUJE | 19020 | 1-C13 |
| | 19500 | 1-K13 |
| | 19610 | 1-E14 |
| PLATO ESTABILIZADOR | 34155 | 2-K5 |
| PLATO MANUAL | 19440 | 1-G14 |
| PLATO SUPLEMENTARIO | 19667 | 1-F14 |
| PLATO- JUEGO DE ALFOMBRAS | 68696 | 4-J4 |
| POLEA | 11371 | 1-C3 |
| | 15131 | 1-H8 |
| | 24530 | 1-L11 |
| | | 1-N11 |
| POLEA ABANICO | 152101 | 1-I8 |
| POLEA BOMBA DE AIRE | 237131 | 1-G6 |
| PORTA CARBON | 24750 | 1-D12 |
| | | 1-G12 |
| | 76612 | 4-J2 |
| PORTA CERRADURA | 60261A | 3-F7 |
| | | 3-J7 |
| PORTA VARILLA | 58307 | 3-D13 |

# INDICE ALFABÉTICO (ESPAÑOL)


| DESCRIPCION | D-CODE | LOCAL |
|---|---|---|
| PORTADOR | 55261 | 3-L7 |
| | 55261A | 3-L7 |
| PORTADOR DE BATERIA | 53260 | 1-H12 |
| PORTADOR DE DIFERENCIAL | 27150 | 2-C3 |
| PRENSA | 24304 | 1-H11 |
| | | 1-J11 |
| | 24305 | 1-H11 |
| | | 1-J11 |
| | 76173 | 3-E14 |
| PRENSA PARA BATERIA | 56030 | 1-H12 |
| PRENSA PARA CANERIA | 133051 | 1-G4 |
| | 45903 | 2-G10 |
| PRENSA PARA FIL.DEL COMBL | 13481 | 1-F4 |
| PRENSA PARA MANGUERA FLEX | 43635A | 2-D8 |
| | 43635 | 2-H9 |
| | 43635B | 2-H9 |
| PRENSA PARA MANGUERZ | 43635C | 2-H9 |
| PRENSA PARA TUBO DEL ACEI | 14296 | 1-C8 |
| PRENSA TRABA GAZA | 13447 | 1-F4 |
| | 13447A | 2-E10 |
| | 13781A | 1-D7 |
| | | 1-G7 |
| | | 1-J6 |
| | | 1-M6 |
| | 13982A | 1-D7 |
| | | 1-G7 |
| | | 1-J6 |
| | | 1-M6 |
| | 146621 | 1-F8 |
| | 18863B | 1-F11 |
| | 19915 | 1-D13 |
| | 19916 | 1-J13 |
| | 19989 | 1-E13 |
| | 32107 | 2-F4 |
| | 33235 | 2-C5 |
| | | 2-E5 |
| | 40437 | 2-D7 |
| | 44173 | 2-D10 |
| | 44189 | 2-D10 |
| | 44436 | 2-D10 |
| | 44471 | 2-D10 |
| | 45903A | 2-I9 |
| | 45903B | 1-E13 |
| | 50506A | 3-G3 |
| | 51402A | 1-F4 |
| | 66944 | 4-H2 |
| | 66991 | 3-L16 |
| | 67031B | 3-M16 |
| | 67052B | 3-N16 |
| | 67059 | 3-N16 |
| | 67515 | 4-G2 |
| | 68015 | 4-C3 |
| | 76419 | 3-F14 |
| | 76419C | 3-J14 |
| | 76434 | 3-K14 |
| | 76435 | 3-G14 |
| | 76435A | 3-K14 |
| PRENSA,ALAMBRE DE DESCARG | 52302 | 3-C5 |
| PRISIONERO | 102081 | 1-G2 |
| | 39382 | 2-H6 |
| | 40398 | 2-D7 |
| PRISIONERO,CUBIERTA | 151041 | 1-G8 |
| PRISIONERO,REACTOR TERMAL | 138761 | 1-D4 |
| PROTECTOR | 14716 | 1-J2 |
| | 34152 | 2-K5 |
| | 41692B | 4-G2 |
| | 51403 | 3-C4 |
| | 60721 | 3-F7 |
| | | 3-K7 |
| | 61216 | 3-D14 |
| | 67032A | 3-M16 |
| PROTECTOR BOMBA DE FRENO | 43605 | 2-H9 |
| | 43609A | 2-H9 |
| PROTECTOR CABLE APAGADOR | 60052 | 3-E7 |
| | | 3-J7 |
| PROTECTOR DE TORNILLO | 51029 | 3-C4 |
| | 72502A | 3-N12 |
| PROTECTOR HILO | 51516 | 3-D4 |
| PROTECTOR MANGUERA ACEITE | 147161 | 1-F8 |
| PROTECTOR NO.1 | 40810 | 2-E7 |
| PROTECTOR RESORTE | 43082 | 2-D9 |
| PROTECTOR TUBO | 45715 | 2-F10 |
| PROTECTOR(D),SALPICADO | 56131 | 3-H5 |
| PROTECTOR(I),SALPICADO | 56141 | 3-H5 |
| PROTECTOR,CALOR | 60715 | 3-F7 |
| | | 3-J7 |
| PUNTA EJES(DERECHO)RECLIN | 88101 | 3-C10 |
| PUNTA EJES(IZ.) RECLINADO | 88151 | 3-H10 |
| PUNTAL,BANDA | 19361 | 1-F13 |
| ** R ** | | |
| RADIADOR | 15200 | 1-I8 |
| RADIADOR DEL ENFRIAMENTO | 15210A | 1-I8 |
| RADIO | 66860 | 3-G16 |
| | | 3-I16 |
| | 66900 | 3-G16 |
| | | 3-J16 |
| REACTOR | 20800 | 1-D4 |
| REBORDE | 19580 | 1-D14 |
| | 76453 | 3-K14 |
| RECIPTENTE | 27230 | 2-D3 |
| | 76425 | 3-J14 |
| RECTIFICADOR | 24510 | 1-L11 |
| | | 1-N11 |
| | 67242 | 4-F2 |
| REGULADOR | 18391 | 1-F11 |
| | 55482 | 3-N7 |
| REGULADOR(D),VENTANA | 58560 | 3-F13 |
| REGULADOR(I),VENTANA | 58560 | 3-F13 |
| REGULADOR,PERSION | 142501 | 1-C8 |
| RELOJ AUTOMATICO | 55711 | 3-N7 |
| RERNO | 25123 | 2-C2 |
| RESISTENCIA | 18101 | 1-C11 |
| | 18102 | 1-C11 |
| | 55610 | 3-E7 |
| | | 3-I7 |
| | 76433 | 3-J14 |
| RESORTE | 114121 | 1-C3 |
| | 13087 | 1-H4 |
| | 142731 | 1-I2 |
| | 17411 | 1-F10 |
| | | 1-J10 |
| | 17411A | 1-F10 |
| | | 1-J10 |
| | 17416 | 1-J10 |
| | 19664 | 1-F14 |
| | 23446B | 1-D6 |
| | | 1-F5 |
| | | 1-K5 |
| | | 1-L4 |
| | 33696 | 2-D5 |
| | 44031 | 2-C10 |
| | 46038 | 2-H10 |
| | 46062 | 2-H10 |
| | 76124 | 3-J14 |
| | 76135A | 3-E14 |
| | 76151A | 3-J14 |
| | 76428A | 3-F14 |
| RESORTE,AJUSTE | 66016 | 3-F4 |
| RESORTE,BOLA ESTACIONARIA | 19703 | 1-H14 |
| RESORTE,CHAVETA DE SINCRO | 17244 | 1-K9 |
| | 17324 | 1-J9 |
| | | 1-N9 |
| RESORTE,DELANTERO EXTERIO | 113531 | 1-F3 |
| RESORTE,DELANTERO INTERIO | 113511 | 1-F3 |
| RESORTE,ESPIRAL | 28010A | 2-F3 |
| RESORTE,GOBERNADOR | 19666 | 1-F14 |
| RESORTE,JUEGO | 24308 | 1-H11 |
| | | 1-J11 |
| | 37193 | 2-C6 |
| RESORTE,PALANCA DE CONTRO | 76432 | 3-J14 |
| RESORTE,PISTON | 19606 | 1-E14 |
| RESORTE,RETORNO | 234551 | 1-D6 |
| | | 1-F5 |
| | | 1-K5 |
| | | 1-L4 |
| | 41081A | 2-C9 |
| | 41619 | 2-E8 |
| | 44352 | 2-D10 |
| | 52672 | 3-C5 |
| | 52863 | 3-C5 |
| | 88107 | 3-C10 |
| RESORTE,RETORNO DE PISTON | 19363 | 1-F13 |
| | 19486 | 1-K13 |
| RESORTE,RETORNO DE TRINQU | 19733 | 1-H14 |
| RESORTE,RETORNO-INFERIOR | 26342 | 2-E2 |
| RESORTE,RETORNO-SUPERIOR | 26341 | 2-E2 |
| RESORTE,SELLO APICE | 113041 | 1-F3 |
| RESORTE,SELLO DE ESQUINA | 113231 | 1-F3 |
| RESORTE,SELLO LATERAL | 113171 | 1-F3 |
| RESORTE,TOPE | 58292 | 3-C13 |
| RESORTE,TRASERO-EXTERIOR | 113631 | 1-G3 |
| RESORTE,TRASERO-INTERIOR | 113611 | 1-F3 |
| RESORTE,ZAPATA DE FRENO | 26345 | 2-E2 |
| RESPIRADOR | 26060 | 2-D2 |
| RESPIRADOR,AIRE | 17530 | 1-D9 |
| | | 1-F9 |
| | 19344 | 1-F13 |
| RETEN,ACEITE | 10507 | 1-H2 |

# INDICE ALFABÉTICO (ESPAÑOL)


| DESCRIPCION | D-CODE | LOCAL |
|---|---|---|
| RETEN,ACEITE | 105561 | 1-E2 |
| | | 1-F2 |
| | 114041 | 1-C3 |
| | 16103 | 1-K8 |
| | 17335 | 1-C9 |
| | | 1-E9 |
| | 18216 | 1-H11 |
| | | 1-J11 |
| | 19223A | 1-C13 |
| | 19335 | 1-F13 |
| | 26154 | 2-D2 |
| | 27018 | 2-C3 |
| | 33065 | 2-C5 |
| | | 2-E5 |
| | 34760 | 2-I5 |
| RETENTOR | 19704 | 1-H14 |
| | 28776 | 2-G3 |
| | 34137 | 2-K5 |
| | 34776 | 2-I5 |
| | 34776C | 2-L5 |
| RETENTOR,RESORTE | 19487 | 1-K13 |
| RETENTOR,SERVC | 19391 | 1-G13 |
| RETENTOR,VARILLA | 41640 | 2-E8 |
| RODAMIENTO | 26151 | 2-D2 |
| | 27305 | 2-E3 |
| | 32182 | 2-G4 |
| RODAMIENTO (DEL) PINON | 27141 | 2-C3 |
| RODAMIENTO (TRAS) PINON | 27141A | 2-C3 |
| RODAMIENTO DE AGUJAS | 114031 | 1-C3 |
| | 115051 | 1-D3 |
| | 17274 | 1-H9 |
| | | 1-L9 |
| | 17612 | 1-C10 |
| | 19621 | 1-N13 |
| | 19622A | 1-N13 |
| | 19623 | 1-N13 |
| | 19624 | 1-N13 |
| RODAMIENTO DE BOLAS | 15C1CJ | 1-G8 |
| | 17201J | 1-G9 |
| | | 1-K9 |
| | 17204 | 1-G9 |
| | | 1-K9 |
| | 17221J | 1-K9 |
| | 17297 | 1-I9 |
| | | 1-M9 |
| | 17297A | 1-I9 |
| | | 1-M9 |
| | 17306 | 1-M9 |
| | 24503 | 1-L11 |
| | | 1-N11 |
| | 24514 | 1-L11 |
| | | 1-N11 |
| RODAMIENTO,AXIAL | 34381 | 2-I5 |
| RODAMIENTO,PRINCIPAL | 105021 | 1-E2 |
| RODAMIENTO,RODILLOS | 17205 | 1-G9 |
| | | 1-K9 |
| RODAMIENTO,ROTOR | 111111 | 1-F3 |
| RODAMIENTO,RUEDA DELANTER | 33047 | 2-C5 |
| | | 2-E5 |
| | 33075 | 2-C5 |
| | | 2-E5 |
| | 33076 | 2-C5 |
| | | 2-E5 |
| ROTOR | 24312 | 1-H11 |
| | | 1-J11 |
| | 24540 | 1-L11 |
| | | 1-N11 |
| | 87923 | 4-K2 |
| RUEDA,RODILLO | 14143 | 1-C8 |
| RUEDA,VOLANTE | 11500 | 1-C3 |
| ** S ** | | |
| SALPICADERO INFERIOR | 53400 | 3-G5 |
| SALPICADERO SUPERIOR | 53510 | 3-G5 |
| SECTOR | 44051 | 2-C10 |
| SEGURO ARBOL DE LEVA | 60253 | 3-E7 |
| | | 3-J7 |
| SEGURO,CAJA | 44439 | 2-D10 |
| | 67290 | 1-H12 |
| | 67293 | 1-H12 |
| SELLO DE GOMA 'O' | 101731 | 1-D2 |
| | 101741 | 1-G2 |
| | 105551 | 1-E2 |
| | 11400J | 1-C3 |
| | 14300J | 1-C8 |
| | 17442J | 1-D9 |
| | | 1-F9 |
| | 17442K | 1-D9 |
| | | 1-F9 |
| | 18201 | 1-E11 |
| | 19395 | 1-G13 |
| | 19396 | 1-G13 |
| | 19432 | 1-G14 |
| | 19442K | 1-H13 |
| | 19446 | 1-G14 |
| | 19475 | 1-K13 |
| | 19604 | 1-D14 |
| | 19822 | 1-I13 |
| | 238371 | 1-E8 |
| | 34731 | 2-I5 |
| SELLO DE GOMA 'O',EXTERNO | 113431 | 1-F3 |
| SELLO DE GOMA 'O',INTERNO | 113411 | 1-F3 |
| SELLO,AGUA | 15120 | 1-G8 |
| SELLO,AIRE | 153311 | 1-I8 |
| | 15332 | 1-I8 |
| SELLO,ANILLO CORTADO | 19258 | 1-D13 |
| SELLO,APICE | 113011 | 1-F3 |
| SELLO,CUERO CORTADO | 19394 | 1-G13 |
| | 19476 | 1-K13 |
| SELLO,ESQUINA | 113211 | 1-F3 |
| SELLO,LATERAL | 23151A | 1-G3 |
| SELLO,PISTON | 19384 | 1-G13 |
| | 19385 | 1-G13 |
| | 19603 | 1-D14 |
| SELLO,POLVO | 19036 | 1-G14 |
| | 32279 | 2-H4 |
| | 32279A | 2-H4 |
| | 34565 | 2-I5 |
| SEPARADOR | 27171 | 2-C3 |
| SILENCIADOR,PISO | 76071 | 4-K4 |
| SILENCIADOR,PRINCIPAL | 40500 | 2-D7 |
| SOLENOIDE,CAMBIO BAJO | 19821 | 1-H13 |
| SOPLADOR | 61140 | 3-C14 |
| SOPORTE | 13081 | 1-H4 |
| | 13153 | 1-E7 |
| | | 1-H6 |
| | | 1-K6 |
| | | 1-N6 |
| | 132411 | 1-C7 |
| | | 1-F7 |
| | | 1-H6 |
| | | 1-L6 |
| | 18111 | 1-D11 |
| | 18111H | 1-D11 |
| | 18114 | 1-D11 |
| | 40070B | 2-C7 |
| | 40081 | 2-C7 |
| | 40660 | 2-E7 |
| | 58762 | 3-E12 |
| | 58921D | 4-J3 |
| | 69885A | 4-K4 |
| | 76504 | 3-H14 |
| SOPORTE (DR),AMORTIGUADOR | 50110 | 3-C3 |
| SOPORTE (DR),MUNON | 51932 | 3-E4 |
| SOPORTE (IZ) | 51932 | 3-E4 |
| SOPORTE (IZ),AMORTIGUADOR | 50110 | 3-C3 |
| SOPORTE CILINDRICO,VOLANT | 32980 | 2-D4 |
| SOPORTE DE MOTOR | 108611 | 1-I2 |
| | 108621 | 1-I2 |
| SOPORTE, SILENCIADOR | 40160 | 2-C7 |
| SOPORTE,ALTERNADOR | 18371 | 1-E11 |
| SOPORTE,AMORTIGUADOR | 133901 | 1-D4 |
| | 50301A | 3-F3 |
| SOPORTE,BOBINA DE ENCENDI | 181901 | 1-E11 |
| | 18810 | 1-F11 |
| SOPORTE,BOMBA COMBUST | 45121 | 2-E10 |
| SOPORTE,BRAZO | 24314 | 1-H11 |
| SOPORTE,CENTRAL | 24706 | 1-F12 |
| SOPORTE,CILINDRO MAESTRO | 43070 | 2-D9 |
| SOPORTE,DEL | 24550 | 1-L11 |
| | | 1-N11 |
| | 24710 | 1-D12 |
| | | 1-F12 |
| | 64350 | 3-G9 |
| | | 3-N8 |
| | 64360 | 3-G9 |
| | | 3-N8 |
| SOPORTE,DELANTERO | 19540 | 1-M13 |
| SOPORTE,DISPOSITIVO DE EN | 18260 | 1-E11 |
| SOPORTE,MANGUERA DE ACEIT | 147401 | 1-F8 |
| SOPORTE,MONTAJE | 33280A | 2-C5 |
| SOPORTE,MONTAJE DE MOTOR | 39020 | 2-G6 |
| SOPORTE,PALANCA | 46110 | 2-I10 |
| SOPORTE,PURIFICADOR DE AI | 13340 | 1-G4 |
| SOPORTE,SUB-TANQUE | 15251 | 1-I8 |
| SOPORTE,TANQUE | 135151 | 1-H4 |
| | 67521 | 4-G2 |
| SOPORTE,TRAS | 24560 | 1-L11 |
| | | 1-N11 |
| | 24740 | 1-D12 |
| | | 1-F12 |

# INDICE ALFABÉTICO (ESPAÑOL)


| DESCRIPCION | D-CODE | LOCAL |
|---|---|---|
| SOPORTE,TRAS | 64370 | 3-G9 |
| | | 3-N8 |
| SOPORTE,VALVULA E.C. | 139111 | 1-J6 |
| SUPORTE,VALVULA RETENCION | 40710D | 2-E7 |
| | 4275C | 2-H8 |
| SOSTEN | 41360A | 2-C8 |
| SOSTEN, BANDA | 60265 | 3-F7 |
| | | 3-J7 |
| SOSTEN, NO. PLACA | 50030 | 3-C3 |
| SUJETADOR, BREQUE EMERGEN | 6712C | 4-F2 |
| SUJETADOR, INSTRUMENTOS | 6703C | 3-M16 |
| SUJETADOR, LAMPARA INTERI | 6710C | 3-N16 |
| SUJETADOR, TRASMISION | 6709C | 3-N16 |
| ** T ** | | |
| TACO DE GOMA PANEL SUPERI | 6035C | 3-D8 |
| | | 3-H8 |
| TACO DE GOMA PISO (C) | 68666 | 4-F4 |
| TACO DE GOMA PISO DELANTE | 68651 | 4-F4 |
| | 68665 | 4-F4 |
| TACO DE GOMA PISO TRAS. ( | 68654 | 4-F4 |
| TACO DE GOMA TANQUE GASOL | 42523 | 2-G8 |
| TAMBOR DEL EMBRAGUE | 19470 | 1-K13 |
| | 19511 | 1-M13 |
| TAMBOR DEL FRENO | 26251 | 2-E2 |
| TAPA | 131C4B | 1-E7 |
| | | 1-H6 |
| | | 1-K6 |
| | | 1-N6 |
| | 17442A | 1-G10 |
| | | 1-K10 |
| | 234631 | 1-K5 |
| | 2431C | 1-H11 |
| | | 1-J11 |
| | 34738 | 2-I5 |
| | 42307 | 2-F8 |
| | 42307A | 1-D7 |
| | | 1-J6 |
| | 44C34 | 2-C10 |
| TAPA CENTRAL | 37190 | 2-C6 |
| TAPA CONTROL DEL MINIMO | 23436 | 1-F4 |
| TAPA DE BOCINA | 32800 | 2-C4 |
| TAPA DE GRIFO DE ACEITE | 114111 | 1-C3 |
| TAPA DE GUANTERA | 64030 | 3-G8 |
| | | 3-K8 |
| TAPA DE LLENADO | 42250 | 2-F8 |
| TAPA DE VENTILACTION | 33693B | 2-C8 |
| TAPA DEL CONDUCTOR DE ACE | 102501 | 1-E2 |
| TAPA DEL RADIADOR | 15205 | 1-I8 |
| TAPA RUEDA,COPA | 33071 | 2-C5 |
| | | 2-E5 |
| TAPA SALIDA DE GASES | 34019 | 2-H5 |
| TAPA SOPORTE | 33695 | 2-D5 |
| TAPON | 16241 | 1-K8 |
| | 235411 | 1-L5 |
| | | 1-M4 |
| | 23657 | 1-E6 |
| | | 1-G5 |
| | | 1-L5 |
| | | 1-M4 |
| | | 1-N4 |
| | 41681 | 2-E8 |
| | 56242F | 3-C14 |
| | 64043 | 3-G8 |
| | | 3-K8 |
| TAPON CIEGO | 10205A | 1-G2 |
| | 102061 | 1-G2 |
| | 102071 | 1-G2 |
| | 114051 | 1-C3 |
| TAPON DE CABEZA CUADRADA | 19331 | 1-F13 |
| TAPON DE HULE | 24311B | 1-H11 |
| | 33693 | 2-D5 |
| | | 2-F5 |
| TAPON DRENAJE | 10404 | 1-H2 |
| | 53134 | 3-C14 |
| | 56241 | 3-L6 |
| | 56241E | 3-C12 |
| | 56242 | 3-L6 |
| | 56615 | 3-N6 |
| TAPON MAGNETICO DE DRENAJ | 17121 | 1-C9 |
| | | 1-E9 |
| | 26051 | 2-D2 |
| TAPON NIVEL DE ACEITE | 26041 | 2-D2 |
| TAPON PARA TANQUE DEL GAS | 87992A | 4-G2 |
| TAPON,COJINETE | 17325 | 1-C9 |
| | | 1-E9 |
| TAPON,DIRECCION | 34159A | 2-H5 |
| TAQUIMETRO | 55461 | 3-M7 |
| TECHO | 74030 | 3-G6 |
| | | 3-N5 |
| TENEDOR,SOSTEN DE CAPO | 52518 | 3-C5 |
| TERMINAL | 32018 | 2-C4 |
| | 67371A | 4-F2 |
| TIRANTE,CAPO | 52510 | 3-C5 |
| TORNILLO | 24705 | 1-F12 |
| | 44187 | 2-D10 |
| | 57109 | 3-C10 |
| | 66865 | 3-G16 |
| | | 3-J16 |
| | 75436 | 3-C8 |
| | 76761 | 3-L14 |
| | 87105 | 4-J2 |
| | 87107 | 4-J2 |
| | 87120 | 4-J2 |
| | 87926 | 4-K2 |
| TORNILLO,AJUSTE | 238451 | 1-E8 |
| | 27301A | 2-E3 |
| | 87016 | 3-F4 |
| TORNILLO,ESPEJO | 69112B | 4-M4 |
| TORNILLO,JGO | 23371 | 1-D5 |
| | | 1-I5 |
| | | 1-K4 |
| | | 1-N5 |
| | 234641 | 1-K5 |
| | 24526 | 1-L11 |
| | | 1-N11 |
| | 24534 | 1-L11 |
| | 24535 | 1-L11 |
| | | 1-N11 |
| | 24725 | 1-D12 |
| | | 1-F12 |
| TORNILLO,JGO.,AJUSTE | 234701 | 1-D6 |
| | | 1-F5 |
| | | 1-K5 |
| | | 1-L4 |
| | 23374 | 1-C6 |
| | | 1-E5 |
| | | 1-J5 |
| | | 1-K4 |
| TORNILLO,PURGADOR | 33691 | 2-D5 |
| | | 2-F5 |
| | 33691A | 2-F2 |
| | 33691B | 2-C8 |
| TORNILLOS,JGO | 17313A | 1-F10 |
| | | 1-I10 |
| | 24360 | 1-I11 |
| | | 1-K11 |
| TRABA DEL CILINDRO DEL LL | 58961 | 3-C2 |
| TRANSMISION & DIFERENCIAL | 27100 | 2-C3 |
| TRINQUETE | 44044 | 2-C10 |
| TUBE,VACIO | 13150J | 1-E7 |
| | | 1-N6 |
| TUBO | 18107 | 1-C11 |
| | 40070 | 2-C7 |
| | 61220 | 3-D14 |
| | 67500 | 4-G2 |
| | 76416B | 3-F14 |
| | 76417C | 3-F14 |
| TUBO AIRE | 137401 | 1-F6 |
| | 13744A | 1-F6 |
| | 40420 | 2-D7 |
| | 40610 | 2-E7 |
| | 40720 | 2-E7 |
| TUBO DER. FRENO DELANTERO | 45280 | 2-I9 |
| TUBO DER. FRENO TRASERO | 43660A | 2-H9 |
| TUBO EMBRAGUE | 41370 | 2-C8 |
| TUBO IZQ. FRENO DELANTERO | 45320 | 2-I9 |
| TUBO IZQ. FRENO TRASERO | 43650A | 2-H9 |
| TUBO LLENADO | 42210 | 2-F8 |
| TUBO PRINCIPAL COMBUSTIBL | 45111 | 2-E10 |
| | 45112 | 2-E10 |
| TUBO RETROCESO COMBUSTIBL | 45611 | 2-F10 |
| TUBO TOMA DE AIRE | 23615 | 1-G4 |
| TUBO VACIO | 19910 | 1-D13 |
| | 23509 | 1-E6 |
| | | 1-G5 |
| | | 1-L5 |
| | | 1-M4 |
| | 43830 | 2-E9 |
| | 43850 | 2-F9 |
| TUBO, ACEITE | 19920 | 1-D13 |
| | 19930 | 1-D13 |
| TUBO, EVAPORACION | 45711 | 2-F10 |
| TUBO, FRENO DELANTERO | 45250 | 2-I9 |
| TUBO, FRENO TRASERO | 45350 | 2-I9 |
| | 45360A | 2-I9 |
| TUBO,DOSIFIC.ACEITE | 146301 | 1-D8 |
| | 146401 | 1-D8 |
| TUBO,EQUILIBRIO | 137551 | 1-G6 |
| TUBO,NIVEL ACEITE | 19870 | 1-I13 |

# INDICE ALFABÉTICO (ESPAÑOL)


| DESCRIPCION | D-CODE | LOCAL |
|---|---|---|
| TUBO,VACIO | 13220K | 1-E7 |
| | | 1-N6 |
| | 137781 | 1-D7 |
| | | 1-F7 |
| | | 1-J6 |
| | | 1-M6 |
| | 18200K | 1-E11 |
| TUERCA | 13461 | 1-D4 |
| | 19389 | 1-G13 |
| | 238471 | 1-E8 |
| | 33042 | 2-C5 |
| | | 2-E5 |
| | 34222 | 2-K5 |
| | 40355A | 2-C7 |
| | 40425 | 2-D7 |
| | 46061 | 2-H10 |
| | 76472A | 3-K14 |
| | 87108 | 4-J2 |
| | 87119 | 4-J2 |
| | 87134 | 4-I2 |
| TUERCA DE SIN-FIN | 32130 | 2-F4 |
| TUERCA,BRIDA | 40355 | 2-C7 |
| TUERCA,EJE | 19443 | 1-G14 |
| TUERCA,SEGURO | 117111 | 1-D3 |
| | 17629 | 1-C10 |
| | | 1-J9 |
| | 27030 | 2-C3 |
| TUERCA,TAPA | 76603 | 4-H2 |
| TUERCAS,JGO | 24533 | 1-L11 |
| | | 1-N11 |
| | 24537 | 1-L11 |
| ** U ** | | |
| UNA APARCAMIENTO | 19732 | 1-H14 |
| UNIDAD DEL CALENTADOR | 76405 | 3-E14 |
| UNIDAD,TERMOSTATO | 135311 | 1-H4 |
| UNION CORTA | 67821 | 3-E16 |
| | 67985 | 4-F2 |
| UNION PARA MANGUERA | 10320 1 | 1-H2 |
| UNION PARA TAMBOR | 19590 | 1-D14 |
| | 19591 | 1-D14 |
| ** V ** | | |
| VALVULA | 19663 | 1-F14 |
| | 19665 | 1-F14 |
| VALVULA,CONTROL | 19750 | 1-H13 |
| VALVULA,CONTROL AIRE | 137201 | 1-F6 |
| VALVULA,MANUAL | 19768 | 1-H13 |
| VALVULA,RETENCION | 13730 1 | 1-F6 |
| | 42710 | 2-H8 |
| | 43770 | 2-E9 |
| VALVULA,SOLENCIDO | 23408 | 1-C6 |
| | | 1-E5 |
| | | 1-J5 |
| | | 1-K4 |
| VARILLA | 41341 | 2-C8 |
| | 46021 | 2-H10 |
| | 46571 | 2-J10 |
| VARILLA DE DESACOPLE | 44032 | 2-C10 |
| VARILLA DE EMPUJE | 41131 | 2-C9 |
| VARILLA DE EMPUJE-MACHO | 26821 | 2-F2 |
| VARILLA,PARQUEO | 19450 | 1-G14 |
| VARILLA,TENSORA | 32365 | 2-H4 |
| VASTAGO | 19386 | 1-G13 |
| VELOCIMETRO | 55471 | 3-M7 |
| VENTILADOR DEL MOTOR | 76424 | 3-J14 |
| VIBRADOR | 67720 | 3-E16 |
| | 75029 | 3-N7 |
| VIDRIO (DER), PUERTA | 58500 | 3-D12 |
| VIDRIO (DER), VENTANA LAT | 63941 | 3-G15 |
| VIDRIO (IZQ), PUERTA | 58500 | 3-D12 |
| VIDRIO (IZQ), VENTANA LAT | 63951 | 3-G15 |
| VIDRIO, VENTANA DELANTERA | 63901 | 3-F15 |
| VIDRIO, VENTANA TRASERA | 63931 | 3-F15 |
| VISERA(D) | 69210 | 4-D5 |
| VISERA(I) | 69240 | 4-E5 |
| ** Z ** | | |
| ZAPATA,FERNO | 26310 | 2-E2 |

# INSTRUCTION

The following charts provide you with the general layout and contents location of Mazda parts catalogs, but some sections may vary slightly in detail.

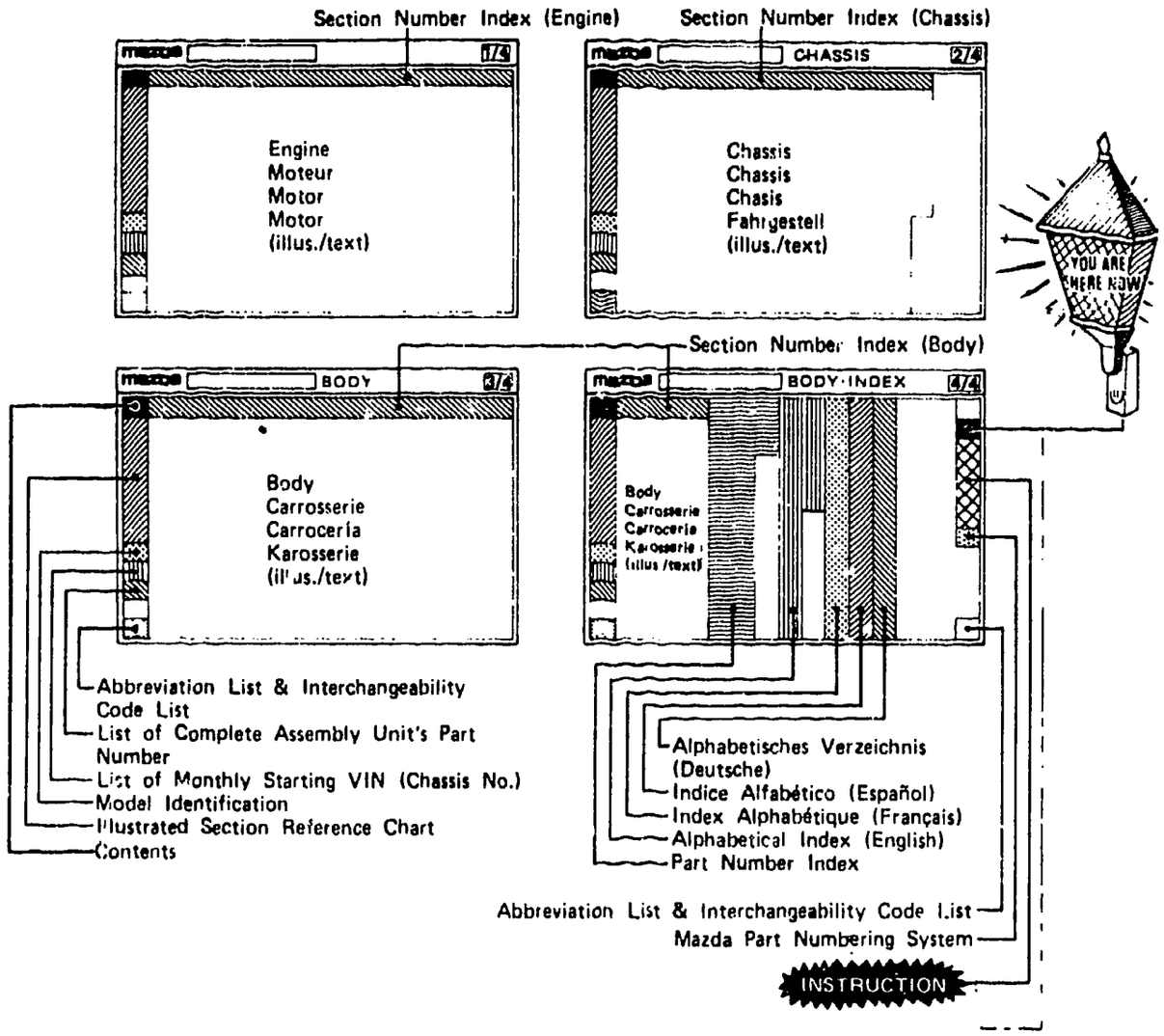


# DATA FLOW & LOCATION NUMBERING

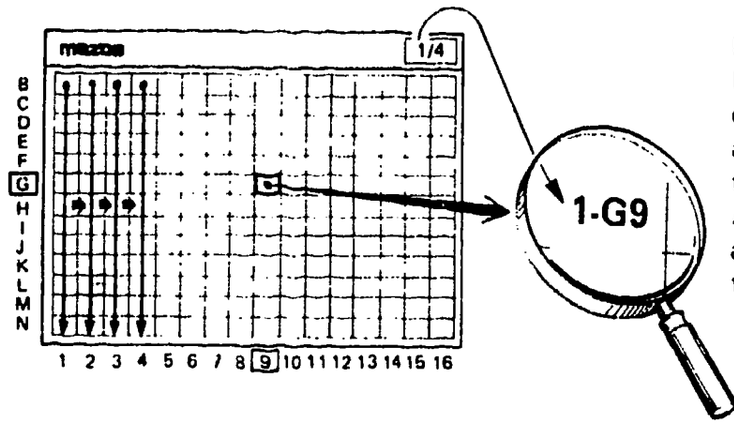


Each frame is identified by LOCATION NUMBER which consists of alphabet (B thru N) and numeric character(s) (1 thru 16).
A numeric character preceding an hyphen (-) indicates the fiche number in the set.

The flow of data is always from the top to the bottom and from the left to the right. It is continued on to the next fiche in the set and on through to the ending frame on the last fiche in the set.

# INSTRUCTION



## HOW TO LOCATE PARTS

FIRST AND MOST IMPORTANT
Assure that you have the Correct Fiche Set, by confirming the MODEL NAME and PRODUCTION YEAR (or MODEL YEAR) on the fiche title.

### LOCATING PARTS FROM "*ILLUSTRATED SECTION REFERENCE CHART*"

1. Place the proper fiche in the projector: either Engine, Chassis or Body fiche.
2. Refer to "Illustrated Section Reference Chart" located on the extreme left frames in a vertical row (loc. C1 thru i1) and locate the illustrated section and its Section Number under which the desired part may be found.
3. Refer to "Section Number Index" located in the top row and find the indicated Section Number and its Location Number.
4. Proceed to the "Illustration-Text" frame at the indicated Location Number and find the illustrated part desired and its D-Code.
5. Locate the indicated D-Code in the text shown opposite.
   (The D-Code appears in numerical sequence in the text.)
6. The Part Name, Part Number, Quantity, etc. desired are listed adjacent to the D-Code.

### LOCATING PARTS FROM "*SECTION NUMBER INDEX*"

If you know the Section where the desired part may be found, take the same procedure as the above except for paragraph 2.

### LOCATING PARTS FROM "*PART NUMBER INDEX*"

1. Place "Index" fiche in the projector.
2. Refer to "Part Number Index" (if a part number is known) and find the Part Number and its Location Number.
3. Select the proper fiche according to the indicated Location Number; the first digit of Location Number indicates the fiche number in the set, e.g., Location Number 1-E6 indicates frame No. E6 of fiche No. 1 in the set. And place it in the projector.
4. Proceed to the "Illustration-Text" frame at the indicated Location Number, and find the Part Number in the text.
5. The D-Code, Part Name, Quantity, Model Application, etc. desired are listed adjacent to the Part Number in the text. An illustration of the Part is also shown opposite.

   [Note]
   The indexing sequence of PART NUMBER INDEX is as follows.
   GENERAL SPARE PARTS are listed in the group number sequence such as in the center two digits of part No.
   STANDARD PARTS are listed after General Spare Parts, in numerical sequence.

### LOCATING PARTS FROM "*ALPHABETICAL INDEX*"

1. Place "Index fiche" in the projector.
2. Refer to the "Alphabetical Index" of your language block and find the Part Name, D-Code and Location Number of the desired part. If there are more than one Location No. indicated for one Part Name, judge by the D-Code which frame may show your requirement.
3. Research your requirement by using the indicated Location Number and Part Name, i.e., very similar to the procedure outlined in paragraph 3 thru 5 above, "LOCATING PARTS FROM PART NUMBER INDEX".

# INSTRUCTION (Cont'd)

## HOW TO INTERPRET THE ILLUSTRATION

❶ ❷
**6800A CEILING TRIM (HATCHBACK)**

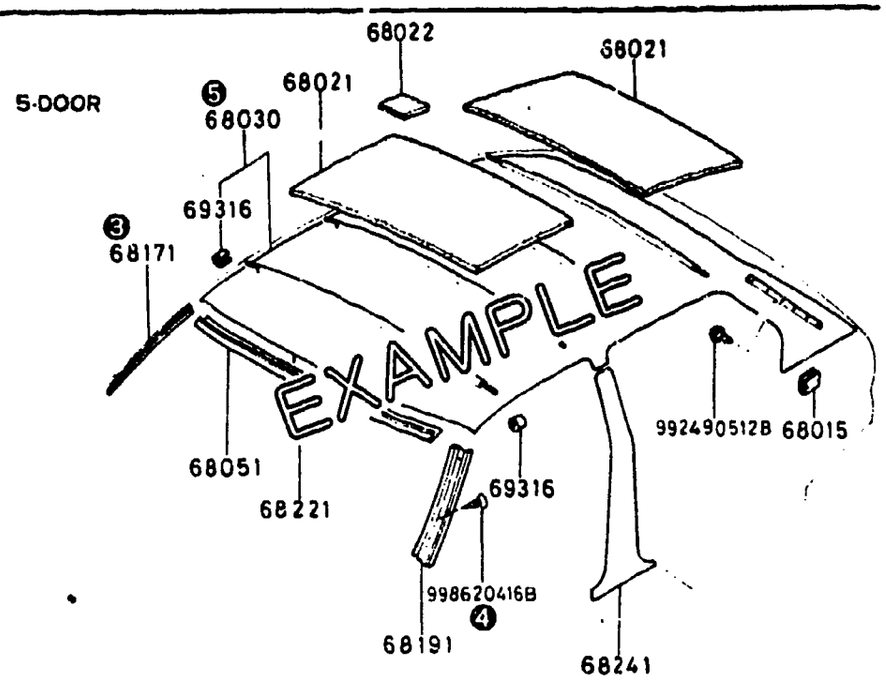


❻ 3-C10

In the example shown above, the interpretation of each item appearing in the illustration area is as follows.

❶ **SECTION NUMBER**
Each illustration is given a Section Number, which is a "IDENTIFICATION NUMBER" of the group of parts classified in function.
Section Number basically consists of four numeric characters and alpha "A". But when a Section (a group of parts) is shown in more than one illustration over the same catalog, an additional alphabetical character is incorporated, e.g.,

| Section No. | Section Name |
|---|---|
| 6800A | Ceiling Trim (Hatchback) |
| 6800AA | Ceiling Trim (Wagon) |

[Note]
Illustrations are always arranged in numerical sequence by SECTION NUMBER throughout the fiches in the set. (Exception. Section No. "0900A Key Sets" is located in the first section of Body group.)

❷ **SECTION NAME**
This is a descriptive name of the illustration (the group of parts).

❸ **D-CODE (KEY NUMBER)**
D-Code consists of five or six digits, and serves as a "KEY NUMBER" to co-ordinate a part's illustration with its related text.

[Note]
Those parts which appear in the illustration without D Code are not available as spare parts. (Exception: Most Standard Parts do not have D-Code, but are available as spare parts.)

❹ **STANDARD PART NUMBER**
Those parts which are standardized in form, dimension, material, etc. such as bolts, nuts, washers, etc. are called "Standard Parts". In most cases, Standard Part Numbers are shown on the illustration instead of via the D-Code, and are distinguised from D-Code by the number which consists of nine or ten digits starting with "9", e.g., 99862-0416B. Those Parts do not appear in the text and part number index.

❺ **ASSEMBLY AND COMPONENTS' RELATIONSHIP**
The relationship between an Assembly and its Components is indicated in the illustration but not in the text.
If the D-Code appeared as the example, the correct interpretation of that would be: D-Code 68030 includes D-Code 69316 and Top Ceiling (no D-Code indicated).

❻ **LOCATION NUMBER**
This is to indicate a location of the frame on the fiche.

# INSTRUCTION (Cont'd)



## HOW TO INTERPRET THE TEXT

IMPORTANT
As there are many abbreviated words used in the text, refer to "Abbreviation List" located in the lower corner of each fiche (frame No. N1).

C800A-1 CEILING TRIM (HATCHBACK)

| D-CODE (Key No.) | PART NAME | PART No. | Qty | MODEL/DESCRIPTION | VIN (Chassis No.) |
|---|---|---|---|---|---|
| ❶ 68030 | ❷ CEILING, TOP<br>CIEL DE PAVILLON<br>CIELO INTERIOR DEL TECHO<br>DACHBESPANNUNG | ❹ 8531-68-030 | ❻ 1 | ❼ (USE W/DEFROSTER)<br>3-DOOR ❽ | |
| | ❸ BLACK | ❺ 00 | | | |
| | BEIGE | 31 | | | |
| | • | 853[illegible] | 1 | (USE W/O DEFROSTER)<br>5-DOOR | |
| | BLACK | 00 | | | |
| | BEIGE | 31 | | | |
| 68051 | PLATE, T/CEILING | 8531-68-051 | 1 | | FA4PS..<br>500001<br>–522626<br>FA4TS..<br>500001<br>–688439 |
| | ❾ <AN> | ❿ •8531-68-051A | 1 | | ⓫ FA4PS..<br>522627–<br>FA4TS..<br>688440– |

EXAMPLE

In the example shown above, the interpretation of the information appearing in each column is as follows.

❶ **D-CODE (KEY NUMBER)**
This is to serve as a "KEY NUMBER" to co-ordinate with a part on the illustration.
Those parts which are identical in function and descriptive name, are given a common code over the Mazda Spare Parts.
Within each Section Number, the D-Code appears in numerical sequence.

❷ **PART NAME**
Part Names are shown in English and/or French and/or Spanish and/or German, depending upon Catalogs and are given to each "D-CODE".

❸ **COLOR NAME**
Color Names appear here when Color Codes are indicated in the "PART No." column. These are shown in English only.

❹ **PART NUMBER**
Under the same D-Code, if there are more than one Part Number, Part Numbers are always listed in numerical and/or alphabetical sequence regardless of the order of modification history of parts.

❺ **COLOR CODE**
When Color Code(s) appear(s), the indicated Part Number requires the Color Code to properly identify the color of the part, e.g., 8531-68-030 00, 8531-68-030 31.

❻ **QUANTITY**
This denotes the Quantity of each part number per the D-Code used on the applicable model(s).

❼ **DESCRIPTION**
An additional descriptive information for each part is provided as necessary.

❽ **MODEL APPLICATION**
Model Application for a part is shown in this column if necessary.
If there is no Model Application indicated, the affected part is applicable to "ALL MODELS" covered in the page.
For further information, refer to "HOW TO INTERPRET THE MODEL APPLICATION" shown later (frame No. G16).

❾ **INTERCHANGEABILITY CODE**
The code in < > brackets appearing in this column indicates the level of interchangeability between the indicated part and the former one.
For the definition of the Codes, refer to "INTERCHANGEABILITY CODE LIST" shown in the lower corner of each fiche (frame No. N1).

❿ **NEW PART NUMBER'S SIGN**
An asterisk (•) appearing in the "Part Number" column indicates that the affected Part Number has been newly added since the last edition.

⓫ **VIN (CHASSIS No.)**
VIN (Vehicle Identification Number) is shown in this column if necessary, to identify the vehicles applicable to the affected part.
For further details, refer to "HOW TO INTERPRET THE VIN (CHASSIS No.)" located in frame No. H16 of this fiche.

# INSTRUCTION (Cont'd)

## HOW TO INTERPRET THE MODEL APPLICATION

Model Application does NOT ALWAYS APPEAR. No "Model Application" indicated denotes that a Part is applicable to ALL MODELS covered by the affected page.

If the information in the "MODEL/DESCRIPTION" column appeared as the example below:

4000A-1 EX. SYSTEM (HATCHBACK)

| D-CODE (Key No.) | PART NAME | PART No. | Qty | MODEL/DESCRIPTION | VIN (Chassis No.) |
|---|---|---|---|---|---|
| 40061 | HANGER, SILENCER<br>SUPPORT, ECHAPPEMENT<br>SOPORTE, SILENCIADOR<br>DAEMPFUNGSRING | 3874-40-060 | 1 | ❶ | |
| 40081 | BRACKET<br>SUPPORT<br>SOPORTE<br>HALTEWINKEL | 3952-40-080A | 1 | U.K. 1000<br>U.K. 1400 ❷ | |
| | | 8021-40-080C | 1 | GENERAL<br>AUSTRALIA<br>1300 ❸ | |

... the correct interpretation of the above would be:

❶ Part No. 3874-40-060 is applicable to All of Hatchbacks.

❷ Part No. 3952-40-080A is applicable to the Hatchbacks of 1000cc engine for *U.K. and of 1400cc engine for U.K.

❸ Part No. 8021-40-080C is appliçable to All Hatchbacks for General Areas and for Australia, and All the 1300cc Hatchbacks (including 1300cc for U.K. if applicable).

*U.K. = The United Kingdom

# INSTRUCTION (Cont'd)



## HOW TO INTERPRET THE VIN (CHASSIS No.)

### VEHICLE IDENTIFICATION SYSTEM FOR MAZDA RX-7 (1979 & 1980 YEAR MODELS)

All vehicles are identified by the VEHICLE ID. No. (VIN = Chassis No.) that consists of VDS and Serial Number. VDS (Vehicle Description Section) consisting of five or six alphanumeric characters denotes the "MODEL SERIES". The Serial Number consisting of six numeric characters denotes the Serial Unit Number of vehicle and is sequentially numbered within each VDS.

EXAMPLE

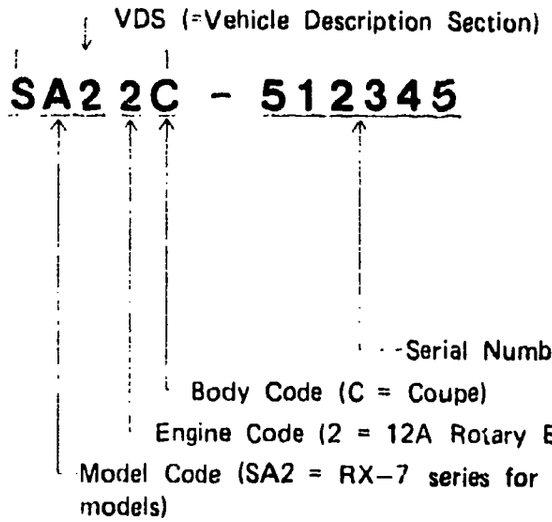


### LOCATION OF VIN PLATE

The plate is attached to the top ledge of the Dash Panel under the Bonnet (Engine Hood), refer to the illustration shown right.

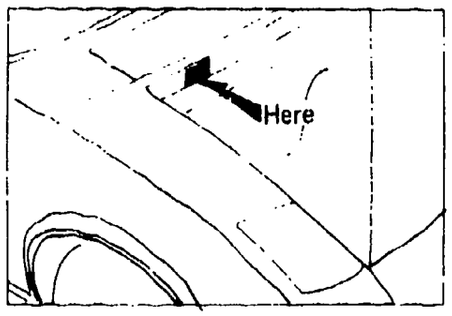


### VIN PRESENTATION ON THE PARTS CATALOG

VIN does NOT ALWAYS APPEAR. No "VIN" indicated denotes that a Part is applicable to the affected model from the FIRST PRODUCTION and ON (up to now).

If the information in the "VIN" column appeared as the example below:

6230A-1 BACK DOOR MECHANISMS (HATCHBACK)

| D-CODE (Key No.) | PART NAME | PART No. | Qty | MODEL/DESCRIPTION | VIN (Chassis No.) |
|---|---|---|---|---|---|
| 62210A | HINGE, BACK DOOR | 8531-62-210B | 2 | 1000<br>1300 | ❶ FA4PS 500001 - 522626<br>FA4TS 500001 - 688439 |
| | | •8531-62-210D | 2 | | ❷ FA4PS 522627<br>FA4TS 688440-<br>FA4US 500001 |
| 62310 | LOCK, BACK DOOR | 8531-62-310B | 2 | | ❸ |

... the correct interpretation of the above would be:

❶ Part No. 8531-62-210B is applicable to Model 1000 from VIN FA4PS 500001 thru FA4PS-522626 and Model 1300 from VIN FA4TS-500001 thru FA4TS-688439 for the Hatchback respectively.

❷ Part No. 8531-62-210D is applicable to Model 1000 from VIN FA4PS 522627 and on, Model 1300 from VIN FA4TS-688440 and on, and Model 1400 from VIN FA4US-500001 (the first production) and on for the Hatchback respectively.

❸ Part No. 8531-62-310B is applicable to ALL MODELS (1000, 1300 and 1400) of the Hatchback series from the PRODUCTION and ON (up to now)

# MAZDA PART NUBERING SYSTEM

Mazda Part Numbers are generally classified into three categories: General Parts, Standard Parts and Special Tools.

## MAZDA GENERAL PARTS

The Part Number basically consists of nine or ten digits. The 10th digit (if applicable) denotes modification of the part. It has twelve digits when a color code consisting of two digits is required.

EXAMPLE

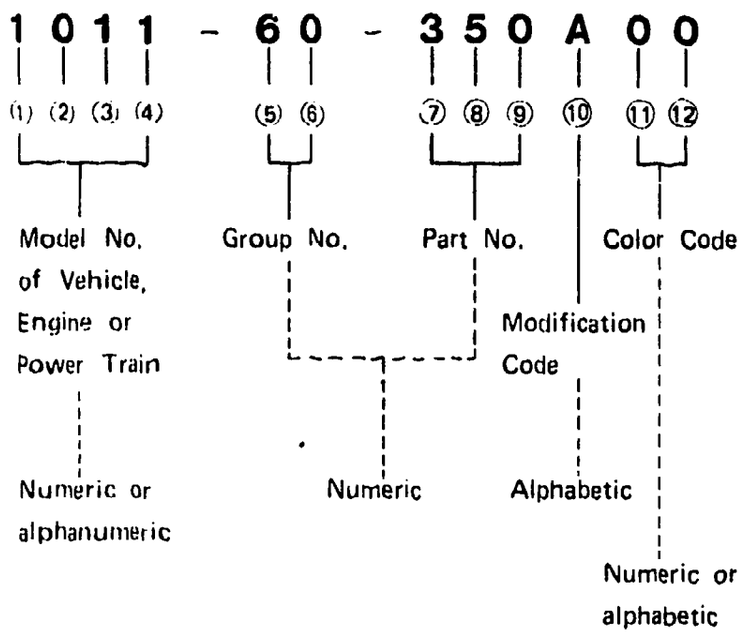


[Note]
If a color code was required but not modification code, the 10th digit would be blank and the color code would follow, e.g.,

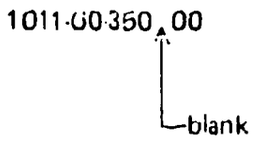


## MAZDA STANDARD PARTS

Those Parts which are standardized in form and dimension such as Bolts, Nuts, Washers, Hoses, Disc Wheels, etc. are called Mazda Standard Parts.

All the Mazda Standard Parts are identified by a Part Number starting with "9". The numbering structure of Standard Parts varies depending upon the kind of parts.

The following is just one example of Standard Part Numbers.
For further details and examples, refer to the wall chart, "LIST OF STANDARD PARTS".

EXAMPLE

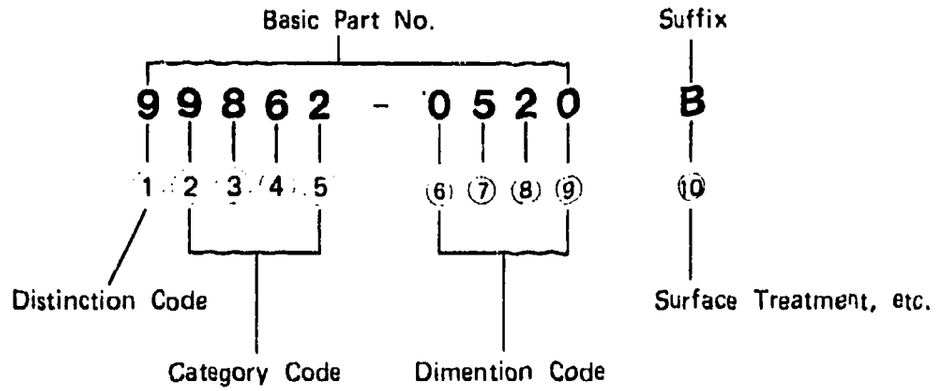


## MAZDA SPECIAL TOOLS

In order to repair Mazda Vehicles, certain equipment is required. Those are called Mazda Special Tools.

EXAMPLE

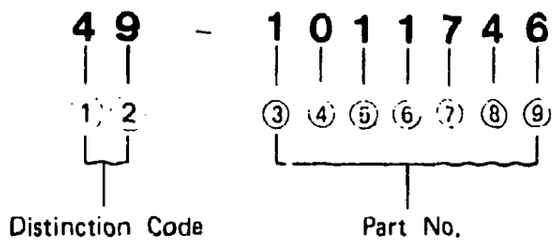


[Note]
As Mazda Special Tools are not shown in the Parts Catalog, refer to "LIST OF SPECIAL TOOLS & APPLYING MODELS" as for further details.

# ABBREVIATION LIST (English)



| Abbreviation | Definiton | Abbreviation | Definiton |
|---|---|---|---|
| 1 ST | First | ..F | Feet |
| 2 ND | Second | FED. | Federal |
| 3 D. | 3-Door | FIX. | Fixing |
| 3 RD | Third | FOLD. | Fold'ng |
| 4-SPD | 4-Speed | FRT. or F. | Front |
| 4 TH | Fourth | F/SHIFT | Floor Shift |
| 5 D. | 5-Door | | |
| 5 SPD | 5 Speed | | |
| 14-FT | 14-Feet Box | | |
| | | ..G | Grams |
| | | GAS. | Gasoline |
| | | GEN. | General |
| ..A | Ampere | | |
| ACCEL. | Accelerator | | |
| ADJ. | Adjust | | |
| A.D.R. | Australia Design Rule | HARN | Harness |
| AIR CON. | Air Conditioner | HEAT. or HEA. | Heater |
| ALUMI | Aluminum | HIGHT. | High-Tension |
| A/REST | Arm Rest | H/LAMP | Headlamp |
| ASS'Y | Assembly | H.B.RE. | Hatchback Release |
| ATT. | Attachment | H/TOP or H/T | Hardtop |
| A/T | Automatic Transmission | | |
| AUST. | Australia | | |
| AUTO. | Automatic | | |
| | | IG. or IGN. | Ignition |
| | | IN. | Inlet |
| | | IND. | Indicator |
| BAL. | Balance | INJ. | Injection |
| B/DOOR | Back Door | INN. | Inner |
| BDY. | Body | INS. | Insulation |
| BELT. | Beltline | INST. | Instrument |
| BRG. | Bearing | INT. | Interior |
| BRKT. | Bracket | INTMT. | Intermittent |
| BRT. | Britain (=The United Kingdom) | | |
| BUMP. | Bumper | | |
| | | ..L | Liters |
| | | L= | Length |
| | | (L) or L | Left |
| (C), C. or CTR. | Center | L/BODY | Long Body |
| CABN. | Cabin | L/BOX | Long Box |
| CALIF. | California | LH. SIDE | Left Hand Side |
| CARB. | Carburettor | L.H.D. | Left Hand Drive |
| CE. | Conventional Engine (=Reciprocating Engine) | LWR. | Lower |
| | | L/VAN | Light Van |
| CLG. | Ceiling | | |
| COMB. | Combination | | |
| COMP. | Companion | | |
| CONN. | Connector or Connecting | MA. CYL. | Master Cylinder |
| CONS. | Console | MAINT. | Maintain |
| COVR. | Cover | MLD. or MLDG. | Moulding |
| CPT. | Complete Assembly | MPX. | Multiplex |
| C/SHIFT | Column Shift | MT. | Mounting |
| CYL. | Cylinder | M/T | Manual Transmission |
| | | | |
| D. | Door | NO. | Number |
| D= | Diameter | NON T/CABIN | Non Tilt Cabin |
| DAY & NIGHT AJST. | Day & Night Adjust Table | NOR. ROOF | Normal Roof |
| D/CABIN | Double Cabin | NOZ. | Nozzle |
| DEF | Defroster | | |
| DIAPH. | Diaphragm | | |
| DIFF. | Differential | | |
| DISC/B | Disc Brake | ORD. BY | Order By |
| DIST. | Distributor | O.S. | Oversize |
| DR. | Door | OUT. | Outer |
| DRUM/B | Drum Brake | | |
| D/TIRE | Dual Tires | | |
| DX. | Deluxe | | |
| DUMP. | Dump Truck | | |
| | | P. | Panel |
| | | (P) | Primary |
| | | PARK. or PARKG | Parking |
| | | PASS. | Passenger |
| E.G.R. | Exhaust Gas Recirculation | P. BOARD | Partition Board |
| ELEC. | Electric | P.C.V. | Positive Crankcase Ventilation |
| EM. | Emission Control System | | |
| ENEGY or ENGY. | Energy | PHLPPNS | The Philipines |
| ENG. | Engine | PILR. | Pillar |
| EQUIP. | Equipment | P.KG. | Package |
| EX. | Exhaust | PNL. | Panel |
| EXC. | Except. | POSIT. | Positive |
| EXTRACT. | Extractor | P.P. | Polypropylene |
| | | P.S. | Power Steering |
| | | P/S | Power Steering |

| Abbreviation | Definition | Abbreviation | Definition |
|---|---|---|---|
| P.T.O. | Power Take Off | SW. | Switch |
| P/VAN | Panel Van | S. WASHER | Screen Washer |
| P/W or P. WINDOW | Power Window | SWD. | Sweden |
| | | SYNC. | Synchronizer |
| QTR. | Quarter | | |
| | | ..T | Tons |
| | | T= | Thickness |
| | | T/CABIN | Tilt Cabin |
| (R) or R | Right | T/CEILING | Top Ceiling |
| RAD. | Radiator | TH. | Throttle |
| RE. | Rotary Engine | THERM. | Thermostat |
| RECIPRO | Reciprocating Engine (=Conventional Engine) | THROT. | Throttle |
| | | T/MISSION | Transmission |
| REGUL. | Regulator | T/L | Tubeless |
| REG. CABN | Regular Cabin | T/STEERING | Tilt Steering |
| REL. | Release | | |
| REM. CON. or REMO. CON. | Remote Controlled | | |
| RET. | Return | U.K. | The United Kingdom |
| RETAIN. | Retaining | UP | Upper |
| REV. | Reverse | URETANE | Urethane Rubber |
| R. H. SIDE | Right Hand Side | U.S. | Undersize |
| R.H.D. | Right Hand Drive | | |
| RR. or R. | Rear | | |
| | | ..V | Volts |
| | | V. | Valve |
| (S) | Secondary | VAC. | Vacuum |
| SAFE. | Safety | Vent. | Ventilator, Ventilation |
| S/BODY | Short Body | | |
| S/BOX | Short Box | | |
| SELECT | Selective use | | |
| SET. TYPE | Separate Type | ..W | Watts |
| SIG. | Signal | W= | Width |
| SILVER M. | Silver Metallic | W/... | With |
| SNGL TIRE | Single Tire | W/CHASSIS | Windshield Chassis |
| SOL. | Solenoid | W/GER. or W. GERMANY | West Germany |
| SPEC. | Specification | | |
| SPEEDO | Speedometer | WIND. | Window |
| SPL. TYPE | Split Type | W/O | Without |
| SPG. | Spring | W. PUMP | Water Pump |
| SPK. | Speaker | WSHLD | Windshield |
| ST. | Steering | WSTR. or WTHSTP. | Weatherstrip |
| STA. WAGON | Station Wagon | W/T | With Tube |
| STAB. | Stabilizer | | |
| SUB T/MISSION | Sub Transmission | | |
| STD. | Standard | | |
| S/TIRE | Single Tire | | |

# INTERCHANGEABILITY CODE LIST

| Code | Definition | |
|---|---|---|
| AN | ⟷ (Both Ways) | A new part and the former part are fully interchangeable. |
| A | → (One Way) | A new part can be used in place of the former part, but the former part cannot be used in place of a new part. |
| C | Plus | A new part with some additional part(s) can be used in place of the former part. |
| G | Plus | Some modification work is required to use a new part in place of the former part. |
| S | ← (One Way Backward) | The former part can be used in place of a new part, but a new part cannot be used in place of the former part. |